VEHICLE LIFT AND SUPPORT LOCATIONS

1. NOTICE ABOUT VEHICLE CONDITION WHEN JACKING UP

(a) As a rule, the vehicle must be unloaded when jacking up. Never jack up or lift up the vehicle loaded with things of heavy weight.

(b) When removing any parts of heavy weight like the engine and transaxle, the center of gravity of the vehicle moves. Place a balance weight so as to keep it from rolling, or hold the jacking support location using the mission jack.

2. NOTICE FOR USING 4 POST LIFT

(a) Follow the instruction manual for a safety operation.

(b) Do not damage tires or wheels with a free wheel beam.

(c) Using a wheel stopper, fix the vehicle.

3. NOTICE FOR USING JACK AND SAFETY STAND

(a) Work in the flat place using a wheel stopper at all times.

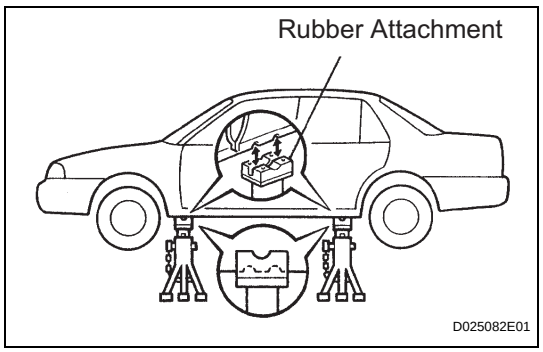

(b) Use a safety stand with a rubber attachment, as shown in the illustration.

(c) Support the specified location with a jack and safety stand accurately.

(d) When jacking up the front wheels, release the parking brake and place wheel stoppers only behind the rear wheels. When jacking up the rear wheels, place wheel stoppers only in front of the front wheels.

(e) Do not work or leave the vehicle supported only by a jack. Be sure to support the vehicle with a safety stand.

(f) When jacking up only the front wheels or only the rear wheels, place wheel stoppers to both sides of the wheels that contact ground.

(g) When jacking down the vehicle with its front wheels jacked up, release the parking brake and place wheel stoppers only in front of the rear wheels. When jacking down the vehicle with its rear wheels jacked up, place wheel stoppers only behind the front wheels.

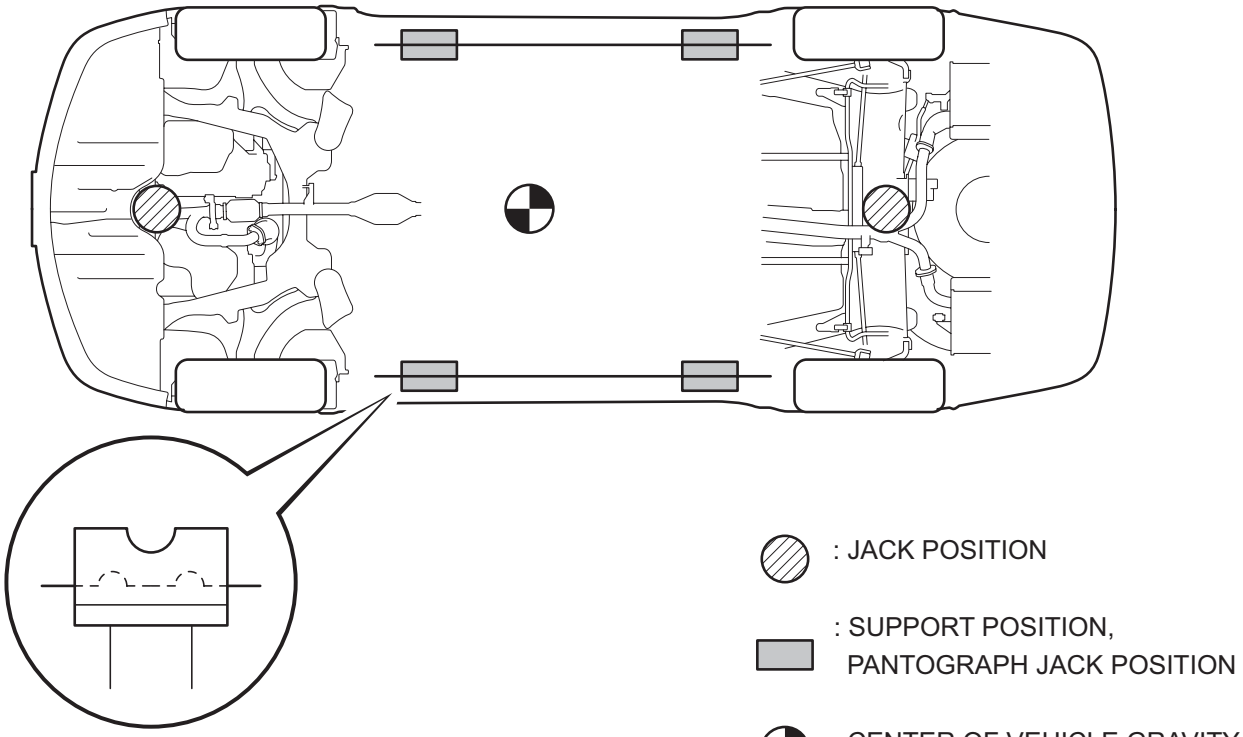

4. NOTICE FOR USING SWING ARM TYPE LIFT

(a) Follow the instruction manual of the lift for a safety operation.
(b) Use a cradle with a rubber attachment, as shown in the illustration.
(c) Set in the vehicle so as to make its center of gravity as close as possible to the center of the lift.
(d) Place the vehicle horizontally by adjusting the height of the cradle, and match the groove of the cradle and the safety stand support location accurately.
(e) Be sure to lock the swing arm during the operation.
(f) Lift the vehicle up until the tires float, and shake the vehicle to make sure that the vehicle is stable.

5. NOTICE FOR USING PLATE TYPE LIFT

(a) Follow the instruction manual of the lift for a safety operation.

(b) Use a plate lift attachment.

(c) Be sure to set the vehicle to the specified position.

Right and left set position	• Place the vehicle over the center of the lift.
Front and rear set position	• Align the cushion gum ends of the plate with the attachment lower ends (A and C). • Align the attachment upper end (B) with the rocker flange front side notch.

(d) Lift the vehicle up until the tires float a bit, and shake the vehicle to make sure that the vehicle is stable.

IN

Swing Arm Type Lift:

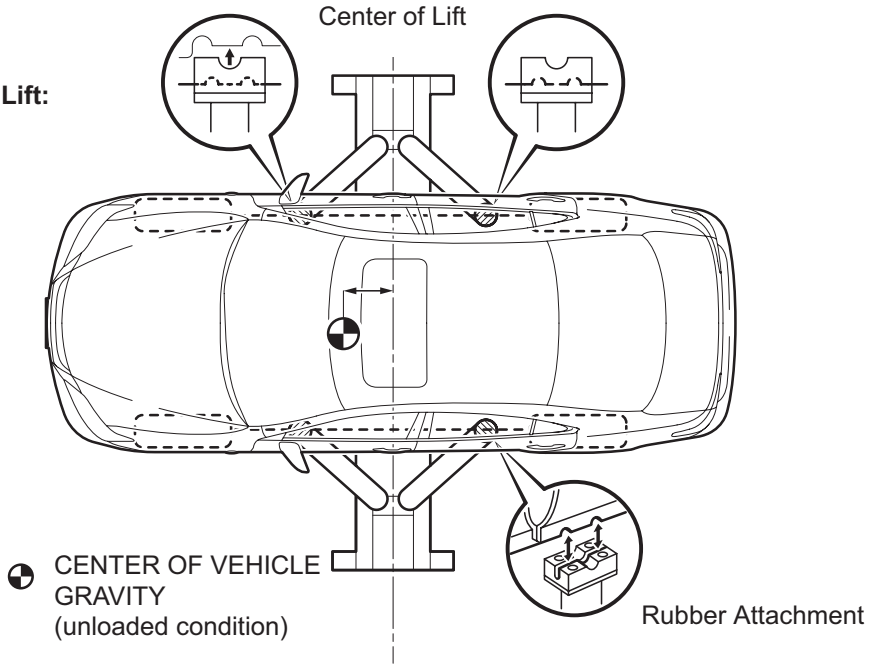

Plate Type Lift:

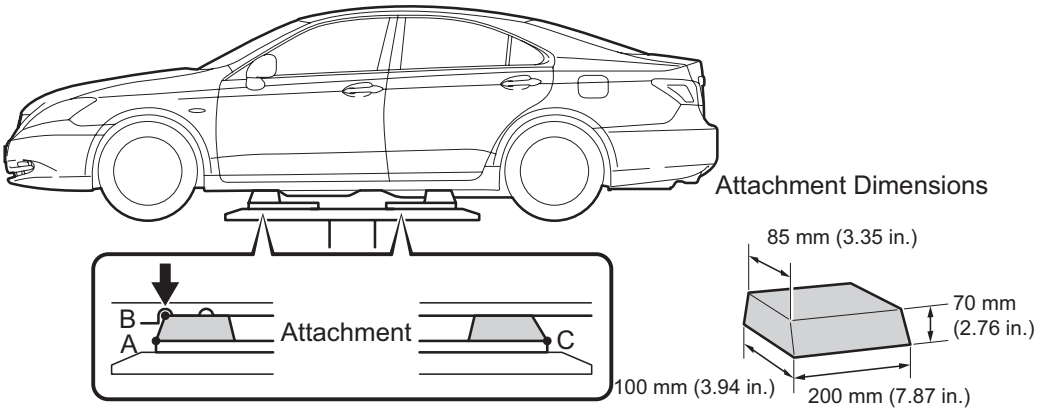

P

D100376E01

RECOMMENDED TOOLS

	09011-12301	Socket Wrench 30 mm	
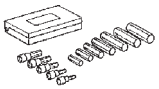	09040-00011	Hexagon Wrench Set	
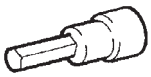	(09043-20050)	Socket Hexagon Wrench 5	
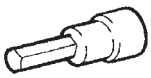	(09043-20060)	Socket Hexagon Wrench 6	
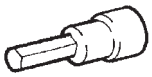	(09043-20080)	Socket Hexagon Wrench 8	
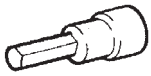	(09043-20100)	Socket Hexagon Wrench 10	
	(09043-30140)	Straight Hexagon Wrench 14	
	09043-30190	Straight Hexagon Wrench 19	
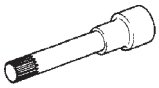	09043-50100	Bi-hexagon Wrench 10 mm	
	09090-04020	Engine Sling Device	
	09200-00010	Engine Adjust Kit	

PP

	(09857-00031)	Spark Plug Gap Gauge	

RECOMMENDED TOOLS

	09082-00040	TOYOTA Electrical Tester	
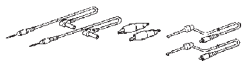	(09083-00150)	Test Lead Set	

EQUIPMENT

Pin (ϕ 1mm)	
Torque wrench	
Vernier calipers	

EQUIPMENT

Torque wrench	

SSM

Toyota Genuine Windshield Glass Adhesive or equivalent	

EQUIPMENT

Protective goggle	
Metal saw	
Torque wrench	
MP grease	
Clip remover	
Protective tape	

HOW TO DETERMINE NUT STRENGTH

Nut Type

Present Standard Hexagon Nut	Old Standard Hexagon Nut		Class
	Cold Forging Nut	Cutting Processed Nut	
No Mark			4N
No Mark (w/ Washer)	No Mark (w/ Washer)	No Mark	5N (4T)
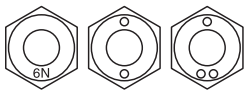			6N
	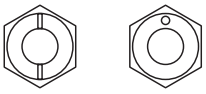	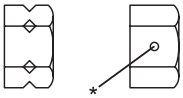	7N (5T)
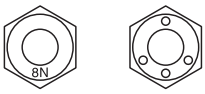			8N
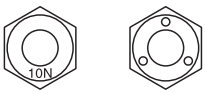	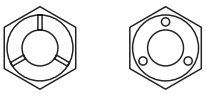	No Mark	10N (7T)
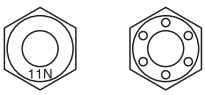			11N
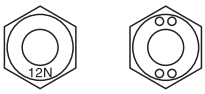			12N

HINT:
- *: Nut with 1 or more marks on one side surface of the nut.
- Use a nut with the same nut strength classification number (or greater) as the bolt strength classification number when tightening parts with a bolt and nut.

Example:
- Bolt = 4T
- Nut = 4N or more

SS

TORQUE SPECIFICATIONS

Part Tightened		N*m	kgf*cm	ft.*lbf
Park/neutral position switch		5.4	55	48 in.*lbf
Control shaft lever x Control shaft		13	130	9
Transmission control cable x Control shaft lever		13	130	9
Transaxle housing x Engine block	Bolt A	64	653	47
	Bolt B	64	653	47
	Bolt C	46	469	34
	Bolt D	43	439	32
Torque converter clutch x Drive plate		41	418	30
Engine mounting front bracket x Transaxle case		64	653	47
Refill plug x Transaxle case		49	500	36
Over flow plug x Transaxle case		40	408	30
Control cable bracket No. 1 x Transaxle case		12	122	9
Oil cooler tube union (inlet oil cooler union) x Transaxle case		27	275	20
Oil cooler tube union (outlet oil cooler union) x Transaxle case		27	275	20
Wire harness x Transaxle case		12	122	9
Wire harness clamp bracket x Transaxle case		8.4	86	74 in.*lbf
Transmission revolution sensor x Valve body		11	112	8
No. 1 transmission oil filler tube x Oil pan		1.7	17	15 in.*lbf
Speedometer driven hole cover x Transaxle case		5.5	56	49 in.*lbf
Transmission wire (ATF temperature sensor) x Valve body		11	112	8
Oil pan x Transaxle case		7.5	76	66 in.*lbf
Transmission wire x Valve body		11	112	8
Valve body x Transaxle case		11	112	8
Oil strainer x Valve body		11	112	8
Breather bracket x Camshaft housing sub-assembly LH		5.5	56	49 in.*lbf
Air cleaner bracket x Body		7.8	80	69 in.*lbf
No. 2 shift cable grommet retainer x Body		5.0	51	44 in.*lbf
Flywheel housing under cover x Transaxle housing		7.8	80	69 in.*lbf
TCM x Transaxle case		11	112	8
Shift lock control unit x Body		12	122	9
Differential gear lube apply tube x Transaxle housing		23	234	17
Lock nut x Transaxle case		120	1,223	88
Transaxle case No. 1 plug x Transaxle rear cover		7.4	75	65 in.*lbf
Transaxle case No. 1 plug x Transaxle housing		7.4	75	65 in.*lbf
Transaxle case No. 1 plug x Transaxle case		29	296	20
Transaxle rear cover x Transaxle case	Bolt A	23	234	17
	Bolt B	17	173	12
Transaxle rear cover plate x Transaxle case		7.5	76	66 in.*lbf
Oil pump assembly x Transaxle case		23	234	17
Transaxle housing x Transaxle case	Bolt A	31	316	23
	Bolt B	23	234	17
Pawl shaft clamp x Transaxle case		23	234	17
Pawl stopper plate x Transaxle case		23	234	17
Manual detent spring x Transaxle case		23	234	17
Oil pump body x Stator shaft assembly		9.3	95	82 in.*lbf
Shift solenoid valve SL3 x Transmission valve body assembly		11	110	8
Shift solenoid valve SL4 x Transmission valve body assembly		11	110	8
Front differential case x Front differential ring gear		120	1,223	88

PARTS LOCATION

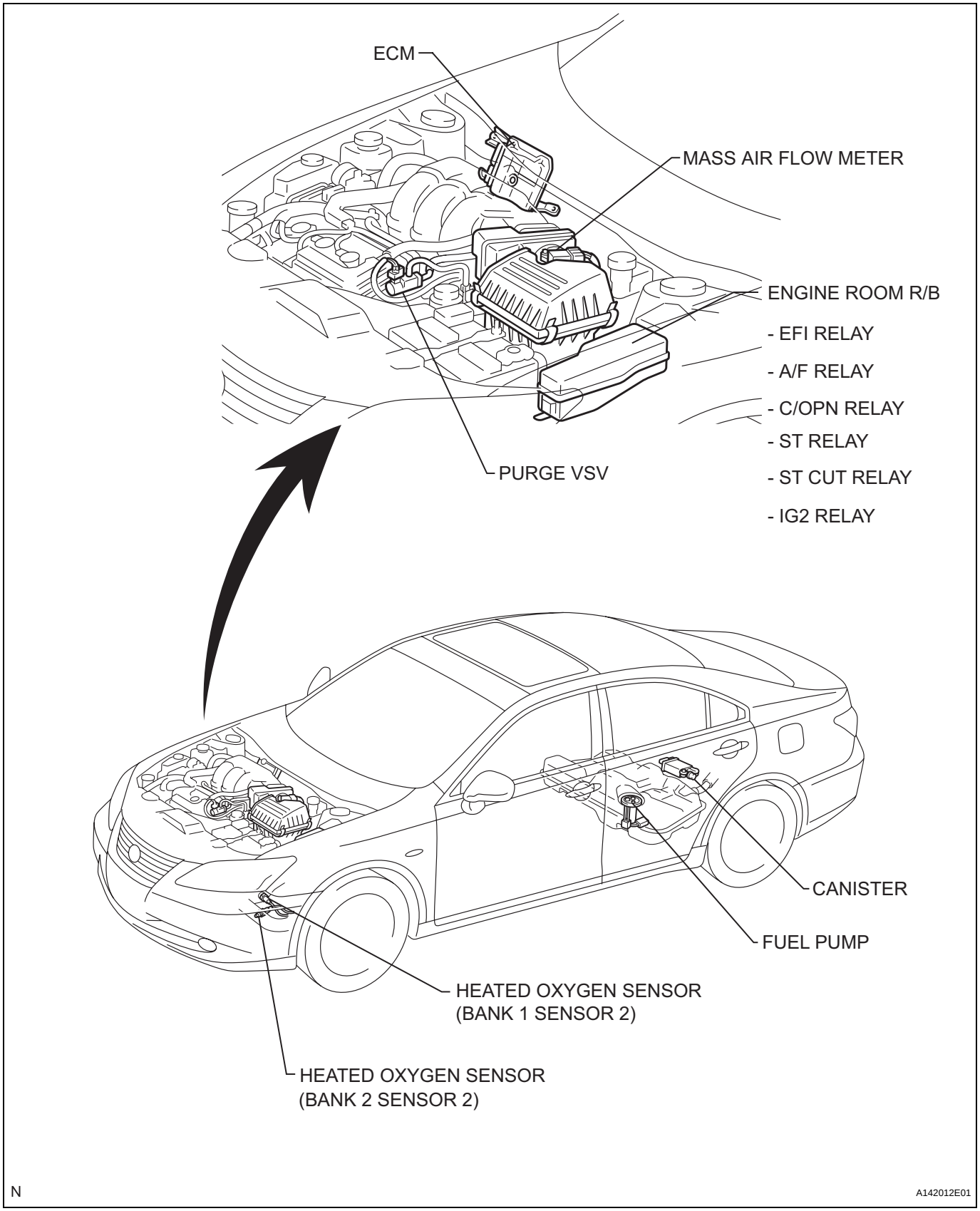

ES

ES

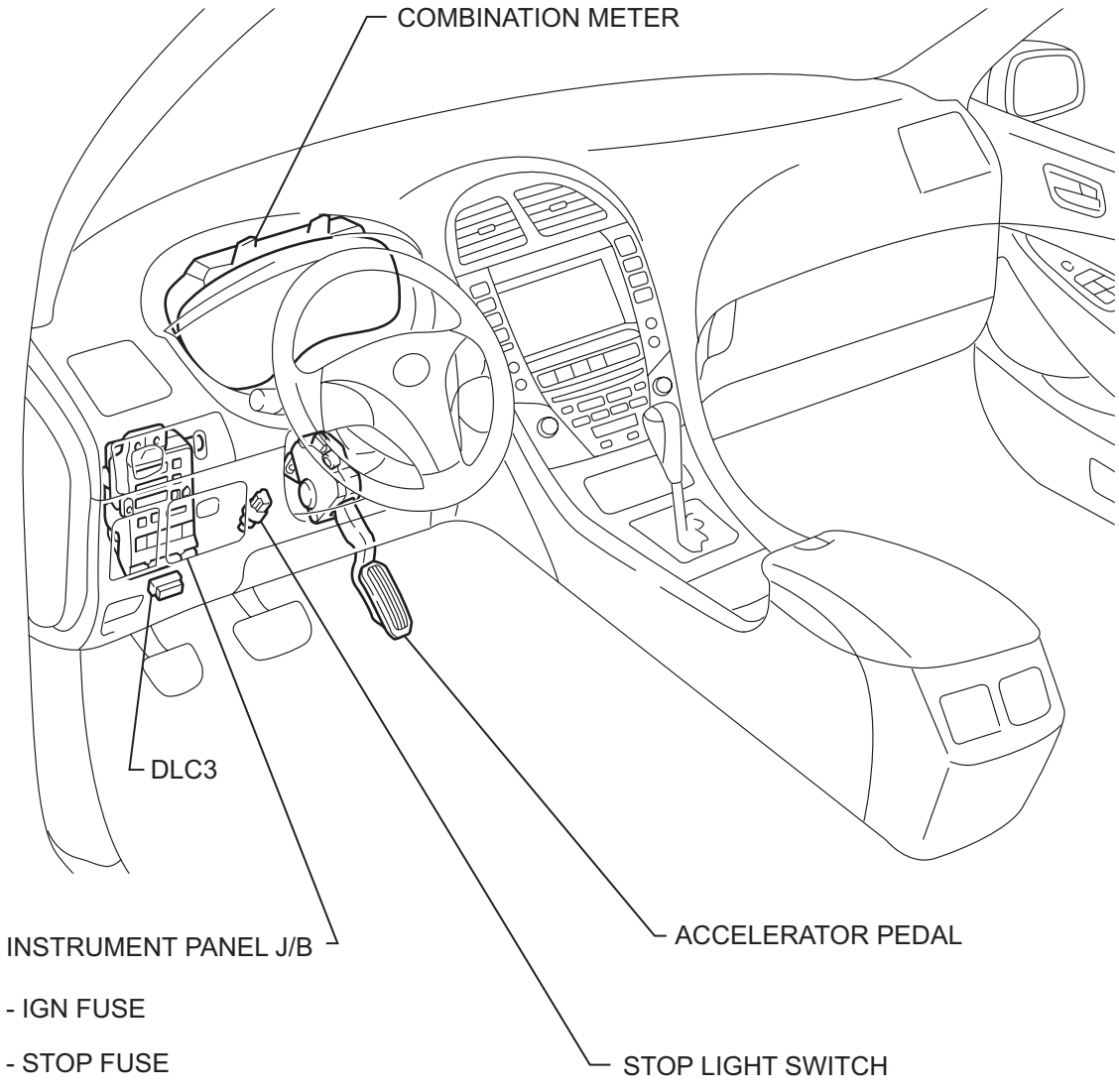

N

A142013E01

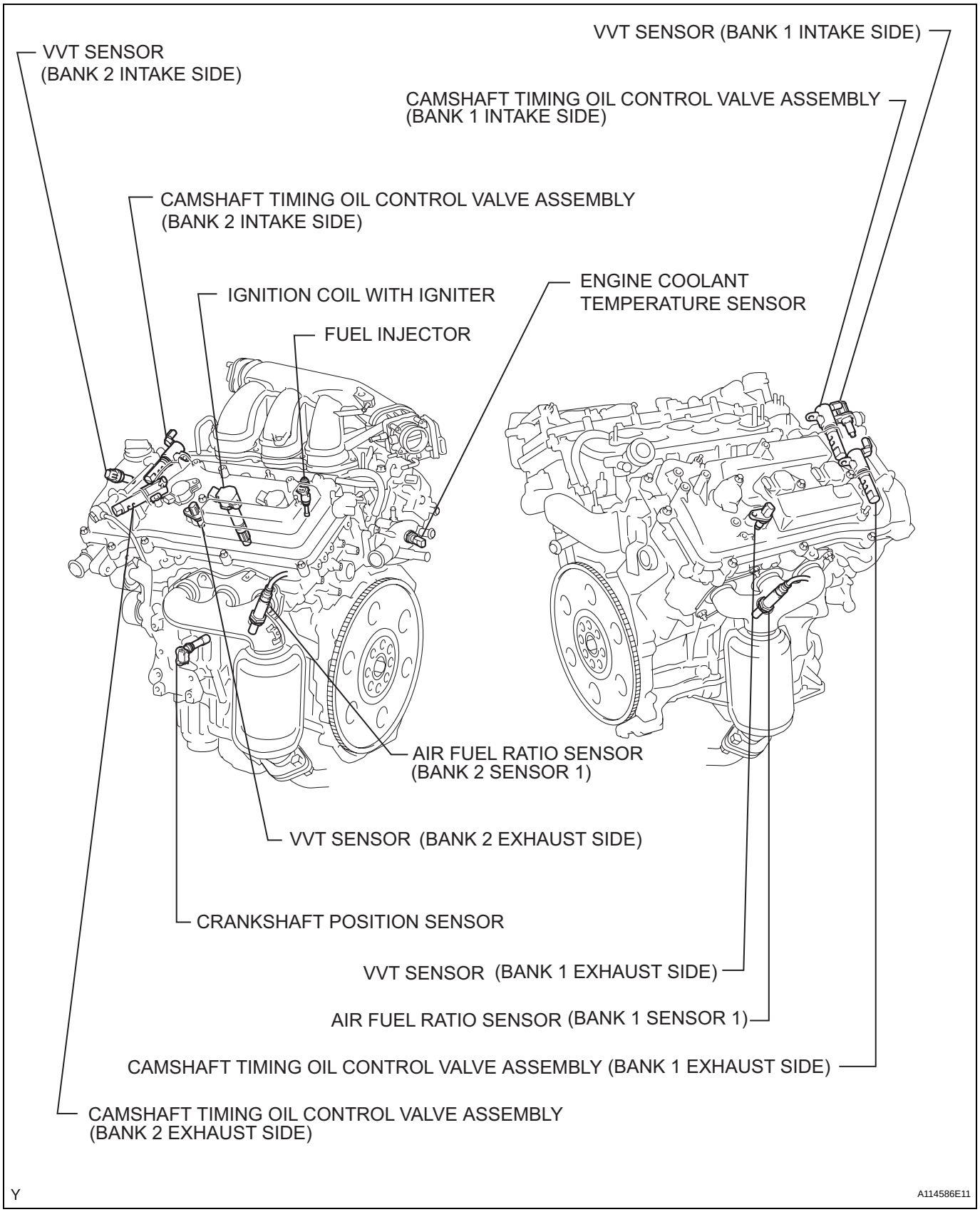
VVT SENSOR (BANK 1 INTAKE SIDE)
VVT SENSOR
(BANK 2 INTAKE SIDE)
CAMSHAFT TIMING OIL CONTROL VALVE ASSEMBLY
(BANK 1 INTAKE SIDE)
CAMSHAFT TIMING OIL CONTROL VALVE ASSEMBLY
(BANK 2 INTAKE SIDE)
IGNITION COIL WITH IGNITER
ENGINE COOLANT
TEMPERATURE SENSOR
FUEL INJECTOR
AIR FUEL RATIO SENSOR
(BANK 2 SENSOR 1)
VVT SENSOR (BANK 2 EXHAUST SIDE)
CRANKSHAFT POSITION SENSOR
VVT SENSOR (BANK 1 EXHAUST SIDE)
AIR FUEL RATIO SENSOR (BANK 1 SENSOR 1)
CAMSHAFT TIMING OIL CONTROL VALVE ASSEMBLY (BANK 1 EXHAUST SIDE)
CAMSHAFT TIMING OIL CONTROL VALVE ASSEMBLY
(BANK 2 EXHAUST SIDE)
Y
A114586E11

ES

ES

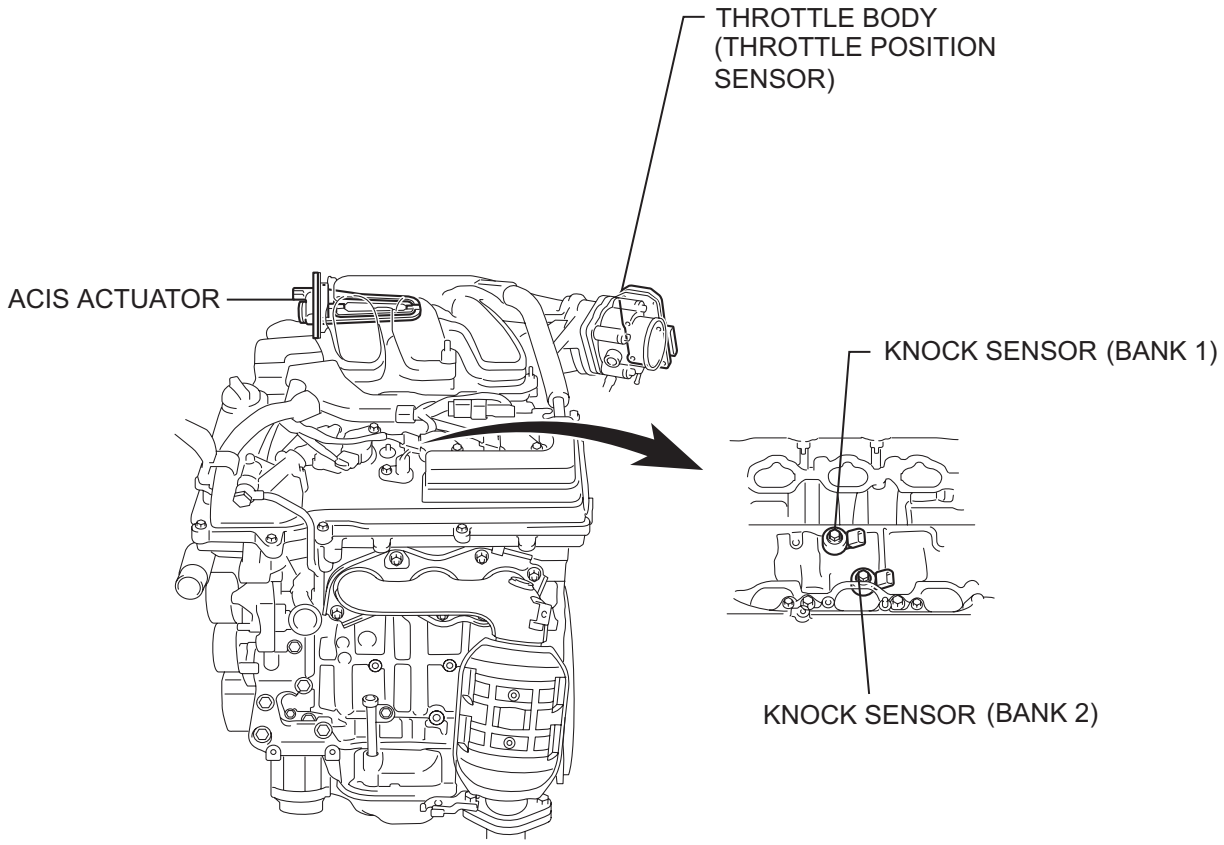

Y

A114543E04

REMOVAL

1. **DISCONNECT CABLE FROM NEGATIVE BATTERY TERMINAL**
2. **REMOVE ENGINE UNDER COVER LH**
3. **REMOVE ENGINE UNDER COVER RH**
4. **REMOVE COOL AIR INTAKE DUCT SEAL (See page EM-22)**
5. **REMOVE ENGINE ROOM SIDE COVER LH (See page EM-22)**
6. **REMOVE V-BANK COVER SUB-ASSEMBLY (See page EM-23)**
7. **REMOVE AIR CLEANER INLET ASSEMBLY (See page EM-23)**
8. **REMOVE NO. 1 AIR CLEANER INLET (See page EM-23)**
9. **REMOVE ENGINE MOUNTING BRACKET FR**

   HINT:
   Securely support the automatic transaxle using a jack.

   (a) Disconnect the 2 connectors and clamp.

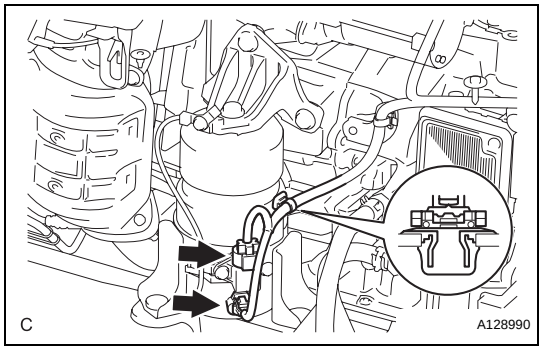

   (b) Remove the bolt and disconnect the earth cable.

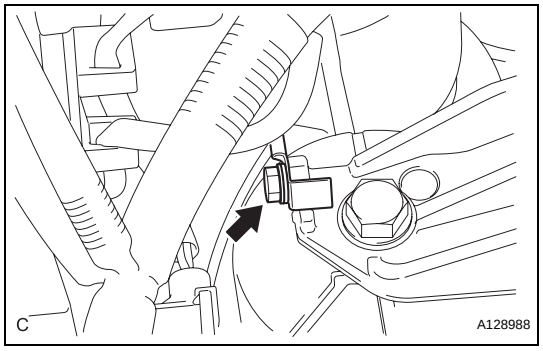

ES

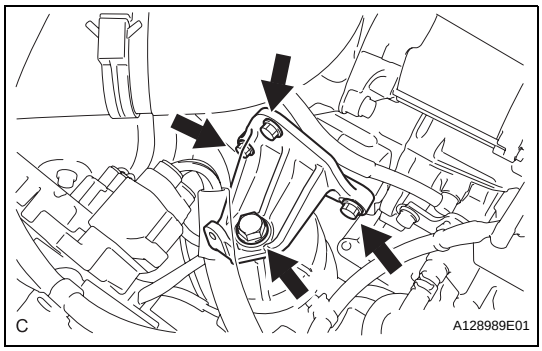

(c) Remove the 4 bolts and engine mounting bracket FR.

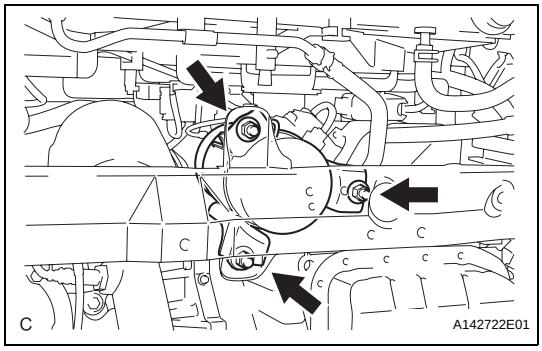

10. REMOVE ACTIVE CONTROL ENGINE MOUNT

(a) Remove the 3 nuts and active control engine mount.

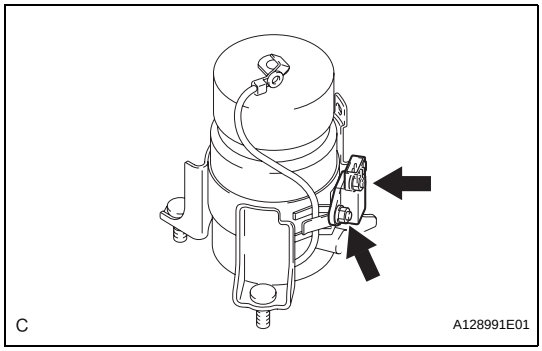

(b) Remove the 2 nuts and acceleration sensor.

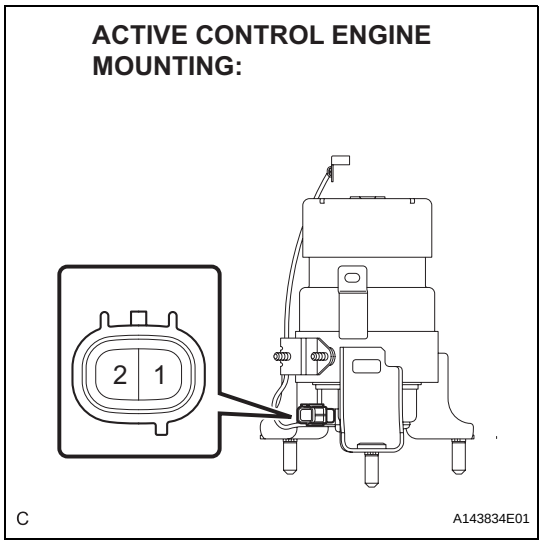

INSPECTION

1. INSPECT ACTIVE CONTROL ENGINE MOUNTING

(a) Using an ohmmeter, measure the resistance between the terminals.

Standard resistance:

0.55 to 0.95Ω

If the resistance is not as specified, replace the active control engine mounting.

EM

REMOVAL

1. **DISCHARGE FUEL SYSTEM PRESSURE**
   HINT:
   See page FU-1.
2. **DISCONNECT CABLE FROM NEGATIVE BATTERY TERMINAL**
3. **PLACE FRONT WHEELS FACING STRAIGHT AHEAD**
4. **REMOVE FRONT WHEELS**
5. **REMOVE ENGINE UNDER COVER LH**
6. **REMOVE ENGINE UNDER COVER RH**
7. **REMOVE FRONT FENDER APRON SEAL RH**
8. **DRAIN ENGINE OIL (See page LU-4)**
9. **DRAIN ENGINE COOLANT (See page CO-5)**
10. **DRAIN AUTOMATIC TRANSAXLE FLUID (See page AX-215)**
11. **REMOVE COOL AIR INTAKE DUCT SEAL**
    (a) Remove the 7 clips and intake duct seal.
12. **REMOVE ENGINE ROOM SIDE COVER LH**
    (a) Remove the hood hinge cover LH.

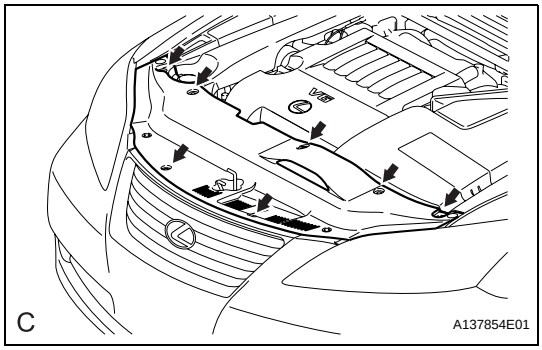

    (b) Remove the 6 clips and engine room side cover LH.
13. **REMOVE ENGINE ROOM SIDE COVER RH**
    (a) Remove the hood hinge cover RH.

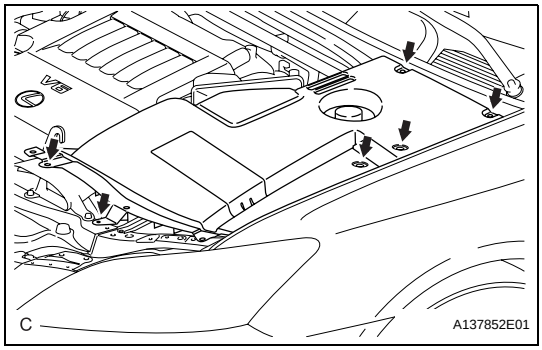

    (b) Remove the 5 clips and engine room side cover RH.

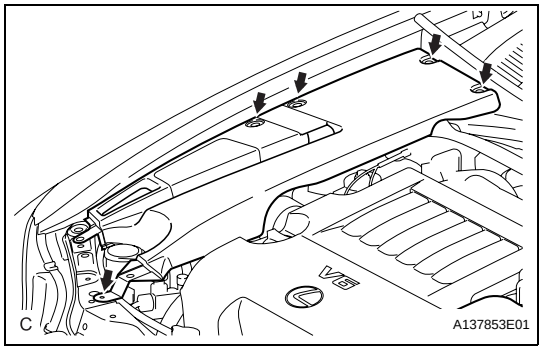

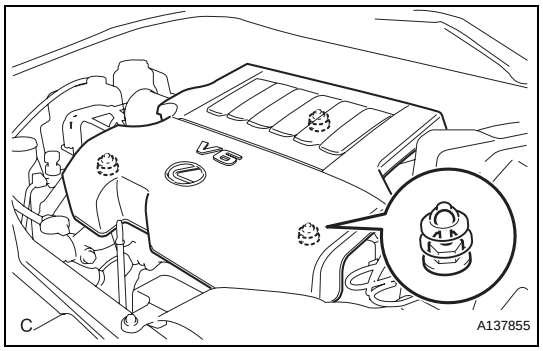

14. REMOVE V-BANK COVER SUB-ASSEMBLY

(a) Hold the front of the V-bank cover and raise it to disengage the 2 clips on the front of the cover. Continue to raise the cover to disengage the clip on the rear of the cover and remove the cover.

NOTICE:

Attempting to disengage both front and rear clips at the same time may cause the cover to break.

15. REMOVE V-RIBBED BELT (See page EM-6)

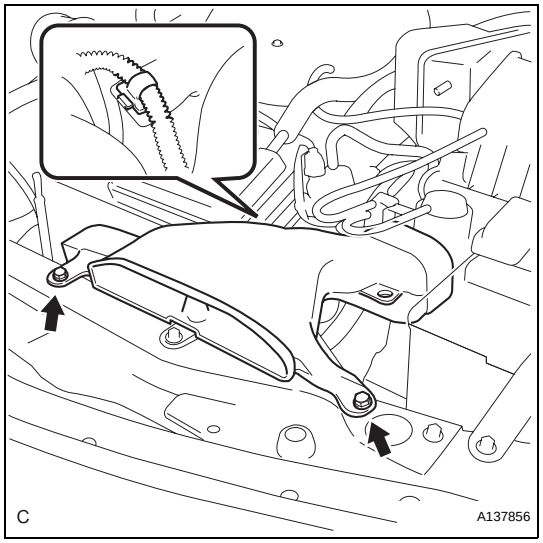

16. REMOVE AIR CLEANER INLET ASSEMBLY

(a) Remove the 2 bolts, clamp and air cleaner inlet.

17. REMOVE AIR CLEANER CAP SUB-ASSEMBLY (See page ES-519)

EM

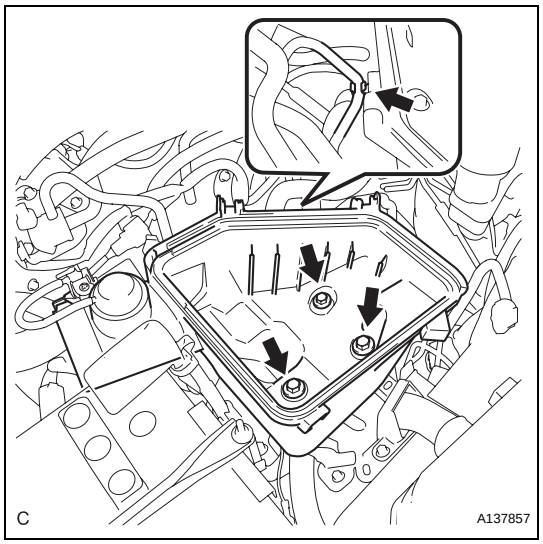

18. REMOVE AIR CLEANER CASE SUB-ASSEMBLY

(a) Disconnect the vacuum hose and hose clamp.

(b) Remove the 3 bolts and air cleaner case.

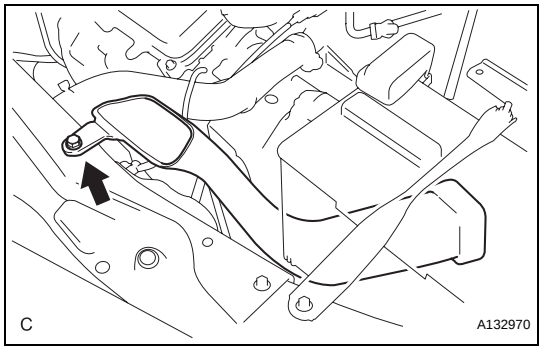

19. REMOVE NO. 1 AIR CLEANER INLET

(a) Remove the bolt and No. 1 air cleaner inlet.

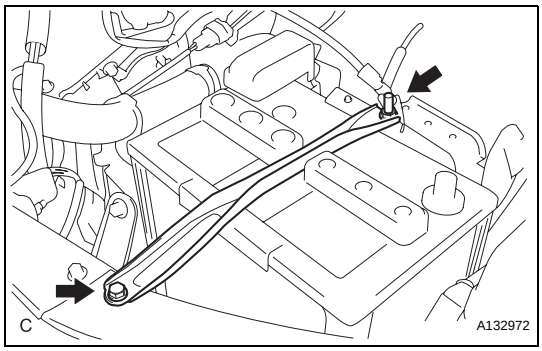

20. REMOVE BATTERY

(a) Loosen the nut, and remove the bolt and battery clamp.

(b) Remove the battery and battery tray.

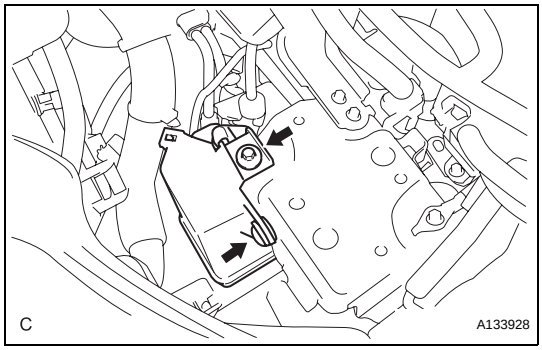

21. REMOVE INTAKE AIR RESONATOR SUB-ASSEMBLY

(a) Remove the clip, bolt and intake air resonator.

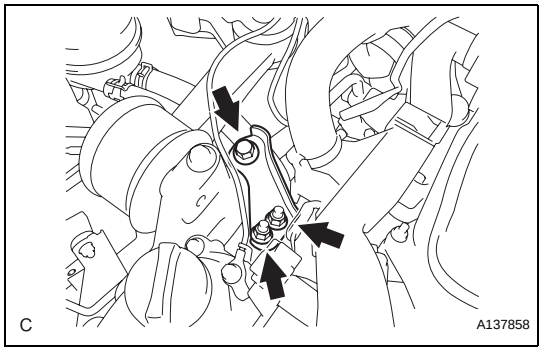

22. REMOVE NO. 2 ENGINE MOUNTING STAY RH

(a) Remove the bolt, 2 nuts, and No. 2 mounting stay RH.

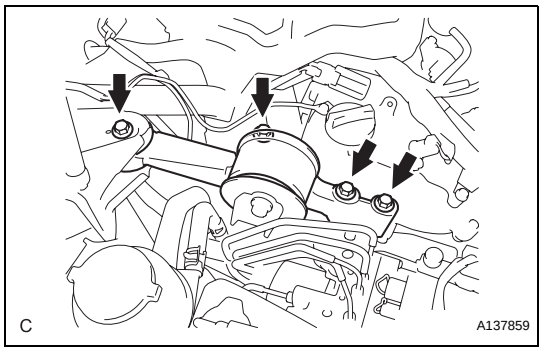

23. REMOVE ENGINE MOVING CONTROL ROD SUB-ASSEMBLY

(a) Remove the 4 bolts and engine moving control rod.

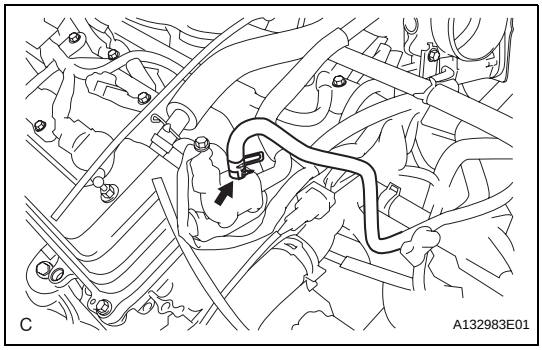

24. DISCONNECT NO. 1 FUEL VAPOR FEED HOSE

(a) Remove the clamp and disconnect the No. 1 fuel vapor feed hose.

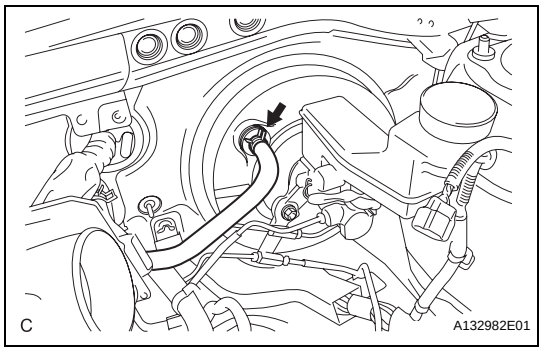

25. DISCONNECT CHECK VALVE TO BRAKE BOOSTER HOSE

(a) Remove the clamp and disconnect the check valve to brake booster hose.

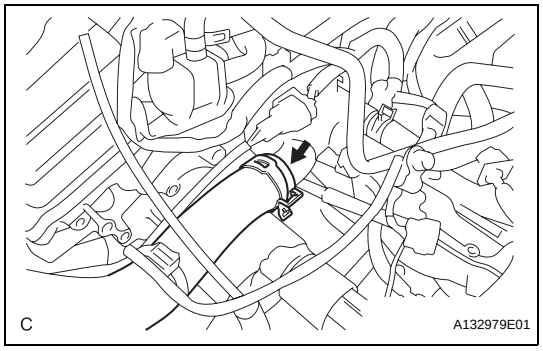

26. REMOVE RADIATOR HOSE INLET

(a) Remove the clamp and disconnect the radiator hose inlet.

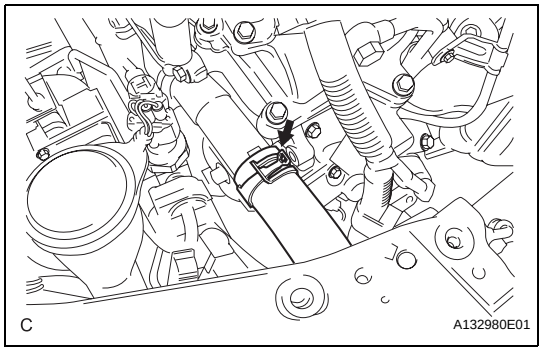

27. REMOVE RADIATOR HOSE OUTLET

(a) Remove the clamp and disconnect the radiator hose outlet.

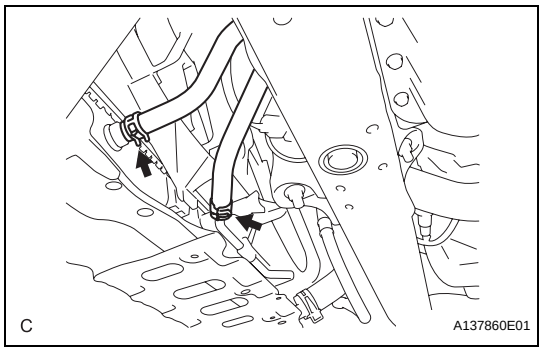

28. DISCONNECT NO. 1 OIL COOLER INLET HOSE

(a) Remove the clamp and disconnect the oil cooler inlet hose.

29. DISCONNECT NO. 1 OIL COOLER OUTLET HOSE

(a) Remove the clamp and disconnect the oil cooler outlet hose.

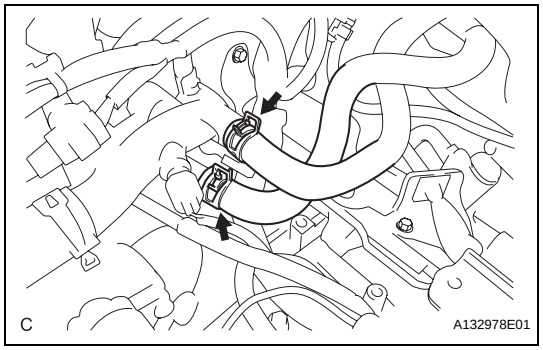

30. DISCONNECT HEATER INLET WATER HOSE

(a) Disconnect the heater inlet water hose.

31. DISCONNECT HEATER OUTLET WATER HOSE

(a) Disconnect the heater outlet water hose.

32. REMOVE ECM

HINT:

See page ES-543.

33. REMOVE RELAY BLOCK COVER UPPER

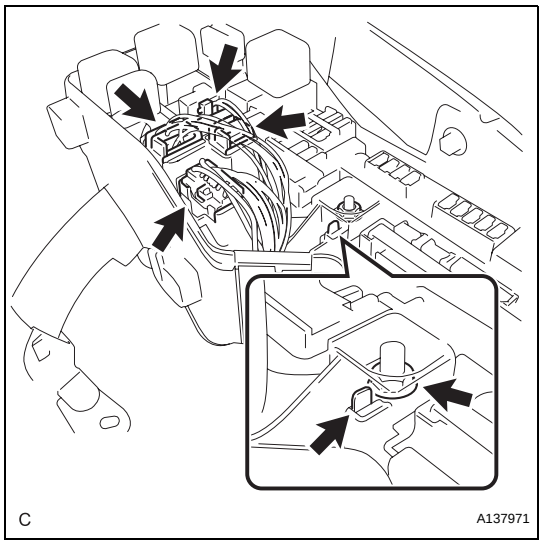

34. DISCONNECT ENGINE WIRE

(a) Disconnect the engine wire from the engine room junction block.
  (1) Remove the nut and separate the wire harness.
  (2) Using a screwdriver, unlock the engine room junction block. Pull the engine room J/B upward.
  (3) Disconnect the engine wire connectors.

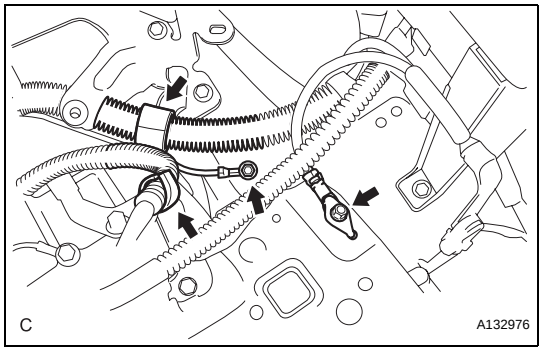

(b) Remove the 2 bolts and 2 clamps from the body.

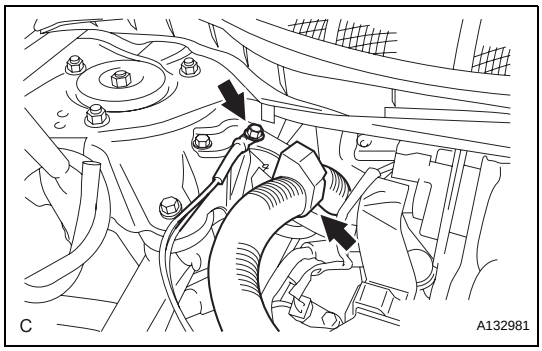

(c) Remove the bolt and clamp from the bracket.

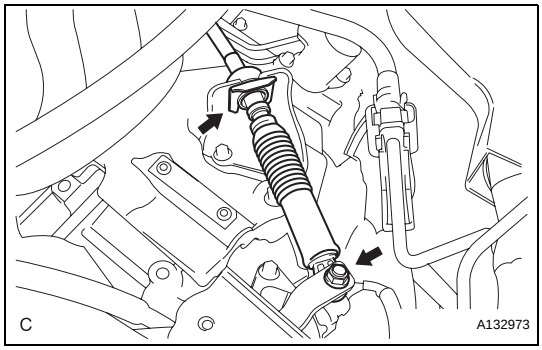

35. DISCONNECT TRANSMISSION CONTROL CABLE ASSEMBLY

(a) Remove the clip and nut, and separate the cable from the transaxle.

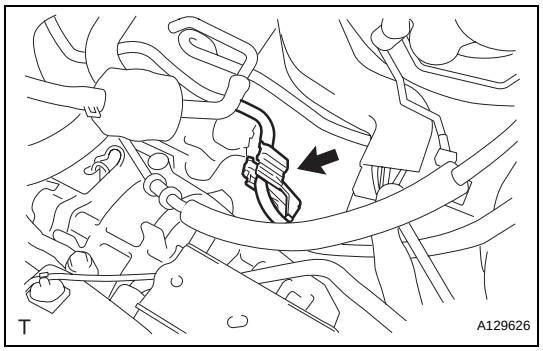

36. SEPARATE FUEL TUBE SUB-ASSEMBLY

(a) Remove the No. 1 fuel pipe clamp.

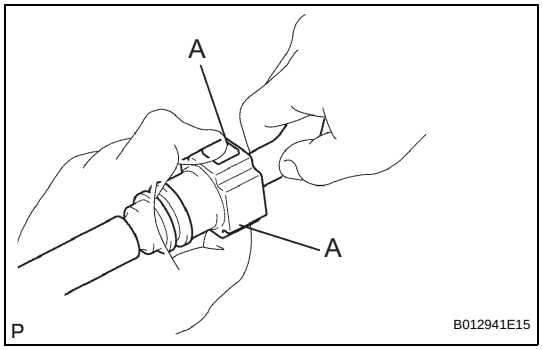

(b) Disconnect the connector from the tube while pinching part A with your fingers as shown in the illustration.

NOTICE:

- **Check for contamination in the pipe and around the connector. Clean if necessary and then disconnect the connector.**
- **Disconnect the connector by hand.**
- **Do not bend, fold or rotate the nylon tube.**
- **If the pipe and connector are stuck together, push and pull the connector until it becomes free.**
- **Put the pipe and connector ends in vinyl bags to prevent damage and contamination.**

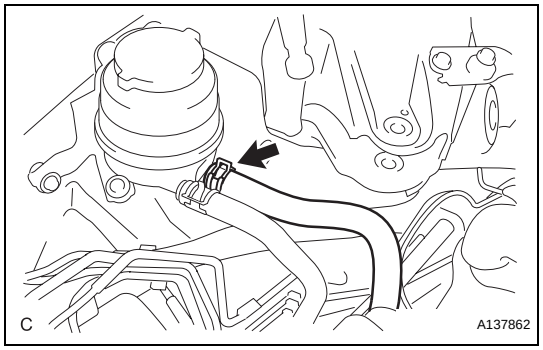

37. DISCONNECT OIL RESERVOIR TO PUMP HOSE

(a) Disconnect the oil reservoir to pump hose.

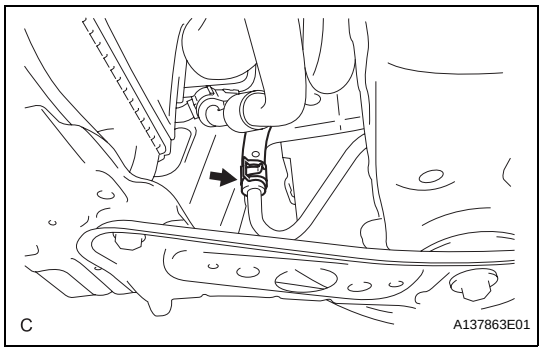

38. DISCONNECT RETURN TUBE SUB-ASSEMBLY

(a) Disconnect the return tube sub-assembly.

39. REMOVE EXHAUST PIPE NO. 1 SUPPORT BRACKET (See page EX-3)

40. REMOVE EXHAUST PIPE ASSEMBLY FRONT (See page EX-3)

41. REMOVE FRONT AXLE HUB NUT LH (See page DS-5)

42. REMOVE FRONT AXLE HUB NUT RH

HINT:

Use the same procedure described for the LH side.

43. DISCONNECT FRONT STABILIZER LINK ASSEMBLY LH (See page DS-5)

EM

44. DISCONNECT FRONT STABILIZER LINK ASSEMBLY RH

HINT:
Use the same procedure described for the LH side.

45. DISCONNECT FRONT SPEED SENSOR LH (See page DS-5)

46. DISCONNECT FRONT SPEED SENSOR RH

HINT:
Use the same procedure described for the LH side.

47. DISCONNECT TIE ROD ASSEMBLY LH (See page DS-6)

48. DISCONNECT TIE ROD ASSEMBLY RH

HINT:
Use the same procedure described for the LH side.

49. DISCONNECT FRONT SUSPENSION LOWER NO. 1 ARM LH (See page DS-6)

50. DISCONNECT FRONT SUSPENSION LOWER NO. 1 ARM RH

HINT:
Use the same procedure described for the LH side.

51. SEPARATE FRONT AXLE ASSEMBLY LH (See page DS-6)

52. SEPARATE FRONT AXLE ASSEMBLY RH

HINT:
Use the same procedure described for the LH side.

53. REMOVE NO. 1 EXHAUST PIPE SUPPORT BRACKET

(a) Remove the No. 1 exhaust pipe support bracket with the 2 nuts.

54. REMOVE DRIVE PLATE AND TORQUE CONVERTER CLUTCH SETTING BOLT (See page AX-219)

55. DISCONNECT STEERING INTERMEDIATE SHAFT ASSEMBLY (See page PS-28)

56. REMOVE GENERATOR ASSEMBLY (See page CH-14)

57. SEPARATE COOLER COMPRESSOR ASSEMBLY

(a) Remove the 2 connector clamps.

(b) Remove the 4 bolts and separate the compressor.
HINT:
Hang up the hoses instead of detaching them.

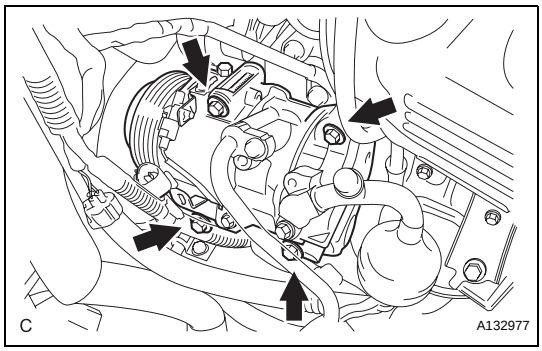

58. REMOVE ENGINE ASSEMBLY WITH TRANSAXLE

(a) Set the engine lifter.

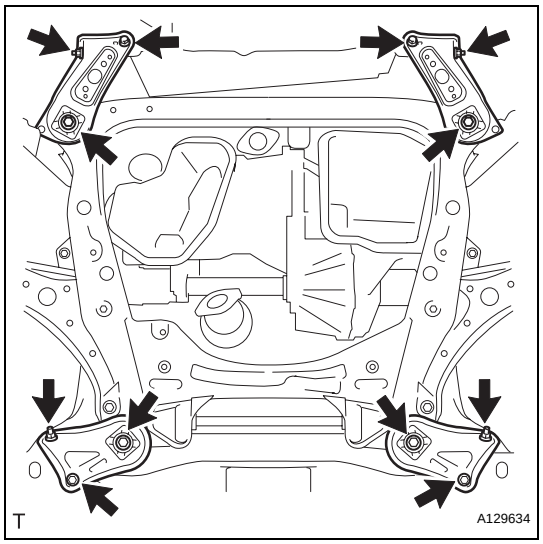

(b) Remove the 4 bolts, 2 nuts, and frame side rail plates RH and LH.
(c) Remove the 4 bolts, 2 nuts, and front suspension member brace rear RH and LH.
(d) Operate the engine lifter, then remove the engine assembly from the vehicle.
NOTICE:
Make sure that the engine is clear of all wiring and hoses.

59. REMOVE VANE PUMP ASSEMBLY

(a) Disconnect the power steering oil pressure switch connector.

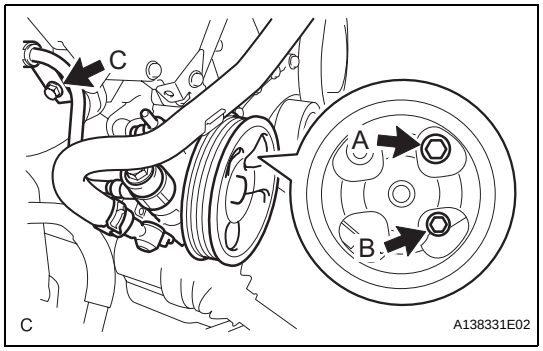

(b) Remove the pressure feed tube clamp bolt C.
(c) Loosen the bolt A.
(d) Remove the bolt B and vane pump.

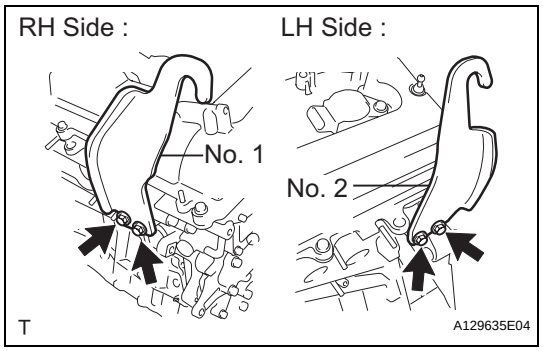

60. INSTALL ENGINE HANGER

(a) Install the 2 engine hangers with the 4 bolts as shown in the illustration.
Part No:
No. 1 Engine hanger 12281-31120
No. 2 Engine hanger 12282-31100
Bolts 91671-10825
Torque: 33 N*m (337 kgf*cm, 24 ft.*lbf)
(b) Attach the engine sling device and hang the engine with the chain block.

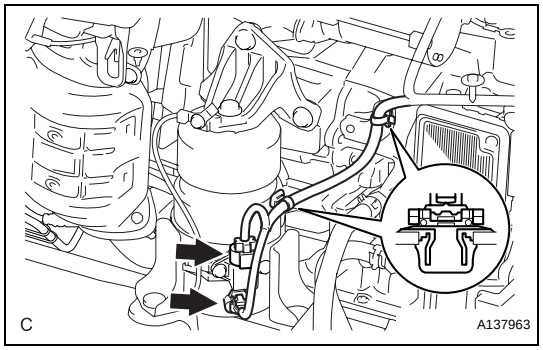

61. REMOVE FRONT FRAME ASSEMBLY

(a) Disconnect the 2 connectors and 2 clamps.

EM

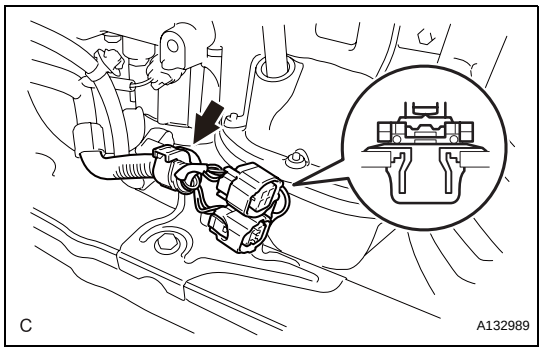

(b) Disconnect the 2 clamps.

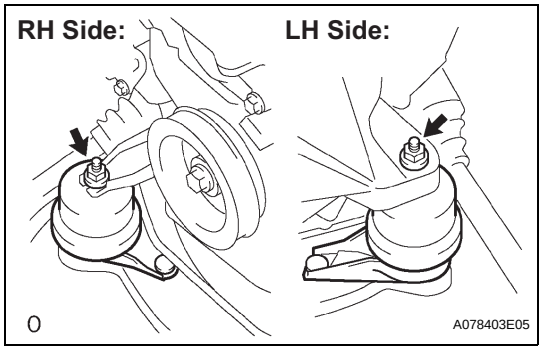

(c) Remove the 2 nuts and disconnect the engine mounting insulators RH and LH.

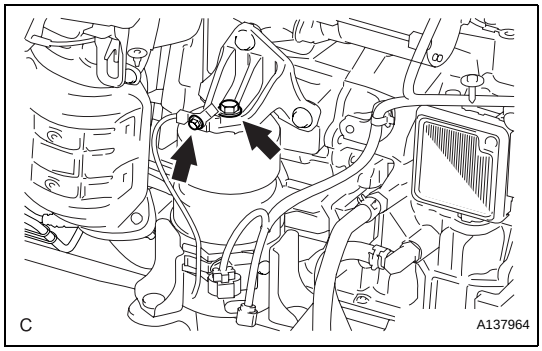

(d) Remove the 2 bolts and disconnect the engine mounting insulator FR and cable.

62. REMOVE FRONT DRIVE SHAFT ASSEMBLY LH (See page DS-6)

63. REMOVE FRONT DRIVE SHAFT ASSEMBLY RH (See page DS-7)

64. REMOVE ENGINE WIRE

65. REMOVE STARTER ASSEMBLY (See page ST-145)

66. REMOVE AUTOMATIC TRANSAXLE ASSEMBLY

HINT:
See page AX-215.

67. REMOVE DRIVE PLATE AND RING GEAR SUB-ASSEMBLY (See page EM-11)

68. SECURE ENGINE

(a) Secure the engine onto an engine stand with the bolts.

69. REMOVE INTAKE AIR SURGE TANK ASSEMBLY

HINT:
See page FU-12.

70. REMOVE IGNITION COIL ASSEMBLY

(a) Remove the 6 bolts and 6 ignition coils.

71. REMOVE NO. 2 ENGINE MOUNTING STAY RH

(a) Remove the bolt and No. 2 engine mounting stay RH.

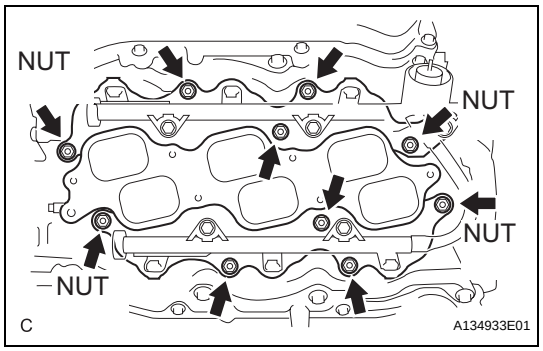

72. REMOVE INTAKE MANIFOLD

(a) Uniformly loosen and remove the 6 bolts and 4 nuts.

(b) Remove the intake manifold and 2 gaskets.

73. REMOVE EXHAUST MANIFOLD SUB-ASSEMBLY RH

(a) Disconnect the A/F sensor connector clamp.

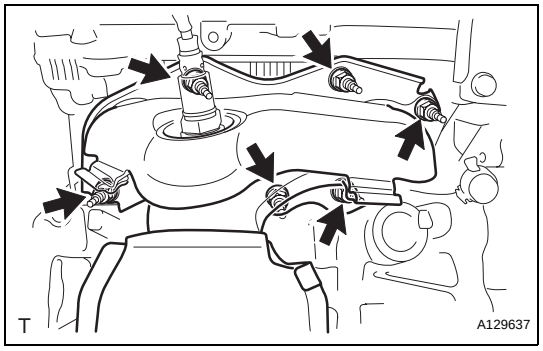

(b) Uniformly loosen and remove the 6 nuts.

(c) Remove the manifold and gasket.

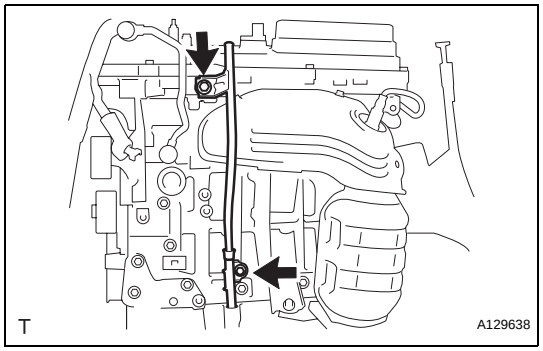

74. REMOVE OIL LEVEL GAUGE GUIDE SUB-ASSEMBLY

(a) Remove the oil level gauge.

(b) Remove the 2 bolts, oil level gauge guides No. 1 and No. 2.

(c) Remove the O-rings from the oil level gauge guide.

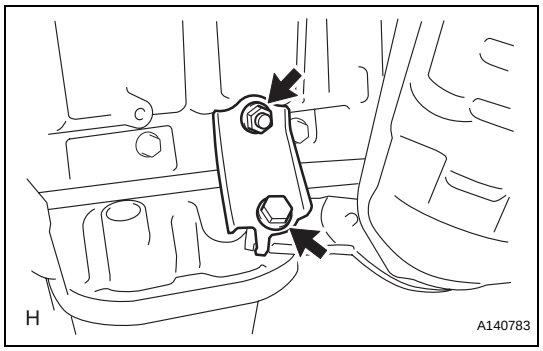

75. REMOVE NO. 2 MANIFOLD STAY

(a) Remove the bolt, nut, and No. 2 manifold stay.

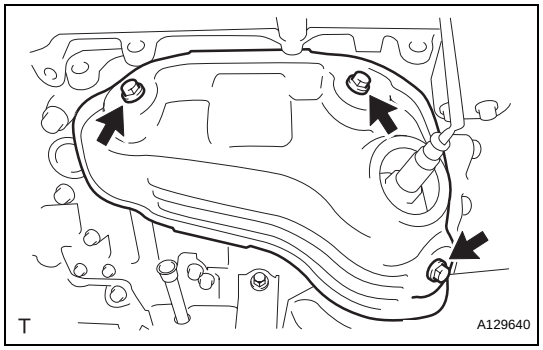

76. REMOVE NO. 2 EXHAUST MANIFOLD HEAT INSULATOR

(a) Remove the 3 bolts and No. 2 insulator.

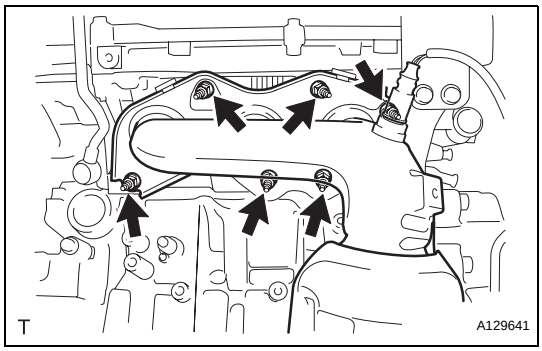

77. REMOVE EXHAUST MANIFOLD SUB-ASSEMBLY LH

(a) Uniformly loosen and remove the 6 nuts.

(b) Remove the manifold and gasket.

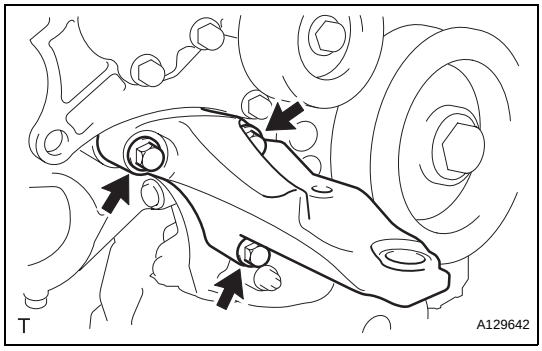

78. REMOVE ENGINE MOUNTING BRACKET RH

(a) Remove the 3 bolts and engine mounting bracket RH.

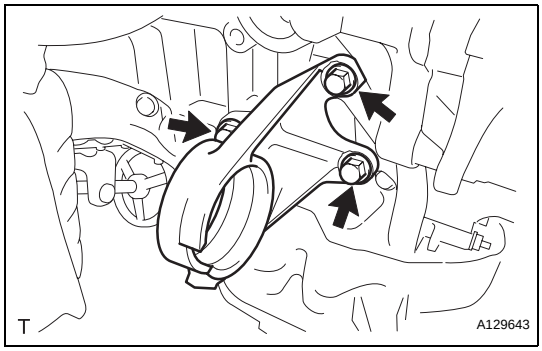

79. REMOVE DRIVE SHAFT BEARING BRACKET

(a) Remove the 3 bolts and drive shaft bearing bracket.

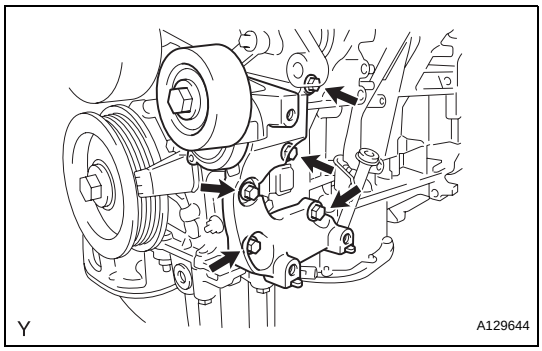

80. REMOVE V-RIBBED BELT TENSIONER ASSEMBLY

(a) Remove the 5 bolts and V-ribbed belt tensioner assembly.

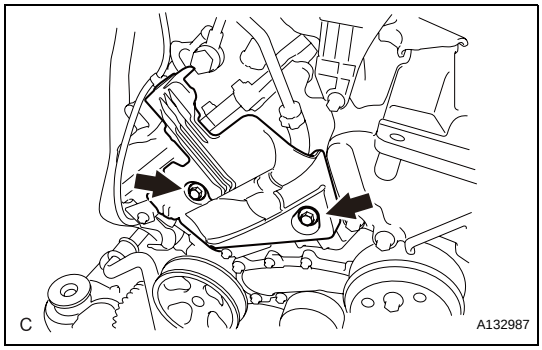

81. REMOVE NO. 2 TIMING GEAR COVER

(a) Remove the 2 bolts and No. 2 timing gear cover.

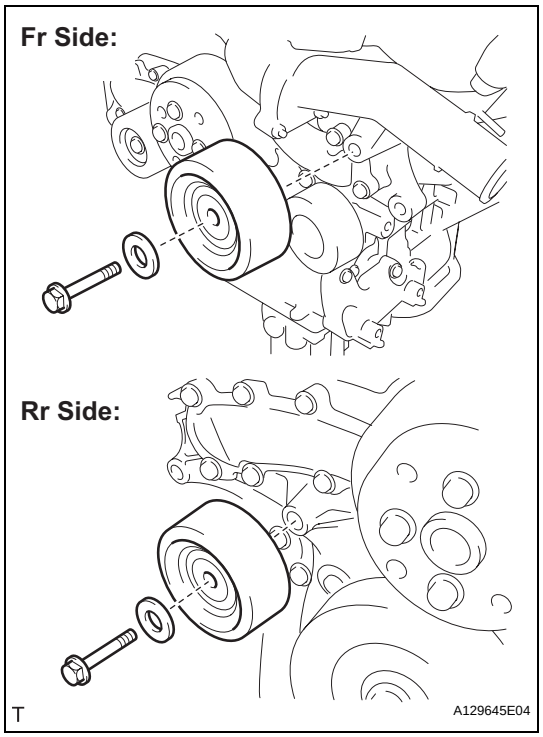

82. REMOVE NO. 2 IDLER PULLEY SUB-ASSEMBLY

(a) Remove the bolt, plate and No. 2 idler pulley sub-assembly.

83. REMOVE WATER PUMP PULLEY (See page CO-8)

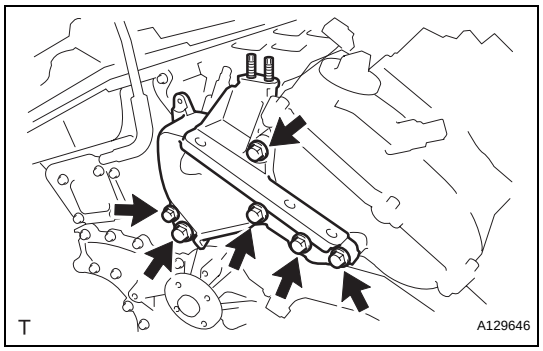

84. REMOVE NO. 1 ENGINE MOUNTING BRACKET FRONT LH

(a) Remove the 6 bolts and No. 1 engine mounting bracket front LH.

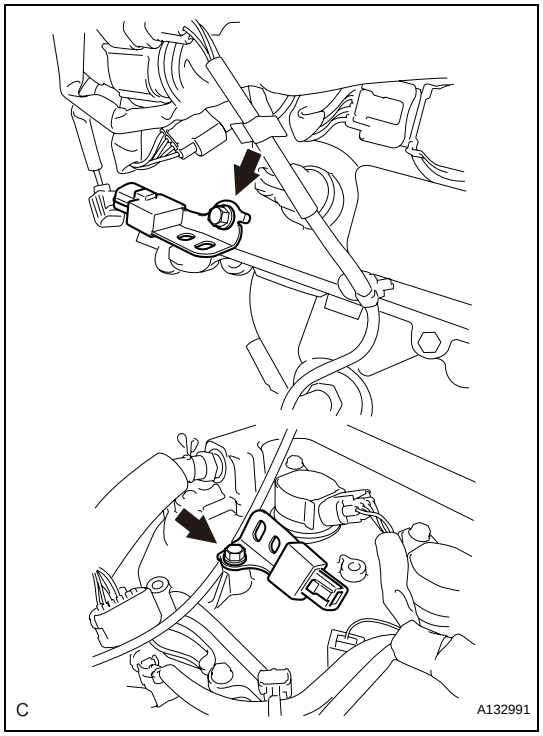

85. REMOVE RADIO SETTING CONDENSER

(a) Remove the 2 bolts and 2 radio setting condensers.

PARTS LOCATION

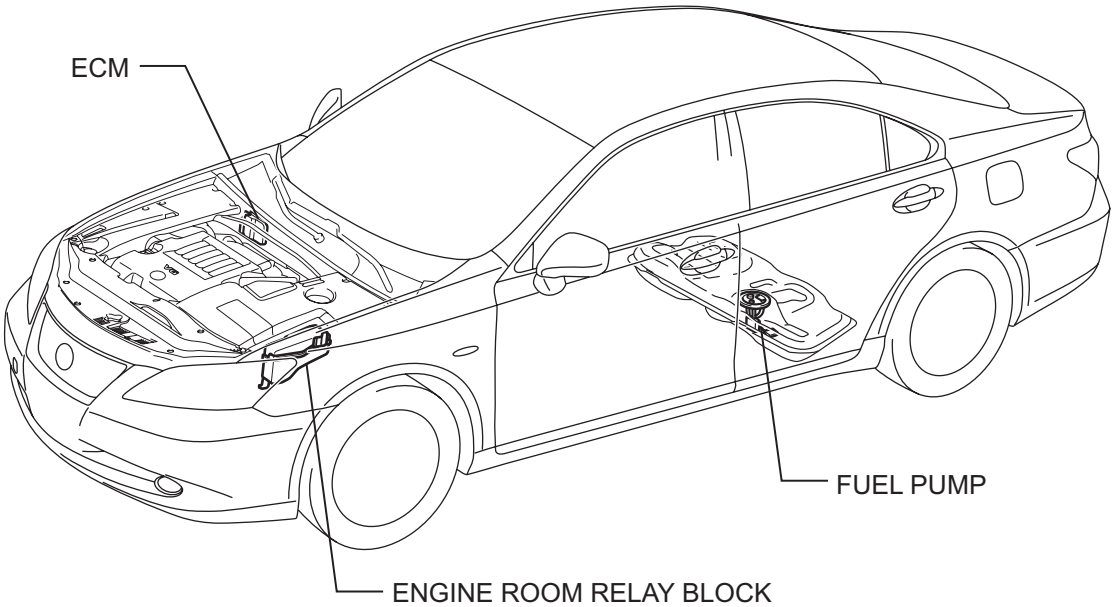

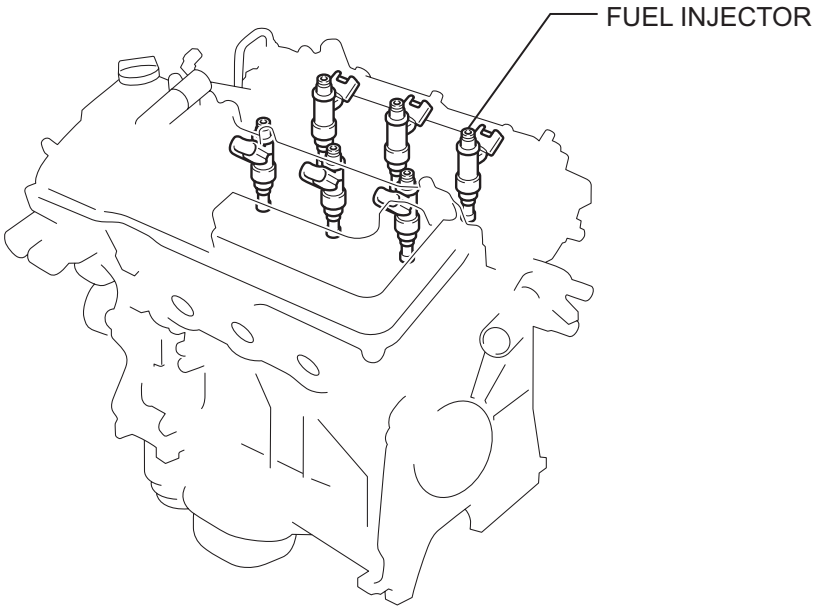

A142951E01

SYSTEM DIAGRAM

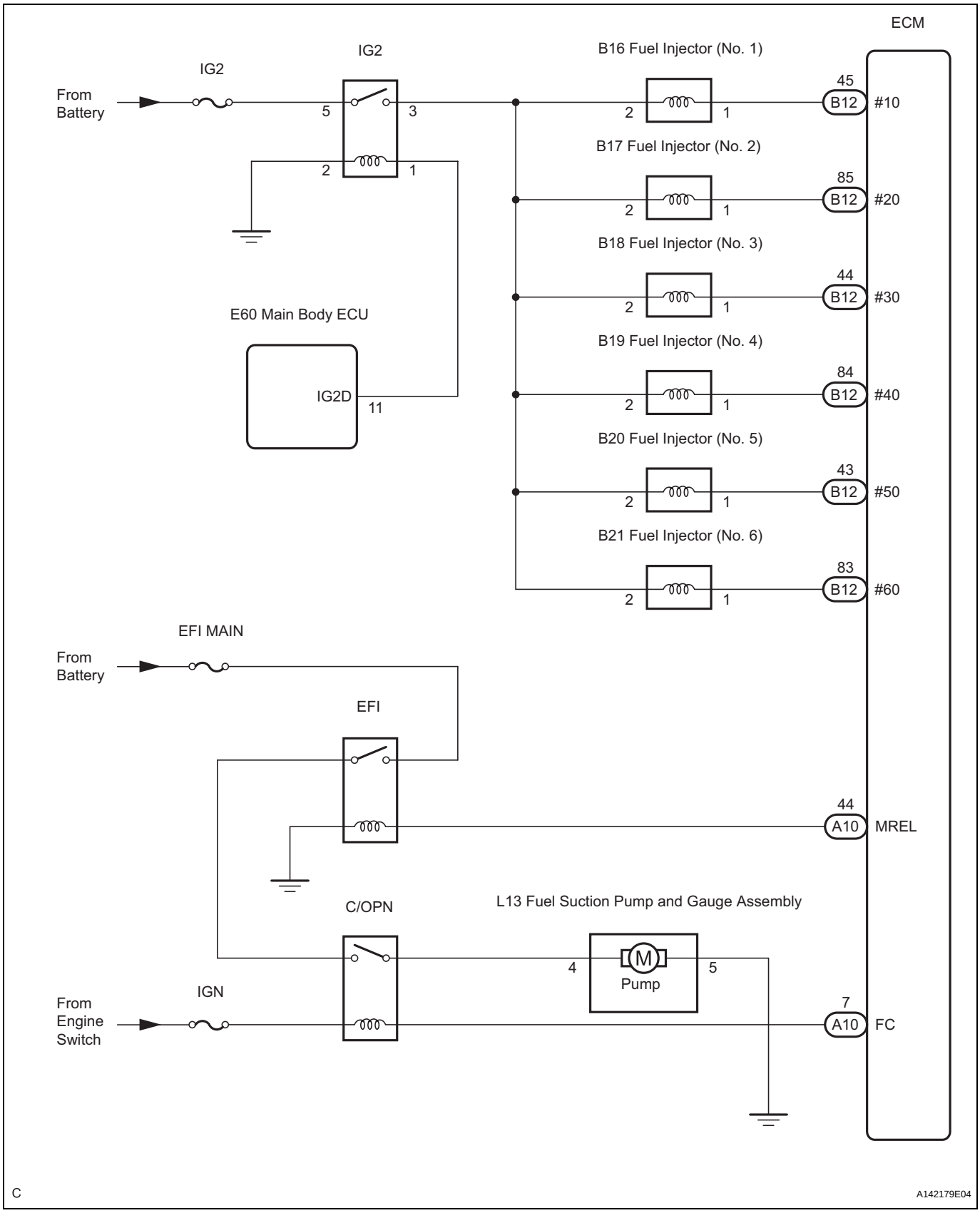

FU

ON-VEHICLE INSPECTION

1. INSPECT FUEL CUT-OFF RPM

(a) Increase the engine speed to at least 3,500 rpm.
(b) Use a sound scope to check for injector operating sounds.
(c) Check that when the throttle lever is released, injector operating sounds stop momentarily (at 2,500 rpm) and then resume (at 1,400 rpm).
Standard

Item	Specified Condition
Fuel cut off rpm	2,500 rpm
Fuel return rpm	1,400 rpm

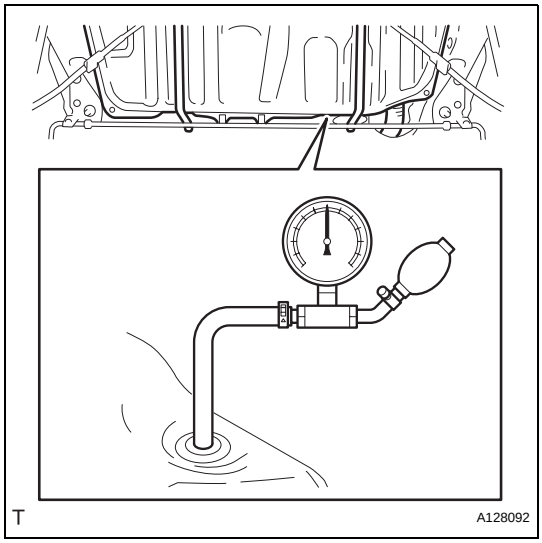

2. CHECK AIR TIGHTNESS IN FUEL TANK AND FILLER PIPE

(a) Disconnect the vent line hose from the fuel tank.
(b) Connect the pressure gauge to the fuel tank.
(c) Apply pressure to the fuel tank to create an internal pressure of 4 kPa (41 gf/cm^2, 0.58 psi).
(d) Check that the internal pressure of the fuel tank is maintained for 1 minute.
(e) Check the connected portions of each hose and pipe.
(f) Check the installed parts on the fuel tank.
If any malfunctions, damage or other problems are found, replace the fuel tank and filler pipe.
(g) Reconnect the vent line hose to the fuel tank.

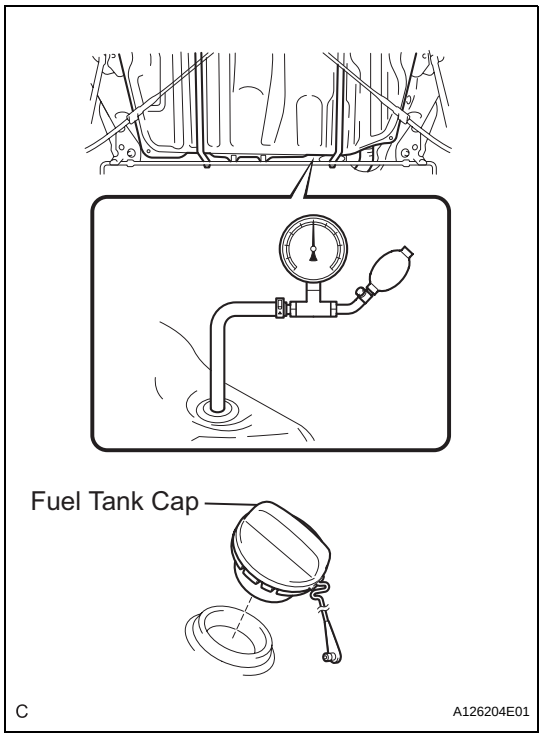

3. INSPECT FUEL CUT OFF VALVE AND FUEL CHECK VALVE

(a) Disconnect the vent line hose from the fuel tank.
(b) Connect the pressure gauge to the fuel tank.
(c) Fill the fuel tank with fuel.
(d) Apply pressure of 4 kPa (41 gf/cm^2, 0.58 psi) to the vent port of the fuel tank.
HINT:
Check the amount of fuel in the fuel tank. When the fuel tank is full, the float valve of the fuel check valve is closed and no air can pass through.
(e) Remove the fuel tank cap, and check that the pressure drops.
If the pressure does not drop, replace the fuel tank assembly.
(f) Reconnect the vent line hose to the fuel tank.

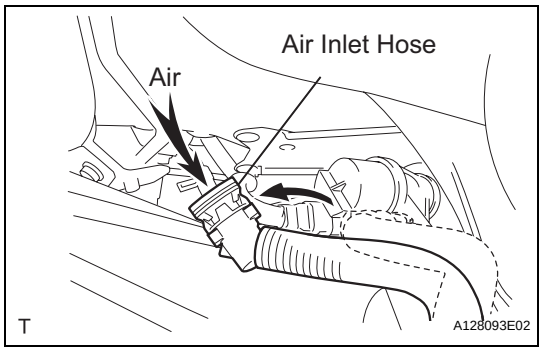

4. CHECK AIR INLET LINE

(a) Disconnect the air inlet line hose from the charcoal canister.

(b) Check that air can flow freely into the air inlet line. If air cannot flow freely into the air inlet line, repair or replace it.

(c) Reconnect the air inlet line hose to the charcoal canister.

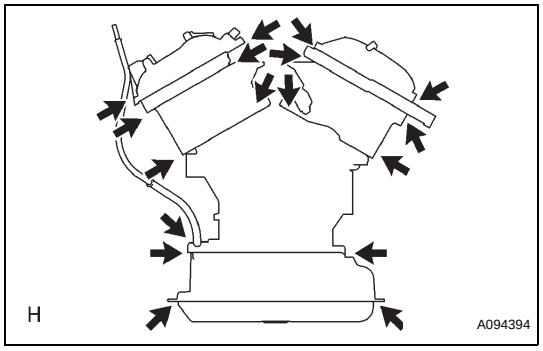

5. VISUALLY INSPECT HOSES, CONNECTIONS AND GASKETS

(a) Check for cracks, leaks or damage.
HINT:
Removal or problems with the engine oil dipstick, oil filler cap, PCV hose and other components may cause the engine to run improperly. Disconnection, looseness or cracks in the parts of the air induction system between the throttle body and cylinder head will allow air suction and cause the engine to run improperly.
If necessary, replace any damaged parts.

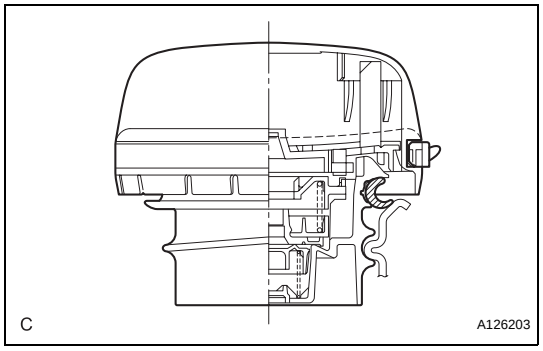

INSPECTION

1. INSPECT FUEL TANK CAP ASSEMBLY

(a) Visually check if the cap and gasket are deformed or damaged.
If necessary, replace the cap.

ON-VEHICLE INSPECTION

1. INSPECT INTAKE AIR CONTROL VALVE ASSEMBLY

(a) Inspection procedure when using the intelligent tester:

(1) Warm up the engine.

(2) Stop the engine.

(3) Connect the intelligent tester to the DLC3.

(4) Turn the engine switch on (IG).

(5) Turn the tester on.

(6) Select the following menu items: DIAGNOSIS / ENHANCED OBD II / ACTIVE TEST / INTAKE CTL VSV1. Press the right or left button.

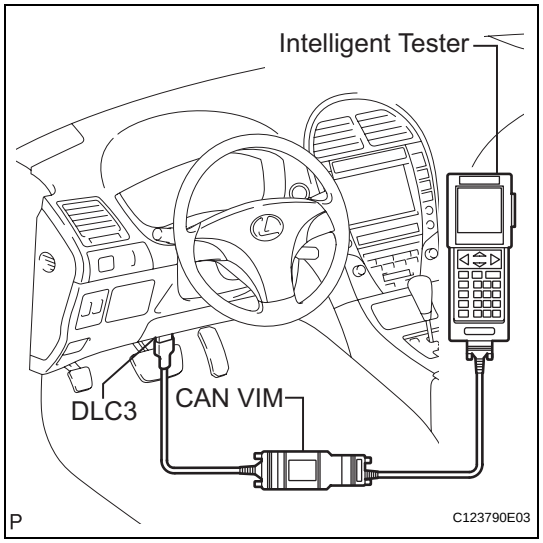

(7) Make sure that a clicking sound is heard from the intake air control valve when current flows. If the result is not as specified, replace the intake air surge tank.

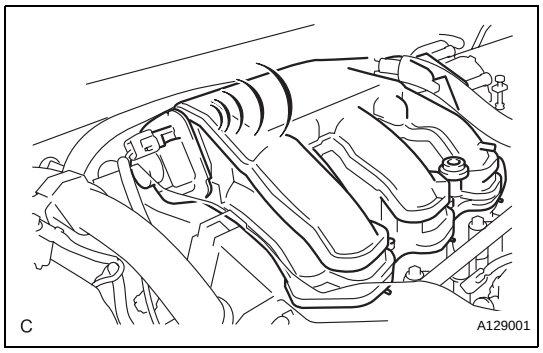

IT

INSPECTION

1. INSPECT INTAKE AIR CONTROL VALVE

(a) Inspection procedure when applying voltage between the terminals:

(1) Disconnect the connector from the intake air control valve.

(2) Apply battery voltage between terminals 1 (-) and 2 (+) of the intake air control valve. Check that a clicking sound is heard from the intake air control valve.
If the result is not as specified, replace the intake air surge tank.

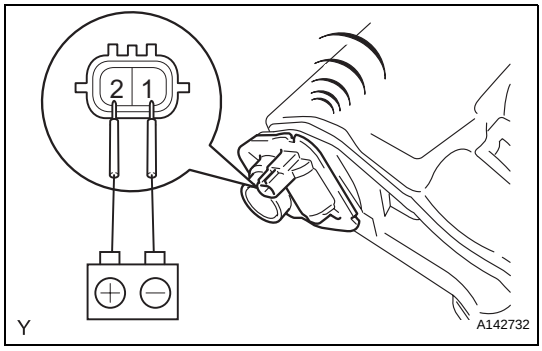

2. INSPECT AIR CLEANER ASSEMBLY

(a) Apply 26.6 kPa (200 mmHg, 7.9 in. Hg) of vacuum to the actuator. Check if the valve rotates open, as shown in the illustration.

(b) Apply vacuum for 1 minute. The actuator should continue to keep the valve open.
If the result is not as specified, replace the air cleaner assembly.

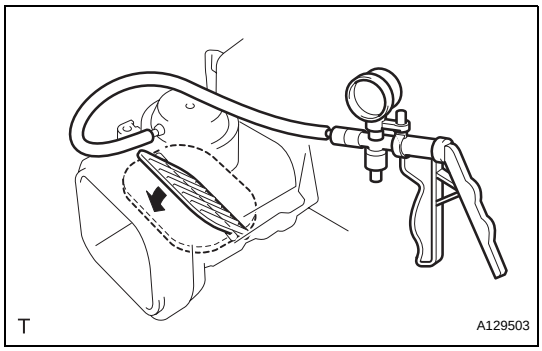

CUSTOMIZE PARAMETERS

1. POWER TILT AND POWER TELESCOPIC STEERING COLUMN SYSTEM

TILT & TELESCO:

DISPLAY	DEFAULT	CONTENTS	SETTING
AUTO TILT AWAY	ON	ON/OFF of the auto away / return function	ON/OFF

2. AIR CONDITIONING SYSTEM

AIR CONDITIONER (AUTO A/C):

DISPLAY (ITEM)	DEFAULT	CONTENTS	SETTING
SET TEMP SHIFT (Set Temperature Shift)	NORMAL	To shift the temperature against the displayed temperature	+2 C / +1 C / NORMAL / -1 C / -2 C
AIR INLET MODE (Air Inlet Mode)	AUTO	In case of turning the A/C ON when you desire to make the compartment cool down quickly, this is the function to change the mode automatically to RECIRCULATION mode	MANUAL / AUTO
COMPRESSOR MODE (Compressor Mode)	AUTO	Function to turn the A/C ON automatically by pressing the AUTO button when the blower is ON and the A/C is OFF	MANUAL / AUTO
COMPRS / DEF OPER (Compressor / Air Inlet DEF Operation)	LINK	Function to turn the A/C ON automatically linked with the FRONT DEF button when the A/C is OFF	NORMAL / LINK
EVAP CTRL (Evaporator Control)	AUTO	Function to set the evaporator control to the AUTOMATIC position (AUTO) to save power, or to the coldest position (MANUAL) to dehumidify the air and to prevent the windows from fogging up	MANUAL / AUTO
GAS SENS SHIF (Emission Gas Sensor Shift)	NORMAL	Function to change the sensitivity of the exhaust gas sensor	MU MORE / MORE / LI MORE / NORMAL / LI LESS / LESS / MU LESS
BUTTON PRS BUZ	ON	Function to sound a buzzer when a button is pressed	OFF / ON
FOOT / DEF MODE (Foot / DEF Auto Mode)	ON	Function to turn the airflow from FOOT/DEF ON automatically when AUTO MODE is ON	OFF / ON
AUTO BLOW UP (Foot / DEF Automatic Blower Up Function)	ON	Function to change the blower level automatically when the defroster is ON	OFF / ON
AMBIENT TMP SFT (Ambient Temperature Shift)	NORMAL	Function to shift the ambient temperature against the displayed ambient temperature	+3 C / +2 C / +1 C / NORMAL / -1 C / -2 C / -3 C

3. THEFT DETERRENT SYSTEM

THEFT DETERRENT SYSTEM

DISPLAY (ITEM)	DEFAULT	CONTENTS	SETTING
PASSIVE MODE (Passive Arming Mode)	OFF	PASSIVE MODE is a function that switches theft deterrent system from arming preparation state to armed state 30 seconds after key is not in the actuation area and all doors, engine hood and luggage compartment door are closed, even if doors are not locked by wireless or door key lock operation. In PASSIVE MODE, if you do not perform following operations within 14 seconds after door is opened during armed state, theft deterrent system will judge that condition as a theft and switch to alarm sounding state – Unlock any door by key or wireless operation – Turn the engine switch on (IG) – Open luggage compartment door by wireless operation	ON/OFF
WARN BY HORN (Warning by horn)	ON	Function that makes vehicle horn and theft deterrent horn able to be used as a warning device	ON/OFF
ENTRY DELAY (Entry delay time)	14 s	Function that changes entry delay time (time before warning starts) for PASSIVE MODE	0 s/14 s/30 s

IN

4. LIGHTING SYSTEM

ILLUMINATED ENTRY:

Display	Default	Contents	Setting
LIGHTING TIME	15 s	Changes the lighting time of the front seat illumination, rear seat illumination, interior light, rear door courtesy lights, and engine switch illumination after closing the door. It will quickly fade out when the engine switch is turned on (IG). (Front personal switches are OFF, DOOR switch is ON, and seat illumination switch is OFF)	7.5 s / 15 s / 30 s
ILLUMI SYSTEM	ON	Lights up the footwell illumination when one of the following occurs: the engine switch is turned on (IG), or any door is unlocked or opened.	ON / OFF
LIGHT CONTROL	ON	Dims (ON setting) or turns off (OFF setting) the footwell illumination under the following conditions: Engine switch on (IG), shift lever not in P, and all doors closed.	ON / OFF
I/L ON / UNLOCK	ON	Lights up the front seat illumination, rear seat illumination, interior light, rear door courtesy lights, footwell illumination, and engine switch illumination when the doors are unlocked.	ON / OFF
I/L ON / ACC OFF	ON	Lights up the front seat illumination, rear seat illumination, interior light, rear door courtesy lights, and engine switch illumination when the engine switch is turned off.	ON / OFF

LIGHT CONTROL:

Display	Default	Contents	Setting
LIGHT OFF DELAY	30 s	Keeps the exterior lights on for a certain period of time after turning the engine switch off and closing all the doors with the low beam headlights on.	OFF / 30 s / 60 s / 90 s
SENSITIVITY	NORMAL	Adjusts the sensitivity of the automatic light control system.	LIGHT 2 / LIGHT 1 / NORMAL / DARK 1 / DARK 2
DRL FUNCTION (*1)	ON	ON / OFF of the DRL function	ON / OFF
DISP EX ON SEN	NORMAL	Changes the ambient brightness level required to dim the lights such as the indicator lights of the combination meter, A/C indicator light, and clock.	LIGHT 2 / LIGHT 1 / NORMAL / DARK 1 / DARK 2
DISP EX OFF SEN	NORMAL	Changes the ambient brightness level required to cancel the dimming of the lights such as the indicator lights of the combination meter, A/C indicator light, and clock.	LIGHT 2 / LIGHT 1 / NORMAL / DARK 1 / DARK 2

HINT:
*1: for U.S.A package models.

5. POWER DOOR LOCK CONTROL SYSTEM

DOOR LOCK:

Display (Item)	Default	Contents	Setting
AUTO UNLK/SHIFT (Unlock w/ engine switch on (IG), shift P, speed 0 km/h (0 mph))	ON	Function that unlocks doors when the shift lever is moved to the P position from any other position while the engine switch is on (IG)	ON/OFF
ALL UNLK/OPN-CL (All unlock w/ D door open-close)	OFF	Function that unlocks all other doors when opening driver side door within 10 seconds after turning the engine switch off from on (IG)	ON/OFF
UNLK/KEY TWICE (Unlock w/ 2 times D key operation)	ON	• Function that unlocks only the driver side door when the driver side door key cylinder is turned to unlock once and unlocks all the doors when it is turned to unlock twice • In the OFF setting, turning it once unlocks all doors	ON/OFF

Display (Item)	Default	Contents	Setting
AUTO LOCK/SHIFT (Auto lock/shift not P)	ON	Function that locks doors when the shift lever is moved from the P position to any other position	ON/OFF
AUTO LOCK	OFF	Function that locks doors when vehicle reaches a vehicle speed 20 km/h (13 mph)	ON/OFF

WIRELESS D LOCK:

Display (Item)	Default	Contents	Setting
AUTO LOCK DELAY	60s	Function that selects AUTO LOCK time (30 sec. or 60 sec.)	30s/60s

6. WIRELESS DOOR LOCK CONTROL SYSTEM

WIRELESS DOOR LOCK CONTROL SYSTEM

Display (item)	Default	Function	Setting
WIRELESS OPER (Wireless door lock control function)	ON	Function that turns wireless door lock function ON/OFF	ON/OFF
HAZARD ANS BACK (Hazard answer-back for wireless door lock control)	ON	• When the doors are locked by wireless operation, the hazard warning lights flash once. • When the doors are unlocked by wireless operation, the hazard warning lights flash twice.	ON/OFF
OPEN DOOR WARN (Door ajar warning)	ON	The buzzer sounds when LOCK is pressed when any of the doors are ajar.	ON/OFF
AUTO LOCK DELAY (Auto lock time)	60 s	This function regulates the interval between unlocking and automatic relocking of doors.	30 s/60 s
UNLOCK /2OPER (Wireless unlock operated twice)	ON	This function unlocks the driver's door when the UNLOCK switch is pressed once, and unlocks all doors when pressed twice within 3 seconds. If set to OFF, pressing UNLOCK once unlocks all doors.	ON/OFF
ALARM FUNCTION (Panic function)	ON	This function operates the theft deterrent system when PANIC is pressed and held for 0.8 seconds.	ON/OFF
WIRELS BUZZ VOL (Wireless buzzer volume)	LEVEL7	This function adjusts the volume of the wireless buzzer.	LEVEL0 to LEVEL7
TRUNK LID OPER (Wireless trunk opener function setting)	0.8 s PR ON	This function changes operation method of transmitter to open luggage compartment door. 1 TIME: Push 1 time 2 TIMES: Push 2 times 0.8 s PR: Push and hold for 0.8 seconds OFF: Does not operate	1 TIME/2 TIMES/0.8 s PR/ OFF

7. SMART ACCESS SYSTEM WITH PUSH-BUTTON START (DOOR LOCK)

SMART:

Display (Item)	Default	Contents	Setting
PARK WAIT TIME (Wait time to permit opening door after locking)	2.5s	Function that sets waiting time to permit opening door after door is locked with entry lock function.	0.5s / 1.5s / 2.5s / 5.0s
SMART UNLOCK	D_DOOR	Function that switches the entry unlock detection area.	ALL / EACH D_DOOR
IGNITION AREA (SMART ignition available area)	ALL	Function to choose the available area for electrical key to start E/G and cancel the steering lock.	FRONT / ALL

Display (Item)	Default	Contents	Setting
TRUNK OPEN MODE (Luggage compartment opening operation)	ON	Function to open a luggage compartment when the driver has the electrical key and presses the luggage open button.	ON / OFF

WIRELESS DOOR LOCK:

Display (Item)	Default	Contents	Setting
ALARM FUNCTION (Panic function)	ON	Function to operate the theft deterrent system by keeping pressing the lock button of the transmitter for 2.5 seconds. If there is a panic button, press the panic button instead of the lock button.	ON / OFF
WIRELS BUZZ VOL	Level 7	Function to adjust the volume of the wireless door lock buzzer.	Level 0 / 1 / 2 / 3 / 4 / 5 / 6 / 7

WARNING:

Display (Item)	Default	Contents	Setting
KEY LOW-BATT WRN	ON	Function to set a warning function for the time when a key battery becomes weak.	ON / OFF

8. METER/GAUGE SYSTEM

METER:

Display (Item)	Default	Contents	Setting
SEAT-BELT WARN	D/P ON	Function to change the setting of the seat belt buzzer.	D/P ON, D ON, P ON, D/P OFF

9. INTUITIVE PARK ASSIST SYSTEM

Warning

DISPLAY	DEFAULT	CONTENTS	SETTING
RR SENSOR RANGE	Wide	Function to set buzzer activation range (for rear center sensors)	NARROW / WIDE
KEEP SENSE BUZ	AVAIL	Function to make buzzer sound when distance between vehicle and obstacle does not change for more than 3 seconds	NOT AVAIL / AVAIL
F & R BUZZER VOLM	M2	Function to change volume of buzzer	L / M1 / M2 / M3 / H

Sensor:

DISPLAY	DEFAULT	CONTENTS	SETTING
SENSOR COND/N	AVAIL	Function to make sensors available when shift position is N	NOT AVAIL / AVAIL

Display:

DISPLAY	DEFAULT	CONTENTS	SETTING
DISPLAY MODE	ALL	Function to change display mode	ALL / UNDISP

10. POWER MIRROR CONTROL SYSTEM (WITH MEMORY)

MIRROR

DISPLAY (ITEM)	DEFAULT CONTENTS	CONTENTS	SETTING
Foot Light T	ON (15 seconds)/OFF	Function to set how long the outer foot light stays on.	001 (7.5 seconds) 010 (15 seconds) 011 (30 seconds) 100 (Off)

11. REAR SUNSHADE SYSTEM

OTHERS

System	Default	Contents	Selection
R OUTPUT TIME	0.7 sec.	Function to change the time before reverse-linked sunshade lowering function is activated	0 / 0.7 / 0.9 / 1.2
R-SHADE REVERSE	AVAIL	NOT AVL/AVAIL of the rear sunshade reverse function	NOT AVL / AVAIL

12. SLIDING ROOF SYSTEM

Sliding roof ECU

Display (Item)	Default	Contents	Setting
OPEN/DOOR KEY (Door key related OPEN)	ON	Function to manually open sliding roof linked with power window if holding driver's side and passenger's side door key for 1.5 seconds or more to unlock position when engine switch is off	ON/OFF
CLOSE/DOOR KEY (Door key related CLOSE)	ON	Function to manually close sliding roof linked with power window if holding driver's side and passenger's side door key for 1.5 seconds or more to lock position when engine switch is off	ON/OFF
OPEN/WIRELESS (Wireless key related OPEN)	ON	Function to manually open sliding roof linked with power window if pressing transmitter UNLOCK switch for 2.4 seconds or more when engine switch is off	ON/OFF
DOOR HANDLE BTN (Door Handle Lock Button)	ON	Function to close the sliding roof manually linking the power window if holding the door handle button for 1.5 seconds or more to the lock side when the engine switch is off.	ON/OFF
DOOR KEY OPER (Door key related operation)	SLIDE	Function to select tilt up or slide open of manual sliding roof operation linked with power window Activated by holding driver's side door key for 1.5 seconds or more to unlock position when engine switch is off	TILT/SLIDE
WIRELESS OPER (Wireless key related operation)	SLIDE	Function to select tilt up or slide open of manual sliding roof operation linked with power window Activated by pressing on transmitter UNLOCK switch for 2.4 seconds or more when engine switch is off	TILT/SLIDE

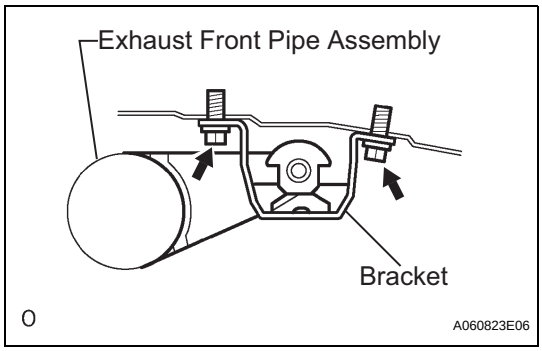

INSTALLATION

1. **INSTALL REAR EXHAUST PIPE NO. 1 SUPPORT BRACKET**
   (a) Install the rear support bracket with the 2 bolts.
   Torque: 33 N*m (337 kgf*cm, 24 ft.*lbf)
   NOTICE:
   Be sure to install the bracket in the correct direction.
2. **REMOVE HEATED OXYGEN SENSOR (for Bank 2) (See page EC-22)**
3. **INSTALL HEATED OXYGEN SENSOR (for Bank 1) (See page EC-23)**
4. **INSTALL EXHAUST FRONT PIPE ASSEMBLY**
   (a) Install 2 new gaskets to the exhaust front pipe.
   (b) Install the exhaust front pipe to the exhaust manifolds with the 2 nuts and 2 bolts.

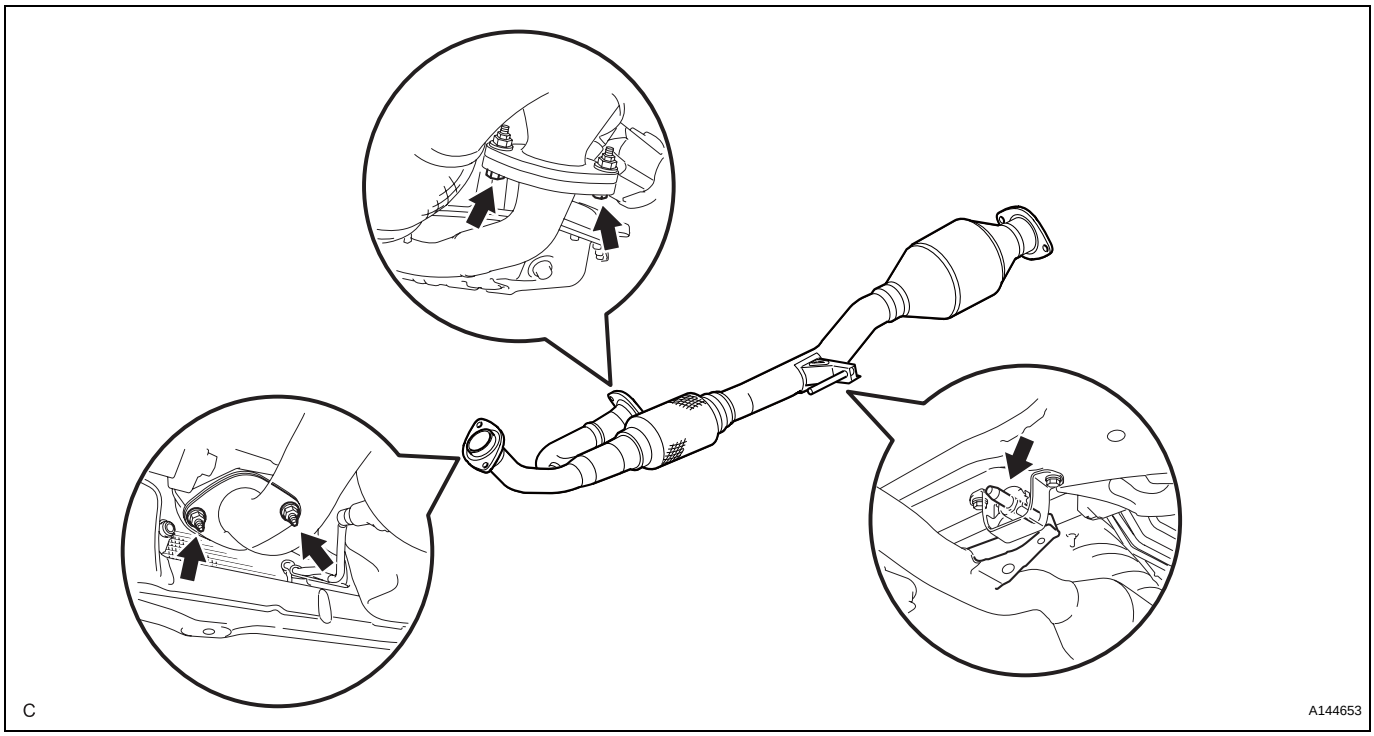

Torque: 62 N*m (632 kgf*cm, 46 ft.*lbf)

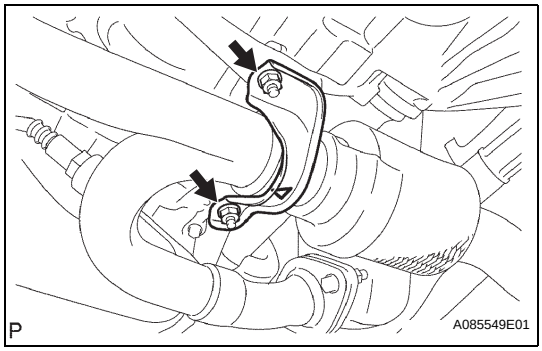

5. **INSTALL FRONT EXHAUST PIPE NO. 1 SUPPORT BRACKET**
   (a) Install the front support brackets with the 2 nuts.
   Torque: 33 N*m (337 kgf*cm, 24 ft.*lbf)
   NOTICE:
   Be sure to install the support brackets in the correct direction.
6. **INSTALL EXHAUST CENTER PIPE ASSEMBLY**
   (a) Install a new gasket to the exhaust center pipe assembly.

(b) Install the exhaust center pipe to the exhaust front pipe with the 2 nuts and 2 bolts.

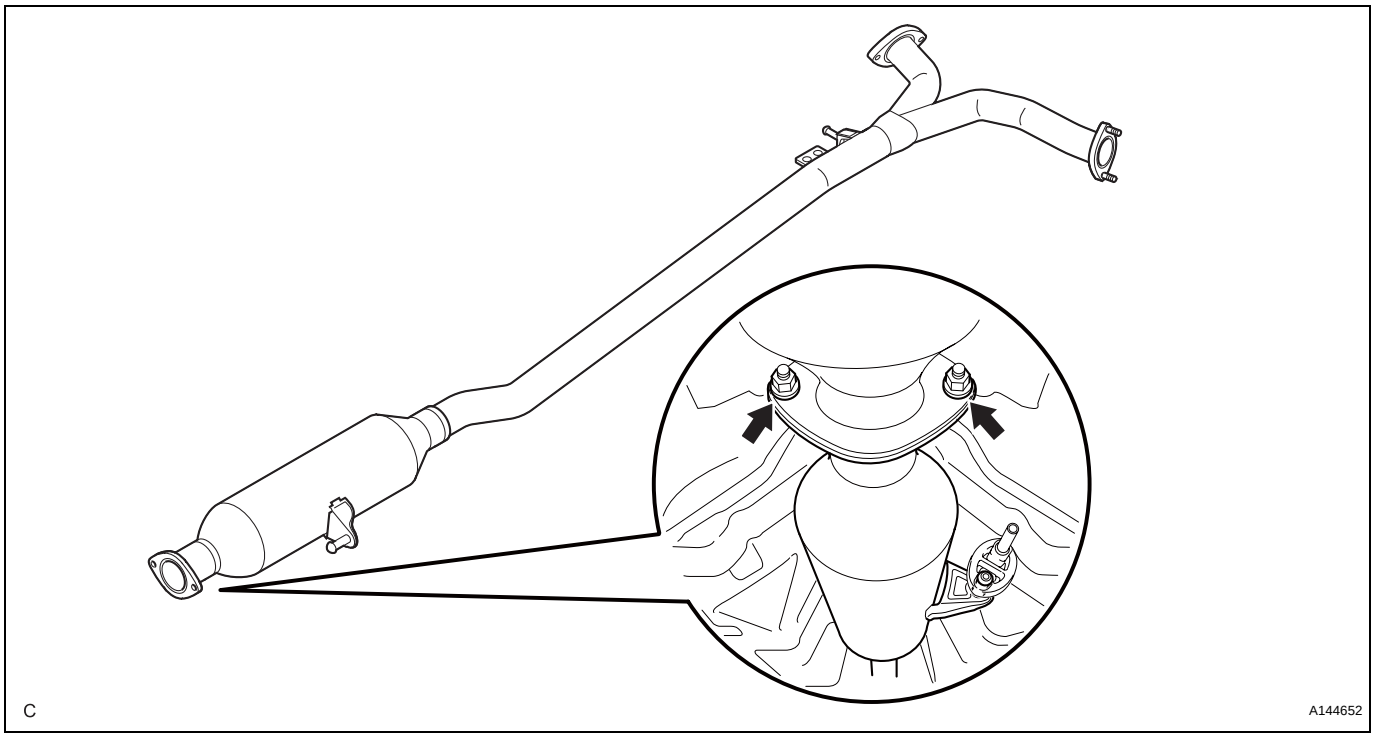

Torque: 56 N*m (571 kgf*cm, 41 ft.*lbf)

7. INSTALL EXHAUST TAIL PIPE ASSEMBLY

(a) Install 2 new gaskets to the exhaust tail pipes.

(b) Install the 2 exhaust tail pipes with the 4 nuts.

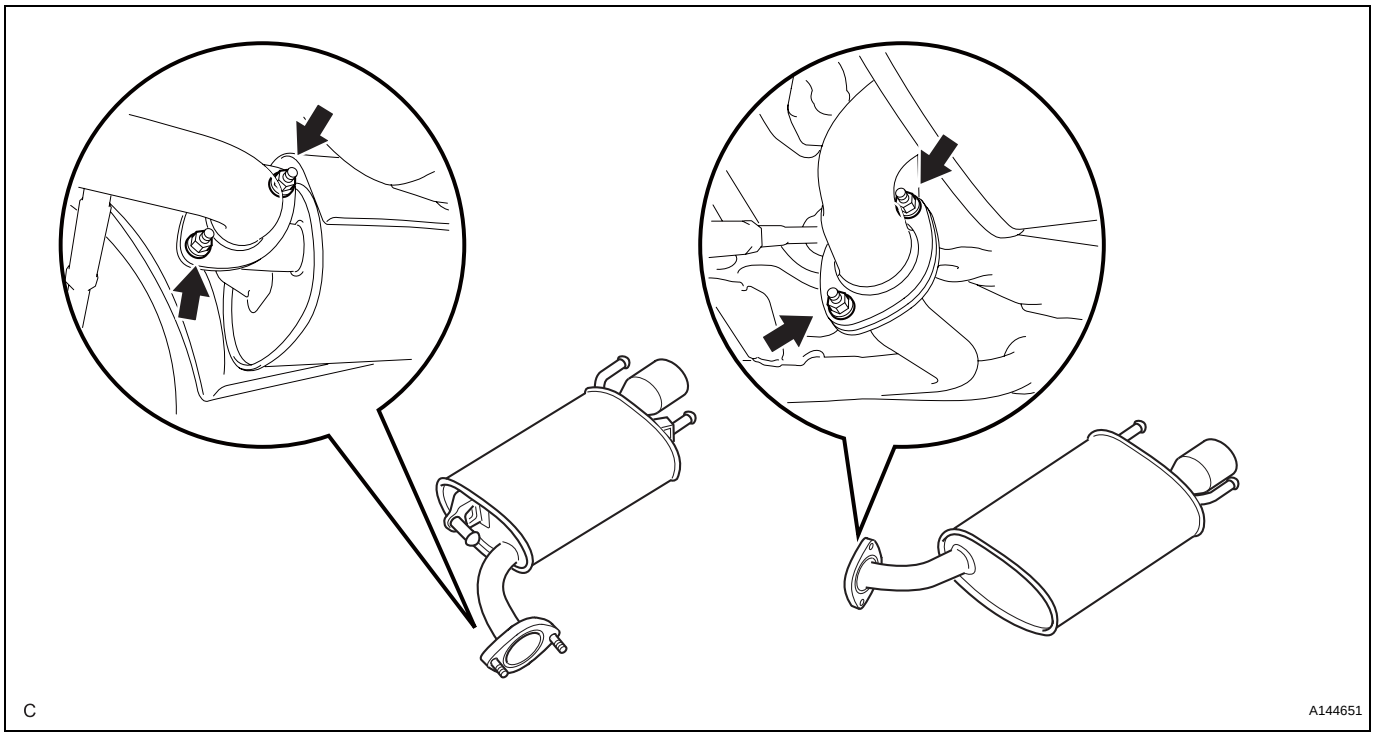

Torque: 43 N*m (438 kgf*cm, 32 ft.*lbf)

8. CHECK FOR EXHAUST GAS LEAKS

If gas is leaking, tighten the areas necessary to stop the leak. Replace the damaged parts as necessary.

INITIALIZATION

1. FOR VEHICLES EQUIPPED WITH SMART ACCESS SYSTEM

(a) Immediately after the battery terminal is reconnected, the main body ECU will not function, and therefore, the smart access system will not operate. To activate the main body ECU, perform a wireless door unlock or lock operation.

(b) If the battery has been discharged, the engine cannot be started even after the battery has been recharged because the steering lock position cannot be recognized correctly. To allow the steering lock ECU to learn the steering lock position, initialize the steering lock ECU.

(c) To start the engine after the battery terminal is reconnected, perform the following:

(1) Open and close the driver's door.

(2) Wait for 10 seconds or more.

HINT:
The first attempt to start the engine will fail because the steering lock ECU has not learned the steering lock position yet. This does not indicate a malfunction. The engine can be started normally on the second or subsequent attempt.

IN

HOW TO PROCEED WITH TROUBLESHOOTING

1. OPERATION FLOW

HINT:
Perform troubleshooting in accordance with the procedures below. The following is an outline of basic troubleshooting procedures. Confirm the troubleshooting procedures for the circuit you are working on before beginning troubleshooting.

1	VEHICLE BROUGHT TO WORKSHOP

NEXT

2	CUSTOMER PROBLEM ANALYSIS

(a) Ask the customer about the conditions and environment when the problem occurred.

NEXT

3	INSPECT BATTERY VOLTAGE

Standard voltage:
11 to 14 V
If the voltage is below 11 V, recharge or replace the battery before proceeding.

NEXT

4	SYMPTOM CONFIRMATION AND DTC (AND FREEZE FRAME DATA) CHECK

(a) Visually check the wire harnesses, connectors and fuses for open and short circuits.
(b) Warm up the engine to the normal operating temperature.
(c) Confirm the problem symptoms and conditions, and check for DTCs

Result

Result	Proceed to
DTC is output	A
DTC is not output	B

B → **Go to step 6**

A

5	DTC CHART

(a) Check the results obtained in step 4. Then find the output DTC in the DTC chart. Look at the "Trouble Area" column for a list of potentially malfunctioning circuits and/or parts.

NEXT → **Go to step 7**

6	PROBLEM SYMPTOMS CHART

(a) Check the results obtained in step 4. Then find the problem symptoms in the problem symptoms table. Look at the "Suspected Area" column for a list of potentially malfunctioning circuits and/or parts.

NEXT

7	CIRCUIT INSPECTION OR PARTS INSPECTION

(a) Identify the malfunctioning circuit or part.

NEXT

8	ADJUST, REPAIR OR REPLACE

(a) Adjust, repair or replace the malfunctioning circuit or parts.

NEXT

9	CONFIRMATION TEST

(a) After the adjustment, repairs or replacement, confirm that the malfunction no longer exists. If the malfunction does not reoccur, perform a confirmation test under the same conditions and in the same environment as when the malfunction occurred the first time.

NEXT

END

2. CUSTOMER PROBLEM ANALYSIS

HINT:
- In troubleshooting, confirm that the problem symptoms have been accurately identified. Preconceptions should be discarded in order to make an accurate judgment. To clearly understand what the problem symptoms are, it is extremely important to ask the customer about the problem and the conditions at the time the malfunction occurred.
- Gather as much information as possible for reference. Past problems that seem unrelated may also help in some cases.
- The following 5 items are important points in the problem analysis:

What	Vehicle model, system name
When	Date, time, occurrence frequency
Where	Road conditions
Under what conditions?	Running conditions, driving conditions, weather conditions
How did it happen?	Problem symptoms

3. SYMPTOM CONFIRMATION AND DIAGNOSTIC TROUBLE CODE

HINT:
The diagnostic system in the LEXUS ES350 has various functions.
- The first function is the Diagnostic Trouble Code (DTC) check. A DTC is a code stored in the ECU memory whenever a malfunction in the signal circuits to the ECU occurs. In a DTC check, a previous malfunction's DTC can be checked by a technician during troubleshooting.
- Another function is the Input Signal Check, which checks if the signals from various switches are sent to the ECU correctly.
  By using these functions, the problem areas can be narrowed down and troubleshooting is more effective. Diagnostic functions are incorporated in the following system in the LEXUS ES350.

System	DTC Check (Normal Mode)	DTC Check (Check Mode)	Sensor Check/Test Mode (Input Signal Check)	Data List	Active Test
SFI System	○	○		○	○
Smart Access System with Push-button Start (Starting)	○			○	○
Automatic Transaxle System	○	○		○	○
Tire Pressure Warning System	○		○	○	
Vehicle Stability Control System	○		○	○	○
Power Tilt and Power Telescopic Steering Column System	○			○	○
Electric Steering Lock	○			○	○
Air Conditioning System	○			○	○

System	DTC Check (Normal Mode)	DTC Check (Check Mode)	Sensor Check/Test Mode (Input Signal Check)	Data List	Active Test
Pre-collision System	○			○	○
Airbag System	○	○		○	
Occupant Classification System	○			○	
Seat Belt Warning System					○
Theft Deterrent System				○	○
Engine Immobilizer System	○			○	○
Cruise Control System	○			○	
Dynamic Radar Cruise Control System	○			○	
Lighting System	○			○	○
Power Door Lock Control System	○			○	○
Wireless Door Lock Control System	○			○	○
Smart Access System with Push-button Start (Door Lock)	○			○	○
Meter/Gauge System	○			○	○
Navigation System	○				
Intuitive Park Assist System	○			○	○
Power Window Control System	○			○	○
Power Mirror Control System (with Memory)				○	○
Front Power Seat Control System (with Seat Position Memory System)				○	○
Luggage Compartment Door Opener System				○	○
Sliding Roof System	○			○	○
Can Communication System	○				

- In the DTC check, it is very important to determine whether the problem indicated by the DTC either: 1) still occurs, or 2) occurred in the past but has returned to normal. In addition, the DTC should be compared to the problem symptom to see if they are related. For this reason, DTCs should be checked before and after confirmation of symptoms (i.e., whether or not problem symptoms exist) to determine current system conditions, as shown in the flowchart below.

- Never skip the DTC check. Failing to check DTCs may, depending on the case, result in unnecessary troubleshooting for systems operating normally or lead to repairs not related to the problem. Follow the procedures listed in the flowchart in the correct order.
- The following flowchart shows how to proceed with troubleshooting using the DTC check. Directions from the flowchart will indicate how to proceed either to DTC troubleshooting or to the troubleshooting of each problem symptom.

1 DTC CHECK

NEXT

2 MAKE A NOTE OF DTCS DISPLAYED AND THEN CLEAR MEMORY

NEXT

3 SYMPTOM CONFIRMATION

Result

Result	Proceed to
No symptoms exist	A
Symptoms exist	B

B → **Go to step 5**

A

4 SIMULATION TEST USING SYMPTOM SIMULATION METHODS

NEXT

5 DTC CHECK

Result

Result	Proceed to
DTC is not output	A
DTC is output	B

B → **TROUBLESHOOTING OF PROBLEM INDICATED BY DTC**

A

6	SYMPTOM CONFIRMATION

Result

Result	Proceed to
No symptoms exist	A
Symptoms exist	B

If a DTC was displayed in the initial DTC check, the problem may have occurred in a wire harness or connector in that circuit in the past. Check the wire harness and connectors.

B → **SYSTEM NORMAL**

A

TROUBLESHOOTING OF EACH PROBLEM SYMPTOM

The problem still occurs in a place other than the diagnostic circuit (the DTC displayed first is either for a past problem or a secondary problem).

4. SYMPTOM SIMULATION

HINT:

The most difficult case in troubleshooting is when no problem symptoms occur. In such a case, a thorough problem analysis must be carried out. A simulation of the same or similar conditions and environment in which the problem occurred in the customer's vehicle should be carried out. No matter how much skill or experience a technician has, troubleshooting without confirming the problem symptoms will lead to important repairs being overlooked and mistakes or delays.

For example:

With a problem that only occurs when the engine is cold or as a result of vibration caused by the road during driving, the problem can never be determined if the symptoms are being checked on a stationary vehicle or a vehicle with a warmed-up engine. Vibration, heat or water penetration (moisture) are difficult to reproduce. The symptom simulation tests below are effective substitutes for the conditions and can be applied to a stationary vehicle. Important points in the symptom simulation test:

In the symptom simulation test, the problem symptoms as well as the problem area or parts must be confirmed. First, narrow down the possible problem circuits according to the symptoms. Then, connect the tester and carry out the symptom simulation test, judging whether the circuit being tested is defective or normal. Also, confirm the problem symptoms at the same time. Refer to the problem symptoms table for each system to narrow down the possible causes.

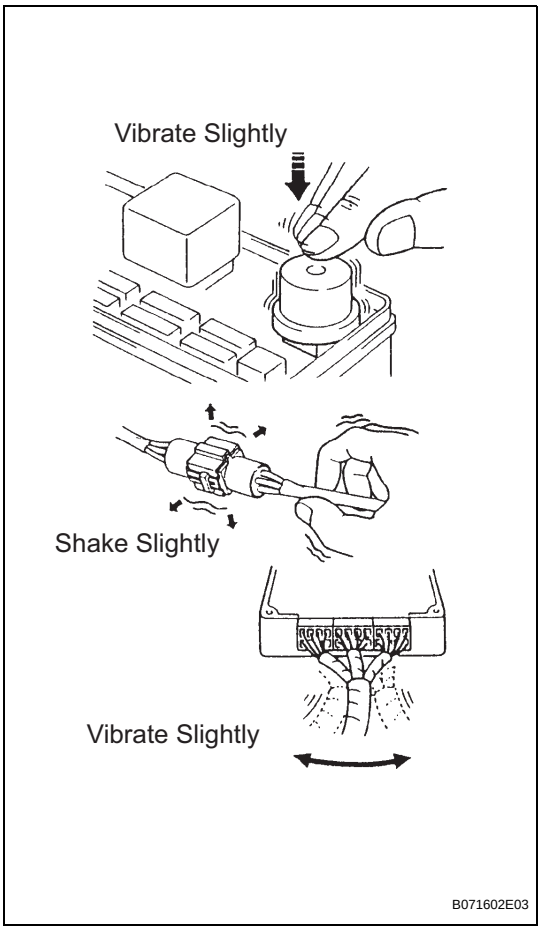

(a) VIBRATION METHOD: When a malfunction seems to occur as a result of vibration.
  (1) PART AND SENSOR
    Apply slight vibration with a finger to the part of the sensor suspected to be the cause of the problem, and check whether the malfunction occurs.
    NOTICE:
    Applying strong vibration to relays may open relays.
  (2) CONNECTORS
    Slightly shake the connector vertically and horizontally.
  (3) WIRE HARNESS
    Slightly shake the wire harness vertically and horizontally.
    HINT:
    The connector joint and fulcrum of the vibration are the major areas that should be checked thoroughly.

(b) HEAT METHOD: When a malfunction seems to occur when the area in question is heated.
  (1) Heat the component that is the possible cause of the malfunction with a hair dryer or similar device. Check if the malfunction occurs.
    NOTICE:
    - **Do not heat to more than 60°C (140°F). Exceeding this temperature may damage the components.**
    - **Do not apply heat directly to the parts in the ECU.**

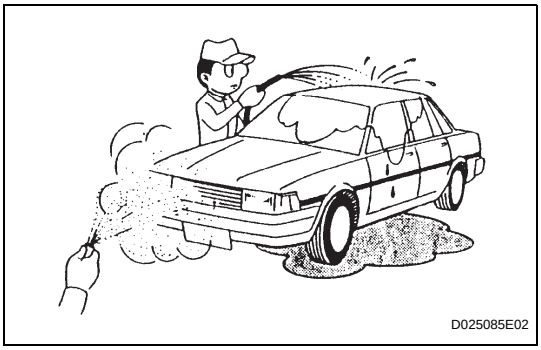

(c) WATER SPRINKLING METHOD: When a malfunction seems to occur on a rainy day or in high-humidity.
  (1) Sprinkle water onto the vehicle and check if the malfunction occurs.
    NOTICE:
    - **Never sprinkle water directly into the engine compartment. Indirectly change the temperature and humidity by spraying water onto the front of the radiator.**
    - **Never apply water directly onto the electronic components.**

HINT:
If the vehicle has or had a water leakage problem, the leakage may have damaged the ECU or connections. Look for evidence of corrosion or short circuits. Proceed with caution during water tests.

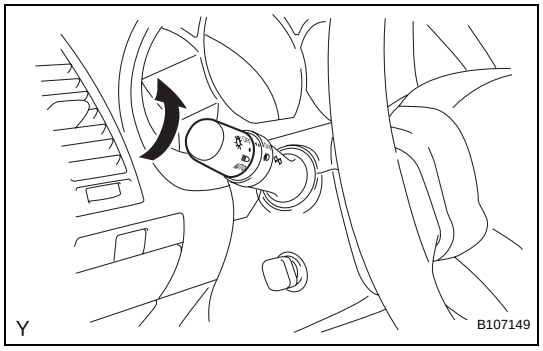

(d) HIGH ELECTRICAL LOAD METHOD: When a malfunction seems to occur when an electrical load is excessive.
(1) Turn on the heater blower, headlight, rear window defogger and all other electrical loads. Check if the malfunction reoccurs.

5. DIAGNOSTIC TROUBLE CODE CHART

Look for output Diagnostic Trouble Codes (DTCs) (from the DTC checks) in the appropriate section's Diagnostic Trouble Code Chart. Use the chart to determine the trouble area and the proper inspection procedure. A description of each of the chart's columns is shown in the table below.

Item	Description
DTC No.	Indicates the diagnostic trouble code
Detection Item	Indicates the system or details of the problem
Trouble Area	Indicates the suspected areas of the problem
See Page	Indicates the page where the inspection procedures for each circuit is to be found, or gives instruction for checking and repairs.

6. PROBLEM SYMPTOMS TABLE

When a "Normal" code is output during a DTC check but the problem still occurs, use the Problem Symptoms Table. The suspected areas (circuits or parts) for each problem symptoms are in the table. The suspected areas are listed in order of probability. A description of each of the chart's columns is shown in the table below.
HINT:
In some cases, the problem is not detected by the diagnostic system even though a problem symptom occurs. It is possible that the problem occurs outside the detection range of the diagnostic system, or that the problem occurs in a completely different system.

Item	Description
Problem Symptom	-
Circuit Inspection, Inspection Order	Indicates the order in which the circuits need to be checked
Circuit or Part Name	Indicates the circuit or part which needs to be checked
See Page	Indicates the page where the flowchart for each circuit is located

7. CIRCUIT INSPECTION

A description of the main areas of each circuit inspection is shown in the table below.

Item	Description
Circuit Description	The major role, operation of the circuit and its component parts are explained.
Diagnostic Trouble Code No. and Detection Item	Indicates the diagnostic trouble codes, diagnostic trouble code settings and suspected areas for a problem

Item	Description
Wiring Diagram	This shows a wiring diagram of the circuit. Use this diagram together with ELECTRICAL WIRING DIAGRAM to thoroughly understand the circuit. Wire colors are indicated by an alphabetical code. B = Black, L = Blue, R = Red, BR = Brown, LG = Light Green, V = Violet, G = Green, O = Orange, W = White, GR = Gray, P = Pink, Y = Yellow, SB = Sky Blue The first letter indicates the basic wire color and the second letter indicates the color of the stripe.
Inspection Procedures	Use the inspection procedures to determine if the circuit is normal or abnormal. If abnormal, use the inspection procedures to determine whether the problem is located in the sensors, actuators, wire harnesses or ECU.
Indicates the condition of the connector of the ECU during the check	Connector being checked is connected. Connections of tester are indicated by (+) or (-) after the terminal name. Connector being checked is disconnected. The inspections between a connector and body ground, information about the body ground is not shown in the illustration.

IN

GLOSSARY OF SAE AND LEXUS TERMS

This glossary lists all SAE-J1930 terms and abbreviations used in this manual in compliance with SAE recommendations, as well as their LEXUS equivalents.

SAE ABBREVIATIONS	SAE TERMS	LEXUS TERMS ( )-ABBREVIATIONS
A/C	Air Conditioning	Air Conditioner
ACL	Air Cleaner	Air Cleaner, A/CL
AIR	Secondary Air Injection	Air Injection (AI)
AP	Accelerator Pedal	-
B+	Battery Positive Voltage	+B, Battery Voltage
BARO	Barometric Pressure	HAC
CAC	Charge Air Cooler	Intercooler
CARB	Carburetor	Carburetor
CFI	Continuous Fuel Injection	-
CKP	Crankshaft Position	Crank Angle
CL	Closed Loop	Closed Loop
CMP	Camshaft Position	Cam Angle
CPP	Clutch Pedal Position	-
CTOX	Continuous Trap Oxidizer	-
CTP	Closed Throttle Position	LL ON, Idle ON
DFI	Direct Fuel Injection	Direct Injection (DI./INJ)
DI	Distributor Ignition	-
DLC3	Data Link Connector 3	OBD II Diagnostic Connector
DTC	Diagnostic Trouble Code	Diagnostic Trouble Code
DTM	Diagnostic Test Mode	-
ECL	Engine Coolant Level	-
ECM	Engine Control Module	Engine Electronic Control Unit (ECU)
ECT	Engine Coolant Temperature	Coolant Temperature, Water Temperature (THW)
EEPROM	Electrically Erasable Programmable Read Only Memory	Electrically Erasable Programmable Read Only Memory (EEPROM), Erasable Programmable Read Only Memory (EPROM)
EFE	Early Fuel Evaporation	Cold Mixture Heater (CMH), Heat Control Valve (HCV)
EGR	Exhaust Gas Recirculation	Exhaust Gas Recirculation (EGR)
EI	Electronic Ignition	Distributorless Ignition (DLI)
EM	Engine Modification	Engine Modification (EM)
EPROM	Erasable Programmable Read Only Memory	Programmable Read Only Memory (PROM)
EVAP	Evaporative Emission	Evaporative Emission Control (EVAP)
FC	Fan Control	-
FEEPROM	Flash Electrically Erasable Programmable Read Only Memory	-
FEPROM	Flash Erasable Programmable Read Only Memory	-
FF	Flexible Fuel	-
FP	Fuel Pump	Fuel Pump
GEN	Generator	Alternator
GND	Ground	Ground (GND)
HO2S	Heated Oxygen Sensor	Heated Oxygen Sensor (HO_2S)
IAC	Idle Air Control	Idle Speed Control (ISC)
IAT	Intake Air Temperature	Intake or Inlet Air Temperature
ICM	Ignition Control Module	-

SAE ABBREVIATIONS	SAE TERMS	LEXUS TERMS ( )-ABBREVIATIONS
IFI	Indirect Fuel Injection	Indirect Injection (IDL)
IFS	Inertia Fuel-Shutoff	-
ISC	Idle Speed Control	-
KS	Knock Sensor	Knock Sensor
MAF	Mass Airflow	Air Flow Meter
MAP	Manifold Absolute Pressure	Manifold Pressure Intake Vacuum
MC	Mixture Control	Electric Bleed Air Control Valve (EBCV) Mixture Control Valve (MCV) Electric Air Control Valve (EACV)
MDP	Manifold Differential Pressure	-
MFI	Multiport Fuel Injection	Electronic Fuel Injection (EFI)
MIL	Malfunction Indicator Light	Check Engine Light
MST	Manifold Surface Temperature	-
MVZ	Manifold Vacuum Zone	-
NVRAM	Non-Volatile Random Access Memory	-
O2S	Oxygen Sensor	Oxygen Sensor, O_2 Sensor (O_2S)
OBD	On-Board Diagnostic	On-Board Diagnostic System (OBD)
OC	Oxidation Catalytic Converter	Oxidation Catalytic Convert (OC), CCo
OL	Open Loop	Open Loop
PAIR	Pulsed Secondary Air Injection	Air Suction (AS)
PCM	Powertrain Control Module	-
PNP	Park/Neutral Position	-
PROM	Programmable Read Only Memory	-
PSP	Power Steering Pressure	-
PTOX	Periodic Trap Oxidizer	Diesel Particulate Filter (DPF) Diesel Particulate Trap (DPT)
RAM	Random Access Memory	Random Access Memory (RAM)
RM	Relay Module	-
ROM	Read Only Memory	Read Only Memory (ROM)
RPM	Engine Speed	Engine Speed
SC	Supercharger	Supercharger
SCB	Supercharger Bypass	E-ABV
SFI	Sequential Multiport Fuel Injection	Electronic Fuel Injection (EFI), Sequential Injection
SPL	Smoke Puff Limiter	-
SRI	Service Reminder Indicator	-
SRT	System Readiness Test	-
ST	Scan Tool	-
TB	Throttle Body	Throttle Body
TBI	Throttle Body Fuel Injection	Single Point Injection Central Fuel Injection (Ci)
TC	Turbocharger	Turbocharger
TCC	Torque Converter Clutch	Torque Converter
TCM	Transmission Control Module	Transmission ECU, ECT ECU
TP	Throttle Position	Throttle Position
TR	Transmission Range	-
TVV	Thermal Vacuum Valve	Bimetallic Vacuum Switching Valve (BVSV) Thermostatic Vacuum Switching Valve (TVSV)
TWC	Three-Way Catalytic Converter	Three-Way Catalytic (TWC) Manifold Converter CC_{RO}

SAE ABBREVIATIONS	SAE TERMS	LEXUS TERMS ( )-ABBREVIATIONS
TWC+OC	Three-Way + Oxidation Catalytic Converter	CC_R + CCo
VAF	Volume Airflow	Air Flow Meter
VR	Voltage Regulator	Voltage Regulator
VSS	Vehicle Speed Sensor	Vehicle Speed Sensor
WOT	Wide Open Throttle	Full Throttle
WU-OC	Warm Up Oxidation Catalytic Converter	-
WU-TWC	Warm Up Three-Way Catalytic Converter	-
3GR	Third Gear	-
4GR	Fourth Gear	-

REPAIR INSTRUCTION

PRECAUTION

1. BASIC REPAIR HINT

(a) HINTS ON OPERATIONS

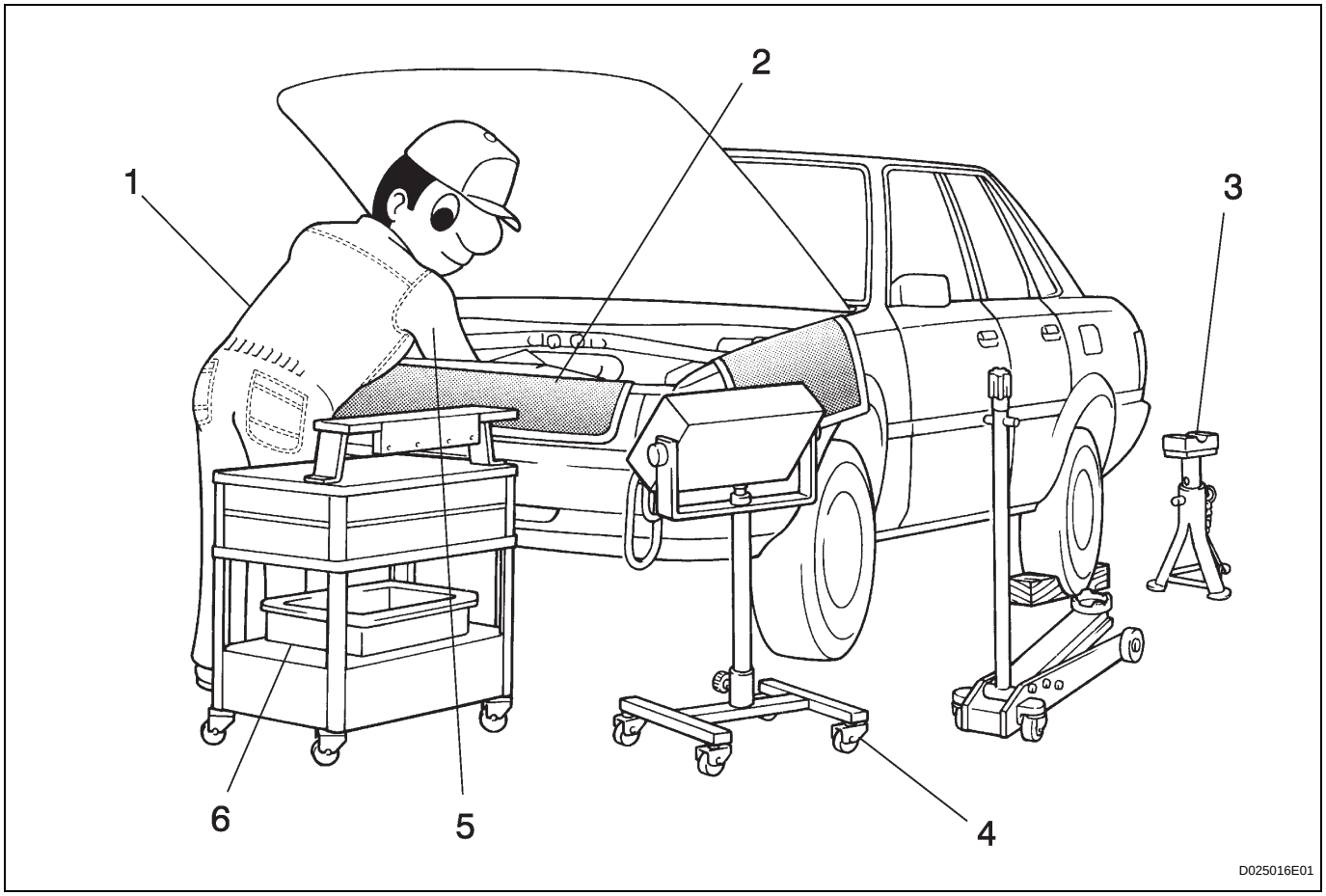

1	Attire	• Always wear a clean uniform. • Hat and safety shoes must be worn.
2	Vehicle protection	Prepare a grille cover, fender cover, seat cover and floor mat before starting the operation.
3	Safety operation	• When working in a pair or groups, be sure to check safety for one another. • When working with the engine running, make sure to provide ventilation for exhaust fumes in the workshop. • If working on high temperature, high pressure, rotating, moving, or vibrating parts, wear appropriate safety equipment and take extra care not to injure yourself or others. • When jacking up the vehicle, be sure to support the specified location with a safety stand. • When lifting up the vehicle, use appropriate safety equipment.
4	Preparation of tools and measuring gauge	Before starting operation, prepare a tool stand, SST, gauge, oil and parts for replacement.
5	Removal and installation, disassembly and assembly operations	• Diagnose with a thorough understanding of proper procedures and of the reported problem. • Before removing the parts, check the general condition of the assembly and for deformation and damage. • When the assembly is complicated, take notes. For example, note the total number of electrical connections, bolts, or hoses removed. Add matchmarks to insure reassembly of components in the original positions. Temporarily mark hoses and their fittings if needed. • Clean and wash the removed parts if necessary and assemble them after a thorough check.

6	Removed parts	• Place the removed parts in a separate box to avoid mixing them up with the new parts or contaminating the new parts. • For non-reusable parts such as gaskets, O-rings, and self-locking nuts, replace them with new ones as instructed in this manual. • Retain the removed parts for customer inspection if requested.

(b) JACKING UP AND SUPPORTING VEHICLE
(1) Care must be taken when jacking up and supporting the vehicle. Be sure to lift and support the vehicle at the proper locations.

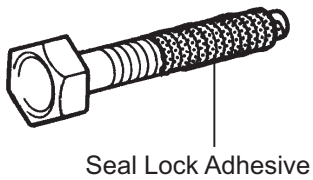

(c) PRECOATED PARTS
(1) Precoated parts are bolts and nuts that are coated with a seal lock adhesive at the factory.
(2) If a precoated part is retightened, loosened or moved in any way, it must be recoated with the specified adhesive.
(3) When reusing a precoated part, clean off the old adhesive and dry the part with compressed air. Then apply new seal lock adhesive appropriate to that part.
(4) Some seal lock agents harden slowly. You may have to wait for the seal lock adhesive to harden.

(d) GASKETS
(1) When necessary, use a sealer on gaskets to prevent leaks.

(e) BOLTS, NUTS AND SCREWS
(1) Carefully follow all the specifications for tightening torques. Always use a torque wrench.

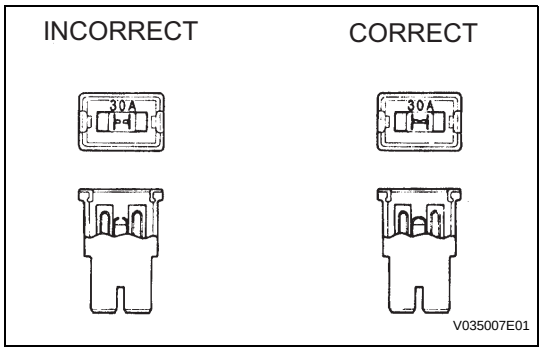

(f) FUSES
(1) When inspecting a fuse, check that the wire of the fuse is not broken.
(2) When replacing fuses, be sure that the new fuse has the correct amperage rating. Do not exceed the rating or use one with a lower rating.

Illustration	Symbol	Part Name	Abbreviation
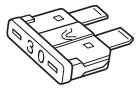 N	N	FUSE	FUSE

Illustration	Symbol	Part Name	Abbreviation
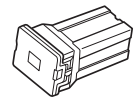 N	N	MEDIUM CURRENT FUSE	M-FUSE
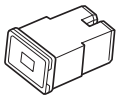 N	N	HIGH CURRENT FUSE	H-FUSE
N	N	FUSIBLE LINK	FL
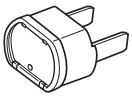 N	N	CIRCUIT BREAKER	CB

(g) CLIPS

(1) The removal and installation methods of typical clips used for vehicle body parts are shown in the table below.

HINT:

If clips are damaged during work, always replace the damaged clip with a new one.

IN

Shape (Example)	Removal/Installation
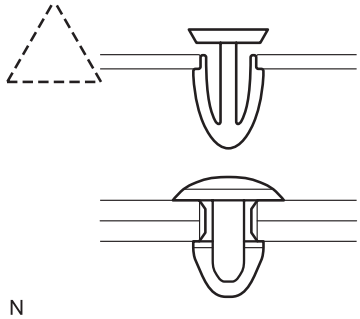 N	Remove clips with clip remover or pliers. 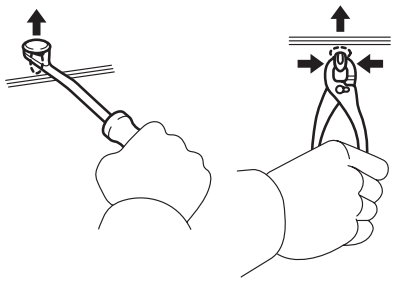 N
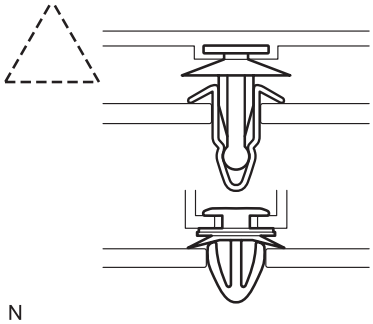 N	Remove fasteners with clip remover or screwdriver. 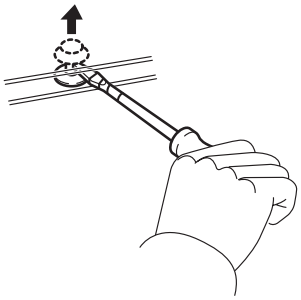 N
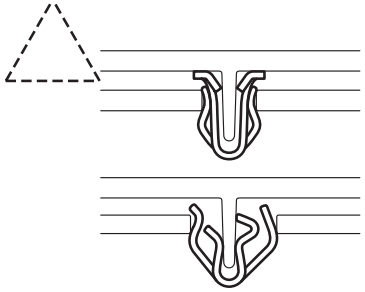 N	Remove clips with wide scraper to prevent panel damage. 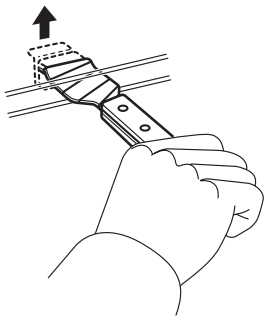 N
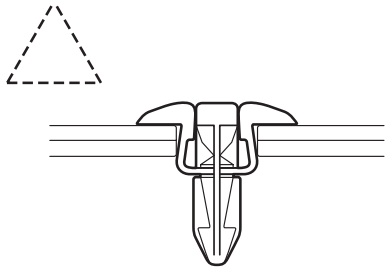 N	Remove clips by pushing center pin through and prying out shell. 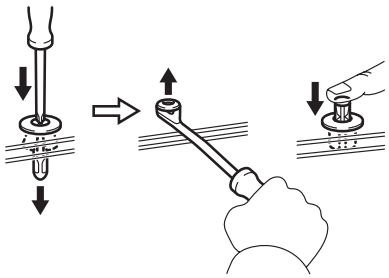 N

Shape (Example)	Removal/Installation
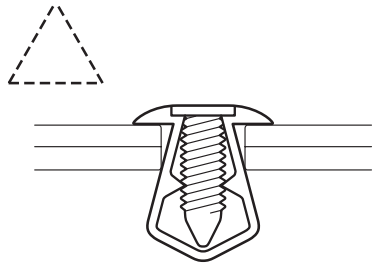 N	Remove clips by unscrewing center pin and prying out shell. 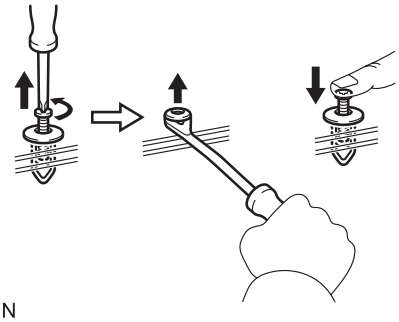 N
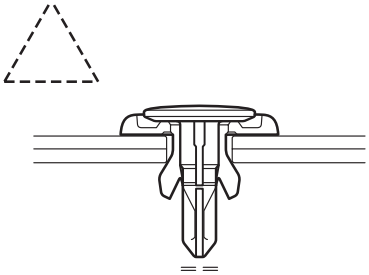 N	Remove clips by prying out pin and then prying out shell. 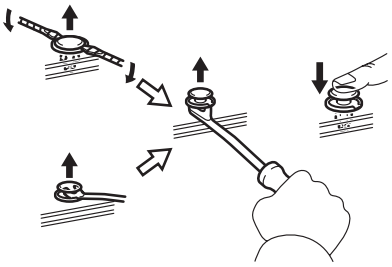 N

(h) CLAWS

(1) The removal and installation methods of typical claws used for vehicle body parts are shown in the table below.

HINT:

If claws are damaged during a procedure, always replace the damaged claws with a new caps or covers.

Shape (Example)	Illustration	Procedures
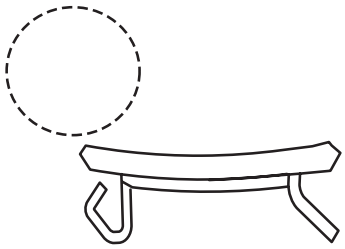	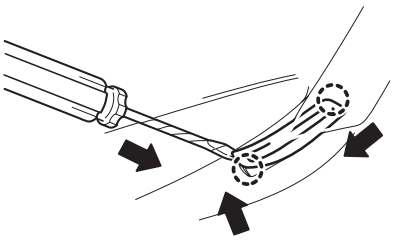	1. Using a screwdriver, detach the claws and remove the cap or covers.
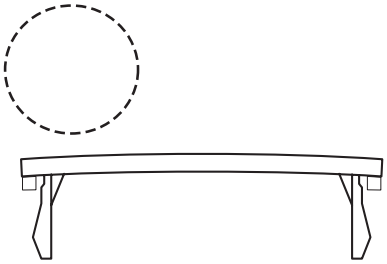	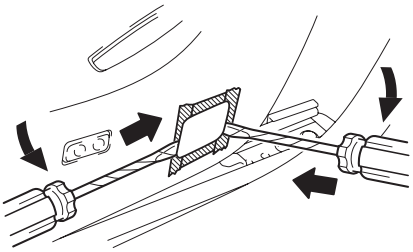	1. Using a screwdriver, detach the claws and remove the cap or covers.

IN

Shape (Example)	Illustration	Procedures
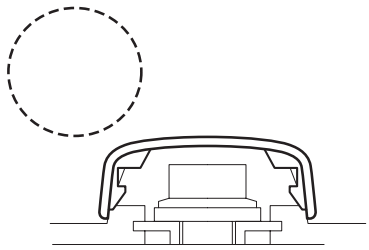	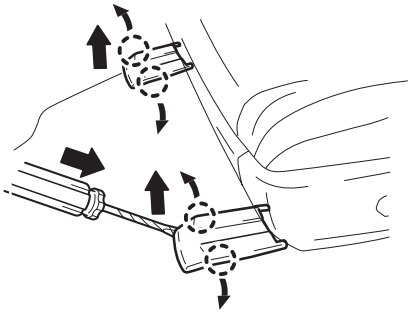	1. Using a screwdriver, detach the claws and remove the cap or covers.

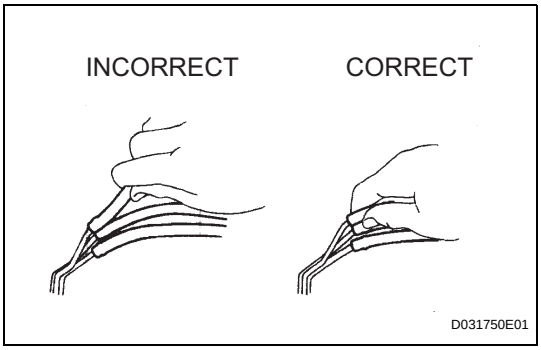

(i) REMOVAL AND INSTALLATION OF VACUUM HOSES

(1) To disconnect a vacuum hose, pull and twist from the end of the hose. Do not pull from the middle of the hose as this may damage the hose.

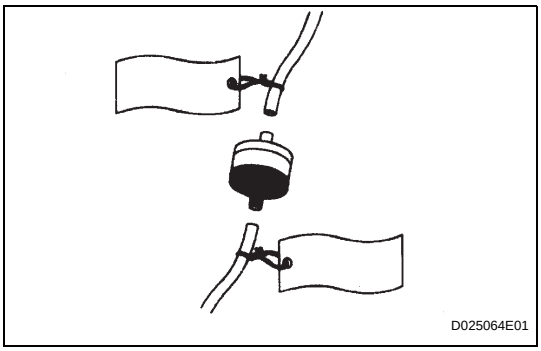

(2) When disconnecting vacuum hoses, use tags to identify where they should be reconnected.

(3) After completing any hose related repairs, double check that the vacuum hoses are properly connected. The label under the hood shows the proper layout.

(4) When using a vacuum gauge, never force the hose onto a connector that is too large. If a hose has been stretched, air may leak. Use a step-down adapter if necessary.

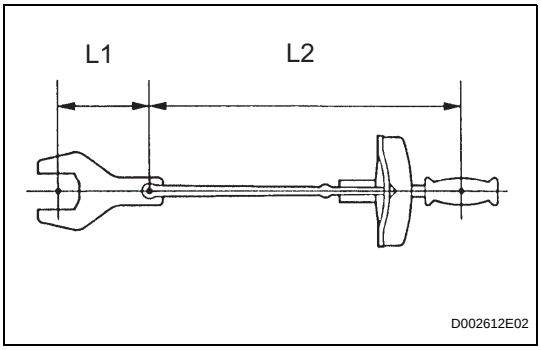

(j) TORQUE WHEN USING TORQUE WRENCH WITH EXTENSION TOOL

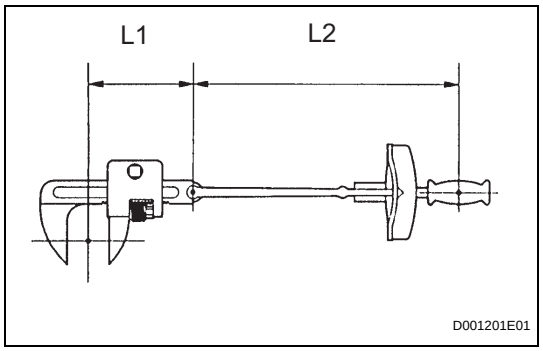

(1) Use the formula below to calculate special torque values for situations where SST or an extension tool is combined with the torque wrench.

Formula:

T' = L2/(L1 + L2) * T

T'	**Reading of torque wrench {N*m (kgf*cm, ft.*lbf)}**
T	**Torque {N*m (kgf*cm, ft.*lbf)}**
L1	**Length of SST or extension tool {cm (in.)}**
L2	**Length of torque wrench {cm (in.)}**

NOTICE:

If an extension tool or SST is combined with a torque wrench and the wrench is used to tighten to a torque specification in this manual, the actual torque will be excessive and parts will be damaged.

2. FOR VEHICLES EQUIPPED WITH SRS AIRBAG AND SEAT BELT PRETENSIONER

The LEXUS ES350 is equipped with a Supplemental Restraint System (SRS).

CAUTION:

Failure to carry out the service operations in the correct sequence could cause the SRS to unexpectedly deploy during servicing and lead to serious injury. Furthermore, if a mistake is made when servicing SRS, it is possible that the SRS may fail to operate properly. Before servicing (including removal or installation of parts, inspection or replacement), be sure to read the following section carefully.

(a) GENERAL NOTICE

(1) As malfunctions of the SRS are difficult to confirm, the Diagnostic Trouble Codes (DTCs) become the most important source of information when troubleshooting. When troubleshooting the SRS, always check the DTCs before disconnecting the battery.

(2) Work must be started at least 90 seconds after the engine switch is turned off and after the cable is disconnected from the negative (-) battery terminal.
The SRS is equipped with a back-up power source. If work is started within 90 seconds after turning the engine switch off and disconnecting the cable from the negative (-) battery terminal, the SRS may deploy.
When the cable is disconnected from the negative (-) battery terminal, clock and audio system memory is erased. Before starting work, make a note of the settings of each memory system. When work is finished, reset the clock and audio system as before.
CAUTION:
Never use a back-up power source (battery or other) to avoid erasing the system memory. The back-up power source may inadvertently power the SRS and cause it to deploy.

(3) In minor collisions where the SRS does not deploy, the steering pad, driver side knee airbag assembly, front passenger side knee airbag assembly, front passenger airbag assembly, curtain shield airbag assembly, front seat side airbag assembly, rear seat side airbag assembly and front seat outer belt assembly should be inspected before further use of the vehicle.
(See page RS-370 for steering pad)
(See page RS-388 for driver side knee airbag assembly)
(See page RS-398 for front passenger side knee airbag assembly)
(See page RS-419 for front passenger airbag assembly)
(See page RS-446 for curtain shield airbag assembly)
(See page RS-452 for front seat side airbag assembly)
(See page RS-461 for rear seat side airbag assembly)
(See page SB-31 for front seat outer belt assembly)

(4) Never use SRS parts from another vehicle. When replacing parts, use new parts.

(5) Before repairs, remove the airbag sensor assemblies if impacts are likely to be applied to the sensor during repairs.

(6) Never disassemble and attempt to repair all airbag sensor assemblies and all airbag assemblies.
1. Steering pad
2. Driver side knee airbag assembly

3. Front passenger side knee airbag assembly
4. Front passenger airbag assembly
5. Curtain shield airbag assembly
6. Front seat side airbag assembly
7. Rear seat side airbag assembly
8. Front seat outer belt assembly

(7) Replace the airbag sensor assemblies and the airbag assemblies if: 1) damage has occurred from being dropped, or 2) cracks, dents or other defects in the case, bracket or connector are present.

(8) Do not directly expose the airbag sensor assembly or airbag assembly to hot air or flames.

(9) Use a voltmeter/ohmmeter with high impedance (minimum = 10 kΩ) for troubleshooting electrical circuits.

(10) Information labels are attached to the SRS components. Follow the instructions on the labels.

(11) After work on the SRS is completed, check the SRS warning light.

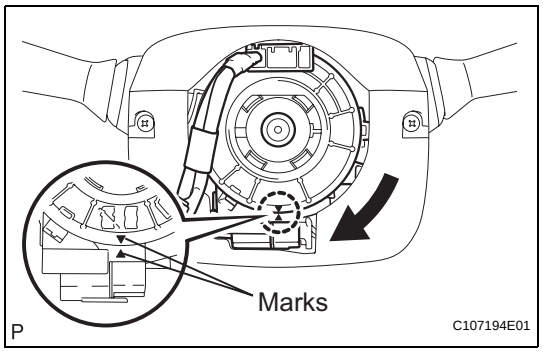

(b) SPIRAL CABLE

(1) The steering wheel must be fitted correctly to the steering column with the spiral cable at the neutral position, as cable disconnection and other problems may occur. Refer to the information about correct installation of the steering wheel (See page RS-382).

(c) STEERING PAD

(1) Always place a removed or new steering pad surface upward as shown in the illustration. Placing the horn button with the pad surface facing down could cause a serious accident if the airbag inflates. Also, do not place anything on top of the horn button.

Example:

N D100381E01

(2) Never measure the resistance of the airbag squib. This may cause the airbag to inflate, which could cause serious injury.

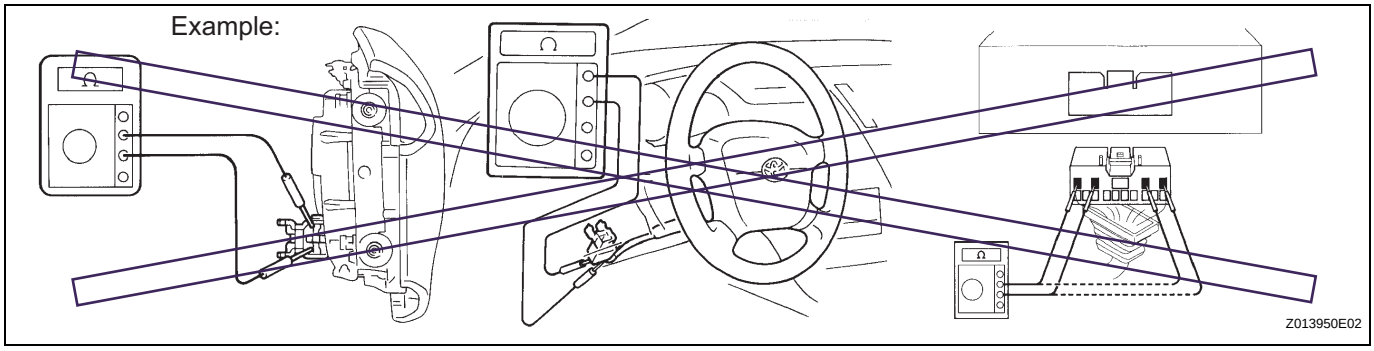

(3) Grease or detergents of any kind should not be applied to the horn button.
(4) Store the horn button assembly in an area where the ambient temperature is below 93°C (200°F), the humidity is not high and there is no electrical noise.
(5) When using electric welding anywhere on the vehicle, disconnect the airbag ECU connectors (4 pins). These connectors contain shorting springs. This feature reduces the possibility of the airbag deploying due to current entering the squib wiring.
(6) When disposing of the vehicle or the horn button assembly by itself, the airbag should be deployed using SST before disposal (See page RS-370). Activate the airbag in a safe place away from electrical noise.

(d) DRIVER SIDE KNEE AIRBAG ASSEMBLY
(1) Always place a removed or new knee airbag assembly with the airbag inflation direction facing upward. Placing the airbag assembly with the airbag inflation direction facing downward could cause a serious accident if the airbag inflates.

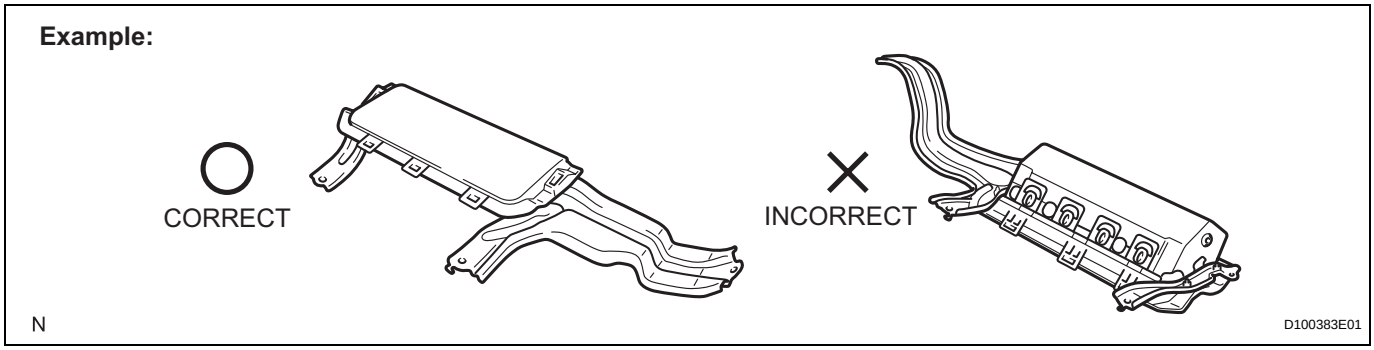

(2) Never measure the resistance of the airbag squib. This may cause the airbag to inflate, which could cause serious injury.

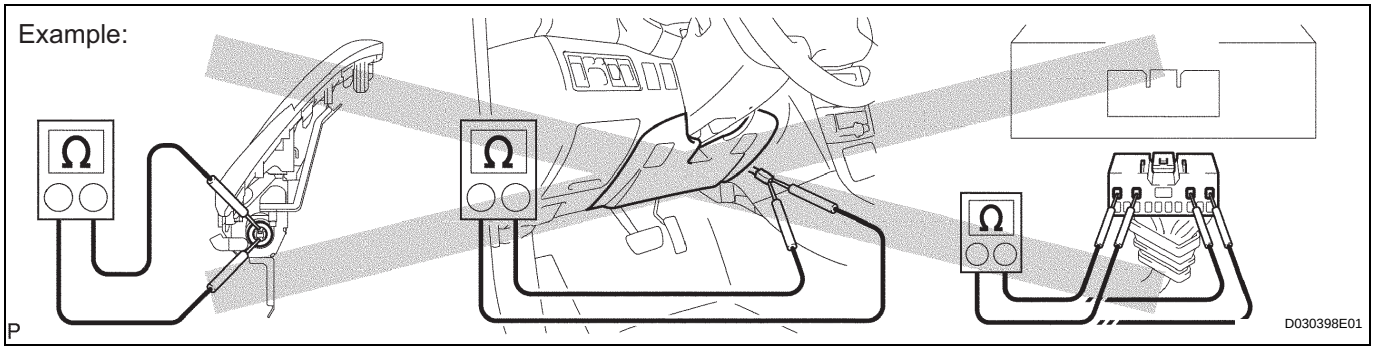

(3) Grease or detergents of any kind should not be applied to the knee airbag assembly.
(4) Store the knee airbag assembly where the ambient temperature is below 93°C (200°F), the humidity is not high and there is no electrical noise.
(5) When using electric welding anywhere on the vehicle, disconnect the airbag ECU connectors (2 pins). These connectors contain shorting springs. This feature reduces the possibility of the airbag deploying due to current entering the squib wiring.
(6) When disposing of a vehicle or knee airbag assembly unit by itself, the airbag should be inflated using SST before disposal (See page RS-388). Activate the airbag in a safe place away from electrical noise.

(e) FRONT PASSENGER SIDE KNEE AIRBAG ASSEMBLY
(1) Always place a removed or new knee airbag assembly with the airbag inflation direction facing upward. Placing the airbag assembly with the airbag inflation direction facing downward could cause a serious accident if the airbag inflates.

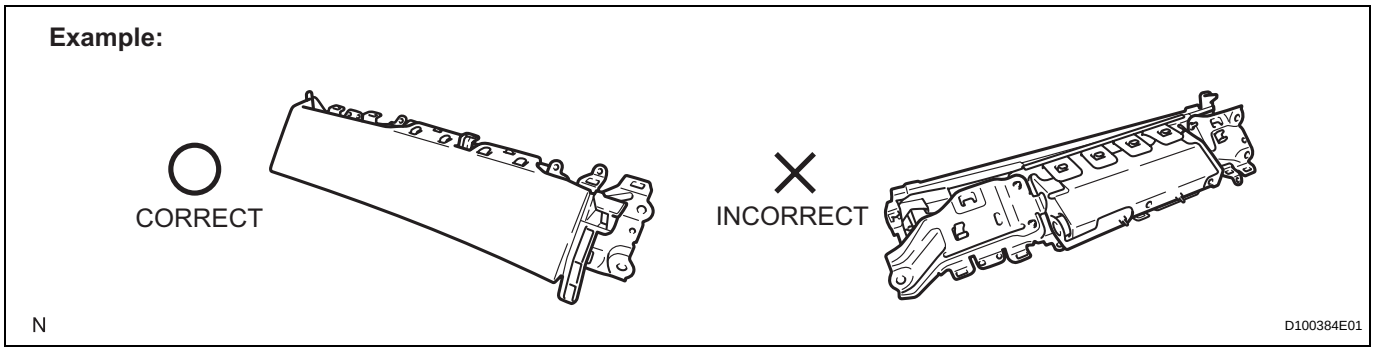

(2) Never measure the resistance of the airbag squib. This may cause the airbag to inflate, which could cause serious injury.

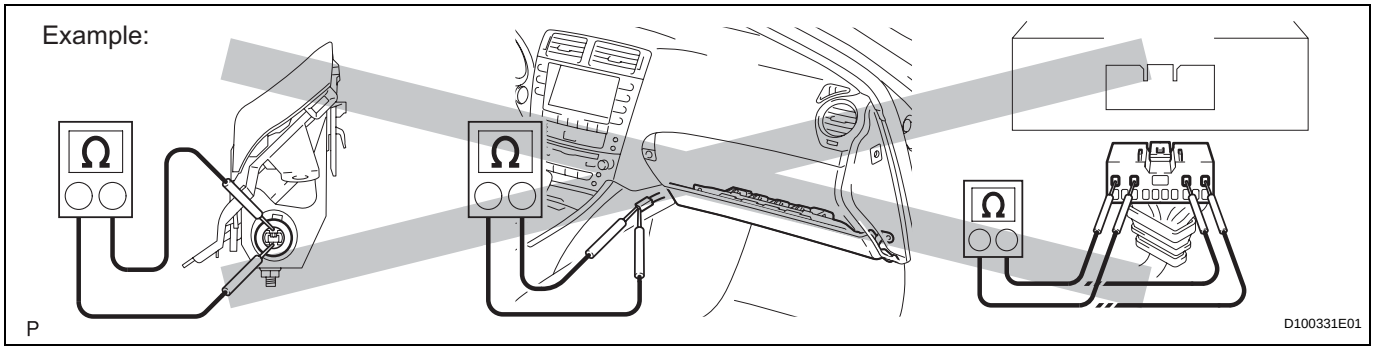

(3) Grease or detergents of any kind should not be applied to the knee airbag assembly.
(4) Store the knee airbag assembly where the ambient temperature is below 93°C (200°F), the humidity is not high and there is no electrical noise.
(5) When using electric welding anywhere on the vehicle, disconnect the airbag ECU connectors (2 pins). These connectors contain shorting springs. This feature reduces the possibility of the airbag deploying due to current entering the squib wiring.
(6) When disposing of a vehicle or knee airbag assembly unit by itself, the airbag should be inflated using SST before disposal (See page RS-398). Activate the airbag in a safe place away from electrical noise.

(f) FRONT PASSENGER AIRBAG ASSEMBLY
(1) Always place a removed or new front passenger airbag assembly with the pad surface facing upward as shown in the illustration. Placing the airbag assembly with the airbag inflation direction facing down could cause a serious accident if the airbag inflates.

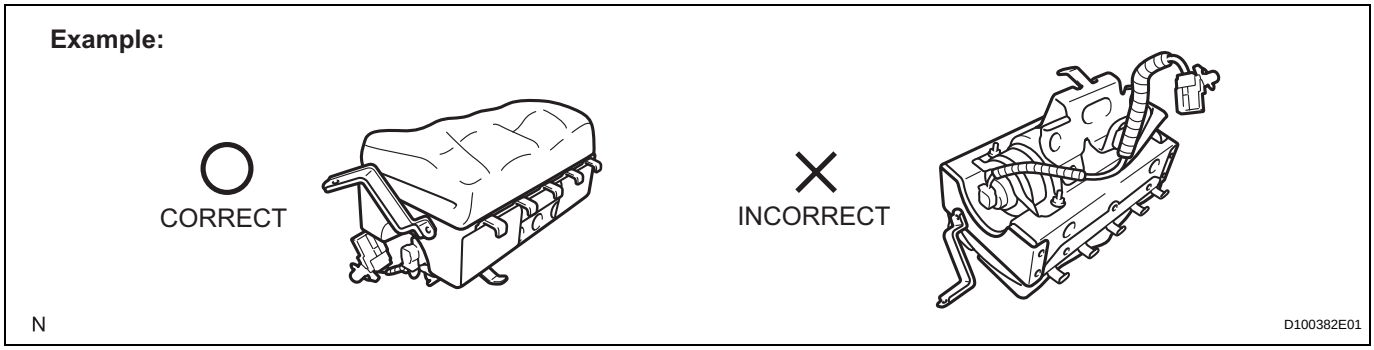

(2) Never measure the resistance of the airbag squib. This may cause the airbag to inflate, which could cause serious injury.

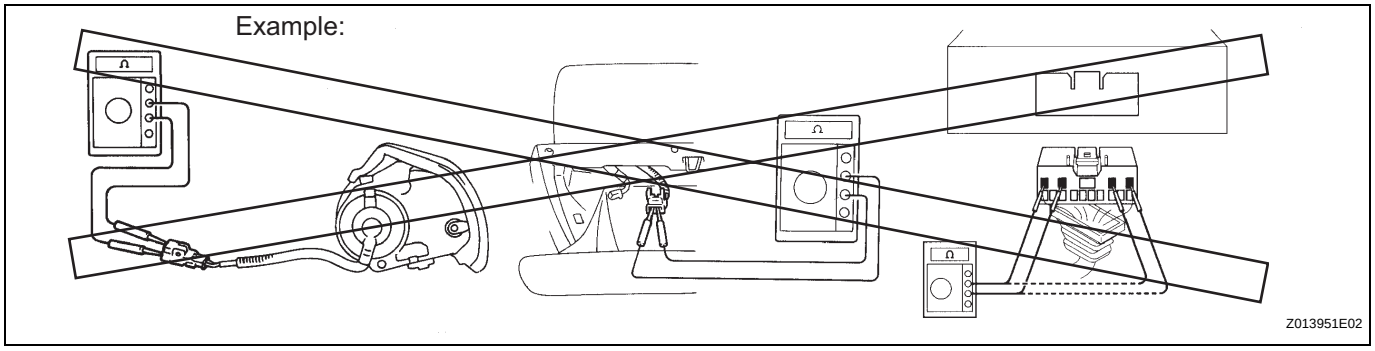

(3) Grease or detergents of any kind should not be applied to the front passenger airbag assembly.
(4) Store the airbag assembly in an area where the ambient temperature is below 93°C (200°F), the humidity is not high and there is no electrical noise.
(5) When using electric welding anywhere on the vehicle, disconnect the airbag ECU connectors (4 pins). These connectors contain shorting springs. This feature reduces the possibility of the airbag deploying due to current entering the squib wiring.
(6) When disposing of the vehicle or the airbag assembly unit by itself, the airbag should be deployed using SST before disposal (See page RS-419). Activate the airbag in a safe place away from electrical noise.

(g) CURTAIN SHIELD AIRBAG ASSEMBLY
(1) Always place a removed or new curtain shield airbag assembly in a clear plastic bag, and keep it in a safe place.

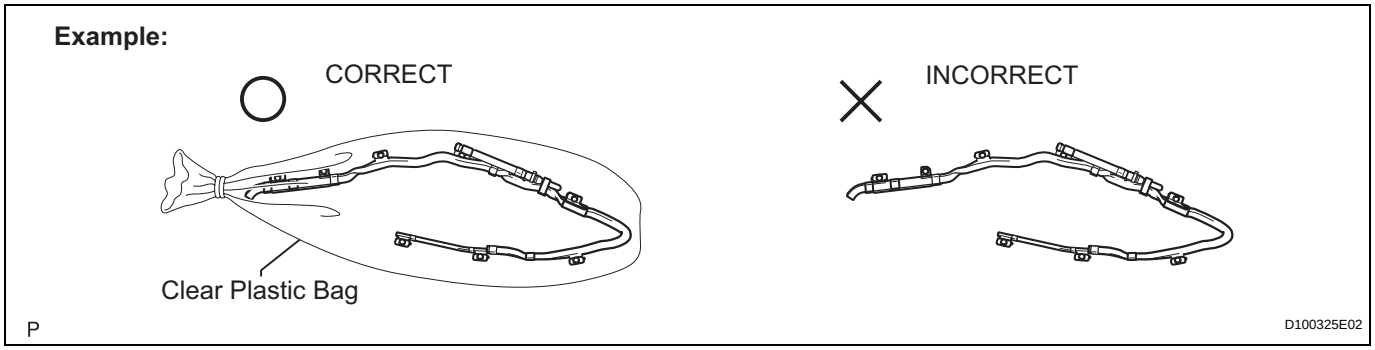

CAUTION:
The plastic bag is not reusable.
NOTICE:
Never disassemble the curtain shield airbag assembly.

(2) Never measure the resistance of the airbag squib. This may cause the airbag to inflate, which could cause serious injury.

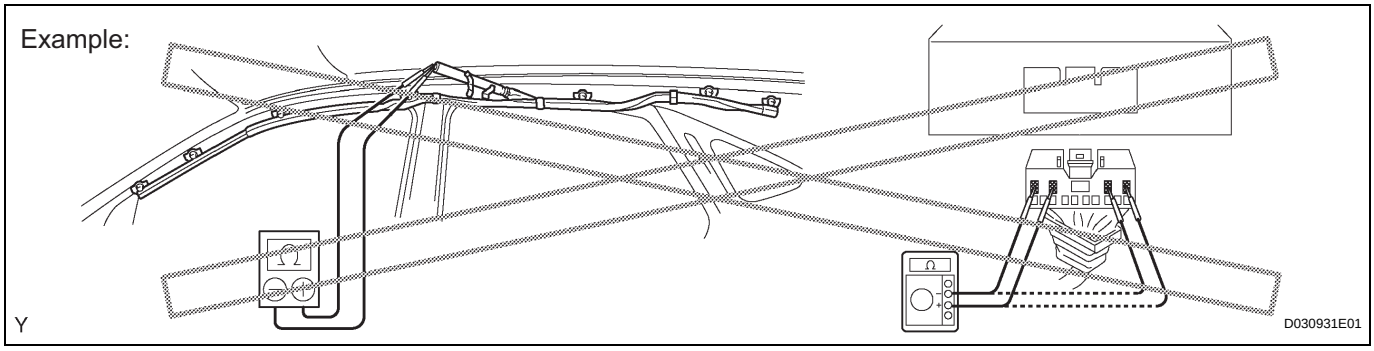

(3) Grease or detergents of any kind should not be applied to the curtain shield airbag assembly.
(4) Store the airbag assembly in an area where the ambient temperature is below 93°C (200°F), the humidity is not high and there is no electrical noise.
(5) When using electric welding anywhere on the vehicle, disconnect the airbag ECU connectors (4 pins). These connectors contain shorting springs. This feature reduces the possibility of the airbag deploying due to current entering the squib wiring.
(6) When disposing of a vehicle or the airbag assembly unit by itself, the airbag should be deployed using SST before disposal (See page RS-446). Activate the airbag in a safe place away from electrical noise.

(h) FRONT SEAT SIDE AIRBAG ASSEMBLY
(1) Always place a removed or new seat side airbag assembly with the airbag inflation direction facing up.
(2) Never measure the resistance of the airbag squib. This may cause the airbag to inflate, which could cause serious injury.

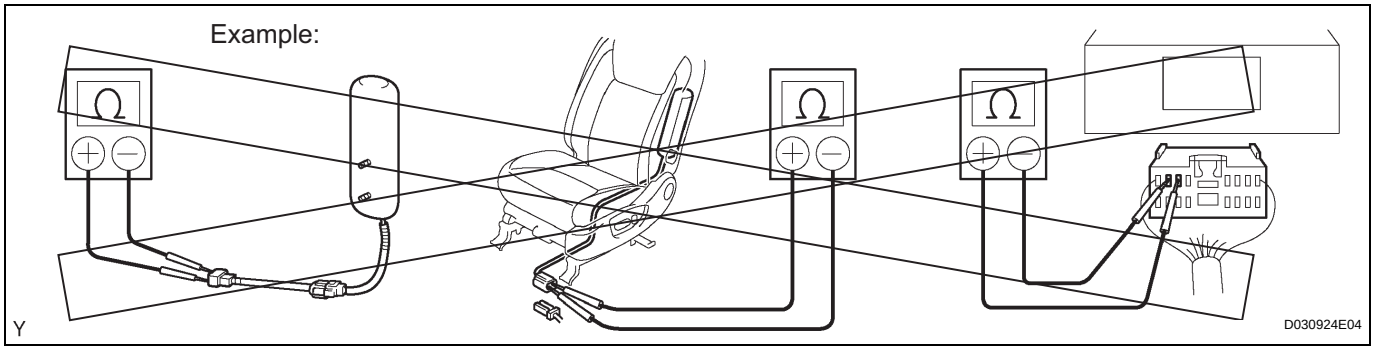

(3) Grease or detergents of any kind should not be applied to the front seat side airbag assembly.
(4) Store the airbag assembly in an area where the ambient temperature is below 93°C (200°F), the humidity is not high and there is no electrical noise.

(5) When using electric welding anywhere on the vehicle, disconnect the airbag ECU connectors (2 pins). These connectors contain shorting springs. This feature reduces the possibility of the airbag deploying due to current entering the squib wiring.

(6) When disposing of a vehicle or the airbag assembly unit by itself, the airbag should be deployed using SST before disposal (See page RS-452). Activate the airbag in a safe place away from electrical noise.

(i) REAR SEAT SIDE AIRBAG ASSEMBLY

(1) Always place a removed or new seat side airbag assembly with the airbag inflation direction facing up.

(2) Never measure the resistance of the airbag squib. This may cause the airbag to inflate, which could cause serious injury.

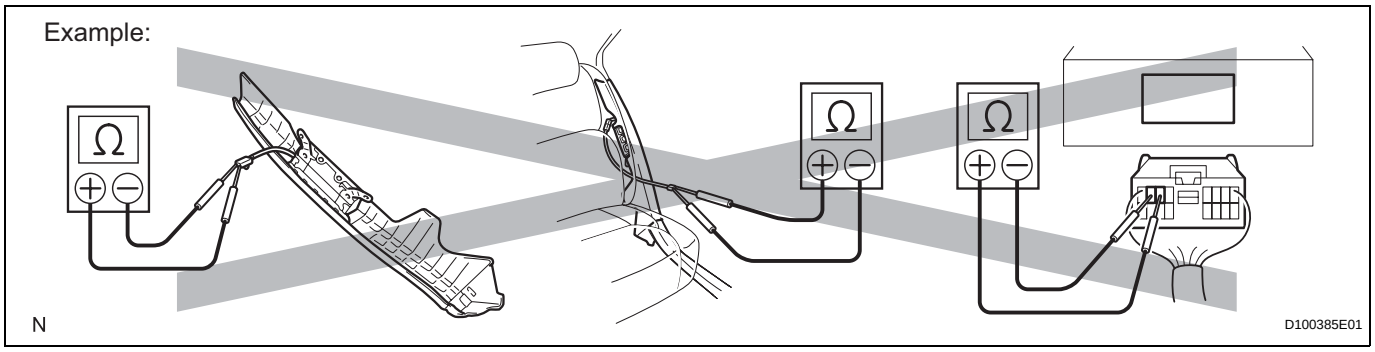

(3) Grease or detergents of any kind should not be applied to the rear seat side airbag assembly.

(4) Store the airbag assembly in an area where the ambient temperature is below 93°C (200°F), the humidity is not high and there is no electrical noise.

(5) When using electric welding anywhere on the vehicle, disconnect the airbag ECU connectors (2 pins). These connectors contain shorting springs. This feature reduces the possibility of the airbag deploying due to current entering the squib wiring.

(6) When disposing of a vehicle or the airbag assembly unit by itself, the airbag should be deployed using SST before disposal (See page RS-461). Activate the airbag in a safe place away from electrical noise.

IN

(j) FRONT SEAT OUTER BELT ASSEMBLY AND REAR SEAT OUTER BELT ASSEMBLY (SEAT BELT PRETENSIONER)

(1) Never measure the resistance of the seat outer belt. This may cause the pretensioner of the seat belt to activate, which could cause serious injury.

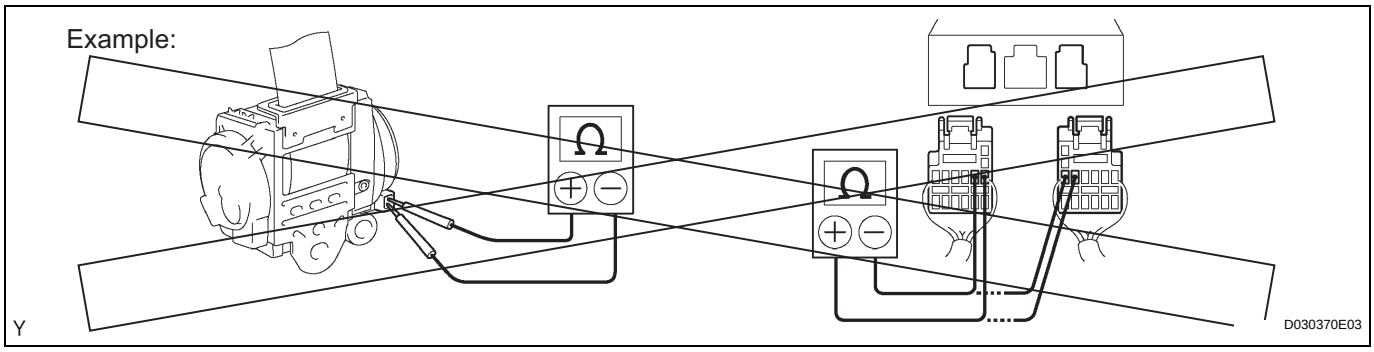

(2) Never disassemble the seat outer belt.

(3) Never install the seat outer belt on another vehicle.

(4) Store the seat outer belt in an area where the ambient temperature is below 80°C (176°F), the humidity is not high and there is no electrical noise.

(5) When using electric welding anywhere on the vehicle, disconnect the airbag ECU connectors (2 pins). These connectors contain shorting springs. This feature reduces the possibility of the airbag deploying due to current entering the squib wiring.

(6) When disposing of a vehicle or the seat outer belt unit by itself, the seat outer belt should be activated before disposal (See page SB-31). Activate the seat outer belt in a safe place away from electrical noise.

(7) As the seat outer belt is hot after being activated, allow some time for it to cool down sufficiently before disposal. Never apply water to cool down the seat outer belt.

(8) Grease, detergents, oil or water should not be applied to the front seat outer belt.

(k) AIRBAG SENSOR ASSEMBLY

(1) Never reuse an airbag sensor assembly that has been involved in a collision where the SRS has deployed.

(2) The connectors to the airbag sensor assembly should be connected or disconnected with the sensor placed on the floor. If the connectors are connected or disconnected while the airbag sensor assembly is not placed on the floor, the SRS may activate.

(3) Work must be started at least 90 seconds after the engine switch is turned off and the cable is disconnected from the negative (-) battery terminal, even if only loosening the set bolts of the airbag sensor assembly.

(l) WIRE HARNESS AND CONNECTOR

(1) The SRS wire harness is integrated with the instrument panel wire harness assembly. All the connectors in the system are a standard yellow color. If the SRS wire harness becomes disconnected or the connector becomes broken, repair or replace it.

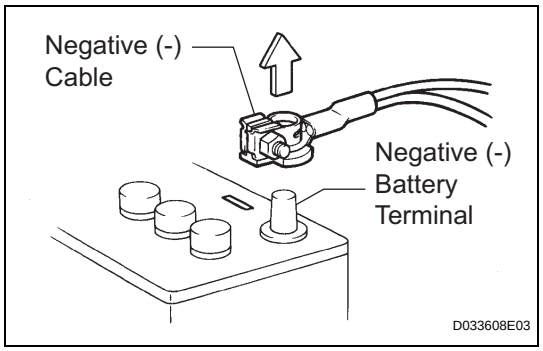

3. ELECTRONIC CONTROL

(a) REMOVAL AND INSTALLATION OF BATTERY TERMINAL

NOTICE:

Certain systems need to be initialized after reconnecting the cable to the negative (-) battery terminal.

(1) Before performing electronic work, disconnect the cable from the negative (-) battery terminal to prevent component and wire damage caused by accidental short circuits.

(2) When disconnecting the cable, turn the engine switch and headlight dimmer switch off and loosen the cable nut completely. Perform these operations without twisting or prying the cable. Then disconnect the cable.

(3) Clock settings, radio settings, audio system memory, DTCs and other data are erased when the cable is disconnected from the negative (-) battery terminal. Write down any necessary data before disconnecting the cable.

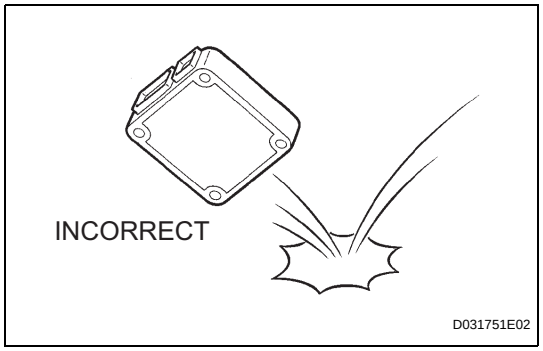

(b) HANDLING OF ELECTRONIC PARTS

(1) Do not open the cover or case of the ECU unless absolutely necessary. If the IC terminals are touched, the IC may be rendered inoperative by static electricity.

(2) Do not pull the wires when disconnecting electronic connectors. Pull the connector itself.

(3) Do not drop electronic components, such as sensors or relays. If they are dropped on a hard surface, they should be replaced.

(4) When cleaning the engine with steam, protect the electronic components, air filter and emission-related components from water.

(5) Never use an impact wrench to remove or install temperature switches or temperature sensors.

(6) When measuring the resistance between terminals of a wire connector, insert the tester probe carefully to prevent terminals from bending.

IN

4. REMOVAL AND INSTALLATION OF FUEL CONTROL PARTS

(a) PLACE FOR REMOVING AND INSTALLING FUEL SYSTEM PARTS
  (1) Work in a location with good air ventilation that does not have welders, grinders, drills, electric motors, stoves, or any other engine sources.
  (2) Never work in a pit or near a pit as vaporized fuel will collect in those places.

(b) REMOVING AND INSTALLING FUEL SYSTEM PARTS
  (1) Prepare a fire extinguisher before starting the operation.
  (2) To prevent static electricity, install a ground wire to the fuel changer, vehicle and fuel tank, do not spray the surrounding area with water. Be careful when performing work in this area, as the work surface will become slippery. Do not clean up gasoline spills with water, as this may cause the gasoline to spread, and possibly create a fire hazard.
  (3) Avoid using electric motors, working lights and other electric equipments that can cause sparks or high temperatures.
  (4) Avoid using iron hammers as they may create sparks.
  (5) Dispose of fuel-contaminated cloth separately using a fire resistant container.

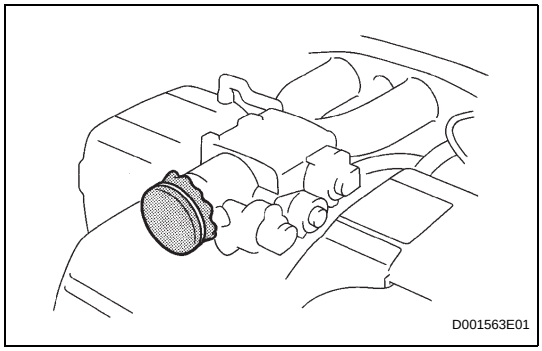

5. REMOVAL AND INSTALLATION OF ENGINE INTAKE PARTS

(a) If any metal particles enter inlet system parts, this may damage the engine.
(b) When removing and installing inlet system parts, cover the openings of the removed parts and engine openings. Use gummed tape or other suitable materials.
(c) When installing inlet system parts, check that no metal particles have entered the engine or the installed parts.

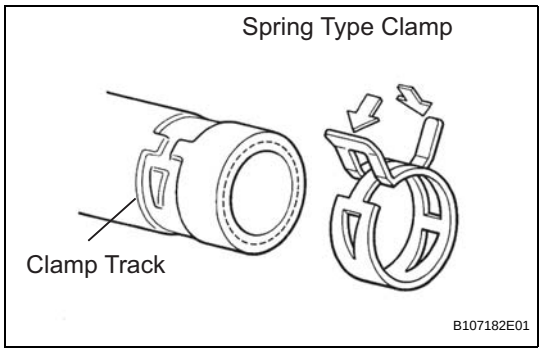

6. HANDLING OF HOSE CLAMPS

(a) Before removing the hose, check the clamp position so that it can be reinstalled in the same position.
(b) Replace any deformed or dented clamps with new ones.
(c) When reusing a hose, attach the clamp on the clamp track portion of the hose.
(d) For a spring type clamp, you may want to spread the tabs slightly after installation by pushing in the direction of the arrows as shown in the illustration.

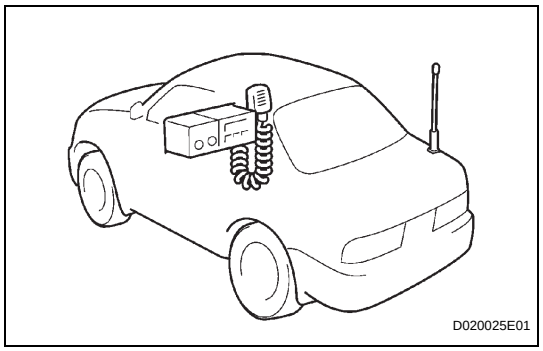

7. FOR VEHICLES EQUIPPED WITH MOBILE COMMUNICATION SYSTEMS

(a) Install the antenna far away from the ECU and sensors of the vehicle electronic systems as possible.

(b) Install an antenna feeder at least 20 cm (7.87 in.) away from the ECU and sensors of the vehicle electronic systems. For details about ECU and sensors locations, refer to the section on the applicable components.

(c) Keep the antenna and feeder separate from other wirings as much as possible. This will prevent signals sent from the communication equipment from affecting vehicle equipment and vice-versa.

(d) Check that the antenna and feeder are correctly adjusted.

(e) Do not install any high-powered mobile communication system.

8. FOR VEHICLES EQUIPPED WITH TRACTION CONTROL (TRAC) AND VEHICLE STABILITY CONTROL (VSC) SYSTEMS

When testing with a 2-wheel drum tester such as a speedometer tester, a combination tester for the speedometer and brake, a chassis dynamometer, or when jacking up the front wheels and turning the wheels, perform the following procedure to enter the inspection mode and stop the TRAC and VSC systems.

(a) Activating inspection mode (Not using the intelligent tester)

HINT:

- Perform procedures "D" to "H" within 30 seconds.
- Perform procedures "F" and "G" within 15 seconds each.

(1) Ensure that the engine switch is off and the engine is stopped (Procedure "A").

(2) Make sure that the shift lever is in the P position (Procedure "B").

(3) Start the engine (Procedure "C").

(4) Apply the parking brake by depressing the parking brake pedal (Procedure "D").

(5) Depress and release the brake pedal twice (Procedure "E").

(6) While holding the brake pedal down, release and apply the parking brake twice (Procedure "F").

(7) With the parking brake applied, depress and release the brake pedal twice (Procedure "G").

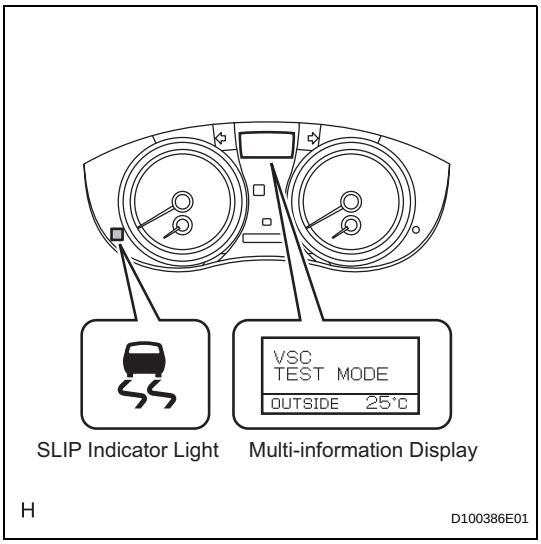

(8) Check that the "VSC TEST MODE" message appears on the multi-information display and SLIP indicator light come on (Procedure "H").
HINT:
- If the "VSC TEST MODE" message appears on the multi-information display and SLIP indicator light do not come on in procedure "H", repeat the procedures from "A" to "H".
- Turning the engine switch off ends inspection mode.

(b) Activating inspection mode (Using the intelligent tester)
(1) Ensure that the engine switch is off and the engine is stopped (Procedure "A").
(2) Make sure that the shift lever is in the P position (Procedure "B").
(3) Connect the intelligent tester to the DLC3 (Procedure "C").
(4) Start the engine (Procedure "D").
(5) Turn the intelligent tester main switch on (Procedure "E").
(6) Select the following menu items: ABS/ INSPECTION MODE (Procedure "F").

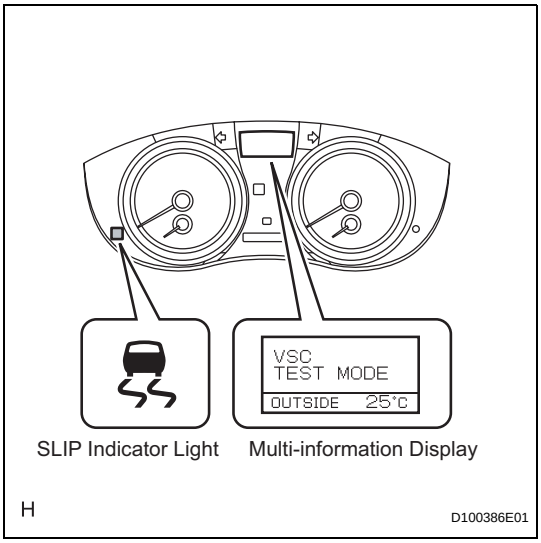

(7) Check that the "VSC TEST MODE" message appears on the multi-information display and SLIP indicator light come on (Procedure "G").
HINT:
- If the "VSC TEST MODE" message appears on the multi-information display and SLIP indicator light do not come on in procedure "G", repeat the procedures from "A" to "G".
- Turning the engine switch off ends inspection mode.

9. FOR VEHICLES EQUIPPED WITH CATALYTIC CONVERTER
CAUTION:
If a large amount of unburned gasoline or gasoline vapors flow into the converter, it may cause overheating and create a fire hazard. To prevent this, observe the following precautions.
(a) Use only unleaded gasoline.
(b) Avoid idling the engine for more than 20 minutes.
(c) Avoid performing unnecessary spark jump tests.
(1) Perform a spark jump test only when absolutely necessary. Perform this test as rapidly as possible.
(2) While testing, never race the engine.
(d) Avoid a prolonged engine compression measurement. Engine compression measurements must be performed as rapidly as possible.
(e) Do not run the engine when the fuel tank is nearly empty. This may cause the engine to misfire and create an extra load on the converter.

INITIALIZATION

1. FOR VEHICLES EQUIPPED WITH SMART ACCESS SYSTEM

(a) Immediately after the battery terminal is reconnected, the main body ECU will not function, and therefore, the smart access system will not operate. To activate the main body ECU, perform a wireless door unlock or lock operation.

(b) If the battery has been discharged, the engine cannot be started even after the battery has been recharged because the steering lock position cannot be recognized correctly. To allow the steering lock ECU to learn the steering lock position, initialize the steering lock ECU.

(c) To start the engine after the battery terminal is reconnected, perform the following:

(1) Open and close the driver's door.

(2) Wait for 10 seconds or more.

HINT:
The first attempt to start the engine will fail because the steering lock ECU has not learned the steering lock position yet. This does not indicate a malfunction. The engine can be started normally on the second or subsequent attempt.

HOW TO TROUBLESHOOT ECU CONTROLLED SYSTEMS

GENERAL INFORMATION

A large number of ECU controlled systems are used in the LEXUS ES350. In general, ECU controlled systems are considered to be very intricate, requiring a high level of technical knowledge to troubleshoot. However, most problem checking procedures only involve inspecting the ECU controlled system's circuits one by one. An adequate understanding of the system and a basic knowledge of electricity is enough to perform effective troubleshooting, accurate diagnoses and necessary repairs.

FOR USING INTELLIGENT TESTER

– Before using the intelligent tester, read the tester operator's manual thoroughly.
– If the tester cannot communicate with the ECU controlled systems when the tester is connected to the DLC3 with the engine switch on and the tester turned on, there is a problem on the vehicle side or tester side.
  (1) If communication is normal when the tester is connected to another vehicle, inspect the diagnosis data link line (Bus (+) line) or ECU power circuit of the vehicle.
  (2) If communication is still not possible when the tester is connected to another vehicle, the problem is probably in the tester itself. Perform the Self Test procedures outlined in the tester operator's manual.

ELECTRONIC CIRCUIT INSPECTION PROCEDURE

1. BASIC INSPECTION

(a) WHEN MEASURING RESISTANCE OF ELECTRONIC PARTS

(1) Unless otherwise stated, all resistance measurements should be made at an ambient temperature of 20°C (68°F). Resistance measurements may be inaccurate if measured at high temperatures, i.e. immediately after the engine has been stopped. Measurements should be made after the engine has cooled down.

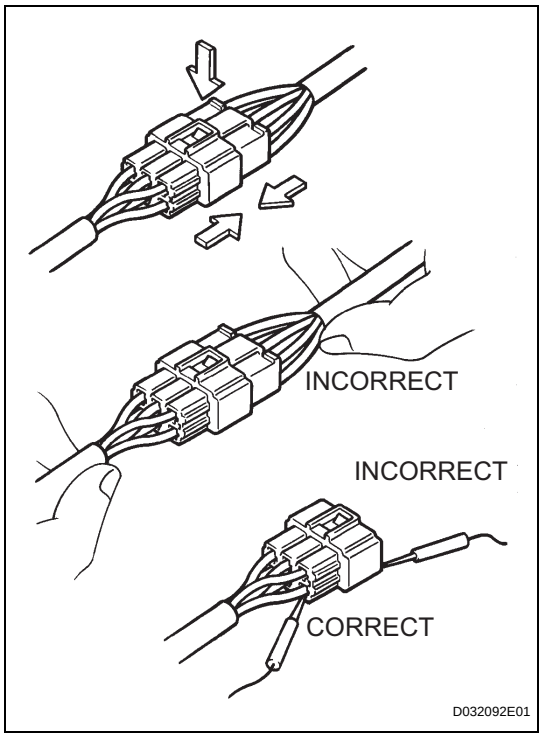

(b) HANDLING CONNECTORS

(1) When disconnecting a connector, first squeeze the mating connector housing halves tightly together to release the lock, and then press the lock claw and separate the connector.

(2) When disconnecting a connector, do not pull on the harnesses. Grasp the connector directly and separate it.

(3) Before connecting a connector, check that there are no deformations, damage, looseness or missing terminals.

(4) When connecting a connector, press firmly until it locks with a "click" sound.

(5) If checking a connector with an intelligent tester, check the connector from the backside (harness side) using a mini test lead.

NOTICE:

- **As a waterproof connector cannot be checked from the backside, check it by connecting a sub-harness.**
- **Do not damage the terminals by moving the inserted tester needle.**

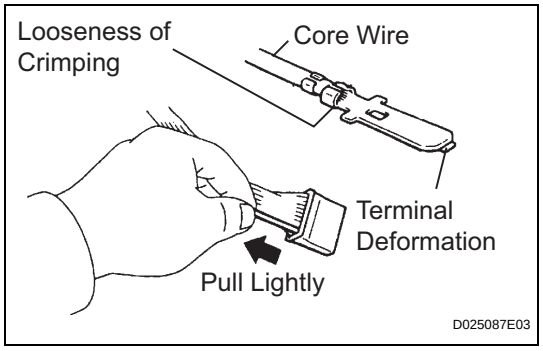

(c) CHECKING CONNECTORS

(1) Checking when a connector is connected: Squeeze the connector together to confirm that they are fully connected and locked.

(2) Checking when a connector is disconnected: Check by pulling the wire harness lightly from the backside of the connector. Look for unlatched terminals, missing terminals, loose crimps or broken conductor wires. Check visually for corrosion, metallic or foreign matter and water, and bent, rusted, overheated, contaminated, or deformed terminals.

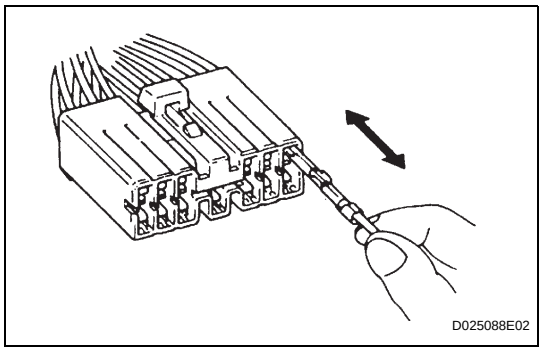

(3) Checking the contact pressure of the terminal: Prepare a spare male terminal. Insert it into a female terminal, and check for ample tension when inserting and after full engagement.
NOTICE:
When testing a gold-plated female terminal, always use a gold-plated male terminal.

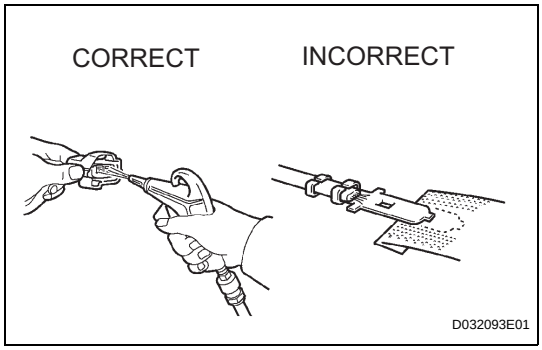

(d) REPAIR METHOD OF CONNECTOR TERMINAL
(1) If there is any foreign matter on the terminal, clean the contact point with compressed air or a cloth. Never rub the contact point using sandpaper as the plating may come off.
(2) If there is abnormal contact pressure, replace the female terminal. If the male terminal is gold-plated (gold color), use a gold-plated female terminal; if it is tin-plated (silver color), use a tin-plated female terminal.
(3) Damaged, deformed, or corroded terminals should be replaced. If the terminal does not lock into the housing, the housing may have to be replaced.

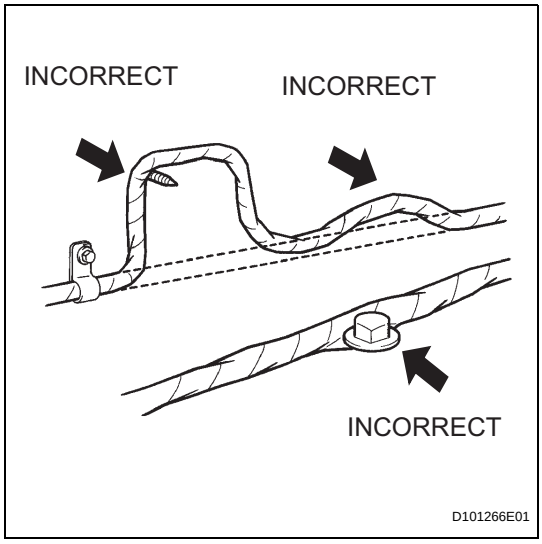

(e) HANDLING OF WIRE HARNESS
(1) If removing a wire harness, check the wiring and clamping before proceeding so that it can be restored in the same way.
(2) Never twist, pull or slacken the wire harness more than necessary.
(3) The wire harness should never come into contact with a high temperature part, or rotating, moving, vibrating or sharp-edged parts. Avoid contact with panel edges, screw tips and other sharp items.
(4) When installing parts, never pinch the wire harness.
(5) Never cut or break the cover of the wire harness. If it is cut or broken, replace it or repair it with vinyl tape.

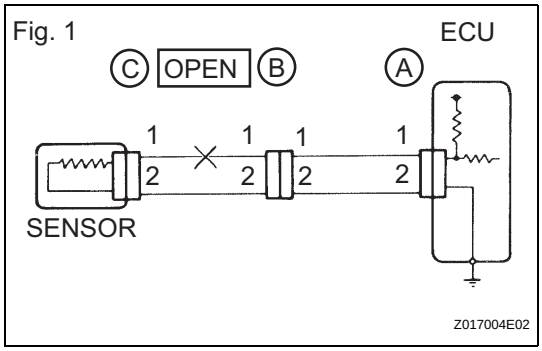

2. CHECK FOR OPEN CIRCUIT
(a) For an open circuit in the wire harness in Fig. 1, the resistance or voltage, as described below.

Fig. 2

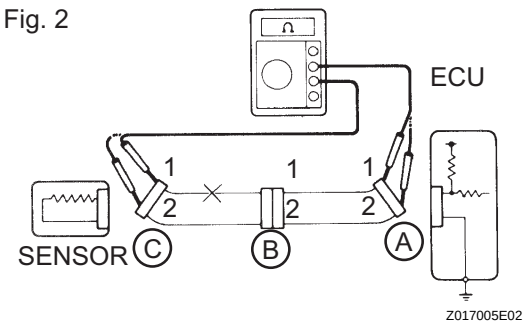

(b) Check the resistance.

(1) Disconnect connectors A and C and measure the resistance between the terminals of the connectors.

Standard resistance (Fig. 2)

Tester Connection	Specified Condition
Connector A terminal 1 - Connector C terminal 1	**10 kΩ or higher**
Connector A terminal 2 - Connector C terminal 2	**Below 1 Ω**

HINT:
Measure the resistance while lightly shaking the wire harness vertically and horizontally. If the results match the examples above, an open circuit exists between terminal 1 of connector A and terminal 1 of connector C.

Fig. 3

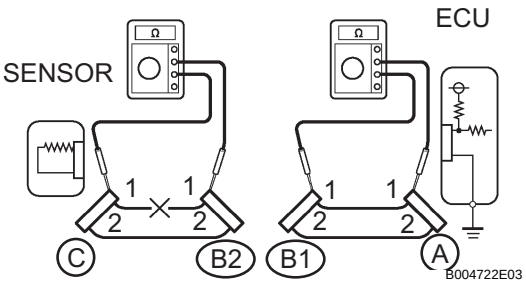

(2) Disconnect connector B and measure the resistance between the terminals of the connectors.

Standard resistance (Fig. 3)

Tester Connection	Specified Condition
Connector A terminal 1 - Connector B1 terminal 1	**Below 1 Ω**
Connector B2 terminal 2 - Connector C terminal 2	**10 kΩ or higher**

If the results match the examples above, an open circuit exists between terminal 1 of connector B2 and terminal 1 of connector C.

Fig. 4

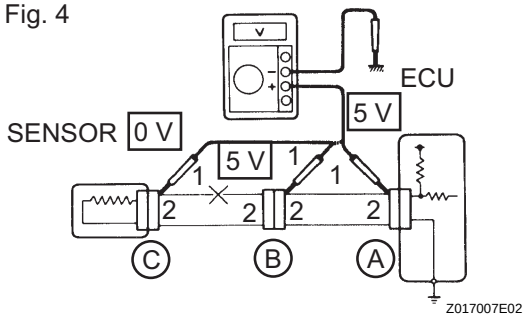

(c) Check the voltage.

(1) In a circuit in which voltage is applied to the ECU connector terminal, an open circuit can be checked by conducting a voltage check.
With each connector still connected, measure the voltage between the body ground and these terminals (in this order): 1) terminal 1 of connector A, 2) terminal 1 of connector B, and 3) terminal 1 of connector C.

Standard voltage (Fig. 4)

Tester Connection	Specified Condition
Connector A terminal 1 - Body ground	**5 V**
Connector B terminal 1 - Body ground	**5 V**
Connector C terminal 1 - Body ground	**Below 1 V**

If the results match the examples above, an open circuit exists in the wire harness between terminal 1 of connector B and terminal 1 of connector C.

Fig. 5

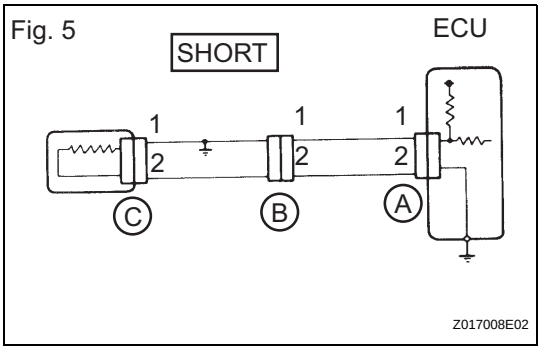

3. CHECK FOR SHORT CIRCUIT

(a) If the wire harness is ground shorted (Fig. 5), locate the section by conducting a resistance check with the body ground (below).

Fig. 6

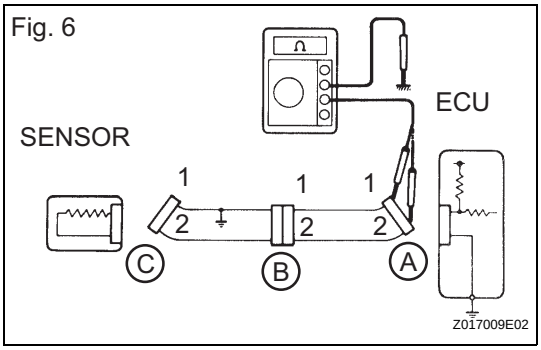

(b) Check the resistance with the body ground.

(1) Disconnect connectors A and C and measure the resistance.

Standard resistance (Fig. 6)

Tester Connection	Specified Condition
Connector A terminal 1 - Body ground	**Below 1 Ω**
Connector A terminal 2 - Body ground	**10 kΩ or higher**

HINT:
Measure the resistance while lightly shaking the wire harness vertically and horizontally. If your results match the examples above, an open circuit exists between terminal 1 of connector A and terminal 1 of connector C.

(2) Disconnect connector B and measure the resistance.

Standard resistance (Fig. 7)

Fig. 7

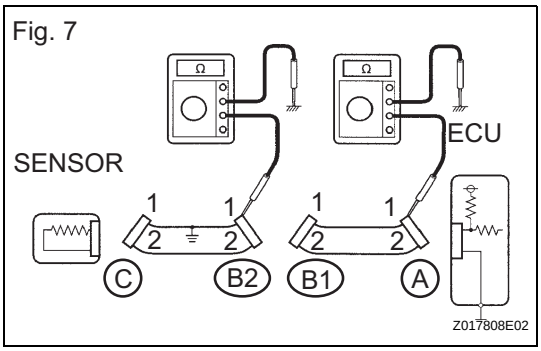

Tester Connection	Specified Condition
Connector A terminal 1 - Body ground	**10 kΩ or higher**
Connector B2 terminal 2 - Body ground	**Below 1 Ω**

If the results match the examples above, a short circuit exists between terminal 1 of connector B2 and terminal 1 of connector C.

4. CHECK AND REPLACE ECU

NOTICE:

- **The connector should not be disconnected from the ECU. Perform the inspection from the backside of the connector on the wire harness side.**
- **When no measuring condition is specified, perform the inspection with the engine stopped and the engine switch on.**
- **Check that the connectors are fully seated. Check for loose, corroded or broken wires.**

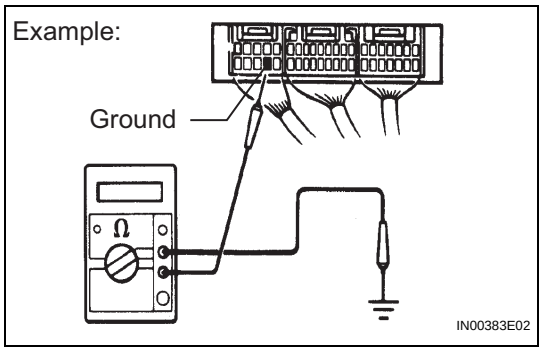

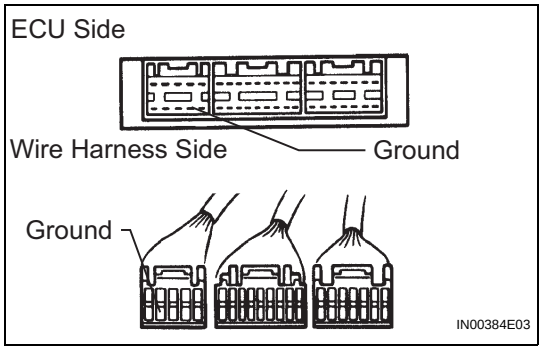

(a) First, check the ECU ground circuit. If it is faulty, repair it. If it is normal, the ECU could be faulty. Temporarily replace the ECU with a normally functioning one and check if the symptoms occur. If the trouble symptoms disappear, replace the original ECU.

(1) Measure the resistance between the ECU ground terminal and body ground.
Standard resistance:
Below 1 Ω

(2) Disconnect the ECU connector. Check the ground terminal on the ECU side and wire harness side for bending, corrosion or foreign matter. Lastly, check the contact pressure of the female terminals.

IN

HOW TO PROCEED WITH TROUBLESHOOTING

1. OPERATION FLOW

HINT:
Perform troubleshooting in accordance with the procedures below. The following is an outline of basic troubleshooting procedures. Confirm the troubleshooting procedures for the circuit you are working on before beginning troubleshooting.

1	VEHICLE BROUGHT TO WORKSHOP

NEXT

2	CUSTOMER PROBLEM ANALYSIS

(a) Ask the customer about the conditions and environment when the problem occurred.

NEXT

3	INSPECT BATTERY VOLTAGE

Standard voltage:
11 to 14 V
If the voltage is below 11 V, recharge or replace the battery before proceeding.

NEXT

4	SYMPTOM CONFIRMATION AND DTC (AND FREEZE FRAME DATA) CHECK

(a) Visually check the wire harnesses, connectors and fuses for open and short circuits.
(b) Warm up the engine to the normal operating temperature.
(c) Confirm the problem symptoms and conditions, and check for DTCs

Result

Result	Proceed to
DTC is output	A
DTC is not output	B

B → **Go to step 6**

A

5	DTC CHART

(a) Check the results obtained in step 4. Then find the output DTC in the DTC chart. Look at the "Trouble Area" column for a list of potentially malfunctioning circuits and/or parts.

NEXT → **Go to step 7**

6	PROBLEM SYMPTOMS CHART

(a) Check the results obtained in step 4. Then find the problem symptoms in the problem symptoms table. Look at the "Suspected Area" column for a list of potentially malfunctioning circuits and/or parts.

NEXT

7	CIRCUIT INSPECTION OR PARTS INSPECTION

(a) Identify the malfunctioning circuit or part.

NEXT

8	ADJUST, REPAIR OR REPLACE

(a) Adjust, repair or replace the malfunctioning circuit or parts.

NEXT

9	CONFIRMATION TEST

(a) After the adjustment, repairs or replacement, confirm that the malfunction no longer exists. If the malfunction does not reoccur, perform a confirmation test under the same conditions and in the same environment as when the malfunction occurred the first time.

NEXT

END

2. CUSTOMER PROBLEM ANALYSIS

HINT:
- In troubleshooting, confirm that the problem symptoms have been accurately identified. Preconceptions should be discarded in order to make an accurate judgment. To clearly understand what the problem symptoms are, it is extremely important to ask the customer about the problem and the conditions at the time the malfunction occurred.
- Gather as much information as possible for reference. Past problems that seem unrelated may also help in some cases.
- The following 5 items are important points in the problem analysis:

What	Vehicle model, system name
When	Date, time, occurrence frequency
Where	Road conditions
Under what conditions?	Running conditions, driving conditions, weather conditions
How did it happen?	Problem symptoms

3. SYMPTOM CONFIRMATION AND DIAGNOSTIC TROUBLE CODE

HINT:
The diagnostic system in the LEXUS ES350 has various functions.
- The first function is the Diagnostic Trouble Code (DTC) check. A DTC is a code stored in the ECU memory whenever a malfunction in the signal circuits to the ECU occurs. In a DTC check, a previous malfunction's DTC can be checked by a technician during troubleshooting.
- Another function is the Input Signal Check, which checks if the signals from various switches are sent to the ECU correctly.
  By using these functions, the problem areas can be narrowed down and troubleshooting is more effective. Diagnostic functions are incorporated in the following system in the LEXUS ES350.

System	DTC Check (Normal Mode)	DTC Check (Check Mode)	Sensor Check/Test Mode (Input Signal Check)	Data List	Active Test
SFI System	○	○		○	○
Smart Access System with Push-button Start (Starting)	○			○	○
Automatic Transaxle System	○	○		○	○
Tire Pressure Warning System	○		○	○	
Vehicle Stability Control System	○		○	○	○
Power Tilt and Power Telescopic Steering Column System	○			○	○
Electric Steering Lock	○			○	○
Air Conditioning System	○			○	○

System	DTC Check (Normal Mode)	DTC Check (Check Mode)	Sensor Check/Test Mode (Input Signal Check)	Data List	Active Test
Pre-collision System	○			○	○
Airbag System	○	○		○	
Occupant Classification System	○			○	
Seat Belt Warning System					○
Theft Deterrent System				○	○
Engine Immobilizer System	○			○	○
Cruise Control System	○			○	
Dynamic Radar Cruise Control System	○			○	
Lighting System	○			○	○
Power Door Lock Control System	○			○	○
Wireless Door Lock Control System	○			○	○
Smart Access System with Push-button Start (Door Lock)	○			○	○
Meter/Gauge System	○			○	○
Navigation System	○				
Intuitive Park Assist System	○			○	○
Power Window Control System	○			○	○
Power Mirror Control System (with Memory)				○	○
Front Power Seat Control System (with Seat Position Memory System)				○	○
Luggage Compartment Door Opener System				○	○
Sliding Roof System	○			○	○
Can Communication System	○				

- In the DTC check, it is very important to determine whether the problem indicated by the DTC either: 1) still occurs, or 2) occurred in the past but has returned to normal. In addition, the DTC should be compared to the problem symptom to see if they are related. For this reason, DTCs should be checked before and after confirmation of symptoms (i.e., whether or not problem symptoms exist) to determine current system conditions, as shown in the flowchart below.

- Never skip the DTC check. Failing to check DTCs may, depending on the case, result in unnecessary troubleshooting for systems operating normally or lead to repairs not related to the problem. Follow the procedures listed in the flowchart in the correct order.
- The following flowchart shows how to proceed with troubleshooting using the DTC check. Directions from the flowchart will indicate how to proceed either to DTC troubleshooting or to the troubleshooting of each problem symptom.

1 DTC CHECK

NEXT

2 MAKE A NOTE OF DTCS DISPLAYED AND THEN CLEAR MEMORY

NEXT

3 SYMPTOM CONFIRMATION

Result

Result	Proceed to
No symptoms exist	A
Symptoms exist	B

B → **Go to step 5**

A

4 SIMULATION TEST USING SYMPTOM SIMULATION METHODS

NEXT

5 DTC CHECK

Result

Result	Proceed to
DTC is not output	A
DTC is output	B

B → **TROUBLESHOOTING OF PROBLEM INDICATED BY DTC**

A

6	SYMPTOM CONFIRMATION

Result

Result	Proceed to
No symptoms exist	A
Symptoms exist	B

If a DTC was displayed in the initial DTC check, the problem may have occurred in a wire harness or connector in that circuit in the past. Check the wire harness and connectors.

B → **SYSTEM NORMAL**

A

TROUBLESHOOTING OF EACH PROBLEM SYMPTOM

The problem still occurs in a place other than the diagnostic circuit (the DTC displayed first is either for a past problem or a secondary problem).

4. SYMPTOM SIMULATION

HINT:

The most difficult case in troubleshooting is when no problem symptoms occur. In such a case, a thorough problem analysis must be carried out. A simulation of the same or similar conditions and environment in which the problem occurred in the customer's vehicle should be carried out. No matter how much skill or experience a technician has, troubleshooting without confirming the problem symptoms will lead to important repairs being overlooked and mistakes or delays.

For example:

With a problem that only occurs when the engine is cold or as a result of vibration caused by the road during driving, the problem can never be determined if the symptoms are being checked on a stationary vehicle or a vehicle with a warmed-up engine. Vibration, heat or water penetration (moisture) are difficult to reproduce. The symptom simulation tests below are effective substitutes for the conditions and can be applied to a stationary vehicle. Important points in the symptom simulation test:

In the symptom simulation test, the problem symptoms as well as the problem area or parts must be confirmed. First, narrow down the possible problem circuits according to the symptoms. Then, connect the tester and carry out the symptom simulation test, judging whether the circuit being tested is defective or normal. Also, confirm the problem symptoms at the same time. Refer to the problem symptoms table for each system to narrow down the possible causes.

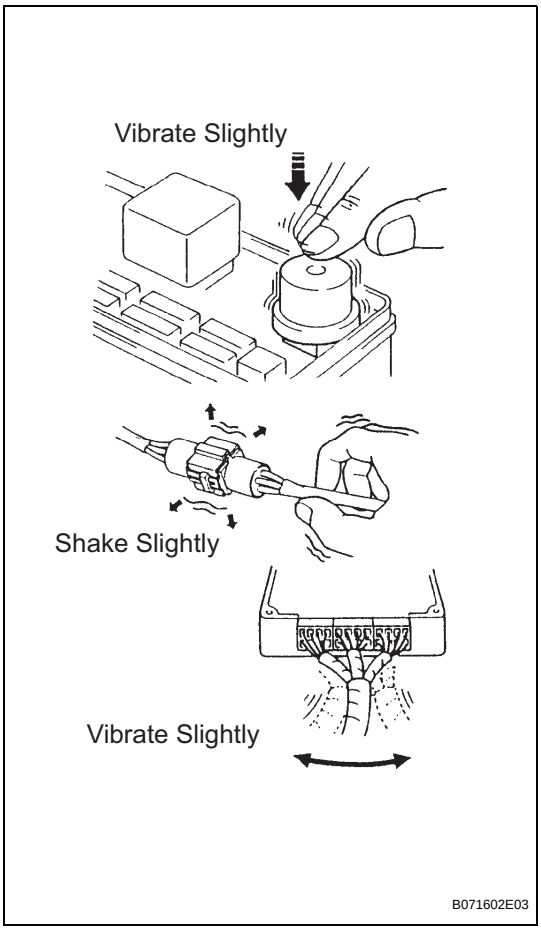

(a) VIBRATION METHOD: When a malfunction seems to occur as a result of vibration.
  (1) PART AND SENSOR
    Apply slight vibration with a finger to the part of the sensor suspected to be the cause of the problem, and check whether the malfunction occurs.
    NOTICE:
    Applying strong vibration to relays may open relays.
  (2) CONNECTORS
    Slightly shake the connector vertically and horizontally.
  (3) WIRE HARNESS
    Slightly shake the wire harness vertically and horizontally.
    HINT:
    The connector joint and fulcrum of the vibration are the major areas that should be checked thoroughly.

(b) HEAT METHOD: When a malfunction seems to occur when the area in question is heated.
  (1) Heat the component that is the possible cause of the malfunction with a hair dryer or similar device. Check if the malfunction occurs.
    NOTICE:
    - **Do not heat to more than 60°C (140°F). Exceeding this temperature may damage the components.**
    - **Do not apply heat directly to the parts in the ECU.**

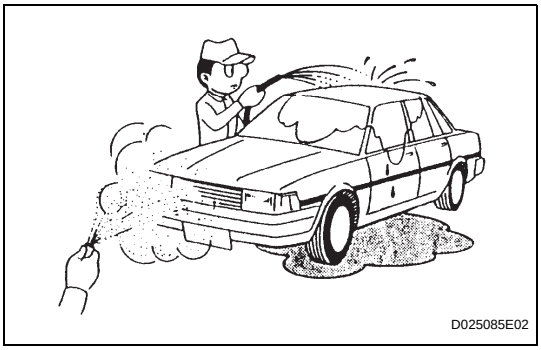

(c) WATER SPRINKLING METHOD: When a malfunction seems to occur on a rainy day or in high-humidity.
  (1) Sprinkle water onto the vehicle and check if the malfunction occurs.
    NOTICE:
    - **Never sprinkle water directly into the engine compartment. Indirectly change the temperature and humidity by spraying water onto the front of the radiator.**
    - **Never apply water directly onto the electronic components.**

HINT:
If the vehicle has or had a water leakage problem, the leakage may have damaged the ECU or connections. Look for evidence of corrosion or short circuits. Proceed with caution during water tests.

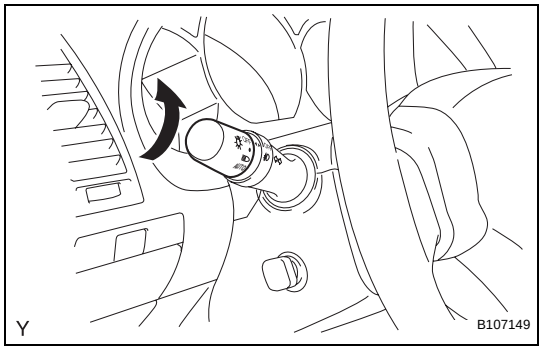

(d) HIGH ELECTRICAL LOAD METHOD: When a malfunction seems to occur when an electrical load is excessive.
(1) Turn on the heater blower, headlight, rear window defogger and all other electrical loads. Check if the malfunction reoccurs.

5. DIAGNOSTIC TROUBLE CODE CHART

Look for output Diagnostic Trouble Codes (DTCs) (from the DTC checks) in the appropriate section's Diagnostic Trouble Code Chart. Use the chart to determine the trouble area and the proper inspection procedure. A description of each of the chart's columns is shown in the table below.

Item	Description
DTC No.	Indicates the diagnostic trouble code
Detection Item	Indicates the system or details of the problem
Trouble Area	Indicates the suspected areas of the problem
See Page	Indicates the page where the inspection procedures for each circuit is to be found, or gives instruction for checking and repairs.

6. PROBLEM SYMPTOMS TABLE

When a "Normal" code is output during a DTC check but the problem still occurs, use the Problem Symptoms Table. The suspected areas (circuits or parts) for each problem symptoms are in the table. The suspected areas are listed in order of probability. A description of each of the chart's columns is shown in the table below.
HINT:
In some cases, the problem is not detected by the diagnostic system even though a problem symptom occurs. It is possible that the problem occurs outside the detection range of the diagnostic system, or that the problem occurs in a completely different system.

Item	Description
Problem Symptom	-
Circuit Inspection, Inspection Order	Indicates the order in which the circuits need to be checked
Circuit or Part Name	Indicates the circuit or part which needs to be checked
See Page	Indicates the page where the flowchart for each circuit is located

7. CIRCUIT INSPECTION

A description of the main areas of each circuit inspection is shown in the table below.

Item	Description
Circuit Description	The major role, operation of the circuit and its component parts are explained.
Diagnostic Trouble Code No. and Detection Item	Indicates the diagnostic trouble codes, diagnostic trouble code settings and suspected areas for a problem

Item	Description
Wiring Diagram	This shows a wiring diagram of the circuit. Use this diagram together with ELECTRICAL WIRING DIAGRAM to thoroughly understand the circuit. Wire colors are indicated by an alphabetical code. B = Black, L = Blue, R = Red, BR = Brown, LG = Light Green, V = Violet, G = Green, O = Orange, W = White, GR = Gray, P = Pink, Y = Yellow, SB = Sky Blue The first letter indicates the basic wire color and the second letter indicates the color of the stripe.
Inspection Procedures	Use the inspection procedures to determine if the circuit is normal or abnormal. If abnormal, use the inspection procedures to determine whether the problem is located in the sensors, actuators, wire harnesses or ECU.
Indicates the condition of the connector of the ECU during the check	Connector being checked is connected. Connections of tester are indicated by (+) or (-) after the terminal name. Connector being checked is disconnected. The inspections between a connector and body ground, information about the body ground is not shown in the illustration.

ON-VEHICLE INSPECTION

1. INSPECT COOLING FAN SYSTEM

(a) Put the vehicle in the following conditions:
  (1) The engine switch is off.
  (2) The coolant temperature is less than 95°C (203°F).
  (3) The battery voltage is between 9 and 14 V.
  (4) The A/C switch is OFF.

(b) Connect the 400 A probe of the ammeter to terminals M+ (M) and M+ (S) of the cooling fan motor.

(c) Turn the engine switch on (IG) and wait for approximately 10 seconds. Check that the fan stops.

(d) Start the engine. Check that the fan stops with the engine idling.
HINT:
- Make sure that the radiator engine coolant temperature is less than 95°C (203°F).
- Turn the A/C switch OFF.

(e) Check that the fan operates when the A/C switch is turned ON (MAX COOL and the magnetic clutch is operating).
Standard current : Without trailer hitch

Item	Specified Condition
Cooling fan motor	2 to 8 A
Cooling fan motor No. 2	2 to 8 A

Standard current : With trailer hitch

Item	Specified Condition
Cooling fan motor	2 to 11 A
Cooling fan motor No. 2	2 to 11 A

HINT:
The coolant temperature is less than 95°C (203°F).

(f) Check that the fan operates when the engine coolant temperature sensor connector is disconnected.
Standard current : Without trailer hitch

Item	Specified Condition
Cooling fan motor	2 to 11 A
Cooling fan motor No. 2	2 to 11 A

Standard current : With trailer hitch

Item	Specified Condition
Cooling fan motor	2 to 15 A
Cooling fan motor No. 2	2 to 15 A

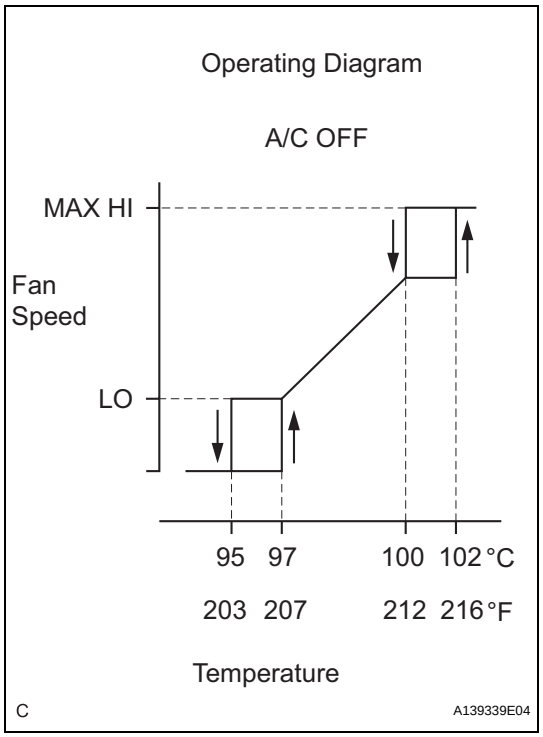

(g) After the engine is warmed up, check that the fan operates as shown in the illustration on the left.
HINT:
- The coolant temperature at which the fan starts operating is approximately 95°C (203°F).
- This system can also be checked using the intelligent tester.
- Select the following menu items: Power train / Engine / Data List / Initial Engine Coolant Temp.

REMOVAL

1. **REMOVE ENGINE ASSEMBLY WITH TRANSAXLE** (See page EM-22)
2. **REMOVE VANE PUMP ASSEMBLY (See page EM-29)**
3. **INSTALL ENGINE HANGER (See page EM-29)**
4. **REMOVE FRONT FRAME ASSEMBLY (See page EM-29)**
5. **REMOVE FRONT DRIVE SHAFT ASSEMBLY LH (See page DS-6)**
6. **REMOVE FRONT DRIVE SHAFT ASSEMBLY RH (See page DS-7)**
7. **REMOVE ENGINE WIRE**
8. **REMOVE STARTER ASSEMBLY (See page ST-145)**
9. **REMOVE AUTOMATIC TRANSAXLE ASSEMBLY** (See page AX-215)
10. **REMOVE DRIVE PLATE AND RING GEAR SUB-ASSEMBLY (See page EM-11)**
11. **SECURE ENGINE (See page EM-30)**
12. **REMOVE INTAKE AIR SURGE TANK ASSEMBLY (See page FU-12)**
13. **REMOVE IGNITION COIL ASSEMBLY (See page EM-30)**
14. **REMOVE NO. 2 ENGINE MOUNTING STAY RH (See page EM-30)**
15. **REMOVE EXHAUST MANIFOLD SUB-ASSEMBLY RH (See page EM-31)**
16. **REMOVE OIL LEVEL GAUGE GUIDE SUB-ASSEMBLY (See page EM-31)**
17. **REMOVE NO. 2 MANIFOLD STAY (See page EM-31)**
18. **REMOVE NO. 2 EXHAUST MANIFOLD HEAT INSULATOR (See page EM-31)**
19. **REMOVE EXHAUST MANIFOLD SUB-ASSEMBLY LH (See page EM-32)**
20. **REMOVE ENGINE MOUNTING BRACKET RH (See page EM-32)**
21. **REMOVE V-RIBBED BELT TENSIONER ASSEMBLY (See page EM-32)**
22. **REMOVE NO. 2 TIMING GEAR COVER (See page EM-32)**
23. **REMOVE NO. 2 IDLER PULLEY SUB-ASSEMBLY (See page EM-33)**
24. **REMOVE WATER PUMP PULLEY (See page CO-8)**

25. **REMOVE RADIO SETTING CONDENSER (See page EM-33)**
26. **REMOVE NO. 1 VACUUM SWITCHING VALVE ASSEMBLY (See page EM-34)**
27. **REMOVE NO. 1 OIL PIPE (See page EM-63)**
28. **REMOVE OIL PIPE (See page EM-63)**
29. **REMOVE CRANKSHAFT PULLEY (See page EM-65)**
30. **REMOVE NO. 1 ENGINE MOUNTING BRACKET FRONT LH (See page EM-66)**
31. **REMOVE WATER INLET HOUSING (See page EM-66)**
32. **REMOVE CYLINDER HEAD COVER SUB-ASSEMBLY RH (See page EM-67)**
33. **REMOVE CYLINDER HEAD COVER SUB-ASSEMBLY LH (See page EM-67)**
34. **REMOVE NO. 2 OIL PAN SUB-ASSEMBLY (See page EM-68)**
35. **REMOVE OIL STRAINER SUB-ASSEMBLY (See page EM-68)**
36. **REMOVE OIL PAN SUB-ASSEMBLY (See page EM-68)**
37. **REMOVE TIMING CHAIN COVER SUB-ASSEMBLY**
    (a) Remove the 23 bolts and 2 nuts as shown in the illustration.

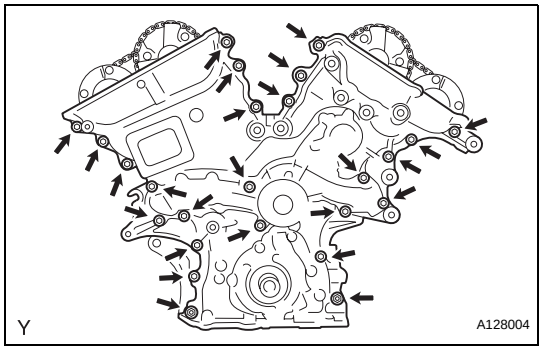

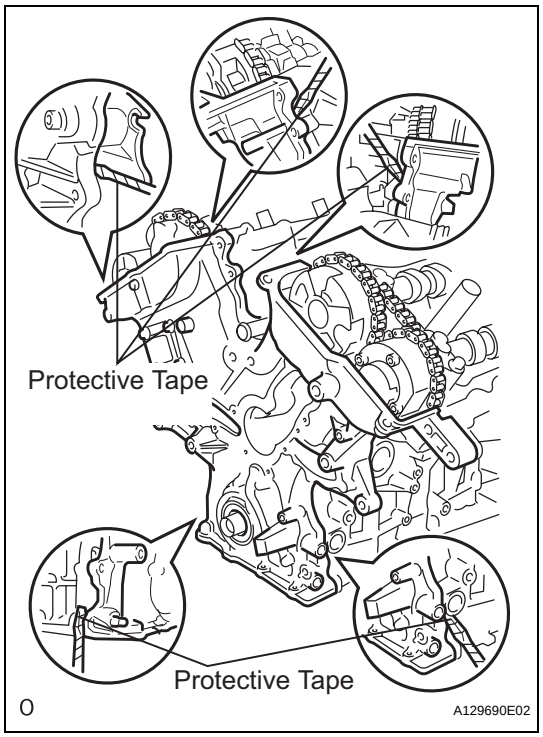

(b) Remove the timing chain cover by prying between the timing chain cover and cylinder head or cylinder block with a screwdriver.
NOTICE:
Be careful not to damage the contact surfaces of the cylinder head, cylinder block and chain cover.
HINT:
Tape the screwdriver tip before use.

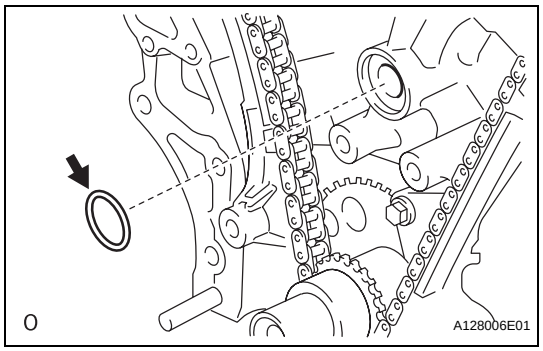

(c) Remove the gasket.

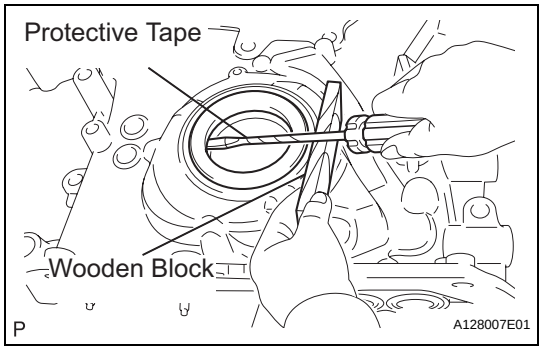

38. REMOVE TIMING CHAIN CASE OIL SEAL

(a) Using a screwdriver, pry out the oil seal.
HINT:
Tape the screwdriver tip before use.

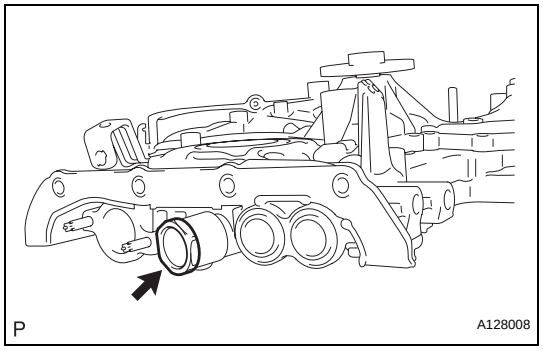

DISASSEMBLY

1. REMOVE OIL PUMP RELIEF VALVE

(a) Using a 27 mm socket wrench, remove the relief valve plug.

(b) Remove the valve spring and oil pump relief valve.

ON-VEHICLE INSPECTION

NOTICE:
In this section, the terms "cold" and "hot" refer to the temperature of the coils. "Cold" means approximately -10°C (14°F) to 50°C (122°F). "Hot" means approximately 50°C (122°F) to 100°C (212°F).

1. INSPECT IGNITION COIL ASSEMBLY

(a) Check for DTCs.
NOTICE:
If any DTC is present, perform troubleshooting in accordance with the procedures for that DTC.

(b) Check that sparks occur.

(1) Remove the intake air surge tank (See page FU-12).

(2) Remove the No. 1 surge tank stay (see page IG-8).

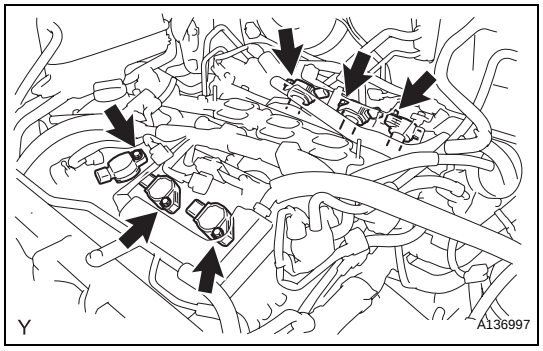

(3) Disconnect the 6 ignition coil connectors and remove the 6 bolts and 6 ignition coils.

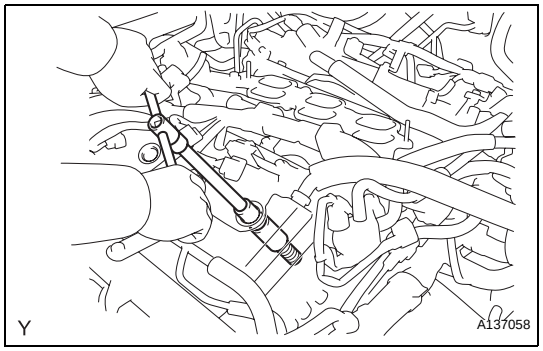

(4) Using a 16 mm (0.63 in.) plug wrench, remove the 6 spark plugs.

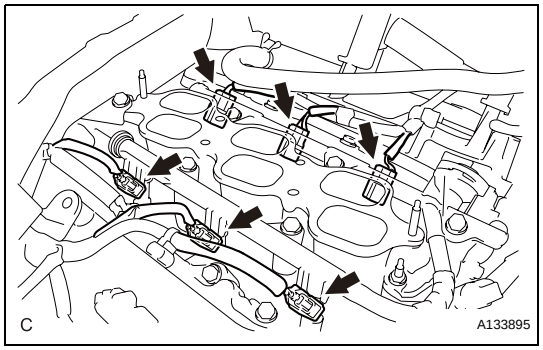

(5) Disconnect the 6 fuel injector connectors.

(6) Install the spark plugs to each ignition coil, and connect the ignition coil connectors.

IG

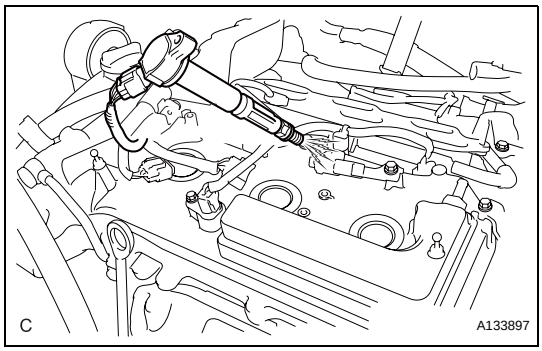

(7) Ground the spark plugs.

(8) Check if a spark occurs at each spark plug while the engine is being cranked.

NOTICE:

- **Be sure to ground the spark plugs when checking.**
- **Replace the ignition coil if it receives an impact.**
- **Do not crank the engine for more than 2 seconds.**

(c) Perform the spark test according to the flowchart below.

(1) Check that the ignition coil connector is securely connected.

Result

Result	Proceed to
NG	Connect securely
OK	Go to next step

(2) Perform a speak test on each ignition coil.

1. Replace the ignition coil with a normal one.
2. Perform the spark test again.

Result

Result	Proceed to
OK	Replace ignition coil
NG	Go to next step

IG

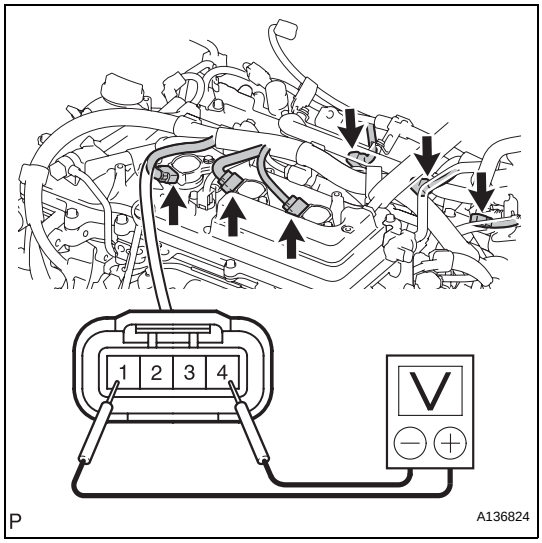

(3) Check the power supply to the ignition coil.

1. Turn the engine switch on (IG).
2. Measure the voltage between the terminals of the wire harness side connector.

Standard voltage

Tester Connection	Specified Condition
1 (+B) - 4 (GND)	9 to 14 V

Result

Result	Proceed to
NG	Check wiring between engine switch and ignition coil
OK	Go to next step

(4) Measure the resistance of the crankshaft position sensor.

Standard resistance

Temperature	Specified Condition
Cold	1,630 to 2,740 Ω
Hot	2,065 to 3,225 Ω

Result

Result	Proceed to
NG	Replace crankshaft position sensor
OK	Go to next step

(5) Check the IGT signal from the ECM.
Result

Result	Proceed to
NG	Check ECM (See page ES-230)
OK	Repair wiring between ignition coil and ECM

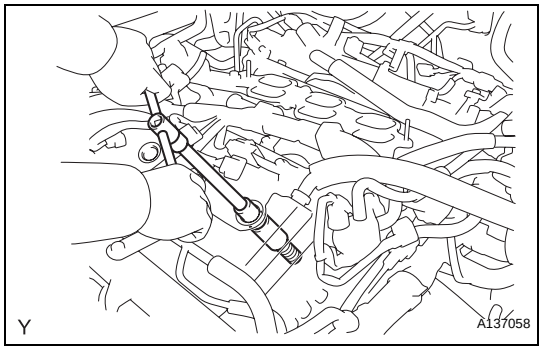

(d) Using a 16 mm (0.63 in.) plug wrench, install the spark plugs.
Torque: 18 N*m (184 kgf*cm, 13 ft.*lbf)

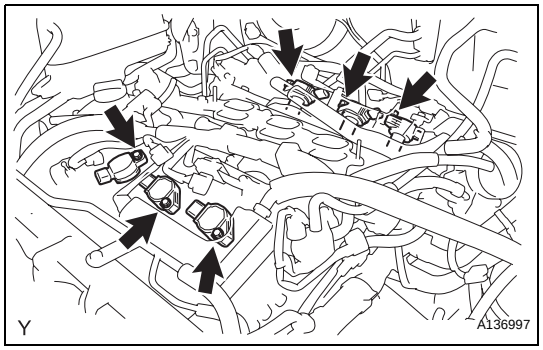

(e) Install the 6 ignition coils with the 6 bolts and connect the 6 ignition coil connectors.
Torque: 10 N*m (102 kgf*cm, 7 ft.*lbf)

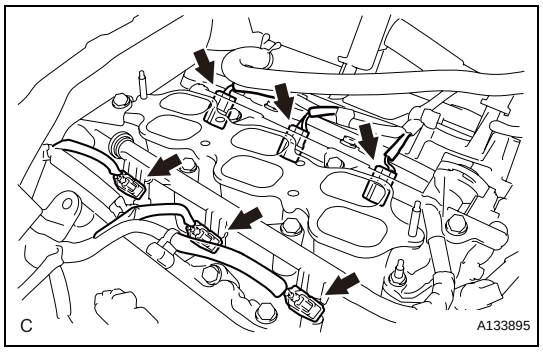

(f) Connect the 6 fuel injector connectors.
(g) Install the No. 1 surge tank stay (See page IG-9).
(h) Install the intake air surge tank (See page FU-17).

2. INSPECT SPARK PLUG
NOTICE:
- **Never use a wire brush for cleaning.**
- **Never attempt to adjust the electrode gap on a used spark plug.**

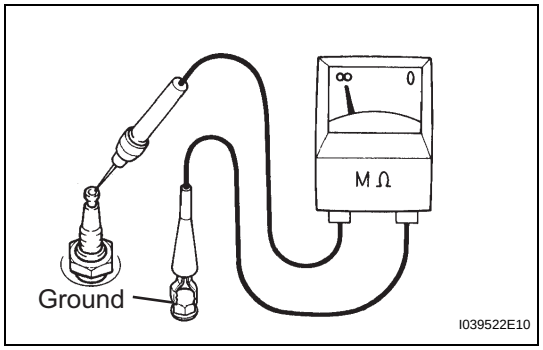

(a) Check the electrode.
(1) Using a megohmmeter, measure the insulation resistance.
Standard insulation resistance:
10 MΩ or higher
HINT:
- If the result is 10 MΩ or less, clean the plug and measure the resistance again.
- If a megohmmeter is not available, perform the following simple inspection instead.

(b) Alternative inspection method:
(1) Quickly accelerate the engine to 4,000 rpm 5 times.
(2) Remove the spark plugs.

IG

(3) Visually check the spark plug.
If the electrode is dry, the spark plug is functioning properly. If the electrode is damp, proceed to the next step.

(c) Check the spark plug for any damage to its threads and insulator. If there is damage, replace the spark plug.
Require spark plug

Manufacturer	Spark plug type
DENSO made	FK20HR11

NOTICE:
Use only the listed spark plug or equivalent to ensure engine performance and smooth driveability.

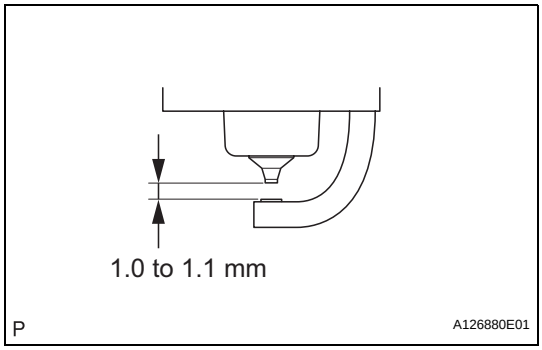

(d) Check the spark plug electrode gap.
Maximum electrode gap for a used spark plug:
1.4 mm (0.055 in.)
If the gap is greater than the maximum, replace the spark plug.
Electrode gap for a new spark plug:
1.0 to 1.1 mm (0.039 to 0.043 in.)

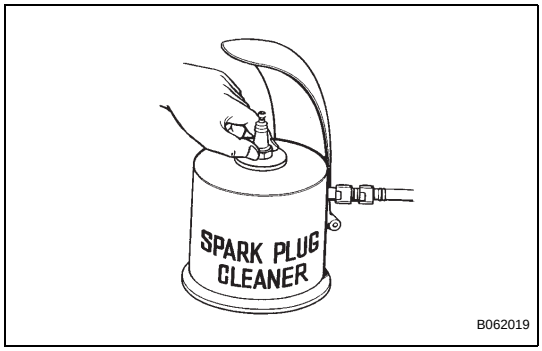

(e) Clean the spark plugs.
If the electrode has traces of wet carbon, clean the electrode with a spark plug cleaner and then dry it.
Standard air pressure:
588 kPa (6 kgf*cm^2, 85 psi)
Standard duration:
20 seconds or less
HINT:
Only use the spark plug cleaner when the electrode is free of oil. If the electrode has traces of oil, use gasoline to clean off the oil before using the spark plug cleaner.

PARTS LOCATION

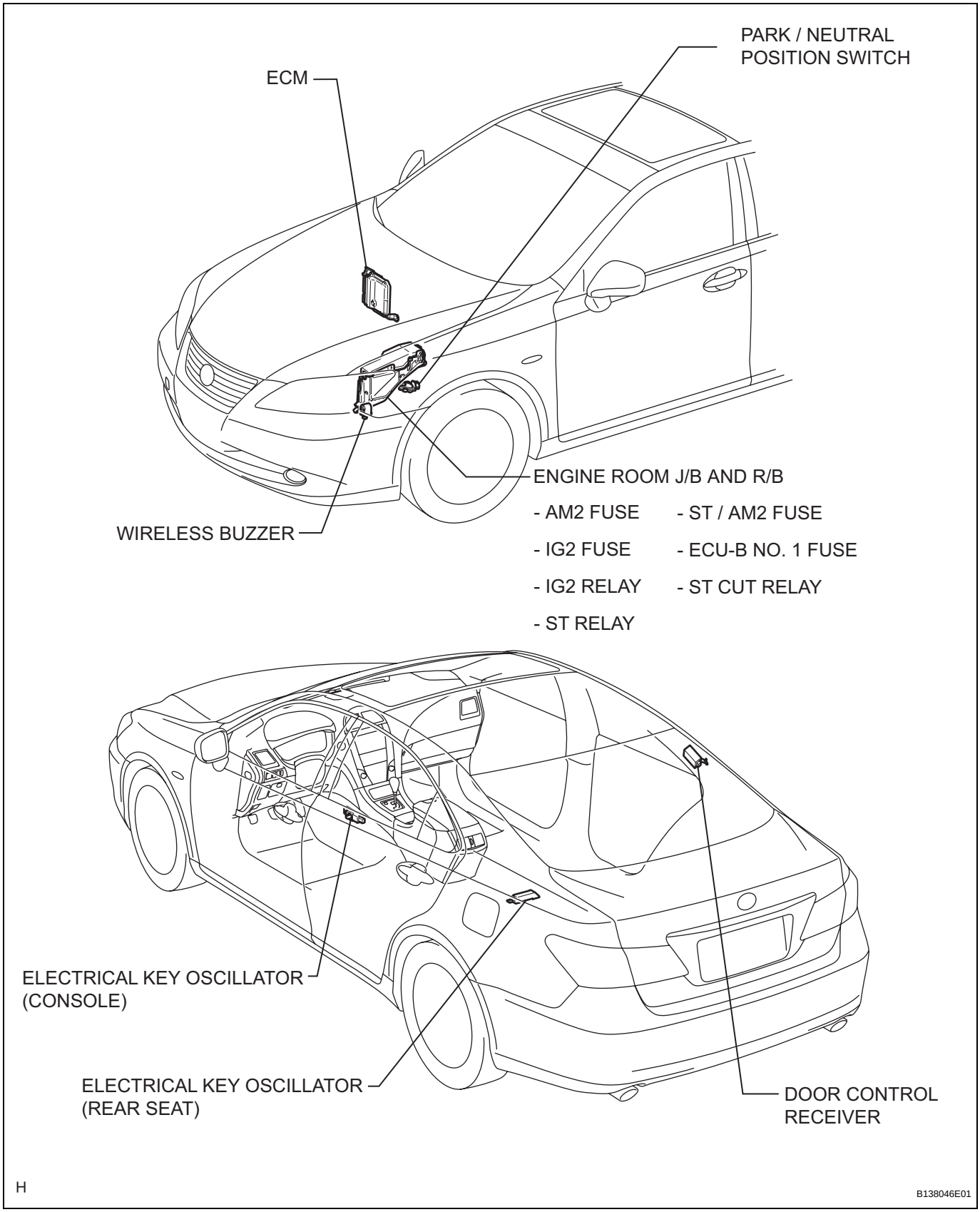

ST

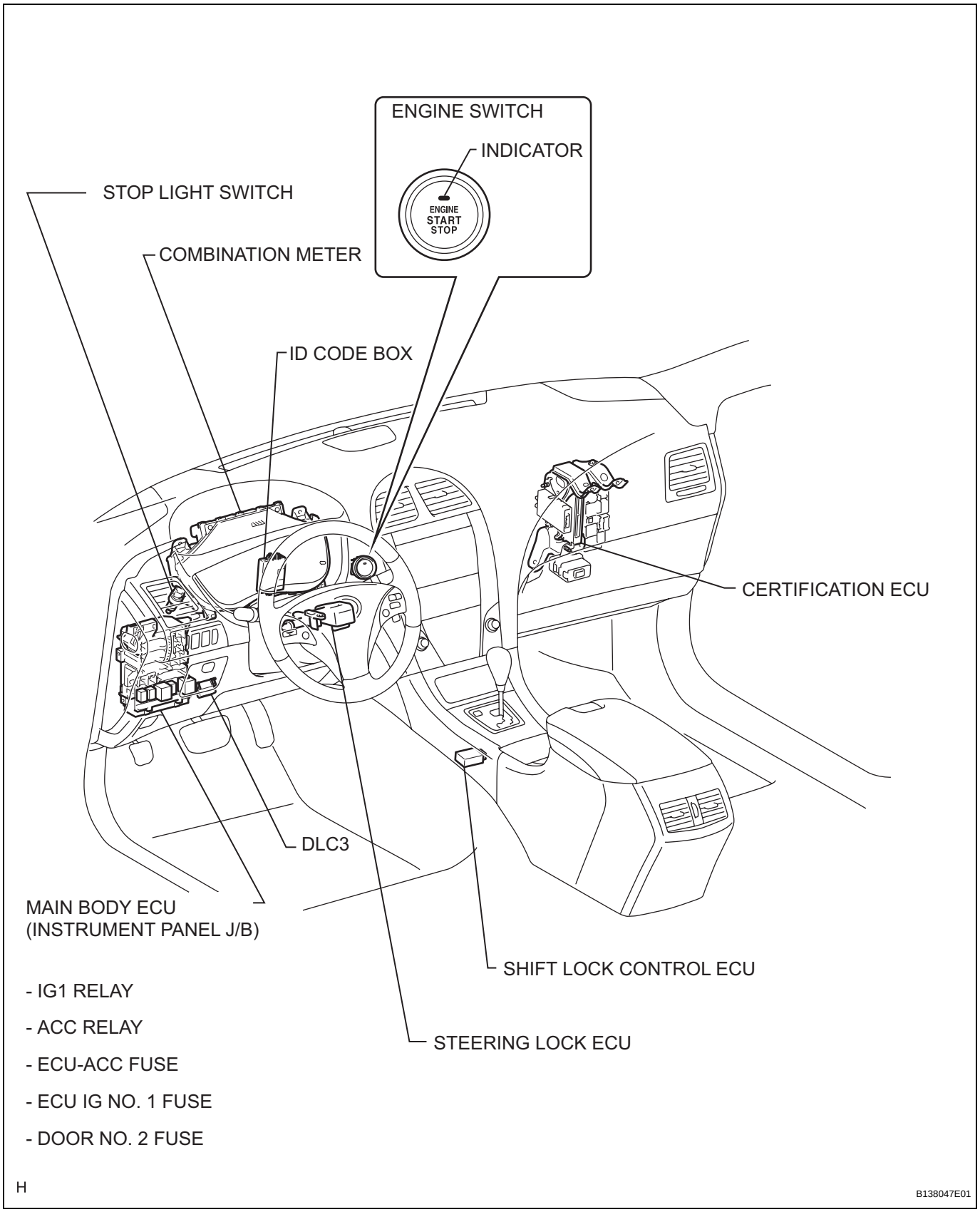
ENGINE SWITCH
INDICATOR
ENGINE
START
STOP
STOP LIGHT SWITCH
COMBINATION METER
ID CODE BOX
CERTIFICATION ECU
DLC3
MAIN BODY ECU
(INSTRUMENT PANEL J/B)
SHIFT LOCK CONTROL ECU
STEERING LOCK ECU
- IG1 RELAY
- ACC RELAY
- ECU-ACC FUSE
- ECU IG NO. 1 FUSE
- DOOR NO. 2 FUSE
H
B138047E01

ST

SYSTEM DIAGRAM

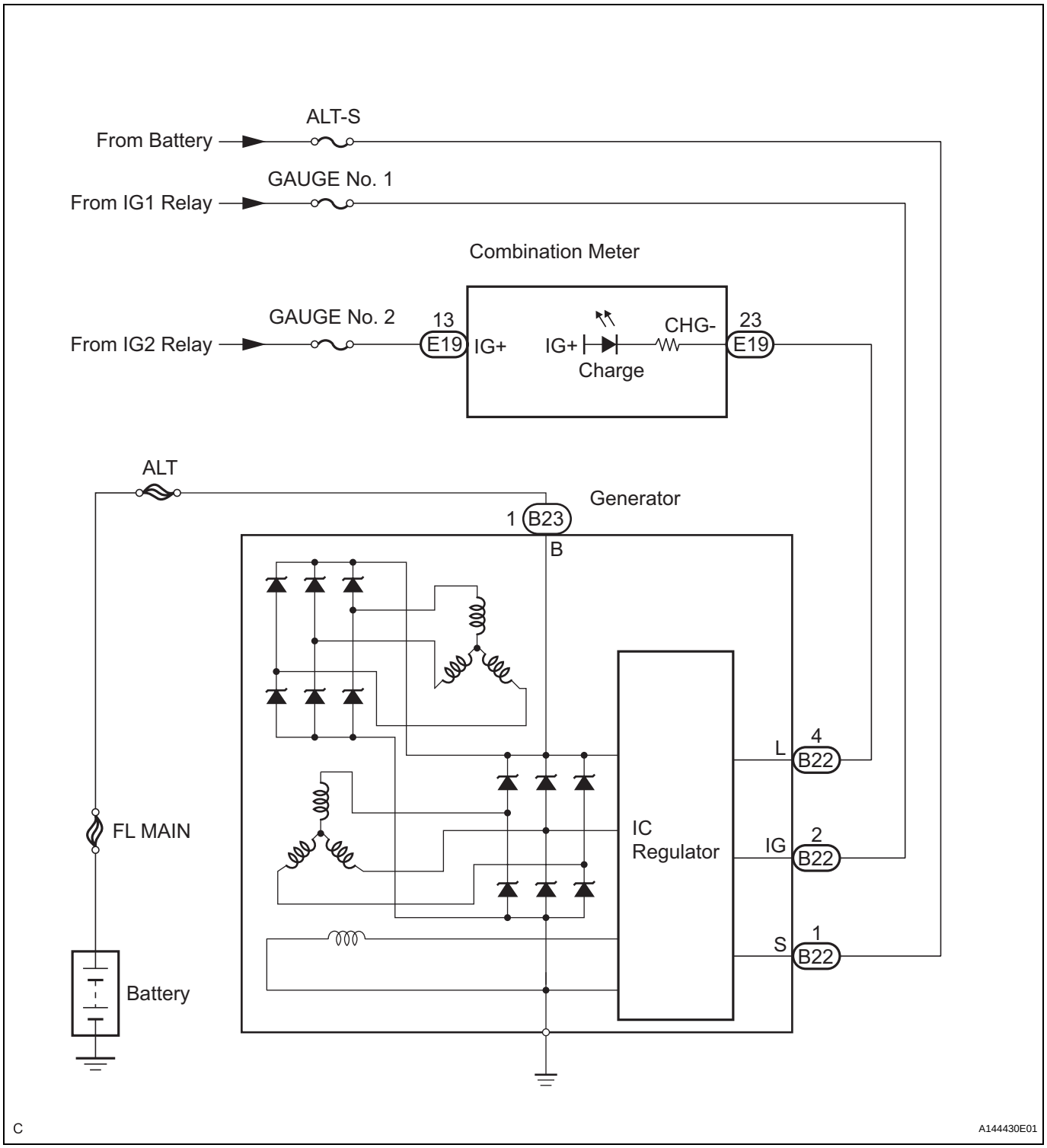

CH

PROBLEM SYMPTOMS TABLE

Result

Symptom	Suspected Area	See page
Charge Warning Light Comes ON while Driving	1. Clutch pulley	CH-7
	2. Generator assembly	
Noise Occurs from Generator while Engine is Running	1. V-ribbed belt	CH-8
	2. Clutch pulley	
	3. Generator assembly	

DEFINITION OF TERMS

Term	Definition
Monitor description	Description of what the TCM monitors and how it detects malfunctions (monitoring purpose and its details).
Related DTCs	Diagnostic code
Typical enabling condition	Preconditions that allow the TCM to detect malfunctions. With all preconditions satisfied, the TCM sets the DTC when the monitored value(s) exceeds the malfunction threshold(s).
Sequence of operation	The priority order that is applied to monitoring, if multiple sensors and components are used to detect the malfunction. While another sensor is being monitored, the next sensor or component will not be monitored until the previous monitoring has concluded.
Required sensor/components	The sensors and components that are used by the TCM to detect malfunctions.
Frequency of operation	The number of times that the TCM checks for malfunctions per driving cycle. "Once per driving cycle" means that the TCM detects malfunction only one time during a single driving cycle. "Continuous" means that the TCM detects malfunction every time when the enabling conditions are met.
Duration	The minimum time that the TCM must sense a continuous deviation in the monitored value(s) before setting a DTC. This timing begins after the "typical enabling conditions" are met.
Malfunction thresholds	Beyond this value, the TCM will conclude that there is a malfunction and set a DTC.
MIL operation	MIL illumination timing after a defect is detected. "Immediately" means that the TCM illuminates MIL the instant the TCM determines that there is a malfunction. "2 driving cycle" means that the TCM illuminates MIL if the same malfunction is detected again in the 2nd driving cycle.
Component operating range	Normal operation range of sensors and solenoids under normal driving conditions. Use these ranges as a reference. They cannot be used to judge if a sensor or solenoid is defective.

PARTS LOCATION

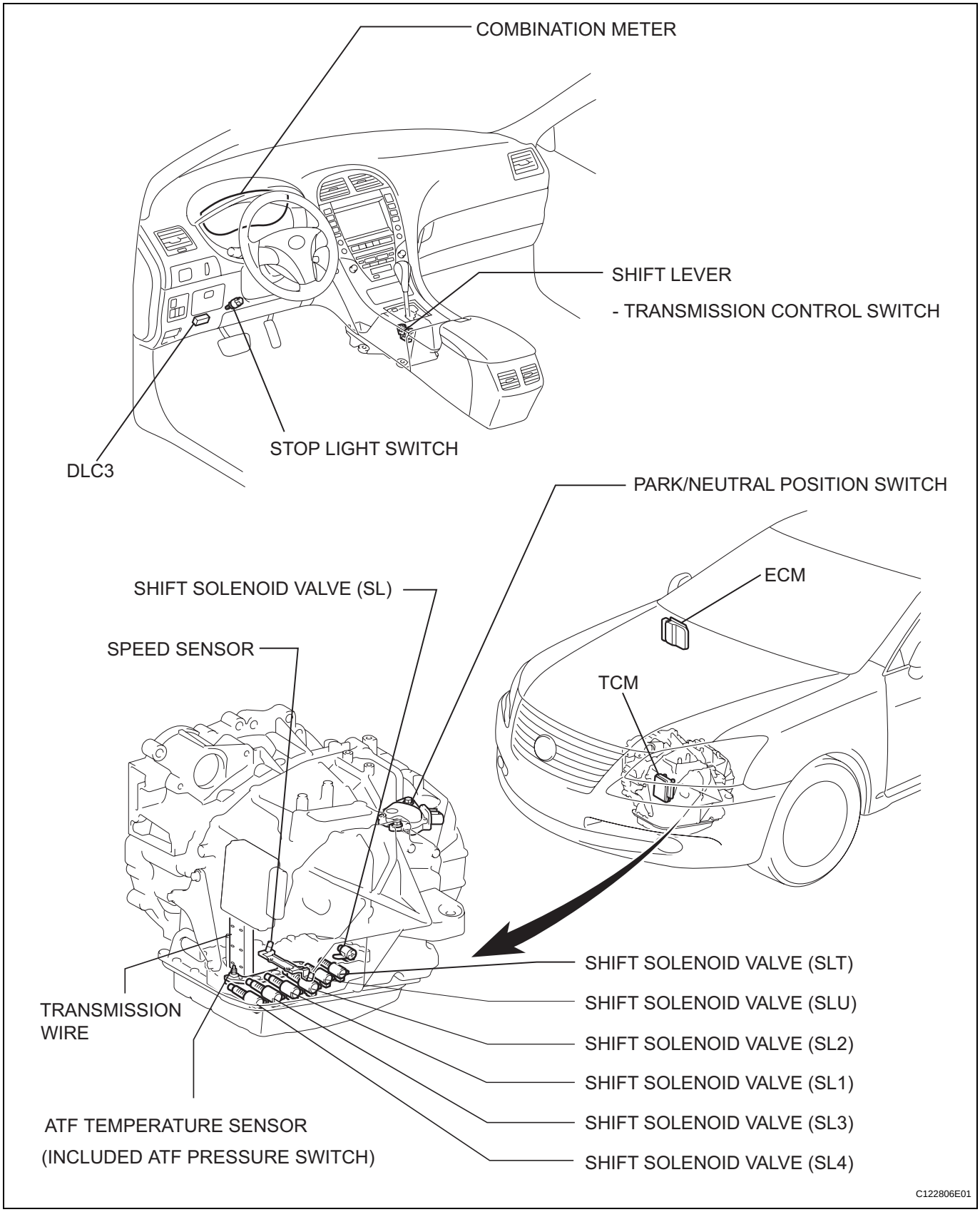

AX

REMOVAL

NOTICE:

- **When the automatic transaxle is replaced, the transaxle's compensation code must be input into the TCM (See page AX-18).**
- **When the TCM is replaced, the existing transaxle compensation codes must be input into the new TCM (See page AX-21).**
- **If the following parts have been replaced, initialize the TCM and perform a road test to allow the TCM to learn (See page AX-24).**
  - **Valve body assembly**
  - **Shift solenoid SL3**
  - **Shift solenoid SL4**
- **If the following parts have been replaced, perform a road test to allow the TCM to learn (See page AX-24).**
  - **Shift solenoid SL1**
  - **Shift solenoid SL2**
- **If the TCM or transaxle has been replaced, register the transmission compensation code in the TCM (See page AX-18).**
- **Perform RESET MEMORY (AT initialization) when replacing the automatic transmission assembly, engine assembly or ECM (See page AX-24).**

1. **DISCHARGE FUEL SYSTEM PRESSURE**
   HINT:
   (See page FU-1)
2. **DISCONNECT CABLE FROM NEGATIVE BATTERY TERMINAL**
3. **PLACE FRONT WHEELS FACING STRAIGHT AHEAD**
4. **REMOVE FRONT WHEELS**
5. **REMOVE ENGINE UNDER COVER LH**
6. **REMOVE ENGINE UNDER COVER RH**
7. **REMOVE FRONT FENDER APRON SEAL RH**
8. **DRAIN ENGINE OIL**
9. **DRAIN ENGINE COOLANT (See page CO-5)**
10. **DRAIN AUTOMATIC TRANSAXLE FLUID**
    (a) Remove the refill plug and gasket.

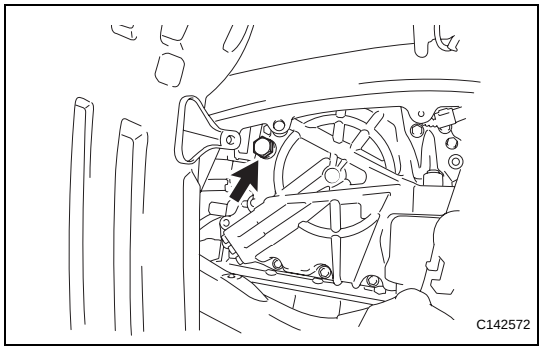

AX

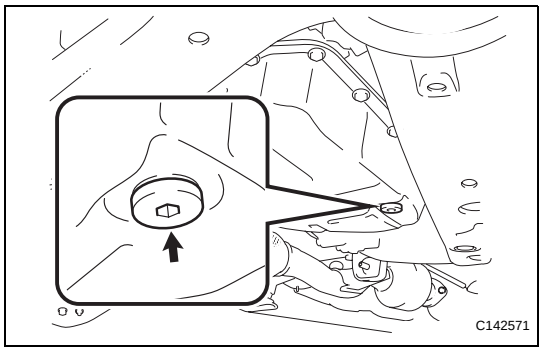

(b) Using a 6 mm socket hexagon wrench, remove the overflow plug and gasket.

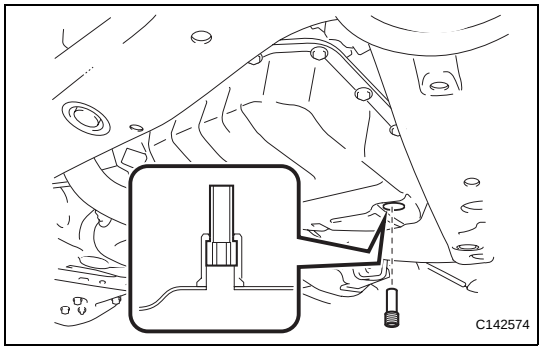

(c) Using a 6 mm socket hexagon wrench, remove the No. 1 transmission oil filler tube.

(d) Drain the automatic transaxle fluid.

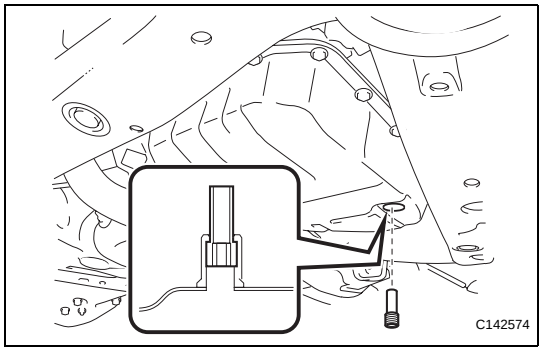

(e) Using a 6 mm socket hexagon wrench, install the No. 1 transmission oil filler tube.
Torque: 1.7 N*m (17 kgf*cm, 15 in.*lbf)

AX

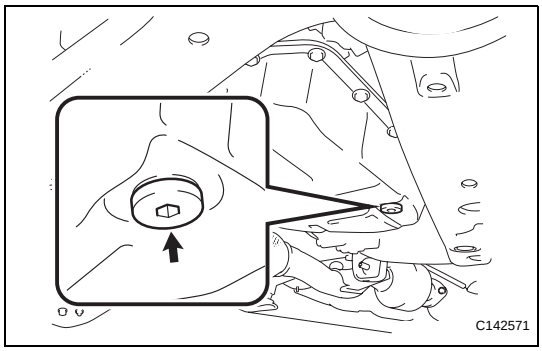

(f) Using a 6 mm socket hexagon wrench, install the overflow plug with a new gasket.
Torque: 40 N*m (408 kgf*cm, 30 ft.*lbf)

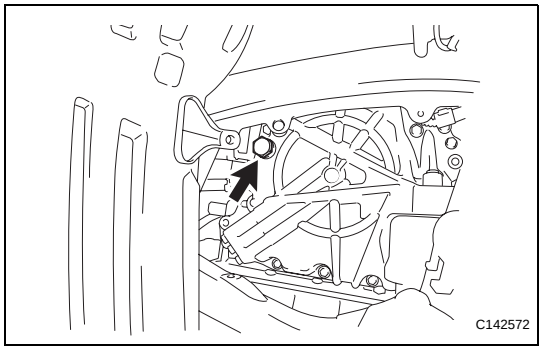

(g) Install the refill plug with a new gasket.
Torque: 49 N*m (500 kgf*cm, 36 ft.*lbf)

11. REMOVE COOL AIR INTAKE DUCT SEAL (See page EM-22)

12. REMOVE ENGINE ROOM SIDE COVER LH (See page EM-22)

13. REMOVE ENGINE ROOM SIDE COVER RH (See page EM-22)

14. **REMOVE V-BANK COVER SUB-ASSEMBLY (See page EM-23)**
15. **REMOVE V-RIBBED BELT (See page EM-6)**
16. **REMOVE AIR CLEANER INLET ASSEMBLY (See page EM-23)**
17. **REMOVE AIR CLEANER CAP SUB-ASSEMBLY (See page ES-519)**
18. **REMOVE AIR CLEANER CASE SUB-ASSEMBLY (See page EM-23)**
19. **REMOVE NO. 1 AIR CLEANER INLET (See page EM-23)**
20. **REMOVE BATTERY (See page EM-24)**
21. **REMOVE INTAKE AIR RESONATOR SUB-ASSEMBLY (See page EM-24)**
22. **REMOVE NO. 2 ENGINE MOUNTING STAY RH (See page EM-24)**
23. **REMOVE ENGINE MOVING CONTROL ROD SUB-ASSEMBLY (See page EM-24)**
24. **DISCONNECT NO. 1 FUEL VAPOR FEED HOSE (See page EM-24)**
25. **DISCONNECT CHECK VALVE TO BRAKE BOOSTER HOSE (See page EM-25)**
26. **REMOVE RADIATOR HOSE INLET (See page EM-25)**
27. **REMOVE RADIATOR HOSE OUTLET (See page EM-25)**
28. **DISCONNECT NO. 1 OIL COOLER INLET HOSE (See page EM-25)**
29. **DISCONNECT NO. 1 OIL COOLER OUTLET HOSE (See page EM-25)**
30. **DISCONNECT HEATER INLET WATER HOSE (See page EM-25)**
31. **DISCONNECT HEATER OUTLET WATER HOSE (See page EM-25)**
32. **REMOVE ECM (See page ES-543)**
33. **REMOVE RELAY BLOCK COVER UPPER**
34. **DISCONNECT ENGINE WIRE (See page EM-26)**

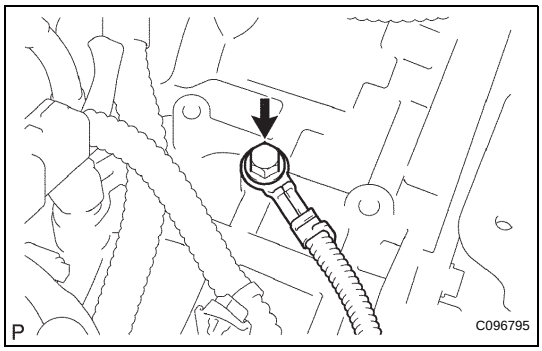

35. SEPARATE WIRE HARNESS

(a) Remove the bolt and disconnect the wire harness.

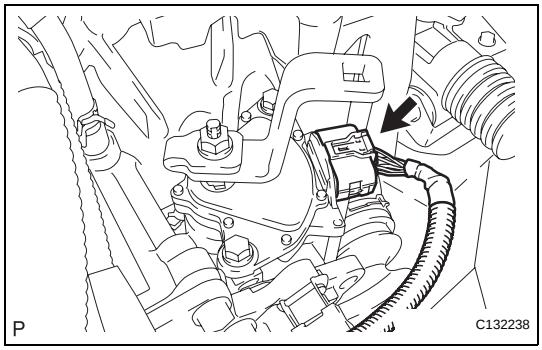

36. DISCONNECT CONNECTOR

(a) Disconnect the park/neutral position switch connector.

37. DISCONNECT TRANSMISSION CONTROL CABLE ASSEMBLY (See page EM-26)

38. SEPARATE FUEL TUBE SUB-ASSEMBLY (See page EM-27)

39. DISCONNECT OIL RESERVOIR TO PUMP HOSE (See page EM-27)

40. DISCONNECT RETURN TUBE SUB-ASSEMBLY (See page EM-27)

41. REMOVE EXHAUST PIPE NO. 1 SUPPORT BRACKET (See page EX-3)

42. REMOVE EXHAUST PIPE ASSEMBLY FRONT (See page EX-3)

43. REMOVE FRONT AXLE HUB NUT LH (See page DS-5)

AX

44. REMOVE FRONT AXLE HUB NUT RH

HINT:
Use the same procedures described for the LH side.

45. DISCONNECT FRONT STABILIZER LINK ASSEMBLY LH (See page DS-5)

46. DISCONNECT FRONT STABILIZER LINK ASSEMBLY RH

HINT:
Use the same procedures described for the LH side.

47. DISCONNECT FRONT SPEED SENSOR LH (See page DS-5)

48. DISCONNECT FRONT SPEED SENSOR RH

HINT:
Use the same procedures described for the LH side.

49. DISCONNECT TIE ROD ASSEMBLY LH (See page DS-6)

50. DISCONNECT TIE ROD ASSEMBLY RH

HINT:
Use the same procedures described for the LH side.

51. DISCONNECT FRONT SUSPENSION LOWER NO. 1 ARM LH (See page DS-6)

52. DISCONNECT FRONT SUSPENSION LOWER NO. 1 ARM RH

HINT:
Use the same procedures described for the LH side.

53. SEPARATE FRONT AXLE ASSEMBLY LH (See page DS-6)

54. SEPARATE FRONT AXLE ASSEMBLY RH

HINT:
Use the same procedures described for the LH side.

55. REMOVE NO. 1 EXHAUST PIPE SUPPORT BRACKET (See page EM-28)

56. REMOVE DRIVE PLATE AND TORQUE CONVERTER CLUTCH SETTING BOLT

(a) Remove the 2 bolts and flywheel housing under cover.

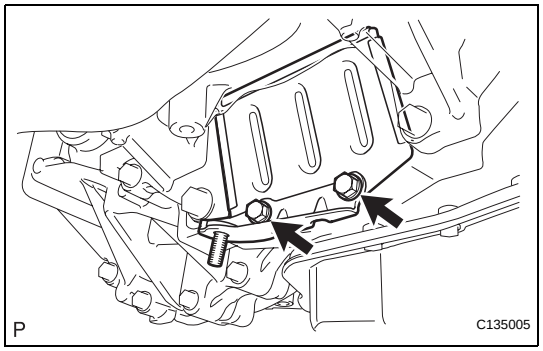

(b) Turn the crankshaft to gain access and remove the 6 bolts while holding the crankshaft pulley bolt with a wrench.

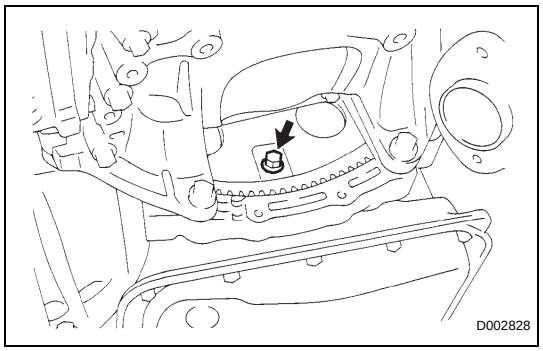

57. DISCONNECT STEERING INTERMEDIATE SHAFT ASSEMBLY (See page PS-28)

58. REMOVE GENERATOR ASSEMBLY (See page CH-14)

59. SEPARATE COOLER COMPRESSOR ASSEMBLY (See page EM-28)

60. REMOVE ENGINE ASSEMBLY WITH TRANSAXLE (See page EM-28)

61. REMOVE VANE PUMP ASSEMBLY (See page EM-29)

62. INSTALL ENGINE HANGER (See page EM-29)

63. REMOVE FRONT FRAME ASSEMBLY (See page EM-29)

64. REMOVE FRONT DRIVE SHAFT ASSEMBLY LH (See page DS-6)

65. REMOVE FRONT DRIVE SHAFT ASSEMBLY RH (See page DS-7)

66. REMOVE ENGINE WIRE

67. REMOVE STARTER ASSEMBLY (See page ST-145)

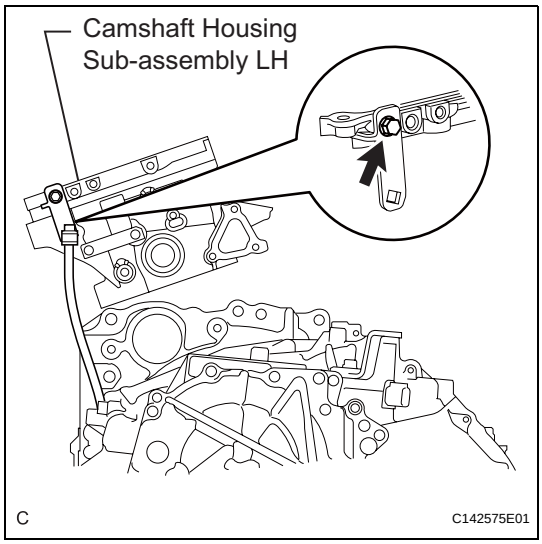

68. REMOVE AUTOMATIC TRANSAXLE ASSEMBLY

(a) Remove the bolt and breather bracket from the camshaft housing sub-assembly LH.

(b) Remove the breather hose from the breather bracket.

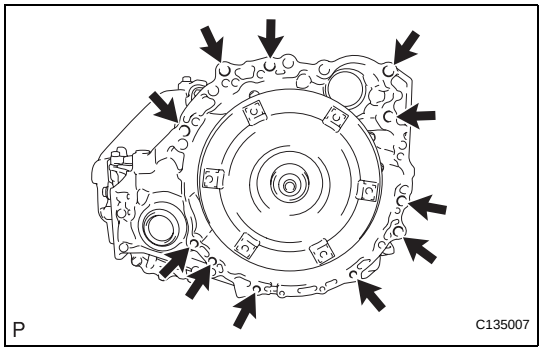

(c) Remove the 11 bolts.

(d) Separate and remove the automatic transaxle.

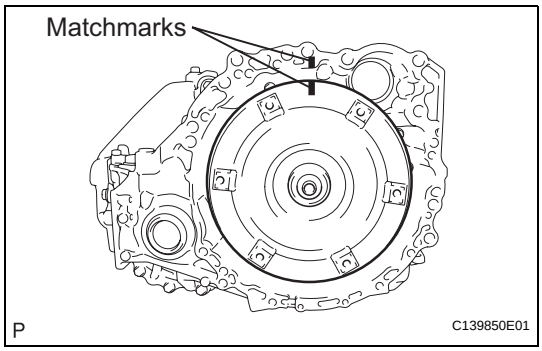

69. REMOVE TORQUE CONVERTER CLUTCH ASSEMBLY

(a) Put matchmarks on the transaxle housing and torque converter clutch assembly.

(b) Remove the torque converter clutch assembly from the automatic transaxle assembly.

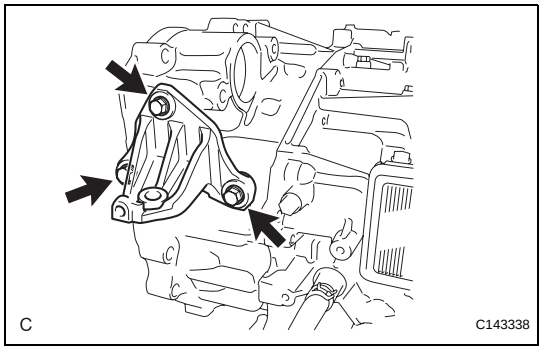

70. REMOVE ENGINE MOUNTING FRONT BRACKET

(a) Remove the 3 bolts and engine mounting front bracket.

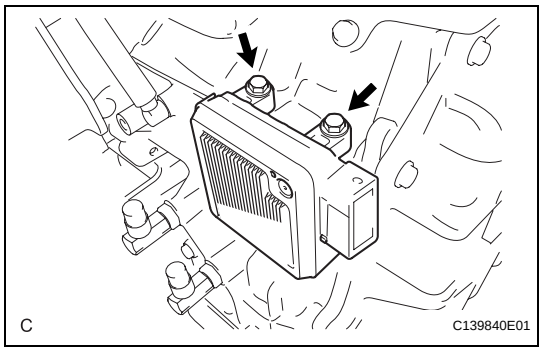

71. REMOVE TCM

(a) Remove the 2 bolts and TCM from the transaxle.

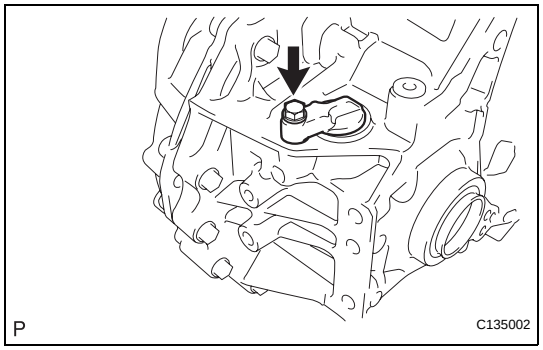

72. REMOVE SPEEDOMETER DRIVEN HOLE COVER SUB-ASSEMBLY

(a) Remove the bolt and hole cover from the transaxle case.

(b) Remove the O-ring from the hole cover.

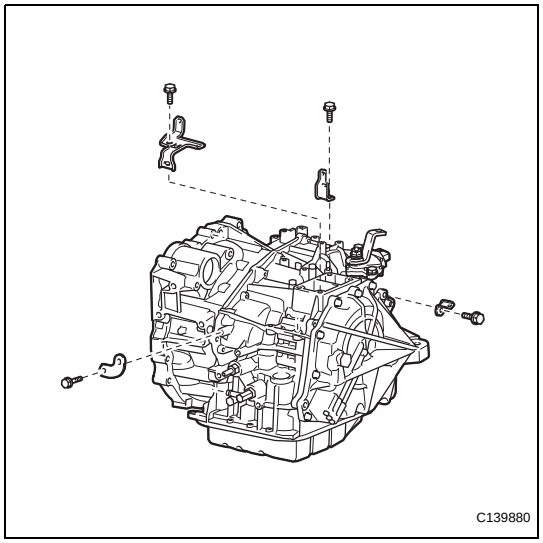

73. REMOVE WIRE HARNESS CLAMP BRACKET

(a) Remove the 4 bolts and 4 clamp brackets.

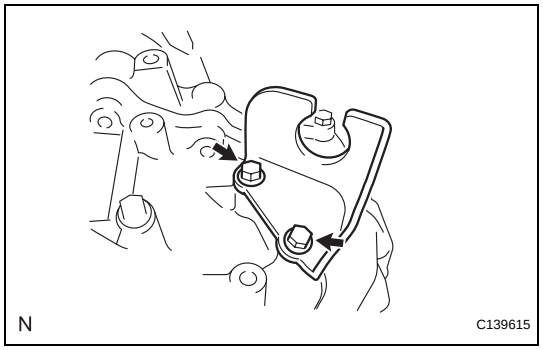

74. REMOVE NO. 1 TRANSMISSION CONTROL CABLE BRACKET

(a) Remove the 2 bolts and No. 1 transmission control cable bracket.

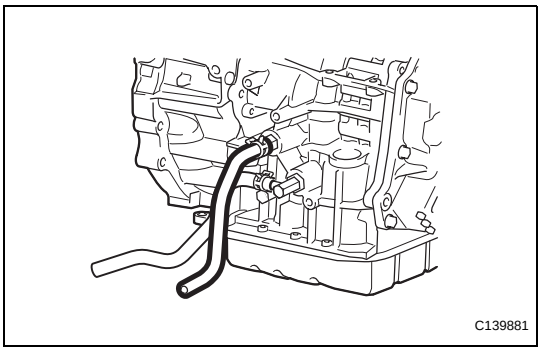

75. SEPARATE NO. 1 OIL COOLER OUTLET HOSE

(a) Separate the No. 1 oil cooler outlet hose.

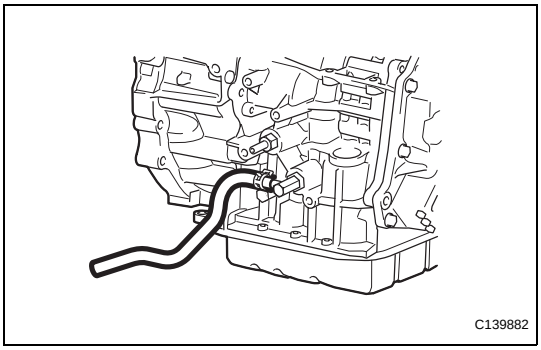

76. SEPARATE NO. 1 OIL COOLER INLET HOSE

(a) Separate the No. 1 oil cooler inlet hose.

REMOVAL

HINT:
- Use the same procedures for the RH side and LH side.
- The procedures listed below are for the LH side.

1. DRAIN AUTOMATIC TRANSAXLE FLUID (See page AX-215)

2. REMOVE FRONT WHEEL

3. REMOVE FRONT AXLE HUB NUT

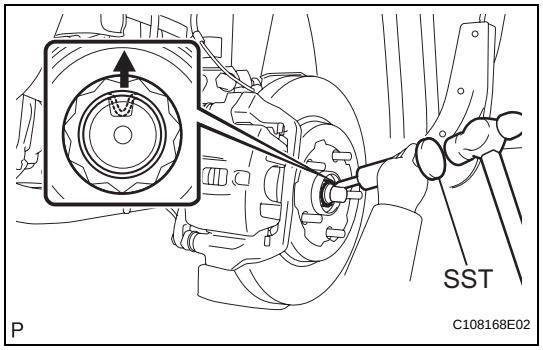

(a) Using SST and a hammer, release the staked part of the front axle hub nut.
SST 09930-00010
NOTICE:
Loosen the staked part of the nut completely, otherwise the thread of the drive shaft may be damaged.

(b) While applying the brakes, remove the front axle hub nut.

4. SEPARATE FRONT STABILIZER LINK ASSEMBLY

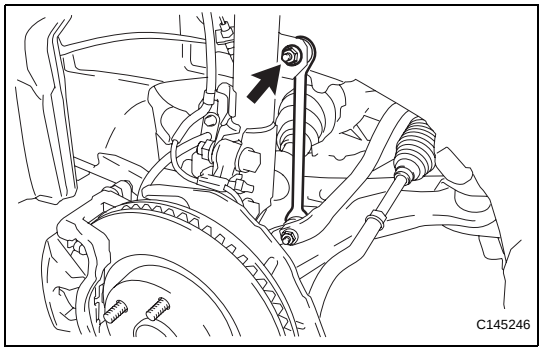

(a) Remove the nut and separate the front stabilizer link assembly.
HINT:
If the ball joint turns together with the nut, use a hexagon wrench (6 mm) to hold the stud.

5. SEPARATE FRONT SPEED SENSOR

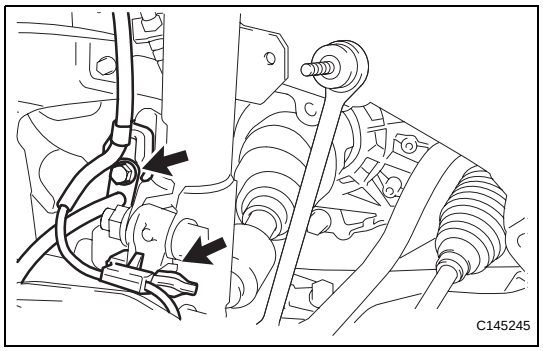

(a) Remove the bolt and clamp, and separate the speed sensor wire and flexible hose from the shock absorber.

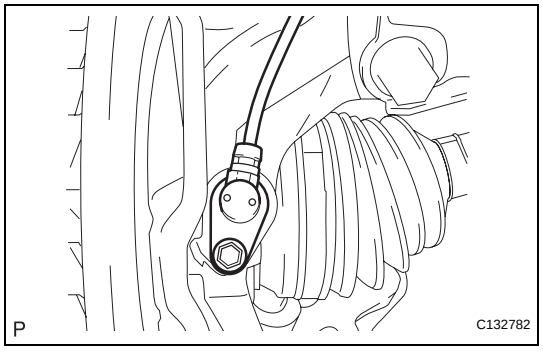

(b) Remove the bolt and separate the speed sensor from the steering knuckle.
NOTICE:
- **Prevent foreign matter from adhering to the speed sensor.**
- **Be careful not to damage the speed sensor.**

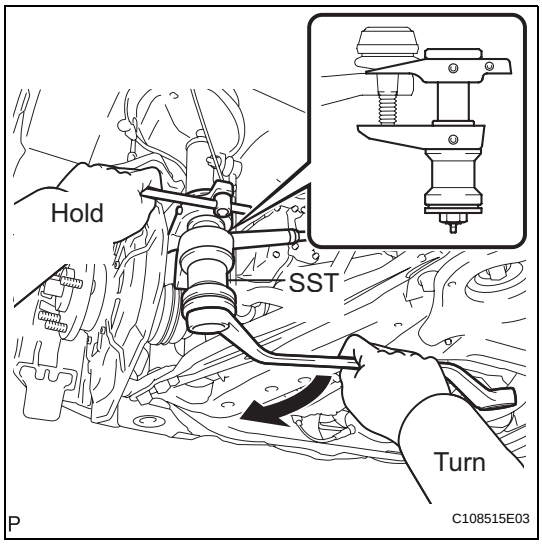

6. SEPARATE TIE ROD END SUB-ASSEMBLY

(a) Remove the cotter pin and nut.

(b) Using SST, separate the tie rod end sub-assembly from the steering knuckle.

SST 09628-00011

NOTICE:

- **Make sure that the string of the SST is securely tied to the vehicle.**
- **Be careful not to damage the ball joint dust cover.**
- **Be careful not to damage the steering knuckle.**
- **Be careful not to damage the front disc brake dust cover.**

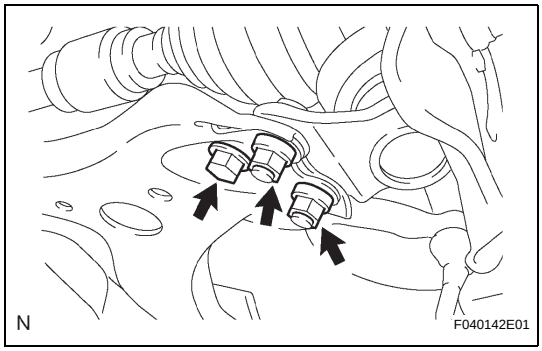

7. SEPARATE FRONT SUSPENSION LOWER NO. 1 ARM

(a) Remove the bolt and 2 nuts, and separate the front suspension lower No. 1 arm from the lower ball joint.

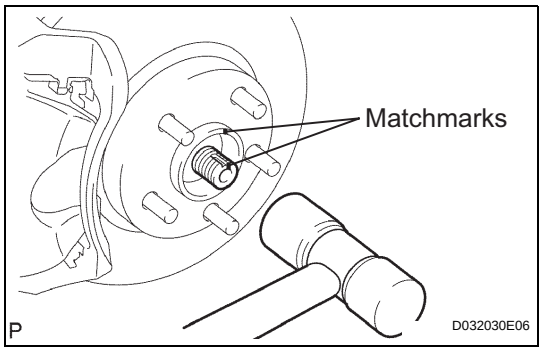

8. SEPARATE FRONT AXLE ASSEMBLY

(a) Put matchmarks on the front drive shaft assembly and the axle hub.

(b) Using a plastic hammer, separate the front drive shaft assembly from the front axle assembly.

NOTICE:

Be careful not to damage the drive shaft boot or speed sensor rotor.

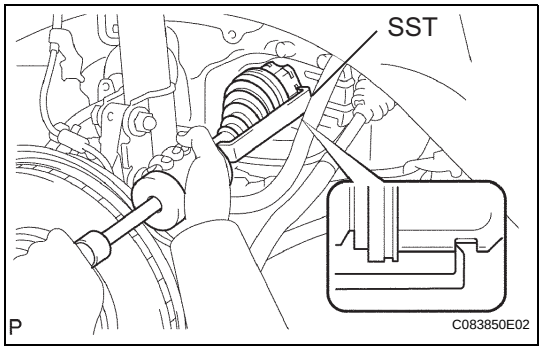

9. REMOVE FRONT DRIVE SHAFT ASSEMBLY LH

(a) Using SST, remove the front drive shaft assembly LH.

SST 09520-01010, 09520-24010 (09520-32040)

NOTICE:

- **Be careful not to damage the drive shaft dust cover, boot, or oil seal.**
- **Be careful not to drop the drive shaft assembly.**

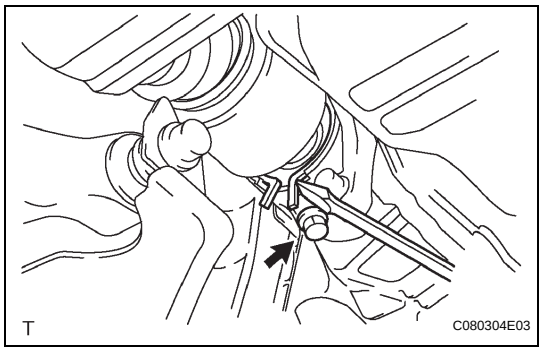

10. REMOVE FRONT DRIVE SHAFT ASSEMBLY RH

(a) Using a screwdriver, remove the bearing bracket hole snap ring.

(b) Remove the bolt and front drive shaft assembly RH from the drive shaft bearing bracket.

NOTICE:

Do not damage the boot or oil seal.

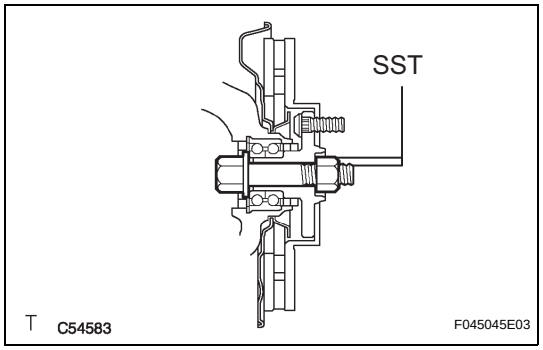

11. SECURE FRONT AXLE HUB SUB-ASSEMBLY

(a) Secure the front axle hub bearing.

SST 09608-16042 (09608-02021, 09608-02041)

NOTICE:

The hub bearing may be damaged if it is subjected to the vehicle's full weight, such as moving the vehicle with the drive shaft removed. If it is necessary to place the vehicle's weight on the hub bearing, first support it with SST.

12. INSPECT FRONT DRIVE SHAFT ASSEMBLY (See page DS-10)

DISASSEMBLY

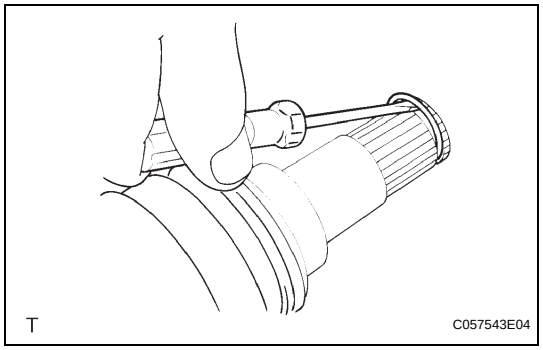

1. REMOVE FRONT DRIVE SHAFT LH HOLE SNAP RING

(a) Using a screwdriver, remove the front drive shaft LH hole snap ring.

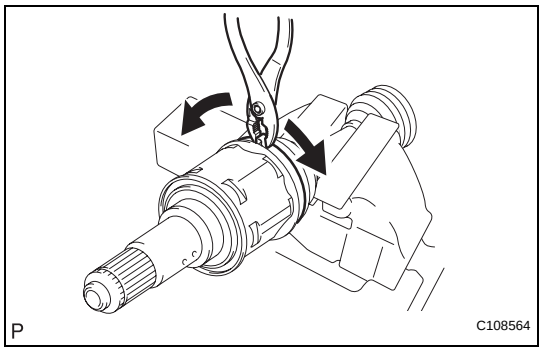

2. REMOVE NO. 2 FRONT AXLE INBOARD JOINT BOOT CLAMP

(a) Using pliers, remove the No. 2 front axle inboard joint boot clamp as shown in the illustration.

3. REMOVE FRONT AXLE INBOARD JOINT BOOT CLAMP

(a) Remove the front axle inboard joint boot clamp.

HINT:

Perform the same procedures as for the No. 2 front axle inboard joint boot clamp.

4. SEPARATE FRONT AXLE INBOARD JOINT BOOT

(a) Separate the front axle inboard joint boot from the inboard joint assembly.

5. REMOVE FRONT DRIVE INBOARD JOINT ASSEMBLY

(a) Remove the grease from the inboard joint assembly.

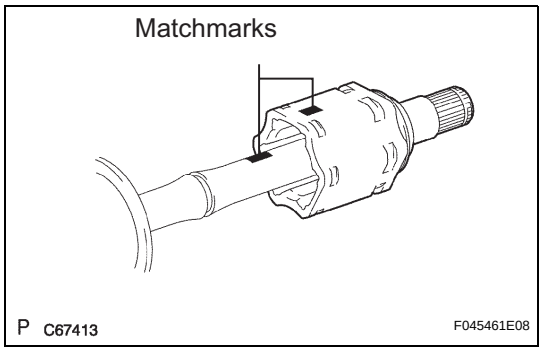

(b) Put matchmarks on the inboard joint assembly and outboard joint shaft.
NOTICE:
Do not use a punch for the marks.

(c) Remove the inboard joint assembly from the outboard joint shaft.

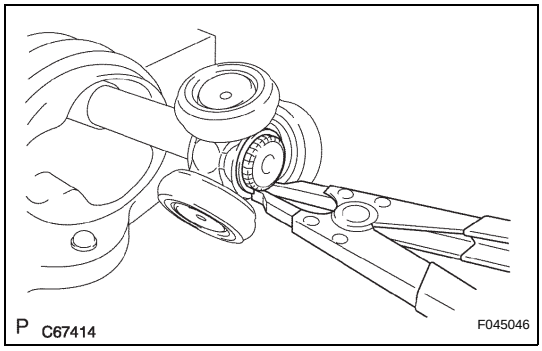

(d) Using a snap ring expander, remove the shaft snap ring.

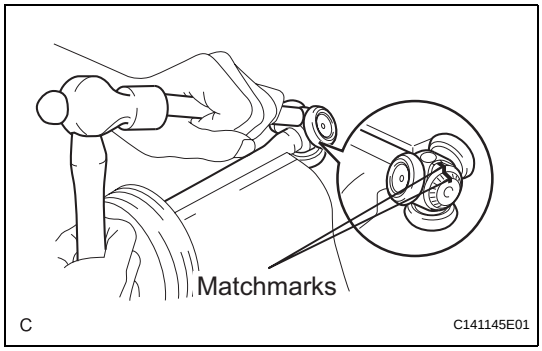

(e) Put matchmarks on the outboard joint shaft and tripod joint.
NOTICE:
Do not use a punch for the marks.

(f) Using a brass bar and a hammer, remove the tripod joint from the outboard joint shaft.
NOTICE:
Do not tap the roller.

6. REMOVE FRONT AXLE INBOARD JOINT BOOT

(a) Remove the inboard joint boot from the outboard joint shaft.

7. REMOVE FRONT DRIVE SHAFT DAMPER LH

(a) Using pliers, remove the drive shaft damper clamp as shown in the illustration.

(b) Remove the drive shaft damper.

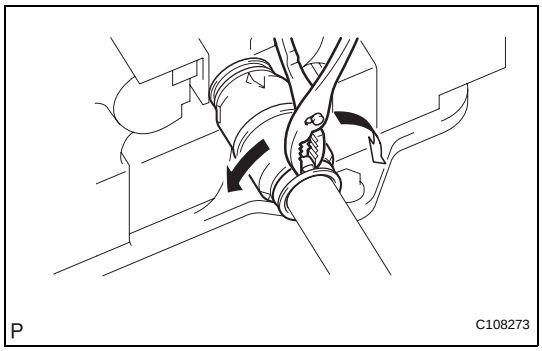

8. REMOVE FRONT DRIVE SHAFT DAMPER RH

(a) Remove the front drive shaft damper RH.
HINT:
Perform the same procedures as for the front drive shaft damper LH.

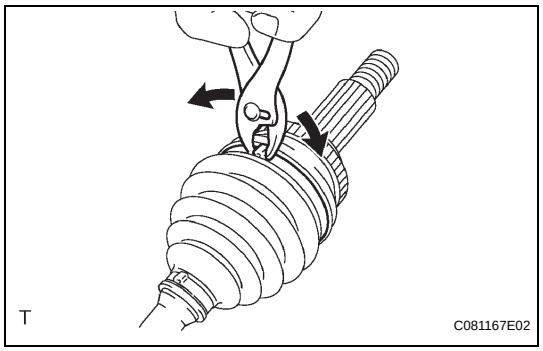

9. REMOVE NO. 2 FRONT AXLE OUTBOARD JOINT BOOT CLAMP

(a) Using pliers, remove the No. 2 front axle outboard joint boot clamp as shown in the illustration.

10. REMOVE FRONT AXLE OUTBOARD JOINT BOOT CLAMP

(a) Remove the front axle outboard joint boot clamp.
HINT:
Perform the same procedures as for the No. 2 front axle outboard joint boot clamp.

11. REMOVE FRONT AXLE OUTBOARD JOINT BOOT

(a) Remove the outboard joint boot from the outboard joint shaft.

(b) Remove the grease from the outboard joint.

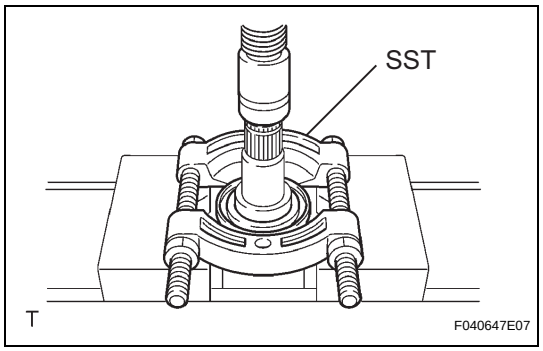

12. REMOVE FRONT DRIVE SHAFT DUST COVER LH

(a) Using SST and a press, remove the drive shaft dust cover LH.
SST 09950-00020
NOTICE:
Be careful not to drop the inboard joint assembly.

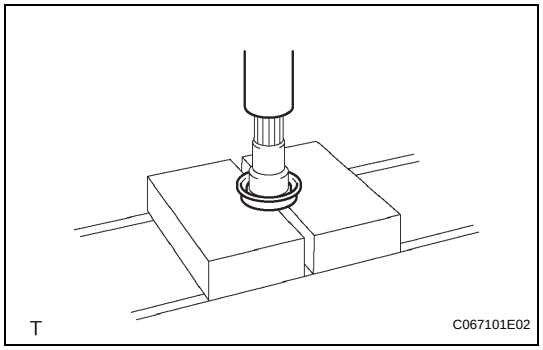

13. REMOVE FRONT DRIVE SHAFT DUST COVER RH

(a) Using a press, remove the drive shaft dust cover RH.

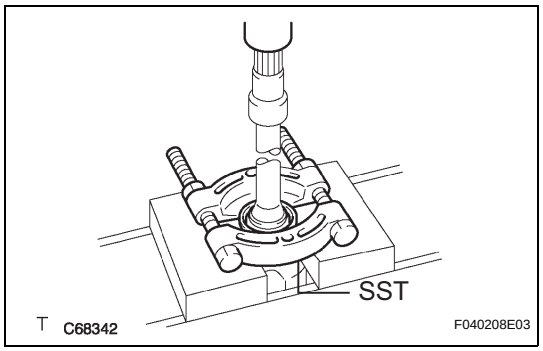

14. REMOVE FRONT DRIVE SHAFT DUST COVER

(a) Using SST and a press, remove the drive shaft dust cover.
SST 09950-00020

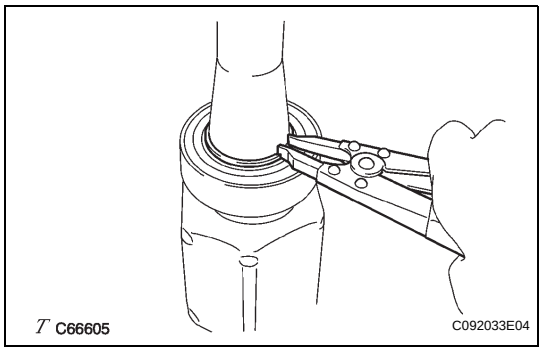

15. REMOVE FRONT DRIVE SHAFT BEARING

(a) Using a snap ring expander, remove the drive shaft hole snap ring.

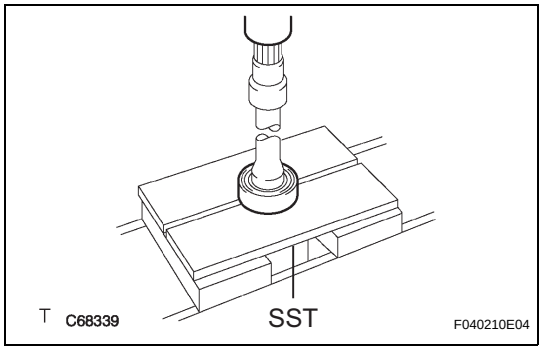

(b) Using SST and a press, remove the bearing.
SST 09527-10011

(c) Remove the bearing bracket hole snap ring.
NOTICE:
Be careful not to drop the inboard joint assembly.

INSPECTION

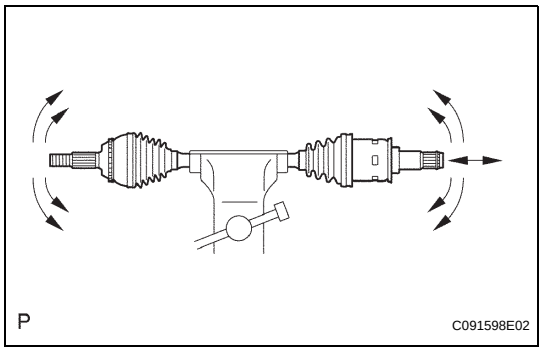

1. INSPECT FRONT DRIVE SHAFT ASSEMBLY

(a) Check that there is no excessive play in the outboard joint.

(b) Check that the inboard joint slides smoothly in the thrust direction.

(c) Check that there is no excessive play in the radial directions of the inboard joint.

(d) Check the boots for damage.

REASSEMBLY

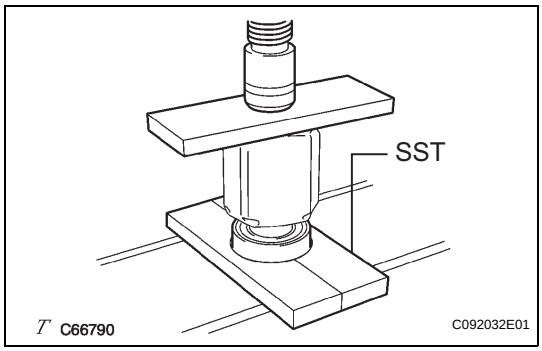

1. INSTALL FRONT DRIVE SHAFT BEARING

(a) Install a new bearing bracket hole snap ring to the front drive shaft assembly RH.

(b) Using SST and a steel plate, install a new front drive shaft bearing.
SST 09527-30010, 09527-10011
NOTICE:
The bearing should be completely installed.

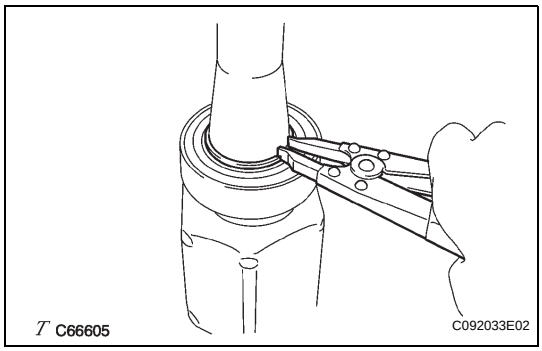

(c) Using a snap ring expander, install a new drive shaft hole snap ring.

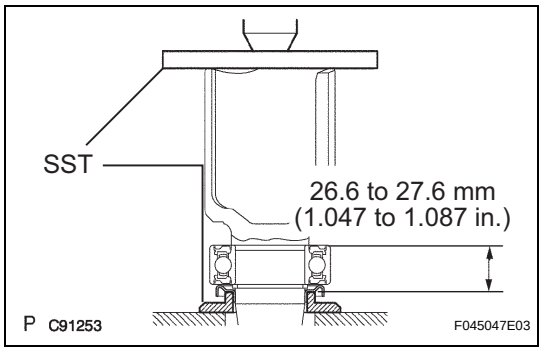

2. INSTALL FRONT DRIVE SHAFT DUST COVER

(a) Using SST and a press, install a new drive shaft dust cover.
SST 09726-40010, 09527-10011
NOTICE:
- **The dust cover should be completely installed.**
- **Be careful not to damage the dust cover.**

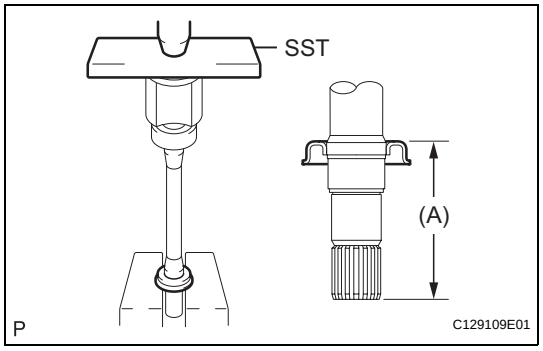

3. INSTALL FRONT DRIVE SHAFT DUST COVER RH

(a) Using SST and a press, install a new drive shaft dust cover RH until distance (A) from the tip of the center drive shaft to the drive shaft dust cover RH meets the specification.
SST 09527-10011
Distance (A):
110.0 to 111.0 mm (4.3307 to 4.3701 in.)
NOTICE:
- **The dust cover should be completely installed.**
- **Be careful not to damage the dust cover.**

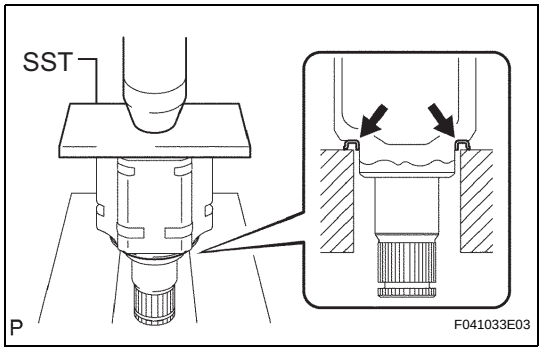

4. INSTALL FRONT DRIVE SHAFT DUST COVER LH

(a) Using SST and a press, install a new drive shaft dust cover LH.
SST 09527-10011
NOTICE:
- **The dust cover should be completely installed.**
- **Be careful not to damage the dust cover.**

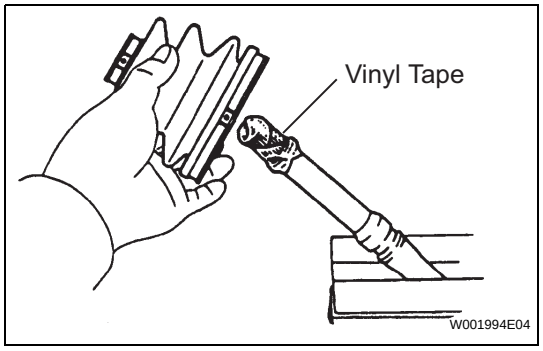

5. INSTALL FRONT AXLE OUTBOARD JOINT BOOT

(a) Hold the drive shaft lightly in a vise between aluminium plates.
HINT:
Before installing the boots, wrap the spline of the drive shaft with vinyl tape to prevent the boots from being damaged.

(b) Temporarily install a new outboard joint boot to the drive shaft with the 2 clamps.

(c) Pack the outboard joint shaft and boot with grease.
Grease capacity:
164 to 184 g (5.8 to 6.5 oz.)

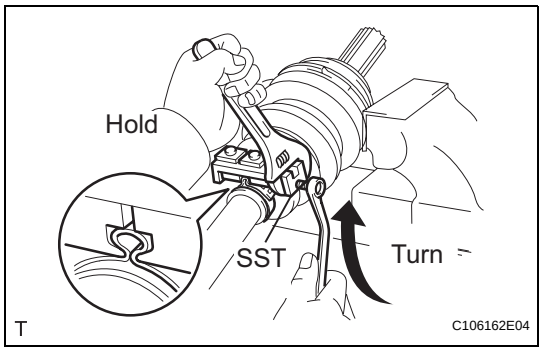

6. INSTALL FRONT AXLE OUTBOARD JOINT BOOT CLAMP

(a) Hold the drive shaft lightly in a vise between aluminum plates.
NOTICE:
Do not overtighten the vise.

(b) Install the 2 outboard joint boot clamps onto the boot.

(c) Place SST onto the outboard joint boot clamp.
SST 09521-24010

(d) Tighten the SST so that the outboard joint boot clamp is pinched.
NOTICE:
Do not overtighten the SST.

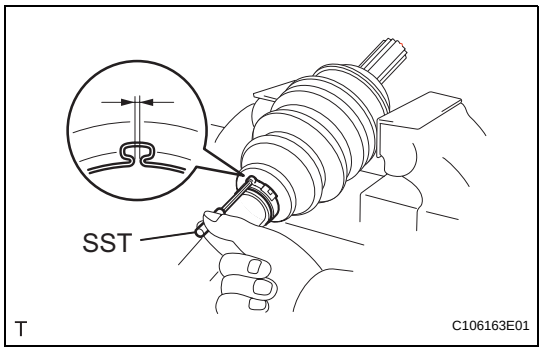

(e) Using SST, measure the clearance of the outboard joint boot clamp.
SST 09240-00020
Clearance:
0.5 to 1.5 mm (0.0197 to 0.0591 in.)
NOTICE:
If the measured value is greater than the specified value, retighten the clamp.

7. INSTALL NO. 2 FRONT AXLE OUTBOARD JOINT BOOT CLAMP

(a) Install the No. 2 outboard joint boot clamp onto the boot.

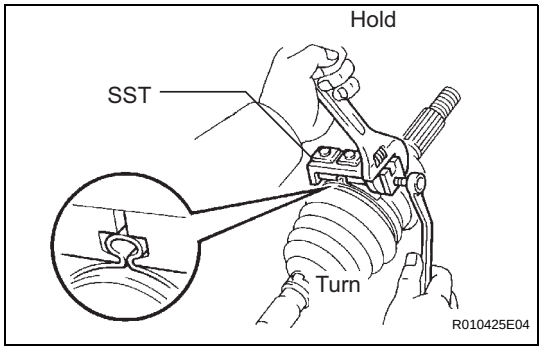

(b) Place SST onto the No. 2 outboard joint boot clamp.
SST 09521-24010

(c) Tighten the SST so that the No. 2 outboard joint boot clamp is pinched.
NOTICE:
Do not overtighten the SST.

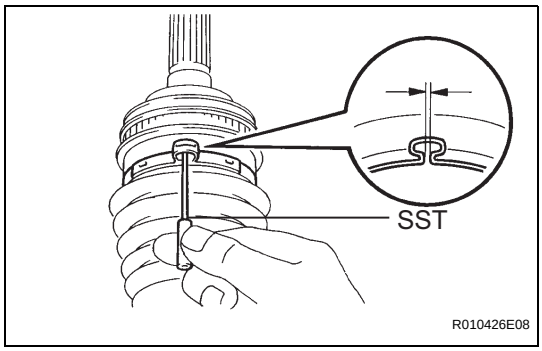

(d) Using SST, measure the clearance of the No. 2 outboard joint boot clamp.
SST 09240-00020
Clearance:
0.5 to 1.5 mm (0.0197 to 0.0591 in.)
NOTICE:
If the measured value is greater than the specified value, retighten the clamp.

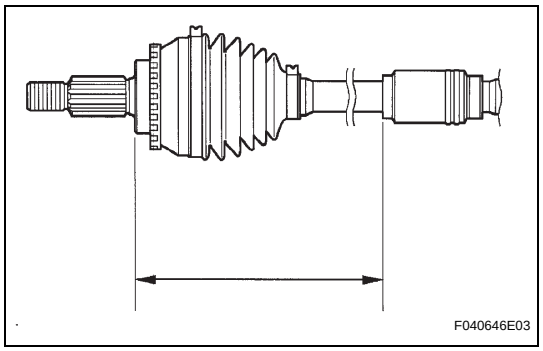

8. INSTALL FRONT DRIVE SHAFT DAMPER LH

(a) Install the drive shaft damper to the drive shaft.

(b) Make sure that the damper is on the shaft groove.

(c) Set the distance as specified below.
Distance:
228.0 to 232.0 mm (8.976 to 9.134 in.)

(d) Install the drive shaft damper clamp onto the drive shaft damper.
NOTICE:
Be sure to install the clamp in the correct position.

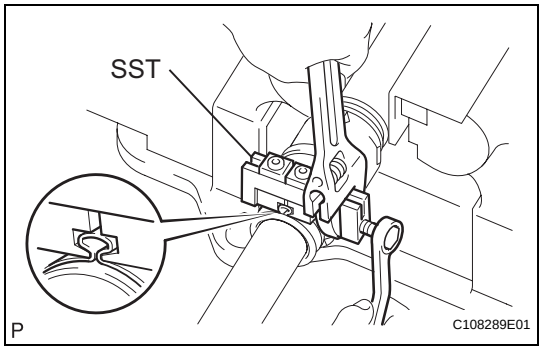

(e) Place SST onto the drive shaft damper clamp.
SST 09521-24010

(f) Tighten the SST so that the clamp is pinched.
NOTICE:
Do not overtighten the SST.

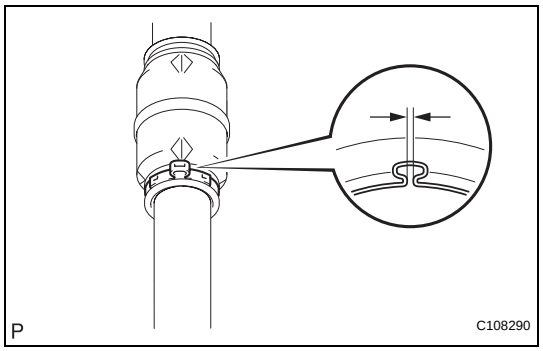

(g) Using SST, measure the clearance of the drive shaft damper clamp.
SST 09240-00020
Clearance:
0.5 to 1.5 mm (0.0197 to 0.0591 in.)
NOTICE:
If the measured value is greater than the specified value, retighten the clamp.

9. INSTALL FRONT DRIVE SHAFT DAMPER RH

(a) Install the front drive shaft damper RH.
HINT:
Perform the same procedures as for the front drive shaft damper LH.

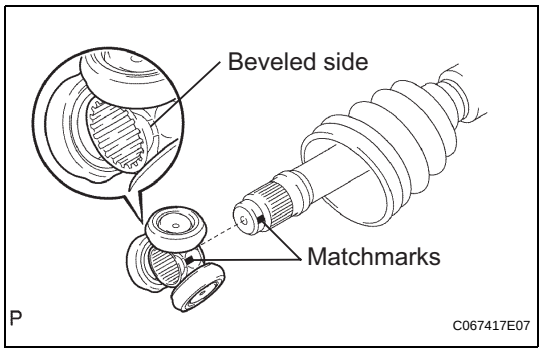

10. INSTALL FRONT DRIVE INBOARD JOINT ASSEMBLY

(a) Temporarily install a new inboard joint boot to the drive shaft with the 2 clamps.

(b) Place the beveled side of the tripod joint axial spline toward the outboard joint shaft.

(c) Align the matchmarks.

(d) Using a brass bar and hammer, tap in the tripod joint to the outboard joint shaft.
NOTICE:
- **Do not tap the roller.**
- **Be sure to install the tripod joint assembly in the correct direction.**

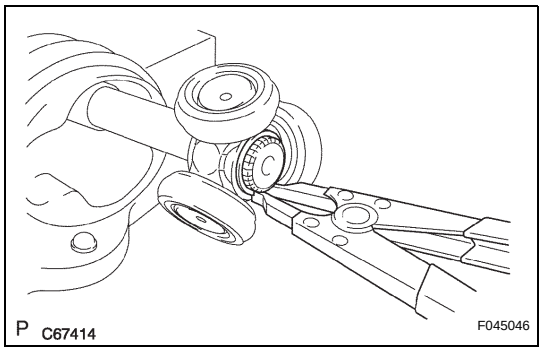

(e) Using a snap ring expander, install a new shaft snap ring.

(f) Coat the outboard joint shaft and boot with grease.
Grease capacity:
155 to 175 g (5.5 to 6.2 oz.)

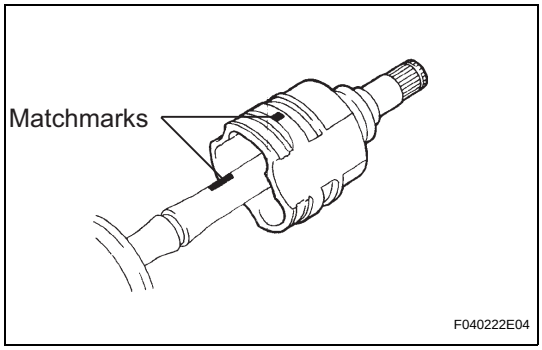

(g) Align the matchmarks and install the inboard joint assembly to the outboard joint shaft assembly.

11. INSTALL FRONT AXLE INBOARD JOINT BOOT

(a) Install the inboard joint boot to the inboard joint assembly.

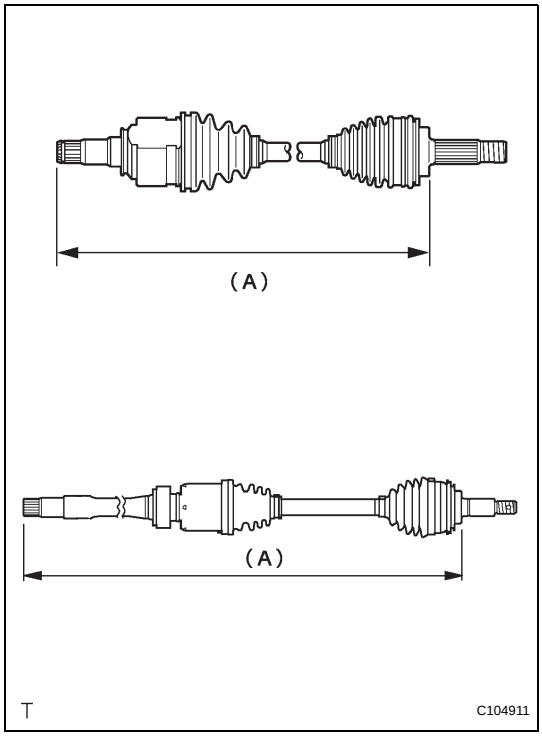

(b) Check whether the drive shaft dimensions are within the following specifications.
HINT:
The following table shows dimension (A) of the drive shaft.
Dimension (A) :

LH	585.5 to 589.5 mm (23.05 to 23.21 in.)
RH	904.4 to 908.4 mm (35.61 to 35.76 in.)

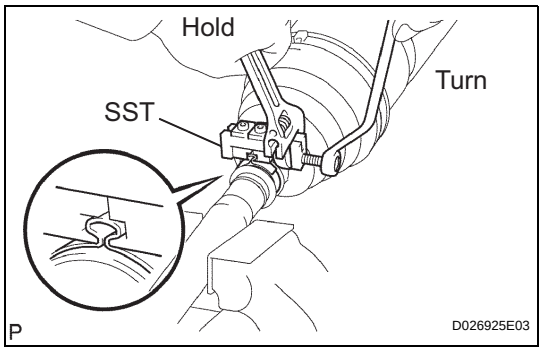

12. INSTALL FRONT AXLE INBOARD JOINT BOOT CLAMP

(a) Hold the drive shaft lightly in a vise between aluminum plates.
NOTICE:
Do not overtighten the vise.

(b) Install the 2 inboard joint boot clamps onto the boot.

(c) Place SST onto the inboard joint boot clamp.
SST 09521-24010

(d) Tighten the SST so that the inboard joint boot clamp is pinched.
NOTICE:
Do not overtighten the SST.

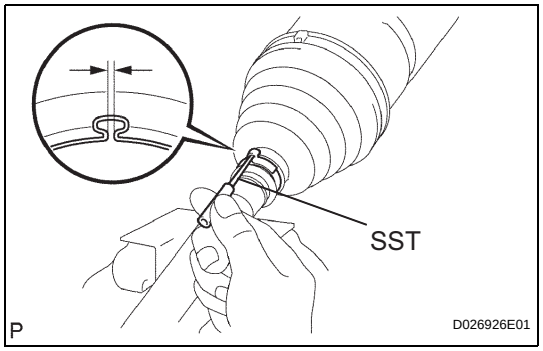

(e) Using SST, measure the clearance of the inboard joint boot clamp.
SST 09240-00020
Clearance:
0.5 to 1.5 mm (0.0197 to 0.0591 in.)
NOTICE:
If the measured value is greater than the specified value, retighten the clamp.

13. INSTALL NO. 2 FRONT AXLE INBOARD JOINT BOOT CLAMP

(a) Hold the inboard joint shaft assembly in a vise between aluminium plates.
NOTICE:
Do not overtighten the vise.

(b) Install the No. 2 front axle inboard joint boot clamp onto the boot.

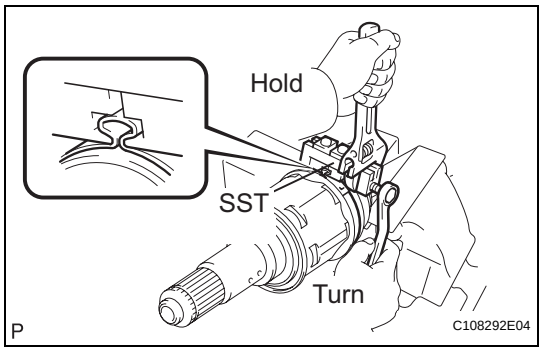

(c) Place SST onto the No. 2 front axle inboard joint boot clamp.
SST 09521-24010

(d) Tighten the SST so that the No. 2 front axle inboard joint boot clamp is pinched.
NOTICE:
Do not overtighten the SST.

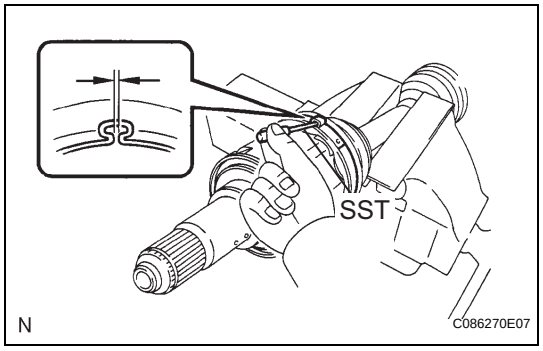

(e) Using SST, measure the clearance of the No. 2 front axle inboard joint boot clamp.
SST 09240-00020
Clearance:
0.5 to 1.5 mm (0.0197 to 0.0591 in.)
NOTICE:
If the measured value is greater than the specified value, retighten the clamp.

14. INSTALL FRONT DRIVE SHAFT LH HOLE SNAP RING

(a) Install a new hole snap ring.

15. INSPECT FRONT DRIVE SHAFT ASSEMBLY (See page DS-10)

INSTALLATION

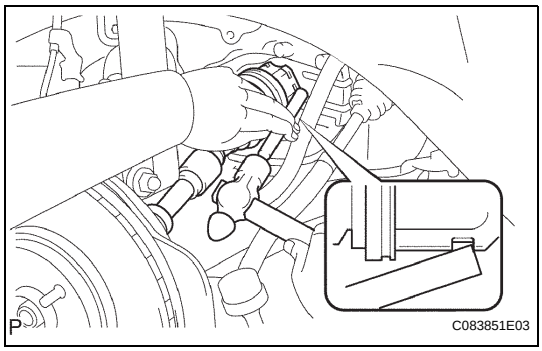

1. INSTALL FRONT DRIVE SHAFT ASSEMBLY LH

(a) Coat the spline of the inboard joint shaft assembly with ATF.

(b) Align the shaft splines and install the drive shaft assembly LH with a brass bar and hammer.

NOTICE:

- **Set the shaft snap ring with the opening side facing down.**
- **Be careful not to damage the drive shaft dust cover, boot, or oil seal.**
- **Move the drive shaft assembly while keeping it level.**

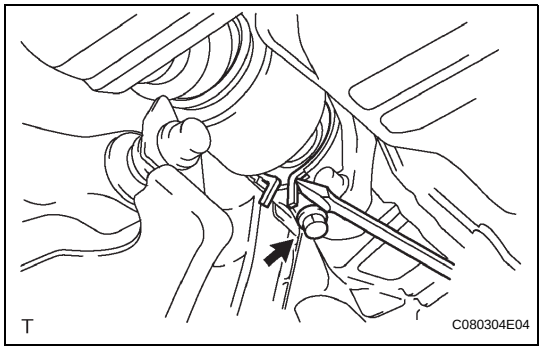

2. INSTALL FRONT DRIVE SHAFT ASSEMBLY RH

(a) Coat the spline of the inboard joint shaft assembly with ATF.

(b) Install the front drive shaft the assembly RH.

(c) Using a screwdriver, install a new bearing bracket hole snap ring.

NOTICE:

- **Do not damage the boot or oil seal.**
- **Move the drive shaft assembly while keeping it level.**

(d) Install a new bolt.

Torque: 32 N*m (330 kgf*cm, 24 ft.*lbf)

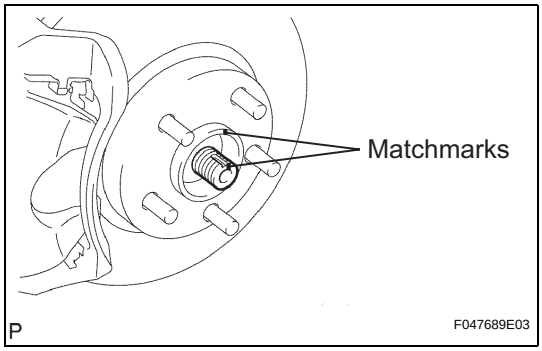

3. INSTALL FRONT AXLE ASSEMBLY

(a) Align the matchmarks and install the front drive shaft assembly to the front axle hub sub-assembly.

NOTICE:

Be careful not to damage the drive shaft boot and speed sensor rotor.

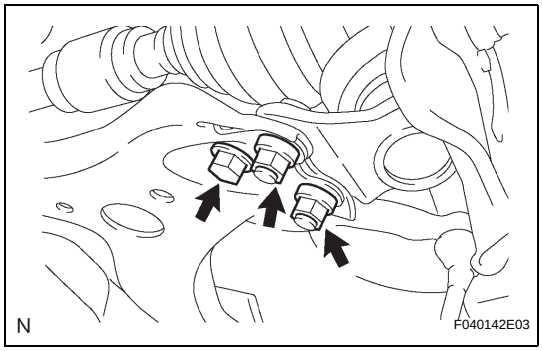

4. INSTALL FRONT SUSPENSION LOWER NO. 1 ARM

(a) Install the lower ball joint to the front suspension lower No. 1 arm with the bolt and 2 nuts.

Torque: 75 N*m (765 kgf*cm, 55 ft.*lbf)

5. INSTALL TIE ROD END SUB-ASSEMBLY

(a) Install the tie rod end sub-assembly to the steering knuckle with the nut.

Torque: 49 N*m (500 kgf*cm, 36 ft.*lbf)

(b) Install a new cotter pin.

NOTICE:

If the holes for the cotter pin are not aligned, tighten the nut up to 60° further.

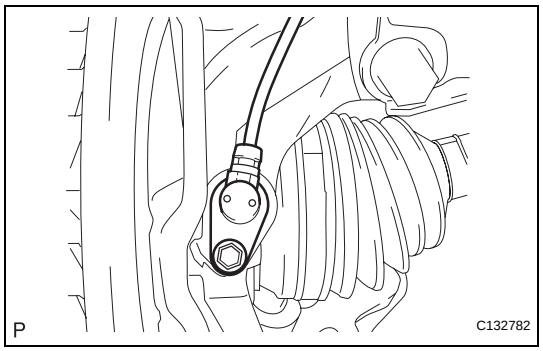

6. INSTALL FRONT SPEED SENSOR

(a) Install the front speed sensor to the steering knuckle with the bolt.
Torque: 8.0 N*m (82 kgf*cm, 71 in.*lbf)
NOTICE:
- **Prevent foreign matter from adhering to the speed sensor.**
- **Be careful not to damage the speed sensor.**

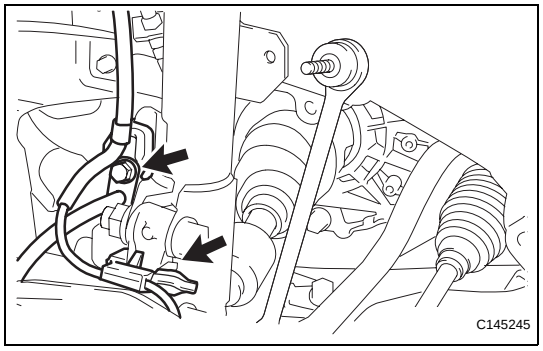

(b) Install the flexible hose and the speed sensor wire to the shock absorber with the bolt and set the clamp of the sensor on the knuckle.
Torque: 19 N*m (192 kgf*cm, 14 ft.*lbf)
NOTICE:
- **Be careful not to damage the speed sensor.**
- **Prevent foreign matter from adhering to the speed sensor.**
- **Do not twist the sensor wire when installing the speed sensor.**

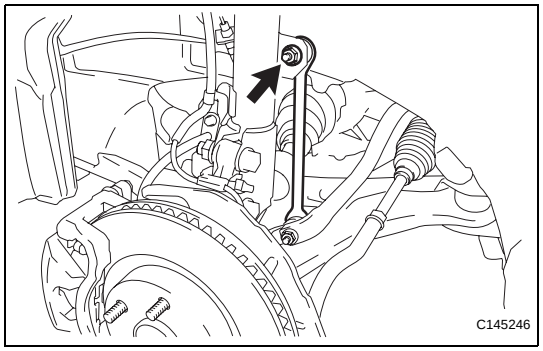

7. INSTALL FRONT STABILIZER LINK ASSEMBLY

(a) Install the stabilizer link assembly with the nut.
Torque: 74 N*m (755 kgf*cm, 55 ft.*lbf)
HINT:
If the ball joint turns together with the nut, use a hexagon wrench (6 mm) to hold the stud.

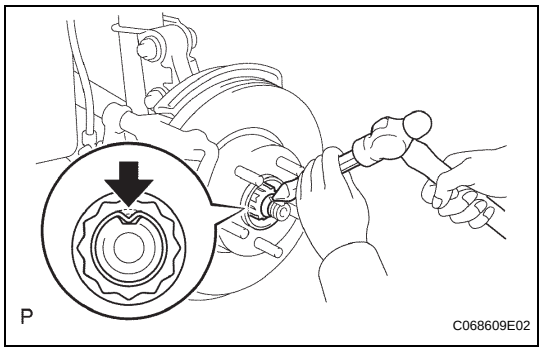

8. INSTALL FRONT AXLE HUB NUT

(a) Using a socket wrench (30 mm), install a new axle hub nut.
Torque: 294 N*m (3,000 kgf*cm, 217 ft.*lbf)

(b) Using a chisel and hammer, stake the front axle hub nut.

9. INSTALL FRONT WHEEL
Torque: 103 N*m (1,050 kgf*cm, 76 ft.*lbf)

10. ADD AUTOMATIC TRANSAXLE FLUID
HINT:
See page AX-176

11. ADJUST FRONT WHEEL ALIGNMENT
HINT:
See page SP-4

12. CHECK ABS SPEED SENSOR SIGNAL
HINT:
See page BC-24

ON-VEHICLE INSPECTION

1. **REMOVE FRONT WHEEL**
2. **SEPARATE FRONT DISC BRAKE CALIPER ASSEMBLY (See page AH-6)**
3. **REMOVE FRONT DISC (See page BR-37)**
4. **INSPECT FRONT AXLE HUB BEARING LOOSENESS**
   (a) Using a dial indicator, check for looseness near the center of the axle hub.
   Maximum:
   0.05 mm (0.0020 in.)
   NOTICE:
   Ensure that the dial indicator is set perpendicular to the measurement surface.
   HINT:
   If looseness exceeds the maximum, replace the bearing.

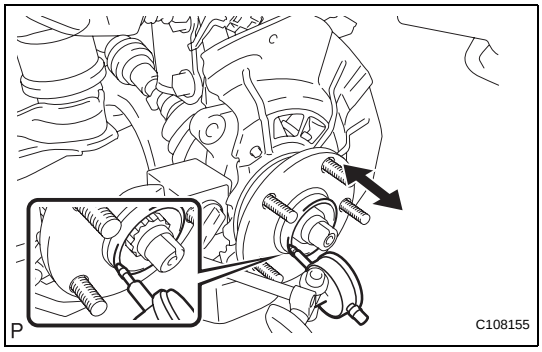

5. **INSPECT FRONT AXLE HUB RUNOUT**
   (a) Using a dial indicator, check for runout on the surface of the axle hub outside the hub bolt.
   Maximum:
   0.05 mm (0.0020 in.)
   NOTICE:
   Ensure that the dial indicator is set perpendicular to the measurement surface.
   HINT:
   If runout exceeds the maximum, replace the axle hub.

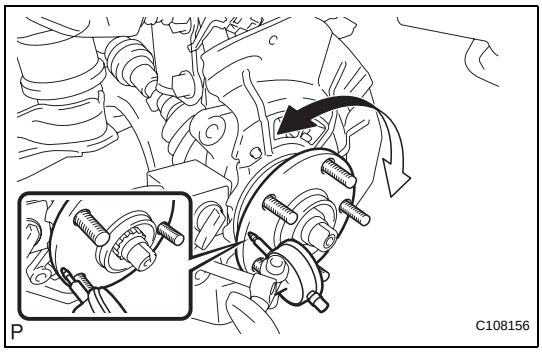

6. **INSTALL FRONT DISC (See page BR-39)**
7. **INSTALL FRONT DISC BRAKE CALIPER ASSEMBLY (See page AH-10)**
8. **INSTALL FRONT WHEEL**
   Torque: 103 N*m (1,050 kgf*cm, 76 ft.*lbf)

REMOVAL

HINT:
- Use the same procedures for the RH side and LH side.
- The procedures listed below are for the LH side.

1. REMOVE FRONT WHEEL

2. REMOVE FRONT AXLE HUB NUT (See page DS-5)

3. SEPARATE FRONT SPEED SENSOR (See page DS-5)

4. SEPARATE FRONT DISC BRAKE CALIPER ASSEMBLY

(a) Remove the 2 bolts and separate the front disc brake caliper assembly from the steering knuckle.
NOTICE:
Use wire or an equivalent tool to keep the brake caliper from hanging by its flexible hose.

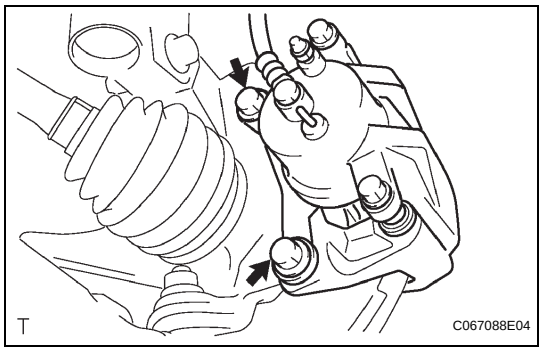

5. REMOVE FRONT DISC (See page BR-37)

6. SEPARATE TIE ROD END SUB-ASSEMBLY (See page DS-6)

7. SEPARATE FRONT SUSPENSION LOWER NO. 1 ARM (See page DS-6)

8. REMOVE FRONT AXLE ASSEMBLY

(a) Put matchmarks on the front drive shaft assembly and the front axle hub sub-assembly.

(b) Using a plastic hammer, separate the front drive shaft assembly from the front axle assembly.
NOTICE:
Be careful not to damage the drive shaft boot or speed sensor rotor.

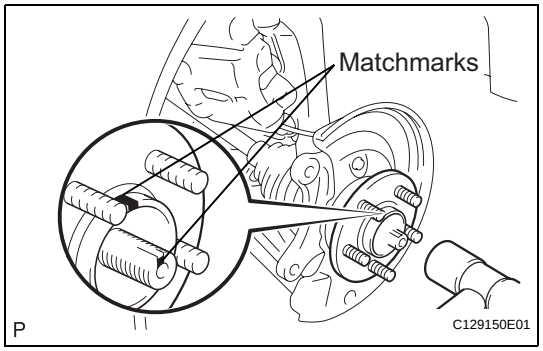

(c) Remove the 2 bolts, 2 nuts, and front axle assembly.

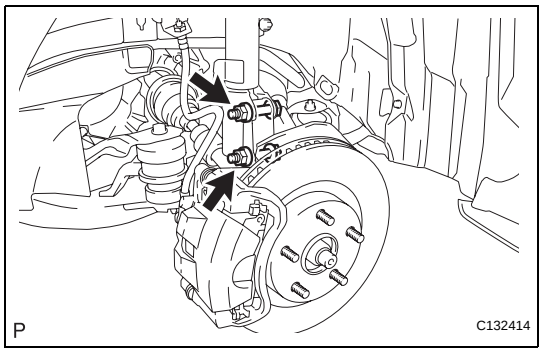

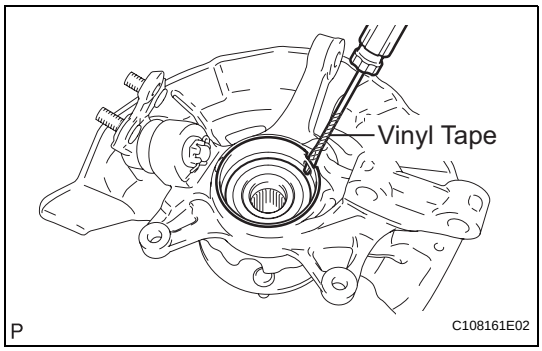

9. REMOVE NO. 1 FRONT WHEEL BEARING DUST DEFLECTOR

(a) Using a screwdriver with its tip wrapped with vinyl tape, remove the No. 1 front wheel bearing dust deflector.
NOTICE:
Be careful not to damage the steering knuckle.

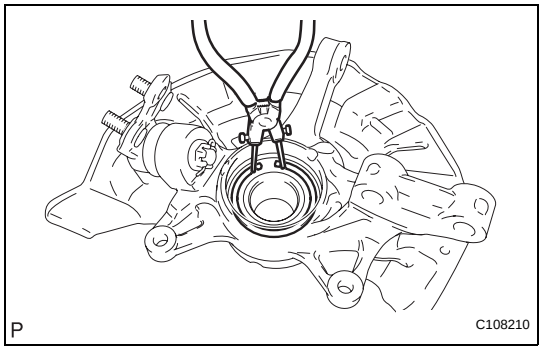

10. REMOVE FRONT AXLE HUB HOLE SNAP RING

(a) Using snap ring pliers, remove the front axle hub hole snap ring.

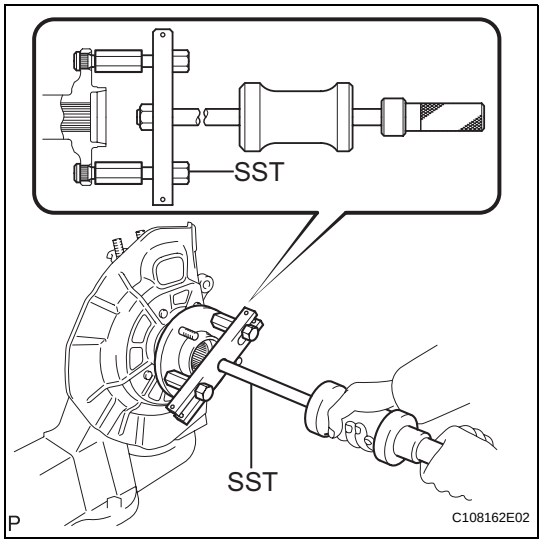

11. REMOVE FRONT AXLE HUB SUB-ASSEMBLY

(a) Hold the front axle assembly between aluminium plates in a vise.
NOTICE:
Do not overtighten the vise.

(b) Using SST, remove the front axle hub sub-assembly.
SST 09520-00031

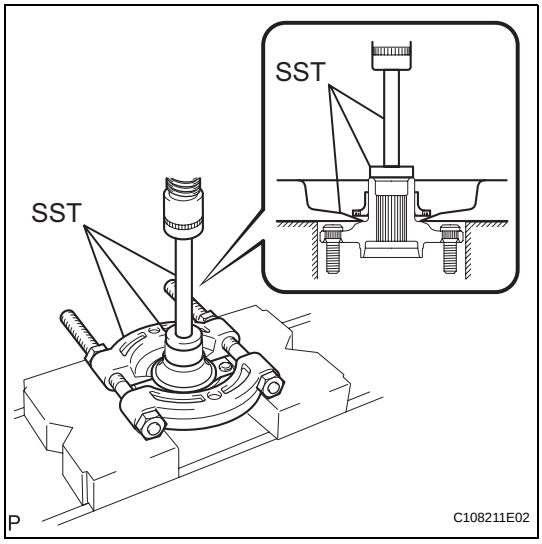

(c) Using SST and a press, remove the bearing inner race (outside) from the front axle hub sub-assembly.
SST 09555-55010, 09950-60010 (09951-00430), 09950-70010 (09951-07100)
NOTICE:
Be careful not to drop the front axle hub sub-assembly.

12. REMOVE FRONT DISC BRAKE DUST COVER

(a) Remove the 4 bolts and disc brake dust cover from the steering knuckle.

13. REMOVE FRONT LOWER BALL JOINT ASSEMBLY
(See page SP-25)

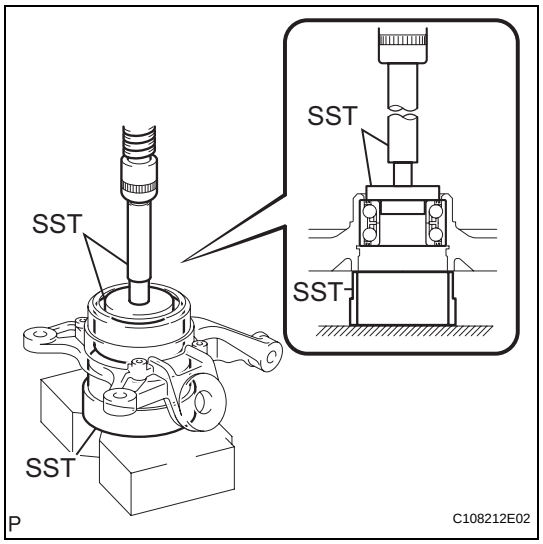

14. REMOVE FRONT AXLE HUB BEARING

(a) Place the bearing inner race (outside) on the front axle hub bearing.

(b) Using SST and a press, press the front axle hub bearing until it contacts the SST.

SST 09527-17011, 09950-60010 (09951-00600, 09951-00400, 09952-06010), 09950-70010 (09951-07100)

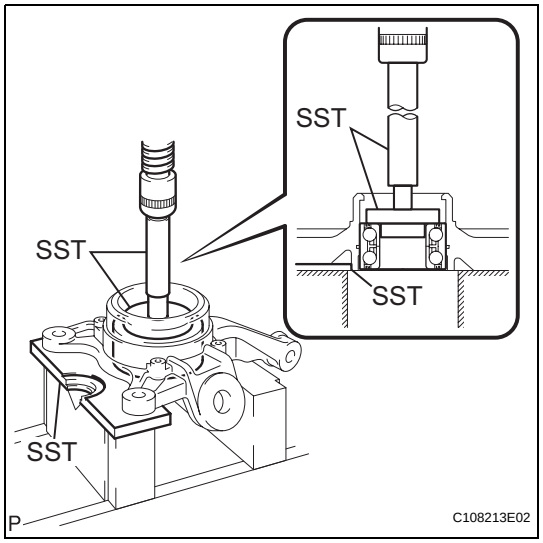

(c) Using SST, support the steering knuckle horizontally. Place it on the V-blocks as shown in the illustration.

SST 09527-20011, 09950-60010 (09951-00600, 09951-00400, 09952-06010), 09950-70010 (09951-07100)

(d) Using SST and a press, remove the front axle hub bearing from the steering knuckle.

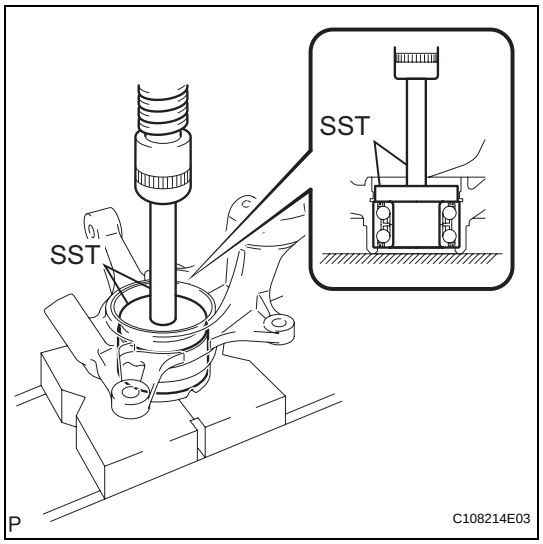

INSTALLATION

1. INSTALL FRONT AXLE HUB BEARING

(a) Using SST and a press, install a new front axle hub bearing to the steering knuckle.

SST 09950-60020 (09951-00810), 09950-70010 (09951-07100)

2. INSTALL FRONT LOWER BALL JOINT ASSEMBLY (See page SP-26)

3. INSTALL FRONT DISC BRAKE DUST COVER

(a) Install the disc brake dust cover to the steering knuckle with the 4 bolts.

Torque: 8.3 N*m (85 kgf*cm, 73 in.*lbf)

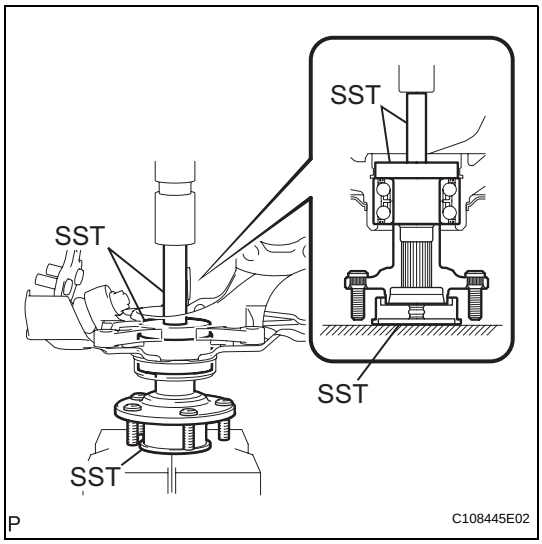

4. INSTALL FRONT AXLE HUB SUB-ASSEMBLY

(a) Using SST and a press, install the front axle hub sub-assembly.

SST 09608-32010, 09950-60020 (09951-00810), 09950-70010 (09951-07100)

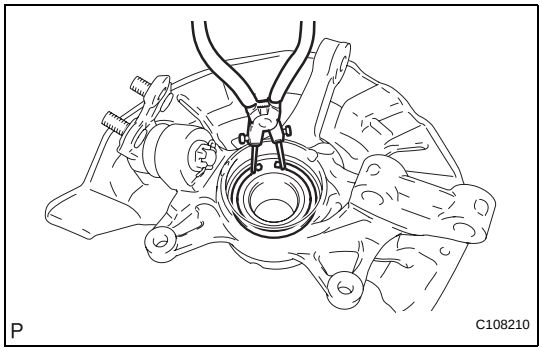

5. INSTALL FRONT AXLE HUB HOLE SNAP RING

(a) Using snap ring pliers, install a new front axle hub hole snap ring.

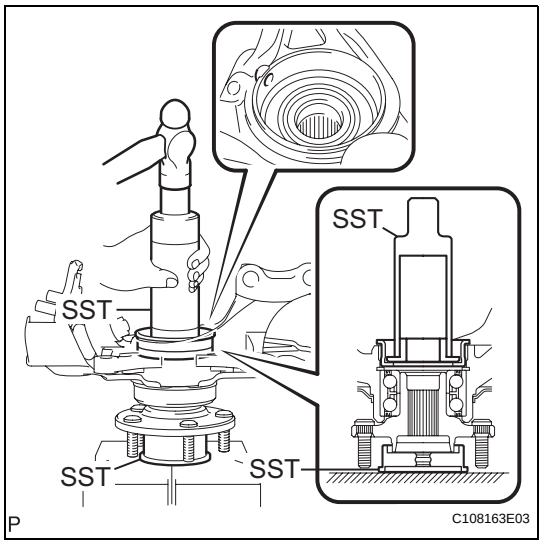

6. INSTALL NO. 1 FRONT WHEEL BEARING DUST DEFLECTOR

(a) Using SST and a hammer, install a new No. 1 front wheel bearing dust deflector.

SST 09316-60011 (09316-00011, 09316-00031), 09608-32010

HINT:

Align the hole for the speed sensor in the No. 1 front wheel bearing dust deflector with the steering knuckle.

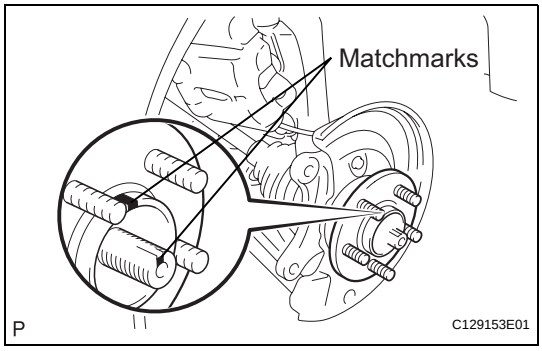

7. INSTALL FRONT AXLE ASSEMBLY

(a) Align the matchmarks and install the front drive shaft assembly to the front axle hub sub-assembly.

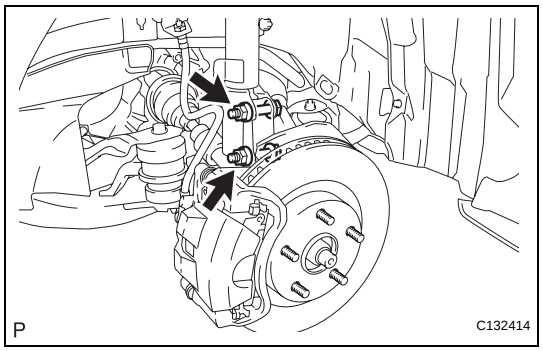

(b) Install the steering knuckle with the front axle assembly to the front shock absorber with the 2 bolts and 2 nuts.
Torque: 210 N*m (2,140 kgf*cm, 155 ft.*lbf)
NOTICE:
- **If the bolts and nuts are reused, apply a small amount of engine oil to the threads of the nuts.**
- **Be careful not to damage the drive shaft boot or speed sensor rotor.**

8. INSTALL FRONT SUSPENSION LOWER NO. 1 ARM (See page DS-16)

9. INSTALL TIE ROD END SUB-ASSEMBLY (See page DS-16)

10. INSTALL FRONT DISC (See page BR-39)

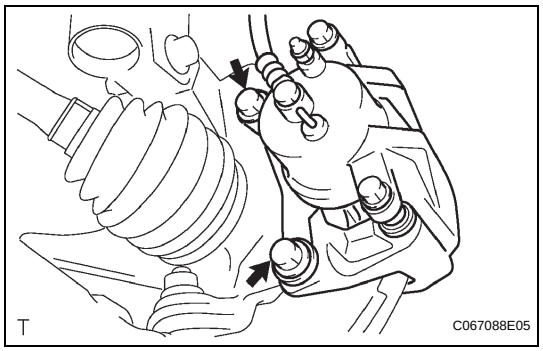

11. INSTALL FRONT DISC BRAKE CALIPER ASSEMBLY
(a) Install the front disc brake caliper assembly to the steering knuckle with the 2 bolts.
Torque: 107 N*m (1,090 kgf*cm, 79 ft.*lbf)
NOTICE:
Do not twist the brake hose when installing the front disc brake caliper assembly.

12. INSTALL FRONT AXLE HUB NUT
(a) Using a socket wrench (30 mm), install a new axle hub nut.
Torque: 294 N*m (3,000 kgf*cm, 217 ft.*lbf)
HINT:
Stake the nut after inspecting for looseness and runout in the following steps.

13. SEPARATE FRONT DISC BRAKE CALIPER ASSEMBLY
(a) Remove the 2 bolts and separate the front disc brake caliper assembly from the steering knuckle.
NOTICE:
Use wire or an equivalent tool to keep the brake caliper from hanging by its flexible hose.

14. REMOVE FRONT DISC (See page BR-37)

15. INSPECT FRONT AXLE HUB BEARING LOOSENESS (See page AH-5)

16. INSPECT FRONT AXLE HUB RUNOUT (See page AH-6)

17. INSTALL FRONT DISC (See page BR-39)

18. INSTALL FRONT DISC BRAKE CALIPER ASSEMBLY
(a) Install the front disc brake caliper assembly to the steering knuckle with the 2 bolts.
Torque: 107 N*m (1,090 kgf*cm, 79 ft.*lbf)
NOTICE:
Do not twist the brake hose when installing the front disc brake caliper assembly.

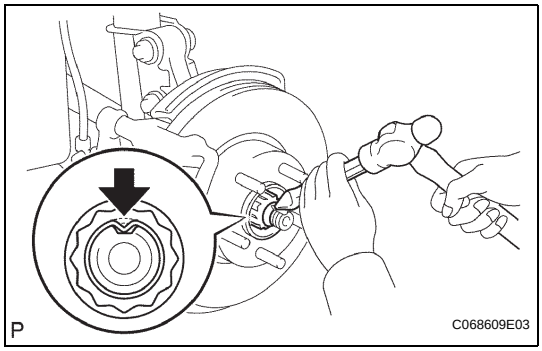

19. INSTALL FRONT SPEED SENSOR (See page DS-17)

20. INSTALL FRONT AXLE HUB NUT

(a) Using a chisel and hammer, stake the axle hub nut.

21. INSTALL FRONT WHEEL

Torque: 103 N*m (1,050 kgf*cm, 76 ft.*lbf)

22. ADJUST FRONT WHEEL ALIGNMENT

HINT:

See page SP-4

23. CHECK ABS SPEED SENSOR SIGNAL

HINT:

See page BC-24

PROBLEM SYMPTOMS TABLE

Use the table below to help find the cause of the problem. The numbers indicate the priority of the likely cause of the problem. Check each part in order. If necessary, replace these parts.

SUSPENSION SYSTEM

Symptom	Suspected Area	See page
Bottoming	1. Vehicle (Overloaded)	-
	2. Spring (Weak)	SP-16
	3. Shock absorber (Worn)	SP-16
Sways/pitches	1. Tire (Worn or improperly inflated)	TW-3
	2. Stabilizer bar (Bent or broken)	SP-29
	3. Shock absorber (Worn)	SP-16
Front wheel shimmy	1. Tire (Worn or improperly inflated)	TW-3
	2. Wheel (Out of balance)	TW-3
	3. Shock absorber (Worn)	SP-16
	4. Wheel alignment (Incorrect)	SP-4
	5. Lower ball joint (Worn)	SP-24
	6. Hub bearing (Worn)	AH-5
	7. Steering gear (Out of adjustment or broken)	PS-37
Rear wheel shimmy	1. Tire (Worn or improperly inflated)	TW-3
	2. Wheel (Out of balance)	TW-3
	3. Shock absorber (Worn)	SP-38
	4. Wheel alignment (Incorrect)	SP-11
	5. Hub bearing (Worn)	AH-14
Abnormal tire wear	1. Tire (Worn or improperly inflated)	TW-3
	2. Wheel alignment (Incorrect)	SP-11
	3. Shock absorber (Worn)	SP-16
	4. Suspension parts (Worn)	-

REMOVAL

NOTICE:
Check if an old gasket still remains on the pipe. If so, remove it. Also, check if any bolts or nuts are rusted. If so, replace them.

1. **REMOVE REAR WHEEL**
2. **REMOVE TAIL EXHAUST PIPE ASSEMBLY (See page EX-2)**
3. **REMOVE CENTER EXHAUST PIPE ASSEMBLY (See page EX-2)**
4. **SEPARATE REAR STABILIZER LINK ASSEMBLY LH**
   (a) Remove the nut and separate the rear stabilizer link assembly LH (lower side) from the rear stabilizer bar.
   HINT:
   If the ball joint turns together with the nut, use a hexagon wrench (5 mm) to hold the stud.

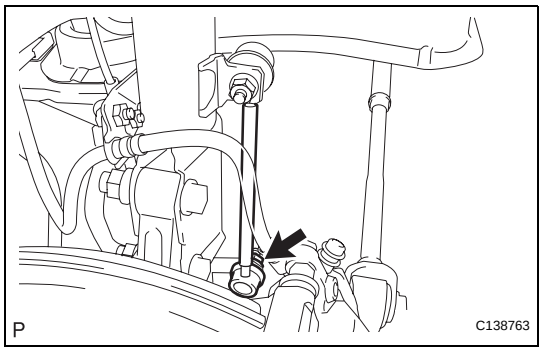

5. **SEPARATE REAR STABILIZER LINK ASSEMBLY RH**
   HINT:
   Separate the RH side using the same procedures as for the LH side.
6. **REMOVE REAR STABILIZER BAR NO. 1 BRACKET (See page SP-65)**
7. **REMOVE REAR STABILIZER BAR**
8. **REMOVE REAR STABILIZER BUSHING (See page SP-65)**
9. **SEPARATE REAR STRUT ROD**
   (a) Remove the bolt, nut and separate the rear strut rod from the rear axle carrier.
   NOTICE:
   When removing the bolt, keep the nut from rotating.

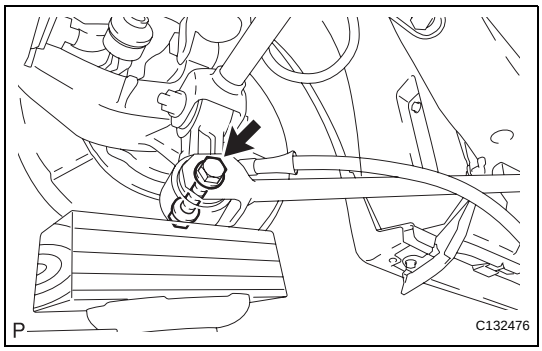

10. **SEPARATE REAR NO. 2 SUSPENSION ARM LH**
    (a) Remove the bolt nut, and separate the rear suspension No. 2 arm (outer side) from the rear axle carrier.
    NOTICE:
    When removing the bolt, keep the nut from rotating.

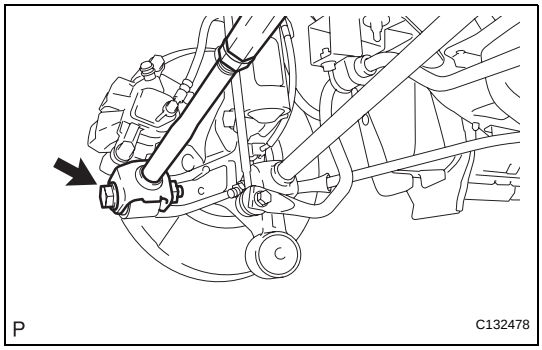

11. **SEPARATE REAR NO. 2 SUSPENSION ARM RH**
    HINT:
    Separate the RH side using the same procedures as for the LH side.

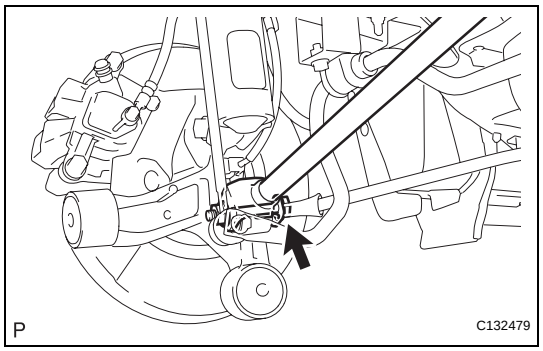

12. SEPARATE REAR NO. 1 SUSPENSION ARM LH

(a) Remove the bolt, nut and the rear No. 1 suspension arm (outer side) from the rear axle carrier.
NOTICE:
When removing the bolt, keep the nut from rotating.

13. SEPARATE REAR NO. 1 SUSPENSION ARM RH

HINT:
Separate the RH side using the same procedures as for the LH side.

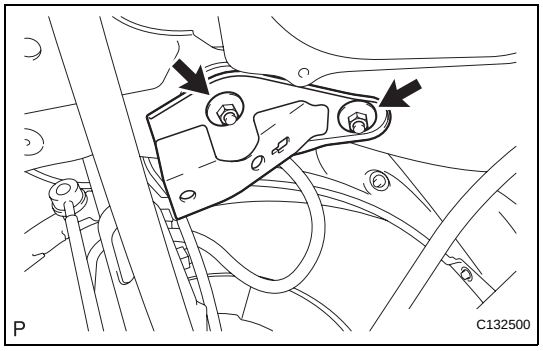

14. REMOVE REAR SUSPENSION MEMBER LOWER STOPPER LH

(a) Remove the 2 nuts and the rear suspension member lower stopper LH.

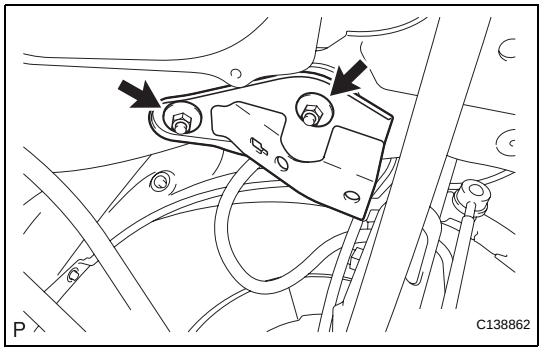

15. REMOVE REAR SUSPENSION MEMBER LOWER STOPPER RH

(a) Remove the 2 nuts and the rear suspension member lower stopper RH.

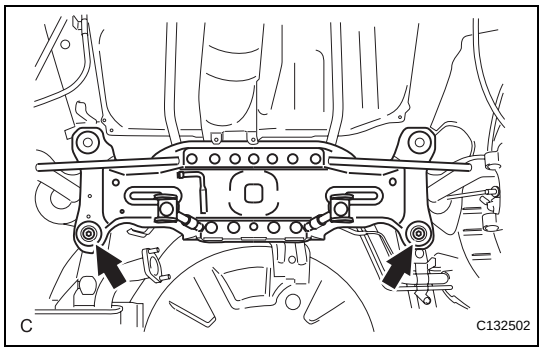

16. REMOVE REAR SUSPENSION MEMBER SUB-ASSEMBLY

(a) Support the rear suspension member with a jack.
(b) Remove the 2 bolts, and the rear suspension member sub-assembly.

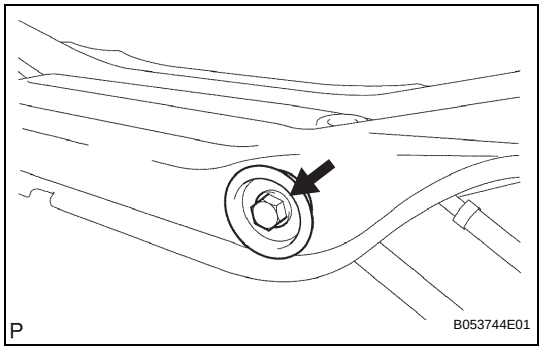

17. REMOVE REAR NO. 1 SUSPENSION ARM LH

(a) Remove the bolt and rear No. 1 suspension arm assembly LH.

EQUIPMENT

Abrasive compound	
Brush	
Caliper gauge	
Carbide cutter (30°)	
Carbide cutter (45°)	
Carbide cutter (60°)	
Carbide cutter (75°)	
Connecting rod aligner	
Cylinder gauge	
Dial indicator	
Dye penetrant	
Engine tune-up tester	
Groove cleaning tool	
Heater	
Micrometer	
Piston ring compressor	
Piston ring expander	
Plastigage	
Precision straight edge	
Press	
Reamer (5.5 mm)	
Ridge reamer	
Soft brush	
Solvent	
Spring tester	
Steel square	
Thermometer	
Torque wrench	
Torx socket wrench	
Valve seat cutter	
Valve guide bushing brush	
V-block	
Vernier calipers	
Wire brush	
Bar	
Chain Block	
CO/HC meter	
Compression gauge	
Dial indicator with magnetic base	
Engine Sling Device	
Feeler gauge	
Radiator cap tester	
Slide calipers	
Tachometer	
Timing light	
Wooden block	
Deep socket wrench 24 mm	

HINT:
TORX is registered trademark of Textron Inc.

INSPECTION

1. INSPECT TIRE

(a) Check the tires for wear and proper inflation pressure.

Cold tire inflation pressure

Tire size	Front kPa (kgf*cm^2, psi)	Rear kPa (kgf*cm^2, psi)
P215/55R17 93V	210 (2.1, 31)	210 (2.1, 31)

When driving under the above vehicle conditions at sustained high speeds above 160 km/h (100 mph), in countries where such speeds are permitted by law, inflate the front and rear tires to 240 kPa (2.4 kgf*cm^2, 35 psi) provided that it does not exceed the maximum cold tire inflation pressure molded on the tire sidewall.

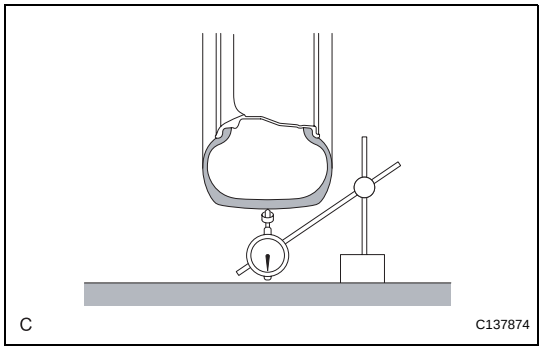

(b) Using a dial indicator, check the runout of the tires.
Tire runout:
1.4 mm (0.055 in.) or less

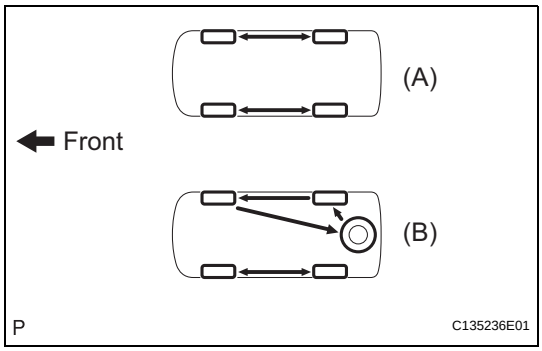

2. ROTATE TIRES

(a) Rotate the tires as shown in illustration (A). If the vehicle is equipped with a grand spare tire, rotate the tires as shown in illustration (B).

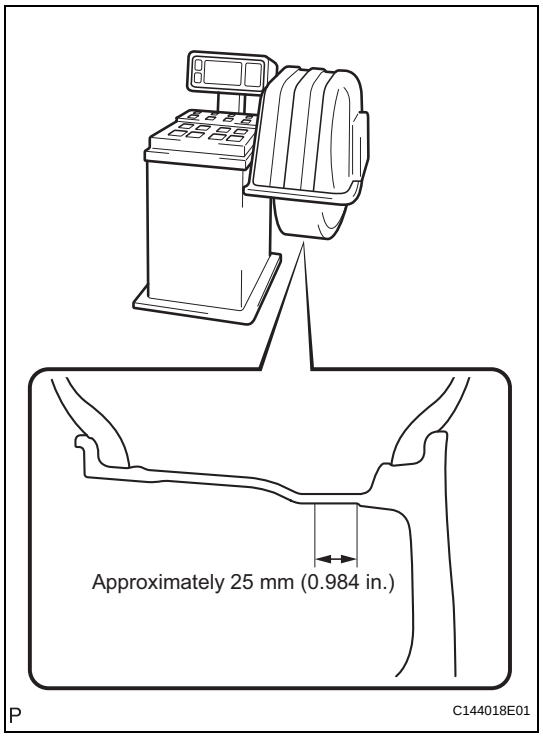

3. INSPECT WHEEL BALANCE

(a) Check and adjust the off-the-car balance.

Imbalance after adjustment:
8.0 g (0.018 lb.) or less.

NOTICE:

- **Remove dirt, oil, and water from the surface where the balance weight is to be adhered with a cleaning detergent.**
- **Do not touch the sticking surface of the tape.**
- **Adhere the sticking type balance weight to the flat position shown in the illustration.**
- **Push the balance weight securely with a finger to adhere it to the indicated position.**
- **Do not reuse balance weights.**
- **Use the LEXUS genuine adhesive type balance weights.**

HINT:

- The inner side balance weight should be installed by clipping it to the rim.
- If necessary, check and adjust the on-the-car balance.

4. INSPECT FRONT AXLE HUB BEARING LOOSENESS

HINT:
(See page AH-5)

5. INSPECT REAR AXLE HUB BEARING LOOSENESS

HINT:
(See page AH-14)

6. INSPECT FRONT AXLE HUB RUNOUT

HINT:
(See page AH-5)

7. INSPECT REAR AXLE HUB RUNOUT

HINT:
(See page AH-14)

SSM

Toyota Genuine Seal Packing Black, Three Bond 1207B or Equivalent
Toyota Genuine Seal Packing 1282B, Three Bond 1282B or Equivalent
Toyota Genuine Adhesive 1324, Three Bond 1324 or Equivalent
Toyota Genuine Adhesive 1344, Three Bond 1344 or Equivalent

EQUIPMENT

Measuring Flask	
Ohmmeter	
Service Wire Harness	
Stopwatch	
Torque wrench	
Vernier calipers	

SSM

	08850-00065	Butyl Tape Set	

EQUIPMENT

Intelligent vacuum pump	
Ohmmeter	
Service Wire Harness	
Torque wrench	
Vacuum gauge	

EQUIPMENT

Ohmmeter	
Radiator cap tester	
Thermometer	
Torque wrench	
Vernier calipers	

COOLANT

Capacity	Classification
9.0 liters (9.5 US qts, 7.9 Imp. qts)	Use only "TOYOTA Super Long Life Coolant" or similar high quality ethylene glycol based non-silicate, non-amine, non-nitrite, non-borate coolant with long-life hybrid organic acid technology (coolant with long-life hybrid organic acid technology consists of a combination of low phosphates and organic acids).

SSM

Toyota Genuine Adhesive 1344, Three Bond 1344 or Equivalent	

EQUIPMENT

Deep socket wrench (24 mm)	
Hose	
Oil pressure gauge	
Socket wrench (27 mm)	
Precision straight edge	
Torque wrench	

LUBRICANT

Item	Capacity	Classification
Oil grade	-	Oil grade: Use ILSAC multigrade engine oil. SAE 5W-30 engine oil may be used. However, SAE 5W- 30 is the best choice for good fuel economy and good starting in cold weather.
Drain and refill with oil filter change	6.1 liters (6.4 US qts, 5.4 Imp. qts)	-
Drain and refill without oil filter change	5.7 lifters (6.0 US qts, 5.0 Imp. qts)	-
Dry fill	6.5 lifters (6.9 US qts, 5.7 Imp. qts)	-

SSM

Toyota Genuine Adhesive 1344, Three Bond 1344 or equivalent	
Toyota Genuine Seal Packing Block, Three Bond 1207B or equivalent	
Toyota Genuine Seal Packing 1282B, Three Bond 1282B or equivalent	

PP

RECOMMENDED TOOLS

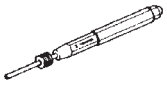	09031-00030	Pin Punch	
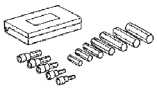	09040-00011	Hexagon Wrench Set	
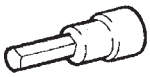	(09043-20060)	Socket Hexagon Wrench 6	
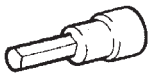	(09043-20100)	Socket Hexagon Wrench 10	
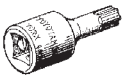	09042-00010	Torx Socket T30	
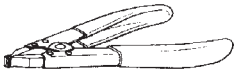	09905-00012	Snap Ring No.1 Expander	
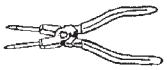	09905-00013	Snap Ring Pliers	
	(09904-00090)	Claw Set	
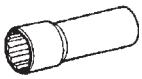	09924-12411	Deep Socket Wrench 41	

HINT:
TORX is registered trademark of Textron Inc.

EQUIPMENT

Dial indicator with magnetic base	
Feeler gauge	
Vernier calipers	
Torque wrench	
Plastic hammer	
Straight edge	
Press	
Punch	

LUBRICANT

Automatic transaxle fluid		
Dry fill	6.57 liter (6.94 USqts, 5.78 Imp.qts)	ATF WS

SSM

Toyota Genuine Seal Packing 1281, Three Bond 1281 or equivalent	
Toyota Genuine Adhesive 1324, Three Bond 1324 or equivalent	
Toyota Genuine Adhesive 1344, Three Bond 1344 or equivalent	

RECOMMENDED TOOLS

	09011-12301	Socket Wrench 30 mm	
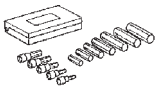	09040-00011	Hexagon Wrench Set	
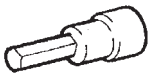	(09043-20060)	Socket Hexagon Wrench 6	
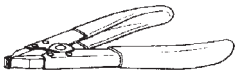	09905-00012	Snap Ring No.1 Expander	

EQUIPMENT

Torque wrench	

LUBRICANT

Item	Capacity
Outboard joint grease	164 to 184 g (5.8 to 6.5 oz.)
Inboard joint grease	155 to 175 g (5.5 to 6.2 oz.)

RECOMMENDED TOOLS

	09011-12301	Socket Wrench 30 mm	
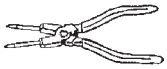	09905-00013	Snap Ring Pliers	

EQUIPMENT

Torque wrench	
Dial indicator with magnetic base	

EQUIPMENT

Torque wrench	
Dial indicator with magnetic base	
Tire pressure gauge	
Alignment tester	
Toe-in gauge	
Angle gauge	
Slide Calipers	
Wooden block	
Camber-caster-kingpin gauge	
Drill (Safety equipment: protective goggles, etc.)	Shock absorber disposal

LUBRICANT

Item	Capacity	Classification
Brake fluid	-	SAE J1703 or FMVSS No. 116 DOT 3

LUBRICANT

Item	Capacity	Classification
Brake fluid	-	SAE J1703 or FMVSS No. 116 DOT 3

SSM

Toyota Genuine Adhesive 1344, Three Bond 1344 or equivalent	

RECOMMENDED TOOLS

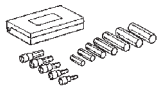	09040-00011	Hexagon Wrench Set	
	(09043-30240)	Straight Hexagon Wrench 24	
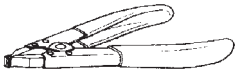	09905-00012	Snap Ring No.1 Expander	

EQUIPMENT

Torque wrench	
Vernier calipers	
Dial indicator	
Feeler gauge	
Micrometer	
V-block	

LUBRICANT

Item	Capacity	Classification
Power steering fluid (Total)	1.0 liters (1.1 US qts, 0.9 Imp. qts)	ATF DEXRON II or III or equivalent

SSM

TOYOTA genuine adhesive 1344, THREE BOND 1344, or equivalent	

EQUIPMENT

Vinyl tape	
Hexagon wrench 4mm	
Hexagon wrench 12 mm	
Gas leak detector	
Dial indicator with magnetic base	
Torque wrench	

LUBRICANT

Item	Capacity	Classification
Compressor oil	-	ND-OIL 8 or equivalent

EQUIPMENT

Torque wrench	
Feeler gauge	
Battery	
Tape	
Bolt Length: 35.0 mm (1.378 in.) Diameter: 6.0 mm (0.236 in.) Pitch: 1.0 mm (0.039 in.)	Airbag disposal
Tire Width: 185 mm (7.28 in.) Inner diameter: 360 mm (14.17 in.)	Airbag disposal
Tire with disc wheel Width: 185 mm (7.28 in.) Inner diameter: 360 mm (14.17 in.)	Airbag disposal
Wire harness	Airbag disposal
Cardboard Box	Airbag disposal
Plastic bag	Airbag disposal

EQUIPMENT

Torque wrench	
Protective tape	

EQUIPMENT

Torque wrench	

PARTS LOCATION

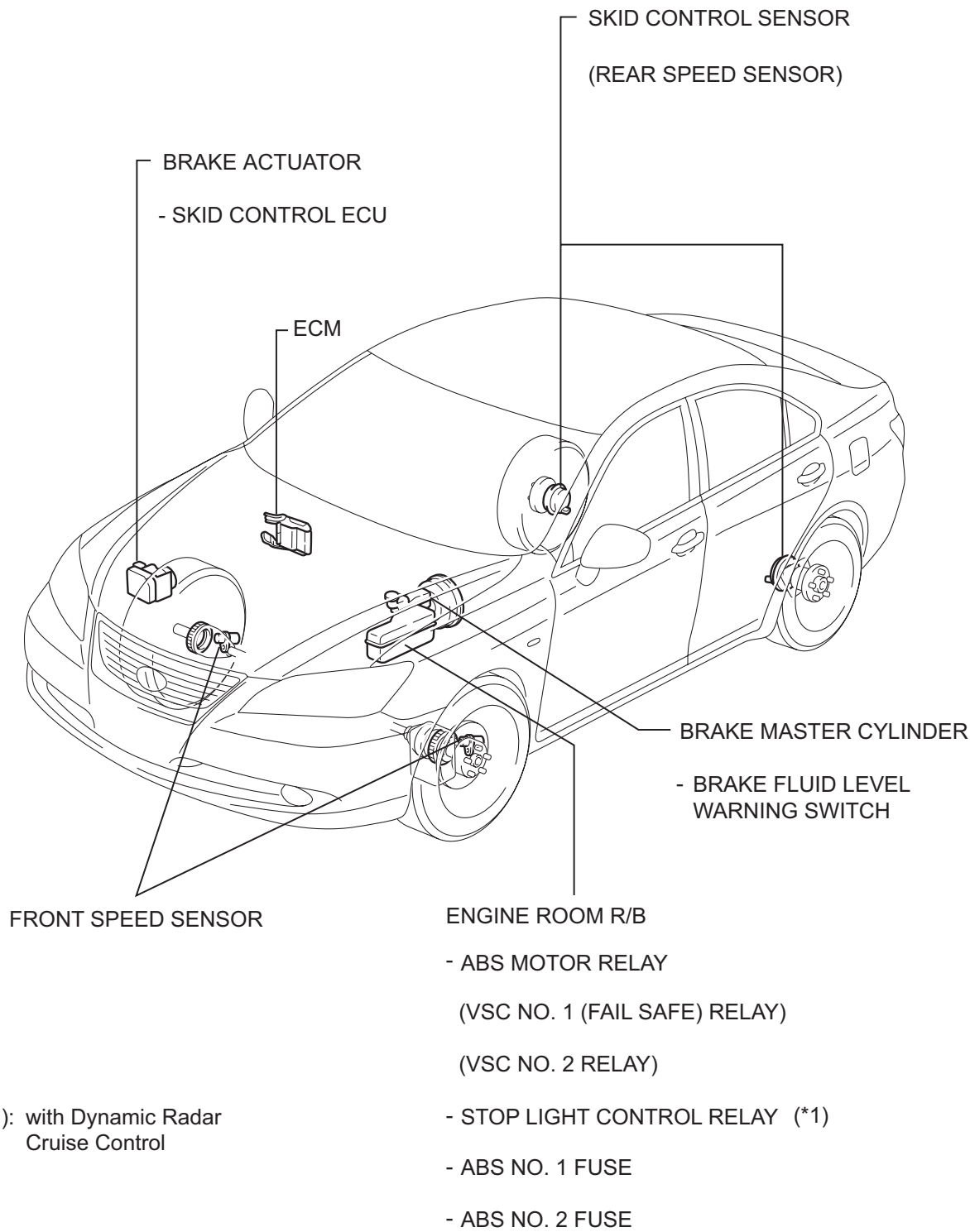

(*1): with Dynamic Radar Cruise Control

N

C135810E01

BC

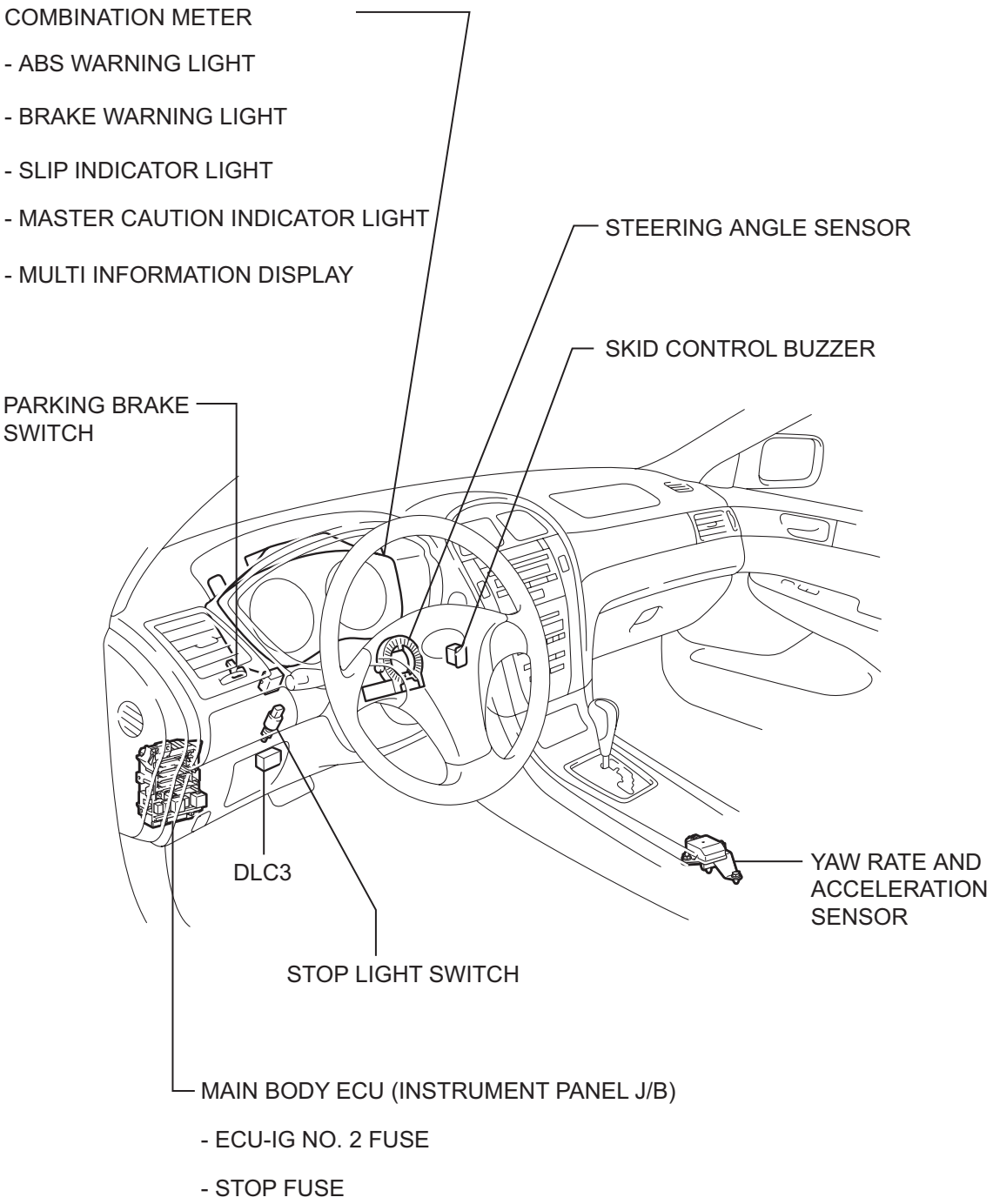

N

C135811E02

SYSTEM DIAGRAM

HINT:
See the layout drawing to confirm the locations and tightening torque of the flexible hoses and brake lines.

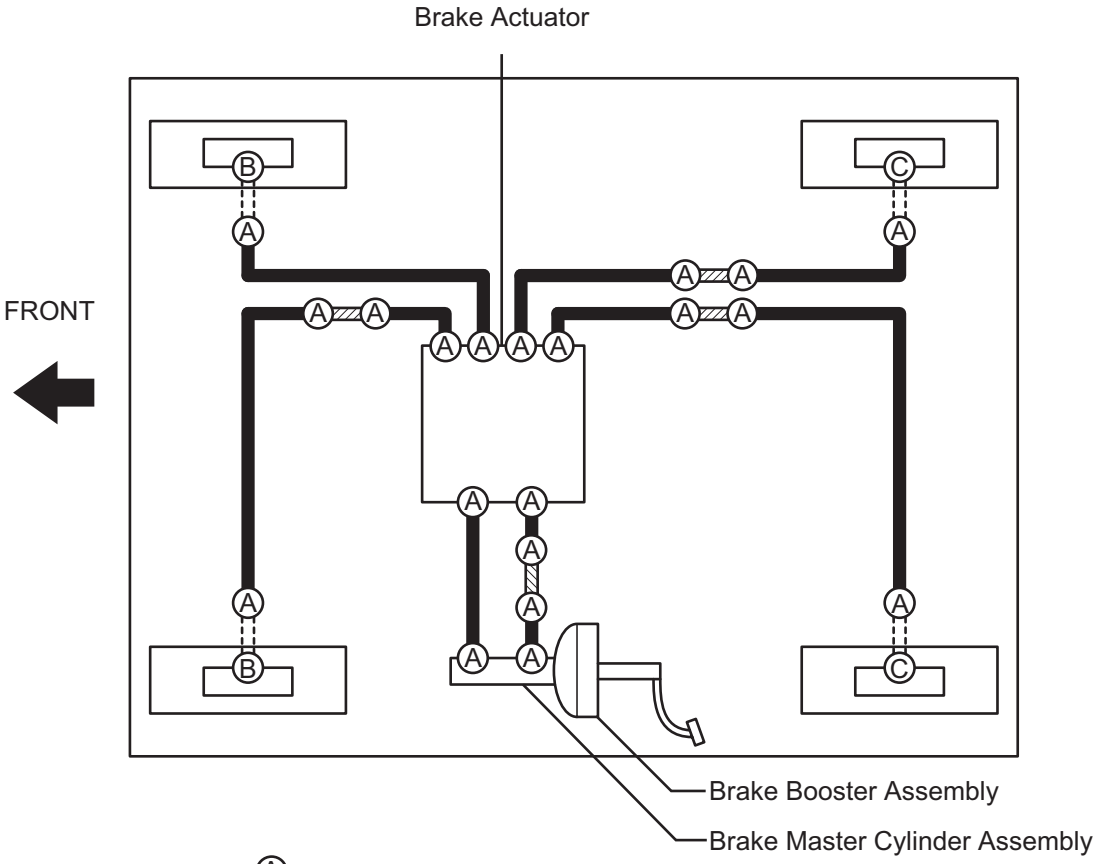

: Brake Line

: Flexible Hose

: Brake Tube Way

Ⓐ : Union Nut
Torque: 15 N*m (155 kgf*cm, 11 ft.*lbf)
: 14 N*m (143 kgf*cm, 10 ft.*lbf)*

Ⓑ : Union Bolt
Torque: 30 N*m (306 kgf*cm, 22 ft.*lbf)

Ⓒ : Union Bolt
Torque: 33 N*m (337 kgf*cm, 24 ft.*lbf)

* For use with SST

C131907E05

PROBLEM SYMPTOMS TABLE

Use the table below to help determine the cause of the problem. The numbers indicate the priority of the likely cause of the problem. Check each part in order. If necessary, replace these parts.

BRAKE SYSTEM

Symptom	Suspected Area	See page
Low pedal or spongy pedal	1. Fluid leaks in brake system	BR-11
	2. Air in brake system	BR-6
	3. Piston seals (Worn or damaged) (FRONT)	BR-35
	4. Piston seals (Worn or damaged) (REAR)	BR-47
	5. Master cylinder (Faulty)	BR-21
Brake drag	1. Brake pedal free play (Insufficient)	BR-16
	2. Parking brake pedal travel (Out of adjustment)	PB-1
	3. Parking brake cable (Sticking)	PB-30
	4. Parking brake shoe clearance (Out of adjustment)	PB-40
	5. Pad (Cracked or distorted) (FRONT)	BR-35
	6. Pad (Cracked or distorted) (REAR)	BR-46
	7. Piston (Stuck) (FRONT)	BR-35
	8. Piston (Stuck) (REAR)	BR-46
	9. Piston (Seized) (FRONT)	BR-35
	10. Piston (Seized) (REAR)	BR-50
	11. Vacuum leaks in booster systems	BR-29
	12. Master cylinder (Faulty)	BR-21
Brake pull	1. Piston (Stuck) (FRONT)	BR-35
	2. Piston (Stuck) (REAR)	BR-47
	3. Pad (Oily) (FRONT)	BR-35
	4. Pad (Oily) (REAR)	BR-47
	5. Piston (Seized) (FRONT)	BR-35
	6. Piston (Seized) (REAR)	BR-47
	7. Disc (Scored) (FRONT)	BR-35
	8. Disc (Scored) (REAR)	BR-47
	9. Pad (Cracked or distorted) (FRONT)	BR-35
	10. Pad (Cracked or distorted) (REAR)	BR-47
Hard pedal but brake inefficient	1. Fluid leaks in brake systems	BR-11
	2. Air in brake system	BR-6
	3. Pad (Worn) (FRONT)	BR-35
	4. Pad (Worn) (REAR)	BR-47
	5. Pad (Cracked or distorted) (FRONT)	BR-35
	6. Pad (Cracked or distorted) (REAR)	BR-47
	7. Pad (Oily) (FRONT)	BR-35
	8. Pad (Oily) (REAR)	BR-47
	9. Pad (Glazed) (FRONT)	BR-35
	10. Pad (Glazed) (REAR)	BR-47
	11. Disc (Scored) (FRONT)	BR-35
	12. Disc (Scored) (REAR)	BR-47
	13. Vacuum leaks in booster system	BR-29

Symptom	Suspected Area	See page
Noise from brakes	1. Pad (Cracked or distorted) (FRONT)	BR-35
	2. Pad (Cracked or distorted) (REAR)	BR-47
	3. Cylinder mounting bolt (Loose) (FRONT)	BR-35
	4. Caliper support bolt (Loose) (REAR)	BR-46
	5. Disc (Scored) (FRONT)	BR-35
	6. Disc (Scored) (REAR)	BR-47
	7. Pad support plate (Loose) (FRONT)	BR-35
	8. Pad support plate (Loose) (REAR)	BR-47
	9. Sliding pin (Worn) (FRONT)	BR-35
	10. Sliding pin (Worn) (REAR)	BR-47
	11. Pad (Dirty) (FRONT)	BR-35
	12. Pad (Dirty) (REAR)	BR-47
	13. Pad (Glazed) (FRONT)	BR-35
	14. Pad (Glazed) (REAR)	BR-47
	15. Anti-squeal shim (Damaged) (FRONT)	BR-35
	16. Anti-squeal shim (Damaged) (REAR)	BR-47

REMOVAL

1. **PRECAUTION (See page RS-366)**
2. **DISCONNECT CABLE FROM NEGATIVE BATTERY TERMINAL (See page RS-366)**
3. **REMOVE FRONT DOOR SCUFF PLATE OUTSIDE LH (See page IR-39)**
4. **REMOVE INSTRUMENT SIDE PANEL LH (See page IP-14)**
5. **REMOVE FRONT DOOR OPENING TRIM COVER LH (See page IR-39)**
6. **REMOVE INSTRUMENT PANEL FINISH PANEL END LH (See page IP-13)**
7. **REMOVE LOWER INSTRUMENT PANEL SUB-ASSEMBLY (See page IP-13)**
8. **REMOVE FRONT DRIVER SIDE KNEE AIRBAG ASSEMBLY (See page RS-386)**
9. **REMOVE INSTRUMENT CLUSTER FINISH PANEL SUB-ASSEMBLY (See page ME-68)**
10. **REMOVE COMBINATION METER (See page ME-69)**
11. **REMOVE STOP LIGHT SWITCH**
    (a) Disconnect the stop light switch connector from the stop light switch.

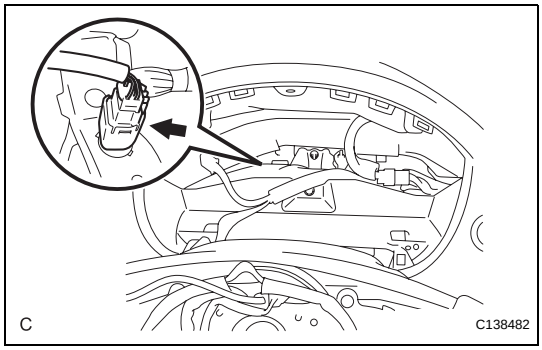

    (b) Turn the stop light switch counterclockwise and remove the stop light switch.

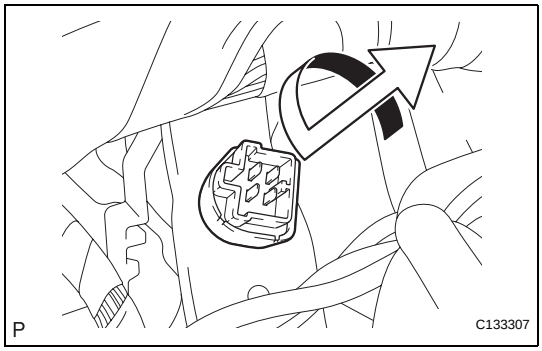

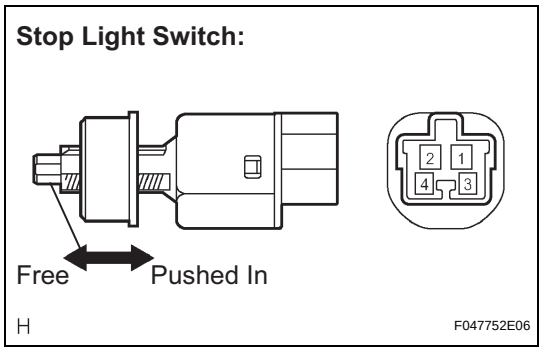

INSPECTION

1. INSPECT STOP LIGHT SWITCH

(a) Measure the resistance according to the value(s) in the table below.

Standard resistance

Tester Connection	Switch Condition	Specified Condition
1 - 2	Switch pin free	Below 1 Ω
1 - 2	Switch pin pushed in	10 kΩ or higher

If the measurement result is not normal, replace the stop light switch.

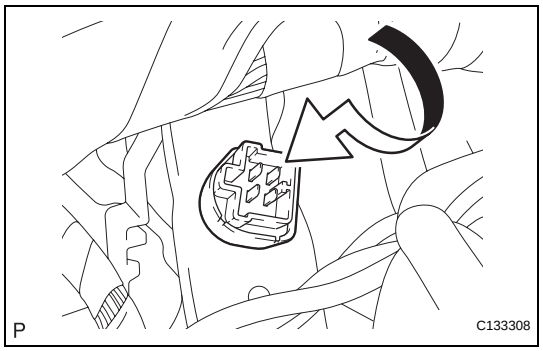

INSTALLATION

1. INSTALL STOP LIGHT SWITCH

(a) Insert the stop light switch until the body hits the cushion.

NOTICE:

When inserting the stop light switch, support the pedal from behind so that the pedal is not pushed in.

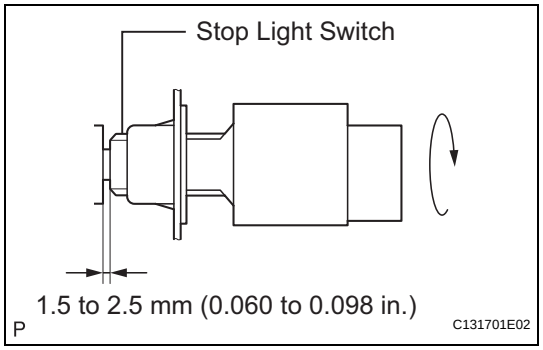

(b) Make a quarter turn clockwise to install the stop light switch.

Torque: 1.5 N*m (15 kgf*cm, 13 in.*lbf) or less

NOTICE:

When inserting the stop light switch, support the pedal from behind so that the pedal is not pushed in.

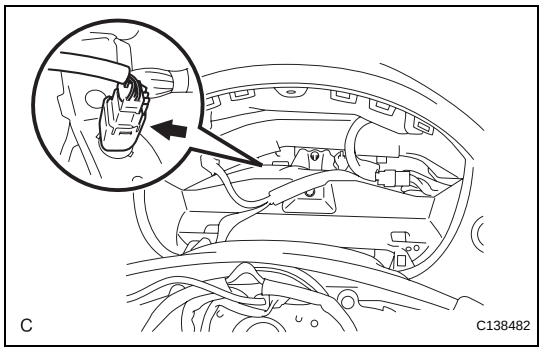

(c) Connect the stop light switch connector to the stop light switch.

(d) Check the protrusion of the rod (See page BR-59).

2. INSTALL COMBINATION METER (See page ME-70)

3. INSTALL INSTRUMENT CLUSTER FINISH PANEL SUB-ASSEMBLY (See page ME-71)

4. INSTALL FRONT DRIVER SIDE KNEE AIRBAG ASSEMBLY (See page RS-387)

5. INSTALL LOWER INSTRUMENT PANEL SUB-ASSEMBLY (See page IP-46)

6. INSTALL INSTRUMENT PANEL FINISH PANEL END LH (See page IP-46)

7. INSTALL INSTRUMENT SIDE PANEL LH (See page IP-47)

8. INSTALL FRONT DOOR OPENING TRIM COVER LH (See page IR-64)

9. **INSTALL FRONT DOOR SCUFF PLATE OUTSIDE LH (See page IR-65)**

10. **CONNECT CABLE TO NEGATIVE BATTERY TERMINAL**

11. **INSPECT SRS WARNING LIGHT**
    HINT:
    (See page RS-37)

12. **PERFORM INITIALIZATION**
    Some systems need initialization after reconnecting the negative battery terminal. (See Page IN-33)

REMOVAL

1. **REMOVE FRONT SEAT ASSEMBLY LH**
   HINT:
   Refer to the procedures up to "REMOVE FRONT SEAT ASSEMBLY". (See page SE-83)
2. **REMOVE FRONT SEAT ASSEMBLY RH**
   HINT:
   Use the same procedures for the RH side and the LH side.
3. **REMOVE FRONT DOOR SCUFF PLATE LH (See page IR-39)**
4. **REMOVE REAR DOOR SCUFF PLATE LH (See page IR-40)**
5. **REMOVE LOWER CENTER PILLAR GARNISH LH (See page IR-40)**
6. **REMOVE FRONT DOOR OPENING TRIM COVER LH (See page IR-39)**
7. **REMOVE SIDE INSTRUMENT PANEL LH (See page IP-12)**
8. **REMOVE INSTRUMENT PANEL FINISH PANEL END LH (See page IP-13)**
9. **REMOVE LOWER INSTRUMENT PANEL SUB-ASSEMBLY (See page IP-13)**
10. **REMOVE INSTRUMENT PANEL FINISH PANEL END RH (See page IP-15)**
11. **REMOVE FRONT DOOR SCUFF PLATE RH (See page IR-42)**
12. **REMOVE REAR DOOR SCUFF PLATE RH (See page IR-42)**
13. **REMOVE LOWER CENTER PILLAR GARNISH RH**
14. **REMOVE FRONT DOOR OPENING TRIM COVER RH (See page IR-42)**
15. **REMOVE NO. 2 INSTRUMENT PANEL UNDER COVER SUB-ASSEMBLY (See page IP-15)**
16. **REMOVE SIDE INSTRUMENT PANEL RH (See page IP-15)**
17. **REMOVE FRONT PASSENGER SIDE KNEE AIRBAG ASSEMBLY (See page RS-396)**
18. **REMOVE LOWER INSTRUMENT PANEL RH (See page IP-16)**
19. **REMOVE SHIFT LEVER KNOB SUB-ASSEMBLY (See page IP-16)**
20. **REMOVE UPPER CONSOLE PANEL ASSEMBLY WITH FRONT ASH RECEPTACLE (See page IP-16)**
21. **REMOVE CONSOLE BOX POCKET (See page IP-18)**

22. REMOVE CONSOLE BOX CARPET (See page IP-18)

23. REMOVE CONSOLE REAR END PANEL SUB-ASSEMBLY (See page IP-19)

24. REMOVE REAR CONSOLE BOX ASSEMBLY (See page IP-19)

25. REMOVE FRONT FLOOR FRONT CARPET ASSEMBLY

(a) Disengage the 11 clamps, 4 claws, 4 clips and 5 fasteners.

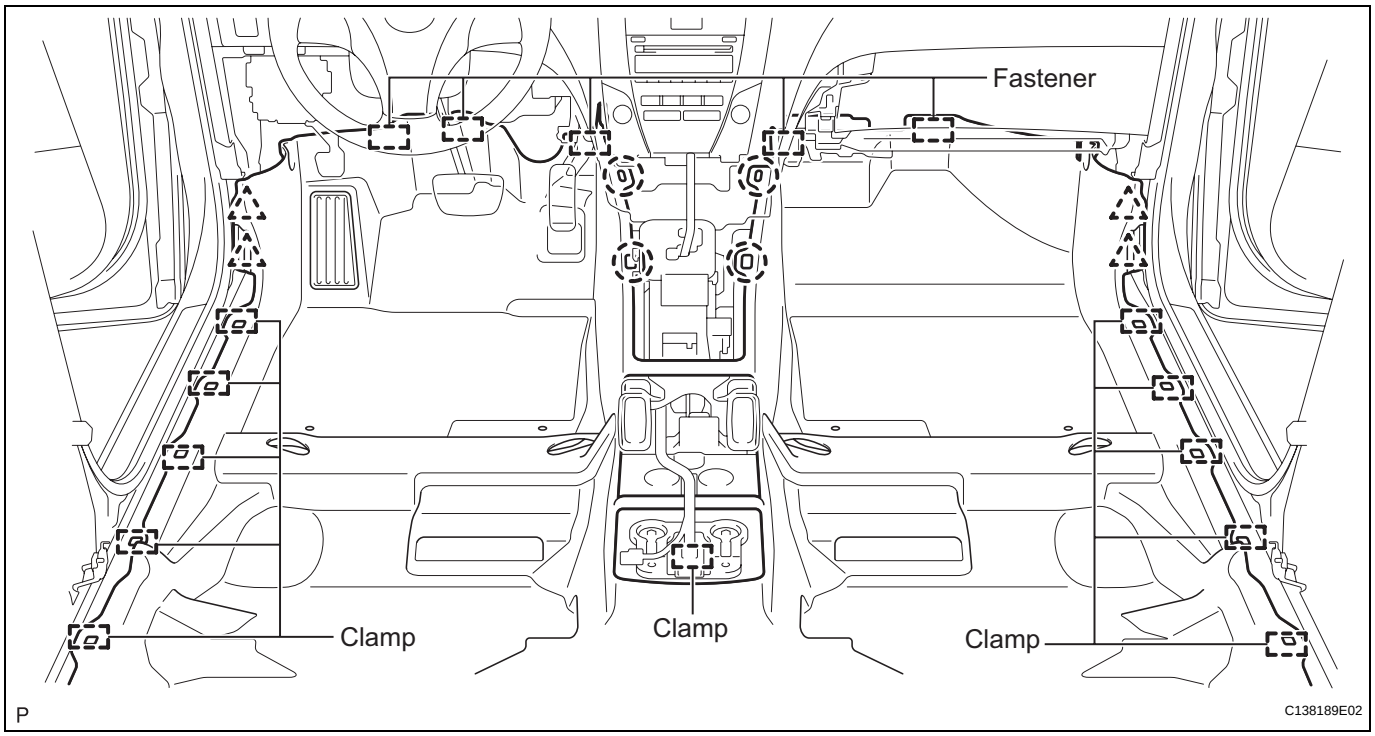

(b) Turn back the front floor front carpet assembly until the whole of the cross member floor No. 4 reinforcement sub-assembly can be seen.

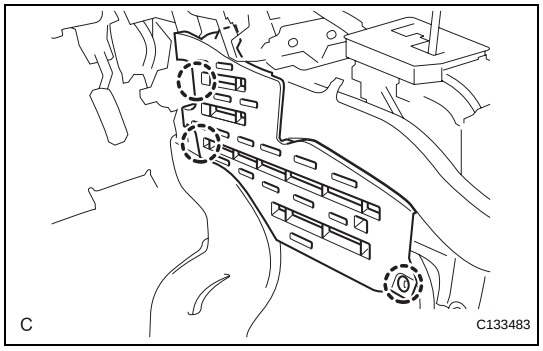

26. REMOVE FLOOR CARPET BRACKET LH

(a) Remove the 3 clips and the floor carpet bracket LH.

27. REMOVE FLOOR CARPET BRACKET RH

HINT:
Use the same procedures for the RH side and the LH side.

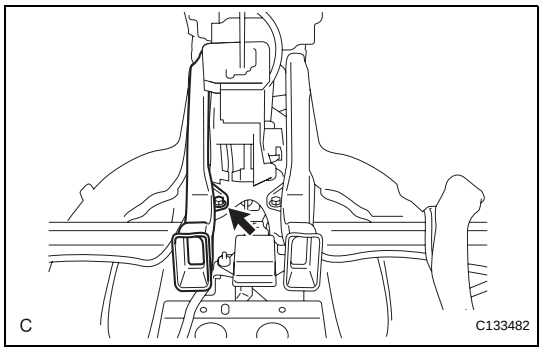

28. REMOVE NO. 2 CONSOLE BOX DUCT

(a) Remove the bolt and the No. 2 console box duct.

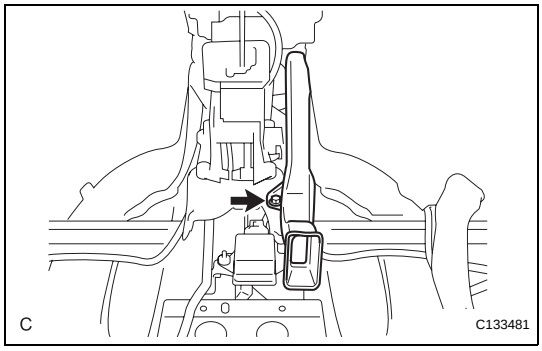

29. REMOVE NO. 3 CONSOLE BOX DUCT

(a) Remove the bolt and the No. 3 console box duct.

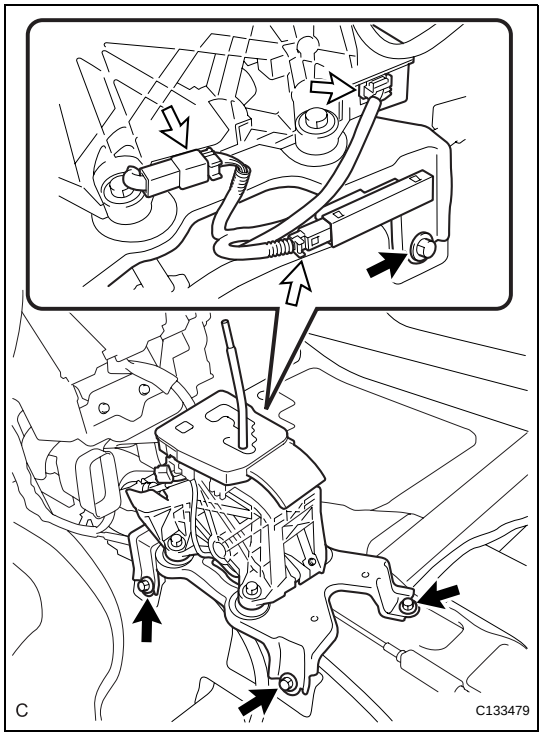

30. REMOVE FLOOR SHIFT LEVER ASSEMBLY

(a) Disconnect the 3 connectors.

(b) Remove the 4 bolts and the floor shift lever assembly.

HINT:

It is not necessary to disconnect the transmission control cable from the floor shift lever assembly.

PB

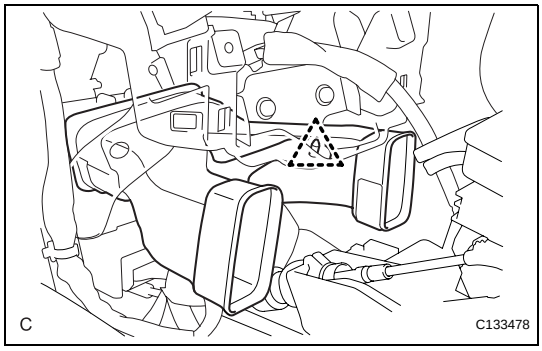

31. REMOVE NO. 1 CONSOLE BOX DUCT

(a) Remove the clip and the No. 1 console box duct.

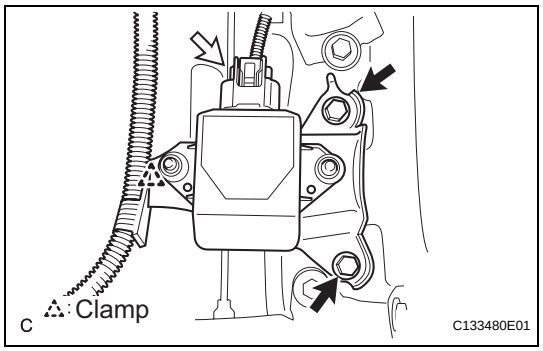

32. REMOVE YAW RATE AND ACCELERATION SENSOR

(a) Disengage the clamp and disconnect the connector.

(b) Remove the 2 bolts and the yaw rate and acceleration sensor.

33. REMOVE CENTER AIRBAG SENSOR ASSEMBLY (See page RS-469)

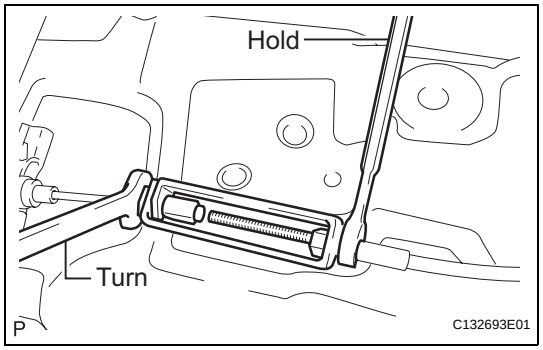

34. DISCONNECT NO. 4 PARKING BRAKE CABLE ASSEMBLY

(a) Using a wrench, hold the lock nut of the No. 1 parking brake cable and loosen the turnbuckle of the No. 4 parking brake cable.

(b) Disconnect the No. 4 parking brake cable assembly from the No. 1 parking brake cable assembly.

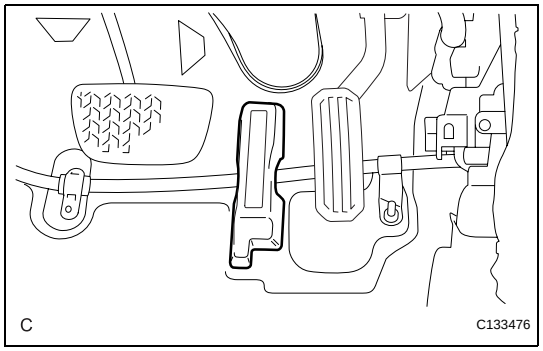

35. REMOVE NO. 2 DASH PANEL INSULATOR PAD

(a) Remove the No. 2 dash panel insulator pad.

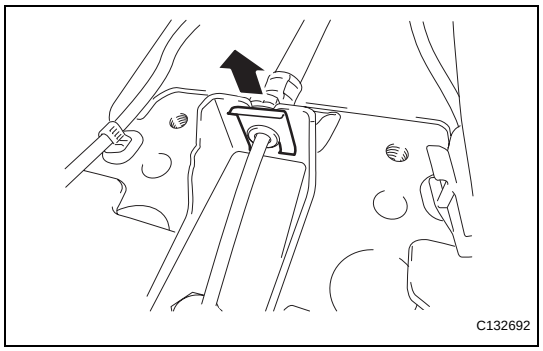

36. REMOVE PARKING BRAKE PEDAL ASSEMBLY

(a) Using needle-nose pliers, remove the clip from the No. 1 parking brake cable assembly.

(b) Remove the bolt, nut, and the No. 1 parking brake cable clamp.

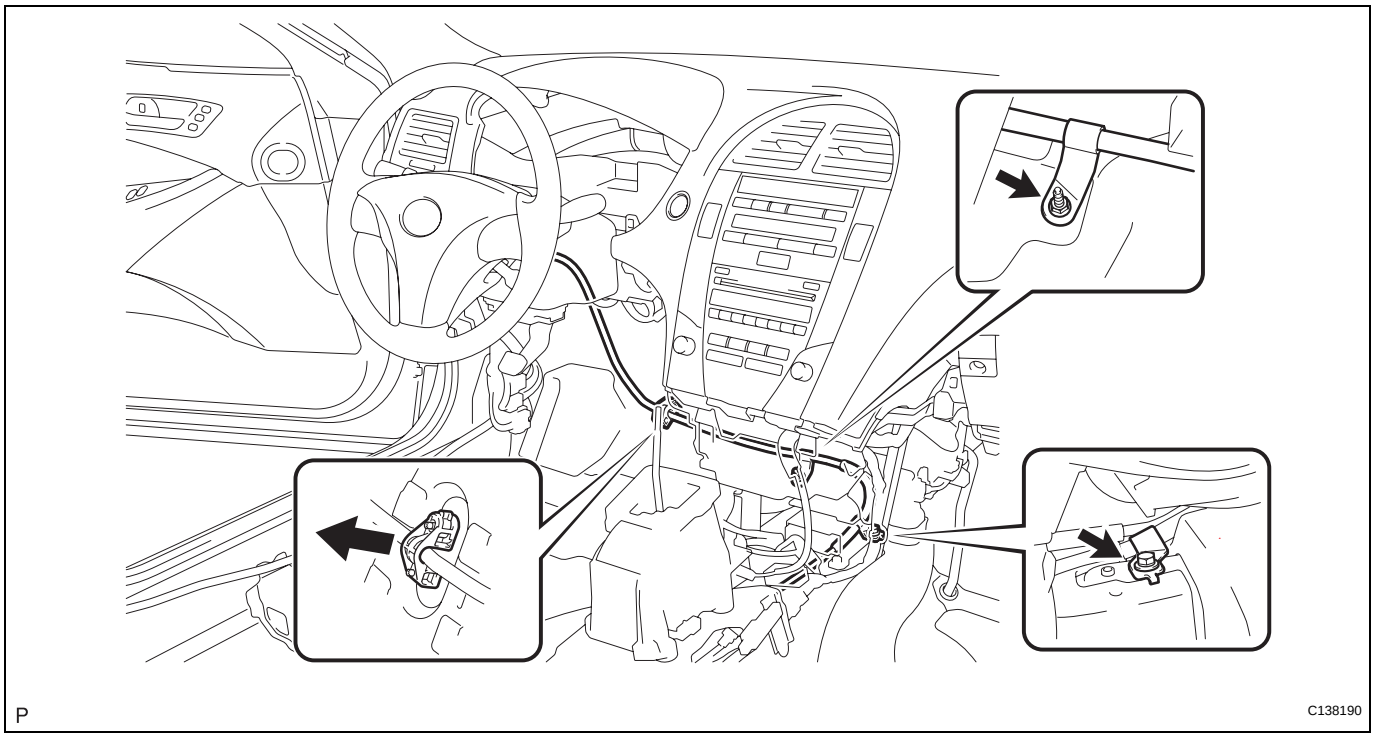

(c) Separate the No. 1 parking brake cable assembly from the body.

(d) Disconnect the parking brake switch connector.

(e) Remove the bolt, 2 nuts, and the parking brake pedal assembly with the No. 1 parking brake cable assembly from the body.

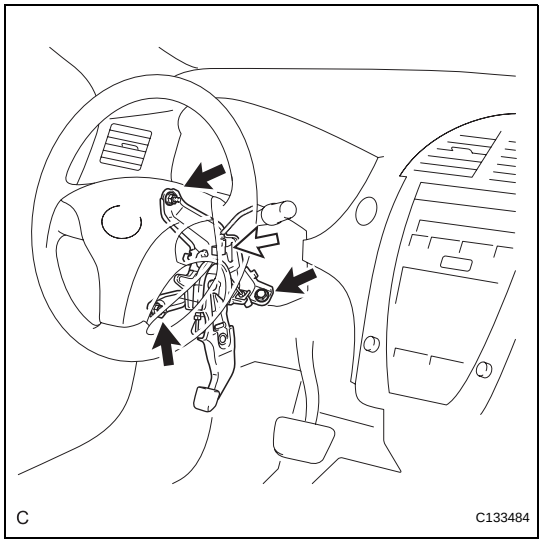

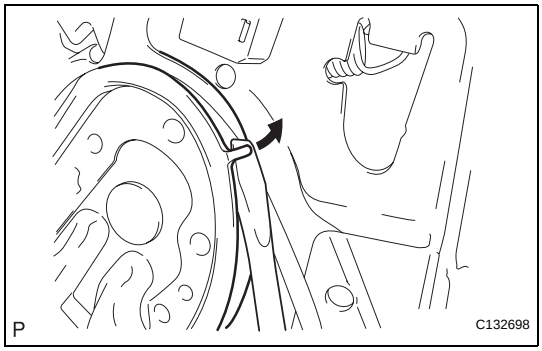

DISASSEMBLY

1. REMOVE NO. 1 PARKING BRAKE CABLE ASSEMBLY

(a) Using a screwdriver, pull up the parking brake pedal claw.

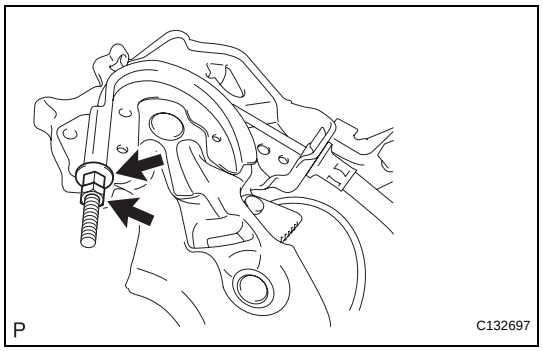

(b) Remove the lock nut and the No. 1 wire adjusting nut.

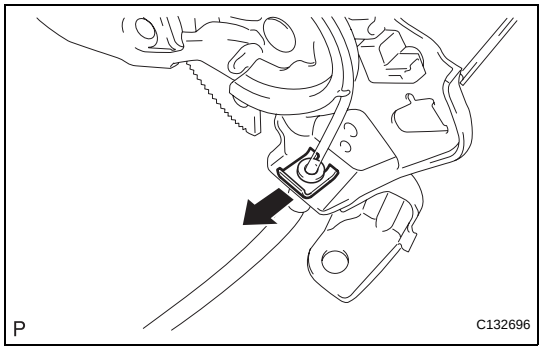

(c) Using needle-nose pliers, remove the clip and the No. 1 parking brake cable from the parking brake pedal assembly.

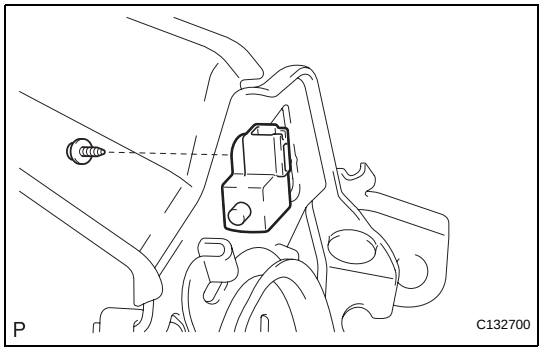

2. REMOVE PARKING BRAKE SWITCH ASSEMBLY

(a) Remove the screw and the parking brake switch assembly.

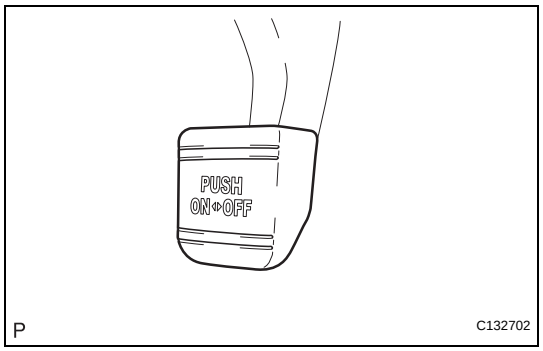

3. REMOVE PARKING PEDAL PAD

(a) Remove the parking pedal pad.

REASSEMBLY

1. INSTALL PARKING PEDAL PAD

(a) Install the parking pedal pad to the parking brake pedal assembly.

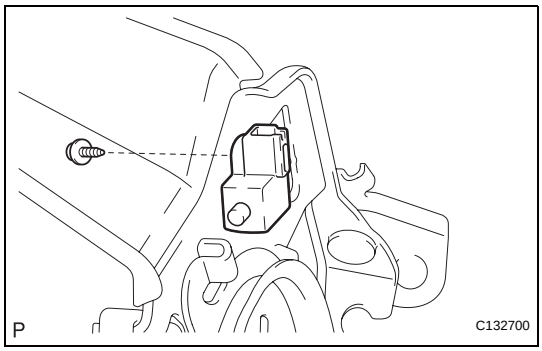

2. INSTALL PARKING BRAKE SWITCH ASSEMBLY

(a) Install the parking brake switch assembly with the screw.

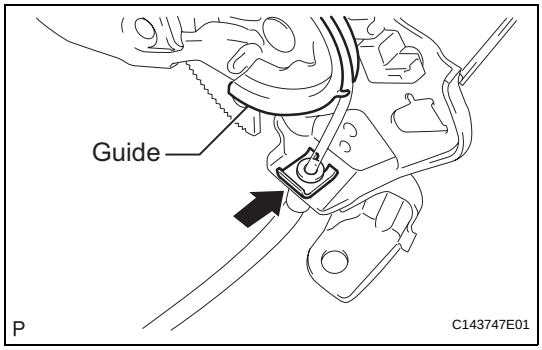

3. INSTALL NO. 1 PARKING BRAKE CABLE ASSEMBLY

(a) Pass the No. 1 parking brake cable assembly through the guide of the parking brake pedal.

(b) Using a brass bar and a hammer, install the clip to the No. 1 parking brake cable assembly.

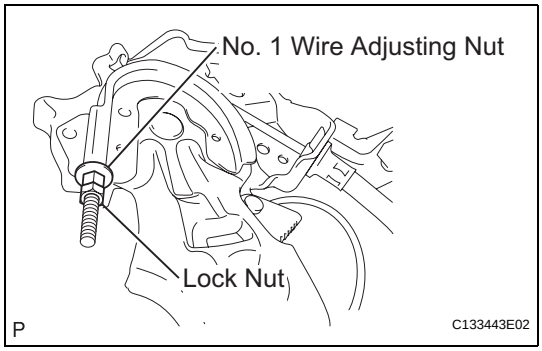

(c) Temporarily tighten the the lock nut and No. 1 wire adjusting nut.

NOTICE:

Fully tighten the lock nut and the No. 1 wire adjusting nut when adjusting the parking brake pedal travel.

Torque: 5.4 N*m (55 kgf*cm, 48 in.*lbf)

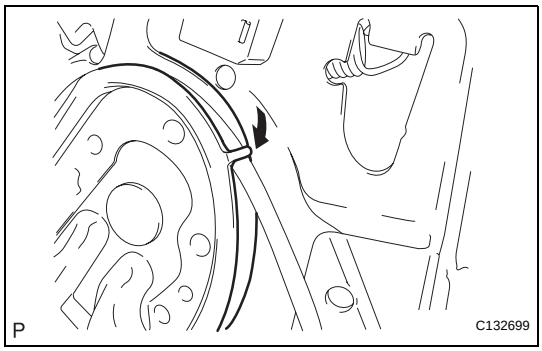

(d) Bend the parking brake pedal claw.

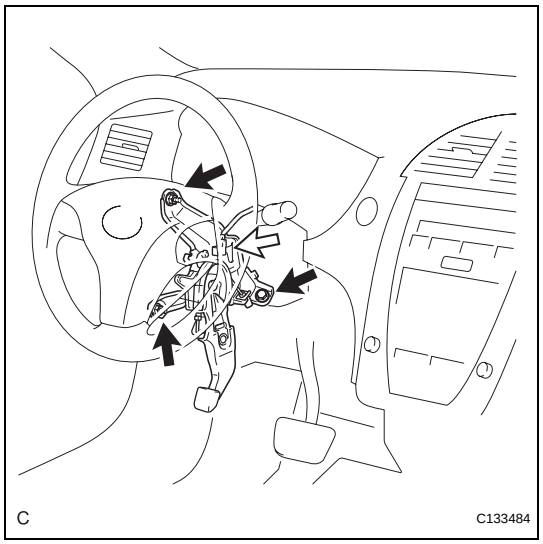

INSTALLATION

1. INSTALL PARKING BRAKE PEDAL ASSEMBLY

(a) Install the parking brake pedal assembly with the bolt and 2 nuts.
Torque: 39 N*m (398 kgf*cm, 29 ft.*lbf)

(b) Connect the parking brake switch connector.

(c) Install the No. 1 parking brake cable assembly to the body with the bolt, nut, and a new No. 1 parking brake cable clamp.

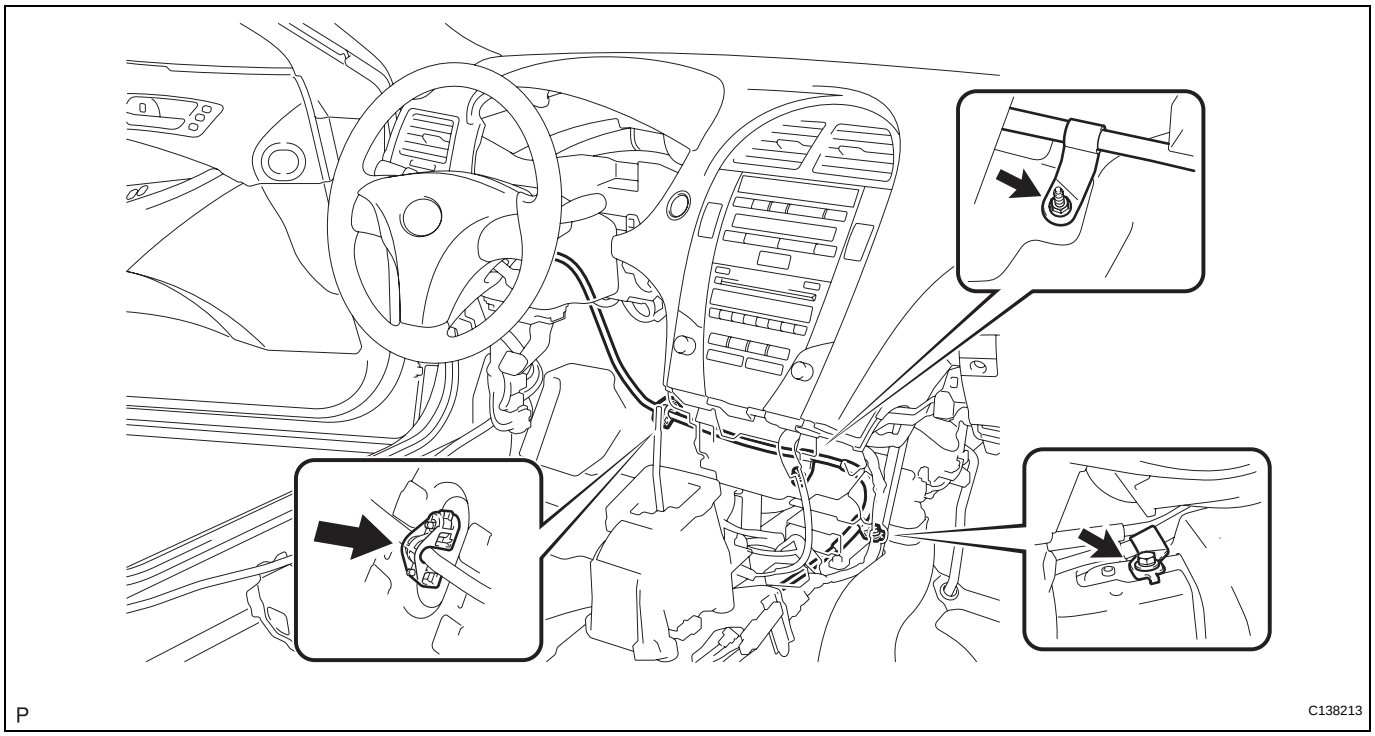

Torque: Bolt
15 N*m (153 kgf*cm, 11 ft.*lbf)
Nut
5.4 N*m (55 kgf*cm, 48 in.*lbf)

(d) Using a brass bar and a hammer, install the clip to the No. 1 parking brake cable assembly.

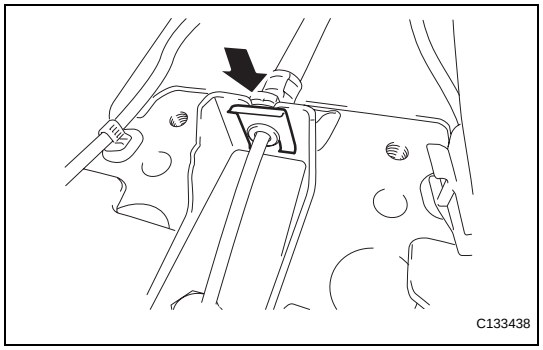

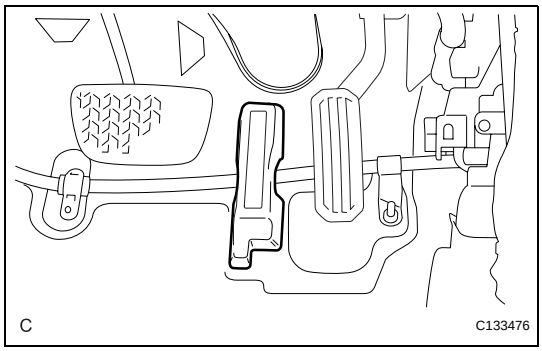

2. INSTALL NO. 2 DASH PANEL INSULATOR PAD

(a) Install the No. 2 dash panel insulator pad.

3. CONNECT NO. 4 PARKING BRAKE CABLE ASSEMBLY

(a) Connect the No. 4 parking brake cable assembly to the No. 1 parking brake cable assembly.

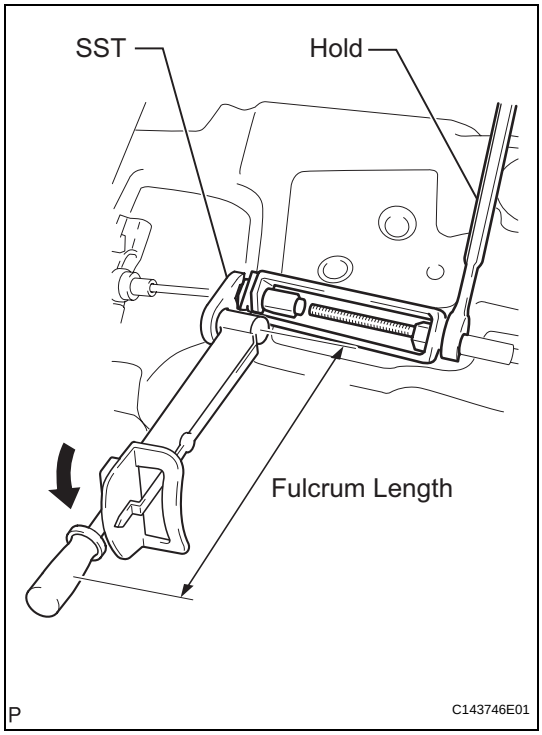

(b) Using SST and a wrench, hold the lock nut of the No. 1 parking brake cable and tighten the turnbuckle of the No. 4 parking brake cable.

SST 09023-00101

Torque: without SST
5.4 N*m (55 kgf*cm, 48 in.*lbf)
with SST
5.0 N*m (51 kgf*cm, 44 in.*lbf)

NOTICE:

- **Use a torque wrench with a fulcrum length of 250 mm (9.84 in.).**
- **This torque is effective when SST is parallel to a torque wrench.**

4. INSTALL CENTER AIRBAG SENSOR ASSEMBLY (See page RS-469)

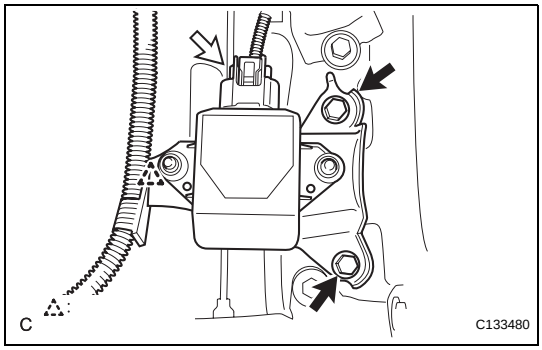

5. INSTALL YAW RATE AND ACCELERATION SENSOR

(a) Install the yaw rate and acceleration sensor assembly with the 2 bolts.
Torque: 13 N*m (133 kgf*cm, 10 ft.*lbf)

(b) Engage the clamp and connect the connector.

PB

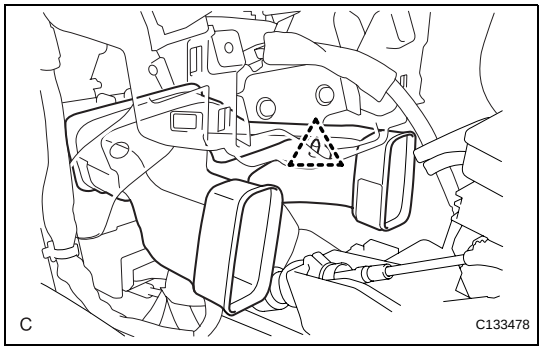

6. INSTALL NO. 1 CONSOLE BOX DUCT

(a) Install the No. 1 console box duct with the clip.

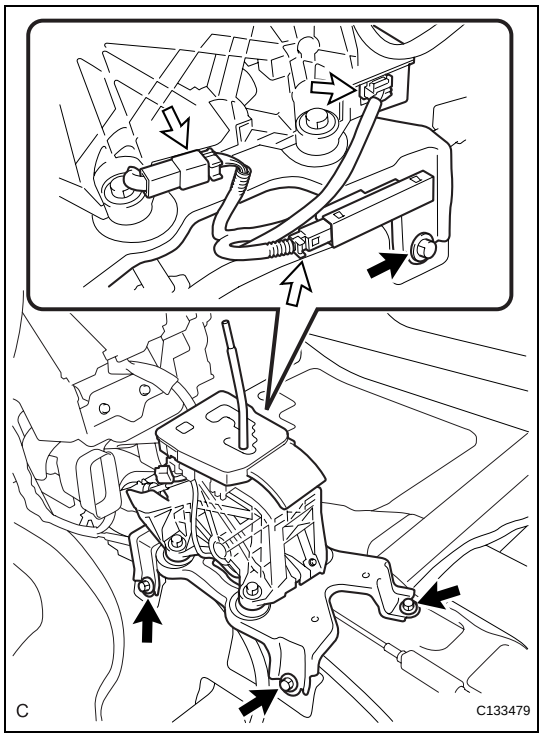

7. INSTALL FLOOR SHIFT LEVER ASSEMBLY

(a) Install the floor shift lever assembly with the 4 bolts.
Torque: 12 N*m (122 kgf*cm, 9 ft.*lbf)

(b) Connect the 3 connectors.

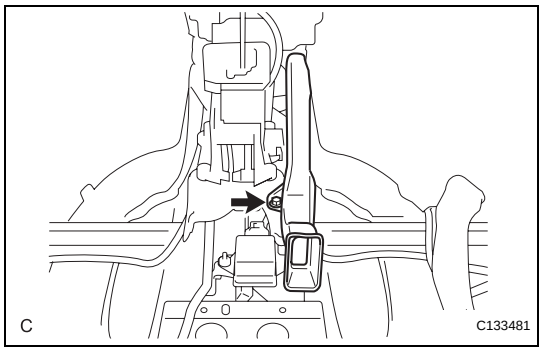

8. INSTALL NO. 3 CONSOLE BOX DUCT

(a) Install the No. 3 console box duct with the bolt.

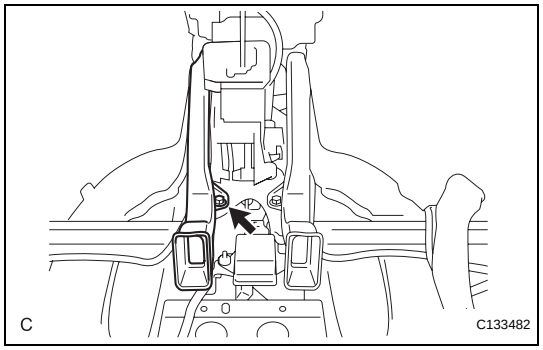

9. INSTALL NO. 2 CONSOLE BOX DUCT

(a) Install the No. 2 console box duct with the bolt.

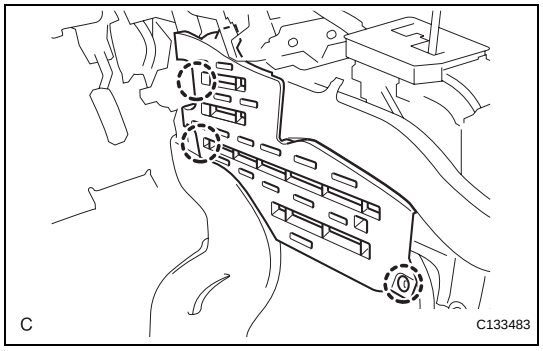

10. INSTALL FLOOR CARPET BRACKET LH

(a) Install the floor carpet bracket LH with the 3 clips.

11. INSTALL FLOOR CARPET BRACKET RH

HINT:
Use the same procedures for the RH side and the LH side.

12. INSTALL FRONT FLOOR FRONT CARPET ASSEMBLY

(a) Engage the 11 clamps, 4 claws, 4 clips and 5 fasteners, and install the front floor front carpet assembly.

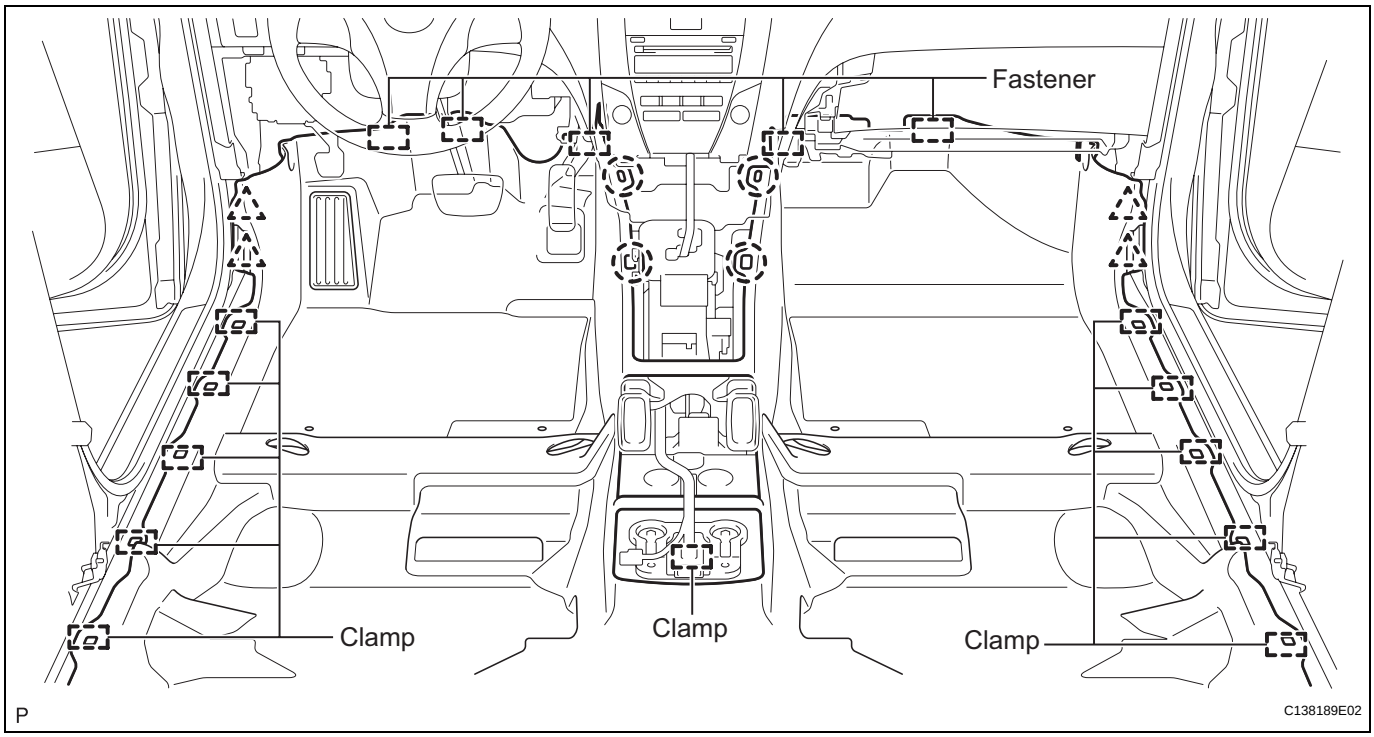

13. INSTALL REAR CONSOLE BOX ASSEMBLY (See page IP-39)

14. INSTALL CONSOLE REAR END PANEL SUB-ASSEMBLY (See page IP-40)

15. INSTALL CONSOLE BOX CARPET (See page IP-41)

16. INSTALL CONSOLE BOX POCKET (See page IP-41)

17. INSTALL UPPER CONSOLE PANEL ASSEMBLY WITH FRONT ASH RECEPTACLE (See page IP-42)

18. INSTALL SHIFT LEVER KNOB SUB-ASSEMBLY (See page IP-42)

19. INSTALL LOWER INSTRUMENT PANEL SUB-ASSEMBLY (See page IP-46)

20. INSTALL INSTRUMENT PANEL FINISH PANEL END LH (See page IP-46)

21. INSTALL SIDE INSTRUMENT PANEL LH (See page IP-47)

22. INSTALL FRONT DOOR OPENING TRIM COVER LH (See page IR-64)

23. INSTALL LOWER CENTER PILLAR GARNISH LH (See page IR-63)

24. INSTALL FRONT DOOR SCUFF PLATE LH (See page IR-65)

25. **INSTALL REAR DOOR SCUFF PLATE LH (See page IR-63)**
26. **INSTALL LOWER INSTRUMENT PANEL RH (See page IP-42)**
27. **INSTALL FRONT PASSENGER SIDE KNEE AIRBAG ASSEMBLY (See page RS-396)**
28. **INSTALL SIDE INSTRUMENT PANEL RH (See page IP-43)**
29. **INSTALL NO. 2 INSTRUMENT PANEL UNDER COVER SUB-ASSEMBLY (See page IP-44)**
30. **INSTALL FRONT DOOR OPENING TRIM COVER RH (See page IR-65)**
31. **INSTALL LOWER CENTER PILLAR GARNISH RH (See page IR-65)**
32. **INSTALL FRONT DOOR SCUFF PLATE RH (See page IR-65)**
33. **INSTALL REAR DOOR SCUFF PLATE RH (See page IR-65)**
34. **INSTALL INSTRUMENT PANEL FINISH PANEL END RH (See page IP-44)**
35. **INSTALL FRONT SEAT ASSEMBLY LH**
    HINT:
    Refer to the procedures up to "INSTALL FRONT SEAT ASSEMBLY". (See page SE-109)
36. **INSTALL FRONT SEAT ASSEMBLY RH**
    HINT:
    Use the same procedures for the RH side and the LH side.
37. **INSPECT PARKING BRAKE PEDAL TRAVEL (See page PB-1)**
38. **ADJUST PARKING BRAKE PEDAL TRAVEL (See page PB-2)**

ON-VEHICLE INSPECTION

1. INSPECT STEERING WHEEL FREE PLAY

(a) Stop the vehicle and align the tires facing straight ahead.

(b) Gently turn the steering wheel right and left by hand, and check the steering wheel free play.
Maximum free play:
30 mm (1.18 in.)
HINT:
If the free play exceeds the maximum, check the steering column, steering intermediate shaft, or steering gear.

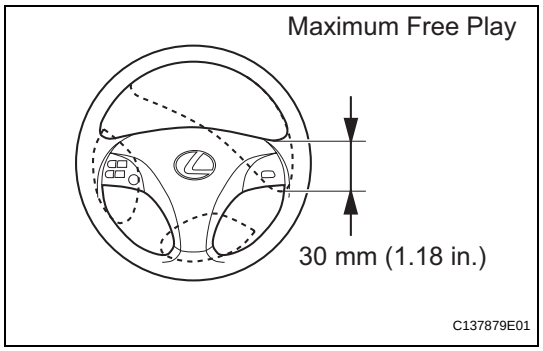

ADJUSTMENT

1. STEERING OFF CENTER ADJUSTMENT PROCEDURE

HINT:
This is the adjustment procedure for steering off center.

(a) Inspect steering wheel off center.

(1) Apply masking tape to the top center of the steering wheel and steering column upper cover.

(2) Drive the vehicle in a straight line for 100 meters at a constant speed of 35 mph (56 km/h), and hold the steering wheel to maintain the course.

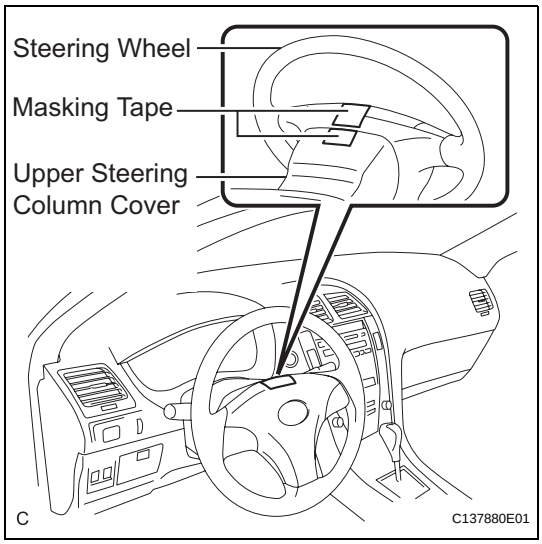

(3) Draw a line on the masking tape as shown in the illustration.

(4) Turn the steering wheel to the center position.
HINT:
Look at the upper surface of the steering wheel, steering spoke, and SRS airbag line to find the center position.

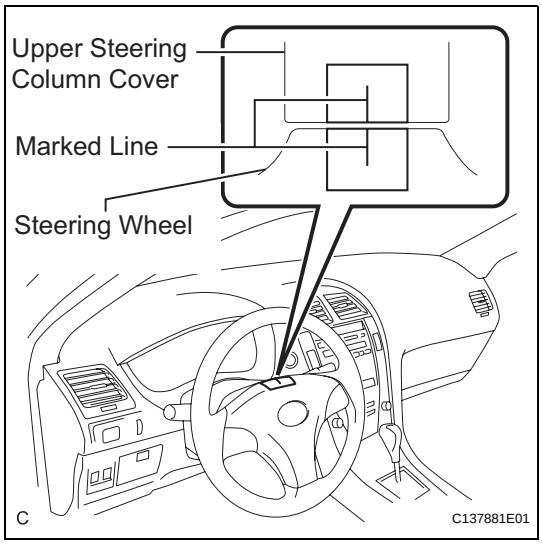

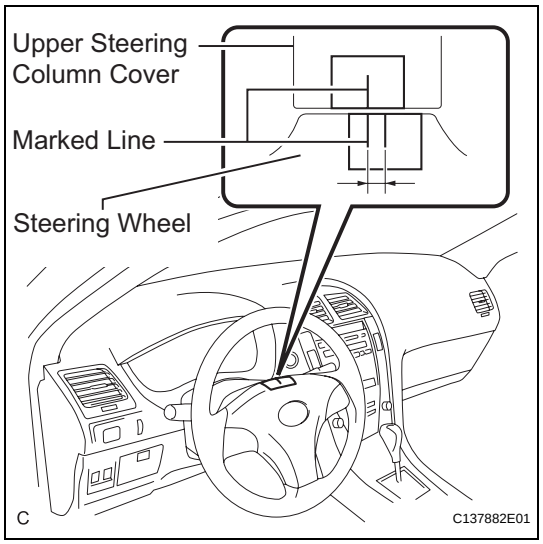

(5) Draw a new line on the masking tape on the steering wheel as shown in the illustration.
(6) Measure the distance between the 2 lines on the masking tape on the steering wheel.
(7) Convert the measured distance to steering angle.
HINT:
- Measured distance 1 mm (0.04 in.) = Steering angle of approximately 1 degree.
- Make a note of the steering angle.

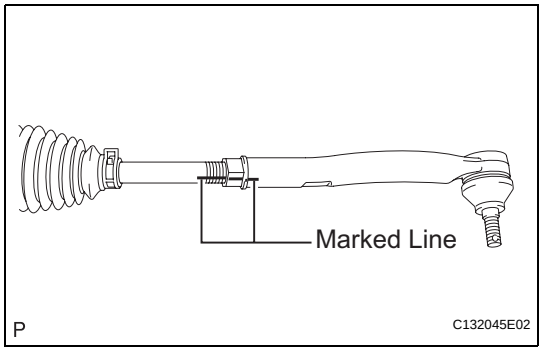

(b) Adjust steering angle.
(1) Draw a line on the RH and LH tie rod ends and rack ends respectively where it can be easily seen.
(2) Using a paper gauge, measure the distance from the RH and LH tie rod ends to the rack end screws.
HINT:
- Measure both the RH and LH sides.
- Make a note of the measured values.

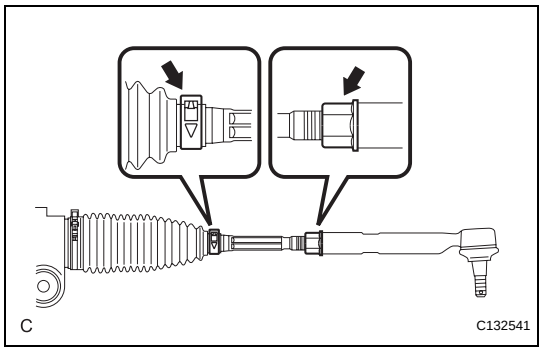

(3) Remove the RH and LH boot clips from the rack boots.
(4) Loosen the RH and LH lock nuts.
(5) Turn the RH and LH rack ends by the same amount (but in different directions) according to the steering angle.
HINT:
One 360 degree turn of the rack end (1.5 mm (0.059 in.) horizontal movement) equals to 12 degrees of steering angle.
(6) Tighten the RH and LH lock nuts to the specified torque.
Torque: 74 N*m (755 kgf*cm, 55 ft.*lbf)
NOTICE:
Make sure that the difference in length between the RH and LH tie rod ends and rack end screws is within 1.5 mm (0.059 in.).
(7) Install the RH and LH boot clips.

PROBLEM SYMPTOMS TABLE

HINT:
Use the table below to help determine the cause of the problem. The numbers indicate likely causes of the problem in descending order. Check each part in order. If necessary, repair or replace faulty parts.

POWER STEERING SYSTEM

Symptom	Suspected Area	See page
Hard steering	1. Tire (Improperly inflated)	TW-3
	2. Power steering fluid level (Low)	PS-3
	3. Drive belt (Loose)	-
	4. Front wheel alignment (Incorrect)	SP-4
	5. Steering system joints (Worn)	-
	6. Suspension arm ball joints (Worn)	SP-25
	7. Steering column (Binding)	SR-78
	8. Power steering vane pump	PS-11
	9. Power steering gear	PS-28
Poor return	1. Tire (Improperly inflated)	TW-3
	2. Front wheel alignment (Incorrect)	SP-4
	3. Steering column (Binding)	SR-78
	4. Power steering gear	PS-28
Excessive free play	1. Steering system joints (Worn)	-
	2. Suspension arm ball joints (Worn)	SP-25
	3. Front wheel bearing (Worn)	AH-5
	4. Intermediate shaft, sliding yoke (Worn)	-
	5. Power steering gear	PS-28
Abnormal noise	1. Power steering fluid level (Low)	PS-3
	2. Steering system joints (Worn)	-
	3. Power steering vane pump	PS-11
	4. Power steering gear	PS-28

Example:

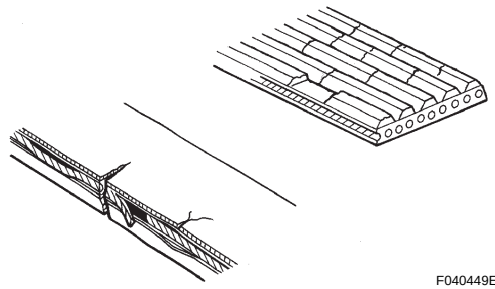

ON-VEHICLE INSPECTION

1. INSPECT DRIVE BELT

(a) Visually check the drive belt for excessive wear, frayed cords, etc.
If any defect is found, replace the drive belt.
HINT:
Cracks on the rib side of a belt are considered acceptable. Replace the belt if there are any missing ribs.

2. CHECK POWER STEERING FLUID LEVEL

(a) Keep the vehicle level.

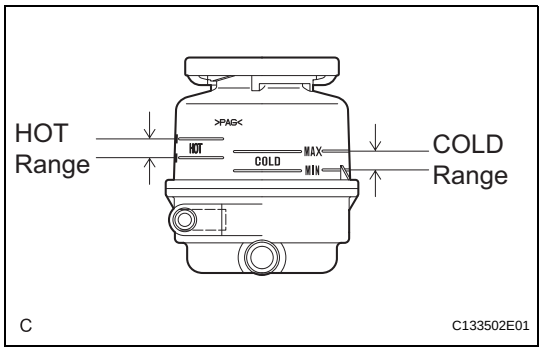

(b) With the engine stopped, check the fluid level in the fluid reservoir.
If necessary, add fluid.
Fluid:
ATF DEXRON II or III, or equivalent
HINT:
If the fluid is hot, check that the fluid level is within the HOT range on the fluid reservoir. If the fluid is cold, check that the fluid level is within the COLD range.

(c) Start the engine and run it at idle.

(d) Turn the steering wheel from lock to lock several times to raise fluid temperature.
Fluid temperature:
75 to 80°C (167 to 176°F)

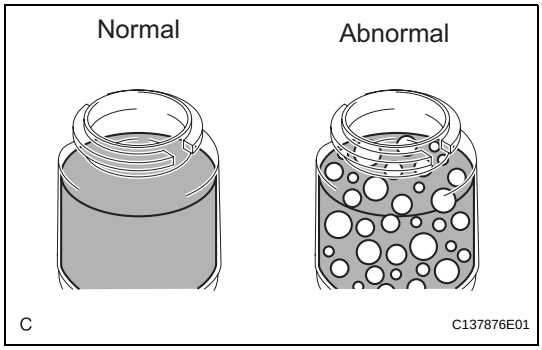

(e) Check for foaming or emulsification.
If foaming or emulsification is identified, bleed the power steering system (See page PS-8).

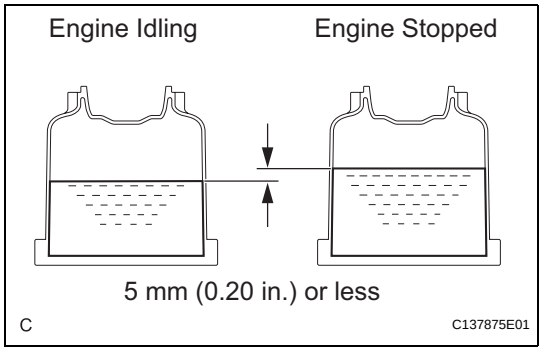

(f) With the engine idling, measure the fluid level in the fluid reservoir.

(g) Stop the engine.

(h) Wait a few minutes and remeasure the fluid level in the fluid reservoir.
Maximum fluid level rise:
5 mm (0.20 in.)
If a problem is found, bleed the power steering system (See page PS-8).

(i) Check the fluid level.

3. INSPECT STEERING FLUID PRESSURE

(a) Disconnect the No. 1 fluid reservoir to pump hose from the vane pump assembly (See page PS-11).

(b) Disconnect the pressure feed tube assembly from the vane pump assembly (See page PS-11).

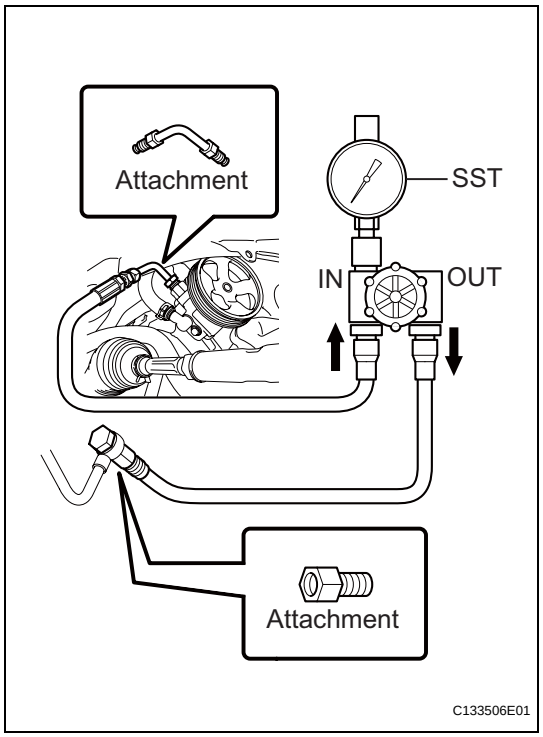

(c) Connect SST as shown in the illustration.
SST 09640-10010 (09641-01010, 09641-01060, 09641-01030)
NOTICE:
Check that the valve of the SST is in the open position.

(d) Connect the No. 1 fluid reservoir to pump hose to the vane pump assembly (See page PS-23).

(e) Bleed the power steering system (See page PS-8).

(f) Start the engine and run it at idle.

(g) Turn the steering wheel from lock to lock several times to raise fluid temperature.
Fluid temperature:
75 to 80°C (167 to 176°F)

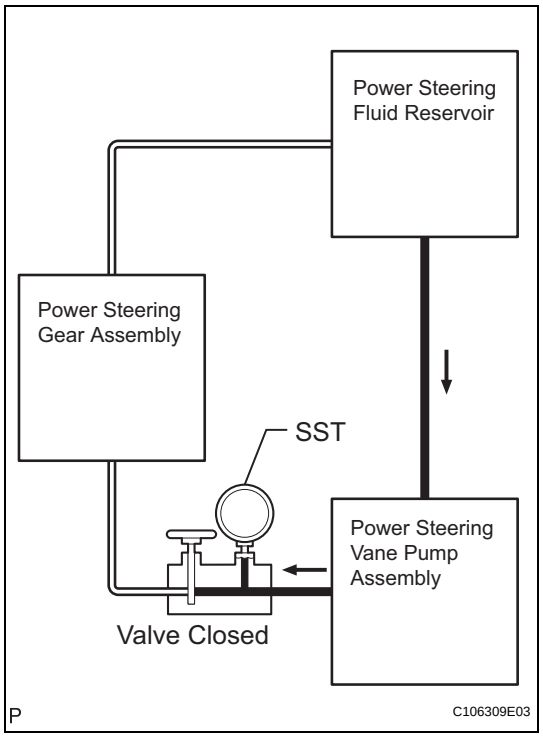

(h) With the engine idling, close the valve of the SST and observe the reading on the SST.
Standard fluid pressure:
7,800 to 8,300 kPa (79.5 to 84.6 kgf/cm^2, 1,131 to 1,204 psi)
NOTICE:
- **Do not keep the valve closed for more than 10 seconds.**
- **Do not allow the fluid temperature to become too high.**

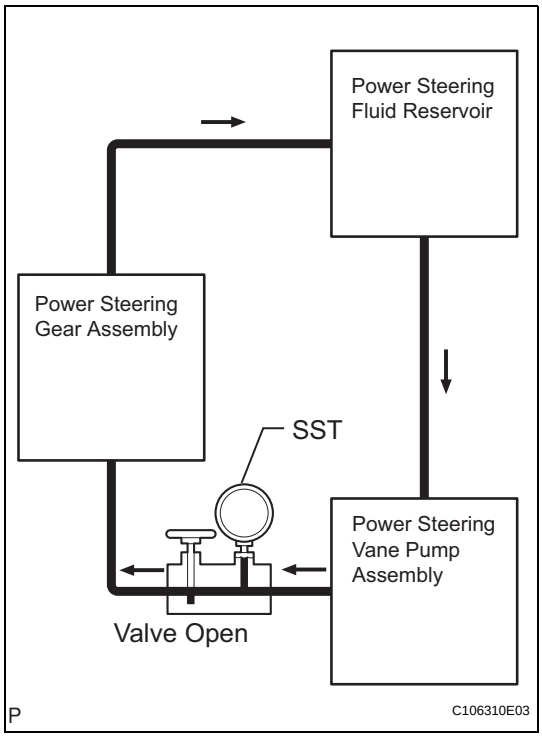

(i) With the engine idling, open the valve fully.
(j) Measure the fluid pressure at engine speeds of 1,000 rpm and 3,000 rpm.
Fluid pressure difference:
490 kPa (5 kgf/cm^2, 71 psi) or less
NOTICE:
Do not turn the steering wheel.

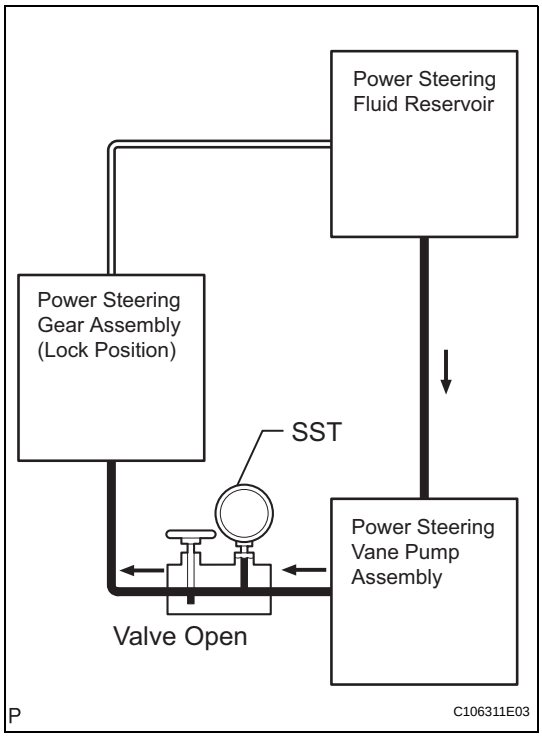

(k) With the engine idling and the valve fully opened, turn the steering wheel left or right to the full lock position. Observe the reading on the SST.
Standard fluid pressure:
7,800 to 8,300 kPa (79.5 to 84.6 kgf/cm^2, 1,131 to 1,204 psi)
NOTICE:
- **Do not keep the steering wheel in the full lock position for more than 10 seconds.**
- **Do not allow the fluid temperature to become too high.**

(l) Disconnect the No. 1 fluid reservoir to pump hose from the vane pump assembly (See page PS-11).
(m) Disconnect the SST.
(n) Connect the pressure feed tube assembly to the vane pump assembly (See page PS-22).
(o) Connect the No. 1 fluid reservoir to pump hose to the vane pump assembly (See page PS-23).
(p) Bleed the power steering system (See page PS-8).

4. CHECK STEERING EFFORT
(a) Stop the vehicle on a level, paved surface and turn the wheels straight ahead.
(b) Disconnect the cable from the negative (-) battery terminal.
NOTICE:
Wait at least 90 seconds after disconnecting the cable from the negative (-) battery terminal to prevent airbag and seat belt pretensioner activation.
(c) Remove the steering pad (See page RS-366).
(d) Connect the cable to the negative (-) battery terminal.

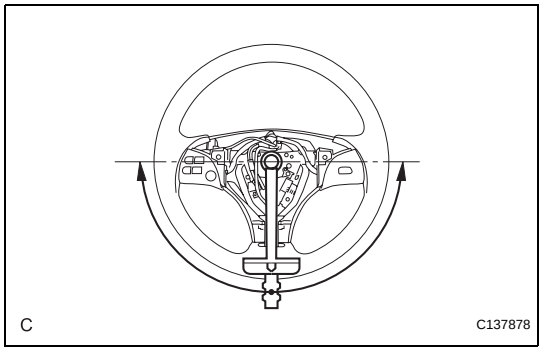

(e) Using a torque wrench, check if the steering wheel set nut is properly tightened.
Torque: 50 N*m (510 kgf*cm, 37 ft.*lbf)

(f) Start the engine and run it at idle.

(g) Turn the steering wheel 90 degrees to the right and check steering effort (torque) while turning the wheel. Check the opposite direction in the same manner.
Torque: Steering effort (Reference)
6.0 N*m (61 kgf*cm, 53 in.*lbf)
HINT:
Check tire type, pressure, and the road surface before making your diagnosis.

(h) Disconnect the cable from the negative (-) battery terminal.

(i) Torque the steering wheel set nut.
Torque: 50 N*m (510 kgf*cm, 37 ft.*lbf)

(j) Install the steering pad (See page RS-368).

(k) Connect the cable to the negative (-) battery terminal.

(l) Clear the DTCs (See page RS-49).

(m) Perform initialization.
NOTICE:
Some systems need initialization after reconnecting the cable to the negative battery terminal (See page IN-33).

(n) Inspect the airbag warning light (See page RS-37).

PARTS LOCATION

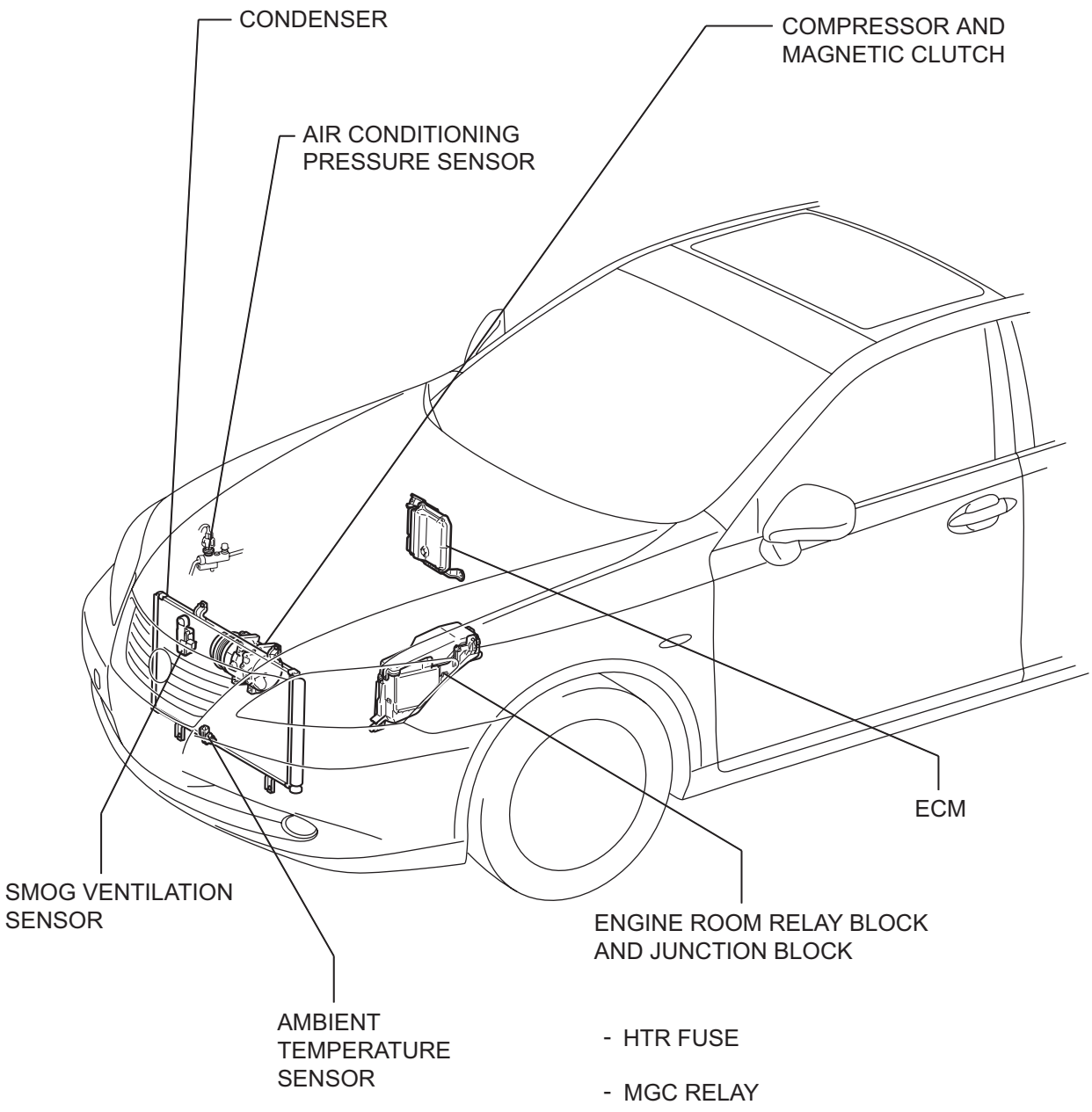

H

E130444E01

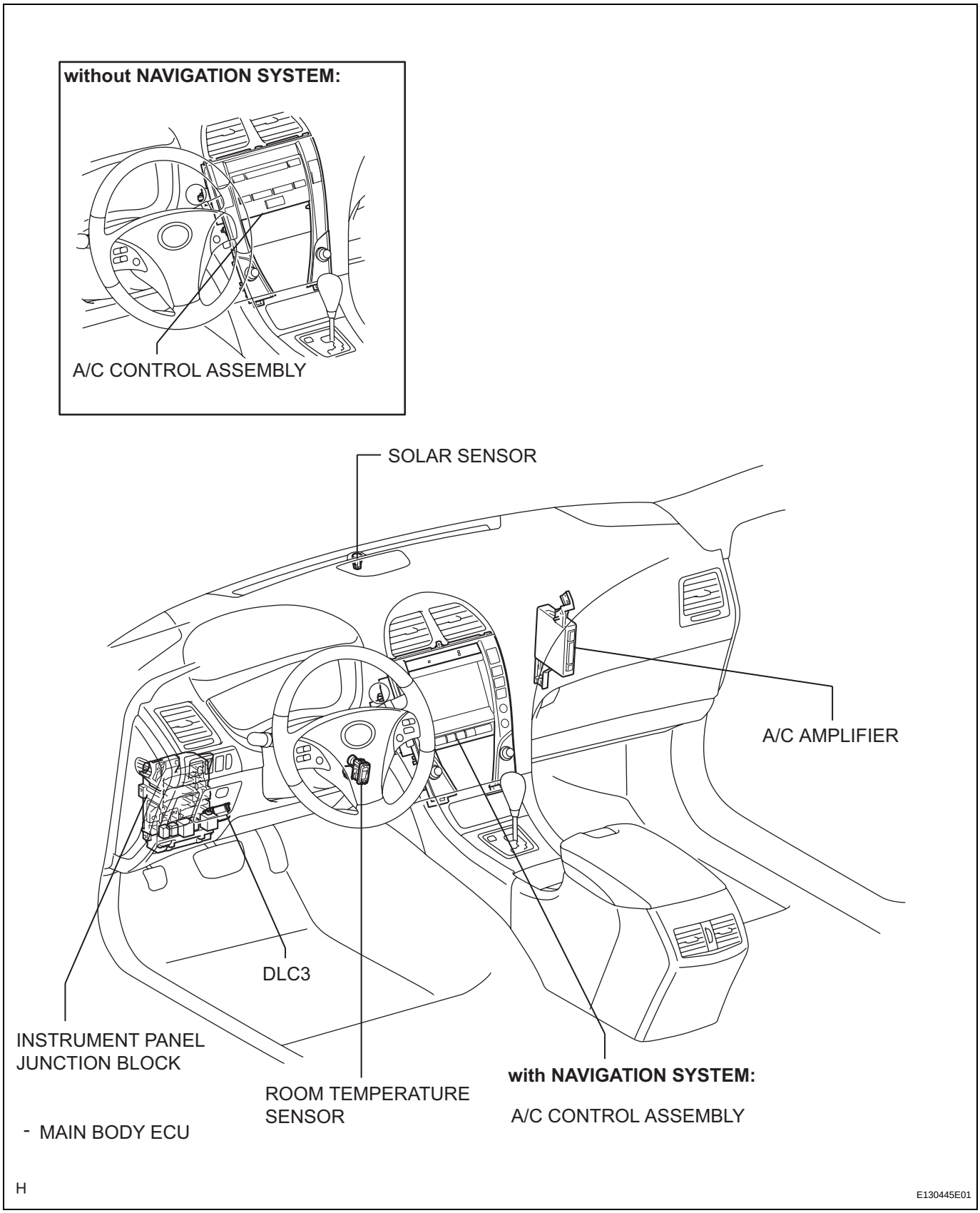
without NAVIGATION SYSTEM:
A/C CONTROL ASSEMBLY
SOLAR SENSOR
A/C AMPLIFIER
DLC3
INSTRUMENT PANEL
JUNCTION BLOCK
ROOM TEMPERATURE
SENSOR
with NAVIGATION SYSTEM:
A/C CONTROL ASSEMBLY
- MAIN BODY ECU
H
E130445E01

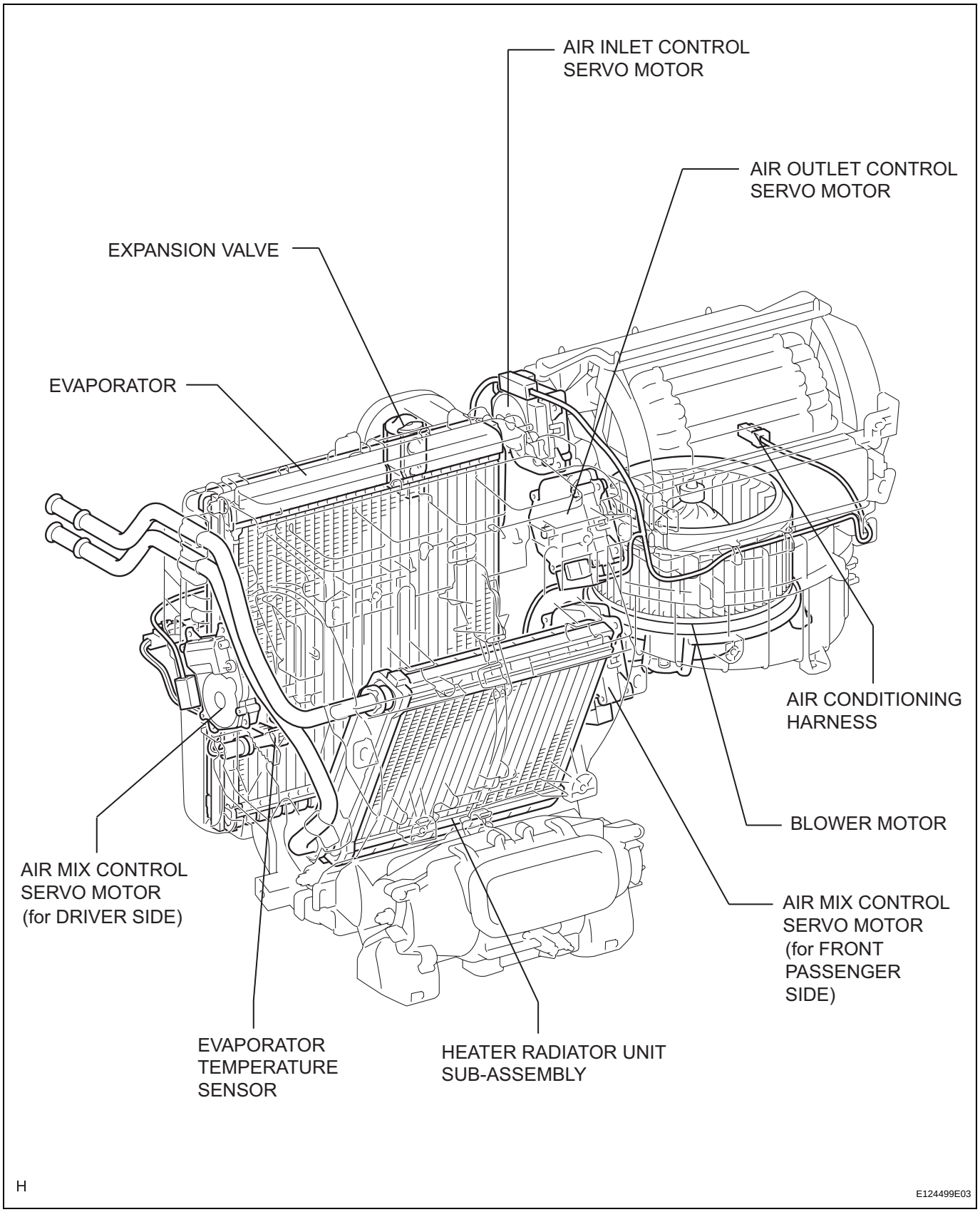
AIR INLET CONTROL SERVO MOTOR
AIR OUTLET CONTROL SERVO MOTOR
EXPANSION VALVE
EVAPORATOR
AIR CONDITIONING HARNESS
BLOWER MOTOR
AIR MIX CONTROL SERVO MOTOR (for DRIVER SIDE)
AIR MIX CONTROL SERVO MOTOR (for FRONT PASSENGER SIDE)
EVAPORATOR TEMPERATURE SENSOR
HEATER RADIATOR UNIT SUB-ASSEMBLY
H
E124499E03

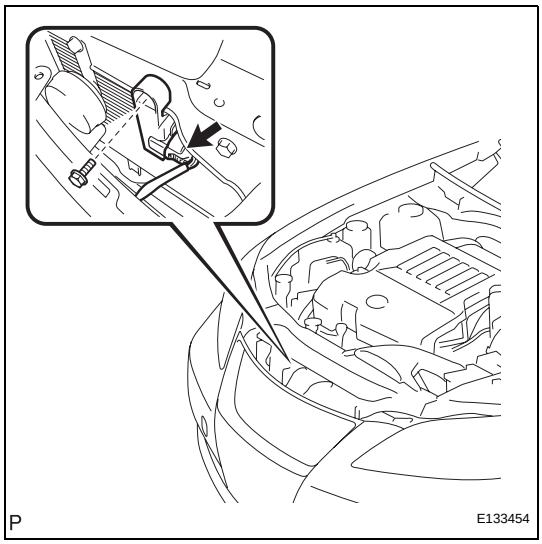

INSTALLATION

1. INSTALL SMOG VENTILATION SENSOR

(a) Install the smog ventilation sensor with the bolt.
Torque: 9.8 N*m (100 kgf*cm, 87 in.*lbf)

(b) Connect the connector.

2. INSTALL COOL AIR INTAKE DUCT SEAL (See page ET-14)

SYSTEM DIAGRAM

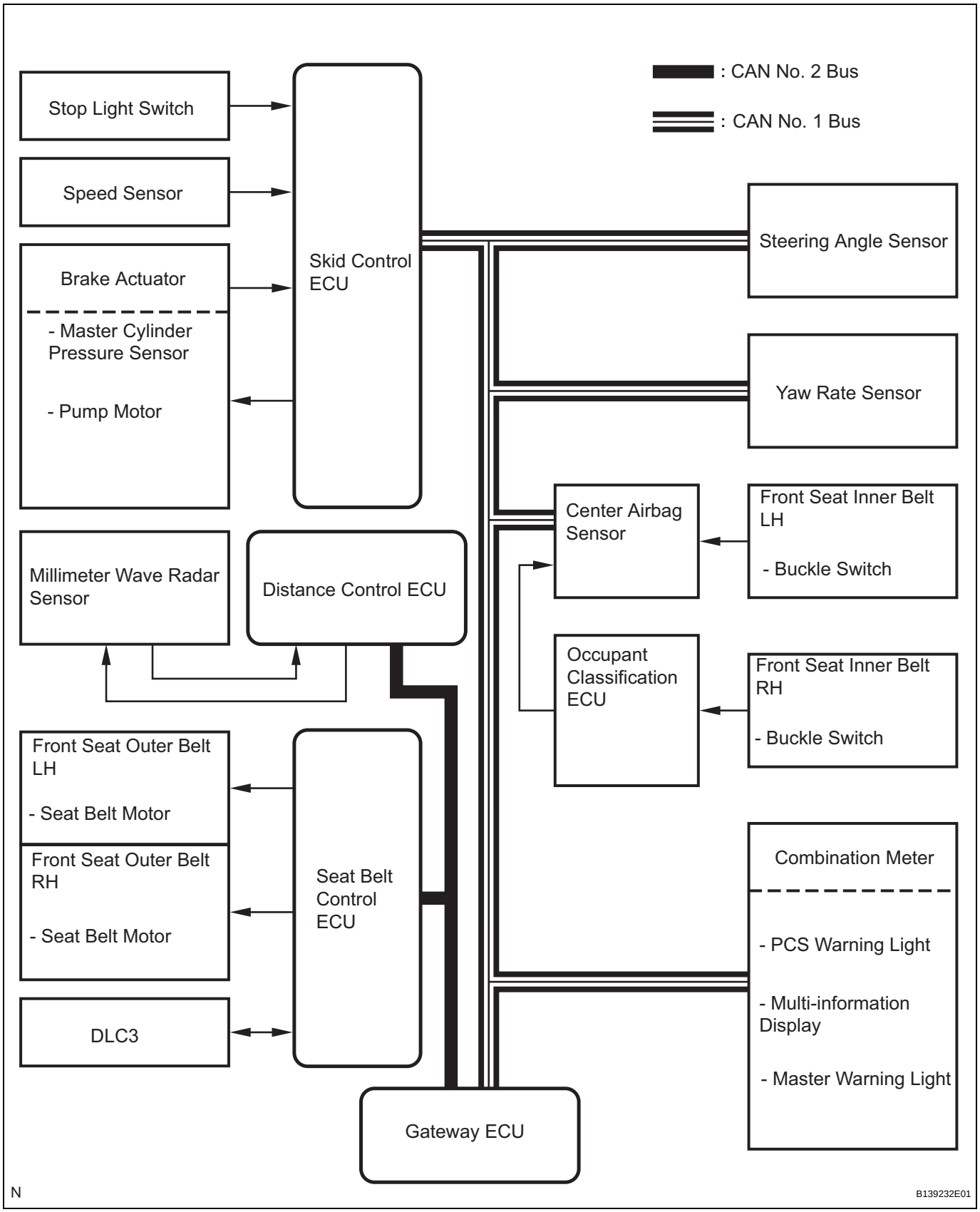

Communication table:

Sender ECU	Receiver	Signal	Line
Distance Control ECU	Seat Belt Control ECU	• Relative vehicle speed signal • Vehicle-to-vehicle distance signal • Seat belt operation signal	CAN
Skid Control ECU	Seat Belt Control ECU	• Seat belt operation signal • Sudden braking signal • VSC control signal • Vehicle speed signal	CAN
Center Airbag Sensor Assembly	Seat Belt Control ECU	• Buckle switch malfunction signal • Driver seat belt buckle switch signal • Passenger seat belt buckle switch signal	CAN
Seat Belt Control ECU	Combination Meter	• Pre-collision malfunction signal	CAN
Distance Control ECU	Skid Control ECU	• Brake assist standby signal	CAN

RS

PARTS LOCATION

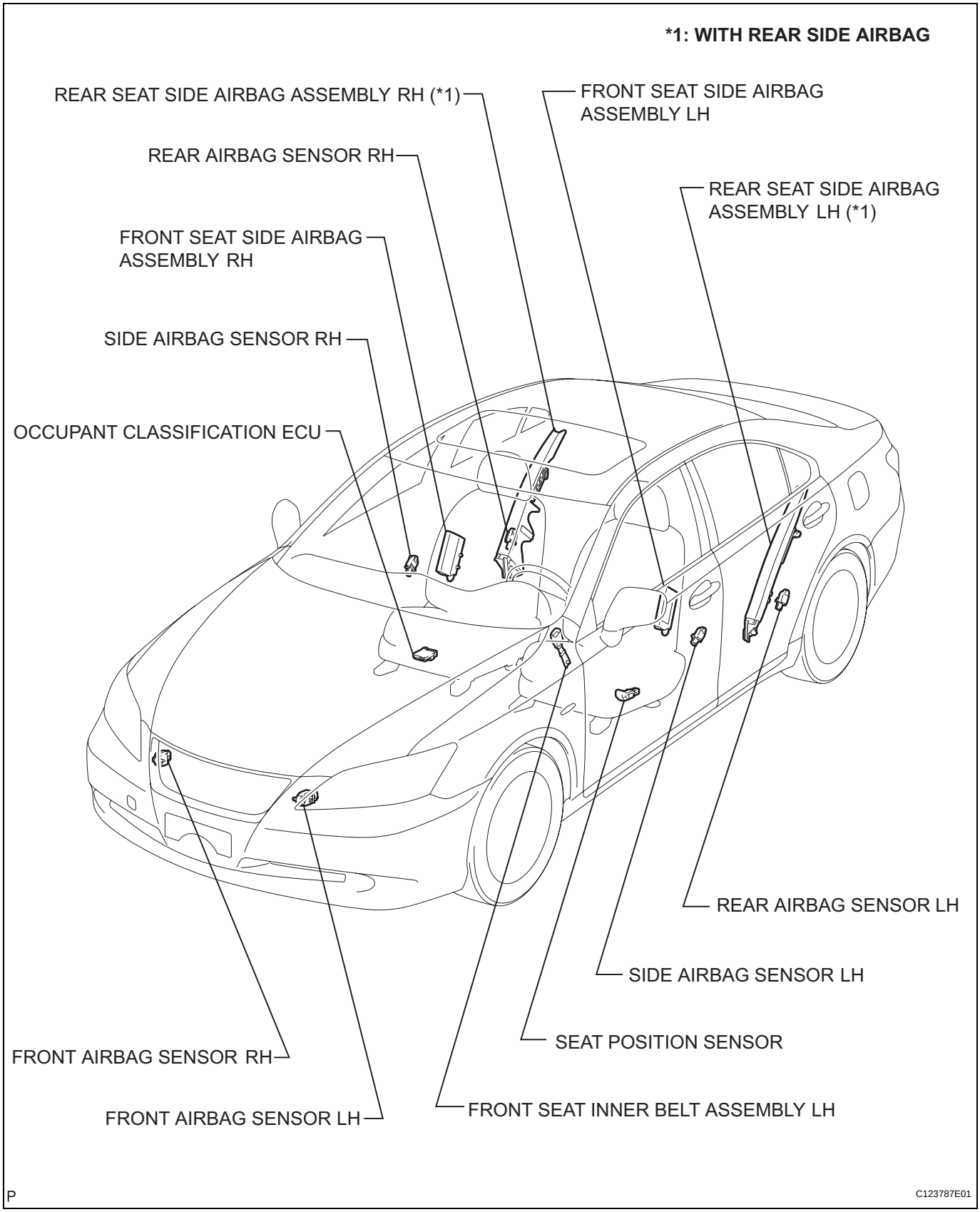

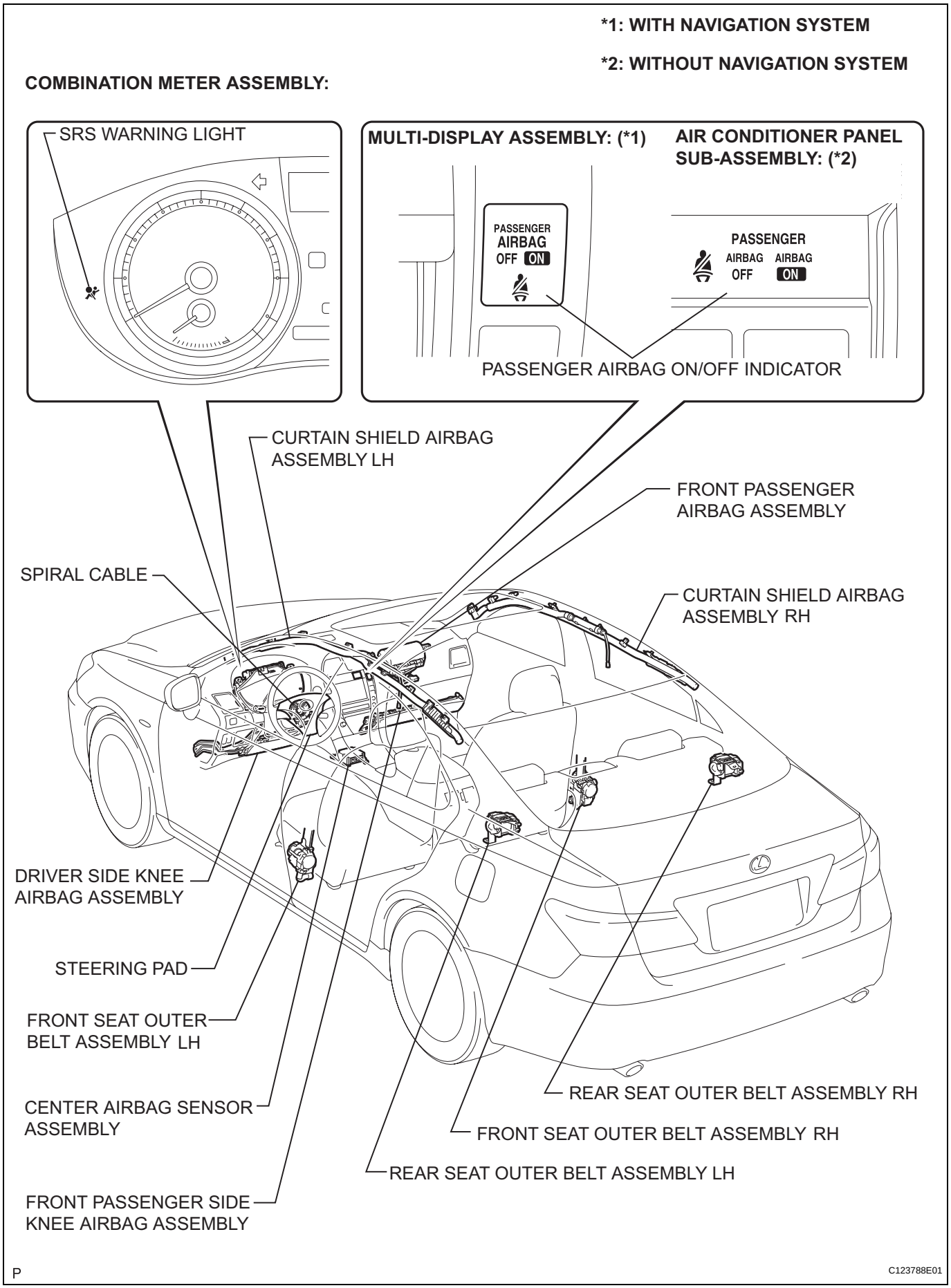
*1: WITH NAVIGATION SYSTEM
*2: WITHOUT NAVIGATION SYSTEM
COMBINATION METER ASSEMBLY:
SRS WARNING LIGHT
MULTI-DISPLAY ASSEMBLY: (*1)
AIR CONDITIONER PANEL SUB-ASSEMBLY: (*2)
PASSENGER AIRBAG OFF ON
PASSENGER AIRBAG OFF AIRBAG ON
PASSENGER AIRBAG ON/OFF INDICATOR
CURTAIN SHIELD AIRBAG ASSEMBLY LH
FRONT PASSENGER AIRBAG ASSEMBLY
SPIRAL CABLE
CURTAIN SHIELD AIRBAG ASSEMBLY RH
DRIVER SIDE KNEE AIRBAG ASSEMBLY
STEERING PAD
FRONT SEAT OUTER BELT ASSEMBLY LH
CENTER AIRBAG SENSOR ASSEMBLY
REAR SEAT OUTER BELT ASSEMBLY RH
FRONT SEAT OUTER BELT ASSEMBLY RH
REAR SEAT OUTER BELT ASSEMBLY LH
FRONT PASSENGER SIDE KNEE AIRBAG ASSEMBLY
P
C123788E01

RS

REMOVAL

1. **PRECAUTION**
   CAUTION:
   Be sure to read "PRECAUTION" thoroughly before servicing (See page RS-1).

2. **DISCONNECT CABLE FROM NEGATIVE BATTERY TERMINAL**
   CAUTION:
   Wait for 90 seconds after disconnecting the cable to prevent airbag deployment.

3. **REMOVE REAR SEAT CUSHION ASSEMBLY (See page SE-113)**

4. **REMOVE REAR SEATBACK ASSEMBLY (See page SE-113)**

5. **REMOVE REAR DOOR SCUFF PLATE (See page IR-40)**

6. **REMOVE REAR SEAT SIDE AIRBAG ASSEMBLY**
   (a) Disconnect the rear seat side airbag connector.
   NOTICE:
   When handling the airbag connector, take care not to damage the airbag wire harness.
   (b) Remove the 2 bolts.
   (c) Disengage the 4 claws and remove the rear seat side airbag assembly.

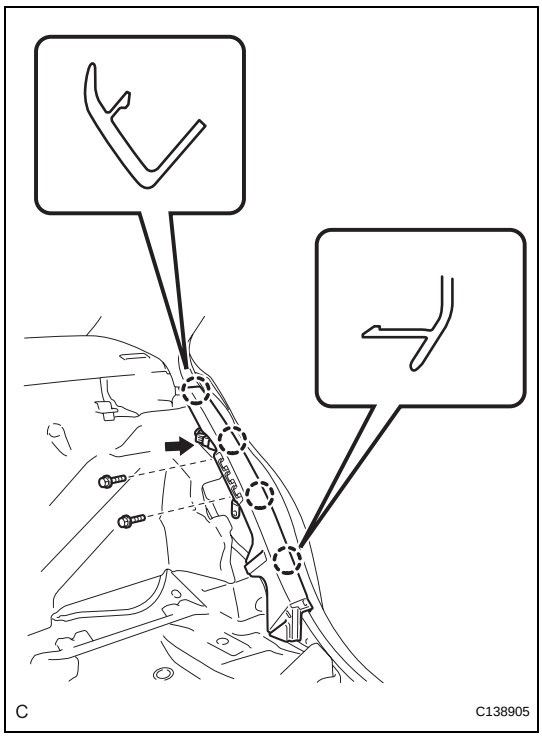

INSTALLATION

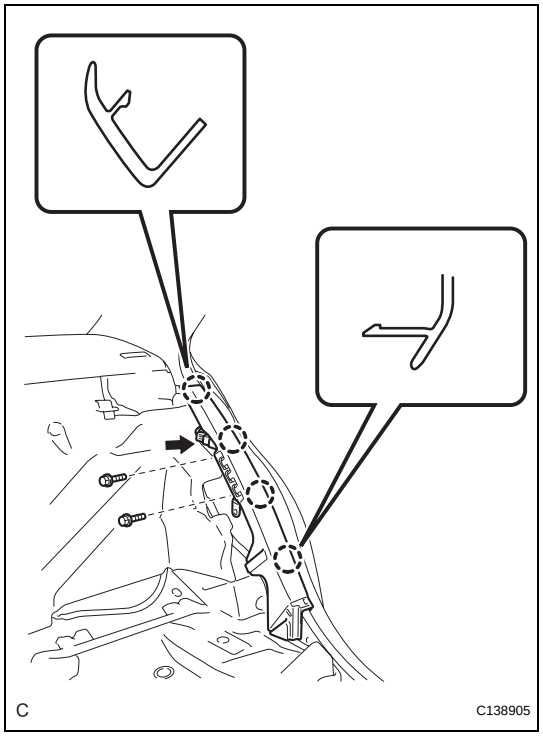

1. INSTALL REAR SEAT SIDE AIRBAG ASSEMBLY

(a) Check that the engine switch is off.

(b) Check that the battery negative (-) cable is disconnected.

CAUTION:
Wait for 90 seconds after disconnecting the cable to prevent airbag deployment.

(c) Engage the 4 claws.

(d) Install the rear seat side airbag assembly with the 2 bolts.

Torque: 8.0 N*m (82 kgf*cm, 71 in.*lbf)

(e) Connect the rear seat side airbag connector.

NOTICE:
When handling the airbag connector, take care not to damage the airbag wire harness.

2. INSTALL REAR DOOR SCUFF PLATE (See page IR-63)

3. INSTALL REAR SEATBACK ASSEMBLY (See page SE-121)

4. INSTALL REAR SEAT CUSHION ASSEMBLY (See page SE-121)

5. CONNECT CABLE TO NEGATIVE BATTERY TERMINAL

6. PERFORM INITIALIZATION

(a) Perform initialization (See page IN-5).

HINT:
Some systems need initialization after reconnecting the cable to the negative battery terminal.

7. INSPECT REAR SEAT SIDE AIRBAG ASSEMBLY (See page RS-459)

8. INSPECT SRS WARNING LIGHT

(a) Inspect the SRS warning light (See page RS-37).

SYSTEM DESCRIPTION

The seat belt tension reducer is adopted to the front seat belts. This mechanism can help reduce the belt tension applied to the occupants in the front seats when the seat belts are fastened.

PROBLEM SYMPTOMS TABLE

Seat Belt Tension Reducer

Symptom	Suspected Area	See page
Driver side tension reducer does not operate	1. ECU IG No. 1 fuse	-
	2. Front seat inner belt assembly (Driver side)	SB-24
	3. Front seat outer belt assembly (Driver side)	SB-29
	4. Wire harness	-
Front passenger side tension reducer does not operate	1. ECU IG No. 1 fuse	-
	2. Front seat inner belt assembly (Front passenger side)	SB-23
	3. Front seat outer belt assembly (Front passenger side)	SB-29
	4. Wire harness	-

TORQUE SPECIFICATIONS

Part Tightened		N*m	kgf*cm	ft.*lbf
Ignition coil assembly x Cylinder head cover sub-assembly		10	102	7
Engine hanger No. 1 x Cylinder head sub-assembly RH		33	337	24
Engine hanger No. 2 x Cylinder head sub-assembly LH		33	337	24
Engine mounting bracket RH x Cylinder block sub-assembly		54	551	40
Oil level gauge guide No. 1 x Cylinder head sub-assembly		21	214	15
Oil level gauge guide No. 2 x Cylinder head sub-assembly		21	214	15
Idler pulley sub-assembly No. 2 x Timing chain cover sub-assembly		43	438	32
V-ribbed belt tensioner assembly x Cylinder block sub-assembly		43	438	32
Intake manifold x Cylinder head sub-assembly		21	214	15
Exhaust manifold sub-assembly RH x Cylinder head sub-assembly RH		21	214	15
Exhaust manifold sub-assembly LH x Cylinder head sub-assembly LH		21	214	15
Drive plate & ring gear sub-assembly x Crankshaft		83	850	61
Air cleaner case x Body		5.0	51	44 in.*lbf
Intake air resonator sub-assembly x Body		5.0	51	44 in.*lbf
E.F.I engine coolant temperature x water by-pass joint RR		20	200	14
Engine assembly with Transaxle x Body	Bolt A	85	867	63
	Bolt B	32	329	24
	Bolt C	85	867	63
	Bolt D	32	329	24
Manifold stay No. 2 x Exhaust manifold sub-assembly LH		34	347	25
Air cleaner inlet No. 1 x Body		5.0	51	44 in.*lbf
Air cleaner inlet assembly x Body		5.0	51	44 in.*lbf
Battery clamp x Body	Bolt	9.0	92	80 in.*lbf
	Nut	3.5	36	31 in.*lbf
Steering intermediate shaft x Steering gear		35	360	26
Stabilizer link x Shock absorber		74	755	55
Tie rod assembly x Steering gear		49	500	36
Speed sensor front x Front axle		8.0	82	71 in.*lbf
Front axle hub nut x Front drive shaft		294	2,998	217
Cooler compressor x V-ribbed belt tensioner		25	250	18
Engine mounting control bracket x Engine mounting bracket front No. 1 LH	Bolt	38	387	28
	Nut	23	235	17
Engine assembly w/ Transaxle x Front frame assembly	Bolt	87	887	64
	Nut	95	969	70
Engine mounting insulator FR cable x Engine mounting bracket FR		7.8	80	69 in.*lbf
Transmission control cable assembly x Control shaft lever		13	130	9
Drive shaft bearing bracket x Cylinder block sub-assembly		64	650	47
Exhaust manifold heat insulator No. 2 x Exhaust manifold sub-assembly LH		8.5	87	75 in.*lbf
Oil pressure switch x Oil pan sub-assembly		21	210	15
Engine mounting stay No. 2 RH x Intake manifold		21	214	15
Timing gear cover No. 2 x Chain cover sub-assembly		6.0	61	53 in.*lbf
Engine mounting bracket front No. 1 LH x Chain cover		54	551	40
Engine mounting bracket front No. 1 LH x Stud bolt		10	102	7
Engine oil level sensor x Oil pan sub-assembly		8.2	84	73 in.*lbf
Vacuum switching valve No. 1 x Cylinder head cover sub-assembly		10	102	7
Radio setting condenser x Cylinder head cover sub-assembly		10	102	7

Part Tightened		N*m	kgf*cm	ft.*lbf
Camshaft bearing cap x Camshaft housing	1st	10	102	7
	2nd	16	163	12
Camshaft housing x Cylinder head sub-assembly		28	286	21
No. 1 chain tensioner x Cylinder head sub-assembly		10	102	7
No. 2 chain tensioner x Cylinder head sub-assembly		21	214	15
No. 3 chain tensioner x Cylinder head sub-assembly		21	214	15
Camshaft timing gear assembly x Camshaft		100	1,020	74
Camshaft timing exhaust gear assembly x Camshaft		100	1,020	74
Engine rear oil seal retainer x Cylinder block sub-assembly		10	102	7
Knock sensor x Cylinder block sub-assembly		20	204	15
Water inlet pipe x Cylinder block sub-assembly		10	102	7
Cylinder head RH x Cylinder block sub-assembly	1st	36	367	27
	2nd	Turn 90°	Turn 90°	Turn 90°
	3nd	Turn 90°	Turn 90°	Turn 90°
Cylinder head sub-assembly LH x Cylinder block sub-assembly	Recessed head 1st	36	367	27
	2nd	Turn 90°	Turn 90°	Turn 90°
	3nd	Turn 90°	Turn 90°	Turn 90°
	14 mm (0.55 in.) head	30	306	22
No. 1 chain vibration damper x Cylinder block sub-assembly		23	230	17
No. 1 idle gear x Cylinder block sub-assembly		60	612	44
Timing chain cover plate x Timing chain cover sub-assembly		9.1	93	81 in.*lbf
Timing chain cover sub-assembly x Cylinder head and block	Areas 1: Bolt	21	214	15
	Areas 2: Bolt	21	214	15
	Areas 3: Bolt and Nut	21	214	15
	Areas 4: Bolt A	43	438	32
	Areas 4: Except Bolt A	21	214	15
Water pump assembly x Timing chain cover sub-assembly		9.1	93	81 in.*lbf
Oil pan baffle plate x Cylinder block sub-assembly		10	102	7
Oil pan stud bolt x Cylinder block and timing chain cover sub-assembly		10	102	7
Oil pan stud bolt x No. 2 oil pan sub-assembly		4.0	41	35 in.*lbf
Oil strainer stud bolt x Timing chain cover sub-assembly		4.0	41	35 in.*lbf
Oil strainer sub-assembly x Cylinder block and timing chain cover sub-assembly		10	102	7
Oil pan sub-assembly x Cylinder block and timing chain cover sub-assembly	Bolt A	10	102	7
	Except Bolt A	21	214	15
No. 2 oil pan sub-assembly x Oil pan sub-assembly		10	102	7
Oil pan drain plug x No. 2 oil pan sub-assembly		40	408	30
Crankshaft pulley x Crankshaft		250	2,550	184
Cylinder head cover sub-assembly x Cylinder head sub-assembly RH	Bolt A	21	214	15
	Except Bolt A	10	102	7
Cylinder head cover sub-assembly LH x Cylinder head sub-assembly LH	Bolt A	21	214	15
	Except Bolt A	10	102	7
Water outlet x Cylinder head sub-assembly	Bolt	10	102	7
	Nut	10	104	8
Water inlet housing set nut		10	102	7
Water inlet set bolt and nut		10	102	7
Oil filter cap x Oil pan		25	255	18

SS

Part Tightened		N*m	kgf*cm	ft.*lbf
Camshaft position sensor		10	102	7
Ventilation valve x Cylinder head cover sub-assembly LH		27	275	20
Oil pipe union x Cylinder block sub-assembly		65	663	48
Oil pipe union x Cylinder head cover sub-assembly		65	663	48
Oil pipe x Cylinder head sub-assembly		10	102	7
Crankshaft position sensor x Cylinder block sub-assembly		10	102	7
Camshaft timing oil control valve assembly x Cylinder head cover		10	102	7
Cylinder block water drain cock sub-assembly x Cylinder block sub-assembly		25	255	18
Drain cock sub-assembly x Water inlet housing		30	306	22
Water drain cock plug x Water drain cock sub-assembly		13	130	9
Drain cock plug x Drain cock sub-assembly		13	130	9
Spark plug x Cylinder head sub-assembly		25	254	18
Stud bolt x Cylinder head sub-assembly	For A and B bolts	10	102	7
	For C Bolts	4.0	41	35 in.*lbf
with Head screw plug x Cylinder head sub-assembly		44	449	32
with Head No. 2 screw plug x Cylinder head sub-assembly		80	816	59
Main bearing cap x Cylinder block sub-assembly	16 pointed head 1st	61	622	45
	2nd	Turn 90°	Turn 90°	Turn 90°
	14 mm head	52	525	38
Connecting rod cap x Connecting rod	1st	25	255	18
	2nd	Turn 90°	Turn 90°	Turn 90°
Stud bolt x Cylinder block sub-assembly	Bolt A	10	102	7
	Bolt B	17	173	13
No. 1 oil nozzle sub-assembly x Cylinder block sub-assembly		9.0	92	80 in.*lbf

SYSTEM DIAGRAM

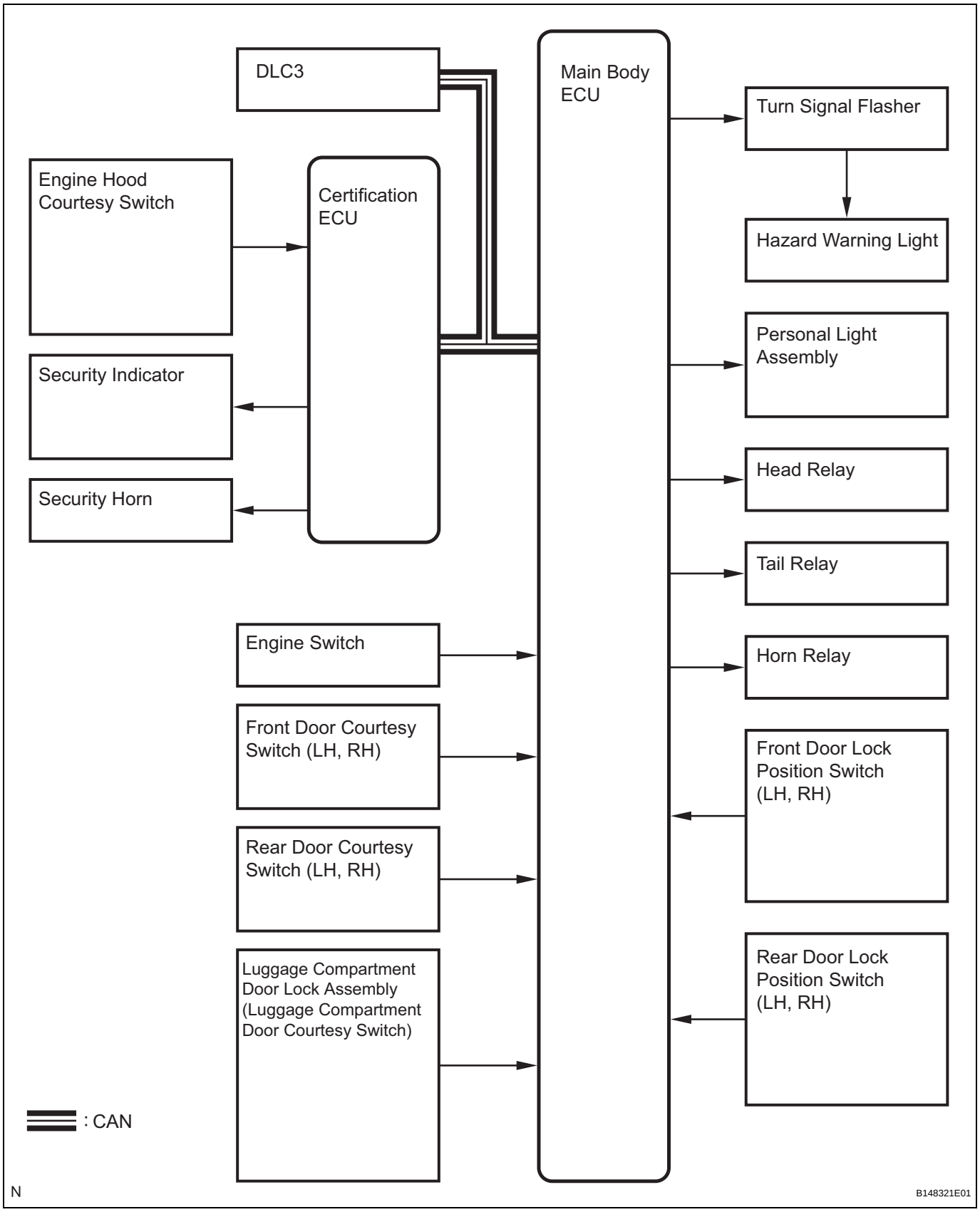

TD

TD

SYSTEM DESCRIPTION

1. OUTLINE OF THEFT DETERRENT SYSTEM

- The theft deterrent system can be set by locking the doors using the transmitter or key, or by opening and closing the doors.
- The alarm function will activate when someone attempts forcibly to lock any of the doors or open any of the doors, engine hood, and luggage door while the system is in the armed state.
- In the alarm sounding state, the system illuminates the interior light and blinks the taillights, headlights, and hazard warning lights. At the same time, the system sounds the vehicle horns and security horn to deter break-in and theft as well as to warn people around the vehicle.
- The theft deterrent system has 2 modes; one is the active arming mode (see ACTIVE ARMING MODE) and the other is passive arming mode (see PASSIVE ARMING MODE). The passive arming mode can be switched ON/OFF using the specified method.
- Each mode has 4 states; a disarmed state, an arming preparation state, an armed state and an alarm sounding state.

(a) Disarmed state:
- The alarm function is not operating.
- The theft deterrent system is not operating.

(b) Arming preparation state:
- The time until the system goes into the armed state.
- The theft deterrent system is not operating.

(c) Armed state:
- The theft deterrent system is operating.

(d) Alarm sounding state:
- Alarm function is operating.

Alarm time:
Approx. 60 sec.

Refer to the table below for alarm methods and time:

Alarm Method	Headlight	Blinking
	Taillight	Blinking
	Hazard Warning Light	Blinking
	Interior Light	Illuminating
	Vehicle Horn	Sounding (approx. 0.4 second cycles)
	Security Horn	Sounding (approx. 0.4 second cycles)
Alarm Time	Approx. 60 sec.	

HINT:
If any of the doors are unlocked when the key is not in the actuation area during the armed state, a forced door lock signal will be output (see FORCED DOOR LOCK CONTROL).

2. FUNCTION OF MAIN COMPONENT

Component	Function
Security indicator	Informs driver of theft deterrent system status.
Security horn	Sounds when attempted brake-in or theft is detected.
Headlights	Blink when attempted break-in or theft is detected.
Taillights	Blink when attempted break-in or theft is detected.
Hazard warning lights	Blink when attempted break-in or theft is detected.
Interior light	Lights up when attempted break-in or theft is detected.
Vehicle horns	Sound when attempted break-in or theft is detected.
Door courtesy light switch	Detects door status (open or closed).
Door lock position switch	Detects door status (locked or unlocked).
Engine hood courtesy switch	Detects engine hood status (open or closed).
Luggage compartment door courtesy switch	Detects luggage compartment door status (open or closed).
Certification ECU	• Receives engine hood courtesy switch status. • Sends operation signal to security indicator and security horn.

3. ACTIVE ARMING MODE

HINT:

Active arming mode starts the alarm control immediately after the doors are locked.

TD

(a) Active arming mode:
This system activates as described in the diagram below when one of items for each condition is met.

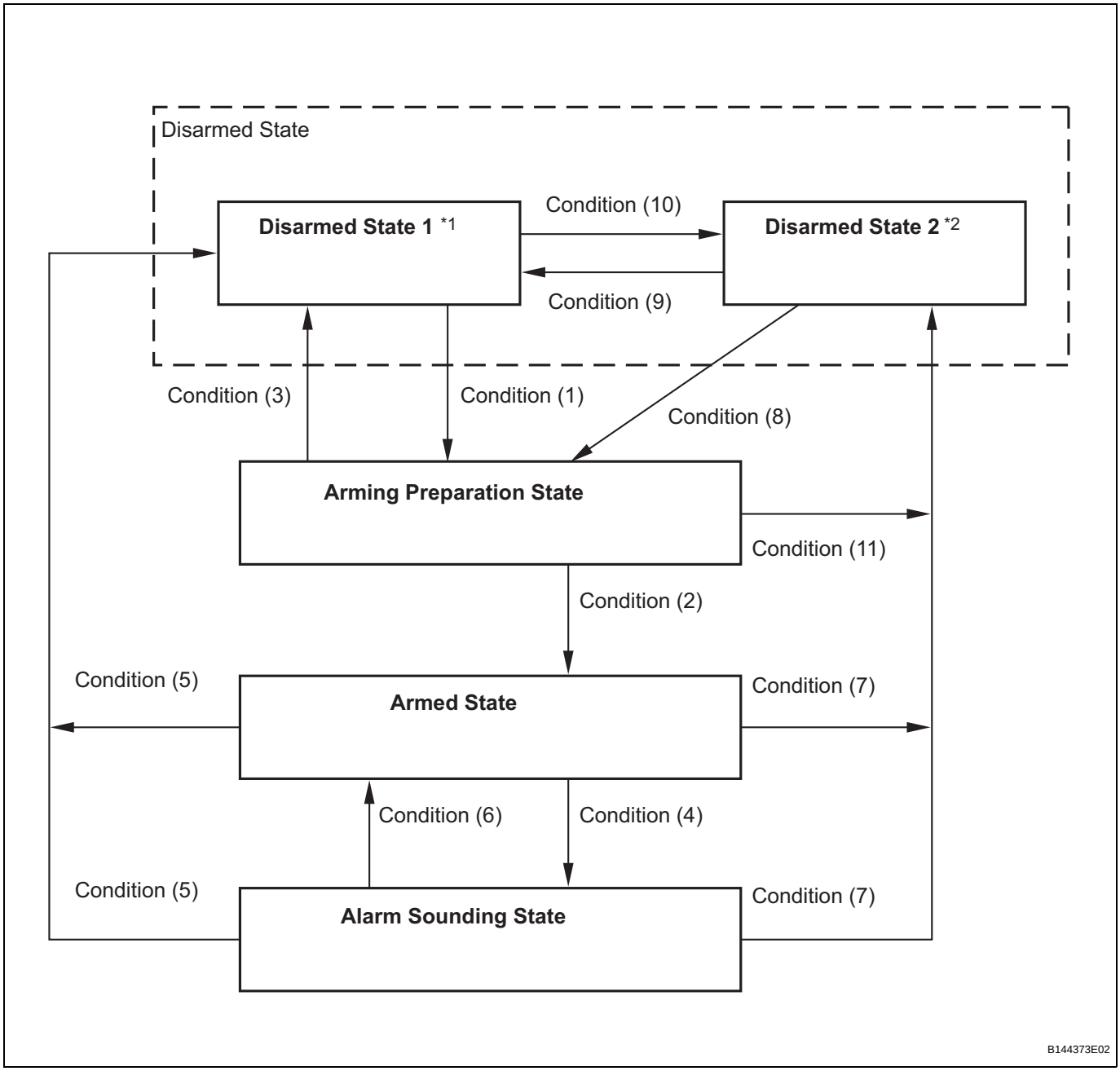

HINT:
- *1: Disarmed state 1 is the normal disarmed state.
- *2: Disarmed state 2 is set from either the disarmed state 1 or the arming preparation state.

Condition	Item
Condition (1)	In the disarmed state 1, when the key is not in the actuation area, the system state is switched if one of the following conditions is met. 1. With all doors, engine hood and luggage compartment door closed, lock all doors by key operation. 2. With all doors, engine hood and luggage compartment door closed, lock all doors by wireless operation. 3. With engine hood and luggage compartment door closed and all doors locked with any door still opened, close the open door.

Condition	Item
Condition (2)	After condition (1) is met, allow approx. 30 seconds to elapse.
Condition (3)	1. Unlock any door. 2. Open any door. 3. Turn the engine switch on (IG or ACC). 4. Reconnect battery.
Condition (4)	1. Open engine hood. 2. Open luggage compartment door. 3. Reconnect battery. 4. Open any door. 5. Unlock any door when all doors are locked, without using wireless operation. 6. Turn the engine switch off. After 5 seconds or more have elapsed, turn the engine switch on (IG).
Condition (5)	1. Unlock only driver's door or all doors by wireless operation. 2. Unlock only driver's door or all doors by key operation. 3. Turn the engine switch on (IG) and run the engine for more than 2 seconds.
Condition (6)	After approx. 60 seconds, alarm stops and system returns to armed state.
Condition (7)	Open the luggage compartment door by wireless operation.
Condition (8)	1. Close the engine hood when the luggage compartment door is closed. 2. Close the luggage compartment door when the engine hood is closed.
Condition (9)	1. Unlock any door. 2. Open any door. 3. Turn the engine switch from off to on (IG or ACC). 4. Reconnect the battery.
Condition (10)	In the disarmed state 1, when the key is not in the actuation area, the system state is switched if one of the following conditions is met. 1. With all doors closed, and the engine hood or luggage compartment door open, lock all doors by wireless operation. 2. With all doors closed, and the engine hood or luggage compartment door open, lock all doors by key operation. 3. With the engine hood or luggage compartment door open and all doors locked with any door still open, close the open door.
Condition (11)	1. Open engine hood. 2. Open luggage compartment door by switch or wireless operation.

4. PASSIVE ARMING MODE

HINT:

- This mode starts the alarm control after the key is out of the actuation area and doors are closed.
- This mode can be switched ON/OFF by the specified method.
- The alarm is initially set (when shipped from the factory) to active arming mode (not passive arming mode).
- During passive arming mode, the theft deterrent system goes into the armed state even if the doors are not locked.
- Detecting that the doors are unlocked does not set off the alarm during passive arming mode.
- A forced door lock signal is not output during passive arming mode (see FORCED DOOR LOCK CONTROL).
- Although the theft deterrent system detects that the doors are opened during passive arming mode, the alarm will not go off immediately because an entry delay time is set.
- If the condition (1) of active arming mode is met during passive arming mode, the theft deterrent system will switch to active arming mode.

TD

(a) Passive arming mode:
This system activates as described in the diagram below when one of items for each condition is met.

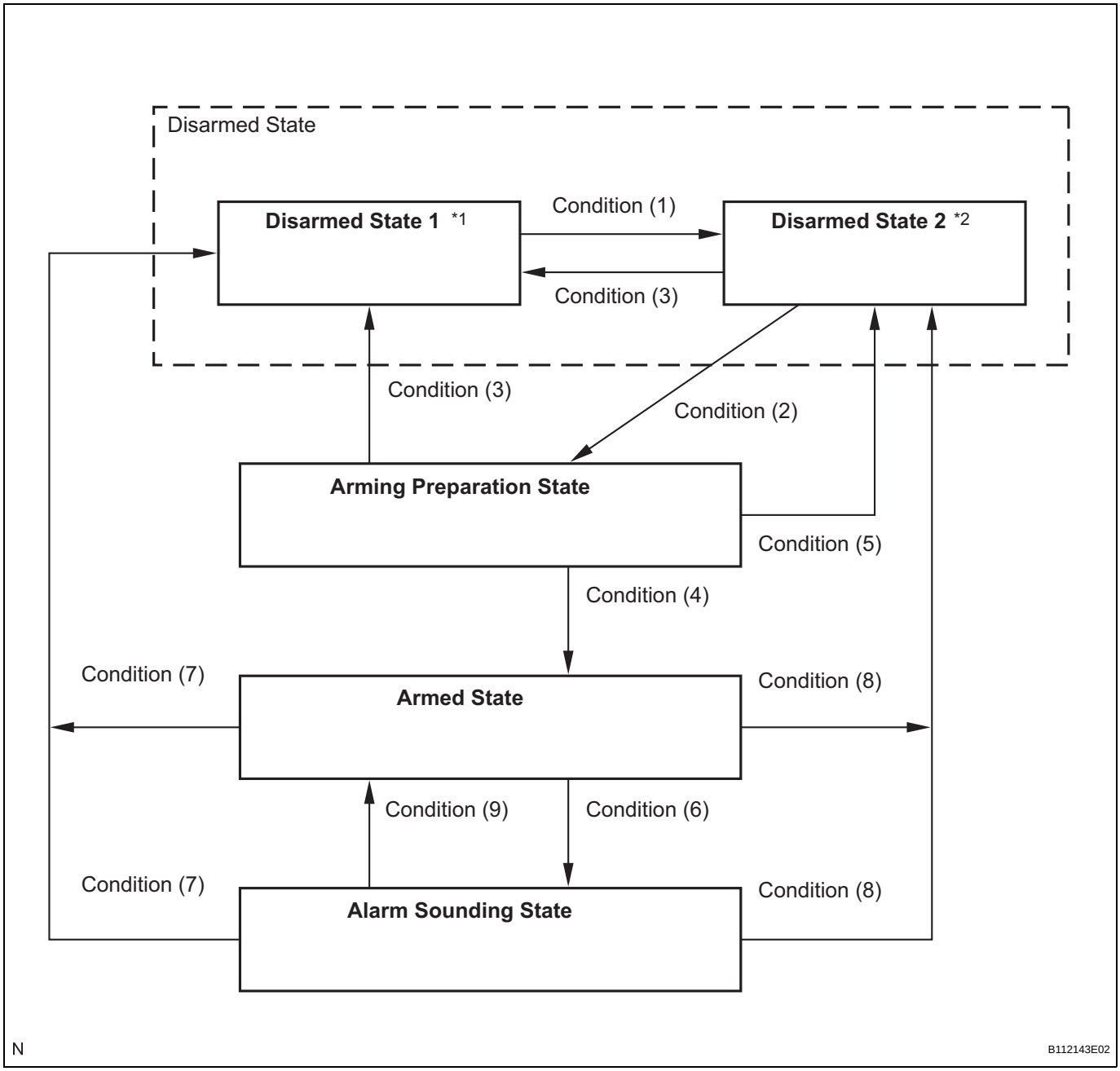

HINT:
- *1: Disarmed state 1 is the normal disarmed state.
- *2: Disarmed state 2 is set from either the disarmed state 1 or the arming preparation state.

Condition	Item
Condition (1)	1. With any door open, turn the engine switch off. 2. With the engine switch off, open any door.
Condition (2)	All doors, engine hood and luggage compartment door are closed.
Condition (3)	1. Unlock only driver's door or all doors by wireless operation. 2. Unlock only driver's door or all doors by key operation. 3. Reconnect battery. 4. Turn the engine switch on (IG or ACC).

Condition	Item
Condition (4)	After condition (1) is met, allow approx. 30 seconds to elapse.
Condition (5)	1. Open any door. 2. Open engine hood. 3. Open luggage compartment door. 4. Unlock luggage compartment door.
Condition (6)	1. Open any door and allow entry delay time*1 to elapse. 2. Open engine hood. 3. Open luggage compartment door. 4. Reconnect battery. 5. Turn the engine switch off. After 5 seconds or more have elapsed, turn the engine switch on (IG).
Condition (7)	1. Unlock only driver's door or all doors by wireless operation. 2. Unlock only driver's door or all doors by key operation. 3. Turn the engine switch on (IG) and run the engine for more than 2 seconds. 4. Turn the engine switch on (IG) within 5 seconds after turning it off or during it is on (IG).
Condition (8)	Open luggage compartment door by wireless operation.
Condition (9)	After approx. 60 sec., alarm stops and system returns to armed state.

HINT:
*1: When any door is opened while all the doors are closed during passive arming mode, the entry delay time starts. If the switch condition (armed state → disarmed state 1 or 2) is met during the entry delay time, the theft deterrent system will return to disarmed state 1 or 2. However, if the switch condition for disarmed state 1 or 2 is not met, the theft deterrent system will recognize it as a theft and set off the alarm. Entry delay time of 0, 14 or 30 sec. can be selected by the customizing function.

5. FORCED DOOR LOCK CONTROL

(a) The forced door lock control prevents the vehicle from being tampered with. Immediately after a door is unlocked (alarm starts), the door is forced to lock by a forced door lock signal.

(1) Conditions that force the doors to lock:
When the key is not in the actuation area and both of the following conditions are met.
- The theft deterrent system is in the alarm sounding state of active arming mode.
- Any door is unlocked.

6. ALARM MEMORY FUNCTION

(a) If the alarm is set off (tampering is detected) while the theft deterrent system is armed, it will be recorded by the alarm memory function. Whenever the theft deterrent system is cancelled, the alarm memory function causes the taillights to light up for 2 seconds in order to inform you that the alarm has been set off.

(1) Conditions of the alarm memory function that cause the taillights to light up:
When the theft deterrent system has entered the alarm sounding state (tampering has been detected) even once, the taillights will light up for 2 seconds if any of the following conditions is met.
- Switched to the disarmed state from the armed state during active arming mode.
- Switched to the disarmed state 1 from the armed state during passive arming mode.

HINT:
Active arming mode: See ACTIVE ARMING MODE.
Passive arming mode: See PASSIVE ARMING MODE.

7. PANIC ALARM CONTROL

(a) The panic alarm control makes it possible to voluntarily set off the panic alarm by pressing the PANIC switch on the wireless transmitter.

(1) Conditions that cause the panic alarm control to set off the panic alarm:
The panic alarm control sets off the panic alarm by pressing the PANIC switch on the wireless transmitter under the following conditions:
- The engine switch is off.
- The theft deterrent system is not in the alarm sounding state. (This condition is common both to active arming mode and to passive arming mode.)

(2) Conditions that cause the panic alarm control to shut off the alarm:
The panic alarm control shuts off the panic alarm when any of the following conditions is met during panic alarm operation:
- The engine switch is turned on (IG).
- The panic alarm switch is turned on again.
- Any of the switches on the wireless transmitter (LOCK/UNLOCK or LUGGAGE OPEN) is pressed.
- The panic alarm ends (approx. 60 sec. have passed).

- The theft deterrent system switches to the alarm sounding state. Under this condition, the theft deterrent system is controlling the alarm rather than the panic alarm control. In order to cancel this alarm, refer to the theft deterrent system alarm sounding state cancellation procedure. (This condition is common both to active arming mode to passive arming mode.)

8. SECURITY INDICATOR OUTPUT

(a) The certification ECU outputs a signal to light up the security indicator, according to the state of the theft deterrent system. However, some of the actual lighting conditions of the security indicator are different from the output signals of the certification ECU.

Output:

State of Theft Deterrent System*	Security Indicator	
	Output Signals from Certification ECU	Actual Lighting Condition
Disarmed state 1, 2	OFF	OFF (Immobiliser system unset) BLINKING (Immobiliser system set)
Arming preparation state	ON	ON
Armed state	OFF	BLINKING
Alarm sounding state	ON	ON

Blinking cycle:

Time	Security Indicator
0.2 sec.	ON
1.8 sec.	OFF

HINT:

- *: The above condition is common both to active arming mode and to passive arming mode.
- When the immobiliser system is set, the security indicator blinks during both the disarmed state and the armed state, due to the output signals from the immobiliser system.

STANDARD BOLT

HOW TO DETERMINE BOLT STRENGTH

Bolt Type

Hexagon Head Bolt			Stud Bolt	Weld Bolt	Class
Normal Recess Bolt		Deep Recess Bolt			
	No Mark	No Mark	No Mark	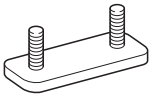	4T
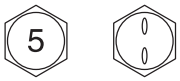					5T
	w/ Washer	w/ Washer			6T
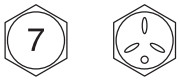		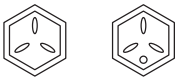			7T
					8T
					9T
					10T
					11T

SS

SS

SPECIFIED TORQUE FOR STANDARD BOLTS

Class	Diameter (mm)	Pitch (mm)	Specified torque					
			Hexagon head bolt			Hexagon flange bolt		
			N*m	kgf*cm	ft.*lbf	N*m	kgf*cm	ft.*lbf
4T	6	1	5	55	48 in.*lbf	6	60	52 in.*lbf
	8	1.25	12.5	130	9	14	145	10
	10	1.25	26	260	19	29	290	21
	12	1.25	47	480	35	53	540	39
	14	1.5	74	760	55	84	850	61
	16	1.5	115	1,150	83	-	-	-
5T	6	1	6.5	65	56 in.*lbf	7.5	75	65 in.*lbf
	8	1.25	15.5	160	12	17.5	175	13
	10	1.25	32	330	24	36	360	26
	12	1.25	59	600	43	65	670	48
	14	1.5	91	930	67	100	1,050	76
	16	1.5	140	1,400	101	-	-	-
6T	6	1	8	80	69 in.*lbf	9	90	78 in.*lbf
	8	1.25	19	195	14	21	210	15
	10	1.25	39	400	29	44	440	32
	12	1.25	71	730	53	80	810	59
	14	1.5	110	1,100	80	125	1,250	90
	16	1.5	170	1,750	127	-	-	-
7T	6	1	10.5	110	8	12	120	9
	8	1.25	25	260	19	28	290	21
	10	1.25	52	530	38	58	590	43
	12	1.25	95	970	70	105	1,050	76
	14	1.5	145	1,500	108	165	1,700	123
	16	1.5	230	2,300	166	-	-	-
8T	8	1.25	29	300	22	33	330	24
	10	1.25	61	620	45	68	690	50
	12	1.25	110	1,100	80	120	1,250	90
9T	8	1.25	34	340	25	37	380	27
	10	1.25	70	710	51	78	790	57
	12	1.25	125	1,300	94	140	1,450	105
10T	8	1.25	38	390	28	42	430	31
	10	1.25	78	800	58	88	890	64
	12	1.25	140	1,450	105	155	1,600	116
11T	8	1.25	42	430	31	47	480	35
	10	1.25	87	890	64	97	990	72
	12	1.25	155	1,600	116	175	1,800	130

U660E AUTOMATIC TRANSAXLE

SERVICE DATA

Line pressure (Wheel locked)		
Engine idling	D position	372 to 412 kPa (3.8 to 4.2 kgf*cm^2, 54 to 60 psi)
	R position	672 to 742 kPa (6.8 to 7.5 kgf*cm^2, 97 to 108 psi)
AT stall (Throttle valve fully open)	D position	1,160 to 1,350 kPa (11.8 to 13.8 kgf*cm^2, 168 to 196 psi)
	R position	1,900 to 2,200 kPa (19.4 to 22.4 kgf*cm^2, 276 to 319 psi)
Engine stall revolution	D position	2,150 to 2,670 rpm
Time lag	N → D position	Less than 1.2 seconds
	N → R position	Less than 1.5 seconds
Engine idle speed (A/C OFF)	N position	600 to 700 rpm
Drive plate runout	Maximum	0.20 mm (0.0079 in.)
Torque converter runout	Maximum	0.30 mm (0.0118 in.)
Differential oil seal drive in depth	LH side	-0.5 to 0.5 mm (-0.020 to 0.020 in.)
	RH side	-0.5 to 0.5 mm (-0.020 to 0.020 in.)
Shift schedule		
D position		
Throttle valve fully open (Normal)	1 → 2	50 to 56 km/h (31 to 35 mph)
	2 → 3	93 to 103 km/h (58 to 64 mph)
	3 → 4	128 to 141 km/h (80 to 88 mph)
	4 → 5	174 to 193 km/h (108 to 120 mph)
	5 → 6	258 to 285 km/h (160 to 177 mph
	6 → 5	252 to 278 km/h (157 to 173 mph
	5 → 4	169 to 187 km/h (105 to 116 mph))
	4 → 3	121 to 134 km/h (75 to 83 mph))
	3 → 2	87 to 96km/h (54 to 60 mph)
	2 → 1	33 to 37 km/h (21 to 23 mph)
Throttle valve fully open (Cold)	1 → 2	37 to 41 km/h (23 to 25 mph)
	2 → 3	72 to 79 km/h (45 to 49 mph)
	3 → 4	110 to 122 km/h (68 to 76 mph)
	4 → 5	174 to 192 km/h (108 to 119 mph)
	5 → 6	258 to 285 km/h (160 to 177 mph
	6 → 5	252 to 278 km/h (157 to 173 mph
	5 → 4	169 to 187 km/h (105 to 116 mph))
	4 → 3	104 to 115 km/h (65 to 71 mph))
	3 → 2	65 to 72km/h (40 to 45 mph)
	2 → 1	33 to 37 km/h (21 to 23 mph)
Throttle valve fully open (Failure)	1 → 3	27 to 30 km/h (17 to 19 mph)
	3 → 1	6 to 8 km/h (4 to 5 mph)
Throttle valve fully closed (Normal)	4 → 5	48 to 54 km/h (30 to 34 mph)
	5 → 6	65 to 72 km/h (40 to 45 mph)
	6 → 5	58 to 65 km/h (36 to 40 mph)
	5 → 4	46 to 51 km/h (29 to 32 mph)
5, 4, 3, 2, 1 position		

Manual down shift speed	→ 5	252 to 278 km/h (157 to 173 mph)
	→ 4	169 to 187 km/h (105 to 116 mph)
	→ 3	121 to 134 km/h (75 to 83 mph)
	→ 2	87 to 96km/h (54 to 60 mph)
	→ 1	38 to 42 km/h (24 to 26 mph)
Lock-up schedule (Throttle valve opening 5%) D position		
6th gear	Lock-up ON	69 to 76 km/h (43 to 47 mph)
	Lock-up OFF	67 to 74 km/h (42 to 46 mph)
5th gear	Lock-up ON	59 to 66 km/h (37 to 41 mph)
	Lock-up OFF	57 to 63 km/h (35 to 39 mph)
4th gear	Lock-up ON	43 to 47 km/h (27 to 29 mph)
	Lock-up OFF	41 to 45 km/h (25 to 28 mph)
3rd gear	Lock-up ON	30 to 33 km/h (19 to 21 mph)
	Lock-up OFF	28 to 31 km/h (17 to 19 mph)
2nd gear	Lock-up ON	23 to 25 km/h (14 to 16 mph)
	Lock-up OFF	22 to 24 km/h (14 to 15 mph)
Flex lock-up schedule (Throttle valve opening 5%) D position		
6th gear	Lock-up ON	62 to 68 km/h (39 to 42 mph)
	Lock-up OFF	60 to 67 km/h (37 to 42 mph)
5th gear	Lock-up ON	50 to 55 km/h (31 to 34 mph)
	Lock-up OFF	50 to 55 km/h (31 to 34 mph)
4th gear	Lock-up ON	37 to 41 km/h (23 to 25 mph)
	Lock-up OFF	35 to 39 km/h (22 to 24 mph)
3rd gear	Lock-up ON	27 to 30 km/h (17 to 19 mph)
	Lock-up OFF	25 to 28 km/h (16 to 17 mph)
2nd gear	Lock-up ON	20 to 22 km/h (12 to 14 mph)
	Lock-up OFF	18 to 20 km/h (11 to 12 mph)
Oil pump		
Body clearance	STD	0.08 to 0.15 mm (0.0031 to 0.0059 in.)
	Maximum	0.15 mm (0.0059 in.)
Side clearance	STD	0.025 to 0.04 mm (0.0010 to 0.0016 in.)
	Maximum	0.04 mm (0.0016 in.)
Drive gear thickness		11.547 to 11.555 mm (0.4546 to 0.4549 in.)
		11.555 to 11.563 mm (0.4549 to 0.4552 in.)
		11.564 to 11.571 mm (0.4553 to 0.4556 in.)
		11.572 to 11.579 mm (0.4556 to 0.4559 in.)
		11.580 to 11.587 mm (0.4559 to 0.4562 in.)
Driven gear thickness		11.547 to 11.555 mm (0.4546 to 0.4549 in.)
		11.555 to 11.563 mm (0.4549 to 0.4552 in.)
		11.564 to 11.571 mm (0.4553 to 0.4556 in.)
		11.572 to 11.579 mm (0.4556 to 0.4559 in.)
		11.580 to 11.587 mm (0.4559 to 0.4562 in.)
Pump body bushing inside diameter	STD	43.113 to 43.138 mm (1.6974 to 1.6983 in.)
	Maximum	43.188 mm (1.7003 in.)
Stator shaft bushing inside diameter	STD	22.500 to 22.526 mm (0.8858 to 0.8868 in.)
	Maximum	22.57 mm (0.8886 in.)
Rear planetary sun gear		
Inside diameter	STD	25.580 to 25.601 mm (1.0071 to 1.0079 in.)
	Maximum	25.601 mm (1.0079 in.)

Under drive planetary gear		
Clearance		0.18 to 0.54 mm (0.0071 to 0.0213 in.)
Planetary sun gear		
Inside diameter	STD	25.525 to 25.546 mm (1.0049 to 1.0058 in.)
	Maximum	25.546 mm (1.0058 in.)
2nd brake piston return spring		
Return spring free length		23.85 mm (0.9390 in.)
Planetary gear		
Clearance	A point	0.23 to 0.59 mm (0.0091 to 0.0232 in.)
	B point	0.16 to 0.66 mm (0.0063 to 0.0260 in.)
1st and reverse brake return spring		
Return spring free length		15.79 mm (0.6217 in.)
No. 2 brake		
Piston stroke		0.884 to 1.196 mm (0.0348 to 0.0471 in.)
Flange thickness	Mark 40	4.0 mm (0.157 in.)
	Mark 41	4.1 mm (0.161 in.)
	Mark 42	4.2 mm (0.165 in.)
	Mark 43	4.3 mm (0.169 in.)
	Mark 44	4.4 mm (0.173 in.)
No. 1 brake		
Piston stroke		0.807 to 0.974 mm (0.0318 to 0.0383 in.)
Flange thickness	Mark 30	3.0 mm (0.118 in.)
	Mark 31	3.1 mm (0.122 in.)
	Mark 32	3.2 mm (0.126 in.)
	Mark 33	3.3 mm (0.130 in.)
	Mark 34	3.4 mm (0.134 in.)
	Mark 35	3.5 mm (0.138 in.)
No. 3 brake		
Clearance		0.599 to 0.761 mm (0.0024 to 0.0300 in.)
Flange thickness	Mark 38	3.8 mm (0.150 in.)
	Mark 39	3.9 mm (0.154 in.)
	Mark 40	4.0 mm (0.157 in.)
	Mark 41	4.1 mm (0.161 in.)
	Mark 42	4.2 mm (0.165 in.)
	Mark 43	4.3 mm (0.169 in.)
No. 1 clutch disc		
Piston stroke		0.806 to 0.974 mm (0.0317 to 0.0383 in.)
Flange thickness	Mark 30	3.0 mm (0.118 in.)
	Mark 31	3.1 mm (0.122 in.)
	Mark 32	3.2 mm (0.126 in.)
	Mark 33	3.3 mm (0.130 in.)
	Mark 34	3.4 mm (0.134 in.)
	Mark 35	3.5 mm (0.138 in.)
No. 2 clutch disc		
Pack clearance		0.544 to 0.744 mm (0.0214 to 0.0293 in.)

Flange thickness	Mark 30	3.0 mm (0.118 in.)
	Mark 31	3.1 mm (0.122 in.)
	Mark 32	3.2 mm (0.126 in.)
	Mark 33	3.3 mm (0.130 in.)
	Mark 34	3.4 mm (0.134 in.)
	Mark 35	3.5 mm (0.138 in.)
Input shaft		
End play		0.012 to 1.250 mm (0.0005 to 0.0492 in.)
Intermediate shaft		
End play		0.007 to 1.113 mm (0.0003 to 0.0438 in.)
Transaxle rear cover		
Bearing press fit depth		21.5 to 21.9 mm (0.8464 to 0.8622 in.)
Transmission valve body		
Valve body installation bolt length	A	25 mm (0.98 in.)
	B	30 mm (1.18 in.)
	C	35 mm (1.38 in.)
	D	45 mm (1.77 in.)
	E	55 mm (2.17 in.)
Manual valve lever shaft oil seal		
Oil seal drive in depth		-0.5 to 0.5 mm (-0.0197 to 0.0197 in.)
Front differential		
Backlash		0 to 0.15 mm (0 to 0.0059 in.)
Thrust washer thickness		1.50 mm (0.0591 in.)
		1.55 mm (0.0610 in.)
		1.60 mm (0..0630 in.)
		1.65 mm (0.0650 in.)
		1.70 mm (0.0669 in.)
		1.75 mm (0.0689 in.)
		1.80 mm (0.0709 in.)
		1.85 mm (0.0728 in.)
		1.90 mm (0.0748 in.)
Preload (at 10 rpm)		1.05 to 1.93 N*m (10.7 to 19.67 kgf*cm, 9.29 to 17.08 in.*lbf)

Shim thickness	2.000 mm (0.0787 in.)
	2.025 mm (0.0797 in.)
	2.050 mm (0.0807 in.)
	2.075 mm (0.0817 in.)
	2.100 mm (0.0827 in.)
	2.125 mm (0.0837 in.)
	2.150 mm (0.0847 in.)
	2.175 mm (0.0856 in.)
	2.200 mm (0.0866 in.)
	2.225 mm (0.0876 in.)
	2.250 mm (0.0886 in.)
	2.275 mm (0.0896 in.)
	2.300 mm (0.0906 in.)
	2.325 mm (0.0915 in.)
	2.350 mm (0.0925 in.)
	2.375 mm (0.0935 in.)
	2.400 mm (0.0945 in.)
	2.425 mm (0.0935 in.)
	2.450 mm (0.0965 in.)
	2.475 mm (0.0974 in.)
	2.500 mm (0.0984 in.)
	2.525 mm (0.0994 in.)
	2.550 mm (0.1004 in.)
	2.575 mm (0.1014 in.)
	2.600 mm (0.1024 in.)
	2.625 mm (0.1034 in.)
	2.650 mm (0.1043 in.)
	2.675 mm (0.1053 in.)
	2.700 mm (01063 in.)
	2.725 mm (0.1073 in.)
	2.750 mm (0.1083 in.)
	2.775 mm (0.1093 in.)
	2.800 mm (0.1102 in.)
	2.825 mm (0.1112 in.)
	2.850 mm (0.1122 in.)
	2.875 mm (0.1132 in.)
Counter driven gear	
Preload (at 10 rpm)	3.29 to 6.07 N*m (35.35 to 61.86 kgf*cm, 2.42 to 4.46 in.*lbf)

Shim thickness	2.000 mm (0.0787 in.)
	2.025 mm (0.0797 in.)
	2.050 mm (0.0807 in.)
	2.075 mm (0.0817 in.)
	2.100 mm (0.0827 in.)
	2.125 mm (0.0837 in.)
	2.150 mm (0.0847 in.)
	2.175 mm (0.0856 in.)
	2.200 mm (0.0866 in.)
	2.225 mm (0.0876 in.)
	2.250 mm (0.0886 in.)
	2.275 mm (0.0896 in.)
	2.300 mm (0.0906 in.)
	2.325 mm (0.0915 in.)
	2.350 mm (0.0925 in.)
	2.375 mm (0.0935 in.)
	2.400 mm (0.0945 in.)
	2.425 mm (0.0935 in.)
	2.450 mm (0.0965 in.)
	2.475 mm (0.0974 in.)
	2.500 mm (0.0984 in.)
	2.525 mm (0.0994 in.)
	2.550 mm (0.1004 in.)
	2.575 mm (0.1014 in.)
	2.600 mm (0.1024 in.)
	2.625 mm (0.1034 in.)
	2.650 mm (0.1043 in.)
	2.675 mm (0.1053 in.)
	2.700 mm (01063 in.)
	2.725 mm (0.1073 in.)
	2.750 mm (0.1083 in.)
	2.775 mm (0.1093 in.)
	2.800 mm (0.1102 in.)
	2.825 mm (0.1112 in.)
	2.850 mm (0.1122 in.)
	2.875 mm (0.1132 in.)
	2.900 mm (0.1141 in.)
	2.925 mm (0.1152 in.)
	2.950 mm (0.1161 in.)
	2.975 mm (0.1171 in.)
	3.000 mm (0.1181 in.)

PARTS LOCATION

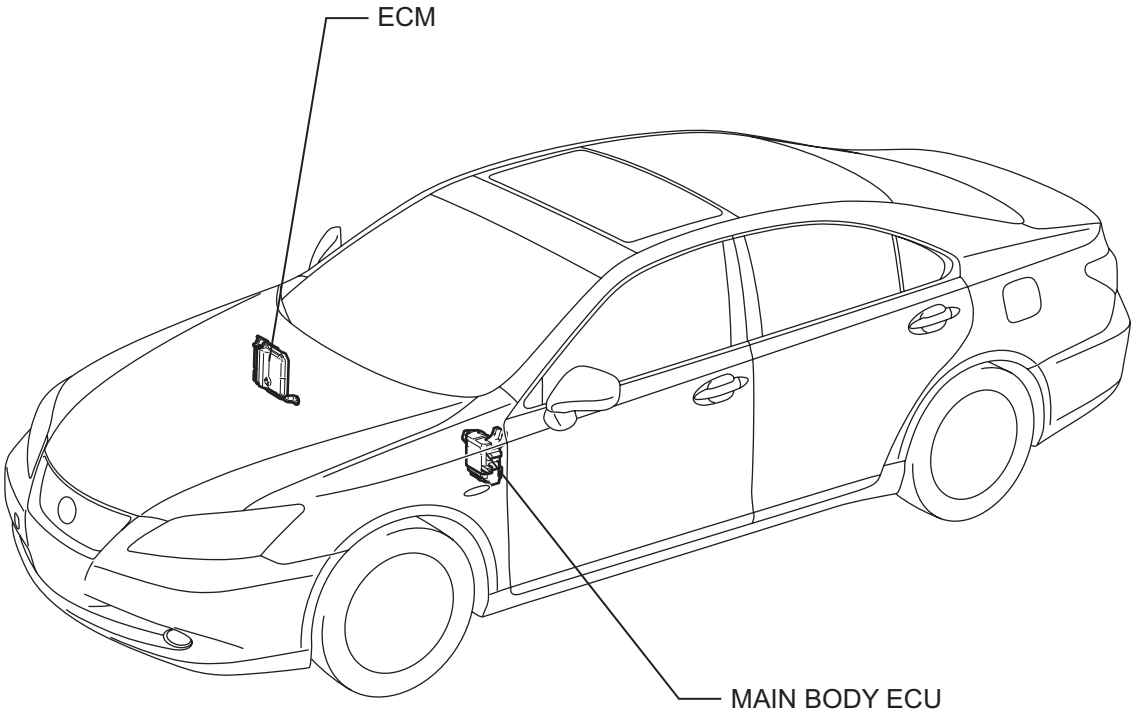

H

B139246E01

EI

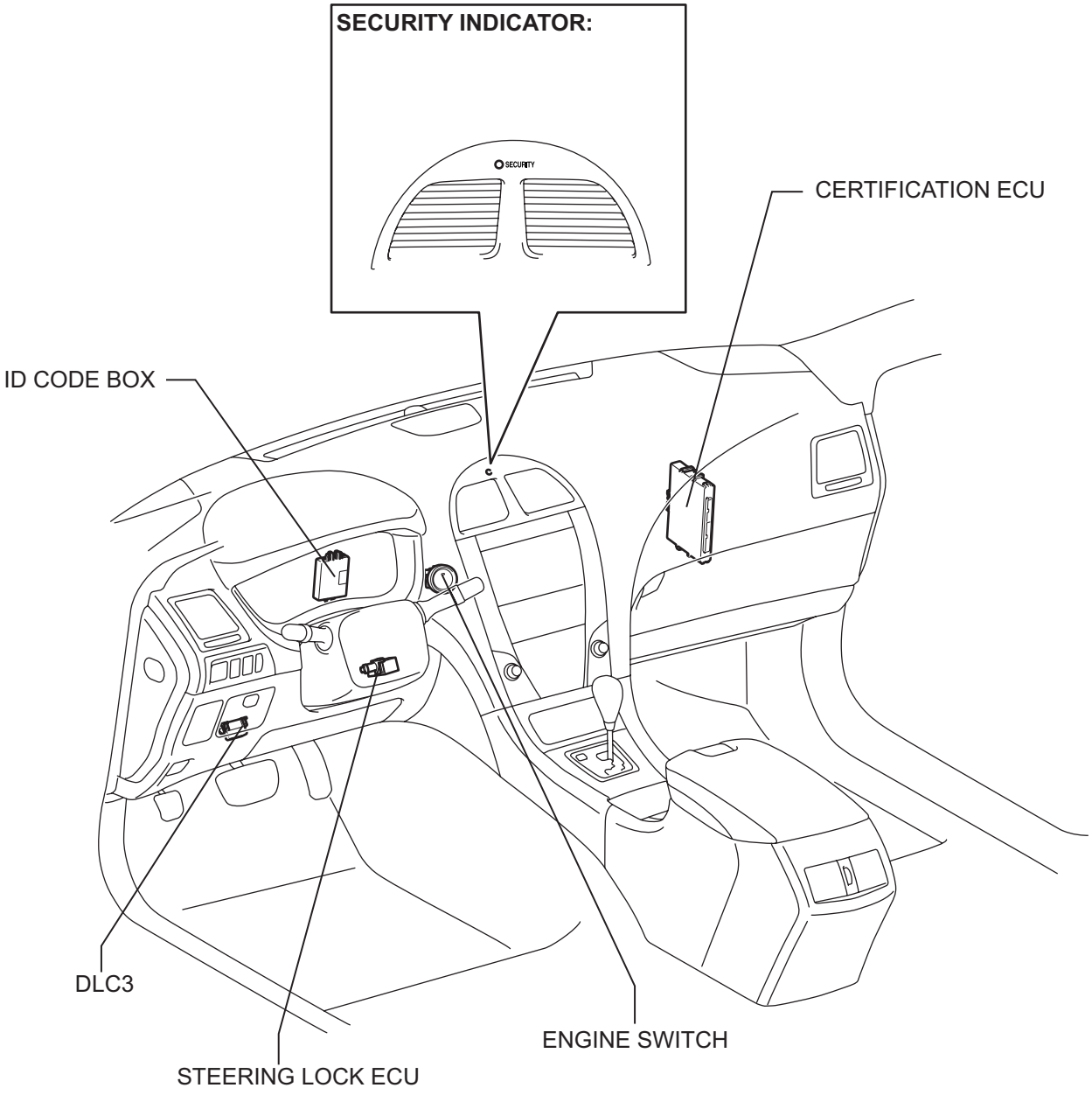

H

B139247E01

SYSTEM DIAGRAM

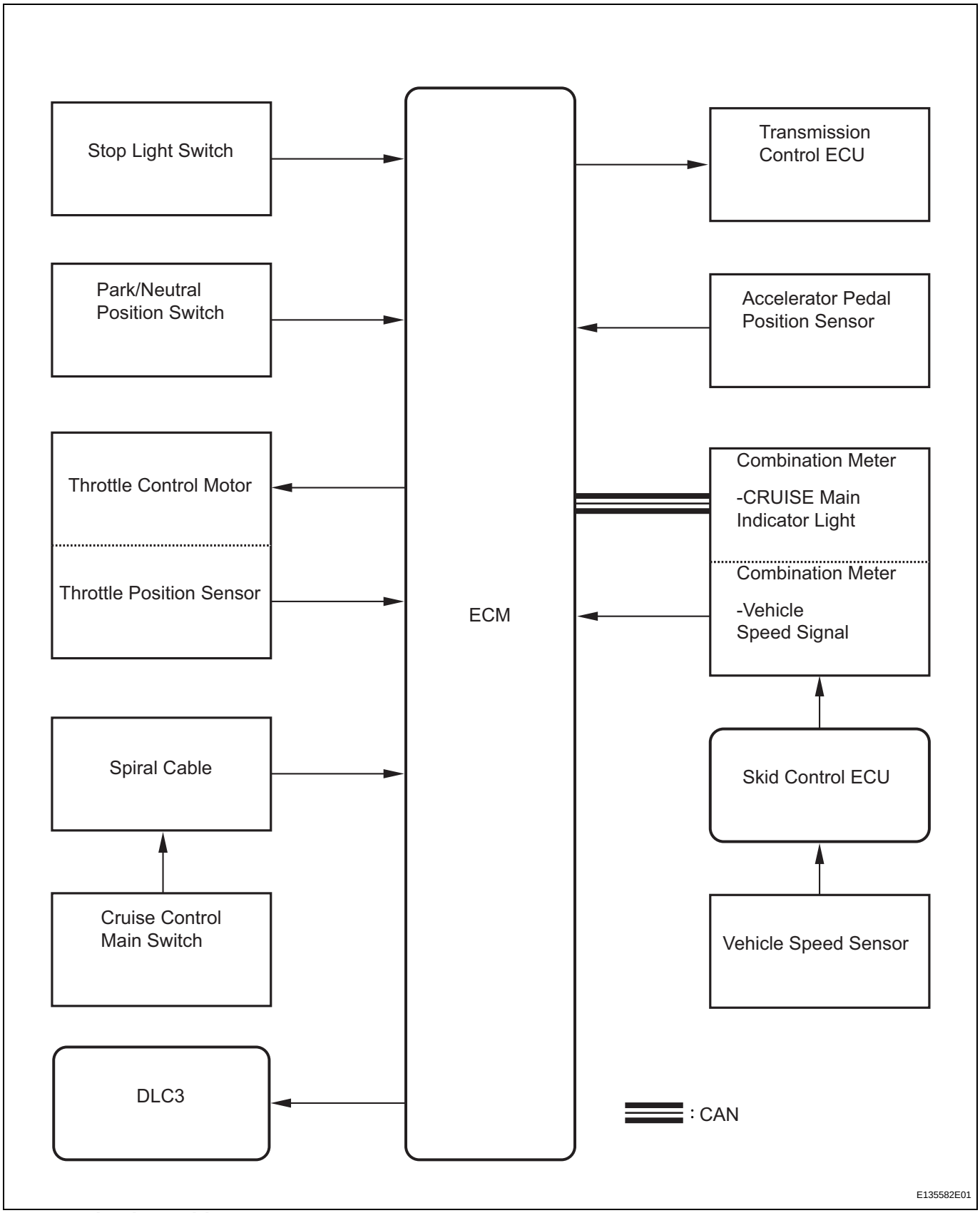

Communication Table:

Sender	Receiver	Signal	Line
ECM	Combination Meter ECU	CRUISE main indicator operation signal	CAN (V Bus)

SYSTEM DESCRIPTION

1. CRUISE CONTROL SYSTEM

This system is controlled by the ECM, and is activated by the throttle position sensor and motor. The ECM controls the following functions: ON-OFF, - (COAST)/SET, + (ACCEL)/RES (RESUME), CANCEL, vehicle speed operation, motor output control, and shift down control.

- The ECM compares the driving vehicle speed from the speed sensor with the stored vehicle speed set through the cruise control main switch. The ECM instructs the throttle valve motor of the throttle body assembly to close the valve when the driving speed is greater than the stored speed, and instructs it to open the valve when the driving speed is less than the stored speed.
- The ECM receives signals such as ON-OFF, - (COAST)/SET, + (ACCEL)/RES (RESUME), and CANCEL from the cruise control main switch and executes the command.
- The ECM illuminates the combination meter's CRUISE main indicator light when it receives a cruise control main switch ON signal.
- The ECM cancels the cruise control system when the brake pedal is depressed and the ECM receives a stop light switch signal.
- The ECM cancels the cruise control system when the shift lever is moved from the D to the N position or the transmission is shifted to the 3rd, 2nd, or 1st gear with the shift lever in the S position, and the ECM receives a park/neutral position switch signal.

2. LIMIT CONTROL

(a) Low speed limit

The lowest possible limit of the speed setting range is set at approximately 40 km/h (25 mph). The cruise control system cannot be set when the driving vehicle speed is below the low speed limit. Cruise control operation will be automatically canceled when the vehicle speed decreases below the low speed limit of 40 km/h (25 mph) while the cruise control is in operation.

(b) High speed limit

The highest possible limit of the speed setting range is set at approximately 200 km/h (125 mph). The cruise control system cannot be set when the driving vehicle speed is over the high speed limit. Also, + (ACCEL)/RES (RESUME) cannot be used to increase speed beyond the high speed limit.

3. OPERATION OF CRUISE CONTROL

The cruise control main switch operates 7 functions: SET, - (COAST), TAP-DOWN, RES (RESUME), + (ACCEL), TAP-UP, and CANCEL. The SET, TAP-DOWN, and - (COAST) functions, and the RES (RESUME), TAP-UP, and + (ACCEL) functions are operated with the same switch. The cruise control main switch is an automatic return type switch which turns on only while operating it in the direction of each arrow and turns off after releasing it.

(a) SET CONTROL

Vehicle speed is stored and constant speed control is maintained when pushing the cruise control main switch to - (COAST)/SET while driving with the main switch on (the CRUISE main indicator light is on), and the vehicle speed is within the set speed range (between the low and high speed limits).

(b) - (COAST) CONTROL

When the cruise control main switch is set to - (COST)/SET and held in that position while the cruise control system is operating, the ECM sends a "throttle valve opening angle 0°" demand signal to the cruise control system. Then the vehicle speed, when the cruise control main switch is released, is stored and maintained.

HINT:

An actual throttle valve opening angle of 0° is not possible due to the idle speed control, etc.

(c) TAP-DOWN CONTROL

When tapping down the cruise control main switch to - (COAST)/SET (for approximately 0.6 seconds) while the cruise control system is in operation, the stored vehicle speed decreases each time by approximately 1.6 km/h (1.0 mph). When the cruise control main switch is released from - (COAST)/SET and the difference between the driving and stored vehicle speed is more than 5 km/h (3 mph), the driving vehicle speed is stored and constant speed control is maintained.

(d) ACCELERATION CONTROL

The throttle valve motor of the throttle body assembly is instructed by the ECM to open the throttle valve when + (ACCEL)/RES (RESUME) on the cruise control main switch is pressed and held while the cruise control system is in operation. When the cruise control main switch is released from + (ACCEL)/RES (RESUME), the vehicle speed is stored and the vehicle is controlled at a constant speed.

(e) TAP-UP CONTROL
When tapping up the cruise control main switch to + (ACCEL)/RES (RESUME) (for approximately 0.6 seconds) while the cruise control system is in operation, the stored vehicle speed increases each time by approximately 1.6 km/h (1.0 mph). However, when the difference between the driving and the stored vehicle speed is more than 5 km/h (approximately 3 mph), the stored vehicle speed will not be changed.

(f) RESUME CONTROL
If cruise control operation was canceled under any of the manual cancel conditions (other than turning the cruise control main switch off), and if driving speed is above the low speed limit, pushing the cruise control main switch to + (ACCEL)/RES (RESUME) restores vehicle speed memorized at the time of cancellation, and maintains constant speed control.

(g) MANUAL CANCEL CONTROL
Performing any of the following cancels the cruise control system while in operation (the stored vehicle speed in the ECM is maintained).
- Pulling the cruise control main switch to CANCEL
- Depressing the brake pedal
- The shift lever is moved from the D to the N position or the transmission is shifted to the 3rd, 2nd, or 1st gear with the shift lever in the S position.
- Turning the cruise control main switch off (the stored vehicle speed in the ECM is not maintained).

4. AUTO CANCEL (FAIL-SAFE)
This system has an automatic cancellation function (fail-safe) (See page CC-15).

HOW TO PROCEED WITH TROUBLESHOOTING

HINT:
- Use the following procedures to troubleshoot the cruise control system.
- *: Use the intelligent tester.

1	VEHICLE BROUGHT TO WORKSHOP

NEXT

CC

2	PROBLEM SYMPTOM CONFIRMATION

NEXT

3	CHECK CAN COMMUNICATION SYSTEM*

Refer to PRECAUTION (See page CA-1).

(a) Check for output DTCs.

Result

Result	Proceed to
CAN DTC is not output	A
CAN DTC is output	B

HINT:
The ECM of this system is connected to the CAN communication system. Therefore, before starting troubleshooting, make sure to check that there is no trouble in the CAN communication system.

B → **PROCEED TO "CAN COMMUNICATION SYSTEM"**

A

4	DTC CHECK AND CLEAR*

Refer to DTC CHECK / CLEAR (See page CC-15).

NEXT

5	DTC CHECK (OTHER THAN CAN SYSTEM DTC)*

Result

Result	Proceed to
DTC is not output	A
DTC is output	B

A → GO TO STEP 7

B

6	DTC CHART

Refer to DIAGNOSTIC TROUBLE CODE CHART (See page CC-17).

NEXT

GO TO STEP 10

CC

7	PROBLEM SYMPTOM CONFIRMATION

Result

Result	Proceed to
Symptom occurs	A
Symptom does not occur	B

A → GO TO STEP 9

B

8	SYMPTOM SIMULATION

Refer to SYMPTOM SIMULATION (See page IN-39).

NEXT

Go to step 7

9	PROBLEM SYMPTOMS TABLE

Refer to PROBLEM SYMPTOMS TABLE (See page CC-11).

NEXT

10	CIRCUIT INSPECTION

NEXT

11	TERMINALS OF ECM

Refer to TERMINALS OF ECM (See page CC-13).

NEXT

12	IDENTIFICATION OF PROBLEM

NEXT

13	REPAIR OR REPLACE

NEXT

CC

14	CONFIRMATION TEST

NEXT

END

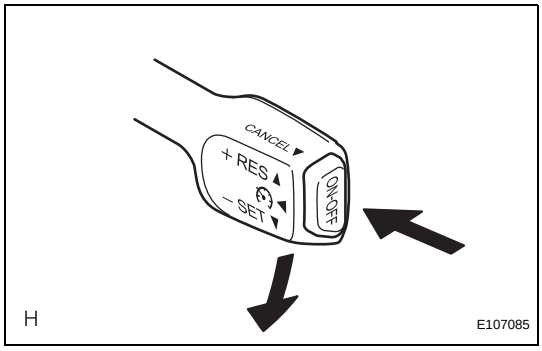

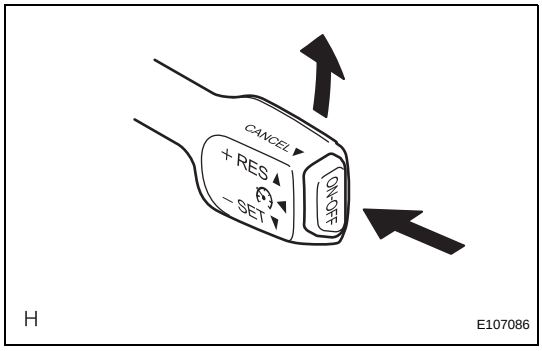

ROAD TEST

1. PROBLEM SYMPTOM CONFIRMATION

(a) Inspect the SET function.
- (1) Turn the cruise control main switch on.
- (2) Drive at the required speed between 40 km/h (25 mph) and 200 km/h (125 mph).
- (3) Push the cruise control main switch to - (COAST)/SET.
- (4) After releasing the switch, check that the vehicle cruises at the set speed.

(b) Inspect the ACCELERATION function.
- (1) Turn the cruise control main switch on.
- (2) Drive at the required speed between 40 km/h (25 mph) and 200 km/h (125 mph).
- (3) Push the cruise control main switch to - (COAST)/SET.
- (4) Check that vehicle speed increases while the cruise control main switch is pushed to + (ACCEL)/RES (RESUME), and that the vehicle cruises at the newly set speed when the switch is released.
- (5) Push the cruise control main switch to + (ACCEL)/RES (RESUME) and then release it immediately. Check that vehicle speed increases by approximately 1.6 km/h (1.0 mph) (tap-up control).

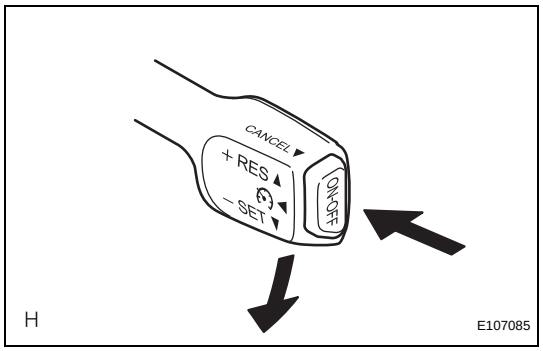

(c) Inspect the - (COAST) function.
  (1) Turn the cruise control main switch on.
  (2) Drive at the required speed between 40 km/h (25 mph) and 200 km/h (125 mph).
  (3) Push the cruise control main switch to - (COAST)/SET.
  (4) Check that vehicle speed decreases while the cruise control main switch is pushed to - (COAST)/SET, and the vehicle cruises at the newly set speed when the switch is released.
  (5) Push the cruise control main switch to - (COAST)/SET, and then release it immediately. Check that vehicle speed decreases by approximately 1.6 km/h (1.0 mph) (tap-down control).

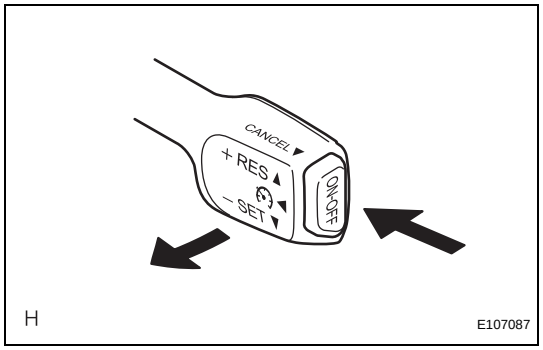

(d) Inspect the CANCEL function.
  (1) Turn the cruise control main switch on.
  (2) Drive at the required speed between 40 km/h (25 mph) and 200 km/h (125 mph).
  (3) Push the cruise control main switch to - (COAST)/SET.
  (4) When performing any one of the following, check that the cruise control system is canceled and that the normal driving mode is reset.
    - Pulling the cruise control main switch to CANCEL
    - Depressing the brake pedal
    - The shift lever is moved from the D to the N position or the transaxle is shifted to the 3rd, 2nd, or 1st gear with the shift lever in the S position.
    - Turning the cruise control main switch off

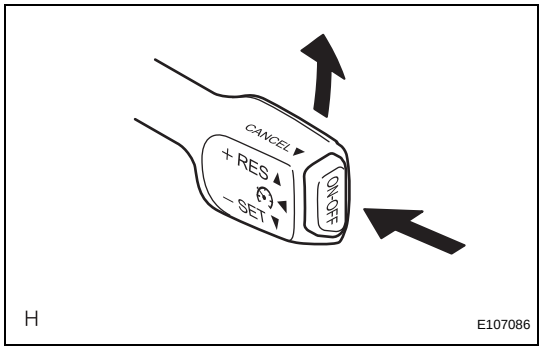

(e) Inspect the RES (RESUME) function.
  (1) Turn the cruise control main switch on.
  (2) Drive at the required speed between 40 km/h (25 mph) and 200 km/h (125 mph).
  (3) Push the cruise control main switch to - (COAST)/SET.
  (4) Cancel the cruise control system by performing any of the above operations (other than turning the main switch off).
  (5) After pushing the cruise control main switch to + (ACCEL)/RES (RESUME) at a driving speed of more than 40 km/h (25 mph), check that the vehicle resumes the speed set prior to the cancellation.

PARTS LOCATION

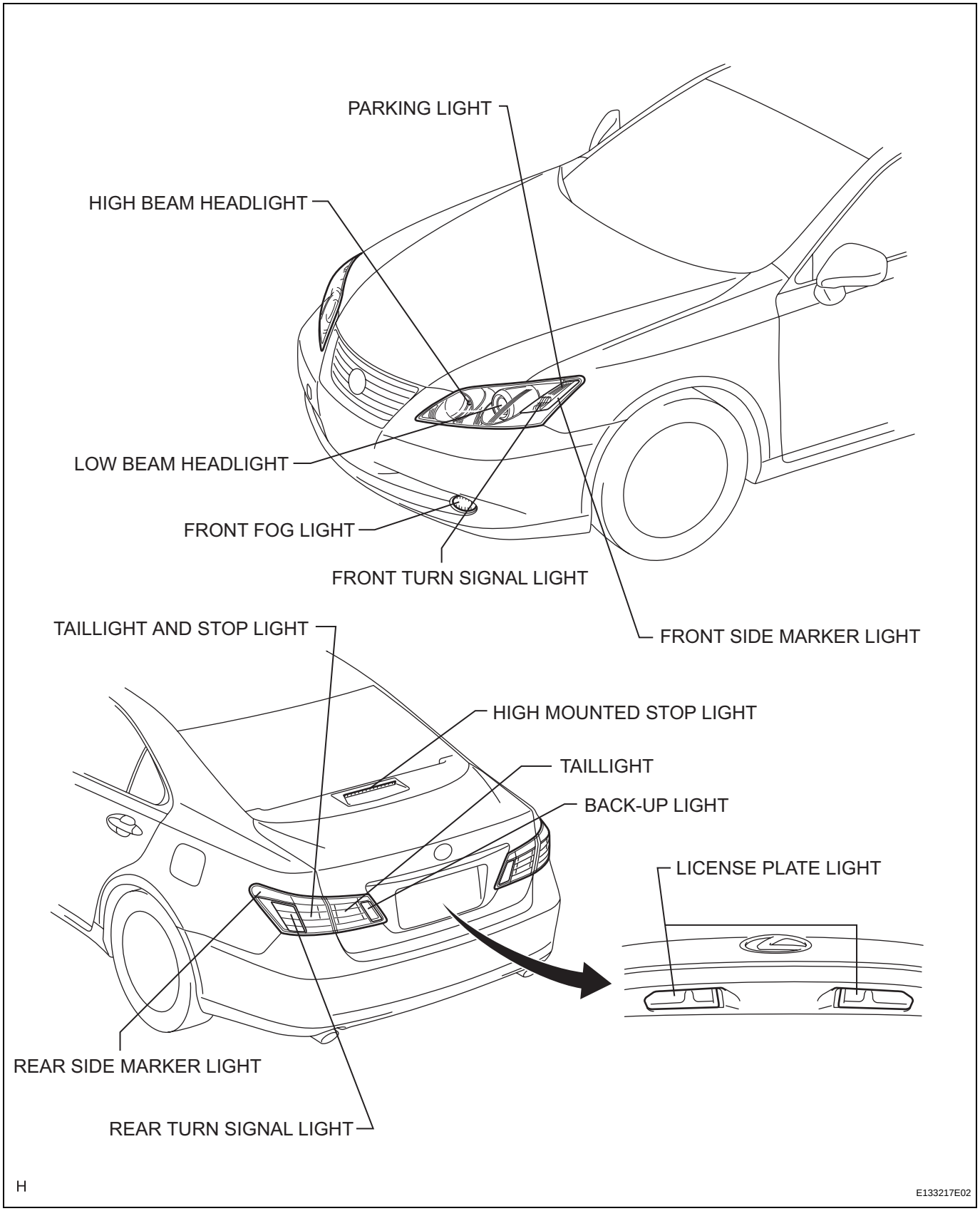

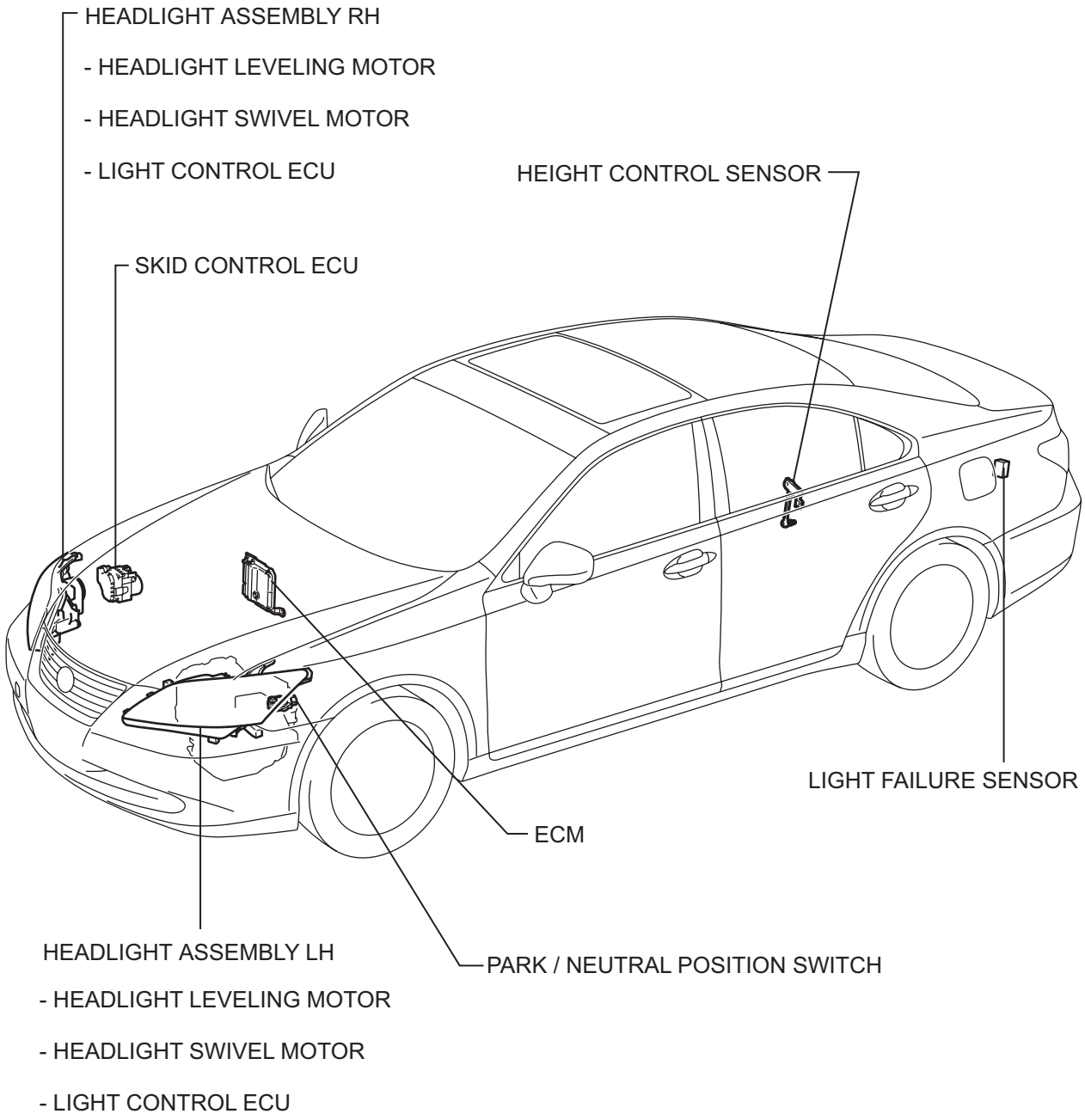

H

E121543E01

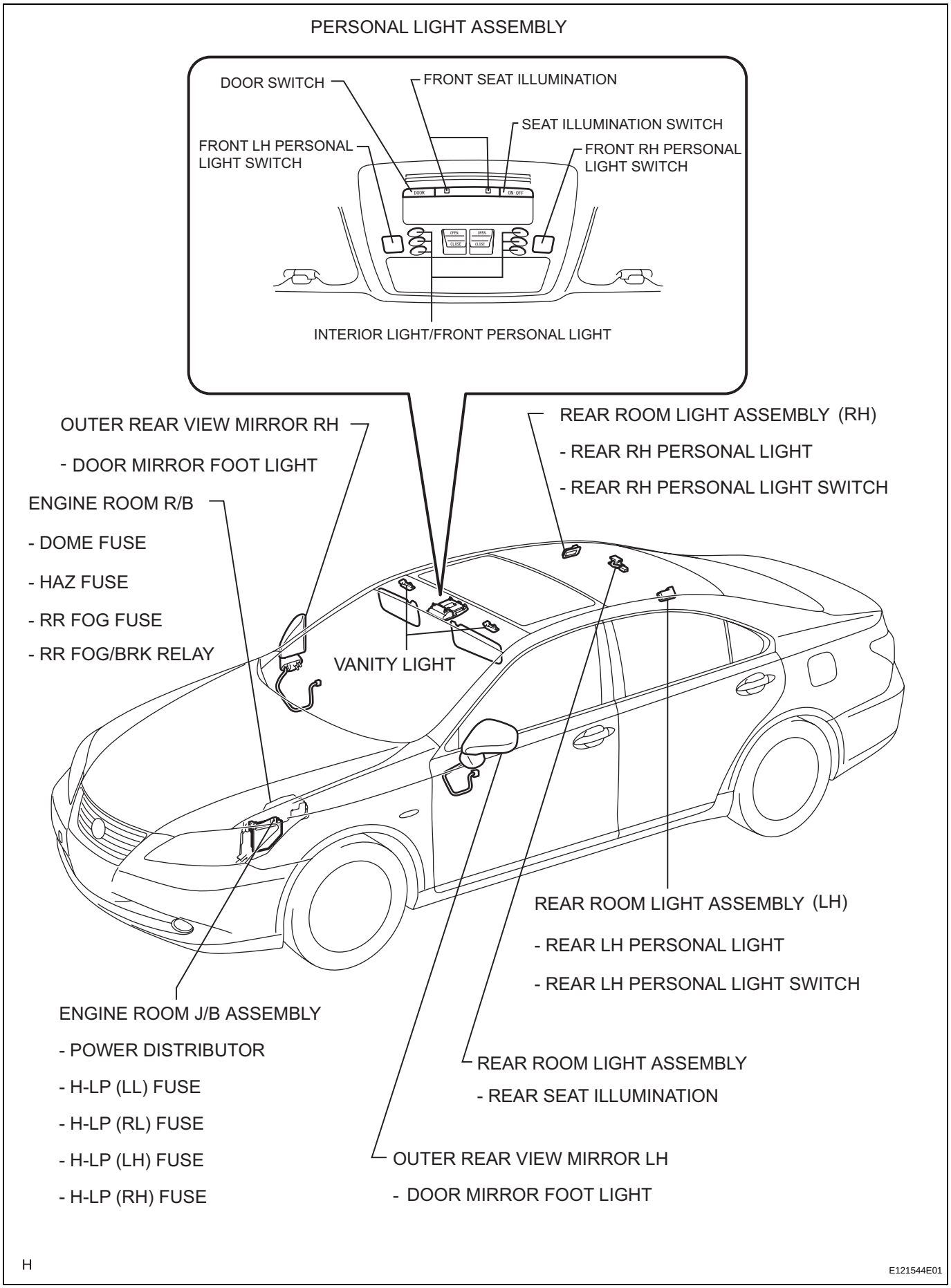
PERSONAL LIGHT ASSEMBLY
DOOR SWITCH
FRONT SEAT ILLUMINATION
SEAT ILLUMINATION SWITCH
FRONT LH PERSONAL LIGHT SWITCH
FRONT RH PERSONAL LIGHT SWITCH
DOOR
ON/OFF
OPEN
CLOSE
INTERIOR LIGHT/FRONT PERSONAL LIGHT
OUTER REAR VIEW MIRROR RH
- DOOR MIRROR FOOT LIGHT
ENGINE ROOM R/B
- DOME FUSE
- HAZ FUSE
- RR FOG FUSE
- RR FOG/BRK RELAY
REAR ROOM LIGHT ASSEMBLY (RH)
- REAR RH PERSONAL LIGHT
- REAR RH PERSONAL LIGHT SWITCH
VANITY LIGHT
REAR ROOM LIGHT ASSEMBLY (LH)
- REAR LH PERSONAL LIGHT
- REAR LH PERSONAL LIGHT SWITCH
ENGINE ROOM J/B ASSEMBLY
- POWER DISTRIBUTOR
- H-LP (LL) FUSE
- H-LP (RL) FUSE
- H-LP (LH) FUSE
- H-LP (RH) FUSE
REAR ROOM LIGHT ASSEMBLY
- REAR SEAT ILLUMINATION
OUTER REAR VIEW MIRROR LH
- DOOR MIRROR FOOT LIGHT
H
E121544E01

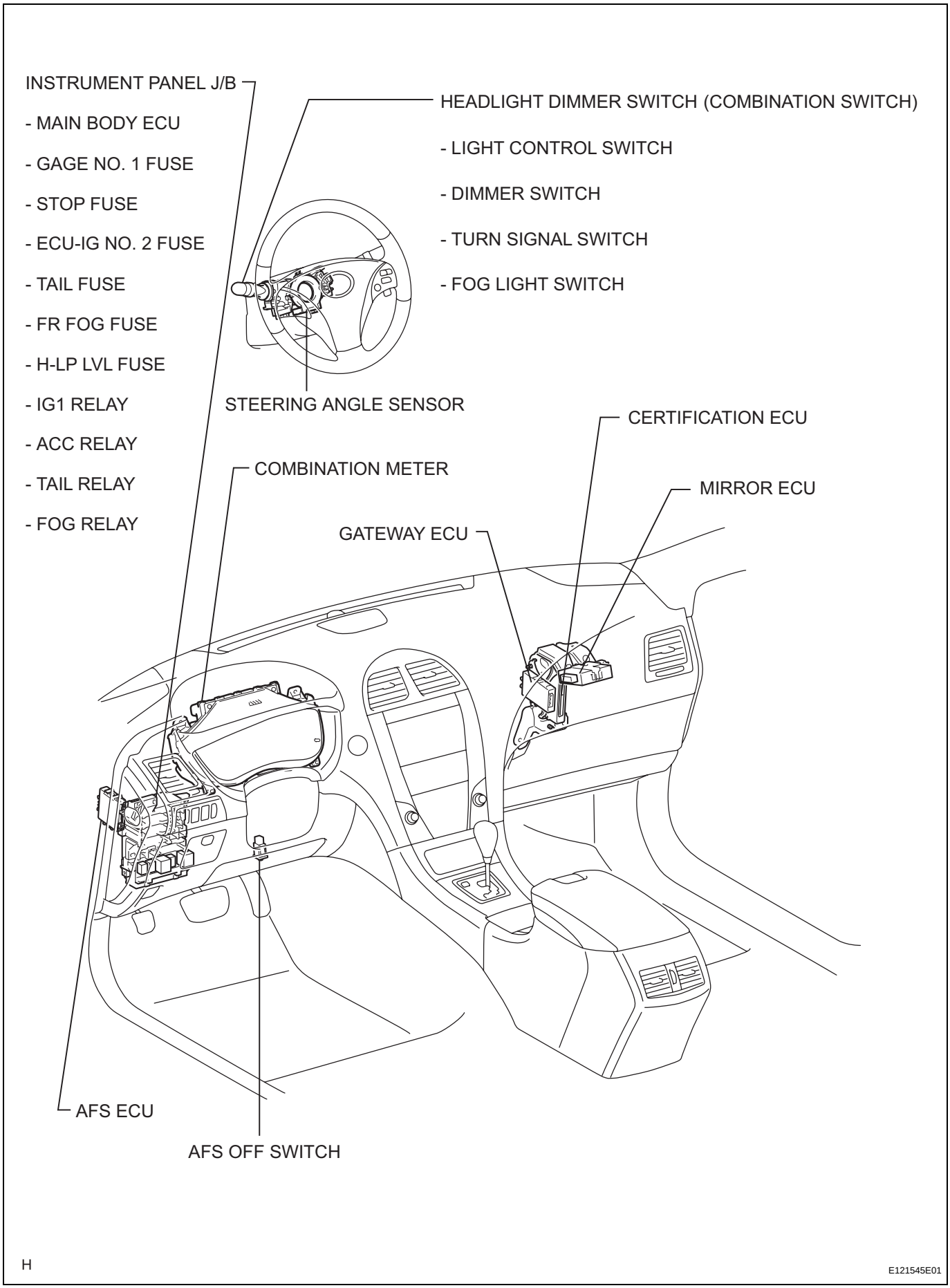
INSTRUMENT PANEL J/B
- MAIN BODY ECU
- GAGE NO. 1 FUSE
- STOP FUSE
- ECU-IG NO. 2 FUSE
- TAIL FUSE
- FR FOG FUSE
- H-LP LVL FUSE
- IG1 RELAY
- ACC RELAY
- TAIL RELAY
- FOG RELAY
HEADLIGHT DIMMER SWITCH (COMBINATION SWITCH)
- LIGHT CONTROL SWITCH
- DIMMER SWITCH
- TURN SIGNAL SWITCH
- FOG LIGHT SWITCH
STEERING ANGLE SENSOR
CERTIFICATION ECU
COMBINATION METER
MIRROR ECU
GATEWAY ECU
AFS ECU
AFS OFF SWITCH
H
E121545E01

LI

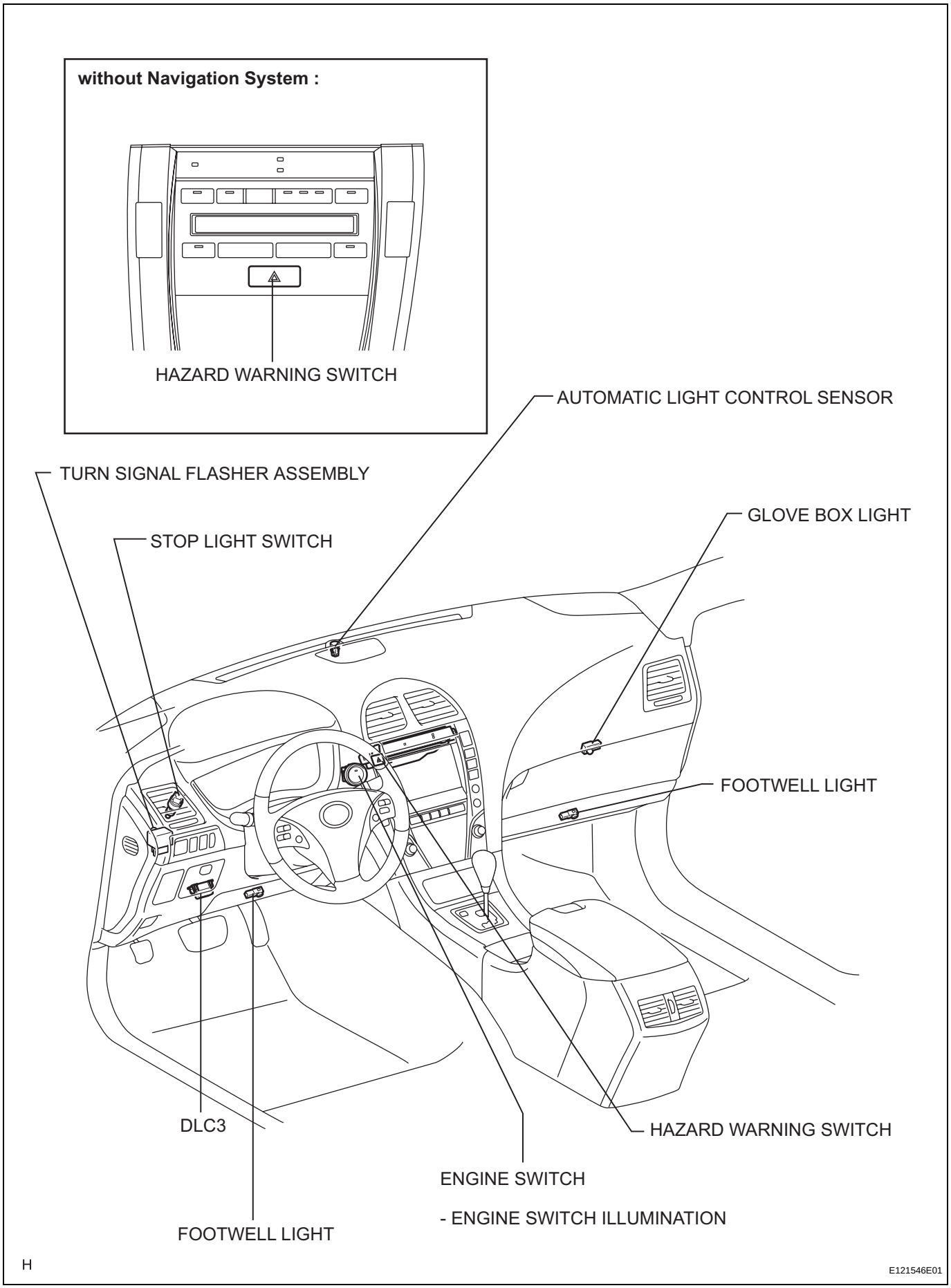
without Navigation System :
HAZARD WARNING SWITCH
AUTOMATIC LIGHT CONTROL SENSOR
TURN SIGNAL FLASHER ASSEMBLY
GLOVE BOX LIGHT
STOP LIGHT SWITCH
FOOTWELL LIGHT
DLC3
HAZARD WARNING SWITCH
ENGINE SWITCH
- ENGINE SWITCH ILLUMINATION
FOOTWELL LIGHT
H
E121546E01

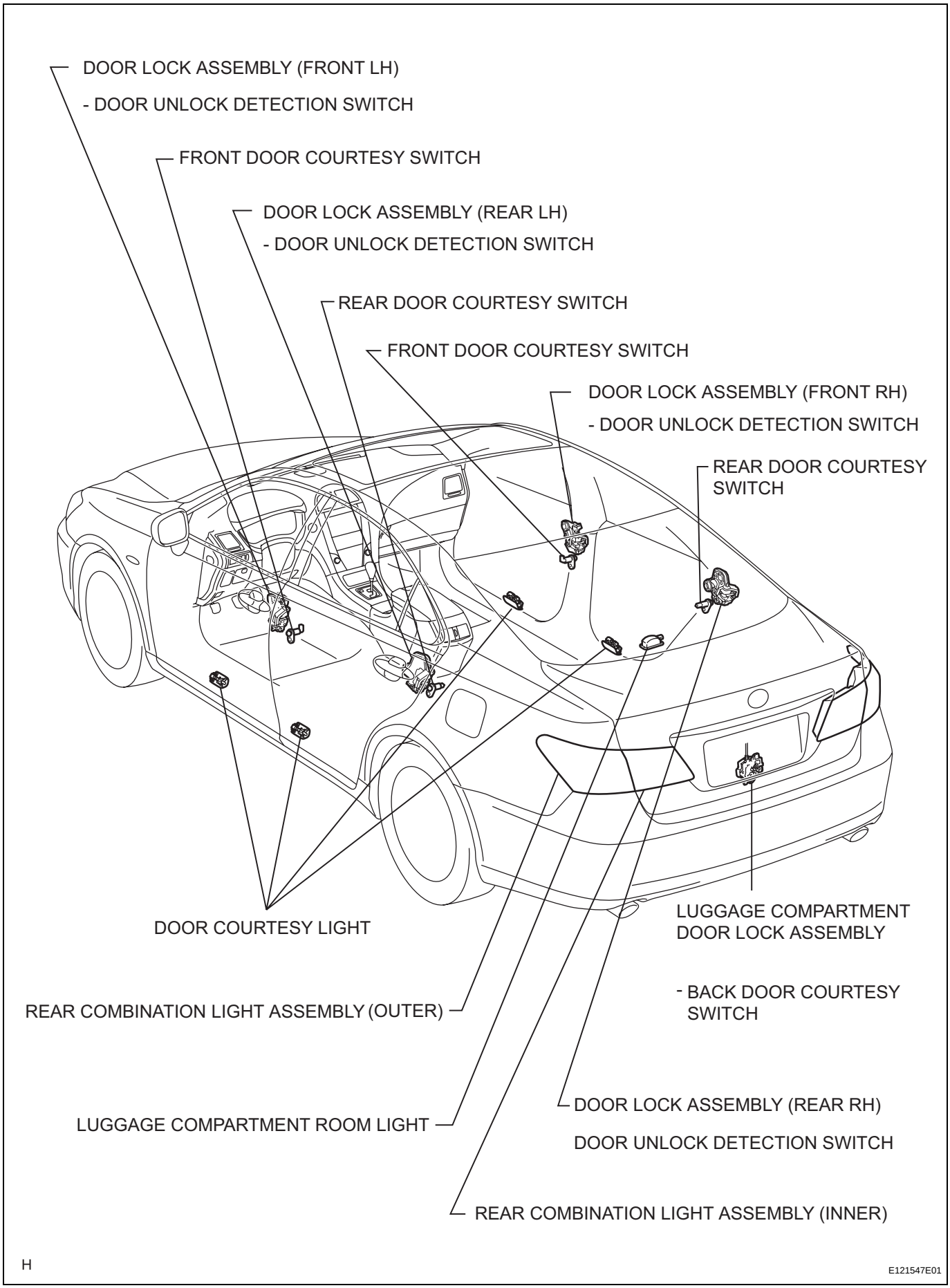
DOOR LOCK ASSEMBLY (FRONT LH)
- DOOR UNLOCK DETECTION SWITCH
FRONT DOOR COURTESY SWITCH
DOOR LOCK ASSEMBLY (REAR LH)
- DOOR UNLOCK DETECTION SWITCH
REAR DOOR COURTESY SWITCH
FRONT DOOR COURTESY SWITCH
DOOR LOCK ASSEMBLY (FRONT RH)
- DOOR UNLOCK DETECTION SWITCH
REAR DOOR COURTESY SWITCH
DOOR COURTESY LIGHT
LUGGAGE COMPARTMENT DOOR LOCK ASSEMBLY
- BACK DOOR COURTESY SWITCH
REAR COMBINATION LIGHT ASSEMBLY (OUTER)
LUGGAGE COMPARTMENT ROOM LIGHT
DOOR LOCK ASSEMBLY (REAR RH)
DOOR UNLOCK DETECTION SWITCH
REAR COMBINATION LIGHT ASSEMBLY (INNER)
H
E121547E01

INSTALLATION

1. **INSTALL COURTESY LIGHT ASSEMBLY (for Front Side) (See page ED-53)**
2. **INSTALL COURTESY LIGHT ASSEMBLY (for Rear Side) (See page ED-77)**

INSTALLATION

1. **INSTALL STOP LIGHT SWITCH ASSEMBLY (See page BR-60)**
2. **INSTALL COMBINATION METER ASSEMBLY (See page ME-70)**
3. **INSTALL INSTRUMENT CLUSTER FINISH PANEL SUB-ASSEMBLY (See page ME-71)**
4. **INSTALL DRIVER SIDE KNEE AIRBAG ASSEMBLY (See page RS-387)**
5. **INSTALL LOWER INSTRUMENT PANEL SUB-ASSEMBLY (See page IP-46)**
6. **INSTALL INSTRUMENT PANEL FINISH PANEL END LH (See page IP-46)**
7. **INSTALL SIDE INSTRUMENT PANEL LH (See page IP-47)**
8. **INSTALL FRONT DOOR OPENING TRIM COVER LH (See page IR-64)**
9. **INSTALL FRONT DOOR SCUFF PLATE LH (See page IR-65)**
10. **CONNECT CABLE TO NEGATIVE BATTERY TERMINAL**
11. **INSPECT SRS WARNING LIGHT**
    (See page RS-37).
12. **PERFORM INITIALIZATION**
    NOTICE:
    Some systems need initialization after reconnecting the cable to the negative battery terminal (See page IN-33).

SYSTEM DIAGRAM

Wiper and Washer System:

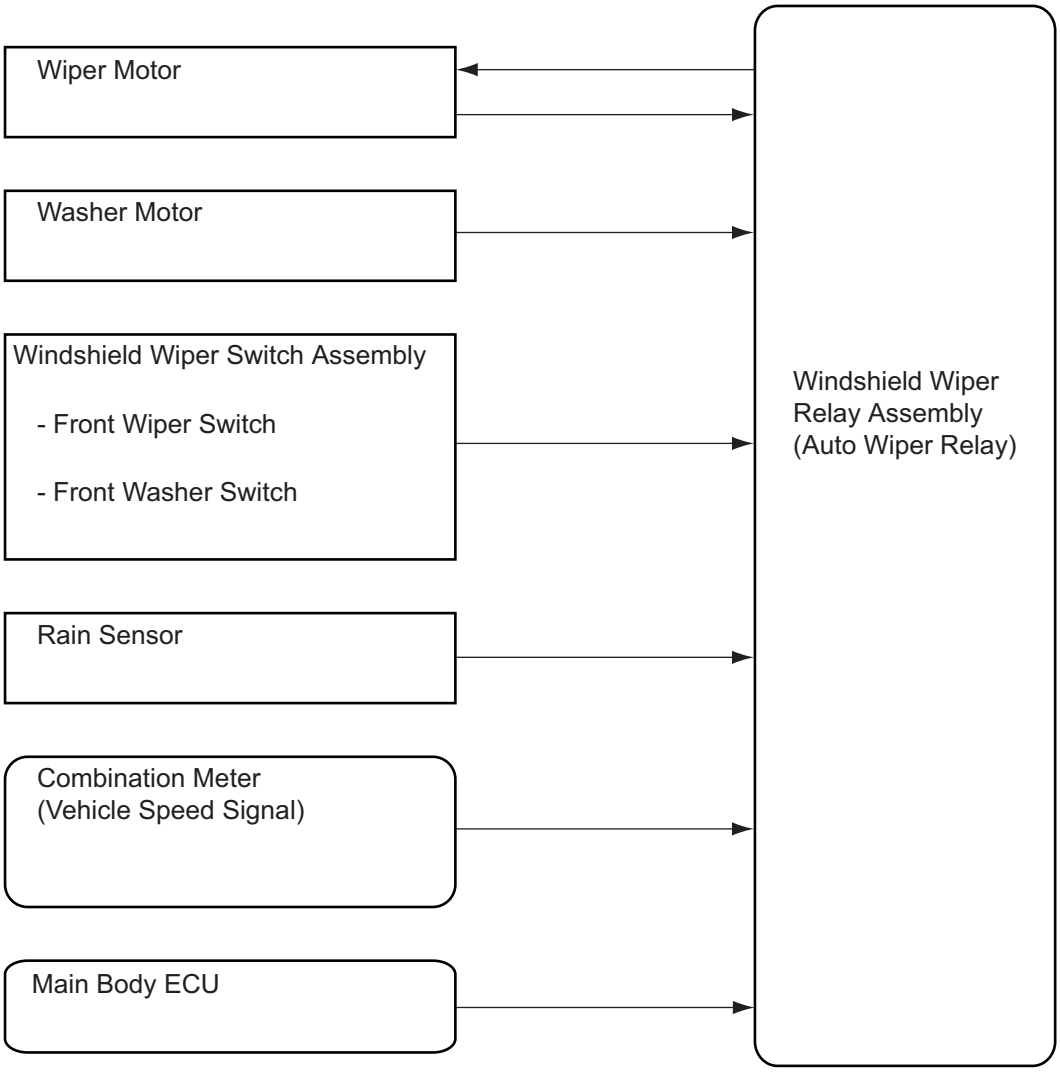

H

E119082E02

WW

SYSTEM DESCRIPTION

1. WIPER AND WASHER SYSTEM

(a) The wiper and washer system may have some of the following functions:

Function	Note
Raindrop Sensing	-
Washer Fluid Level Warning	-

(b) The windshield wiper relay assembly (auto wiper relay) controls the wiper system.

2. RAINDROP SENSING FUNCTION

(a) General

(1) The raindrop sensing function controls the wiper timing in accordance with the amount of raindrops that strike the windshield glass when the windshield wiper switch assembly is in the AUTO position.

- The windshield wiper relay assembly (auto wiper relay) adjusts the wiper timing based on commands from the rain sensor. These adjustments are based on the vehicle speed and whether the vehicle is being driven or stops during automatic operation.
- The windshield wiper relay assembly (auto wiper relay) adjusts the wiper timing based on a command from the main body ECU. Wiper speed is adjusted based on the degree of brightness.
- The rain sensor sends a wiper operation instruction signal to the windshield wiper relay assembly (auto wiper relay) based on the amount of rainfall.
- The wiper speed sensitivity can be adjusted by operating the adjustment ring on the windshield wiper switch assembly.
- When the windshield wiper relay assembly is in the AUTO position, the rain sensor determines the wiper speed based on the vehicle speed received from the combination meter and the amount of raindrops. The rain sensor sends a signal to the windshield wiper relay assembly (auto wiper relay). The windshield wiper relay assembly (auto wiper relay) will vary the wiper speed in accordance with the signal received from the windshield wiper relay assembly (auto wiper relay).

(b) Rain Sensor

(1) The rain sensor consists of 2 LEDs (Light Emitting Diodes) that emit infrared rays, a photo diode that can receive those rays, a lens, and rain sensor tape.

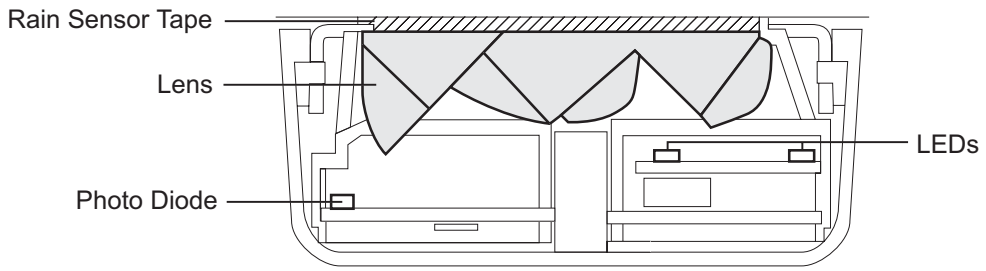

T

E119077E01

WW

HINT:
If the windshield glass is being replaced, make sure to use new rain sensor tape. Failure to do so will lead to a system malfunction.

- If no raindrops are present in the detection area, the infrared rays emitted by the LED are all reflected from the outer surface of the windshield glass and are received by the photo diode.

- If raindrops are present in the detection area, a portion of the emitted infrared rays penetrates the windshield glass due to the change in the difference of the index of refraction between the glass and the area outside the windshield glass (difference between air and water). The ability of the windshield glass to reflect the emitted rays back inside changes due to the presence of raindrops. This reduces the amount of infrared rays that are received by the photo diode. The amount of this reduction is then used to determine the amount of raindrops. Thus, this function selects the LO, and HI wiper operation in order to operate the wipers at an optimal speed and timing.

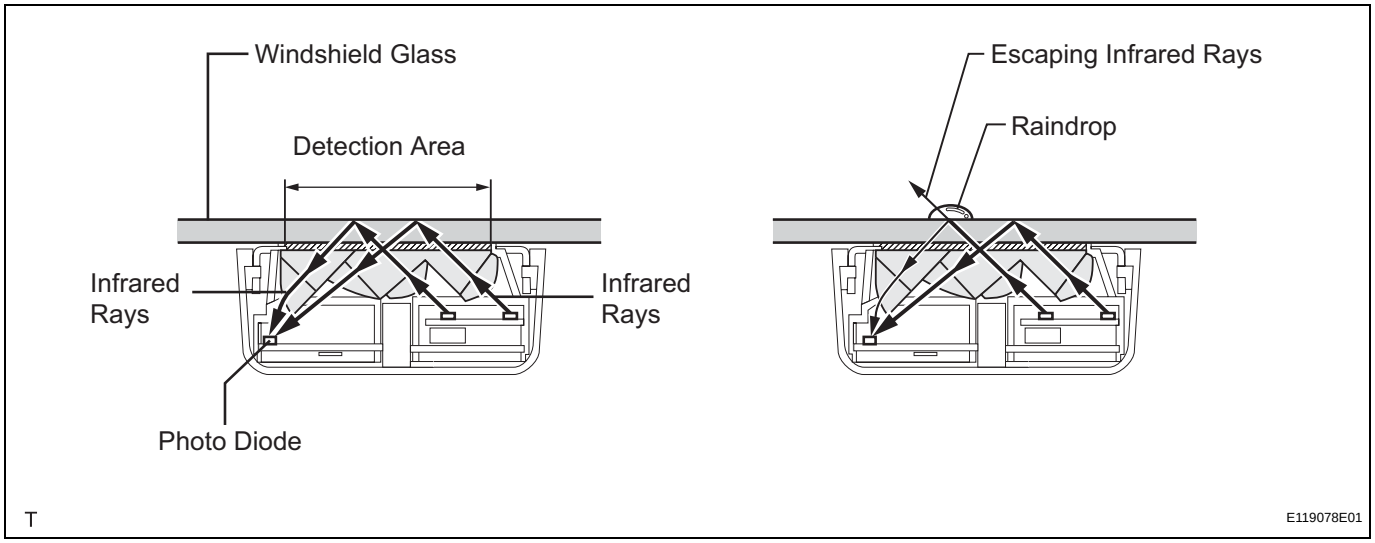

3. WASHER FLUID LEVEL WARNING

(a) When the volume of washer fluid decreases to below a certain level (when the washer fluid level warning switch is turned ON), the combination meter assembly warns the driver through the master warning light illumination, the buzzer and the warning message on the multi-information display.

SYSTEM DIAGRAM

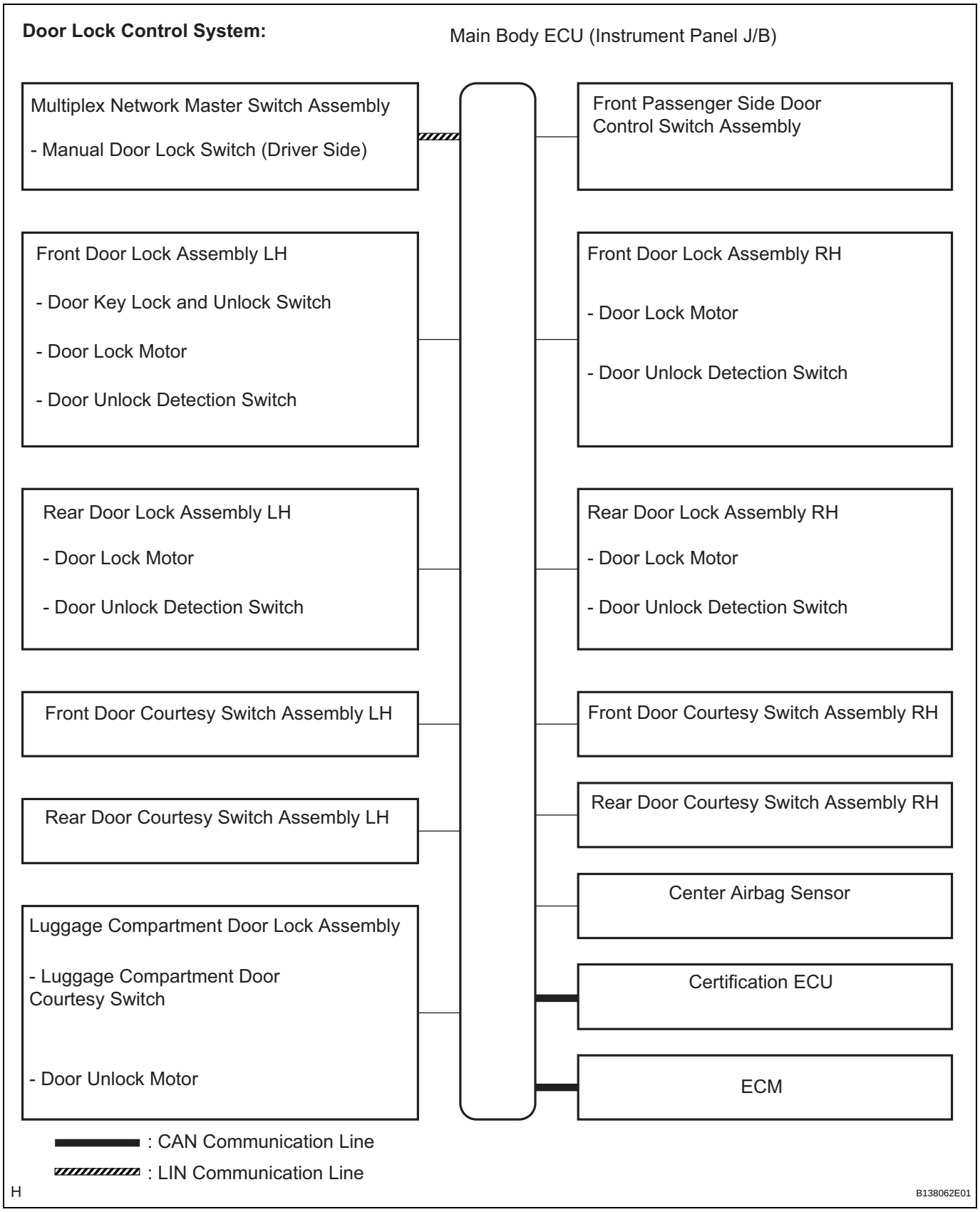

Transmitting ECU (Transmitter)	Receiving ECU (Receiver)	Signals	Communication method
ECM	Main Body ECU	Park/Neutral Position Switch Signal	CAN

DL

Transmitting ECU (Transmitter)	Receiving ECU (Receiver)	Signals	Communication method
Certification ECU	Main Body ECU	Door Lock / Unlock Request Signal	CAN
Multiplex Network Master Switch	Main Body ECU	Driver Side Door Manual Lock Switch Signal	LIN
Main Body ECU	Multiplex Network Master Switch	• Door Lock / Unlock Condition Signal • Driver side door courtesy Switch Signal	CAN

SYSTEM DIAGRAM

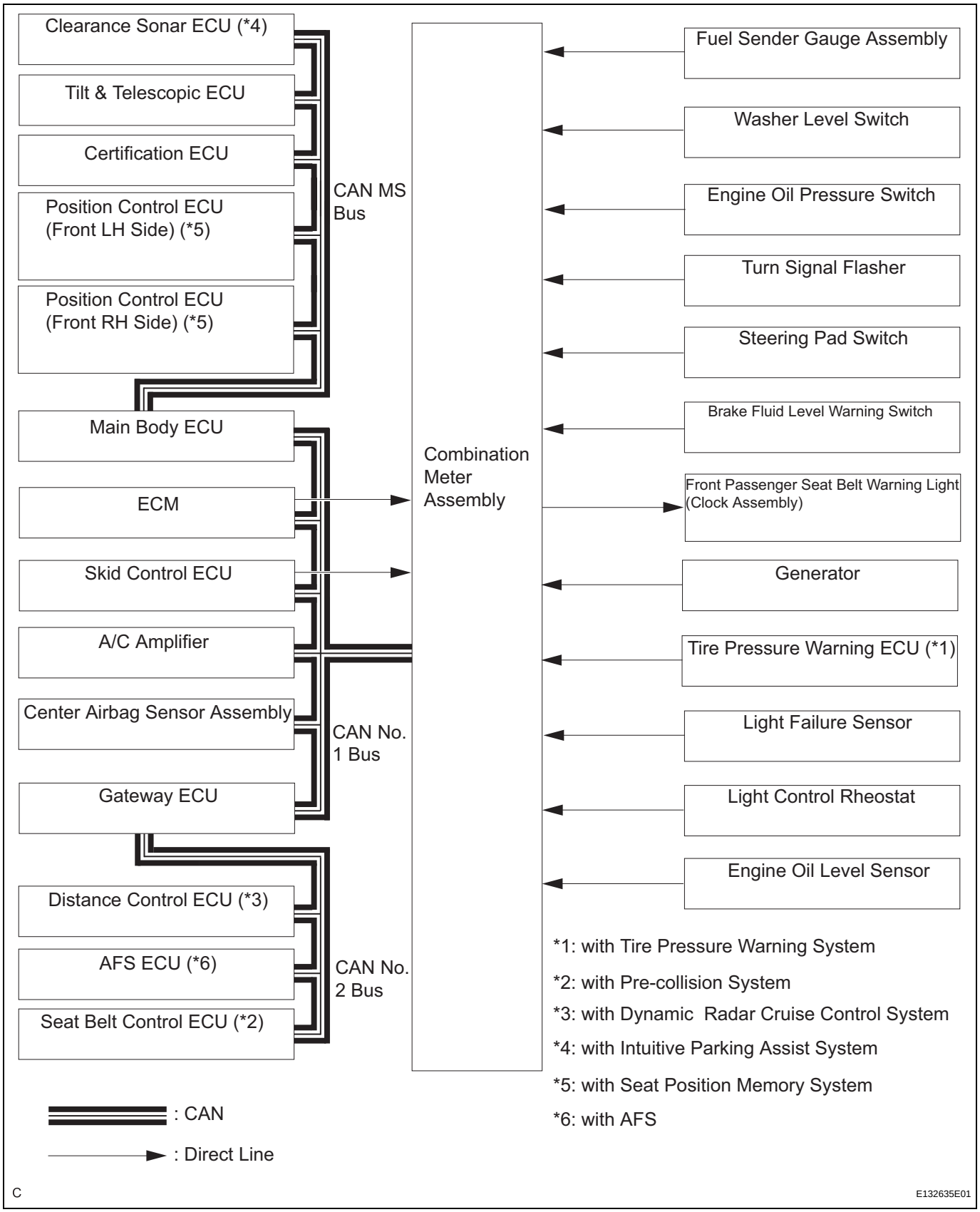

ME

INPUT AND OUTPUT SIGNALS OF THE COMBINATION METER ASSEMBLY:

Sender	Receiver	Communication Signal	Communication Line
Combination Meter Assembly	• ECM • A/C Amplifier • Center Airbag Sensor Assembly • Main Body ECU	Vehicle speed signal	CAN (CAN No. 1 Bus)
	• Certification ECU • Position Control ECU (Front LH Side) (*1) • Position Control ECU (Front RH Side) (*1) • Clearance Sonar ECU (*2) • Tilt & Telescopic ECU		CAN (CAN MS Bus)
	• Main Body ECU • A/C Amplifier	Rheostat duty signal	CAN (CAN No. 1 Bus)
		Tail cancel signal	
	Main Body ECU	Lounge illumination signal	CAN (CAN No. 1 Bus)
	• A/C Amplifier • ECM	Vehicle specification signal (Destination/Handle code)	CAN (CAN No. 1 Bus)
	Certification ECU	Odometer signal	CAN (CAN MS Bus)
	Clock Assembly	Passenger seat belt warning light signal	Direct Line
ECM	Combination Meter Assembly	Starter signal	CAN (CAN No. 1 Bus)
		Test mode signal	
		Cruise operation indicator light signal	
		Cruise control warning signal	
		TM oil temperature range	
		Engine coolant temperature signal	
		Shift position signal	
		Reject buzzer signal	
		Gear position signal	
		Sports mode indicator light signal	
		Engine RPM data	
Main Body ECU	Combination Meter Assembly	Illuminance data	CAN (CAN No. 1 Bus)
		Auto dimmer signal	
		ACC switch signal	
		Key switch signal	
		Each door courtesy switch signal	
		Slide roof signal	
		Smart key signal	
		Driver side seat belt switch signal	
		Parking brake switch signal	
		High beam indicator light signal	
		Head (*3)/Tail (*4) indicator light signal	
		Front fog indicator light signal	
		Wireless buzzer signal	
• Main Body ECU • Certification ECU	Combination Meter Assembly	Engine hood courtesy switch signal	CAN (CAN MS Bus)

Sender	Receiver	Communication Signal	Communication Line
Certification ECU	Combination Meter Assembly	Meter buzzer request signal	CAN (CAN MS Bus)
		Each door open display signal	
		Key lose warning signal	
		Low key battery warning signal	
		Shift position warning signal	
		Steering lock abnormal warning	
		Steering lock unlock warning	
		Immobiliser key identification completion signal	
Clearance Warning ECU (*2)	Combination Meter Assembly	Clearance warning display signal	
		Sensor diagnosis signal	
		Tire angle information	
		Display indication request	
Skid Control ECU	Combination Meter Assembly	Vehicle speed signal	CAN (CAN No. 1 Bus)
		Brake warning light control flag	
		ABS warning light signal	
		Slip indicator light signal	
		Stop light signal	
		VSC warning signal	
Distance Control ECU (*5)	Combination Meter Assembly	Radar cruise beam axis adjustment signal	CAN (CAN No. 2 Bus)
• ECM • Skid Control ECU	Combination Meter Assembly	Diagnosis signal	CAN (CAN No. 1 Bus)
A/C Amplifier	Combination Meter Assembly	Ambient temperature display signal	CAN (CAN No. 1 Bus)
Center Airbag Sensor Assembly	Combination Meter Assembly	Airbag warning light signal	CAN (CAN No. 1 Bus)
		Front passenger seat condition signal	
		Front passenger seat belt condition signal	
Seat Belt Control ECU (*6)	Combination Meter Assembly	PCS indicator light signal	CAN (CAN No. 2 Bus)
		Radar sensor information signal	
		PCS system information signal	
AFS ECU (*7)	Combination Meter Assembly	AFS OFF indicator light signal	CAN (CAN No. 2 Bus)
Steering Pad Switch	Combination Meter Assembly	Steering pad switch operation signal	Direct Line
Fuel Sender Gauge Assembly	Combination Meter Assembly	Fuel level signal	Direct Line
Turn Signal Flasher	Combination Meter Assembly	Turn LH/RH indicator light signal	Direct Line
Tire Pressure Warning ECU (*8)	Combination Meter Assembly	Tire pressure warning light signal	Direct Line
Washer Level Switch	Combination Meter Assembly	Washer fluid level warning light signal	Direct Line
Brake Fluid Level Warning Switch	Combination Meter Assembly	Brake fluid level warning light signal	Direct Line
Light Control Rheostat	Combination Meter Assembly	Illumination signal	Direct Line
		Tail cancel signal	
Engine Oil Level Sensor	Combination Meter Assembly	Engine oil level signal	Direct Line
Light Failure Sensor	Combination Meter Assembly	Rear light indicator light signal	Direct Line
Generator	Combination Meter Assembly	Charge warning light signal	Direct Line
Engine Oil Pressure Switch	Combination Meter Assembly	Engine oil pressure signal	Direct Line
ECM	Combination Meter Assembly	Check engine warning light signal	Direct Line

*1: with Seat Position Memory System
*2: with Intuitive Parking Assist System

*3: for U.S.A.
*4: for Canada
*5: with Dynamic Radar Cruise Control System
*6: with Pre-collision System
*7: with AFS
*8: with Tire Pressure Warning System

SYSTEM DIAGRAM

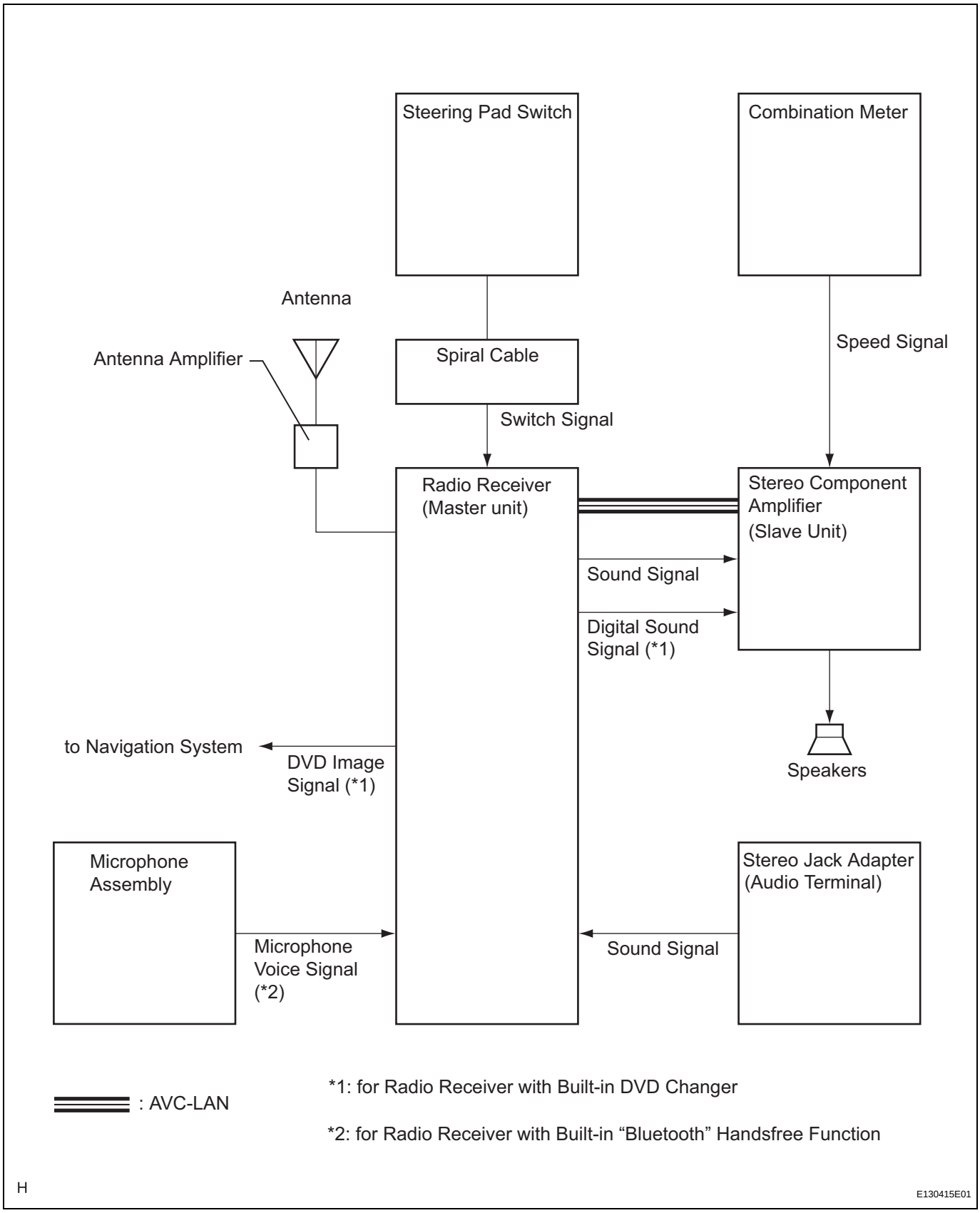

AV

SYSTEM DESCRIPTION

1. DISC PLAYER OUTLINE

(a) A CD/DVD player uses a laser pickup to read digital signals recorded on CDs or DVDs. By converting the digital signals to analog, music and other content can be played.

CAUTION:

Do not look directly at the laser pickup because the CD or DVD player uses an invisible laser beam. Be sure to operate the player only as instructed.

NOTICE:

- **Do not disassemble any part of the CD or DVD player.**
- **Do not apply oil to the CD or DVD player.**
- **Do not insert anything but a CD or a DVD into the CD or DVD player.**

(b) Usable discs

(1) CD player

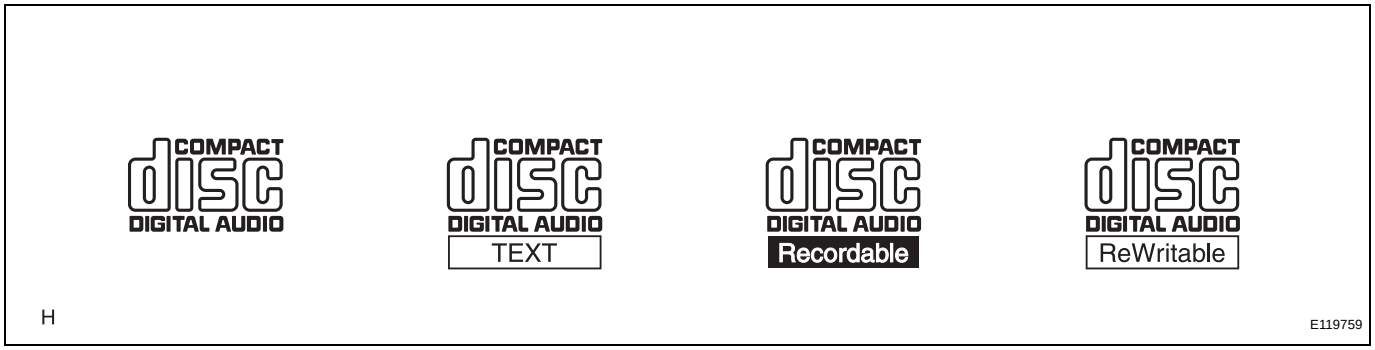

(2) DVD player

(c) Precautions for use of discs

NOTICE:

- **Copy-protected CDs cannot be played.**

AV

- **CD-Rs and CD-RWs may not be played depending on the recording conditions or characteristics of the discs, or due to damage, dirt, or deterioration caused by leaving the discs in the cabin for a long time.**
- **Unfinalized CD-Rs and CD-RWs cannot be played.**
- **PAL or SECAM color television standard discs cannot be played. (Only NTSC discs can be played.)**
- **Dualdiscs that mate DVD recorded material on one side with CD digital audio material on the other cannot be played.**
- **Keep the discs away from dirt. Be careful not to damage the discs or leave your fingerprints on them.**
- **Hold discs by the outer edge and center hole with the label side up.**
- **Leaving the disc exposed halfway out of the slot for a long time after pressing the disc eject button may cause deformation of the disc, making the disc unusable.**
- **If discs have adhesive tape, stickers, CDR labels, or any traces of such labels attached, the discs may not be ejected or player malfunctions may result.**
- **Keep the discs away from direct sunlight. (Exposure to direct sunlight may cause deformation of the disc, making the disc unusable.)**
- **Do not use odd-shaped CDs because these may cause player malfunctions.**
- **Do not use discs whose recording portion is transparent or translucent because they may not be inserted, ejected, or played normally.**

HINT:

- When it is cold or it is raining, if the windows mist up, mist and also dew may form in the player. In such a case, the CD may skip or the CD may stop in the middle of play. Ventilate or dehumidify the cabin for a while before using the player.
- The CD may skip if the player experiences strong vibrations when the vehicle is driven on rough road or similar uneven surface(s).

(d) Cleaning

NOTICE:

Do not use a lens cleaner because it may cause a malfunction in the pickup portion of the player.

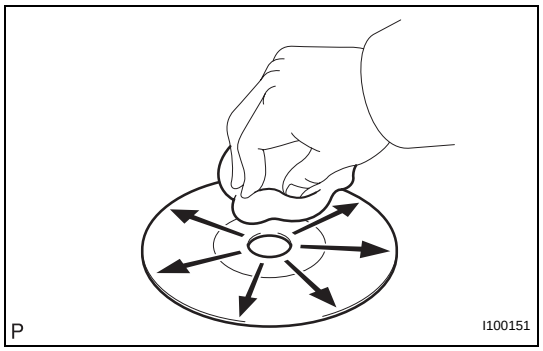

(1) If dirt is on the disc surface, wipe it clean with a soft dry cloth such as an eyeglass cleaner for plastic lenses from the inside to the outside in a radial direction.

NOTICE:

- **Pressing on the disc by hand or rubbing the disc with a hard cloth may scratch the disc surface.**
- **Use of solvent such as a record spray, antistatic agent, alcohol, benzine, and thinner, or a chemical cloth may cause damage to the disc, making the disc unusable.**

2. MP3/WMA OUTLINE

(a) Playable MP3 file standards

Compatible standard	MP3 (MPEG1 LAYER3, MPEG2 LSF LAYER 3)
Compatible sampling frequency	• MPEG1 LAYER3: 32, 44.1, 48 (kHz) • MPEG2 LSF LAYER3: 16, 22.05, 24 (kHz)
Compatible bit rate	• MPEG1 LAYER3: 64, 80, 96, 112, 128, 160, 192, 224, 256, 320 (kbps) • MPEG2 LSF LAYER3: 64, 80, 96, 112, 128, 160 (kbps) • Compatible with VBR
Compatible channel mode	Stereo, joint stereo, dual channel, monaural

(b) Playable WMA file standards

Compatible standard	WMA Ver. 7, 8, and 9
Compatible sampling frequency	32, 44.1, 48 (kHz)
Compatible bit rate	• Ver. 7, 8: CBR48, 64, 80, 96, 128, 160, 192 (kbps) • Ver. 9: CBR48, 64, 80, 96, 128, 160, 192, 256, 320 (kbps) • Compatible with playback of channel 2 only

(c) ID3 tag and WMA tag

(1) Additional textual information called ID3 tag can be input to MP3 files. Information such as song titles and artist names can be stored.

HINT:

This player is compatible with the ID3 tags of ID3 Ver. 1.0 and 1.1, and ID3 Ver. 2.2 and 2.3. (Number of characters complies with ID3 Ver. 1.0 and 1.1.)

(2) Additional textual information called WMA tag can be input to WMA files. Information such as song titles and artist names can be stored.

(d) Usable media

(1) Only CD-ROMs, CD-Rs (CD-Recordable), and CD-RWs (CD-ReWritable) can be used to play MP3/WMA files.

NOTICE:

- **CD-Rs and CD-RWs are more easily affected by a hot and humid environment than discs used for normal audio CDs. For this reason, some CD-Rs and CD-RWs may not be played.**
- **If there are fingerprints or scratches on the disc, the disc may not be played or the CD may skip.**

- **Some CD-Rs and CD-RWs deteriorate if they are left in the cabin for a long time.**
- **Keep CD-Rs and CD-RWs in a storage case that is impenetrable to light.**

(e) Usable media format

(1) Usable media format

Disc format	CD-ROM Mode 1, CD-ROM XA Mode 2 Form1
File format	ISO9660 Level 1 and Level 2 (Joliet, Romeo)

HINT:

- As for MP3/WMA files written in any format other than those above, the contents of the files may not be played normally or the file names or folder names may not be displayed correctly.
- This player is compatible with multi-session discs and can play CD-Rs and CD-RWs on which MP3/WMA files are added. However, only the first session can be played.
- Discs whose first session includes both music data and MP3 or WMA format data cannot be played.

(2) Standard and restrictions

Maximum directory levels	8 levels
Maximum number of characters for a folder name/file name	32 characters
Maximum number of folders	192 (Including empty folders, route folders, and folders that do not contain MP3/WMA files)
Maximum number of files in a disc	255 (Including non-MP3/WMA files)

(f) File names

(1) Only files with an extension of ".mp3" or ".wma" can be recognized and played as MP3 or WMA files.

(2) Save MP3 or WMA files with an extension of ".mp3" or ".wma".

NOTICE:

If saving non-MP3 or non-WMA files with an extension of ".mp3" or ".wma", those files are wrongly recognized as MP3 or WMA files and played. A loud noise may occur and damage to the speaker may result.

3. AVC-LAN DESCRIPTION

(a) What is AVC-LAN?

Example:

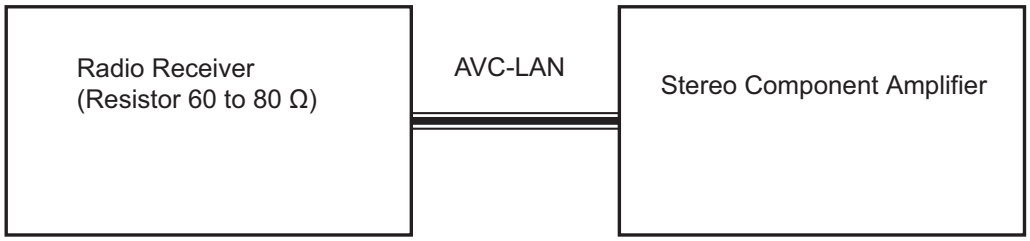

T

I100319E09

AVC-LAN, an abbreviation for "Audio Visual Communication Local Area Network", is a united standard developed by the manufacturers in affiliation with Toyota Motor Corporation. This standard pertains to audio and visual signals as well as switch and communication signals.

(b) Purpose:
Recently, car audio systems have rapidly developed and the functions have vastly changed. The conventional car audio system is being integrated with multi-media interfaces similar to those in navigation systems. At the same time, customers are demanding higher quality from their audio systems. This is merely an overview of the standardization background. The specific purposes are as follows:

(1) To solve sound problems, etc. caused by using components of different manufacturers through signal standardization.

(2) To allow each manufacturer to concentrate on developing products they do best. From this, reasonably priced products can be produced.
HINT:
- If a short to +B or short to ground is detected in the AVC-LAN circuit, communication is interrupted and the audio system will stop functioning.
- If an audio system is equipped with a navigation system, the multi-display unit acts as the master unit. If the navigation system is not equipped, the audio head unit acts as the master unit instead. If the radio and navigation assembly is equipped, it is the master unit.
- The radio receiver contains a resistor that is necessary to enable communication on the different AVC-LAN circuits.
- The car audio system with an AVC-LAN circuit has a diagnostic function.
- Each component has a specified number (3-digit) called a physical address. Each function has a number (2-digit) called a logical address.

4. COMMUNICATION SYSTEM OUTLINE

(a) Components of the audio system communicate with each other via the AVC-LAN.

(b) The master component of the AVC-LAN is a radio receiver with a 60 to 80 Ω resistor. This is essential for communication.

(c) If a short circuit or open circuit occurs in the AVC-LAN circuit, communication is interrupted and the audio system will stop functioning.

5. DIAGNOSTIC FUNCTION OUTLINE

(a) The audio system has a diagnostic function (the result is indicated on the master unit).

(b) A 3-digit hexadecimal component code (physical address) is allocated to each component on the AVC-LAN. Using this code, the component in the diagnostic function can be displayed.

6. "BLUETOOTH" OUTLINE

(a) "Bluetooth" is a trademark owned by Bluetooth SIG. Inc.

(b) "Bluetooth" is a new wireless connection technology that uses the 2.4 GHz frequency band. This makes it possible to connect a cellular phone ("Bluetooth" compatible phone *1) to the radio receiver (the "Bluetooth" system is built in), and use the handsfree function of the cellular phone, even if it is in a pocket or bag. As a result, it is not necessary to use a connector attached directly to the cellular phone.

*1: Some versions of "Bluetooth" compatible cellular phones may not function.

H E100921

AV

Example:

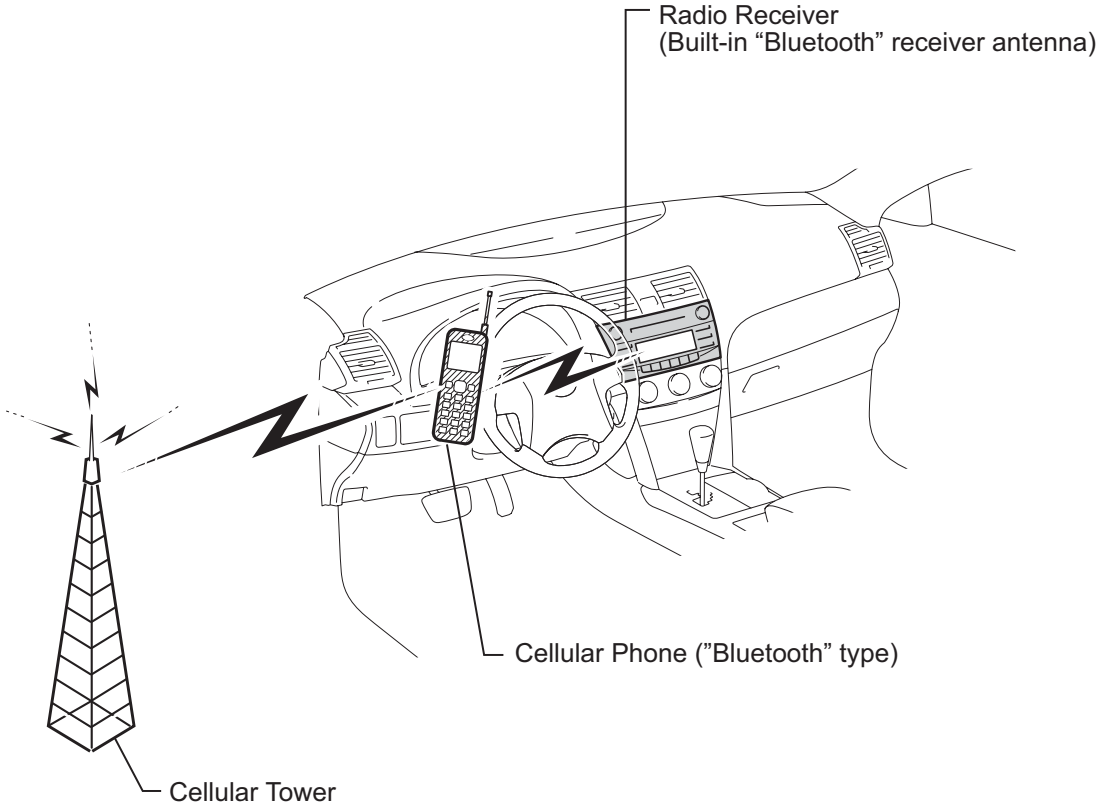

P E129829E03

HINT:
The communication performance of "Bluetooth" may vary depending on obstructions or radio wave conditions between communication devices, electromagnetic radiation, communication device sensitivity, or antenna capacity.

INSPECTION

1. INSPECT STEERING PAD SWITCH

(a) Disconnect the steering pad switch connector.

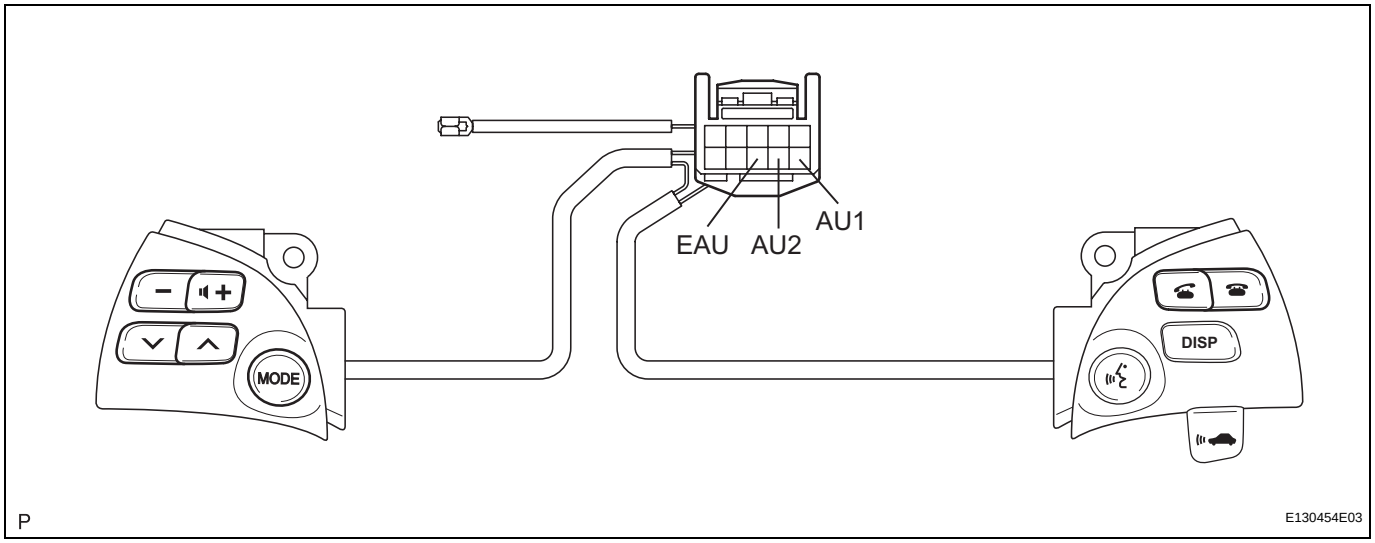

(b) Measure the resistance according to the values in the table below.

Standard resistance

Tester connection	Condition	Specified condition
AU1 - EAU	No switch is pushed	Approx. 100 kΩ
AU1 - EAU	SEEK+ switch: push	Approx. 0 to 2.5 Ω
AU1 - EAU	SEEK- switch: push	Approx. 0.3 kΩ
AU1 - EAU	VOL+ switch: push	Approx. 1 kΩ
AU1 - EAU	VOL- switch: push	Approx. 3.1 kΩ
AU2 - EAU	No switch is pushed	Approx. 100 kΩ
AU2 - EAU	MODE switch: push	Approx. 0 to 2.5 Ω
AU2 - EAU	VOICE switch: push	Approx. 3.1 kΩ
AU2 - EAU	ON HOOK switch: push	Approx. 0.3 kΩ
AU2 - EAU	OFF HOOK switch: push	Approx. 1 kΩ

If the result is not as specified, replace the steering pad switch.

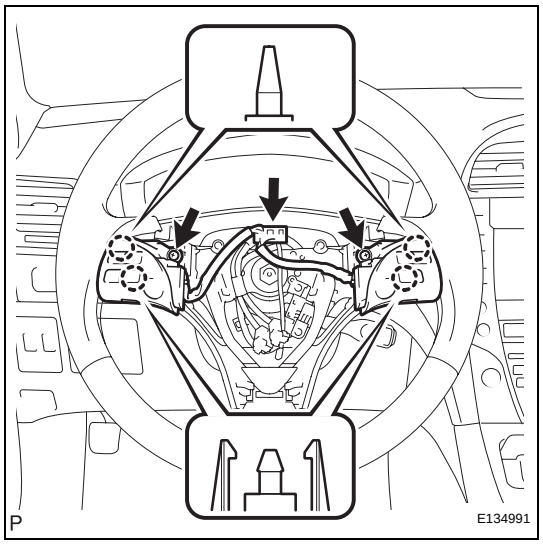

INSTALLATION

1. INSTALL STEERING PAD SWITCH ASSEMBLY

(a) Engage the 4 claws.

(b) Install the steering pad switch assembly with the 2 screws.

Torque: 2.4 N*m (25 kgf*cm, 21 in.*lbf)

(c) Connect the connector to the spiral cable.

2. INSTALL STEERING PAD (See page RS-368)

3. INSTALL LOWER NO. 3 STEERING WHEEL COVER (See page RS-369)

4. INSTALL LOWER NO. 2 STEERING WHEEL COVER (See page RS-369)

5. CONNECT CABLE TO NEGATIVE BATTERY TERMINAL

6. **PERFORM INITIALIZATION**
   NOTICE:
   Some systems need initialization after reconnecting the cable to the negative battery terminal (See page IN-33).

7. **INSPECT SRS WARNING LIGHT**
   (See page RS-37)

SYSTEM DIAGRAM

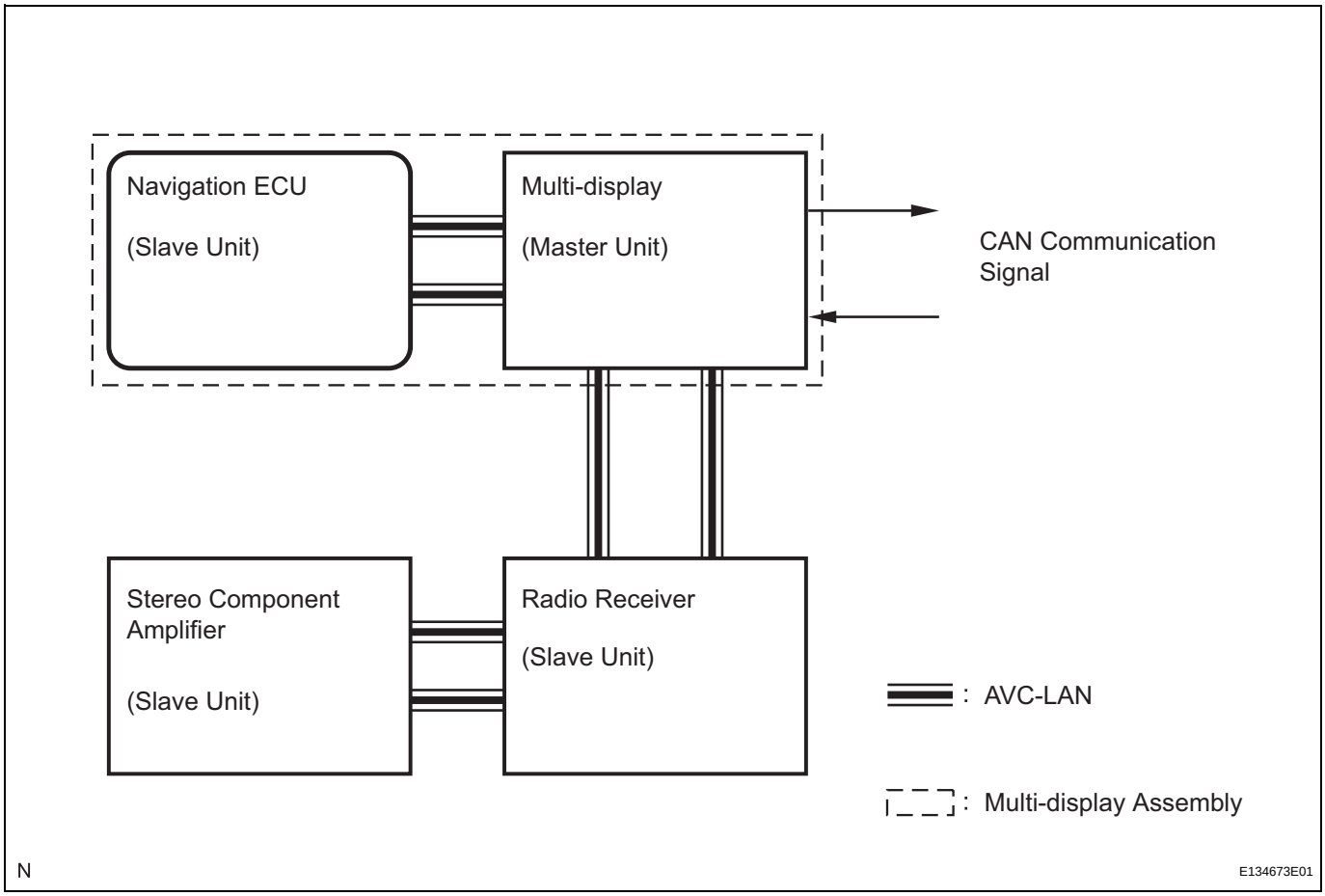

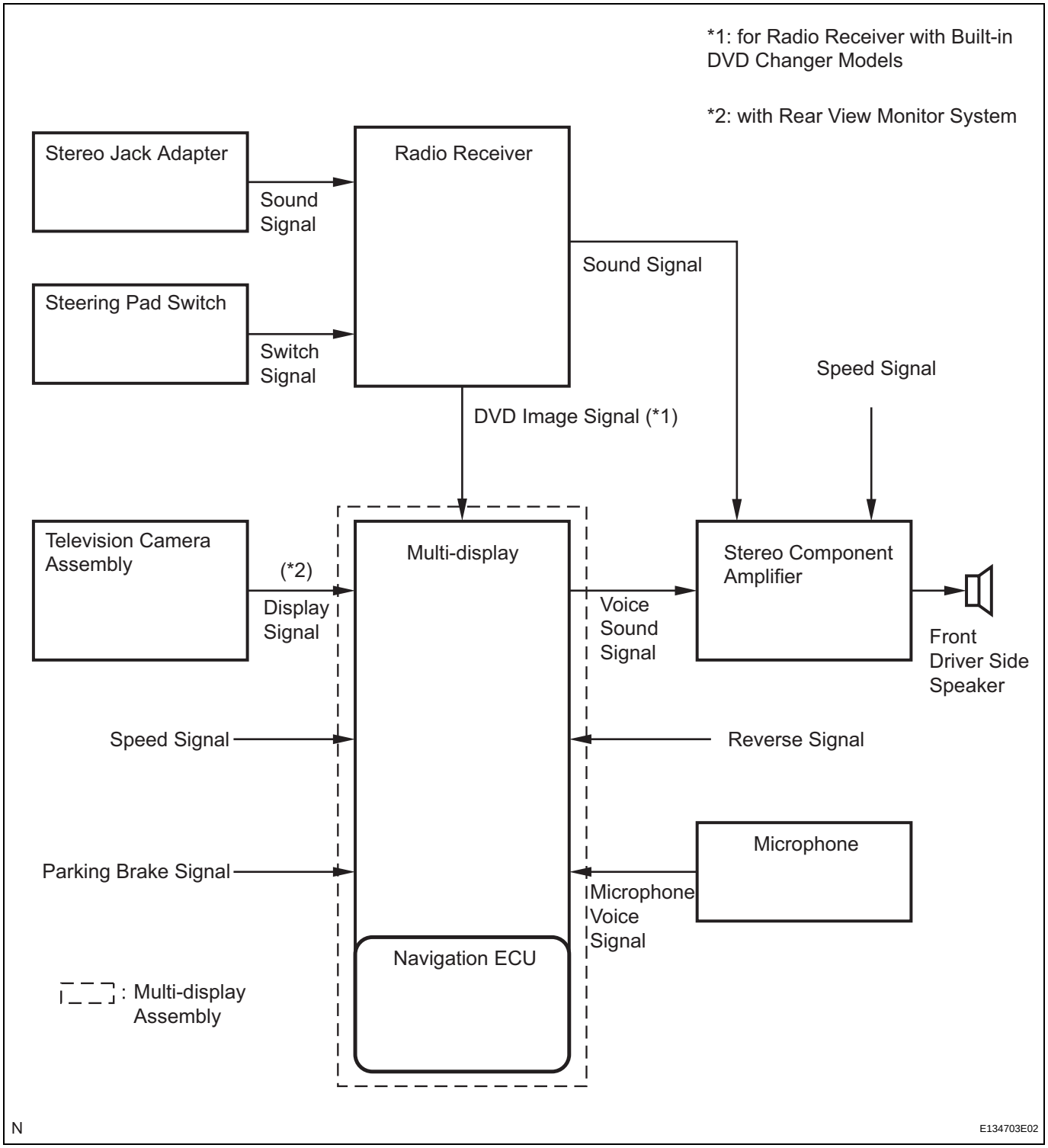
*1: for Radio Receiver with Built-in DVD Changer Models
*2: with Rear View Monitor System
Stereo Jack Adapter
Sound Signal
Radio Receiver
Sound Signal
Steering Pad Switch
Switch Signal
Speed Signal
DVD Image Signal (*1)
Television Camera Assembly
(*2)
Display Signal
Multi-display
Voice Sound Signal
Stereo Component Amplifier
Front Driver Side Speaker
Speed Signal
Reverse Signal
Microphone
Parking Brake Signal
Microphone Voice Signal
Navigation ECU
: Multi-display Assembly
N
E134703E02

NS

PARTS LOCATION

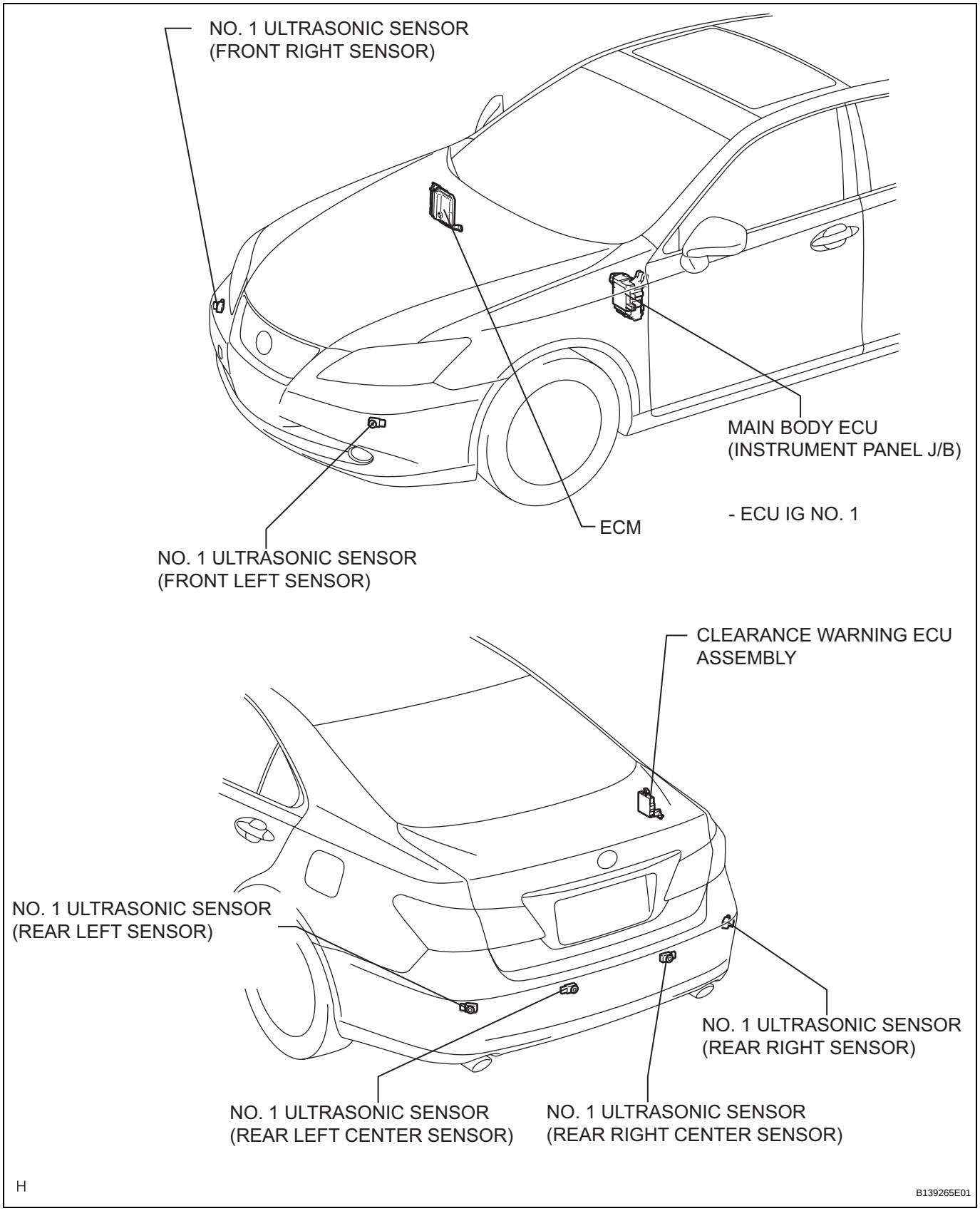

PM

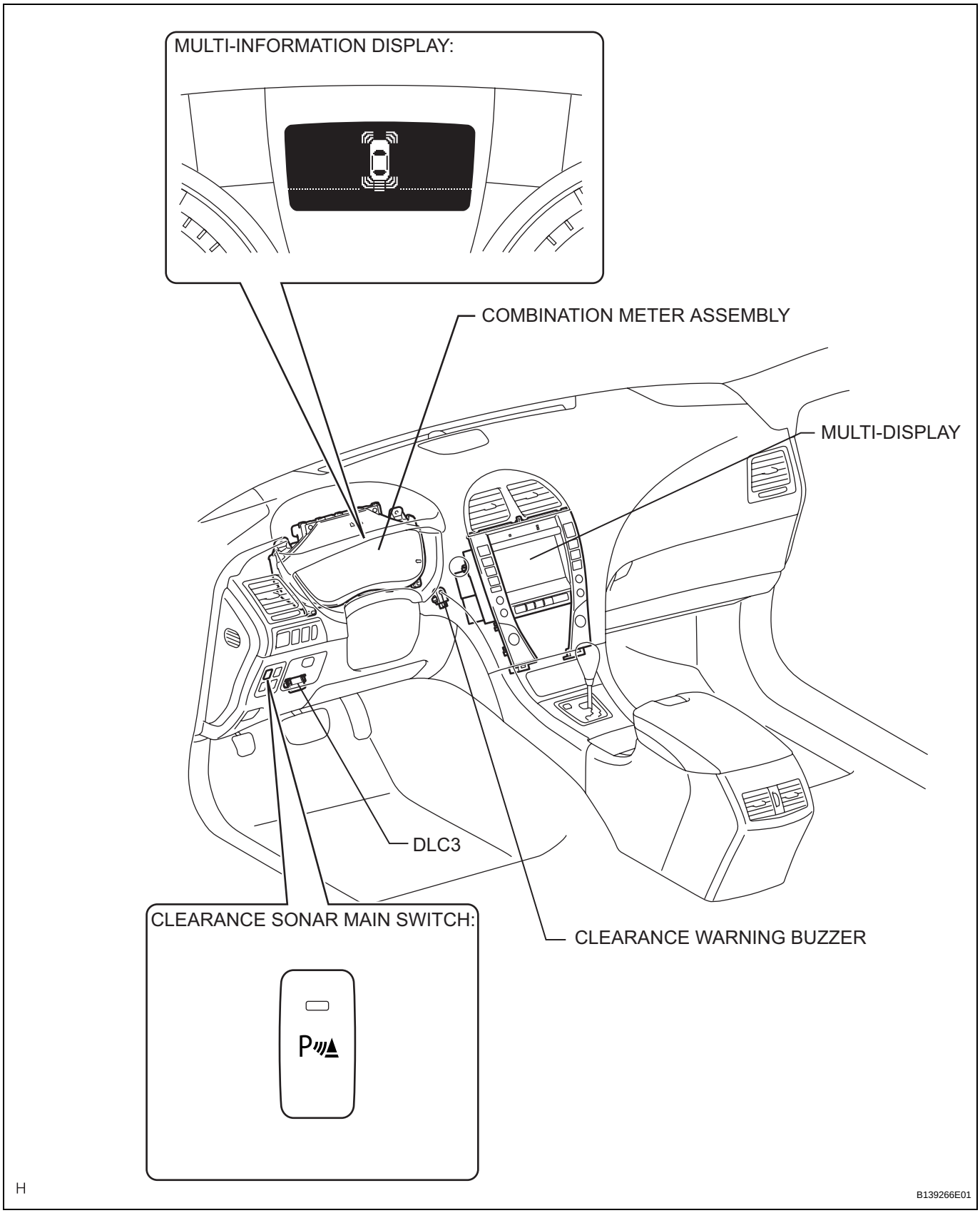
MULTI-INFORMATION DISPLAY:
COMBINATION METER ASSEMBLY
MULTI-DISPLAY
DLC3
CLEARANCE SONAR MAIN SWITCH:
CLEARANCE WARNING BUZZER
H
B139266E01

SYSTEM DIAGRAM

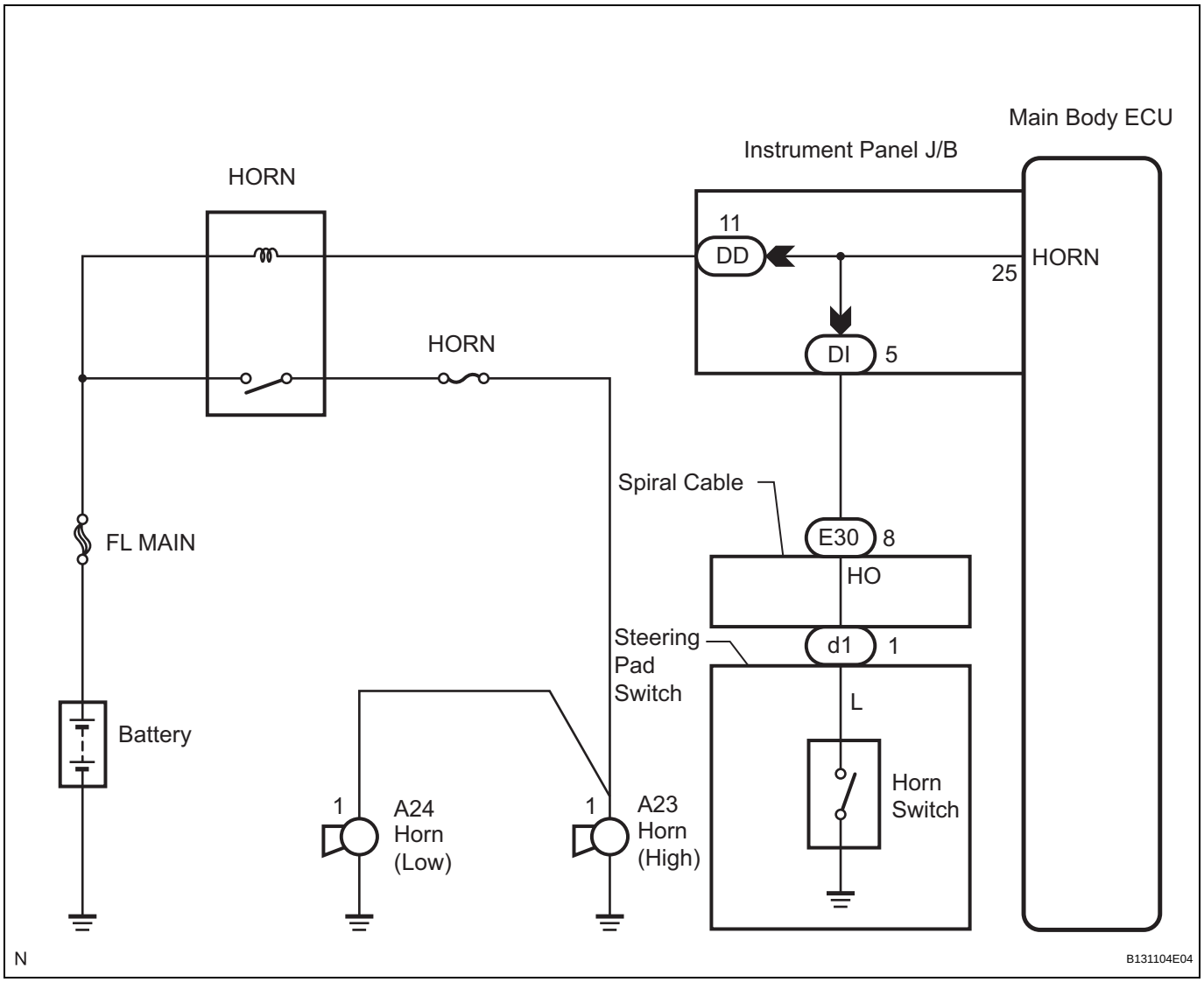

PROBLEM SYMPTOMS TABLE

HORN SYSTEM

Symptom	Suspected Area	See page
Horn does not sound	1. HORN fuse	HO-4
	2. Horn relay	HO-4
	3. Steering pad switch	RS-365
	4. Spiral cable	RS-380
	5. Wire harness	-
Horn blows all the time	1. Horn relay	HO-4
	2. Steering pad switch	RS-365
	3. Wire harness	-
Low pitched horn operates but high pitched horn does not operate	1. High pitched horn	HO-8
	2. Wire harness	-
High pitched horn operates but low pitched horn does not operate	1. Low pitched horn	HO-6
	2. Wire harness	-

COMPONENTS

with Navigation System:

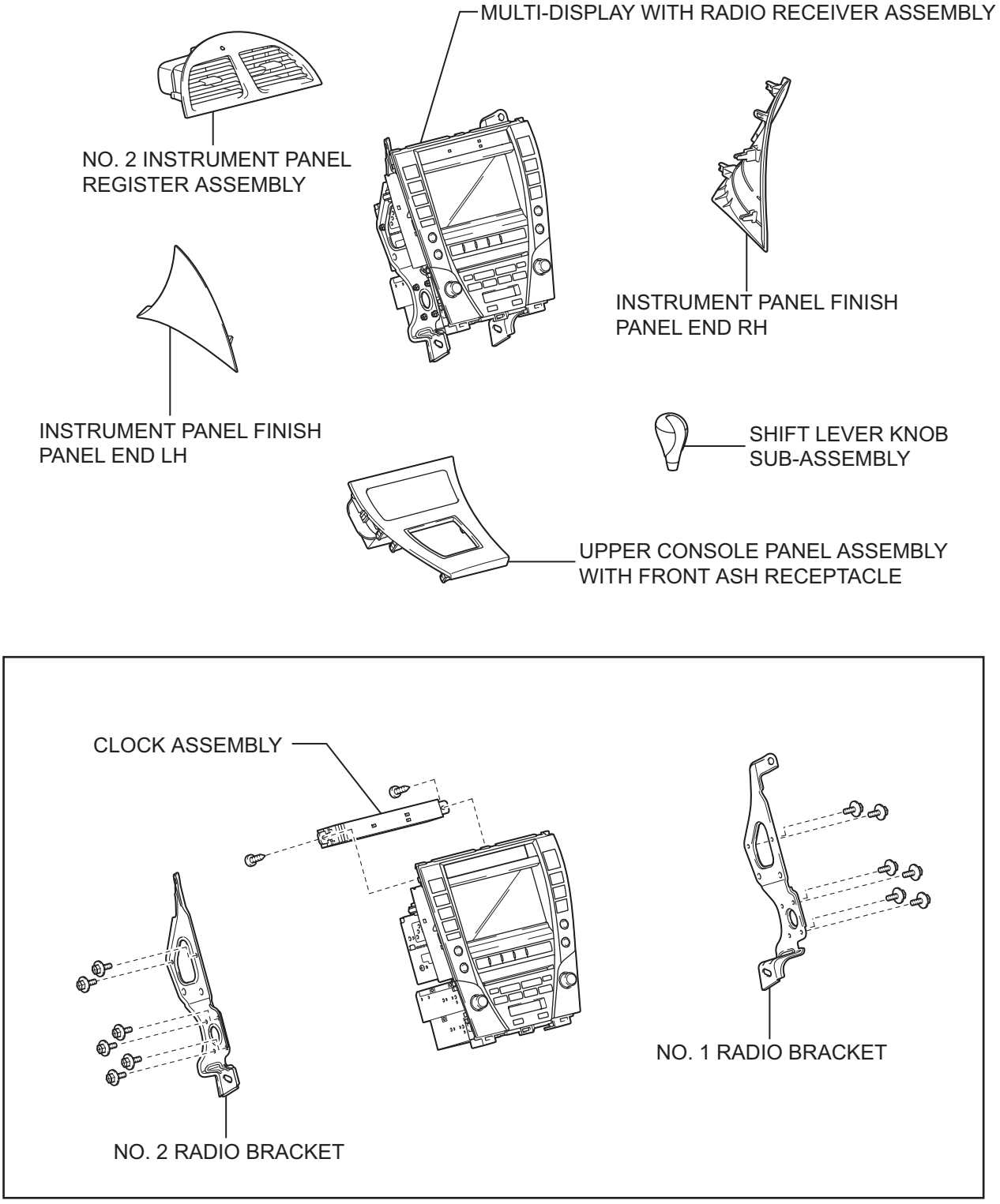

P

E131658E01

PROBLEM SYMPTOMS TABLE

CLOCK ASSEMBLY:

Symptom	Suspected Area	See page
Clock does not operate at all.	1. Fuse (ECU-ACC, ALT, DOME)	-
	2. Power Source Circuit	-
Clock illumination malfunction (Clock illumination does not dim at night.)	1. Clock Display Circuit	-
	2. Combination Meter Assembly	-

SYSTEM DIAGRAM

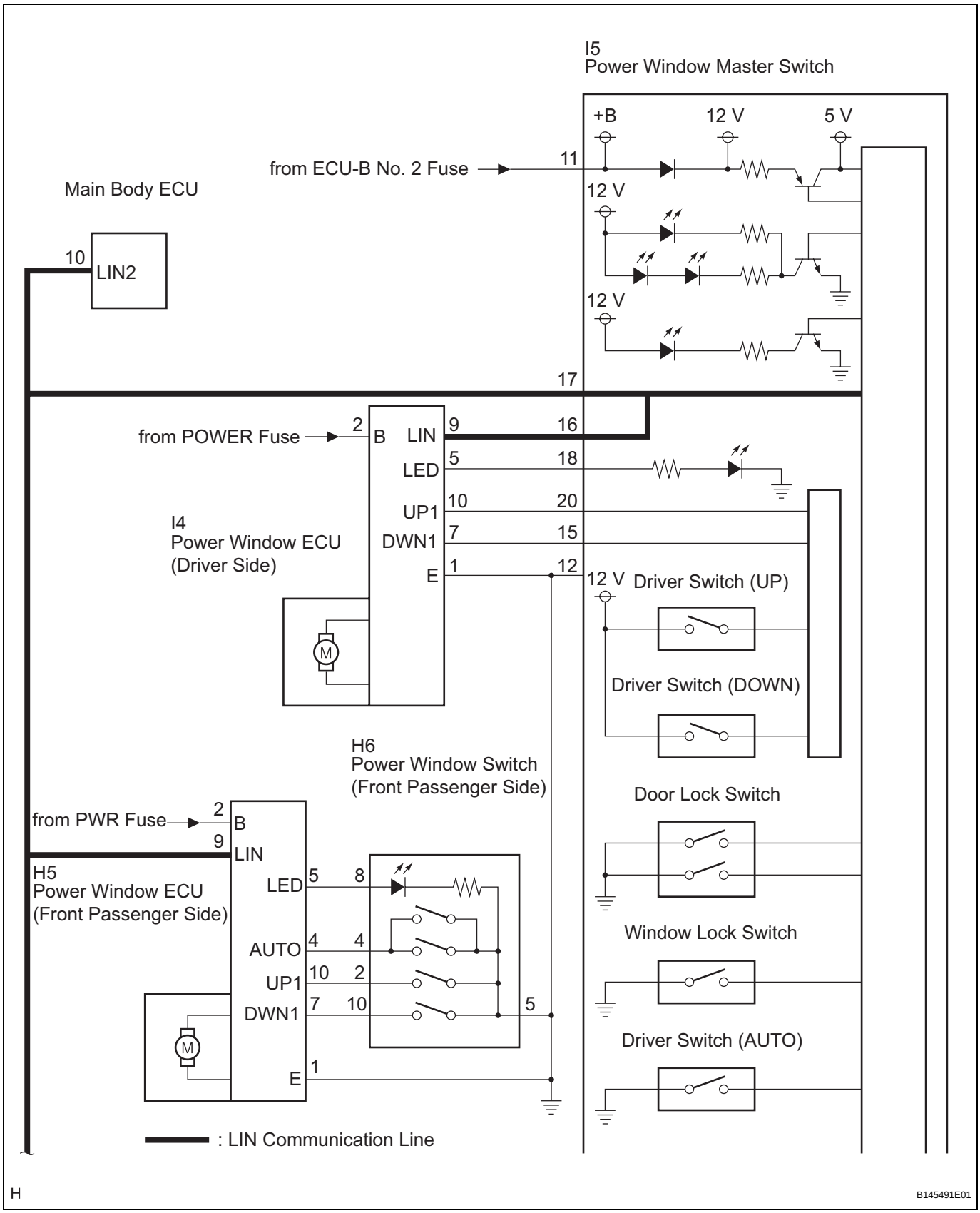

WS

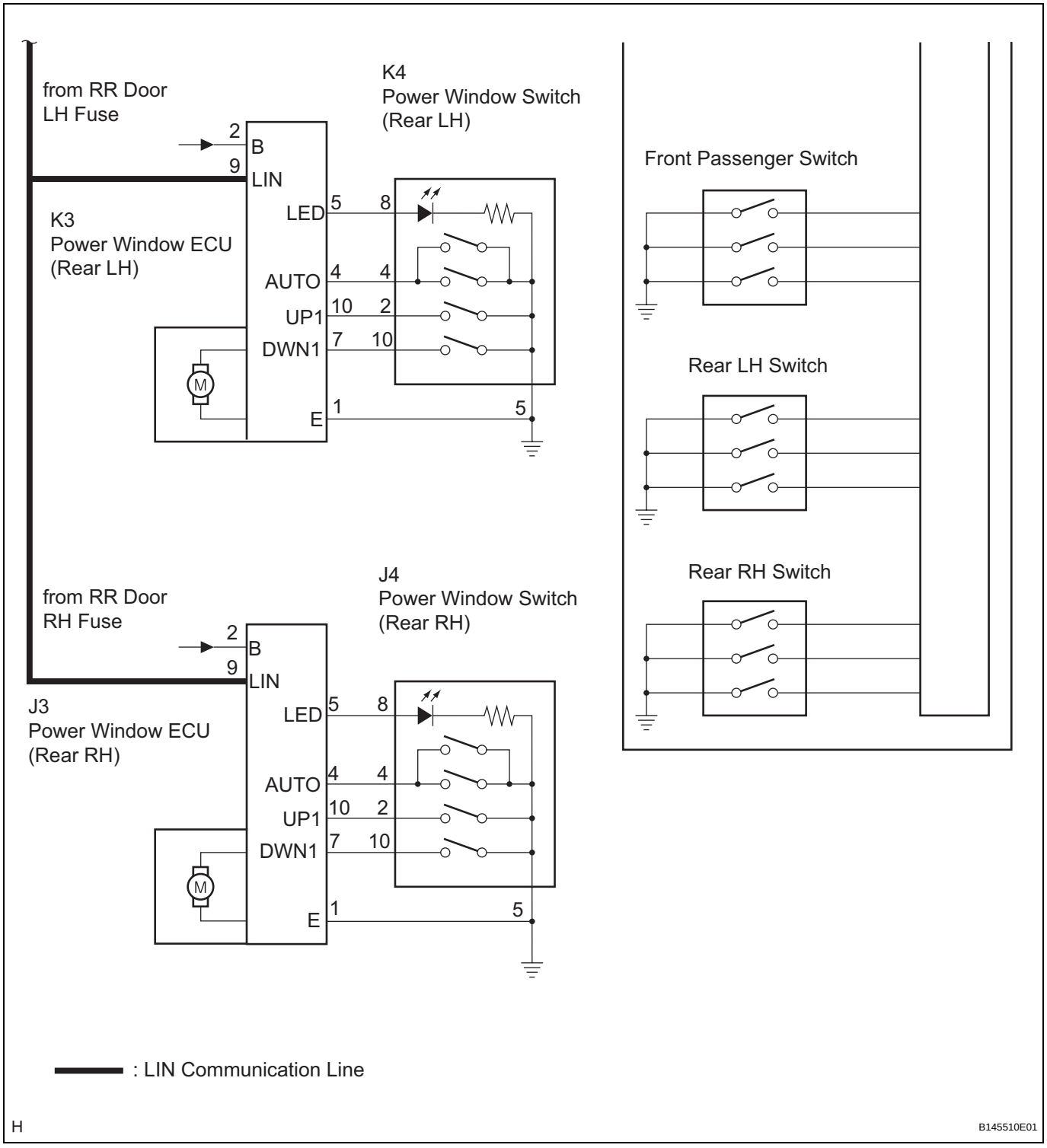
from RR Door
LH Fuse
K4
Power Window Switch
(Rear LH)
Front Passenger Switch
K3
Power Window ECU
(Rear LH)
B
LIN
LED
AUTO
UP1
DWN1
E
Rear LH Switch
from RR Door
RH Fuse
J4
Power Window Switch
(Rear RH)
Rear RH Switch
J3
Power Window ECU
(Rear RH)
: LIN Communication Line
H
B145510E01

SYSTEM DIAGRAM

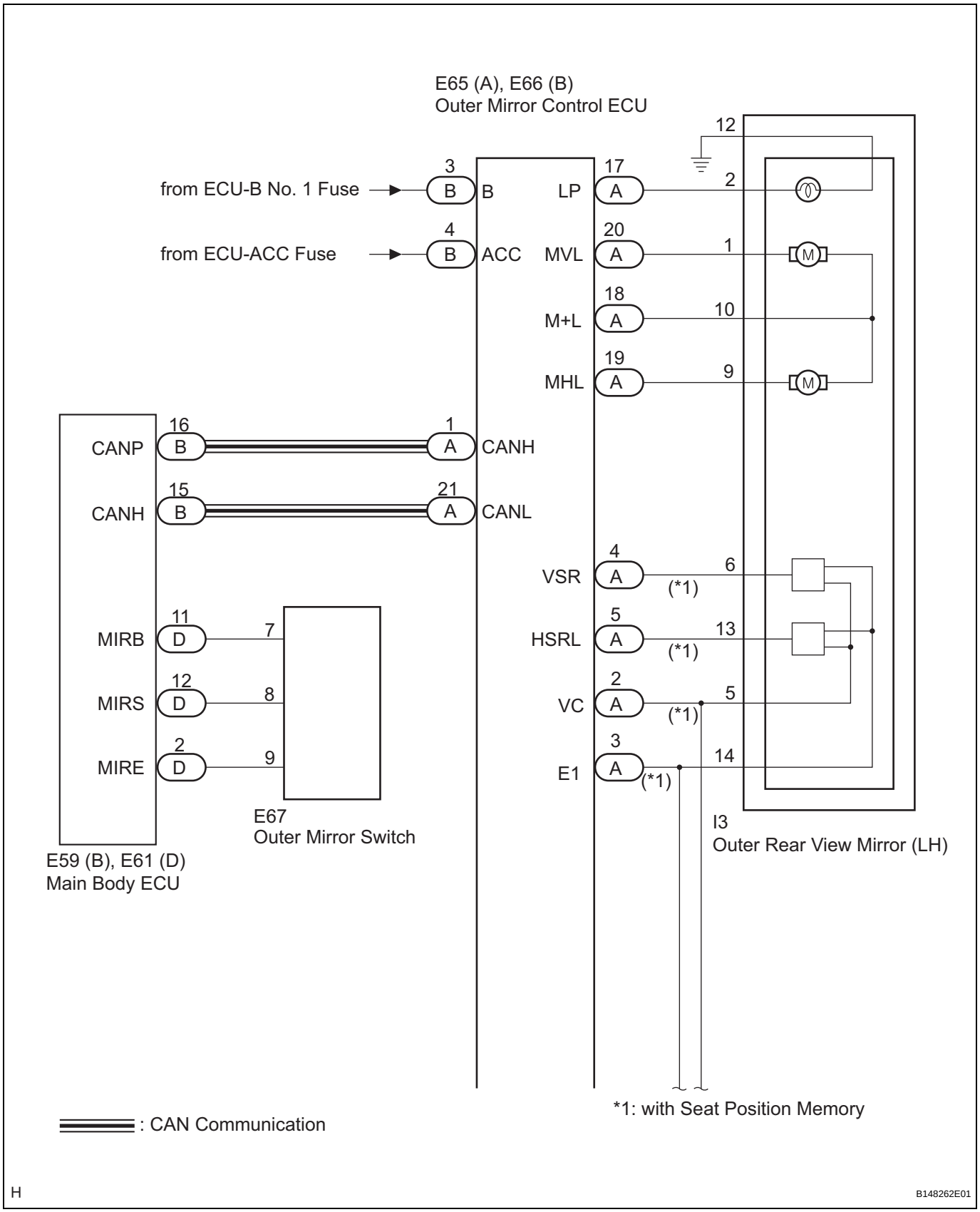

MI

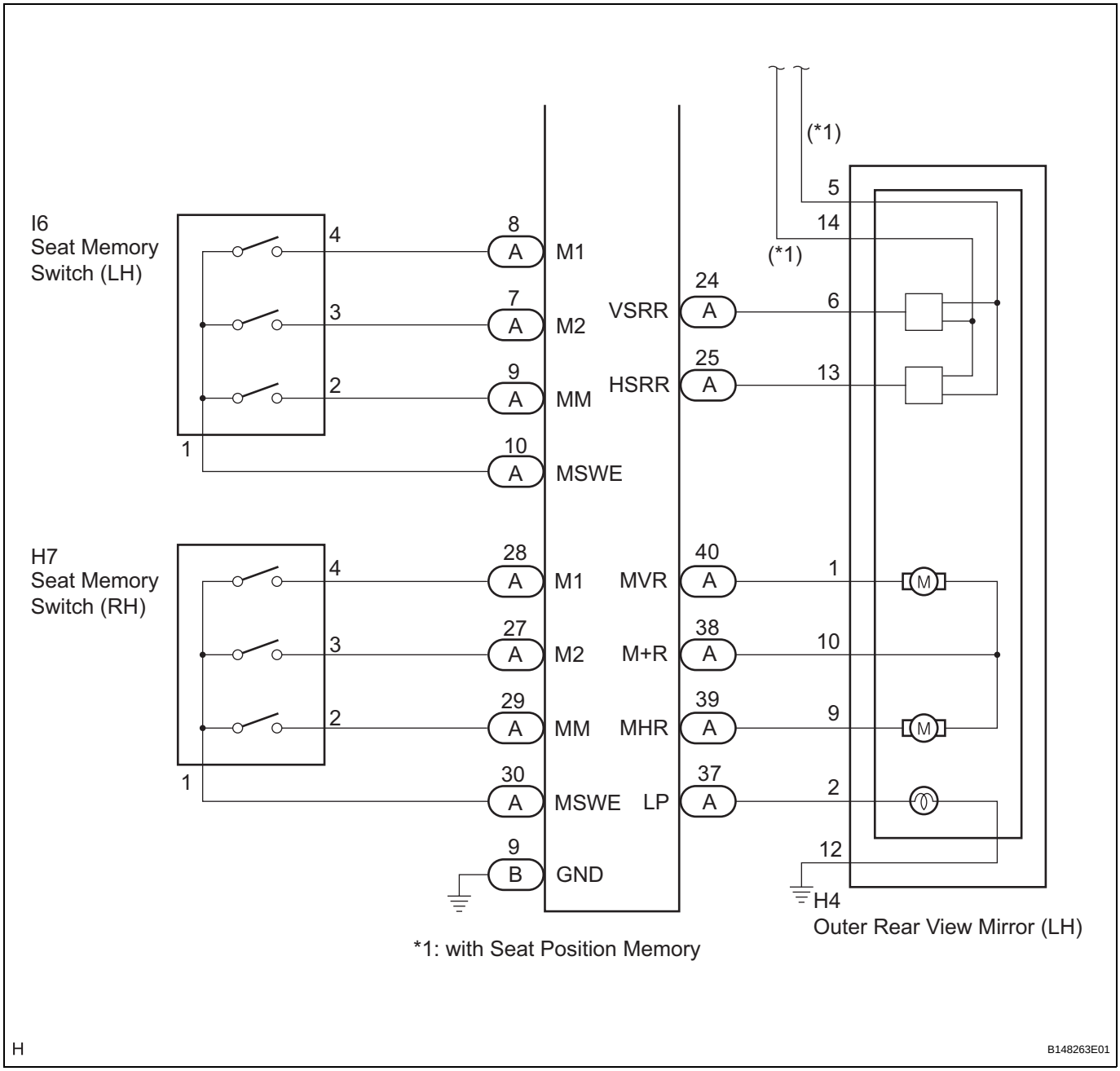
I6
Seat Memory
Switch (LH)
H7
Seat Memory
Switch (RH)
M1
M2
MM
MSWE
GND
VSRR
HSRR
MVR
M+R
MHR
LP
(*1)
H4
Outer Rear View Mirror (LH)
*1: with Seat Position Memory
H
B148263E01

Mirror Heater Operation:

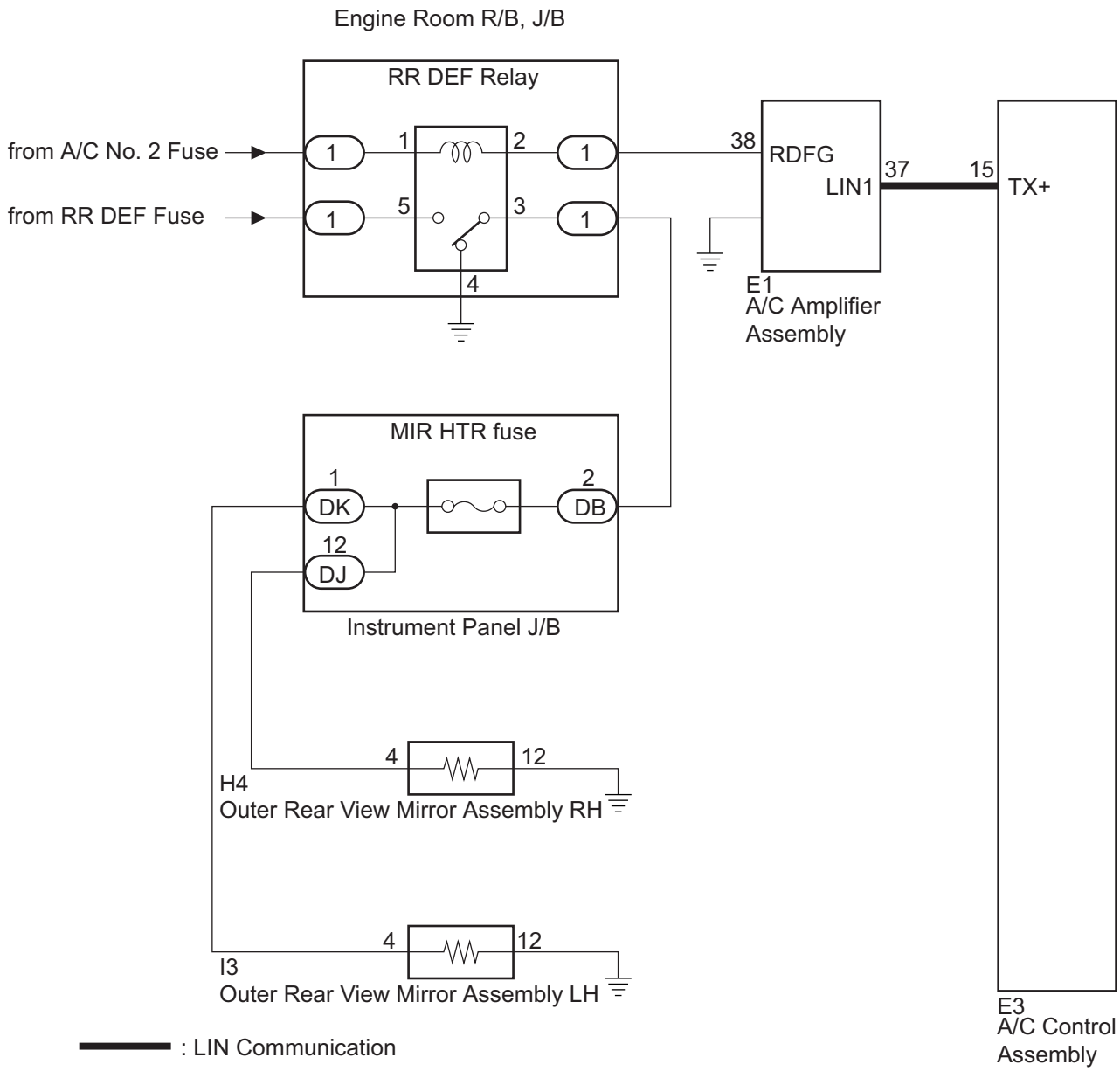

H

B137069E03

MI

EC Mirror Operation:

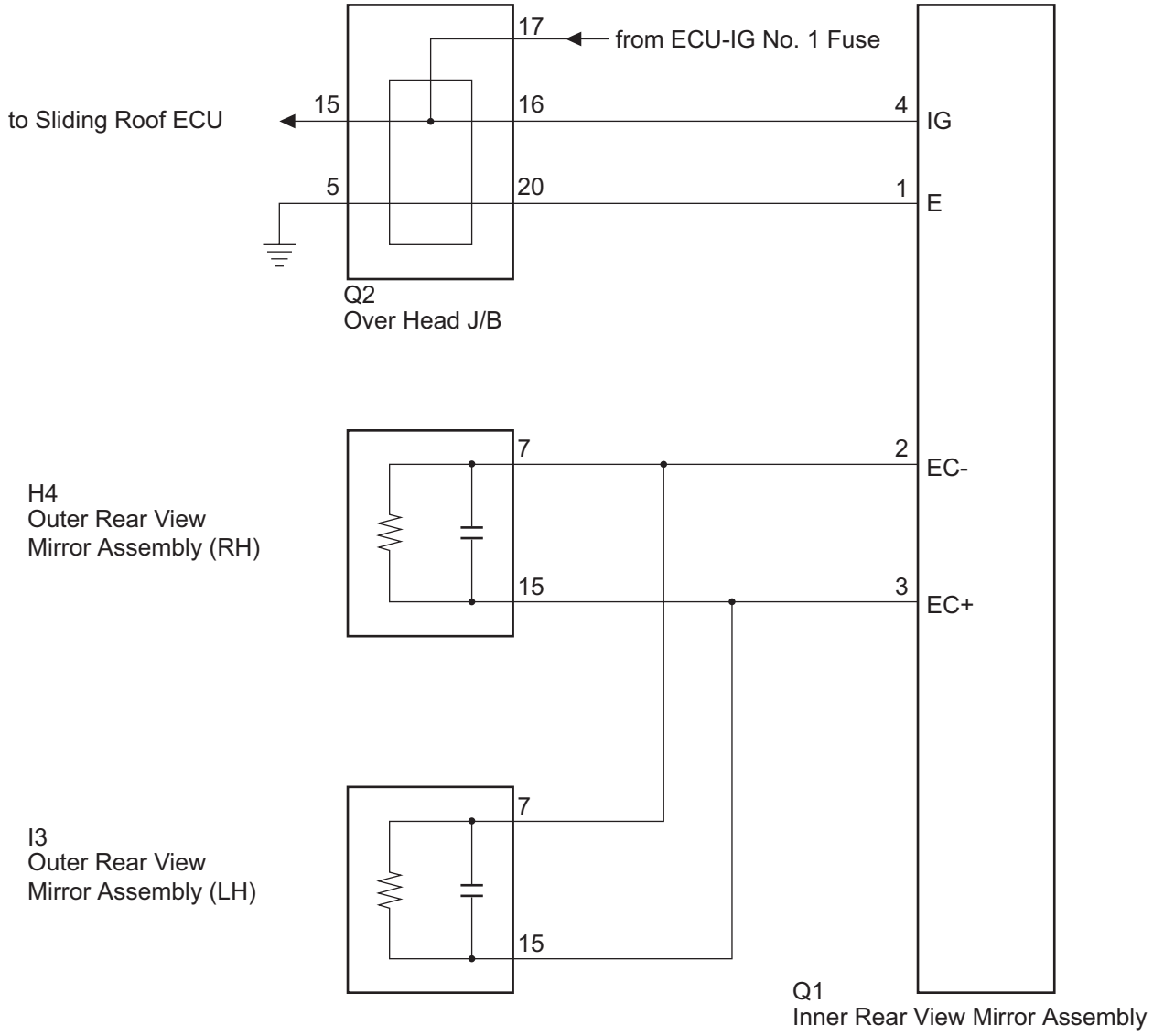

H

B145476E01

COMPONENTS

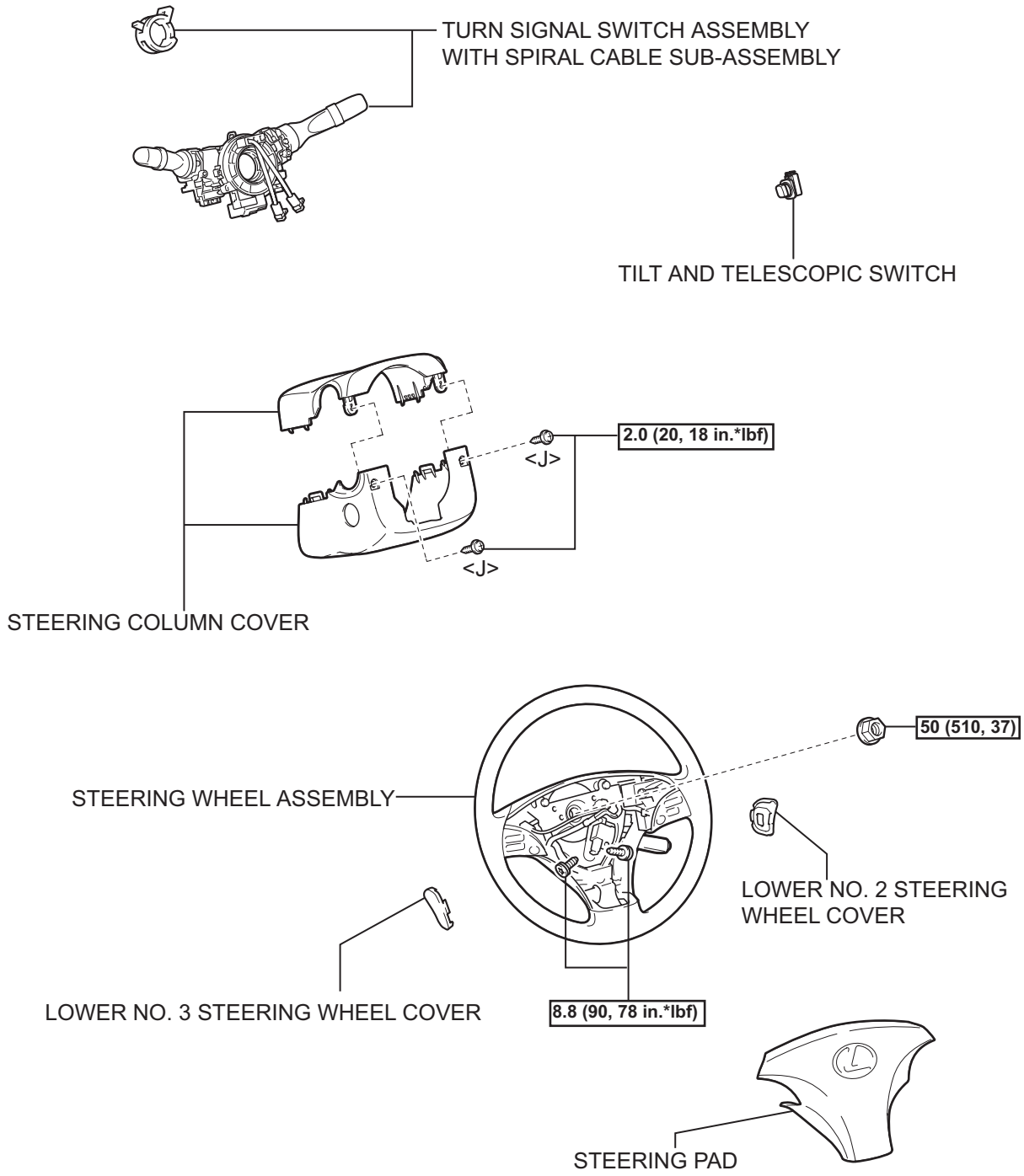

N*m (kgf*cm, ft.*lbf) : Specified torque

P

B145852E01

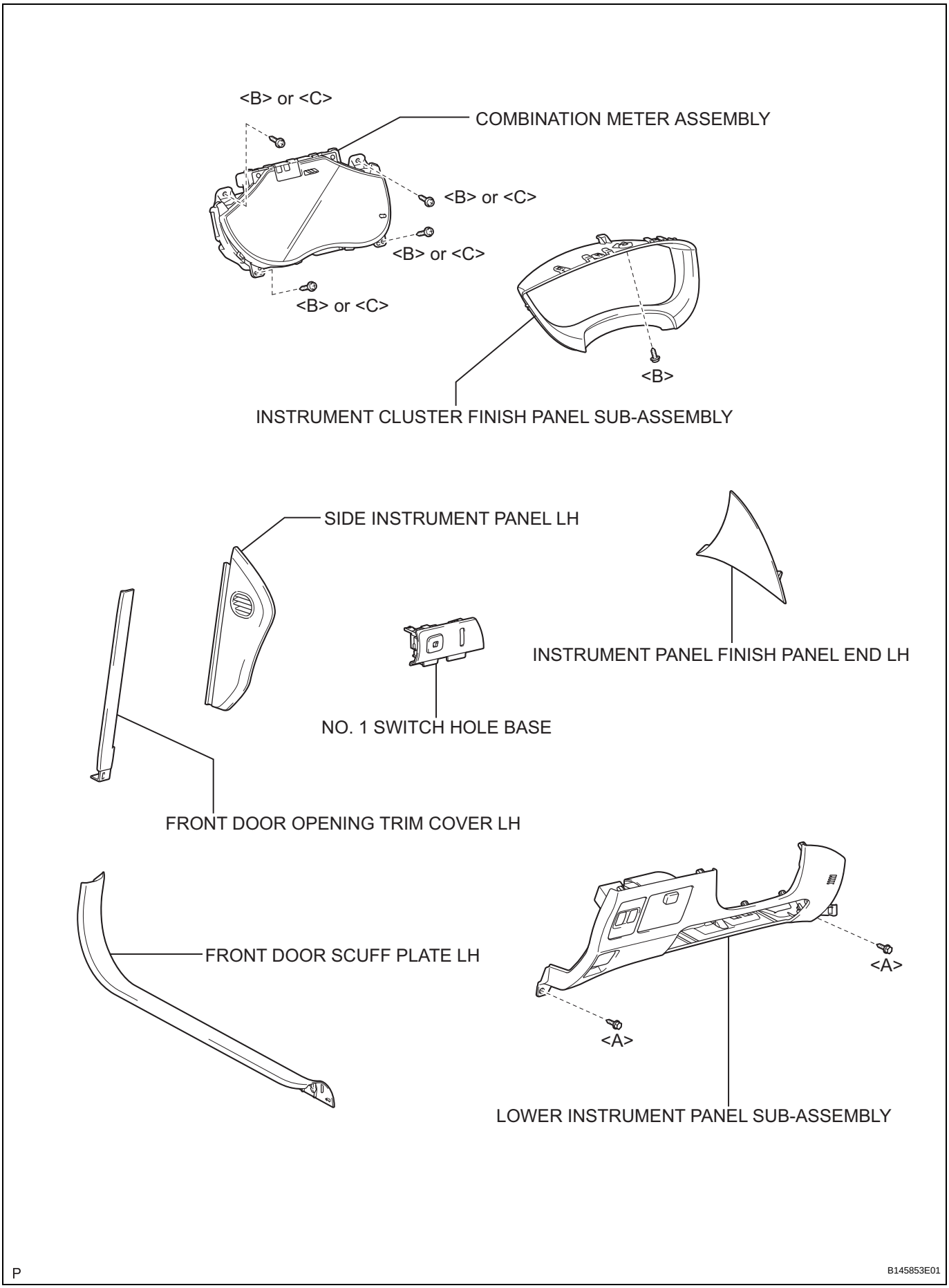
<B> or <C>
COMBINATION METER ASSEMBLY
<B> or <C>
<B> or <C>
<B> or <C>
<B>
INSTRUMENT CLUSTER FINISH PANEL SUB-ASSEMBLY
SIDE INSTRUMENT PANEL LH
INSTRUMENT PANEL FINISH PANEL END LH
NO. 1 SWITCH HOLE BASE
FRONT DOOR OPENING TRIM COVER LH
FRONT DOOR SCUFF PLATE LH
<A>
<A>
LOWER INSTRUMENT PANEL SUB-ASSEMBLY
P
B145853E01

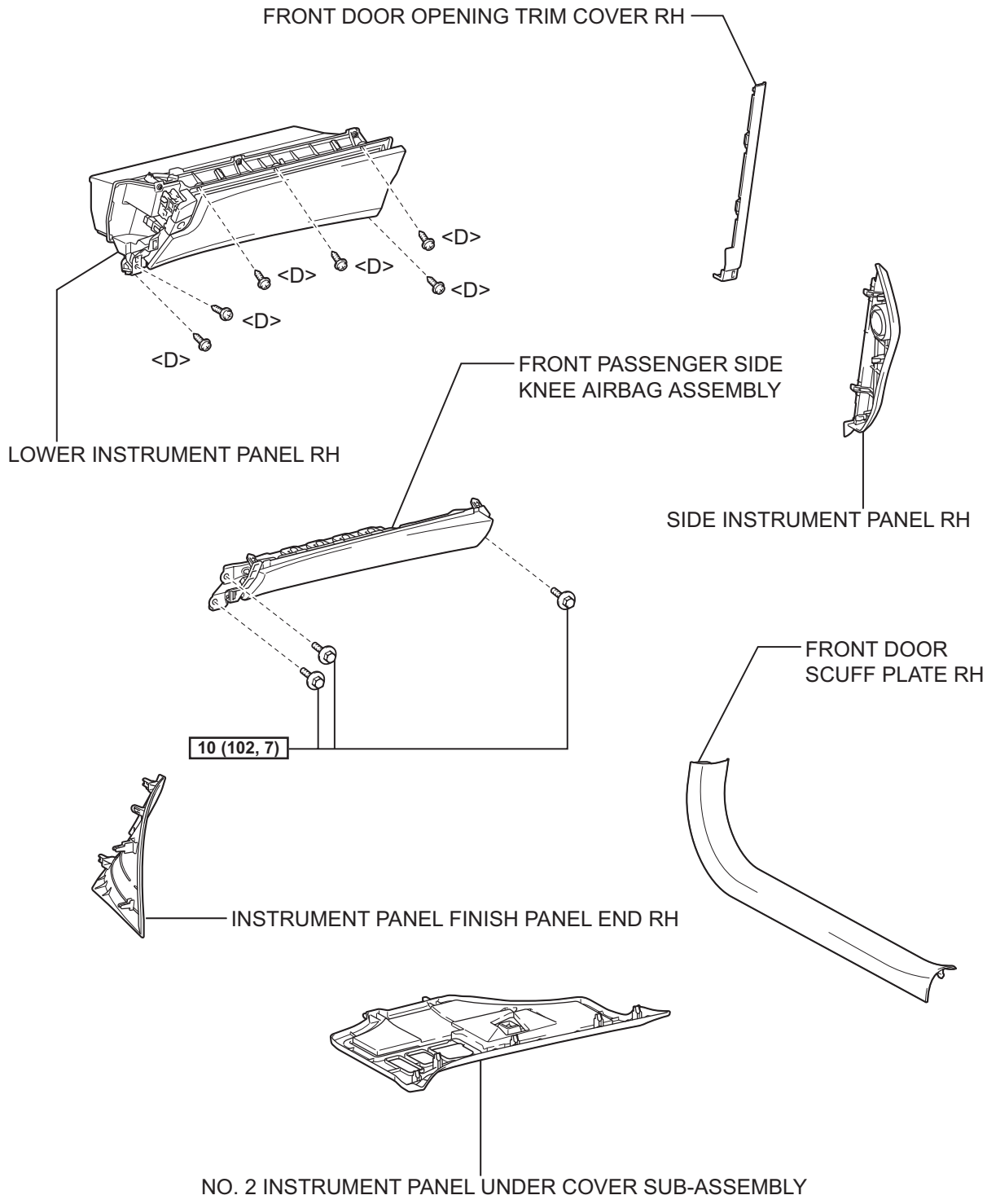

N*m (kgf*cm, ft.*lbf) : Specified torque

P

B145855E01

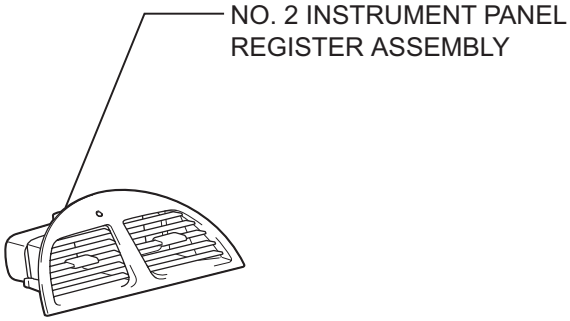

without Navigation System:

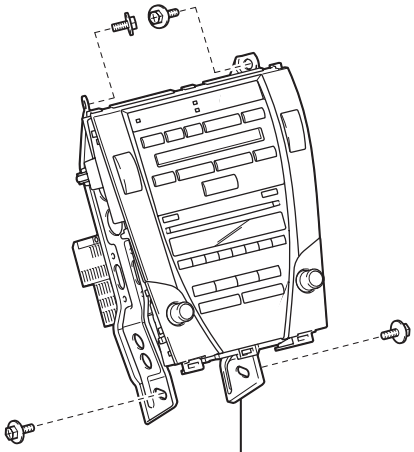

with Navigation System:

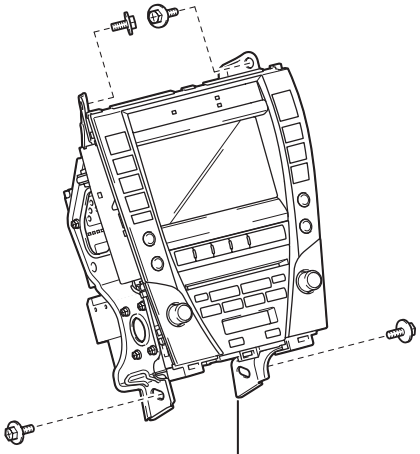

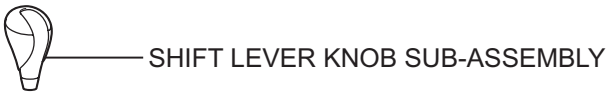

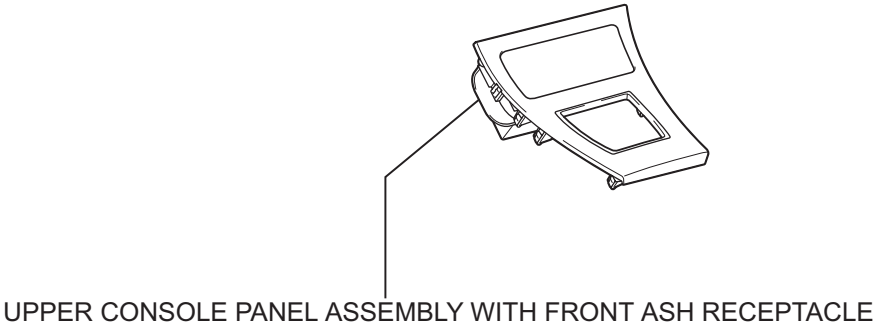

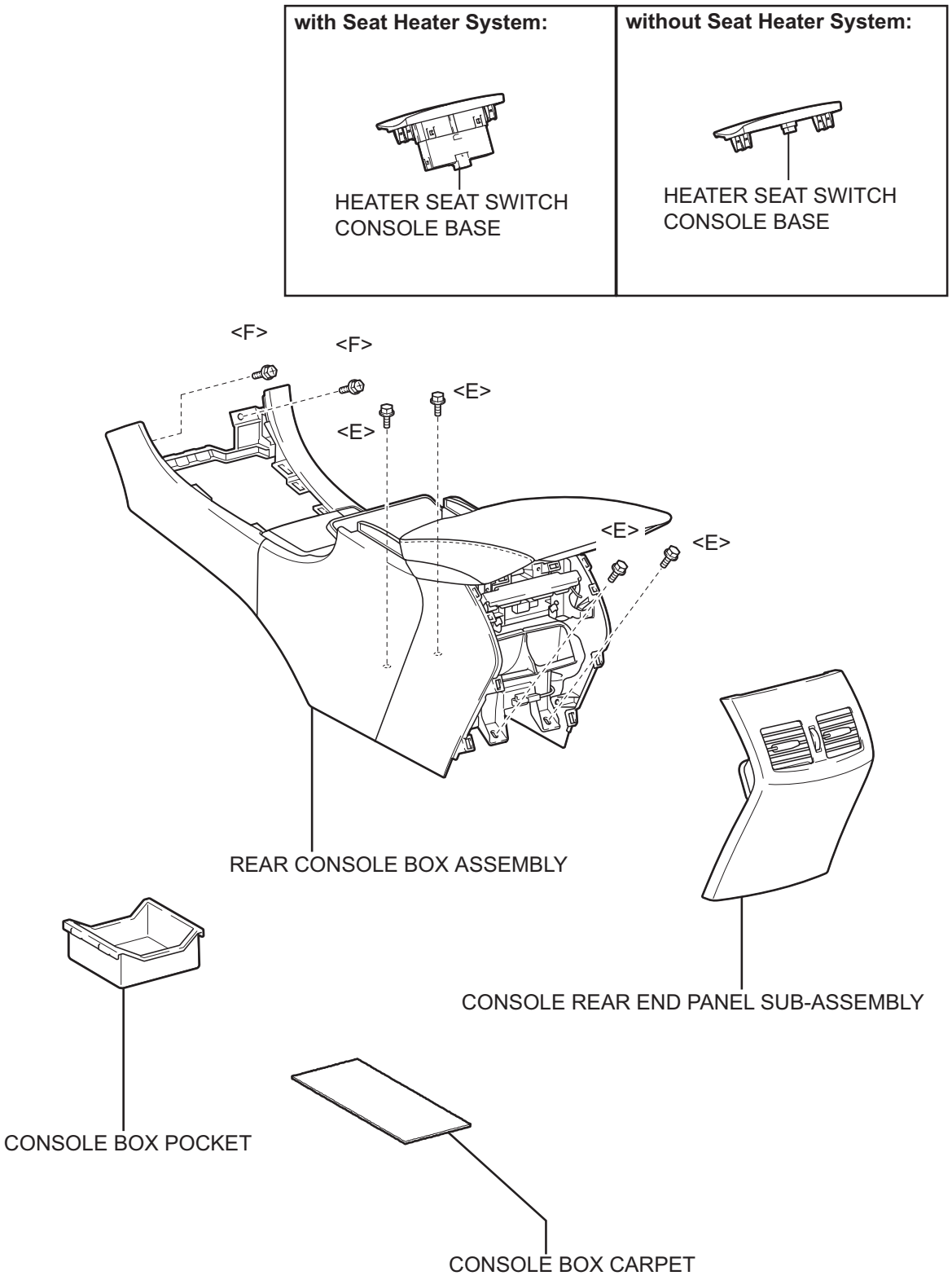

P

B145857E01

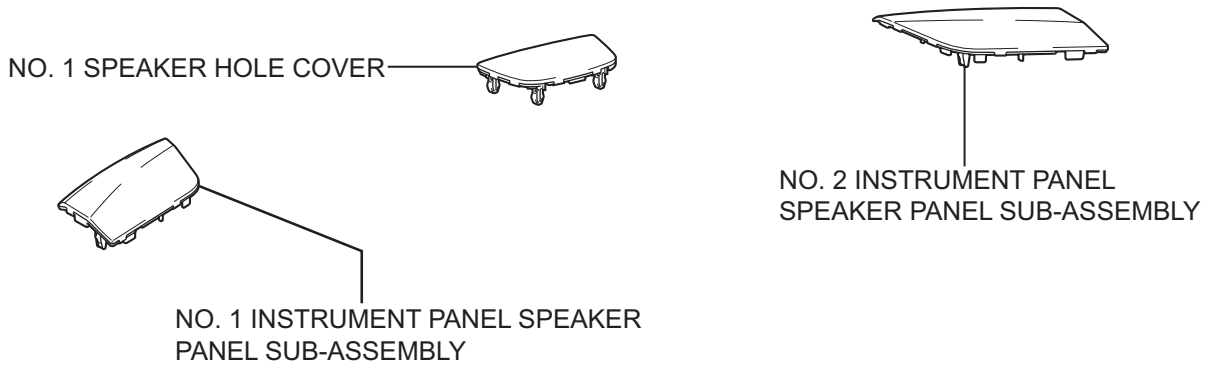

without Rear Header Speaker:

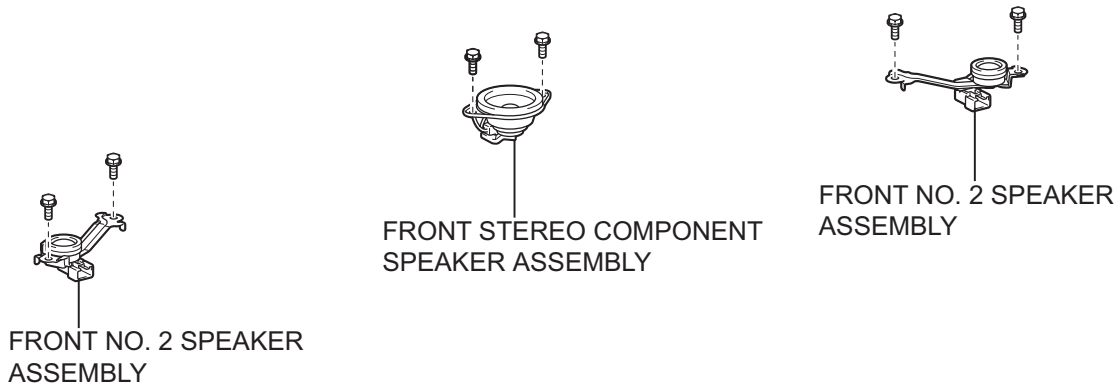

with Rear Header Speaker:

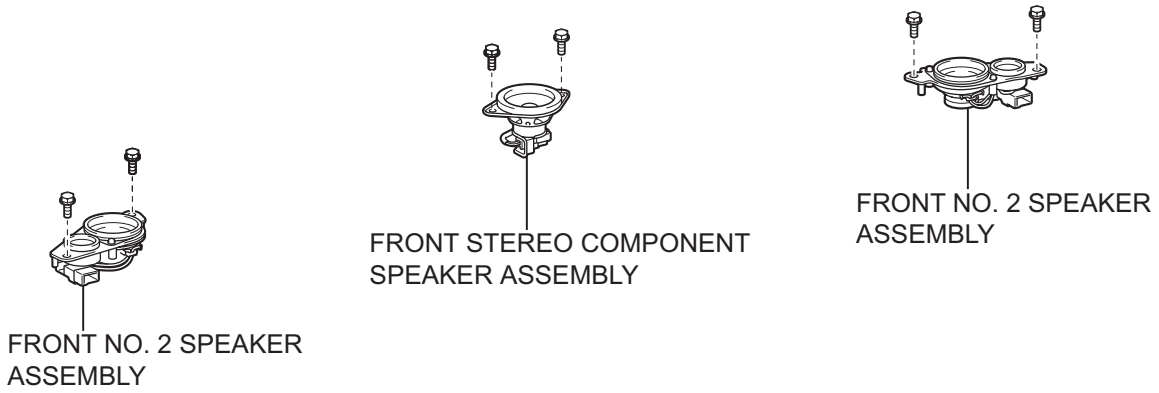

IP

P

B145858E02

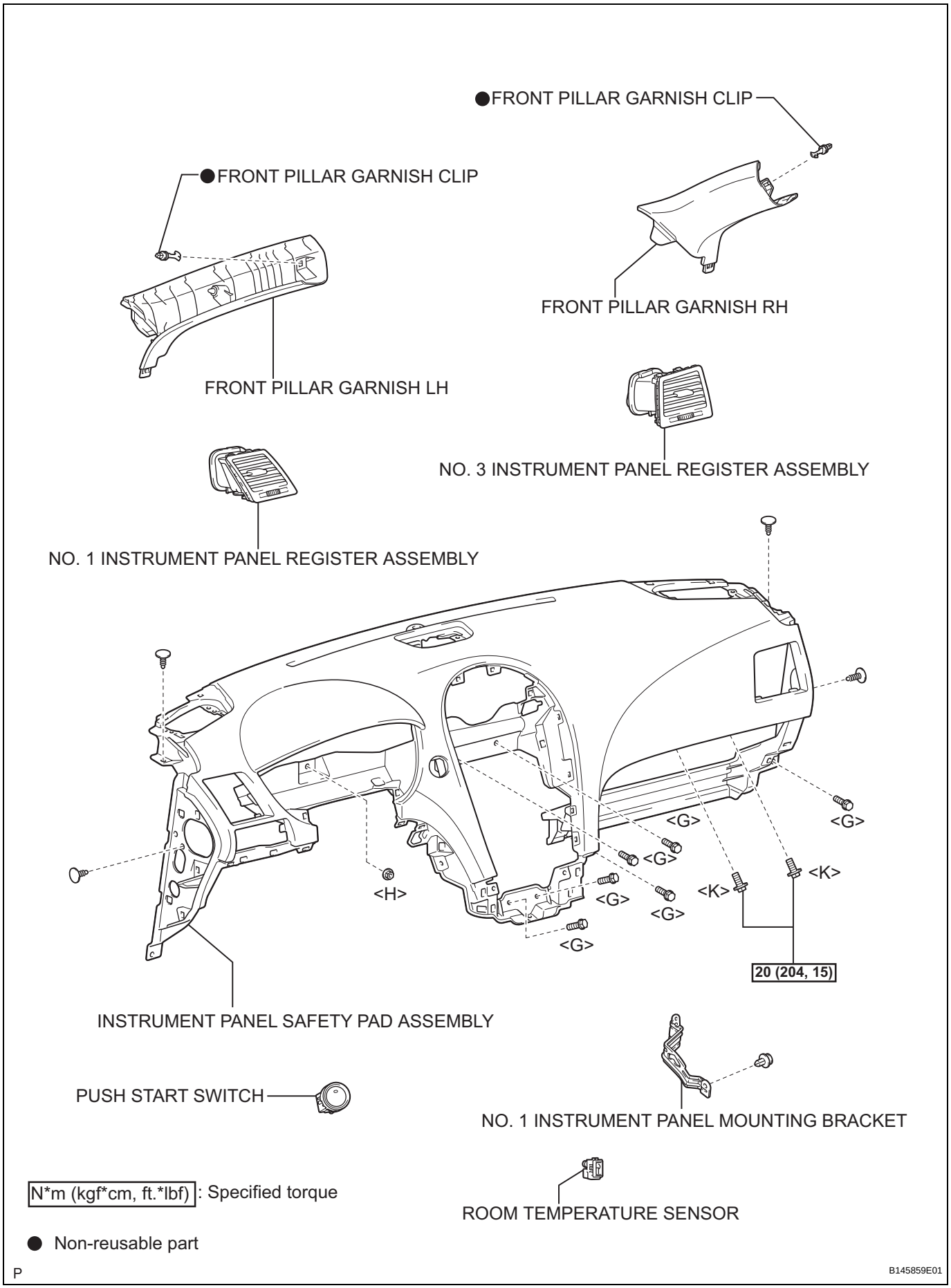
●FRONT PILLAR GARNISH CLIP
●FRONT PILLAR GARNISH CLIP
FRONT PILLAR GARNISH RH
FRONT PILLAR GARNISH LH
NO. 3 INSTRUMENT PANEL REGISTER ASSEMBLY
NO. 1 INSTRUMENT PANEL REGISTER ASSEMBLY
<G>
<G>
<G>
<K>
<H>
<G>
<K>
<G>
<G>
20 (204, 15)
INSTRUMENT PANEL SAFETY PAD ASSEMBLY
PUSH START SWITCH
NO. 1 INSTRUMENT PANEL MOUNTING BRACKET
N*m (kgf*cm, ft.*lbf) : Specified torque
ROOM TEMPERATURE SENSOR
● Non-reusable part
P
B145859E01

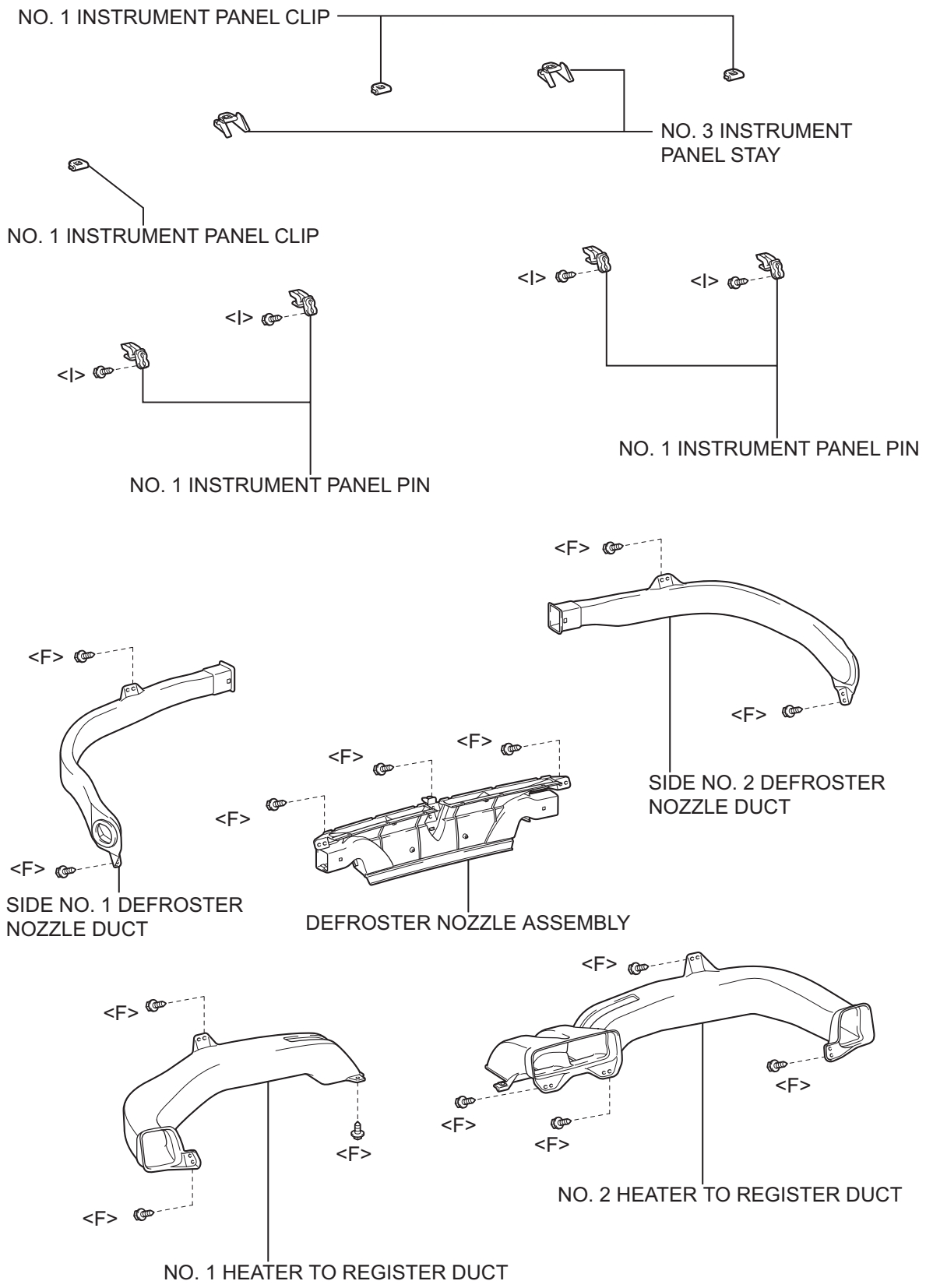
NO. 1 INSTRUMENT PANEL CLIP
NO. 3 INSTRUMENT PANEL STAY
NO. 1 INSTRUMENT PANEL CLIP
<I>
<I>
<I>
<I>
NO. 1 INSTRUMENT PANEL PIN
NO. 1 INSTRUMENT PANEL PIN
<F>
<F>
SIDE NO. 2 DEFROSTER NOZZLE DUCT
<F>
<F>
<F>
<F>
<F>
SIDE NO. 1 DEFROSTER NOZZLE DUCT
DEFROSTER NOZZLE ASSEMBLY
<F>
<F>
<F>
<F>
<F>
<F>
<F>
NO. 2 HEATER TO REGISTER DUCT
NO. 1 HEATER TO REGISTER DUCT

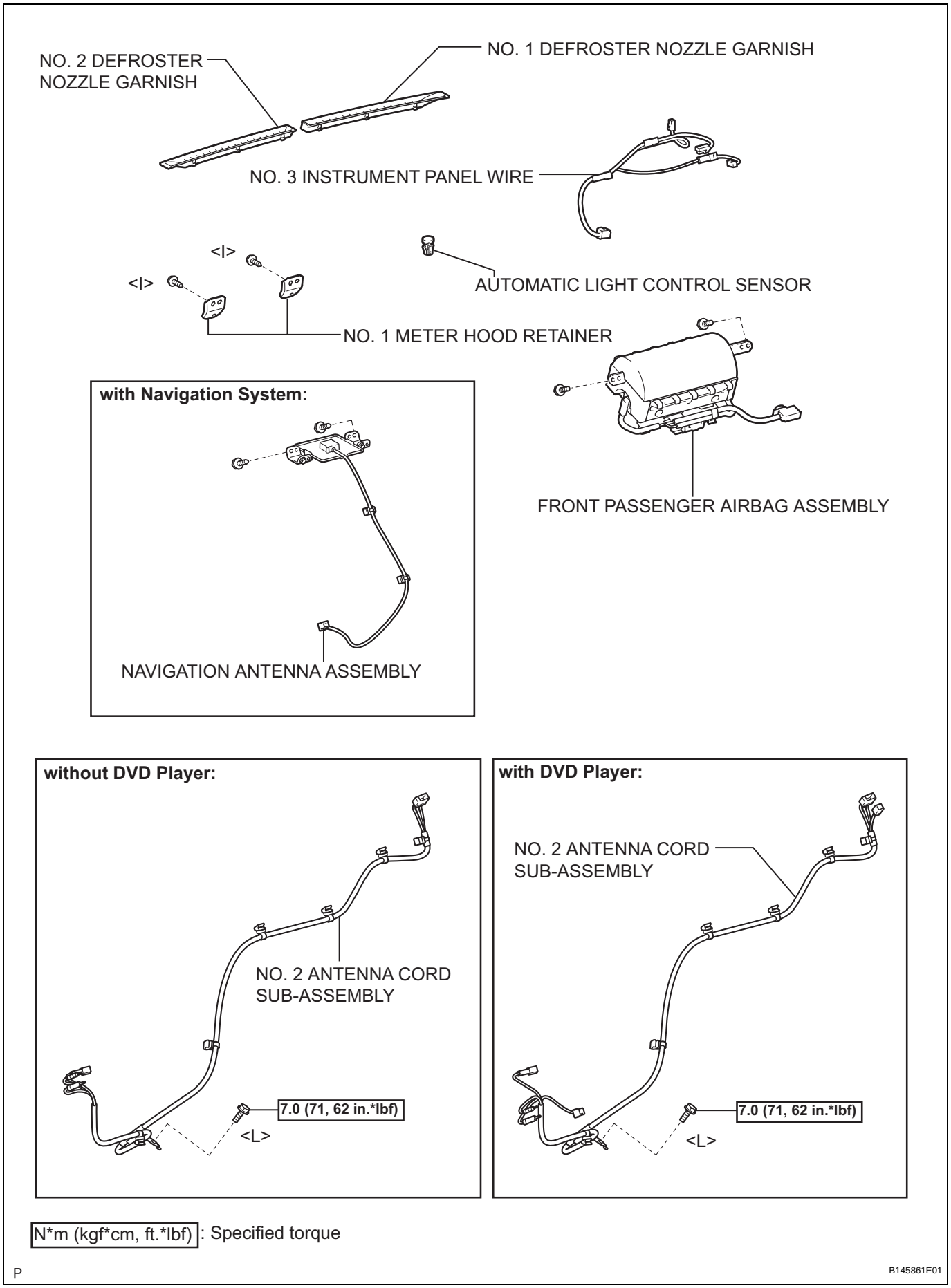
NO. 2 DEFROSTER NOZZLE GARNISH
NO. 1 DEFROSTER NOZZLE GARNISH
NO. 3 INSTRUMENT PANEL WIRE
<I>
<I>
AUTOMATIC LIGHT CONTROL SENSOR
NO. 1 METER HOOD RETAINER
with Navigation System:
FRONT PASSENGER AIRBAG ASSEMBLY
NAVIGATION ANTENNA ASSEMBLY
without DVD Player:
NO. 2 ANTENNA CORD SUB-ASSEMBLY
7.0 (71, 62 in.*lbf)
<L>
with DVD Player:
NO. 2 ANTENNA CORD SUB-ASSEMBLY
7.0 (71, 62 in.*lbf)
<L>
N*m (kgf*cm, ft.*lbf) : Specified torque
P
B145861E01

SYSTEM DIAGRAM

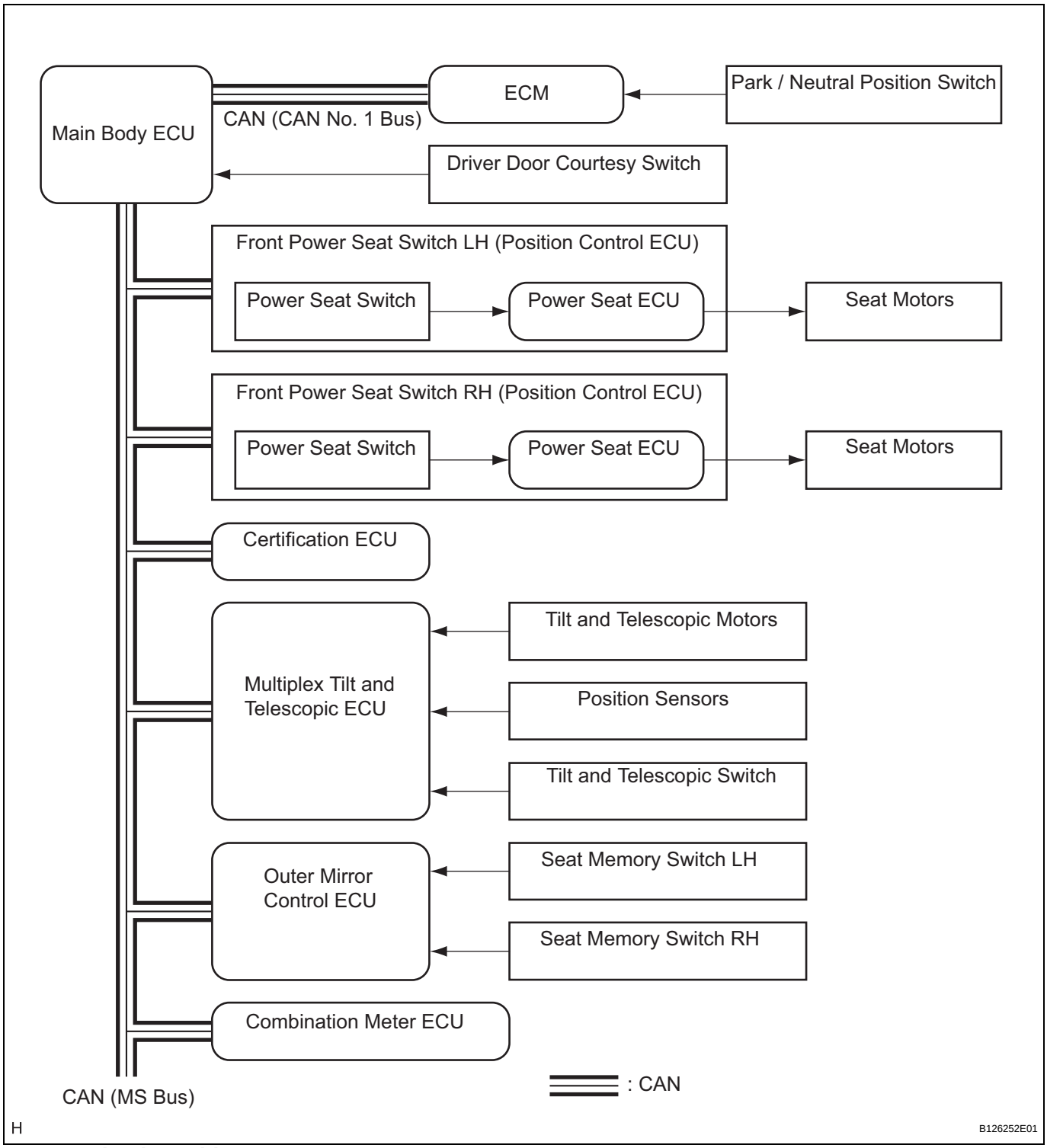

Communication table

Sender	Receiver	Signal	Line
ECM	Front Power Seat Switch LH (Position Control ECU)	Shift position signal (P, R, N, D, S)	CAN
ECM	Front Power Seat Switch RH (Position Control ECU)	Shift position signal (P, R, N, D, S)	CAN

SE

Sender	Receiver	Signal	Line
Outer Mirror Control ECU	Front Power Seat Switch LH (Position Control ECU)	• Driver's seat memory switch M1 signal • Driver's seat memory switch M2 signal • Driver's seat memory switch SET signal	CAN
Outer Mirror Control ECU	Front Power Seat Switch RH (Position Control ECU)	• Front passenger seat memory switch M1 signal • Front passenger seat memory switch M2 signal • Front passenger seat memory switch SET signal	CAN
Main Body ECU	Front Power Seat Switch LH (Position Control ECU)	• Engine switch signal • Key switch signal • Driver's door courtesy light switch signal • Parking brake switch signal • Door lock output factor	CAN
Main Body ECU	Front Power Seat Switch RH (Position Control ECU)	• Engine switch signal • Front passenger door courtesy light switch signal • Parking brake switch signal	CAN
Certification ECU	Front Power Seat Switch LH (Position Control ECU)	Smart memory call replay request	CAN
Multiplex Tilt and Telescopic ECU	Front Power Seat Switch LH (Position Control ECU)	• Tilt and Telescopic excution signal • Tilt and Telescopic completion signal	CAN
Front Power Seat Switch LH (Position Control ECU)	Multiplex Tilt and Telescopic ECU	• Memory command of Memory 1 for driver's seat • Memory command of Memory 2 for driver's seat • Play command of Memory 1 for driver's seat • Play command of Memory 2 for driver's seat • Start signal to play tilt and telescopic steering • Stop signal to play tilt and telescopic steering	CAN
Front Power Seat Switch LH (Position Control ECU)	Outer Mirror Control ECU	• Memory command of Memory 1 for driver's seat • Memory command of Memory 2 for driver's seat • Play command of Memory 1 for driver's seat • Play command of Memory 2 for driver's seat	CAN
Combination meter ECU	Front Power Seat Switch LH (Position Control ECU)	Vehicle speed signal (meter to other)	CAN
Combination meter ECU	Front Power Seat Switch RH (Position Control ECU)	Vehicle speed signal (meter to other)	CAN

REMOVAL

1. **REMOVE SEAT BELT ANCHOR COVER CAP (See page SB-22)**
2. **DISCONNECT FRONT SEAT OUTER BELT ASSEMBLY (See page SB-22)**
3. **REMOVE FRONT SEAT HEADREST ASSEMBLY**
4. **REMOVE FRONT SEAT OUTER TRACK BRACKET COVER (See page SE-83)**
5. **REMOVE FRONT SEAT INNER TRACK BRACKET COVER (See page SE-83)**
6. **REMOVE FRONT SEAT REAR OUTER TRACK BRACKET COVER (See page SE-83)**
7. **REMOVE FRONT SEAT REAR INNER TRACK BRACKET COVER (See page SE-83)**
8. **REMOVE FRONT SEAT ASSEMBLY (See page SE-83)**
9. **REMOVE FRONT SEAT INNER BELT ASSEMBLY (See page SB-23)**
10. **REMOVE RECLINING POWER SEAT SWITCH KNOB (See page SE-84)**
11. **REMOVE SLIDE AND VERTICAL POWER SEAT SWITCH KNOB (See page SE-84)**
12. **REMOVE FRONT SEAT CUSHION SHIELD ASSEMBLY (See page SE-84)**
13. **REMOVE FRONT SEAT INNER CUSHION SHIELD (See page SE-86)**
14. **REMOVE FRONT SEATBACK BOARD SUB-ASSEMBLY (See page SE-91)**
15. **REMOVE FRONT SEATBACK BOARD COVER SUB-ASSEMBLY (See page SE-91)**
16. **REMOVE FRONT SEAT HEADREST SUPPORT (See page SE-91)**
17. **REMOVE FRONT SEAT HEADREST SUPPORT**
18. **REMOVE FRONT SEPARATE TYPE SEATBACK COVER WITH PAD (See page SE-92)**
19. **REMOVE LUMBAR SUPPORT ADJUSTER ASSEMBLY**
    (a) Disconnect the connector.
    (b) Remove the 2 screws and lumbar support adjuster assembly.

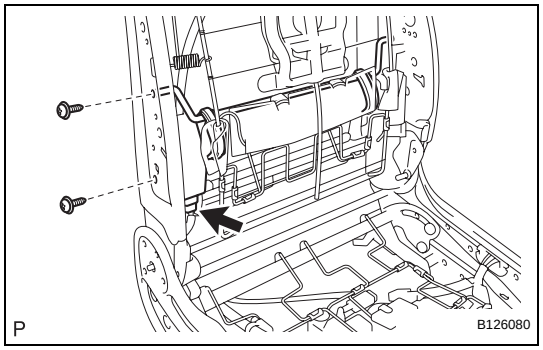

SE

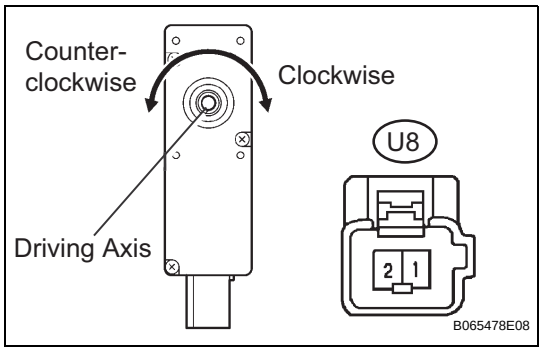

INSPECTION

1. INSPECT LUMBAR SUPPORT ADJUSTER ASSEMBLY LH

(a) Check operation of the lumbar support adjuster.

(1) Check if the lumbar support adjuster moves smoothly when the battery is connected to the lumbar support adjuster motor connector terminals.

OK

Measurement Condition	Operation Direction
Battery positive (+) → U8-2 Battery negative (-) → U8-1	Clockwise
Battery positive (+) → U8-1 Battery negative (-) → U8-2	Counterclockwise

If the result is not as specified, replace the lumbar support adjuster LH.

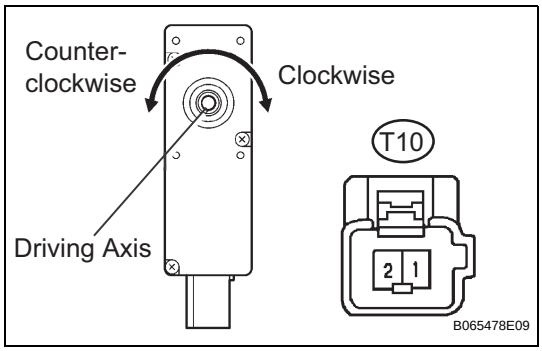

2. INSPECT LUMBAR SUPPORT ADJUSTER ASSEMBLY RH

(a) Check operation of the lumbar support adjuster.

(1) Check if the lumbar support adjuster moves smoothly when the battery is connected to the lumbar support adjuster motor connector terminals.

OK

Measurement Condition	Operation Direction
Battery positive (+) → T10-1 Battery negative (-) → T10-2	Clockwise
Battery positive (+) → T10-2 Battery negative (-) → T10-1	Counterclockwise

If the result is not as specified, replace the lumbar support adjuster RH.

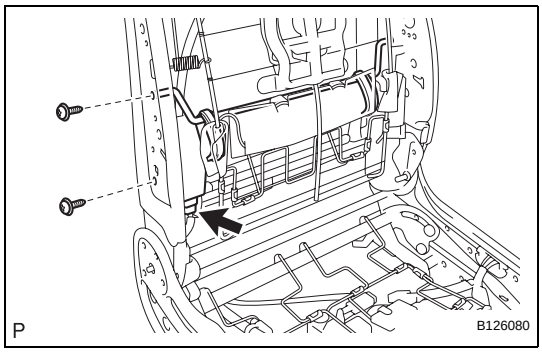

INSTALLATION

1. INSTALL LUMBAR SUPPORT ADJUSTER ASSEMBLY

(a) Install the lumber support adjuster assembly with the 2 screws.

(b) Connect the connector.

2. INSTALL FRONT SEPARATE TYPE SEATBACK COVER WITH PAD (See page SE-100)

3. INSTALL FRONT SEAT HEADREST SUPPORT (See page SE-101)

4. INSTALL FRONT SEAT HEADREST SUPPORT

5. INSTALL FRONT SEATBACK BOARD COVER SUB-ASSEMBLY (See page SE-101)

6. INSTALL FRONT SEATBACK BOARD SUB-ASSEMBLY (See page SE-101)

7. INSTALL FRONT SEAT INNER CUSHION SHIELD (See page SE-107)

8. **INSTALL FRONT SEAT CUSHION SHIELD ASSEMBLY (See page SE-108)**
9. **INSTALL SLIDE AND VERTICAL POWER SEAT SWITCH KNOB (See page SE-108)**
10. **INSTALL RECLINING POWER SEAT SWITCH KNOB (See page SE-109)**
11. **INSTALL FRONT SEAT INNER BELT ASSEMBLY (See page SB-24)**
12. **INSTALL FRONT SEAT ASSEMBLY (See page SE-109)**
13. **INSTALL FRONT SEAT REAR OUTER TRACK BRACKET COVER (See page SE-110)**
14. **INSTALL FRONT SEAT REAR INNER TRACK BRACKET COVER (See page SE-110)**
15. **INSTALL FRONT SEAT OUTER TRACK BRACKET COVER (See page SE-110)**
16. **INSTALL FRONT SEAT INNER TRACK BRACKET COVER (See page SE-110)**
17. **INSTALL FRONT SEAT HEADREST ASSEMBLY**
18. **CONNECT FRONT SEAT OUTER BELT ASSEMBLY (See page SB-31)**
19. **INSTALL SEAT BELT ANCHOR COVER CAP (See page SB-31)**
20. **PERFORM INITIALIZATION**
    NOTICE:
    Some systems need initialization after reconnecting the negative battery cable (See Page IN-33)
21. **INSPECT FRONT SEAT ASSEMBLY (See page SE-110)**
22. **INSPECT SRS WARNING LIGHT**
    Check the SRS warning light. (See Page RS-37)

SYSTEM DESCRIPTION

1. LUGGAGE COMPARTMENT DOOR OPENER SYSTEM DESCRIPTION

(a) The trunk opener is an electric type.

(b) The main body ECU (instrument panel J/B) activates the luggage compartment door lock motor when the ON signal from the luggage compartment door opener inner switch is received.

(c) The luggage door opener main switch operates:

Opener Main Switch Condition	Opener Inner Switch Condition	Door Lock Condition	Luggage Compartment Door Opener System Condition
ON (Pushed)	ON (Pushed)	Lock	Does not operate
	OFF (Free)	Lock	Does not operate
OFF (Free)	ON (Pushed)	Unlock	Operates

2. FUNCTION OF MAIN COMPONENTS

Components	Function
Luggage Compartment Door Lock Motor	Operates when signals from main body ECU (instrument panel J/B) are received
Luggage Compartment Door Opener Inner Switch	When luggage door opener inner switch is pushed, opener inner switch ON signal is sent to main body ECU
Luggage Compartment Door Opener Main Switch	When luggage door opener main switch is pushed, opener switch ON signal is sent to main body ECU
Main Body ECU (Instrument Panel J/B)	When luggage door opener switch is turned ON, main body ECU receives opener switch ON signals When luggage door opener main switch is turned ON, main body ECU receives opener main switch ON signals

HOW TO PROCEED WITH TROUBLESHOOTING

HINT:
- Use the following procedures to troubleshoot the luggage compartment door opener system.
- The intelligent tester should be used in step 3.

1	VEHICLE BROUGHT TO WORKSHOP

NEXT

2	PROBLEM SYMPTOMS TABLE

(a) If fault is not listed on the problem symptoms table, proceed to A.
(b) If fault is listed on the problem symptoms table, proceed to B.

B → Go to step 4

A

3	OVERALL ANALYSIS AND TROUBLESHOOTING

(a) DATA LIST/ACTIVE TEST (See page ED-6).
(b) Terminals of ECU (See page ED-3).

NEXT

4	REPAIR OR REPLACE

NEXT

5	CONFIRMATION TEST

NEXT

END

INSTALLATION

HINT:

- The RH side torsion bar is in front of the LH side torsion bar, thus the installation should be performed in the order of RH to LH.
- After installing the torsion bar, use your hand to open and close the luggage door. Make sure that the luggage door can be opened and closed smoothly.

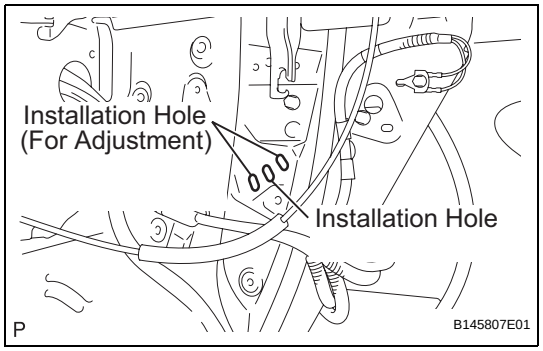

1. INSTALL LUGGAGE DOOR HINGE TORSION BAR RH

(a) Set the tip of the luggage door hinge torsion bar RH in the installation hole placed in the center part. Holes placed in the upper and lower parts are used for adjustment.

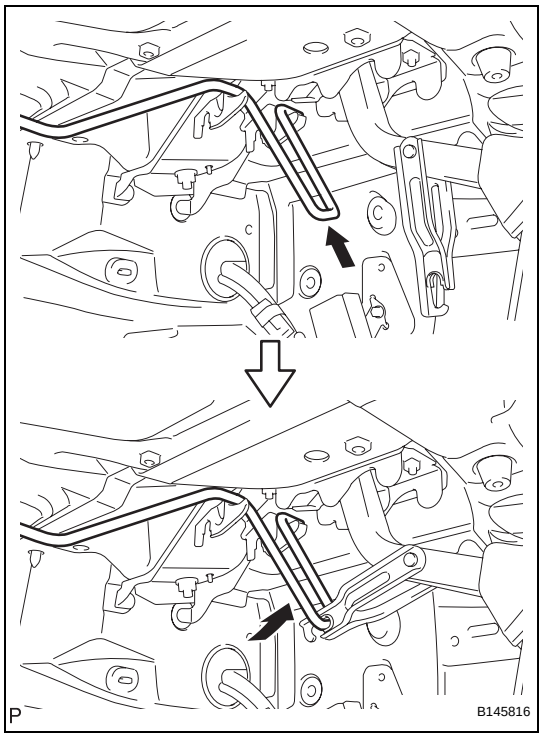

(b) Connect the luggage door hinge torsion bar RH to the luggage door hinge and body LH side as shown in the illustration.

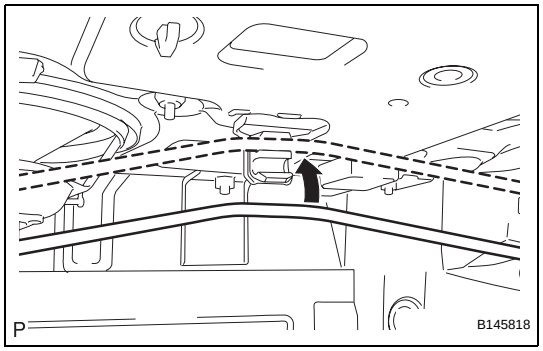

(c) Connect the luggage door hinge torsion bar RH to the luggage compartment door torsion bar support as shown in the illustration.

ED

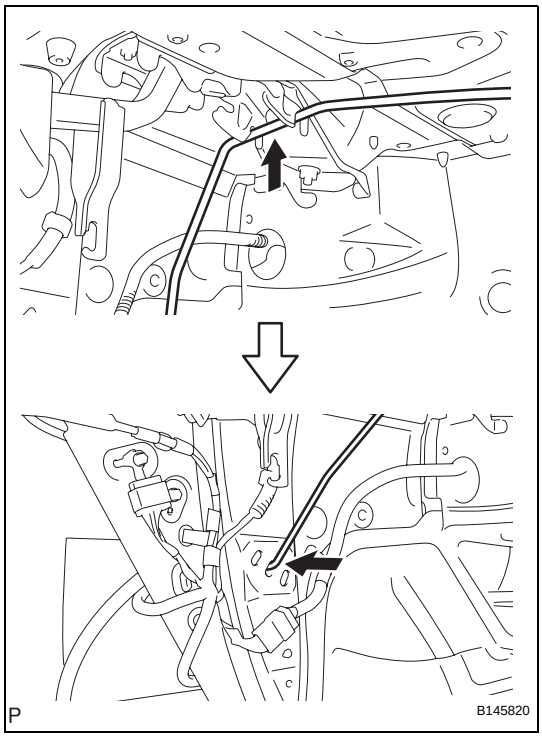

(d) Install the luggage door hinge torsion bar RH to the body LH side as shown in the illustration.

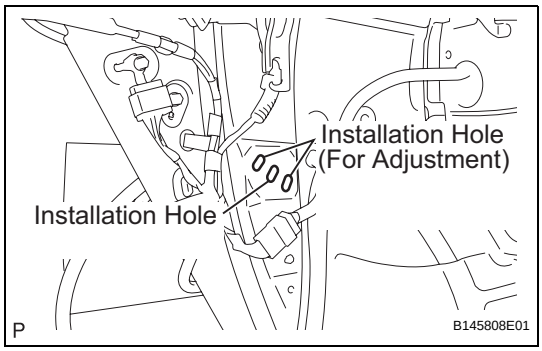

2. INSTALL LUGGAGE DOOR HINGE TORSION BAR LH

(a) Set the tip of the luggage door hinge torsion bar LH in the installation hole placed in the center part. Holes placed in the upper and lower parts are used for adjustment.

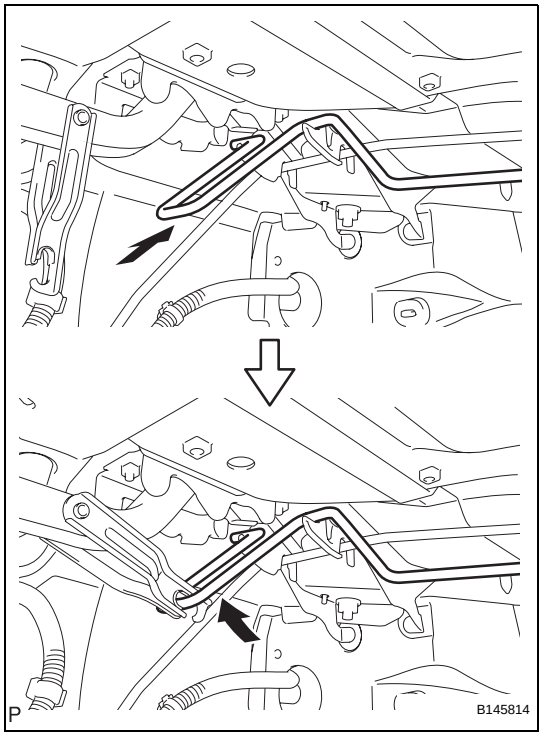

(b) Connect the luggage door hinge torsion bar LH to the luggage door hinge and body LH side as shown in the illustration.

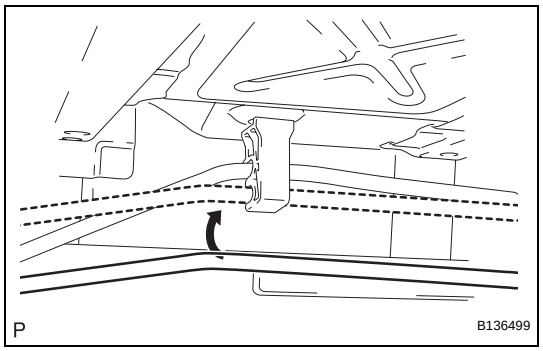

(c) Connect the luggage door hinge torsion bar LH to the luggage compartment door torsion bar support as shown in the illustration.

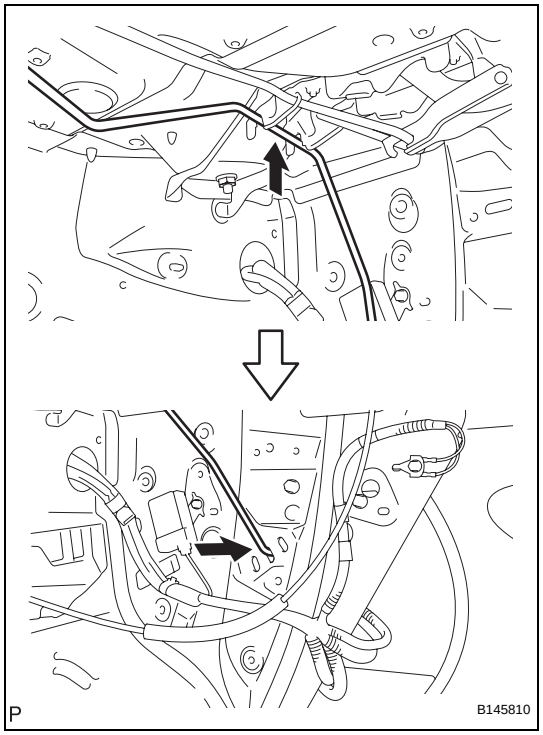

(d) Install the luggage door hinge torsion bar LH to the body RH side as shown in the illustration.

3. **INSTALL LUGGAGE COMPARTMENT INNER TRIM COVER RH (See page ED-88)**
4. **INSTALL LUGGAGE COMPARTMENT INNER TRIM COVER LH (See page ED-88)**
5. **INSTALL REAR FLOOR FINISH PLATE (See page ED-88)**
6. **INSTALL NO. 1 LUGGAGE COMPARTMENT TRIM HOOK (See page ED-89)**
7. **INSTALL LUGGAGE HOLD BELT STRIKER ASSEMBLY (See page ED-89)**
8. **INSTALL SPARE WHEEL COVER TRAY**
9. **INSTALL NO. 2 SPARE WHEEL COVER**
10. **INSTALL LUGGAGE COMPARTMENT FLOOR MAT**

FRONT BUMPER STAY RH

72 (734, 53)

FRONT BUMPER REINFORCEMENT

72 (734, 53)

FRONT BUMPER ENERGY ABSORBER

FRONT BUMPER STAY LH

N*m (kgf*cm, ft.*lbf): Specified torque

P

B146200E01

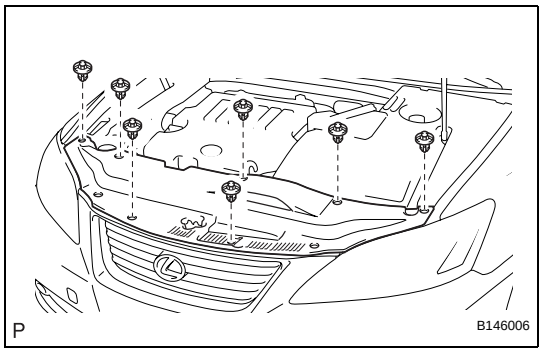

P

B146006

REMOVAL

1. REMOVE COOL AIR INTAKE DUCT SEAL

(a) Remove the 7 clips and cool air intake duct seal.

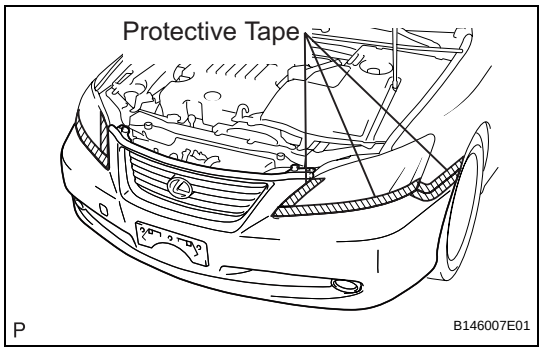

2. REMOVE FRONT BUMPER ASSEMBLY

(a) Put protective tape around the front bumper assembly.

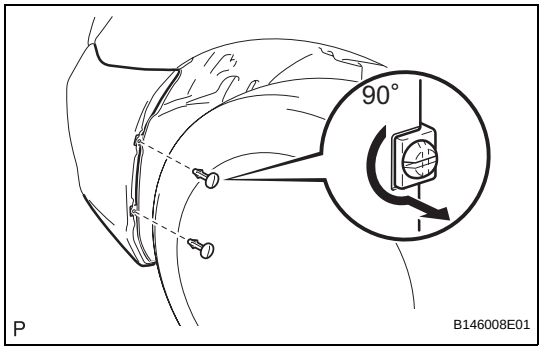

(b) Using a screwdriver, turn the pin 90 degrees and remove the 2 pin hold clips.
HINT:
Use the same procedures for the RH side and LH side.

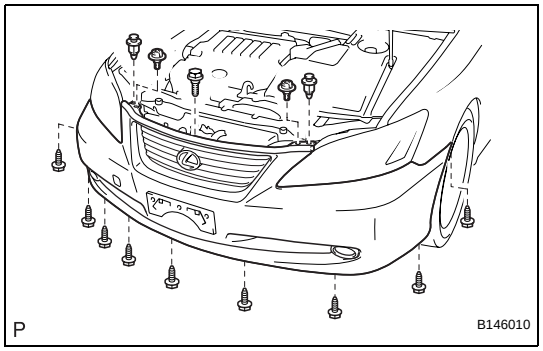

(c) Remove the 9 screws, 2 clips, 2 radiator grille protectors and bolt.

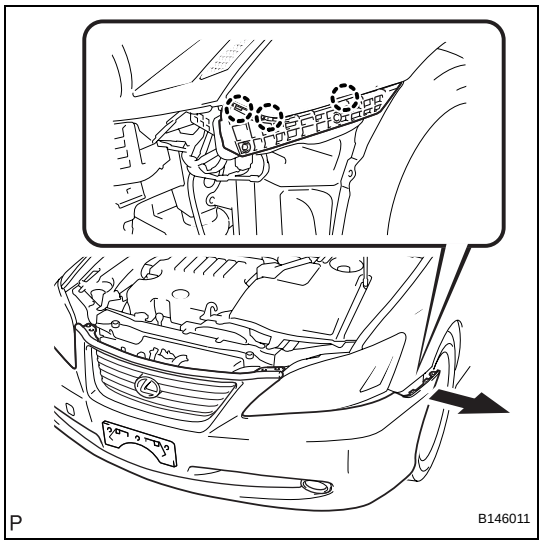

(d) Disengage the 3 claws and disconnect the front bumper assembly as shown in the illustration.
HINT:
Use the same procedures for the RH side and LH side.

(e) Disconnect each connector, and then remove the front bumper assembly.

REMOVAL

1. **REMOVE REAR DOOR INSIDE HANDLE BEZEL PLUG (See page ED-58)**
2. **REMOVE REAR DOOR ARMREST BASE PANEL ASSEMBLY (See page ED-59)**
3. **REMOVE COURTESY LIGHT ASSEMBLY (See page ED-59)**
4. **REMOVE REAR DOOR ARMREST COVER (See page ED-59)**
5. **REMOVE REAR DOOR TRIM BOARD SUB-ASSEMBLY (See page ED-60)**
6. **REMOVE REAR DOOR INNER GLASS WEATHERSTRIP (See page ED-61)**
7. **REMOVE REAR DOOR BELT MOULDING ASSEMBLY (See page ET-34)**
8. **REMOVE REAR DOOR FRAME GARNISH (See page ED-61)**
9. **REMOVE REAR DOOR SERVICE HOLE COVER (See page ED-61)**
10. **REMOVE REAR DOOR TRIM BRACKET (See page ED-62)**
11. **REMOVE REAR DOOR WEATHERSTRIP (See page ED-62)**
12. **REMOVE REAR DOOR GLASS RUN (See page ED-63)**
13. **REMOVE REAR DOOR WINDOW DIVISION BAR SUB-ASSEMBLY (See page ED-63)**
14. **REMOVE REAR DOOR QUARTER WINDOW GLASS (See page ED-63)**
15. **REMOVE REAR DOOR GLASS SUB-ASSEMBLY (See page ED-63)**
16. **REMOVE REAR DOOR WINDOW REGULATOR SUB-ASSEMBLY (See page ED-64)**
17. **REMOVE REAR DOOR FRONT WINDOW FRAME MOULDING**
    HINT:
    When removing the rear door front window frame moulding, heat the vehicle body and rear door front window frame moulding using a heat light.
    Heating temperature

Item	Temperature
Vehicle Body	40 to 60°C (104 to 140°F)
Moulding	20 to 30°C (68 to 86°F)

NOTICE:
Do not heat the vehicle body and moulding excessively.

(a) Using a heat light, heat the rear door front window frame moulding.

(b) Disengage the clip.

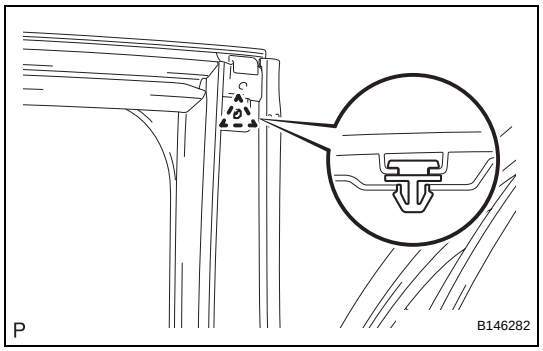

(c) Using a moulding remover, peel off the double-sided tape and remove the rear door front window frame moulding.

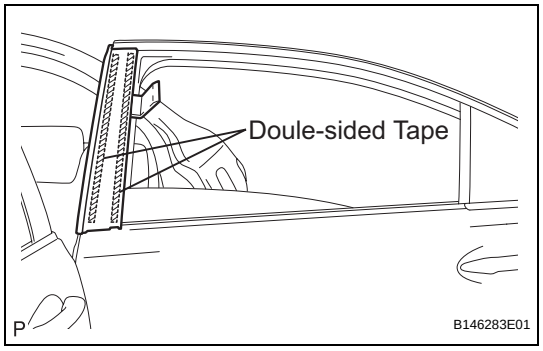

18. REMOVE REAR DOOR WINDOW FRAME MOULDING SUB-ASSEMBLY

(a) Put a 4 mm (0.16 in.) drill bit into a drill.

(b) Tape the drill bit without the portion of 5 mm (0.20 in.) from the tip covered.
HINT:
Tape the drill bit to prevent the drill bit from going too deep.

(c) Lightly press the drill bit against the rivets, drill off the flanges of the rivets, and remove the 7 rivets.
NOTICE:
- **Pressing the drill too firmly will cause the rivet to turn and result in the rivet not being drilled through.**
- **Do not pry the rivets with the drill, as this may cause damage to the installation holes of the rivets or the drill bit.**
- **Be careful when touching the drilled rivets, as they may become hot.**

(d) Using a vacuum cleaner, remove the rivet fragments and shavings from the drilled areas.

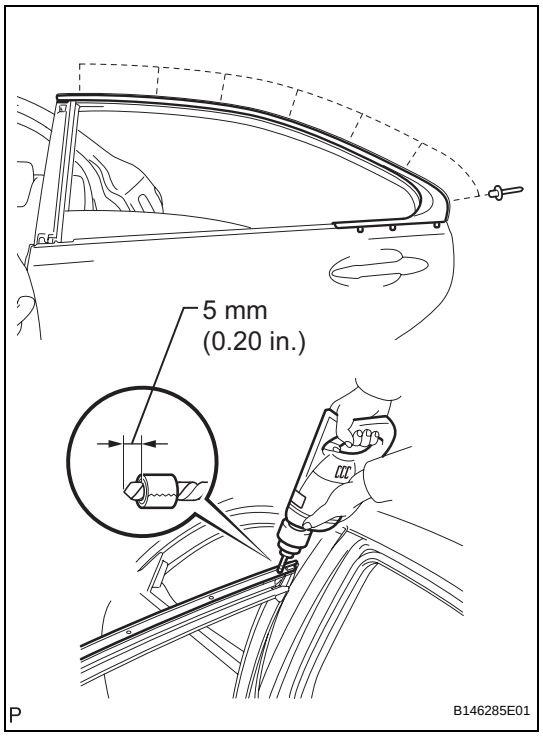

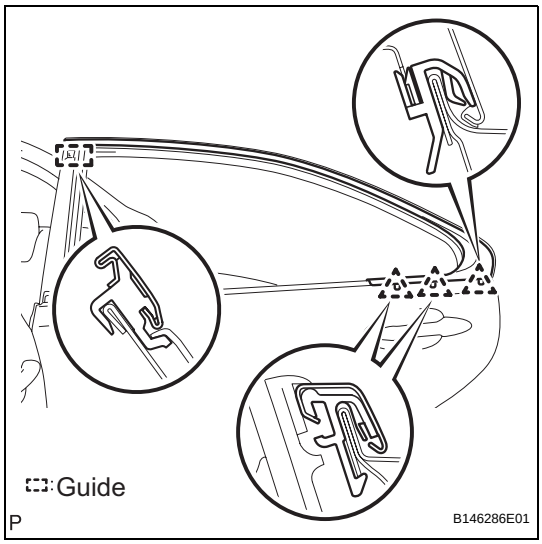

(e) Disengage the 3 clips and guide, and remove the rear door window frame moulding sub-assembly from the door frame.

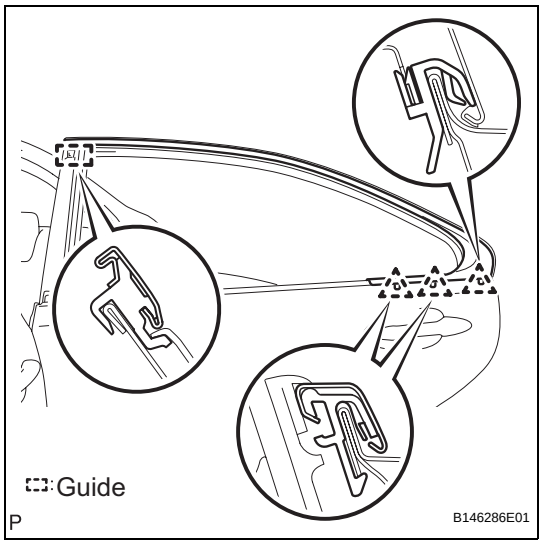

INSTALLATION

1. INSTALL REAR DOOR WINDOW FRAME MOULDING SUB-ASSEMBLY

(a) Engage the guide and 3 clips, and install the rear door window frame moulding sub-assembly to the door frame.

(b) Using an air riveter or hand riveter with a nose piece, install the 7 new rivets in the order shown in the illustration to install the rear door window frame moulding sub-assembly.

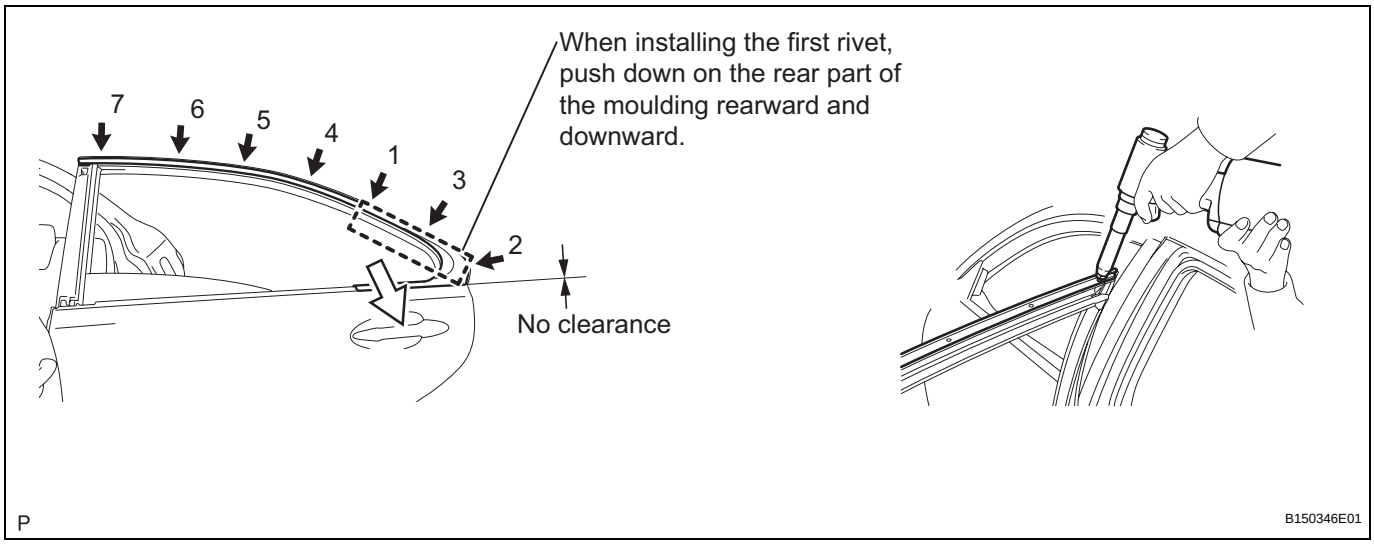

HINT:

- Make sure that there is no clearance between the rear door window frame moulding sub-assembly and the rear door panel.
- If the rivet cannot be cut, pull it once and cut it.

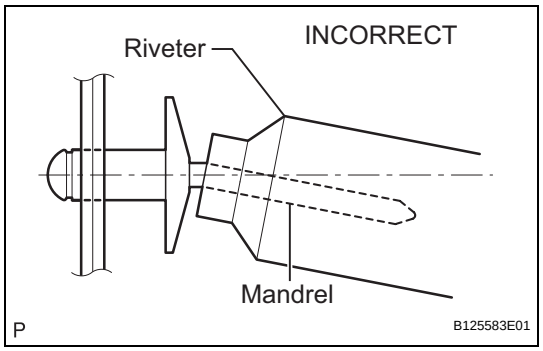

NOTICE:

- **Do not pry the rivet with the riveter, as this will cause damage to the riveter and mandrel.**

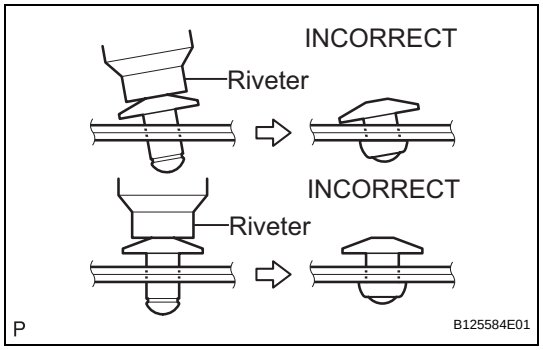

- **Confirm that the rivets are seated properly against the moulding. Do not tilt the riveter when installing the rivet to the moulding. Do not leave any space between the rivet head and moulding.**

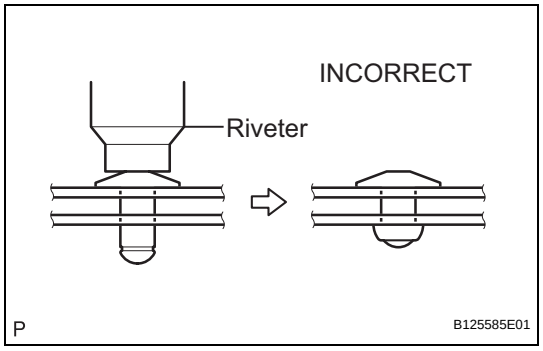

- **Do not leave any space between the moulding and door frame. Firmly hold together the 2 items while installing the rivet.**

2. INSTALL REAR DOOR FRONT WINDOW FRAME MOULDING

HINT:
When installing the rear door front window frame moulding, heat the vehicle body and rear door front window frame using a heat light.

Heating temperature

Item	Temperature
Vehicle Body	**40 to 60°C (104 to 140°F)**
Moulding	**20 to 30°C (68 to 86°F)**

NOTICE:
Do not heat the vehicle body and rear door window frame moulding excessively.

(a) Clean the vehicle body surface.
  (1) Using a heat light, heat the vehicle body surface.
  (2) Remove the double-sided tape from the vehicle body.
  (3) Wipe off any tape adhesive residue with cleaner.

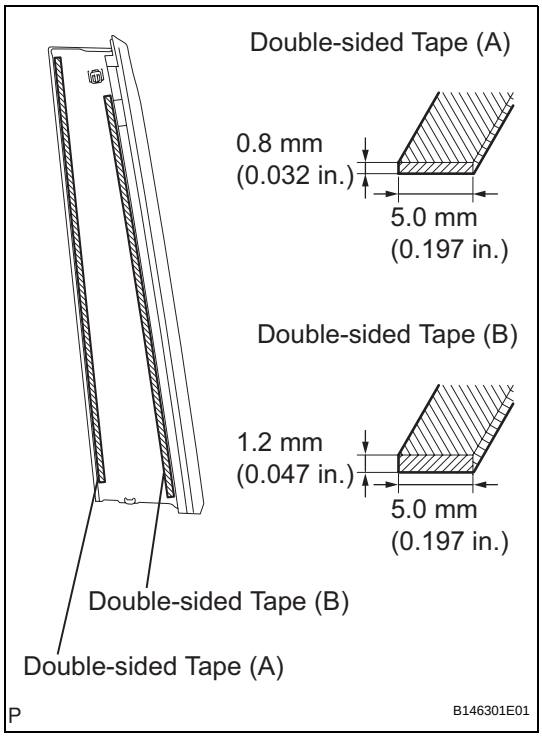

(b) Clean the rear door front window frame moulding. (If reusing the rear door front window frame moulding)
  (1) Using a heat light, heat the rear door front window frame moulding.
  (2) Remove the double-sided tape from the rear door front window frame moulding.
  (3) Wipe off any tape adhesive residue with cleaner.
  (4) Apply new double-sided tape to the rear door front window frame moulding.

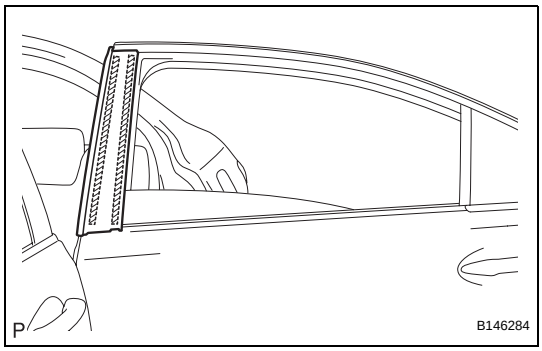

(c) Install the rear door front window frame moulding.
  (1) Using a heat light, heat the vehicle body and rear door front window frame moulding.
  (2) Remove the release paper from the rear door front window frame moulding.
  HINT:
  After removing the release paper, keep the exposed adhesive free from foreign matter.

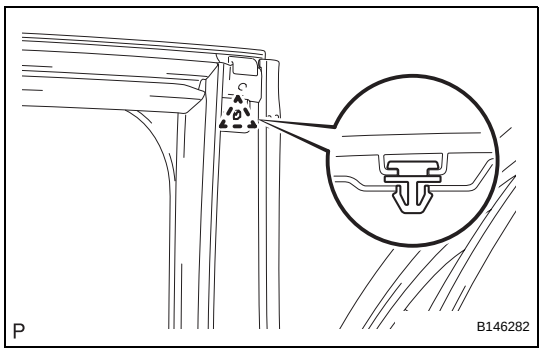

  (3) Engage the clip and install the rear door front window frame moulding.

3. **INSTALL REAR DOOR WINDOW REGULATOR SUB-ASSEMBLY (See page ED-73)**
4. **INSTALL REAR DOOR GLASS RUN (See page ED-73)**
5. **INSTALL REAR DOOR GLASS SUB-ASSEMBLY (See page ED-74)**
6. **INSTALL REAR DOOR QUARTER WINDOW GLASS (See page ED-74)**
7. **INSTALL REAR DOOR WINDOW DIVISION BAR SUB-ASSEMBLY (See page ED-74)**
8. **INSTALL REAR DOOR WEATHERSTRIP (See page ED-74)**
9. **INSTALL REAR DOOR TRIM BRACKET (See page ED-75)**
10. **INSTALL REAR DOOR SERVICE HOLE COVER (See page ED-75)**

11. **INSTALL REAR DOOR FRAME GARNISH (See page ED-76)**
12. **INSTALL REAR DOOR BELT MOULDING ASSEMBLY (See page ET-34)**
13. **INSTALL REAR DOOR INNER GLASS WEATHERSTRIP (See page ED-76)**
14. **INSTALL REAR DOOR TRIM BOARD SUB-ASSEMBLY (See page ED-76)**
15. **INSTALL REAR DOOR ARMREST COVER (See page ED-77)**
16. **INSTALL COURTESY LIGHT ASSEMBLY (See page ED-77)**
17. **INSTALL REAR DOOR ARMREST BASE PANEL ASSEMBLY (See page ED-78)**
18. **INSTALL REAR DOOR INSIDE HANDLE BEZEL PLUG (See page ED-78)**

SYSTEM DIAGRAM

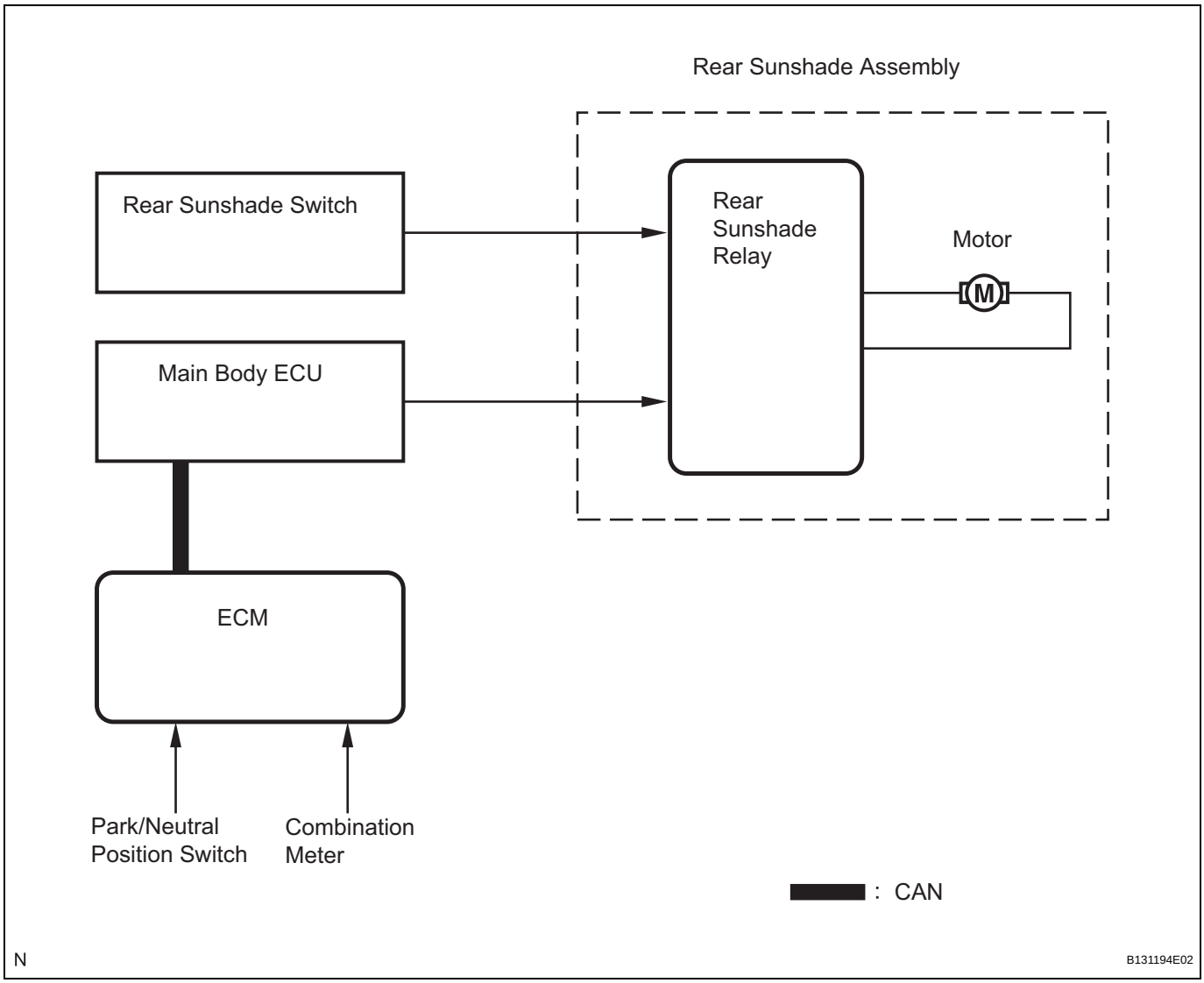

Communication table

Sender	Receiver	Signal	Line
Park/Neutral Position Switch	ECM	Park/neutral position switch shift position signal	-
Combination Meter	ECM	Speed signal	-
ECM	Main Body ECU	• Park/neutral position switch shift position signal • Speed signal	CAN
Main Body ECU	Rear Sunshade Relay	Park/neutral position switch shift position signal	-
Rear Sunshade Switch	Rear Sunshade Relay	Rear sunshade OPEN/CLOSE signal	-

SYSTEM DESCRIPTION

1. REAR SUNSHADE SYSTEM DESCRIPTION

(a) The rear sunshade is raised or lowered by operating the rear sunshade switch located in the lower instrument panel sub-assembly.

(b) When the shift lever in the R position, the park/neutral position switch sends a reverse-linked signal to the rear sunshade relay, and the rear sunshade lowers.

(c) When the shift lever is moved to the D or S position, or when the vehicle speed is 15 km/h (9.3 mph) or more, the rear sunshade is redeployed.

(d) Using the intelligent tester, the reverse-linked sunshade lowering function's response time can be customized to one of the following (seconds): 0, 0.7, 0.9, 1.2.

SYSTEM DIAGRAM

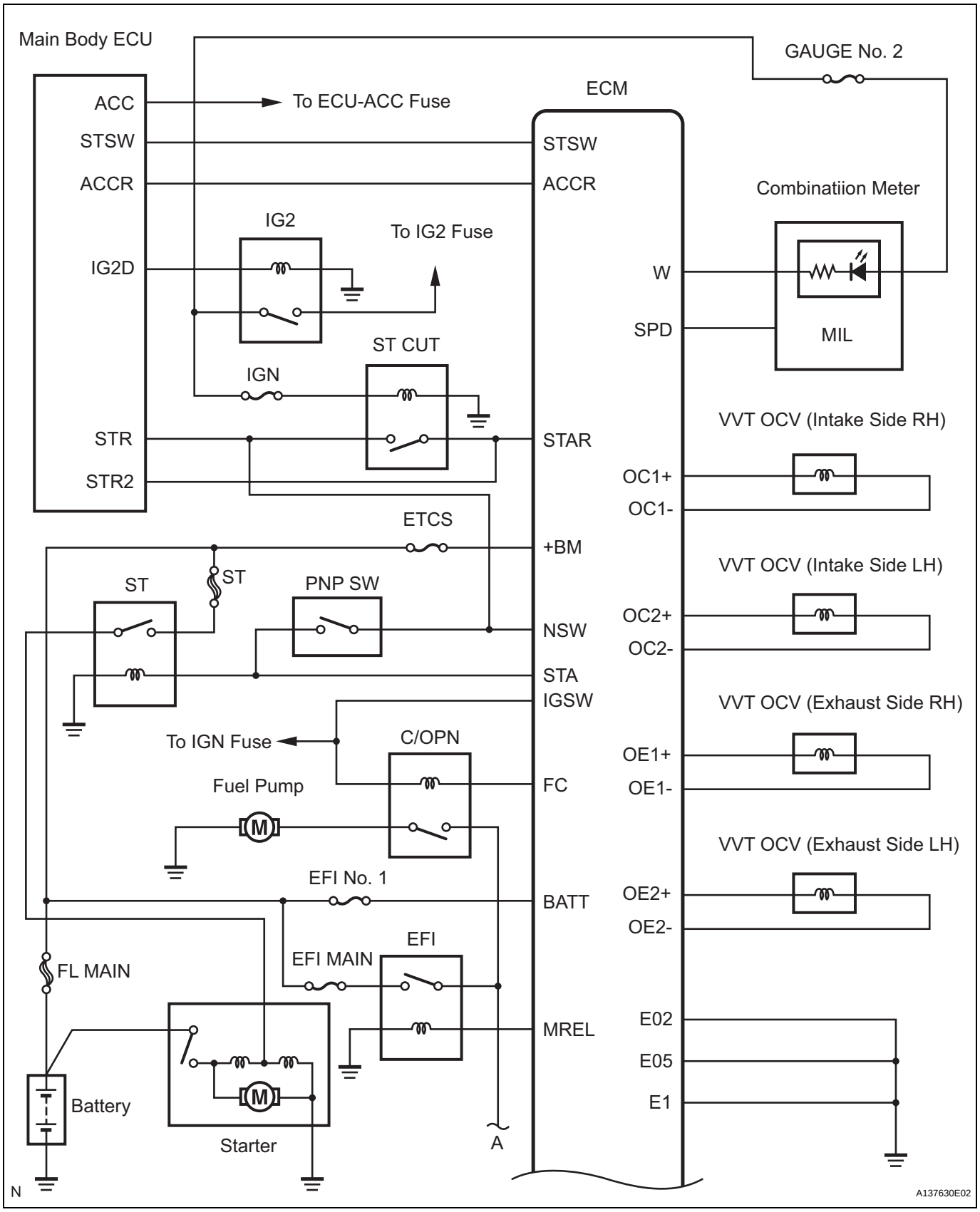

ES

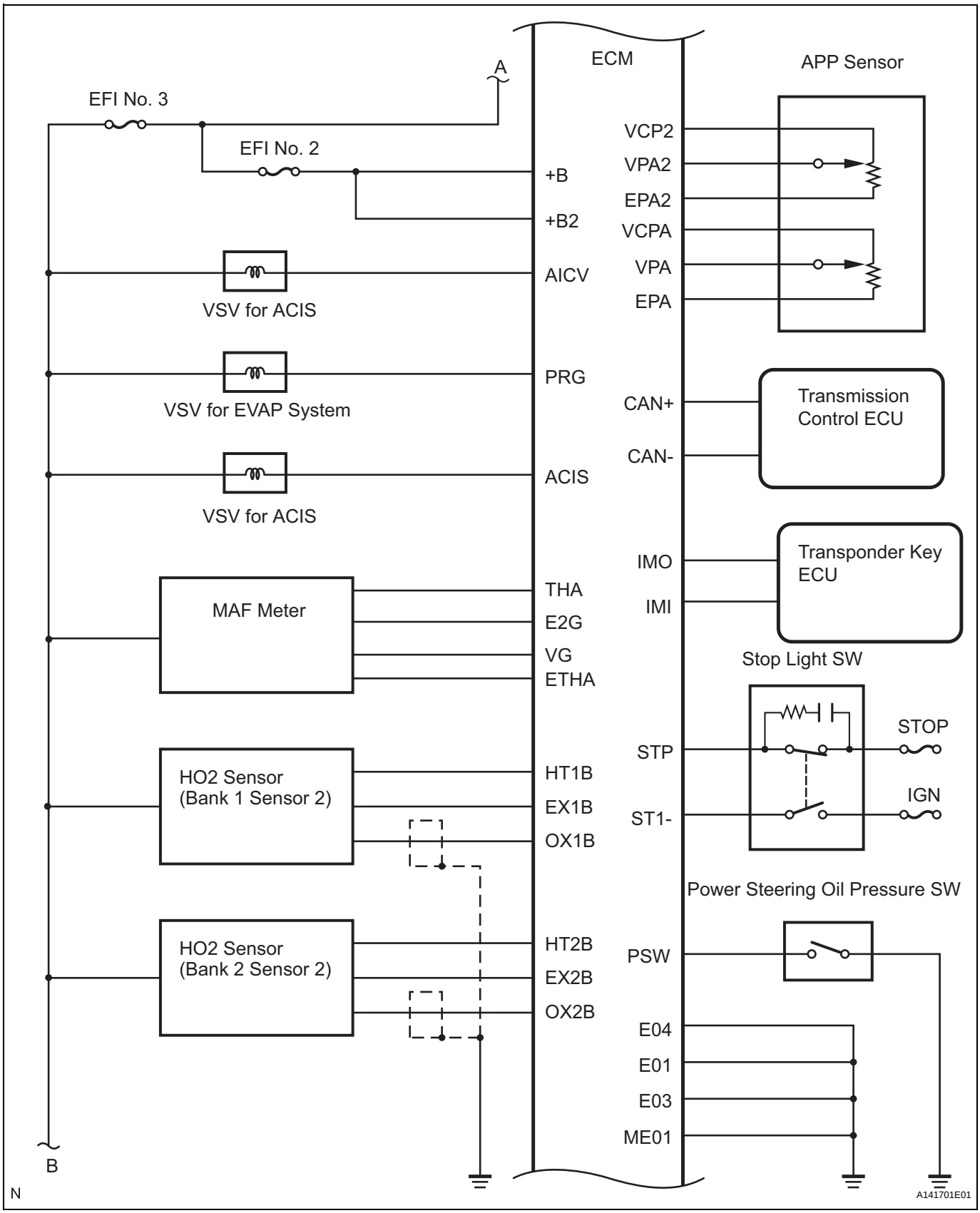
ECM
APP Sensor
A
EFI No. 3
EFI No. 2
+B
+B2
VCP2
VPA2
EPA2
VCPA
VPA
EPA
AICV
VSV for ACIS
PRG
VSV for EVAP System
CAN+
CAN-
Transmission Control ECU
ACIS
VSV for ACIS
IMO
IMI
Transponder Key ECU
MAF Meter
THA
E2G
VG
ETHA
Stop Light SW
STOP
STP
IGN
ST1-
HO2 Sensor (Bank 1 Sensor 2)
HT1B
EX1B
OX1B
Power Steering Oil Pressure SW
PSW
HO2 Sensor (Bank 2 Sensor 2)
HT2B
EX2B
OX2B
E04
E01
E03
ME01
B
N
A141701E01

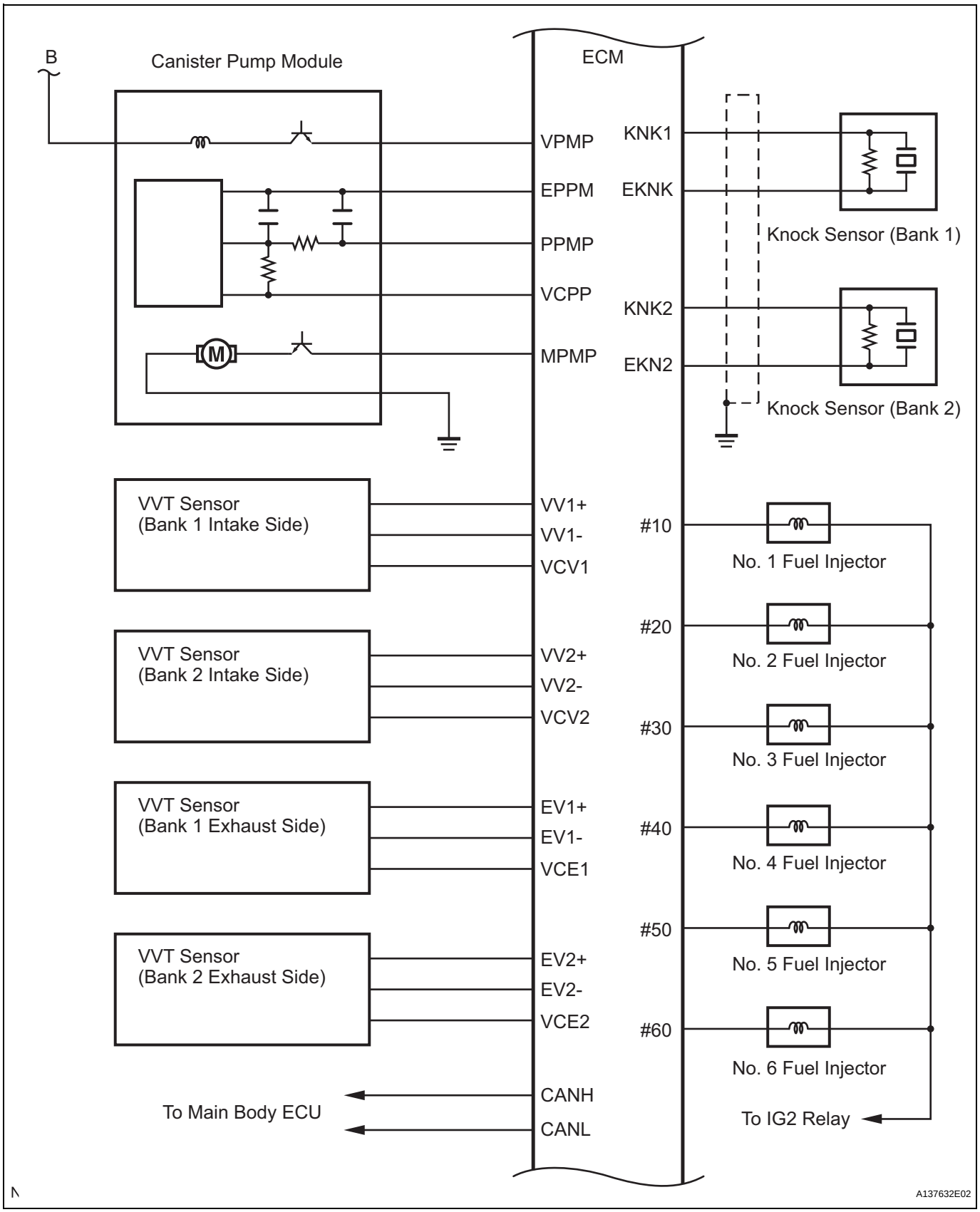
B
Canister Pump Module
ECM
VPMP
EPPM
PPMP
VCPP
MPMP
KNK1
EKNK
Knock Sensor (Bank 1)
KNK2
EKN2
Knock Sensor (Bank 2)
VVT Sensor
(Bank 1 Intake Side)
VV1+
VV1-
VCV1
VVT Sensor
(Bank 2 Intake Side)
VV2+
VV2-
VCV2
VVT Sensor
(Bank 1 Exhaust Side)
EV1+
EV1-
VCE1
VVT Sensor
(Bank 2 Exhaust Side)
EV2+
EV2-
VCE2
To Main Body ECU
CANH
CANL
#10
No. 1 Fuel Injector
#20
No. 2 Fuel Injector
#30
No. 3 Fuel Injector
#40
No. 4 Fuel Injector
#50
No. 5 Fuel Injector
#60
No. 6 Fuel Injector
To IG2 Relay
A137632E02

ES

ES

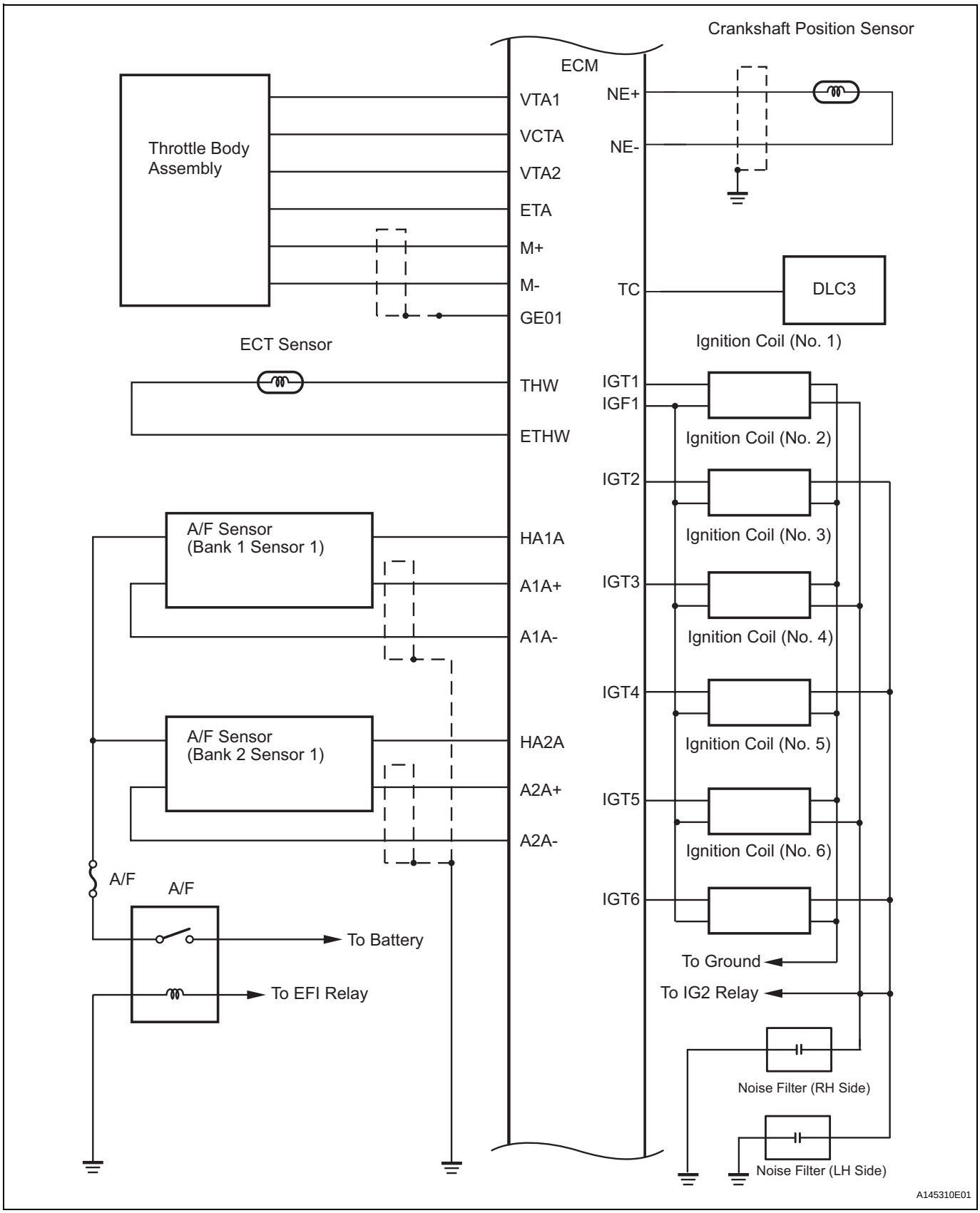
Crankshaft Position Sensor
ECM
Throttle Body Assembly
VTA1
VCTA
VTA2
ETA
M+
M-
GE01
NE+
NE-
TC
DLC3
ECT Sensor
THW
ETHW
IGT1
IGF1
Ignition Coil (No. 1)
Ignition Coil (No. 2)
IGT2
Ignition Coil (No. 3)
IGT3
Ignition Coil (No. 4)
IGT4
Ignition Coil (No. 5)
IGT5
Ignition Coil (No. 6)
IGT6
A/F Sensor (Bank 1 Sensor 1)
HA1A
A1A+
A1A-
A/F Sensor (Bank 2 Sensor 1)
HA2A
A2A+
A2A-
A/F
A/F
To Battery
To EFI Relay
To Ground
To IG2 Relay
Noise Filter (RH Side)
Noise Filter (LH Side)
A145310E01

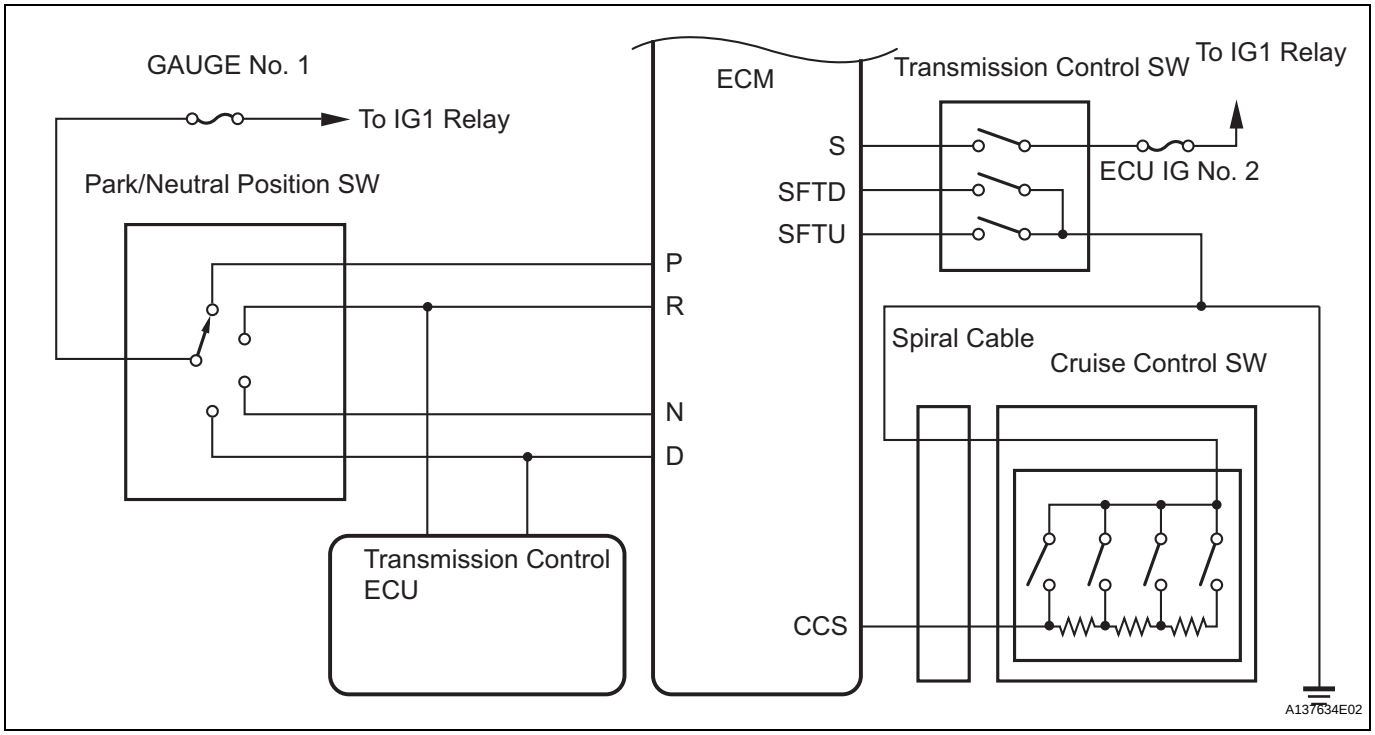
GAUGE No. 1
To IG1 Relay
Park/Neutral Position SW
ECM
P
R
N
D
Transmission Control ECU
S
SFTD
SFTU
CCS
Transmission Control SW
To IG1 Relay
ECU IG No. 2
Spiral Cable
Cruise Control SW
A137634E02

SYSTEM DIAGRAM

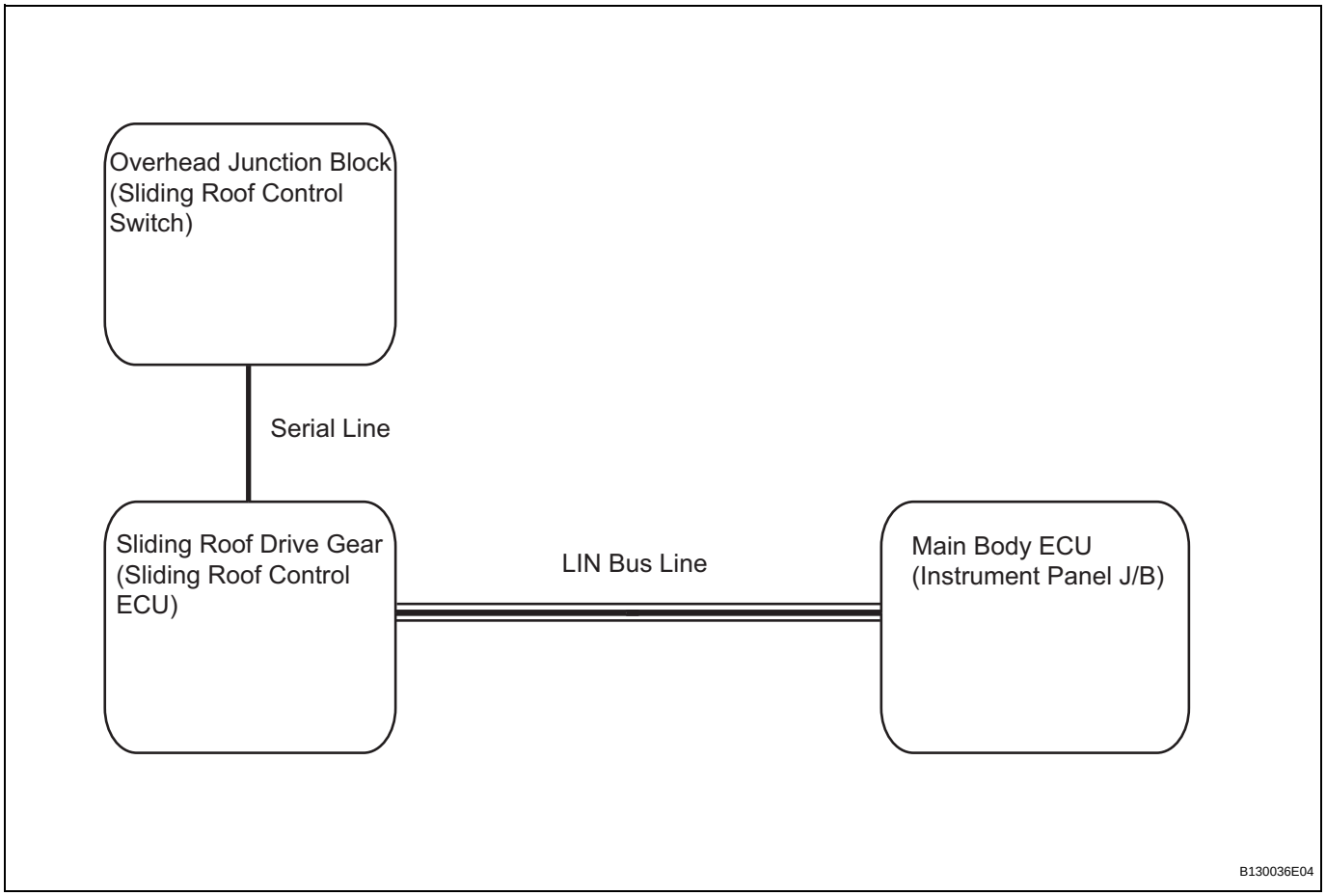

Communication table

Sender	Receiver	Signal	Line
Main Body ECU (Instrument Panel J/B)	Sliding Roof Control ECU	Key-off operation signal	LIN

SYSTEM DESCRIPTION

1. GENERAL

This system has the following functions: manual slide open and close; auto slide open and close; manual tilt up and down; auto tilt up and down; jam protection; and key off operation.

2. FUNCTION OF MAIN COMPONENT

Component	Outline
Sliding Roof Drive Gear Sub-assembly (Sliding Roof Control ECU)	Sliding roof control ECU controls sliding roof motor to rotate forward and backward, which tilts or slides sliding roof glass.
Overhead Junction Block	Output of operation signals from built-in sliding roof switch to sliding roof control ECU is handled by overhead junction block.

3. SYSTEM OPERATION

The sliding roof has the following features:

Function	Outline
Manual slide open and close	This function causes sliding roof to open (or close) when OPEN/CLOSE switch is momentarily pressed. Sliding roof stops as soon as the switch is released.
Auto slide open and close	This function causes sliding roof to fully open (or close) when OPEN/CLOSE switch is momentarily pressed. Sliding roof stops as soon as the switch is released.
Manual tilt up and down	This function causes sliding roof to tilt up (or tilt down) when UP/DOWN switch is pressed for a maximum of 0.3 seconds.
Auto tilt up and down	This function enables sliding roof to tilt up (or down) when UP/DOWN switch is pressed for a minimum of 0.3 seconds.
Jam protection	The jam protection function automatically stops sliding roof, or stops sliding roof and makes it open halfway (or fully tilted up) if a foreign object gets jammed in sliding roof during auto close operation (or auto tilt down operation).
Key off operation	Key off operation function makes it possible to operate sliding roof for approximately 43 seconds after engine switch is turned off, if front doors are not opened.

HOW TO PROCEED WITH TROUBLESHOOTING

HINT:
*: Use the intelligent tester.

1	**VEHICLE BROUGHT TO WORKSHOP**

NEXT

ES

2	**CUSTOMER PROBLEM ANALYSIS**

NEXT

3	**CONNECT INTELLIGENT TESTER TO DLC3***

HINT:
If the display indicates a communication fault in the tester, inspect the DLC3.

NEXT

4	**CHECK DTC AND FREEZE FRAME DATA***

HINT:
Record or print DTCs and freeze frame data, if necessary.

NEXT

5	**CLEAR DTC AND FREEZE FRAME DATA***

NEXT

6	**CONDUCT VISUAL INSPECTION**

NEXT

7	**SET CHECK MODE DIAGNOSIS***

NEXT

8	**CONFIRM PROBLEM SYMPTOMS**

HINT:
If the engine does not start, perform steps 10 and 12 first.

Result

Result	Proceed to
Malfunction does not occur	A
Malfunction occurs	B

B → GO TO STEP 10

A

9	SIMULATE SYMPTOMS

NEXT

10	CHECK FOR DTCS*

Result

Result	Proceed to
Trouble code	A
No code	B

B → GO TO STEP 12

A

11	REFER TO DTC CHART

NEXT

GO TO STEP 14

12	CONDUCT BASIC INSPECTION

Result

Result	Proceed to
Malfunctioning parts not confirmed	A
Malfunctioning parts confirmed	B

B → GO TO STEP 17

A

13	REFER TO PROBLEM SYMPTOMS TABLE

Result

Result	Proceed to
Malfunctioning circuit confirmed	A

Result	Proceed to
Malfunctioning parts confirmed	B

B → GO TO STEP 17

A

14 CHECK ECM POWER SOURCE CIRCUIT

NEXT

ES

15 CONDUCT CIRCUIT INSPECTION

Result

Result	Proceed to
Malfunction not confirmed	A
Malfunction confirmed	B

B → GO TO STEP 18

A

16 CHECK FOR INTERMITTENT PROBLEMS

NEXT

GO TO STEP 18

17 CONDUCT PARTS INSPECTION

NEXT

18 IDENTIFY PROBLEM

NEXT

19 ADJUST AND/OR REPAIR

NEXT

20	**CONDUCT CONFIRMATION TEST**

NEXT

END

HOW TO PROCEED WITH TROUBLESHOOTING

HINT:
*: Use the intelligent tester.

1	**VEHICLE BROUGHT TO WORKSHOP**

NEXT

ES

2	**CUSTOMER PROBLEM ANALYSIS**

NEXT

3	**CONNECT INTELLIGENT TESTER TO DLC3***

HINT:
If the display indicates a communication fault in the tester, inspect the DLC3.

NEXT

4	**CHECK DTC AND FREEZE FRAME DATA***

HINT:
Record or print DTCs and freeze frame data, if necessary.

NEXT

5	**CLEAR DTC AND FREEZE FRAME DATA***

NEXT

6	**CONDUCT VISUAL INSPECTION**

NEXT

7	**SET CHECK MODE DIAGNOSIS***

NEXT

8	**CONFIRM PROBLEM SYMPTOMS**

HINT:
If the engine does not start, perform steps 10 and 12 first.

Result

Result	Proceed to
Malfunction does not occur	A
Malfunction occurs	B

B → GO TO STEP 10

A

9	SIMULATE SYMPTOMS

NEXT

10	CHECK FOR DTCS*

Result

Result	Proceed to
Trouble code	A
No code	B

B → GO TO STEP 12

A

11	REFER TO DTC CHART

NEXT

GO TO STEP 14

12	CONDUCT BASIC INSPECTION

Result

Result	Proceed to
Malfunctioning parts not confirmed	A
Malfunctioning parts confirmed	B

B → GO TO STEP 17

A

13	REFER TO PROBLEM SYMPTOMS TABLE

Result

Result	Proceed to
Malfunctioning circuit confirmed	A

Result	Proceed to
Malfunctioning parts confirmed	B

B → GO TO STEP 17

A

14 CHECK ECM POWER SOURCE CIRCUIT

NEXT

ES

15 CONDUCT CIRCUIT INSPECTION

Result

Result	Proceed to
Malfunction not confirmed	A
Malfunction confirmed	B

B → GO TO STEP 18

A

16 CHECK FOR INTERMITTENT PROBLEMS

NEXT

GO TO STEP 18

17 CONDUCT PARTS INSPECTION

NEXT

18 IDENTIFY PROBLEM

NEXT

19 ADJUST AND/OR REPAIR

NEXT

20	**CONDUCT CONFIRMATION TEST**

NEXT

END

REGISTRATION

NOTICE:
The Vehicle Identification Number (VIN) must be input into the replacement ECM.
HINT:
The VIN is in the form of a 17-digit alphanumeric vehicle identification number. An intelligent tester is required to register the VIN.

1. INPUT INSTRUCTIONS

(a) The arrow buttons (UP, DOWN, RIGHT and LEFT) and numerical buttons (0 to 9) are used, in order to input the VIN.

(b) Cursor Operation
To move the cursor around the tester screen, press the RIGHT and LEFT buttons.

(c) Alphabetical Character Input
(1) Press the UP and DOWN buttons to select the desired alphabetical character.

(d) Numeric Character Input
(1) Press the numerical button corresponding to the number that you want to input.
HINT:
Numerical characters can be selected by using the UP and DOWN buttons.

(e) Correction
(1) When correcting the input character(s), put the cursor onto the character using the RIGHT or LEFT button.
(2) Select or input the correct character using the UP and DOWN buttons, or the numerical buttons.

(f) Finishing Input Operation
(1) Make sure that the input VIN matches the vehicle VIN after input.
(2) Press the ENTER button on the tester.

2. READ VIN (Vehicle Identification Number)

(a) The flowchart of the VIN reading process is shown. This process allows the VIN stored in the ECM to be read, in order to confirm that the two VINs, provided with the vehicle and stored in the vehicle's ECM, are the same.
(b) Read VIN using an intelligent tester.
(c) Check the vehicle's VIN.
(d) Connect the intelligent tester to the DLC3.
(e) Turn the engine switch on (IG).
(f) Turn the tester on.

(g) Enter the following menus: DIAGNOSIS / ENHANCED OBD II / VIN.

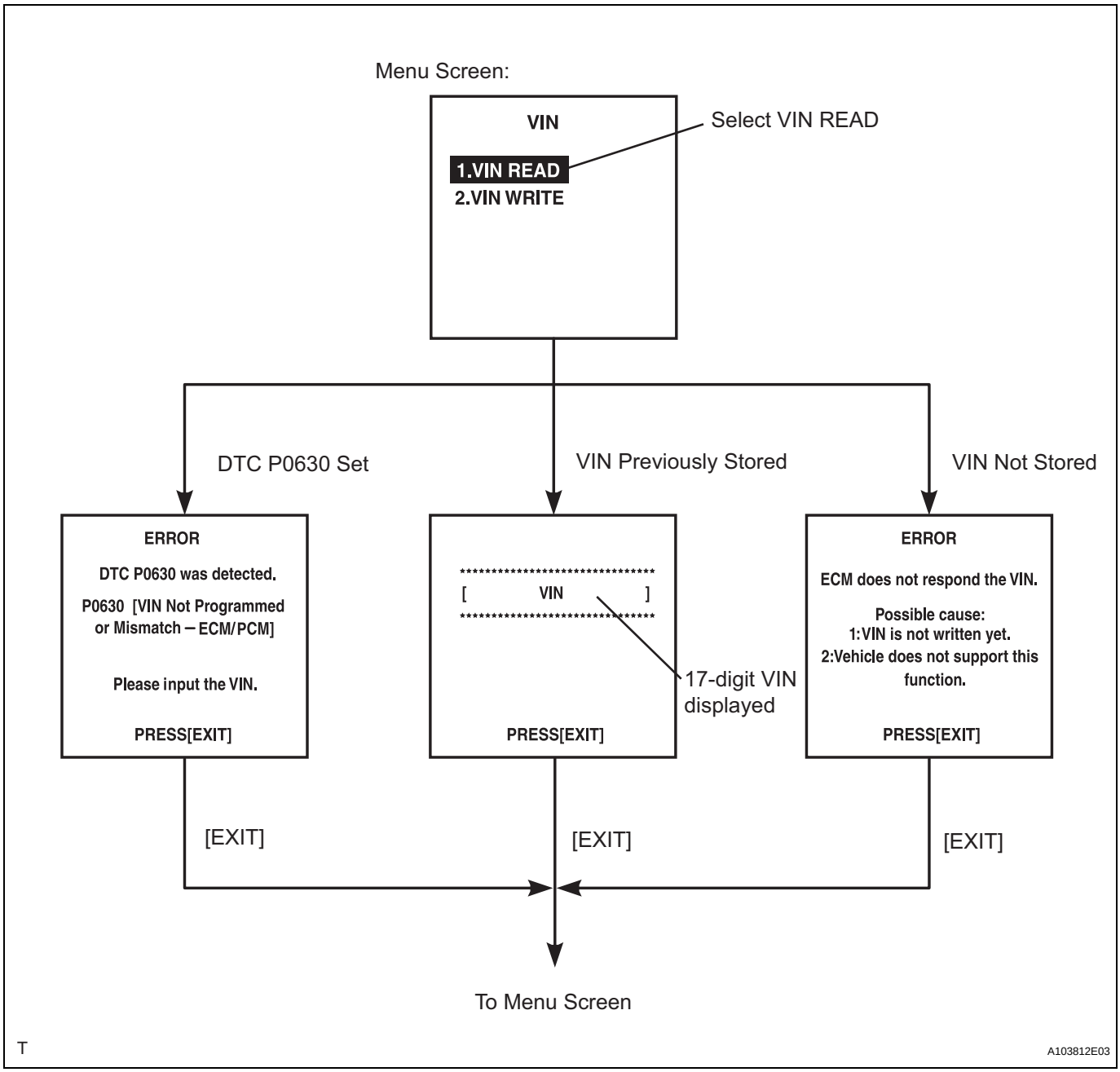

3. WRITE VIN

(a) The flowchart of the VIN writing process is shown. This process allows the VIN to be input into the ECM. If the ECM is changed, or the VINs do not match, the VIN can be registered, or overwritten in the ECM by following this procedure.

(b) Write VIN using the intelligent tester.

(c) Check the vehicle's VIN.

(d) Connect the intelligent tester to the DLC3.

(e) Turn the engine switch on (IG).

(f) Turn the tester on.

(g) Enter the following menus: DIAGNOSIS / ENHANCED OBD II / VIN.

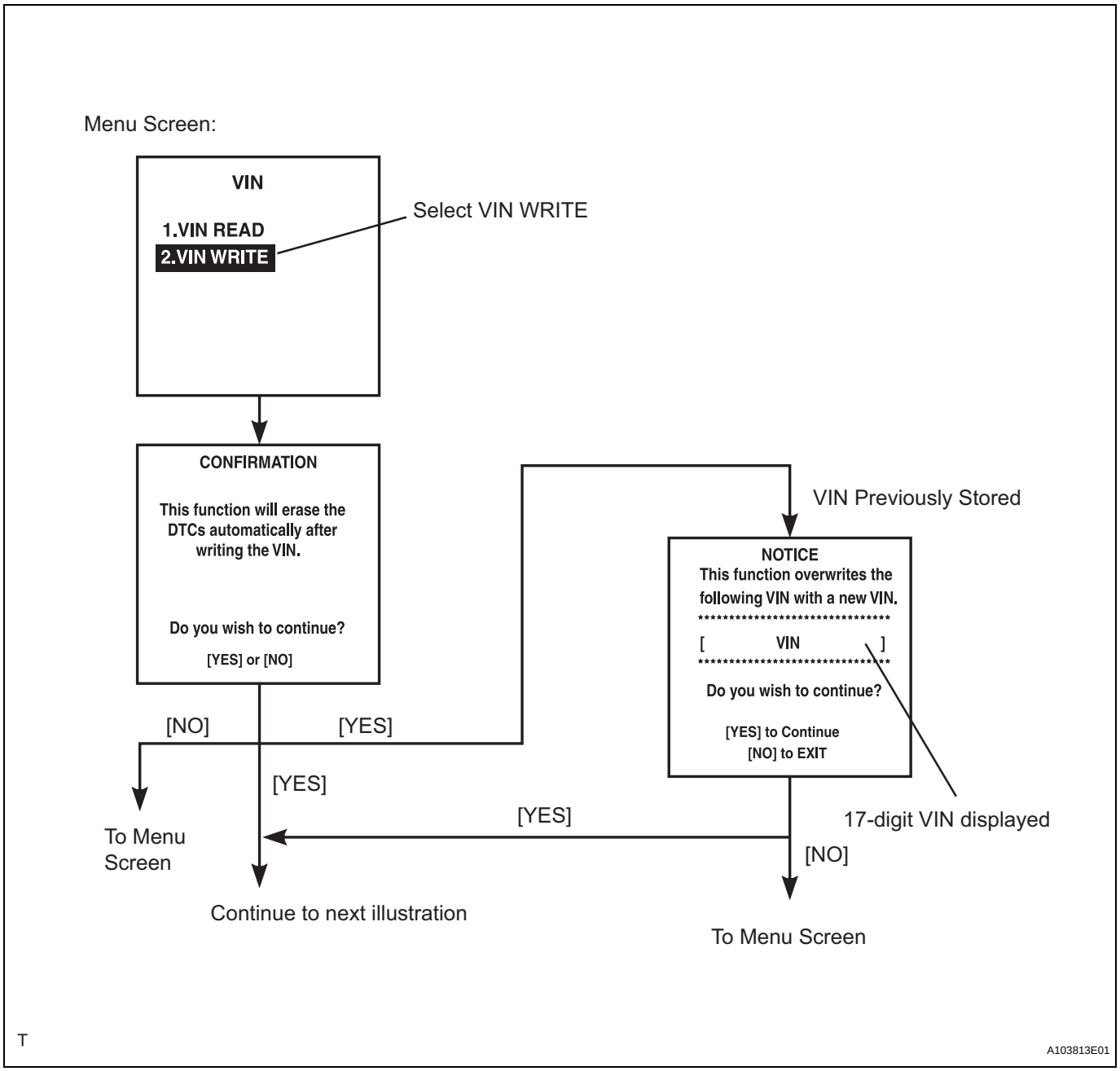

ES

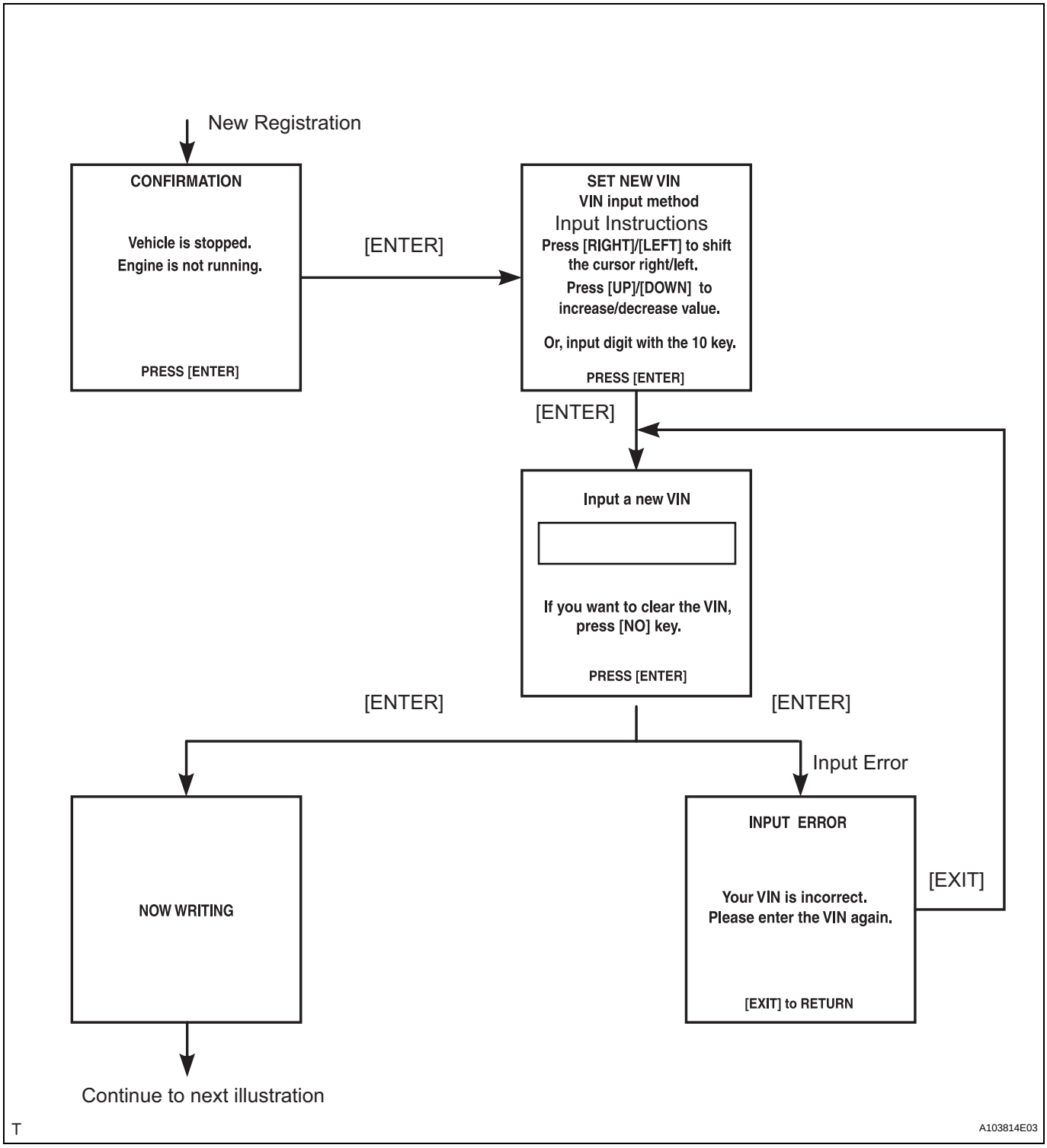
New Registration
CONFIRMATION
Vehicle is stopped.
Engine is not running.
PRESS [ENTER]
[ENTER]
SET NEW VIN
VIN input method
Input Instructions
Press [RIGHT]/[LEFT] to shift the cursor right/left.
Press [UP]/[DOWN] to increase/decrease value.
Or, input digit with the 10 key.
PRESS [ENTER]
[ENTER]
Input a new VIN
If you want to clear the VIN, press [NO] key.
PRESS [ENTER]
[ENTER]
[ENTER]
Input Error
NOW WRITING
INPUT ERROR
Your VIN is incorrect.
Please enter the VIN again.
[EXIT] to RETURN
[EXIT]
Continue to next illustration
T
A103814E03

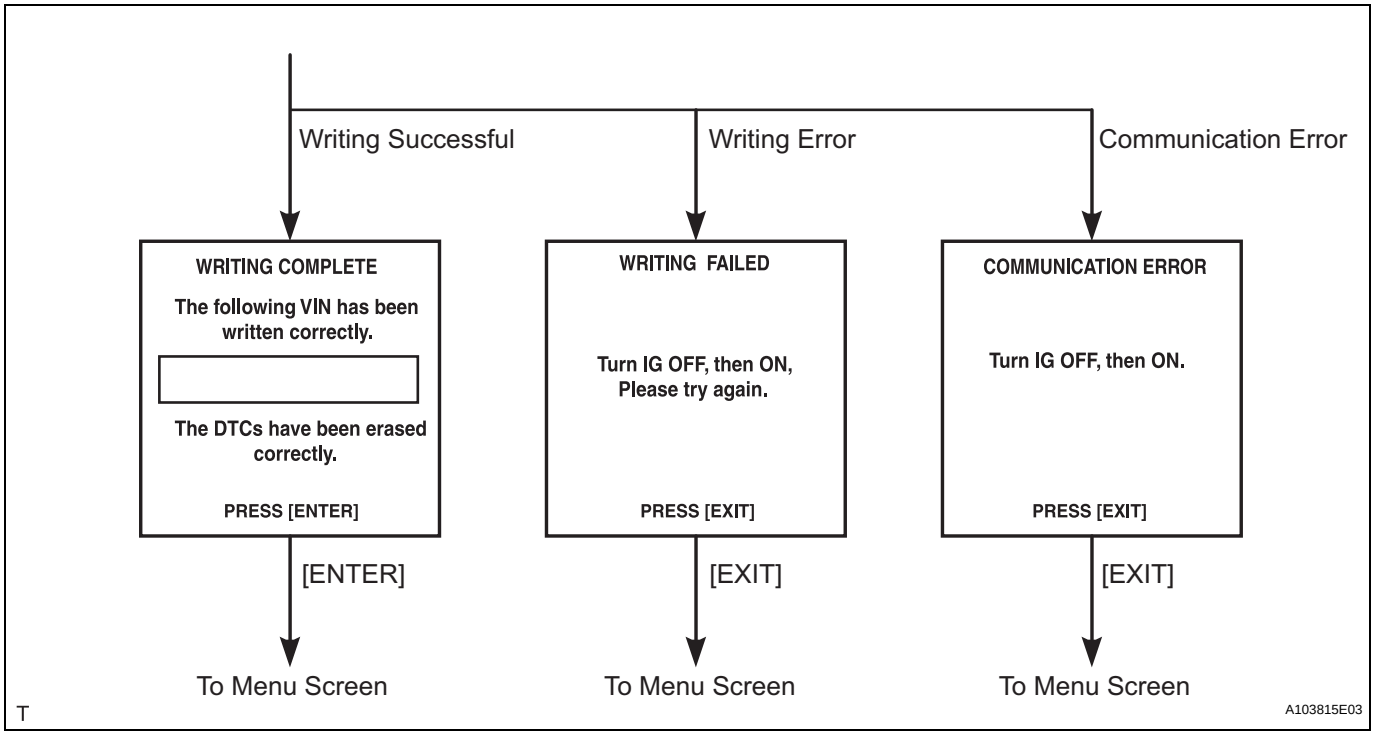
Writing Successful
Writing Error
Communication Error
WRITING COMPLETE
The following VIN has been written correctly.
The DTCs have been erased correctly.
PRESS [ENTER]
WRITING FAILED
Turn IG OFF, then ON, Please try again.
PRESS [EXIT]
COMMUNICATION ERROR
Turn IG OFF, then ON.
PRESS [EXIT]
[ENTER]
[EXIT]
[EXIT]
To Menu Screen
To Menu Screen
To Menu Screen
T
A103815E03

ES

CHECKING MONITOR STATUS

The purpose of the monitor result (mode 06) is to allow access to the results for on-board diagnostic monitoring tests of specific components/systems that are not continuously monitored. Examples are catalyst, evaporative emission (EVAP) and thermostat.

The monitor result allows the OBD II scan tool to display the monitor status, test value, minimum test limit and maximum test limit. These data are displayed after the vehicle has been driven to run the monitor.

When the test value is not between the minimum test limit and maximum test limit, the ECM (PCM) interprets this as a malfunction. When the component is not malfunctioning, if the difference of the test value and test limit is very small, the component will malfunction in the near future.

Perform the following instructions to view the monitor status. Although the Toyota diagnostic tester is used in the following instructions, it can be checked using a generic OBD II scan tool. Refer to your scan tool operator's manual for specific procedures.

1. PERFORM MONITOR DRIVE PATTERN

The monitor results and test values can be checked with the OBD II scan tool or the intelligent tester. The engine control module (ECM) monitors the emissions-related components such as the thermostat, catalyst converter and evaporative emissions (EVAP), and determines whether they are functioning normally or not. When monitoring is finished, the ECM stores the monitor results and the test values. The monitor result indicates whether the component is functioning normally or not. The test value is the value that was used to determine the monitor result. If the test value is outside of the test limit (malfunction criterion), the ECM determines the component is malfunctioning. Some emissions-related components have multiple test values to determine monitor result. If one of these test values is outside of the test limit, the ECM determines the component is malfunctioning.

(a) Connect the intelligent tester to the DLC3.
(b) Start the engine and turn the tester on.
(c) Clear the DTCs.
(d) Run the vehicle in accordance with the applicable drive pattern described in READINESS MONITOR DRIVE PATTERN (See page ES-23). DO NOT turn the engine switch off.

NOTICE:
The test results will be lost if the engine switch is turned off.

2. ACCESS MONITOR RESULT

(a) Select the following menus on the intelligent tester: DIAGNOSIS, ENHANCED OBDII, MONITOR INFO and MONITOR RESULT. The monitor status appears after the component name.
- INCMP: The component has not been monitored yet.
- PASS: The component is functioning normally.
- FAIL: The component is malfunctioning.

(b) Confirm that the component is either PASS or FAIL.

(c) Select the component and press ENTER. The accuracy test value appears if the monitor status is either PASS or FAIL.
HINT:
The monitor result might be PASS on rare occasions even if the Malfunction Indicator Lamp (MIL) is illuminated. This indicates that the system was malfunctioning in the previous driving cycle. This might be caused by an intermittent problem.

3. CHECK COMPONENT STATUS

(a) Compare the test value with the minimum test limit (MIN LIMIT) and maximum test limit (MAX LIMIT).

(b) If the test value is between the minimum test limit and maximum test limit, the component is functioning normally. If not, the component is malfunctioning. The test value is usually significantly higher or lower than the test limit. If the test value is on the borderline of the test limit, the component will malfunction in the near future.

HINT:
The monitor result might be PASS on rare occasions even if the Malfunction Indicator Lamp (MIL) is illuminated. This indicates that the system was malfunctioning in the previous driving cycle. This might be caused by an intermittent problem.

4. MONITOR RESULT INFORMATION

If you use a generic scan tool, multiply the test value by the scaling value listed below.

A/F Sensor Bank 1:

Monitor ID	Test ID	Scaling	Unit	Description
$01	$8E	Multiply by 0.0003	No dimension	A/F sensor deterioration level
$01	$91	Multiply by 0.004	mA	A/F sensor current

HO2S Bank 1 Sensor 2:

Monitor ID	Test ID	Scaling	Unit	Description
$02	$07	Multiply by 0.001	V	Minimum sensor voltage
$02	$08	Multiply by 0.001	V	Maximum sensor voltage
$02	$8F	Multiply by 0.003	g	Maximum oxygen storage capacity

A/F Sensor Bank 2:

Monitor ID	Test ID	Scaling	Unit	Description
$05	$8E	Multiply by 0.0003	No dimension	A/F sensor deterioration level
$05	$91	Multiply by 0.004	mA	A/F sensor current

HO2S Bank 2 Sensor 2:

Monitor ID	Test ID	Scaling	Unit	Description
$06	$07	Multiply by 0.001	V	Minimum sensor voltage
$06	$08	Multiply by 0.001	V	Maximum sensor voltage
$06	$8F	Multiply by 0.003	g	Maximum oxygen storage capacity

Catalyst-Bank 1:

Monitor ID	Test ID	Scaling	Unit	Description
$21	$A9	Multiply by 0.003	No dimension	Oxygen storage capacity of catalyst-bank 1

Catalyst-Bank 2:

Monitor ID	Test ID	Scaling	Unit	Description
$22	$A9	Multiply by 0.003	No dimension	Oxygen storage capacity of catalyst-bank 2

EVAP:

Monitor ID	Test ID	Scaling	Unit	Description
$3D	$C9	Multiply by 0.001	kPa	Test value for small leak (P0456)
$3D	$CA	Multiply by 0.001	kPa	Test value for gross leak (P0455)
$3D	$CB	Multiply by 0.001	kPa	Test value for leak detection pump OFF stuck (P2401)
$3D	$CD	Multiply by 0.001	kPa	Test value for leak detection pump ON stuck (P2402)
$3D	$CE	Multiply by 0.001	kPa	Test value for vent valve OFF stuck (P2420)
$3D	$CF	Multiply by 0.001	kPa	Test value for vent valve ON stuck (P2419)
$3D	$D0	Multiply by 0.001	kPa	Test value for reference orifice low flow (P043E)
$3D	$D1	Multiply by 0.001	kPa	Test value for reference orifice high flow (P043F)
$3D	$D4	Multiply by 0.001	kPa	Test value for purge VSV close stuck (P0441)
$3D	$D5	Multiply by 0.001	kPa	Test value for purge VSV open stuck (P0441)
$3D	$D7	Multiply by 0.001	kPa	Test value for purge flow insufficient (P0441)

Misfire:

Monitor ID	Test ID	Scaling	Unit	Description
$A1	$0B	Multiply by 1	Time	Exponential Weighted Moving Average (EWMA) misfire for all cylinders: Misfire counts for last ten driving cycles-Total
$A1	$0C	Multiply by 1	Time	Misfire rate for all cylinders: Misfire counts for last/current driving cycles-Total
$A2	$0B	Multiply by 1	Time	EWMA misfire for cylinder 1: Misfire counts for last ten driving cycles-Total
$A2	$0C	Multiply by 1	Time	Misfire rate for cylinder 1: Misfire counts for last/current driving cycle-Total
$A3	$0B	Multiply by 1	Time	EWMA misfire for cylinder 2: Misfire counts for last ten driving cycles-Total
$A3	$0C	Multiply by 1	Time	Misfire rate for cylinder 2: Misfire counts for last/current driving cycle-Total
$A4	$0B	Multiply by 1	Time	EWMA misfire for cylinder 3: Misfire counts for last ten driving cycles-Total
$A4	$0C	Multiply by 1	Time	Misfire rate for cylinder 3: Misfire counts for last/current driving cycle-Total
$A5	$0B	Multiply by 1	Time	EWMA misfire for cylinder 4: Misfire counts for last ten driving cycles-Total
$A5	$0C	Multiply by 1	Time	Misfire rate for cylinder 4: Misfire counts for last/current driving cycle-Total
$A6	$0B	Multiply by 1	Time	EWMA misfire for cylinder 5: Misfire counts for last ten driving cycles-Total
$A6	$0C	Multiply by 1	Time	Misfire rate for cylinder 5: Misfire counts for last/current driving cycle-Total
$A7	$0B	Multiply by 1	Time	EWMA misfire for cylinder 6: Misfire counts for last ten driving cycles-Total

Monitor ID	Test ID	Scaling	Unit	Description
$A7	$0C	Multiply by 1	Time	Misfire rate for cylinder 6: Misfire counts for last/current driving cycle-Total

Rear Oxygen Sensor Heater:

Monitor ID	Test ID	Scaling	Unit	Description
$42	$91	Multiply by 0.001	Ohm	Oxygen sensor heater resistance bank 1 sensor 2
$46	$91	Multiply by 0.004	Ohm	Oxygen sensor heater resistance bank 2 sensor 2

READINESS MONITOR DRIVE PATTERN

1. PURPOSE OF READINESS TESTS

- The On-Board Diagnostic (OBD II) system is designed to monitor the performance of emission-related components, and indicate any detected abnormalities with DTCs (Diagnostic Trouble Codes). Since various components need to be monitored in different driving conditions, the OBD II system is designed to run separate monitoring programs called Readiness Monitors.
- The intelligent tester's software must be version 9.0 or newer to view the Readiness Monitor status. To view the status, select the following menu items: DIAGNOSIS / ENHANCED OBD II / MONITOR INFO / MONITOR STATUS.
- When the Readiness Monitor status reads COMPL (complete), the necessary conditions have been met for running the performance tests for that Readiness Monitor.
- A generic OBD II scan tool can also be used to view the Readiness Monitor status.

HINT:
Many Inspection and Maintenance (I/M) programs require a vehicle's Readiness Monitor status to show COMPL before beginning emission tests.
The Readiness Monitor will be reset to INCMPL (incomplete) if:

- The ECM has lost battery power or broken a fuse.
- DTCs have been cleared.
- The conditions for running the Readiness Monitor have not been met.

If the Readiness Monitor status shows INCMPL, follow the appropriate Readiness Monitor Drive Pattern to change the status to COMPL.

CAUTION:
Strictly observe posted speed limits, traffic laws, and road conditions when performing these drive patterns.

NOTICE:
These drive patterns represent the fastest method of satisfying all conditions necessary to achieve complete status for each specific Readiness Monitor.
In the event of a drive pattern being interrupted (possibly due to factors such as traffic conditions), the drive pattern can be resumed. In most cases, the Readiness Monitor will still achieve complete status upon completion of the drive pattern.
To ensure completion of the Readiness Monitors, avoid sudden changes in vehicle load and speed (driving up and down hills and/or sudden acceleration).

2. CATALYST MONITOR (ACTIVE AIR-FUEL RATIO CONTROL TYPE)

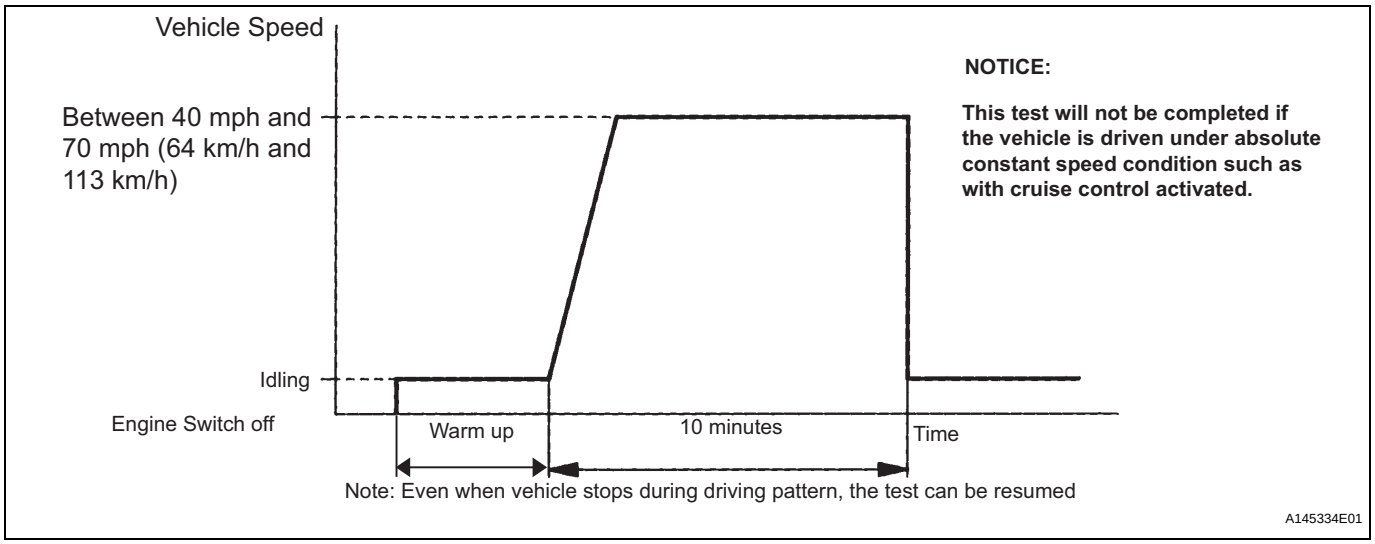

(a) Preconditions
The monitor will not run unless:
The MIL is OFF.

(b) Drive Pattern
(1) Connect an intelligent tester.
(2) Turn the engine switch on (IG).
(3) Turn the tester or scan tool on.
(4) Clear the DTCs.
(5) Start the engine and warm it up.
(6) Drive the vehicle at between 40 mph and 70 mph (64 km/h and 113 km/h) for at least 10 minutes.

(c) Monitor Status
(1) Check the Readiness Monitor status displayed on the tester.
(2) If the status does not switch to COMPL (complete), extend the driving time.

3. EVAP MONITOR (KEY-OFF TYPE)

(a) Preconditions
The monitor will not run unless:
- The fuel tank is less than 90% full.
- The altitude is less than 8,000 ft (2,450 m).
- The vehicle is stationary.
- The engine coolant temperature is between 4.4°C and 35°C (40°F to 95°F).
- The intake air temperature is between 4.4°C and 35°C (40°F to 95°F).
- Vehicle was driven in the city area (or on free-way) for 10 minutes or more.

(b) Monitor Conditions
(1) Turn the engine switch off and wait for 6 hours.
HINT:
Do not start the engine until checking Readiness Monitor status. If the engine is started, the step described above must be repeated.

ES

(c) Monitor Status
(1) Connect an intelligent tester to the DLC3.
(2) Turn the engine switch on (IG).
(3) Turn the tester or scan tool on.
(4) Check the Readiness Monitor status displayed on the tester or scan tool.
If the status does not switch to COMPL (complete), restart the engine, make sure that the preconditions have been met, and then perform the Monitor Conditions again.

4. A/F SENSOR AND HO2S MONITORS

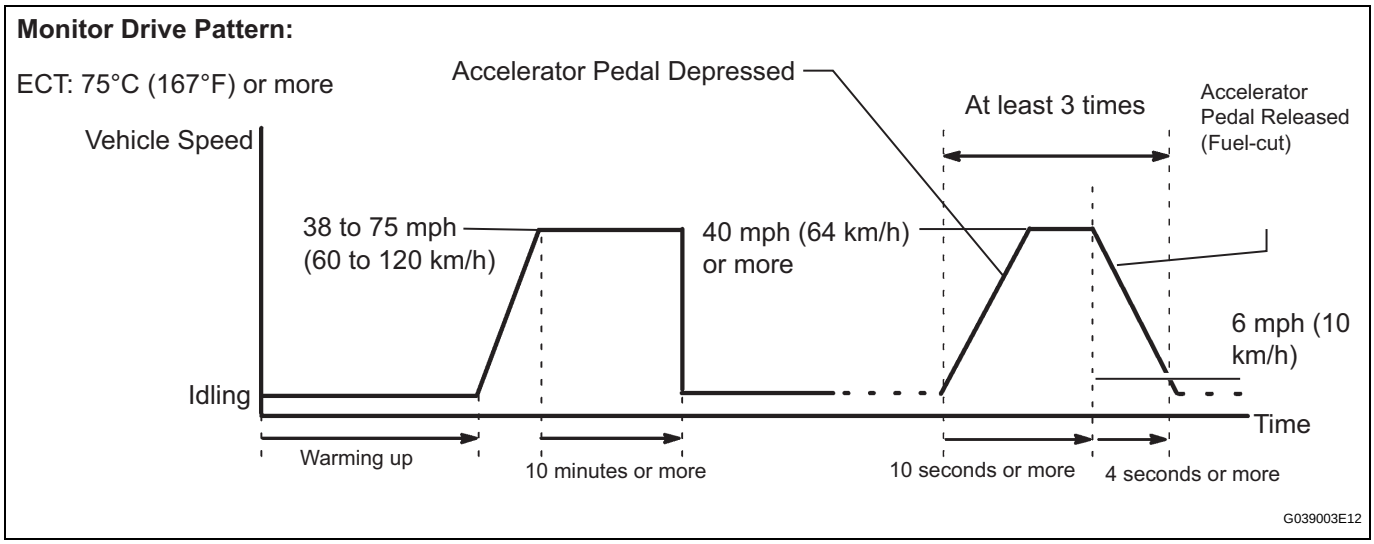

(a) Preconditions
The monitor will not run unless:
- 2 minutes or more have elapsed since the engine was started.
- The Engine Coolant Temperature (ECT) is 75°C (167°F) or more.
- Cumulative driving time at a vehicle speed of 30 mph (48 km/h) or more exceeds 6 minutes.
- Air-fuel ratio feedback control is performed.
- Fuel-cut control is performed for 8 seconds or more (for the Rear HO2 Sensor Monitor).

(b) Drive Pattern for front A/F sensor and HO2 sensor
(1) Connect an intelligent tester to the DLC3.
(2) Turn the engine switch on (IG).
(3) Turn the tester on.
(4) Clear the DTCs.
(5) Start the engine, and warm it up until the ECT reaches 75°C (167°F) or higher.
(6) Drive the vehicle at 38 mph (60 km/h) or more for at least 10 minutes.
(7) Change the transmission to the 2nd gear.
(8) Accelerate the vehicle to 40 mph (64 km/h) or more by depressing the accelerator pedal for at least 10 seconds (Procedure "A").

(9) Soon after performing procedure "A" above, release the accelerator pedal for at least 4 seconds without depressing the brake pedal, in order to execute fuel-cut control (Procedure "B").
(10) Allow the vehicle to decelerate until the vehicle speed declines to less than 6 mph (10 km/h) (Procedure "C").
(11) Repeat procedures from "A" through "C" above at least 3 times in one driving cycle.

(c) Monitor Status
(1) Check the Readiness Monitor status displayed on the tester.
(2) If the status does not switch to COMPL (complete), make sure that the preconditions have been met and then perform the Drive Pattern again.

5. AIR-FUEL RATIO (A/F) AND HEATED OXYGEN (HO2) SENSOR HEATER MONITORS (FRONT A/F AND REAR HO2 SENSOR TYPE)

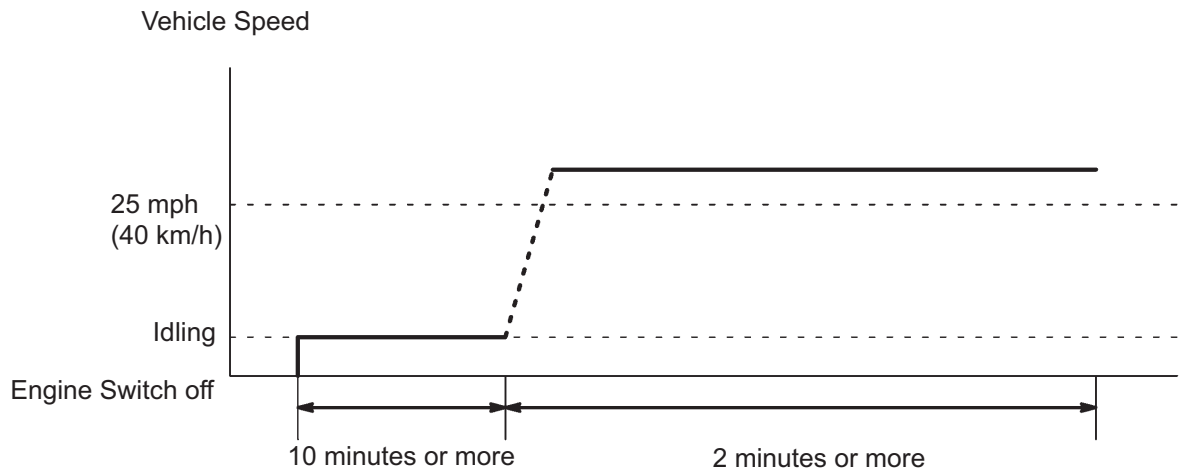

A078886E25

(a) Preconditions
The monitor will not run unless:
The MIL is OFF.

(b) Drive Pattern
(1) Connect an intelligent tester to the DLC3.
(2) Turn the engine switch on (IG).
(3) Clear the DTCs.
(4) Start the engine.
(5) Allow the engine to idle for 10 minutes or more.
(6) Drive the vehicle at 25 mph (40 km/h) or more for at least 2 minutes.

(c) Monitor Status

(1) Check the Readiness Monitor status displayed on the tester or scan tool.
If the status does not switch to COMPL (complete), make sure that the preconditions have been met, and repeat the Drive Pattern.

PROBLEM SYMPTOMS TABLE

HINT:
When a malfunction is not confirmed by a DTC (Diagnostic Trouble Code) check and the cause of problem cannot be identified through a basic inspection, troubleshoot according to the priority order indicated in the table below.

SFI SYSTEM:

Symptom	Suspected Area	See page
Engine does not crank (Does not start)	1. Immobilizer system	EI-8
	2. Cranking holding function circuit	ES-449
	3. Starter signal circuit	ES-305
	4. Starter	ST-147
	5. STARTER relay	ST-154
	6. ECM power source circuit	ES-427
	7. ECM	ES-542
No initial combustion (Does not start)	1. ECM power source circuit	ES-427
	2. Ignition system	IG-3
	3. Fuel pump control circuit	ES-443
	4. Injector	ES-200
	5. Crank angle sensor	ES-514
	6. ECM	ES-542
Engine cranks normally but difficult to start	1. Electronic Throttle Control System (ETCS)	ES-323
	2. VC Output Circuit	ES-436
	3. Fuel pump control circuit	ES-443
	4. Ignition system	IG-3
	5. Spark plug	IG-5
	6. Compression	EM-3
	7. Injector	ES-200
	8. Crank angle sensor	ES-514
Difficult to start with cold engine	1. Starter signal circuit	ES-305
	2. VC Output Circuit	ES-436
	3. Electronic Throttle Control System (ETCS)	ES-323
	4. Fuel pump control circuit	ES-443
	5. Spark plug	IG-5
	6. Ignition system	IG-3
	7. Injector	ES-200
	8. Engine coolant temperature sensor	ES-517
Difficult to start with warm engine	1. Starter signal circuit	ES-305
	2. VC Output Circuit	ES-436
	3. Electronic Throttle Control System (ETCS)	ES-323
	4. Fuel pump control circuit	ES-443
	5. Spark plug	IG-5
	6. Ignition system	IG-3
	7. Injector	ES-200
	8. Engine coolant temperature sensor	ES-517

Symptom	Suspected Area	See page
High engine idling speed (Poor idling)	1. Electronic Throttle Control System (ETCS)	ES-323
	2. ECM power source circuit	ES-427
	3. A/C signal circuit (Compressor circuit)	-
	4. Acoustic Control Induction System (ACIS)	ES-456
	5. PCV hose	-
	6. ECM	ES-542
Low engine idling speed (Poor idling)	1. Electronic Throttle Control System (ETCS)	ES-323
	2. ECM power source circuit	ES-427
	3. A/C signal circuit (Compressor circuit)	-
	4. Acoustic Control Induction System (ACIS)	ES-456
	5. PCV hose	-
	6. Injector	ES-200
	7. ECM	ES-542
Rough idling (Poor idling)	1. Electronic Throttle Control System (ETCS)	ES-323
	2. Injector	ES-200
	3. Ignition system	IG-3
	4. Compression	EM-3
	5. Fuel pump control circuit	ES-443
	6. Spark plug	IG-5
	7. Acoustic Control Induction System (ACIS)	ES-456
	8. PCV hose	-
Hunting (Poor idling)	1. Electronic Throttle Control System (ETCS)	ES-323
	2. ECM power source circuit	ES-427
	3. Fuel pump control circuit	ES-443
	4. Spark plug	IG-5
	5. Ignition system	IG-3
	6. Injector	ES-200
	7. Acoustic Control Induction System (ACIS)	ES-456
	8. PCV hose	-
Hesitation/Poor acceleration (Poor driveability)	1. Injector	ES-200
	2. Fuel pump control circuit	ES-443
	3. Ignition system	IG-3
	4. Spark plug	IG-5
	5. Air Intake Control System (AICS)	ES-461
	6. A/T faulty	AX-8
Surging (Poor driveability)	1. Fuel pump control circuit	ES-443
	2. Spark plug	IG-3
	3. Ignition system	IG-3
	4. Injector	ES-200
Engine stalls soon after starting	1. Fuel pump control circuit	ES-443
	2. Electronic Throttle Control System (ETCS)	ES-323
	3. Crank angle sensor	ES-514
	4. Spark plug	IG-5
	5. Ignition system	IG-3
	6. Injector	ES-200
Engine stalls during A/C operation	1. A/C signal circuit	-
	2. ECM	ES-542
Unable/difficult to refuel	Refueling valve (canister)	EC-8
Engine vibrates frequently when idling (Active Control engine Mount (ACM) system does not operate)	Active control engine mount circuit	ES-472

TERMINALS OF ECM

1. SFI SYSTEM

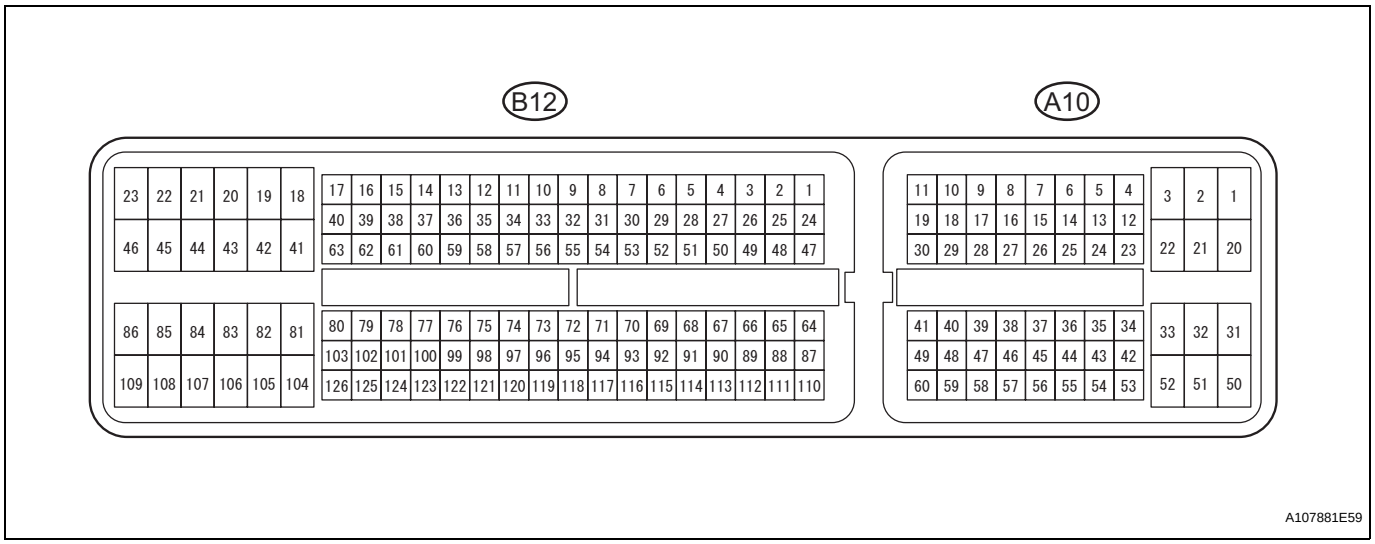

HINT:
The standard normal voltage between each pair of the ECM terminals is shown in the table below. The appropriate conditions for checking each pair of the terminals are also indicated.
The check results should be compared with the standard normal voltage for that pair of terminals, listed in the "STD Voltages" column.
The illustration above can be used as a reference to identify the ECM terminal locations.

Symbols (Terminal No.)	Wiring Colors	Terminal Descriptions	Conditions	STD Voltages
+B (A10-2) - E1 (B12-81)	R - W-B	Power source of ECM	Engine switch on (IG)	9 to 14 V
+B2 (A10-1) - E1 (B12-81)	R - W-B	Power source of ECM	Engine switch on (IG)	9 to 14 V
BATT (A10-20) - E1 (B12-81)	Y - W-B	Battery (for measuring the battery voltage and for the ECM memory)	Always	9 to 14 V
VPMP (A10-42) - E1 (B12-81)	W - W-B	Vent valve operation signal (built into pump module)	Engine switch on (IG)	9 to 14 V
MPMP (A10-34) - E1 (B12-81)	G - W-B	Vacuum pump operation signal (built into pump module)	Vacuum pump OFF	0 to 3 V
MPMP (A10-34) - E1 (B12-81)	G - W-B	Vacuum pump operation signal (built into pump module)	Vacuum pump ON	9 to 14 V
+BM (A10-3) - E1 (B12-81)	LG - W-B	Power source of ETCS throttle motor	Always	9 to 14 V
MREL (A10-44) - E1 (B12-81)	O - W-B	EFI relay operation signal	Engine switch on (IG)	9 to 14 V
IGSW (A10-28) - E1 (B12-81)	Y - W-B	Engine switch signal	Engine switch on (IG)	9 to 14 V
FC (A10-7) - E1 (B12-81)	Y - W-B	C/OPEN relay operation signal (fuel pump control)	Engine switch on (IG), Engine stopped	9 to 14 V
FC (A10-7) - E1 (B12-81)	Y - W-B	C/OPEN relay operation signal (fuel pump control)	Engine switch on (IG), Engine idling	0 to 1.5 V
STP (A10-36) - E1 (B12-81)	W - W-B	Stop light switch signal	W-Brake pedal depressed	7.5 to 14 V
STP (A10-36) - E1 (B12-81)	W - W-B	Stop light switch signal	W-Brake pedal released	Below 1.5 V
ST1- (A10-35) - E1 (B12-81)	GR - W-B	Stop light switch signal (opposite to STP terminal)	Engine switch on (IG), W-Brake pedal depressed	Below 1.5 V

Symbols (Terminal No.)	Wiring Colors	Terminal Descriptions	Conditions	STD Voltages
ST1- (A10-35) - E1 (B12-81)	GR - W-B	Stop light switch signal (opposite to STP terminal)	Engine switch on (IG), W-Brake pedal released	7.5 to 14 V
ACCR (A10-13) - E1 (B12-81)	B - W-B	ACC relay control signal	Cranking	Below 1.5 V
VPA (A10-55) - E1 (B12-81)	G - W-B	Accelerator pedal position sensor signal (for engine control)	Engine switch on (IG), Accelerator pedal fully released	0.5 to 1.1 V
VPA (A10-55) - E1 (B12-81)	G - W-B	Accelerator pedal position sensor signal (for engine control)	Engine switch on (IG), Accelerator pedal fully depressed	2.6 to 4.5 V
VPA2 (A10-56) - EPA2 (A10-60)	R - O	Accelerator pedal position sensor signal (for sensor malfunction detection)	Engine switch on (IG), Accelerator pedal fully released	1.2 to 2.0 V
VPA2 (A10-56) - EPA2 (A10-60)	R - O	Accelerator pedal position sensor signal (for sensor malfunction detection)	Engine switch on (IG), Accelerator pedal fully depressed	3.4 to 5.0 V
EPA (A10-59) - VPA (A10-55)	Y - G	Accelerator pedal position sensor signal (for engine control)	Engine switch on (IG), Accelerator pedal fully released	0.5 to 1.1 V
EPA (A10-59) - VPA (A10-55)	Y - G	Accelerator pedal position sensor signal (for engine control)	Engine switch on (IG), Accelerator pedal fully depressed	2.6 to 4.5 V
EPA2 (A10-60) - VPA2 (A10-56)	O - R	Accelerator pedal position sensor signal (for sensor malfunction detection)	Engine switch on (IG), Accelerator pedal fully released	1.2 to 2.0 V
EPA2 (A10-60) - VPA2 (A10-56)	O - R	Accelerator pedal position sensor signal (for sensor malfunction detection)	Engine switch on (IG), Accelerator pedal fully depressed	3.4 to 5.0 V
PPMP (B12-77) - E1 (B12-81)	L - W-B	Pressure sensor signal (built into pump module)	Engine switch on (IG)	3 to 3.6 V
TC (A10-27) - E1 (B12-81)	P - W-B	Terminal TC of DLC3	Engine switch on (IG)	9 to 14 V
VCPA (A10-57) - EPA (A10-59)	B - Y	Power source of accelerator pedal position sensor (for VPA)	Engine switch on (IG)	4.5 to 5.0 V
VCP2 (A10-58) - EPA2 (A10-60)	L - O	Power source of accelerator pedal position sensor (for VPA2)	Engine switch on (IG)	4.5 to 5.0 V
TACH (A10-15) - E1 (B12-81)	B - W-B	Engine speed signal (for combination meter)	Idling	Pulse generation (see waveform 11)
CCS (A10-40) - E1 (B12-81)	GR - W-B	Cruise control main switch signal	Engine switch on (IG) CANCEL switch ON SET/COAST switch ON RES/ACC switch ON Main switch ON	10 to 16 V 6.6 to 10.1 V 4.5 to 7.1 V 2.3 to 4.0 V Below 1 V
SPD (A10-8) - E1 (B12-81)	V - W-B	Vehicle speed signal from combination meter	Engine switch on (IG), driving wheel rotated slowly	Pulse generation (see waveform 8)
W (A10-24) - E1 (B12-81)	BR - W-B	Malfunction Indicator Lamp (MIL) operation signal	Engine switch on (IG)	Below 3.0 V
W (A10-24) - E1 (B12-81)	BR - W-B	Malfunction Indicator Lamp (MIL) operation signal	Idling	9 to 14 V
CANH (A10-41) - E1 (B12-81)	B - W-B	CAN communication line	Engine switch on (IG)	Pulse generation (see waveform 12)
CANL (A10-49) - E1 (B12-81)	W - W-B	CAN communication line	Engine switch on (IG)	Pulse generation (see waveform 13)
E1 (B12-81) - Body ground	W-B - -	Earth (ground) circuit of ECM	Always	Below 1 V

Symbols (Terminal No.)	Wiring Colors	Terminal Descriptions	Conditions	STD Voltages
#10 (B12-45) - E01 (B12-22) #20 (B12-85) - E01 (B12-22) #30 (B12-44) - E01 (B12-22) #40 (B12-84) - E01 (B12-22) #50 (B12-43) - E01 (B12-22) #60 (B12-83) - E01 (B12-22)	B - W-B R - W-B Y - W-B L - W-B W-L - W-B BR - W-B	Fuel injector operation signal	Engine switch on (IG)	9 to 14 V
#10 (B12-45) - E01 (B12-22) #20 (B12-85) - E01 (B12-22) #30 (B12-44) - E01 (B12-22) #40 (B12-84) - E01 (B12-22) #50 (B12-43) - E01 (B12-22) #60 (B12-83) - E01 (B12-22)	B - W-B R - W-B Y - W-B L - W-B W-L - W-B BR - W-B	Fuel injector operation signal	Idling	Pulse generation (see waveform 3)
PSW (B12-70) - E1 (B12-81)	B - W-B	P/S pressure switch signal	Engine switch on (IG)	9 to 14 V
STA (A10-48) - E1 (B12-81)	V - W-B	Starter relay operation signal	Cranking	9 to 14 V
STSW (A10-14) - E1 (B12-81)	R - W-B	Starter relay operation signal	Cranking	9 to 14 V
OC2- (B12-51) - OC2+ (B12-52)	R - BR	Camshaft timing Oil Control Valve (OCV) operation signal (Intake side)	Engine switch on (IG)	Pulse generation (see waveform 1)
OC2+ (B12-52) - OC2- (B12-51)	BR - R	Camshaft timing Oil Control Valve (OCV) operation signal (Intake side)	Engine switch on (IG)	Pulse generation (see waveform 1)
OC1- (B12-57) - OC1+ (B12-58)	B - W	Camshaft timing Oil Control Valve (OCV) operation signal (Intake side)	Engine switch on (IG)	Pulse generation (see waveform 1)
OC1+ (B12-58) - OC1- (B12-57)	W - B	Camshaft timing Oil Control Valve (OCV) operation signal (Intake side)	Engine switch on (IG)	Pulse generation (see waveform 1)
VV2+ (B12-67) - VV2- (B12-90)	W - B	Variable Valve Timing (VVT) sensor signal (Intake side)	Idling	Pulse generation (see waveform 5)
VV1+ (B12-69) - VV1- (B12-92)	L - LG	Variable Valve Timing (VVT) sensor signal (Intake side)	Idling	Pulse generation (see waveform 5)
NE- (B12-111) - NE+ (B12-110)	R - G	Crankshaft position sensor signal	Idling	Pulse generation (see waveform 5)
NE+ (B12-110) - NE- (B12-111)	G - R	Crankshaft position sensor signal	Idling	Pulse generation (see waveform 5)
EV2- (B12-89) - EV2+ (B12-66)	L - G-R	Variable Valve Timing (VVT) sensor signal (Exhaust side)	Idling	Pulse generation (see waveform 5)
EV2+ (B12-66) - EV2- (B12-89)	G-R - L	Variable Valve Timing (VVT) sensor signal (Exhaust side)	Idling	Pulse generation (see waveform 5)
EV1- (B12-91) - EV1+ (B12-68)	B - Y	Variable Valve Timing (VVT) sensor signal (Exhaust side)	Idling	Pulse generation (see waveform 5)
EV1+ (B12-68) - EV1- (B12-91)	Y - B	Variable Valve Timing (VVT) sensor signal (Exhaust side)	Idling	Pulse generation (see waveform 5)
OE1+ (B12-16) - OE1- (B12-17)	L - LG	Camshaft timing Oil Control Valve (OCV) operation signal (Exhaust side)	Engine switch on (IG)	Pulse generation (see waveform 1)

Symbols (Terminal No.)	Wiring Colors	Terminal Descriptions	Conditions	STD Voltages
OE2+ (B12-14) - OE2- (B12-15)	W-L - Y	Camshaft timing Oil Control Valve (OCV) operation signal (Exhaust side)	Engine switch on (IG)	Pulse generation (see waveform 1)
VV2- (B12-90) - VV2+ (B12-67)	B - W	Variable Valve Timing (VVT) sensor signal (Intake side)	Idling	Pulse generation (see waveform 5)
VV1- (B12-92) - VV1+ (B12-69)	LG - L	Variable Valve Timing (VVT) sensor signal (Intake side)	Idling	Pulse generation (see waveform 5)
OE1- (B12-17) - OE1+ (B12-16)	LG - L	Camshaft timing Oil Control Valve (OCV) operation signal (Exhaust side)	Engine switch on (IG)	Pulse generation (see waveform 1)
OE2- (B12-15) - OE2+ (B12-14)	Y - W-L	Camshaft timing Oil Control Valve (OCV) operation signal (Exhaust side)	Engine switch on (IG)	Pulse generation (see waveform 1)
HT1B (B12-48) - E1 (B12-81) HT2B (B12-47) - E1 (B12-81)	LG - W-B Y - W-B	Heated oxygen sensor heater operation signal	Idling	Below 3.0 V
HT1B (B12-48) - E1 (B12-81) HT2B (B12-47) - E1 (B12-81)	LG - W-B Y - W-B	Heated oxygen sensor heater operation signal	Engine switch on (IG)	9 to 14 V
M- (B12-18) - ME01 (B12-20)	R - B	Throttle drive motor operation signal (negative terminal)	Idling with warm engine	Pulse generation (see waveform 10)
M+ (B12-19) - ME01 (B12-20)	G - B	Throttle drive motor operation signal (positive terminal)	Idling with warm engine	Pluse generation (see waveform 9)
E02 (B12-21) - Body ground	B-W - -	Earth (ground) circuit of ECM	Always	Below 1 V
E01 (B12-22) - Body ground	W-B - -	Earth (ground) circuit of ECM	Always	Below 1 V
IGT1 (B12-40) - E1 (B12-81) IGT2 (B12-39) - E1 (B12-81) IGT3 (B12-38) - E1 (B12-81) IGT4 (B12-37) - E1 (B12-81) IGT5 (B12-36) - E1 (B12-81) IGT6 (B12-35) - E1 (B12-81)	W - W-B G-R - W-B G - W-B LG - W-B P - W-B L-B - W-B	Engine coil with igniter (ignition signal)	Idling	Pulse generation (see waveform 6)
GE01(B12-41) - E1 (B12-81)	G-R - W-B	Shielded earth (ground) circuit of throttle drive motor	Always	Below 1 V
OX1B (B12-88) - EX1B (B12-65) OX2B (B12-87) - EX2B (B12-64)	W - BR B - W-B	Heated oxygen sensor signal	With engine speed at 2,500 rpm for 2 minutes after warming up	Pulse generation (see waveform 2)
VTA2 (B12-99) - ETA (B12-97)	W-L - P	Throttle position sensor signal (for sensor malfunction detection)	Engine switch on (IG), Accelerator pedal fully released	2.1 to 3.1 V
VTA2 (B12-99) - ETA (B12-97)	W-L - P	Throttle position sensor signal (for sensor malfunction detection)	Engine switch on (IG), Accelerator pedal fully depressed	4.5 to 5.0 V
VTA1 (B12-98) - ETA (B12-97)	Y - P	Throttle position sensor signal (for engine control)	Engine switch on (IG), Throttle valve fully closed	0.5 to 1.2 V
VTA1 (B12-98) - ETA (B12-97)	Y - P	Throttle position sensor signal (for engine control)	Engine switch on (IG), Throttle valve fully open	3.2 to 4.8 V
THW (B12-79) - ETHW (B12-78)	B - P	Engine coolant temperature sensor signal	Idling, Engine coolant temperature 80°C (176°F)	0.2 to 1.0 V
THA (B12-71) - ETHA (B12-74)	P - G-R	Intake air temperature sensor signal	Idling, Intake air temperature 20°C (68°F)	0.5 to 3.4 V
IGF1 (B12-106) - E1 (B12-81)	BR - W-B	Engine coil with igniter (ignition confirmation signal)	Engine switch on (IG)	4.5 to 5.0 V

Symbols (Terminal No.)	Wiring Colors	Terminal Descriptions	Conditions	STD Voltages
IGF1 (B12-106) - E1 (B12-81)	BR - W-B	Engine coil with igniter (ignition confirmation signal)	Idling	Pulse generation (see waveform 6)
AICV (A10-4) - E1 (B12-81)	V - W-B	VSV for Air intake control system operation signal	Engine switch on (IG)	9 to 14 V
E2G (B12-73) - E1 (B12-81)	LG - W-B	Earth (ground) circuit of sensor for mass air flow meter	Always	Below 1 V
VG (B12-72) - E2G (B12-73)	L-B - LG	Mass Air Flow (MAF) meter signal	Idling, Shift lever position P or N, A/C switch OFF	0.5 to 3.0 V
ACIS (B12-107) - E1 (B12-81)	B-W - W-B	VSV for ACIS (Acoustic Control Induction System) operation signal	Engine switch on (IG)	9 to 14 V
PRG (B12-108) - E1 (B12-81)	G-R - W-B	Purge VSV for EVAP system operation signal	Engine switch on (IG)	9 to 14 V
PRG (B12-108) - E1 (B12-81)	G-R - W-B	Purge VSV for EVAP system operation signal	Idling	Pulse generation (see waveform 7)
HA2A (B12-109) - E05 (B12-46)	B-W - W	A/F sensor heater operation signal	Idling	Below 3.0 V
HA2A (B12-109) - E05 (B12-46)	B-W - W	A/F sensor heater operation signal	Engine switch on (IG)	9 to 14 V
HA1A (B12-86) - E04 (B12-23)	G - W	A/F sensor heater operation signal	Idling	Below 3.0 V
HA1A (B12-86) - E04 (B12-23)	G - W	A/F sensor heater operation signal	Engine switch on (IG)	9 to 14 V
ME01 (B12-20) - E1 (B12-81)	B - W-B	Earth (ground) circuit of ECM	Always	Below 1 V
E03 (B12-104) - E1 (B12-81)	B - W-B	Earth (ground) circuit of ECM	Always	Below 1 V
HT2B (B12-47) - E1 (B12-81) HT1B (B12-48) - E1 (B12-81)	Y - W-B LG - W-B	Heated oxygen sensor heater operation signal	Idling	Below 3.0 V
HT2B (B12-47) - E1 (B12-81) HT1B (B12-48) - E1 (B12-81)	Y - W-B LG - W-B	Heated oxygen sensor heater operation signal	Engine switch on (IG)	9 to 14 V
E05 (B12-46) - E1 (B12-81)	W - W-B	Earth (ground) circuit of ECM	Always	Below 1 V
E04 (B12-23) - E1 (B12-81)	W - W-B	Earth (ground) circuit of ECM	Always	Below 1 V
NSW (B12-62) - E1 (B12-81)	L-B - W-B	Park/Neutral position switch signal	Engine switch on (IG), Shift lever position P or N	Below 3.0 V
NSW (B12-62) - E1 (B12-81)	L-B - W-B	Park/Neutral position switch signal	Engine switch on (IG), Shift lever position other than P or N	9 to 14 V
EKN2 (B12-117) - KNK2 (B12-118)	W - B	Earth (ground) circuit of knock sensor	With engine speed at 4,000 rpm after warming up	Pulse generation (see waveform 4)
KNK2 (B12-118) - EKN2 (B12-117)	B - W	Knock sensor signal	With engine speed at 4,000 rpm after warming up	Pulse generation (see waveform 4)
A1A+ (B12-93) - E1 (B12-81)	L - W-B	A/F sensor signal	Engine switch on (IG)	3.3 V*1
A1A+ (B12-93) - E1 (B12-81)	L - W-B	A/F sensor signal	Engine switch on (IG)	3.0 V*1
A2A+ (B12-120) - E1 (B12-81)	BR - W-B	A/F sensor signal	Engine switch on (IG)	3.3 V*1
A2A+ (B12-120) - E1 (B12-81)	BR - W-B	A/F sensor signal	Engine switch on (IG)	3.0 V*1
EKNK (B12-94) - KNK1 (B12-95)	G - R	Earth (ground) circuit of knock sensor	With engine speed at 4,000 rpm after warming up	Pulse generation (see waveform 4)
KNK1 (B12-95) - EKNK (B12-94)	R - G	Knock sensor signal	With engine speed at 4,000 rpm after warming up	Pulse generation (see waveform 4)
A1A- (B12-116) - E1 (B12-81)	P - W-B	A/F sensor	Engine switch on (IG)	3.3 V*1
A1A- (B46-116) - E1 (B12-81)	P - W-B	A/F sensor	Engine switch on (IG)	3.0 V*1
A2A- (B12-119) - E1 (B12-81)	Y - W-B	A/F sensor	Engine switch on (IG)	3.3 V*1

Symbols (Terminal No.)	Wiring Colors	Terminal Descriptions	Conditions	STD Voltages
A2A- (B12-119) - E1 (B12-81)	Y - W-B	A/F sensor	Engine switch on (IG)	3.0 V*1
OX2B (B12-87) - EX2B (B12-64) OX1B (B12-88) - EX1B (B12-65)	B - W-R W - BR	Heated oxygen sensor signal	With engine speed at 2,500 rpm for 2 minutes after warming up	Pulse generation (see waveform 2)

*1: The ECM terminal voltage is constant regardless of the output voltage from the sensor.

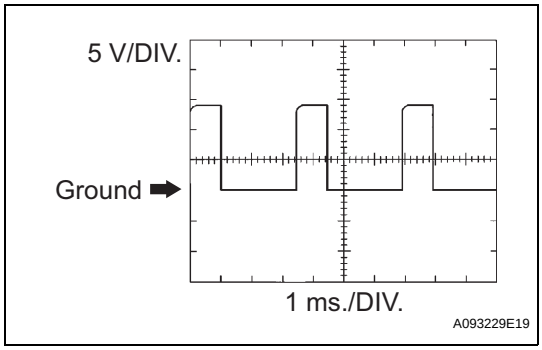

(a) WAVEFORM 1
(1) Camshaft timing Oil Control Valve (OCV) operation signal

ECM Terminal Names	Between OC1+ and OC1- , OC2+ and OC2- , OE1+ and OE1- , or OE2+ and OE2-
Tester Ranges	5 V/DIV., 1 ms./DIV.
Conditions	Idling

HINT:
The wavelength becomes shorter as the engine rpm increases.

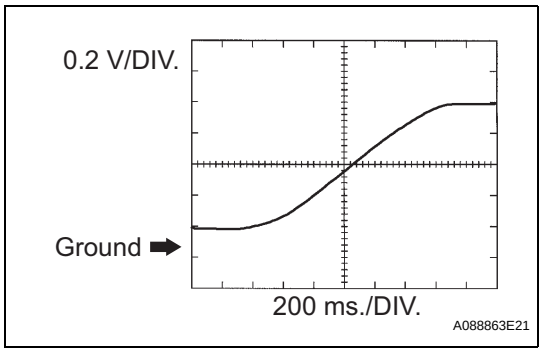

(b) WAVEFORM 2
(1) Heated oxygen sensor signal

ECM Terminal Names	Between OX1B and EX1B, or OX2B and EX2B
Tester Ranges	0.2 V/DIV., 200 ms./DIV.
Conditions	Engine speed is maintained at 2,500 rpm for 2 minutes after sensor is warmed up

HINT:
In the DATA LIST, item O2S B1S2 shows the ECM input values from the heated oxygen sensor.

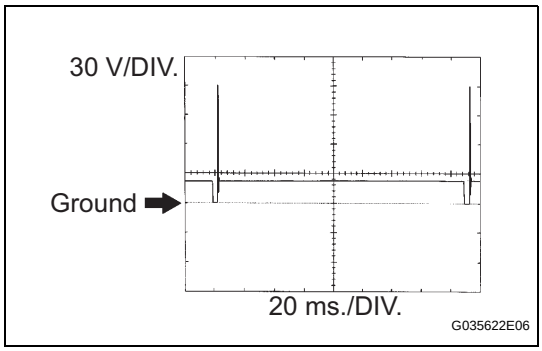

(c) WAVEFORM 3
(1) Fuel injector operation signal

ECM Terminal Names	Between #10 (to 60) and E01
Tester Ranges	30 V/DIV., 20 ms./DIV.
Conditions	Idling

HINT:
The wavelength becomes shorter as the engine rpm increases.

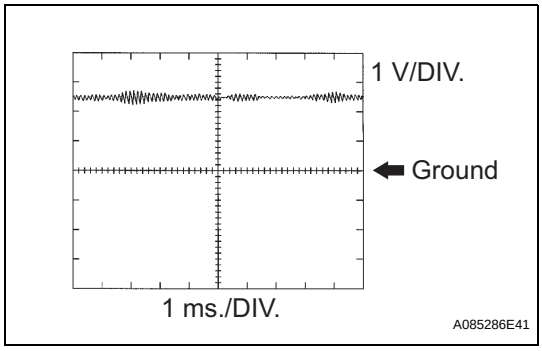

(d) WAVEFORM 4
(1) Knock sensor signal

ECM Terminal Names	Between KNK1 and EKNK, or KNK2 and EKN2
Tester Ranges	0.01 to 10 V/DIV., 0.01 to 10 ms./DIV.
Conditions	Engine speed is maintained at 4,000 rpm after engine is warmed up

HINT:
- The wavelength becomes shorter as the engine rpm increases.
- The waveforms and amplitudes displayed differ slightly depending on the vehicle.

ES

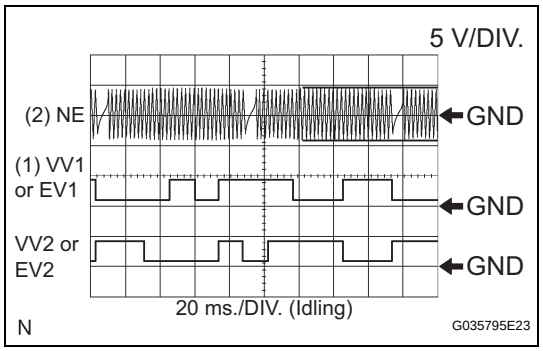

(e) WAVEFORM 5
(1) Variable Valve Timing (VVT) sensor signal (1)
(2) Crankshaft position sensor signal (2)

ECM Terminal Names	(1) Between VV1+ and VV1- , VV2+ and VV2-, EV1+ and EV1-, or EV2+ and EV2- (2) Between NE+ and NE-
Tester Ranges	5 V/DIV., 20 ms./DIV.
Conditions	Idling

HINT:
The wavelength becomes shorter as the engine rpm increases.

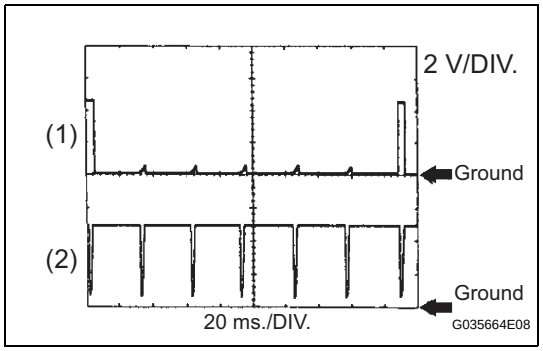

(f) WAVEFORM 6
(1) Igniter IGT signal (from ECM to igniter) (1)
(2) Igniter IGF signal (from igniter to ECM) (2)

ECM Terminal Names	(1) Between IGT (1 to 6) and E1 (2) Between IGF1 and E1
Tester Ranges	2 V/DIV., 20 ms./DIV.
Conditions	Idling

HINT:
The wavelength becomes shorter as the engine rpm increases.

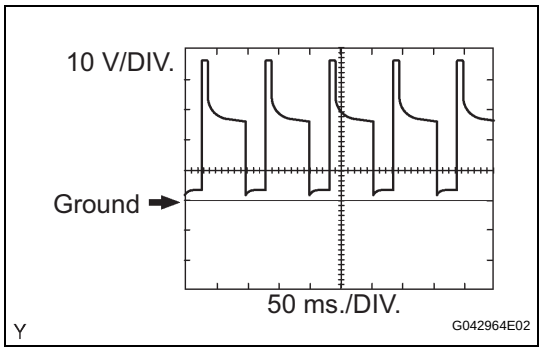

(g) WAVEFORM 7
(1) Purge VSV for EVAP system operation signal

ECM Terminal Names	Between PRG and E1
Tester Ranges	10 V/DIV., 50 ms./DIV.
Conditions	Idling

HINT:
If the waveform is not similar to that shown in the illustration, check the waveform again after idling for 10 minutes or more.

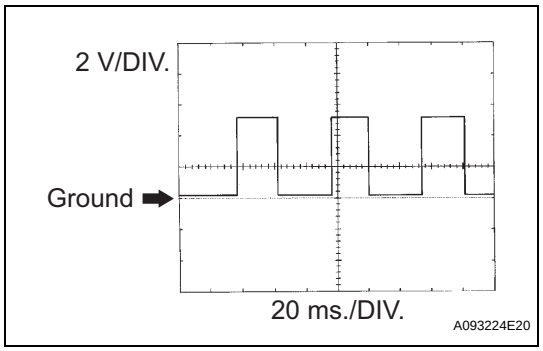

(h) WAVEFORM 8
(1) Vehicle speed signal

ECM Terminal Names	Between SPD and E1
Tester Ranges	2 V/DIV., 20 ms./DIV.
Conditions	Driving at 12 mph (20 km/h)

HINT:
- The wavelength becomes shorter as the vehicle speed increases.
- Depending on the vehicle, the output waveform voltage may rise to 12 V if influenced by optionally installed systems.

ES

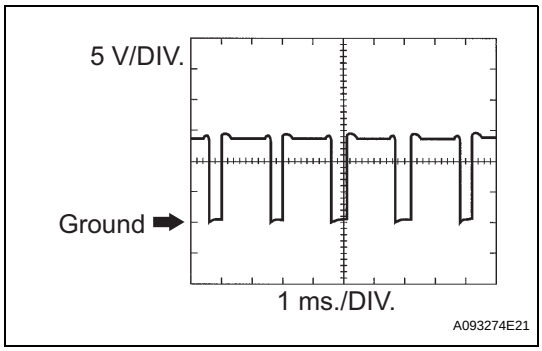

(i) WAVEFORM 9
(1) Throttle drive motor operation signal (positive terminal)

ECM Terminal Names	Between M+ and ME01
Tester Ranges	5 V/DIV., 1 ms./DIV.
Conditions	Idling with warm engine

HINT:
The duty ratio varies depending on the throttle actuator operation.

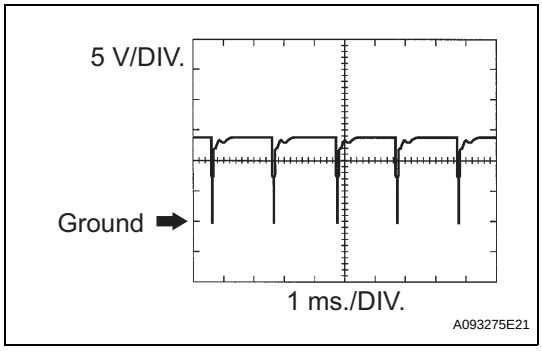

(j) WAVEFORM 10
(1) Throttle drive motor operation signal (negative terminal)

ECM Terminal Names	Between M- and ME01
Tester Ranges	5 V/DIV., 1 ms./DIV.
Conditions	Idling with warm engine

HINT:
The duty ratio varies depending on the throttle actuator operation.

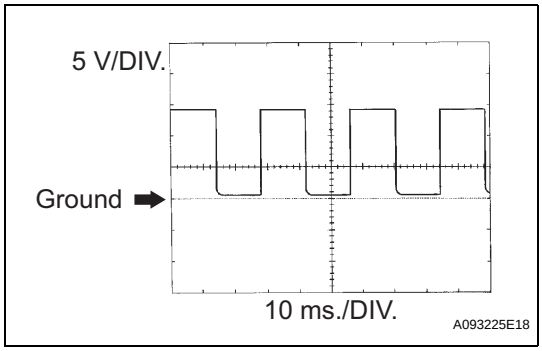

(k) WAVEFORM 11
(1) Engine speed signal

ECM Terminal Names	Between TACH and E1
Tester Ranges	5 V/DIV., 10 ms./DIV.
Conditions	Idling

HINT:
The wavelength becomes shorter as the engine rpm increases.

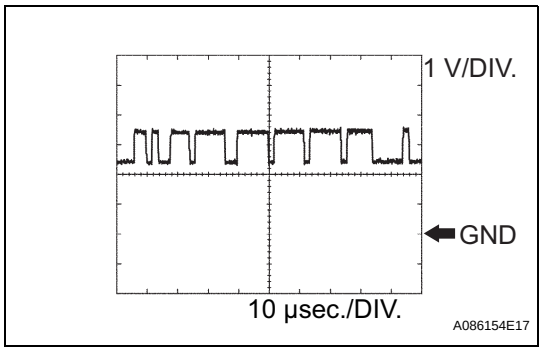

(l) WAVEFORM 12
(1) CAN communication signal

ECM Terminal Names	Between CANH and E1
Tester Ranges	1 V/DIV., 10 µsec./DIV.
Conditions	Engine stops and engine switch on (IG)

HINT:
The waveform varies depending on the CAN communication signal.

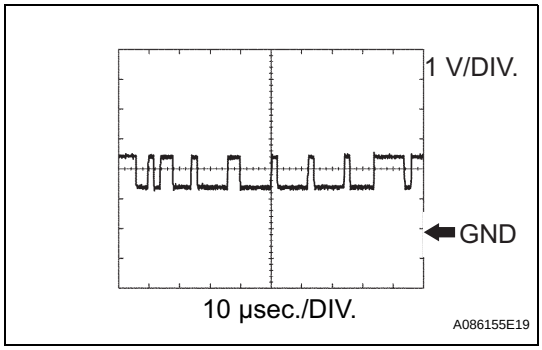

(m) WAVEFORM 13
(1) CAN communication signal

ECM Terminal Names	Between CANL and E1
Tester Ranges	1 V/DIV., 10 µsec./DIV.
Conditions	Engine stops and engine switch on (IG)

HINT:
The waveform varies depending on the CAN communication signal.

DIAGNOSIS SYSTEM

1. DESCRIPTION

When troubleshooting OBD II (On-Board Diagnostics) vehicles, the intelligent tester (complying with SAE J1987) must be connected to the DLC3 (Data Link Connector 3) of the vehicle. Various data in the vehicle's ECM (Engine Control Module) can be then read.

OBD ll regulations require that the vehicle's on-board computer illuminates the MIL (Malfunction Indicator Lamp) on the instrument panel when the computer detects a malfunction in:

(a) The emission control systems and components.

(b) The power train control components (which affect vehicle emissions).

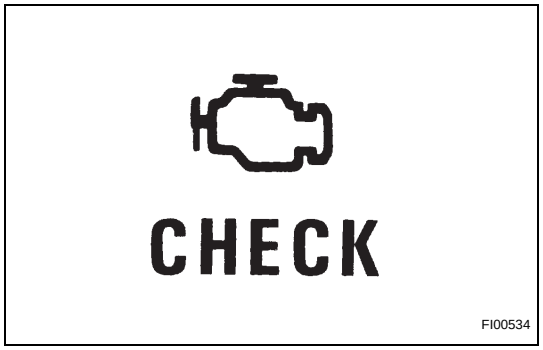

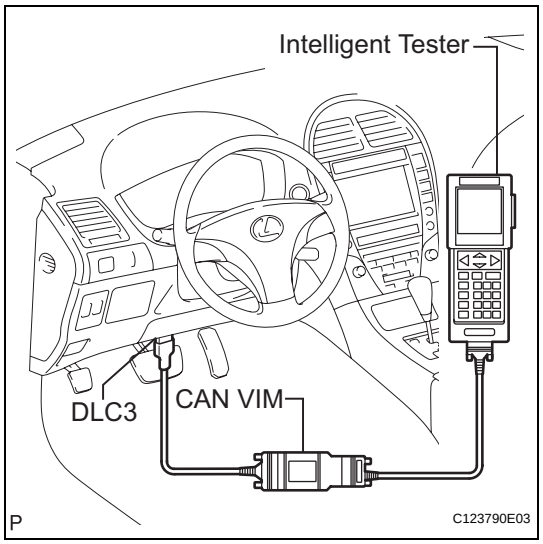

(c) The computer itself.

In addition, the applicable DTCs (Diagnostic Trouble Codes) prescribed by SAE J2012 are recorded on 3 consecutive trips, the MIL turns off automatically but the DTCs remain recorded in the ECM memory.

To check for DTCs, connect the intelligent tester to the DLC3. The tester displays DTCs, freeze frame data, and a variety of the engine data. The DTCs and freeze frame data can be erased with the tester.

In order to enhance OBD function on vehicles and develop the Off-Board diagnosis system, CAN communication is introduced in this system (CAN: Controller Area Network). It minimizes a gap between technician skills and vehicle technology. CAN is a network, which uses a pair of data transmission lines, spanning multiple computers and sensors. It allows a high speed communication between the systems and simplification of the wire harness connection. Since this system is equipped with the CAN communication, connecting the CAN VIM (VIM: Vehicle Interface Module) with the intelligent tester is necessary to display any information from the ECM. (Also the communication between the intelligent tester and the ECM uses CAN communication signal). When confirming the DTCs and any data of the ECM, connect the CAN VIM between the DLC3 and the intelligent tester.

2. NORMAL MODE AND CHECK MODE

The diagnosis system operates in normal mode during normal vehicle use. In normal mode, 2 trip detection logic is used to ensure accurate detection of malfunctions. Check mode is also available as an option for technicians. In check mode, 1 trip detection logic is used for simulating malfunction symptoms and increasing the system's ability to detect malfunctions, including intermittent problems (intelligent tester only).

3. 2 TRIP DETECTION LOGIC

When a malfunction is first detected, the malfunction is temporarily stored in the ECM memory (1st trip). If the same malfunction is detected during the next subsequent drive cycle, the MIL is illuminated (2nd trip).

4. FREEZE FRAME DATA

The ECM records vehicle and driving condition information as freeze frame data the moment a DTC is stored. When troubleshooting, freeze frame data can be helpful in determining whether the vehicle was running or stopped, whether the engine was warmed up or not, whether the air-fuel ratio was lean or rich, as well as other data recorded at the time of a malfunction.

5. DLC3 (Data link Connector 3)

The vehicle's ECM uses ISO 15765-4 for communication protocol. The terminal arrangement of the DLC3 complies with SAE J1962 and matches the ISO 15765-4 format.

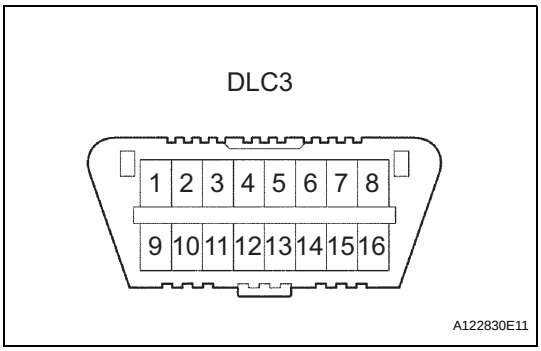

Symbols (Terminal No.)	Terminal Description	Condition	Specified Condition
SIL (7) - SG (5)	Bus "+" line	During transmission	Pulse generation
CG (4) - Body ground	Chassis ground	Always	Below 1 Ω
SG (5) - Body ground	Signal ground	Always	Below 1 Ω
BAT (16) - Body ground	Battery positive	Always	11 to 14 V
CANH (6) - CANL (14)	CAN bus line	Engine switch off	54 to 69 Ω
CANH (6) - CG (4)	HIGH-level CAN bus line	Engine switch off	200 Ω or higher
CANL (14) - CG (4)	LOW-level CAN bus line	Engine switch off	200 Ω or higher
CANH (6) - BAT (16)	HIGH-level CAN bus line	Engine switch off	6 kΩ or higher

HINT:
The DLC3 is the interface prepared for reading various data from the vehicle's ECM. After connecting the cable of an intelligent tester, turn the engine switch on (IG) and turn the tester on. If a communication failure message is displayed on the tester screen (on the tester: UNABLE TO CONNECT TO VEHICLE), a problem exists in either the vehicle or tester. In order to identify the location of the problem, connect the tester to another vehicle.
If communication is normal: Inspect the DLC3 on the original vehicle.
If communication is still not possible: The problem is probably in the tester itself. Consult the Service Department listed in the instruction manual.

6. BATTERY VOLTAGE

Standard Voltage:

11 to 14 V

If voltage is below 11 V, replace or recharge the battery before proceeding to the next step.

7. MIL (Malfunction Indicator Lamp)

(a) The MIL is illuminated when the engine switch is first turned on (the engine is not running).

(b) The MIL should turn off when the engine is started. If the MIL remains illuminated, the diagnosis system has detected a malfunction or abnormality in the system.

HINT:

If the MIL is not illuminated when the engine switch is first turned on, check the MIL circuit (See page ES-465).

ES

DTC CHECK / CLEAR

NOTICE:
When the diagnosis system is changed from the normal mode to check mode or vice versa, all DTCs and freeze frame data recorded in normal mode are erased. Before changing modes, always check and make a note of DTCs and freeze frame data.

HINT:

- DTCs which are stored in the ECM can be displayed on an intelligent tester. An intelligent tester can display the current and pending DTCs.
- Some DTCs are not set if the ECM does not detect the same malfunction again during a second consecutive driving cycle. However, such malfunctions, detected on only one occasion, are stored as pending DTCs.

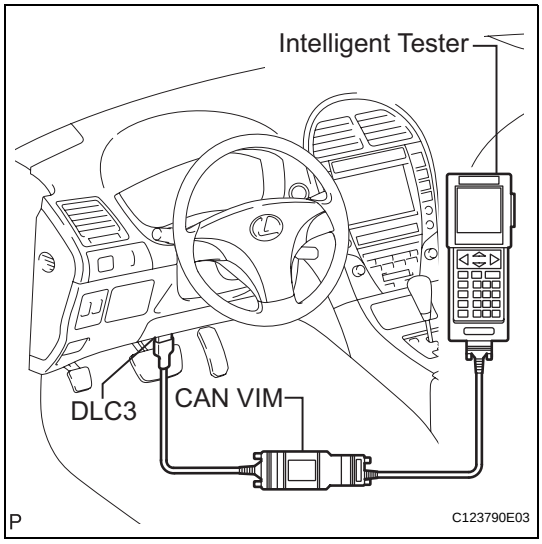

1. CHECK DTC (Using an intelligent tester)
(a) Connect an intelligent tester to the DLC3.
(b) Turn the engine switch on (IG).
(c) Turn the tester on.
(d) Enter the following menu items: DIAGNOSIS / ENHANCED OBD II / DTC INFO / CURRENT CODES.
(e) Check the DTC(s) and freeze frame data, and then write them down.
(f) Check the details of the DTC(s) (See page ES-59).

2. CLEAR DTC (Using an intelligent tester)
(a) Connect an intelligent tester to the DLC3.
(b) Turn the engine switch on (IG).
(c) Turn the tester on.
(d) Enter the following menu items: DIAGNOSIS / ENHANCED OBD II / DTC INFO / CLEAR CODES.
(e) Press the YES button.

3. CLEAR DTC (Without using an intelligent tester)
(a) Perform either one of the following operations:
(1) Disconnect the negative battery cable for more than 1 minute.
(2) Remove the EFI MAIN and ETCS fuses from the engine room relay block located inside the engine compartment for more than 1 minute.

FREEZE FRAME DATA

1. DESCRIPTION

The ECM records vehicle and driving condition information as freeze frame data the moment a DTC is stored. When troubleshooting, freeze frame data can be helpful in determining whether the vehicle was running or stopped, whether the engine was warmed up or not, whether the air-fuel ratio was lean or rich, as well as other data recorded at the time of a malfunction.

HINT:

If it is impossible to duplicate the problem even though a DTC is detected, confirm the freeze frame data.

The ECM records engine conditions as freeze frame data every 0.5 seconds. Using the intelligent tester, five separate sets of freeze frame data, including the data values at the time when the DTC was set, can be checked.

– 3 data set before the DTC was set.
– 1 data set when the DTC was set.
– 1 data set after the DTC was set.

These data sets can be used to simulate the condition of the vehicle around the time of the occurrence of the malfunction. The data may assist in identifying of the cause of the malfunction, and in judging whether it was temporary or not.

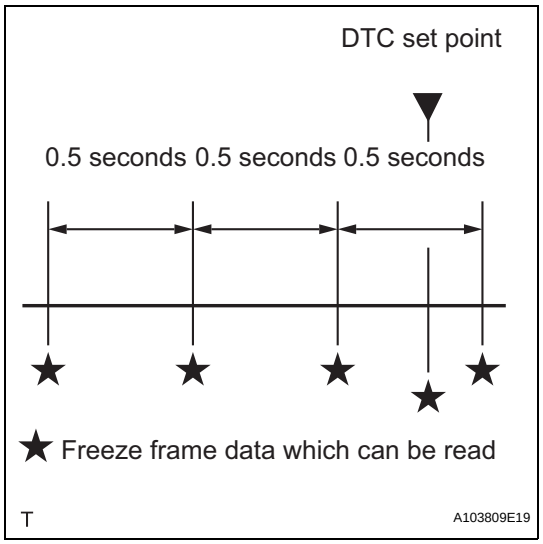

2. LIST OF FREEZE FRAME DATA

LABEL (Intelligent Tester Display)	Measurement Item/Range	Diagnostic Note
FREEZE DTC	Freeze DTC	-
INJECTOR	Injector	-
IGN ADVANCE	Ignition advance	-
CALC LOAD	Calculate load	Calculated load by ECM
VEHICLE LOAD	Vehicle load	-
MAF	Mass air flow volume	If value is approximately 0.0 g/s: • Mass air flow meter power source circuit open or shorted • VG circuit open or shorted If value is 160.0 g/s or more: • E2G circuit open
ENGINE SPD	Engine speed	-
VEHICLE SPD	Vehicle speed	Speed indicated on speedometer
COOLANT TEMP	Engine coolant temperature	If value is -40°C (-40°F), sensor circuit open If value is 140°C (284°F), sensor circuit shorted
INTAKE AIR	Intake air temperature	If value is -40°C (-40°F), sensor circuit open If value is 140°C (284°F), sensor circuit shorted
AIR-FUEL PATIO	Air-fuel ratio	-
EVAP PURGE FLOW	EVAP gauge flow	-
PURGE DENSITY	Learning value of purge density	-
EVAP PURGE VSV	EVAP purge VSV duty ratio	-
KNOCK CRRT VAL	Correction learning value of knocking	-

LABEL (Intelligent Tester Display)	Measurement Item/Range	Diagnostic Note
KNOCK FB VAL	Feedback value of knocking	-
ACCEL POS #1	Absolute Accelerator Pedal Position (APP) No. 1	-
ACCEL POS #2	Absolute APP No. 2	-
THROTTLE POS	Throttle position	Read value with ignition switch on (IG) (Do not start engine)
THROTTLE POS	Throttle sensor positioning	Read value with ignition switch on (IG) (Do not start engine)
THROTTLE POS #2	Throttle sensor positioning #2	-
THROTTLE MOT	Throttle motor	-
O2S B1 S2	Heated oxygen sensor output	Performing INJ VOL or A/F CONTROL function of ACTIVE TEST enables technician to check output voltage of sensor
O2S B2 S2	Heated oxygen sensor output	Performing INJ VOL or A/F CONTROL function of ACTIVE TEST enables technician to check output voltage of sensor
AFS B1 S1	A/F sensor output	Performing INJ VOL or A/F CONTROL function of ACTIVE TEST enables technician to check output voltage of sensor
AFS B2 S1	A/F sensor output	Performing INJ VOL or A/F CONTROL function of ACTIVE TEST enables technician to check output voltage of sensor
TOTAL FT #1	Total fuel trim	-
TOTAL FT #2	Total fuel trim	-
SHORT FT #1	Short-term fuel trim	Short-term fuel compensation used to maintain air-fuel ratio at stoichiometric air-fuel ratio
LONG FT #1	Long-term fuel trim	Overall fuel compensation carried out in long-term to compensate for a continual deviation of short-term fuel trim from central valve
SHORT FT #2	Short-term fuel trim	Short-term fuel compensation used to maintain air-fuel ratio at stoichiometric air-fuel ratio
LONG FT #2	Long-term fuel trim	Overall fuel compensation carried out in long-term to compensate for a continual deviation of short-term fuel trim from central valve
FUEL SYS #1	Fuel system status (Bank 1)	• OL (Open Loop): Has not yet satisfied conditions to go closed loop • CL (Closed Loop): Using heated oxygen sensor as feedback for fuel control • OL DRIVE: Open loop due to driving conditions (fuel enrichment) • OL FAULT: Open loop due to detected system fault • CL FAULT: Closed loop but heated oxygen sensor, which used for fuel control malfunctioning
FUEL SYS #2	Fuel system status (Bank 2)	• OL (Open Loop): Has not yet satisfied conditions to go closed loop • CL (Closed Loop): Using heated oxygen sensor as feedback for fuel control • OL DRIVE: Open loop due to driving conditions (fuel enrichment) • OL FAULT: Open loop due to detected system fault • CL FAULT: Closed loop but heated oxygen sensor, which used for fuel control malfunctioning
O2FT B1 S2	Fuel trim at heated oxygen sensor	Same as SHORT FT #1
O2FT B2 S2	Fuel trim at heated oxygen sensor	Same as SHORT FT #1

LABEL (Intelligent Tester Display)	Measurement Item/Range	Diagnostic Note
AF FT B1 S1	Fuel trim at A/F sensor	-
AFS B1 S1	A/F sensor output current	-
AF FT B2 S1	Fuel trim at A/F sensor	-
CAT TEMP B1 S1	Catalyst temperature	-
CAT TEMP B2 S1	Catalyst temperature	-
CAT TEMP B1 S2	Catalyst temperature	-
CAT TEMP B2 S2	Catalyst temperature	-
SO2S B1 S2	Heated oxygen sensor impedance (sensor 2)	-
SO2S B2 S2	Heated oxygen sensor impedance (sensor 2)	-
INI COOL TEMP	Initial engine coolant temperature	-
INI INTAKE TEMP	Initial intake air temperature	-
INJ VOL	Injection volume	-
ACC RELAY	ACC relay	-
STARTER RELAY	Starter relay	-
STARTER SIG	Starter signal	-
STARTER CONTROL	Starter control	-
A/C SIGNAL	A/C signal	-
PNP SW (NSW)	Neutral position switch signal	-
ELECT LOAD SIG	Electrical load signal	-
STOP LIGHT SW	Stop light switch	-
BATTERY VOLTAGE	Battery voltage	-
ATM PRESSURE	Atmospheric pressure	-
VVT CTRL B2	VVT control status (bank 2)	-
EVAP (Purge) VSV	EVAP Purge VSV	-
FUEL PUMP/SPD	Fuel pump/speed status	-
VVT CTRL B1	VVT control status (bank 1)	-
VACUUM PUMP	Key-off EVAP system pump status	-
EVAP VENT VAL	Key-off EVAP system vent valve status	-
FAN MOTOR	Electric fan motor	-
TC/TE1	TC and TE1 terminals of DLC3	-
AICV VSV	VSV for Air Intake Control System (ACIS)	-
ENG SPEED #1	Engine speed of Cylinder #1 of Injector Stopped	-
ENG SPEED #2	Engine speed of Cylinder #2 of injection Stopped	-
ENG SPEED #3	Engine speed of Cylinder #3 of injection Stopped	-
ENG SPEED #4	Engine speed of Cylinder #4 of injection Stopped	-
ENG SPEED #5	Engine speed of Cylinder #5 of injection Stopped	-
ENG SPEED #6	Engine speed of Cylinder #6 of injection Stopped	-
ENG SPEED ALL	Avg Eng Spd, All Cylinder of Injection Stopped	-
VVTL AIM ANGL#1	VVT aim angle (bank 1)	-
VVT CHNG ANGL#1	VVT change angle (bank 1)	-
VVT OCV D B1	VVT OCV operation duty (bank 1)	-
VVT EX HOLD B1	VVT exhaust hold duty ratio learning value (bank 1)	-
VVT EX CHG ANG1	VVT exhaust change angle (bank 1)	-

LABEL (Intelligent Tester Display)	Measurement Item/Range	Diagnostic Note
VVT EX OCV D B1	VVT exhaust OCV duty (bank 1)	-
VVTL AIM ANGL#2	VVT aim angle (bank 2)	-
VVT CHNG ANGL#2	VVT change angle (bank 2)	-
VVT OCV DUTY B2	VVT OCV operation duty (bank 2)	-
VVT EX HOLD B2	VVT exhaust hold duty ratio learning value (bank 2)	-
VVT EX CHG ANG2	VVT exhaust change angle (bank 2)	-
VVT EX OCV D B2	VVT exhaust OCV duty (bank 2)	-
FC IDL	Idle fuel cut	ON: when throttle valve fully closed and engine speed over 1,500 rpm
FC TAU	FC TAU	Fuel cut being performed under very light load to prevent incomplete engine combustion
CYL #1	Cylinder #1 misfire rate	Displayed only during idling
CYL #2	Cylinder #2 misfire rate	Displayed only during idling
CYL #3	Cylinder #3 misfire rate	Displayed only during idling
CYL #4	Cylinder #4 misfire rate	Displayed only during idling
CYL #5	Cylinder #5 misfire rate	Displayed only during idling
CYL #6	Cylinder #6 misfire rate	Displayed only during idling
IGNITION	Ignition	-
CYL ALL	All cylinder misfire rate	Displayed only during idling
MISFIRE RPM	Misfire RPM	-
MISFIRE RPM	Misfire RPM	-
MISFIRE LOAD	Misfired load	-
MISFIRE MARGIN	Misfire monitoring	-
MIL	MIL status	-
ENG RUN TIME	Accumulated engine running time	-
TIME DTC CLEAR	Cumulative time after DTC cleared	-
DIST DTC CLEAR	Accumulated distance after DTC cleared	-
WU CYC DTC CLEAR	Warm-up cycle after DTC cleared	-

CHECK MODE PROCEDURE

HINT:
Intelligent tester only:
Compared to the normal mode, check mode is more sensitive to malfunctions. Therefore, check mode can detect the malfunctions that cannot be detected in normal mode.

NOTICE:
All the stored DTCs and freeze frame data are erased if: 1) the ECM is changed from normal mode to check mode or vice versa; or 2) the engine switch is turned from on (IG) to on (ACC) or off while in check mode. Before changing modes, always check and note any DTCs and freeze frame data.

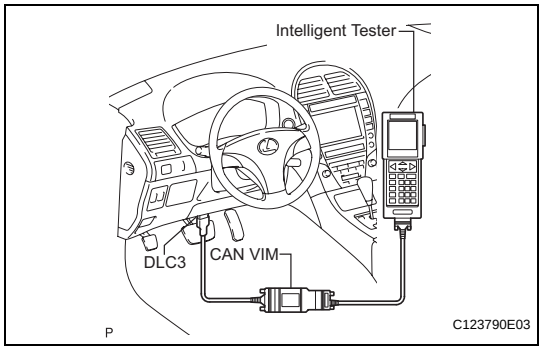

1. CHECK MODE PROCEDURE (Using an intelligent tester)

(a) Check and ensure the following conditions:
  (1) Battery positive voltage 11 V or more.
  (2) Throttle valve fully closed.
  (3) Transmission in the P or N position.
  (4) A/C switch OFF.
(b) Turn the engine switch off.
(c) Connect the intelligent tester to the DLC3.
(d) Turn the engine switch on (IG).
(e) Turn the tester on.
(f) Enter the following menus: DIAGNOSIS / ENHANCED OBD II / CHECK MODE.
(g) Switch the ECM from normal mode to check mode.

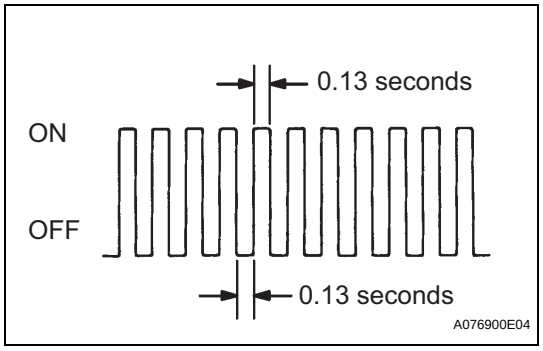

(h) Make sure that the MIL flashes as shown in the illustration.
(i) Start the engine.
(j) Make sure that the MIL turns off.
(k) Simulate the conditions of the malfunction described by the customer.
(l) Check for DTCs and freeze frame data using the tester.

ES

FAIL-SAFE CHART

If any of the following DTCs are set, the ECM enters fail-safe mode to allow the vehicle to be driven temporarily.

DTCs	Components	Fail-Safe Operations	Fail-Safe Deactivation Conditions
P0031, P0032, P0051 and P0052	Air-Fuel Ratio (A/F) Sensor Heater	ECM turns off A/F sensor heater	Engine switch off
P0037, P0038, P0057 and P0058	Heated Oxygen (HO2) Sensor Heater	ECM turns off HO2 sensor heater	Engine switch off
P0100, P0102 and P0103	Mass Air Flow (MAF) Meter	ECM calculates ignition timing according to engine speed and throttle valve position	Pass condition detected
P0110, P0112 and P0113	Intake Air Temperature (IAT) Sensor	ECM estimates IAT to be 20°C (68°F)	Pass condition detected
P0115, P0117 and P0118	Engine Coolant Temperature (ECT) Sensor	ECM estimates ECT to be 80°C (176°F)	Pass condition detected
P0120, P0121, P0122, P0123, P0220, P0222, P0223, P0604, P0606, P0607, P0657, P2102, P2103, P2111, P2112, P2118, P2119 and P2135	Electronic Throttle Control System (ETCS)	ECM cuts off throttle actuator current and throttle valve returned to 6.5° throttle position by return spring ECM then adjusts engine output by controlling fuel injection (intermittent fuel-cut) and ignition timing in accordance with accelerator pedal opening angle, to allow vehicle to continue at minimal speed*	Pass condition detected and then engine switch turned off
P0327, P0328, P0332 and P0333	Knock Sensor	ECM sets ignition timing to maximum retard	Engine switch off
P0351 to P0356	Igniter	ECM cuts fuel	Pass condition detected
P2120, P2121, P2122, P2123, P2125, P2127, P2128 and P2138	Accelerator Pedal Position (APP) Sensor	APP sensor has 2 sensor circuits: Main and Sub If either of circuits malfunctions, ECM controls engine using the other circuit If both of circuits malfunction, ECM regards accelerator pedal as being released. As a result, throttle valve is closed and engine idles	Pass condition detected and then engine switch turned off

NOTE:

*: The vehicle can be driven slowly when the accelerator pedal is depressed slowly. If the accelerator pedal is depressed quickly, the vehicle may speed up and slow down erratically.

DATA LIST / ACTIVE TEST

1. DATA LIST

HINT:
By reading the DATA LIST displayed on an intelligent tester, you can check values, including those of the switches, sensors, and actuators, without removing any parts. Reading the DATA LIST as the first step in troubleshooting is one method of shortening diagnostic time.

NOTICE:
In the table below, the values listed under Normal Condition are reference only. Do not depend solely on these values when determining whether or not a part is faulty.

(a) Warm up the engine.
(b) Turn the engine switch off.
(c) Connect the intelligent tester to the DLC3.
(d) Turn the engine switch on (IG).
(e) Turn the tester on.
(f) Enter the following menus: DIAGNOSIS / ENHANCED OBD II / DATA LIST.
(g) Check the values by referring to the table below.

Tester Display	Measurement Item/Range	Normal Condition	Diagnostic Note
INJECTOR	Injection period of No. 1 cylinder: Min.: 0 ms, Max.: 32.64 ms	1.2 to 2.4 ms: Idling	-
IGN ADVANCE	Ignition timing advance for No. 1 cylinder: Min.: -64 deg, Max.: 63.5 deg	BTDC 7 to 24 deg: Idling	-
CALC LOAD	Load calculated by ECM: Min.: 0%, Max.: 100%	• 10 to 20%: Idling • 10 to 20%: Running without load at 2,500 rpm	Load value
VEHICLE LOAD	Vehicle load: Min.: 0%, Max.: 25,700%	Actual vehicle load	Load percentage in terms of maximum intake air flow amount
MAF	Air flow rate from MAF meter: Min.: 0 g/sec., Max.: 655.35 g/sec.	2 to 5 g/sec.: Idling 8 to 19 g/sec.: Running without load at 2,500 rpm	If value is approximately 0.0 g/sec.: • Mass air flow meter power source circuit open • VG circuit open or shorted If value is 160.0 g/sec. or more: • E2G circuit open
ENGINE SPD	Engine speed: Min.: 0 rpm, Max.: 16,383.75 rpm	600 to 700 rpm: Idling	-
VEHICLE SPD	Vehicle speed: Min.: 0 km/h, Max.: 255 km/h	Actual vehicle speed	Speed indicated on speedometer
COOLANT TEMP	Engine coolant temperature: Min.: -40°C, Max.: 140°C	80 to 100°C (176 to 212°F): After warming up	• If value is -40°C (-40°F): sensor circuit open • If value is 140°C (284°F) or more: sensor circuit shorted
INTAKE AIR	Intake air temperature: Min.: -40°C, Max.: 140°C	Equivalent to ambient air temperature	• If value is -40°C (-40°F): sensor circuit open • If value is 140°C (284°F) or more: sensor circuit shorted
AIR-FUEL RATIO	Ratio compared to stoichiometric level: Min.: 0, Max.: 1.999	0.8 to 1.2: Idling	-
PURGE DENSITY	Learning value of purge density: Min.: -50, Max.: 350	-40 to 0: Idling	Service data

Tester Display	Measurement Item/Range	Normal Condition	Diagnostic Note
EVAP PURGE FLOW	Ratio of evaporative purge flow to intake air volume: Min.: 0%, Max.: 102.4%	0 to 8%: Idling	-
EVAP PURGE VSV	EVAP (PURGE) VSV control duty: Min.: 0%, Max.: 100%	0 to 100%: Idling	Command signal from ECM
VAPOR PRES PUMP	Vapor pressure: Min.: 33.853 kPa, Max.: 125.596 kPa	0 kPa: Fuel tank cap removed	EVAP system pressure monitored by canister pressure sensor
VAPOR PRES CALC	Vapor pressure (calculated): Min.: -5.632 kPa, Max.: 715.264 kPa	0 kPa: Fuel tank cap removed	EVAP system pressure monitored by canister pressure sensor
KNOCK CRRT VAL	Correction learning value of knocking: Min: -64°CA, Max.: 1,984°CA	0 to 22°CA: Driving at 70 km/h (44 mph)	Service data
KNOCK FB VAL	Feedback value of knocking: Min: -64°CA, Max.: 1,984°CA	-22 to 0°CA: Driving at 70 km/h (44 mph)	Service data
ACCEL POS #1	Absolute Accelerator Pedal Position (APP) No. 1: Min.: 0%, Max.: 100%	10 to 22%: Accelerator pedal released 54 to 86%: Accelerator pedal fully depressed	Read value with ignition switch ON (Do not start engine)
ACCEL POS #2	Absolute APP No. 2: Min.: 0%, Max.: 100%	12 to 42%: Accelerator pedal released 66 to 98%: Accelerator pedal fully depressed	Read value with ignition switch ON (Do not start engine)
ACCEL POS #1	APP sensor No. 1 voltage: Min.: 0 V, Max.: 4.98 V	-	ETCS freeze frame data
ACCEL POS #2	APP sensor No. 2 voltage: Min.: 0 V, Max.: 4.98 V	-	ETCS freeze frame data
ACCEL POS #1	APP sensor No. 1 voltage: Min.: 0 V, Max.: 5 V	0.5 to 1.1 V: Accelerator pedal released 2.6 to 4.5 V: Accelerator pedal fully depressed	Read value with ignition switch ON (Do not start engine)
ACCEL POS #2	APP sensor No. 2 voltage: Min.: 0 V, Max.: 5 V	1.2 to 2.0 V: Accelerator pedal released 3.4 to 5.0 V: Accelerator pedal fully depressed	Read value with ignition switch ON (Do not start engine)
ACCEL IDL POS	Whether or not accelerator pedal position sensor detecting idle: ON or OFF	ON: Idling	-
THRTL LEARN VAL	Throttle valve fully closed (learned value): Min.: 0 V, Max.: 5 V	0.4 to 0.8 V	-
ACCEL SSR #1 AD	Accelerator fully closed value No. 1 (AD): Min.: 0 V, Max.: 4.98 V	-	ETCS service data
ACCEL LRN VAL#1	Accelerator fully closed learning value No. 1: Min.: 0 deg, Max.: 124.512 deg	-	ETCS service data
ACCEL LRN VAL#2	Accelerator fully closed learning value No. 2: Min.: 0 deg, Max.: 124.512 deg	-	ETCS service data
FAIL #1	Whether or not fail safe function executed: ON or OFF	ON: ETCS has failed	-
FAIL #2	Whether or not fail safe function executed: ON or OFF	ON: ETCS has failed	-
ST1	Starter signal: ON or OFF	ON: Cranking	-
SYS GUARD JUDGE	System guard: ON or OFF	-	ETCS service data

Tester Display	Measurement Item/Range	Normal Condition	Diagnostic Note
OPN MALFUNCTION	Open side malfunction: ON or OFF	-	ETCS service data
THROTTLE POS	Absolute throttle position sensor: Min.: 0%, Max.: 100%	• 10 to 24%: Throttle fully closed • 64 to 96%: Throttle fully open	• Calculated value based on VTA1 • Read value with ignition switch ON (Do not start engine)
THROTTL IDL POS	Whether or not throttle position sensor detecting idle: ON or OFF	ON: Idling	-
THRTL REQ POS	Throttle requirement position: Min.: 0 V, Max.: 5 V	0.5 to 1.0 V: Idling	-
THROTTLE POS	Throttle position: Min.: 0%, Max.: 100%	0 to 18%: Idling	Calculated value based on VTA1
THROTTLE POS #2	Absolute throttle position sensor No. 2: Min.: 0%, Max.: 100%	-	Calculated value based on VTA2
THROTTLE POS #1	Throttle position sensor No. 1 output voltage: Min.: 0 V, Max.: 4.98 V	-	ETCS freeze frame data
THROTTLE POS #2	Throttle position sensor No. 2 output voltage: Min.: 0 V, Max.: 4.98 V	-	ETCS freeze frame data
THROTTLE POS #1	Throttle position sensor No. 1 output voltage: Min.: 0 V, Max.: 5 V	• 0.5 to 1.2 V: Throttle fully closed • 3.2 to 4.8 V: Throttle fully open	-
THROTTLE POS #2	Throttle position sensor No. 2 output voltage: Min.: 0 V, Max.: 5 V	• 2.0 to 2.9 V: Throttle fully closed • 4.6 to 5.0 V: Throttle fully open	Read value with ignition switch ON (Do not start engine)
THRTL COMND VAL	Throttle position command value: Min.: 0 V, Max.: 4.9804 V	0.5 to 4.8 V	Read value with ignition switch ON (Do not start engine)
THROTTLE SSR #1	Throttle sensor opener position No. 1: Min.: 0 V, Max.: 4.9804 V	0.6 to 0.9 V	ETCS service data
THROTTLE SSR #2	Throttle sensor opener position No. 2: Min.: 0 V, Max.: 4.9804 V	2.2 to 2.6 V	ETCS service data
THRTL SSR #1 AD	Throttle position sensor No. 1 output voltage (AD): Min.: 0 V, Max.: 4.9804 V	0.6 to 0.9 V	ETCS service data
THROTTLE MOT	Whether or not throttle actuator control permitted: ON or OFF	ON: Idling	Read value with ignition switch ON (Do not start engine)
THROTTLE MOT	Throttle actuator current: Min.: 0 A, Max.: 80 A	0 to 3.0 A: Idling	-
THROTTLE MOT	Throttle actuator: Min.: 0%, Max.: 100%	0.5 to 40%: Idling	-
THROTTLE MOT	Throttle actuator current: Min.: 0 A, Max.: 19.92 A	0 to 3.0 A: Idling	-
THROTL OPN DUTY	Throttle actuator opening duty ratio: Min.: 0%, Max.: 100%	0 to 40%: Idling	• When accelerator pedal is depressed, duty ratio increaseds • Read value with ignition switch ON (Do not start engine)
THROTL CLS DUTY	Throttle actuator closed duty ratio: Min.: 0%, Max.: 100%	0 to 40%: Idling	• When accelerator pedal is increaseds quickly, duty ratio increaseds • Read value with ignition switch ON (Do not start engine)

Tester Display	Measurement Item/Range	Normal Condition	Diagnostic Note
THRTL MOT (OPN)	Throttle actuator duty ratio (open): Min.: 0%, Max.: 100%	-	ETCS service data
THRTL MOT (CLS)	Throttle actuator duty ratio (closed): Min.: 0%, Max.: 100%	-	ETCS service data
O2S B1 S2	Heated oxygen sensor output voltage for bank 1 sensor 2: Min.: 0 V Max.: 1.275 V	0.1 to 0.9 V: Driving at 70 km/h (44 mph)	Performing INJ VOL or A/F CONTROL function of ACTIVE TEST enables technician to check output voltage of sensor
O2S B2 S2	Heated oxygen sensor output voltage for bank 2 sensor 2: Min.: 0 V Max.: 1.275 V	0.1 to 0.9 V: Driving at 70 km/h (44 mph)	Performing INJ VOL or A/F CONTROL function of ACTIVE TEST enables technician to check output voltage of sensor
AFS B1 S1	A/F sensor output voltage for bank 1 sensor 1: Min.: 0 V Max.: 7.999 V	2.8 to 3.8 V: Idling	Performing INJ VOL or A/F CONTROL function of ACTIVE TEST enables technician to check output voltage of sensor
AFS B2 S1	A/F sensor output voltage for bank 2 sensor 1: Min.: 0 V Max.: 7.999 V	2.8 to 3.8 V: Idling	Performing INJ VOL or A/F CONTROL function of ACTIVE TEST enables technician to check output voltage of sensor
AFS B2 S1	A/F sensor current: Min.: -128 mA, Max.: 127.99 mA	-	-
TOTAL FT #1	Total fuel trim of bank 1 Average value for fuel system of bank 1: Min.: -0.5, Max.: 0.496	-0.2 to 0.2: Idling	-
TOTAL FT #2	Total fuel trim of bank 2 Average value for fuel system of bank 2: Min.: -0.5, Max.: 0.496	-0.2 to 0.2: Idling	-
SHORT FT #1	Short-term fuel trim of bank 1: Min.: -100%, Max.: 99.2%	-20 to 20%	Short-term fuel compensation used to maintain air-fuel ratio at stoichiometric air-fuel ratio
SHORT FT #2	Short-term fuel trim of bank 2: Min.: -100%, Max.: 99.2%	-20 to 20%	Short-term fuel compensation used to maintain air-fuel ratio at stoichiometric air-fuel ratio
LONG FT #1	Long-term fuel trim of bank 1: Min.: -100%, Max.: 99.2%	-20 to 20%	Overall fuel compensation carried out in long-term to compensate for continual deviation of short-term fuel trim from central value
LONG FT #2	Long-term fuel trim of bank 2: Min.: -100%, Max.: 99.2%	-20 to 20%	Overall fuel compensation carried out in long-term to compensate for continual deviation of short-term fuel trim from central value
FUEL SYS #1	Fuel system status (Bank 1): OL or CL or OL DRIVE or OL FAULT or CL FAULT	CL: Idling after warming up	• OL (Open Loop): Has not yet satisfied conditions to go closed loop • CL (Closed Loop): Using A/F sensor as feedback for fuel control • OL DRIVE: Open loop due to driving conditions (fuel enrichment) • OL FAULT: Open loop due to detected system fault • CL FAULT: Closed loop but A/F sensor, which used for fuel control malfunctioning

Tester Display	Measurement Item/Range	Normal Condition	Diagnostic Note
FUEL SYS #2	Fuel system status (Bank 2): OL or CL or OL DRIVE or OL FAULT or CL FAULT	CL: Idling after warming up	• OL (Open Loop): Has not yet satisfied conditions to go closed loop • CL (Closed Loop): Using A/F sensor as feedback for fuel control • OL DRIVE: Open loop due to driving conditions (fuel enrichment) • OL FAULT: Open loop due to detected system fault • CL FAULT: Closed loop but A/F sensor, which used for fuel control, malfunctioning
O2FT B1 S2	Short-term fuel trim associated with bank 1 sensor 2: Min.: -100%, Max.: 99.2%	-20 to 20%	Same as SHORT FT #1
O2FT B2 S2	Short-term fuel trim associated with bank 2 sensor 2: Min.: -100%, Max.: 99.2%	-20 to 20%	Same as SHORT FT #2
AF FT B1 S1	Short-term fuel trim associated with bank 1 sensor 1: Min.: 0, Max.: 1.999	• Value less than 1 (0.000 to 0.999) = Lean • Stoichiometric air-fuel ratio = 1 • Value greater than 1 (1.001 to 1.999) = Rich	-
AF FT B2 S1	Short-term fuel trim associated with bank 2 sensor 1: Min.: 0, Max.: 1.999	• Value less than 1 (0.000 to 0.999) = Lean • Stoichiometric air-fuel ratio = 1 • Value greater than 1 (1.001 to 1.999) = Rich	-
AFS B1 S1	A/F sensor current: Min.: -128 mA, Max.: 127.99 mA	-	-
CAT TEMP B1S1	Estimated catalyst temperature (bank 1 sensor 1): Min.: -40°C, Max.: 6,513.5°C	-	-
CAT TEMP B1S2	Estimated catalyst temperature (bank 1 sensor 2): Min.: -40°C, Max.: 6,513.5°C	-	-
CAT TEMP B2S1	Estimated catalyst temperature (bank 2 sensor 1): Min.: -40°C, Max.: 6,513.5°C	-	-
CAT TEMP B2S2	Estimated catalyst temperature (bank 2 sensor 2): Min.: -40°C, Max.: 6,513.5°C	-	-
S O2S B1S2	Sub heated oxygen sensor impedance (bank 1 sensor 2): Min.: 0 Ω, Max.: 21,247.68 Ω	-	-
S O2S B2S2	Sub heated oxygen sensor impedance (bank 2 sensor 2): Min.: 0 Ω, Max.: 21,247.68 Ω	-	-
INI COOL TEMP	Engine coolant temperature at engine start: Min.: -40°C, Max.: 120°C	Close to ambient air temperature	-
INI INTAKE TEMP	Intake air temperature at engine start: Min.: -40°C, Max.: 120°C	Close to ambient air temperature	-
INJ VOL	Injection volume (cylinder 1): Min.: 0 ml, Max.: 2.048 ml	Max.: 0.5 ml	Fuel volume injected over 10 injections
ACC RELAY	ACC relay/ON or OFF	ON: Cranking	-
STARTER RELAY	Starter relay/ON or OFF	ON: Cranking	-

Tester Display	Measurement Item/Range	Normal Condition	Diagnostic Note
STARTER SIG	Starter signal: ON or OFF	ON: Cranking	-
STARTER CONTROL	Starter switch signal: ON or OFF	-	-
PS SW	Power steering signal: ON or OFF	ON: Power steering operation	-
PS SIGNAL	Power steering signal (history): ON or OFF	ON: When steering wheel is first turned after battery terminals connected	Signal status usually ON until battery terminals disconnected
CTP SW	Closed throttle position switch: ON or OFF	• ON: Throttle fully closed • OFF: Throttle open	-
A/C SIGNAL	A/C signal: ON or OFF	ON: A/C ON	-
PNP SW [NSW]	PNP switch status: ON or OFF	ON: P or N position	-
ELECT LOAD SIG	Electrical load signal: ON or OFF	ON: Headlights or defogger turned ON	-
STOP LIGHT SW	Stop light switch: ON or OFF	ON: Brake pedal depressed	-
+BM	Whether or not electric throttle control system power input: ON or OFF	ON: Idling	-
+BM VOLTAGE	+BM voltage: Min.: 0, Max.: 19.922	10 to 15 V: Idling	ETCS service data
BATTERY VOLTAGE	Battery voltage: Min.: 0 V, Max.: 65.535 V	9 to 14 V: Idling	-
ACTUATOR POWER	Actuator power supply: ON or OFF	ON: Idling	ETCS service data
ATM PRESSURE	Atmospheric pressure: Min.: 0 kPa, Max.: 255 kPa	Equivalent to atmospheric pressure (absolute pressure)	-
ACIS VSV	VSV for Acoustic Control Induction System Status: ON or OFF	-	ON: Open OFF: Closed
VVT CTRL B2	VVT control (bank 2) status: ON or OFF	-	Active Test support data
EVAP (Purge) VSV	Purge VSV status: ON or OFF	-	Active Test support data
FUEL PUMP / SPD	Fuel pump status: ON or OFF	-	Active Test support data
VVT CTRL B1	VVT control (bank 1) status: ON or OFF	-	Active Test support data
VACUUM PUMP	Key-off EVAP system leak detection pump status: ON or OFF	-	Active Test support data
EVAP VENT VAL	Key-off EVAP system vent valve status: ON or OFF	-	Active Test support data
FAN MOTOR	Electric fan motor: ON or OFF	ON: Electric fan motor operating	Active Test support data
AICV VSV	VSV for Air Intake Control System Status: ON or OFF	-	-
TC/TE1	TC and CG (TE1) terminal of DLC3: ON or OFF	-	Active Test support data
ENG SPEED #1	Engine Speed of Cylinder #1 of Injection Stopped	-	-
ENG SPEED #2	Engine Speed of Cylinder #21 of Injection Stopped	-	-

Tester Display	Measurement Item/Range	Normal Condition	Diagnostic Note
ENG SPEED #3	Engine Speed of Cylinder #3 of Injection Stopped	-	-
ENG SPEED #4	Engine Speed of Cylinder #4 of Injection Stopped	-	-
ENG SPEED #5	Engine Speed of Cylinder #5 of Injection Stopped	-	-
ENG SPEED #6	Engine Speed of Cylinder #6 of Injection Stopped	-	-
ENG SPEED #ALL	Avg Eng Spd, All Cylinder of Injection Stopped	-	-
VVTL AIM ANGL#1*	VVT aim angle (bank 1 Intake side): Min.: 0%, Max.: 100%	-	-
VVT CHNG ANGL#1*	VVT change angle (bank 1 Intake side): Min.: 0°FR, Max.: 60°FR	0 to 5°FR: Idling	Displacement angle during intrusive operation
VVT OCV DUTY B1*	VVT OCV operation duty (bank 1 Intake side): Min.: 0%, Max.: 100%	0 to 100%	Requested duty value for intrusive operation
VVT EX HOLD B1*	VVT exhaust hold duty ratio learning value (bank 1 Exhaust side): Min.: 0%, Max.: 100%	10 to 50%: Idling	Requested duty value for intrusive operation
VVT EX CHG ANG1*	VVT change angle (bank 1 Exhaust side): Min.: 0° FR, Max.: 60° FR	0 to 5° FR: Idling	Displacement angle during intrusive operation
VVT EX OCV D B1*	VVT OCV operation duty (bank 1 Exhaust side): Min.: 0%, Max.: 100%	0 to 100%	Requested duty value for intrusive operation
VVTL AIM ANGL #2*	VVT aim angle (bank 2 Intake side): Min.: 0%, Max.: 100%	-	-
VVT CHNG ANGL #2*	VVT change angle (bank 2 Intake side): Min.: 0° FR, Max.: 60° FR	0 to 5° FR: Idling	Displacement angle during intrusive operation
VVT OCV DUTY B2*	VVT OCV operation duty (bank 2 Intake side): Min.: 0%, Max.: 100%	0 to 100%	Requested duty value for intrusive operation
VVT EX HOLD B2*	VVT exhaust hold duty ratio learning value (bank 2 Exhaust side): Min.: 0%, Max.: 100%	10 to 50%: Idling	Requested duty value for intrusive operation
VVT EX CHG ANG2*	VVT change angle (bank 2 Exhaust side): Min.: 0° FR, Max.: 60° FR	0 to 5° FR: Idling	Displacement angle during intrusive operation
VVT EX OCV D B2*	VVT exhaust operation duty (bank 2 Exhaust side): Min.: 0%, Max.: 100%	0 to 100%	Requested duty value for intrusive operation
FC IDL	Fuel cut idle: ON or OFF	ON: Fuel cut operation	FC IDL = "ON" when throttle valve fully closed and engine speed over 2,800 rpm
FC TAU	Fuel cut TAU (Fuel cut with very light load): ON or OFF	ON: Fuel cut operating	Fuel cut being performed with very light load to prevent incomplete engine combustion
IGNITION	Ignition counter: Min.: 0, Max.: 800	0 to 800	-
CYL #1	Misfire ratio of cylinder 1: Min.: 0, Max.: 255	0	This item displayed only during idling
CYL #2	Misfire ratio of cylinder 2: Min.: 0, Max.: 255	0	This item displayed only during idling

Tester Display	Measurement Item/Range	Normal Condition	Diagnostic Note
CYL #3	Misfire ratio of cylinder 3: Min.: 0, Max.: 255	0	This item displayed only during idling
CYL #4	Misfire ratio of cylinder 4: Min.: 0, Max.: 255	0	This item displayed only during idling
CYL #5	Misfire ratio of cylinder 5: Min.: 0, Max.: 255	0	This item displayed only during idling
CYL #6	Misfire ratio of cylinder 6: Min.: 0, Max.: 255	0	This item displayed only during idling
CYL ALL	All cylinders misfire rate: Min.: 0, Max.: 255	0 to 35	-
MISFIRE RPM	Engine RPM for first misfire range: Min.: 0 rpm, Max.: 6,375 rpm	0 rpm: Misfire 0	-
MISFIRE LOAD	Engine load for first misfire range: Min.: 0 g/rev, Max.: 3.98 g/rev	0 g/rev: Misfire 0	-
MISFIRE MARGIN	Misfire monitoring: Min.: -100%, Max.: 99.22%	-100 to 99.22%	Misfire detecting margin
#CODES	#Codes: Min.: 0, Max.: 255	-	Number of detected DTCs
CHECK MODE	Check mode: ON or OFF	ON: Check mode ON	(See page ES-45)
SPD TEST	Check mode result for vehicle speed sensor: COMPL or INCMPL	-	-
MISFIRE TEST	Check mode result for misfire monitor: COMPL or INCMPL	-	-
OXS2 TEST	Check mode result for HO2 sensor (bank 2): COMPL or INCMPL	-	-
OXS1 TEST	Check mode result for HO2 sensor (bank 1): COMPL or INCMPL	-	-
A/F SSR TEST B1	Check mode result for air-fuel ratio sensor (bank 1): COMPL or INCMPL	-	-
A/F SSR TEST B2	Check mode result for air-fuel ratio sensor (bank 2): COMPL or INCMPL	-	-
MIL	MIL status: ON or OFF	ON: MIL ON	-
MIL ON RUN DIST	MIL ON run distance: Min.: 0 mile, Max.: 105,465 mile	Distance driven after DTC detected	-
MIL ON RUN TIME	Running time from MIL ON: Min.: 0 minutes, Max.: 65,535 minutes	Running time after MIL ON	-
ENG RUN TIME	Engine run time: Min.: 0 seconds, Max.: 65,535 seconds	Time after engine start	-
TIME DTC CLEAR	Time after DTC cleared: Min.: 0 minutes, Max.: 65,535 minutes	Time after DTCs erased	-
DIST DTC CLEAR	Distance after DTC cleared: Min.: 0 mile, Max.: 105,465 mile	Distance driven after DTCs erased	-
WU CYC DTC CLEAR	Warm-up cycle after DTC cleared: Min.: 0, Max.: 255	-	Number of warm-up cycles after DTC cleared
OBD CERT	OBD requirement	OBD2	-
#CARB CODES	Number of emission related DTCs	-	-

Tester Display	Measurement Item/Range	Normal Condition	Diagnostic Note
COMP MON	Comprehensive component monitor: NOT AVL or AVAIL	-	-
FUEL MON	Fuel system monitor: NOT AVL or AVAIL	-	-
MISFIRE MON	Misfire monitor: NOT AVL or AVAIL	-	-
EGR MON	EGR monitor: NOT AVL or AVAIL	-	-
EGR MON	EGR monitor: COMPL or INCMPL	-	-
O2S (A/FS) HTR	O2S (A/FS) heater monitor: NOT AVL or AVAIL	-	-
O2S (A/FS) HTR	O2S (A/FS) heater monitor: COMPL or INCMPL	-	-
O2S (A/FS) MON	O2S (A/FS) monitor: NOT AVL or AVAIL	-	-
O2S (A/FS) MON	O2S (A/FS) monitor: COMPL or INCMPL	-	-
A/C MON	A/C monitor: NOT AVL or AVAIL	-	-
A/C MON	A/C monitor: COMPL or INCMPL	-	-
2nd AIR MON	Secondary Air monitor: NOT AVL or AVAIL	-	-
2nd AIR MON	Secondary Air monitor: COMPL or INCMPL	-	-
EVAP MON	EVAP monitor: NOT AVL or AVAIL	-	-
EVAP MON	EVAP monitor: COMPL or INCMPL	-	-
HTD CAT MON	Heated catalyst monitor: NOT AVL or AVAIL	-	-
HTD CAT MON	Heated catalyst monitor: COMPL or INCMPL	-	-
CAT MON	Catalyst monitor: NOT AVL or AVAIL	-	-
CAT MON	Catalyst monitor: COMPL or INCMPL	-	-
CCM ENA	Comprehensive component monitor: UNABLE or ENABLE	-	-
CCM CMPL	Comprehensive component monitor: COMPL or INCMPL	-	-
FUEL ENA	Fuel system monitor: UNABLE or ENABLE	-	-
FUEL CMPL	Fuel system monitor: COMPL or INCMPL	-	-
MISFIRE ENA	Misfire monitor: UNABLE or ENABLE	-	-
MISFIRE CMPL	Misfire monitor: COMPL or INCMPL	-	-
EGR ENA	EGR monitor: UNABLE or ENABLE	-	-
EGR CMPL	EGR monitor: COMPL or INCMPL	-	-

Tester Display	Measurement Item/Range	Normal Condition	Diagnostic Note
HTR ENA	O2S (A/FS) heater monitor: UNABLE or ENABLE	-	-
HTR CMPL	O2S (A/FS) heater monitor: COMPL or INCMPL	-	-
O2S (A/FS) ENA	O2S (A/FS) monitor: UNABLE or ENABLE	-	-
O2S (A/FS) CMPL	O2S (A/FS) monitor: COMPL or INCMPL	-	-
ACRF ENA	A/C monitor: UNABLE or ENABLE	-	-
ACRF CMPL	A/C monitor: COMPL or INCMPL	-	-
AIR ENA	2nd Air monitor: UNABLE or ENABLE	-	-
AIR CMPL	2nd Air monitor: COMPL or INCMPL	-	-
EVAP ENA	EVAP monitor: UNABLE or ENABLE	-	-
EVAP CMPL	EVAP monitor: COMPL or INCMPL	-	-
HCAT ENA	Heated catalyst monitor: UNABLE or ENABLE	-	-
HCAT CMPL	Heated catalyst monitor: COMPL or INCMPL	-	-
CAT ENA	Catalyst monitor: UNABLE or ENABLE	-	-
CAT CMPL	Catalyst monitor: COMPL or INCMPL	-	-
MODEL CODE	Model code information	-	Identifying model code: GSV40#
ENGINE TYPE	Engine type information	-	Identifying engine type: 2GRFE
CYLINDER NUMBER	Cylinder number: Min.: 0, Max.: 255	-	Identifying cylinder number: 6
TRANSMISSION	Transmission type information	-	Identifying transmission type: 6AT
DESTINATION	Destination information	-	Identifying destination: A (America)
MODEL YEAR	Model year: Min.: 1900, Max.: 2155	-	Identifying model year: 2007MY
SYSTEM	Engine system information	-	Identifying engine system: GASLIN (gasoline engine)

HINT:

- *: DATA LIST values are displayed only when performing the following ACTIVE TESTs: VVT B1, VVT B2, VVT EX B1 and VVT EX B2. For other ACTIVE TESTs, the DATA LIST value will be 0.
- Normal Condition: If no idling conditions are specified, the transmission gear selector lever should be in the N or P position, and the A/C switch and all accessory switches should be OFF.

2. ACTIVE TEST

HINT:

Performing an ACTIVE TEST enables components including the relays, VSV (Vacuum Switching Valve) and actuators, to be operated without removing any parts. The ACTIVE TEST can be performed with an intelligent tester. Performing an ACTIVE TEST as the first step in troubleshooting is one method of shortening diagnostic time.

DATA LIST can be displayed during ACTIVE TEST.

(a) Connect the intelligent tester to the DLC3.
(b) Turn the engine switch on (IG).
(c) Turn the tester on.
(d) Enter the following menus: DIAGNOSIS / ENHANCED OBD II / ACTIVE TEST.
(e) Perform the ACTIVE TEST by referring to the table below.

Tester Display	Test Part	Control Range	Diagnostic Note
INJ VOL	Change injection volume	Between -12.5 and 24.8 %	• All injectors tested at the same time • Perform test at less than 3,000 rpm • Injection volume can be changed in 1 % graduations within control range
A/F CONTROL	Change injection volume	Lower by 12.5 % or increase by 24.8 %	• Perform test at less than 3,000 rpm • A/F CONTROL enables to check and to graph A/F (Air Fuel Ratio) sensor and Heated Oxygen (HO2) sensor voltage outputs • To conduct test, select following menu items: ACTIVE TEST / A/F CONTROL / USER DATA / AFS B1S1 and O2S B1S2, and press YES and ENTER followed by F4
INTAKE CTL VSV1	Activate VSV for intake control	ON/OFF	• ON: ACIS VSV ON • OFF: ACIS VSV OFF
EVAP VSV (ALONE)	Activate EVAP VSV control	ON/OFF	-
FUEL PUMP / SPD	Activate fuel pump (C/OPN Relay)	ON/OFF	-
TC/TE1	Turn on and off TC and TE1 connection	ON/OFF	• ON: TC and TE1 connected • OFF: TC and TE1 disconnected
FC IDL PROHBT	Prohibit idling fuel cut control	ON/OFF	-
COOLING FAN	Control Electric Cooling Fan	ON/OFF	Test is possible when following conditions are met: • Ignition switch is on (IG) • Ignition is stopped
STARTER	Starter	ON/OFF	-
ACC CUT	Active ACC cut relay	ON/OFF	Test is possible when following conditions are met: • Ignition switch is on (IG) • Ignition is stopped

Tester Display	Test Part	Control Range	Diagnostic Note
ETCS OPEN SLOW	Throttle actuator	ON: Throttle valve opens slowly	Test is possible when following conditions are met: • Ignition switch is on (IG) • Ignition is stopped • Accelerator pedal is fully depressed (APP: 58 degrees or more)
ETCS CLOSE SLOW	Throttle actuator	ON: Throttle valve closes slowly	Same as above
ETCS OPEN FAST	Throttle actuator	ON: Throttle valve opens fast	Same as above
ETCS CLOSE FAST	Throttle actuator	ON: Throttle valve closes fast	Same as above
VVT B1	Control VVT (bank 1)	-128 to 127 % This valve added to present OCV control duty 100 %: Maximum advance -100 %: Maximum retard	Engine stalls or roughly idles when VVT actuator is operated by 100 %. Test is possible during idling.
VVT CTRL B1	Turn on and off OCV (Oil Control Valve)	ON/OFF	• Engine stalls or idles roughly when OCV turned ON • Normal engine running or idling when OCV OFF
VVT B2	Control VVT (bank 2)	Between -128 and 127%	Engine stalls or roughly idles when VVT actuator is operated by 100 %. Test is possible during idling.
VVT CTRL B2	Turn on and off OCV (Oil Control Valve)	ON/OFF	• Engine stalls or idles roughly when OCV turned ON • Normal engine running or idling when OCV OFF
VVT EX B1	Control VVT (bank 1)	-128 to 127 % This valve added to present OCV control duty 100 %: Maximum advance -100 %: Maximum retard	-
VVT EX B2	Control VVT (bank 2)	Between -128 and 127 %	-
VACUUM PUMP	Vacuum pump	ON/OFF	-
VENT VALVE	Vent valve	ON/OFF	-
AICV VSV	AICV VSV	ON/OFF	-
FUEL CUT #1	Cylinder #1 injector fuel cut	ON/OFF	Test is possible during vehicle stopping and engine idling.
FUEL CUT #2	Cylinder #2 injector fuel cut	ON/OFF	Same as above
FUEL CUT #3	Cylinder #3 injector fuel cut	ON/OFF	Same as above
FUEL CUT #4	Cylinder #4 injector fuel cut	ON/OFF	Same as above
FUEL CUT #5	Cylinder #5 injector fuel cut	ON/OFF	Same as above
FUEL CUT #6	Cylinder #6 injector fuel cut	ON/OFF	Same as above
FUEL CUT ALL	Control the all cylinder fuel cut	ON/OFF	Same as above
COMPRESS CHECK	Check the cylinder compression pressure	ON/OFF	Fuel injection and ignition stop in all cylinders.

3. SYSTEM CHECK

HINT:

Performing a SYSTEM CHECK enables the system, which consists of multiple actuators, to be operated without removing any parts. In addition, it can show whether or not any DTCs are set, and can detect potential malfunctions in the system. The SYSTEM CHECK can be performed with an intelligent tester.

(a) Connect the intelligent tester to the DLC3.

(b) Turn the engine switch on (IG).

(c) Turn the tester on.

(d) Enter the following menus: DIAGNOSIS / ENHANCED OBD II / SYSTEM CHECK.

(e) Perform the SYSTEM CHECK by referring to the table below.

ECM:

Tester Display	Test Part	Control Range	Diagnostic Note
OS2/RPM CHECK	Graphs HO2S voltage	-	-
FUEL CONSUMPTION	Long: Indicates fuel consumption for maximum 60 sec. Short: Indicates fuel consumption for maximum 20 sec.	-	While driving (vehicle speed 3.1 mph (5 km/h) or more)
EVAP SYS CHECK (AUTO OPERATION)	Perform 5 steps in order to operate EVAP key-off monitor automatically	-	35°C (95°F) or less
EVAP SYS CHECK (MANUAL OPERATION)	Perform 5 steps in order to operate EVAP key-off monitor manually	-	35°C (95°F) or less

DIAGNOSTIC TROUBLE CODE CHART

HINT:
The parameters listed in the chart may not conform exactly to those read during the DTC check due to the type of instrument or other factors.
If a trouble code is displayed during the DTC check in the check mode, check the circuit for the code listed in the table below. For details of each code, refer to the "See page" column in the DTC chart.

ES

SFI SYSTEM:

DTC Code	Detection Item	Suspected Trouble Area	MIL	Memory	See page
P0010	Camshaft Position "A" Actuator Circuit (Bank 1)	1. Open or short in Oil Control Valve (OCV) for intake camshaft circuit 2. OCV for intake camshaft (bank 1) 3. ECM	Comes on	DTC stored	ES-75
P0011	Camshaft Position "A" - Timing Over-Advanced or System Performance (Bank 1)	1. Valve timing 2. OCV for intake camshaft 3. OCV filter 4. Intake camshaft timing gear assembly 5. ECM	Comes on	DTC stored	ES-80
P0012	Camshaft Position "A" - Timing Over-Retarded (Bank 1)	Same as DTC P0011	Comes on	DTC stored	ES-80
P0013	Camshaft Position "B" Actuator Circuit / Open (Bank 1)	1. Open or short in Oil Control Valve (OCV) for exhaust camshaft circuit 2. OCV for exhaust camshaft (bank 1) 3. ECM	Comes on	DTC stored	ES-87
P0014	Camshaft Position "B" - Timing Over-Advanced or System Performance (Bank 1)	1. Valve timing 2. OCV for exhaust camshaft 3. OCV filter 4. Exhaust camshaft 5. ECM	Comes on	DTC stored	ES-92
P0015	Camshaft Position "B" - Timing Over-Retarded (Bank 1)	Same as DTC P0014	Comes on	DTC stored	ES-92
P0016	Crankshaft Position - Camshaft Position Correlation (Bank 1 Sensor A)	1. Mechanical system (Timing chain has jumped teeth or chain is stretched) 2. ECM	Comes on	DTC stored	ES-100
P0017	Crankshaft Position - Camshaft Position Correlation (Bank 1 Sensor B)	Same as DTC P0016	Comes on	DTC stored	ES-100
P0018	Crankshaft Position - Camshaft Position Correlation (Bank 2 Sensor A)	Same as DTC P0016	Comes on	DTC stored	ES-100
P0019	Crankshaft Position - Camshaft Position Correlation (Bank 2 Sensor B)	Same as DTC P0016	Comes on	DTC stored	ES-100

DTC Code	Detection Item	Suspected Trouble Area	MIL	Memory	See page
P0020	Camshaft Position "A" Actuator Circuit (Bank 2)	1. Open or short in Oil Control Valve (OCV) for intake camshaft circuit 2. OCV for intake camshaft (bank 2) 3. ECM	Comes on	DTC stored	ES-75
P0021	Camshaft Position "A" - Timing Over-Advanced or System Performance (Bank 2)	Same as DTC P0011	Comes on	DTC stored	ES-80
P0022	Camshaft Position "A" - Timing Over-Retarded (Bank 2)	Same as DTC P0011	Comes on	DTC stored	ES-80
P0023	Camshaft Position "B" Actuator Circuit / Open (Bank 2)	1. Open or short in Oil Control Valve (OCV) for exhaust camshaft circuit 2. OCV for exhaust camshaft (bank 2) 3. ECM	Comes on	DTC stored	ES-87
P0024	Camshaft Position "B" - Timing Over-Advanced or System Performance (Bank 2)	Same as DTC P0014	Comes on	DTC stored	ES-92
P0025	Camshaft Position "B" - Timing Over-Retarded (Bank 2)	Same as DTC P0014	Comes on	DTC stored	ES-92
P0031	Oxygen (A/F) Sensor Heater Control Circuit Low (Bank 1 Sensor 1)	1. Open in Air-Fuel Ratio (A/F) sensor heater circuit 2. A/F sensor heater (bank 1 sensor 1) 3. A/F sensor heater relay 4. ECM	Comes on	DTC stored	ES-103
P0032	Oxygen (A/F) Sensor Heater Control Circuit High (Bank 1 Sensor 1)	1. Short in A/F sensor heater circuit 2. A/F sensor heater (bank 1 sensor 1) 3. A/F sensor heater relay 4. ECM	Comes on	DTC stored	ES-103
P0037	Oxygen Sensor Heater Control Circuit Low (Bank 1 Sensor 2)	1. Open in Heated Oxygen (HO2) sensor heater circuit 2. HO2 sensor heater (bank 1 sensor 2) 3. Engine room junction block (EFI relay) 4. ECM	Comes on	DTC stored	ES-111
P0038	Oxygen Sensor Heater Control Circuit High (Bank 1 Sensor 2)	1. Short in HO2 sensor heater circuit 2. HO2 sensor heater (bank 1 sensor 2) 3. Engine room junction block (EFI relay) 4. ECM	Comes on	DTC stored	ES-111

DTC Code	Detection Item	Suspected Trouble Area	MIL	Memory	See page
P0051	Oxygen (A/F) Sensor Heater Control Circuit Low (Bank 2 Sensor 1)	1. Open in A/F sensor heater circuit 2. A/F sensor heater (bank 2 sensor 1) 3. A/F sensor heater relay 4. ECM	Comes on	DTC stored	ES-103
P0052	Oxygen (A/F) Sensor Heater Control Circuit High (Bank 2 Sensor 1)	1. Short in A/F sensor heater circuit 2. A/F sensor heater (bank 2 sensor 1) 3. A/F sensor heater relay 4. ECM	Comes on	DTC stored	ES-103
P0057	Oxygen Sensor Heater Control Circuit Low (Bank 2 Sensor 2)	1. Open in HO2 sensor heater circuit 2. HO2 sensor heater (bank 2 sensor 2) 3. Engine room junction block (EFI relay) 4. ECM	Comes on	DTC stored	ES-111
P0058	Oxygen Sensor Heater Control Circuit High (Bank 2 Sensor 2)	1. Short in HO2 sensor heater circuit 2. HO2 sensor heater (bank 2 sensor 2) 3. Engine room junction block (EFI relay) 4. ECM	Comes on	DTC stored	ES-111
P0100	Mass or Volume Air Flow Circuit	1. Open or short in Mass Air Flow (MAF) meter circuit 2. MAF meter 3. ECM	Comes on	DTC stored	ES-121
P0101	Mass Air Flow Circuit Range / Performance Problem	MAF meter	Comes on	DTC stored	ES-129
P0102	Mass or Volume Air Flow Circuit Low Input	1. Open in MAF meter circuit 2. Short in MAF meter circuit 3. MAF meter 4. ECM	Comes on	DTC stored	ES-121
P0103	Mass or Volume Air Flow Circuit High Input	1. Short in MAF meter circuit (+B circuit) 2. MAF meter 3. ECM	Comes on	DTC stored	ES-121
P0110	Intake Air Temperature Circuit Malfunction	1. Open or short in Intake Air Temperature (IAT) sensor circuit 2. IAT sensor (built into Mass Air Flow [MAF] meter) 3. ECM	Comes on	DTC stored	ES-132
P0111	Intake Air Temperature Sensor Gradient Too High	MAF meter	Comes on	DTC stored	ES-138

DTC Code	Detection Item	Suspected Trouble Area	MIL	Memory	See page
P0112	Intake Air Temperature Circuit Low Input	1. Short in IAT sensor circuit 2. IAT sensor (built into MAF meter) 3. ECM	Comes on	DTC stored	ES-132
P0113	Intake Air Temperature Circuit High Input	1. Open in IAT sensor circuit 2. IAT sensor (built into MAF meter) 3. ECM	Comes on	DTC stored	ES-132
P0115	Engine Coolant Temperature Circuit Malfunction	1. Open or short in Engine Coolant Temperature (ECT) sensor circuit 2. ECT sensor 3. ECM	Comes on	DTC stored	ES-141
P0116	Engine Coolant Temperature Circuit Range / Performance Problem	1. Thermostat 2. ECT sensor	Comes on	DTC stored	ES-147
P0117	Engine Coolant Temperature Circuit Low Input	1. Short in ECT sensor circuit 2. ECT sensor 3. ECM	Comes on	DTC stored	ES-141
P0118	Engine Coolant Temperature Circuit High Input	1. Open in ECT sensor circuit 2. ECT sensor 3. ECM	Comes on	DTC stored	ES-141
P0120	Throttle / Pedal Position Sensor / Switch "A" Circuit Malfunction	1. Throttle Position (TP) sensor (built into throttle body) 2. ECM	Comes on	DTC stored	ES-150
P0121	Throttle / Pedal Position Sensor / Switch "A" Circuit Range / Performance Problem	TP sensor (built into throttle body)	Comes on	DTC stored	ES-157
P0122	Throttle / Pedal Position Sensor / Switch "A" Circuit Low Input	1. TP sensor (built into throttle body) 2. Short in VTA1 circuit 3. Open in VC circuit 4. ECM	Comes on	DTC stored	ES-150
P0123	Throttle / Pedal Position Sensor / Switch "A" Circuit High Input	1. TP sensor (built into throttle body) 2. Open in VTA1 circuit 3. Open in E2 circuit 4. Short between VC and VTA1 circuits 5. ECM	Comes on	DTC stored	ES-150
P0125	Insufficient Coolant Temperature for Closed Loop Fuel Control	1. Cooling system 2. ECT sensor 3. Thermostat	Comes on	DTC stored	ES-161
P0128	Coolant Thermostat (Coolant Temperature Below Thermostat Regulating Temperature)	1. Thermostat 2. Cooling system 3. ECT sensor 4. ECM	Comes on	DTC stored	ES-164

DTC Code	Detection Item	Suspected Trouble Area	MIL	Memory	See page
P0136	Oxygen Sensor Circuit Malfunction (Bank 1 Sensor 2)	1. Open or short in HO2 sensor (bank 1 sensor 2) circuit 2. HO2 sensor (bank 1 sensor 2) 3. HO2 sensor heater (bank 1 sensor 2) 4. A/F sensor (bank 1 sensor 1) 5. Engine room junction block (EFI relay) 6. Gas leakage from exhaust system	Comes on	DTC stored	ES-167
P0137	Oxygen Sensor Circuit Low Voltage (Bank 1 Sensor 2)	1. Open in HO2 sensor (bank 1 sensor 2) circuit 2. HO2 sensor (bank 1 sensor 2) 3. HO2 sensor heater (bank 1 sensor 2) 4. Engine room junction block (EFI relay) 5. Gas leakage from exhaust system	Comes on	DTC stored	ES-167
P0138	Oxygen Sensor Circuit High Voltage (Bank 1 Sensor 2)	1. Short in HO2 sensor (bank 1 sensor 2) circuit 2. HO2 sensor (bank 1 sensor 2) 3. ECM internal circuit malfunction	Comes on	DTC stored	ES-167
P0141	Oxygen Sensor Heater Circuit Malfunction (Bank 1 Sensor 2)	1. HO2 sensor 2. ECM	Comes on	DTC stored	ES-111
P0156	Oxygen Sensor Circuit Malfunction (Bank 2 Sensor 2)	1. Open or short in HO2 sensor (bank 2 sensor 2) circuit 2. HO2 sensor (bank 2 sensor 2) 3. HO2 sensor heater (bank 2 sensor 2) 4. A/F sensor (bank 2 sensor 1) 5. Engine room junction block (EFI relay) 6. Gas leakage from exhaust system	Comes on	DTC stored	ES-167
P0157	Oxygen Sensor Circuit Low Voltage (Bank 2 Sensor 2)	1. Open in HO2 sensor (bank 2 sensor 2) circuit 2. HO2 sensor (bank 2 sensor 2) 3. HO2 sensor heater (bank 2 sensor 2) 4. Engine room junction block (EFI relay) 5. Gas leakage from exhaust system	Comes on	DTC stored	ES-167

DTC Code	Detection Item	Suspected Trouble Area	MIL	Memory	See page
P0158	Oxygen Sensor Circuit High Voltage (Bank 2 Sensor 2)	1. Short in HO2 sensor (bank 2 sensor 2) circuit 2. HO2 sensor (bank 2 sensor 2) 3. ECM internal circuit malfunction	Comes on	DTC stored	ES-167
P0161	Oxygen Sensor Heater Circuit Malfunction (Bank 2 Sensor 2)	1. HO2 sensor 2. ECM	Comes on	DTC stored	ES-111
P0171	System Too Lean (Bank 1)	1. Air induction system 2. Injector blockage 3. MAF meter 4. ECT sensor 5. Fuel pressure 6. Gas leakage from exhaust system 7. Open or short in A/F sensor (bank 1 sensor 1) circuit 8. A/F sensor (bank 1 sensor 1) 9. A/F sensor heater (bank 1 sensor 1) 10. A/F sensor heater relay 11. A/F sensor heater and A/F sensor heater relay circuits 12. PCV hose connections 13. PCV valve and hose 14. ECM	Comes on	DTC stored	ES-187
P0172	System Too Rich (Bank 1)	1. Injector leakage or blockage 2. MAF meter 3. ECT sensor 4. Ignition system 5. Fuel pressure 6. Gas leakage from exhaust system 7. Open or short in A/F sensor (bank 1 sensor 1) circuit 8. A/F sensor (bank 1 sensor 1) 9. A/F sensor heater (bank 1 sensor 1) 10. A/F sensor heater relay 11. A/F sensor heater and A/F sensor heater relay circuits 12. ECM	Comes on	DTC stored	ES-187

DTC Code	Detection Item	Suspected Trouble Area	MIL	Memory	See page
P0174	System Too Lean (Bank 2)	1. Air induction system 2. Injector blockage 3. MAF meter 4. ECT sensor 5. Fuel pressure 6. Gas leakage from exhaust system 7. Open or short in A/F sensor (bank 2 sensor 1) circuit 8. A/F sensor (bank 2 sensor 1) 9. A/F sensor heater (bank 2 sensor 1) 10. A/F sensor heater relay 11. A/F sensor heater and A/F sensor heater relay circuits 12. PCV hose connections 13. PCV valve and hose 14. ECM	Comes on	DTC stored	ES-187
P0175	System Too Rich (Bank 2)	1. Injector leakage or blockage 2. MAF meter 3. ECT sensor 4. Ignition system 5. Fuel pressure 6. Gas leakage from exhaust system 7. Open or short in A/F sensor (bank 2 sensor 1) circuit 8. A/F sensor (bank 2 sensor 1) 9. A/F sensor heater (bank 2 sensor 1) 10. A/F sensor heater relay 11. A/F sensor heater and A/F sensor heater relay circuits 12. ECM	Comes on	DTC stored	ES-187
P0220	Throttle / Pedal Position Sensor / Switch "B" Circuit	1. TP sensor (built into throttle body) 2. ECM	Comes on	DTC stored	ES-150
P0222	Throttle / Pedal Position Sensor / Switch "B" Circuit Low Input	1. TP sensor (built into throttle body) 2. Short in VTA2 circuit 3. Open in VC circuit 4. ECM	Comes on	DTC stored	ES-150
P0223	Throttle / Pedal Position Sensor / Switch "B" Circuit High Input	1. TP sensor (built into throttle body) 2. Open in VTA2 circuit 3. Open in E2 circuit 4. Short between VC and VTA2 circuits 5. ECM	Comes on	DTC stored	ES-150

DTC Code	Detection Item	Suspected Trouble Area	MIL	Memory	See page
P0300	Random / Multiple Cylinder Misfire Detected	1. Open or short in engine wire harness 2. Connector connections 3. Vacuum hose connection 4. Ignition system 5. Injector 6. Fuel pressure 7. Mass Air Flow (MAF) meter 8. Engine Coolant Temperature (ECT) sensor 9. Compression pressure 10. Valve clearance 11. Valve timing 12. PCV valve and hose 13. PCV hose connections 14. Air induction system 15. ECM	Comes on or flashes	DTC stored	ES-200
P0301	Cylinder 1 Misfire Detected	Same as DTC P0300	Comes on or flashes	DTC stored	ES-200
P0302	Cylinder 2 Misfire Detected	Same as DTC P0300	Comes on or flashes	DTC stored	ES-200
P0303	Cylinder 3 Misfire Detected	Same as DTC P0300	Comes on or flashes	DTC stored	ES-200
P0304	Cylinder 4 Misfire Detected	Same as DTC P0300	Comes on or flashes	DTC stored	ES-200
P0305	Cylinder 5 Misfire Detected	Same as DTC P0300	Comes on or flashes	DTC stored	ES-200
P0306	Cylinder 6 Misfire Detected	Same as DTC P0300	Comes on or flashes	DTC stored	ES-200
P0327	Knock Sensor 1 Circuit Low Input (Bank 1 or Single Sensor)	1. Short in knock sensor 1 circuit 2. Knock sensor 1 3. ECM	Comes on	DTC stored	ES-212
P0328	Knock Sensor 1 Circuit High Input (Bank 1 or Single Sensor)	1. Open in knock sensor 1 circuit 2. Knock sensor 1 3. ECM	Comes on	DTC stored	ES-212
P0332	Knock Sensor 2 Circuit Low Input (Bank 2)	1. Short in knock sensor 2 circuit 2. Knock sensor 2 3. ECM	Comes on	DTC stored	ES-212
P0333	Knock Sensor 2 Circuit High Input (Bank 2)	1. Open in knock sensor 2 circuit 2. Knock sensor 2 3. ECM	Comes on	DTC stored	ES-212
P0335	Crankshaft Position Sensor "A" Circuit	1. Open or short in Crankshaft Position Sensor (CKP) circuit 2. CKP sensor 3. Sensor plate (CKP sensor plate) 4. ECM	Comes on	DTC stored	ES-218
P0339	Crankshaft Position Sensor "A" Circuit Intermittent	Same as DTC P0335	Does not come on	DTC stored	ES-218

DTC Code	Detection Item	Suspected Trouble Area	MIL	Memory	See page
P0340	Camshaft Position Sensor Circuit Malfunction	1. Open or short in VVT sensor for intake camshaft circuit 2. VVT sensor for intake camshaft 3. Camshaft timing gear for intake camshaft 4. Jumped tooth of timing chain for intake camshaft 5. ECM	Comes on	DTC stored	ES-224
P0342	Camshaft Position Sensor "A" Circuit Low Input (Bank 1 or Single Sensor)	Same as DTC P0340	Comes on	DTC stored	ES-224
P0343	Camshaft Position Sensor "A" Circuit High Input (Bank 1 or Single Sensor)	Same as DTC P0340	Comes on	DTC stored	ES-224
P0345	Camshaft Position Sensor "A" Circuit (Bank 2)	Same as DTC P0340	Comes on	DTC stored	ES-224
P0347	Camshaft Position Sensor "A" Circuit Low Input (Bank 2)	Same as DTC P0340	Comes on	DTC stored	ES-224
P0348	Camshaft Position Sensor "A" Circuit High Input (Bank 2)	Same as DTC P0340	Comes on	DTC stored	ES-224
P0351	Ignition Coil "A" Primary / Secondary Circuit	1. Ignition system 2. Open or short in IGF1 or IGT circuit (1 to 6) between ignition coil and ECM 3. No. 1 to No. 6 ignition coils 4. ECM	Comes on	DTC stored	ES-230
P0352	Ignition Coil "B" Primary / Secondary Circuit	Same as DTC P0351	Comes on	DTC stored	ES-230
P0353	Ignition Coil "C" Primary / Secondary Circuit	Same as DTC P0351	Comes on	DTC stored	ES-230
P0354	Ignition Coil "D" Primary / Secondary Circuit	Same as DTC P0351	Comes on	DTC stored	ES-230
P0355	Ignition Coil "E" Primary / Secondary Circuit	Same as DTC P0351	Comes on	DTC stored	ES-230
P0356	Ignition Coil "F" Primary / Secondary Circuit	Same as DTC P0351	Comes on	DTC stored	ES-230
P0365	Camshaft Position Sensor "B" Circuit (Bank 1)	1. Open or short in VVT sensor for exhaust camshaft circuit 2. VVT sensor for exhaust camshaft 3. Exhaust camshaft 4. Jumped tooth of timing chain 5. ECM	Comes on	DTC stored	ES-239

DTC Code	Detection Item	Suspected Trouble Area	MIL	Memory	See page
P0367	Camshaft Position Sensor "B" Circuit Low Input (Bank 1)	1. Open or short in VVT sensor for exhaust camshaft circuit 2. VVT sensor for exhaust camshaft 3. Exhaust camshaft 4. Jumped tooth of timing chain 5. ECM	Comes on	DTC stored	ES-239
P0368	Camshaft Position Sensor "B" Circuit High Input (Bank 1)	1. Open or short in VVT sensor for exhaust camshaft circuit 2. VVT sensor for exhaust camshaft 3. Exhaust camshaft 4. Jumped tooth of timing chain 5. ECM	Comes on	DTC stored	ES-239
P0390	Camshaft Position Sensor "B" Circuit (Bank 2)	1. Open or short in VVT sensor for exhaust camshaft circuit 2. VVT sensor for exhaust camshaft 3. Exhaust camshaft 4. Jumped tooth of timing chain 5. ECM	Comes on	DTC stored	ES-239
P0392	Camshaft Position Sensor "B" Circuit Low Input (Bank 2)	1. Open or short in VVT sensor for exhaust camshaft circuit 2. VVT sensor for exhaust camshaft 3. Exhaust camshaft 4. Jumped tooth of timing chain 5. ECM	Comes on	DTC stored	ES-239
P0393	Camshaft Position Sensor "B" Circuit High Input (Bank 2)	1. Open or short in VVT sensor for exhaust camshaft circuit 2. VVT sensor for exhaust camshaft 3. Exhaust camshaft 4. Jumped tooth of timing chain 5. ECM	Comes on	DTC stored	ES-239
P0420	Catalyst System Efficiency Below Threshold (Bank 1)	1. Gas leakage from exhaust system 2. A/F sensor (bank 1 sensor 1) 3. HO2 sensor (bank 1 sensor 2) 4. Exhaust manifold (Three-Way Catalytic Converter [TWC])	Comes on	DTC stored	ES-245

DTC Code	Detection Item	Suspected Trouble Area	MIL	Memory	See page
P0430	Catalyst System Efficiency Below Threshold (Bank 2)	1. Gas leakage from exhaust system 2. A/F sensor (bank 2 sensor 1) 3. HO2 sensor (bank 2 sensor 2) 4. Exhaust manifold (Three-Way Catalytic Converter [TWC])	Comes on	DTC stored	ES-245
P043E	Evaporative Emission System Reference Orifice Clog Up	1. Pump module 2. Connector / wire harness (Pump module - ECM) 3. ECM	Comes on	DTC stored	ES-251
P043F	Evaporative Emission System Reference Orifice High Flow	1. Pump module 2. Connector / wire harness (Pump module - ECM) 3. ECM	Comes on	DTC stored	ES-251
P0441	Evaporative Emission Control System Incorrect Purge Flow	1. EVAP VSV 2. Connector / wire harness (EVAP VSV - ECM) 3. ECM 4. Pump module 5. Leakage from EVAP system 6. Leakage from EVAP line (EVAP VSV - Intake manifold)	Comes on	DTC stored	ES-256
P0450	Evaporative Emission Control System Pressure Sensor / Switch	1. Pump module (including pressure sensor) 2. ECM	Comes on	DTC stored	ES-263
P0451	Evaporative Emission Control System Pressure Sensor Range / Performance	1. Pump module (including pressure sensor) 2. Connector / wire harness (between pump module and ECM) 3. ECM	Comes on	DTC stored	ES-263
P0452	Evaporative Emission Control System Pressure Sensor / Switch Low Input	1. Pump module (including pressure sensor) 2. Connector / wire harness (between pump module and ECM) 3. ECM	Comes on	DTC stored	ES-263
P0453	Evaporative Emission Control System Pressure Sensor / Switch High Input	1. Pump module (include pressure sensor) 2. Connector / wire harness (between pump module and ECM) 3. ECM	Comes on	DTC stored	ES-263

DTC Code	Detection Item	Suspected Trouble Area	MIL	Memory	See page
P0455	Evaporative Emission Control System Leak Detected (Gross Leak)	1. Fuel tank cap (loose) 2. Leakage from EVAP line (Canister - Fuel tank) 3. Leakage from EVAP line (EVAP VSV - Canister) 4. Pump module 5. Leakage from fuel tank 6. Leakage from canister	Comes on	DTC stored	ES-270
P0456	Evaporative Emission Control System Leak Detected (Very Small Leak)	Same as DTC P0455	Comes on	DTC stored	ES-270
P0500	Vehicle Speed Sensor "A"	1. Vehicle speed sensor 2. Vehicle speed sensor signal circuit 3. Combination meter 4. ECM 5. Skid control ECU	Comes on	DTC stored	ES-275
P0504	Brake Switch "A" / "B" Correlation	1. Short in stop light switch signal circuit 2. Stop light switch 3. ECM	Does not come on	DTC stored	ES-280
P0505	Idle Control System Malfunction	1. ETCS (Electronic Throttle Control System) 2. Air induction system 3. PCV hose connection 4. ECM	Comes on	DTC stored	ES-284
P050A	Cold Start Idle Air Control System Performance	1. Throttle body assembly 2. MAF meter 3. Air induction system 4. PCV hose connections 5. VVT system 6. Air cleaner filter element 7. ECM	Comes on	DTC stored	ES-287
P050B	Cold Start Ignition Timing Performance	Same as DTC P050A	Comes on	DTC stored	ES-287
P0560	System Voltage	1. Open in back-up power source circuit 2. ECM	Comes on	DTC stored	ES-293
P0604	Internal Control Module Random Access Memory (RAM) Error	ECM	Comes on	DTC stored	ES-298
P0606	ECM / PCM Processor	1. Exhaust gas leak 2. Heated oxygen sensor 3. ECM	Comes on (except when there is a malfunction in the ECM internal circuit)	DTC stored	ES-300

DTC Code	Detection Item	Suspected Trouble Area	MIL	Memory	See page
P0607	Control Module Performance	ECM	Comes on (except when there is a malfunction in the cruise control switch circuit)	DTC stored	ES-303
P0617	Starter Relay Circuit High	1. Park/Neutral Position (PNP) switch 2. Starter relay circuit 3. Cranking holding function circuit 4. Engine switch 5. ECM	Comes on	DTC stored	ES-305
P0630	VIN not Programmed or Mismatch - ECM / PCM	ECM	Comes on	DTC stored	ES-309
P0657	Actuator Supply Voltage Circuit / Open	ECM	Comes on	DTC stored	ES-311
P0705	Transmission Range Sensor Circuit Malfunction (PRNDL Input)	1. Short in park/ neutral position switch circuit 2. Park/neutral position switch 3. ECM	Comes on	DTC stored	ES-313
P0724	Brake Switch "B" Circuit High	1. Short in stop light switch signal circuit 2. Stop light switch 3. ECM	Comes on	DTC stored	ES-280
P2102	Throttle Actuator Control Motor Circuit Low	1. Open in throttle actuator circuit 2. Throttle actuator 3. ECM	Comes on	DTC stored	ES-323
P2103	Throttle Actuator Control Motor Circuit High	1. Short in throttle actuator circuit 2. Throttle actuator 3. Throttle valve 4. Throttle body assembly 5. ECM	Comes on	DTC stored	ES-323
P2111	Throttle Actuator Control System - Stuck Open	1. Throttle actuator 2. Throttle body 3. Throttle valve	Comes on	DTC stored	ES-327
P2112	Throttle Actuator Control System - Stuck Closed	Same as DTC P2111	Comes on	DTC stored	ES-327
P2118	Throttle Actuator Control Motor Current Range / Performance	1. Open in ETCS power source circuit 2. ETCS fuse 3. ECM	Comes on	DTC stored	ES-330
P2119	Throttle Actuator Control Throttle Body Range / Performance	1. ETCS 2. ECM	Comes on	DTC stored	ES-334
P2120	Throttle / Pedal Position Sensor / Switch "D" Circuit	1. Accelerator Pedal Position (APP) sensor 2. ECM	Comes on	DTC stored	ES-337
P2121	Throttle / Pedal Position Sensor / Switch "D" Circuit Range / Performance	1. Accelerator Pedal Position (APP) sensor 2. ECM	Comes on	DTC stored	ES-344

DTC Code	Detection Item	Suspected Trouble Area	MIL	Memory	See page
P2122	Throttle / Pedal Position Sensor / Switch "D" Circuit Low Input	1. Accelerator Pedal Position (APP) sensor 2. Open in VCP1 circuit 3. Open or ground short in VPA circuit 4. ECM	Comes on	DTC stored	ES-337
P2123	Throttle / Pedal Position Sensor / Switch "D" Circuit High Input	1. Accelerator Pedal Position (APP) sensor 2. Open in EPA circuit 3. ECM	Comes on	DTC stored	ES-337
P2125	Throttle / Pedal Position Sensor / Switch "E" Circuit	1. Accelerator Pedal Position (APP) sensor 2. ECM	Comes on	DTC stored	ES-337
P2127	Throttle / Pedal Position Sensor / Switch "E" Circuit Low Input	1. Accelerator Pedal Position (APP) sensor 2. Open in VCP2 circuit 3. Open or ground short in VPA2 circuit 4. ECM	Comes on	DTC stored	ES-337
P2128	Throttle / Pedal Position Sensor / Switch "E" Circuit High Input	1. Accelerator Pedal Position (APP) sensor 2. Open in EPA2 circuit 3. ECM	Comes on	DTC stored	ES-337
P2135	Throttle / Pedal Position Sensor / Switch "A" / "B" Voltage Correlation	1. Short between VTA1 and VTA2 circuits 2. TP sensor (built into throttle body) 3. ECM	Comes on	DTC stored	ES-150
P2138	Throttle / Pedal Position Sensor / Switch "D" / "E" Voltage Correlation	1. Short between VPA and VPA2 circuits 2. APP sensor 3. ECM	Comes on	DTC stored	ES-337
P2195	Oxygen (A/F) Sensor Signal Stuck Lean (Bank 1 Sensor 1)	1. Open or short in A/F sensor (bank 1 sensor 1) circuit 2. A/F sensor (bank 1 sensor 1) 3. A/F sensor heater (bank 1 sensor 1) 4. A/F sensor heater relay 5. A/F sensor heater and relay circuits 6. Air induction system 7. Fuel pressure 8. Injector 9. ECM	Comes on	DTC stored	ES-348
P2196	Oxygen (A/F) Sensor Signal Stuck Rich (Bank 1 Sensor 1)	Same as DTC P2195	Comes on	DTC stored	ES-348

DTC Code	Detection Item	Suspected Trouble Area	MIL	Memory	See page
P2197	Oxygen (A/F) Sensor Signal Stuck Lean (Bank 2 Sensor 1)	1. Open or short in A/F sensor (bank 2 sensor 1) circuit 2. A/F sensor (bank 2 sensor 1) 3. A/F sensor heater (bank 2 sensor 1) 4. A/F sensor heater relay 5. A/F sensor heater and relay circuits 6. Air induction system 7. Fuel pressure 8. Injector 9. ECM	Comes on	DTC stored	ES-348
P2198	Oxygen (A/F) Sensor Signal Stuck Rich (Bank 2 Sensor 1)	Same as DTC P2197	Comes on	DTC stored	ES-348
P2238	Oxygen (A/F) Sensor Pumping Current Circuit Low (Bank 1 Sensor 1)	1. Open or short in A/F sensor (bank 1 sensor 1) circuit 2. A/F sensor (bank 1 sensor 1) 3. A/F sensor heater (bank 1 sensor 1) 4. A/F sensor heater relay 5. A/F sensor heater and relay circuits 6. ECM	Comes on	DTC stored	ES-366
P2239	Oxygen (A/F) Sensor Pumping Current Circuit High (Bank 1 Sensor 1)	Same as DTC P2238	Comes on	DTC stored	ES-366
P2241	Oxygen (A/F) Sensor Pumping Current Circuit Low (Bank 2 Sensor 1)	1. Open or short in A/F sensor (bank 2 sensor 1) circuit 2. A/F sensor (bank 2 sensor 1) 3. A/F sensor heater (bank 2 sensor 1) 4. A/F sensor heater relay 5. A/F sensor heater and relay circuits 6. ECM	Comes on	DTC stored	ES-366
P2242	Oxygen (A/F) Sensor Pumping Current Circuit High (Bank 2 Sensor 1)	Same as DTC P2241	Comes on	DTC stored	ES-366
P2252	Oxygen (A/F) Sensor Reference Ground Circuit Low (Bank 1 Sensor 1)	Same as DTC P2238	Comes on	DTC stored	ES-366
P2253	Oxygen (A/F) Sensor Reference Ground Circuit High (Bank 1 Sensor 1)	Same as DTC P2238	Comes on	DTC stored	ES-366
P2255	Oxygen (A/F) Sensor Reference Ground Circuit Low (Bank 2 Sensor 1)	Same as DTC P2241	Comes on	DTC stored	ES-366

DTC Code	Detection Item	Suspected Trouble Area	MIL	Memory	See page
P2256	Oxygen (A/F) Sensor Reference Ground Circuit High (Bank 2 Sensor 1)	Same as DTC P2241	Comes on	DTC stored	ES-366
P2401	Evaporative Emission System Leak Detection Pump Control Circuit Low	1. Pump module 2. Connector / wire harness (Pump module - ECM) 3. ECM	Comes on	DTC stored	ES-251
P2402	Evaporative Emission System Leak Detection Pump Control Circuit High	1. Pump module 2. Connector / wire harness (Pump module - ECM) 3. ECM	Comes on	DTC stored	ES-251
P2419	Evaporative Emission System Switching Valve Control Circuit Low	1. Pump module 2. Connector / wire harness (Pump module - ECM) 3. ECM	Comes on	DTC stored	ES-251
P2420	Evaporative Emission System Switching Valve Control Circuit High	1. Pump module (0.02 inch orifice, vacuum pump, vent valve) 2. Connector / wire harness (Pump module - ECM) 3. ECM	Comes on	DTC stored	ES-375
P2610	ECM / PCM Internal Engine Off Timer Performance	ECM	Comes on	DTC stored	ES-379
P2A00	A/F Sensor Circuit Slow Response (Bank 1 Sensor 1)	1. Open or short in A/F sensor (bank 1 sensor 1) circuit 2. A/F sensor (bank1 sensor 1) 3. ECM	Comes on	DTC stored	ES-382
P2A03	A/F Sensor Circuit Slow Response (Bank 2 Sensor 1)	1. Open or short in A/F sensor (bank 2 sensor 1) circuit 2. A/F sensor (bank 2 sensor 1) 3. ECM	Comes on	DTC stored	ES-382
U0101	Lost Communication with TCM	1. Open or short in TCM and ECM circuit 2. TCM 3. ECM	Comes on	DTC stored	ES-391

DTC	P0010	Camshaft Position "A" Actuator Circuit (Bank 1)

DTC	P0020	Camshaft Position "A" Actuator Circuit (Bank 2)

DESCRIPTION

The Variable Valve Timing (VVT) system includes the ECM, Oil Control Valve (OCV) and VVT controller. The ECM sends a target duty-cycle control signal to the OCV. This control signal regulates the oil pressure supplied to the VVT controller. Camshaft timing control is performed according to engine operating conditions such as intake air volume, throttle valve position and engine coolant temperature. The ECM controls the OCV, based on the signals transmitted by several sensors. The VVT controller regulates the intake camshaft angle using oil pressure through the OCV. As a result, the relative positions of the camshaft and crankshaft are optimized, the engine torque and fuel economy improve, and the exhaust emissions decrease under overall driving conditions. The ECM detects the actual intake valve timing using signals from the camshaft and crankshaft position sensors, and performs feedback control. This is how the target intake valve timing is verified by the ECM.

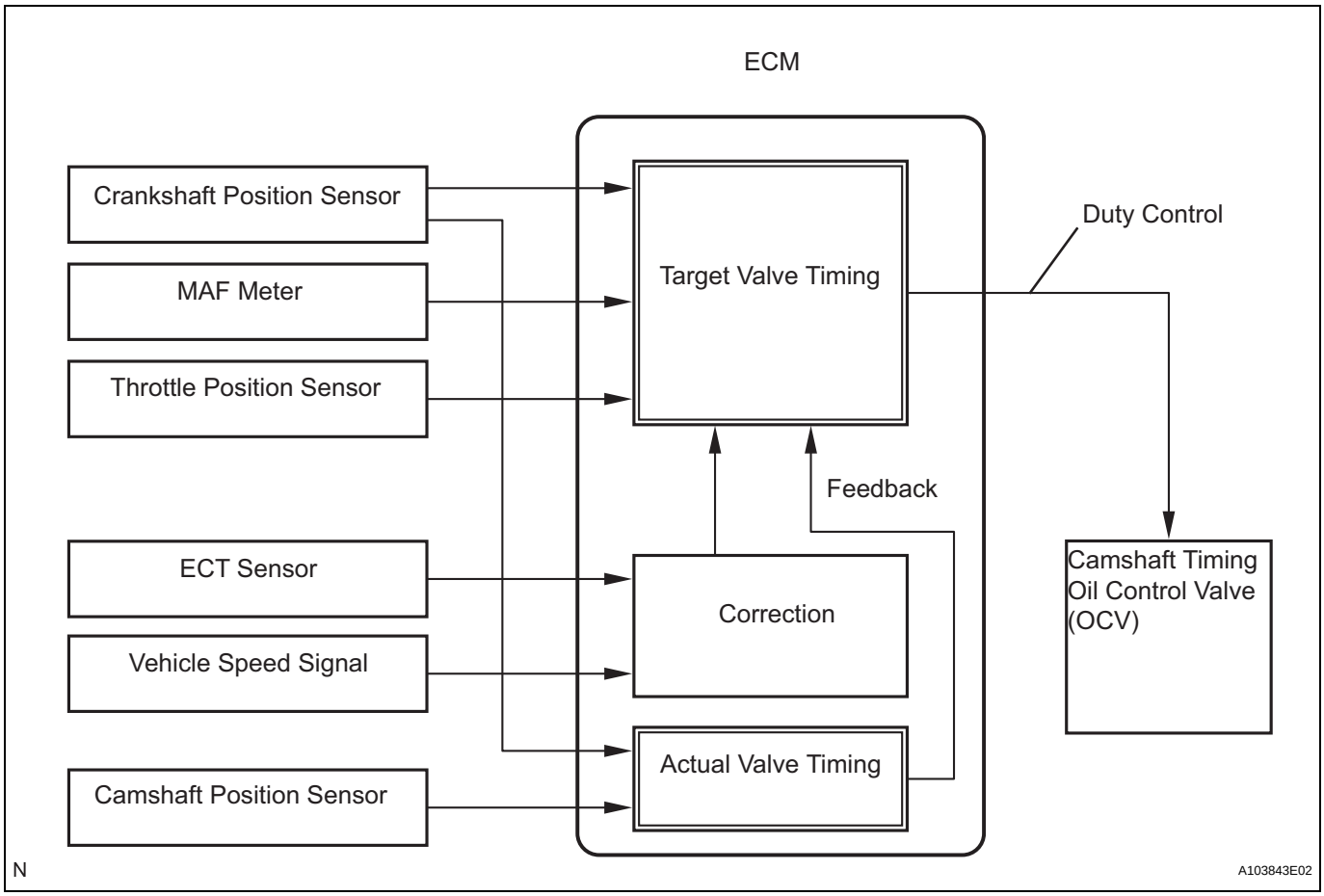

DTC No.	DTC Detection Condition	Trouble Area
P0010	Open or short in OCV for intake camshaft (bank 1) circuit (1 trip detection logic)	• Open or short in OCV for intake camshaft (bank 1) circuit • OCV for intake camshaft (bank 1) • ECM
P0020	Open or short in OCV for intake camshaft (bank 2) circuit (1 trip detection logic)	• Open or short in OCV for intake camshaft (bank 2) circuit • OCV for intake camshaft (bank 2) • ECM

MONITOR DESCRIPTION

After the ECM sends the "target" duty-cycle signal to the OCV, the ECM monitors the OCV current to establish an "actual" duty-cycle. The ECM detects a malfunction and sets a DTC when the actual duty-cycle ratio varies from the target duty-cycle ratio.

MONITOR STRATEGY

Related DTCs	P0010: VVT OCV (bank 1) open/short P0020: VVT OCV (bank 2) open/short
Required sensors/components (Main)	VVT OCV (Variable Valve Timing oil control valve)
Required sensors/components (Sub)	-
Frequency of operation	Continuous
Duration	1 second
MIL operation	Immediately
Sequence of operation	None

TYPICAL ENABLING CONDITIONS

Monitor will run whenever these DTCs are not present	None
All of the following conditions are met:	-
Starter	OFF
Engine switch	ON
Time after turning engine switch off to on (IG)	0.5 seconds or more

TYPICAL MALFUNCTION THRESHOLDS

One of the following conditions is met:	Condition A, B or C
A. All of the following conditions are met:	-
Battery voltage	11 to 13 V
Target duty ratio	Less than 70 %
Output signal duty ratio	100 %
B. All of the following conditions are met:	-
Battery voltage	13 V or more
Target duty ratio	Less than 80 %
Output signal duty ratio	100 %
C. All of the following conditions are met:	-
Current cut status	Not cut
Output signal duty ratio	3 % or less

COMPONENT OPERATING RANGE

VVT OCV duty ratio	More than 3 %, and Less than 100 %

WIRING DIAGRAM

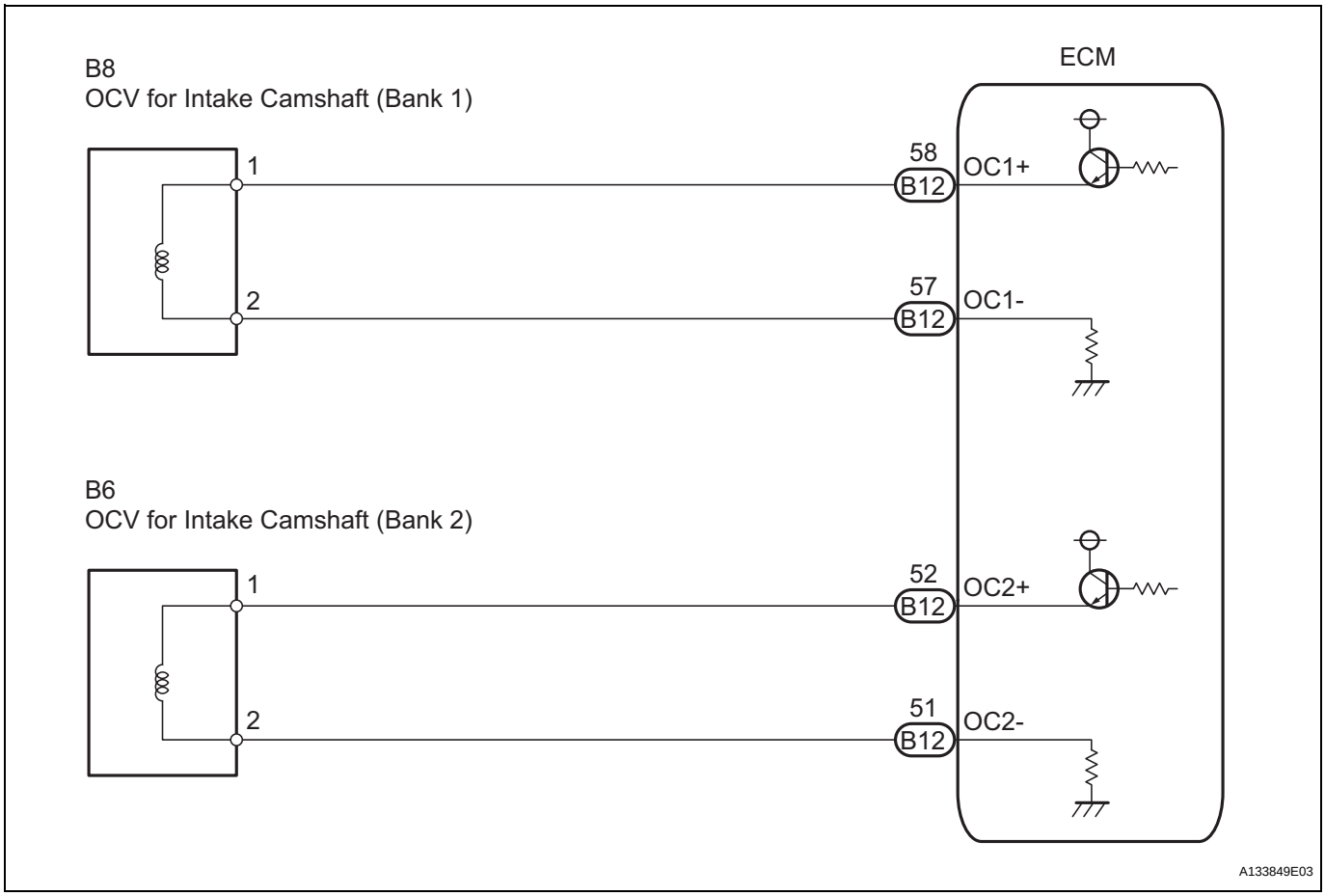

INSPECTION PROCEDURE

HINT:

- If DTC P0010 is displayed, check the intake camshaft circuit for the right bank VVT system.
- Bank 1 refers to the bank that includes cylinder No. 1.
- If DTC P0020 is displayed, check the intake camshaft circuit for the left bank VVT system.
- Bank 2 refers to the bank that does not include cylinder No. 1.
- Read freeze frame data using the intelligent tester. The ECM records vehicle and driving condition information as freeze frame data the moment a DTC is stored. When troubleshooting, freeze frame data can be helpful in determining whether the vehicle was running or stopped, whether the engine was warmed up or not, whether the air-fuel ratio was lean or rich, as well as other data recorded at the time of a malfunction (See page ES-41).

1	**PERFORM ACTIVE TEST BY CAMSHAFT TIMING OIL CONTROL VALVE ASSEMBLY (OCV)**

(a) Connect the intelligent tester to the DLC3.
(b) Start the engine and turn the tester on.
(c) Warm up the engine.
(d) On the tester, enter the following menus: DIAGNOSIS / ENHANCED OBD II / ACTIVE TEST / VVT CTRL B1 or VVT CTRL B2.
(e) Check the engine speed while operating the Oil Control Valve (OCV) using the tester.

OK

Tester Operation	Specified Condition
OCV OFF	Normal engine speed
OCV ON	Engine idles roughly or stalls (soon after OCV switched from OFF to ON)

OK → **CHECK FOR INTERMITTENT PROBLEMS (See page ES-28)**

NG

2 INSPECT CAMSHAFT TIMING OIL CONTROL VALVE ASSEMBLY

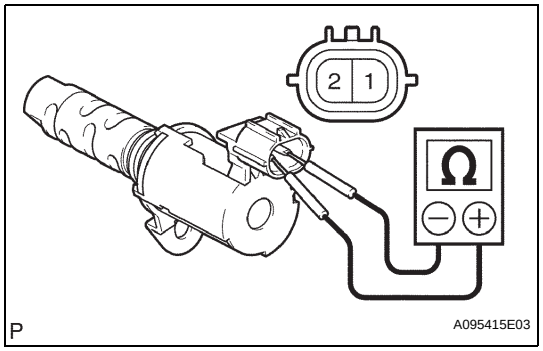

(a) Disconnect the B8 or B6 OCV connector.
(b) Measure the resistance between the terminals of the OCV.
Standard resistance

Tester Connection	Condition	Specified Condition
1 - 2	20°C (68°F)	6.9 to 7.9 Ω

(c) Reconnect the OCV connector.

OK → **REPLACE CAMSHAFT TIMING OIL CONTROL VALVE ASSEMBLY (See page ES-500)**

NG

3 CHECK HARNESS AND CONNECTOR (OCV - ECM)

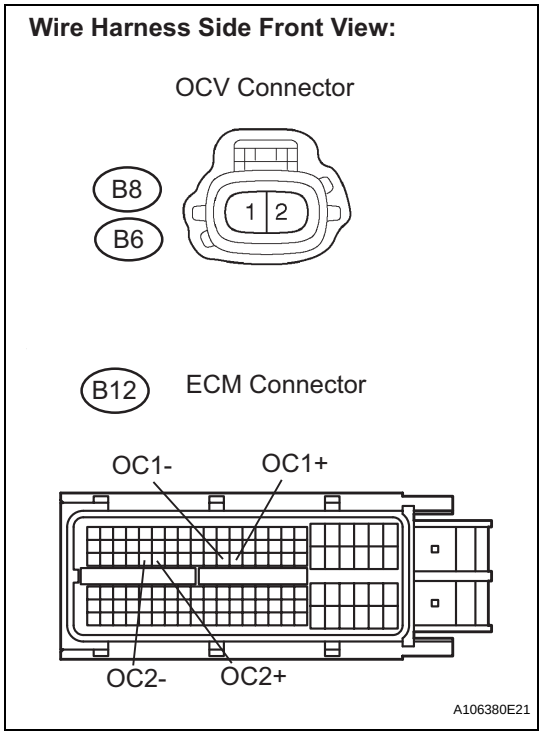

(a) Disconnect the B8 or B6 OCV connector.
(b) Disconnect the B12 ECM connector.
(c) Measure the resistance between the terminals.
Standard resistance (Check for open)

Tester Connection	Specified Condition
OC1+ (B12-58) - B8-1	Below 1 Ω
OC1- (B12-57) - B8-2	Below 1 Ω
OC2+ (B12-52) - B6-1	Below 1 Ω
OC2- (B12-51) - B6-2	Below 1 Ω

Standard resistance (Check for short)

Tester Connection	Specified Condition
OC1+ (B12-58) or B8-1 - Body ground	10 kΩ or higher
OC1- (B12-57) or B8-2 - Body ground	10 kΩ or higher
OC2+ (B12-52) or B6-1 - Body ground	10 kΩ or higher
OC2- (B12-51) or B6-2 - Body ground	10 kΩ or higher

(d) Reconnect the OCV connector.
(e) Reconnect the ECM connector.

NG → **REPAIR OR REPLACE HARNESS OR CONNECTOR**

ES

OK

REPLACE ECM (See page ES-543)

DTC	P0011	Camshaft Position "A" - Timing Over-Advanced or System Performance (Bank 1)

DTC	P0012	Camshaft Position "A" - Timing Over-Retarded (Bank 1)

DTC	P0021	Camshaft Position "A" - Timing Over-Advanced or System Performance (Bank 2)

DTC	P0022	Camshaft Position "A" - Timing Over-Retarded (Bank 2)

DESCRIPTION

The Variable Valve Timing (VVT) system includes the ECM, Oil Control Valve (OCV) and VVT controller. The ECM sends a target duty-cycle control signal to the OCV. This control signal regulates the oil pressure supplied to the VVT controller. Camshaft timing control is performed according to engine operating conditions such as intake air volume, throttle valve position and engine coolant temperature. The ECM controls the OCV, based on the signals transmitted by several sensors. The VVT controller regulates the intake camshaft angle using oil pressure through the OCV. As a result, the relative positions of the camshaft and crankshaft are optimized, the engine torque and fuel economy improve, and the exhaust emissions decrease under overall driving conditions. The ECM detects the actual intake valve timing using signals from the camshaft and crankshaft position sensors, and performs feedback control. This is how the target intake valve timing is verified by the ECM.

DTC No.	DTC Detection Condition	Trouble Area
P0011 P0021	Advanced cam timing: With warmed-up engine and engine speed of between 500 rpm and 4,000 rpm, all conditions (1), (2) and (3) are met (1 trip detection logic): 1. Difference between target and actual intake valve timing is more than 5°CA (Crankshaft Angle) for 4.5 seconds 2. Current intake valve timing is fixed (timing changes less than 5°CA in 5 seconds) 3. Variations in VVT controller timing is more than 19°CA of maximum delayed timing (advance)	• Valve timing • Oil Control valve (OCV) for intake camshaft (bank 1) • OCV filter (bank 1) • Intake camshaft (bank 1) timing gear assembly • ECM
P0012 P0022	Retarded cam timing: With warmed-up engine and engine speed of between 500 rpm and 4,000 rpm, all conditions (1), (2) and (3) are met (2 trip detection logic): 1. Difference between target and actual intake valve timing is more than 5°CA (Crankshaft Angle) for 4.5 seconds 2. Current intake valve timing is fixed (timing changes less than 5°CA in 5 seconds) 3. Variations in VVT controller timing is 19°CA or less of maximum delayed timing (retarded)	• Valve timing • OCV for intake camshaft (bank 2) • OCV filter (bank 2) • Intake camshaft (bank 2) timing gear assembly • ECM

MONITOR DESCRIPTION

1. The ECM optimizes the intake valve timing using the VVT (Variable Valve Timing) system to control the intake camshaft. The VVT system includes the ECM, the Oil Control Valve (OCV) and the VVT controller.

2. The ECM sends a target duty-cycle control signal to the OCV. This control signal regulates the oil pressure supplied to the VVT controller. The VVT controller can advance or retard the intake camshaft. If the difference between the target and actual intake valve timing is large, and changes in the actual intake valve timing are small, the ECM interprets this as the VVT controller stuck malfunction and sets a DTC.
   Example:
   A DTC will be set when the following conditions 1), 2) and 3) are met:
      1) The difference between the target and actual intake valve timings is more than 5°CA (Crankshaft Angle) and the condition continues for more than 4.5 seconds.
      2) It takes 5 seconds or more to change the valve timing by 5°CA.
      3) After above conditions 1) and 2) are met, the OCV is forcibly activated 63 times or more.
3. DTCs P0011 and P0021 (Advanced Cam Timing) are detected with 1 trip detection logic.
4. DTCs P0012 and P0022 (Retarded Cam Timing) are detected with 2 trip detection logic.
   These DTCs indicate that the VVT controller cannot operate properly due to OCV malfunctions or the presence of foreign objects in the OCV.
5. The monitor will not run unless the following conditions are met:
   (a) The engine is warm (the engine coolant temperature is 75°C (167°F) or more).
   (b) The vehicle has been driven at more than 40 mph (64 km/h) for 3 minutes.
   (c) The engine has idled for 3 minutes.

MONITOR STRATEGY

Related DTCs	P0011: Advanced camshaft timing (bank 1) P0012: Retard camshaft timing (bank 1) P0021: Advanced camshaft timing (bank 2) P0022: Retard camshaft timing (bank 2)
Required sensors/components (Main)	VVT OCV and VVT Actuator
Required sensors/components (Sub)	Crankshaft position sensor, camshaft position sensor and Engine coolant temperature sensor
Frequency of operation	Once per drive cycle
Duration	Within 10 seconds
MIL operation	Advanced camshaft timing (bank 1): Immediately Advanced camshaft timing (bank 2): Immediately Retard camshaft timing (bank 1): 2 driving cycles Retard camshaft timing (bank 2): 2 driving cycles
Sequence of operation	None

TYPICAL ENABLING CONDITIONS

Monitor runs whenever following DTCs are not present	P0100 - P0103 (MAF sensor) P0115 - P0118 (ECT sensor) P0125 (Insufficient ECT for closed loop) P0335 (CKP sensor) P0340, P0341 (CMP sensor) P0351 - P0358 (ignitor)
Battery voltage	11 V or more
Engine	500 to 4,000 rpm
ECT	75 to 100°C (167 to 212°F)

TYPICAL MALFUNCTION THRESHOLDS

Advanced camshaft timing:

Difference between actual valve timing and target valve timing	More than 5°CA
Valve timing	No change in advanced valve timing

Retard camshaft timing:

Difference between actual valve timing and target valve timing	More than 5°CA

Valve timing	No change in retarded valve timing

WIRING DIAGRAM

Refer to DTC P0010 (See page ES-77).

INSPECTION PROCEDURE

HINT:

Abnormal bank	Advanced timing over (Valve timing is out of specified range)	Retarded timing over (Valve timing is out of specified range)
Bank 1	P0011	P0012
Bank 2	P0021	P0022

- If DTC P0011 or P0012 is displayed, check the right bank VVT system for intake camshaft circuit (bank 1).
- Bank 1 refers to the bank that includes cylinder No. 1.
- If DTC P0021 or P0022 is displayed, check the intake camshaft circuit for the left bank VVT system (bank 2).
- Bank 2 refers to the bank that does not include cylinder No. 1.
- Read freeze frame data using an intelligent tester. The ECM records vehicle and driving condition information as freeze frame data the moment a DTC is stored. When troubleshooting, freeze frame data can be helpful in determining whether the vehicle was running or stopped, whether the engine was warmed up or not, whether the air-fuel ratio was lean or rich, as well as other data recorded at the time of a malfunction (See page ES-41).

ES

1	CHECK ANY OTHER DTCS OUTPUT (IN ADDITION TO DTC P0011, P0012, P0021 OR P0022)

(a) Connect the intelligent tester to the DLC3.
(b) Turn the engine switch on (IG) and turn the tester on.
(c) Enter the following menus: DIAGNOSIS / ENHANCED OBD II / DTC INFO / CURRENT CODES.
(d) Read the DTCs.

Result

Display (DTC Output)	Proceed to
P0011, P0012, P0021 or P0022	A
P0011, P0012, P0021 or P0022 and other DTCs	B

HINT:
If any DTCs other than P0011, P0012, P0021 or P0022 are output, troubleshoot those DTCs first.

B → **GO TO DTC CHART (See page ES-59)**

A

2	PERFORM ACTIVE TEST BY INTELLIGENT TESTER (OPERATE OCV)

(a) Connect the intelligent tester to the DLC3.
(b) Start the engine and turn the tester on.
(c) Warm up the engine.
(d) Enter the following menus: DIAGNOSIS / ENHANCED OBD II / ACTIVE TEST / VVT CTRL B1 or VVT CTRL B2.

(e) Check the engine speed while operating the Oil Control Valve (OCV) using the tester.

OK

Tester Operation	Specified Condition
OCV OFF	Normal engine speed
OCV ON	Engine idles roughly or stalls (soon after OCV switched from OFF to ON)

NG → **Go to step 4**

OK

ES

3	CHECK WHETHER DTC OUTPUT RECURS (DTC P0011, P0012, P0021 OR P0022)

(a) Connect the intelligent tester to the DLC3.
(b) Turn the engine switch on (IG) and turn the tester on.
(c) Clear the DTCs.
(d) Start the engine and warm it up.
(e) Switch the ECM from normal mode to check mode using the tester.
(f) Drive the vehicle for more than 10 minutes.
(g) Read the DTCs using the tester.
OK:
No DTC output.

NG → **Go to step 4**

OK

END

4	CHECK VALVE TIMING (CHECK FOR LOOSE AND JUMPED TEETH ON TIMING CHAIN)

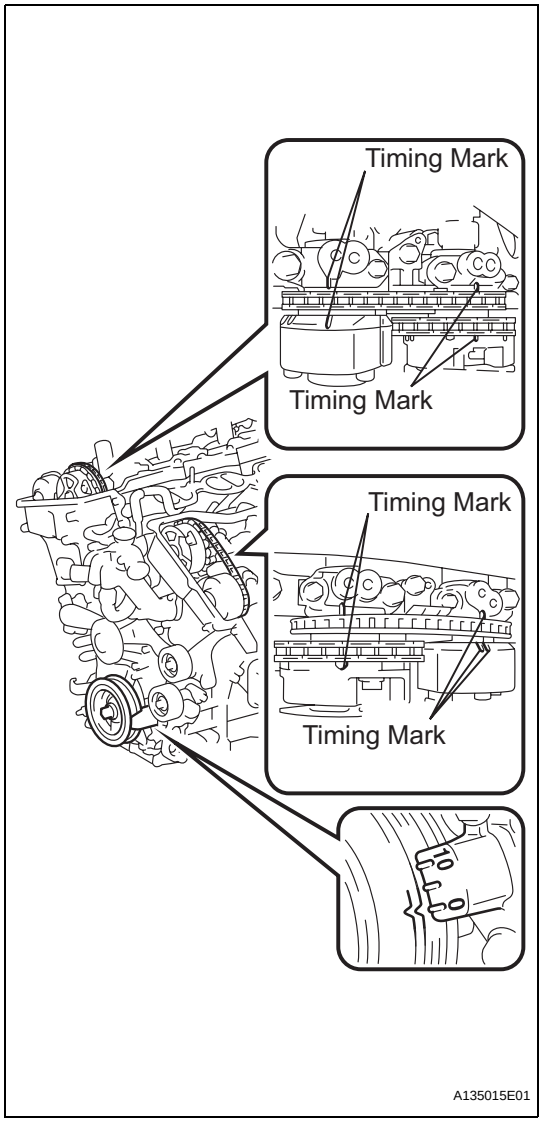

(a) Remove the cylinder head covers RH and LH.
(b) Turn the crankshaft pulley, and align its groove with the timing mark "0" of the timing chain cover.
(c) Check that the timing marks of the camshaft timing gears are aligned with the timing marks of the bearing cap as shown in the illustration.
If not, turn the crankshaft 1 revolution (360°), then align the marks as above.
OK:
The timing marks on the camshaft timing gears are aligned as shown in the illustration.
(d) Reinstall the cylinder head covers.

NG → **ADJUST VALVE TIMING**

OK

5	INSPECT CAMSHAFT TIMING OIL CONTROL VALVE ASSEMBLY (OCV)

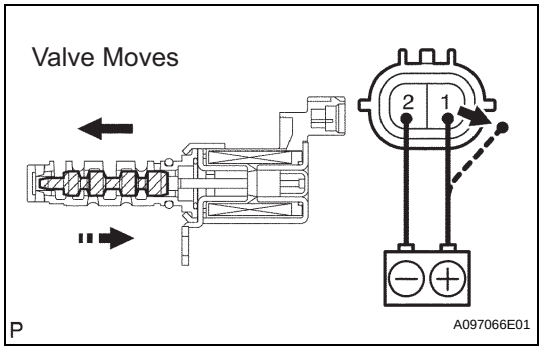

(a) Remove the OCV.
(b) Measure the resistance between the terminals of the OCV.
Standard resistance

Tester Connection	Condition	Specified Condition
1 - 2	20°C (68°F)	6.9 to 7.9 Ω

(c) Apply positive battery voltage to terminal 1 and negative battery voltage to terminal 2. Check the valve operation.
OK:
Valve moves quickly.
(d) Reinstall the OCV.

ES

NG → **REPLACE CAMSHAFT TIMING OIL CONTROL VALVE ASSEMBLY (See page ES-500)**

OK

6	INSPECT OIL CONTROL VALVE FILTER AND PIPE

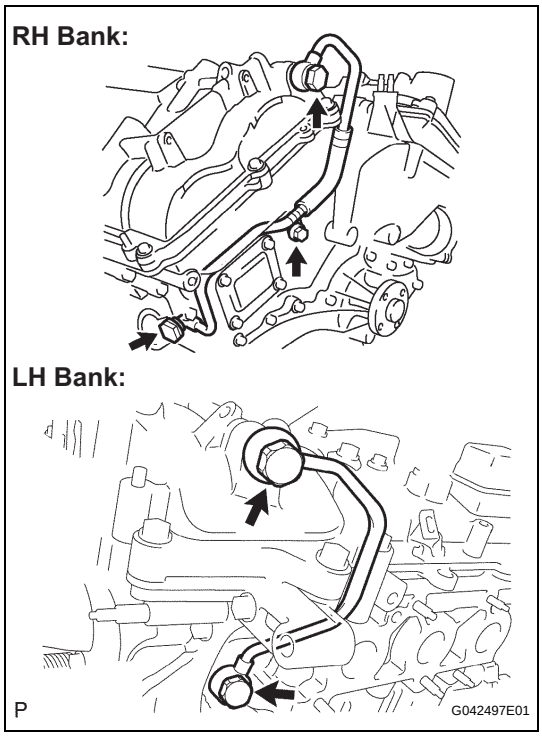

(a) Remove the oil pipe No. 1 or No. 2.
(b) Remove the oil control valve filter.
(c) Check that the filter and pipe are not clogged.
OK:
The filter and pipe are not clogged.

NG → **CLEAN OIL CONTROL VALVE FILTER AND PIPE**

OK

7	REPLACE CAMSHAFT TIMING GEAR ASSEMBLY

NEXT

8	CHECK WHETHER DTC OUTPUT RECURS

(a) Connect the intelligent tester to the DLC3.
(b) Turn the engine switch on (IG) and turn the tester on.
(c) Clear the DTCs.
(d) Start the engine and warm it up.
(e) Switch the ECM from normal mode to check mode using the tester.
(f) Drive the vehicle for more than 10 minutes.
(g) Read the output DTCs using the intelligent tester.
OK:
No DTC output.

HINT:
DTC P0011, P0012, P0021 or P0022 is output when foreign objects in engine oil are caught in some parts of the system. These codes will stay output even if the system returns to normal after a short time. These foreign objects are then captured by the oil filter, thus eliminating the source of the problem.

OK → **SYSTEM IS OK**

NG

REPLACE ECM (See page ES-543)

DTC	P0013	Camshaft Position "B" Actuator Circuit / Open (Bank 1)

DTC	P0023	Camshaft Position "B" Actuator Circuit / Open (Bank 2)

DESCRIPTION

The Variable Valve Timing (VVT) system includes the ECM, OCV and VVT controller. The ECM sends a target duty-cycle control signal to the OCV. This control signal regulates the oil pressure supplied to the VVT controller. Camshaft timing control is performed according to engine operating conditions such as the intake air volume, throttle valve position and engine coolant temperature. The ECM controls the OCV, based on the signals transmitted by several sensors. The VVT controller regulates the exhaust camshaft angle using oil pressure through the OCV. As a result, the relative positions of the camshaft and crankshaft are optimized, the engine torque and fuel economy improve, and the exhaust emissions decrease under overall driving conditions. The ECM detects the actual exhaust valve timing using signals from the camshaft and crankshaft position sensors, and performs feedback control. This is how the target intake valve timing is verified by the ECM.

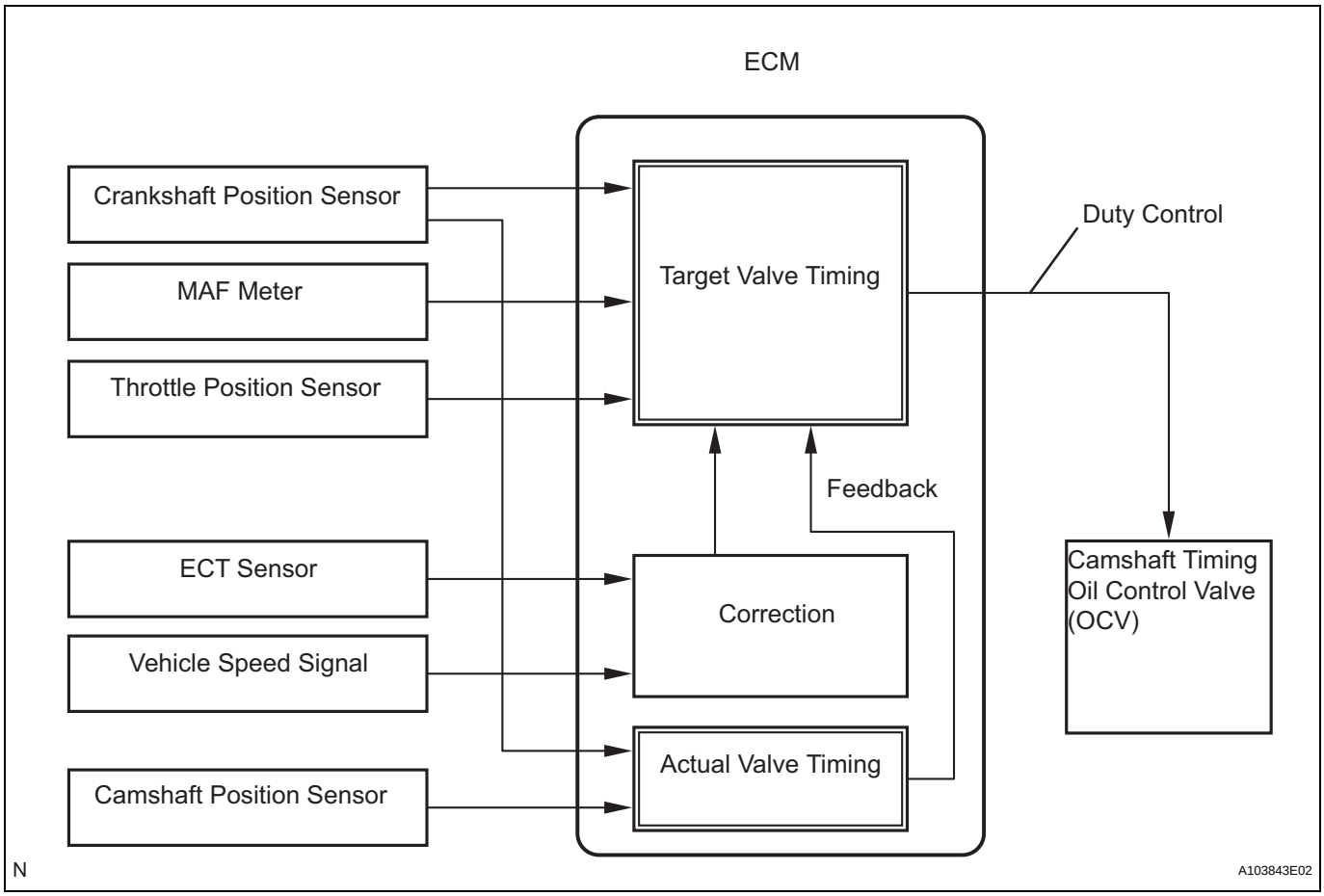

DTC No.	DTC Detection Condition	Trouble Area
P0013	Open or short in OCV for exhaust camshaft (bank 1) circuit (1 trip detection logic)	• Open or short in OCV for exhaust camshaft (bank 1) circuit • OCV for exhaust camshaft (bank 1) • ECM
P0023	Open or short in OCV for exhaust camshaft (bank 2) circuit (1 trip detection logic)	• Open or short in OCV for exhaust camshaft (bank 2) circuit • OCV for exhaust camshaft (bank 2) • ECM

MONITOR DESCRIPTION

The ECM optimizes the valve timing using the VVT system to control the exhaust camshaft. The VVT system includes the ECM, the OCV and the VVT controller. The ECM sends a target duty-cycle control signal to the OCV. This control signal regulates the oil pressure supplied to the VVT controller. The VVT controller can advance or retard the exhaust camshaft.
After the ECM sends the target duty-cycle signal to the OCV, the ECM monitors the OCV current to establish an actual duty-cycle. The ECM determines the existence of a malfunction and sets the DTC when the actual duty-cycle ratio varies from the target duty-cycle ratio.

MONITOR STRATEGY

Related DTCs	P0013: VVT OCV (bank 1) open/short P0023: VVT OCV (bank 2) open/short
Required sensors/components (Main)	VVT OCV (Variable Valve Timing oil control valve)
Required sensors/components (Sub)	-
Frequency of operation	Continuous
Duration	1 second
MIL operation	Immediate
Sequence of operation	None

TYPICAL ENABLING CONDITIONS

Monitor runs whenever following DTCs are not present	None
All of the following conditions are met:	-
Starter	OFF
Engine switch	ON
Time after turning engine switch off to on (IG)	0.5 seconds or more

TYPICAL MALFUNCTION THRESHOLDS

One of the following conditions is met:	Condition A, B or C
A. All of the following conditions are met:	-
Battery voltage	11 to 13 V
Target duty ratio	Less than 70%
Output signal duty ratio	100 %
B. All of the following conditions are met:	-
Battery voltage	13 V or more
Target duty ratio	Less than 80%
Output duty ratio	100 %
C. All of the following conditions are met:	-
Current cut status	Not cut
Output signal duty ratio	3% or less

COMPONENT OPERATING RANGE

VVT duty ratio	More than 3, and less than 100 %

WIRING DIAGRAM

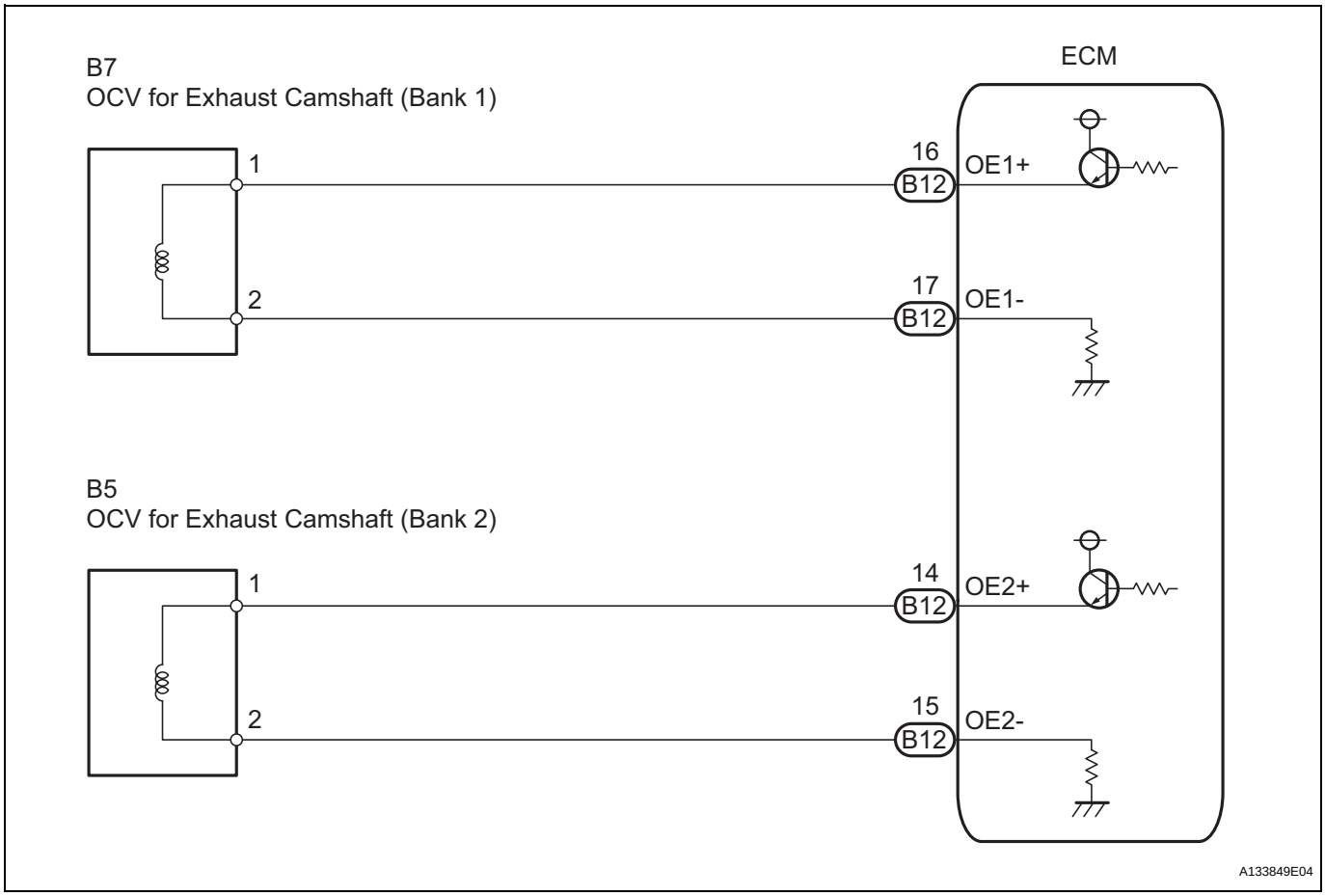

INSPECTION PROCEDURE

HINT:

- If DTC P0013 is displayed, check the exhaust camshaft circuit for the bank 1 VVT system.
- Bank 1 refers to the bank that includes cylinder No. 1.
- If DTC P0023 is displayed, check the exhaust camshaft circuit for the bank 2 VVT system.
- Bank 2 refers to the bank that does not include cylinder No. 1.
- Read freeze frame data using an intelligent tester. The ECM records vehicle and driving condition information as freeze frame data the moment a DTC is stored. When troubleshooting, freeze frame data can be helpful in determining whether the vehicle was running or stopped, whether the engine was warmed up or not, whether the air-fuel ratio was lean or rich, as well as other data recorded at the time of a malfunction (See page ES-41).

1	PERFORM ACTIVE TEST BY INTELLIGENT TESTER (OPERATE OCV)

(a) Connect the intelligent tester to the DLC3.
(b) Start the engine and turn the tester on.
(c) Warm up the engine.
(d) Enter the following menus: DIAGNOSIS / ENHANCED OBD II / ACTIVE TEST / VVT CTRL B1 or VVT CTRL B2.
(e) Check the engine speed while operating the Oil Control Valve (OCV) using the tester.

OK

Tester Operation	Specified Condition
OCV OFF	Normal engine speed
OCV ON	Engine idles roughly or stalls (soon after OCV switched from OFF to ON)

NG → **Go to step 2**

OK

CHECK FOR INTERMITTENT PROBLEMS

ES

2 INSPECT CAMSHAFT TIMING OIL CONTROL VALVE ASSEMBLY

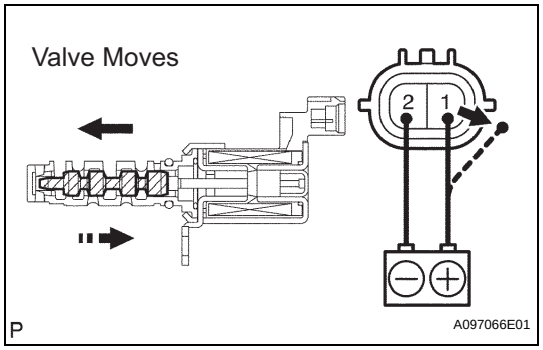

(a) Disconnect the B7 or B5 OCV connector.
(b) Measure the resistance between the terminals of the OCV.
Standard resistance

Tester Connection	Condition	Specified Condition
1 - 2	20°C (68°F)	6.9 to 7.9 Ω

(c) Reconnect the OCV connector.

NG → **Go to step 3**

OK

REPLACE CAMSHAFT TIMING OIL CONTROL VALVE ASSEMBLY (See page ES-500)

3	CHECK HARNESS AND CONNECTOR (OCV - ECM)

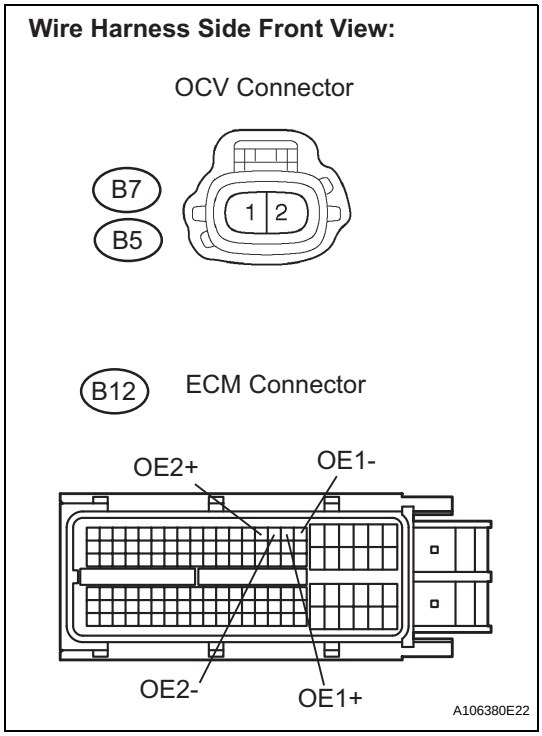

(a) Disconnect the B7 or B5 OCV connector.
(b) Disconnect the B12 ECM connector.
(c) Measure the resistance according to the value(s) in the table below.

Standard resistance (Check for open)

Tester Connection	Specified Condition
OE1+ (B12-16) - B7-1	Below 1 Ω
OE1- (B12-17) - B7-2	Below 1 Ω
OE2+ (B12-14) - B5-1	Below 1 Ω
OE2- (B12-15) - B5-2	Below 1 Ω

Standard resistance (Check for short)

Tester Connection	Specified Condition
OE1+ (B12-16) or B7-1 - Body ground	10 kΩ or higher
OE1- (B12-17) or B7-2 - Body ground	10 kΩ or higher
OE2+ (B12-14) or B5-1 - Body ground	10 kΩ or higher
OE2- (B12-15) or B5-2 - Body ground	10 kΩ or higher

(d) Reconnect the ECM connector.
(e) Reconnect the OCV connector.

NG → **REPAIR OR REPLACE HARNESS OR CONNECTOR**

OK

REPLACE ECM (See page ES-543)

ES

DTC	**P0014**	**Camshaft Position "B" - Timing Over-Advanced or System Performance (Bank 1)**

DTC	**P0015**	**Camshaft Position "B" - Timing Over-Retarded (Bank 1)**

DTC	**P0024**	**Camshaft Position "B" - Timing Over-Advanced or System Performance (Bank 2)**

DTC	**P0025**	**Camshaft Position "B" - Timing Over-Retarded (Bank 2)**

DESCRIPTION

HINT:
If DTC P0014, P0015, P0024 or P0025 is present, check the VVT (Variable Valve Timing) system.
The Variable Valve Timing (VVT) system includes the ECM, OCV and VVT controller. The ECM sends a target duty-cycle control signal to the OCV. This control signal regulates the oil pressure supplied to the VVT controller. Camshaft timing control is performed according to engine operating conditions such as the intake air volume, throttle valve position and engine coolant temperature. The ECM controls the OCV, based on the signals transmitted by several sensors. The VVT controller regulates the exhaust camshaft angle using oil pressure through the OCV. As a result, the relative positions of the camshaft and crankshaft are optimized, the engine torque and fuel economy improve, and the exhaust emissions decrease under overall driving conditions. The ECM detects the actual exhaust valve timing using signals from the camshaft and crankshaft position sensors, and performs feedback control. This is how the target intake valve timing is verified by the ECM.

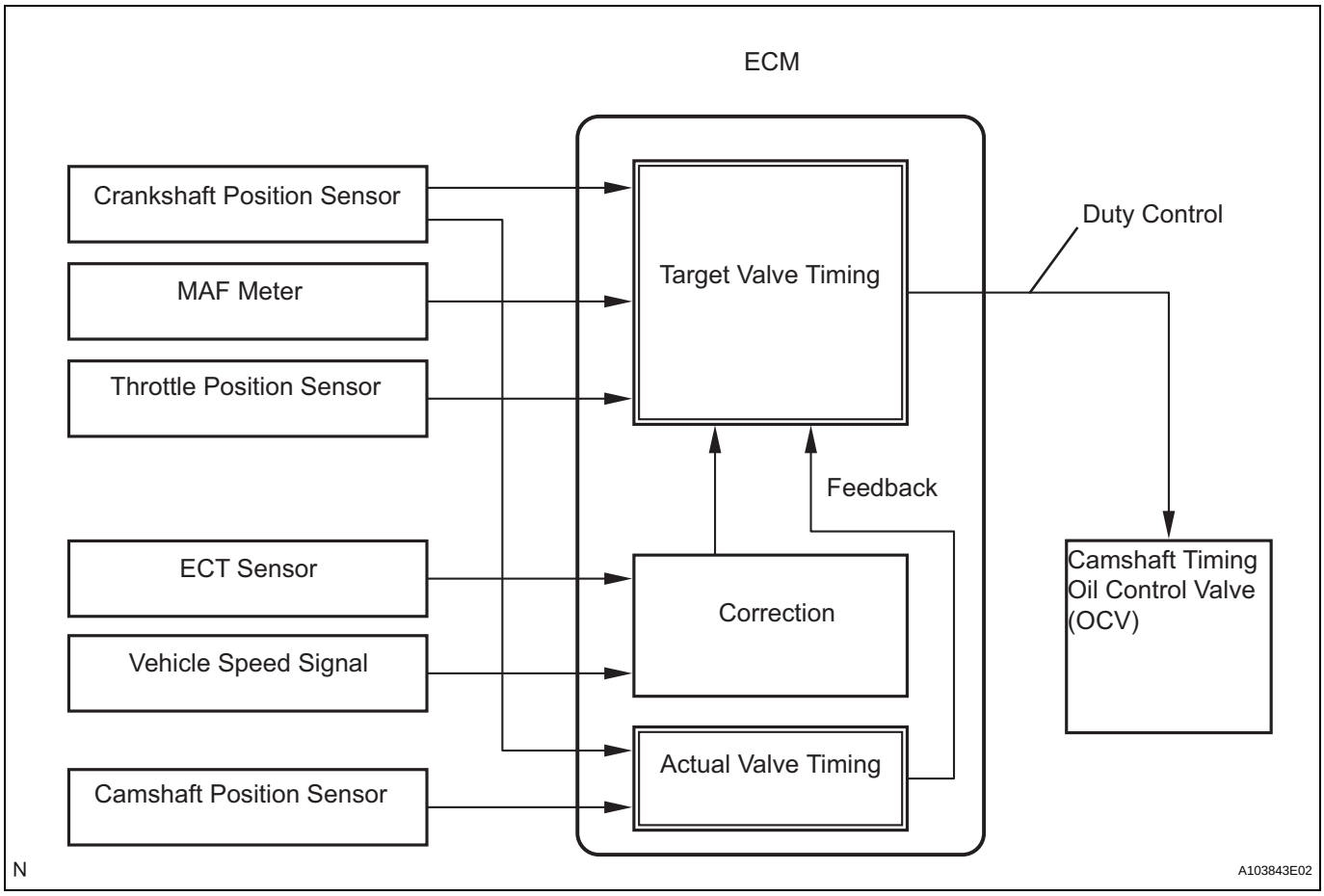

DTC No.	DTC Detection Condition	Trouble Area
P0014 P0024	Advanced cam timing: With warmed-up engine and engine speed of between 500 rpm and 4,000 rpm, all conditions (a), (b) and (c) are met (2 trip detection logic): (a) Difference between target and actual exhaust valve timing is more than 5°CA (Crankshaft Angle) for 4.5 seconds (b) Current exhaust valve timing is fixed (timing changes less than 5°CA in 5 seconds) (c) Variations in VVT controller timing are more than 19°CA of maximum delayed timing (advanced)	• Valve timing • Oil control valve (OCV) for exhaust camshaft (bank 1) • OCV filter (bank 1) • Exhaust camshaft • ECM
P0015 P0025	Retarded cam timing: With warmed-up engine and engine speed of between 500 rpm and 4,000 rpm, all conditions (a), (b) and (c) are met (1 trip detection logic): (a) Difference between target and actual exhaust valve timing is more than 5°CA (Crankshaft Angle) for 4.5 seconds (b) Current exhaust valve timing is fixed (timing changes less than 5°CA in 5 seconds) (c) Variations in VVT controller timing are more than 19°CA or less of maximum delayed timing (retarded)	• Valve timing • OCV for exhaust camshaft (bank 2) • OCV filter (bank 2) • Exhaust camshaft • ECM

MONITOR DESCRIPTION

1. The ECM optimizes the exhaust valve timing using the VVT (Variable Valve Timing) system to control the exhaust camshaft. The VVT system includes the ECM, the Oil Control Valve (OCV) and the VVT controller.

2. The ECM sends a target duty-cycle control signal to the OCV. This control signal regulates the oil pressure supplied to the VVT controller. The VVT controller can advance or retard the exhaust camshaft.
   If the difference between the target and actual exhaust valve timings is large, and changes in actual exhaust valve timing are small, the ECM interprets this as the VVT controller stuck malfunction and sets a DTC.
   Example:
   A DTC is set when the following conditions A, B and C are met:
   (1) The difference between the target and actual exhaust valve timings is more than 5°CA (Crankshaft Angle) and the condition continues for more than 4.5 seconds (Procedure "A").
   (2) It takes 5 seconds or more to change the valve timing by 5°CA (Procedure "B").
   (3) After above procedures "A" and "B" are met, the OCV is forcibly activated 63 times or more (Procedure "C").
3. DTCs P0014 and P0024 (Advanced Cam Timing) are detected with 1 trip detection logic.
4. DTCs P0015 and P0025 (Retarded Cam Timing) are detected with 2 trip detection logic.
   These DTCs indicate that the VVT controller cannot operate properly due to OCV malfunctions or the presence of foreign objects in the OCV.
5. The monitor will not run unless the following conditions are met:
   (a) The engine is warm (the engine coolant temperature is 75°C [167°F] or more).
   (b) The vehicle has been driven at more than 40 mph (64 km/h) for 3 minutes.
   (c) The engine has idled for 3 minutes.

MONITOR STRATEGY

Related DTCs	P0014: Advanced camshaft timing (bank 1) P0015: Retarded camshaft timing (bank 1) P0024: Advanced camshaft timing (bank 2) P0025: Retarded camshaft timing (bank 2)
Required sensors/components (Main)	VVT OCV and VVT Actuator
Required sensors/components (Related)	Crankshaft position sensor, Camshaft position sensor and Engine coolant temperature sensor
Frequency of operation	Once per driving cycle
Duration	Within 10 seconds
MIL operation	Advanced camshaft timing (bank 1): Immediate Advanced camshaft timing (bank 2): Immediate Retarded camshaft timing (bank 1): 2 driving cycles Retarded camshaft timing (bank 2): 2 driving cycles
Sequence of operation	None

TYPICAL ENABLING CONDITIONS

Monitor runs whenever following DTCs are not present	P0100 - P0103 (MAF sensor) P0115 - P0118 (ECT sensor) P0125 (insufficient ECT for closed loop) P0335 (CKP sensor) P0340, P0341 (CMP sensor) P0351 - P0358 (ignitor)
Battery voltage	11 V or more
Engine RPM	500 to 4,000 rpm
Engine coolant temperature	75 to 100°C (167 to 212°F)

TYPICAL MALFUNCTION THRESHOLDS

Advanced camshaft timing:

Valve timing	No change
Valve timing	Advanced position

Retarded camshaft timing:

Valve timing	No change
Valve timing	Retard position

WIRING DIAGRAM

Refer to DTC P0013 (See page ES-89).

INSPECTION PROCEDURE

HINT:

Abnormal bank	Advanced timing over (Valve timing is out of specified range)	Retarded timing over (Valve timing is out of specified range)
Bank 1	P0014	P0015
Bank 2	P0024	P0025

ES

- If DTC P0014 or P0015 is displayed, check the exhaust camshaft circuit for the bank 1 VVT system.
- Bank 1 refers to the bank that includes cylinder No. 1.
- If DTC P0024 or P0025 is displayed, check the exhaust camshaft circuit for the bank 2 VVT system.
- Bank 2 refers to the bank that does not include cylinder No. 1.
- Read freeze frame data using the intelligent tester. The ECM records vehicle and driving condition information as freeze frame data the moment a DTC is stored. When troubleshooting, freeze frame data can be helpful in determining whether the vehicle was running or stopped, whether the engine was warmed up or not, whether the air-fuel ratio was lean or rich, as well as other data recorded at the time of a malfunction (See page ES-41).

1 CHECK ANY OTHER DTCS OUTPUT (IN ADDITION TO DTC P0014, P0015, P0024 OR P0025)

(a) Connect the intelligent tester to the DLC3.
(b) Turn the engine switch on (IG) and turn the tester on.
(c) Enter the following menus: DIAGNOSIS / ENHANCED OBD II / DTC INFO / CURRENT CODES.
(d) Read the DTCs.

Result

Display (DTC output)	Proceed to
P0014, P0015, P0024 or P0025	A
P0014, P0015, P0024 or P0025 and other DTCs	B

HINT:
If any DTCs other than P0014, P0015, P0024 or P0025 are output, troubleshoot those DTCs first.

B → **GO TO DTC CHART (See page ES-59)**

A

2 PERFORM ACTIVE TEST BY INTELLIGENT TESTER (OPERATE OCV)

(a) Connect the intelligent tester to the DLC3.
(b) Start the engine and turn the tester on.
(c) Warm up the engine.
(d) Enter the following menus: DIAGNOSIS / ENHANCED OBD II / ACTIVE TEST / VVT CTRL B1.

(e) Check the engine speed while operating the Oil Control Valve (OCV) using the tester.

OK

Tester Operation	Specified Condition
OCV OFF	Normal engine speed
OCV ON	Engine idles roughly or stalls (soon after OCV switched from OFF to ON)

NG → **Go to step 4**

OK

3 CHECK WHETHER DTC OUTPUT RECURS (DTC P0014, P0015, P0024 OR P0025)

ES

(a) Connect the intelligent tester to the DLC3.
(b) Turn the engine switch on (IG) and turn the tester on.
(c) Clear the DTCs (See page ES-41).
(d) Start the engine and warm it up.
(e) Switch the ECM from normal mode to check mode using the tester (See page ES-45).
(f) Drive the vehicle for more than 10 minutes.
(g) Read the DTCs using the tester.
OK:
No DTC output.

NG → **Go to step 4**

OK

END

ES

4	CHECK VALVE TIMING (CHECK FOR LOOSE AND JUMPED TEETH ON TIMING CHAIN)

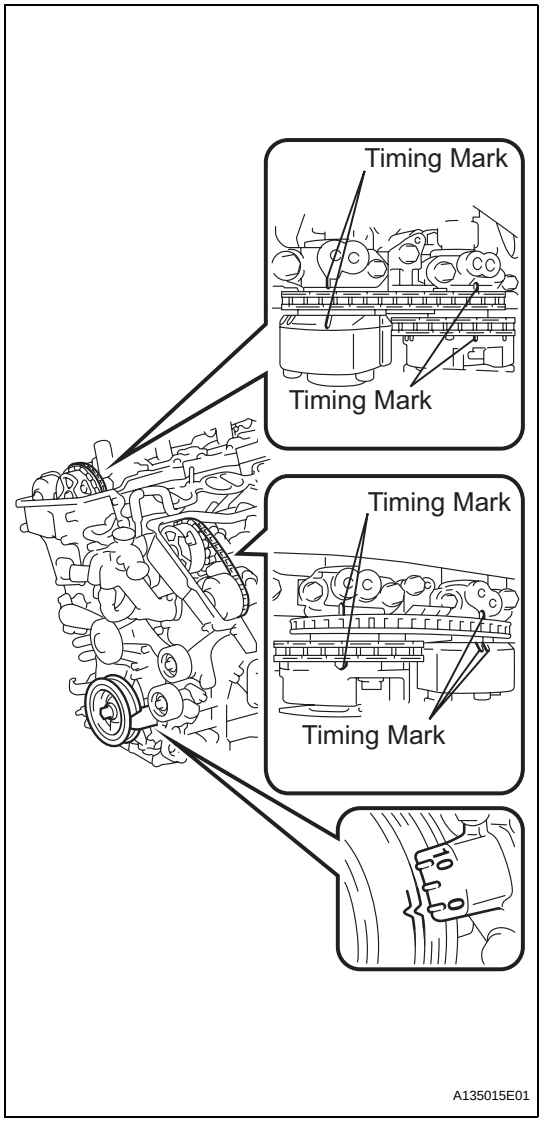

(a) Remove the cylinder head covers RH and LH.
(b) Turn the crankshaft pulley, and align its groove with the timing mark "0" of the timing chain cover.
(c) Check that the timing marks of the camshaft timing gears are aligned with the timing marks of the bearing cap as shown in the illustration.
If not, turn the crankshaft 1 revolution (360°), then align the marks as above.
OK:
The timing marks on the crankshaft timing gears are aligned as shown in the illustration.
(d) Reinstall the cylinder head covers.

NG → **ADJUST VALVE TIMING**

OK

5	INSPECT CAMSHAFT TIMING OIL CONTROL VALVE ASSEMBLY (OCV FOR EXHAUST CAMSHAFT)

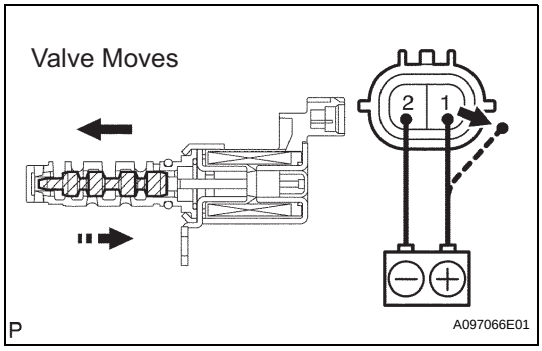

(a) Remove the OCV.
(b) Measure the resistance between the terminals of the OCV.
Standard resistance

Tester Connection	Condition	Specified Condition
1 - 2	20°C (68°F)	6.9 to 7.9 Ω

(c) Apply positive battery voltage to terminal 1 and negative battery voltage to terminal 2. Check the valve operation.
OK:
Valve moves quickly.
(d) Reinstall the OCV.

NG → **REPLACE CAMSHAFT TIMING OIL CONTROL VALVE ASSEMBLY (See page ES-500)**

OK

6	INSPECT OIL CONTROL VALVE FILTER AND PIPE

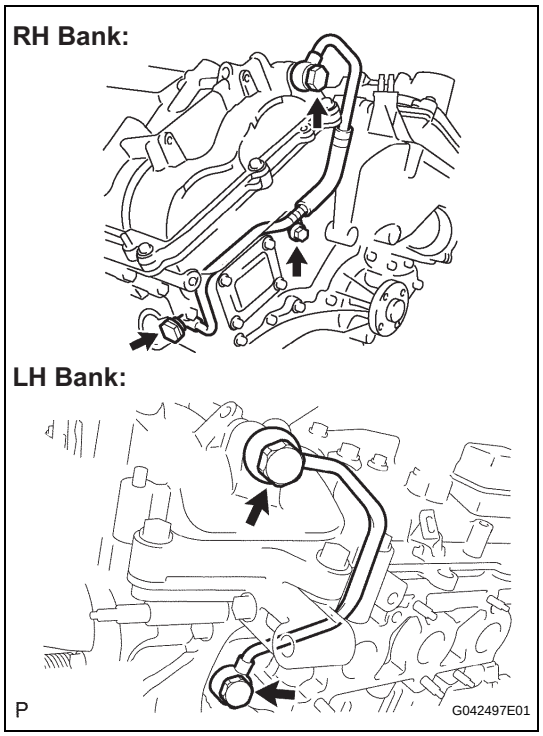

(a) Remove the oil pipe No. 1 or No. 2.
(b) Remove the oil control valve filter.
(c) Check that the filter and pipe are not clogged.
OK:
Filter is not clogged.

NG → **CLEAN OIL CONTROL VALVE FILTER AND PIPE**

ES

OK

7	REPLACE EXHAUST CAMSHAFT

NEXT

8	CHECK WHETHER DTC OUTPUT RECURS

(a) Clear the DTCs.
  (1) Operate the intelligent tester, or disconnect the EFI and ETCS fuses more than 60 seconds to erase the codes.
(b) Start the engine and warm up the engine.
(c) Switch the ECM from normal mode to check mode using the intelligent tester (See page ES-45).
(d) Drive the vehicle for more than 10 minutes or more.
(e) Read the output DTCs using the intelligent tester.
OK:
No DTC output.

HINT:
DTC P0014, P0015, P0024 or P0025 is output when foreign objects in engine oil are caught in some parts of the system. These codes will stay output even if the system returns to normal after a short time. These foreign objects are then captured by the oil, thus eliminating the source of the problem.

OK → **SYSTEM IS OK**

NG

REPLACE ECM (See page ES-543)

DTC	P0016	Crankshaft Position - Camshaft Position Correlation (Bank 1 Sensor A)

DTC	P0017	Crankshaft Position - Camshaft Position Correlation (Bank 1 Sensor B)

DTC	P0018	Crankshaft Position - Camshaft Position Correlation (Bank 2 Sensor A)

DTC	P0019	Crankshaft Position - Camshaft Position Correlation (Bank 2 Sensor B)

DESCRIPTION

In the VVT system, the appropriate intake and exhaust valve open and close timings are controlled by the ECM. The ECM performs intake and exhaust valve control by performing the following: 1) controlling the camshaft and camshaft oil control valve, and operating the camshaft timing gear; and 2) changing the relative positions of the gaps between the camshaft and crankshaft.

DTC No.	DTC Detection Condition	Trouble Area
P0016	Deviation in crankshaft position sensor signal and VVT sensor 1 (for intake camshaft (bank 1)) signal (2 trip detection logic)	• Mechanical system (Timing chain has jumped teeth or chain is stretched) • ECM
P0017	Deviation in crankshaft position sensor signal and VVT sensor 1 (for exhaust camshaft (bank 1)) signal (2 trip detection logic)	• Mechanical system (Timing chain has jumped teeth or chain stretched) • ECM
P0018	Deviation in crankshaft position sensor signal and VVT sensor 2 (for intake camshaft (bank 2)) signal (2 trip detection logic)	• Mechanical system (Timing chain has jumped teeth or chain stretched) • ECM
P0019	Deviation in crankshaft position sensor signal and VVT sensor 2 (for exhaust camshaft (bank 2)) signal (2 trip detection logic)	• Mechanical system (Timing chain has jumped teeth or chain stretched) • ECM

MONITOR DESCRIPTION

To monitor the correlation of the intake camshaft position and crankshaft position, the ECM checks the VVT learning value while the engine is idling. The VVT learning value is calibrated based on the camshaft position and crankshaft position. The intake valve timing is set to the most retarded angle while the engine is idling. If the VVT learning value is out of the specified range in consecutive driving cycles, the ECM illuminates the MIL and sets DTC P0016 (Bank 1) or P0018 (Bank 2).
To monitor the correlation of the exhaust camshaft position and crankshaft position, the ECM checks the VVT learning value while the engine is idling. The VVT learning value is calibrated based on the camshaft position and crankshaft position. The exhaust valve timing is set to the most advanced angle while the engine is idling. If the VVT learning value is out of the specified range in consecutive driving cycles, the ECM illuminates the MIL and sets DTC P0017 (Bank 1) or P0019 (Bank 2).

MONITOR STRATEGY

Related DTCs	P0016: Camshaft timing misalignment at idle (intake camshaft bank 1) P0017: Camshaft timing misalignment at idle (exhaust camshaft bank 1) P0018: Camshaft timing misalignment at idle (intake camshaft bank 2) P0019: Camshaft timing misalignment at idle (exhaust camshaft bank 2)
Required sensors/components (Main)	VVT actuator

Required sensors/components (Sub)	Camshaft position sensor, Crankshaft position sensor
Frequency of operation	Once per drive cycle
Duration	Within 1 minute
MIL operation	2 driving cycles
Sequence of operation	None

TYPICAL ENABLING CONDITIONS

All:

Monitor runs whenever following DTCs are not present	P0011 (VVT system 1 - advance) P0012 (VVT system 1 - retard) P0021 (VVT system 2 - advance) P0115 - P0118 (ECT sensor)

Intake side:

Engine speed	500 to 1,000 rpm

Exhaust side:

VVT feedback mode	Executing
VVT	Maximum advanced position
Engine speed	500 to 1,000 rpm

TYPICAL MALFUNCTION THRESHOLDS

Intake side:

One of the following conditions is met:	Condition 1 or 2
1. VVT leaning value at maximum retarded valve timing	Less than 18.5°CA
2. VVT leaning valve at maximum retarded valve timing	More than 43.5°CA

Exhaust side:

One of the following conditions is met:	Condition 1 or 2
1. VVT leaning value	Less than 77°CA
2. VVT leaning value	More than 102°CA

WIRING DIAGRAM

Refer to DTC P0335 (See page ES-220).

INSPECTION PROCEDURE

HINT:

Read freeze frame data using the intelligent tester. The ECM records vehicle and driving condition information as freeze frame data the moment a DTC is stored. When troubleshooting, freeze frame data can be helpful in determining whether the vehicle was running or stopped, whether the engine was warmed up or not, whether the air-fuel ratio was lean or rich, as well as other data recorded at the time of a malfunction (See page ES-41).

1	CHECK VALVE TIMING (CHECK FOR LOOSE AND A JUMPED TOOTH OF TIMING CHAIN)

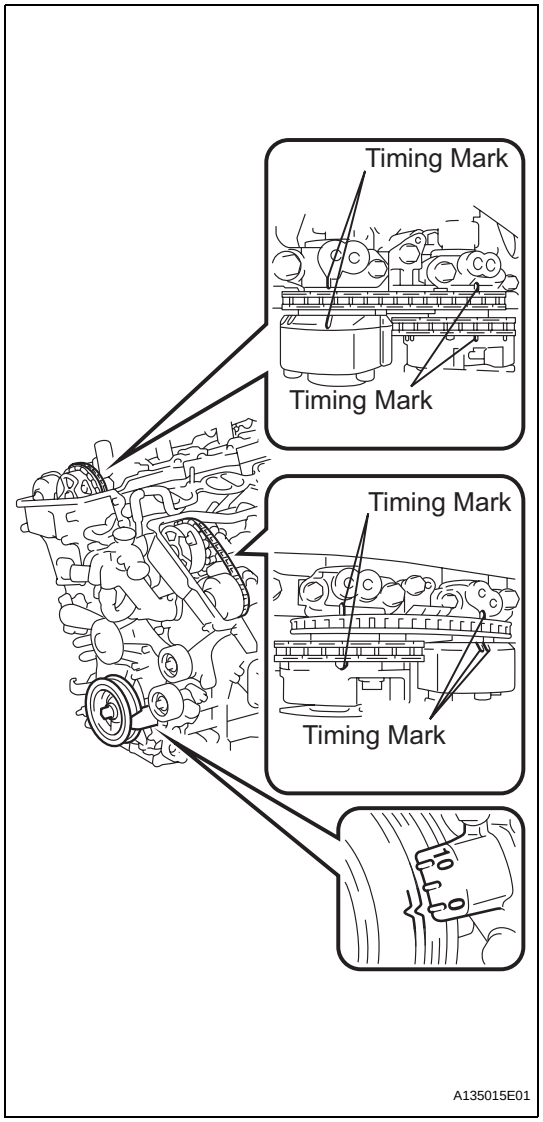

(a) Remove the cylinder head covers RH and LH.
(b) Turn the crankshaft pulley, and align its groove with the timing mark "0" of the timing chain cover.
(c) Check that the timing marks of the camshaft timing gears are aligned with the timing marks of the bearing cap as shown in the illustration.
If not, turn the crankshaft 1 revolution (360°), then align the marks as above.
OK:
The timing marks on the camshaft timing gears are aligned as shown in the illustration.
(d) Reinstall the cylinder head covers.

NG → **ADJUST VALVE TIMING (REPAIR OR REPLACE TIMING CHAIN)**

ES

OK

REPLACE ECM (See page ES-543)

DTC	**P0031**	**Oxygen (A/F) Sensor Heater Control Circuit Low (Bank 1 Sensor 1)**

DTC	**P0032**	**Oxygen (A/F) Sensor Heater Control Circuit High (Bank 1 Sensor 1)**

DTC	**P0051**	**Oxygen (A/F) Sensor Heater Control Circuit Low (Bank 2 Sensor 1)**

DTC	**P0052**	**Oxygen (A/F) Sensor Heater Control Circuit High (Bank 2 Sensor 1)**

DESCRIPTION

HINT:

- Although the DTC titles include oxygen sensor, these DTCs relate to the Air-Fuel Ratio (A/F) sensor.
- Sensor 1 refers to the sensor mounted in front of the Three-Way Catalytic Converter (TWC) and located near the engine assembly.

The A/F sensor generates voltage* that corresponds to the actual air-fuel ratio. This sensor voltage is used to provide the ECM with feedback so that it can control the air-fuel ratio. The ECM determines the deviation from the stoichiometric air-fuel ratio level, and regulates the fuel injection time. If the A/F sensor malfunctions, the ECM is unable to control the air-fuel ratio accurately.

The A/F sensor is the planar type and is integrated with the heater, which heats the solid electrolyte (zirconia element). This heater is controlled by the ECM. When the intake air volume is low (the exhaust gas temperature is low), a current flows into the heater to heat the sensor, in order to facilitate accurate oxygen concentration detection. In addition, the sensor and heater portions are narrower than the conventional type. The heat generated by the heater is conducted to the solid electrolyte through the alumina, therefore the sensor activation is accelerated.

A three-way catalytic converter (TWC) is used in order to convert the carbon monoxide (CO), hydrocarbon (HC), and nitrogen oxide (NOx) into less harmful substances. To allow the TWC to function effectively, it is necessary to keep the air-fuel ratio of the engine near the stoichiometric air-fuel ratio.

*: Value changes inside the ECM. Since the A/F sensor is the current output element, a current is converted to a voltage inside the ECM. Any measurements taken at the A/F sensor or ECM connectors will show a constant voltage.

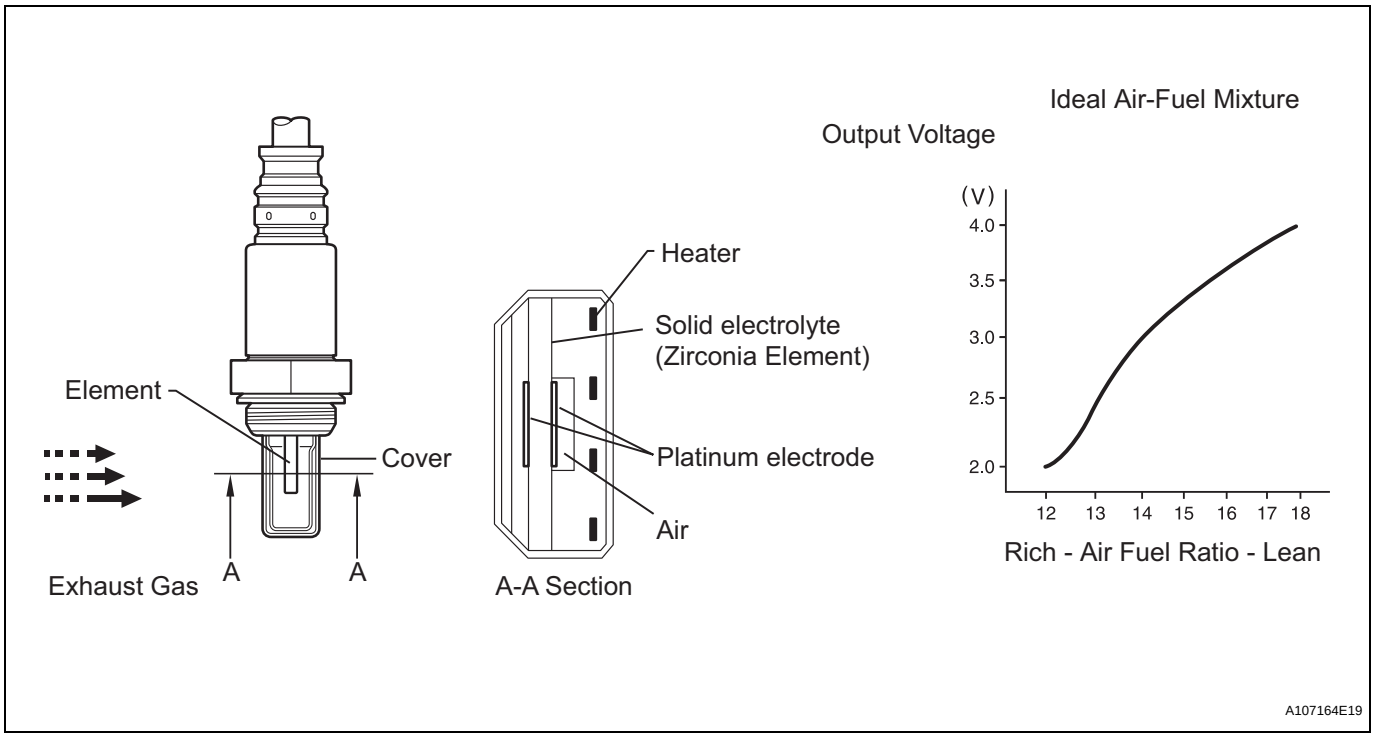

HINT:

- When any of these DTCs are set, the ECM enters fail-safe mode. The ECM turns off the A/F sensor heater in fail-safe mode. Fail-safe mode continues until the engine switch is turned off.
- The ECM provides a pulse width modulated control circuit to adjust the current through the heater. The A/F sensor heater circuit uses a relay on the B+ side of the circuit.

Reference (System Diagram of Bank 1 Sensor 1):

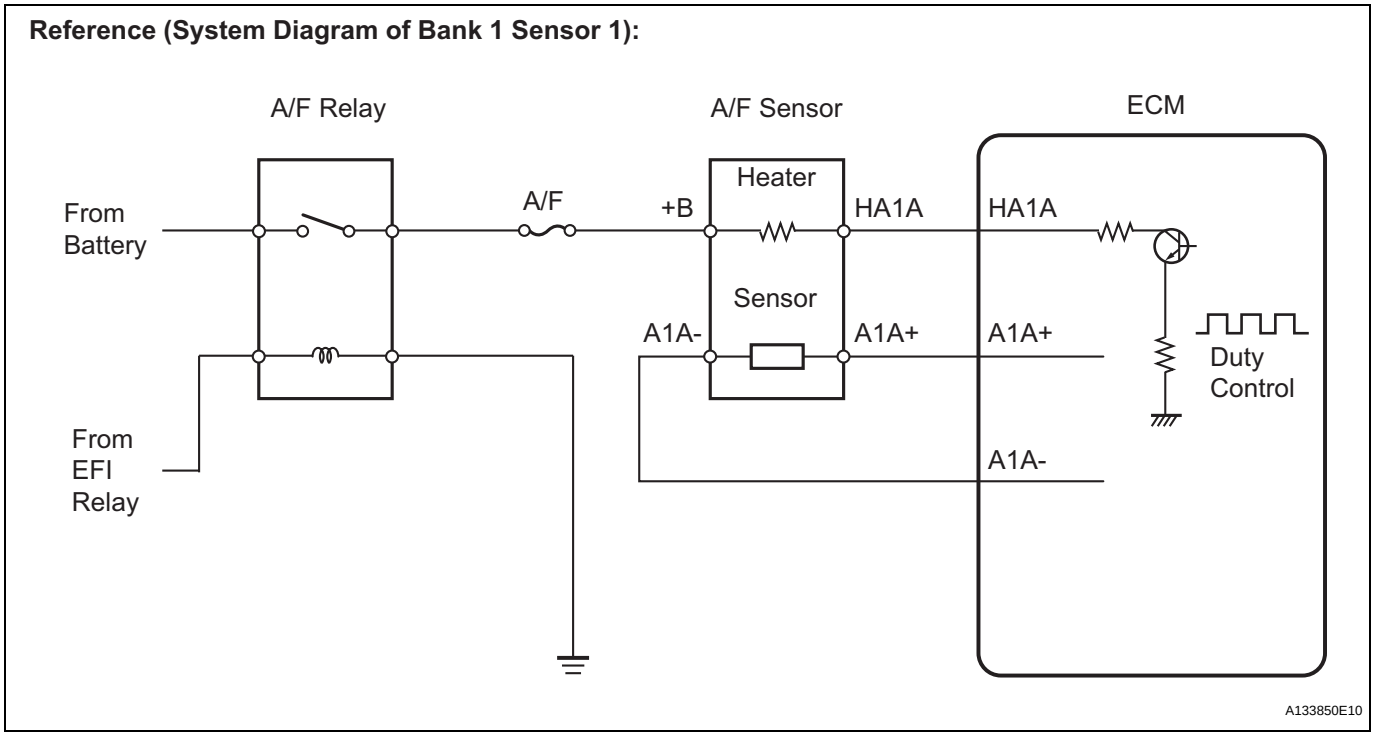

DTC No.	DTC Detection Condition	Trouble Area
P0031 P0051	Air-Fuel Ratio (A/F) sensor heater (bank 1, 2, sensor 1) current is less than 0.8 A (1 trip detection logic)	• Open in A/F sensor heater (bank 1, 2, sensor 1) circuit • A/F sensor heater (bank 1, 2, sensor 1) • A/F HTR relay • ECM

ES

DTC No.	DTC Detection Condition	Trouble Area
P0032 P0052	Air-Fuel Ratio (A/F) sensor heater (bank 1, 2, sensor 1) current is more than 10 A (1 trip detection logic)	• Short in A/F sensor heater (bank 1, 2, sensor 1) circuit • A/F sensor heater (sensor 1) • A/F HTR relay • ECM

HINT:
- Bank 1 refers to the bank that includes cylinder No. 1.
- Bank 2 refers to the bank that does not include cylinder No. 1.
- Sensor 1 refers to the sensor closest to the engine assembly.
- Sensor 2 refers to the sensor farthest away from the engine assembly.

MONITOR DESCRIPTION

1. The ECM uses information from the Air-Fuel Ratio (A/F) sensor to regulate the air-fuel ratio and keep it close to the stoichiometric level. This maximizes the ability of the Three-Way Catalytic Converter (TWC) to purify the exhaust gases.
2. The A/F sensor detects oxygen levels in the exhaust gas and transmits the information to the ECM. The inner surface of the sensor element is exposed to the outside air. The outer surface of the sensor element is exposed to the exhaust gas. The sensor element is made of platinum coated zirconia and includes an integrated heating element.
3. The zirconia element generates a small voltage when there is a large difference in the oxygen concentrations between the exhaust gas and outside air. The platinum coating amplifies this voltage generation.
4. The A/F sensor is more efficient when heated. When the exhaust gas temperature is low, the sensor cannot generate useful voltage signals without supplementary heating. The ECM regulates the supplementary heating using a duty-cycle approach to adjust the average current in the sensor heater element. If the heater current is outside the normal range, the signal transmitted by the A/F sensor will be inaccurate, as a result, the ECM will be unable to regulate air-fuel ratio properly.
5. When the current in the A/F sensor heater is outside the normal operating range, the ECM interprets this as a malfunction in the sensor heater and sets a DTC.

   Example:

   The ECM sets DTC P0032 or P0052 when the current in the A/F sensor heater is more than 10 A. Conversely, when the heater current is less than 0.8 A, DTC P0031 or P0051 is set.

MONITOR STRATEGY

Related DTCs	P0031: A/F sensor heater (bank 1) open/short (Low electrical current) P0032: A/F sensor heater (bank 1) open/short (High electrical current) P0051: A/F sensor heater (bank 2) open/short (Low electrical current) P0052: A/F sensor heater (bank 2) open/short (High electrical current)
Required sensors/components (Main)	A/F sensor heater (bank 1 and 2)
Required sensors/components (Sub)	-
Frequency of operation	Continuous
Duration	10 seconds
MIL operation	Immediate
Sequence of operation	None

TYPICAL ENABLING CONDITIONS

All:

Monitor runs whenever following DTCs are not present	P0300 - P0306 (misfire)

P0031 and P0051:

Battery voltage	10.5 V or more
Heater output duty	50 % or more

Time after engine start	10 seconds or more

P0032 and P0052:

Battery voltage	Less than 20 V
Engine	Running
Heater output duty	More than 0 %

TYPICAL MALFUNCTION THRESHOLDS

P0031 and P0051:

A/F sensor heater current	Less than 0.8 A

P0032 and P0052:

Hybrid IC high current limiter port	Fail

COMPONENT OPERATING RANGE

P0031 and P0051:

A/F sensor heater current	1.8 to 3.4 A at 20°C (68°F)

WIRING DIAGRAM

Refer to DTC P2195 (See page ES-353).

INSPECTION PROCEDURE

HINT:

Read freeze frame data using the intelligent tester. The ECM records vehicle and driving condition information as freeze frame data the moment a DTC is stored. When troubleshooting, freeze frame data can be helpful in determining whether the vehicle was running or stopped, whether the engine was warmed up or not, whether the air-fuel ratio was lean or rich, as well as other data recorded at the time of a malfunction (See page ES-41).

ES

1 INSPECT AIR FUEL RATIO SENSOR (HEATER RESISTANCE)

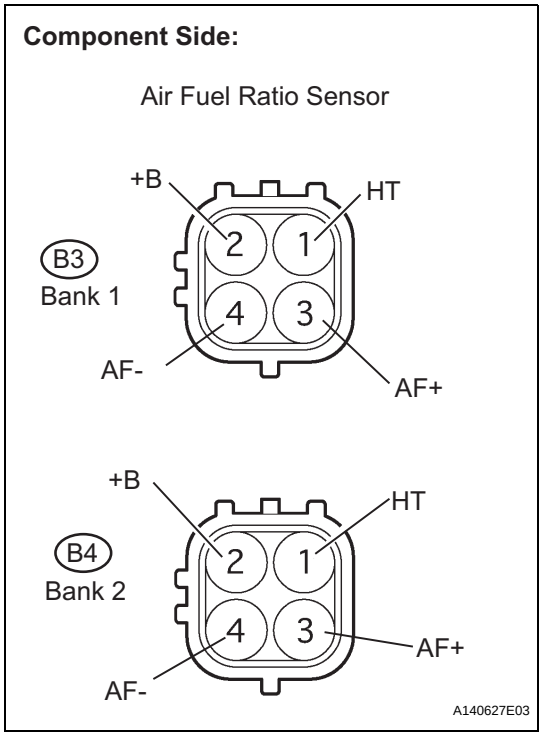

(a) Disconnect the B3 or B4 A/F sensor connector.
(b) Measure the resistance according to the value(s) in the table below.

Standard resistance (Bank 1 sensor 1)

Tester Connection	Condition	Specified Condition
HT (1) - +B (2)	20°C (68°F)	1.8 to 3.4 Ω
HT (1) - AF- (4)	-	10 kΩ or higher

Standard resistance (Bank 2 sensor 1)

Tester Connection	Condition	Specified Condition
HT (1) - +B (2)	20°C (68°F)	1.8 to 3.4 Ω
HT (1) - AF- (4)	-	10 kΩ or higher

(c) Reconnect the A/F sensor connector.

NG → **REPLACE AIR FUEL RATIO SENSOR (See page EC-19)**

OK

2 CHECK TERMINAL VOLTAGE (+B OF A/F SENSOR)

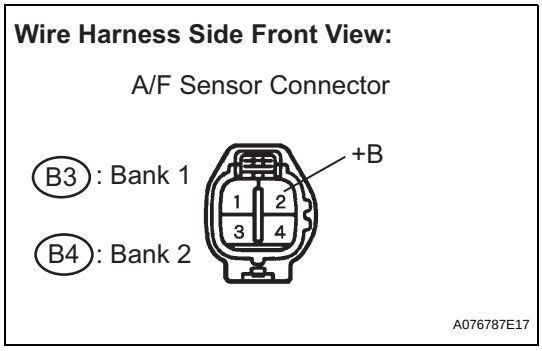

(a) Disconnect the B3 or B4 A/F sensor connector.
(b) Turn the engine switch on (IG).
(c) Measure the voltage between the terminals of the A/F sensor connector and body ground.

Standard voltage

Tester Connection	Specified Condition
+B (B3-2) - Body ground	9 to 14 V
+B (B4-2) - Body ground	9 to 14 V

OK → **Go to step 7**

NG

3 INSPECT FUSE (A/F)

(a) Remove the A/F sensor fuse from the engine room junction block.
(b) Measure the A/F sensor fuse resistance.

Standard resistance:
Below 1 Ω

(c) Reinstall the A/F fuse.

NG → **REPLACE A/F FUSE**

OK

4 INSPECT ENGINE ROOM JUNCTION BLOCK (EFI RELAY, A/F RELAY)

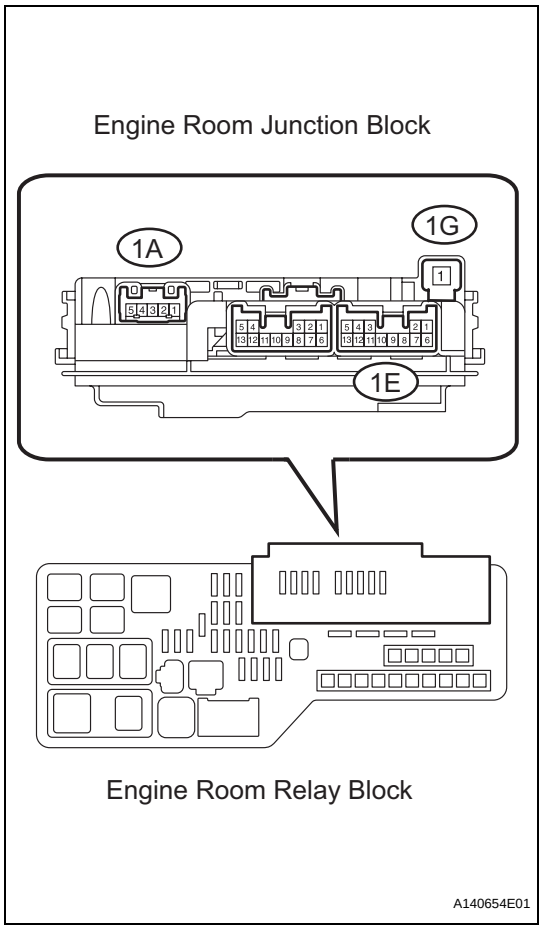

(a) Remove the engine room junction block from the engine room R/B.

(b) Inspect the EFI relay.

(1) Measure the EFI relay resistance.

Standard resistance

Tester Connection	Specified Condition
1E-12 - 1E-6	10 kΩ or higher
1E-12 - 1E-6	Below 1 Ω (Apply battery voltage between terminals 1E-9 and 1E-10)

(c) Inspect the A/F relay.

(1) Measure the A/F relay resistance.

Standard resistance

Tester Connection	Specified Condition
1G-1 - 1A-4	10 kΩ or higher
1G-1 - 1A-4	Below 1 Ω (Apply battery voltage between terminals 1E-9 and 1E-10)

NG → **REPLACE ENGINE ROOM JUNCTION BLOCK**

OK

5 INSPECT FUSE (EFI MAIN)

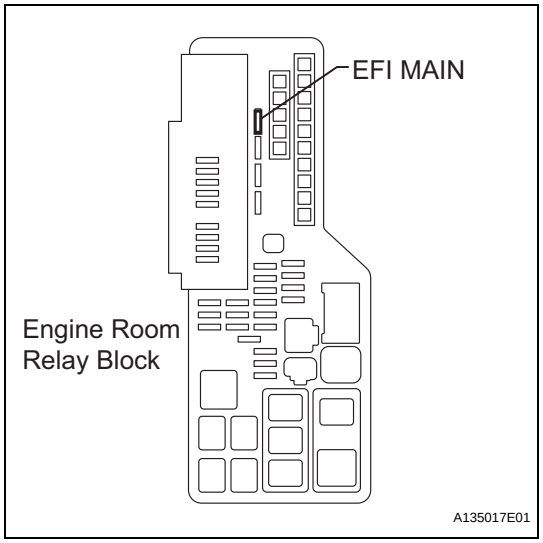

(a) Remove the EFI MAIN fuse from the engine room R/B.

(b) Measure the EFI MAIN fuse resistance.

Standard resistance:

Below 1 Ω

(c) Reinstall the EFI MAIN fuse.

NG → **REPLACE EFI MAIN FUSE**

ES

OK

6	CHECK HARNESS AND CONNECTOR (A/F SENSOR - A/F RELAY)

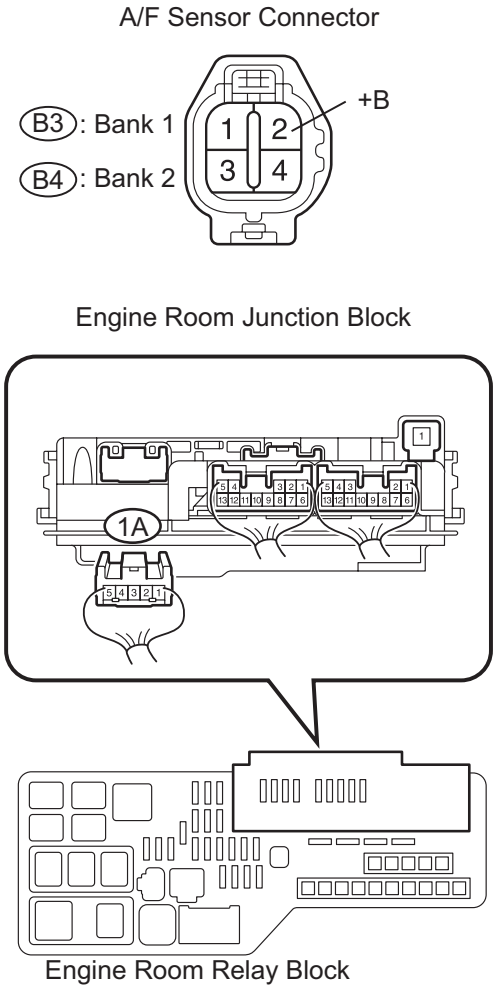

(a) Disconnect the B3 or B4 A/F sensor connector.
(b) Remove the engine room junction block from the engine room R/B.
(c) Measure the resistance between the terminals.

Standard resistance (Check for open)

Tester Connection	Specified Condition
+B (B3-2) - 1A-4 (Engine room R/B)	Below 1 Ω
+B (B4-2) - 1A-4 (Engine room R/B)	Below 1 Ω

Standard resistance (Check for short)

Tester Connection	Specified Condition
+B (B3-2) or 1A-4 (Engine room R/B) - Body ground	10 kΩ or higher
+B (B4-2) or 1A-4 (Engine room R/B) - Body ground	10 kΩ or higher

(d) Reinstall the engine room junction block.
(e) Reconnect the A/F sensor connector.

NG → **REPAIR OR REPLACE HARNESS OR CONNECTOR**

OK

CHECK ECM POWER SOURCE CIRCUIT (See page ES-427)

7 CHECK HARNESS AND CONNECTOR

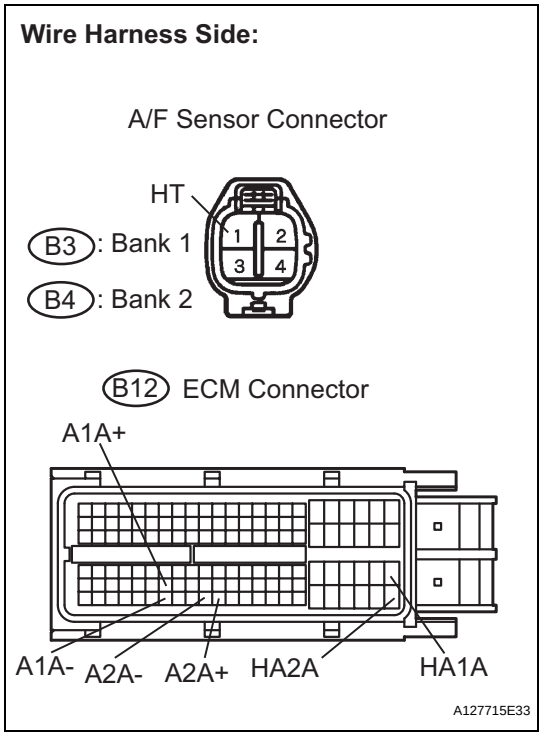

(a) Disconnect the B3 or B4 A/F sensor connector.
(b) Disconnect the B12 ECM connector.
(c) Measure the resistance between the terminals.

Standard resistance (Check for open)

Tester Connection	Specified Condition
HA1A (B12-86) - HT (B3-1)	Below 1 Ω
HA2A (B12-109) - HT (B4-1)	Below 1 Ω

Standard resistance (Check for short)

Tester Connection	Specified Condition
HA1A (B12-86) or HT (B3-1) - Body ground	10 kΩ or higher
HA2A (B12-109) or HT (B4-1) - Body ground	10 kΩ or higher

(d) Reconnect the ECM connector.
(e) Reconnect the A/F sensor connectors.

NG → **REPAIR OR REPLACE HARNESS OR CONNECTOR**

OK

8 CHECK WHETHER DTC OUTPUT RECURS

(a) Connect the intelligent tester to the DLC3.
(b) Turn the engine switch on (IG).
(c) Turn the intelligent tester on.
(d) Clear the DTCs (See page ES-41).
(e) Start the engine.
(f) Allow the engine to idle for 1 minute or more.
(g) Select the following menu items: DIAGNOSIS / ENHANCED OBD II / DTC INFO / CURRENT CODES.
(h) Read the DTCs.

Result

Display (DTC Output)	Proceed to
No output	A
P0031, P0032, P0051 and/or P0052	B

B → **REPLACE ECM (See page ES-543)**

A

CHECK FOR INTERMITTENT PROBLEMS

ES

DTC	P0037	Oxygen Sensor Heater Control Circuit Low (Bank 1 Sensor 2)

DTC	P0038	Oxygen Sensor Heater Control Circuit High (Bank 1 Sensor 2)

DTC	P0057	Oxygen Sensor Heater Control Circuit Low (Bank 2 Sensor 2)

DTC	P0058	Oxygen Sensor Heater Control Circuit High (Bank 2 Sensor 2)

DTC	P0141	Oxygen Sensor Heater Circuit Malfunction (Bank 1 Sensor 2)

DTC	P0161	Oxygen Sensor Heater Circuit Malfunction (Bank 2 Sensor 2)

DESCRIPTION

A three-way catalytic converter (TWC) is used in order to convert the carbon monoxide (CO), hydrocarbon (HC), and nitrogen oxide (NOx) into less harmful substances. To allow the TWC to function effectively, it is necessary to keep the air-fuel ratio of the engine near the stoichiometric air-fuel ratio. For the purpose of helping the ECM to deliver accurate air-fuel ratio control, a Heated Oxygen (HO2) sensor is used.
The HO2 sensor is located behind the TWC, and detects the oxygen concentration in the exhaust gas. Since the sensor is integrated with the heater that heats the sensing portion, it is possible to detect the oxygen concentration even when the intake air volume is low (the exhaust gas temperature is low).
When the air-fuel ratio becomes lean, the oxygen concentration in the exhaust gas becomes rich. The HO2 sensor informs the ECM that the post-TWC air-fuel ratio is lean (low voltage, i.e. less than 0.45 V). Conversely, when the air-fuel ratio is richer than the stoichiometric air-fuel level, the oxygen concentration in the exhaust gas becomes lean. The HO2 sensor informs the ECM that the post-TWC air-fuel ratio is rich (high voltage, i.e. more than 0.45 V). The HO2 sensor has the property of changing its output voltage drastically when the air-fuel ratio is close to the stoichiometric level.
The ECM uses the supplementary information from the HO2 sensor to determine whether the air-fuel ratio after the TWC is rich or lean, and adjusts the fuel injection time accordingly. Thus, if the HO2 sensor is working improperly due to internal malfunctions, the ECM is unable to compensate for deviations in the primary air-fuel ratio control.

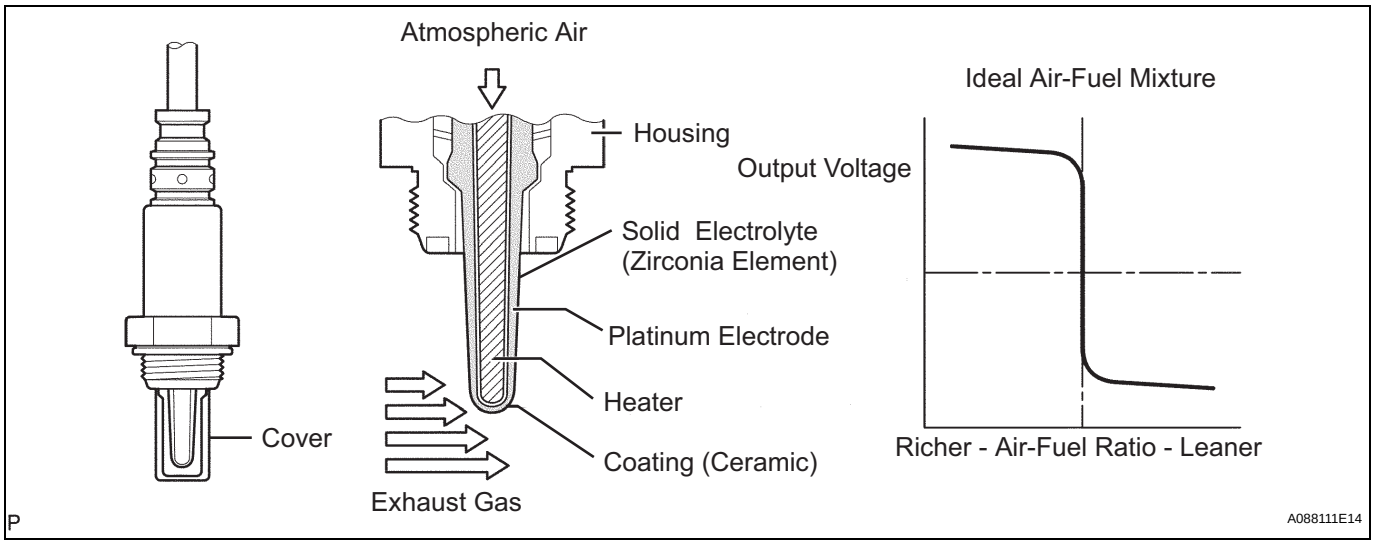

HINT:

- Sensor 2 refers to the sensor mounted behind the Three-Way Catalytic Converter (TWC) and located far from the engine assembly.
- When any of these DTCs are set, the ECM enters fail-safe mode. The ECM turns off the Heated Oxygen (HO2) Sensor heater in fail-safe mode. Fail-safe mode continues until the engine switch is turned off.
- The ECM provides a pulse width modulated control circuit to adjust the current through the heater. The HO2 sensor heater circuit uses a relay on the B+ side of the circuit.

Reference (System Diagram of Bank 1 Sensor 2):

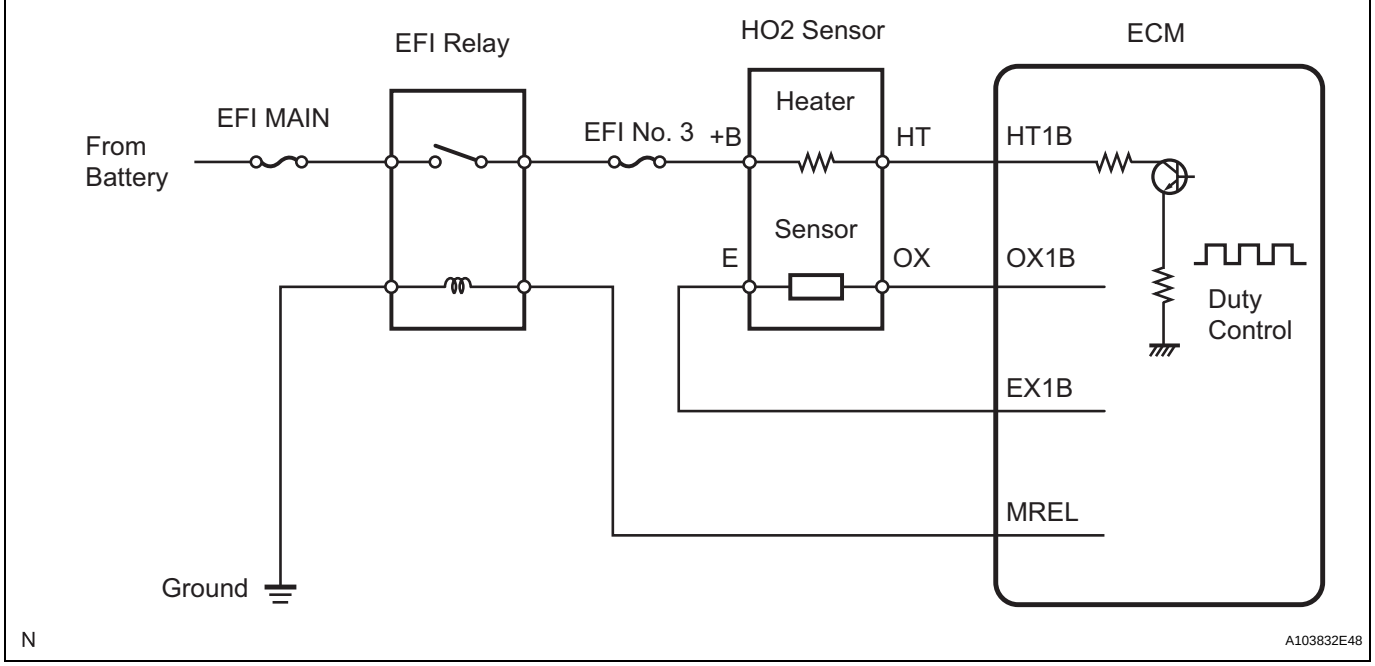

DTC No.	DTC Detection Condition	Trouble Area
P0037 P0057	Heated Oxygen (HO2) sensor heater current is less than 0.3 A (1 trip detection logic)	• Open in HO2 sensor heater circuit • HO2 sensor heater • Engine room junction block (EFI relay) • ECM
P0038 P0058	Heated Oxygen (HO2) sensor heater current is more than 3.5 A (1 trip detection logic)	• Short in HO2 sensor heater circuit • HO2 sensor heater • Engine room junction block (EFI relay) • ECM

ES

DTC No.	DTC Detection Condition	Trouble Area
P0141 P0161	Cumulative heater resistance correction value exceeds the acceptable threshold. (2 trip detection logic)	• HO2 sensor heater • ECM

HINT:
- Bank 1 refers to the bank that includes cylinder No. 1.
- Bank 2 refers to the bank that does not include cylinder No. 1.
- Sensor 1 refers to the sensor closest to the engine assembly.
- Sensor 2 refers to the sensor farthest away from the engine assembly.

MONITOR DESCRIPTION

The sensing position of the Heated Oxygen (HO2) sensor has a zirconia element which is used to detect the oxygen concentration in the exhaust gas. If the zirconia element is at the appropriate temperature, and the difference between the oxygen concentrations surrounding the inside and outside surfaces of the sensor is large, the zirconia element generates voltage signals. In order to increase the oxygen concentration detecting capacity of the zirconia element, the ECM supplements the heat from the exhaust with heat from a heating element inside the sensor.

Heated oxygen sensor heater range check (P0037,P0038, P0057 and P0058):

The ECM monitors the current applied to the O2 sensor heater to check the heater for malfunctions. If the current is below the threshold value, the ECM will determine that there is an open circuit in the heater. If the current is above the threshold value, the ECM will determine that there is a short circuit in the heater.

Example:

The ECM sets DTC P0038 or P0058 when the current in the HO2 sensor heater is more than 2 A. Conversely, when the heater current is less than 0.3 A, DTC P0037 or P0057 is set.

Heated oxygen sensor heater performance (P0141 and P0161):

After the accumulated heater ON time exceeds 100 seconds, the ECM calculates the heater resistance using the battery voltage and the current applied to the heater. If the resistance is above the threshold value, the ECM will determine that there is a malfunction in the HO2S heater and set DTC P0141 and P0161.

MONITOR STRATEGY

Related DTCs	P0037: Heated oxygen sensor heater (bank 1 sensor 2) open/short (Low electrical current) P0038: Heated oxygen sensor heater (bank 1 sensor 2) open/short (High electrical current) P0057: Heated oxygen sensor heater (bank 2 sensor 2) open/short (Low electrical current) P0058: Heated oxygen sensor heater (bank 2 sensor 2) open/short (High electrical current) P0141: Heated oxygen sensor heater performance (bank 1 sensor 2) P0161: Heated oxygen sensor heater performance (bank 2 sensor 2)
Required sensors/components (Main)	Heated oxygen sensor heater (bank 1 sensor 2) Heated oxygen sensor heater (bank 2 sensor 2)
Required sensors/components (Sub)	Vehicle speed sensor
Frequency of operation	Continuous
Duration	1 second: P0037, P0038, P0057 and P0058 10 seconds: P0141 and P0161
MIL operation	Immediate: P0037, P0038, P0057 and P0058 2 driving cycles: P0141 and P0161
Sequence of operation	None

TYPICAL ENABLING CONDITIONS

All:

Monitor runs whenever following DTCs are not present	None

P0037 and P0057:

Battery voltage	10.5 to 20 V

P0038 and P0058 (Case 1):

Battery voltage	10.5 V or more
Engine	Running
Starter	OFF

P0038 and P0058 (Case 2):

Battery voltage	10.5 to 20 V

P0141 and P0161:

One of the following conditions is met:	Condition A or B
A. All of the following conditions are met:	Conditions 1, 2, 3, 4 and 5
1. Battery voltage	10.5 V or more
2. Fuel cut	OFF
3. Time after fuel cut ON to OFF	30 seconds or more
4. Accumulated heater ON time	100 seconds or more
5. Learned heater OFF current operation	Completed
B. Duration that rear heated oxygen sensor impedance is less than 15 kΩ	2 seconds or more

TYPICAL MALFUNCTION THRESHOLDS

P0037 and P0057:

Heater current	Less than 0.3 A

P0038 and P0058:

One of the following conditions is met:	Condition A or B
A. Learned heater OFF current	More than 2 A
B. Heater current	2 A or more

P0141 and P0161 (Heater performance monitor check):

Accumulated heater resistance	Varies with sensor element temperature (Example: More than 23 ohm)

COMPONENT OPERATING RANGE

Heated Oxygen (HO2) sensor heater current	0.4 to 1 A (when engine idles, HO2 sensor warmed up and battery voltage 11 to 14 V)

MONITOR RESULT

Refer to CHECKING MONITOR STATUS (See page ES-20).

WIRING DIAGRAM

Refer to DTC P0136 (See page ES-174).

INSPECTION PROCEDURE

HINT:

Read freeze frame data using the intelligent tester. The ECM records vehicle and driving condition information as freeze frame data the moment a DTC is stored. When troubleshooting, freeze frame data can be helpful in determining whether the vehicle was running or stopped, whether the engine was warmed up or not, whether the air-fuel ratio was lean or rich, as well as other data recorded at the time of a malfunction (See page ES-41).

ES

1 INSPECT HEATED OXYGEN SENSOR (HEATER RESISTANCE)

Component Side:

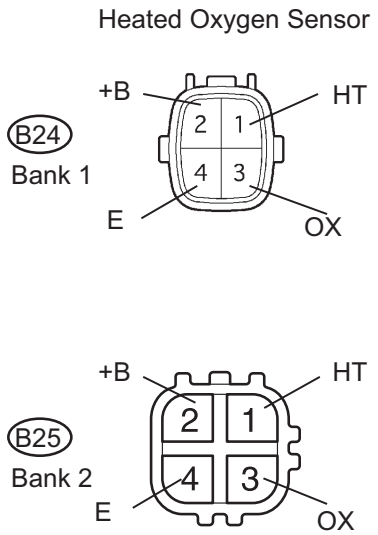

A137614E12

(a) Disconnect the B24 heated oxygen sensor connector (Bank 1 Sensor 2) or B25 heated oxygen sensor connector (Bank 2 Sensor 2).

(b) Measure the resistance according to the value(s) in the table below.

Standard resistance (Bank 1 sensor 2)

Tester Connection	Condition	Specified Condition
HT (1) - +B (2)	20°C (68°F)	11 to 16 Ω
HT (1) - E (4)	Always	10 kΩ or higher

Standard resistance (Bank 2 sensor 2)

Tester Connection	Condition	Specified Condition
HT (1) - +B (2)	20°C (68°F)	11 to 16 Ω
HT (1) - E (4)	Always	10 kΩ or higher

(c) Reconnect the HO2 sensor connector.

NG → **REPLACE HEATED OXYGEN SENSOR (See page EC-21)**

OK

2 CHECK TERMINAL VOLTAGE (+B OF HO2 SENSOR)

Wire Harness Side:

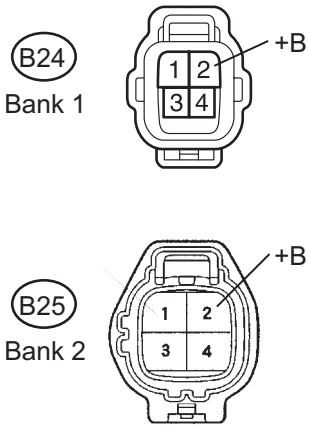

A137619E03

(a) Disconnect the B24 heated oxygen sensor connector (Bank 1 Sensor 2) or B25 heated oxygen sensor connector (Bank 2 Sensor 2).

(b) Turn the engine switch on (IG).

(c) Measure the voltage between the terminals.

Standard voltage

Tester Connection	Specified Condition
+B (B24-2) - Body ground	9 to 11 V
+B (B25-2) - Body ground	9 to 11 V

(d) Reconnect the HO2 sensor connector.

OK → **Go to step 7**

NG

3 INSPECT FUSE (EFI NO. 3)

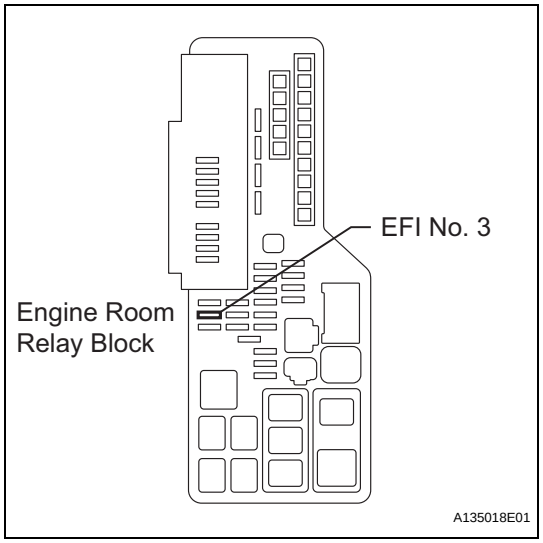

(a) Remove the EFI No. 3 fuse from the engine room R/B.
(b) Measure the EFI No. 3 fuse resistance.
Standard resistance:
Below 1 Ω
(c) Reinstall the EFI No. 3 fuse.

NG → **REPLACE EFI NO. 3 FUSE**

OK

4 INSPECT ENGINE ROOM JUNCTION BLOCK

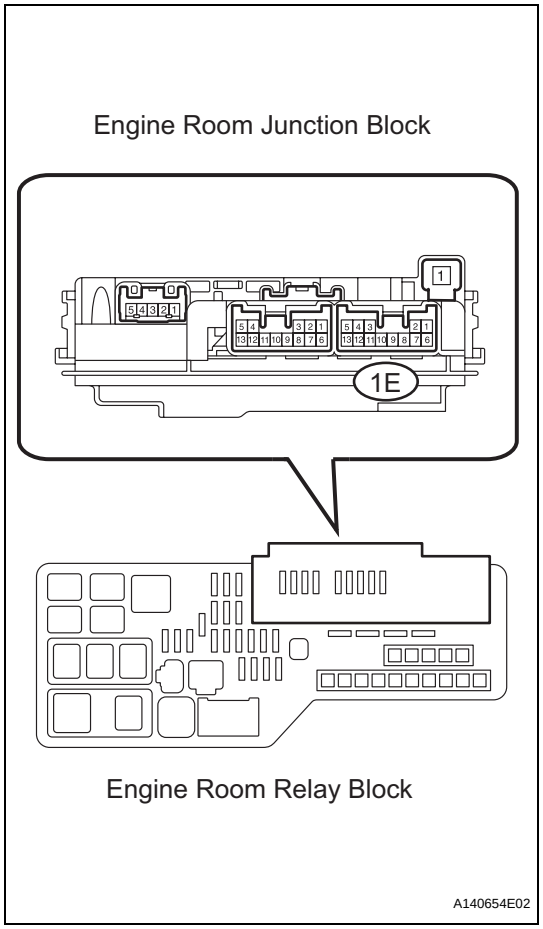

(a) Remove the engine room junction block from the engine room R/B.
(b) Inspect the EFI relay.
(1) Measure the EFI relay resistance.
Standard resistance

Tester Connection	Specified Condition
1E-12 - 1E-6	10 kΩ or higher
1E-12 - 1E-6	Below 1 Ω (Apply battery voltage between terminals 1E-9 and 1E-10)

(c) Reinstall the engine room junction block.

NG → **REPLACE ENGINE ROOM JUNCTION BLOCK**

OK

ES

5	INSPECT FUSE (EFI MAIN)

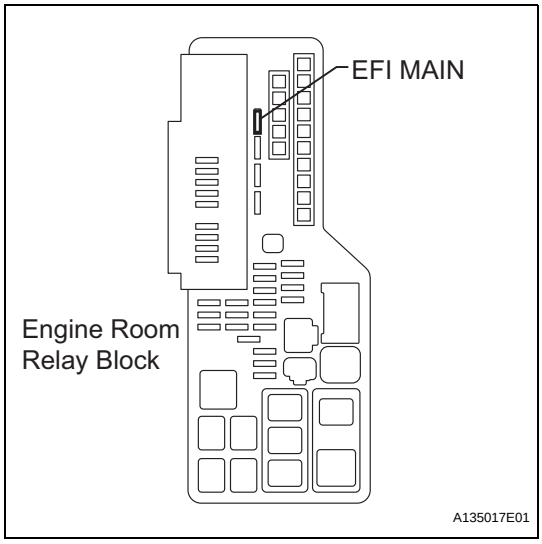

(a) Remove the EFI MAIN fuse from the engine room R/B.
(b) Measure the EFI MAIN fuse.
Standard resistance:
Below 1 Ω
(c) Reinstall the EFI MAIN fuse.

NG → **REPLACE EFI MAIN FUSE**

OK

6	CHECK HARNESS AND CONNECTOR (HO2 SENSOR - EFI RELAY)

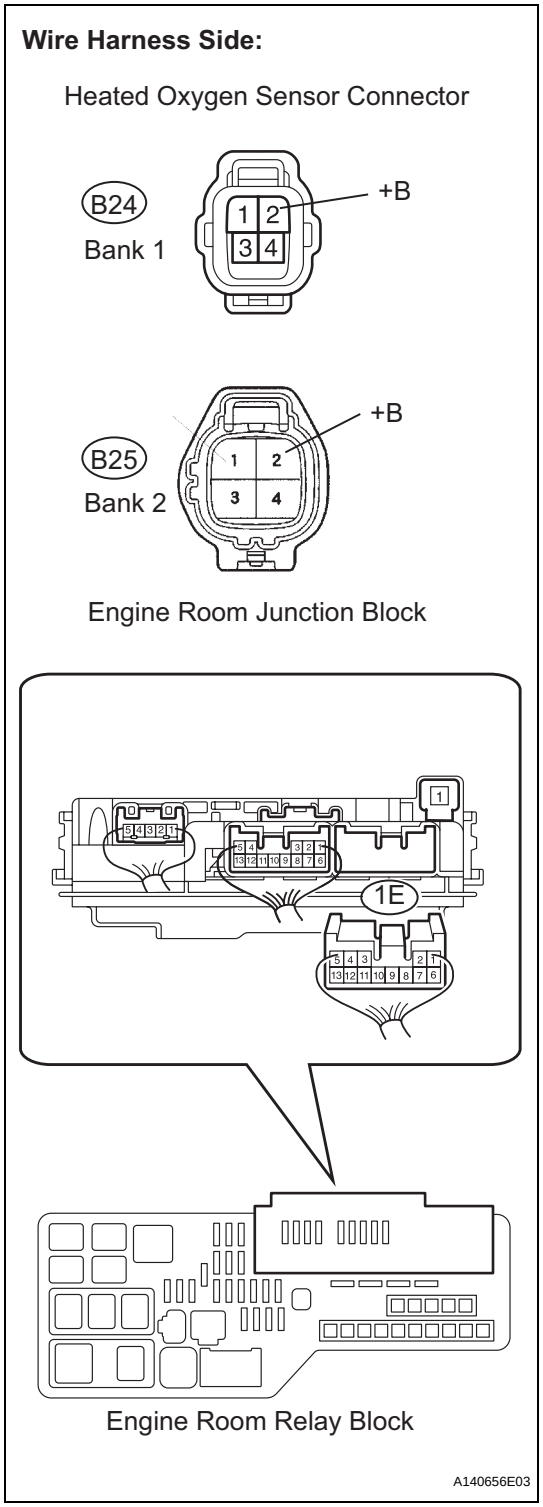

(a) Disconnect the B24 or B25 HO2 sensor connector.
(b) Remove the engine room junction block from the engine room R/B.
(c) Measure the resistance between the terminals.

Standard resistance (Check for open)

Tester Connection	Specified Condition
+B (B24-2) - 1E-6 (Engine room R/B)	Below 1 Ω
+B (B25-2) - 1E-6 (Engine room R/B)	Below 1 Ω

Standard resistance (Check for short)

Tester Connection	Specified Condition
+B (B24-2) or 1E-6 (Engine room R/B) - Body ground	10 kΩ or higher
+B (B25-2) or 1E-6 (Engine room R/B) - Body ground	10 kΩ or higher

(d) Reinstall the engine room junction block.
(e) Reconnect the HO2 sensor connector.

NG → **REPAIR OR REPLACE HARNESS OR CONNECTOR**

OK

CHECK ECM POWER SOURCE CIRCUIT

ES

ES

7 CHECK HARNESS AND CONNECTOR (HO2 SENSOR - ECM)

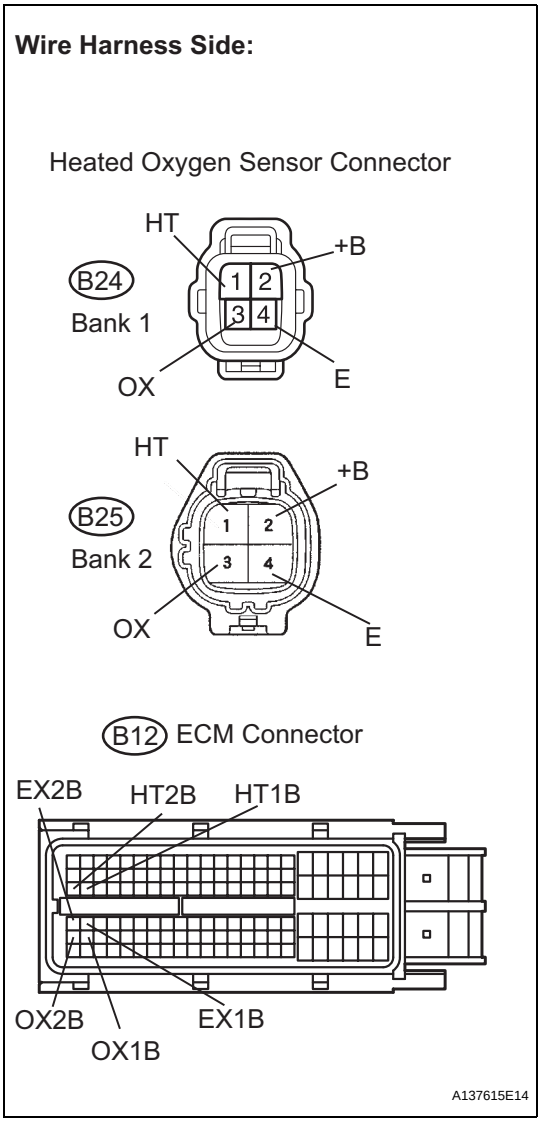

(a) Disconnect the B24 heated oxygen sensor connector (Bank 1 Sensor 2) or B25 heated oxygen sensor connector (Bank 2 Sensor 2).
(b) Turn the engine switch on (IG).
(c) Measure the voltage according to the value(s) in the table below.

Standard voltage

Terminal Connection	Specified Condition
+B (B24-2) - Body ground	9 to 14 V
+B (B25-2) - Body ground	9 to 14 V

(d) Turn the engine switch off.
(e) Disconnect the B12 ECM connector.
(f) Measure the resistance according to the value(s) in the table below.

Standard resistance (Check for open)

Terminal Connection	Specified Condition
HT (B24-1) - HT1B (B12-48)	Below 1 Ω
OX (B24-3) - OX1B (B12-88)	Below 1 Ω
E (B24-4) - EX1B (B12-65)	Below 1 Ω
HT (B25-1) - HT2B (B12-47)	Below 1 Ω
OX (B25-3) - OX2B (B12-87)	Below 1 Ω
E (B25-4) - EX2B (B12-64)	Below 1 Ω

Standard resistance (Check for short)

Terminal Connection	Specified Condition
HT (B24-1) or HT1B (B12-48) - Body ground	10 kΩ or higher
OX (B24-3) or OX1B (B12-88) - Body ground	10 kΩ or higher
E (B24-4) or EX1B (B12-65) - Body ground	10 kΩ or higher
HT (B25-1) or HT2B (B12-47) - Body ground	10 kΩ or higher
OX (B25-3) or OX2B (B12-87) - Body ground	10 kΩ or higher
E (B25-4) or EX2B (B12-64) - Body ground	10 kΩ or higher

(g) Reconnect the HO2 sensor connector.
(h) Reconnect the ECM connector.

NG → **REPAIR OR REPLACE HARNESS OR CONNECTOR**

OK

8 CHECK WHETHER DTC OUTPUT RECURS

(a) Connect the intelligent tester to the DLC3.
(b) Turn the engine switch on (IG).
(c) Turn the intelligent tester on.
(d) Clear the DTCs (See page ES-41).
(e) Start the engine.
(f) Allow the engine to idle for 2 minutes.

(g) Select the following menu items: DIAGNOSIS / ENHANCED OBD II / DTC INFO / CURRENT CODES.
(h) Read the DTCs.

Result

Display (DTC Output)	Proceed to
No output	A
P0037, P0038, P0057 and/or P0058	B

B → **REPLACE ECM (See page ES-543)**

A

CHECK FOR INTERMITTENT PROBLEMS (See page ES-28)

DTC	P0100	Mass or Volume Air Flow Circuit

DTC	P0102	Mass or Volume Air Flow Circuit Low Input

DTC	P0103	Mass or Volume Air Flow Circuit High Input

DESCRIPTION

The Mass Air Flow (MAF) meter is a sensor that measures the amount of air flowing through the valve. The ECM uses this information to determine the fuel injection time and to prove appropriate air-fuel ratio. Inside the MAF meter, there is a heated platinum wire which is exposed to the flow of intake air.

ES

By applying a specific electrical current to the wire, the ECM heats it to a given temperature. The flow of incoming air cools both the wire and an internal thermistor, affecting their resistance. To maintain a constant current value, the ECM varies the voltage applied to these components in the MAF meter. The voltage level is proportional to the airflow through the sensor, and the ECM uses it to calculate the intake air volume.

The circuit is constructed so that the platinum hot wire and the temperature sensor provide a bridge circuit, and the power transistor is controlled so that the potentials of A and B remain equal to maintain the predetermined temperature.

HINT:

When any of these DTCs are set, the ECM enters fail-safe mode. During fail-safe mode, the ignition timing is calculated by the ECM, according to the engine RPM and throttle valve position. Fail-safe mode continues until a pass condition is detected.

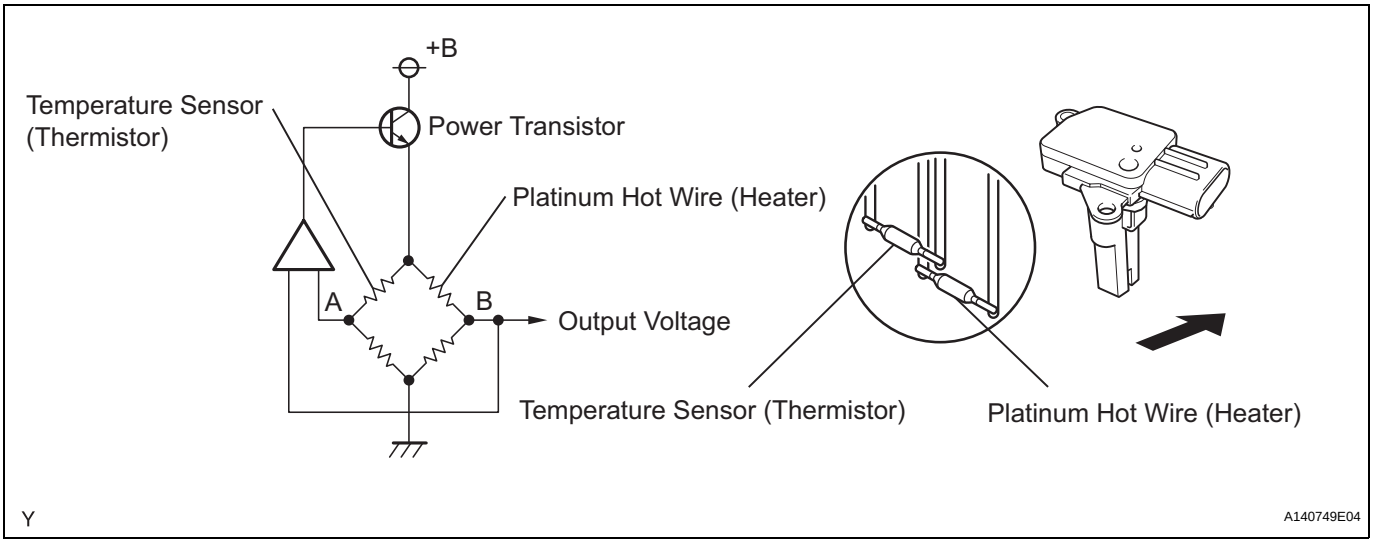

DTC No.	DTC Detection Condition	Trouble Area
P0100	Open or short in Mass Air Flow (MAF) meter circuit for 3 seconds	• Open or short in MAF meter circuit • MAF meter • ECM
P0102	Open in Mass Air Flow (MAF) meter circuit for 3 seconds	• Open in MAF meter circuit • Short in MAF meter circuit • MAF meter • ECM
P0103	Short in Mass Air Flow (MAF) meter circuit for 3 seconds	• Short in MAF meter circuit (+B circuit) • MAF meter • ECM

HINT:
When any of these DTCs are set, check the air-flow rate by entering the following menus on the intelligent tester: DIAGNOSIS / ENHANCED OBD II / DATA LIST / PRIMARY / MAF.

Mass Air Flow Rate (gm/s)	Malfunctions
Approximately 0.0	• Open in Mass Air Flow (MAF) meter power source circuit • Open or short in VG circuit
271.0 or more	Open in ELG circuit

MONITOR DESCRIPTION

If there is a defect in the MAF meter or an open or short circuit, the voltage level deviates from the normal operating range. The ECM interprets this deviation as a malfunction in the MAF meter and sets a DTC.
Example:
When the sensor output voltage remains less than 0.2 V, or more than 4.9 V, for more than 3 seconds, the ECM sets a DTC.
If the malfunction is not repaired successfully, a DTC is set 3 seconds after the engine is next started.

MONITOR STRATEGY

Related DTCs	P0100: Mass air flow meter range check (Fluctuating) P0102: Mass air flow meter range check (Low voltage) P0103: Mass air flow meter range check (High voltage)
Required Sensors/Components (Main)	MAF meter
Required Sensors/Components (Sub)	Crankshaft position sensor
Frequency of Operation	Continuous
Duration	3 seconds
MIL Operation	Immediate: Engine RPM less than 4,000 rpm 2 driving cycles: Engine RPM 4,000 rpm or more
Sequence of Operation	None

TYPICAL ENABLING CONDITIONS

Monitor runs whenever following DTCs are not present	None

TYPICAL MALFUNCTION THRESHOLDS

P0100:

Mass air flow meter voltage	Less than 0.2 V, or more than 4.9 V

P0102:

Mass air flow meter voltage	Less than 0.2 V

P0103:

Mass air flow meter voltage	More than 4.9 V

COMPONENT OPERATING RANGE

Mass air flow meter voltage	Between 0.4 V and 2.2 V

WIRING DIAGRAM

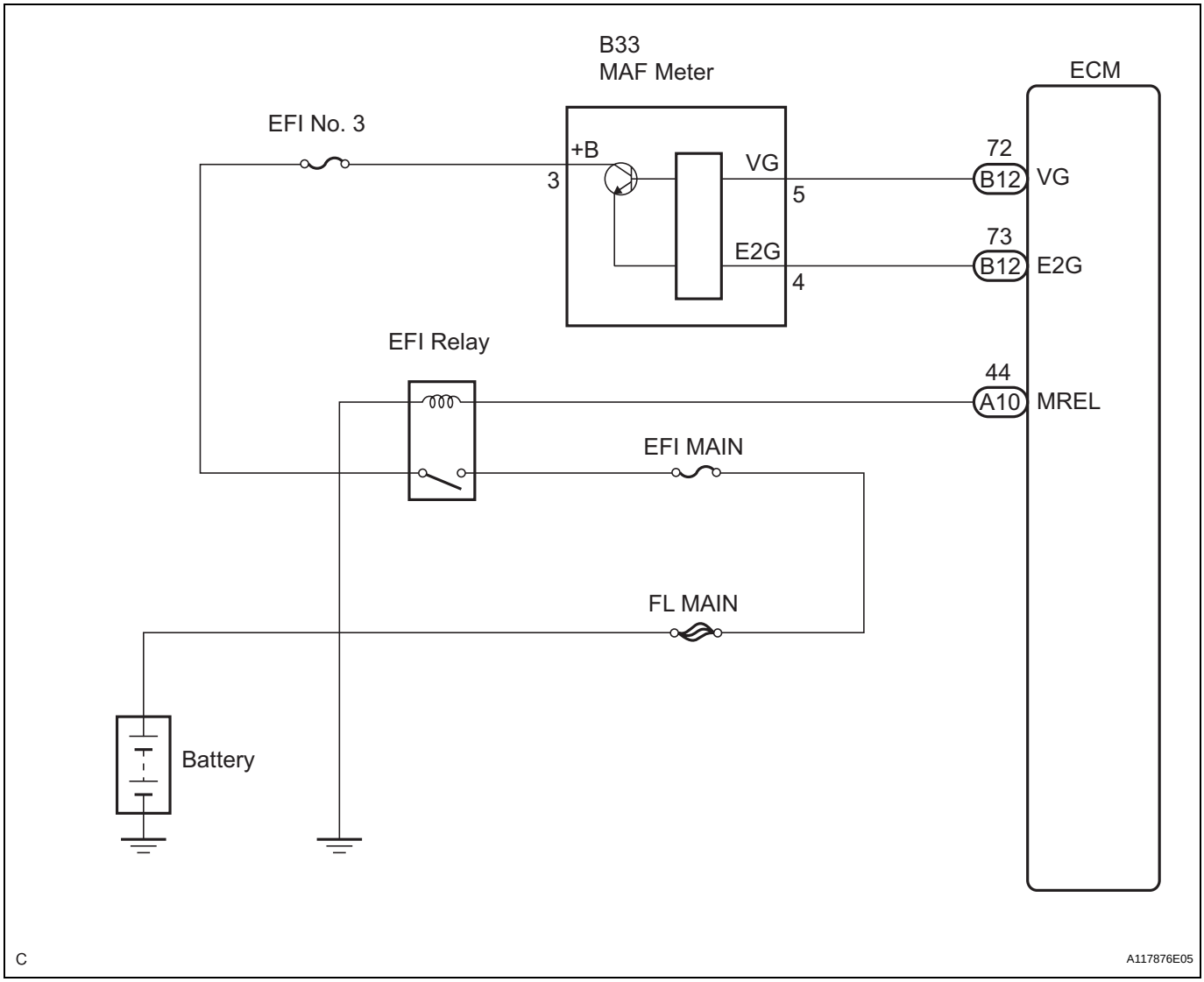

INSPECTION PROCEDURE

HINT:
Read freeze frame data using the intelligent tester. The ECM records vehicle and driving condition information as freeze frame data the moment a DTC is stored. When troubleshooting, freeze frame data can be helpful in determining whether the vehicle was running or stopped, whether the engine was warmed up or not, whether the air-fuel ratio was lean or rich, as well as other data recorded at the time of a malfunction (See page ES-41).

1	READ VALUE OF MASS AIR FLOW METER (MAF)

(a) Connect the intelligent tester to the DLC3.
(b) Start the engine.
(c) Turn the tester on.
(d) Enter the following menus: DIAGNOSIS / ENHANCED OBD II / DATA LIST / PRIMARY / MAF.
(e) Read the values displayed on the tester.

Result

Mass Air Flow Rate (gm/s)	Proceed to
0.0	A
271.0 or more	B
Between 1.0 and 270.0 (*1)	C

*1: The value must be changed when the throttle valve is open or closed.

B → **Go to step 8**

C → **CHECK FOR INTERMITTENT PROBLEMS (See page ES-28)**

A

2 INSPECT MASS AIR FLOW METER (POWER SOURCE VOLTAGE)

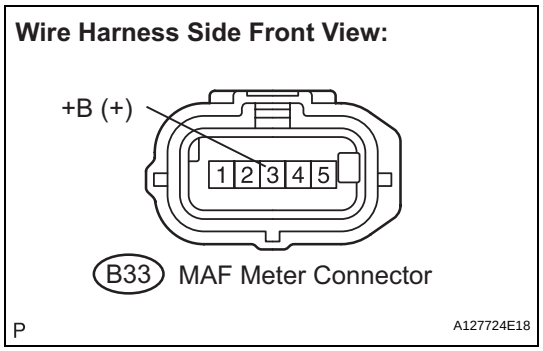

(a) Disconnect the B33 mass air flow (MAF) meter connector.
(b) Turn the engine switch on (IG).
(c) Measure the voltage according to the value(s) in the table below.
Standard voltage

Tester Connection	Specified Condition
+B (B33-3) - Body ground	9 to 14 V

(d) Reconnect the MAF meter connector.

NG → **Go to step 5**

OK

3 INSPECT MASS AIR FLOW METER (VG VOLTAGE)

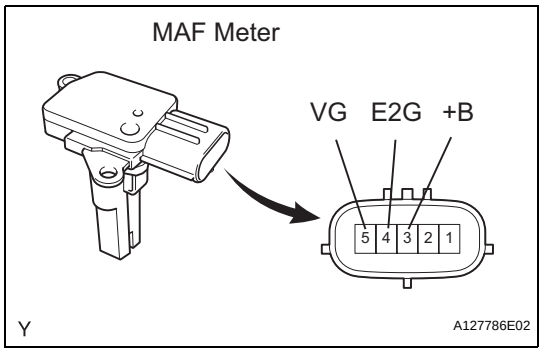

(a) Inspect the output voltage.
(1) Apply battery voltage across terminals +B and E2G.
(2) Connect the positive (+) tester probe to terminal VG, and negative (-) tester probe to terminal E2G.
(3) Measure the voltage between the terminals.
Standard voltage

Tester Connection	Specified Condition
5 (VG) - 4 (E2G)	0.2 to 4.9 V

NG → **REPLACE MASS AIR FLOW METER**

OK

ES

4 CHECK HARNESS AND CONNECTOR (MASS AIR FLOW METER - ECM)

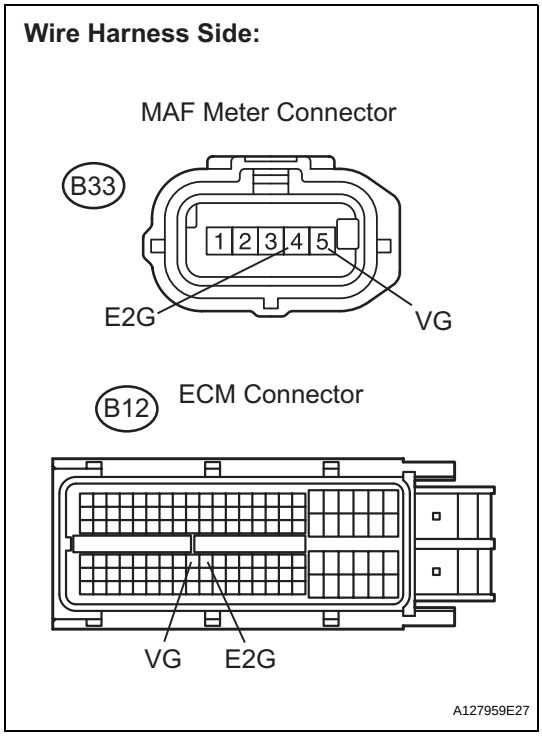

(a) Disconnect the B33 MAF meter connector.
(b) Disconnect the B12 ECM connector.
(c) Measure the resistance between the terminals.

Standard resistance (Check for open)

Tester Connection	Specified Condition
VG (B12-72) - VG (B33-5)	Below 1 Ω
E2G (B12-73) - E2G (B33-4)	Below 1 Ω

Standard resistance (Check for short)

Tester Connection	Specified Condition
VG (B12-72) or VG (B33-5) - Body ground	10 kΩ or higher
E2G (B12-73) or E2G (B33-4) - Body ground	10 kΩ or higher

(d) Reconnect the MAF meter connector.
(e) Reconnect the ECM connector.

NG → **REPAIR OR REPLACE HARNESS OR CONNECTOR**

OK

REPLACE ECM

5 INSPECT FUSE (EFI NO. 3)

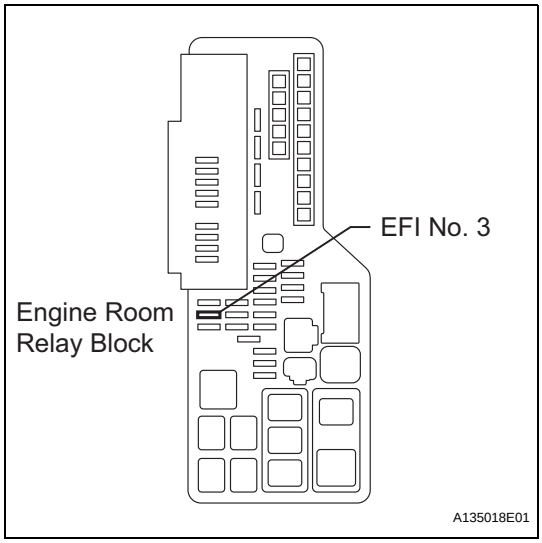

(a) Remove the EFI No. 3 fuse from the engine room R/B.
(b) Measure the EFI No. 3 fuse resistance.

Standard resistance:
Below 1 Ω

(c) Reinstall the EFI No. 3 fuse.

NG → **REPLACE EFI NO. 3 FUSE**

OK

6	CHECK HARNESS AND CONNECTOR (MASS AIR FLOW METER - ENGINE ROOM JUNCTION BLOCK)

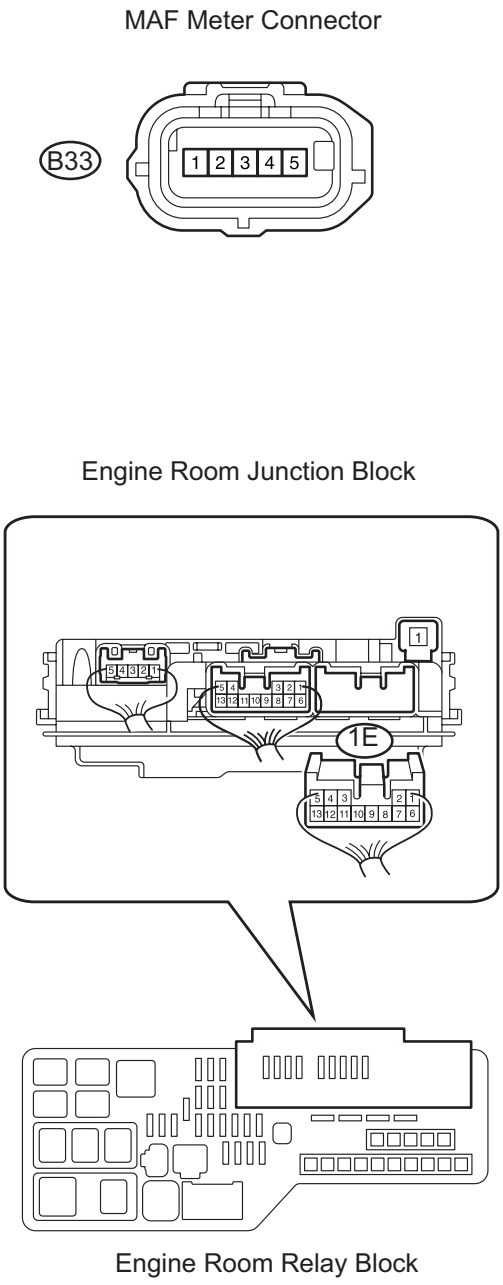

(a) Disconnect the B33 MAF meter connector.
(b) Remove the engine room junction block from the engine room R/B.
(c) Measure the resistance between the terminals.

Standard resistance (Check for open)

Tester Connection	Specified Condition
+B (B33-3) - 1E-6 (Engine room R/B)	Below 1 Ω

Standard resistance (Check for short)

Tester Connection	Specified Condition
+B (B33-3) or 1E-6 (Engine room R/B) - Body ground	10 kΩ or higher

(d) Reinstall the engine room junction block.
(e) Reconnect the B33 MAF meter connector.

NG → **REPAIR OR REPLACE HARNESS OR CONNECTOR**

OK

ES

ES

7 INSPECT ENGINE ROOM JUNCTION BLOCK (EFI RELAY)

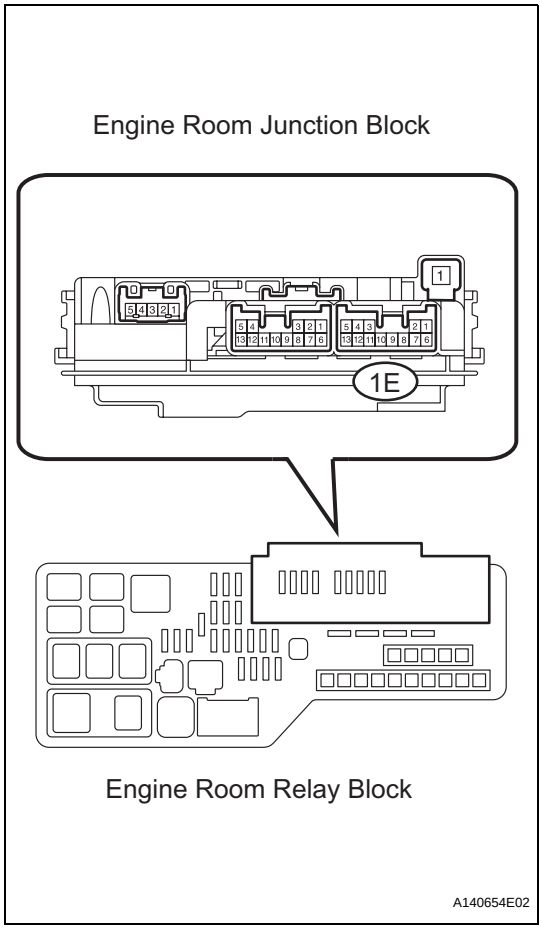

(a) Remove the engine room junction block from the engine room R/B.

(b) Inspect the EFI relay.

(1) Measure the EFI relay resistance.

Standard resistance

Tester Connection	Specified Condition
1E-12 - 1E-6	10 kΩ or higher
1E-12 - 1E-6	Bellow 1 Ω (Apply battery voltage between terminals 1E-9 and 1E-10)

(c) Reinstall the engine room junction block.

NG → **REPLACE ENGINE ROOM JUNCTION BLOCK**

OK

CHECK ECM POWER SOURCE CIRCUIT (See page ES-427)

8 CHECK HARNESS AND CONNECTOR (SENSOR GROUND)

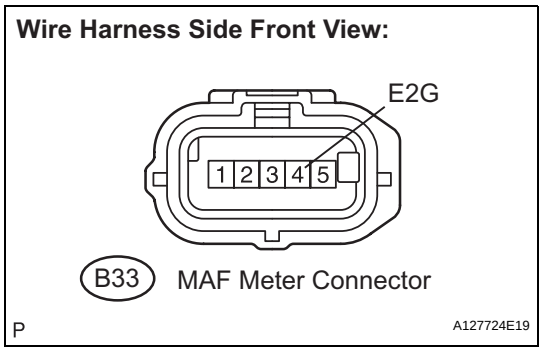

(a) Disconnect the B33 MAF meter connector.

(b) Measure the resistance between the terminals.

Standard resistance

Tester Connection	Specified Condition
E2G (B33-4) - Body ground	Below 1 Ω

(c) Reconnect the MAF meter connector.

OK → **REPLACE MASS AIR FLOW METER (See page ES-497)**

NG

9	CHECK HARNESS AND CONNECTOR (MASS AIR FLOW METER - ECM)

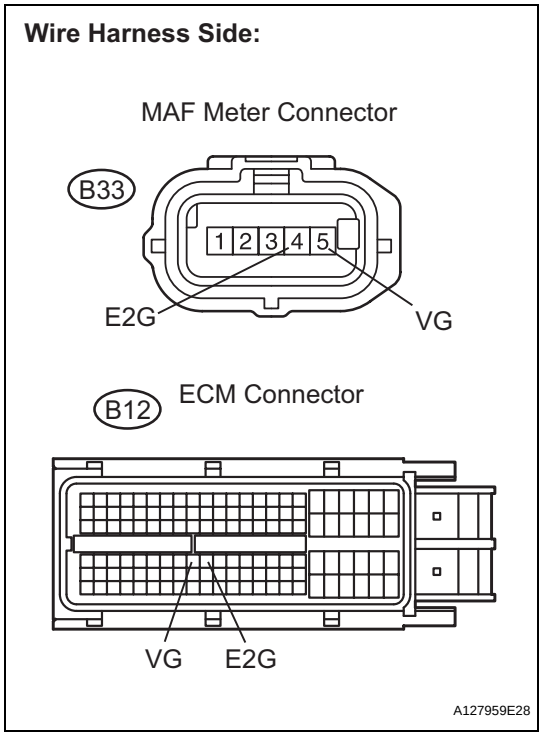

(a) Disconnect the B33 MAF meter connector.
(b) Disconnect the B12 ECM connector.
(c) Measure the resistance between the terminals.

Standard resistance (Check for open)

Tester Connection	Specified Condition
VG (B12-72) - VG (B33-5)	Below 1 Ω
E2G (B12-73) - E2G (B33-4)	Below 1 Ω

Standard resistance (Check for short)

Tester Connection	Specified Condition
VG (B12-72) or VG (B33-5) - Body ground	10 kΩ or higher
E2G (B12-73) or E2G (B33-4) - Body ground	10 kΩ or higher

(d) Reconnect the MAF meter connector.
(e) Reconnect the ECM connector.

NG → **REPAIR OR REPLACE HARNESS OR CONNECTOR**

OK

REPLACE ECM (See page ES-543)

ES

DTC	P0101	Mass Air Flow Circuit Range / Performance Problem

DESCRIPTION

The Mass Air Flow (MAF) meter is a sensor that measures the amount of air flowing through the valve. The ECM uses this information to determine the fuel injection time and to prove appropriate air-fuel ratio. Inside the MAF meter, there is a heated platinum wire which is exposed to the flow of intake air.
By applying a specific electrical current to the wire, the ECM heats it to a given temperature. The flow of incoming air cools both the wire and an internal thermistor, affecting their resistance. To maintain a constant current value, the ECM varies the voltage applied to these components in the MAF meter. The voltage level is proportional to the airflow through the sensor, and the ECM uses it to calculate the intake air volume.

ES

The circuit is constructed so that the platinum hot wire and the temperature sensor provide a bridge circuit, and the power transistor is controlled so that the potentials of A and B remain equal to maintain the predetermined temperature.
HINT:
When any of these DTCs are set, the ECM enters fail-safe mode. During fail-safe mode, the ignition timing is calculated by the ECM, according to the engine RPM and throttle valve position. Fail-safe mode continues until a pass condition is detected.

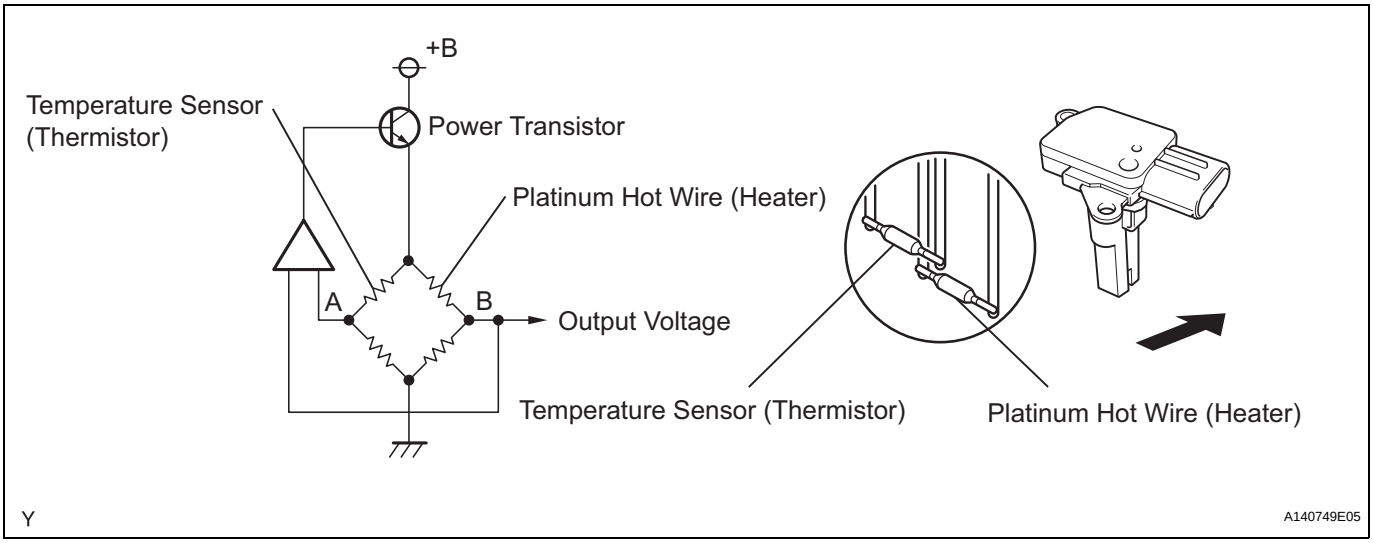

DTC No.	DTC Detection Condition	Trouble Area
P0101	Test value calculated with engine load and fuel trim are out of specified threshold under the following conditions (2 trip detection logic): – Engine load is 30 % or more and constant – Engine coolant temperature is 70°C (158°F) or higher	MAF meter

MONITOR DESCRIPTION

The MAF meter is a sensor that measures the amount of air flowing through the throttle valve. The ECM uses this information to determine the fuel injection time and to provide an appropriate air-fuel ratio. Inside the MAF meter, there is a heated platinum wire which is exposed to the flow of intake air. By applying a specific electrical current to the wire, the ECM heats it to a specific temperature. The flow of incoming air cools both the wire and an internal thermistor, affecting their resistance. To maintain a constant current value, the ECM varies the voltage applied to these components of the MAF meter. The voltage level is proportional to the airflow through the sensor, and the ECM uses it to calculate the intake air volume. If there is a defect in the sensor, or an open or short in the circuit, the voltage level deviates from the normal operating range. The ECM interprets this deviation as a malfunction in the MAF meter and sets the DTC.

Example:

If the voltage is more than 2.2 V, or less than 1.48 V while idling, the ECM determines that there is a malfunction in the MAF meter and sets the DTC.

MONITOR STRATEGY

Related DTCs	P0101: Mass air flow meter rationality
Required Sensors/Components (Main)	Mass air flow meter
Required Sensors/Components (Sub)	Crankshaft position sensor, engine coolant temperature sensor and throttle position sensor
Frequency of Operation	Continuos
Duration	10 seconds
MIL Operation	2 driving cycles
Sequence of Operation	None

TYPICAL ENABLING CONDITIONS

Monitor runs whenever following DTCs are not present	P0115 - P0118 (ECT sensor) P0120 - P0223, P2135 (TP sensor) P0125 (Insufficient ECT for closed loop) P0335 (CKP sensor) P0340, P0341 (CMP sensor)
TP (Throttle position) sensor voltage	0.24 V or more
Engine	Running
Battery voltage	10.5 V or more
ECT	70°C (158°F) or more
IAT sensor circuit	OK
ECT sensor circuit	OK
CKP sensor circuit	OK
TP sensor circuit	OK
FTP sensor circuit	OK
EVAP leak detection pump	OK
EVAP vent valve	OK

TYPICAL MALFUNCTION THRESHOLDS

Average engine load	Less than 0.838 %, or more than 1.287 %

WIRING DIAGRAM

Refer to DTC P0100 (See page ES-123).

INSPECTION PROCEDURE

HINT:
Read freeze frame data using the intelligent tester. The ECM records vehicle and driving condition information as freeze frame data the moment a DTC is stored. When troubleshooting, freeze frame data can be helpful in determining whether the vehicle was running or stopped, whether the engine was warmed up or not, whether the air-fuel ratio was lean or rich, as well as other data recorded at the time of a malfunction (See page ES-41).

1	CHECK ANY OTHER DTCS OUTPUT (IN ADDITION TO DTC P0101)

ES

(a) Connect the intelligent tester to the DLC3.
(b) Turn the engine switch on (IG).
(c) Turn the tester on.
(d) Enter the following menus: DIAGNOSIS / ENHANCED OBD II / DTC INFO / CURRENT CODES.

Result

Display (DTC Output)	Proceed to
P0101 and other DTCs	A
P0101	B

(e) Read the DTCs.
HINT:
If any DTCs other than P0101 are output, troubleshoot those DTCs first.

B → **REPLACE MASS AIR FLOW METER (See page ES-497)**

A

GO TO DTC CHART (See page ES-59)

DTC	P0110	Intake Air Temperature Circuit Malfunction

DTC	P0112	Intake Air Temperature Circuit Low Input

DTC	P0113	Intake Air Temperature Circuit High Input

DESCRIPTION

Fig. 1

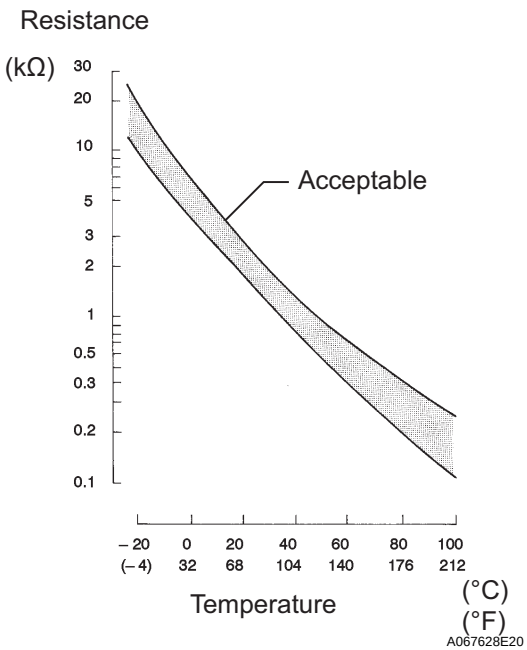

The Intake Air Temperature (IAT) sensor, mounted on the Mass Air Flow (MAF) meter, monitors the IAT. The IAT sensor has a built-in thermistor with a resistance that varies according to the temperature of the intake air. When the IAT drops, the resistance of the thermistor increases. When the temperature rises, the resistance drops. These variations in resistance are transmitted to the ECM as voltage changes (See Fig. 1).

The IAT sensor is powered by a 5 V supply from the THA terminal of the ECM, via resistor R.

Resistor R and the IAT sensor are connected in series. When the resistance value of the IAT sensor changes, according to changes in the IAT, the voltage at terminal THA also varies. Based on this signal, the ECM increases the fuel injection volume when the engine is cold to improve driveability.

HINT:

When any of DTCs P0110, P0112 and P0113 are set, the ECM enters fail-safe mode. During fail-safe mode, the IAT is estimated to be 20°C (68°F) by the ECM. Fail-safe mode continues until a pass condition is detected.

DTC No.	Proceed to	DTC Detection Condition	Trouble Area
P0110	Step 1	Open or short in Intake Air Temperature (IAT) sensor circuit for 0.5 seconds (1 trip detection logic)	• Open or short in IAT sensor circuit • IAT sensor (built into MAF meter) • ECM
P0112	Step 4	Short in Intake Air Temperature (IAT) sensor circuit for 0.5 seconds (1 trip detection logic)	• Short in IAT sensor circuit • IAT sensor (built into MAF meter) • ECM
P0113	Step 2	Open in Intake Air Temperature (IAT) sensor circuit for 0.5 seconds (1 trip detection logic)	• Open in IAT sensor circuit • IAT sensor (built into MAF meter) • ECM

HINT:
When any of these DTCs are set, check the IAT by entering the following menus on the intelligent tester: DIAGNOSIS / ENHANCED OBD II / DATA LIST / PRIMARY / INTAKE AIR.

Temperature Displayed	Malfunction
-40°C (-40°F)	Open circuit
140°C (284°F) or higher	Short circuit

MONITOR DESCRIPTION

The ECM monitors the sensor voltage and uses this value to calculate the Intake Air Temperature (IAT). When the sensor output voltage deviates from the normal operating range, the ECM interprets this as a malfunction in the IAT sensor and sets a DTC.

Example:

If the sensor output voltage is -40°C (-40°F) for 0.5 seconds or more, the ECM determines that there is an open in the IAT sensor circuit, and sets DTC P0113. Conversely, if the output voltage is more than 140°C (284°F) for 0.5 seconds or more, the ECM determines that there is a short in the sensor circuit, and sets DTC P0112.

If the malfunction is not repaired successfully, a DTC is set 0.5 seconds after the engine is next started.

MONITOR STRATEGY

Related DTCs	P0110: Intake air temperature sensor open/short (Fluctuating) P0112: Intake air temperature sensor short (Low electrical resistance) P0113: Intake air temperature sensor open (High electrical resistance)
Required Sensors/Components (Main)	Intake Air Temperature (IAT) sensor
Required Sensors/Components (Sub)	-
Frequency of Operation	Continuous
Duration	0.5 seconds
MIL Operation	Immediate
Sequence of Operation	None

TYPICAL ENABLING CONDITIONS

Monitor runs whenever following DTCs are not present	None

TYPICAL MALFUNCTION THRESHOLDS

P0110:

Intake air temperature sensor voltage	Less than 0.18 V, or more than 4.91 V

P0112:

Intake air temperature sensor voltage	Less than 0.18 V

P0113:

Intake air temperature sensor voltage	More than 4.91 V

COMPONENT OPERATING RANGE

Intake air temperature sensor resistance	98.5 Ω to 156 kΩ [-40 to 140°C (-40 to 284°F)]

WIRING DIAGRAM

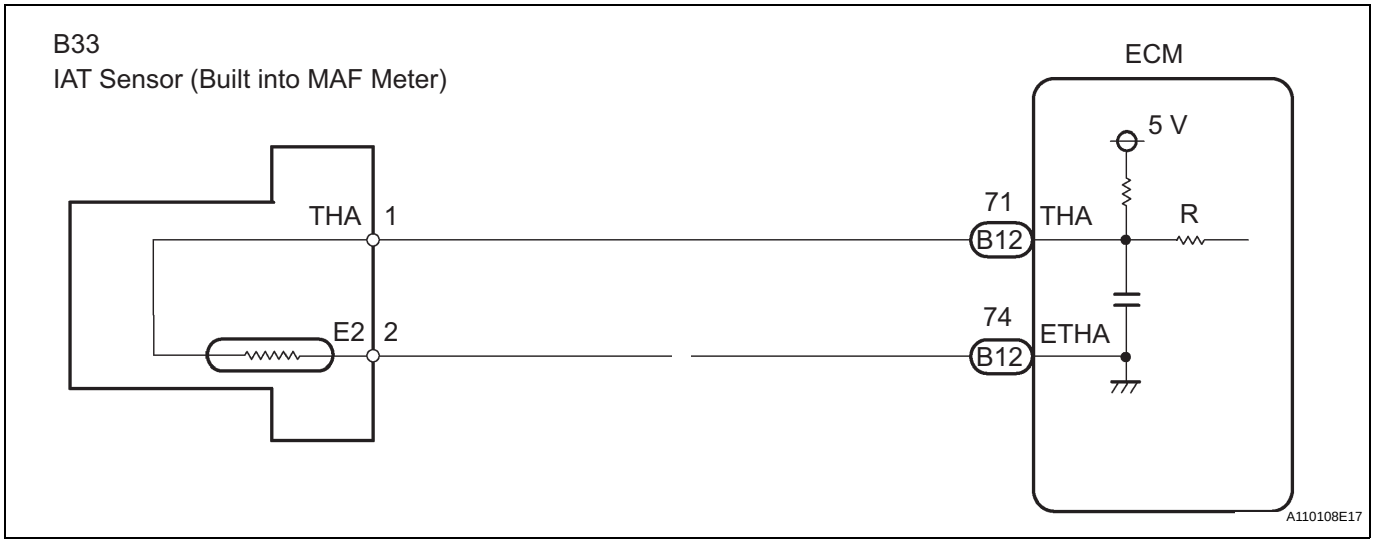

INSPECTION PROCEDURE

HINT:
Read freeze frame data using the intelligent tester. The ECM records vehicle and driving condition information as freeze frame data the moment a DTC is stored. When troubleshooting, freeze frame data can be helpful in determining whether the vehicle was running or stopped, whether the engine was warmed up or not, whether the air-fuel ratio was lean or rich, as well as other data recorded at the time of a malfunction (See page ES-41).

1	CHECK DTC OUTPUT

(a) Connect the intelligent tester to the DLC3.
(b) Turn the engine switch on (IG).
(c) Turn the intelligent tester on.
(d) Select the following menu items: DIAGNOSIS / ENHANCED OBD II / DTC INFO / CURRENT CODES.
(e) Read the DTCs.

Result

Display (DTC output)	Proceed to
P0110	A
P0112	B
P0113	C

B → **Go to step 6**

C → **Go to step 4**

A

2	READ VALUE OF INTAKE AIR TEMPERATURE SENSOR (INTAKE AIR)

(a) Connect the intelligent tester to the DLC3.
(b) Turn the engine switch on (IG).
(c) Turn the tester on.

ES

(d) Enter the following menus: DIAGNOSIS / ENHANCED OBD II / DATA LIST / PRIMARY / INTAKE AIR.
(e) Read the value displayed on the tester.
Standard:
Same as actual Intake Air Temperature (IAT).

Result

Temperature Displayed	Proceed to
-40°C (-40°F)	A
140°C (284°F) or higher	B
Same as actual IAT	C

HINT:
- If there is an open circuit, the intelligent tester indicates -40°C (-40°F).
- If there is a short circuit, the intelligent tester indicates 140°C (284°F) or higher.

B → **Go to step 5**

C → **CHECK FOR INTERMITTENT PROBLEMS (See page ES-28)**

A

3 CHECK MASS AIR FLOW METER (CHECK FOR OPEN IN SENSOR)

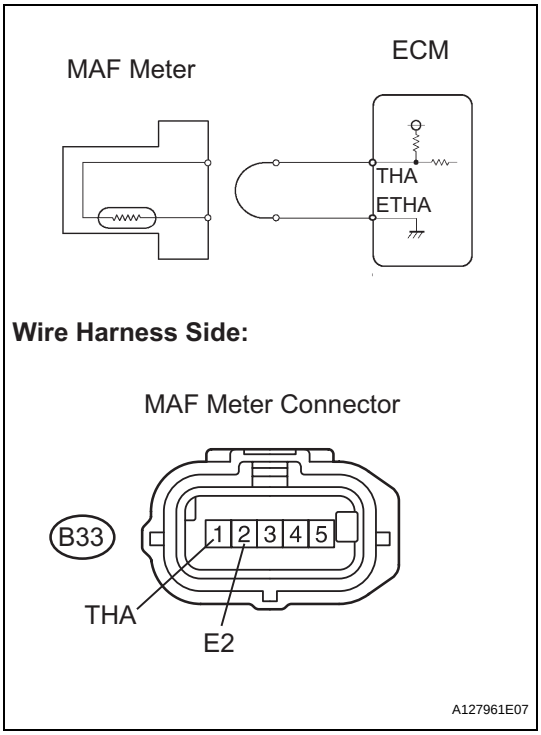

(a) Confirm good connection of the Mass Air Flow (MAF) meter.
(b) Disconnect the B33 MAF meter connector.
(c) Connect terminals THA and E2 of the MAF meter wire harness side connector.
(d) Connect the intelligent tester to the DLC3.
(e) Turn the engine switch on (IG).
(f) Turn the tester on.
(g) Enter the following menus: DIAGNOSIS / ENHANCED OBD II / DATA LIST / PRIMARY / INTAKE AIR.
(h) Read the value displayed on the tester.
Standard:
140°C (284°F) or higher
(i) Reconnect the MAF meter connector.

OK → **REPLACE MASS AIR FLOW METER (See page ES-497)**

NG

4 CHECK HARNESS AND CONNECTOR (MASS AIR FLOW METER - ECM)

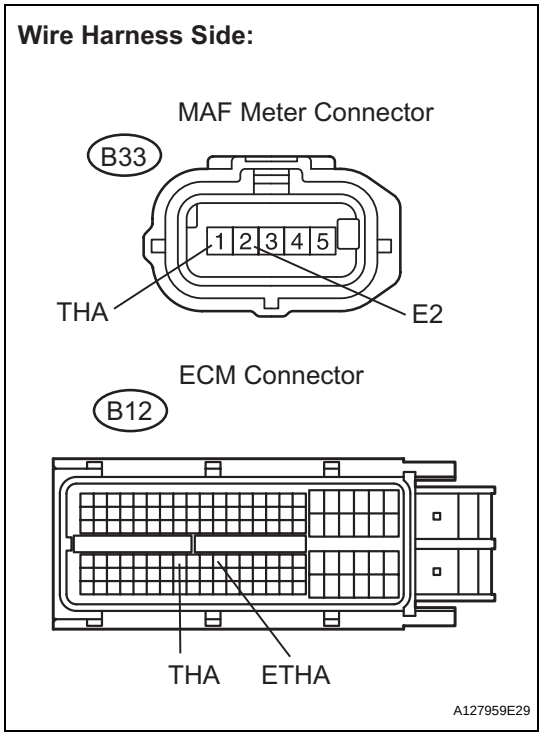

(a) Disconnect the B33 MAF meter connector.
(b) Disconnect the B12 ECM connector.
(c) Measure the resistance according to the value(s) in the table below.

Standard resistance (Check for open)

Tester Connection	Specified Condition
THA (B12-71) - THA (B33-1)	Below 1 Ω
ETHA (B12-74) - E2 (B33-2)	Below 1 Ω

Standard resistance (Check for short)

Tester Connection	Specified Condition
THA (B12-71) or THA (B33-1) - Body ground	10 kΩ or higher
ETHA (B12-74) or E2 (B33-2) - Body ground	10 kΩ or higher

(d) Reconnect the MAF meter connector.
(e) Reconnect the ECM connector.

NG → **REPAIR OR REPLACE HARNESS OR CONNECTOR**

OK

REPLACE ECM (See page ES-543)

5 CHECK MASS AIR FLOW METER (CHECK FOR SHORT IN SENSOR)

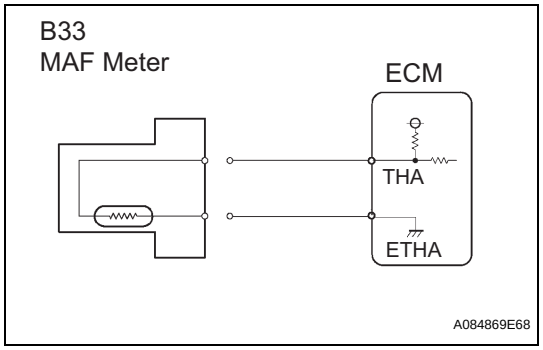

(a) Disconnect the B33 MAF meter connector.
(b) Connect the intelligent tester to the DLC3.
(c) Turn the engine switch on (IG).
(d) Turn the tester on.
(e) Enter the following menus: DIAGNOSIS / ENHANCED OBD II / DATA LIST / PRIMARY / INTAKE AIR.
(f) Read the value displayed on the tester.
Standard:
-40°C (-40°F) or higher
(g) Reconnect the MAF meter connector.

OK → **REPLACE MASS AIR FLOW METER (See page ES-497)**

NG

ES

6	CHECK HARNESS AND CONNECTOR (MASS AIR FLOW METER- ECM)

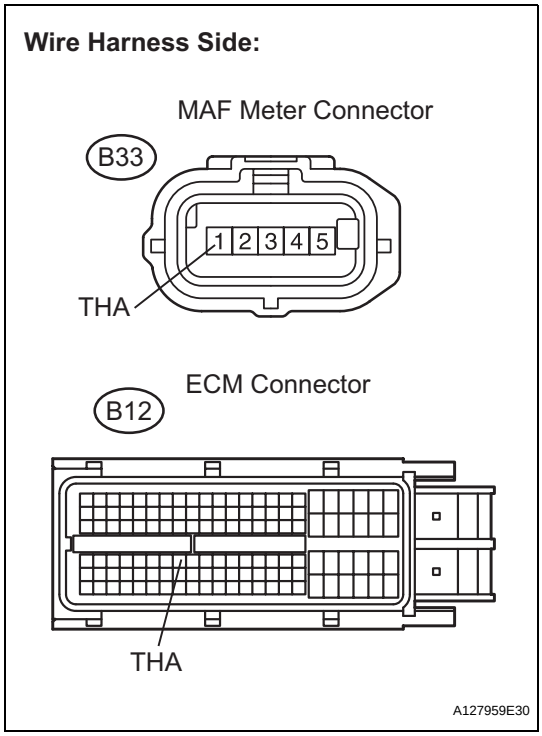

(a) Disconnect the B33 MAF meter connector.
(b) Disconnect the B12 ECM connector.
(c) Measure the resistance according to the value(s) in the table below.

Standard resistance

Tester Connection	Specified Condition
THA (B12-71) or THA (B33-1) - Body ground	10 kΩ or higher

(d) Reconnect the MAF meter connector.
(e) Reconnect the ECM connector.

NG → **REPAIR OR REPLACE HARNESS OR CONNECTOR**

OK

REPLACE ECM (See page ES-543)

DTC	P0111	Intake Air Temperature Sensor Gradient Too High

DESCRIPTION

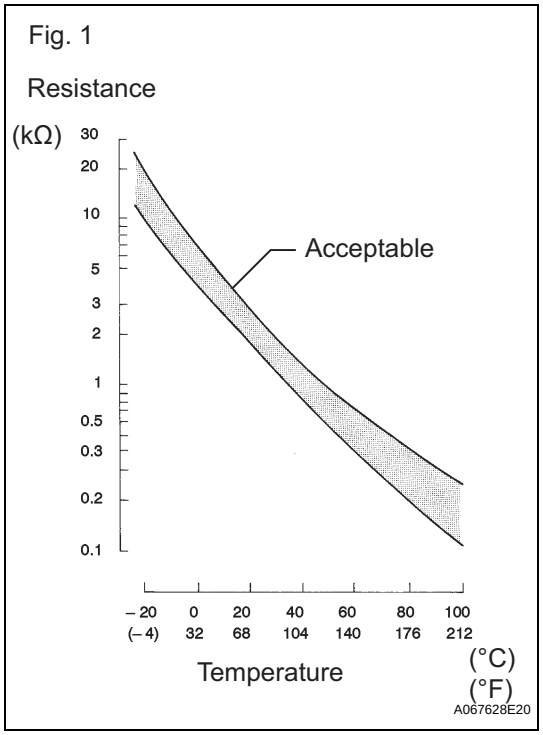

The Intake Air Temperature (IAT) sensor, mounted on the Mass Air Flow (MAF) meter, monitors the IAT. The IAT sensor has a built-in thermistor with a resistance that varies according to the temperature of the intake air. When the IAT drops, the resistance of the thermistor increases. When the temperature rises, the resistance drops. These variations in resistance are transmitted to the ECM as voltage changes (See Fig. 1).
The IAT sensor is powered by a 5 V supply from the THA terminal of the ECM, via resistor R.
Resistor R and the IAT sensor are connected in series. When the resistance value of the IAT sensor changes, according to changes in the IAT, the voltage at terminal THA also varies. Based on this signal, the ECM increases the fuel injection volume when the engine is cold to improve driveability.

DTC No.	DTC Detection Condition	Trouble Area
P0111	1. The intake air temperature rise is large, from the previous trip warm-up to the following trip. (2 trip detection logic) 2. When change in the intake air temperature after engine start is less than the threshold value.	Mass air flow meter

MONITOR DESCRIPTION

The ECM performs OBD II monitoring based on the values from the intake air temperature sensor. If there is no change in the sensor value within the normal range, the ECM will not be able to perform OBD II monitoring or will misdiagnose that there is a malfunction in the sensor. The ECM detects the stuck intake air temperature sensor value by performing monitoring after the engine switch is turned off or the engine is started (short soak or long soak).

MONITOR STRATEGY

Related DTCs	P0111: Intake air temperature sensor rationality (After engine stop) P0111: Intake air temperature sensor rationality (After cold engine start)

ES

Required Sensors/Components (Main)	Intake Air Temperature (IAT) sensor
Required Sensors/Components (Sub)	-
Frequency of Operation	Once per driving cycle
Duration	5 hours
MIL Operation	2 driving cycles
Sequence of Operation	None

TYPICAL ENABLING CONDITIONS

All:

Monitor runs whenever following DTCs are not present	None

ES

After engine stop:

Time after engine start	10 seconds or more
Battery voltage	10.5 V or more
ECT sensor circuit	OK
ECT change since engine stopped	Less than 180°C (356°F)
ECT before engine stop	70°C (158°F) or more
Time that MAF is low before engine stop	70 minutes
Accumulated MAF amount before engine stop	3,800 g or more
Key-off duration	30 minutes

After cold engine start:

Key-off duration	5 hours
Time after engine start	10 seconds or more
ECT sensor circuit	OK
ECT	70°C (158°F) or more
Accumulated MAF amount	6,300 g or more
Either following condition 1 or 2 is met:	-
1. Duration while engine load is low	129 seconds or more
2. Duration while engine load is high	10 seconds or more

TYPICAL MALFUNCTION THRESHOLDS

After engine stop:

IAT change	Less than 1°C (2°F)

After cold engine start:

IAT change	Less than 1°C (2°F)

WIRING DIAGRAM

Refer to DTC P0110 (See page ES-134).

INSPECTION PROCEDURE

1	CHECK ANY OTHER DTCS OUTPUT (IN ADDITION TO DTC P0111)

(a) Connect the intelligent tester to the DLC3.
(b) Turn the engine switch on (IG).
(c) Turn the tester on.
(d) Enter the following menus: DIAGNOSIS / ENHANCED OBD II / DTC INFO / CURRENT CODES.

(e) Read the DTCs.

Result

Display (DTC Output)	Proceed to
P0111 and other DTCs	A
P0111	B

HINT:
If any DTCs other than P0111 are output, troubleshoot those DTCs first.

B → **REPLACE MASS AIR FLOW METER (See page ES-497)**

A

GO TO DTC CHART (See page ES-59)

DTC	P0115	Engine Coolant Temperature Circuit Malfunction

DTC	P0117	Engine Coolant Temperature Circuit Low Input

DTC	P0118	Engine Coolant Temperature Circuit High Input

DESCRIPTION

A thermistor is built into the Engine Coolant Temperature (ECT) sensor, of which the resistance value varies according to the ECT.

ES

The structure of the sensor and its connection to the ECM are the same as those of the Intake Air Temperature (IAT) sensor.

HINT:

When any of DTCs P0115, P0117 and P0118 are set, the ECM enters fail-safe mode. During fail-safe mode, the ECT is estimated to be 80°C (176°F) by the ECM. Fail-safe mode continues until a pass condition is detected.

DTC No.	Proceed to	DTC Detection Condition	Trouble Area
P0115	Step 1	Open or short in Engine Coolant Temperature (ECT) sensor circuit for 0.5 seconds (1 trip detection logic)	• Open or short in ECT sensor circuit • ECT sensor • ECM
P0117	Step 4	Short in Engine Coolant Temperature (ECT) sensor circuit for 0.5 seconds (1 trip detection logic)	• Short in ECT sensor circuit • ECT sensor • ECM
P0118	Step 2	Open in Engine Coolant Temperature (ECT) sensor circuit for 0.5 seconds (1 trip detection logic)	• Open in ECT sensor circuit • ECT sensor • ECM

HINT:

When any of these DTCs are set, check the ECT by entering the following menus on the intelligent tester: DIAGNOSIS / ENHANCED OBD II / DATA LIST / PRIMARY / COOLANT TEMP.

Temperature Displayed	Malfunction
-40°C (-40°F)	Open circuit
140°C (284°F) or higher	Short circuit

MONITOR DESCRIPTION

The Engine Coolant Temperature (ECT) sensor is used to monitor the ECT. The ECT sensor has a thermistor with a resistance that varies according to the temperature of the engine coolant. When the coolant temperature drops, the resistance in the thermistor increases. When the temperature rises, the resistance drops. These variations in resistance are reflected in the output voltage from the sensor. The ECM monitors the sensor voltage and uses this value to calculate the ECT. When the sensor output voltage deviates from the normal operating range, the ECM interprets this as a fault in the ECT sensor and sets a DTC.

Example:

If the sensor output voltage is -40°C (-40°F) for 0.5 seconds or more, the ECM determines that there is an open in the ECT sensor circuit, and sets DTC P0118. Conversely, if the voltage output is more than 140°C (284°F) for 0.5 seconds or more, the ECM determines that there is a short in the sensor circuit, and sets DTC P0117.

If the malfunction is not repaired successfully, a DTC is set 0.5 seconds after the engine is next started.

MONITOR STRATEGY

Related DTCs	P0115: Engine coolant temperature sensor open/short (Fluctuating) P0117: Engine coolant temperature sensor short (Low electrical resistance) P0118: Engine coolant temperature sensor open (High electrical resistance)
Required Sensors/Components (Main)	Engine coolant temperature sensor
Required Sensors/Components (Sub)	-
Frequency of Operation	Continuous
Duration	0.5 seconds
MIL Operation	Immediate
Sequence of Operation	None

TYPICAL ENABLING CONDITIONS

Monitor runs whenever following DTCs are not present	None

TYPICAL MALFUNCTION THRESHOLDS

P0115:

Engine coolant temperature sensor voltage	Less than 0.14 V, or more than 4.91 V

P0117:

Engine coolant temperature sensor voltage	Less than 0.14 V

P0118:

Engine coolant temperature sensor voltage	More than 4.91 V

COMPONENT OPERATING RANGE

Engine coolant temperature sensor resistance	79 Ω to 156 kΩ [-40 to 140°C (-40 to 284°F)]

WIRING DIAGRAM

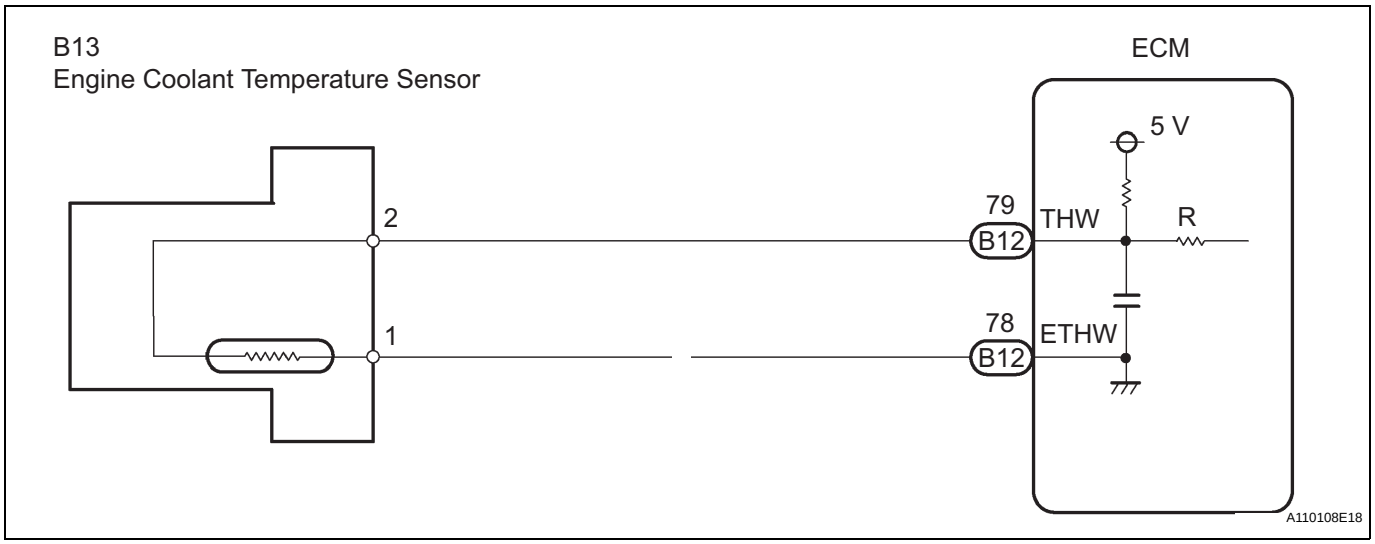

INSPECTION PROCEDURE

HINT:
Read freeze frame data using the intelligent tester. The ECM records vehicle and driving condition information as freeze frame data the moment a DTC is stored. When troubleshooting, freeze frame data can be helpful in determining whether the vehicle was running or stopped, whether the engine was warmed up or not, whether the air-fuel ratio was lean or rich, as well as other data recorded at the time of a malfunction (See page ES-41).

ES

1 CHECK DTC OUTPUT

(a) Connect the intelligent tester to the DLC3.
(b) Turn the engine switch on (IG).
(c) Select the following menu items: DIAGNOSIS / ENHANCED OBD II / DTC INFO / CURRENT CODES.
(d) Read the DTCs.
Result

Display (DTC Output)	Proceed to
P0115	A
P0117	B
P0118	C

B → **Go to step 6**

C → **Go to step 4**

A

2 READ VALUE OF ENGINE COOLANT TEMPERATURE SENSOR (COOLANT TEMP)

(a) Connect the intelligent tester to the DLC3.
(b) Turn the engine switch on (IG).
(c) Turn the tester on.
(d) Enter the following menus: DIAGNOSIS / ENHANCED OBD II / DATA LIST / PRIMARY / COOLANT TEMP.
(e) Read the value displayed on the tester.
Standard:
Between 80°C and 97°C (176°F and 207°F) with warm engine.

Result

Temperature Displayed	Proceed to
-40°C (-40°F)	A
140°C (284°F) or higher	B
Between 80°C and 97°C (176°F and 207°F)	C

HINT:
- If there is an open circuit, the intelligent tester indicates -40°C (-40°F).
- If there is a short circuit, the intelligent tester indicates 140°C (284°F) or higher.

B → **Go to step 5**

C → CHECK FOR INTERMITTENT PROBLEMS

A

3 CHECK ENGINE COOLANT TEMPERATURE SENSOR (CHECK FOR OPEN IN SENSOR)

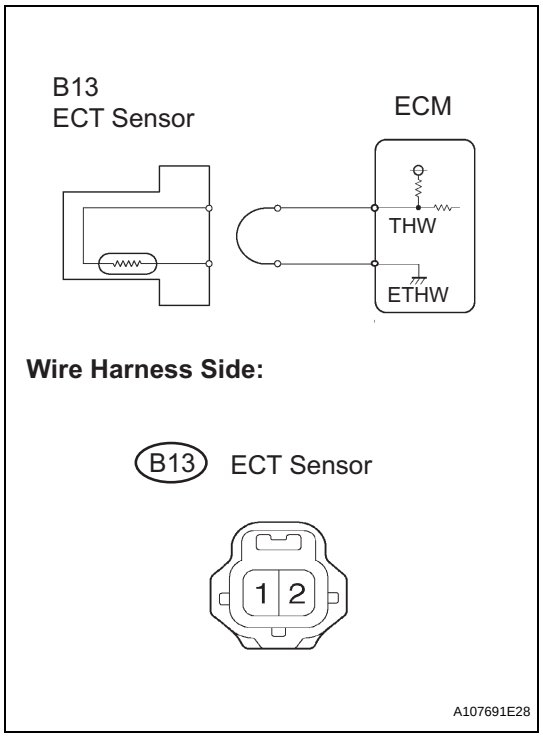

(a) Confirm good connection of the sensor.
(b) Disconnect the B13 engine coolant temperature (ECT) sensor connector.
(c) Connect terminals 1 and 2 of the ECT sensor connector on the wire harness side.
(d) Connect the intelligent tester to the DLC3.
(e) Turn the engine switch on (IG).
(f) Turn the tester on.
(g) Enter the following menus: DIAGNOSIS / ENHANCED OBD II / DATA LIST / PRIMARY / COOLANT TEMP.
(h) Read the value displayed on the tester.
Standard:
140°C (284°F) or higher.
(i) Reconnect the ECT sensor connector.

OK → **REPLACE ENGINE COOLANT TEMPERATURE SENSOR (See page ES-516)**

NG

ES

ES

4 CHECK HARNESS AND CONNECTOR (ENGINE COOLANT TEMPERATURE SENSOR - ECM)

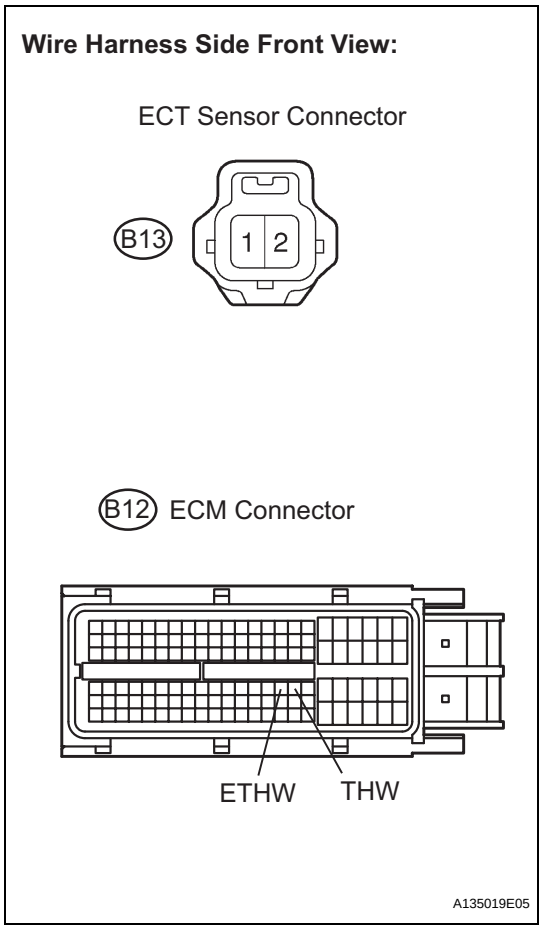

(a) Disconnect the B13 ECT sensor connector.
(b) Disconnect the B12 ECM connector.
(c) Measure the resistance between the terminals.
Standard resistance

Tester Connection	Specified Condition
THW (B12-79) - B13-2	Below 1 Ω
ETHW (B12-78) - B13-1	Below 1 Ω

(d) Reconnect the ECM connector.
(e) Reconnect the ECT connector.

NG → **REPAIR OR REPLACE HARNESS OR CONNECTOR**

OK

REPLACE ECM (See page ES-543)

5 CHECK ENGINE COOLANT TEMPERATURE SENSOR (CHECK FOR SHORT IN SENSOR)

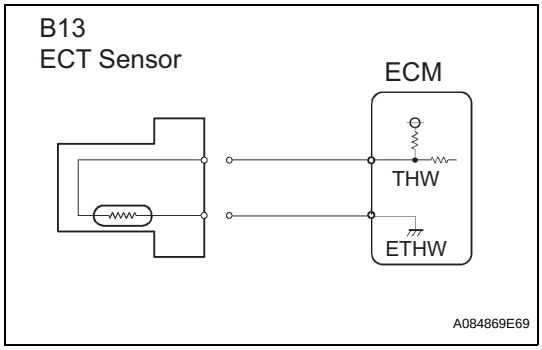

(a) Disconnect the B13 ECT sensor connector.
(b) Connect the intelligent tester to the DLC3.
(c) Turn the engine switch on (IG).
(d) Turn the tester on.
(e) Enter the following menus: DIAGNOSIS / ENHANCED OBD II / DATA LIST / PRIMARY / COOLANT TEMP.
(f) Read the value displayed on the tester.
Standard:
-40°C (-40°F)
(g) Reconnect the ECT sensor connector.

OK → **REPLACE ENGINE COOLANT TEMPERATURE SENSOR (See page ES-516)**

NG

6	CHECK HARNESS AND CONNECTOR (ENGINE COOLANT TEMPERATURE SENSOR - ECM)

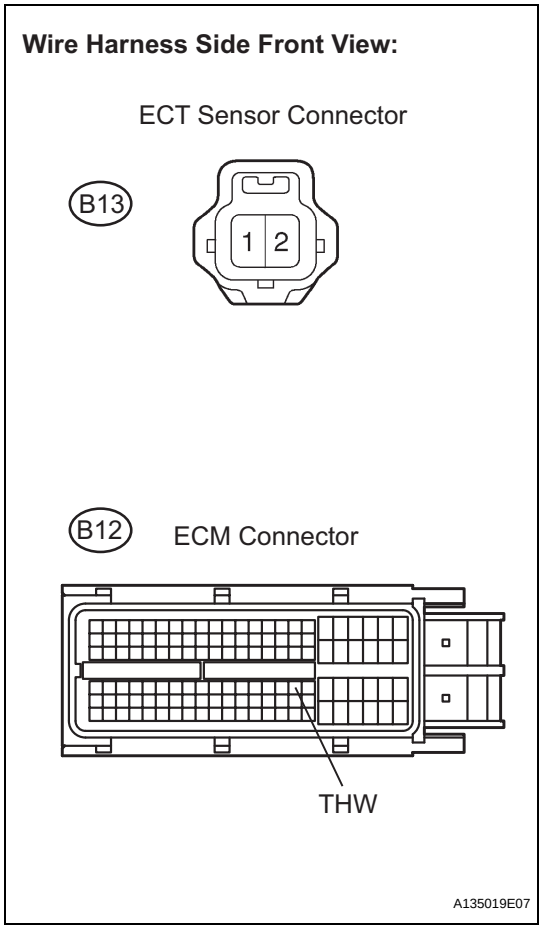

(a) Disconnect the B13 ECT sensor connector.
(b) Disconnect the B12 ECM connector.
(c) Measure the resistance according to the value(s) in the table below.

Standard resistance

Tester Connection	Specified Condition
THW (B12-79) or B13-2 - Body ground	10 kΩ or higher

(d) Reconnect the ECT sensor connector.
(e) Reconnect the ECM connector.

NG → **REPAIR OR REPLACE HARNESS OR CONNECTOR**

ES

OK

REPLACE ECM (See page ES-543)

DTC	P0116	Engine Coolant Temperature Circuit Range / Performance Problem

DESCRIPTION

A thermistor is built into the Engine Coolant Temperature (ECT) sensor, of which the resistance value varies according to the ECT.
The structure of the sensor and its connection to the ECM are the same as those of the Intake Air Temperature (IAT) sensor.

DTC No.	DTC Detection Condition	Trouble Area
P0116	ECTs as listed below are nearly same (2 trip detection logic): – ECT when engine is started at lower than 60°C (140°F) of ECT – ECT when engine is warmed up	• Thermostat • ECT sensor
	ECTs as listed below are nearly same when engine is started at higher than 60°C (140°F) of ECT (2 trip detection logic) – ECT when engine is stopped after driving – ECT when engine is started at lower than 60°C (140°F) of ECT	

ES

MONITOR DESCRIPTION

The ECT sensor is used to monitor the ECT. The ECT sensor has a built-in thermistor with a resistance that varies according to the temperature of the engine coolant. When the ECT drops, the resistance of the thermistor increases. When the temperature rises, the resistance drops. These variations in the resistance are reflected in the output voltage from the ECT sensor.
The ECM monitors the sensor voltage and uses this value to calculate the ECT. If the sensor output voltage deviates from the normal operating range, the ECM interprets this deviation as a malfunction in the ECT sensor and sets the DTC.

Examples:

(1) Upon starting the engine, the ECT is between 35°C and 60°C (95°F and 140°F). If, after driving for 250 seconds, the ECT remains within 3°C (5.4°F) of the starting temperature, the DTC is set (2 trip detection logic).

(2) Upon starting the engine, the ECT is over 60°C (140°F). If, after driving for 250 seconds, the ECM remains within 1°C (1.8°F) of the starting temperature, the DTC is set (2 trip detection logic).

MONITOR STRATEGY

Related DTCs	P0116: Engine coolant temperature sensor rationality (ECT sensor cold start monitor) P0116: Engine coolant temperature sensor rationality (ECT sensor soak monitor)
Required Sensors/Components (Main)	Engine coolant temperature (ECT) sensor
Required Sensors/Components (Sub)	-
Frequency of Operation	Once per driving cycle
Duration	10
MIL Operation	2 driving cycles
Sequence of Operation	None

TYPICAL ENABLING CONDITIONS

All:

Monitor runs whenever following DTCs are not present	P0100 - P0103 (MAF sensor)

ECT sensor cold start monitor:

Battery voltage	10.5 V or more
Time after engine start	1 second or more
ECT at engine start	Less than 60°C (140°F)
IAT sensor circuit	OK
Soak time	5 hours
Accumulated MAF	1,056.06 g or more
Engine	Running
Fuel cut	OFF
Difference between ECT at engine start and IAT	Less than 40°C (104°F)

ECT sensor soak monitor:

Battery voltage	10.5 V or more
Engine	Running
Soak time	5 hours or more
ECT at engine start	60°C (140°F) or more
Accumulated MAF	2,101.98 times or more

TYPICAL MALFUNCTION THRESHOLDS

ECT sensor cold start monitor:

ECT sensor value change	Less than 5°C (9°F)

ECT sensor soak monitor:

Difference between current ECT sensor value and previous ECT sensor value when engine stopped	Less than 5°C (9°F)

COMPONENT OPERATING RANGE

Engine coolant temperature	Varies with actual engine coolant temperature

INSPECTION PROCEDURE

HINT:

- If any of DTCs P0115, P0117, P0118 or P0125 are set simultaneously with DTC P0116, the ECT sensor may have an open or a short circuit. Troubleshoot those DTCs first.
- Read freeze frame data using the intelligent tester. The ECM records vehicle and driving condition information as freeze frame data the moment a DTC is stored. When troubleshooting, freeze frame data can be helpful in determining whether the vehicle was running or stopped, whether the engine was warmed up or not, whether the air-fuel ratio was lean or rich, as well as other data recorded at the time of a malfunction (See page ES-41).

1	CHECK OTHER DTC OUTPUT (IN ADDITION TO DTC P0116)

(a) Connect the intelligent tester to the DLC3.
(b) Turn the engine switch on (IG).
(c) Turn the tester on.
(d) Enter the following menus: DIAGNOSIS / ENHANCED II / DTC INFO / CURRENT CODES.
(e) Read the DTCs.

Result

Display (DTC output)	Proceed to
P0116	A

Display (DTC output)	Proceed to
P0116 and other DTCs	B

B → **GO TO DTC CHART (See page ES-59)**

A

2 INSPECT THERMOSTAT

(a) Remove the thermostat (See page CO-13).
(b) Check the valve opening temperature of the thermostat.
Standard:
80 to 84°C (176 to 183°F)
HINT:
In addition to the above check, confirm that the valve is completely closed when the temperature is below the standard.
(c) Reinstall the thermostat (See page CO-14).

NG → **REPLACE THERMOSTAT (See page CO-13)**

OK

REPLACE ENGINE COOLANT TEMPERATURE SENSOR (See page ES-516)

DTC	P0120	Throttle / Pedal Position Sensor / Switch "A" Circuit Malfunction
DTC	P0122	Throttle / Pedal Position Sensor / Switch "A" Circuit Low Input
DTC	P0123	Throttle / Pedal Position Sensor / Switch "A" Circuit High Input
DTC	P0220	Throttle / Pedal Position Sensor / Switch "B" Circuit
DTC	P0222	Throttle / Pedal Position Sensor / Switch "B" Circuit Low Input
DTC	P0223	Throttle / Pedal Position Sensor / Switch "B" Circuit High Input
DTC	P2135	Throttle / Pedal Position Sensor / Switch "A" / "B" Voltage Correlation

DESCRIPTION

HINT:
This ETCS (Electrical Throttle Control System) does not use a throttle cable.
The Throttle Position (TP) sensor is mounted on the throttle body, and detects the opening angle of the throttle valve. This sensor is a non-contact type, and uses Hall-effect elements, in order to yield accurate signals, even in extreme driving conditions, such as at high speeds as well as very low speeds.
The TP sensor has two sensor circuits which each transmits a signal, VTA1 and VTA2. VTA1 is used to detect the throttle valve angle and VTA2 is used to detect malfunctions in VTA1. The sensor signal voltages vary between 0 V and 5 V in proportion to the throttle valve opening angle, and are transmitted to the VTA terminals of the ECM.
As the valve closes, the sensor output voltage decreases and as the valve opens, the sensor output voltage increases. The ECM calculates the throttle valve opening angle according to these signals and controls the throttle actuator in response to driver inputs. These signals are also used in calculations such as air-fuel ratio correction, power increase correction and fuel-cut control.

ES

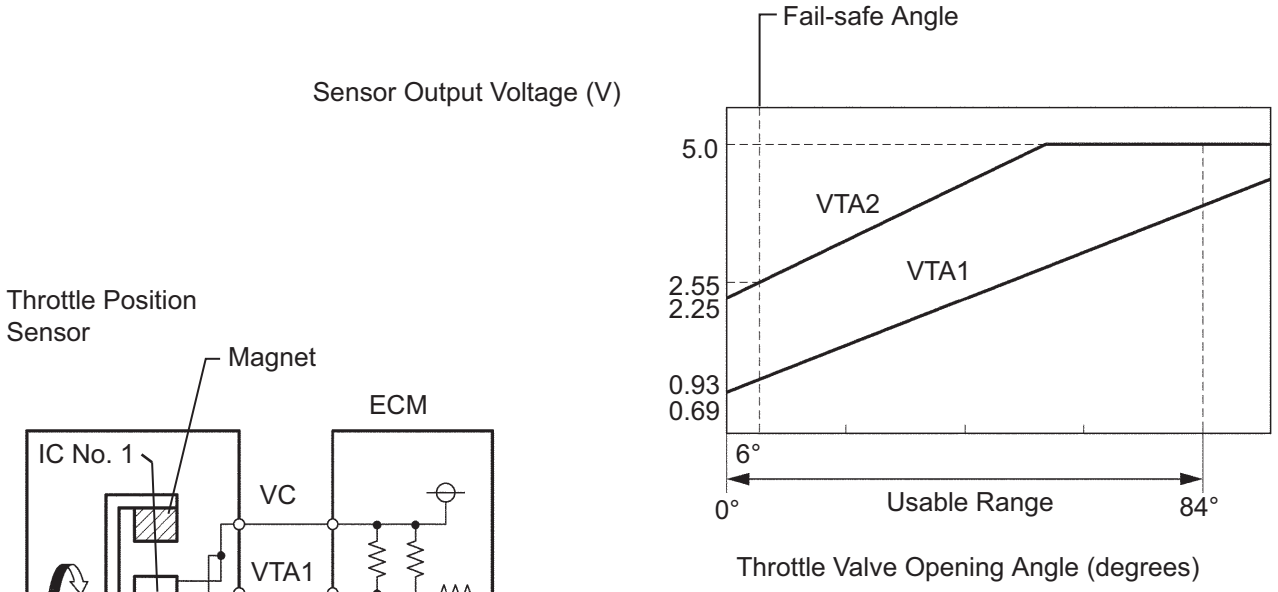

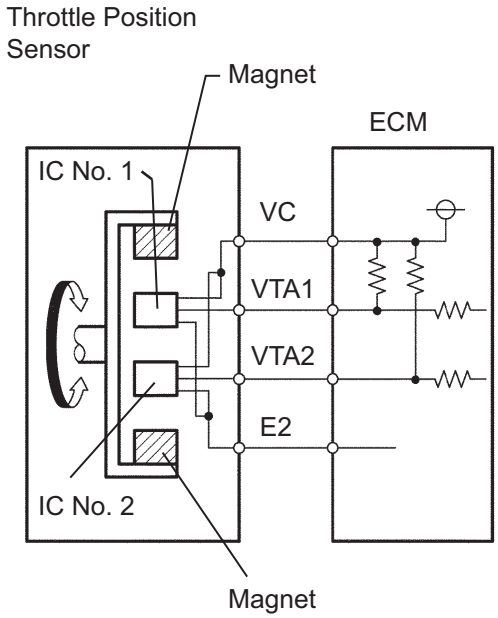

Note:

The throttle valve opening angle detected by the sensor terminal VTA1 is expressed as percentages.

Between 10 % and 24 %: Throttle valve fully closed

Between 64 % and 96 %: Throttle valve fully open

Approximately 19 %: Fail-safe angle (6°)

A019802E59

DTC No.	DTC Detection Condition	Trouble Area
P0120	Output voltage of VTA1 quickly fluctuates beyond lower and upper malfunction thresholds for 2 seconds (1 trip detection logic)	• Throttle Position (TP) sensor (built into throttle body) • ECM
P0122	Output voltage of VTA1 is 0.2 V or less for 2 seconds (1 trip detection logic)	• TP sensor (built into throttle body) • Short in VTA1 circuit • Open in VC circuit • ECM
P0123	Output voltage of VTA1 is 4.535 V or more for 2 seconds (1 trip detection logic)	• TP sensor (built into throttle body) • Open in VTA1 circuit • Open in E2 circuit • Short between VC and VTA1 circuits • ECM
P0220	Output voltage of VTA2 quickly fluctuates beyond lower and upper malfunction thresholds for 2 seconds (1 trip detection logic)	• TP sensor (built into throttle body) • ECM

DTC No.	DTC Detection Condition	Trouble Area
P0222	Output voltage of VTA2 is 1.75 V or less for 2 seconds (1 trip detection logic)	• TP sensor (built into throttle body) • Short in VTA2 circuit • Open in VC circuit • ECM
P0223	Output voltage of VTA2 is 4.8 V or more, and VTA1 is between 0.2 V and 2.02 V, for 2 seconds (1 trip detection logic)	• TP sensor (built into throttle body) • Open in VTA2 circuit • Open in E2 circuit • Short between VC and VTA2 circuits • ECM
P2135	Either condition (a) or (b) is met (1 trip detection logic): (a) Difference between output voltages of VTA1 and VTA2 is 0.02 V or less for 0.5 seconds or more (b) Output voltage of VTA1 is 0.2 V or less, and VTA2 is 1.75 V or less, for 0.4 seconds or more	• Short between VTA1 and VTA2 circuits • TP sensor (built into throttle body) • ECM

HINT:
- When any of these DTCs are set, check the throttle valve opening angle by entering the following menus on an intelligent tester: DIAGNOSIS / ENHANCED OBD II / DATA LIST / ETCS / THROTTLE POS AND THROTTLE POS #2.
- THROTTLE POS denotes the VTA1 signal (expressed in percentages), and THROTTLE POS #2 denotes the VTA2 signal (expressed in voltages).

Reference (Normal Condition):

Tester Display	Accelerator Pedal Fully Released	Accelerator Pedal Fully Depressed
THROTTLE POS	10 to 24 %	64 to 96 %
THROTTLE POS #2	2.1 to 3.1 V	4.5 to 5.0 V

MONITOR DESCRIPTION

The ECM uses the Throttle Position (TP) sensor to monitor the throttle valve opening angle. There are several checks that the ECM performs to confirm the proper operation of the TP sensor.
- A specific voltage difference is expected between the sensor terminals, VTA1 and VTA2, for each throttle valve opening angle. If the difference between VTA1 and VTA2 is incorrect, the ECM interprets this as a malfunction in the sensor, and sets a DTC.
- VTA1 and VTA2 each has a specific voltage range. If VTA1 or VTA2 is outside the normal operating range, the ECM interprets this as a malfunction in the sensor, and sets a DTC.
- VTA1 and VTA2 should never be close to the same voltage level. If VTA1 is within 0.02 V of VTA2, the ECM determines that there is a short circuit in the sensor, and sets a DTC.

MONITOR STRATEGY

Related DTCs	P0120: Throttle position sensor 1 range check (Fluctuating) P0122: Throttle position sensor 1 range check (Low voltage) P0123: Throttle position sensor 1 range check (High voltage) P0220: Throttle position sensor 2 range check (Fluctuating) P0222: Throttle position sensor 2 range check (Low voltage) P0223: Throttle position sensor 2 range check (High voltage) P2135: Throttle position sensor range check (Correlation)
Required Sensors/Components (Main)	Throttle position sensor
Required Sensors/Components (Sub)	-
Frequency of Operation	Continuous

ES

Duration	Throttle position sensor 1 range check (Fluctuating): 2 seconds (Accelerator pedal ON) Throttle position sensor 1 range check (Low voltage): 2 seconds (Accelerator pedal ON) Throttle position sensor 1 range check (High voltage): 2 seconds (Accelerator pedal ON) Throttle position sensor 2 range check (Fluctuating): 2 seconds (Accelerator pedal ON) Throttle position sensor 2 range check (Low voltage): 2 seconds (Accelerator pedal ON) Throttle position sensor 2 range check (High voltage): 2 seconds (Accelerator pedal ON) Throttle position sensor 1 range check (Fluctuating): 10 seconds (Accelerator pedal OFF) Throttle position sensor 1 range check (Low voltage): 10 seconds (Accelerator pedal OFF) Throttle position sensor 1 range check (High voltage): 10 seconds (Accelerator pedal OFF) Throttle position sensor 2 range check (Fluctuating): 10 seconds (Accelerator pedal OFF) Throttle position sensor 2 range check (Low voltage): 10 seconds (Accelerator pedal OFF) Throttle position sensor 2 range check (High voltage): 10 seconds (Accelerator pedal OFF) Throttle position sensor range check (Correlation): Within 0.5 seconds
MIL Operation	Immediate
Sequence of Operation	None

TYPICAL ENABLING CONDITIONS

Monitor runs whenever following DTCs are not present	None

TYPICAL MALFUNCTION THRESHOLDS

P0120:

VTA1 voltage	0.2 V or less, or 4.535 V or more

P0122:

VTA1 voltage	0.2 V or less

P0123:

VTA1 voltage	4.535 V or more

P0220:

VTA2 voltage	1.75 V or less, or 4.8 V or more

P0222:

VTA2 voltage	1.75 V or less

P0223:

VTA2 voltage when VTA1 is 0.2 to 2.02 V	4.8 V or more

P2135:

Either following condition A or B is met:	-
Condition A	-
Difference between VTA1 and VTA2 voltages	0.02 V or less
Condition B	-
VTA1 voltage	0.2 V or less
VTA2 voltage	1.75 V or less

COMPONENT OPERATING RANGE

VTA1 voltage	0.69 to 4.05 V
VTA2 voltage	2.25 to 4.8 V

FAIL-SAFE

When any of these DTCs, as well as other DTCs relating to ETCS (Electronic Throttle Control System) malfunctions, are set, the ECM enters fail-safe mode. During fail-safe mode, the ECM cuts the current to the throttle actuator off, and the throttle valve is returned to a 6° throttle angle by the return spring. The ECM then adjusts the engine output by controlling the fuel injection (intermittent fuel-cut) and ignition timing, in accordance with the accelerator pedal opening angle, to allow the vehicle to continue at a minimal speed. If the accelerator pedal is depressed gently, the vehicle can be driven slowly.

WIRING DIAGRAM

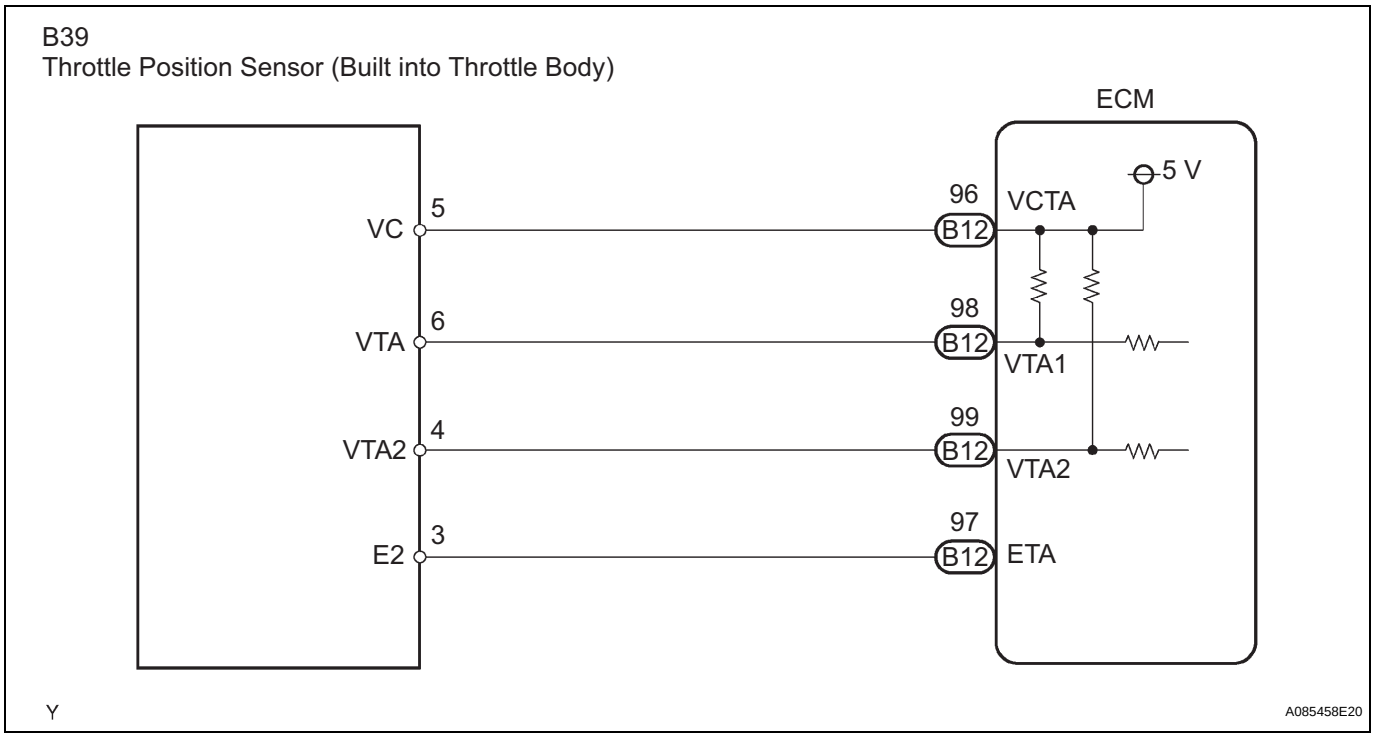

INSPECTION PROCEDURE

HINT:
Read freeze frame data using the intelligent tester. The ECM records vehicle and driving condition information as freeze frame data the moment a DTC is stored. When troubleshooting, freeze frame data can be helpful in determining whether the vehicle was running or stopped, whether the engine was warmed up or not, whether the air-fuel ratio was lean or rich, as well as other data recorded at the time of a malfunction (See page ES-41).

1	READ VALUE OF THROTTLE POSITION SENSOR (THROTTLE POS AND THROTTLE POS #2)

(a) Connect the intelligent tester to the DLC3.
(b) Turn the engine switch on (IG) and turn the intelligent tester on.

(c) Enter the following menus: DIAGNOSIS / ENHANCED OBD II / DATA LIST / ETCS / THROTTLE POS and THROTTLE POS #2.
(d) Check the values displayed on the tester.

Result

TP#1 (VTA1) When AP Released	TP#2 (VTA2) When AP Released	TP#1 (VTA1) When AP Depressed	TP#2 (VTA2) When AP Depressed	Trouble Area	Proceed to
0 %	Between 0 V and 0.2 V	0 %	Between 0 V and 0.2 V	VC circuit open	A
100 %	Between 4.5 V and 5.0 V	100 %	Between 4.5 V and 5.0 V	E2 circuit open	A
0 % or 100 %	Between 2.1 V and 3.1 V (Fail-safe)	0 % or 100 %	Between 2.1 V and 3.1 V (Fail-safe)	VTA1 circuit open or ground short	A
Approx. 19 % (Fail-safe)	Between 0 V and 0.2 V, or 4.5 V and 5.0 V	Between 10 % and 24 % (Fail-safe)	Between 0 V and 0.2 V, or 4.5 V and 5.0 V	VTA2 circuit open or ground short	A
Between 10 % and 24 %	Between 2.1 V and 3.1 V	Between 64 % and 96 % (Not fail-safe)	Between 4.5 V and 5.0 V (Not fail-safe)	TP sensor circuit normal	B

HINT:
- TP#1 denotes THROTTLE POS, and TP#2 denotes THROTTLE POS#2.
- AP denotes Accelerator Pedal.
- VTA1 is expressed as percentages, and VTA2 is expressed as voltages.

B → **Go to step 5**

A

2 CHECK HARNESS AND CONNECTOR (THROTTLE POSITION SENSOR - ECM)

Wire Harness Side Front View:

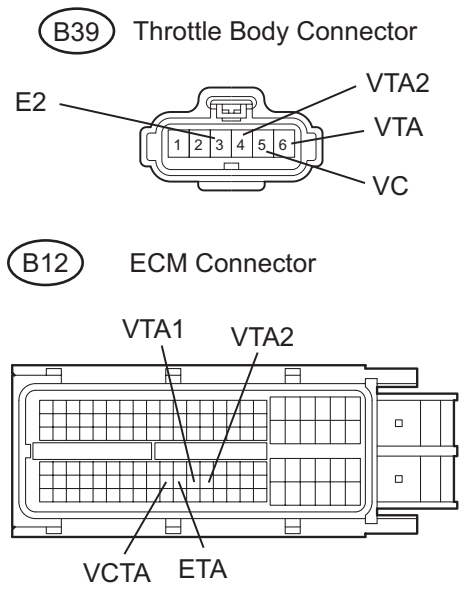

(a) Disconnect the B39 throttle body connector.
(b) Disconnect the B12 ECM connector.
(c) Measure the resistance according to the value(s) in the table below.

Standard resistance (Check for open)

Tester Connection	Specified Condition
VC (B39-5) - VCTA (B12-96)	Below 1 Ω
VTA (B39-6) - VTA1 (B12-98)	Below 1 Ω
VTA2 (B39-4) - VTA2 (B12-99)	Below 1 Ω
E2 (B39-3) - ETA (B12-97)	Below 1 Ω

Standard resistance (Check for short)

Tester Connection	Specified Condition
VC (B39-5) or VCTA (B12-96) - Body ground	10 kΩ or higher
VTA (B39-6) or VTA1 (B12-98) - Body ground	10 kΩ or higher
VTA2 (B39-4) or VTA2 (B12-99) - Body ground	10 kΩ or higher

(d) Reconnect the throttle body connector.
(e) Reconnect the ECM connector.

NG → **REPAIR OR REPLACE HARNESS OR CONNECTOR**

OK

3 INSPECT ECM (VC VOLTAGE)

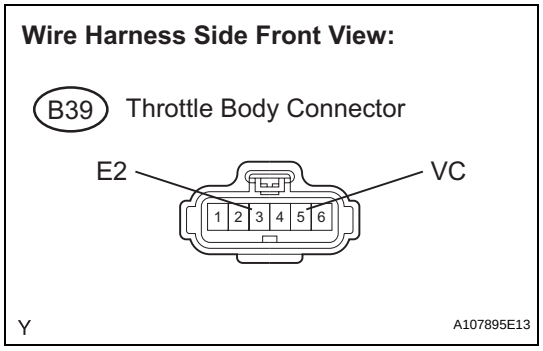

(a) Disconnect the B39 throttle body connector.
(b) Turn the engine switch on (IG).
(c) Measure the voltage according to the value(s) in the table below.

Standard voltage

Tester Connection	Specified Condition
VC (B39-5) - E2 (B39-3)	4.5 to 5.0 V

(d) Reconnect the throttle body connector.

NG → **REPLACE ECM (See page ES-543)**

OK

4 REPLACE THROTTLE BODY

(a) Replace the throttle body assembly (See page ES-519).

NEXT

5 CHECK WHETHER DTC OUTPUT RECURS (THROTTLE POSITION SENSOR DTCS)

(a) Connect the intelligent tester to the DLC3.
(b) Turn the engine switch on (IG) and turn the tester on.
(c) Clear the DTCs (See page ES-41).
(d) Start the engine.
(e) Allow the engine to idle for 15 seconds or more.
(f) Enter the following menus: DIAGNOSIS / ENHANCED OBD II / DTC INFO / CURRENT CODES.
(g) Read the DTCs.

Result

Display (DTC Output)	Proceed to
P0120, P0122, P0123, P0220, P0223, and/or P2135	A
No output	B

B → **SYSTEM IS OK**

A

REPLACE ECM (See page ES-543)

ES

DTC	P0121	Throttle / Pedal Position Sensor / Switch "A" Circuit Range / Performance Problem

DESCRIPTION

HINT:
This ETC (Electrical Throttle Control System) does not use a throttle cable.
The Throttle Position (TP) sensor is mounted on the throttle body, and detects the opening angle of the throttle valve. This sensor is a non-contact type, and uses Hall-effect elements, in order to yield accurate signals, even in extreme driving conditions, such as at high speeds as well as very low speeds.
The TP sensor has two sensor circuits which each transmits a signal, VTA1 and VTA2. VTA1 is used to detect the throttle valve angle and VTA2 is used to detect malfunctions in VTA1. The sensor signal voltages vary between 0 V and 5 V in proportion to the throttle valve opening angle, and are transmitted to the VTA terminals of the ECM.
As the valve closes, the sensor output voltage decreases and as the valve opens, the sensor output voltage increases. The ECM calculates the throttle valve opening angle according to these signals and controls the throttle actuator in response to driver inputs. These signals are also used in calculations such as air-fuel ratio correction, power increase correction and fuel-cut control.

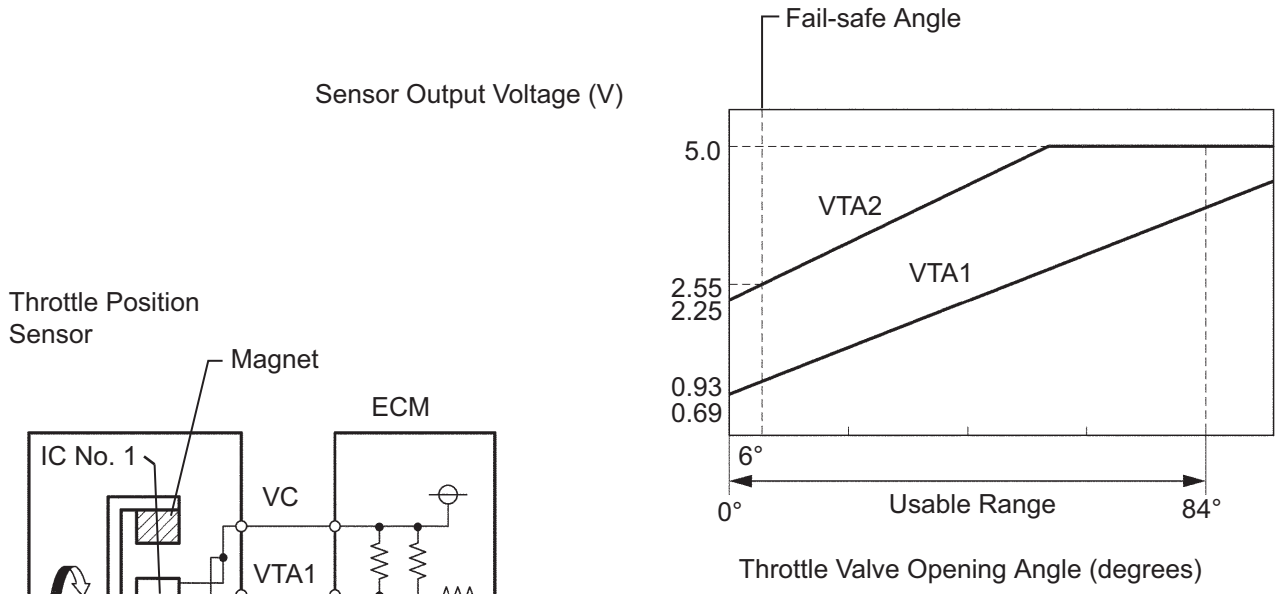

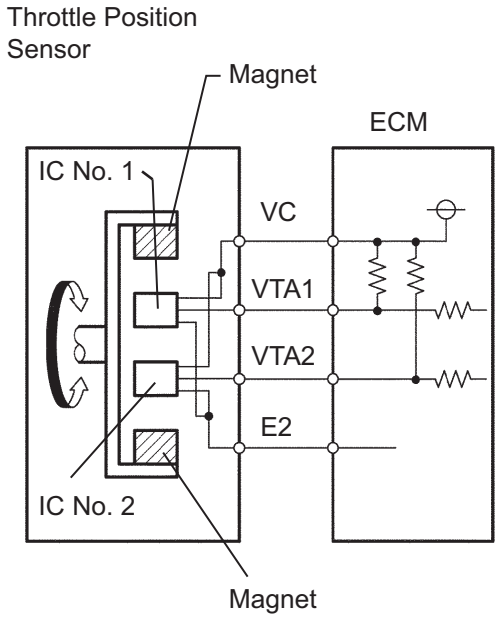

Note:

The throttle valve opening angle detected by the sensor terminal VTA1 is expressed as percentages.

Between 10 % and 24 %: Throttle valve fully closed

Between 64 % and 96 %: Throttle valve fully open

Approximately 19 %: Fail-safe angle (6°)

A019802E59

HINT:
This DTC relates to the Throttle Position (TP) sensor.

DTC No.	DTC Detection Condition	Trouble Area
P0121	Difference between VTA1 and VTA2 voltages is less than 0.8 V, or more than 1.6 V for 2 seconds (1 trip detection logic)	TP sensor (built into throttle body)

MONITOR DESCRIPTION

The ECM uses the TP sensor to monitor the throttle valve opening angle.
This sensor transmits two signals: VTA1 and VTA2. VTA1 is used to detect the throttle opening angle and VTA2 is used to detect malfunctions in VTA1. The ECM performs several checks to confirm the proper operation of the TP sensor and VTA1.

For each throttle opening angle, a specific voltage difference is expected between the outputs of VTA1 and VTA2. If the output voltage difference between the two signals deviates from the normal operating range, the ECM interprets this as a malfunction of the TP sensor. The ECM illuminates the MIL and sets the DTC.
If the malfunction is not repaired successfully, the DTC is set 2 seconds after the engine is next started.

MONITOR STRATEGY

Related DTCs	P0121: TP sensor rationality
Required Sensors/Components (Main)	TP sensor
Required Sensors/Components (Sub)	-
Frequency of Operation	Continuous
Duration	Within 2 seconds
MIL Operation	Immediate
Sequence of Operation	None

TYPICAL ENABLING CONDITIONS

Monitor runs whenever following DTCs are not present	P0120, P0122, P0123, P0220, P0222, P0223, P2135 (TP sensor)
Either following condition A or B is met:	-
A. Engine switch	ON
B. Electric throttle motor power	ON
TP sensor malfunction (P0120, P0122, P0123, P0220, P0222, P0223, P2135)	Not detected

TYPICAL MALFUNCTION THRESHOLDS

Difference in voltage between VAT1 and VTA2 TP sensor 1 - [TP sensor 2 x 0.8 (corrected by learning value)]	Less than 0.8 V or more than 1.6 V

FAIL-SAFE

When this DTC, as well as other DTCs relating to ETCS (Electronic Throttle Control System) malfunctions, is set, the ECM enters fail-safe mode. During fail-safe mode, the ECM cuts the current to the throttle actuator off, and the throttle valve is returned to a 6° throttle angle by the return spring. The ECM then adjusts the engine output by controlling the fuel injection (intermittent fuel-cut) and ignition timing, in accordance with the accelerator pedal opening angle, to allow the vehicle to continue at a minimal speed. If the accelerator pedal is depressed gently, the vehicle can be driven slowly.
Fail-safe mode continues until a pass condition is detected, and the engine switch is then turned off.

INSPECTION PROCEDURE

HINT:
Read freeze frame data using the intelligent tester. The ECM records vehicle and driving condition information as freeze frame data the moment a DTC is stored. When troubleshooting, freeze frame data can be helpful in determining whether the vehicle was running or stopped, whether the engine was warmed up or not, whether the air-fuel ratio was lean or rich, as well as other data recorded at the time of a malfunction (See page ES-41).

1	CHECK OTHER DTC OUTPUT (IN ADDITION TO DTC P0121)

(a) Connect the intelligent tester to the DLC3.
(b) Turn the engine switch on (IG).
(c) Turn the tester on.

(d) Enter the following menus: DIAGNOSIS / ENHANCED II / DTC INFO / CURRENT CODES.

(e) Read the DTC.

Result

Display (DTC output)	Proceed to
P0121	A
P0121 and other DTCs	B

B → **GO TO DTC CHART (See page ES-59)**

A

REPLACE THROTTLE BODY (See page ES-519)

DTC	P0125	Insufficient Coolant Temperature for Closed Loop Fuel Control

DESCRIPTION

A thermistor is built into the Engine Coolant Temperature (ECT) sensor, and its resistance value varies according to the ECT.
The structure of the sensor and its connection to the ECM are the same as those of the Intake Air Temperature (IAT) sensor.

DTC No.	DTC Detection Condition	Trouble Area
P0125	Engine coolant temperature (ECT) does not reach closed-loop enabling temperature for 20 minutes (this period varies with ECT when engine start)	• Engine coolant temperature sensor • Cooling system • Thermostat

MONITOR DESCRIPTION

The resistance of the ECT varies in proportion to the actual ECT. The ECT supplies a constant voltage to the sensor and monitors the signal output voltage of the sensor. The signal voltage output varies according to the changing resistance of the sensor. After the engine is started, the ECT is monitored through this signal. If the ECT sensor indicates that the engine is not yet warm enough for closed-loop fuel control, despite a specified period of time having elapsed since the engine was started, the ECM interprets this as a malfunction in the sensor or cooling system and sets the DTC.
Example:

The ECT is 0°C (32°F) at engine start. After 5 minutes running time, the ECT sensor still indicates that the engine is not warm enough to begin closed-loop fuel (air-fuel ratio feedback) control. The ECM interprets this as a malfunction in the sensor or cooling system and sets the DTC.

MONITOR STRATEGY

Related DTCs	P0125: Insufficient engine coolant temperature for closed-loop fuel control
Required Sensors/Components (Main)	Thermostat, cooling system
Required Sensors/Components (Related)	Engine coolant temperature sensor and mass air flow meter
Frequency of Operation	Once per driving cycle
Duration	64 seconds: Closed-loop enabling temperature -8.34°C (15°F) or more 111.2 seconds: Closed-loop enabling temperature -19.45 to 8.34°C (35 to 15°F) 1,200 seconds: Less than closed-loop enabling temperature -19.45°C (35°F)
MIL Operation	2 driving cycles
Sequence of Operation	None

TYPICAL ENABLING CONDITIONS

Monitor runs whenever following DTCs are not present	P0100 - P0103 (MAF sensor) P0110 - P0113 (IAT sensor) P0115 - P0118 (ECT sensor)
MAF sensor circuit fail	Not detected
IAT sensor circuit fail	Not detected
ECT sensor circuit fail	Not detected
Thermostat fail	Not detected

TYPICAL MALFUNCTION THRESHOLDS

Time until actual engine coolant temperature reaches closed-loop fuel control enabling temperature	64 seconds or more: Engine coolant temperature at engine start is -8.34°C (15°F) or more 111.2 seconds or more: Engine coolant temperature at engine start is -19.45 to -8.34°C (35 to 15°F) 1,200 seconds or more: Engine coolant temperature at engine start is less than -19.4°C (35°F)

WIRING DIAGRAM

Refer to DTC P0115 (See page ES-142).

INSPECTION PROCEDURE

HINT:

- If any of DTCs P0115, P0116, P0117 or P0118 are set simultaneously with DTC P0125, the Engine Coolant Temperature (ECT) sensor may have an open or a short circuit. Troubleshoot those DTCs first.
- Read freeze frame data using the intelligent tester. The ECM records vehicle and driving condition information as freeze frame data the moment a DTC is stored. When troubleshooting, freeze frame data can be helpful in determining whether the vehicle was running or stopped, whether the engine was warmed up or not, whether the air-fuel ratio was lean or rich, as well as other data recorded at the time of a malfunction (See page ES-41).

ES

1 CHECK ANY OTHER DTCS OUTPUT (IN ADDITION TO DTC P0125)

(a) Connect an intelligent tester to the DLC3.
(b) Turn the engine switch on (IG).
(c) Turn the tester on.
(d) Enter the following menus: DIAGNOSIS / ENHANCED OBD II / DTC INFO / CURRENT CODES.
(e) Read the DTCs.

Result

Display (DTC Output)	Proceed to
P0125	A
P0125 and other DTCs	B

HINT:
If any DTCs other than P0125 are output, troubleshoot those DTCs first.

B → **GO TO DTC CHART (See page ES-59)**

A

2 INSPECT THERMOSTAT

(a) Remove the thermostat (See page CO-13).
(b) Check the valve opening temperature of the thermostat.
Standard:
80 to 84°C (176 to 183°F)
HINT:
In addition to the above check, confirm that the valve is completely closed when the temperature is below the standard.
(c) Reinstall the thermostat (See page CO-14).

NG → **REPLACE THERMOSTAT (See page CO-13)**

OK

3	CHECK COOLING SYSTEM

(a) Check for defects in the cooling system that might cause the system to be too cold, such as abnormal radiator fan operation or any modifications.

NG → **REPAIR OR REPLACE COOLING SYSTEM**

ES

OK

REPLACE ENGINE COOLANT TEMPERATURE SENSOR (See page ES-516)

DTC	P0128	Coolant Thermostat (Coolant Temperature Below Thermostat Regulating Temperature)

DESCRIPTION

This DTC is set when the Engine Coolant Temperature (ECT) does not reach 75°C (167°F) despite sufficient engine warm-up time.

DTC No.	DTC Detection Condition	Trouble Area
P0128	Conditions (a), (b) and (c) are met for 5 seconds (2 rip detection logic): (a) Cold start (b) Engine warmed up (c) ECT less than 75°C (167°F)	• Thermostat • Cooling system • ECT sensor • ECM

ES

MONITOR DESCRIPTION

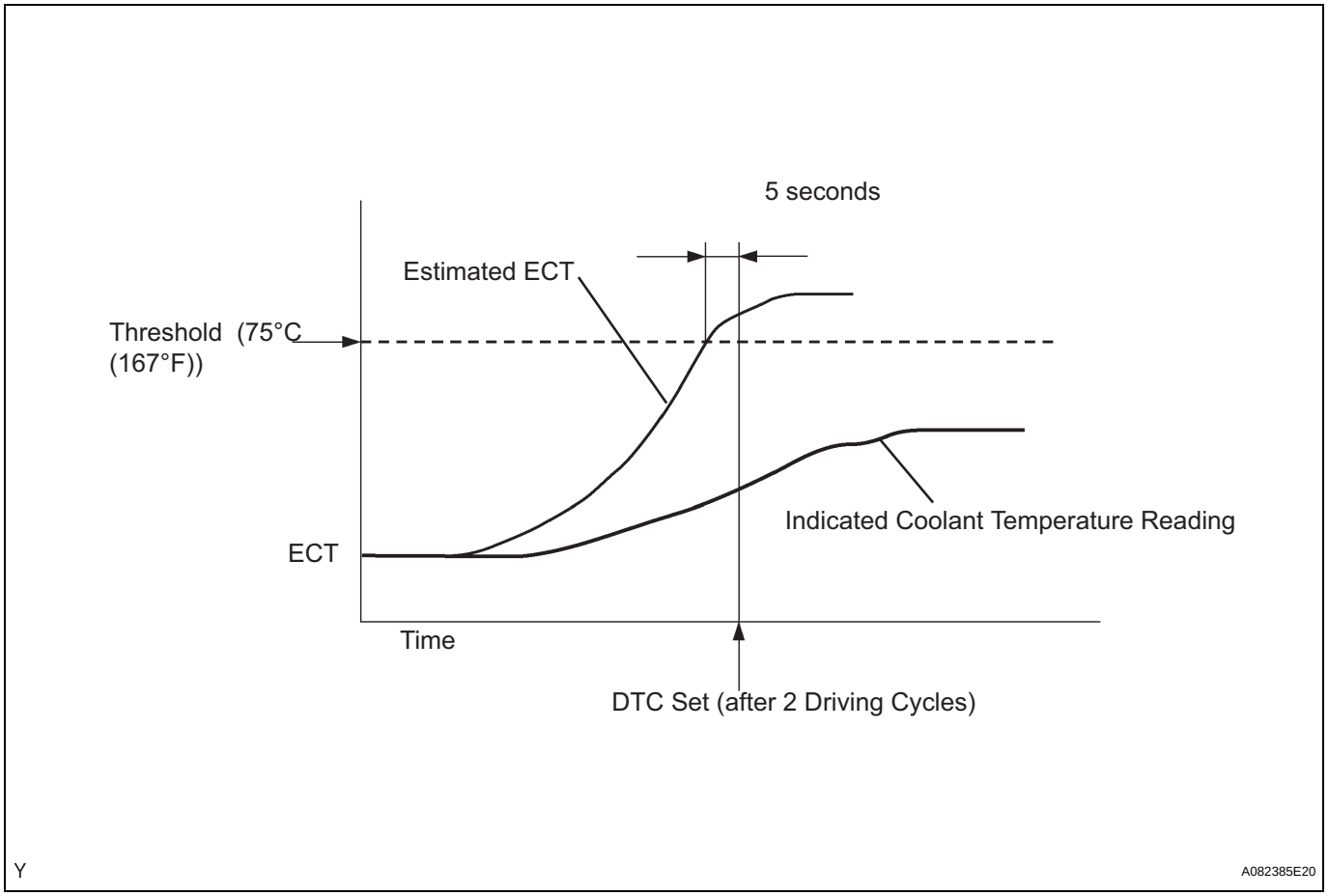

The ECM estimates the ECT based on the starting temperature, engine loads, and engine speeds. The ECM then compares the estimated temperature with the actual ECT. When the estimated ECT reaches 75°C (167°F), the ECM checks the actual ECT. If the actual ECT is less than 75°C (167°F), the ECM interprets this as a malfunction in the thermostat or the engine cooling system and sets the DTC.

MONITOR STRATEGY

Related DTCs	P0128: Coolant Thermostat
Required Sensors/Components (Main)	Thermostat
Required Sensors/Components (Sub)	Engine Coolant Temperature (ECT) sensor, Intake Air Temperature (IAT) sensor, Vehicle speed sensor
Frequency of Operation	Once per driving cycle

Duration	900 seconds
MIL Operation	2 driving cycles
Sequence of Operation	None

TYPICAL ENABLING CONDITIONS

Monitor will run whenever this DTC is not present	P0010, P0020 (VVT OCV Bank 1, 2) P0011 (VVT System 1 - Advance) P0012 (VVT System 1 - Retard) P0021 (VVT System 2 - Advance) P0022 (VVT System 2 - Retard) P0031, P0032, P0051, P0052 (A/F sensor heater - Sensor 1) P0100 - P0103 (MAF meter) P0110 - P0113 (IAT sensor) P0115 - P0118 (ECT sensor) P0125 (Insufficient ECT for Closed Loop) P0171, P0172 (Fuel system) P0300 - P0308 (Misfire) P0335 (CKP sensor) P0340, P0341 (CMP sensor) P0351 - P0356 (Ignitor) P0500 (VSS) P2196, P2198 (A/F sensor - rationality) P2A00, P2A03 (A/F sensor - slow response)
Battery voltage	11 V or more
Either following condition 1 or 2 is met:	-
1. All of following conditions are met:	-
• ECT at engine start - IAT at engine start	-15 to 7°C (-27 to 12.6°F)
• ECT at engine start	-10 to 56°C (14 to 133°F)
• IAT at engine start	-10 to 56°C (14 to 133°F)
2. All of following conditions are met:	-
• ECT at engine start - IAT at engine start	More than 7°C (12.6°F)
• ECT at engine start	56°C (132.8°F) or less
• IAT at engine start	-10°C (14°F) or more
Accumulated time with 80 mph (128 km/h) or more of vehicle speed	Less than 20 seconds

TYPICAL MALFUNCTION THRESHOLDS

Duration that both of the following conditions 1 and 2 are met:	5 seconds or more
1. Estimated ECT	75°C (167°F) or more
2. ECT sensor output	Less than 75°C (167°F)

INSPECTION PROCEDURE

HINT:
Read freeze frame data using the intelligent tester. The ECM records vehicle and driving condition information as freeze frame data the moment a DTC is stored. When troubleshooting, freeze frame data can be helpful in determining whether the vehicle was running or stopped, whether the engine was warmed up or not, whether the air-fuel ratio was lean or rich, as well as other data recorded at the time of a malfunction (See page ES-41).

1	CHECK OTHER DTC OUTPUT (IN ADDITION TO DTC P0128)

(a) Connect the intelligent tester to the DLC3.
(b) Turn the engine switch on (IG).
(c) Turn the tester on.

(d) Enter the following menus: DIAGNOSIS / ENHANCED II / DTC INFO / CURRENT CODES.
(e) Read the DTC.

Result

Display (DTC Output)	Proceed to
P0128	A
P0128 and other DTCs	B

HINT:
If any DTC other than P0128 are output, troubleshoot those DTCs first.

B → **GO TO DTC CHART (See page ES-59)**

A

2 CHECK COOLING SYSTEM

(a) Check for defects in the cooling system that might cause the system to be too cold, such as abnormal radiator fan operation or any modifications.

NG → **REPAIR OR REPLACE COOLING SYSTEM**

OK

3 INSPECT THERMOSTAT

(a) Remove the thermostat (See page CO-13).
(b) Check the valve opening temperature of the thermostat.
Standard:
80 to 84°C (176 to 183°F)
HINT:
In addition to the above check, confirm that the valve is completely closed when the temperature is below the standard.
(c) Reinstall the thermostat (See page CO-14).

NG → **REPLACE THERMOSTAT (See page CO-13)**

OK

REPLACE ECM (See page ES-543)

DTC	P0136	Oxygen Sensor Circuit Malfunction (Bank 1 Sensor 2)
DTC	P0137	Oxygen Sensor Circuit Low Voltage (Bank 1 Sensor 2)
DTC	P0138	Oxygen Sensor Circuit High Voltage (Bank 1 Sensor 2)
DTC	P0156	Oxygen Sensor Circuit Malfunction (Bank 2 Sensor 2)
DTC	P0157	Oxygen Sensor Circuit Low Voltage (Bank 2 Sensor 2)
DTC	P0158	Oxygen Sensor Circuit High Voltage (Bank 2 Sensor 2)

DESCRIPTION

A three-way catalytic converter (TWC) is used in order to convert the carbon monoxide (CO), hydrocarbon (HC), and nitrogen oxide (NOx) into less harmful substances. To allow the TWC to function effectively, it is necessary to keep the air-fuel ratio of the engine near the stoichiometric air-fuel ratio. For the purpose of helping the ECM to deliver accurate air-fuel ratio control, the Heated Oxygen (HO2) sensor is used.
The HO2 sensor is located behind the TWC, and detects the oxygen concentration in the exhaust gas. Since the sensor is integrated with the heater that heats the sensing portion, it is possible to detect the oxygen concentration even when the intake air volume is low (the exhaust gas temperature is low).
When the air-fuel ratio becomes lean, the oxygen concentration in the exhaust gas becomes rich. The HO2 sensor informs the ECM that the post-TWC air-fuel ratio is lean (low voltage, i.e. less than 0.45 V). Conversely, when the air-fuel ratio is richer than the stoichiometric air-fuel level, the oxygen concentration in the exhaust gas becomes lean. The HO2 sensor informs the ECM that the post-TWC air-fuel ratio is rich (high voltage, i.e. more than 0.45 V). The HO2 sensor has the property of changing its output voltage drastically when the air-fuel ratio is close to the stoichiometric level.
The ECM uses the supplementary information from the HO2 sensor to determine whether the air-fuel ratio after the TWC is rich or lean, and adjusts the fuel injection time accordingly. Thus, if the HO2 sensor is working improperly due to internal malfunctions, the ECM is unable to compensate for deviations in the primary air-fuel ratio control.

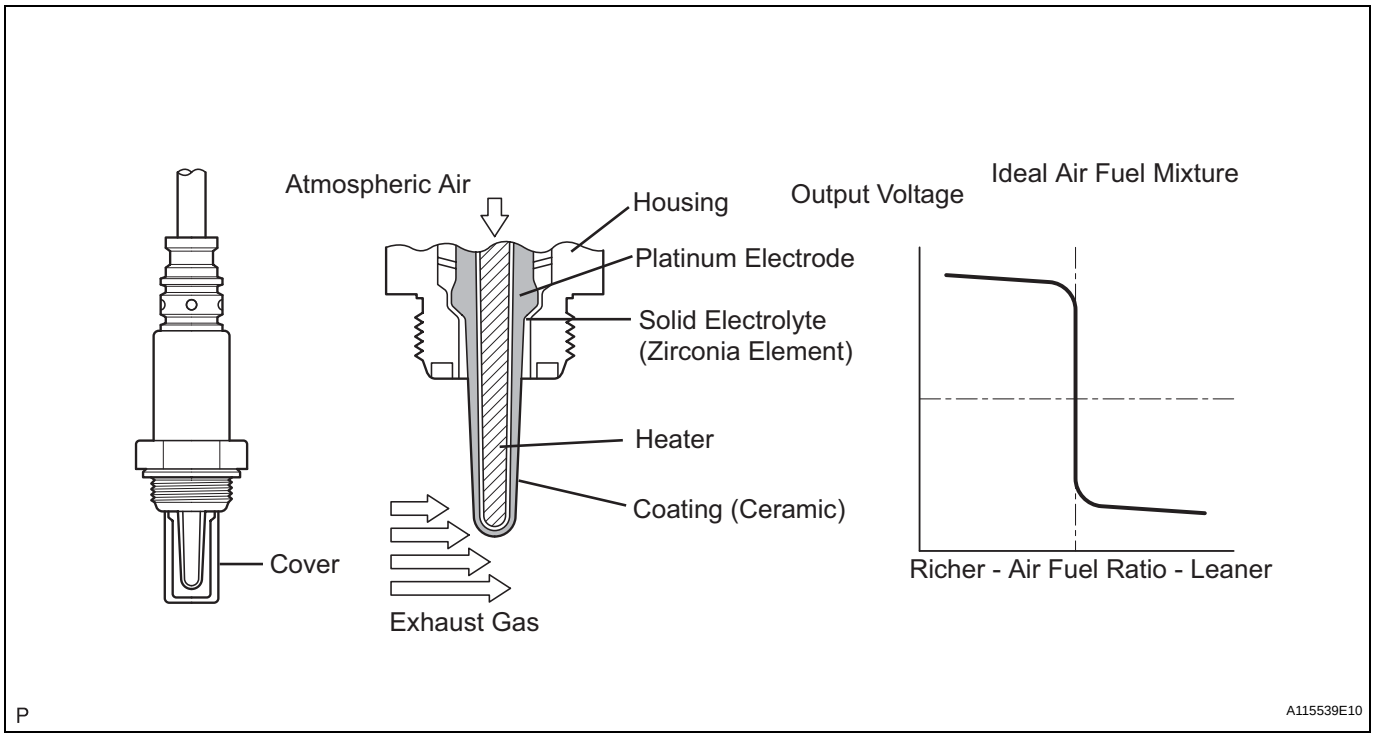

DTC No.	DTC Detection Condition	Trouble Area
P0136 P0156	• Abnormal voltage output: During active air-fuel ratio control, following conditions (a) and (b) are met for a certain period of time (2 trip detection logic) (a) Heated Oxygen (HO2) sensor voltage does not decrease to less than 0.2 V (b) HO2 sensor voltage does not increase to more than 0.6 V • Low impedance: Sensor impedance is less than 5 Ω for more than 30 seconds when ECM presumes sensor to being warmed up and operating normally (2 trip detection logic)	• Open or short in HO2 sensor (bank 1, 2 sensor 2) circuit • HO2 sensor (bank 1, 2 sensor 2) • HO2 sensor heater (bank 1, 2 sensor 2) • Air-Fuel Ratio (A/F) sensor (bank 1, 2 sensor 1) • Engine room junction block (EFI relay) • Gas leakage from exhaust system
P0137 P0157	• Low voltage (open): During active air-fuel ratio control, following conditions (a) and (b) are met for a certain period of time (2 trip detection logic) (a) HO2 sensor voltage output less than 0.21 V (b) Target air-fuel ratio rich • High impedance: Sensor impedance is 15 kΩ or more for more than 90 seconds when ECM presumes sensor to being warmed up and operating normally (2 trip detection logic)	• Open in HO2 sensor (bank 1, 2 sensor 2) circuit • HO2 sensor (bank 1, 2 sensor 2) • HO2 sensor heater (bank 1, 2 sensor 2) • Engine room junction block (EFI relay) • Gas leakage from exhaust system
P0138 P0158	• High voltage (short): During active air-fuel ratio control, following conditions (a) and (b) are met for a certain period of time (2 trip detection logic) (a) HO2 sensor voltage output 0.59 V or more (b) Target air-fuel ratio lean • Extremely high voltage (short): HO2 sensor voltage output exceeds 1.2 V for more than 30 seconds (2 trip detection logic)	• Short in HO2 sensor (bank 1, 2 sensor 2) circuit • HO2 sensor (bank 1, 2 sensor 2) • ECM internal circuit malfunction

ES

MONITOR DESCRIPTION

1. Active Air-Fuel Ratio Control

The ECM usually performs air-fuel ratio feedback control so that the Air-Fuel Ratio (A/F) sensor output indicates a near stoichiometric air-fuel level. This vehicle includes active air-fuel ratio control in addition to regular air-fuel ratio control. The ECM performs active air-fuel ratio control to detect any deterioration in the Three-Way Catalytic Converter (TWC) and Heated Oxygen (HO2) sensor malfunctions (refer to the diagram below).

Active air-fuel ratio control is performed for approximately 15 to 20 seconds while driving with a warm engine. During active air-fuel ratio control, the air-fuel ratio is forcibly regulated to become lean or rich by the ECM. If the ECM detects a malfunction, one of the following DTCs is set: DTC P0136 or P0156 (abnormal voltage output), P0137 or P0157 (open circuit) or P0138 or P0158 (short circuit).

2. Abnormal Voltage Output of HO2 Sensor (DTCs P0136 and P0156)

ES

While the ECM is performing active air-fuel ratio control, the air-fuel ratio is forcibly regulated to become rich or lean. If the sensor is not functioning properly, the voltage output variation is small. For example, when the HO2 sensor voltage does not decrease to less than 0.21 V and does not increase to more than 0.59 V during active air-fuel ratio control, the ECM determines that the sensor voltage output is abnormal and sets DTCs P0136 and P0156.

HO2 SENSOR CIRCUIT MALFUNCTION (P0136 and P0156: ABNORMAL VOLTAGE):

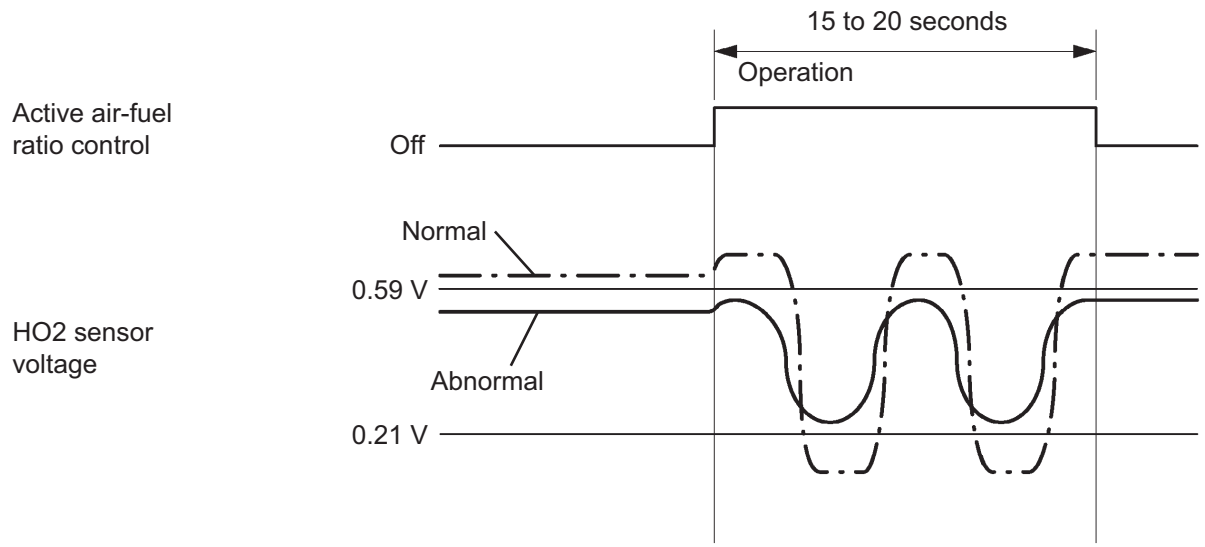

Y A076837E10

3. Open or Short in Heated Oxygen (HO2) Sensor Circuit (DTCs P0137 and P0157 or P0138 and P0158)

During active air-fuel ratio control, the ECM calculates the Oxygen Storage Capacity (OSC)* of the Three- Way Catalytic Converter (TWC) by forcibly regulating the air-fuel ratio to become rich or lean. If the HO2 sensor has an open or short circuit, or the voltage output of the sensor noticeably decreases, the OSC indicates an extraordinarily high value. Even if the ECM attempts to continue regulating the air-fuel ratio to become rich or lean, the HO2 sensor output does not change.

While performing active air-fuel ratio control, when the target air-fuel ratio is rich and the HO2 sensor voltage output is 0.21 V or less (lean), the ECM interprets this as an abnormally low sensor output voltage and sets DTC P0137 or P0157. When the target air-fuel ratio is lean and the voltage output is 0.59 V or more (rich) during active air-fuel ratio control, the ECM determines that the sensor voltage output is abnormally high, and sets DTC P0138 or P0158.

HINT:

DTC P0138 or P0158 is also set if the HO2 sensor voltage output is more than 1.2 V for 30 seconds or more.

*: The TWC has the capability to store oxygen. The OSC and the emission purification capacity of the TWC are mutually related. The ECM determines whether the catalyst has deteriorated, based on the calculated OSC value (See page ES-245).

HO2 SENSOR CIRCUIT LOW VOLTAGE (P0137 and P0157: OPEN):

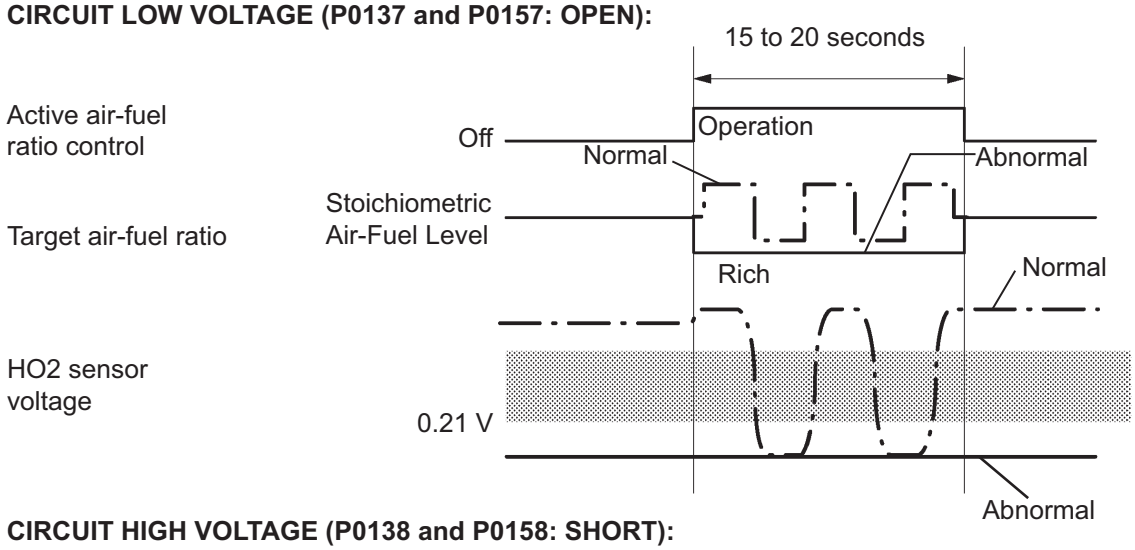

HO2 SENSOR CIRCUIT HIGH VOLTAGE (P0138 and P0158: SHORT):

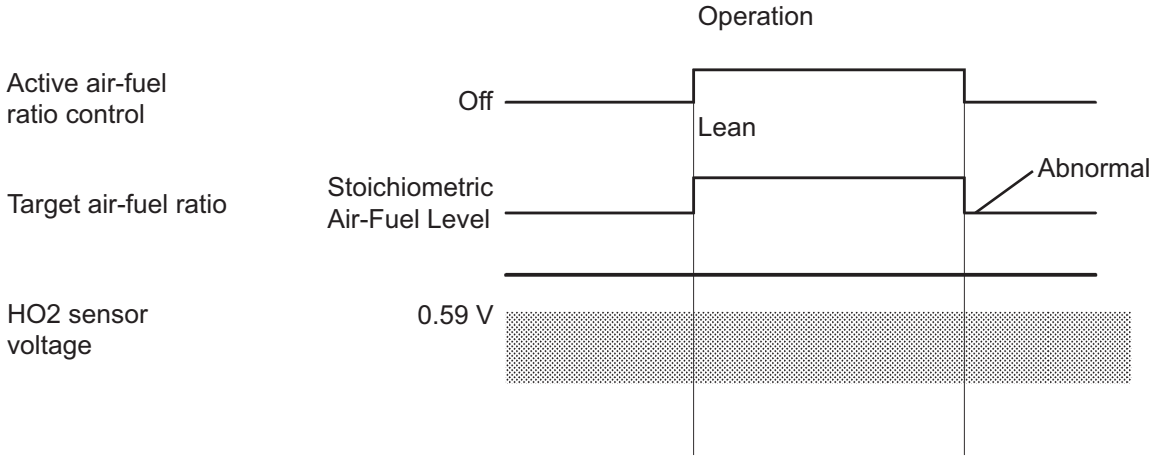

Y A080024E12

Interrelation between temperature of element and impedance:

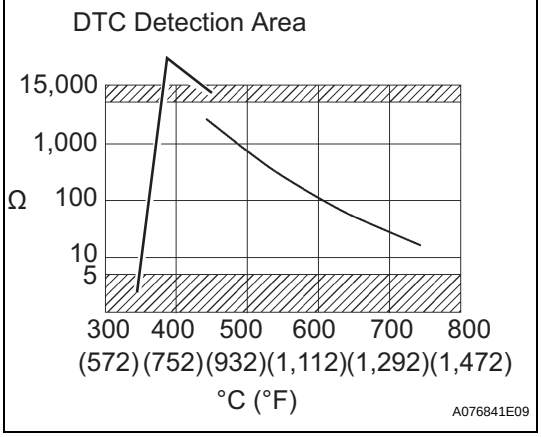

A076841E09

4. High or Low Impedance of Heated Oxygen (HO2) Sensor (DTCs P0136 and P0156 or P0137 and P0157)

During normal air-fuel ratio feedback control, there are small variations in the exhaust gas oxygen concentration. In order to continuously monitor the slight variation of the HO2 sensor signal while the engine is running, the impedance* of the sensor is measured by the ECM. The ECM determines that there is a malfunction in the sensor when the measured impedance deviates from the standard range.

*: The effective resistance in an alternating current electrical circuit.

HINT:

- The impedance cannot be measured using an ohmmeter.

ES

- DTCs P0136 and P0156 indicate the deterioration of the HO2 sensor. The ECM sets the DTCs by calculating the impedance of the sensor when the typical enabling conditions are satisfied (1 driving cycle).
- DTCs P0137 and P0157 indicate an open or short circuit in the HO2 sensor (1 driving cycle). The ECM sets the DTCs when the impedance of the sensor exceeds the threshold of 15 kΩ.

MONITOR STRATEGY

Related DTCs	P0136: HO2S voltage (Bank 1) P0136: HO2S low impedance (Bank 1) P0137: HO2S high impedance (Bank 1) P0137: HO2S low voltage (Bank 1) P0138: HO2S high voltage (Bank 1) P0138: HO2S high voltage (Extremely high) (Bank 1) P0156: HO2S voltage (Bank 2) P0156: HO2S low impedance (Bank 2) P0157: HO2S high impedance (Bank 2) P0157: HO2S low voltage (Bank 2) P0158: HO2S high voltage (Bank 2) P0158: HO2S high voltage (Extremely high) (Bank 2)
Required Sensors/Components (Main)	HO2S
Required Sensors/Components (Sub)	Crankshaft position sensor, Engine coolant temperature sensor, Mass air flow meter, Throttle position sensor
Frequency of Operation	Once per driving cycle
Duration	20 seconds: HO2S voltage (P0136, P0156), HO2S low voltage (P0137, P0157), HO2S high voltage (P0138, P0158) 30 seconds: HO2S low impedance (P0136, P0156) 90 seconds: HO2S high impedance (P0137, P0157) 10 seconds: HO2S high voltage (P0138, P0158)
MIL Operation	2 driving cycles
Sequence of Operation	None

TYPICAL ENABLING CONDITIONS

All:

Monitor runs whenever following DTCs are not present	P0031, P0032, P0051, P0052 (A/F sensor heater - Sensor 1) P0037, P0038, P0057, P0058 (O2 sensor heater - Sensor 2) P0100 - P0103 (MAF meter) P0110 - P0113 (IAT sensor) P0115 - P0118 (ECT sensor) P0120 - P0223, P2135 (TP sensor) P0125 (Insufficient ECT for Closed Loop) P0171, P0172 (Fuel system) P0300 - P0308 (Misfire) P0335 (CKP sensor) P0340, P0341 (CMP sensor) P0442 - P0456 (EVAP system) P0500 (VSS) P2196, P2198 (A/F sensor - rationality) P2A00, P2A03 (A/F sensor - slow response)

HO2S voltage (P0136, P0156), HO2S low voltage (P0137, P0157), HO2S high voltage (P0138, P0158):

Active A/F control	Performing
Battery voltage	11 V or more
ECT	75°C (167°F) or more
Idle	OFF

Engine rpm	Less than 3,200 rpm
A/F sensor status	Activated
Fuel system status	Closed loop
Fuel-cut	OFF
Engine load	10 to 70%
Shift position	4th or more

HO2S low impedance (P0136, P0156):

Battery voltage	11 V or more
Estimated rear HO2S temperature	Less than 700°C (1,292°F)
ECM monitor	Completed
P0606	Not set

HO2S high impedance (P0137, P0157):

Battery voltage	11 V or more
Estimated rear HO2S temperature	450°C (842°F) or more
P0606	Not preset

HO2S high voltage (Extremely high) (P0138, P0158):

Battery voltage	11 V or more
Time after engine start	2 seconds or more

TYPICAL MALFUNCTION THRESHOLDS

HO2S voltage (P0136, P0156):

Either the following condition 1 or 2 is met:	-
1. All of the following conditions (a), (b) and (c) are met:	-
(a) Commanded air-fuel ratio	14.3 or less
(b) Rear HO2S voltage	0.21 to 0.59 V
(c) OSC (Oxygen capacity of catalyst)	2 g or more
2. All of the following conditions (d), (e) and (f) are met:	-
(d) Commanded air-fuel ratio	14.9 or more
(e) Rear HO2S voltage	0.21 to 0.59 V
(f) OSC (Oxygen capacity of catalyst)	2 g or more

HO2S low impedance (P0136, P0156):

Duration that following condition is met:	30 seconds or more
Rear HO2S impedance	Less than 5 Ω

HO2S high impedance (P0137, P0157):

Duration that following condition is met:	90 seconds or more
Rear HO2S impedance	15 kΩ or more

HO2S low voltage (P0137, P0157):

All of the following conditions 1, 2 and 3 are met:	-
1. Commanded air-fuel ratio	14.3 or less
2. Rear HO2S voltage	Less than 0.21 V
3. OSC (Oxygen capacity of catalyst)	2 g or more

HO2S high voltage (P0138, P0158):

All of the following conditions 1, 2 and 3 are met:	-
1. Commanded air-fuel ratio	14.9 or more
2. Rear HO2S voltage	More than 0.59 V
3. OSC (Oxygen capacity of catalyst)	2 g or more

HO2S high voltage (Extremely high) (P0138, P0158):

Duration that following condition is met:	10 seconds or more
Rear HO2S voltage	1.2 V or more

COMPONENT OPERATING RANGE

Duration that following condition is met:	30 seconds or more
Heated oxygen sensor voltage	Varies between 0.1 and 0.9 V

MONITOR RESULT

Refer to CHECKING MONITOR STATUS (See page ES-20).

WIRING DIAGRAM

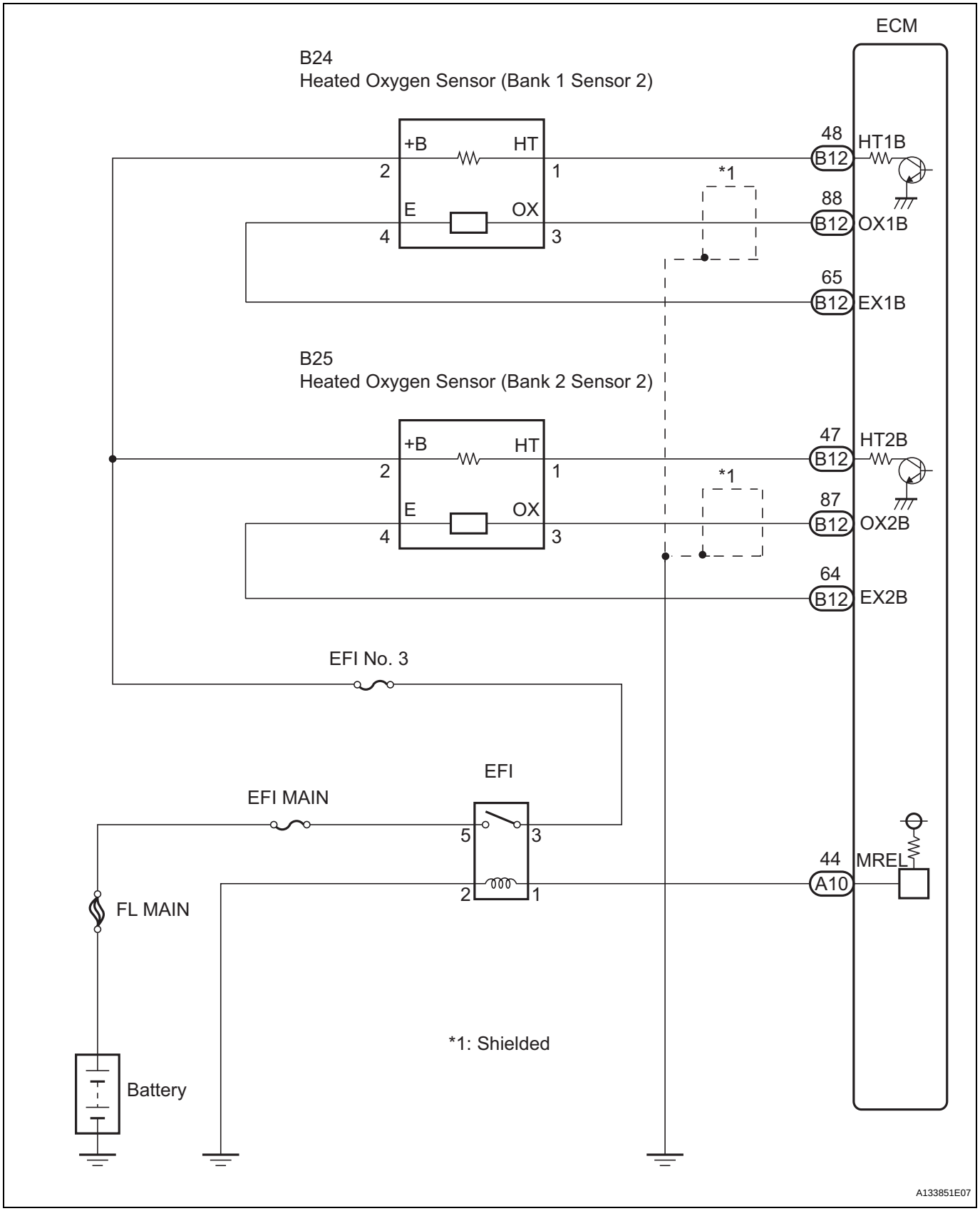

ES

ES

CONFIRMATION DRIVING PATTERN

HINT:

- This confirmation driving pattern is used in steps 5, 8 and 11 of the following diagnostic troubleshooting procedure when using an intelligent tester.
- Performing this confirmation driving pattern will activate the Heated Oxygen (HO2) sensor monitor. (The catalyst monitor is performed simultaneously.) This is very useful for verifying the completion of a repair.

NOTICE:

This test will not be completed if the vehicle is driven under absolutely constant speed conditions such as with cruise control activated.

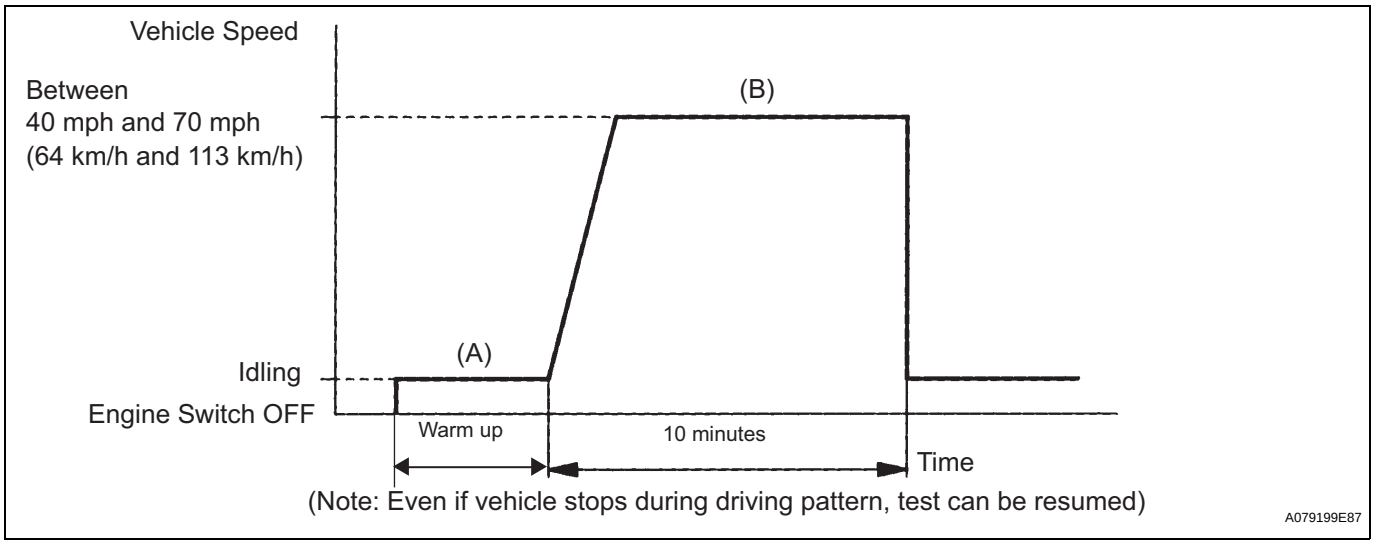

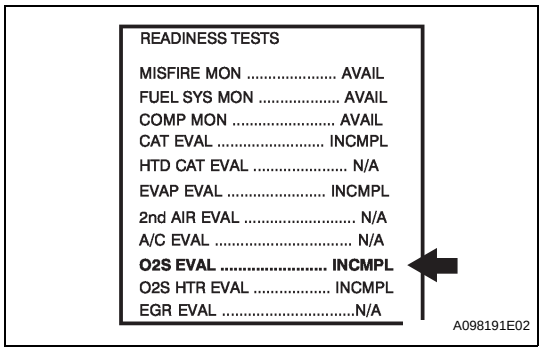

1. Connect an intelligent tester to the DLC3.
2. Turn the engine switch on (IG).
3. Turn the tester on.
4. Clear the DTCs (where set) (See page ES-41).
5. Select the following menu items: DIAGNOSIS / CARB OBD II / READINESS TESTS.
6. Check that O2S EVAL is INCMPL (incomplete).
7. Start the engine and warm it up (Procedure "A").
8. Drive the vehicle at between 40 mph and 70 mph (64 km/h and 113 km/h) for at least 10 minutes (Procedure "B").
9. Note the state of the Readiness Tests items. Those items will change to COMPL (complete) as O2S EVAL monitor operates.
10. On the tester, select the following menu items: DIAGNOSIS / ENHANCED OBD II / DTC INFO / PENDING CODES and check if any DTCs (any pending DTCs) are set.

HINT:

If O2S EVAL does not change to COMPL, and any pending DTCs fail to set, extend the driving time.

INSPECTION PROCEDURE

HINT:
Intelligent tester only:
Malfunctioning areas can be identified by performing the A/F CONTROL function provided in the ACTIVE TEST. The A/F CONTROL function can help determine whether the Air-Fuel Ratio (A/F) sensor, Heated Oxygen (HO2) sensor and other potential trouble areas are malfunctioning.
The following instructions describe how to conduct the A/F CONTROL operation using an intelligent tester.

1. Connect the intelligent tester to the DLC3.
2. Start the engine and turn the tester on.
3. Warm up the engine at an engine speed of 2,500 rpm for approximately 90 seconds.
4. On the tester, enter the following menus: DIAGNOSIS / ENHANCED OBD II / ACTIVE TEST / A/F CONTROL.
5. Perform the A/F CONTROL operation with the engine in an idling condition (press the RIGHT or LEFT button to change the fuel injection volume).
6. Monitor the voltage outputs of the A/F and HO2 sensors (AFS B1S1 and O2S B1S2 or AFS B2S1 and O2S B2S2) displayed on the tester.

HINT:
- The A/F CONTROL operation lowers the fuel injection volume by 12.5 % or increases the injection volume by 25 %.
- Each sensor reacts in accordance with increases in the fuel injection volume.

Tester Display (Sensor)	Injection Volume	Status	Voltage
AFS B1S1 or AFS B2S1 (A/F)	+25 %	Rich	Less than 3.0 V
AFS B1S1 or AFS B2S1 (A/F)	-12.5 %	Lean	More than 3.35 V
O2S B1S2 or O2S B2S2 (HO2)	+25 %	Rich	More than 0.55 V
O2S B1S2 or O2S B2S2 (HO2)	-12.5 %	Lean	Less than 0.4 V

NOTICE:
The Air-Fuel Ratio (A/F) sensor has an output delay of a few seconds and the Heated Oxygen (HO2) sensor has a maximum output delay of approximately 20 seconds.

Case	A/F Sensor (Sensor 1) Output Voltage		HO2 Sensor (Sensor 2) Output Voltage		Main Suspected Trouble Area
1	Injection Volume +25 % -12.5 %		Injection Volume +25 % -12.5 %		-
	Output Voltage More than 3.35 V Less than 3.0 V		Output Voltage More than 0.55 V Less than 0.4 V		
2	Injection Volume +25 % -12.5 %		Injection Volume +25 % -12.5 %		• A/F sensor • A/F sensor heater • A/F sensor circuit
	Output Voltage Almost no reaction	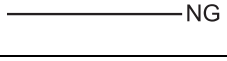	Output Voltage More than 0.55 V Less than 0.4 V		

ES

Case	A/F Sensor (Sensor 1) Output Voltage		HO2 Sensor (Sensor 2) Output Voltage		Main Suspected Trouble Area
3	Injection Volume +25 % -12.5 %		Injection Volume +25 % -12.5 %		• HO2 sensor • HO2 sensor heater • HO2 sensor circuit
	Output Voltage More than 3.35 V Less than 3.0 V	OK	Output Voltage Almost no reaction	NG	
4	Injection Volume +25 % -12.5 %		Injection Volume +25 % -12.5 %		• Fuel pressure • Gas leakage from exhaust system (Air-fuel ratio extremely lean or rich)
	Output Voltage Almost no reaction	NG	Output Voltage Almost no reaction	NG	

- Following the A/F CONTROL procedure enables technicians to check and graph the voltage outputs of both the A/F and HO2 sensors.
- To display the graph, enter the following menus: DIAGNOSIS / ENHANCED OBD II / ACTIVE TEST / A/F CONTROL / USER DATA / AFS B1S1 and O2S B1S2 or AFS B2S1 and O2S B2S2, and press the YES button and then the ENTER button followed by the F4 button.

HINT:

- Read freeze frame data using the intelligent tester. The ECM records vehicle and driving condition information as freeze frame data the moment a DTC is stored. When troubleshooting, freeze frame data can be helpful in determining whether the vehicle was running or stopped, whether the engine was warmed up or not, whether the air-fuel ratio was lean or rich, as well as other data recorded at the time of a malfunction (See page ES-41).
- If the OX1B wire from the ECM connector is short-circuited to the +B wire, DTC P0136 will be set.
- If the OX2B wire from the ECM connector is short-circuited to the +B wire, DTC P0156 will be set.

1 READ DTC OUTPUT

(a) Connect the intelligent tester to the DLC3.
(b) Turn the engine switch on (IG) and turn the tester on.
(c) Enter the following menus: DIAGNOSIS / ENHANCED OBD II / DTC INFO / CURRENT CODES.
(d) Read the DTCs.

Result

Display (DTC Output)	Proceed to
P0138 or P0158	A
P0137 or P0157	B
P0136 or P0156	C

B → **Go to step 14**

C → **Go to step 7**

A

2 READ VALUE OF OXYGEN SENSOR (OUTPUT VOLTAGE)

(a) Connect the intelligent tester to the DLC3.
(b) Turn the engine switch on (IG) and turn the tester on.

(c) Enter the following menus: DIAGNOSIS / ENHANCED OBD II / DATA LIST / PRIMARY / O2S B1S2 or O2S B2S2.
(d) Allow the engine to idle.
(e) Read the Heated Oxygen (HO2) sensor output voltage while idling.

Result

HO2 Sensor Output Voltage	Proceed to
More than 1.2 V	A
Less than 1.0 V	B

B → **Go to step 5**

A

3 CHECK HARNESS AND CONNECTOR (CHECK FOR SHORT)

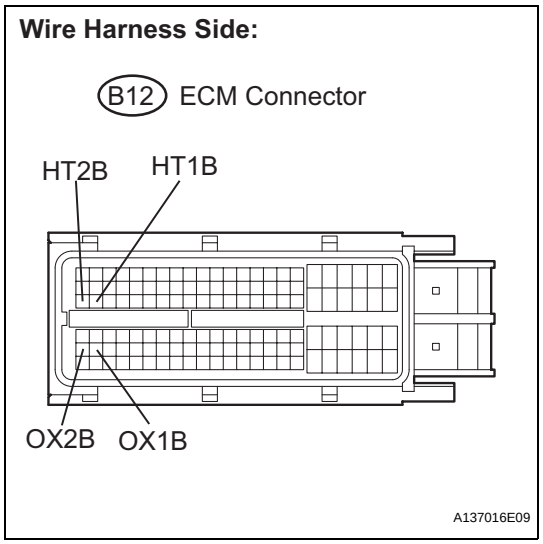

(a) Turn the engine switch off and wait for 5 minutes.
(b) Disconnect the B12 ECM connector.
(c) Measure the resistance according to the value(s) in the table below.

Standard resistance

Tester Connection	Specified Condition
HT1B (B12-48) - OX1B (B12-88)	10 kΩ or higher
HT2B (B12-47) - OX2B (B12-87)	10 kΩ or higher

(d) Reconnect the ECM connector.

NG → **Go to step 4**

OK

REPLACE ECM (See page ES-543)

ES

4 INSPECT HEATED OXYGEN SENSOR (CHECK FOR SHORT)

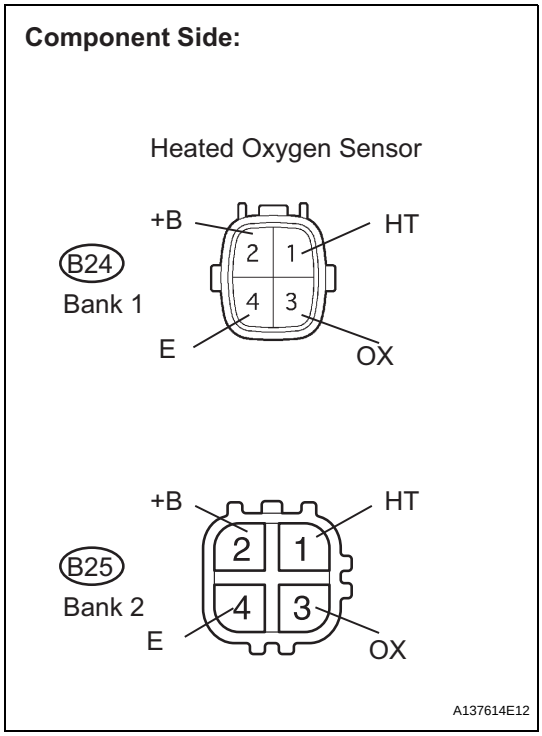

(a) Disconnect the B24 oxygen sensor connector (Bank 1 Sensor 2) or B25 oxygen sensor connector (Bank 2 sensor 2).

(b) Measure the resistance according to the value(s) in the table below.

Standard resistance (Bank 1 sensor 2)

Tester Connection	Specified Condition
+B (2) - E (4)	10 kΩ or higher
+B (2) - OX (3)	10 kΩ or higher

Standard resistance (Bank 2 sensor 2)

Tester Connection	Specified Condition
+B (2) - E (4)	10 kΩ or higher
+B (2) - OX (3)	10 kΩ or higher

NG → **REPLACE HEATED OXYGEN SENSOR (See page EC-21)**

OK

REPAIR OR REPLACE HARNESS OR CONNECTOR

5 PERFORM CONFIRMATION DRIVING PATTERN

NEXT

6 CHECK WHETHER DTC OUTPUT RECURS (DTC P0138 or P0158)

(a) On the intelligent tester, enter the following menus: DIAGNOSIS / ENHANCED OBD II / DTC INFO / CURRENT CODES.

(b) Read the DTCs.

Result

Display (DTC Output)	Proceed to
P0138 or P0158	A
No output	B

B → **CHECK FOR INTERMITTENT PROBLEMS**

A

REPLACE HEATED OXYGEN SENSOR (See page EC-21)

7	READ VALUE OF OXYGEN SENSOR (OUTPUT VOLTAGE)

(a) Connect the intelligent tester to the DLC3.
(b) Turn the engine switch on (IG) and turn the tester on.
(c) Start the engine.
(d) Enter the following menus: DIAGNOSIS / ENHANCED OBD II / DATA LIST / ALL / O2S B1S2 or O2S B1S2.
(e) After warming up the engine, run the engine at an engine speed of 2,500 rpm for 3 minutes.
(f) Read the output voltage of the HO2 sensor when the engine rpm is suddenly increased.
HINT:
Quickly accelerate the engine to 4,000 rpm 3 times using the accelerator pedal.
Standard voltage:
Fluctuates between 0.4 V or less and 0.5 V or more.

ES

NG → **Go to step 14**

OK

8	PERFORM CONFIRMATION DRIVING PATTERN

NEXT

9	CHECK WHETHER DTC OUTPUT RECURS (DTC P0136 or P0156)

(a) On the intelligent tester, enter the following menus: DIAGNOSIS / ENHANCED OBD II / DTC INFO / CURRENT CODES.
(b) Read the DTCs.

Result

Display (DTC Output)	Proceed to
P0136 or P0156	A
No output	B

B → **CHECK FOR INTERMITTENT PROBLEMS**

A

10	REPLACE HEATED OXYGEN SENSOR

(a) Replace the hated oxygen sensor (See page EC-21).

NEXT

11	PERFORM CONFIRMATION DRIVING PATTERN

NEXT

12	CHECK WHETHER DTC OUTPUT RECURS (DTC P0136 or P0156)

(a) On the intelligent tester, enter the following menus: DIAGNOSIS / ENHANCED OBD II / DTC INFO / CURRENT CODES.
(b) Read the DTCs.

ES

Result

Display (DTC Output)	Proceed to
P0136 or P0156	A
No output	B

B → END

A

13	PERFORM ACTIVE TEST BY INTELLIGENT TESTER (INJECTION VOLUME)

(a) Connect the intelligent tester to the DLC3.
(b) Start the engine and turn the tester on.
(c) Warm up the engine.
(d) Enter the following menus: DIAGNOSIS / ENHANCED OBD II /ACTIVE TEST / INJ VOL.
(e) Change the fuel injection volume using the tester, while monitoring the output voltage of Air-Fuel Ratio (A/F) and HO2 sensor displayed on the tester.

HINT:
- Change the fuel injection volume within the range of -12 % and +12 %. The injection volume can be changed in 1 % graduations within the range.
- The A/F sensor is displayed as AFS B1S1 or AFS B2S1, and the HO2 sensor is displayed as O2S B1S2 or O2S B2S2, on the intelligent tester.

Result

Tester Display (Sensor)	Voltage Variation	Proceed to
AFS B1S1 (A/F) AFS B2S1 (A/F)	Alternates between more and less than 3.3 V	OK
AFS B1S1 (A/F) AFS B2S1 (A/F)	Remains more than 3.3 V	NG
AFS B1S1 (A/F) AFS B2S1 (A/F)	Remains less than 3.3 V	NG

HINT:
A normal HO2 sensor voltage (O2S B1S2 or O2S B2S2) reacts in accordance with increases and decreases in fuel injection volumes. When the A/F sensor voltage remains either less or more than 3.3 V despite the HO2 sensor indicating a normal reaction, the A/F sensor is malfunctioning.

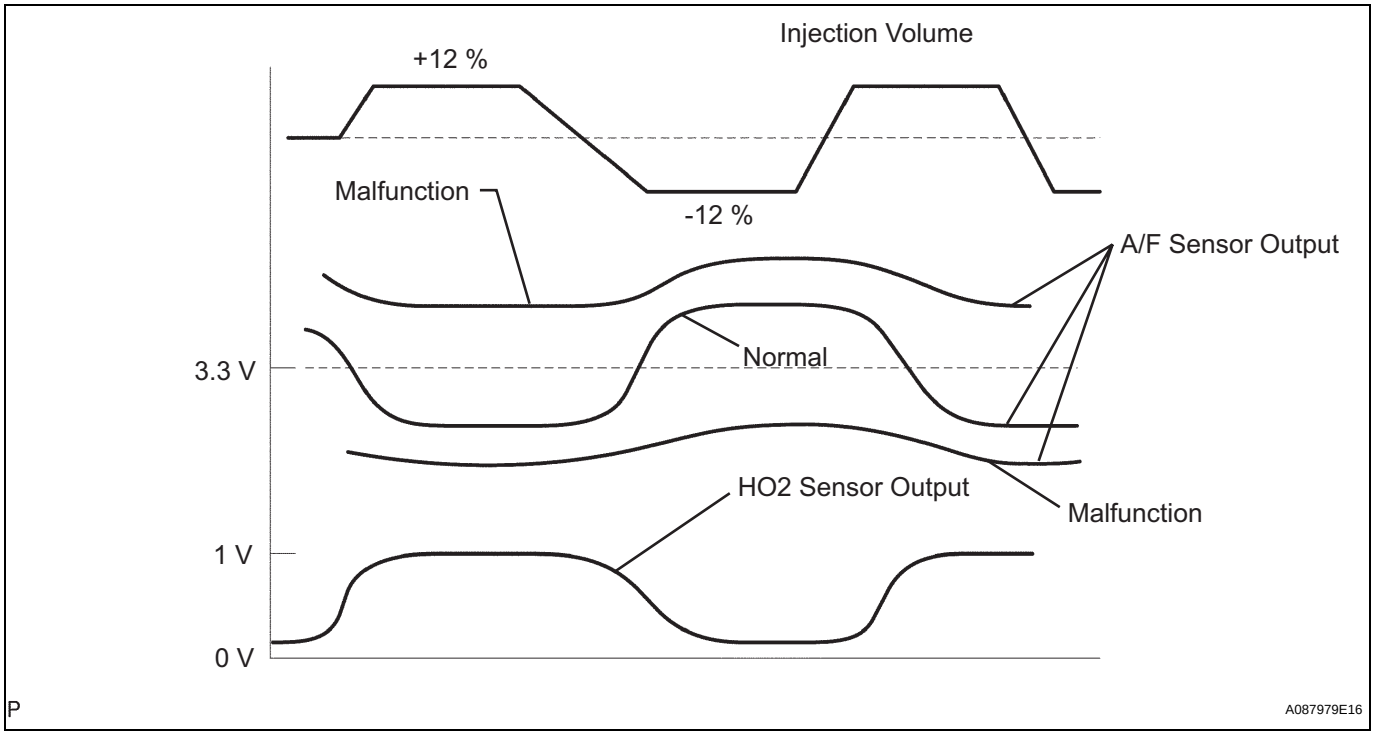

NG → **REPLACE AIR FUEL RATIO SENSOR (See page EC-19)**

OK

CHECK AND REPAIR EXTREMELY RICH OR LEAN ACTUAL AIR FUEL RATIO (INJECTOR, FUEL PRESSURE, GAS LEAKAGE FROM EXHAUST SYSTEM)

14	CHECK FOR EXHAUST GAS LEAKS

OK:
No gas leakage.

NG → **REPAIR OR REPLACE EXHAUST GAS LEAKAGE POINT**

OK

ES

ES

15 INSPECT HEATED OXYGEN SENSOR (HEATER RESISTANCE)

Component Side:

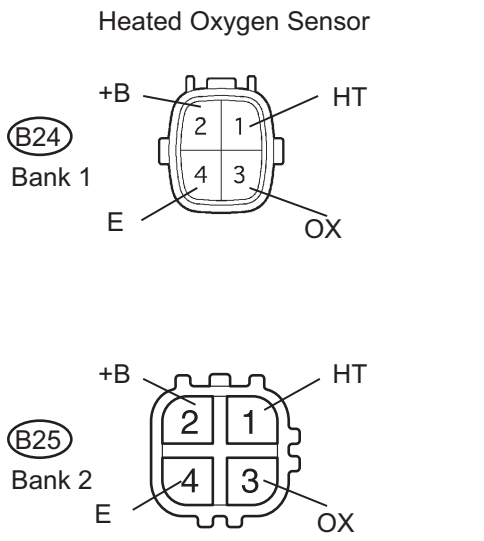

A137614E12

(a) Disconnect the B24 oxygen sensor connector (Bank 1 Sensor 2) or B25 oxygen sensor connector (Bank 2 sensor 2).

(b) Measure the resistance according to the value(s) in the table below.

Standard resistance (Bank 1 sensor 2)

Tester Connection	Condition	Specified Condition
HT (1) - +B (2)	20°C (68°F)	11 to 16 Ω
HT (1) - E (4)	Always	10 kΩ or higher

Standard resistance (Bank 2 sensor 2)

Tester Connection	Condition	Specified Condition
HT (1) - +B (2)	20°C (68°F)	11 to 16 Ω
HT (1) - E (4)	Always	10 kΩ or higher

NG → **REPLACE HEATED OXYGEN SENSOR (See page EC-21)**

OK

16	INSPECT ENGINE ROOM JUNCTION BLOCK (EFI RELAY)

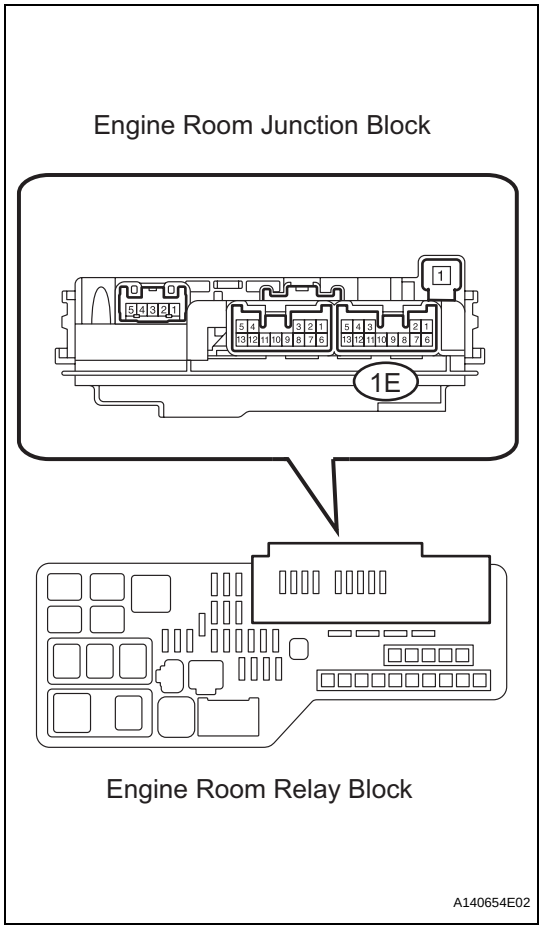

(a) Remove the engine room junction block from the engine room R/B.

(b) Measure the resistance according to the value(s) in the table below.

Standard resistance

Terminal Connection	Specified Condition
1E-12 - 1E-6	10 kΩ or higher
1E-12 - 1E-6	Below 1 Ω (when battery voltage applied to terminals 1E-9 and 1E-10)

(c) Reinstall the engine room junction block.

NG → **REPLACE ENGINE ROOM JUNCTION BLOCK**

OK

ES

ES

17 CHECK HARNESS AND CONNECTOR (HEATED OXYGEN SENSOR - ECM)

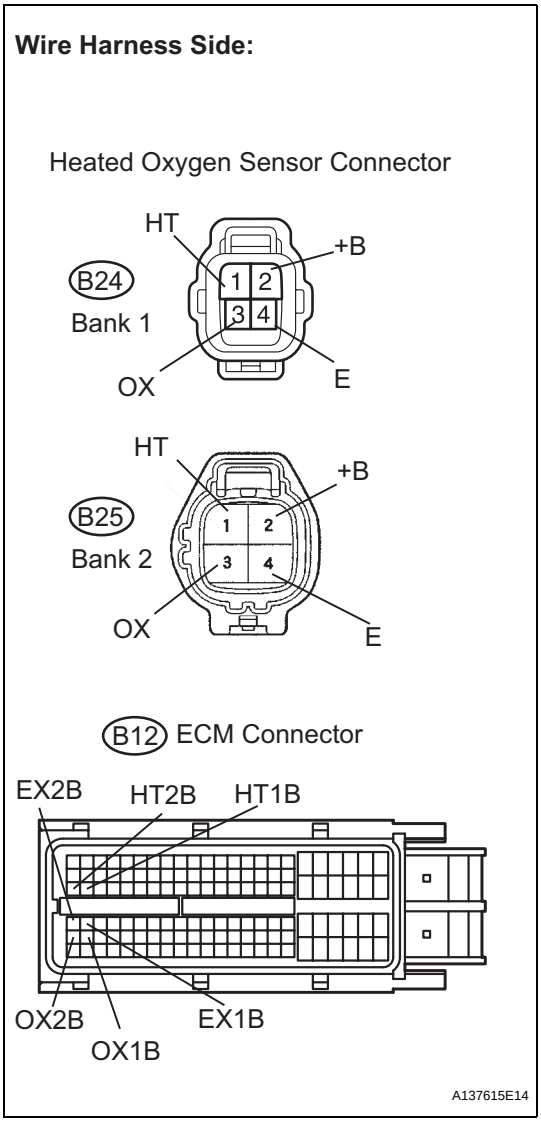

(a) Disconnect the B24 oxygen sensor connector (Bank 1 Sensor 2) or B25 oxygen sensor connector (Bank 2 sensor 2).
(b) Turn the engine switch on (IG).
(c) Measure the voltage according to the value(s) in the table below.

Standard voltage

Terminal Connection	Specified Condition
+B (B24-2) - Body ground	9 to 14 V
+B (B25-2) - Body ground	9 to 14 V

(d) Turn the engine switch off.
(e) Disconnect the B12 ECM connector.
(f) Measure the resistance according to the value(s) in the table below.

Standard resistance (Check for open)

Terminal Connection	Specified Condition
HT (B24-1) - HT1B (B12-48)	Below 1 Ω
OX (B24-3) - OX1B (B12-88)	Below 1 Ω
E (B24-4) - EX1B (B12-65)	Below 1 Ω
HT (B25-1) - HT2B (B12-47)	Below 1 Ω
OX (B25-3) - OX2B (B12-87)	Below 1 Ω
E (B25-4) - EX2B (B12-64)	Below 1 Ω

Standard resistance (Check for short)

Terminal Connection	Specified Condition
HT (B24-1) or HT1B (B12-48) - Body ground	10 kΩ or higher
OX (B24-3) or OX1B (B12-88) - Body ground	10 kΩ or higher
E (B24-4) or EX1B (B12-65) - Body ground	10 kΩ or higher
HT (B25-1) or HT2B (B12-47) - Body ground	10 kΩ or higher
OX (B25-3) or OX2B (B12-87) - Body ground	10 kΩ or higher
E (B25-4) or EX2B (B12-64) - Body ground	10 kΩ or higher

(g) Reconnect the HO2 sensor connector.
(h) Reconnect the ECM connector.

Reference (System Diagram of Bank 1 Sensor 2):

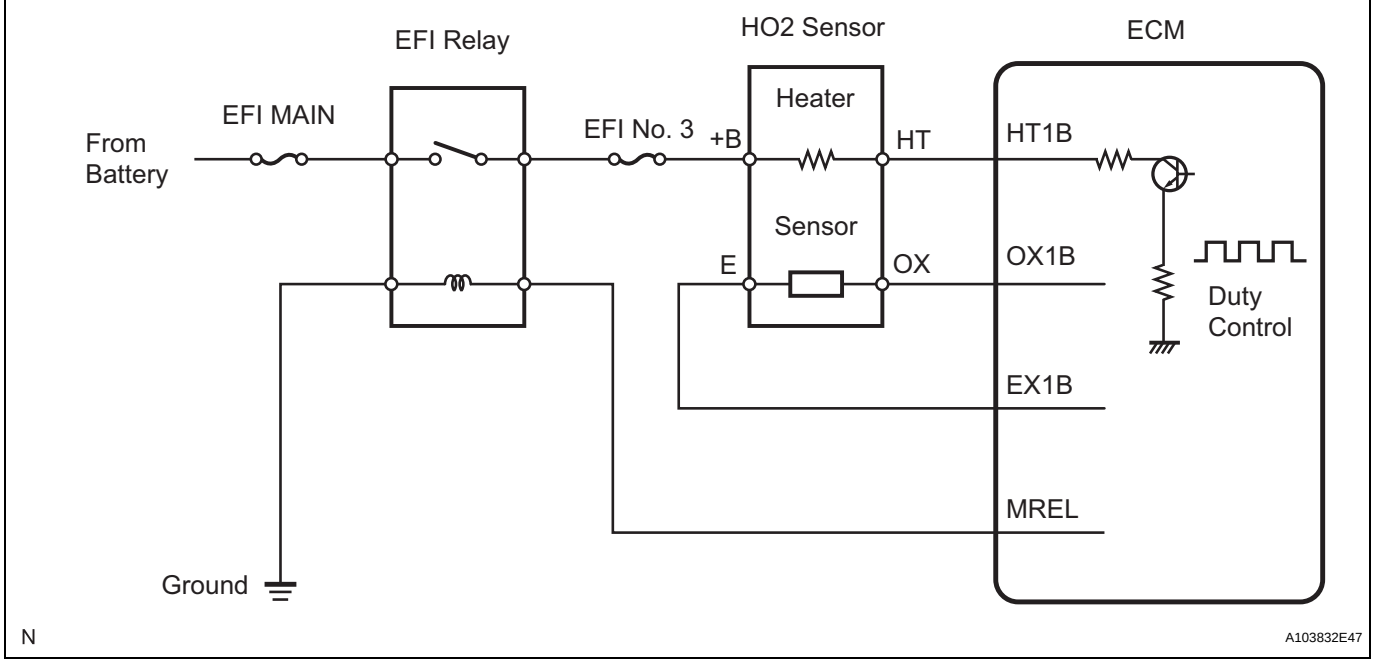

NG → **REPAIR OR REPLACE HARNESS OR CONNECTOR**

OK

REPLACE HEATED OXYGEN SENSOR (See page EC-21)

ES

DTC	P0171	System Too Lean (Bank 1)

DTC	P0172	System Too Rich (Bank 1)

DTC	P0174	System Too Lean (Bank 2)

DTC	P0175	System Too Rich (Bank 2)

DESCRIPTION

ES

The fuel trim is related to the feedback compensation value, not to the basic injection time. The fuel trim consists of both the short-term and long-term fuel trims.
The short-term fuel trim is fuel compensation that is used to constantly maintain the air-fuel ratio at stoichiometric levels. The signal from the Air-Fuel Ratio (A/F) sensor indicates whether the air-fuel ratio is rich or lean compared to the stoichiometric ratio. This triggers a reduction in the fuel injection volume if the air-fuel ratio is rich and an increase in the fuel injection volume if it is lean.
Factors such as individual engine differences, wear over time and changes in operating environment cause short-term fuel trim to vary from the central value. The long-term fuel trim, which controls overall fuel compensation, compensates for long-term deviations in the fuel trim from the central value caused by the short-term fuel trim compensation.
If both the short-term and long-term fuel trims are lean or rich beyond predetermined values, it is interpreted as a malfunction, and the ECM illuminates the MIL and sets a DTC.

DTC No.	DTC Detection Conditions	Trouble Areas
P0171 P0174	With warm engine and stable air-fuel ratio feedback, fuel trim considerably in error to lean side (2 trip detection logic)	• Air induction system • Injector blockage • Mass Air Flow (MAF) meter • Engine Coolant Temperature (ECT) sensor • Fuel pressure • Gas leakage from exhaust system • Open or short in A/F sensor (bank 1, 2 sensor 1) circuit • A/F sensor (bank 1, 2 sensor 1) • A/F sensor heater (bank 1, 2 sensor 1) • A/F sensor heater relay • A/F sensor heater and A/F sensor heater relay circuits • PCV valve and hose • PCV hose connections • ECM
P0172 P0175	With warm engine and stable air-fuel ratio feedback, fuel trim considerably in error to rich side (2 trip detection logic)	• Injector leakage or blockage • MAF meter • ECT sensor • Ignition system • Fuel pressure • Gas leakage from exhaust system • Open or short in A/F sensor (bank 1, 2 sensor 1) circuit • A/F sensor (bank 1, 2 sensor 1) • A/F sensor heater (bank 1, 2 sensor 1) • A/F sensor heater relay • A/F sensor heater and A/F sensor heater relay circuits • ECM

HINT:
- When DTC P0171 or P0174 is set, the actual air-fuel ratio is on the lean side. When DTC P0172 or P0175 is set, the actual air-fuel ratio is on the rich side.
- If the vehicle runs out of fuel, the air-fuel ratio is lean and DTC P0171 or P0174 may be set. The MIL is then illuminated.

- When the total of the short-term and long-term fuel trim values is within the malfunction threshold (and the engine coolant temperature is more than 75°C [167°F]), the system is functioning normally.

MONITOR DESCRIPTION

Under closed-loop fuel control, fuel injection volumes that deviate from those estimated by the ECM cause changes in the long-term fuel trim compensation value. The long-term fuel trim is adjusted when there are persistent deviations in the short-term fuel trim values. Deviations from the ECM's estimated fuel injection volumes also affect the average fuel trim learning value, which is a combination of the average short-term fuel trim (fuel feedback compensation value) and the average long-term fuel trim (learning value of the air-fuel ratio). If the average fuel trim learning value exceeds the malfunction thresholds, the ECM interprets this as a fault in the fuel system and sets a DTC.

Example:

The average fuel trim learning value is more than +35% or less than -35%, the ECM interprets this as a fuel system malfunction.

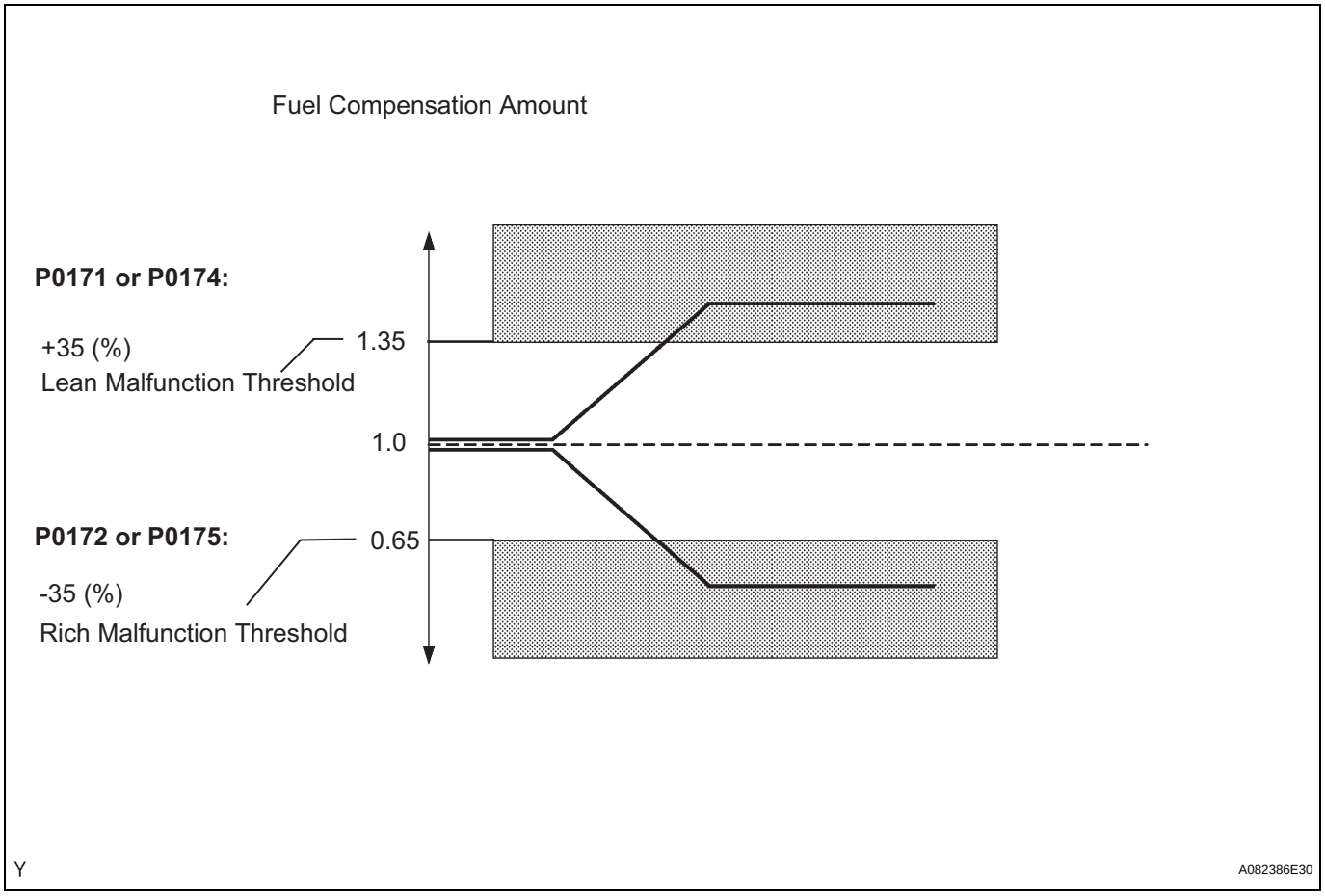

MONITOR STRATEGY

Related DTCs	P0171: Fuel trim Lean (Bank 1) P0172: Fuel trim Rich (Bank 1) P0174: Fuel trim Lean (Bank 2) P0175: Fuel trim Rich (Bank 2)
Required Sensors/Components (Main)	Fuel system
Required Sensors/Components (Related)	A/F sensor, Mass air flow meter, Crankshaft position sensor
Frequency of Operation	Continuous
Duration	Less than 10 seconds
MIL Operation	2 driving cycles
Sequence of Operation	None

TYPICAL ENABLING CONDITIONS

Fuel trim:

The monitor will run whenever these DTCs are not present	P0010, P0020 (VVT VSV1, 2), P0011, P0012 (VVT System-Advance, Retard), P0021, P0022(VVT System2-Adavance, Retard), P0031, P0031, P0032, P0051, P0052 (A/F Sensor heater Sensor 1), P0100, P0101, P0102, P0103 (MAF Sensor), P0115, P0116, P0117, P0118 (ECT Sensor), P0120, P0121, P0122, P0123, P0220, P0222, P0223 , P2135 (TP Sensor), P0125 (Insufficient ECT for Closed Loop), P0335 (CKP Sensor), P0340, P0342, P0343, P0345 (VVT Sensor 1, 2), P0351, P0352, P0353, P0354, P0356 (Ignitor), P0500 (VSS),
Fuel system status	Closed-loop
Battery voltage	11 V or more
Either following condition is met	Condition 1 or 2
1. Engine RPM	Less than 1,100 rpm
2. Intake air amount per revolution	0.22 g/rev or more

TYPICAL MALFUNCTION THRESHOLDS

Fuel trim:

EVAP purge-cut	Executing
Either following condition is met	Condition 1 or 2
1. Average between short-term fuel trim and long-term fuel trim	35% or more at 80°C (176°F) of ECT
2. Average between short-term fuel trim and long-term fuel trim	-35% or less at 80°C (176°F) of ECT

WIRING DIAGRAM

Refer to DTC P2195 (See page ES-353).

INSPECTION PROCEDURE

HINT:
For use of the intelligent tester only:
Malfunctioning areas can be identified by performing the A/F CONTROL function provided in the ACTIVE TEST. The A/F CONTROL function can help to determine whether the Air-Fuel Ratio (A/F) sensor, Heated Oxygen (HO2) sensor and other potential trouble areas are malfunctioning.
The following instructions describe how to conduct the A/F CONTROL operation using the intelligent tester.

1. Connect the intelligent tester to the DLC3.
2. Start the engine and turn the tester on.
3. Warm up the engine at an engine speed of 2,500 rpm for approximately 90 seconds.
4. Select the following menu items on the tester: DIAGNOSIS / ENHANCEDOBD II / ACTIVE TEST / A/F CONTROL.
5. Perform the A/F CONTROL operation with the engine in an idling condition (press the RIGHT or LEFT button to change the fuel injection volume).
6. Monitor the voltage outputs of the A/F and HO2 sensors (AFS B1S1 and O2S B1S2 or AFS B2S1 and O2S B2S2) displayed on the tester.
   HINT:
   - The A/F CONTROL operation lowers the fuel injection volume by 12.5% or increases the injection volume by 25%.
   - Each sensor reacts in accordance with increases and decreases in the fuel injection volume.

Standard voltage

Tester Display (Sensor)	Injection Volumes	Status	Voltages
AFS B1S1 or AFS B2S1 (A/F)	**+25%**	**Rich**	**Less than 3.0**
AFS B1S1 or AFS B2S1 (A/F)	**-12.5%**	**Lean**	**More than 3.35**

Tester Display (Sensor)	Injection Volumes	Status	Voltages
O2S B1S2 or O2S B2S2 (HO2)	+25%	Rich	More than 0.55
O2S B1S2 or O2S B2S2 (HO2)	-12.5%	Lean	Less than 0.4

NOTICE:
The Air-Fuel Ratio (A/F) sensor has an output delay of a few seconds and the Heated Oxygen (HO2) sensor has a maximum output delay of approximately 20 seconds.

Case	A/F Sensor (Sensor 1) Output Voltage		HO2 Sensor (Sensor 2) Output Voltage		Main Suspected Trouble Area
1	Injection Volume +25% -12.5%		Injection Volume +25% -12.5%		-
	Output Voltage More than 3.35 V Less than 3.0 V	OK	Output Voltage More than 0.55 V Less than 0.4 V	OK	
2	Injection Volume +25% -12.5%		Injection Volume +25% -12.5%		• A/F sensor • A/F sensor heater • A/F sensor circuit
	Output Voltage Almost no reaction	NG	Output Voltage More than 0.55 V Less than 0.4 V	OK	
3	Injection Volume +25% -12.5%		Injection Volume +25% -12.5%		• HO2 sensor • HO2 sensor heater • HO2 sensor circuit
	Output Voltage More than 3.35 V Less than 3.0 V	OK	Output Voltage Almost no reaction	NG	
4	Injection Volume +25% -12.5%		Injection Volume +25% -12.5%		• Injector • Fuel pressure • Gas leakage from exhaust system (Air-fuel ratio extremely lean or rich)
	Output Voltage Almost no reaction	NG	Output Voltage Almost no reaction	NG	

– Following the A/F CONTROL procedure enables technicians to check and graph the voltage outputs of both the A/F and HO2 sensors.
– To display the graph, select the following menu items on the tester: DIAGNOSIS / ENHANCED OBD II / ACTIVE TEST / A/F CONTROL / USER DATA / AFS B1S1 and O2S B1S2 or AFS B2S1 and O2S B2S2. Press the YES button and then the ENTER button. Then press the F4 button.
HINT:
- Read freeze frame data using the intelligent tester. The ECM records vehicle and driving condition information as freeze frame data the moment a DTC is stored. When troubleshooting, freeze frame data can be helpful in determining whether the vehicle was running or stopped, whether the engine was warmed up or not, whether the air-fuel ratio was lean or rich, as well as other data recorded at the time of a malfunction.
- A low A/F sensor voltage could be caused by a rich air-fuel mixture. Check for conditions that would cause the engine to run rich.
- A high A/F sensor voltage could be caused by a lean air-fuel mixture. Check for conditions that would cause the engine to run lean.

1	CHECK ANY OTHER DTCS OUTPUT (IN ADDITION TO DTC P0171, P0172, P0174 OR P0175)

(a) Connect the intelligent tester to the DLC3.
(b) Turn the engine switch on (IG) and turn the tester on.
(c) Select the following menu items: DIAGNOSIS / ENHANCED OBD II / DTC INFO / CURRENT CODES.
(d) Read the DTCs.

Result

Display (DTC Output)	Proceed to
P0171, P0172, P0174 or P0175	A
P0171, P0172, P0174 or P0175 and other DTCs	B

ES

HINT:
If any DTCs other than P0171, P0172, P0174 or P0175 are output, troubleshoot those DTCs first.

B → **GO TO DTC CHART (See page ES-59)**

A

2	CHECK PCV HOSE CONNECTIONS

OK:
PCV hose is connected correctly and is not damaged.

NG → **REPAIR OR REPLACE PCV HOSE**

OK

3	CHECK AIR INDUCTION SYSTEM

(a) Check the air induction system for vacuum leakage.
OK:
No leakage from the air induction system.

NG → **REPAIR OR REPLACE AIR INDUCTION SYSTEM**

OK

4	PERFORM ACTIVE TEST BY INTELLIGENT TESTER (A/F CONTROL)

(a) Connect the intelligent tester to the DLC3.
(b) Start the engine and turn the tester on.
(c) Warm up the engine at an engine speed of 2,500 rpm for approximately 90 seconds.
(d) Select the following menu items on the tester: DIAGNOSIS / ENHANCED OBD II / ACTIVE TEST / A/F CONTROL.
(e) Perform the A/F CONTROL operation with the engine in an idling condition (press the RIGHT or LEFT button to change the fuel injection volume).

(f) Monitor the voltage outputs of the A/F and HO2 sensors (AFS B1S1 and O2S B1S2 or AFS B2S1 and O2S B2S2) displayed on the tester.
HINT:
- The A/F CONTROL operation lowers the fuel injection volume by 12.5% or increases the injection volume by 25%.
- Each sensor reacts in accordance with increases and decreases in the fuel injection volume.

Standard voltage

Tester Display (Sensor)	Injection Volumes	Status	Voltages
AFS B1S1 or AFS B2S1 (A/F)	+25%	Rich	Less than 3.0
AFS B1S1 or AFS B2S1 (A/F)	-12.5%	Lean	More than 3.35
O2S B1S2 or O2S B2S2 (HO2)	+25%	Rich	More than 0.55
O2S B1S2 or O2S B2S2 (HO2)	-12.5%	Lean	Less than 0.4

ES

Result

Status AFS B1S1 or AFS B2S1	Status O2S B1S2 or O2S B2S2	A/F Condition and A/F Sensor Condition	Misfires	Suspected Trouble Areas	Proceed to
Lean/Rich	Lean/Rich	Normal	-	-	C
Lean	Lean	Actual air-fuel ratio lean	May occur	• PCV valve and hose • PCV hose connections • Injector blockage • Gas leakage from exhaust system • Air induction system • Fuel pressure • Mass Air Flow (MAF) meter • Engine Coolant Temperature (ECT) sensor	A
Rich	Rich	Actual air-fuel ratio rich	-	• Injector leakage or blockage • Gas leakage from exhaust system • Ignition system • Fuel pressure • MAF meter • ECT sensor	A
Lean	Lean/Rich	A/F sensor malfunction	-	A/F sensor	B
Rich	Lean/Rich	A/F sensor malfunction	-	A/F sensor	B

Lean: During A/F CONTROL, the A/F sensor output voltage (AFS) is consistently more than 3.35 V, and the HO2 sensor output voltage (O2S) is consistently less than 0.4 V.
Rich: During A/F CONTROL, the AFS is consistently less than 3.0 V, and the O2S is consistently more than 0.55 V.
Lean/Rich: During A/F CONTROL of the ACTIVE TEST, the output voltage of the heated oxygen sensor alternates correctly.

B → **Go to step 11**

C → **Go to step 15**

A

5	READ VALUE OF INTELLIGENT TESTER (COOLANT TEMP)

(a) Connect the intelligent tester to the DLC3.
(b) Turn the engine switch on (IG) and turn the tester on.
(c) Select the following menu items: DIAGNOSIS / ENHANCED OBD II / DATA LIST / PRIMARY / COOLANT TEMP.
(d) Read COOLANT TEMP twice, when the engine is both cold and warmed up.
Standard:
With cold engine:
Same as ambient air temperature.
With warm engine:
Between 75°C and 95°C (167°F and 203°F)

NG → **REPLACE ENGINE COOLANT TEMPERATURE SENSOR (See page ES-516)**

OK

6	READ VALUE OF INTELLIGENT TESTER (MAF)

(a) Connect the intelligent tester to the DLC3.
(b) Turn the engine switch on (IG) and turn the tester on.
(c) Select the following menu items: DIAGNOSIS / ENHANCED OBD II / DATA LIST / PRIMARY / MAF and COOLANT TEMP.
(d) Allow the engine to idle until COOLANT TEMP reaches 75°C (167°F) or more.
(e) Read MAF with the engine in an idling condition and at an engine speed of 2,500 rpm.
Standard:
MAF while engine is idling:
Between 3.2 g/s and 4.7 g/s (shift position: N, A/C: OFF).
MAF at engine speed of 2,500 rpm:
Between 13.1 g/s and 18.9 g/s (shift position: N, A/C: OFF).

NG → **REPLACE MASS AIR FLOW METER (See page ES-497)**

OK

7	CHECK FUEL PRESSURE

(a) Check the fuel pressure (See page FU-7).

NG → **REPAIR OR REPLACE FUEL SYSTEM**

ES

OK

8	CHECK FOR EXHAUST GAS LEAKS

OK:
No gas leakage.

NG → **REPAIR OR REPLACE EXHAUST SYSTEM**

OK

9	CHECK FOR SPARKS AND IGNITION

ES

(a) Check for sparks and ignition (See page ES-214).
HINT:
If the spark plugs or ignition system malfunctions, engine misfire may occur. The misfire count can be read using the intelligent tester. Select the following menu items: DIAGNOSIS / ENHANCED OBD II / DATA LIST / PRIMARY / CYL #1 (to CYL #6).

NG → **REPAIR OR REPLACE IGNITION SYSTEM**

OK

10	INSPECT FUEL INJECTOR ASSEMBLY (INJECTION AND VOLUME)

(a) Inspect the fuel injector assembly (See page FU-14).
HINT:
If the injectors malfunction, engine misfire may occur. The misfire count can be read using the intelligent tester. Select the following menu items: DIAGNOSIS / ENHANCED OBD II / DATA LIST / PRIMARY / CYL #1 (to CYL #6).

NG → **REPLACE FUEL INJECTOR ASSEMBLY (See page FU-12)**

OK

11	INSPECT AIR FUEL RATIO SENSOR (HEATER RESISTANCE)

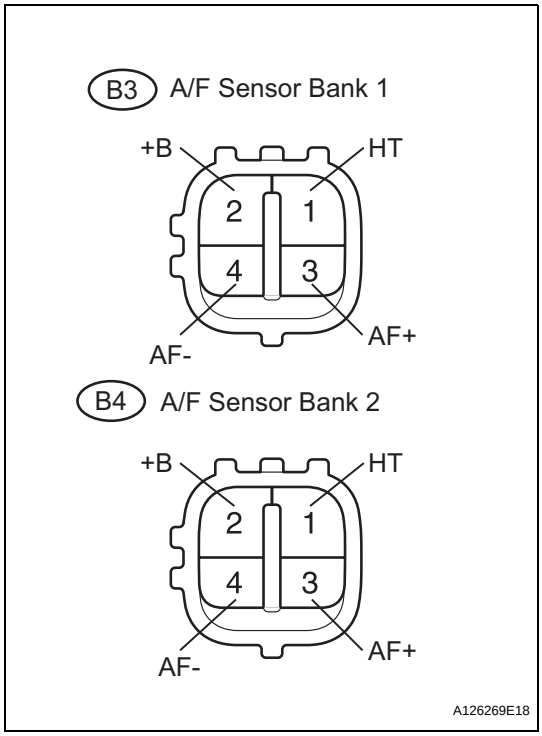

(a) Disconnect the B3 or B4 A/F sensor connector.

(b) Measure the resistance between the terminals of the A/F sensor connector.

Standard resistance:

Bank 1

Tester Connections	Specified Conditions
HT (1) - +B (2)	1.8 to 3.4 Ω at 20°C (68°F)
HT (1) - AF- (4)	10 kΩ or higher

Bank 2

Tester Connections	Specified Conditions
HT (1) - +B (2)	1.8 to 3.4 Ω at 20°C (68°F)
HT (1) - AF- (4)	10 kΩ or higher

(c) Reconnect the A/F sensor connector.

NG → **REPLACE AIR FUEL RATIO SENSOR (See page EC-19)**

OK

ES

12 INSPECT ENGINE ROOM JUNCTION BLOCK (A/F SENSOR HEATER RELAY)

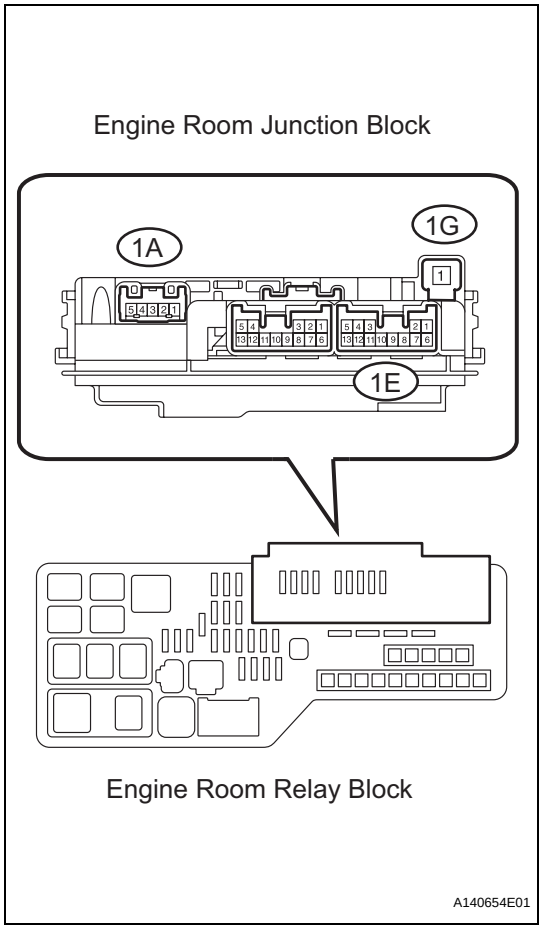

(a) Remove the engine room junction block from the engine room R/B.

(b) Measure the A/F relay resistance.

Standard resistance

Tester Connections	Specified Conditions
1G-1 - 1A-4	10 kΩ or higher
1G-1 - 1A-4	Below 1 Ω (when battery voltage applied to terminals 1E-6 and 1E-10)

(c) Reinstall the engine room junction block.

NG → **REPLACE ENGINE ROOM JUNCTION BLOCK**

OK

ES

13	CHECK HARNESS AND CONNECTOR (A/F SENSOR - ECM)

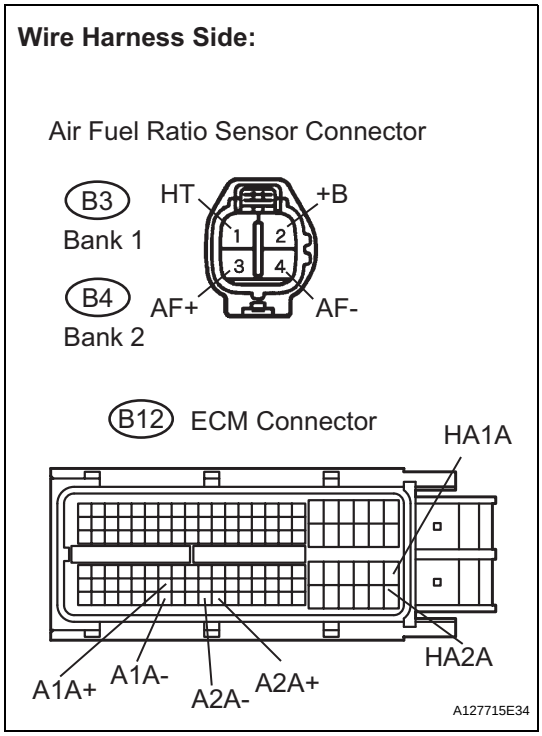

(a) Disconnect the B3 or B4 A/F sensor connector.
(b) Turn the engine switch on (IG).
(c) Measure the voltage between the +B terminal of the A/F sensor connector and body ground.

Standard voltage

Tester Connections	Specified Conditions
+B (B3-2) - Body ground	9 to 14 V
+B (B4-2) - Body ground	9 to 14 V

(d) Turn the engine switch off.
(e) Disconnect the B12 ECM connector.
(f) Measure the resistance.

Standard resistance (Check for open)

Tester Connections	Specified Conditions
HT (B3-1) - HA1A (B12-86)	Below 1 Ω
AF+ (B3-3) - A1A+ (B12-93)	Below 1 Ω
AF- (B3-4) - A1A- (B12-116)	Below 1 Ω
HT (B4-1) - HA2A (B12-109)	Below 1 Ω
AF+ (B4-3) - A2A+ (B12-120)	Below 1 Ω
AF- (B4-4) - A2A- (B12-119)	Below 1 Ω

Standard resistance (Check for short)

Tester Connections	Specified Conditions
HT (B3-1) or HA1A (B12-86) - Body ground	10 kΩ or higher
AF+ (B3-3) or A1A+ (B12-93) - Body ground	10 kΩ or higher
AF- (B3-4) or A1A- (B12-116) - Body ground	10 kΩ or higher
HT (B4-1) or HA2A (B12-109) - Body ground	10 kΩ or higher
AF+ (B4-3) or A2A+ (B12-120) - Body ground	10 kΩ or higher
AF- (B4-4) or A2A- (B12-119) - Body ground	10 kΩ or higher

(g) Reconnect the ECM connector.
(h) Reconnect the A/F sensor connector.

ES

Reference (System Diagram of Bank 1 Sensor 1):

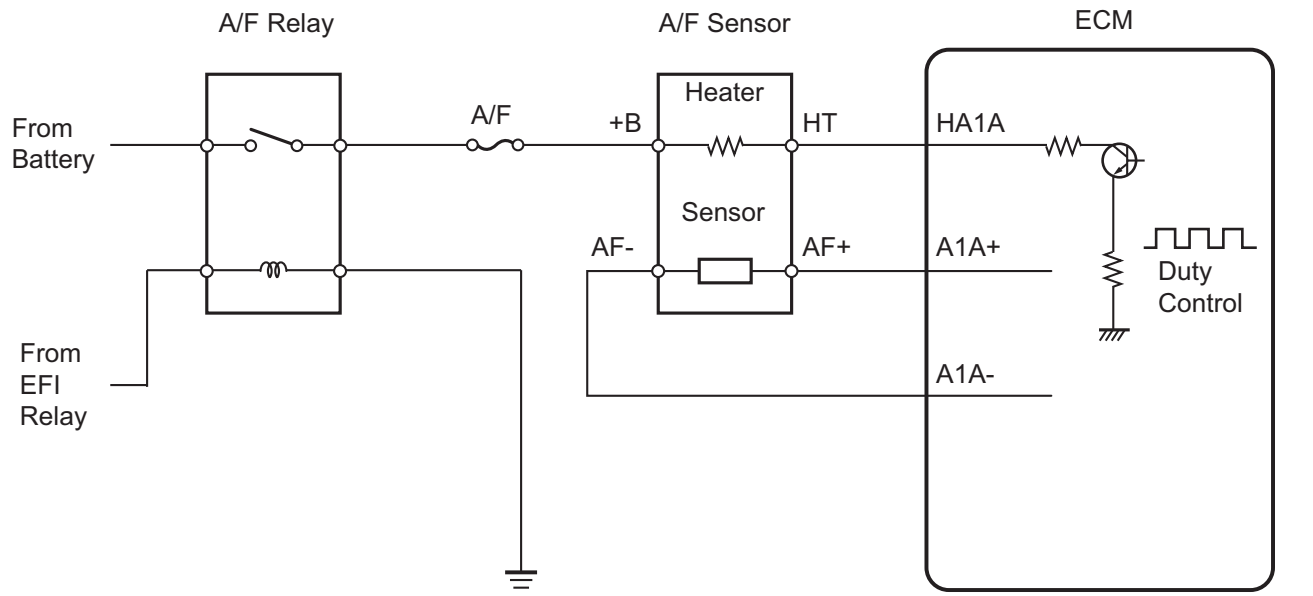

NG → **REPAIR OR REPLACE HARNESS OR CONNECTOR**

OK

14	REPLACE AIR FUEL RATIO SENSOR

(a) Replace the air fuel ratio sensor (See page EC-19).

NEXT

15	PERFORM CONFIRMATION DRIVING PATTERN

(a) Connect the intelligent tester to the DLC3 (Procedure A).
(b) Turn the engine switch on (IG) and turn the tester on (Procedure B).
(c) Clear the DTCs (See page ES-41) (Procedure C).
(d) Select the check mode using the tester (See page ES-45) (Procedure D).
(e) Start the engine and warm it up with all the accessories switched off (Procedure E).
(f) Drive the vehicle at between 38 mph and 75 mph (60 km/h and 120 km/h) and at an engine speed of between 1,400 rpm and 3,200 rpm for 3 to 5 minutes (Procedure F).

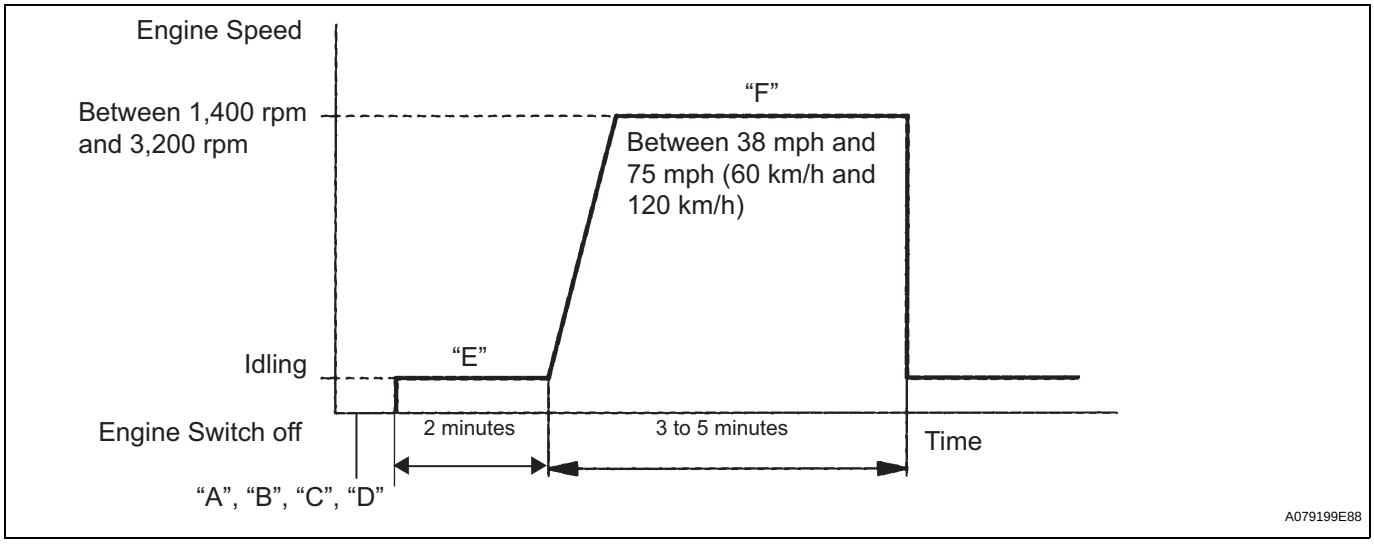

HINT:
If the system is still malfunctioning, the MIL will be illuminated during procedure "F".
NOTICE:
If the conditions in this test are not strictly followed, no malfunction will be detected.

NEXT

16	CHECK WHETHER DTC OUTPUT RECURS (DTC P0171, P0172, P0174 OR P0175)

(a) Select the following menu items: DIAGNOSIS / ENHANCED OBD II / DTC INFO / PENDING CODES.
(b) Read the DTCs.

Result

Display (DTC Output)	Proceed to
No output	A
P0171, P0172, P0174 or P0175	B

B → **Go to step 5**

A

END

DTC	P0300	Random / Multiple Cylinder Misfire Detected

DTC	P0301	Cylinder 1 Misfire Detected

DTC	P0302	Cylinder 2 Misfire Detected

DTC	P0303	Cylinder 3 Misfire Detected

DTC	P0304	Cylinder 4 Misfire Detected

DTC	P0305	Cylinder 5 Misfire Detected

DTC	P0306	Cylinder 6 Misfire Detected

DESCRIPTION

When the engine misfires, high concentrations of hydrocarbons (HC) enter the exhaust gas. Extremely high HC concentration levels can cause an increase in exhaust emission levels. High concentrations of HC can also cause increases in the Three-Way Catalytic Converter (TWC) temperature, which may cause damage to the TWC. To prevent this increase in emissions and to limit the possibility of thermal damage, the ECM monitors the misfire rate. When the temperature of the TWC reaches the point of thermal degradation, the ECM blinks the MIL. To monitor misfires, the ECM uses both the Camshaft Position (CMP) sensor and the Crankshaft Position (CKP) sensor. The CMP sensor is used to identify any misfiring cylinders and the CKP sensor is used to measure variations in the crankshaft rotation speed. Misfires are counted when the crankshaft rotation speed variations exceed predetermined thresholds. If the misfire exceeds the threshold levels and may cause emission deterioration, the ECM illuminates the MIL and sets a DTC.

DTC No.	DTC Detection Condition	Trouble Area
P0300	Simultaneous misfiring of several cylinder detected (2 trip detection logic)	• Open or short in engine wire harness • Connector connection • Vacuum hose connections • Ignition system • Injector • Fuel pressure • Mass Air Flow (MAF) meter • Engine Coolant Temperature (ECT) sensor • Compression pressure • Valve clearance • Valve timing • PCV valve and hose • PCV hose connections • Air induction system • ECM

DTC No.	DTC Detection Condition	Trouble Area
P0301 P0302 P0303 P0304 P0305 P0306	Misfiring of specific cylinder detected (2 trip detection logic)	• Open or short in engine wire harness • Connector connection • Vacuum hose connections • Ignition system • Injector • Fuel pressure • Mass Air Flow (MAF) meter • Engine Coolant Temperature (ECT) sensor • Compression pressure • Valve clearance • Valve timing • PCV valve and hose • PCV hose connections • Air induction system • ECM

If DTCs that indicate misfires are set for different cylinders, but DTC P0300 is not set, it indicates that misfires have been detected in different cylinders at different times. DTC P0300 is only set when several misfiring cylinders are detected at the same time.

MONITOR DESCRIPTION

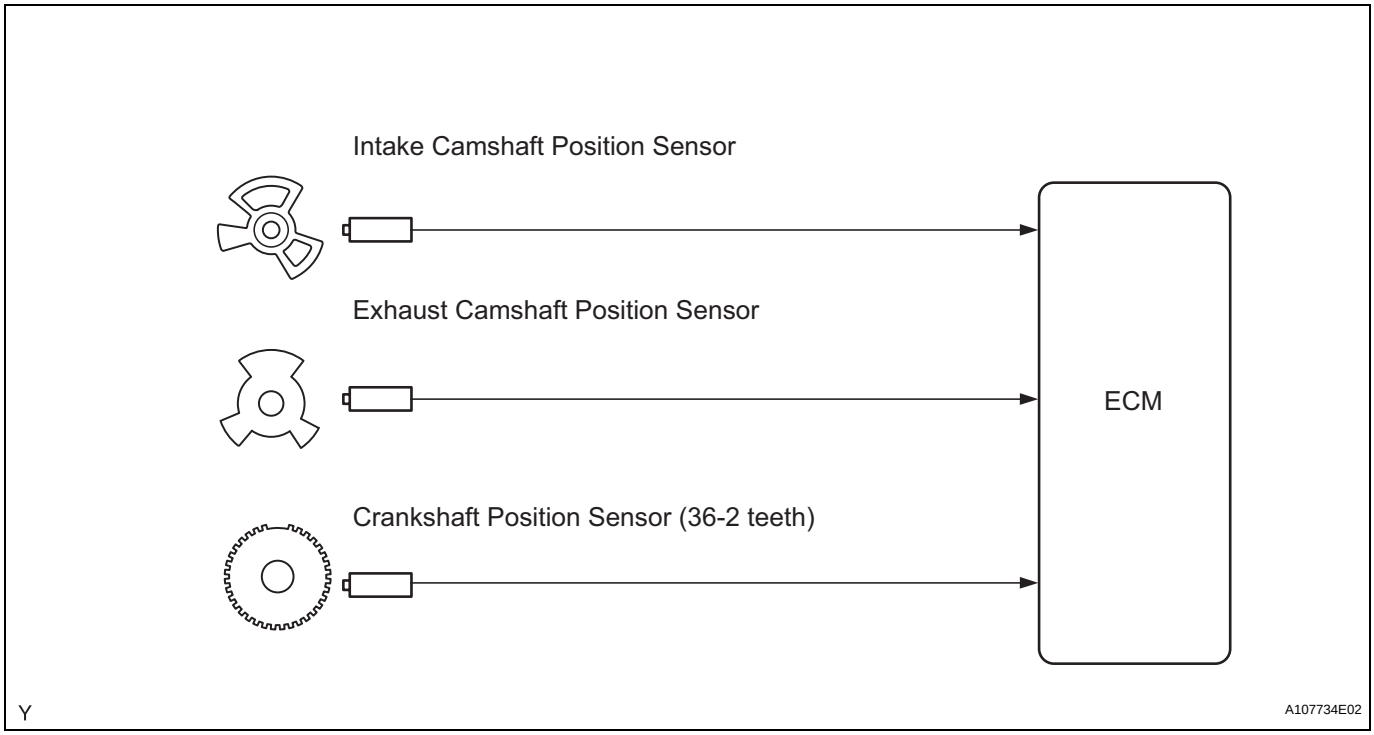

The ECM illuminates the MIL and sets a DTC when either one of the following conditions, which could cause emission deterioration, is detected (2 trip detection logic):

- Within the first 1,000 crankshaft revolutions of the engine starting, an excessive misfiring rate (approximately 20 to 50 misfires per 1, 000 crankshaft revolutions) occurs once.
- After the first 1,000 crankshaft revolutions, an excessive misfiring rate (approximately 20 to 60 misfires per 1, 000 crankshaft revolutions) occurs 4 times in sequential crankshaft revolutions.

The ECM flashes the MIL and sets a DTC when either one of the following conditions, which could cause the Three-Way Catalytic Converter (TWC) damage, is detected (2 trip detection logic):

- In every 200 crankshaft revolutions at a high engine rpm, the threshold misfiring percentage is recorded once.
- In every 200 crankshaft revolutions at a normal engine rpm, the threshold misfiring percentage is recorded 3 times.

MONITOR STRATEGY

Related DTCs	P0300: Multiple cylinder misfire P0301: Cylinder 1 misfire P0302: Cylinder 2 misfire P0303: Cylinder 3 misfire P0304: Cylinder 4 misfire P0305: Cylinder 5 misfire P0306: Cylinder 6 misfire
Required Sensors/Components (Main)	Injector, Ignition coil, Spark plug
Required Sensors/Components (Related)	Crankshaft, Camshaft, Engine coolant temperature and intake air temperature sensors and mass air flow meter
Frequency of Operation	Continuous
Duration	1,000 to 4,000 crankshaft revolutions: Emission related misfire 200 to 600 crankshaft revolutions: Catalyst damaged misfire
MIL Operation	2 driving cycles: Emission related misfire MIL flashes immediately: Catalyst damaged misfire
Sequence of Operation	None

TYPICAL ENABLING CONDITIONS

Misfire:

Monitor runs whenever following DTCs are not present	P0100 - P0103 (MAF meter) P0110 - P0113 (IAT sensor) P0115 - P0118 (ECT sensor) P0120 - P0223, P2135 (TP sensor) P0125 (Insufficient ECT for Closed Loop) P0327 - P0333 (Knock sensor) P0335 (CKP sensor) P0340, P0341 (CMP sensor) P0500 (VSS)
Battery voltage	8 V or more
VVT system	Not operated by scan tool
Engine RPM	450 to 6,500 rpm
Either following condition (a) or (b) is met:	-
(a) ECT at engine start	More than -7°C (19°F)
(b) ECT	More than 20°C (68°F)
Fuel cut	OFF

Monitor period of emission-related-misfire:

First 1,000 revolutions after engine start, or check mode	Crankshaft 1,000 revolutions
Except above	Crankshaft 1,000 revolutions x 4

Monitor period of catalyst-damaged-misfire (MIL blinks):

All of following conditions 1, 2 and 3 are met:	Crankshaft 200 revolutions
1. Driving cycles	1st
2. Check mode	OFF
3. Engine RPM	Less than 2,500 rpm
Except above	Crankshaft 200 revolutions x 3

TYPICAL MALFUNCTION THRESHOLDS

Monitor period of emission-related-misfire:

Misfire rate	1 % or more

Monitor period of catalyst-damage-misfire (MIL blinks):

Number of misfire per 200 revolutions	94 or more (varies with intake air amount and RPM)
Paired cylinders misfire (MIL blinks immediately)	Detected

ES

MONITOR RESULT

Refer to CHECKING MONITOR STATUS (See page ES-20).

WIRING DIAGRAM

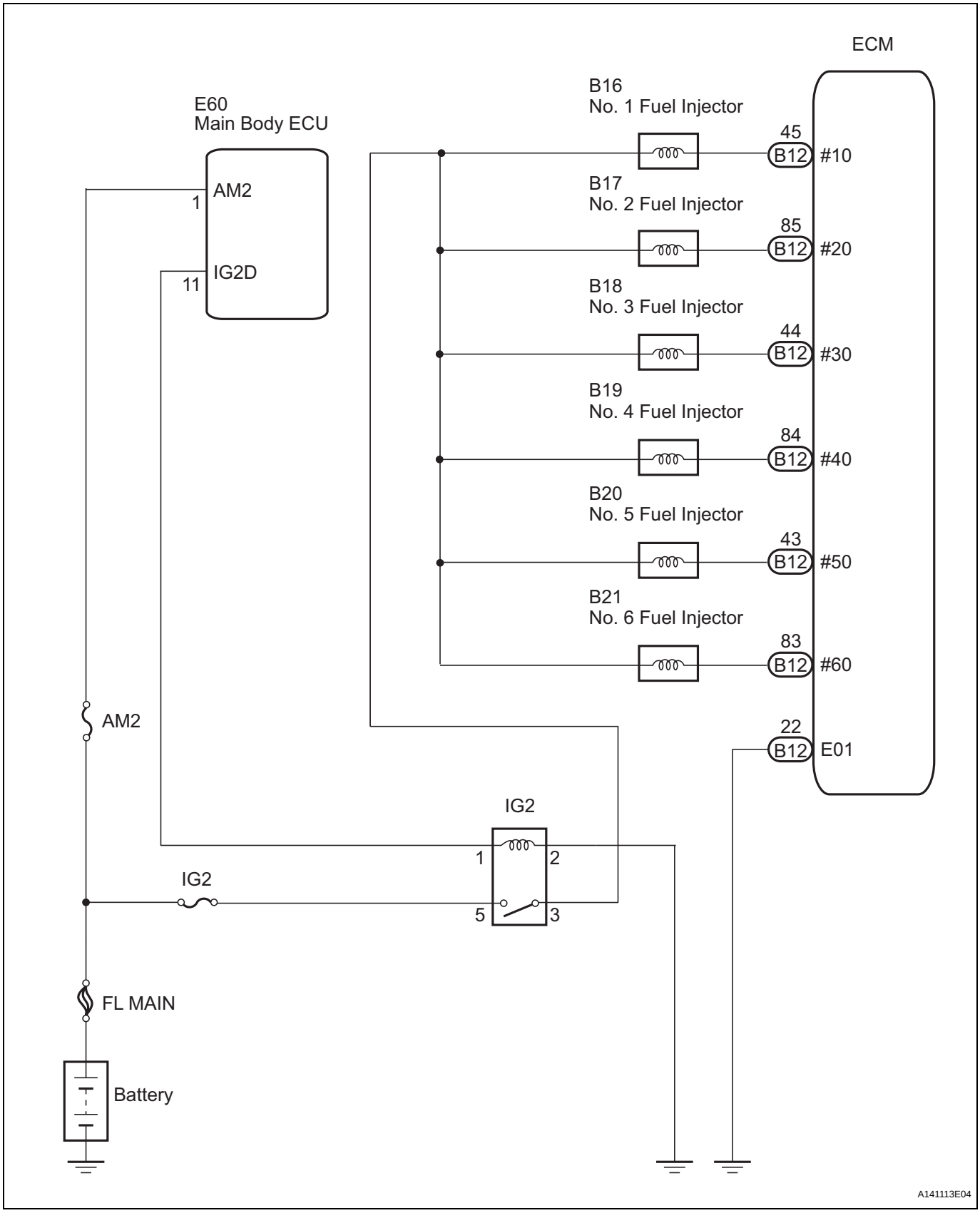

CONFIRMATION DRIVING PATTERN

1. Connect the intelligent tester to the DLC3.
2. Turn the engine switch on (IG).
3. Turn the tester on.
4. Record the DTC(s) and freeze frame data.
5. Using the tester, switch the ECM from normal mode to check mode (See page ES-45).
6. Read the misfire counts of each cylinder (CYL #10 to #60) with the engine in an idling condition. If any misfire count is displayed, skip the following confirmation driving pattern.
7. Drive the vehicle several times with the conditions, such as engine rpm and engine load, shown in MISFIRE RPM and MISFIRE LOAD in the DATA LIST.
   HINT:
   In order to store misfire DTCs, it is necessary to operate the vehicle for the period of time shown in the table below, using the MISFIRE RPM and MISFIRE LOAD in the DATA LIST.

Engine RPM	Duration
Idling	3.5 minutes or more
1,000	3 minutes or more
2,000	1.5 minutes or more
3,000	1 minute or more

8. Check whether misfires have occurred by checking DTCs and freeze frame data.
   HINT:
   Do not turn the engine switch off until the stored DTC(s) and freeze frame data have been recorded. When the ECM returns to normal mode (default), the stored DTC(s), freeze frame data and other data will be erased.
9. Record the DTC(s), freeze frame data and misfire counts.
10. Turn the engine switch off and wait for at least 5 seconds.

INSPECTION PROCEDURE

HINT:

- If any DTCs other than misfire DTCs are output, troubleshoot those DTCs first.
- Read freeze frame data using the intelligent tester. The ECM records vehicle and driving condition information as freeze frame data the moment a DTC is stored. When troubleshooting, freeze frame data can be helpful in determining whether the vehicle was running or stopped, whether the engine was warmed up or not, whether the air-fuel ratio was lean or rich, as well as other data recorded at the time of a malfunction (See page ES-41).
- If the misfire does not recur when the vehicle is brought to the workshop, reproduce the conditions stored in the ECM as freeze frame data.
- If the misfire still cannot be reproduced even though the conditions stored in the ECM as freeze frame data have been reproduced, one of the following factors is considered to be a possible cause of the problem:
  (a) There was insufficient fuel in the tank.
  (b) Improper fuel is used.
  (c) The spark plugs have been contaminated.
  (d) The problem requires further diagnosis.
- After finishing repairs, check the misfire counts of the cylinders (CYL #1, #2, #3, #4, #5 and #6).
- Be sure to confirm that no misfiring cylinder DTCs are set again by conducting the confirmation driving pattern after finishing repairs.
- For 6 and 8 cylinder engines, the ECM intentionally does not set the specific misfiring cylinder DTCs at a high engine RPM. If misfires occur only in high engine RPM areas, only DTC P0300 is set.
  In the event of DTC P0300 being present, perform the following operations:
  (a) Clear the DTC (See page ES-41).
  (b) Start the engine and conduct the confirmation driving pattern.
  (c) Read the misfiring rates of each cylinder or DTC(s) using the tester.

(d) Repair the cylinder(s) that has a high misfiring rate or is indicated by the DTC.
(e) After finishing repairs, conduct the confirmation driving pattern again, in order to verify that DTC P0300 is not set.

- When one of SHORT FT #1, LONG FT #1, SHORT FT #2 or LONG FT #2 in the freeze frame data is outside the range of +-20 %, the air-fuel ratio may be RICH (-20 % or less) or LEAN (+20 % or more).
- When COOLANT TEMP in the freeze frame data is less than 75°C (167°F), misfires have occurred only while warming up the engine.

1 CHECK ANY OTHER DTC OUTPUT (IN ADDITION TO MISFIRE DTCS)

(a) Connect the intelligent tester to the DLC3.
(b) Turn the engine switch on (IG).
(c) Turn the tester on.
(d) Enter the following menus: DIAGNOSIS / ENHANCED OBD II / DTC INFO / CURRENT CODES.
(e) Read the DTCs.

Result

Display (DTC output)	Proceed to
P0300, P0301, P0302, P0303, P0304, P0305 and/or P0306	A
P0300, P0301, P0302, P0303, P0304, P0305 and/or P0306 and other DTCs	B

HINT:
If any DTCs other than P0300, P0301, P0302, P0303, P0304, P0305 and P0306 are output, troubleshoot those DTCs first.

B → **GO TO DTC CHART (See page ES-59)**

A

2 READ VALUE OF INTELLIGENT TESTER (MISFIRE RPM AND MISFIRE LOAD)

(a) Connect the intelligent tester to the DLC3.
(b) Turn the engine switch on (IG) and turn the tester on.
(c) Enter the following menus: DIAGNOSIS / ENHANCED OBD II / DATA LIST / MISFIRE / MISFIRE RPM and MISFIRE LOAD.
(d) Read and note the MISFIRE RPM and MISFIRE LOAD (engine load) values.
HINT:
The MISFIRE RPM and MISFIRE LOAD values indicate the vehicle conditions under which the misfire occurred.

NEXT

3 CHECK PCV HOSE (HOSE CONNECTIONS)

OK:
PCV hose is connected correctly and is not damaged.

NG → **REPAIR OR REPLACE PCV HOSE**

OK

4	CHECK MISFIRE COUNT (CYL #1, #2, #3, #4, #5 AND #6)

(a) Connect the intelligent tester to the DLC3.
(b) Turn the engine switch on (IG).
(c) Turn the tester on.
(d) Clear the DTCs.
(e) Enter the following menus: DIAGNOSIS / ENHANCED OBD II / DATA LIST / MISFIRE / CYL #1, #2, #3, #4, #5 and #6 (Step "A").
(f) Allow the engine to idle (Step "B").
(g) Read the value of CYL #1 to #6 displayed on the tester. If no misfire counts occur in any cylinders, perform the following operations (Step "C"):
  (1) Shift the gear selector lever to the D position.
  (2) Repeat steps "A" to "C" above.
  (3) Check the CYL #1 to #6.
  (4) If misfire counts are still not displayed, perform steps "D" and "E" and then check the misfire counts again.
(h) Drive the vehicle with MISFIRE RPM and MISFIRE LOAD noted in step 2 (Step "D").
(i) Read CYL #1 to #6 or DTCs displayed on the tester (Step "E").

ES

Result

Misfire count	Proceed to
1 or 2 cylinders have misfire counts	A
3 cylinders or more have misfire counts	B

B → **Go to step 13**

A

5	CHECK SPARK PLUG

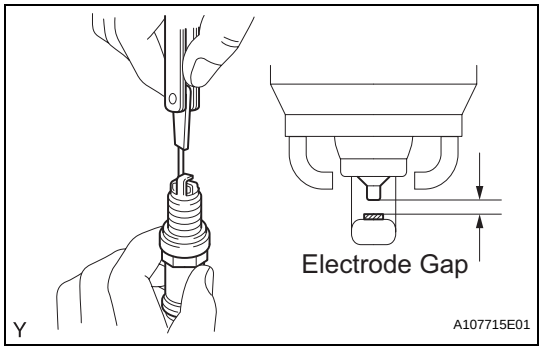

(a) Remove the ignition coil and the spark plug of the misfiring cylinder.
(b) Measure the spark plug electrode gap.
Standard:
Between 1.0 mm and 1.4 mm (0.039 in. and 0.055 in.)
(c) Check the electrode for carbon deposits.
Recommended spark plug:

Manufacturer	Product
DENSO	FK20HR11

NOTICE:
If the electrode gap is larger than standard, replace the spark plug. Do not adjust the electrode gap.

NG → **REPLACE SPARK PLUG**

OK

6	CHECK FOR SPARKS AND IGNITION

(a) Disconnect the injector connectors, in order to prevent the engine from starting.
(b) Install the spark plug to the ignition coil.
(c) Attach the spark plug assembly to the cylinder head cover.
(d) Crank the engine for less than 2 seconds and check the sparks.
OK:
Sparks jump across the electrode gap.
(e) Reconnect the injector connectors.

NG → **Go to step 8**

ES

OK

7	CHECK CYLINDER COMPRESSION PRESSURE (MALFUNCTION CYLINDER)

(a) Measure the cylinder compression pressure of the misfiring cylinder.

OK → **Go to step 9**

NG

REPAIR OR REPLACE ENGINE TO DETERMINE CAUSE OF LOW COMPRESSION

8	CHANGE SPARK PLUG WITH NORMAL ONE AND CHECK FOR SPARKS OF MISFIRING CYLINDER

(a) Change the installed spark plug with a spark plug that functions normally.
(b) Perform a spark test.
CAUTION:
Always disconnect each injector connector.
NOTICE:
Do not crank the engine for more than 2 seconds.
(1) Install the spark plug to the ignition coil and connect the ignition coil connector.
(2) Disconnect the injector connector.
(3) Ground the spark plug.
(4) Check if sparks occur while the engine is being cranked.
OK:
Sparks jump across the electrode gap.

NG → **REPLACE IGNITION COIL ASSEMBLY (See page IG-8)**

OK

REPLACE SPARK PLUG

9 INSPECT ECM (#10, #20, #30, #40, #50 AND/OR #60 VOLTAGE))

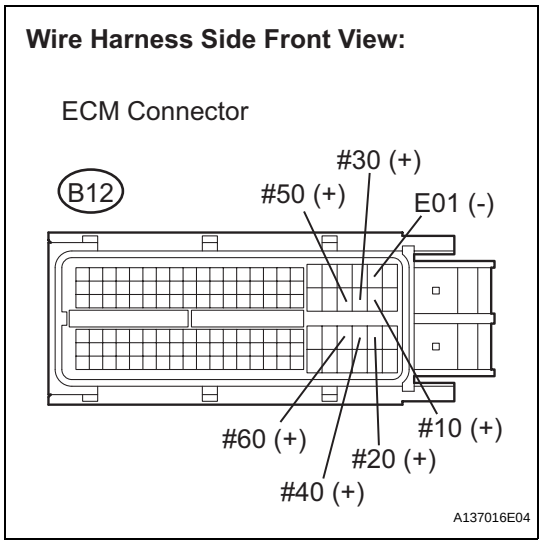

(a) Disconnect the B12 ECM connector.
(b) Turn the engine switch on (IG).
(c) Measure the voltage between the terminals.
Standard voltage

Tester Connection	Specified Condition
#10 (B12-45) - E01 (B12-22)	9 to 14 V
#20 (B12-85) - E01 (B12-22)	9 to 14 V
#30 (B12-44) - E01 (B12-22)	9 to 14 V
#40 (B12-84) - E01 (B12-22)	9 to 14 V
#50 (B12-43) - E01 (B12-22)	9 to 14 V
#60 (B12-83) - E01 (B12-22)	9 to 14 V

(d) Reconnect the ECM connector.

OK → **Go to step 12**

NG

10 CHECK HARNESS AND CONNECTOR (INJECTOR - ECM)

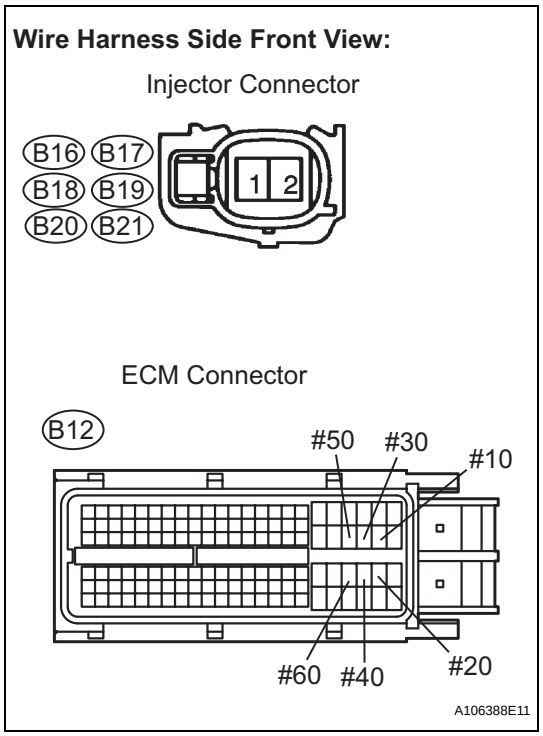

(a) Disconnect the injector connector (misfire cylinder).
(b) Disconnect the B12 ECM connector.
(c) Measure the resistance according to the value(s) in the table below.
Standard resistance

Tester Connection	Specified Condition
#10 (B12-45) - B16-1	Below 1 Ω
#20 (B12-85) - B17-1	Below 1 Ω
#30 (B12-44) - B18-1	Below 1 Ω
#40 (B12-84) - B19-1	Below 1 Ω
#50 (B12-43) - B20-1	Below 1 Ω
#60 (B12-83) - B21-1	Below 1 Ω
#10 (B12-45) or B16-1 - Body ground	10 kΩ or higher
#20 (B12-85) or B17-1 - Body ground	10 kΩ or higher
#30 (B12-44) or B18-1 - Body ground	10 kΩ or higher
#40 (B12-84) or B19-1 - Body ground	10 kΩ or higher
#50 (B12-43) or B20-1 - Body ground	10 kΩ or higher
#60 (B12-83) or B21-1 - Body ground	10 kΩ or higher

(d) Reconnect the injector connector.
(e) Reconnect the ECM connector.

NG → **REPAIR OR REPLACE HARNESS OR CONNECTOR**

ES

OK

11	CHECK FUEL INJECTOR ASSEMBLY (MISFIRING CYLINDER)

(a) Check the injector injection (whether fuel volume high or low, and whether injection pattern is poor).

NG → **REPLACE FUEL INJECTOR ASSEMBLY (See page FU-12)**

OK

ES

12	CHECK VALVE CLEARANCE (MISFIRING CYLINDER)

NG → **ADJUST VALVE CLEARANCE**

OK

13	CHECK AIR INDUCTION SYSTEM

(a) Check the air induction system for vacuum leakage.
OK:
No leakage from air induction system.

NG → **REPAIR OR REPLACE AIR INDUCTION SYSTEM**

OK

14 CHECK VALVE TIMING

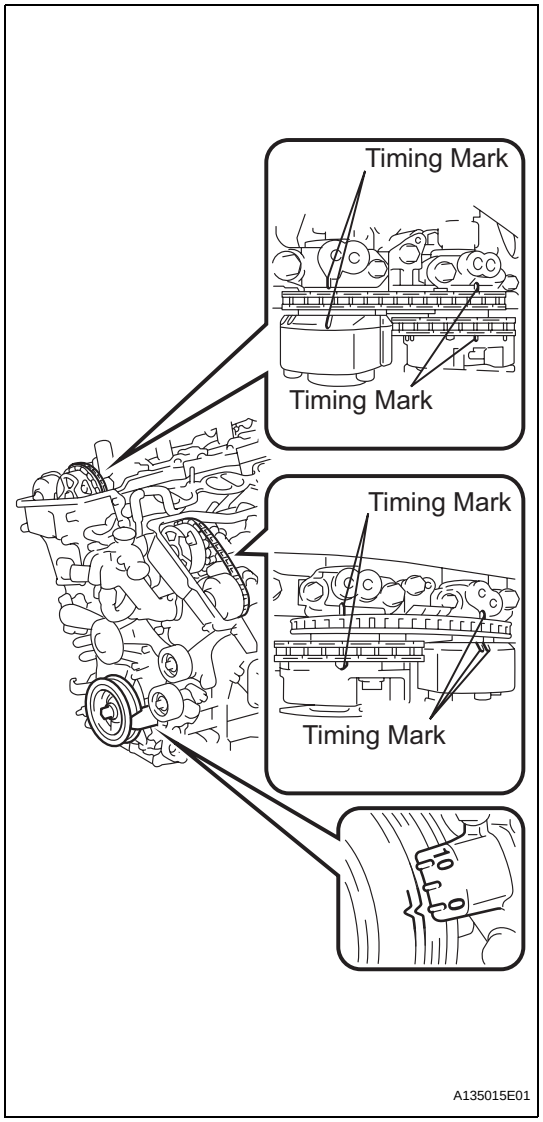

(a) Remove the cylinder head covers.
(b) Turn the crankshaft pulley, and align its groove with the timing mark "0" of the timing chain cover.
(c) Check that the timing marks of the camshaft timing gears are aligned with the timing marks of the bearing cap as shown in the illustration.
If not, turn the crankshaft 1 revolution (360°) and align the marks as above.
OK:
The timing marks on the camshaft timing gears are aligned as shown in the illustration.
(d) Reinstall the cylinder head covers.

NG → **ADJUST VALVE TIMING**

ES

OK

15 CHECK FUEL PRESSURE

(a) Check the fuel pressure (high or low pressure).
Standard

Item	Standard Condition
Fuel pressure	147 kPa (1.5 kgf/cm^2, 21 psi)

NG → **CHECK AND REPLACE FUEL SYSTEM**

OK

16 READ VALUE ON INTELLIGENT TESTER (COOLANT TEMP)

(a) Connect the intelligent tester to the DLC3.

(b) Turn the engine switch on (IG).
(c) Turn the tester on.
(d) Enter the following menus: DIAGNOSIS / ENHANCED OBD II / DATA LIST / PRIMARY / COOLANT TEMP.
(e) Read COOLANT TEMP twice, when the engine is both cold and warmed up.
Standard:
With cold engine:
Same as ambient air temperature.
With warm engine:
Between 75°C and 95°C (167°F and 203°F).

NG → **REPLACE ENGINE COOLANT TEMPERATURE SENSOR (See page ES-516)**

ES

OK

17	READ VALUE OF INTELLIGENT TESTER (MAF)

(a) Connect the intelligent tester to the DLC3.
(b) Turn the engine switch on (IG).
(c) Turn the tester on.
(d) Enter the following menus: DIAGNOSIS / ENHANCED OBD II / DATA LIST / PRIMARY / MAF and COOLANT TEMP.
(e) Allow the engine to idle until COOLANT TEMP reaches 75°C (167°F) or more.
(f) Read the MAF with the engine in an idling condition and at an engine speed of 2,500 rpm.
Standard:
MAF while engine is idling:
Between 2.1 g/sec and 3.1 g/sec (shift position: N, A/C: OFF).
MAF at an engine speed of 2,500 rpm:
Between 7.8 g/sec and 11.4 g/sec (shift position: N, A/C: OFF).

NG → **REPLACE MASS AIR FLOW METER (See page ES-497)**

OK

18	CHECK MISFIRE COUNT (CYL #1, #2, #3, #4, #5 AND #6)

HINT:
- If the result of step 4 is "1 or 2 cylinders", proceed to A.
- If the result of step 4 is "more than 3 cylinders", proceed to B.

B → **Go to step 5**

A

CHECK FOR INTERMITTENT PROBLEMS

DTC	P0327	Knock Sensor 1 Circuit Low Input (Bank 1 or Single Sensor)

DTC	P0328	Knock Sensor 1 Circuit High Input (Bank 1 or Single Sensor)

DTC	P0332	Knock Sensor 2 Circuit Low Input (Bank 2)

DTC	P0333	Knock Sensor 2 Circuit High Input (Bank 2)

DESCRIPTION

A flat type knock sensor (non-resonant type) has a structure that can detect vibrations over a wide band of frequencies: between approximately 6 kHz and 15 kHz.
Knock sensors are fitted onto the engine block to detect engine knocking.
The knock sensor contains a piezoelectric element which generates a voltage when it becomes deformed. The voltage is generated when the engine block vibrates due to knocking. Any occurrence of engine knocking can be suppressed by delaying the ignition timing.

DTC No.	DTC Detection Condition	Trouble Area
P0327 P0332	Output voltage of knock sensor 1 or 2 is 0.5 V or less (1 trip detection logic)	• Short in knock sensor 1 or 2 circuit • Knock sensor 1 or 2 • ECM
P0328 P0333	Output voltage of knock sensor 1 or 2 is 4.5 V or more (1 trip detection logic)	• Open in knock sensor 1 or 2 circuit • Knock sensor 1 or 2 • ECM

HINT:
When any of DTCs P0327, P0328, P0332 and P0333 are set, the ECM enters fail-safe mode. During fail-safe mode, the ignition timing is delayed to its maximum retardation. Fail-safe mode continues until the engine switch is turned off.
Reference: Inspection using an oscilloscope

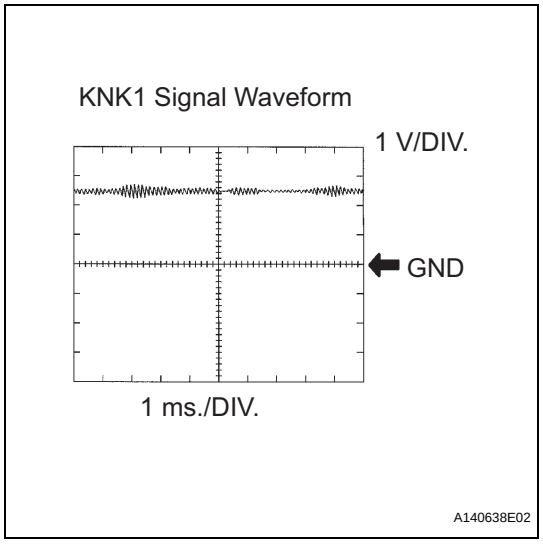

The correct waveform is as shown.

Item	Content
Terminals	KNK1 - EKNK or KNK2 -EKN2

Item	Content
Equipment Settings	0.01 to 10 V/DIV. 0.01 to 10 ms./DIV.
Conditions	Keep engine speed at 4,000 rpm with warm engine

MONITOR DESCRIPTION

The knock sensor, located on the cylinder block, detects spark knock. When spark knock occurs, the piezoelectric element of the sensor vibrates. When the ECM detects a voltage in this frequency range, it retards the ignition timing to suppress spark knock.
The ECM also senses background engine noise with the knock sensor and uses this noise to check for faults in the sensor. If the knock sensor signal level is too low for more than 10 seconds, or if the knock sensor output voltage is outside the normal range, the ECM interprets this as a fault in the knock sensor and sets a DTC.

MONITOR STRATEGY

Related DTCs	P0327: Knock sensor (Bank 1) open/short (Low voltage) P0328: Knock sensor (Bank 1) open/short (High voltage) P0332: Knock sensor (Bank 2) open/short (Low voltage) P0333: Knock sensor (Bank 2) open/short (High voltage)
Required Sensors/Components (Main)	Knock sensor (Bank 1 and 2)
Required Sensors/Components (Related)	-
Frequency of Operation	Continuous
Duration	1 second
MIL Operation	Immediate
Sequence of Operation	None

TYPICAL ENABLING CONDITIONS

Monitor runs whenever following DTCs are not present	None
Battery voltage	10.5 V or more
Time after engine start	5 seconds or more
Engine switch	ON
Starter	OFF

TYPICAL MALFUNCTION THRESHOLDS

Knock Sensor Range Check (Low voltage) P0327 and P0332:

Knock sensor voltage	Less than 0.5 V

Knock Sensor Range Check (High voltage) P0328 and P0333:

Knock sensor voltage	More than 4.5 V

WIRING DIAGRAM

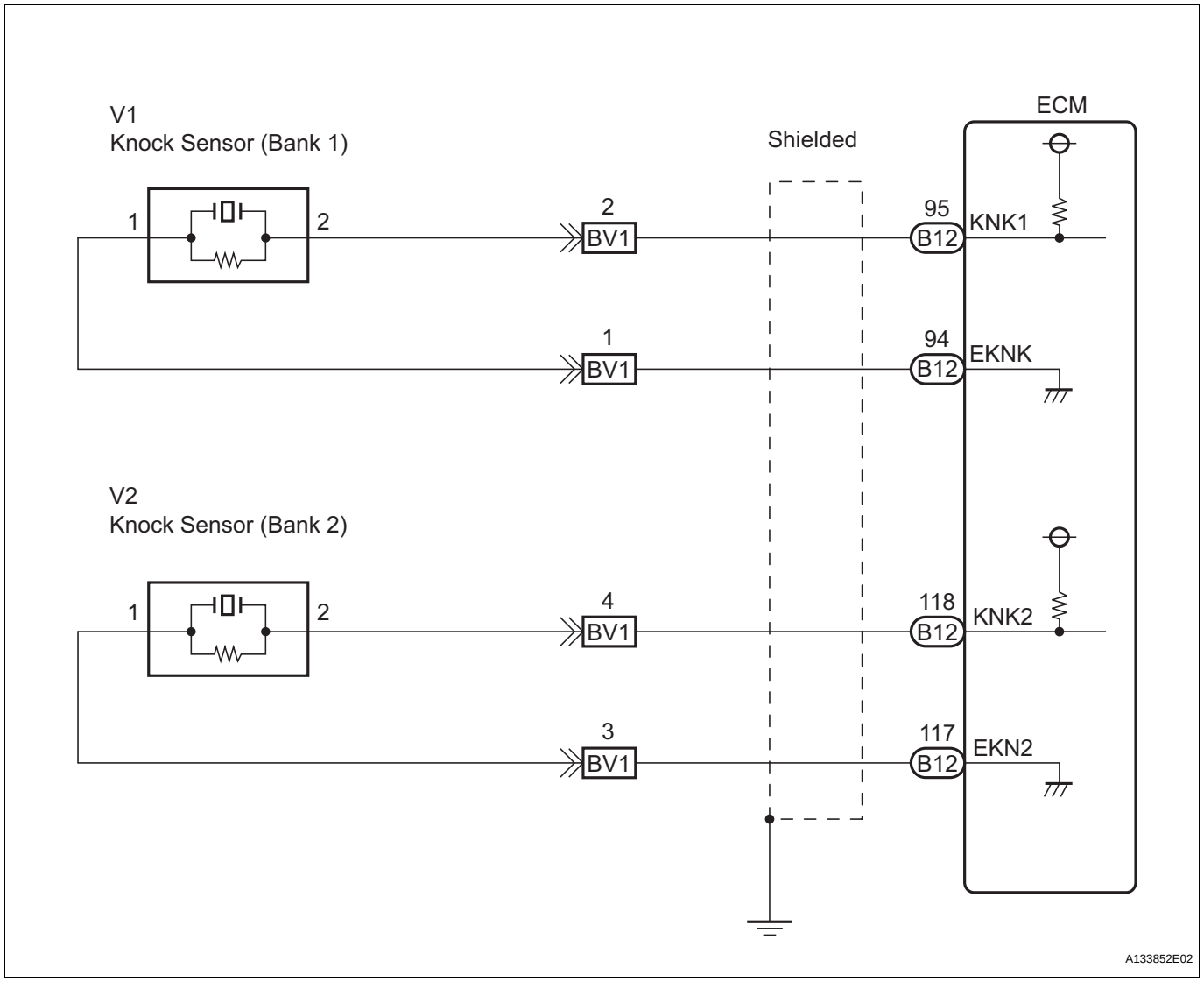

INSPECTION PROCEDURE

HINT:

- DTCs P0327 and P0328 are for the bank 1 knock sensor circuit.
- DTCs P0332 and P0333 are for the bank 2 knock sensor circuit.
- Read freeze frame data using the intelligent tester. The ECM records vehicle and driving condition information as freeze frame data the moment a DTC is stored. When troubleshooting, freeze frame data can be helpful in determining whether the vehicle was running or stopped, whether the engine was warmed up or not, whether the air-fuel ratio was lean or rich, as well as other data recorded at the time of a malfunction (See page ES-41).

ES

1	READ OUTPUT DTC (CHECK KNOCK SENSOR CIRCUIT)

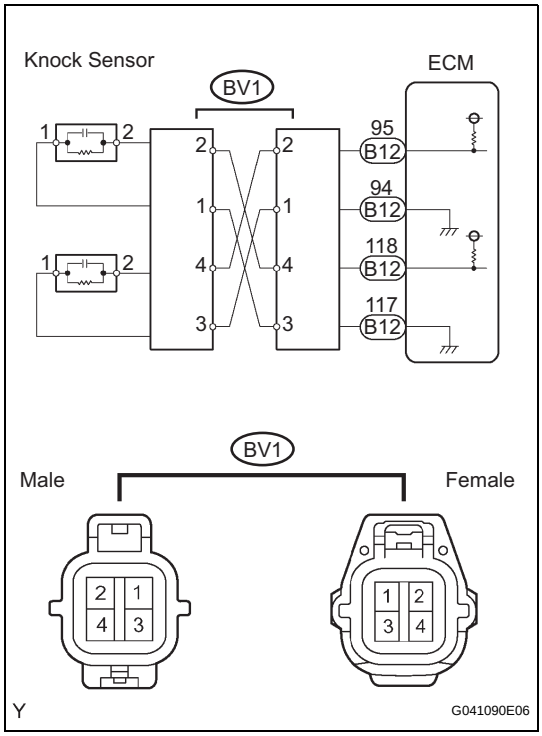

(a) Disconnect the BV1 connector.
(b) Using lead wires, connect the connectors as follows:

Male Connector - Female Connector
Terminal 2 - Terminal 4
Terminal 1 - Terminal 3
Terminal 4 - Terminal 2
Terminal 3 - Terminal 1

(c) Warm up the engine.
(d) Run the engine at 3,000 rpm for 10 seconds or more.
(e) Connect the intelligent tester to the DLC3.
(f) Turn the engine switch on (IG) and turn the intelligent tester on.
(g) Enter the following menus: DIAGNOSIS / ENHANCED OBD II / DTC INFO / CURRENT CODES.
(h) Read the DTCs.

Result

Display	Proceed to
DTCs same as when vehicle brought in: P0327, P0328 → P0327, P0328 or P0332, P0333 → P0332, P0333	**A**
DTCs different from when vehicle brought in: P0327, P0328 → P0332, P0333 or P0332, P0333 → P0327, P0328	**B**

(i) Reconnect the BV1 connector.

B → **Go to step 4**

A

ES

2 CHECK WIRE HARNESS AND CONNECTOR (CONNECTOR - ECM)

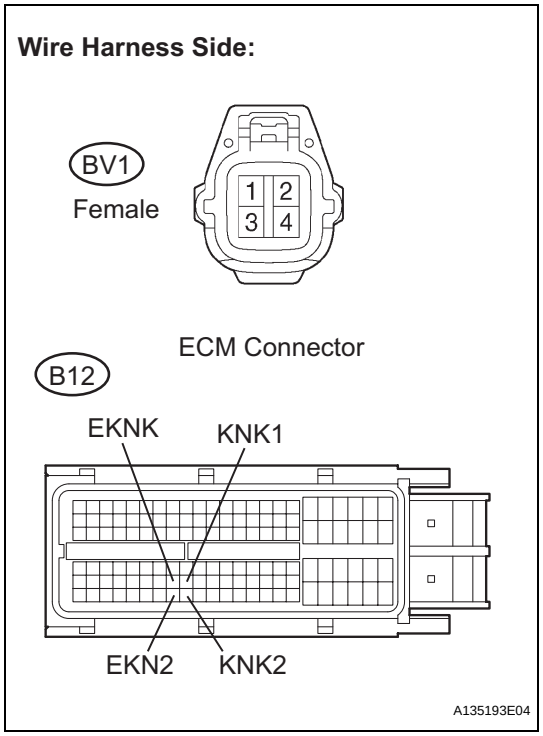

(a) Disconnect the BV1 connector.
(b) Disconnect the B12 ECM connector.
(c) Measure the resistance according to the value(s) in the table below.

Standard resistance (Check for open)

Tester Connection	Specified Condition
BV1 female connector 2 - KNK1 (B12-95)	Below 1 Ω
BV1 female connector 1 - EKNK (B12-94)	Below 1 Ω
BV1 female connector 4 - KNK2 (B12-118)	Below 1 Ω
BV1 female connector 3 - EKN2 (B12-117)	Below 1 Ω

Standard resistance (Check for short)

Tester Connection	Specified Condition
BV1 female connector 2 or KNK1 (B12-95) - Body ground	10 kΩ or higher
BV1 female connector 1 or EKNK (B12-94) - Body ground	10 kΩ or higher
BV1 female connector 4 or KNK2 (B12-118) - Body ground	10 kΩ or higher
BV1 female connector 3 or EKN2 (B12-117) - Body ground	10 kΩ or higher

(d) Reconnect the BV1 connector.
(e) Reconnect the ECM connector.

NG → **REPAIR OR REPLACE HARNESS OR CONNECTOR**

OK

3 INSPECT ECM

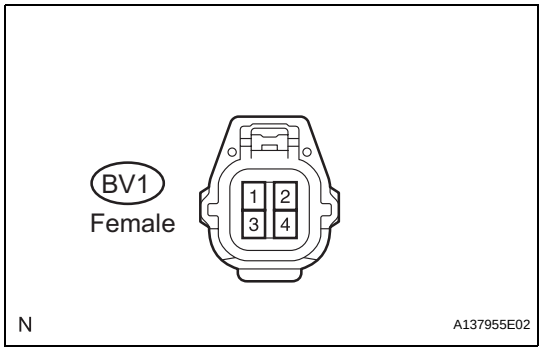

(a) Disconnect the BV1 connector.
(b) Turn the engine switch on (IG).
(c) Measure the voltage according to the value(s) in the table below.

Standard voltage

Tester Connection	Specified Condition
BV1 female connector 2 - 1	4.5 to 5.5 V
BV1 female connector 4 - 3	4.5 to 5.5 V

(d) Reconnect the ECM connector.

NG → **REPLACE ECM (See page ES-543)**

OK

CHECK FOR INTERMITTENT PROBLEMS

ES

ES

4 INSPECT KNOCK SENSOR

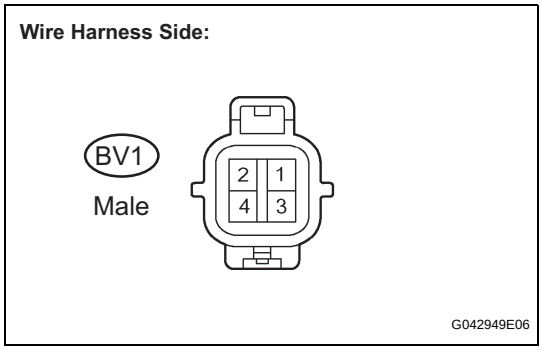

(a) Disconnect the BV1 connector.
(b) Measure the resistance according to the value(s) in the table below.

Standard resistance

Tester Connection	Specified Condition
BV1 male connector 1 - 2	120 to 280 kΩ
BV1 male connector 3- 4	120 to 280 kΩ

(c) Reconnect the BV1 connector.

OK → **CHECK FOR INTERMITTENT PROBLEMS**

NG

5 CHECK HARNESS AND CONNECTOR (CONNECTOR - KNOCK SENSOR)

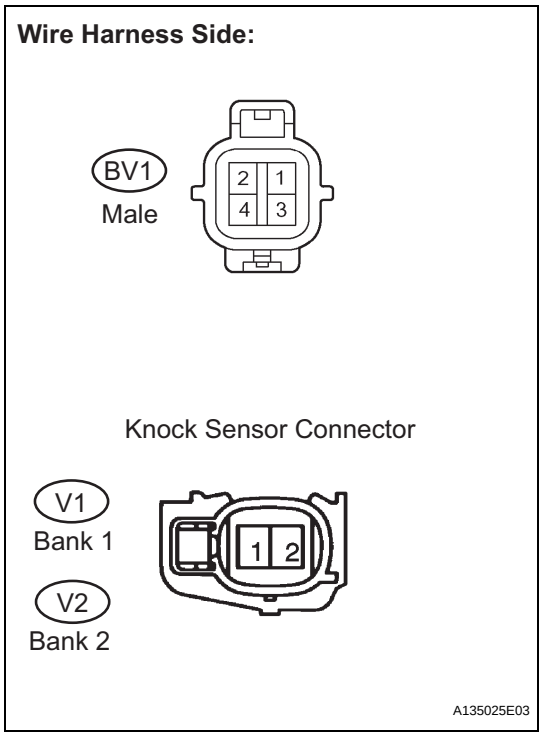

HINT:
- If DTC P0327 or P0328 has changed to P0332 or P0333, check the knock sensor circuit on the right bank side.
- If DTC P0332 or P0333 has changed to P0327 or P0328, check the knock sensor circuit on the left bank side.

(a) Disconnect the BV1 connector.
(b) Disconnect the V1 and V2 knock sensor connectors.
(c) Measure the resistance according to the value(s) in the table below.

Standard resistance (Check for open)

Tester Connection	Specified Condition
BV1 male connector 2 - V1-2	Below 1 Ω
BV1 male connector 1 - V1-1	Below 1 Ω
BV1 male connector 4 - V2-2	Below 1 Ω
BV1 male connector 3 - V2-1	Below 1 Ω

Standard resistance (Check for short)

Tester Connection	Specified Condition
BV1 male connector 2 or V1-2 - Body ground	10 kΩ or higher
BV1 male connector 1 or V1-1 - Body ground	10 kΩ or higher
BV1 male connector 4 or V2-2 - Body ground	10 kΩ or higher
BV1 male connector 3 or V2-1 - Body ground	10 kΩ or higher

(d) Reconnect the BV1 connector.
(e) Reconnect the knock sensor connectors.

NG → **REPAIR OR REPLACE HARNESS OR CONNECTOR**

OK

REPLACE KNOCK SENSOR (See page ES-525)

DTC	P0335	Crankshaft Position Sensor "A" Circuit

DTC	P0339	Crankshaft Position Sensor "A" Circuit Intermittent

DESCRIPTION

The crankshaft position (CKP) sensor system consists of a crankshaft position sensor plate and a magnetic coil.

The sensor plate has 34 teeth and is installed on the crankshaft. The pickup coil is made of windings, an iron core and magnet. The sensor plate rotates and as each tooth passes through the pickup coil, a pulse signal is created. The pickup coil generates 34 signals for each engine revolution. Based on these signals, the ECM calculates the crankshaft position and engine RPM. Using these calculations, the fuel injection time and ignition time are controlled.

DTC No.	DTC Detection Condition	Trouble Area
P0335	• No CKP sensor signal to ECM while cranking (1 trip detection logic) • No CKP sensor signal to ECM at engine speed of 600 rpm or more (1 trip detection logic)	• Open or short in CKP sensor circuit • CKP sensor • CKP sensor plate • ECM
P0339	Under conditions (a), (b) and (c), no CKP sensor signal to ECM for 0.05 seconds or more (1 trip detection logic): (a) Engine speed 1,000 rpm or more (b) Starter signal OFF (c) 3 seconds or more have elapsed since starter signal switched from ON to OFF	• Open or short in CKP sensor circuit • CKP sensor • CKP sensor plate • ECM

Reference: Inspection using an oscilloscope.

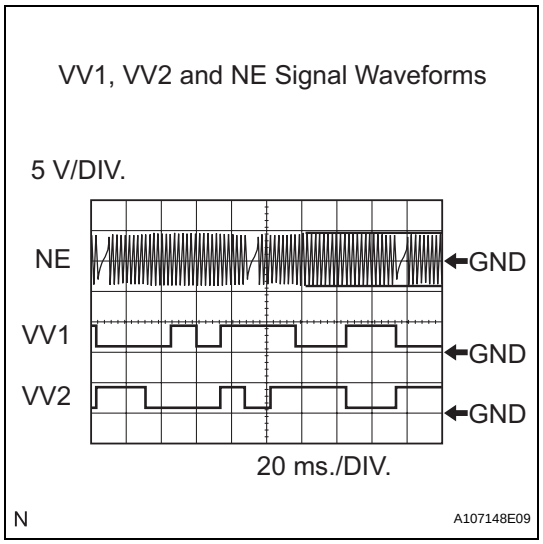

HINT:
- The correct waveform is as shown.
- VV1+ and VV2+ stand for the VVT sensor signal, and NE+ stands for the CKP sensor signal.

Item	Content
Terminals	VV1+ - VV1- VV2+ - VV2- NE+ - NE-
Equipment Settings	5 V/DIV. 20 ms./DIV.
Conditions	Cranking or idling

MONITOR DESCRIPTION

If there is no signal from the crankshaft position sensor despite the engine revolving, the ECM interprets this as a malfunction of the sensor.
If the malfunction is not repaired successfully, these DTCs are set 10 seconds after the engine is next started.

MONITOR STRATEGY

Related DTCs	P0335: CKP sensor signal check when starter ON P0335: CKP sensor signal check when starter OFF P0335: Sensor pulse check
Required Sensors/Components (Main)	Crankshaft Position (CKP) sensor
Required Sensors/Components (Sub)	-
Frequency of Operation	Continuous
Duration	Within 5 seconds and 3 times
MIL Operation	Immediate
Sequence of Operation	None

TYPICAL ENABLING CONDITIONS

All:

Monitor will run whenever these DTCs are not present	-

CKP sensor signal check when starter OFF:

Engine rpm	600 rpm or more
Time after starter ON to OFF	3 seconds or more

CKP sensor pulse check:

Battery voltage	7 V or higher
Starter	ON
Number of VVT sensor signal pulse	6 times
CMP sensor circuit fail	Not detected
Engine switch	ON

TYPICAL MALFUNCTION THRESHOLDS

CKP sensor signal check when starter OFF:

Sensor signal	No signal

CKP sensor pulse check:

Number of sensor pulse	132 or less, or 174 or more

COMPONENT OPERATING RANGE

CKP sensor	• CKP sensor output voltage fluctuates while crankshaft is revolving • 34 CKP sensor signals per crankshaft revolution

WIRING DIAGRAM

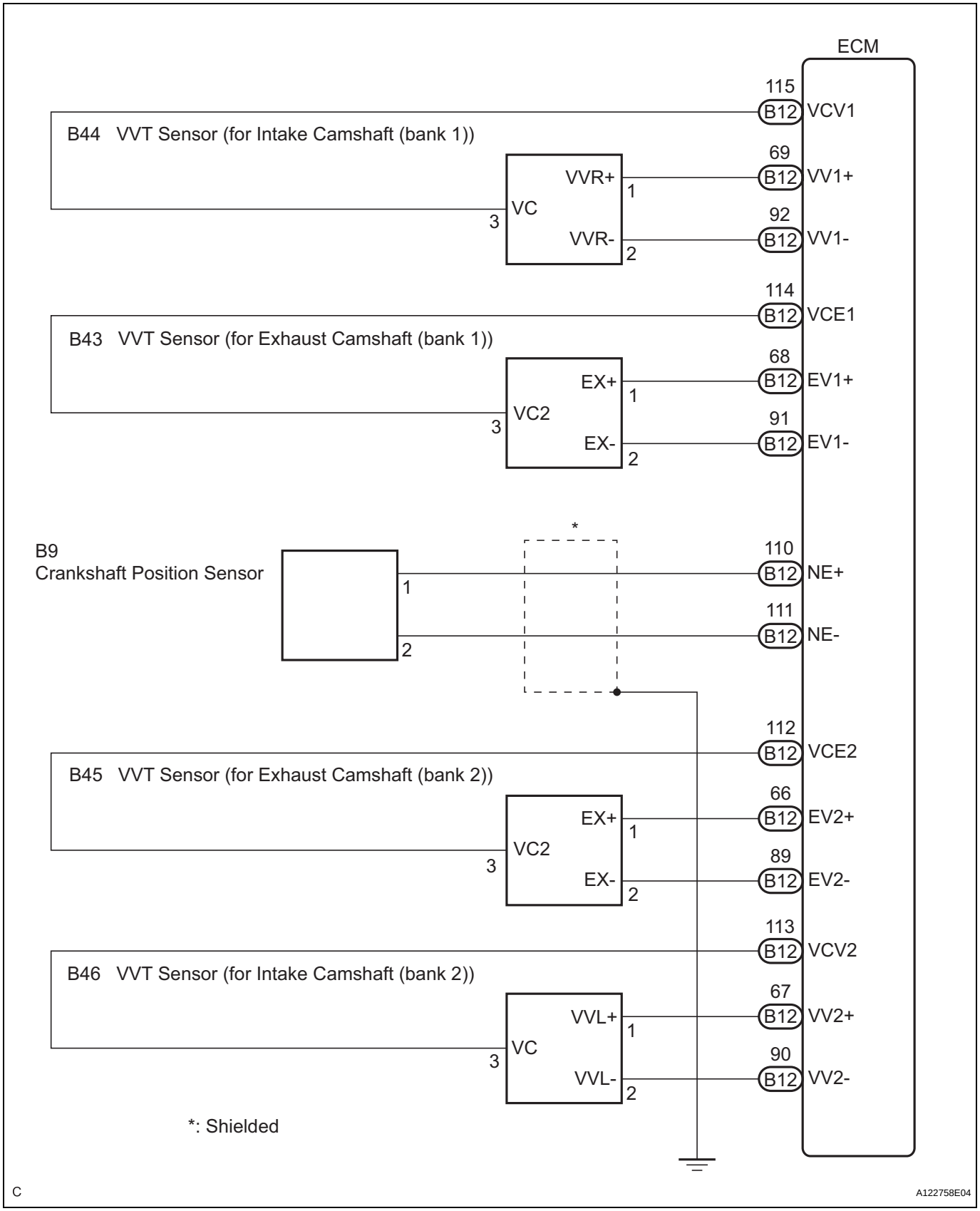

ES

INSPECTION PROCEDURE

HINT:

- If no problem is found by this diagnostic troubleshooting procedure, troubleshoot the engine mechanical system.
- Check the engine speed. The engine speed can be checked by using the intelligent tester. To check, follow the procedure below:
  (a) Connect the intelligent tester to the DLC3.
  (b) Start the engine.
  (c) Turn the tester on.
  (d) Enter the following menus: DIAGNOSIS / ENHANCED OBD II / DATA LIST / PRIMARY / ENGINE SPD.
  The engine speed may be indicated as zero despite the engine revolving normally. This is caused by a lack of NE signals from the crankshaft position (CKP) sensor. Alternatively, the engine speed may be indicated as lower than the actual engine speed, if the CKP sensor output voltage is insufficient.
- Read freeze frame data using the intelligent tester. The ECM records vehicle and driving condition information as freeze frame data the moment a DTC is stored. When troubleshooting, freeze frame data can be helpful in determining whether the vehicle was running or stopped, whether the engine was warmed up or not, whether the air-fuel ratio was lean or rich, as well as other data recorded at the time of a malfunction (See page ES-41).

ES

1 INSPECT CRANKSHAFT POSITION SENSOR

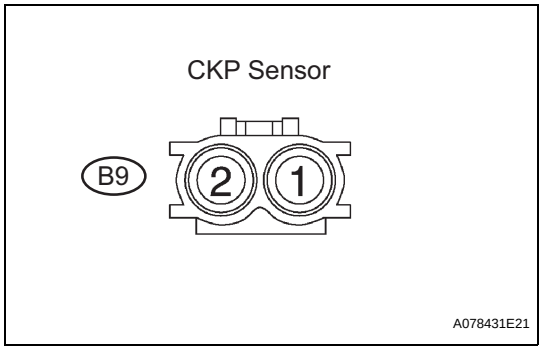

(a) Disconnect the B9 crankshaft position (CKP) sensor connector.

(b) Measure the resistance according to the value(s) in the table below.

Standard resistance

Tester Connection	Condition	Specified Condition
1 - 2	Cold	1,630 to 2,740 Ω
1 - 2	Hot	2,065 to 3,225 Ω

HINT:
Terms "cold" and "hot" refer to the temperature of the coils. "Cold" means approximately -10 to 50°C (14 to 122°F). "Hot" means approximately 50 to 100°C (122 to 212°F).

(c) Reconnect the CKP sensor connector.

NG → **REPLACE CRANKSHAFT POSITION SENSOR (See page ES-513)**

OK

2 CHECK HARNESS AND CONNECTOR (CRANKSHAFT POSITION SENSOR - ECM)

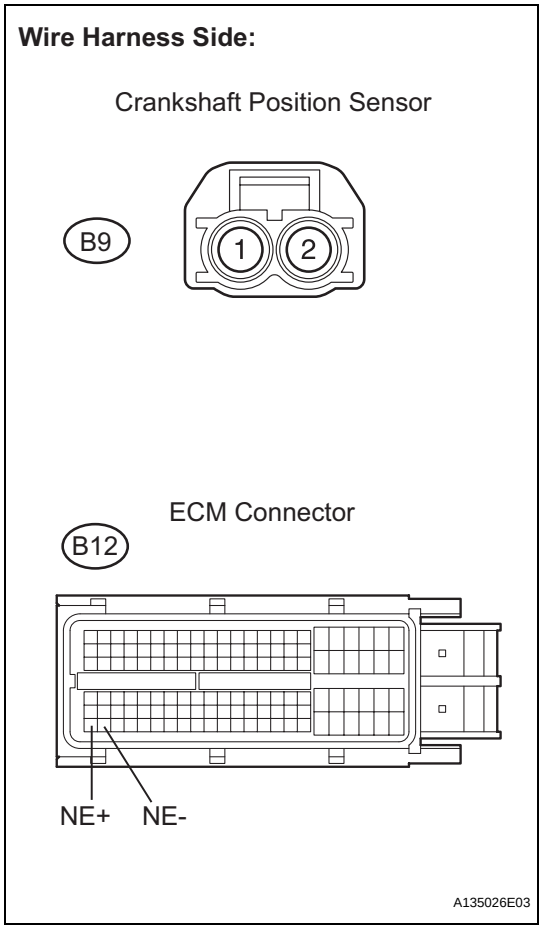

(a) Disconnect the B9 CKP sensor connector.
(b) Disconnect the B12 ECM connector.
(c) Measure the resistance according to the value(s) in the table below.

Standard resistance (Check for open)

Tester Connection	Specified Condition
B9-1 - NE+ (B12-110)	Below 1 Ω
B9-2 - NE- (B12-111)	Below 1 Ω

Standard resistance (Check for short)

Tester Connection	Specified Condition
B9-1 or NE+ (B12-110) - Body ground	10 kΩ or higher
B9-2 or NE- (B12-111) - Body ground	10 kΩ or higher

(d) Reconnect the ECM connector.
(e) Reconnect the CKP sensor connector.

NG → **REPAIR OR REPLACE HARNESS OR CONNECTOR**

OK

3 CHECK CRANK POSITION SENSOR (SENSOR INSTALLATION)

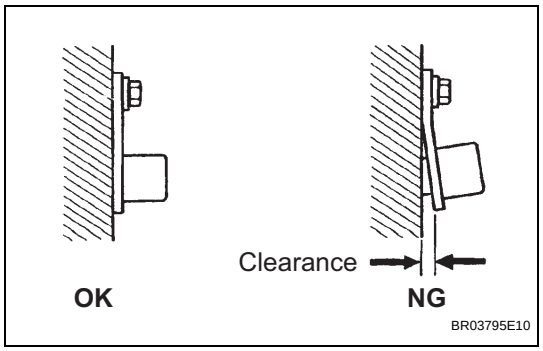

(a) Check the CKP sensor installation condition.
OK:
Sensor is installed correctly.

NG → **REPAIR OR REPLACE CRANK POSITION SENSOR**

OK

4 CHECK CRANKSHAFT POSITION SENSOR PLATE (TEETH OF SENSOR PLATE)

(a) Check the teeth of the sensor plate.

ES

OK:
Sensor plate does not have any cracks or deformation.

NG → **REPLACE CRANKSHAFT POSITION SENSOR PLATE**

OK

REPLACE ECM (See page ES-543)

DTC	P0340	Camshaft Position Sensor Circuit Malfunction

DTC	P0342	Camshaft Position Sensor "A" Circuit Low Input (Bank 1 or Single Sensor)

DTC	P0343	Camshaft Position Sensor "A" Circuit High Input (Bank 1 or Single Sensor)

DTC	P0345	Camshaft Position Sensor "A" Circuit (Bank 2)

DTC	P0347	Camshaft Position Sensor "A" Circuit Low Input (Bank 2)

DTC	P0348	Camshaft Position Sensor "A" Circuit High Input (Bank 2)

DESCRIPTION

The intake camshaft's Variable Valve Timing (VVT) sensor (G signal) consists of a magnet and MRE (Magnet Resistance Element).
The VVT camshaft drive gear has a sensor plate with 3 teeth on its outer circumference. When the gear rotates, changes occur in the air gaps between the sensor plate and MRE, which affects the magnetic field. As a result, the resistance of the MRE material fluctuates. The VVT sensor converts the gear rotation data to pulse signals, uses the pulse signals to determine the camshaft angle, and sends it to the ECM.
The crankshaft angle sensor plate has 34 teeth. The pickup coil generates 34 signals for each engine revolution. Based on combination of the G signal and NE signal, the ECM detects the crankshaft angle. Then the ECM uses this data to control fuel injection time and injection timing. Also, based on the NE signal, the ECM detects the engine speed.

DTC No.	DTC Detection Condition	Trouble Area
P0340 P0345	• Input voltage to ECM remains 0.3 V or less, or 4.7 V or higher for more than 5 seconds, when 2 or more seconds have elapsed after turning engine switch on (IG) (1 trip detection logic) • No VVT sensor signal to ECM during cranking (1 trip detection logic)	• Open or short in VVT sensor for intake camshaft circuit • VVT sensor for intake camshaft • Camshaft timing gear for intake camshaft • Jumped tooth of timing chain for intake camshaft • ECM
P0342 P0347	Output voltage of VVT sensor is 0.3 V or less for 5 seconds (1 trip detection logic)	• Open or short in VVT sensor for intake camshaft circuit • VVT sensor for intake camshaft • Camshaft timing gear for intake camshaft • Jumped tooth of timing chain for intake camshaft • ECM
P0343 P0348	Output voltage of VVT sensor is 4.7 V or more for 5 seconds (1 trip detection logic)	• Open or short in VVT sensor for intake camshaft circuit • VVT sensor for intake camshaft • Camshaft timing gear for intake camshaft • Jumped tooth of timing chain for intake camshaft • ECM

Reference: Inspection using an oscilloscope

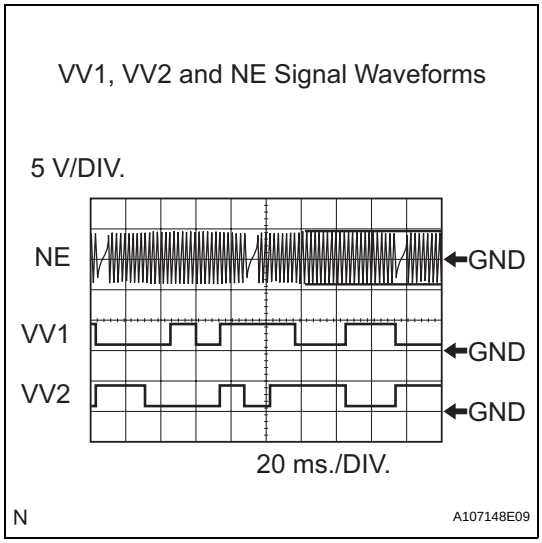

HINT:
- The correct waveform is as shown.
- VV1+ and VV2+ stand for the VVT sensor signal, and NE+ stands for the CKP sensor signal.

Item	Content
Terminals	NE+ - NE- VV1+ - VV1- VV2+ - VV2-
Equipment Settings	5 V/DIV. 20 ms./DIV.
Conditions	Cranking or idling

MONITOR DESCRIPTION

If no signal is transmitted by the VVT sensor despite the engine revolving, or the rotations of the camshaft and the crankshaft are not synchronized, the ECM interprets this as a malfunction of the sensor.

MONITOR STRATEGY

Related DTCs	P0340: VVT sensor (Bank 1) open/short P0340: VVT position/Crankshaft position misalignment (Bank 1) P0342: VVT position sensor (Bank 1) range check (low voltage) P0343: VVT position sensor (Bank 1) range check (high voltage) P0345: VVT sensor (Bank 2) open/short P0345: VVT position/Crankshaft position misalignment (Bank 2) P0347: VVT position sensor (Bank 2) range check (low voltage) P0348: VVT position sensor (Bank 2) range check (high voltage)
Required Sensors/Components (Main)	VVT position sensor (Bank 1 and 2)
Required Sensors/Components (Sub)	Crankshaft position sensor
Frequency of Operation	Continuous
Duration	5 seconds
MIL Operation	2 driving cycles: P0340 (cranking), P0345 (cranking) Immediate: Others
Sequence of Operation	None

TYPICAL ENABLING CONDITIONS

All:

Monitor runs whenever following DTCs are not present	None

P0340 (Engine running):

Engine speed	600 rpm or more
Starter	OFF

P0345 (Engine running):

Engine speed	600 rpm or more
Battery voltage	8 V or more
Starter	OFF
Engine switch	ON

P0340 (Cranking):

Starter	ON
Minimum battery voltage	Less than 11 V
CPU initial	Not initial

P0345 (Cranking):

Starter	ON
Battery voltage while starter is ON at least once	Less than 11 V

P0340, P0342, P0343 (Chattering, Low voltage, High voltage):

Starter	OFF
Engine switch	ON
Time after engine switch off to on	2 seconds or more

P0345, P0347, P0348 (Chattering, Low voltage, High voltage):

Starter	OFF
Engine switch	ON
Time after engine switch off to on	2 seconds or more
Battery Voltage	8 V or more

TYPICAL MALFUNCTION THRESHOLDS

P0340 (Engine running):

Camshaft position and crankshaft position phase	Misaligned
Camshaft position signal	No signal

P0340 (Cranking):

Camshaft position signal	No signal

P0340 (Chattering):

Camshaft position sensor voltage	Less than 0.3 V, or more than 4.7 V

P0342 (Low voltage):

Camshaft position sensor voltage	Less than 0.3 V

P0343 (High voltage):

Camshaft position sensor voltage	More than 4.7 V

P0345 (Engine running, cranking):

VVT sensor signal	No signal

P0345 (Chattering):

VVT sensor voltage	Less than 0.3 V, or more than 4.7 V

P0347 (Low voltage):

VVT sensor voltage	Less than 0.3 V

P0348 (High voltage):

VVT sensor voltage	More than 4.7 V

COMPONENT OPERATING RANGE

VVT sensor voltage	0.3 to 4.7 V

WIRING DIAGRAM

Refer to DTC P0335 (See page ES-220).

INSPECTION PROCEDURE

ES

HINT:

Read freeze frame data using the intelligent tester. The ECM records vehicle and driving condition information as freeze frame data the moment a DTC is stored. When troubleshooting, freeze frame data can be helpful in determining whether the vehicle was running or stopped, whether the engine was warmed up or not, whether the air-fuel ratio was lean or rich, as well as other data recorded at the time of a malfunction (See page ES-41).

1	CHECK HARNESS AND CONNECTOR (SENSOR POWER SOURCE)

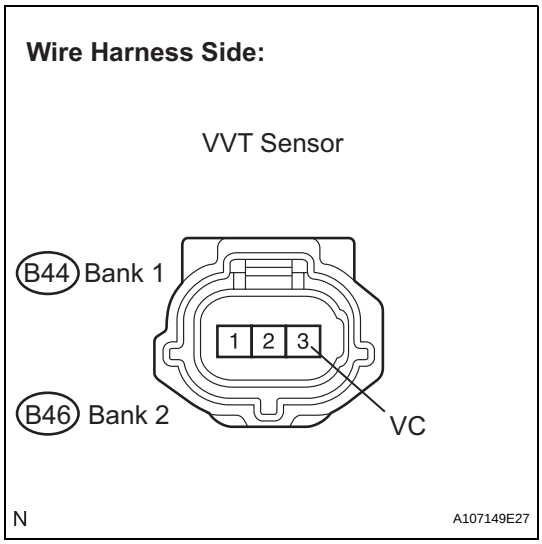

(a) Disconnect the B44 or B46 VVT sensor connector.

(b) Measure the voltage according to the value(s) in the table below.

Standard voltage

Tester Connection	Specified Condition
VC (B44-3) - Body ground	4.5 to 5.0 V
VC (B46-3) - Body ground	4.5 to 5.0 V

(c) Reconnect the VVT sensor connector.

NG → **REPAIR OR REPLACE HARNESS OR CONNECTOR**

OK

2 CHECK HARNESS AND CONNECTOR (VVT SENSOR FOR INTAKE CAMSHAFT - ECM)

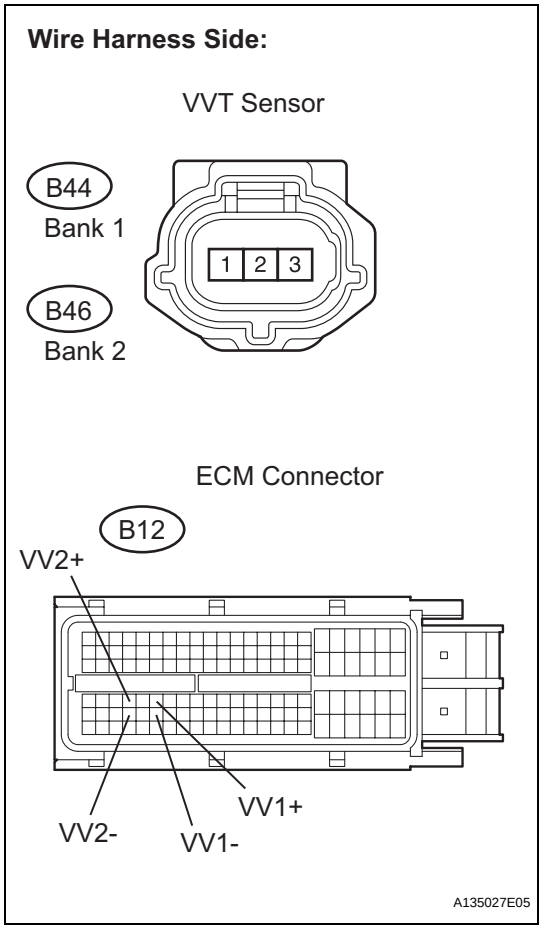

(a) Disconnect the B44 or B46 VVT sensor connector.
(b) Disconnect the B12 ECM connector.
(c) Measure the resistance according to the value(s) in the table below.

Standard resistance (Check for open)

Tester Connection	Specified Condition
VVR+ (B44-1) - VV1+ (B12-69)	Below 1 Ω
VVR- (B44-2) - VV1- (B12-92)	Below 1 Ω
VVL+ (B46-1) - VV2+ (B12-67)	Below 1 Ω
VVL- (B46-2) - VV2- (B12-90)	Below 1 Ω

Standard resistance (Check for short)

Tester Connection	Specified Condition
VVR+ (B44-1) or VV1+ (B12-69) - Body ground	10 kΩ or higher
VVR- (B44-2) or VV1- (B12-92) - Body ground	10 kΩ or higher
VVL+ (B46-1) or VV2+ (B12-67) - Body ground	10 kΩ or higher
VVL- (B46-2) or VV2- (B12-90) - Body ground	10 kΩ or higher

(d) Reconnect the VVT sensor connector.
(e) Reconnect the ECM connector.

NG → **REPAIR OR REPLACE HARNESS OR CONNECTOR**

OK

3 CHECK VVT SENSOR FOR INTAKE CAMSHAFT (SENSOR INSTALLATION)

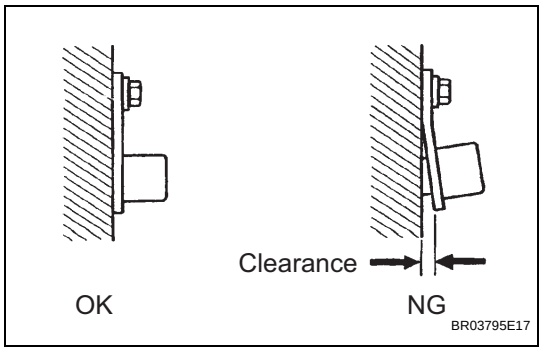

(a) Check the CKP sensor installation condition.
OK:
Sensor is installed correctly.

NG → **REPAIR OR REPLACE VVT SENSOR**

OK

4 CHECK CAMSHAFT TIMING GEAR ASSEMBLY (TEETH OF PLATE)

(a) Check the teeth of the signal plate.

ES

OK:
Sensor plate teeth do not have any cracks or deformation.

NG → **REPLACE CAMSHAFT TIMING GEAR ASSEMBLY**

OK

5	REPLACE VVT SENSOR

NEXT

ES

6	CHECK WHETHER DTC OUTPUT RECURS

(a) Connect the intelligent tester to the DLC3.
(b) Turn the engine switch on (IG).
(c) Turn the intelligent tester on.
(d) Clear the DTCs (See page ES-41).
(e) Select the following menu items: DIAGNOSIS / ENHANCED OBD II / DTC INFO / PENDING CODES.
(f) Read the DTCs.

Result

Display (DTC Output)	Proceed to
No output	A
P0340, P0342, P0343, P0345, P0347 or P0348	B

HINT:
If the engine does not start, replace the ECM.

B → **REPLACE ECM (See page ES-543)**

A

END

DTC	**P0351**	**Ignition Coil "A" Primary / Secondary Circuit**
DTC	**P0352**	**Ignition Coil "B" Primary / Secondary Circuit**
DTC	**P0353**	**Ignition Coil "C" Primary / Secondary Circuit**
DTC	**P0354**	**Ignition Coil "D" Primary / Secondary Circuit**
DTC	**P0355**	**Ignition Coil "E" Primary / Secondary Circuit**
DTC	**P0356**	**Ignition Coil "F" Primary / Secondary Circuit**

DESCRIPTION

HINT:

- These DTCs indicate malfunctions relating to the primary circuit.
- If DTC P0351 is set, check the No. 1 ignition coil circuit.
- If DTC P0352 is set, check the No. 2 ignition coil circuit.
- If DTC P0353 is set, check the No. 3 ignition coil circuit.
- If DTC P0354 is set, check the No. 4 ignition coil circuit.
- If DTC P0355 is set, check the No. 5 ignition coil circuit.
- If DTC P0356 is set, check the No. 6 ignition coil circuit.

A Direct Ignition System (DIS) is used on this vehicle.

The DIS is a 1-cylinder ignition system in which each cylinder is ignited by one ignition coil and spark plug is connected to the end of each secondary wiring. A powerful voltage, generated in the secondary wiring, is applied directly to each spark plug. Sparks of the spark plugs pass from the center electrode to the ground electrodes.

The ECM determines the ignition timing and transmits the ignition signals (IGT) to each cylinder. Using the IGT signal, the ECM turns the power transistor inside the igniter on and off. The power transistor, in turn, switches on and off the current to the primary coil. When the current to the primary coil is cut off, a powerful voltage is generated in the secondary coil. This voltage is applied to the spark plugs, causing them to spark inside the cylinders. As the ECM cuts the current to the primary coil off, the igniter sends back an ignition confirmation signal (IGF) to the ECM, for each cylinder ignition.

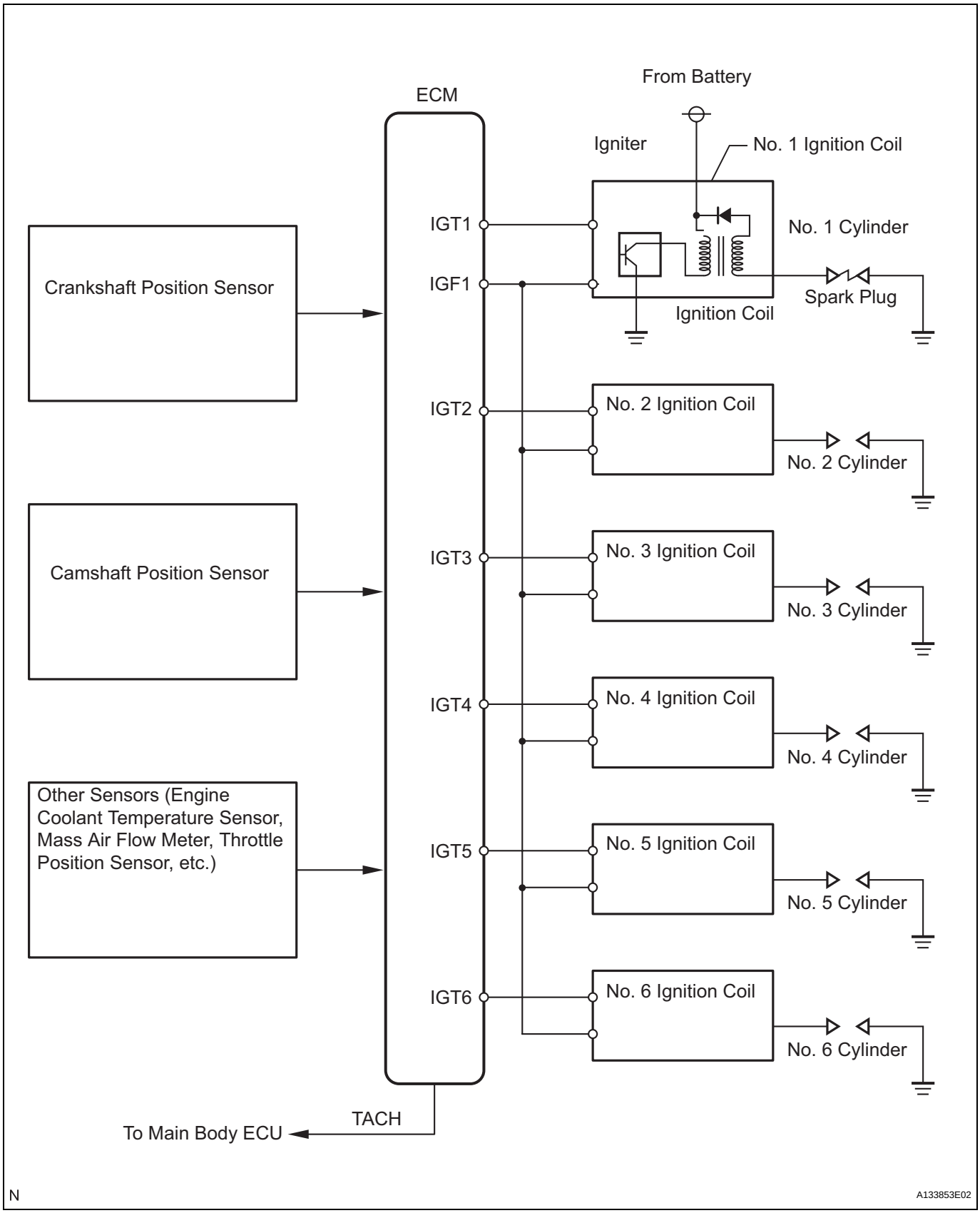
From Battery
ECM
Igniter
No. 1 Ignition Coil
IGT1
IGF1
No. 1 Cylinder
Spark Plug
Ignition Coil
Crankshaft Position Sensor
IGT2
No. 2 Ignition Coil
No. 2 Cylinder
Camshaft Position Sensor
IGT3
No. 3 Ignition Coil
No. 3 Cylinder
IGT4
No. 4 Ignition Coil
No. 4 Cylinder
Other Sensors (Engine Coolant Temperature Sensor, Mass Air Flow Meter, Throttle Position Sensor, etc.)
IGT5
No. 5 Ignition Coil
No. 5 Cylinder
IGT6
No. 6 Ignition Coil
No. 6 Cylinder
TACH
To Main Body ECU
N
A133853E02

DTC No.	DTC Detection Condition	Trouble Area
P0351 P0352 P0353 P0354 P0355 P0356	No IGF signal to ECM while engine is running (1 trip detection logic)	• Ignition system • Open or short in IGF1 or IGT circuit (1 to 6) between ignition coil and ECM • No. 1 to No. 6 ignition coils • ECM

Reference: Inspection using an oscilloscope.

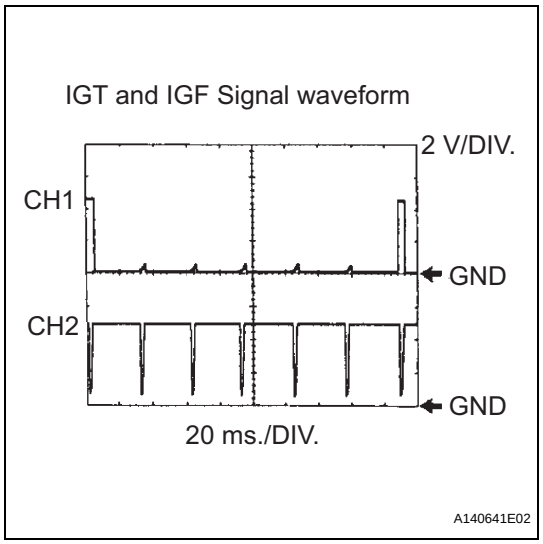

While cranking or idling the engine, check the waveform between terminals IGT (1 to 6) and E1, IGF1 and E1 of the ECM connector.

Item	Content
Terminals	CH1: IGT1, IGT2, IGT3, IGT4, IGT5, IGT6 - E1 CH2: IGF1 - E1
Equipment Settings	2 V/DIV. 20 ms./DIV.
Conditions	Cranking or idling

MONITOR DESCRIPTION

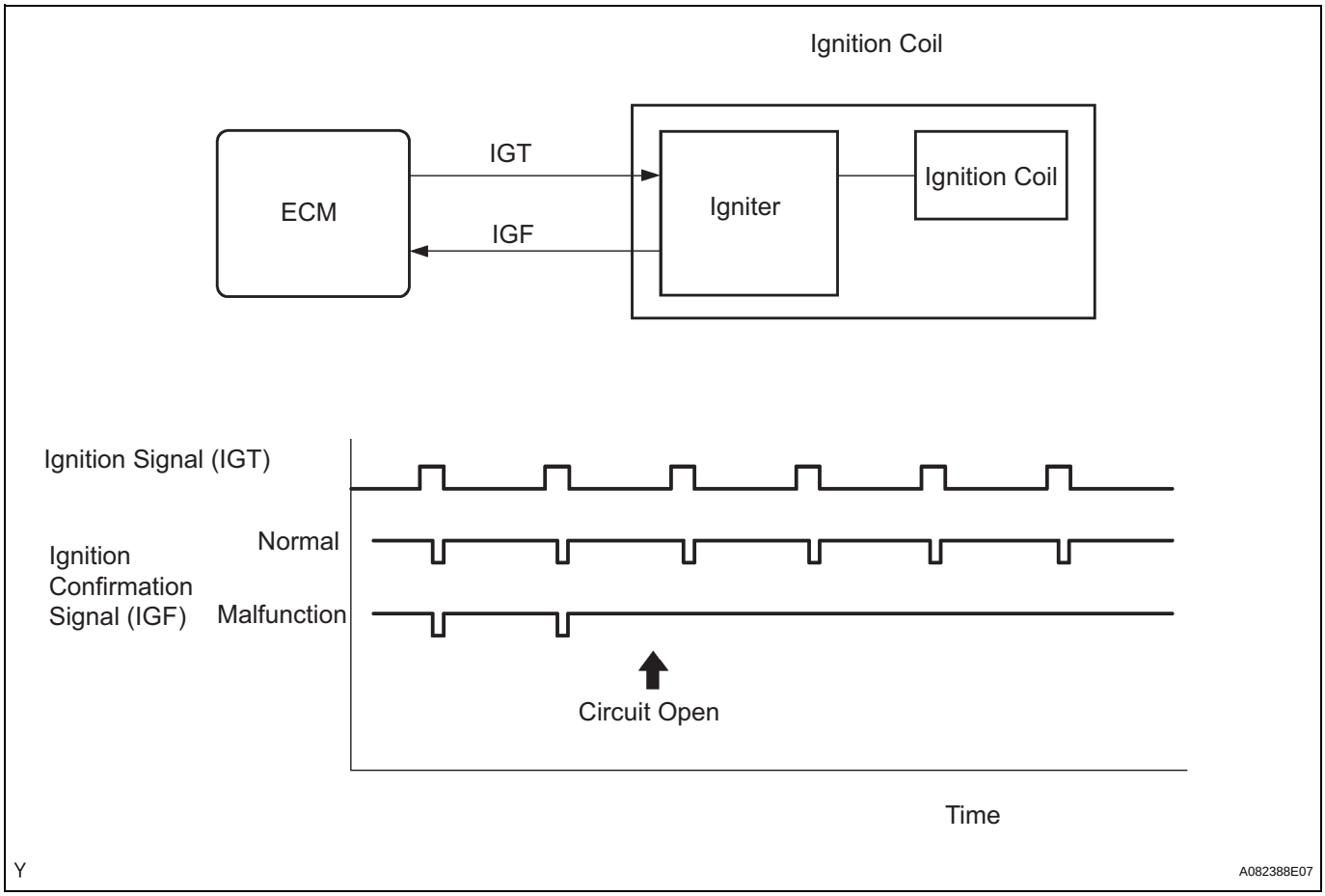

If the ECM does not receive any IGF signals despite transmitting the IGT signal, it interprets this as a fault in the igniter and sets a DTC.
If the malfunction is not repaired successfully, a DTC is set 1 second after the engine is next started.

MONITOR STRATEGY

Related DTCs	P0351: Igniter (cylinder 1) malfunction P0352: Igniter (cylinder 2) malfunction P0353: Igniter (cylinder 3) malfunction P0354: Igniter (cylinder 4) malfunction P0355: Igniter (cylinder 5) malfunction P0356: Igniter (cylinder 6) malfunction
Required Sensors/Components (Main)	Igniter (Cylinder 1 to 6)
Required Sensors/Components (Sub)	Crankshaft position sensor
Frequency of Operation	Continuous
Duration	0.256 seconds and 4 sparks
MIL Operation	Immediate
Sequence of Operation	None

TYPICAL ENABLING CONDITIONS

Monitor runs whenever the following DTCs are not present	None
Either following condition A or B is met:	-
A. Engine RPM	1,500 rpm or less
B. Starter	OFF
Either following condition C or D is met:	-

C. Both of the following conditions are met:	-
(a) Engine speed	500 rpm or less
(b) Battery voltage	6 V or more
D. All of the following conditions are met:	-
(a) Engine speed	More than 500 rpm
(b) Battery voltage	10 V or more
(c) Number of sparks after CPU reset	5 sparks or more

TYPICAL MALFUNCTION THRESHOLDS

Ignition signal fail count	More than 2 times
Ignition signal fail count	No ignition confirmation signal from igniter

COMPONENT OPERATING RANGE

IGF signal	Igniter transmits IGF signal when it receives IGT signal from ECM

WIRING DIAGRAM

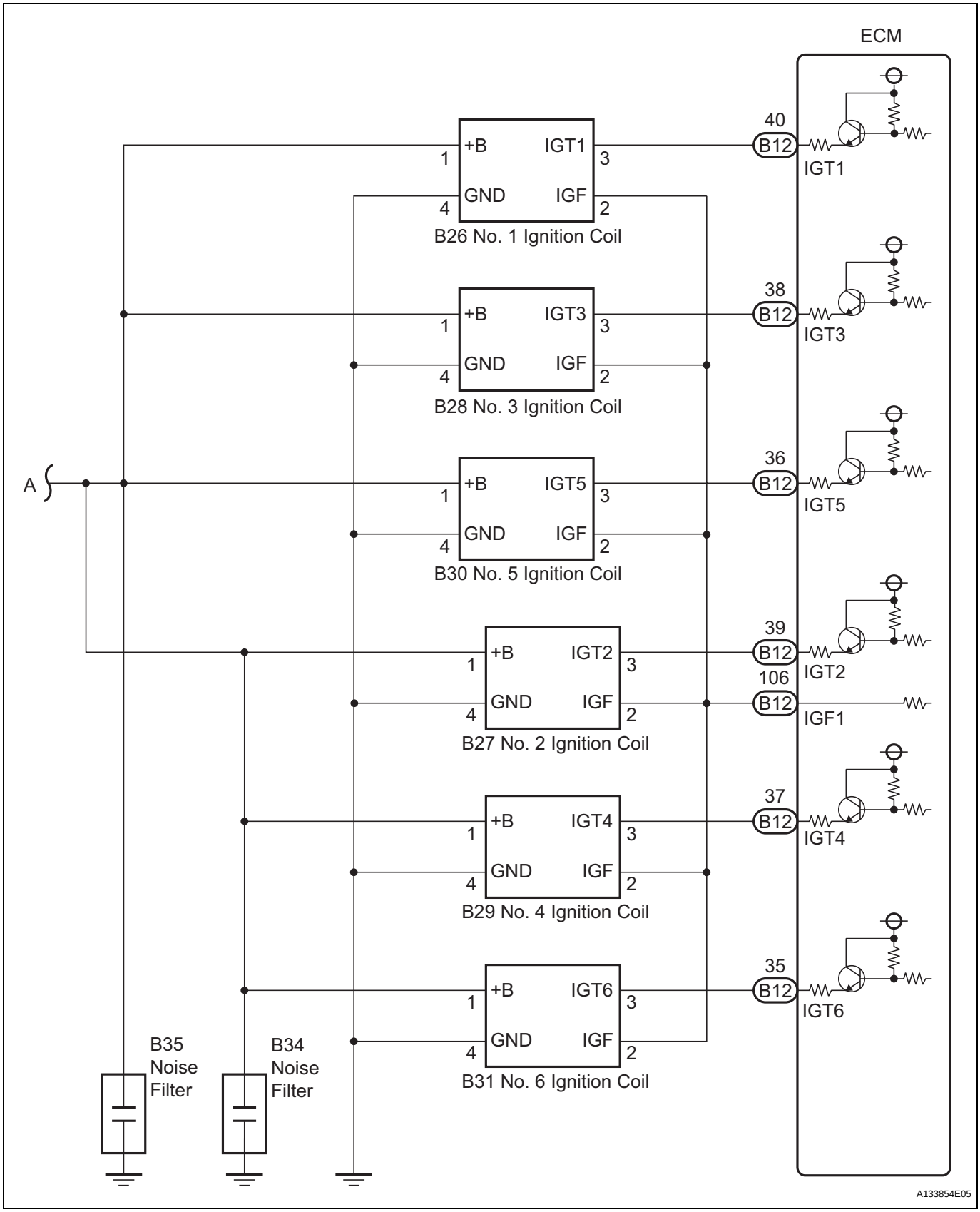

ES

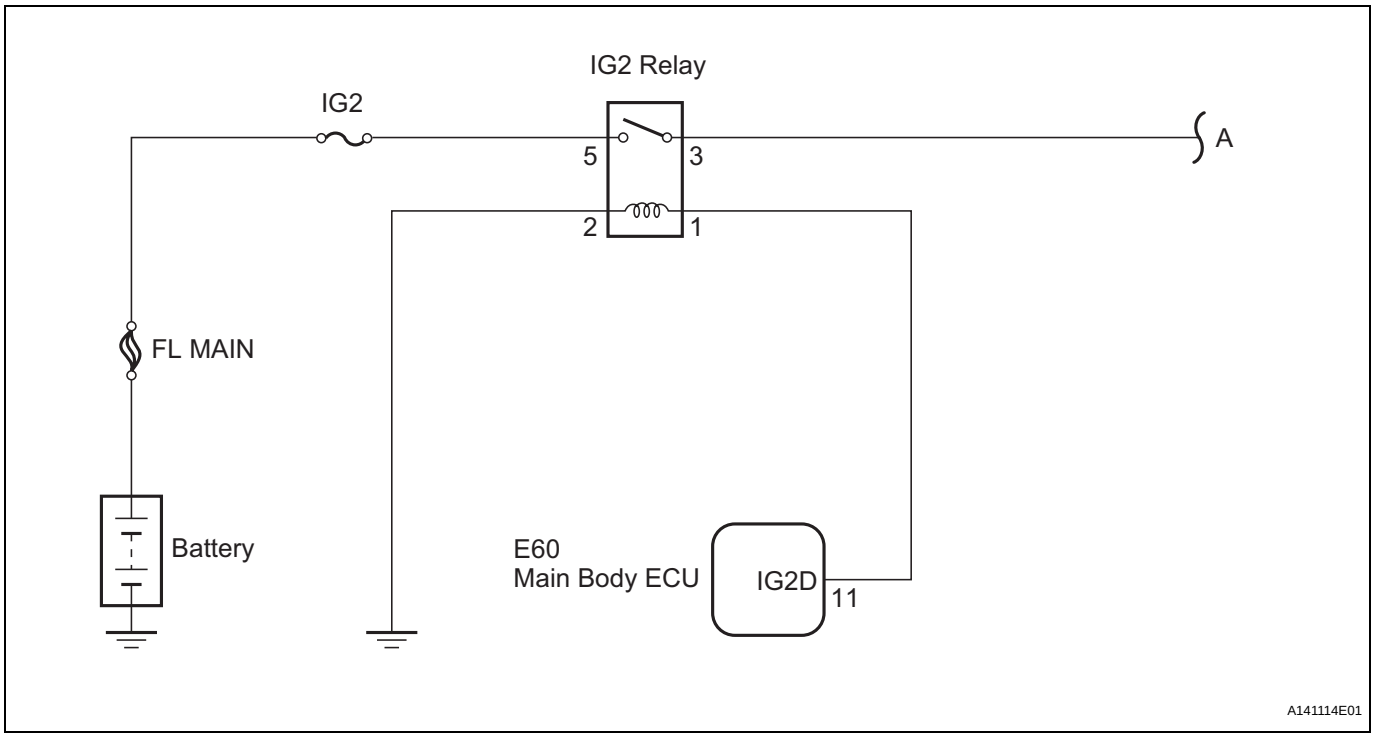

INSPECTION PROCEDURE

HINT:
Read freeze frame data using the intelligent tester. The ECM records vehicle and driving condition information as freeze frame data the moment a DTC is stored. When troubleshooting, freeze frame data can be helpful in determining whether the vehicle was running or stopped, whether the engine was warmed up or not, whether the air-fuel ratio was lean or rich, as well as other data recorded at the time of a malfunction (See page ES-41).

1	INSPECT IGNITION COIL ASSEMBLY (POWER SOURCE)

Wire Harness Side:

Ignition Coil Connector

(a) Disconnect the B26, B27, B28, B29, B30 or B31 ignition coil connector.
(b) Turn the engine switch on (IG).
(c) Measure the voltage according to the value(s) in the table below.

Standard voltage

Tester Connection	Specified Condition
B26-1 - Body ground	9 to 14 V
B27-1 - Body ground	9 to 14 V
B28-1 - Body ground	9 to 14 V
B29-1 - Body ground	9 to 14 V
B30-1 - Body ground	9 to 14 V
B31-1 - Body ground	9 to 14 V

(d) Measure the resistance according to the value(s) in the table below.

Standard resistance

Tester Connection	Specified Condition
B26-4 - Body ground	Below 1 Ω
B27-4 - Body ground	Below 1 Ω

Tester Connection	Specified Condition
B28-4 - Body ground	Below 1 Ω
B29-4 - Body ground	Below 1 Ω
B30-4 - Body ground	Below 1 Ω
B31-4 - Body ground	Below 1 Ω

NG → **REPAIR OR REPLACE HARNESS OR CONNECTOR**

OK

ES

2 CHECK HARNESS AND CONNECTOR (IGNITION COIL ASSEMBLY - ECM (IGT SIGNAL TERMINAL))

Wire Harness Side Front View:

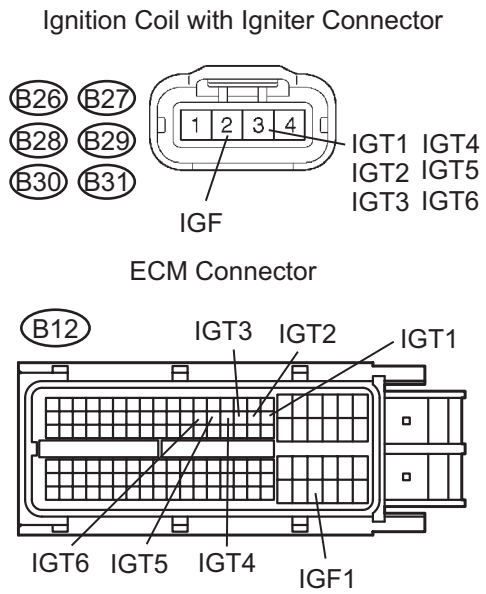

(a) Disconnect the B26, B27, B28, B29, B30 or B31 ignition coil connector.
(b) Disconnect the ECM B12 connectors.
(c) Measure the resistance according to the value(s) in the table below.

Standard resistance (Check for open)

Tester Connection	Specified Condition
IGT1 (B26-3) - IGT1 (B12-40)	Below 1 Ω
IGT2 (B27-3) - IGT2 (B12-39)	Below 1 Ω
IGT3 (B28-3) - IGT3 (B12-38)	Below 1 Ω
IGT4 (B29-3) - IGT4 (B12-37)	Below 1 Ω
IGT5 (B30-3) - IGT5 (B12-36)	Below 1 Ω
IGT6 (B31-3) - IGT6 (B12-35)	Below 1 Ω

Standard resistance (Check for short)

Tester Connection	Specified Condition
IGT1 (B26-3) or IGT1 (B12-40) - Body ground	10 kΩ or higher
IGT2 (B27-3) or IGT2 (B12-39) - Body ground	10 kΩ or higher
IGT3 (B28-3) or IGT3 (B12-38) - Body ground	10 kΩ or higher
IGT4 (B29-3) or IGT4 (B12-37) - Body ground	10 kΩ or higher
IGT5 (B30-3) or IGT5 (B12-36) - Body ground	10 kΩ or higher
IGT6 (B31-3) or IGT6 (B12-35) - Body ground	10 kΩ or higher

Standard resistance (Check for open)

Tester Connection	Specified Condition
IGF (B26-2) - IGF1 (B12-106)	Below 1 Ω
IGF (B27-2) - IGF1 (B12-106)	Below 1 Ω
IGF (B28-2) - IGF1 (B12-106)	Below 1 Ω
IGF (B29-2) - IGF1 (B12-106)	Below 1 Ω
IGF (B30-2) - IGF1 (B12-106)	Below 1 Ω
IGF (B31-2) - IGF1 (B12-106)	Below 1 Ω

Standard resistance (Check for short)

Tester Connection	Specified Condition
IGF (B26-2) or IGF1 (B12-106) - Body ground	10 kΩ or higher
IGF (B27-2) or IGF1 (B12-106) - Body ground	10 kΩ or higher
IGF (B28-2) or IGF1 (B12-106)- Body ground	10 kΩ or higher
IGF (B29-2) or IGF1 (B12-106) - Body ground	10 kΩ or higher

Tester Connection	Specified Condition
IGF (B30-2) or IGF1 (B12-106) - Body ground	10 kΩ or higher
IGF (B31-2) or IGF1 (B12-106) - Body ground	10 kΩ or higher

NG → **REPAIR OR REPLACE HARNESS OR CONNECTOR**

OK

3 PERFORM SIMULATION TEST

(a) Clear the DTC(s) (See page ES-41).
(b) Change the arrangement of the ignition coils (with igniters).
NOTICE:
Do not change the location of the connectors.
(c) Perform a simulation test.

Result

Display (DTC Output)	Proceed to
Same DTCs (that have been erased)	A
Other DTCs	B

B → **REPLACE IGNITION COIL ASSEMBLY**

A

REPLACE ECM (See page ES-543)

DTC	P0365	Camshaft Position Sensor "B" Circuit (Bank 1)

DTC	P0367	Camshaft Position Sensor "B" Circuit Low Input (Bank 1)

DTC	P0368	Camshaft Position Sensor "B" Circuit High Input (Bank 1)

DTC	P0390	Camshaft Position Sensor "B" Circuit (Bank 2)

DTC	P0392	Camshaft Position Sensor "B" Circuit Low Input (Bank 2)

DTC	P0393	Camshaft Position Sensor "B" Circuit High Input (Bank 2)

DESCRIPTION

The exhaust camshaft's Variable Valve Timing (VVT) sensor consists of a magnet and MRE (Magnet Resistance Element).
The exhaust camshaft has a sensor plate with 3 teeth on its outer circumference.
When the exhaust camshaft rotates, changes occur in the air gaps between the 3 teeth and MRE, which affects the magnet. As a result, the resistance of the MRE material fluctuates. The VVT sensor converts the exhaust camshaft rotation data to pulse signals, uses the pulse signals to determine the camshaft angle, and sends it to the ECM.

DTC No.	DTC Detection Condition	Trouble Area
P0365 P0390	• Input voltage to ECM remains 0.3 V or less, or 4.7 V or higher for more than 5 seconds, when 2 or more seconds have elapsed after turning engine switch on (IG) (1 trip detection logic) • No VVT sensor signal to ECM during cranking (1 trip detection logic)	• Open or short in VVT sensor for exhaust camshaft circuit • VVT sensor for exhaust camshaft • Exhaust camshaft • Jumped tooth of timing chain • ECM
P0367 P0392	Output voltage of VVT sensor is 0.3 V or less for 5 seconds (1 trip detection logic)	• Open or short in VVT sensor for exhaust camshaft circuit • VVT sensor for exhaust camshaft • Exhaust camshaft • Jumped tooth of timing chain • ECM
P0368 P0393	Output voltage of VVT sensor is 4.7 V or more for 5 seconds (1 trip detection logic)	• Open or short in VVT sensor for exhaust camshaft circuit • VVT sensor for exhaust camshaft • Exhaust camshaft • Jumped tooth of timing chain • ECM

Reference: Inspection using an oscilloscope

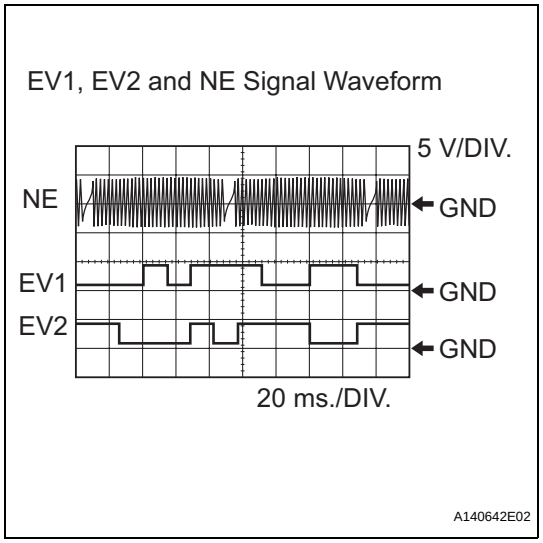

HINT:
- The correct waveform is as shown.
- EV1+ and EV2+ stand for the VVT sensor signal, and NE+ stands for the CKP sensor signal.

Item	Content
Terminal	NE+ - NE- EV1+ - EV1- EV2+ - EV2-
Equipment Setting	5 V/DIV. 20 ms./DIV.
Condition	Cranking or idling

MONITOR DESCRIPTION

If no signal is transmitted by the VVT sensor despite the engine revolving, or the rotations of the camshaft and the crankshaft are not synchronized, the ECM interprets this as a malfunction of the sensor.

MONITOR STRATEGY

Related DTCs	P0365: VVT sensor (Bank 1) open/short P0365: VVT position/Crankshaft position misalignment (Bank 1) P0367: VVT position sensor (Bank 1) range check (low voltage) P0368: VVT position sensor (Bank 1) range check (high voltage) P0390: VVT sensor (Bank 2) open/short P0390: VVT position/Crankshaft position misalignment (Bank 2) P0392: VVT position sensor (Bank 2) range check (low voltage) P0393: VVT position sensor (Bank 2) range check (high voltage)
Required Sensors/Components (Main)	VVT position sensor (Bank 1 and 2)
Required Sensors/Components (Sub)	Crankshaft position sensor
Frequency of Operation	Continuous
Duration	5 seconds
MIL Operation	2 driving cycles: P0365, P0390 (cranking) Immediate: Others
Sequence of Operation	None

TYPICAL ENABLING CONDITIONS

All:

Monitor runs whenever following DTCs are not present	None

ES

Chattering, Low voltage, High voltage:

Starter	OFF
Engine switch	ON
Time after turning engine switch off to on (IG)	2 seconds or more
Battery voltage	8 V or more

P0365, P0390 (Engine running):

Engine speed	600 rpm or more
Battery voltage	8 V or more
Starter	OFF
Engine switch	ON

P0365, P0390 (Cranking):

Starter	ON
Minimum battery voltage	Less than 11 V

TYPICAL MALFUNCTION THRESHOLDS

P0365, P0390 (Chattering):

Exhaust camshaft position sensor voltage	Less than 0.3 V, or more than 4.7 V

P0367, P0392 (Low voltage):

Exhaust camshaft position sensor voltage	Less than 0.3 V

P0368, P0393 (High voltage):

Exhaust camshaft position sensor voltage	More than 4.7 V

P0365, P0390 (Engine running, Cranking):

Exhaust camshaft position signal	No signal

COMPONENT OPERATING RANGE

VVT sensor voltage	0.3 to 4.7 V

WIRING DIAGRAM

Refer to DTC P0335 (See page ES-220).

INSPECTION PROCEDURE

Read freeze frame data using the intelligent tester. The ECM records vehicle and driving condition information as freeze frame data the moment a DTC is stored. When troubleshooting, freeze frame data can be helpful in determining whether the vehicle was running or stopped, whether the engine was warmed up or not, whether the air-fuel ratio was lean or rich, as well as other data recorded at the time of a malfunction (See page ES-41).

1 CHECK HARNESS AND CONNECTOR (SENSOR POWER SOURCE)

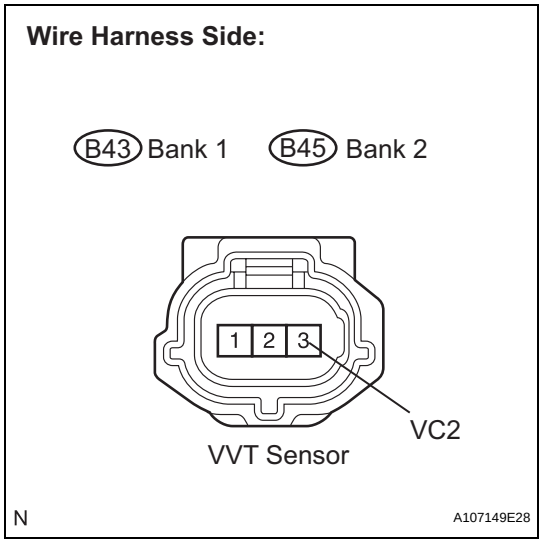

(a) Disconnect the B43 or B45 VVT sensor connector.
(b) Measure the voltage according to the value(s) in the table below.

Standard voltage

Tester Connection	Specified Condition
VC2 (B43-3) - Body ground	4.5 to 5.0 V
VC2 (B45-3) - Body ground	4.5 to 5.0 V

(c) Reconnect the VVT sensor connector.

NG → **REPAIR OR REPLACE HARNESS OR CONNECTOR**

OK

2 CHECK HARNESS AND CONNECTOR (VVT SENSOR - ECM)

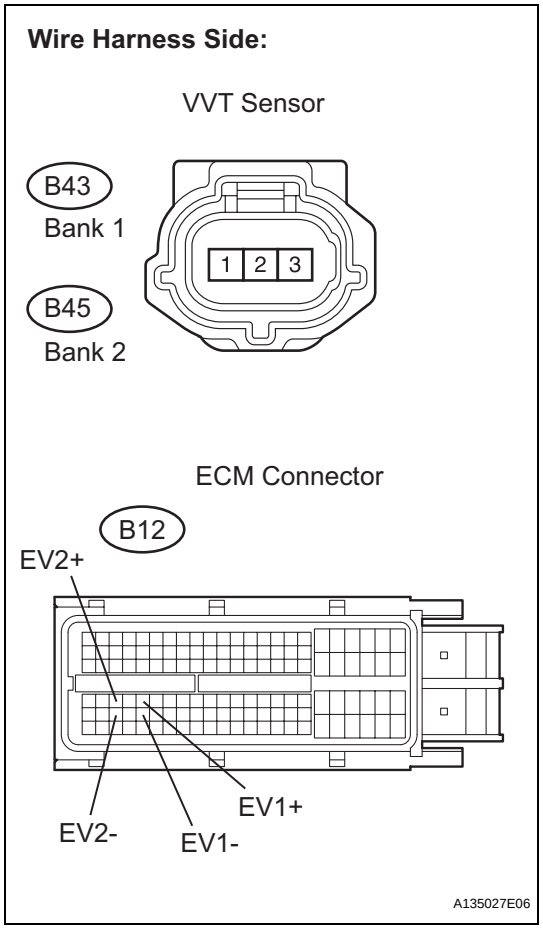

(a) Disconnect the B43 or B45 VVT sensor connector.
(b) Disconnect the B12 ECM connector.
(c) Measure the resistance according to the value(s) in the table below.

Standard resistance (Check for open)

Tester Connection	Specified Condition
EX+ (B43-1) - EV1+ (B12-68)	Below 1 Ω
EX- (B43-2) - EV1- (B12-91)	Below 1 Ω
EX+ (B45-1) - EV2+ (B12-66)	Below 1 Ω
EX- (B45-2) - EV2- (B12-89)	Below 1 Ω

Standard resistance (Check for short)

Tester Connection	Specified Condition
EX+ (B43-1) or EV1+ (B12-68) - Body ground	10 kΩ or higher
EX- (B43-2) or EV1- (B12-91) - Body ground	10 kΩ or higher
EX+ (B45-1) or EV2+ (B12-66) - Body ground	10 kΩ or higher
EX- (B45-2) or EV2- (B12-89) - Body ground	10 kΩ or higher

(d) Reconnect the VVT sensor connector.
(e) Reconnect the ECM connector.

NG → **REPAIR OR REPLACE HARNESS OR CONNECTOR**

OK

ES

ES

3	CHECK VVT SENSOR FOR EXHAUST CAMSHAFT (SENSOR INSTALLATION)

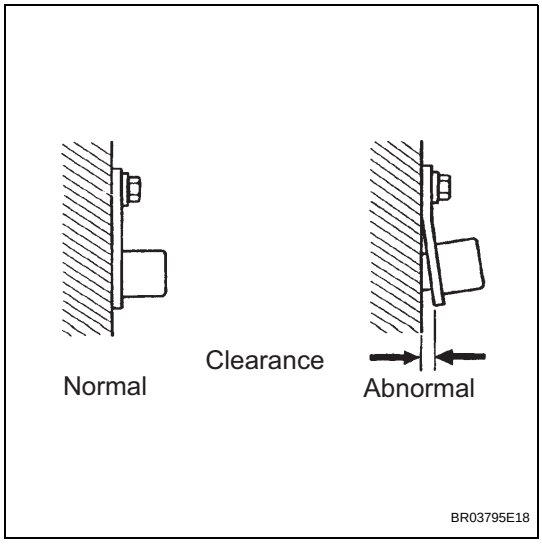

(a) Check the VVT sensor installation condition.
OK:
Sensor is installed correctly.

NG → **REPAIR OR REPLACE VVT SENSOR**

OK

4	CHECK EXHAUST CAMSHAFT

(a) Check the teeth of the camshaft.

NG → **REPLACE EXHAUST CAMSHAFT**

OK

5	REPLACE VVT SENSOR

NEXT

6	CHECK WHETHER DTC OUTPUT RECURS

(a) Connect the intelligent tester to the DLC3.
(b) Turn the engine switch on (IG).
(c) Turn the intelligent tester on.
(d) Clear the DTCs (See page ES-41).
(e) Select the following menu items: DIAGNOSIS / ENHANCED OBD II / DTC INFO / PENDING CODES.
(f) Read the DTCs.

Result

Display (DTC Output)	Proceed to
No output	A
P0365, P0352, P0353, P0354, P0355 or P0356	B

HINT:
If the engine does not start, replace the ECM.

B → **REPLACE ECM (See page ES-543)**

A

END

DTC	P0420	Catalyst System Efficiency Below Threshold (Bank 1)

DTC	P0430	Catalyst System Efficiency Below Threshold (Bank 2)

MONITOR DESCRIPTION

The ECM uses the sensors mounted in front of and behind the Three-Way Catalytic Converter (TWC) to monitor its efficiency.
The first sensor, the Air-Fuel Ratio (A/F) sensor, sends pre-catalyst information to the ECM. The second sensor, the Heated Oxygen (HO2) sensor, sends post-catalyst information to the ECM.
In order to detect any deterioration in the TWC, the ECM calculates the Oxygen Storage Capacity (OSC) of the TWC. This calculation is based on the voltage output of the HO2 sensor while performing active air-fuel ratio control, rather than the conventional detecting method, which uses the locus ratio.
The OSC value is an indication of the oxygen storage capacity of the TWC. When the vehicle is being driven with a warm engine, active air-fuel ratio control is performed for approximately 15 to 20 seconds. When it is performed, the ECM deliberately sets the air-fuel ratio to lean or rich levels. If a rich-lean cycle of the HO2 sensor is long, the OSC becomes greater. There is a direct correlation between the OSCs of the HO2 sensor and the TWC.
The ECM uses the OSC value to determine the state of the TWC. If any deterioration has occurred, it illuminates the MIL and sets a DTC.

DTC No.	DTC Detection Condition	Trouble Area
P0420	OSC value is smaller than standard value under active air-fuel ratio control (2 trip detection logic)	• Gas leakage from exhaust system • A/F sensor (bank 1 sensor 1) • HO2 sensor (bank 1 sensor 2) • Exhaust manifold (TWC)
P0430	OSC value is smaller than standard value under active air-fuel ratio control (2 trip detection logic)	• Gas leakage from exhaust system • A/F sensor (bank 2 sensor 1) • HO2 sensor (bank 2 sensor 2) • Exhaust manifold (TWC)

HINT:
- Bank 1 refers to the bank that includes cylinder No. 1.
- Bank 2 refers to the bank that does not include cylinder No. 1.
- Sensor 1 refers to the sensor closest to the engine assembly.
- Sensor 2 refers to the sensor farthest away from the engine assembly.

MONITOR STRATEGY

Related DTCs	P0420: Catalyst Deterioration P0420: Catalyst Deterioration
Required Sensors/Components (Main)	TWC
Required Sensors/Components (Sub)	A/F sensor, heated oxygen sensor, intake air temperature sensor, mass air flow meter, crankshaft position sensor and engine coolant temperature sensor
Frequency of Operation	Once per driving cycle
Duration	Approximately 30 seconds
MIL Operation	2 driving cycles
Sequence of Operation	None

TYPICAL ENABLING CONDITIONS

Monitor runs whenever following DTCs are not present	P0011, 14 (VVT System 1 - Advance) P0012, 15 (VVT System 1 - Retard) P0031, 32, 51, 52 (A/F Sensor heater - Sensor 1) P0037, 38, 58, 59 (O2 Sensor heater - Sensor 2) P0100 - P0103 (MAF meter) P0115 - P0118 (ECT sensor) P0120 - P0223, P2135 (TP sensor) P0125 (Insufficient ECT for Closed Loop) P0136, P0156(O2 Sensor - Sensor 2) P0171, P0172, P0174, P0175 (Fuel system) P0300 - P0304 (Misfire) P0335 (CKP sensor) P0340 (CMP sensor) P0351 - P0354 (Igniter) P0500 (VSS) P2196, P2198 (A/F Sensor - rationality) P2A00, P2A03 (A/F Sensor - slow response)
Battery voltage	11 V or more
IAT	-10°C (14°F) or more
ECT	70 kPa (525 mmHg) or more
Atmospheric pressure	-
Idle	OFF
Engine RPM	Less than 3,200 rpm
A/F sensor	Activated
Fuel system status	Closed loop
Engine load	10 to 70 %
All of the following conditions 1, 2 and 3 are met:	-
1. MAF	5 to 25 g/sec.
2. Front catalyst temperature (estimated)	600 to 750°C (1,112 to 1,382°F)
3. Rear catalyst temperature (estimated)	100 to 900°C (212 to 1,652°F)
EVAP system monitor	The monitor has not run yet or the vacuum introduction has been completed.
A/F sensor monitor	Completed
Rear HO2S monitor	Completed
Shift position	4th or higher

TYPICAL MALFUNCTION THRESHOLDS

OSC (Oxygen Storage Capacity) of Catalyst	Less than 0.046 g

MONITOR RESULT

Refer to CHECKING MONITOR STATUS (See page ES-20).

CONDITIONING FOR SENSOR TESTING

Perform the operation with the engine speeds and time durations described below prior to checking the waveforms of the A/F and HO2 sensors. This is performed in order to heat the sensors sufficiently to obtain the appropriate inspection results.

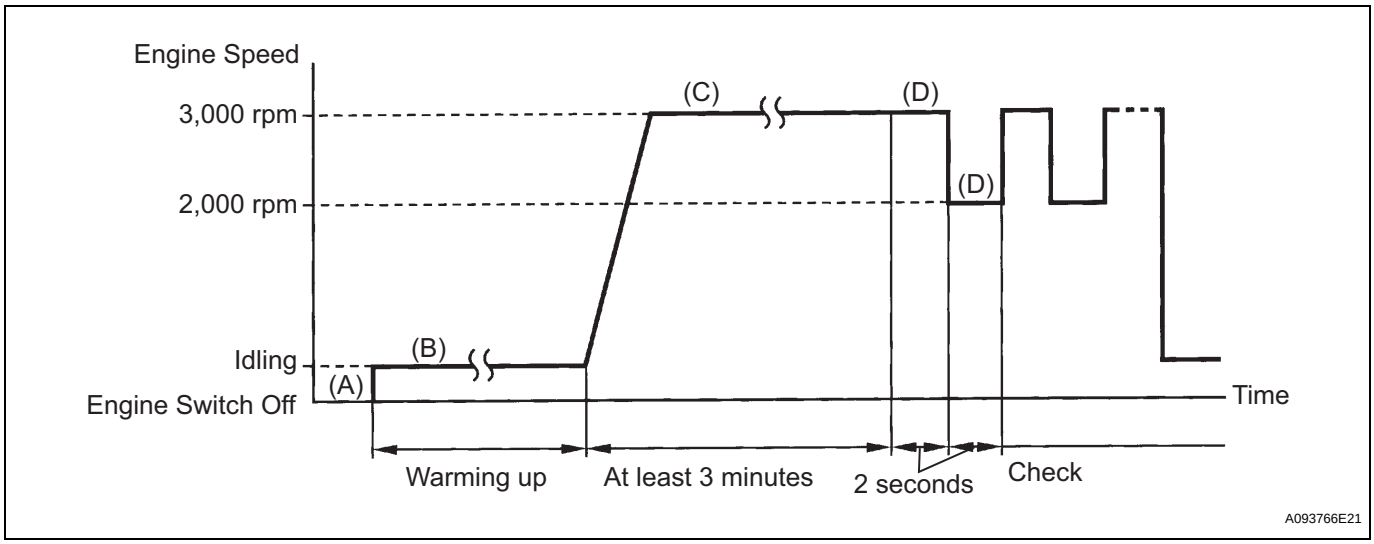

1. Connect the intelligent tester to the DLC3 (Procedure "A").
2. Start the engine and warm it up with all the accessories switched off, until the engine coolant temperature stabilizes (Procedure "B").
3. Run the engine at an engine speed of between 2,500 rpm and 3,000 rpm for at least 3 minutes (Procedure "C").
4. While running the engine at 3,000 rpm for 2 seconds and 2,000 rpm for 2 seconds, check the waveforms of the A/F and HO2 sensors using the tester or scan tool (Procedure "D").

NOTICE:

The Air-Fuel Ratio (A/F) sensor has an output delay of a few seconds and the Heated Oxygen (HO2) sensor has a maximum output delay of approximately 20 seconds.

Case	A/F Sensor (Sensor 1) Output Voltage		HO2 Sensor (Sensor 2) Output Voltage		Main Suspected Trouble Area
1	Injection Volume +25 % -12.5 %		Injection Volume +25 % -12.5 %		-
	Output Voltage More than 3.35 V Less than 3.0 V	OK	Output Voltage More than 0.55 V Less than 0.4 V	OK	
2	Injection Volume +25 % -12.5 %		Injection Volume +25 % -12.5 %		• A/F sensor • A/F sensor heater • A/F sensor circuit
	Output Voltage Almost no reaction	NG	Output Voltage More than 0.55 V Less than 0.4 V	OK	
3	Injection Volume +25 % -12.5 %		Injection Volume +25 % -12.5 %		• HO2 sensor • HO2 sensor heater • HO2 sensor circuit
	Output Voltage More than 3.35 V Less than 3.0 V	OK	Output Voltage Almost no reaction	NG	
4	Injection Volume +25 % -12.5 %		Injection Volume +25 % -12.5 %		• Fuel pressure • Gas leakage from exhaust system (Air-fuel ratio extremely lean or rich)
	Output Voltage Almost no reaction	NG	Output Voltage Almost no reaction	NG	

- Following the A/F CONTROL procedure enables technicians to check and graph the output voltages of both the A/F and HO2 sensors.
- To display the graph, enter the following menus on the tester: DIAGNOSIS / ENHANCED OBD II / ACTIVE TEST / A/F CONTROL / USER DATA / AFS B1 S1 and O2S B1 S2 or AFS B2 S1 and O2S B2 S2, and press the YES button and then the ENTER button followed by the F4 button.

INSPECTION PROCEDURE

HINT:
Read freeze frame data using the intelligent tester. The ECM records vehicle and driving condition information as freeze frame data the moment a DTC is stored. When troubleshooting, freeze frame data can be helpful in determining whether the vehicle was running or stopped, whether the engine was warmed up or not, whether the air-fuel ratio was lean or rich, as well as other data recorded at the time of a malfunction (See page ES-41).

1	CHECK ANY OTHER DTCS OUTPUT (IN ADDITION TO DTC P0420 AND/OR P0430)

(a) Connect the intelligent tester to the DLC3.
(b) Turn the engine switch on (IG) and turn the tester on.
(c) Enter the following menus: DIAGNOSIS / ENHANCED OBD II / DTC INFO / CURRENT CODES.
(d) Read the DTCs.

Result

Display (DTC output)	Proceed to
P0420 and/or P0430	A
P0420 and/or P0430 and other DTCs	B

HINT:
If any DTCs other than P0420 or P0430 are output, troubleshoot those DTCs first.

B → **GO TO DTC CHART (See page ES-59)**

A

2	PERFORM ACTIVE TEST BY INTELLIGENT TESTER (A/F CONTROL)

(a) Connect the intelligent tester to the DLC3.
(b) Start the engine and turn the tester on.
(c) Warm up the engine at an engine speed of 2,500 rpm for approximately 90 seconds.
(d) On the tester, enter the following menus: DIAGNOSIS / ENHANCED OBD II / ACTIVE TEST / A/F CONTROL.
(e) Perform the A/F CONTROL operation with the engine in an idling condition (press the RIGHT or LEFT button to change the fuel injection volume.)
(f) Monitor the output voltages of the A/F and HO2 sensors (AFS B1 S1 and O2S B1 S2 or AFS B2 S1 and O2S B2 S2) displayed on the tester.
HINT:
- The A/F CONTROL operation lowers the fuel injection volume by 12.5 % or increases the injection volume by 25 %.

- Each sensor reacts in accordance with increases and decreases in the fuel injection volume.

Tester Display (Sensor)	Injection Volume	Status	Voltage
AFS B1 S1 or AFS B2 S1 (A/F)	+25 %	Rich	Less than 3.0 V
AFS B1 S1 or AFS B2 S1 (A/F)	-12.5 %	Lean	More than 3.35 V
O2S B1 S2 or O2S B2 S2 (HO2)	+25 %	Rich	More than 0.55 V
O2S B1 S2 or O2S B2 S2 (HO2)	-12.5 %	Lean	Less than 0.4 V

ES

Result

Status AFS B1 S1 or AFS B2 S1	Status O2S B1 S2 or O2S B2 S2	A/F Condition and A/F and HO2 Sensor Conditions	Misfire	Main Suspected Trouble Areas	Proceed to
Lean/Rich	**Lean/Rich**	**Normal**	**-**	• **Three-Way Catalytic Converter (TWC)** • **Gas leakage from exhaust system**	**A**
Lean	**Lean/Rich**	**A/F sensor malfunction**	**-**	• **A/F sensor**	**B**
Rich	**Lean/Rich**	**A/F sensor malfunction**	**May occur**	• **A/F sensor**	**B**
Lean/Rich	**Lean**	**HO2 sensor malfunction**	**-**	• **HO2 sensor** • **Gas leakage from exhaust system**	**C**
Lean/Rich	**Rich**	**HO2 sensor malfunction**	**-**	• **HO2 sensor** • **Gas leakage from exhaust system**	**C**
Lean	**Lean**	**Actual air-fuel ratio lean**	**May occur**	• **Extremely rich or lean actual air-fuel ratio** • **Gas leakage from exhaust system**	**A**
Rich	**Rich**	**Actual air-fuel ratio lean**	**-**	• **Extremely rich or lean actual air-fuel ratio** • **Gas leakage from exhaust system**	**A**

Lean:
During A/F CONTROL, the A/F sensor (AFS) output voltage is consistently more than 3.35 V, and the HO2 sensor output voltage (O2S) is consistently less than 0.4 V.

Rich:
During A/F CONTROL, the AFS is consistently less than 3.0 V, and the O2S is consistently more than 0.55 V.

Lean/Rich:
During A/F CONTROL of the ACTIVE TEST, the output voltage of the HO2 sensor alternates correctly.

B → **CHECK AND REPLACE AIR FUEL RATIO SENSOR**

C → CHECK AND REPLACE HEATED OXYGEN SENSOR, AND CHECK AND REPAIR EXHAUST GAS LEAKAGE

A

3	CHECK FOR EXHAUST GAS LEAK

OK:
No gas leakage.

NG → REPAIR OR REPLACE EXHAUST GAS LEAKAGE POINT

OK

REPLACE THREE-WAY CATALYTIC CONVERTER

DTC	P043E	Evaporative Emission System Reference Orifice Clog Up

DTC	P043F	Evaporative Emission System Reference Orifice High Flow

DTC	P2401	Evaporative Emission System Leak Detection Pump Control Circuit Low

ES

DTC	P2402	Evaporative Emission System Leak Detection Pump Control Circuit High

DTC	P2419	Evaporative Emission System Switching Valve Control Circuit Low

DTC SUMMARY

DTCs	Monitoring Items	Malfunction Detection Conditions	Trouble Areas	Detection Timings	Detection Logic
P043E	0.02 inch orifice clogged	P043E, P043F, P2401, P2402, P2419 are present when one of the following conditions is met during key-off EVAP monitor • Reference orifice clogged • Reference orifice high-flow • Leak detection pump OFF malfunction • Leak detection pump ON malfunction • Vent valve ON (close) malfunction	• Pump module • Connector/wire harness (Pump module - ECM) • ECM	While engine switch OFF	2 trip
P043F	0.02 inch orifice high-flow				
P2401	Vacuum pump stuck OFF				
P2402	Vacuum pump stuck ON				
P2419	Vent valve stuck open (vent)				

HINT:
The 0.02 inch orifice is located inside the pump module.

DESCRIPTION

The circuit description can be found in the EVAP (Evaporative Emission) System (See page ES-395).

INSPECTION PROCEDURE

Refer to the EVAP System (See page ES-395).

MONITOR DESCRIPTION

5 hours*1 after the engine switch is turned off, the electric vacuum pump creates negative pressure (vacuum) in the EVAP (Evaporative Emission) system. The ECM monitors for leaks and actuator malfunctions based on the EVAP pressure.
HINT:
*1: If the engine coolant temperature is not below 35°C (95°F) 5 hours after the engine switch is turned off, the monitor check starts 2 hours later. If it is still not below 35°C (95°F) 7 hours after the engine switch is turned off, the monitor check starts 2.5 hours later.

Sequence	Operations	Descriptions	Duration
-	ECM activation	Activated by soak timer, 5 hours (7 or 9.5 hours) after engine switch is turned off.	-

Sequence	Operations	Descriptions	Duration
A	Atmospheric pressure measurement	Vent valve turned OFF (vent) and EVAP system pressure measured by ECM in order to register atmospheric pressure. If pressure in EVAP system is not between 70 kPa and 110 kPa (525 mmHg and 825 mmHg), ECM cancels EVAP system monitor.	10 seconds
B	First 0.02 inch leak pressure measurement	In order to determine 0.02 inch leak pressure standard, vacuum pump creates negative pressure (vacuum) through 0.02 inch orifice and then ECM checks if vacuum pump and vent valve operate normally.	60 seconds
C	EVAP system pressure measurement	Vent valve turned ON (closed) to shut EVAP system. Negative pressure (vacuum) is created in EVAP system, and EVAP system pressure then measured. Write down measured value as it will be used in leak check. If EVAP pressure does not stabilize within 15 minutes, ECM cancels EVAP system monitor.	15 minutes*2
D	Purge VSV monitor	Purge VSV is opened and then EVAP system pressure is measured by ECM. Large increase indicates normal.	10 seconds
E	Second 0.02 inch leak pressure measurement	After second 0.02 inch leak pressure measurement, leak check is performed by comparing first and second 0.02 inch leak pressure standards. If stabilized system pressure is higher than second 0.02 inch leak pressure standard, ECM determines that EVAP system is leaking.	60 seconds
F	Final check	Atmospheric pressure is measured and then monitoring result is recorded by ECM.	-

*2: If there is only a small amount of fuel in the fuel tank, stabilizing the EVAP pressure takes longer than usual.

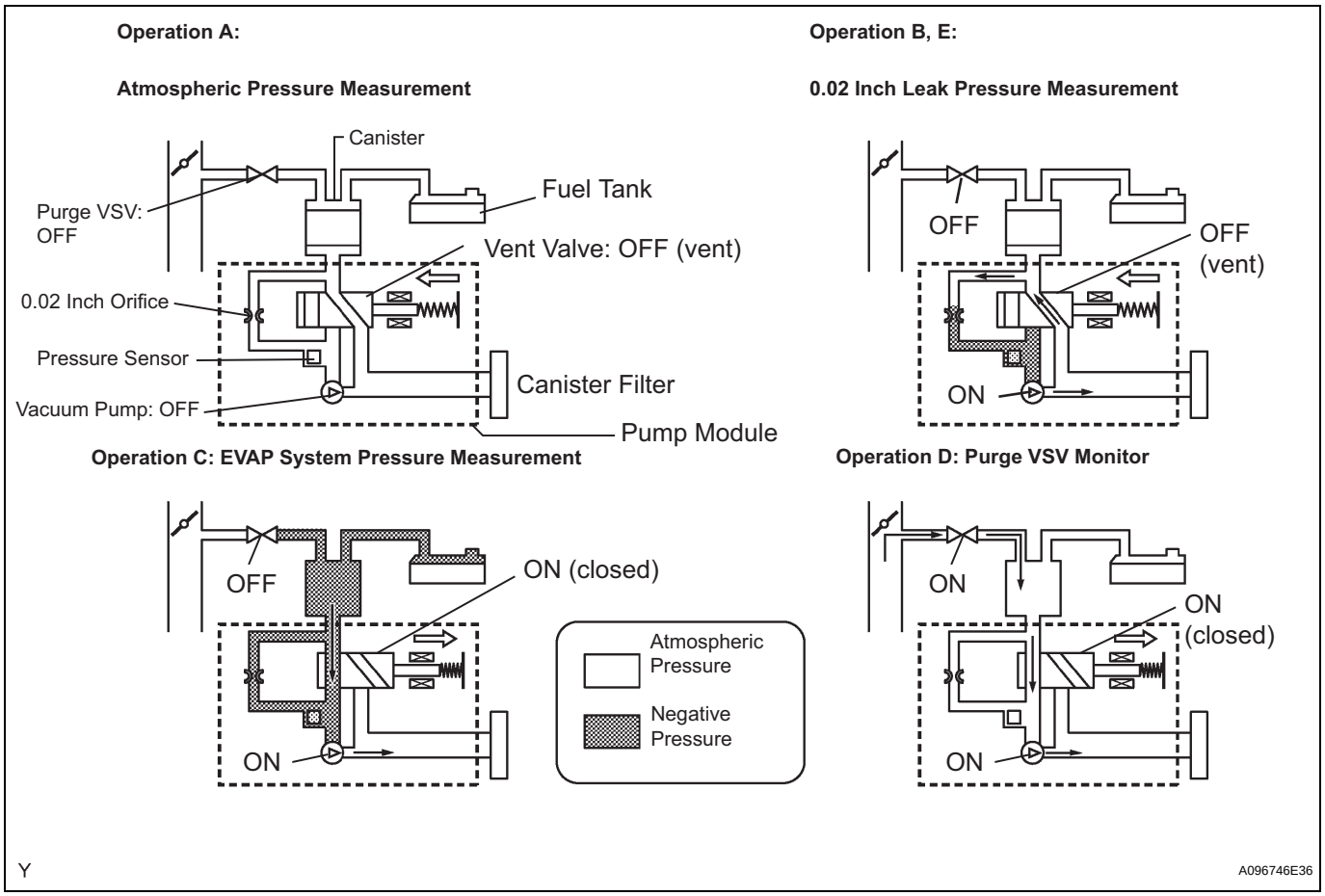

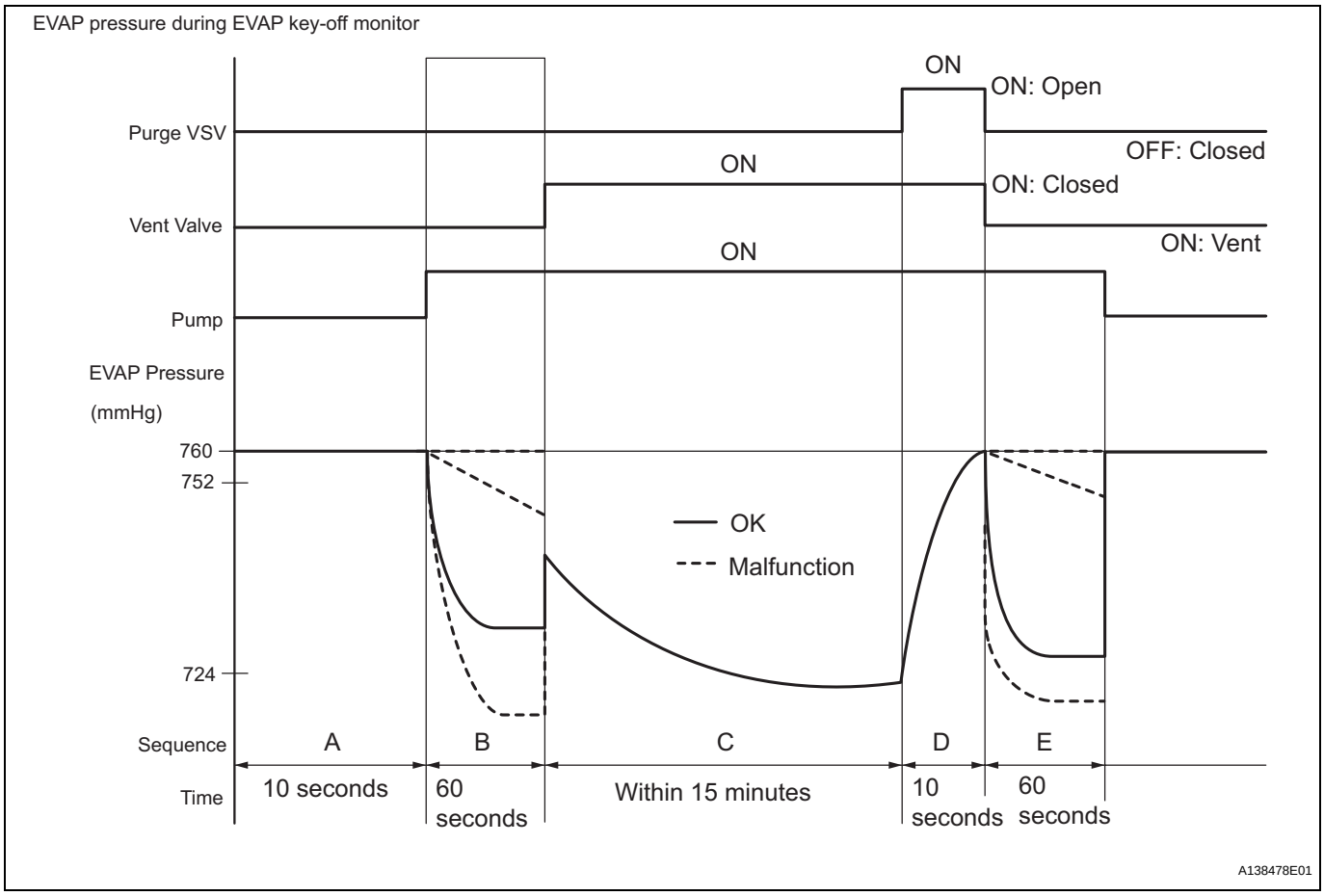

The leak detection pump creates negative pressure through the reference orifice. When the system is normal, the EVAP pressure is within 724 to 752 mmHg* and saturated within a minute.
If not, the ECM interprets this as a malfunction. The ECM will illuminate the MIL and set DTC if this malfunction is detected in a consecutive drive cycle.
*: Typical valve

MONITOR STRATEGY

Related DTCs	P043E: 0.02 inch orifice clog (built-in pump module) P043F: 0.02 inch orifice high-flow (built-in pump module) P2401: Vacuum pump stuck OFF P2402: Vacuum pump stuck ON P2419: Vent valve stuck open (vent)
Required Sensors/Components	Pump module
Frequency of Operation	Once per driving cycle
Duration	Within 2 minutes
MIL Operation	2 driving cycles
Sequence of Operation	None

TYPICAL ENABLING CONDITIONS

The monitor will run whenever these DTCs are not present	None
EVAP key-off monitor is run when all of the following conditions are met	-
Atmospheric pressure	70 to 110 kPa (525 to 825 mmHg)
Battery voltage	10.5 V or more
Vehicle speed	Below 2.5 mph (4 km/h)

Engine switch	OFF
Time after key-off	5 or 7 or 9.5 hours
EVAP pressure sensor malfunction (P0450, P0451, P0452, P0453)	Not detected
EVAP canister purge valve	Not operated by scan tool
EVAP canister vent valve	Not operated by scan tool
EVAP leak detection pump	Not operated by scan tool
Both of the following conditions 1 and 2 are met before key-off	Conditions 1 and 2
1. Duration that vehicle is driven	5 minutes or more
2. EVAP purge operation	Performed
ECT	4.4 to 35°C (40 to 95°F)
IAT	4.4 to 35°C (40 to 95°F)

Key-off monitor sequence 1 to 8

1. Atmospheric pressure measurement

Next sequence is run if the following condition is met:	-
Atmospheric pressure measurement	Less than 0.3 kPa (2.25 mmHg) in 1 second

2. First reference pressure measurement

Next sequence is run if all of the following conditions are met:	Conditions 1, 2 and 3
1. EVAP pressure just after reference pressure measurement	-1 kPa (-7.5 mmHg) or less
2. Reference pressure	-4.85 to -1.057 kPa (-36.384 to -7.929 mmHg)
3. Reference pressure	Saturated within 1 minute

3. EVAP canister vent valve close stuck check

Next sequence is run if the following condition is met:	-
EVAP pressure change after vent valve is ON	0.3 kPa (2.25 mmHg) or more

4. Vacuum introduction

Next sequence is run if the following condition is met:	-
Vacuum introduction time	Saturated within 15 minutes

5. EVAP canister purge valve close stuck check

Next sequence is run if the following condition is met:	-
EVAP pressure change after purge valve is open	0.3 kPa (2.25 mmHg) or more

6. Second reference pressure measurement

Next sequence is run if all of the following conditions are met:	Conditions 1, 2, 3 and 4
1. EVAP pressure just after reference pressure	-1 kPa (-7.5 mmHg) or less
2. Reference pressure	-4.85 to -1.057 kPa (-36.384 to -7.929 mmHg)
3. Reference pressure	Saturated
4. Difference between first reference pressure and second reference pressure	Less than 0.7 kPa (5.25 mmHg)

7. Leak check

Next sequence is run if the following condition is met	-
EVAP pressure when vacuum introduction was complete	Lower than second reference pressure

8. Atmospheric pressure measurement

EVAP monitor is complete if the following condition is met:	-

Atmospheric pressure difference between sequence 1 and 8	Within 0.3 kPa (2.25 mmHg)

TYPICAL MALFUNCTION THRESHOLDS

One of following conditions is met	-
EVAP pressure just after reference pressure measurement start	More than -1 kPa (-7.5 mmHg)
Reference pressure	Less than -4.85 kPa (-36.384 mmHg)
Reference pressure	-1.057 kPa (-7.929 mmHg) or more
Reference pressure	Not saturated
Difference between first reference pressure and second reference pressure	0.7 kPa (5.25 mmHg) or more

MONITOR RESULT

Refer to CHECKING MONITOR STATUS (See page ES-20).

DTC	P0441	Evaporative Emission Control System Incorrect Purge Flow

DTC SUMMARY

DTC No.	Monitoring Item	DTC Detection Condition	Trouble Area	Detection Timing	Detection Logic
P0441	EVAP VSV (Vacuum Switching Valve) stuck open	Vacuum pump creates negative pressure (vacuum) in EVAP system and EVAP system pressure is measured. 0.02 inch leak pressure standard is measured at start and at end of leak check. If stabilized pressure is higher than [second 0.02 inch leak pressure standard x 0.2], ECM determines that EVAP VSV is stuck open	• EVAP VSV • Connector/wire harness (EVAP VSV - ECM) • ECM • Pump module • Leakage from EVAP system	While engine switch off	2 trip
P0441	EVAP VSV stuck closed	After EVAP leak check is performed, EVAP VSV is turned ON (open), and atmospheric air is introduced into EVAP system. 0.02 inch leak pressure standard is measured at start and at end of the check. If pressure does not return to near atmospheric pressure, ECM determines that purge valve is stuck closed	• EVAP VSV • Connector/wire harness (EVAP VSV - ECM) • ECM • Pump module • Leakage from EVAP system	While engine switch off	2 trip
P0441	Purge flow	While engine is running, following conditions are successively met: • Negative pressure is not created in EVAP system when EVAP VSV is turned ON (open) • EVAP system pressure change is less than 0.5 kPa (3.75 mmHg) when vent valve is turned ON (closed) • Atmospheric pressure change before and after purge flow monitor is less than 0.1 kPa (0.75 mmHg)	• EVAP VSV • Connector/wire harness (EVAP VSV - ECM) • Leakage from EVAP line (EVAP VSV - Intake manifold) • ECM	While engine running	2 trip

ES

DESCRIPTION

The circuit description can be found in the EVAP (Evaporative Emission) system (See page ES-395).

INSPECTION PROCEDURE

Refer to the EVAP system (See page ES-395).

MONITOR DESCRIPTION

The two monitors, Key-off and Purge Flow, are used to detect malfunctions relating to DTC P0441. The key-off monitor is initiated by the ECM internal timer, known as the soak timer, 5 hours* after the engine switch is turned off. The purge flow monitor runs while the engine is running.

1. KEY-OFF MONITOR

5 hours* after the engine switch is turned off, the electric vacuum pump creates negative pressure (vacuum) in the EVAP (Evaporative Emission) system. The ECM monitors for leaks and actuator malfunctions based on the EVAP pressure.

HINT:

*: If the engine coolant temperature is not below 35°C (95°F) 5 hours after the engine switch is turned off, the monitor check starts 2 hours later. If it is still not below 35°C (95°F) 7 hours after the engine switch is turned off, the monitor check starts 2.5 hours later.

Sequence	Operation	Description	Duration
-	ECM activation	Activated by soak timer, 5 hours (7 or 9.5 hours) after engine switch turned is off.	-
A	Atmospheric pressure measurement	Vent valve is turned OFF (vent) and EVAP system pressure is measured by ECM in order to register atmospheric pressure. If pressure in EVAP system is not between 70 kPa and 110 kPa (525 mmHg and 825 mmHg), ECM cancels EVAP system monitor.	10 seconds
B	First 0.02 inch leak pressure measurement	In order to determine 0.02 inch leak pressure standard, vacuum pump creates negative pressure (vacuum) through 0.02 inch orifice and then ECM checks if vacuum pump and vent valve operate normally.	60 seconds
C	EVAP system pressure measurement	Vent valve is turned ON (closed) to shut EVAP system. Negative pressure (vacuum) is created in EVAP system, and EVAP system pressure is then measured. Write down measured value as they will be used in leak check. If EVAP pressure does not stabilize within 15 minutes, ECM cancels EVAP system monitor.	15 seconds*
D	EVAP VSV monitor	EVAP VSV is opened and then EVAP system pressure is measured by ECM. Large increase indicates normal.	10 seconds
E	Second 0.02 inch leak pressure measurement	After second 0.02 inch leak pressure measurement, leak check is performed by comparing first and second 0.02 inch leak pressure standards. If stabilized system pressure is higher than second 0.02 inch leak pressure standard, ECM determines that there is a leak in EVAP system.	60 seconds
F	Final check	Atmospheric pressure is measured and then monitoring result is recorded by ECM.	-

HINT:

*: If only a small amount of fuel is in the fuel tank, it takes longer for the EVAP pressure to stabilize.

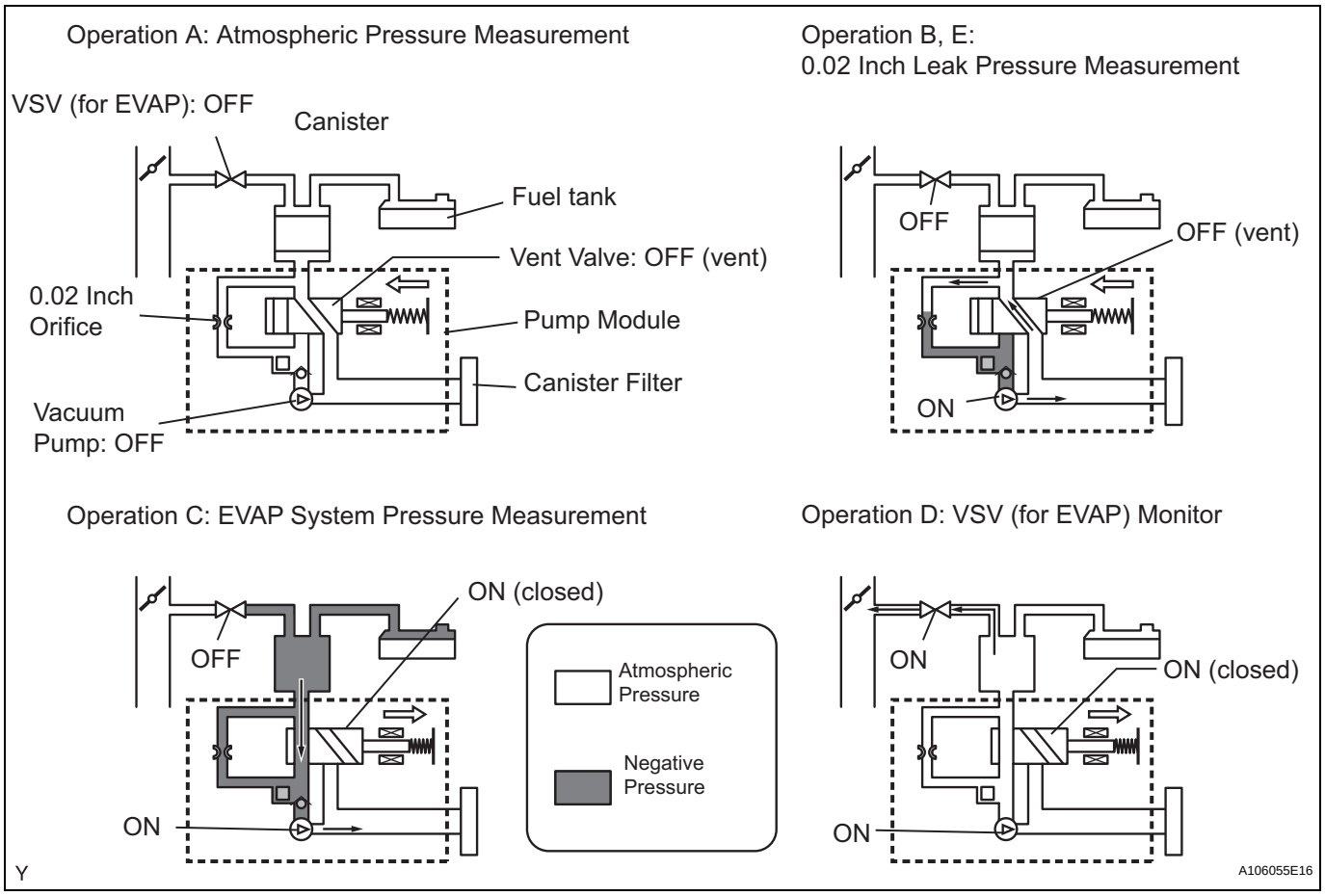
Operation A: Atmospheric Pressure Measurement
VSV (for EVAP): OFF
Canister
Fuel tank
Vent Valve: OFF (vent)
0.02 Inch Orifice
Pump Module
Canister Filter
Vacuum Pump: OFF
Operation B, E: 0.02 Inch Leak Pressure Measurement
OFF
OFF (vent)
ON
Operation C: EVAP System Pressure Measurement
ON (closed)
OFF
ON
Atmospheric Pressure
Negative Pressure
Operation D: VSV (for EVAP) Monitor
ON
ON (closed)
ON
Y
A106055E16

ES

(a) EVAP VSV stuck open
In operation C, the vacuum pump creates negative pressure (vacuum) in the EVAP (Evaporative Emission) system. The EVAP system pressure is then measured by the ECM using the pressure sensor. If the stabilized system pressure is higher than [second 0.02 inch leak pressure standard x 0.2], the ECM interprets this as the EVAP VSV (Vacuum Switching Valve) being stuck open. The ECM illuminates the MIL and sets the DTC (2 trip detection logic).

EVAP Pressure when VSV (for EVAP) Stuck Open:

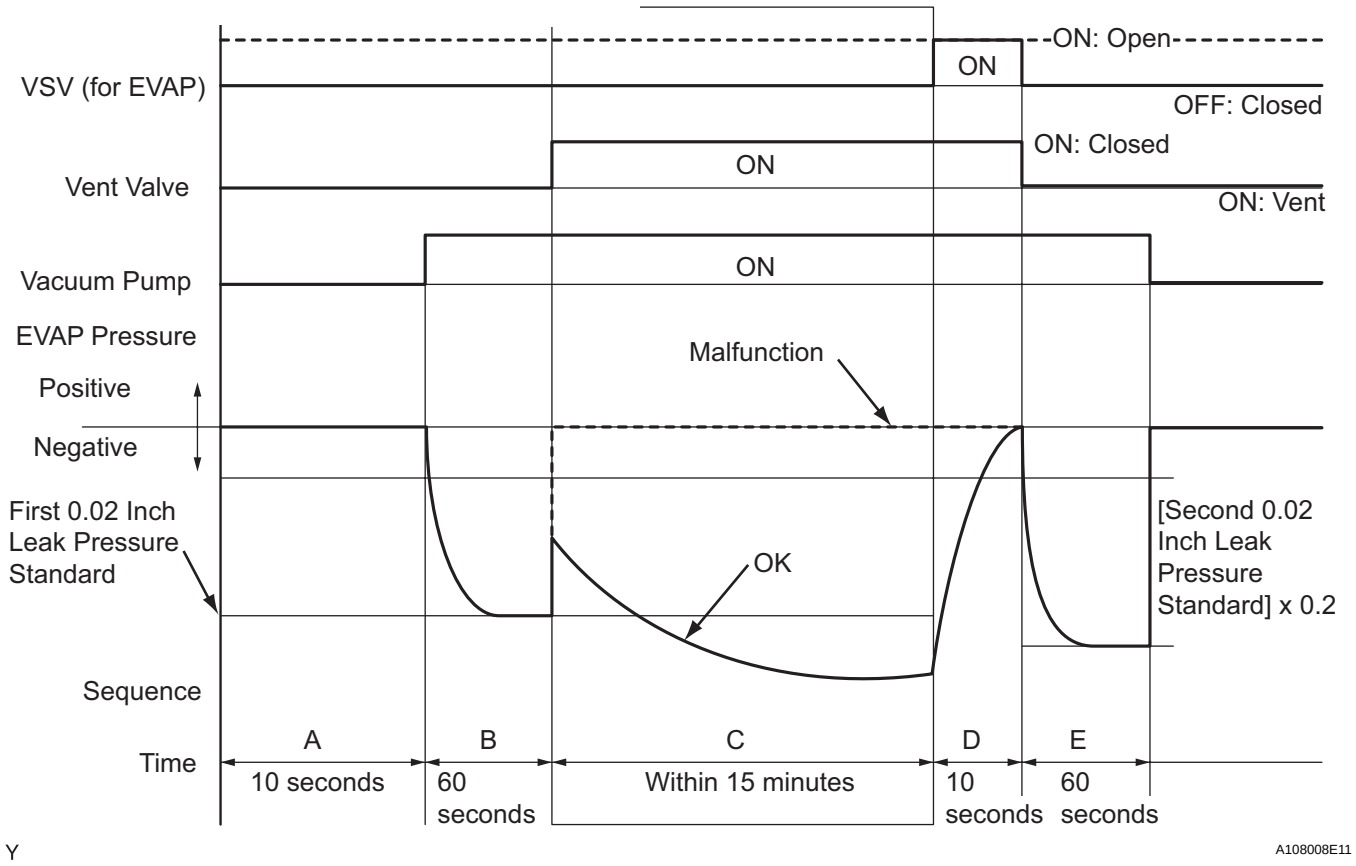

ES

(b) EVAP VSV stuck closed
In operation D, the pressure sensor measures the EVAP (Evaporative Emission) system pressure. The pressure measurement for EVAP VSV monitor is begun when the EVAP VSV is turned ON (open) after the EVAP leak check. When the measured pressure indicates an increase of 0.3 kPa (2.25 mmHg) or more, the EVAP VSV is functioning normally. If the pressure does not increase, the ECM interprets this as the EVAP VSV being stuck closed. The ECM illuminates the MIL and sets the DTC (2 trip detection logic).

EVAP Pressure when VSV (for EVAP) Stuck Closed:

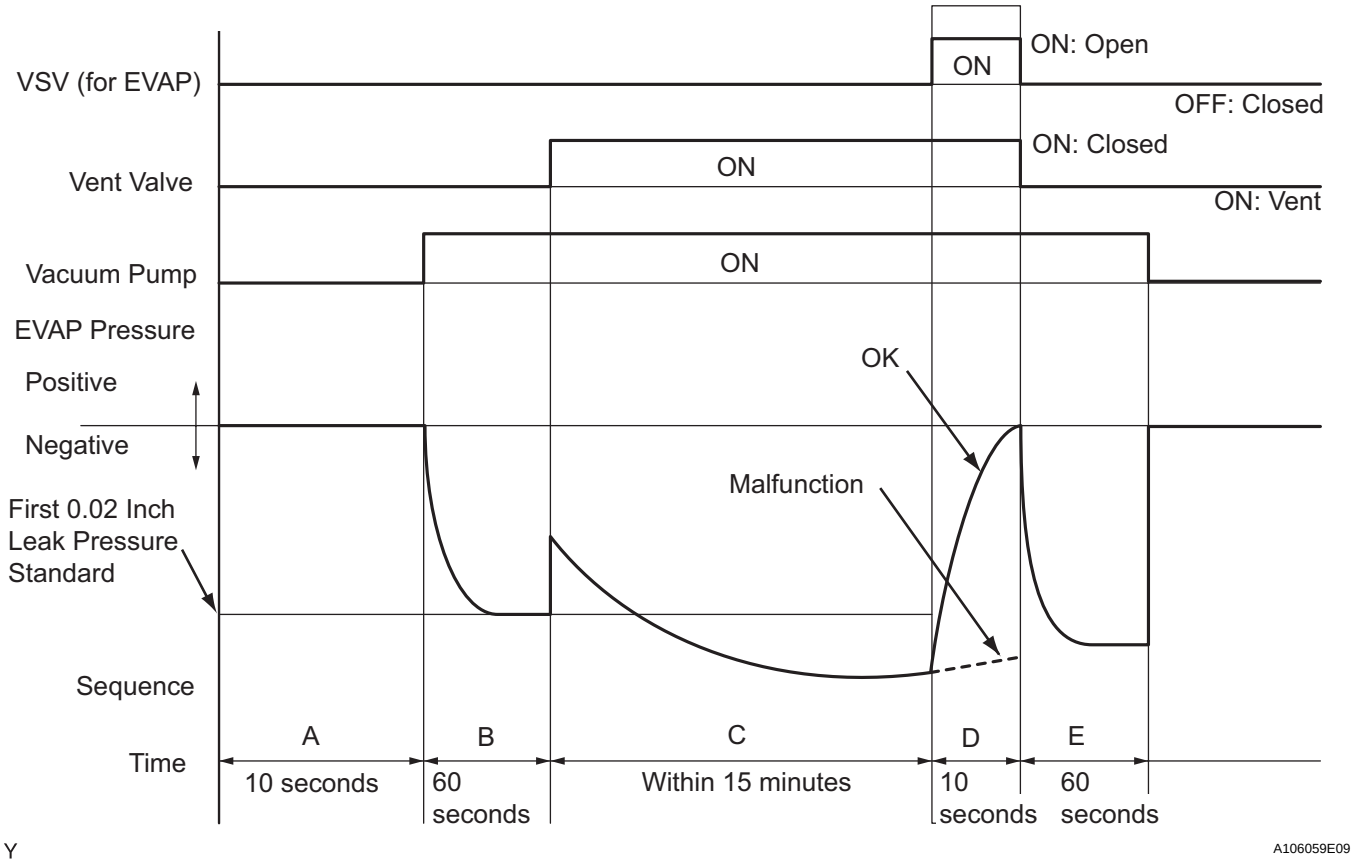

EVAP Pressure During Purge Flow Monitor:

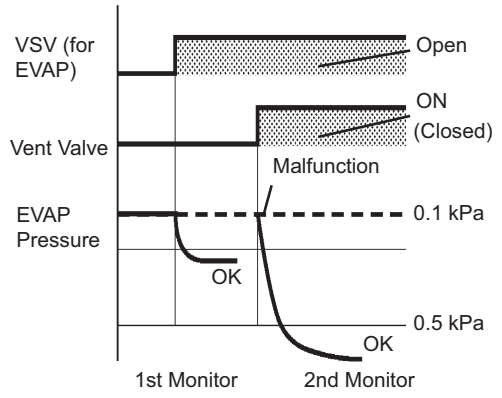

2. PURGE FLOW MONITOR

The purge flow monitor consists of the two step monitors. The 1st monitor is conducted every time and the 2nd monitor is activated if necessary.

- The 1st monitor
  While the engine is running and the EVAP VSV (Vacuum Switching Valve) is ON (open), the ECM monitors the purge flow by measuring the EVAP pressure change. If negative pressure is not created, the ECM begins the 2nd monitor.
- The 2nd monitor
  The vent valve is turned ON (closed) and the EVAP pressure is then measured. If the variation in the pressure is less than 0.5 kPa (3.75 mmHg), the ECM interprets this as the EVAP VSV being stuck closed, and illuminates the MIL and sets DTC P0441 (2 trip detection logic).

Atmospheric pressure check:

In order to ensure reliable malfunction detection, the variation between the atmospheric pressure, before and after conduction of the purge flow monitor, is measured by the ECM.

OBD II MONITOR SPECIFICATIONS

1. Key-off Monitor

Monitor Strategy:

Required Sensors/Components	EVAP VSV and pump module
Frequency of Operation	Once per driving cycle
Duration	Within 15 minutes
MIL Operation	2 driving cycles
Sequence of Operation	None

Typical Enabling Conditions:

EVAP key-off monitor runs when all of following conditions are met:	-
Atmospheric pressure	70 to 110 kPa (525 to 825 mmHg)
Battery voltage	10.5 V or more
Vehicle speed	Below 2.5 mph (4 km/h)
Engine switch	OFF
Time after key off	5, 7 or 9.5 hours
EVAP pressure sensor malfunction (P0450, P0451, P0452 and/or P0453)	Not detected
EVAP VSV	Not operated by scan tool
Vent valve	Not operated by scan tool
Leak detection pump	Not operated by scan tool
Both of following conditions are met before key off:	Conditions 1 and 2
1. Duration that vehicle is being driven	5 minutes or more
2. EVAP purge operation	Performed
ECT	4.4 to 35°C (40 to 95°F)
IAT	4.4 to 35°C (40 to 95°F)

(a) Key-off monitor sequence 1 to 8

1. Atmospheric pressure

Next sequence is run if following condition is met:	-
Atmospheric pressure change	Less than 0.3 kPa (2.25 mmHg) for 1 second

2. First reference pressure

Next sequence is run if all of following conditions are met:	Conditions 1, 2 and 3
1. EVAP pressure 4 seconds after reference pressure measurement	-1 kPa (-7.5 mmHg) or less
2. Reference pressure	-4.85 to -1.05 kPa (-36.38 to -7.87 mmHg)
3. Reference pressure	Saturated within 1 minute

3. Vent valve stuck closed check

Next sequence is run if following condition is met:	-
EVAP pressure change after vent valve is turned ON	0.3 kPa (2.25 mmHg) or more

4. Vacuum introduction and leak

Next sequence is run if both of following condition is met:	-
Vacuum introduction time	15 minutes or less

5. EVAP VSV stuck closed check

Next sequence is run if following condition is met:	-
EVAP pressure change after purge VSV is turned ON	0.3 kPa (2.25 mmHg) or more

6. Second reference pressure measurement

Next sequence is run if all of following conditions are met:	Conditions 1, 2, 3 and 4
1. EVAP pressure just after reference pressure measurement	-1 kPa (-7.5 mmHg) or less
2. Reference pressure	-4.85 to -1.05 kPa (-36.38 to -7.87 mmHg)
3. Reference pressure	Saturated within 1 minute
4. Reference pressure difference between first and second	Less than 0.7 kPa (5.25 mmHg)

7. Leak check

Next sequence is run if following condition is met:	-
EVAP pressure when vacuum introduction was complete	Less than second reference pressure

8. Atmospheric pressure

Monitor is complete	-
Atmospheric pressure difference between sequence 1 and 8	0.3 kPa (2.25 mmHg) or less

ES

Typical Malfunction Thresholds:

One of the following conditions is met:	-
(a) EVAP VSV stuck open	-
EVAP pressure when vacuum introduction is complete	Higher than reference pressure x 0.2
(b) EVAP VSV stuck closed	-
EVAP pressure change after EVAP canister purge valve is opened	Less than 0.3 kPa (2.25 mmHg)

2. Purge Flow Monitor

Monitor Strategy:

Required Sensors/Components	EVAP VSV and pump module
Frequency of Operation	Once per driving cycle
Duration	Within 10 minutes
MIL Operation	2 driving cycles
Sequence of Operation	None

Typical Enabling Conditions:

Monitor runs whenever these DTCs are not present	-
Engine	Running
ECT	4.4°C (40°F) or more
IAT	4.4°C (40°F) or more
EVAP pressure sensor malfunction	Not detected
EVAP VSV	Not operated by scan tool
EVAP system check	Not detected by scan tool
Battery voltage	10 V or more
Purge duty cycle	8 % or more

Typical Malfunction Thresholds:

Both of following conditions are met:	Condition 1 or 2
1. EVAP pressure change when purge operation is started	Less than 0.1 kPa (0.75 mmHg)
2. EVAP pressure change during purge operation when vent valve is closed	Less than 0.5 kPa (3.75 mmHg)

MONITOR RESULT

Refer to CHECKING MONITOR STATUS (See page ES-20).

DTC	P0450	Evaporative Emission Control System Pressure Sensor / Switch

DTC	P0451	Evaporative Emission Control System Pressure Sensor Range / Performance

DTC	P0452	Evaporative Emission Control System Pressure Sensor / Switch Low Input

ES

DTC	P0453	Evaporative Emission Control System Pressure Sensor / Switch High Input

DTC SUMMARY

DTC No.	Monitoring Item	Malfunction Detection Condition	Trouble Area	Detection Timing	Detection logic
P0450	Pressure sensor voltage abnormal fluctuation	Sensor output voltage rapidly fluctuates beyond upper and lower malfunction thresholds for 0.5 seconds.	• Pump module • ECM	• EVAP monitoring (engine switch off) • Engine switch on	1 trip
P0451	Pressure sensor noising	Sensor output voltage fluctuates frequently in a certain time period.	• Pump module • Connector/wire harness (Pump module - ECM) • ECM	• EVAP monitoring (engine switch off) • Engine running	2 trip
P0451	Pressure sensor stuck	Sensor output voltage does not vary in a certain time period.	• Pump module • Connector/wire harness (Pump module - ECM) • ECM	• EVAP monitoring (engine switch off)	2 trip
P0452	Pressure sensor voltage low	Sensor output voltage is less than 0.45 V for 0.5 seconds.	• Pump module • Connector/wire harness (Pump module - ECM) • ECM	• EVAP monitoring (engine switch off) • Engine switch on	1 trip
P0453	Pressure sensor voltage high	Sensor output voltage is more than 4.9 V for 0.5 seconds.	• Pump module • Connector/wire harness (Pump module - ECM) • ECM	• EVAP monitoring (engine switch off) • Engine switch on	1 trip

HINT:
The pressure sensor is built into the pump module.

DESCRIPTION

The circuit description can be found in the EVAP (Evaporative Emission) system (See page ES-395).

MONITOR DESCRIPTION

1. DTC P0450: Pressure sensor voltage abnormal fluctuation
   If the pressure sensor output voltage rapidly fluctuates between less than 0.45 V and more than 4.9 V, the ECM interprets this as an open or short circuit in the pressure sensor or its circuit, and stops the EVAP (Evaporative Emission) system monitor. The ECM then illuminates the MIL and sets the DTC (1 trip detection logic).

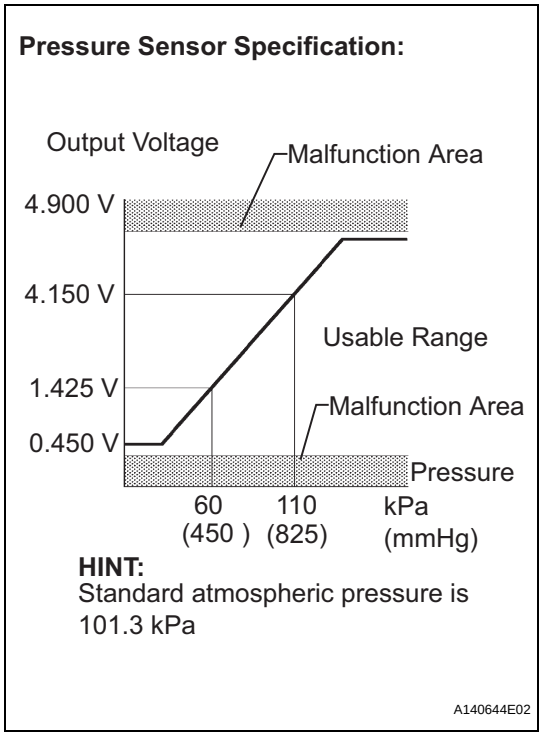

2. DTC P0451: Pressure sensor noising or stuck
   If the pressure sensor output voltage fluctuates rapidly for 10 seconds, the ECM stops the EVAP system monitor. The ECM interprets this as noise from the pressure sensor, and stops the EVAP system monitor. The ECM then illuminates the MIL and sets the DTC.
   Alternatively, if the sensor output voltage does not change for 10 seconds, the ECM interprets this as the sensor being stuck, and stops the monitor. The ECM then illuminates the MIL and sets the DTC. (Both the malfunctions are detected by 2 trip detection logic).
3. DTC P0452: Pressure sensor voltage low
   If the pressure sensor output voltage is below 0.45 V, the ECM interprets this as an open or short circuit in the pressure sensor or its circuit, and stops the EVAP system monitor. The ECM then illuminates the MIL and sets the DTC (1 trip detection logic).
4. DTC P0453: Pressure sensor voltage high
   If the pressure sensor voltage output is 4.9 V or more, the ECM interprets this as an open or short circuit in the pressure sensor or its circuit, and stops the EVAP system monitor. The ECM then illuminates the MIL and sets the DTC (1 trip detection logic).

MONITOR STRATEGY

Related DTCs	P0450: Pressure sensor chattering P0451: Pressure sensor noise P0451: Pressure sensor stuck P0452: Pressure sensor low voltage P0453: Pressure sensor high voltage
Required Sensors/Components	Pump module
Frequency of Operation	Once per driving cycle: P0451 sensor stuck Continuous: P0451 sensor noising, P0450, P0452 and P0453
Duration	0.5 seconds: P0450, P0452, P0453 Within 15 seconds: P0451

MIL Operation	Immediate: P0450, P0452, P0453 2 driving cycles: P0451
Sequence of Operation	None

TYPICAL ENABLING CONDITIONS

P0450, P0452 and P0453 (Pressure sensor chattering, low voltage, high voltage):

Monitor runs whenever following DTCs are not present:	None
Battery voltage	8 V or more
Starter	OFF
Engine switch	ON

P0451 (Pressure sensor noise):

Atmospheric pressure	70 kPa (525 mmHg) to 110 kPa (825 mmHg)
Battery voltage	10.5 V or more
Intake air temperature	4.4 to 35°C (40 to 95°F)
EVAP pressure sensor malfunction (P0450, P0452, P0453)	Not detected
Either of following conditions is met:	1 or 2
1. Engine	Running
2. Time after key off	5, 7 or 9.5 hours

P0451 (Pressure sensor stuck):

Atmospheric pressure	Less than 70 kPa (525 mmHg), or 110 kPa (825 mmHg) or more
Battery voltage	10.5 V or more
Intake air temperature	4.4 to 35°C (40 to 95°F)
EVAP pressure sensor malfunction (P0450, P0452, P0453)	Not detected
Time after key off	5, 7 or 9.5 hours

TYPICAL MALFUNCTION THRESHOLDS

P0450: Pressure sensor chattering

EVAP pressure	Less than 42.11 kPa (315.82 mmHg), or more than 123.761 kPa (928.207 mmHg)

P0451: Pressure sensor noise

Frequency that EVAP pressure change is 0.3 kPa or more	10 times or more in 10 seconds

P0451: Pressure sensor stuck

EVAP pressure change during reference pressure	Less than 0.65 kPa (4.87 mmHg)

P0452: Pressure sensor low voltage

EVAP pressure	Less than 42.11 kPa (315.82 mmHg)

P0453: Pressure sensor high voltage

EVAP pressure	More than 123.761 kPa (928.207 mmHg)

WIRING DIAGRAM

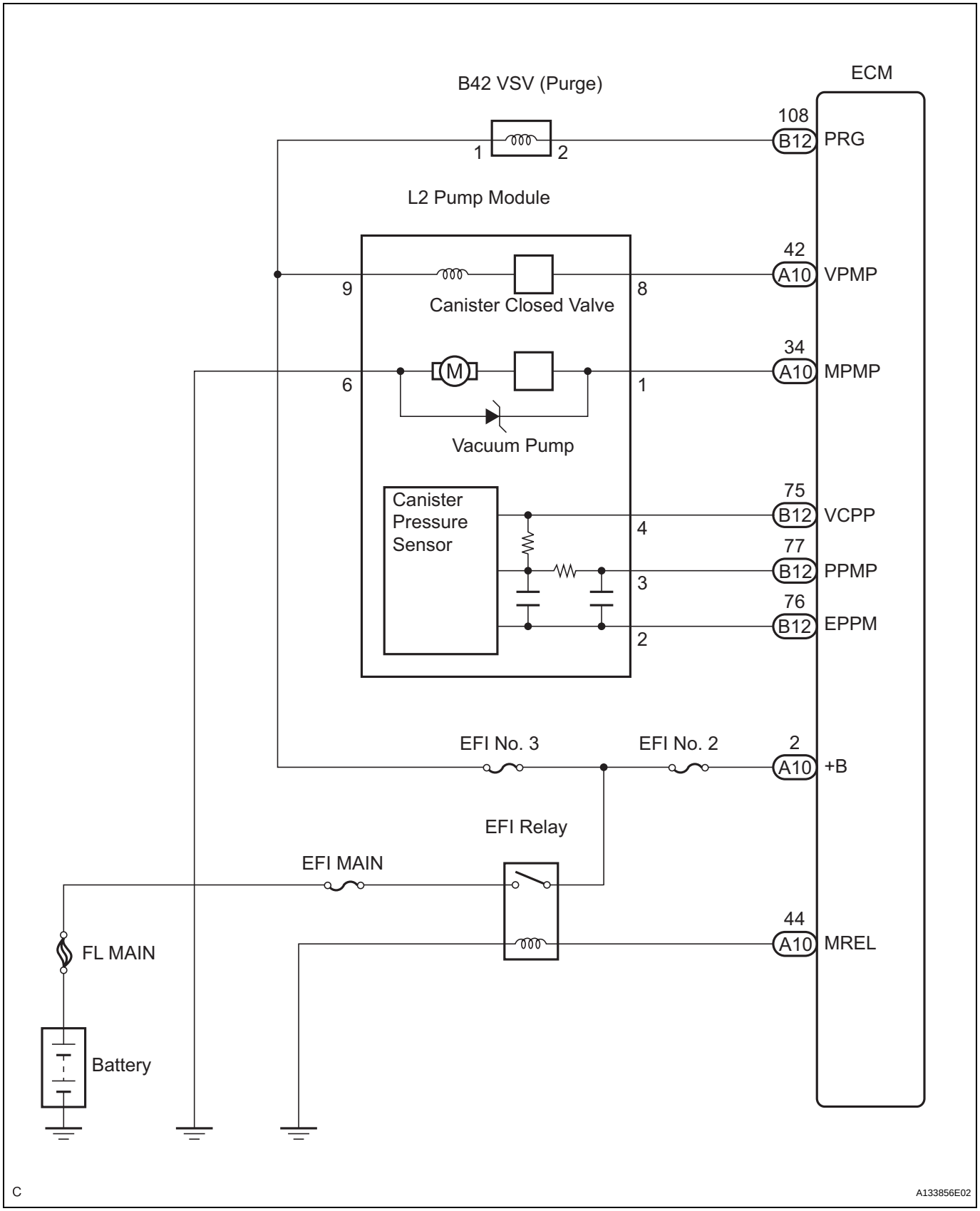

ES

INSPECTION PROCEDURE

NOTICE:

- **When a vehicle is brought into a workshop, leave it as it is. Do not change the vehicle condition. For example, do not tighten the fuel tank cap.**
- **Do not disassemble the pump module.**
- **The intelligent tester is required to conduct the following diagnostic troubleshooting procedure.**

ES

1 CHECK HARNESS AND CONNECTOR (PUMP MODULE - ECM)

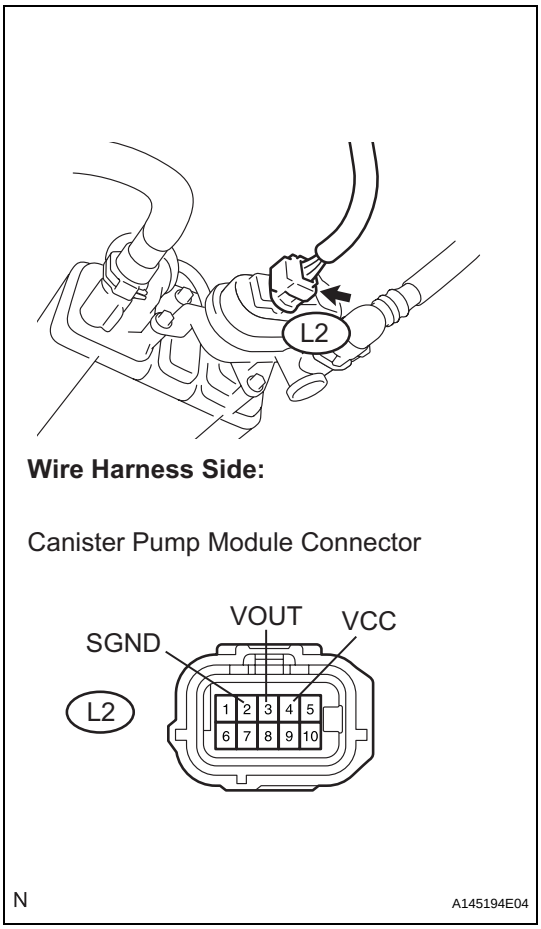

(a) Disconnect the L2 canister connector.
(b) Turn the engine switch on (IG).
(c) Measure the voltage and resistance according to the value(s) in the table below.

Standard

Tester Connection	Specified Condition
L2-4 - Body ground	4.5 to 5.0 V
L2-3 - Body ground	4.5 to 5.0 V
L2-2 - Body ground	100 Ω or less

Result

Test Result	Suspected Trouble Area	Proceed to
Voltage and resistance within standard ranges	Open in pressure sensor circuit	A
Voltage and resistance outside standard ranges	Open in wire harness/ connector (ECM - pressure sensor)	B

(d) Reconnect the canister connector.

B → **Go to step 3**

A

2 REPLACE CHARCOAL CANISTER ASSEMBLY

(a) Replace the canister assembly (See page EC-9).
NOTICE:
When replacing the canister, check the canister pump module interior and related pipes for water, fuel and other liquids. If liquids are present, check for disconnections and/or cracks in the following: 1) the pipe from the air inlet pipe to the canister pump module; 2) the canister filter; and 3) the fuel tank vent hose.

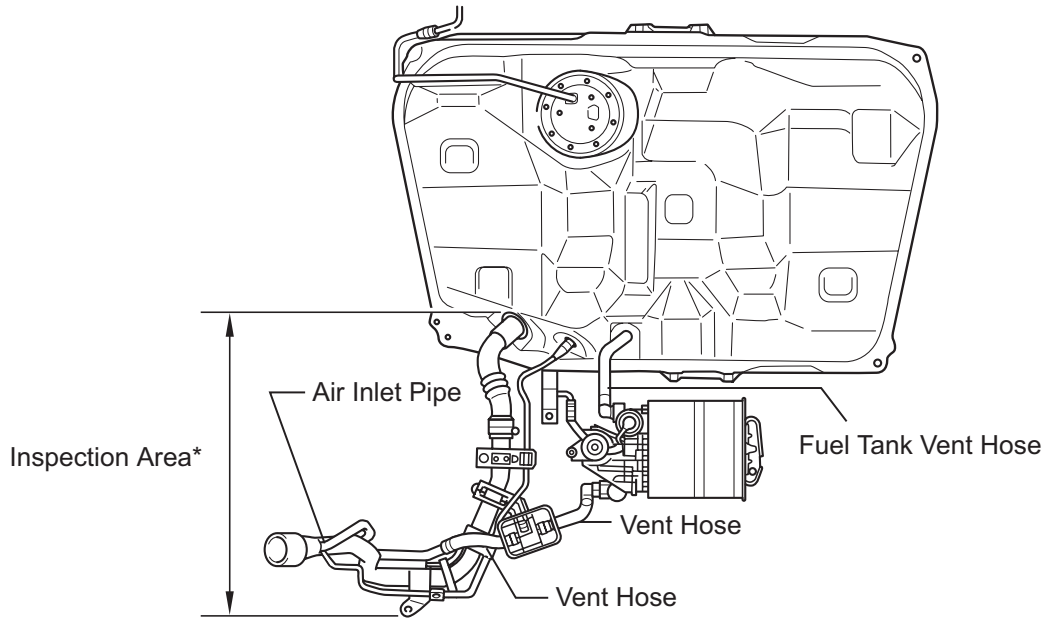

*: Check for disconnection and/or crack

N

A132283E05

NEXT → **Go to step 5**

3 CHECK HARNESS AND CONNECTOR

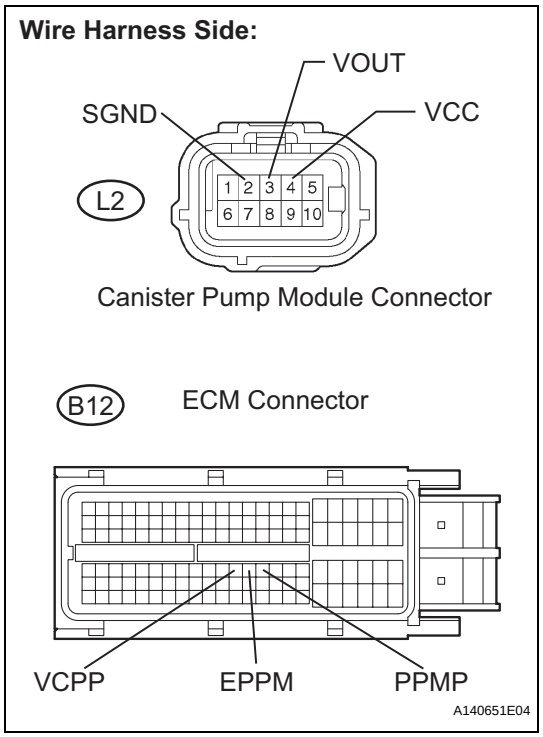

(a) Disconnect the L2 canister pump module connector.
(b) Disconnect the B12 ECM connector.
(c) Measure the resistance according to the value(s) in the table below.

Standard resistance (Check for open)

Tester Connection	Specified Condition
L2-4 (VCC) - B12-75 (VCPP)	Below 1 Ω
L2-3 (VOUT) - B12-77 (PPMP)	Below 1 Ω
L2-2 (SGND) - B12-76 (EPPM)	Below 1 Ω

Standard resistance (Check for short)

Tester Connection	Specified Condition
L2-4 (VCC) or B12-75 (VCPP) - Body ground	10 kΩ or higher
L2-3 (VOUT) or B12-77 (PPMP) - Body ground	10 kΩ or higher
L2-2 (SGND) or B12-76 (EPPM) - Body ground	10 kΩ or higher

(d) Reconnect the canister pump module connector.
(e) Reconnect the ECM connector.

NG → **REPAIR OR REPLACE HARNESS OR CONNECTOR**

ES

OK

4	REPLACE ECM

(a) Replace the ECM (See page ES-543).

NEXT

5	CHECK WHETHER DTC OUTPUT RECURS (AFTER REPAIR)

ES

(a) Connect the intelligent tester to the DLC3.
(b) Turn the engine switch on (IG) (do not start the engine).
(c) Turn the tester on.
(d) Wait for at least 60 seconds.
(e) Enter the following menus: DIAGNOSIS / ENHANCED OBD II / DTC INFO / PENDING CODES.
HINT:
If no pending DTCs are displayed on the tester, the repair has been successfully completed.

NEXT

COMPLETED

DTC	P0455	Evaporative Emission Control System Leak Detected (Gross Leak)

DTC	P0456	Evaporative Emission Control System Leak Detected (Very Small Leak)

DTC SUMMARY

DTC No.	Monitoring Item	Malfunction Detection Condition	Trouble Area	Detection Timing	Detection logic
P0455	EVAP gross leak	Vacuum pump creates negative pressure (vacuum) in EVAP system and EVAP system pressure measured. 0.02 inch leak pressure standard measured at start and at end of leak check. If stabilized pressure higher than [second 0.02 inch leak pressure standard x 0.2], ECM determines that EVAP system has a large leak	• Fuel tank cap (loose) • Leakage from EVAP line (Canister - Fuel tank) • Leakage from EVAP line (EVAP VSV - Canister) • Pump module • Leakage from fuel tank • Leakage from canister	While engine switch off	2 trip
P0456	EVAP small leak	Vacuum pump creates negative pressure (vacuum) in EVAP system and EVAP system pressure measured. 0.02 inch leak pressure standard measured at start and at end of leak check. If stabilized pressure higher than second 0.02 inch leak pressure standard, ECM determines that EVAP system has a small leak	Same as above	While engine switch off	2 trip

ES

DESCRIPTION

The circuit description can be found in the EVAP (Evaporative Emission) system (See page ES-395).

INSPECTION PROCEDURE

Refer to the EVAP system (See page ES-395).

MONITOR DESCRIPTION

5 hours* after the engine switch is turned off, the electric vacuum pump creates negative pressure (vacuum) in the EVAP (Evaporative Emission) system. The ECM monitors for leaks and actuator malfunctions based on the EVAP pressure.

HINT:

*: If the engine coolant temperature is not below 35°C (95°F) 5 hours after the engine switch is turned off, the monitor check starts 2 hours later. If it is still not below 35°C (95°F) 7 hours after the engine switch is turned off, the monitor check starts 2.5 hours later.

Sequence	Operation	Description	Duration
-	ECM activation	Activated by soak timer, 5 hours (7 or 9.5 hours) after engine switch is turned off.	-
A	Atmospheric pressure measurement	Vent valve is turned OFF (vent) and EVAP system pressure is measured by ECM in order to register atmospheric pressure. If pressure in EVAP system is not between 70 kPa and 110 kPa (525 mmHg and 825 mmHg), ECM cancels EVAP system monitor.	10 seconds

Sequence	Operation	Description	Duration
B	First 0.02 inch leak pressure measurement	In order to determine 0.02 inch leak pressure standard, vacuum pump creates negative pressure (vacuum) through 0.02 inch orifice and then ECM checks if vacuum pump and vent valve operate normally.	60 seconds
C	EVAP system pressure measurement	Vent valve is turned ON (closed) to shut EVAP system. Negative pressure (vacuum) is created in EVAP system, and EVAP system pressure is then measured. Write down measured value as they will be used in leak check. If EVAP pressure does not stabilize within 15 minutes, ECM cancels EVAP system monitor.	15 minutes*
D	EVAP VSV monitor	EVAP VSV is opened and then EVAP system pressure is measured by ECM. Large increase indicates normal.	10 seconds
E	Second 0.02 inch leak pressure measurement	After second 0.02 inch leak pressure measurement, leak check is performed by comparing first and second 0.02 inch leak pressure standards. If stabilized system pressure is higher than second 0.02 inch leak pressure standard, ECM determines that there is a leak in EVAP system.	60 seconds
F	Final check	Atmospheric pressure is measured and then monitoring result is recorded by ECM.	-

HINT:
*: If only a small amount of fuel is in the fuel tank, it takes longer for the EVAP pressure to stabilize.

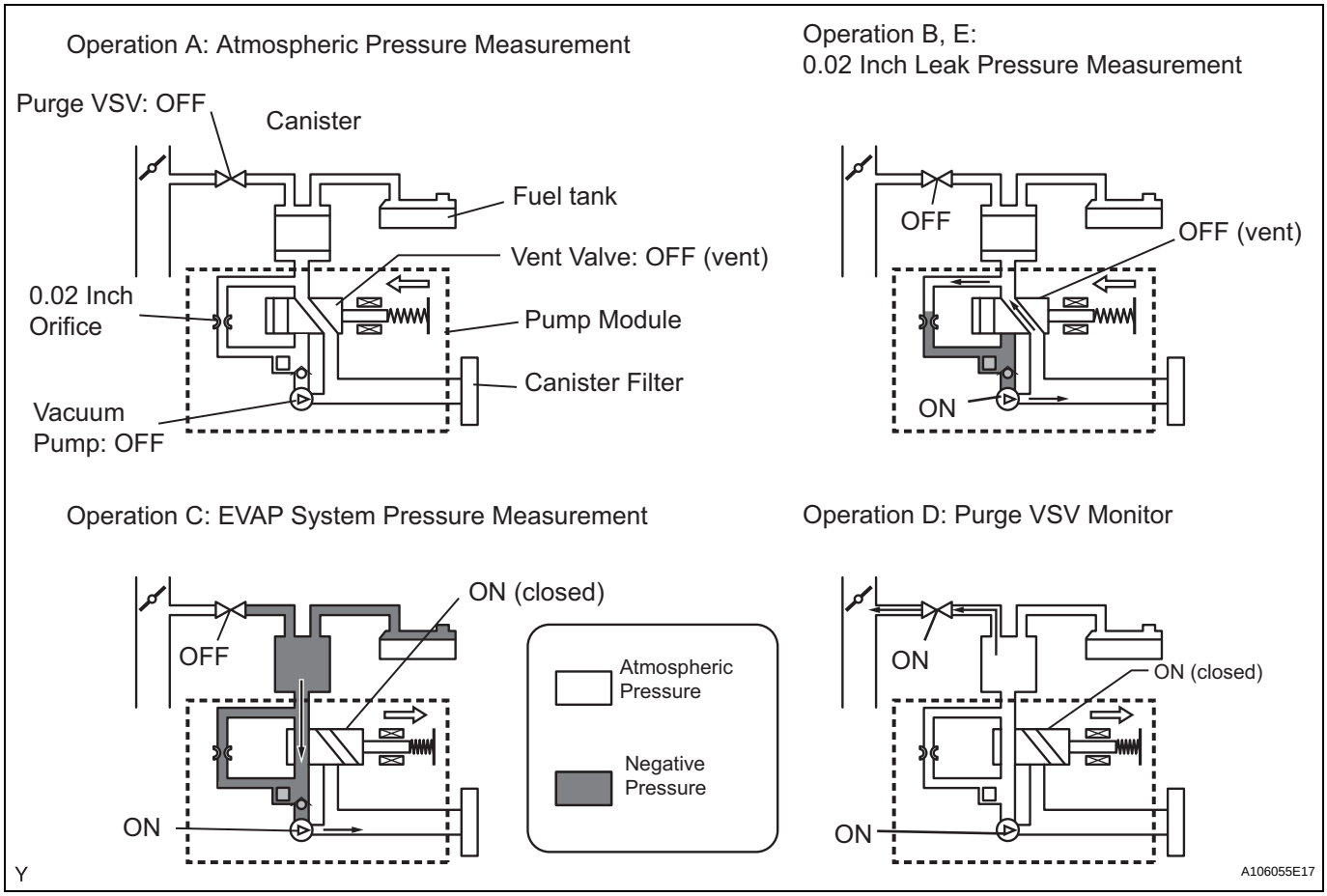

1. P0455: EVAP (Evaporative Emission) gross leak
   In operation C, the vacuum pump creates negative pressure (vacuum) in the EVAP system and the EVAP system pressure is measured. If the stabilized system pressure is higher than [second 0.02 inch leak pressure standard x 0.2] (near atmospheric pressure), the ECM determines that the EVAP system has a large leak, illuminates the MIL and sets the DTC (2 trip detection logic).

2. P0456: EVAP very small leak
   In operation C, the vacuum pump creates negative pressure (vacuum) in the EVAP system and the EVAP system pressure is measured. If the stabilized system pressure is higher than the second 0.02 inch leak pressure standard, the ECM determines that the EVAP system has a small leak, illuminates the MIL and sets the DTC (2 trip detection logic).

EVAP Pressure when EVAP System Leaks:

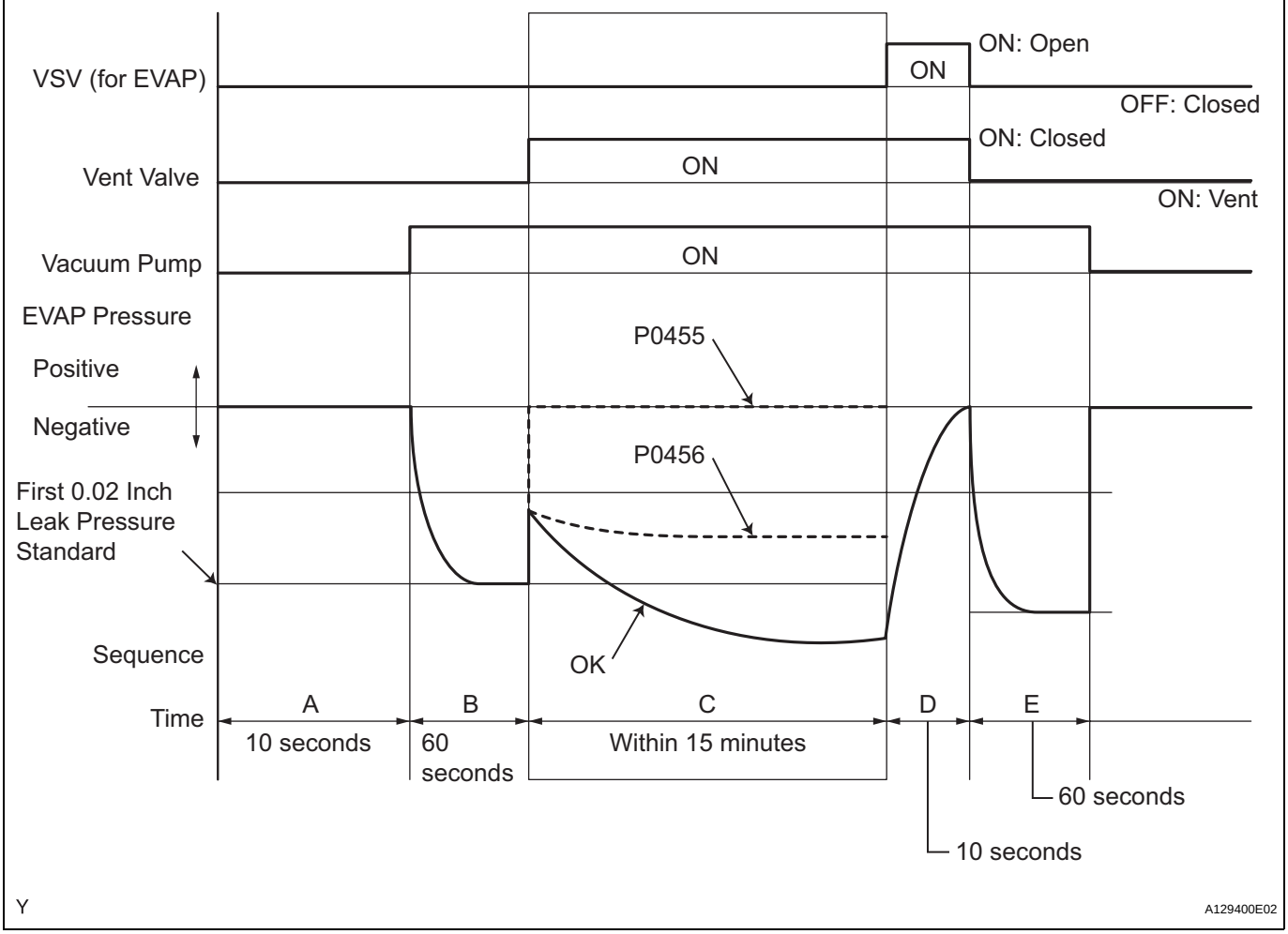

MONITOR STRATEGY

Required Sensors/Components	EVAP VSV and pump module
Frequency of Operation	Once per driving cycle
Duration	Within 15 minutes (varies with amount of fuel in tank)
MIL Operation	2 driving cycles
Sequence of Operation	None

TYPICAL ENABLING CONDITIONS

EVAP key-off monitor runs when all of following conditions are met:	-
Atmospheric pressure	70 to 110 kPa (525 to 825 mmHg)
Battery voltage	10.5 V or more
Vehicle speed	Below 2.5 mph (4 km/h)
Engine switch	OFF

Time after key off	5, 7 or 9.5 hours
EVAP pressure sensor malfunction (P0450, P0451, P0452 and P0453)	Not detected
EVAP VSV	Not operated by scan tool
Vent valve	Not operated by scan tool
Leak detection pump	Not operated by scan tool
Both of following conditions are met before key OFF:	Conditions 1 and 2
1. Duration that vehicle is being driven	5 minutes or more
2. EVAP purge operation	Performed
ECT	4.4 to 35°C (40 to 95°F)
IAT	4.4 to 35°C (40 to 95°F)

1. Key-off monitor sequence 1 to 8

1. Atmospheric pressure

Next sequence is run if following condition is met:	-
Atmospheric pressure change	Less than 0.3 kPa (2.25 mmHg) for 1 second

2. First reference pressure

Next sequence is run if all of following conditions are met:	Conditions 1, 2 and 3
1. EVAP pressure 4 seconds after reference pressure measurement	-1 kPa (-7.5 mmHg) or less
2. Reference pressure	-4.85 to -1.05 kPa (-36.38 to -7.87 mmHg)
3. Reference pressure	Saturated within 1 minute

3. Vent valve stuck closed check

Next sequence is run if following condition is met:	-
EVAP pressure change after vent valve is turned ON	0.3 kPa (2.25 mmHg) or more

4. Vacuum introduction and leak

Next sequence is run if following condition is met:	-
Vacuum introduction time	15 minutes or less

5. EVAP VSV stuck closed check

Next sequence is run if following condition is met:	-
EVAP pressure change after purge VSV is turned ON	0.3 kPa (2.25 mmHg) or more

6. Second reference pressure measurement

Next sequence is run if all of following conditions are met:	Conditions 1, 2, 3 and 4
1. EVAP pressure just after reference pressure measurement	-1 kPa (-7.5 mmHg) or less
2. Reference pressure	-4.85 to -1.05 kPa (-36.38 to -7.87 mmHg)
3. Reference pressure	Saturated within 1 minute
4. Reference pressure difference between first and second	Less than 0.7 kPa (5.25 mmHg)

7. Leak check

Next sequence is run if following condition is met:	-
EVAP pressure when vacuum introduction was complete	Less than second reference pressure

8. Atmospheric pressure

Monitor is complete	-
Atmospheric pressure difference between sequence 1 and 8	0.3 kPa (2.25 mmHg) or less

TYPICAL MALFUNCTION THRESHOLDS

"Saturated" indicates that the EVAP pressure change is less than 0.1 kPa (0.75 mmHg) in 30 seconds.

P0455: EVAP gross leak

EVAP pressure when vacuum introduction is complete	Higher than reference pressure x 0.2

P0456: EVAP small leak

EVAP pressure when vacuum introduction is complete	Between reference pressure and reference pressure x 0.2

MONITOR RESULT

Refer to CHECKING MONITOR STATUS (See page ES-20).

DTC	P0500	Vehicle Speed Sensor "A"

DESCRIPTION

The speed sensor detects the wheel speed and sends the appropriate signals to the skid control ECU. The skid control ECU converts these wheel speed signals into a 4-pulse signal and outputs it to the ECM via the combination meter. The ECM determines the vehicle speed based on the frequency of these pulse signals.

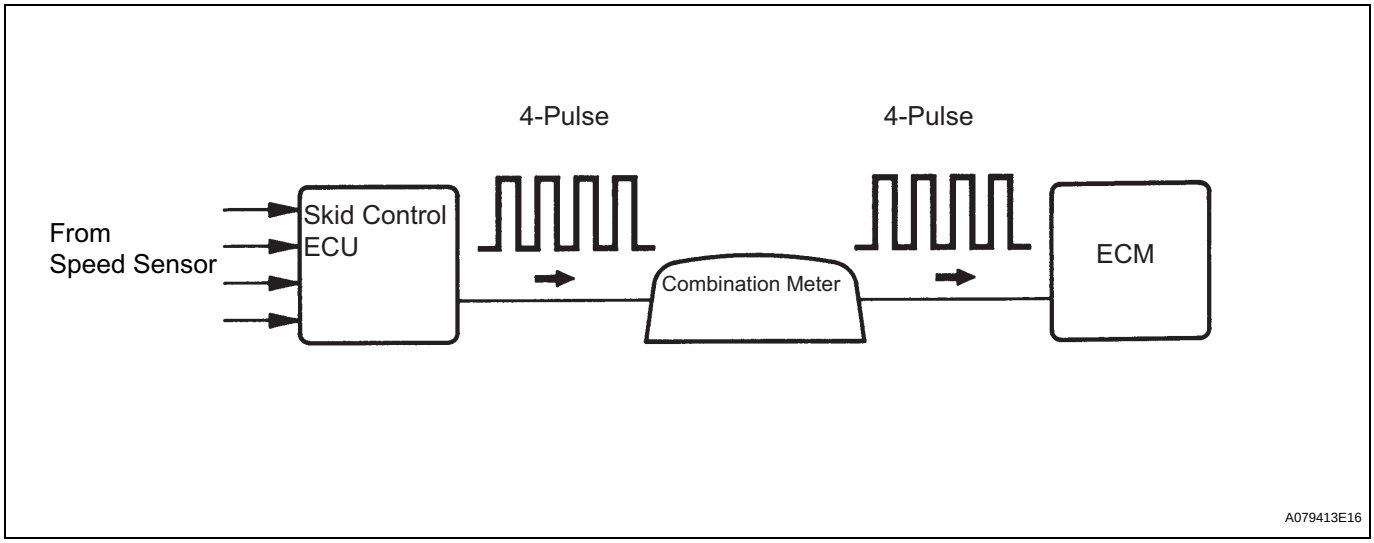

DTC No.	DTC Detection Condition	Trouble Area
P0500	Vehicle speed signal from vehicle speed sensor is cut for 0.14 sec. or more while cruise control is in operation	• Vehicle speed sensor • Vehicle speed sensor signal circuit • Combination meter • ECM • Skid control ECU

MONITOR DESCRIPTION

The ECM assumes that the vehicle is being driven when the transmission counter gear indicates more than 300 rpm and over 30 seconds have passed since the park/neutral position switch was turned OFF. If there is no signal from the vehicle speed sensor with these conditions satisfied, the ECM concludes that the vehicle speed sensor is malfunctioning. The ECM will turn on the MIL and a DTC will be set.

MONITOR STRATEGY

Related DTCs	P0500: Vehicle Speed Sensor Circuit
Required sensors/components (Main)	Vehicle speed sensor, Combination meter, ABS ECU
Required sensors/components (Sub)	Counter gear Speed (CS) sensor, ECT sensor
Frequency of operation	Continuous
Duration	8 seconds
MIL operation	2 driving cycles
Sequence of operation	None

TYPICAL ENABLING CONDITIONS

The monitor will run whenever these DTCs are not present	P0100 - P0103 (MAF sensor) P0105 - P0108 (MAP sensor) P0115 - P0118 (ECT sensor) P0120 - P02238 (TP sensor) P0125 (VSS/ECT1 sensor, non-ECT)
Engine coolant temperature	70°C (158°F) or more

Engine speed	2,000 to 5,000 rpm
Engine load	30.37 % or more
Fuel cut high engine speed	Not executing
Battery voltage	8 V or more
Engine switch	ON
ETC sensor circuit fail	Not detected
MAF sensor circuit fail	Not detected
Starter	OFF

TYPICAL MALFUNCTION THRESHOLDS

Vehicle speed sensor signal	No pulse input

WIRING DIAGRAM

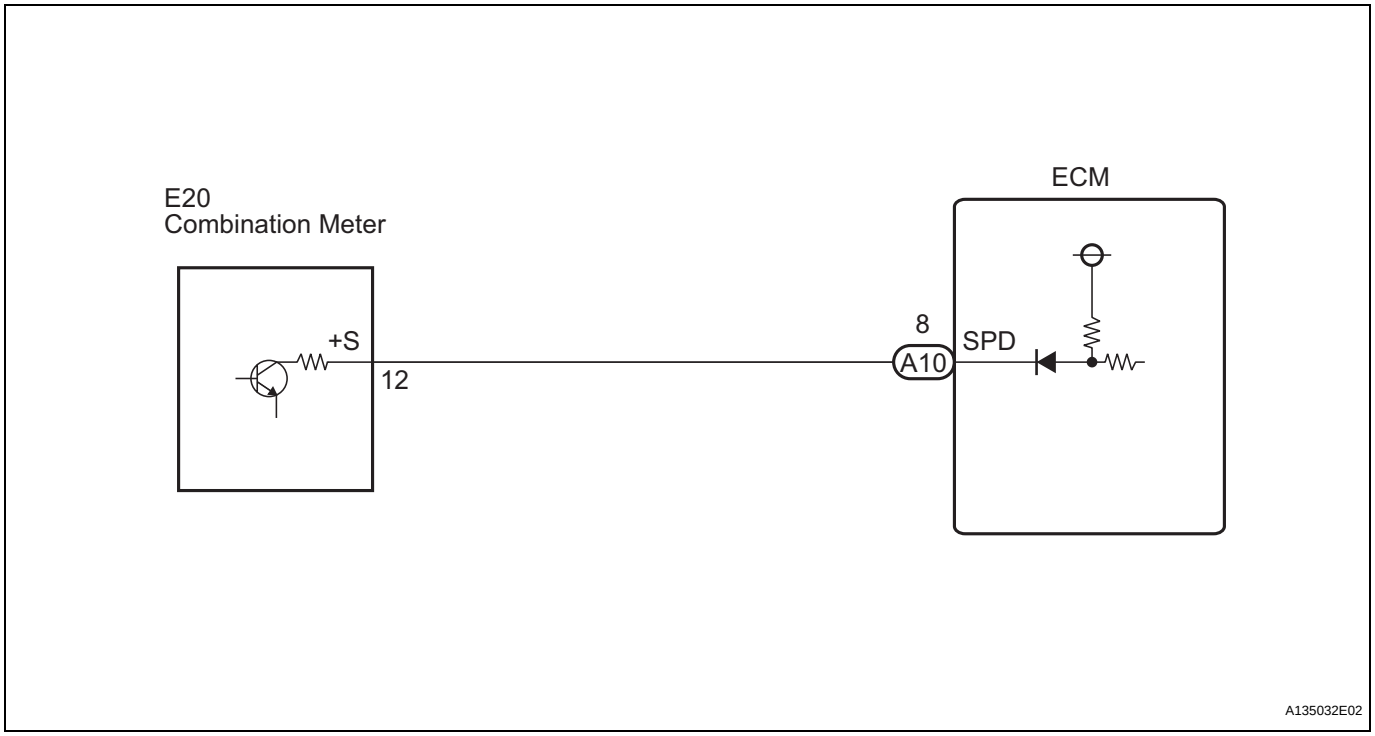

INSPECTION PROCEDURE

HINT:
Read freeze frame data using the intelligent tester. The ECM records vehicle and driving condition information as freeze frame data the moment a DTC is stored. When troubleshooting, freeze frame data can be helpful in determining whether the vehicle was running or stopped, whether the engine was warmed up or not, whether the air-fuel ratio was lean or rich, as well as other data recorded at the time of a malfunction (See page ES-41).

1	CHECK SPEEDOMETER

(a) Drive the vehicle and check whether the operation of the speedometer in the combination meter is normal.
HINT:
- The vehicle speed sensor is operating normally if the speedometer reading is normal.

- If the speedometer does not operate, check it by following the procedure described in speedometer circuit.

NG → **GO TO SPEEDOMETER CIRCUIT**

OK

2 READ VALUE OF INTELLIGENT TESTER (VEHICLE SPEED)

(a) Connect the intelligent tester to the DLC3.
(b) Turn the engine switch on (IG).
(c) Turn the tester on.
(d) Select the following menu items: DIAGNOSIS / ENHANCED OBD II / DATA LIST / PRIMARY / VEHICLE SPD.
(e) Drive the vehicle.
(f) Read the value displayed on the tester.
OK:
Vehicle speeds displayed on tester and speedometer display are equal.

NG → **CHECK INTERMITTENT PROBLEMS**

OK

3 CHECK COMBINATION METER ASSEMBLY (+S VOLTAGE)

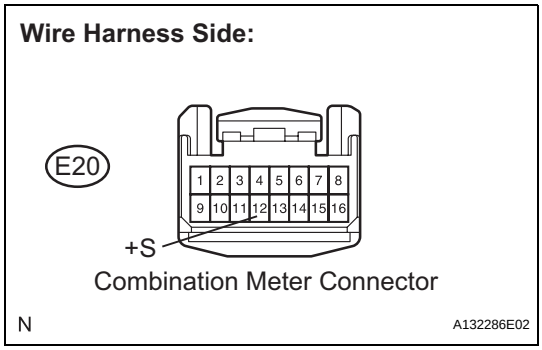

(a) Disconnect the E20 combination meter connector.
(b) Turn the engine switch on (IG).
(c) Measure the voltage between the specified terminal of the combination meter and body ground.
Standard voltage

Tester Connection	Specified Condition
E20-12 (+S) - Body ground	4.5 to 5.5 V

(d) Reconnect the combination meter connector.

NG → **Go to step 5**

OK

4 CHECK COMBINATION METER ASSEMBLY (SPD SIGNAL WAVEFORM)

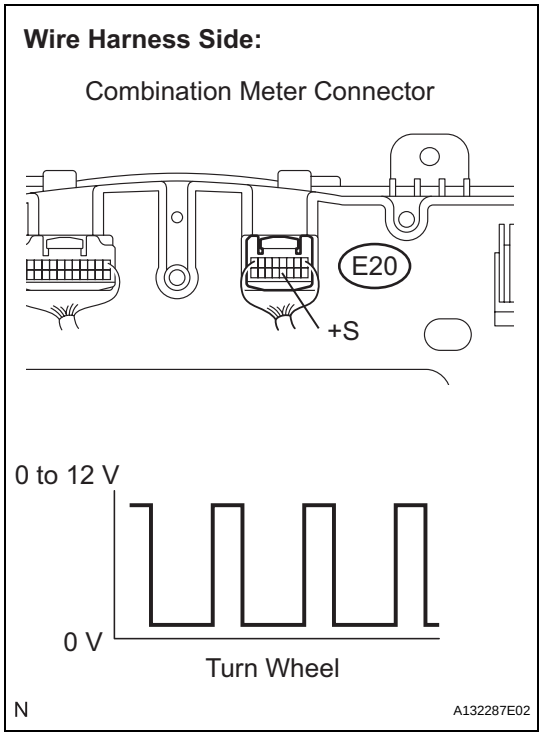

(a) Shift the transmission gear selector lever to the neutral position.
(b) Jack up the vehicle.
(c) Turn the engine switch on (IG).
(d) Measure the voltage between the specified terminal of the combination meter and body ground while the wheel is turned slowly.

Standard voltage

Tester Connection	Specified Condition
E20-12 (+S) - Body ground	Voltage generated intermittently

HINT:
The output voltage should fluctuate up and down, similarly to the diagram, when the wheel is turned slowly.

NG → **REPLACE COMBINATION METER ASSEMBLY (See page ME-67)**

OK

5 CHECK HARNESS AND CONNECTOR (COMBINATION METER ASSEMBLY - ECM)

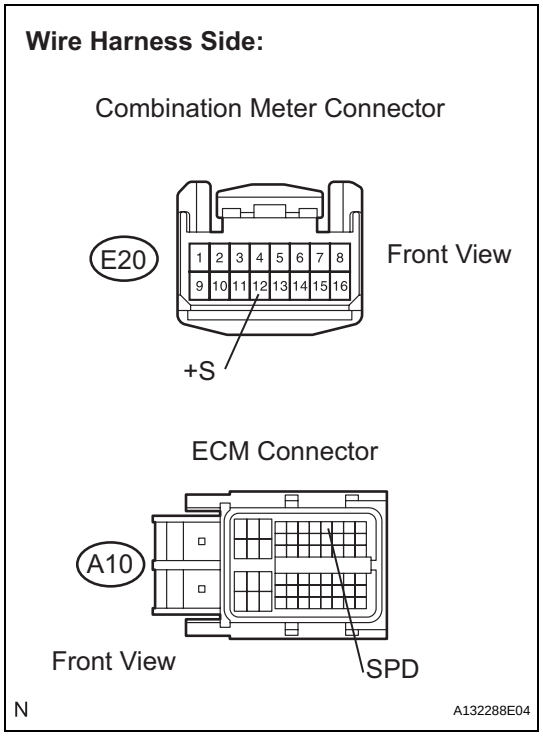

(a) Disconnect the E20 combination meter connector.
(b) Disconnect the A10 ECM connector.
(c) Measure the resistance.

Standard resistance (Check for open)

Tester Connection	Specified Condition
+S (E20-12) - SPD (A10-8)	Below 1 Ω

Standard resistance (Check for short)

Tester Connection	Specified Condition
+S (E20-12) or SPD (A10-8) - Body ground	10 kΩ or higher

(d) Reconnect the combination meter connector.
(e) Reconnect the ECM connector.

NG → **REPAIR OR REPLACE HARNESS OR CONNECTOR**

ES

OK

REPLACE ECM (See page ES-543)

DTC	P0504	Brake Switch "A" / "B" Correlation

DTC	P0724	Brake Switch "B" Circuit High

DESCRIPTION

The stop light switch is a duplex system that transmits two signals: STP and ST1-. These two signals are used by the ECM to monitor whether or not the brake system is working properly. If the signals, which indicate the brake pedal is being depressed and released, are detected simultaneously, the ECM interprets this as a malfunction in the stop light switch and sets the DTC.
HINT:
The normal conditions are as shown in the table below. The signals can be read using an intelligent tester.

ES

Signal	Brake Pedal Released	In Transition	Brake Pedal Depressed
STP	OFF	ON	ON
ST1-	ON	ON	OFF

DTC No.	DTC Detection Condition	Trouble Area
P0504	Conditions (a), (b) and (c) continue for 0.5 seconds or more (1 trip detection logic): (a) Engine switch on (IG) (b) Brake pedal released (c) STP signal OFF when ST1- signal OFF	• Short in stop light switch signal circuit • Stop light switch • ECM
P0724	The stop light switch remains ON even when the vehicle is driven in a STOP (less than 2 mph (3 km/h)) and GO (19 mph (30 km/h) or more) fashion 5 times. (2 trip detection logic)	• Short in stop light switch signal circuit • Stop light switch • ECM

MONITOR DESCRIPTION

This DTC indicates that the stop light switch remains on. When the stop light switch remains ON during "stop and go" driving, the ECM interprets this as a fault in the stop light switch and the MIL comes on and the ECM stores the DTC. The vehicle must stop (less than 2 mph (3 km/h)) and go (19 mph (30 km/h) or more) 5 times in two driving cycles in order to detect a malfunction.

MONITOR STRATEGY

Related DTCs	P0724: Stop light switch/Rationality
Required sensors/Components	Stop light switch, Vehicle speed sensor
Frequency of operation	Continuous
Duration	GO and STOP 5 times
MIL operation	2 driving cycles
Sequence of operation	None

TYPICAL ENABLING CONDITIONS

The monitor will run whenever these DTCs are not present	None
Engine switch	ON
Starter	OFF
Battery voltage	8 V or more
GO (Vehicle speed is 18.65 mph (30 km/h) or more)	Once
STOP (Vehicle speed is less than 1.86 mph (3 km/h))	Once

TYPICAL MALFUNCTION THRESHOLDS

Brake switch	Remain ON during GO and STOP 5 times

WIRING DIAGRAM

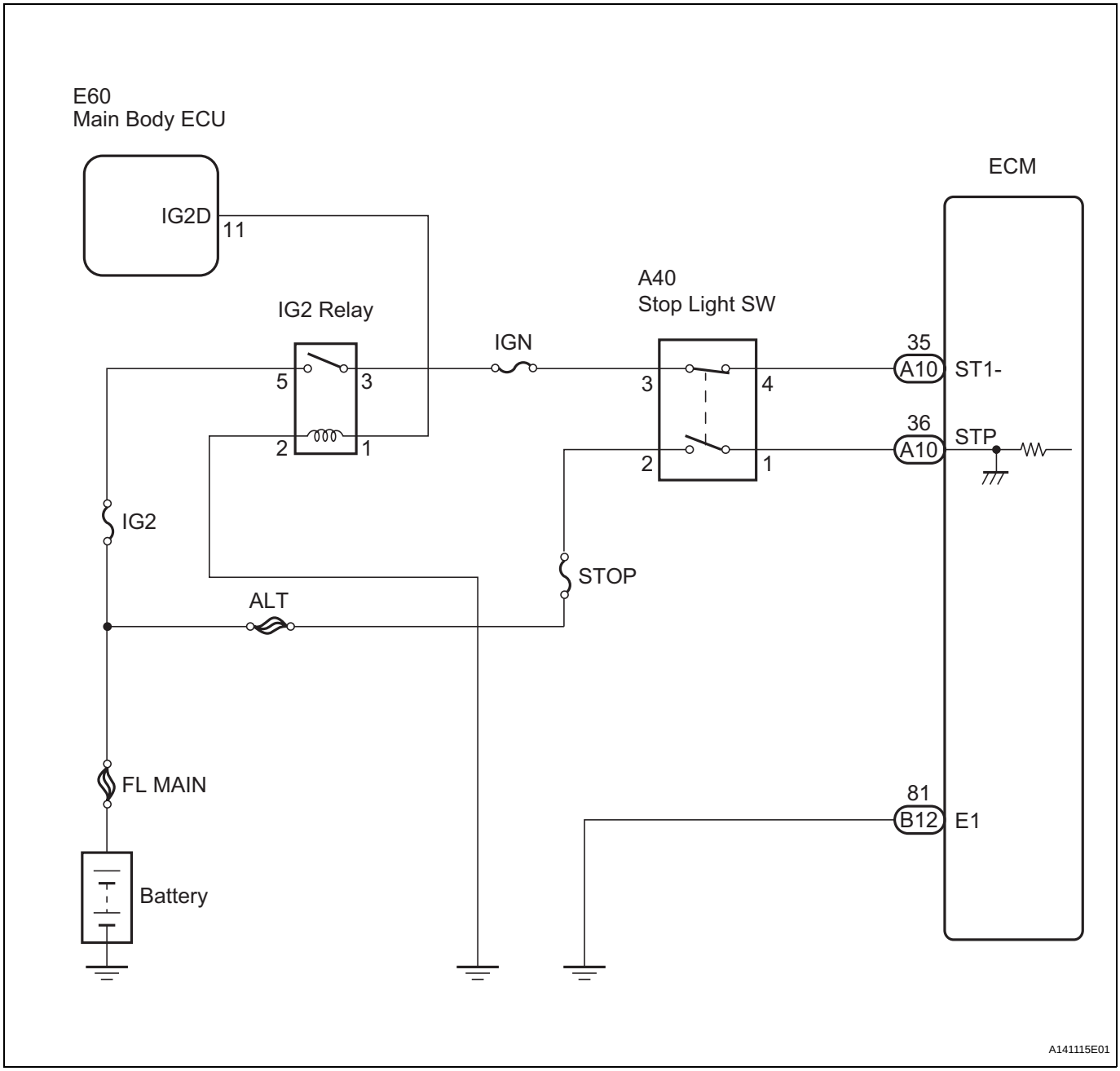

INSPECTION PROCEDURE

HINT:

Read freeze frame data using the intelligent tester. The ECM records vehicle and driving condition information as freeze frame data the moment a DTC is stored. When troubleshooting, freeze frame data can be helpful in determining whether the vehicle was running or stopped, whether the engine was warmed up or not, whether the air-fuel ratio was lean or rich, as well as other data recorded at the time of a malfunction (See page ES-41).

1 CHECK STOP LIGHT (OPERATION OF STOP LIGHT)

(a) Check whether the stop lights turn on and off normally when the brake pedal is depressed and released.
OK:
Stop lights turn ON when brake pedal is depressed.

NG → **REPAIR OR REPLACE STOP LIGHT SWITCH CIRCUIT**

OK

2 READ VALUE OF INTELLIGENT TESTER (STP SIGNAL AND ST1 - VOLTAGE)

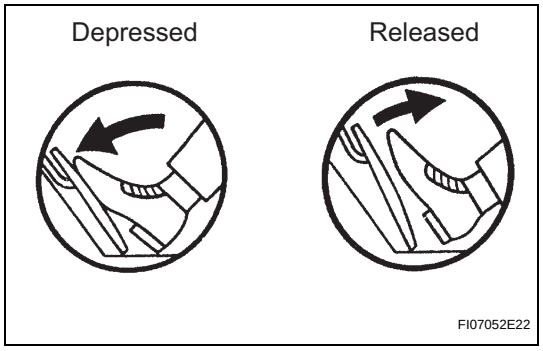

(a) Connect the intelligent tester to the DLC3.
(b) Turn the engine switch on (IG) and turn the tester on.
(c) Enter the following menus: DIAGNOSIS / ENHANCED OBD II / DATA LIST / PRIMARY / STOP LIGHT SW.
(d) Check the STP signal when the brake pedal is depressed and released.
OK

Brake Pedal Condition	Specified Condition
Depressed	STP signal ON
Released	STP signal OFF

(e) Enter the following menus: DIAGNOSIS / ENHANCED OBD II / DATA LIST / PRIMARY / ST1.
(f) Check the ST1 signal when the brake pedal is depressed and released.
OK

Brake Pedal Condition	Specified Condition
Depressed	ST1 signal OFF
Released	ST1 signal ON

OK → **CHECK FOR INTERMITTENT PROBLEMS**

NG

3 INSPECT STOP LIGHT SWITCH ASSEMBLY

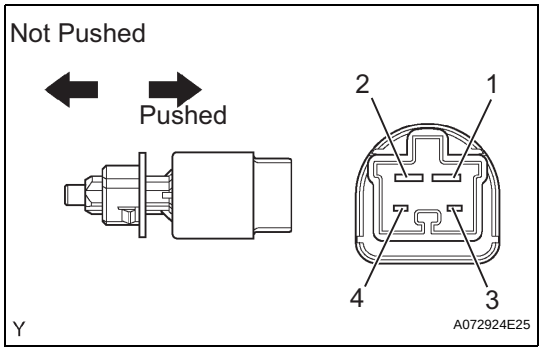

(a) Remove the stop light switch assembly.
(b) Measure the resistance according to the value(s) in the table below.
Standard resistance

Switch Position	Tester Connection	Specified Condition
Switch pin free	1 - 2	Below 1 Ω
Switch pin free	3 - 4	10 kΩ or higher
Switch pin pushed in	1 - 2	10 kΩ or higher
Switch pin pushed in	3 - 4	Below 1 Ω

(c) Reinstall the stop light switch assembly.

NG → **REPLACE STOP LIGHT SWITCH ASSEMBLY (See page LI-200)**

OK

4 CHECK ECM (STP, ST1 - VOLTAGE)

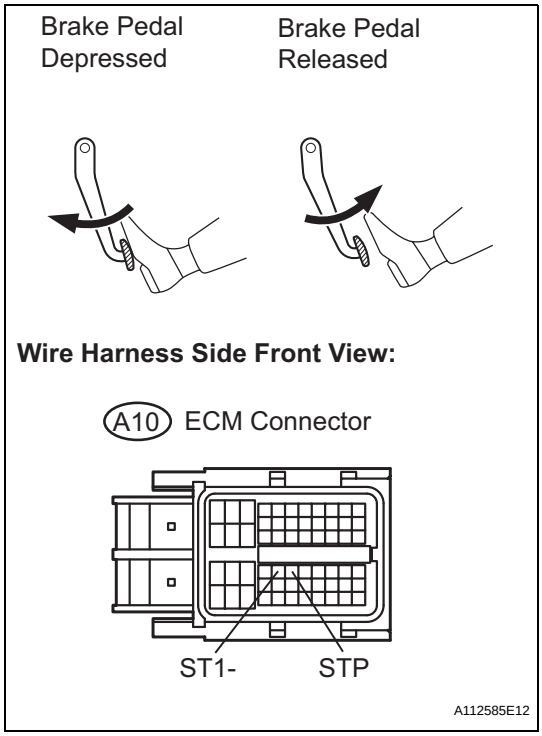

(a) Disconnect the A10 ECM connector.
(b) Measure the voltage according to the value(s) in the table below.

Standard voltage

Tester Connection	Brake Pedal Condition	Specified Condition
STP (A10-36) - Body ground	Depressed	9 to 14 V
STP (A10-36) - Body ground	Released	0 to 3 V
ST1- (A10-35) - Body ground	Depressed	0 to 3 V
ST1- (A10-35) - Body ground	Released	9 to 14 V

NG → **REPAIR OR REPLACE HARNESS OR CONNECTOR**

OK

REPLACE ECM (See page ES-543)

DTC	P0505	Idle Control System Malfunction

DESCRIPTION

The idle speed is controlled by the Electronic Throttle Control System (ETCS). The ETCS is comprised of: 1) one valve type throttle body; 2) the throttle actuator, which operates the throttle valve; 3) the throttle position sensor, which detects the opening angle of the throttle valve; 4) the accelerator pedal position sensor, which detects the accelerator pedal position; 5) the ECM, which controls the ETCS. Based on the target idle speed, the ECM controls the throttle actuator to provide the proper throttle valve opening angle.

DTC No.	DTC Detection Condition	Trouble Area
P0505	Idle speed continues to vary greatly from target speed (2 trip detection logic)	• ETCS • Air induction system • PCV hose connection • ECM

MONITOR DESCRIPTION

The ECM monitors the idling speed and idling air flow volume to conduct Idle Speed Control (ISC). The ECM determines that the ISC system is malfunctioning if the following conditions are met:

- The learned idling air flow volume remains at the maximum or minimum 5 times or more during a driving cycle
- While driving at 6 mph (10 km/h) or more, the actual engine idling speed varies from the target idling speed by between 100 rpm and 200 rpm, 5 times or more during a driving cycle.

Example:

If the actual idling speed varies from the target idling speed by more than 200 rpm* 5 times during a driving cycle, the ECM illuminates the MIL and sets the DTC.

HINT:

*: Threshold idling speed varies with engine load.

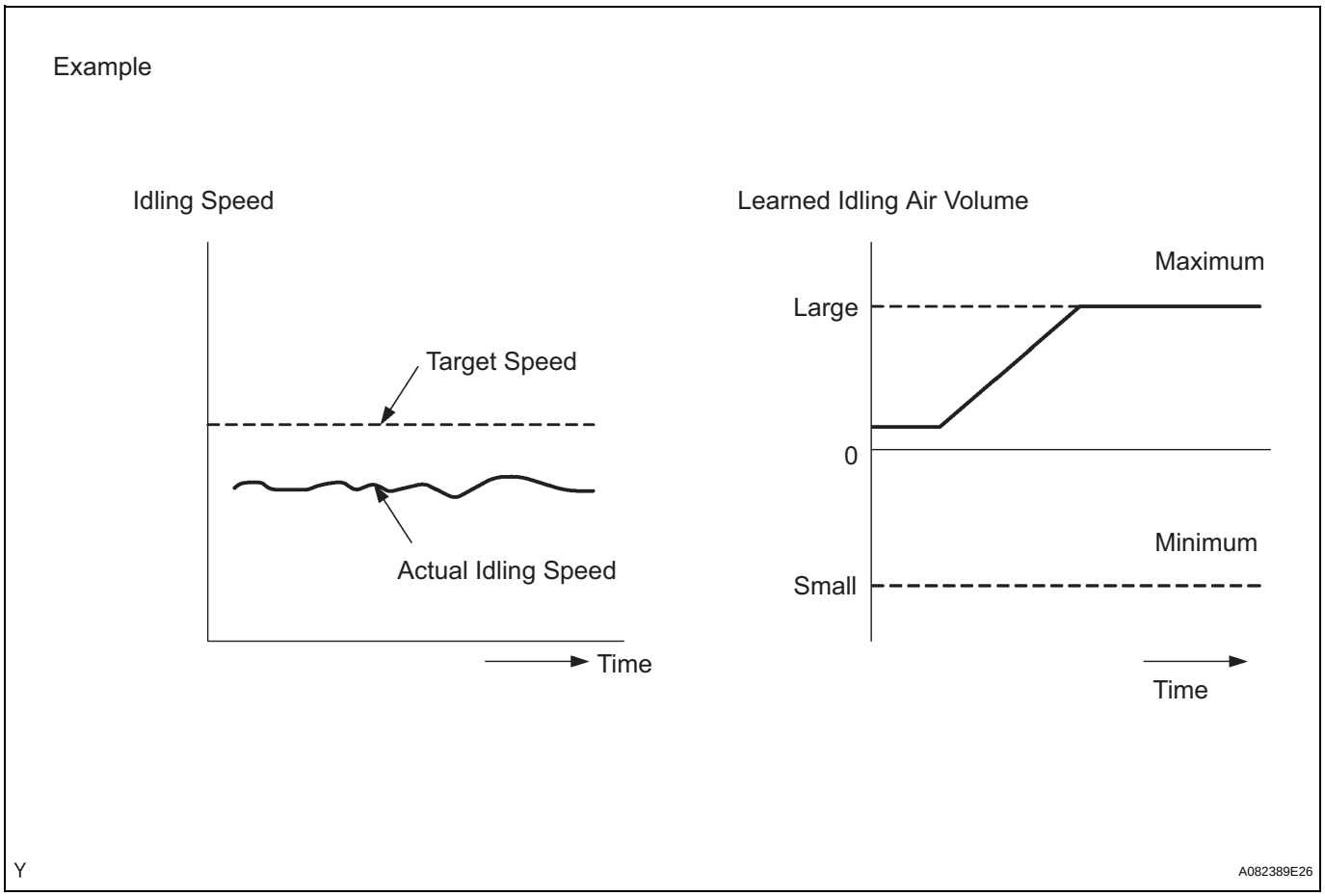

MONITOR STRATEGY

Related DTCs	P0505: ISC function
Required Sensors/Components (Main)	ETCS
Required Sensors/Components (Sub)	Crankshaft position sensor, Engine coolant temperature sensor, and Vehicle speed sensor
Frequency of Operation	Continuous
Duration	10 minutes
MIL Operation	2 driving cycles
Sequence of Operation	None

TYPICAL ENABLING CONDITIONS

Functional check:

Monitor will run whenever these DTCs are not present	None
Engine	Running

TYPICAL MALFUNCTION THRESHOLDS

Functional check:

Either the following condition 1 or 2 is met:	-
1. Frequency that following conditions (a) and (b) are met:	5 time or more
(a) Engine RPM - target engine RPM	Below -100 rpm, or 200 rpm or more
(b) Vehicle condition	Stop after vehicle was driven by 6.25 mph (10 km/h) or more
2. Frequency that following conditions (a) and (b) are met:	Once
(a) Engine RPM - target engine RPM	Below -100 rpm, or 200 rpm or more
(b) ISC flow rate learning value	1.3 L/sec. or less. or 8.5 L/sec. or more

INSPECTION PROCEDURE

HINT:

- The following condition may also cause DTC P0505 to be set:
  (a) The throttle valve is not fully closed. (e.g. The accelerator pedal is slightly depressed by something such as a floor carpet overlapping the accelerator pedal.)
- Read freeze frame data using the intelligent tester. The ECM records vehicle and driving condition information as freeze frame data the moment a DTC is stored. When troubleshooting, freeze frame data can be helpful in determining whether the vehicle was running or stopped, whether the engine was warmed up or not, whether the air-fuel ratio was lean or rich, as well as other data recorded at the time of a malfunction (See page ES-41).

1	CHECK ANY OTHER DTCS OUTPUT (IN ADDITION TO DTC P0505)

(a) Connect the intelligent tester to the DLC3.
(b) Turn the engine switch on (IG).
(c) Turn the tester on.
(d) Enter the following the menus: DIAGNOSIS / ENHANCED OBD II / DTC INFO / CURRENT CODES.
(e) Read the DTCs.

Result

Display (DTC output)	Proceed to
P0505	A
P0505 and other DTCs	B

HINT:
If any DTCs other than P0505 are output, troubleshoot those DTCs first.

B → **GO TO DTC CHART (See page ES-59)**

A

2	CHECK PCV HOSE (HOSE CONNECTIONS)

OK:
PCV hose is connected correctly and is not damaged.

NG → **REPAIR OR REPLACE PCV HOSE**

ES

OK

3	CHECK AIR INDUCTION SYSTEM

(a) Check the air induction system for vacuum leakage.
OK:
No leakage from air induction system.

NG → **REPAIR OR REPLACE AIR INDUCTION SYSTEM**

OK

4	CHECK THROTTLE BODY (VISUALLY CHECK THROTTLE VALVE)

(a) Check for contamination between the throttle valve and the housing. If necessary, clean the throttle body. And check that the throttle valve moves smoothly.
OK:
Throttle valve is not contamainated with foreign objects and moves smoothly.

NG → **REPLACE THROTTLE BODY (See page ES-519)**

OK

REPLACE ECM (See page ES-543)

DTC	P050A	Cold Start Idle Air Control System Performance

DTC	P050B	Cold Start Ignition Timing Performance

DESCRIPTION

The Electronic Throttle Control System (ETCS) controls the engine idling speed. The ETCS operates the throttle actuator to open and close the throttle valve, and adjusts the intake air amount to achieve the target idling speed.
In addition, the ECM retards the ignition timing and the ETCS increases the intake air amount to quickly increase the catalyst temperature at cold start to reduce emissions.

ES

DTC No.	DTC Detection Conditions	Trouble Areas
P050A	Accumulated intake air amount during 10 seconds of idling after cold start is less than threshold (2 trip detection logic)	• Throttle body assembly • Mass air flow meter • Air induction system • PCV hose connections • VVT system • Air cleaner filter element • ECM
P050B	Ignition timing retard value is insufficient for 5 seconds or more during 10 seconds of P050A monitoring at cold start (2 trip detection logic)	• Throttle body assembly • Mass air flow meter • Air induction system • PCV hose connections • VVT system • Air cleaner filter element • ECM

MONITOR DESCRIPTION

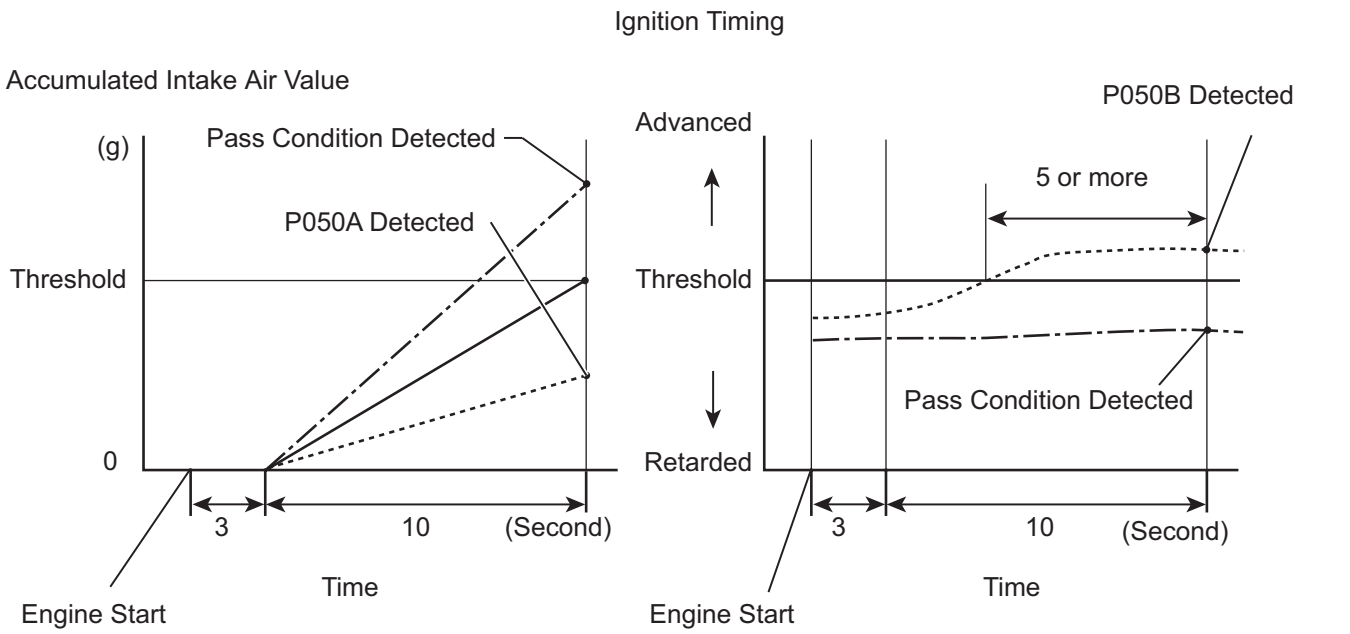

The ECM monitors the intake air amount during idling and the ignition timing.
When the Engine Coolant Temperature (ECT) is between -10°C and 50°C (14°F and 122°F), the ECM calculates the idling intake air amount for 10 seconds, beginning 3 seconds after the engine starts.
When the accumulated value is below the threshold, the ECM interprets this as a malfunction in the Idle Speed Control (ISC) system at cold start.
The ECM also monitors the ignition timing at cold start, and judges it to be incorrect when it is advanced to the same value for a warm engine for 5 seconds or more of the 10 second monitoring period.
Example:
P050A is detected when all conditions below are met (2 trip detection logic).
1. The ECT is between -10°C and 50°C (14°F and 122°F) when the engine starts.
2. The engine idles for 13 seconds after engine start.
3. The accumulated intake air amount is below the threshold.

The ECM sets the DTC and illuminates the MIL 13 seconds after the engine is next started.

NOTICE:
When the negative battery terminal is disconnected during inspection or repairs, the ISC learning values are cleared. The ISC learning must be performed by warming up the engine and idling for 5 minutes with the ECT at 75°C (167°F) or more because DTCs cannot be detected with the ISC learning values cleared.

MONITOR STRATEGY

Related DTCs	P050A: Idle speed control problem at cold P050B: Idle ignition timing problem at cold
Required Sensors/Components (Main)	Mass air flow meter
Required Sensors/Components (Related)	Engine Coolant Temperature (ECT) sensor, Throttle position sensor, Vehicle speed sensor
Frequency of Operation	Once per driving cycle
Duration	10 seconds
MIL Operation	2 driving cycles
Sequence of Operation	None

TYPICAL ENABLING CONDITIONS

P050A:

Battery voltage	8 V or more
Time after engine start	3 seconds or more
Starter	OFF
ECT at engine start	-10°C (14°F) or more
ECT	-10°C to 50°C (14°F to 122°F)
Engine idling time	3 seconds or more
Fuel-cut	OFF
Vehicle speed	Less than 1.875 mph (3 km/h)
Time after shift position changed	1 second or more
Atmospheric pressure	76 kPa (570 mmHg) or more

P050B:

Battery voltage	8 V or more
Time after engine start	3 seconds or more
Starter	OFF
ECT at engine start	-10°C (14°F) or more
ECT	-10°C to 50°C (14°F to 122°F)
Engine idling time	3 seconds or more
Fuel-cut	OFF
Vehicle speed	Less than 1.875 mph (3 km/h)

TYPICAL MALFUNCTION THRESHOLDS

P050A:

Accumulated mass air flow	Varies with ECT (Example: Less than 42.5 g)

P050B:

Accumulated time when ignition timing retard is cut off	5 seconds or more

INSPECTION PROCEDURE

HINT:
Read freeze frame data using an intelligent tester. The ECM records vehicle and driving condition information as freeze frame data the moment a DTC is stored. When troubleshooting, freeze frame data can be helpful in determining whether the vehicle was running or stopped, whether the engine was warmed up or not, whether the air-fuel ratio was lean or rich, as well as other data recorded at the time of a malfunction (See page ES-41).

ES

1	CHECK ANY OTHER DTCS OUTPUT (IN ADDITION TO DTC P050A AND/OR P050B)

(a) Connect an intelligent tester to the DLC3.
(b) Turn the engine switch on (IG).
(c) Turn the tester on.
(d) Select the following menu items: DIAGNOSIS / ENHANCED OBD II / DTC INFO / CURRENT CODES.
(e) Read the DTCs.

Result

Display (DTC Output)	Proceed to
P050A and/or P050B	A
P050A and/or P050B and other DTCs	B

HINT:
If any DTCs other than P050A and P050B are output, troubleshoot those DTCs first.

B → **GO TO DTC CHART (See page ES-59)**

A

2	READ VALUE USING INTELLIGENT TESTER (FUEL TRIM)

HINT:
Calculate the total fuel trim values to check the characteristic deviation of the mass air flow meter.
(a) Connect the intelligent tester to the DLC3.
(b) Turn the engine switch on (IG).
(c) Turn the tester on.
(d) Select the following menu items: DIAGNOSIS / ENHANCED OBD II / DATA LIST / PRIMARY / SHORT FT #1 and LONG FT #1.
(e) Read the values displayed on the tester.
(f) Add together the SHORT FT #1 and LONG FT #1 values to obtain the total FUEL TRIM.

OK:
Total of SHORT FT #1 and LONG FT #1 values is between -20 % and 20 %.

OK → **Go to step 12**

NG

3 PERFORM ACTIVE TEST USING INTELLIGENT TESTER (OPERATE OCV)

(a) Connect the intelligent tester to the DLC3.
(b) Start the engine and turn the tester ON.
(c) Warm up the engine.
(d) Select the following menu items: DIAGNOSIS / ENHANCED OBD II / ACTIVE TEST / VVT CTRL B1.
(e) Check the engine speed while operating the Oil Control Valve (OCV) using the tester.

OK

Tester Operation	Specified Condition
OCV OFF	Normal engine speed
OCV ON	Engine idles roughly or stalls (soon after OCV switched from OFF to ON)

NG → **Go to step 8**

OK

4 CHECK PCV HOSE CONNECTIONS

OK:
PCV hose is connected correctly and is not damaged.

NG → **Go to step 9**

OK

5 CHECK AIR INDUCTION SYSTEM

(a) Check the air induction system for vacuum leakage.
OK:
No leakage from air induction system.

NG → **Go to step 10**

OK

6 CHECK AIR CLEANER FILTER ELEMENT SUB-ASSEMBLY

(a) Visually check that the air cleaner filter element is not excessively contaminated with dirt or oil.
OK:
Air cleaner filter element is not excessively contaminated with dirt or oil.

ES

NG → Go to step 11

OK

7	REPLACE MASS AIR FLOW METER

(a) Replace the mass air flow meter (See page ES-497).

NEXT → Go to step 15

8	CHECK AND REPAIR VVT SYSTEM

NEXT → Go to step 15

9	REPAIR OR REPLACE PCV HOSE

NEXT → Go to step 15

10	REPAIR OR REPLACE AIR INDUCTION SYSTEM

NEXT → Go to step 15

11	REPLACE AIR CLEANER FILTER ELEMENT SUB-ASSEMBLY

NEXT → Go to step 15

12	CHECK THROTTLE VALVE

(a) Check for deposits around the throttle valve and throttle valve condition.
OK:
No deposits around throttle valve and throttle valve moves smoothly.

NG → Go to step 14

OK

13	REPLACE ECM

(a) Replace the ECM (See page ES-543).

NEXT → Go to step 15

14	REPAIR OR REPLACE THROTTLE BODY ASSEMBLY

NEXT → Go to step 15

15	CHECK WHETHER DTC OUTPUT RECURS (DTC P050A AND/OR P050B)

NOTICE:
In this operation, the engine must be cold (the same level as the engine coolant temperature recorded in the freeze frame data).

(a) Connect the intelligent tester to the DLC3.
(b) Turn the engine switch on (IG).
(c) Turn the tester on.
(d) Clear the DTCs (See page ES-41).
(e) Switch the ECM from normal mode to check mode using the tester (See page ES-45).
(f) Start the engine to idle for a minute.
OK:
Stable fast idling.
(g) Read the DTCs.
OK:
No DTC output.

NEXT

END

DTC	P0560	System Voltage

DESCRIPTION

The battery supplies electricity to the ECM even when the engine switch is off. This power allows the ECM to store data such as DTC history, freeze frame data and fuel trim values. If the battery voltage falls below a minimum level, these memories are cleared and the ECM determines that there is a malfunction in the power supply circuit. When the engine is next started, the ECM illuminates the MIL and sets the DTC.

DTC No.	DTC Detection Condition	Trouble Area
P0560	Open in ECM back-up power source circuit (1 trip detection logic)	• Open in back-up power source circuit • ECM

HINT:
If DTC P0560 is set, the ECM does not store other DTCs.

MONITOR STRATEGY

Related DTCs	P0560: ECM system voltage
Required Sensors/Components (Main)	ECM
Required Sensors/Components (Sub)	-
Frequency of Operation	Continuous
Duration	3 seconds
MIL Operation	Immediate (MIL illuminated after next engine start)
Sequence of Operation	None

TYPICAL ENABLING CONDITIONS

Monitor runs whenever following DTCs are not present:	None
Stand-by RAM	Initialized

TYPICAL MALFUNCTION THRESHOLDS

ECM power source	Less than 3.5 V

WIRING DIAGRAM

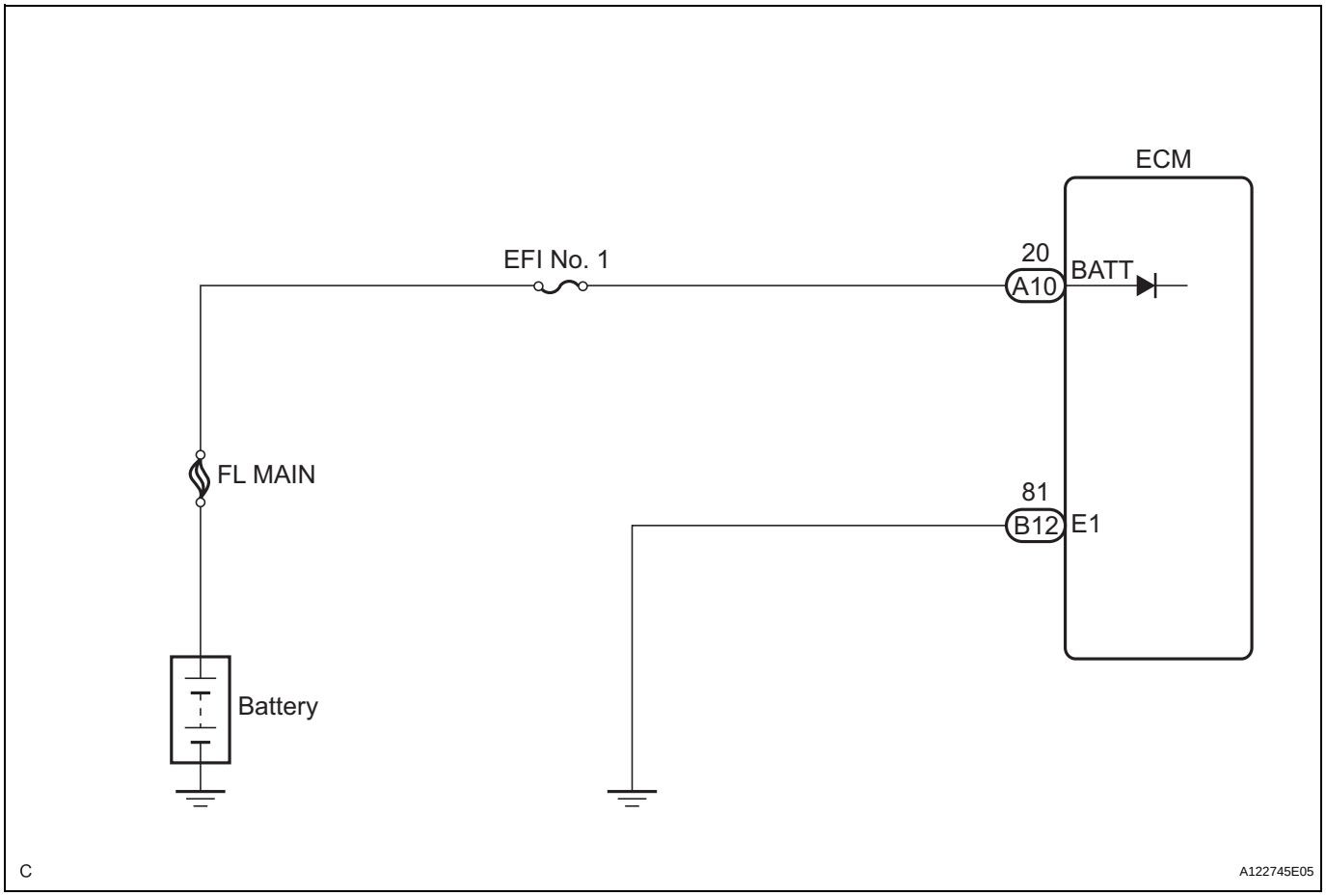

INSPECTION PROCEDURE

HINT:

Read freeze frame data using the intelligent tester. The ECM records vehicle and driving condition information as freeze frame data the moment a DTC is stored. When troubleshooting, freeze frame data can be helpful in determining whether the vehicle was running or stopped, whether the engine was warmed up or not, whether the air-fuel ratio was lean or rich, as well as other data recorded at the time of a malfunction (See page ES-41).

1	INSPECT FUSE (EFI NO. 1)

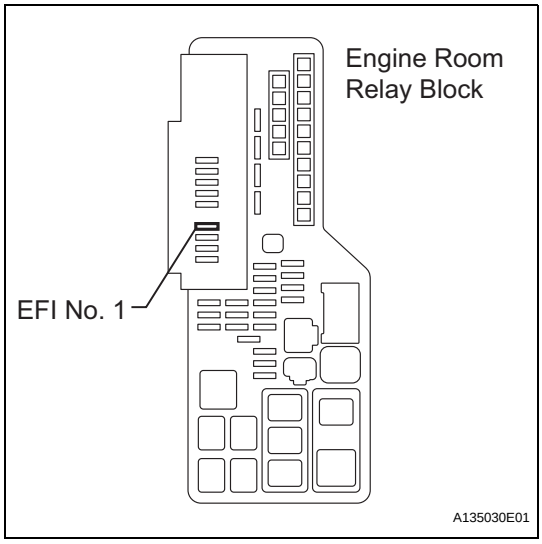

(a) Remove the EFI No. 1 fuse from the engine room R/B.
(b) Measure the EFI No. 1 fuse resistance.
Standard resistance:
Below 1 Ω
(c) Reinstall the EFI No. 1 fuse.

NG → **REPLACE EFI NO. 1 FUSE**

OK

2 CHECK HARNESS AND CONNECTOR

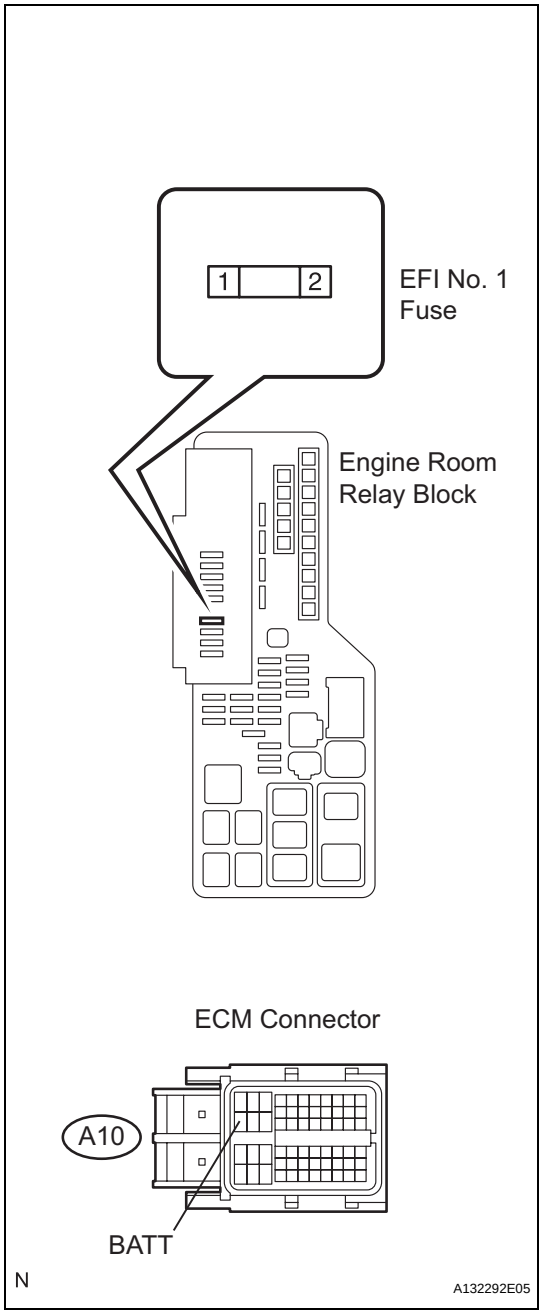

(a) Check the harness and connector between the EFI No. 1 fuse and ECM.
  (1) Remove the EFI No. 1 fuse from the engine room R/B.
  (2) Disconnect the A10 ECM connector.
  (3) Measure the resistance according to the value(s) in the table below.

Standard resistance (Check for open)

Tester Connection	Specified Condition
Engine room R/B EFI No. 1 fuse terminal 2 - BATT (A10-20)	Below 1 Ω

Standard resistance (Check for short)

Tester Connection	Specified Condition
Engine room R/B EFI No. 1 fuse terminal 2 or BATT (A10-20) - Body ground	10 kΩ or higher

  (4) Reinstall the ECM connector.

(b) Check the harness and the connector between the EFI No. 1 fuse and battery.
  (1) Disconnect the negative battery terminal.
  (2) Disconnect the positive battery terminal.
  (3) Measure the resistance according to the value(s) in the table below.

Standard resistance (Check for open)

Tester Connection	Specified Condition
Battery positive terminal - Engine room R/B EFI No. 1 fuse terminal 1	Below 1 Ω

Standard resistance (Check for short)

Tester Connection	Specified Condition
Battery positive terminal or Engine room R/B EFI No. 1 fuse terminal 1 - Body ground	10 kΩ or higher

  (4) Reconnect the positive battery terminal.
  (5) Reconnect the negative battery terminal.
  (6) Reinstall the EFI No. 1 fuse.

NG → **REPAIR OR REPLACE HARNESS OR CONNECTOR**

OK

3 INSPECT BATTERY

(a) Check that the battery is not depleted.
OK:
Battery is not depleted.

NG → **REPLACE BATTERY**

ES

OK

4	CHECK BATTERY TERMINAL

(a) Check that the battery terminals are not loose or corroded.
OK:
Battery terminals are not loose or corroded.

NG → **REPAIR OR REPLACE BATTERY TERMINAL**

OK

ES

5	CHECK WHETHER DTC OUTPUT RECURS

(a) Connect the intelligent tester to the DLC3.
(b) Turn the engine switch on (IG).
(c) Turn the intelligent tester on.
(d) Clear the DTCs (See page ES-41).
(e) Turn the intelligent tester off.
(f) Start the engine and turn the intelligent tester on.
(g) Select the following menu items: DIAGNOSIS / ENHANCED OBD II / DTC INFO / CURRENT CODES.
(h) Read the DTCs.

Result

Display (DTC Output)	Proceed to
P0560	A
No output	B

B → **CHECK FOR INTERMITTENT PROBLEMS**

A

REPLACE ECM (See page ES-543)

DTC	P0604	Internal Control Module Random Access Memory (RAM) Error

DESCRIPTION

The ECM continuously monitors its internal memory status. This self-check ensures that the ECM is functioning properly. It is diagnosed by internal "mirroring" of the main CPU and sub CPU to detect the Random Access Memory (RAM) errors. If outputs from these CPUs are different and deviate from the standards, the ECM will illuminate the MIL and set a DTC immediately.

DTC	DTC Setting Condition	Trouble Area
P0604	ECM RAM errors	ECM

MONITOR STRATEGY

Related DTC	P0604: ECM RAM error
Required sensors/Components	ECM
Frequency of Operation	Continuous
Duration	16 seconds
MIL Operation	Immediate
Sequence of Operation	None

TYPICAL ENABLING CONDITIONS

Monitor will run whenever this DTC is not present	None

TYPICAL MALFUNCTION THRESHOLDS

Main CPU and sub CPU mirroring	Fail

INSPECTION PROCEDURE

1	CHECK OTHER DTC OUTPUT (IN ADDITION TO DTC P0604)

(a) Connect the intelligent tester to the DLC3.
(b) Turn the engine switch on (IG).
(c) Turn the tester on.
(d) Clear the DTC.
(e) Turn the engine switch off.
(f) Disconnect the battery negative terminal and wait for 1 minute.
(g) Connect the battery negative terminal.
(h) Turn the engine switch on (IG).
(i) Enter the following menus: DIAGNOSIS / ENHANCED II / DTC INFO / CURRENT CODES.
(j) Read the DTCs.

Result

Display (DTC output)	Proceed to
P0604	**A**
No output DTC	**B**

B → **CHECK FOR INTERMITTENT PROBLEMS**

A

REPLACE ECM (See page ES-543)

DTC	P0606	ECM / PCM Processor

DESCRIPTION

The ECM continuously monitors its internal processors (CPUs), A/F sensor transistors and heated oxygen sensor (HO2S) transistors. This self-check ensures that the ECM is functioning properly. These are diagnosed by internal "mirroring" of the main and sub CPUs to detect the processors error. If outputs from the processors deviate from the standards, the ECM will illuminate the MIL and set a DTC immediately.

DTC	DTC Setting Condition	Trouble Area
P0606	• ECM CPUs malfunction • A/F sensor transistors malfunction • HO2S transistors malfunction	• Exhaust gas leak • HO2 Sensor • ECM

MONITOR STRATEGY

Related DTC	P0606: ECM range check
Required sensors/Components (main)	ECM
Required sensors/Components (sub)	APP sensor, TP sensor, Brake switch, Cruise control, A/F sensor HO2S
Frequency of Operation	Continuous
Duration	60 seconds
MIL Operation	Immediate
Sequence of Operation	None

TYPICAL ENABLING CONDITIONS

Monitor will run whenever this DTC is not present	None
Engine	Running
Estimated A/F sensor temperature	450 to 800°C (842 to 1,472°F)
Estimated HO2S temperature	450 to 800°C (842 to 1,472°F)

TYPICAL MALFUNCTION THRESHOLDS

Difference of main APP and sub APP	0.3 V or more
Difference of main TP and sub TP	0.3 V or more
Difference of main brake switch signal and sub brake switch signal	Different
Cruise control	Fail
A/F sensor transistors	Fail
HO2S transistors	Fail

INSPECTION PROCEDURE

1	CHECK FOR EXHAUST GAS LEAK

(a) Allow the engine to idle.
(b) Check for exhaust gas leak around the heated oxygen sensor.
OK:
No leak from the heated oxygen sensor.

NG → **REPAIR OR REPLACE EXHAUST GAS LEAKAGE POINT**

OK

2 CHECK HEATED OXYGEN SENSOR

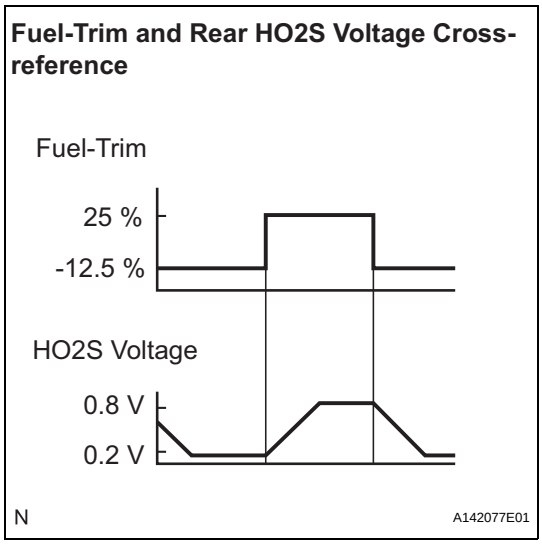

(a) Connect the intelligent tester to the DLC3.
(b) Start the engine and turn the tester on.
(c) Warm up the engine at an engine speed of 2,500rpm for approximately 90 seconds.
(d) Enter the following menus: DIAGNOSIS / ENHANCED II / ACTIVE TEST / A/F CONTROL.
(e) Perform the A/F CONTROL operation with the engine in an idling condition (press the RIGHT or LEFT button to change the fuel injection volume).
(f) Monitor the voltage outputs of the HO2 sensors (O2S B1S2 or O2S B2S2) displayed on the tester.
HINT:
- The A/F CONTROL operation lowers the fuel injection volume by 12.5 % or increases the injection volume by 25 %.
- Each sensor reacts in accordance with increases in the fuel injection volume.

Standard voltage

Tester Display (Sensor)	Injection Volume	Voltage
O2S B1S2 or O2S B2S2	-12.5 %	Less than 0.2 V
	+25 %	More than 0.8 V

NG → **REPLACE HEATED OXYGEN SENSOR (See page EC-21)**

OK

3 CHECK WHETHER DTC OUTPUT RECURS (IN ADDITION TO DTC P0606)

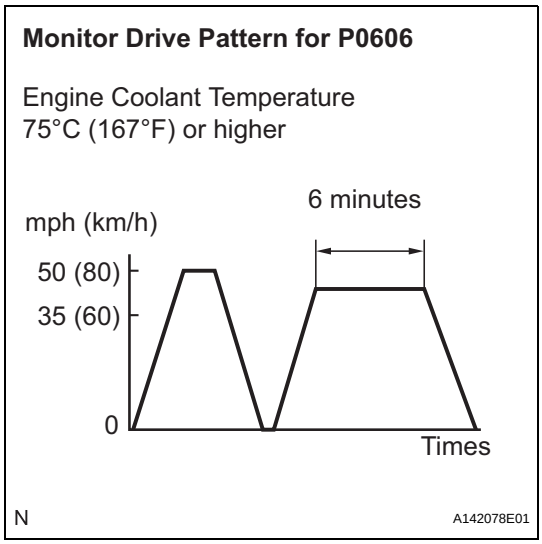

(a) Connect the intelligent tester to the DLC3.
(b) Turn the engine switch on (IG).
(c) Turn the tester on.
(d) Clear the DTC.
(e) Turn the engine switch off.
(f) Disconnect the battery negative terminal and wait for 1 minute.
(g) Connect the battery negative terminal.
(h) Start the engine.
(i) Perform the drive pattern.
  (1) Warm up the engine.
  (2) Accelerate the vehicle to 50 mph (80 km/h) and stop the vehicle.
  (3) Drive the vehicle at 35 to 50 mph (60 to 80 km/h) for 5 minutes or more.
(j) Enter the following menus: DIAGNOSIS / ENHANCED II / DTC INFO / CURRENT CODES.
(k) Read the DTCs.

Result

Display (DTC output)	Proceed to
P0606	A
No output DTC	B

B → **CHECK FOR INTERMITTENT PROBLEMS**

A

REPLACE ECM (See page ES-543)

DTC	P0607	Control Module Performance

DESCRIPTION

The ECM continuously monitors its main and sub CPUs. This self-check ensures that the ECM is functioning properly. If outputs from the CPUs are different and deviate from the standards, the ECM will illuminate the MIL and set a DTC immediately.
The ECM also monitors the cruise control cancel circuit. If this circuit malfunctions, the ECM will set a DTC immediately (MIL is not illuminated).

DTC No.	DTC Detection Condition	Trouble Area
P0607	• ECM main CPU error • ECM sub CPU error • Cruise control cancel circuit malfunction	ECM

NOTICE:
First check for an exhaust gas leak around the HO2S if P0606 is present. An exhaust gas leak generates noise in the HO2S output. The ECM may interpret this as an HO2S transistor malfunction.

MONITOR STRATEGY

Related DTC	P0607: ECM CPU malfunction
Required sensors/Components	ECM
Frequency of Operation	Continuous
Duration	Within 1 second
MIL Operation	Immediate
Sequence of Operation	None

TYPICAL ENABLING CONDITIONS

Monitor will run whenever this DTC is not present	None

TYPICAL MALFUNCTION THRESHOLDS

Either of the following conditions is met:	Condition A or B
A. All of the following conditions are met:	Conditions (a), (b) and (c)
(a) CPU reset	1 time or more
(b) Leaned TP - learned APP	0.4 V or more
Throttle actuator	OFF
B. CPU reset	2 times or more

INSPECTION PROCEDURE

1	CHECK WHETHER DTC OUTPUT RECURS (IN ADDITION TO DTC P0607)

(a) Connect the intelligent tester to the DLC3.
(b) Turn the engine switch on (IG).
(c) Turn the tester on.
(d) Clear the DTC.
(e) Turn the engine switch off.
(f) Disconnect the battery negative terminal and wait for 1 minute.
(g) Connect the battery negative terminal.

(h) Turn the engine switch on (IG).
(i) Enter the following menus: DIAGNOSIS / ENHANCED II / DTC INFO / CURRENT CODES.
(j) Read the DTCs.

Result

Display (DTC output)	Proceed to
P0607	A
No output DTC	B

B → **CHECK FOR INTERMITTENT PROBLEMS**

A

REPLACE ECM (See page ES-543)

DTC	P0617	Starter Relay Circuit High

DESCRIPTION

While the engine is being cranked, the positive battery voltage is applied to terminal STA of the ECM. If the ECM detects the Starter Control (STA) signal while the vehicle is being driven, it determines that there is a malfunction in the STA circuit. The ECM then illuminates the MIL and sets the DTC.
This monitor runs when the vehicle is driven at 12.4 mph (20 km/h) for over 20 seconds.

DTC No.	DTC Detection Condition	Trouble Area
P0617	When conditions (a), (b) and (c) are met, positive (+B) battery voltage of 10.5 V or more is applied to ECM for 20 seconds (1 trip detection logic): (a) Vehicle speed more than 12.4 mph (20 km/h) (b) Engine speed more than 1,000 rpm (c) STA signal ON	• Park/Neutral Position (PNP) switch • Starter relay circuit • Cranking holding function circuit • Engine switch • ECM

ES

MONITOR STRATEGY

Related DTCs	P0617: Starter signal
Required Sensors/Components (Main)	STARTER relay, PMP switch, Engine switch
Required Sensors/Components (Sub)	Vehicle speed sensor (VSS), Crankshaft Position (CKP) sensor
Frequency of Operation	Continuous
Duration	20 seconds
MIL Operation	Immediate
Sequence of Operation	None

TYPICAL ENABLING CONDITIONS

Monitor runs whenever this DTC is not present:	None
Battery voltage	10.5 V or more
Vehicle speed	12.43 mph (20 km/h) or more
Engine speed	1,000 rpm or more

TYPICAL MALFUNCTION THRESHOLDS

Starter signal	ON

WIRING DIAGRAM

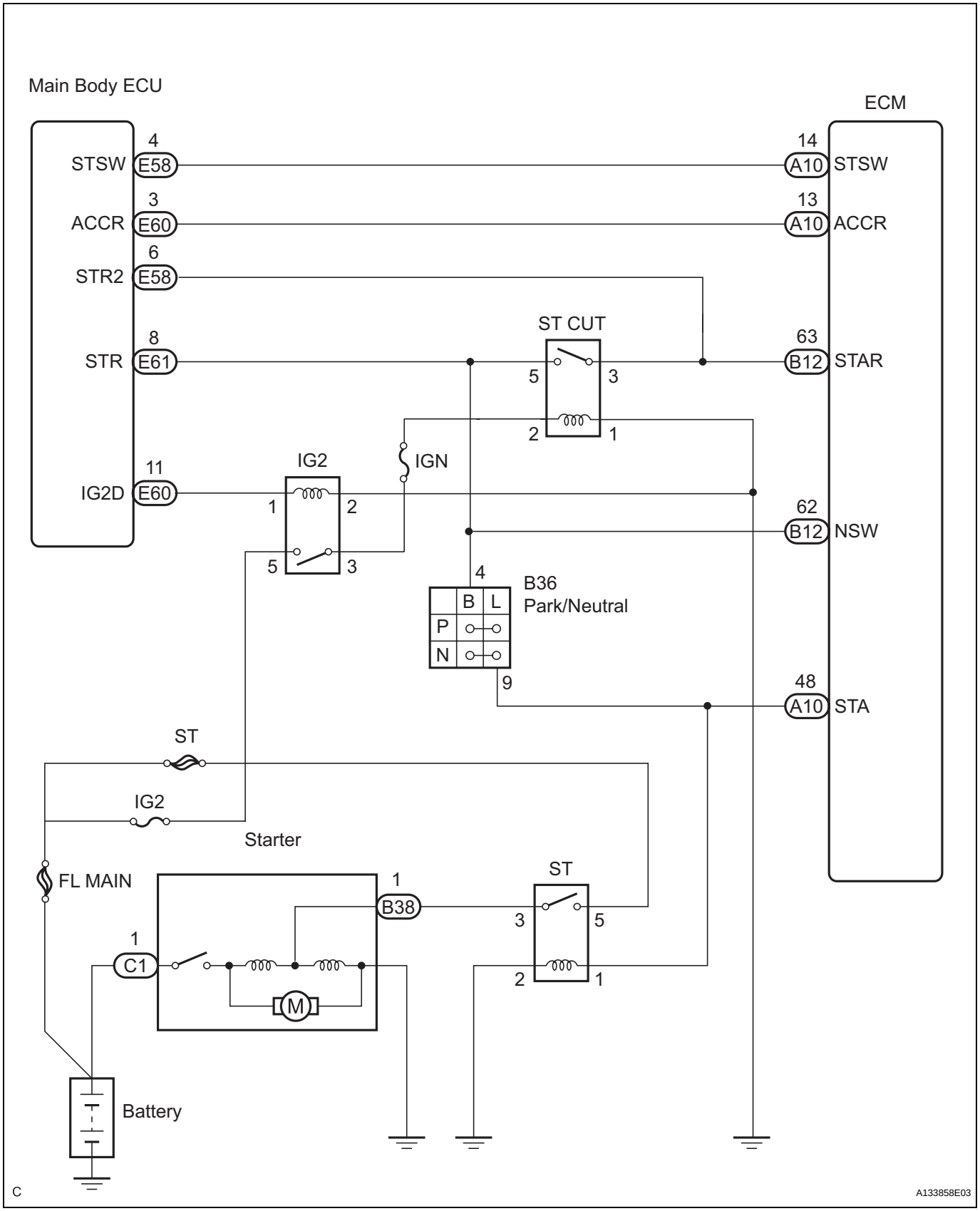

ES

INSPECTION PROCEDURE

HINT:

- The following troubleshooting flowchart is based on the premise that the engine is cranked normally. If the engine does not crank, proceed to the problem symptoms table (See page ES-28).
- Read freeze frame data using the intelligent tester. The ECM records vehicle and driving condition information as freeze frame data the moment a DTC is stored. When troubleshooting, freeze frame data can be helpful in determining whether the vehicle was running or stopped, whether the engine was warmed up or not, whether the air-fuel ratio was lean or rich, as well as other data recorded at the time of a malfunction (See page ES-41).

1 READ VALUE OF INTELLIGENT TESTER (STARTER SIGNAL)

(a) Connect the intelligent tester to the DLC3.
(b) Turn the engine switch on (IG) and turn the tester on.
(c) Enter the following menus: DIAGNOSIS / ENHANCED OBD II / DATA LIST / ALL / STARTER SIG.
(d) Check the value displayed on the tester when the engine switch is turned on (IG) and the engine is started.

OK

Condition	Engine switch on (IG)	Engine start
STARTER SIG	OFF	ON

OK → **REPLACE ECM (See page ES-543)**

NG

2 INSPECT PARK/NEUTRAL POSITION SWITCH ASSEMBLY

Component Side:

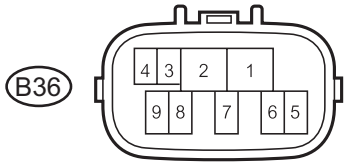

Park/Neutral Position Switch

A107908E07

(a) Inspect the Park/Neutral Position (PNP) switch.
  (1) Disconnect the B36 switch connector.
  (2) Measure the resistance according to the value(s) in the table below.

Standard resistance

Gear Selector Lever Position	Tester Connection	Specified Condition
P	4 - 5	Below 1 Ω
N	4 - 5	Below 1 Ω

  (3) Reconnect the PNP switch connector.

Result

Result	Proceed to
OK	A
NG	B

B → **REPLACE PARK/NEUTRAL POSITION SWITCH (THEN CHECK CRANKING HOLDING FUNCTION CIRCUIT) (See page AX-184)**

A

CHECK CRANKING HOLDING FUNCTION CIRCUIT (See page ES-449)

DTC	P0630	VIN not Programmed or Mismatch - ECM / PCM

DESCRIPTION

DTC P0630 is set when the Vehicle Identification Number (VIN) is not stored in the Engine Control Module (ECM) or the input VIN is not accurate. Input the VIN with the intelligent tester.

DTC No.	DTC Detection Condition	Trouble Area
P0630	• VIN not stored in ECM • Input VIN in ECM not accurate	ECM

MONITOR STRATEGY

ES

Related DTCs	P0630: VIN not programmed
Required Sensors/Components (Main)	ECM
Required Sensors/Components (Sub)	-
Frequency of Operation	Continuous
Duration	0.325 seconds
MIL Operation	Immediate
Sequence of Operation	None

TYPICAL ENABLING CONDITIONS

Battery voltage	8 V or more
Engine switch	ON
Starter	OFF

TYPICAL MALFUNCTION THRESHOLDS

VIN code	Not programmed

COMPONENT OPERATING RANGE

VIN code	Programmed

INSPECTION PROCEDURE

1	READ DTC OUTPUT

(a) Connect the intelligent tester to the DLC3.
(b) Turn the engine switch on (IG) and turn the tester on.
(c) Enter the following menus: DIAGNOSIS / ENHANCED OBD II / DTC INFO / CURRENT CODES.
(d) Read the DTCs.

Result

Display (DTC Output)	Proceed to
P0630	**A**
P0630 and other DTCs	**B**

If any DTCs other than P0630 are output, troubleshoot those DTCs first.

NOTICE:
If P0630 is set, the VIN must be input to the ECM using the intelligent tester. However, all DTCs are cleared automatically by the tester when inputting the VIN. If DTCs other than P0630 are set, check them first.

B → **GO TO DTC CHART (See page ES-59)**

A

2	**INPUT VIN WITH INTELLIGENT TESTER**

NEXT

END

DTC	P0657	Actuator Supply Voltage Circuit / Open

DESCRIPTION

The ECM monitors the output voltage to the throttle actuator. This self-check ensures that the ECM is functioning properly. The output voltage usually is 0 V when the engine switch is turned off. If the output voltage is higher than 7 volts when the engine switch is turned off, the ECM will illuminate the MIL and set a DTC when the engine switch is turned on.

DTC	DTC Setting Condition	Trouble Area
P0657	Throttle actuator power supply error	ECM

ES

MONITOR STRATEGY

Related DTC	P0657: ETCS power supply
Required sensors/Components (main)	ECM
Required sensors/Components (sub)	Throttle actuator
Frequency of Operation	Once per driving cycle
Duration	Within 1 second
MIL Operation	Immediate
Sequence of Operation	None

TYPICAL ENABLING CONDITIONS

Monitor will run whenever this DTC is not present	None
Engine switch	From ON to OFF

TYPICAL MALFUNCTION THRESHOLDS

Throttle actuator power supply	7 V or more

INSPECTION PROCEDURE

1	CHECK WHETHER DTC OUTPUT RECURS (IN ADDITION TO DTC P0657)

(a) Connect the intelligent tester to the DLC3.
(b) Turn the engine switch on (IG).
(c) Turn the tester on.
(d) Clear the DTC.
(e) Turn the engine switch off.
(f) Disconnect the battery negative terminal and wait for 1 minute.
(g) Connect the battery negative terminal.
(h) Turn the engine switch on (IG) for 10 seconds.
(i) Turn the engine switch off.
(j) Turn the engine switch on (IG).
(k) Enter the following menus: DIAGNOSIS / ENHANCED II / DTC INFO / CURRENT CODES.
(l) Read the DTCs.

Result

Display (DTC output)	Proceed to
P0657	**A**

Display (DTC output)	Proceed to
No output DTC	B

B → **CHECK FOR INTERMITTENT PROBLEMS**

A

REPLACE ECM (See page ES-543)

DTC	P0705	Transmission Range Sensor Circuit Malfunction (PRNDL Input)

DESCRIPTION

The park/neutral position switch detects the shift lever position and sends signals to the ECM.

DTC No.	DTC Detection Condition	Trouble Area
P0705	(A) Any 2 or more signals of the following are ON simultaneously (2-trip detection logic): • P input signal is ON. • N input signal is ON. • R input signal is ON. • D input signal is ON. (B) Any 2 or more signals of the following are ON simultaneously (2-trip detection logic): • NSW input signal is ON. • R input signal is ON. • D input signal is ON. (C) Any of following conditions is met for 2.0 sec. or more in the S position (2-trip detection logic): • NSW input signal is ON. • P input signal is ON. • N input signal is ON. • R input signal is ON. (D) All switches are OFF simultaneously for NSW, P, R, N and D.	• Short in park/neutral position switch circuit • Park/neutral position switch • ECM

ES

MONITOR DESCRIPTION

These DTCs indicate a problem with the park/neutral position switch and the wire harness in the park/neutral position switch circuit.
The park/neutral position switch detects the shift lever position and sends a signal to the ECM.
For security, the park/neutral position switch detects the shift lever position so that the engine can be started only when the shift lever is in the P or N position.
The park/neutral position switch sends a signal to the ECM according to the shift position (P, R, N or D).
The ECM determines that there is a problem with the switch or related parts if it receives more than 1 position signal simultaneously. The ECM will turn on the MIL and store the DTC.

MONITOR STRATEGY

Related DTCs	P0705: Park/neutral position switch/Verify switch input
Required sensors/Components	Park/neutral position switch
Frequency of operation	Continuous
Duration	2 sec.
MIL operation	2 driving cycles
Sequence of operation	None

TYPICAL ENABLING CONDITIONS

All:

The monitor will run whenever this DTC is not present.	None
Engine switch	ON
Battery voltage	10.5 V or more

Condition (C):

One of the following conditions is met:	Condition (a), (b), (c) or (d)
(a) Park Neutral position switch	ON
(b) Park position switch	ON

(c) Neutral position switch	ON
(d) R range position switch	ON

TYPICAL MALFUNCTION THRESHOLDS

1. One of the following conditions is met: Conditions (A), (B) and (C)

Condition (A):

Number of the following signal input at the same time	2 or more
Park position switch	ON
Neutral position switch	ON
R range position switch	ON
D range position switch	ON

Condition (B):

Number of the following signal input at the same time	2 or more
Park neutral position switch	ON
R range switch	ON
D range switch	ON

Condition (C):

"M" switch	ON

Condition (D):

Park position switch	OFF
Neutral position switch	OFF
Park neutral position switch	OFF
R range switch	OFF
D range switch	OFF

COMPONENT OPERATING RANGE

Park/neutral Position switch	The park/neutral position switch sends only one signal to the ECM.

WIRING DIAGRAM

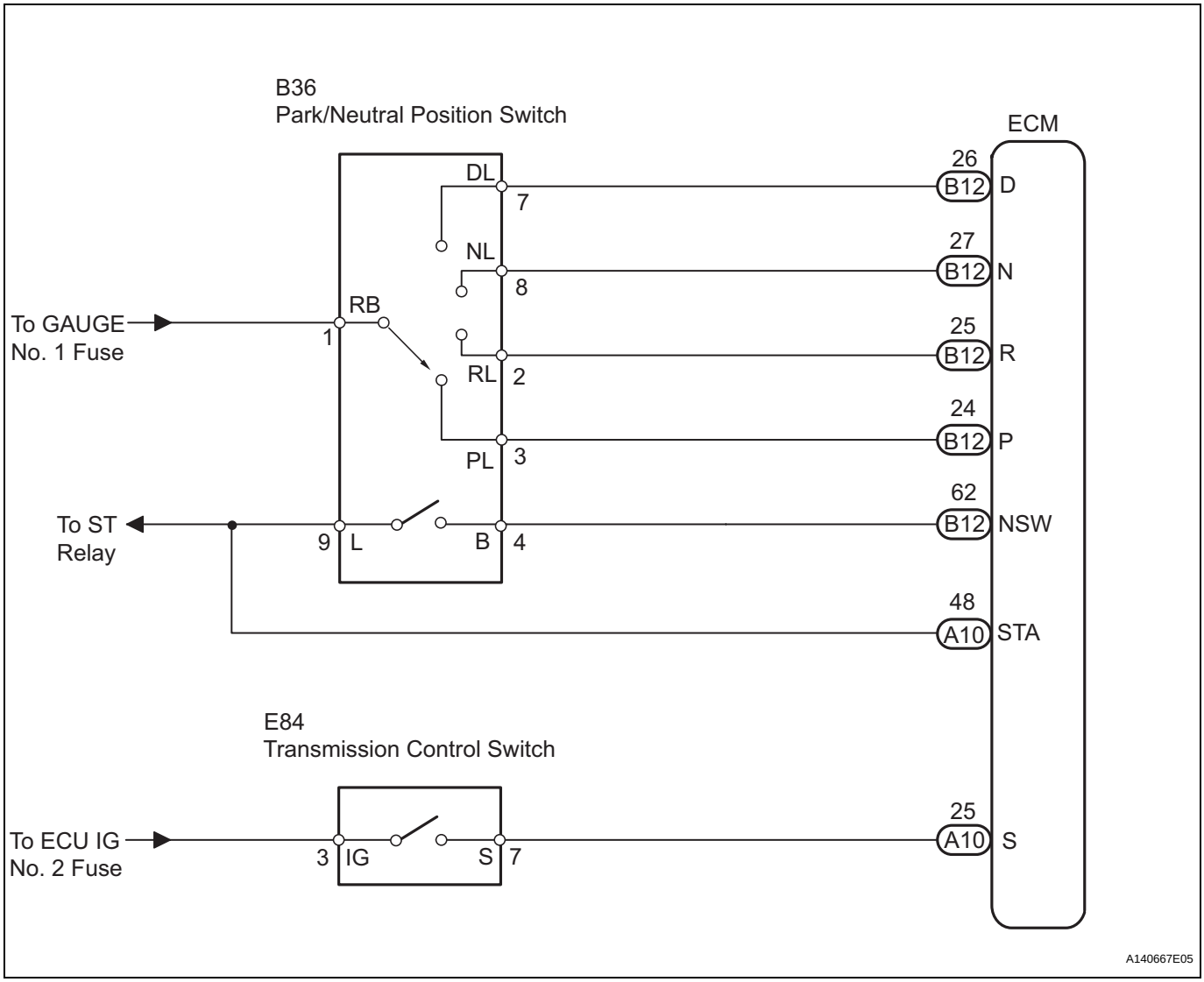

INSPECTION PROCEDURE

HINT:

According to the DATA LIST displayed by the intelligent tester, you can read the value of the switch, sensor, actuator and so on without parts removal. Reading the DATA LIST as the first step of troubleshooting is one method to shorten labor time.

NOTICE:

In the table below, the values listed under "Normal Condition" are reference values. Do not depend solely on these reference values when deciding whether a part is faulty or not.

1. READ DATA LIST

(a) Turn the engine switch off.

(b) Connect the intelligent tester together with the CAN VIM (controller area network vehicle interface module) to the DLC3.

(c) Turn the engine switch on (IG).

(d) Turn on the tester.

(e) Select the item "DIAGNOSIS / ENHANCED OBD II / DATA LIST".

(f) According to the display on the tester, read the "DATA LIST".

Item	Measurement Item / Range (Display)	Normal Condition	Diagnostic Note
PNP SW [NSW]	PNP SW Status / ON or OFF	Shift lever position is; P and N: ON Except P or N: OFF	When the shift lever position displayed on the intelligent tester differs from the actual position, adjustment of the PNP switch or the shift cable may be incorrect.
REVERSE	PNP SW Status / ON or OFF	Shift lever position is; R: ON Except R: OFF	↑
DRIVE	PNP SW Status / ON or OFF	Shift lever position is; D and S: ON Except D or S: OFF	↑

1 CHECK HARNESS AND CONNECTOR (BATTERY - PARK/NEUTRAL POSITION SWITCH)

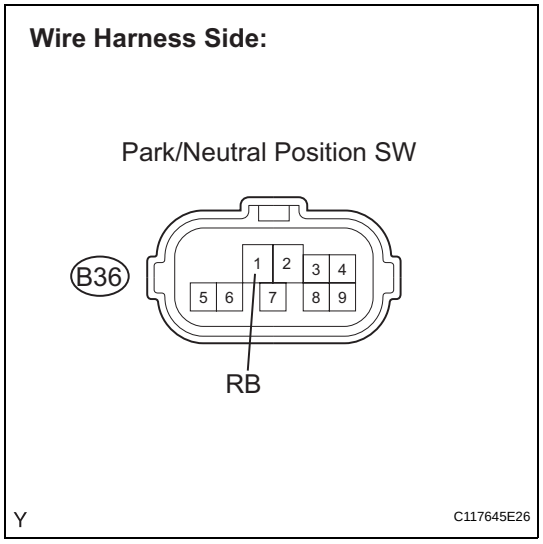

(a) Disconnect the park/neutral position switch connector.
(b) Turn the engine switch on (IG).
(c) Measure the voltage according to the value(s) in the table below.

Standard voltage

Tester Connection	Specified Condition
RB (B36-1) - Body ground	10 to 14 V

NG → **REPAIR OR REPLACE HARNESS OR CONNECTOR**

OK

2 CHECK ECM (OUTPUT SIGNAL)

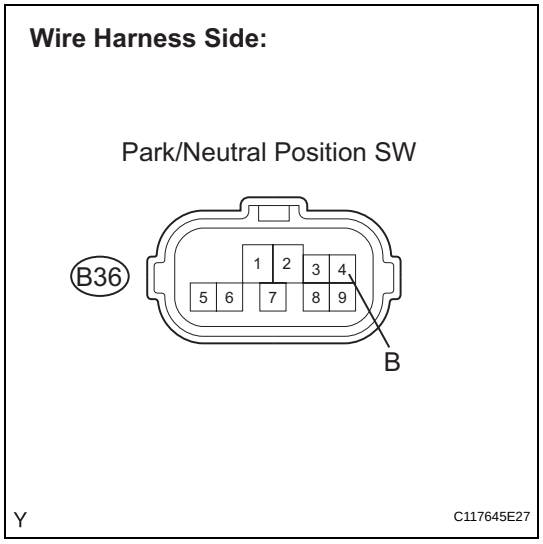

(a) Turn the engine switch on (IG).
(b) Measure the voltage according to the value(s) in the table below.

Standard voltage

Tester Connection	Specified Condition
RB (B36-4) - Body ground	Below 3 V

NG → **Go to step 11**

OK

3	CHECK HARNESS AND CONNECTOR (PARK/NEUTRAL POSITION SWITCH - ST RELAY)

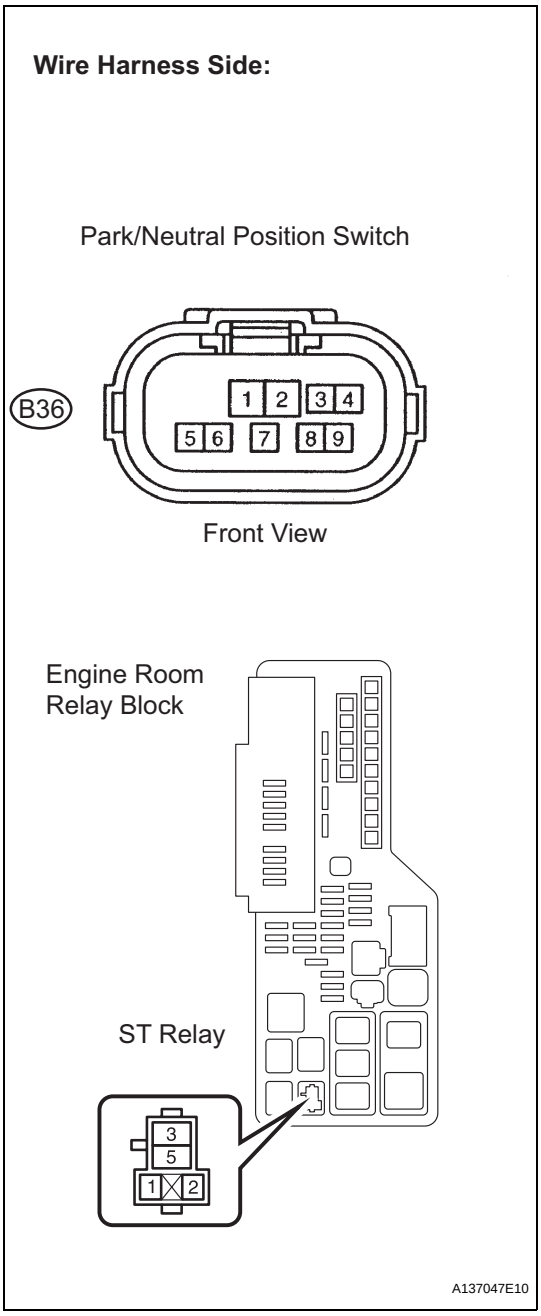

(a) Disconnect the B36 park/neutral position switch connector.
(b) Remove the ST relay from the engine room relay block.
(c) Measure the resistance according to the value(s) in the table below.

Standard resistance (check for open)

Tester Connection	Specified Condition
L (B36-9) - ST relay terminal 1	Below 1 Ω

Standard resistance (check for open)

Tester Connection	Specified Condition
L (B36-9) or ST relay terminal 1 - Body ground	10 kΩ or higher

(d) Reinstall the ST relay.
(e) Reconnect the park/neutral position switch connector.

NG → **REPAIR OR REPLACE HARNESS OR CONNECTOR**

OK

4 INSPECT ST RELAY

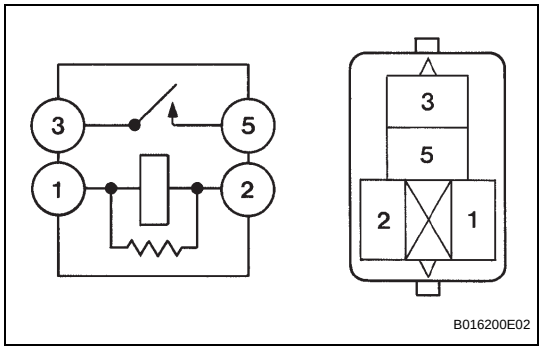

(a) Remove the ST relay from the engine room relay block.
(b) Measure the resistance between the terminals.
Standard resistance

Tester Connection	Specified Condition
3 - 5	10 kΩ or higher
3 - 5	Below 1Ω Apply battery voltage between terminals 1 and 2

(c) Reinstall the ST relay.

NG → **REPLACE ST RELAY**

OK

5 CHECK HARNESS AND CONNECTOR (ST RELAY - BODY GROUND)

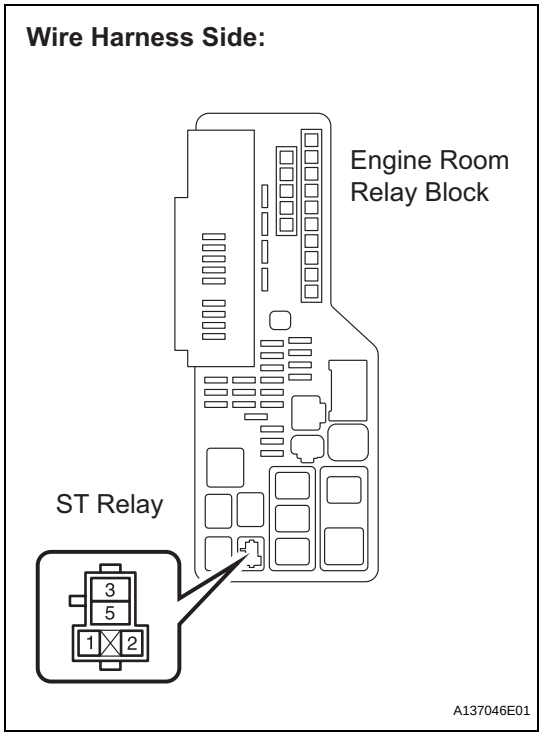

(a) Remove the ST relay from the engine room relay block.
(b) Measure the resistance between the terminals.
Standard resistance

Tester connection	Specified Condition
ST relay terminal 2 - Body ground	Below 1 Ω

NG → **REPAIR OR REPLACE HARNESS OR CONNECTOR**

OK

ES

ES

6 INSPECT PARK/NEUTRAL POSITION SWITCH ASSEMBLY

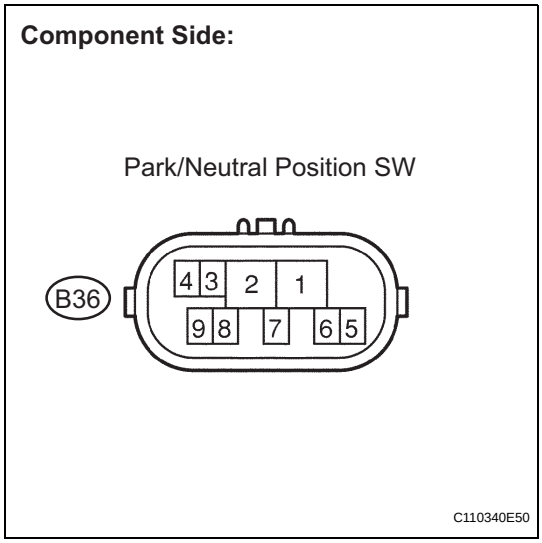

(a) Disconnect the B36 park/neutral position switch connector.

(b) Measure the resistance according to the value(s) in the table below when the shift lever is moved to each position.

Standard resistance

Shift Position	Tester Connection	Specified Condition
P	1 - 3 and 4 - 9	Below 1 Ω
Except P		10 kΩ or higher
R	1 - 2	Below 1 Ω
Except R		10 kΩ or higher
N	1 - 8 and 4 - 9	Below 1 Ω
Except N		10 kΩ or higher
D, S, "+" and "-"	1 - 7	Below 1 Ω
Except D, S, "+" and "-"		10 kΩ or higher

(c) Reconnect the park/neutral position switch connector.

NG → **REPLACE PARK/NEUTRAL POSITION SWITCH ASSEMBLY (See page AX-184)**

OK

7 CHECK HARNESS AND CONNECTOR

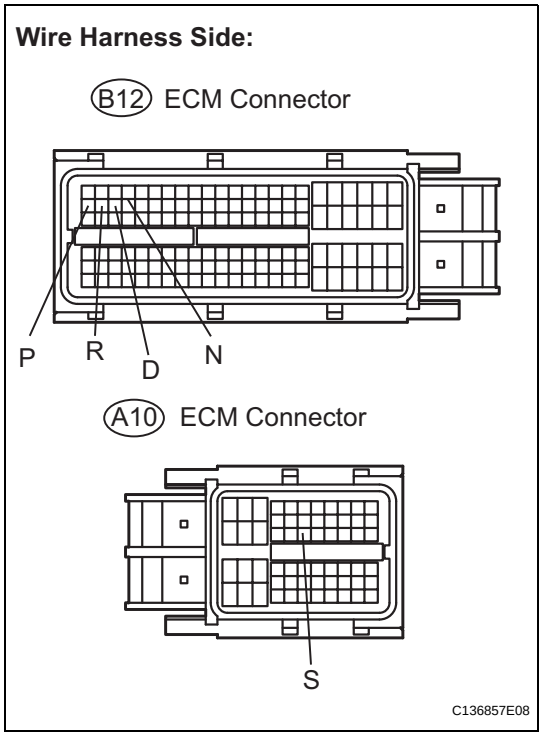

(a) Disconnect the ECM connectors.

(b) Turn the engine switch on (IG), and measure the voltage according to the value(s) in the table below when the shift lever is moved to each position.

Standard voltage

Shift Position	Tester Connection	Specified Condition
P	B12-24 (P) - Body ground	10 to 14 V
Except P		Below 1 V
N	B12-27 (N) - Body ground	10 to 14 V
Except N		Below 1 V
R	B12-25 (R) - Body ground	10 to 14 V*
Except R		Below 1 V
D and S	B12-26 (D) - Body ground	10 to 14 V
Except D and S		Below 1 V
S, "+" and "-"	A10-25 (S) - Body ground	10 to 14 V
Except S, "+" and "-"		Below 1 V

ES

HINT:

*: The voltage will drop slightly due to lighting up of the back up light.

(c) Reconnect the ECM connectors.

NG → **REPAIR OR REPLACE HARNESS OR CONNECTOR**

OK

8 CHECK HARNESS AND CONNECTOR

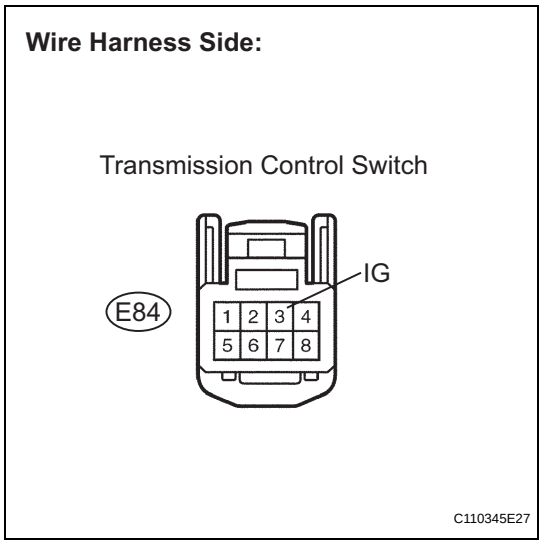

(a) Disconnect the transmission control switch connector from the shift lock control unit assembly.

(b) Turn the engine switch on (IG).

(c) Measure the voltage according to the value(s) in the table below.

Standard voltage

Tester Connection	Specified Condition
IG (E84-3) - Body ground	10 to 14 V

(d) Reconnect the transmission control switch connector.

NG → **REPAIR OR REPLACE HARNESS OR CONNECTOR**

OK

ES

9 INSPECT TRANSMISSION CONTROL SWITCH

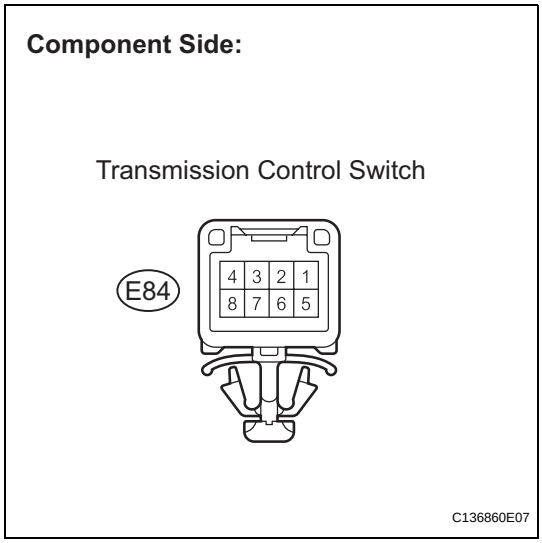

(a) Disconnect the E84 transmission control switch connector.

(b) Measure the resistance according to the value(s) in the table below when the shift lever is moved to each position.

Standard resistance

Shift Position	Tester Connection	Specified Condition
S, "+" and "-"	3 - 7	Below 1 Ω
Except S, "+" and "-"		10 kΩ or higher

(c) Reconnect the transmission control switch.

NG → **REPLACE TRANSMISSION CONTROL SWITCH**

OK

10 CHECK HARNESS AND CONNECTOR

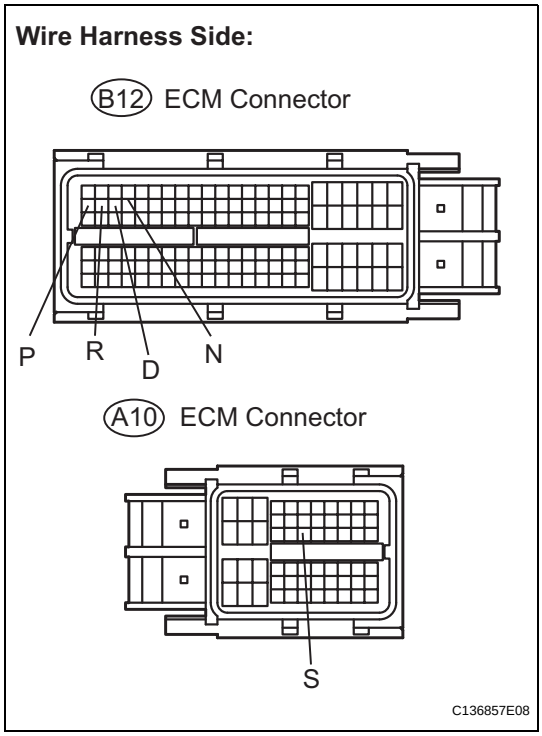

(a) Disconnect the ECM connectors.

(b) Turn the engine switch on (IG), and measure the voltage according to the value(s) in the table below when the shift lever is moved to each position.

Standard voltage

Shift Position	Tester Connection	Specified Condition
P	B12-24 (P) - Body ground	10 to 14 V
Except P		Below 1 V
N	B12-27 (N) - Body ground	10 to 14 V
Except N		Below 1 V

Shift Position	Tester Connection	Specified Condition
R	B12-25 (R) - Body ground	10 to 14 V *
Except R		Below 1 V
D and S	B12-26 (D) - Body ground	10 to 14 V
Except D and S		Below 1 V
S, "+" and "-"	A10-25 (S) - Body ground	10 to 14 V
Except S, "+" and "-"		Below 1 V

HINT:
The voltage will drop slightly due to lighting up of the back up light.

(c) Reconnect the ECM connectors.

NG → **REPAIR OR REPLACE HARNESS OR CONNECTOR**

ES

OK

REPLACE ECM (See page ES-543)

11 CHECK HARNESS AND CONNECTOR (PARK/NEUTRAL POSITION SWITCH - ECM)

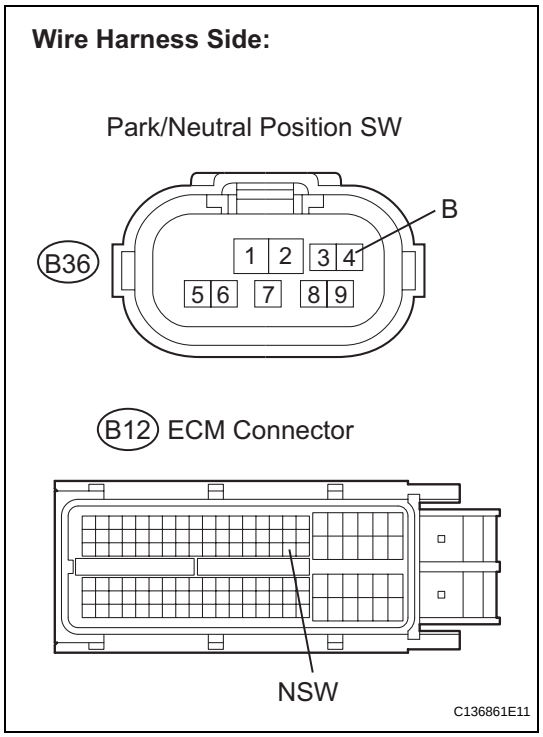

(a) Disconnect the ECM connectors.
(b) Turn the engine switch off.
(c) Measure the resistance according to the value(s) in the table below.

Standard resistance (Check for open)

Tester Connection	Specified Condition
B (B36-4) - NSW (B12-62)	Below 1 Ω

Standard resistance (Check for short)

Tester Connection	Specified Condition
B (B36-4) or NSW (B12-62) - Body ground	10 kΩ or higher

NG → **REPAIR OR REPLACE HARNESS OR CONNECTOR**

OK

REPLACE ECM (See page ES-543)

DTC	P2102	Throttle Actuator Control Motor Circuit Low

DTC	P2103	Throttle Actuator Control Motor Circuit High

SYSTEM DESCRIPTION

The throttle actuator is operated by the ECM and opens and closes the throttle valve using the gears. The opening angle of the throttle valve is detected by the Throttle Position (TP) sensor, which is mounted on the throttle body. The TP sensor provides feedback to the ECM. This feedback allows the ECM to appropriately control the throttle actuator and monitor the throttle opening angle as the ECM responds to driver inputs.

HINT:

ES

This ETCS (Electronic Throttle Control System) does not use a throttle cable.

DTC No.	DTC Detection Condition	Trouble Area
P2102	Conditions (a) and (b) continue for 2.0 seconds (1 trip detection logic): (a) Throttle actuator duty ratio 80 % or more (b) Throttle actuator current 0.5 A or less	• Open in throttle actuator circuit • Throttle actuator • ECM
P2103	Either of the following conditions is met: • Hybrid IC diagnosis signal fails • Hybrid IC current limiter port fails	• Short in throttle actuator circuit • Throttle actuator • Throttle valve • Throttle body assembly • ECM

MONITOR DESCRIPTION

The ECM monitors the electrical current through the electronic actuator, and detects malfunctions and open circuits in the throttle actuator based on this value. If the current is outside the standard range, the ECM determines that there is a malfunction in the throttle actuator. In addition, if the throttle valve does not function properly (for example, stuck on), the ECM determines that there is a malfunction. The ECM then illuminates the MIL and sets a DTC.

Example:

When the electrical current is more than 10 A, or less than 0.5 A and the throttle actuator duty ratio exceeds 80 %, the ECM interprets this as the current being outside the standard range, and illuminates the MIL and sets a DTC.

If the malfunction is not repaired successfully, a DTC is set when the engine is quickly revved up to a high rpm several times after the engine has idled for 5 seconds after engine start.

MONITOR STRATEGY

Related DTCs	P2102: Throttle actuator current (low current) P2103: Throttle actuator current (high current)
Required Sensors/Components (Main)	Throttle actuator (throttle body)
Required Sensors/Components (Related)	None
Frequency of Operation	Continuous
Duration	P2102 (Throttle actuator current (low current)): 2 seconds P2103 (Throttle actuator current (high current)): 25 times or 0.6 seconds
MIL Operation	Immediate
Sequence of Operation	None

TYPICAL ENABLING CONDITIONS

All:

Monitor runs whenever following DTCs are not present	None

P2102:

Throttle motor	ON
Duty-cycle ratio to open throttle actuator	80 % or more
Throttle actuator power supply	8 V or more
Current motor current - Motor current before 0.016 sec.	Less than 0.2 A

P2103:

Throttle motor	ON
Either following condition 1 or 2 is met:	-
1. Throttle actuator power supply	8 V or more
2. Throttle actuator power	ON
Battery voltage	8 V or more
Starter	OFF

TYPICAL MALFUNCTION THRESHOLDS

P2102:

Throttle actuator current	Less than 0.5 A

P2103:

Either of following conditions is met:	A or B
A. Hybrid IC diagnosis signal	Fail
B. Hybrid IC current limiter port	Fail

FAIL-SAFE

When either of these DTCs, as well as other DTCs relating to ETCS (Electronic Throttle Control System) malfunctions, is set, the ECM enters fail-safe mode. During fail-safe mode, the ECM cuts the current to the throttle actuator off, and the throttle valve is returned to a 6° throttle angle by the return spring. The ECM then adjusts the engine output by controlling the fuel injection (intermittent fuel-cut) and ignition timing, in accordance with the accelerator pedal opening angle, to allow the vehicle to continue running at a minimal speed. If the accelerator pedal is depressed gently, the vehicle can be driven slowly.
Fail-safe mode continues until a pass condition is detected, and the engine switch is then turned off.

WIRING DIAGRAM

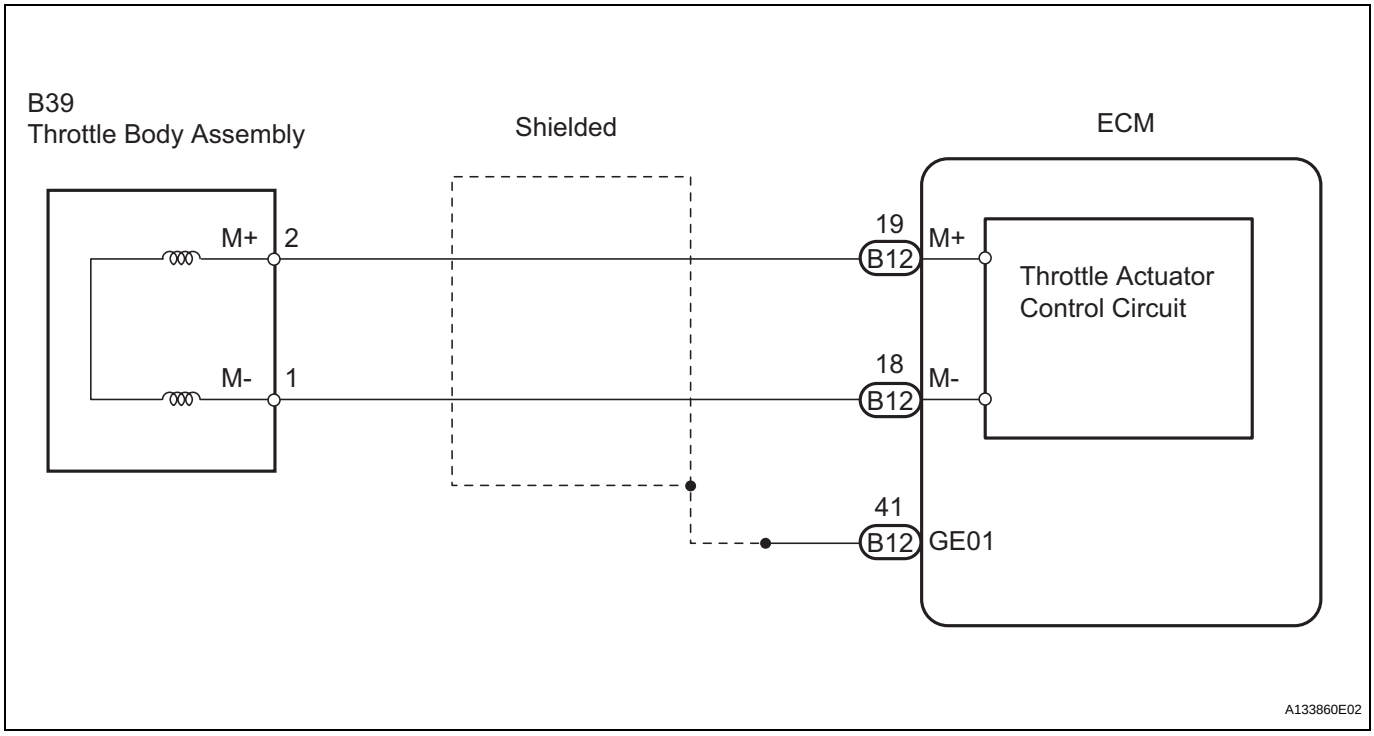

ES

INSPECTION PROCEDURE

HINT:

- Read freeze frame data using an intelligent tester. The ECM records vehicle and driving condition information as freeze frame data the moment a DTC is stored. When troubleshooting, freeze frame data can be helpful in determining whether the vehicle was running or stopped, whether the engine was warmed up or not, whether the air-fuel ratio was lean or rich, as well as other data recorded at the time of a malfunction (See page ES-41).
- The throttle actuator current (THROTTLE MOT) and the throttle actuator duty ratio (THROTTLE OPN / THROTTLE CLS) can be read using the intelligent tester. However, the ECM shuts off the throttle actuator current when the ETCS malfunctions.

1	INSPECT THROTTLE BODY (RESISTANCE OF THROTTLE CONTROL MOTOR)

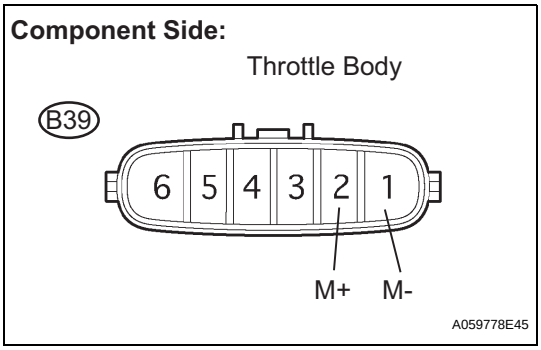

(a) Disconnect the B39 throttle body connector.

(b) Measure the resistance according to the value(s) in the table below.

Standard resistance

Tester Connection	Condition	Specified Condition
M+ (B39-2) - M- (B39-1)	20°C (68°F)	0.3 to 100 Ω

(c) Reconnect the throttle body connector.

NG → **REPLACE THROTTLE BODY (See page ES-519)**

OK

2	CHECK HARNESS AND CONNECTOR (THROTTLE CONTROL MOTOR - ECM)

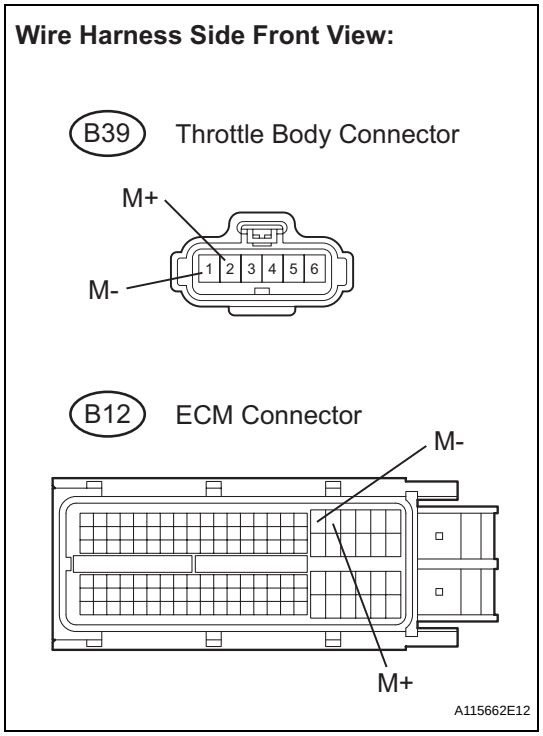

(a) Disconnect the B39 throttle body connector.
(b) Disconnect the B12 ECM connector.
(c) Measure the resistance according to the value(s) in the table below.

Standard resistance (Check for open)

Tester Connection	Specified Condition
M+ (B39-2) - M+ (B12-19)	Below 1 Ω
M- (B39-1) - M- (B12-18)	Below 1 Ω

Standard resistance (Check for short)

Tester Connection	Specified Condition
M+ (B39-2) or M+ (B12-19) - Body ground	10 kΩ or higher
M- (B39-1) or M- (B12-18) - Body ground	10 kΩ or higher

(d) Reconnect the throttle body connector.
(e) Reconnect the ECM connector.

NG → **REPAIR OR REPLACE HARNESS OR CONNECTOR**

OK

3	INSPECT THROTTLE BODY (VISUALLY CHECK THROTTLE VALVE)

(a) Check for foreign objects between the throttle valve and the housing.

NG → **REMOVE FOREIGN OBJECT AND CLEAN THROTTLE BODY**

OK

4	INSPECT THROTTLE VALVE

(a) Check if the throttle valve opens and closes smoothly.

NG → **REPLACE THROTTLE BODY (See page ES-519)**

OK

REPLACE ECM (See page ES-543)

ES

DTC	P2111	Throttle Actuator Control System - Stuck Open

DTC	P2112	Throttle Actuator Control System - Stuck Closed

SYSTEM DESCRIPTION

The throttle actuator is operated by the ECM, and opens and closes the throttle valve using the gears. The opening angle of the throttle valve is detected by the Throttle Position (TP) sensor, which is mounted on the throttle body. The TP sensor provides feedback to the ECM. This feedback allows the ECM to appropriately control the throttle actuator and monitor the throttle opening angle as the ECM responds to driver inputs.

HINT:
This ETCS (Electronic Throttle Control System) does not use a throttle cable.

DTC No.	DTC Detection Condition	Trouble Area
P2111	ECM signals throttle actuator to close, but actuator is stuck (1 trip detection logic)	• Throttle actuator • Throttle body • Throttle valve
P2112	ECM signals throttle actuator to open, but actuator is stuck (1 trip detection logic)	• Throttle actuator • Throttle body • Throttle valve

MONITOR DESCRIPTION

The ECM determines that there is a malfunction in the ETCS when the throttle valve remains at a fixed angle despite a high drive current from the ECM. The ECM illuminates the MIL and sets a DTC.
If the malfunction is not repaired successfully, a DTC is set when the accelerator pedal is fully depressed and released quickly (to fully open and close the throttle valve) after the engine is next started.

MONITOR STRATEGY

Related DTCs	P2111: Throttle actuator stuck open P2112: Throttle actuator stuck closed
Required Sensors/Components (Main)	Throttle actuator
Required Sensors/Components (Sub)	-
Frequency of Operation	Continuous
Duration	0.5 seconds
MIL Operation	Immediate
Sequence of Operation	None

TYPICAL ENABLING CONDITIONS

All:

Monitor runs whenever following DTCs are not present	None

P2111 (Throttle actuator stuck open):

System guard*	ON
Throttle actuator current	2 A or more
Duty cycle to close throttle	80 % or more

P2112 (Throttle actuator stuck closed):

System guard*	ON
Throttle actuator current	2 A or more
Duty cycle to open throttle	80 % or more

*System guard is set when following conditions are met:	-
Throttle actuator	ON
Throttle actuator duty calculation	Executing
Throttle position sensor	Fail determined
Throttle actuator current-cut operation	Not executing
Throttle actuator power supply	4 V or more
Throttle actuator	Fail determined

TYPICAL MALFUNCTION THRESHOLDS

P2111 (Throttle actuator stuck open):

TP sensor voltage change	No change

P2112 (Throttle actuator stuck closed):

TP sensor voltage change	No change

FAIL-SAFE

When either of these DTCs, as well as other DTCs relating to ETCS (Electronic Throttle Control System) malfunctions, is set, the ECM enters fail-safe mode. During fail-safe mode, the ECM cuts the current to the throttle actuator off, and the throttle valve is returned to a 6° throttle angle by the return spring. The ECM then adjusts the engine output by controlling the fuel injection (intermittent fuel-cut) and ignition timing, in accordance with the accelerator pedal opening angle, to allow the vehicle to continue running at a minimal speed. If the accelerator pedal is depressed firmly and gently, the vehicle can be driven slowly. Fail-safe mode continues until a pass condition is detected, and the engine switch is then turned off.

WIRING DIAGRAM

Refer to DTC P2102 (See page ES-323).

INSPECTION PROCEDURE

HINT:
Read freeze frame data using the intelligent tester. The ECM records vehicle and driving condition information as freeze frame data the moment a DTC is stored. When troubleshooting, freeze frame data can be helpful in determining whether the vehicle was running or stopped, whether the engine was warmed up or not, whether the air-fuel ratio was lean or rich, as well as other data recorded at the time of a malfunction (See page ES-41).

1	CHECK ANY OTHER DTCS OUTPUT (IN ADDITION TO DTC P2111 or P2112)

(a) Connect the intelligent tester to the DLC3.
(b) Turn the engine switch on (IG).
(c) Turn the tester on.
(d) Enter the following menus: DIAGNOSIS / ENHANCED OBD II / DTC INFO / CURRENT CODES.
(e) Read the DTCs.

Result

Display (DTC Output)	Proceed to
P2111 or P2112	A
P2111 or P2112 and other DTCs	B

HINT:
If any DTCs other than P2111 or P2112 are output, troubleshoot those DTCs first.

B → **GO TO DTC CHART (See page ES-59)**

A

2	INSPECT THROTTLE BODY (VISUALLY CHECK THROTTLE VALVE)

(a) Check for contamination between the throttle valve and the housing. If necessary, clean the throttle body. And check that the throttle valve moves smoothly.
OK:
Throttle valve is not contaminated with foreign objects and moves smoothly.

ES

NG → **REPLACE THROTTLE BODY ASSEMBLY (See page ES-519)**

OK

3	CHECK WHETHER DTC OUTPUT RECURS (DTC P2111 OR P2112)

(a) Connect the intelligent tester to the DLC3.
(b) Turn the engine switch on (IG).
(c) Turn the tester on.
(d) Clear the DTCs (See page ES-41).
(e) Start the engine, and fully depress and release the accelerator pedal quickly (to fully open and close the throttle valve).
(f) Enter the following menus: DIAGNOSIS / ENHANCED OBD II / DTC INFO / CURRENT CODES.
(g) Read the DTCs.

Result

Display (DTC Output)	Proceed to
No DTC	A
P2111 or P2112	B

B → **REPLACE ECM (See page ES-543)**

A

CHECK FOR INTERMITTENT PROBLEMS

DTC	P2118	Throttle Actuator Control Motor Current Range / Performance

DESCRIPTION

The ETCS (Electronic Throttle Control System) has a dedicated power supply circuit. When the monitored voltage (+BM) is low (less than 4 V), the ECM determines that there is a malfunction in the ETCS and cuts off the current to the throttle actuator.
When the voltage becomes unstable, the ETCS itself becomes unstable. For this reason, when the voltage is low, the current to the throttle actuator is cut. If repairs are made and the system returns to normal, turn the engine switch off. The ECM then allows the current to flow to the throttle actuator so that it can be restarted.
HINT:
The ETCS does not use a throttle cable.

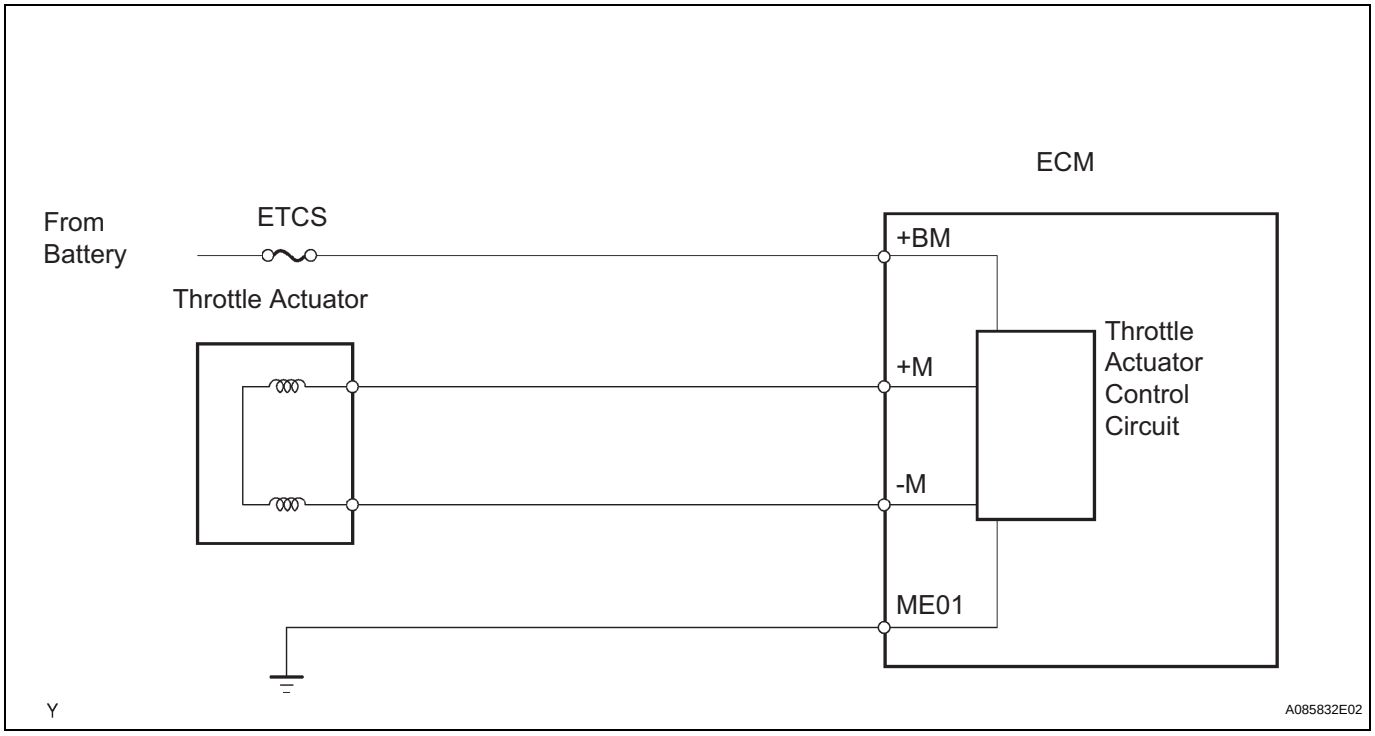

DTC No.	DTC Detection Condition	Trouble Area
P2118	Open in ETCS power source (+BM) circuit (1 trip detection logic)	• Open in ETCS power source circuit • ETCS fuse • ECM

MONITOR DESCRIPTION

The ECM monitors the battery supply voltage applied to the throttle actuator.
When the power supply voltage (+BM) drops below 4 V for 0.8 seconds or more, the ECM interprets this as an open in the power supply circuit (+BM). The ECM illuminates the MIL and sets the DTC.
If the malfunction is not repaired successfully, the DTC is set 5 seconds after the engine is next started.

MONITOR STRATEGY

Related DTCs	P2118: Throttle actuator power supply
Required Sensors/Components (Main)	Throttle actuator, throttle valve, ETCS fuse
Required Sensors/Components (Sub)	None
Frequency of Operation	Continuous
Duration	0.8 seconds

MIL Operation	Immediate
Sequence of Operation	None

TYPICAL ENABLING CONDITIONS

Monitor runs whenever following DTCs are not present	None
Battery voltage	8 V or more
Throttle actuator power	ON

TYPICAL MALFUNCTION THRESHOLDS

Throttle actuator power supply voltage (+BM)	Less than 4 V

COMPONENT OPERATING RANGE

Throttle actuator power supply voltage	9 to 14 V

FAIL-SAFE

When this DTC, as well as other DTCs relating to ETCS (Electronic Throttle Control System) malfunctions, is set, the ECM enters fail-safe mode. During fail-safe mode, the ECM cuts the current to the throttle actuator off, and the throttle valve is returned to a 6° throttle angle by the return spring. The ECM then adjusts the engine output by controlling the fuel injection (intermittent fuel-cut) and ignition timing, in accordance with the accelerator pedal opening angle, to allow the vehicle to continue running at a minimal speed. If the accelerator pedal is depressed firmly and gently, the vehicle can be driven slowly. Fail-safe mode continues until a pass condition is detected, and the engine switch is then turned off.

WIRING DIAGRAM

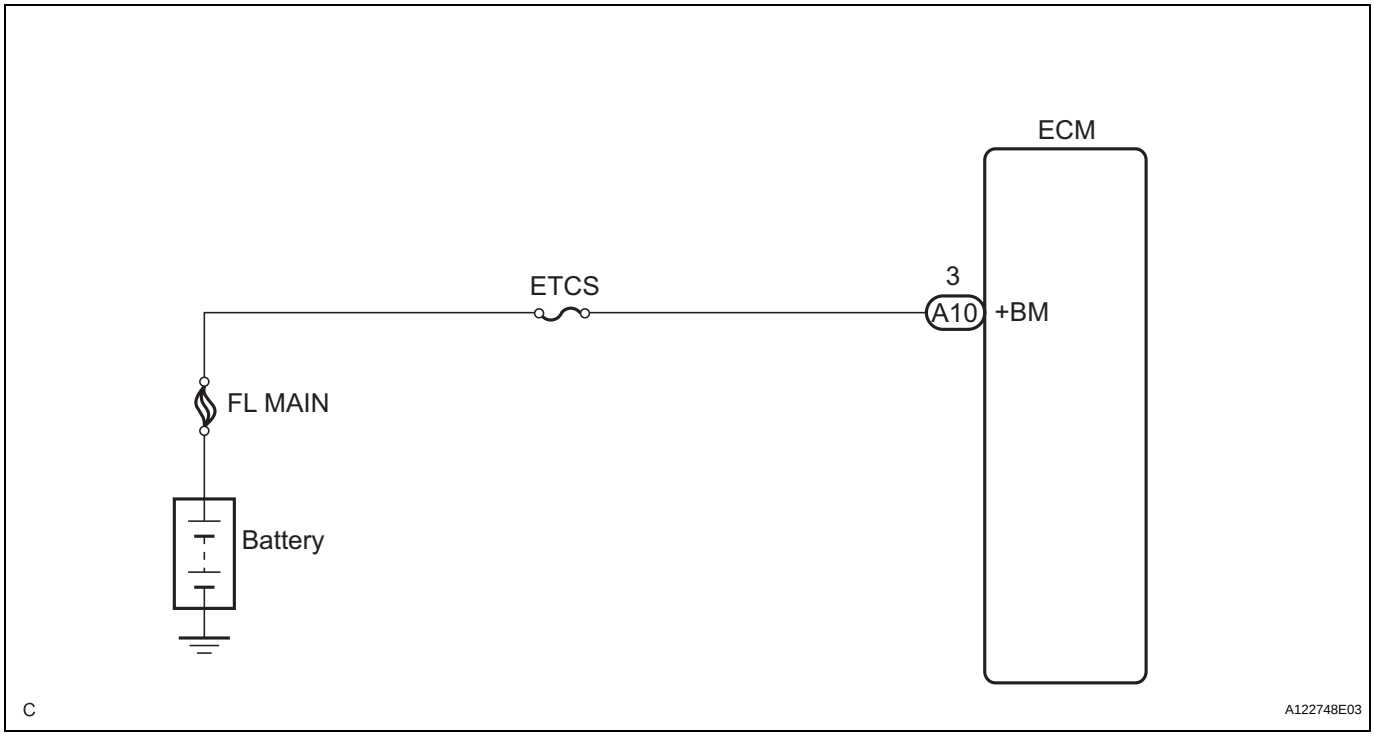

INSPECTION PROCEDURE

HINT:
Read freeze frame data using the intelligent tester. The ECM records vehicle and driving condition information as freeze frame data the moment a DTC is stored. When troubleshooting, freeze frame data can be helpful in determining whether the vehicle was running or stopped, whether the engine was warmed up or not, whether the air-fuel ratio was lean or rich, as well as other data recorded at the time of a malfunction (See page ES-41).

1 CHECK FUSE (ETCS FUSE)

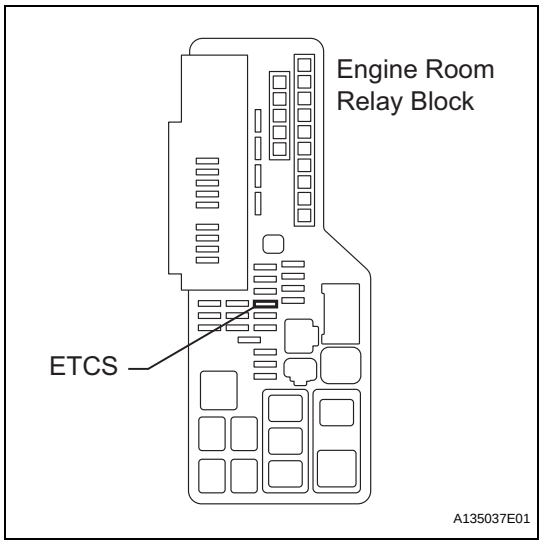

(a) Remove the ETCS fuse from the engine room R/B.
(b) Measure the resistance of the ETCS fuse.
Standard resistance:
Below 1 Ω
(c) Reinstall the ETCS fuse.

NG → **REPLACE ETCS FUSE**

OK

2 INSPECT ECM (+BM VOLTAGE)

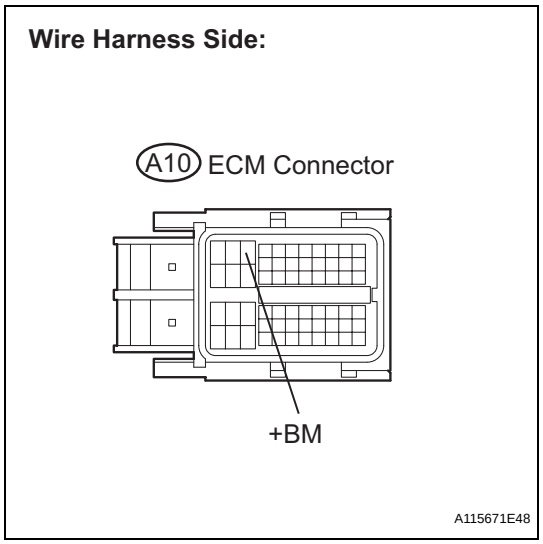

(a) Disconnect the A10 ECM connector.
(b) Measure the voltage according to the value(s) in the table below.
Standard voltage

Tester Connection	Specified Condition
+BM (A10-3) - Body ground	9 to 14 V

(c) Reconnect the ECM connector.

OK → **CHECK FOR INTERMITTENT PROBLEMS**

NG

ES

ES

3	CHECK HARNESS AND CONNECTOR (ECM - ETCS FUSE, ETCS FUSE - BATTERY)

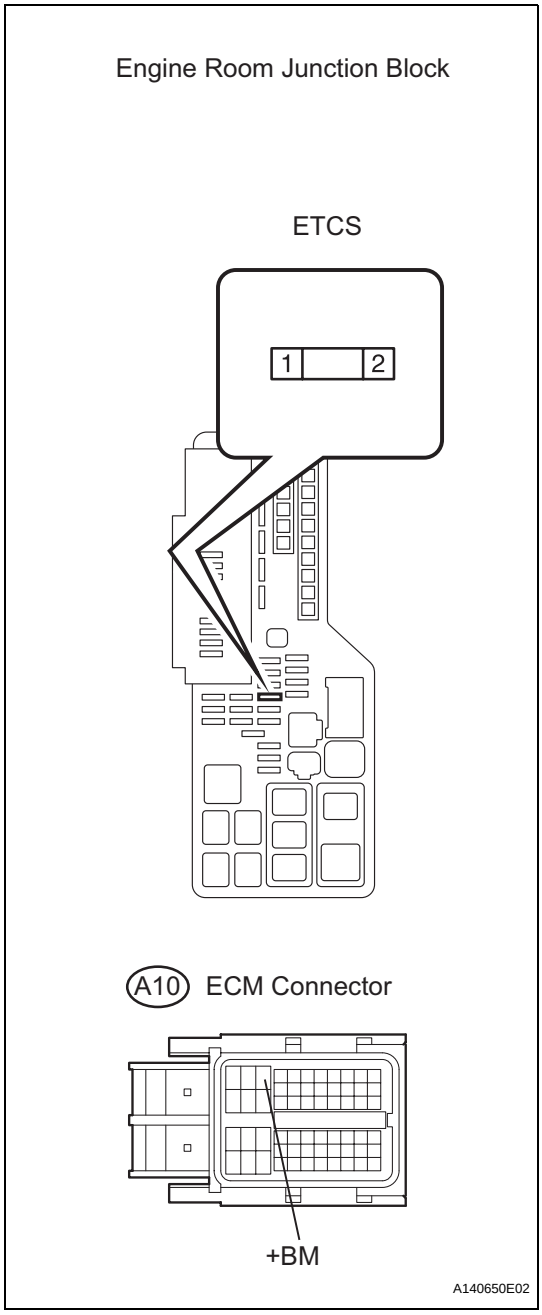

(a) Check the harness and connector between the ETCS fuse and ECM.
  (1) Remove the ETCS fuse from the engine room R/B.
  (2) Disconnect the A10 ECM connector.
  (3) Measure the resistance according to the value(s) in the table below.

Standard resistance (Check for open)

Tester Connection	Specified Condition
Engine room R/B ETCS fuse terminal 2 - +BM (A10-3)	Below 1 Ω

Standard resistance (Check for short)

Tester Connection	Specified Condition
Engine room R/B ETCS fuse terminal 2 or +BM (A10-3) - Body ground	10 kΩ or higher

  (4) Reinstall the ETCS fuse.
  (5) Reconnect the ECM connector.

(b) Check the harness and connector between the ETCS fuse and positive battery cable.
  (1) Remove the ETCS fuse from the engine room R/B.
  (2) Disconnect the negative battery terminal.
  (3) Disconnect the positive battery terminal.
  (4) Measure the resistance according to the value(s) in the table below.

Standard resistance (Check for open)

Tester Connection	Specified Condition
Positive battery terminal - Engine room R/B ETCS fuse terminal 1	Below 1 Ω

Standard resistance (Check for short)

Tester Connection	Specified Condition
Positive battery terminal or Engine room R/B ETCS fuse terminal 1 - Body ground	10 kΩ or higher

  (5) Reinstall the ETCS fuse.
  (6) Reconnect the positive battery terminal.
  (7) Reconnect the negative battery terminal.

NG → **REPAIR OR REPLACE HARNESS OR CONNECTOR**

OK

REPLACE ECM (See page ES-543)

DTC	P2119	Throttle Actuator Control Throttle Body Range / Performance

SYSTEM DESCRIPTION

The Electronic Throttle Control System (ETCS) is composed of the throttle actuator, Throttle Position (TP) sensor, Accelerator Pedal Position (APP) sensor, and ECM. The ECM operates the throttle actuator to regulate the throttle valve in response to driver inputs. The TP sensor detects the opening angle of the throttle valve, and provides the ECM with feedback so that the throttle valve can be appropriately controlled by the ECM.

DTC No.	DTC Detection Condition	Trouble Area
P2119	Throttle valve opening angle continues to vary greatly from target opening angle (1 trip detection logic)	• ETCS • ECM

MONITOR DESCRIPTION

The ECM determines the actual opening angle of the throttle valve from the TP sensor signal. The actual opening angle is compared to the target opening angle commanded by the ECM. If the difference between these two values is outside the standard range, the ECM interprets this as a malfunction in the ETCS. The ECM then illuminates the MIL and sets the DTC.
If the malfunction is not repaired successfully, the DTC is set when the accelerator pedal is quickly released (to close the throttle valve) after the engine speed reaches 5,000 rpm by fully depressing the accelerator pedal (fully open the throttle valve).

MONITOR STRATEGY

Related DTCs	P2119: ETCS malfunction
Required Sensors/Components (Main)	Throttle actuator
Required Sensors/Components (Sub)	-
Frequency of Operation	Continuous
Duration	1 second
MIL Operation	Immediate
Sequence of Operation	None

TYPICAL ENABLING CONDITIONS

Monitor runs whenever following DTCs are not present	None
System guard*	ON
*System guard is set when following conditions are met:	-
Throttle actuator	ON
Throttle actuator duty calculation	Executing
TP sensor	Fail determined
Throttle actuator current-cut operation	Not executing
Throttle actuator power supply	4 V or more
Throttle actuator	Fail determined

TYPICAL MALFUNCTION THRESHOLDS

Either following condition A or B is met	-
A. Commanded closed TP - current closed TP	0.3 V or more for 1 second
B. Commanded open TP - current open TP	0.3 V or more for 0.6 seconds

FAIL-SAFE

When this DTC, as well as other DTCs relating to ETCS (Electronic Throttle Control System) malfunctions, is set, the ECM enters fail-safe mode. During fail-safe mode, the ECM cuts the current to the throttle actuator off, and the throttle valve is returned to a 6° throttle angle by the return spring. The ECM then adjusts the engine output by controlling the fuel injection (intermittent fuel-cut) and ignition timing, in accordance with the accelerator pedal opening angle, to allow the vehicle to continue running at a minimal speed. If the accelerator pedal is depressed firmly and gently, the vehicle can be driven slowly. Fail-safe mode continues until a pass condition is detected, and the engine switch is then turned off.

WIRING DIAGRAM

Refer to DTC P2102 (See page ES-325).

ES

INSPECTION PROCEDURE

HINT:
Read freeze frame data using the intelligent tester. The ECM records vehicle and driving condition information as freeze frame data the moment a DTC is stored. When troubleshooting, freeze frame data can be helpful in determining whether the vehicle was running or stopped, whether the engine was warmed up or not, whether the air-fuel ratio was lean or rich, as well as other data recorded at the time of a malfunction (See page ES-41).

1	CHECK ANY OTHER DTCS OUTPUT (IN ADDITION TO DTC P2119)

(a) Connect the intelligent tester to the DLC3.
(b) Turn the engine switch on (IG).
(c) Turn the tester on.
(d) Enter the following menus: DIAGNOSIS / ENHANCED OBD II / DTC INFO / CURRENT CODES.
(e) Read the DTCs.

Result

Display (DTC Output)	Proceed to
P2119	A
P2119 and other DTCs	B

HINT:
If any DTCs other than P2119 are output, troubleshoot those DTCs first.

B → **GO TO DTC CHART (See page ES-59)**

A

2	CHECK WHETHER DTC OUTPUT RECURS (DTC P2119)

(a) Connect the intelligent tester to the DLC3.
(b) Turn the engine switch on (IG).
(c) Turn the tester on.
(d) Clear the DTCs (See page ES-41).
(e) Allow the engine to idle for 15 seconds.
CAUTION:
Exercise extreme care and take precautions at procedures "A" and "B" below. Failure to do so may result in the vehicle unexpectedly rolling away.

(f) Securely apply the parking brake and move the gear selector lever to the D position (Procedure "A").

(g) While depressing the brake pedal securely, fully depress the accelerator pedal for 5 seconds (Procedure "B").

(h) On the tester, enter the following menus: DIAGNOSIS / ENHANCED OBD II / DTC INFO / CURRENT CODES.

(i) Read the DTCs.

HINT:

The output voltage of the throttle position sensor can be checked during procedure "B" using the intelligent tester. Variations in the output voltage indicate that the throttle actuator is in operation. To check the output voltage using the intelligent tester, enter the following menus: DIAGNOSIS / ENHANCED OBD II / DATA LIST / PRIMARY / THROTTLE POS #1.

OK:

No DTC output.

NG → **REPLACE THROTTLE BODY ASSEMBLY (See page ES-519)**

OK

END

DTC	P2120	Throttle / Pedal Position Sensor / Switch "D" Circuit
DTC	P2122	Throttle / Pedal Position Sensor / Switch "D" Circuit Low Input
DTC	P2123	Throttle / Pedal Position Sensor / Switch "D" Circuit High Input
DTC	P2125	Throttle / Pedal Position Sensor / Switch "E" Circuit
DTC	P2127	Throttle / Pedal Position Sensor / Switch "E" Circuit Low Input
DTC	P2128	Throttle / Pedal Position Sensor / Switch "E" Circuit High Input
DTC	P2138	Throttle / Pedal Position Sensor / Switch "D" / "E" Voltage Correlation

DESCRIPTION

This ETCS (Electronic Throttle Control System) does not use a throttle cable.
The Accelerator Pedal Position (APP) sensor is mounted on the accelerator pedal bracket and has 2 sensor circuits: VPA (main) and VPA2 (sub). This sensor is a non-contact type, and uses Hall-effect elements, in order to yield accurate signals, even in extreme driving conditions, such as at high speeds as well as very low speeds. The voltage, which is applied to terminals VPA and VPA2 of the ECM, varies between 0 V and 5 V in proportion to the operating angle of the accelerator pedal (throttle valve). A signal from VPA indicates the actual accelerator pedal opening angle (throttle valve opening angle) and is used for engine control. A signal from VPA2 conveys the status of the VPA circuit and is used to check the APP sensor itself.
The ECM monitors the actual accelerator pedal opening angle (throttle valve opening angle) through the signals from VPA and VPA2, and controls the throttle actuator according to these signals.

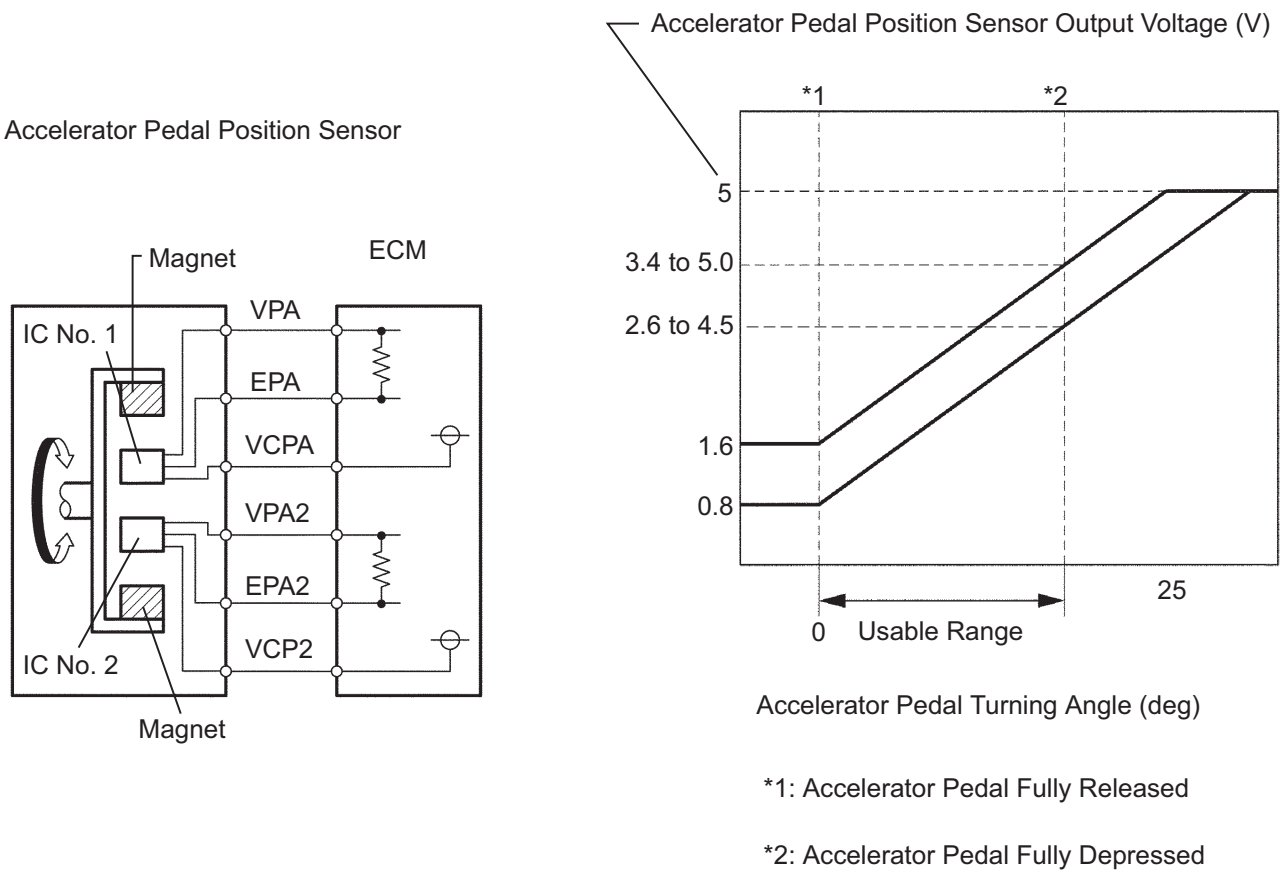

A019803E27

DTC No.	DTC Detection Condition	Trouble Area
P2120	VPA fluctuates rapidly beyond upper and lower malfunction thresholds for 0.5 seconds or more (1 trip detection logic)	• Accelerator Pedal Position (APP) sensor • ECM
P2122	VPA is 0.4 V or less for 0.5 seconds or more when accelerator pedal is fully released (1 trip detection logic)	• APP sensor • Open in VCP1 circuit • Open or ground short in VPA circuit • ECM
P2123	VPA is 4.8 V or more for 2.0 seconds or more (1 trip detection logic)	• APP sensor • Open in EPA circuit • ECM
P2125	VPA2 fluctuates rapidly beyond upper and lower malfunction thresholds for 0.5 seconds or more (1 trip detection logic)	• APP sensor • ECM
P2127	VPA2 is 1.2 V or less for 0.5 seconds or more when accelerator pedal is fully released (1 trip detection logic)	• APP sensor • Open in VCP2 circuit • Open or ground short in VPA2 circuit • ECM
P2128	Conditions (a) and (b) continue for 2.0 seconds or more (1 trip detection logic): (a) VPA2 is 4.8 V or more (b) VPA is between 0.4 V and 3.45 V	• APP sensor • Open in EPA2 circuit • ECM

DTC No.	DTC Detection Condition	Trouble Area
P2138	Condition (a) or (b) continues for 2.0 seconds or more (1 trip detection logic): (a) Difference between VPA and VPA2 is 0.02 V or less (b) VPA is 0.4 V or less and VPA2 is 1.2 V or less	• Short between VPA and VPA2 circuits • APP sensor • ECM

HINT:
When any of these DTCs are set, check the APP sensor voltage by entering the following menus on the intelligent tester: DIAGNOSIS / ENHANCED OBD II / DATA LIST / PRIMARY / ACCEL POS #1 and ACCEL POS #2.

Trouble Areas	ACCEL POS #1 When AP Released	ACCEL POS #2 When AP Released	ACCEL POS #1 When AP Depressed	ACCEL POS #2 When AP Depressed
VCP circuit open	0 to 0.4 V	0 to 1.2 V	0 to 0.4 V	0 to 1.2 V
Open or ground short in VPA circuit	0 to 0.4 V	1.2 to 2.0 V	0 to 0.4 V	3.4 to 5.0 V
Open or ground short in VPA2 circuit	0.5 to 1.1 V	0 to 0.2 V	2.6 to 4.5 V	0 to 0.2 V
EPA circuit open	4.5 to 5.0 V	4.5 to 5.0 V	4.5 to 5.0 V	4.5 to 5.0 V
Normal condition	0.5 to 1.1 V	1.2 to 2.0 V	2.6 to 4.5 V	3.4 to 5.0 V

HINT:
- Accelerator pedal positions are expressed as voltages.
- AP denotes Accelerator Pedal.

MONITOR DESCRIPTION

When either of the output voltages of VPA or VPA2 deviates from the standard range, or the difference between the output voltages of the 2 sensor circuits is less than the threshold, the ECM determines that there is a malfunction in the APP sensor. The ECM then illuminates the MIL and sets a DTC.

Example:

When the output voltage of VPA drops below 0.4 V for more than 0.5 seconds when the accelerator pedal is fully depressed, DTC P2122 is set.

If the malfunction is not repaired successfully, a DTC is set 2 seconds after the engine is next started.

MONITOR STRATEGY

Related DTCs	P2120: Accelerator Pedal Position (APP) sensor 1 range check (fluctuating) P2122: APP sensor 1 range check (low voltage) P2123: APP sensor 1 range check (high voltage) P2125: APP sensor 2 range check (fluctuating) P2127: APP sensor 2 range check (low voltage) P2128: APP sensor 2 range check (high voltage) P2138: APP sensor range check (correlation)
Required Sensors/Components (Main)	APP sensor
Required Sensors/Components (Sub)	-
Frequency of Operation	Continuous
Duration	Accelerator Pedal Position (APP) sensor 1 range check (fluctuating): 0.5 seconds APP sensor 1 range check (low voltage): 0.5 seconds APP sensor 1 range check (high voltage): 2 seconds APP sensor 2 range check (fluctuating): 0.5 seconds APP sensor 2 range check (low voltage): 0.5 seconds APP sensor 2 range check (high voltage): 2 seconds APP sensor range check (correlation): 2 seconds
MIL Operation	Immediate
Sequence of Operation	None

TYPICAL ENABLING CONDITIONS

Monitor runs whenever following DTCs are not present	None

TYPICAL MALFUNCTION THRESHOLDS

P2120:

Either of the following conditions is met:	-
VPA voltage when VPA2 is 0.04 V or more	0.4 V or less
VPA voltage	4.8 V or more

P2122:

VPA voltage when VPA2 is 0.04 V or more	0.4 V or less

P2123:

VPA voltage	4.8 V or more

P2125:

Either of the following conditions is met:	-
VPA2 voltage when VPA 0.04 V or more	1.2 V or less
VPA2 voltage when VPA 0.4 to 3.45 V	4.8 V or more

P2127:

VPA2 voltage when VPA is 0.04 V or more	1.2 V or less

P2128:

VPA2 voltage when VPA is 0.4 to 3.45 V	4.8 V or more

P2138:

Either following condition A or B is met:	-
Condition A	-
Difference between VPA and VPA 2 voltages	0.02 V or less
Condition B	-
VPA voltage	0.4 V or less
VPA2 voltage	1.2 V or less

COMPONENT OPERATING RANGE

Parameter	Standard Value
VPA voltage	0.4 V to 4.8 V
VPA2 voltage	0.5 V to 4.8 V
Difference between VPA and VPA2 voltages	More than 0.02 V

FAIL-SAFE

When any of DTCs P2120, P2121, P2122, P2123, P2125, P2127, P2128 and P2138 are set, the ECM enters fail-safe mode. If either of the 2 sensor circuits malfunctions, the ECM uses the remaining circuit to calculate the accelerator pedal position to allow the vehicle to continue driving. If both of the circuits malfunction, the ECM regards the accelerator pedal as being released. As a result, the throttle valve is closed and the engine idles.

Fail-safe mode continues until a pass condition is detected, and the engine switch is then turned off.

WIRING DIAGRAM

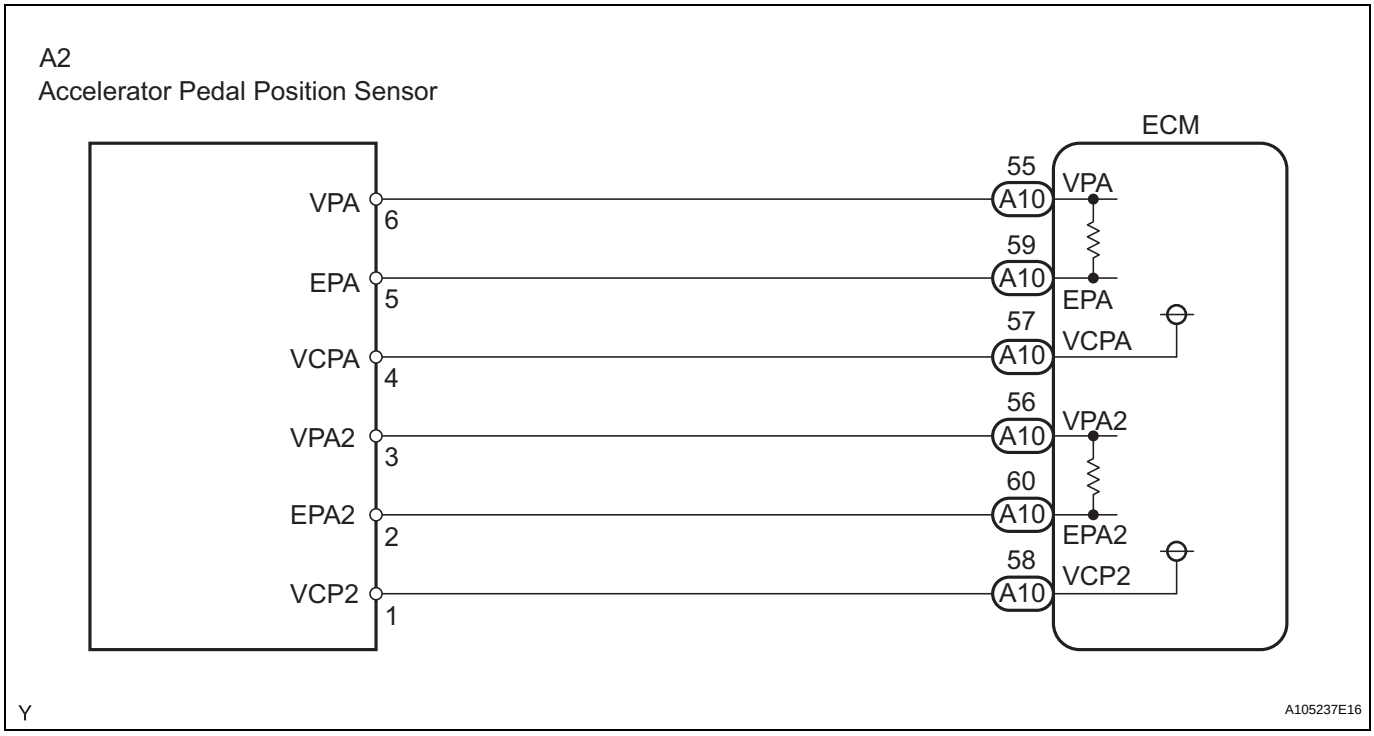

INSPECTION PROCEDURE

HINT:

- Read freeze frame data using the intelligent tester. The ECM records vehicle and driving condition information as freeze frame data the moment a DTC is stored. When troubleshooting, freeze frame data can be helpful in determining whether the vehicle was running or stopped, whether the engine was warmed up or not, whether the air-fuel ratio was lean or rich, as well as other data recorded at the time of a malfunction (See page ES-41).
- These DTCs relate to the Accelerator Pedal Position (APP) sensor.

1	READ VALUE OF INTELLIGENT TESTER (ACCEL POS #1 AND ACCEL POS #2)

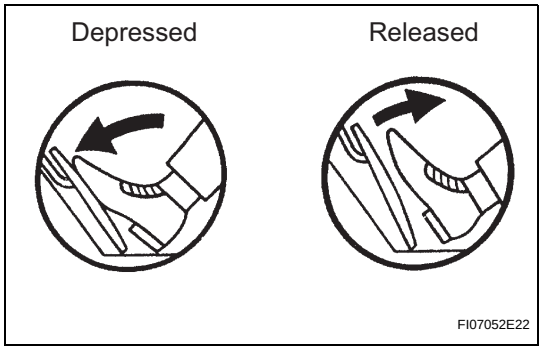

(a) Connect the intelligent tester to the DLC3.
(b) Turn the engine switch on (IG) and turn the tester on.
(c) Enter the following menus: DIAGNOSIS / ENHANCED OBD II / DATA LIST / ALL / ACCEL POS #1 and ACCEL POS #2.
(d) Read the value displayed on the tester.
Standard voltage

Accelerator Pedal Condition	ACCEL POS #1 (AP#1)	ACCEL POS #2 (AP#2)
Released	0.5 to 1.1 V	1.2 to 2.0 V
Depressed	2.6 to 4.5 V	3.4 to 5.0 V

OK → **Go to step 5**

NG

2 CHECK HARNESS AND CONNECTOR (ACCELERATOR PEDAL POSITION SENSOR - ECM)

Wire Harness Side Front View:

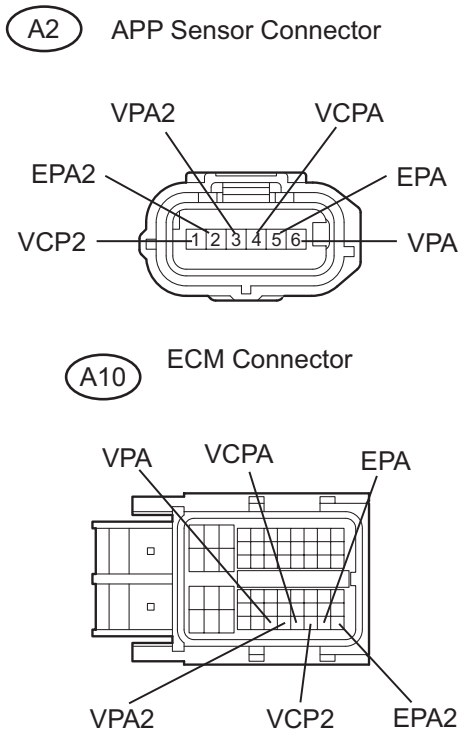

(a) Disconnect the A2 Accelerator Pedal Position (APP) sensor connector.
(b) Disconnect the A10 ECM connector.
(c) Measure the resistance according to the value(s) in the table below.

Standard resistance (Check for open)

Tester Connection	Specified Condition
VPA (A2-6) - VPA (A10-55)	Below 1 Ω
EPA (A2-5) - EPA (A10-59)	Below 1 Ω
VCPA (A2-4) - VCPA (A10-57)	Below 1 Ω
VPA2 (A2-3) - VPA2 (A10-56)	Below 1 Ω
EPA2 (A2-2) - EPA2 (A10-60)	Below 1 Ω
VCP2 (A2-1) - VCP2 (A10-58)	Below 1 Ω

Standard resistance (Check for short)

Tester Connection	Specified Condition
VPA (A2-6) or VPA (A10-55) - body ground	10 kΩ or higher
EPA (A2-5) or EPA (A10-59) - body ground	10 kΩ or higher
VCPA (A2-4) or VCPA (A10-57) - body ground	10 kΩ or higher
VPA2 (A2-3) or VPA2 (A10-56) - body ground	10 kΩ or higher
EPA2 (A2-2) or EPA2 (A10-60) - body ground	10 kΩ or higher
VCP2 (A2-1) or VCP2 (A10-58) - body ground	10 kΩ or higher

(d) Reconnect the APP sensor connector.
(e) Reconnect the ECM connector.

NG → **REPAIR OR REPLACE HARNESS OR CONNECTOR**

OK

3 INSPECT ACCELERATOR PEDAL POSITION SENSOR (VCPA AND VCP2 VOLTAGE)

Wire Harness Side Front View:

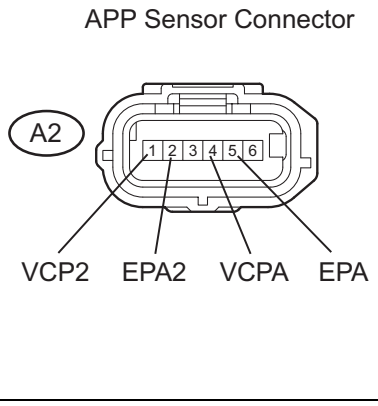

(a) Disconnect the A2 APP sensor connector.
(b) Turn the engine switch on (IG).
(c) Measure the voltage according to the value(s) in the table below.

Standard voltage

Tester Connection	Specified Condition
VCPA (A2-4) - EPA (A2-5)	4.5 to 5.0 V
VCP2 (A2-1) - EPA2 (A2-2)	4.5 to 5.0 V

(d) Reconnect the APP sensor connector.

NG → **REPLACE ECM (See page ES-543)**

ES

OK

4	REPLACE ACCELERATOR PEDAL ROD ASSEMBLY

NEXT

5	CHECK WHETHER DTC OUTPUT RECURS (ACCELERATOR PEDAL POSITION SENSOR DTCS)

ES

(a) Connect the intelligent tester to the DLC3.
(b) Turn the engine switch on (IG) and turn the tester on.
(c) Clear the DTCs (See page ES-41).
(d) Start the engine.
(e) Allow the engine to idle for 15 seconds.
(f) Enter the following menus: DIAGNOSIS / ENHANCED OBD II / DTC INFO / CURRENT CODES.
(g) Read the DTCs.

Result

Display (DTC Output)	Proceed to
P2120, P2122, P2123, P2125, P2127, P2128, and/or P2138	A
No output	B

B → **SYSTEM IS OK**

A

REPLACE ECM (See page ES-543)

DTC	P2121	Throttle / Pedal Position Sensor / Switch "D" Circuit Range / Performance

DESCRIPTION

This ETCS (Electronic Throttle Control System) does not use a throttle cable.
The Accelerator Pedal Position (APP) sensor is mounted on the accelerator pedal bracket and has 2 sensor circuits: VPA (main) and VPA2 (sub). This sensor is a non-contact type, and uses Hall-effect elements, in order to yield accurate signals, even in extreme driving conditions, such as at high speeds as well as very low speeds. The voltage, which is applied to terminals VPA and VPA2 of the ECM, varies between 0 V and 5 V in proportion to the operating angle of the accelerator pedal (throttle valve). A signal from VPA indicates the actual accelerator pedal opening angle (throttle valve opening angle) and is used for engine control. A signal from VPA2 conveys the status of the VPA circuit and is used to check the APP sensor itself.
The ECM monitors the actual accelerator pedal opening angle (throttle valve opening angle) through the signals from VPA and VPA2, and controls the throttle actuator according to these signals.

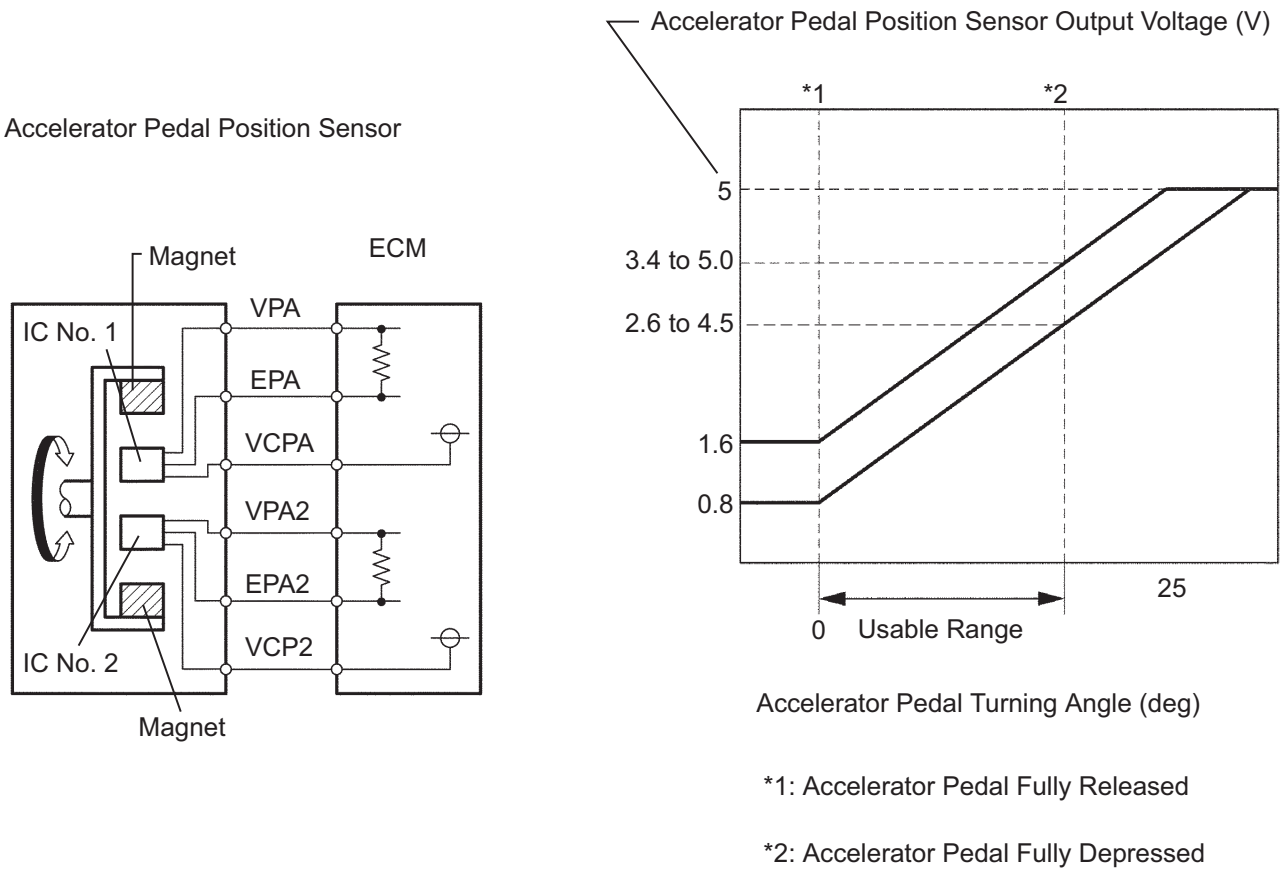

DTC No.	DTC Detection Condition	Trouble Area
P2121	Difference between VPA and VPA2 is less than 0.4 V, or more than 1.2 V for 0.5 seconds (1 trip detection logic)	• Accelerator Pedal Position (APP) sensor • ECM

MONITOR DESCRIPTION

The accelerator pedal position sensor is mounted on the accelerator pedal bracket. The accelerator pedal position sensor has 2 sensor elements and 2 signal outputs: VPA and VPA2. VPA is used to detect the actual accelerator pedal angle (used for engine control) and VPA2 is used to detect malfunctions in VPA. When the difference between the output voltages of VPA and VPA2 deviates from the standard, the ECM determines that the accelerator pedal position sensor is malfunctioning. The ECM turns on the MIL and the DTC is set.

MONITOR STRATEGY

Related DTCs	P2121: Accelerator pedal position (APP) sensor rationality
Required Sensors/Components (Main)	APP sensor
Required Sensors/Components (Sub)	-
Frequency of Operation	Continuous
Duration	0.5 seconds
MIL Operation	Immediate
Sequence of Operation	None

TYPICAL ENABLING CONDITIONS

Monitor runs whenever following DTCs are not present	None

TYPICAL MALFUNCTION THRESHOLDS

Difference between VPA1 voltage (learned value) and VPA2 voltage (learned value)	Less than 0.4 V, or more than 1.2 V

FAIL-SAFE

The accelerator pedal position sensor has two (main and sub) sensor circuits. If a malfunction occurs in either of the sensor circuits, the ECM detects the abnormal signal voltage difference between the two sensor circuits and switches to limp mode. In limp mode, the functioning circuit is used to calculate the accelerator pedal opening angle to allow the vehicle to continue driving. If both circuits malfunction, the ECM regards the opening angle of the accelerator pedal as being fully closed. In this case, the throttle valve remains closed as if the engine is idling.
If a pass condition is detected and then the engine switch is turned off, the fail-safe operation stops and the system returns to a normal condition.

WIRING DIAGRAM

Refer to DTC P2120 (See page ES-341).

INSPECTION PROCEDURE

HINT:

- Read freeze frame data using the intelligent tester. The ECM records vehicle and driving condition information as freeze frame data the moment a DTC is stored. When troubleshooting, freeze frame data can be helpful in determining whether the vehicle was running or stopped, whether the engine was warmed up or not, whether the air-fuel ratio was lean or rich, as well as other data recorded at the time of a malfunction (See page ES-41).
- This DTC relates to the Accelerator Pedal Position (APP) sensor.

1 READ VALUE OF INTELLIGENT TESTER (ACCEL POS #1 AND ACCEL POS #2)

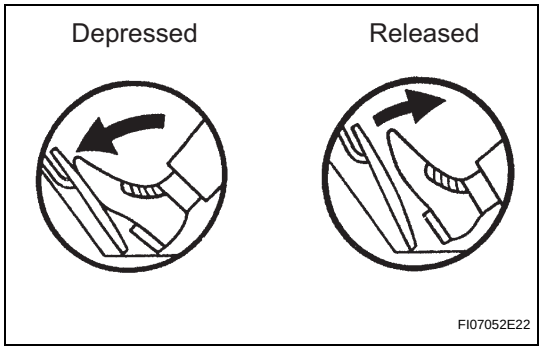

(a) Connect the intelligent tester to the DLC3.
(b) Turn the engine switch on (IG) and turn the tester on.
(c) Enter the following menus: DIAGNOSIS / ENHANCED OBD II / DATA LIST / ALL / ACCEL POS #1 and ACCEL POS #2.
(d) Read the values displayed on the tester.

Standard voltage

Accelerator Pedal Condition	ACCEL POS #1 (AP#1)	ACCEL POS #2 (AP#2)
Released	0.5 to 1.1 V	1.2 to 2.0 V
Depressed	2.6 to 4.5 V	3.4 to 5.0 V

ES

OK → **Go to step 3**

NG

2 CHECK HARNESS AND CONNECTOR (ACCELERATOR PEDAL POSITION SENSOR - ECM)

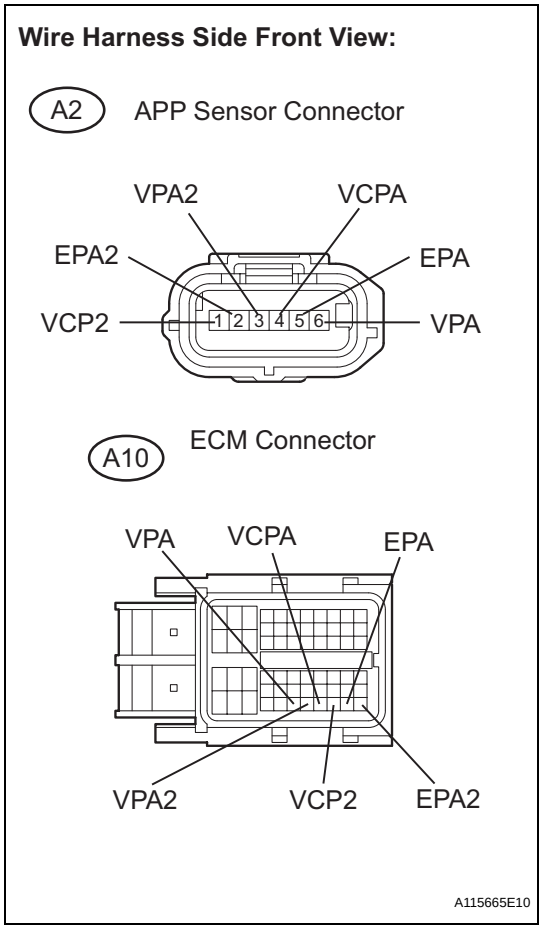

(a) Disconnect the A2 Accelerator Pedal Position (APP) sensor connector.
(b) Disconnect the A10 ECM connector.
(c) Measure the resistance according to the value(s) in the table below.

Standard resistance (Check for open)

Tester Connection	Specified Condition
VPA (A2-6) - VPA (A10-55)	Below 1 Ω
EPA (A2-5) - EPA (A10-59)	Below 1 Ω
VCPA (A2-4) - VCPA (A10-57)	Below 1 Ω
VPA2 (A2-3) - VPA2 (A10-56)	Below 1 Ω
EPA2 (A2-2) - EPA2 (A10-60)	Below 1 Ω
VCP2 (A2-1) - VCP2 (A10-58)	Below 1 Ω

Standard resistance (Check for short)

Tester Connection	Specified Condition
VPA (A2-6) or VPA (A10-55) - body ground	10 kΩ or higher
EPA (A2-5) or EPA (A10-59) - body ground	10 kΩ or higher
VCPA (A2-4) or VCPA (A10-57) - body ground	10 kΩ or higher
VPA2 (A2-3) or VPA2 (A10-56) - body ground	10 kΩ or higher
EPA2 (A2-2) or EPA2 (A10-60) - body ground	10 kΩ or higher
VCP2 (A2-1) or VCP2 (A10-58) - body ground	10 kΩ or higher

(d) Reconnect the APP sensor connector.
(e) Reconnect the ECM connector.

NG → **REPAIR OR REPLACE HARNESS OR CONNECTOR**

OK

3	REPLACE ACCELERATOR PEDAL ROD ASSEMBLY

NEXT

4	CHECK WHETHER DTC OUTPUT RECURS (ACCELERATOR PEDAL POSITION SENSOR DTCS)

(a) Connect the intelligent tester to the DLC3.
(b) Turn the engine switch on (IG) and turn the tester on.
(c) Clear the DTCs (See page ES-41).
(d) Start the engine.
(e) Allow the engine to idle for 15 seconds.
(f) Enter the following menus: DIAGNOSIS / ENHANCED OBD II / DTC INFO / CURRENT CODES.
(g) Read the DTCs.

Result

Display (DTC Output)	Proceed to
P2121	A
No output	B

B → END

A

REPLACE ECM (See page ES-543)

DTC	**P2195**	**Oxygen (A/F) Sensor Signal Stuck Lean (Bank 1 Sensor 1)**

DTC	**P2196**	**Oxygen (A/F) Sensor Signal Stuck Rich (Bank 1 Sensor 1)**

DTC	**P2197**	**Oxygen (A/F) Sensor Signal Stuck Lean (Bank 2 Sensor 1)**

DTC	**P2198**	**Oxygen (A/F) Sensor Signal Stuck Rich (Bank 2 Sensor 1)**

DESCRIPTION

HINT:

- Although the DTC titles include oxygen sensor, these DTCs relate to the Air-Fuel Ratio (A/F) sensor.
- Sensor 1 refers to the sensor mounted in front of the Three-Way Catalytic Converter (TWC) and located near the engine assembly.

The A/F sensor generates voltage* that corresponds to the actual air-fuel ratio. This sensor voltage is used to provide the ECM with feedback so that it can control the air-fuel ratio. The ECM determines the deviation from the stoichiometric air-fuel ratio level, and regulates the fuel injection time. If the A/F sensor malfunctions, the ECM is unable to control the air-fuel ratio accurately.

The A/F sensor is the planar type and is integrated with the heater, which heats the solid electrolyte (zirconia element). This heater is controlled by the ECM. When the intake air volume is low (the exhaust gas temperature is low), a current flows into the heater to heat the sensor, in order to facilitate accurate oxygen concentration detection. In addition, the sensor and heater portions are narrower than the conventional type. The heat generated by the heater is conducted to the solid electrolyte through the alumina, therefore the sensor activation is accelerated.

A three-way catalytic converter (TWC) is used in order to convert the carbon monoxide (CO), hydrocarbon (HC), and nitrogen oxide (NOx) into less harmful substances. To allow the TWC to function effectively, it is necessary to keep the air-fuel ratio of the engine near the stoichiometric air-fuel ratio.

*: Value changes inside the ECM. Since the A/F sensor is the current output element, a current is converted to a voltage inside the ECM. Any measurements taken at the A/F sensor or ECM connectors will show a constant voltage.

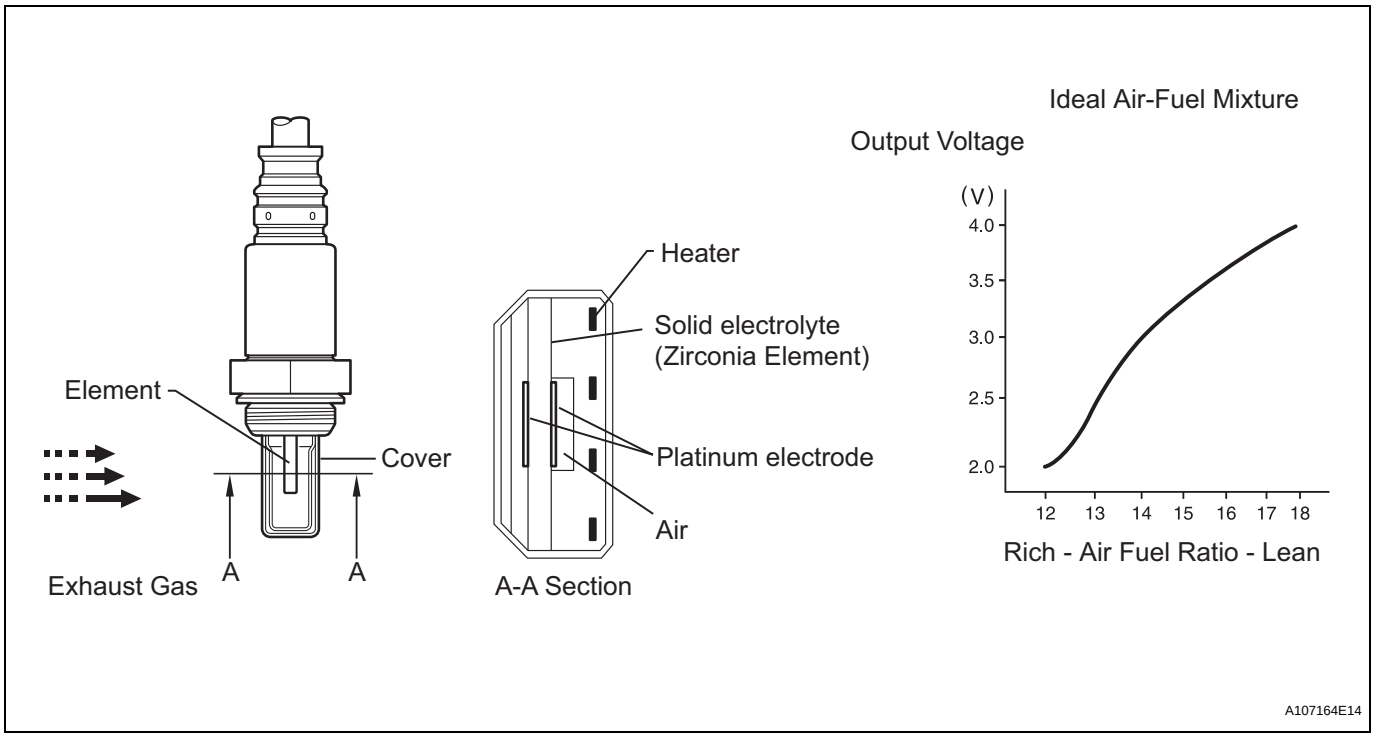

DTC No.	DTC Detection Condition	Trouble Area
P2195 P2197	Conditions (a) and (b) continue for 2 seconds or more (2 trip detection logic): (a) Air-Fuel Ratio (A/F) sensor voltage is more than 3.8 V (b) Heated Oxygen (HO2) sensor voltage is 0.15 V or more	• Open or short in A/F sensor (bank 1, 2 sensor 1) circuit • A/F sensor (bank 1, 2 sensor 1) • A/F sensor (bank 1, 2 sensor 1) heater • A/F sensor heater relay • A/F sensor heater and relay circuits • Air induction system • Injector • ECM
P2195 P2197	While fuel-cut operation is performed (during vehicle deceleration), air-fuel ratio (A/F) sensor current is 3.6 mA or more for 3 seconds (2 trip detection logic)	• A/F sensor • ECM
P2196 P2198	Conditions (a) and (b) continue for 2 seconds or more (2 trip detection logic): (a) A/F sensor voltage is less than 2.8 V (b) HO2 sensor voltage is less than 0.85 V	• Open or short in A/F sensor (bank 1, 2 sensor 1) circuit • A/F sensor (bank 1, 2 sensor 1) • A/F sensor (bank 1, 2 sensor 1) heater • A/F sensor heater relay • A/F sensor heater and relay circuits • Air induction system • Injector • ECM
P2196 P2198	While fuel-cut operation is performed (during vehicle deceleration), air-fuel ratio (A/F) sensor current is 1.4 mA for 3 seconds (2 trip detection logic)	• A/F sensor • ECM

HINT:
- DTCs P2195 and P2196 indicate malfunctions related to the bank 1 A/F sensor circuit.
- DTCs P2197 and P2198 indicate malfunctions related to the bank 2 A/F sensor circuit.
- Bank 1 refers to the bank that includes cylinder No. 1.
- Bank 2 refers to the bank that includes cylinder No. 2.
- When any of these DTCs are set, check the A/F sensor output voltage by entering the following menus on the intelligent tester: DIAGNOSIS / ENHANCED OBD II / DATA LIST / PRIMARY / AFS B1S1.
- Short-term fuel trim values can also be read using an intelligent tester.
- The ECM regulates the voltages at the A1A+, A2A+, A1A- and A2A- terminals of the ECM to a constant level. Therefore, the A/F sensor output voltage cannot be confirmed without using the intelligent tester.

- If an A/F sensor malfunction is detected, the ECM sets a DTC.

MONITOR DESCRIPTION

Sensor voltage detection monitor

Under the air-fuel ratio feedback control, if the A/F sensor output voltage indicates rich or lean for a certain period of time, the ECM determines that there is a malfunction in the A/F sensor. The ECM illuminates the MIL and sets a DTC.

Example:

(1) If the A/F sensor voltage output is less than 2.8 V (very rich condition) for 10 seconds, despite the HO2 sensor output voltage being less than 0.6 V, the ECM sets DTC P2196. Alternatively, if the A/F sensor output voltage is more than 3.8 V (very lean condition) for 15 seconds, despite the HO2 sensor output voltage being 0.15 V or more, DTC P2195 is set.

(2) Sensor current detection monitor

(3) A rich air-fuel mixture causes a low A/F sensor current, and a lean air-fuel mixture causes a high A/F sensor current. Therefore, the sensor output becomes low during acceleration, and it becomes high during deceleration with the throttle valve fully closed. The ECM monitors the A/F sensor current during fuel-cut and detects any abnormal current values.

(4) If the A/F sensor output is 3.6 mA or more for more than 3 seconds of cumulative time, the ECM interprets this as a malfunction in the A/F sensor and sets DTC P2195 (high-side stuck). If the A/F sensor output is 1.0 mA or less for more than 3 seconds of cumulative time, the ECM sets DTC P2196 (low-side stuck).

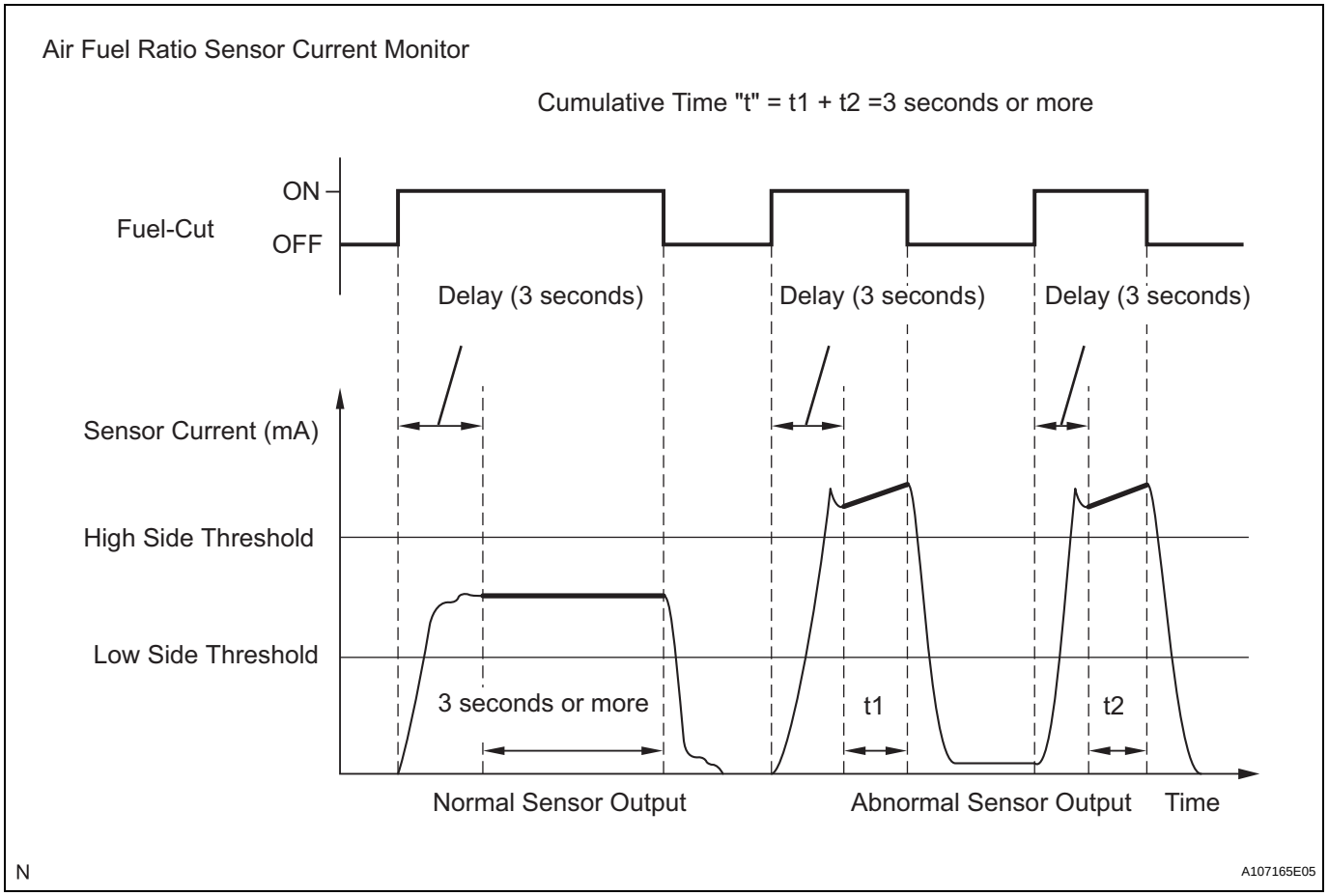

MONITOR STRATEGY

Related DTCs	P2195: A/F sensor (Bank 1) signal stuck lean P2196: A/F sensor (Bank 1) signal stuck rich P2197: A/F sensor (Bank 2) signal stuck lean P2198: A/F sensor (Bank 2) signal stuck rich

Required Sensors/Components (Main)	A/F sensor
Required Sensors/Components (Related)	HO2 sensor
Frequency of Operation	Continuous
Duration	10 seconds
MIL Operation	2 driving cycles
Sequence of Operation	None

TYPICAL ENABLING CONDITIONS

Sensor voltage detection monitor (Lean side malfunction P2195, P2197):

The monitor will run whenever these DTCs are not present	P0031, P0032, P0051, P0052 (A/F sensor heater - Sensor 1) P0100 - P0103 (MAF meter) P0110 - P0113 (IAT sensor) P0115 - P0118 (ECT sensor) P0120 - P0223, P2135 (TP sensor) P0125 (Insufficient ECT for Closed Loop) P0136, P0156 (HO2 Sensor - Sensor 2) P0171, P0172 (Fuel system) P0300 - P0308 (Misfire) P0335 (CKP sensor) P0340, P0341 (CMP sensor) P0500 (VSS)
Time while all of following conditions are met:	2 seconds or more
Rear HO2 sensor voltage	0.15 V or more
Time after engine start	30 seconds or more
A/F sensor status	Activated
Fuel system status	Closed-loop
Engine	Running

Sensor voltage detection monitor (Rich side malfunction P2196, P2198):

The monitor will run whenever these DTCs are not present	P0031, P0032, P0051, P0052 (A/F sensor heater - Sensor 1) P0100 - P0103 (MAF meter) P0110 - P0113 (IAT sensor) P0115 - P0118 (ECT sensor) P0120 - P0223, P2135 (TP sensor) P0125 (Insufficient ECT for Closed Loop) P0136, P0156 (HO2 Sensor - Sensor 2) P0171, P0172 (Fuel system) P0300 - P0308 (Misfire) P0335 (CKP sensor) P0340, P0341 (CMP sensor) P0500 (VSS)
Time while all of following conditions are met:	2 seconds or more
Rear HO2 sensor voltage	Less than 0.6 V
Time after engine start	30 seconds or more
A/F sensor status	Activated
Fuel system status	Closed-loop
Engine	Running

Sensor current detection monitor (High and low side malfunction P2195, P2196, P2197 and P2198):

Monitor runs whenever following DTCs are not present	P0031, P0032, P0051, P0052 (A/F sensor heater - Sensor 1) P0037, P0038, P0057, P0058 (HO2 sensor heater - Sensor 2) P0100 - P0103 (MAF meter) P0110 - P0113 (IAT sensor) P0115 - P0118 (ECT sensor) P0120 - P0223, P2135 (TP sensor) P0125 (Insufficient ECT for Closed Loop) P0136, P0156 (O2 Sensor - Sensor 2) P0171, P0172 (Fuel system) P0300 - P0308 (Misfire) P0335 (CKP sensor) P0340, P0341 (CMP sensor) P0500 (VSS)
Battery voltage	11 V or more
Atmospheric pressure	76 kPa (570 mmHg) or more
A/F sensor status	Activated
Continuous time of fuel cut	3 to 10 seconds
ECT	75°C (167°F) or more

ES

TYPICAL MALFUNCTION THRESHOLDS

Sensor voltage detection monitor (Lean side malfunction P2195, P2197):

A/F sensor voltage	More than 3.8 V

Sensor voltage detection monitor (Rich side malfunction P2196, P2198):

A/F sensor voltage	Less than 2.8 V

Sensor current detection monitor (High side malfunction P2195, P2197):

A/F sensor current	3.6 mA or more

Sensor current detection monitor (Low side malfunction P2196, P2198):

A/F sensor current	Less than 1.4 mA

MONITOR RESULT

Refer to CHECKING MONITOR STATUS (See page ES-45).

WIRING DIAGRAM

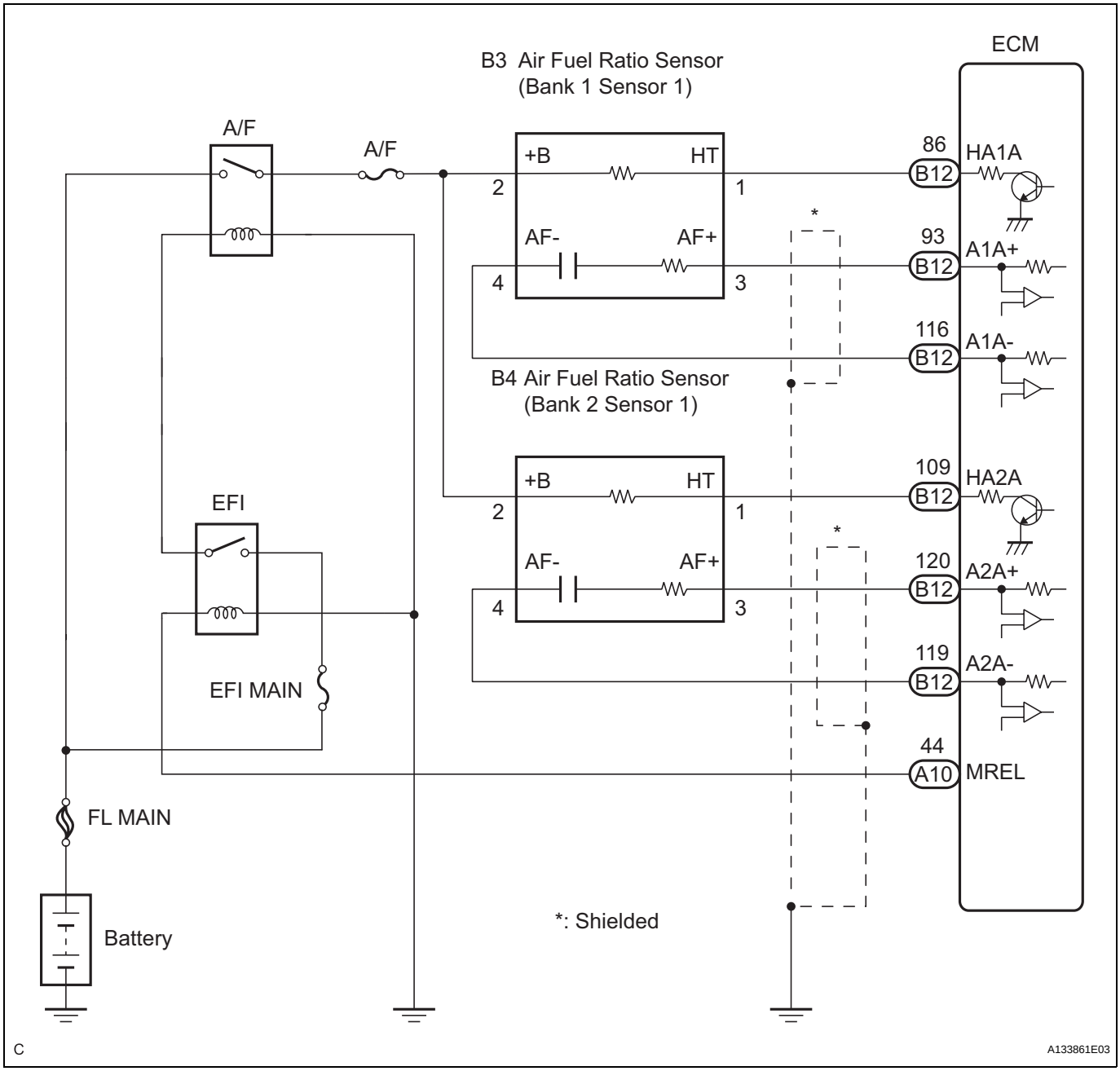

CONFIRMATION DRIVING PATTERN

This confirmation driving pattern is used in steps 2, 4, 7, 17 and 21 of the following diagnostic troubleshooting procedure when using an intelligent tester.

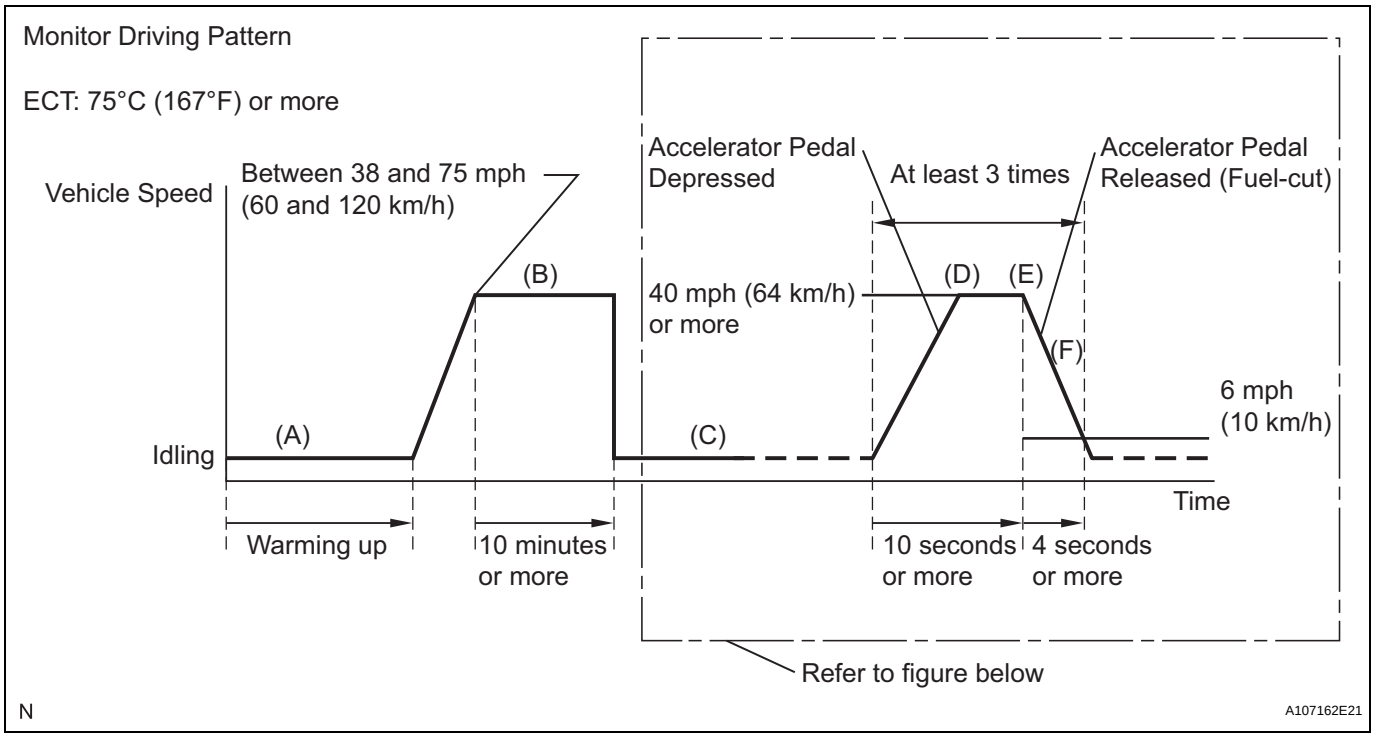

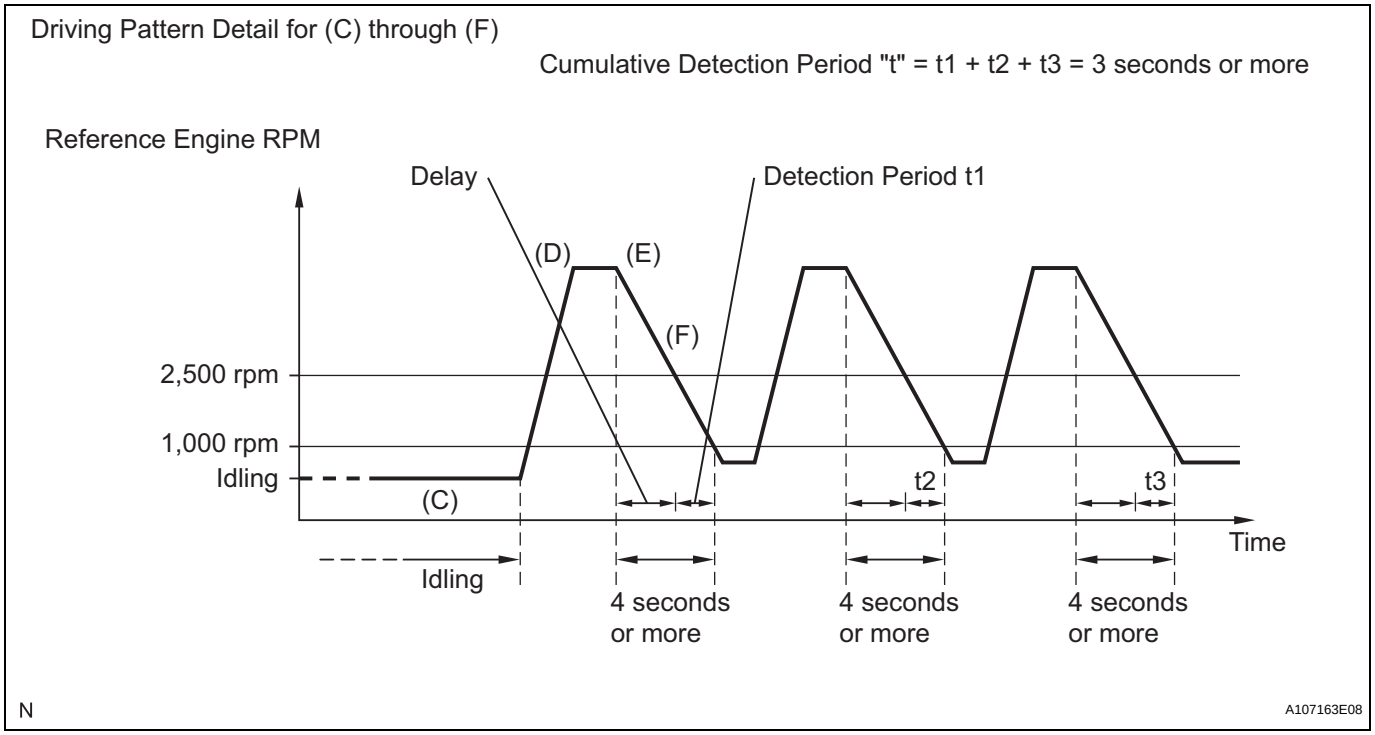

1. Connect an intelligent tester to the DLC3.
2. Turn the engine switch on (IG).
3. Turn the tester on.
4. Clear the DTCs.
5. Start the engine, and warm it up until the ECT reaches 75°C (167°F) or higher (Procedure "A").
6. On the intelligent tester, enter the following menus to check the fuel-cut status: DIAGNOSIS / ENHANCED OBD II / DATA LIST / USER DATA / FC IDLE.
7. Drive the vehicle at between 38 mph (60 km/h) and 75 mph (120 km/h) for at least 10 minutes (Procedure "B").
8. Change the transmission to the 2nd gear (Procedure "C").

9. Drive the vehicle at a proper vehicle speed to perform fuel-cut operation (refer to the following HINT) (Procedure "D").
   HINT:
   Fuel-cut is performed when the following conditions are met:
   - Accelerator pedal is fully released.
   - Engine speed is 2,500 rpm or more (fuel injection resumes at 1,000 rpm).
10. Accelerate the vehicle to 40 rpm (64 km/h) or more by depressing the accelerator pedal for at least 10 seconds (Procedure "E").
11. Soon after performing procedure E above, release the accelerator pedal for at least 4 seconds without depressing the brake pedal, in order to execute fuel-cut control (Procedure "F").
12. Allow the vehicle to decelerate until the vehicle speed declines to less than 6 mph (10 km/h).
13. Repeat procedure from C through F above at least 3 times in one driving cycle.
    HINT:
    Completion of all A/F sensor monitors is required to change the value in TEST RESULT.
    CAUTION:
    Strictly observe posted speed limits, traffic laws, and road conditions when performing these drive patterns.

INSPECTION PROCEDURE

HINT:
Malfunctioning areas can be identified by performing the A/F CONTROL function provided in the ACTIVE TEST. The A/F CONTROL function can help to determine whether the Air-fuel Ratio (A/F) sensor, Heated Oxygen (HO2) sensor and other potential trouble areas are malfunctioning.
The following instructions describe how to conduct the A/F CONTROL operation using the intelligent tester.

1. Connect the intelligent tester to the DLC3.
2. Start the engine and turn the tester on.
3. Warm up the engine at an engine speed of 2,500 rpm for approximately 90 seconds.
4. On the intelligent tester, enter the following menus: DIAGNOSIS / ENHANCED OBD II / ACTIVE TEST / A/F CONTROL.
5. Perform the A/F CONTROL operation with the engine in an idling condition (press the RIGHT or LEFT button to change the fuel injection volume).
6. Monitor the output voltages of the A/F and HO2 sensors (AFS B1 S1 and O2S B1 S2 or AFS B2 S1 and O2S B2 S2) displayed on the tester.

HINT:
- The A/F CONTROL operation lowers the fuel injection volume by 12.5 % or increases the injection volume by 25 %.
- Each sensor reacts in accordance with increases in the fuel injection volume.

Tester Display (Sensor)	Injection Volume	Status	Voltage
AFS B1S1 or AFS B2S1 (A/F)	+25 %	Rich	Less than 3.0 V
AFS B1S1 or AFS B2S1 (A/F)	-12.5 %	Lean	More than 3.35 V
O2S B1S2 or O2S B2S2 (HO2)	+25 %	Rich	More than 0.55 V
O2S B1S2 or O2S B2S2 (HO2)	-12.5 %	Lean	Less than 0.4 V

NOTICE:
The Air-Fuel Ratio (A/F) sensor has an output delay of a few seconds and the HO2S (sensor 2) output has a maximum output delay of 20 seconds.

Case	A/F Sensor (Sensor 1) Output Voltage		HO2 Sensor (Sensor 2) Output Voltage		Main Suspected Trouble Areas
1	Injection Volume +25 % -12.5 %		Injection Volume +25 % -12.5 %		-
	Output Voltage More than 3.35 V Less than 3.0 V	OK	Output Voltage More than 0.55 V Less than 0.4 V	OK	
2	Injection Volume +25 % -12.5 %		Injection Volume +25 % -12.5 %		• A/F sensor • A/F sensor heater • A/F sensor circuit
	Output Voltage Almost no reaction	NG	Output Voltage More than 0.55 V Less than 0.4 V	OK	
3	Injection Volume +25 % -12.5 %		Injection Volume +25 % -12.5 %		• HO2 sensor • HO2 sensor heater • HO2 sensor circuit
	Output Voltage More than 3.35 V Less than 3.0 V	OK	Output Voltage Almost no reaction	NG	
4	Injection Volume +25 % -12.5 %		Injection Volume +25 % -12.5 %		• Fuel pressure • Gas leakage from exhaust system (Air-fuel ratio extremely lean or rich)
	Output Voltage Almost no reaction	NG	Output Voltage Almost no reaction	NG	

- Following the A/F CONTROL procedure enables technicians to check and graph the voltage outputs of both the A/F and HO2 sensors.
- To display the graph, enter the following menus on the tester: DIAGNOSIS / ENHANCED OBD II / ACTIVE TEST / A/F CONTROL / USER DATA / AFS B1 S1 and O2S B 1S2 or AFS B2 S1 and O2S B2 S2 and press the YES button and then the ENTER button followed by the F4 button.

HINT:

- Read freeze frame data using the intelligent tester. The ECM records vehicle and driving condition information as freeze frame data the moment a DTC is stored. When troubleshooting, freeze frame data can be helpful in determining whether the vehicle was running or stopped, whether the engine was warmed up or not, whether the air-fuel ratio was lean or rich, as well as other data recorded at the time of a malfunction (See page ES-41).
- A low A/F sensor voltage could be caused by a rich air-fuel mixture. Check for conditions that would cause the engine to run rich.
- A high A/F sensor voltage could be caused by a lean air-fuel mixture. Check for conditions that would cause the engine to run lean.

1	CHECK ANY OTHER DTCS OUTPUT (IN ADDITION TO P2195, P2196, 2197 OR P2198)

(a) Connect the intelligent tester to the DLC3.
(b) Turn the engine switch on (IG).
(c) Turn the tester on.
(d) Enter the following menus: DIAGNOSIS / ENHANCED OBD II / DTC INFO / CURRENT CODES.
(e) Read the DTCs.

Result

Display (DTC Output)	Proceed to
P2195, P2196, P2197, or P2198	A
P2195, P2196, P2197, or P2198 and other DTCs	B

HINT:
If any DTCs other than P2195, P2196, P2197 or P2198 are output, troubleshoot those DTCs first.

B → **GO TO DTC CHART (See page ES-59)**

A

2 READ VALUE OF INTELLIGENT TESTER (TEST VALUE OF A/F SENSOR)

(a) Connect the intelligent tester to the DLC3.
(b) Turn the engine switch on (IG) and turn the tester on.
(c) Clear the DTCs.
(d) Allow the vehicle to drive in accordance with the driving pattern described in the CONFIRMATION DRIVING PATTERN.
(e) Enter the following menus: DIAGNOSIS / ENHANCED OBD II / MONITOR INFO / MONITOR STATUS.
(f) Check the status of O2S MON is COMPL.
If the status is still INCMPL, drive the vehicle according to the driving pattern again.
HINT:
- AVAIL indicates that the component has not been monitored yet.
- COMPL indicates that the component is functioning normally.
- INCMPL indicates that the component is malfunctioning.

(g) Enter the following menus: DIAGNOSIS / ENHANCED OBD II / MONITOR INFO / TEST RESULT / RANGE B1 S1, then press the ENTER button.
(h) Check the test value of the A/F sensor output current during fuel-cut.

Result

Test Value	Proceed to
Within normal range (1.4 mA or more, and less than 3.6 mA)	A
Outside normal range (Less than 1.4 mA, or 3.6 mA or more)	B

B → **Go to step 20**

A

3 READ VALUE OF INTELLIGENT TESTER (OUTPUT VOLTAGE OF A/F SENSOR)

(a) Connect the intelligent tester to the DLC3.
(b) Start the engine.
(c) Turn the tester on.

(d) Warm up the Air-Fuel Ratio (A/F) sensor at an engine speed of 2,500 rpm for 90 seconds.

(e) On the tester, enter the following menus: DIAGNOSIS / ENHANCED OBD II / SNAPSHOT / MANUAL SNAPSHOT / USER DATA / AFS B1 S1 or AFS B2 S1 and ENGINE SPD.

(f) Check the A/F sensor voltage three times, when the engine is in each of the following conditions:
   (1) While idling (check for at least 30 seconds)
   (2) At an engine speed of approximately 2,500 rpm (without any sudden changes in engine speed)
   (3) Raise the engine speed to 4,000 rpm and then quickly release the accelerator pedal so that the throttle valve is fully closed.

Standard voltage

Condition	A/F Sensor Voltage Variation	Reference
(1) and (2)	Changes at approximately 3.3 V	Between 3.1 V and 3.5 V
(3)	Increases to 3.8 V or more	This occurs during engine deceleration (when fuel-cut performed)

HINT:
- For more information, see the diagrams below.

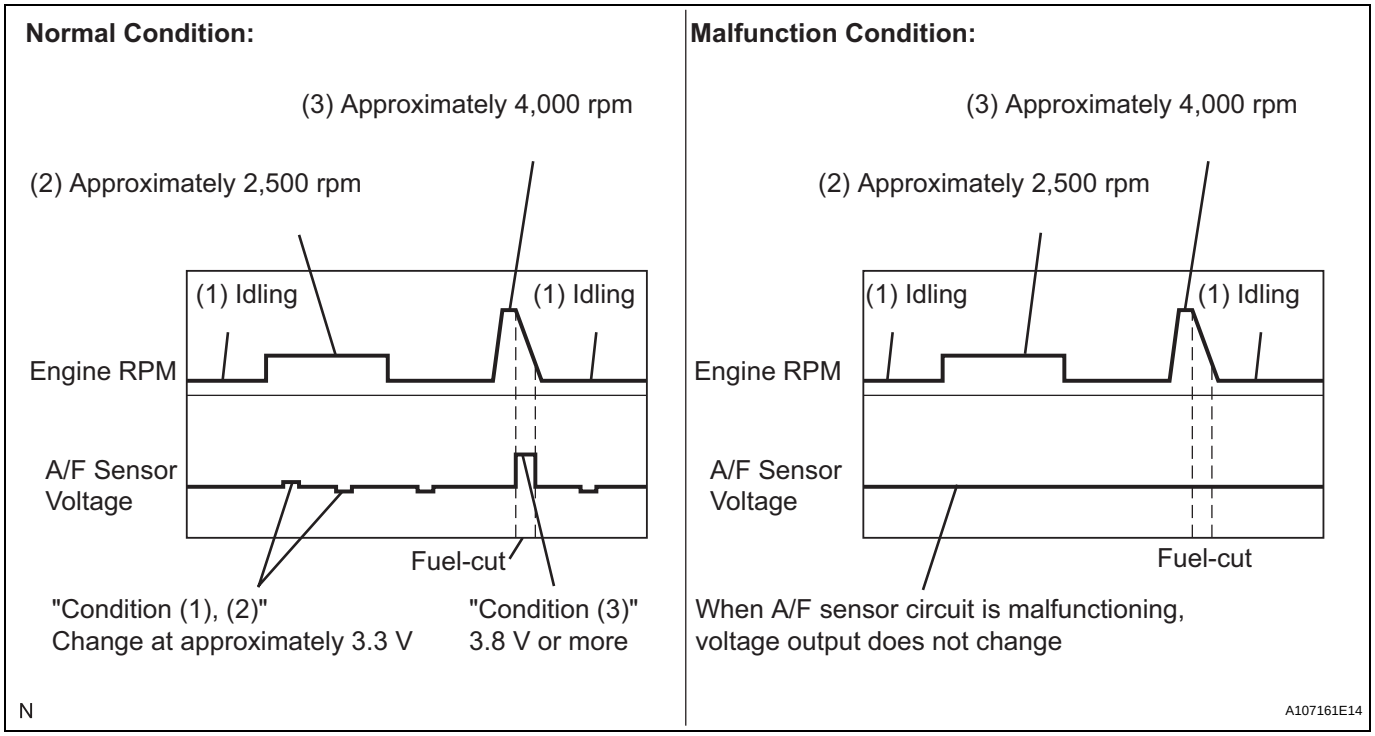

- If the output voltage of the A/F sensor remains at approximately 3.3 V (see the Malfunction Condition diagram) under any conditions, including those above, the A/F sensor may have an open circuit. (This will also happen if the A/F sensor heater has an open circuit.)
- If the output voltage of the A/F sensor remains at either approximately 3.8 V or more, or 2.8 V or less (see the Malfunction Condition diagram) under any conditions, including those above, the A/F sensor may have a short circuit.

ES

- The ECM stops fuel injection (fuel cut) during engine deceleration. This causes a lean condition and results in a momentary increase in the A/F sensor output voltage.
- The ECM must establish a closed throttle valve position learning value to perform fuel cut. If the battery terminal has been reconnected, the vehicle must be driven at over 10 mph (16 km/h) to allow the ECM to learn the closed throttle valve position.
- When the vehicle is driven:
  The output voltage of the A/F sensor may be below 2.8 V during fuel enrichment. For the vehicle, this translates to a sudden increase in speed with the accelerator pedal fully depressed when trying to overtake another vehicle. The A/F sensor is functioning normally.
- The A/F sensor is a current output element; therefore, the current is converted into a voltage inside the ECM. Measuring the voltage at the connectors of the A/F sensor or ECM will show a constant voltage result.

NG → **Go to step 10**

OK

4	PERFORM CONFIRMATION DRIVING PATTERN

NEXT

5	CHECK WHETHER DTC OUTPUT RECURS (DTC P2195, P2196, P2197 OR P2198)

(a) Read the DTCs using the intelligent tester.
(b) Enter the following menus: DIAGNOSIS / ENHANCED OBD II / DTC INFO / CURRENT CODES.

Result

Display (DTC Output)	Proceed to
P2195, P2196, P2197, or P2198	A
No output	B

B → **Go to step 9**

A

6	REPLACE AIR FUEL RATIO SENSOR

(a) Replace the air fuel ratio sensor (See page EC-19).

NEXT

7	PERFORM CONFIRMATION DRIVING PATTERN

NEXT

8 CHECK WHETHER DTC OUTPUT RECURS (DTC P2195, P2196, P2197 OR P2198)

(a) Read the DTCs using the intelligent tester.
(b) Enter the following menus: DIAGNOSIS / ENHANCED OBD II / DTC INFO / CURRENT CODES.

Result

Display (DTC Output)	Proceed to
No output	A
P2195, P2196, P2197, or P2198	B

B → **REPLACE ECM (See page ES-543)**

A

9 CONFIRM IF VEHICLE HAS RUN OUT OF FUEL IN PAST

(a) Has the vehicle run out of fuel in the past?

NO → **CHECK FOR INTERMITTENT PROBLEMS**

YES

DTC CAUSED BY RUNNING OUT OF FUEL

10 INSPECT AIR FUEL RATIO SENSOR (HEATER RESISTANCE)

Component Side:

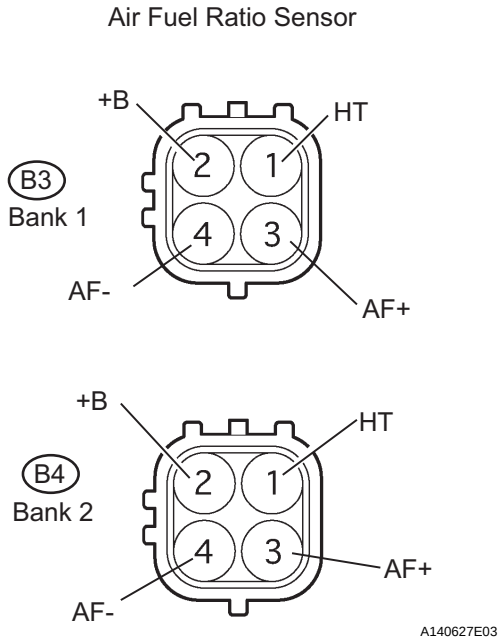

(a) Disconnect the B3 or B4 A/F sensor connector.
(b) Measure the resistance according to the value(s) in the table below.

Standard resistance (Bank 1 sensor 1)

Tester Connection	Condition	Specified Condition
HT (1) - +B (2)	20°C (68°F)	1.8 to 3.4 Ω
HT (1) - AF- (4)	Always	10 kΩ or higher

Standard resistance (Bank 2 sensor 1)

Tester Connection	Condition	Specified Condition
HT (1) - +B (2)	20°C (68°F)	1.8 to 3.4 Ω
HT (1) - AF- (4)	Always	10 kΩ or higher

(c) Reconnect the A/F sensor connector.

NG → **REPLACE AIR FUEL RATIO SENSOR (See page EC-19)**

OK

ES

11	INSPECT FUSE (A/F FUSE)

(a) Remove the A/F fuse from the integration relay.
(b) Measure the A/F fuse resistance.
Standard resistance:
Below 1 Ω
(c) Reinstall the A/F fuse.

NG → **REPLACE A/F FUSE**

OK

ES

12	INSPECT ENGINE ROOM JUNCTION BLOCK (A/F RELAY)

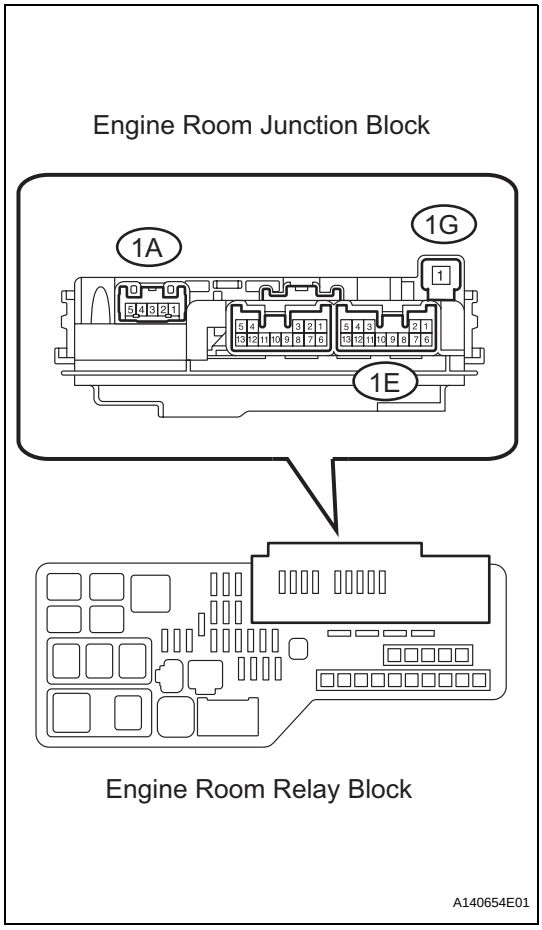

(a) Remove the engine room junction block from the engine room R/B.
(b) Inspect the A/F relay.
(1) Measure the A/F relay resistance.
Standard resistance

Tester Connection	Specified Condition
1G-1 - 1A-4	10 kΩ or higher
1G-1 - 1A-4	Below 1 Ω (Apply battery voltage between terminals 1E-9 and 1E-10)

(c) Reinstall the engine room junction block.

NG → **REPLACE ENGINE ROOM JUNCTION BLOCK**

OK

13 CHECK HARNESS AND CONNECTOR (A/F SENSOR - ECM)

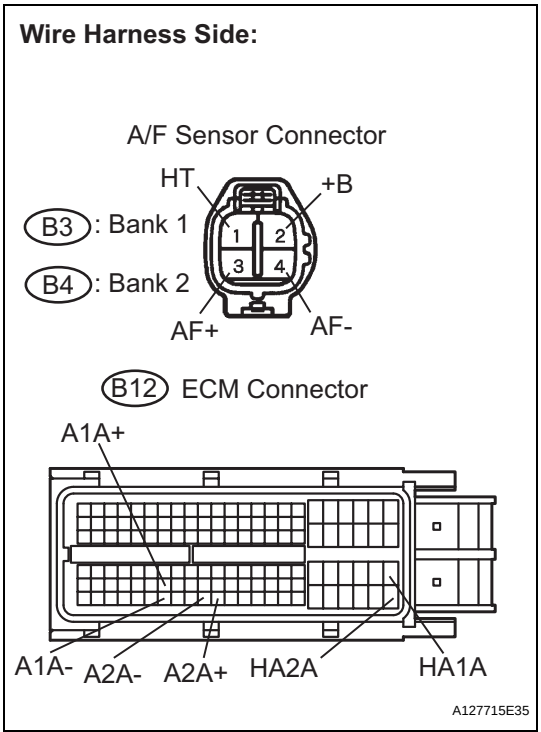

(a) Disconnect the B3 and B4 A/F sensor connectors.
(b) Turn the engine switch on (IG).
(c) Measure the voltage according to the value(s) in the table below.

Standard voltage

Tester Connection	Specified Condition
+B (B3-2) - Body ground	9 to 14 V
+B (B4-2) - Body ground	9 to 14 V

(d) Turn the engine switch off.
(e) Disconnect the B12 ECM connector.
(f) Measure the resistance according to the value(s) in the table below.

Standard resistance (Check for open)

Tester Connection	Specified Condition
HT (B3-1) - HA1A (B12-86)	Below 1 Ω
AF+ (B3-3) - A1A+ (B12-93)	Below 1 Ω
AF- (B3-4) - A1A- (B12-116)	Below 1 Ω
HT (B4-1) - HA2A (B12-109)	Below 1 Ω
AF+ (B4-3) - A2A+ (B12-120)	Below 1 Ω
AF- (B4-4) - A2A- (B12-119)	Below 1 Ω

Standard resistance (Check for short)

Tester Connection	Specified Condition
HT (B3-1) or HA1A (B12-86) - Body ground	10 kΩ or higher
AF+ (B3-3) or A1A+ (B12-93) - Body ground	10 kΩ or higher
AF- (B3-4) or A1A- (B12-116) - Body ground	10 kΩ or higher
HT (B4-1) or HA2A (B12-109) - Body ground	10 kΩ or higher
AF+ (B4-3) or A2A+ (B12-120) - Body ground	10 kΩ or higher
AF- (B4-4) or A2A- (B12-119) - Body ground	10 kΩ or higher

(g) Reconnect the ECM connector.
(h) Reconnect the A/F sensor connectors.

Reference (System Diagram of Bank 1 Sensor 1):

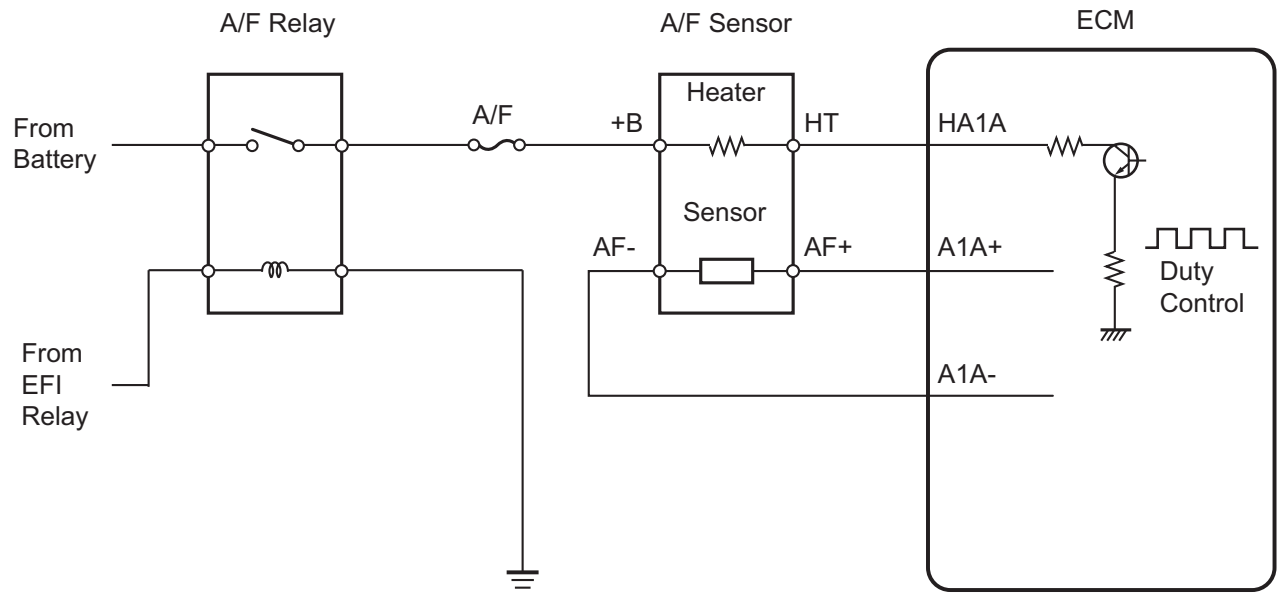

A133850E11

NG → **REPAIR OR REPLACE HARNESS OR CONNECTOR**

OK

14	CHECK AIR INDUCTION SYSTEM

(a) Check the air induction system for vacuum leakage.
OK:
No leakage from air induction system.

NG → **REPAIR OR REPLACE AIR INDUCTION SYSTEM**

OK

15	CHECK FUEL PRESSURE (HIGH PRESSURE SIDE AND LOW PRESSURE SIDE)

(a) Check the fuel pressure.

NG → **REPAIR OR REPLACE FUEL SYSTEM**

OK

16	REPLACE AIR FUEL RATIO SENSOR

(a) Replace the air fuel ratio sensor (See page EC-19).

NEXT

17	PERFORM CONFIRMATION DRIVING PATTERN

NEXT

18	CHECK WHETHER DTC OUTPUT RECURS (DTC P2195, P2196, P2197 OR P2198)

(a) Read the DTCs using the intelligent tester.
(b) Enter the following menus: DIAGNOSIS / ENHANCED OBD II / DTC INFO / PENDING CODES.

Result

Display (DTC Output)	Proceed to
No output	A
P2195, P2196, P2197 or P2198	B

B → **REPAIR OR REPLACE ECM**

A

19	CONFIRM IF VEHICLE HAS RUN OUT OF FUEL IN PAST

(a) Has the vehicle run out of fuel in the past?

NO → **CHECK FOR INTERMITTENT PROBLEMS**

YES

DTC CAUSED BY RUNNING OUT OF FUEL

20	REPLACE AIR FUEL RATIO SENSOR

(a) Replace the air fuel ratio sensor (See page EC-19).

NEXT

21	PERFORM CONFIRMATION DRIVING PATTERN

NEXT

22	CHECK WHETHER DTC OUTPUT RECURS (DTC P2195, P2196, P2197 OR P2198)

(a) Connect the intelligent tester to the DLC3.
(b) Turn the engine switch on (IG) and turn the tester on.
(c) Read the DTCs using the intelligent tester.
(d) Enter the following menus: DIAGNOSIS / ENHANCED OBD II / DTC INFO / PENDING CODES.

Result

Display (DTC Output)	Proceed to
No output	A
P2195, P2196, P2197 or P2198 (A/F sensor pending DTCs)	B

B → **REPLACE ECM (See page ES-543)**

A

END

DTC	P2238	Oxygen (A/F) Sensor Pumping Current Circuit Low (Bank 1 Sensor 1)
DTC	P2239	Oxygen (A/F) Sensor Pumping Current Circuit High (Bank 1 Sensor 1)
DTC	P2241	Oxygen (A/F) Sensor Pumping Current Circuit Low (Bank 2 Sensor 1)
DTC	P2242	Oxygen (A/F) Sensor Pumping Current Circuit High (Bank 2 Sensor 1)
DTC	P2252	Oxygen (A/F) Sensor Reference Ground Circuit Low (Bank 1 Sensor 1)
DTC	P2253	Oxygen (A/F) Sensor Reference Ground Circuit High (Bank 1 Sensor 1)
DTC	P2255	Oxygen (A/F) Sensor Reference Ground Circuit Low (Bank 2 Sensor 1)
DTC	P2256	Oxygen (A/F) Sensor Reference Ground Circuit High (Bank 2 Sensor 1)

DESCRIPTION

HINT:

- Although the DTC titles include oxygen sensor, these DTCs relate to the Air-Fuel Ratio (A/F) sensor.
- Sensor 1 refers to the sensor mounted in front of the Three-Way Catalytic Converter (TWC) and located near the engine assembly.

The A/F sensor generates voltage* that corresponds to the actual air-fuel ratio. This sensor voltage is used to provide the ECM with feedback so that it can control the air-fuel ratio. The ECM determines the deviation from the stoichiometric air-fuel ratio level, and regulates the fuel injection time. If the A/F sensor malfunctions, the ECM is unable to control the air-fuel ratio accurately.

The A/F sensor is the planar type and is integrated with the heater, which heats the solid electrolyte (zirconia element). This heater is controlled by the ECM. When the intake air volume is low (the exhaust gas temperature is low), a current flows into the heater to heat the sensor, in order to facilitate accurate oxygen concentration detection. In addition, the sensor and heater portions are narrower than the conventional type. The heat generated by the heater is conducted to the solid electrolyte through the alumina, therefore the sensor activation is accelerated.

A three-way catalytic converter (TWC) is used in order to convert the carbon monoxide (CO), hydrocarbon (HC), and nitrogen oxide (NOx) into less harmful substances. To allow the TWC to function effectively, it is necessary to keep the air-fuel ratio of the engine near the stoichiometric air-fuel ratio.

*: Value changes inside the ECM. Since the A/F sensor is the current output element, a current is converted to a voltage inside the ECM. Any measurements taken at the A/F sensor or ECM connectors will show a constant voltage.

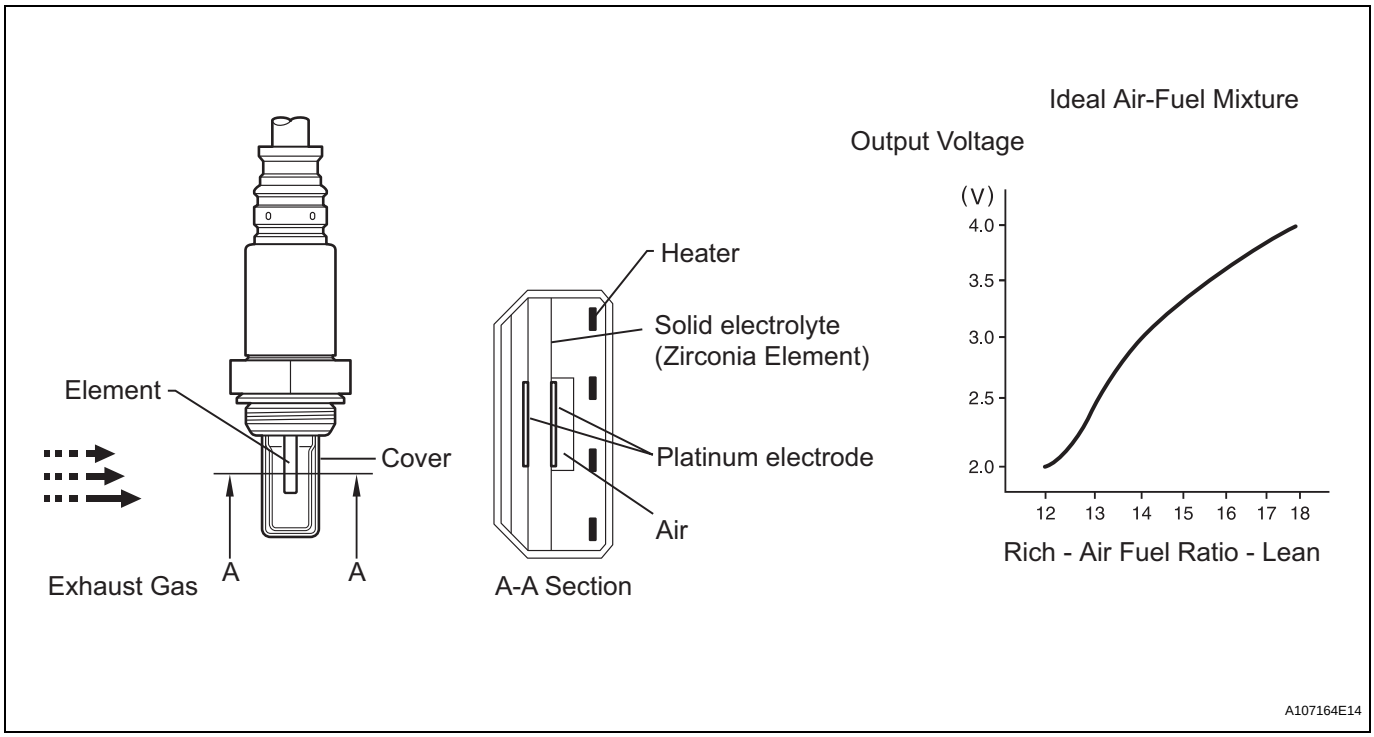

DTC No.	DTC Detection Condition	Trouble Area
P2238 P2241	• Case 1: Condition (a) or (b) continues for 5.0 seconds or more (1 trip detection logic): (a) AF+ voltage is 0.5 V or less (b) (AF+) - (AF-) = 0.1 V or less • Case 2: A/F sensor admittance: Less than 0.022 1/Ω (2 trip detection logic)	• Open or short in A/F sensor (bank 1, 2 sensor 1) circuit • A/F sensor (bank 1, 2 sensor 1) • A/F sensor heater • A/F sensor heater relay • A/F sensor heater and relay circuits • ECM
P2239 P2242	AF+ voltage is more than 4.5 V for 5.0 seconds or more (2 trip detection logic)	• Open or short in A/F sensor (bank 1, 2 sensor 1) circuit • A/F sensor (bank 1, 2 sensor 1) • A/F sensor heater • A/F sensor heater relay • A/F sensor heater and relay circuits • ECM
P2252 P2255	AF- voltage is 0.5 V or less for 5.0 seconds or more (2 trip detection logic)	• Open or short in A/F sensor (bank 1, 2 sensor 1) circuit • A/F sensor (bank 1, 2 sensor 1) • A/F sensor heater • A/F sensor heater relay • A/F sensor heater and relay circuits • ECM
P2253 P2256	AF- voltage is more than 4.5 V for 5.0 seconds or more (2 trip detection logic)	• Open or short in A/F sensor (bank 1, 2 sensor 1) circuit • A/F sensor (bank 1, 2 sensor 1) • A/F sensor heater • A/F sensor heater relay • A/F sensor heater and relay circuits • ECM

HINT:
- DTCs P2238, P2239, P2252 and P2253 indicate malfunctions related to the bank 1 A/F sensor circuit.
- DTCs P2241, P2242, P2255 and P2256 indicate malfunctions related to the bank 2 A/F sensor circuit.
- Bank 1 refers to the bank that includes cylinder No. 1.
- Bank 2 refers to the bank that includes cylinder No. 2.

MONITOR DESCRIPTION

The Air-Fuel Ratio (A/F) sensor varies its output voltage in proportion to the air-fuel ratio. If the A/F sensor impedance (alternating current resistance) or output voltage deviates greatly from the standard range, the ECM determines that there is an open or short malfunction in the A/F sensor circuit.

MONITOR STRATEGY

Related DTCs	P2238: A/F sensor (Bank 1) open circuit between AF+ and AF- P2238: A/F sensor (Bank 1) short circuit between AF+ and AF- P2238: A/F sensor (Bank 1) short circuit between AF+ and GND P2239: A/F sensor (Bank 1) short circuit between AF+ and +B P2241: A/F sensor (Bank 2) open circuit between AF+ and AF- P2241: A/F sensor (Bank 2) short circuit between AF+ and AF- P2241: A/F sensor (Bank 2) short circuit between AF+ and GND P2242: A/F sensor (Bank 2) short circuit between AF+ and +B P2252: A/F sensor (Bank 1) short circuit between AF- and GND P2253: A/F sensor (Bank 1) short circuit between AF- and +B P2255: A/F sensor (Bank 2) short circuit between AF- and GND P2256: A/F sensor (Bank 2) short circuit between AF- and +B
Required Sensors/Components (Main)	A/F sensor
Required Sensors/Components (Sub)	Engine Coolant Temperature (ECT) sensor, Crankshaft position sensor
Frequency of Operation	Once per driving cycle
Duration	10 seconds
MIL Operation	2 driving cycles
Sequence of Operation	None

ES

TYPICAL ENABLING CONDITIONS

Monitor runs whenever following DTCs are not present	P0031, P0032, P0051, P0052 (A/F sensor heater - Sensor 1) P0100 - P0103 (MAF meter) P0110 - P0113 (IAT sensor) P0115 - P0118 (ECT sensor) P0120 - P0223, P2135 (TP sensor) P0125 (Insufficient ECT for Closed Loop) P0171, P0172 (Fuel system) P0300 - P0308 (Misfire) P0335 (CKP sensor) P0500 (VSS)

P2238 and P2241 (open circuit between AF+ and AF-):

AF+ terminal voltage	0.5 to 4.5 V
AF- terminal voltage	0.5 to 4.5 V
Difference between AF+ and AF- terminal voltages	0.1 to 0.8 V
ECT	5°C (41°F) or more (Varies with ECT at engine start)
Engine condition	Running
Fuel-cut	OFF
Time after engine start	10 seconds or more
A/F sensor heater duty-cycle	ON
Time after A/F sensor heating	5 seconds or more
Battery voltage	11 V or more
Engine switch	ON

Others:

Battery voltage	10.5 V or more
Engine switch	ON

TYPICAL MALFUNCTION THRESHOLDS

P2238 and P2241 (Open circuit between AF+ and AF-):

A/F sensor admittance	Below 0.022 1/Ω

P2238 and P2241 (Short circuit between AF+ and GND):

AF+ terminal voltage	0.5 V or less

P2238 and P2241 (Short circuit between AF+ and AF-):

Difference between AF+ and AF- terminal voltages	0.1 v or less

P2239 and P2242 (Short circuit between AF+ and +B):

AF+ terminal voltage	More than 4.5 V

P2252 and P2255 (Short circuit between AF- and GND):

AF- terminal voltage	0.5 V or less

P2253 and P2256 (Short circuit between AF- and +B):

AF- terminal voltage	More than 4.5 V

WIRING DIAGRAM

Refer to DTC P2195 (See page ES-353).

INSPECTION PROCEDURE

HINT:
Intelligent tester only:
Malfunctioning areas can be identified by performing the A/F CONTROL function provided in the ACTIVE TEST. The A/F CONTROL function can help to determine whether the Air-Fuel Ratio (A/F) sensor, Heated Oxygen (HO2) sensor and other potential trouble areas are malfunctioning.
The following instructions describe how to conduct the A/F CONTROL operation using the intelligent tester.

1. Connect the intelligent tester to the DLC3.
2. Start the engine and turn the tester on.
3. Warm up the engine at an engine speed of 2,500 rpm for approximately 90 seconds.
4. On the tester, enter the following menus: DIAGNOSIS / ENHANCED OBD II / ACTIVE TEST / A/F CONTROL.
5. Perform the A/F CONTROL operation with the engine in an idling condition (press the RIGHT or LEFT button to change the fuel injection volume).
6. Monitor the output voltages of the A/F and HO2 sensors (AFS B1 S1 and O2S B1 S2 or AFS B2 S1 and O2S B2 S2) displayed on the tester.

HINT:

- The A/F CONTROL operation lowers the fuel injection volume by 12.5 % or increases the injection volume by 25 %.
- Each sensor reacts in accordance with increases and decreases in the fuel injection volume.

Tester Display (Sensor)	Injection Volume	Status	Voltage
AFS B1S1 or AFS B2S1 (A/F)	+25 %	Rich	Less than 3.0 V
AFS B1S1 or AFS B2S1 (A/F)	-12.5 %	Lean	More than 3.35 V
O2S B1S2 or O2S B2S2 (HO2)	+25 %	Rich	More than 0.55 V
O2S B1S2 or O2S B2S2 (HO2)	-12.5 %	Lean	Less than 0.4 V

NOTICE:
The Air-Fuel Ratio (A/F) sensor has an output delay of a few seconds and the Heated Oxygen (HO2) sensor has a maximum output delay of approximately 20 seconds.

Case	A/F Sensor (Sensor 1) Output Voltage		HO2 Sensor (Sensor 2) Output Voltage		Main Suspected Trouble Areas
1	Injection Volume +25 % -12.5 %		Injection Volume +25 % -12.5 %		-
	Output Voltage More than 3.35 V Less than 3.0 V	OK	Output Voltage More than 0.55 V Less than 0.4 V	OK	
2	Injection Volume +25 % -12.5 %		Injection Volume +25 % -12.5 %		• A/F sensor • A/F sensor heater • A/F sensor circuit
	Output Voltage Almost no reaction	NG	Output Voltage More than 0.55 V Less than 0.4 V	OK	
3	Injection Volume +25 % -12.5 %		Injection Volume +25 % -12.5 %		• HO2 sensor • HO2 sensor heater • HO2 sensor circuit
	Output Voltage More than 3.35 V Less than 3.0 V	OK	Output Voltage Almost no reaction	NG	
4	Injection Volume +25 % -12.5 %		Injection Volume +25 % -12.5 %		• Injector • Fuel pressure • Gas leakage from exhaust system (Air-fuel ratio extremely lean or rich)
	Output Voltage Almost no reaction	NG	Output Voltage Almost no reaction	NG	

- Following the A/F CONTROL procedure enables technicians to check and graph the output voltages of both the A/F and HO2 sensors.
- To display the graph, enter the following menus: DIAGNOSIS / ENHANCED OBD II / ACTIVE TEST / A/F CONTROL / USER DATA / AFS B1 S1 and O2S B1 S2 or AFS B2 S1 and O2S B2 S2, and press the YES button and then the ENTER button followed by the F4 button.

HINT:

- Read freeze frame data using the intelligent tester. The ECM records vehicle and driving condition information as freeze frame data the moment a DTC is stored. When troubleshooting, freeze frame data can be helpful in determining whether the vehicle was running or stopped, whether the engine was warmed up or not, whether the air-fuel ratio was lean or rich, as well as other data recorded at the time of a malfunction (See page ES-41).

ES

ES

1 INSPECT AIR FUEL RATIO SENSOR (HEATER RESISTANCE)

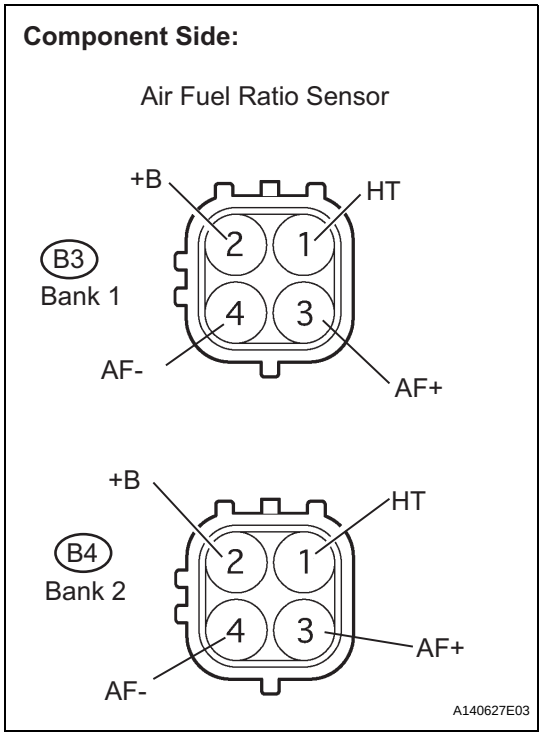

(a) Disconnect the B3 or B4 A/F sensor connector.
(b) Measure the resistance according to the value(s) in the table below.

Standard resistance (Bank 1 sensor 1)

Tester Connection	Condition	Specified Condition
HT (1) - +B (2)	20°C (68°F)	1.8 to 3.4 Ω
HT (1) - AF- (4)	-	10 kΩ or higher

Standard resistance (Bank 2 sensor 1)

Tester Connection	Condition	Specified Condition
HT (1) - +B (2)	20°C (68°F)	1.8 to 3.4 Ω
HT (1) - AF- (4)	-	10 kΩ or higher

(c) Reconnect the A/F sensor connector.

NG → **REPLACE AIR FUEL RATIO SENSOR (See page EC-19)**

OK

2 INSPECT A/F FUSE

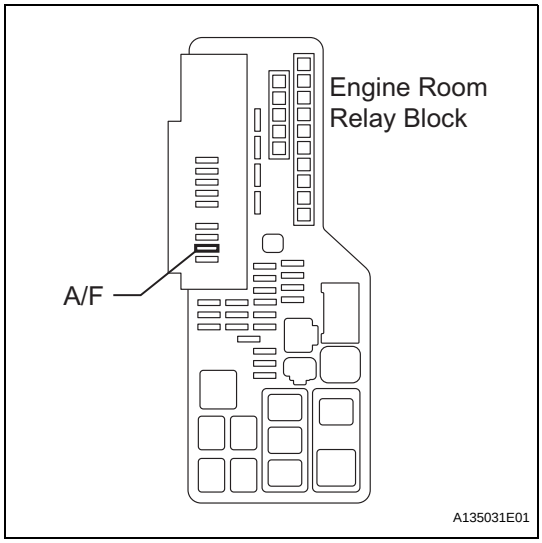

(a) Remove the A/F fuse from the engine room junction block.
(b) Measure the A/F fuse resistance.
Standard resistance:
Below 1 Ω
(c) Reinstall the A/F fuse.

NG → **REPLACE A/F FUSE**

OK

3	INSPECT ENGINE ROOM JUNCTION BLOCK (A/F RELAY)

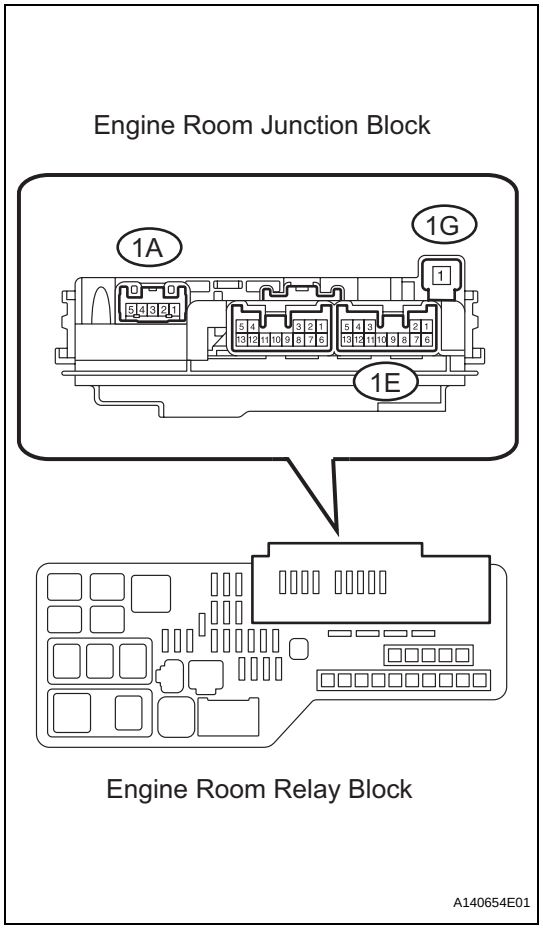

(a) Remove the engine room junction block from the engine room R/B.

(b) Inspect the A/F relay.

(1) Measure the A/F relay resistance.

Standard resistance

Tester Connection	Specified Condition
1G-1 - 1A-4	10 kΩ or higher
1G-1 - 1A-4	Below 1 Ω (Apply battery voltage between terminals 1E-6 and 1E-10)

(c) Reinstall the engine room junction block.

NG → **REPLACE ENGINE ROOM JUNCTION BLOCK**

OK

ES

4	CHECK HARNESS AND CONNECTOR (A/F SENSOR - ECM)

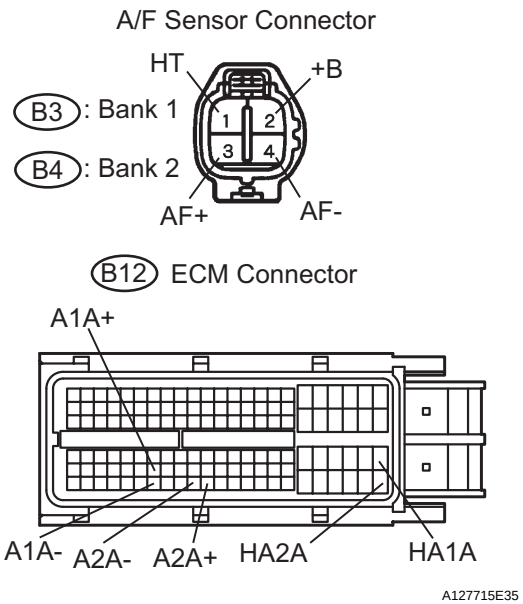

(a) Disconnect the B3 and B4 A/F sensor connectors.
(b) Turn the engine switch on (IG).
(c) Measure the voltage according to the value(s) in the table below.

Standard voltage

Tester Connection	Specified Condition
+B (B3-2) - Body ground	9 to 14 V
+B (B4-2) - Body ground	9 to 14 V

(d) Turn the engine switch off.
(e) Disconnect the B12 ECM connector.
(f) Measure the resistance according to the value(s) in the table below.

Standard resistance (Check for open)

Tester Connection	Specified Condition
HT (B3-1) - HA1A (B12-86)	Below 1 Ω
AF+ (B3-3) - A1A+ (B12-93)	Below 1 Ω
AF- (B3-4) - A1A- (B12-116)	Below 1 Ω
HT (B4-1) - HA2A (B12-109)	Below 1 Ω
AF+ (B4-3) - A2A+ (B12-120)	Below 1 Ω
AF- (B4-4) - A2A- (B12-119)	Below 1 Ω

Standard resistance (Check for short)

Tester Connection	Specified Condition
HT (B3-1) or HA1A (B12-86) - Body ground	10 kΩ or higher
AF+ (B3-3) or A1A+ (B12-93) - Body ground	10 kΩ or higher
AF- (B3-4) or A1A- (B12-116) - Body ground	10 kΩ or higher
HT (B4-1) or HA2A (B12-109) - Body ground	10 kΩ or higher
AF+ (B4-3) or A2A+ (B12-120) - Body ground	10 kΩ or higher
AF- (B4-4) or A2A- (B12-119) - Body ground	10 kΩ or higher

(g) Reconnect the ECM connector.
(h) Reconnect the A/F sensor connectors.

Reference (System Diagram of Bank 1 Sensor 1):

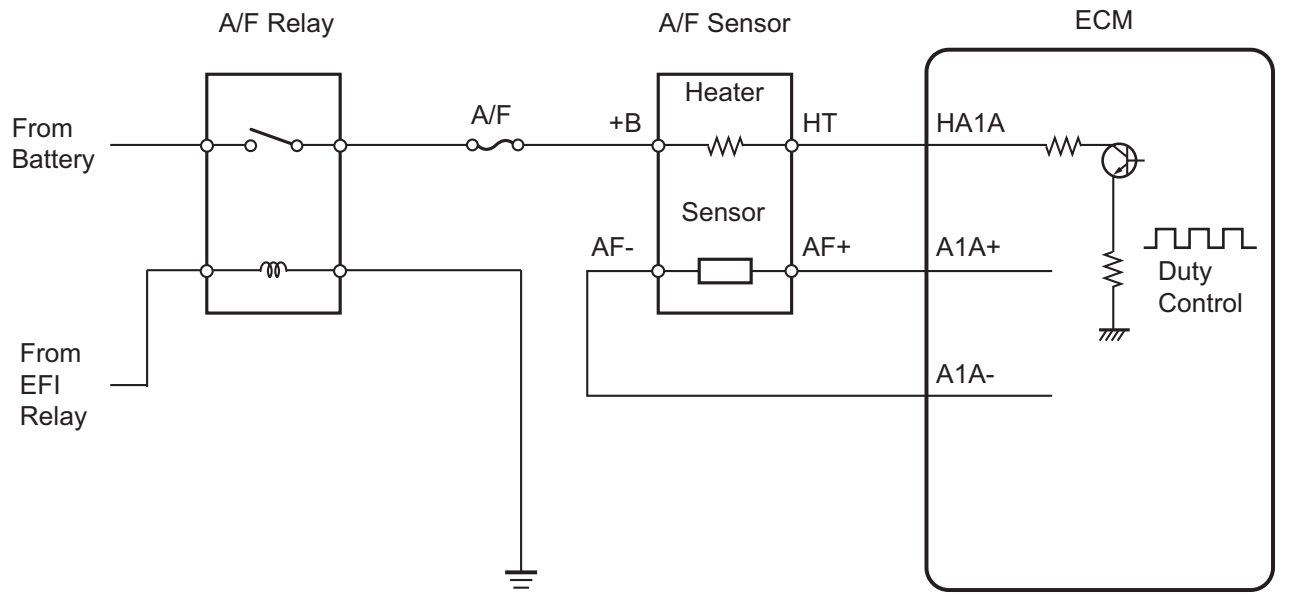

NG → **REPAIR OR REPLACE HARNESS OR CONNECTOR**

OK

REPLACE ECM (See page ES-543)

ES

DTC	P2420	Evaporative Emission System Switching Valve Control Circuit High

DTC SUMMARY

DTC No.	Monitoring Item	DTC Detection Condition	Trouble Area	Detection Timing	Detection Logic
P2420	Vent valve stuck open (vent)	The following condition is met during key-off EVAP monitor • EVAP pressure change when vent valve is closed (ON) is less than 2.3 mmHg	• Pump module (0.02 inch orifice, vacuum pump, vent valve) • Connector / wire harness (Pump module - ECM) • ECM	Engine switch off	2 trip

ES

DESCRIPTION

The circuit description can be found in the EVAP (Evaporative Emission) system (See page ES-395).

INSPECTION PROCEDURE

Refer to the EVAP system (See page ES-395).

MONITOR DESCRIPTION

5 hours*1 after the engine switch is turned off, the electric vacuum pump creates negative pressure (vacuum) in the EVAP (Evaporative Emission) system. The ECM monitors for leaks and actuator malfunctions based on the EVAP pressure.
HINT:
*1: If the engine coolant temperature is not below 35°C (95°F) 5 hours after the engine switch is turned off, the monitor check starts 2 hours later. If it is still not below 35°C (95°F) 7 hours after the engine switch is turned off, the monitor check starts 2.5 hours later.

Sequence	Operations	Descriptions	Duration
-	ECM activation	Activated by soak timer, 5 hours (7 or 9.5 hours) after engine switch is turned off.	-
A	Atmospheric pressure measurement	Vent valve is turned OFF (vent) and EVAP system pressure is measured by ECM in order to register atmospheric pressure. If pressure in EVAP system is not between 70 kPa and 110 kPa (525 mmHg and 825 mmHg), ECM cancels EVAP system monitor.	10 seconds
B	First 0.02 inch leak pressure measurement	In order to determine 0.02 inch leak pressure standard, vacuum pump creates negative pressure (vacuum) through 0.02 inch orifice and then ECM checks if vacuum pump and vent valve operate normally.	60 seconds
C	EVAP system pressure measurement	Vent valve is turned ON (closed) to shut EVAP system. Negative pressure (vacuum) is created in EVAP system, and then EVAP system pressure is measured. Write down measured value as they will be used in leak check. If EVAP pressure does not stabilize within 15 minutes, ECM cancels EVAP system monitor.	15 minutes*2
D	Purge VSV monitor	Purge VSV is opened and then EVAP system pressure is measured by ECM. Large increase indicates normal.	10 seconds
E	Second 0.02 inch leak pressure measurement	After second 0.02 inch leak pressure measurement, leak check is performed by comparing first and second 0.02 inch leak pressure standards. If stabilized system pressure is higher than second 0.02 inch leak pressure standard, ECM determines that there is a leak in EVAP system.	60 seconds
F	Final check	Atmospheric pressure is measured and then monitoring result is recorded by ECM.	-

*2: If only a small amount of fuel is in the fuel tank, it takes longer for the EVAP pressure to stabilize.

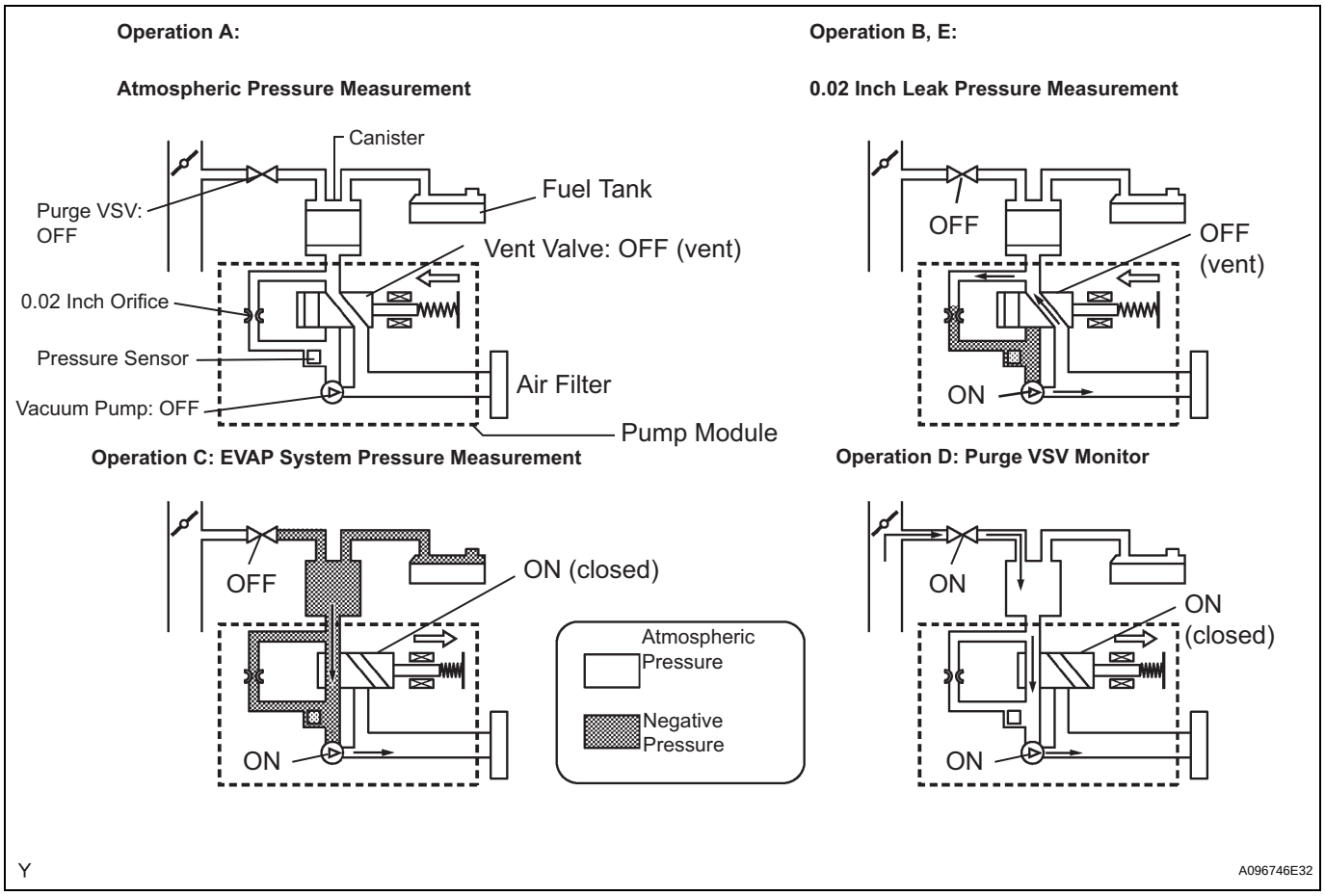

The vent valve turns ON (closes) and the EVAP (Evaporative Emission) system pressure is then measured by the ECM, using the pressure sensor, to conduct an EVAP leak check. If the pressure does not increase when the vent valve is open, the ECM interprets this as the vent valve being stuck open. The ECM illuminates the MIL and sets the DTC.

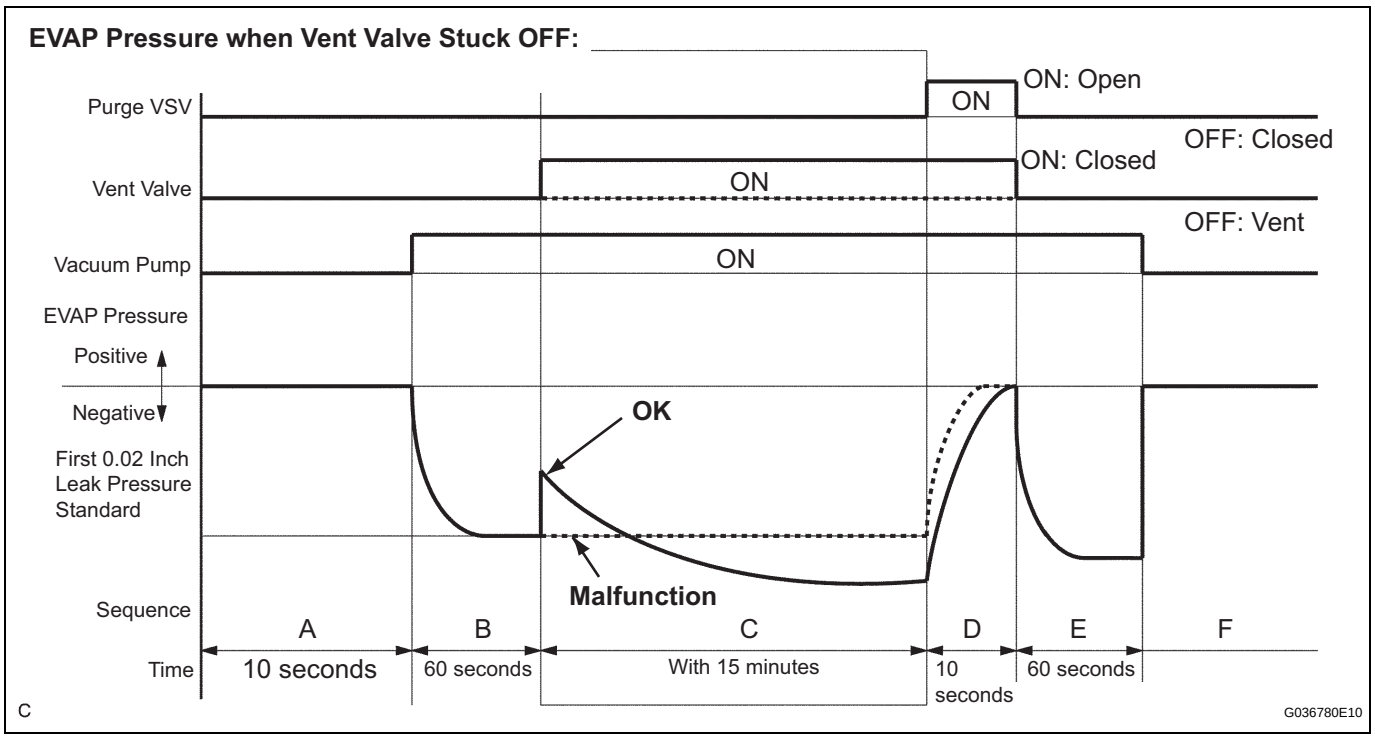

ES

MONITOR STRATEGY

Related DTC	P2420: Vent valve stuck open (vent)
Required Sensors/Components	Purge VSV and pump module
Frequency of Operation	Once per driving cycle
Duration	Within 2 minutes
MIL Operation	2 driving cycles
Sequence of Operation	None

TYPICAL ENABLING CONDITIONS

ES

The monitor will run whenever these DTCs are not present	None
Key-off monitor is run when all of the following conditions are met	-
Atmospheric pressure	70 to 110 kPa (525 to 825 mmHg)
Battery voltage	10.5 V or more
Vehicle speed	2.5 mph (4 km/h) or less
Engine switch	OFF
Time after key-off	5 or 7 or 9.5 hours
EVAP pressure sensor malfunction (P0450, P0452, P0453)	Not detected
EVAP canister purge valve	Not operated by scan tool
EVAP canister vent valve	Not operated by scan tool
EVAP leak detection pump	Not operated by scan tool
Both of the following conditions 1 and 2 are met before key-off	-
1. Duration that vehicle has been driven	5 minutes or more
2. EVAP purge operation	Performed
ECT	4.4 to 35°C (40 to 95°F)
IAT	4.4 to 35°C (40 to 95°F)

Key-off monitor sequence 1 to 8

1. Atmospheric pressure measurement

Next sequence is run if the following condition is met	-
Atmospheric pressure change	Less than 0.3 kPa (2.25 mmHg) in 1 second

2. First reference pressure measurement

Next sequence is run if the following conditions are met	Conditions 1, 2 and 3
1. EVAP pressure just after reference pressure measurement start	-1 kPa (-7.5 mmHg) or less
2. Reference pressure	-4.85 to -1.057 kPa (-36.384 to -7.929 mmHg)
3. Reference pressure	Saturated

3. EVAP canister vent valve close stuck check

Next sequence is run if the following condition is met	-
EVAP pressure change after vent valve is turned ON	0.3 kPa (2.25 mmHg) or more

4. Vacuum introduction

Next sequence is run if the following condition is met	-
EVAP pressure	Saturated within 15 minutes

5. EVAP canister purge valve close stuck check

Next sequence is run if the following condition is met	-
EVAP pressure change after purge valve is opened	0.3 kPa (2.25 mmHg) or more

6. Second reference pressure measurement

Next sequence is run if the following conditions are met	Conditions 1, 2, 3 and 4
1. EVAP pressure just after reference pressure	-1 kPa (-7.5 mmHg) or less
2. Reference pressure	-4.85 to -1.057 kPa (-36.384 to -7.929 mmHg)
3. Reference pressure	Saturated
4. Difference between first reference pressure and second reference pressure	Less than 0.7 kPa (5.25 mmHg)

7. Leak check

Next sequence is run if the following condition is met	-
EVAP pressure when vacuum introduction is complete	Lower than second reference pressure

8. Atmospheric pressure measurement

EVAP monitor is complete if the following condition is met	-
Atmospheric pressure difference between sequence 1 and 8	Within 0.3 kPa (2.25 mmHg)

TYPICAL MALFUNCTION THRESHOLDS

EVAP pressure change after EVAP canister vent valve is turned ON	Less than 0.3 kPa (2.25 mmHg)

MONITOR RESULT

Refer to CHECKING MONITOR STATUS (See page ES-20).

DTC	P2610	ECM / PCM Internal Engine Off Timer Performance

DTC SUMMARY

DTC No.	Monitoring Item	DTC Detection Condition	Trouble Area	Detection Timing	Detection Logic
P2610	Soak timer (built into ECM)	ECM internal malfunction	ECM	Engine running	2 trip

DESCRIPTION

ES

To ensure the accuracy of the EVAP (Evaporative Emission) monitor values, the soak timer, which is built into the ECM, measures 5 hours (+/- 15 minutes) from when the engine switch is turned off, before the monitor is run. This allows the fuel to cool down, which stabilizes the Fuel Tank Pressure (FTP). When 5 hours have elapsed, the ECM turns on.

Soak Timer Circuit (fig. 3):

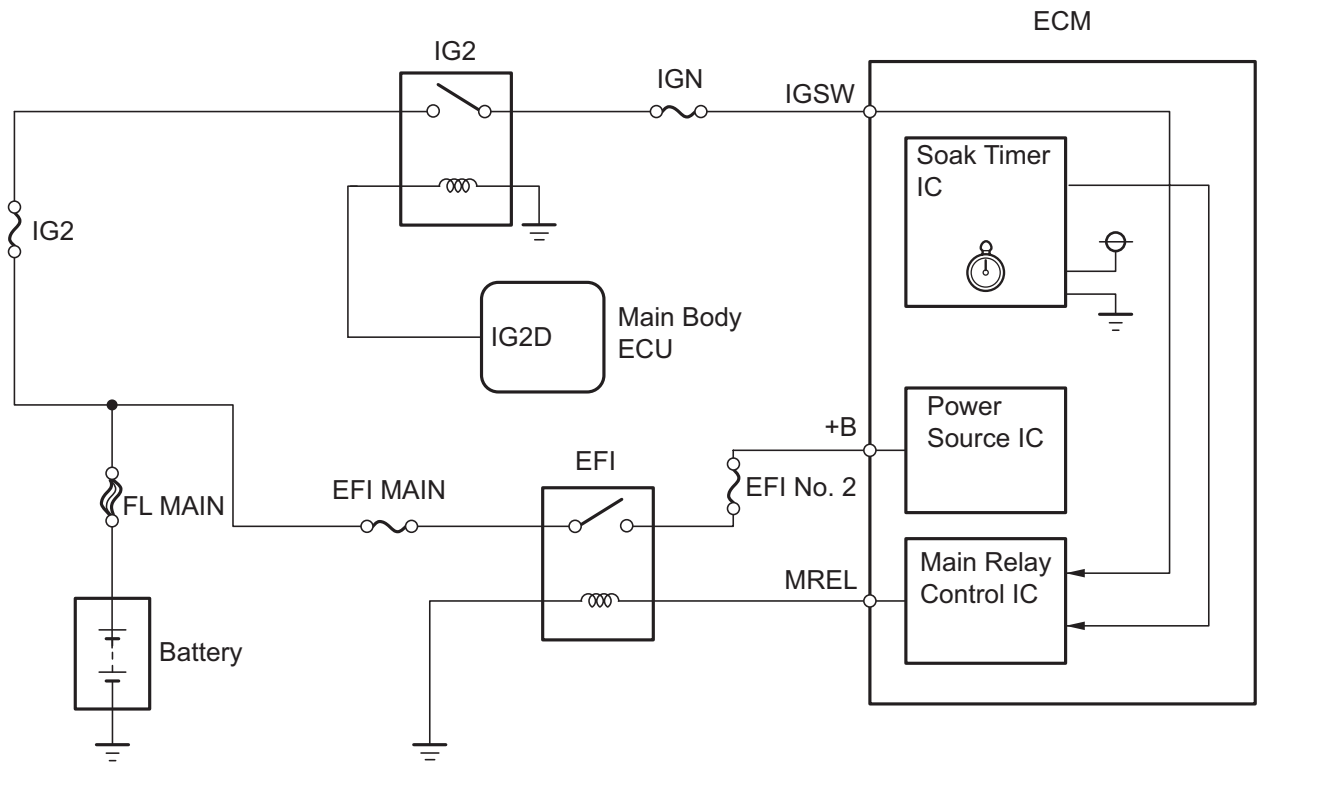

MONITOR DESCRIPTION

5 hours after the engine switch is turned off, the soak timer activates the ECM to begin the EVAP system monitor. While the engine is running, the ECM monitors the synchronization of the soak timer and the CPU clock. If these two are not synchronized, the ECM interprets this as a malfunction, illuminates the MIL and sets the DTC (2 trip detection logic).

MONITOR STRATEGY

Required Sensors/Components	ECM
Frequency of Operation	Once per driving cycle

Duration	10 minutes
MIL Operation	2 driving cycles
Sequence of Operation	None

TYPICAL ENABLING CONDITIONS

Case 1:

Engine switch	ON
Engine	Running
Battery voltage	8 V or more
Starter	OFF

Case 2:

Internal engine OFF timer (elapsed time from engine stop)	10 to 300 minutes
Battery voltage	8 V or more
Engine switch	ON
Starter	OFF

Case 3:

Internal engine OFF timer (elapsed time from engine stop)	310 minutes
Battery voltage	8 V or more
Engine switch	ON
Starter	OFF

TYPICAL MALFUNCTION THRESHOLDS

Case 1:

Soak timer measurement when ECM CPU clock counts 10 minutes	Less than 7 minutes or more than 13 minutes

Case 2:

ECM had the started record by internal engine OFF timer	Yes

Case 3:

ECM had the started record by internal engine OFF timer	No

INSPECTION PROCEDURE

HINT:

- DTC P2610 is set if an internal ECM problem is detected. In this case, diagnostic procedures are not required. ECM replacement is required.
- Read freeze frame data using the intelligent tester. The ECM records vehicle and driving condition information as freeze frame data the moment a DTC is stored. When troubleshooting, freeze frame data can be helpful in determining whether the vehicle was running or stopped, whether the engine was warmed up or not, whether the air-fuel ratio was lean or rich, as well as other data recorded at the time of a malfunction (See page ES-41).

1	REPLACE ECM

(a) Replace the ECM (See page ES-543).

NEXT

2	CHECK WHETHER DTC OUTPUT RECURS

(a) Connect the intelligent tester to the DLC3.
(b) Turn the engine switch on.
(c) Clear the DTCs (See page ES-41).
(d) Start the engine and wait for 10 minutes or more.
(e) On the tester, enter the following menu items: DIAGNOSIS / ENHANCED OBD II / DTC / INFO / PENDING CODES.
(f) If no pending DTC is displayed, the repair has been successfully completed.

NEXT

END

DTC	**P2A00**	**A/F Sensor Circuit Slow Response (Bank 1 Sensor 1)**

DTC	**P2A03**	**A/F Sensor Circuit Slow Response (Bank 2 Sensor 1)**

DESCRIPTION

HINT:

- DTC P2A00 indicates malfunctions related to the bank 1 A/F sensor.
- DTC P2A03 indicates malfunctions related to the bank 2 A/F sensor.
- Bank 1 refers to the bank that includes cylinder No. 1.
- Bank 2 refers to the bank that includes cylinder No. 2.
- Sensor 1 refers to the sensor mounted in front of the Three-Way Catalytic Converter (TWC) and located near the engine assembly.
- Although the DTC titles say oxygen sensor, these DTCs relate to the Air-Fuel Ratio (A/F) sensor.

The A/F sensor generates voltage* that corresponds to the actual air-fuel ratio. This sensor voltage is used to provide the ECM with feedback so that it can control the air-fuel ratio. The ECM determines the deviation from the stoichiometric air-fuel ratio level, and regulates the fuel injection time. If the A/F sensor malfunctions, the ECM is unable to control the air-fuel ratio accurately.

The A/F sensor is the planar type and is integrated with the heater, which heats the solid electrolyte (zirconia element). This heater is controlled by the ECM. When the intake air volume is low (the exhaust gas temperature is low), a current flows into the heater to heat the sensor, in order to facilitate accurate oxygen concentration detection. In addition, the sensor and heater portions are narrower than the conventional type. The heat generated by the heater is conducted to the solid electrolyte through the alumina, therefore the sensor activation is accelerated.

A three-way catalytic converter (TWC) is used in order to convert the carbon monoxide (CO), hydrocarbon (HC), and nitrogen oxide (NOx) into less harmful substances. To allow the TWC to function effectively, it is necessary to keep the air-fuel ratio of the engine near the stoichiometric air-fuel ratio.

*: Value changes inside the ECM. Since the A/F sensor is the current output element, a current is converted to a voltage inside the ECM. Any measurements taken at the A/F sensor or ECM connectors will show a constant voltage.

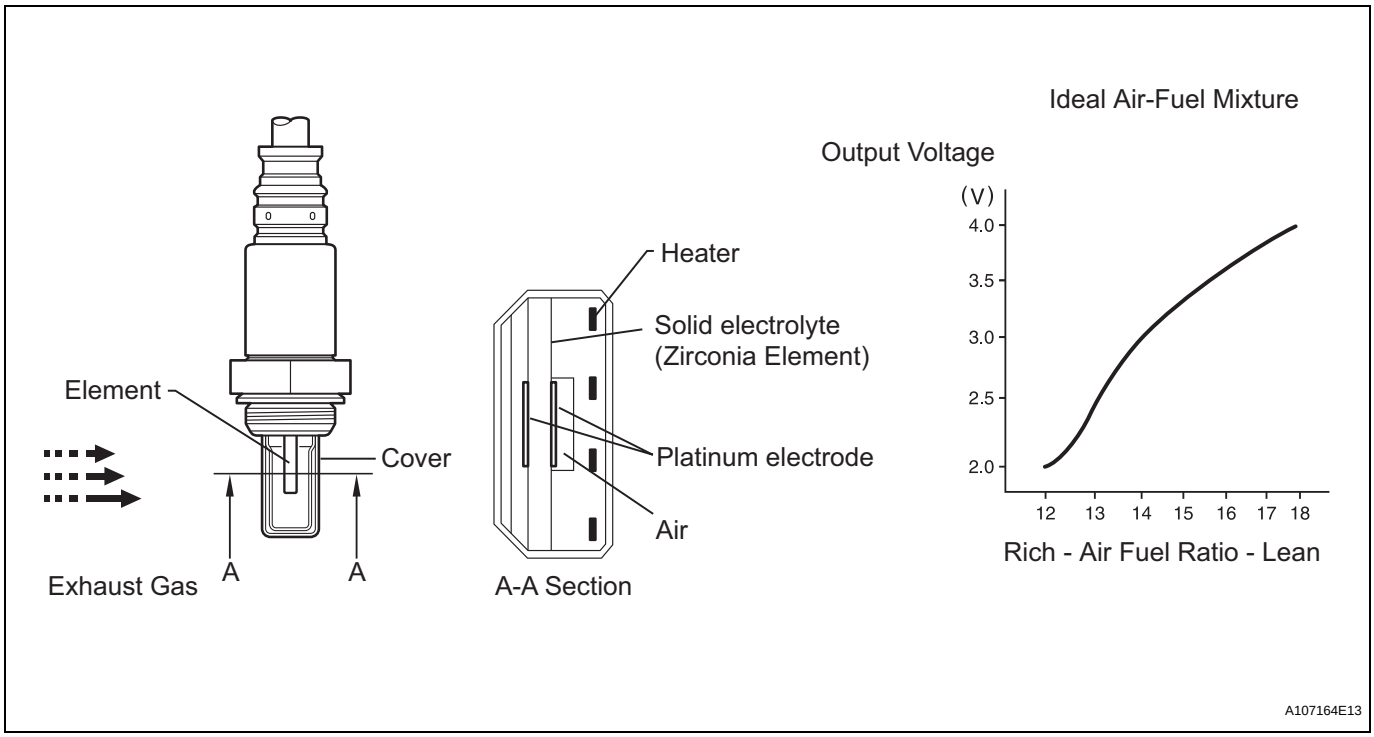

DTC No.	DTC Detection Conditions	Trouble Area
P2A00 P2A03	Calculated value for air-fuel ratio (A/F) sensor response rate deterioration level is less than threshold	• Open or short in A/F sensor circuit • A/F sensor • ECM

MONITOR DESCRIPTION

After the engine is warmed up, the ECM performs air-fuel ratio feedback control to maintain the air-fuel ratio at the stoichiometric level. In addition, active A/F ratio control is performed for approximately 10 seconds after preconditions are met in order to measure the A/F sensor response rate. During active A/F ratio control, the ECM forcibly increases and decreases the injection volume by a certain amount, based on the stoichiometric air-fuel ratio learned during normal air-fuel ratio control, and measures the A/F sensor response rate. The ECM receives a signal from the A/F sensor while performing active A/F ratio control and uses it to calculate the A/F sensor response rate deterioration level.
If the value for A/F sensor response rate deterioration level is less than the threshold, the ECM interprets this as a malfunction and sets the DTC.

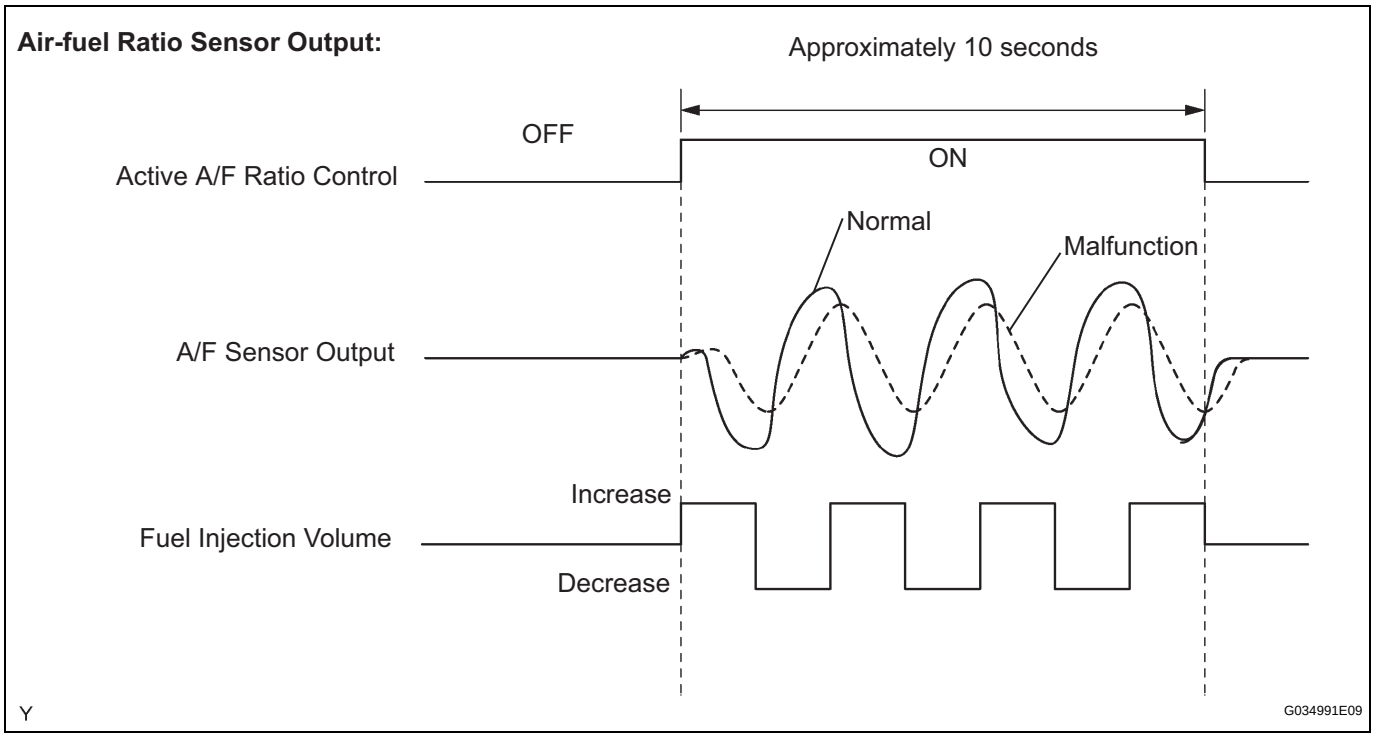

CONFIRMATION DRIVING PATTERN

HINT:

Performing this confirmation pattern will activate the A/F sensor response monitor.

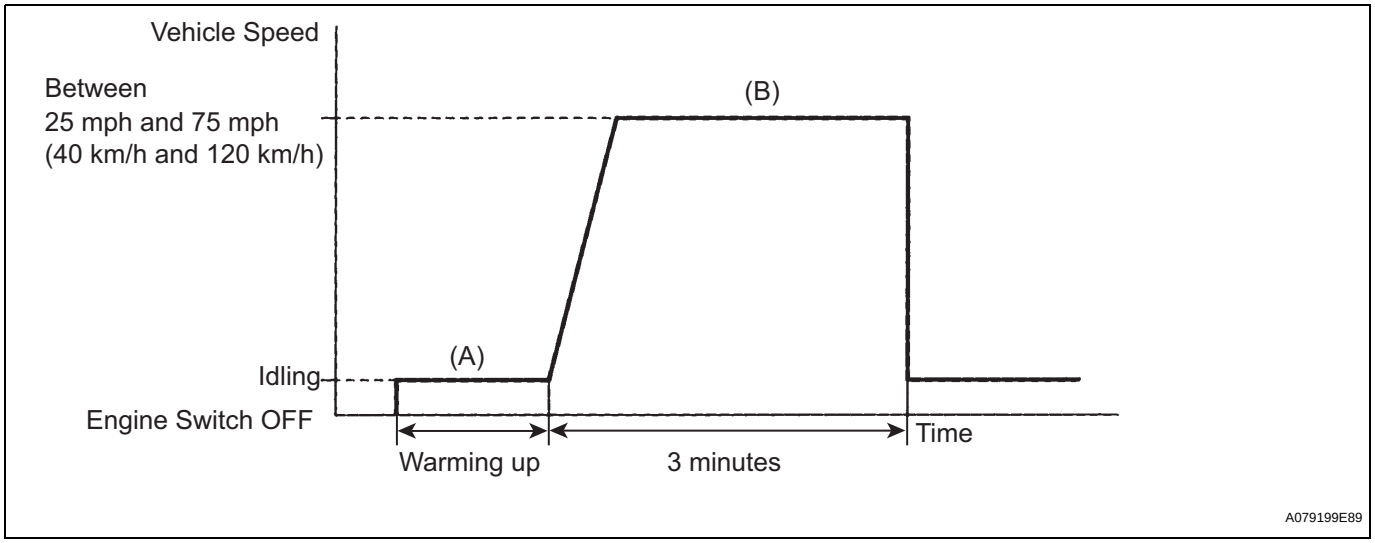

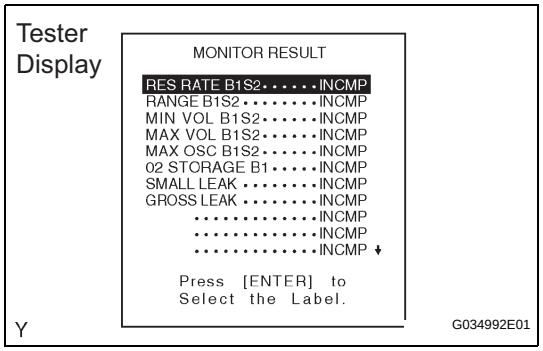

1. Connect an intelligent tester to the DLC3.

2. Turn the engine switch on (IG).
3. Turn the tester on.
4. Clear the DTCs (where set).
5. Select the following menu items: DIAGNOSIS / ENHANCED OBD II / MONITOR INFO / MONITOR RESULT.
6. Check that RES RATE B1S1 is INCOMP.
7. Start the engine and warm it up (Procedure "A").
8. Drive the vehicle at between 25 mph and 75 mph (40 km/h and 120 km/h) for 3 minutes. However, the vehicle should be driven at a constant speed (Procedure "B").
9. Check the monitor result values on the intelligent tester by selecting the following menu items: DIAGNOSIS / ENHANCED OBD II / MONITOR INFO / TEST RESULT.
10. If the values indicated on the tester do not change, perform READINESS MONITOR DRIVE PATTERN for the A/F sensor and the heated oxygen sensor (See page ES-341).
    HINT:
    Completion of all A/F sensor monitors is required to change the value in TEST RESULT.
11. Note the value of the Monitor Result.
12. Select the following menu items: DIAGNOSIS / ENHANCED OBD II / DTC INFO / PENDING CODES.
13. Check if any DTCs (any pending DTCs) are set.

MONITOR STRATEGY

Related DTCs	P2A00: A/F sensor (Bank 1) slow response P2A03: A/F sensor (Bank 2) slow response
Required Sensors/Components (Main)	A/F sensor
Required Sensors/Components (Related)	Vehicle speed sensor, Crankshaft position sensor
Frequency of Operation	Once per driving cycle
Duration	10 to 15 seconds
MIL Operation	2 driving cycles
Sequence of Operation	None

TYPICAL ENABLING CONDITIONS

Monitor runs whenever following DTCs are not present	P0031, P0032, P0051, P0052 (A/F sensor heater - Sensor 1) P0100 - P0103 (MAF meter) P0110 - P0113 (IAT sensor) P0115 - P0118 (ECT sensor) P0120 - P0223, P2135 (TP sensor) P0125 (Insufficient ECT for Closed Loop) P0171, P0172, P0173, P0174 (Fuel system) P0300 - P0308 (Misfire) P0335 (CKP sensor) P0340, P0341 (CMP sensor) P0500 (VSS) P2196, P2198 (A/F sensor - rationality)
Battery voltage	11 V or more
ECT	75°C (167°F) or more
Idle	OFF
Engine rpm	Less than 4,000 rpm
A/F sensor status	Activated
Fuel-cut	OFF
Engine load	10 to 70 %
Shift position	2 or more
Catalyst monitor	Not yet
MAF	2.5 to 15 g/sec.

TYPICAL MALFUNCTION THRESHOLDS

Response rate deterioration level	Less than 0.18 V

MONITOR RESULT

Refer to CHECKING MONITOR STATUS (See page ES-20).

WIRING DIAGRAM

Refer to DTC P2195 (See page ES-353).

INSPECTION PROCEDURE

HINT:
Intelligent tester only:
Malfunctioning areas can be identified by performing the A/F CONTROL function provided in the ACTIVE TEST. The A/F CONTROL function can help to determine whether the Air-fuel Ratio (A/F) sensor, Heated Oxygen (HO2) sensor and other potential trouble areas are malfunctioning.
The following instructions describe how to conduct the A/F CONTROL operation using the intelligent tester.

1. Connect the intelligent tester to the DLC3.
2. Start the engine and turn the tester on.
3. Warm up the engine at an engine speed of 2,500 rpm for approximately 90 seconds.
4. On the intelligent tester, enter the following menus: DIAGNOSIS / ENHANCED OBD II / ACTIVE TEST / A/F CONTROL.
5. Perform the A/F CONTROL operation with the engine in an idling condition (press the RIGHT or LEFT button to change the fuel injection volume).
6. Monitor the output voltages of the A/F and HO2 sensors (AFS B1 S1 and O2S B1 S2 or AFS B2 S1 and O2S B2 S2) displayed on the tester.

HINT:

- The A/F CONTROL operation lowers the fuel injection volume by 12.5 % or increases the injection volume by 25 %.
- Each sensor reacts in accordance with increases in the fuel injection volume.

Tester Display (Sensor)	Injection Volume	Status	Voltage
AFS B1 S1 or AFS B2 S1 (A/F)	+25 %	Rich	Less than 3.0 V
AFS B1 S1 or AFS B2 S1 (A/F)	-12.5 %	Lean	More than 3.35 V
O2S B1 S2 or O2S B2 S2 (HO2)	+25 %	Rich	More than 0.55 V
O2S B1 S2 or O2S B2 S2 (HO2)	-12.5 %	Lean	Less than 0.4 V

NOTICE:
The Air-Fuel Ratio (A/F) sensor has an output delay of a few seconds and the Heated Oxygen (HO2) sensor has a maximum output delay of approximately 20 seconds.

Case	A/F Sensor (Sensor 1) Output Voltage		HO2 Sensor (Sensor 2) Output Voltage		Main Suspected Trouble Areas
1	Injection Volume +25 % -12.5 %		Injection Volume +25 % -12.5 %		-
	Output Voltage More than 3.35 V Less than 3.0 V		Output Voltage More than 0.55 V Less than 0.4 V		

Case	A/F Sensor (Sensor 1) Output Voltage		HO2 Sensor (Sensor 2) Output Voltage		Main Suspected Trouble Areas
2	Injection Volume +25 % -12.5 %		Injection Volume +25 % -12.5 %		• A/F sensor • A/F sensor heater • A/F sensor circuit
	Output Voltage Almost no reaction	NG	Output Voltage More than 0.55 V Less than 0.4 V	OK	
3	Injection Volume +25 % -12.5 %		Injection Volume +25 % -12.5 %		• HO2 sensor • HO2 sensor heater • HO2 sensor circuit
	Output Voltage More than 3.35 V Less than 3.0 V	OK	Output Voltage Almost no reaction	NG	
4	Injection Volume +25 % -12.5 %		Injection Volume +25 % -12.5 %		• Injector • Fuel pressure • Gas leakage from exhaust system (Air-fuel ratio extremely lean or rich)
	Output Voltage Almost no reaction	NG	Output Voltage Almost no reaction	NG	

- Following the A/F CONTROL procedure enables technicians to check and graph the voltage outputs of both the A/F and HO2 sensors.
- To display the graph, enter the following menus: DIAGNOSIS / ENHANCED OBD II / ACTIVE TEST / A/F CONTROL / USER DATA / AFS B1 S1 and O2S B1 S2 or AFS B2 S1 and O2S B2 S2, and press the YES button and then the ENTER button followed by the F4 button.

HINT:

- DTC P2A00 or P2A03 may also be set, when the air-fuel ratio is stuck rich or lean.
- A low A/F sensor voltage could be caused by a rich air-fuel mixture. Check for conditions that would cause the engine to run rich.
- A high A/F sensor voltage could be caused by a lean air-fuel mixture. Check for conditions that would cause the engine to run lean.
- Read freeze frame data using the intelligent tester. The ECM records vehicle and driving condition information as freeze frame data the moment a DTC is stored. When troubleshooting, freeze frame data can be helpful in determining whether the vehicle was running or stopped, whether the engine was warmed up or not, whether the air-fuel ratio was lean or rich, as well as other data recorded at the time of a malfunction (See page ES-41).

1	CHECK ANY OTHER DTCS OUTPUT (IN ADDITION TO DTC P2A00 AND/OR P2A03)

(a) Connect the intelligent tester to the DLC3.
(b) Turn the engine switch on (IG).
(c) Turn the tester on.
(d) Enter the following menus: DIAGNOSIS / ENHANCED OBD II / DTC INFO / CURRENT CODES.
(e) Read the DTCs.

Result

Display (DTC Output)	Proceed to
P2A00 and/or P2A03	A
P2A00 and/or P2A03 and other DTCs	B

HINT:
If any DTCs other than P2A00 or P2A03 are output, troubleshoot those DTCs first.

B → **GO TO DTC CHART (See page ES-59)**

A

2 INSPECT AIR FUEL RATIO SENSOR (HEATER RESISTANCE)

Component Side:

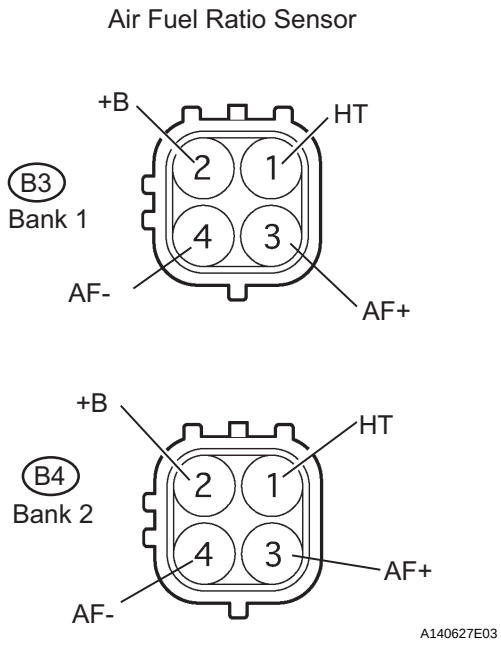

(a) Disconnect the B3 or B4 A/F sensor connector.
(b) Measure the resistance according to the value(s) in the table below.

Standard resistance (Bank 1 sensor 1)

Tester Connection	Condition	Specified Condition
HT (1) - +B (2)	20°C (68°F)	1.8 to 3.4 Ω
HT (1) - AF- (4)	-	10 kΩ or higher

Standard resistance (Bank 2 sensor 1)

Tester Connection	Condition	Specified Condition
HT (1) - +B (2)	20°C (68°F)	1.8 to 3.4 Ω
HT (1) - AF- (4)	-	10 kΩ or higher

(c) Reconnect the A/F sensor connector.

NG → **REPLACE AIR FUEL RATIO SENSOR (See page EC-19)**

OK

ES

ES

3	CHECK HARNESS AND CONNECTOR (A/F SENSOR - ECM)

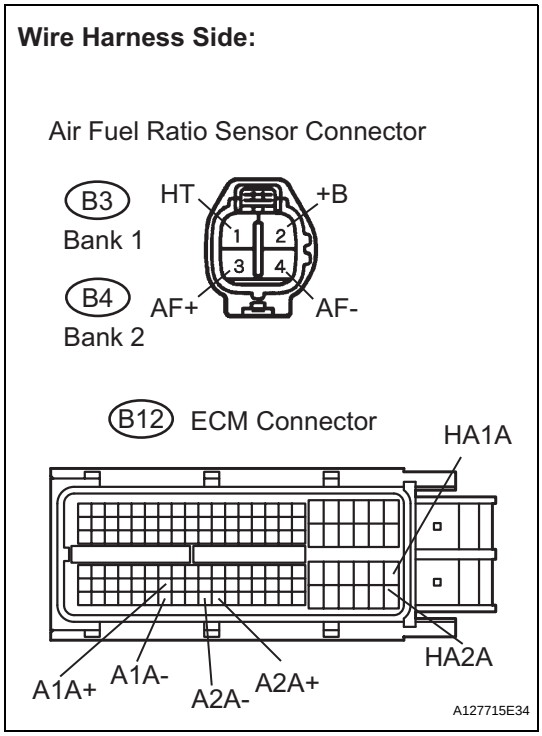

(a) Disconnect the B3 and B4 A/F sensor connectors.
(b) Turn the engine switch on (IG).
(c) Measure the voltage according to the value(s) in the table below.

Standard voltage

Tester Connection	Specified Condition
+B (B3-2) - Body ground	9 to 14 V
+B (B4-2) - Body ground	9 to 14 V

(d) Turn the engine switch off.
(e) Disconnect the B12 ECM connector.
(f) Measure the resistance according to the value(s) in the table below.

Standard resistance (Check for open)

Tester Connection	Specified Condition
HT (B3-1) - HA1A (B12-86)	Below 1 Ω
AF+ (B3-3) - A1A+ (B12-93)	Below 1 Ω
AF- (B3-4) - A1A- (B12-116)	Below 1 Ω
HT (B4-1) - HA2A (B12-109)	Below 1 Ω
AF+ (B4-3) - A2A+ (B12-120)	Below 1 Ω
AF- (B4-4) - A2A- (B12-119)	Below 1 Ω

Standard resistance (Check for short)

Tester Connection	Specified Condition
HT (B3-1) or HA1A (B12-86) - Body ground	10 kΩ or higher
AF+ (B3-3) or A1A+ (B12-93) - Body ground	10 kΩ or higher
AF- (B3-4) or A1A- (B12-116) - Body ground	10 kΩ or higher
HT (B4-1) or HA2A (B12-109) - Body ground	10 kΩ or higher
AF+ (B4-3) or A2A+ (B12-120) - Body ground	10 kΩ or higher
AF- (B4-4) or A2A- (B12-119) - Body ground	10 kΩ or higher

(g) Reconnect the ECM connector.
(h) Reconnect the A/F sensor connectors.

NG → **REPAIR OR REPLACE HARNESS OR CONNECTOR**

OK

4	PERFORM CONFIRMATION DRIVING PATTERN

NEXT

5	CHECK WHETHER DTC OUTPUT RECURS (DTC P2A00 AND/OR P2A03)

(a) Read the DTCs using the intelligent tester.
(b) Enter the following menus: DIAGNOSIS / ENHANCED OBD II / DTC INFO / CURRENT CODES.

Result

Display (DTC Output)	Proceed to
P2A00 and/or P2A03	A
No output	B

B → **REPLACE ECM (See page ES-543)**

A

6 REPLACE AIR FUEL RATIO SENSOR

(a) Replace the air fuel ratio sensor (See page EC-19).

NEXT

7 PERFORM CONFIRMATION DRIVING PATTERN

NEXT

8 CHECK WHETHER DTC OUTPUT RECURS (DTC P2A00 AND/OR P2A03)

(a) Read the DTCs using the intelligent tester.
(b) Enter the following menus: DIAGNOSIS / ENHANCED OBD II / DTC INFO / CURRENT CODES.

Result

Display (DTC Output)	Proceed to
No output	A
P2A00 and/or P2A03	B

B → **REPLACE ECM (See page ES-543)**

A

END

DTC	U0101	Lost Communication with TCM

DESCRIPTION

The Transmission Control Module (TCM) and ECM perform 2-way communications with each other via the Controller Area Network (CAN). The TCM sends signals to the ECM concerning required engine rpm, required engine torques, warning indicators in the combination meter, DTCs and other data. The ECM sends signals to the TCM concerning engine rpm, opening angles of the throttle valve, temperature of intake air, temperature of engine coolant, engine torques and other data. If the TCM cannot communicate with the ECM, the TCM will conclude that there is a malfunction in the CAN system, illuminate the MIL and set a DTC.

DTC No.	DTC Detection Condition	Trouble Area
U0101	No communication from TCM	• Open or short in TCM and ECM circuit • TCM • ECM

MONITOR STRATEGY

Related DTCs	U0101: Verify communication
Required Sensors/Components (Main)	ECM
Required Sensors/Components (Sub)	-
Frequency of Operation	Continuous
Duration	1.25 seconds
MIL Operation	immediate
Sequence of Operation	None

TYPICAL ENABLING CONDITIONS

Monitor runs whenever following DTCs are not present	None
Battery Voltage	10.5 V or more (0.5 second or more)
Engine switch	ON
Starter	OFF

TYPICAL MALFUNCTION THRESHOLDS

Communication signal	Lost communication with TCM

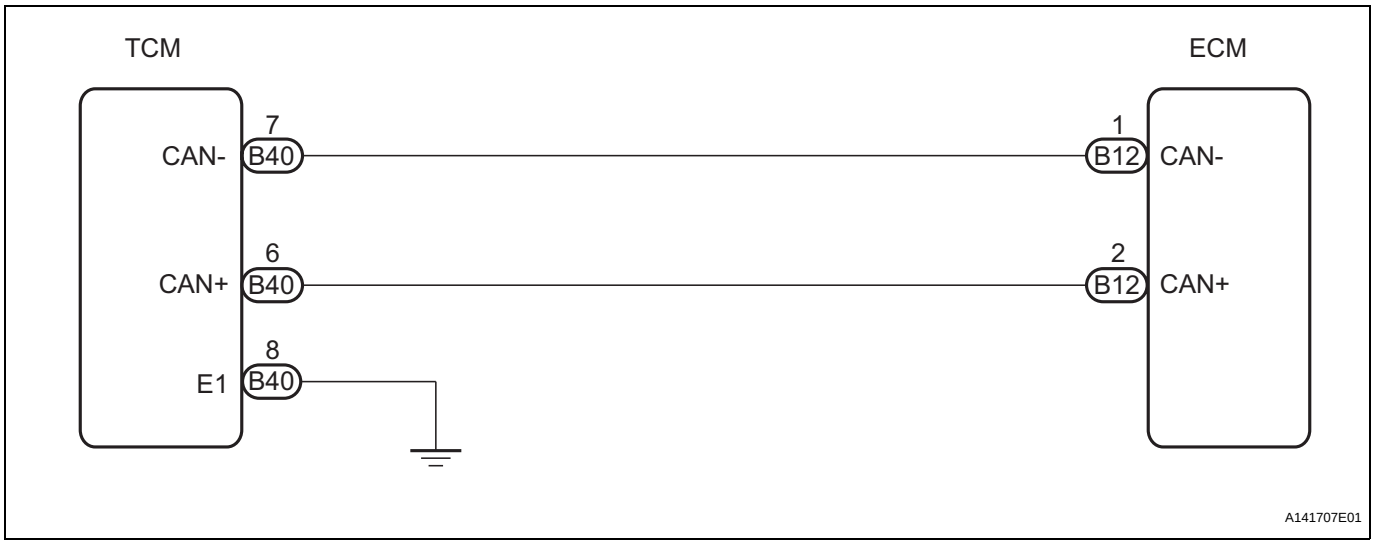

INSPECTION PROCEDURE

1	CHECK OTHER DTC OUTPUT (IN ADDITION TO DTC U0101)

(a) Connect the intelligent tester to the DLC3.
(b) Turn the engine switch on (IG).
(c) Turn the tester on.
(d) Enter the following menus: DIAGNOSIS / ENHANCED OBD II / DTC INFO / CURRENT CODES.
(e) Read the DTCs.

Result

Display (DTC output)	Proceed to
U0101	A
U0101 and other DTCs	B

ES

B → **GO TO DTC CHART (See page ES-59)**

A

2	CHECK TCM TERMINAL VOLTAGE (+B AND E1 TERMINALS)

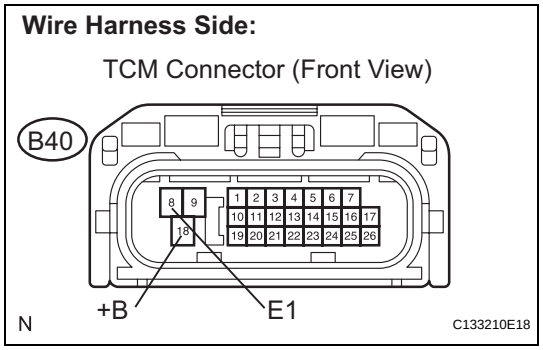

(a) Disconnect the TCM connector.
(b) Turn the engine switch on (IG).
(c) Measure the voltage according to the value(s) in the table below.

Standard voltage

Tester Connection	Specified Condition
B40-18 (+B) - B40-8 (E1)	9 to 14 V

(d) Turn the engine switch off.
(e) Measure the resistance according to the value(s) in the table below.

Standard resistance

Tester Connection	Specified Condition
B40-8 (E1) - Body ground	Below 1 Ω

NG → **REPAIR OR REPLACE HARNESS OR CONNECTOR**

OK

ES

3 CHECK HARNESS AND CONNECTOR

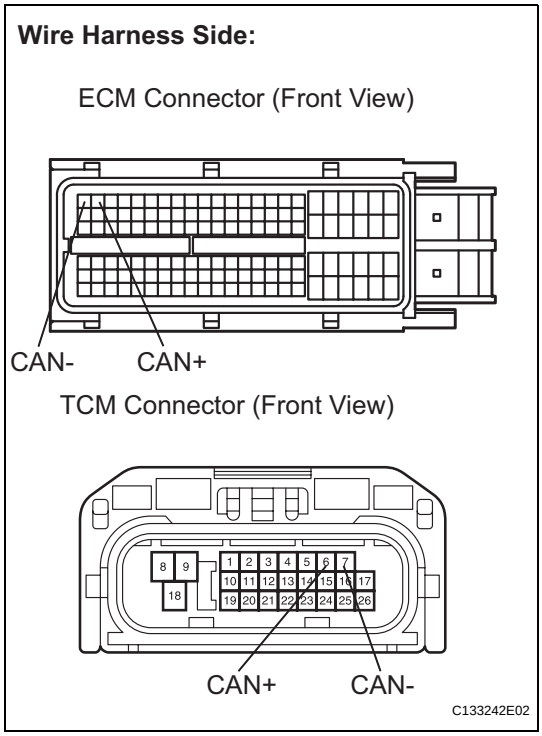

(a) Disconnect the B40 TCM connector.
(b) Disconnect the B12 ECM connector.
(c) Measure the resistance according to the value(s) in the table below.

Standard resistance

Tester Connection	Specified Condition
B40-6 (CAN+) - B12-2 (CAN+)	Below 1 Ω
B40-7 (CAN-) - B12-1 (CAN-)	Below 1 Ω
B40-6 (CAN+) or B12-2 (CAN+) - Body ground	1 MΩ or more
B40-7 (CAN-) or B12-1 (CAN-) - Body ground	1 MΩ or more

NG → **REPAIR OR REPLACE HARNESS OR CONNECTOR**

OK

4 REPLACE ECM

(a) Replace the ECM (See page ES-543).
NOTICE:
Replace the ECM with an ECM from a normally functioning vehicle of the same model.

NEXT

5 CHECK IF DTC RECURS

(a) Connect the intelligent tester to the DLC3.
(b) Clear the DTC.
(c) Start the engine.
(d) Read the DTCs.

Result

Display (DTC Output)	Proceed to
U0101	A
No DTC	B

B → **REPLACE ECM (See page ES-543)**

A

REPLACE TCM (See page ES-543)

EVAP System

RELATED DTCS

DTCs	Monitoring Items	See page
P043E	Reference orifice clogged (built into canister pump module)	ES-251
P043F	Reference orifice high-flow (built into canister pump module)	
P0441	• Purge VSV (Vacuum Switching Valve) stuck closed • Purge VSV stuck open • Purge flow	ES-256
P0450	Canister pressure sensor (built into canister pump module) voltage abnormal fluctuation	ES-263
P0451	• Canister pressure sensor (built into canister pump module) noise • Canister pressure sensor (built into canister pump module) signal becomes fixed/flat	
P0452	Canister pressure sensor (built into canister pump module) voltage low	
P0453	Canister pressure sensor (built into canister pump module) voltage high	
P0455	EVAP gross leak	ES-270
P0456	EVAP small leak	
P2401	Leak detection pump stuck OFF (built into canister pump module)	ES-251
P2402	Leak detection pump stuck ON (built into canister pump module)	
P2419	Vent valve stuck closed (built into canister pump module)	ES-251
P2420	Vent valve stuck open (vent) (built into canister pump module)	ES-375
P2610	Soak timer (built into ECM)	ES-379

If any EVAP system DTCs are set, the malfunctioning area can be determined using the table below.

Malfunctioning Areas \ DTCs	P043E P043F	P0441	P0450	P0451	P0452	P0453	P0455	P0456	P2401 P2402	P2419	P2420
Reference orifice clogged	●								●	●	
Reference orifice high-flow	●								●	●	
Purge VSV stuck open		●					●				
Purge VSV stuck closed		●									
Canister pressure sensor fixed output				●							
Canister pressure sensor noise				●							
Canister pressure sensor low output			●		●						
Canister pressure sensor high output			●			●					
Gross leak		●					●				
Small leak								●			
Leak detection pump stuck OFF	●								●	●	
Leak detection pump stuck ON	●								●	●	
Vent valve stuck closed	●								●	●	
Vent valve stuck open (vent)											●

Y

A106731E11

NOTICE:
If the reference pressure difference between the first and second checks is greater than the specification, all the DTCs relating to the reference pressure (P043E, P043F, P2401, P2402 and P2419) are stored.

ES

DESCRIPTION

Location of EVAP (Evaporative Emission) System:

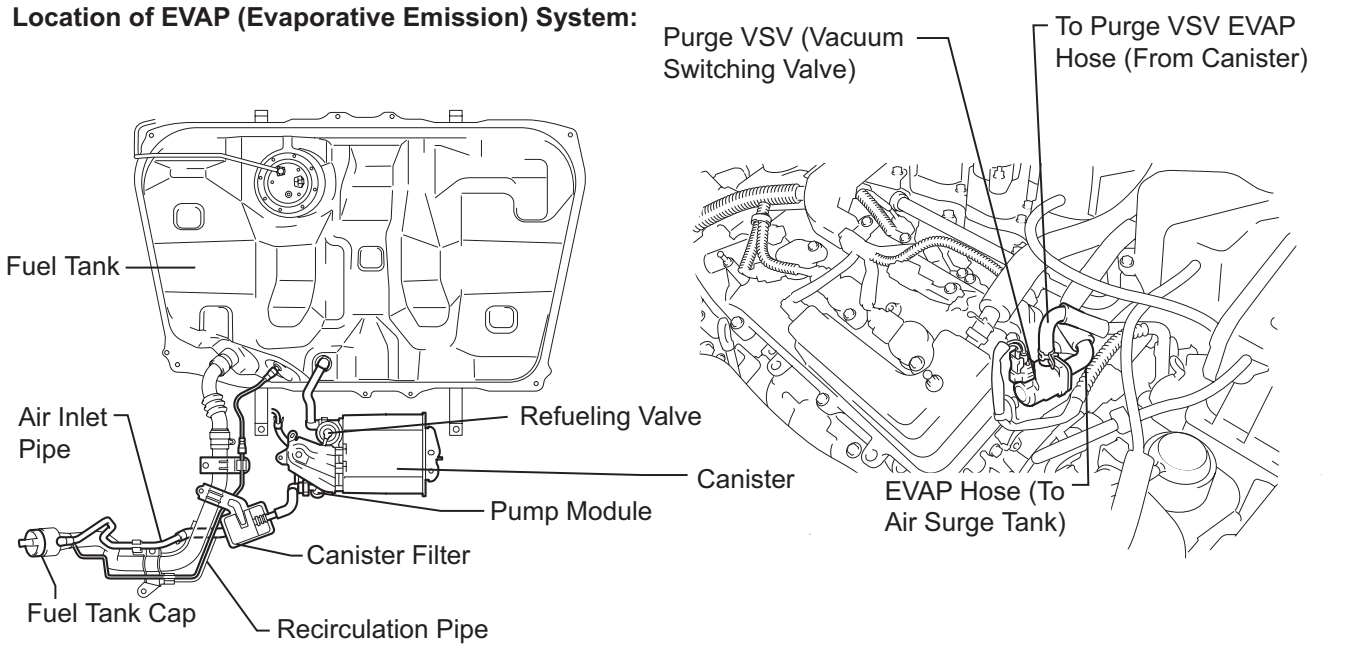

EVAP System Circuit:

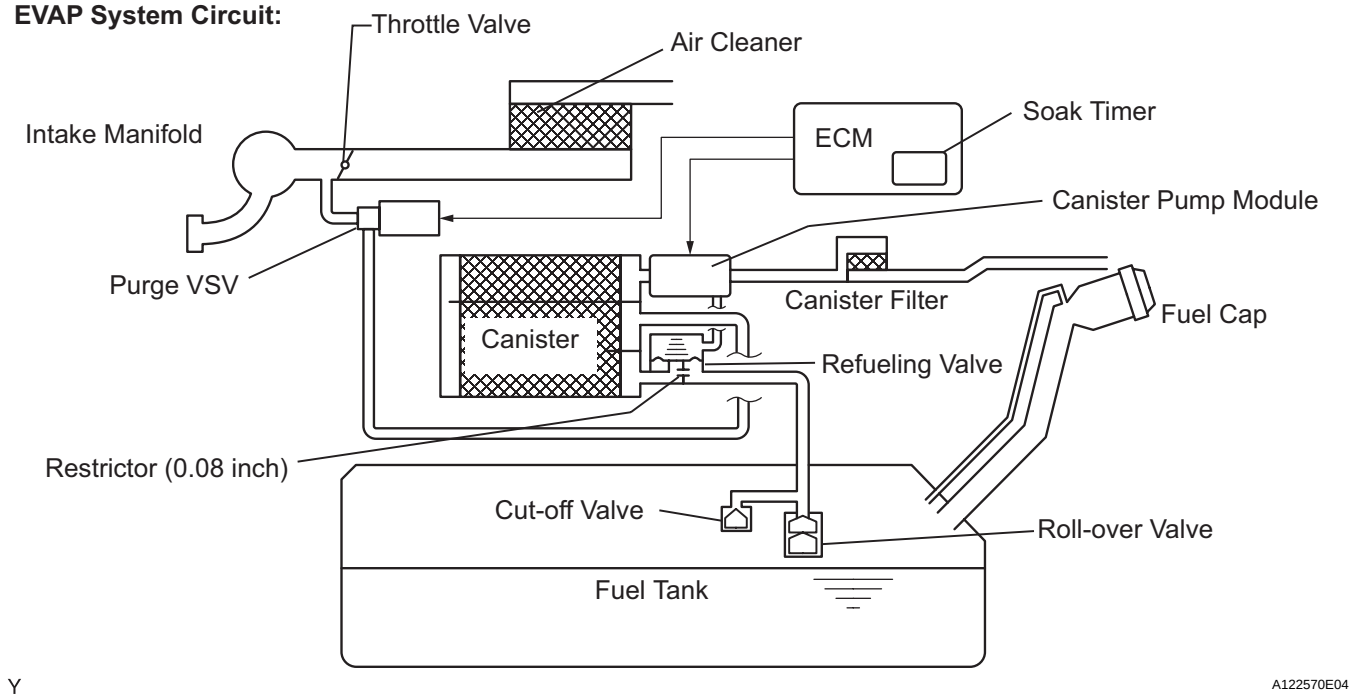

NOTICE:

In this vehicle's EVAP system, turning ON the vent valve does not seal off the EVAP system. To check for leaks in the EVAP system, disconnect the air inlet vent hose and apply pressure from the atmospheric side of the canister.

While the engine is running, if a predetermined condition (closed-loop, etc.) is met, the purge VSV is opened by the ECM and fuel vapors stored in the canister are purged into the intake manifold. The ECM changes the duty cycle ratio of the purge VSV to control purge flow volume.

The purge flow volume is also determined by the intake manifold pressure. Atmospheric pressure is allowed into the canister through the vent valve to ensure that the purge flow is maintained when negative pressure (vacuum) is applied to the canister.

The following two monitors run to confirm the appropriate EVAP system operation.

1. Key-off monitor

This monitor checks for EVAP (Evaporative Emission) system leaks and canister pump module malfunctions. The monitor starts 5 hours* after the engine switch is turned off. At least 5 hours are required for the fuel to cool down to stabilize the EVAP pressure, thus making the EVAP system monitor more accurate.

The leak detection pump creates negative pressure (vacuum) in the EVAP system and the pressure is measured. Finally, the ECM monitors for leaks from the EVAP system, and malfunctions in both the canister pump module and purge VSV, based on the EVAP pressure.

HINT:

*: If the engine coolant temperature is not below 35°C (95°F) 5 hours after the engine switch is turned off, the monitor check starts 2 hours later. If it is still not below 35°C (95°F) 7 hours after the engine switch is turned off, the monitor check starts 2.5 hours later.

2. Purge flow monitor

The purge flow monitor consists of the two monitors. The 1st monitor is conducted every time and the 2nd monitor is activated if necessary.

- The 1st monitor
  While the engine is running and the purge VSV (Vacuum Switching Valve) is ON (open), the ECM monitors the purge flow by measuring the EVAP pressure change. If negative pressure is not created, the ECM begins the 2nd monitor.
- The 2nd monitor
  The vent valve is turned OFF (open) and the EVAP pressure is measured. If the variation in the pressure is less than 0.5 kPa-g (3.75 mmHg-g), the ECM interprets this as the purge VSV being stuck closed, and illuminates the MIL and sets DTC P0441 (2 trip detection logic).

Atmospheric pressure check:

In order to ensure reliable malfunction detection, the variation between the atmospheric pressures, before and after conduction of the purge flow monitor, is measured by the ECM.

EVAP Purge Flow:

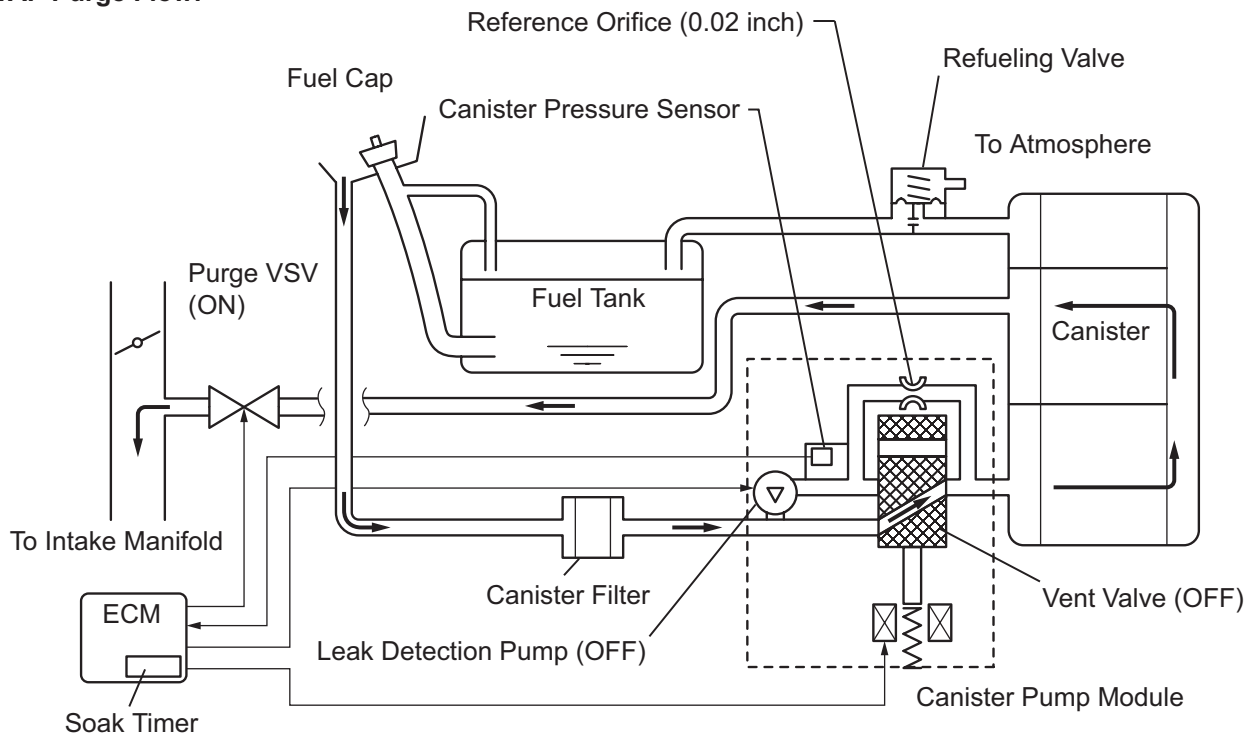

Y

A122571E07

ES

Components	Operations
Canister	Contains activated charcoal to absorb EVAP (Evaporative Emissions) generated in fuel tank.
Cut-off valve	Located in fuel tank. Valve floats and closes when fuel tank is 100 % full.
Purge VSV (Vacuum Switching Valve)	Opens or closes line between canister and intake manifold. ECM uses purge VSV to control EVAP purge flow. In order to discharge EVAP absorbed by canister to intake manifold, ECM opens purge VSV. EVAP discharge volume to intake manifold is controlled by purge VSV duty cycle ratio (current-carrying time) (Open: ON; Closed: OFF).
Refueling valve	Controls EVAP pressure from fuel tank to canister. Valve consists of diaphragm, spring and restrictor (diameter: 0.08 inch). When fuel vapor and pressure inside fuel tank increase, valve opens. While EVAP is purged, valve closes and restrictor prevents large amount of vacuum from affecting pressure in fuel tank. Valve is opened while refueling.
Roll-over valve	Located in fuel tank. Valve is closed by its own weight when vehicle overturns to prevent fuel from spilling out.
Soak timer	Built into ECM. To ensure accurate EVAP monitor, measures 5 hours (+-15 min) after engine switch is turned off. This allows fuel to cool down, stabilizing EVAP pressure. When approximately 5 hours have elapsed, ECM is activated (refer to fig. 3).
Canister pump module	Consists of (a) to (d) below. Canister pump module cannot be disassembled.
(a) Vent valve	Vents and closes EVAP system. When ECM turns valve ON, EVAP system is closed. When ECM turns valve off, EVAP system is vented. Negative pressure (vacuum) is created in EVAP system to check for EVAP leaks by closing purge VSV, turning on vent valve (closed) and operating leak detection pump (refer to fig. 1).
(b) Canister pressure sensor	Indicates pressure as voltages. ECM supplies regulated 5 V to canister pressure sensor, and uses feedback from sensor to monitor EVAP system pressure (refer to fig. 2).
(c) Leak detection pump	Creates negative pressure (vacuum) in EVAP system for leak check.
(d) Reference orifice	Has opening with 0.02 inch diameter. Vacuum is produced through orifice by closing purge VSV, turning off vent valve and operating leak detection pump, to monitor reference pressure. Reference pressure indicates small leak of EVAP.

Canister Pump Module (fig. 1):

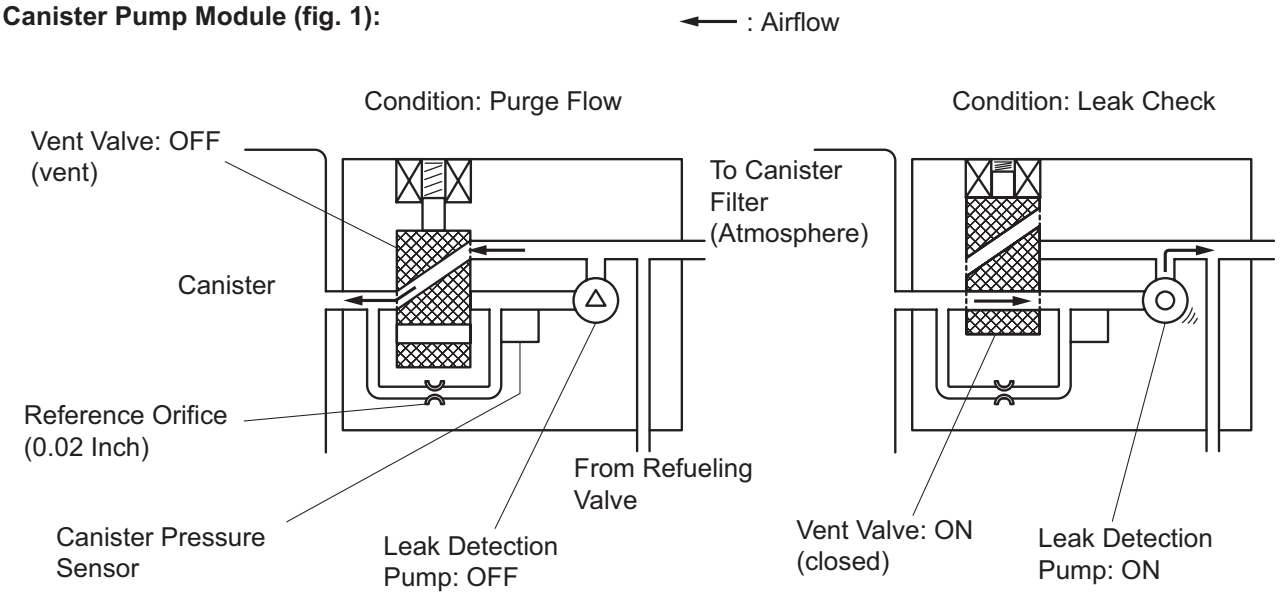

Y

A115902E02

Canister Pressure Sensor Specification (fig. 2):

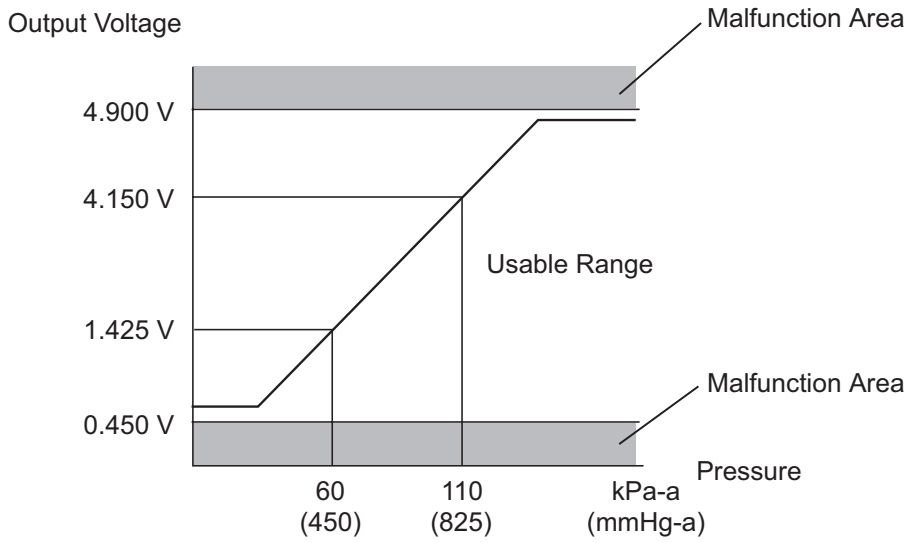

HINT:

Standard atmospheric pressure is 101.3 kPa-a (760 mmHg-a)

A115543E06

Soak Timer Circuit (fig. 3):

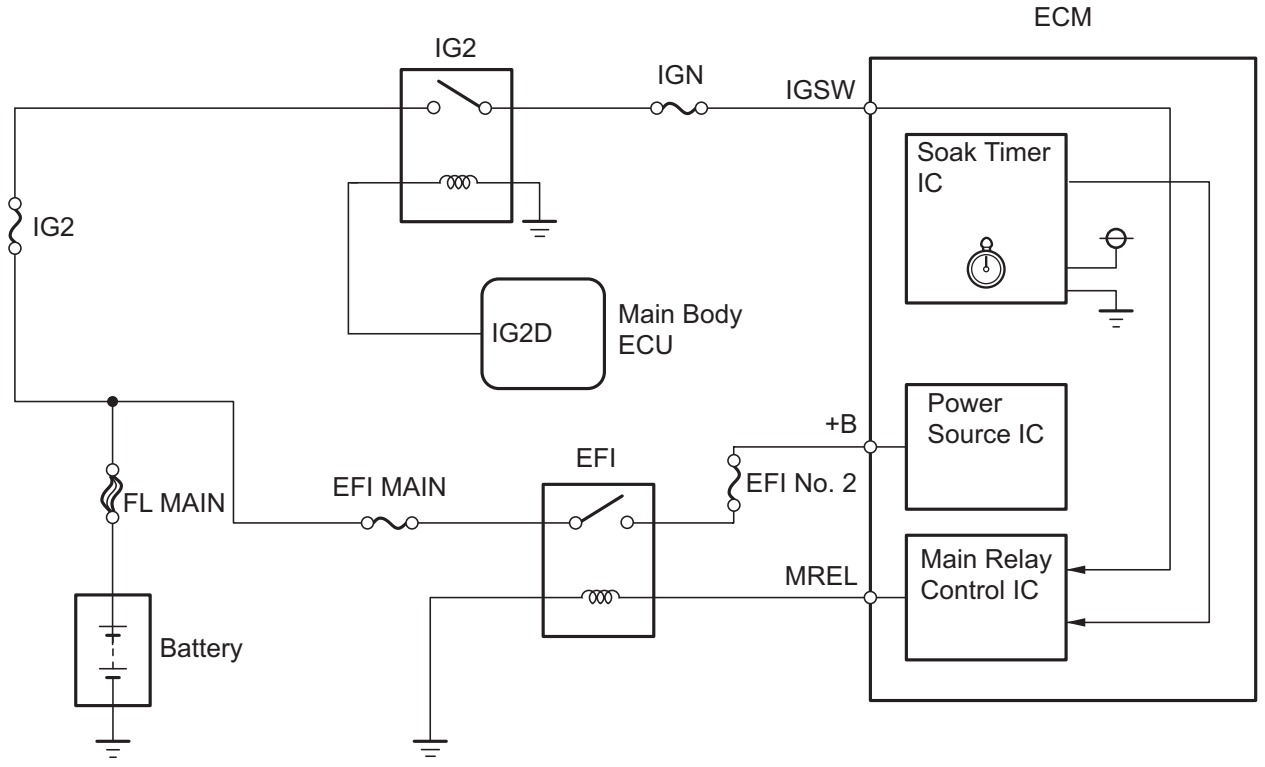

A141702E01

ES

ES

WIRING DIAGRAM

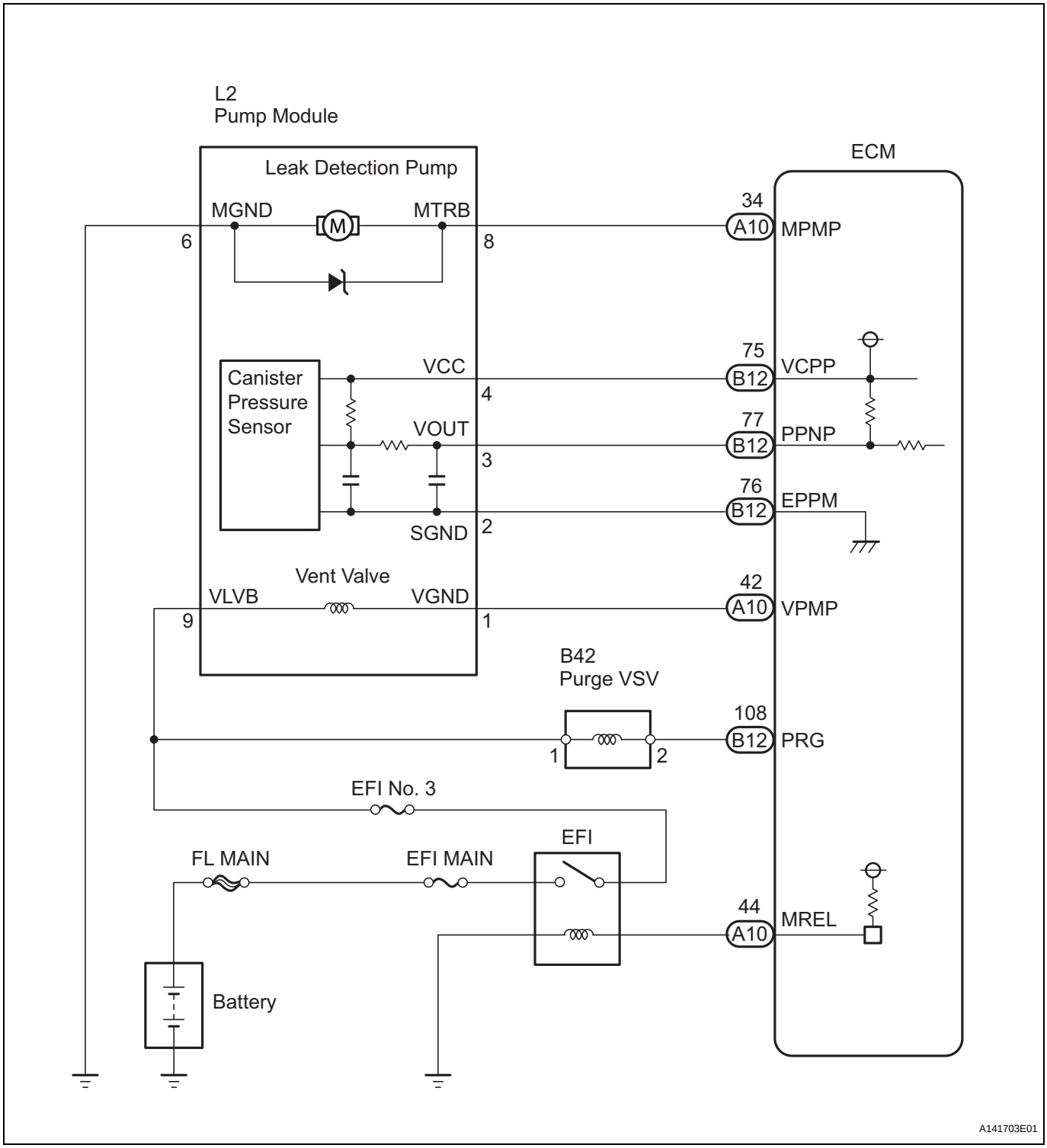

INSPECTION PROCEDURE

NOTICE:

The intelligent tester is required to conduct the following diagnostic troubleshooting procedure.

HINT:

- Using intelligent tester monitor results enables the EVAP (Evaporative Emission) system to be confirmed.

- Read freeze frame data using the intelligent tester. The ECM records vehicle and driving condition information as freeze frame data the moment a DTC is stored. When troubleshooting, freeze frame data can be helpful in determining whether the vehicle was running or stopped, whether the engine was warmed up or not, whether the air-fuel ratio was lean or rich, as well as other data recorded at the time of a malfunction (See page ES-41).

1	CONFIRM DTC

(a) Turn the engine switch off and wait for 10 seconds.
(b) Turn the engine switch on (IG).
(c) Turn the engine switch off and wait for 10 seconds.
(d) Connect an intelligent tester to the DLC3.
(e) Turn the engine switch on (IG) and turn the tester ON.
(f) Select the following menu items: DIAGNOSIS / ENHANCED OBD II / DTC INFO / CURRENT CODES.
(g) Confirm DTCs and freeze frame data.
If any EVAP system DTCs are set, the malfunctioning area can be determined using the table below.
NOTICE:
If the reference pressure difference between the first and second checks is greater than the specification, all the DTCs relating to the reference pressure (P043E, P043F, P2401, P2402 and P2419) are stored.

ES

Malfunctioning Areas \ DTCs	P043E P043F	P0441	P0450	P0451	P0452	P0453	P0455	P0456	P2401 P2402	P2419	P2420
Reference orifice clogged	●								●	●	
Reference orifice high-flow	●								●	●	
Purge VSV stuck open		●					●				
Purge VSV stuck closed		●									
Canister pressure sensor fixed output				●							
Canister pressure sensor noise				●							
Canister pressure sensor low output			●		●						
Canister pressure sensor high output			●			●					
Gross leak		●					●				
Small leak								●			
Leak detection pump stuck OFF	●								●	●	
Leak detection pump stuck ON	●								●	●	
Vent valve stuck closed	●								●	●	
Vent valve stuck open (vent)											●

Y A106731E11

NEXT

2	PERFORM EVAP SYSTEM CHECK (AUTO OPERATION)

NOTICE:

- **The EVAP SYSTEM CHECK (AUTO OPERATION) consists of 5 steps performed automatically by the intelligent tester. It takes a maximum of approximately 18 minutes.**
- **Do not perform the EVAP SYSTEM CHECK when the fuel tank is more than 90% full because the cut-off valve may be closed, making the fuel tank leak check unavailable.**
- **Do not run the engine during this operation.**
- **When the temperature of the fuel is 35°C (95°F) or more, a large amount of vapor forms and any check results become inaccurate. When performing the EVAP SYSTEM CHECK, keep the temperature below 35°C (95°F).**

(a) Clear the DTCs (See page ES-41).

(b) On the tester, select the following menu items: DIAGNOSIS / ENHANCED OBD II / SYSTEM CHECK / EVAP SYS CHECK / AUTO OPERATION.

(c) After the EVAP SYSTEM CHECK is completed, check for pending DTCs by selecting the following menu items: DIAGNOSIS / ENHANCED OBD II / DTC INFO / PENDING CODES.
HINT:
If no pending DTCs are displayed, perform the MONITOR CONFIRMATION (see "Diagnostic Help" menu). After this confirmation, check for pending DTCs. If no DTCs are displayed, the EVAP system is normal.

NEXT

ES

3	PERFORM EVAP SYSTEM CHECK (MANUAL OPERATION)

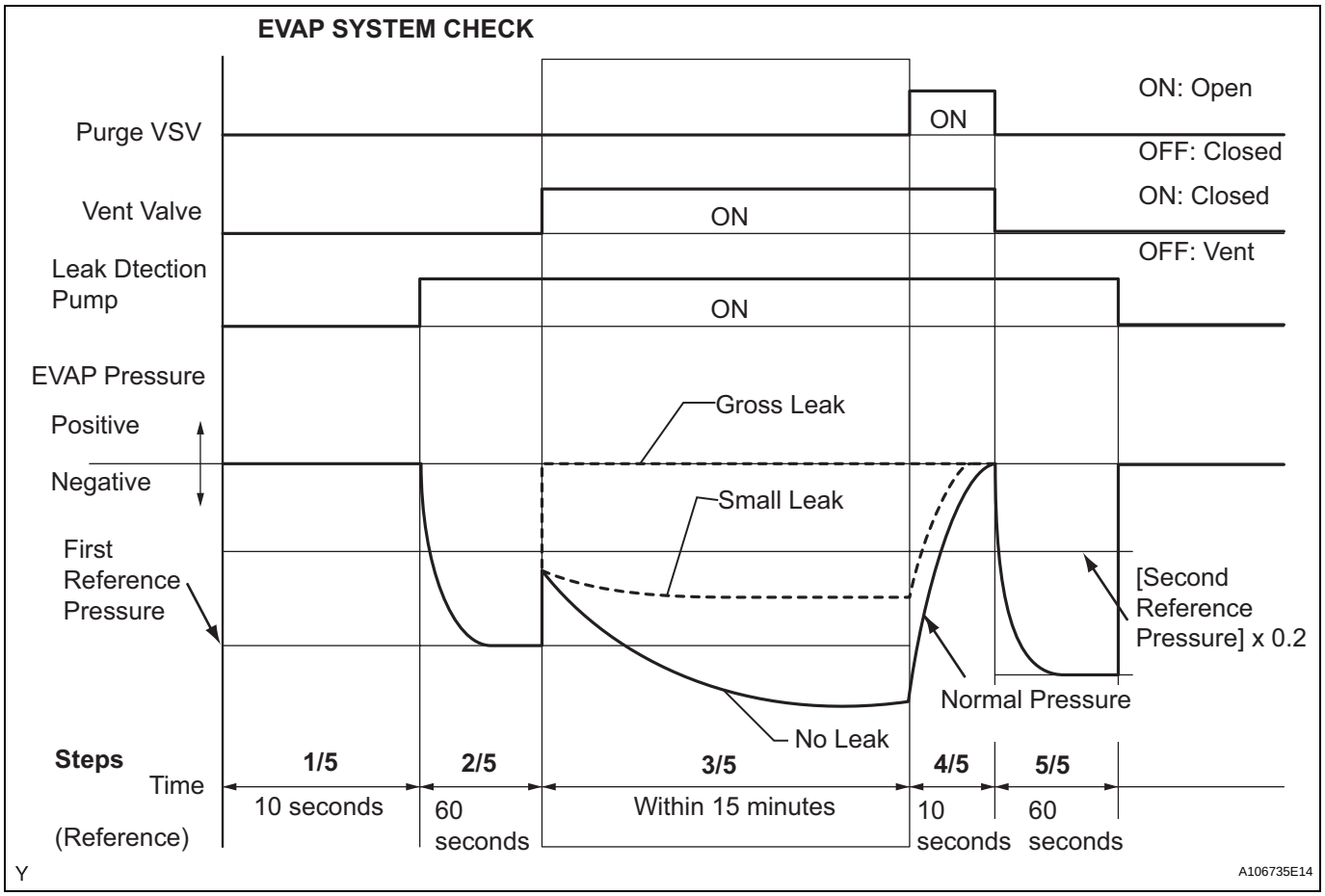

NOTICE:

- **In the EVAP SYSTEM CHECK (MANUAL OPERATION), perform the series of 5 EVAP SYSTEM CHECK steps manually using the intelligent tester.**
- **Do not perform the EVAP SYSTEM CHECK when the fuel tank is more than 90% full because the cut-off valve may be closed, making the fuel tank leak check unavailable.**
- **Do not run the engine during this operation.**

- **When the temperature of the fuel is 35°C (95°F) or more, a large amount of vapor forms and any check results become inaccurate. When performing the EVAP SYSTEM CHECK, keep the temperature below 35°C (95°F).**

(a) Clear the DTCs (See page ES-41).
(b) Select the following menu items: DIAGNOSIS / ENHANCED OBD II / SYSTEM CHECK / EVAP SYS CHECK / MANUAL OPERATION.

NEXT

ES

4	PERFORM EVAP SYSTEM CHECK (STEP 1/5)

(a) Check the EVAP pressure in step 1/5.

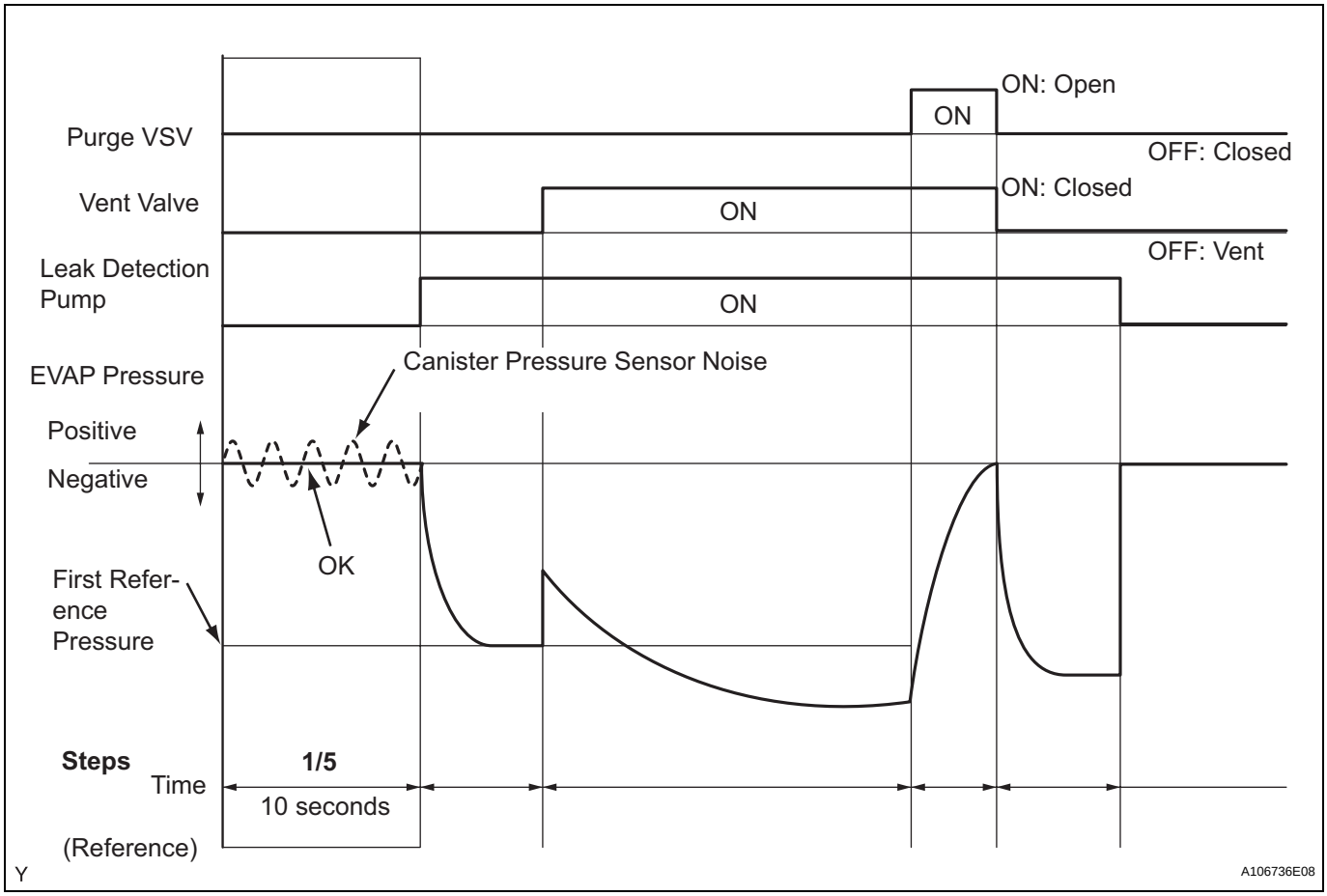

Result

DTCs*	Test Results	Suspected Trouble Areas	Proceed to
-	Virtually no variation in EVAP pressure	Not yet determined	A
P0451	EVAP pressure fluctuates by +-0.3 kPa-g (2.25 mmHg-g) or more	Canister pressure sensor noise	B

*: These DTCs are already present in the ECM when the vehicle arrives and are confirmed in the "CONFIRM DTC" procedures above.

B → **Go to step 29**

A

5	PERFORM EVAP SYSTEM CHECK (STEP 1/5 TO 2/5)

(a) Check the EVAP pressure in steps 1/5 and 2/5.

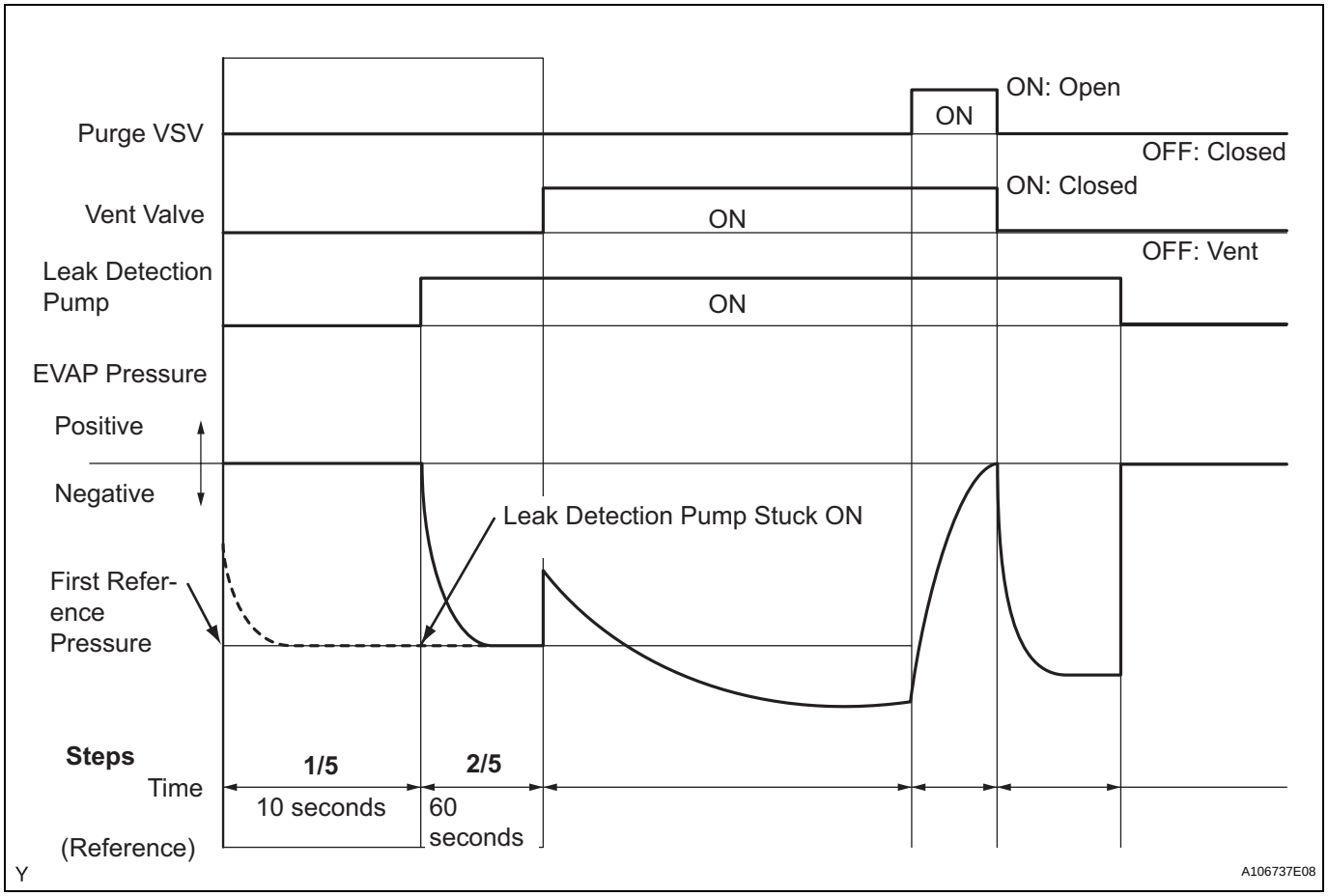

Result

DTCs*	Test Results	Suspected Trouble Areas	Proceed to
-	Virtually no variation in EVAP pressure during step 1/5. Then EVAP pressure decreases to reference pressure.	Not yet determined	A
P2402	Small difference between EVAP pressures during steps 1/5 and 2/5	Leak detection pump stuck ON	B

*: These DTCs are already present in the ECM when the vehicle arrives and are confirmed in the "CONFIRM DTC" procedures above.
HINT:
The first reference pressure is the value determined in step 2/5.

B → **Go to step 22**

A

ES

6	PERFORM EVAP SYSTEM CHECK (STEP 2/5)

HINT:
Make a note of the pressures checked in steps "A" and "B" below.

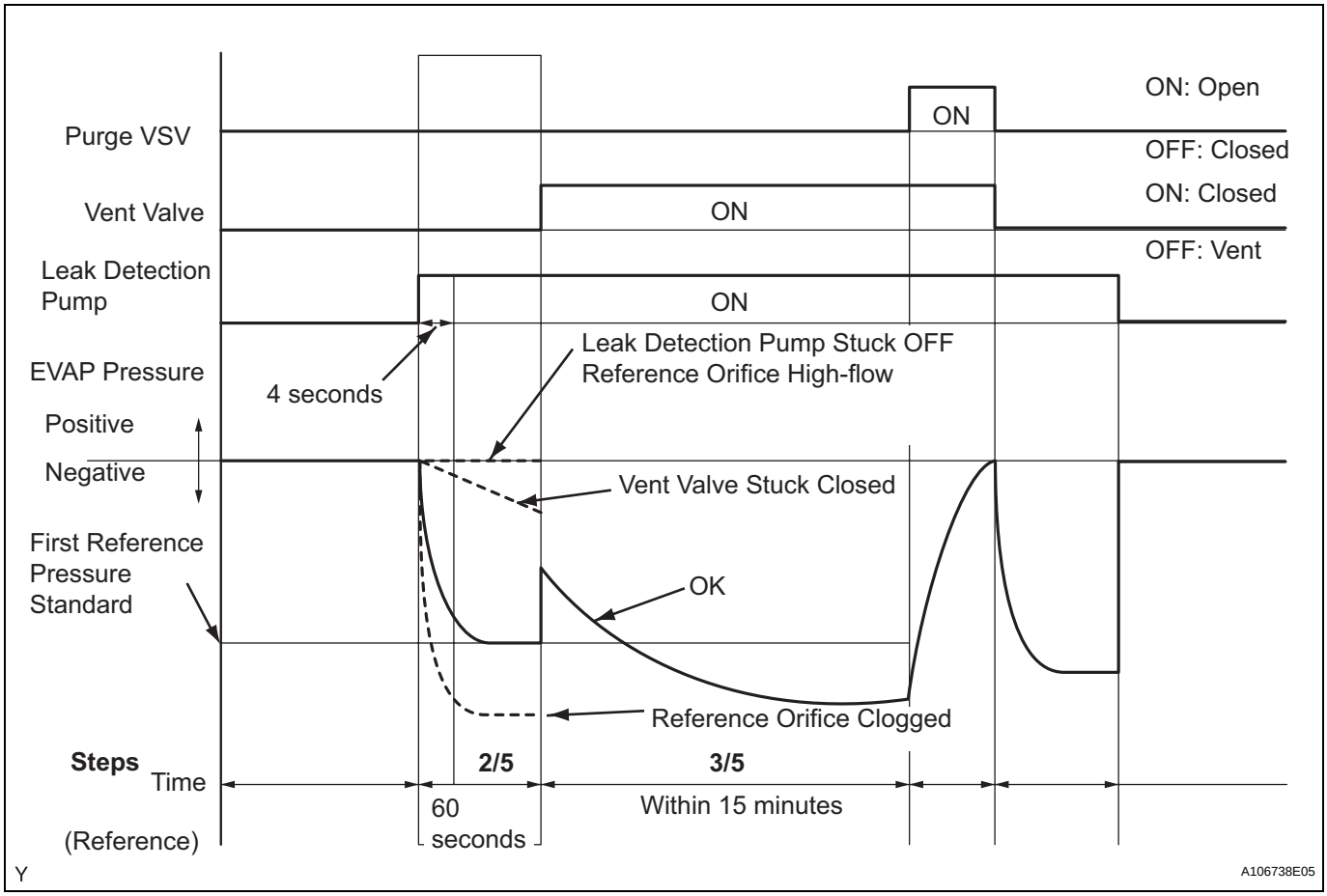

(a) Check the EVAP pressure 4 seconds after the leak detection pump is activated* (Step "A").
*: The leak detection pump begins to operate as step 1/5 finishes and step 2/5 starts.
(b) Check the EVAP pressure again when it has stabilized. This pressure is the reference pressure (Step "B").

Result

DTCs*	Test Results	Suspected Trouble Areas	Proceed to
-	EVAP pressure in step (b) between -4.85 kPa-g and -1.057 kPa-g (-36.4 mmHg-g and -7.93 mmHg-g)	Not yet determined	A
P043F and P2401	EVAP pressure in step (b) -1.057 kPa-g (-7.93 mmHg-g) or more	• Reference orifice high-flow • Leak detection pump stuck OFF	B
P043E	EVAP pressure in step (b) below -4.85 kPa-g (-36.4 mmHg-g)	Reference orifice clogged	C
P2419	EVAP pressure in step (a) more than -1.057 kPa-g (-7.93 mmHg-g)	Vent valve stuck closed	D

*: These DTCs are already present in the ECM when the vehicle arrives and are confirmed in the "CONFIRM DTC" procedures above.

B	Go to step 11
C	Go to step 29
D	Go to step 20

A

7	PERFORM EVAP SYSTEM CHECK (STEP 2/5 TO 3/5)

(a) Check the EVAP pressure increase in step 3/5.

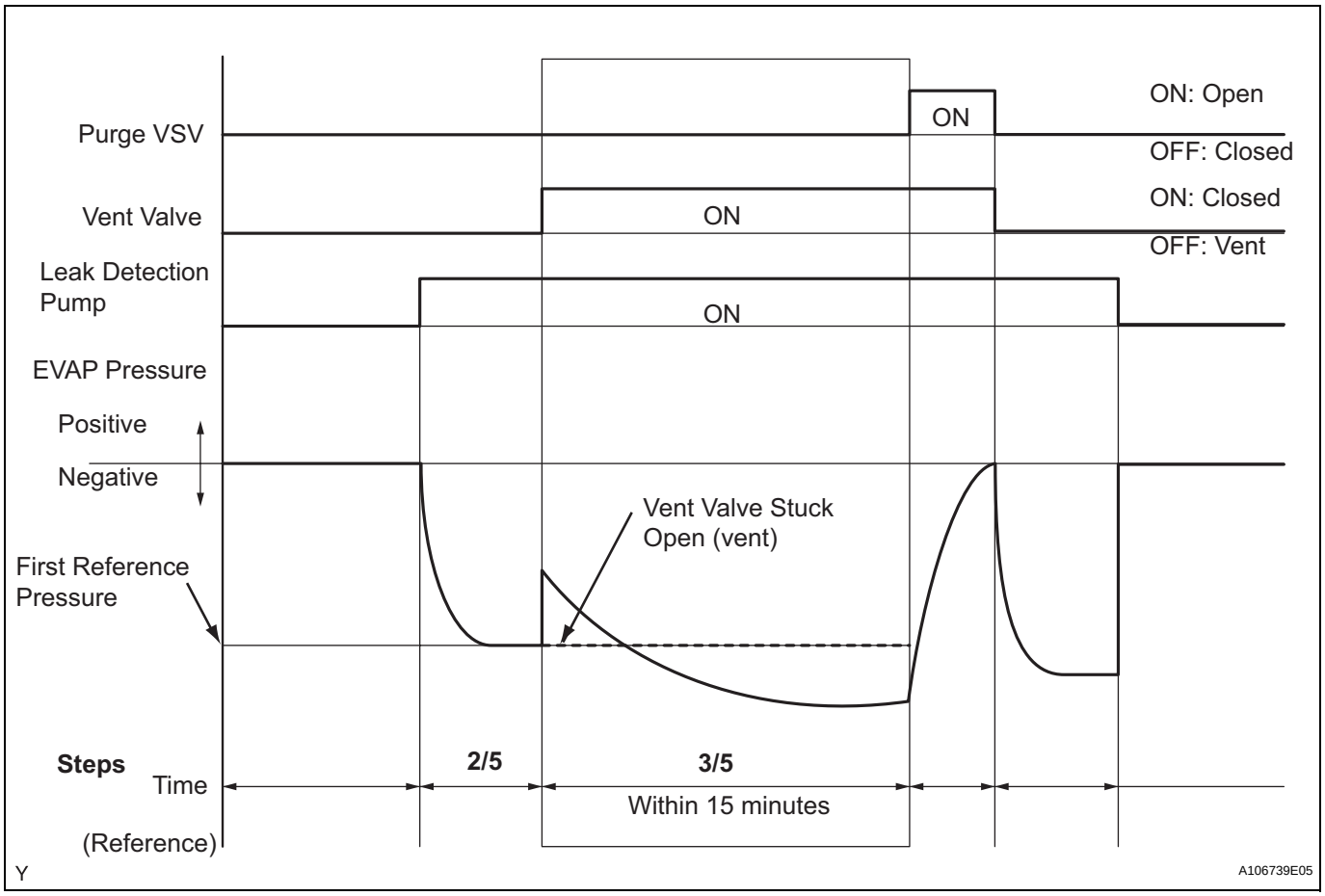

Result

DTCs*	Test Results	Suspected Trouble Areas	Proceed to
-	EVAP pressure increases by 0.3 kPa-g (2.25 mmHg-g) or more within 10 seconds of proceeding from step 2/5 to step 3/5	Not yet determined	A
P2420	No variation in EVAP pressure despite proceeding from step 2/5 to step 3/5	Vent valve stuck open (vent)	B
P0451	No variation in EVAP pressure during steps 1/5 through 3/5	Canister pressure sensor malfunction fixed	C

*: These DTCs are already present in the ECM when the vehicle arrives and are confirmed in the "CONFIRM DTC" procedures above.

B	Go to step 19

C → Go to step 29

A

8	PERFORM EVAP SYSTEM CHECK (STEP 3/5)

(a) Wait until the EVAP pressure change is less than 0.1 kPa-g (0.75 mmHg-g) for 30 seconds.

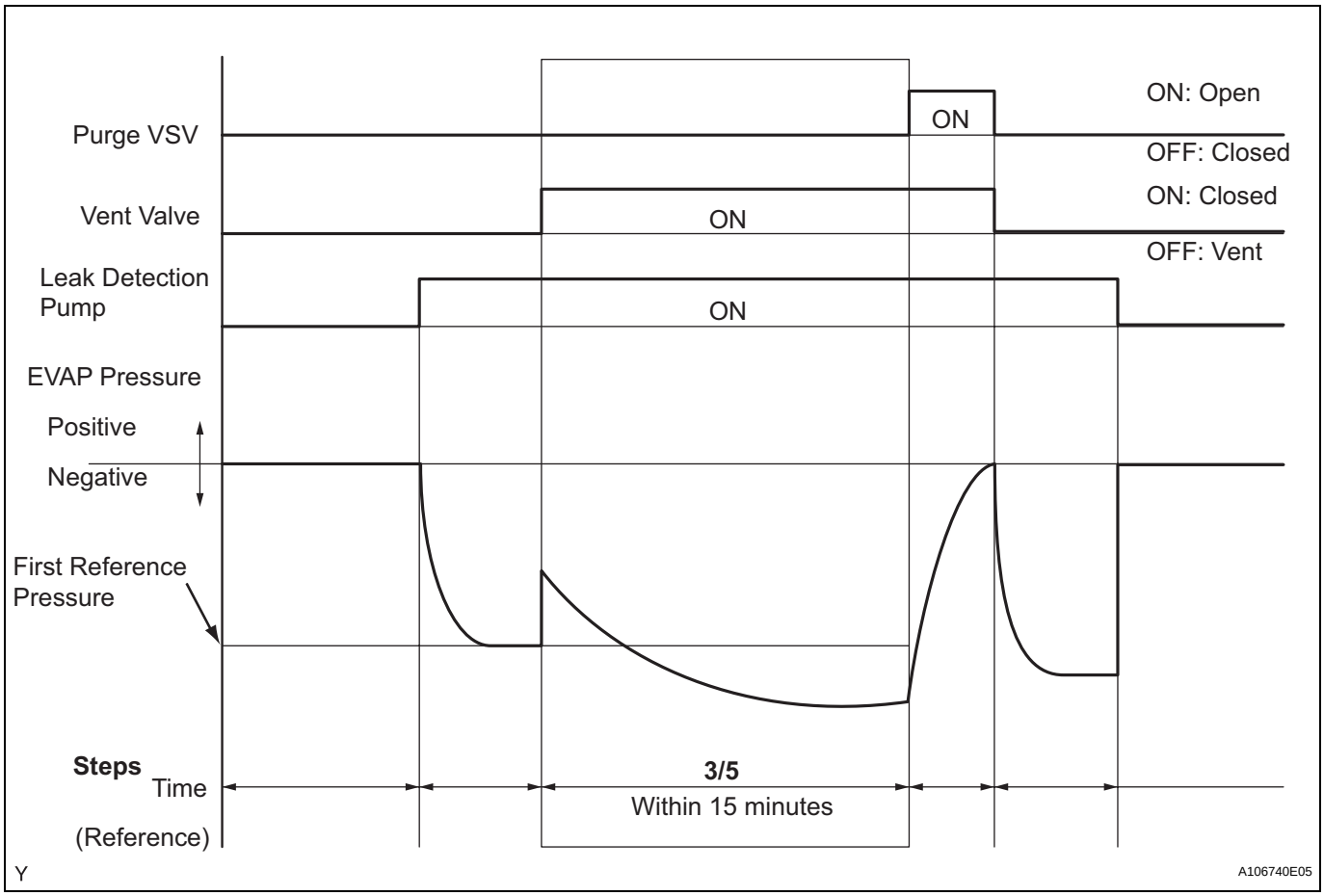

(b) Measure the EVAP pressure and record it.
HINT:
A few minutes are required for the EVAP pressure to become saturated. When there is little fuel in the fuel tank, it takes up to 15 minutes.

NEXT

9	PERFORM EVAP SYSTEM CHECK (STEP 4/5)

(a) Check the EVAP pressure in step 4/5.

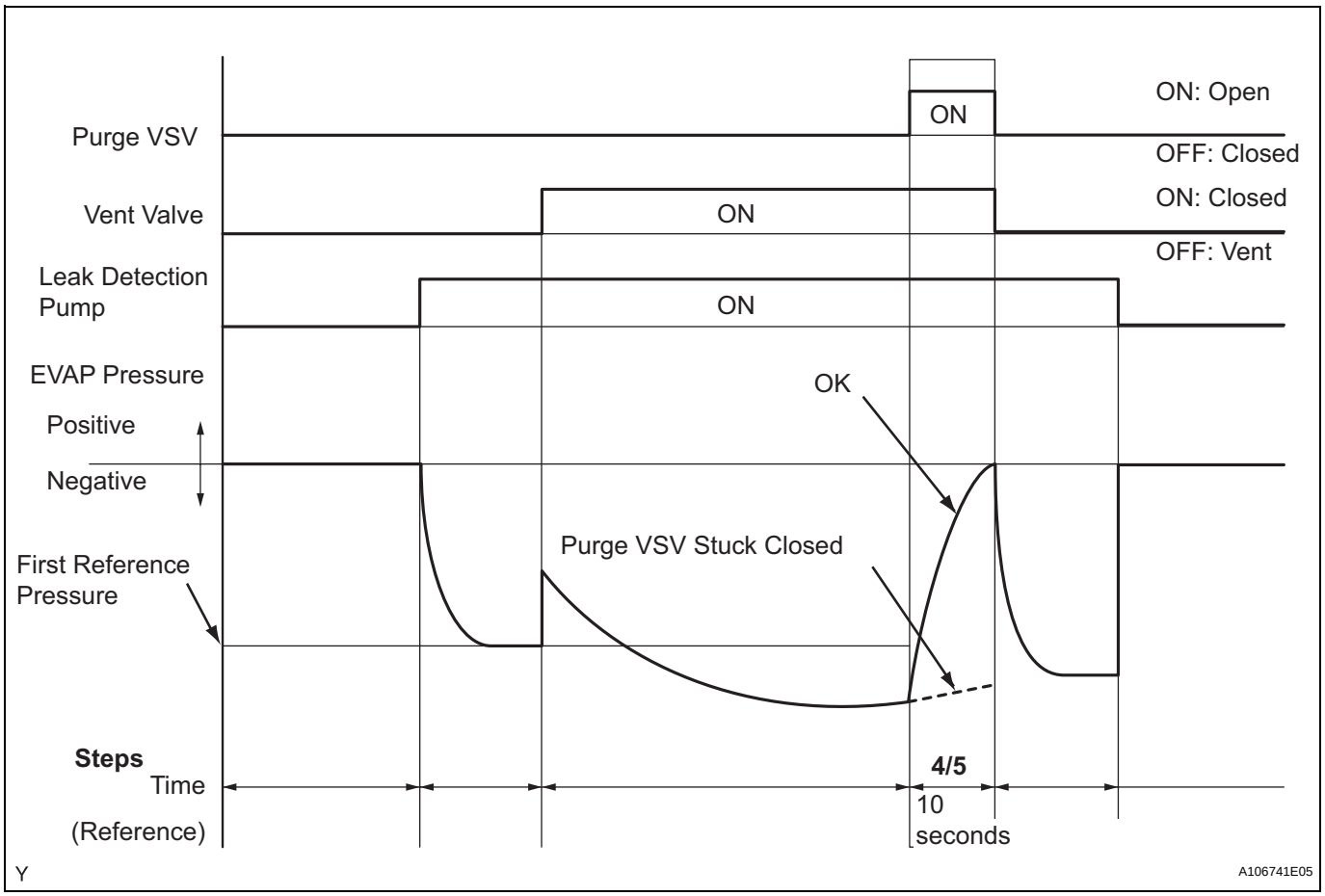

Result

DTCs*	Test Results	Suspected Trouble Areas	Proceed to
-	EVAP pressure increases by 0.3 kPa-g (2.25 mmHg-g) or more within 10 seconds of proceeding from step 3/5 to step 4/5	Not yet determined	A
P0441	EVAP pressure increases by 0.3 kPa-g (2.25 mmHg-g) or more within 10 seconds of proceeding from step 3/5 to step 4/5	Problems in EVAP hose between purge VSV and intake manifold	B
P0441	Variation in EVAP pressure less than 0.3 kPa-g (2.25 mmHg-g) for 10 seconds, after proceeding from step 3/5 to step 4/5	Purge VSV stuck closed	C

*: These DTCs are already present in the ECM when the vehicle arrives and are confirmed in the "CONFIRM DTC" procedures above.

B → **Go to step 15**

C → **Go to step 12**

A

10	PERFORM EVAP SYSTEM CHECK (STEP 5/5)

(a) Check the EVAP pressure in step 5/5.

ES

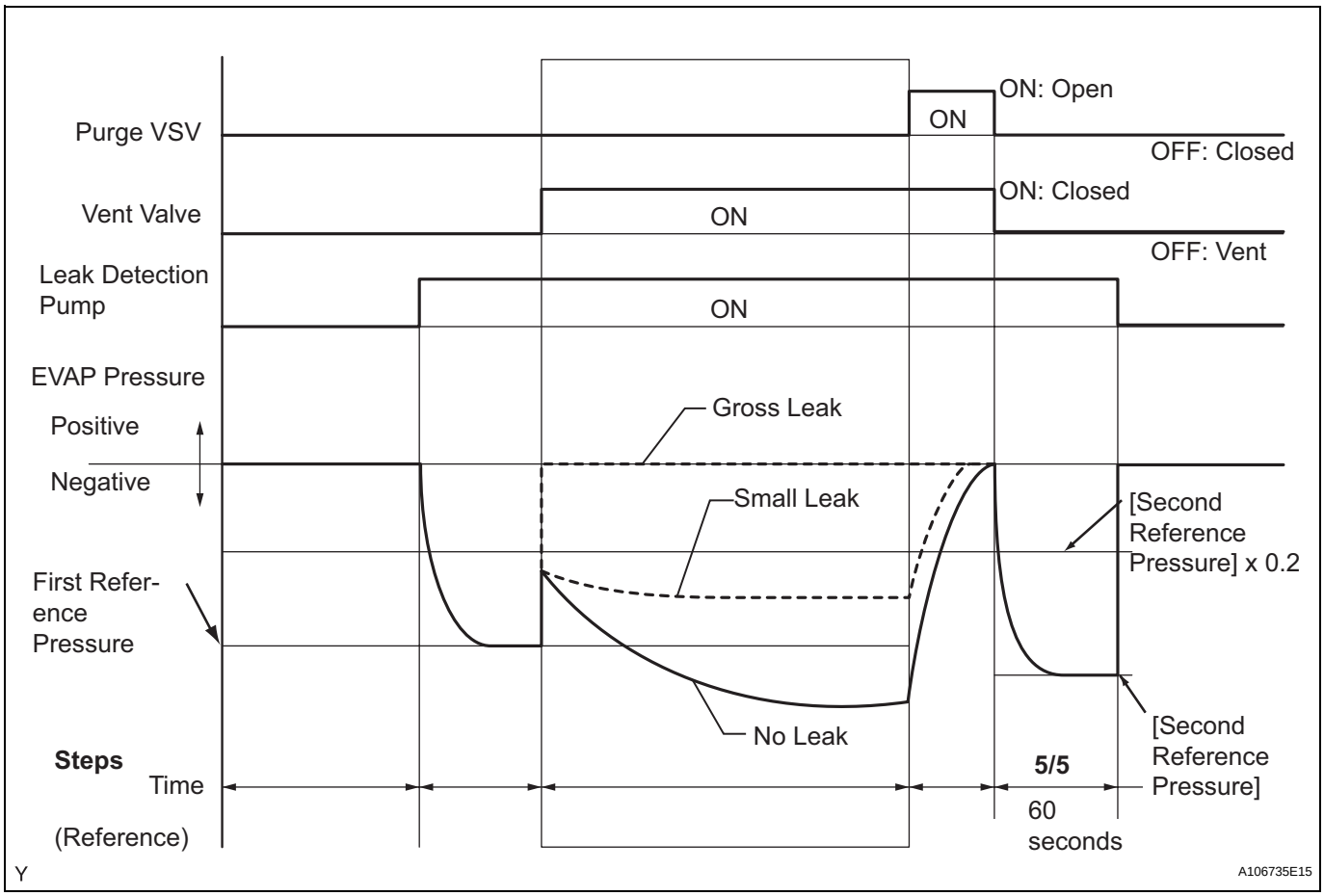

(b) Compare the EVAP pressure in step 3/5 and the second reference pressure (step 5/5).

Result

DTCs*	Test Results	Suspected Trouble Areas	Proceed to
-	EVAP pressure (step 3/5) lower than second reference pressure (step 5/5)	Not yet determined (no leakage from EVAP system)	A
P0441 and P0455	EVAP pressure (step 3/5) higher than [second reference pressure (step 5/5) x 0.2]	• Purge VSV stuck open • EVAP gross leak	B
P0456	EVAP pressure (step 3/5) higher than second reference pressure (step 5/5)	EVAP small leak	B

*: These DTCs are already present in the ECM when the vehicle arrives and are confirmed in the "CONFIRM DTC" procedures above.

A → **Go to step 35**

B → **Go to step 12**

11 PERFORM EVAP SYSTEM CHECK (STEP 3/5)

(a) Check the EVAP pressure in step 3/5.

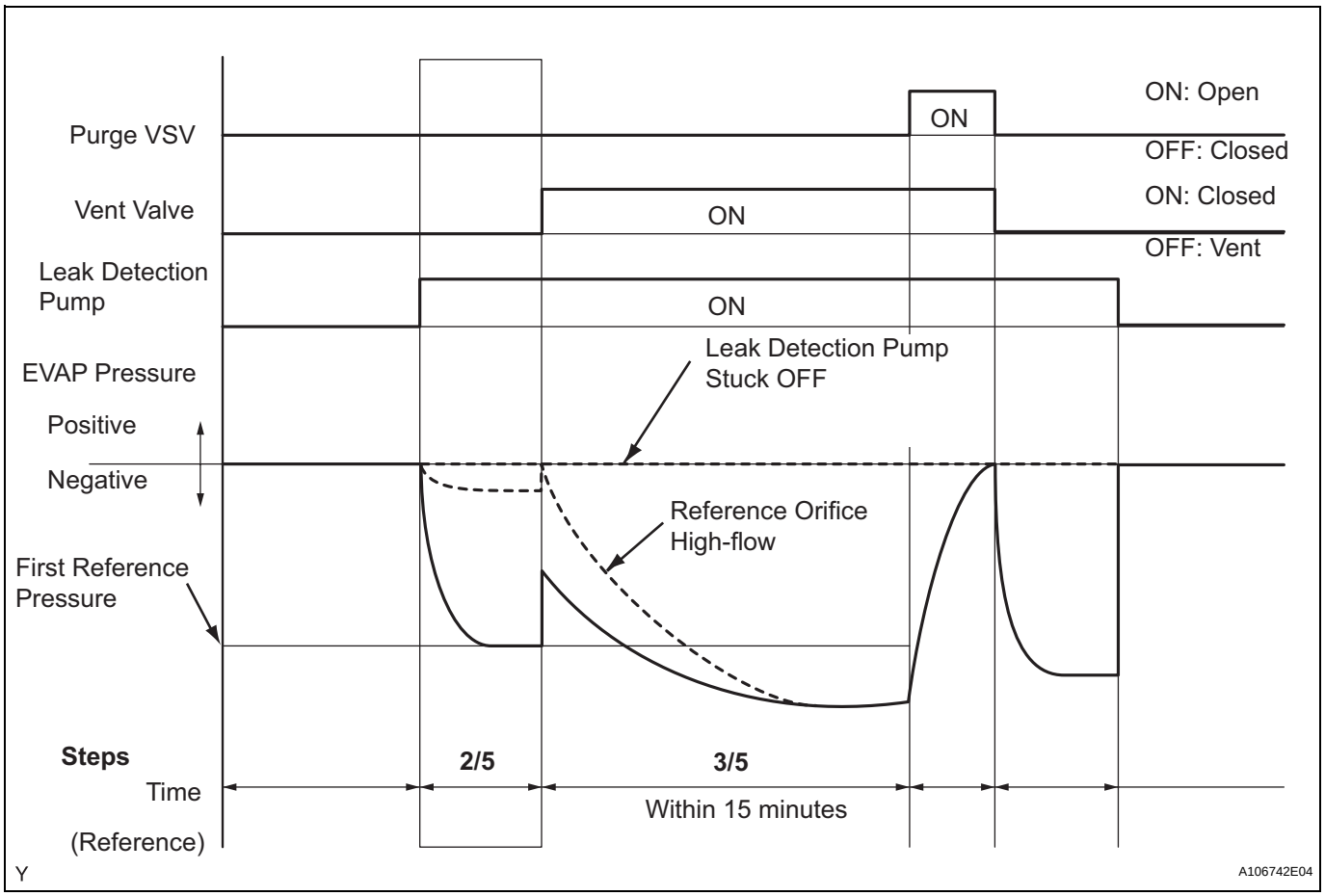

Result

DTCs*	Test Results	Suspected Trouble Areas	Proceed to
P043F	**EVAP pressure less than reference pressure measured at 2/5**	**Reference orifice high-flow**	**A**
P2401	**EVAP pressure almost same as reference pressure measured at 2/5**	**Leak detection pump stuck OFF**	**B**

*: These DTCs are already present in the ECM when the vehicle arrives and are confirmed in the "CONFIRM DTC" procedures above.
HINT:
The first reference pressure is the value determined in step 2/5.

A	**Go to step 29**
B	**Go to step 22**

12 PERFORM ACTIVE TEST USING INTELLIGENT TESTER (PURGE VSV)

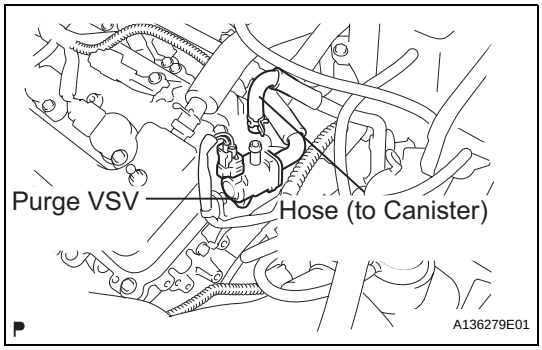

(a) On the intelligent tester, select the following menu items: DIAGNOSIS / ENHANCED OBD II / ACTIVE TEST / EVAP VSV (ALONE).
(b) Disconnect the hose (connected to the canister) from the purge VSV.
(c) Start the engine.
(d) Using the tester, turn off the purge VSV (EVAP VSV: OFF).
(e) Use your finger to confirm that the purge VSV has no suction.
(f) Using the tester, turn on the purge VSV (EVAP VSV: ON).
(g) Use your finger to confirm that the purge VSV has suction.

Result

Test Results	Suspected Trouble Areas	Proceed to
No suction when purge VSV turned OFF, and suction applied when turned ON	Purge VSV normal	A
Suction applied when purge VSV turned OFF	Purge VSV stuck open	B
No suction when purge VSV turned ON	• Purge VSV stuck closed • Problems with EVAP hose between purge VSV and intake manifold	C

(h) Reconnect the hose.

B → **Go to step 14**

C → **Go to step 15**

A

13 CHECK FUEL CAP ASSEMBLY

(a) Check that the fuel cap is correctly installed and confirm the fuel cap meets OEM specifications.
(b) Tighten the fuel cap until a click sounds are heard.
HINT:
If an EVAP tester is available, check the fuel cap using the tester.
1. Remove the fuel cap and install it onto a fuel cap adapter.
2. Connect an EVAP tester pump hose to the adapter, and pressurize the cap to 3.2 to 3.7 kPa (24 to 28 mmHg) using an EVAP tester pump.
3. Seal the adapter and wait for 2 minutes.
4. Check the pressure. If the pressure is 2 kPa (15 mmHg) or more, the fuel cap is normal.

Result

Test Results	Suspected Trouble Areas	Proceed to
Fuel cap correctly installed	-	A

Test Results	Suspected Trouble Areas	Proceed to
Fuel cap loose	• Fuel cap improperly installed • Defective fuel cap • Fuel cap does not meet OEM specifications	B
Defective fuel cap	-	B
No fuel cap	-	C

(c) Reinstall the fuel cap.

A → **Go to step 28**

B → **Go to step 26**

C → **Go to step 27**

14 INSPECT DUTY VACUUM SWITCHING VALVE (PURGE VSV)

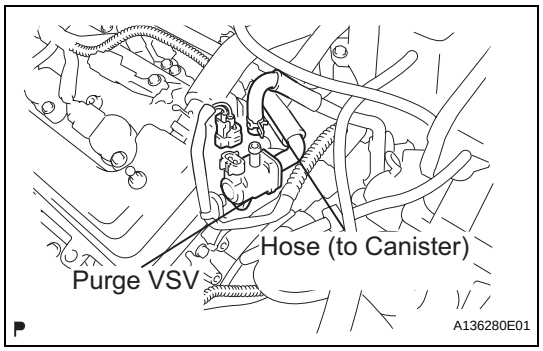

(a) Turn the engine switch off.
(b) Disconnect the B42 purge VSV connector.
(c) Disconnect the hose (connected to the canister) from the purge VSV.
(d) Start the engine.
(e) Use your finger to confirm that the purge VSV has no suction.

Result

Test Results	Suspected Trouble Areas	Proceed to
No suction	ECM	A
Suction applied	Purge VSV	B

(f) Reconnect the purge VSV connector.
(g) Reconnect the hose.

A → **Go to step 34**

B → **Go to step 30**

15 CHECK EVAP HOSE (PURGE VSV - AIR SURGE TANK)

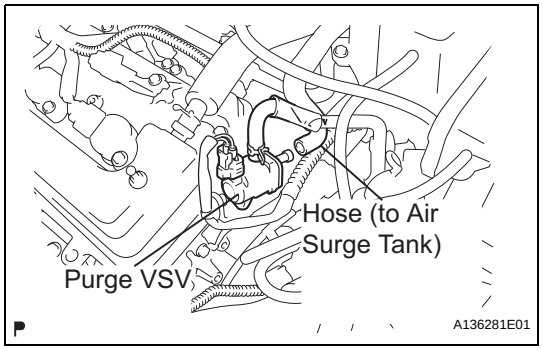

(a) Disconnect the hose (connected to the air surge tank) from the purge VSV.
(b) Start the engine.
(c) Use your finger to confirm that the hose has suction.

Result

Test Results	Suspected Trouble Areas	Proceed to
Suction applied	EVAP hose between purge VSV and intake manifold normal	A
No suction	• Intake manifold port • EVAP hose between purge VSV and intake manifold	B

(d) Reconnect the hose.

B → **Go to step 25**

A

ES

16 INSPECT DUTY VACUUM SWITCHING VALVE (PURGE VSV)

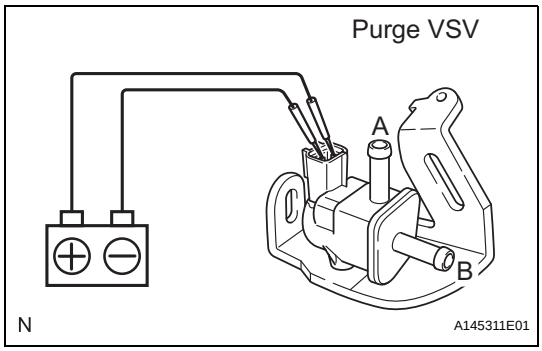

(a) Remove the purge VSV.
(b) Apply the battery voltage to the terminals of the purge VSV.
(c) Using an air gun, confirm that air flows from port A to port B.

Result

Test Results	Suspected Trouble Areas	Proceed to
Air flows	Purge VSV normal	A
No air flow	Purge VSV	B

(d) Install the purge VSV.

B → **Go to step 30**

A

17 CHECK HARNESS AND CONNECTOR (POWER SOURCE OF PURGE VSV)

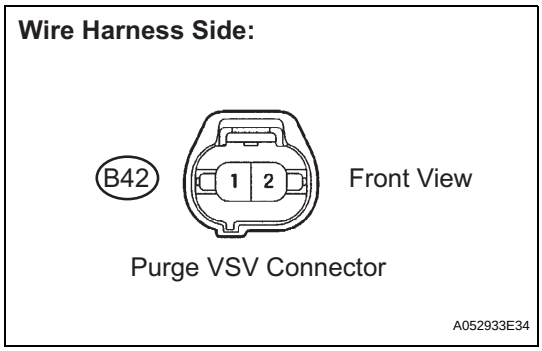

(a) Disconnect the B42 purge VSV connector.
(b) Turn the engine switch on (IG).
(c) Measure the voltage between terminal 2 of the purge VSV connector and body ground.

Result

Test Results	Suspected Trouble Areas	Proceed to
9 to 14 V	Normal	A
Other than result above	Wire harness or connectors between purge VSV and ECM	B

(d) Reconnect the purge VSV connector.

B → **Go to step 31**

A

18 CHECK HARNESS AND CONNECTOR (PURGE VSV - ECM)

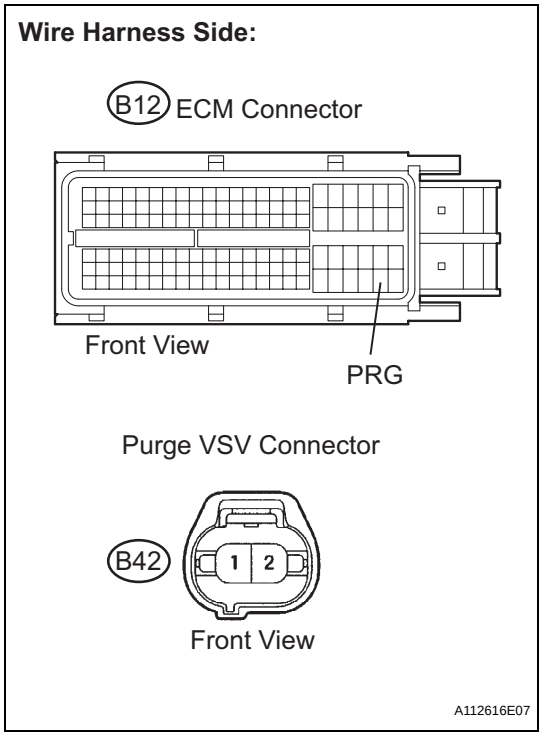

(a) Disconnect the B12 ECM connector and the B42 purge VSV connector.
(b) Measure the resistance.
Standard resistance

Tester Connection	Specified Condition
B12-108 (PRG) - B42-2 (Purge VSV)	Below 1 Ω
B12-108 (PRG) - Body ground	10 kΩ or higher
B42-2 (Purge VSV) - Body ground	10 kΩ or higher

(c) Reconnect the purge VSV connector.
(d) Reconnect the ECM connector.

OK → **Go to step 34**

NG → **Go to step 31**

ES

19	INSPECT CANISTER PUMP MODULE (POWER SOURCE FOR VENT VALVE)

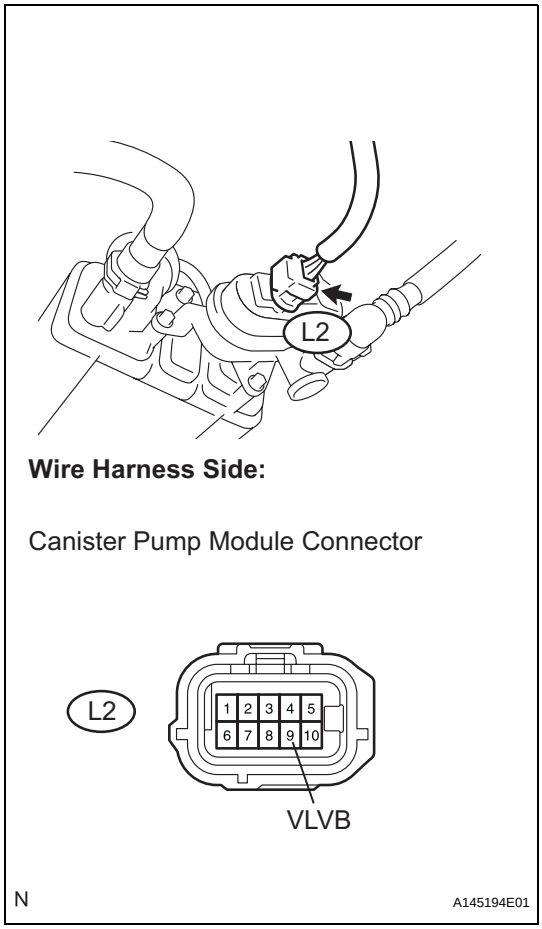

(a) Turn the engine switch off.
(b) Disconnect the L2 canister pump module connector.
(c) Turn the engine switch on (IG).
(d) Measure the voltage between the VLVB terminal of the canister pump module connector and body ground.

Result

Test Results	Suspected Trouble Areas	Proceed to
9 to 14 V	**1. Wire harness between vent valve and ECM 2. Vent valve 3. ECM**	**A**
Below 3 V	**Power source wire harness of vent valve**	**B**

(e) Reconnect the canister pump module connector.

B → **Go to step 31**

A

20 INSPECT CANISTER PUMP MODULE (VENT VALVE OPERATION)

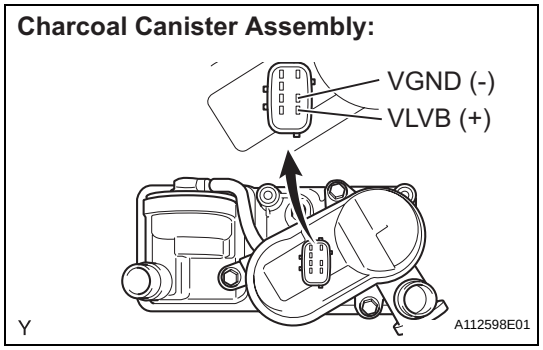

(a) Turn the engine switch off.
(b) Disconnect the L2 canister pump module connector.
(c) Apply battery voltage to the VLVB and VGND terminals of the canister pump module.
(d) Touch the canister pump module to confirm the vent valve operation.

ES

Result

Test Results	Suspected Trouble Areas	Proceed to
Operating	**1. Wire harness between vent valve and ECM 2. ECM**	**A**
Not operating	**Vent valve**	**B**

(e) Reconnect the canister connector.

B → **Go to step 29**

A

21 CHECK HARNESS AND CONNECTOR (ECM - CANISTER PUMP MODULE)

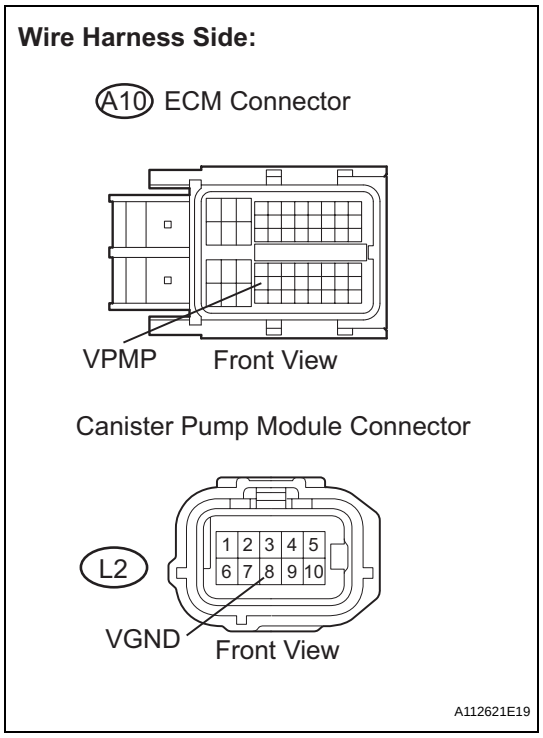

(a) Disconnect the A10 ECM connector.
(b) Disconnect the L2 canister pump module connector.
(c) Measure the resistance between the VPMP terminal of the ECM connector and the VGND terminal of the canister pump module connector.

Result

Test Results	Suspected Trouble Areas	Proceed to
Below 1 Ω	**ECM**	**A**
10 kΩ or higher	**Wire harness between ECM and canister pump module**	**B**

(d) Reconnect the ECM connector.
(e) Reconnect the canister pump module connector.

A → **Go to step 34**

B → **Go to step 31**

22 PERFORM ACTIVE TEST USING INTELLIGENT TESTER (VACUUM PUMP (ALONE))

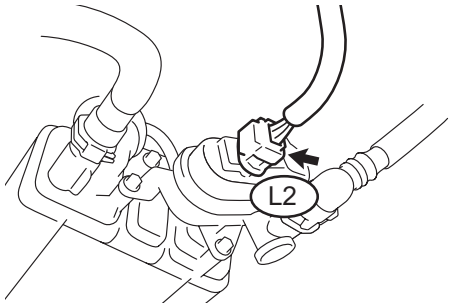

Wire Harness Side:

Canister Pump Module Connector

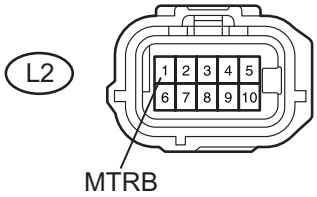

N A145194E02

(a) Turn the engine switch off.
(b) Disconnect the L2 canister pump module connector.
(c) Turn the engine switch on (IG).
(d) On the intelligent tester, select the following menu items: DIAGNOSIS / ENHANCED OBD II / ACTIVE TEST / VACUUM PUMP.
(e) Measure the voltage between the MTRB terminal of the canister pump module connector and body ground when the leak detection pump is turned ON and OFF using the tester.

Result

Test Results	Suspected Trouble Areas	Proceed to
Below 3 V when OFF 9 to 14 V when ON	**1. Wire harness between leak detection pump and body ground 2. Leak detection pump**	**A**
Below 3 V when OFF and ON	**1. Wire harness between leak detection pump and ECM 2. ECM**	**B**

B → **Go to step 24**

A

23	CHECK HARNESS AND CONNECTOR (CANISTER PUMP MODULE - BODY GROUND)

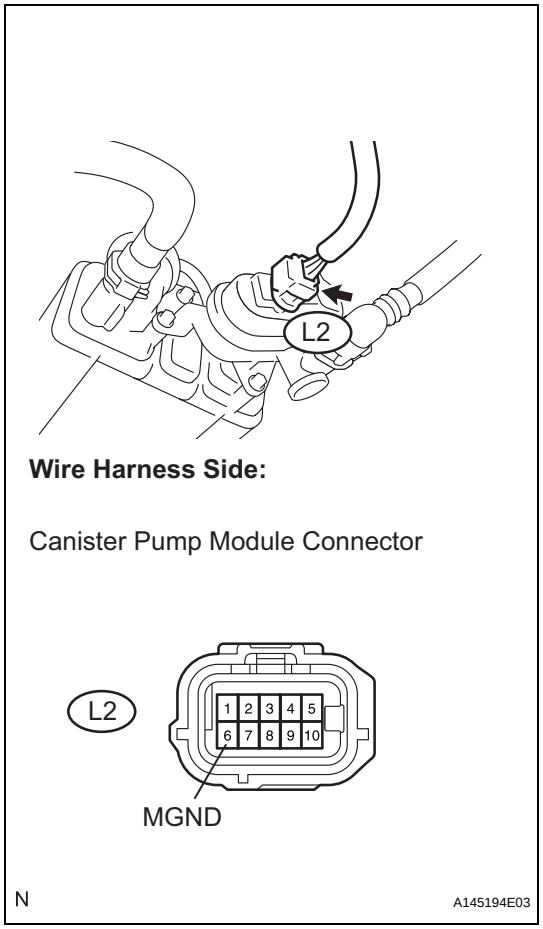

(a) Turn the engine switch off.
(b) Disconnect the L2 canister pump module connector.
(c) Measure the resistance between the MGND terminal of the canister pump module connector and body ground.

ES

Result

Test Results	Suspected Trouble Areas	Proceed to
Below 1 Ω	**Leak detection pump**	**A**
10 kΩ or higher	**Wire harness between canister pump module and body ground**	**B**

(d) Reconnect the canister pump module connector.

A	**Go to step 29**
B	**Go to step 31**

24 CHECK HARNESS AND CONNECTOR (ECM - CANISTER PUMP MODULE)

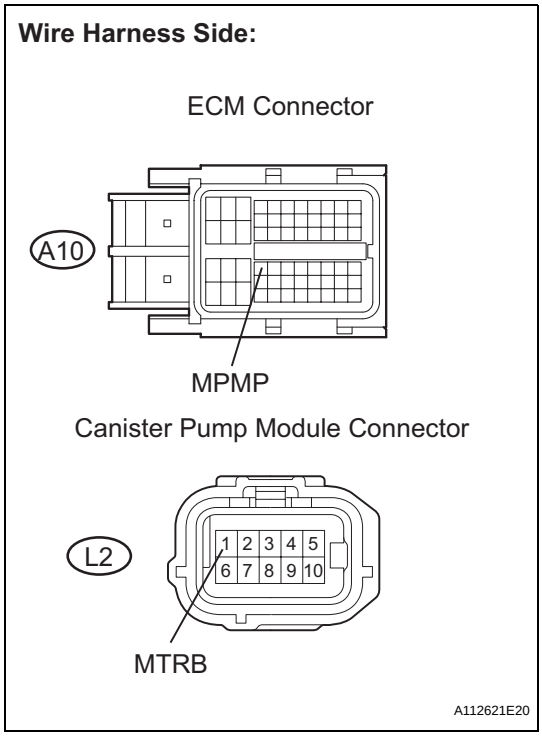

(a) Turn the engine switch off.
(b) Disconnect the L2 canister pump module connector.
(c) Disconnect the A10 ECM connector.
(d) Measure the resistance between the MPMP terminal of the ECM connector and the MTRB terminal of the canister pump module connector.

Result

Test Results	Suspected Trouble Areas	Proceed to
Below 1 Ω	ECM	A
10 kΩ or higher	Wire harness between ECM and canister pump module	B

(e) Reconnect the canister pump module connector.
(f) Reconnect the ECM connector.

A → **Go to step 34**

B → **Go to step 31**

25 INSPECT INTAKE MANIFOLD (EVAP PURGE PORT)

(a) Stop the engine.
(b) Disconnect the EVAP hose from the intake manifold.
(c) Start the engine.
(d) Use your finger to confirm that the port of the intake manifold has suction.

Result

Test Results	Suspected Trouble Areas	Proceed to
Suction applied	EVAP hose between intake manifold and purge VSV	A
No suction	Intake manifold	B

(e) Reconnect the EVAP hose.

A → **Go to step 32**

B → **Go to step 33**

26	CORRECTLY REINSTALL OR REPLACE FUEL CAP

HINT:
- When reinstalling the fuel cap, tighten it until a few click sounds are heard.
- When replacing the fuel cap, use a fuel cap that meets OEM specifications, and install it until a click sounds are heard.

NEXT → **Go to step 36**

27	REPLACE FUEL CAP

HINT:
When installing the fuel cap, tighten it until a few click sounds are heard.

NEXT → **Go to step 36**

28	LOCATE EVAP LEAK PART

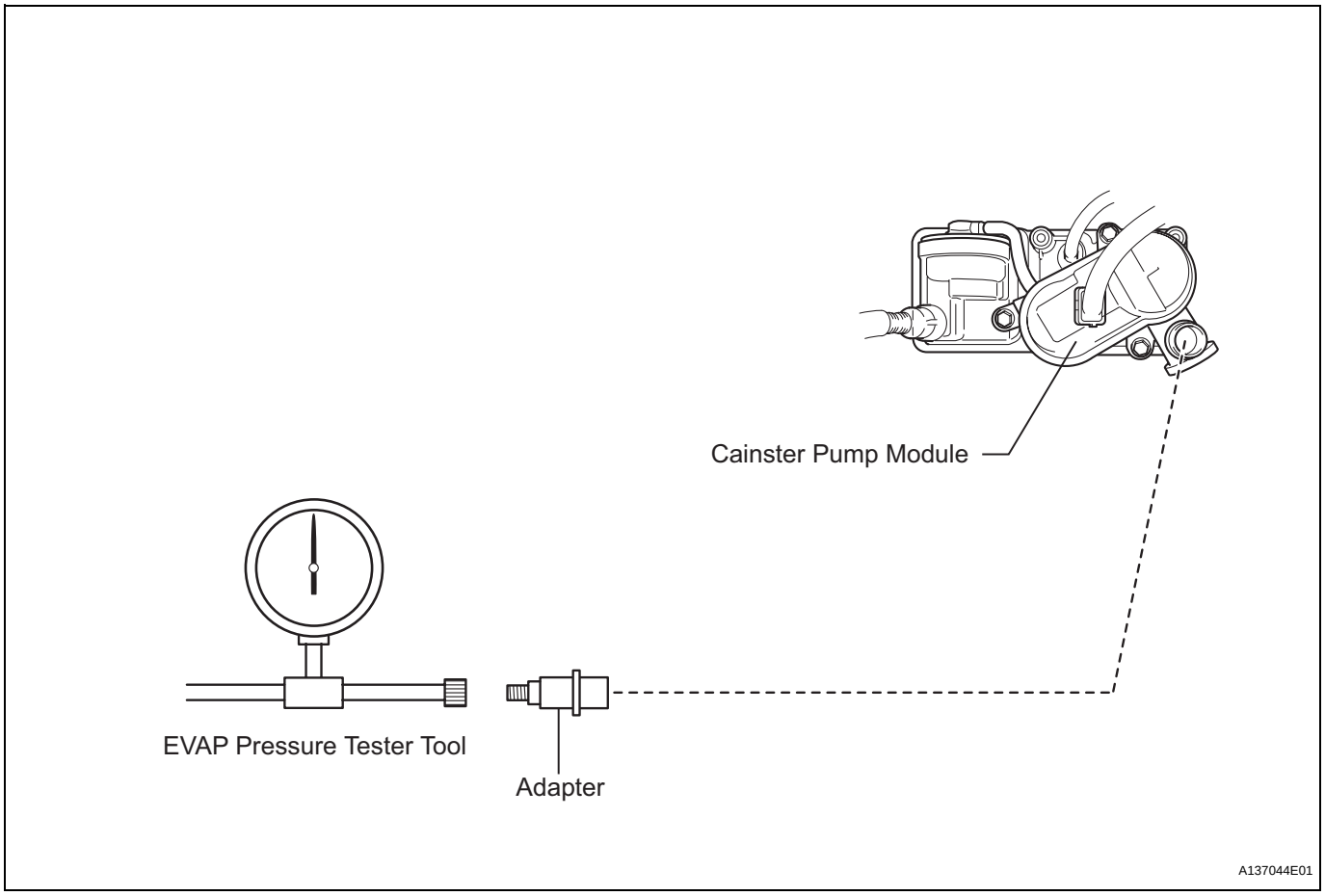

(a) Disconnect the vent hose.
(b) Connect the EVAP pressure tester tool to the canister pump module with the adapter.

(c) Pressurize the EVAP system to 3.2 to 3.7 kPa (24 to 28 mmHg).
(d) Apply soapy water to the piping and connecting parts of the EVAP system.
(e) Look for areas where bubbles appear. This indicates the leak point.
(f) Repair or replace the leak point.
HINT:
Disconnect the hose between the canister and the fuel tank from the canister. Block the canister side and conduct an inspection. In this way, the fuel tank can be excluded as an area suspected of causing fuel leaks.

ES

NEXT	Go to step 36

29	REPLACE CHARCOAL CANISTER ASSEMBLY

(a) Replace the canister assembly (See page EC-9).

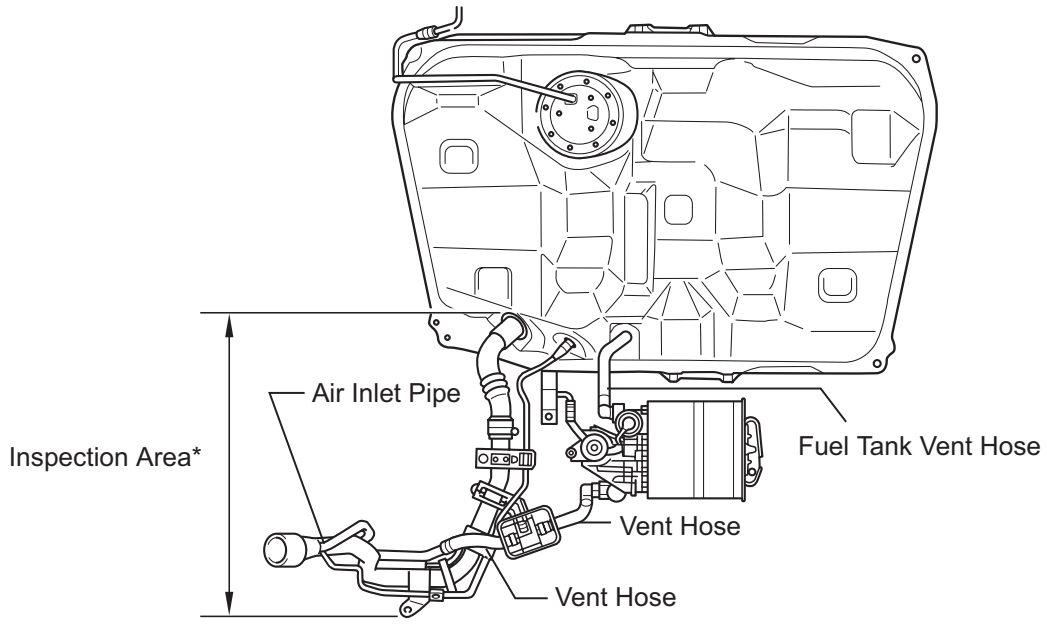

*: Check for disconnection and/or crack

N A132283E05

NOTICE:
When replacing the canister, check the canister pump module interior and related pipes for water, fuel and other liquids. If liquids are present, check for disconnections and/or cracks in the following: 1) the pipe from the air inlet pipe to the canister pump module; 2) the canister filter; and 3) the fuel tank vent hose.

NEXT → Go to step 36

30 REPLACE DUTY VACUUM SWITCHING VALVE (PURGE VSV)

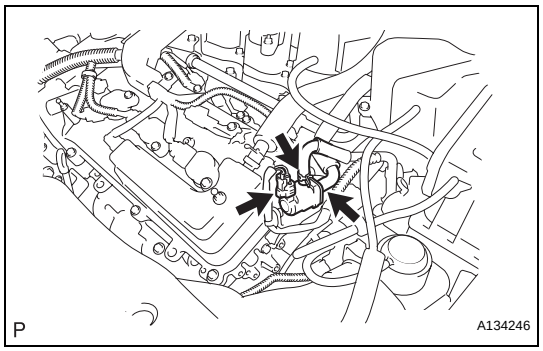

(a) Disconnect the connector and the hoses from the purge VSV.
(b) Remove the purge VSV (See page EC-13).
(c) Install a new purge VSV (See page EC-14).
(d) Reconnect the connector and hoses.

NEXT → Go to step 36

ES

31 REPAIR OR REPLACE HARNESS OR CONNECTOR

NEXT → Go to step 36

32 REPLACE EVAP HOSE (INTAKE MANIFOLD - PURGE VSV)

NEXT → Go to step 36

33 INSPECT INTAKE MANIFOLD (EVAP PURGE PORT)

(a) Check that the EVAP purge port of the intake manifold is not clogged. If necessary, replace the intake manifold.

NEXT → Go to step 36

34 REPLACE ECM

(a) Replace the ECM (See page ES-543).

NEXT → Go to step 36

35 REPAIR OR REPLACE PARTS AND COMPONENTS INDICATED BY OUTPUT DTCS

(a) Repair the malfunctioning areas indicated by the DTCs that had been confirmed when the vehicle was brought in.

NEXT → Go to step 36

36	PERFORM EVAP SYSTEM CHECK (AUTO OPERATION)

NOTICE:

- **The EVAP SYSTEM CHECK (AUTO OPERATION) consists of 5 steps performed automatically by the intelligent tester. It takes a maximum of approximately 18 minutes.**
- **Do not perform the EVAP SYSTEM CHECK when the fuel tank is more than 90% full because the cut-off valve may be closed, making the fuel tank leak check unavailable.**
- **Do not run the engine in this step.**
- **When the temperature of the fuel is 35°C (95°F) or more, a large amount of vapor forms and any check results become inaccurate. When performing an EVAP SYSTEM CHECK, keep the temperature below 35°C (95°F).**

(a) Clear the DTCs (See page ES-41).

(b) On the intelligent tester, select the following menu items: DIAGNOSIS / ENHANCED OBD II / SYSTEM CHECK / EVAP SYS CHECK / AUTO OPERATION.

(c) After the SYSTEM CHECK is completed, check for pending DTCs by selecting the following menu items: DIAGNOSIS / ENHANCED OBD II / DTC INFO / PENDING CODES.
HINT:
If no pending DTCs are found, the repair has been successfully completed.

NEXT

COMPLETED

CONFIRMATION DRIVING PATTERN

HINT:
After a repair, check Monitor Status by performing the Key-Off Monitor Confirmation and Purge Flow Monitor Confirmation described below.

1. KEY-OFF MONITOR CONFIRMATION

(a) Preconditions
The monitor will not run unless:
- The vehicle has been driven for 10 minutes or more (in a city area or on a freeway).
- The fuel tank is less than 90 % full.
- The altitude is less than 8,000 ft (2,400 m).
- The Engine Coolant Temperature (ECT) is between 4.4°C and 35°C (40°F and 95°F).
- The Intake Air Temperature (IAT) is between 4.4°C and 35°C (40°F and 95°F).
- The vehicle remains stationary (the vehicle speed is 0 mph (0 km/h)).

(b) Monitor Conditions
1. Allow the engine to idle for at least 5 minutes.
2. Turn the engine switch off and wait for 6 hours (8 or 10.5 hours).
HINT:
Do not start the engine until checking MONITOR STATUS. If the engine is started, the steps described above must be repeated.

(c) Monitor Status
1. Connect the intelligent tester to the DLC3.
2. Turn the engine switch on (IG) and turn the tester on.
3. Select the following menu items: DIAGNOSIS / ENHANCED OBD II / MONITOR STATUS.
4. Check the Monitor Status displayed on the tester.
   HINT:
   If INCMP is displayed, the monitor is not complete. Make sure that the preconditions have been met, and perform the Monitor Conditions again.

2. PURGE FLOW MONITOR CONFIRMATION (P0441)

HINT:
Perform this monitor confirmation after the Key-Off Monitor Confirmation shows COMPL (complete).

(a) Preconditions
The monitor will not run unless:
- The vehicle has been driven for 10 minutes or more (in a city area or on a freeway)
- The ECT is between 4.4°C and 35°C (40°F and 95°F)
- The IAT is between 4.4°C and 35°C (40°F and 95°F)

(b) Monitor Conditions
1. Release the pressure from the fuel tank by removing and reinstalling the fuel cap.
2. Warm the engine up until the ECT reaches more than 75°C (167°F).
3. Increase the engine speed to 3,000 rpm once.
4. Allow the engine to idle and turn A/C ON for 1 minute.

(c) Monitor Status
1. Turn the engine switch off (if ON or the engine is running).
2. Connect the intelligent tester to the DLC3.
3. Turn the engine switch on (IG) and turn the tester on.
4. Select the following menu items: DIAGNOSIS / ENHANCED OBD II / MONITOR STATUS.
5. Check the Monitor Status displayed on the tester.
   HINT:
   If INCMP is displayed, the monitor is not complete. Make sure that the preconditions have been met, and perform the Monitor Conditions again.

MONITOR RESULT

Refer to CHECKING MONITOR STATUS (See page ES-20).

ECM Power Source Circuit

DESCRIPTION

When the engine switch is turned on (IG), the battery voltage is applied to terminal IGSW of the ECM. The ECM MREL output signal causes a current to flow to the coil, closing the contacts of the EFI MAIN relay and supplying power to terminal +B of the ECM.
If the engine switch is turned off, the ECM holds the EFI MAIN relay ON for a maximum of 2 seconds to allow for the initial setting of the throttle valve.
When the engine switch is turned on (IG), voltage from the ECM's MREL terminal applies to the engine room junction block (EFI relay). This causes the contacts of the engine room junction block (EFI relay) to close, which supplies power to terminal +B or +B1 of the ECM.

WIRING DIAGRAM

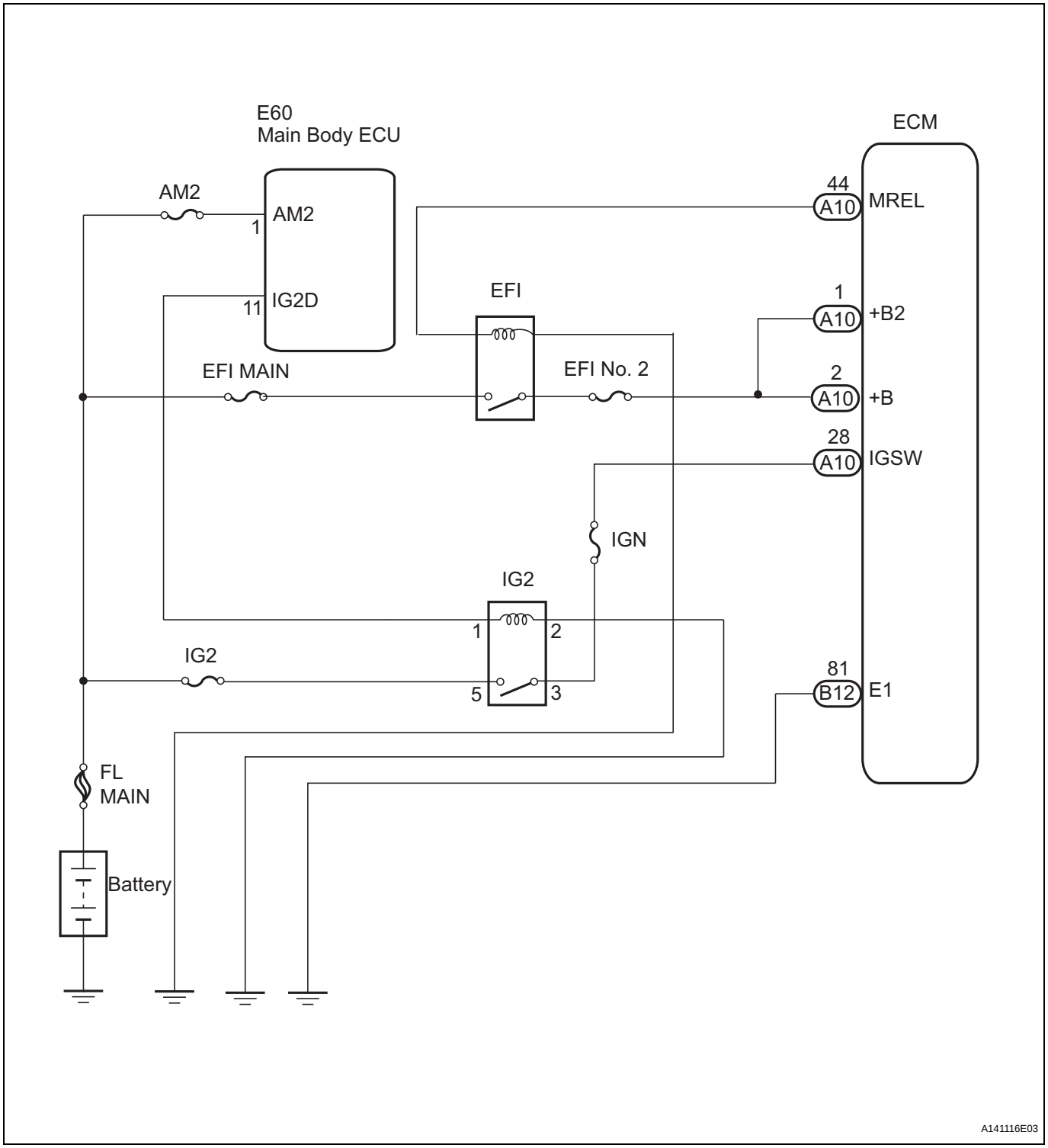

ES

INSPECTION PROCEDURE

1 CHECK HARNESS AND CONNECTOR (ECM - BODY GROUND)

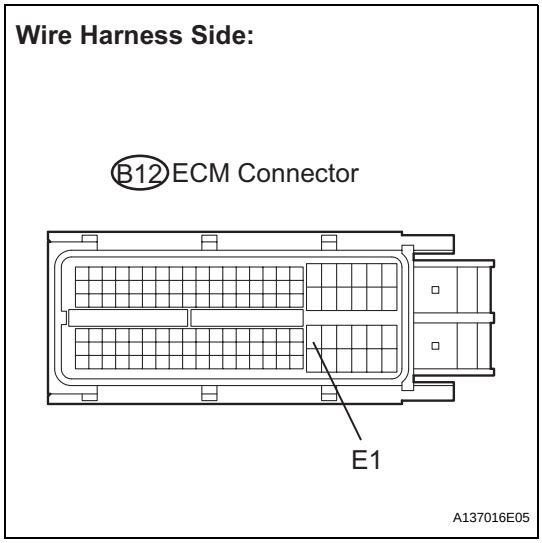

(a) Disconnect the B12 ECM connector.
(b) Measure the resistance according to the value(s) in the table below.
Standard resistance

Tester Connection	Specified Condition
E1 (B12-81) - Body ground	Below 1 Ω

(c) Reconnect the ECM connector.

NG → **REPAIR OR REPLACE HARNESS OR CONNECTOR**

OK

2 CHECK ENGINE ROOM JUNCTION BLOCK (EFI RELAY VOLTAGE)

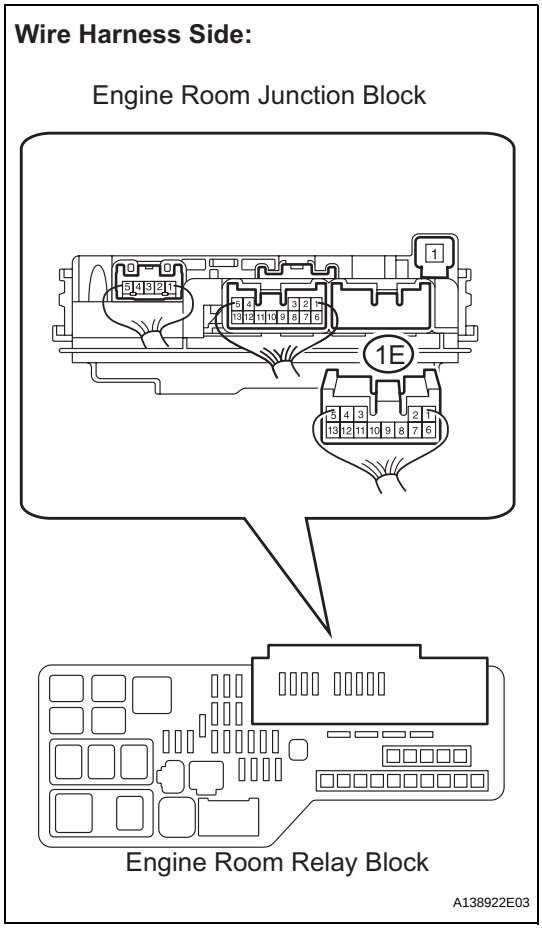

(a) Remove the engine room junction block from the engine room R/B.
(b) Turn the engine switch on (IG).
(c) Measure the voltage according to the value(s) in the table below.
Standard voltage

Tester Connection	Specified Condition
1E-6 - Body ground	9 to 14 V

OK → **Go to step 5**

NG

3 INSPECT EFI MAIN FUSE

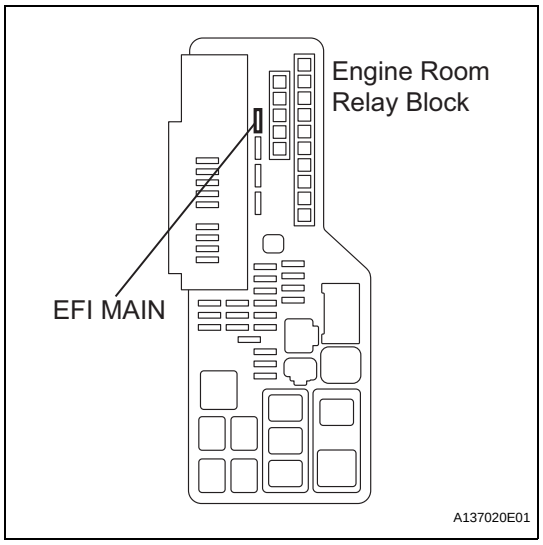

(a) Remove the EFI MAIN fuse from the engine room R/B.
(b) Measure the EFI MAIN fuse resistance.
Standard resistance:
Below 1 Ω
(c) Reinstall the EFI MAIN fuse.

NG → **REPLACE EFI MAIN FUSE**

ES

OK

4 CHECK HARNESS AND CONNECTOR (ENGINE ROOM RELAY BLOCK - BATTERY)

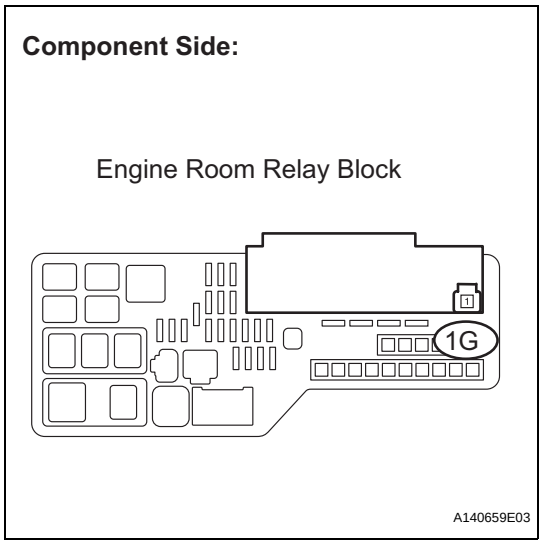

(a) Disconnect the negative battery terminal.
(b) Disconnect the positive battery terminal.
(c) Remove the engine room junction block from the engine room R/B.
(d) Measure the resistance according to the value(s) in the table below.

Standard resistance (Check for open)

Tester Connection	Specified Condition
1G-1 - Positive battery terminal	Below 1 Ω

Standard resistance (Check for short)

Tester Connection	Specified Condition
1G-1 or Positive battery terminal - Body ground	10 kΩ or higher

(e) Reinstall the engine room junction block.
(f) Reconnect the positive battery terminal.
(g) Reconnect the negative battery terminal.

NG → **REPAIR OR REPLACE HARNESS OR CONNECTOR**

OK

PROCEED TO NEXT CIRCUIT INSPECTION SHOWN IN PROBLEM SYMPTOMS TABLE (See page ES-28)

ES

5	INSPECT ENGINE ROOM JUNCTION BLOCK (EFI RELAY)

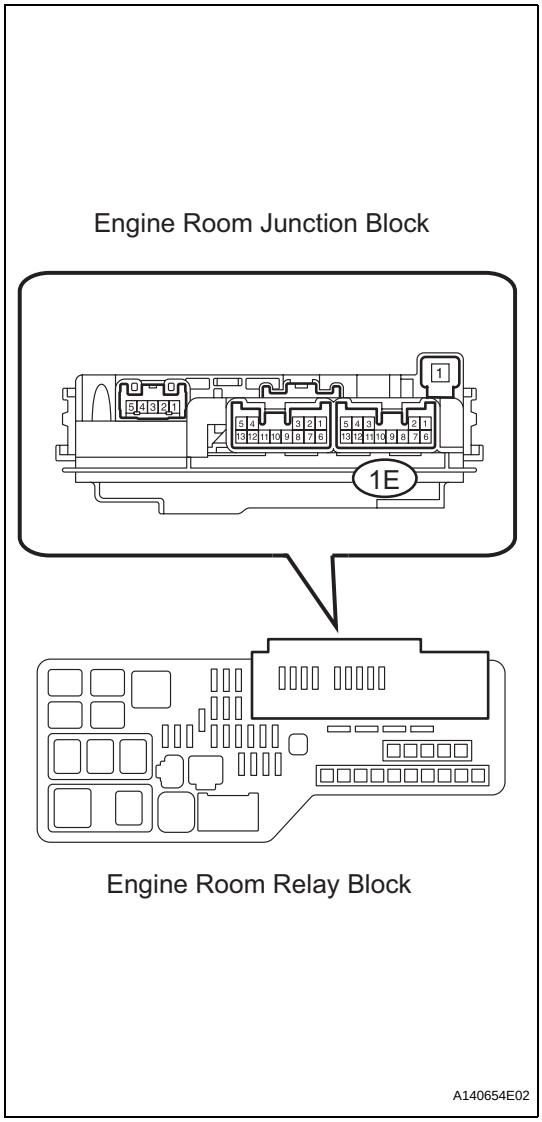

(a) Remove the engine room junction block from the engine room R/B.

(b) Measure the resistance between the terminals.

Standard resistance

Tester Connection	Specified Condition
1E-6 - 1E-12	10 kΩ or higher
1E-6 - 1E-12	Below 1 Ω (Apply battery voltage between terminals 1E-9 and 1E-11)

(c) Reinstall the engine room junction block.

NG → **REPLACE ENGINE ROOM JUNCTION BLOCK**

OK

6	INSPECT EFI NO. 2 FUSE

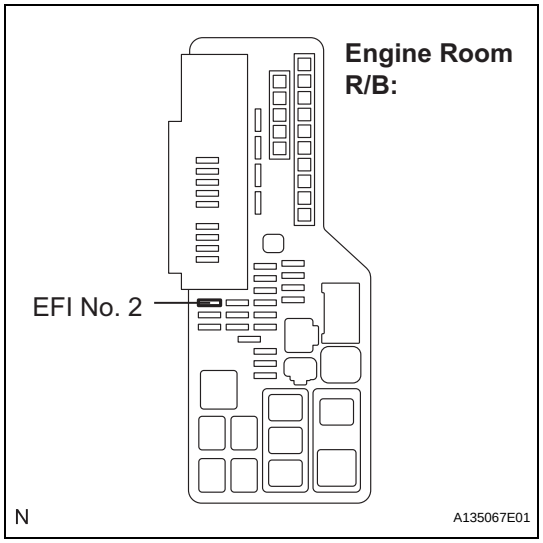

(a) Remove the EFI No. 2 fuse from the engine room R/B.
(b) Measure the EFI No. 2 fuse resistance.
Standard resistance:
Below 1 Ω
(c) Reinstall the EFI No. 2 fuse.

NG → **REPLACE EFI NO. 2 FUSE**

OK

ES

ES

7	CHECK HARNESS AND CONNECTOR (ECM - ENGINE ROOM JUNCTION BLOCK)

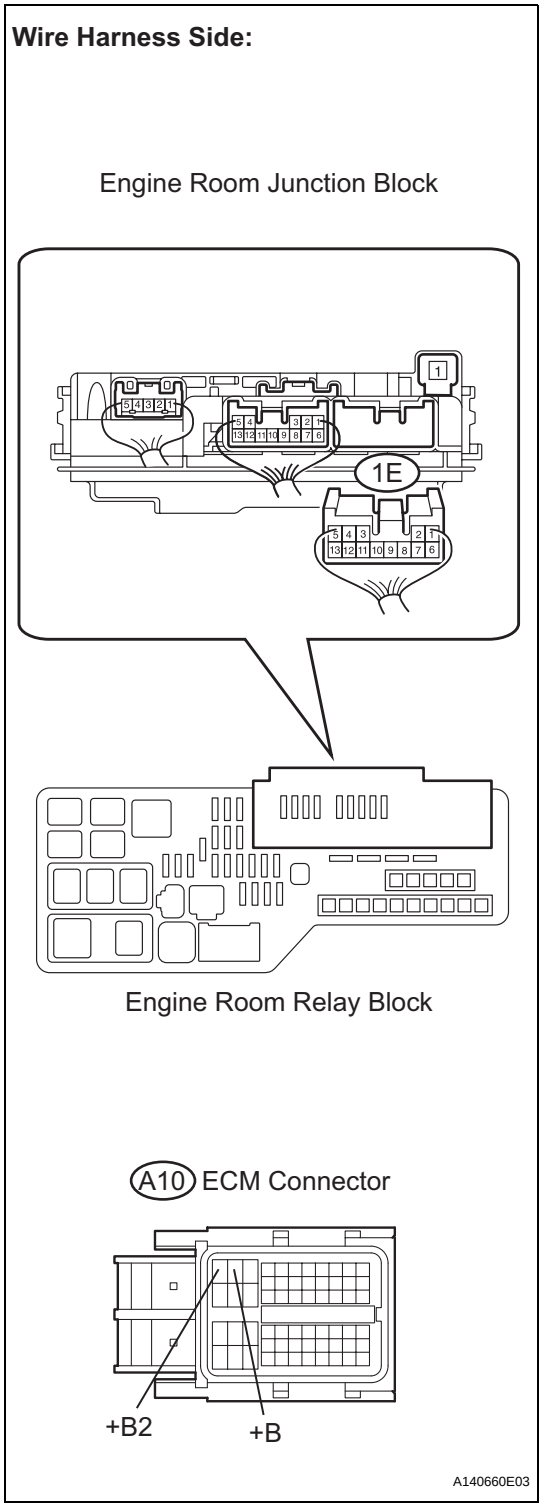

(a) Disconnect the A10 ECM connector.
(b) Remove the engine room junction block from the engine room R/B.
(c) Measure the resistance according to the value(s) in the table below.

Standard resistance (Check for open)

Tester Connection	Specified Condition
1E-6 - +B (A10-2)	Below 1 Ω
1E-6 - +B2 (A10-1)	Below 1 Ω

Standard resistance (Check for short)

Tester Connection	Specified Condition
1E-6 or +B (A10-2) - Body ground	10 kΩ or higher
1E-6 or +B2 (A10-1) - Body ground	10 kΩ or higher

(d) Reinstall the engine room junction block.
(e) Reconnect the ECM connector.

NG → **REPAIR OR REPLACE HARNESS OR CONNECTOR**

OK

8 INSPECT ECM (IGSW VOLTAGE)

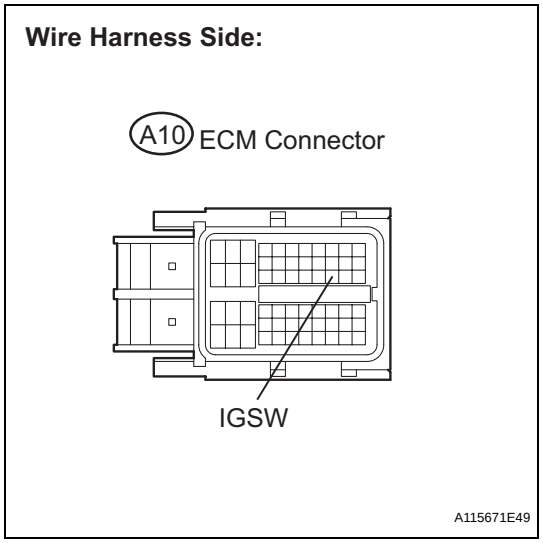

(a) Disconnect the A10 ECM connector.
(b) Measure the voltage according to the value(s) in the table below.
Standard voltage

Tester Connection	Specified Condition
IGSW (A10-28) - Body ground	9 to 14 V

(c) Reconnect the ECM connector.

OK → **Go to step 11**

NG

9 INSPECT IG2 RELAY

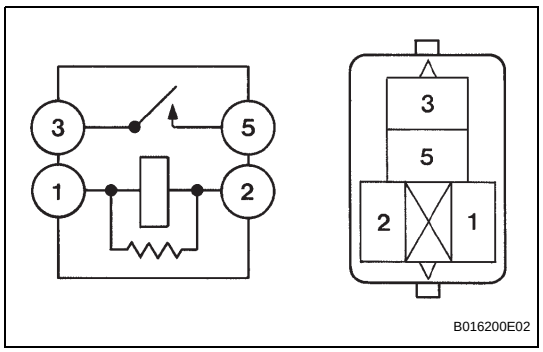

(a) Remove the IG2 relay from the engine room R/B.
(b) Measure the resistance according to the value(s) in the table below.
Standard resistance

Tester Connection	Specified Condition
3 - 5	10 kΩ or higher
3 - 5	Below 1 Ω (Apply battery voltage between terminals 1 and 2)

(c) Reinstall the IG2 relay.

NG → **REPLACE IG2 RELAY**

OK

ES

ES

10 CHECK HARNESS AND CONNECTOR (IG2 RELAY - BODY GROUND)

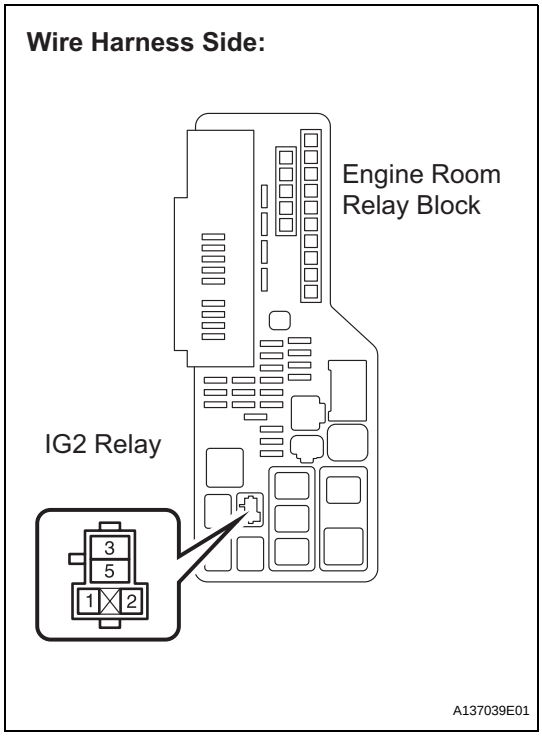

(a) Remove the IG2 relay from the engine room R/B.
(b) Measure the resistance according to the value(s) in the table below.
Standard resistance

Tester Connection	Specified Condition
IG2 relay terminal 2 - Body ground	Below 1 Ω

(c) Reinstall the IG2 relay.
Result

Result	Proceed to
OK	A
NG	B

A → **GO TO SMART ACCESS SYSTEM WITH PUSH-BUTTON START**

B

REPAIR OR REPLACE HARNESS OR CONNECTOR

11 CHECK HARNESS AND CONNECTOR (ECM - BODY GROUND)

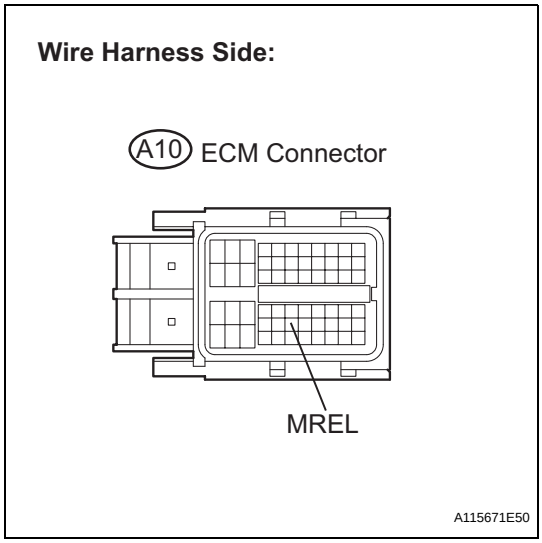

(a) Disconnect the A10 ECM connector.
(b) Measure the resistance according to the value(s) in the table below.
Standard resistance

Tester Connection	Specified Condition
MREL (A10-44) - Body ground	Below 1 Ω

(c) Reconnect the ECM connector.

NG → **REPAIR OR REPLACE HARNESS OR CONNECTOR**

OK

REPLACE ECM (See page ES-543)

VC Output Circuit

DESCRIPTION

The ECM constantly uses 5 V from the battery voltages supplied to the +B (BATT) terminal to operate the microprocessor. The ECM also provides this power to the sensors through the VC output circuit.
When the VC circuit is short-circuited, the microprocessor in the ECM and sensors that are supplied power through the VC circuit are inactivated because the power is not supplied from the VC circuit. Under this condition, the system does not start up and the MIL does not illuminate even if the system malfunctions.
HINT:
Under normal conditions, the MIL is illuminated for several seconds when the engine switch is first turned on (IG). The MIL goes off when the engine is started.

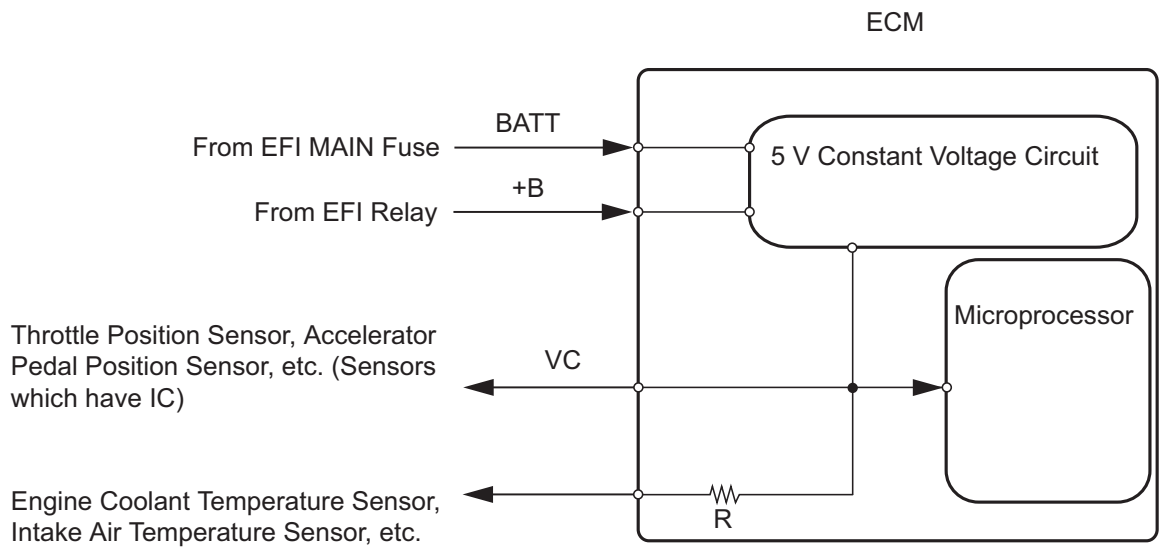

A116143E14

WIRING DIAGRAM

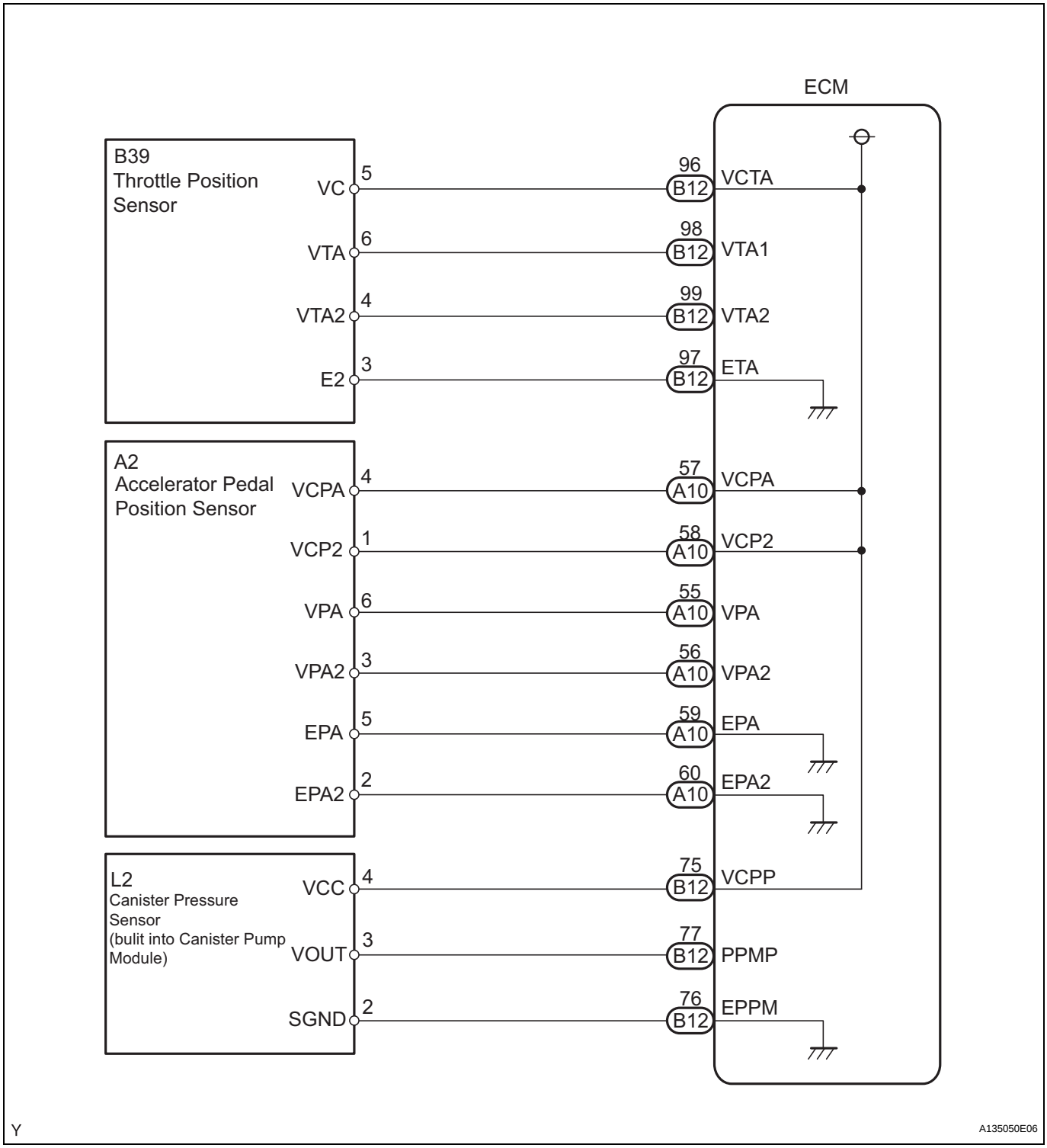

ES

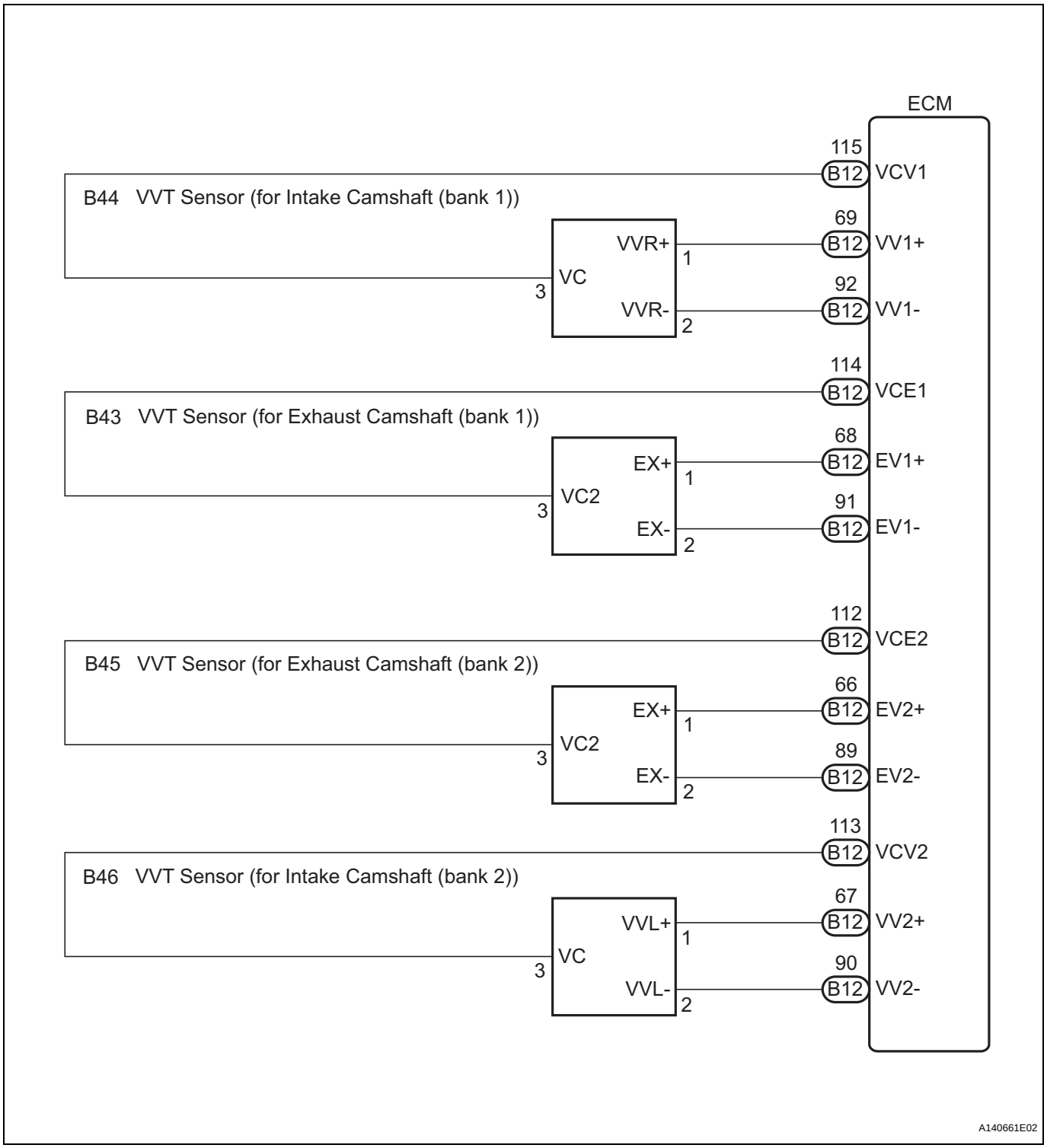

INSPECTION PROCEDURE

1	CHECK MIL

(a) Check that Malfunction Indicator Lamp (MIL) lights up when turning the engine switch on (IG).

OK:

MIL lights up.

ES

OK → GO TO MIL CIRCUIT (See page ES-465)

NG

2 CHECK CONNECTION BETWEEN INTELLIGENT TESTER AND ECM

(a) Connect the intelligent tester to the DLC3.
(b) Turn the engine switch on (IG) and turn the tester on.
(c) Check the communication between the tester and ECM.

Result

Result	Proceed to
Communication is possible	A
Communication is not possible	B

A → GO TO MIL CIRCUIT (See page ES-465)

B

3 CHECK THROTTLE BODY ASSEMBLY (CHECK MIL ILLUMINATED)

(a) Disconnect the throttle body connector.
(b) Turn the engine switch on (IG).
(c) Check the MIL.

Result

Result	Proceed to
MIL illuminates	A
MIL does not illuminate	B

(d) Reconnect the throttle body connector.

A → REPLACE THROTTLE BODY ASSEMBLY (See page ES-519)

B

4 CHECK ACCELERATOR PEDAL ASSEMBLY (CHECK MIL ILLUMINATED)

(a) Disconnect the accelerator pedal position sensor connector.
(b) Turn the engine switch on (IG).
(c) Check the MIL.

Result

Result	Proceed to
MIL illuminates	A
MIL does not illuminate	B

(d) Reconnect the accelerator pedal position sensor connector.

A → REPLACE ACCELERATOR PEDAL ASSEMBLY (See page ES-546)

B

5	CHECK VVT SENSOR FOR INTAKE CAMSHAFT BANK 1 (CHECK MIL ILLUMINATED)

(a) Disconnect the VVT sensor for intake camshaft bank 1 connector.
(b) Turn the engine switch on (IG).
(c) Check the MIL.

Result

Result	Proceed to
MIL illuminates	A
MIL does not illuminate	B

(d) Reconnect the VVT sensor for intake camshaft bank 1 connector.

A → **REPLACE VVT SENSOR FOR INTAKE CAMSHAFT BANK 1 (See page ES-507)**

B

6	CHECK VVT SENSOR FOR EXHAUST CAMSHAFT BANK 1 (CHECK MIL ILLUMINATED)

(a) Disconnect the VVT sensor for exhaust camshaft bank 1 connector.
(b) Turn the engine switch on (IG).
(c) Check the MIL.

Result

Result	Proceed to
MIL illuminates	A
MIL does not illuminate	B

(d) Reconnect the VVT sensor for exhaust camshaft bank 1 connector.

A → **REPLACE VVT SENSOR FOR EXHAUST CAMSHAFT BANK 1 (See page ES-507)**

B

7	CHECK VVT SENSOR FOR INTAKE CAMSHAFT BANK 2 (CHECK MIL ILLUMINATED)

(a) Disconnect the VVT sensor for intake camshaft bank 2 connector.
(b) Turn the engine switch on (IG).
(c) Check the MIL.

Result

Result	Proceed to
MIL illuminates	A
MIL does not illuminate	B

(d) Reconnect the VVT sensor for intake camshaft bank 2 connector.

A → **REPLACE VVT SENSOR FOR INTAKE CAMSHAFT BANK 2 (See page ES-507)**

B

8	CHECK VVT SENSOR FOR EXHAUST CAMSHAFT BANK 2 (CHECK MIL ILLUMINATED)

(a) Disconnect the VVT sensor for exhaust camshaft bank 2 connector.
(b) Turn the engine switch on (IG).
(c) Check the MIL.

ES

Result

Result	Proceed to
MIL illuminates	A
MIL does not illuminate	B

(d) Reconnect the VVT sensor for exhaust camshaft bank 2 connector.

A → **REPLACE VVT SENSOR FOR EXHAUST CAMSHAFT BANK 2 (See page ES-507)**

B

9	CHECK CHARCOAL CANISTER ASSEMBLY (CHECK MIL ILLUMINATED)

(a) Disconnect the canister pump module connector.
(b) Turn the engine switch on (IG).
(c) Check the MIL.

Result

Result	Proceed to
MIL illuminates	A
MIL does not illuminate	B

(d) Reconnect the canister pump module connector.

A → **REPLACE CHARCOAL CANISTER ASSEMBLY (See page EC-9)**

B

10	CHECK HARNESS AND CONNECTOR

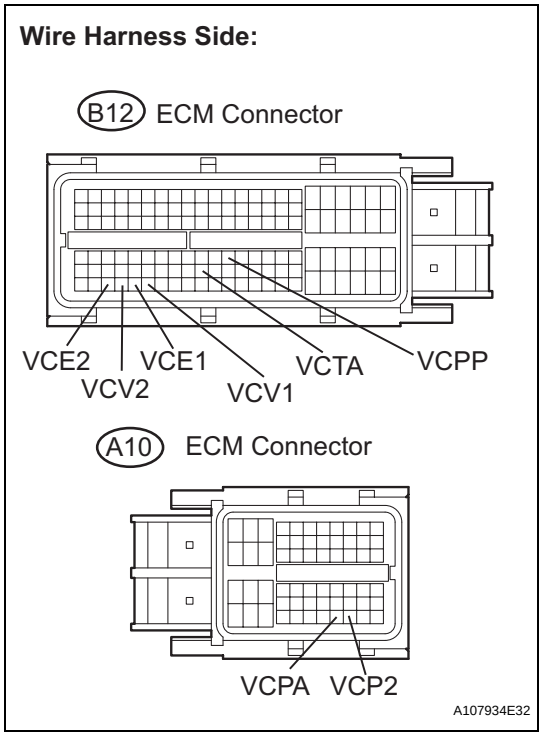

(a) Disconnect the throttle body connector.
(b) Disconnect the accelerator pedal position sensor connector.
(c) Disconnect the VVT sensor for intake camshaft bank 1 connector.
(d) Disconnect the VVT sensor for exhaust camshaft bank 1 connector.
(e) Disconnect the VVT sensor for intake camshaft bank 2 connector.
(f) Disconnect the VVT sensor for exhaust camshaft bank 2 connector.
(g) Disconnect the canister pump module connector.
(h) Disconnect the B12 and A10 ECM connectors.
(i) Measure the resistance according to the value(s) in the table below.

Standard resistance (Check for short)

Tester Connection	Specified Condition
VCTA (B12-96) - Body ground	10 kΩ or higher
VCV1 (B12-115) - Body ground	10 kΩ or higher
VCV2 (B12-113) - Body ground	10 kΩ or higher
VCE1 (B12-114) - Body ground	10 kΩ or higher
VCE2 (B12-112) - Body ground	10 kΩ or higher
VCPA (A10-57) - Body ground	10 kΩ or higher
VCP2 (A10-58) - Body ground	10 kΩ or higher
VCPP (B12-75) - Body ground	10 kΩ or higher

(j) Reconnect the ECM connectors.
(k) Reconnect the canister pump module connector.
(l) Reconnect the fuel pressure sensor connector.
(m) Reconnect the VVT sensor for exhaust camshaft bank 2 connector.
(n) Reconnect the VVT sensor for intake camshaft bank 2 connector.
(o) Reconnect the VVT sensor for exhaust camshaft bank 1 connector.
(p) Reconnect the VVT sensor for intake camshaft bank 1 connector.
(q) Reconnect the accelerator pedal position sensor connector.
(r) Reconnect the throttle body connector.

NG → **REPAIR OR REPLACE HARNESS OR CONNECTOR**

OK

REPLACE ECM (See page ES-543)

ES

Fuel Pump Control Circuit

DESCRIPTION

In the diagram below, when the engine is cranked, current flows from terminal ST1 (STR) of the engine switch (power source control ECU) to the starter relay (Marking: ST) coil and also current flows to terminal STA of the ECM (STA signal).
When the STA signal and NE signal are input to the ECM, Tr is turned ON, current flows to the coil of the circuit opening relay (Marking: C/OPN), the relay switches on, power is supplied to the fuel pump and the fuel pump operates.
While the NE signal is generated (engine running), the ECM keeps Tr ON (circuit opening relay ON) and the fuel pump also keeps operating.

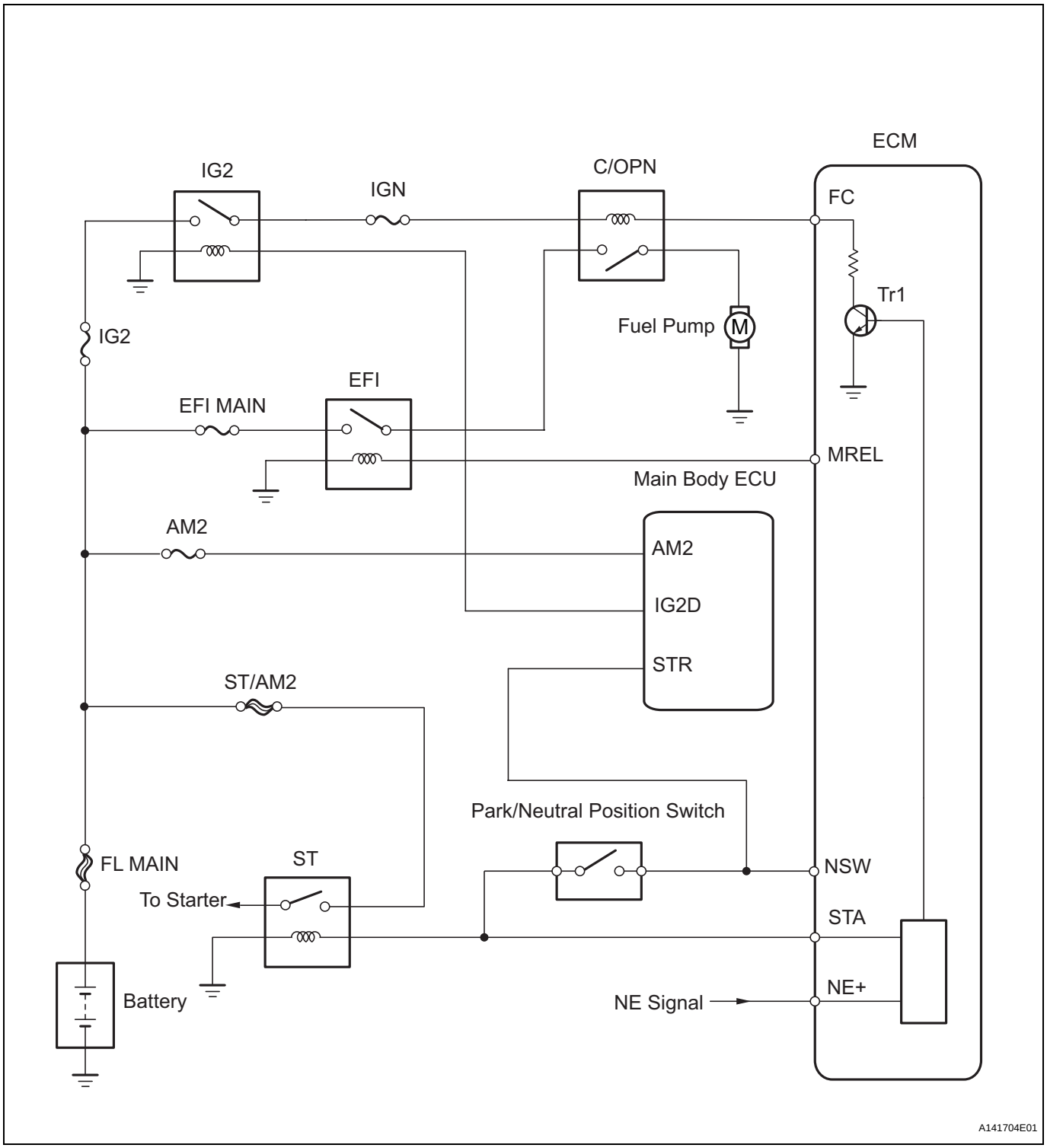
ECM
IG2
IGN
C/OPN
FC
Tr1
Fuel Pump
M
IG2
EFI
EFI MAIN
MREL
Main Body ECU
AM2
AM2
IG2D
STR
ST/AM2
Park/Neutral Position Switch
FL MAIN
ST
NSW
To Starter
STA
Battery
NE+
NE Signal
A141704E01

ES

WIRING DIAGRAM

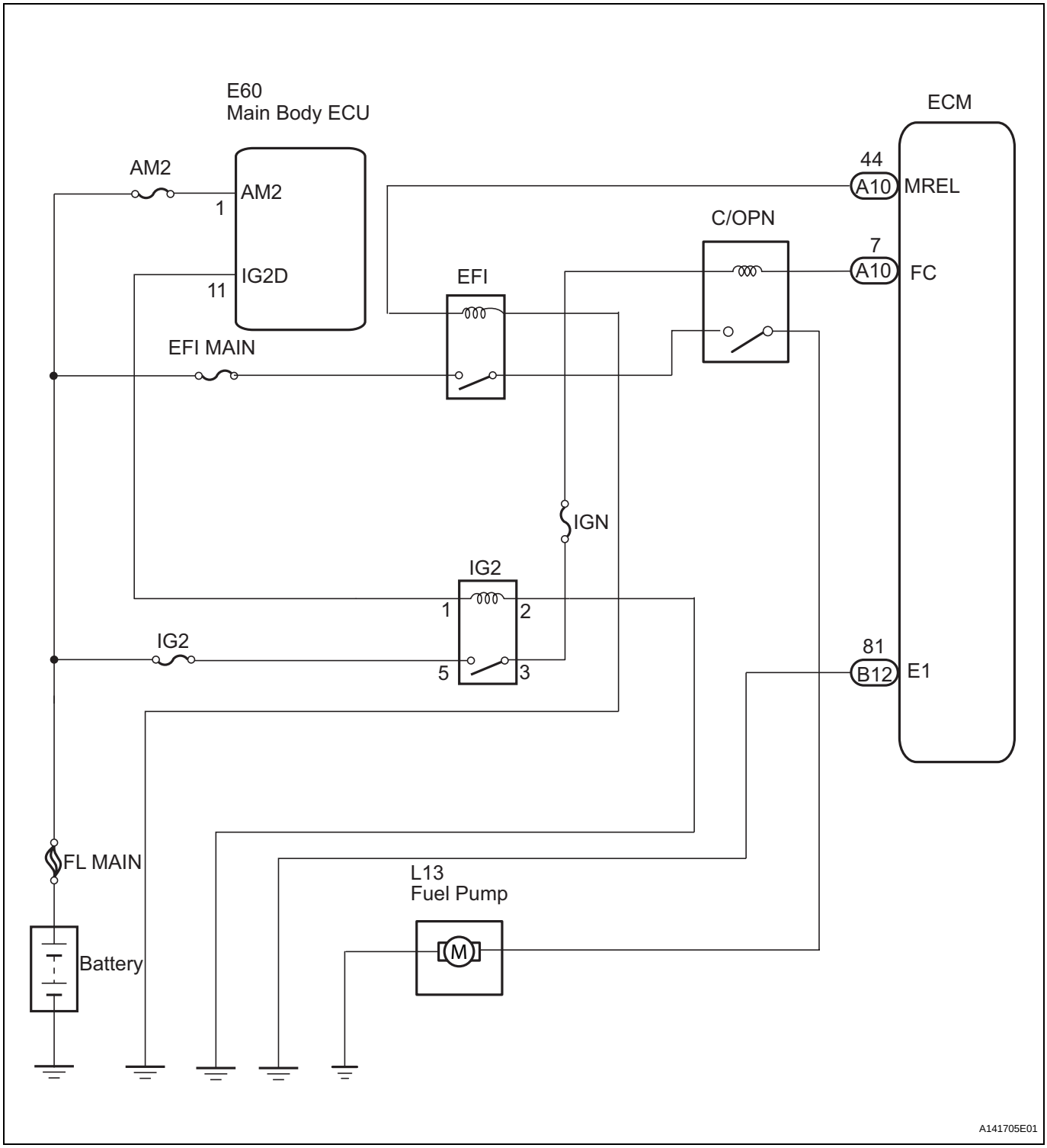

INSPECTION PROCEDURE

1	PERFORM ACTIVE TEST BY INTELLIGENT TESTER (OPERATE C/OPN RELAY)

(a) Connect the intelligent tester to the DLC3.
(b) Turn the engine switch on (IG) and turn the tester on.

(c) Select the following menu items: DIAGNOSIS / ENHANCED OBD II / ACTIVE TEST / FUEL PUMP / SPD.

(d) Check whether the fuel pump operation sound occurs when performing the Active Test on the tester.

OK:

Fuel pump operating sound occurs.

NG → **Go to step 2**

OK

PROCEED TO NEXT CIRCUIT INSPECTION SHOWN IN PROBLEM SYMPTOMS TABLE (See page ES-28)

ES

2 CHECK ECM POWER SOURCE CIRCUIT

NG → **REPAIR OR REPLACE ECM POWER SOURCE CIRCUIT**

OK

3 INSPECT ENGINE ROOM JUNCTION BLOCK (C/OPN RELAY)

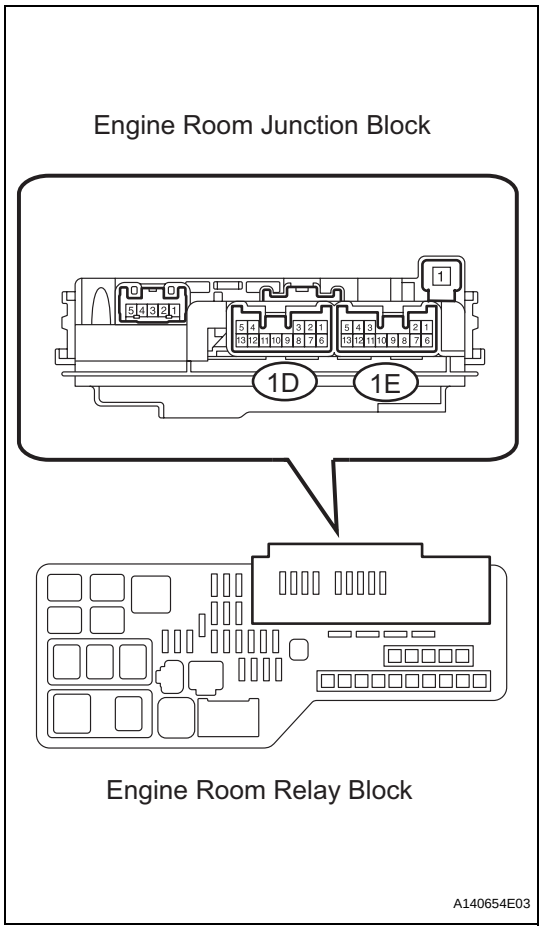

(a) Remove the integration relay from the engine room relay block.

(b) Inspect the C/OPN relay.

(1) Measure the C/OPN relay resistance.

Standard resistance

Tester Connection	Specified Condition
1E-7 - 1E-13	10 kΩ or higher
	Below 1 Ω (Apply battery voltage between terminals 1D-12 and 1E-8)

(c) Reinstall the integration relay.

NG → **REPLACE ENGINE ROOM JUNCTION BLOCK**

OK

4	INSPECT ECM (FC VOLTAGE)

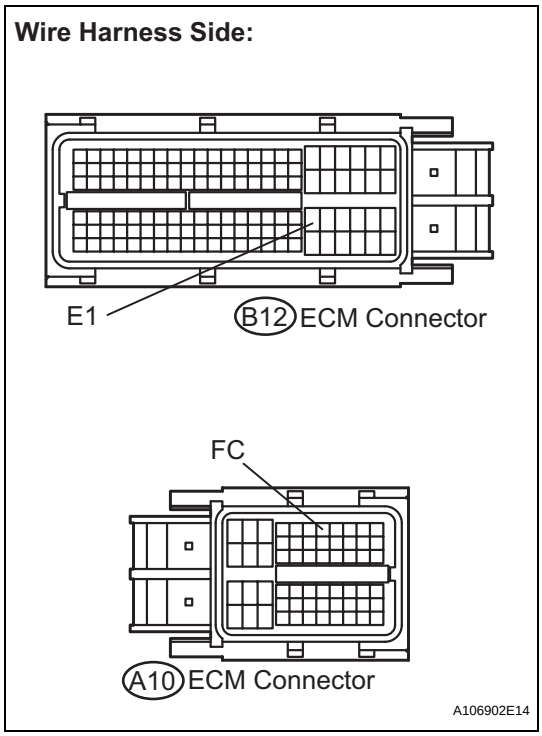

(a) Disconnect the A10 and B12 ECM connectors.
(b) Measure the voltage between the terminals of the A10 and B12 ECM connectors.
Standard voltage

Tester Connection	Specified Condition
A10-7 (FC) - B12-81 (E1)	9 to 14 V

(c) Reconnect the ECM connectors.

NG → **REPAIR OR REPLACE HARNESS OR CONNECTOR (ECM - BATTERY)**

OK

5	INSPECT FUEL PUMP

NG → **REPLACE FUEL PUMP (See page FU-26)**

OK

ES

6	CHECK HARNESS AND CONNECTOR (C/OPN RELAY - FUEL PUMP - BODY GROUND)

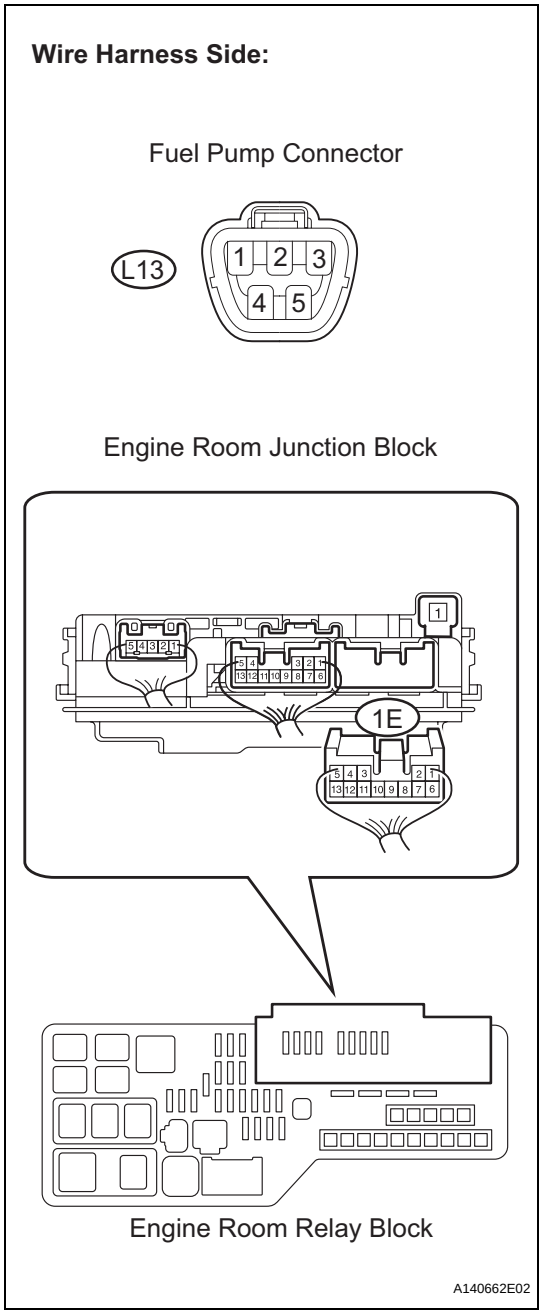

(a) Check the harness and the connectors between the engine room relay block and the fuel pump.
  (1) Disconnect the integration relay connector.
  (2) Disconnect the L13 fuel pump connector.
  (3) Measure the resistance.
  Standard resistance (Check for open)

Tester Connection	Specified Condition
1E-13 - L13-4 (Fuel pump)	Below 1 Ω

Standard resistance (Check for short)

Tester Connection	Specified Condition
1E-13 or L13-4 (Fuel pump) - Body ground	10 kΩ or higher

(b) Check the harness and the connectors between the fuel pump and body ground.
  (1) Disconnect the L13 fuel pump connector.
  (2) Measure the resistance.
  Standard resistance (Check for open)

Tester Connection	Specified Condition
L13-5 (Fuel pump) - Body ground	Below 1 Ω

(c) Reconnect the integration relay connector.
(d) Reconnect the fuel pump connector.

NG → **REPAIR OR REPLACE HARNESS OR CONNECTOR**

OK

REPLACE ECM (See page ES-543)

ES

Cranking Holding Function Circuit

DESCRIPTION

The cranking holding control system provides current to the starter when the ECM detects the engine switch's start signal (STSW). When the ECM performs a firing judgment, the system cuts current to the starter. When the ECM receives the STSW signal, it turns on the ST CUT relay, which prevents flickering of the combination meter, clock, audio system, etc. Also, the ECM sends a signal to the ECM's STAR terminal. Then the STAR output signal travels through the park/neutral position (PNP) switch to the STARTER relay, causing the starter to be activated.
When the engine is cranking, the starter operation signal is sent to the ECM's STA terminal.

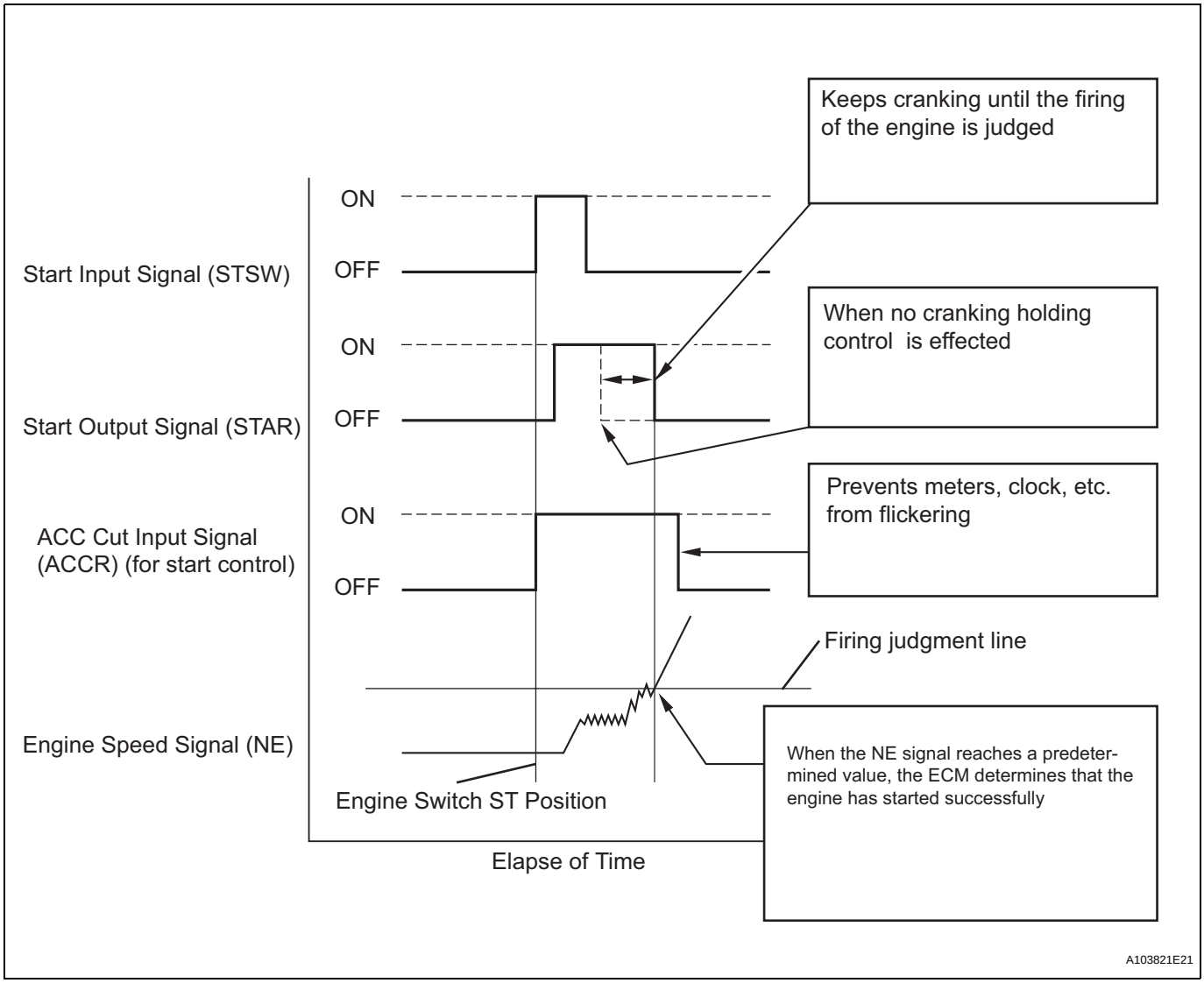

WIRING DIAGRAM

Refer to DTC P0617 (See page ES-306).

INSPECTION PROCEDURE

1	CHECK CRANKING

(a) When starting the engine, check whether the starter motor starts.

OK → CHECK FOR INTERMITTENT PROBLEMS

NG

2	READ VALUE OF INTELLIGENT TESTER (STA SIGNAL)

ES

(a) Connect the intelligent tester to the DLC3.
(b) Turn the engine switch on (IG).
(c) Turn the intelligent tester on.
(d) Select the following menu items: DIAGNOSIS / ENHANCED OBD II / DATA LIST / ALL / STARTER SIG. Read the values.
(e) Check the result when the engine switch is turned on (IG) and when the engine is started.

Standard

Display (STARTER SIG)	Condition
OFF	Engine switch on (IG)
ON	Engine start

OK → Go to step 7

NG

3	INSPECT ECM (STSW VOLTAGE)

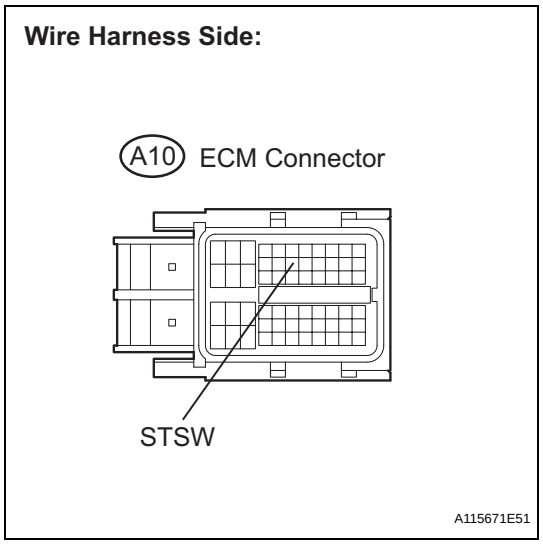

(a) Disconnect the A10 ECM Connector.
(b) Measure the voltage between the specified terminal of the ECM connector and body ground while cranking the engine.

Standard voltage

Tester Connection	Specified Condition
STSW (A10-14) - Body ground	9 to 14 V

(c) Reconnect the ECM connector.

NG → Go to step 11

OK

ES

4 INSPECT ECM (STAR VOLTAGE)

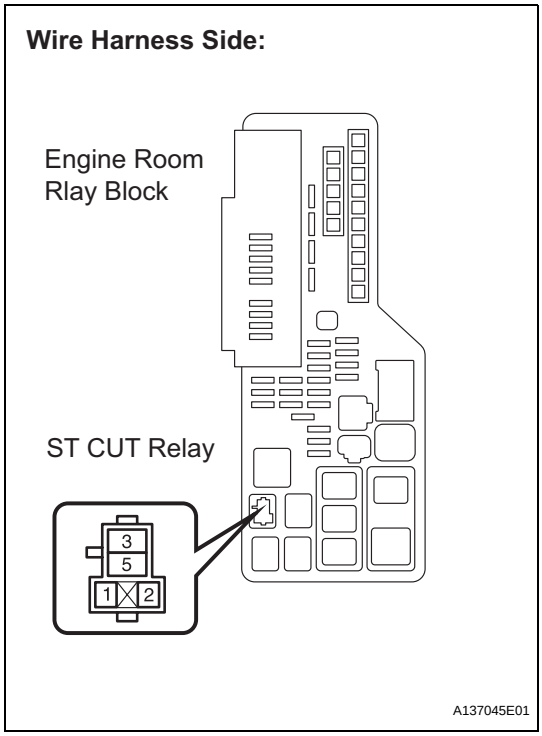

(a) Remove the ST CUT relay from the engine room R/B.
(b) Measure the voltage between the specified terminal of the engine room R/B and body ground while cranking the engine.
Standard voltage

Tester Connection	Specified Condition
ST CUT relay (3) - Body ground	9 to 14 V

(c) Reinstall the ST CUT relay.

NG → **Go to step 8**

OK

5 INSPECT ST CUT RELAY

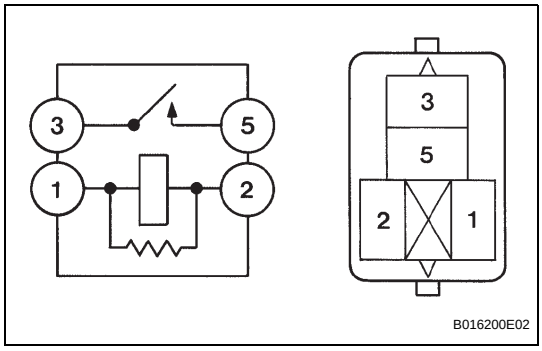

(a) Remove the ST CUT relay from the engine room R/B.
(b) Measure the resistance between the terminals.
Standard resistance

Tester Connection	Specified Condition
3 - 5	10 kΩ or higher
3 - 5	Below 1 Ω (when battery voltage is applied to terminals 1 and 2)

(c) Reinstall the ST CUT relay.

NG → **REPLACE ST CUT RELAY**

OK

6 INSPECT PARK/NEUTRAL SWITCH ASSEMBLY

Component Side:

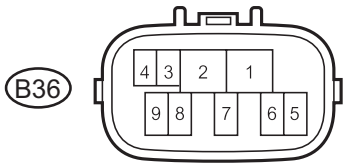

Park/Neutral Position Switch

A107908E07

(a) Inspect the Park/Neutral Position (PNP) switch.
  (1) Disconnect the B36 switch connector.
  (2) Measure the resistance according to the value(s) in the table below.

Standard resistance

Gear Selector Lever Position	Tester Connection	Specified Condition
P	4 - 5	Below 1 Ω
N	4 - 5	Below 1 Ω

  (3) Reconnect the PNP switch connector.

NG → **REPLACE PARK/NEUTRAL POSITION SWITCH ASSEMBLY (See page AX-184)**

OK

CHECK HARNESS AND CONNECTOR

7 INSPECT STARTER RELAY

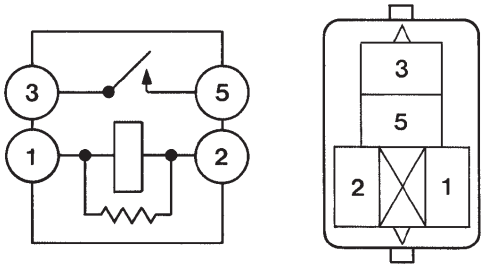

B016200E02

(a) Remove the ST relay from the engine room R/B.
(b) Measure the resistance between the terminals.

Standard resistance

Tester Connection	Specified Condition
3 - 5	10 kΩ or higher
3 - 5	Below 1 Ω (when battery voltage is applied to terminals 1 and 2)

(c) Reinstall the ST relay.

NG → **REPLACE STARTER RELAY**

OK

ES

8	CHECK HARNESS AND CONNECTOR (PARK/NEUTRAL POSITION SWITCH - STARTER RELAY)

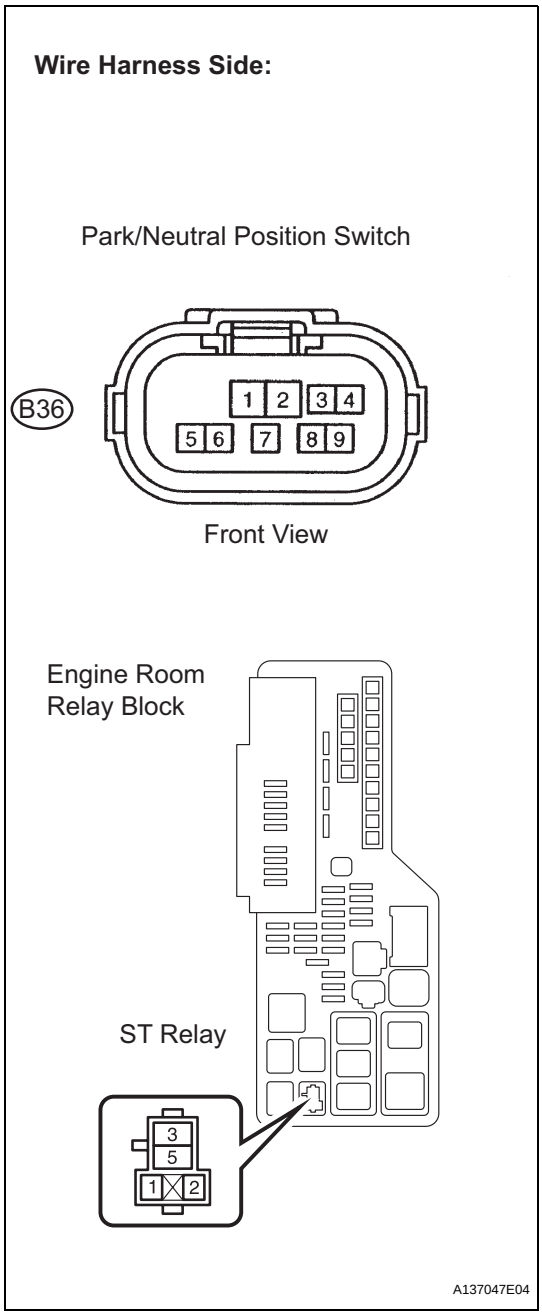

(a) Disconnect the B36 park/neutral position switch connector.
(b) Remove the ST relay from the engine room R/B.
(c) Measure the resistance according to the value(s) in the table below.

Standard resistance (Check for open)

Tester Connection	Specified Condition
B36-9 - ST relay terminal (1)	Below 1 Ω

Standard resistance (Check for open)

Tester Connection	Specified Condition
B36-9 or ST relay terminal (1) - Body ground	10 kΩ or higher

(d) Reinstall the ST relay.

NG → **REPAIR OR REPLACE HARNESS OR CONNECTOR**

OK

9	INSPECT ENGINE ROOM RELAY BLOCK (STARTER RELAY VOLTAGE)

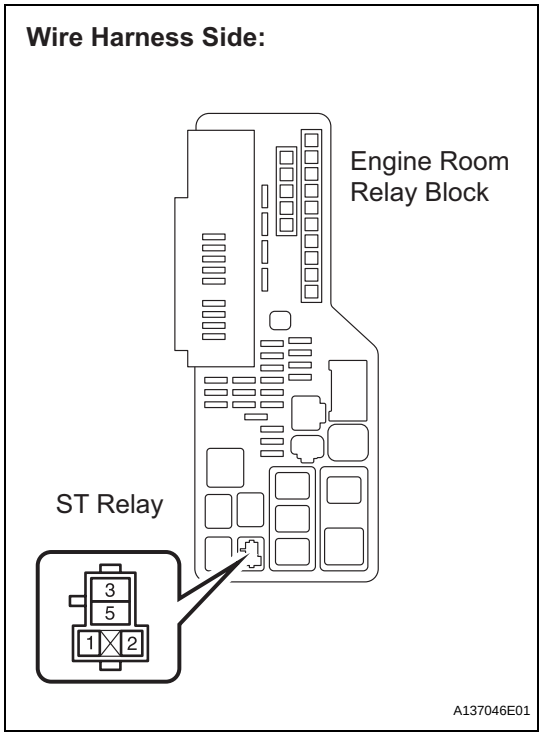

(a) Remove the ST relay from the engine room R/B.
(b) Measure the voltage between the specified terminal of the engine room R/B and body ground.

Standard voltage

Tester Connection	Specified Condition
ST relay (5) - Body ground	9 to 14 V

NG → **REPAIR OR REPLACE HARNESS OR CONNECTOR**

OK

10	INSPECT STARTER ASSEMBLY

NG → **REPAIR OR REPLACE STARTER ASSEMBLY**

OK

REPAIR OR REPLACE HARNESS OR CONNECTOR (STARTER RELAY - STARTER, STARTER - BATTERY)

ES

ES

11	CHECK HARNESS AND CONNECTOR (MAIN BODY ECU - ECM)

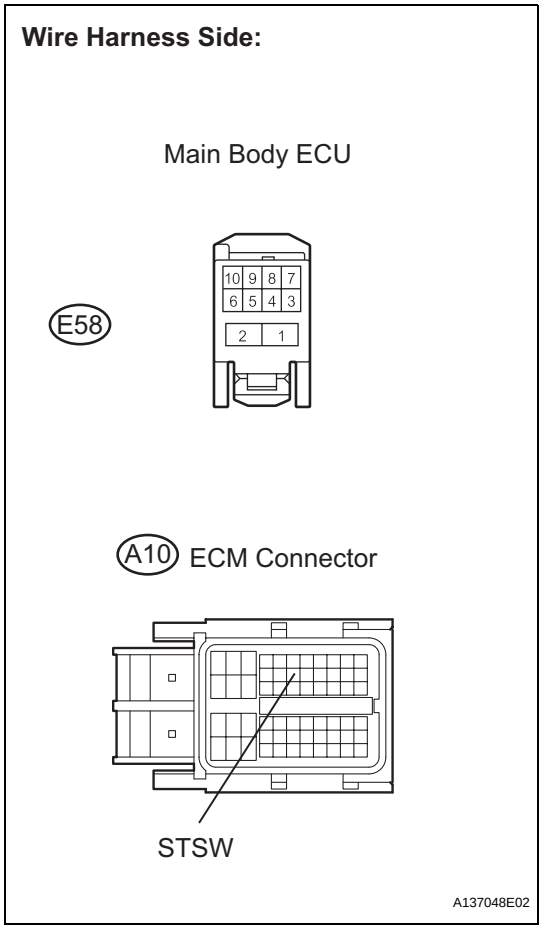

(a) Disconnect the E58 main body ECU connector.
(b) Disconnect the A10 ECM connector.
(c) Measure the resistance according to the value(s) in the table below.

Standard resistance (Check for open)

Tester Connection	Specified Condition
STSW (E58-4) - STSW (A10-14)	Below 1 Ω

Standard resistance (Check for short)

Tester Connection	Specified Condition
STSW (E58-4) or STSW (A10-14) - Body ground	10 kΩ or higher

(d) Reconnect the main body ECU connector.
(e) Reconnect the ECM connector.

NG → **REPAIR OR REPLACE HARNESS OR CONNECTOR**

OK

GO TO SMART KEY SYSTEM

ACIS Control Circuit

DESCRIPTION

This circuit opens and closes the Intake Air Control Valve (IACV) in response to changes in the engine load in order to increase the intake efficiency (ACIS: Acoustic Control Induction System).
When the engine speed is between 0 and 4,450 rpm and the throttle valve opening angle is 60° or more, the ECM supplies current to the VSV (ON status), to close the IACV. Under other conditions, the VSV is usually OFF and the IACV is open.

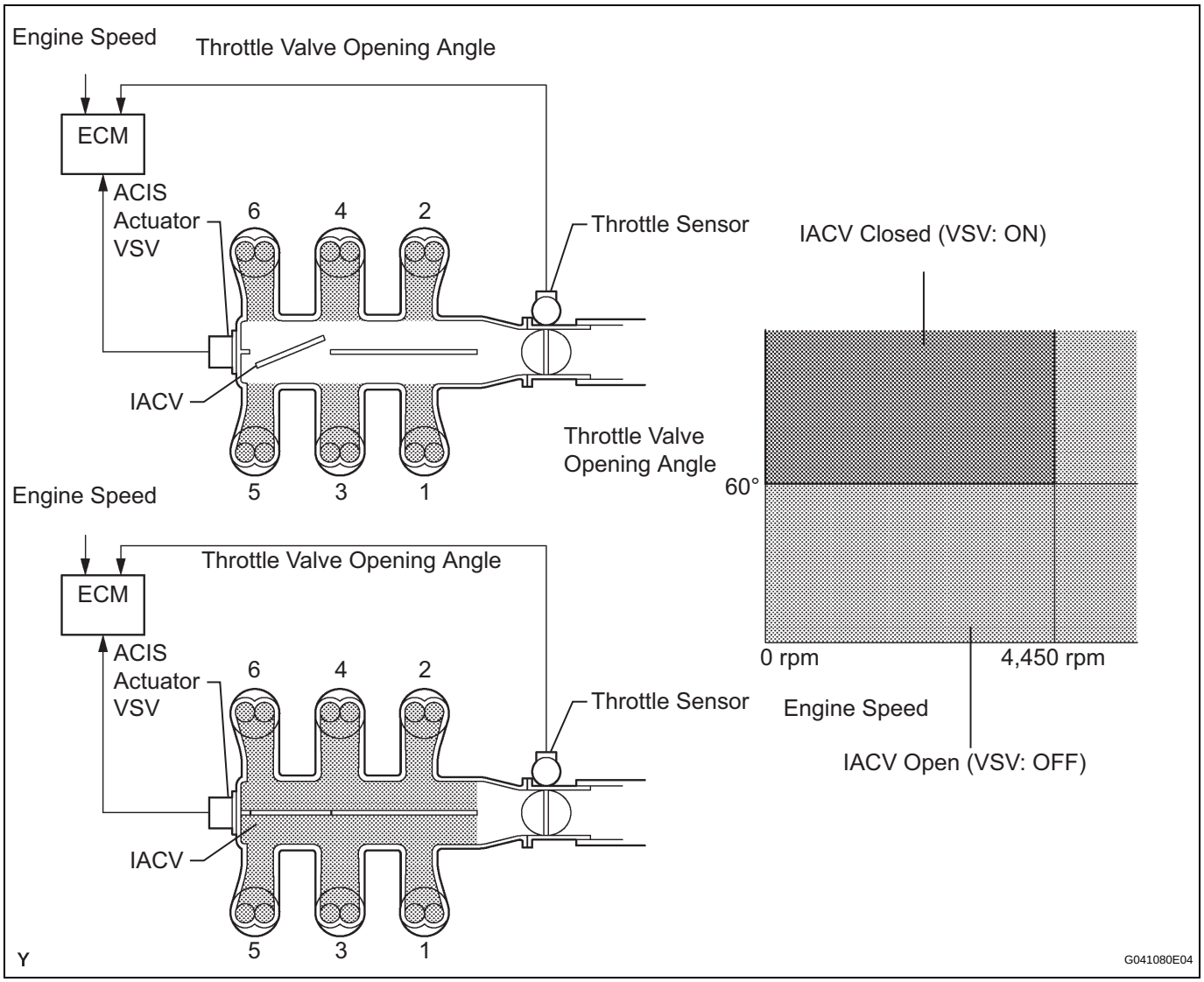

ES

WIRING DIAGRAM

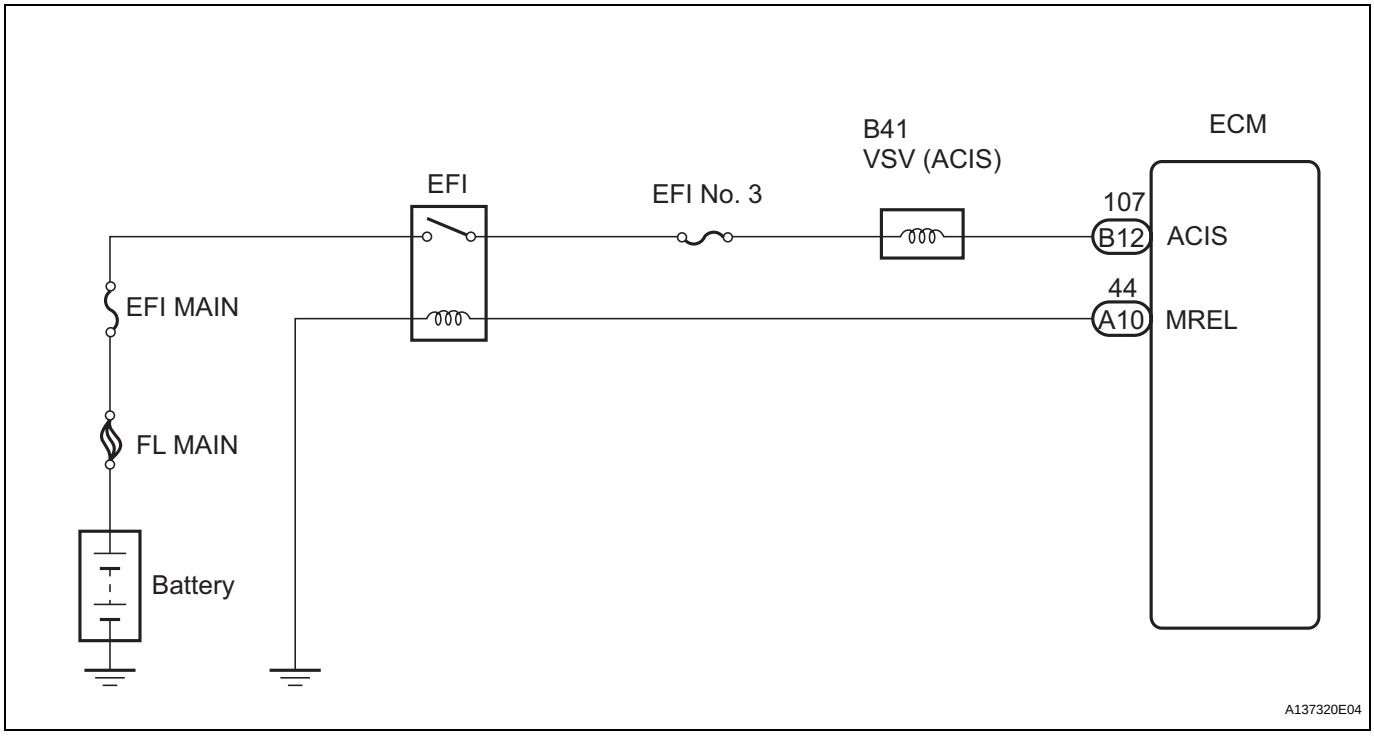

INSPECTION PROCEDURE

1	PERFORM ACTIVE TEST BY INTELLIGENT TESTER (OPERATE VSV FOR ACIS)

(a) Connect the intelligent tester to the DLC3.
(b) Start the engine and turn the intelligent tester on.
(c) Select the following menu items: DIAGNOSIS / ENHANCED OBD II / ACTIVE TEST / INTAKE CTL VSC48. Operate the VSV for AICS.
OK:
Operational noise can be heard.

OK → **PROCEED TO NEXT CIRCUIT INSPECTION SHOWN IN PROBLEM SYMPTOMS TABLE (See page ES-28)**

NG

2	CHECK INTAKE AIR CONTROL VALVE (OPERATION)

Component Side:

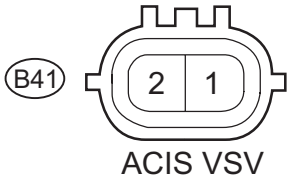

(a) Disconnect the B41 air intake valve connector.
(b) Apply battery voltage between the terminals of the air intake control valve connector.
(c) Check the air intake valve operation.
OK:
Operational noise can be heard.

NG → **REPLACE INTAKE AIR SURGE TANK**

OK

ES

ES

3	CHECK HARNESS AND CONNECTOR (VSV FOR ACIS - ECM, VSV FOR ACIS - EFI RELAY)

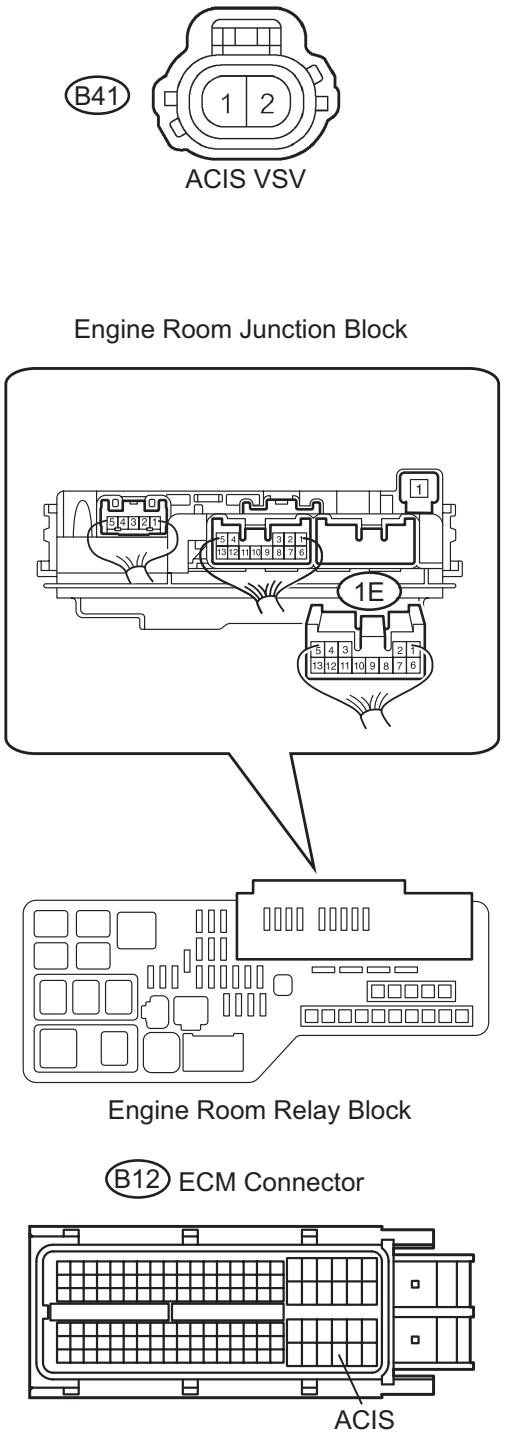

(a) Check the wire harness and connectors between the VSV for ACIS and ECM.
  (1) Disconnect the B41 VSV for ACIS connector.
  (2) Disconnect the B12 ECM connector.
  (3) Measure the resistance according to the value(s) in the table below.

Standard resistance (Check for open)

Tester Connection	Specified Condition
VSV for ACIS (B41-1) - ACIS (B12-107)	Below 1 Ω

Standard resistance (Check for short)

Tester Connection	Specified Condition
VSV for ACIS (B41-1) or ACIS (B12-107) - Body ground	10 kΩ or higher

  (4) Reconnect the VSV for ACIS connector.
  (5) Reconnect the ECM connector.

(b) Check the EFI No. 3 fuse.
  (1) Remove the EFI No. 3 fuse from the engine room R/B.
  (2) Measure the EFI No. 3 fuse resistance.
  Standard resistance:
  Below 1 Ω
  (3) Reinstall the EFI No. 3 fuse.

(c) Check the wire harness between the VSV for ACIS connector and EFI MAIN relay.
  (1) Remove the engine room junction block from the engine room R/B.
  (2) Disconnect the B41 VSV connector.
  (3) Measure the resistance between the terminals.
  Standard resistance (Check for open)

Tester Connection	Specified Condition
VSV for ACIS (B41-2) - 1E-6	Below 1 Ω

  (4) Reinstall the engine room junction block.
  (5) Reconnect the VSV connector.

NG → **REPAIR OR REPLACE HARNESS OR CONNECTOR**

OK

REPLACE ECM (See page ES-543)

Air Intake Control Circuit

DESCRIPTION

The air cleaner is equipped with two inlets, one of which is opened or closed by the Air Intake Control Valve (AICV). This system reduces intake noise and increases engine power at low-to-high engine speed range.

When the engine is operating in the low-to-mid speed range, this control operates the AICV to close one of the air cleaner inlets. When the engine speed is more than 3,600 rpm and the opening angle of the throttle valve is more than 60°, the ECM activates the VSV and opens the AICV.

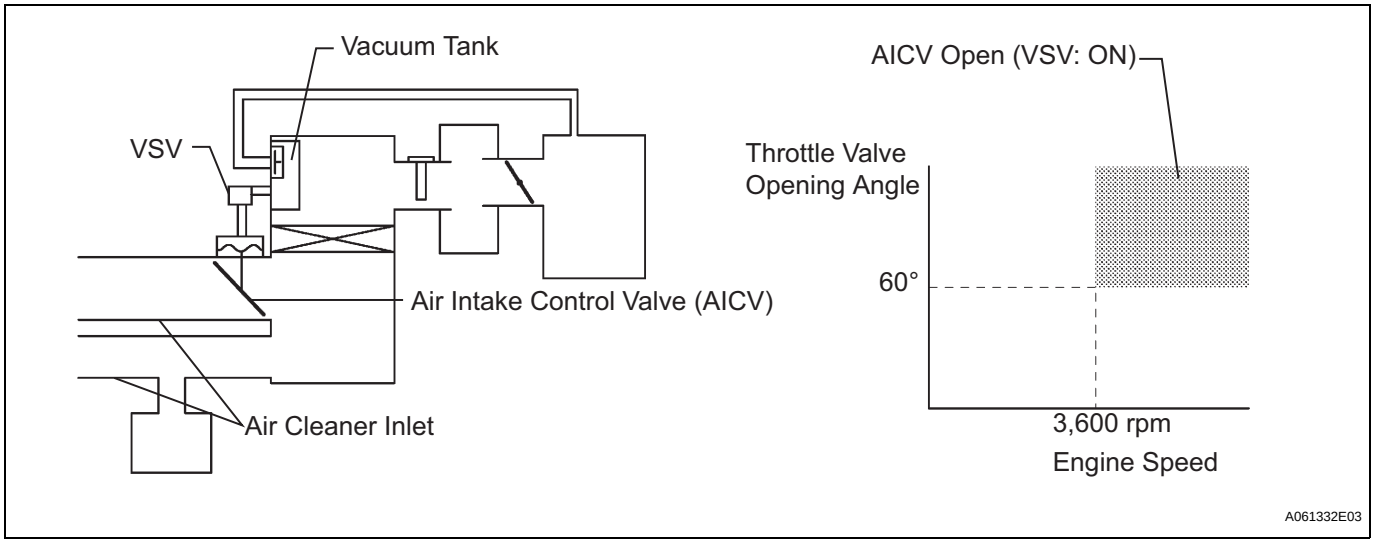

WIRING DIAGRAM

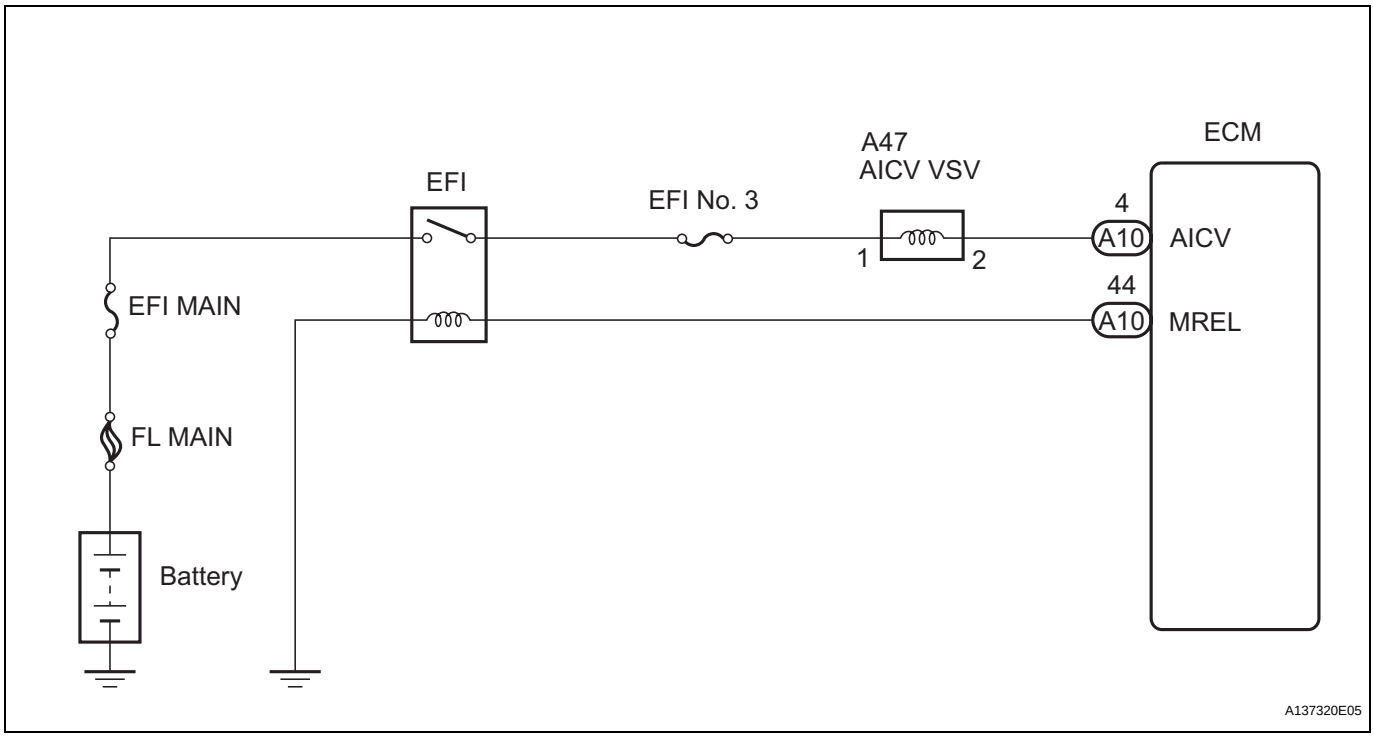

INSPECTION PROCEDURE

1	PERFORM ACTIVE TEST BY INTELLIGENT TESTER (VSV FOR AICV)

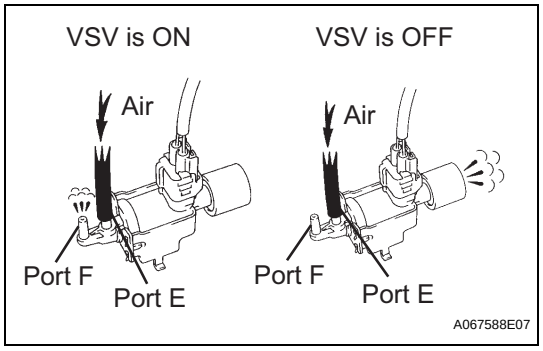

(a) Turn the engine switch on (IG) and turn the intelligent tester ON.
(b) Select the following menu items: DIAGNOSIS / ENHANCED OBD II / ACTIVE TEST / INTAKE CTL VSV1 and operate the VSV for AICV.
(c) Check the operation of the VSV when the VSV is operated by the intelligent tester.
Standard

Tester Operation	Specified Condition
VSV is ON	Air from port E flows out through port F
VSV is OFF	Air from port E flows out through the air filter

ES

OK → **Go to step 4**

NG

2	CHECK VSV (FOR AICV)

(a) Inspect the intake air control valve assembly (See page IT-6).

NG → **REPLACE INTAKE AIR CONTROL VALVE ASSEMBLY**

OK

ES

3	CHECK HARNESS AND CONNECTOR (VSV FOR AICV - ECM, VSV FOR AICV - EFI RELAY)

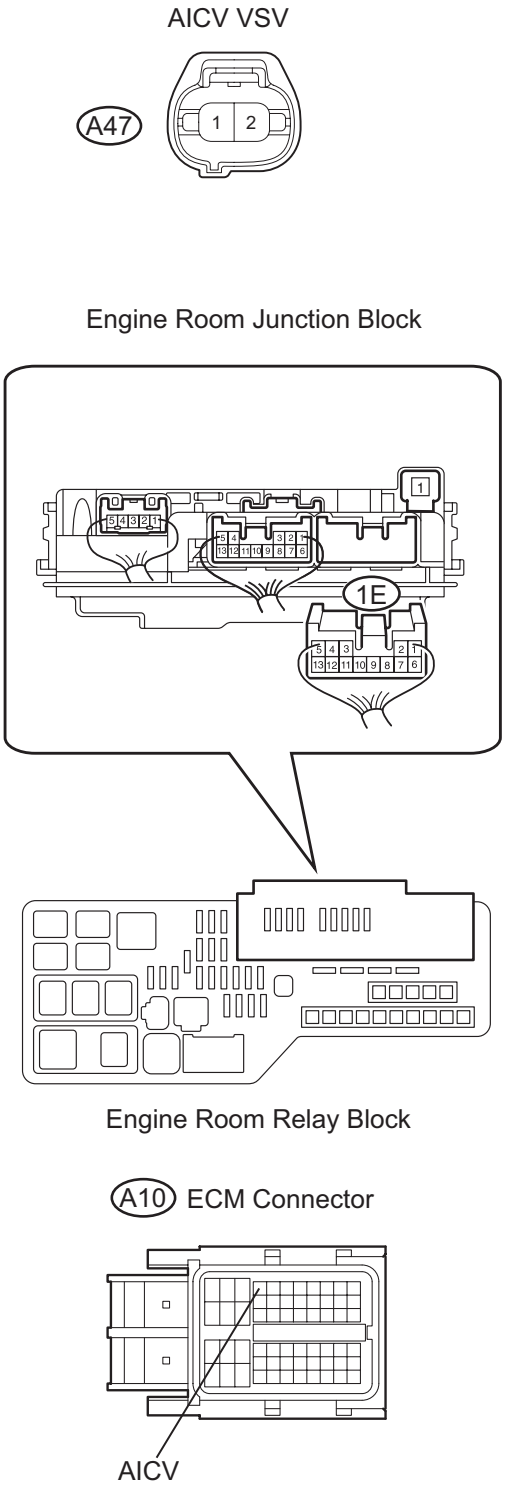

(a) Check the wire harness between the VSV for AICV connector and the ECM connector.
  (1) Disconnect the A47 VSV for AICV connector.
  (2) Disconnect the A10 ECM connector.
  (3) Measure the resistance according to the value(s) in the table below.
  Standard resistance (Check for open)

Tester Connection	Specified Condition
VSV for AICV (A47-2) - AICV (A10-4)	Below 1 Ω

Standard resistance (Check for short)

Tester Connection	Specified Condition
VSV for AICV (A47-2) or AICV (A10-4) - Body ground	10 kΩ or higher

  (4) Reconnect the ECM connector.

(b) Check the EFI No. 3 fuse.
  (1) Remove the EFI No. 3 fuse from the engine room R/B.
  (2) Measure the resistance of the EFI No. 3 fuse.
  Standard resistance:
  Below 1 Ω
  (3) Reinstall the EFI No. 3 fuse.

(c) Check the wire harness between the VSV for AICV and the EFI relay.
  (1) Remove the engine room junction block from the engine room R/B.
  (2) Measure the resistance between the terminals of the wire harness side connectors.
  Standard resistance (Check for open)

Tester Connection	Specified Condition
VSV for AICV (A47-1) - 1E-6	Below 1 Ω

  (3) Reconnect the VSV for AICV connector.
  (4) Reinstall the engine room junction block.

NG → **REPAIR OR REPLACE HARNESS OR CONNECTOR**

OK

4	INSPECT VACUUM TANK

(a) Inspect the vacuum tank (See page IT-3).

NG → **REPAIR OR REPLACE AIR CLEANER CAP**

OK

REPLACE ECM (See page ES-543)

MIL Circuit

DESCRIPTION

The MIL (Malfunction Indicator Lamp) is used to indicate vehicle malfunctions detected by the ECM. When the engine switch is turned on (IG), power is supplied to the MIL circuit, and the ECM provides the circuit ground which illuminates the MIL.
The MIL operation can be checked visually: When the engine switch is first turned on (IG), the MIL should be illuminated and should then turn off. If the MIL remains illuminated or is not illuminated, conduct the following troubleshooting procedure using the intelligent tester.

WIRING DIAGRAM

ES

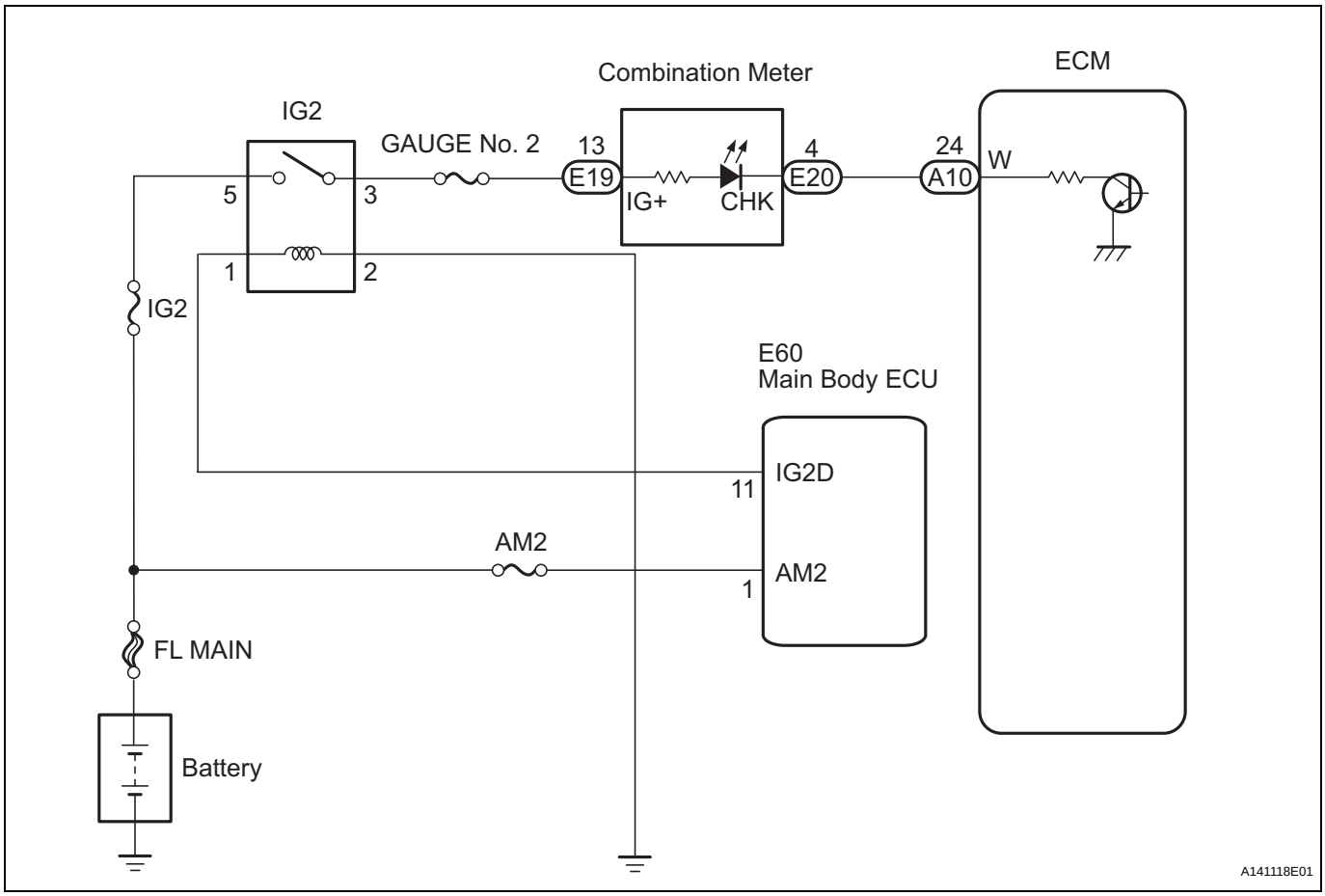

INSPECTION PROCEDURE

1	CHECK THAT MIL IS ILLUMINATED

(a) Perform troubleshooting in accordance with the table below:
Result

Conditions	Proceed to
MIL remains ON	A
MIL does not illuminate	B

B	Go to step 5

A

2	CHECK WHETHER MIL TURNS OFF

(a) Connect the intelligent tester to the DLC3.
(b) Turn the engine switch on (IG) and turn the tester on.
(c) Select the following menu items: DIAGNOSIS / ENHANCED OBD II / DTC INFO / CURRENT CODES.
(d) Check if any DTCs have been stored. Note down any DTCs.
(e) Clear the DTCs (See page ES-41).
(f) Check if the MIL goes off.
Standard:
MIL goes off.

OK → **REPAIR CIRCUITS INDICATED BY OUTPUT DTCS (See page ES-59)**

NG

3	CHECK HARNESS AND CONNECTOR (CHECK FOR SHORT IN WIRE HARNESS)

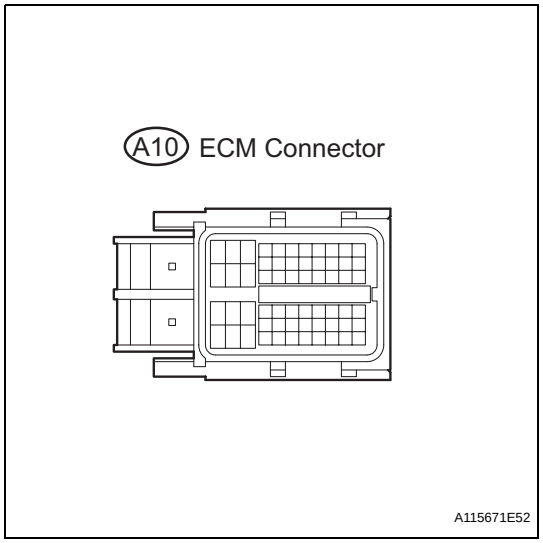

(a) Disconnect the A10 ECM connector.
(b) Turn the engine switch on (IG).
(c) Check that the MIL is not illuminated.
OK:
MIL is not illuminated.
(d) Reconnect the ECM connector.

OK → **REPLACE ECM (See page ES-543)**

NG

ES

4	CHECK HARNESS AND CONNECTOR (COMBINATION METER - ECM)

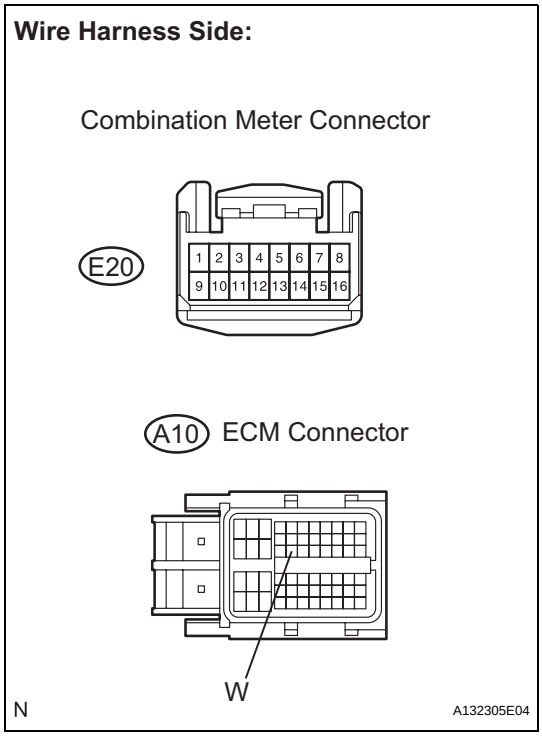

(a) Disconnect the A10 ECM connector.
(b) Disconnect the E20 combination meter connector.
(c) Measure the resistance.
Standard resistance (Check for short)

Tester Connection	Specified Condition
A10-24 (W) or E20-4 (CHK) - Body ground	10 kΩ or higher

(d) Reconnect the ECM connector.
(e) Reconnect the combination meter connector.

OK → **REPAIR OR REPLACE COMBINATION METER ASSEMBLY**

NG

REPAIR OR REPLACE HARNESS OR CONNECTOR

5	CHECK THAT MIL IS ILLUMINATED

(a) Check if the MIL is illuminated when the engine switch is turned on (IG).
OK:
MIL is illuminated.

OK → **SYSTEM OK**

NG

6	CHECK THAT ENGINE STARTS

(a) Turn the engine switch on (IG).
(b) Start the engine.
Result

Result	Proceed to
Engine starts	A
Engine does not start*	B

HINT:
*: The intelligent tester cannot communicate with the ECM.

B → **GO TO VC OUTPUT CIRCUIT (See page ES-436)**

A

7	INSPECT COMBINATION METER ASSEMBLY (MIL CIRCUIT)

(a) Check the MIL circuit (See page ME-14).

NG → **REPAIR OR REPLACE COMBINATION METER ASSEMBLY**

OK

CHECK AND REPLACE HARNESS AND CONNECTOR (COMBINATION METER - ECM)

CHECK FOR INTERMITTENT PROBLEMS

HINT:
Inspect the vehicle's ECM using check mode. Intermittent problems are easier to detect with an intelligent tester when the ECM is in check mode. In check mode, the ECM uses 1 trip detection logic, which is more sensitive to malfunctions than normal mode (default), which uses 2 trip detection logic.

1. Clear the DTCs.
2. Switch the ECM from normal mode to check mode using an intelligent tester (See page ES-45).
3. Perform a simulation test (See page IN-39).
4. Check and wiggle the harness(es), connector(s) and terminal(s) (See page IN-34).

BASIC INSPECTION

When the malfunction is not confirmed by the DTC check, troubleshooting should be carried out in all circuits considered to be possible causes of the problem. In many cases, by carrying out the basic engine check shown in the following flowchart, the location of the problem can be found quickly and efficiently. Therefore, using this check is essential when troubleshooting the engine.

1 CHECK BATTERY VOLTAGE

NOTICE:
Carry out this check with the engine stopped and the engine switch off.
Result

Result	Proceed to
11 V or more	OK
Below 11 V	NG

NG → **CHARGE OR REPLACE BATTERY**

OK ↓

2 CHECK WHETHER ENGINE CRANKS

NG → **PROCEED TO PROBLEM SYMPTOMS TABLE**

OK ↓

3 CHECK WHETHER ENGINE STARTS

NG → **GO TO STEP 6**

OK ↓

4 CHECK AIR FILTER

(a) Visually check that the air filter is not excessively contaminated with dirt or oil.

NG → **REPLACE AIR FILTER**

OK ↓

5 CHECK IDLING SPEED

NG → **TROUBLESHOOT IDLING SPEED AND PROCEED TO NEXT STEP**

OK

6	CHECK FUEL PRESSURE

NG → TROUBLESHOOT FUEL PRESSURE AND PROCEED TO NEXT STEP

OK

7	CHECK FOR SPARKS

NG → TROUBLESHOOT SPARK AND PROCEED TO NEXT STEP

OK

PROCEED TO PROBLEM SYMPTOMS TABLE

HOW TO PROCEED WITH TROUBLESHOOTING

HINT:
- Use this procedure to troubleshoot the active engine mounting system.
- The intelligent tester should be used in steps 2, 6 and 7.

ES

1	VEHICLE BROUGHT TO WORKSHOP

NEXT

2	CUSTOMER PROBLEM ANALYSIS

NEXT

3	INSPECT BATTERY VOLTAGE

Standard voltage:
11 to 14 V

If the voltage is below 11 V, recharge or replace the battery before proceeding.

NEXT

4	CHECK AND CLEAR DTCS

(a) Refer to the DTC CHECK / CLEAR (See page ES-477).

NEXT

5	VISUAL INSPECTION

NEXT

6	PERFORM ACTIVE TEST

(a) Connect the intelligent tester to the DLC3.
(b) Start the engine.
(c) Select the item "DIAGNOSIS / OBD/MOBD / E-ACM / ACTIVE TEST / CHECK THE E-ACM".

NEXT

7	CHECK FOR DTC

(a) Check for DTCs and note any codes that are output.
(b) Delete the DTC.

(c) Recheck for DTCs. Try to prompt the DTC by simulating the original activity that the DTC suggests.

Result

Result	Proceed to
DTC does not reoccur	A
DTC reoccurs	B

B → **GO TO DTC CHART**

A

ES

8 OVERALL ANALYSIS AND TROUBLESHOOTING

(a) Terminals of ECU (See page ES-474).

NEXT

9 ADJUST, REPAIR OR REPLACE

NEXT

10 CONFIRMATION TEST

NEXT

END

TERMINALS OF ECU

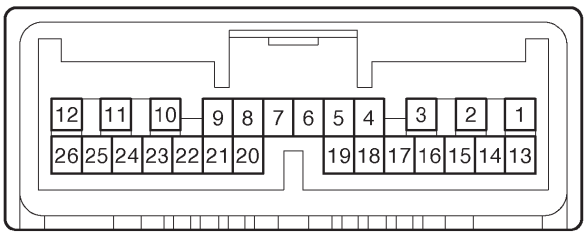

N I034896E12

Symbols (Terminal No.)	Wiring Color	Terminal Description	Condition	Specified Condition
+B (A9-2) - GND (A9-12)	B - GR	+B (BATT) power supply	Always	10 to 14 V
IG2 (A9-10) - GND (A9-12)	P - GR	Ignition power supply	Engine switch on (IG)	10 to 14 V
ACT+ (A9-1) - ACT- (A9-3)	R - L	E-ACM actuator	Idling	Pulse generation (see waveform 1)
VGS (A9-24) - GGND (A9-26)	B - R	Acceleration sensor power supply	Engine switch on (IG)	4.5 to 5.2 V
GL1 (A9-19) - GGND (A9-26)	W - R	Acceleration sensor output voltage	Engine switch on (IG)	0.11 to 4.46 V
TACH (A9-16) - GND (A9-12)	B - GR	Engine speed	Idling	Pulse generation (see waveform 2)
CANH (A9-14) - GND (A9-12)	G - GR	MPX line	Always	Pulse generation (see waveform 3)
CANL (A9-13) - GND (A9-12)	R - GR	MPX line	Always	Pulse generation (see waveform 4)

ES

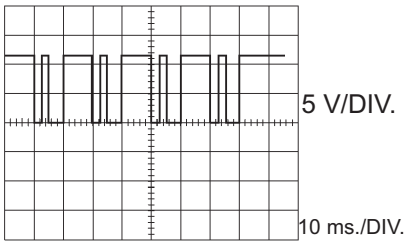

Y A009437E06

1. Waveform 1

(a) Active control engine mount actuator signal

Symbols (Terminal No.)	Between ACT+ and ACT-
Tool Setting	5 V/DIV., 10 ms./DIV.
Condition	Idling with warm engine

HINT:
- The duty ratio varies depending on the active control engine mount actuator operation.
- Do not disconnect the active control engine mount ECU connector.

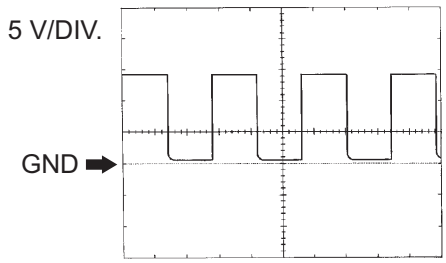

A093225E11

2. Waveform 2

(a) Engine speed signal

Symbols (Terminal No.)	Between TACH and GND
Tool Setting	5 V/DIV., 10 ms./DIV.
Condition	Idling

HINT:
The wavelength becomes shorter as the engine rpm increases.

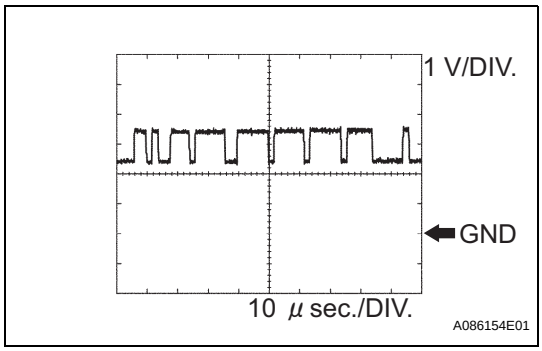

3. Waveform 3

(a) CAN communication signal

Symbols (Terminal No.)	Between CANH and E1
Tool Setting	1 V/DIV., 10 μs/DIV.
Condition	Stop engine and engine switch on (IG)

HINT:
The waveform varies depending on the CAN communication signal.

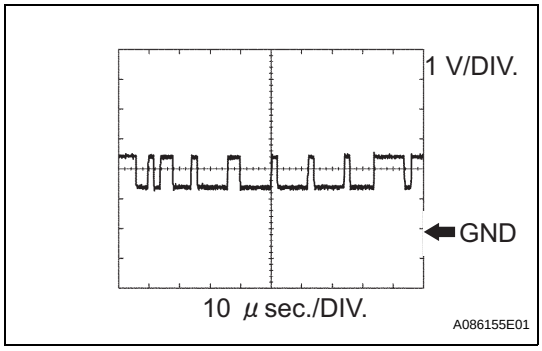

4. Waveform 4

(a) CAN communication signal

Symbols (Terminal No.)	Between CANL and E1
Tool Setting	1 V/DIV., 10 μs/DIV.
Condition	Stop engine and engine switch on (IG)

HINT:
The waveform varies depending on the CAN communication signal.

ES

DIAGNOSIS SYSTEM

1. DESCRIPTION

(a) The active control engine mount ECU controls the functions of the CAN communication system on the vehicle. Data of the CAN communication system and the Diagnostic Trouble Codes (DTCs) can be read through the Data Link Connector 3 (DLC3) of the vehicle.

2. CHECK DLC3

The vehicle's ECU uses ISO 15765-4 for communication protocol. The terminal arrangement of the DLC3 complies with SAEJ 1962 and matches the ISO 15765-4 format.

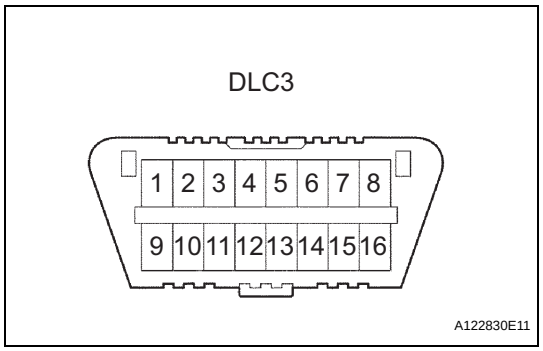

Symbols	Terminal No.	Names	Reference terminal	Results	Condition
SIL	7	Bus "+" line	5 - Signal ground	Pulse generation	During transmission
CG	4	Chassis ground	Body ground	1 Ω or less	Always
SG	5	Signal ground	Body ground	1 Ω or less	Always
BAT	16	Battery ground	Body ground	9 to 14 V	Always
CANH	6	CAN "High" line	CANL	54 to 69 Ω	Engine switch off
CANH	6	CAN "High" line	Battery positive	6 kΩ or higher	Engine switch off
CANH	6	CAN "High" line	CG	200 Ω or higher	Engine switch off
CANL	14	CAN "Low" line	Battery positive	6 kΩ or higher	Engine switch off
CANL	14	CAN "Low" line	CG	200 Ω or higher	Engine switch off

HINT:
The DLC3 is the interface prepared for reading various data from the vehicle's ECU. After connecting the cable of an intelligent tester, turn the engine switch on (IG) and turn the tester on. If a communication failure message is displayed on the tester screen (on the tester: UNABLE TO CONNECT TO VEHICLE), a problem exists in either the vehicle or tester. In order to identify the location of the problem, connect the tester to another vehicle.
If communication is normal: Inspect the DLC3 on the original vehicle.
If communication is still not possible: The problem is probably in the tester itself. Consult the Service Department listed in the instruction manual.

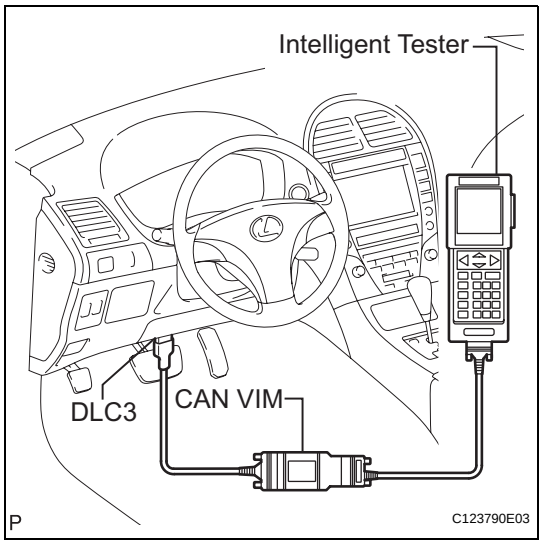

(a) Intelligent tester
HINT:
Connect the cable of the intelligent tester to the DLC3, turn the engine switch on (IG) and attempt to use the tester. If the display indicates that a communication error has occurred, there is a problem either with the vehicle or with the tester.
- If communication is normal when the tester is connected to another vehicle, inspect the DLC3 of the original vehicle.
- If communication is still not possible when the tester is connected to another vehicle, the problem may be in the tester itself. Consult the Service Department listed in the tester's instruction manual.

3. INSPECT BATTERY VOLTAGE
Standard voltage:
11 to 14 V
If the voltage is below 11 V, recharge or replace the battery before proceeding.

DTC CHECK / CLEAR

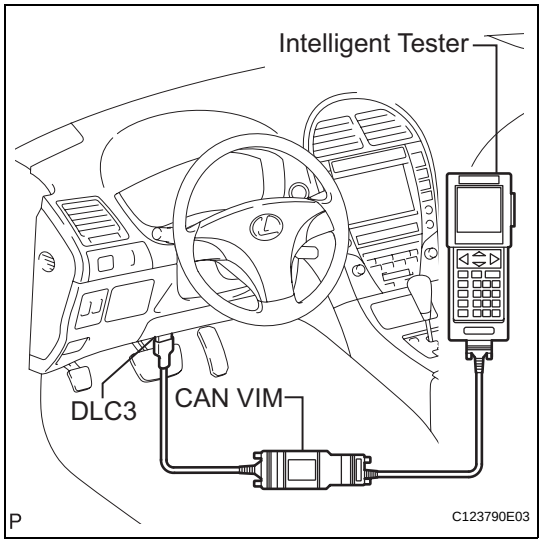

1. CHECK DTC
(a) Connect the intelligent tester to the DLC3.
(b) Turn the engine switch on (IG).
(c) Enter the following menus: DIAGNOSIS / OBD/ MOBD / E-ACM / DTC INFO / CURRENT CODE.
(d) Check the DTCs on the tester screen.
HINT:
Refer to the intelligent tester operator's manual for further details.

2. CLEAR DTC
(a) Connect the intelligent tester to the DLC3.
(b) Turn the engine switch on (IG).
(c) Erase the DTCs by following the prompts on the tester screen.
(d) Enter the following menus: DIAGNOSIS / OBD/ MOBD / E-ACM / DTC INFO / CLEAR CODE.
HINT:
Refer to the intelligent tester operator's manual for further details.

DIAGNOSTIC TROUBLE CODE CHART

If any trouble code is displayed during DTC check, check the circuit corresponding to the code in the table below. Proceed to the page given for the circuit.

ACTIVE ENGINE MOUNTING:

DTC Code	Detection Item	Trouble Area	See page
P16A0	G Sensor Circuit	1. Open or short in acceleration sensor circuit 2. Acceleration sensor power source circuit 3. Acceleration sensor 4. Active control engine mount ECU	ES-481
P16A1	Linear Solenoid Circuit or G Sensor Circuit	1. Open or short in active control engine mount actuator circuit 2. Front engine mounting insulator 3. Acceleration sensor 4. Active control engine mount ECU	ES-484
P16A2	Battery High Voltage	1. ECU power source circuit 2. Active control engine mount ECU	ES-487
P16A3	TACH Signal Communication	1. Open or short in TACH signal circuit 2. Active control engine mount ECU 3. ECM	ES-489
P16A4	High Speed CAN Communication Bus	1. CAN communication system 2. Active control engine mount ECU 3. ECM 4. A/C amplifier 5. Skid control ECU	ES-492

DTC	P16A0	G Sensor Circuit

DESCRIPTION

A G sensor is installed on the front engine mount to detect vibration of the vehicle. The ECU uses signals sent from the G sensor to determine the vehicle condition, control the active control engine mount actuator, and detect malfunctions in the mount. If there is a malfunction in the G sensor, the ECU stops Active control engine mount operation.

DTC No.	DTC Detection Condition	Trouble Area
P16A0	While the power source voltage of the G sensor (VGS) is 4.8 V or more and less than 5.2 V, the GL1 voltage is less than 0.03 x VGS, or 0.94 x VGS or more for 10 seconds or more.	• Acceleration sensor • Acceleration sensor power source circuit • Open or short in acceleration sensor circuit • Active control engine mount ECU
	While the power source voltage of the G sensor (VGS) is less than 1 V, the GL1 voltage is less than 0.03 x VGS for 10 seconds or more.	
	Power source voltage of the G sensor is less than 4.8 V or 5.2 V or more for 10 seconds or more.	
	Difference between the current 11-fold G sensor value and the last 11-fold G sensor value exceeds the specified value.	
	The G sensor standard voltage in the ECU remains less than 2 V or 3 V or more for 10 seconds or more.	

ES

WIRING DIAGRAM

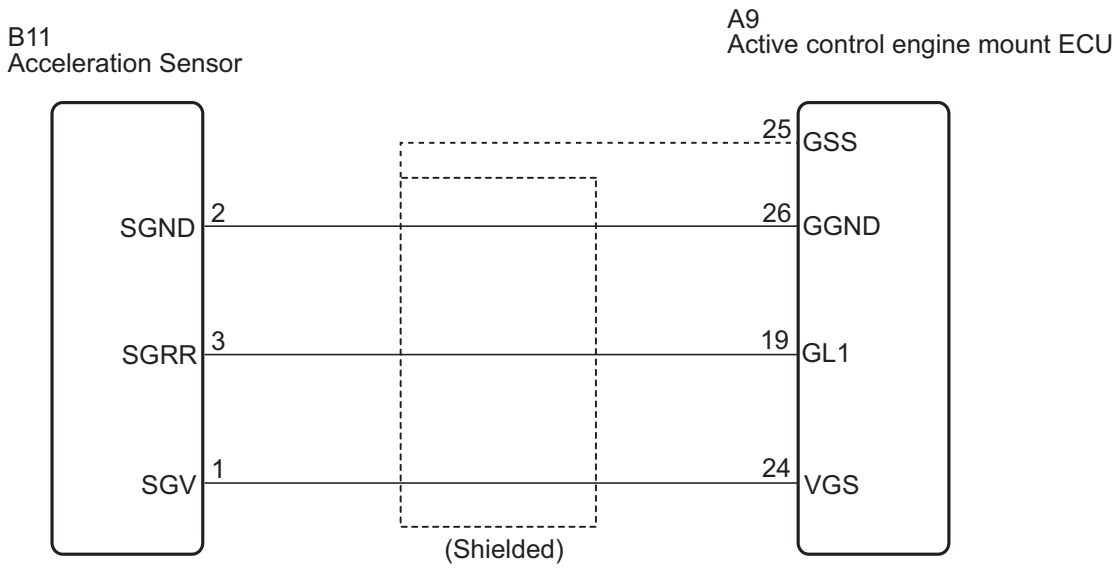

C A140957E03

INSPECTION PROCEDURE

1	READ VALUE OF INTELLIGENT TESTER (G SENS VOL (1X))

(a) Connect the intelligent tester to DLC3.
(b) Start the engine and turn the tester on.

(c) Enter the following menus: DIAGNOSIS / OBD/MOBD / E-ACM / DATA LIST.
(d) Read the G SENS VOL (1X) value.
Standard voltage:
The voltage changes within the range of 0.11 to 4.46 V.

NG → **Go to step 3**

OK

ES

2	READ VALUE OF INTELLIGENT TESTER (G SENS VOL (11X) AND G SENS STD VOL)

(a) Connect the intelligent tester to DLC3.
(b) Start the engine and turn the tester ON.
(c) Enter the following menus: DIAGNOSIS / OBD/MOBD / E-ACM / DATA LIST.
(d) Read the G SENS VOL (11X).
Standard voltage:
The voltage changes within the range of 0 to 5 V.
(e) Read the G SENS STD VOL value.
Standard voltage:
1.94 to 3.08 V

OK → **REPLACE ACTIVE CONTROL ENGINE MOUNT ECU**

NG

3	CHECK HARNESS AND CONNECTOR (ACTIVE CONTROL ENGINE MOUNT ECU - ACCELERATION SENSOR)

Wire Harness Side:

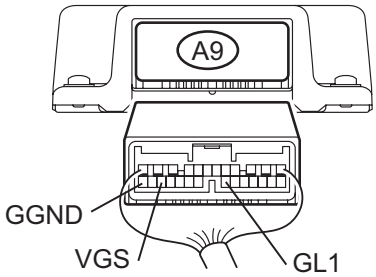

Acceleration Sensor Connector (Front View):

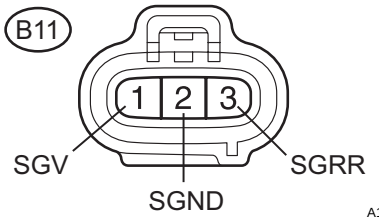

N A140981E02

(a) Disconnect the A9 E-ACM ECU connector and B11 acceleration sensor connector.
(b) Measure the resistance according to the value(s) in the table below.
Standard resistance

Tester Connection	Specified Value
VGS (A9-24) - SGV (B11-1)	Below 1 Ω
GL1 (A9-19) - SGRR (B11-3)	Below 1 Ω
GGND (A9-26) - SGND (B11-2)	Below 1 Ω

NG → **REPAIR OR REPLACE HARNESS OR CONNECTOR**

OK

4 CHECK POWER SOURCE CIRCUIT (ACCELERATION SENSOR)

Wire Harness Side:

Acceleration Sensor Connector (Front View)

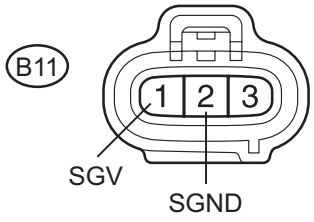

(a) Disconnect the B11 acceleration sensor connector.
(b) Measure the voltage according to the value(s) in the table below.

Standard voltage

Tester Connection	Specified Value
SGV (B11-1) - SGND (B11-2)	4.5 to 5.2 V

NG → **REPLACE ACTIVE CONTROL ENGINE MOUNT ECU**

ES

OK

REPLACE ACCELERATION SENSOR

DTC	P16A1	Linear Solenoid Circuit or G Sensor Circuit

DESCRIPTION

The ECU receives information from the G sensor, ECM (engine speed, engine load ratio coolant temperature, and shift position) skid control ECU (vehicle speed), and A/C ECU (ambient temperature). Based on this information, the ECU drives the solenoid actuator that is built in the front mount to generate vibration that is opposite to the engine vibration in order to reduce engine vibration.

DTC No.	DTC Detection Condition	Trouble Area
P16A1	While the active control engine mount ECU is controlling the actuators, problems (open circuit, short circuit, overcurrent, etc.) occur in the ECU, actuators, or the circuits.	• Acceleration sensor • Front engine mounting insulator • Open or short in active control engine mount actuator circuit • Active control engine mount ECU
	The vibration signal level from the acceleration sensor is lower than specified (problems with the sensor or the actuator may be stuck).	

ES

WIRING DIAGRAM

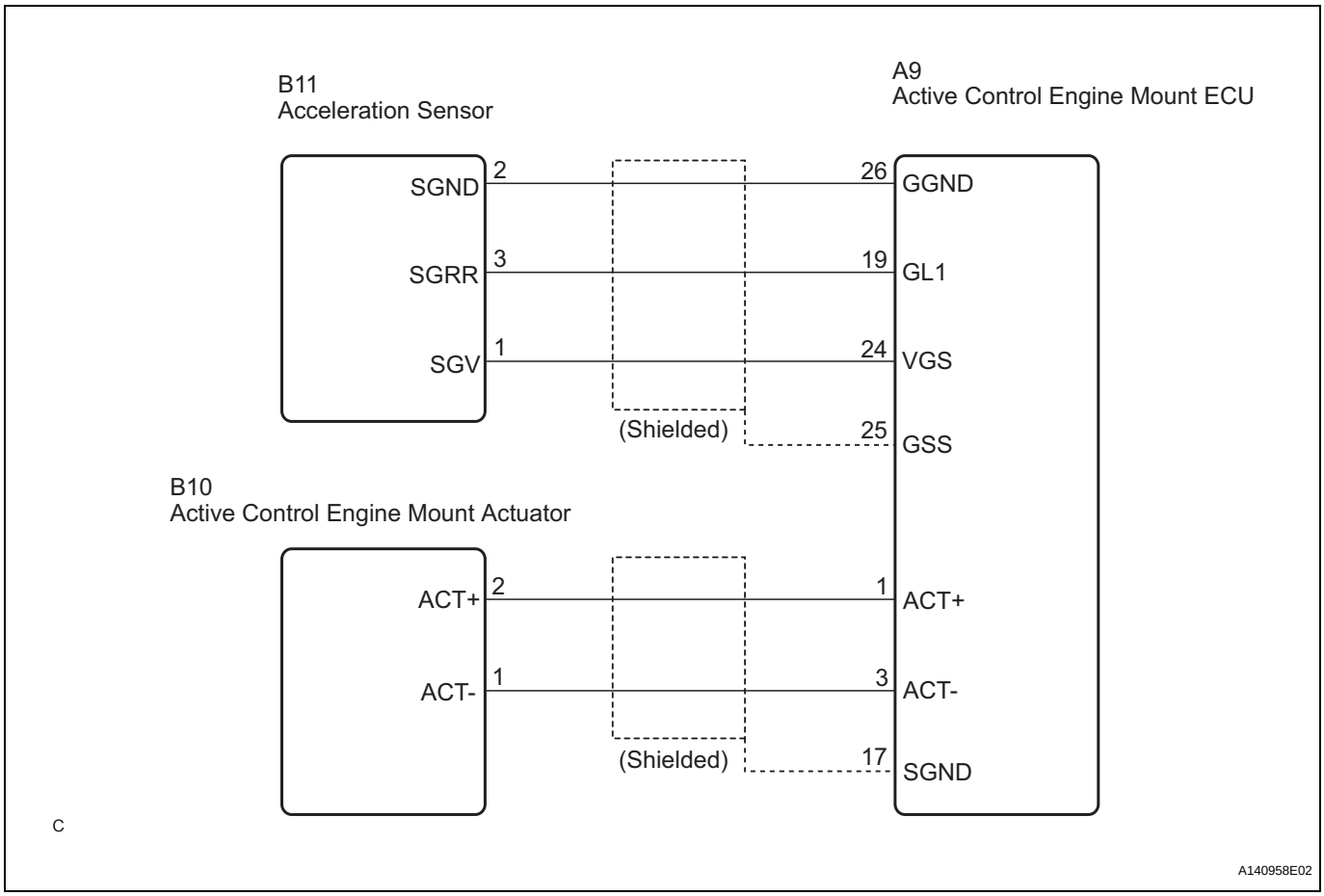

INSPECTION PROCEDURE

1	PERFORM ACTIVE TEST BY INTELLIGENT TESTER (CHECK THE E-ACM)

(a) Connect the intelligent tester to DLC3.
(b) Start the engine and turn the tester ON.

(c) Enter the following menus: DIAGNOSIS / OBD/MOBD / E-ACM / ACTIVE TEST.

(d) Check if the active mount control actuator operates.

Standard:

The active mount control actuator operates normally.

OK → **CHECK ACCELERATION SENSOR (See page ES-481)**

NG

2	CHECK FRONT ENGINE MOUNTING INSULATOR (ACTIVE CONTROL ENGINE MOUNT ACTUATOR)

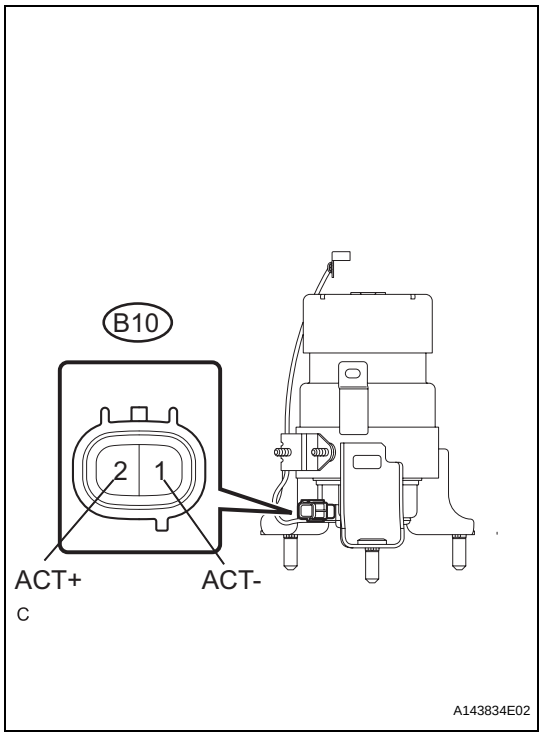

(a) Disconnect the B10 active control mount actuator connector.

(b) Measure the resistance between the ACT+ and ACT- terminals of the actuator connector.

Standard resistance

Tester Connection	Specified Value
ACT+ (B10-2) - ACT- (B10-1)	0.73 to 0.77 Ω
ACT+ (B10-2) - Body ground	1 MΩ or higher
ACT- (B10-1) - Body ground	1 MΩ or higher

NG → **REPLACE FRONT ENGINE MOUNTING INSULATOR**

OK

ES

3	CHECK HARNESS AND CONNECTOR (ECU - ACTUATOR)

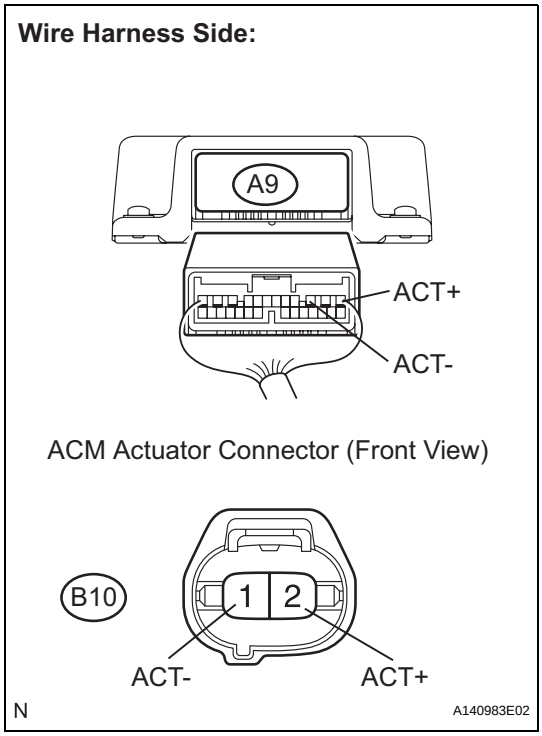

(a) Disconnect the A9 active control engine mount ECU connector and B10 active control engine mount actuator connector.

(b) Measure the resistance according to the value(s) in the table below.

Standard resistance

Tester Connection	Specified Value
ACT+ (A9-1) - ACT+ (B10-2)	Below 1 Ω
ACT- (A9-3) - ACT- (B10-1)	Below 1 Ω

NG → **REPAIR OR REPLACE HARNESS OR CONNECTOR**

OK

REPLACE ACTIVE CONTROL ENGINE MOUNT ECU

ES

DTC	P16A2	Battery High Voltage

DESCRIPTION

If power source voltage drops, the control will stop because the ECU does not operate. If the power source voltage exceeds the specified level, the control is stopped to protect the actuator.

DTC No.	DTC Detection Condition	Trouble Area
P16A2	IG voltage is more than 16 V for 0.5 seconds or more.	• ECU power source circuit • Active control engine mount ECU

WIRING DIAGRAM

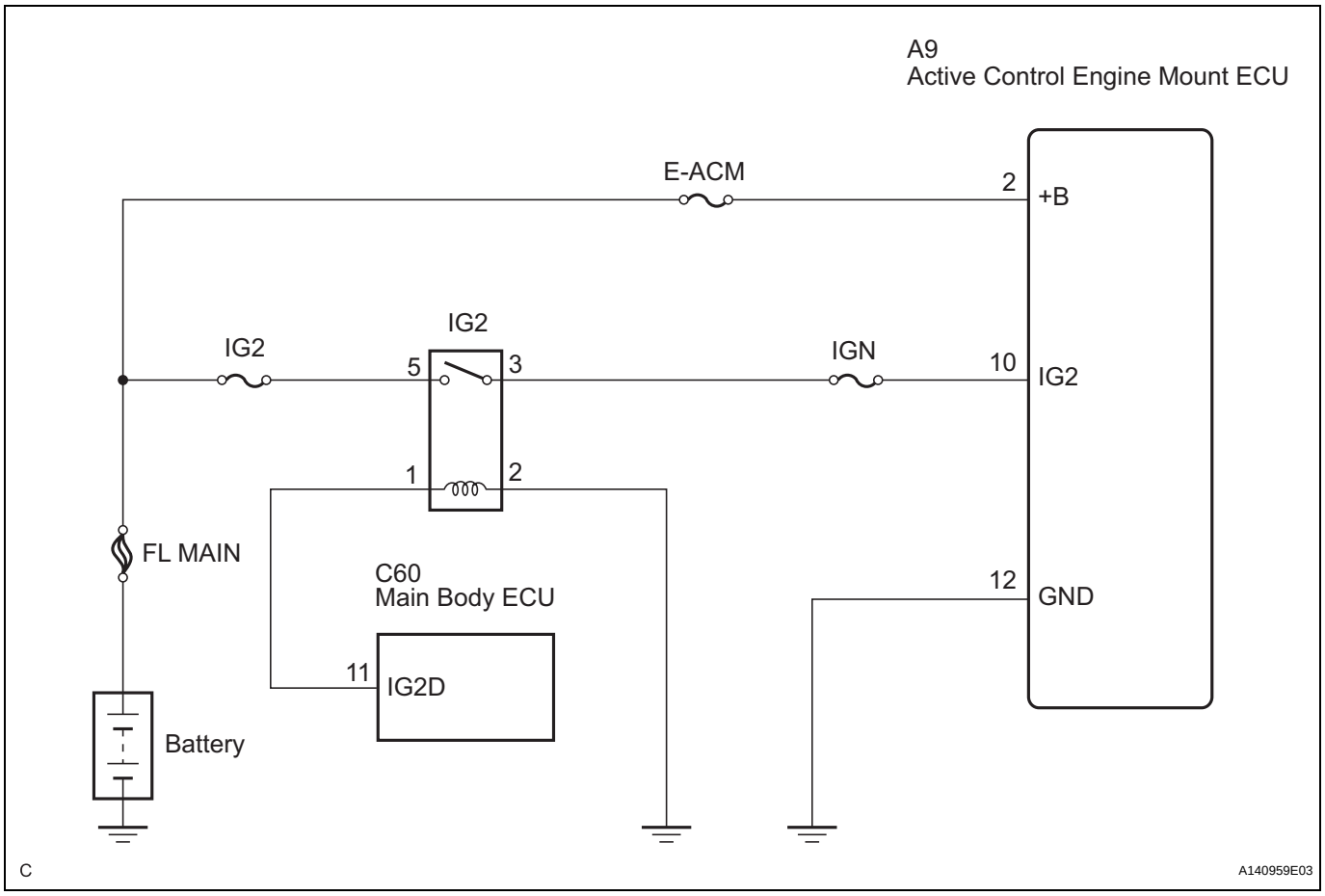

ES

INSPECTION PROCEDURE

1	CHECK ECU TERMINAL VOLTAGE (+B AND IG2 VOLTAGE)

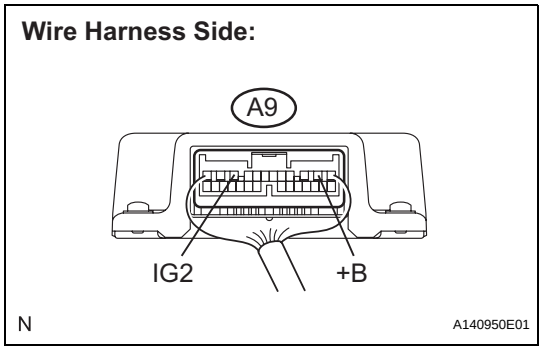

(a) Measure the voltage according to the value(s) in the table below.

Standard voltage

Tester Connection	Condition	Specified Value
+B (A9-2) - Body ground	Always	10 to 14 V
IG2 (A9-10) - Body ground	Engine switch on (IG)	10 to 14 V

NG → **CHECK AND REPAIR HARNESS AND CONNECTOR (E-ACM AND IGN FUSE - ACTIVE CONTROL ENGINE MOUNT ECU)**

OK

2	CHECK HARNESS AND CONNECTOR (ACM ECU - BODY GROUND)

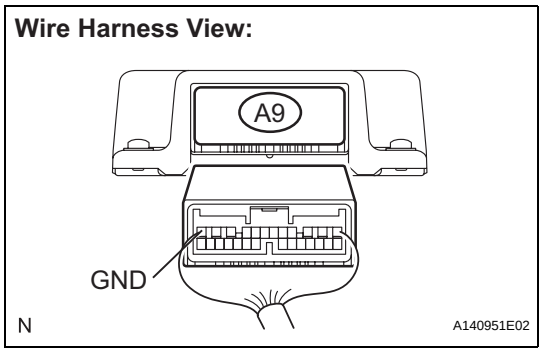

(a) Disconnect the A9 active control engine mount ECU connector.

(b) Measure the resistance according to the value(s) in the table below.

Standard resistance

Tester Connection	Specified Value
GND (A9-12) - Body ground	Below 1 Ω

NG → **REPAIR OR REPLACE HARNESS OR CONNECTOR**

OK

REPLACE ACTIVE CONTROL ENGINE MOUNT ECU

ES

DTC	P16A3	TACH Signal Communication

DESCRIPTION

If the TACH signal cannot be detected and if the communication is interrupted, the ECU will stop controlling the E-ACM.

DTC No.	DTC Detection Condition	Trouble Area
P16A3	TACH signals from the ECM remain interrupted for 1.3 seconds or more.	• Open or short in TACH signal circuit • Active control engine mount ECU • ECM

WIRING DIAGRAM

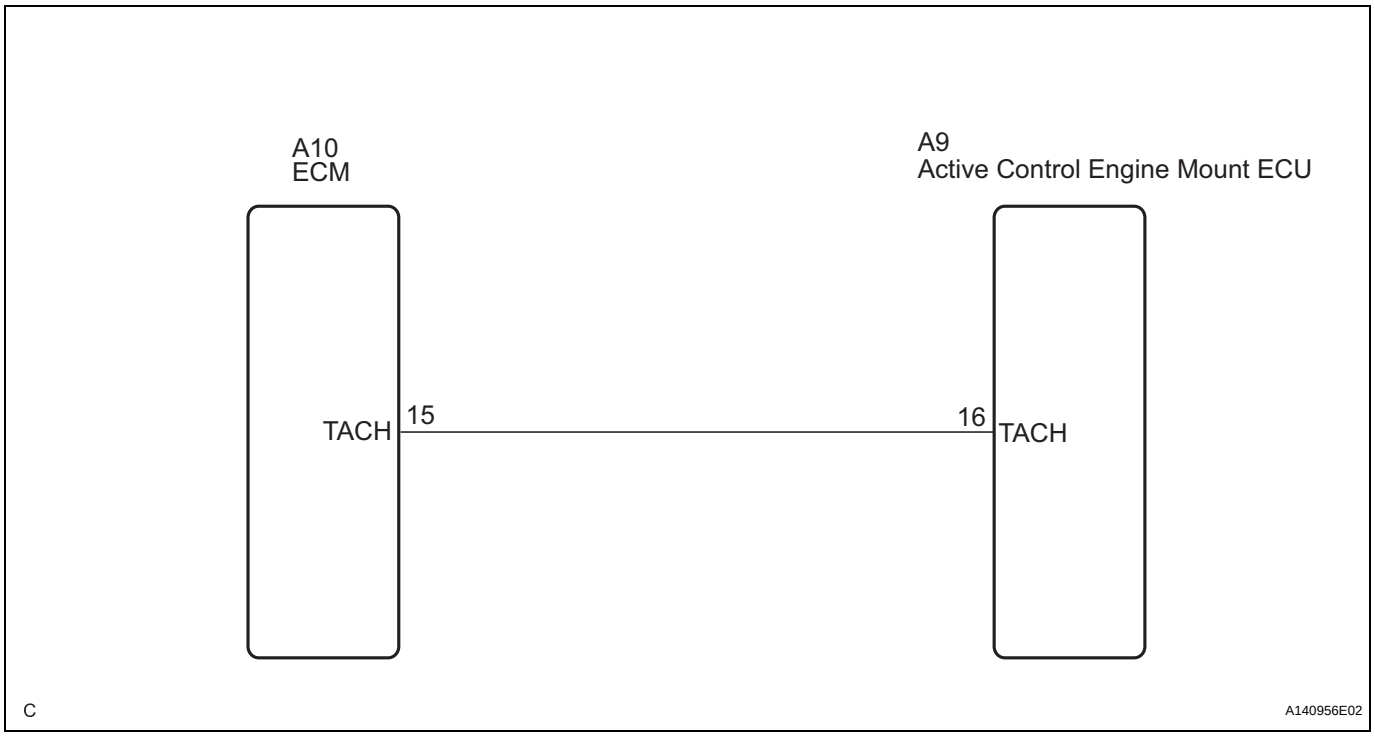

INSPECTION PROCEDURE

1 CHECK TERMINAL VOLTAGE (TACH TERMINAL)

Wire Harness Side:

Active Control Engine Mount ECU

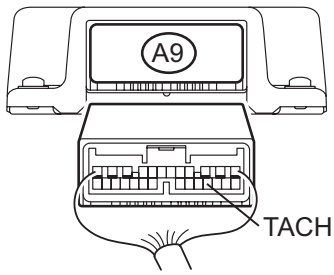

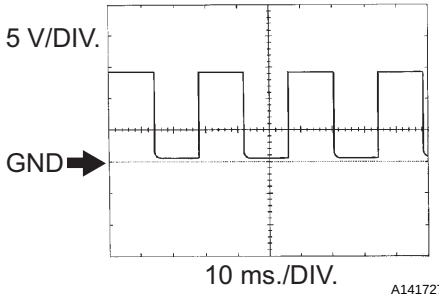

(a) Disconnect the A9 Active control engine mount ECU connector.

(b) Measure the voltage between the TACH terminal of the A9 Active control engine mount ECU connector and body ground.

Standard

Tester Connection	Specified Value
TACH (A9-16) - Body ground	Correct waveform is as shown

OK → **REPLACE ACTIVE CONTROL ENGINE MOUNT ECU**

NG

2 CHECK HARNESS AND CONNECTOR (ACTIVE CONTROL ENGINE MOUNT ECU - ECM)

Wire Harness Side:

ACM ECU Connector

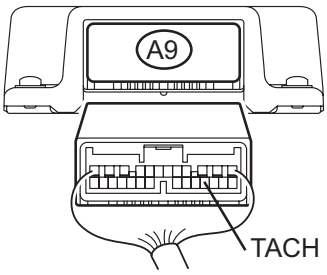

ECM Connector (Front View)

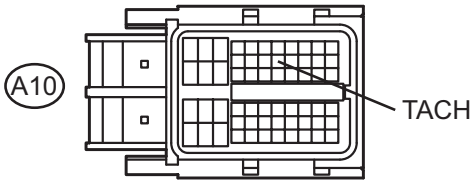

A140985E02

(a) Disconnect the A9 active control engine mount (ACM) ECU connector and A10 ECM connector.

(b) Measure the resistance according to the value(s) in the table below.

Standard resistance

Tester Connection	Specified Value
TACH (A9-16) - TACH (A10-15)	Below 1 Ω

NG → **REPAIR OR REPLACE HARNESS OR CONNECTOR**

ES

OK

REPLACE ECM

DTC	P16A4	High Speed CAN Communication Bus

DESCRIPTION

ECM skid control ECU and A/C amplifier intercommunicates with the active control engine mount ECU through the Controller Area Network (CAN). If there is a problem in this intercommunication, the active control engine mount ECU sets a DTC.

DTC No.	DTC Detection Condition	Trouble Area
P16A4	Communication between the ECM and E-ACM ECU is interrupted.	• ECM • Active control engine mount ECU • Skid control ECU • A/C amplifier • CAN communication system
	Signals indicating ambient temperature of less than -40°C (-40°F) or more than 50°C (122°F) are received for 10.6 seconds or more.	
	Signals indicating coolant temperature of less than -40°C (-40°F) or more than 140°C (284°F) are received for 1.25 seconds or more.	
	Signals indicating that more than one shift position are ON or all shift positions are OFF for 30 seconds or more.	

ES

INSPECTION PROCEDURE

HINT:

- Refer to inspection procedure for CAN communication system (See page CA-11).
- If the CAN communication malfunctions, the ECU cannot receive the current data from the ECM. However, reading the Data List as the first step of troubleshooting is effective to find malfunctions.
- The malfunction area can be checked using the BUS CHECK function of the intelligent tester (See page CA-41).

ECU Power Source Circuit

WIRING DIAGRAM

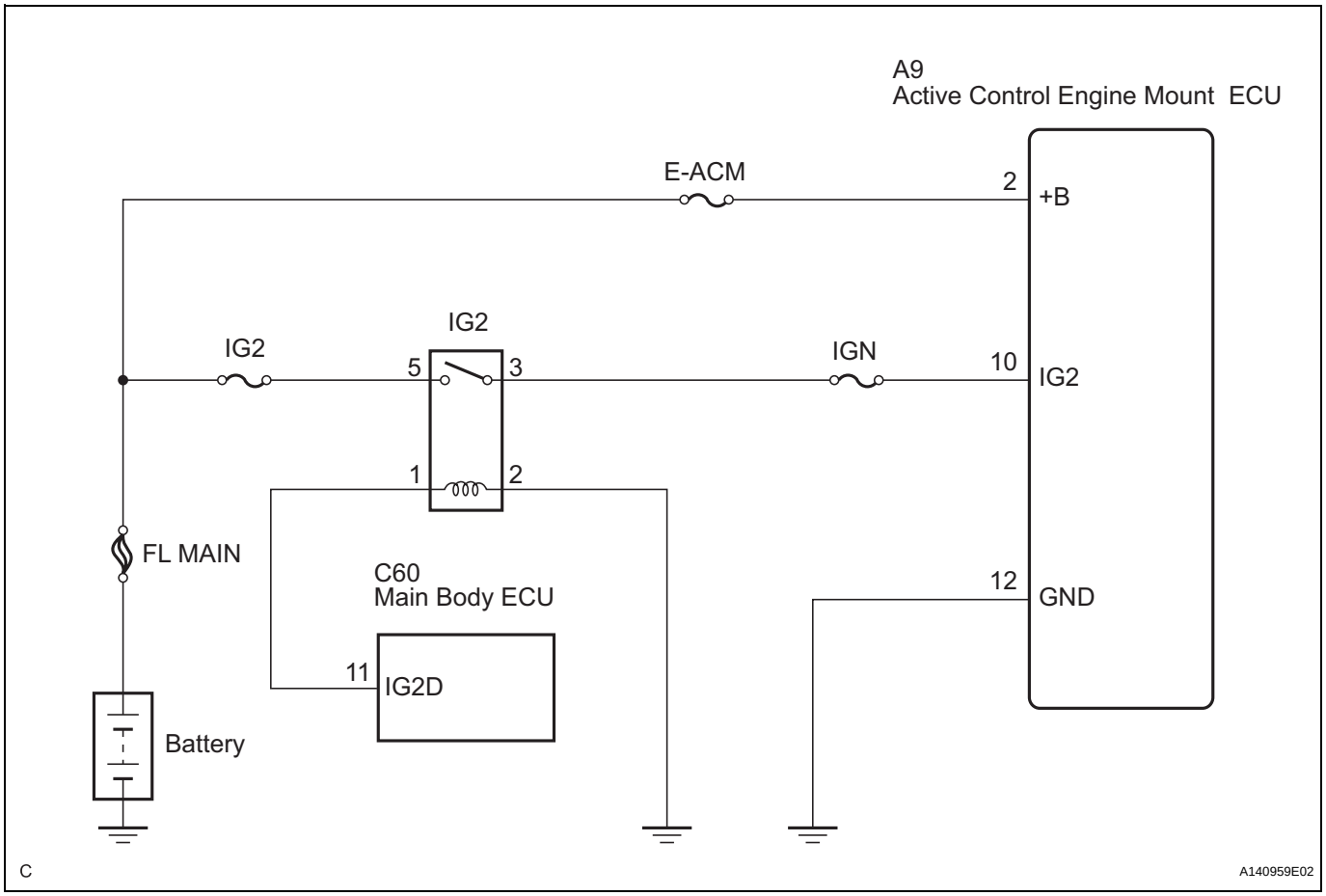

INSPECTION PROCEDURE

1	INSPECT ECU TERMINAL VOLTAGE (+B AND IG2 TERMINAL)

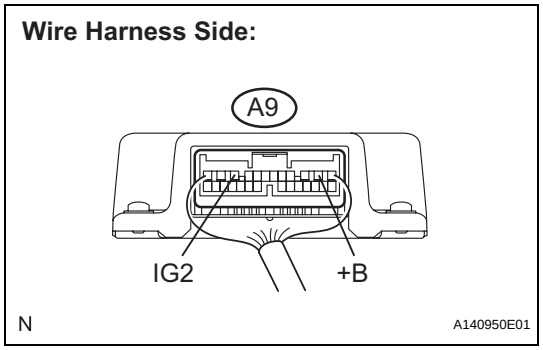

(a) Measure the voltage according to the value(s) in the table below.

Standard voltage

Tester Connection	Condition	Specified Value
+B (A9-2)- Body ground	Always	10 to 14 V
IG2 (A9-10) - Body ground	Engine switch on (IG)	10 to 14 V

OK → **CHECK FOR INTERMITTENT PROBLEMS**

NG

2	CHECK HARNESS AND CONNECTOR (ACTIVE CONTROL ENGINE MOUNT ECU - BODY GROUND)

Wire Harness View:

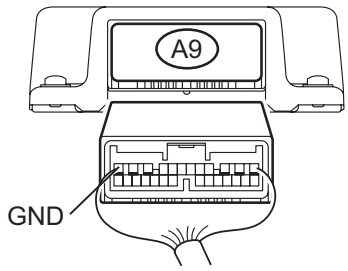

(a) Disconnect the active control engine mount ECU connector.

(b) Measure the resistance according to the value(s) in the table below.

Standard resistance

Tester Connection	Specified Condition
GND (A9-12) - Body ground	Below 1 Ω

(c) Reconnect the active control engine mount ECU connector.

NG → **REPAIR OR REPLACE HARNESS OR CONNECTOR (ACTIVE CONTROL ENGINE MOUNT ECU - BODY GROUND)**

OK

REPAIR OR REPLACE HARNESS OR CONNECTOR (ACTIVE CONTROL ENGINE MOUNT ECU - BATTERY)

ES

REGISTRATION

NOTICE:
The Vehicle Identification Number (VIN) must be input into the replacement ECM.
HINT:
The VIN is in the form of a 17-digit alphanumeric vehicle identification number. An intelligent tester is required to register the VIN.

1. INPUT INSTRUCTIONS

(a) The arrow buttons (UP, DOWN, RIGHT and LEFT) and numerical buttons (0 to 9) are used, in order to input the VIN.

(b) Cursor Operation
To move the cursor around the tester screen, press the RIGHT and LEFT buttons.

(c) Alphabetical Character Input
(1) Press the UP and DOWN buttons to select the desired alphabetical character.

(d) Numeric Character Input
(1) Press the numerical button corresponding to the number that you want to input.
HINT:
Numerical characters can be selected by using the UP and DOWN buttons.

(e) Correction
(1) When correcting the input character(s), put the cursor onto the character using the RIGHT or LEFT button.
(2) Select or input the correct character using the UP and DOWN buttons, or the numerical buttons.

(f) Finishing Input Operation
(1) Make sure that the input VIN matches the vehicle VIN after input.
(2) Press the ENTER button on the tester.

2. READ VIN (Vehicle Identification Number)

(a) The flowchart of the VIN reading process is shown. This process allows the VIN stored in the ECM to be read, in order to confirm that the two VINs, provided with the vehicle and stored in the vehicle's ECM, are the same.
(b) Read VIN using an intelligent tester.
(c) Check the vehicle's VIN.
(d) Connect the intelligent tester to the DLC3.
(e) Turn the engine switch on (IG).
(f) Turn the tester on.

(g) Enter the following menus: DIAGNOSIS / ENHANCED OBD II / VIN.

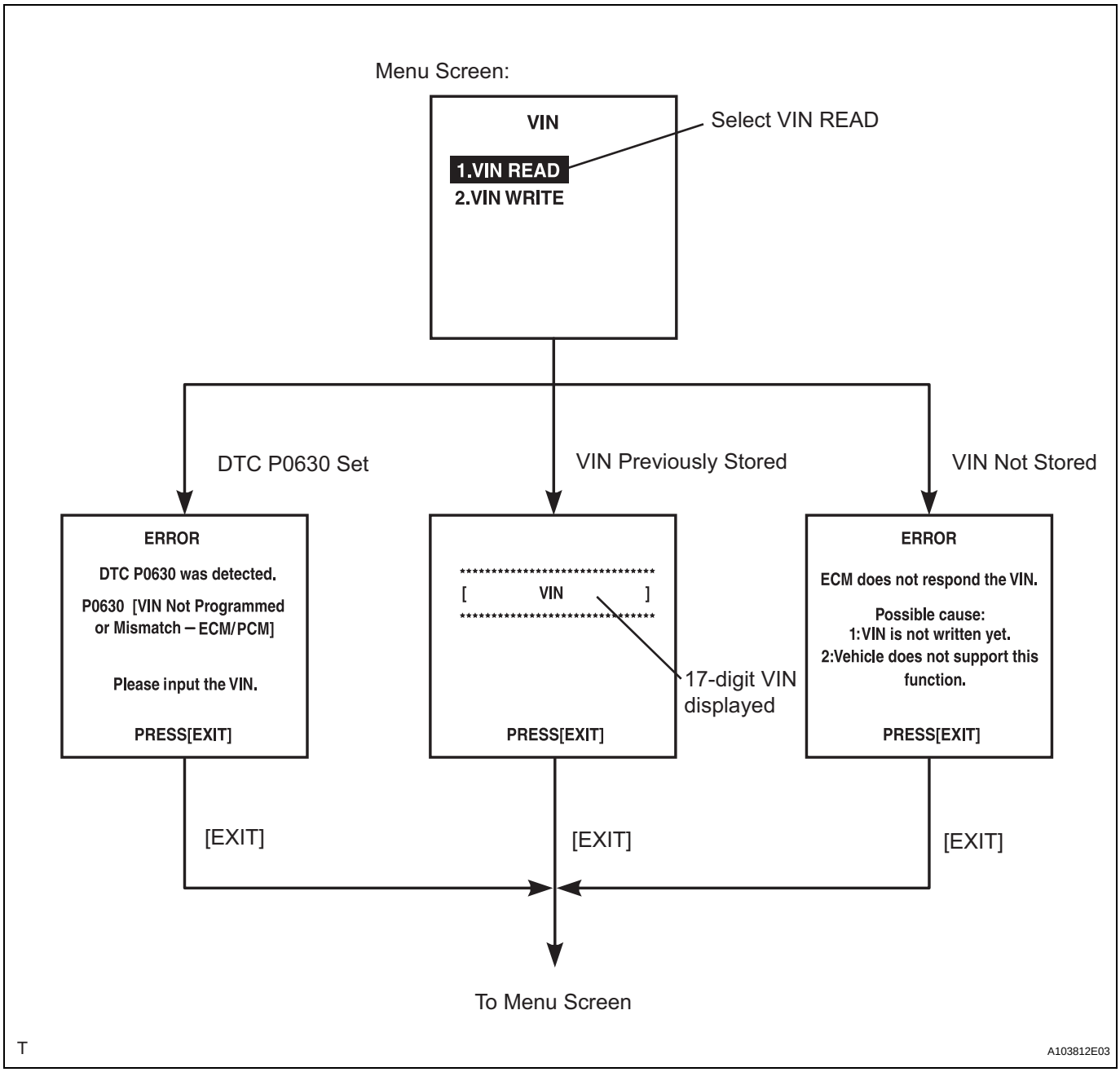

3. WRITE VIN

(a) The flowchart of the VIN writing process is shown. This process allows the VIN to be input into the ECM. If the ECM is changed, or the VINs do not match, the VIN can be registered, or overwritten in the ECM by following this procedure.

(b) Write VIN using the intelligent tester.

(c) Check the vehicle's VIN.

(d) Connect the intelligent tester to the DLC3.

(e) Turn the engine switch on (IG).

(f) Turn the tester on.

(g) Enter the following menus: DIAGNOSIS / ENHANCED OBD II / VIN.

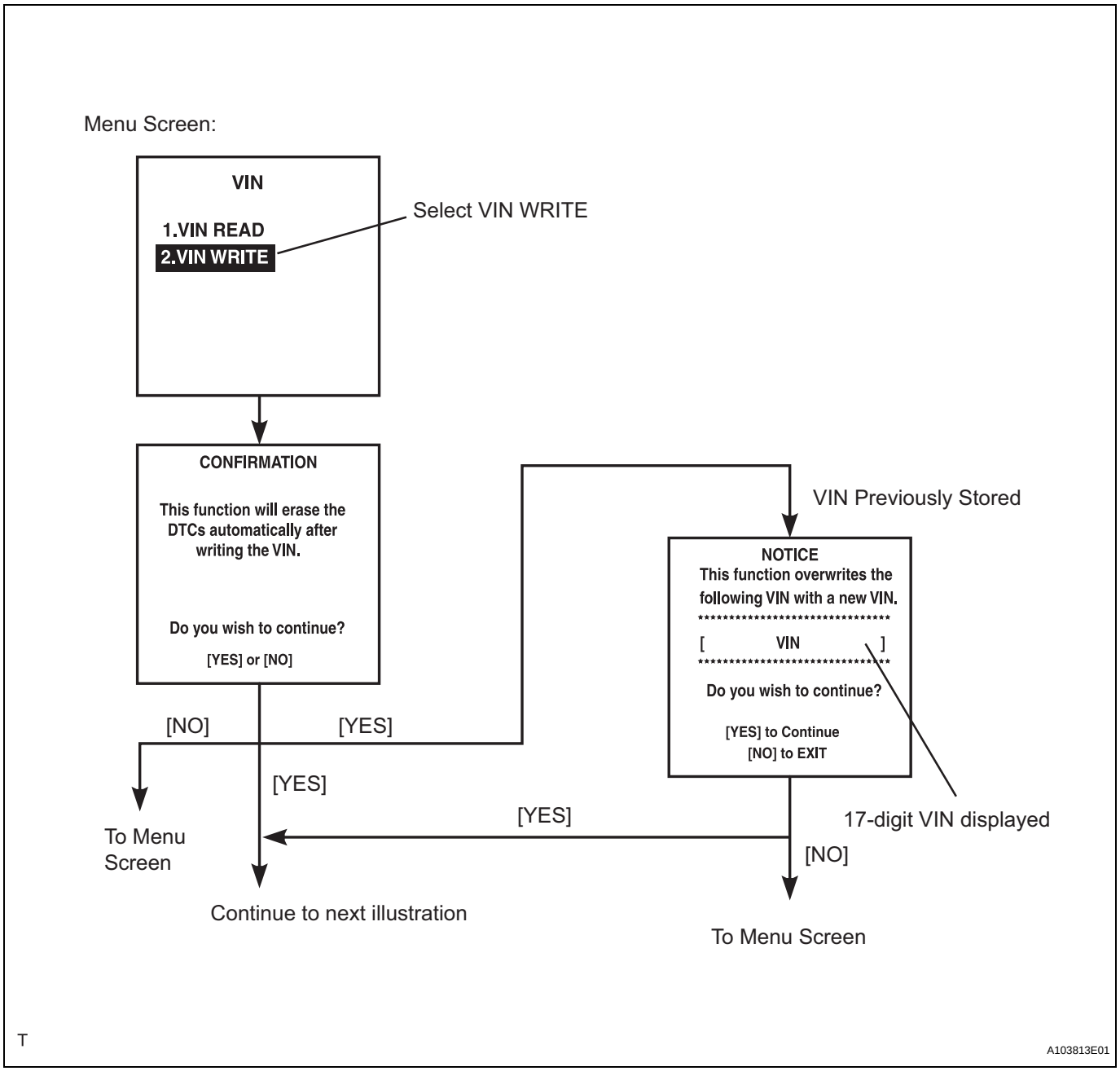

ES

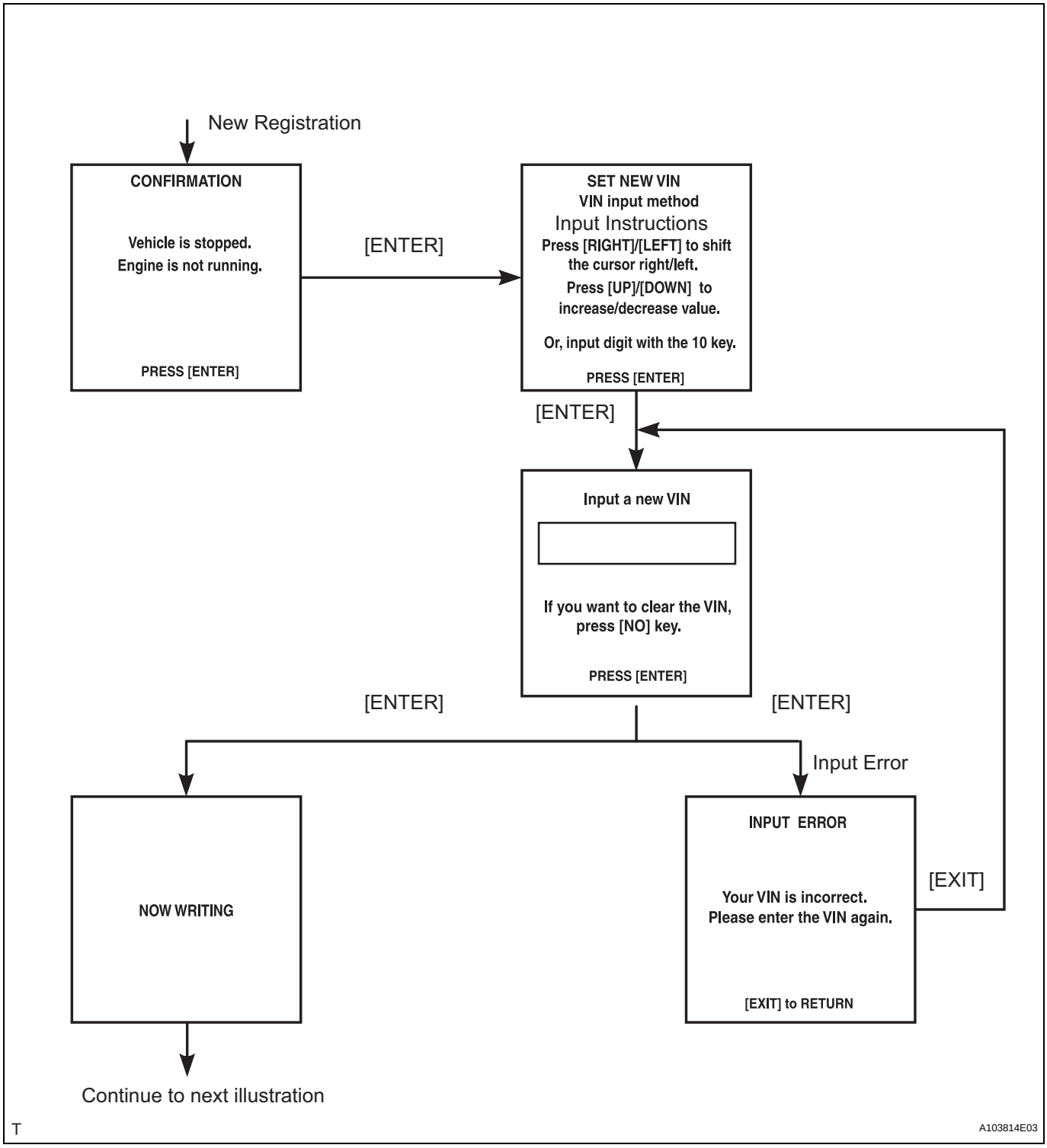
New Registration
CONFIRMATION
Vehicle is stopped.
Engine is not running.
PRESS [ENTER]
[ENTER]
SET NEW VIN
VIN input method
Input Instructions
Press [RIGHT]/[LEFT] to shift the cursor right/left.
Press [UP]/[DOWN] to increase/decrease value.
Or, input digit with the 10 key.
PRESS [ENTER]
[ENTER]
Input a new VIN
If you want to clear the VIN, press [NO] key.
PRESS [ENTER]
[ENTER]
[ENTER]
Input Error
NOW WRITING
INPUT ERROR
Your VIN is incorrect.
Please enter the VIN again.
[EXIT] to RETURN
[EXIT]
Continue to next illustration
T
A103814E03

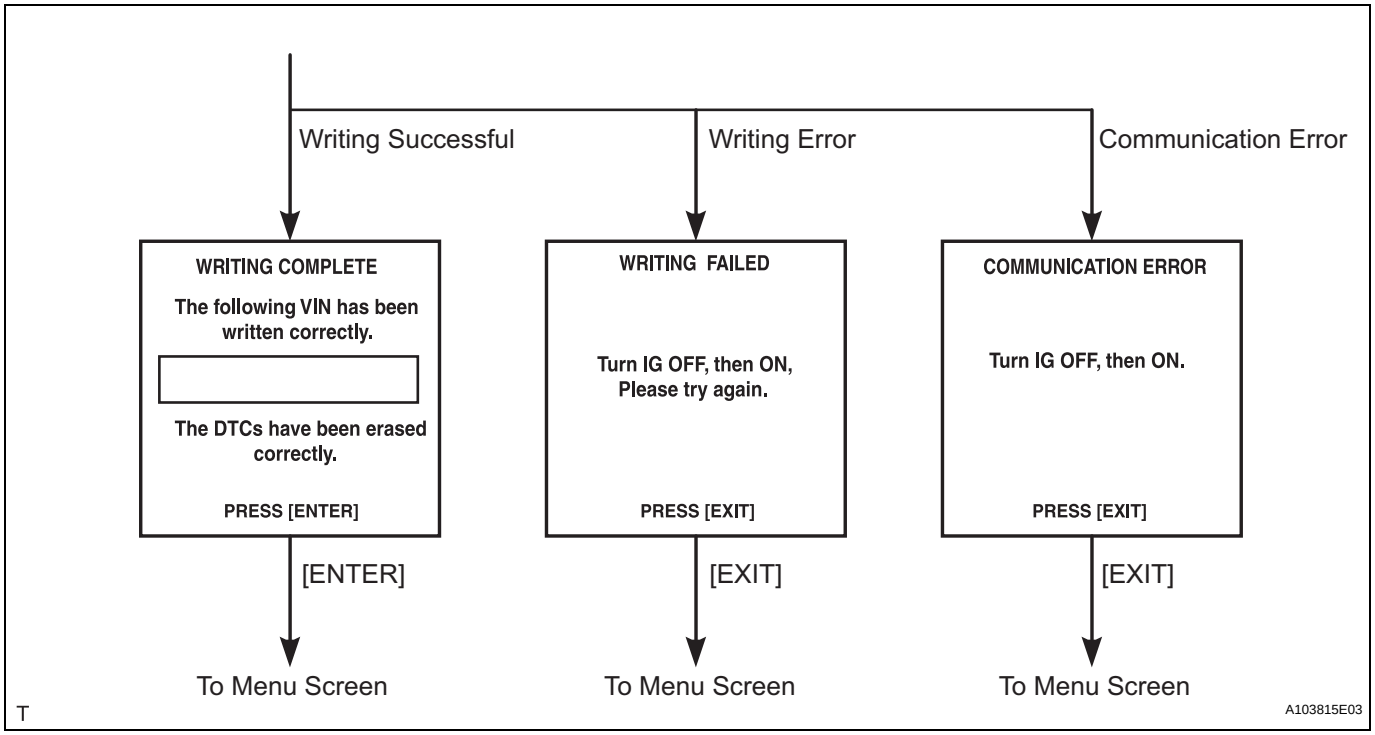
Writing Successful
Writing Error
Communication Error
WRITING COMPLETE
The following VIN has been written correctly.
The DTCs have been erased correctly.
PRESS [ENTER]
WRITING FAILED
Turn IG OFF, then ON, Please try again.
PRESS [EXIT]
COMMUNICATION ERROR
Turn IG OFF, then ON.
PRESS [EXIT]
[ENTER]
[EXIT]
[EXIT]
To Menu Screen
To Menu Screen
To Menu Screen
T
A103815E03

ES

ES

REMOVAL

1. **REMOVE COOL AIR INTAKE DUCT SEAL (See page EM-22)**
2. **REMOVE ENGINE ROOM SIDE COVER LH (See page EM-22)**
3. **REMOVE MASS AIR FLOW METER**
   (a) Disconnect the mass air flow meter connector.
   (b) Remove the 2 screws and mass air flow meter.

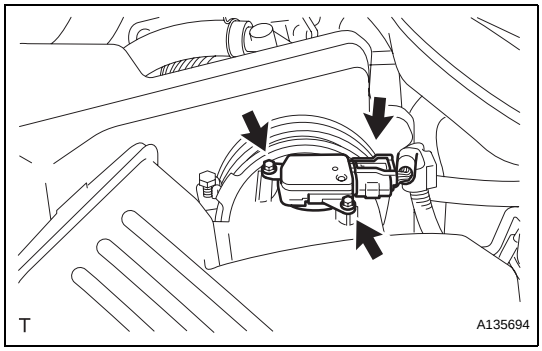

INSTALLATION

1. **INSTALL MASS AIR FLOW METER**
   (a) Install the mass air flow meter with the 2 screws.
   (b) Connect the mass air flow meter connector.
2. **INSTALL ENGINE ROOM SIDE COVER LH (See page EM-50)**
3. **INSTALL COOL AIR INTAKE DUCT SEAL (See page EM-50)**

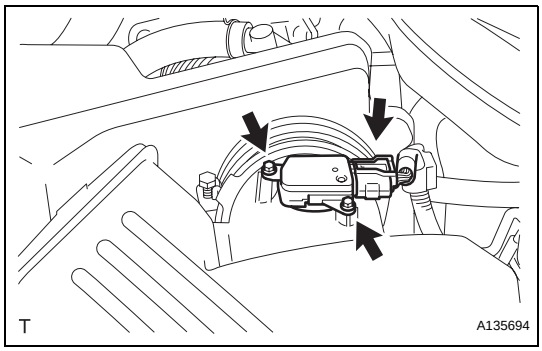

CHECKING MONITOR STATUS

The purpose of the monitor result (mode 06) is to allow access to the results for on-board diagnostic monitoring tests of specific components/systems that are not continuously monitored. Examples are catalyst, evaporative emission (EVAP) and thermostat.

The monitor result allows the OBD II scan tool to display the monitor status, test value, minimum test limit and maximum test limit. These data are displayed after the vehicle has been driven to run the monitor.

When the test value is not between the minimum test limit and maximum test limit, the ECM (PCM) interprets this as a malfunction. When the component is not malfunctioning, if the difference of the test value and test limit is very small, the component will malfunction in the near future.

Perform the following instructions to view the monitor status. Although the Toyota diagnostic tester is used in the following instructions, it can be checked using a generic OBD II scan tool. Refer to your scan tool operator's manual for specific procedures.

1. PERFORM MONITOR DRIVE PATTERN

The monitor results and test values can be checked with the OBD II scan tool or the intelligent tester. The engine control module (ECM) monitors the emissions-related components such as the thermostat, catalyst converter and evaporative emissions (EVAP), and determines whether they are functioning normally or not. When monitoring is finished, the ECM stores the monitor results and the test values. The monitor result indicates whether the component is functioning normally or not. The test value is the value that was used to determine the monitor result. If the test value is outside of the test limit (malfunction criterion), the ECM determines the component is malfunctioning. Some emissions-related components have multiple test values to determine monitor result. If one of these test values is outside of the test limit, the ECM determines the component is malfunctioning.

(a) Connect the intelligent tester to the DLC3.
(b) Start the engine and turn the tester on.
(c) Clear the DTCs.
(d) Run the vehicle in accordance with the applicable drive pattern described in READINESS MONITOR DRIVE PATTERN (See page ES-23). DO NOT turn the engine switch off.

NOTICE:
The test results will be lost if the engine switch is turned off.

2. ACCESS MONITOR RESULT

(a) Select the following menus on the intelligent tester: DIAGNOSIS, ENHANCED OBDII, MONITOR INFO and MONITOR RESULT. The monitor status appears after the component name.
- INCMP: The component has not been monitored yet.
- PASS: The component is functioning normally.
- FAIL: The component is malfunctioning.

(b) Confirm that the component is either PASS or FAIL.

(c) Select the component and press ENTER. The accuracy test value appears if the monitor status is either PASS or FAIL.
HINT:
The monitor result might be PASS on rare occasions even if the Malfunction Indicator Lamp (MIL) is illuminated. This indicates that the system was malfunctioning in the previous driving cycle. This might be caused by an intermittent problem.

3. CHECK COMPONENT STATUS

(a) Compare the test value with the minimum test limit (MIN LIMIT) and maximum test limit (MAX LIMIT).

(b) If the test value is between the minimum test limit and maximum test limit, the component is functioning normally. If not, the component is malfunctioning. The test value is usually significantly higher or lower than the test limit. If the test value is on the borderline of the test limit, the component will malfunction in the near future.

HINT:
The monitor result might be PASS on rare occasions even if the Malfunction Indicator Lamp (MIL) is illuminated. This indicates that the system was malfunctioning in the previous driving cycle. This might be caused by an intermittent problem.

4. MONITOR RESULT INFORMATION

If you use a generic scan tool, multiply the test value by the scaling value listed below.

A/F Sensor Bank 1:

Monitor ID	Test ID	Scaling	Unit	Description
$01	$8E	Multiply by 0.0003	No dimension	A/F sensor deterioration level
$01	$91	Multiply by 0.004	mA	A/F sensor current

HO2S Bank 1 Sensor 2:

Monitor ID	Test ID	Scaling	Unit	Description
$02	$07	Multiply by 0.001	V	Minimum sensor voltage
$02	$08	Multiply by 0.001	V	Maximum sensor voltage
$02	$8F	Multiply by 0.003	g	Maximum oxygen storage capacity

A/F Sensor Bank 2:

Monitor ID	Test ID	Scaling	Unit	Description
$05	$8E	Multiply by 0.0003	No dimension	A/F sensor deterioration level
$05	$91	Multiply by 0.004	mA	A/F sensor current

HO2S Bank 2 Sensor 2:

Monitor ID	Test ID	Scaling	Unit	Description
$06	$07	Multiply by 0.001	V	Minimum sensor voltage
$06	$08	Multiply by 0.001	V	Maximum sensor voltage
$06	$8F	Multiply by 0.003	g	Maximum oxygen storage capacity

Catalyst-Bank 1:

Monitor ID	Test ID	Scaling	Unit	Description
$21	$A9	Multiply by 0.003	No dimension	Oxygen storage capacity of catalyst-bank 1

Catalyst-Bank 2:

Monitor ID	Test ID	Scaling	Unit	Description
$22	$A9	Multiply by 0.003	No dimension	Oxygen storage capacity of catalyst-bank 2

EVAP:

Monitor ID	Test ID	Scaling	Unit	Description
$3D	$C9	Multiply by 0.001	kPa	Test value for small leak (P0456)
$3D	$CA	Multiply by 0.001	kPa	Test value for gross leak (P0455)
$3D	$CB	Multiply by 0.001	kPa	Test value for leak detection pump OFF stuck (P2401)
$3D	$CD	Multiply by 0.001	kPa	Test value for leak detection pump ON stuck (P2402)
$3D	$CE	Multiply by 0.001	kPa	Test value for vent valve OFF stuck (P2420)
$3D	$CF	Multiply by 0.001	kPa	Test value for vent valve ON stuck (P2419)
$3D	$D0	Multiply by 0.001	kPa	Test value for reference orifice low flow (P043E)
$3D	$D1	Multiply by 0.001	kPa	Test value for reference orifice high flow (P043F)
$3D	$D4	Multiply by 0.001	kPa	Test value for purge VSV close stuck (P0441)
$3D	$D5	Multiply by 0.001	kPa	Test value for purge VSV open stuck (P0441)
$3D	$D7	Multiply by 0.001	kPa	Test value for purge flow insufficient (P0441)

Misfire:

Monitor ID	Test ID	Scaling	Unit	Description
$A1	$0B	Multiply by 1	Time	Exponential Weighted Moving Average (EWMA) misfire for all cylinders: Misfire counts for last ten driving cycles-Total
$A1	$0C	Multiply by 1	Time	Misfire rate for all cylinders: Misfire counts for last/current driving cycles-Total
$A2	$0B	Multiply by 1	Time	EWMA misfire for cylinder 1: Misfire counts for last ten driving cycles-Total
$A2	$0C	Multiply by 1	Time	Misfire rate for cylinder 1: Misfire counts for last/current driving cycle-Total
$A3	$0B	Multiply by 1	Time	EWMA misfire for cylinder 2: Misfire counts for last ten driving cycles-Total
$A3	$0C	Multiply by 1	Time	Misfire rate for cylinder 2: Misfire counts for last/current driving cycle-Total
$A4	$0B	Multiply by 1	Time	EWMA misfire for cylinder 3: Misfire counts for last ten driving cycles-Total
$A4	$0C	Multiply by 1	Time	Misfire rate for cylinder 3: Misfire counts for last/current driving cycle-Total
$A5	$0B	Multiply by 1	Time	EWMA misfire for cylinder 4: Misfire counts for last ten driving cycles-Total
$A5	$0C	Multiply by 1	Time	Misfire rate for cylinder 4: Misfire counts for last/current driving cycle-Total
$A6	$0B	Multiply by 1	Time	EWMA misfire for cylinder 5: Misfire counts for last ten driving cycles-Total
$A6	$0C	Multiply by 1	Time	Misfire rate for cylinder 5: Misfire counts for last/current driving cycle-Total
$A7	$0B	Multiply by 1	Time	EWMA misfire for cylinder 6: Misfire counts for last ten driving cycles-Total

Monitor ID	Test ID	Scaling	Unit	Description
$A7	$0C	Multiply by 1	Time	Misfire rate for cylinder 6: Misfire counts for last/current driving cycle-Total

Rear Oxygen Sensor Heater:

Monitor ID	Test ID	Scaling	Unit	Description
$42	$91	Multiply by 0.001	Ohm	Oxygen sensor heater resistance bank 1 sensor 2
$46	$91	Multiply by 0.004	Ohm	Oxygen sensor heater resistance bank 2 sensor 2

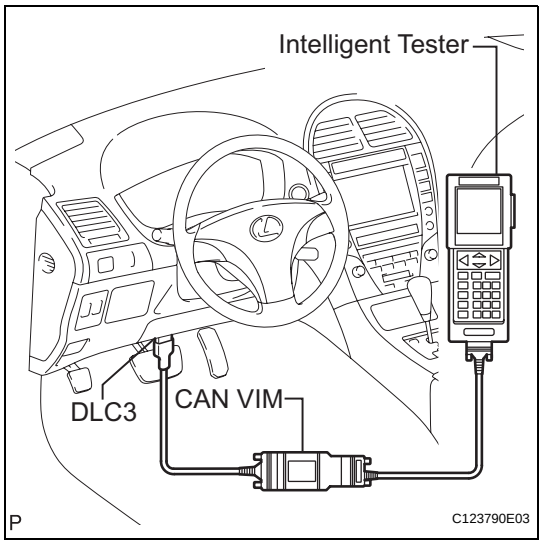

ON-VEHICLE INSPECTION

1. INSPECT CAMSHAFT TIMING OIL CONTROL VALVE ASSEMBLY

(a) Connect the intelligent tester (with CAN VIM) to the DLC3.
(b) Turn the engine switch on (IG).
(c) Start and warm up the engine.
(d) Connect the intelligent tester and select VVT from the ACTIVE TEST menu.
(e) Check the engine speed when the OCV is operated with the intelligent tester.
OK

Condition	Specified Condition
VVT system is OFF (OCV is OFF)	Normal engine speed
VVT system is ON (OCV is ON)	Rough idle or engine stalled

ES

REMOVAL

1. **REMOVE ENGINE UNDER COVER LH**
2. **REMOVE ENGINE UNDER COVER RH**
3. **REMOVE COOL AIR INTAKE DUCT SEAL (See page EM-22)**
4. **REMOVE ENGINE ROOM SIDE COVER LH (See page EM-22)**
5. **REMOVE ENGINE ROOM SIDE COVER RH (See page EM-22)**
6. **DRAIN ENGINE COOLANT (See page CO-5)**
7. **REMOVE FRONT SUSPENSION UPPER CENTER BRACE (See page BR-22)**
8. **REMOVE V-BANK COVER SUB-ASSEMBLY (See page EM-23)**
9. **REMOVE AIR CLEANER INLET ASSEMBLY (See page EM-23)**
10. **REMOVE AIR CLEANER CAP SUB-ASSEMBLY (See page ES-519)**
11. **REMOVE AIR CLEANER CASE SUB-ASSEMBLY (See page EM-23)**
12. **REMOVE NO. 1 AIR CLEANER INLET (See page EM-23)**
13. **REMOVE INTAKE AIR SURGE TANK (See page FU-12)**
14. **REMOVE CAMSHAFT TIMING OIL CONTROL VALVE (for Bank 1 Exhaust Side)**
    (a) Disconnect the camshaft timing oil control valve connector.
    (b) Remove the bolt and camshaft timing oil control valve.
    (c) Remove the O-ring from the camshaft timing oil control valve.

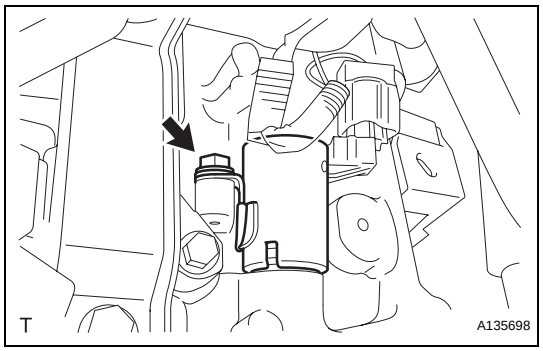

15. **REMOVE CAMSHAFT TIMING OIL CONTROL VALVE (for Bank 1 Intake Side)**
    (a) Disconnect the camshaft timing oil control valve connector.
    (b) Remove the bolt and camshaft timing oil control valve.
    (c) Remove the O-ring from the camshaft timing oil control valve.

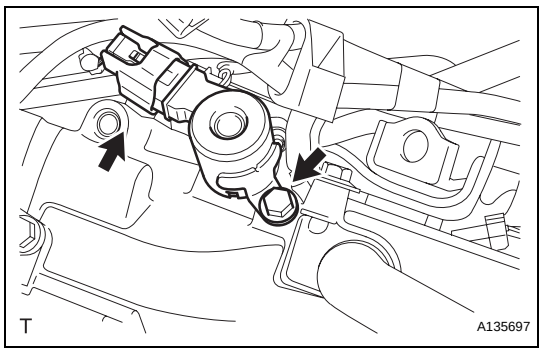

ES

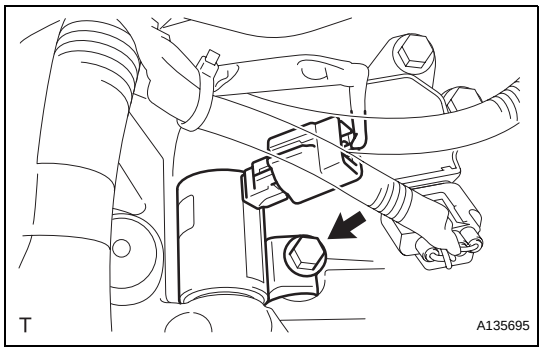

16. REMOVE CAMSHAFT TIMING OIL CONTROL VALVE (for Bank 2 Exhaust Side)

(a) Disconnect the camshaft timing oil control valve connector.

(b) Remove the bolt and camshaft timing oil control valve.

(c) Remove the O-ring from the camshaft timing oil control valve.

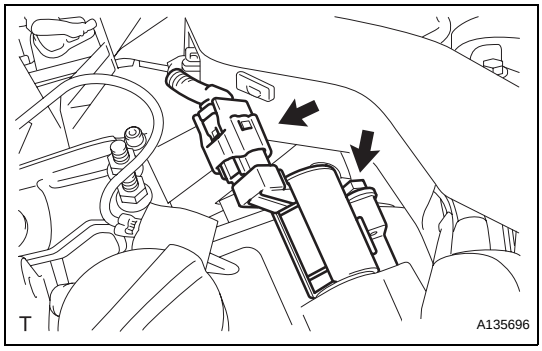

17. REMOVE CAMSHAFT TIMING OIL CONTROL VALVE (for Bank 2 Intake Side)

(a) Disconnect the camshaft timing oil control valve connector.

(b) Remove the bolt and camshaft timing oil control valve.

(c) Remove the O-ring from the camshaft timing oil control valve.

READINESS MONITOR DRIVE PATTERN

1. PURPOSE OF READINESS TESTS

- The On-Board Diagnostic (OBD II) system is designed to monitor the performance of emission-related components, and indicate any detected abnormalities with DTCs (Diagnostic Trouble Codes). Since various components need to be monitored in different driving conditions, the OBD II system is designed to run separate monitoring programs called Readiness Monitors.
- The intelligent tester's software must be version 9.0 or newer to view the Readiness Monitor status. To view the status, select the following menu items: DIAGNOSIS / ENHANCED OBD II / MONITOR INFO / MONITOR STATUS.
- When the Readiness Monitor status reads COMPL (complete), the necessary conditions have been met for running the performance tests for that Readiness Monitor.
- A generic OBD II scan tool can also be used to view the Readiness Monitor status.

HINT:
Many Inspection and Maintenance (I/M) programs require a vehicle's Readiness Monitor status to show COMPL before beginning emission tests.
The Readiness Monitor will be reset to INCMPL (incomplete) if:

- The ECM has lost battery power or broken a fuse.
- DTCs have been cleared.
- The conditions for running the Readiness Monitor have not been met.

If the Readiness Monitor status shows INCMPL, follow the appropriate Readiness Monitor Drive Pattern to change the status to COMPL.

CAUTION:
Strictly observe posted speed limits, traffic laws, and road conditions when performing these drive patterns.

NOTICE:
These drive patterns represent the fastest method of satisfying all conditions necessary to achieve complete status for each specific Readiness Monitor.
In the event of a drive pattern being interrupted (possibly due to factors such as traffic conditions), the drive pattern can be resumed. In most cases, the Readiness Monitor will still achieve complete status upon completion of the drive pattern.
To ensure completion of the Readiness Monitors, avoid sudden changes in vehicle load and speed (driving up and down hills and/or sudden acceleration).

2. CATALYST MONITOR (ACTIVE AIR-FUEL RATIO CONTROL TYPE)

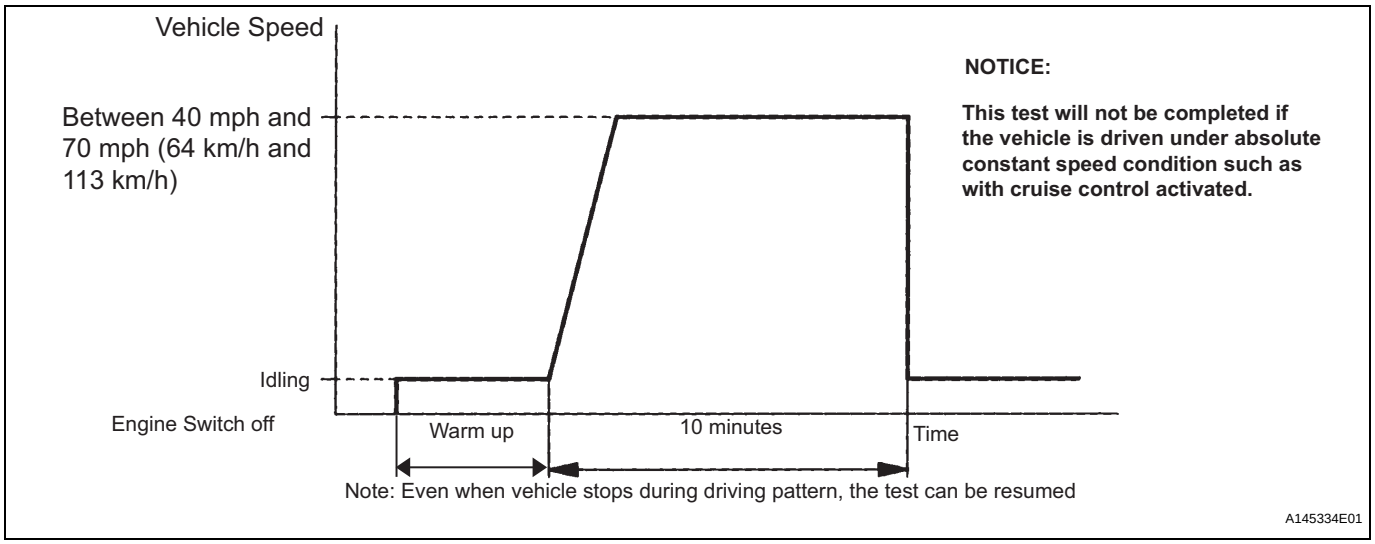

(a) Preconditions
The monitor will not run unless:
The MIL is OFF.

(b) Drive Pattern
(1) Connect an intelligent tester.
(2) Turn the engine switch on (IG).
(3) Turn the tester or scan tool on.
(4) Clear the DTCs.
(5) Start the engine and warm it up.
(6) Drive the vehicle at between 40 mph and 70 mph (64 km/h and 113 km/h) for at least 10 minutes.

(c) Monitor Status
(1) Check the Readiness Monitor status displayed on the tester.
(2) If the status does not switch to COMPL (complete), extend the driving time.

3. EVAP MONITOR (KEY-OFF TYPE)

(a) Preconditions
The monitor will not run unless:
- The fuel tank is less than 90% full.
- The altitude is less than 8,000 ft (2,450 m).
- The vehicle is stationary.
- The engine coolant temperature is between 4.4°C and 35°C (40°F to 95°F).
- The intake air temperature is between 4.4°C and 35°C (40°F to 95°F).
- Vehicle was driven in the city area (or on free-way) for 10 minutes or more.

(b) Monitor Conditions
(1) Turn the engine switch off and wait for 6 hours.
HINT:
Do not start the engine until checking Readiness Monitor status. If the engine is started, the step described above must be repeated.

ES

(c) Monitor Status
(1) Connect an intelligent tester to the DLC3.
(2) Turn the engine switch on (IG).
(3) Turn the tester or scan tool on.
(4) Check the Readiness Monitor status displayed on the tester or scan tool.
If the status does not switch to COMPL (complete), restart the engine, make sure that the preconditions have been met, and then perform the Monitor Conditions again.

4. A/F SENSOR AND HO2S MONITORS

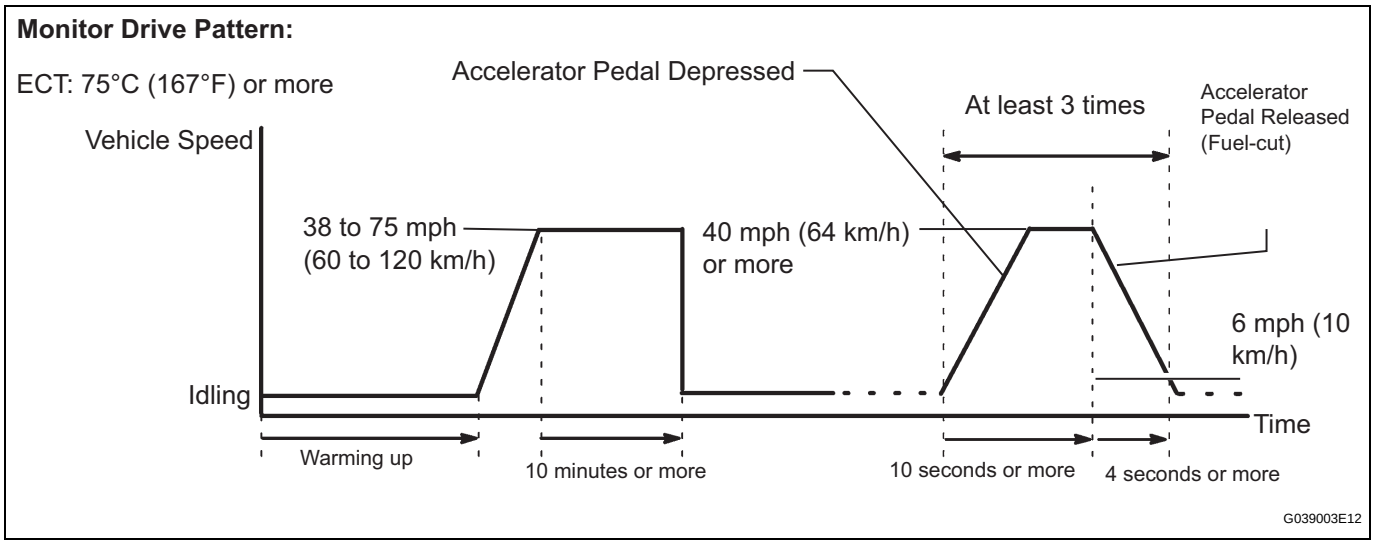

(a) Preconditions
The monitor will not run unless:
- 2 minutes or more have elapsed since the engine was started.
- The Engine Coolant Temperature (ECT) is 75°C (167°F) or more.
- Cumulative driving time at a vehicle speed of 30 mph (48 km/h) or more exceeds 6 minutes.
- Air-fuel ratio feedback control is performed.
- Fuel-cut control is performed for 8 seconds or more (for the Rear HO2 Sensor Monitor).

(b) Drive Pattern for front A/F sensor and HO2 sensor
(1) Connect an intelligent tester to the DLC3.
(2) Turn the engine switch on (IG).
(3) Turn the tester on.
(4) Clear the DTCs.
(5) Start the engine, and warm it up until the ECT reaches 75°C (167°F) or higher.
(6) Drive the vehicle at 38 mph (60 km/h) or more for at least 10 minutes.
(7) Change the transmission to the 2nd gear.
(8) Accelerate the vehicle to 40 mph (64 km/h) or more by depressing the accelerator pedal for at least 10 seconds (Procedure "A").

(9) Soon after performing procedure "A" above, release the accelerator pedal for at least 4 seconds without depressing the brake pedal, in order to execute fuel-cut control (Procedure "B").
(10) Allow the vehicle to decelerate until the vehicle speed declines to less than 6 mph (10 km/h) (Procedure "C").
(11) Repeat procedures from "A" through "C" above at least 3 times in one driving cycle.

(c) Monitor Status
(1) Check the Readiness Monitor status displayed on the tester.
(2) If the status does not switch to COMPL (complete), make sure that the preconditions have been met and then perform the Drive Pattern again.

5. AIR-FUEL RATIO (A/F) AND HEATED OXYGEN (HO2) SENSOR HEATER MONITORS (FRONT A/F AND REAR HO2 SENSOR TYPE)

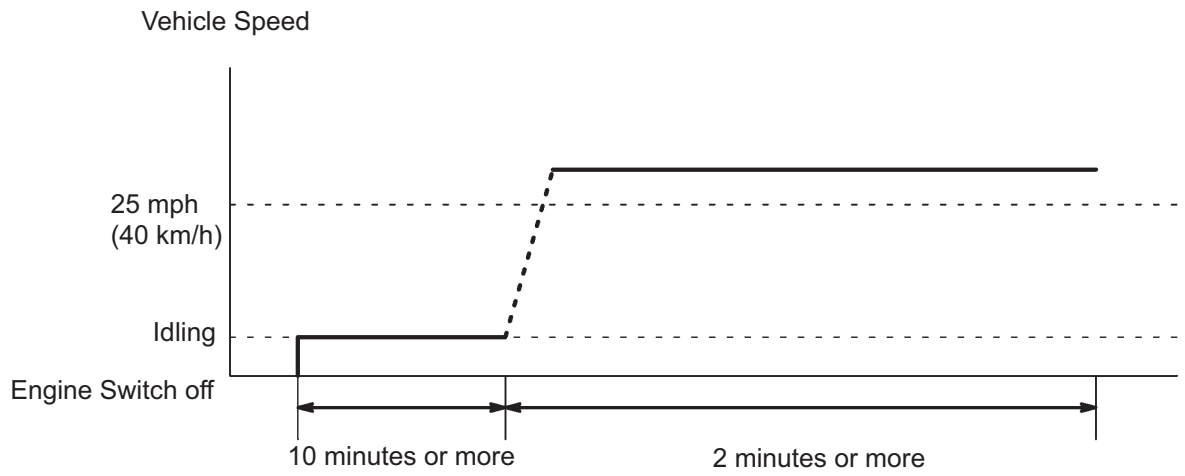

A078886E25

(a) Preconditions
The monitor will not run unless:
The MIL is OFF.

(b) Drive Pattern
(1) Connect an intelligent tester to the DLC3.
(2) Turn the engine switch on (IG).
(3) Clear the DTCs.
(4) Start the engine.
(5) Allow the engine to idle for 10 minutes or more.
(6) Drive the vehicle at 25 mph (40 km/h) or more for at least 2 minutes.

(c) Monitor Status

(1) Check the Readiness Monitor status displayed on the tester or scan tool.
If the status does not switch to COMPL (complete), make sure that the preconditions have been met, and repeat the Drive Pattern.

REMOVAL

1. **REMOVE ENGINE UNDER COVER LH**
2. **REMOVE ENGINE UNDER COVER RH**
3. **DRAIN ENGINE COOLANT (See page CO-5)**
4. **REMOVE COOL AIR INTAKE DUCT SEAL (See page EM-22)**
5. **REMOVE ENGINE ROOM SIDE COVER LH (See page EM-22)**
6. **REMOVE ENGINE ROOM SIDE COVER RH (See page EM-22)**
7. **REMOVE V-BANK COVER SUB-ASSEMBLY (See page EM-23)**
8. **REMOVE AIR CLEANER INLET ASSEMBLY (See page EM-23)**
9. **REMOVE AIR CLEANER CAP SUB-ASSEMBLY (See page ES-519)**
10. **REMOVE AIR CLEANER CASE SUB-ASSEMBLY (See page EM-23)**
11. **REMOVE NO. 1 AIR CLEANER INLET (See page EM-23)**
12. **REMOVE FRONT SUSPENSION UPPER CENTER BRACE (See page BR-22)**
13. **REMOVE INTAKE AIR SURGE TANK ASSEMBLY (See page FU-12)**
14. **REMOVE VVT SENSOR (for Bank 1 Intake Side)**
    (a) Disconnect the VVT sensor connector.
    (b) Remove the bolt and VVT sensor.

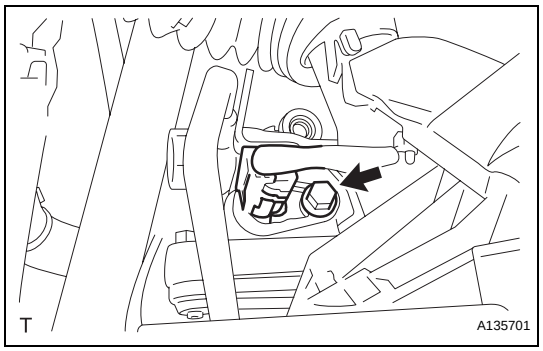

15. **REMOVE VVT SENSOR (for Bank 1 Exhaust Side)**
    (a) Disconnect the VVT sensor connector.
    (b) Remove the bolt and VVT sensor.

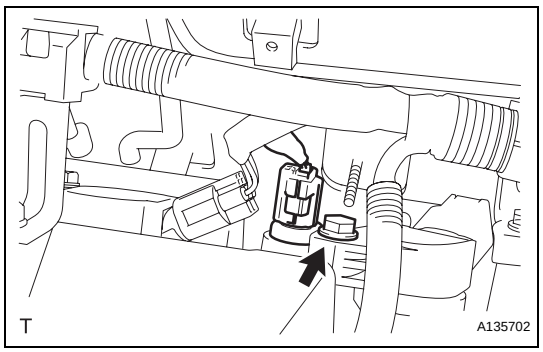

ES

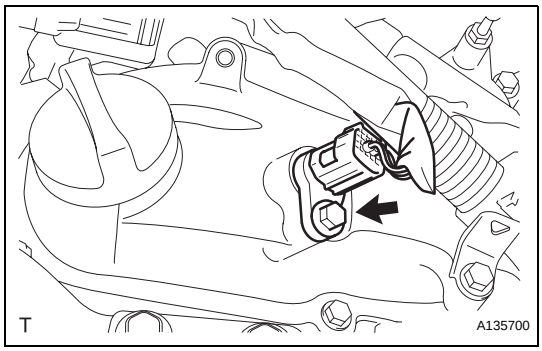

16. REMOVE VVT SENSOR (for Bank 2 Intake Side)
(a) Disconnect the VVT sensor connector.
(b) Remove the bolt and VVT sensor.

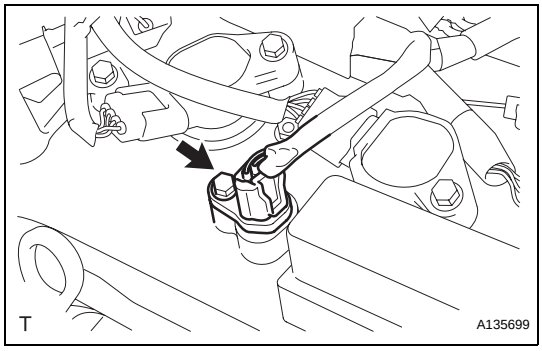

17. REMOVE VVT SENSOR (for Bank 2 Exhaust Side)
(a) Disconnect the VVT sensor connector.
(b) Remove the bolt and VVT sensor.

INSTALLATION

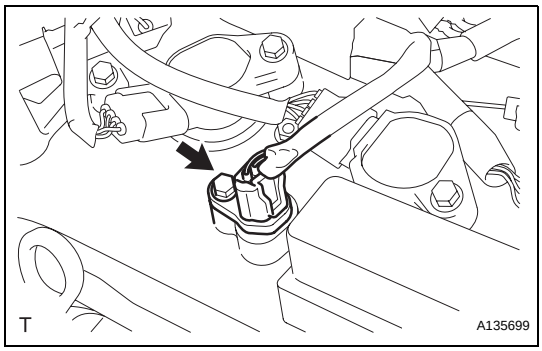

1. INSTALL VVT SENSOR (for Bank 2 Exhaust Side)
(a) Install the VVT sensor with the bolt.
Torque: 10 N*m (102 kgf*cm, 7 ft.*lbf)
(b) Connect the VVT sensor connector.

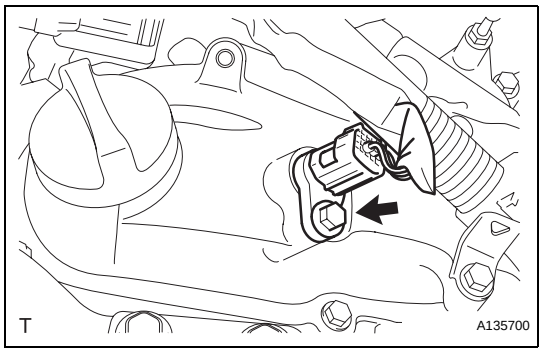

2. INSTALL VVT SENSOR (for Bank 2 Intake Side)
(a) Install the VVT sensor with the bolt.
Torque: 10 N*m (102 kgf*cm, 7 ft.*lbf)
(b) Connect the VVT sensor connector.

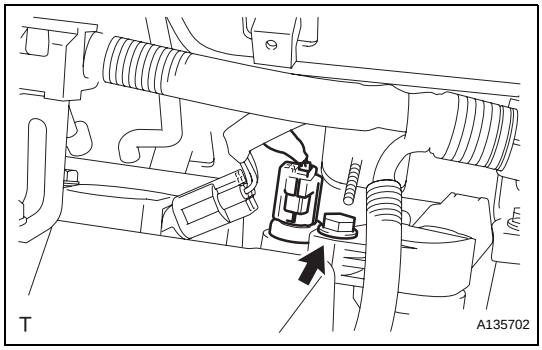

3. INSTALL VVT SENSOR (for Bank 1 Exhaust Side)
(a) Install the VVT sensor with the bolt.
Torque: 10 N*m (102 kgf*cm, 7 ft.*lbf)
(b) Connect the VVT sensor connector.

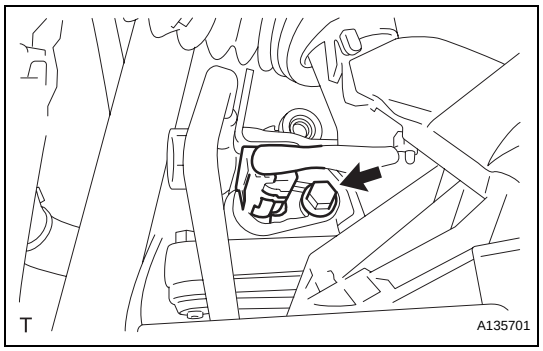

4. **INSTALL VVT SENSOR (for Bank 1 Intake Side)**
   (a) Install the VVT sensor with the bolt.
   Torque: 10 N*m (102 kgf*cm, 7 ft.*lbf)
   (b) Connect the VVT sensor connector.
5. **INSTALL INTAKE AIR SURGE TANK ASSEMBLY (See page FU-17)**
6. **INSTALL NO. 1 AIR CLEANER INLET (See page EM-48)**
7. **INSTALL AIR CLEANER CASE SUB-ASSEMBLY (See page EM-48)**
8. **INSTALL AIR CLEANER CAP SUB-ASSEMBLY (See page ES-522)**
9. **INSTALL AIR CLEANER INLET ASSEMBLY (See page EM-48)**
10. **INSTALL V-BANK COVER SUB-ASSEMBLY (See page EM-49)**
11. **ADD ENGINE COOLANT (See page CO-6)**
12. **CHECK FOR ENGINE COOLANT LEAKS (See page CO-1)**
13. **INSTALL FRONT SUSPENSION UPPER CENTER BRACE (See page BR-25)**
14. **INSTALL ENGINE ROOM SIDE COVER LH (See page EM-50)**
15. **INSTALL ENGINE ROOM SIDE COVER RH (See page EM-50)**
16. **INSTALL COOL AIR INTAKE DUCT SEAL (See page EM-50)**
17. **INSTALL ENGINE UNDER COVER RH**
18. **INSTALL ENGINE UNDER COVER LH**

PROBLEM SYMPTOMS TABLE

HINT:
When a malfunction is not confirmed by a DTC (Diagnostic Trouble Code) check and the cause of problem cannot be identified through a basic inspection, troubleshoot according to the priority order indicated in the table below.

SFI SYSTEM:

Symptom	Suspected Area	See page
Engine does not crank (Does not start)	1. Immobilizer system	EI-8
	2. Cranking holding function circuit	ES-449
	3. Starter signal circuit	ES-305
	4. Starter	ST-147
	5. STARTER relay	ST-154
	6. ECM power source circuit	ES-427
	7. ECM	ES-542
No initial combustion (Does not start)	1. ECM power source circuit	ES-427
	2. Ignition system	IG-3
	3. Fuel pump control circuit	ES-443
	4. Injector	ES-200
	5. Crank angle sensor	ES-514
	6. ECM	ES-542
Engine cranks normally but difficult to start	1. Electronic Throttle Control System (ETCS)	ES-323
	2. VC Output Circuit	ES-436
	3. Fuel pump control circuit	ES-443
	4. Ignition system	IG-3
	5. Spark plug	IG-5
	6. Compression	EM-3
	7. Injector	ES-200
	8. Crank angle sensor	ES-514
Difficult to start with cold engine	1. Starter signal circuit	ES-305
	2. VC Output Circuit	ES-436
	3. Electronic Throttle Control System (ETCS)	ES-323
	4. Fuel pump control circuit	ES-443
	5. Spark plug	IG-5
	6. Ignition system	IG-3
	7. Injector	ES-200
	8. Engine coolant temperature sensor	ES-517
Difficult to start with warm engine	1. Starter signal circuit	ES-305
	2. VC Output Circuit	ES-436
	3. Electronic Throttle Control System (ETCS)	ES-323
	4. Fuel pump control circuit	ES-443
	5. Spark plug	IG-5
	6. Ignition system	IG-3
	7. Injector	ES-200
	8. Engine coolant temperature sensor	ES-517

Symptom	Suspected Area	See page
High engine idling speed (Poor idling)	1. Electronic Throttle Control System (ETCS)	ES-323
	2. ECM power source circuit	ES-427
	3. A/C signal circuit (Compressor circuit)	-
	4. Acoustic Control Induction System (ACIS)	ES-456
	5. PCV hose	-
	6. ECM	ES-542
Low engine idling speed (Poor idling)	1. Electronic Throttle Control System (ETCS)	ES-323
	2. ECM power source circuit	ES-427
	3. A/C signal circuit (Compressor circuit)	-
	4. Acoustic Control Induction System (ACIS)	ES-456
	5. PCV hose	-
	6. Injector	ES-200
	7. ECM	ES-542
Rough idling (Poor idling)	1. Electronic Throttle Control System (ETCS)	ES-323
	2. Injector	ES-200
	3. Ignition system	IG-3
	4. Compression	EM-3
	5. Fuel pump control circuit	ES-443
	6. Spark plug	IG-5
	7. Acoustic Control Induction System (ACIS)	ES-456
	8. PCV hose	-
Hunting (Poor idling)	1. Electronic Throttle Control System (ETCS)	ES-323
	2. ECM power source circuit	ES-427
	3. Fuel pump control circuit	ES-443
	4. Spark plug	IG-5
	5. Ignition system	IG-3
	6. Injector	ES-200
	7. Acoustic Control Induction System (ACIS)	ES-456
	8. PCV hose	-
Hesitation/Poor acceleration (Poor driveability)	1. Injector	ES-200
	2. Fuel pump control circuit	ES-443
	3. Ignition system	IG-3
	4. Spark plug	IG-5
	5. Air Intake Control System (AICS)	ES-461
	6. A/T faulty	AX-8
Surging (Poor driveability)	1. Fuel pump control circuit	ES-443
	2. Spark plug	IG-3
	3. Ignition system	IG-3
	4. Injector	ES-200
Engine stalls soon after starting	1. Fuel pump control circuit	ES-443
	2. Electronic Throttle Control System (ETCS)	ES-323
	3. Crank angle sensor	ES-514
	4. Spark plug	IG-5
	5. Ignition system	IG-3
	6. Injector	ES-200
Engine stalls during A/C operation	1. A/C signal circuit	-
	2. ECM	ES-542
Unable/difficult to refuel	Refueling valve (canister)	EC-8
Engine vibrates frequently when idling (Active Control engine Mount (ACM) system does not operate)	Active control engine mount circuit	ES-472

ES

REMOVAL

1. REMOVE GENERATOR ASSEMBLY

HINT:

(See page CH-13)

2. DISCONNECT COOLER COMPRESSOR ASSEMBLY

HINT:

(See page AC-195)

3. REMOVE CRANKSHAFT POSITION SENSOR

(a) Disconnect the crankshaft position sensor connector.

(b) Remove the bolt and crankshaft position sensor.

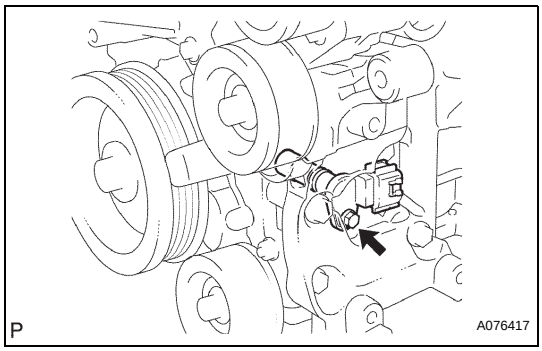

INSPECTION

1. INSPECT CRANKSHAFT POSITION SENSOR

(a) Using an ohmmeter, measure the resistance between the terminals.

Standard resistance

Condition	Specified Condition
Cold	1,630 to 2,740 Ω
Hot	2,065 to 3,225 Ω

NOTICE:

The terms "cold" and "hot" refer to the temperature of the coils. "Cold" means approximately -10 to 50°C (14 to 122°F). "Hot" means approximately 50 to 100°C (122 to 212°F).

If the resistance is not as specified, replace the sensor.

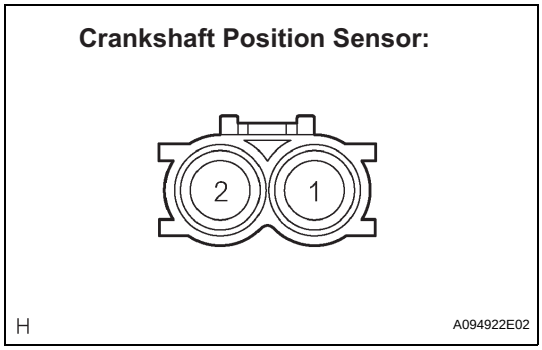

INSTALLATION

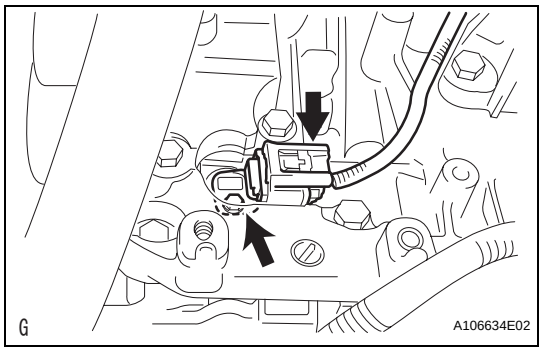

1. INSTALL CRANKSHAFT POSITION SENSOR

(a) Apply a light coat of engine oil to the O-ring of the crankshaft position sensor.

(b) Install the crankshaft position sensor with the bolt.
Torque: 10 N*m (102 kgf*cm, 7 ft.*lbf)

(c) Connect the crankshaft position sensor connector.

2. INSTALL COOLER COMPRESSOR ASSEMBLY

HINT:
(See page AC-201)

3. INSTALL GENERATOR ASSEMBLY

HINT:
(See page CH-22)

ES

TERMINALS OF ECM

1. SFI SYSTEM

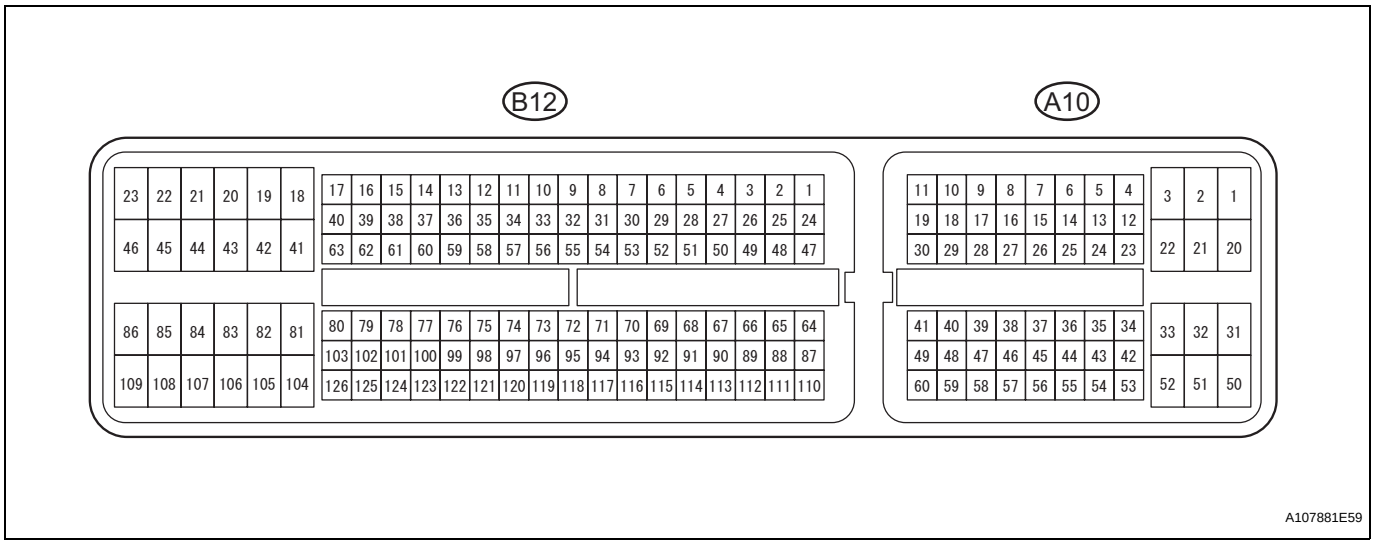

HINT:
The standard normal voltage between each pair of the ECM terminals is shown in the table below. The appropriate conditions for checking each pair of the terminals are also indicated.
The check results should be compared with the standard normal voltage for that pair of terminals, listed in the "STD Voltages" column.
The illustration above can be used as a reference to identify the ECM terminal locations.

Symbols (Terminal No.)	Wiring Colors	Terminal Descriptions	Conditions	STD Voltages
+B (A10-2) - E1 (B12-81)	R - W-B	Power source of ECM	Engine switch on (IG)	9 to 14 V
+B2 (A10-1) - E1 (B12-81)	R - W-B	Power source of ECM	Engine switch on (IG)	9 to 14 V
BATT (A10-20) - E1 (B12-81)	Y - W-B	Battery (for measuring the battery voltage and for the ECM memory)	Always	9 to 14 V
VPMP (A10-42) - E1 (B12-81)	W - W-B	Vent valve operation signal (built into pump module)	Engine switch on (IG)	9 to 14 V
MPMP (A10-34) - E1 (B12-81)	G - W-B	Vacuum pump operation signal (built into pump module)	Vacuum pump OFF	0 to 3 V
MPMP (A10-34) - E1 (B12-81)	G - W-B	Vacuum pump operation signal (built into pump module)	Vacuum pump ON	9 to 14 V
+BM (A10-3) - E1 (B12-81)	LG - W-B	Power source of ETCS throttle motor	Always	9 to 14 V
MREL (A10-44) - E1 (B12-81)	O - W-B	EFI relay operation signal	Engine switch on (IG)	9 to 14 V
IGSW (A10-28) - E1 (B12-81)	Y - W-B	Engine switch signal	Engine switch on (IG)	9 to 14 V
FC (A10-7) - E1 (B12-81)	Y - W-B	C/OPEN relay operation signal (fuel pump control)	Engine switch on (IG), Engine stopped	9 to 14 V
FC (A10-7) - E1 (B12-81)	Y - W-B	C/OPEN relay operation signal (fuel pump control)	Engine switch on (IG), Engine idling	0 to 1.5 V
STP (A10-36) - E1 (B12-81)	W - W-B	Stop light switch signal	W-Brake pedal depressed	7.5 to 14 V
STP (A10-36) - E1 (B12-81)	W - W-B	Stop light switch signal	W-Brake pedal released	Below 1.5 V
ST1- (A10-35) - E1 (B12-81)	GR - W-B	Stop light switch signal (opposite to STP terminal)	Engine switch on (IG), W-Brake pedal depressed	Below 1.5 V

Symbols (Terminal No.)	Wiring Colors	Terminal Descriptions	Conditions	STD Voltages
ST1- (A10-35) - E1 (B12-81)	GR - W-B	Stop light switch signal (opposite to STP terminal)	Engine switch on (IG), W-Brake pedal released	7.5 to 14 V
ACCR (A10-13) - E1 (B12-81)	B - W-B	ACC relay control signal	Cranking	Below 1.5 V
VPA (A10-55) - E1 (B12-81)	G - W-B	Accelerator pedal position sensor signal (for engine control)	Engine switch on (IG), Accelerator pedal fully released	0.5 to 1.1 V
VPA (A10-55) - E1 (B12-81)	G - W-B	Accelerator pedal position sensor signal (for engine control)	Engine switch on (IG), Accelerator pedal fully depressed	2.6 to 4.5 V
VPA2 (A10-56) - EPA2 (A10-60)	R - O	Accelerator pedal position sensor signal (for sensor malfunction detection)	Engine switch on (IG), Accelerator pedal fully released	1.2 to 2.0 V
VPA2 (A10-56) - EPA2 (A10-60)	R - O	Accelerator pedal position sensor signal (for sensor malfunction detection)	Engine switch on (IG), Accelerator pedal fully depressed	3.4 to 5.0 V
EPA (A10-59) - VPA (A10-55)	Y - G	Accelerator pedal position sensor signal (for engine control)	Engine switch on (IG), Accelerator pedal fully released	0.5 to 1.1 V
EPA (A10-59) - VPA (A10-55)	Y - G	Accelerator pedal position sensor signal (for engine control)	Engine switch on (IG), Accelerator pedal fully depressed	2.6 to 4.5 V
EPA2 (A10-60) - VPA2 (A10-56)	O - R	Accelerator pedal position sensor signal (for sensor malfunction detection)	Engine switch on (IG), Accelerator pedal fully released	1.2 to 2.0 V
EPA2 (A10-60) - VPA2 (A10-56)	O - R	Accelerator pedal position sensor signal (for sensor malfunction detection)	Engine switch on (IG), Accelerator pedal fully depressed	3.4 to 5.0 V
PPMP (B12-77) - E1 (B12-81)	L - W-B	Pressure sensor signal (built into pump module)	Engine switch on (IG)	3 to 3.6 V
TC (A10-27) - E1 (B12-81)	P - W-B	Terminal TC of DLC3	Engine switch on (IG)	9 to 14 V
VCPA (A10-57) - EPA (A10-59)	B - Y	Power source of accelerator pedal position sensor (for VPA)	Engine switch on (IG)	4.5 to 5.0 V
VCP2 (A10-58) - EPA2 (A10-60)	L - O	Power source of accelerator pedal position sensor (for VPA2)	Engine switch on (IG)	4.5 to 5.0 V
TACH (A10-15) - E1 (B12-81)	B - W-B	Engine speed signal (for combination meter)	Idling	Pulse generation (see waveform 11)
CCS (A10-40) - E1 (B12-81)	GR - W-B	Cruise control main switch signal	Engine switch on (IG) CANCEL switch ON SET/COAST switch ON RES/ACC switch ON Main switch ON	10 to 16 V 6.6 to 10.1 V 4.5 to 7.1 V 2.3 to 4.0 V Below 1 V
SPD (A10-8) - E1 (B12-81)	V - W-B	Vehicle speed signal from combination meter	Engine switch on (IG), driving wheel rotated slowly	Pulse generation (see waveform 8)
W (A10-24) - E1 (B12-81)	BR - W-B	Malfunction Indicator Lamp (MIL) operation signal	Engine switch on (IG)	Below 3.0 V
W (A10-24) - E1 (B12-81)	BR - W-B	Malfunction Indicator Lamp (MIL) operation signal	Idling	9 to 14 V
CANH (A10-41) - E1 (B12-81)	B - W-B	CAN communication line	Engine switch on (IG)	Pulse generation (see waveform 12)
CANL (A10-49) - E1 (B12-81)	W - W-B	CAN communication line	Engine switch on (IG)	Pulse generation (see waveform 13)
E1 (B12-81) - Body ground	W-B - -	Earth (ground) circuit of ECM	Always	Below 1 V

Symbols (Terminal No.)	Wiring Colors	Terminal Descriptions	Conditions	STD Voltages
#10 (B12-45) - E01 (B12-22) #20 (B12-85) - E01 (B12-22) #30 (B12-44) - E01 (B12-22) #40 (B12-84) - E01 (B12-22) #50 (B12-43) - E01 (B12-22) #60 (B12-83) - E01 (B12-22)	B - W-B R - W-B Y - W-B L - W-B W-L - W-B BR - W-B	Fuel injector operation signal	Engine switch on (IG)	9 to 14 V
#10 (B12-45) - E01 (B12-22) #20 (B12-85) - E01 (B12-22) #30 (B12-44) - E01 (B12-22) #40 (B12-84) - E01 (B12-22) #50 (B12-43) - E01 (B12-22) #60 (B12-83) - E01 (B12-22)	B - W-B R - W-B Y - W-B L - W-B W-L - W-B BR - W-B	Fuel injector operation signal	Idling	Pulse generation (see waveform 3)
PSW (B12-70) - E1 (B12-81)	B - W-B	P/S pressure switch signal	Engine switch on (IG)	9 to 14 V
STA (A10-48) - E1 (B12-81)	V - W-B	Starter relay operation signal	Cranking	9 to 14 V
STSW (A10-14) - E1 (B12-81)	R - W-B	Starter relay operation signal	Cranking	9 to 14 V
OC2- (B12-51) - OC2+ (B12-52)	R - BR	Camshaft timing Oil Control Valve (OCV) operation signal (Intake side)	Engine switch on (IG)	Pulse generation (see waveform 1)
OC2+ (B12-52) - OC2- (B12-51)	BR - R	Camshaft timing Oil Control Valve (OCV) operation signal (Intake side)	Engine switch on (IG)	Pulse generation (see waveform 1)
OC1- (B12-57) - OC1+ (B12-58)	B - W	Camshaft timing Oil Control Valve (OCV) operation signal (Intake side)	Engine switch on (IG)	Pulse generation (see waveform 1)
OC1+ (B12-58) - OC1- (B12-57)	W - B	Camshaft timing Oil Control Valve (OCV) operation signal (Intake side)	Engine switch on (IG)	Pulse generation (see waveform 1)
VV2+ (B12-67) - VV2- (B12-90)	W - B	Variable Valve Timing (VVT) sensor signal (Intake side)	Idling	Pulse generation (see waveform 5)
VV1+ (B12-69) - VV1- (B12-92)	L - LG	Variable Valve Timing (VVT) sensor signal (Intake side)	Idling	Pulse generation (see waveform 5)
NE- (B12-111) - NE+ (B12-110)	R - G	Crankshaft position sensor signal	Idling	Pulse generation (see waveform 5)
NE+ (B12-110) - NE- (B12-111)	G - R	Crankshaft position sensor signal	Idling	Pulse generation (see waveform 5)
EV2- (B12-89) - EV2+ (B12-66)	L - G-R	Variable Valve Timing (VVT) sensor signal (Exhaust side)	Idling	Pulse generation (see waveform 5)
EV2+ (B12-66) - EV2- (B12-89)	G-R - L	Variable Valve Timing (VVT) sensor signal (Exhaust side)	Idling	Pulse generation (see waveform 5)
EV1- (B12-91) - EV1+ (B12-68)	B - Y	Variable Valve Timing (VVT) sensor signal (Exhaust side)	Idling	Pulse generation (see waveform 5)
EV1+ (B12-68) - EV1- (B12-91)	Y - B	Variable Valve Timing (VVT) sensor signal (Exhaust side)	Idling	Pulse generation (see waveform 5)
OE1+ (B12-16) - OE1- (B12-17)	L - LG	Camshaft timing Oil Control Valve (OCV) operation signal (Exhaust side)	Engine switch on (IG)	Pulse generation (see waveform 1)

Symbols (Terminal No.)	Wiring Colors	Terminal Descriptions	Conditions	STD Voltages
OE2+ (B12-14) - OE2- (B12-15)	W-L - Y	Camshaft timing Oil Control Valve (OCV) operation signal (Exhaust side)	Engine switch on (IG)	Pulse generation (see waveform 1)
VV2- (B12-90) - VV2+ (B12-67)	B - W	Variable Valve Timing (VVT) sensor signal (Intake side)	Idling	Pulse generation (see waveform 5)
VV1- (B12-92) - VV1+ (B12-69)	LG - L	Variable Valve Timing (VVT) sensor signal (Intake side)	Idling	Pulse generation (see waveform 5)
OE1- (B12-17) - OE1+ (B12-16)	LG - L	Camshaft timing Oil Control Valve (OCV) operation signal (Exhaust side)	Engine switch on (IG)	Pulse generation (see waveform 1)
OE2- (B12-15) - OE2+ (B12-14)	Y - W-L	Camshaft timing Oil Control Valve (OCV) operation signal (Exhaust side)	Engine switch on (IG)	Pulse generation (see waveform 1)
HT1B (B12-48) - E1 (B12-81) HT2B (B12-47) - E1 (B12-81)	LG - W-B Y - W-B	Heated oxygen sensor heater operation signal	Idling	Below 3.0 V
HT1B (B12-48) - E1 (B12-81) HT2B (B12-47) - E1 (B12-81)	LG - W-B Y - W-B	Heated oxygen sensor heater operation signal	Engine switch on (IG)	9 to 14 V
M- (B12-18) - ME01 (B12-20)	R - B	Throttle drive motor operation signal (negative terminal)	Idling with warm engine	Pulse generation (see waveform 10)
M+ (B12-19) - ME01 (B12-20)	G - B	Throttle drive motor operation signal (positive terminal)	Idling with warm engine	Pluse generation (see waveform 9)
E02 (B12-21) - Body ground	B-W - -	Earth (ground) circuit of ECM	Always	Below 1 V
E01 (B12-22) - Body ground	W-B - -	Earth (ground) circuit of ECM	Always	Below 1 V
IGT1 (B12-40) - E1 (B12-81) IGT2 (B12-39) - E1 (B12-81) IGT3 (B12-38) - E1 (B12-81) IGT4 (B12-37) - E1 (B12-81) IGT5 (B12-36) - E1 (B12-81) IGT6 (B12-35) - E1 (B12-81)	W - W-B G-R - W-B G - W-B LG - W-B P - W-B L-B - W-B	Engine coil with igniter (ignition signal)	Idling	Pulse generation (see waveform 6)
GE01(B12-41) - E1 (B12-81)	G-R - W-B	Shielded earth (ground) circuit of throttle drive motor	Always	Below 1 V
OX1B (B12-88) - EX1B (B12-65) OX2B (B12-87) - EX2B (B12-64)	W - BR B - W-B	Heated oxygen sensor signal	With engine speed at 2,500 rpm for 2 minutes after warming up	Pulse generation (see waveform 2)
VTA2 (B12-99) - ETA (B12-97)	W-L - P	Throttle position sensor signal (for sensor malfunction detection)	Engine switch on (IG), Accelerator pedal fully released	2.1 to 3.1 V
VTA2 (B12-99) - ETA (B12-97)	W-L - P	Throttle position sensor signal (for sensor malfunction detection)	Engine switch on (IG), Accelerator pedal fully depressed	4.5 to 5.0 V
VTA1 (B12-98) - ETA (B12-97)	Y - P	Throttle position sensor signal (for engine control)	Engine switch on (IG), Throttle valve fully closed	0.5 to 1.2 V
VTA1 (B12-98) - ETA (B12-97)	Y - P	Throttle position sensor signal (for engine control)	Engine switch on (IG), Throttle valve fully open	3.2 to 4.8 V
THW (B12-79) - ETHW (B12-78)	B - P	Engine coolant temperature sensor signal	Idling, Engine coolant temperature 80°C (176°F)	0.2 to 1.0 V
THA (B12-71) - ETHA (B12-74)	P - G-R	Intake air temperature sensor signal	Idling, Intake air temperature 20°C (68°F)	0.5 to 3.4 V
IGF1 (B12-106) - E1 (B12-81)	BR - W-B	Engine coil with igniter (ignition confirmation signal)	Engine switch on (IG)	4.5 to 5.0 V

Symbols (Terminal No.)	Wiring Colors	Terminal Descriptions	Conditions	STD Voltages
IGF1 (B12-106) - E1 (B12-81)	BR - W-B	Engine coil with igniter (ignition confirmation signal)	Idling	Pulse generation (see waveform 6)
AICV (A10-4) - E1 (B12-81)	V - W-B	VSV for Air intake control system operation signal	Engine switch on (IG)	9 to 14 V
E2G (B12-73) - E1 (B12-81)	LG - W-B	Earth (ground) circuit of sensor for mass air flow meter	Always	Below 1 V
VG (B12-72) - E2G (B12-73)	L-B - LG	Mass Air Flow (MAF) meter signal	Idling, Shift lever position P or N, A/C switch OFF	0.5 to 3.0 V
ACIS (B12-107) - E1 (B12-81)	B-W - W-B	VSV for ACIS (Acoustic Control Induction System) operation signal	Engine switch on (IG)	9 to 14 V
PRG (B12-108) - E1 (B12-81)	G-R - W-B	Purge VSV for EVAP system operation signal	Engine switch on (IG)	9 to 14 V
PRG (B12-108) - E1 (B12-81)	G-R - W-B	Purge VSV for EVAP system operation signal	Idling	Pulse generation (see waveform 7)
HA2A (B12-109) - E05 (B12-46)	B-W - W	A/F sensor heater operation signal	Idling	Below 3.0 V
HA2A (B12-109) - E05 (B12-46)	B-W - W	A/F sensor heater operation signal	Engine switch on (IG)	9 to 14 V
HA1A (B12-86) - E04 (B12-23)	G - W	A/F sensor heater operation signal	Idling	Below 3.0 V
HA1A (B12-86) - E04 (B12-23)	G - W	A/F sensor heater operation signal	Engine switch on (IG)	9 to 14 V
ME01 (B12-20) - E1 (B12-81)	B - W-B	Earth (ground) circuit of ECM	Always	Below 1 V
E03 (B12-104) - E1 (B12-81)	B - W-B	Earth (ground) circuit of ECM	Always	Below 1 V
HT2B (B12-47) - E1 (B12-81) HT1B (B12-48) - E1 (B12-81)	Y - W-B LG - W-B	Heated oxygen sensor heater operation signal	Idling	Below 3.0 V
HT2B (B12-47) - E1 (B12-81) HT1B (B12-48) - E1 (B12-81)	Y - W-B LG - W-B	Heated oxygen sensor heater operation signal	Engine switch on (IG)	9 to 14 V
E05 (B12-46) - E1 (B12-81)	W - W-B	Earth (ground) circuit of ECM	Always	Below 1 V
E04 (B12-23) - E1 (B12-81)	W - W-B	Earth (ground) circuit of ECM	Always	Below 1 V
NSW (B12-62) - E1 (B12-81)	L-B - W-B	Park/Neutral position switch signal	Engine switch on (IG), Shift lever position P or N	Below 3.0 V
NSW (B12-62) - E1 (B12-81)	L-B - W-B	Park/Neutral position switch signal	Engine switch on (IG), Shift lever position other than P or N	9 to 14 V
EKN2 (B12-117) - KNK2 (B12-118)	W - B	Earth (ground) circuit of knock sensor	With engine speed at 4,000 rpm after warming up	Pulse generation (see waveform 4)
KNK2 (B12-118) - EKN2 (B12-117)	B - W	Knock sensor signal	With engine speed at 4,000 rpm after warming up	Pulse generation (see waveform 4)
A1A+ (B12-93) - E1 (B12-81)	L - W-B	A/F sensor signal	Engine switch on (IG)	3.3 V*1
A1A+ (B12-93) - E1 (B12-81)	L - W-B	A/F sensor signal	Engine switch on (IG)	3.0 V*1
A2A+ (B12-120) - E1 (B12-81)	BR - W-B	A/F sensor signal	Engine switch on (IG)	3.3 V*1
A2A+ (B12-120) - E1 (B12-81)	BR - W-B	A/F sensor signal	Engine switch on (IG)	3.0 V*1
EKNK (B12-94) - KNK1 (B12-95)	G - R	Earth (ground) circuit of knock sensor	With engine speed at 4,000 rpm after warming up	Pulse generation (see waveform 4)
KNK1 (B12-95) - EKNK (B12-94)	R - G	Knock sensor signal	With engine speed at 4,000 rpm after warming up	Pulse generation (see waveform 4)
A1A- (B12-116) - E1 (B12-81)	P - W-B	A/F sensor	Engine switch on (IG)	3.3 V*1
A1A- (B46-116) - E1 (B12-81)	P - W-B	A/F sensor	Engine switch on (IG)	3.0 V*1
A2A- (B12-119) - E1 (B12-81)	Y - W-B	A/F sensor	Engine switch on (IG)	3.3 V*1

Symbols (Terminal No.)	Wiring Colors	Terminal Descriptions	Conditions	STD Voltages
A2A- (B12-119) - E1 (B12-81)	Y - W-B	A/F sensor	Engine switch on (IG)	3.0 V*1
OX2B (B12-87) - EX2B (B12-64) OX1B (B12-88) - EX1B (B12-65)	B - W-R W - BR	Heated oxygen sensor signal	With engine speed at 2,500 rpm for 2 minutes after warming up	Pulse generation (see waveform 2)

*1: The ECM terminal voltage is constant regardless of the output voltage from the sensor.

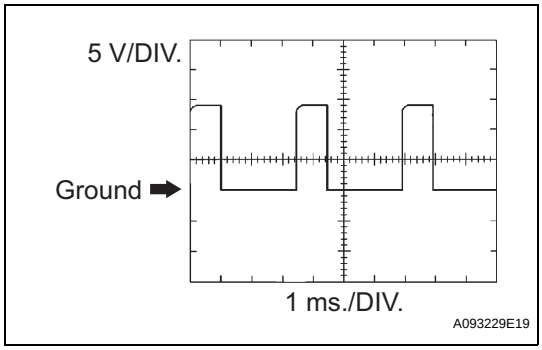

(a) WAVEFORM 1
(1) Camshaft timing Oil Control Valve (OCV) operation signal

ECM Terminal Names	Between OC1+ and OC1- , OC2+ and OC2- , OE1+ and OE1- , or OE2+ and OE2-
Tester Ranges	5 V/DIV., 1 ms./DIV.
Conditions	Idling

HINT:
The wavelength becomes shorter as the engine rpm increases.

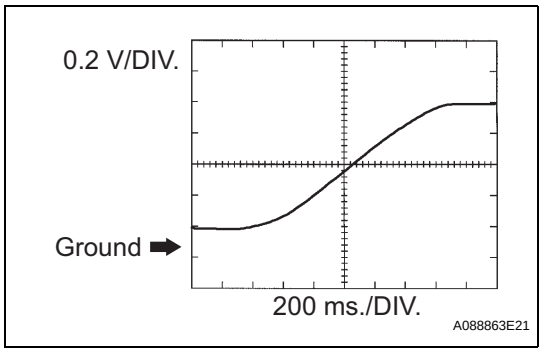

(b) WAVEFORM 2
(1) Heated oxygen sensor signal

ECM Terminal Names	Between OX1B and EX1B, or OX2B and EX2B
Tester Ranges	0.2 V/DIV., 200 ms./DIV.
Conditions	Engine speed is maintained at 2,500 rpm for 2 minutes after sensor is warmed up

HINT:
In the DATA LIST, item O2S B1S2 shows the ECM input values from the heated oxygen sensor.

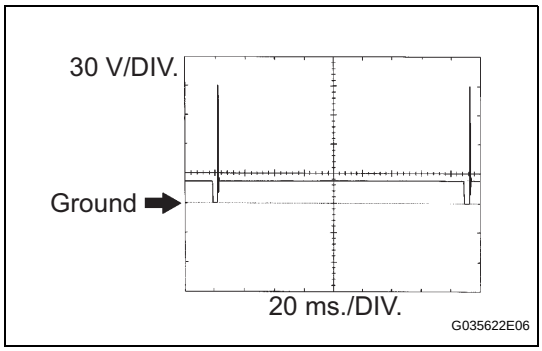

(c) WAVEFORM 3
(1) Fuel injector operation signal

ECM Terminal Names	Between #10 (to 60) and E01
Tester Ranges	30 V/DIV., 20 ms./DIV.
Conditions	Idling

HINT:
The wavelength becomes shorter as the engine rpm increases.

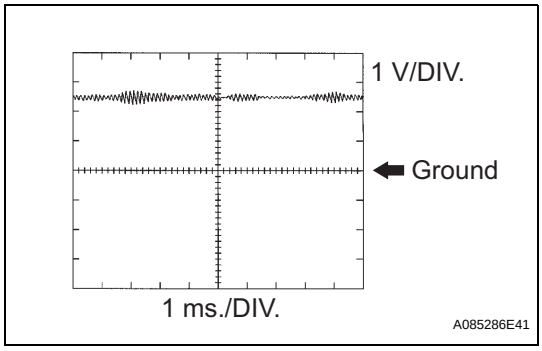

(d) WAVEFORM 4
(1) Knock sensor signal

ECM Terminal Names	Between KNK1 and EKNK, or KNK2 and EKN2
Tester Ranges	0.01 to 10 V/DIV., 0.01 to 10 ms./DIV.
Conditions	Engine speed is maintained at 4,000 rpm after engine is warmed up

HINT:
- The wavelength becomes shorter as the engine rpm increases.
- The waveforms and amplitudes displayed differ slightly depending on the vehicle.

ES

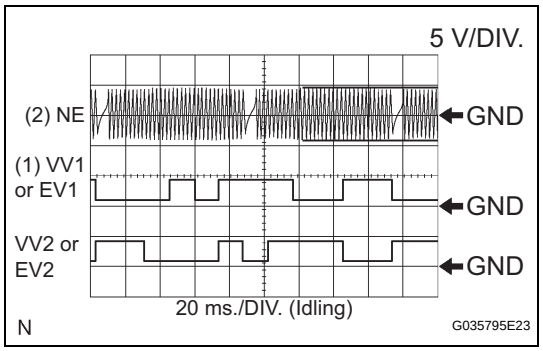

(e) WAVEFORM 5
(1) Variable Valve Timing (VVT) sensor signal (1)
(2) Crankshaft position sensor signal (2)

ECM Terminal Names	(1) Between VV1+ and VV1- , VV2+ and VV2-, EV1+ and EV1-, or EV2+ and EV2- (2) Between NE+ and NE-
Tester Ranges	5 V/DIV., 20 ms./DIV.
Conditions	Idling

HINT:
The wavelength becomes shorter as the engine rpm increases.

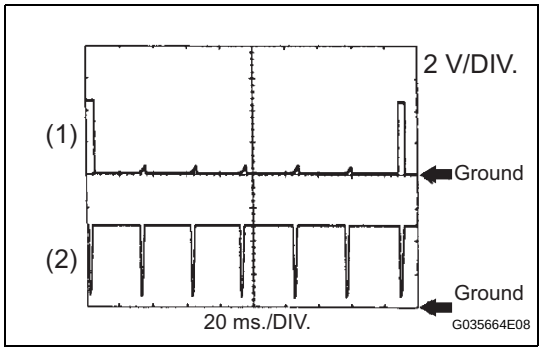

(f) WAVEFORM 6
(1) Igniter IGT signal (from ECM to igniter) (1)
(2) Igniter IGF signal (from igniter to ECM) (2)

ECM Terminal Names	(1) Between IGT (1 to 6) and E1 (2) Between IGF1 and E1
Tester Ranges	2 V/DIV., 20 ms./DIV.
Conditions	Idling

HINT:
The wavelength becomes shorter as the engine rpm increases.

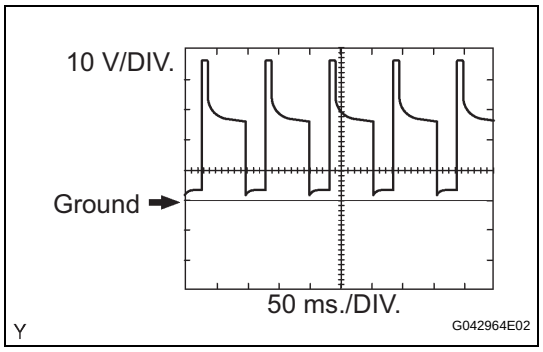

(g) WAVEFORM 7
(1) Purge VSV for EVAP system operation signal

ECM Terminal Names	Between PRG and E1
Tester Ranges	10 V/DIV., 50 ms./DIV.
Conditions	Idling

HINT:
If the waveform is not similar to that shown in the illustration, check the waveform again after idling for 10 minutes or more.

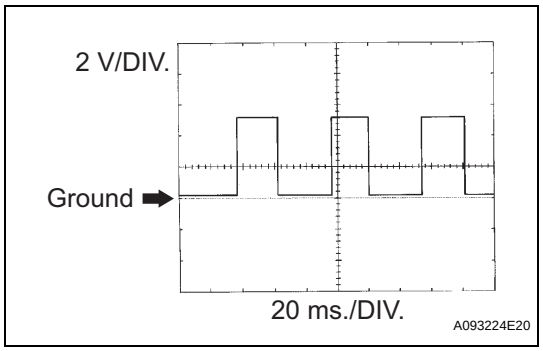

(h) WAVEFORM 8
(1) Vehicle speed signal

ECM Terminal Names	Between SPD and E1
Tester Ranges	2 V/DIV., 20 ms./DIV.
Conditions	Driving at 12 mph (20 km/h)

HINT:
- The wavelength becomes shorter as the vehicle speed increases.
- Depending on the vehicle, the output waveform voltage may rise to 12 V if influenced by optionally installed systems.

ES

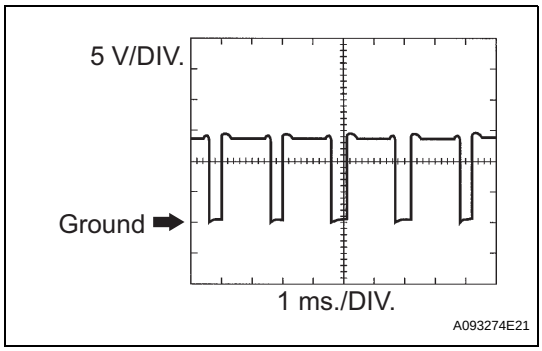

(i) WAVEFORM 9
(1) Throttle drive motor operation signal (positive terminal)

ECM Terminal Names	Between M+ and ME01
Tester Ranges	5 V/DIV., 1 ms./DIV.
Conditions	Idling with warm engine

HINT:
The duty ratio varies depending on the throttle actuator operation.

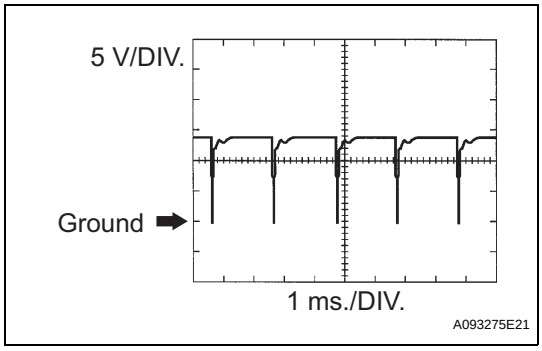

(j) WAVEFORM 10
(1) Throttle drive motor operation signal (negative terminal)

ECM Terminal Names	Between M- and ME01
Tester Ranges	5 V/DIV., 1 ms./DIV.
Conditions	Idling with warm engine

HINT:
The duty ratio varies depending on the throttle actuator operation.

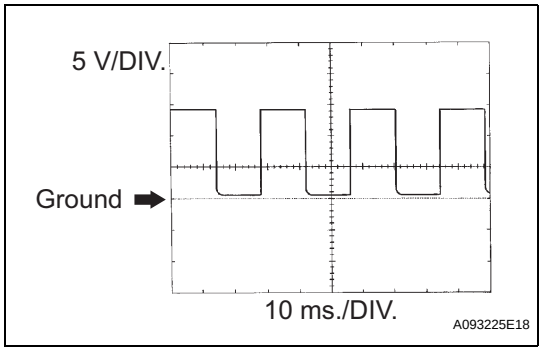

(k) WAVEFORM 11
(1) Engine speed signal

ECM Terminal Names	Between TACH and E1
Tester Ranges	5 V/DIV., 10 ms./DIV.
Conditions	Idling

HINT:
The wavelength becomes shorter as the engine rpm increases.

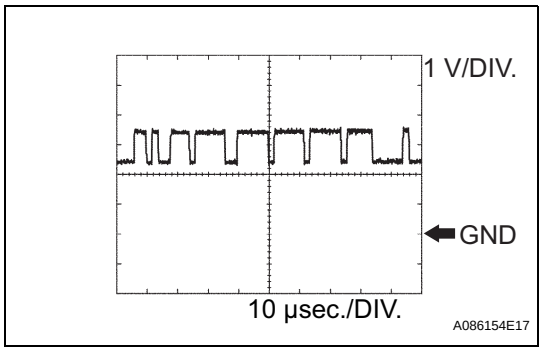

(l) WAVEFORM 12
(1) CAN communication signal

ECM Terminal Names	Between CANH and E1
Tester Ranges	1 V/DIV., 10 µsec./DIV.
Conditions	Engine stops and engine switch on (IG)

HINT:
The waveform varies depending on the CAN communication signal.

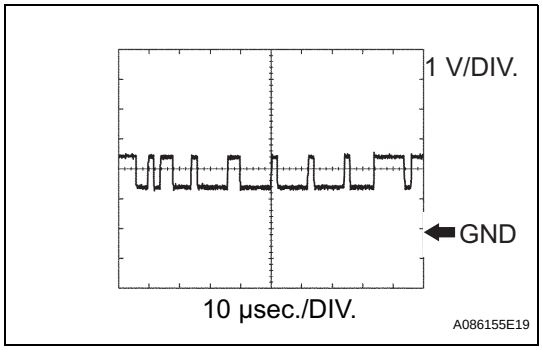

(m) WAVEFORM 13
(1) CAN communication signal

ECM Terminal Names	Between CANL and E1
Tester Ranges	1 V/DIV., 10 µsec./DIV.
Conditions	Engine stops and engine switch on (IG)

HINT:
The waveform varies depending on the CAN communication signal.

ENGINE COOLANT TEMPERATURE SENSOR

COMPONENTS

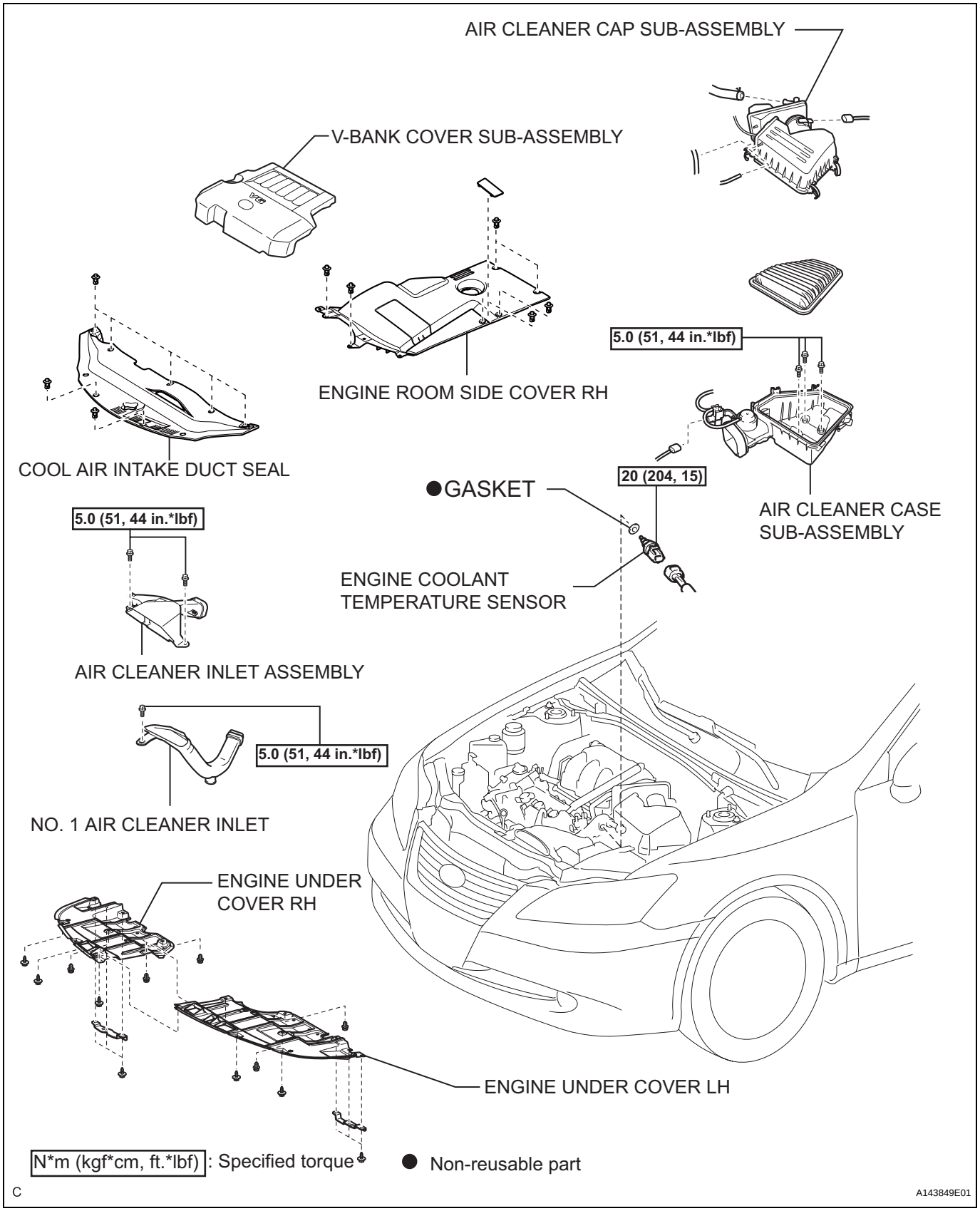

ES

ES

REMOVAL

1. **REMOVE ENGINE UNDER COVER LH**
2. **REMOVE ENGINE UNDER COVER RH**
3. **DRAIN ENGINE COOLANT (See page CO-5)**
4. **REMOVE V-BANK COVER SUB-ASSEMBLY (See page EM-23)**
5. **REMOVE COOL AIR INTAKE DUCT SEAL (See page EM-22)**
6. **REMOVE ENGINE ROOM SIDE COVER LH (See page EM-22)**
7. **REMOVE AIR CLEANER INLET ASSEMBLY (See page EM-23)**
8. **REMOVE AIR CLEANER CAP SUB-ASSEMBLY (See page ES-519)**
9. **REMOVE AIR CLEANER CASE SUB-ASSEMBLY (See page EM-23)**
10. **REMOVE NO. 1 AIR CLEANER INLET (See page EM-23)**
11. **REMOVE ENGINE COOLANT TEMPERATURE SENSOR**
    (a) Remove the engine coolant temperature sensor connector.
    (b) Remove the engine coolant temperature sensor.
    (c) Remove the gasket from the engine coolant temperature sensor.

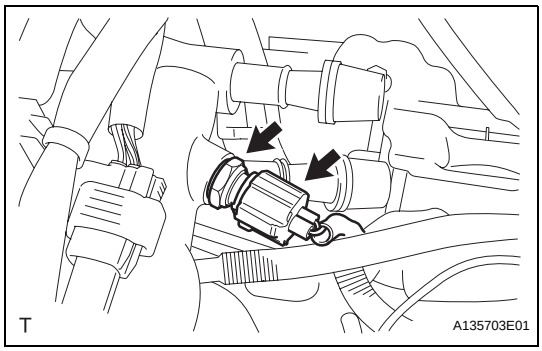

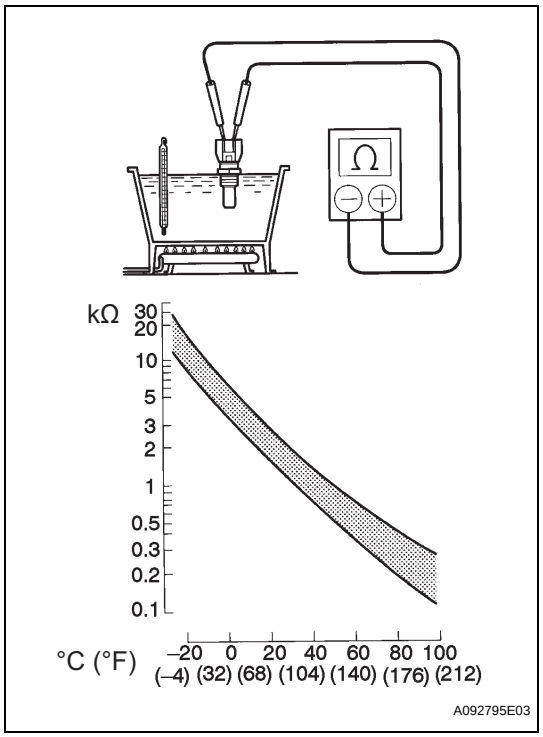

INSPECTION

1. INSPECT ENGINE COOLANT TEMPERATURE SENSOR

(a) Measure the resistance between the terminals.

Standard resistance

Condition	Specified Condition
Approx. 20°C (68°F)	2.32 to 2.59 kΩ
Approx. 80°C (176°F)	0.31 to 0.326 kΩ

If the result is not as specified, replace the sensor.

NOTICE:

If checking the ECT sensor in the water, keep the terminals dry. After checking, dry the sensor.

ES

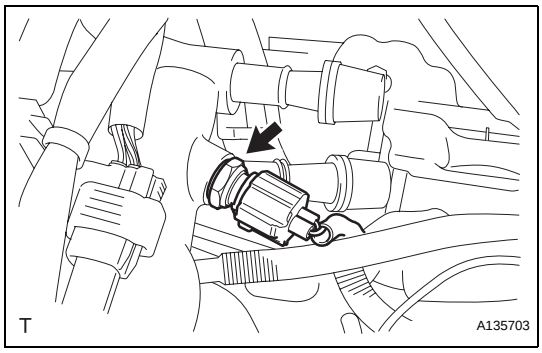

INSTALLATION

1. **INSTALL ENGINE COOLANT TEMPERATURE SENSOR**
   (a) Install a new gasket to the engine coolant temperature sensor.
   (b) Install the engine coolant temperature sensor.
   Torque: 20 N*m (204 kgf*cm, 15 ft.*lbf)
   (c) Connect the engine coolant temperature sensor connector.
2. **INSTALL NO. 1 AIR CLEANER INLET (See page EM-48)**
3. **INSTALL AIR CLEANER CASE SUB-ASSEMBLY (See page EM-48)**
4. **INSTALL AIR CLEANER CAP SUB-ASSEMBLY (See page ES-522)**
5. **INSTALL AIR CLEANER INLET ASSEMBLY (See page EM-48)**
6. **ADD ENGINE COOLANT (See page CO-6)**
7. **CHECK FOR ENGINE COOLANT LEAKS (See page CO-1)**
8. **INSTALL ENGINE ROOM SIDE COVER LH (See page EM-50)**
9. **INSTALL COOL AIR INTAKE DUCT SEAL (See page EM-50)**
10. **INSTALL V-BANK COVER SUB-ASSEMBLY (See page EM-49)**
11. **INSTALL ENGINE UNDER COVER RH**
12. **INSTALL ENGINE UNDER COVER LH**

DIAGNOSIS SYSTEM

1. DESCRIPTION

When troubleshooting OBD II (On-Board Diagnostics) vehicles, the intelligent tester (complying with SAE J1987) must be connected to the DLC3 (Data Link Connector 3) of the vehicle. Various data in the vehicle's ECM (Engine Control Module) can be then read.

OBD ll regulations require that the vehicle's on-board computer illuminates the MIL (Malfunction Indicator Lamp) on the instrument panel when the computer detects a malfunction in:

(a) The emission control systems and components.

(b) The power train control components (which affect vehicle emissions).

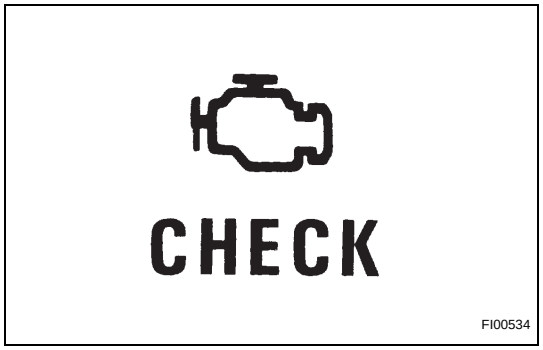

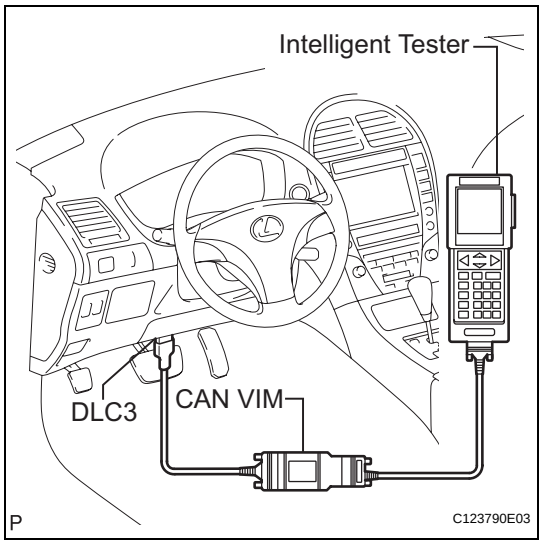

(c) The computer itself.

In addition, the applicable DTCs (Diagnostic Trouble Codes) prescribed by SAE J2012 are recorded on 3 consecutive trips, the MIL turns off automatically but the DTCs remain recorded in the ECM memory.

To check for DTCs, connect the intelligent tester to the DLC3. The tester displays DTCs, freeze frame data, and a variety of the engine data. The DTCs and freeze frame data can be erased with the tester.

In order to enhance OBD function on vehicles and develop the Off-Board diagnosis system, CAN communication is introduced in this system (CAN: Controller Area Network). It minimizes a gap between technician skills and vehicle technology. CAN is a network, which uses a pair of data transmission lines, spanning multiple computers and sensors. It allows a high speed communication between the systems and simplification of the wire harness connection. Since this system is equipped with the CAN communication, connecting the CAN VIM (VIM: Vehicle Interface Module) with the intelligent tester is necessary to display any information from the ECM. (Also the communication between the intelligent tester and the ECM uses CAN communication signal). When confirming the DTCs and any data of the ECM, connect the CAN VIM between the DLC3 and the intelligent tester.

2. NORMAL MODE AND CHECK MODE

The diagnosis system operates in normal mode during normal vehicle use. In normal mode, 2 trip detection logic is used to ensure accurate detection of malfunctions. Check mode is also available as an option for technicians. In check mode, 1 trip detection logic is used for simulating malfunction symptoms and increasing the system's ability to detect malfunctions, including intermittent problems (intelligent tester only).

3. 2 TRIP DETECTION LOGIC

When a malfunction is first detected, the malfunction is temporarily stored in the ECM memory (1st trip). If the same malfunction is detected during the next subsequent drive cycle, the MIL is illuminated (2nd trip).

4. FREEZE FRAME DATA

The ECM records vehicle and driving condition information as freeze frame data the moment a DTC is stored. When troubleshooting, freeze frame data can be helpful in determining whether the vehicle was running or stopped, whether the engine was warmed up or not, whether the air-fuel ratio was lean or rich, as well as other data recorded at the time of a malfunction.

5. DLC3 (Data link Connector 3)

The vehicle's ECM uses ISO 15765-4 for communication protocol. The terminal arrangement of the DLC3 complies with SAE J1962 and matches the ISO 15765-4 format.

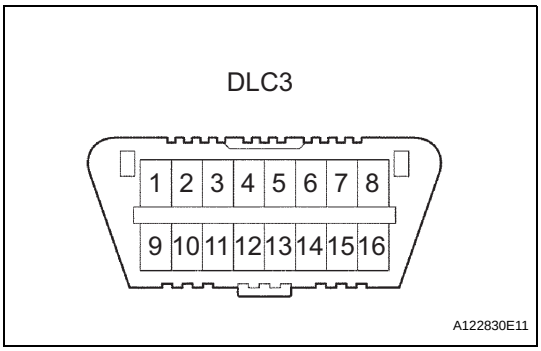

Symbols (Terminal No.)	Terminal Description	Condition	Specified Condition
SIL (7) - SG (5)	Bus "+" line	During transmission	Pulse generation
CG (4) - Body ground	Chassis ground	Always	Below 1 Ω
SG (5) - Body ground	Signal ground	Always	Below 1 Ω
BAT (16) - Body ground	Battery positive	Always	11 to 14 V
CANH (6) - CANL (14)	CAN bus line	Engine switch off	54 to 69 Ω
CANH (6) - CG (4)	HIGH-level CAN bus line	Engine switch off	200 Ω or higher
CANL (14) - CG (4)	LOW-level CAN bus line	Engine switch off	200 Ω or higher
CANH (6) - BAT (16)	HIGH-level CAN bus line	Engine switch off	6 kΩ or higher

HINT:
The DLC3 is the interface prepared for reading various data from the vehicle's ECM. After connecting the cable of an intelligent tester, turn the engine switch on (IG) and turn the tester on. If a communication failure message is displayed on the tester screen (on the tester: UNABLE TO CONNECT TO VEHICLE), a problem exists in either the vehicle or tester. In order to identify the location of the problem, connect the tester to another vehicle.
If communication is normal: Inspect the DLC3 on the original vehicle.
If communication is still not possible: The problem is probably in the tester itself. Consult the Service Department listed in the instruction manual.

6. BATTERY VOLTAGE

Standard Voltage:

11 to 14 V

If voltage is below 11 V, replace or recharge the battery before proceeding to the next step.

7. MIL (Malfunction Indicator Lamp)

(a) The MIL is illuminated when the engine switch is first turned on (the engine is not running).

(b) The MIL should turn off when the engine is started. If the MIL remains illuminated, the diagnosis system has detected a malfunction or abnormality in the system.

HINT:

If the MIL is not illuminated when the engine switch is first turned on, check the MIL circuit (See page ES-465).

ES

DTC CHECK / CLEAR

NOTICE:
When the diagnosis system is changed from the normal mode to check mode or vice versa, all DTCs and freeze frame data recorded in normal mode are erased. Before changing modes, always check and make a note of DTCs and freeze frame data.

HINT:

- DTCs which are stored in the ECM can be displayed on an intelligent tester. An intelligent tester can display the current and pending DTCs.
- Some DTCs are not set if the ECM does not detect the same malfunction again during a second consecutive driving cycle. However, such malfunctions, detected on only one occasion, are stored as pending DTCs.

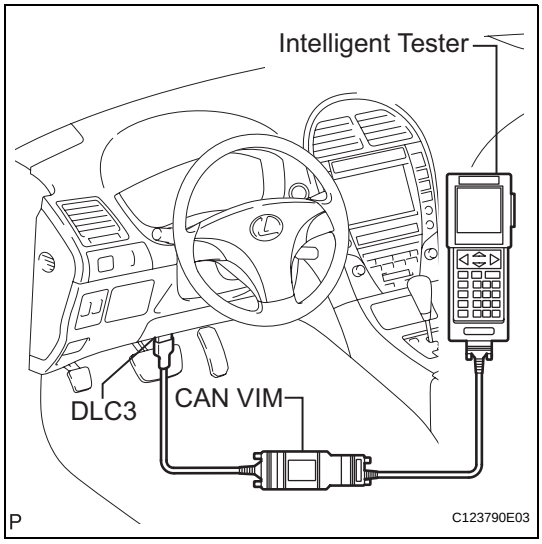

1. CHECK DTC (Using an intelligent tester)
(a) Connect an intelligent tester to the DLC3.
(b) Turn the engine switch on (IG).
(c) Turn the tester on.
(d) Enter the following menu items: DIAGNOSIS / ENHANCED OBD II / DTC INFO / CURRENT CODES.
(e) Check the DTC(s) and freeze frame data, and then write them down.
(f) Check the details of the DTC(s) (See page ES-59).

2. CLEAR DTC (Using an intelligent tester)
(a) Connect an intelligent tester to the DLC3.
(b) Turn the engine switch on (IG).
(c) Turn the tester on.
(d) Enter the following menu items: DIAGNOSIS / ENHANCED OBD II / DTC INFO / CLEAR CODES.
(e) Press the YES button.

3. CLEAR DTC (Without using an intelligent tester)
(a) Perform either one of the following operations:
(1) Disconnect the negative battery cable for more than 1 minute.
(2) Remove the EFI MAIN and ETCS fuses from the engine room relay block located inside the engine compartment for more than 1 minute.

THROTTLE BODY

COMPONENTS

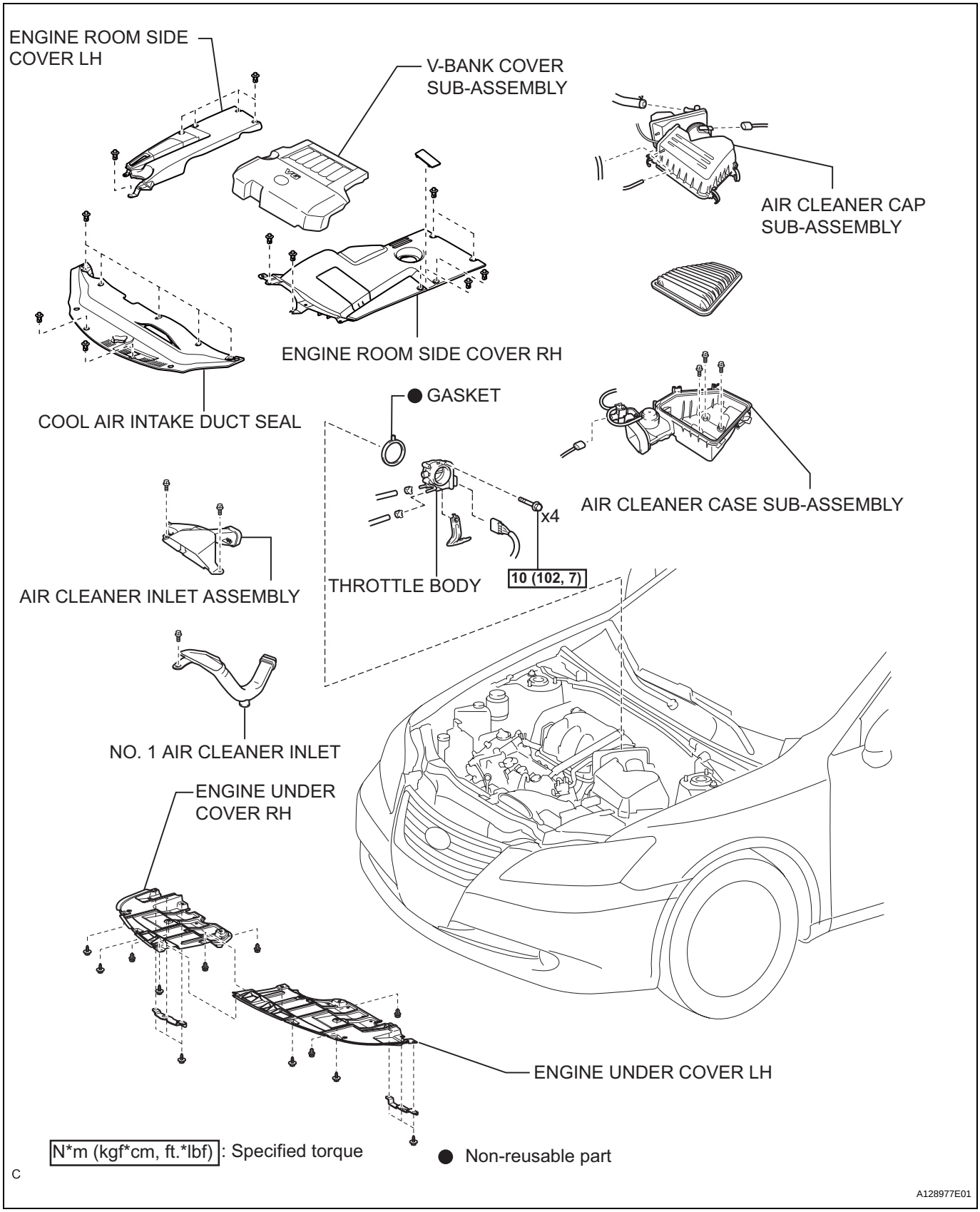

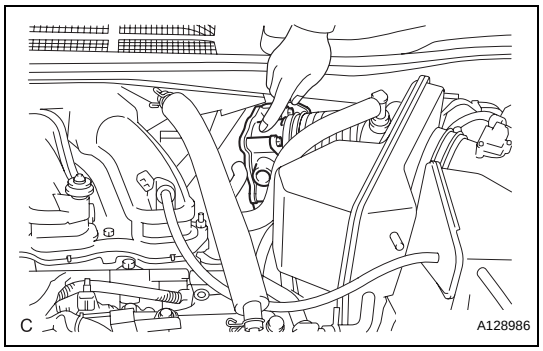

ON-VEHICLE INSPECTION

1. INSPECTION THROTTLE BODY

(a) Inspect the throttle control motor for operating sounds.

(1) Turn the engine switch on (IG).

(2) When turning the accelerator pedal position sensor lever, check for running sounds of the motor. The motor should be running smoothly without friction sounds.
If operation is not as specified, check the throttle control motor, wiring and ECM (See page ES-521).

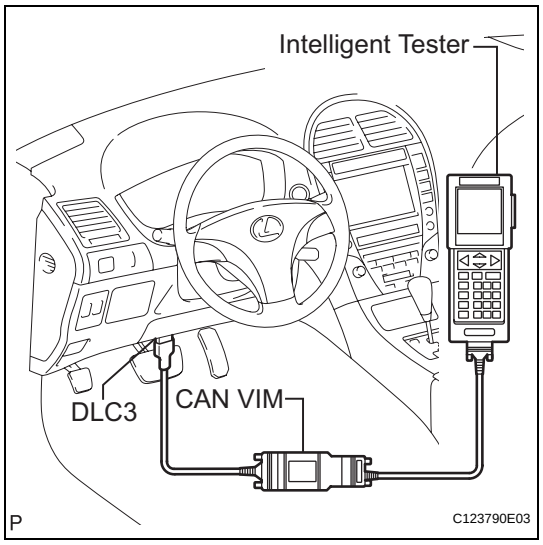

(b) Inspect the throttle position sensor.

(1) Connect the intelligent tester (with CAN VIM) to the DLC3.

(2) Turn the engine switch on (IG).

(3) Check that the MIL is off.

(4) Check that, under the CURRENT DATA, THROTTLE POS (throttle valve opening percentage) is within the standard range below.
Standard throttle valve opening percentage: 60 % or more
If operation is not as specified, check the throttle position sensor, wiring and ECM (See page ES-521).

ES

ES

REMOVAL

1. **REMOVE ENGINE UNDER COVER LH**
2. **REMOVE ENGINE UNDER COVER RH**
3. **DRAIN ENGINE COOLANT (See page CO-5)**
4. **REMOVE COOL AIR INTAKE DUCT SEAL (See page EM-22)**
5. **REMOVE ENGINE ROOM SIDE COVER LH (See page EM-22)**
6. **REMOVE V-BANK COVER SUB-ASSEMBLY (See page EM-23)**
7. **REMOVE AIR CLEANER INLET ASSEMBLY (See page EM-23)**
8. **REMOVE AIR CLEANER CAP SUB-ASSEMBLY**
   (a) Disconnect the 2 vacuum hoses.

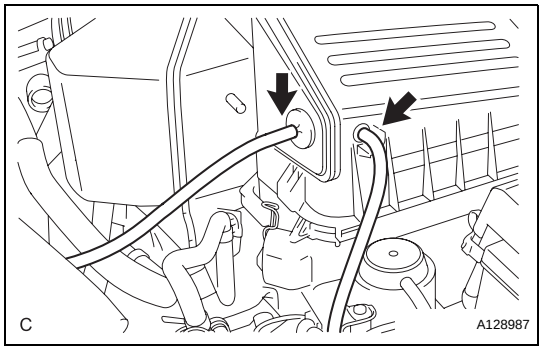

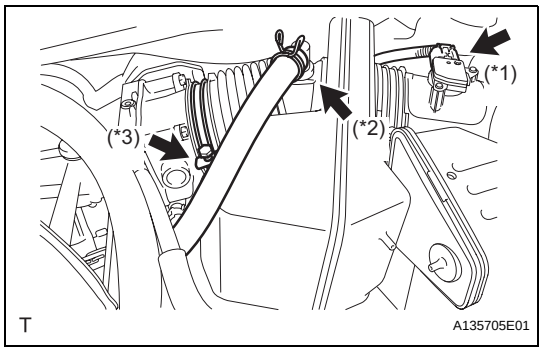

   (b) Disconnect the mass air flow meter connector (*1).
   (c) Disconnect the No. 2 ventilation hose (*2).
   (d) Disconnect the hose band (*3).

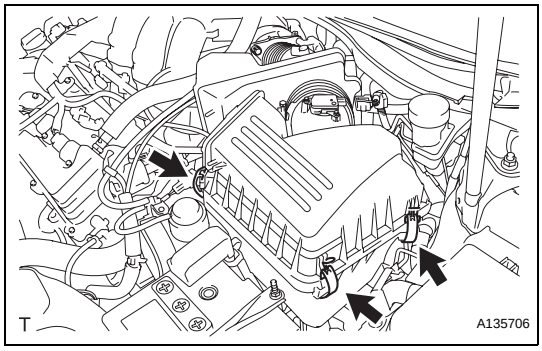

   (e) Disconnect the 3 bands, and remove the air cleaner cap sub-assembly.
9. **REMOVE AIR CLEANER CASE SUB-ASSEMBLY (See page EM-23)**
10. **REMOVE NO. 1 AIR CLEANER INLET (See page EM-23)**

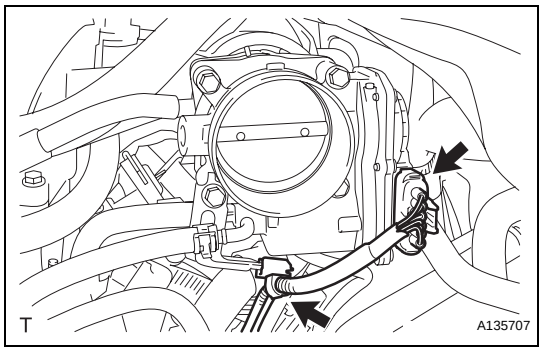

11. REMOVE THROTTLE BODY

(a) Disconnect the throttle body connector and clamp.

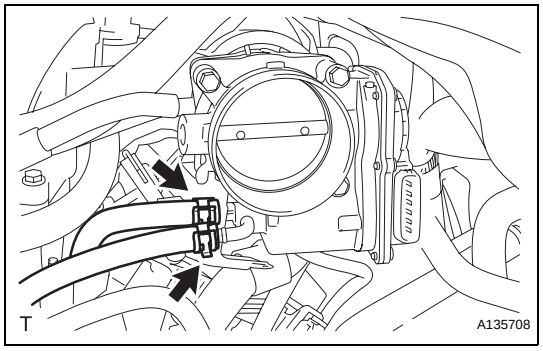

(b) Disconnect the 2 water by-pass hoses from the throttle body.

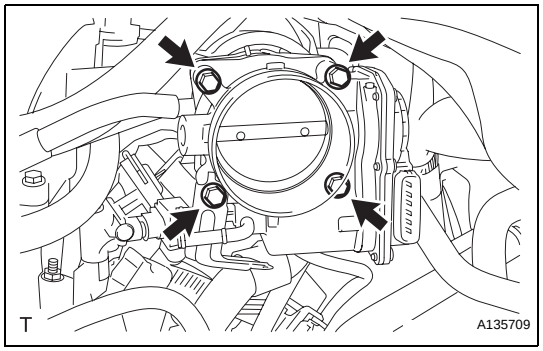

(c) Remove the 4 bolts and throttle body.

(d) Remove the throttle body gasket from the intake air surge tank.

INSPECTION

1. INSPECT THROTTLE BODY

(a) Measure the resistance between the terminals.

Standard resistance

Tester Connection	Condition	Specified Condition
2 (M+) - 1 (M-)	20°C (68°F)	0.3 to 100 Ω
5 (VC) - 3 (E2)	20°C (68°F)	1.2 to 3.2 kΩ

If the result is not as specified, replace the throttle body assembly.

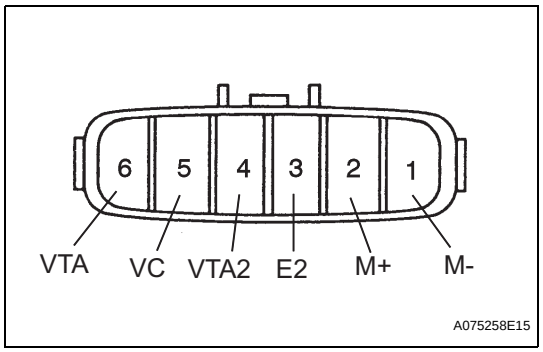

INSTALLATION

1. INSTALL THROTTLE BODY

(a) Install a new throttle body gasket to the intake air surge tank.

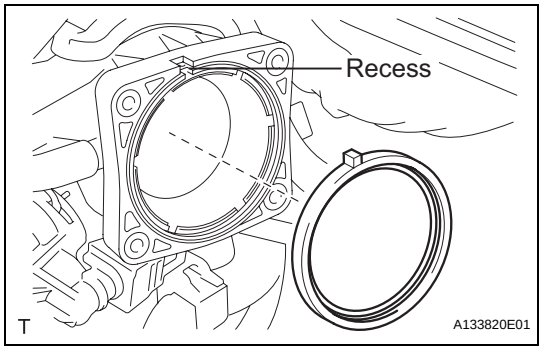

ES

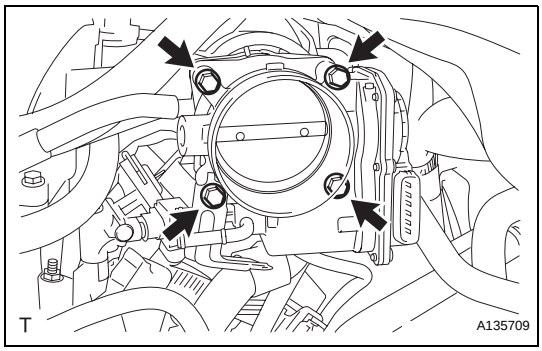

(b) Install the throttle body with the 4 bolts.
Torque: 10 N*m (102 kgf*cm, 7 ft.*lbf)

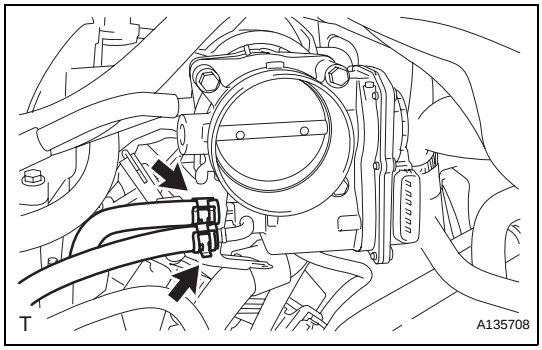

(c) Connect the 2 water by-pass hoses.

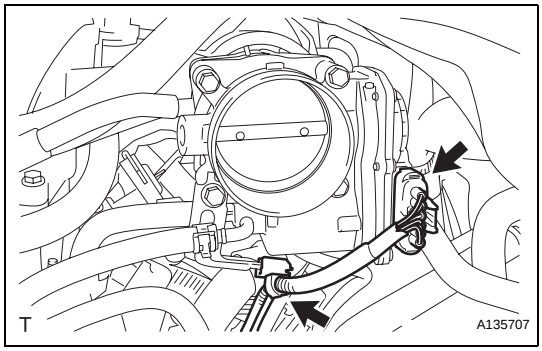

(d) Connect the throttle body connector and clamp.

2. INSTALL NO. 1 AIR CLEANER INLET (See page EM-48)

3. INSTALL AIR CLEANER CASE SUB-ASSEMBLY (See page EM-48)

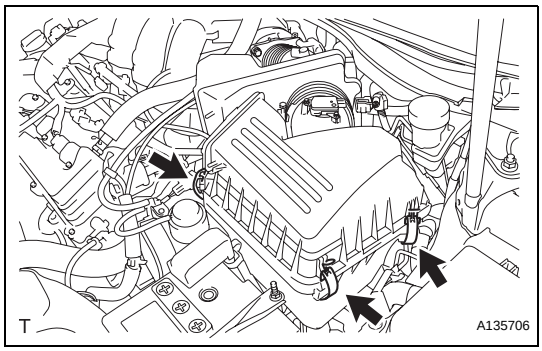

4. INSTALL AIR CLEANER CAP SUB-ASSEMBLY

(a) Install the air cleaner cap sub-assembly, and connect the 3 bands.

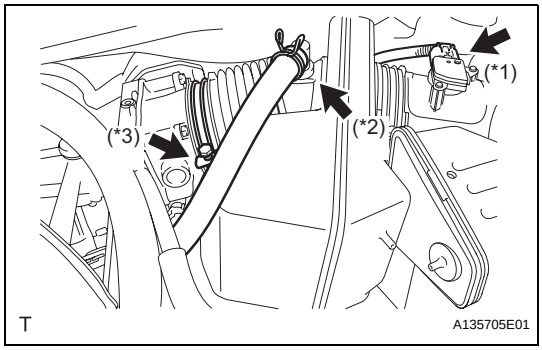

(b) Connect the mass air flow meter connector (*1).

(c) Connect the No. 2 ventilation hose (*2).

(d) Connect the hose band (*3).

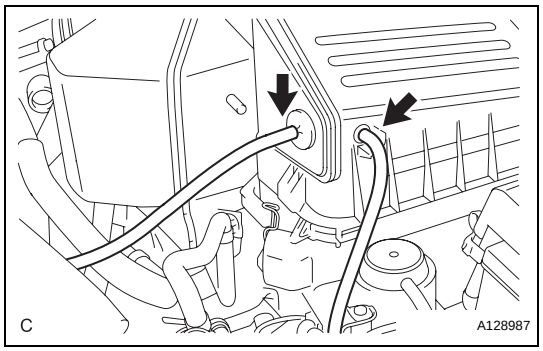

(e) Connect the 2 vacuum hoses.

5. **INSTALL AIR CLEANER INLET ASSEMBLY (See page EM-48)**
6. **ADD ENGINE COOLANT (See page CO-6)**
7. **CHECK FOR ENGINE COOLANT LEAKS (See page CO-1)**
8. **CHECK FUNCTION OF THROTTLE BODY (See page ES-519)**
9. **INSTALL ENGINE ROOM SIDE COVER LH (See page EM-50)**
10. **INSTALL COOL AIR INTAKE DUCT SEAL (See page EM-50)**
11. **INSTALL V-BANK COVER SUB-ASSEMBLY (See page EM-49)**

FREEZE FRAME DATA

1. DESCRIPTION

The ECM records vehicle and driving condition information as freeze frame data the moment a DTC is stored. When troubleshooting, freeze frame data can be helpful in determining whether the vehicle was running or stopped, whether the engine was warmed up or not, whether the air-fuel ratio was lean or rich, as well as other data recorded at the time of a malfunction.

HINT:

If it is impossible to duplicate the problem even though a DTC is detected, confirm the freeze frame data.

The ECM records engine conditions as freeze frame data every 0.5 seconds. Using the intelligent tester, five separate sets of freeze frame data, including the data values at the time when the DTC was set, can be checked.

– 3 data set before the DTC was set.
– 1 data set when the DTC was set.
– 1 data set after the DTC was set.

These data sets can be used to simulate the condition of the vehicle around the time of the occurrence of the malfunction. The data may assist in identifying of the cause of the malfunction, and in judging whether it was temporary or not.

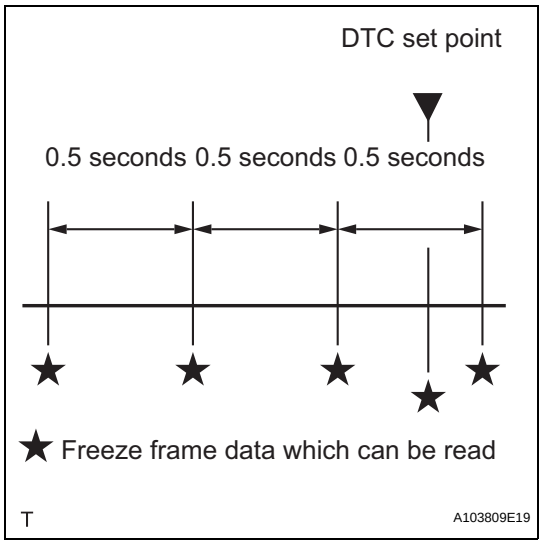

2. LIST OF FREEZE FRAME DATA

LABEL (Intelligent Tester Display)	Measurement Item/Range	Diagnostic Note
FREEZE DTC	Freeze DTC	-
INJECTOR	Injector	-
IGN ADVANCE	Ignition advance	-
CALC LOAD	Calculate load	Calculated load by ECM
VEHICLE LOAD	Vehicle load	-
MAF	Mass air flow volume	If value is approximately 0.0 g/s: • Mass air flow meter power source circuit open or shorted • VG circuit open or shorted If value is 160.0 g/s or more: • E2G circuit open
ENGINE SPD	Engine speed	-
VEHICLE SPD	Vehicle speed	Speed indicated on speedometer
COOLANT TEMP	Engine coolant temperature	If value is -40°C (-40°F), sensor circuit open If value is 140°C (284°F), sensor circuit shorted
INTAKE AIR	Intake air temperature	If value is -40°C (-40°F), sensor circuit open If value is 140°C (284°F), sensor circuit shorted
AIR-FUEL PATIO	Air-fuel ratio	-
EVAP PURGE FLOW	EVAP gauge flow	-
PURGE DENSITY	Learning value of purge density	-
EVAP PURGE VSV	EVAP purge VSV duty ratio	-
KNOCK CRRT VAL	Correction learning value of knocking	-

LABEL (Intelligent Tester Display)	Measurement Item/Range	Diagnostic Note
KNOCK FB VAL	Feedback value of knocking	-
ACCEL POS #1	Absolute Accelerator Pedal Position (APP) No. 1	-
ACCEL POS #2	Absolute APP No. 2	-
THROTTLE POS	Throttle position	Read value with ignition switch on (IG) (Do not start engine)
THROTTLE POS	Throttle sensor positioning	Read value with ignition switch on (IG) (Do not start engine)
THROTTLE POS #2	Throttle sensor positioning #2	-
THROTTLE MOT	Throttle motor	-
O2S B1 S2	Heated oxygen sensor output	Performing INJ VOL or A/F CONTROL function of ACTIVE TEST enables technician to check output voltage of sensor
O2S B2 S2	Heated oxygen sensor output	Performing INJ VOL or A/F CONTROL function of ACTIVE TEST enables technician to check output voltage of sensor
AFS B1 S1	A/F sensor output	Performing INJ VOL or A/F CONTROL function of ACTIVE TEST enables technician to check output voltage of sensor
AFS B2 S1	A/F sensor output	Performing INJ VOL or A/F CONTROL function of ACTIVE TEST enables technician to check output voltage of sensor
TOTAL FT #1	Total fuel trim	-
TOTAL FT #2	Total fuel trim	-
SHORT FT #1	Short-term fuel trim	Short-term fuel compensation used to maintain air-fuel ratio at stoichiometric air-fuel ratio
LONG FT #1	Long-term fuel trim	Overall fuel compensation carried out in long-term to compensate for a continual deviation of short-term fuel trim from central valve
SHORT FT #2	Short-term fuel trim	Short-term fuel compensation used to maintain air-fuel ratio at stoichiometric air-fuel ratio
LONG FT #2	Long-term fuel trim	Overall fuel compensation carried out in long-term to compensate for a continual deviation of short-term fuel trim from central valve
FUEL SYS #1	Fuel system status (Bank 1)	• OL (Open Loop): Has not yet satisfied conditions to go closed loop • CL (Closed Loop): Using heated oxygen sensor as feedback for fuel control • OL DRIVE: Open loop due to driving conditions (fuel enrichment) • OL FAULT: Open loop due to detected system fault • CL FAULT: Closed loop but heated oxygen sensor, which used for fuel control malfunctioning
FUEL SYS #2	Fuel system status (Bank 2)	• OL (Open Loop): Has not yet satisfied conditions to go closed loop • CL (Closed Loop): Using heated oxygen sensor as feedback for fuel control • OL DRIVE: Open loop due to driving conditions (fuel enrichment) • OL FAULT: Open loop due to detected system fault • CL FAULT: Closed loop but heated oxygen sensor, which used for fuel control malfunctioning
O2FT B1 S2	Fuel trim at heated oxygen sensor	Same as SHORT FT #1
O2FT B2 S2	Fuel trim at heated oxygen sensor	Same as SHORT FT #1

LABEL (Intelligent Tester Display)	Measurement Item/Range	Diagnostic Note
AF FT B1 S1	Fuel trim at A/F sensor	-
AFS B1 S1	A/F sensor output current	-
AF FT B2 S1	Fuel trim at A/F sensor	-
CAT TEMP B1 S1	Catalyst temperature	-
CAT TEMP B2 S1	Catalyst temperature	-
CAT TEMP B1 S2	Catalyst temperature	-
CAT TEMP B2 S2	Catalyst temperature	-
SO2S B1 S2	Heated oxygen sensor impedance (sensor 2)	-
SO2S B2 S2	Heated oxygen sensor impedance (sensor 2)	-
INI COOL TEMP	Initial engine coolant temperature	-
INI INTAKE TEMP	Initial intake air temperature	-
INJ VOL	Injection volume	-
ACC RELAY	ACC relay	-
STARTER RELAY	Starter relay	-
STARTER SIG	Starter signal	-
STARTER CONTROL	Starter control	-
A/C SIGNAL	A/C signal	-
PNP SW (NSW)	Neutral position switch signal	-
ELECT LOAD SIG	Electrical load signal	-
STOP LIGHT SW	Stop light switch	-
BATTERY VOLTAGE	Battery voltage	-
ATM PRESSURE	Atmospheric pressure	-
VVT CTRL B2	VVT control status (bank 2)	-
EVAP (Purge) VSV	EVAP Purge VSV	-
FUEL PUMP/SPD	Fuel pump/speed status	-
VVT CTRL B1	VVT control status (bank 1)	-
VACUUM PUMP	Key-off EVAP system pump status	-
EVAP VENT VAL	Key-off EVAP system vent valve status	-
FAN MOTOR	Electric fan motor	-
TC/TE1	TC and TE1 terminals of DLC3	-
AICV VSV	VSV for Air Intake Control System (ACIS)	-
ENG SPEED #1	Engine speed of Cylinder #1 of Injector Stopped	-
ENG SPEED #2	Engine speed of Cylinder #2 of injection Stopped	-
ENG SPEED #3	Engine speed of Cylinder #3 of injection Stopped	-
ENG SPEED #4	Engine speed of Cylinder #4 of injection Stopped	-
ENG SPEED #5	Engine speed of Cylinder #5 of injection Stopped	-
ENG SPEED #6	Engine speed of Cylinder #6 of injection Stopped	-
ENG SPEED ALL	Avg Eng Spd, All Cylinder of Injection Stopped	-
VVTL AIM ANGL#1	VVT aim angle (bank 1)	-
VVT CHNG ANGL#1	VVT change angle (bank 1)	-
VVT OCV D B1	VVT OCV operation duty (bank 1)	-
VVT EX HOLD B1	VVT exhaust hold duty ratio learning value (bank 1)	-
VVT EX CHG ANG1	VVT exhaust change angle (bank 1)	-

LABEL (Intelligent Tester Display)	Measurement Item/Range	Diagnostic Note
VVT EX OCV D B1	VVT exhaust OCV duty (bank 1)	-
VVTL AIM ANGL#2	VVT aim angle (bank 2)	-
VVT CHNG ANGL#2	VVT change angle (bank 2)	-
VVT OCV DUTY B2	VVT OCV operation duty (bank 2)	-
VVT EX HOLD B2	VVT exhaust hold duty ratio learning value (bank 2)	-
VVT EX CHG ANG2	VVT exhaust change angle (bank 2)	-
VVT EX OCV D B2	VVT exhaust OCV duty (bank 2)	-
FC IDL	Idle fuel cut	ON: when throttle valve fully closed and engine speed over 1,500 rpm
FC TAU	FC TAU	Fuel cut being performed under very light load to prevent incomplete engine combustion
CYL #1	Cylinder #1 misfire rate	Displayed only during idling
CYL #2	Cylinder #2 misfire rate	Displayed only during idling
CYL #3	Cylinder #3 misfire rate	Displayed only during idling
CYL #4	Cylinder #4 misfire rate	Displayed only during idling
CYL #5	Cylinder #5 misfire rate	Displayed only during idling
CYL #6	Cylinder #6 misfire rate	Displayed only during idling
IGNITION	Ignition	-
CYL ALL	All cylinder misfire rate	Displayed only during idling
MISFIRE RPM	Misfire RPM	-
MISFIRE RPM	Misfire RPM	-
MISFIRE LOAD	Misfired load	-
MISFIRE MARGIN	Misfire monitoring	-
MIL	MIL status	-
ENG RUN TIME	Accumulated engine running time	-
TIME DTC CLEAR	Cumulative time after DTC cleared	-
DIST DTC CLEAR	Accumulated distance after DTC cleared	-
WU CYC DTC CLEAR	Warm-up cycle after DTC cleared	-

REMOVAL

1. **DISCHARGE FUEL SYSTEM PRESSURE (See page FU-35)**
2. **REMOVE ENGINE UNDER COVER LH**
3. **REMOVE ENGINE UNDER COVER RH**
4. **DRAIN ENGINE COOLANT (See page CO-5)**
5. **REMOVE COOL AIR INTAKE DUCT SEAL (See page EM-22)**
6. **REMOVE ENGINE ROOM SIDE COVER LH (See page EM-22)**
7. **REMOVE ENGINE ROOM SIDE COVER RH (See page EM-22)**
8. **REMOVE V-BANK COVER SUB-ASSEMBLY (See page EM-23)**
9. **REMOVE FRONT SUSPENSION UPPER CENTER BRACE (See page BR-22)**
10. **REMOVE AIR CLEANER INLET ASSEMBLY (See page EM-23)**
11. **REMOVE AIR CLEANER CAP SUB-ASSEMBLY (See page ES-519)**
12. **REMOVE AIR CLEANER CASE SUB-ASSEMBLY (See page EM-23)**
13. **REMOVE NO. 1 AIR CLEANER INLET (See page EM-23)**
14. **REMOVE INTAKE AIR SURGE TANK (See page FU-12)**
15. **SEPARATE FUEL TUBE SUB-ASSEMBLY (See page FU-13)**
16. **REMOVE INTAKE MANIFOLD (See page EM-31)**
17. **REMOVE KNOCK CONTROL SENSOR**
    (a) Disconnect the 2 knock control sensor connectors.
    (b) Remove the 2 bolts and 2 knock control sensors.

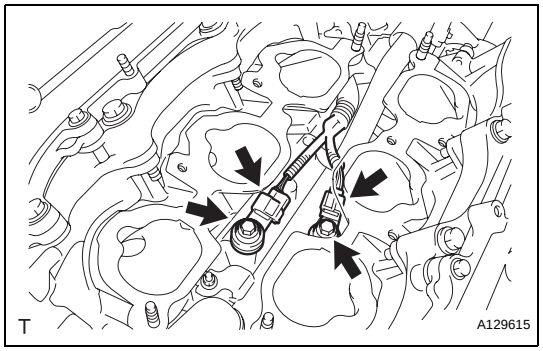

ES

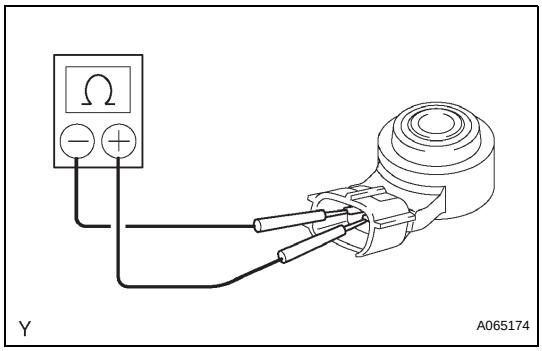

INSPECTION

1. **INSPECT KNOCK CONTROL SENSOR**
   (a) Using an ohmmeter, measure the resistance between the terminals.
   Standard resistance:
   120 to 280 kΩ at 20°C (68°F)
   If the result is not as specified, replace the sensor.

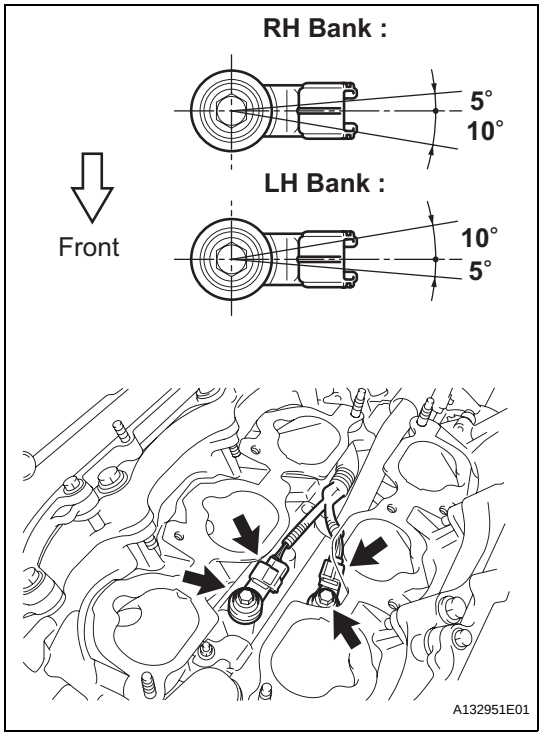

INSTALLATION

1. **INSTALL KNOCK CONTROL SENSOR**
   (a) Install the 2 knock control sensors with the 2 bolts as shown in the illustration.
   Torque: 20 N*m (204 kgf*cm, 15 ft.*lbf)
   (b) Connect the 2 knock control sensor connectors.
2. **INSTALL INTAKE MANIFOLD (See page EM-40)**
3. **CONNECT FUEL TUBE SUB-ASSEMBLY (See page FU-17)**
4. **INSTALL INTAKE AIR SURGE TANK (See page FU-17)**
5. **INSTALL NO. 1 AIR CLEANER INLET (See page EM-48)**
6. **INSTALL AIR CLEANER CASE SUB-ASSEMBLY (See page EM-48)**
7. **INSTALL AIR CLEANER CAP SUB-ASSEMBLY (See page ES-522)**
8. **INSTALL AIR CLEANER INLET ASSEMBLY (See page EM-48)**
9. **ADD ENGINE COOLANT (See page CO-6)**
10. **CHECK FOR ENGINE COOLANT LEAKS (See page CO-1)**
11. **CHECK FOR FUEL LEAKS (See page FU-7)**
12. **INSTALL FRONT SUSPENSION UPPER CENTER BRACE (See page BR-25)**
13. **INSTALL V-BANK COVER SUB-ASSEMBLY (See page EM-49)**
14. **INSTALL ENGINE ROOM SIDE COVER LH (See page EM-50)**
15. **INSTALL ENGINE ROOM SIDE COVER RH (See page EM-50)**
16. **INSTALL COOL AIR INTAKE DUCT SEAL (See page EM-50)**
17. **INSTALL ENGINE UNDER COVER RH**
18. **INSTALL ENGINE UNDER COVER LH**

INSTALLATION

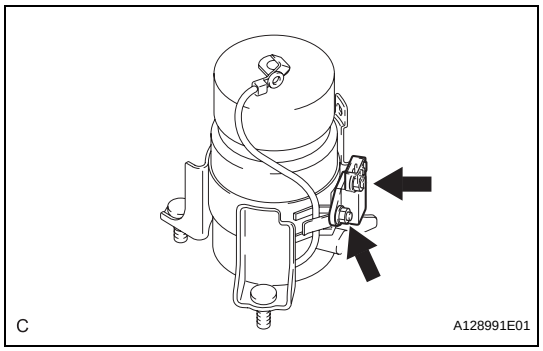

1. INSTALL ACTIVE CONTROL ENGINE MOUNT

(a) Install the acceleration sensor with the 2 nuts.
Torque: 8.0 N*m (81 kgf*cm, 71 in.*lbf)

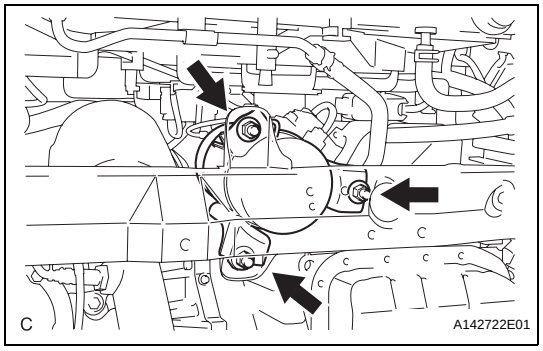

(b) Install the active control engine mount with the 3 nuts.
Torque: 52 N*m (530 kgf*cm, 38 ft.*lbf)

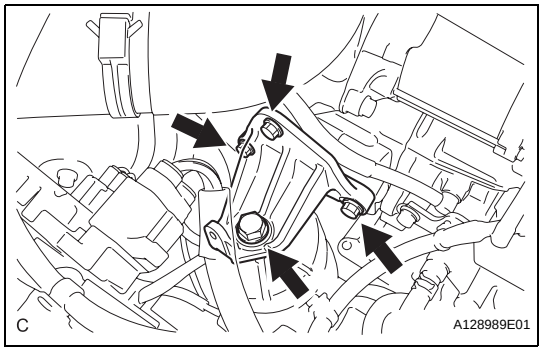

2. INSTALL ENGINE MOUNTING BRACKET FR

(a) Install the engine mounting bracket FR with the 4 bolts.
Torque: Automatic Transaxle Side
64 N*m (653 kgf*cm, 47 ft.*lbf)
Active Engine Mounting Side
87 N*m (887 kgf*cm, 64 ft.*lbf)

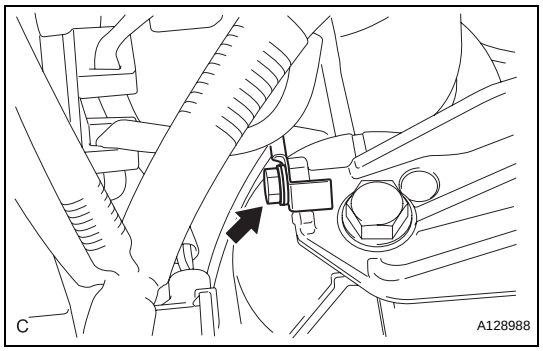

(b) Connect the earth cable with the bolt.
Torque: 5.0 N*m (51 kgf*cm, 44 in.*lbf)

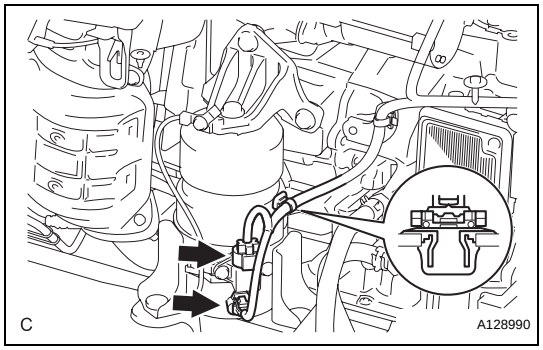

(c) Connect the 2 connectors and clamp.

3. INSTALL NO. 1 AIR CLEANER INLET (See page EM-48)

4. INSTALL AIR CLEANER INLET ASSEMBLY (See page EM-48)

5. INSTALL V-BANK COVER SUB-ASSEMBLY (See page EM-49)

6. INSTALL ENGINE ROOM SIDE COVER LH (See page EM-50)

7. **INSTALL COOL AIR INTAKE DUCT SEAL (See page EM-50)**

8. **INSTALL ENGINE UNDER COVER RH**

9. **INSTALL ENGINE UNDER COVER LH**

10. **CONNECT CABLE TO NEGATIVE BATTERY TERMINAL**

11. **PERFORM INITIALIZATION**
    (a) Perform initialization procedure (See page IN-33).
    NOTICE:
    Some vehicle systems require initialization after reconnecting the cable to the negative battery terminal.

REMOVAL

1. **DISCONNECT CABLE FROM NEGATIVE BATTERY TERMINAL**
2. **REMOVE ENGINE UNDER COVER LH**
3. **REMOVE ENGINE UNDER COVER RH**
4. **REMOVE COOL AIR INTAKE DUCT SEAL (See page EM-22)**
5. **REMOVE ENGINE ROOM SIDE COVER LH (See page EM-22)**
6. **REMOVE V-BANK COVER SUB-ASSEMBLY (See page EM-23)**
7. **REMOVE AIR CLEANER INLET ASSEMBLY (See page EM-23)**
8. **REMOVE NO. 1 AIR CLEANER INLET (See page EM-23)**
9. **REMOVE ENGINE MOUNTING BRACKET FR**

   HINT:
   Securely support the automatic transaxle using a jack.

   (a) Disconnect the 2 connectors and clamp.

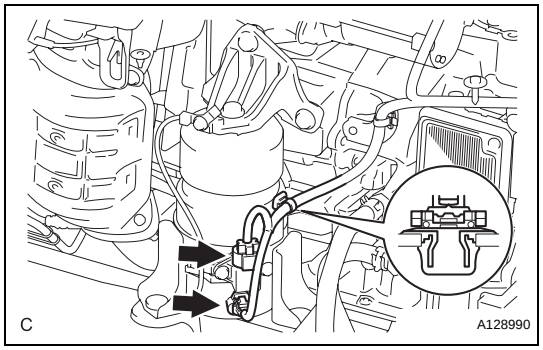

   (b) Remove the bolt and disconnect the earth cable.

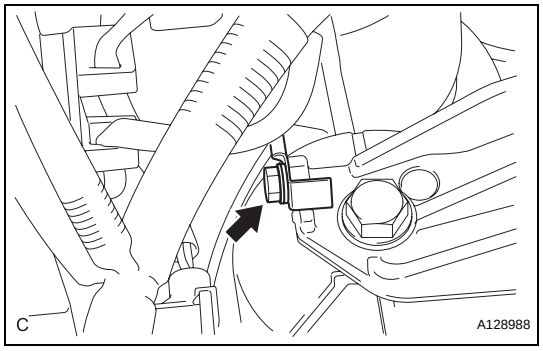

ES

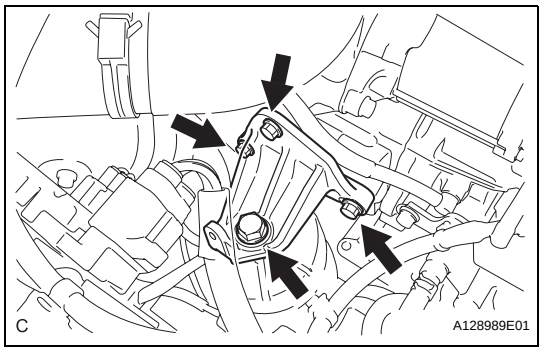

(c) Remove the 4 bolts and engine mounting bracket FR.

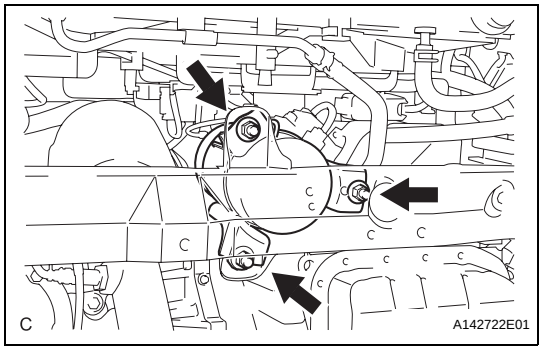

10. REMOVE ACTIVE CONTROL ENGINE MOUNT

(a) Remove the 3 nuts and active control engine mount.

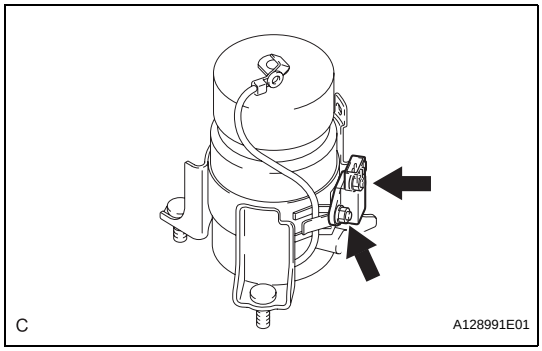

(b) Remove the 2 nuts and acceleration sensor.

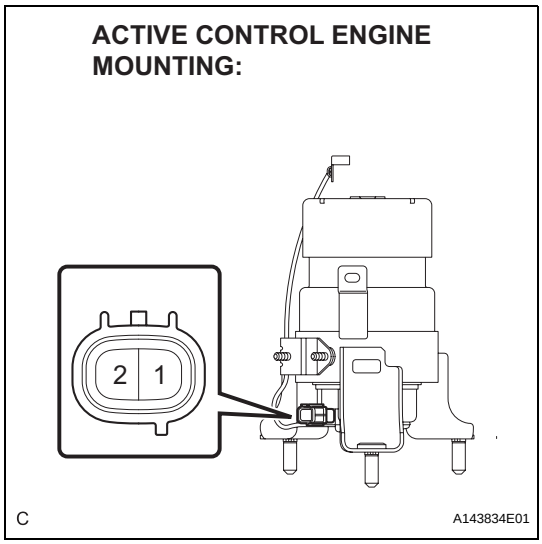

INSPECTION

1. INSPECT ACTIVE CONTROL ENGINE MOUNTING

(a) Using an ohmmeter, measure the resistance between the terminals.

Standard resistance:

0.55 to 0.95Ω

If the resistance is not as specified, replace the active control engine mounting.

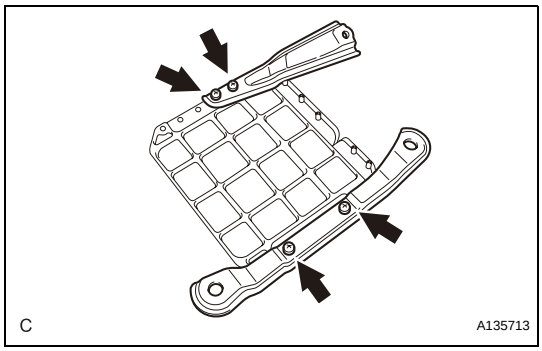

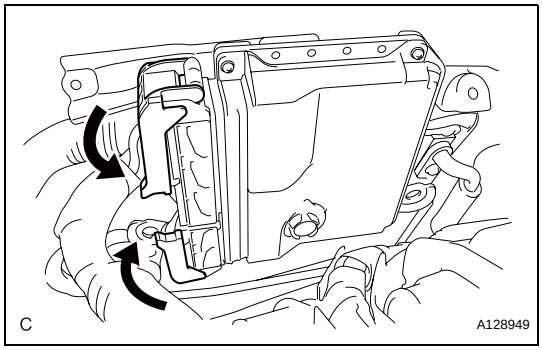

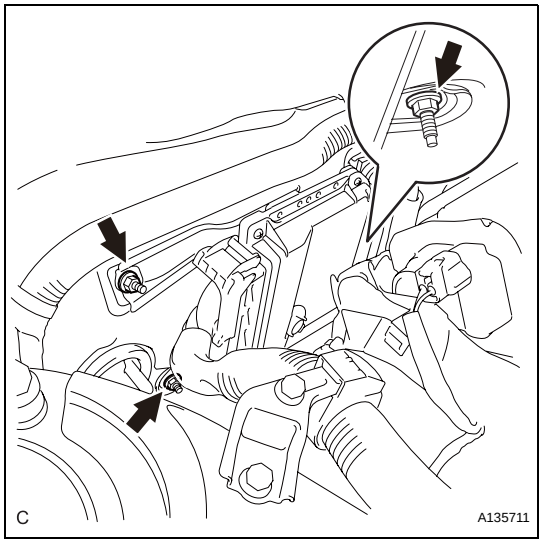

INSTALLATION

1. INSTALL ECM

(a) Install the ECM bracket with the 4 screws.
Torque: 3.0 N*m (31 kgf*cm, 27 in.*lbf)

(b) Connect the 2 ECM connectors.
NOTICE:
When connecting the connector, make sure that dirt, water and other foreign matter do not become stuck between the connector and other parts.

(1) Connect the 2 ECM connectors and lower the 2 levers.
NOTICE:
Make sure that the 2 levers are securely lowered.

(c) Install the ECM with the 3 nuts.
Torque: 8.0 N*m (82 kgf*cm, 71 in.*lbf)

2. INSTALL FRONT SUSPENSION UPPER CENTER BRACE (See page BR-25)

3. INSTALL ENGINE ROOM SIDE COVER LH (See page EM-50)

4. INSTALL ENGINE ROOM SIDE COVER RH (See page EM-50)

5. INSTALL COOL AIR INTAKE DUCT SEAL (See page EM-50)

6. CONNECT CABLE TO NEGATIVE BATTERY TERMINAL

7. PERFORM INITIALIZATION

(a) Perform initialization procedure (See page IN-33).
NOTICE:
Some vehicle systems require initialization after reconnecting the cable to the negative battery terminal.

INSTALLATION

1. INSTALL ACCELERATOR PEDAL

NOTICE:

- **Avoid physical shock to the accelerator pedal assembly.**
- **Do not disassemble the accelerator pedal assembly.**

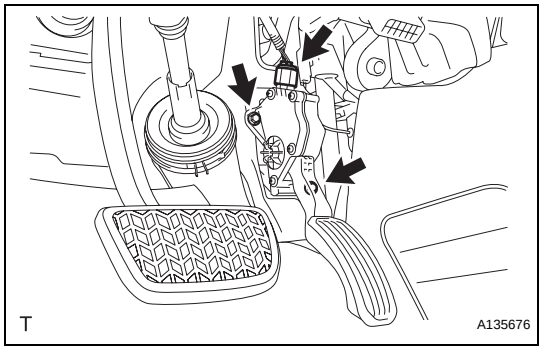

(a) Install the accelerator pedal assembly with the 2 bolts.
Torque: 5.4 N*m (55 kgf*cm, 48 in.*lbf)

(b) Connect the accelerator pedal connector.

ECM

COMPONENTS

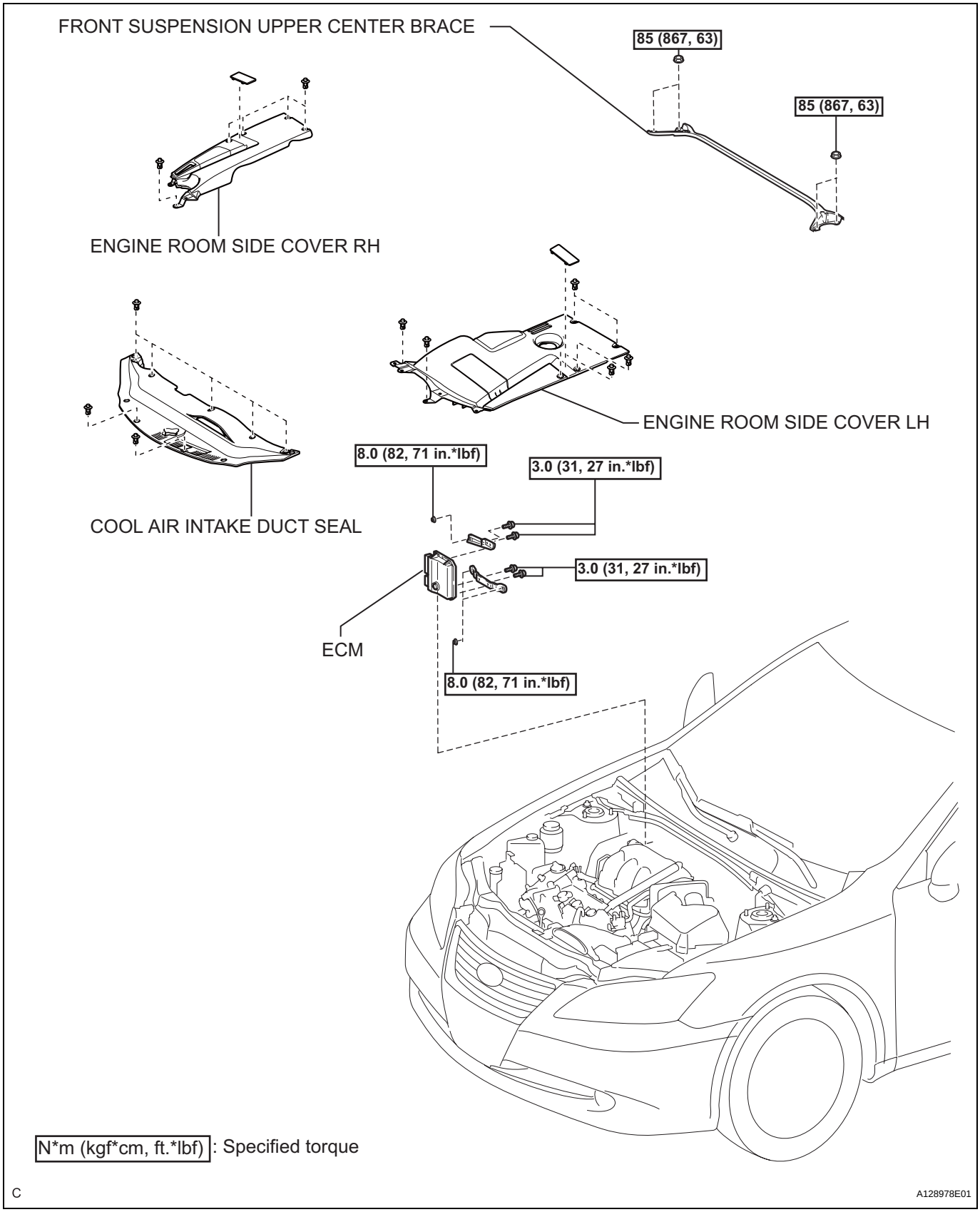

ES

REMOVAL

1. **DISCONNECT CABLE TO NEGATIVE BATTERY TERMINAL**
2. **REMOVE COOL AIR INTAKE DUCT SEAL (See page EM-22)**
3. **REMOVE ENGINE ROOM SIDE COVER LH (See page EM-22)**
4. **REMOVE ENGINE ROOM SIDE COVER RH (See page EM-22)**
5. **REMOVE FRONT SUSPENSION UPPER CENTER BRACE (See page BR-22)**
6. **REMOVE ECM**
   (a) Remove the 3 nuts.

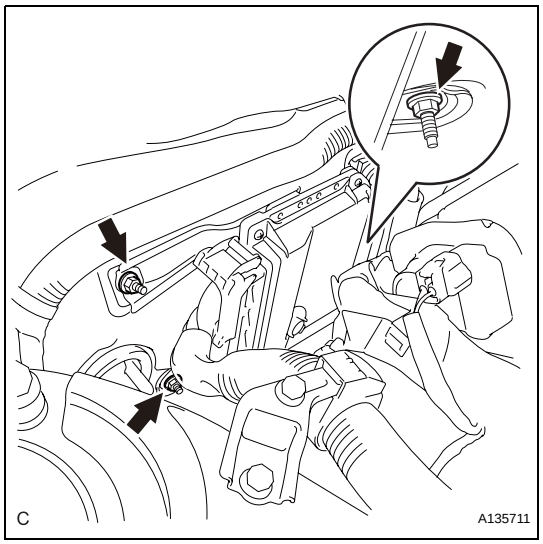

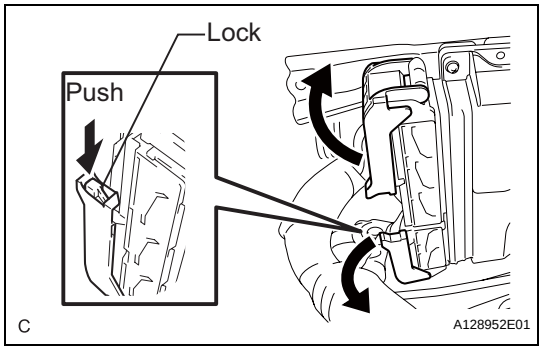

(b) Disconnect the 2 ECM connectors and remove the ECM.
   (1) Raise the 2 levers while pushing the locks on the 2 levers, and disconnect the 2 ECM connectors.
   NOTICE:
   After disconnecting the connector, make sure that dirt, water and other foreign matter do not contact the connecting part of the connector.
   (2) Remove the ECM.

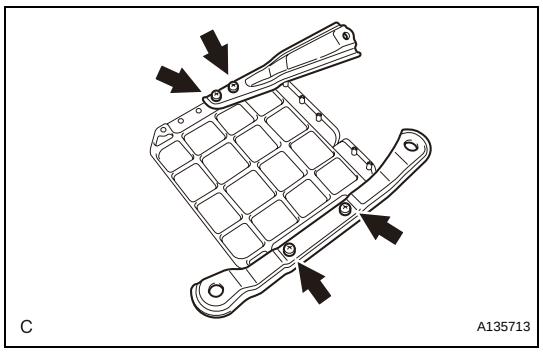

(c) Remove the 4 screws and 2 ECM brackets.

ES

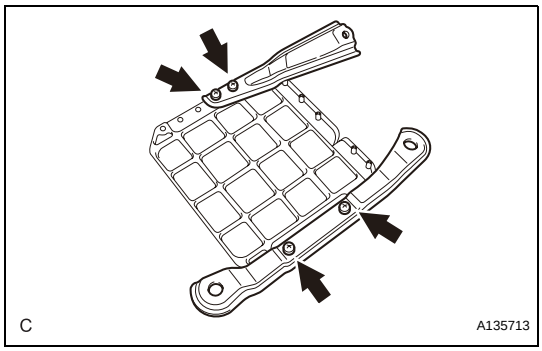

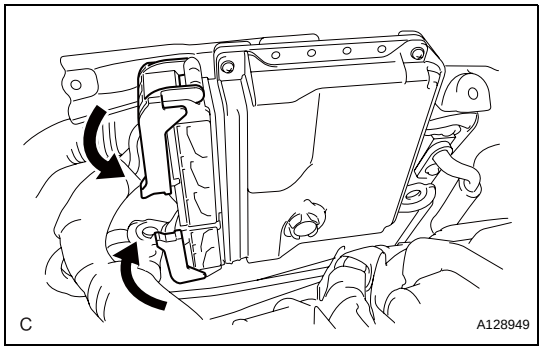

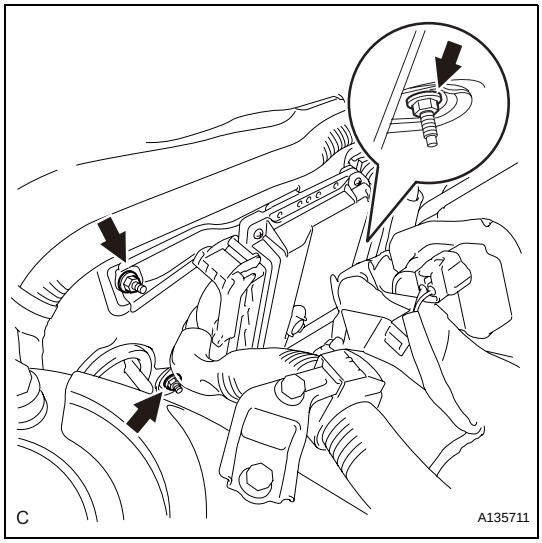

INSTALLATION

1. INSTALL ECM

(a) Install the ECM bracket with the 4 screws.
Torque: 3.0 N*m (31 kgf*cm, 27 in.*lbf)

(b) Connect the 2 ECM connectors.
NOTICE:
When connecting the connector, make sure that dirt, water and other foreign matter do not become stuck between the connector and other parts.

(1) Connect the 2 ECM connectors and lower the 2 levers.
NOTICE:
Make sure that the 2 levers are securely lowered.

(c) Install the ECM with the 3 nuts.
Torque: 8.0 N*m (82 kgf*cm, 71 in.*lbf)

2. INSTALL FRONT SUSPENSION UPPER CENTER BRACE (See page BR-25)

3. INSTALL ENGINE ROOM SIDE COVER LH (See page EM-50)

4. INSTALL ENGINE ROOM SIDE COVER RH (See page EM-50)

5. INSTALL COOL AIR INTAKE DUCT SEAL (See page EM-50)

6. CONNECT CABLE TO NEGATIVE BATTERY TERMINAL

7. PERFORM INITIALIZATION

(a) Perform initialization procedure (See page IN-33).
NOTICE:
Some vehicle systems require initialization after reconnecting the cable to the negative battery terminal.

ACCELERATOR PEDAL

COMPONENTS

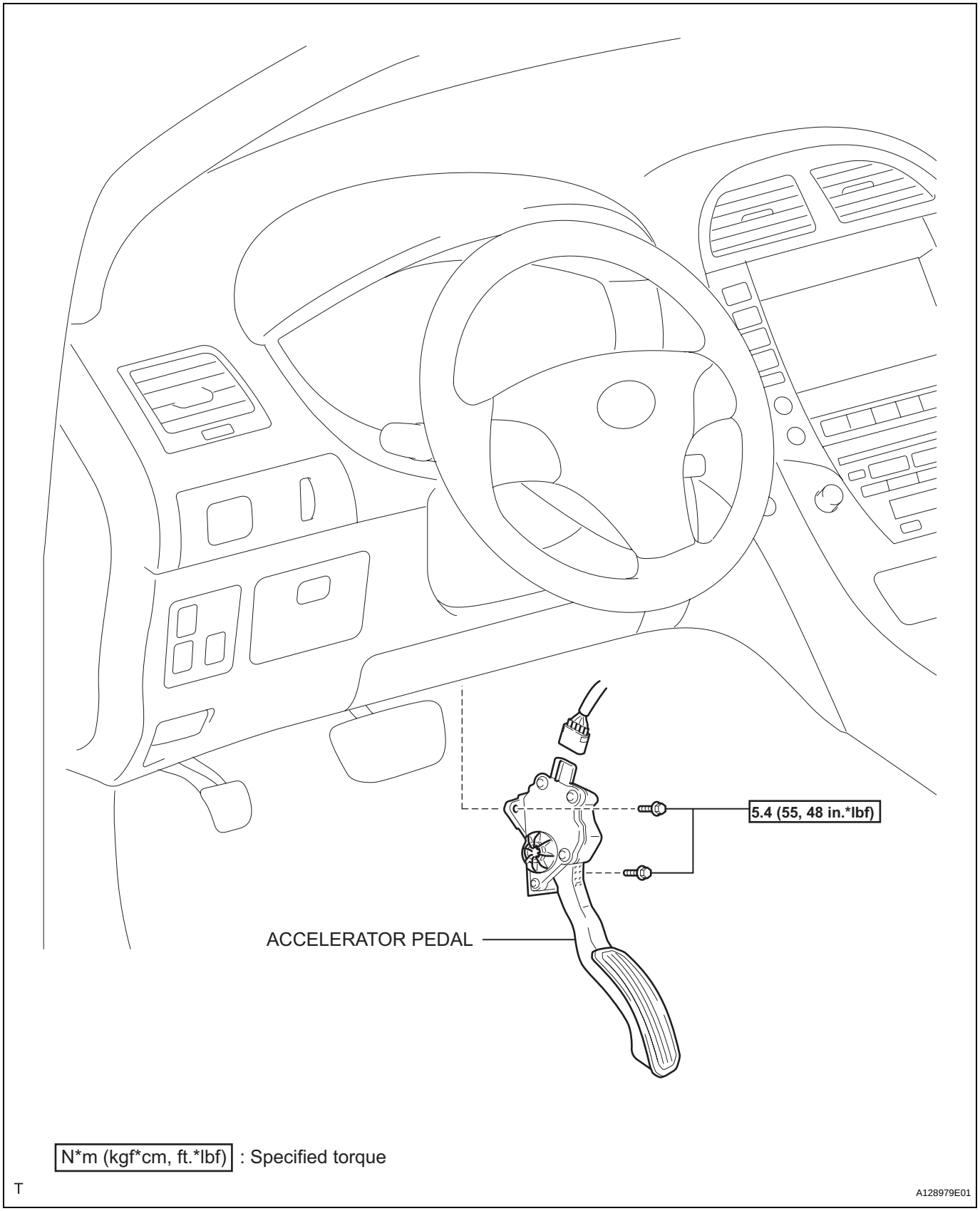

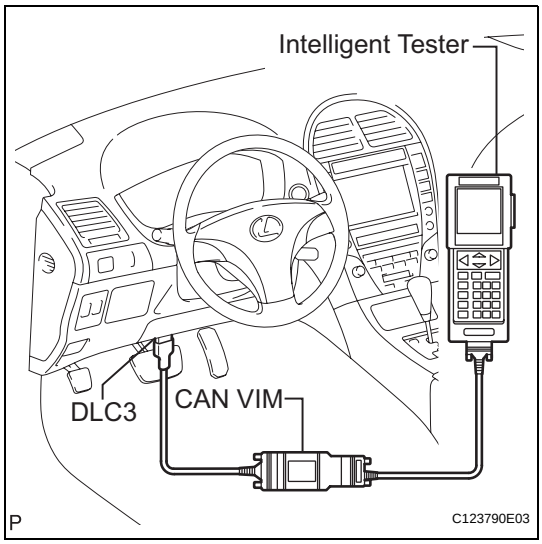

ON-VEHICLE INSPECTION

1. CHECK ACCELERATOR PEDAL ROD

(a) Measure the voltage.

(1) Connect the intelligent tester to the DLC3.

(2) Turn the engine switch on (IG).

(3) Turn the intelligent tester on.

(4) Select the menu items: DIAGNOSIS / ENHANCED OBD II / DATA LIST / ALL / ACCEL POS #1, ACCEL POS #2.

(5) Operate the accelerator pedal, and then check that the ACCEL POS #1 and ACCEL POS #2 values are within the specifications.

Standard voltage (ACCEL POS #1)

Accelerator Pedal Condition	Specified Condition
Released	**0.5 to 1.1 V**
Depressed	**2.5 to 4.5 V**

Standard voltage (ACCEL POS #2)

Accelerator Pedal Condition	Specified Condition
Released	**1.2 to 2.0 V**
Depressed	**3.4 to 5.0 V**

If the result is not as specified, check the accelerator pedal rod, wire harness or ECM.

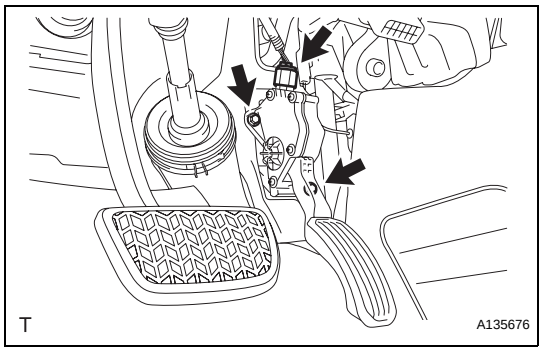

REMOVAL

1. REMOVE ACCELERATOR PEDAL

(a) Disconnect the accelerator pedal connector.

(b) Remove the 2 bolts and the accelerator pedal assembly.

PARTS LOCATION

CAN NO. 1 BUS:

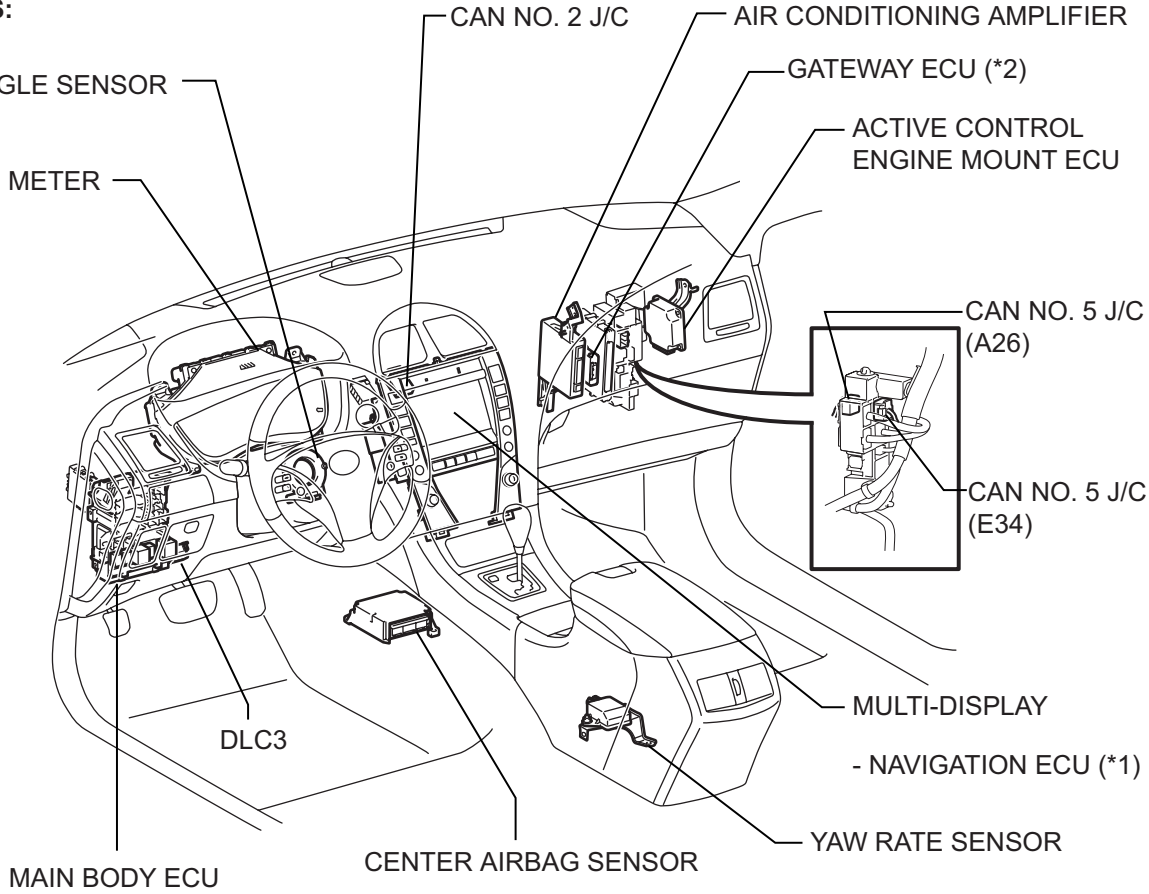

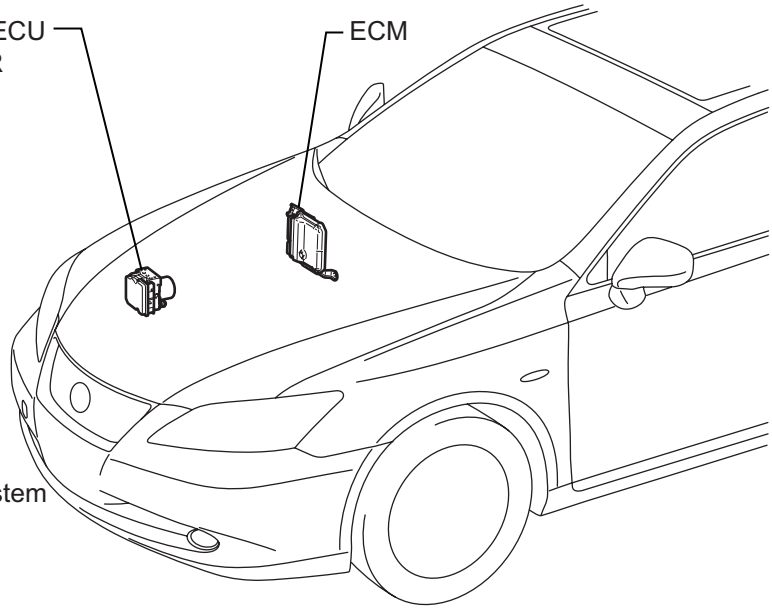

(*1): with Navigation System

(*2): with AFS, Dynamic Radar Cruise Control System or Pre-collision System

H

C142204E01

CA

CAN NO. 2 BUS:

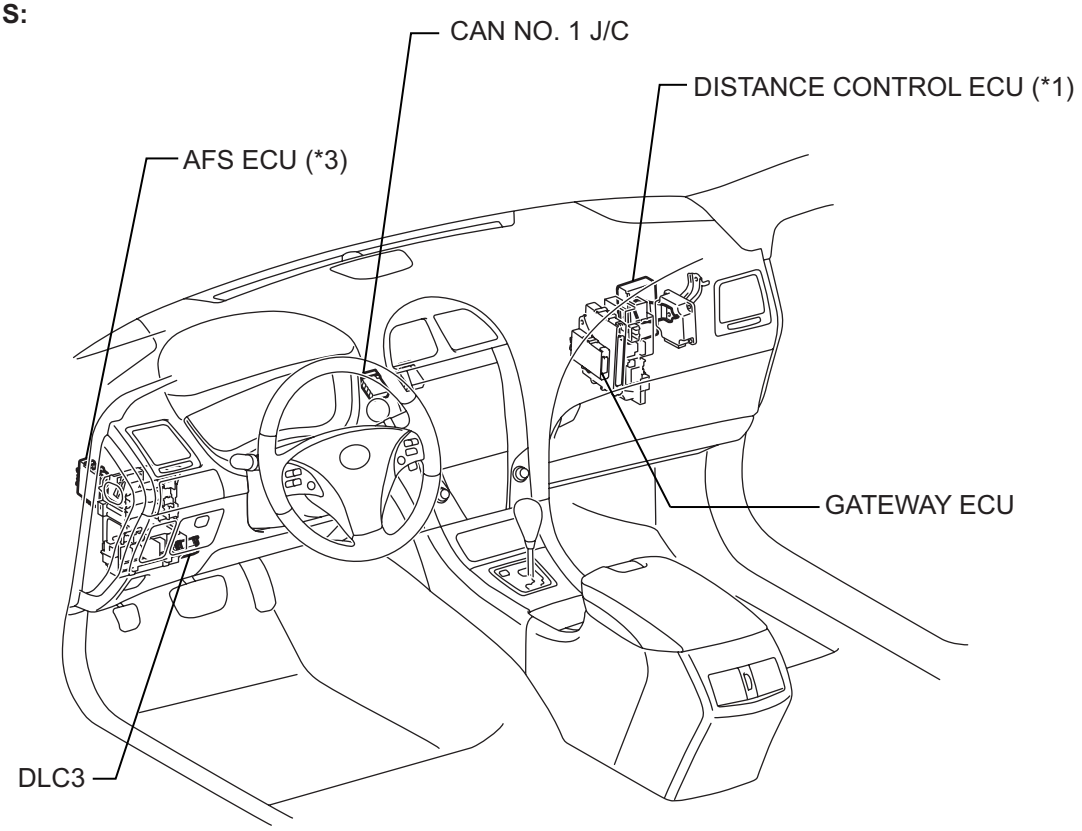

(*1): with Dynamic Radar Cruise Control System

(*2): with Pre-collision System

(*3): with AFS

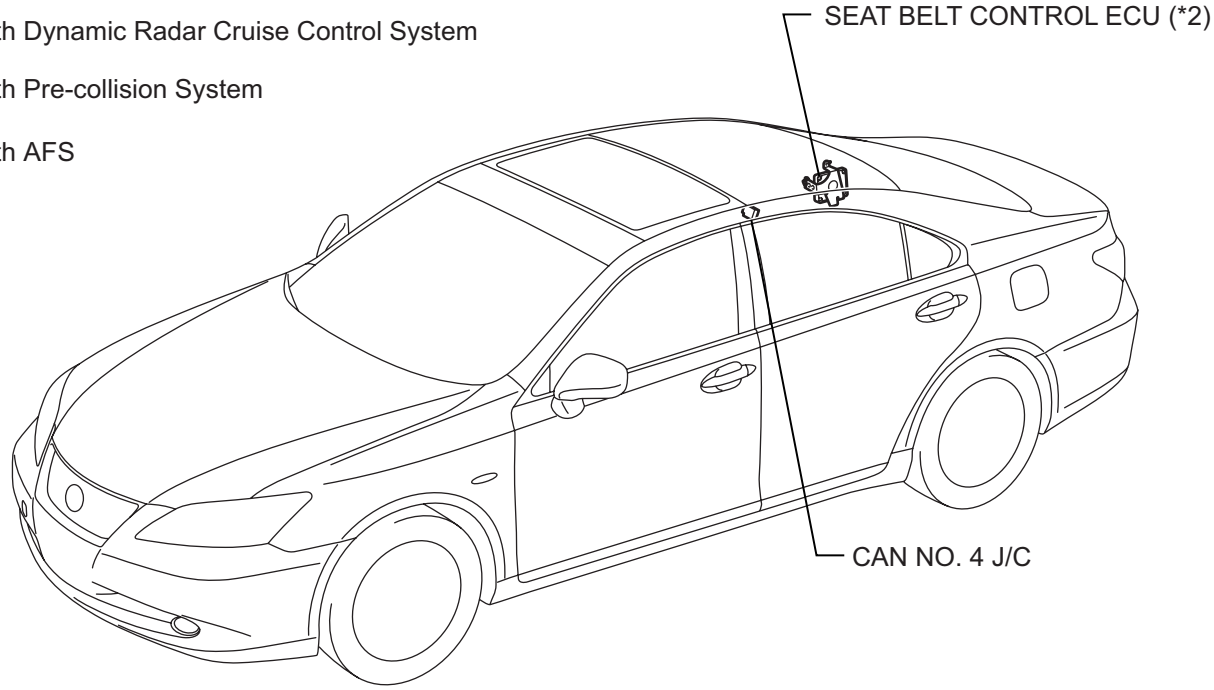

H

C142205E01

CAN MS BUS:

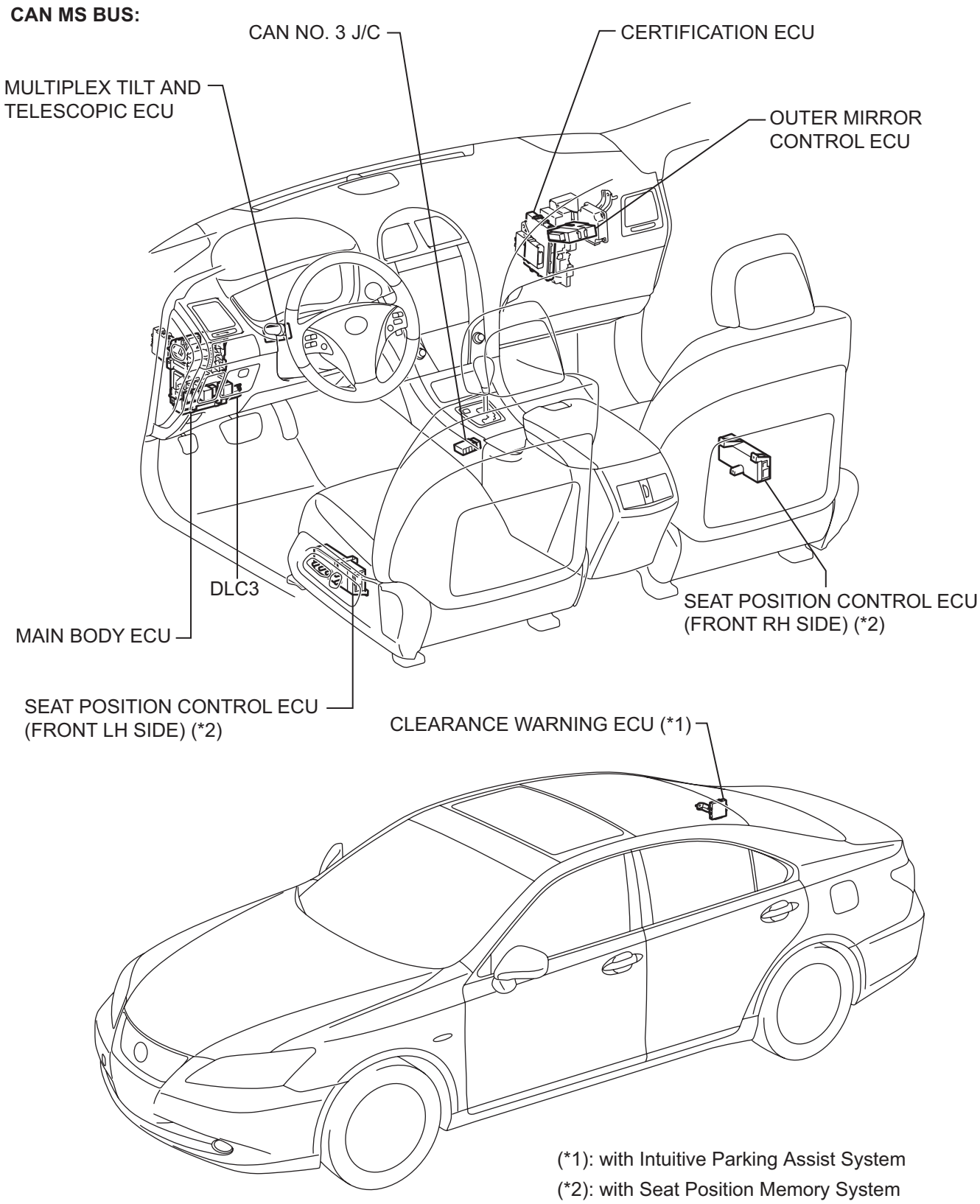

H

C142206E03

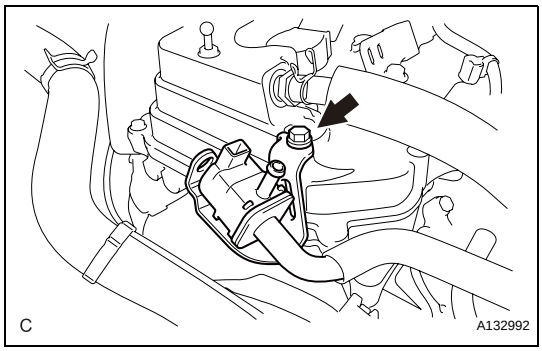

86. REMOVE NO. 1 VACUUM SWITCHING VALVE ASSEMBLY

(a) Remove the bolt and No. 1 vacuum switching valve.

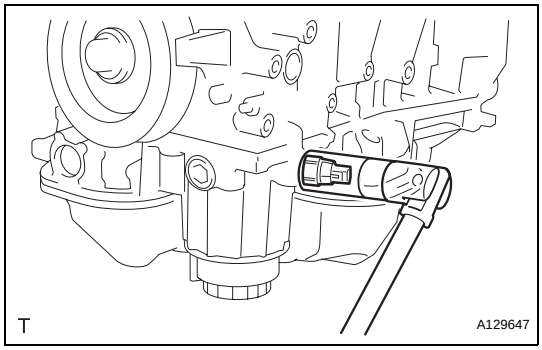

87. REMOVE ENGINE OIL PRESSURE SWITCH ASSEMBLY

(a) Using a 24 mm deep socket wrench, remove the engine oil pressure switch assembly.

88. REMOVE KNOCK CONTROL SENSOR (See page ES-525)

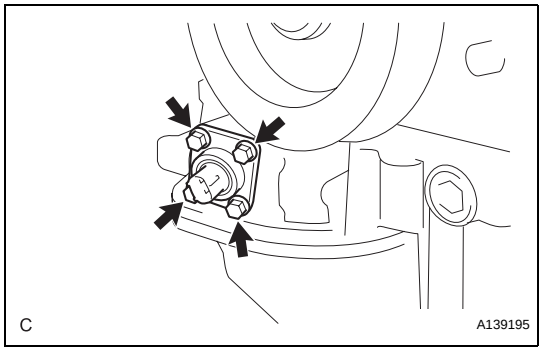

89. REMOVE ENGINE OIL LEVEL SENSOR

(a) Remove the 4 bolts, then remove the oil level sensor and gasket.

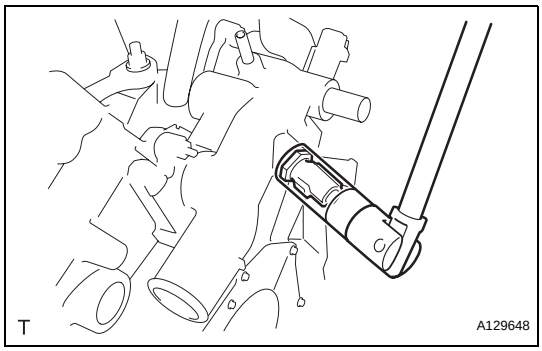

90. REMOVE ENGINE COOLANT TEMPERATURE SENSOR

(a) Using a 19 mm deep socket wrench, remove the EFI engine coolant temperature sensor and gasket.

INSPECTION

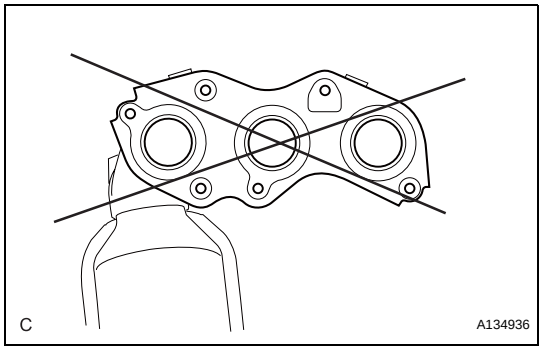

1. INSPECT EXHAUST MANIFOLD SUB-ASSEMBLY LH

(a) Using a precision straightedge and feeler gauge, measure the warpage on the contact surface of the cylinder head.

Maximum warpage:
0.7 mm (0.028 in.)

HINT:
The maximum allowable warpage of each installation surface is 0.3 mm (0.012 in.).

If the warpage is greater than the maximum, replace the manifold.

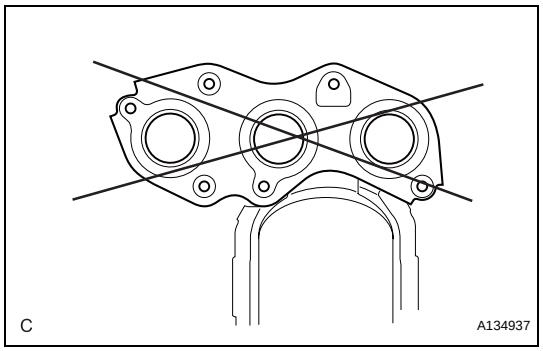

2. INSPECT EXHAUST MANIFOLD SUB-ASSEMBLY RH

(a) Using a precision straightedge and feeler gauge, measure the warpage on the contact surface of the cylinder head.

Maximum warpage:
0.7 mm (0.028 in.)

HINT:
The maximum allowable warpage of each installation surface is 0.3 mm (0.012 in.).
If the warpage is greater than the maximum, replace the manifold.

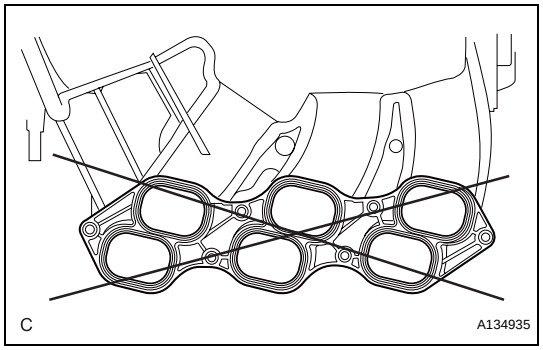

3. INSPECT INTAKE AIR SURGE TANK ASSEMBLY

(a) Using a precision straightedge and feeler gauge, measure the warpage on the contact surface of the intake manifold.

Maximum warpage:
2.5 mm (0.098 in.)
If the warpage is greater than the maximum, replace the surge tank.

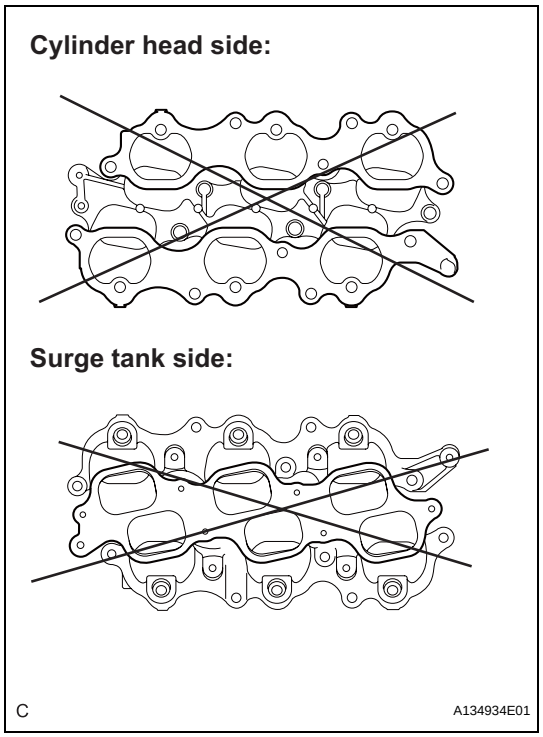

4. INSPECT INTAKE MANIFOLD

(a) Cylinder head side:

(1) Using a precision straightedge and feeler gauge, measure the surface contacting the cylinder head for warpage.

Maximum warpage:
0.1 mm (0.003 in.)
If the warpage is greater than the maximum, replace the intake manifold.

(b) Surge tank side:

(1) Using a precision straightedge and feeler gauge, measure the surface contacting the surge tank for warpage.

Maximum warpage:
0.1 mm (0.003 in.)
If the warpage is greater than the maximum, replace the intake manifold.

EM

INSTALLATION

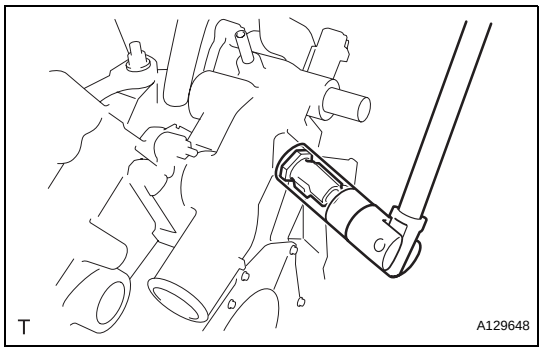

1. INSTALL ENGINE COOLANT TEMPERATURE SENSOR

(a) Using a 19 mm deep socket wrench, install the engine coolant temperature sensor and a new gasket.
Torque: 20 N*m (200 kgf*cm, 14 ft.*lbf)

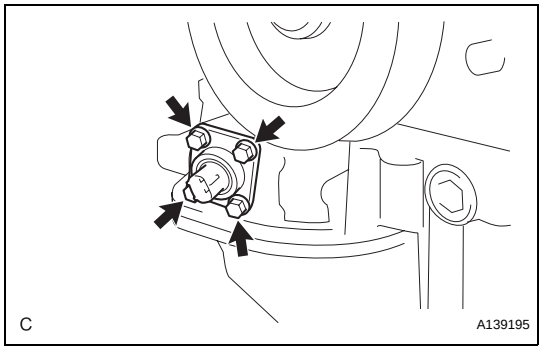

2. INSTALL ENGINE OIL LEVEL SENSOR

(a) Install the engine oil level sensor and a new gasket with the 4 bolts.
Torque: 8.2 N*m (84 kgf*cm, 73 in.*lbf)

3. INSTALL KNOCK CONTROL SENSOR (See page ES-526)

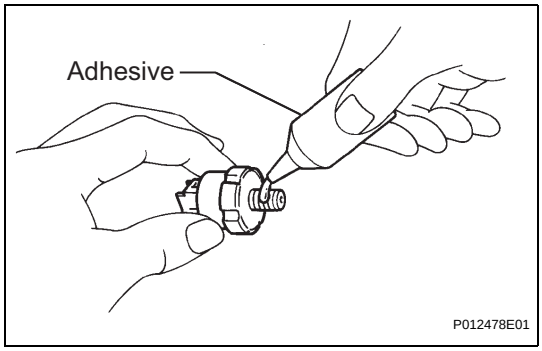

4. INSTALL ENGINE OIL PRESSURE SWITCH ASSEMBLY

(a) Clean the threads of the oil pressure switch. Apply adhesive to 2 or 3 threads of the oil pressure switch.
Adhesive:
Toyota Genuine Adhesive 1344, Three Bond 1344 or equivalent

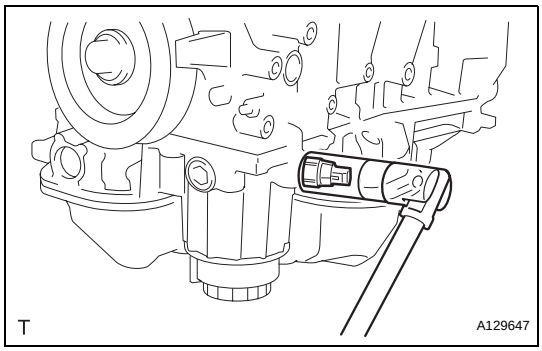

(b) Using a 24 mm deep socket wrench, install the oil pressure switch.
Torque: 21 N*m (214 kgf*cm, 15 ft.*lbf)
NOTICE:
Do not start the engine within 1 hour after installation to prevent oil leaks.

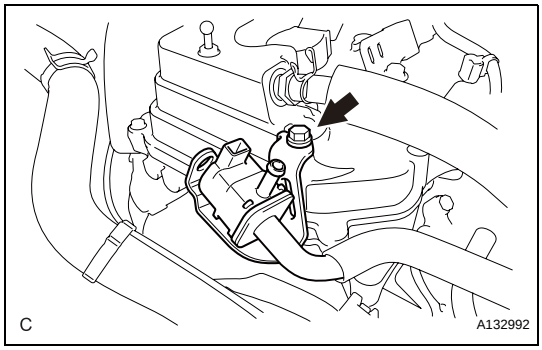

5. INSTALL NO. 1 VACUUM SWITCHING VALVE ASSEMBLY

(a) Install the No. 1 vacuum switching valve with the bolt.
Torque: 10 N*m (102 kgf*cm, 7 ft.*lbf)

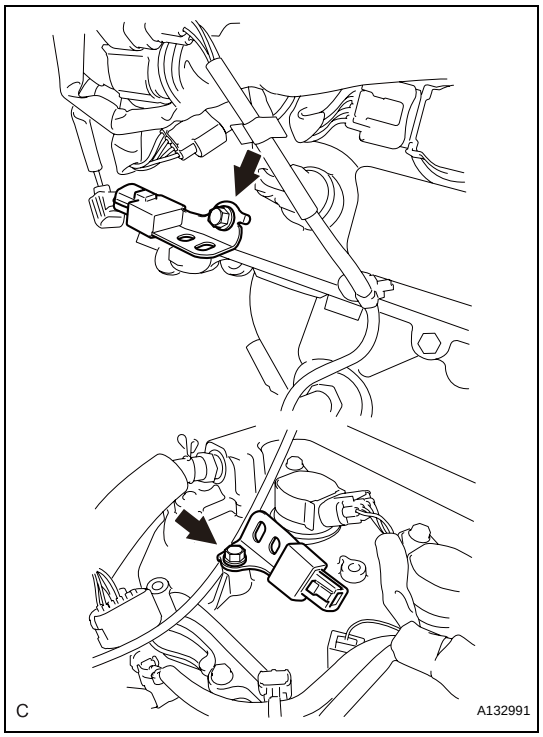

6. INSTALL RADIO SETTING CONDENSER

(a) Install the 2 radio setting condensers with the 2 bolts.
Torque: 10 N*m (102 kgf*cm, 7 ft.*lbf)

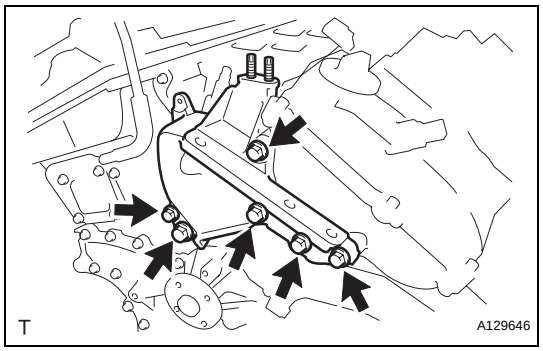

7. INSTALL NO. 1 ENGINE MOUNTING BRACKET FRONT LH

(a) Install the No. 1 engine mounting bracket front LH with the 6 bolts.
Torque: 54 N*m (551 kgf*cm, 40 ft.*lbf)

8. INSTALL WATER PUMP PULLEY (See page CO-10)

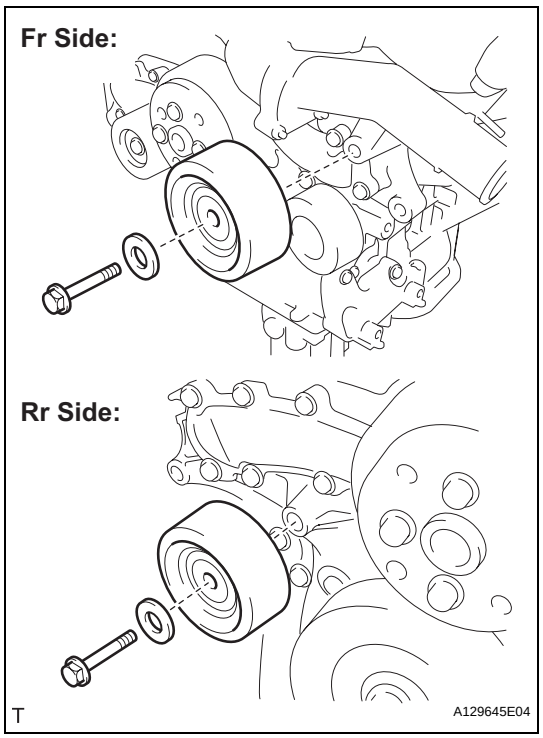

9. INSTALL NO. 2 IDLER PULLEY SUB-ASSEMBLY

(a) Install the No. 2 idler pulley sub-assembies and cover plates with the bolts.
Torque: 43 N*m (438 kgf*cm, 32 ft.*lbf)

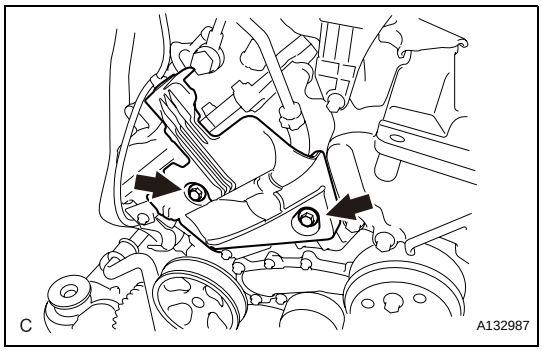

10. INSTALL NO. 2 TIMING GEAR COVER

(a) Install the No. 2 timing gear cover with the 2 bolts.
Torque: 6.0 N*m (61 kgf*cm, 53 in.*lbf)

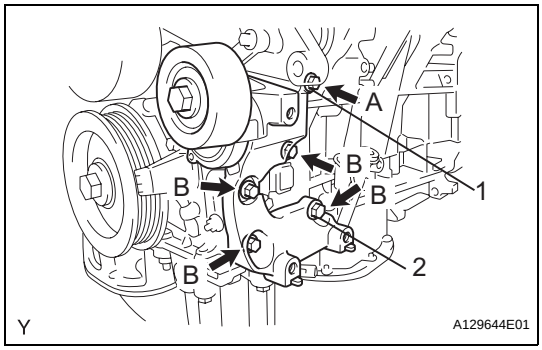

11. INSTALL V-RIBBED BELT TENSIONER ASSEMBLY

(a) Temporarily install the V-ribbed belt tensioner with the 5 bolts.
HINT:
Each bolt length is as follows:
A: 70 mm (2.76 in.)
B: 33 mm (1.30 in.)

(b) Install the V-ribbed belt tensioner by tightening the bolt 1 and bolt 2 in the order shown in the illustration.
Torque: 43 N*m (438 kgf*cm, 32 ft.*lbf)

(c) Tighten the other bolts.
Torque: 43 N*m (438 kgf*cm, 32 ft.*lbf)

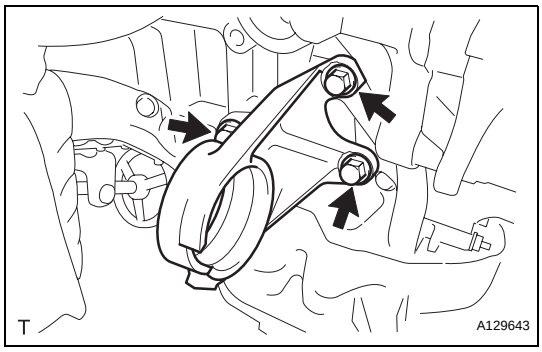

12. INSTALL DRIVE SHAFT BEARING BRACKET

(a) Install the drive shaft bearing bracket with the 3 bolts.
Torque: 64 N*m (653 kgf*cm, 47 ft.*lbf)

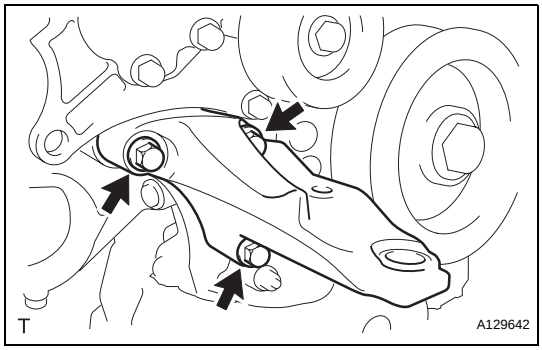

13. INSTALL ENGINE MOUNTING BRACKET RH

(a) Install the engine mounting bracket RH with the 3 bolts.
Torque: 54 N*m (551 kgf*cm, 40 ft.*lbf)

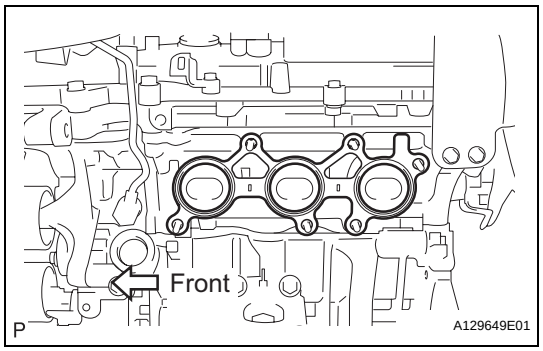

14. INSTALL EXHAUST MANIFOLD SUB-ASSEMBLY LH

(a) Install a new gasket as shown in the illustration.

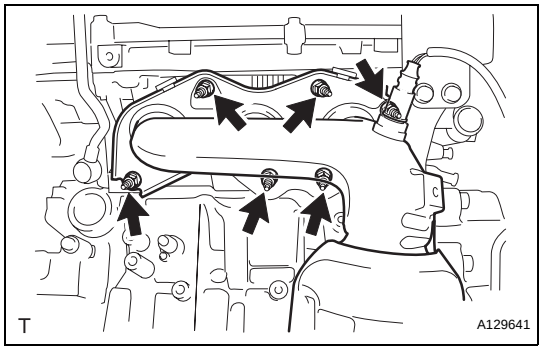

(b) Install the exhaust manifold sub-assembly LH with the 6 nuts.
Torque: 21 N*m (214 kgf*cm, 15 ft.*lbf)

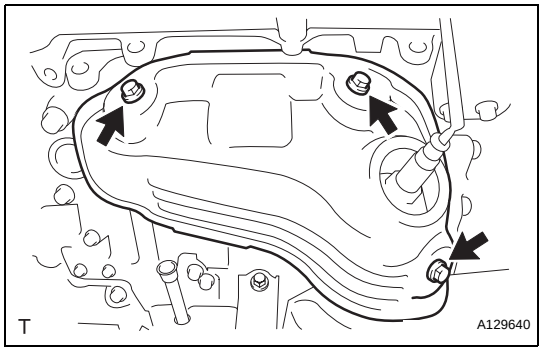

15. INSTALL NO. 2 EXHAUST MANIFOLD HEAT INSULATOR

(a) Install the No. 2 insulator with the 3 bolts.
Torque: 8.5 N*m (87 kgf*cm, 75 in.*lbf)

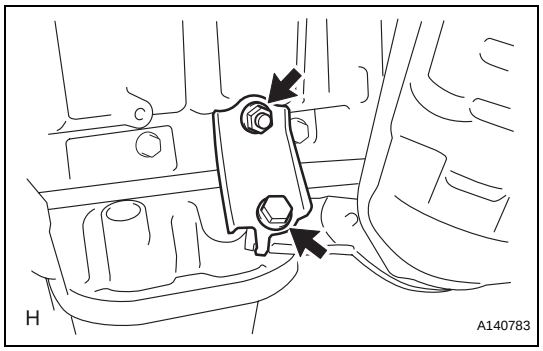

16. INSTALL NO. 2 MANIFOLD STAY

(a) Install the No. 2 manifold stay with the bolt and nut.
Torque: 34 N*m (347 kgf*cm, 25 ft.*lbf)

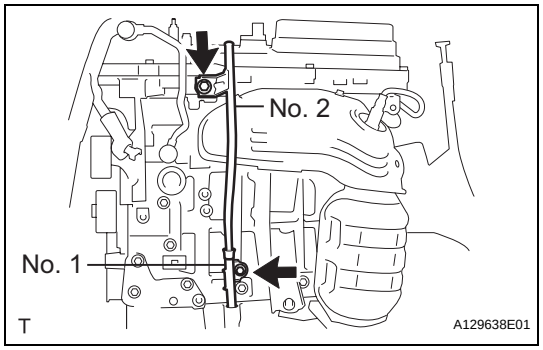

17. INSTALL OIL LEVEL GAUGE GUIDE SUB-ASSEMBLY

(a) Install 2 new O-rings to the oil level gauge guide.
(b) Apply a light coat of engine oil to the O-rings.
(c) Push in the oil level gauge guide end into the guide hole.
(d) Install the oil level gauge guide No. 1 with the bolt.
Torque: 21 N*m (214 kgf*cm, 15 ft.*lbf)
(e) Install the oil level gauge guide No. 2 with the bolt.
Torque: 21 N*m (214 kgf*cm, 15 ft.*lbf)
(f) Install the oil level gauge.

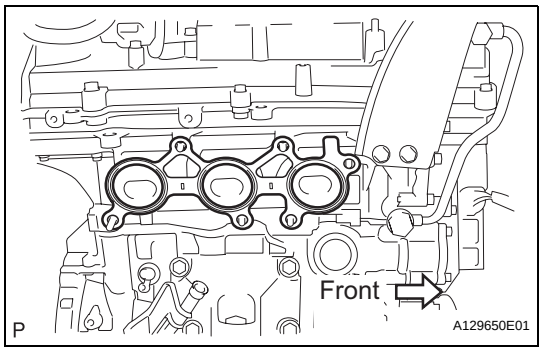

18. INSTALL EXHAUST MANIFOLD SUB-ASSEMBLY RH

(a) Install a new gasket as shown in the illustration.

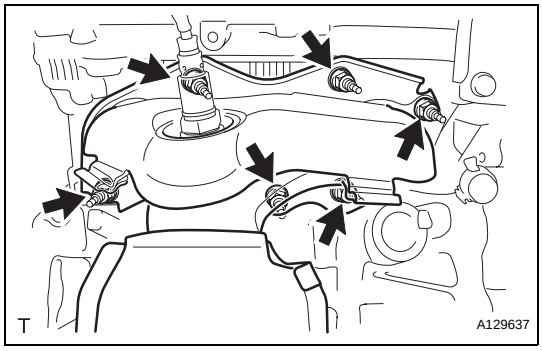

(b) Install the exhaust manifold sub-assembly RH with the 6 nuts.
Torque: 21 N*m (214 kgf*cm, 15 ft.*lbf)

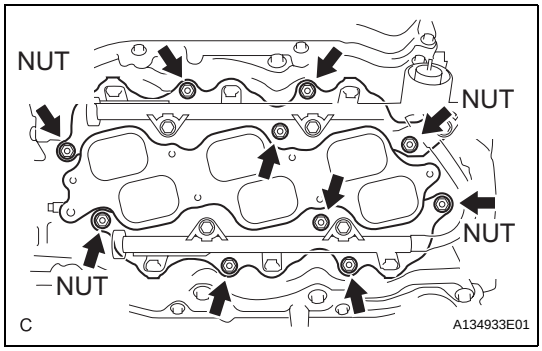

19. INSTALL INTAKE MANIFOLD

(a) Set a new gasket on each cylinder head.
NOTICE:
- **Align the port holes of the gasket and cylinder head.**
- **Make sure that the gasket is installed in the correct direction.**

(b) Set the intake manifold on the cylinder heads.

(c) Install and tighten the 6 bolts and 4 nuts uniformly in several steps.
Torque: 21 N*m (214 kgf*cm, 15 ft.*lbf)

20. INSTALL NO. 2 ENGINE MOUNTING STAY RH

(a) Install the No. 2 engine mounting stay RH with the bolt.
Torque: 21 N*m (214 kgf*cm, 15 ft.*lbf)

21. INSTALL IGNITION COIL ASSEMBLY

(a) Install the 6 ignition coil assemblies with the 6 bolts.
Torque: 10 N*m (102 kgf*cm, 7 ft.*lbf)

22. INSTALL INTAKE AIR SURGE TANK ASSEMBLY
NOTICE:
DO NOT apply oil to the bolts listed below:

Tightening Parts
Surge Tank and Intake Manifold
No. 1 Surge Tank Stay and Cylinder Head Cover
No. 1 Surge Tank Stay and Surge Tank
Throttle Body Bracket and Cylinder Head Cover
Throttle Body Bracket and Surge Tank

(a) Install a new gasket to the intake air surge tank.

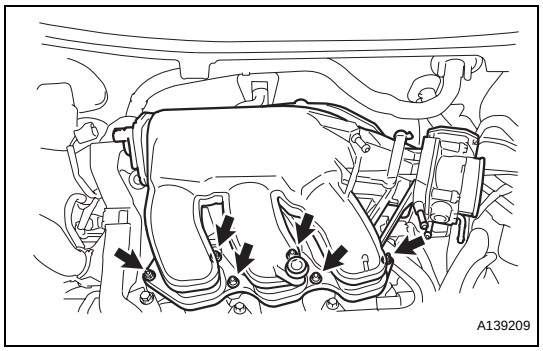

(b) Using a 5 mm hexagon socket wrench, install the 4 bolts and 2 nuts.
Torque: Bolt
18 N*m (184 kgf*cm, 13 ft.*lbf)
Nut
16 N*m (163 kgf*cm, 12 ft.*lbf)

(c) Install the throttle body bracket, No. 1 surge tank stay and 4 bolts.
Torque: 21 N*m (214 kgf*cm, 15 ft.*lbf)

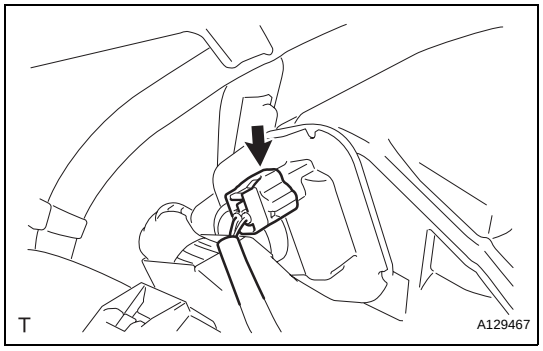

(d) Connect the connector.

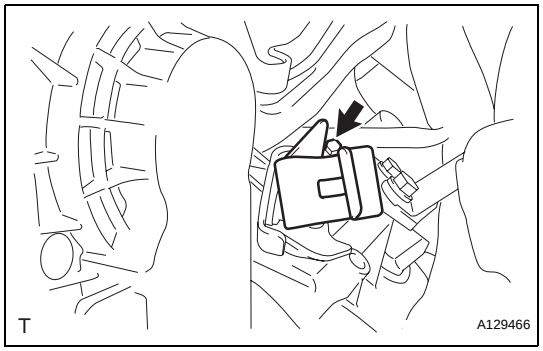

(e) Install the vacuum hose clamp with the bolt.
Torque: 5.4 N*m (55 kgf*cm, 48 in.*lbf)

(f) Connect the No. 1 ventilation hose.

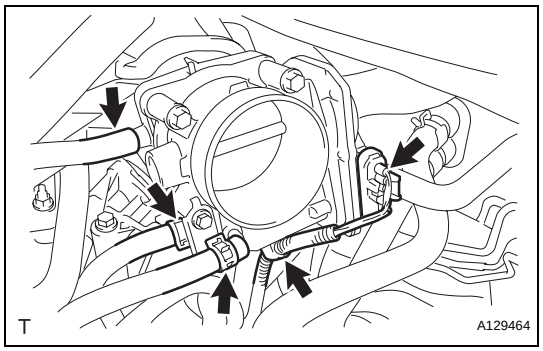

(g) Install the clamp and connect the throttle with motor body assembly connector.

(h) Connect the vapor feed hose.

(i) Connect the 2 water by-pass hoses to the throttle with motor body assembly.

23. REMOVE ENGINE STAND

24. INSTALL DRIVE PLATE AND RING GEAR SUB-ASSEMBLY (See page EM-12)

25. INSTALL AUTOMATIC TRANSAXLE ASSEMBLY
HINT:
See page AX-222.

26. INSTALL STARTER ASSEMBLY (See page ST-152)

27. INSTALL ENGINE WIRE

28. INSTALL FRONT DRIVE SHAFT ASSEMBLY LH (See page DS-16)

29. INSTALL FRONT DRIVE SHAFT ASSEMBLY RH (See page DS-16)

EM

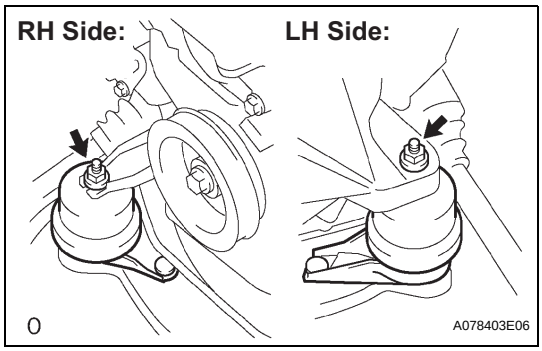

30. INSTALL FRONT FRAME ASSEMBLY

(a) Install the engine mounting insulators RH and LH with the 2 nuts.
Torque: 95 N*m (969 kgf*cm, 70 ft.*lbf)

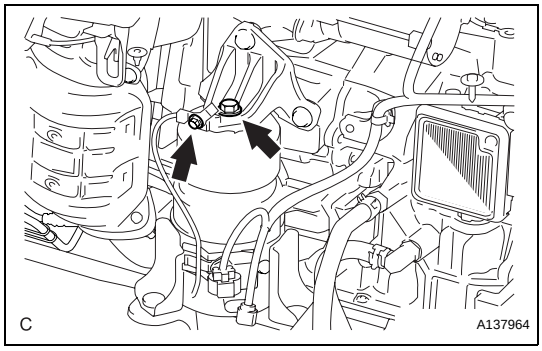

(b) Install the engine mounting insulator FR with the bolt.
Torque: 87 N*m (887 kgf*cm, 64 ft.*lbf)

(c) Connect the cable with the bolt.
Torque: 7.8 N*m (80 kgf*cm, 69 in.*lbf)

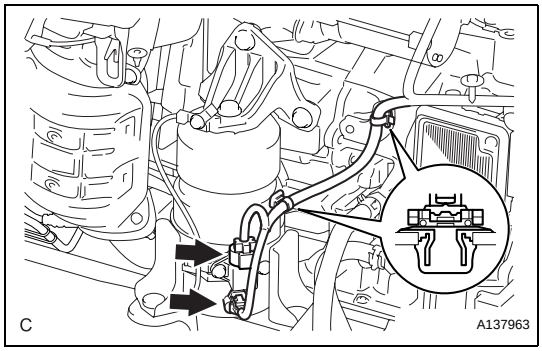

(d) Connect the 2 connectors and 2 clamps.

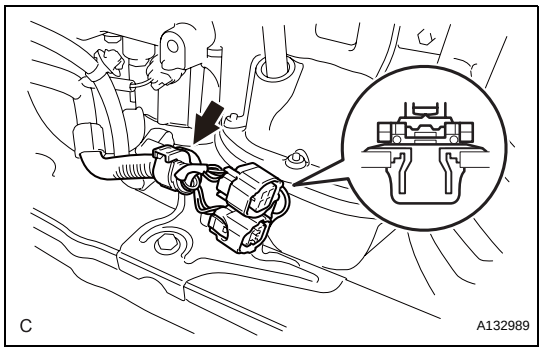

(e) Connect the 2 clamps.

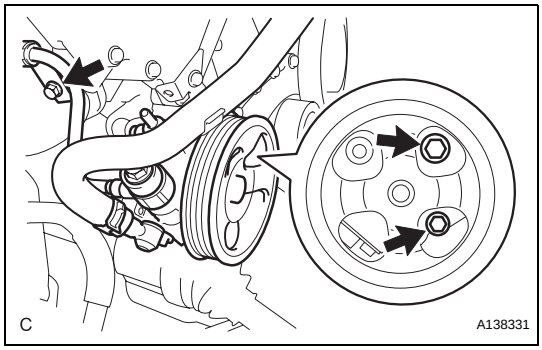

31. INSTALL VANE PUMP ASSEMBLY

(a) Install the vane pump with the 2 bolts.
Torque: 43 N*m (438 kgf*cm, 32 ft.*lbf)

(b) Install the pressure feed tube clamp bolt.
Torque: 9.8 N*m (100 kgf*cm, 87 in.*lbf)

(c) Connect the power steering oil pressure switch connector.

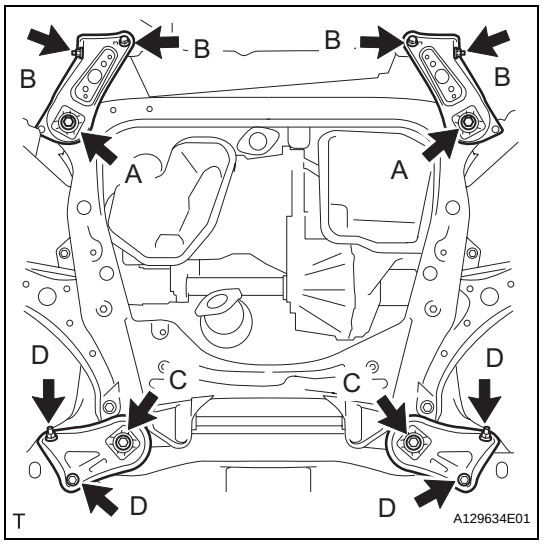

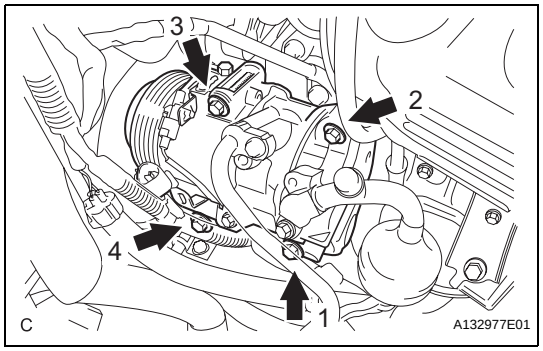

32. INSTALL ENGINE ASSEMBLY WITH TRANSAXLE

(a) Set the engine assembly with transaxle on the engine lifter.

(b) Install the engine assembly to the vehicle.

(c) Install the frame side rail plates RH and LH with the 4 bolts and 2 nuts.

Torque: A
85 N*m (867 kgf*cm, 63 ft.*lbf)
B
32 N*m (329 kgf*cm, 24 ft.*lbf)

(d) Install the front suspension member brace rear RH and LH with the 4 bolts and 2 nuts.

Torque: C
85 N*m (867 kgf*cm, 63 ft.*lbf)
D
32 N*m (329 kgf*cm, 24 ft.*lbf)

33. INSTALL COOLER COMPRESSOR ASSEMBLY

(a) Temporarily install the cooler compressor with the 4 bolts.

(b) Install the compressor with the 4 bolts by tightening the bolts in the order shown in the illustration.

Torque: 25 N*m (250 kgf*cm, 18 ft.*lbf)

(c) Install the 2 connector clamps.

34. INSTALL GENERATOR ASSEMBLY (See page CH-22)

35. INSTALL STEERING INTERMEDIATE SHAFT ASSEMBLY (See page PS-53)

36. INSTALL DRIVE PLATE AND TORQUE CONVERTER CLUTCH SETTING BOLT (See page AX-226)

37. INSTALL NO. 1 EXHAUST PIPE SUPPORT BRACKET

(a) Install the No. 1 exhaust pipe support bracket with the 2 nuts.

Torque: 21 N*m (214 kgf*cm, 15 ft.*lbf) (bolt)

38. INSTALL FRONT AXLE ASSEMBLY LH (See page DS-16)

39. INSTALL FRONT AXLE ASSEMBLY RH

HINT:
Use the same procedure described for the LH side.

40. INSTALL FRONT SUSPENSION LOWER NO. 1 ARM LH (See page DS-16)

41. INSTALL FRONT SUSPENSION LOWER NO. 1 ARM RH

HINT:
Use the same procedure described for the LH side.

42. INSTALL TIE ROD ASSEMBLY LH (See page DS-16)

43. INSTALL TIE ROD ASSEMBLY RH

HINT:
Use the same procedure described for the LH side.

44. INSTALL FRONT SPEED SENSOR LH (See page DS-17)

45. INSTALL FRONT SPEED SENSOR RH
HINT:
Use the same procedure described for the LH side.

46. INSTALL FRONT STABILIZER LINK ASSEMBLY LH (See page DS-17)

47. INSTALL FRONT STABILIZER LINK ASSEMBLY RH
HINT:
Use the same procedure described for the LH side.

48. INSTALL FRONT AXLE HUB NUT LH (See page DS-17)

49. INSTALL FRONT AXLE HUB NUT RH
HINT:
Use the same procedure described for the LH side.

50. INSTALL EXHAUST PIPE ASSEMBLY FRONT (See page EX-4)

51. INSTALL EXHAUST PIPE NO. 1 SUPPORT BRACKET (See page EX-4)

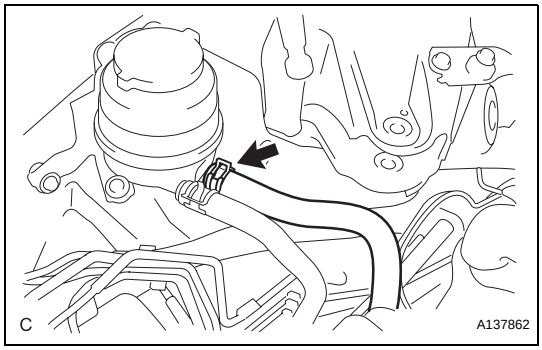

52. CONNECT OIL RESERVOIR TO PUMP HOSE
(a) Connect the oil reservoir to pump hose.

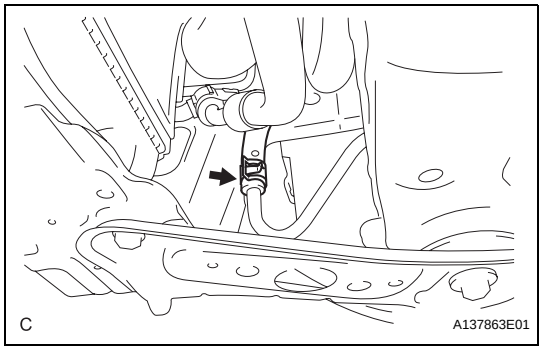

53. CONNECT RETURN TUBE SUB-ASSEMBLY
(a) Connect the return tube sub-assembly.

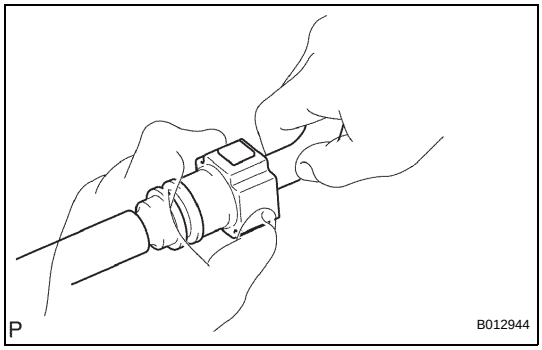

54. CONNECT FUEL TUBE SUB-ASSEMBLY
(a) Push in the fuel tube connector to the fuel pipe until the connector makes a "click" sound.
NOTICE:
- **Check for damage or contamination on the connected part of the pipe.**
- **Check if the pipe and the connector are securely connected by trying to pull them apart.**

(b) Install the No. 1 fuel pipe clamp.

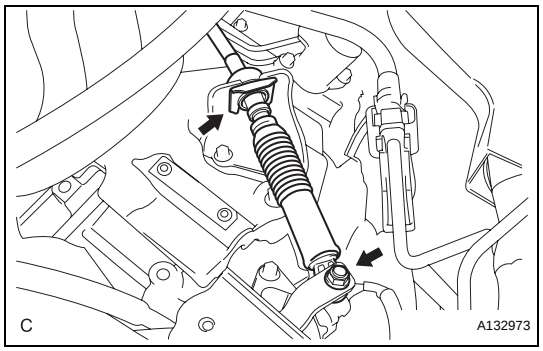

55. CONNECT TRANSMISSION CONTROL CABLE ASSEMBLY

(a) Connect the cable to the transaxle with the clip and nut.
Torque: 13 N*m (130 kgf*cm, 9 ft.*lbf)

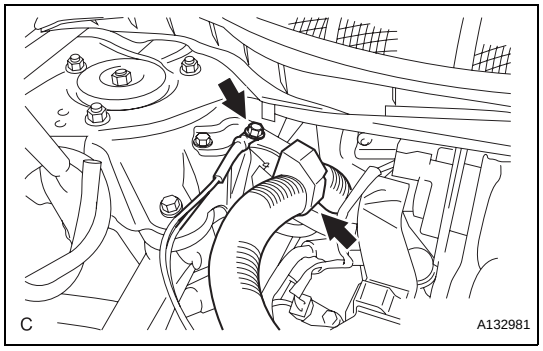

56. CONNECT ENGINE WIRE

(a) Install the clamp to the bracket with the bolt.
Torque: 8.4 N*m (85 kgf*cm, 74 in.*lbf)

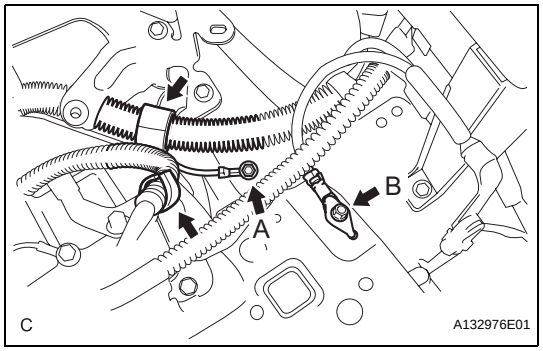

(b) Install the 2 clamps to the body with the 2 bolts.
Torque: Bolt A
12 N*m (123 kgf*cm, 9 ft.*lbf)
Bolt B
8.4 N*m (85 kgf*cm, 74 in.*lbf)

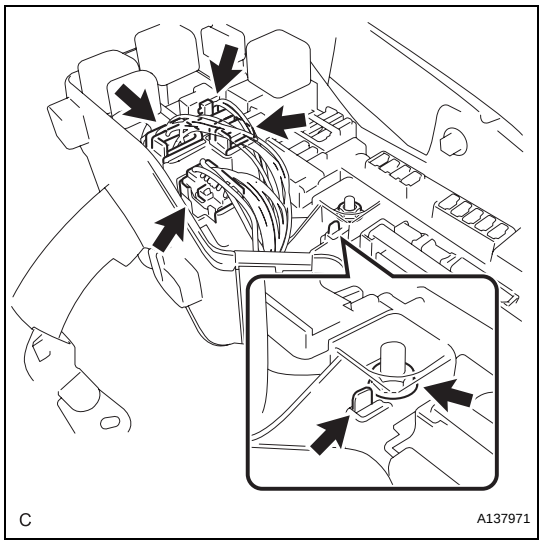

(c) Connect the engine wire connectors to the engine room junction block. Then, install it with the nut.
Torque: 8.4 N*m (85 kgf*cm, 74 in.*lbf)

57. INSTALL RELAY BLOCK COVER UPPER

58. INSTALL ECM (See page ES-544)

EM

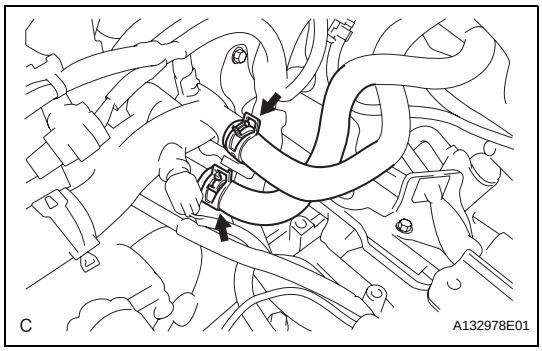

59. CONNECT HEATER INLET WATER HOSE
(a) Connect the heater inlet water hose.

60. CONNECT HEATER OUTLET WATER HOSE
(a) Connect the heater outlet water hose.

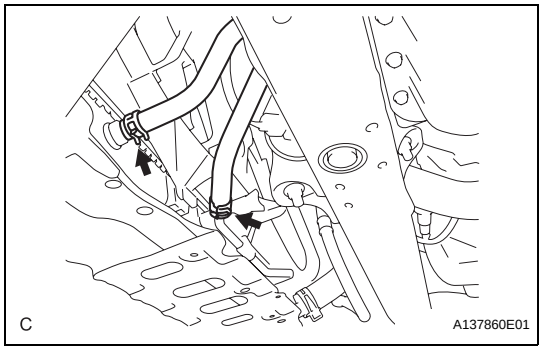

61. CONNECT NO. 1 OIL COOLER INLET HOSE
(a) Install the oil cooler inlet hose with the clamp.

62. CONNECT NO. 1 OIL COOLER OUTLET HOSE
(a) Install the oil cooler outlet hose with the clamp.

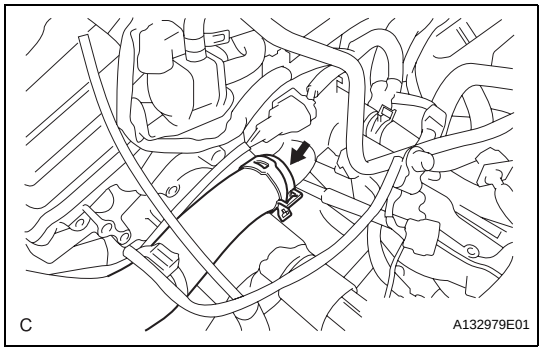

63. INSTALL RADIATOR HOSE INLET
(a) Install the radiator hose inlet with the clamp.

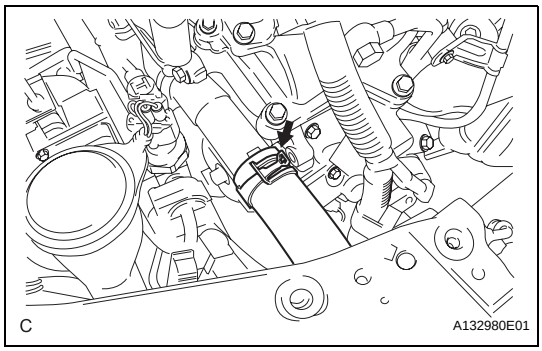

64. INSTALL RADIATOR HOSE OUTLET
(a) Install the radiator hose outlet with the clamp.

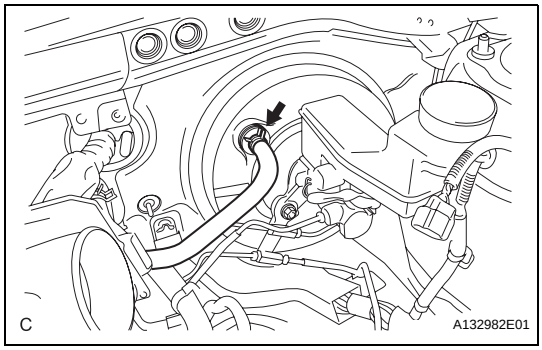

65. CONNECT CHECK VALVE TO BRAKE BOOSTER HOSE
(a) Install the check valve to brake booster hose with the clamp.

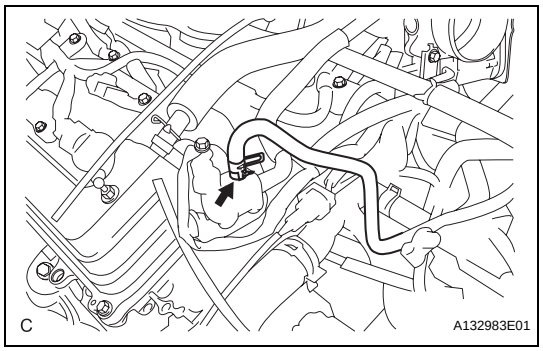

66. CONNECT NO. 1 FUEL VAPOR FEED HOSE

(a) Install the No. 1 fuel vapor feed hose with the clamp.

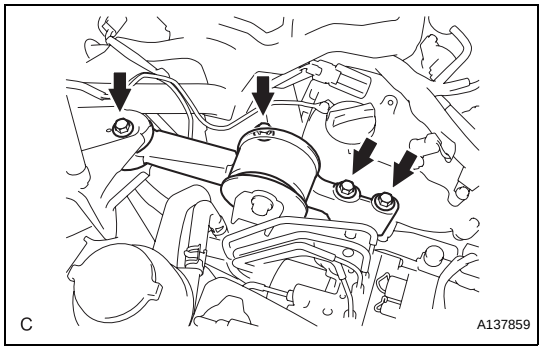

67. INSTALL ENGINE MOVING CONTROL ROD SUB-ASSEMBLY

(a) Temporarily install the engine moving control rod with the 4 bolts.

(b) Tighten the 4 bolts.

Torque: 38 N*m (388 kgf*cm, 28 ft.*lbf)

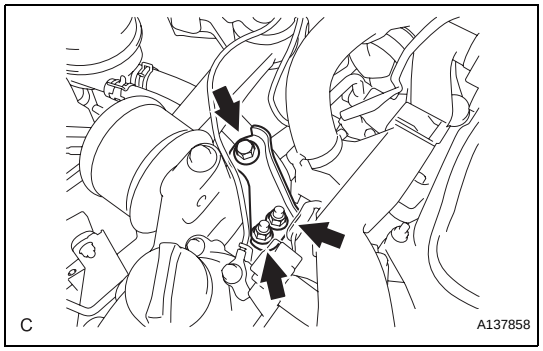

68. INSTALL NO. 2 ENGINE MOUNTING STAY RH

(a) Temporarily install the No. 2 engine mounting stay RH with the bolt and 2 nuts.

(b) Tighten the bolt and 2 nuts.

Torque: Bolt
38 N*m (388 kgf*cm, 28 ft.*lbf)
Nut
23 N*m (235 kgf*cm, 17 ft.*lbf)

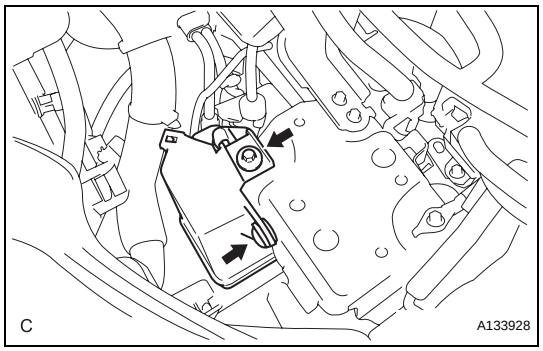

69. INSTALL INTAKE AIR RESONATOR SUB-ASSEMBLY

(a) Install the intake air resonator with the bolt and clip.

Torque: 5.0 N*m (51 kgf*cm, 44 in.*lbf)

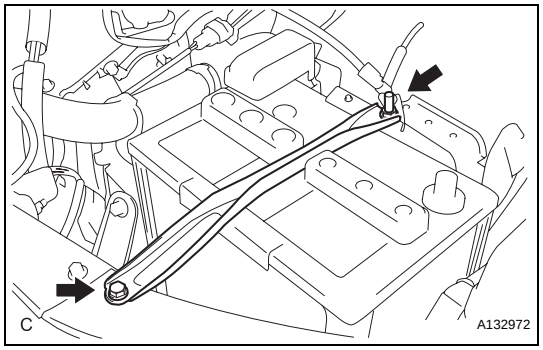

70. INSTALL BATTERY

(a) Install the battery and battery tray.

(b) Install the battery clamp with the bolt and nut.

Torque: Bolt
9.0 N*m (92 kgf*cm, 80 in.*lbf)
Nut
3.5 N*m (36 kgf*cm, 31 in.*lbf)

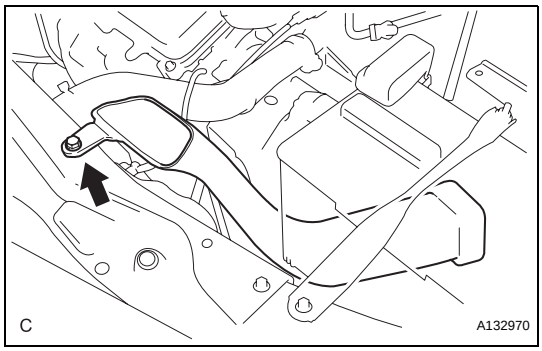

71. INSTALL NO. 1 AIR CLEANER INLET

(a) Install the No. 1 air cleaner inlet with the bolt.
Torque: 5.0 N*m (51 kgf*cm, 44 in.*lbf)

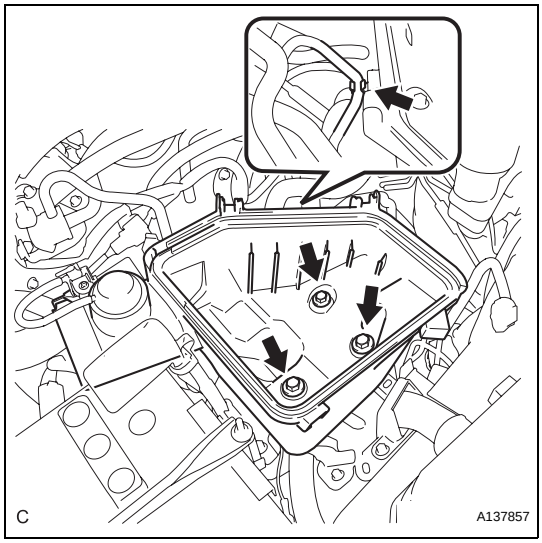

72. INSTALL AIR CLEANER CASE SUB-ASSEMBLY

(a) Install the air cleaner case with the 3 bolts.
Torque: 5.0 N*m (51 kgf*cm, 44 in.*lbf)

(b) Connect the vacuum hose and hose clamp.

73. INSTALL AIR CLEANER CAP SUB-ASSEMBLY (See page ES-522)

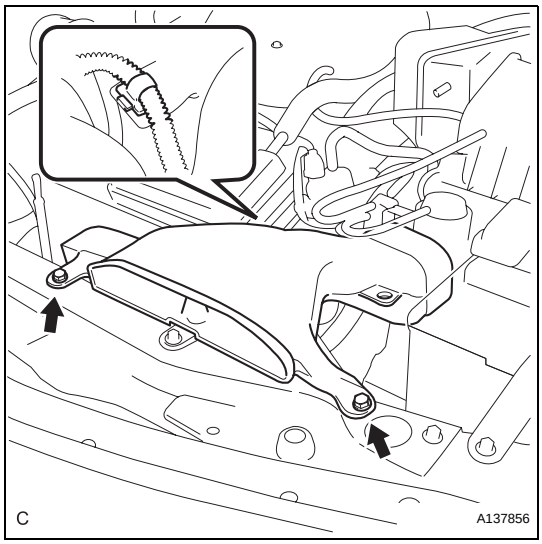

74. INSTALL AIR CLEANER INLET ASSEMBLY

(a) Install the air cleaner inlet with the clamp and 2 bolts.
Torque: 5.0 N*m (51 kgf*cm, 44 in.*lbf)

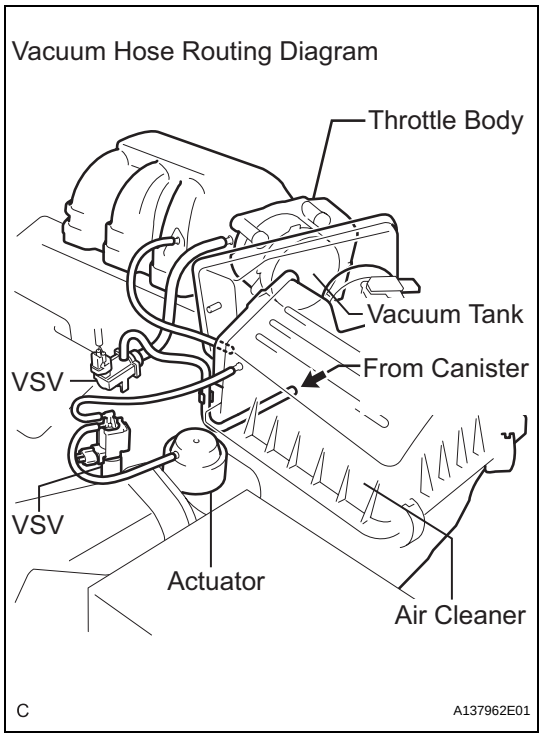

75. CONNECT VACUUM HOSES

76. INSTALL V-RIBBED BELT (See page EM-7)

77. INSTALL FRONT WHEELS
Torque: 103 N*m (1,050 kgf*cm, 76 ft.*lbf)

78. ADD ENGINE OIL

79. CONNECT CABLE TO NEGATIVE BATTERY TERMINAL
Torque: 6.9 N*m (70 kgf*cm, 61 in.*lbf)

80. ADD ENGINE COOLANT (See page CO-6)

81. ADD AUTOMATIC TRANSAXLE FLUID
HINT:
See page AX-176

82. ADD POWER STEERING FLUID

83. BLEED POWER STEERING FLUID (See page PS-8)

84. CHECK FOR FUEL LEAKS (See page FU-7)

85. INSPECT FOR OIL LEAK

86. INSPECT FOR COOLANT OIL LEAK (See page CO-1)

87. INSPECT FOR EXHAUST GAS LEAK

88. CHECK SHIFT LEVER POSITION (See page AX-232)

89. CHECK AND ADJUST FRONT WHEEL ALIGNMENT
HINT:
See page SP-4.

90. CHECK IGNITION TIMING (See page EM-1)

91. CHECK ENGINE IDLE SPEED (See page EM-2)

92. CHECK CO/HC (See page EM-4)

93. CHECK FUNCTION OF THROTTLE BODY (See page ES-519)

94. INSTALL FRONT FENDER APRON SEAL RH

95. INSTALL ENGINE UNDER COVER LH

96. INSTALL ENGINE UNDER COVER RH

97. INSTALL V-BANK COVER SUB-ASSEMBLY
(a) Fit the 3 retainers and install the V-bank cover.

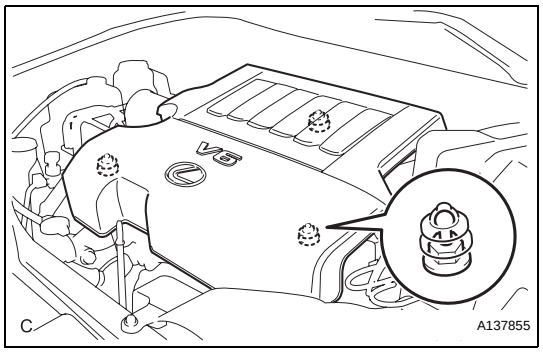

EM

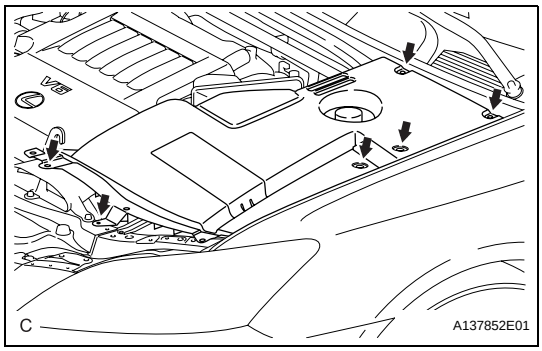

98. INSTALL ENGINE ROOM SIDE COVER LH

(a) Install the engine room side cover LH with the 6 clips.

(b) Install the hood hinge cover LH.

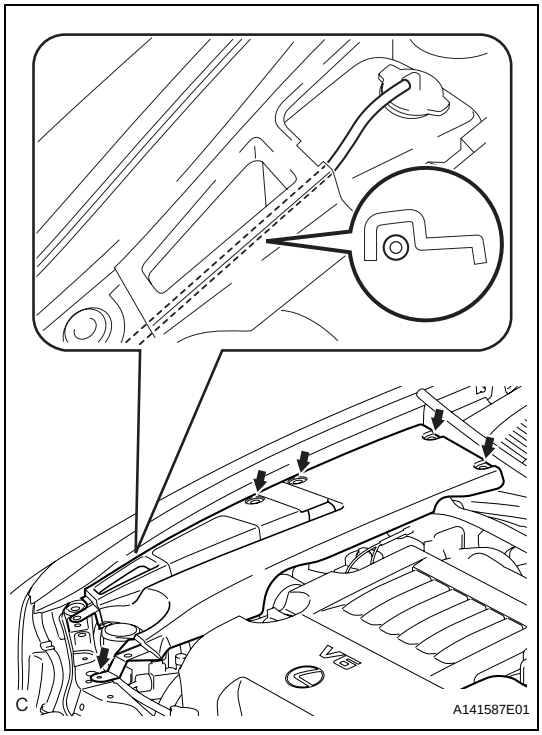

99. INSTALL ENGINE ROOM SIDE COVER RH

(a) Install the engine room side cover RH with the 5 clips.

NOTICE:

When installing the engine room side cover RH, make sure that the engine coolant reservoir hose is positioned as shown in the illustration.

(b) Install the hood hinge cover RH.

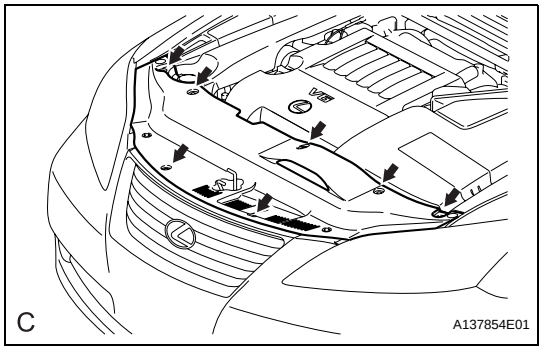

100. INSTALL COOL AIR INTAKE DUCT SEAL

(a) Install the intake duct seal with the 7 clips.

101. CHECK ABS SPEED SENSOR SIGNAL

HINT:

See page BC-24

102. PERFORM INITIALIZATION

(a) Perform initialization procedure (See page IN-33).

NOTICE:

Some systems need initialization after reconnecting the cable to the negative battery terminal.

EM

ENGINE

ON-VEHICLE INSPECTION

1. INSPECT ENGINE COOLANT

(a) Inspect the engine coolant (See page CO-6).

2. INSPECT ENGINE OIL

(a) Inspect the engine oil (See page LU-1).

3. INSPECT BATTERY

(a) Inspect the battery (See page CH-4).

4. INSPECT SPARK PLUGS

(a) Inspect the spark plugs (See page IG-5).

5. INSPECT AIR CLEANER FILTER ELEMENT SUB-ASSEMBLY

(a) Remove the air cleaner filter element sub-assembly.

(b) Visually check that there is no dirt, blockage, and/or damage to the air cleaner filter element.
HINT:
- If there is any dirt or a blockage in the air cleaner filter element, clean it with compressed air.
- If any dirt or a blockage remains even after cleaning the air cleaner filter element with compressed air, replace it.

6. INSPECT VALVE LASH ADJUSTER NOISE

(a) Rev up the engine several times. Check that the engine does not emit unusual noises.
If unusual noises occur, warm up the engine and idle it for over 30 minutes. Then repeat this procedure.
HINT:
If any defects or problems are found during the inspection above, perform lash adjuster inspection (See page EM-85).

7. INSPECT IGNITION TIMING

(a) Warm up the engine.

(b) When using the intelligent tester:
Check the ignition timing.
(1) Connect the intelligent tester to the DLC3.
(2) Enter DATA LIST mode with the intelligent tester.
Ignition timing:
8 to 12° BTDC at idle
HINT:
Refer to the intelligent tester operator's manual for help when selecting the DATA LIST.

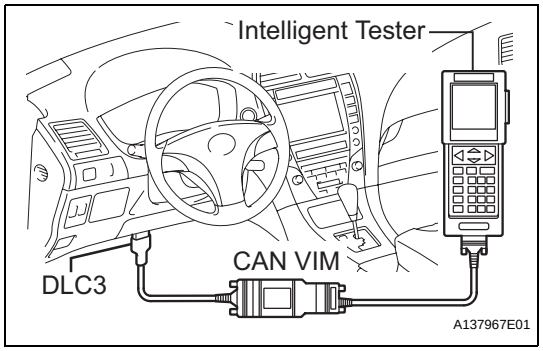

EM

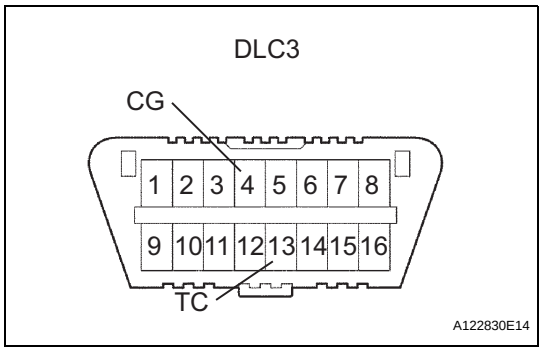

(c) When not using the intelligent tester:
Check the ignition timing.

(1) Using SST, connect terminals 13 (TC) and 4 (CG) of the DLC3.
SST 09843-18040
NOTICE:
- **Confirm the terminal numbers before connecting them. Connection with a wrong terminal can damage the engine.**
- **Turn off all electrical systems before connecting the terminals.**
- **Perform this inspection after the cooling fan motor is turned off.**

(2) Remove the cool air intake duct seal. (See page EM-22)

(3) Remove the engine room side cover LH. (See page EM-22)

(4) Remove the engine room side cover RH. (See page EM-22)

(5) Remove the V-bank cover. (See page EM-23)

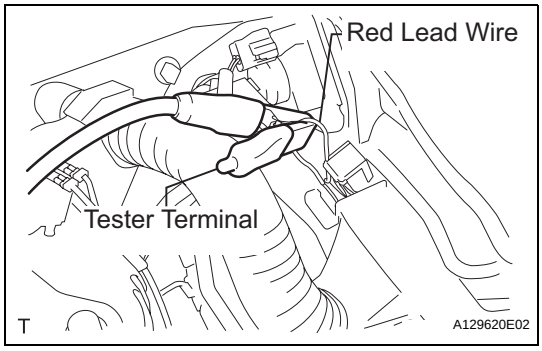

(6) Pull out the red lead wire harness.

(7) Connect the tester terminal of the timing light to the red lead wire as shown in the illustration.
NOTICE:
Use a timing light which can detect the first signal.

(8) Check the ignition timing at idle.
Ignition timing:
8 to 12° BTDC at idle
NOTICE:
When checking the ignition timing, the transmission should be in neutral.
HINT:
Run the engine at 1,000 to 1,300 rpm for 5 seconds, and then check that the engine rpm returns to idle speed.

(9) Disconnect terminals 13 (TC) and 4 (CG) of the DLC3.

(10) Check the ignition timing at idle.
Ignition timing:
12 to 22° BTDC at idle

(11) Confirm that the ignition timing moves to the advanced angle side when the engine rpm is increased.

(12) Remove the timing light.

8. INSPECT ENGINE IDLE SPEED

(a) Warm up the engine.

EM

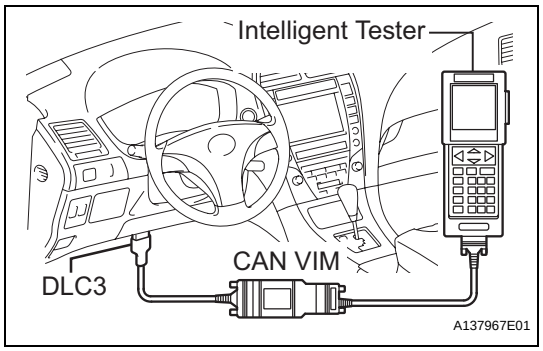

(b) When using the intelligent tester:
Check the idle speed.
(1) Connect the intelligent tester to the DLC3.
(2) Enter DATA LIST mode with the intelligent tester.
Idle speed:
600 to 700 rpm
NOTICE:
- **When checking the idle speed, the transmission should be in neutral.**
- **Check the idle speed with the cooling fan off.**
- **Switch off all accessories and air conditioning before connecting the intelligent tester.**

HINT:
Refer to the intelligent tester operator's manual for further details.

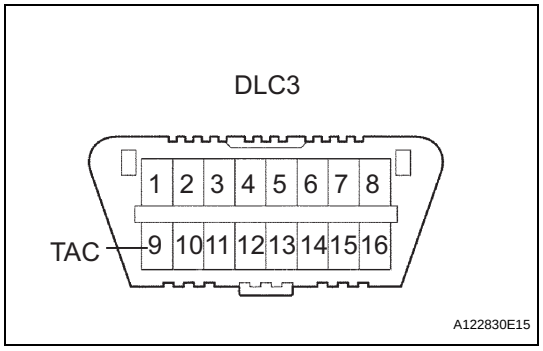

(c) When not using the intelligent tester:
Check the idle speed.
(1) Using SST, connect the tachometer test probe to terminal 9 (TAC) of the DLC3.
SST 09843-18030
(2) Check the idle speed.
Idle speed:
600 to 700 rpm

9. INSPECT COMPRESSION
(a) Warm up and stop the engine.
(b) Disconnect the injector connectors.
(c) Remove the intake air surge tank (See page FU-12).
(d) Remove the 6 ignition coils.
(e) Remove the 6 spark plugs.

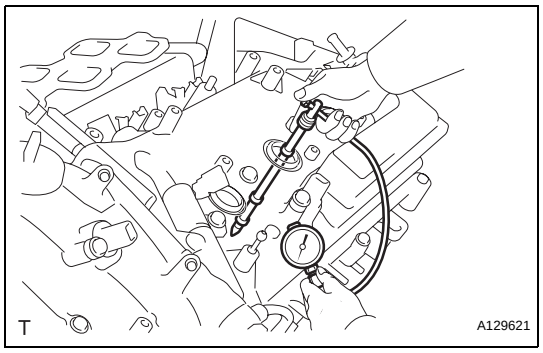

(f) Check the cylinder compression pressure.
(1) Insert a compression gauge into the spark plug hole.
(2) While cranking the engine, measure the compression pressure.
Compression pressure:
1.4 MPa (14 kgf/cm^2, 199 psi)
Minimum pressure:
0.98 MPa (10 kgf/cm^2, 142 psi)
Difference between each cylinder:
0.1 MPa (1.0 kgf/cm^2, 15 psi)
NOTICE:
- **Always use a fully charged battery to obtain an engine speed of 250 rpm or more.**
- **Check the other cylinders' compression pressure in the same way.**
- **This measurement must be done as quickly as possible.**

EM

(3) If the cylinder compression is low, pour a small amount of engine oil into the cylinder through the spark plug hole and inspect again.
HINT:
- If adding oil increases the compression, the piston rings and/or cylinder bore may be worn or damaged.
- If pressure stays low, a valve may be stuck or seated improperly, or there may be leakage in the gasket.

(g) Install the 6 spark plugs.
Torque: 18 N*m (184 kgf*cm, 13 ft.*lbf)

(h) Install the 6 ignition coils.
Torque: 10 N*m (102 kgf*cm, 7 ft.*lbf)

(i) Install the intake air surge tank. (See page FU-16)

10. INSPECT CO/HC

(a) Start the engine.

(b) Run the engine at 2,500 rpm for approximately 180 seconds.

(c) Insert the CO/HC meter testing probe at least 40 cm (1.3 ft) into the tailpipe during idling.

(d) Check CO/HC concentration at idle and/or 2,500 rpm.
HINT:
Check regulations and restrictions in your area when performing 2 mode CO/HC concentration testing (engine check at both idle speed and at 2,500 rpm).
If the CO/HC concentration does not comply with regulations, perform troubleshooting in the order given below.

(1) Check A/F sensor and heated oxygen sensor operation.

(2) See the table below for possible causes, and then inspect and repair.

CO	HC	Problems	Causes
Normal	High	Rough idle	1. Faulty ignitions: – Incorrect timing – Fouled, shorted or improperly gapped plugs 2. Incorrect valve clearance 3. Leaks in intake and exhaust valves 4. Leaks in cylinders
Low	High	Rough idle (fluctuating HC reading)	1. Vacuum leaks: – PCV hoses – Intake manifold – Throttle body – Brake booster line 2. Lean mixture causing misfire
High	High	Rough idle (black smoke from exhaust)	1. Restricted air filter 2. Plugged PCV valve 3. Faulty SFI system: – Faulty fuel pressure regulator – Defective ECT sensor – Defective MAF meter – Faulty ECM – Faulty injectors – Faulty throttle position sensor

DISASSEMBLY

1. REMOVE OIL FILLER CAP SUB-ASSEMBLY

(a) Remove the oil filler cap and gasket.

2. REMOVE SPARK PLUG

(a) Remove the spark plugs.

3. REMOVE OIL PAN DRAIN PLUG

(a) Remove the drain plug and gasket.

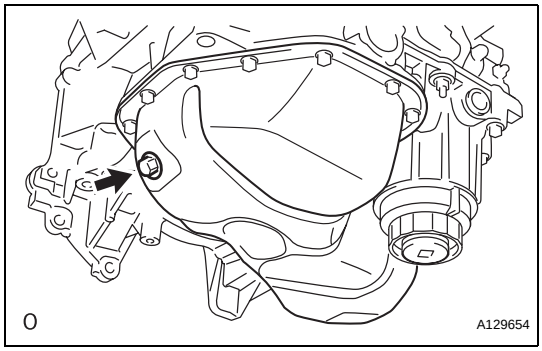

4. REMOVE VENTILATION VALVE SUB-ASSEMBLY

(a) Remove the ventilation valve.

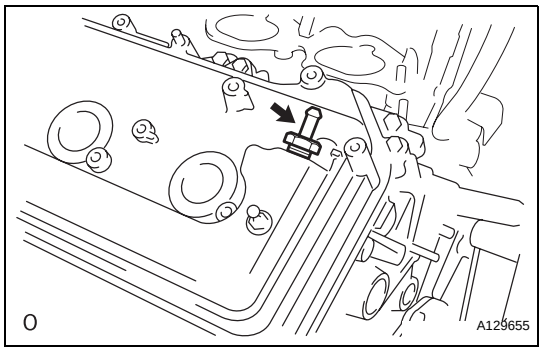

5. REMOVE CAMSHAFT POSITION SENSOR

(a) Remove the 4 bolts and 4 sensors.

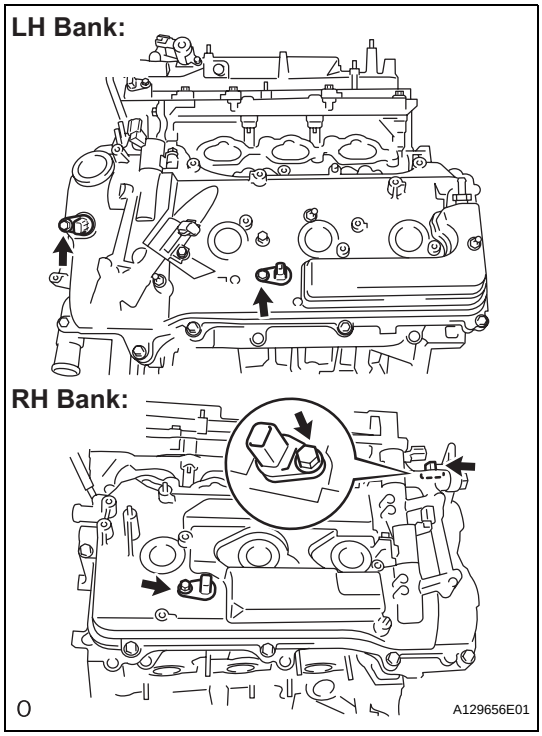

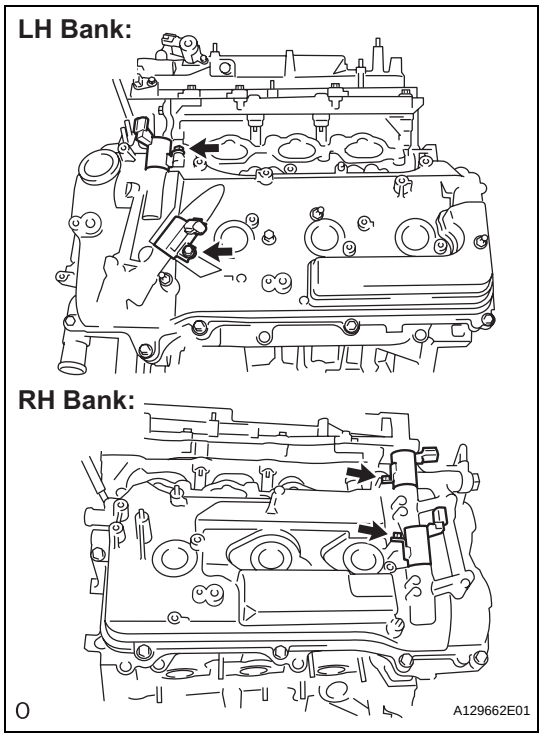

6. REMOVE CAMSHAFT TIMING OIL CONTROL VALVE ASSEMBLY

(a) Remove the 4 bolts and 4 oil control valves.

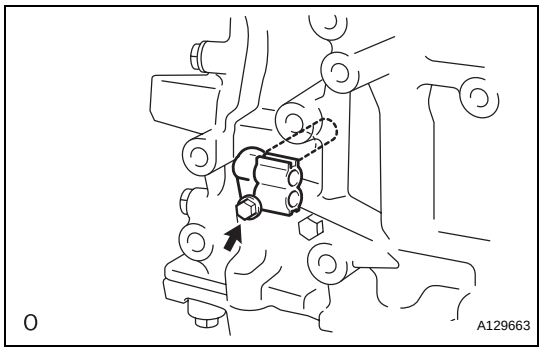

7. REMOVE CRANKSHAFT POSITION SENSOR

(a) Remove the bolt and sensor.

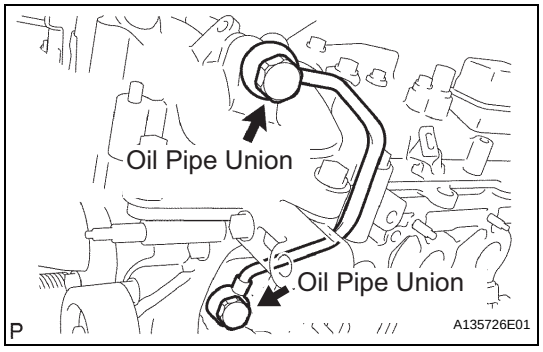

8. REMOVE NO. 1 OIL PIPE

(a) Remove the 2 oil pipe unions and oil pipe.

(b) Remove the oil control valve filter LH and gaskets.

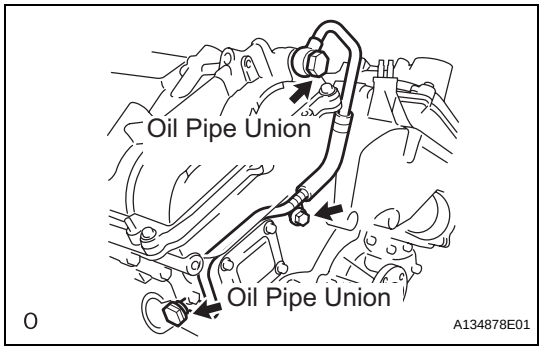

9. REMOVE OIL PIPE

(a) Remove the bolt.

(b) Remove the 2 oil pipe unions and oil pipe.

(c) Remove the oil control valve filter RH and gaskets.

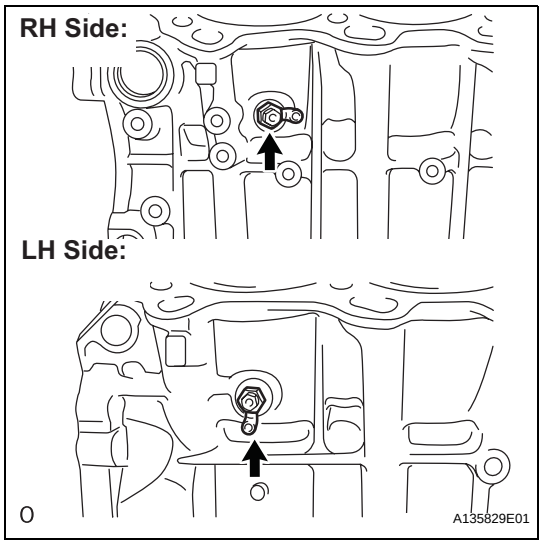

10. REMOVE CYLINDER BLOCK WATER DRAIN COCK SUB-ASSEMBLY

(a) Remove the water drain cocks from the cylinder block.

(b) Remove the water drain cock plugs from the water drain cocks.

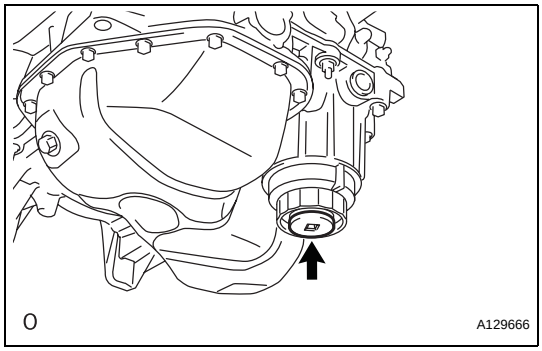

11. REMOVE OIL FILTER ELEMENT

(a) Remove the drain plug.

NOTICE:

Do not remove the O-ring from the oil filter cap.

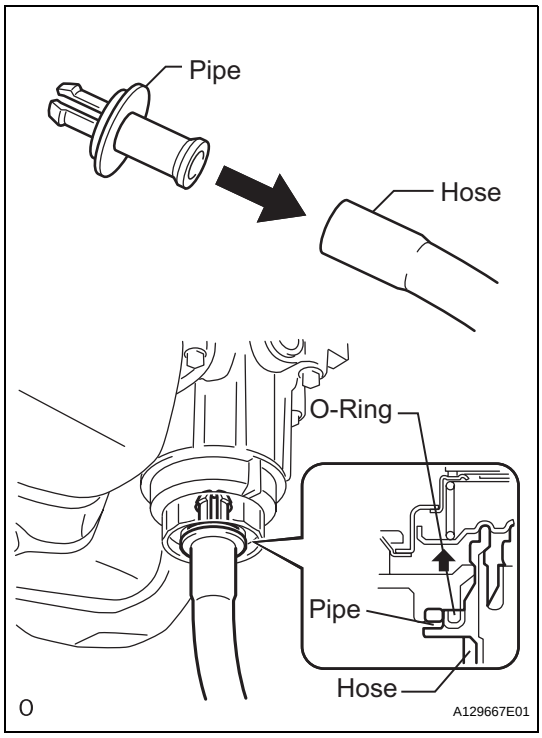

(b) Connect the hose to the pipe.

(c) Insert the pipe with the hose into the oil filter cap.

(d) Make sure that the oil is completely drained and remove the pipe and O-ring.

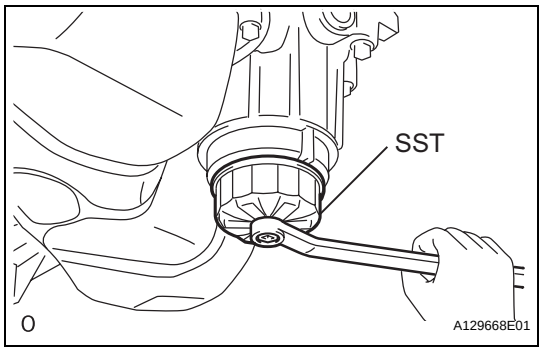

(e) Using SST, remove the oil filter cap.
SST 09228-06501

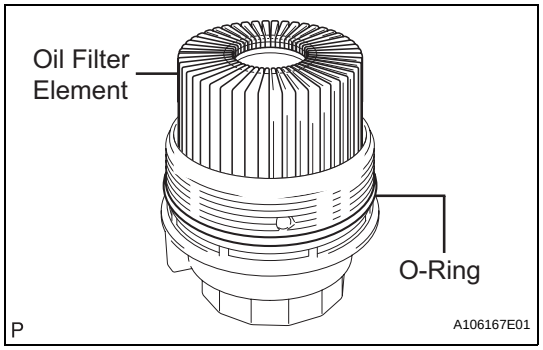

(f) Remove the oil filter element and O-ring from the oil filter cap.
NOTICE:
Do not use any tools when removing the O-ring to prevent the O-ring groove from being damaged.

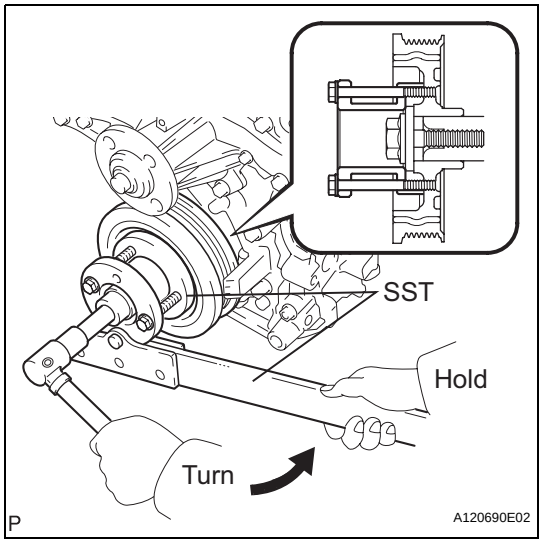

12. REMOVE CRANKSHAFT PULLEY

(a) Using SST, loosen the crankshaft pulley bolt.
SST 09213-70011 (09213-70020), 09330-00021

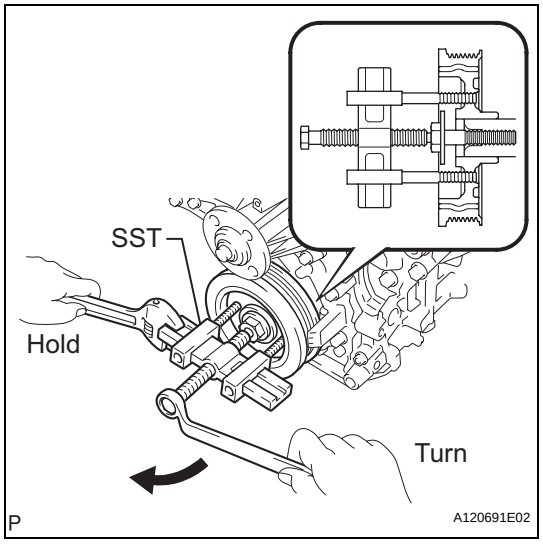

(b) Using SST, remove the crankshaft pulley bolt and crankshaft pulley.
SST 09950-50013 (09951-05010, 09952-05010, 09953-05020, 09954-05021)

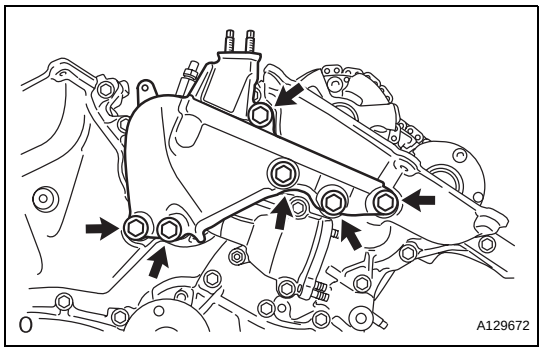

13. REMOVE FRONT ENGINE MOUNTING BRACKET NO. 1 LH

(a) Remove the 6 bolts and engine mounting bracket.
(b) Using a "TORX" socket wrench E8, remove the 2 stud bolts.

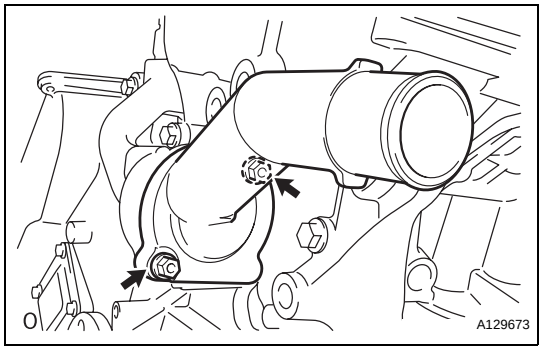

14. REMOVE WATER INLET HOUSING

(a) Remove the 2 nuts, water inlet, and thermostat.
(b) Remove the gasket.
(c) Remove the 2 stud bolts.
(d) Separate the No. 1 water by-pass hose.

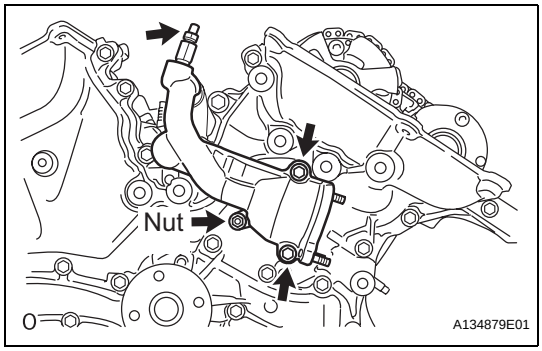

(e) Remove the 2 bolts, nut, and water inlet housing.
(f) Remove the drain cock plug.
(g) Remove the drain cock.

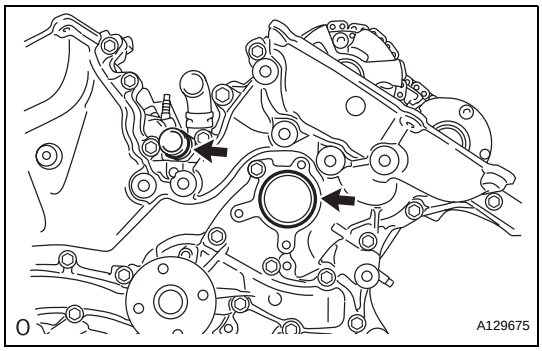

(h) Remove the 2 O-rings.

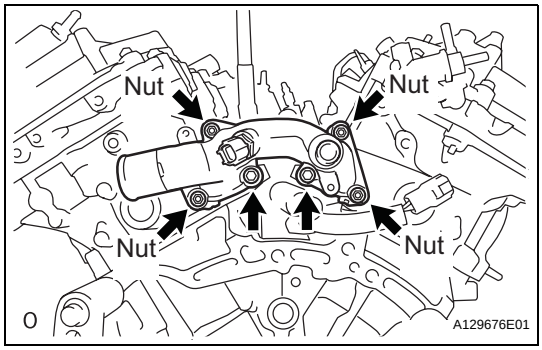

15. REMOVE WATER OUTLET

(a) Remove the 2 bolts, 4 nuts, and water outlet.

EM

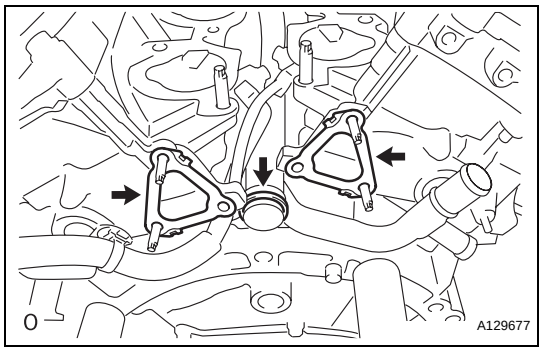

(b) Remove the 2 gaskets and O-ring.

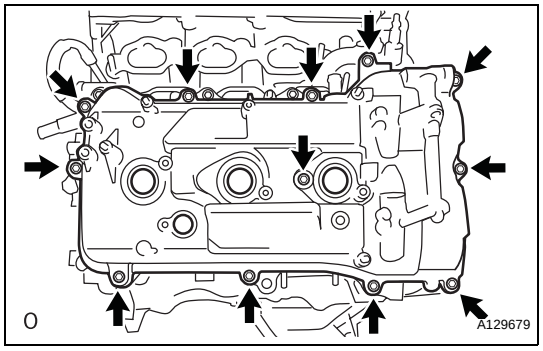

16. REMOVE CYLINDER HEAD COVER SUB-ASSEMBLY (for Bank 1)

(a) Remove the 12 bolts, seal washer, head cover, and gasket.

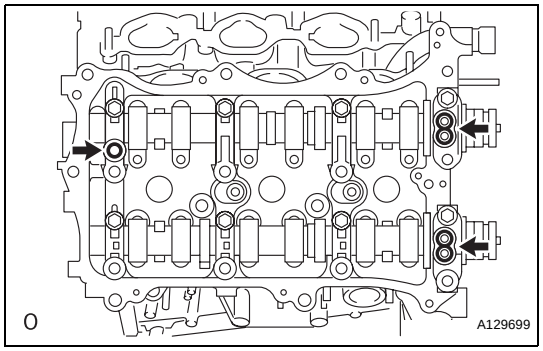

(b) Remove the 3 gaskets.

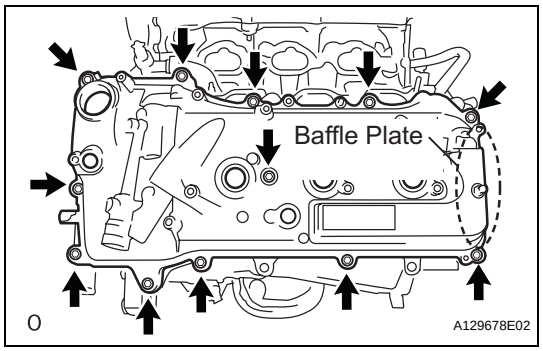

17. REMOVE CYLINDER HEAD COVER SUB-ASSEMBLY (for Bank 2)

(a) Remove the 12 bolts, seal washer, head cover, and gasket.

NOTICE:

The baffle plate is located on the back of the portion shown in the illustration. Do not damage the baffle plate when removing the head cover.

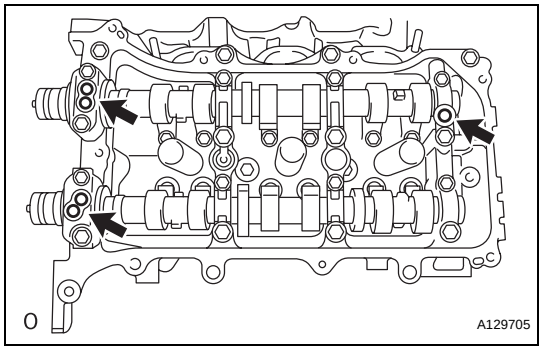

(b) Remove the 3 gaskets.

EM

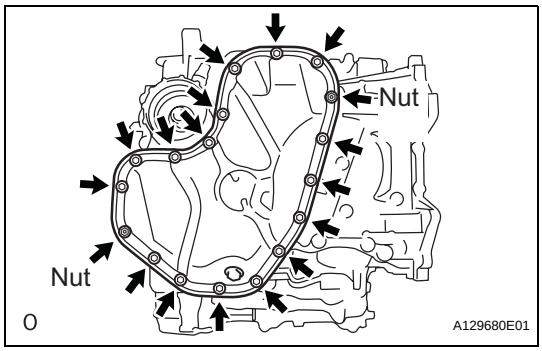

18. REMOVE NO. 2 OIL PAN SUB-ASSEMBLY

(a) Remove the 16 bolts and 2 nuts.

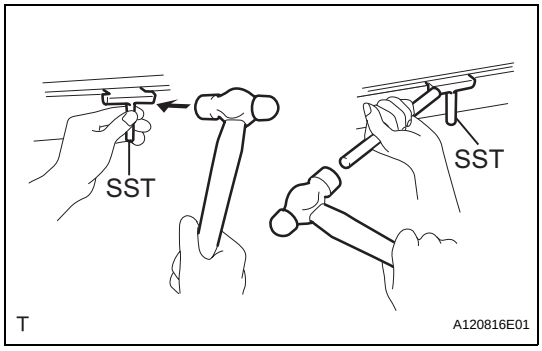

(b) Insert the blade of SST between the oil pans. Cut through the applied sealer and remove the No. 2 oil pan sub-assembly.
SST 09032-00100
NOTICE:
Be careful not to damage the contact surfaces of the oil pans.

(c) Using a "TORX" socket wrench E6, remove the 2 stud bolts.

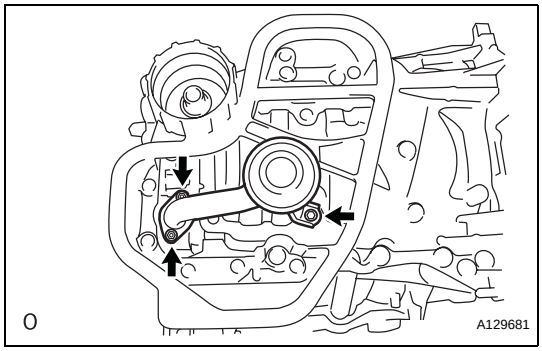

19. REMOVE OIL STRAINER SUB-ASSEMBLY

(a) Remove the bolt, 2 nuts, oil strainer, and gasket.

(b) Using a "TORX" socket wrench E6, remove the 2 stud bolts.

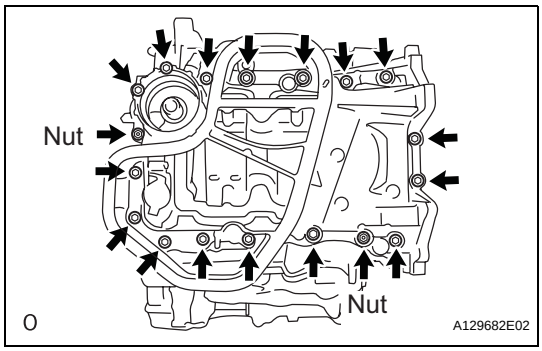

20. REMOVE OIL PAN SUB-ASSEMBLY

(a) Remove the 16 bolts and 2 nuts.
HINT:
Be sure to clean the bolts and stud bolts and check the threads for cracks or other damage.

EM

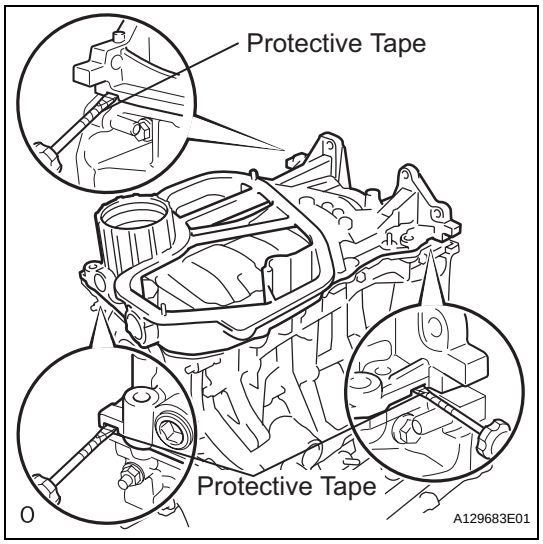

(b) Remove the oil pan by prying between the oil pan and cylinder block with a screwdriver.
NOTICE:
Be careful not to damage the contact surfaces of the cylinder block and oil pan.
HINT:
Tape the screwdriver tip before use.

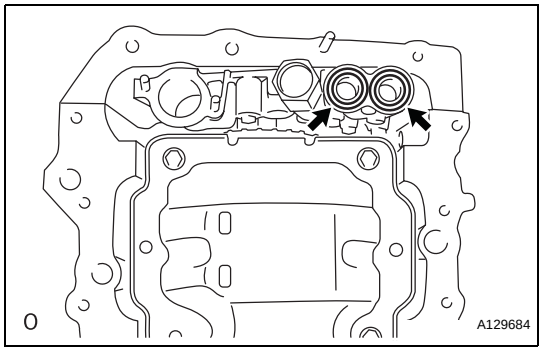

(c) Remove the 2 O-rings.
(d) Using a "TORX" socket wrench E8, remove the 2 stud bolts.

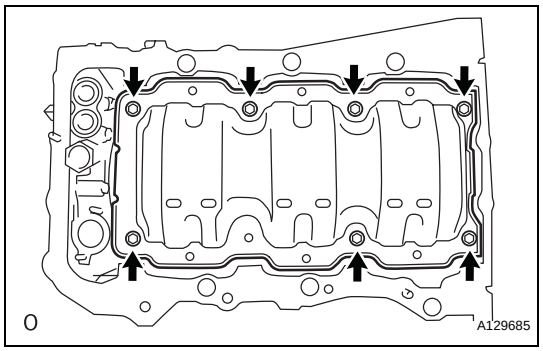

21. REMOVE OIL PAN BAFFLE PLATE
(a) Remove the 7 bolts and baffle plate.

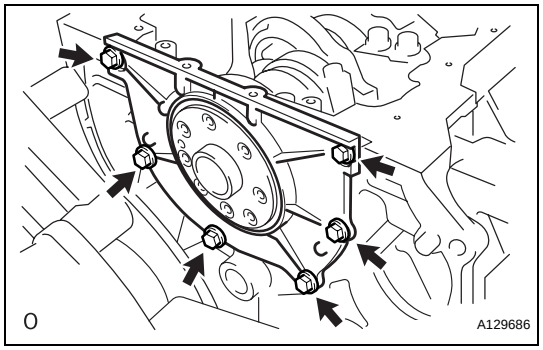

22. REMOVE ENGINE REAR OIL SEAL RETAINER
(a) Remove the 6 bolts.

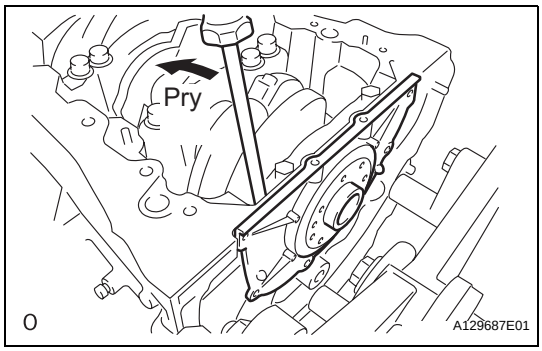

(b) Using a screwdriver, pry out the oil seal retainer.
NOTICE:
Be careful not to damage the engine rear oil seal retainer.
HINT:
Tape the screwdriver tip before use.

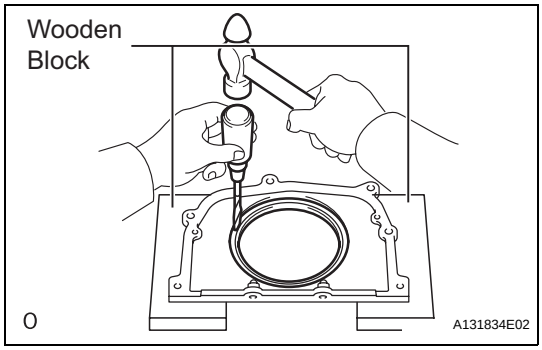

23. REMOVE ENGINE REAR OIL SEAL

(a) Place the oil seal retainer on wooden blocks.
NOTICE:
Be careful not to damage the engine rear oil seal retainer.

(b) Using a screwdriver and a hammer, tap out the oil seal.
HINT:
Tape the screwdriver tip before use.

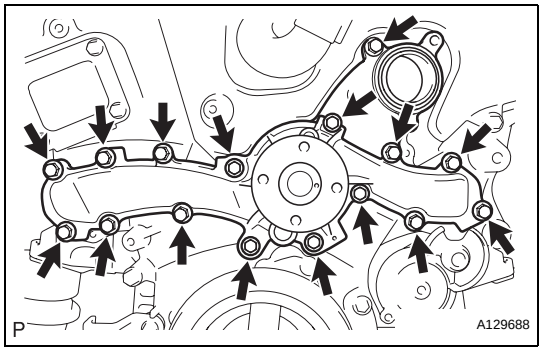

24. REMOVE WATER PUMP ASSEMBLY

(a) Remove the 16 bolts, water pump, and gasket.

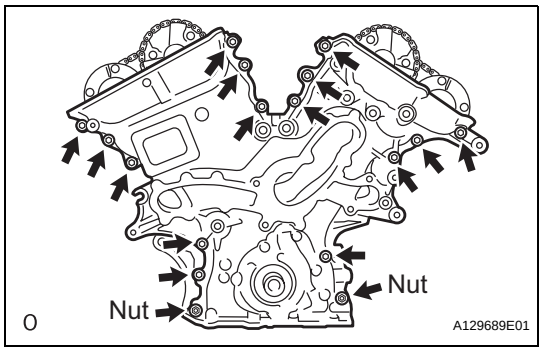

25. REMOVE TIMING CHAIN COVER SUB-ASSEMBLY

(a) Remove the 15 bolts and 2 nuts as shown in the illustration.

EM

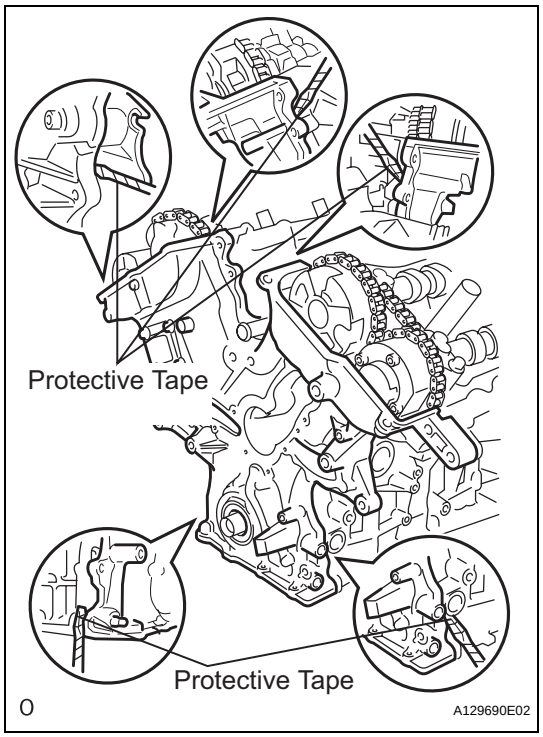

(b) Remove the timing chain cover by prying between the timing chain cover and cylinder head or cylinder block with a screwdriver.
NOTICE:
Be careful not to damage the contact surfaces of the cylinder head, cylinder block, and chain cover.
HINT:
Tape the screwdriver tip before use.

(c) Remove the 4 bolts, chain cover plate, and gasket.

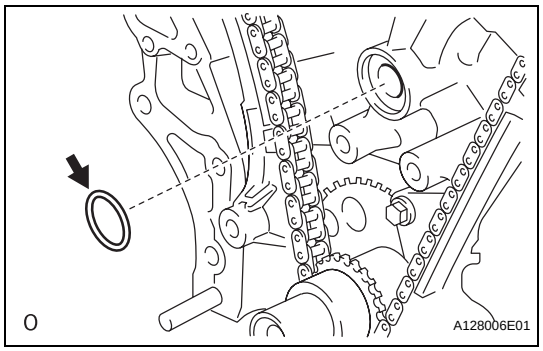

(d) Remove the gasket.

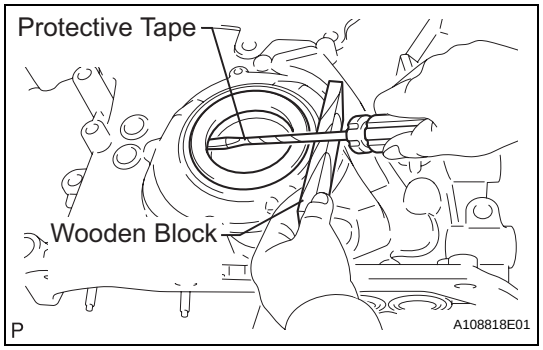

26. REMOVE TIMING CHAIN CASE OIL SEAL

(a) Using a screwdriver, pry out the oil seal.
HINT:
Tape the screwdriver tip before use.

27. SET NO. 1 CYLINDER TO TDC / COMPRESSION

(a) Temporarily tighten the pulley set bolt.

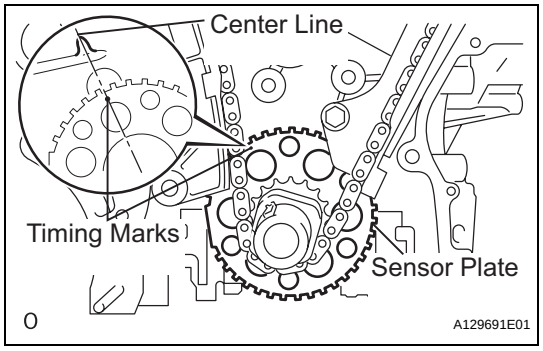

(b) Set the timing mark on the crank angle sensor plate to the RH block bore center line (TDC / compression).

EM

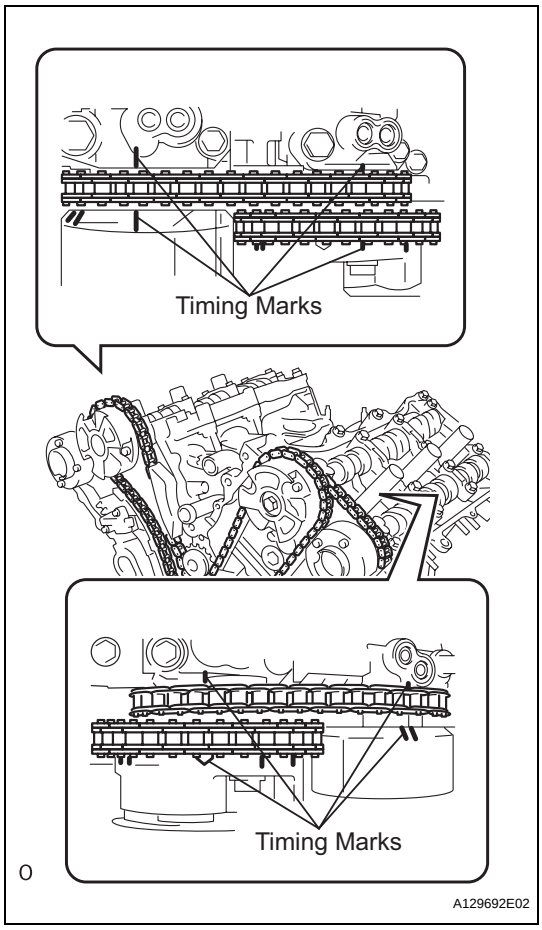

(c) Check that the timing marks of the camshaft timing gears are aligned with those of the bearing cap as shown in the illustration.
If not, turn the crankshaft 1 revolution (360°) and align the timing marks as above.

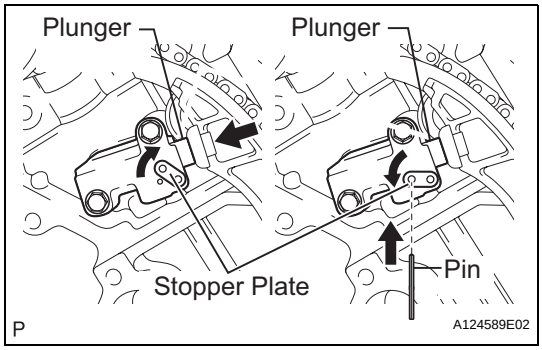

28. REMOVE NO. 1 CHAIN TENSIONER ASSEMBLY

(a) Move the stopper plate upward to release the lock, and push the plunger deep into the tensioner.

(b) Move the stopper plate downward to set the lock, and insert a pin of ϕ1.27 mm (0.05 in.) into the stopper plate's hole.

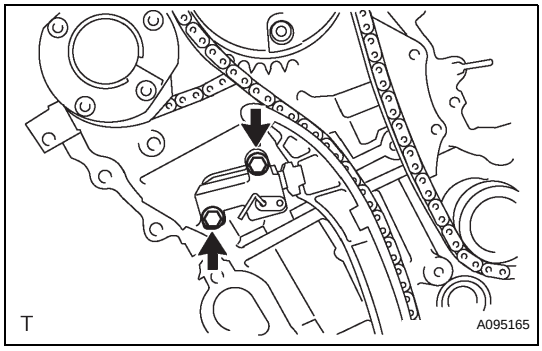

(c) Remove the 2 bolts and chain tensioner.

29. REMOVE CHAIN TENSIONER SLIPPER

(a) Remove the chain tensioner slipper.

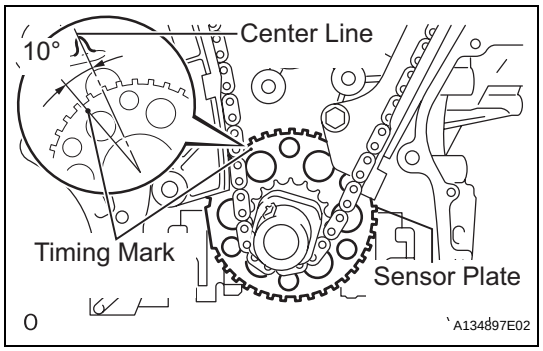

30. REMOVE CHAIN SUB-ASSEMBLY

(a) Turn the crankshaft counterclockwise 10° to loosen the chain of the crankshaft timing sprocket.

(b) Remove the pulley set bolt.

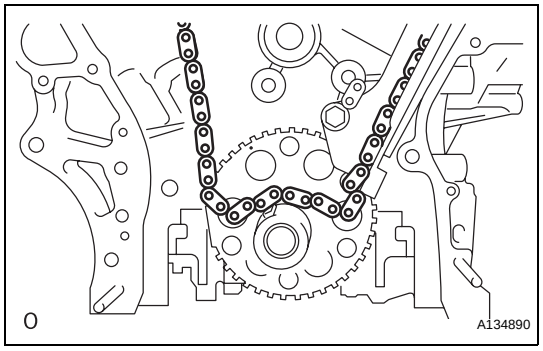

(c) Remove the chain from the crankshaft timing sprocket and place it on the crankshaft.

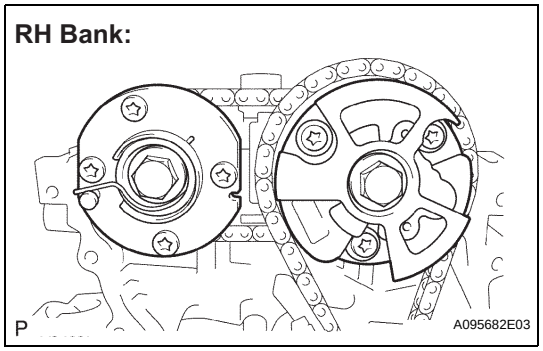

(d) Turn the camshaft timing gear assembly on the RH bank clockwise (approximately 60°) and set it as shown in the illustration. Be sure to loosen the chain between the banks.

(e) Remove the chain.

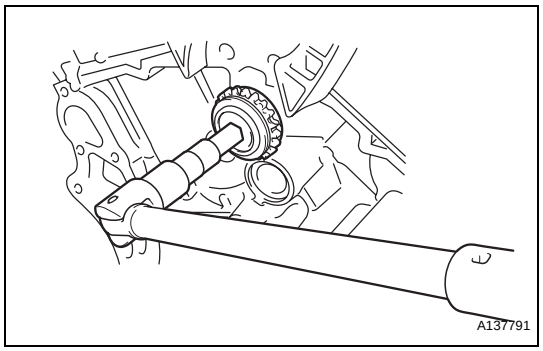

31. REMOVE IDLE SPROCKET ASSEMBLY

(a) Using a 10 mm hexagon wrench, remove the No. 2 idle gear shaft, sprocket, and No. 1 idle gear shaft.

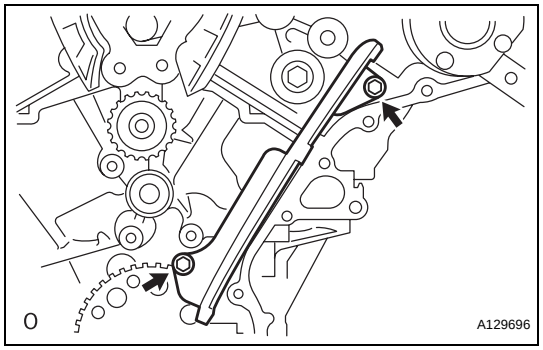

32. REMOVE NO. 1 CHAIN VIBRATION DAMPER

(a) Remove the 2 bolts and vibration damper.

33. REMOVE NO. 2 CHAIN VIBRATION DAMPER

(a) Remove the 2 vibration dampers.

EM

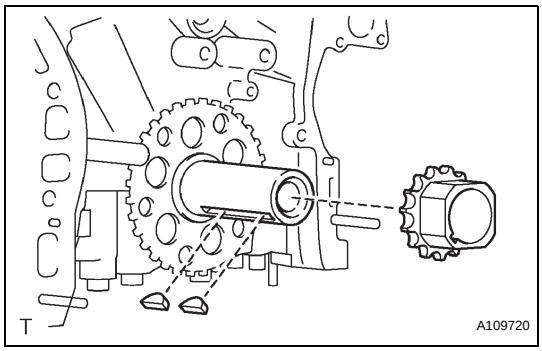

34. REMOVE CRANKSHAFT TIMING SPROCKET

(a) Remove the crankshaft timing sprocket from the crankshaft.

(b) Remove the 2 pulley set keys from the crankshaft.

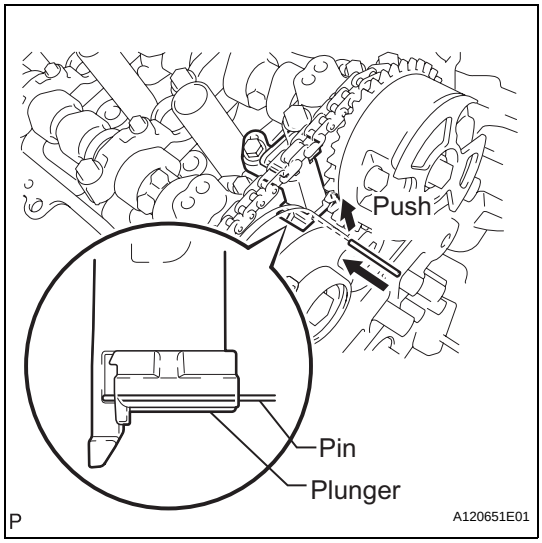

35. REMOVE CAMSHAFT TIMING GEARS AND NO. 2 CHAIN (for Bank 1)

(a) While raising the No. 2 chain tensioner, insert a pin of ϕ 1.0 mm (0.039 in.) into the hole to fix the No. 2 chain tensioner.

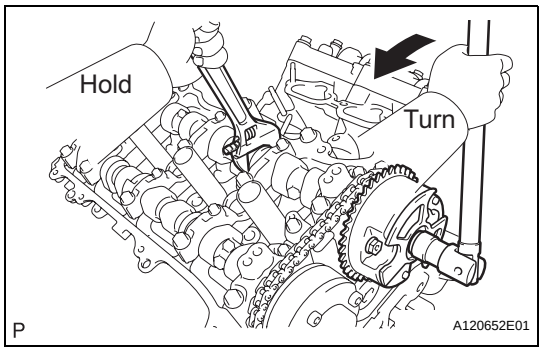

(b) Hold the hexagonal portion of the camshaft with a wrench, and remove the 2 bolts and 2 camshaft timing gear assemblies.

NOTICE:

- **Be careful not to damage the cylinder head with the wrench.**
- **Do not disassemble the camshaft timing gear assemblies.**

(c) Remove the No. 2 chain.

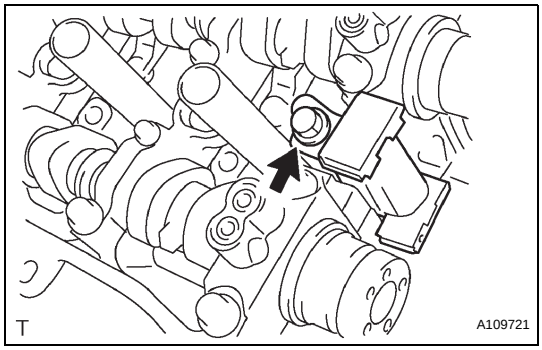

36. REMOVE NO. 2 CHAIN TENSIONER ASSEMBLY

(a) Remove the bolt and No. 2 chain tensioner.

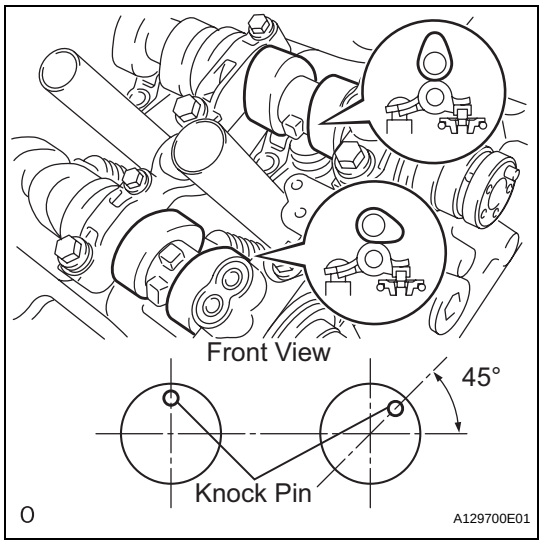

37. REMOVE CAMSHAFT BEARING CAP (for Bank 1)

(a) Check that the camshafts are positioned as shown in the illustration.

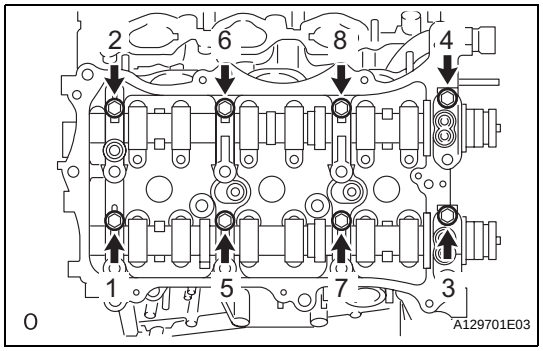

(b) Uniformly loosen and remove the 8 bearing cap bolts in the sequence shown in the illustration.

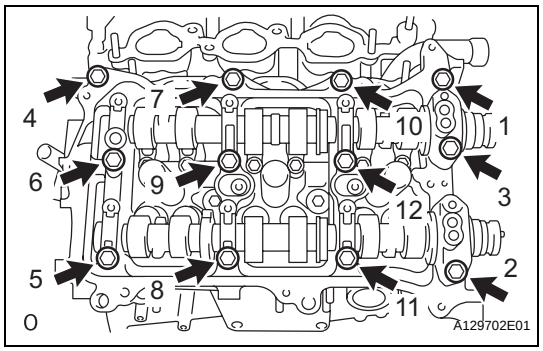

(c) Uniformly loosen and remove the 12 bearing cap bolts in the sequence shown in the illustration.
NOTICE:
Uniformly loosen the bolts while keeping the camshaft level.

(d) Remove the 5 bearing caps.

38. REMOVE CAMSHAFT

(a) Remove the camshaft.

39. REMOVE NO. 2 CAMSHAFT

(a) Remove the No. 2 camshaft.

EM

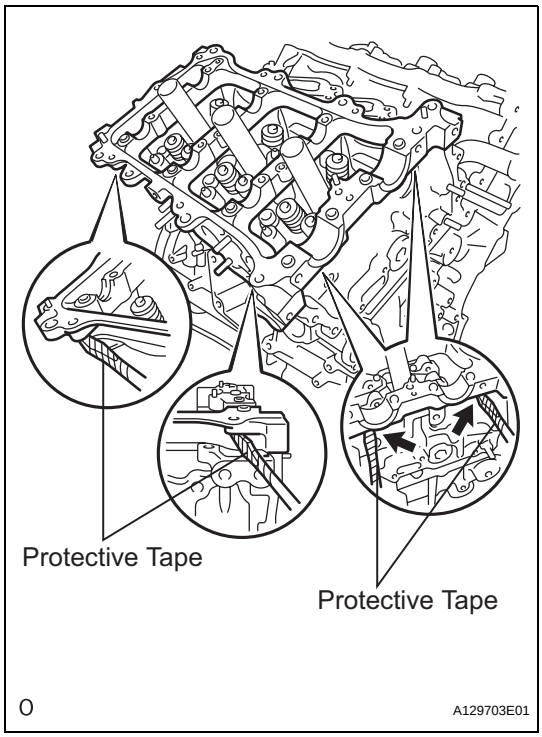

40. REMOVE CAMSHAFT HOUSING SUB-ASSEMBLY RH

(a) Remove the camshaft housing sub-assembly RH by prying between the cylinder head and camshaft housing sub-assembly RH with a screwdriver.
NOTICE:
Be careful not to damage the contact surfaces of the cylinder head and camshaft housing.
HINT:
Tape the screwdriver tip before use.

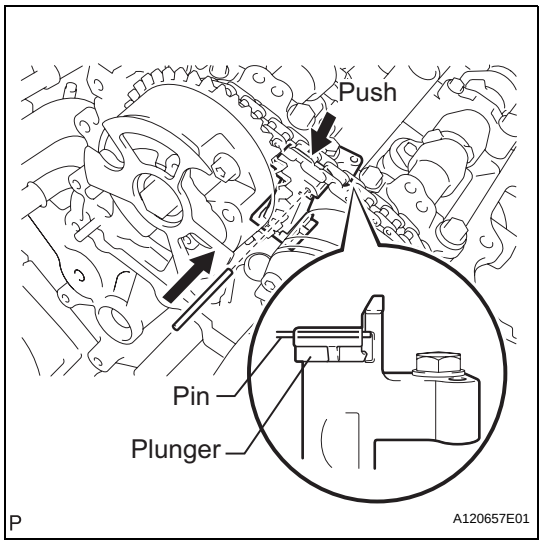

41. REMOVE CAMSHAFT TIMING GEARS AND NO. 2 CHAIN (for Bank 2)

(a) While pushing down the No. 3 chain tensioner, insert a pin of ϕ 1.0 mm (0.039 in.) into the hole to fix the No. 3 chain tensioner.

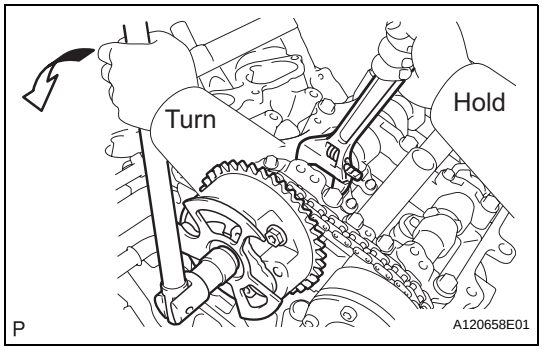

(b) Hold the hexagonal portion of the camshaft with a wrench, and remove the 2 bolts and 2 camshaft timing gear assemblies.
NOTICE:
- **Be careful not to damage the cylinder head with the wrench.**
- **Do not disassemble the camshaft timing gear assemblies.**

(c) Remove the No. 2 chain.

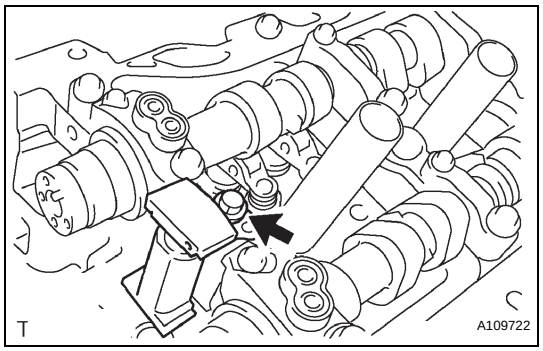

42. REMOVE NO. 3 CHAIN TENSIONER ASSEMBLY

(a) Remove the bolt and No. 3 chain tensioner.

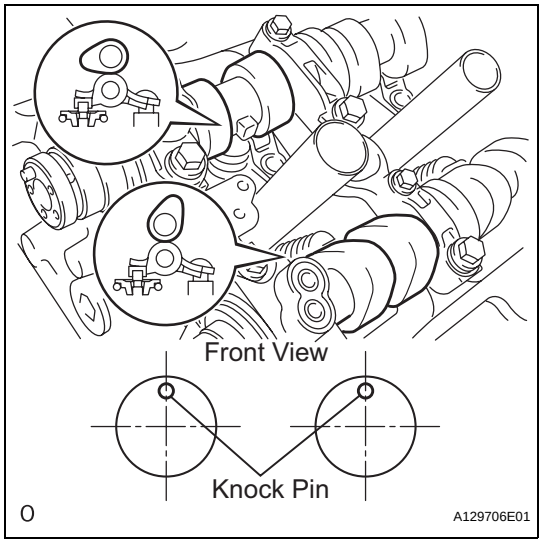

43. REMOVE CAMSHAFT BEARING CAP (for Bank 2)

(a) Check that the camshafts are positioned as shown in the illustration.

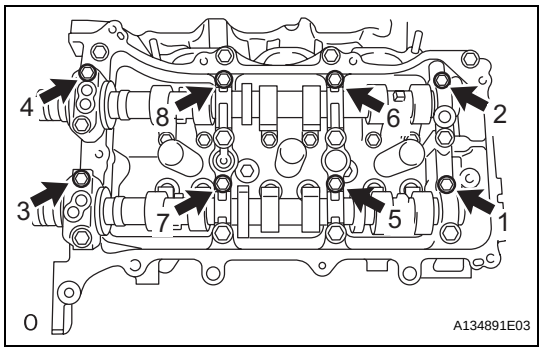

(b) Uniformly loosen and remove the 8 bearing cap bolts in the sequence shown in the illustration.

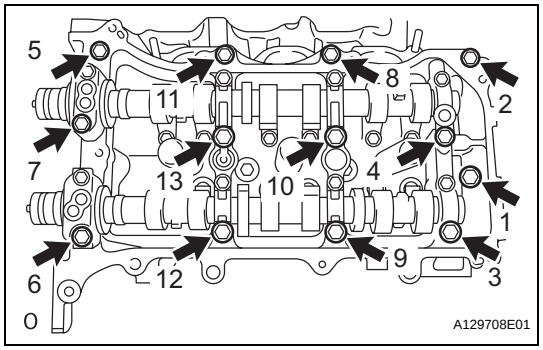

(c) Uniformly loosen and remove the 13 bearing cap bolts in the sequence shown in the illustration.
NOTICE:
Uniformly loosen the bolts while keeping the camshaft level.

(d) Remove the 5 bearing caps.

44. REMOVE NO. 3 CAMSHAFT

(a) Remove the No. 3 camshaft.

45. REMOVE NO. 4 CAMSHAFT

(a) Remove the No. 4 camshaft.

EM

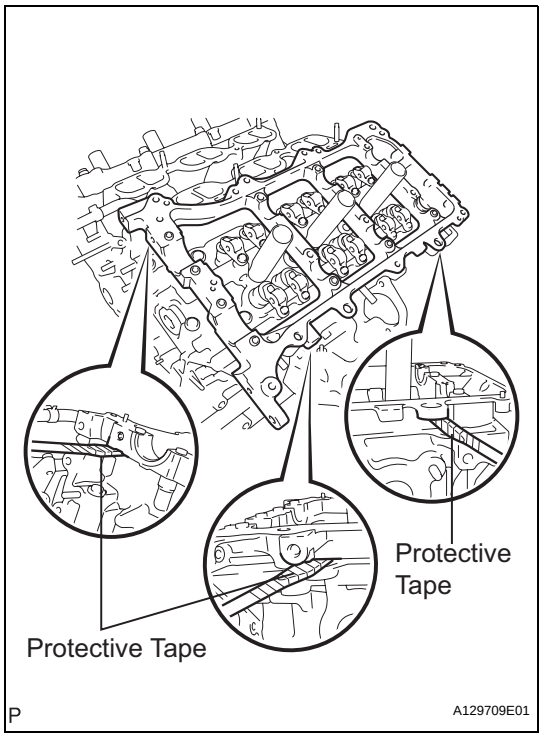

46. REMOVE CAMSHAFT HOUSING SUB-ASSEMBLY LH

(a) Remove the camshaft housing by prying between the cylinder head and camshaft housing with a screwdriver.

NOTICE:

Be careful not to damage the contact surfaces of the cylinder head and camshaft housing.

HINT:

Tape the screwdriver tip before use.

47. REMOVE NO. 1 VALVE ROCKER ARM SUB-ASSEMBLY

(a) Remove the 24 valve rocker arms.

HINT:

Arrange the removed parts in the correct order.

48. REMOVE VALVE LASH ADJUSTER ASSEMBLY

(a) Remove the 24 valve lash adjusters from the cylinder head.

HINT:

Arrange the removed parts in the correct order.

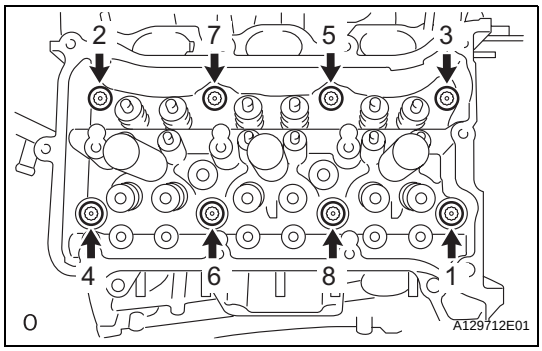

49. REMOVE CYLINDER HEAD SUB-ASSEMBLY RH

(a) Using a 10 mm bi-hexagon wrench, uniformly loosen the 8 bolts in the sequence shown in the illustration. Remove the 8 cylinder head bolts and plate washers.

NOTICE:

- **Be careful not to drop the washers into the cylinder head.**
- **Cylinder head warpage or cracking could result from removing the bolts in an incorrect order.**

HINT:

Be sure to keep separate the removed parts for each installation position.

(b) Remove the cylinder head and gasket.

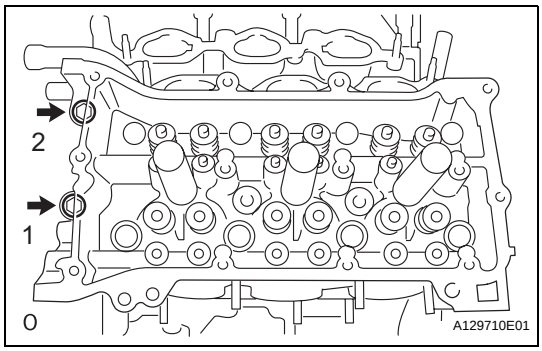

50. REMOVE CYLINDER HEAD SUB-ASSEMBLY LH

(a) Uniformly loosen and remove the bolts in the sequence shown in the illustration.

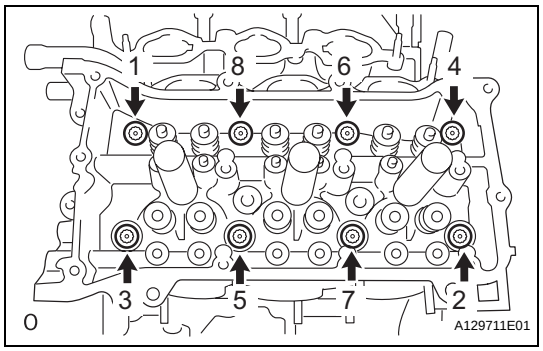

(b) Using a 10 mm bi-hexagon wrench, uniformly loosen the 8 bolts in the sequence shown in the illustration. Remove the 8 cylinder head bolts and plate washers.

NOTICE:

- **Be careful not to drop the washers into the cylinder head.**
- **Cylinder head warpage or cracking could result from removing the bolts in an incorrect order.**

HINT:

Be sure to keep separate the removed parts for each installation position.

(c) Remove the cylinder head and gasket.

51. REMOVE WATER INLET PIPE

(a) Separate the No. 1 water by-pass hose.

(b) Remove the 2 bolts and water inlet pipe.

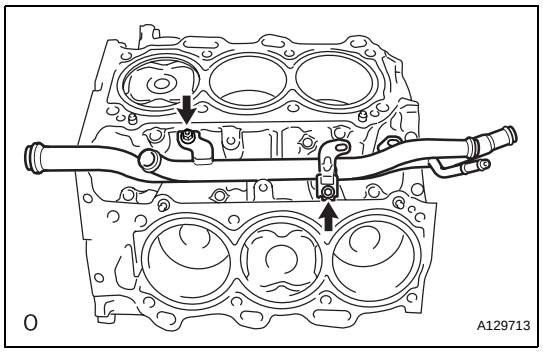

52. REMOVE VALVE STEM CAP

(a) Remove the valve stem caps from the cylinder heads.

HINT:

Arrange the removed parts in the correct order.

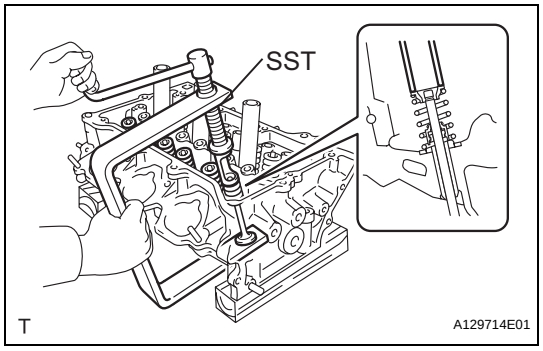

53. REMOVE INTAKE VALVE

(a) Using SST, compress the compression spring and remove the valve spring retainer locks.

SST 09202-70020 (09202-00010)

(b) Remove the retainer, compression spring, and valve.

HINT:

Arrange the removed parts in the correct order.

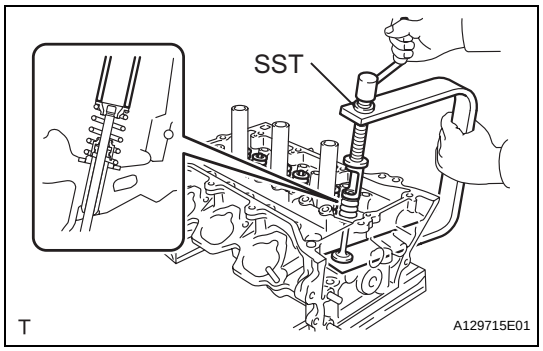

54. REMOVE EXHAUST VALVE

(a) Using SST, compress the compression spring and remove the valve spring retainer locks.

SST 09202-70020 (09202-00010)

(b) Remove the retainer, compression spring, and valve.

HINT:

Arrange the removed parts in the correct order.

EM

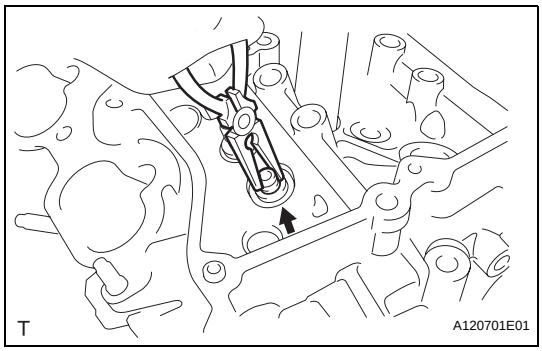

55. REMOVE VALVE STEM OIL SEAL

(a) Using needle-nose pliers, remove the oil seals.

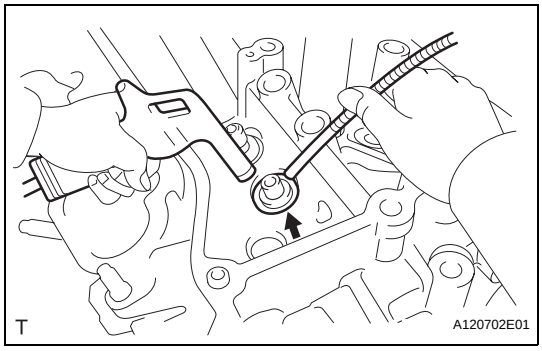

56. REMOVE VALVE SPRING SEAT

(a) Using compressed air and a magnetic finger, remove the valve spring seats by blowing air onto them.

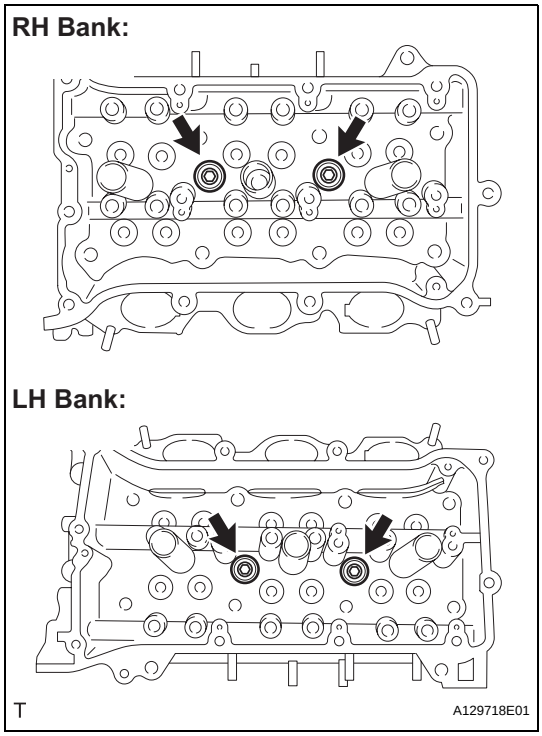

57. REMOVE NO. 1 STRAIGHT SCREW PLUG

(a) Using a 10 mm hexagon wrench, remove the 4 screw plugs and 4 gaskets.

NOTICE:

If water leaks from the straight screw plug or the plug corrodes, replace it.

EM

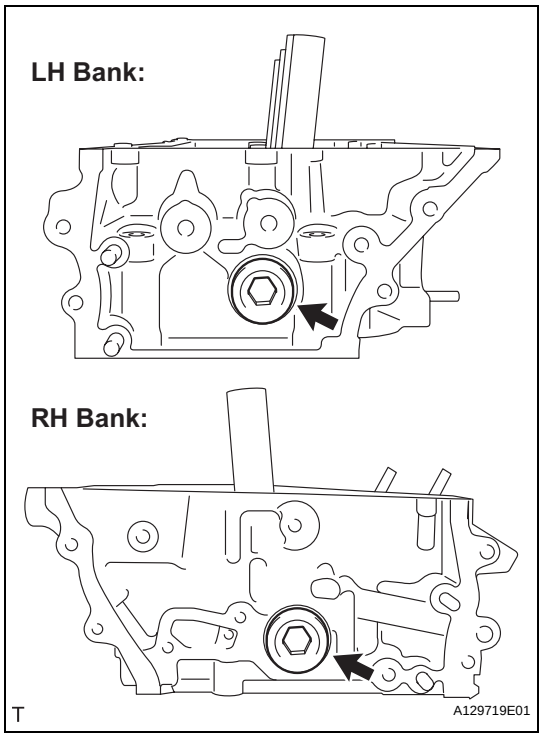

58. REMOVE NO. 2 STRAIGHT SCREW PLUG

(a) Using a 14 mm hexagon wrench, remove the screw plugs and gaskets.
NOTICE:
If water leaks from the straight screw plug or the plug corrodes, replace it.

59. REMOVE RING PIN
NOTICE:
It is not necessary to remove the ring pin unless it is being replaced.

60. REMOVE STUD BOLT
NOTICE:
If the stud bolt is deformed or the threads are damaged, replace it.

61. REMOVE INTAKE VALVE GUIDE BUSH

(a) Heat the cylinder head to 80 to 100°C (176 to 212°F).
(b) Place the cylinder head on wooden blocks.

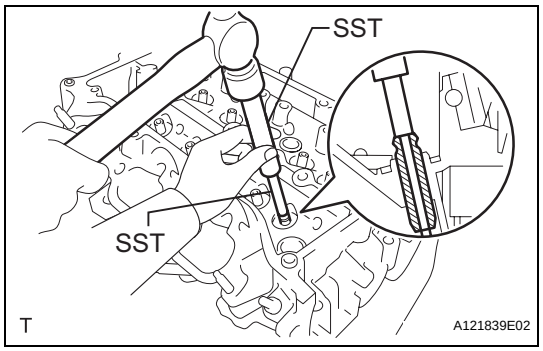

(c) Using SST and a hammer, tap out the guide bushes.
SST 09201-10000 (09201-01050), 09950-70010 (09951-07100)

62. REMOVE EXHAUST VALVE GUIDE BUSH

(a) Heat the cylinder head to 80 to 100°C (176 to 212°F).
(b) Place the cylinder head on wooden blocks.

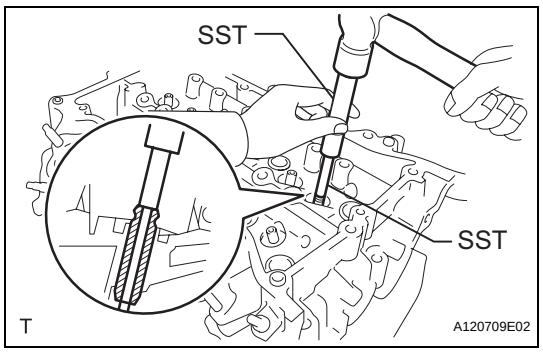

(c) Using SST and a hammer, tap out the guide bushes.
SST 09201-10000 (09201-01050), 09950-70010 (09951-07100)

63. REMOVE PISTON SUB-ASSEMBLY WITH CONNECTING ROD

(a) Check that the matchmarks on the connecting rod and cap are aligned.
HINT:
The matchmarks on the connecting rods and caps are for ensuring the correct reassembly.

EM

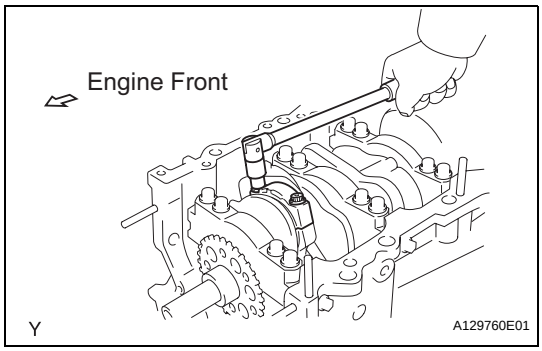

(b) Remove the 2 connecting rod cap bolts.

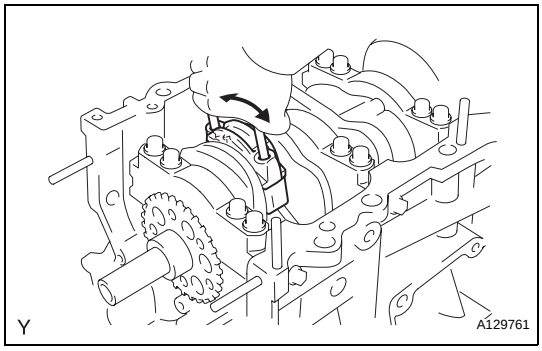

(c) Using the 2 removed connecting rod cap bolts, remove the connecting rod cap and lower bearing by wiggling the connecting rod cap right and left.
HINT:
Keep the lower bearing inserted to the connecting rod cap.

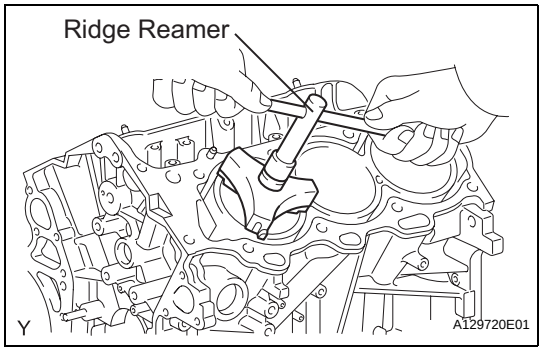

(d) Using a ridge reamer, remove all the carbon from the top of the cylinder.
(e) Push the piston, connecting rod assembly and upper bearing through the top of the cylinder block.
HINT:
- Keep the bearing, connecting rod, and cap together.
- Arrange the piston and connecting rod assemblies in the correct order.

64. REMOVE CONNECTING ROD BEARING
HINT:
Arrange the removed parts in the correct order.

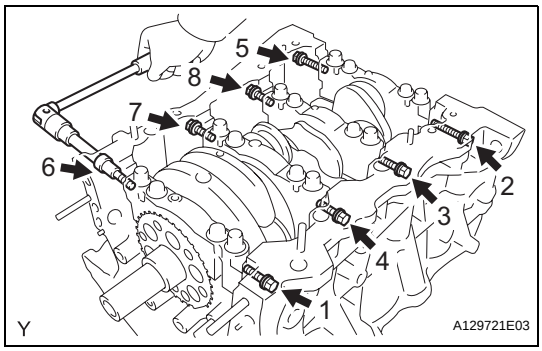

65. REMOVE CRANKSHAFT
(a) Uniformly loosen and remove the 8 main bearing cap bolts and seal washers in several steps and in the sequence shown in the illustration.

EM

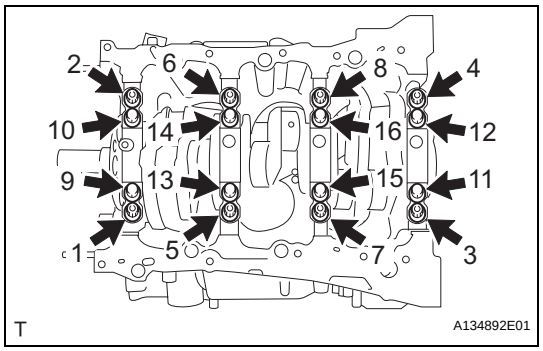

(b) Uniformly loosen the 16 bearing cap bolts in several steps and in the sequence shown in the illustration.

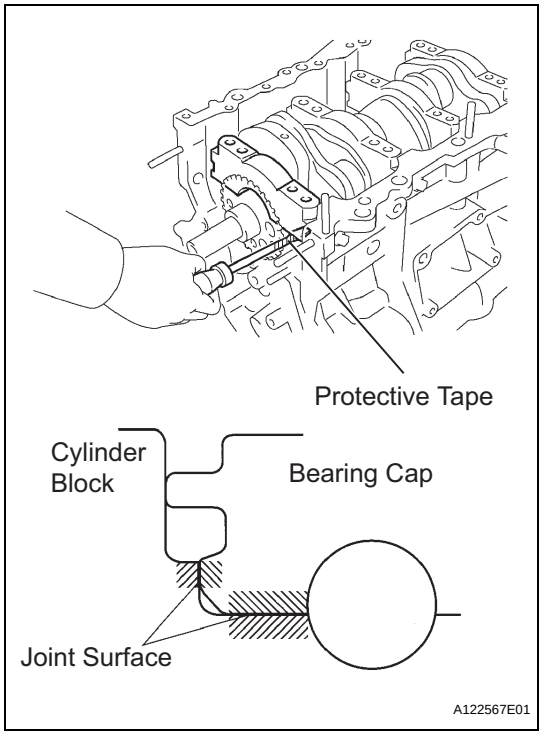

(c) Using a screwdriver, pry out the main bearing caps. Remove the 4 main bearing caps and lower bearings.
NOTICE:
- **Push up on the cap little by little, from the right and left side alternately so that the cap can be removed.**
- **Be careful not to damage the joint surface of the cylinder block and the main bearing cap.**

(d) Remove the crankshaft.

66. REMOVE CRANKSHAFT BEARING
HINT:
Arrange the removed parts in the correct order.

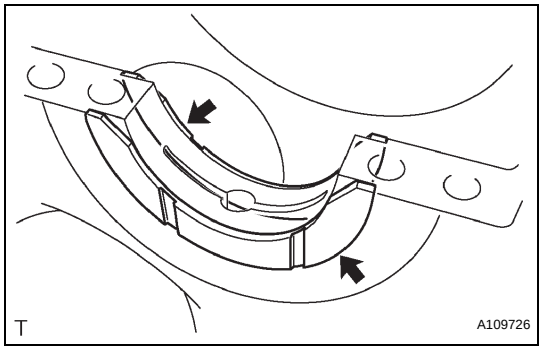

67. REMOVE CRANKSHAFT THRUST WASHER SET
(a) Remove the upper bearings and upper thrust washers from the cylinder block.

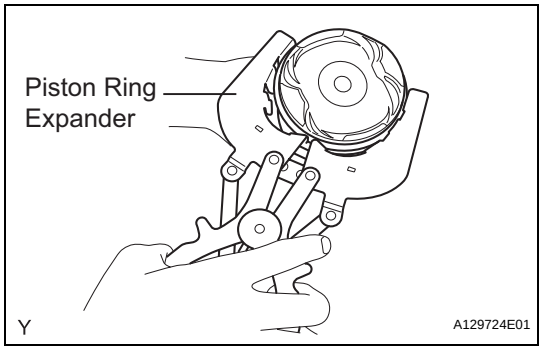

68. REMOVE PISTON RING SET
(a) Using a piston ring expander, remove the 2 compression rings.
(b) Remove the oil ring expander and 2 side rails by hand.
HINT:
Arrange the removed parts in the correct order.

EM

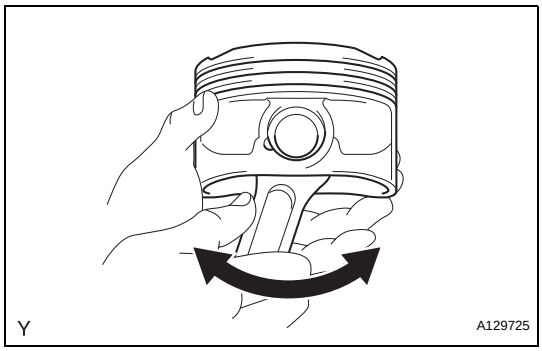

69. REMOVE PISTON SUB-ASSEMBLY WITH PIN

(a) Check the fitting condition between the piston and piston pin.

(1) Try to move the piston back and forth on the piston pin.
If any movement is felt, replace the piston and pin as a set.

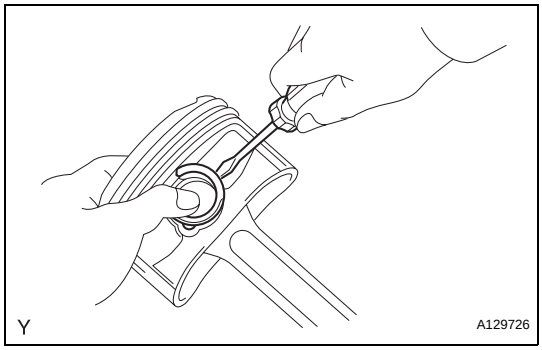

(b) Disconnect the connecting rod from the piston.

(1) Using a screwdriver, pry off the snap rings from the piston.

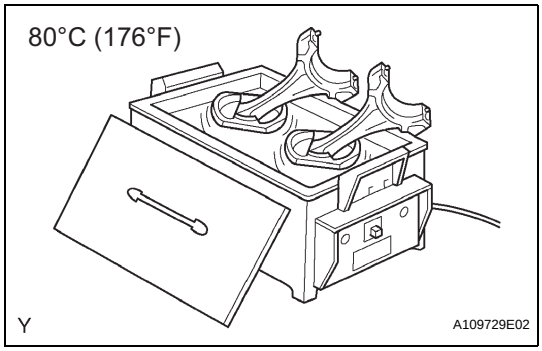

(2) Gradually heat the piston to approximately 80°C (176°F).

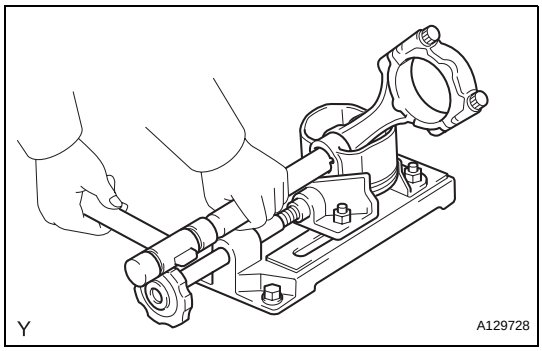

(3) Using a brass bar and plastic hammer, lightly tap out the piston pin and remove the connecting rod.
HINT:
- The piston and pin are a matched set.
- Arrange the pistons, pins, rings, connecting rods and bearings in the correct order.

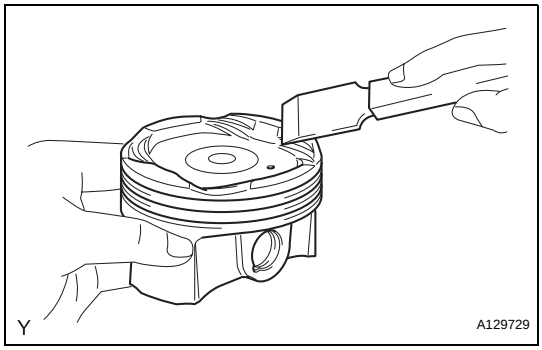

(c) Using a gasket scraper, remove the carbon from the piston top.

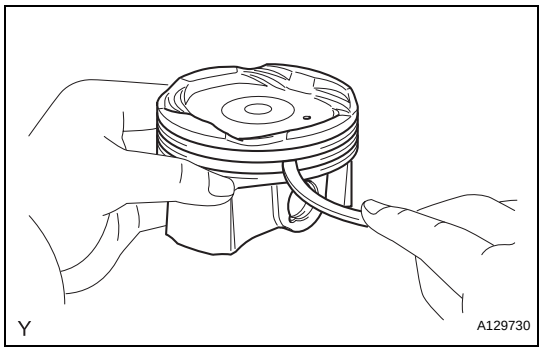

(d) Using a groove cleaning tool or broken ring, clean the piston ring grooves.

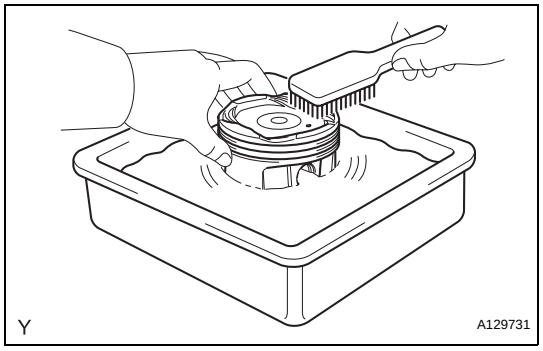

(e) Using solvent and a brush, thoroughly clean the piston.
NOTICE:
Do not use a wire brush.

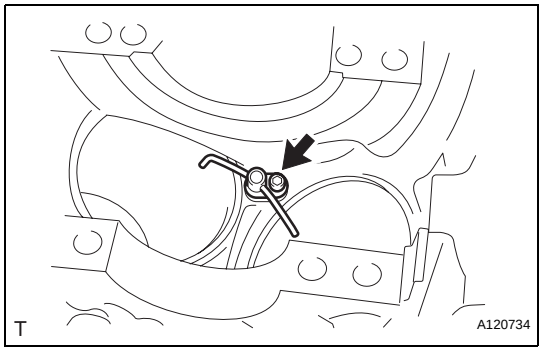

70. REMOVE NO. 1 OIL NOZZLE SUB-ASSEMBLY

(a) Using a 5 mm hexagon wrench, remove the bolts and oil nozzles.

(b) Check the 3 oil nozzles for damage or clogging. If necessary, replace the oil nozzle.

71. CLEAN CYLINDER BLOCK

INSPECTION

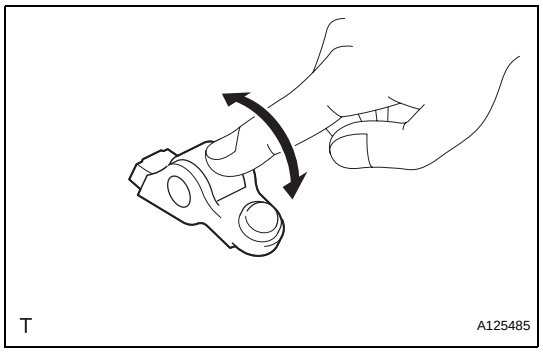

1. INSPECT NO. 1 VALVE ROCKER ARM SUB-ASSEMBLY

(a) Turn the roller by hand to check that it turns smoothly.
HINT:
If the roller does not turn smoothly, replace the valve rocker arm sub-assembly.

2. INSPECT VALVE LASH ADJUSTER ASSEMBLY
NOTICE:
- **Keep the lash adjuster free of dirt and foreign objects.**
- **Only use clean engine oil.**

(a) Place the lash adjuster into a container filled with engine oil.

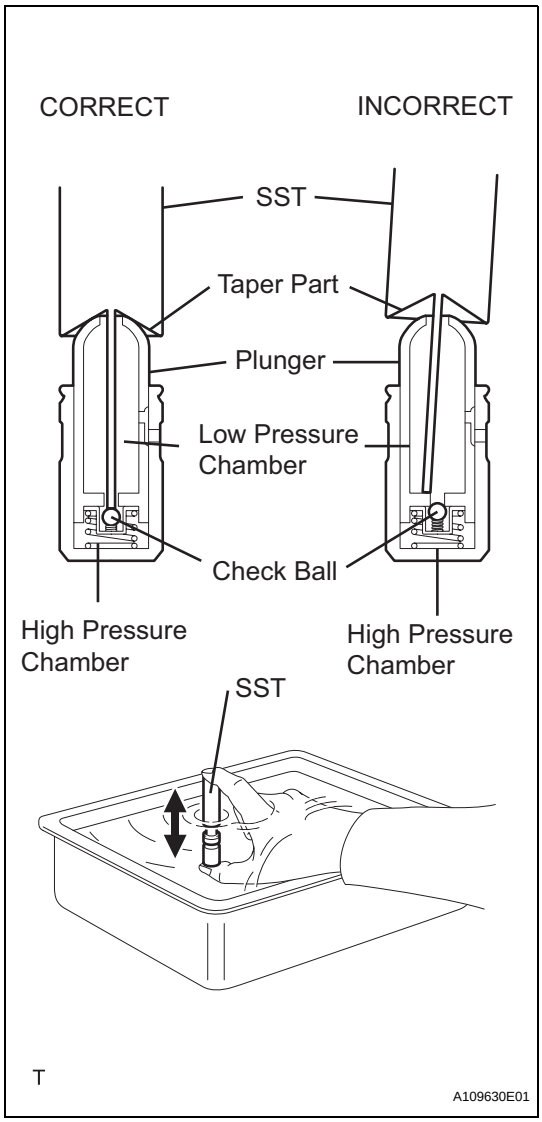

(b) Insert the SST's tip into the lash adjuster's plunger and use the tip to press down on the check ball inside the plunger.
SST 09276-75010

(c) Squeeze the SST and lash adjuster together to move the plunger up and down 5 to 6 times.

(d) Check the movement of the plunger and bleed the air.
OK:
Plunger moves up and down.
NOTICE:
When bleeding air from the high-pressure chamber, make sure that the tip of the SST is actually pressing the check ball as shown in the illustration. If the check ball is not pressed, air will not bleed.

(e) After bleeding the air, remove the SST. Then try to quickly and firmly press the plunger with a finger.
OK:
Plunger is very difficult to move.
If the result is not as specified, replace the lash adjuster.

3. INSPECT CAMSHAFT

(a) Inspect the camshaft for runout.

(1) Place the camshaft on V-blocks.

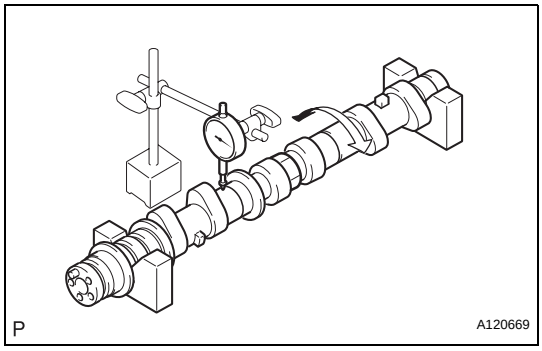

(2) Using a dial indicator, measure the circle runout at the center journal.
Maximum circle runout:
0.04 mm (0.0016 in.)
If the circle runout is greater than the maximum, replace the camshaft.
HINT:
Check the oil clearance after replacing the camshaft.

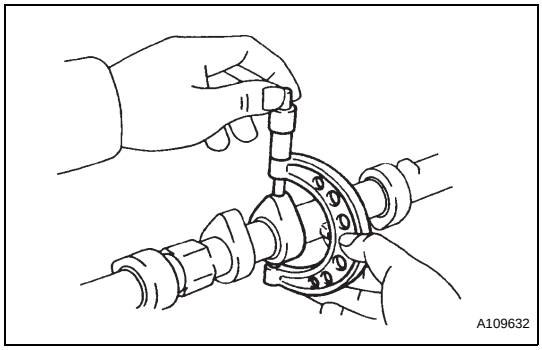

(b) Using a micrometer, measure the cam lobe height.
Standard cam lobe height

Item	Specification
Intake camshaft	44.316 to 44.416 mm (1.7447 to 1.7487 in.)
Exhaust camshaft	44.262 to 44.362 mm (1.7426 to 1.7465 in.)

Maximum cam lobe height

Item	Specification
Intake camshaft	44.166 mm (1.7388 in.)
Exhaust camshaft	44.112 mm (1.7367 in.)

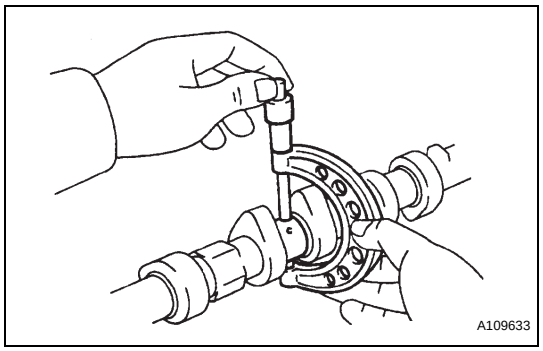

(c) Using a micrometer, measure the journal diameter.
Standard journal diameter

Item	Specification
No. 1 journal	35.946 to 35.960 mm (1.4152 to 1.4157 in.)
Other journals	25.959 to 25. 975 mm (1.0220 to 1.0226 in.)

If the journal diameter is not as specified, check the oil clearance.

4. INSPECT CAMSHAFT TIMING GEAR ASSEMBLY

(a) Clamp the camshaft in a vise.
NOTICE:
Be careful not to damage the camshaft in the vise.

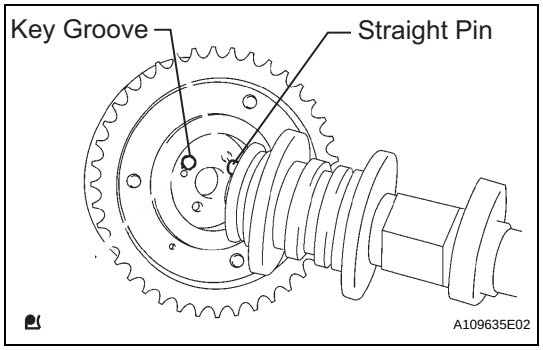

(b) Put the camshaft timing gear and camshaft together by aligning the key groove and straight pin.

(c) Lightly press the gear against the camshaft, and turn the gear. Push further at the position where the pin enters the groove.
NOTICE:
Be sure not to turn the camshaft timing gear in the retard direction (the right angle).

(d) Check that there is no clearance between the gear's flange and the camshaft.

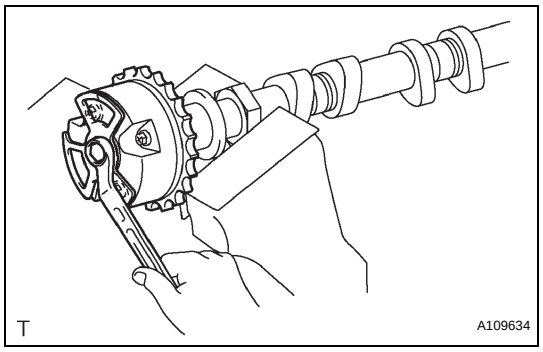

(e) Tighten the flange bolt with the camshaft timing gear fixed.
Torque: 100 N*m (1,020 kgf*cm, 74 ft.*lbf)

(f) Check the lock of the camshaft timing gear.
(1) Clamp the camshaft in a vise, and confirm that the camshaft timing gear is locked.
NOTICE:
Be careful not to damage the camshaft.

EM

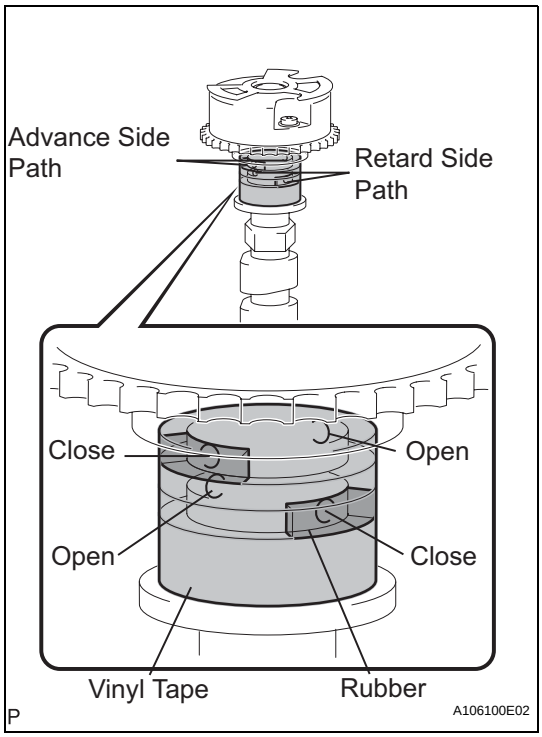

(g) Release the lock pin.
(1) Cover the 4 oil paths of the cam journal with vinyl tape as shown in the illustration.
HINT:
2 advance side paths are provided in the groove of the camshaft. Plug one of the paths with a rubber piece.
(2) Break through the tape of the advance side path and the retard side path on the opposite side to the hole of the advance side path, as shown in the illustration.

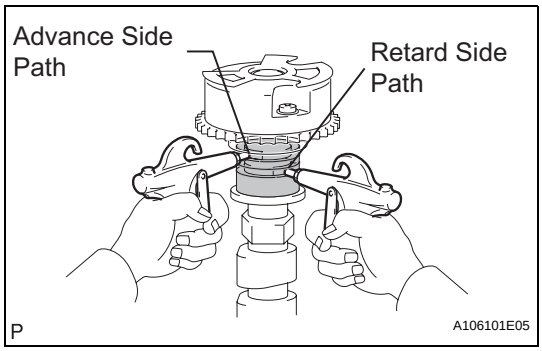

(3) Apply approximately 200 kPa (2.0 kgf/cm^2, 28 psi) of air pressure to the 2 broken paths.
CAUTION:
Cover the paths with a piece of cloth when applying pressure to keep oil from splashing.

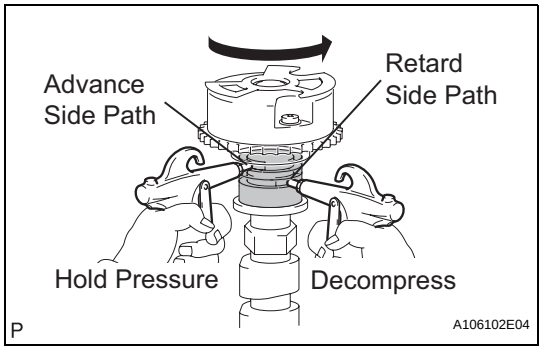

(4) Check that the camshaft timing gear revolves in the advance direction when reducing the air pressure applied to the retard side path.
HINT:
This operation releases the lock pin for the most retarded position.
(5) When the camshaft timing gear reaches the most advanced position, release the air pressure from the retard side path and advance side path in that order.
NOTICE:
Do not release the air pressure from the advance side path first. The gear may abruptly shift in the retard direction and break the lock pin.

EM

(h) Check for smooth rotation.
  (1) Turn the camshaft timing gear within its movable range (21°) 2 or 3 times, but do not turn it to the most retarded position. Make sure that the gear turns smoothly.
  NOTICE:
  Do not use air pressure to perform the smooth operation check.

(i) Check the lock in the most retarded position.
  (1) Confirm that the camshaft timing gear is locked at the most retarded position.

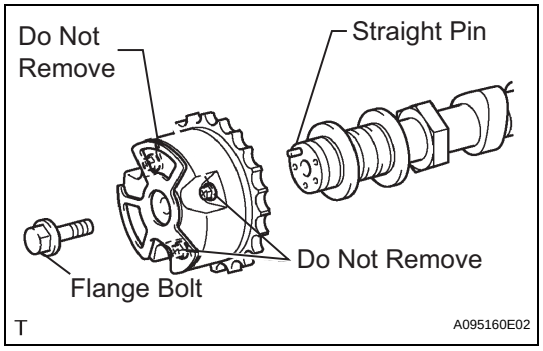

(j) Remove the flange bolt and camshaft timing gear.
NOTICE:
- **Do not remove the other 3 bolts.**
- **If the gear will be reused, be sure to release the straight pin lock before installing the gear.**

EM

5. INSPECT CAMSHAFT TIMING EXHAUST GEAR ASSEMBLY

(a) Clamp the camshaft in a vise.
NOTICE:
Be careful not to damage the camshaft in the vise.

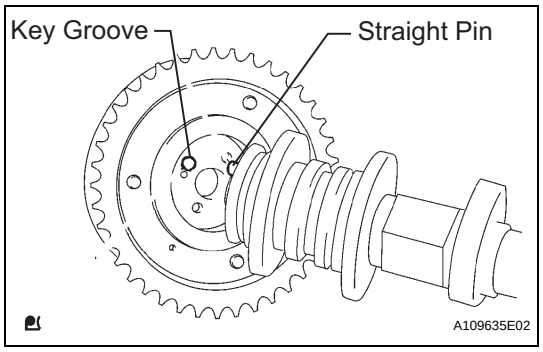

(b) Put the camshaft timing exhaust gear and camshaft together by aligning the key groove and straight pin.

(c) Lightly press the gear against the camshaft and turn the gear. Push further at the position where the pin enters the groove.
NOTICE:
Be sure not to turn the camshaft timing exhaust gear in the retard direction (the right angle).

(d) Check that there is no clearance between the gear's flange and the camshaft.

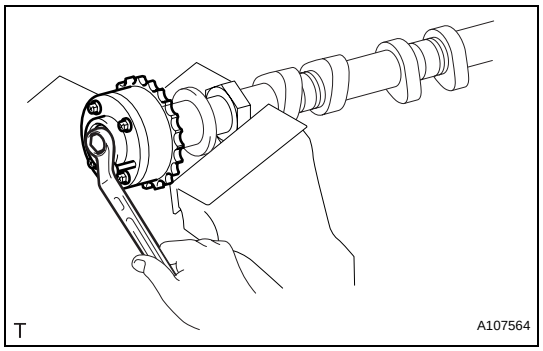

(e) Tighten the flange bolt with the camshaft timing exhaust gear fixed.
Torque: 100 N*m (1,020 kgf*cm, 74 ft.*lbf)

(f) Check the camshaft timing exhaust gear lock.
  (1) Make sure that the camshaft timing exhaust gear is locked.

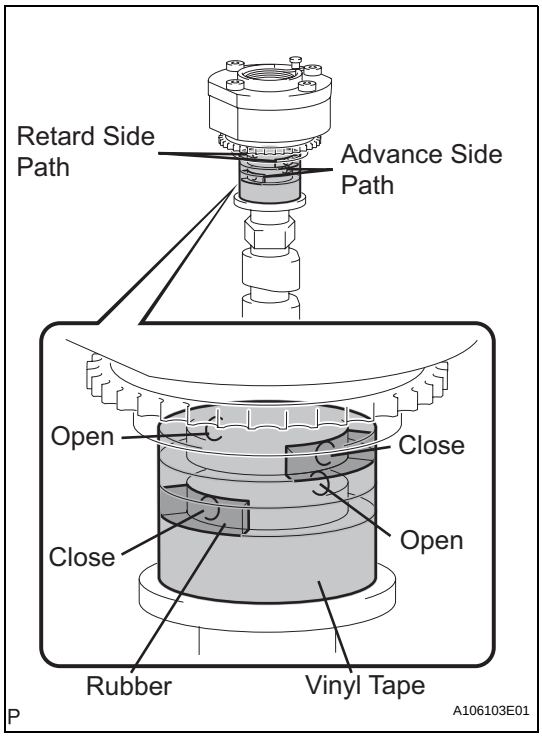

(g) Release the lock pin.

(1) Cover the 4 oil paths of the cam journal with vinyl tape as shown in the illustration.
HINT:
4 oil paths are provided in the groove. Plug 2 paths with rubber pieces.

(2) Prick a hole in the tape placed on the advance side path. Prick a hole in the tape placed on the retard side path, on the opposite side to that of the advance side path, as shown in the illustration.

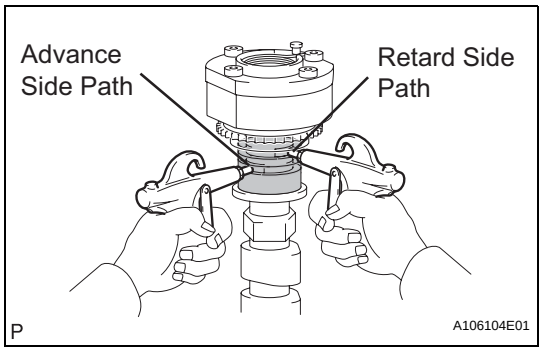

(3) Apply approximately 200 kPa (2.0 kgf/cm^2, 28 psi) of air pressure to the 2 broken paths (the advance side path and the retard side path).
CAUTION:
Cover the paths with a piece of cloth when applying pressure to keep oil from splashing.

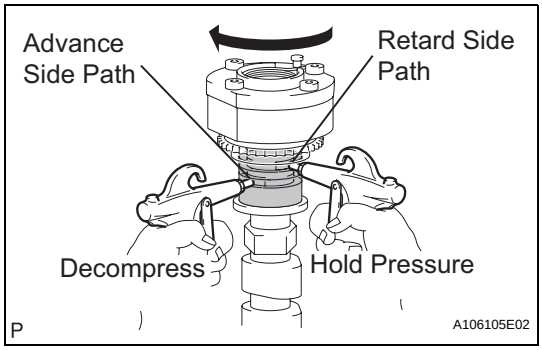

(4) Make sure that the camshaft timing exhaust gear turns in the retard direction when reducing the air pressure applied to the advance side path.
HINT:
The lock pin is released and the camshaft timing exhaust gear turns in the retard direction.

(5) When the camshaft timing exhaust gear moves to the most retarded position, release the air pressure from the advance side path, and then release the air pressure from the retard side path.
NOTICE:
Be sure to release the air pressure from the advance side path first. If the air pressure of the retard side path is released first, the camshaft timing exhaust gear may abruptly shift in the advance direction and break the lock pin or other parts.

(h) Check for smooth rotation.
(1) Turn the camshaft timing exhaust gear within its movable range (18.5°) 2 or 3 times, but do not turn it to the most advanced position. Make sure that the gear turns smoothly.
NOTICE:
When the air pressure is released from the advance side path and then from the retard side path, the gear automatically returns to the most advanced position due to the advance assist spring operation and locks. Gradually release the air pressure from the retard side path before performing the smooth rotation check.

(i) Check the lock at the most advanced position.
(1) Make sure that the camshaft timing exhaust gear is locked at the most advanced position.

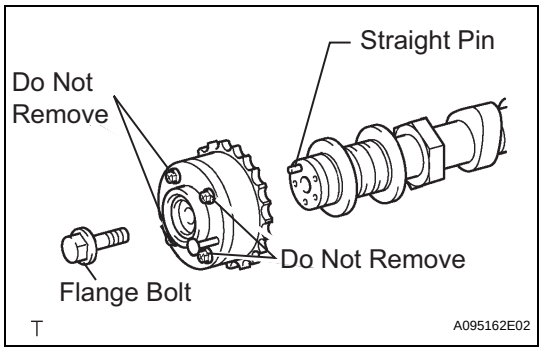

(j) Remove the flange bolt and camshaft timing exhaust gear.
NOTICE:
- **Be sure not to remove the other 4 bolts.**
- **If the gear will be reused, be sure to release the straight pin lock before installing the gear.**

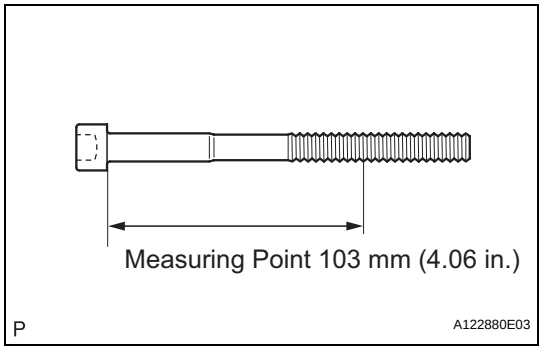

6. INSPECT CYLINDER HEAD SET BOLT

(a) Using vernier calipers, measure the minimum diameter of the elongated thread at the measuring point.
Standard outside diameter:
10.85 to 11.00 mm (0.4272 to 0.4331 in.)
Minimum outside diameter:
10.70 mm (0.4213 in.)
Measuring Point:
103 mm (4.06 in.)
HINT:
If no excessively thin areas are found in a visual check, check the center of the bolt and find the area that has the lowest diameter.
If the diameter is less than the minimum, replace the cylinder head bolt.

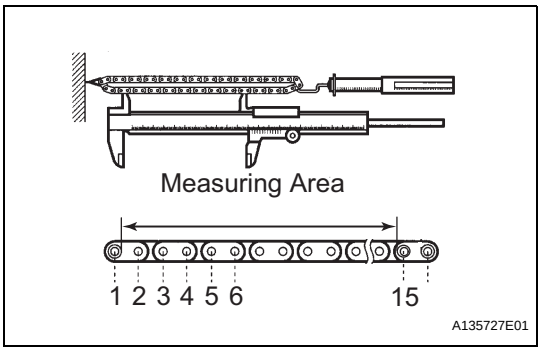

7. INSPECT CHAIN SUB-ASSEMBLY

(a) Pull the chain with a force of 147 N (15 kgf, 33 lbf) as shown in the illustration.

(b) Using vernier calipers, measure the length of 15 links.

Maximum chain elongation:
136.9 mm (5.390 in.)

NOTICE:
Perform the measurement at 3 random places.
Use the average of the measurements.

If the elongation is greater than the maximum, replace the chain.

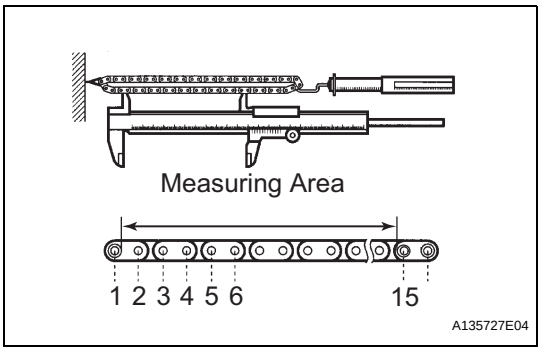

8. INSPECT NO. 2 CHAIN SUB-ASSEMBLY

(a) Pull the chain with a force of 147 N (15 kgf, 33 lbf) as shown in the illustration.

(b) Using vernier calipers, measure the length of 15 links.

Maximum chain elongation:
137.6 mm (5.417 in.)

NOTICE:
Perform the measurement at 3 random places.
Use the average of the measurements.

If the elongation is greater than the maximum, replace the chain.

9. INSPECT CRANKSHAFT TIMING SPROCKET

(a) Wrap the chain around the sprocket.

(b) Using vernier calipers, measure the sprocket diameter with the chain.

Minimum sprocket diameter (with chain):
61.4 mm (2.417 in.)

HINT:
The vernier calipers must contact the chain rollers for the measurement.
If the diameter is less than the minimum, replace the chain and sprocket.

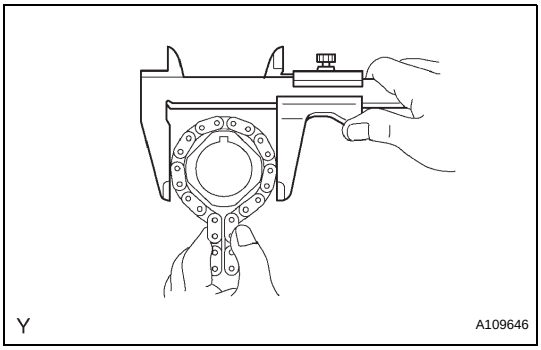

10. INSPECT IDLE SPROCKET ASSEMBLY

(a) Wrap the chain around the sprocket.

(b) Using vernier calipers, measure the sprocket diameter with the chain.

Minimum sprocket diameter (with chain):
61.4 mm (2.417 in.)

HINT:
The vernier calipers must contact the chain rollers for the measurement.
If the diameter is less than the minimum, replace the chain and sprocket.

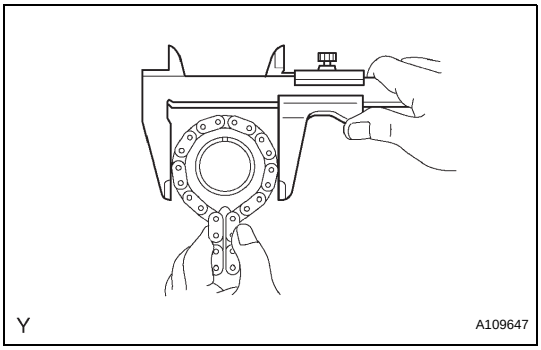

EM

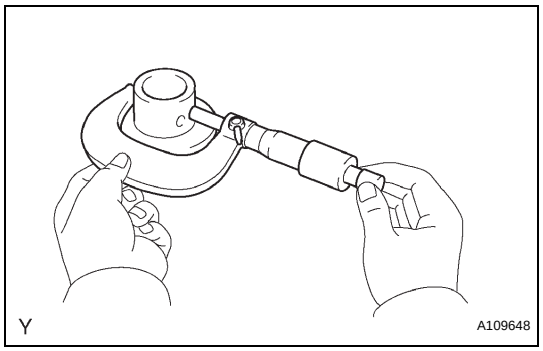

11. INSPECT IDLE GEAR SHAFT OIL CLEARANCE

(a) Using a micrometer, measure the idle gear shaft diameter.
Idle gear shaft diameter:
22.987 to 23.000 mm (0.9050 to 0.9055 in.)

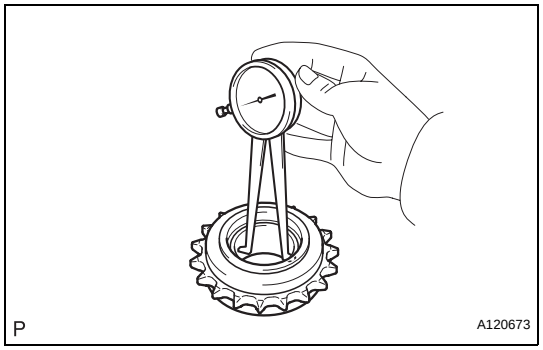

(b) Using a caliper gauge, measure the inside diameter of the idle gear.
Idle gear inside diameter:
23.020 to 23.030 mm (0.9063 to 0.9067 in.)

(c) Subtract the idle gear shaft diameter measurement from the idle gear inside diameter measurement.
Standard oil clearance:
0.020 to 0.043 mm (0.0008 to 0.0017 in.)
Maximum oil clearance:
0.093 mm (0.0037 in.)
If the thrust oil clearance is greater than the maximum, replace the idle gear shaft and idle gear.

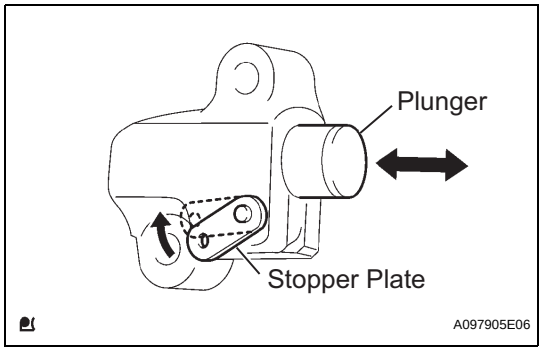

12. INSPECT NO. 1 CHAIN TENSIONER ASSEMBLY

(a) Move the stopper plate upward to release the lock. Push the plunger and check that it moves smoothly. If necessary, replace the chain tensioner assembly.

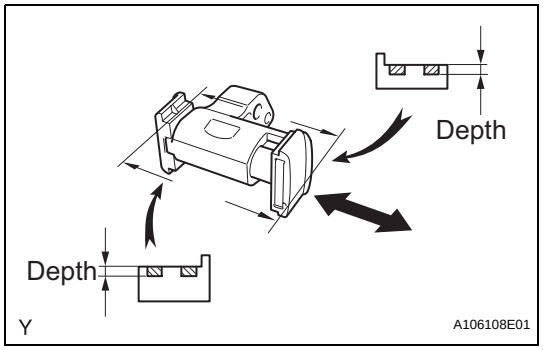

13. INSPECT NO. 2 CHAIN TENSIONER ASSEMBLY

(a) Check that the plunger moves smoothly.

(b) Measure the worn depth of the chain tensioner.
Maximum depth:
0.9 mm (0.035 in.)
If the depth is greater than the maximum, replace the chain tensioner assembly.

EM

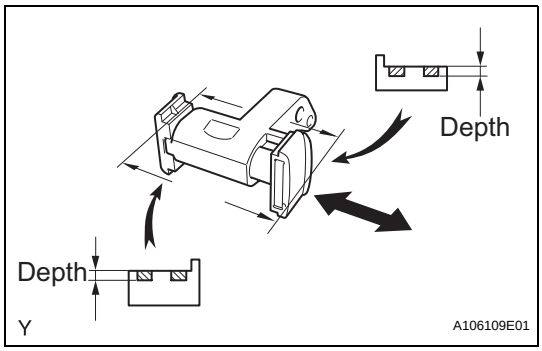

14. INSPECT NO. 3 CHAIN TENSIONER ASSEMBLY

(a) Check that the plunger moves smoothly.

(b) Measure the worn depth of the chain tensioner.

Maximum depth:

0.9 mm (0.035 in.)

If the depth is greater than the maximum, replace the chain tensioner assembly.

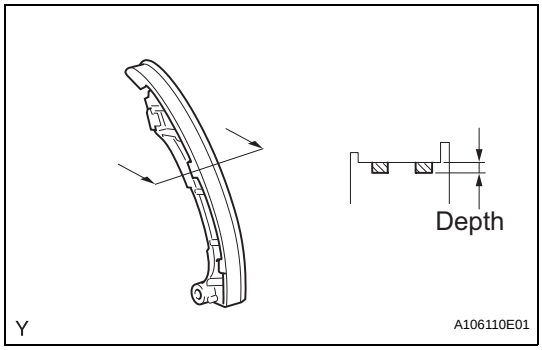

15. INSPECT CHAIN TENSIONER SLIPPER

(a) Measure the worn depth of the chain tensioner slipper.

Maximum depth:

1.0 mm (0.039 in.)

If the depth is greater than the maximum, replace the chain tensioner slipper.

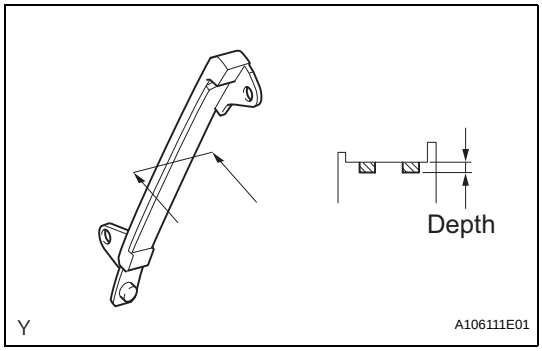

16. INSPECT NO. 1 CHAIN VIBRATION DAMPER

(a) Measure the worn depth of the chain vibration damper.

Maximum depth:

1.0 mm (0.039 in.)

If the depth is greater than the maximum, replace the chain vibration damper.

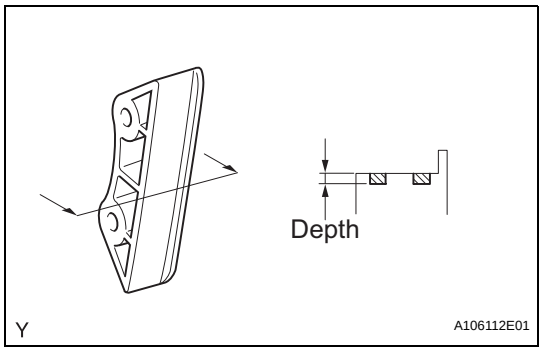

17. INSPECT NO. 2 CHAIN VIBRATION DAMPER

(a) Measure the worn depth of the chain vibration damper.

Maximum depth:

1.0 mm (0.039 in.)

If the depth is greater than the maximum, replace the chain vibration damper.

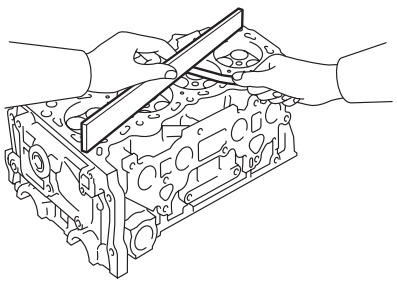

Cylinder head lower side:

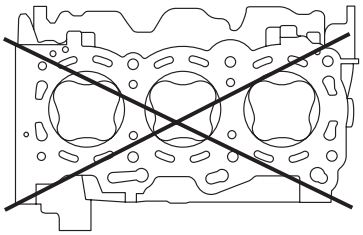

Intake side:

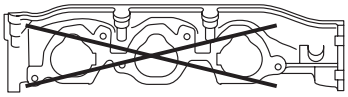

Exhaust side:

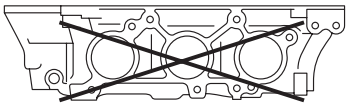

T A129747E01

18. INSPECT CYLINDER HEAD ASSEMBLY

(a) Using a precision straight edge and feeler gauge, measure the warpage of the contact surface of the cylinder block and manifolds.

Standard warpage

Item	Warpage
Cylinder head lower	0.05 mm (0.0020 in.)
Intake	0.08 mm (0.0031 in.)
Exhaust	0.08 mm (0.0031 in.)

Maximum warpage

Item	Warpage
Cylinder head lower	0.10 mm (0.0039 in.)
Intake	0.10 mm (0.0039 in.)
Exhaust	0.10 mm (0.0039 in.)

If the warpage is greater than the maximum, replace the cylinder head assembly.

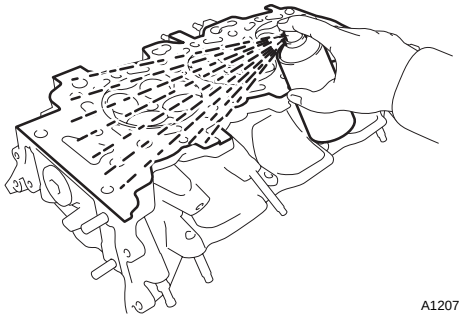

T A120706

(b) Using a dye penetrant, check the intake ports, exhaust ports, and cylinder surface for cracks. If cracked, replace the cylinder head assembly.

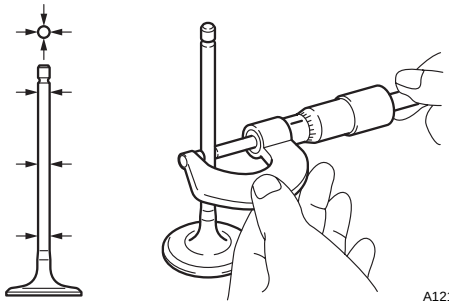

T A121378

19. INSPECT INTAKE VALVE

(a) Using a micrometer, measure the diameter of the valve stem.

Valve stem diameter:
5.470 to 5.485 mm (0.2154 to 0.2159 in.)

If the valve stem is not as specified, check the oil clearance.

EM

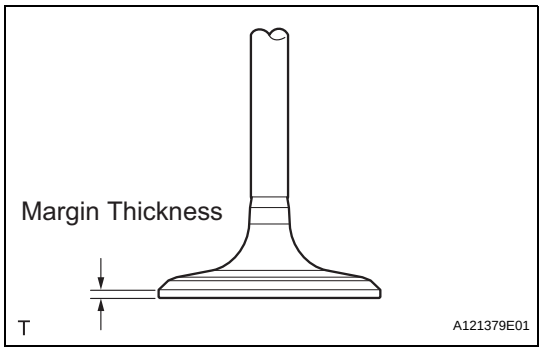

(b) Using vernier calipers, measure the valve head margin thickness.
Standard margin thickness:
1.0 mm (0.0394 in.)
Minimum margin thickness:
0.5 mm (0.0197 in.)
If the margin thickness is less than the minimum, replace the intake valve.

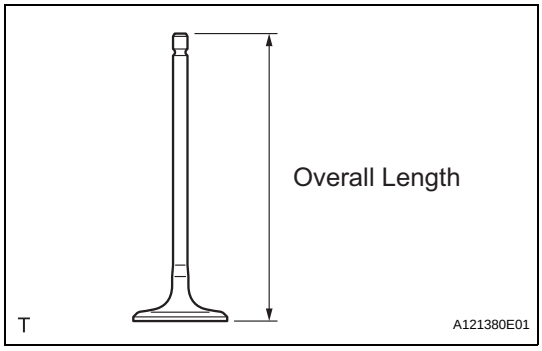

(c) Using vernier calipers, measure the valve's overall length.
Standard overall length:
105.85 mm (4.1673 in.)
Minimum overall length:
105.35 mm (4.1476 in.)
If the overall length is less than the minimum, replace the intake valve.

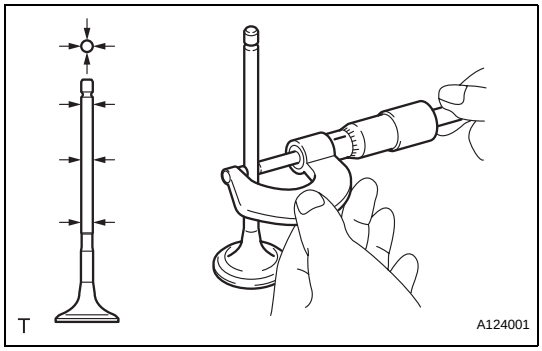

20. INSPECT EXHAUST VALVE

(a) Using a micrometer, measure the diameter of the valve stem.
Valve stem diameter:
5.465 to 5.480 mm (0.2151 to 0.2157 in.)
If the valve stem is not as specified, check the oil clearance.

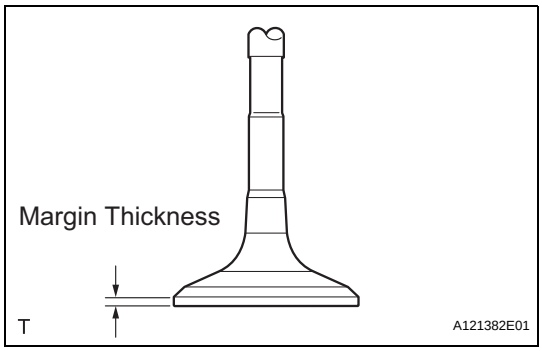

(b) Using vernier calipers, measure the valve head margin thickness.
Standard margin thickness:
1.0 mm (0.0394 in.)
Minimum margin thickness:
0.5 mm (0.0197 in.)
If the margin thickness is less than the minimum, replace the exhaust valve.

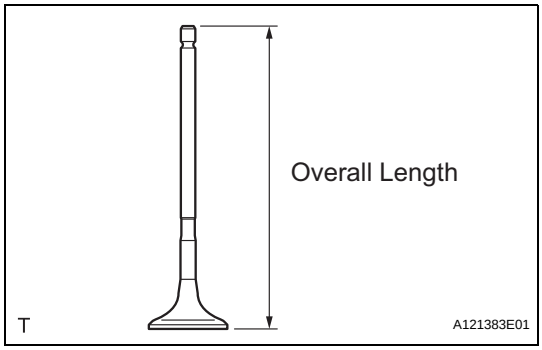

(c) Using vernier calipers, measure the valve's overall length.
Standard overall length:
110.40 mm (4.3464 in.)
Minimum overall length:
109.90 mm (4.3268 in.)
If the overall length is less than the minimum, replace the exhaust valve.

21. INSPECT INTAKE VALVE SEAT

(a) Apply a light coat of Prussian blue to the valve face.

(b) Lightly press the valve face against the valve seat.

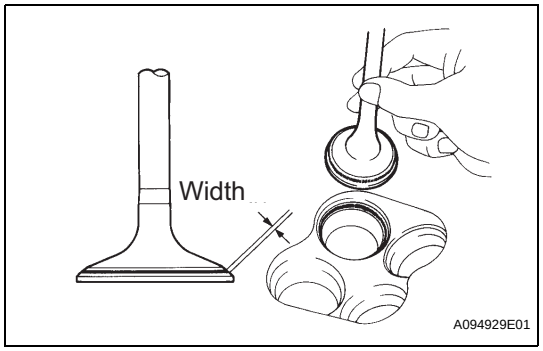

(c) Check the valve face and valve seat by using the following procedure.
   (1) If Prussian blue appears around the entire valve face, the valve face is concentric. If not, replace the valve.
   (2) If Prussian blue appears around the entire valve seat, the guide and valve face are concentric. If not, resurface the valve seat.
   (3) Check that the valve seat contacts in the middle of the valve face with the width between 1.1 and 1.5 mm (0.043 and 0.059 in.).

22. INSPECT EXHAUST VALVE SEAT

(a) Apply a light coat of Prussian blue to the valve face.
(b) Lightly press the valve face against the valve seat.

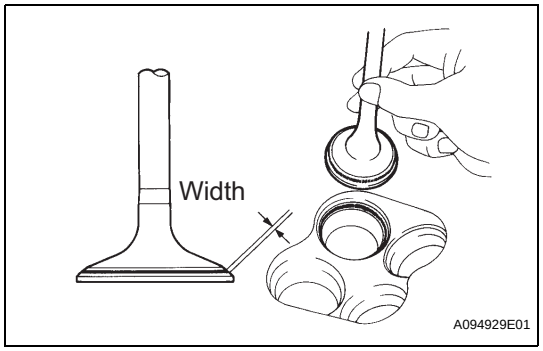

(c) Check the valve face and valve seat by using the following procedure.
   (1) If Prussian blue appears around the entire valve face, the valve face is concentric. If not, replace the valve.
   (2) If Prussian blue appears around the entire valve seat, the guide and valve face are concentric. If not, resurface the valve seat.
   (3) Check that the valve seat contacts in the middle of the valve face with the width between 1.1 and 1.5 mm (0.043 and 0.059 in.).

23. REPAIR INTAKE VALVE SEAT

NOTICE:
- **Repair the seat while checking the seating position.**
- **Keep the lip free of foreign matter.**

(a) Using a 45° cutter, resurface the valve seat so that the valve seat width is more than the specification.

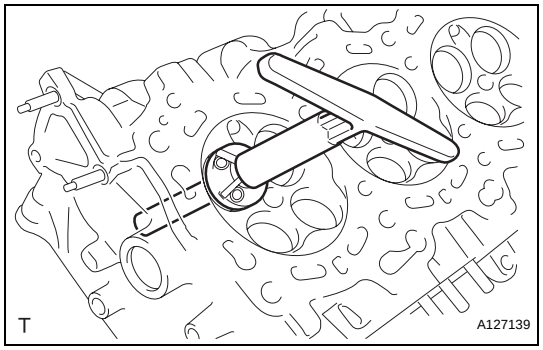

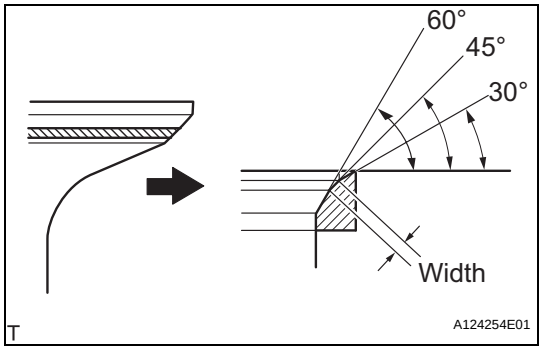

(b) Using 30° and 60° cutters, correct the valve seat so that the valve contacts the entire circumference of the seat. The contact should be in the center of the valve seat, and the valve seat width should be maintained within the specified range around the entire circumference of the seat.
   Width:
   1.1 to 1.5 mm (0.043 to 0.059 in.)
(c) Handrub the valve and valve seat with an abrasive compound.
(d) Check the valve seating position.

24. REPAIR EXHAUST VALVE SEAT

NOTICE:

- **Repair the seat while checking the seating position.**
- **Keep the lip free of foreign matter.**

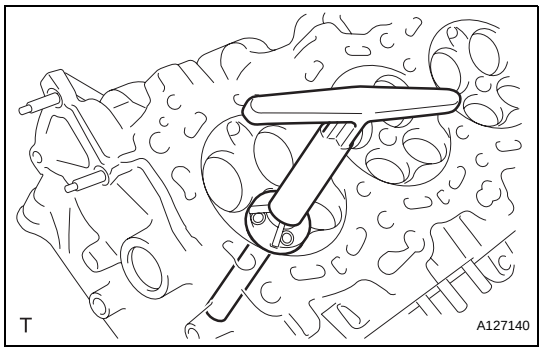

(a) Using a 45° cutter, resurface the valve seat so that the valve seat width is more than the specification.

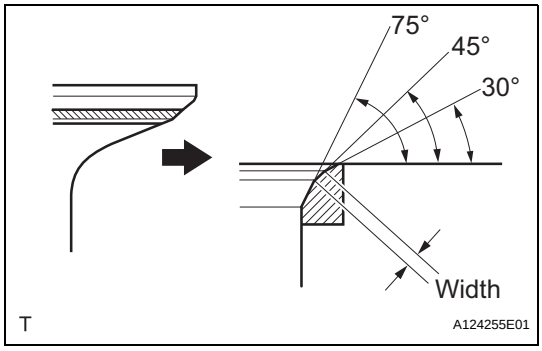

(b) Using 30° and 75° cutters, correct the valve seat so that the valve contacts the entire circumference of the seat. The contact should be in the center of the valve seat, and the valve seat width should be maintained within the specified range around the entire circumference of the seat.

Width:

1.1 to 1.5 mm (0.043 to 0.059 in.)

(c) Handrub the valve and valve seat with an abrasive compound.

(d) Check the valve seating position.

25. INSPECT COMPRESSION SPRING

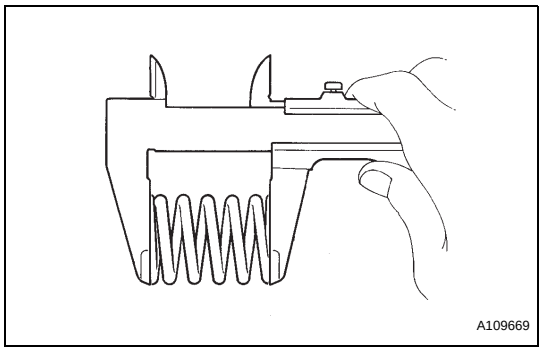

(a) Using vernier calipers, measure the free length of the compression spring.

Free length:

45.46 mm (1.7898 in.)

If the free length is not as specified, replace the spring.

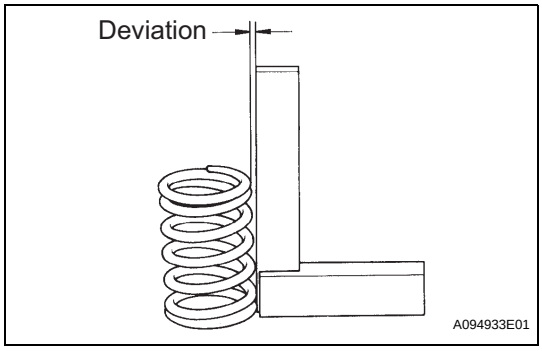

(b) Using a steel square, measure the deviation of the inner compression spring.

Maximum deviation:

1.0 mm (0.039 in.)

Maximum angle (reference):

2°

If the deviation is greater than the maximum, replace the spring.

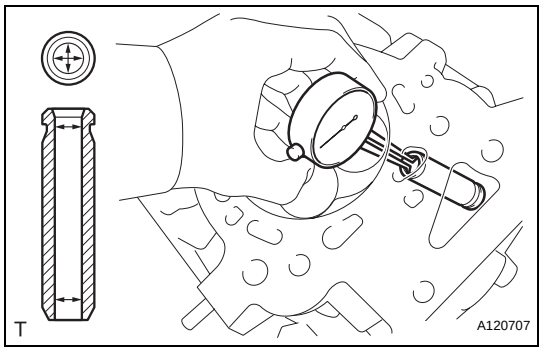

26. INSPECT VALVE GUIDE BUSH OIL CLEARANCE

(a) Using a caliper gauge, measure the inside diameter of the guide bush.
Bush inside diameter:
5.510 to 5.530 mm (0.2169 to 0.2177 in.)

(b) Subtract the valve stem diameter measurement from the guide bush inside diameter measurement.
Standard clearance

Item	Clearance
Intake	0.025 to 0.060 mm (0.0010 to 0.0024 in.)
Exhaust	0.030 to 0.065 mm (0.0012 to 0.0026 in.)

Maximum oil clearance

Item	Clearance
Intake	0.08 mm (0.0032 in.)
Exhaust	0.10 mm (0.0039 in.)

For intake side:
If the clearance is greater than the maximum, replace the intake valve and intake guide bush.
For exhaust side:
If the clearance is greater than the maximum, replace the exhaust valve and exhaust guide bush.

27. INSPECT CAMSHAFT THRUST CLEARANCE

(a) Inspect the RH bank camshaft thrust clearance.
(1) Install the RH bank camshafts (See page EM-111).

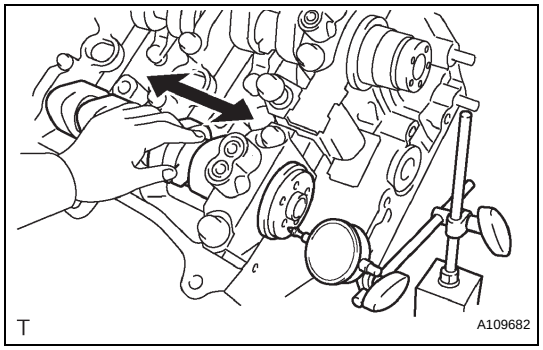

(2) Using a dial indicator, measure the thrust clearance while moving the camshaft back and forth.
Standard thrust clearance:
0.08 to 0.13 mm (0.0031 to 0.0051 in.)
Maximum thrust clearance:
0.15 mm (0.006 in.)
If the thrust clearance is greater than the maximum, replace the cylinder head. If the thrust surface is damaged, replace the camshaft.

(b) Inspect the LH bank camshaft thrust clearance.
(1) Install the LH bank camshafts (See page EM-111).
(2) Using a dial indicator, measure the thrust clearance while moving the camshaft back and forth.
Standard thrust clearance:
0.08 to 0.13 mm (0.0031 to 0.0051 in.)
Maximum thrust clearance:
0.15 mm (0.006 in.)
If the thrust clearance is greater than the maximum, replace the cylinder head. If the thrust surface is damaged, replace the camshaft.

28. INSPECT CAMSHAFT OIL CLEARANCE

(a) Clean the bearing caps, camshaft housing, and camshaft journals.

(b) Place the camshafts on the camshaft housing.

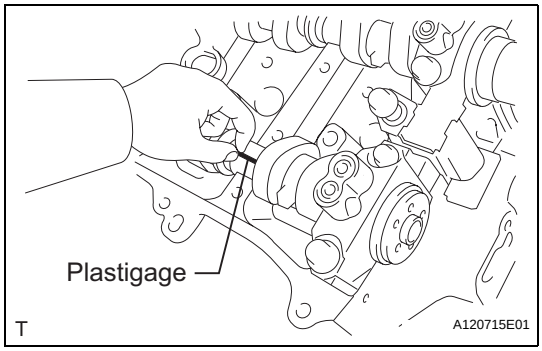

(c) Lay a strip of Plastigage across each of the camshaft journals.

(d) Install the bearing caps (See page EM-111).
NOTICE:
Do not turn the camshaft.

(e) Remove the bearing caps (See page EM-62).

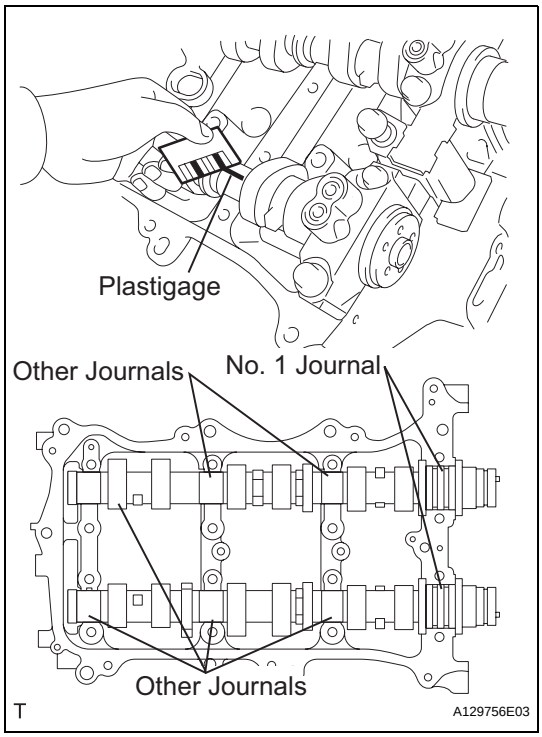

(f) Measure the Plastigage at its widest point.
Standard oil clearance

Item	Oil Clearance
No. 1 journal	0.040 to 0.079 mm (0.0016 to 0.0031 in.)
Other journals	0.025 to 0.062 mm (0.00098 to 0.0024 in.)

Maximum oil clearance

Item	Oil Clearance
No. 1 journal	0.10 mm (0.0039 in.)
Other journals	0.09 mm (0.0035 in.)

If the oil clearance is greater than the maximum, replace the camshaft. If necessary, replace the camshaft housing.

(g) Clean the bearing caps, camshaft housing, and camshaft journals.

(h) Place the camshafts on the camshaft housing.

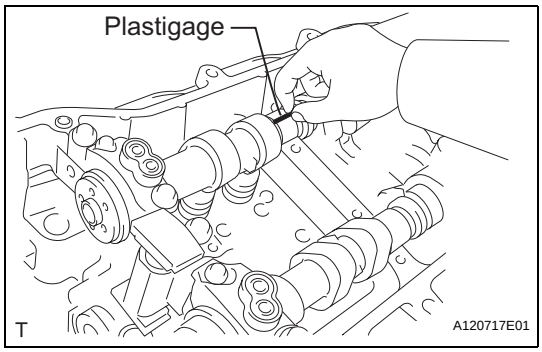

(i) Lay a strip of Plastigage across each of the camshaft journals.

(j) Install the bearing caps (See page EM-111).
NOTICE:
Do not turn the camshaft.

(k) Remove the bearing caps (See page EM-62).

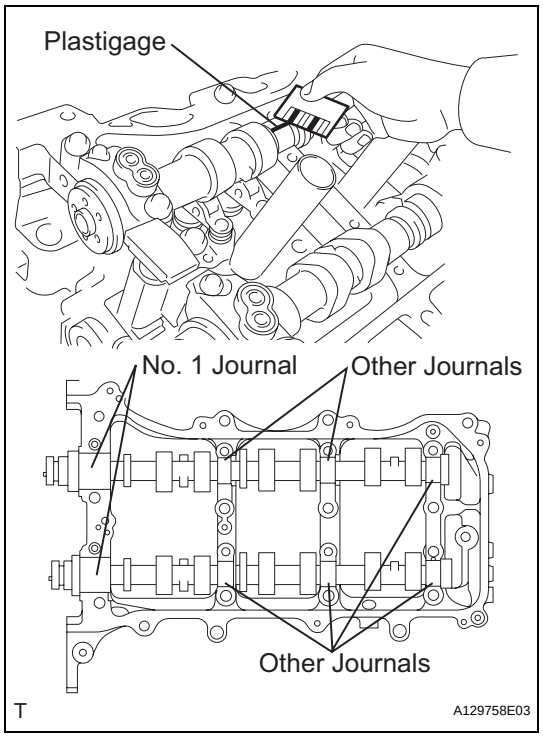

(l) Measure the Plastigage at its widest point.
Standard oil clearance

Item	Oil Clearance
No. 1 journal	0.040 to 0.079 mm (0.0016 to 0.0031 in.)
Other journals	0.025 to 0.062 mm (0.00098 to 0.0024 in.)

Maximum oil clearance

Item	Oil Clearance
No. 1 journal	0.10 mm (0.0039 in.)
Other journals	0.09 mm (0.0035 in.)

If the oil clearance is greater than the maximum, replace the camshaft. If necessary, replace the camshaft housing.

29. INSPECT CONNECTING ROD THRUST CLEARANCE

(a) Install the connecting rod cap (See page EM-111).

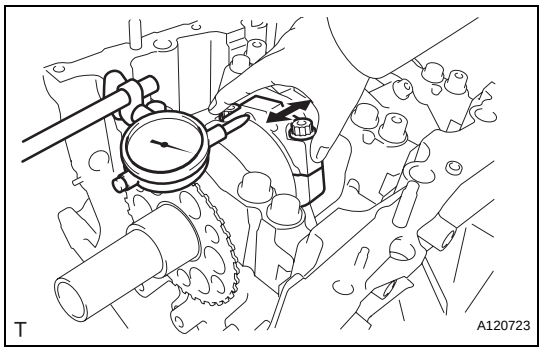

(b) Using a dial indicator, measure the thrust clearance while moving the connecting rod back and forth.
Standard thrust clearance:
0.15 to 0.40 mm (0.0059 to 0.0157 in.)
Maximum thrust clearance:
0.50 mm (0.020 in.)
If the thrust clearance is greater than the maximum, replace the connecting rod assemblies as necessary. If necessary, replace the crankshaft.

30. INSPECT CONNECTING ROD OIL CLEARANCE

(a) Clean the crank pin and bearing.
(b) Check the crank pin and bearing for pitting and scratches.

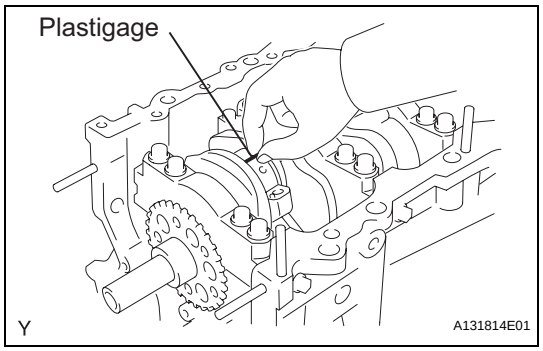

(c) Lay a strip of Plastigage on the crank pin.

EM

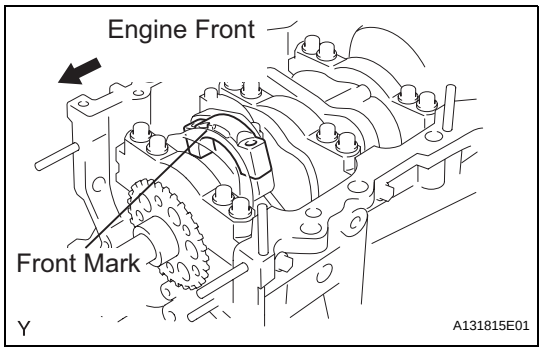

(d) Check that the front mark of the connecting rod cap is facing forward.

(e) Install the connecting rod cap (See page EM-111).
NOTICE:
Do not turn the crankshaft.

(f) Remove the 2 bolts and connecting rod cap (See page EM-62).

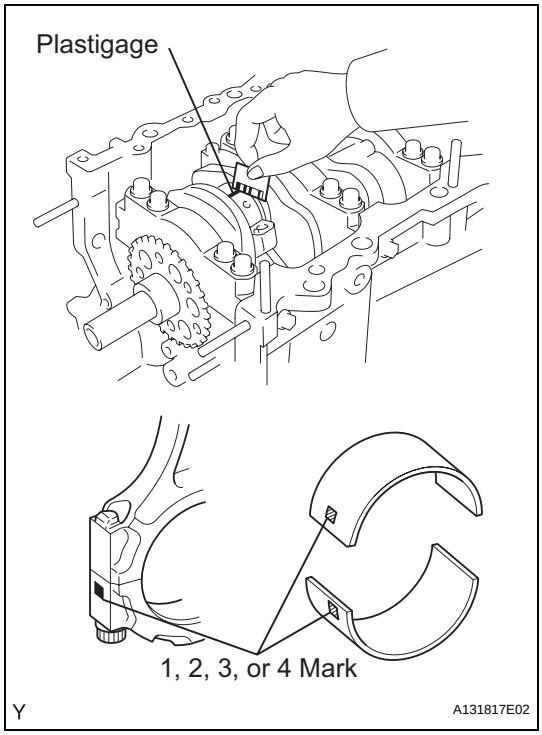

(g) Measure the Plastigage at its widest point.
Standard oil clearance:
0.045 to 0.067 mm (0.0018 to 0.0026 in.)
Maximum oil clearance:
0.070 mm (0.0028 in.)
If the oil clearance is greater than the maximum, replace the connecting rod bearings. If necessary, inspect the crankshaft.
HINT:
If replacing a bearing, replace it with one that has the same number as its respective connecting rod cap. Each bearing's standard thickness is indicated by a 1, 2, 3, or 4 mark on its surface.
Connecting rod diameter

Mark	Diameter
1	56.000 to 56.006 mm (2.2047 to 2.2050 in.)
2	56.007 to 56.012 mm (2.2050 to 2.2052 in.)
3	56.013 to 56.018 mm (2.2052 to 2.2054 in.)
4	56.019 to 56.024 mm (2.2055 to 2.2057 in.)

Connecting rod bearing center wall thickness

Mark	Thickness
1	1.481 to 1.484 mm (0.0583 to 0.0584 in.)
2	1.484 to 1.487 mm (0.0584 to 0.0585 in.)
3	1.487 to 1.490 mm (0.0585 to 0.0587 in.)
4	1.490 to 1.493 mm (0.0587 to 0.0588 in.)

Crankshaft pin diameter:
52.992 to 53.000 mm (2.0863 to 2.0866 in.)
NOTICE:
Completely remove the Plastigage after the measurement.

31. INSPECT CRANKSHAFT THRUST CLEARANCE

(a) Install the main bearing cap (See page EM-111).

EM

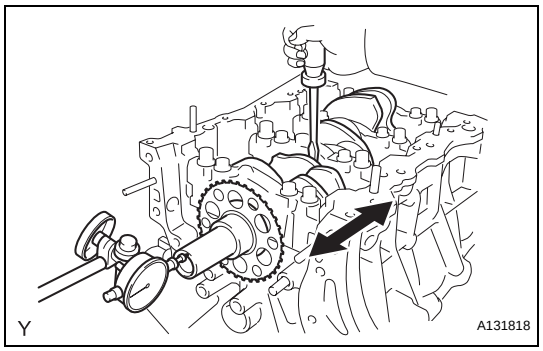

(b) Using a dial indicator, measure the thrust clearance while prying the crankshaft back and forth with a screwdriver.
Standard thrust clearance:
0.04 to 0.24 mm (0.0016 to 0.0094 in.)
Maximum thrust clearance:
0.30 mm (0.0118 in.)
If the thrust clearance is greater than the maximum, replace the thrust washers as a set. If necessary, replace the crankshaft.
Thrust washer thickness:
2.43 to 2.48 mm (0.0957 to 0.0976 in.)

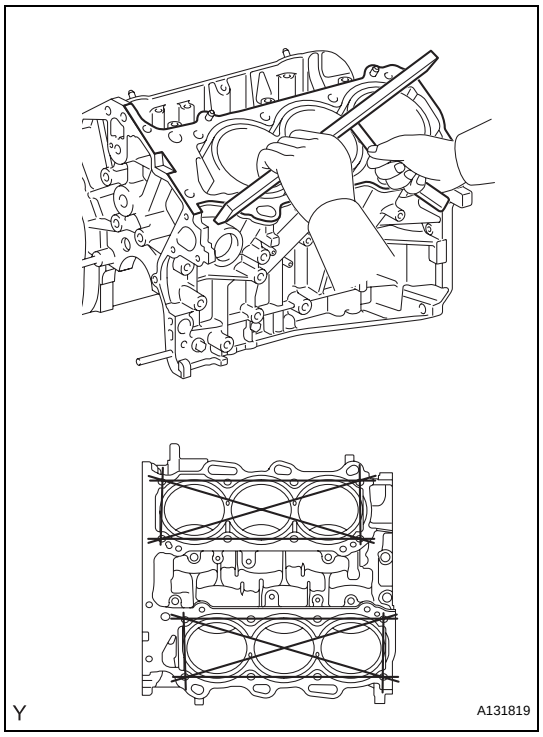

32. INSPECT CYLINDER BLOCK FOR WARPAGE

(a) Using a precision straight edge and feeler gauge, measure the warpage of the contact surface of the cylinder head gasket.
Maximum warpage:
0.07 mm (0.0028 in.)
If the warpage is greater than the maximum, replace the cylinder block.

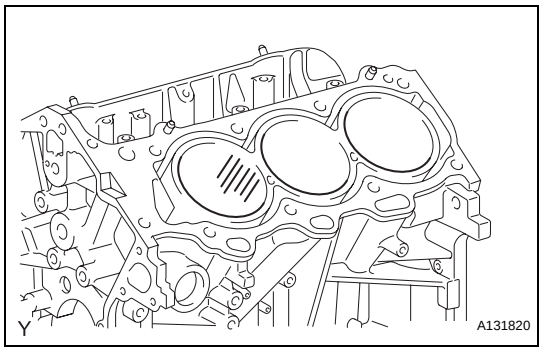

33. INSPECT CYLINDER BORE

(a) Visually check the cylinder for vertical scratches. If deep scratches are present, rebore all the 6 cylinders. If necessary, replace the cylinder block.

EM

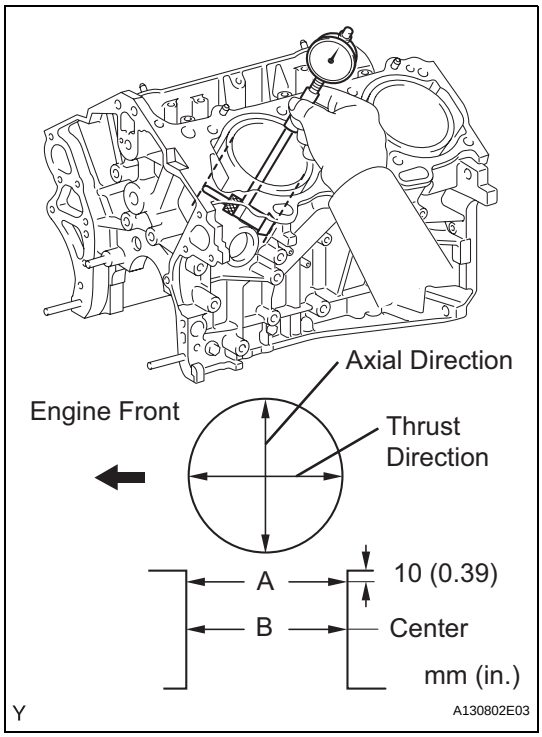

(b) Using a cylinder gauge, measure the cylinder bore diameter at positions A and B in the thrust and axial directions.
Standard diameter:
94.000 to 94.012 mm (3.7008 to 3.7013 in.)
Maximum diameter:
94.200 mm (3.7087 in.)
If the average diameter of 4 positions is greater than the maximum, replace the cylinder block.

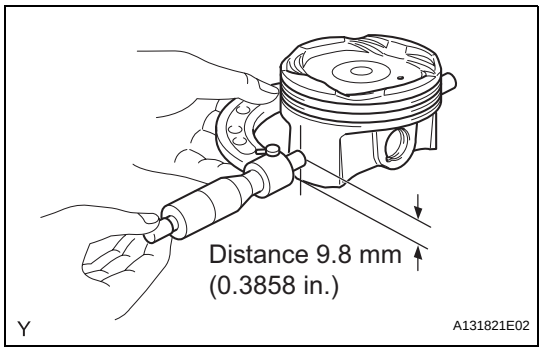

34. INSPECT PISTON SUB-ASSEMBLY WITH PIN

(a) Using a micrometer, measure the piston diameter at right angles to the piston center line where the distance from the piston end is as specified.
Distance:
9.8 mm (0.3858 in.)
Standard diameter:
93.960 to 93.980 mm (3.6992 to 3.7000 in.)
Maximum diameter:
93.830 mm (3.6941 in.)

35. INSPECT PISTON OIL CLEARANCE

(a) Measure the cylinder bore diameter in the thrust directions.

(b) Subtract the piston diameter measurement from the cylinder bore diameter measurement.
Standard oil clearance:
0.020 to 0.052 mm (0.0008 to 0.0020 in.)
Maximum oil clearance:
0.060 mm (0.0024 in.)
If the oil clearance is greater than the maximum, replace all the pistons. If necessary, replace the cylinder block.

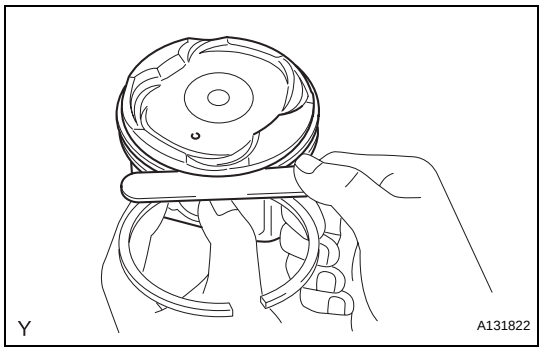

36. INSPECT RING GROOVE CLEARANCE

(a) Using a feeler gauge, measure the clearance between a new piston ring and the wall of the ring groove.

Ring groove clearance

Item	Clearance
No. 1	0.020 to 0.070 mm (0.0008 to 0.0028 in.)
No. 2	0.020 to 0.060 mm (0.0008 to 0.0024 in.)
Oil	0.070 to 0.150 mm (0.0028 to 0.0059 in.)

If the clearance is not as specified, replace the piston.

37. INSPECT PISTON RING END GAP

(a) Insert the piston ring into the cylinder bore.

(b) Using a piston, push the piston ring a little beyond the bottom of the ring travel, 110 mm (4.33 in.) from the top of the cylinder block.

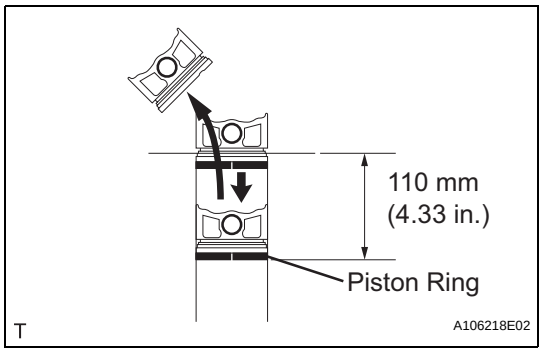

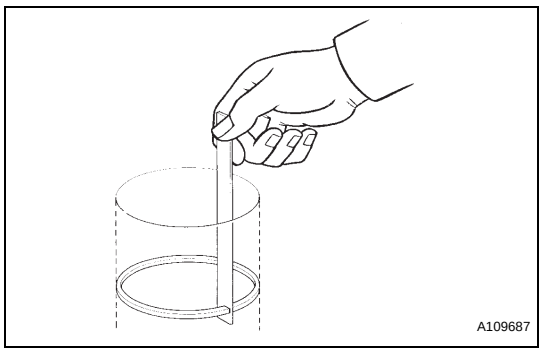

(c) Using a feeler gauge, measure the end gap.

Standard end gap

Item	End Gap
No. 1	0.25 to 0.35 mm (0.0098 to 0.0138 in.)
No. 2	0.50 to 0.60 mm (0.0197 to 0.0236 in.)
Oil	0.10 to 0.40 mm (0.0039 to 0.0157 in.)

Maximum end gap

Item	End Gap
No. 1	0.50 mm (0.0197 in.)
No. 2	0.85 mm (0.0335 in.)
Oil	0.60 mm (0.0236 in.)

If the end gap is greater than the maximum, replace the piston ring. If the end gap is greater than the maximum even with a new piston ring, rebore all the 6 cylinders or replace the cylinder block.

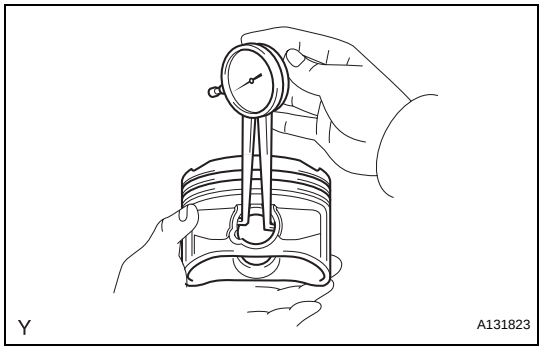

38. INSPECT PISTON PIN OIL CLEARANCE

(a) Using a caliper gauge, measure the inside diameter of the piston pin hole.

Piston pin hole inside diameter

Mark	Diameter
A	22.001 to 22.004 mm (0.8662 to 0.8663 in.)
B	22.004 to 22.007 mm (0.8663 to 0.8664 in.)
C	22.007 to 22.010 mm (0.8664 to 0.8665 in.)

EM

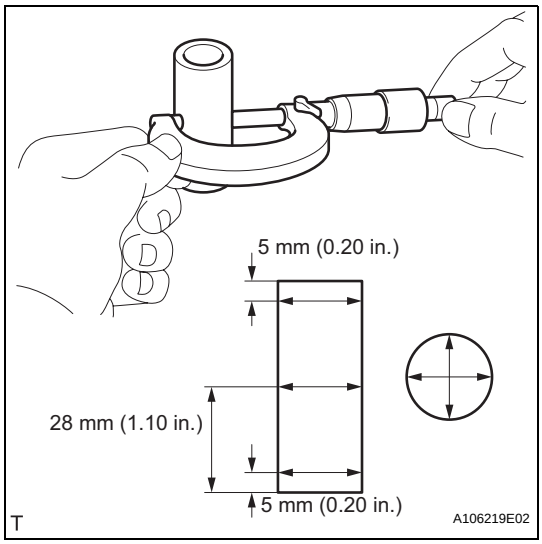

(b) Using a micrometer, measure the piston pin diameter.
Piston pin diameter

Mark	Diameter
A	21.997 to 22.000 mm (0.8660 to 0.8661 in.)
B	22.000 to 22.003 mm (0.8661 to 0.8663 in.)
C	22.003 to 22.006 mm (0.8663 to 0.8664 in.)

(c) Subtract the piston pin diameter measurement from the piston pin hole diameter measurement.
Standard oil clearance:
0.001 to 0.007 mm (0.00004 to 0.00028 in.)
Maximum oil clearance:
0.015 mm (0.0006 in.)
If the oil clearance is greater than the maximum, replace the piston and piston pin as a set.

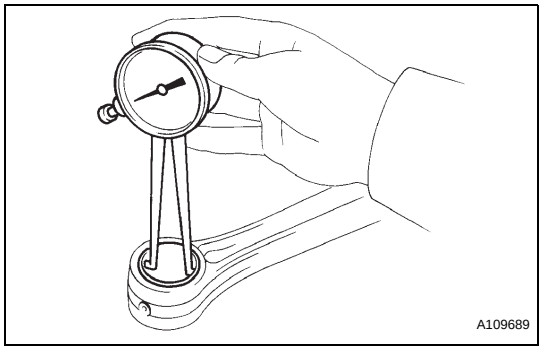

(d) Using a caliper gauge, measure the inside diameter of the connecting rod bushing.
Bushing inside diameter

Mark	Diameter
A	22.005 to 22.008 mm (0.8663 to 0.8665 in.)
B	22.009 to 22.011 mm (0.8665 to 0.8666 in.)
C	22.012 to 22.014 mm (0.8666 to 0.8667 in.)

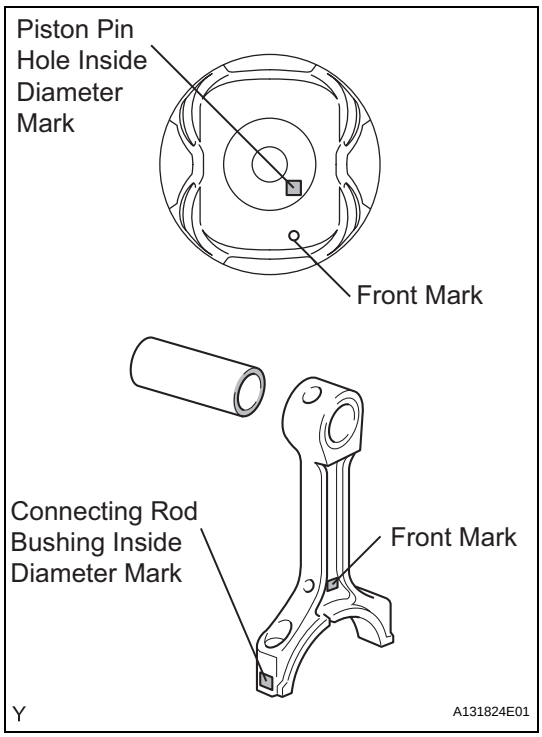

(e) Subtract the piston pin diameter measurement from the bushing inside diameter measurement.
Standard oil clearance:
0.005 to 0.011 mm (0.0002 to 0.0004 in.)
Maximum oil clearance:
0.030 mm (0.0012 in.)
If the oil clearance is greater than the maximum, replace the bushing. If necessary, replace the connecting rod and piston pin as a set.

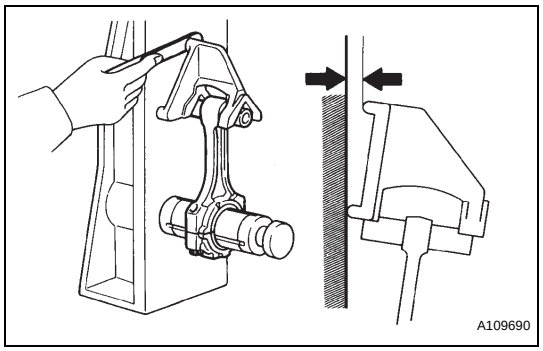

39. INSPECT CONNECTING ROD

(a) Using a rod aligner and feeler gauge, check the connecting rod alignment.

(1) Check for out-of-alignment.

Maximum out-of-alignment:
0.05 mm (0.0020 in.) per 100 mm (3.94 in.)

If the out-of-alignment is greater than the maximum, replace the connecting rod assembly.

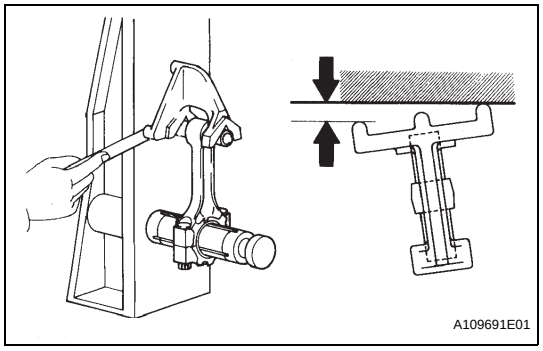

(2) Check for twist.

Maximum twist:
0.15 mm (0.0059 in.) per 100 mm (3.94 in.)

If the twist is greater than the maximum, replace the connecting rod assembly.

EM

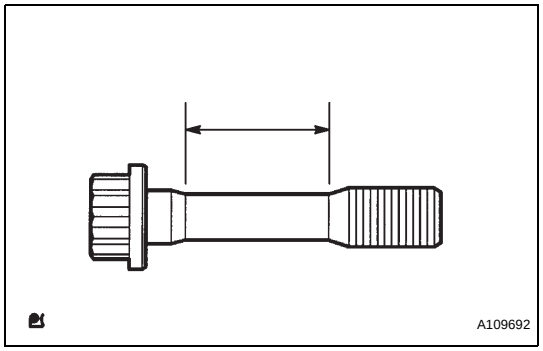

40. INSPECT CONNECTING ROD BOLT

(a) Using vernier calipers, measure the tension portion diameter of the bolt.

Standard diameter:
7.2 to 7.3 mm (0.284 to 0.287 in.)
Minimum diameter:
7.0 mm (0.276 in.)

If the diameter is less than the minimum, replace the bolt.

41. INSPECT CRANKSHAFT

(a) Inspect for circle runout.

(1) Clean the crank journal.

(2) Place the crankshaft on V-blocks.

(3) Using a dial indicator, measure the circle runout at the center journal.

Maximum circle runout:
0.06 mm (0.0024 in.)

If the circle runout is greater than the maximum, replace the crankshaft.

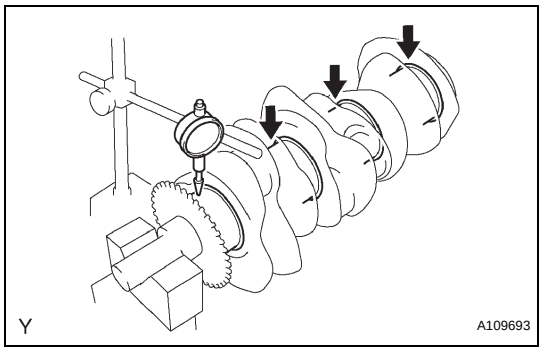

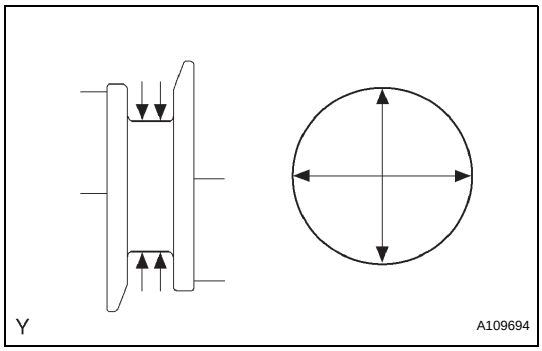

(b) Inspect the main journals.
(1) Using a micrometer, measure the diameter of each main journal.
Standard journal diameter:
60.988 to 61.000 mm (2.4011 to 2.4016 in.)
If the diameter is not as specified, check the oil clearance. If necessary, replace the crankshaft.
(2) Check each main journal for taper and out-of-round as shown in the illustration.
Maximum taper and out-of-round:
0.02 mm (0.0008 in.)
If the taper and out-of-round is greater than the maximum, replace the crankshaft.

EM

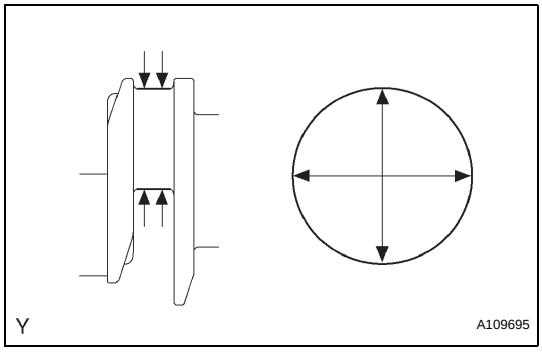

(c) Inspect the crank pin.
(1) Using a micrometer, measure the diameter of each crank pin.
Crankshaft pin diameter:
52.992 to 53.000 mm (2.0863 to 2.0866 in.)
If the diameter is not as specified, check the oil clearance. If necessary, replace the crankshaft.
(2) Check each crank pin for taper and out-of-round as shown in the illustration.
Maximum taper and out-of-round:
0.02 mm (0.0008 in.)
If the taper and out-of-round is greater than the maximum, replace the crankshaft.

42. INSPECT CRANKSHAFT OIL CLEARANCE
(a) Check the crank journal and bearing for pitting and scratches.
(b) Install the crankshaft bearing (See page EM-111).
(c) Place the crankshaft on the cylinder block.

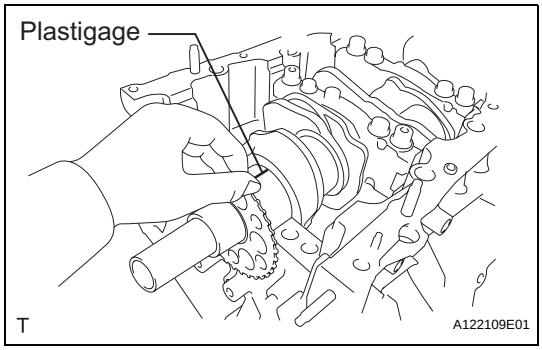

(d) Lay a strip of Plastigage across each journal.
(e) Examine the front marks and numbers and install the bearing caps on the cylinder block.
HINT:
A number is marked on each main bearing cap to indicate the installation position.
(f) Install the main bearing cap (See page EM-111).
NOTICE:
Do not turn the crankshaft.
(g) Remove the main bearing caps (See page EM-62).

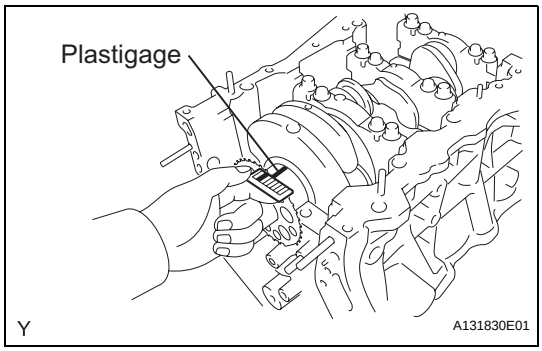

(h) Measure the Plastigage at its widest point.
Standard oil clearance:
0.026 to 0.047 mm (0.0010 to 0.0019 in.)
Maximum oil clearance:
0.050 mm (0.0020 in.)
If the oil clearance is greater than the maximum, replace the bearings. If necessary, replace the crankshaft.
NOTICE:
Completely remove the Plastigage after the measurement.

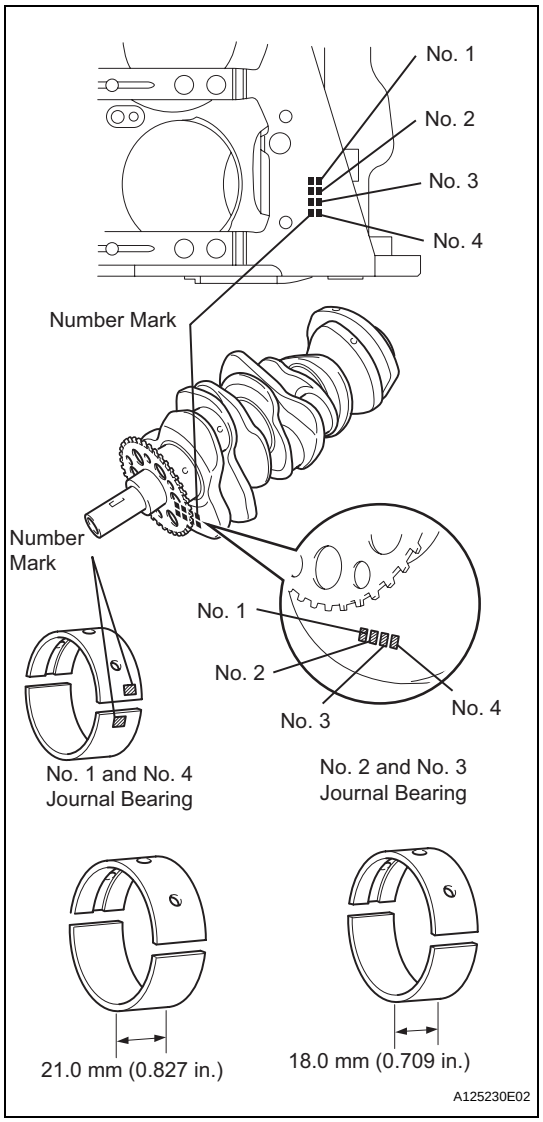

(i) If replacing a bearing, replace it with one having the same number. If the number of the bearing cannot be determined, select the correct bearing by adding together the numbers imprinted on the cylinder block and crankshaft, then refer to the table below for the appropriate bearing number. There are 5 sizes of standard bearings, marked "1", "2", "3", "4" and "5" accordingly.

Journal bearings:

Cylinder block + Crankshaft	0 - 5	6 - 11	12 - 17	18 - 23	24 - 28
Bearing to be used	"1"	"2"	"3"	"4"	"5"

HINT:
EXAMPLE: Cylinder block "11" + Crankshaft "06" = Total number 17 (Use bearing "3")

Crankshaft main journal diameter

Mark	Diameter
"00"	60.999 to 61.000 mm (2.4015 to 2.4016 in.)
"01"	60.998 to 60.999 mm (2.4015 to 2.4015 in.)
"02"	60.997 to 60.998 mm (2.4015 to 2.4015 in.)
"03"	60.996 to 60.997 mm (2.4014 to 2.4015 in.)
"04"	60.995 to 60.996 mm (2.4014 to 2.4014 in.)
"05"	60.994 to 60.995 mm (2.4013 to 2.4014 in.)
"06"	60.993 to 60.994 mm (2.4013 to 2.4013 in.)
"07"	60.992 to 60.993 mm (2.4013 to 2.4013 in.)
"08"	60.991 to 60.992 mm (2.4012 to 2.4013 in.)
"09"	60.990 to 60.991 mm (2.4012 to 2.4012 in.)
"10"	60.989 to 60.990 mm (2.4011 to 2.4012 in.)
"11"	60.988 to 60.989 mm (2.4011 to 2.4011 in.)

Standard upper bearing center wall thickness (No. 1 and No. 4 journal)

Mark	Thickness
"1"	2.500 to 2.503 mm (0.0984 to 0.0985 in.)
"2"	2.503 to 2.506 mm (0.0985 to 0.0987 in.)
"3"	2.506 to 2.509 mm (0.0987 to 0.0988 in.)
"4"	2.509 to 2.512 mm (0.0988 to 0.0989 in.)
"5"	2.512 to 2.515 mm (0.0989 to 0.0990 in.)

Standard lower bearing center wall thickness (No. 1 and No. 4 journal)

Mark	Thickness
"1"	2.478 to 2.481 mm (0.0976 to 0.0977 in.)
"2"	2.481 to 2.484 mm (0.0977 to 0.0978 in.)
"3"	2.484 to 2.487 mm (0.0978 to 0.0979 in.)
"4"	2.487 to 2.490 mm (0.0979 to 0.0980 in.)
"5"	2.490 to 2.493 mm (0.0980 to 0.0981 in.)

Standard upper bearing center wall thickness (No. 2 and No. 3 journal)

Mark	Thickness
"1"	2.478 to 2.481 mm (0.0976 to 0.0977 in.)
"2"	2.481 to 2.484 mm (0.0977 to 0.0978 in.)
"3"	2.484 to 2.487 mm (0.0978 to 0.0979 in.)
"4"	2.487 to 2.490 mm (0.0979 to 0.0980 in.)
"5"	2.490 to 2.493 mm (0.0980 to 0.0981 in.)

Standard lower bearing center wall thickness (No. 2 and No. 3 journal)

Mark	Thickness
"1"	2.500 to 2.503 mm (0.0984 to 0.0985 in.)
"2"	2.503 to 2.506 mm (0.0985 to 0.0987 in.)
"3"	2.506 to 2.509 mm (0.0987 to 0.0988 in.)
"4"	2.509 to 2.512 mm (0.0988 to 0.0989 in.)
"5"	2.512 to 2.515 mm (0.0989 to 0.0990 in.)

EM

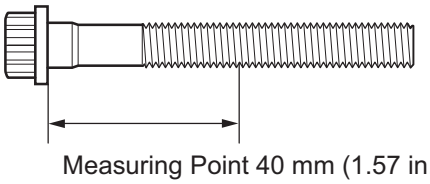

43. INSPECT CRANKSHAFT BEARING CAP SET BOLT

(a) Using vernier calipers, measure the minimum diameter of the compressed thread at the measuring point.

Standard diameter:
10.8 to 11.0 mm (0.4252 to 0.4331 in.)
Minimum diameter:
10.7 mm (0.4213 in.)
Measuring Point:
40 mm (1.57 in.)

If the diameter is less than the minimum, replace the bolt.

DRIVE BELT

COMPONENTS

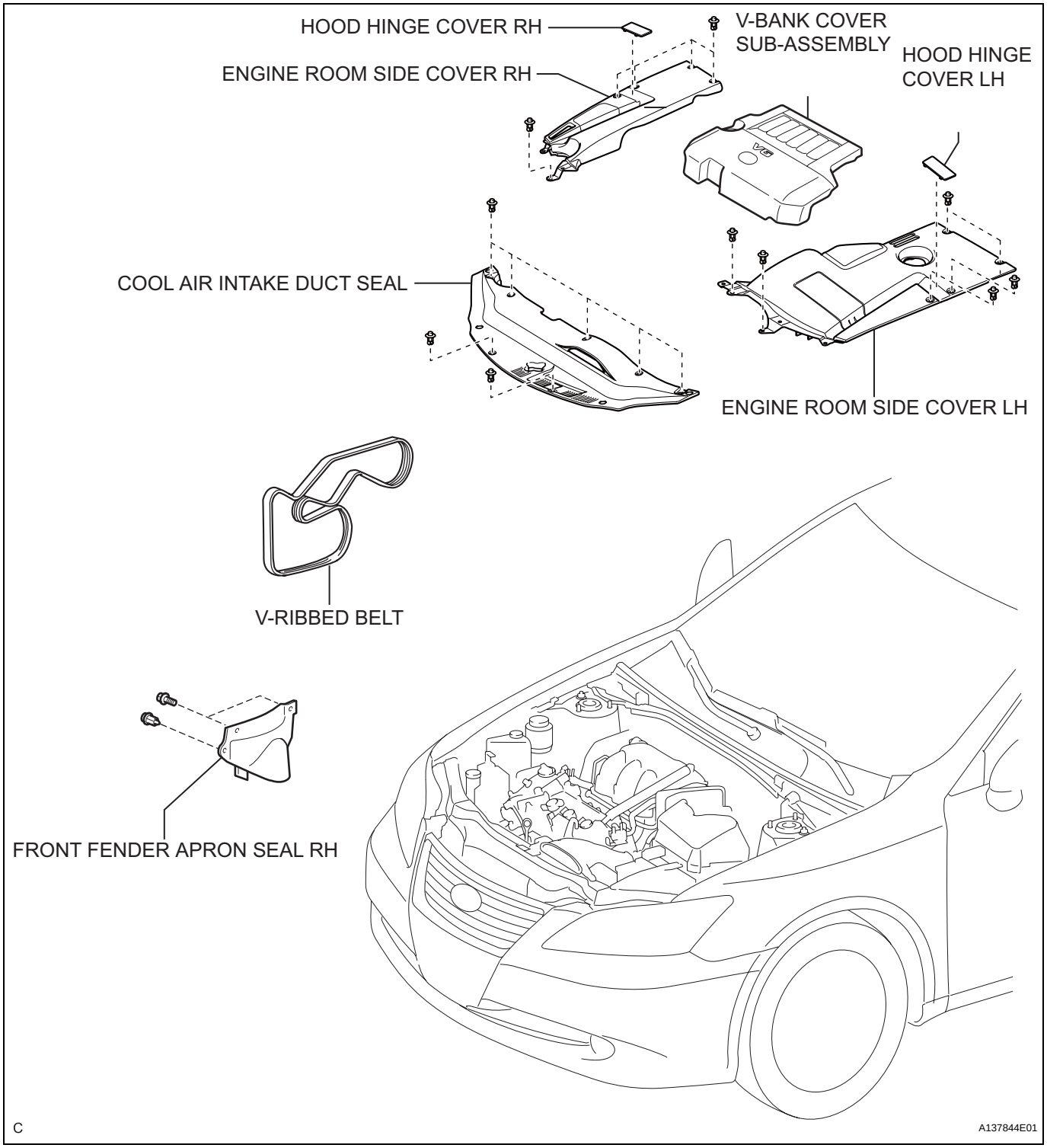

EM

EM

REMOVAL

1. **REMOVE FRONT WHEEL RH**
2. **REMOVE FRONT FENDER APRON SEAL RH**
3. **REMOVE COOL AIR INTAKE DUCT SEAL (See page EM-22)**
4. **REMOVE ENGINE ROOM SIDE COVER LH (See page EM-22)**
5. **REMOVE ENGINE ROOM SIDE COVER RH (See page EM-22)**
6. **REMOVE V-BANK COVER SUB-ASSEMBLY (See page EM-23)**
7. **REMOVE V-RIBBED BELT**
   (a) While releasing the belt tension by turning the belt tensioner counterclockwise, remove the V-ribbed belt from the belt tensioner.
   (b) While turning the belt tensioner counterclockwise, align with its holes, and then insert the 5 mm bi-hexagon wrench into the holes to fix the V-ribbed belt tensioner.

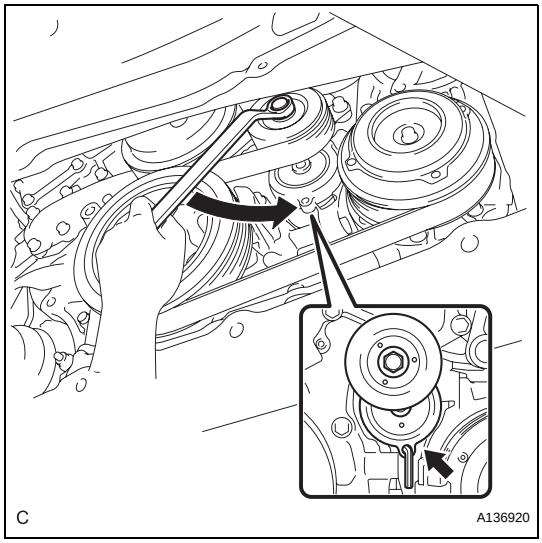

INSPECTION

1. **INSPECT V-RIBBED BELT**
   (a) Visually check the V-ribbed belt for excessive wear, frayed cords, etc.
   If any defect has been found, replace the V-ribbed belt.
   HINT:
   Cracks on the rib side of a V-ribbed belt are considered acceptable.
   If the drive belt has chunks missing from its ribs, it should be replaced.
   HINT:
   - A "new belt" is a belt which has been used for less than 5 minutes with the engine running.
   - A "used belt" is a belt which has been used for 5 minutes or more with the engine running.

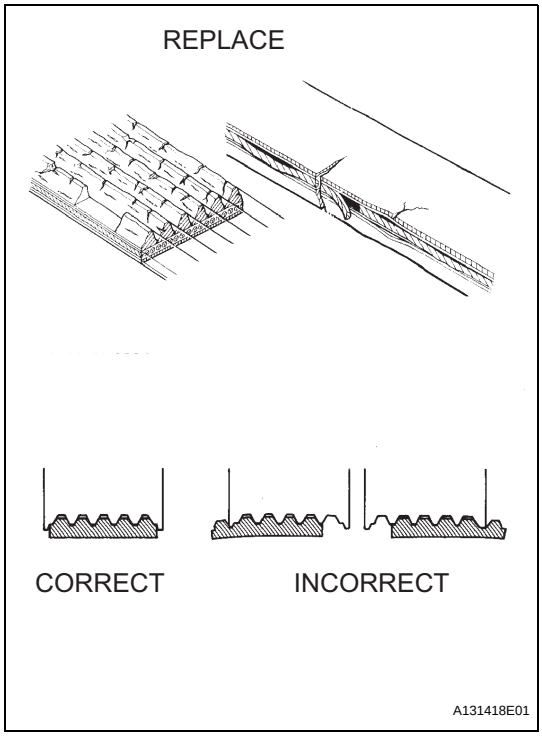

2. **INSPECT V-RIBBED BELT TENSIONER ASSEMBLY**
   (a) Check that nothing gets caught in the tensioner by turning it clockwise and counterclockwise.
   If a malfunction exitsts, replace the tensioner.

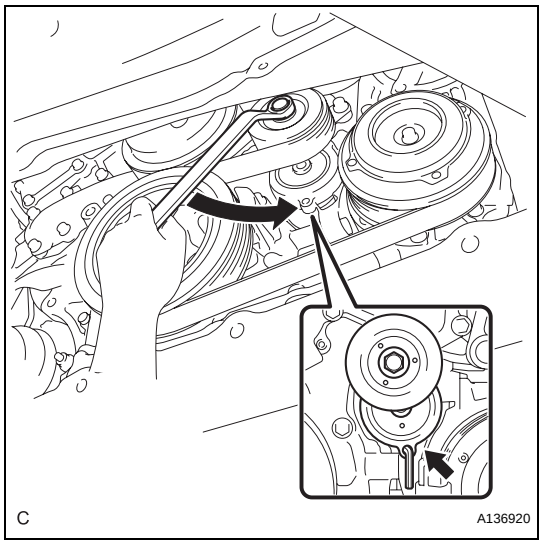

INSTALLATION

1. INSTALL V-RIBBED BELT

(a) Install the V-ribbed belt.

(b) While turning the belt tensioner counterclockwise, remove the bar.

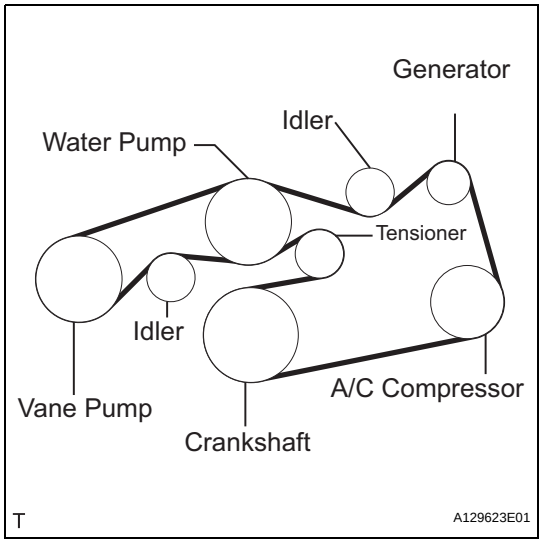

(c) If it is difficult to install the V-ribbed belt, perform the following procedure:

(1) Put the V-ribbed belt on every pulley except the tensioner pulley as shown in the illustration.

(2) While releasing the belt tension by turning the belt tensioner counterclockwise, put the V-ribbed belt on the tensioner pulley.

NOTICE:

- **Put the backside of the V-ribbed belt on the tensioner pulley and idler pulley.**
- **Check that the V-ribbed belt is properly set to each pulley.**

(d) After installing the V-ribbed belt, check that it fits properly in the ribbed grooves. Confirm that the belt has not slipped out of the grooves on the bottom of the crank pulley by hand.

2. INSTALL V-BANK COVER SUB-ASSEMBLY (See page EM-49)

3. INSTALL ENGINE ROOM SIDE COVER RH (See page EM-50)

4. INSTALL ENGINE ROOM SIDE COVER LH (See page EM-50)

5. INSTALL COOL AIR INTAKE DUCT SEAL (See page EM-50)

6. INSTALL FRONT FENDER APRON SEAL RH

7. INSTALL FRONT WHEEL RH
Torque: 103 N*m (1,050 kgf*cm, 76 ft.*lbf)

REASSEMBLY

1. INSTALL STRAIGHT PIN

(a) Using a plastic hammer, tap in new straight pins to the cylinder block.

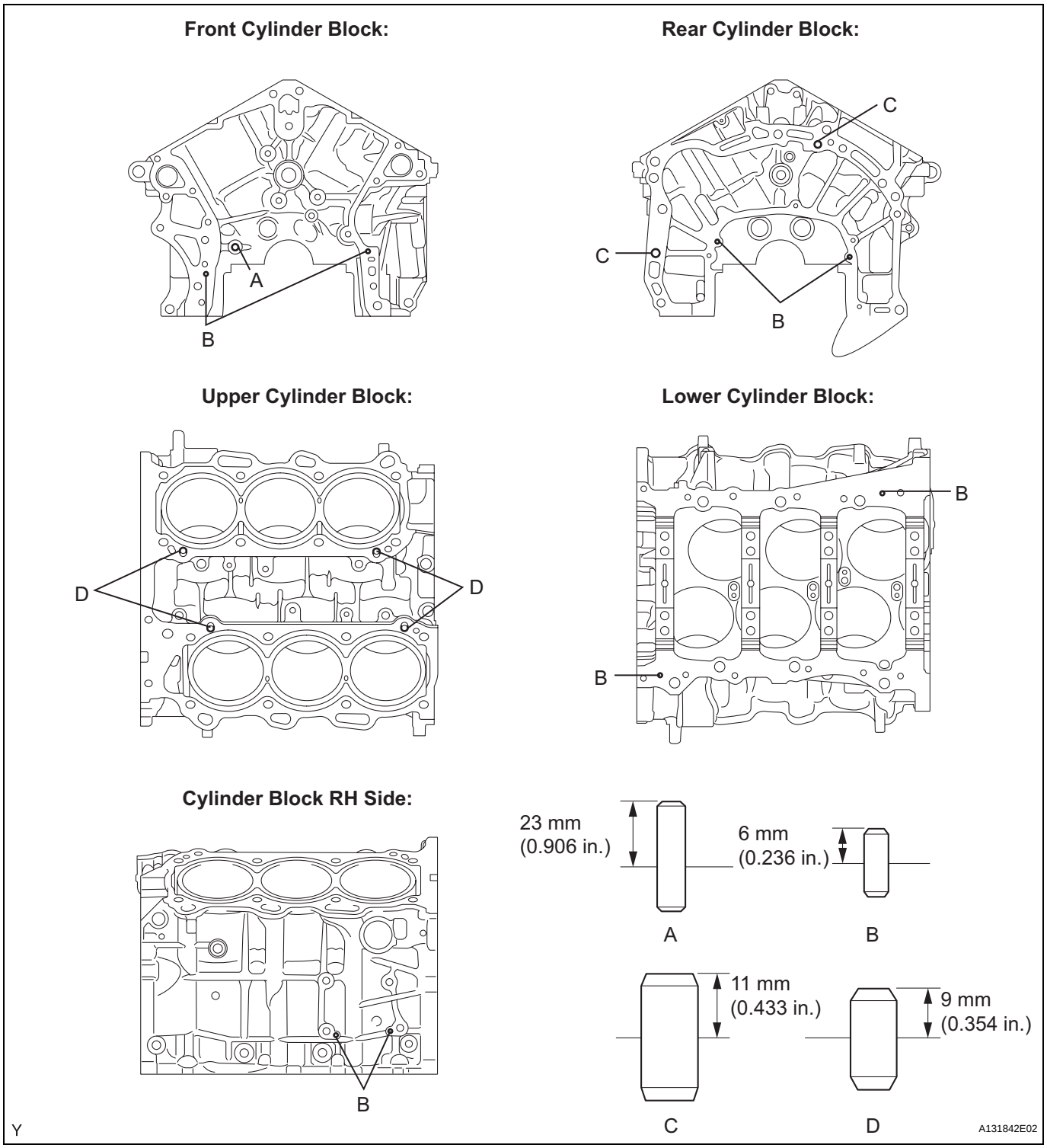

Standard protrusion

Item	Protrusion
Pin A	23 mm (0.906 in.)
Pin B	6 mm (0.236 in.)
Pin C	11 mm (0.433 in.)

EM

Item	Protrusion
Pin D	9 mm (0.354 in.)

2. INSTALL STUD BOLT

(a) Using E8 and E10 "TORX" sockets, install the stud bolts.

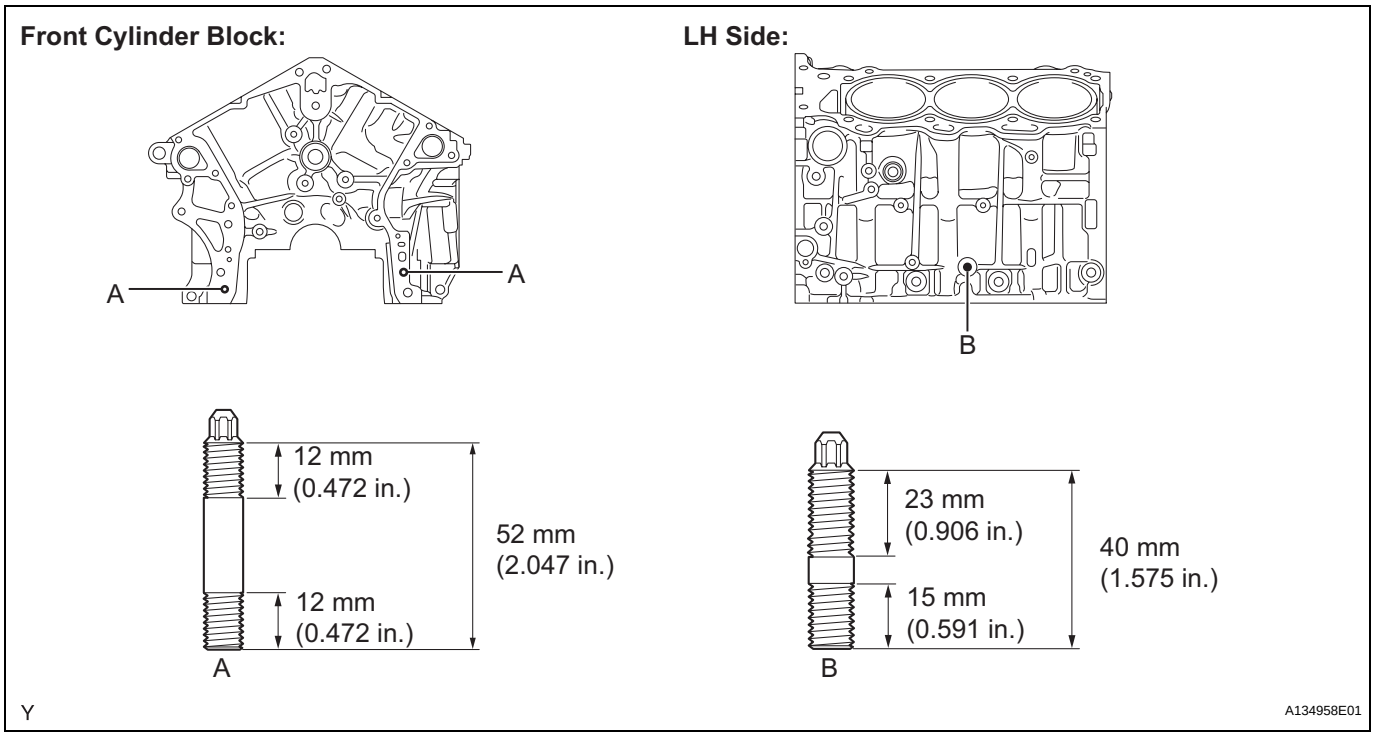

Torque: 10 N*m (102 kgf*cm, 7 ft.*lbf) for bolt A
17 N*m (173 kgf*cm, 13 ft.*lbf) for bolt B

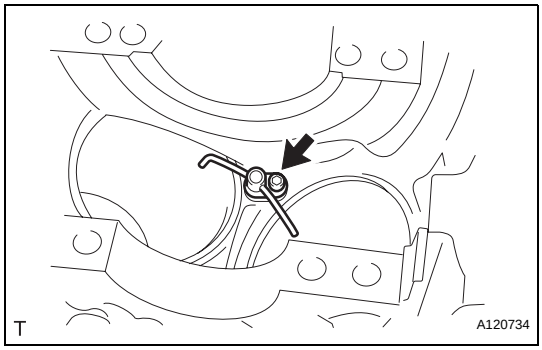

3. INSTALL NO. 1 OIL NOZZLE SUB-ASSEMBLY

(a) Using a 5 mm hexagon wrench, install the oil nozzles.
Torque: 9.0 N*m (92 kgf*cm, 80 in.*lbf)

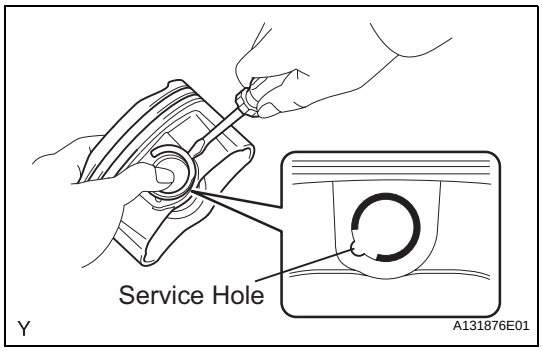

4. INSTALL PISTON SUB-ASSEMBLY WITH PIN

(a) Using a screwdriver, install a new snap ring at one end of the piston pin hole.
HINT:
Be sure that the end gap of the snap ring is not aligned with the pin hole cutout portion of the piston.

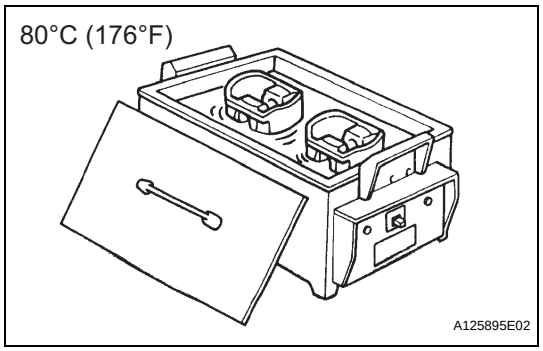

(b) Gradually heat the piston to approximately 80°C (176°F).
(c) Coat the piston pin with engine oil.

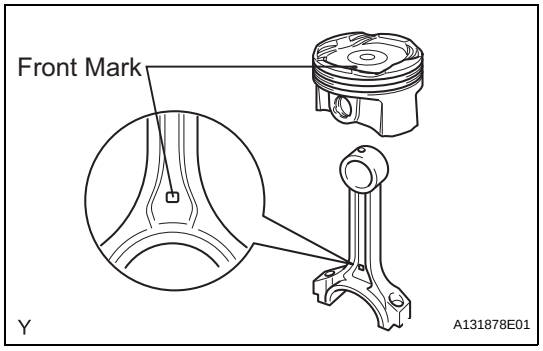

(d) Align the front marks of the piston and connecting rod, and push in the piston pin with your thumb.
HINT:
The piston and pin are a matched set.

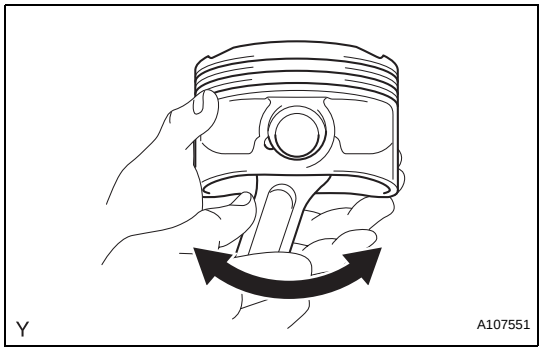

(e) Check the fitting condition between the piston and piston pin by trying to move the piston back and forth on the piston pin.

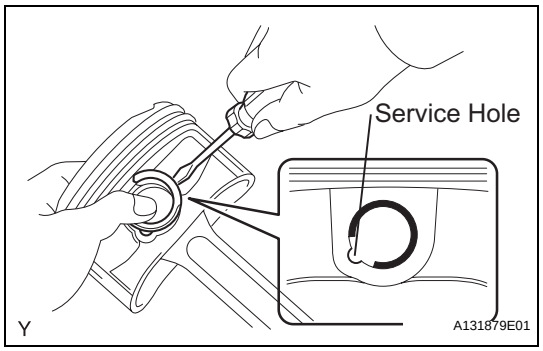

(f) Using a screwdriver, install a new snap ring at the other end of the piston pin hole.
HINT:
Be sure that the end gap of the snap ring is not aligned with the pin hole cutout portion of the piston.

5. INSTALL PISTON RING SET

(a) Install the oil ring expander and 2 side rails by hand.

EM

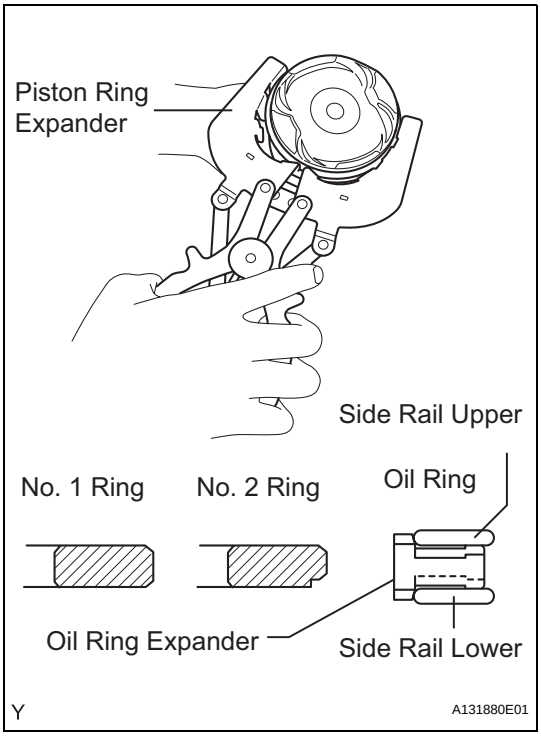

(b) Using a piston ring expander, install the oil ring rail as shown in the illustration.

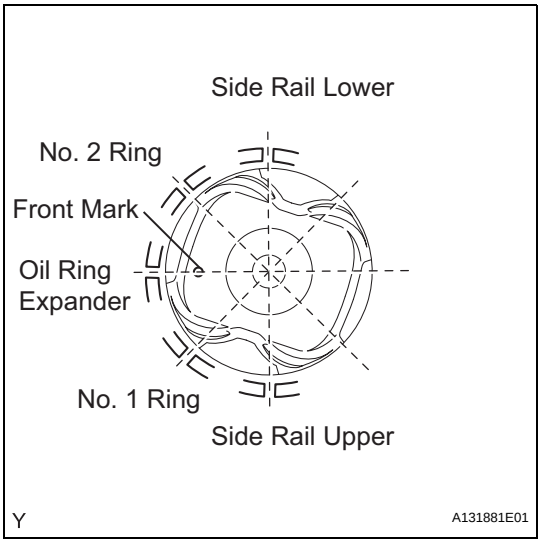

(c) Position the piston rings so that the ring ends are as shown in the illustration.
NOTICE:
Do not align the ring ends.

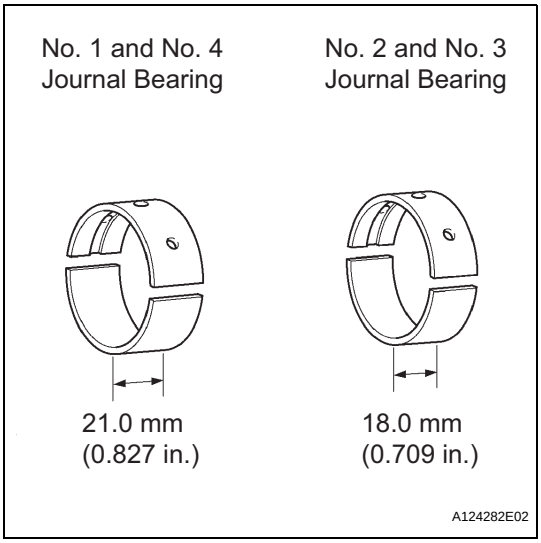

6. INSTALL CRANKSHAFT BEARING

(a) Clean the main journal and both surfaces of the bearing.
NOTICE:
Main bearings come in widths between 18.0 mm (0.709 in.) and 21.0 mm (0.827 in.). Install the 21.0 mm (0.827 in.) bearings in the No. 1 and No. 4 cylinder block journal positions with the main bearing cap. Install the 18.0 mm (0.709 in.) bearings in the No. 2 and No. 3 positions.

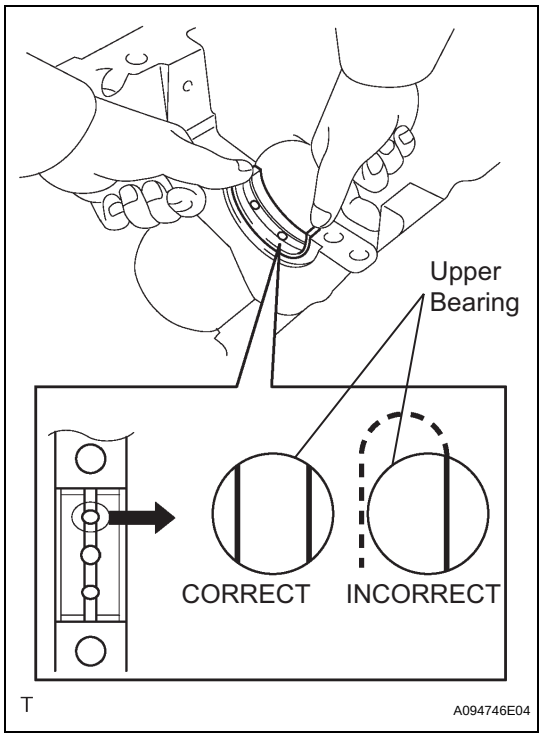

(b) Install the upper bearing.
  (1) Install the upper bearings to the cylinder block as shown in the illustration.
  NOTICE:
  - **Do not apply engine oil to the bearings and the contact surfaces.**
  - **Both sides of the oil groove in the cylinder block should be visible through the oil feed holes in the bearing. The amount visible on each side of the holes should be equal.**

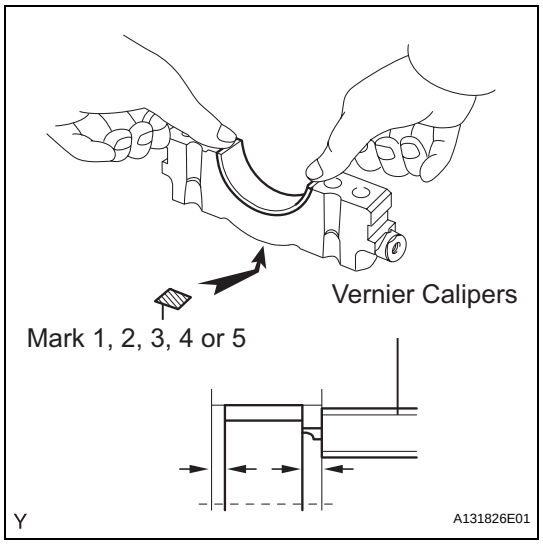

(c) Install the lower bearing.
  (1) Install the lower bearings to the bearing caps.
  (2) Using vernier calipers, measure the distance between the bearing cap's edge and the lower bearing's edge.
  Dimension (A - B):
  0.7 mm (0.0276 in.) or less
  NOTICE:
  Do not apply engine oil to the bearings and the contact surfaces.

7. INSTALL CRANKSHAFT THRUST WASHER SET
(a) Apply engine oil to the crankshaft thrust washer.

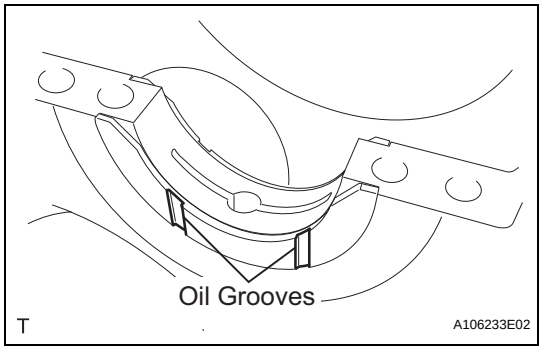

(b) Install the 2 thrust washers under the No. 2 journal position of the cylinder block with the oil grooves facing outward.

8. INSTALL CRANKSHAFT
(a) Apply engine oil to the upper bearing, then place the crankshaft on the cylinder block.

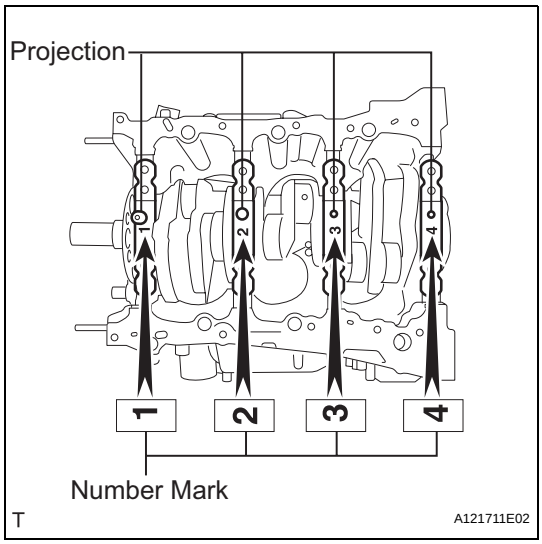

(b) Confirm the projection and numbers of the main bearing caps and install the bearing caps on the cylinder block.
HINT:
A number is marked on each main bearing cap to indicate the installation position.

(c) Apply a light coat of engine oil to the threads and under the heads of the bearing cap bolts.

(d) Temporarily install the 8 main bearing cap bolts to the inside positions.

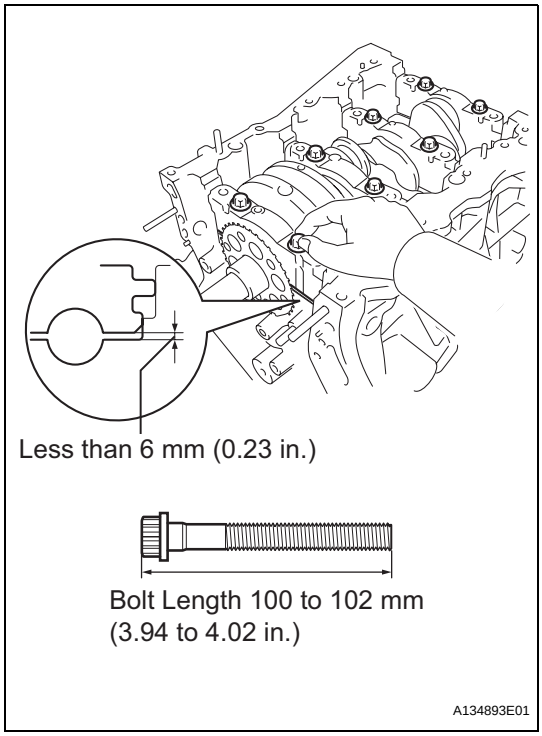

(e) Insert the main bearing cap with your hand until the clearance between the main bearing cap and the cylinder block is less than 6 mm (0.23 in.) by marking the 2 internal bearing cap bolts as a guide.
Bolt length:
100 to 102 mm (3.94 to 4.02 in.)

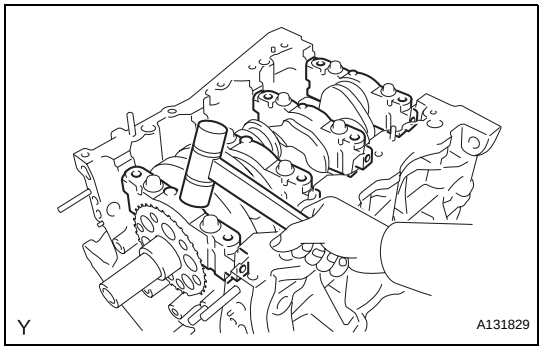

(f) Using a plastic hammer, lightly tap the bearing cap to ensure a proper fit.

(g) Apply a light coat of engine oil to the threads and under the heads of the 8 main bearing cap bolts.

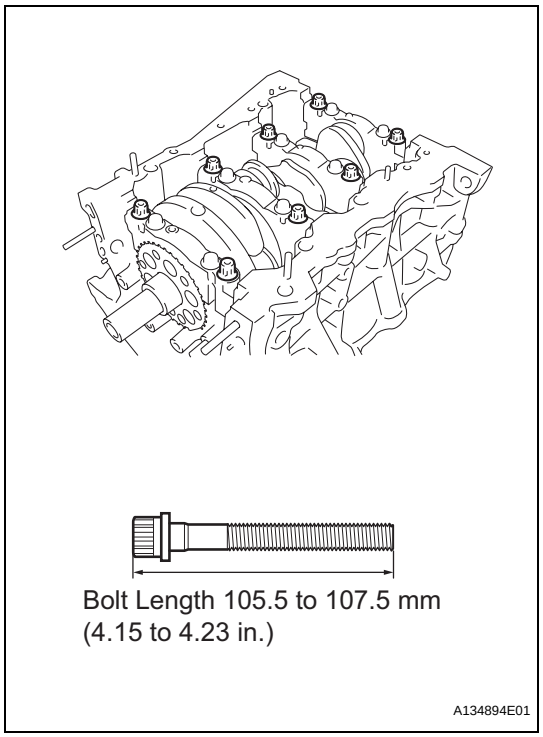

(h) Install the 8 main bearing cap bolts to the outside positions.

(i) Install the crankshaft bearing cap bolts.
HINT:
The main bearing cap bolts are tightened in 2 progressive steps.

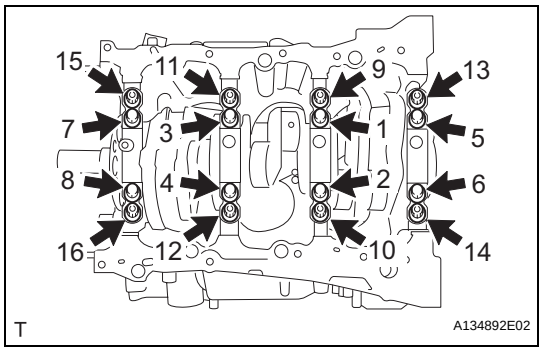

(j) Step 1
(1) Install and uniformly tighten the 16 main bearing cap bolts in the sequence shown in the illustration.
Torque: 61 N*m (622 kgf*cm, 45 ft.*lbf)
If any of the main bearing cap bolts does not meet the specified torque, replace it.

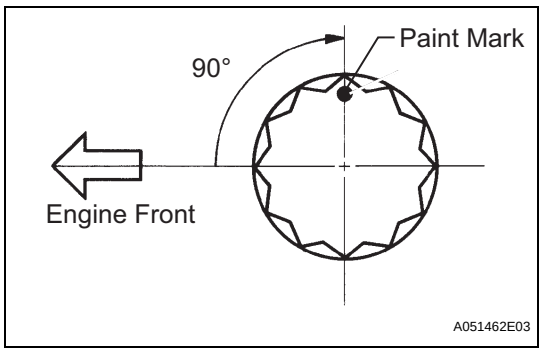

(k) Step 2
(1) Mark the front of the bearing cap bolts with paint.
(2) Retighten the bearing cap bolts 90° in the order above.
(3) Check that the painted mark is now at a 90° angle to the front.

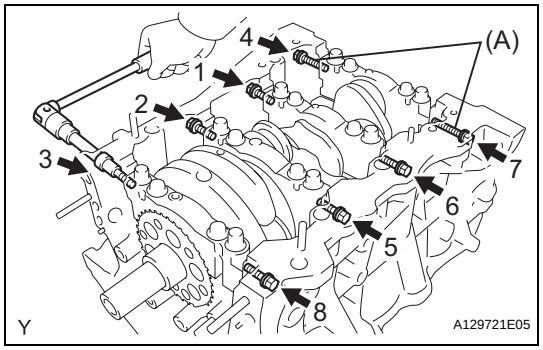

(l) Install 8 new seal washers and uniformly tighten the 8 main bearing cap bolts in several steps and in the sequence shown in the illustration.
Torque: 52 N*m (525 kgf*cm, 38 ft.*lbf)
Bolt length

Item	Length
Bolt A	45 mm (1.77 in.)
Except bolt A	30 mm (1.18 in.)

(m) Check that the crankshaft turns smoothly.

EM

(n) Check the crankshaft thrust clearance (See page EM-102).

9. INSTALL CONNECTING ROD BEARING

(a) Install the connecting rod bearing to the connecting rod and bearing cap.

(b) Using vernier calipers, measure the distance between the connecting rod's and bearing cap's edges and the connecting rod bearing's edge.
Dimension (A - B):
0.7 mm (0.0276 in.) or less
NOTICE:
Do not apply engine oil to the bearings and the contact surfaces.

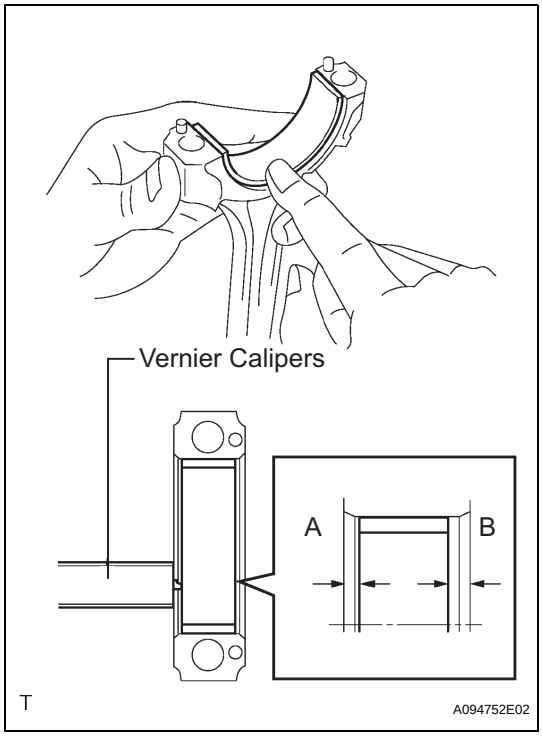

10. INSTALL PISTON SUB-ASSEMBLY WITH CONNECTING ROD

(a) Apply engine oil to the cylinder walls, the pistons, and the surfaces of the connecting rod bearings.

(b) Position the piston rings so that the ring ends are as shown in the illustration.
NOTICE:
Do not align the ring ends.

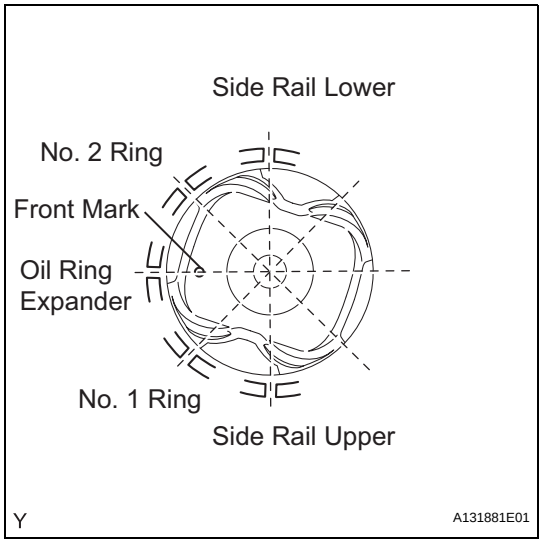

EM

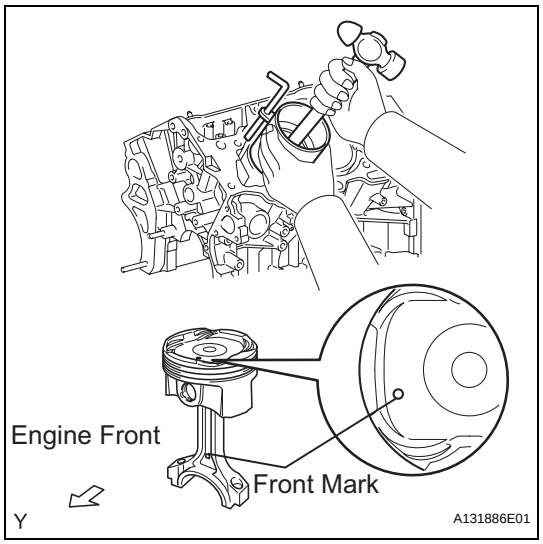

(c) Using a piston ring compressor, push the correctly numbered piston and connecting rod assembly into the cylinder with the front mark of the piston facing forward.
NOTICE:
Match the numbered connecting rod cap with the connecting rod.

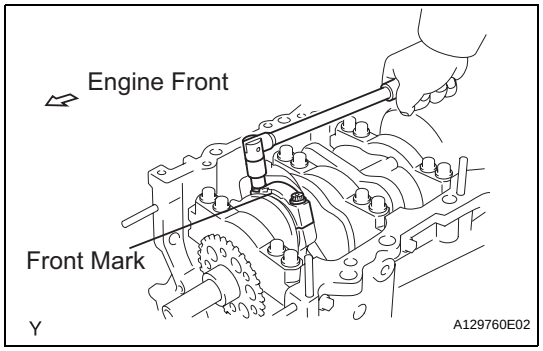

(d) Check that the front mark of the connecting rod cap is facing forward.
(e) Apply a light coat of engine oil to the threads and under the heads of the connecting rod cap bolts.
(f) Install the connecting cap bolts.
HINT:
The connecting cap bolts are tightened in 2 progressive steps.

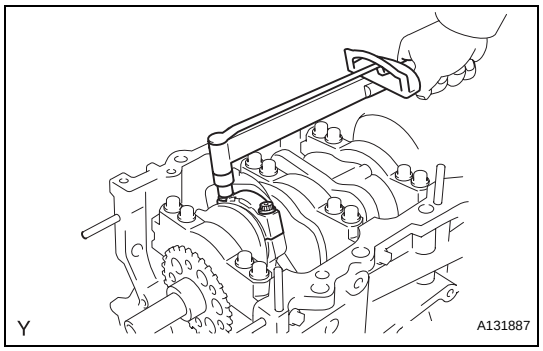

(g) Step 1
(1) Install and alternately tighten the bolts of the connecting rod cap in several steps.
Torque: 25 N*m (255 kgf*cm, 18 ft.*lbf)

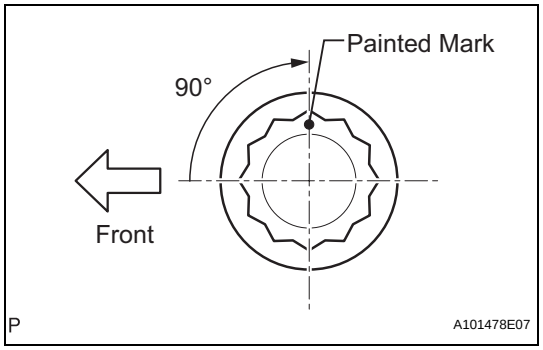

(h) Step 2
(1) Mark the front side of each connecting cap bolt with paint.
(2) Retighten the cap bolts 90° as shown in the illustration.
(3) Check that the painted mark is now at a 90° angle to the front.
(i) Check that the crankshaft turns smoothly.
(j) Check the connecting rod thrust clearance (See page EM-101).

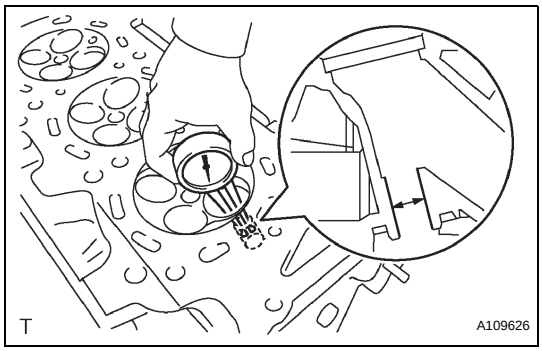

11. INSTALL INTAKE VALVE GUIDE BUSH

(a) Using a caliper gauge, measure the bush bore diameter of the cylinder head.
Cylinder bore diameter:
10.285 to 10.306 mm (0.4049 to 0.4057 in.)
Select a new guide bush (STD or O/S 0.05).

Bush size	Bush bore diameter
STD	10.285 to 10.306 mm (0.4049 to 0.4057 in.)
O/S 0.05	10.335 to 10.356 mm (0.4069 to 0.4077 in.)

If the bush bore diameter of the cylinder head is greater than 10.306 mm (0.4057 in.), machine the bush bore to the dimension of 10.335 to 10.356 mm (0.4069 to 0.4077 in.) to install an O/S 0.05 valve guide bush.
If the bush bore diameter of the cylinder head is greater than 10.356 mm (0.4077 in.), replace the cylinder head.

(b) Heat the cylinder head to 80 to 100°C (176 to 212°F).

(c) Place the cylinder head on wooden blocks.

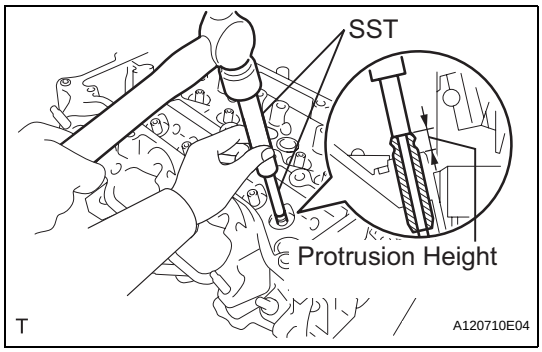

(d) Using SST, tap in new valve guide bushes to the specified protrusion height.
SST 09201-10000 (09201-01050), 09950-70010 (09951-07100)
Protrusion height:
9.30 to 9.70 mm (0.3661 to 0.3819 in.)

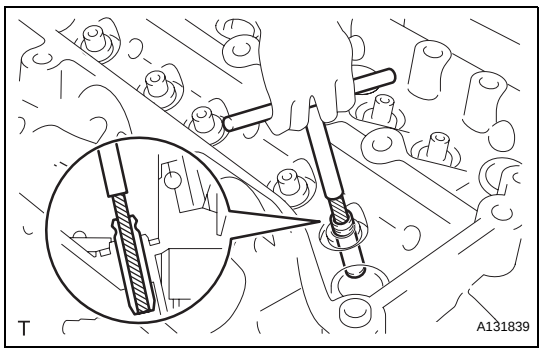

(e) Using a sharp 5.5 mm reamer, ream the valve guide bushings to obtain the specified clearance.
Standard oil clearance:
0.025 to 0.060 mm (0.0010 to 0.0023 in.)

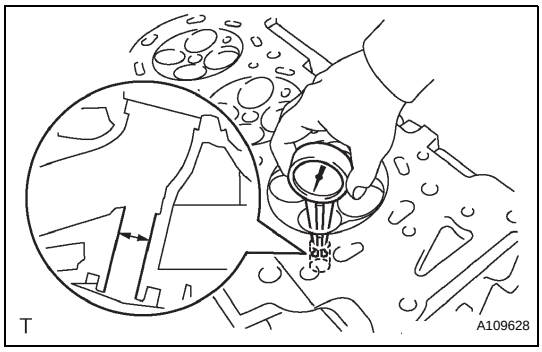

12. INSTALL EXHAUST VALVE GUIDE BUSH

(a) Using a caliper gauge, measure the bush bore diameter of the cylinder head.
Cylinder bore diameter:
10.285 to 10.306 mm (0.4049 to 0.4057 in.)
Select a new guide bush (STD or O/S 0.05).

Bush size	Bush bore diameter
STD	10.285 to 10.306 mm (0.4049 to 0.4057 in.)
O/S 0.05	10.335 to 10.356 mm (0.4069 to 0.4077 in.)

If the bush bore diameter of the cylinder head is greater than 10.306 mm (0.4057 in.), machine the bush bore to the dimension of 10.335 to 10.356 mm (0.4069 to 0.4077 in.) to install an O/S 0.05 valve guide bush.
If the bush bore diameter of the cylinder head is greater than 10.356 mm (0.4077 in.), replace the cylinder head.

(b) Heat the cylinder head to 80 to 100°C (176 to 212°F).

(c) Place the cylinder head on wooden blocks.

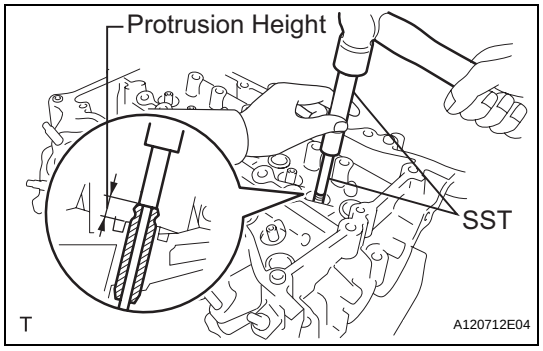

(d) Using SST, tap in new valve guide bushes to the specified protrusion height.
SST 09201-10000 (09201-01050), 09950-70010 (09951-07100)
Protrusion height:
9.30 to 9.70 mm (0.3661 to 0.3819 in.)

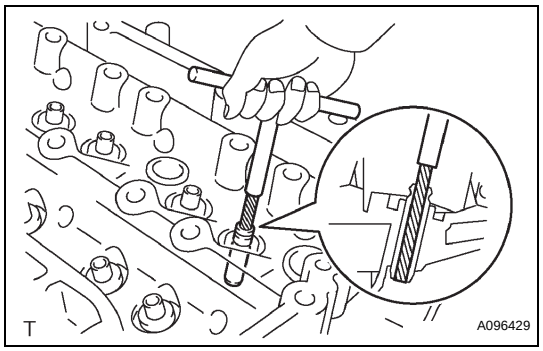

(e) Using a sharp 5.5 mm reamer, ream the valve guide bushings to obtain the specified clearance.
Standard oil clearance:
0.030 to 0.065 mm (0.0012 to 0.0026 in.)

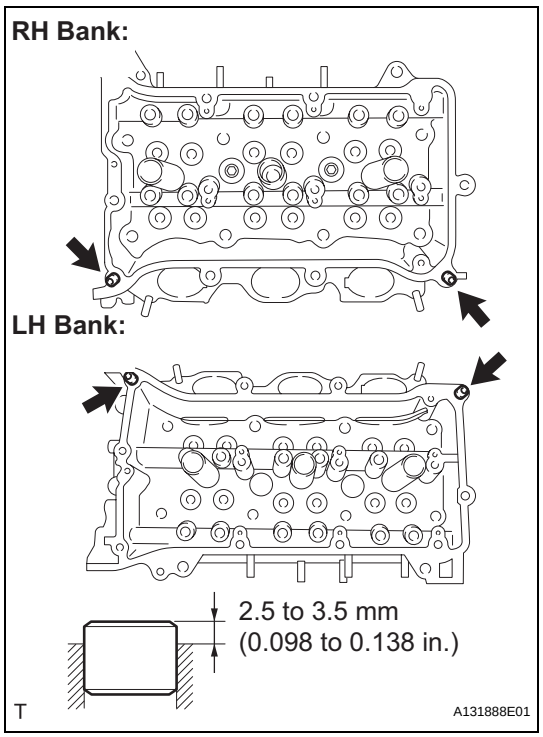

13. INSTALL RING PIN

(a) Using a plastic hammer, tap in new ring pins to the specified protrusion height.
Specified protrusion height:
2.5 to 3.5 mm (0.098 to 0.138 in.)

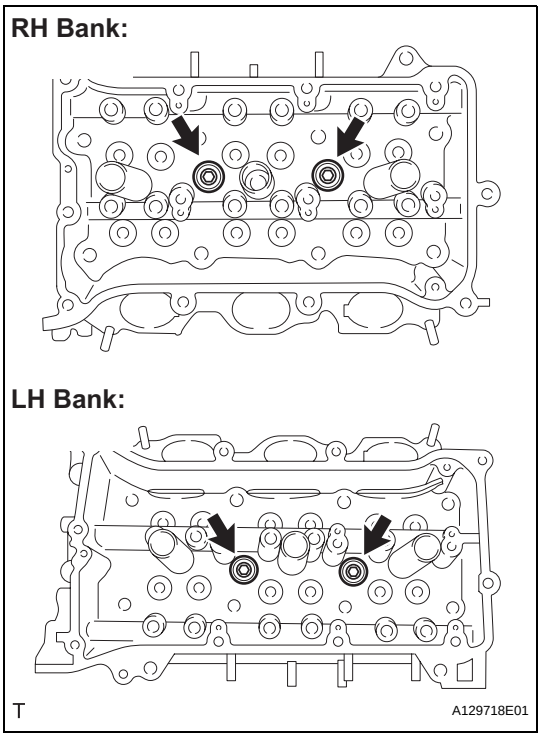

14. INSTALL NO. 1 STRAIGHT SCREW PLUG

(a) Using a 10 mm hexagon wrench, install 4 new gaskets and the straight screw plugs.
Torque: 44 N*m (449 kgf*cm, 32 ft.*lbf)

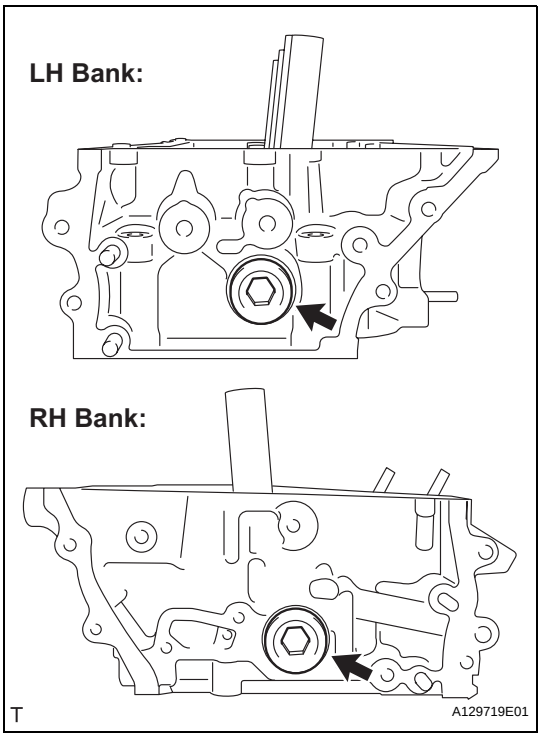

15. INSTALL NO. 2 STRAIGHT SCREW PLUG

(a) Using a 14 mm hexagon wrench, install 2 new gaskets and the 2 straight screw plugs.
Torque: 80 N*m (816 kgf*cm, 59 ft.*lbf)

16. INSTALL STUD BOLT

NOTICE:
If the stud bolt is deformed or the threads are damaged, replace it.

(a) Using E6 and E8 "TORX" sockets, install the stud bolts.

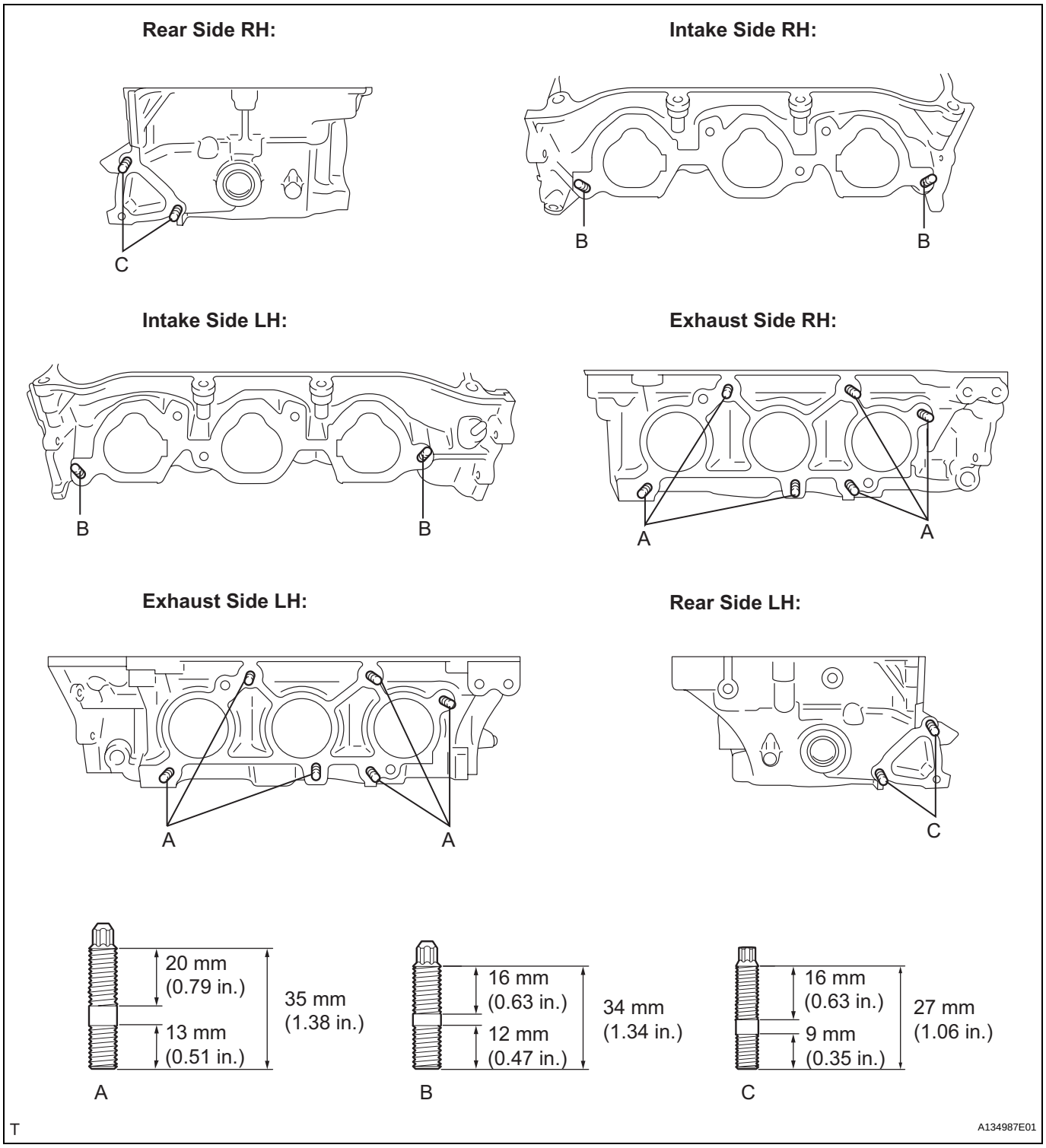

Torque: 10 N*m (102 kgf*cm, 7 ft.*lbf) for bolts A and B
4.0 N*m (41 kgf*cm, 35 in.*lbf) for bolt C

EM

17. INSTALL STRAIGHT PIN

(a) Using a plastic hammer, tap in new straight pins as shown in the illustration.

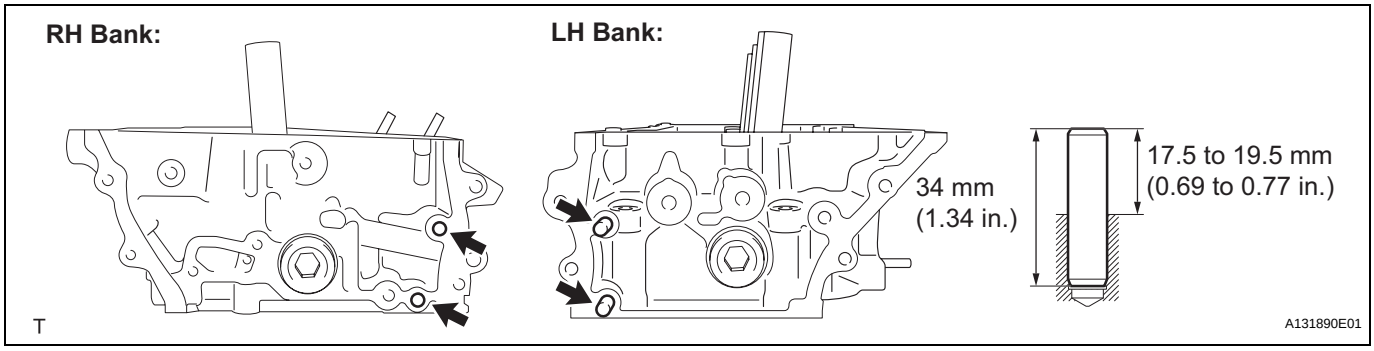

Protrusion height:
17.5 to 19.5 mm (0.689 to 0.768 in.)

18. INSTALL VALVE SPRING SEAT

(a) Install the valve spring seats to the cylinder head.

19. INSTALL VALVE STEM OIL SEAL

(a) Apply a light coat of engine oil to new oil seals.
NOTICE:
Pay attention when installing the intake and exhaust oil seals. For example, installing the intake oil seal into the exhaust side or installing the exhaust oil seal to the intake side can cause installation problems later.
HINT:
The intake valve oil seals are gray and the exhaust valve oil seals are black.

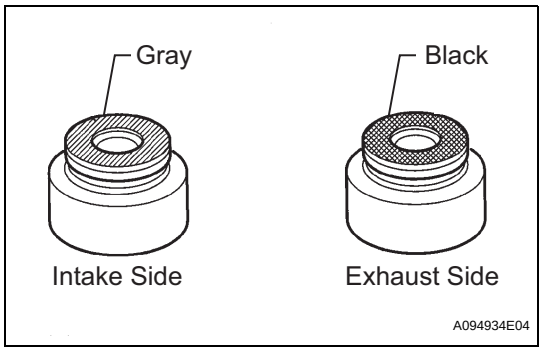

(b) Using SST, push in the oil seals.
SST 09201-41020
NOTICE:
Failure to use SST will cause the seal to be damaged or improperly seated.

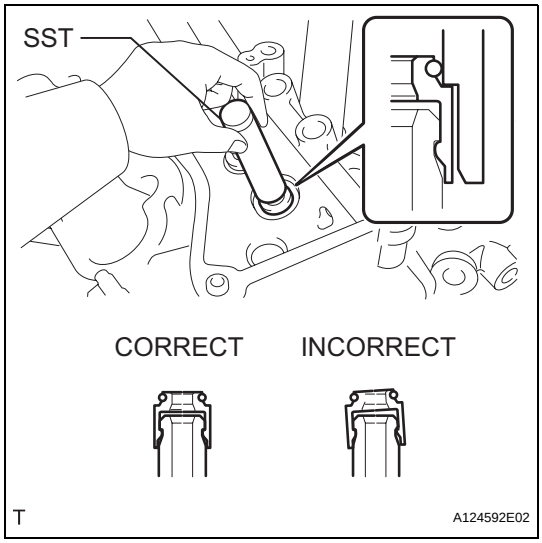

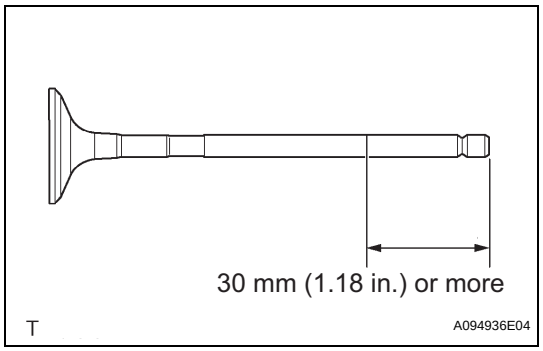

20. INSTALL EXHAUST VALVE

(a) Apply a sufficient coat of engine oil to the tip area of the intake valve shown in the illustration.

(b) Install the valve, compression spring, and spring retainer to the cylinder head.
NOTICE:
Install the same parts in the same combination to the original locations.

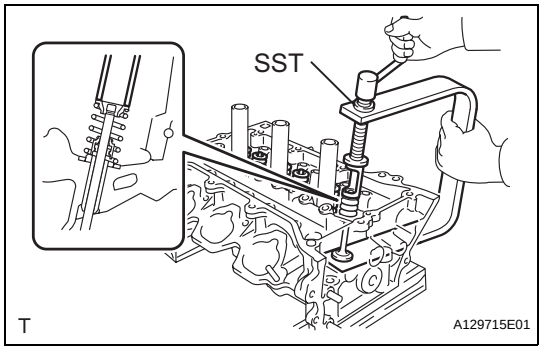

(c) Using SST, compress the spring and install the 2 retainer locks.
SST 09202-70020 (09202-00010)

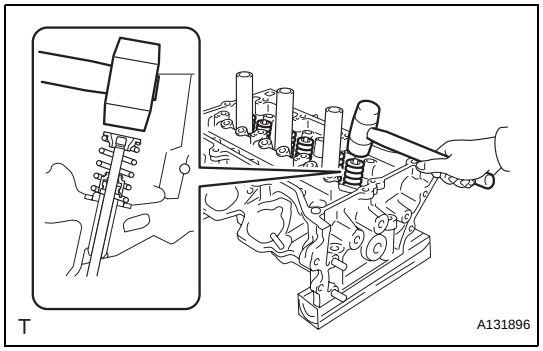

(d) Using a plastic hammer, lightly tap the valve stem tip to ensure a proper fit.
NOTICE:
Be careful not to damage the retainer.

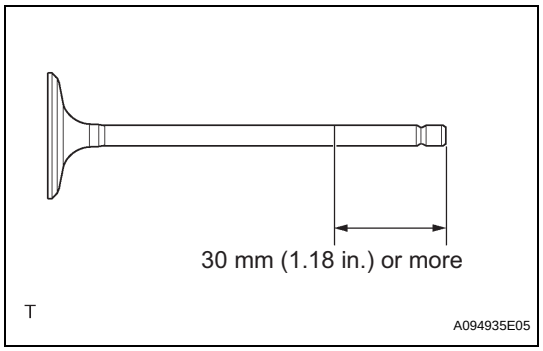

21. INSTALL INTAKE VALVE

(a) Apply a sufficient coat of engine oil to the tip area of the intake valve shown in the illustration.

(b) Install the valve, compression spring, and spring retainer to the cylinder head.
NOTICE:
Install the same parts in the same combination to the original locations.

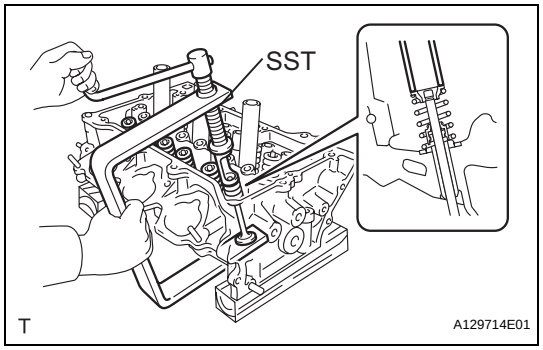

(c) Using SST, compress the spring and install the 2 retainer locks.
SST 09202-70020 (09202-00010)

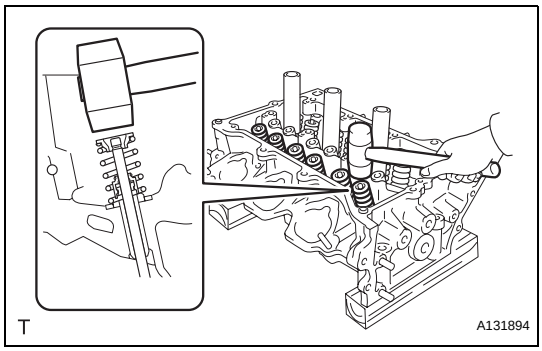

(d) Using a plastic hammer, lightly tap the valve stem tip to ensure a proper fit.
NOTICE:
Be careful not to damage the retainer.

22. INSTALL VALVE STEM CAP

(a) Apply a light coat of engine oil to the valve stem caps.

(b) Install the valve stem caps on the valves.

23. INSTALL ENGINE REAR OIL SEAL

(a) Place the oil seal retainer on wooden blocks.

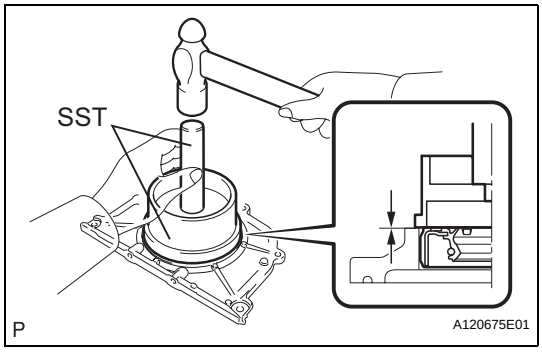

(b) Using SST, tap in a new oil seal until its surface is flush with the oil seal retainer edge.
SST 09223-15030, 09950-70010 (09951-07100)
NOTICE:
- **Keep the lip free of foreign matter.**
- **Do not tap on the oil seal at an angle.**

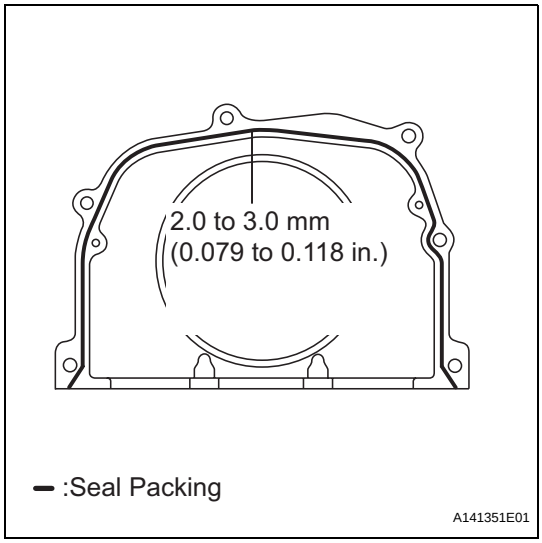

24. INSTALL ENGINE REAR OIL SEAL RETAINER

(a) Apply seal packing in a continuous line as shown in the illustration.
Seal packing:
Toyota Genuine Seal Packing Black, Three Bond 1207B or equivalent
Seal Diameter:
2.0 to 3.0 mm (0.079 to 0.118 in.)
NOTICE:
- **Remove any oil from the contact surface.**
- **Install the oil seal retainer within 3 minutes after applying seal packing.**
- **Do not start the engine for at least 2 hours after installation.**

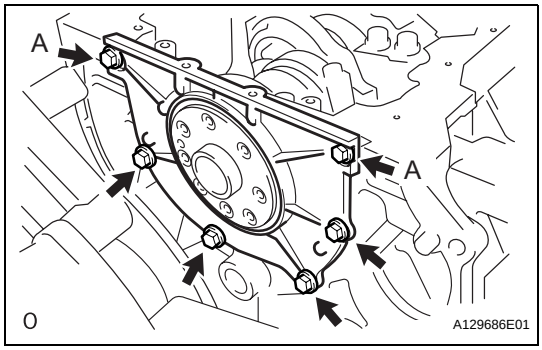

(b) Install the oil seal retainer with the 6 bolts.
Torque: 10 N*m (102 kgf*cm, 7 ft.*lbf)
NOTICE:
Be sure to apply adhesive 1324 to the bolts in the places indicated by A before installing them.
Adhesive:
Toyota Genuine Adhesive 1324, Three Bond 1324 or equivalent

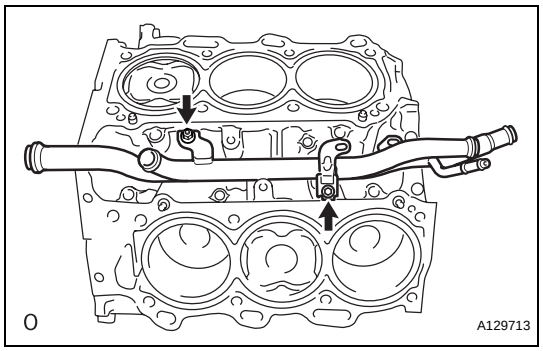

25. INSTALL WATER INLET PIPE

(a) Install the water inlet pipe with the 2 bolts.
Torque: 10 N*m (102 kgf*cm, 7 ft.*lbf)

(b) Install the No. 1 water by-pass hose.

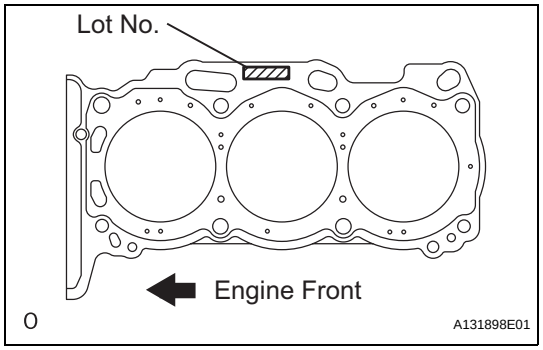

26. INSTALL CYLINDER HEAD SUB-ASSEMBLY RH

(a) Place the cylinder head gasket on the cylinder block surface with the Lot No. stamp upward.
NOTICE:
- **Be sure to install the gasket in the correct direction.**
- **Gently place the cylinder head in order not to damage the gasket with the bottom part of the cylinder head.**

(b) Place the cylinder head on the cylinder block.
NOTICE:
Be careful not to allow oil to adhere to the bottom part of the cylinder head.
HINT:
The cylinder head bolts are tightened in 3 progressive steps.

(c) Apply a light coat of engine oil to the threads and under the heads of the cylinder head bolts.

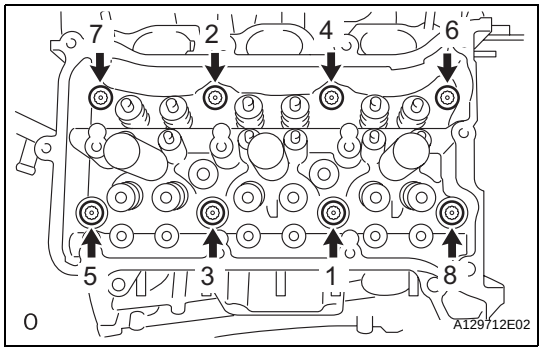

(d) Step 1
(1) Using a 10 mm bi-hexagon wrench, install and uniformly tighten the 8 cylinder head bolts with the plate washers in several steps and in the sequence shown in the illustration.
Torque: 36 N*m (367 kgf*cm, 27 ft.*lbf)

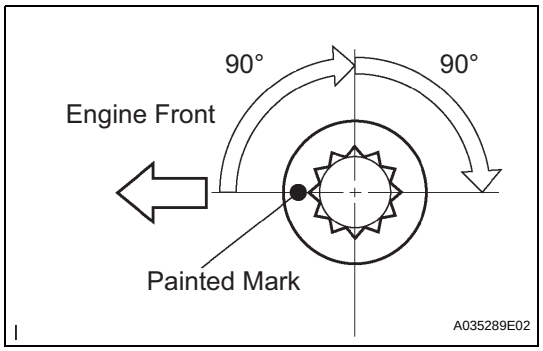

(e) Step 2
(1) Mark the cylinder head bolt head with paint as shown in the illustration.
(2) Tighten the cylinder head bolts another 90°.

(f) Step 3
(1) Tighten the cylinder head bolts an additional 90°.
(2) Check that the painted mark is now facing rearward.

EM

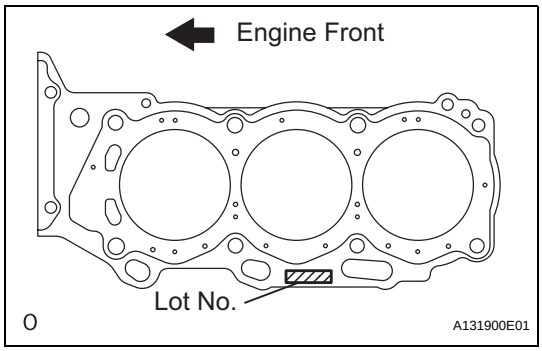

27. INSTALL CYLINDER HEAD SUB-ASSEMBLY LH

(a) Place the cylinder head gasket on the cylinder block surface with the Lot No. stamp upward.

NOTICE:

- **Be sure to install the gasket in the correct direction.**
- **Gently place the cylinder head in order not to damage the gasket with the bottom part of the cylinder head.**

(b) Place the cylinder head on the cylinder block.

NOTICE:

Be careful not to allow oil to adhere to the bottom part of the cylinder head.

HINT:

The cylinder head bolts are tightened in 3 progressive steps.

(c) Apply a light coat of engine oil to the threads and under the heads of the cylinder head bolts.

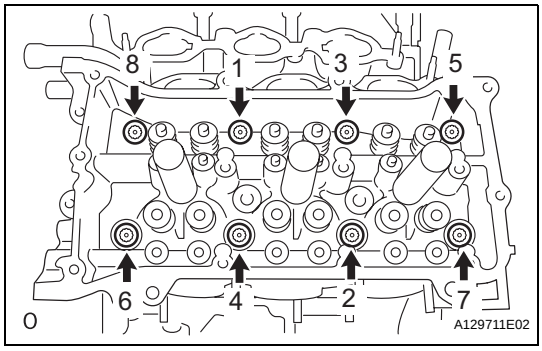

(d) Step 1

(1) Using a 10 mm bi-hexagon wrench, install and uniformly tighten the 8 cylinder head bolts with the plate washers in several steps and in the sequence shown in the illustration.

Torque: 36 N*m (367 kgf*cm, 27 ft.*lbf)

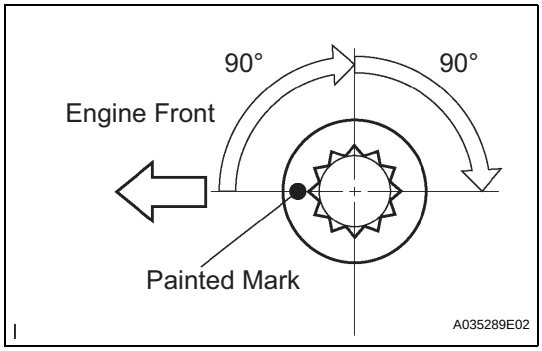

(e) Step 2

(1) Mark the cylinder head bolt head with paint as shown in the illustration.

(2) Tighten the cylinder head bolts another 90°.

(f) Step 3

(1) Tighten the cylinder head bolts an additional 90°.

(2) Check that the painted mark is now facing rearward.

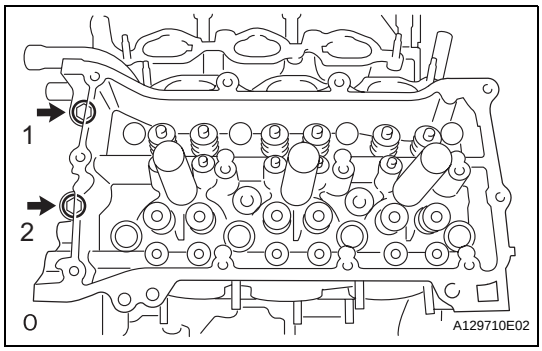

(g) Tighten the 2 bolts in the order shown in the illustration.

Torque: 30 N*m (306 kgf*cm, 22 ft.*lbf)

28. INSTALL VALVE LASH ADJUSTER ASSEMBLY

NOTICE:

- **Keep the lash adjuster free of dirt and foreign objects.**
- **Only use clean engine oil.**

(a) Place the lash adjuster into a container filled with engine oil.

EM

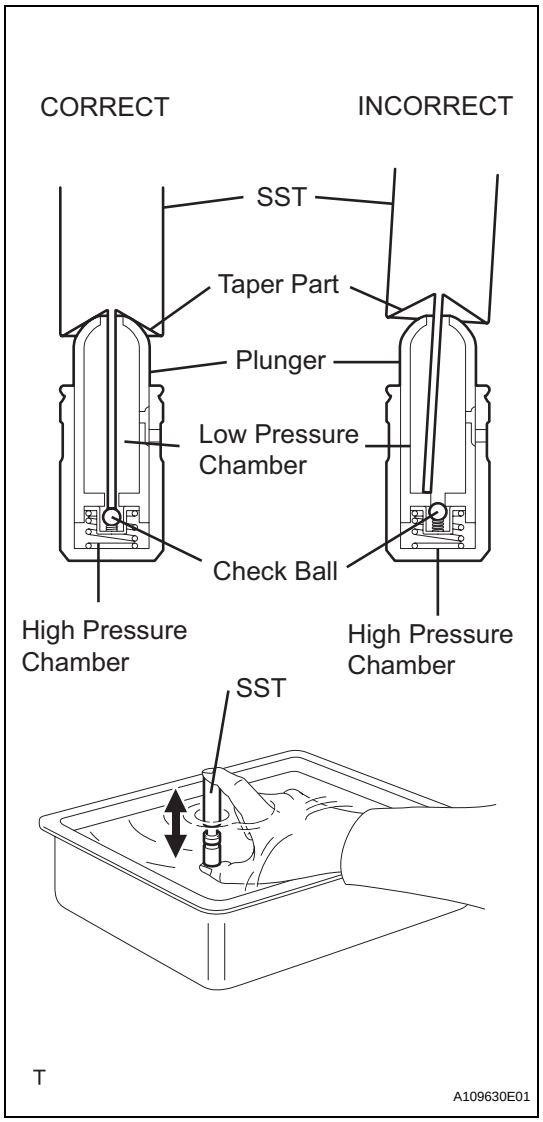

(b) Insert the SST's tip into the lash adjuster's plunger and use the tip to press down on the check ball inside the plunger.
SST 09276-75010

(c) Squeeze the SST and lash adjuster together to move the plunger up and down 5 to 6 times.

(d) Check the movement of the plunger and bleed the air.
OK:
Plunger moves up and down.
NOTICE:
When bleeding air from the high-pressure chamber, make sure that the tip of the SST is actually pressing the check ball as shown in the illustration. If the check ball is not pressed, air will not be bled.

(e) After bleeding the air, remove the SST. Then, try to press the plunger quickly and firmly with a finger.
OK:
Plunger is very difficult to move.
If the result is not as specified, replace the lash adjuster.

(f) Install the lash adjusters.
NOTICE:
Install the lash adjuster to the same place where it was removed from.

29. INSTALL NO. 1 VALVE ROCKER ARM SUB-ASSEMBLY

(a) Apply engine oil to the lash adjuster tip and valve stem cap end.

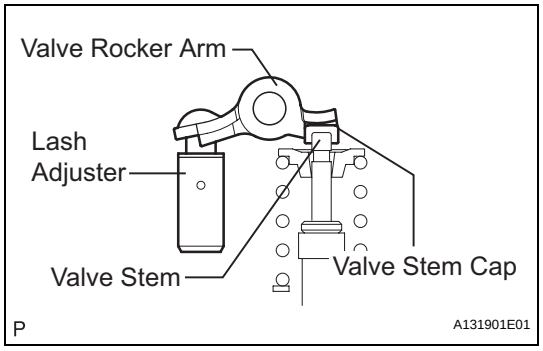

(b) Make sure that the valve rocker arms are installed as shown in the illustration.

30. INSTALL CAMSHAFT BEARING CAP (for Bank 1)

(a) Apply engine oil to the camshaft journals, camshaft housing, and bearing caps.

(b) Install the camshaft and No. 2 camshaft to the camshaft housing RH.

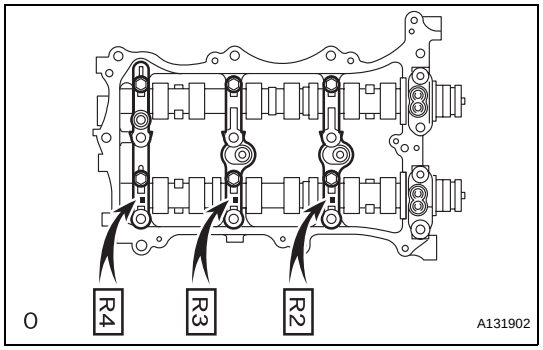

(c) Make sure of the marks and numbers on the camshaft bearing caps and place them in each proper position and direction.

EM

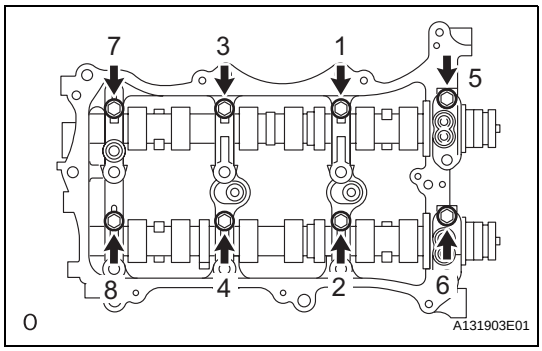

(d) Temporarily tighten the 8 bolts in the order shown in the illustration.
Torque: 10 N*m (102 kgf*cm, 7 ft.*lbf)

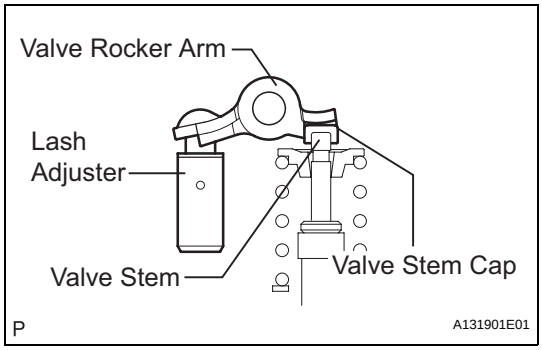

31. INSTALL CAMSHAFT HOUSING SUB-ASSEMBLY RH

(a) Make sure that the valve rocker arm is installed as shown in the illustration.

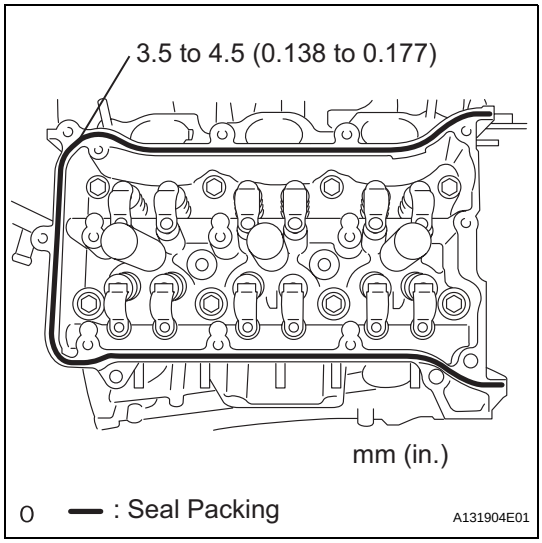

(b) Apply seal packing in a continuous line as shown in the illustration.
Seal packing:
Toyota Genuine Seal Packing Black, Three Bond 1207B or equivalent
Seal diameter:
3.5 to 4.5 mm (0.138 to 0.177 in.)
NOTICE:
- **Remove any oil from the contact surface.**
- **Install the camshaft housing sub-assembly RH within 3 minutes.**
- **Do not start the engine for at least 2 hours after installing.**

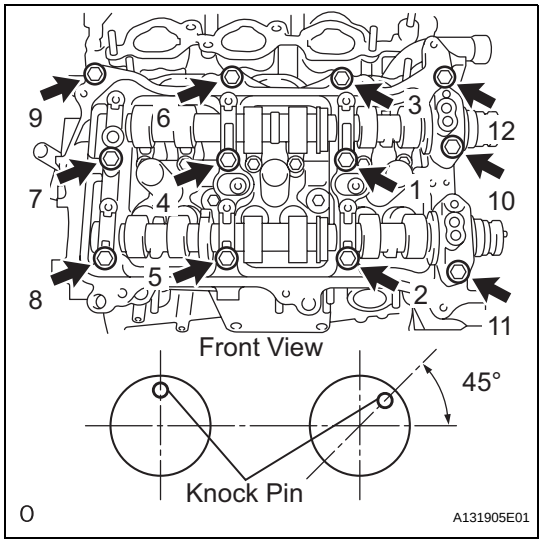

(c) Install the camshaft housing RH and tighten the 12 bolts in the order shown in the illustration.
Torque: 28 N*m (286 kgf*cm, 21 ft.*lbf)
NOTICE:
- **When installing the camshaft housing RH, it is necessary to correctly position the camshafts as shown in the illustration. Failure to correctly position these parts may result in damage due to contact between the pistons and valves. If a camshaft is rotated with a piston at TDC, valve contact will occur.**
- **If any of the bolts are loosened during installation, remove the camshaft housing, clean the installation surfaces, and reapply seal packing.**

- **If the camshaft housing is removed because any of the bolts are loosened during installation, make sure that the previously applied seal packing does not enter any oil passages.**

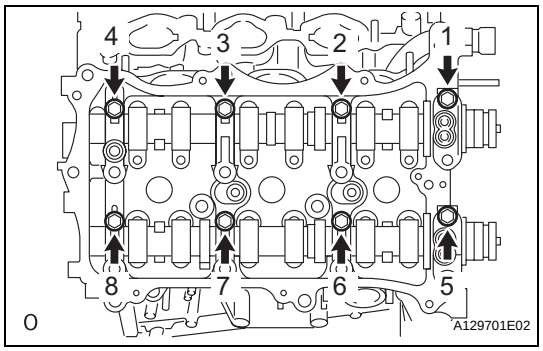

(d) Tighten the 8 bolts in the order shown in the illustration.
Torque: 16 N*m (163 kgf*cm, 12 ft.*lbf)

32. INSTALL CAMSHAFT BEARING CAP (for Bank 2)

(a) Apply engine oil to the camshaft journals, camshaft housing, and bearing caps.

(b) Install the No. 3 camshaft and No. 4 camshaft to the camshaft housing LH.

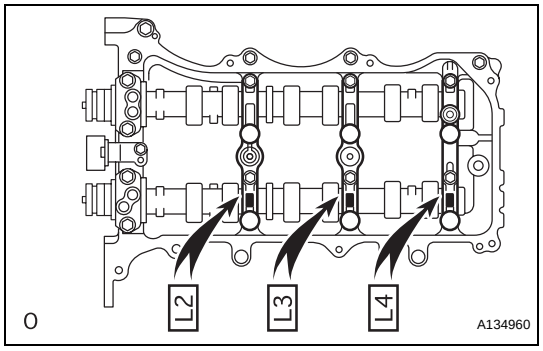

(c) Make sure of the marks and numbers on the camshaft bearing caps and place them in each proper position and direction.

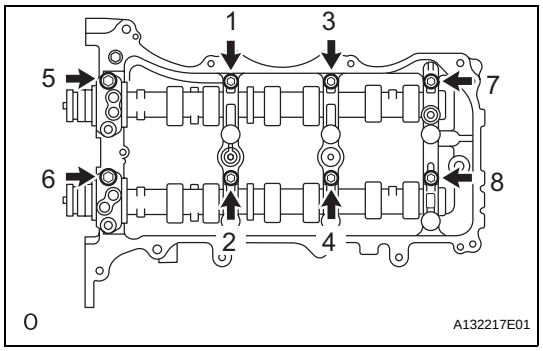

(d) Temporarily tighten the 8 bolts in the order shown in the illustration.
Torque: 10 N*m (102 kgf*cm, 7 ft.*lbf)

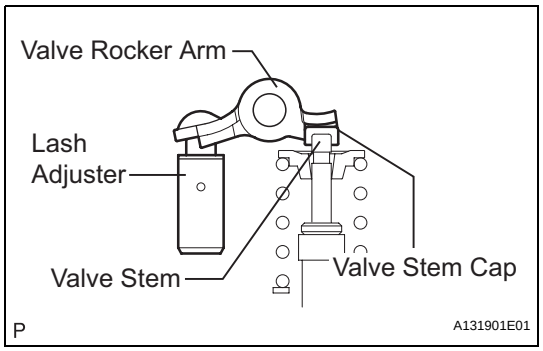

33. INSTALL CAMSHAFT HOUSING SUB-ASSEMBLY LH

(a) Make sure that the valve rocker arm is installed as shown in the illustration.

EM

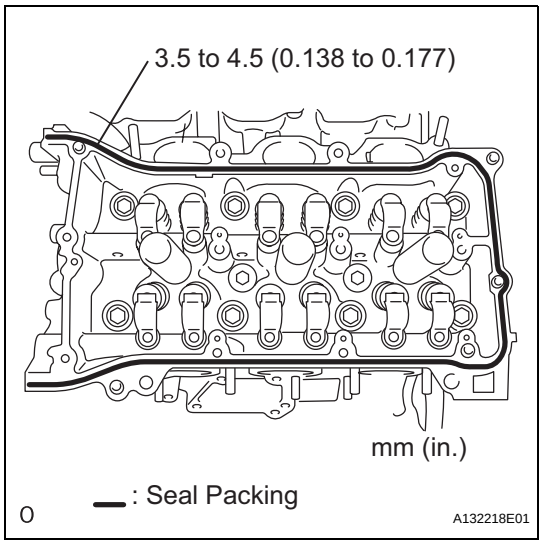

(b) Apply seal packing in a continuous line as shown in the illustration.
Seal packing:
Toyota Genuine Seal Packing Black, Three Bond 1207B or equivalent
Seal diameter:
3.5 to 4.5 mm (0.138 to 0.177 in.)
NOTICE:
- **Remove any oil from the contact surface.**
- **Install the camshaft housing sub-assembly LH within 3 minutes.**
- **Do not start the engine for at least 2 hours after installing.**

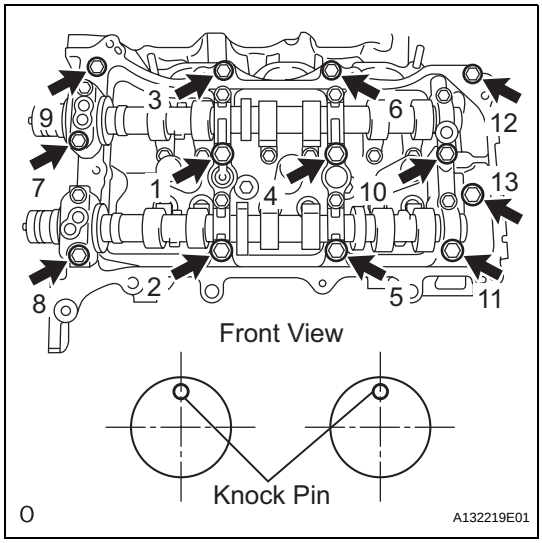

(c) Install the camshaft housing LH and tighten the 13 bolts in the order shown in the illustration.
Torque: 28 N*m (286 kgf*cm, 21 ft.*lbf)
NOTICE:
- **When installing the camshaft housing LH, it is necessary to correctly position the camshafts as shown in the illustration. Failure to correctly position these parts may result in damage due to contact between the pistons and valves. If a camshaft is rotated with a piston at TDC, valve contact will occur.**
- **If any of the bolts are loosened during installation, remove the camshaft housing, clean the installation surfaces, and reapply seal packing.**
- **If the camshaft housing is removed because any of the bolts are loosened during installation, make sure that the previously applied seal packing does not enter any oil passages.**

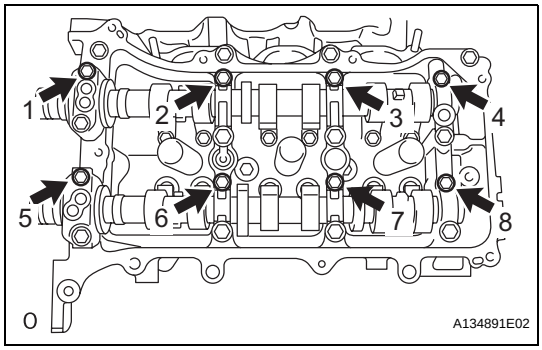

(d) Tighten the 8 bolts in the order shown in the illustration.
Torque: 16 N*m (163 kgf*cm, 12 ft.*lbf)

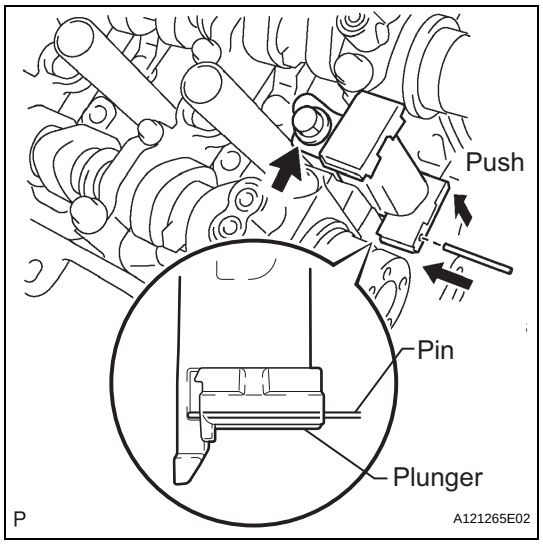

34. INSTALL NO. 2 CHAIN TENSIONER ASSEMBLY

(a) Install the No. 2 chain tensioner with the bolt.
Torque: 21 N*m (214 kgf*cm, 15 ft.*lbf)

(b) While pushing in the tensioner, insert a pin of ϕ 1.0 mm (0.039 in.) into the hole to fix it.

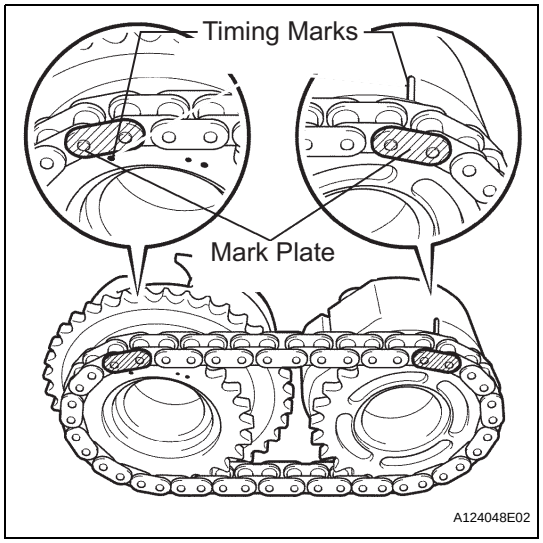

35. INSTALL CAMSHAFT TIMING GEARS AND NO. 2 CHAIN (for Bank 1)

(a) Align the mark plate (yellow) with the timing marks (1-dot mark) of the camshaft timing gears as shown in the illustration.

(b) Apply a light coat of engine oil to the bolt threads and bolt-seating surface.

(c) Align the knock pin of the camshaft with the pin hole of the camshaft timing gear. Install the camshaft timing gear and camshaft timing exhaust gear RH with the No. 2 chain installed.

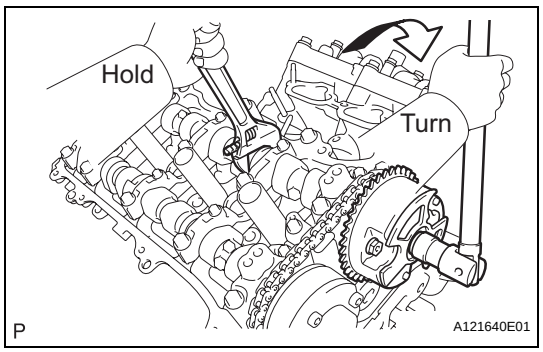

(d) Hold the hexagonal portion of the camshaft with a wrench, and tighten the 2 bolts.
Torque: 100 N*m (1,020 kgf*cm, 74 ft.*lbf)

(e) Remove the pin from the chain tensioner.

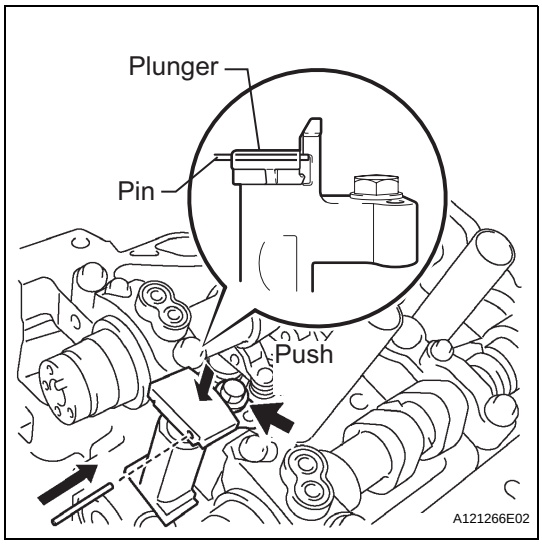

36. INSTALL NO. 3 CHAIN TENSIONER ASSEMBLY

(a) Install the chain tensioner with the bolt.
Torque: 21 N*m (214 kgf*cm, 15 ft.*lbf)

(b) While pushing in the tensioner, insert a pin of ϕ 1.0 mm (0.039 in.) into the hole to hold it.

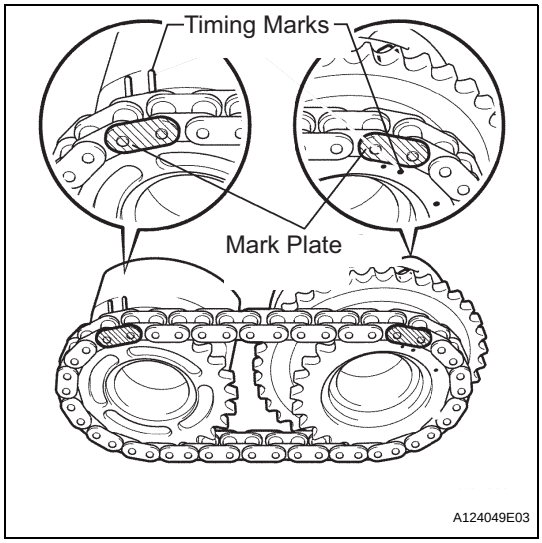

37. INSTALL CAMSHAFT TIMING GEARS AND NO. 2 CHAIN (for Bank 2)

(a) Align the mark plate (yellow) with the timing marks (2-dot mark) of the camshaft timing gears as shown in the illustration.

(b) Apply a light coat of engine oil to the bolt threads and bolt-seating surface.

(c) Align the knock pin of the camshaft with the pin hole of the camshaft timing gear. Install the camshaft timing gear and camshaft timing exhaust gear LH with the No. 2 chain installed.

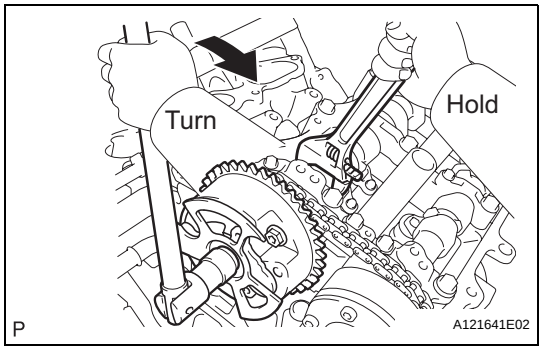

(d) Hold the hexagonal portion of the camshaft with a wrench, and tighten the 2 bolts.
Torque: 100 N*m (1,020 kgf*cm, 74 ft.*lbf)

(e) Remove the pin from the chain tensioner.

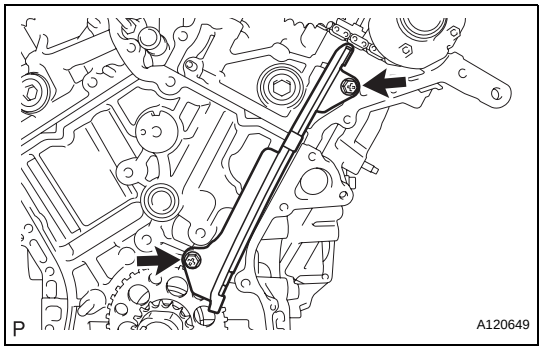

38. INSTALL NO. 1 CHAIN VIBRATION DAMPER

(a) Install the chain vibration damper with the 2 bolts.
Torque: 23 N*m (230 kgf*cm, 17 ft.*lbf)

39. INSTALL NO. 2 CHAIN VIBRATION DAMPER

(a) Install the 2 chain vibration dampers.

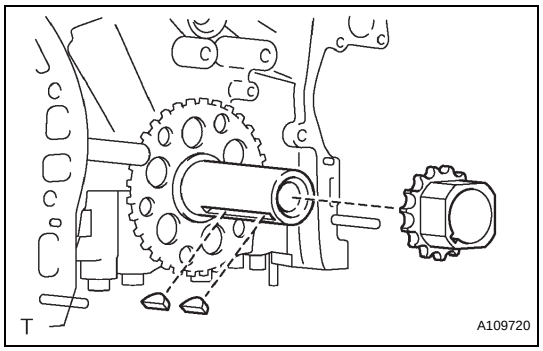

40. INSTALL CRANKSHAFT TIMING SPROCKET

(a) Install the 2 timing gear set keys and timing sprocket as shown in the illustration.

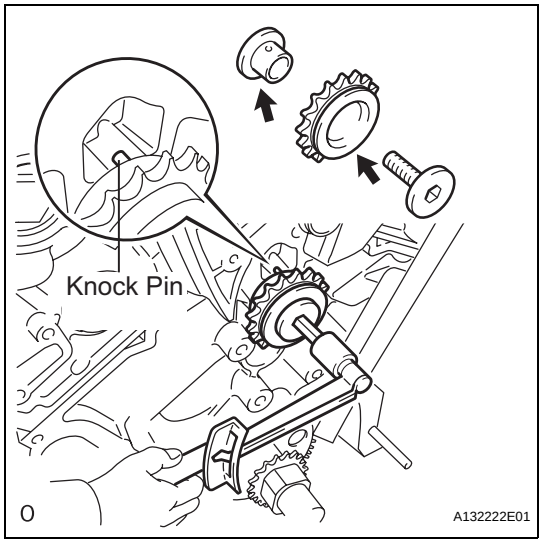

41. INSTALL IDLE SPROCKET ASSEMBLY

(a) Apply a light coat of engine oil to the rotating surface of the No. 1 idle gear shaft.

(b) Temporarily install the No. 1 idle gear shaft and idle sprocket with the No. 2 idle gear shaft while aligning the knock pin of the No. 1 idle gear with the knock pin groove of the cylinder block.

NOTICE:

Be sure to install the idle gear shaft in the correct direction.

HINT:

Check that no foreign objects are on the idle gear shafts No. 1 and No. 2.

(c) Using a 10 mm hexagon wrench, tighten the No. 2 idle gear shaft.

Torque: 60 N*m (612 kgf*cm, 44 ft.*lbf)

HINT:

After installing the idle sprocket assembly, check that the idle sprocket turns smoothly.

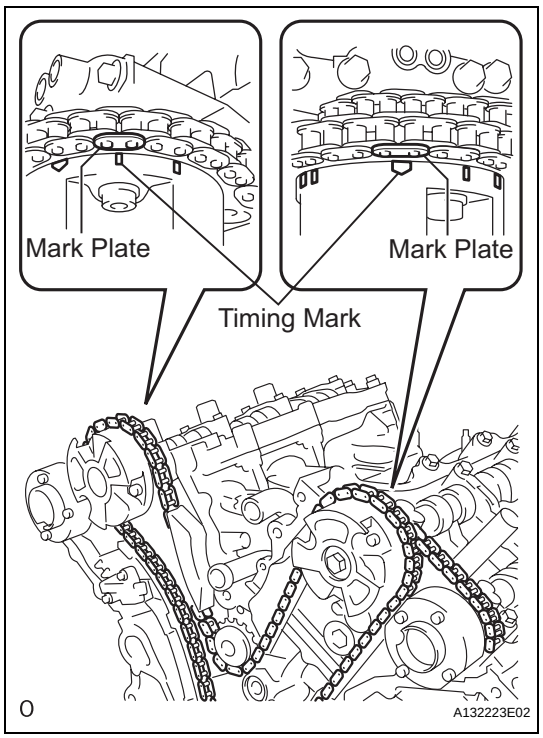

42. INSTALL CHAIN SUB-ASSEMBLY

(a) Align the mark plate and timing marks as shown in the illustration and install the chain.

HINT:

The color of the camshaft mark plate is orange.

EM

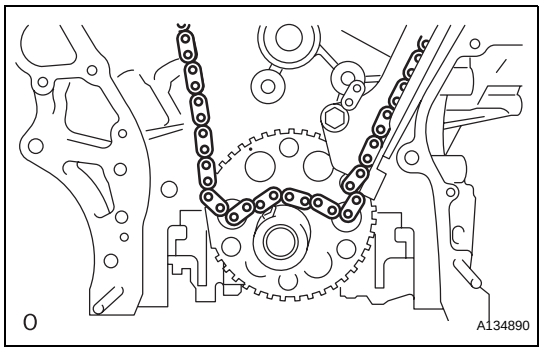

(b) Do not pass the chain over the crankshaft, just put it on it.

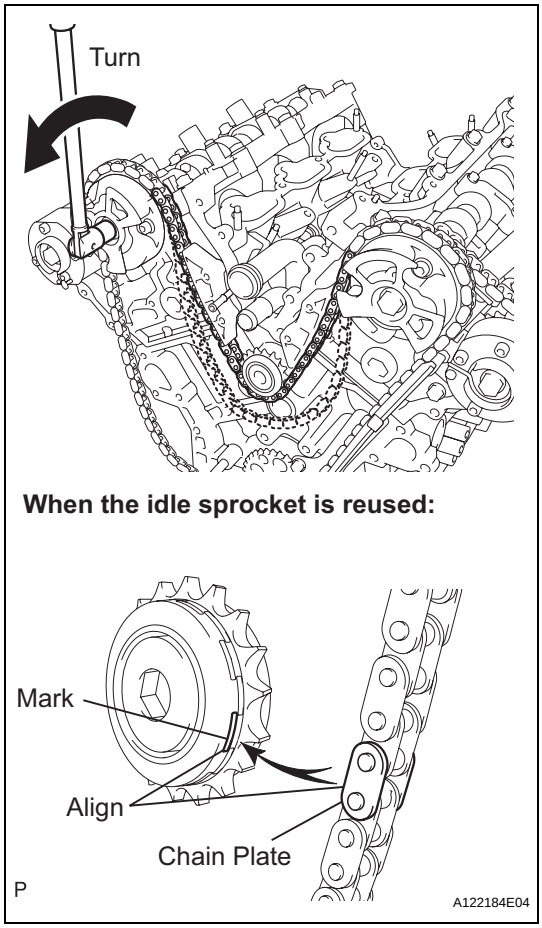

(c) Turn the camshaft timing gear assembly on the RH bank counterclockwise to tighten the chain between the banks.
NOTICE:
When the idle sprocket is reused, align the chain plate with the mark where the plate had been in order to tighten the chain between the banks.

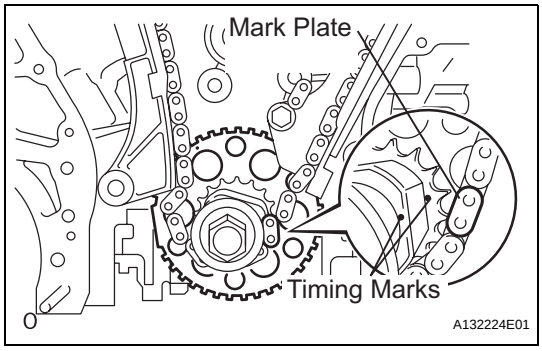

(d) Align the mark plate and timing marks as shown in the illustration and install the chain onto the crankshaft timing sprocket.
HINT:
The color of the crankshaft mark plate is yellow.

(e) Temporarily tighten the pulley set bolt.

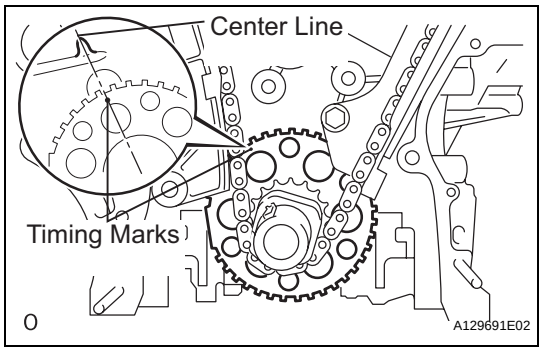

(f) Turn the crankshaft clockwise to set it to the RH block bore center line (TDC / compression).

43. INSTALL CHAIN TENSIONER SLIPPER

(a) Install the chain tensioner slipper.

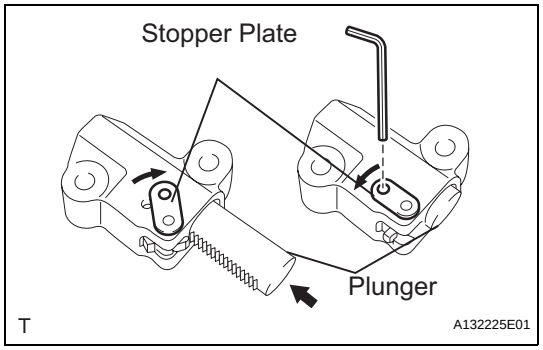

44. INSTALL NO. 1 CHAIN TENSIONER ASSEMBLY

(a) Move the stopper plate upward to release the lock, and push the plunger deep into the tensioner.

(b) Move the stopper plate downward to set the lock, and insert a hexagon wrench into the hole of the stopper plate.

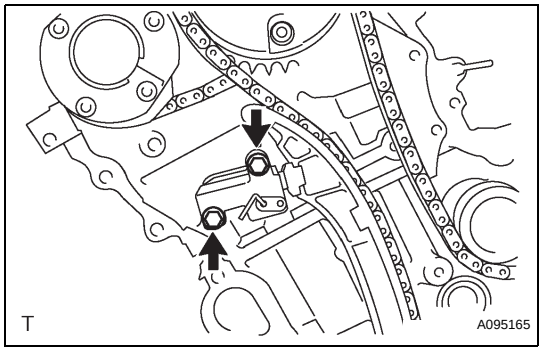

(c) Install the chain tensioner with the 2 bolts.
Torque: 10 N*m (102 kgf*cm, 7 ft.*lbf)

EM

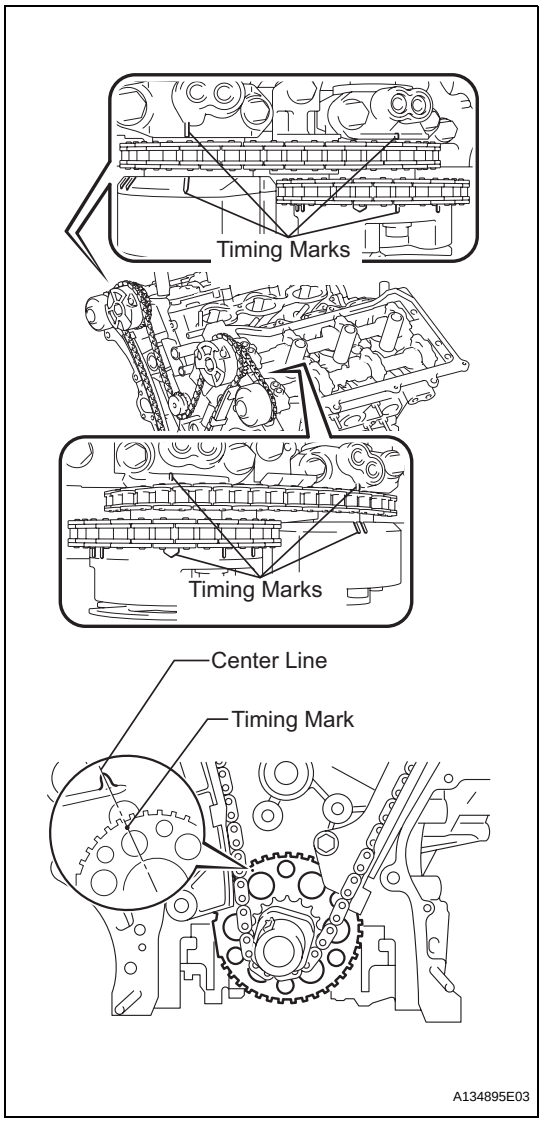

(d) Remove the hexagon wrench of the chain tensioner. Check that each timing mark is aligned with the crankshaft at the TDC / compression.

(e) Remove the pulley set bolt.

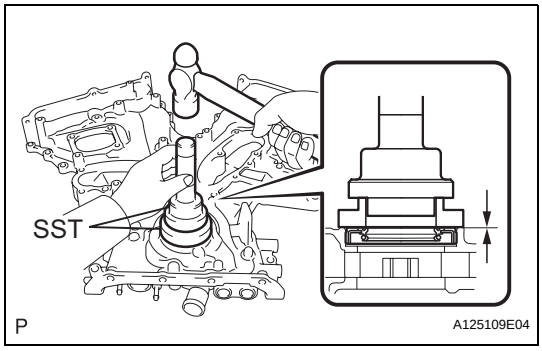

45. INSTALL TIMING CHAIN CASE OIL SEAL

(a) Using SST, tap in a new oil seal until its surface is flush with the timing gear case edge.
SST 09223-22010, 09506-35010
NOTICE:
- **Keep the lip free of foreign matter.**
- **Do not tap on the oil seal at an angle.**
- **Make sure that the oil seal edge does not stick out of the timing chain case.**

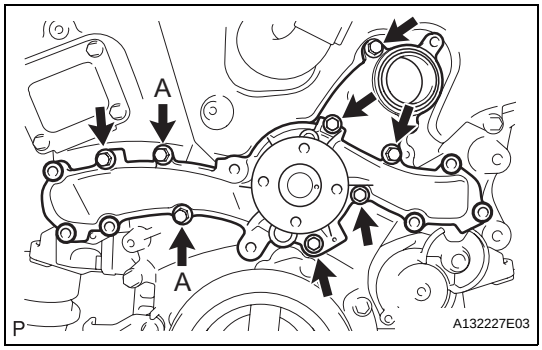

46. INSTALL WATER PUMP ASSEMBLY

(a) Install a new gasket and the water pump with the 8 bolts.
Torque: 9.1 N*m (93 kgf*cm, 81 in.*lbf)
NOTICE:
Be sure to replace the bolts indicated by A with new ones or reuse them after applying adhesive 1344.

47. INSTALL TIMING CHAIN COVER SUB-ASSEMBLY

(a) Apply seal packing in a continuous line to the engine unit as shown in the following illustration.

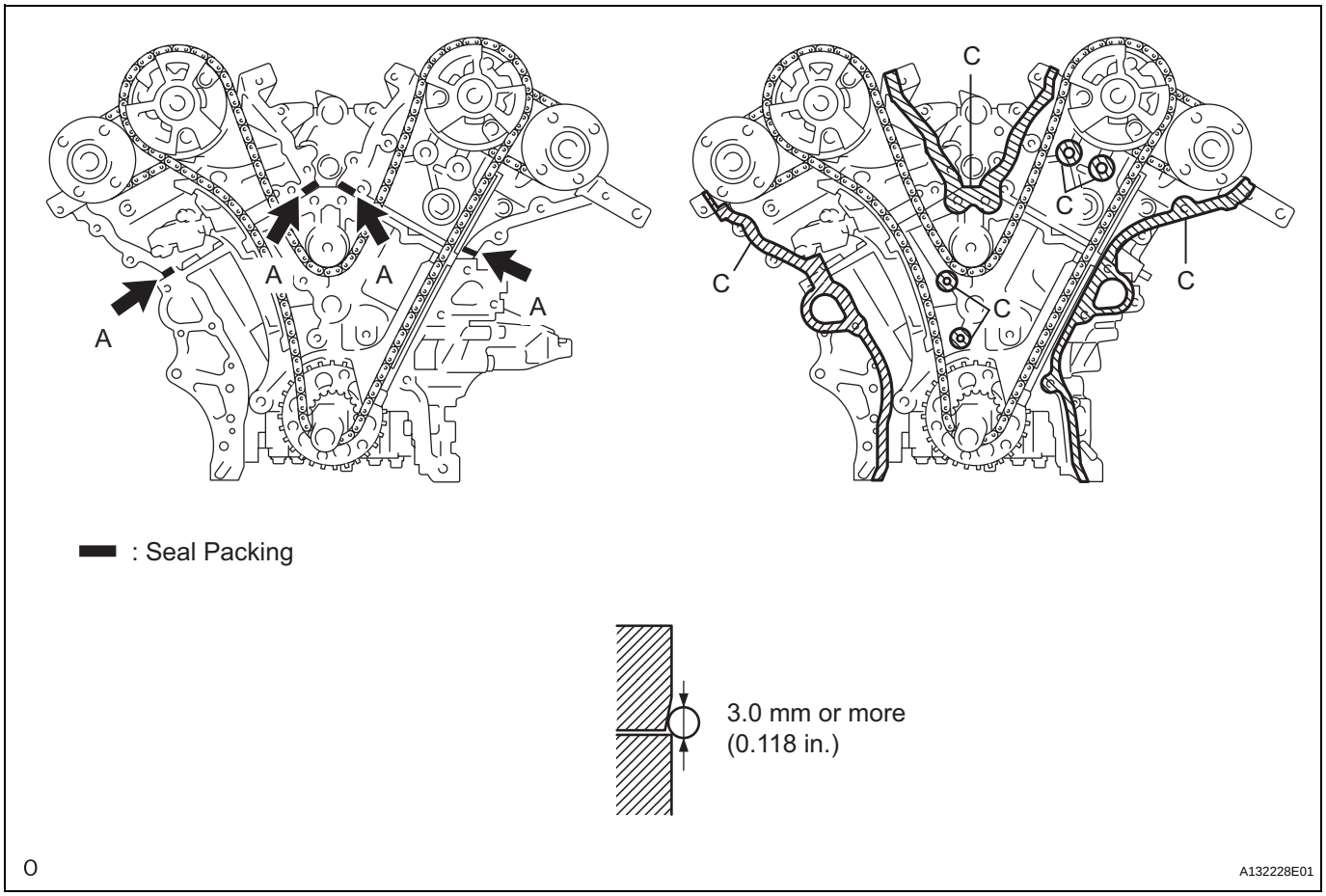

Seal packing:
Toyota Genuine Seal Packing Black, Three Bond 1207B or equivalent
Seal diameter:
3.0 mm (0.118 in.)
NOTICE:

- **Be sure to clean and degrease the contact surfaces, especially the surfaces indicated by C in the illustration.**
- **When the contact surfaces are wet, wipe them with an oil-free cloth before applying seal packing.**
- **Install the chain cover within 3 minutes.**
- **Do not start the engine for at least 2 hours after installing.**

EM

(b) Apply seal packing in a continuous line to the timing chain cover as shown in the following illustration.

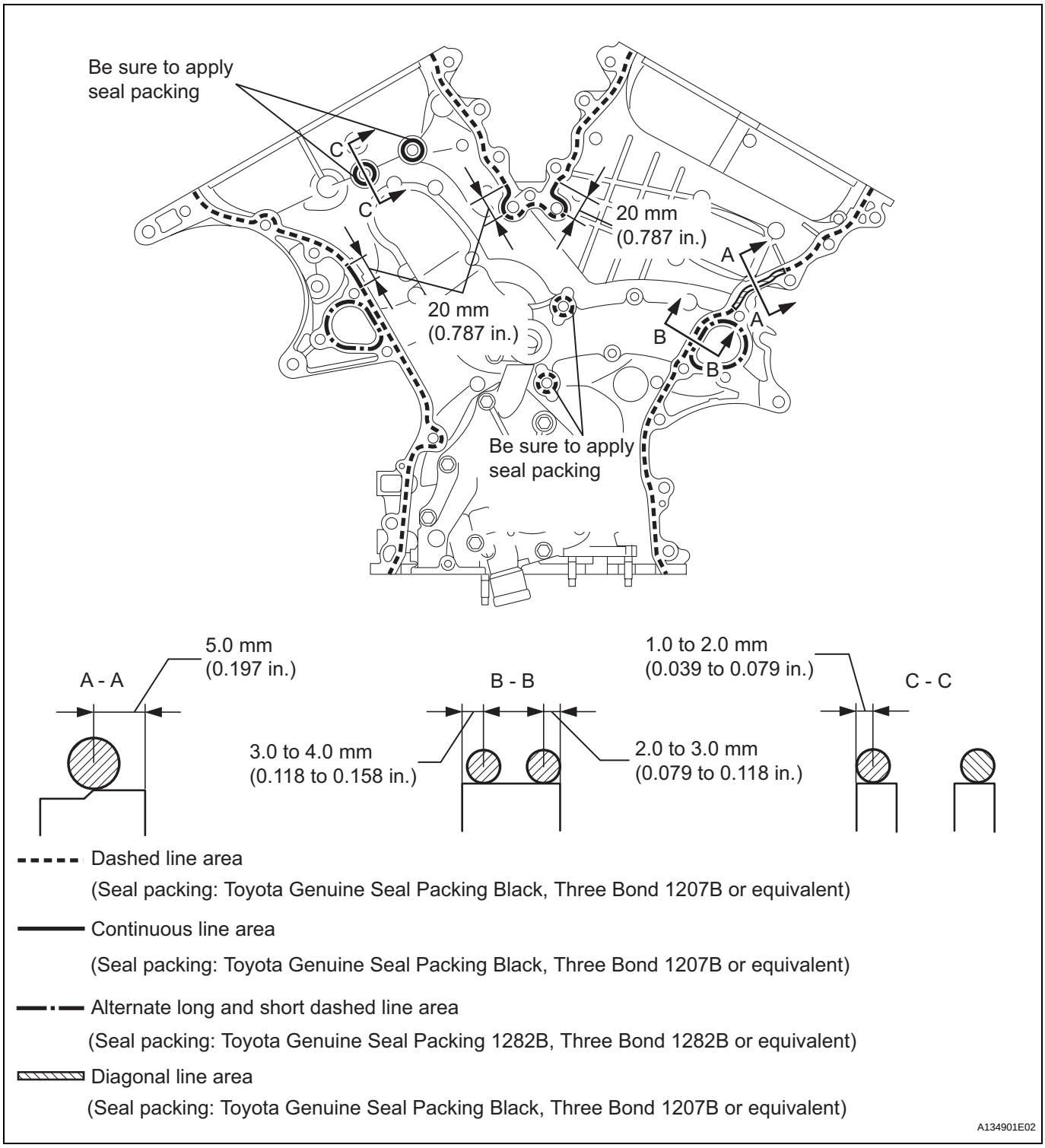

Seal packing:
Toyota Genuine Seal Packing Black, Three Bond 1207B or equivalent
Toyota Genuine Seal Packing Black 1282B, Three Bond 1282B or equivalent

NOTICE:
- **When the contact surfaces are wet, wipe them with an oil-free cloth before applying seal packing.**
- **Install the chain cover within 3 minutes and tighten the bolts within 15 minutes after applying seal packing.**
- **Do not start the engine for at least 2 hours after installing.**

Apply seal packing as follows

Area	Seal Packing Diameter	Application Position from Inside Seal Line
Continuous Line Area	4.5 mm or more (0.177 in.)	3.0 to 4.0 mm (0.118 to 0.158 in.)
Alternate Long and Short Dashed Line Area	3.5 mm or more (0.138 in.)	2.0 to 3.0 mm (0.079 to 0.118 in.)
Dashed Line Area	3.5 mm or more (0.138 in.)	3.0 to 4.0 mm (0.118 to 0.158 in.)
Diagonal Line Area	6.0 mm or more (0.236 in.)	5.0 mm (0.197 in.)

EM

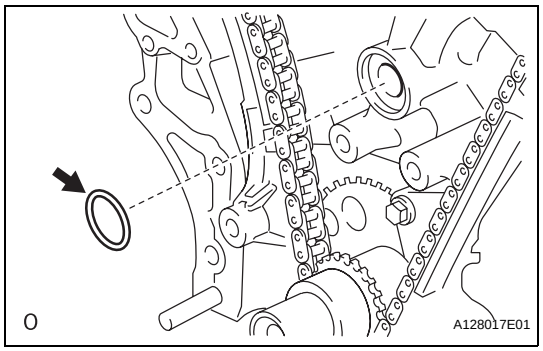

(c) Install a new gasket.

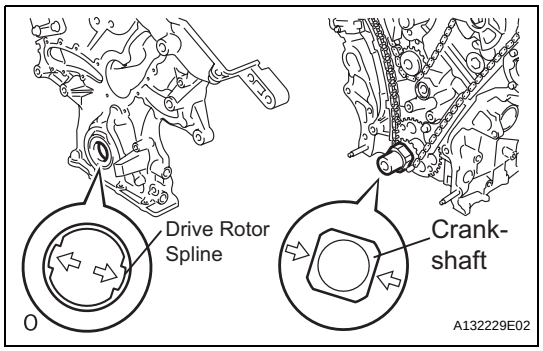

(d) Align the oil pump's drive rotor spline and the crankshaft as shown in the illustration. Install the spline and chain cover to the crankshaft.
(e) Temporarily tighten the timing chain cover with the 23 bolts and 2 nuts.

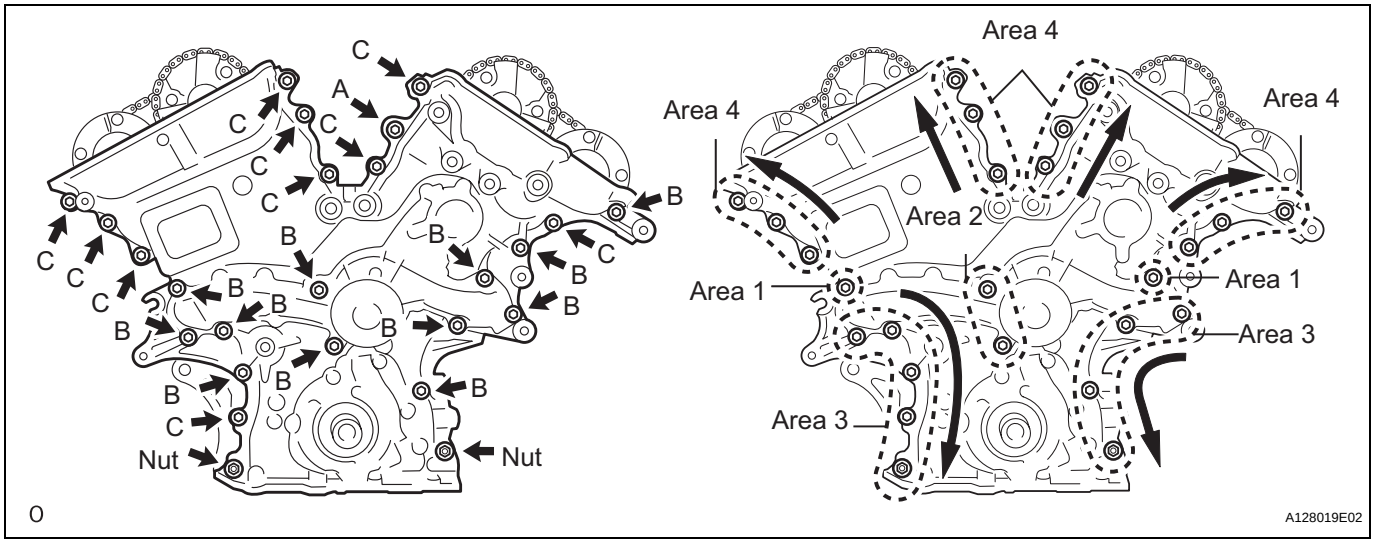

Bolt length

Item	Length
Bolt A	40 mm (1.57 in.)
Bolt B	55 mm (2.17 in.)
Bolt C	25 mm (0.98 in.)

NOTICE:
Make sure that there is no oil on the bolt and nut threads.

(f) Fully tighten the bolts in this order: Area 1 and Area 2.
Torque: 21 N*m (214 kgf*cm, 15 ft.*lbf)

(g) Fully tighten the bolts in Area 3.
Torque: 21 N*m (214 kgf*cm, 15 ft.*lbf)
HINT:
Tighten the bolts and nuts in the order of upper to lower as shown in the illustration.

(h) Fully tighten the bolts in Area 4.
Torque: 43 N*m (438 kgf*cm, 32 ft.*lbf) for bolt A
21 N*m (214 kgf*cm, 15 ft.*lbf) for bolts except bolt A
HINT:
Tighten the bolts in the order of lower to upper as shown in the illustration.

(i) Install a new gasket and the chain cover plate with the 4 bolts.
Torque: 9.1 N*m (93 kgf*cm, 81 in.*lbf)

48. INSTALL WATER INLET HOUSING

(a) Install 2 new O-rings.
HINT:
Apply a small amount of water or soapy water to O-ring (A) in the illustration before installing it.

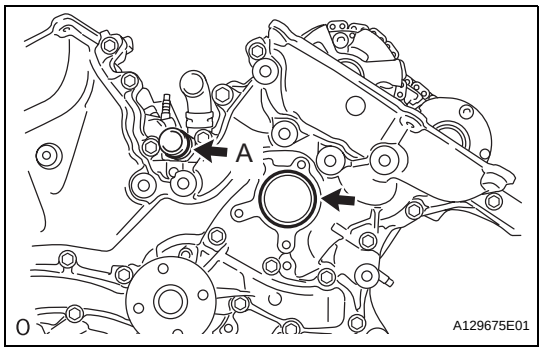

EM

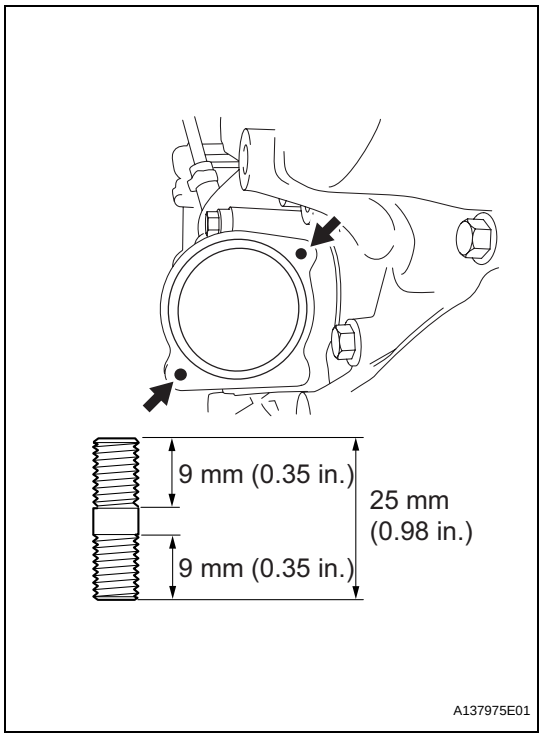

(b) Install the stud bolts.
Torque: 4.0 N*m (41 kgf*cm, 35 in.*lbf)

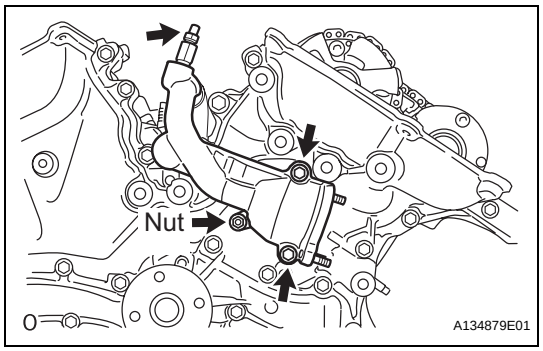

(c) Install the water inlet with the 2 bolts and nut.
Torque: 10 N*m (102 kgf*cm, 7 ft.*lbf)
NOTICE:
Be careful that the O-ring does not get caught between the parts.

(d) Connect the No. 1 water by-pass hose.

(e) Apply adhesive around the drain cock.
Adhesive:
Toyota Genuine Adhesive 1324, Three Bond 1324 or equivalent

(f) Install the drain cock to the water inlet housing.
Torque: 30 N*m (306 kgf*cm, 22 ft.*lbf)

(g) Install the drain cock plug to the water drain cock.
Torque: 13 N*m (130 kgf*cm, 9 ft.*lbf)

(h) Install a new gasket to the thermostat.

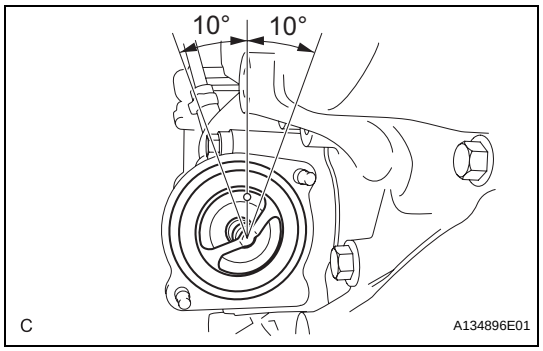

(i) Align the thermostat jiggle valve with the upper stud bolt, and insert the thermostat in the water inlet housing.
HINT:
The jiggle valve may be set within 10° of either side of the prescribed positions.

EM

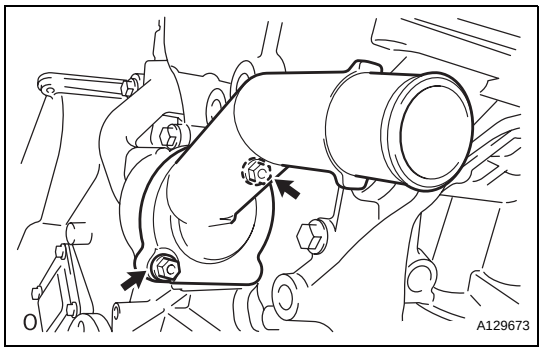

(j) Install the water inlet with the 2 nuts.
Torque: 10 N*m (102 kgf*cm, 7 ft.*lbf)

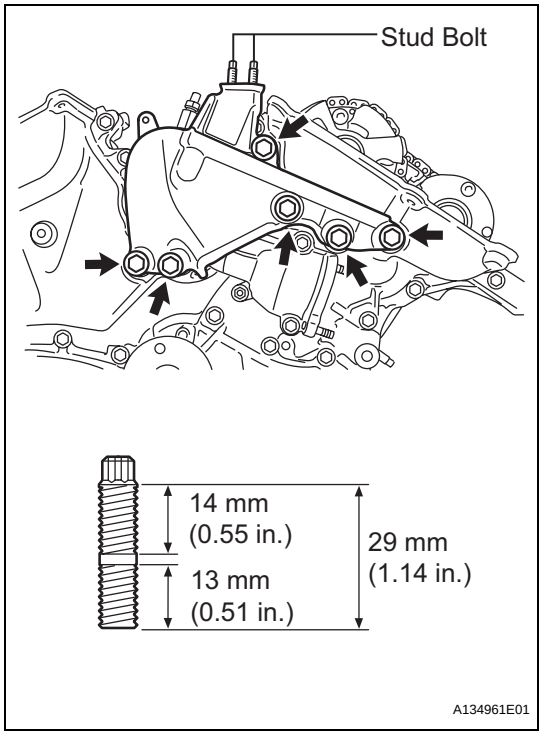

49. INSTALL FRONT ENGINE MOUNTING BRACKET NO. 1 LH

(a) Install the engine mounting bracket with the 6 bolts.
Torque: 54 N*m (551 kgf*cm, 40 ft.*lbf)
NOTICE:
- **Install the water inlet and mounting bracket within 15 minutes after installing the chain cover.**
- **Do not start the engine for at least 2 hours after installation.**

(b) When replacing a stud bolt, install it by using an E8 "TORX" socket wrench.
Torque: 10 N*m (102 kgf*cm, 7 ft.*lbf)

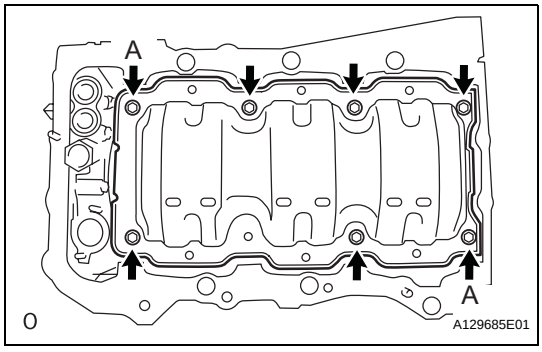

50. INSTALL OIL PAN BAFFLE PLATE

(a) Install the oil pan baffle plate with the 7 bolts.
Torque: 10 N*m (102 kgf*cm, 7 ft.*lbf)
HINT:
Temporarily tighten the 7 bolts. Fully tighten 2 bolts A as shown in the illustration before tightening the other bolts.

51. INSTALL OIL PAN SUB-ASSEMBLY

(a) When replacing a stud bolt, install it by using an E8 "TORX" socket wrench.

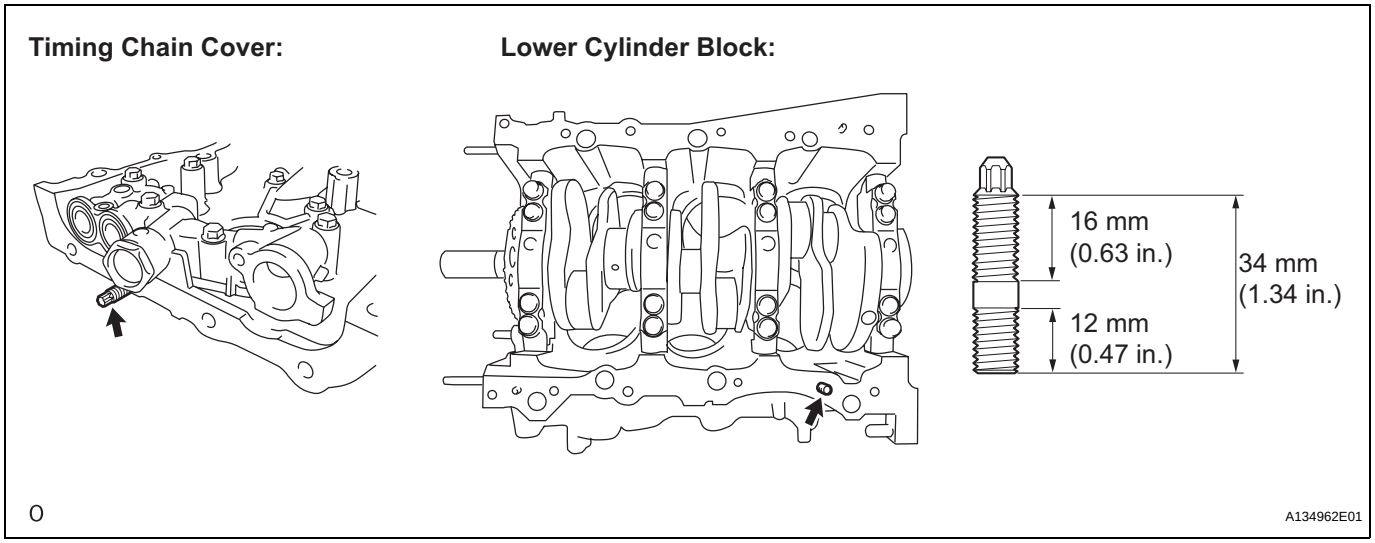

Torque: 10 N*m (102 kgf*cm, 7 ft.*lbf)

(b) Install 2 new O-rings.

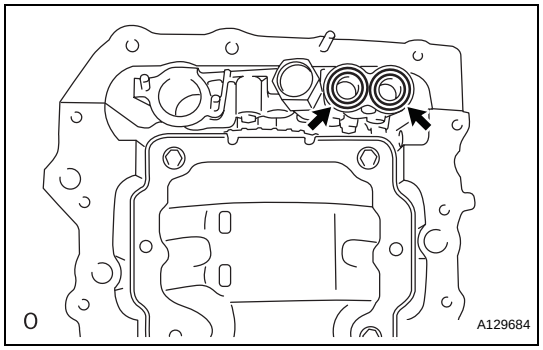

(c) Apply seal packing in a continuous line as shown in the illustration.

Seal packing:
Toyota Genuine Seal Packing Black, Three Bond 1207B or equivalent

Seal diameter:
3.0 to 4.0 mm (0.118 to 0.156 in.)

NOTICE:
- **Remove any oil from the contact surface.**
- **Install the oil pan within 3 minutes after applying seal packing.**
- **Do not start the engine for at least 2 hours after installing.**

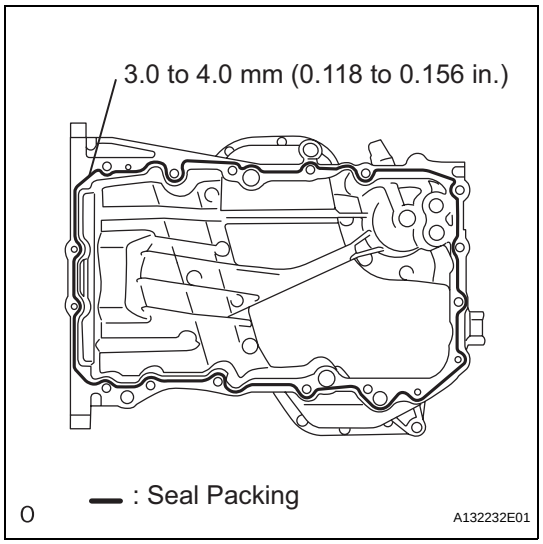

EM

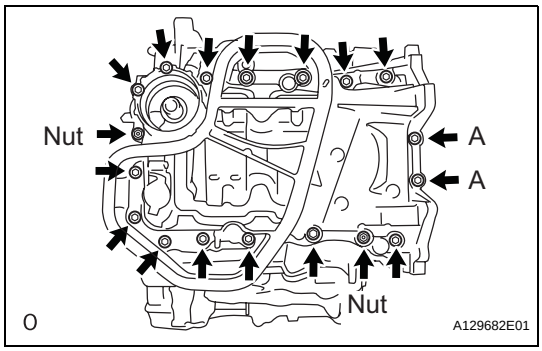

(d) Install the oil pan with the 16 bolts and 2 nuts.
Torque: 10 N*m (102 kgf*cm, 7 ft.*lbf) for bolt A
21 N*m (214 kgf*cm, 15 ft.*lbf) for bolts except A

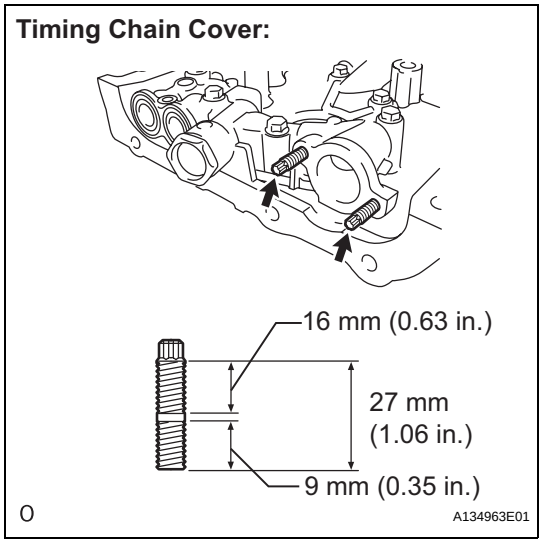

52. INSTALL OIL STRAINER SUB-ASSEMBLY

(a) Using an E6 "TORX" socket, install the stud bolts as shown in the illustration.
Torque: 4.0 N*m (41 kgf*cm, 35 in.*lbf)

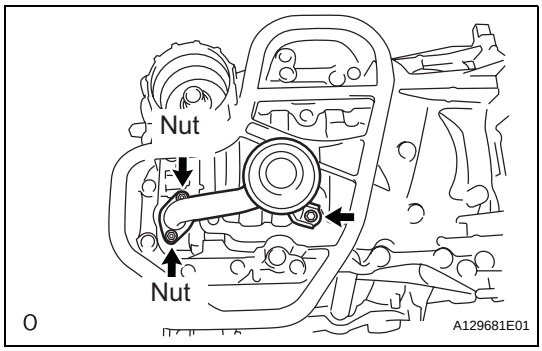

(b) Install a new gasket and the oil strainer with the bolt and 2 nuts.
Torque: 10 N*m (102 kgf*cm, 7 ft.*lbf)

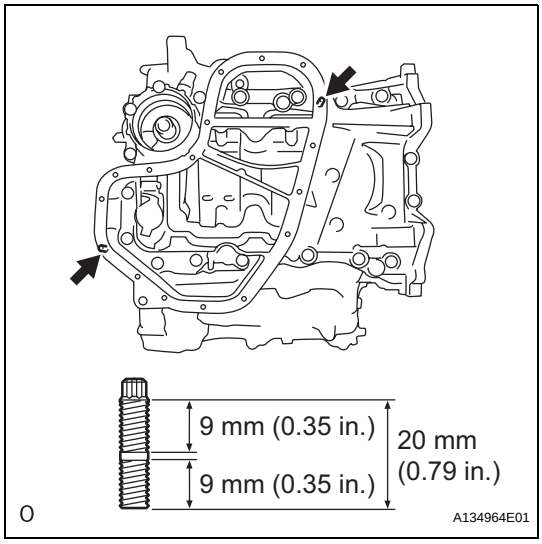

53. INSTALL NO. 2 OIL PAN SUB-ASSEMBLY

(a) Using an E6 "TORX" socket, install the stud bolts as shown in the illustration.
Torque: 4.0 N*m (41 kgf*cm, 35 in.*lbf)

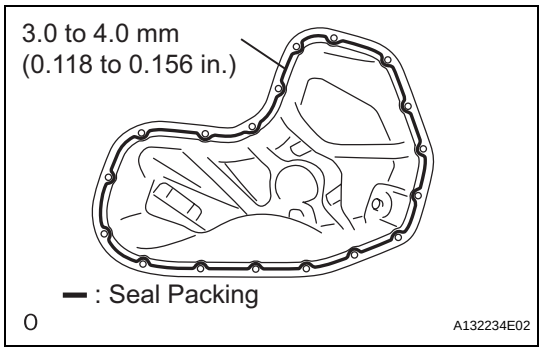

(b) Apply seal packing in a continuous line as shown in the illustration.
Seal packing:
Toyota Genuine Seal Packing Black, Three Bond 1207B or equivalent
Seal diameter:
3.0 to 4.0 mm (0.118 to 0.156 in.)
NOTICE:
- **Remove any oil from the contact surface.**
- **Install the oil pan No. 2 within 3 minutes after applying seal packing.**
- **Do not start the engine for at least 2 hours after installing.**

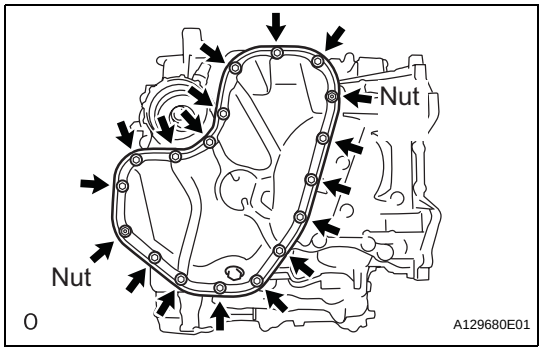

(c) Install the oil pan with the 16 bolts and 2 nuts.
Torque: 10 N*m (102 kgf*cm, 7 ft.*lbf)

EM

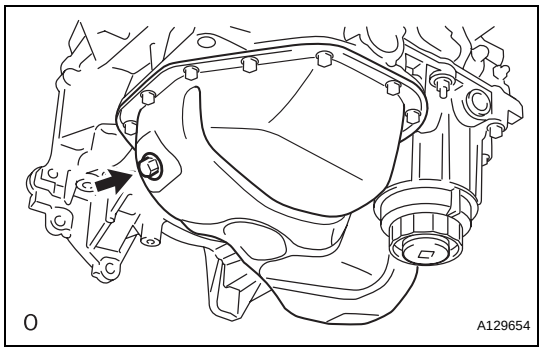

54. INSTALL OIL PAN DRAIN PLUG

(a) Install a new gasket and the drain plug.
Torque: 40 N*m (408 kgf*cm, 30 ft.*lbf)

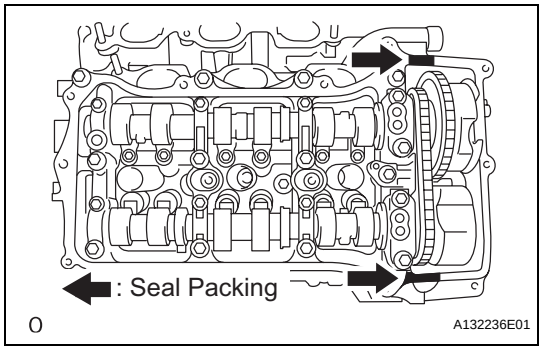

55. INSTALL CYLINDER HEAD COVER SUB-ASSEMBLY (for Bank 1)

(a) Apply seal packing as shown in the illustration.
Seal packing:
Toyota Genuine Seal Packing Black, Three Bond 1207B or equivalent
NOTICE:
- **Remove any oil from the contact surface.**
- **Install the head cover within 3 minutes after applying seal packing.**
- **Do not start the engine for at least 2 hours after installing.**

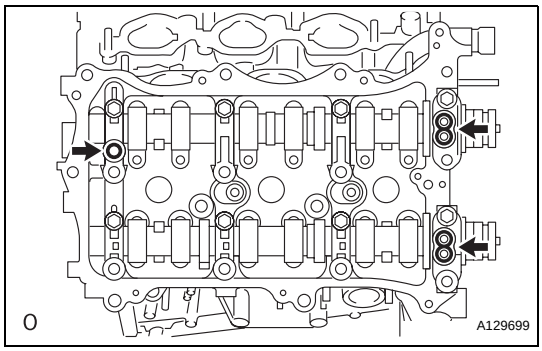

(b) Install 3 new gaskets as shown in the illustration.
(c) Install a new gasket to the head cover.

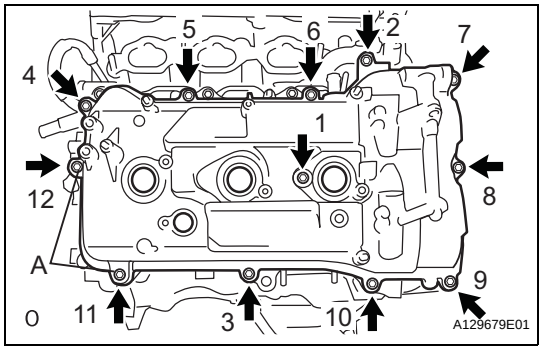

(d) Install a head cover with the 12 bolts and a new washer.
Torque: 21 N*m (214 kgf*cm, 15 ft.*lbf) for bolt A
10 N*m (102 kgf*cm, 7 ft.*lbf) for bolts except A
HINT:
After tightening all bolts, check the tightening torque of 1 and 11. Retighten the bolt if necessary.

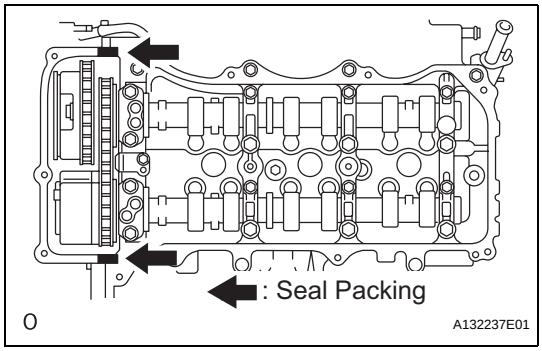

56. INSTALL CYLINDER HEAD COVER SUB-ASSEMBLY (for Bank 2)

(a) Apply seal packing as shown in the illustration.
Seal packing:
Toyota Genuine Seal Packing Black, Three Bond 1207B or equivalent
NOTICE:
- **Remove any oil from the contact surface.**
- **Install the head cover within 3 minutes after applying seal packing.**
- **Do not start the engine for at least 2 hours after installing.**

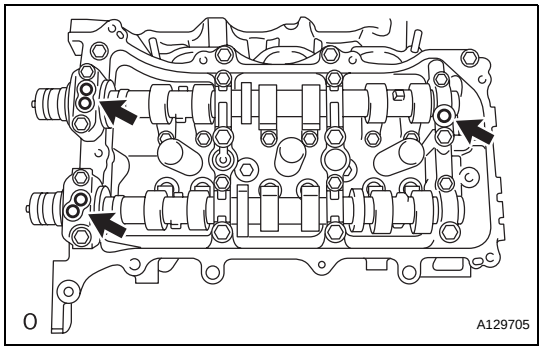

(b) Install 3 new gaskets as shown in the illustration.
(c) Install a new gasket to the head cover.

EM

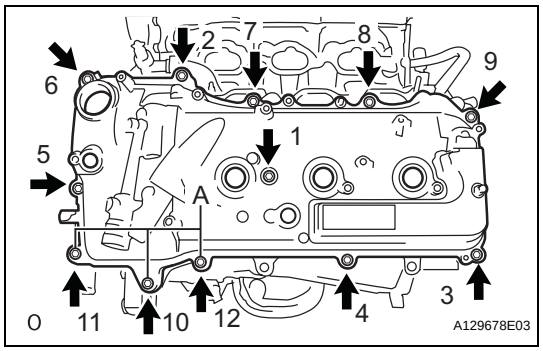

(d) Install the head cover with the 12 bolts and a new washer.
Torque: 21 N*m (214 kgf*cm, 15 ft.*lbf) for bolt A
10 N*m (102 kgf*cm, 7 ft.*lbf) for bolts except A
HINT:
After tightening all bolts, check the tightening torque of 1 and 10. Retighten the bolt if necessary.

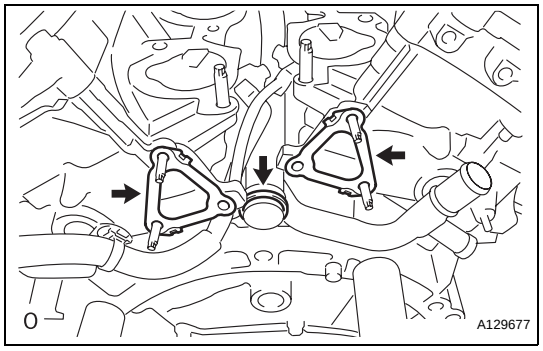

57. INSTALL WATER OUTLET

(a) Install 2 new gaskets and a new O-ring.
HINT:
Apply soapy water to the O-ring.

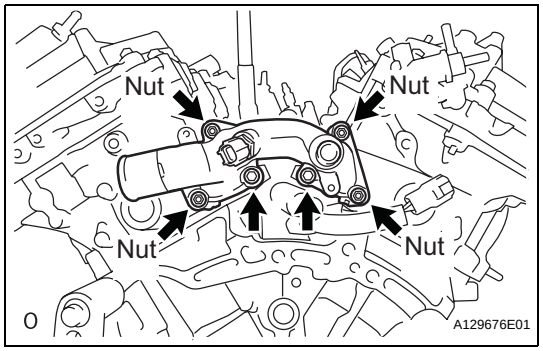

(b) Install the water by-pass joint with the 2 bolts and 4 nuts.
Torque: 10 N*m (102 kgf*cm, 7 ft.*lbf) for bolts
10 N*m (103 kgf*cm, 7 ft.*lbf) for nuts
NOTICE:
Be careful that the O-ring does not get caught between the parts.

58. INSTALL CRANKSHAFT PULLEY

(a) Align the pulley set key with the key groove of the pulley, and slide it on the pulley.

(b) Using SST, install the pulley bolt.
SST 09213-70011 (09213-70020), 09330-00021
Torque: 250 N*m (2,550 kgf*cm, 184 ft.*lbf)

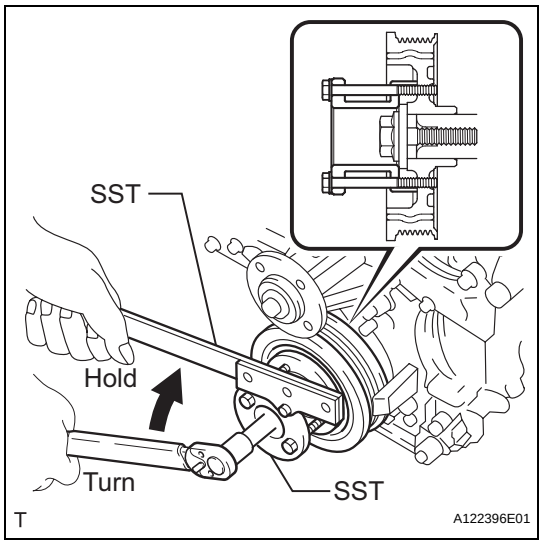

EM

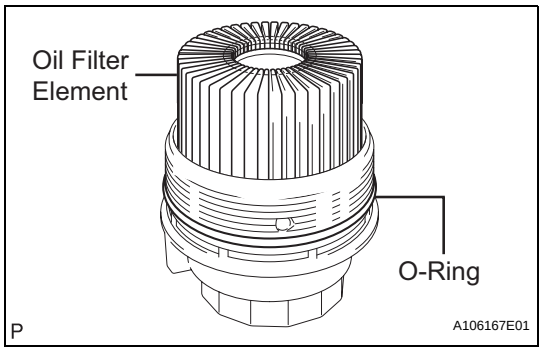

59. INSTALL OIL FILTER ELEMENT

(a) Clean the inside of the oil filter cap, the threads and O-ring groove.

(b) Apply a light coat of engine oil to a new O-ring and install it to the oil filter cap.

(c) Set a new oil filter element to the oil filter cap.

(d) Remove dirt or foreign matter from the installation surface of the engine.

(e) Apply a light coat of engine oil to the O-ring again and install the oil filter cap.

NOTICE:

- **Be careful that the O-ring does not get caught between the parts.**
- **The O-ring must not be twisted on the groove.**

EM

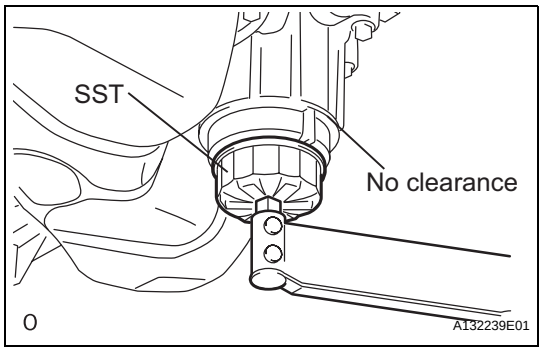

(f) Using SST, tighten the oil filter cap.

SST 09228-06501

Torque: 25 N*m (255 kgf*cm, 18 ft.*lbf)

NOTICE:

Make sure that the oil filter is installed securely as shown in the illustration.

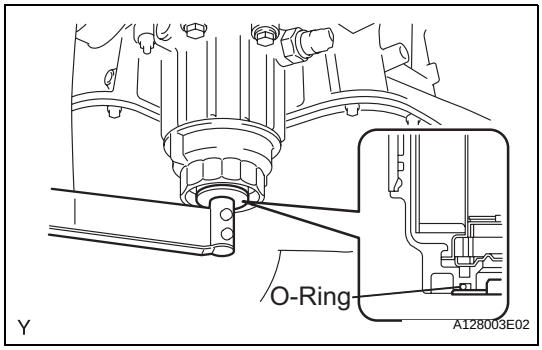

(g) Apply a light coat of engine oil to a new O-ring and install it to the oil filter cap.

NOTICE:

Remove all dirt and foreign matter from the installation surface.

(h) Install the oil filter drain plug to the oil filter cap.

Torque: 13 N*m (127 kgf*cm, 9 ft.*lbf)

NOTICE:

Make sure that the O-ring does not get caught between the parts.

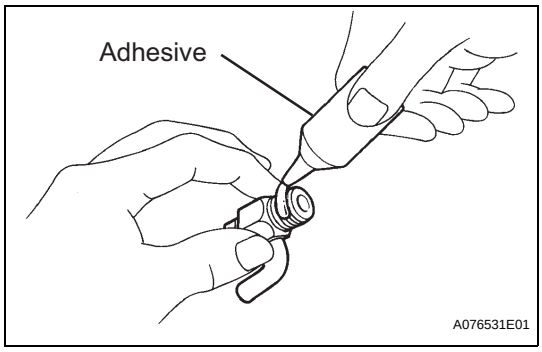

60. INSTALL CYLINDER BLOCK WATER DRAIN COCK SUB-ASSEMBLY

(a) Apply adhesive around the drain cocks.

Adhesive:

Toyota Genuine Adhesive 1324, Three Bond 1324 or equivalent

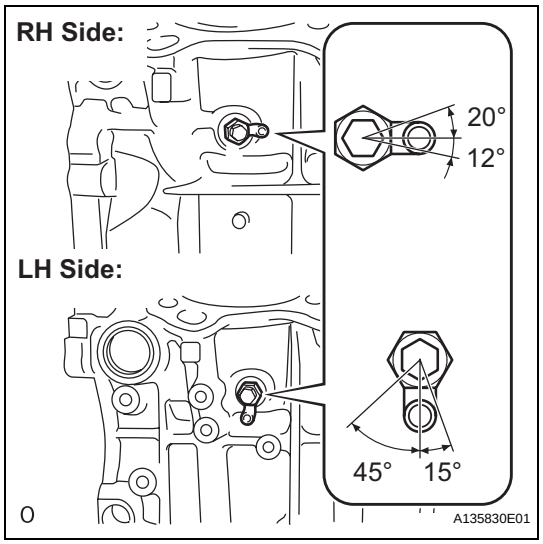

(b) Install the water drain cocks as shown in the illustration.
Torque: 25 N*m (255 kgf*cm, 18 ft.*lbf)
NOTICE:
Do not rotate the drain cocks more than 1 revolution (360°) after tightening the drain cocks to the specified torque.

(c) Install the water drain cock plugs to the water drain cocks.
Torque: 13 N*m (130 kgf*cm, 9 ft.*lbf)

61. INSTALL NO. 1 OIL PIPE

(a) Make sure that there is no foreign matter on the mesh of the oil control valve filter LH.
NOTICE:
Do not touch the mesh when installing the oil control valve filter.

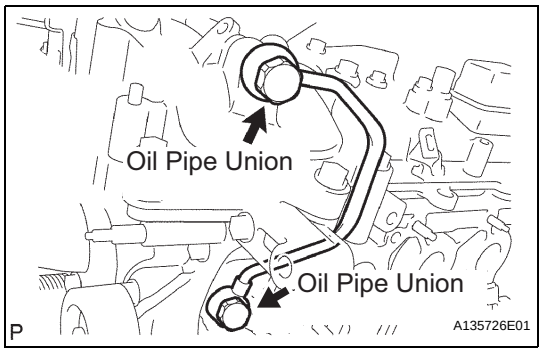

(b) Install the oil control valve filter LH to the oil pipe union. Install new gaskets and temporarily install the oil pipe (on the head cover side).

(c) Install a new gasket and temporarily install the oil pipe (on the cylinder head side) with the oil check valve bolt.

(d) Tighten the oil pipe union (on the head cover side).
Torque: 65 N*m (663 kgf*cm, 48 ft.*lbf)

(e) Tighten the oil pipe union (on the cylinder head side).
Torque: 65 N*m (663 kgf*cm, 48 ft.*lbf)
NOTICE:
If the link that connects the gaskets is broken, remove the connecting link by using nippers or similar tools.

62. INSTALL OIL PIPE

(a) Make sure that there is no foreign matter on the mesh of the oil control valve filter RH.
NOTICE:
Do not touch the mesh when installing the oil control valve filter.

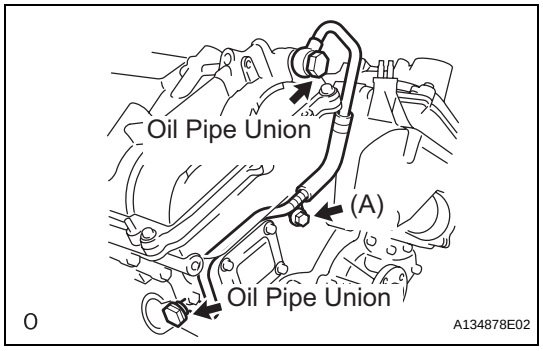

(b) Install the oil control valve filter RH to the oil pipe union. Install new gaskets and temporarily install the oil pipe (on the head cover side).

(c) Install a new gasket and temporarily install the oil pipe (on the cylinder head side) with the oil check valve bolt.

(d) Install the bolt (A) to the cylinder head.
Torque: 10 N*m (102 kgf*cm, 7 ft.*lbf)

(e) Tighten the oil pipe union (on the head cover side).
Torque: 65 N*m (663 kgf*cm, 48 ft.*lbf)

(f) Tighten the oil pipe union (on the cylinder head side).
Torque: 65 N*m (663 kgf*cm, 48 ft.*lbf)

EM

NOTICE:
If the link that connects the gaskets is broken, remove the connecting link by using nippers or similar tools.

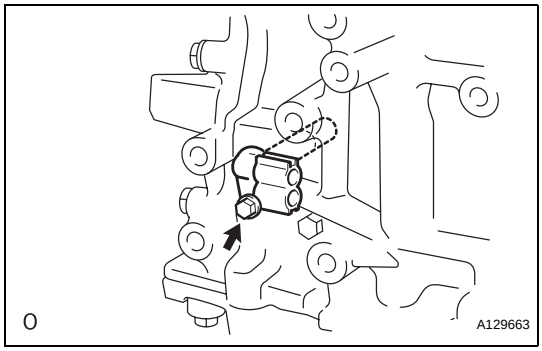

63. INSTALL CRANKSHAFT POSITION SENSOR

(a) Install the sensor with the bolt.
Torque: 10 N*m (102 kgf*cm, 7 ft.*lbf)

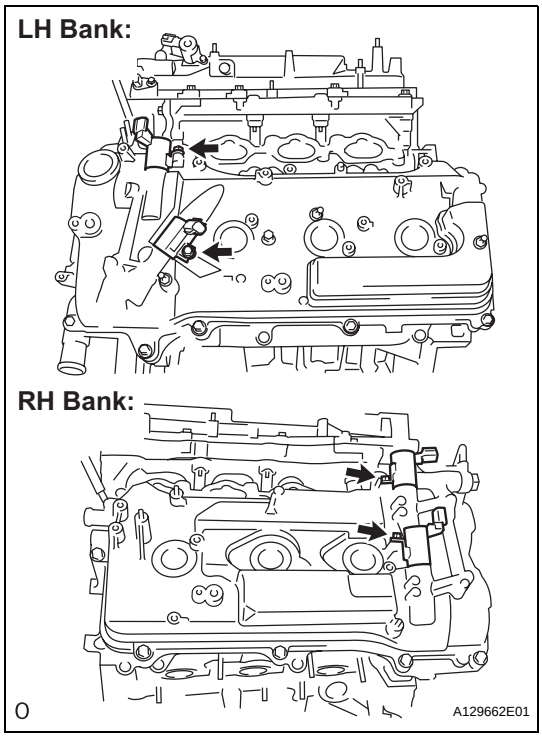

64. INSTALL CAMSHAFT TIMING OIL CONTROL VALVE ASSEMBLY

(a) Install the 4 oil control valves with the 4 bolts.
Torque: 10 N*m (102 kgf*cm, 7 ft.*lbf)

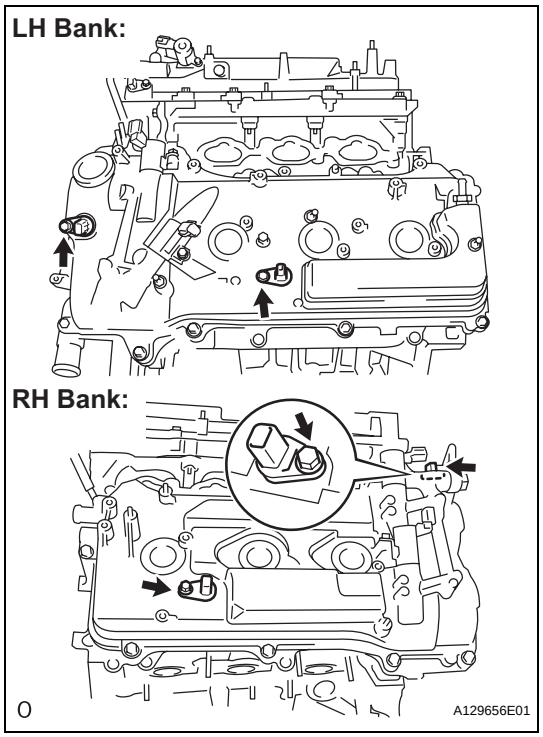

65. INSTALL CAMSHAFT POSITION SENSOR

(a) Install the 4 sensors with the 4 bolts.
Torque: 10 N*m (102 kgf*cm, 7 ft.*lbf)

66. INSTALL VENTILATION VALVE SUB-ASSEMBLY

(a) Apply adhesive around the ventilation valve.
Adhesive:
Toyota Genuine Adhesive 1324, Three Bond 1324 or equivalent

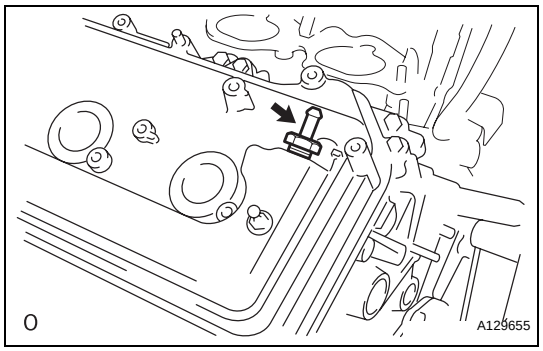

(b) Install the ventilation valve.
Torque: 27 N*m (275 kgf*cm, 20 ft.*lbf)

67. INSTALL SPARK PLUG

(a) Install the 6 spark plugs.
Torque: 18 N*m (184 kgf*cm, 13 ft.*lbf)

68. INSTALL OIL FILLER CAP SUB-ASSEMBLY

(a) Install a new gasket.
(b) Install the oil filler cap.

ENGINE REAR OIL SEAL

COMPONENTS

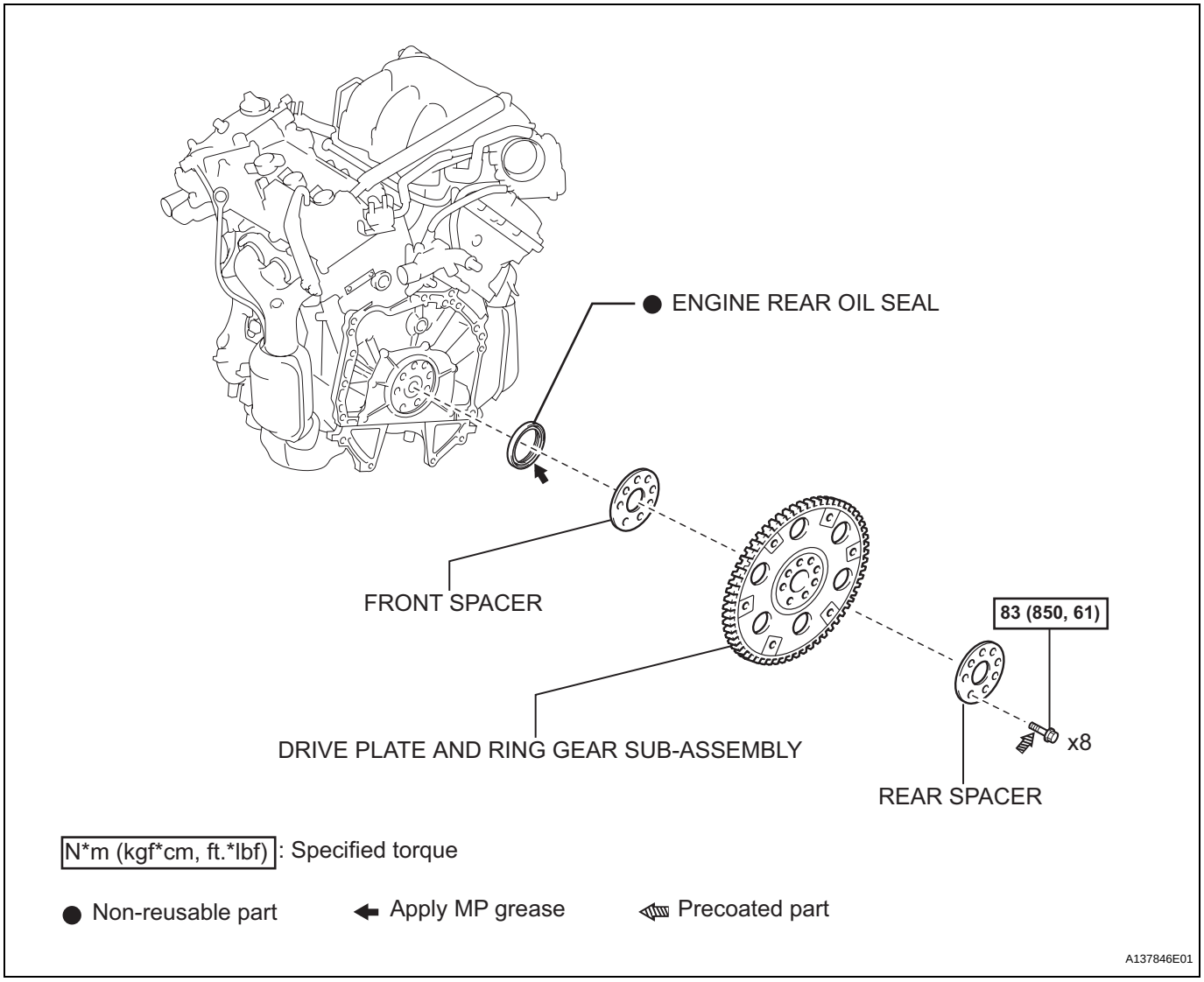

EM

REMOVAL

1. REMOVE AUTOMATIC TRANSAXLE ASSEMBLY

HINT:

See page AX-215.

2. REMOVE DRIVE PLATE AND RING GEAR SUB-ASSEMBLY

(a) Using SST, hold the crankshaft.

SST 09213-70011 (09213-70020), 09330-00021

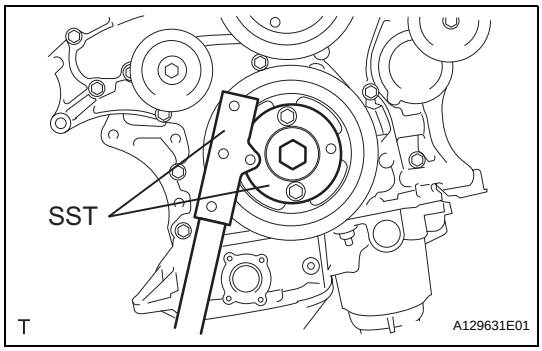

(b) Remove the 8 bolts, front spacer, drive plate and rear spacer.

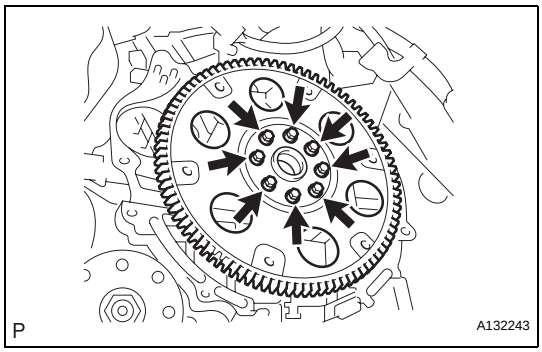

3. REMOVE ENGINE REAR OIL SEAL

(a) Using a knife, cut off the oil seal lip.

(b) Using a screwdriver, pry out the oil seal.

NOTICE:

Be careful not to damage the crankshaft.

HINT:

Tape the screwdriver tip before use.

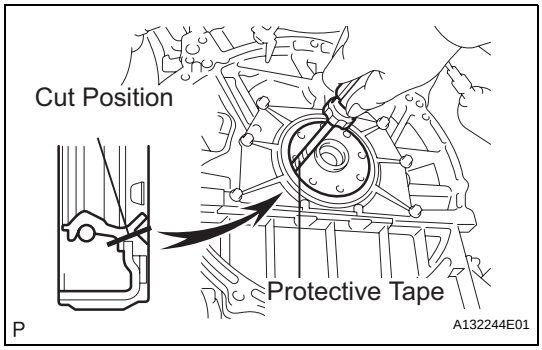

INSTALLATION

1. INSTALL ENGINE REAR OIL SEAL

(a) Apply MP grease to a new oil seal lip.

(b) Using SST and a hammer, tap in the oil seal.

SST 09223-15030, 09950-70010 (09951-07150)

Oil seal tap in depth:

-0.5 to 0.5 mm (-0.020 to 0.020 in.)

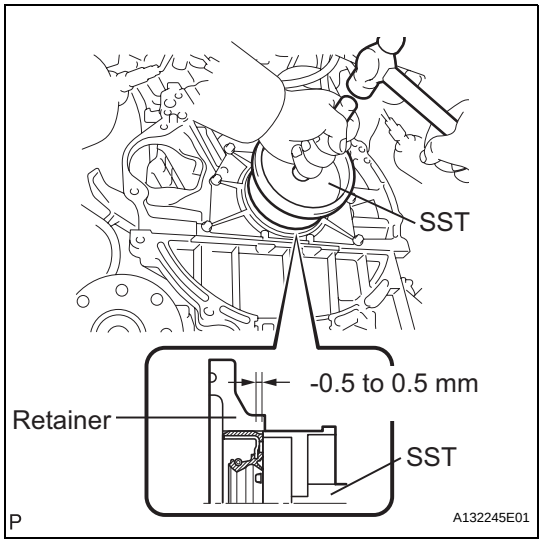

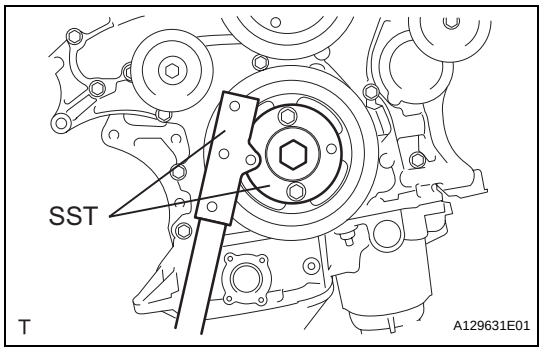

2. INSTALL DRIVE PLATE AND RING GEAR SUB-ASSEMBLY

(a) Using SST, hold the crankshaft.
SST 09213-70011 (09213-70020), 09330-00021

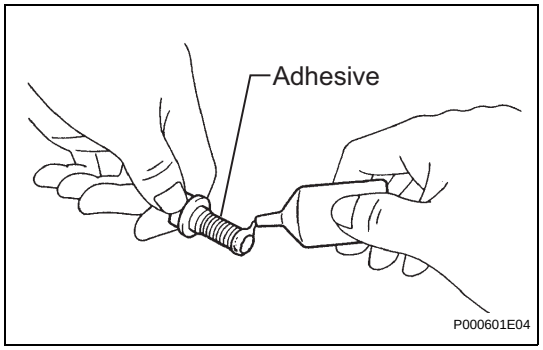

(b) Apply adhesive to 2 or 3 threads of the mounting bolt end.
Adhesive:
Toyota Genuine Adhesive 1324, Three Bond 1324 or equivalent

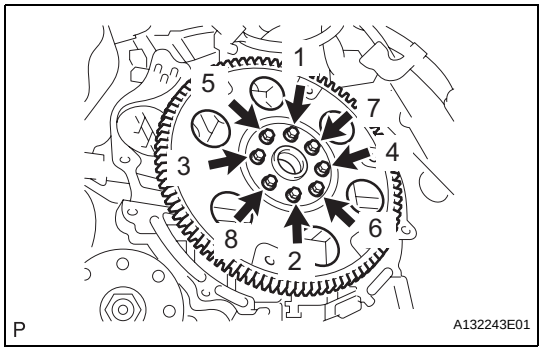

(c) Install the front spacer, drive plate and rear spacer on the crankshaft.
(d) Install and tighten the 8 mounting bolts uniformly in several steps.
Torque: 83 N*m (850 kgf*cm, 61 ft.*lbf)

3. INSTALL AUTOMATIC TRANSAXLE ASSEMBLY

HINT:
See page AX-222.

EM

EM

REMOVAL

1. **DISCHARGE FUEL SYSTEM PRESSURE**
   HINT:
   See page FU-1.
2. **DISCONNECT CABLE FROM NEGATIVE BATTERY TERMINAL**
3. **PLACE FRONT WHEELS FACING STRAIGHT AHEAD**
4. **REMOVE FRONT WHEELS**
5. **REMOVE ENGINE UNDER COVER LH**
6. **REMOVE ENGINE UNDER COVER RH**
7. **REMOVE FRONT FENDER APRON SEAL RH**
8. **DRAIN ENGINE OIL (See page LU-4)**
9. **DRAIN ENGINE COOLANT (See page CO-5)**
10. **DRAIN AUTOMATIC TRANSAXLE FLUID (See page AX-215)**
11. **REMOVE COOL AIR INTAKE DUCT SEAL**
    (a) Remove the 7 clips and intake duct seal.
12. **REMOVE ENGINE ROOM SIDE COVER LH**
    (a) Remove the hood hinge cover LH.

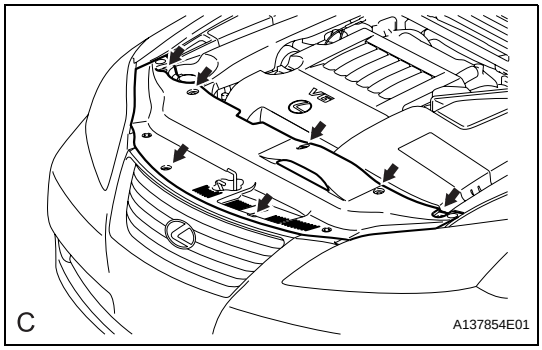

    (b) Remove the 6 clips and engine room side cover LH.
13. **REMOVE ENGINE ROOM SIDE COVER RH**
    (a) Remove the hood hinge cover RH.

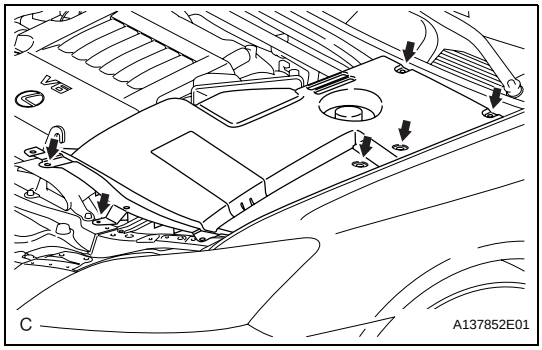

    (b) Remove the 5 clips and engine room side cover RH.

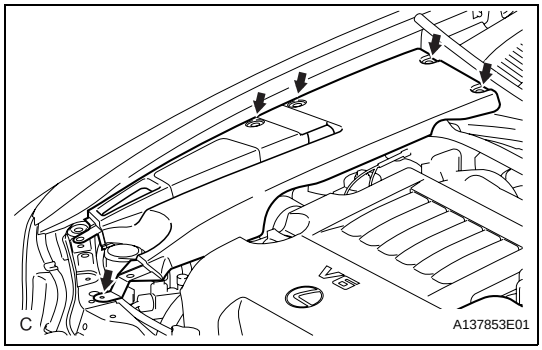

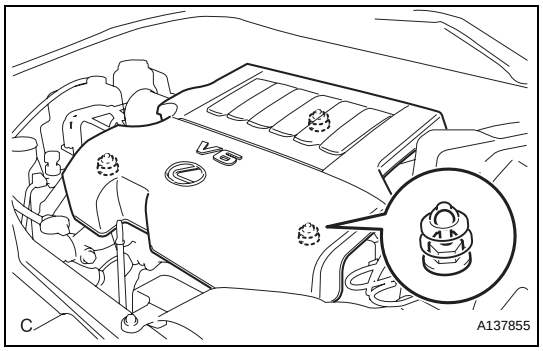

14. REMOVE V-BANK COVER SUB-ASSEMBLY

(a) Hold the front of the V-bank cover and raise it to disengage the 2 clips on the front of the cover. Continue to raise the cover to disengage the clip on the rear of the cover and remove the cover.

NOTICE:

Attempting to disengage both front and rear clips at the same time may cause the cover to break.

15. REMOVE V-RIBBED BELT (See page EM-6)

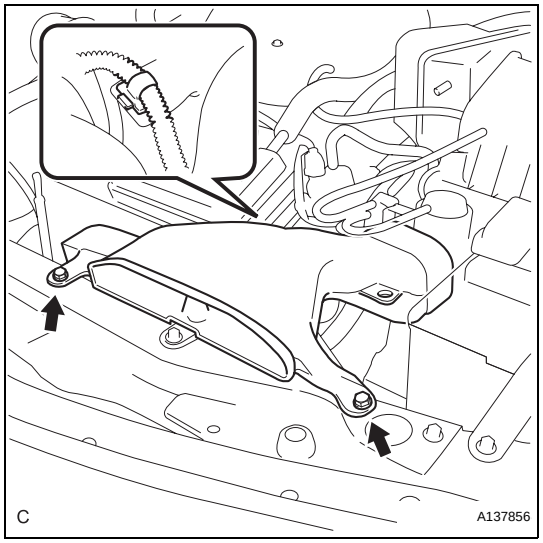

16. REMOVE AIR CLEANER INLET ASSEMBLY

(a) Remove the 2 bolts, clamp and air cleaner inlet.

17. REMOVE AIR CLEANER CAP SUB-ASSEMBLY (See page ES-519)

EM

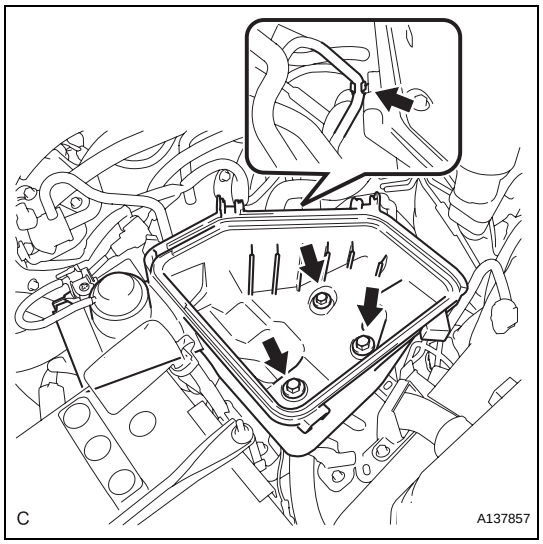

18. REMOVE AIR CLEANER CASE SUB-ASSEMBLY

(a) Disconnect the vacuum hose and hose clamp.

(b) Remove the 3 bolts and air cleaner case.

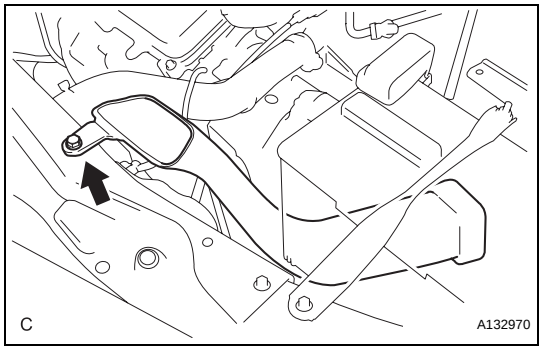

19. REMOVE NO. 1 AIR CLEANER INLET

(a) Remove the bolt and No. 1 air cleaner inlet.

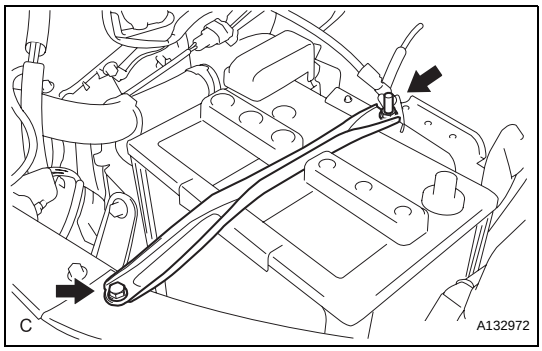

20. REMOVE BATTERY

(a) Loosen the nut, and remove the bolt and battery clamp.

(b) Remove the battery and battery tray.

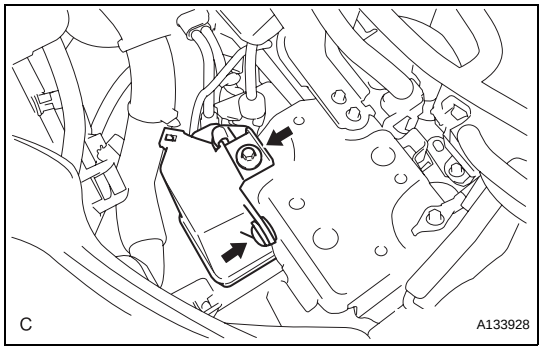

21. REMOVE INTAKE AIR RESONATOR SUB-ASSEMBLY

(a) Remove the clip, bolt and intake air resonator.

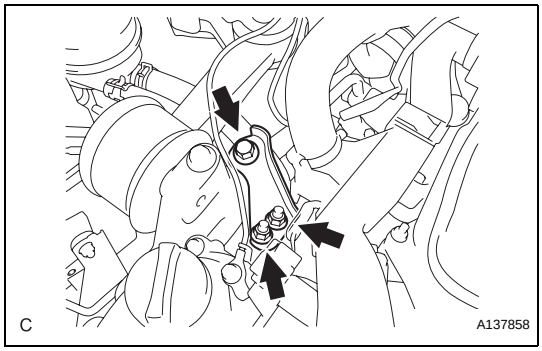

22. REMOVE NO. 2 ENGINE MOUNTING STAY RH

(a) Remove the bolt, 2 nuts, and No. 2 mounting stay RH.

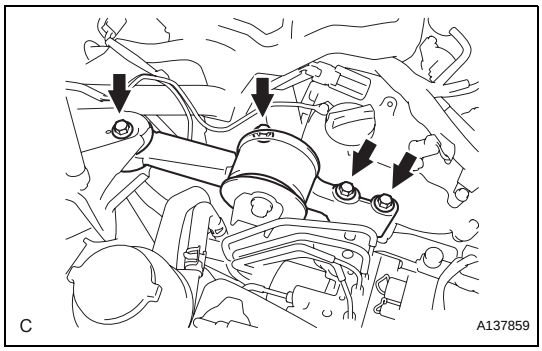

23. REMOVE ENGINE MOVING CONTROL ROD SUB-ASSEMBLY

(a) Remove the 4 bolts and engine moving control rod.

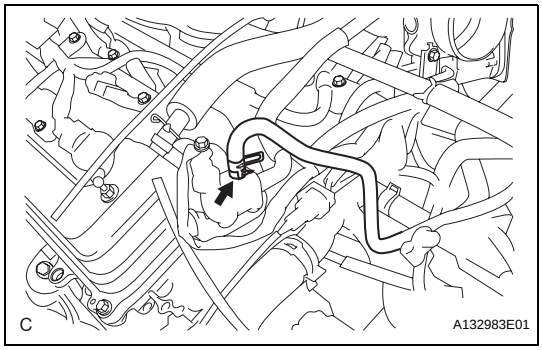

24. DISCONNECT NO. 1 FUEL VAPOR FEED HOSE

(a) Remove the clamp and disconnect the No. 1 fuel vapor feed hose.

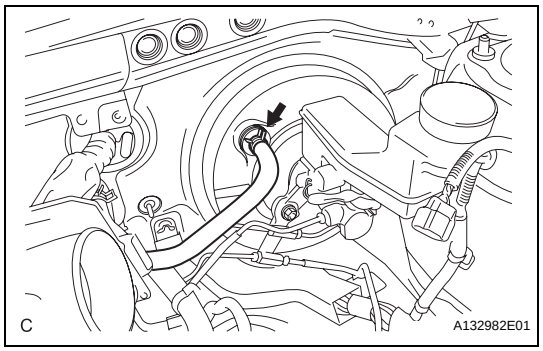

25. DISCONNECT CHECK VALVE TO BRAKE BOOSTER HOSE

(a) Remove the clamp and disconnect the check valve to brake booster hose.

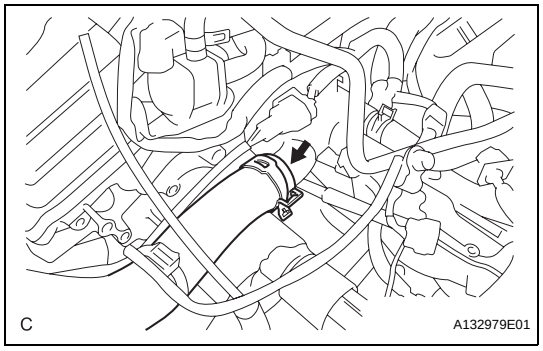

26. REMOVE RADIATOR HOSE INLET

(a) Remove the clamp and disconnect the radiator hose inlet.

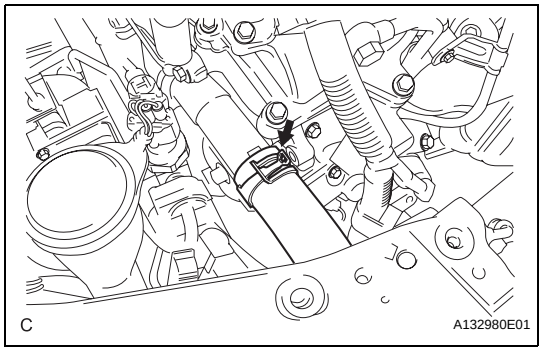

27. REMOVE RADIATOR HOSE OUTLET

(a) Remove the clamp and disconnect the radiator hose outlet.

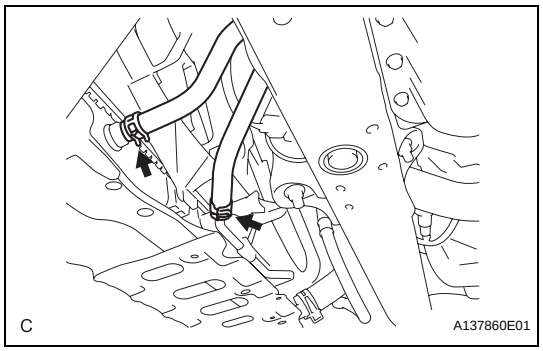

28. DISCONNECT NO. 1 OIL COOLER INLET HOSE

(a) Remove the clamp and disconnect the oil cooler inlet hose.

29. DISCONNECT NO. 1 OIL COOLER OUTLET HOSE

(a) Remove the clamp and disconnect the oil cooler outlet hose.

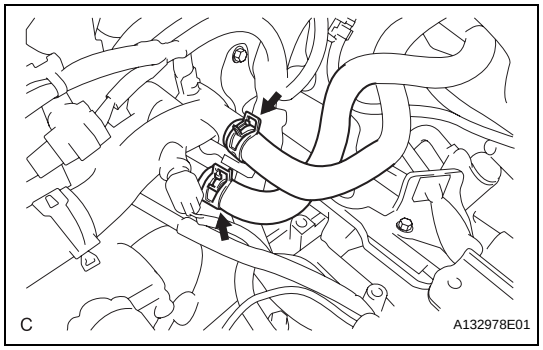

30. DISCONNECT HEATER INLET WATER HOSE

(a) Disconnect the heater inlet water hose.

31. DISCONNECT HEATER OUTLET WATER HOSE

(a) Disconnect the heater outlet water hose.

32. REMOVE ECM

HINT:

See page ES-543.

33. REMOVE RELAY BLOCK COVER UPPER

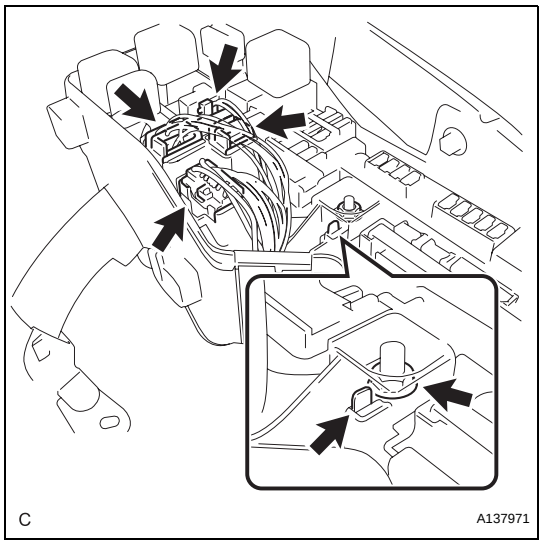

34. DISCONNECT ENGINE WIRE

(a) Disconnect the engine wire from the engine room junction block.
  (1) Remove the nut and separate the wire harness.
  (2) Using a screwdriver, unlock the engine room junction block. Pull the engine room J/B upward.
  (3) Disconnect the engine wire connectors.

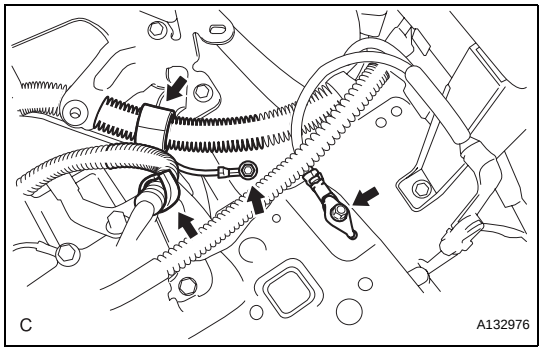

(b) Remove the 2 bolts and 2 clamps from the body.

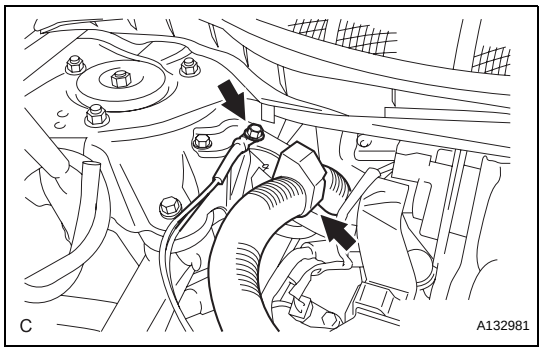

(c) Remove the bolt and clamp from the bracket.

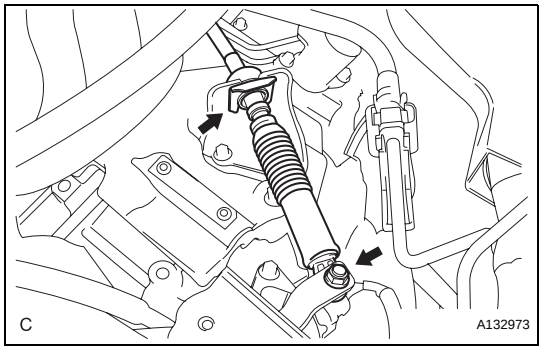

35. DISCONNECT TRANSMISSION CONTROL CABLE ASSEMBLY

(a) Remove the clip and nut, and separate the cable from the transaxle.

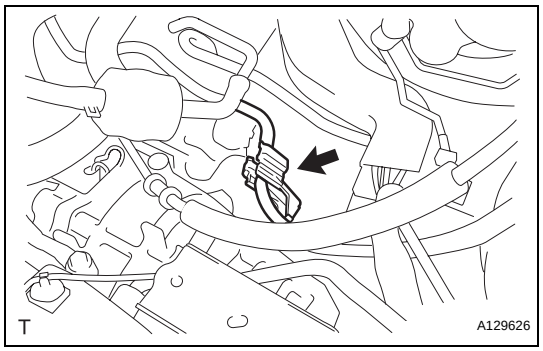

36. SEPARATE FUEL TUBE SUB-ASSEMBLY

(a) Remove the No. 1 fuel pipe clamp.

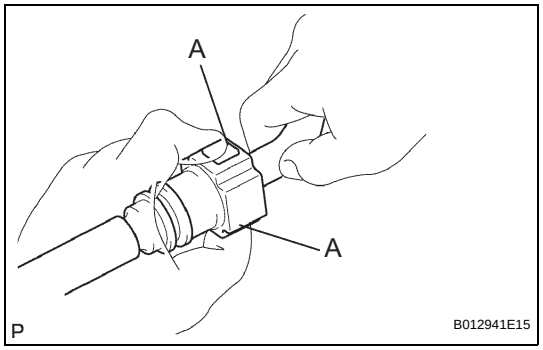

(b) Disconnect the connector from the tube while pinching part A with your fingers as shown in the illustration.

NOTICE:

- **Check for contamination in the pipe and around the connector. Clean if necessary and then disconnect the connector.**
- **Disconnect the connector by hand.**
- **Do not bend, fold or rotate the nylon tube.**
- **If the pipe and connector are stuck together, push and pull the connector until it becomes free.**
- **Put the pipe and connector ends in vinyl bags to prevent damage and contamination.**

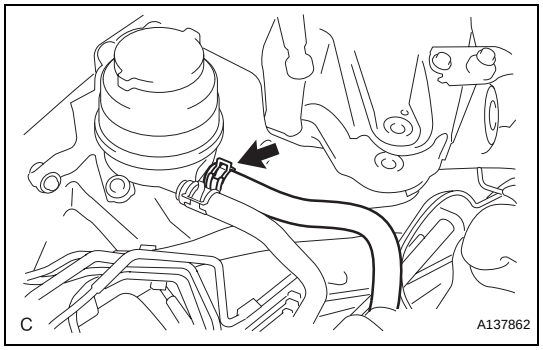

37. DISCONNECT OIL RESERVOIR TO PUMP HOSE

(a) Disconnect the oil reservoir to pump hose.

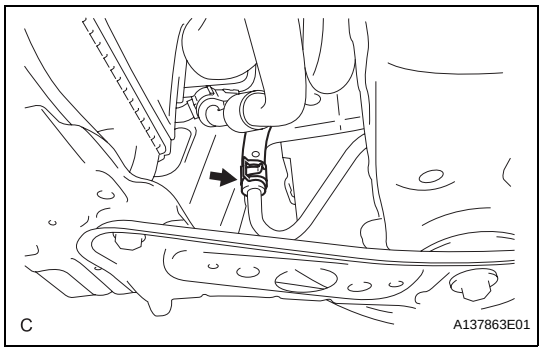

38. DISCONNECT RETURN TUBE SUB-ASSEMBLY

(a) Disconnect the return tube sub-assembly.

39. REMOVE EXHAUST PIPE NO. 1 SUPPORT BRACKET (See page EX-3)

40. REMOVE EXHAUST PIPE ASSEMBLY FRONT (See page EX-3)

41. REMOVE FRONT AXLE HUB NUT LH (See page DS-5)

42. REMOVE FRONT AXLE HUB NUT RH

HINT:

Use the same procedure described for the LH side.

43. DISCONNECT FRONT STABILIZER LINK ASSEMBLY LH (See page DS-5)

EM

44. DISCONNECT FRONT STABILIZER LINK ASSEMBLY RH

HINT:
Use the same procedure described for the LH side.

45. DISCONNECT FRONT SPEED SENSOR LH (See page DS-5)

46. DISCONNECT FRONT SPEED SENSOR RH

HINT:
Use the same procedure described for the LH side.

47. DISCONNECT TIE ROD ASSEMBLY LH (See page DS-6)

48. DISCONNECT TIE ROD ASSEMBLY RH

HINT:
Use the same procedure described for the LH side.

49. DISCONNECT FRONT SUSPENSION LOWER NO. 1 ARM LH (See page DS-6)

50. DISCONNECT FRONT SUSPENSION LOWER NO. 1 ARM RH

HINT:
Use the same procedure described for the LH side.

51. SEPARATE FRONT AXLE ASSEMBLY LH (See page DS-6)

52. SEPARATE FRONT AXLE ASSEMBLY RH

HINT:
Use the same procedure described for the LH side.

53. REMOVE NO. 1 EXHAUST PIPE SUPPORT BRACKET

(a) Remove the No. 1 exhaust pipe support bracket with the 2 nuts.

54. REMOVE DRIVE PLATE AND TORQUE CONVERTER CLUTCH SETTING BOLT (See page AX-219)

55. DISCONNECT STEERING INTERMEDIATE SHAFT ASSEMBLY (See page PS-28)

56. REMOVE GENERATOR ASSEMBLY (See page CH-14)

57. SEPARATE COOLER COMPRESSOR ASSEMBLY

(a) Remove the 2 connector clamps.

(b) Remove the 4 bolts and separate the compressor.
HINT:
Hang up the hoses instead of detaching them.

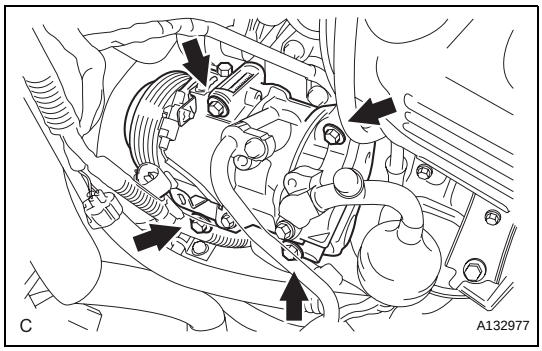

58. REMOVE ENGINE ASSEMBLY WITH TRANSAXLE

(a) Set the engine lifter.

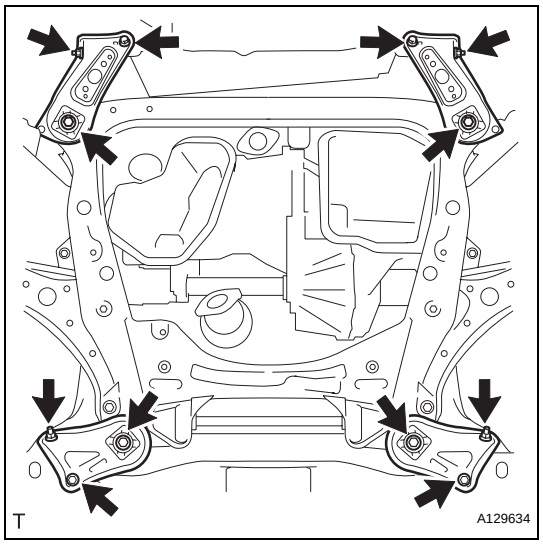

(b) Remove the 4 bolts, 2 nuts, and frame side rail plates RH and LH.
(c) Remove the 4 bolts, 2 nuts, and front suspension member brace rear RH and LH.
(d) Operate the engine lifter, then remove the engine assembly from the vehicle.
NOTICE:
Make sure that the engine is clear of all wiring and hoses.

59. REMOVE VANE PUMP ASSEMBLY

(a) Disconnect the power steering oil pressure switch connector.

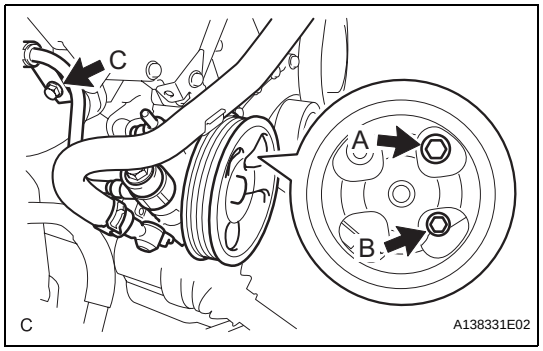

(b) Remove the pressure feed tube clamp bolt C.
(c) Loosen the bolt A.
(d) Remove the bolt B and vane pump.

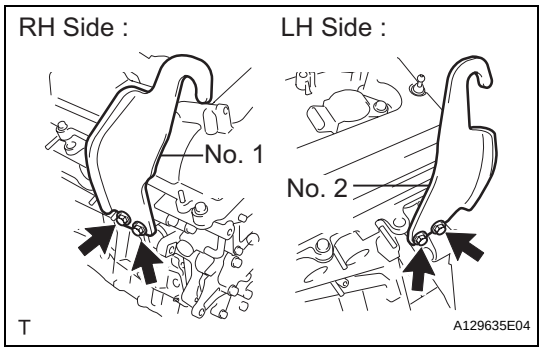

60. INSTALL ENGINE HANGER

(a) Install the 2 engine hangers with the 4 bolts as shown in the illustration.
Part No:
No. 1 Engine hanger 12281-31120
No. 2 Engine hanger 12282-31100
Bolts 91671-10825
Torque: 33 N*m (337 kgf*cm, 24 ft.*lbf)
(b) Attach the engine sling device and hang the engine with the chain block.

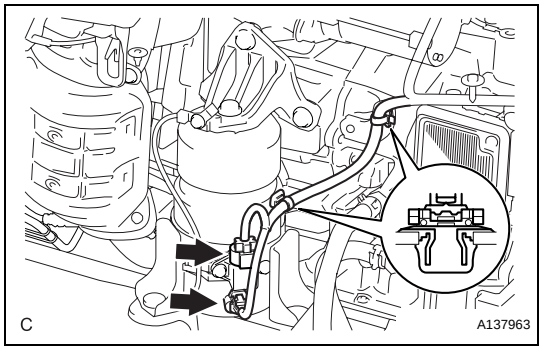

61. REMOVE FRONT FRAME ASSEMBLY

(a) Disconnect the 2 connectors and 2 clamps.

EM

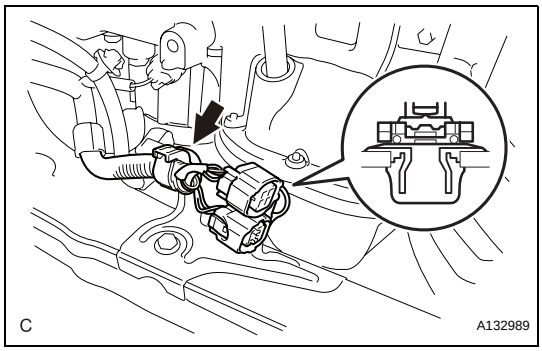

(b) Disconnect the 2 clamps.

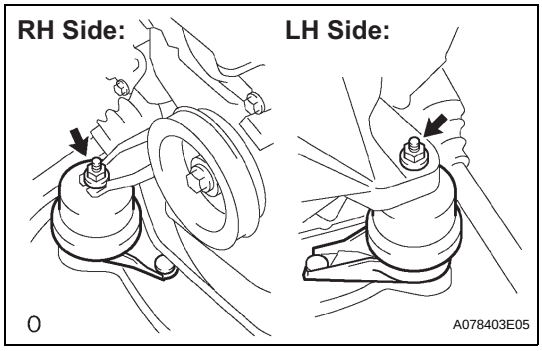

(c) Remove the 2 nuts and disconnect the engine mounting insulators RH and LH.

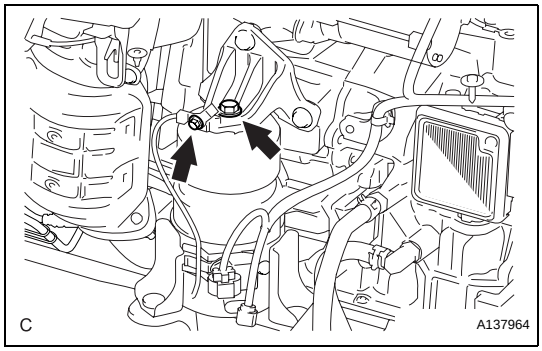

(d) Remove the 2 bolts and disconnect the engine mounting insulator FR and cable.

62. REMOVE FRONT DRIVE SHAFT ASSEMBLY LH (See page DS-6)

63. REMOVE FRONT DRIVE SHAFT ASSEMBLY RH (See page DS-7)

64. REMOVE ENGINE WIRE

65. REMOVE STARTER ASSEMBLY (See page ST-145)

66. REMOVE AUTOMATIC TRANSAXLE ASSEMBLY

HINT:
See page AX-215.

67. REMOVE DRIVE PLATE AND RING GEAR SUB-ASSEMBLY (See page EM-11)

68. SECURE ENGINE

(a) Secure the engine onto an engine stand with the bolts.

69. REMOVE INTAKE AIR SURGE TANK ASSEMBLY

HINT:
See page FU-12.

70. REMOVE IGNITION COIL ASSEMBLY

(a) Remove the 6 bolts and 6 ignition coils.

71. REMOVE NO. 2 ENGINE MOUNTING STAY RH

(a) Remove the bolt and No. 2 engine mounting stay RH.

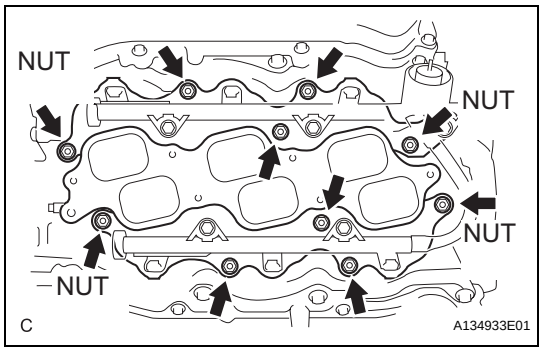

72. REMOVE INTAKE MANIFOLD

(a) Uniformly loosen and remove the 6 bolts and 4 nuts.

(b) Remove the intake manifold and 2 gaskets.

73. REMOVE EXHAUST MANIFOLD SUB-ASSEMBLY RH

(a) Disconnect the A/F sensor connector clamp.

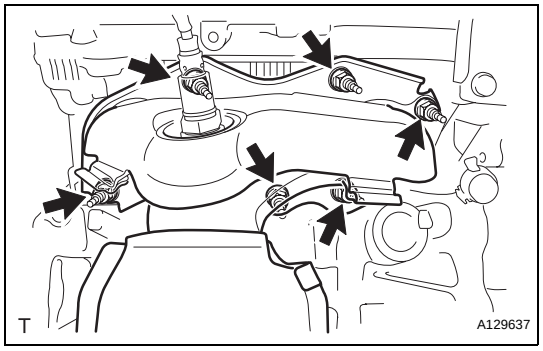

(b) Uniformly loosen and remove the 6 nuts.

(c) Remove the manifold and gasket.

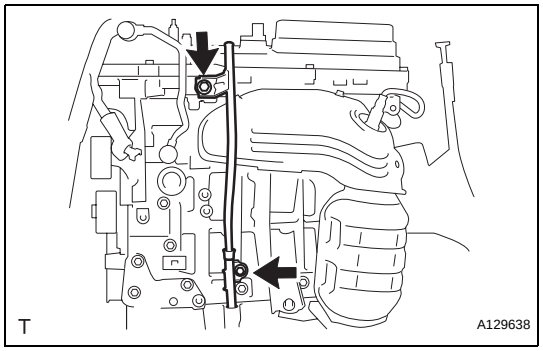

74. REMOVE OIL LEVEL GAUGE GUIDE SUB-ASSEMBLY

(a) Remove the oil level gauge.

(b) Remove the 2 bolts, oil level gauge guides No. 1 and No. 2.

(c) Remove the O-rings from the oil level gauge guide.

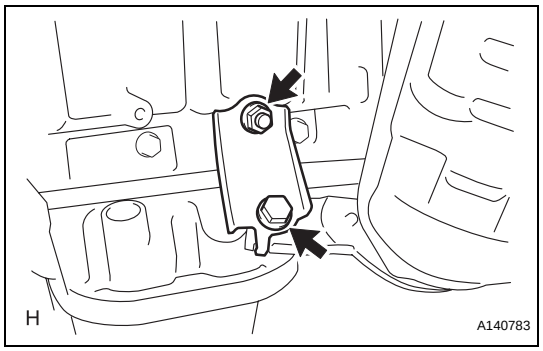

75. REMOVE NO. 2 MANIFOLD STAY

(a) Remove the bolt, nut, and No. 2 manifold stay.

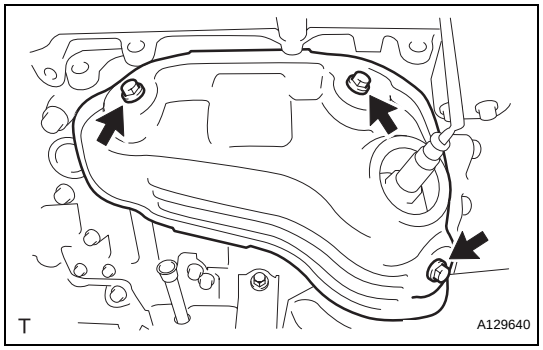

76. REMOVE NO. 2 EXHAUST MANIFOLD HEAT INSULATOR

(a) Remove the 3 bolts and No. 2 insulator.

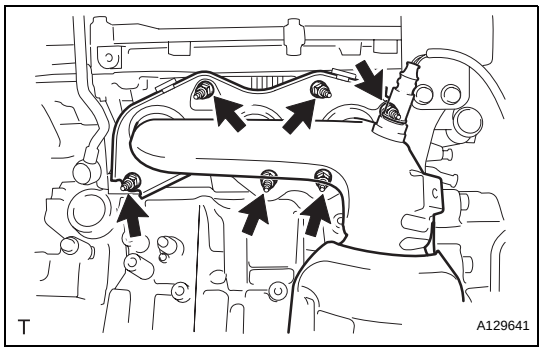

77. REMOVE EXHAUST MANIFOLD SUB-ASSEMBLY LH

(a) Uniformly loosen and remove the 6 nuts.

(b) Remove the manifold and gasket.

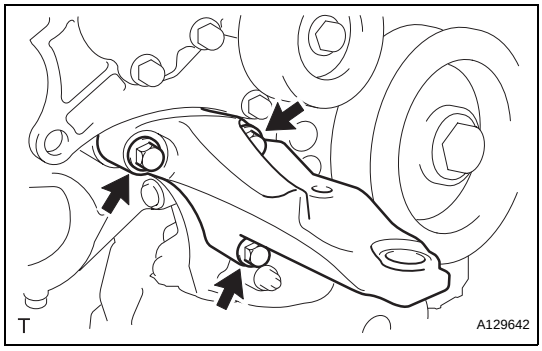

78. REMOVE ENGINE MOUNTING BRACKET RH

(a) Remove the 3 bolts and engine mounting bracket RH.

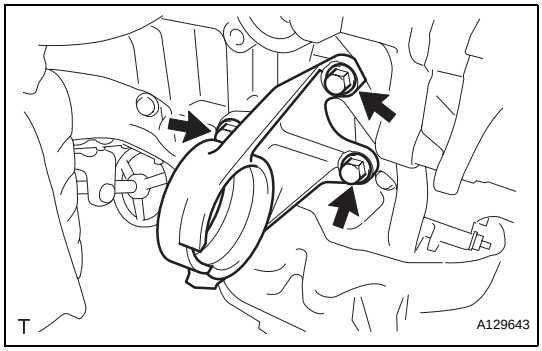

79. REMOVE DRIVE SHAFT BEARING BRACKET

(a) Remove the 3 bolts and drive shaft bearing bracket.

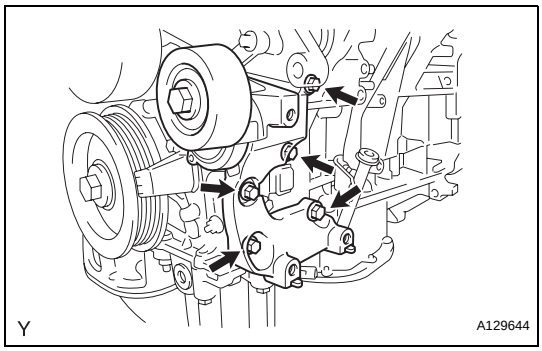

80. REMOVE V-RIBBED BELT TENSIONER ASSEMBLY

(a) Remove the 5 bolts and V-ribbed belt tensioner assembly.

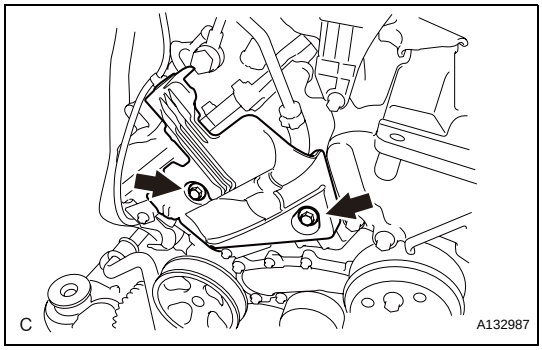

81. REMOVE NO. 2 TIMING GEAR COVER

(a) Remove the 2 bolts and No. 2 timing gear cover.

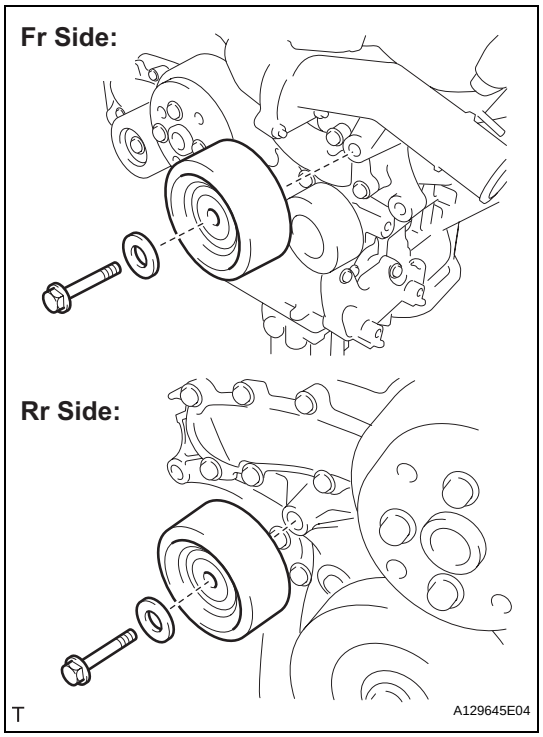

82. REMOVE NO. 2 IDLER PULLEY SUB-ASSEMBLY

(a) Remove the bolt, plate and No. 2 idler pulley sub-assembly.

83. REMOVE WATER PUMP PULLEY (See page CO-8)

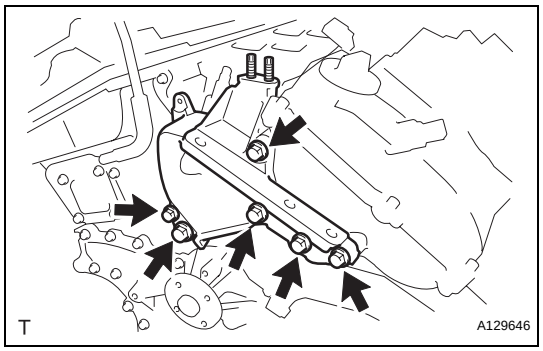

84. REMOVE NO. 1 ENGINE MOUNTING BRACKET FRONT LH

(a) Remove the 6 bolts and No. 1 engine mounting bracket front LH.

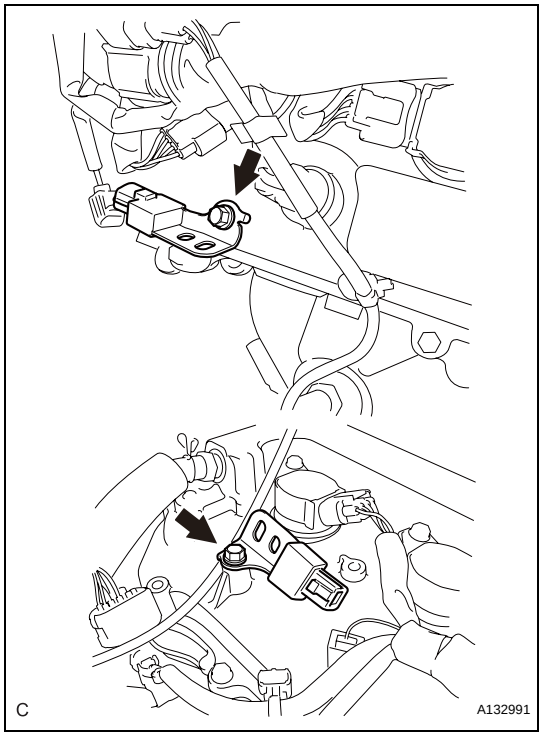

85. REMOVE RADIO SETTING CONDENSER

(a) Remove the 2 bolts and 2 radio setting condensers.

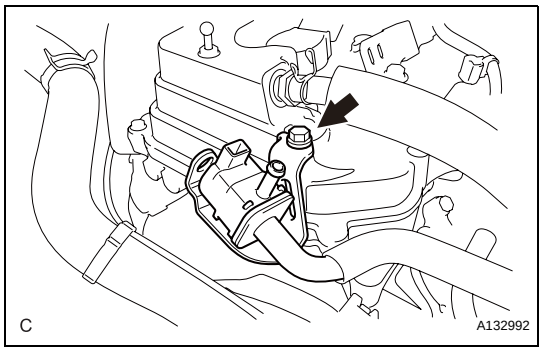

86. REMOVE NO. 1 VACUUM SWITCHING VALVE ASSEMBLY

(a) Remove the bolt and No. 1 vacuum switching valve.

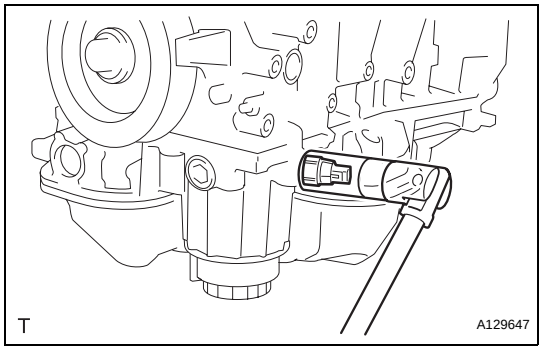

87. REMOVE ENGINE OIL PRESSURE SWITCH ASSEMBLY

(a) Using a 24 mm deep socket wrench, remove the engine oil pressure switch assembly.

88. REMOVE KNOCK CONTROL SENSOR (See page ES-525)

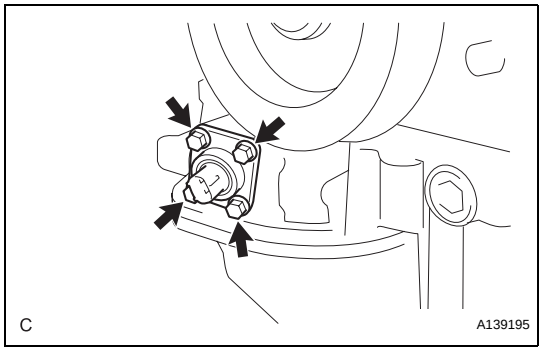

89. REMOVE ENGINE OIL LEVEL SENSOR

(a) Remove the 4 bolts, then remove the oil level sensor and gasket.

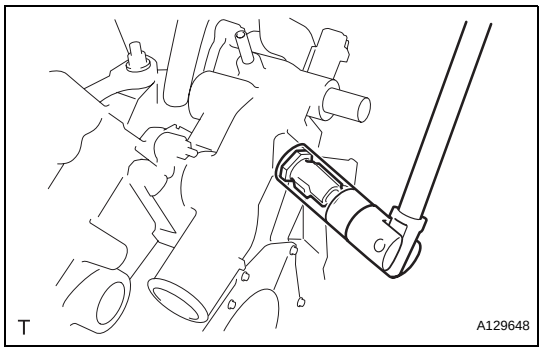

90. REMOVE ENGINE COOLANT TEMPERATURE SENSOR

(a) Using a 19 mm deep socket wrench, remove the EFI engine coolant temperature sensor and gasket.

INSPECTION

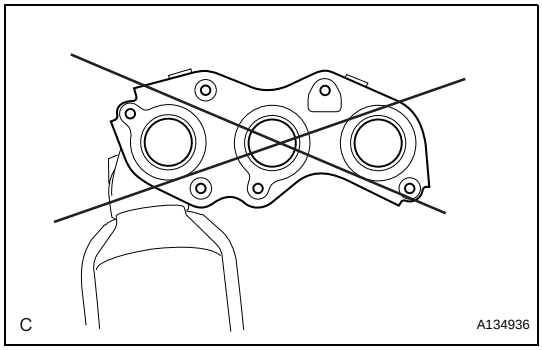

1. INSPECT EXHAUST MANIFOLD SUB-ASSEMBLY LH

(a) Using a precision straightedge and feeler gauge, measure the warpage on the contact surface of the cylinder head.

Maximum warpage:
0.7 mm (0.028 in.)

HINT:
The maximum allowable warpage of each installation surface is 0.3 mm (0.012 in.).

If the warpage is greater than the maximum, replace the manifold.

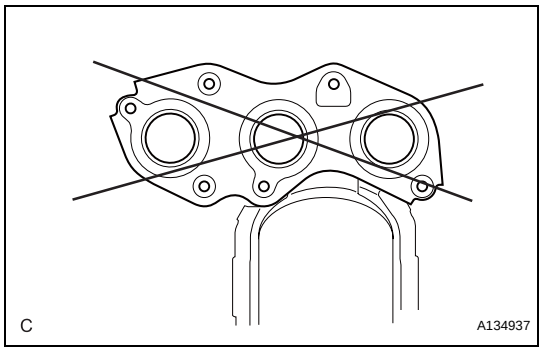

2. INSPECT EXHAUST MANIFOLD SUB-ASSEMBLY RH

(a) Using a precision straightedge and feeler gauge, measure the warpage on the contact surface of the cylinder head.

Maximum warpage:
0.7 mm (0.028 in.)

HINT:
The maximum allowable warpage of each installation surface is 0.3 mm (0.012 in.).
If the warpage is greater than the maximum, replace the manifold.

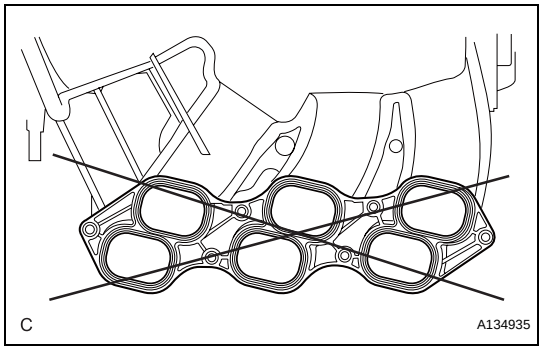

3. INSPECT INTAKE AIR SURGE TANK ASSEMBLY

(a) Using a precision straightedge and feeler gauge, measure the warpage on the contact surface of the intake manifold.

Maximum warpage:
2.5 mm (0.098 in.)
If the warpage is greater than the maximum, replace the surge tank.

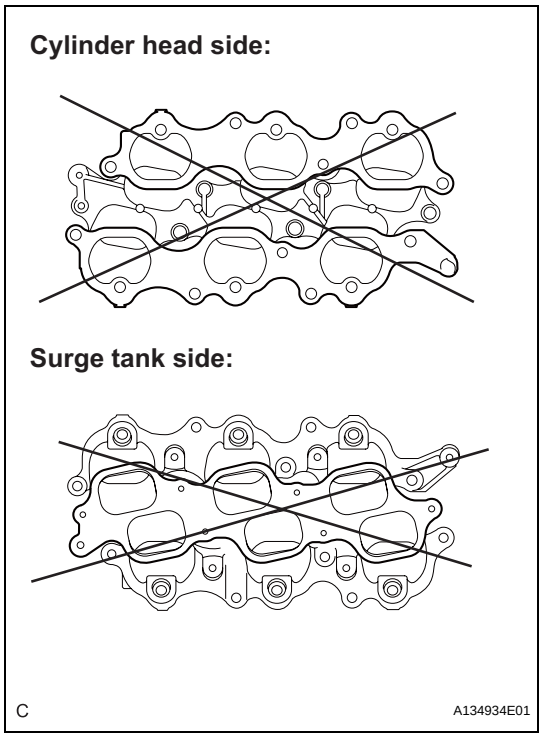

4. INSPECT INTAKE MANIFOLD

(a) Cylinder head side:

(1) Using a precision straightedge and feeler gauge, measure the surface contacting the cylinder head for warpage.

Maximum warpage:
0.1 mm (0.003 in.)
If the warpage is greater than the maximum, replace the intake manifold.

(b) Surge tank side:

(1) Using a precision straightedge and feeler gauge, measure the surface contacting the surge tank for warpage.

Maximum warpage:
0.1 mm (0.003 in.)
If the warpage is greater than the maximum, replace the intake manifold.

EM

INSTALLATION

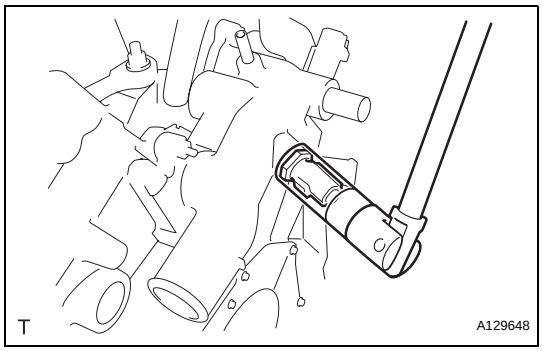

1. INSTALL ENGINE COOLANT TEMPERATURE SENSOR

(a) Using a 19 mm deep socket wrench, install the engine coolant temperature sensor and a new gasket.
Torque: 20 N*m (200 kgf*cm, 14 ft.*lbf)

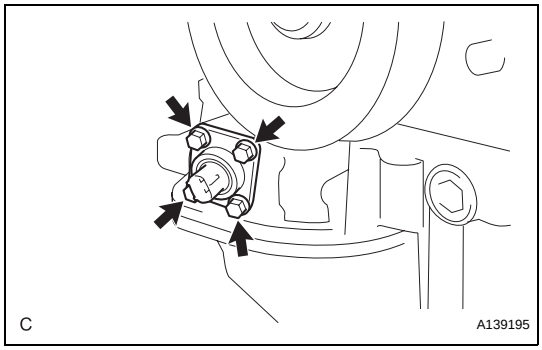

2. INSTALL ENGINE OIL LEVEL SENSOR

(a) Install the engine oil level sensor and a new gasket with the 4 bolts.
Torque: 8.2 N*m (84 kgf*cm, 73 in.*lbf)

3. INSTALL KNOCK CONTROL SENSOR (See page ES-526)

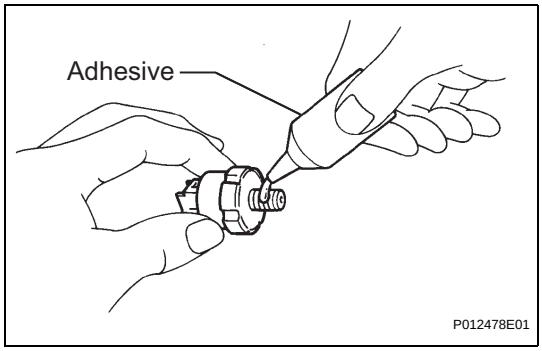

4. INSTALL ENGINE OIL PRESSURE SWITCH ASSEMBLY

(a) Clean the threads of the oil pressure switch. Apply adhesive to 2 or 3 threads of the oil pressure switch.
Adhesive:
Toyota Genuine Adhesive 1344, Three Bond 1344 or equivalent

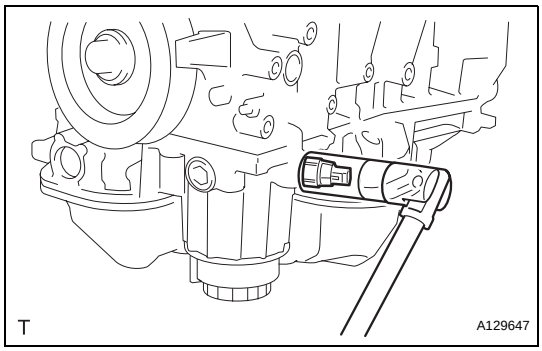

(b) Using a 24 mm deep socket wrench, install the oil pressure switch.
Torque: 21 N*m (214 kgf*cm, 15 ft.*lbf)
NOTICE:
Do not start the engine within 1 hour after installation to prevent oil leaks.

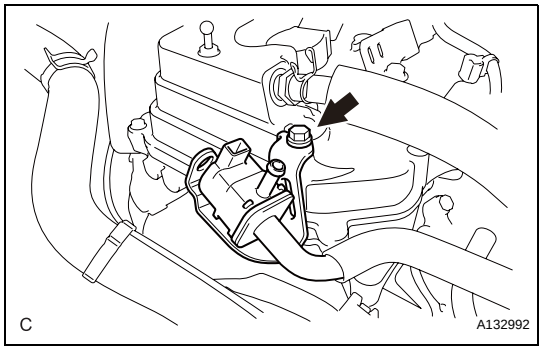

5. INSTALL NO. 1 VACUUM SWITCHING VALVE ASSEMBLY

(a) Install the No. 1 vacuum switching valve with the bolt.
Torque: 10 N*m (102 kgf*cm, 7 ft.*lbf)

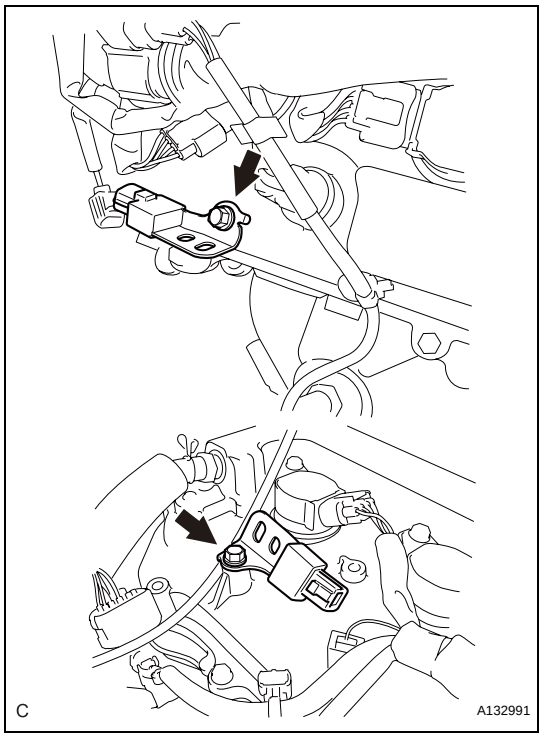

6. INSTALL RADIO SETTING CONDENSER

(a) Install the 2 radio setting condensers with the 2 bolts.
Torque: 10 N*m (102 kgf*cm, 7 ft.*lbf)

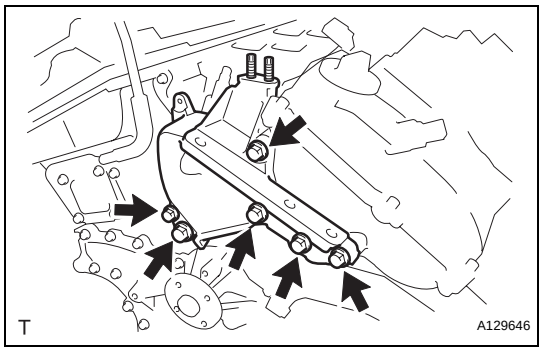

7. INSTALL NO. 1 ENGINE MOUNTING BRACKET FRONT LH

(a) Install the No. 1 engine mounting bracket front LH with the 6 bolts.
Torque: 54 N*m (551 kgf*cm, 40 ft.*lbf)

8. INSTALL WATER PUMP PULLEY (See page CO-10)

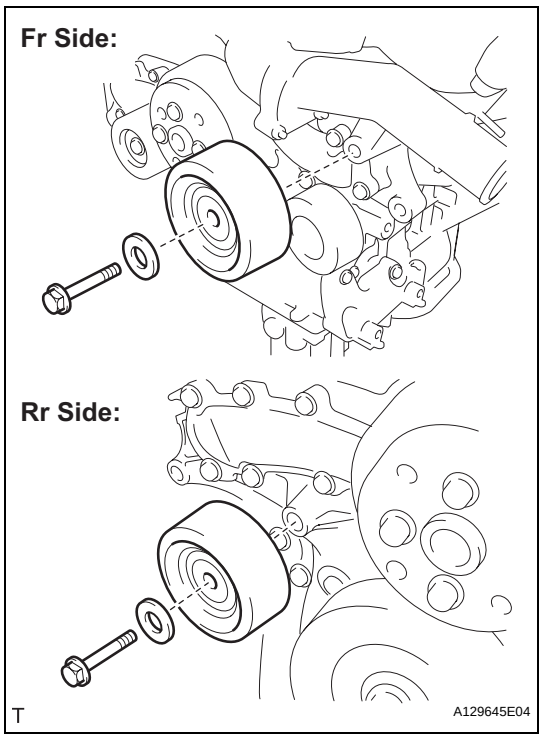

9. INSTALL NO. 2 IDLER PULLEY SUB-ASSEMBLY

(a) Install the No. 2 idler pulley sub-assembies and cover plates with the bolts.
Torque: 43 N*m (438 kgf*cm, 32 ft.*lbf)

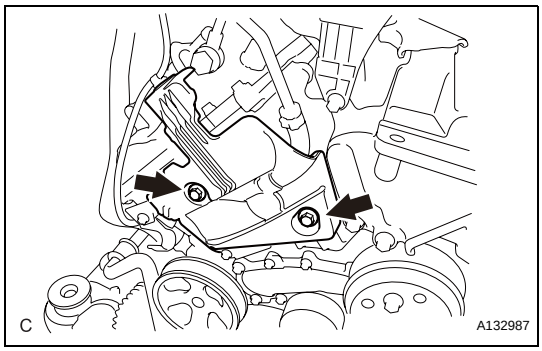

10. INSTALL NO. 2 TIMING GEAR COVER

(a) Install the No. 2 timing gear cover with the 2 bolts.
Torque: 6.0 N*m (61 kgf*cm, 53 in.*lbf)

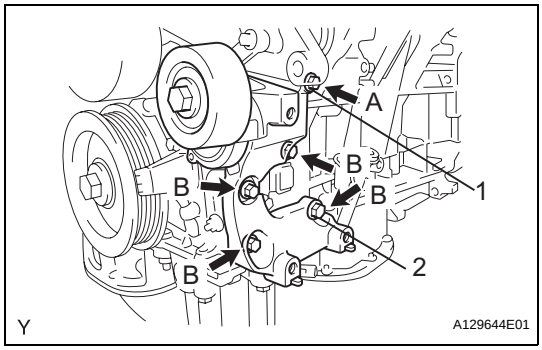

11. INSTALL V-RIBBED BELT TENSIONER ASSEMBLY

(a) Temporarily install the V-ribbed belt tensioner with the 5 bolts.
HINT:
Each bolt length is as follows:
A: 70 mm (2.76 in.)
B: 33 mm (1.30 in.)

(b) Install the V-ribbed belt tensioner by tightening the bolt 1 and bolt 2 in the order shown in the illustration.
Torque: 43 N*m (438 kgf*cm, 32 ft.*lbf)

(c) Tighten the other bolts.
Torque: 43 N*m (438 kgf*cm, 32 ft.*lbf)

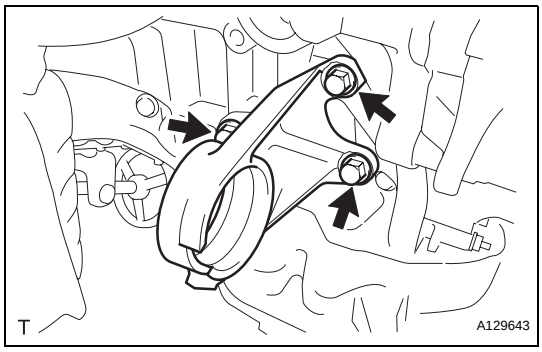

12. INSTALL DRIVE SHAFT BEARING BRACKET

(a) Install the drive shaft bearing bracket with the 3 bolts.
Torque: 64 N*m (653 kgf*cm, 47 ft.*lbf)

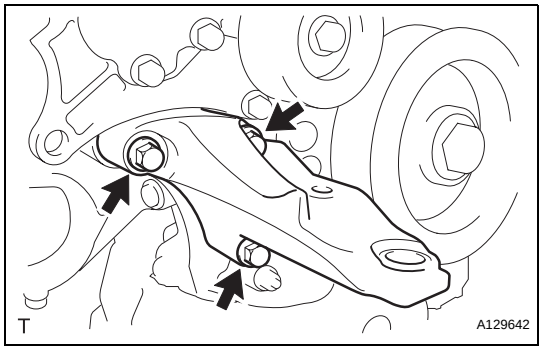

13. INSTALL ENGINE MOUNTING BRACKET RH

(a) Install the engine mounting bracket RH with the 3 bolts.
Torque: 54 N*m (551 kgf*cm, 40 ft.*lbf)

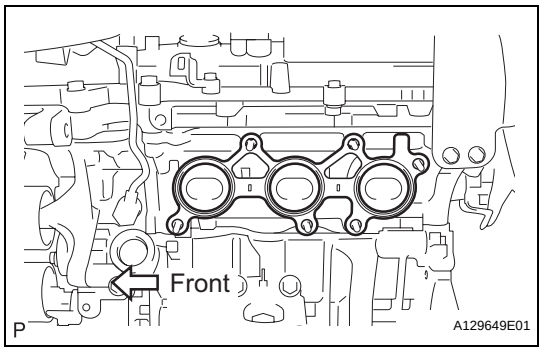

14. INSTALL EXHAUST MANIFOLD SUB-ASSEMBLY LH

(a) Install a new gasket as shown in the illustration.

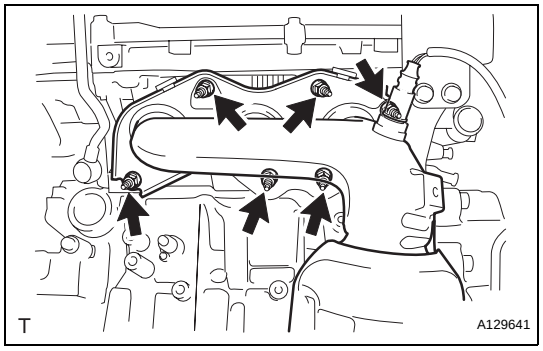

(b) Install the exhaust manifold sub-assembly LH with the 6 nuts.
Torque: 21 N*m (214 kgf*cm, 15 ft.*lbf)

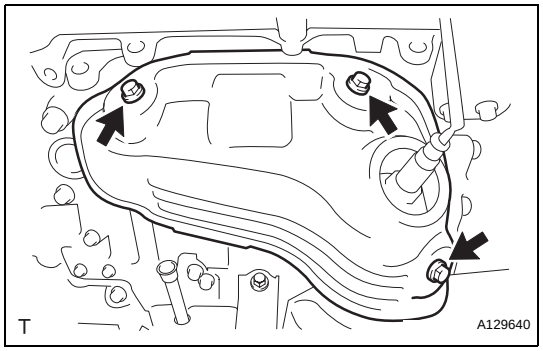

15. INSTALL NO. 2 EXHAUST MANIFOLD HEAT INSULATOR

(a) Install the No. 2 insulator with the 3 bolts.
Torque: 8.5 N*m (87 kgf*cm, 75 in.*lbf)

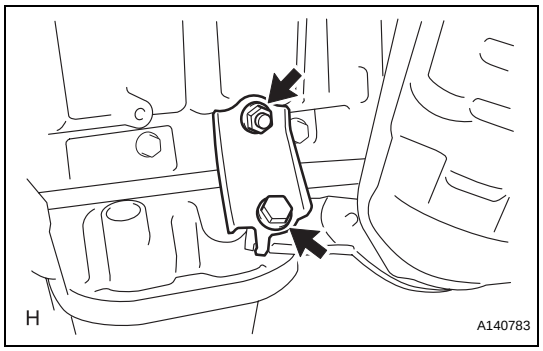

16. INSTALL NO. 2 MANIFOLD STAY

(a) Install the No. 2 manifold stay with the bolt and nut.
Torque: 34 N*m (347 kgf*cm, 25 ft.*lbf)

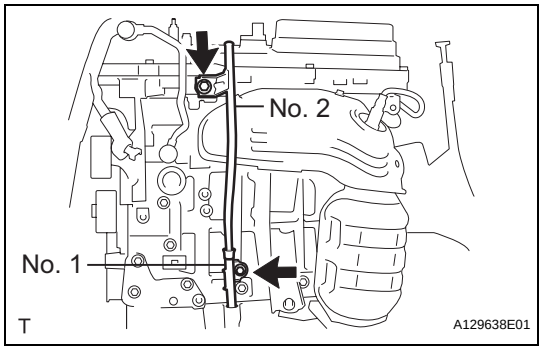

17. INSTALL OIL LEVEL GAUGE GUIDE SUB-ASSEMBLY

(a) Install 2 new O-rings to the oil level gauge guide.
(b) Apply a light coat of engine oil to the O-rings.
(c) Push in the oil level gauge guide end into the guide hole.
(d) Install the oil level gauge guide No. 1 with the bolt.
Torque: 21 N*m (214 kgf*cm, 15 ft.*lbf)
(e) Install the oil level gauge guide No. 2 with the bolt.
Torque: 21 N*m (214 kgf*cm, 15 ft.*lbf)
(f) Install the oil level gauge.

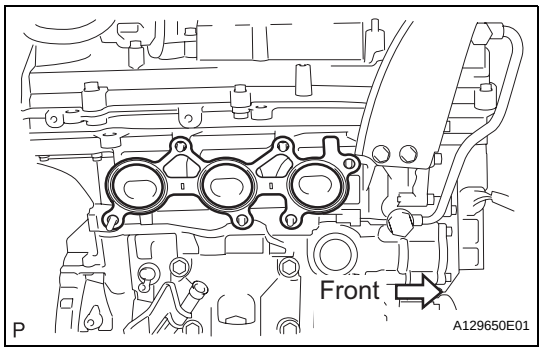

18. INSTALL EXHAUST MANIFOLD SUB-ASSEMBLY RH

(a) Install a new gasket as shown in the illustration.

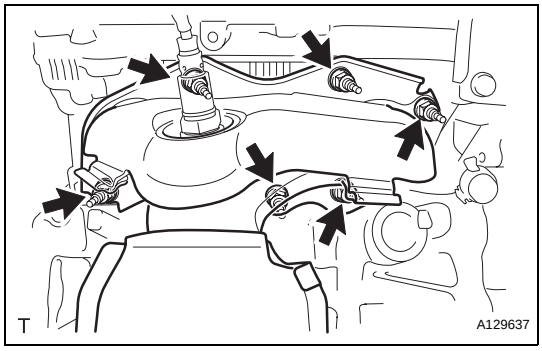

(b) Install the exhaust manifold sub-assembly RH with the 6 nuts.
Torque: 21 N*m (214 kgf*cm, 15 ft.*lbf)

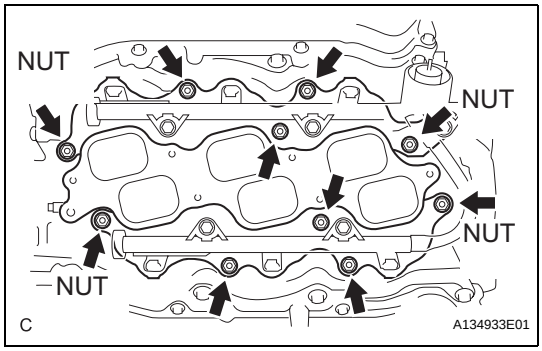

19. INSTALL INTAKE MANIFOLD

(a) Set a new gasket on each cylinder head.
NOTICE:
- **Align the port holes of the gasket and cylinder head.**
- **Make sure that the gasket is installed in the correct direction.**

(b) Set the intake manifold on the cylinder heads.

(c) Install and tighten the 6 bolts and 4 nuts uniformly in several steps.
Torque: 21 N*m (214 kgf*cm, 15 ft.*lbf)

20. INSTALL NO. 2 ENGINE MOUNTING STAY RH

(a) Install the No. 2 engine mounting stay RH with the bolt.
Torque: 21 N*m (214 kgf*cm, 15 ft.*lbf)

21. INSTALL IGNITION COIL ASSEMBLY

(a) Install the 6 ignition coil assemblies with the 6 bolts.
Torque: 10 N*m (102 kgf*cm, 7 ft.*lbf)

22. INSTALL INTAKE AIR SURGE TANK ASSEMBLY
NOTICE:
DO NOT apply oil to the bolts listed below:

Tightening Parts
Surge Tank and Intake Manifold
No. 1 Surge Tank Stay and Cylinder Head Cover
No. 1 Surge Tank Stay and Surge Tank
Throttle Body Bracket and Cylinder Head Cover
Throttle Body Bracket and Surge Tank

(a) Install a new gasket to the intake air surge tank.

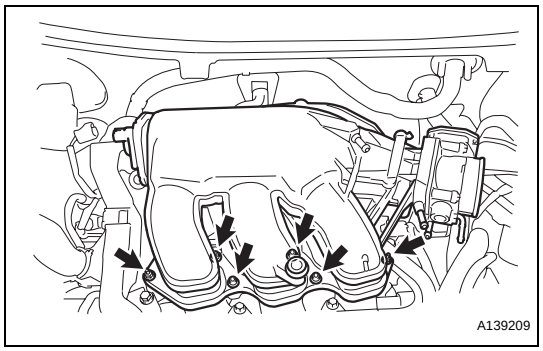

(b) Using a 5 mm hexagon socket wrench, install the 4 bolts and 2 nuts.
Torque: Bolt
18 N*m (184 kgf*cm, 13 ft.*lbf)
Nut
16 N*m (163 kgf*cm, 12 ft.*lbf)

(c) Install the throttle body bracket, No. 1 surge tank stay and 4 bolts.
Torque: 21 N*m (214 kgf*cm, 15 ft.*lbf)

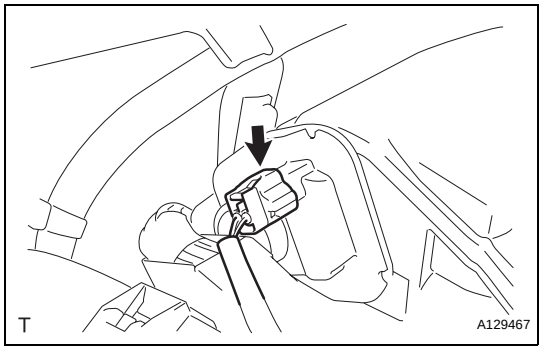

(d) Connect the connector.

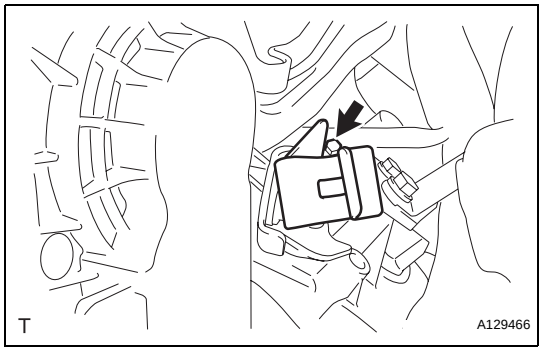

(e) Install the vacuum hose clamp with the bolt.
Torque: 5.4 N*m (55 kgf*cm, 48 in.*lbf)

(f) Connect the No. 1 ventilation hose.

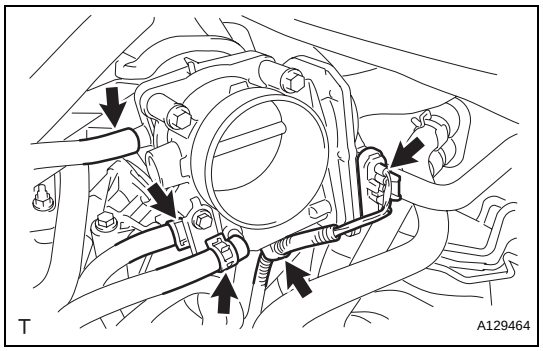

(g) Install the clamp and connect the throttle with motor body assembly connector.

(h) Connect the vapor feed hose.

(i) Connect the 2 water by-pass hoses to the throttle with motor body assembly.

23. REMOVE ENGINE STAND

24. INSTALL DRIVE PLATE AND RING GEAR SUB-ASSEMBLY (See page EM-12)

25. INSTALL AUTOMATIC TRANSAXLE ASSEMBLY
HINT:
See page AX-222.

26. INSTALL STARTER ASSEMBLY (See page ST-152)

27. INSTALL ENGINE WIRE

28. INSTALL FRONT DRIVE SHAFT ASSEMBLY LH (See page DS-16)

29. INSTALL FRONT DRIVE SHAFT ASSEMBLY RH (See page DS-16)

EM

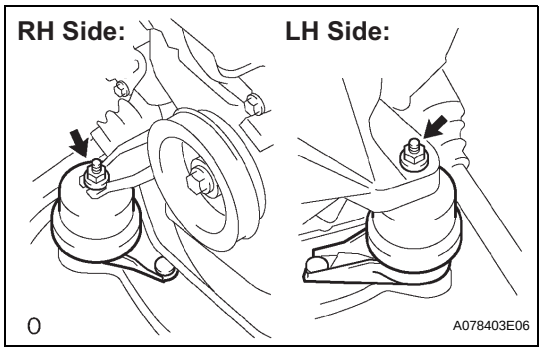

30. INSTALL FRONT FRAME ASSEMBLY

(a) Install the engine mounting insulators RH and LH with the 2 nuts.
Torque: 95 N*m (969 kgf*cm, 70 ft.*lbf)

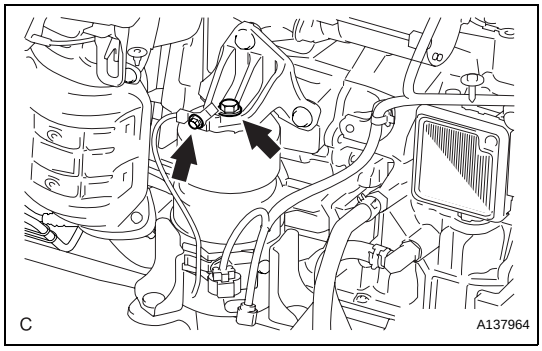

(b) Install the engine mounting insulator FR with the bolt.
Torque: 87 N*m (887 kgf*cm, 64 ft.*lbf)

(c) Connect the cable with the bolt.
Torque: 7.8 N*m (80 kgf*cm, 69 in.*lbf)

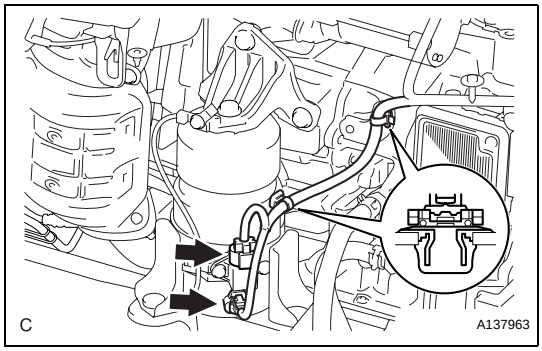

(d) Connect the 2 connectors and 2 clamps.

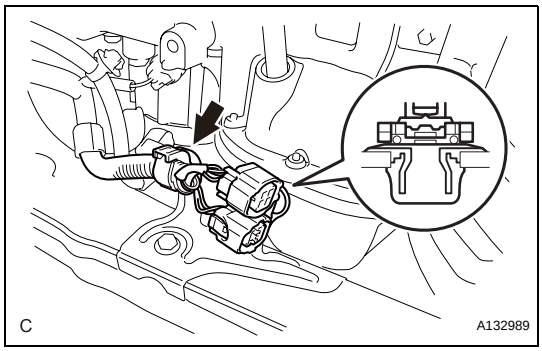

(e) Connect the 2 clamps.

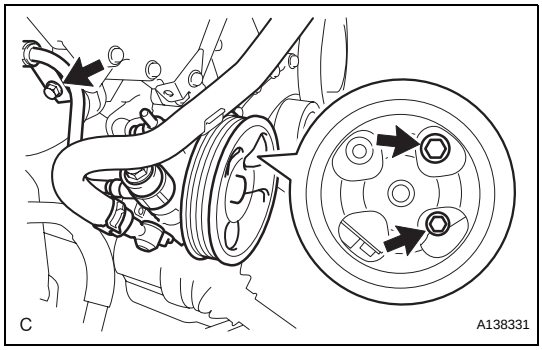

31. INSTALL VANE PUMP ASSEMBLY

(a) Install the vane pump with the 2 bolts.
Torque: 43 N*m (438 kgf*cm, 32 ft.*lbf)

(b) Install the pressure feed tube clamp bolt.
Torque: 9.8 N*m (100 kgf*cm, 87 in.*lbf)

(c) Connect the power steering oil pressure switch connector.

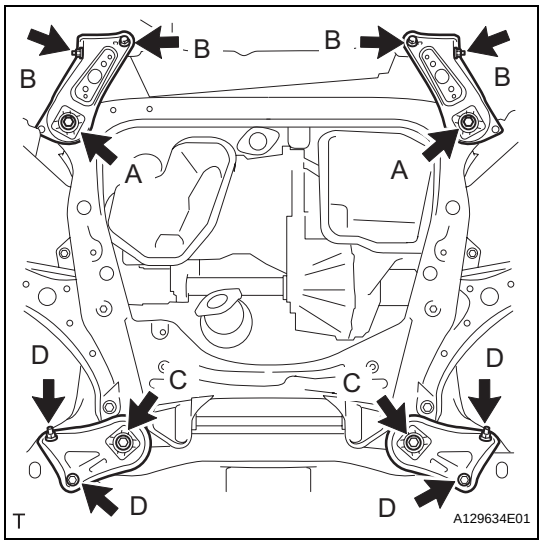

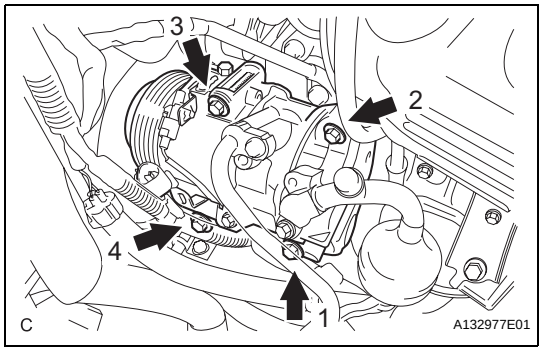

32. INSTALL ENGINE ASSEMBLY WITH TRANSAXLE

(a) Set the engine assembly with transaxle on the engine lifter.

(b) Install the engine assembly to the vehicle.

(c) Install the frame side rail plates RH and LH with the 4 bolts and 2 nuts.

Torque: A
85 N*m (867 kgf*cm, 63 ft.*lbf)
B
32 N*m (329 kgf*cm, 24 ft.*lbf)

(d) Install the front suspension member brace rear RH and LH with the 4 bolts and 2 nuts.

Torque: C
85 N*m (867 kgf*cm, 63 ft.*lbf)
D
32 N*m (329 kgf*cm, 24 ft.*lbf)

33. INSTALL COOLER COMPRESSOR ASSEMBLY

(a) Temporarily install the cooler compressor with the 4 bolts.

(b) Install the compressor with the 4 bolts by tightening the bolts in the order shown in the illustration.

Torque: 25 N*m (250 kgf*cm, 18 ft.*lbf)

(c) Install the 2 connector clamps.

34. INSTALL GENERATOR ASSEMBLY (See page CH-22)

35. INSTALL STEERING INTERMEDIATE SHAFT ASSEMBLY (See page PS-53)

36. INSTALL DRIVE PLATE AND TORQUE CONVERTER CLUTCH SETTING BOLT (See page AX-226)

37. INSTALL NO. 1 EXHAUST PIPE SUPPORT BRACKET

(a) Install the No. 1 exhaust pipe support bracket with the 2 nuts.

Torque: 21 N*m (214 kgf*cm, 15 ft.*lbf) (bolt)

38. INSTALL FRONT AXLE ASSEMBLY LH (See page DS-16)

39. INSTALL FRONT AXLE ASSEMBLY RH

HINT:
Use the same procedure described for the LH side.

40. INSTALL FRONT SUSPENSION LOWER NO. 1 ARM LH (See page DS-16)

41. INSTALL FRONT SUSPENSION LOWER NO. 1 ARM RH

HINT:
Use the same procedure described for the LH side.

42. INSTALL TIE ROD ASSEMBLY LH (See page DS-16)

43. INSTALL TIE ROD ASSEMBLY RH

HINT:
Use the same procedure described for the LH side.

44. INSTALL FRONT SPEED SENSOR LH (See page DS-17)

45. INSTALL FRONT SPEED SENSOR RH
HINT:
Use the same procedure described for the LH side.

46. INSTALL FRONT STABILIZER LINK ASSEMBLY LH (See page DS-17)

47. INSTALL FRONT STABILIZER LINK ASSEMBLY RH
HINT:
Use the same procedure described for the LH side.

48. INSTALL FRONT AXLE HUB NUT LH (See page DS-17)

49. INSTALL FRONT AXLE HUB NUT RH
HINT:
Use the same procedure described for the LH side.

50. INSTALL EXHAUST PIPE ASSEMBLY FRONT (See page EX-4)

51. INSTALL EXHAUST PIPE NO. 1 SUPPORT BRACKET (See page EX-4)

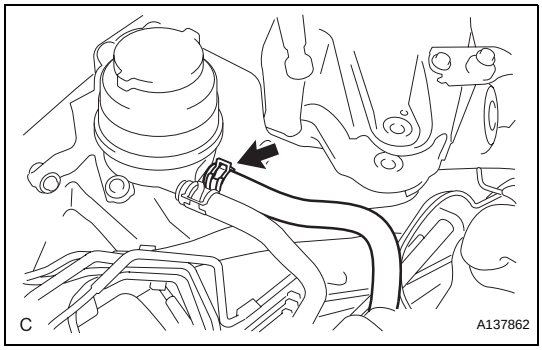

52. CONNECT OIL RESERVOIR TO PUMP HOSE
(a) Connect the oil reservoir to pump hose.

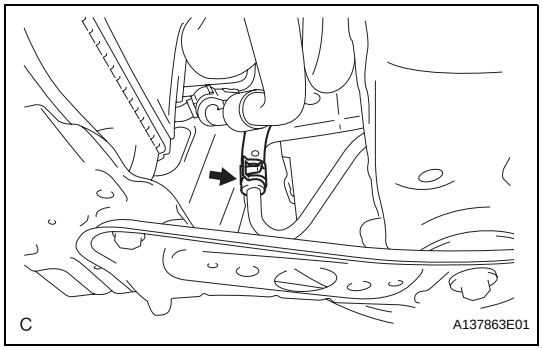

53. CONNECT RETURN TUBE SUB-ASSEMBLY
(a) Connect the return tube sub-assembly.

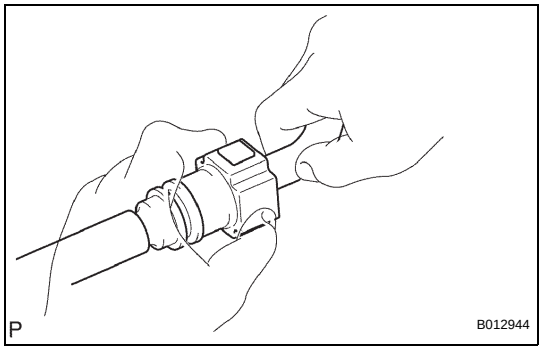

54. CONNECT FUEL TUBE SUB-ASSEMBLY
(a) Push in the fuel tube connector to the fuel pipe until the connector makes a "click" sound.
NOTICE:
- **Check for damage or contamination on the connected part of the pipe.**
- **Check if the pipe and the connector are securely connected by trying to pull them apart.**

(b) Install the No. 1 fuel pipe clamp.

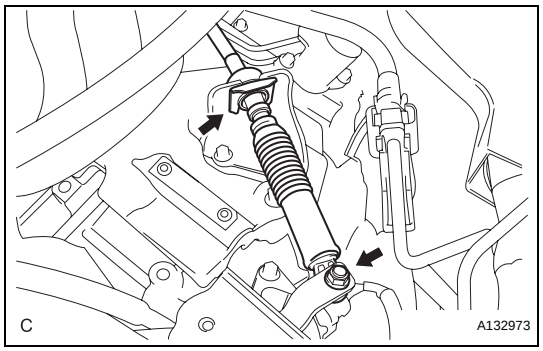

55. CONNECT TRANSMISSION CONTROL CABLE ASSEMBLY

(a) Connect the cable to the transaxle with the clip and nut.
Torque: 13 N*m (130 kgf*cm, 9 ft.*lbf)

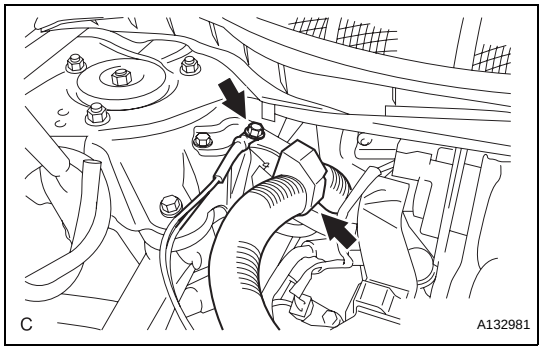

56. CONNECT ENGINE WIRE

(a) Install the clamp to the bracket with the bolt.
Torque: 8.4 N*m (85 kgf*cm, 74 in.*lbf)

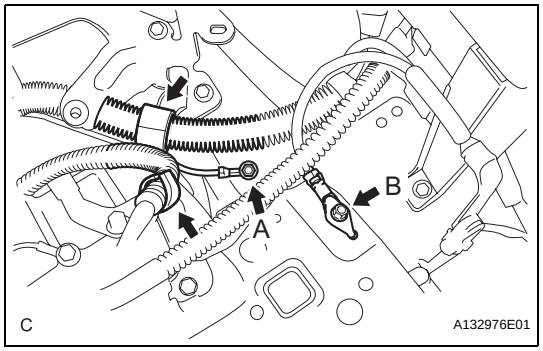

(b) Install the 2 clamps to the body with the 2 bolts.
Torque: Bolt A
12 N*m (123 kgf*cm, 9 ft.*lbf)
Bolt B
8.4 N*m (85 kgf*cm, 74 in.*lbf)

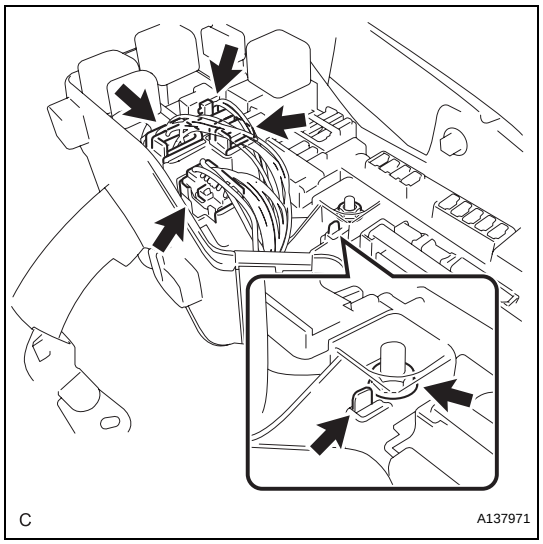

(c) Connect the engine wire connectors to the engine room junction block. Then, install it with the nut.
Torque: 8.4 N*m (85 kgf*cm, 74 in.*lbf)

57. INSTALL RELAY BLOCK COVER UPPER

58. INSTALL ECM (See page ES-544)

EM

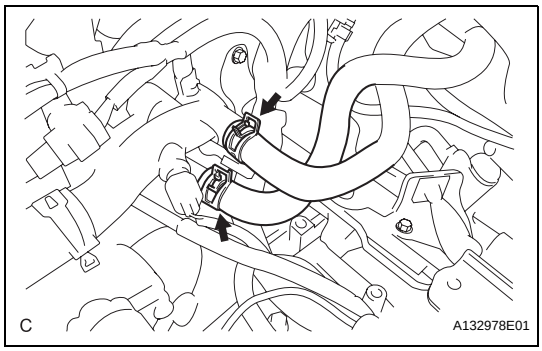

59. CONNECT HEATER INLET WATER HOSE
(a) Connect the heater inlet water hose.

60. CONNECT HEATER OUTLET WATER HOSE
(a) Connect the heater outlet water hose.

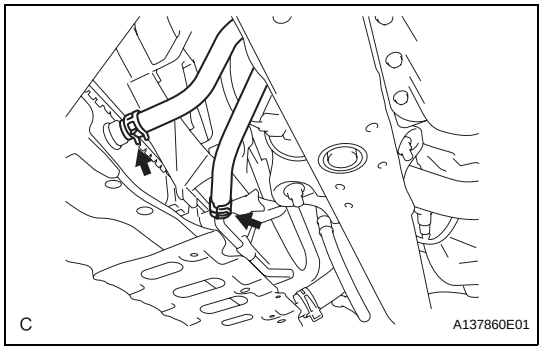

61. CONNECT NO. 1 OIL COOLER INLET HOSE
(a) Install the oil cooler inlet hose with the clamp.

62. CONNECT NO. 1 OIL COOLER OUTLET HOSE
(a) Install the oil cooler outlet hose with the clamp.

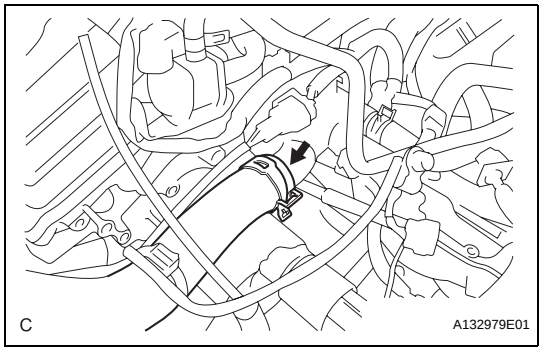

63. INSTALL RADIATOR HOSE INLET
(a) Install the radiator hose inlet with the clamp.

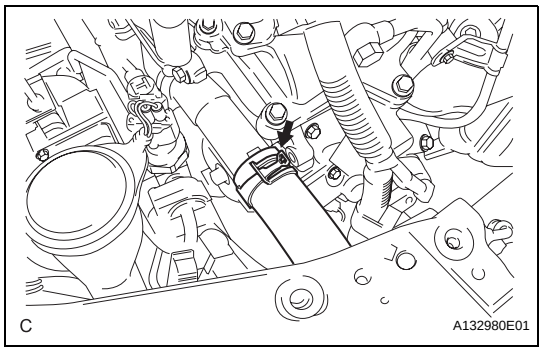

64. INSTALL RADIATOR HOSE OUTLET
(a) Install the radiator hose outlet with the clamp.

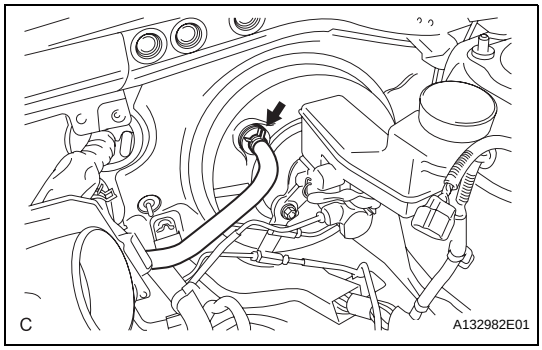

65. CONNECT CHECK VALVE TO BRAKE BOOSTER HOSE
(a) Install the check valve to brake booster hose with the clamp.

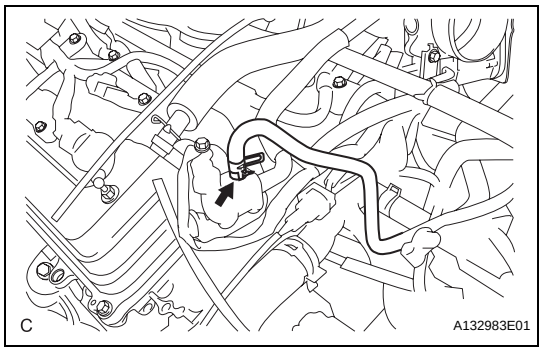

66. CONNECT NO. 1 FUEL VAPOR FEED HOSE

(a) Install the No. 1 fuel vapor feed hose with the clamp.

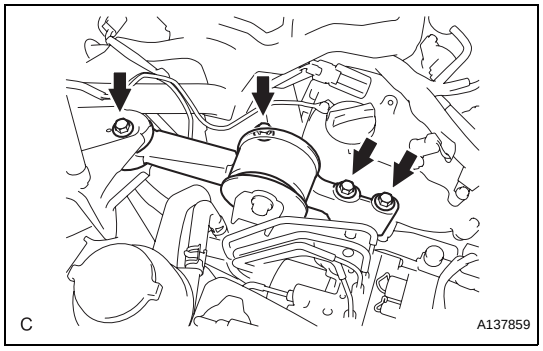

67. INSTALL ENGINE MOVING CONTROL ROD SUB-ASSEMBLY

(a) Temporarily install the engine moving control rod with the 4 bolts.

(b) Tighten the 4 bolts.

Torque: 38 N*m (388 kgf*cm, 28 ft.*lbf)

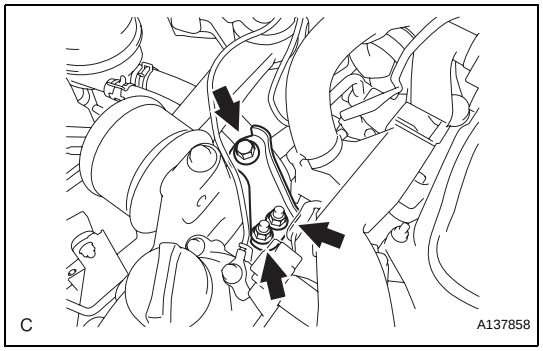

68. INSTALL NO. 2 ENGINE MOUNTING STAY RH

(a) Temporarily install the No. 2 engine mounting stay RH with the bolt and 2 nuts.

(b) Tighten the bolt and 2 nuts.

Torque: Bolt
38 N*m (388 kgf*cm, 28 ft.*lbf)
Nut
23 N*m (235 kgf*cm, 17 ft.*lbf)

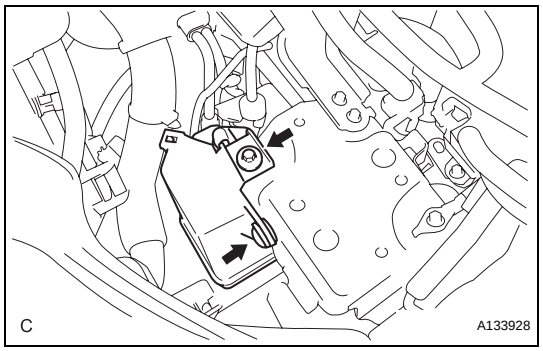

69. INSTALL INTAKE AIR RESONATOR SUB-ASSEMBLY

(a) Install the intake air resonator with the bolt and clip.

Torque: 5.0 N*m (51 kgf*cm, 44 in.*lbf)

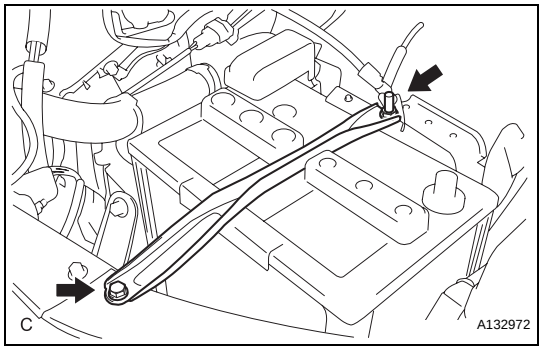

70. INSTALL BATTERY

(a) Install the battery and battery tray.

(b) Install the battery clamp with the bolt and nut.

Torque: Bolt
9.0 N*m (92 kgf*cm, 80 in.*lbf)
Nut
3.5 N*m (36 kgf*cm, 31 in.*lbf)

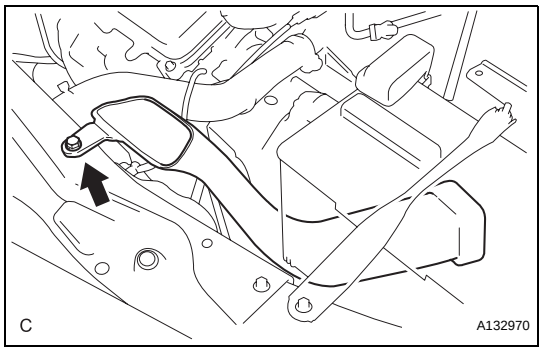

71. INSTALL NO. 1 AIR CLEANER INLET

(a) Install the No. 1 air cleaner inlet with the bolt.
Torque: 5.0 N*m (51 kgf*cm, 44 in.*lbf)

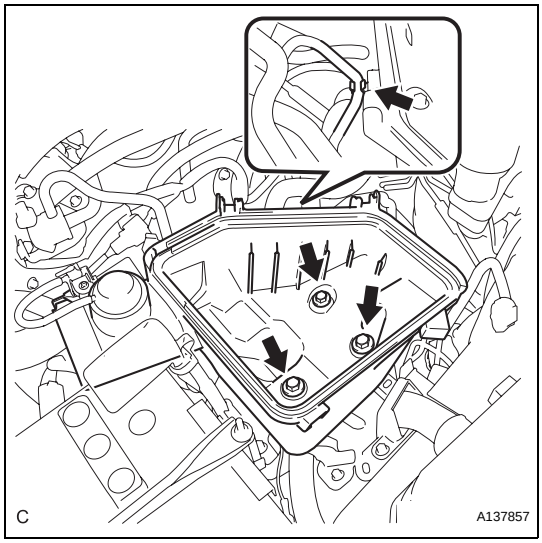

72. INSTALL AIR CLEANER CASE SUB-ASSEMBLY

(a) Install the air cleaner case with the 3 bolts.
Torque: 5.0 N*m (51 kgf*cm, 44 in.*lbf)

(b) Connect the vacuum hose and hose clamp.

73. INSTALL AIR CLEANER CAP SUB-ASSEMBLY (See page ES-522)

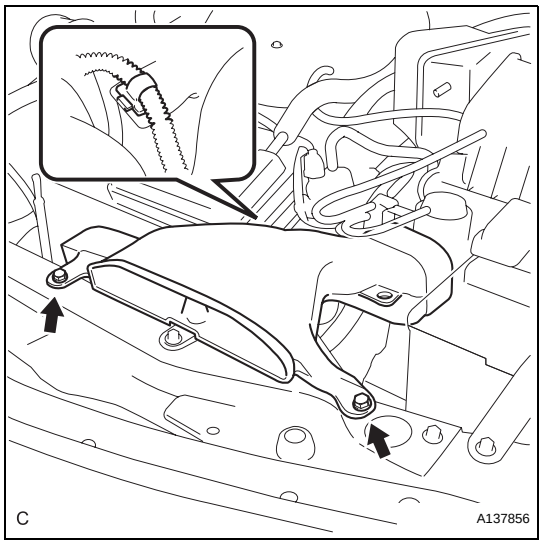

74. INSTALL AIR CLEANER INLET ASSEMBLY

(a) Install the air cleaner inlet with the clamp and 2 bolts.
Torque: 5.0 N*m (51 kgf*cm, 44 in.*lbf)

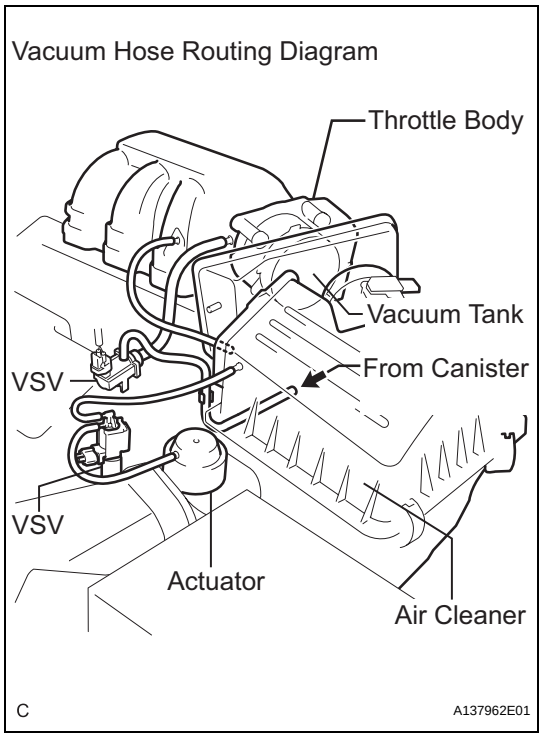

75. CONNECT VACUUM HOSES

76. INSTALL V-RIBBED BELT (See page EM-7)

77. INSTALL FRONT WHEELS
Torque: 103 N*m (1,050 kgf*cm, 76 ft.*lbf)

78. ADD ENGINE OIL

79. CONNECT CABLE TO NEGATIVE BATTERY TERMINAL
Torque: 6.9 N*m (70 kgf*cm, 61 in.*lbf)

80. ADD ENGINE COOLANT (See page CO-6)

81. ADD AUTOMATIC TRANSAXLE FLUID
HINT:
See page AX-176

82. ADD POWER STEERING FLUID

83. BLEED POWER STEERING FLUID (See page PS-8)

84. CHECK FOR FUEL LEAKS (See page FU-7)

85. INSPECT FOR OIL LEAK

86. INSPECT FOR COOLANT OIL LEAK (See page CO-1)

87. INSPECT FOR EXHAUST GAS LEAK

88. CHECK SHIFT LEVER POSITION (See page AX-232)

89. CHECK AND ADJUST FRONT WHEEL ALIGNMENT
HINT:
See page SP-4.

90. CHECK IGNITION TIMING (See page EM-1)

91. CHECK ENGINE IDLE SPEED (See page EM-2)

92. CHECK CO/HC (See page EM-4)

93. CHECK FUNCTION OF THROTTLE BODY (See page ES-519)

94. INSTALL FRONT FENDER APRON SEAL RH

95. INSTALL ENGINE UNDER COVER LH

96. INSTALL ENGINE UNDER COVER RH

97. INSTALL V-BANK COVER SUB-ASSEMBLY
(a) Fit the 3 retainers and install the V-bank cover.

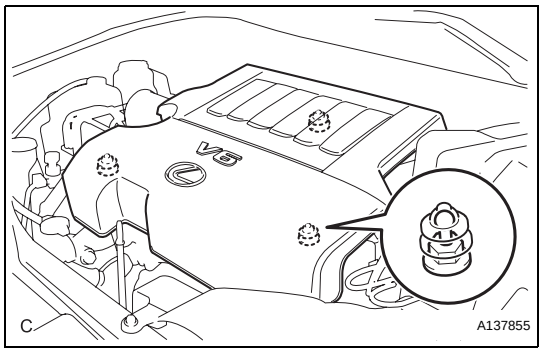

EM

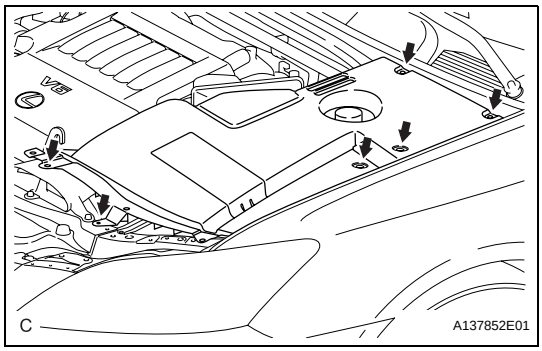

98. INSTALL ENGINE ROOM SIDE COVER LH

(a) Install the engine room side cover LH with the 6 clips.

(b) Install the hood hinge cover LH.

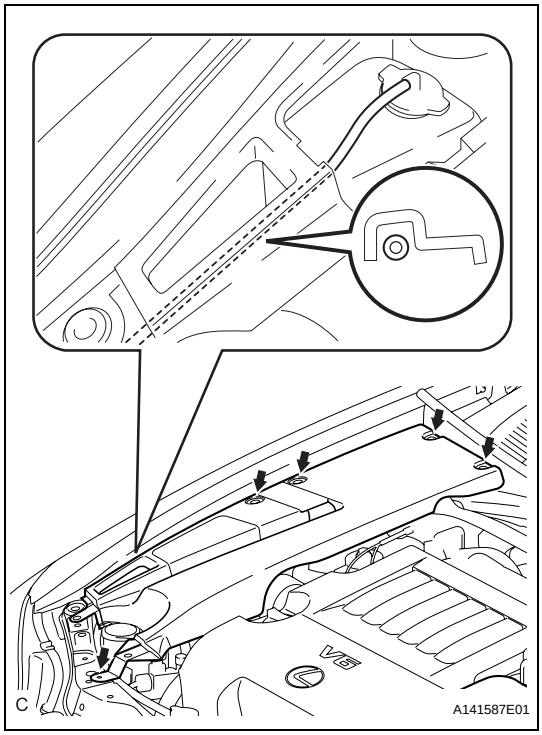

99. INSTALL ENGINE ROOM SIDE COVER RH

(a) Install the engine room side cover RH with the 5 clips.

NOTICE:

When installing the engine room side cover RH, make sure that the engine coolant reservoir hose is positioned as shown in the illustration.

(b) Install the hood hinge cover RH.

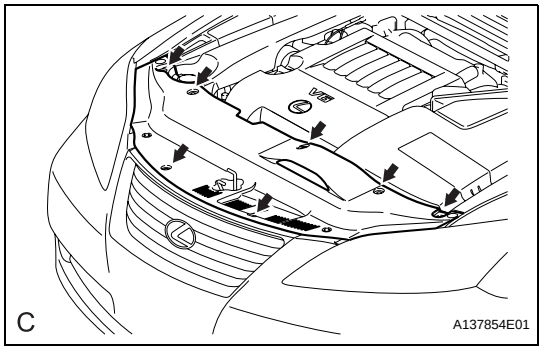

100. INSTALL COOL AIR INTAKE DUCT SEAL

(a) Install the intake duct seal with the 7 clips.

101. CHECK ABS SPEED SENSOR SIGNAL

HINT:

See page BC-24

102. PERFORM INITIALIZATION

(a) Perform initialization procedure (See page IN-33).

NOTICE:

Some systems need initialization after reconnecting the cable to the negative battery terminal.

EM

DISASSEMBLY

1. REMOVE OIL FILLER CAP SUB-ASSEMBLY

(a) Remove the oil filler cap and gasket.

2. REMOVE SPARK PLUG

(a) Remove the spark plugs.

3. REMOVE OIL PAN DRAIN PLUG

(a) Remove the drain plug and gasket.

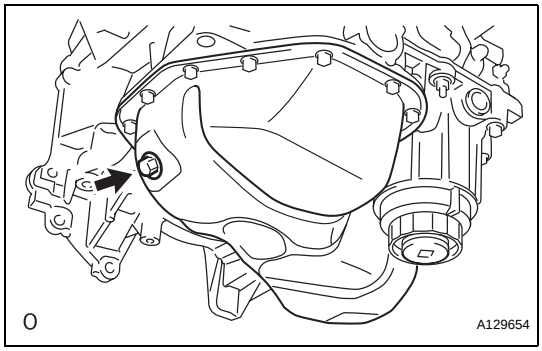

4. REMOVE VENTILATION VALVE SUB-ASSEMBLY

(a) Remove the ventilation valve.

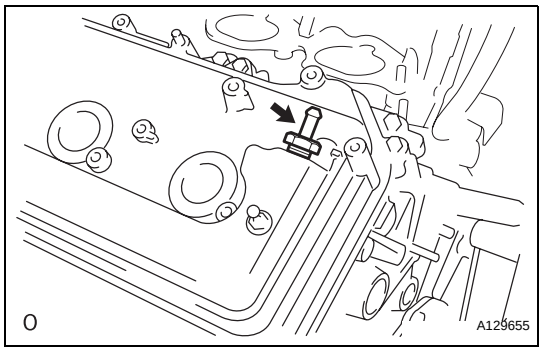

5. REMOVE CAMSHAFT POSITION SENSOR

(a) Remove the 4 bolts and 4 sensors.

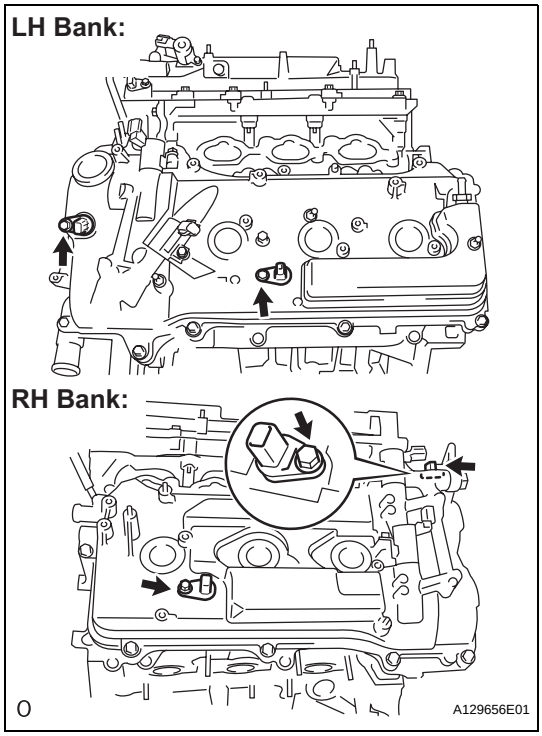

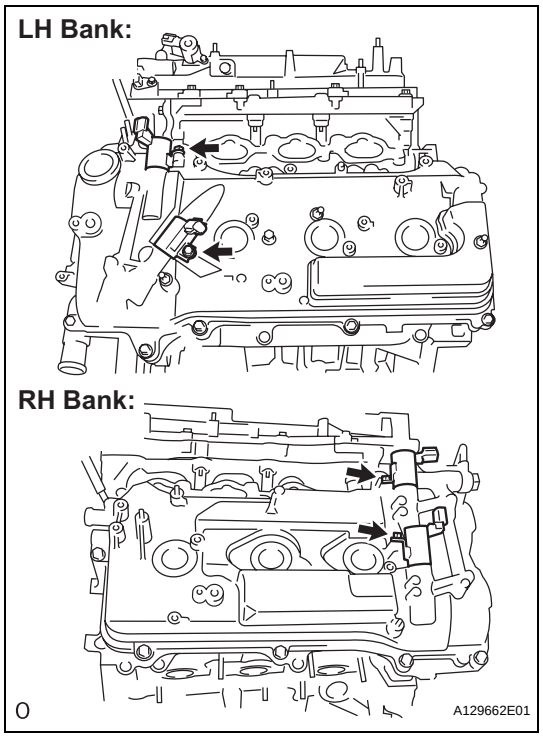

6. REMOVE CAMSHAFT TIMING OIL CONTROL VALVE ASSEMBLY

(a) Remove the 4 bolts and 4 oil control valves.

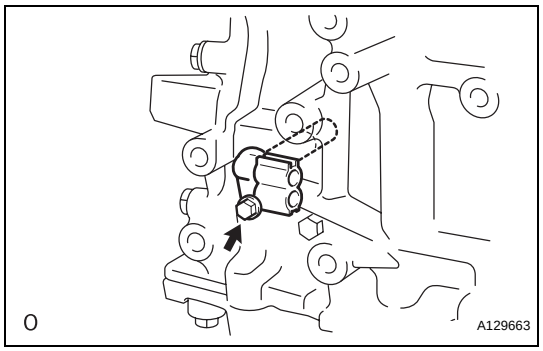

7. REMOVE CRANKSHAFT POSITION SENSOR

(a) Remove the bolt and sensor.

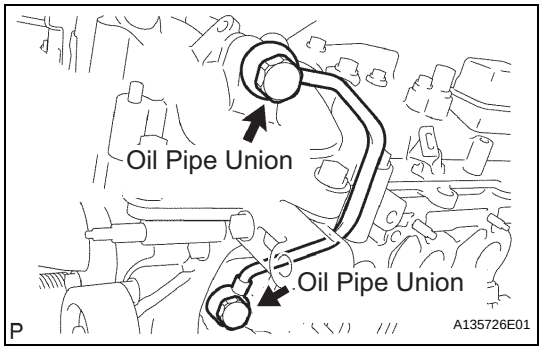

8. REMOVE NO. 1 OIL PIPE

(a) Remove the 2 oil pipe unions and oil pipe.

(b) Remove the oil control valve filter LH and gaskets.

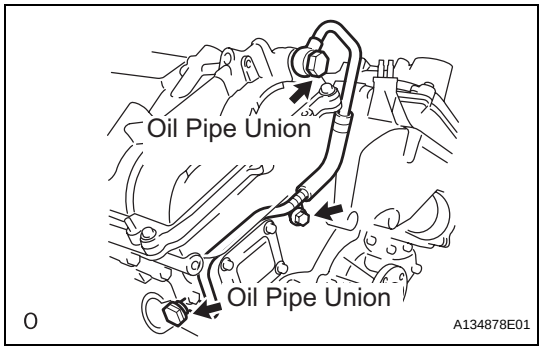

9. REMOVE OIL PIPE

(a) Remove the bolt.

(b) Remove the 2 oil pipe unions and oil pipe.

(c) Remove the oil control valve filter RH and gaskets.

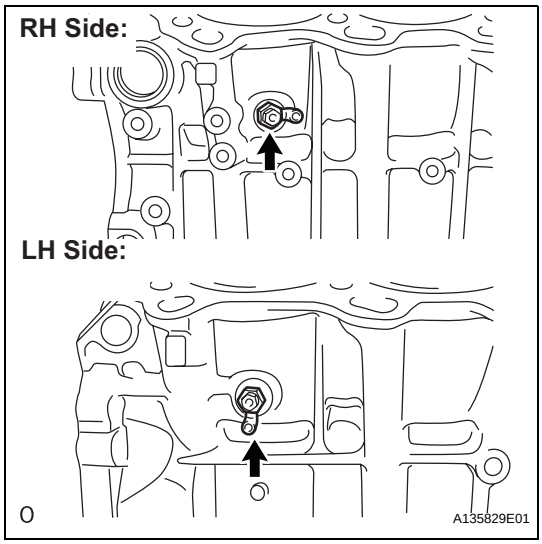

10. REMOVE CYLINDER BLOCK WATER DRAIN COCK SUB-ASSEMBLY

(a) Remove the water drain cocks from the cylinder block.

(b) Remove the water drain cock plugs from the water drain cocks.

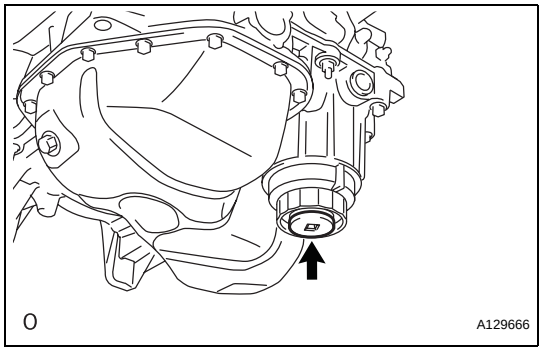

11. REMOVE OIL FILTER ELEMENT

(a) Remove the drain plug.

NOTICE:

Do not remove the O-ring from the oil filter cap.

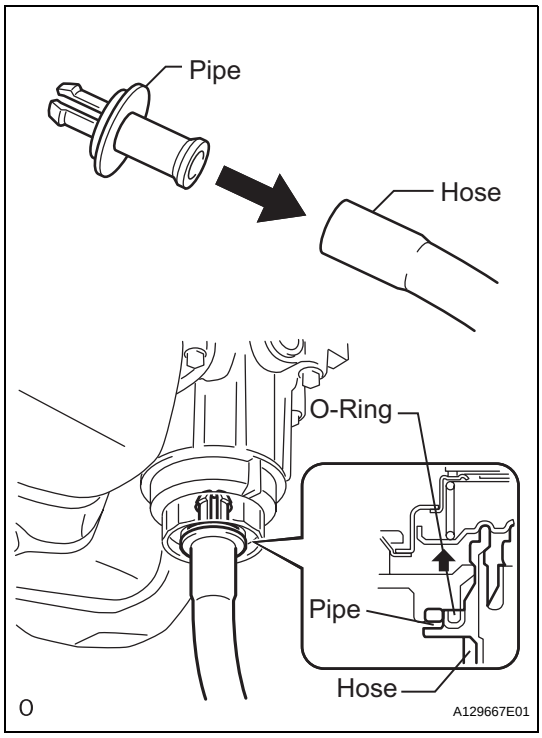

(b) Connect the hose to the pipe.

(c) Insert the pipe with the hose into the oil filter cap.

(d) Make sure that the oil is completely drained and remove the pipe and O-ring.

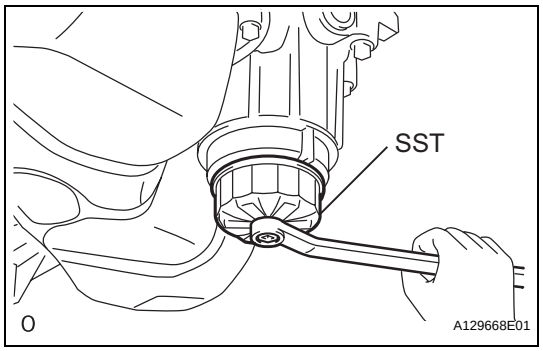

(e) Using SST, remove the oil filter cap.
SST 09228-06501

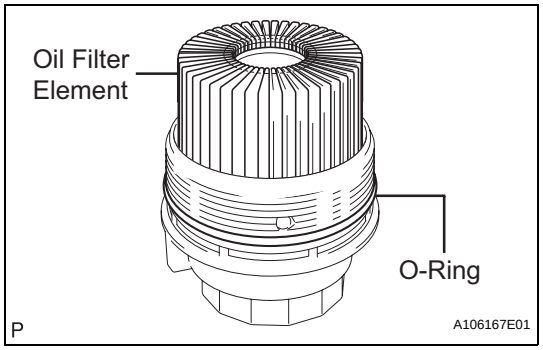

(f) Remove the oil filter element and O-ring from the oil filter cap.
NOTICE:
Do not use any tools when removing the O-ring to prevent the O-ring groove from being damaged.

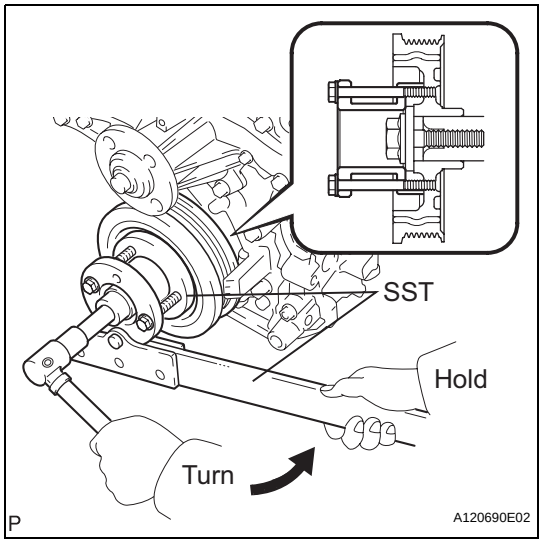

12. REMOVE CRANKSHAFT PULLEY

(a) Using SST, loosen the crankshaft pulley bolt.
SST 09213-70011 (09213-70020), 09330-00021

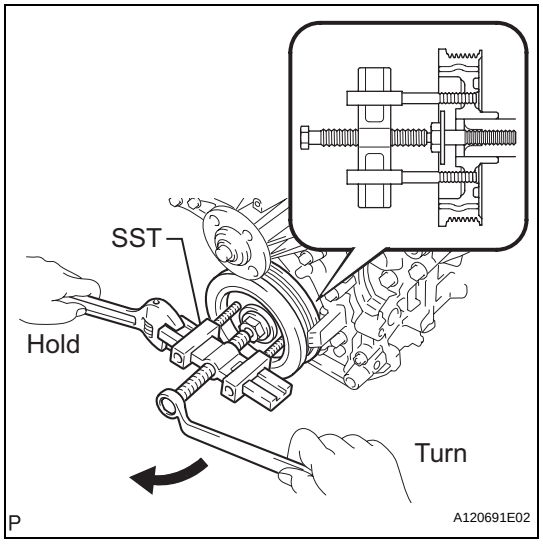

(b) Using SST, remove the crankshaft pulley bolt and crankshaft pulley.
SST 09950-50013 (09951-05010, 09952-05010, 09953-05020, 09954-05021)

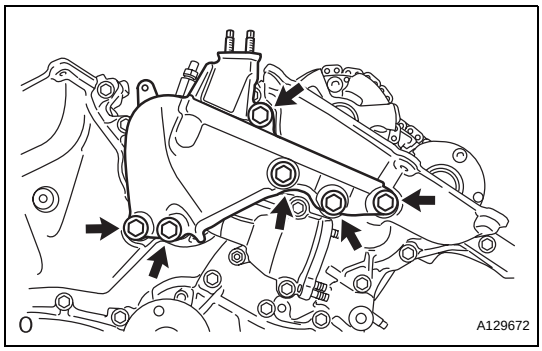

13. REMOVE FRONT ENGINE MOUNTING BRACKET NO. 1 LH

(a) Remove the 6 bolts and engine mounting bracket.
(b) Using a "TORX" socket wrench E8, remove the 2 stud bolts.

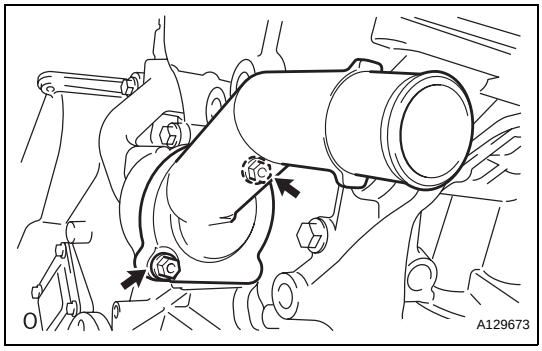

14. REMOVE WATER INLET HOUSING

(a) Remove the 2 nuts, water inlet, and thermostat.
(b) Remove the gasket.
(c) Remove the 2 stud bolts.
(d) Separate the No. 1 water by-pass hose.

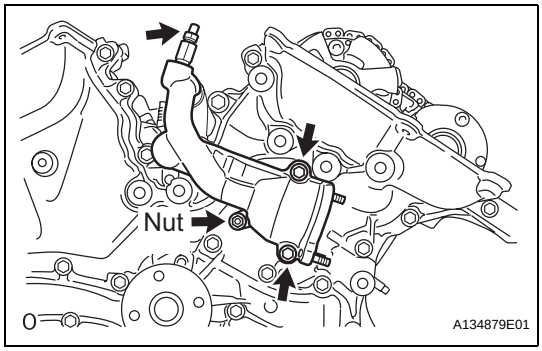

(e) Remove the 2 bolts, nut, and water inlet housing.
(f) Remove the drain cock plug.
(g) Remove the drain cock.

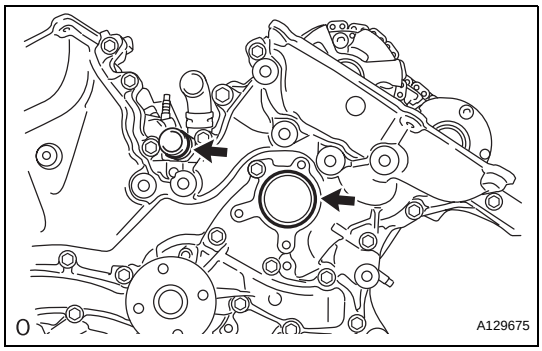

(h) Remove the 2 O-rings.

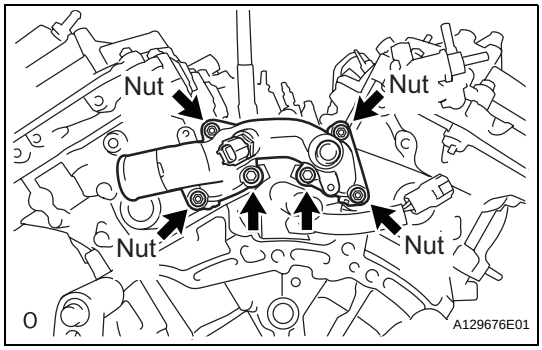

15. REMOVE WATER OUTLET

(a) Remove the 2 bolts, 4 nuts, and water outlet.

EM

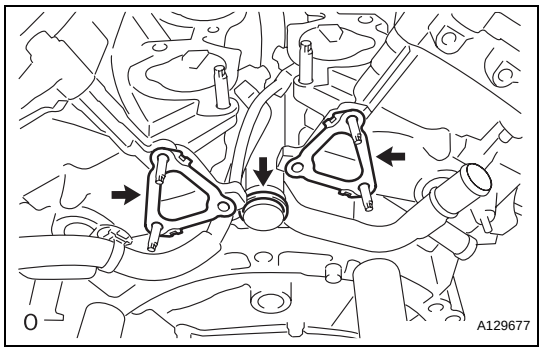

(b) Remove the 2 gaskets and O-ring.

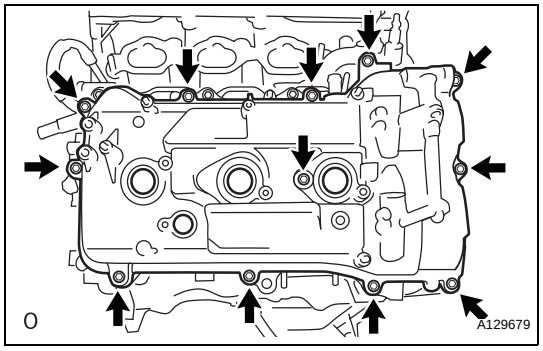

16. REMOVE CYLINDER HEAD COVER SUB-ASSEMBLY (for Bank 1)

(a) Remove the 12 bolts, seal washer, head cover, and gasket.

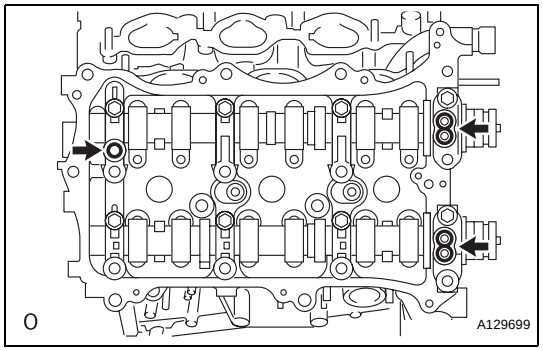

(b) Remove the 3 gaskets.

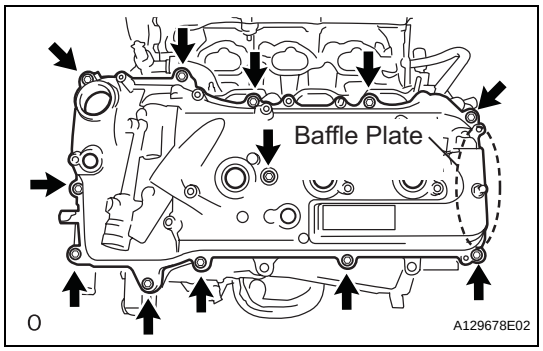

17. REMOVE CYLINDER HEAD COVER SUB-ASSEMBLY (for Bank 2)

(a) Remove the 12 bolts, seal washer, head cover, and gasket.

NOTICE:

The baffle plate is located on the back of the portion shown in the illustration. Do not damage the baffle plate when removing the head cover.

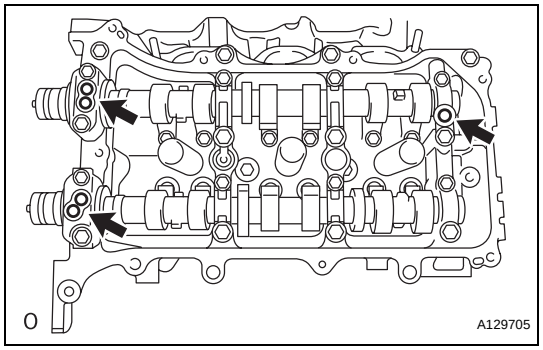

(b) Remove the 3 gaskets.

EM

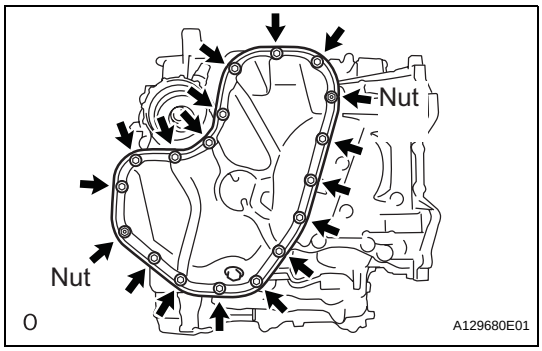

18. REMOVE NO. 2 OIL PAN SUB-ASSEMBLY

(a) Remove the 16 bolts and 2 nuts.

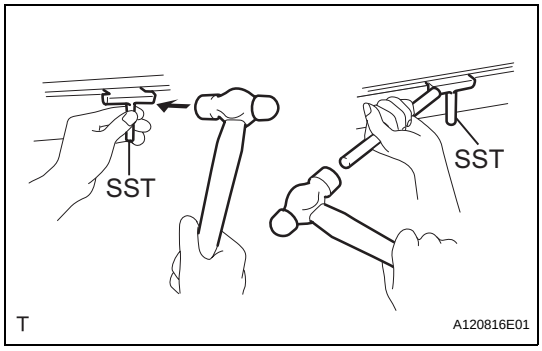

(b) Insert the blade of SST between the oil pans. Cut through the applied sealer and remove the No. 2 oil pan sub-assembly.
SST 09032-00100
NOTICE:
Be careful not to damage the contact surfaces of the oil pans.

(c) Using a "TORX" socket wrench E6, remove the 2 stud bolts.

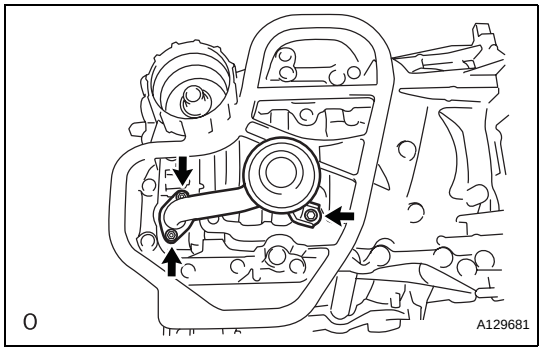

19. REMOVE OIL STRAINER SUB-ASSEMBLY

(a) Remove the bolt, 2 nuts, oil strainer, and gasket.

(b) Using a "TORX" socket wrench E6, remove the 2 stud bolts.

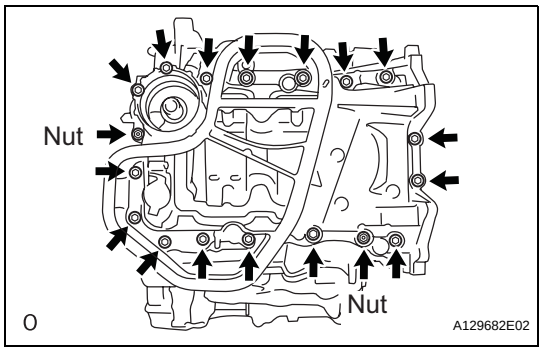

20. REMOVE OIL PAN SUB-ASSEMBLY

(a) Remove the 16 bolts and 2 nuts.
HINT:
Be sure to clean the bolts and stud bolts and check the threads for cracks or other damage.

EM

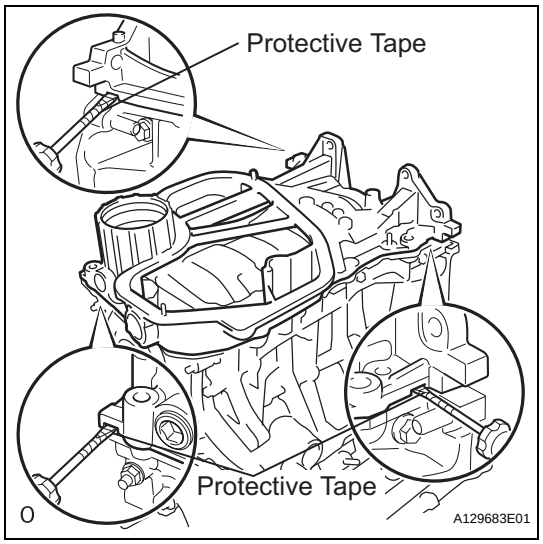

(b) Remove the oil pan by prying between the oil pan and cylinder block with a screwdriver.
NOTICE:
Be careful not to damage the contact surfaces of the cylinder block and oil pan.
HINT:
Tape the screwdriver tip before use.

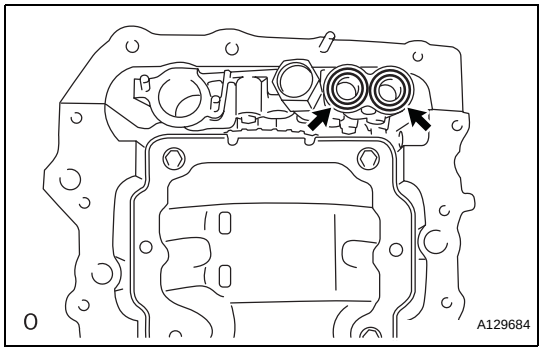

(c) Remove the 2 O-rings.
(d) Using a "TORX" socket wrench E8, remove the 2 stud bolts.

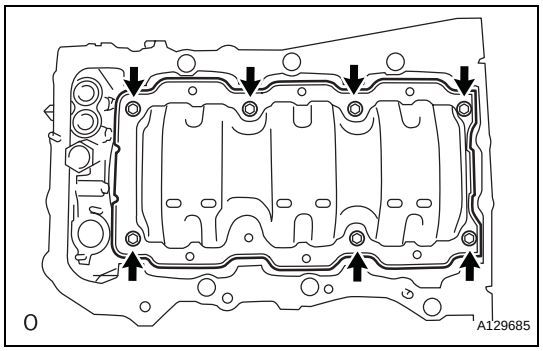

21. REMOVE OIL PAN BAFFLE PLATE
(a) Remove the 7 bolts and baffle plate.

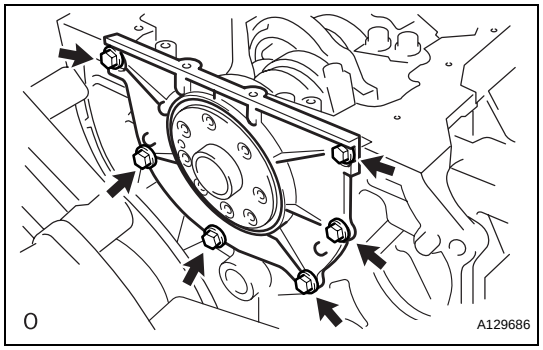

22. REMOVE ENGINE REAR OIL SEAL RETAINER
(a) Remove the 6 bolts.

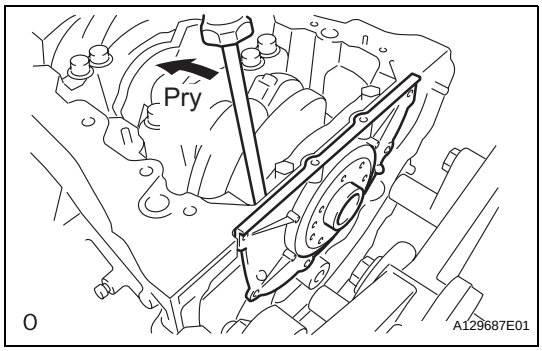

(b) Using a screwdriver, pry out the oil seal retainer.
NOTICE:
Be careful not to damage the engine rear oil seal retainer.
HINT:
Tape the screwdriver tip before use.

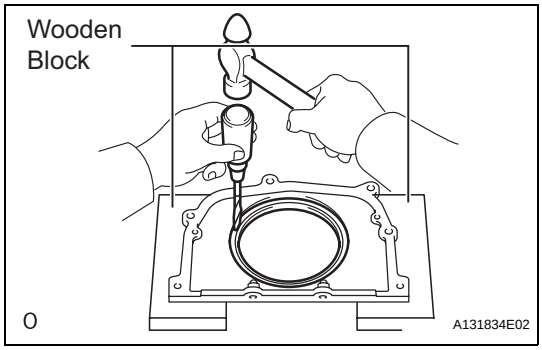

23. REMOVE ENGINE REAR OIL SEAL

(a) Place the oil seal retainer on wooden blocks.
NOTICE:
Be careful not to damage the engine rear oil seal retainer.

(b) Using a screwdriver and a hammer, tap out the oil seal.
HINT:
Tape the screwdriver tip before use.

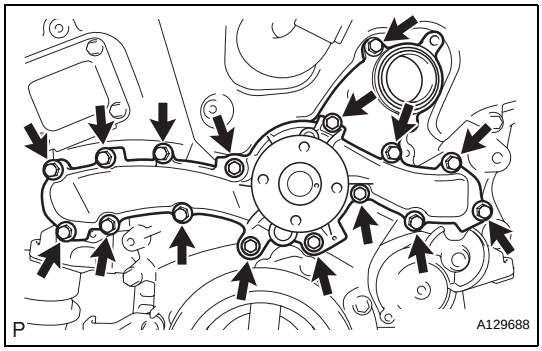

24. REMOVE WATER PUMP ASSEMBLY

(a) Remove the 16 bolts, water pump, and gasket.

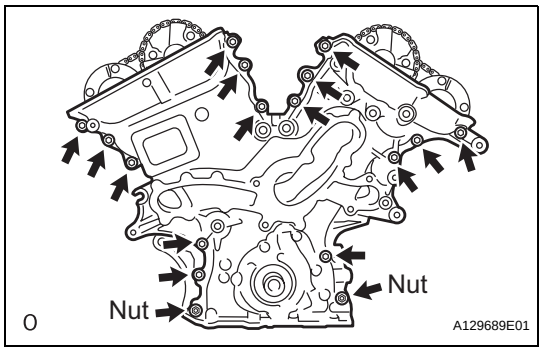

25. REMOVE TIMING CHAIN COVER SUB-ASSEMBLY

(a) Remove the 15 bolts and 2 nuts as shown in the illustration.

EM

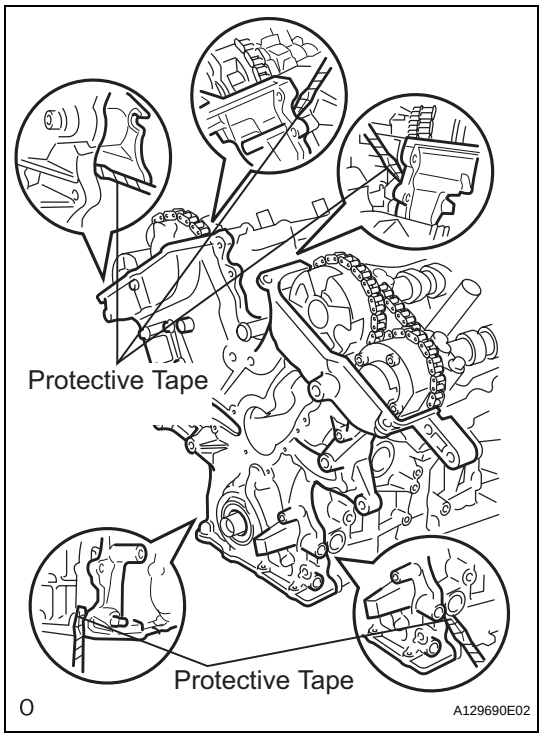

(b) Remove the timing chain cover by prying between the timing chain cover and cylinder head or cylinder block with a screwdriver.
NOTICE:
Be careful not to damage the contact surfaces of the cylinder head, cylinder block, and chain cover.
HINT:
Tape the screwdriver tip before use.

(c) Remove the 4 bolts, chain cover plate, and gasket.

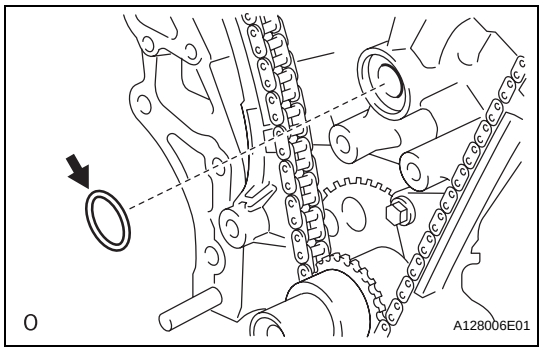

(d) Remove the gasket.

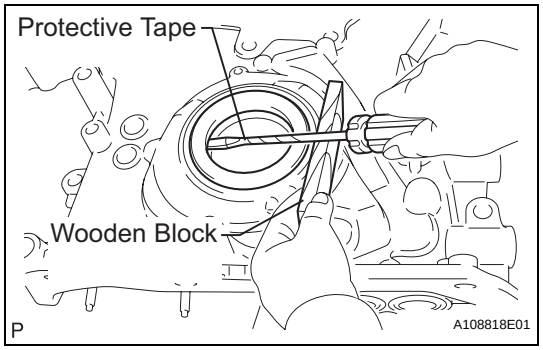

26. REMOVE TIMING CHAIN CASE OIL SEAL

(a) Using a screwdriver, pry out the oil seal.
HINT:
Tape the screwdriver tip before use.

27. SET NO. 1 CYLINDER TO TDC / COMPRESSION

(a) Temporarily tighten the pulley set bolt.

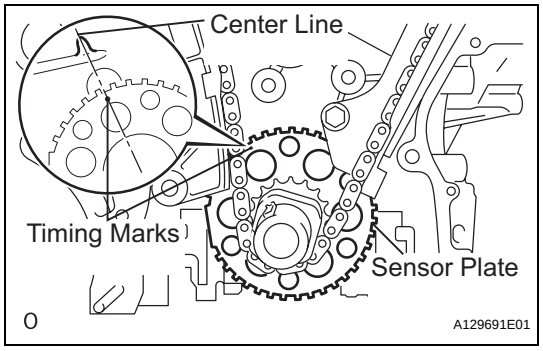

(b) Set the timing mark on the crank angle sensor plate to the RH block bore center line (TDC / compression).

EM

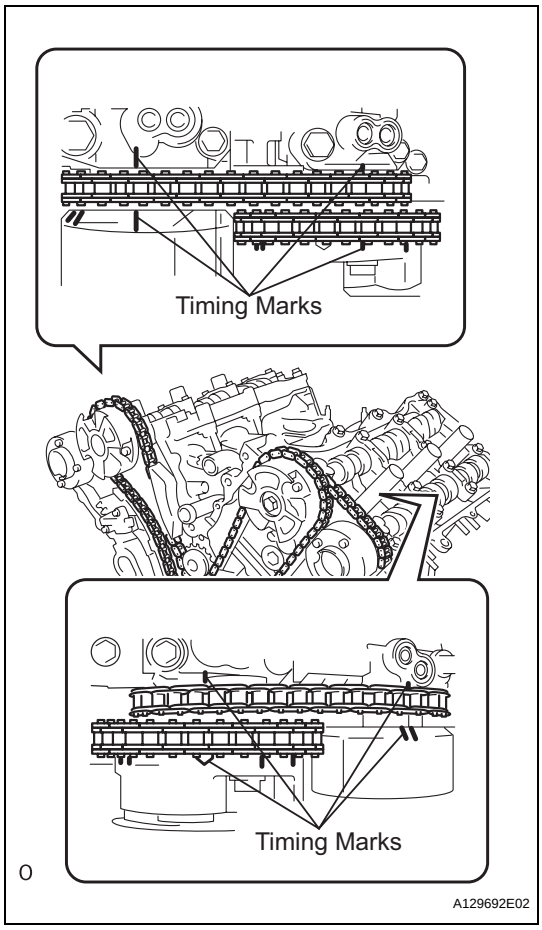

(c) Check that the timing marks of the camshaft timing gears are aligned with those of the bearing cap as shown in the illustration.
If not, turn the crankshaft 1 revolution (360°) and align the timing marks as above.

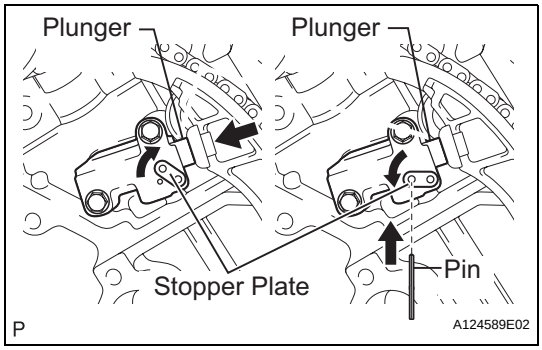

28. REMOVE NO. 1 CHAIN TENSIONER ASSEMBLY

(a) Move the stopper plate upward to release the lock, and push the plunger deep into the tensioner.

(b) Move the stopper plate downward to set the lock, and insert a pin of ϕ1.27 mm (0.05 in.) into the stopper plate's hole.

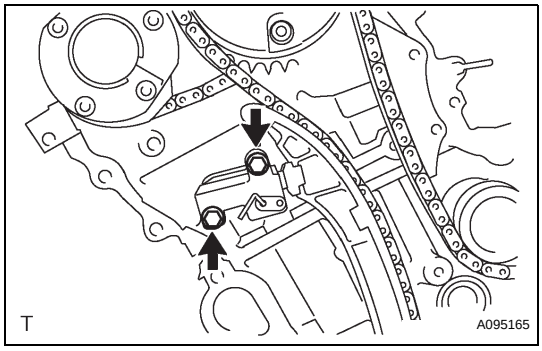

(c) Remove the 2 bolts and chain tensioner.

29. REMOVE CHAIN TENSIONER SLIPPER

(a) Remove the chain tensioner slipper.

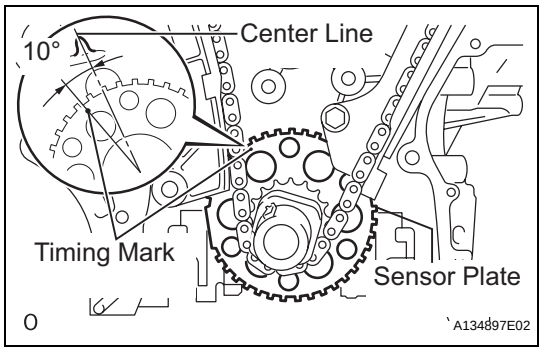

30. REMOVE CHAIN SUB-ASSEMBLY

(a) Turn the crankshaft counterclockwise 10° to loosen the chain of the crankshaft timing sprocket.

(b) Remove the pulley set bolt.

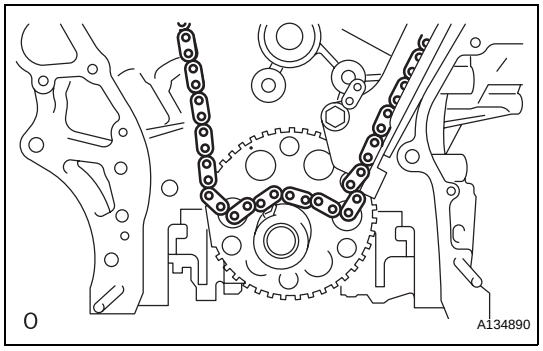

(c) Remove the chain from the crankshaft timing sprocket and place it on the crankshaft.

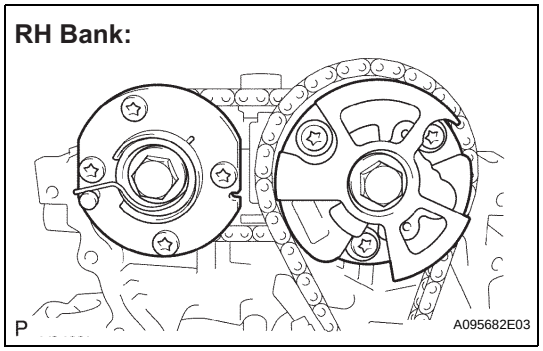

(d) Turn the camshaft timing gear assembly on the RH bank clockwise (approximately 60°) and set it as shown in the illustration. Be sure to loosen the chain between the banks.

(e) Remove the chain.

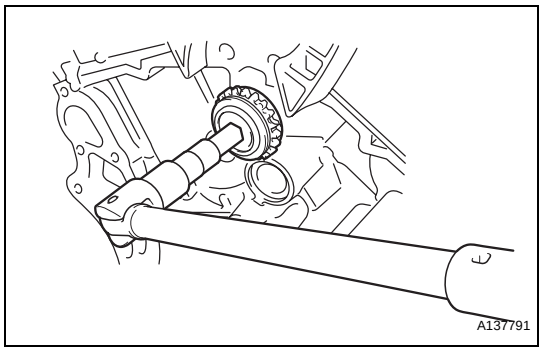

31. REMOVE IDLE SPROCKET ASSEMBLY

(a) Using a 10 mm hexagon wrench, remove the No. 2 idle gear shaft, sprocket, and No. 1 idle gear shaft.

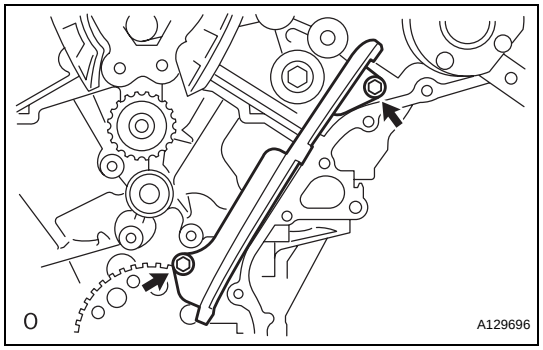

32. REMOVE NO. 1 CHAIN VIBRATION DAMPER

(a) Remove the 2 bolts and vibration damper.

33. REMOVE NO. 2 CHAIN VIBRATION DAMPER

(a) Remove the 2 vibration dampers.

EM

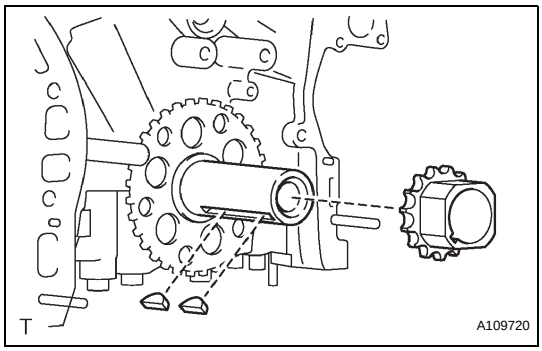

34. REMOVE CRANKSHAFT TIMING SPROCKET

(a) Remove the crankshaft timing sprocket from the crankshaft.

(b) Remove the 2 pulley set keys from the crankshaft.

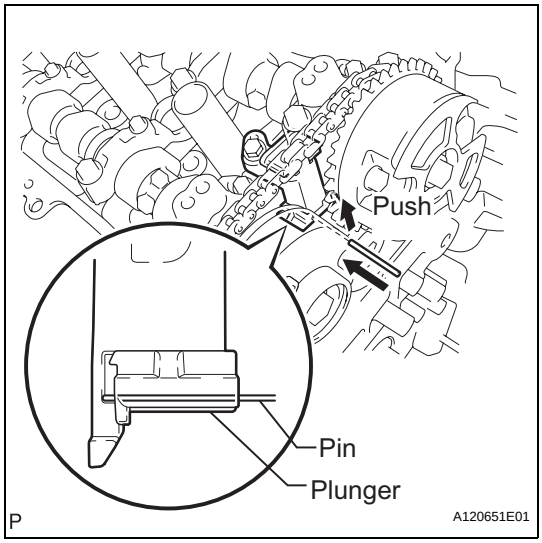

35. REMOVE CAMSHAFT TIMING GEARS AND NO. 2 CHAIN (for Bank 1)

(a) While raising the No. 2 chain tensioner, insert a pin of ϕ 1.0 mm (0.039 in.) into the hole to fix the No. 2 chain tensioner.

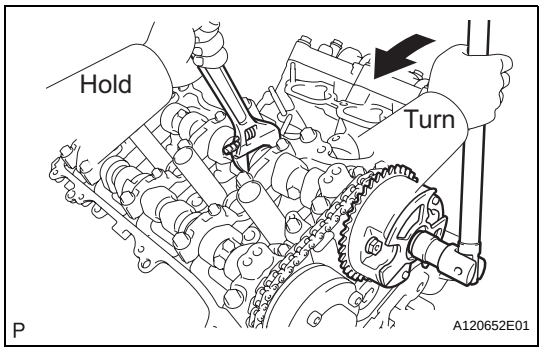

(b) Hold the hexagonal portion of the camshaft with a wrench, and remove the 2 bolts and 2 camshaft timing gear assemblies.

NOTICE:

- **Be careful not to damage the cylinder head with the wrench.**
- **Do not disassemble the camshaft timing gear assemblies.**

(c) Remove the No. 2 chain.

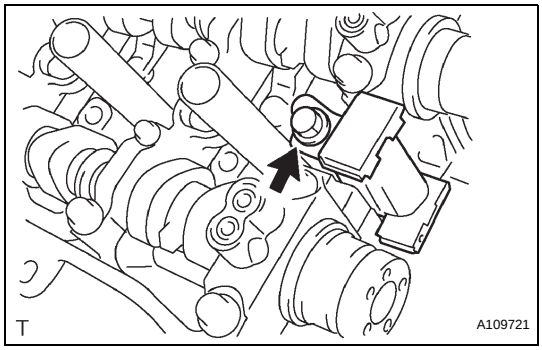

36. REMOVE NO. 2 CHAIN TENSIONER ASSEMBLY

(a) Remove the bolt and No. 2 chain tensioner.

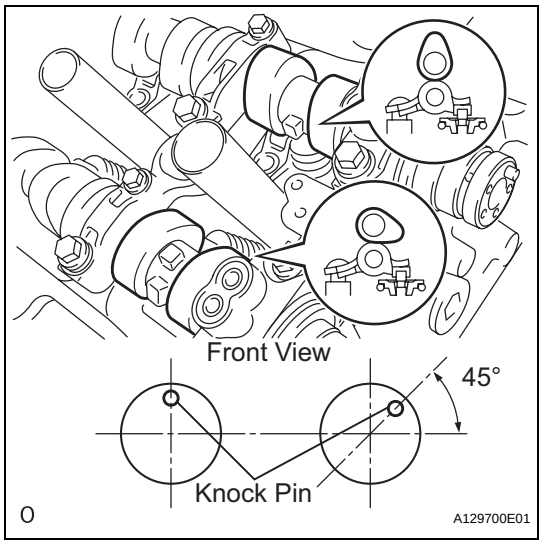

37. REMOVE CAMSHAFT BEARING CAP (for Bank 1)

(a) Check that the camshafts are positioned as shown in the illustration.

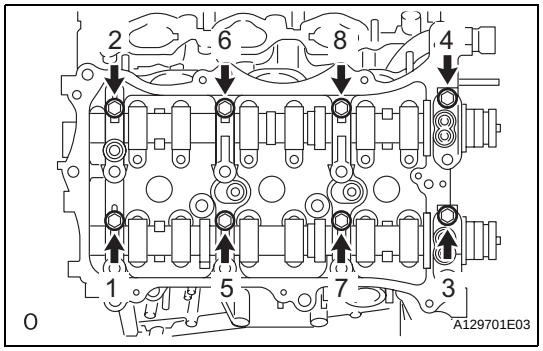

(b) Uniformly loosen and remove the 8 bearing cap bolts in the sequence shown in the illustration.

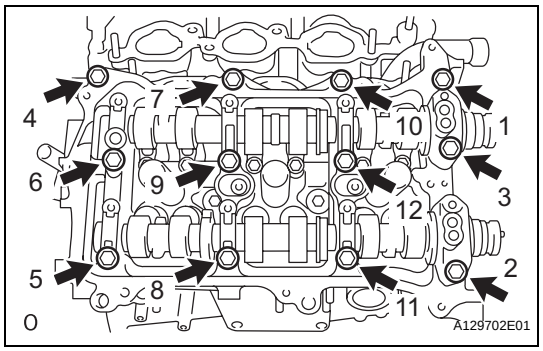

(c) Uniformly loosen and remove the 12 bearing cap bolts in the sequence shown in the illustration.
NOTICE:
Uniformly loosen the bolts while keeping the camshaft level.

(d) Remove the 5 bearing caps.

38. REMOVE CAMSHAFT

(a) Remove the camshaft.

39. REMOVE NO. 2 CAMSHAFT

(a) Remove the No. 2 camshaft.

EM

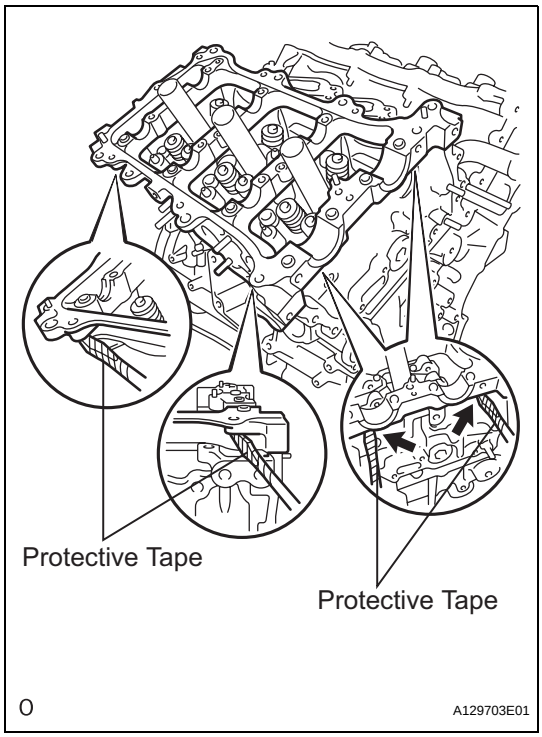

40. REMOVE CAMSHAFT HOUSING SUB-ASSEMBLY RH

(a) Remove the camshaft housing sub-assembly RH by prying between the cylinder head and camshaft housing sub-assembly RH with a screwdriver.
NOTICE:
Be careful not to damage the contact surfaces of the cylinder head and camshaft housing.
HINT:
Tape the screwdriver tip before use.

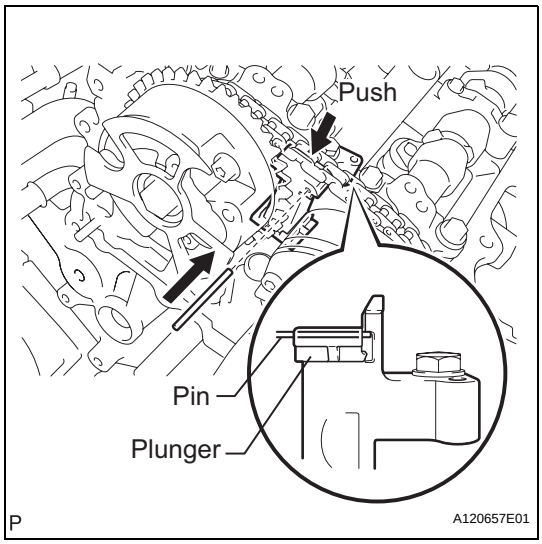

41. REMOVE CAMSHAFT TIMING GEARS AND NO. 2 CHAIN (for Bank 2)

(a) While pushing down the No. 3 chain tensioner, insert a pin of ϕ 1.0 mm (0.039 in.) into the hole to fix the No. 3 chain tensioner.

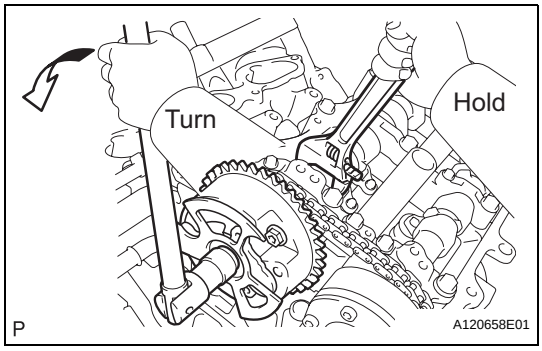

(b) Hold the hexagonal portion of the camshaft with a wrench, and remove the 2 bolts and 2 camshaft timing gear assemblies.
NOTICE:
- **Be careful not to damage the cylinder head with the wrench.**
- **Do not disassemble the camshaft timing gear assemblies.**

(c) Remove the No. 2 chain.

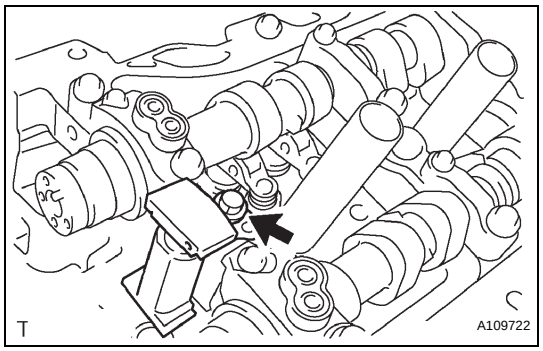

42. REMOVE NO. 3 CHAIN TENSIONER ASSEMBLY

(a) Remove the bolt and No. 3 chain tensioner.

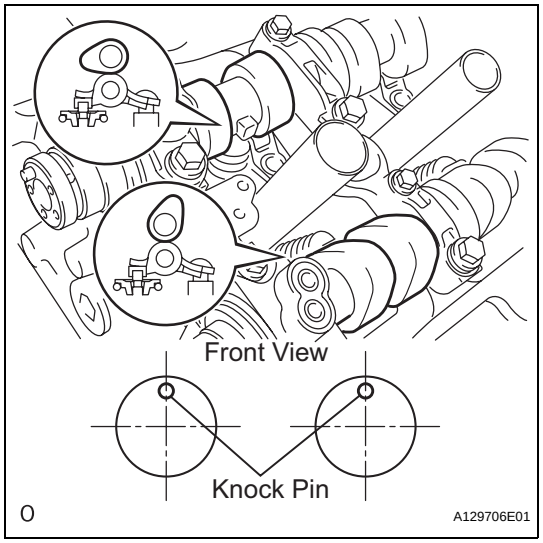

43. REMOVE CAMSHAFT BEARING CAP (for Bank 2)

(a) Check that the camshafts are positioned as shown in the illustration.

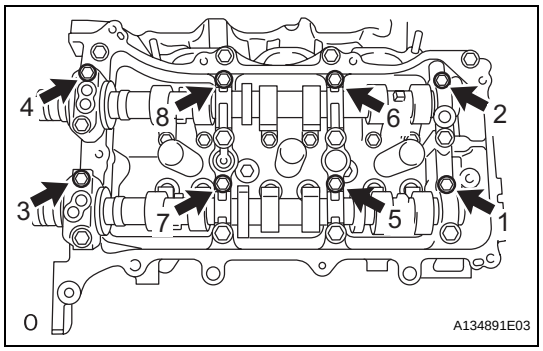

(b) Uniformly loosen and remove the 8 bearing cap bolts in the sequence shown in the illustration.

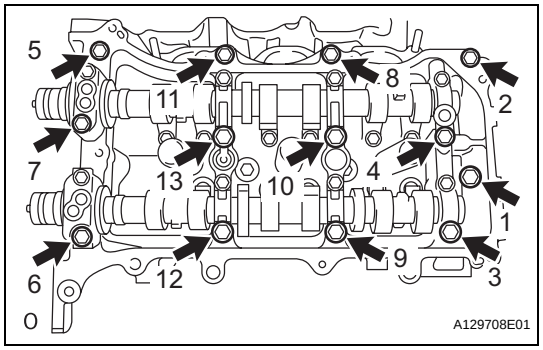

(c) Uniformly loosen and remove the 13 bearing cap bolts in the sequence shown in the illustration.
NOTICE:
Uniformly loosen the bolts while keeping the camshaft level.

(d) Remove the 5 bearing caps.

44. REMOVE NO. 3 CAMSHAFT

(a) Remove the No. 3 camshaft.

45. REMOVE NO. 4 CAMSHAFT

(a) Remove the No. 4 camshaft.

EM

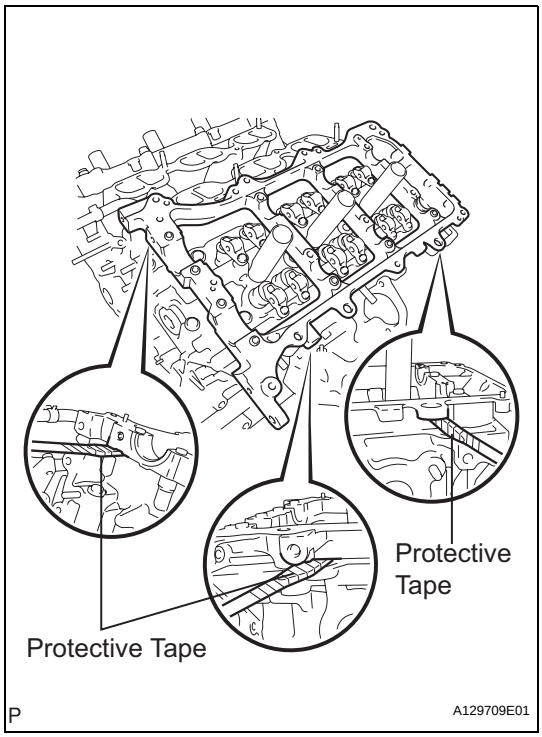

46. REMOVE CAMSHAFT HOUSING SUB-ASSEMBLY LH

(a) Remove the camshaft housing by prying between the cylinder head and camshaft housing with a screwdriver.

NOTICE:

Be careful not to damage the contact surfaces of the cylinder head and camshaft housing.

HINT:

Tape the screwdriver tip before use.

47. REMOVE NO. 1 VALVE ROCKER ARM SUB-ASSEMBLY

(a) Remove the 24 valve rocker arms.

HINT:

Arrange the removed parts in the correct order.

48. REMOVE VALVE LASH ADJUSTER ASSEMBLY

(a) Remove the 24 valve lash adjusters from the cylinder head.

HINT:

Arrange the removed parts in the correct order.

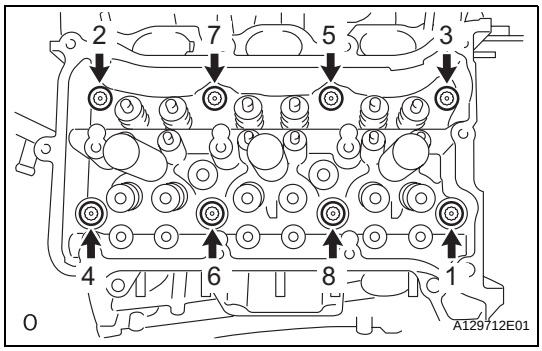

49. REMOVE CYLINDER HEAD SUB-ASSEMBLY RH

(a) Using a 10 mm bi-hexagon wrench, uniformly loosen the 8 bolts in the sequence shown in the illustration. Remove the 8 cylinder head bolts and plate washers.

NOTICE:

- **Be careful not to drop the washers into the cylinder head.**
- **Cylinder head warpage or cracking could result from removing the bolts in an incorrect order.**

HINT:

Be sure to keep separate the removed parts for each installation position.

(b) Remove the cylinder head and gasket.

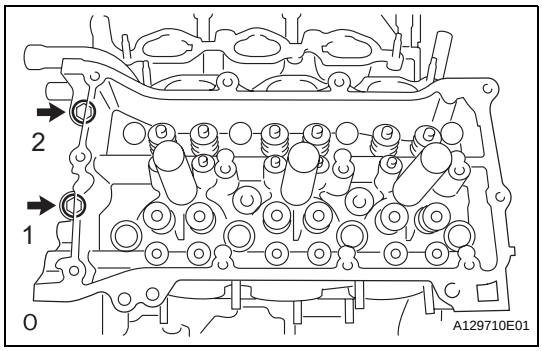

50. REMOVE CYLINDER HEAD SUB-ASSEMBLY LH

(a) Uniformly loosen and remove the bolts in the sequence shown in the illustration.

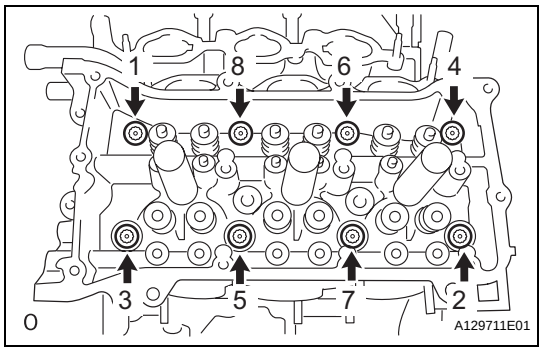

(b) Using a 10 mm bi-hexagon wrench, uniformly loosen the 8 bolts in the sequence shown in the illustration. Remove the 8 cylinder head bolts and plate washers.

NOTICE:

- **Be careful not to drop the washers into the cylinder head.**
- **Cylinder head warpage or cracking could result from removing the bolts in an incorrect order.**

HINT:

Be sure to keep separate the removed parts for each installation position.

(c) Remove the cylinder head and gasket.

51. REMOVE WATER INLET PIPE

(a) Separate the No. 1 water by-pass hose.

(b) Remove the 2 bolts and water inlet pipe.

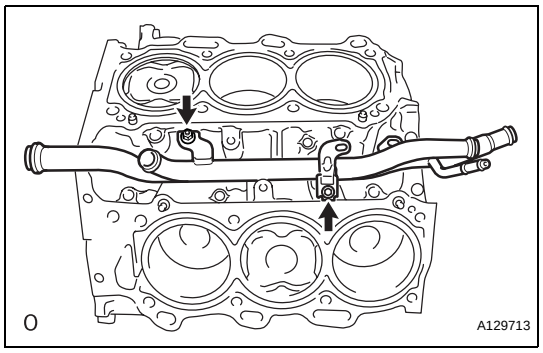

52. REMOVE VALVE STEM CAP

(a) Remove the valve stem caps from the cylinder heads.

HINT:

Arrange the removed parts in the correct order.

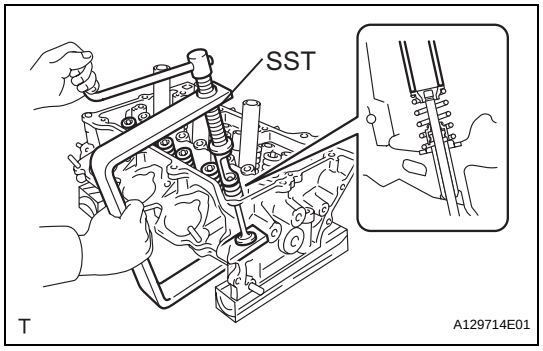

53. REMOVE INTAKE VALVE

(a) Using SST, compress the compression spring and remove the valve spring retainer locks.

SST 09202-70020 (09202-00010)

(b) Remove the retainer, compression spring, and valve.

HINT:

Arrange the removed parts in the correct order.

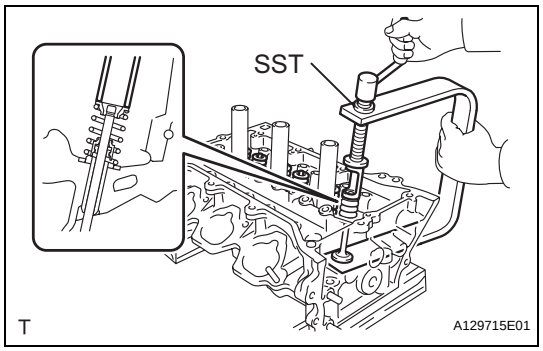

54. REMOVE EXHAUST VALVE

(a) Using SST, compress the compression spring and remove the valve spring retainer locks.

SST 09202-70020 (09202-00010)

(b) Remove the retainer, compression spring, and valve.

HINT:

Arrange the removed parts in the correct order.

EM

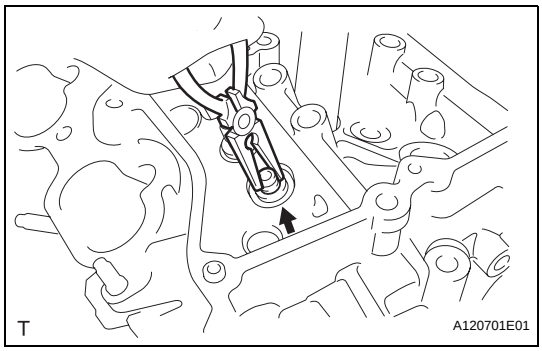

55. REMOVE VALVE STEM OIL SEAL

(a) Using needle-nose pliers, remove the oil seals.

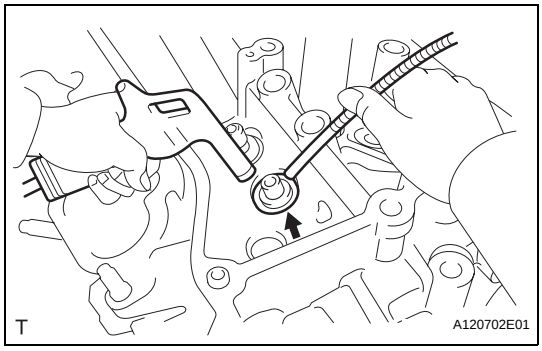

56. REMOVE VALVE SPRING SEAT

(a) Using compressed air and a magnetic finger, remove the valve spring seats by blowing air onto them.

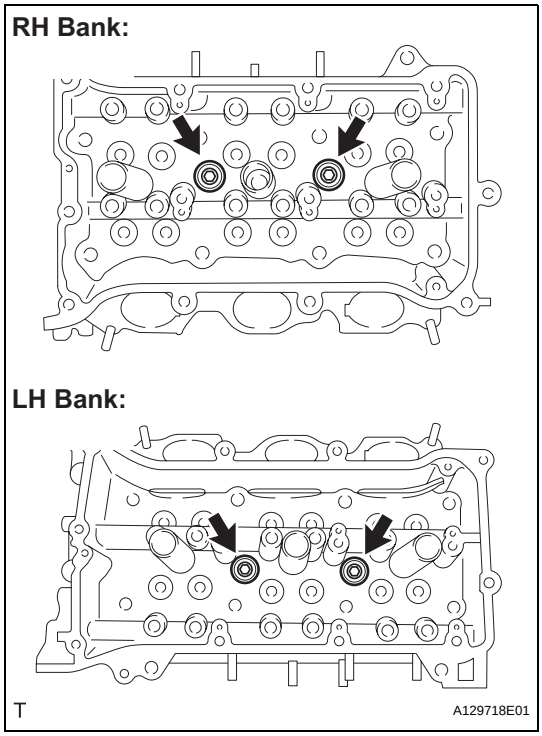

57. REMOVE NO. 1 STRAIGHT SCREW PLUG

(a) Using a 10 mm hexagon wrench, remove the 4 screw plugs and 4 gaskets.

NOTICE:

If water leaks from the straight screw plug or the plug corrodes, replace it.

EM

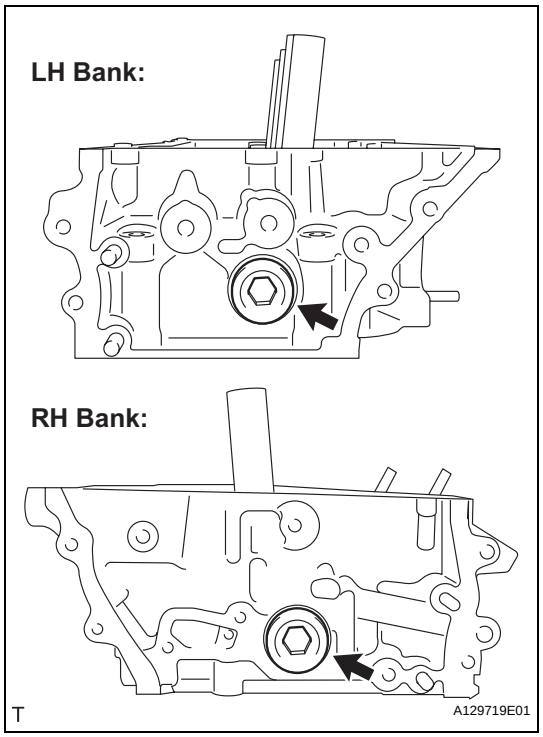

58. REMOVE NO. 2 STRAIGHT SCREW PLUG

(a) Using a 14 mm hexagon wrench, remove the screw plugs and gaskets.
NOTICE:
If water leaks from the straight screw plug or the plug corrodes, replace it.

59. REMOVE RING PIN
NOTICE:
It is not necessary to remove the ring pin unless it is being replaced.

60. REMOVE STUD BOLT
NOTICE:
If the stud bolt is deformed or the threads are damaged, replace it.

61. REMOVE INTAKE VALVE GUIDE BUSH

(a) Heat the cylinder head to 80 to 100°C (176 to 212°F).
(b) Place the cylinder head on wooden blocks.

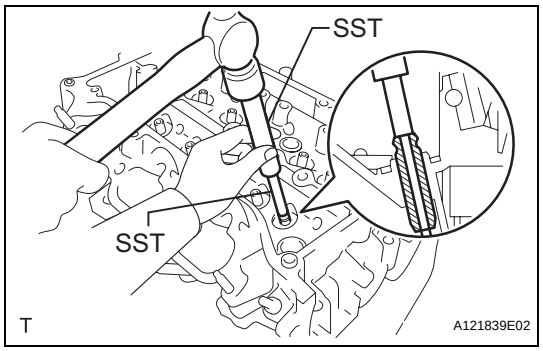

(c) Using SST and a hammer, tap out the guide bushes.
SST 09201-10000 (09201-01050), 09950-70010 (09951-07100)

62. REMOVE EXHAUST VALVE GUIDE BUSH

(a) Heat the cylinder head to 80 to 100°C (176 to 212°F).
(b) Place the cylinder head on wooden blocks.

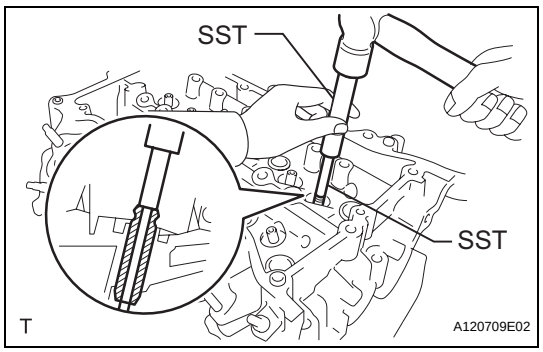

(c) Using SST and a hammer, tap out the guide bushes.
SST 09201-10000 (09201-01050), 09950-70010 (09951-07100)

63. REMOVE PISTON SUB-ASSEMBLY WITH CONNECTING ROD

(a) Check that the matchmarks on the connecting rod and cap are aligned.
HINT:
The matchmarks on the connecting rods and caps are for ensuring the correct reassembly.

EM

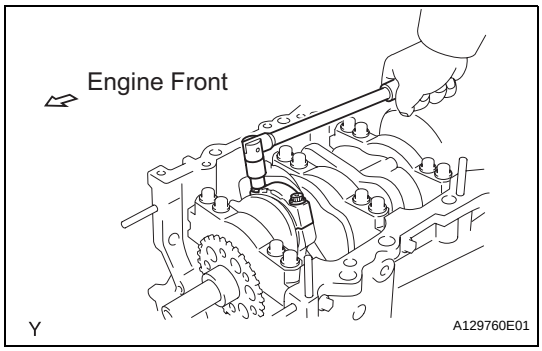

(b) Remove the 2 connecting rod cap bolts.

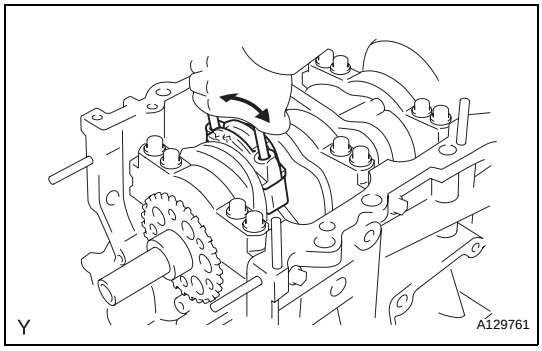

(c) Using the 2 removed connecting rod cap bolts, remove the connecting rod cap and lower bearing by wiggling the connecting rod cap right and left.
HINT:
Keep the lower bearing inserted to the connecting rod cap.

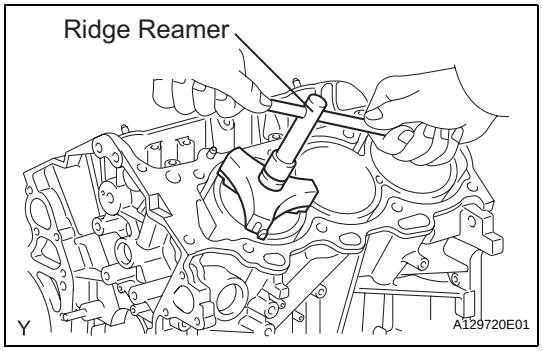

(d) Using a ridge reamer, remove all the carbon from the top of the cylinder.
(e) Push the piston, connecting rod assembly and upper bearing through the top of the cylinder block.
HINT:
- Keep the bearing, connecting rod, and cap together.
- Arrange the piston and connecting rod assemblies in the correct order.

64. REMOVE CONNECTING ROD BEARING
HINT:
Arrange the removed parts in the correct order.

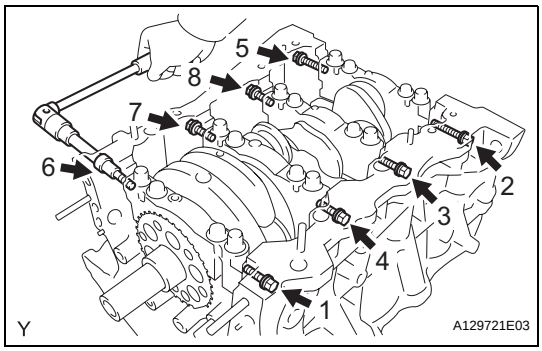

65. REMOVE CRANKSHAFT
(a) Uniformly loosen and remove the 8 main bearing cap bolts and seal washers in several steps and in the sequence shown in the illustration.

EM

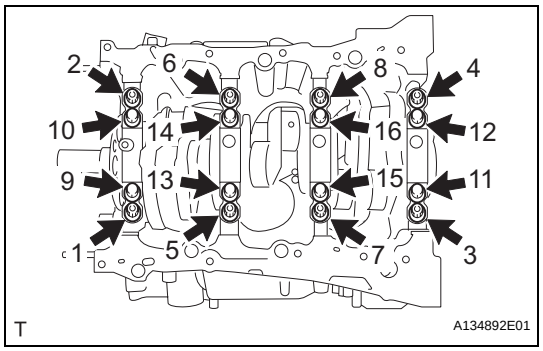

(b) Uniformly loosen the 16 bearing cap bolts in several steps and in the sequence shown in the illustration.

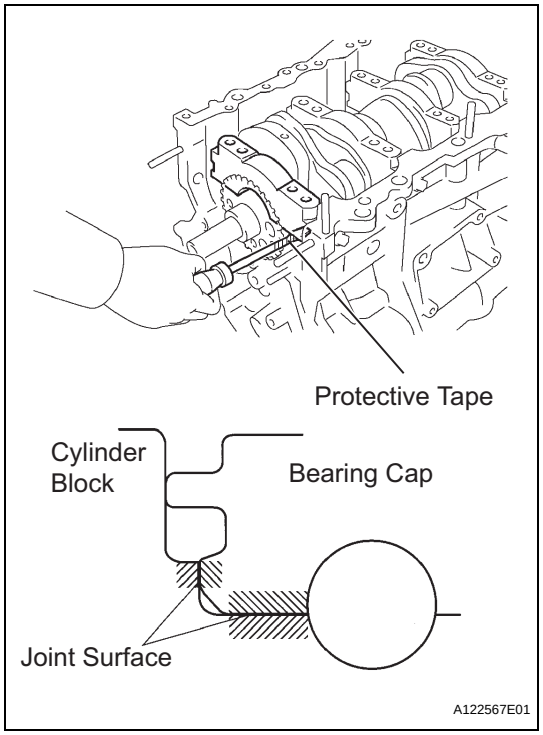

(c) Using a screwdriver, pry out the main bearing caps. Remove the 4 main bearing caps and lower bearings.
NOTICE:
- **Push up on the cap little by little, from the right and left side alternately so that the cap can be removed.**
- **Be careful not to damage the joint surface of the cylinder block and the main bearing cap.**

(d) Remove the crankshaft.

66. REMOVE CRANKSHAFT BEARING
HINT:
Arrange the removed parts in the correct order.

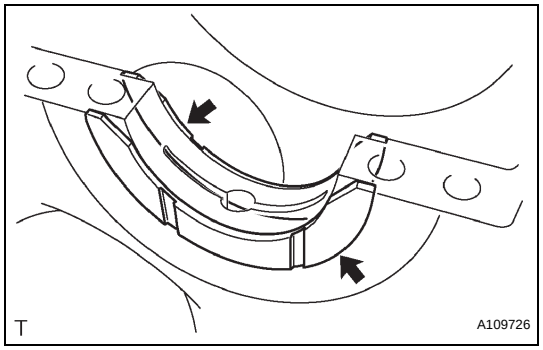

67. REMOVE CRANKSHAFT THRUST WASHER SET
(a) Remove the upper bearings and upper thrust washers from the cylinder block.

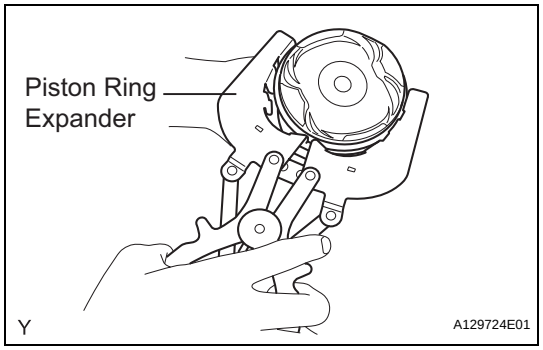

68. REMOVE PISTON RING SET
(a) Using a piston ring expander, remove the 2 compression rings.
(b) Remove the oil ring expander and 2 side rails by hand.
HINT:
Arrange the removed parts in the correct order.

EM

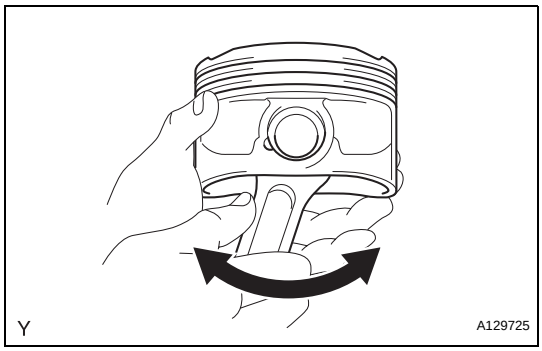

69. REMOVE PISTON SUB-ASSEMBLY WITH PIN

(a) Check the fitting condition between the piston and piston pin.

(1) Try to move the piston back and forth on the piston pin.
If any movement is felt, replace the piston and pin as a set.

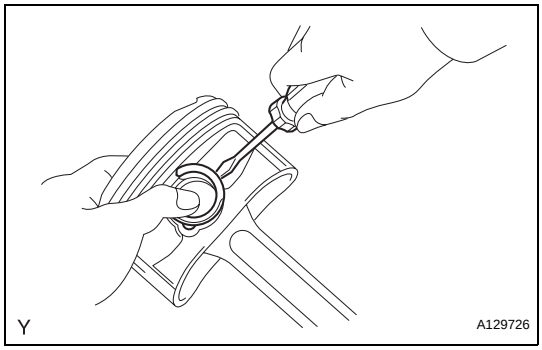

(b) Disconnect the connecting rod from the piston.

(1) Using a screwdriver, pry off the snap rings from the piston.

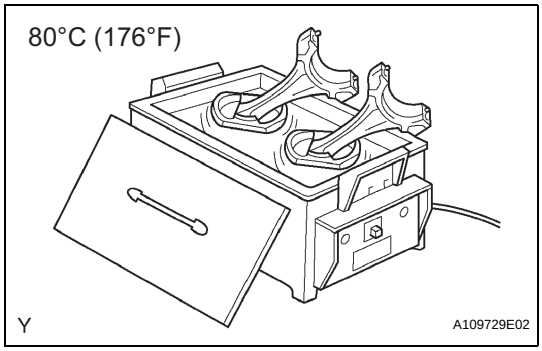

(2) Gradually heat the piston to approximately 80°C (176°F).

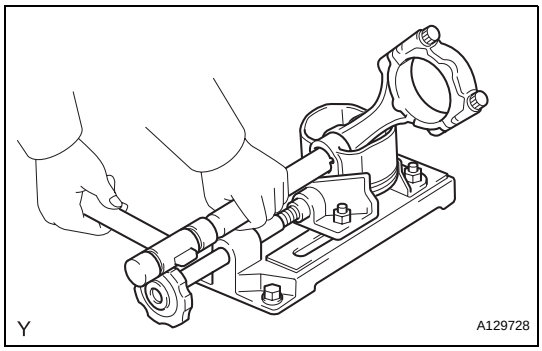

(3) Using a brass bar and plastic hammer, lightly tap out the piston pin and remove the connecting rod.
HINT:
- The piston and pin are a matched set.
- Arrange the pistons, pins, rings, connecting rods and bearings in the correct order.

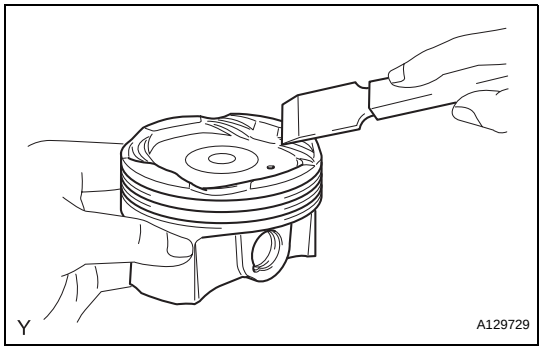

(c) Using a gasket scraper, remove the carbon from the piston top.

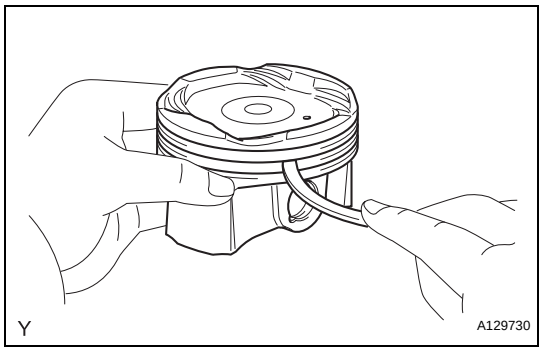

(d) Using a groove cleaning tool or broken ring, clean the piston ring grooves.

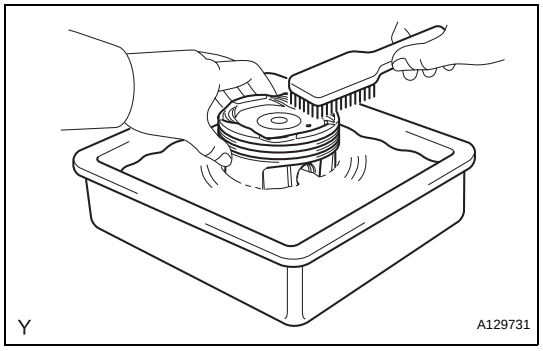

(e) Using solvent and a brush, thoroughly clean the piston.
NOTICE:
Do not use a wire brush.

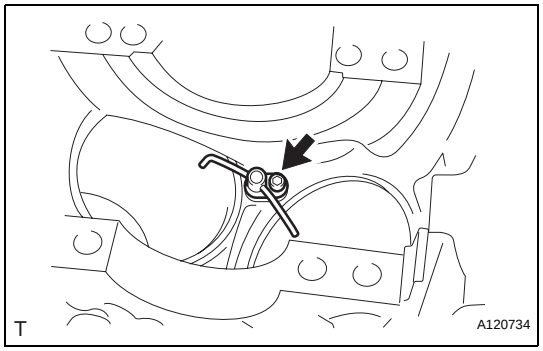

70. REMOVE NO. 1 OIL NOZZLE SUB-ASSEMBLY

(a) Using a 5 mm hexagon wrench, remove the bolts and oil nozzles.

(b) Check the 3 oil nozzles for damage or clogging. If necessary, replace the oil nozzle.

71. CLEAN CYLINDER BLOCK

INSPECTION

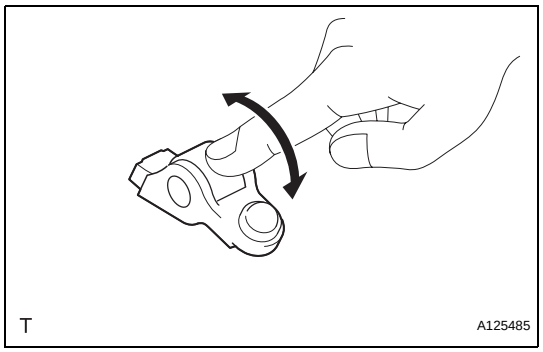

1. INSPECT NO. 1 VALVE ROCKER ARM SUB-ASSEMBLY

(a) Turn the roller by hand to check that it turns smoothly.
HINT:
If the roller does not turn smoothly, replace the valve rocker arm sub-assembly.

2. INSPECT VALVE LASH ADJUSTER ASSEMBLY
NOTICE:
- **Keep the lash adjuster free of dirt and foreign objects.**
- **Only use clean engine oil.**

(a) Place the lash adjuster into a container filled with engine oil.

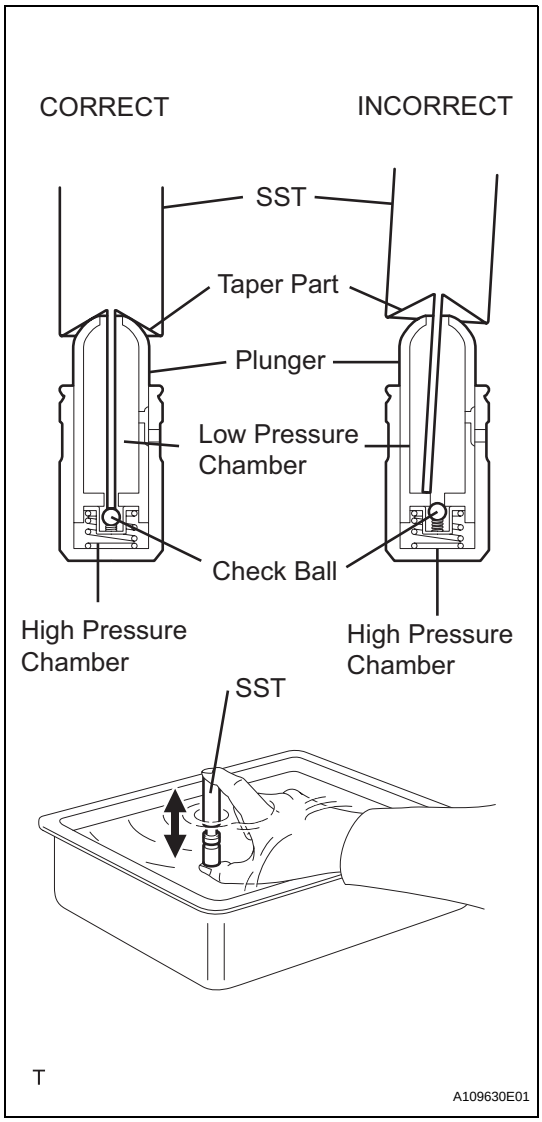

(b) Insert the SST's tip into the lash adjuster's plunger and use the tip to press down on the check ball inside the plunger.
SST 09276-75010

(c) Squeeze the SST and lash adjuster together to move the plunger up and down 5 to 6 times.

(d) Check the movement of the plunger and bleed the air.
OK:
Plunger moves up and down.
NOTICE:
When bleeding air from the high-pressure chamber, make sure that the tip of the SST is actually pressing the check ball as shown in the illustration. If the check ball is not pressed, air will not bleed.

(e) After bleeding the air, remove the SST. Then try to quickly and firmly press the plunger with a finger.
OK:
Plunger is very difficult to move.
If the result is not as specified, replace the lash adjuster.

3. INSPECT CAMSHAFT

(a) Inspect the camshaft for runout.

(1) Place the camshaft on V-blocks.

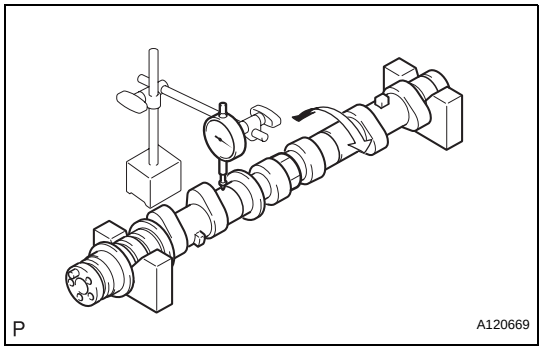

(2) Using a dial indicator, measure the circle runout at the center journal.
Maximum circle runout:
0.04 mm (0.0016 in.)
If the circle runout is greater than the maximum, replace the camshaft.
HINT:
Check the oil clearance after replacing the camshaft.

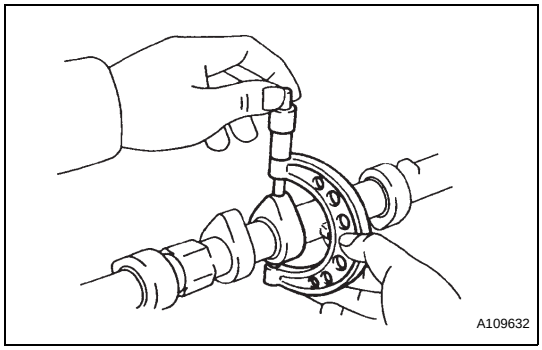

(b) Using a micrometer, measure the cam lobe height.
Standard cam lobe height

Item	Specification
Intake camshaft	44.316 to 44.416 mm (1.7447 to 1.7487 in.)
Exhaust camshaft	44.262 to 44.362 mm (1.7426 to 1.7465 in.)

Maximum cam lobe height

Item	Specification
Intake camshaft	44.166 mm (1.7388 in.)
Exhaust camshaft	44.112 mm (1.7367 in.)

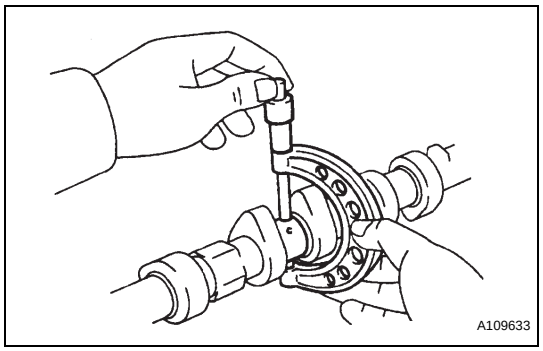

(c) Using a micrometer, measure the journal diameter.
Standard journal diameter

Item	Specification
No. 1 journal	35.946 to 35.960 mm (1.4152 to 1.4157 in.)
Other journals	25.959 to 25. 975 mm (1.0220 to 1.0226 in.)

If the journal diameter is not as specified, check the oil clearance.

4. INSPECT CAMSHAFT TIMING GEAR ASSEMBLY

(a) Clamp the camshaft in a vise.
NOTICE:
Be careful not to damage the camshaft in the vise.

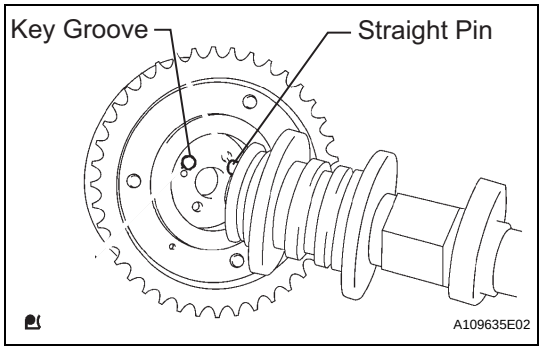

(b) Put the camshaft timing gear and camshaft together by aligning the key groove and straight pin.

(c) Lightly press the gear against the camshaft, and turn the gear. Push further at the position where the pin enters the groove.
NOTICE:
Be sure not to turn the camshaft timing gear in the retard direction (the right angle).

(d) Check that there is no clearance between the gear's flange and the camshaft.

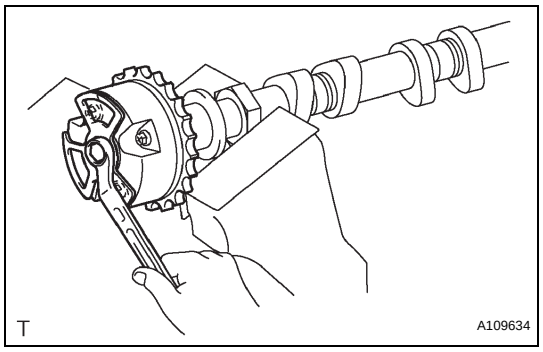

(e) Tighten the flange bolt with the camshaft timing gear fixed.
Torque: 100 N*m (1,020 kgf*cm, 74 ft.*lbf)

(f) Check the lock of the camshaft timing gear.
(1) Clamp the camshaft in a vise, and confirm that the camshaft timing gear is locked.
NOTICE:
Be careful not to damage the camshaft.

EM

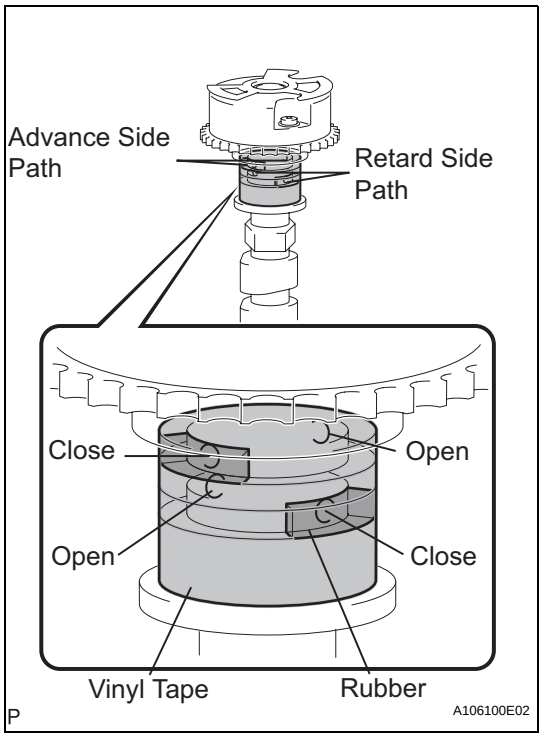

(g) Release the lock pin.
(1) Cover the 4 oil paths of the cam journal with vinyl tape as shown in the illustration.
HINT:
2 advance side paths are provided in the groove of the camshaft. Plug one of the paths with a rubber piece.
(2) Break through the tape of the advance side path and the retard side path on the opposite side to the hole of the advance side path, as shown in the illustration.

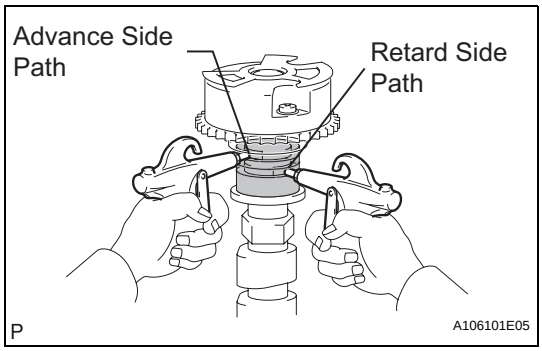

(3) Apply approximately 200 kPa (2.0 kgf/cm^2, 28 psi) of air pressure to the 2 broken paths.
CAUTION:
Cover the paths with a piece of cloth when applying pressure to keep oil from splashing.

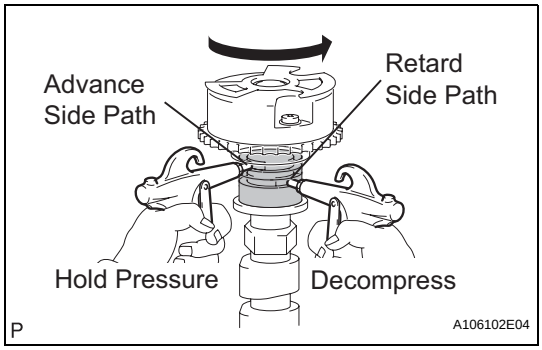

(4) Check that the camshaft timing gear revolves in the advance direction when reducing the air pressure applied to the retard side path.
HINT:
This operation releases the lock pin for the most retarded position.
(5) When the camshaft timing gear reaches the most advanced position, release the air pressure from the retard side path and advance side path in that order.
NOTICE:
Do not release the air pressure from the advance side path first. The gear may abruptly shift in the retard direction and break the lock pin.

EM

(h) Check for smooth rotation.
  (1) Turn the camshaft timing gear within its movable range (21°) 2 or 3 times, but do not turn it to the most retarded position. Make sure that the gear turns smoothly.
  NOTICE:
  Do not use air pressure to perform the smooth operation check.

(i) Check the lock in the most retarded position.
  (1) Confirm that the camshaft timing gear is locked at the most retarded position.

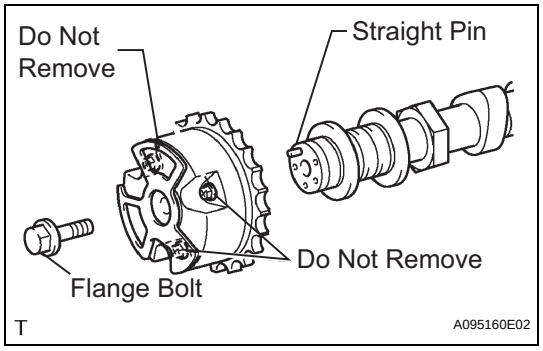

(j) Remove the flange bolt and camshaft timing gear.
NOTICE:
- **Do not remove the other 3 bolts.**
- **If the gear will be reused, be sure to release the straight pin lock before installing the gear.**

EM

5. INSPECT CAMSHAFT TIMING EXHAUST GEAR ASSEMBLY

(a) Clamp the camshaft in a vise.
NOTICE:
Be careful not to damage the camshaft in the vise.

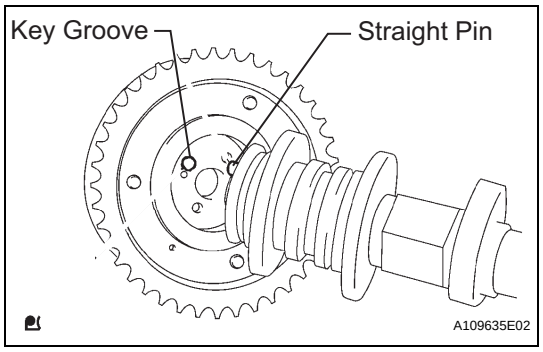

(b) Put the camshaft timing exhaust gear and camshaft together by aligning the key groove and straight pin.

(c) Lightly press the gear against the camshaft and turn the gear. Push further at the position where the pin enters the groove.
NOTICE:
Be sure not to turn the camshaft timing exhaust gear in the retard direction (the right angle).

(d) Check that there is no clearance between the gear's flange and the camshaft.

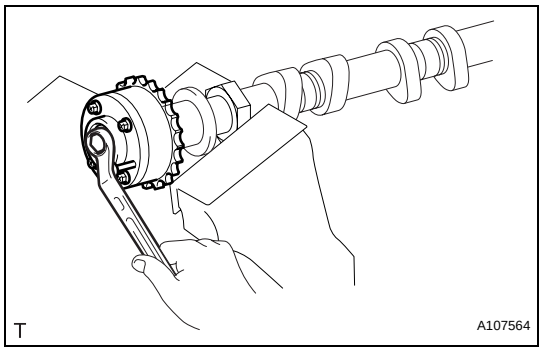

(e) Tighten the flange bolt with the camshaft timing exhaust gear fixed.
Torque: 100 N*m (1,020 kgf*cm, 74 ft.*lbf)

(f) Check the camshaft timing exhaust gear lock.
  (1) Make sure that the camshaft timing exhaust gear is locked.

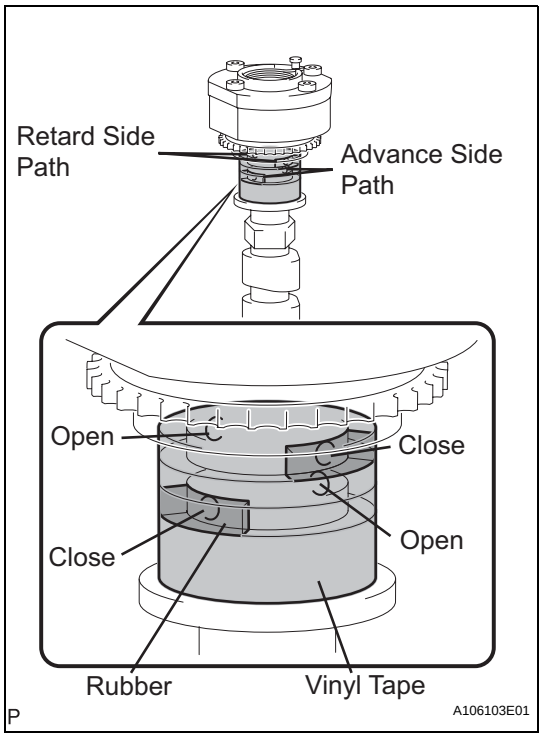

(g) Release the lock pin.

(1) Cover the 4 oil paths of the cam journal with vinyl tape as shown in the illustration.
HINT:
4 oil paths are provided in the groove. Plug 2 paths with rubber pieces.

(2) Prick a hole in the tape placed on the advance side path. Prick a hole in the tape placed on the retard side path, on the opposite side to that of the advance side path, as shown in the illustration.

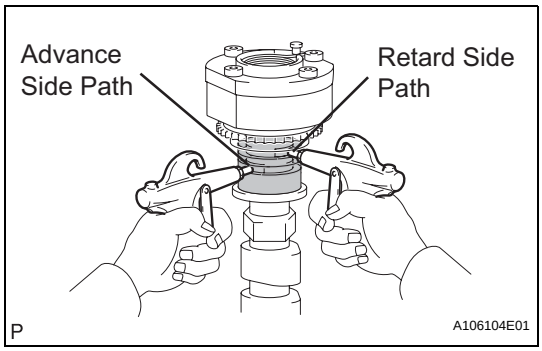

(3) Apply approximately 200 kPa (2.0 kgf/cm^2, 28 psi) of air pressure to the 2 broken paths (the advance side path and the retard side path).
CAUTION:
Cover the paths with a piece of cloth when applying pressure to keep oil from splashing.

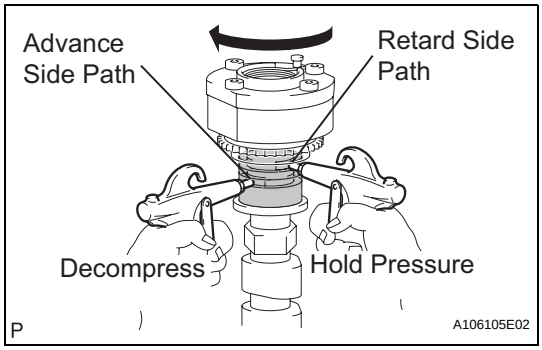

(4) Make sure that the camshaft timing exhaust gear turns in the retard direction when reducing the air pressure applied to the advance side path.
HINT:
The lock pin is released and the camshaft timing exhaust gear turns in the retard direction.

(5) When the camshaft timing exhaust gear moves to the most retarded position, release the air pressure from the advance side path, and then release the air pressure from the retard side path.
NOTICE:
Be sure to release the air pressure from the advance side path first. If the air pressure of the retard side path is released first, the camshaft timing exhaust gear may abruptly shift in the advance direction and break the lock pin or other parts.

(h) Check for smooth rotation.
(1) Turn the camshaft timing exhaust gear within its movable range (18.5°) 2 or 3 times, but do not turn it to the most advanced position. Make sure that the gear turns smoothly.
NOTICE:
When the air pressure is released from the advance side path and then from the retard side path, the gear automatically returns to the most advanced position due to the advance assist spring operation and locks. Gradually release the air pressure from the retard side path before performing the smooth rotation check.

(i) Check the lock at the most advanced position.
(1) Make sure that the camshaft timing exhaust gear is locked at the most advanced position.

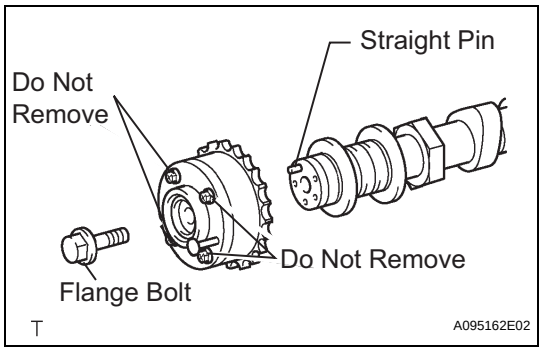

(j) Remove the flange bolt and camshaft timing exhaust gear.
NOTICE:
- **Be sure not to remove the other 4 bolts.**
- **If the gear will be reused, be sure to release the straight pin lock before installing the gear.**

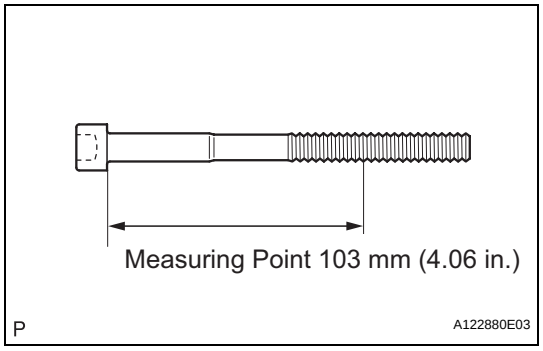

6. INSPECT CYLINDER HEAD SET BOLT

(a) Using vernier calipers, measure the minimum diameter of the elongated thread at the measuring point.
Standard outside diameter:
10.85 to 11.00 mm (0.4272 to 0.4331 in.)
Minimum outside diameter:
10.70 mm (0.4213 in.)
Measuring Point:
103 mm (4.06 in.)
HINT:
If no excessively thin areas are found in a visual check, check the center of the bolt and find the area that has the lowest diameter.
If the diameter is less than the minimum, replace the cylinder head bolt.

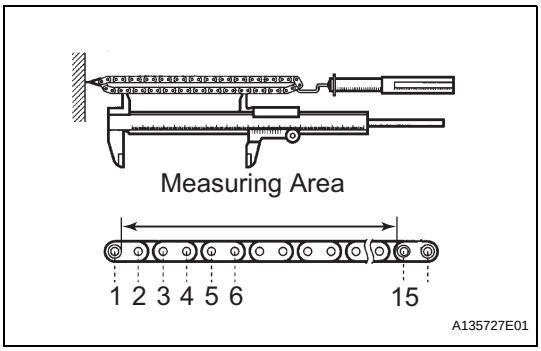

7. INSPECT CHAIN SUB-ASSEMBLY

(a) Pull the chain with a force of 147 N (15 kgf, 33 lbf) as shown in the illustration.

(b) Using vernier calipers, measure the length of 15 links.

Maximum chain elongation:
136.9 mm (5.390 in.)

NOTICE:
Perform the measurement at 3 random places.
Use the average of the measurements.

If the elongation is greater than the maximum, replace the chain.

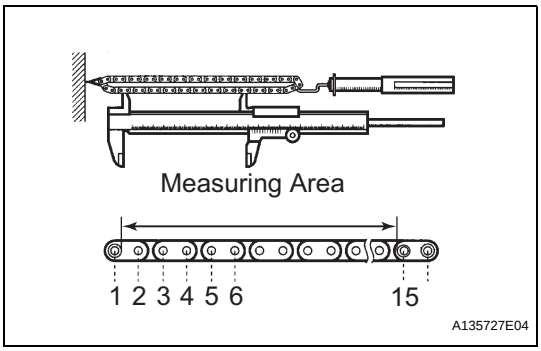

8. INSPECT NO. 2 CHAIN SUB-ASSEMBLY

(a) Pull the chain with a force of 147 N (15 kgf, 33 lbf) as shown in the illustration.

(b) Using vernier calipers, measure the length of 15 links.

Maximum chain elongation:
137.6 mm (5.417 in.)

NOTICE:
Perform the measurement at 3 random places.
Use the average of the measurements.

If the elongation is greater than the maximum, replace the chain.

9. INSPECT CRANKSHAFT TIMING SPROCKET

(a) Wrap the chain around the sprocket.

(b) Using vernier calipers, measure the sprocket diameter with the chain.

Minimum sprocket diameter (with chain):
61.4 mm (2.417 in.)

HINT:
The vernier calipers must contact the chain rollers for the measurement.
If the diameter is less than the minimum, replace the chain and sprocket.

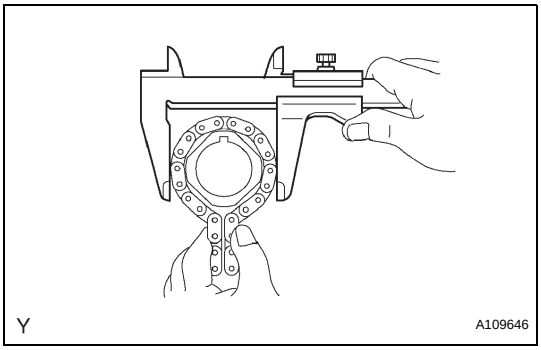

10. INSPECT IDLE SPROCKET ASSEMBLY

(a) Wrap the chain around the sprocket.

(b) Using vernier calipers, measure the sprocket diameter with the chain.

Minimum sprocket diameter (with chain):
61.4 mm (2.417 in.)

HINT:
The vernier calipers must contact the chain rollers for the measurement.
If the diameter is less than the minimum, replace the chain and sprocket.

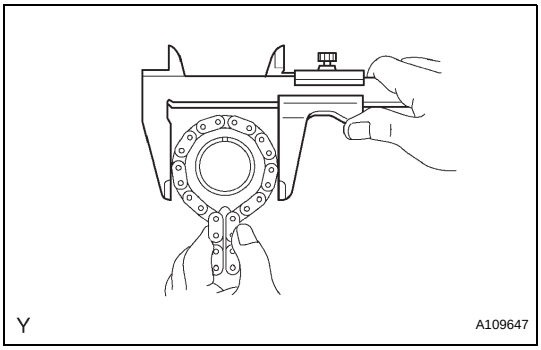

EM

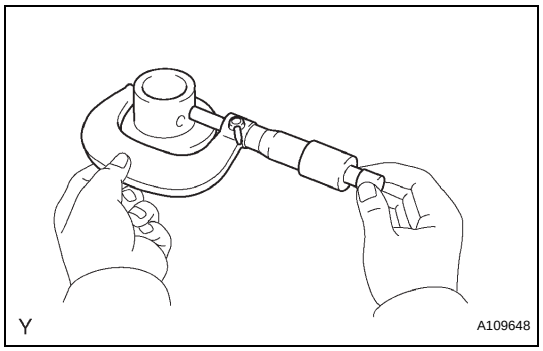

11. INSPECT IDLE GEAR SHAFT OIL CLEARANCE

(a) Using a micrometer, measure the idle gear shaft diameter.
Idle gear shaft diameter:
22.987 to 23.000 mm (0.9050 to 0.9055 in.)

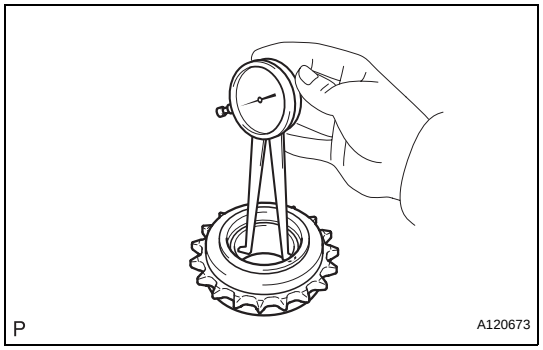

(b) Using a caliper gauge, measure the inside diameter of the idle gear.
Idle gear inside diameter:
23.020 to 23.030 mm (0.9063 to 0.9067 in.)

(c) Subtract the idle gear shaft diameter measurement from the idle gear inside diameter measurement.
Standard oil clearance:
0.020 to 0.043 mm (0.0008 to 0.0017 in.)
Maximum oil clearance:
0.093 mm (0.0037 in.)
If the thrust oil clearance is greater than the maximum, replace the idle gear shaft and idle gear.

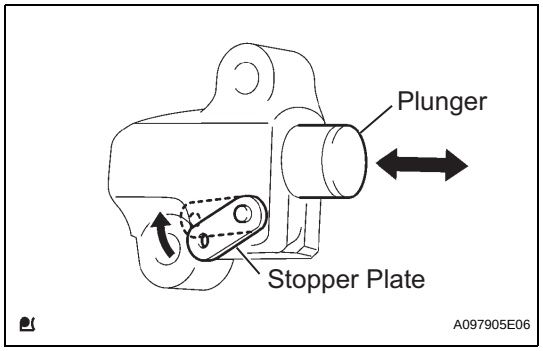

12. INSPECT NO. 1 CHAIN TENSIONER ASSEMBLY

(a) Move the stopper plate upward to release the lock. Push the plunger and check that it moves smoothly. If necessary, replace the chain tensioner assembly.

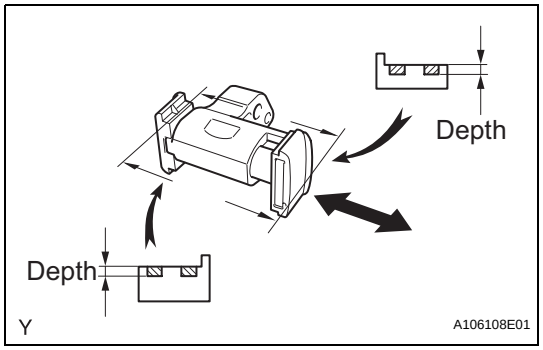

13. INSPECT NO. 2 CHAIN TENSIONER ASSEMBLY

(a) Check that the plunger moves smoothly.

(b) Measure the worn depth of the chain tensioner.
Maximum depth:
0.9 mm (0.035 in.)
If the depth is greater than the maximum, replace the chain tensioner assembly.

EM

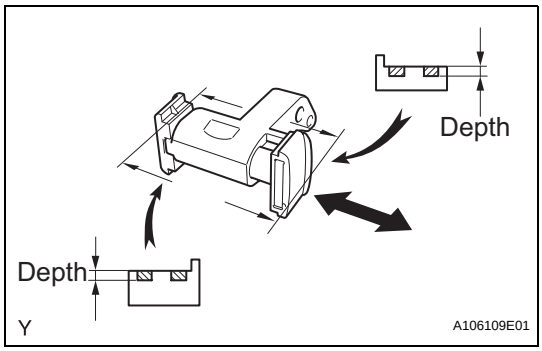

14. INSPECT NO. 3 CHAIN TENSIONER ASSEMBLY

(a) Check that the plunger moves smoothly.

(b) Measure the worn depth of the chain tensioner.

Maximum depth:

0.9 mm (0.035 in.)

If the depth is greater than the maximum, replace the chain tensioner assembly.

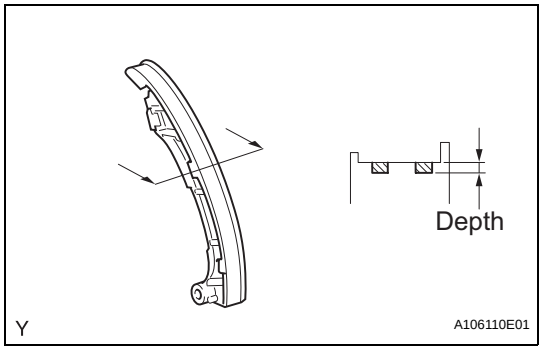

15. INSPECT CHAIN TENSIONER SLIPPER

(a) Measure the worn depth of the chain tensioner slipper.

Maximum depth:

1.0 mm (0.039 in.)

If the depth is greater than the maximum, replace the chain tensioner slipper.

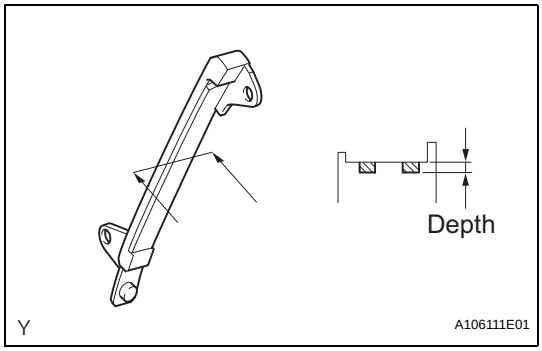

16. INSPECT NO. 1 CHAIN VIBRATION DAMPER

(a) Measure the worn depth of the chain vibration damper.

Maximum depth:

1.0 mm (0.039 in.)

If the depth is greater than the maximum, replace the chain vibration damper.

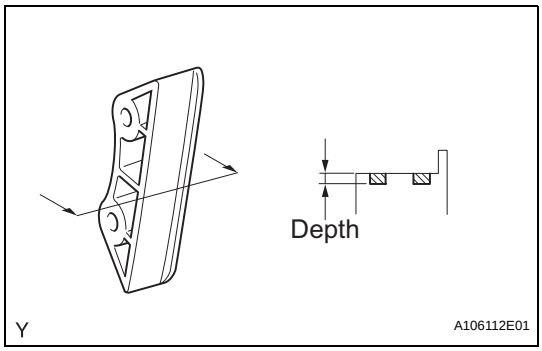

17. INSPECT NO. 2 CHAIN VIBRATION DAMPER

(a) Measure the worn depth of the chain vibration damper.

Maximum depth:

1.0 mm (0.039 in.)

If the depth is greater than the maximum, replace the chain vibration damper.

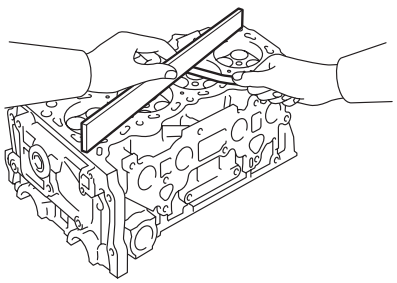

Cylinder head lower side:

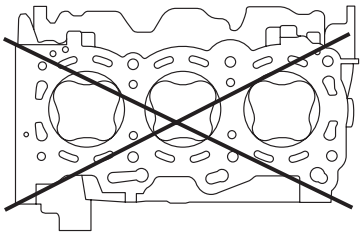

Intake side:

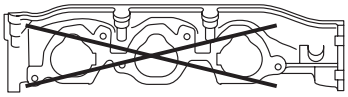

Exhaust side:

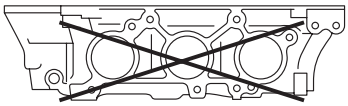

T A129747E01

18. INSPECT CYLINDER HEAD ASSEMBLY

(a) Using a precision straight edge and feeler gauge, measure the warpage of the contact surface of the cylinder block and manifolds.

Standard warpage

Item	Warpage
Cylinder head lower	0.05 mm (0.0020 in.)
Intake	0.08 mm (0.0031 in.)
Exhaust	0.08 mm (0.0031 in.)

Maximum warpage

Item	Warpage
Cylinder head lower	0.10 mm (0.0039 in.)
Intake	0.10 mm (0.0039 in.)
Exhaust	0.10 mm (0.0039 in.)

If the warpage is greater than the maximum, replace the cylinder head assembly.

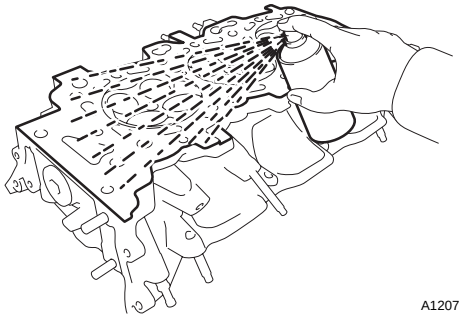

T A120706

(b) Using a dye penetrant, check the intake ports, exhaust ports, and cylinder surface for cracks. If cracked, replace the cylinder head assembly.

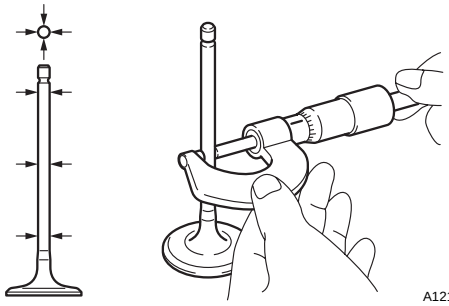

T A121378

19. INSPECT INTAKE VALVE

(a) Using a micrometer, measure the diameter of the valve stem.

Valve stem diameter:
5.470 to 5.485 mm (0.2154 to 0.2159 in.)

If the valve stem is not as specified, check the oil clearance.

EM

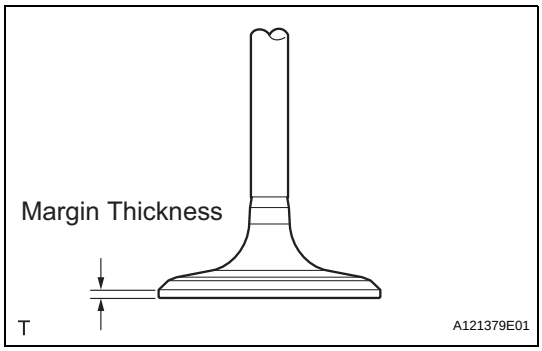

(b) Using vernier calipers, measure the valve head margin thickness.
Standard margin thickness:
1.0 mm (0.0394 in.)
Minimum margin thickness:
0.5 mm (0.0197 in.)
If the margin thickness is less than the minimum, replace the intake valve.

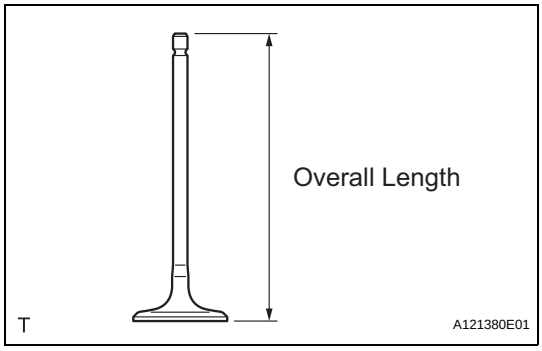

(c) Using vernier calipers, measure the valve's overall length.
Standard overall length:
105.85 mm (4.1673 in.)
Minimum overall length:
105.35 mm (4.1476 in.)
If the overall length is less than the minimum, replace the intake valve.

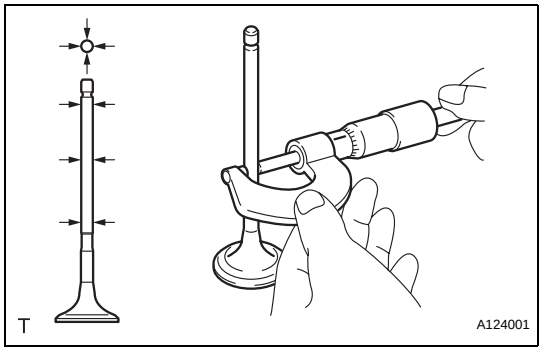

20. INSPECT EXHAUST VALVE

(a) Using a micrometer, measure the diameter of the valve stem.
Valve stem diameter:
5.465 to 5.480 mm (0.2151 to 0.2157 in.)
If the valve stem is not as specified, check the oil clearance.

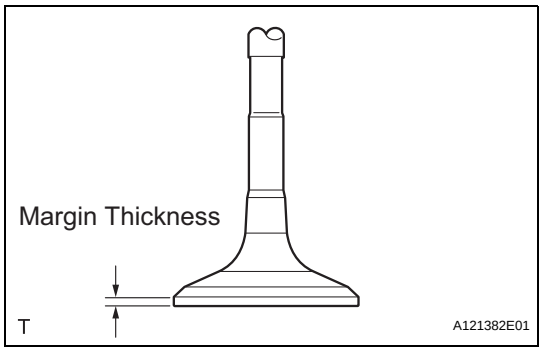

(b) Using vernier calipers, measure the valve head margin thickness.
Standard margin thickness:
1.0 mm (0.0394 in.)
Minimum margin thickness:
0.5 mm (0.0197 in.)
If the margin thickness is less than the minimum, replace the exhaust valve.

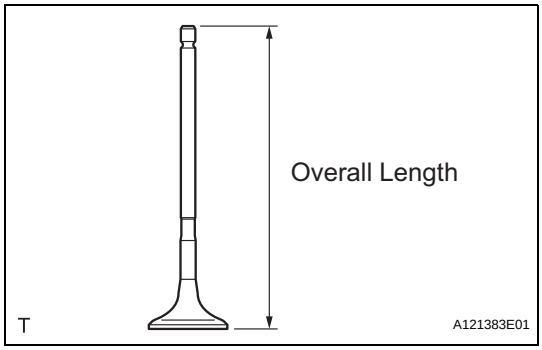

(c) Using vernier calipers, measure the valve's overall length.
Standard overall length:
110.40 mm (4.3464 in.)
Minimum overall length:
109.90 mm (4.3268 in.)
If the overall length is less than the minimum, replace the exhaust valve.

21. INSPECT INTAKE VALVE SEAT

(a) Apply a light coat of Prussian blue to the valve face.

(b) Lightly press the valve face against the valve seat.

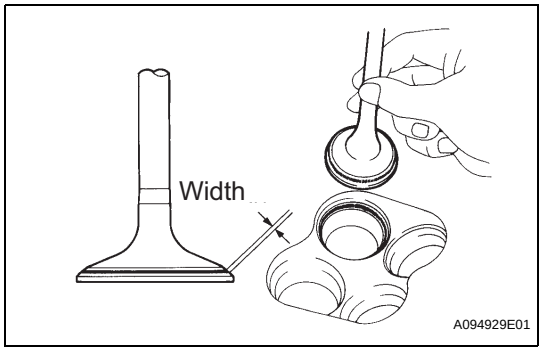

(c) Check the valve face and valve seat by using the following procedure.
   (1) If Prussian blue appears around the entire valve face, the valve face is concentric. If not, replace the valve.
   (2) If Prussian blue appears around the entire valve seat, the guide and valve face are concentric. If not, resurface the valve seat.
   (3) Check that the valve seat contacts in the middle of the valve face with the width between 1.1 and 1.5 mm (0.043 and 0.059 in.).

22. INSPECT EXHAUST VALVE SEAT

(a) Apply a light coat of Prussian blue to the valve face.
(b) Lightly press the valve face against the valve seat.

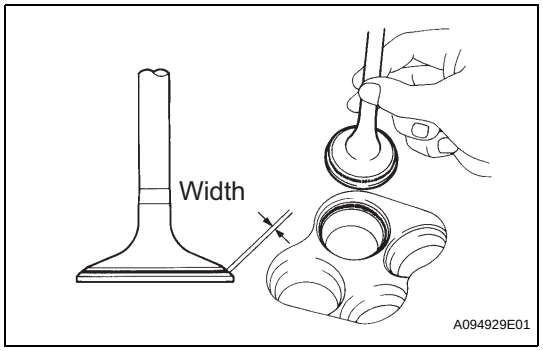

(c) Check the valve face and valve seat by using the following procedure.
   (1) If Prussian blue appears around the entire valve face, the valve face is concentric. If not, replace the valve.
   (2) If Prussian blue appears around the entire valve seat, the guide and valve face are concentric. If not, resurface the valve seat.
   (3) Check that the valve seat contacts in the middle of the valve face with the width between 1.1 and 1.5 mm (0.043 and 0.059 in.).

23. REPAIR INTAKE VALVE SEAT

NOTICE:
- **Repair the seat while checking the seating position.**
- **Keep the lip free of foreign matter.**

(a) Using a 45° cutter, resurface the valve seat so that the valve seat width is more than the specification.

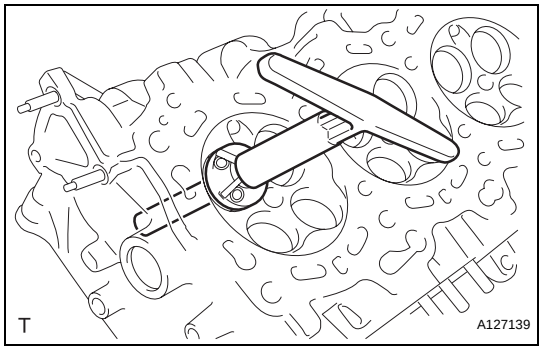

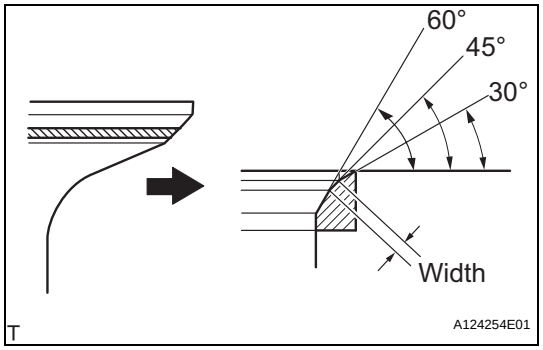

(b) Using 30° and 60° cutters, correct the valve seat so that the valve contacts the entire circumference of the seat. The contact should be in the center of the valve seat, and the valve seat width should be maintained within the specified range around the entire circumference of the seat.
   Width:
   1.1 to 1.5 mm (0.043 to 0.059 in.)
(c) Handrub the valve and valve seat with an abrasive compound.
(d) Check the valve seating position.

24. REPAIR EXHAUST VALVE SEAT

NOTICE:

- **Repair the seat while checking the seating position.**
- **Keep the lip free of foreign matter.**

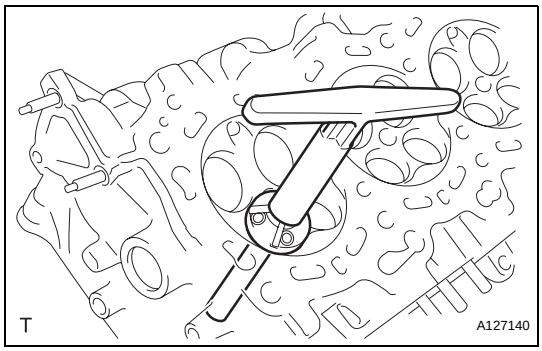

(a) Using a 45° cutter, resurface the valve seat so that the valve seat width is more than the specification.

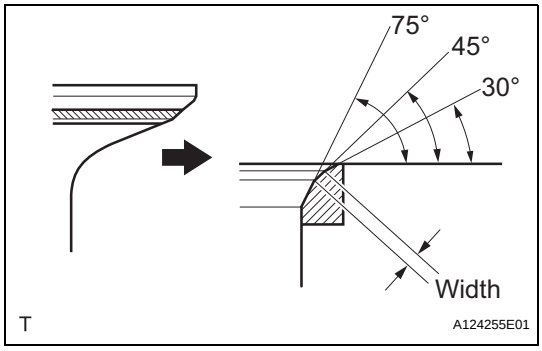

(b) Using 30° and 75° cutters, correct the valve seat so that the valve contacts the entire circumference of the seat. The contact should be in the center of the valve seat, and the valve seat width should be maintained within the specified range around the entire circumference of the seat.

Width:

1.1 to 1.5 mm (0.043 to 0.059 in.)

(c) Handrub the valve and valve seat with an abrasive compound.

(d) Check the valve seating position.

25. INSPECT COMPRESSION SPRING

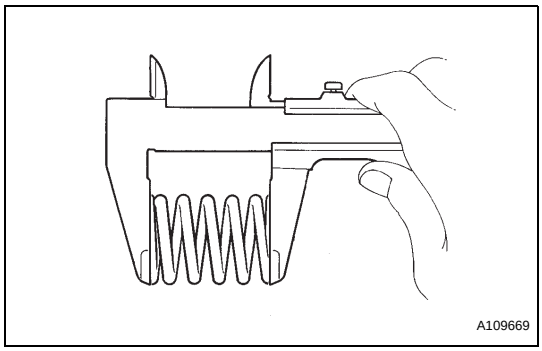

(a) Using vernier calipers, measure the free length of the compression spring.

Free length:

45.46 mm (1.7898 in.)

If the free length is not as specified, replace the spring.

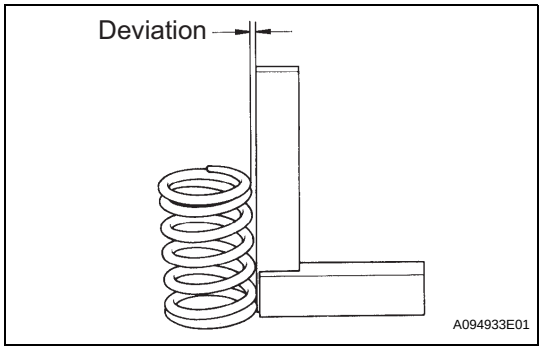

(b) Using a steel square, measure the deviation of the inner compression spring.

Maximum deviation:

1.0 mm (0.039 in.)

Maximum angle (reference):

2°

If the deviation is greater than the maximum, replace the spring.

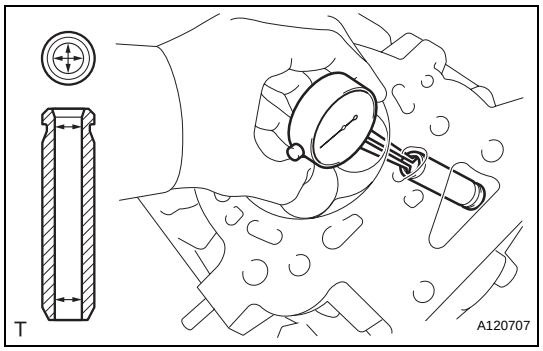

26. INSPECT VALVE GUIDE BUSH OIL CLEARANCE

(a) Using a caliper gauge, measure the inside diameter of the guide bush.
Bush inside diameter:
5.510 to 5.530 mm (0.2169 to 0.2177 in.)

(b) Subtract the valve stem diameter measurement from the guide bush inside diameter measurement.
Standard clearance

Item	Clearance
Intake	0.025 to 0.060 mm (0.0010 to 0.0024 in.)
Exhaust	0.030 to 0.065 mm (0.0012 to 0.0026 in.)

Maximum oil clearance

Item	Clearance
Intake	0.08 mm (0.0032 in.)
Exhaust	0.10 mm (0.0039 in.)

For intake side:
If the clearance is greater than the maximum, replace the intake valve and intake guide bush.
For exhaust side:
If the clearance is greater than the maximum, replace the exhaust valve and exhaust guide bush.

27. INSPECT CAMSHAFT THRUST CLEARANCE

(a) Inspect the RH bank camshaft thrust clearance.
(1) Install the RH bank camshafts (See page EM-111).

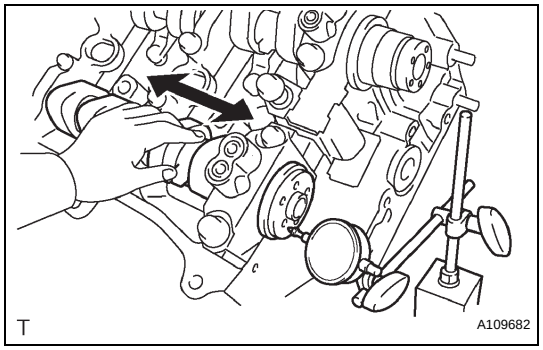

(2) Using a dial indicator, measure the thrust clearance while moving the camshaft back and forth.
Standard thrust clearance:
0.08 to 0.13 mm (0.0031 to 0.0051 in.)
Maximum thrust clearance:
0.15 mm (0.006 in.)
If the thrust clearance is greater than the maximum, replace the cylinder head. If the thrust surface is damaged, replace the camshaft.

(b) Inspect the LH bank camshaft thrust clearance.
(1) Install the LH bank camshafts (See page EM-111).
(2) Using a dial indicator, measure the thrust clearance while moving the camshaft back and forth.
Standard thrust clearance:
0.08 to 0.13 mm (0.0031 to 0.0051 in.)
Maximum thrust clearance:
0.15 mm (0.006 in.)
If the thrust clearance is greater than the maximum, replace the cylinder head. If the thrust surface is damaged, replace the camshaft.

28. INSPECT CAMSHAFT OIL CLEARANCE

(a) Clean the bearing caps, camshaft housing, and camshaft journals.

(b) Place the camshafts on the camshaft housing.

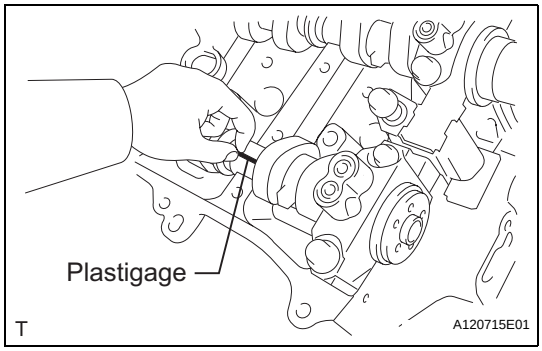

(c) Lay a strip of Plastigage across each of the camshaft journals.

(d) Install the bearing caps (See page EM-111).
NOTICE:
Do not turn the camshaft.

(e) Remove the bearing caps (See page EM-62).

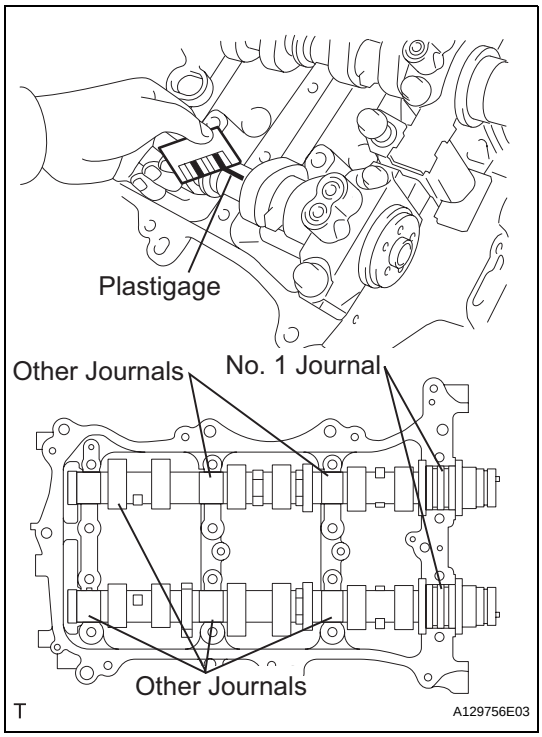

(f) Measure the Plastigage at its widest point.
Standard oil clearance

Item	Oil Clearance
No. 1 journal	0.040 to 0.079 mm (0.0016 to 0.0031 in.)
Other journals	0.025 to 0.062 mm (0.00098 to 0.0024 in.)

Maximum oil clearance

Item	Oil Clearance
No. 1 journal	0.10 mm (0.0039 in.)
Other journals	0.09 mm (0.0035 in.)

If the oil clearance is greater than the maximum, replace the camshaft. If necessary, replace the camshaft housing.

(g) Clean the bearing caps, camshaft housing, and camshaft journals.

(h) Place the camshafts on the camshaft housing.

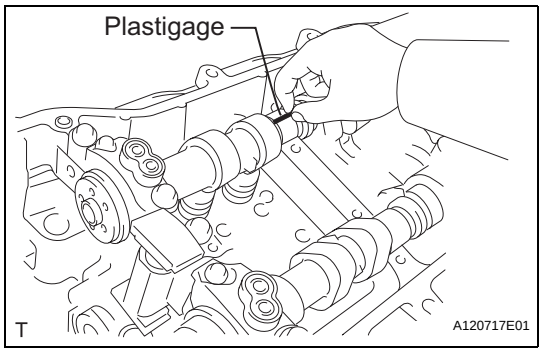

(i) Lay a strip of Plastigage across each of the camshaft journals.

(j) Install the bearing caps (See page EM-111).
NOTICE:
Do not turn the camshaft.

(k) Remove the bearing caps (See page EM-62).

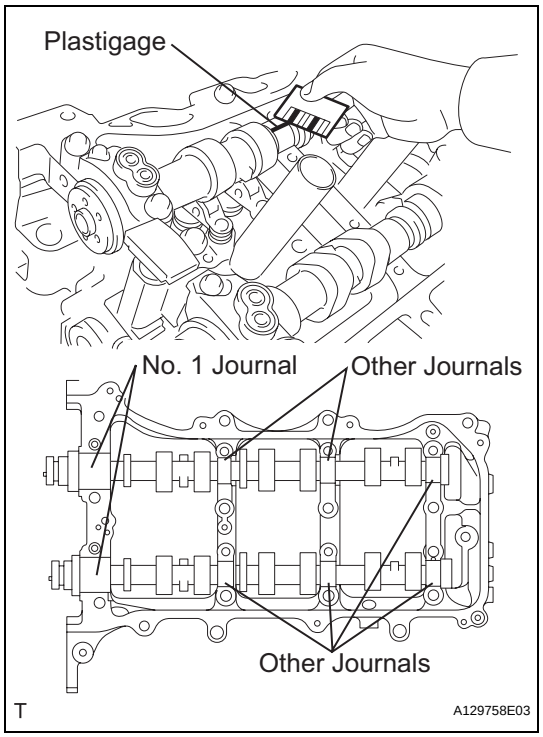

(l) Measure the Plastigage at its widest point.
Standard oil clearance

Item	Oil Clearance
No. 1 journal	0.040 to 0.079 mm (0.0016 to 0.0031 in.)
Other journals	0.025 to 0.062 mm (0.00098 to 0.0024 in.)

Maximum oil clearance

Item	Oil Clearance
No. 1 journal	0.10 mm (0.0039 in.)
Other journals	0.09 mm (0.0035 in.)

If the oil clearance is greater than the maximum, replace the camshaft. If necessary, replace the camshaft housing.

29. INSPECT CONNECTING ROD THRUST CLEARANCE

(a) Install the connecting rod cap (See page EM-111).

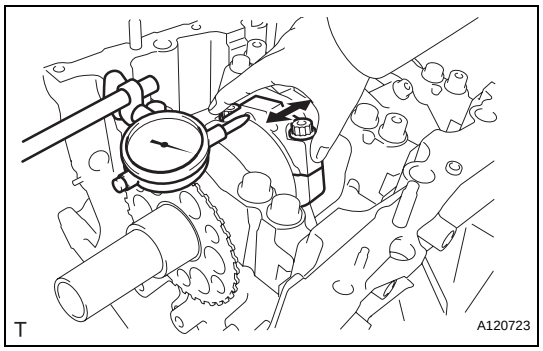

(b) Using a dial indicator, measure the thrust clearance while moving the connecting rod back and forth.
Standard thrust clearance:
0.15 to 0.40 mm (0.0059 to 0.0157 in.)
Maximum thrust clearance:
0.50 mm (0.020 in.)
If the thrust clearance is greater than the maximum, replace the connecting rod assemblies as necessary. If necessary, replace the crankshaft.

30. INSPECT CONNECTING ROD OIL CLEARANCE

(a) Clean the crank pin and bearing.
(b) Check the crank pin and bearing for pitting and scratches.

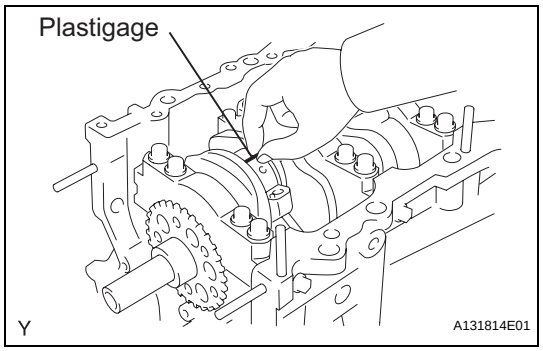

(c) Lay a strip of Plastigage on the crank pin.

EM

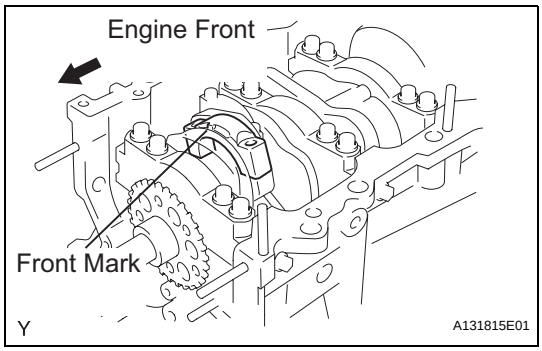

(d) Check that the front mark of the connecting rod cap is facing forward.

(e) Install the connecting rod cap (See page EM-111).
NOTICE:
Do not turn the crankshaft.

(f) Remove the 2 bolts and connecting rod cap (See page EM-62).

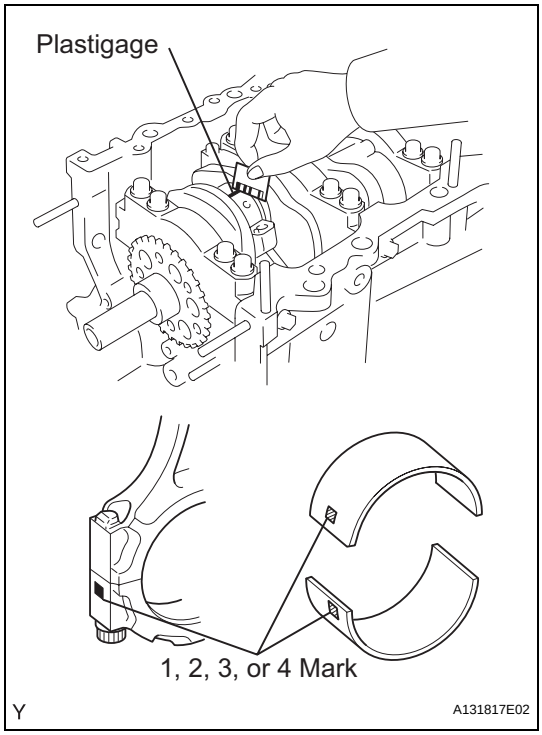

(g) Measure the Plastigage at its widest point.
Standard oil clearance:
0.045 to 0.067 mm (0.0018 to 0.0026 in.)
Maximum oil clearance:
0.070 mm (0.0028 in.)
If the oil clearance is greater than the maximum, replace the connecting rod bearings. If necessary, inspect the crankshaft.
HINT:
If replacing a bearing, replace it with one that has the same number as its respective connecting rod cap. Each bearing's standard thickness is indicated by a 1, 2, 3, or 4 mark on its surface.
Connecting rod diameter

Mark	Diameter
1	56.000 to 56.006 mm (2.2047 to 2.2050 in.)
2	56.007 to 56.012 mm (2.2050 to 2.2052 in.)
3	56.013 to 56.018 mm (2.2052 to 2.2054 in.)
4	56.019 to 56.024 mm (2.2055 to 2.2057 in.)

Connecting rod bearing center wall thickness

Mark	Thickness
1	1.481 to 1.484 mm (0.0583 to 0.0584 in.)
2	1.484 to 1.487 mm (0.0584 to 0.0585 in.)
3	1.487 to 1.490 mm (0.0585 to 0.0587 in.)
4	1.490 to 1.493 mm (0.0587 to 0.0588 in.)

Crankshaft pin diameter:
52.992 to 53.000 mm (2.0863 to 2.0866 in.)
NOTICE:
Completely remove the Plastigage after the measurement.

31. INSPECT CRANKSHAFT THRUST CLEARANCE

(a) Install the main bearing cap (See page EM-111).

EM

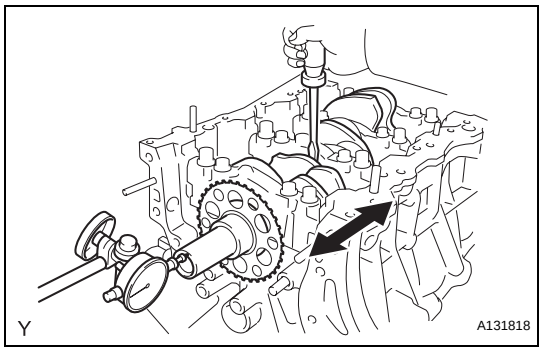

(b) Using a dial indicator, measure the thrust clearance while prying the crankshaft back and forth with a screwdriver.
Standard thrust clearance:
0.04 to 0.24 mm (0.0016 to 0.0094 in.)
Maximum thrust clearance:
0.30 mm (0.0118 in.)
If the thrust clearance is greater than the maximum, replace the thrust washers as a set. If necessary, replace the crankshaft.
Thrust washer thickness:
2.43 to 2.48 mm (0.0957 to 0.0976 in.)

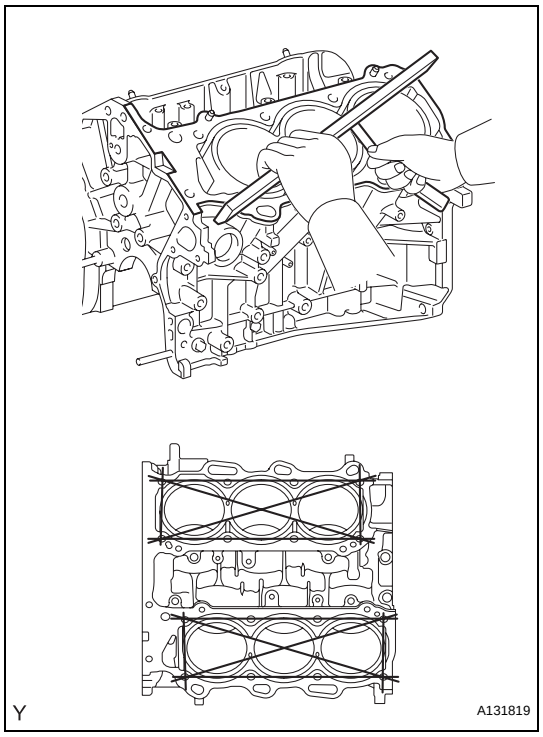

32. INSPECT CYLINDER BLOCK FOR WARPAGE

(a) Using a precision straight edge and feeler gauge, measure the warpage of the contact surface of the cylinder head gasket.
Maximum warpage:
0.07 mm (0.0028 in.)
If the warpage is greater than the maximum, replace the cylinder block.

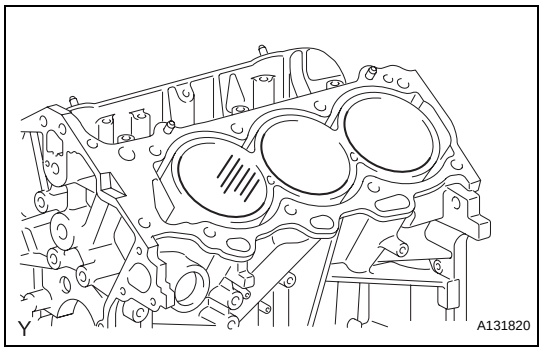

33. INSPECT CYLINDER BORE

(a) Visually check the cylinder for vertical scratches. If deep scratches are present, rebore all the 6 cylinders. If necessary, replace the cylinder block.

EM

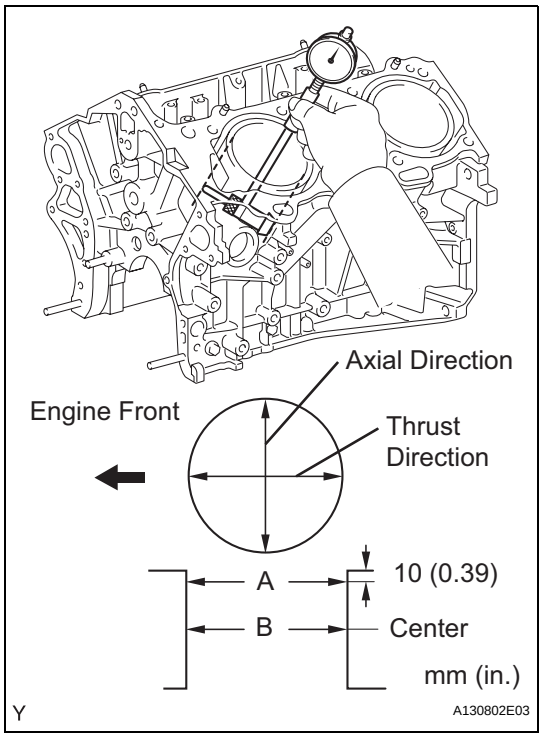

(b) Using a cylinder gauge, measure the cylinder bore diameter at positions A and B in the thrust and axial directions.
Standard diameter:
94.000 to 94.012 mm (3.7008 to 3.7013 in.)
Maximum diameter:
94.200 mm (3.7087 in.)
If the average diameter of 4 positions is greater than the maximum, replace the cylinder block.

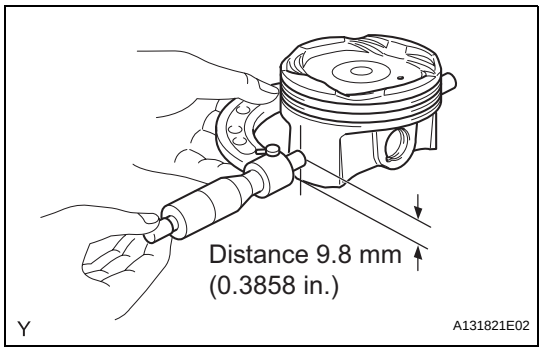

34. INSPECT PISTON SUB-ASSEMBLY WITH PIN

(a) Using a micrometer, measure the piston diameter at right angles to the piston center line where the distance from the piston end is as specified.
Distance:
9.8 mm (0.3858 in.)
Standard diameter:
93.960 to 93.980 mm (3.6992 to 3.7000 in.)
Maximum diameter:
93.830 mm (3.6941 in.)

35. INSPECT PISTON OIL CLEARANCE

(a) Measure the cylinder bore diameter in the thrust directions.

(b) Subtract the piston diameter measurement from the cylinder bore diameter measurement.
Standard oil clearance:
0.020 to 0.052 mm (0.0008 to 0.0020 in.)
Maximum oil clearance:
0.060 mm (0.0024 in.)
If the oil clearance is greater than the maximum, replace all the pistons. If necessary, replace the cylinder block.

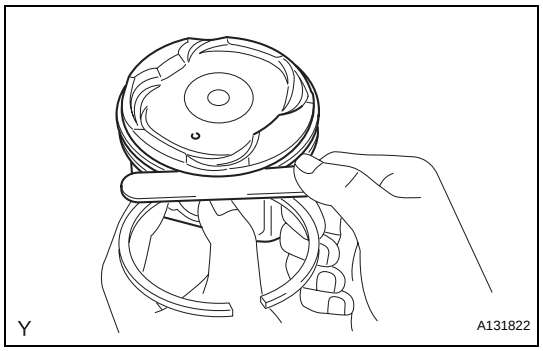

36. INSPECT RING GROOVE CLEARANCE

(a) Using a feeler gauge, measure the clearance between a new piston ring and the wall of the ring groove.

Ring groove clearance

Item	Clearance
No. 1	0.020 to 0.070 mm (0.0008 to 0.0028 in.)
No. 2	0.020 to 0.060 mm (0.0008 to 0.0024 in.)
Oil	0.070 to 0.150 mm (0.0028 to 0.0059 in.)

If the clearance is not as specified, replace the piston.

37. INSPECT PISTON RING END GAP

(a) Insert the piston ring into the cylinder bore.

(b) Using a piston, push the piston ring a little beyond the bottom of the ring travel, 110 mm (4.33 in.) from the top of the cylinder block.

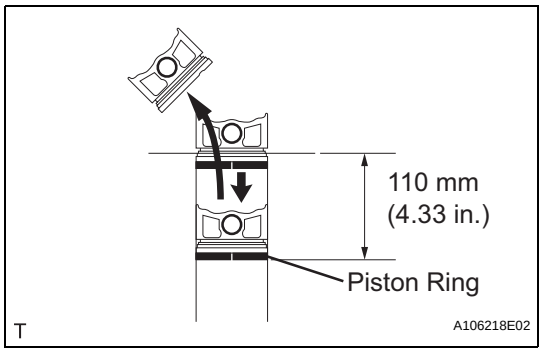

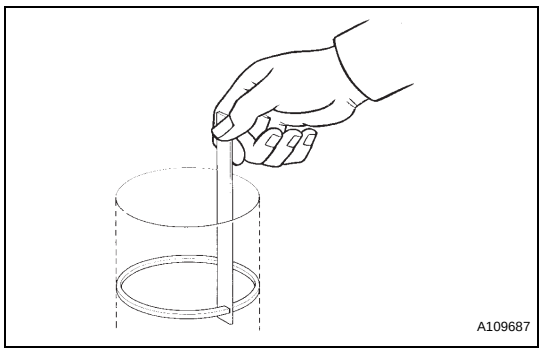

(c) Using a feeler gauge, measure the end gap.

Standard end gap

Item	End Gap
No. 1	0.25 to 0.35 mm (0.0098 to 0.0138 in.)
No. 2	0.50 to 0.60 mm (0.0197 to 0.0236 in.)
Oil	0.10 to 0.40 mm (0.0039 to 0.0157 in.)

Maximum end gap

Item	End Gap
No. 1	0.50 mm (0.0197 in.)
No. 2	0.85 mm (0.0335 in.)
Oil	0.60 mm (0.0236 in.)

If the end gap is greater than the maximum, replace the piston ring. If the end gap is greater than the maximum even with a new piston ring, rebore all the 6 cylinders or replace the cylinder block.

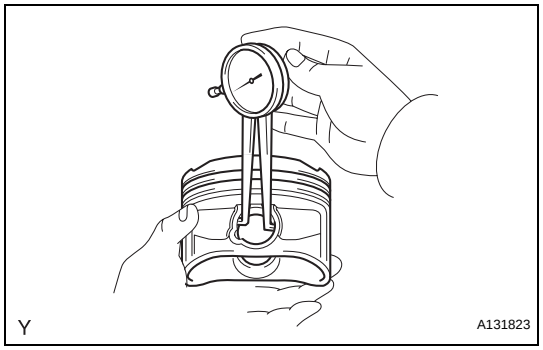

38. INSPECT PISTON PIN OIL CLEARANCE

(a) Using a caliper gauge, measure the inside diameter of the piston pin hole.

Piston pin hole inside diameter

Mark	Diameter
A	22.001 to 22.004 mm (0.8662 to 0.8663 in.)
B	22.004 to 22.007 mm (0.8663 to 0.8664 in.)
C	22.007 to 22.010 mm (0.8664 to 0.8665 in.)

EM

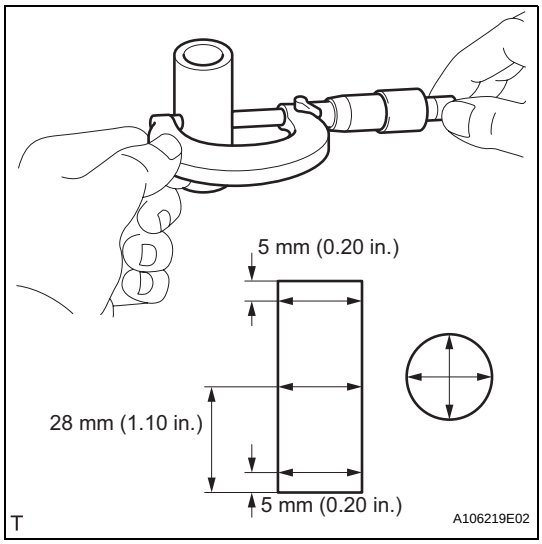

(b) Using a micrometer, measure the piston pin diameter.
Piston pin diameter

Mark	Diameter
A	21.997 to 22.000 mm (0.8660 to 0.8661 in.)
B	22.000 to 22.003 mm (0.8661 to 0.8663 in.)
C	22.003 to 22.006 mm (0.8663 to 0.8664 in.)

(c) Subtract the piston pin diameter measurement from the piston pin hole diameter measurement.
Standard oil clearance:
0.001 to 0.007 mm (0.00004 to 0.00028 in.)
Maximum oil clearance:
0.015 mm (0.0006 in.)
If the oil clearance is greater than the maximum, replace the piston and piston pin as a set.

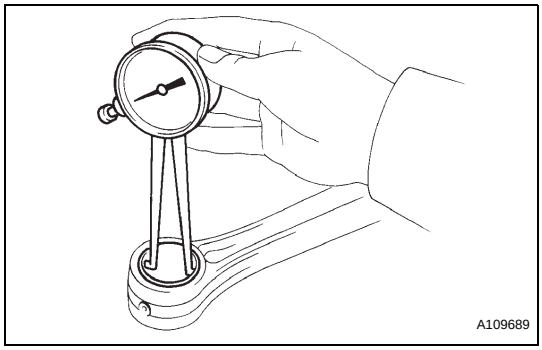

(d) Using a caliper gauge, measure the inside diameter of the connecting rod bushing.
Bushing inside diameter

Mark	Diameter
A	22.005 to 22.008 mm (0.8663 to 0.8665 in.)
B	22.009 to 22.011 mm (0.8665 to 0.8666 in.)
C	22.012 to 22.014 mm (0.8666 to 0.8667 in.)

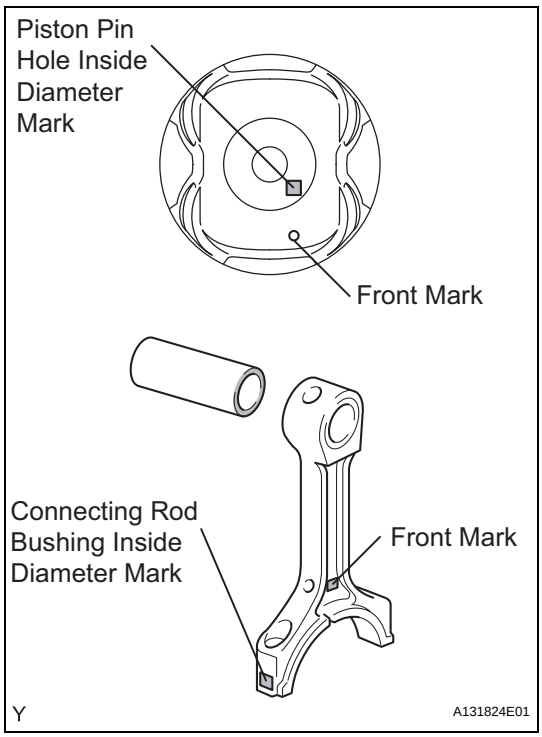

(e) Subtract the piston pin diameter measurement from the bushing inside diameter measurement.
Standard oil clearance:
0.005 to 0.011 mm (0.0002 to 0.0004 in.)
Maximum oil clearance:
0.030 mm (0.0012 in.)
If the oil clearance is greater than the maximum, replace the bushing. If necessary, replace the connecting rod and piston pin as a set.

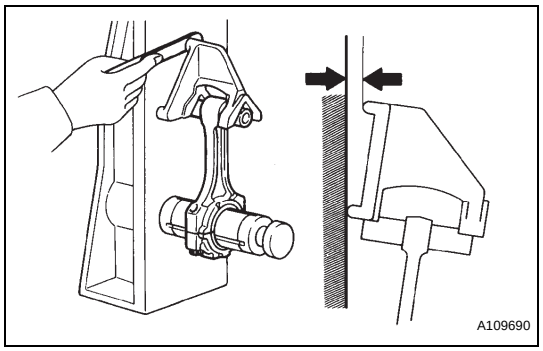

39. INSPECT CONNECTING ROD

(a) Using a rod aligner and feeler gauge, check the connecting rod alignment.

(1) Check for out-of-alignment.

Maximum out-of-alignment:
0.05 mm (0.0020 in.) per 100 mm (3.94 in.)

If the out-of-alignment is greater than the maximum, replace the connecting rod assembly.

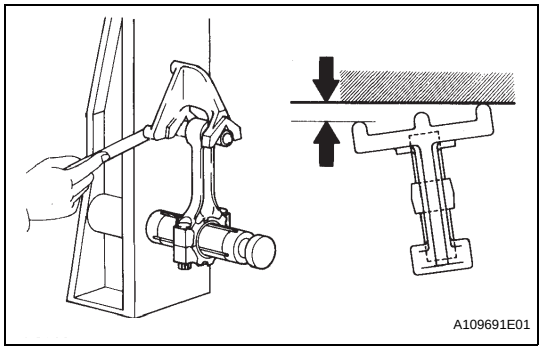

(2) Check for twist.

Maximum twist:
0.15 mm (0.0059 in.) per 100 mm (3.94 in.)

If the twist is greater than the maximum, replace the connecting rod assembly.

EM

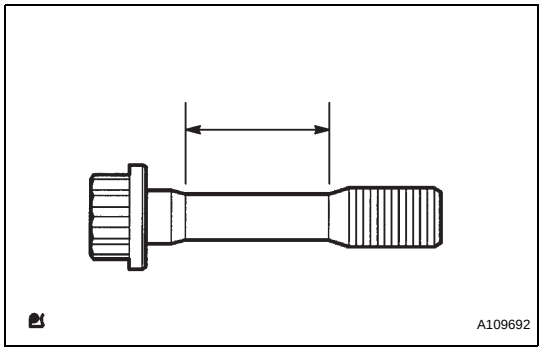

40. INSPECT CONNECTING ROD BOLT

(a) Using vernier calipers, measure the tension portion diameter of the bolt.

Standard diameter:
7.2 to 7.3 mm (0.284 to 0.287 in.)
Minimum diameter:
7.0 mm (0.276 in.)

If the diameter is less than the minimum, replace the bolt.

41. INSPECT CRANKSHAFT

(a) Inspect for circle runout.

(1) Clean the crank journal.

(2) Place the crankshaft on V-blocks.

(3) Using a dial indicator, measure the circle runout at the center journal.

Maximum circle runout:
0.06 mm (0.0024 in.)

If the circle runout is greater than the maximum, replace the crankshaft.

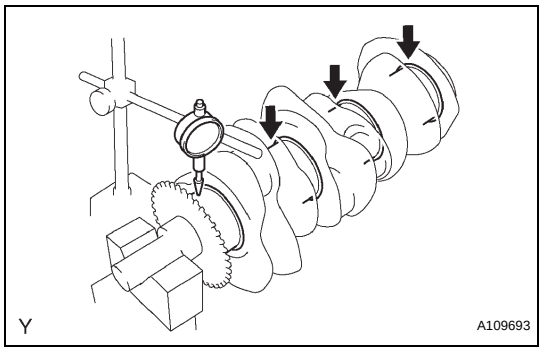

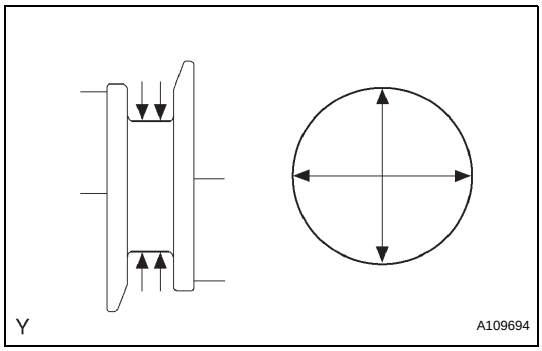

(b) Inspect the main journals.
(1) Using a micrometer, measure the diameter of each main journal.
Standard journal diameter:
60.988 to 61.000 mm (2.4011 to 2.4016 in.)
If the diameter is not as specified, check the oil clearance. If necessary, replace the crankshaft.
(2) Check each main journal for taper and out-of-round as shown in the illustration.
Maximum taper and out-of-round:
0.02 mm (0.0008 in.)
If the taper and out-of-round is greater than the maximum, replace the crankshaft.

EM

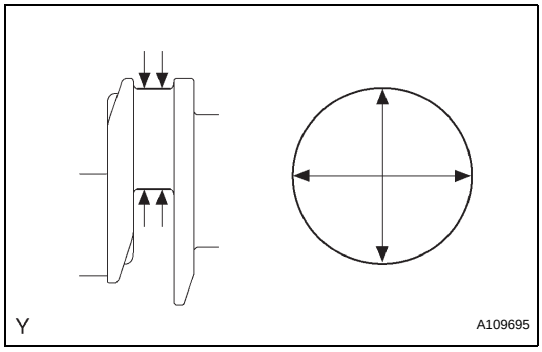

(c) Inspect the crank pin.
(1) Using a micrometer, measure the diameter of each crank pin.
Crankshaft pin diameter:
52.992 to 53.000 mm (2.0863 to 2.0866 in.)
If the diameter is not as specified, check the oil clearance. If necessary, replace the crankshaft.
(2) Check each crank pin for taper and out-of-round as shown in the illustration.
Maximum taper and out-of-round:
0.02 mm (0.0008 in.)
If the taper and out-of-round is greater than the maximum, replace the crankshaft.

42. INSPECT CRANKSHAFT OIL CLEARANCE
(a) Check the crank journal and bearing for pitting and scratches.
(b) Install the crankshaft bearing (See page EM-111).
(c) Place the crankshaft on the cylinder block.

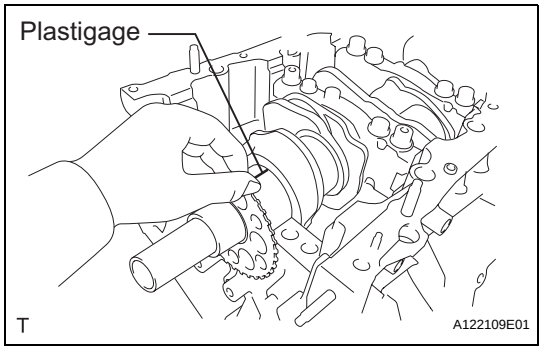

(d) Lay a strip of Plastigage across each journal.
(e) Examine the front marks and numbers and install the bearing caps on the cylinder block.
HINT:
A number is marked on each main bearing cap to indicate the installation position.
(f) Install the main bearing cap (See page EM-111).
NOTICE:
Do not turn the crankshaft.
(g) Remove the main bearing caps (See page EM-62).

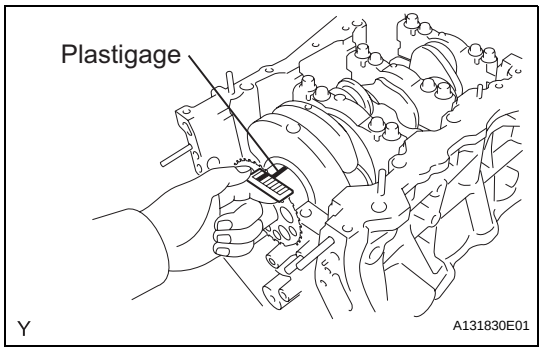

(h) Measure the Plastigage at its widest point.
Standard oil clearance:
0.026 to 0.047 mm (0.0010 to 0.0019 in.)
Maximum oil clearance:
0.050 mm (0.0020 in.)
If the oil clearance is greater than the maximum, replace the bearings. If necessary, replace the crankshaft.
NOTICE:
Completely remove the Plastigage after the measurement.

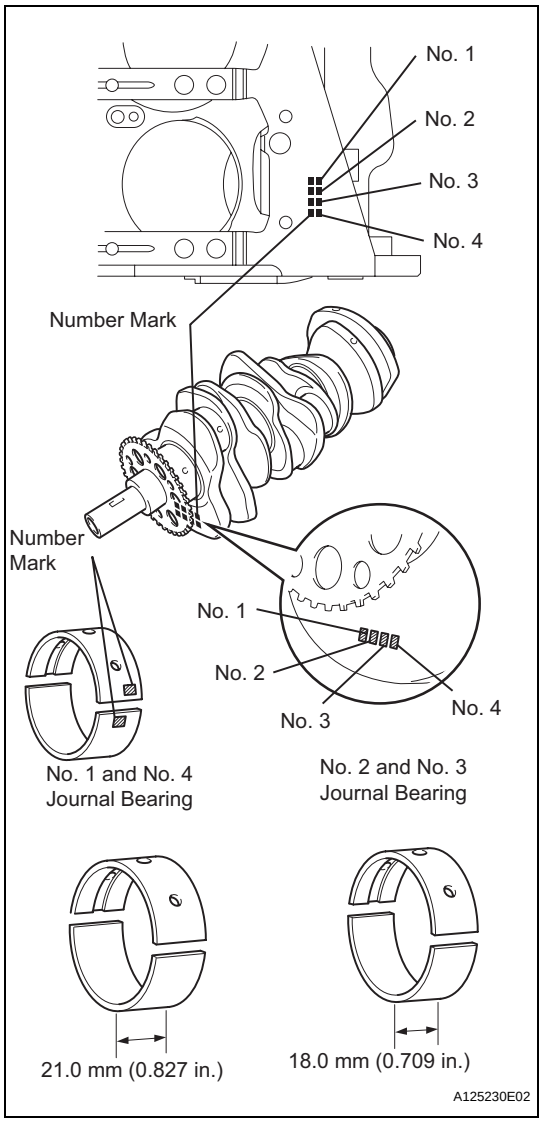

(i) If replacing a bearing, replace it with one having the same number. If the number of the bearing cannot be determined, select the correct bearing by adding together the numbers imprinted on the cylinder block and crankshaft, then refer to the table below for the appropriate bearing number. There are 5 sizes of standard bearings, marked "1", "2", "3", "4" and "5" accordingly.

Journal bearings:

Cylinder block + Crankshaft	0 - 5	6 - 11	12 - 17	18 - 23	24 - 28
Bearing to be used	"1"	"2"	"3"	"4"	"5"

HINT:
EXAMPLE: Cylinder block "11" + Crankshaft "06" = Total number 17 (Use bearing "3")

Crankshaft main journal diameter

Mark	Diameter
"00"	60.999 to 61.000 mm (2.4015 to 2.4016 in.)
"01"	60.998 to 60.999 mm (2.4015 to 2.4015 in.)
"02"	60.997 to 60.998 mm (2.4015 to 2.4015 in.)
"03"	60.996 to 60.997 mm (2.4014 to 2.4015 in.)
"04"	60.995 to 60.996 mm (2.4014 to 2.4014 in.)
"05"	60.994 to 60.995 mm (2.4013 to 2.4014 in.)
"06"	60.993 to 60.994 mm (2.4013 to 2.4013 in.)
"07"	60.992 to 60.993 mm (2.4013 to 2.4013 in.)
"08"	60.991 to 60.992 mm (2.4012 to 2.4013 in.)
"09"	60.990 to 60.991 mm (2.4012 to 2.4012 in.)
"10"	60.989 to 60.990 mm (2.4011 to 2.4012 in.)
"11"	60.988 to 60.989 mm (2.4011 to 2.4011 in.)

Standard upper bearing center wall thickness (No. 1 and No. 4 journal)

Mark	Thickness
"1"	2.500 to 2.503 mm (0.0984 to 0.0985 in.)
"2"	2.503 to 2.506 mm (0.0985 to 0.0987 in.)
"3"	2.506 to 2.509 mm (0.0987 to 0.0988 in.)
"4"	2.509 to 2.512 mm (0.0988 to 0.0989 in.)
"5"	2.512 to 2.515 mm (0.0989 to 0.0990 in.)

Standard lower bearing center wall thickness (No. 1 and No. 4 journal)

Mark	Thickness
"1"	2.478 to 2.481 mm (0.0976 to 0.0977 in.)
"2"	2.481 to 2.484 mm (0.0977 to 0.0978 in.)
"3"	2.484 to 2.487 mm (0.0978 to 0.0979 in.)
"4"	2.487 to 2.490 mm (0.0979 to 0.0980 in.)
"5"	2.490 to 2.493 mm (0.0980 to 0.0981 in.)

Standard upper bearing center wall thickness (No. 2 and No. 3 journal)

Mark	Thickness
"1"	2.478 to 2.481 mm (0.0976 to 0.0977 in.)
"2"	2.481 to 2.484 mm (0.0977 to 0.0978 in.)
"3"	2.484 to 2.487 mm (0.0978 to 0.0979 in.)
"4"	2.487 to 2.490 mm (0.0979 to 0.0980 in.)
"5"	2.490 to 2.493 mm (0.0980 to 0.0981 in.)

Standard lower bearing center wall thickness (No. 2 and No. 3 journal)

Mark	Thickness
"1"	2.500 to 2.503 mm (0.0984 to 0.0985 in.)
"2"	2.503 to 2.506 mm (0.0985 to 0.0987 in.)
"3"	2.506 to 2.509 mm (0.0987 to 0.0988 in.)
"4"	2.509 to 2.512 mm (0.0988 to 0.0989 in.)
"5"	2.512 to 2.515 mm (0.0989 to 0.0990 in.)

EM

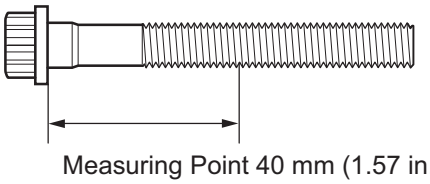

43. INSPECT CRANKSHAFT BEARING CAP SET BOLT

(a) Using vernier calipers, measure the minimum diameter of the compressed thread at the measuring point.

Standard diameter:
10.8 to 11.0 mm (0.4252 to 0.4331 in.)
Minimum diameter:
10.7 mm (0.4213 in.)
Measuring Point:
40 mm (1.57 in.)

If the diameter is less than the minimum, replace the bolt.

REASSEMBLY

1. INSTALL STRAIGHT PIN

(a) Using a plastic hammer, tap in new straight pins to the cylinder block.

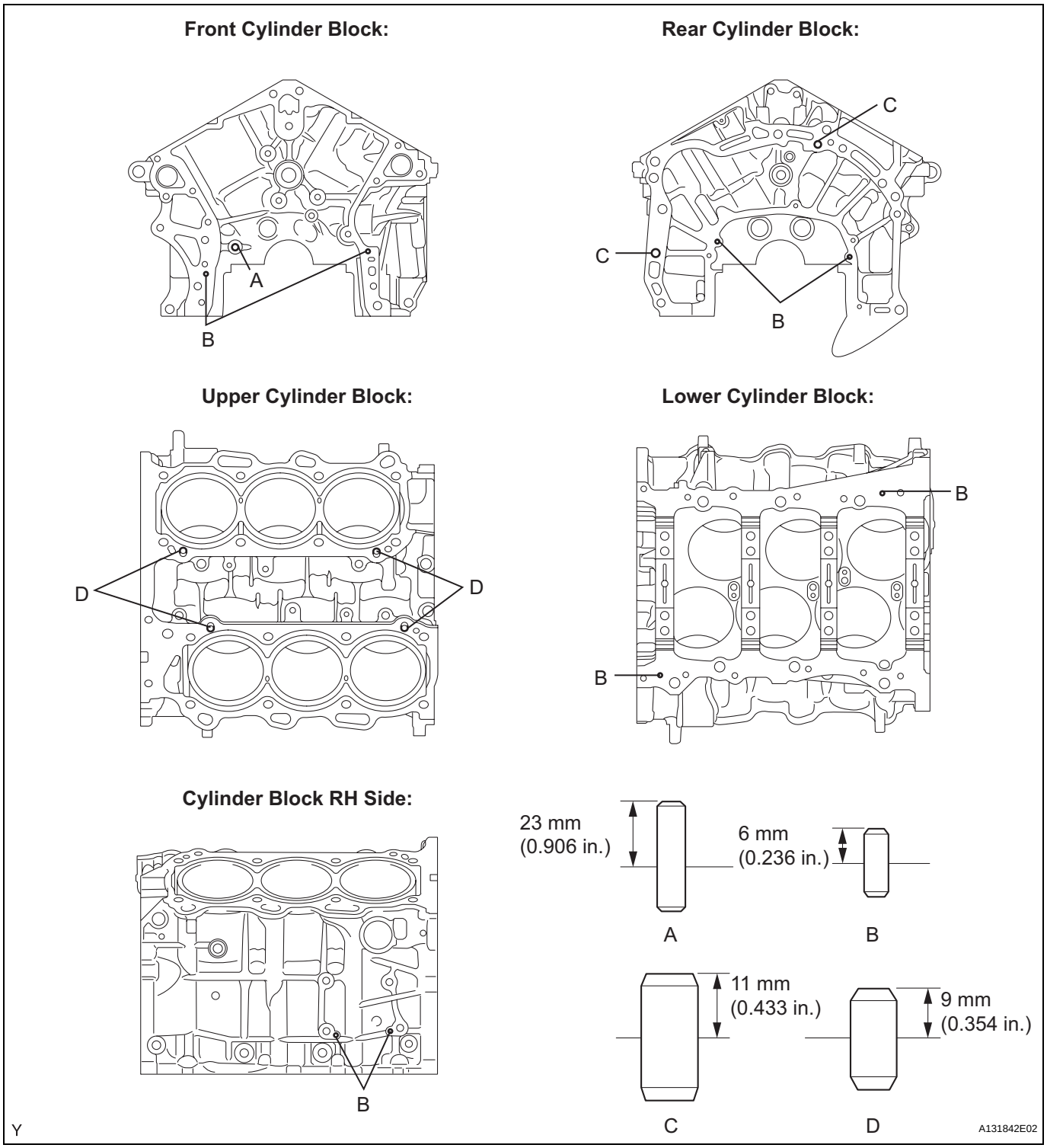

Standard protrusion

Item	Protrusion
Pin A	23 mm (0.906 in.)
Pin B	6 mm (0.236 in.)
Pin C	11 mm (0.433 in.)

EM

Item	Protrusion
Pin D	9 mm (0.354 in.)

2. INSTALL STUD BOLT

(a) Using E8 and E10 "TORX" sockets, install the stud bolts.

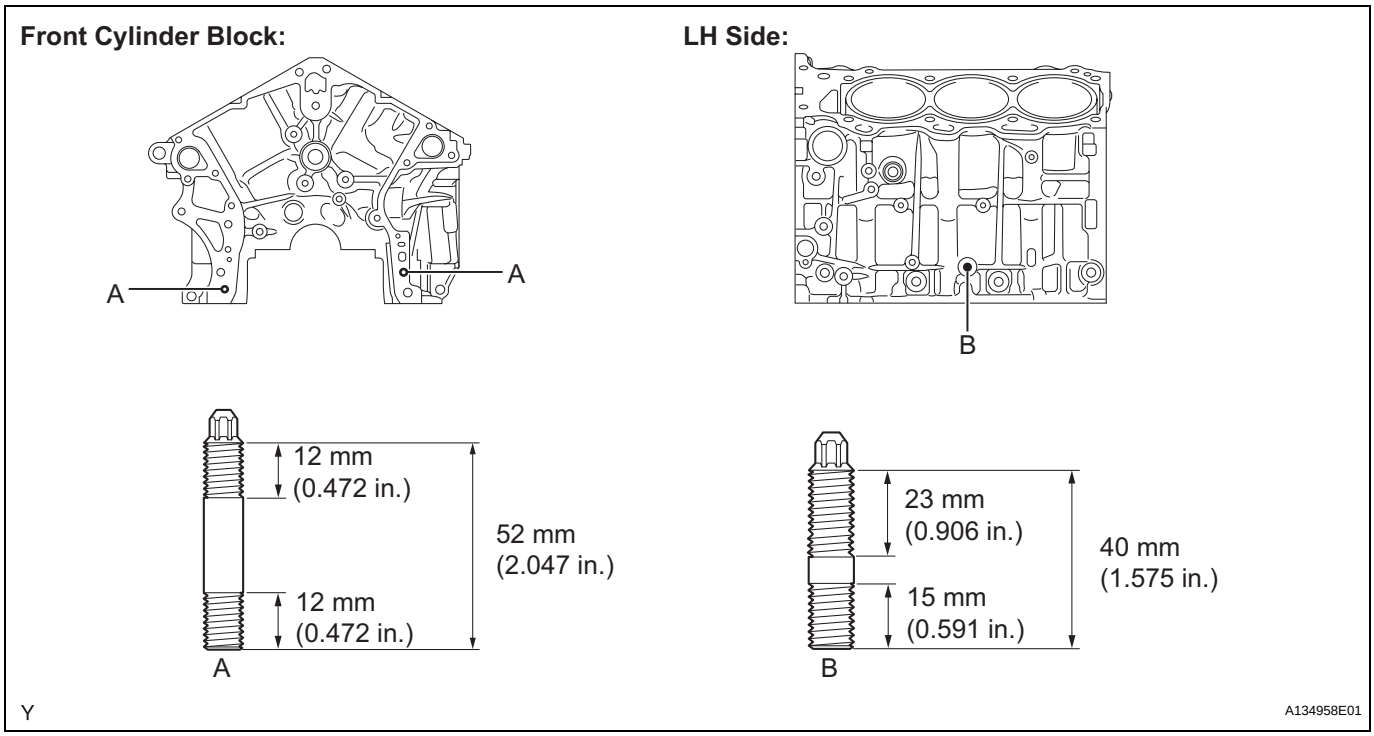

Torque: 10 N*m (102 kgf*cm, 7 ft.*lbf) for bolt A
17 N*m (173 kgf*cm, 13 ft.*lbf) for bolt B

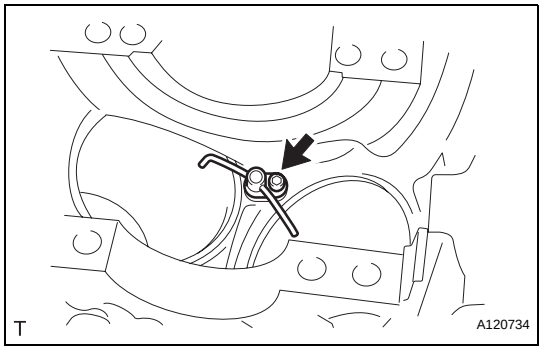

3. INSTALL NO. 1 OIL NOZZLE SUB-ASSEMBLY

(a) Using a 5 mm hexagon wrench, install the oil nozzles.
Torque: 9.0 N*m (92 kgf*cm, 80 in.*lbf)

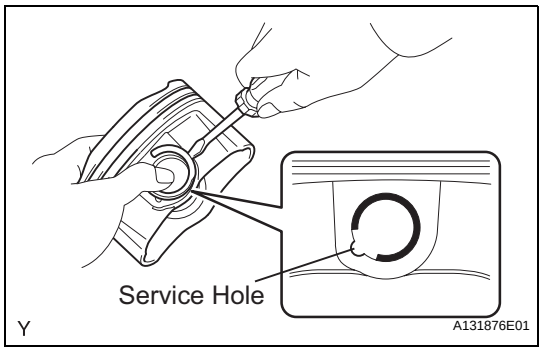

4. INSTALL PISTON SUB-ASSEMBLY WITH PIN

(a) Using a screwdriver, install a new snap ring at one end of the piston pin hole.
HINT:
Be sure that the end gap of the snap ring is not aligned with the pin hole cutout portion of the piston.

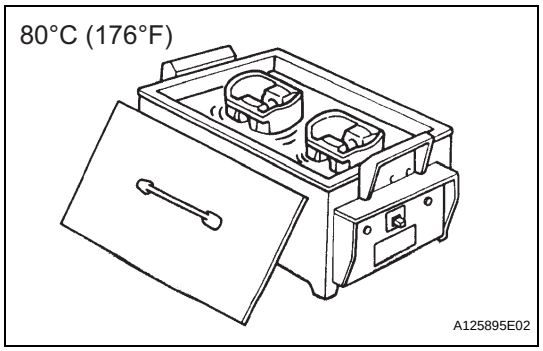

(b) Gradually heat the piston to approximately 80°C (176°F).
(c) Coat the piston pin with engine oil.

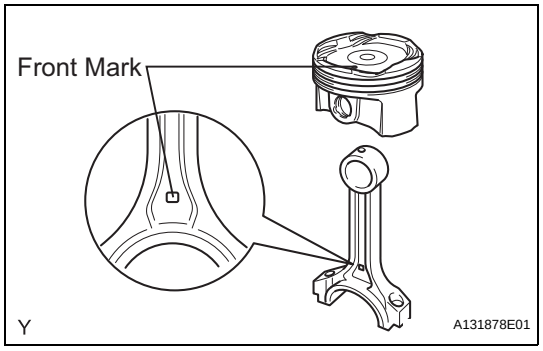

(d) Align the front marks of the piston and connecting rod, and push in the piston pin with your thumb.
HINT:
The piston and pin are a matched set.

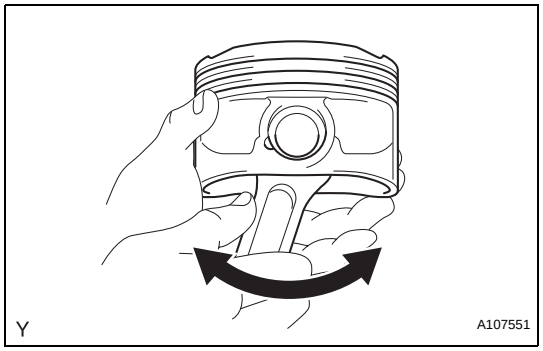

(e) Check the fitting condition between the piston and piston pin by trying to move the piston back and forth on the piston pin.

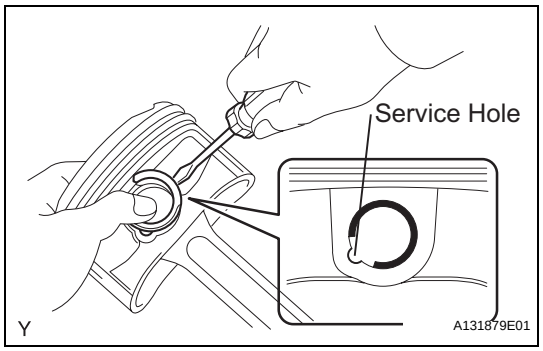

(f) Using a screwdriver, install a new snap ring at the other end of the piston pin hole.
HINT:
Be sure that the end gap of the snap ring is not aligned with the pin hole cutout portion of the piston.

5. INSTALL PISTON RING SET

(a) Install the oil ring expander and 2 side rails by hand.

EM

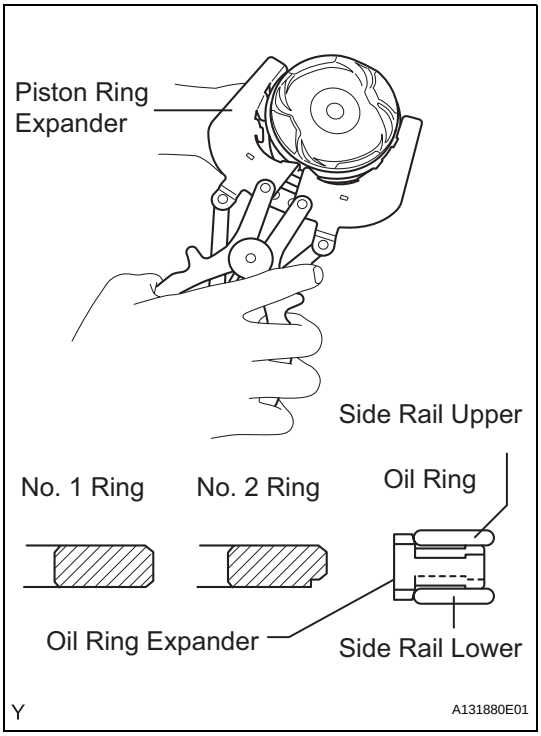

(b) Using a piston ring expander, install the oil ring rail as shown in the illustration.

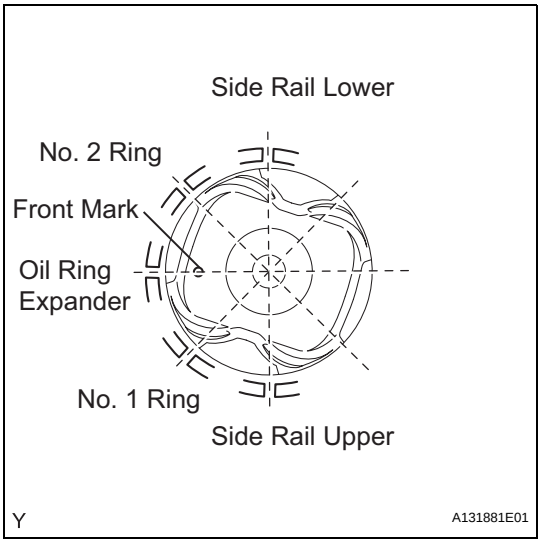

(c) Position the piston rings so that the ring ends are as shown in the illustration.
NOTICE:
Do not align the ring ends.

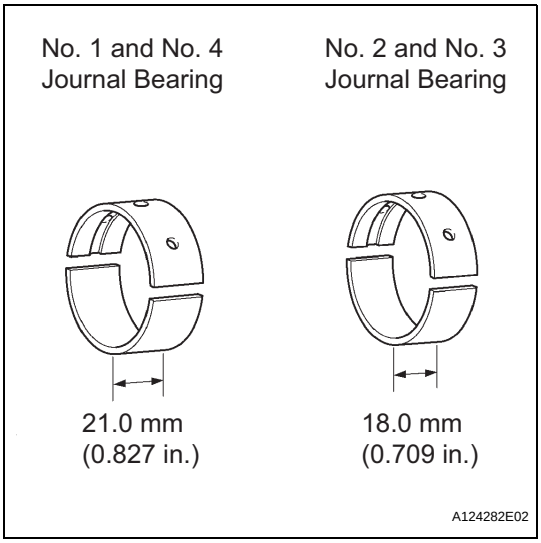

6. INSTALL CRANKSHAFT BEARING

(a) Clean the main journal and both surfaces of the bearing.
NOTICE:
Main bearings come in widths between 18.0 mm (0.709 in.) and 21.0 mm (0.827 in.). Install the 21.0 mm (0.827 in.) bearings in the No. 1 and No. 4 cylinder block journal positions with the main bearing cap. Install the 18.0 mm (0.709 in.) bearings in the No. 2 and No. 3 positions.

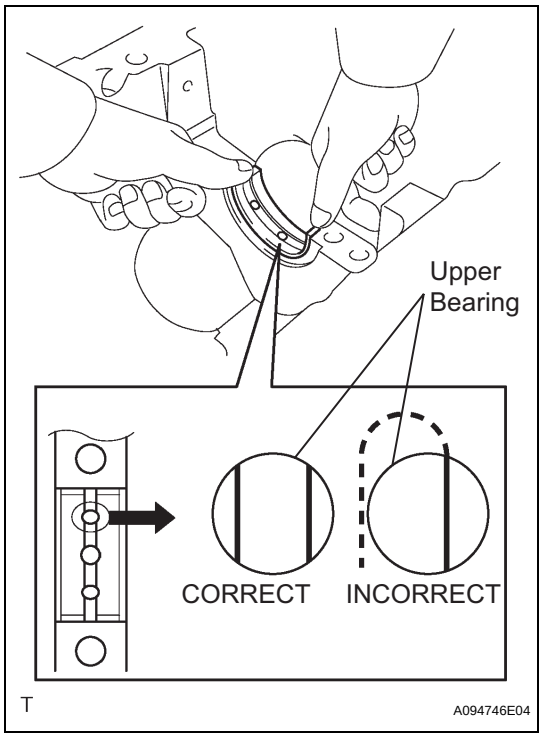

(b) Install the upper bearing.
  (1) Install the upper bearings to the cylinder block as shown in the illustration.
  NOTICE:
  - **Do not apply engine oil to the bearings and the contact surfaces.**
  - **Both sides of the oil groove in the cylinder block should be visible through the oil feed holes in the bearing. The amount visible on each side of the holes should be equal.**

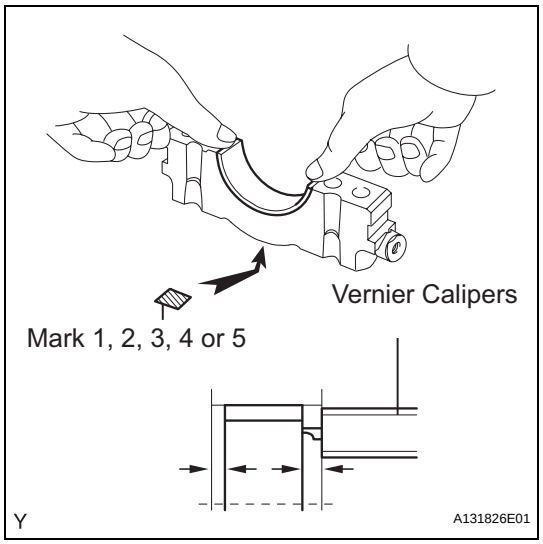

(c) Install the lower bearing.
  (1) Install the lower bearings to the bearing caps.
  (2) Using vernier calipers, measure the distance between the bearing cap's edge and the lower bearing's edge.
  Dimension (A - B):
  0.7 mm (0.0276 in.) or less
  NOTICE:
  Do not apply engine oil to the bearings and the contact surfaces.

7. INSTALL CRANKSHAFT THRUST WASHER SET
(a) Apply engine oil to the crankshaft thrust washer.

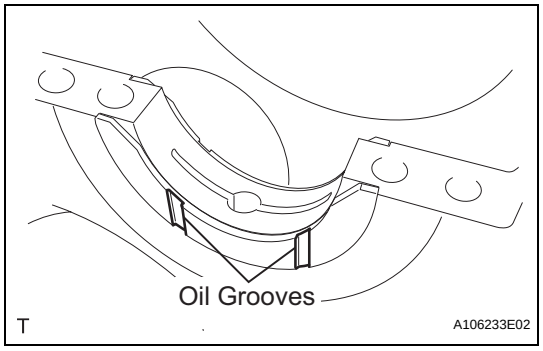

(b) Install the 2 thrust washers under the No. 2 journal position of the cylinder block with the oil grooves facing outward.

8. INSTALL CRANKSHAFT
(a) Apply engine oil to the upper bearing, then place the crankshaft on the cylinder block.

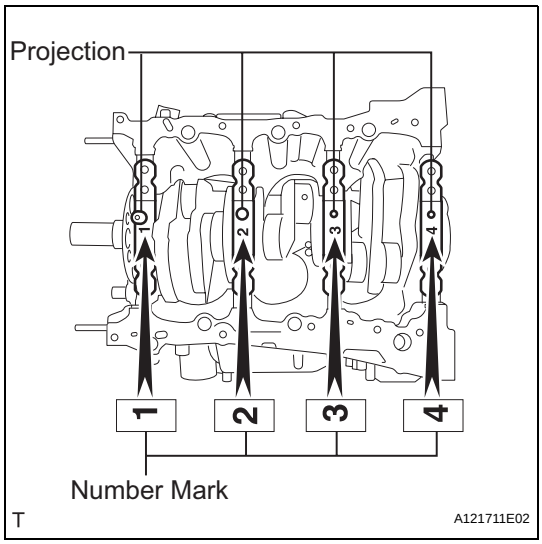

(b) Confirm the projection and numbers of the main bearing caps and install the bearing caps on the cylinder block.
HINT:
A number is marked on each main bearing cap to indicate the installation position.

(c) Apply a light coat of engine oil to the threads and under the heads of the bearing cap bolts.

(d) Temporarily install the 8 main bearing cap bolts to the inside positions.

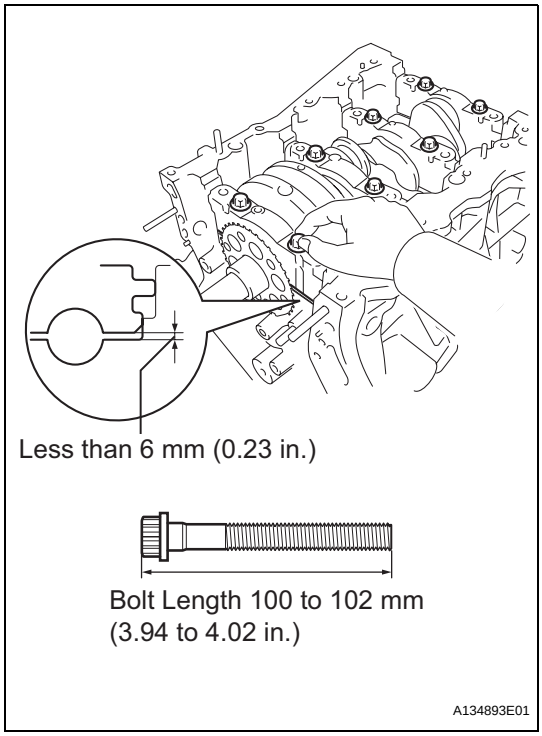

(e) Insert the main bearing cap with your hand until the clearance between the main bearing cap and the cylinder block is less than 6 mm (0.23 in.) by marking the 2 internal bearing cap bolts as a guide.
Bolt length:
100 to 102 mm (3.94 to 4.02 in.)

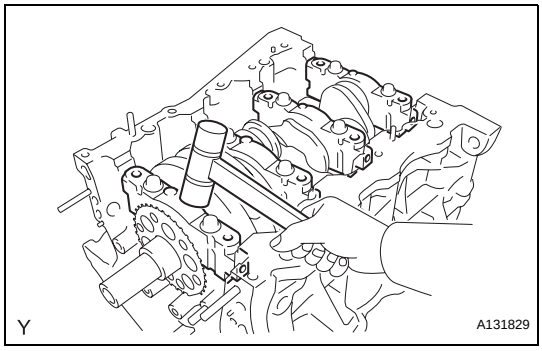

(f) Using a plastic hammer, lightly tap the bearing cap to ensure a proper fit.

(g) Apply a light coat of engine oil to the threads and under the heads of the 8 main bearing cap bolts.

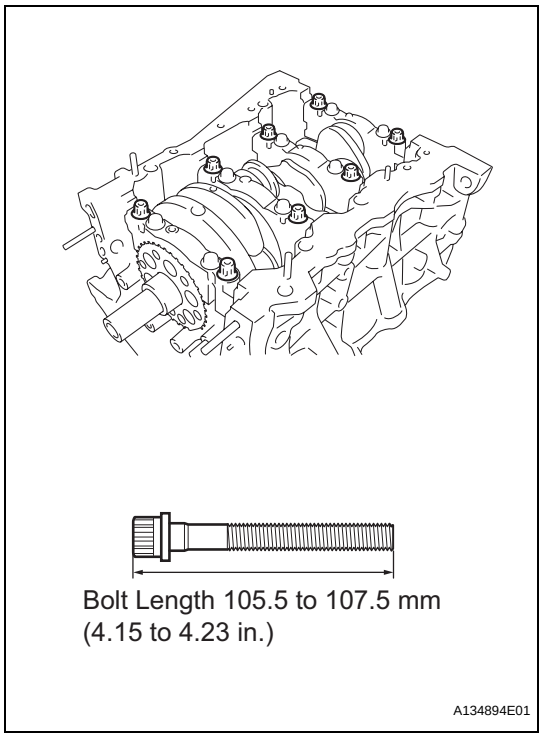

(h) Install the 8 main bearing cap bolts to the outside positions.

(i) Install the crankshaft bearing cap bolts.
HINT:
The main bearing cap bolts are tightened in 2 progressive steps.

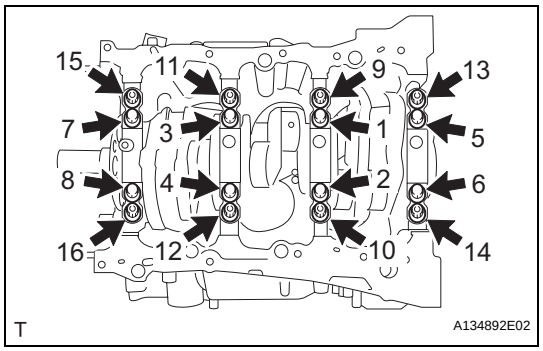

(j) Step 1
(1) Install and uniformly tighten the 16 main bearing cap bolts in the sequence shown in the illustration.
Torque: 61 N*m (622 kgf*cm, 45 ft.*lbf)
If any of the main bearing cap bolts does not meet the specified torque, replace it.

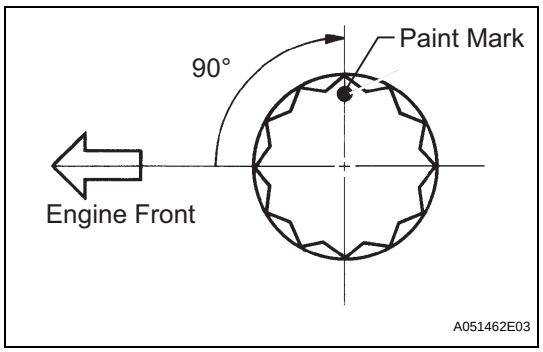

(k) Step 2
(1) Mark the front of the bearing cap bolts with paint.
(2) Retighten the bearing cap bolts 90° in the order above.
(3) Check that the painted mark is now at a 90° angle to the front.

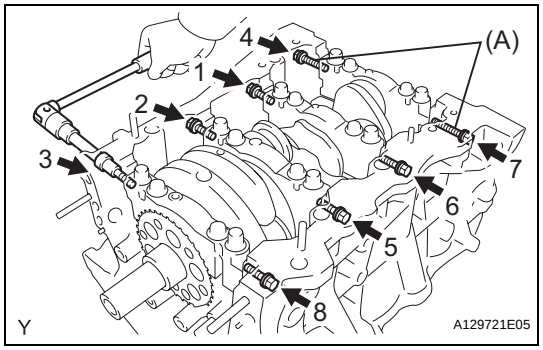

(l) Install 8 new seal washers and uniformly tighten the 8 main bearing cap bolts in several steps and in the sequence shown in the illustration.
Torque: 52 N*m (525 kgf*cm, 38 ft.*lbf)
Bolt length

Item	Length
Bolt A	45 mm (1.77 in.)
Except bolt A	30 mm (1.18 in.)

(m) Check that the crankshaft turns smoothly.

EM

(n) Check the crankshaft thrust clearance (See page EM-102).

9. INSTALL CONNECTING ROD BEARING

(a) Install the connecting rod bearing to the connecting rod and bearing cap.

(b) Using vernier calipers, measure the distance between the connecting rod's and bearing cap's edges and the connecting rod bearing's edge.
Dimension (A - B):
0.7 mm (0.0276 in.) or less
NOTICE:
Do not apply engine oil to the bearings and the contact surfaces.

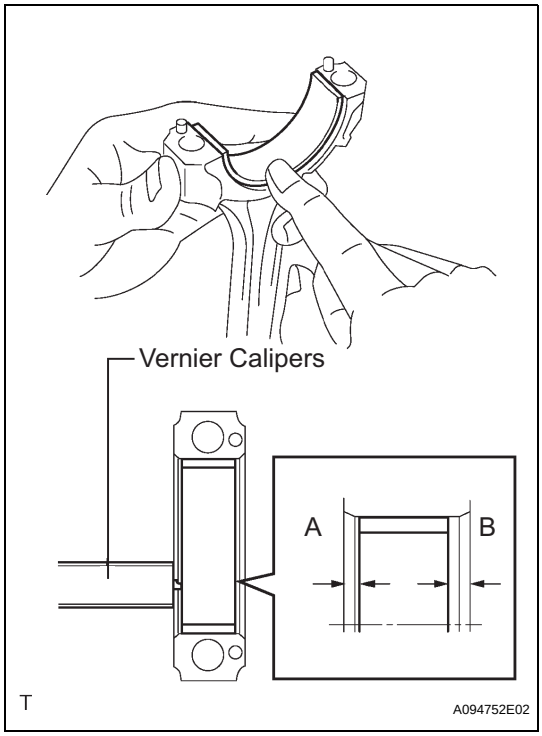

10. INSTALL PISTON SUB-ASSEMBLY WITH CONNECTING ROD

(a) Apply engine oil to the cylinder walls, the pistons, and the surfaces of the connecting rod bearings.

(b) Position the piston rings so that the ring ends are as shown in the illustration.
NOTICE:
Do not align the ring ends.

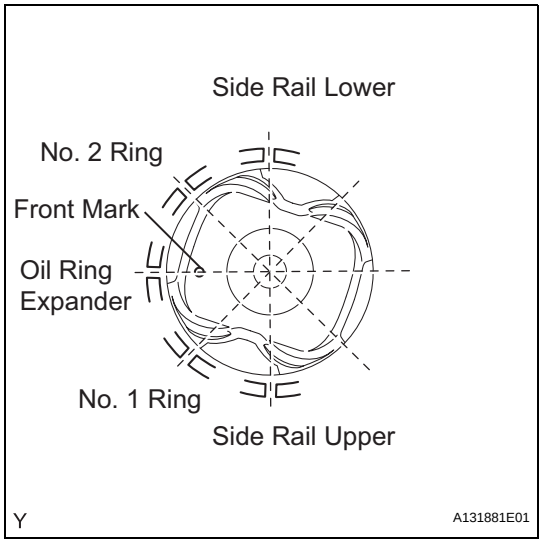

EM

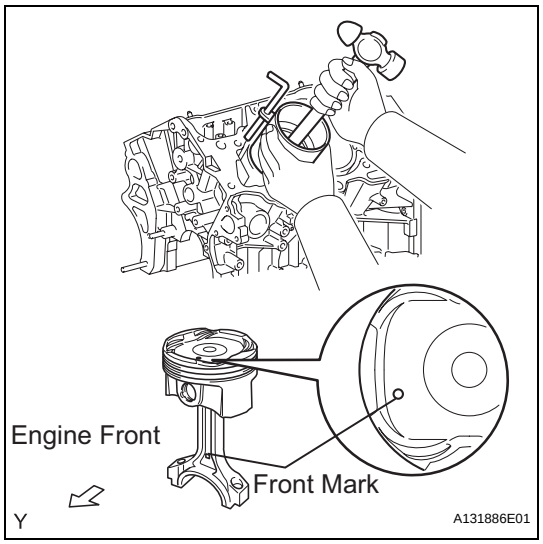

(c) Using a piston ring compressor, push the correctly numbered piston and connecting rod assembly into the cylinder with the front mark of the piston facing forward.
NOTICE:
Match the numbered connecting rod cap with the connecting rod.

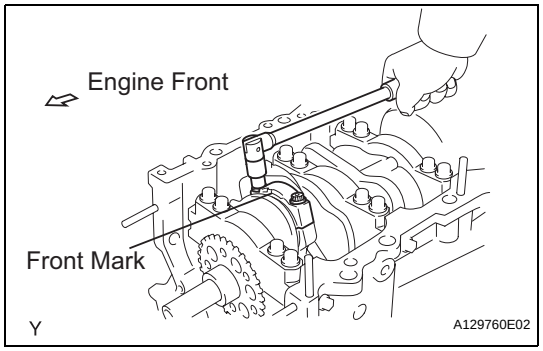

(d) Check that the front mark of the connecting rod cap is facing forward.
(e) Apply a light coat of engine oil to the threads and under the heads of the connecting rod cap bolts.
(f) Install the connecting cap bolts.
HINT:
The connecting cap bolts are tightened in 2 progressive steps.

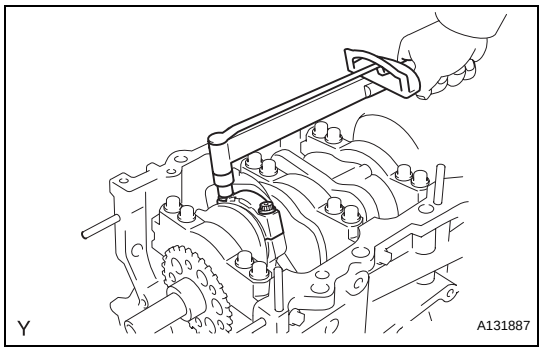

(g) Step 1
(1) Install and alternately tighten the bolts of the connecting rod cap in several steps.
Torque: 25 N*m (255 kgf*cm, 18 ft.*lbf)

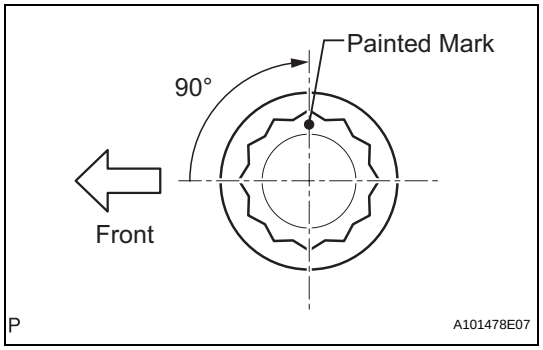

(h) Step 2
(1) Mark the front side of each connecting cap bolt with paint.
(2) Retighten the cap bolts 90° as shown in the illustration.
(3) Check that the painted mark is now at a 90° angle to the front.
(i) Check that the crankshaft turns smoothly.
(j) Check the connecting rod thrust clearance (See page EM-101).

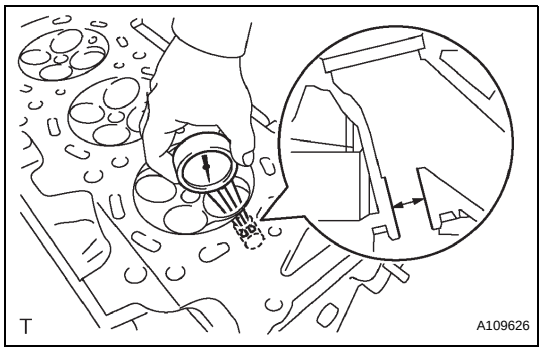

11. INSTALL INTAKE VALVE GUIDE BUSH

(a) Using a caliper gauge, measure the bush bore diameter of the cylinder head.
Cylinder bore diameter:
10.285 to 10.306 mm (0.4049 to 0.4057 in.)
Select a new guide bush (STD or O/S 0.05).

Bush size	Bush bore diameter
STD	10.285 to 10.306 mm (0.4049 to 0.4057 in.)
O/S 0.05	10.335 to 10.356 mm (0.4069 to 0.4077 in.)

If the bush bore diameter of the cylinder head is greater than 10.306 mm (0.4057 in.), machine the bush bore to the dimension of 10.335 to 10.356 mm (0.4069 to 0.4077 in.) to install an O/S 0.05 valve guide bush.
If the bush bore diameter of the cylinder head is greater than 10.356 mm (0.4077 in.), replace the cylinder head.

(b) Heat the cylinder head to 80 to 100°C (176 to 212°F).

(c) Place the cylinder head on wooden blocks.

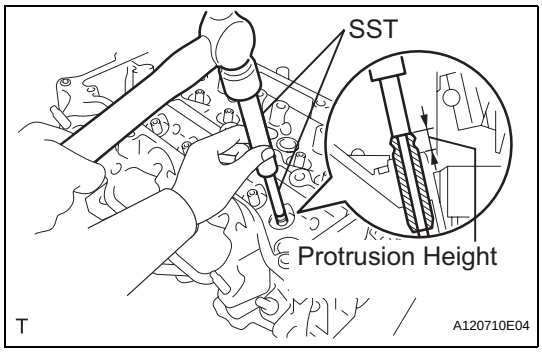

(d) Using SST, tap in new valve guide bushes to the specified protrusion height.
SST 09201-10000 (09201-01050), 09950-70010 (09951-07100)
Protrusion height:
9.30 to 9.70 mm (0.3661 to 0.3819 in.)

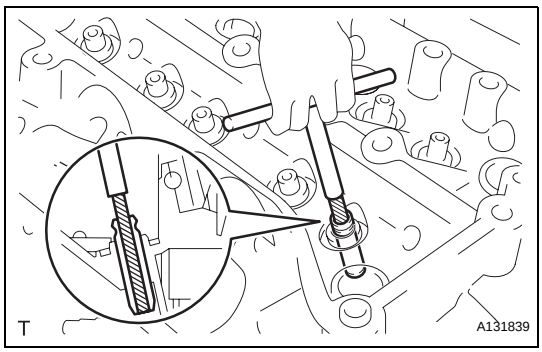

(e) Using a sharp 5.5 mm reamer, ream the valve guide bushings to obtain the specified clearance.
Standard oil clearance:
0.025 to 0.060 mm (0.0010 to 0.0023 in.)

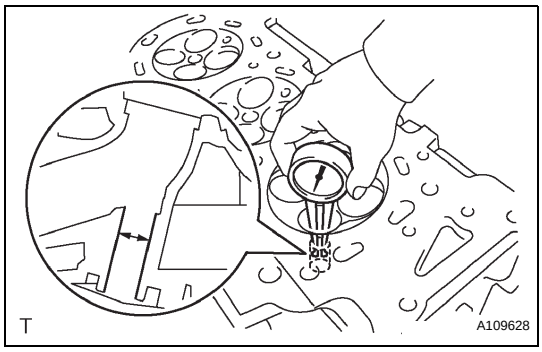

12. INSTALL EXHAUST VALVE GUIDE BUSH

(a) Using a caliper gauge, measure the bush bore diameter of the cylinder head.
Cylinder bore diameter:
10.285 to 10.306 mm (0.4049 to 0.4057 in.)
Select a new guide bush (STD or O/S 0.05).

Bush size	Bush bore diameter
STD	10.285 to 10.306 mm (0.4049 to 0.4057 in.)
O/S 0.05	10.335 to 10.356 mm (0.4069 to 0.4077 in.)

If the bush bore diameter of the cylinder head is greater than 10.306 mm (0.4057 in.), machine the bush bore to the dimension of 10.335 to 10.356 mm (0.4069 to 0.4077 in.) to install an O/S 0.05 valve guide bush.
If the bush bore diameter of the cylinder head is greater than 10.356 mm (0.4077 in.), replace the cylinder head.

(b) Heat the cylinder head to 80 to 100°C (176 to 212°F).

(c) Place the cylinder head on wooden blocks.

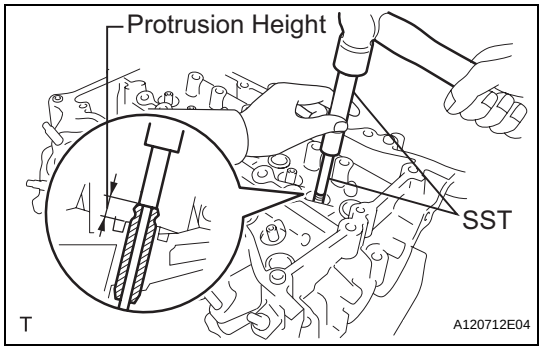

(d) Using SST, tap in new valve guide bushes to the specified protrusion height.
SST 09201-10000 (09201-01050), 09950-70010 (09951-07100)
Protrusion height:
9.30 to 9.70 mm (0.3661 to 0.3819 in.)

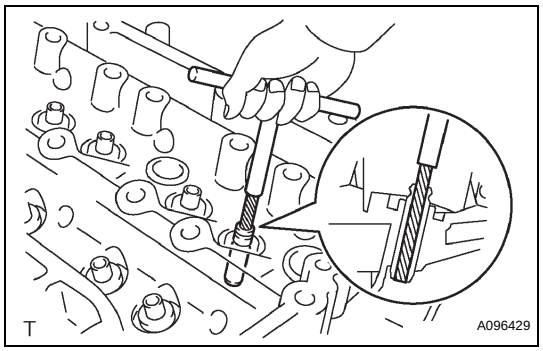

(e) Using a sharp 5.5 mm reamer, ream the valve guide bushings to obtain the specified clearance.
Standard oil clearance:
0.030 to 0.065 mm (0.0012 to 0.0026 in.)

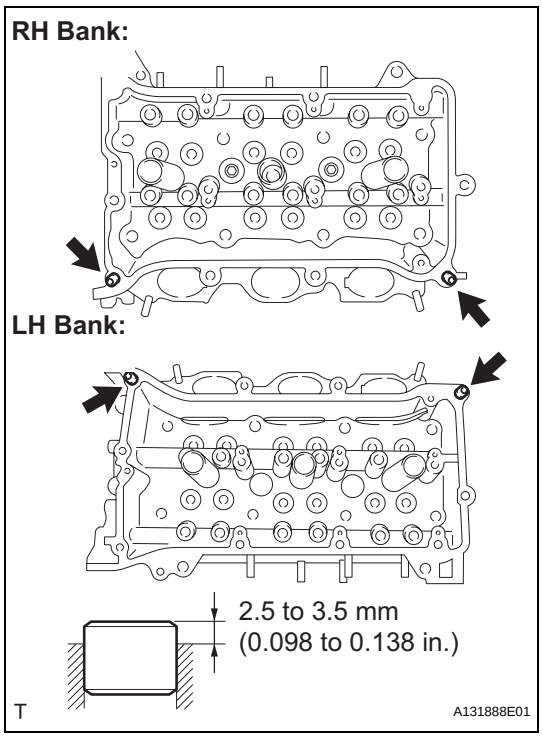

13. INSTALL RING PIN

(a) Using a plastic hammer, tap in new ring pins to the specified protrusion height.
Specified protrusion height:
2.5 to 3.5 mm (0.098 to 0.138 in.)

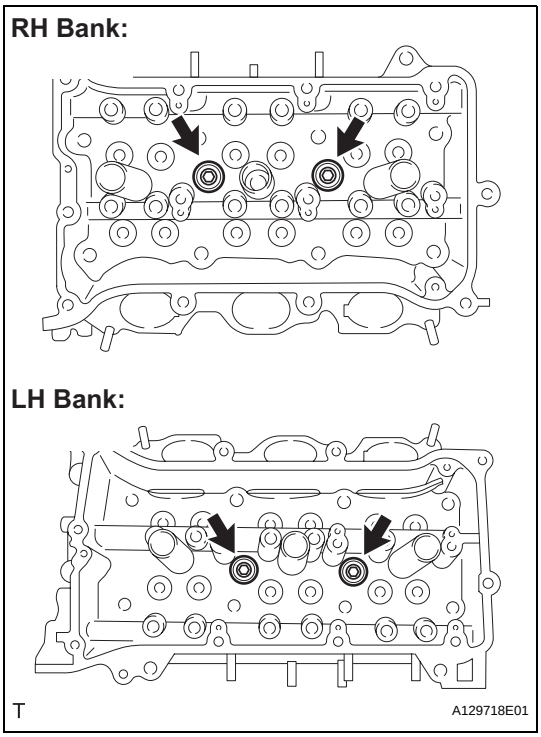

14. INSTALL NO. 1 STRAIGHT SCREW PLUG

(a) Using a 10 mm hexagon wrench, install 4 new gaskets and the straight screw plugs.
Torque: 44 N*m (449 kgf*cm, 32 ft.*lbf)

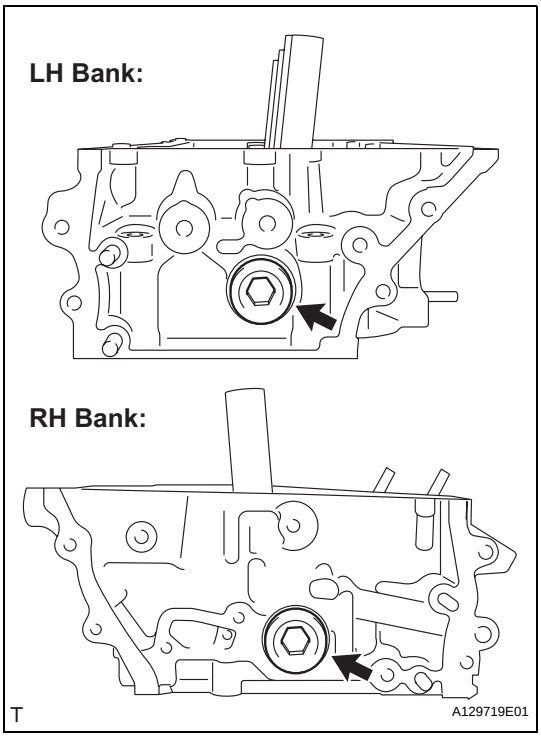

15. INSTALL NO. 2 STRAIGHT SCREW PLUG

(a) Using a 14 mm hexagon wrench, install 2 new gaskets and the 2 straight screw plugs.
Torque: 80 N*m (816 kgf*cm, 59 ft.*lbf)

16. INSTALL STUD BOLT

NOTICE:
If the stud bolt is deformed or the threads are damaged, replace it.

(a) Using E6 and E8 "TORX" sockets, install the stud bolts.

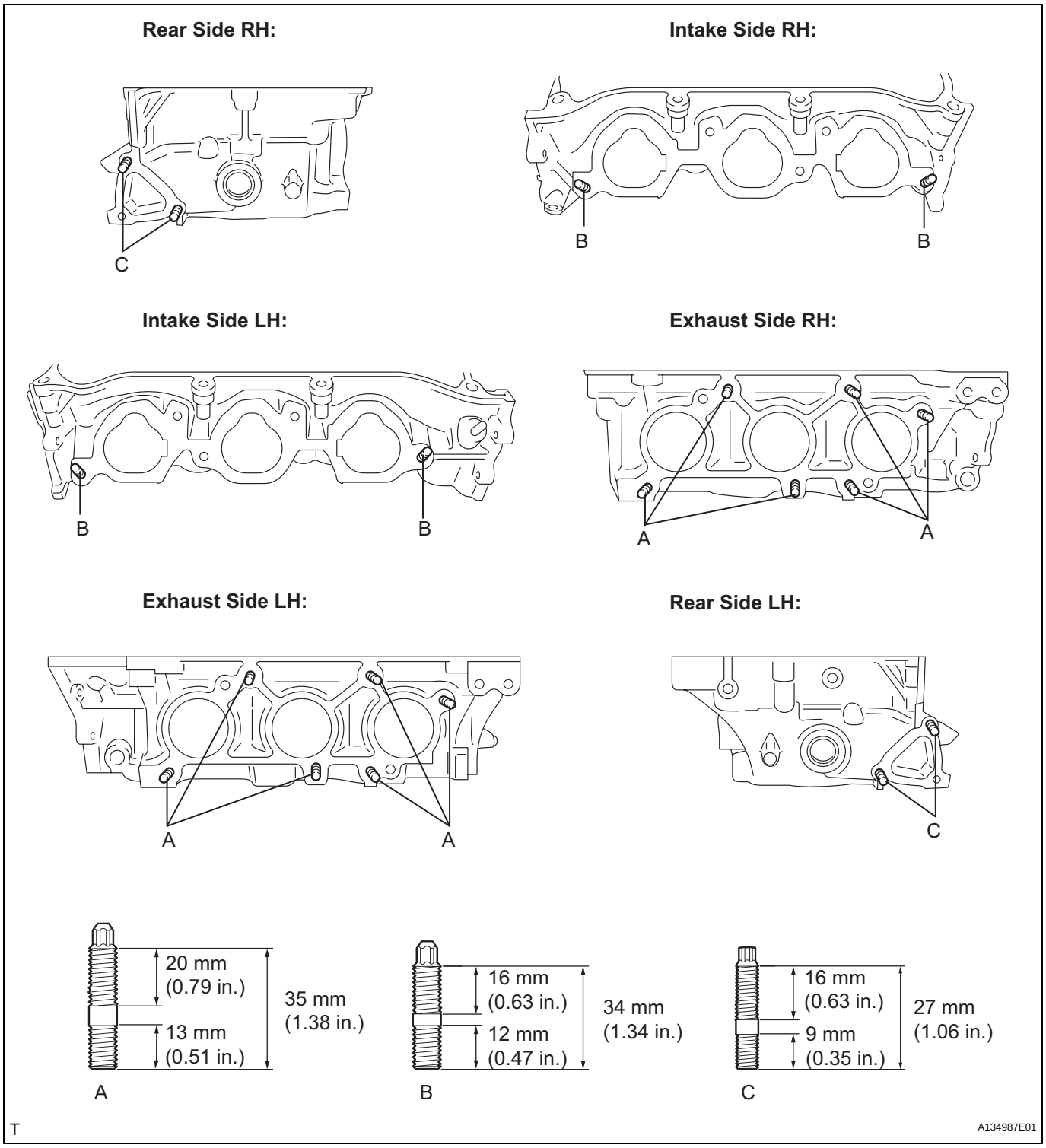

Torque: 10 N*m (102 kgf*cm, 7 ft.*lbf) for bolts A and B
4.0 N*m (41 kgf*cm, 35 in.*lbf) for bolt C

EM

17. INSTALL STRAIGHT PIN

(a) Using a plastic hammer, tap in new straight pins as shown in the illustration.

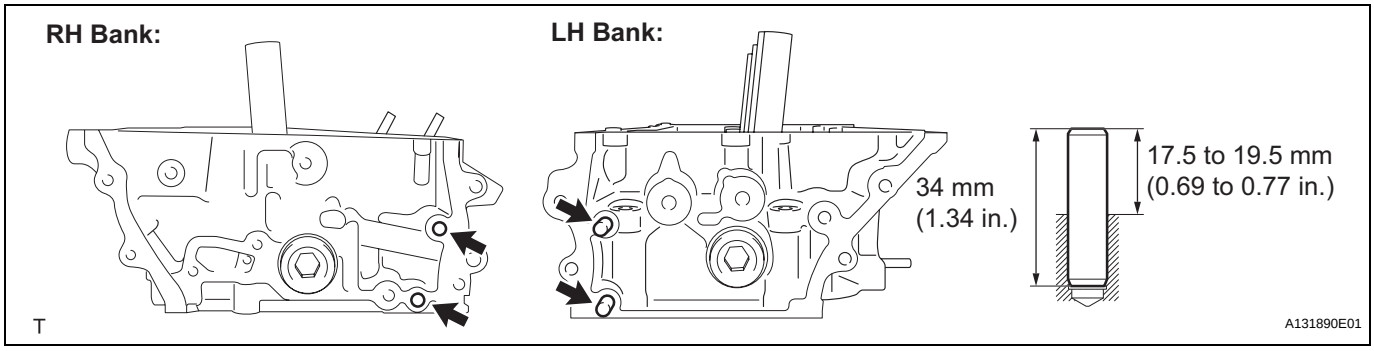

Protrusion height:
17.5 to 19.5 mm (0.689 to 0.768 in.)

18. INSTALL VALVE SPRING SEAT

(a) Install the valve spring seats to the cylinder head.

19. INSTALL VALVE STEM OIL SEAL

(a) Apply a light coat of engine oil to new oil seals.
NOTICE:
Pay attention when installing the intake and exhaust oil seals. For example, installing the intake oil seal into the exhaust side or installing the exhaust oil seal to the intake side can cause installation problems later.
HINT:
The intake valve oil seals are gray and the exhaust valve oil seals are black.

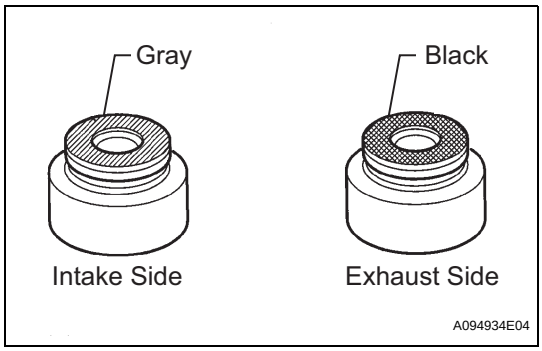

(b) Using SST, push in the oil seals.
SST 09201-41020
NOTICE:
Failure to use SST will cause the seal to be damaged or improperly seated.

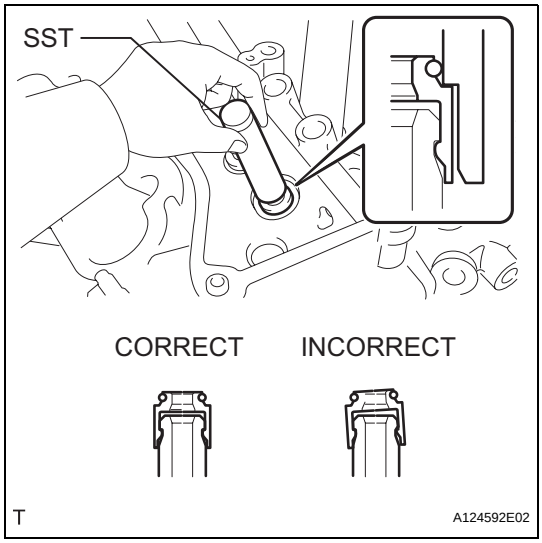

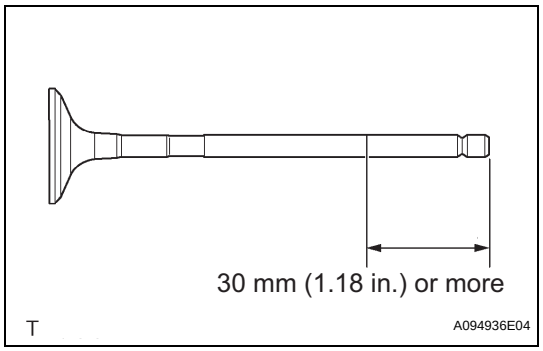

20. INSTALL EXHAUST VALVE

(a) Apply a sufficient coat of engine oil to the tip area of the intake valve shown in the illustration.

(b) Install the valve, compression spring, and spring retainer to the cylinder head.
NOTICE:
Install the same parts in the same combination to the original locations.

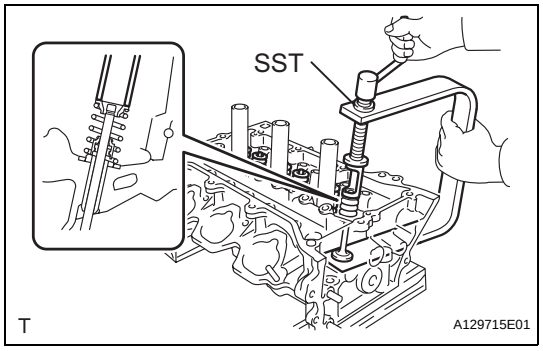

(c) Using SST, compress the spring and install the 2 retainer locks.
SST 09202-70020 (09202-00010)

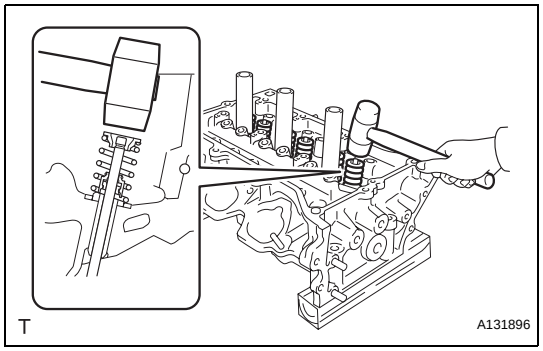

(d) Using a plastic hammer, lightly tap the valve stem tip to ensure a proper fit.
NOTICE:
Be careful not to damage the retainer.

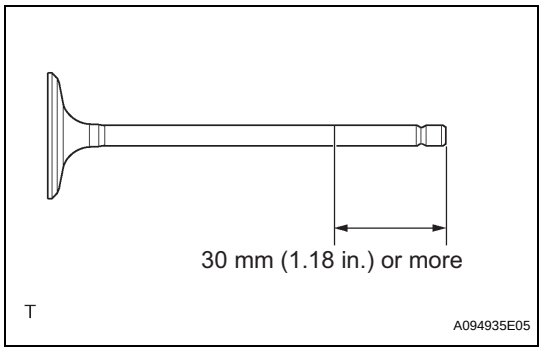

21. INSTALL INTAKE VALVE

(a) Apply a sufficient coat of engine oil to the tip area of the intake valve shown in the illustration.

(b) Install the valve, compression spring, and spring retainer to the cylinder head.
NOTICE:
Install the same parts in the same combination to the original locations.

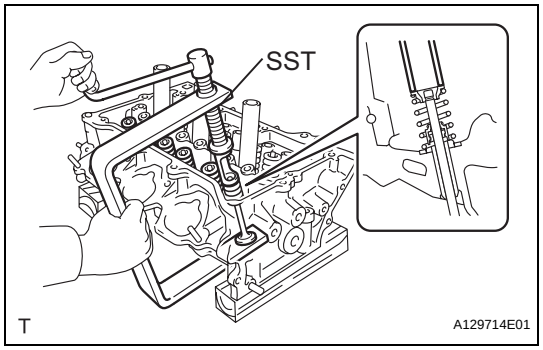

(c) Using SST, compress the spring and install the 2 retainer locks.
SST 09202-70020 (09202-00010)

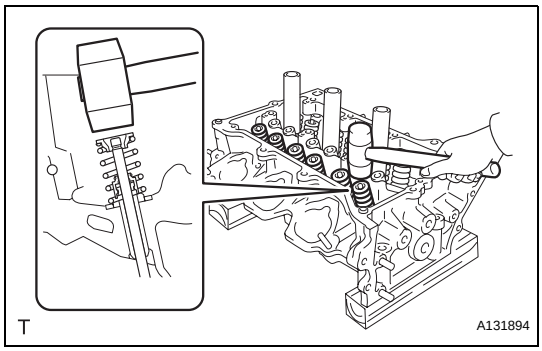

(d) Using a plastic hammer, lightly tap the valve stem tip to ensure a proper fit.
NOTICE:
Be careful not to damage the retainer.

22. INSTALL VALVE STEM CAP

(a) Apply a light coat of engine oil to the valve stem caps.

(b) Install the valve stem caps on the valves.

23. INSTALL ENGINE REAR OIL SEAL

(a) Place the oil seal retainer on wooden blocks.

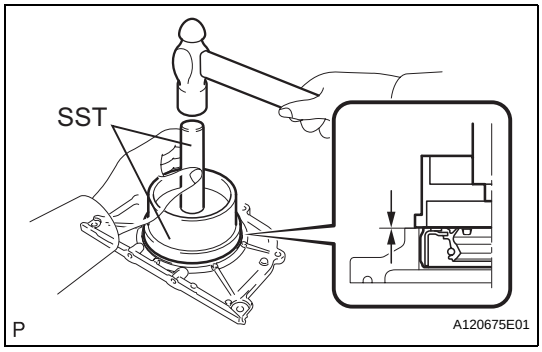

(b) Using SST, tap in a new oil seal until its surface is flush with the oil seal retainer edge.
SST 09223-15030, 09950-70010 (09951-07100)
NOTICE:
- **Keep the lip free of foreign matter.**
- **Do not tap on the oil seal at an angle.**

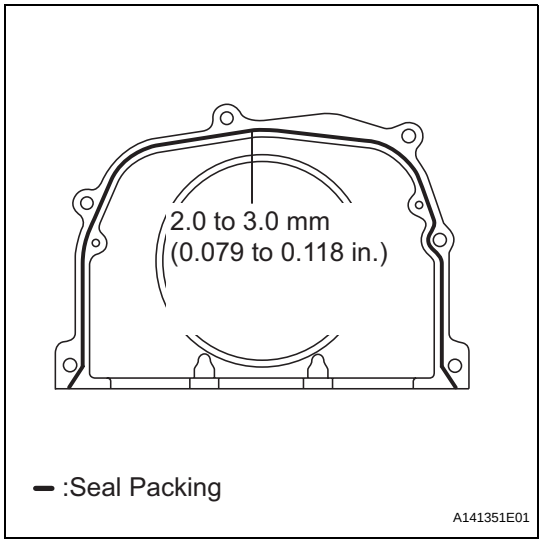

24. INSTALL ENGINE REAR OIL SEAL RETAINER

(a) Apply seal packing in a continuous line as shown in the illustration.
Seal packing:
Toyota Genuine Seal Packing Black, Three Bond 1207B or equivalent
Seal Diameter:
2.0 to 3.0 mm (0.079 to 0.118 in.)
NOTICE:
- **Remove any oil from the contact surface.**
- **Install the oil seal retainer within 3 minutes after applying seal packing.**
- **Do not start the engine for at least 2 hours after installation.**

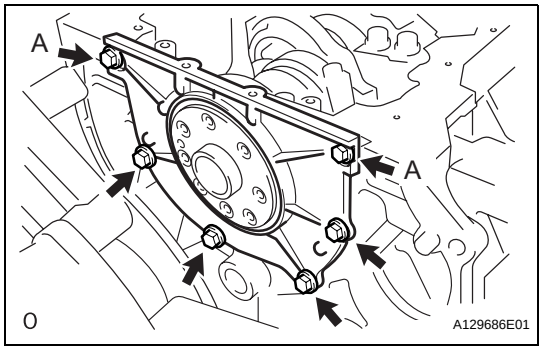

(b) Install the oil seal retainer with the 6 bolts.
Torque: 10 N*m (102 kgf*cm, 7 ft.*lbf)
NOTICE:
Be sure to apply adhesive 1324 to the bolts in the places indicated by A before installing them.
Adhesive:
Toyota Genuine Adhesive 1324, Three Bond 1324 or equivalent

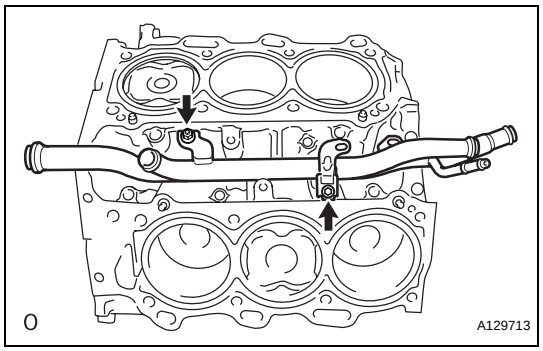

25. INSTALL WATER INLET PIPE

(a) Install the water inlet pipe with the 2 bolts.
Torque: 10 N*m (102 kgf*cm, 7 ft.*lbf)

(b) Install the No. 1 water by-pass hose.

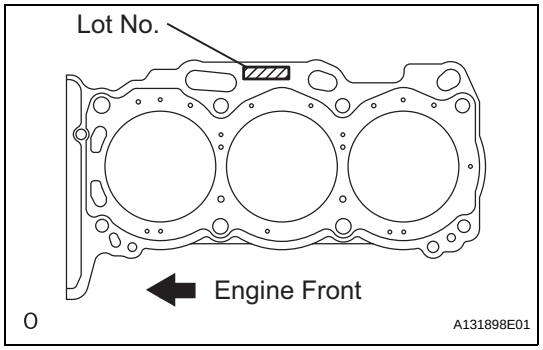

26. INSTALL CYLINDER HEAD SUB-ASSEMBLY RH

(a) Place the cylinder head gasket on the cylinder block surface with the Lot No. stamp upward.
NOTICE:
- **Be sure to install the gasket in the correct direction.**
- **Gently place the cylinder head in order not to damage the gasket with the bottom part of the cylinder head.**

(b) Place the cylinder head on the cylinder block.
NOTICE:
Be careful not to allow oil to adhere to the bottom part of the cylinder head.
HINT:
The cylinder head bolts are tightened in 3 progressive steps.

(c) Apply a light coat of engine oil to the threads and under the heads of the cylinder head bolts.

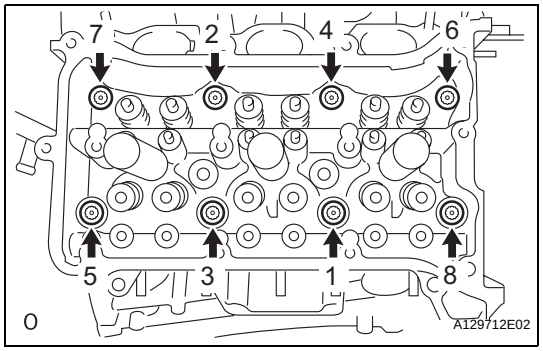

(d) Step 1
(1) Using a 10 mm bi-hexagon wrench, install and uniformly tighten the 8 cylinder head bolts with the plate washers in several steps and in the sequence shown in the illustration.
Torque: 36 N*m (367 kgf*cm, 27 ft.*lbf)

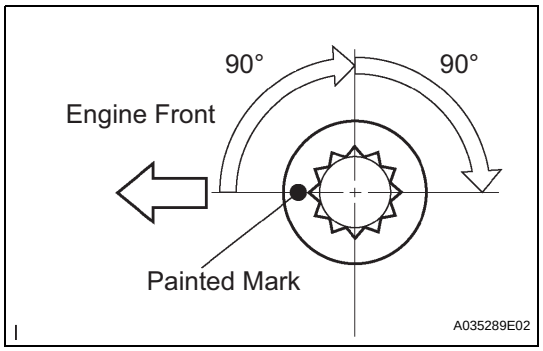

(e) Step 2
(1) Mark the cylinder head bolt head with paint as shown in the illustration.
(2) Tighten the cylinder head bolts another 90°.

(f) Step 3
(1) Tighten the cylinder head bolts an additional 90°.
(2) Check that the painted mark is now facing rearward.

EM

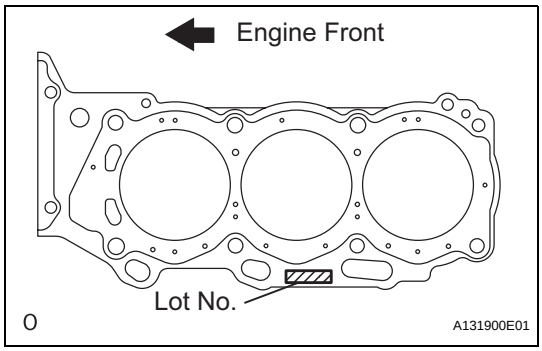

27. INSTALL CYLINDER HEAD SUB-ASSEMBLY LH

(a) Place the cylinder head gasket on the cylinder block surface with the Lot No. stamp upward.

NOTICE:

- **Be sure to install the gasket in the correct direction.**
- **Gently place the cylinder head in order not to damage the gasket with the bottom part of the cylinder head.**

(b) Place the cylinder head on the cylinder block.

NOTICE:

Be careful not to allow oil to adhere to the bottom part of the cylinder head.

HINT:

The cylinder head bolts are tightened in 3 progressive steps.

(c) Apply a light coat of engine oil to the threads and under the heads of the cylinder head bolts.

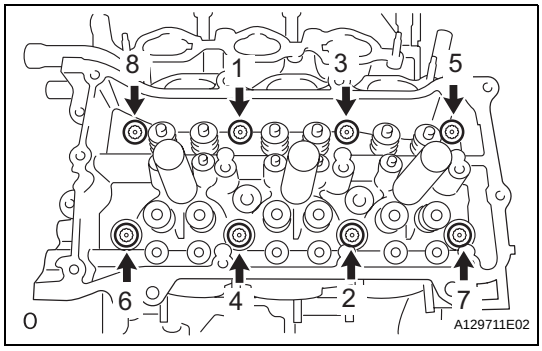

(d) Step 1

(1) Using a 10 mm bi-hexagon wrench, install and uniformly tighten the 8 cylinder head bolts with the plate washers in several steps and in the sequence shown in the illustration.

Torque: 36 N*m (367 kgf*cm, 27 ft.*lbf)

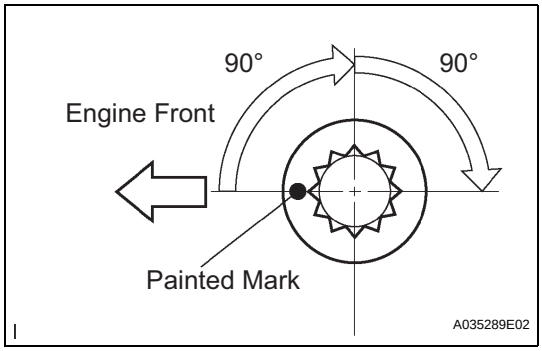

(e) Step 2

(1) Mark the cylinder head bolt head with paint as shown in the illustration.

(2) Tighten the cylinder head bolts another 90°.

(f) Step 3

(1) Tighten the cylinder head bolts an additional 90°.

(2) Check that the painted mark is now facing rearward.

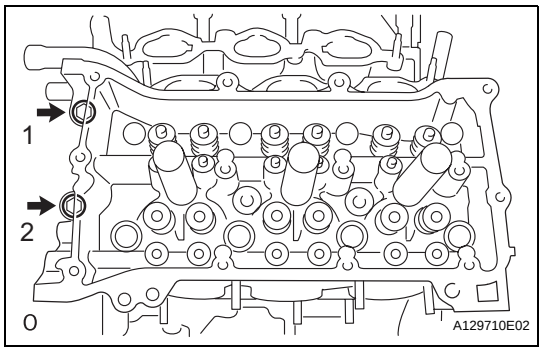

(g) Tighten the 2 bolts in the order shown in the illustration.

Torque: 30 N*m (306 kgf*cm, 22 ft.*lbf)

28. INSTALL VALVE LASH ADJUSTER ASSEMBLY

NOTICE:

- **Keep the lash adjuster free of dirt and foreign objects.**
- **Only use clean engine oil.**

(a) Place the lash adjuster into a container filled with engine oil.

EM

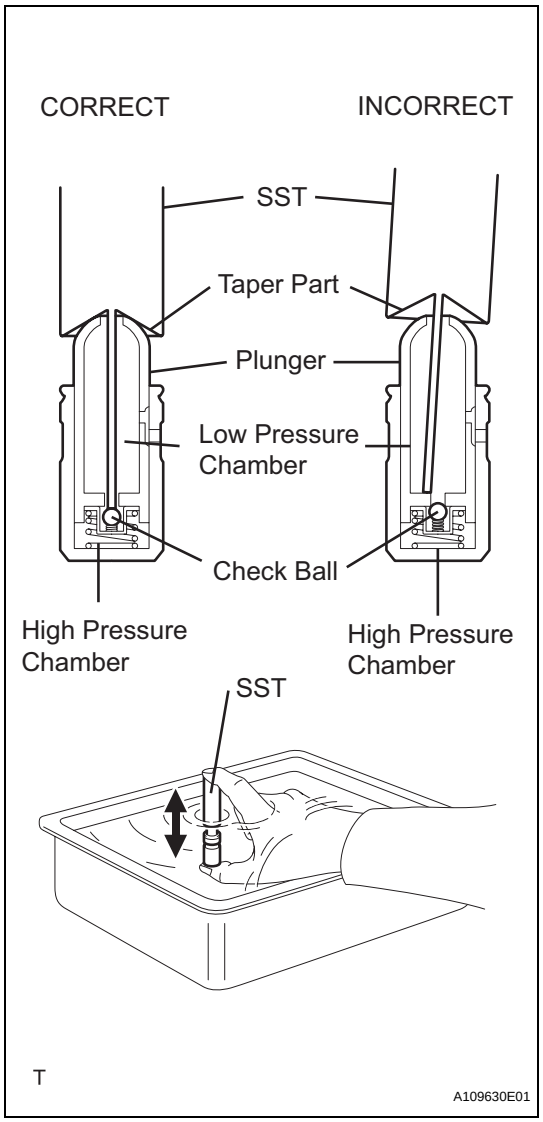

(b) Insert the SST's tip into the lash adjuster's plunger and use the tip to press down on the check ball inside the plunger.
SST 09276-75010

(c) Squeeze the SST and lash adjuster together to move the plunger up and down 5 to 6 times.

(d) Check the movement of the plunger and bleed the air.
OK:
Plunger moves up and down.
NOTICE:
When bleeding air from the high-pressure chamber, make sure that the tip of the SST is actually pressing the check ball as shown in the illustration. If the check ball is not pressed, air will not be bled.

(e) After bleeding the air, remove the SST. Then, try to press the plunger quickly and firmly with a finger.
OK:
Plunger is very difficult to move.
If the result is not as specified, replace the lash adjuster.

(f) Install the lash adjusters.
NOTICE:
Install the lash adjuster to the same place where it was removed from.

29. INSTALL NO. 1 VALVE ROCKER ARM SUB-ASSEMBLY

(a) Apply engine oil to the lash adjuster tip and valve stem cap end.

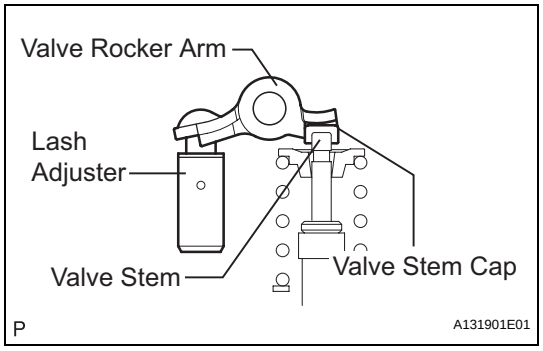

(b) Make sure that the valve rocker arms are installed as shown in the illustration.

30. INSTALL CAMSHAFT BEARING CAP (for Bank 1)

(a) Apply engine oil to the camshaft journals, camshaft housing, and bearing caps.

(b) Install the camshaft and No. 2 camshaft to the camshaft housing RH.

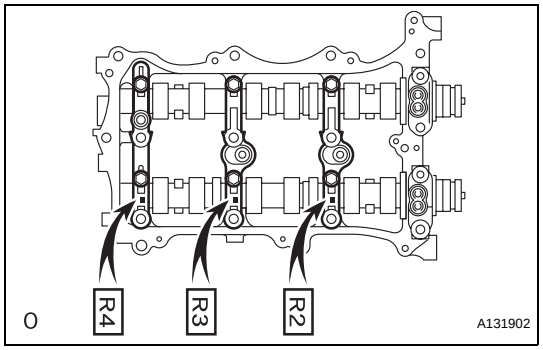

(c) Make sure of the marks and numbers on the camshaft bearing caps and place them in each proper position and direction.

EM

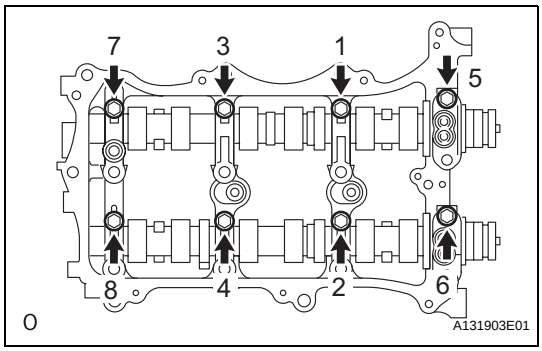

(d) Temporarily tighten the 8 bolts in the order shown in the illustration.
Torque: 10 N*m (102 kgf*cm, 7 ft.*lbf)

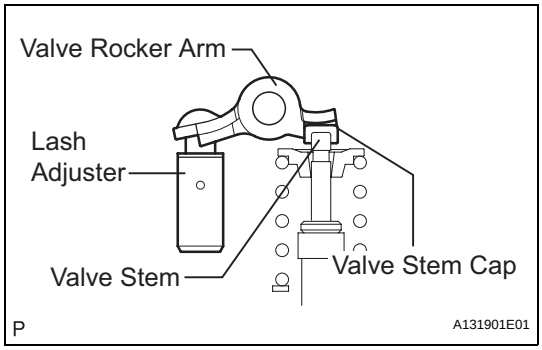

31. INSTALL CAMSHAFT HOUSING SUB-ASSEMBLY RH

(a) Make sure that the valve rocker arm is installed as shown in the illustration.

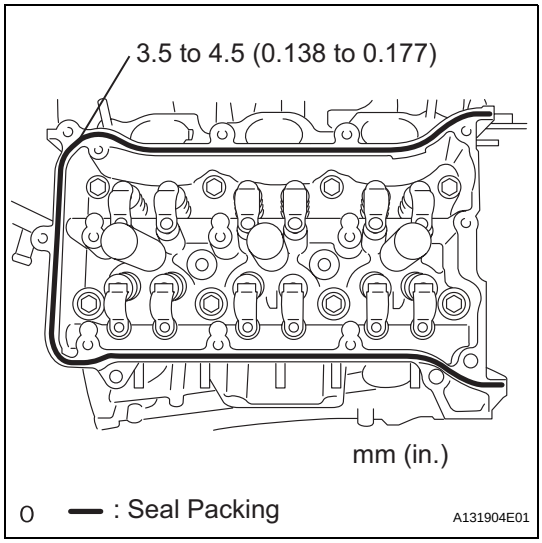

(b) Apply seal packing in a continuous line as shown in the illustration.
Seal packing:
Toyota Genuine Seal Packing Black, Three Bond 1207B or equivalent
Seal diameter:
3.5 to 4.5 mm (0.138 to 0.177 in.)
NOTICE:
- **Remove any oil from the contact surface.**
- **Install the camshaft housing sub-assembly RH within 3 minutes.**
- **Do not start the engine for at least 2 hours after installing.**

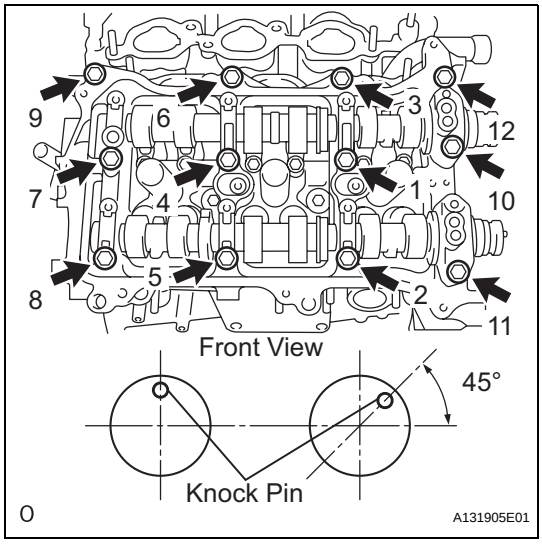

(c) Install the camshaft housing RH and tighten the 12 bolts in the order shown in the illustration.
Torque: 28 N*m (286 kgf*cm, 21 ft.*lbf)
NOTICE:
- **When installing the camshaft housing RH, it is necessary to correctly position the camshafts as shown in the illustration. Failure to correctly position these parts may result in damage due to contact between the pistons and valves. If a camshaft is rotated with a piston at TDC, valve contact will occur.**
- **If any of the bolts are loosened during installation, remove the camshaft housing, clean the installation surfaces, and reapply seal packing.**

- **If the camshaft housing is removed because any of the bolts are loosened during installation, make sure that the previously applied seal packing does not enter any oil passages.**

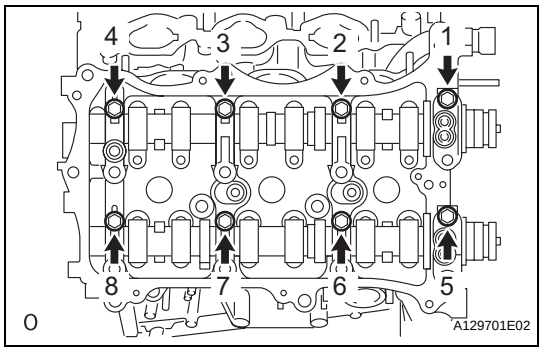

(d) Tighten the 8 bolts in the order shown in the illustration.
Torque: 16 N*m (163 kgf*cm, 12 ft.*lbf)

32. INSTALL CAMSHAFT BEARING CAP (for Bank 2)

(a) Apply engine oil to the camshaft journals, camshaft housing, and bearing caps.

(b) Install the No. 3 camshaft and No. 4 camshaft to the camshaft housing LH.

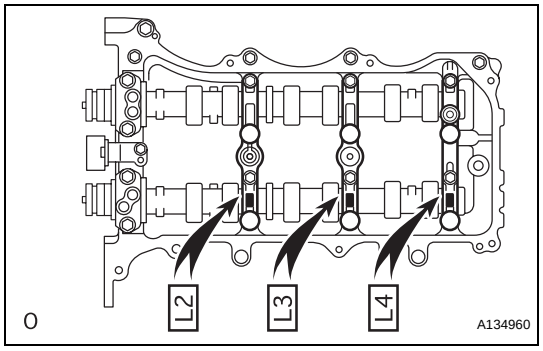

(c) Make sure of the marks and numbers on the camshaft bearing caps and place them in each proper position and direction.

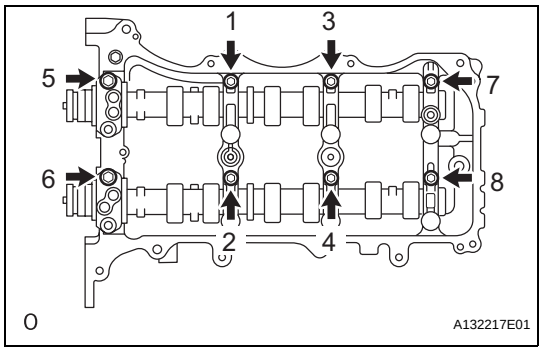

(d) Temporarily tighten the 8 bolts in the order shown in the illustration.
Torque: 10 N*m (102 kgf*cm, 7 ft.*lbf)

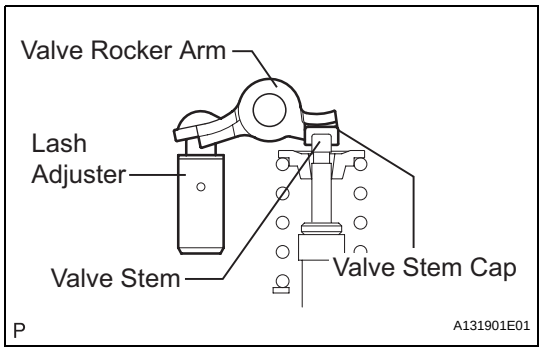

33. INSTALL CAMSHAFT HOUSING SUB-ASSEMBLY LH

(a) Make sure that the valve rocker arm is installed as shown in the illustration.

EM

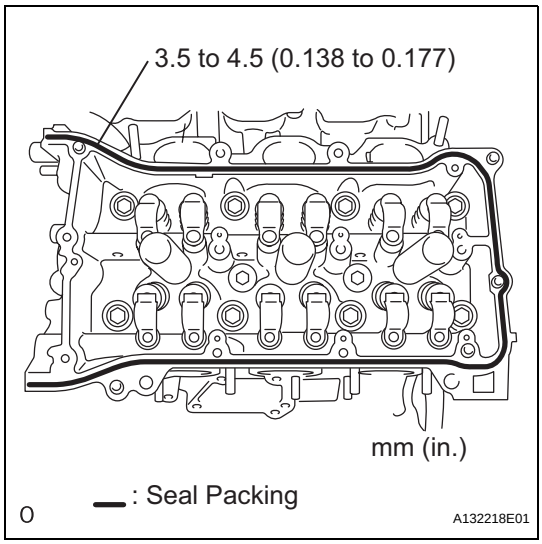

(b) Apply seal packing in a continuous line as shown in the illustration.
Seal packing:
Toyota Genuine Seal Packing Black, Three Bond 1207B or equivalent
Seal diameter:
3.5 to 4.5 mm (0.138 to 0.177 in.)
NOTICE:
- **Remove any oil from the contact surface.**
- **Install the camshaft housing sub-assembly LH within 3 minutes.**
- **Do not start the engine for at least 2 hours after installing.**

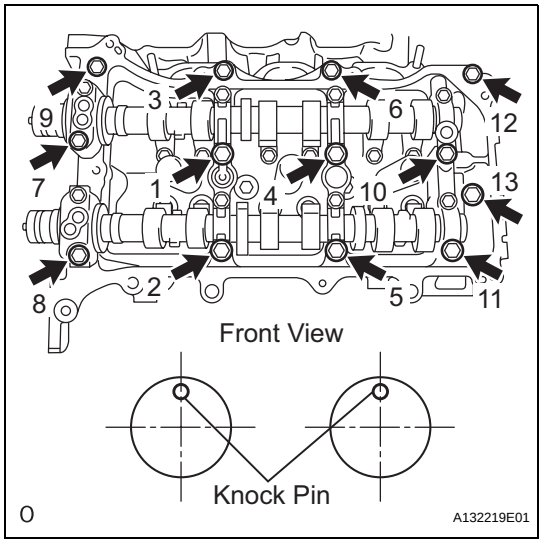

(c) Install the camshaft housing LH and tighten the 13 bolts in the order shown in the illustration.
Torque: 28 N*m (286 kgf*cm, 21 ft.*lbf)
NOTICE:
- **When installing the camshaft housing LH, it is necessary to correctly position the camshafts as shown in the illustration. Failure to correctly position these parts may result in damage due to contact between the pistons and valves. If a camshaft is rotated with a piston at TDC, valve contact will occur.**
- **If any of the bolts are loosened during installation, remove the camshaft housing, clean the installation surfaces, and reapply seal packing.**
- **If the camshaft housing is removed because any of the bolts are loosened during installation, make sure that the previously applied seal packing does not enter any oil passages.**

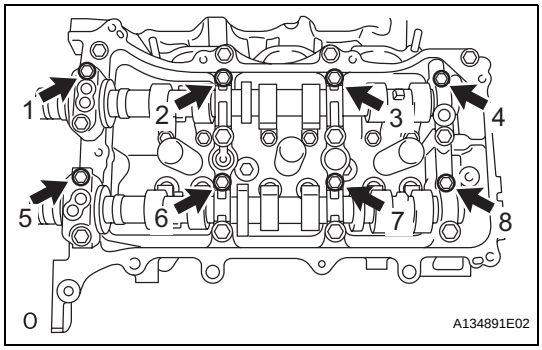

(d) Tighten the 8 bolts in the order shown in the illustration.
Torque: 16 N*m (163 kgf*cm, 12 ft.*lbf)

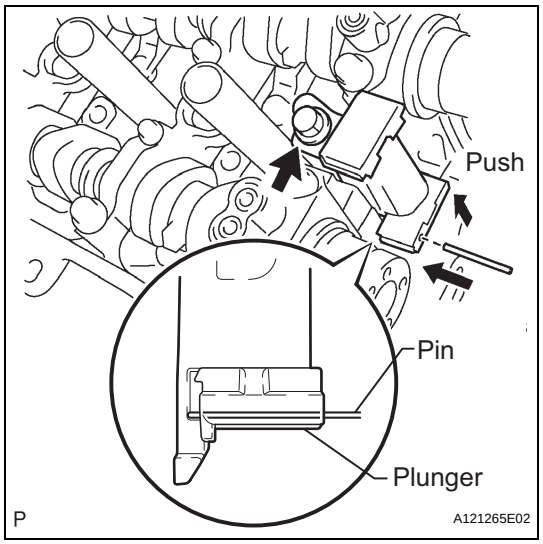

34. INSTALL NO. 2 CHAIN TENSIONER ASSEMBLY

(a) Install the No. 2 chain tensioner with the bolt.
Torque: 21 N*m (214 kgf*cm, 15 ft.*lbf)

(b) While pushing in the tensioner, insert a pin of ϕ 1.0 mm (0.039 in.) into the hole to fix it.

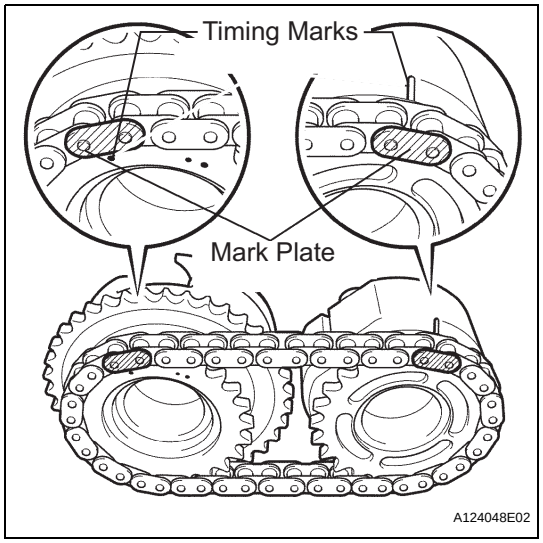

35. INSTALL CAMSHAFT TIMING GEARS AND NO. 2 CHAIN (for Bank 1)

(a) Align the mark plate (yellow) with the timing marks (1-dot mark) of the camshaft timing gears as shown in the illustration.

(b) Apply a light coat of engine oil to the bolt threads and bolt-seating surface.

(c) Align the knock pin of the camshaft with the pin hole of the camshaft timing gear. Install the camshaft timing gear and camshaft timing exhaust gear RH with the No. 2 chain installed.

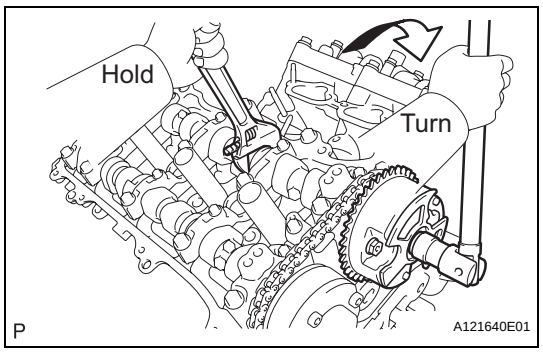

(d) Hold the hexagonal portion of the camshaft with a wrench, and tighten the 2 bolts.
Torque: 100 N*m (1,020 kgf*cm, 74 ft.*lbf)

(e) Remove the pin from the chain tensioner.

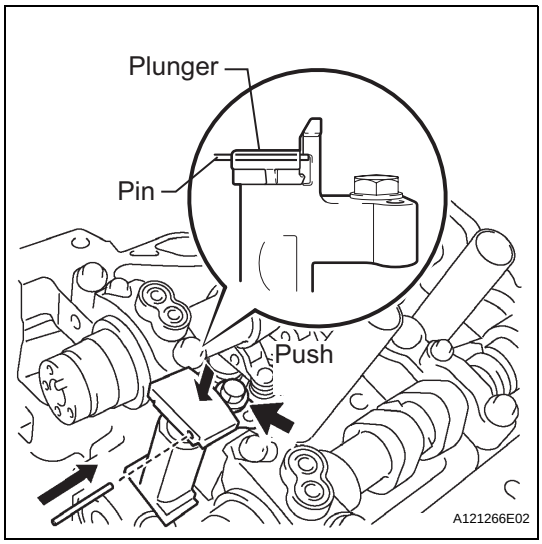

36. INSTALL NO. 3 CHAIN TENSIONER ASSEMBLY

(a) Install the chain tensioner with the bolt.
Torque: 21 N*m (214 kgf*cm, 15 ft.*lbf)

(b) While pushing in the tensioner, insert a pin of ϕ 1.0 mm (0.039 in.) into the hole to hold it.

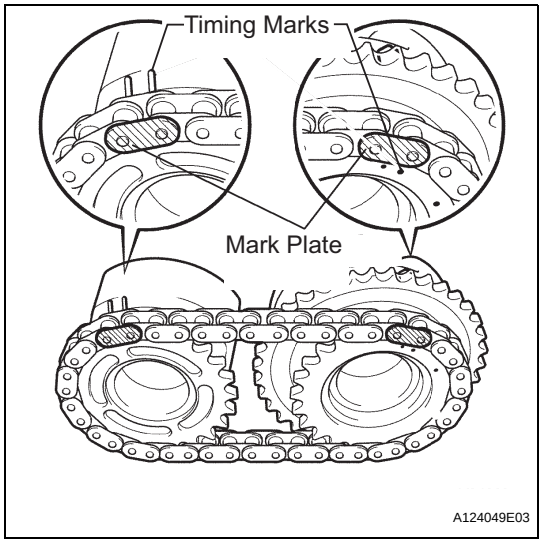

37. INSTALL CAMSHAFT TIMING GEARS AND NO. 2 CHAIN (for Bank 2)

(a) Align the mark plate (yellow) with the timing marks (2-dot mark) of the camshaft timing gears as shown in the illustration.

(b) Apply a light coat of engine oil to the bolt threads and bolt-seating surface.

(c) Align the knock pin of the camshaft with the pin hole of the camshaft timing gear. Install the camshaft timing gear and camshaft timing exhaust gear LH with the No. 2 chain installed.

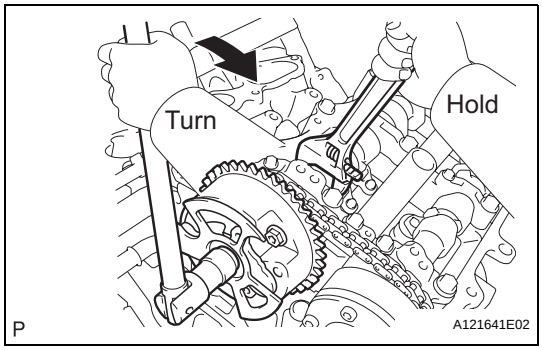

(d) Hold the hexagonal portion of the camshaft with a wrench, and tighten the 2 bolts.
Torque: 100 N*m (1,020 kgf*cm, 74 ft.*lbf)

(e) Remove the pin from the chain tensioner.

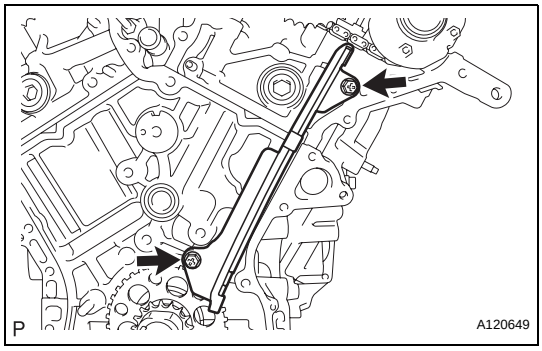

38. INSTALL NO. 1 CHAIN VIBRATION DAMPER

(a) Install the chain vibration damper with the 2 bolts.
Torque: 23 N*m (230 kgf*cm, 17 ft.*lbf)

39. INSTALL NO. 2 CHAIN VIBRATION DAMPER

(a) Install the 2 chain vibration dampers.

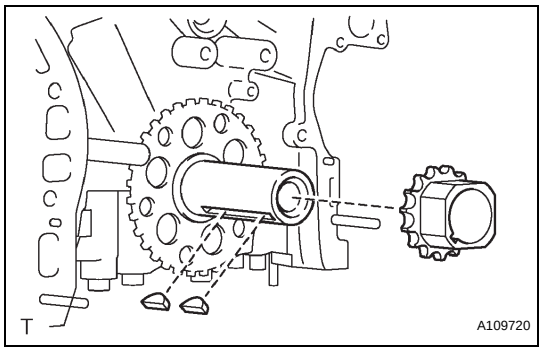

40. INSTALL CRANKSHAFT TIMING SPROCKET

(a) Install the 2 timing gear set keys and timing sprocket as shown in the illustration.

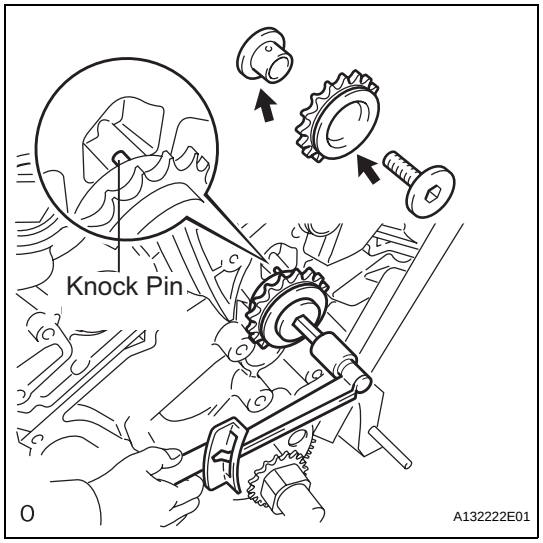

41. INSTALL IDLE SPROCKET ASSEMBLY

(a) Apply a light coat of engine oil to the rotating surface of the No. 1 idle gear shaft.

(b) Temporarily install the No. 1 idle gear shaft and idle sprocket with the No. 2 idle gear shaft while aligning the knock pin of the No. 1 idle gear with the knock pin groove of the cylinder block.

NOTICE:

Be sure to install the idle gear shaft in the correct direction.

HINT:

Check that no foreign objects are on the idle gear shafts No. 1 and No. 2.

(c) Using a 10 mm hexagon wrench, tighten the No. 2 idle gear shaft.

Torque: 60 N*m (612 kgf*cm, 44 ft.*lbf)

HINT:

After installing the idle sprocket assembly, check that the idle sprocket turns smoothly.

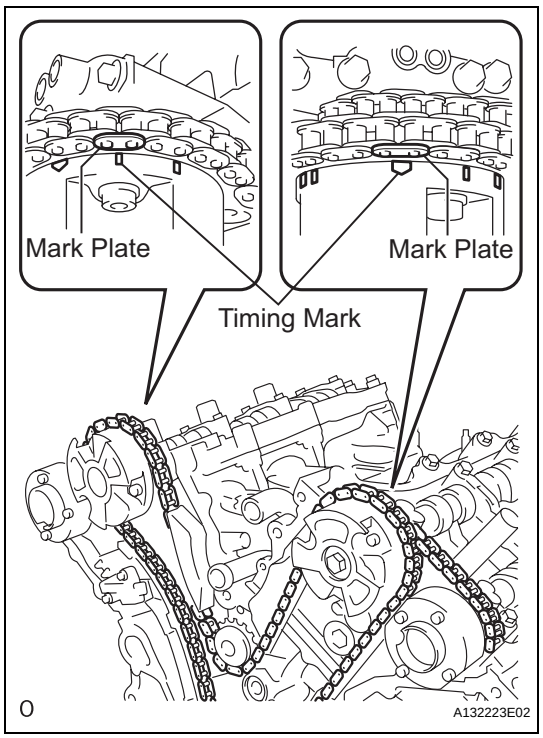

42. INSTALL CHAIN SUB-ASSEMBLY

(a) Align the mark plate and timing marks as shown in the illustration and install the chain.

HINT:

The color of the camshaft mark plate is orange.

EM

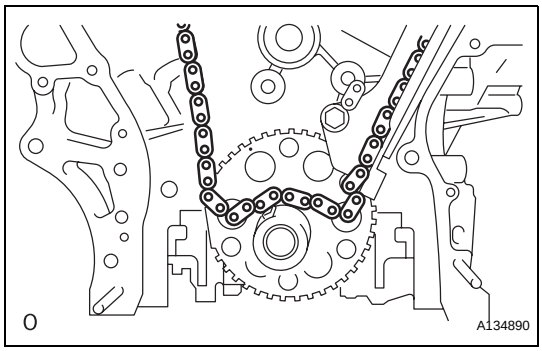

(b) Do not pass the chain over the crankshaft, just put it on it.

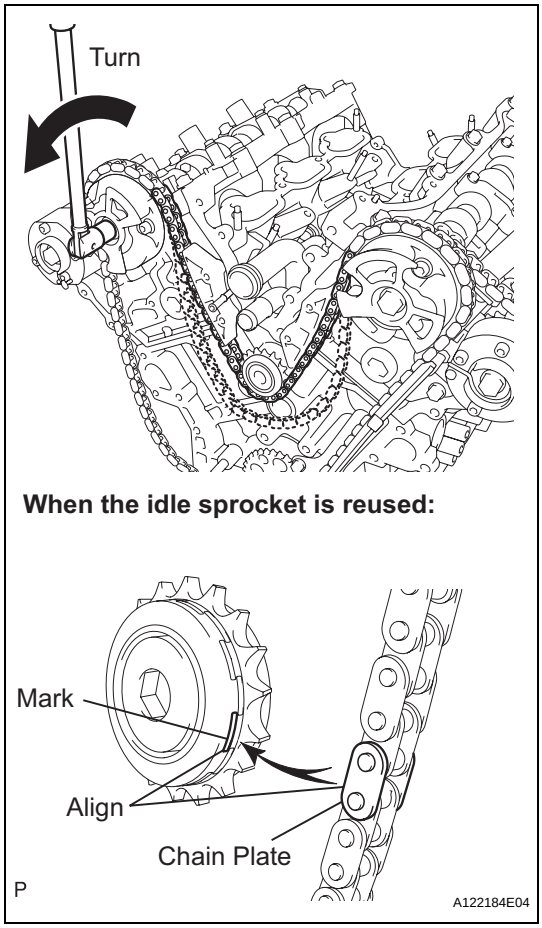

(c) Turn the camshaft timing gear assembly on the RH bank counterclockwise to tighten the chain between the banks.
NOTICE:
When the idle sprocket is reused, align the chain plate with the mark where the plate had been in order to tighten the chain between the banks.

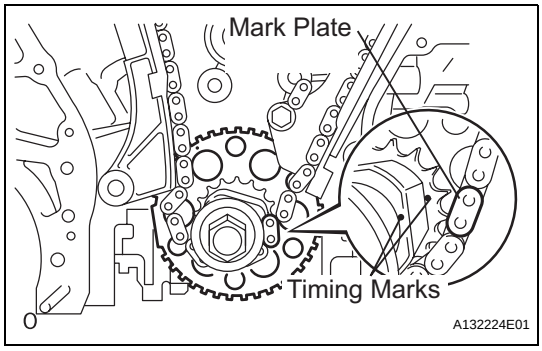

(d) Align the mark plate and timing marks as shown in the illustration and install the chain onto the crankshaft timing sprocket.
HINT:
The color of the crankshaft mark plate is yellow.

(e) Temporarily tighten the pulley set bolt.

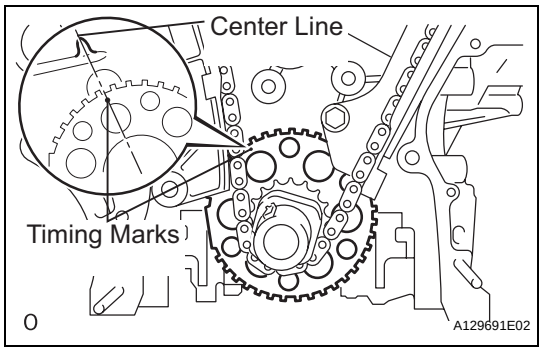

(f) Turn the crankshaft clockwise to set it to the RH block bore center line (TDC / compression).

43. INSTALL CHAIN TENSIONER SLIPPER

(a) Install the chain tensioner slipper.

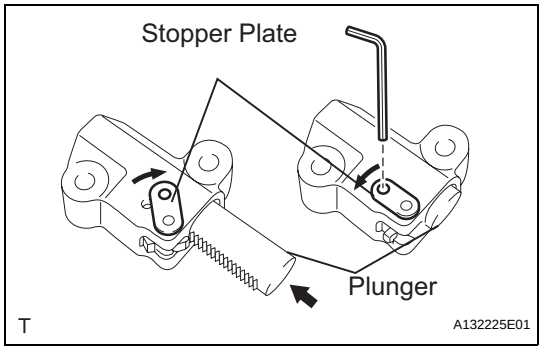

44. INSTALL NO. 1 CHAIN TENSIONER ASSEMBLY

(a) Move the stopper plate upward to release the lock, and push the plunger deep into the tensioner.

(b) Move the stopper plate downward to set the lock, and insert a hexagon wrench into the hole of the stopper plate.

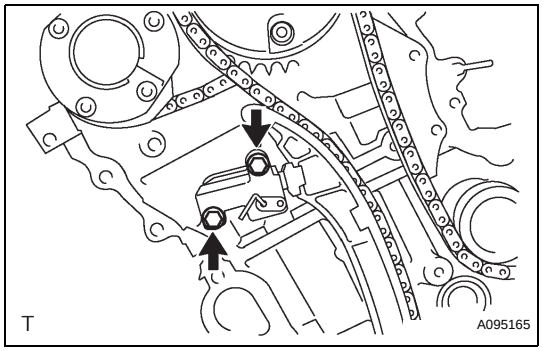

(c) Install the chain tensioner with the 2 bolts.
Torque: 10 N*m (102 kgf*cm, 7 ft.*lbf)

EM

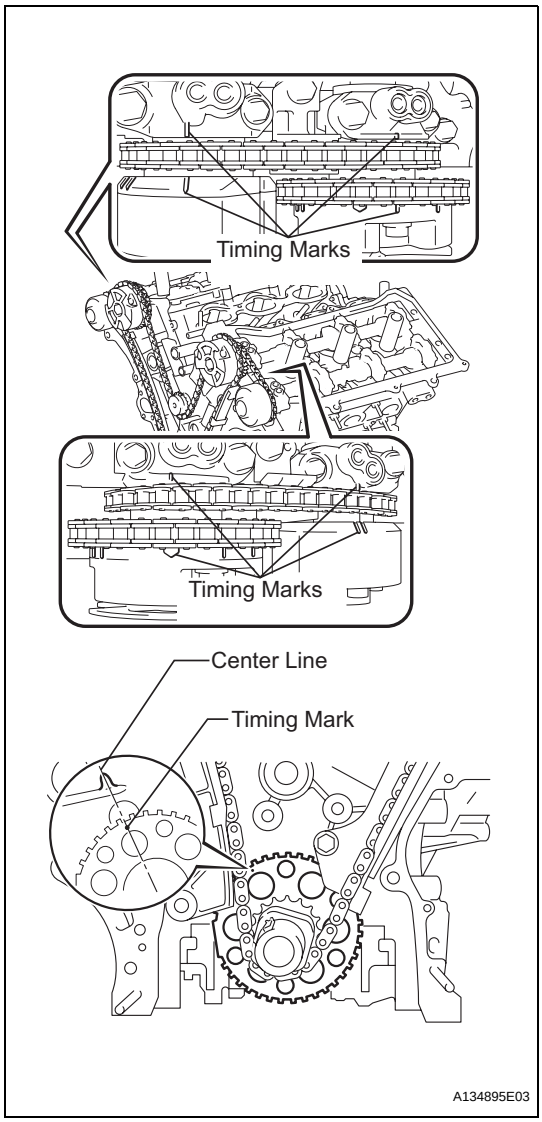

(d) Remove the hexagon wrench of the chain tensioner. Check that each timing mark is aligned with the crankshaft at the TDC / compression.

(e) Remove the pulley set bolt.

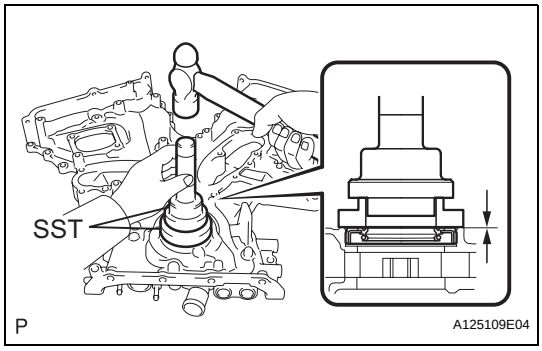

45. INSTALL TIMING CHAIN CASE OIL SEAL

(a) Using SST, tap in a new oil seal until its surface is flush with the timing gear case edge.
SST 09223-22010, 09506-35010
NOTICE:
- **Keep the lip free of foreign matter.**
- **Do not tap on the oil seal at an angle.**
- **Make sure that the oil seal edge does not stick out of the timing chain case.**

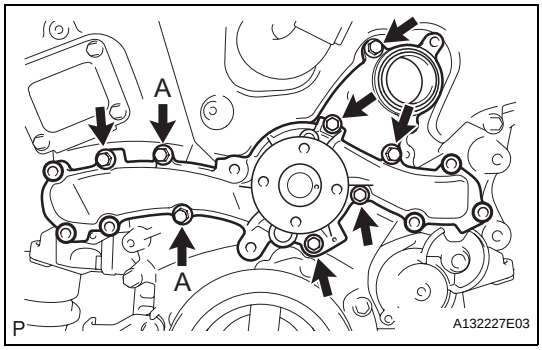

46. INSTALL WATER PUMP ASSEMBLY

(a) Install a new gasket and the water pump with the 8 bolts.
Torque: 9.1 N*m (93 kgf*cm, 81 in.*lbf)
NOTICE:
Be sure to replace the bolts indicated by A with new ones or reuse them after applying adhesive 1344.

47. INSTALL TIMING CHAIN COVER SUB-ASSEMBLY

(a) Apply seal packing in a continuous line to the engine unit as shown in the following illustration.

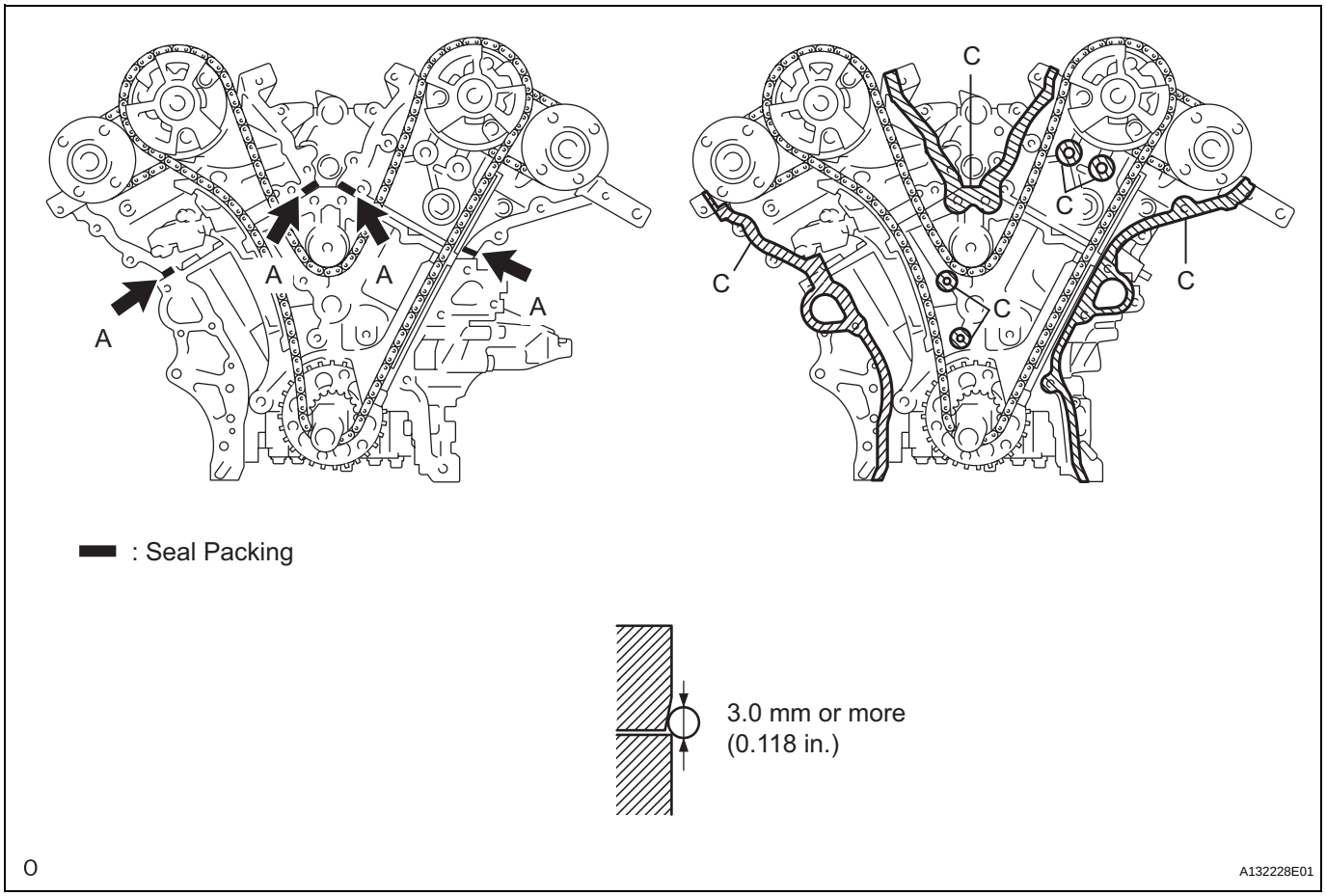

Seal packing:
Toyota Genuine Seal Packing Black, Three Bond 1207B or equivalent
Seal diameter:
3.0 mm (0.118 in.)
NOTICE:

- **Be sure to clean and degrease the contact surfaces, especially the surfaces indicated by C in the illustration.**
- **When the contact surfaces are wet, wipe them with an oil-free cloth before applying seal packing.**
- **Install the chain cover within 3 minutes.**
- **Do not start the engine for at least 2 hours after installing.**

EM

(b) Apply seal packing in a continuous line to the timing chain cover as shown in the following illustration.

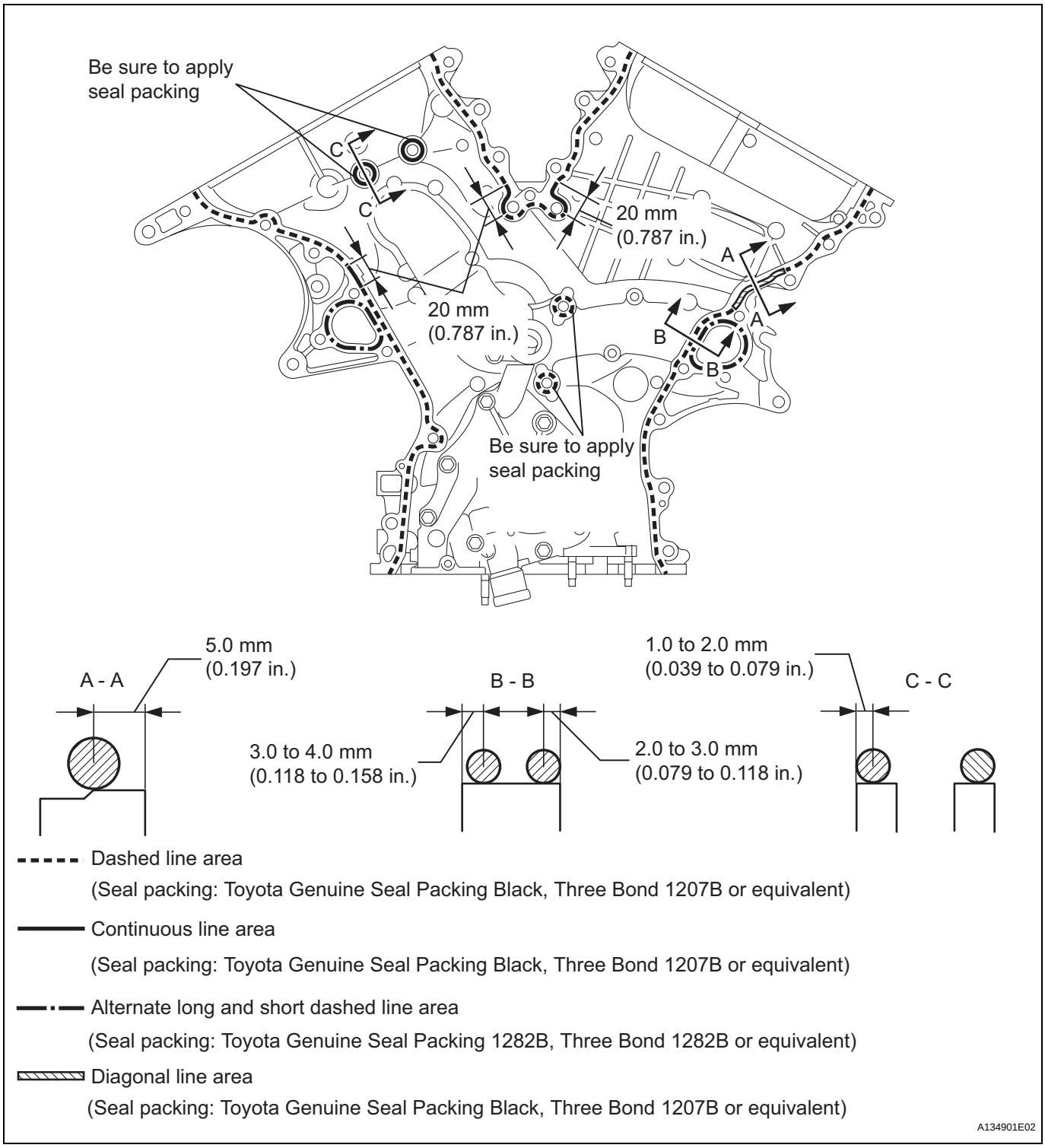

Seal packing:
Toyota Genuine Seal Packing Black, Three Bond 1207B or equivalent
Toyota Genuine Seal Packing Black 1282B, Three Bond 1282B or equivalent

NOTICE:
- **When the contact surfaces are wet, wipe them with an oil-free cloth before applying seal packing.**
- **Install the chain cover within 3 minutes and tighten the bolts within 15 minutes after applying seal packing.**
- **Do not start the engine for at least 2 hours after installing.**

Apply seal packing as follows

Area	Seal Packing Diameter	Application Position from Inside Seal Line
Continuous Line Area	4.5 mm or more (0.177 in.)	3.0 to 4.0 mm (0.118 to 0.158 in.)
Alternate Long and Short Dashed Line Area	3.5 mm or more (0.138 in.)	2.0 to 3.0 mm (0.079 to 0.118 in.)
Dashed Line Area	3.5 mm or more (0.138 in.)	3.0 to 4.0 mm (0.118 to 0.158 in.)
Diagonal Line Area	6.0 mm or more (0.236 in.)	5.0 mm (0.197 in.)

EM

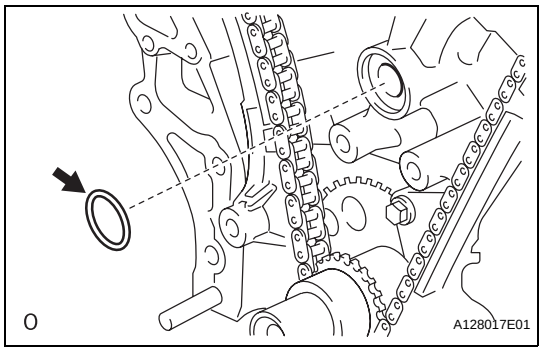

(c) Install a new gasket.

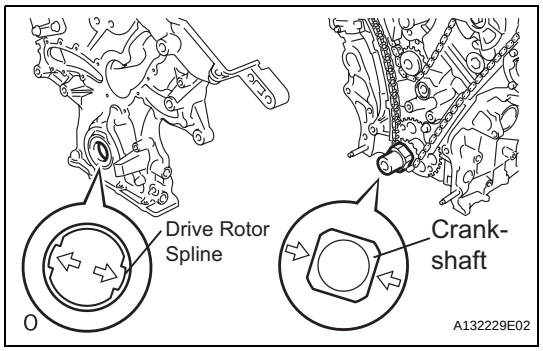

(d) Align the oil pump's drive rotor spline and the crankshaft as shown in the illustration. Install the spline and chain cover to the crankshaft.
(e) Temporarily tighten the timing chain cover with the 23 bolts and 2 nuts.

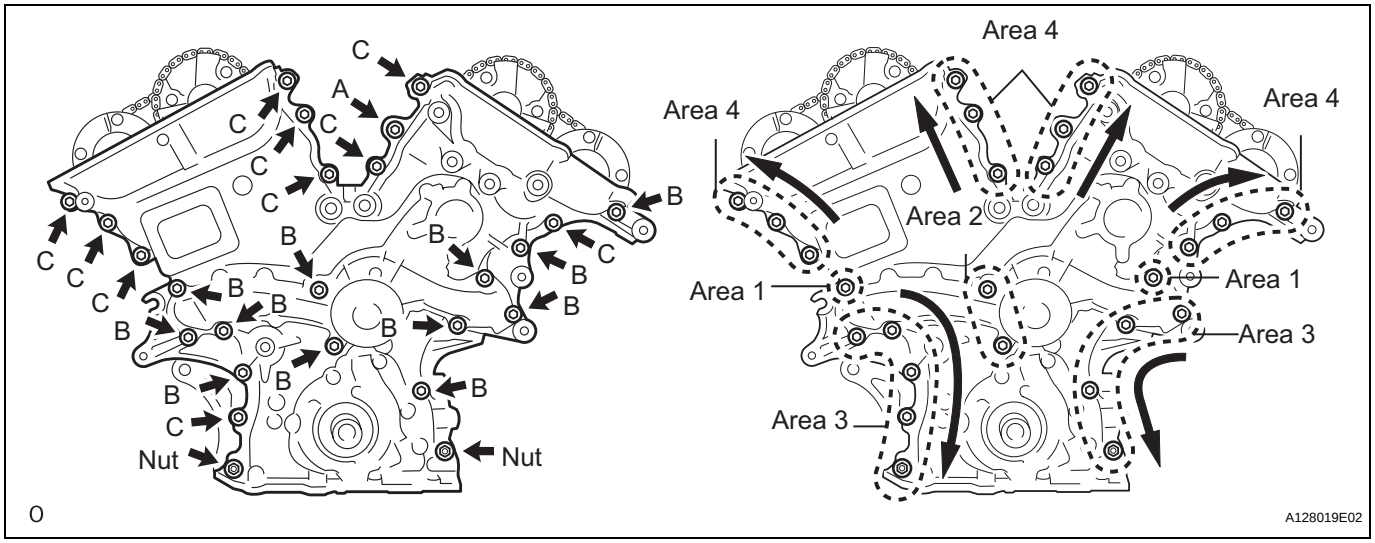

Bolt length

Item	Length
Bolt A	40 mm (1.57 in.)
Bolt B	55 mm (2.17 in.)
Bolt C	25 mm (0.98 in.)

NOTICE:
Make sure that there is no oil on the bolt and nut threads.

(f) Fully tighten the bolts in this order: Area 1 and Area 2.
Torque: 21 N*m (214 kgf*cm, 15 ft.*lbf)

(g) Fully tighten the bolts in Area 3.
Torque: 21 N*m (214 kgf*cm, 15 ft.*lbf)
HINT:
Tighten the bolts and nuts in the order of upper to lower as shown in the illustration.

(h) Fully tighten the bolts in Area 4.
Torque: 43 N*m (438 kgf*cm, 32 ft.*lbf) for bolt A
21 N*m (214 kgf*cm, 15 ft.*lbf) for bolts except bolt A
HINT:
Tighten the bolts in the order of lower to upper as shown in the illustration.

(i) Install a new gasket and the chain cover plate with the 4 bolts.
Torque: 9.1 N*m (93 kgf*cm, 81 in.*lbf)

48. INSTALL WATER INLET HOUSING

(a) Install 2 new O-rings.
HINT:
Apply a small amount of water or soapy water to O-ring (A) in the illustration before installing it.

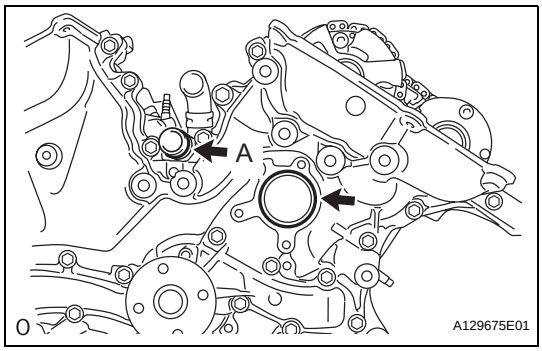

EM

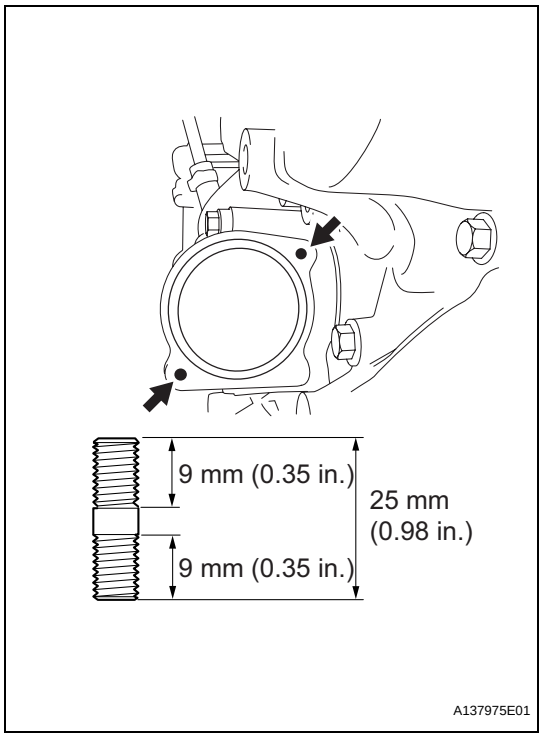

(b) Install the stud bolts.
Torque: 4.0 N*m (41 kgf*cm, 35 in.*lbf)

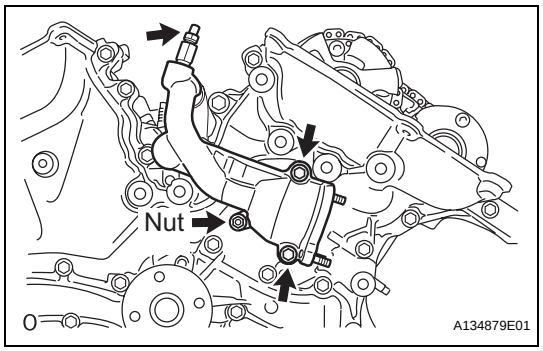

(c) Install the water inlet with the 2 bolts and nut.
Torque: 10 N*m (102 kgf*cm, 7 ft.*lbf)
NOTICE:
Be careful that the O-ring does not get caught between the parts.

(d) Connect the No. 1 water by-pass hose.

(e) Apply adhesive around the drain cock.
Adhesive:
Toyota Genuine Adhesive 1324, Three Bond 1324 or equivalent

(f) Install the drain cock to the water inlet housing.
Torque: 30 N*m (306 kgf*cm, 22 ft.*lbf)

(g) Install the drain cock plug to the water drain cock.
Torque: 13 N*m (130 kgf*cm, 9 ft.*lbf)

(h) Install a new gasket to the thermostat.

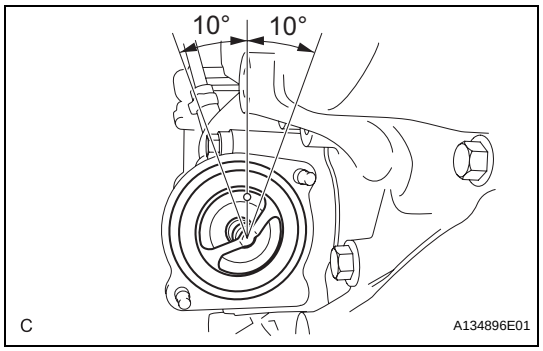

(i) Align the thermostat jiggle valve with the upper stud bolt, and insert the thermostat in the water inlet housing.
HINT:
The jiggle valve may be set within 10° of either side of the prescribed positions.

EM

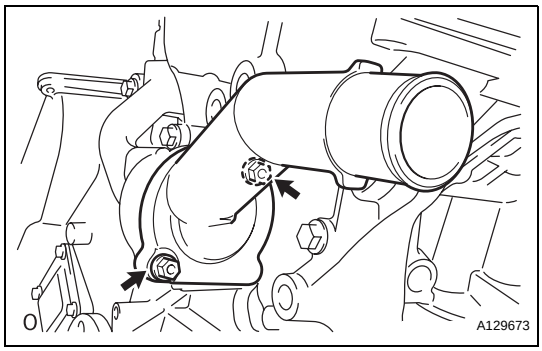

(j) Install the water inlet with the 2 nuts.
Torque: 10 N*m (102 kgf*cm, 7 ft.*lbf)

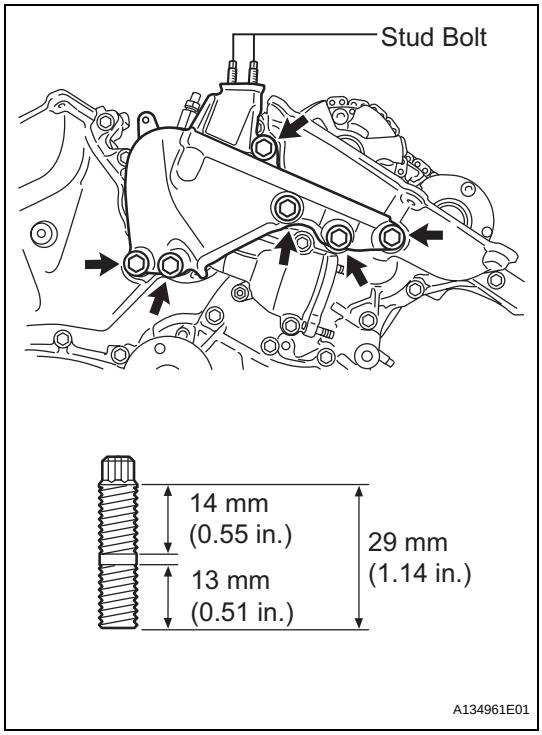

49. INSTALL FRONT ENGINE MOUNTING BRACKET NO. 1 LH

(a) Install the engine mounting bracket with the 6 bolts.
Torque: 54 N*m (551 kgf*cm, 40 ft.*lbf)
NOTICE:
- **Install the water inlet and mounting bracket within 15 minutes after installing the chain cover.**
- **Do not start the engine for at least 2 hours after installation.**

(b) When replacing a stud bolt, install it by using an E8 "TORX" socket wrench.
Torque: 10 N*m (102 kgf*cm, 7 ft.*lbf)

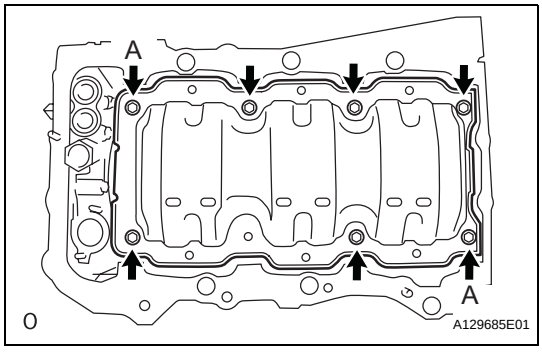

50. INSTALL OIL PAN BAFFLE PLATE

(a) Install the oil pan baffle plate with the 7 bolts.
Torque: 10 N*m (102 kgf*cm, 7 ft.*lbf)
HINT:
Temporarily tighten the 7 bolts. Fully tighten 2 bolts A as shown in the illustration before tightening the other bolts.

51. INSTALL OIL PAN SUB-ASSEMBLY

(a) When replacing a stud bolt, install it by using an E8 "TORX" socket wrench.

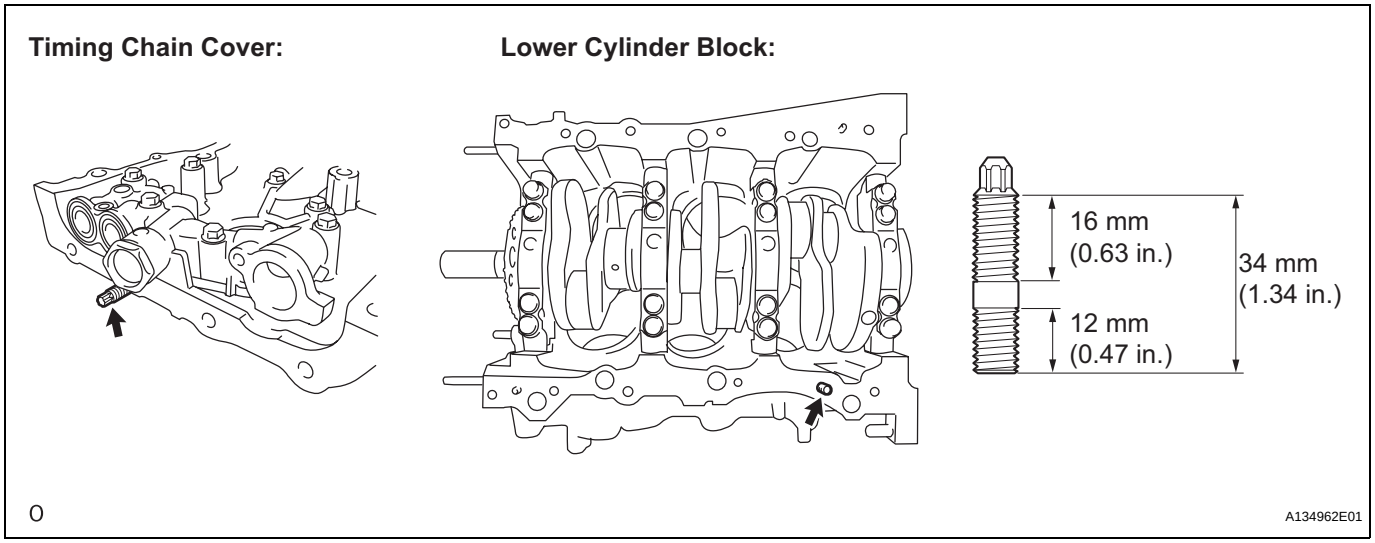

Torque: 10 N*m (102 kgf*cm, 7 ft.*lbf)

(b) Install 2 new O-rings.

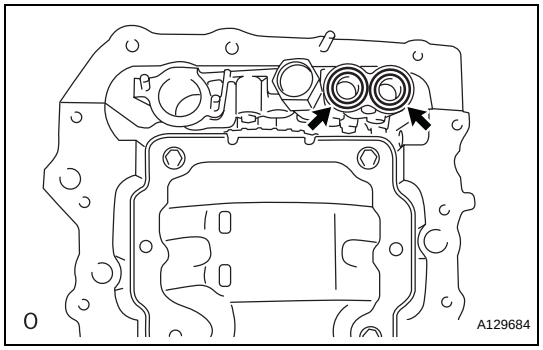

(c) Apply seal packing in a continuous line as shown in the illustration.

Seal packing:
Toyota Genuine Seal Packing Black, Three Bond 1207B or equivalent

Seal diameter:
3.0 to 4.0 mm (0.118 to 0.156 in.)

NOTICE:
- **Remove any oil from the contact surface.**
- **Install the oil pan within 3 minutes after applying seal packing.**
- **Do not start the engine for at least 2 hours after installing.**

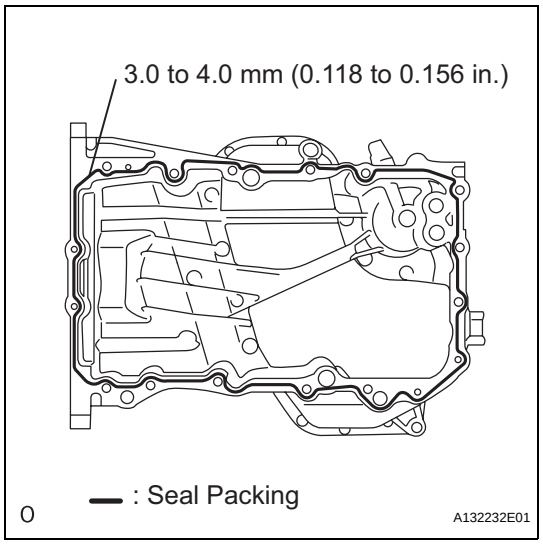

EM

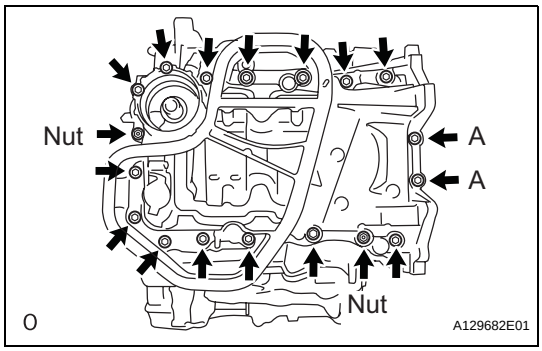

(d) Install the oil pan with the 16 bolts and 2 nuts.
Torque: 10 N*m (102 kgf*cm, 7 ft.*lbf) for bolt A
21 N*m (214 kgf*cm, 15 ft.*lbf) for bolts except A

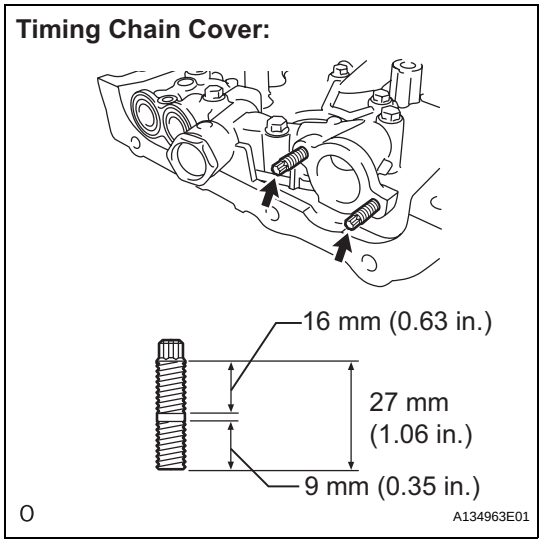

52. INSTALL OIL STRAINER SUB-ASSEMBLY

(a) Using an E6 "TORX" socket, install the stud bolts as shown in the illustration.
Torque: 4.0 N*m (41 kgf*cm, 35 in.*lbf)

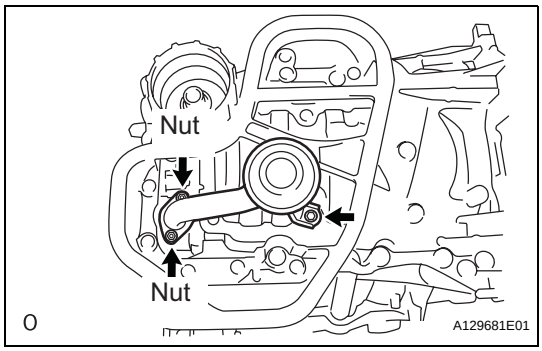

(b) Install a new gasket and the oil strainer with the bolt and 2 nuts.
Torque: 10 N*m (102 kgf*cm, 7 ft.*lbf)

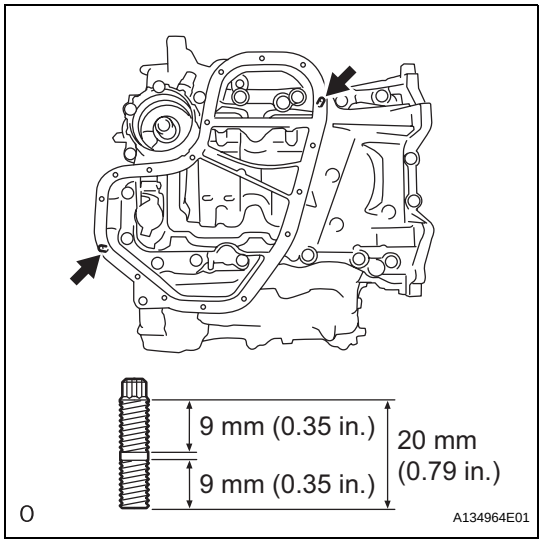

53. INSTALL NO. 2 OIL PAN SUB-ASSEMBLY

(a) Using an E6 "TORX" socket, install the stud bolts as shown in the illustration.
Torque: 4.0 N*m (41 kgf*cm, 35 in.*lbf)

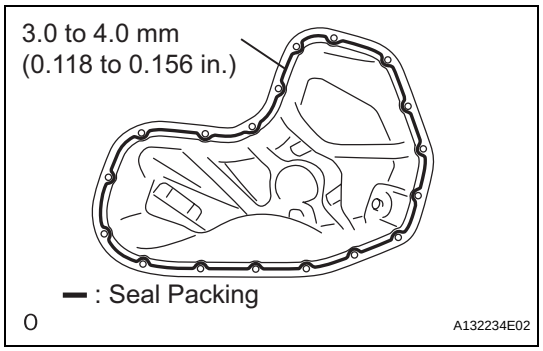

(b) Apply seal packing in a continuous line as shown in the illustration.
Seal packing:
Toyota Genuine Seal Packing Black, Three Bond 1207B or equivalent
Seal diameter:
3.0 to 4.0 mm (0.118 to 0.156 in.)
NOTICE:
- **Remove any oil from the contact surface.**
- **Install the oil pan No. 2 within 3 minutes after applying seal packing.**
- **Do not start the engine for at least 2 hours after installing.**

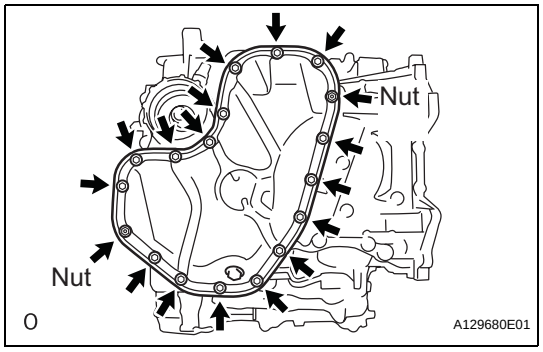

(c) Install the oil pan with the 16 bolts and 2 nuts.
Torque: 10 N*m (102 kgf*cm, 7 ft.*lbf)

EM

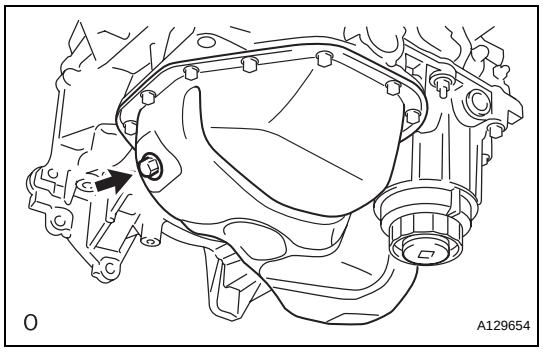

54. INSTALL OIL PAN DRAIN PLUG

(a) Install a new gasket and the drain plug.
Torque: 40 N*m (408 kgf*cm, 30 ft.*lbf)

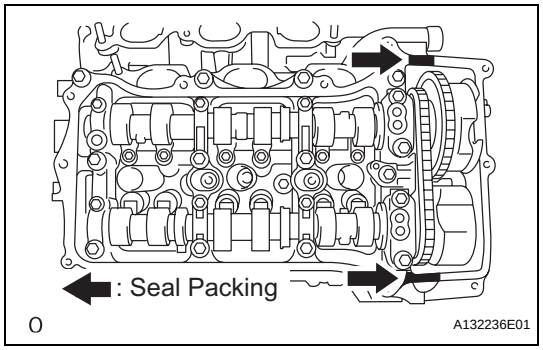

55. INSTALL CYLINDER HEAD COVER SUB-ASSEMBLY (for Bank 1)

(a) Apply seal packing as shown in the illustration.
Seal packing:
Toyota Genuine Seal Packing Black, Three Bond 1207B or equivalent
NOTICE:
- **Remove any oil from the contact surface.**
- **Install the head cover within 3 minutes after applying seal packing.**
- **Do not start the engine for at least 2 hours after installing.**

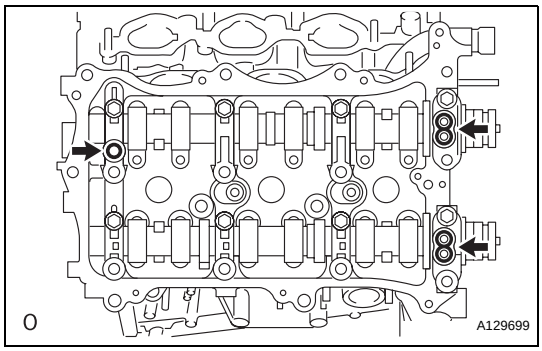

(b) Install 3 new gaskets as shown in the illustration.
(c) Install a new gasket to the head cover.

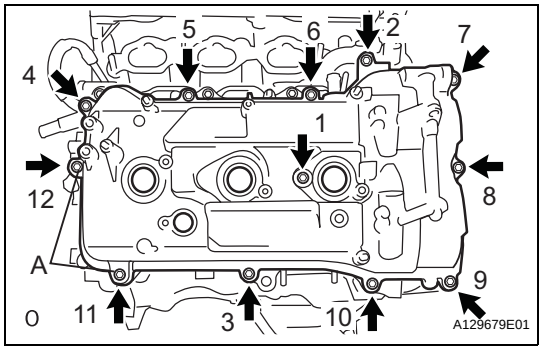

(d) Install a head cover with the 12 bolts and a new washer.
Torque: 21 N*m (214 kgf*cm, 15 ft.*lbf) for bolt A
10 N*m (102 kgf*cm, 7 ft.*lbf) for bolts except A
HINT:
After tightening all bolts, check the tightening torque of 1 and 11. Retighten the bolt if necessary.

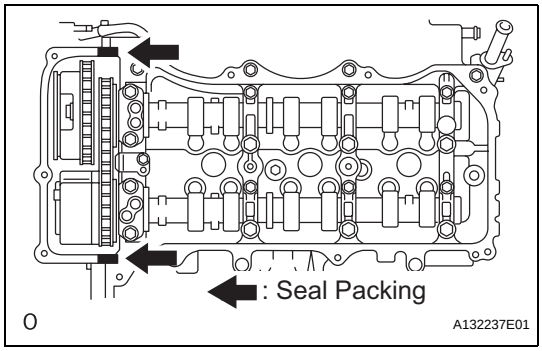

56. INSTALL CYLINDER HEAD COVER SUB-ASSEMBLY (for Bank 2)

(a) Apply seal packing as shown in the illustration.
Seal packing:
Toyota Genuine Seal Packing Black, Three Bond 1207B or equivalent
NOTICE:
- **Remove any oil from the contact surface.**
- **Install the head cover within 3 minutes after applying seal packing.**
- **Do not start the engine for at least 2 hours after installing.**

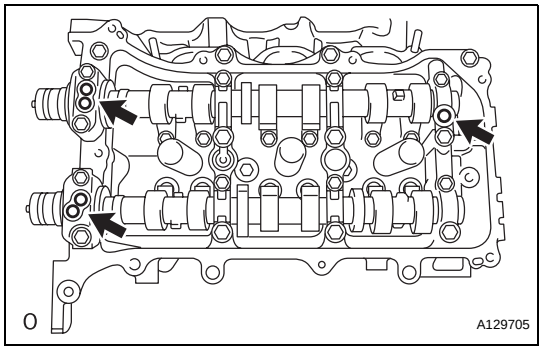

(b) Install 3 new gaskets as shown in the illustration.
(c) Install a new gasket to the head cover.

EM

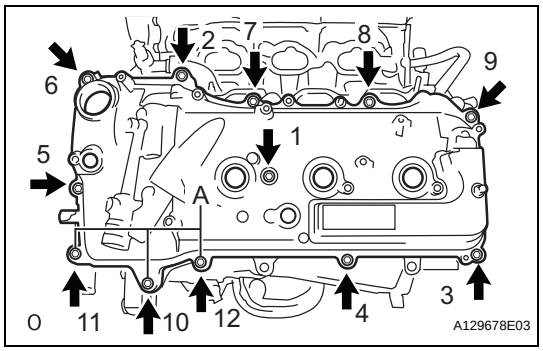

(d) Install the head cover with the 12 bolts and a new washer.
Torque: 21 N*m (214 kgf*cm, 15 ft.*lbf) for bolt A
10 N*m (102 kgf*cm, 7 ft.*lbf) for bolts except A
HINT:
After tightening all bolts, check the tightening torque of 1 and 10. Retighten the bolt if necessary.

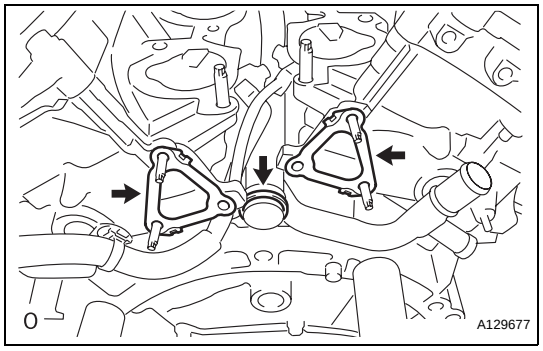

57. INSTALL WATER OUTLET

(a) Install 2 new gaskets and a new O-ring.
HINT:
Apply soapy water to the O-ring.

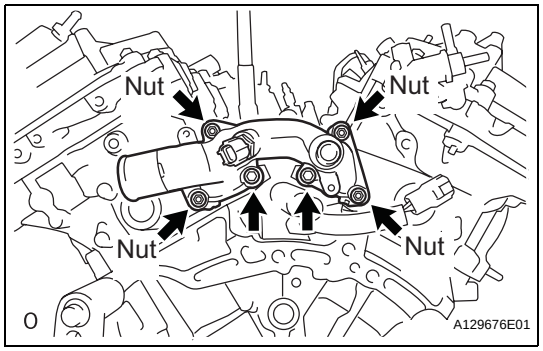

(b) Install the water by-pass joint with the 2 bolts and 4 nuts.
Torque: 10 N*m (102 kgf*cm, 7 ft.*lbf) for bolts
10 N*m (103 kgf*cm, 7 ft.*lbf) for nuts
NOTICE:
Be careful that the O-ring does not get caught between the parts.

58. INSTALL CRANKSHAFT PULLEY

(a) Align the pulley set key with the key groove of the pulley, and slide it on the pulley.

(b) Using SST, install the pulley bolt.
SST 09213-70011 (09213-70020), 09330-00021
Torque: 250 N*m (2,550 kgf*cm, 184 ft.*lbf)

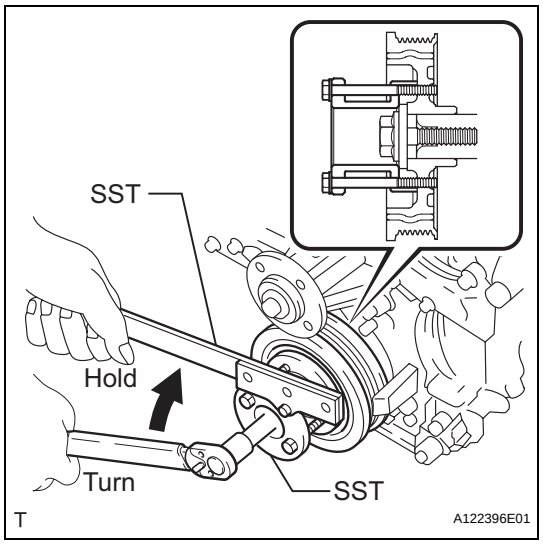

EM

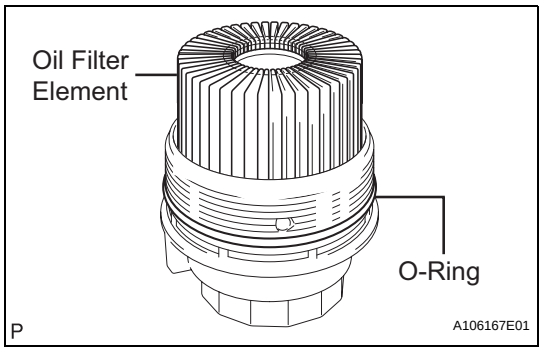

59. INSTALL OIL FILTER ELEMENT

(a) Clean the inside of the oil filter cap, the threads and O-ring groove.

(b) Apply a light coat of engine oil to a new O-ring and install it to the oil filter cap.

(c) Set a new oil filter element to the oil filter cap.

(d) Remove dirt or foreign matter from the installation surface of the engine.

(e) Apply a light coat of engine oil to the O-ring again and install the oil filter cap.

NOTICE:

- **Be careful that the O-ring does not get caught between the parts.**
- **The O-ring must not be twisted on the groove.**

EM

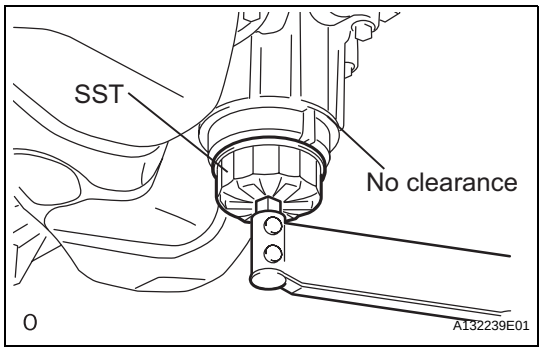

(f) Using SST, tighten the oil filter cap.

SST 09228-06501

Torque: 25 N*m (255 kgf*cm, 18 ft.*lbf)

NOTICE:

Make sure that the oil filter is installed securely as shown in the illustration.

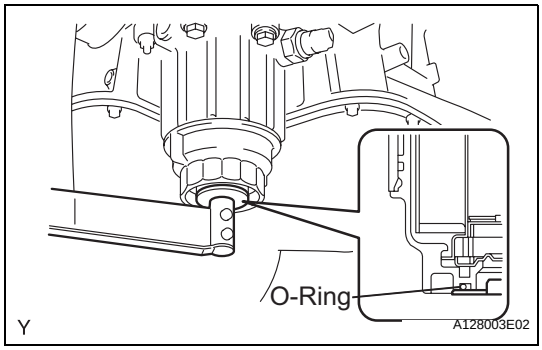

(g) Apply a light coat of engine oil to a new O-ring and install it to the oil filter cap.

NOTICE:

Remove all dirt and foreign matter from the installation surface.

(h) Install the oil filter drain plug to the oil filter cap.

Torque: 13 N*m (127 kgf*cm, 9 ft.*lbf)

NOTICE:

Make sure that the O-ring does not get caught between the parts.

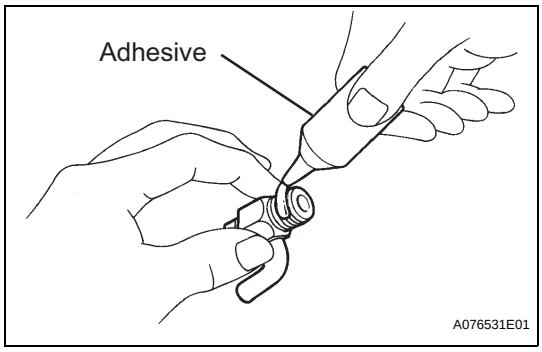

60. INSTALL CYLINDER BLOCK WATER DRAIN COCK SUB-ASSEMBLY

(a) Apply adhesive around the drain cocks.

Adhesive:

Toyota Genuine Adhesive 1324, Three Bond 1324 or equivalent

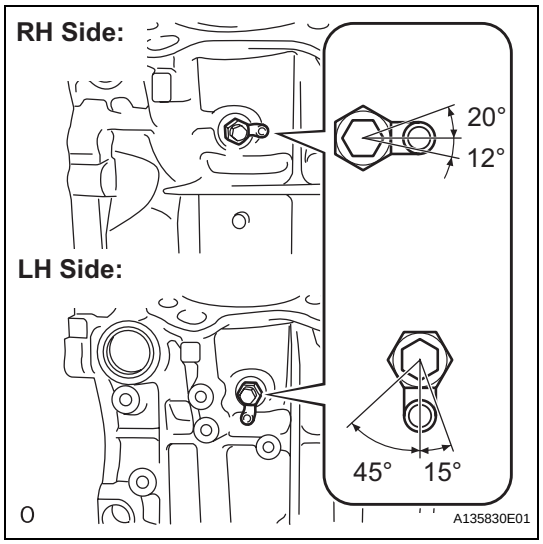

(b) Install the water drain cocks as shown in the illustration.
Torque: 25 N*m (255 kgf*cm, 18 ft.*lbf)
NOTICE:
Do not rotate the drain cocks more than 1 revolution (360°) after tightening the drain cocks to the specified torque.

(c) Install the water drain cock plugs to the water drain cocks.
Torque: 13 N*m (130 kgf*cm, 9 ft.*lbf)

61. INSTALL NO. 1 OIL PIPE

(a) Make sure that there is no foreign matter on the mesh of the oil control valve filter LH.
NOTICE:
Do not touch the mesh when installing the oil control valve filter.

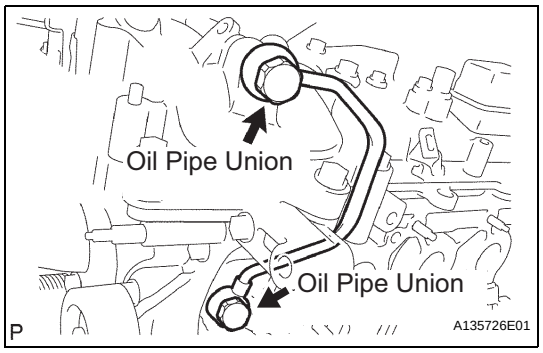

(b) Install the oil control valve filter LH to the oil pipe union. Install new gaskets and temporarily install the oil pipe (on the head cover side).

(c) Install a new gasket and temporarily install the oil pipe (on the cylinder head side) with the oil check valve bolt.

(d) Tighten the oil pipe union (on the head cover side).
Torque: 65 N*m (663 kgf*cm, 48 ft.*lbf)

(e) Tighten the oil pipe union (on the cylinder head side).
Torque: 65 N*m (663 kgf*cm, 48 ft.*lbf)
NOTICE:
If the link that connects the gaskets is broken, remove the connecting link by using nippers or similar tools.

62. INSTALL OIL PIPE

(a) Make sure that there is no foreign matter on the mesh of the oil control valve filter RH.
NOTICE:
Do not touch the mesh when installing the oil control valve filter.

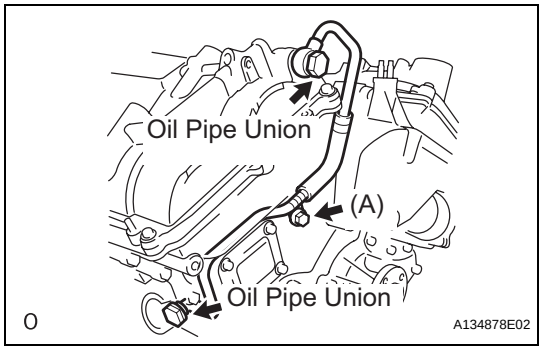

(b) Install the oil control valve filter RH to the oil pipe union. Install new gaskets and temporarily install the oil pipe (on the head cover side).

(c) Install a new gasket and temporarily install the oil pipe (on the cylinder head side) with the oil check valve bolt.

(d) Install the bolt (A) to the cylinder head.
Torque: 10 N*m (102 kgf*cm, 7 ft.*lbf)

(e) Tighten the oil pipe union (on the head cover side).
Torque: 65 N*m (663 kgf*cm, 48 ft.*lbf)

(f) Tighten the oil pipe union (on the cylinder head side).
Torque: 65 N*m (663 kgf*cm, 48 ft.*lbf)

EM

NOTICE:
If the link that connects the gaskets is broken, remove the connecting link by using nippers or similar tools.

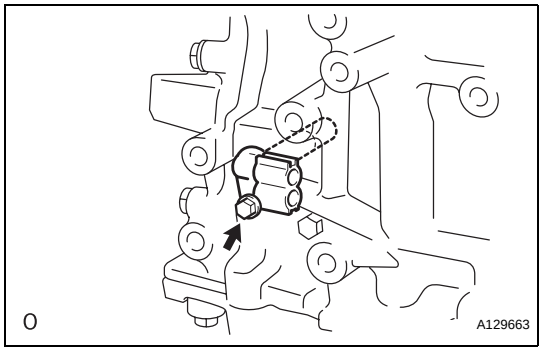

63. INSTALL CRANKSHAFT POSITION SENSOR

(a) Install the sensor with the bolt.
Torque: 10 N*m (102 kgf*cm, 7 ft.*lbf)

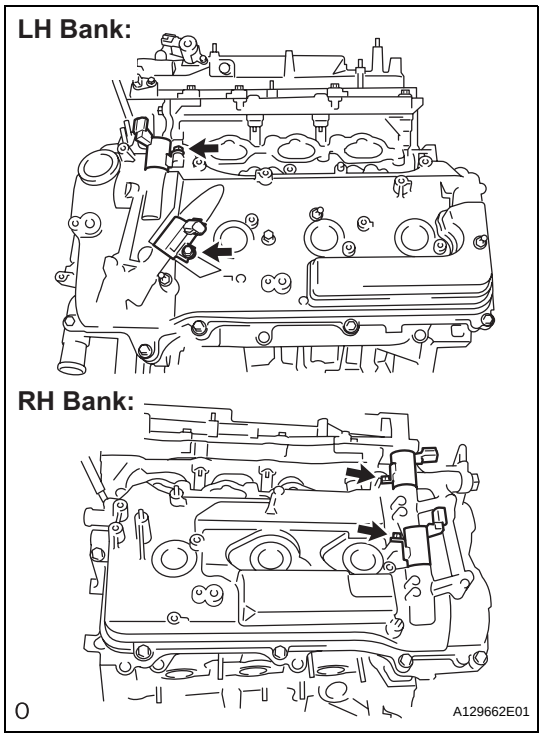

64. INSTALL CAMSHAFT TIMING OIL CONTROL VALVE ASSEMBLY

(a) Install the 4 oil control valves with the 4 bolts.
Torque: 10 N*m (102 kgf*cm, 7 ft.*lbf)

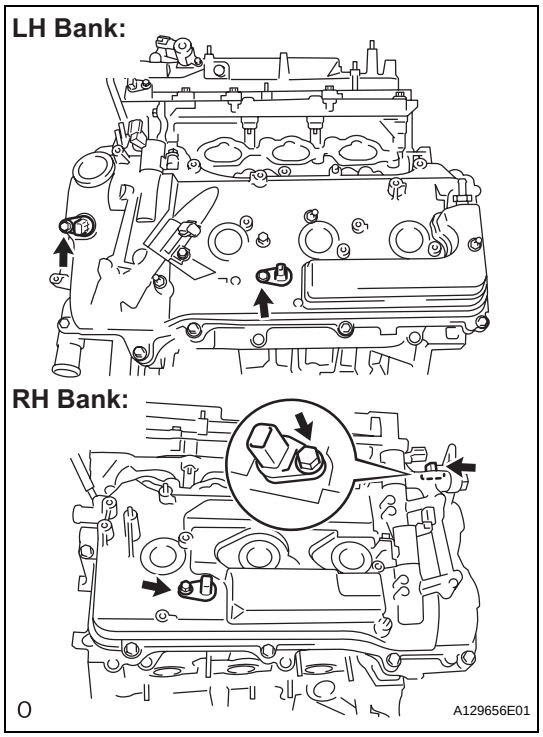

65. INSTALL CAMSHAFT POSITION SENSOR

(a) Install the 4 sensors with the 4 bolts.
Torque: 10 N*m (102 kgf*cm, 7 ft.*lbf)

66. INSTALL VENTILATION VALVE SUB-ASSEMBLY

(a) Apply adhesive around the ventilation valve.
Adhesive:
Toyota Genuine Adhesive 1324, Three Bond 1324 or equivalent

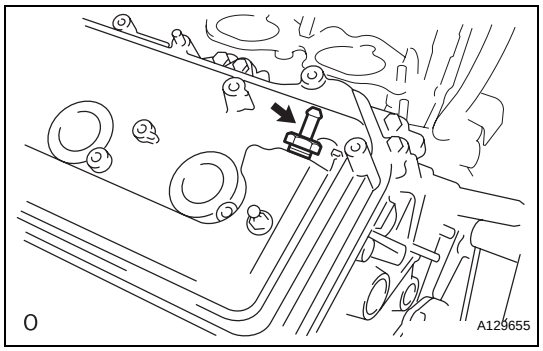

(b) Install the ventilation valve.
Torque: 27 N*m (275 kgf*cm, 20 ft.*lbf)

67. INSTALL SPARK PLUG

(a) Install the 6 spark plugs.
Torque: 18 N*m (184 kgf*cm, 13 ft.*lbf)

68. INSTALL OIL FILLER CAP SUB-ASSEMBLY

(a) Install a new gasket.
(b) Install the oil filler cap.

ON-VEHICLE INSPECTION

1. CHECK FOR FUEL PUMP OPERATION AND FUEL LEAKS

(a) Check fuel pump operation.

(1) Connect the intelligent tester to the DLC3.

(2) Turn the engine switch on (IG) and push the intelligent tester main switch on.

NOTICE:

Do not start the engine.

(3) Select the following menu items: DIAGNOSIS / ENHANCED OBD II / ACTIVE TEST / FUEL PUMP / SPD.

(4) Check for pressure in the fuel inlet tube from the fuel line. Check that sound of fuel flowing in the fuel tank can be heard. If no sound can be heard, check the integration relay, fuel pump, ECM and wiring connector.

(b) Check for fuel leaks.

(1) Check that there are no fuel leaks anywhere on the system after performing maintenance. If there is a fuel leak, repair or replace parts as necessary.

(c) Turn the engine switch off.

(d) Disconnect the intelligent tester from the DLC3.

2. CHECK FUEL PRESSURE

(a) Discharge the fuel system pressure (See page FU-1).

(b) Using a voltmeter, measure the battery voltage.

Standard voltage:

11 to 14 V

(c) Disconnect the cable from the negative (-) battery terminal.

(d) Disconnect the fuel hose from the fuel main tube (See page FU-1).

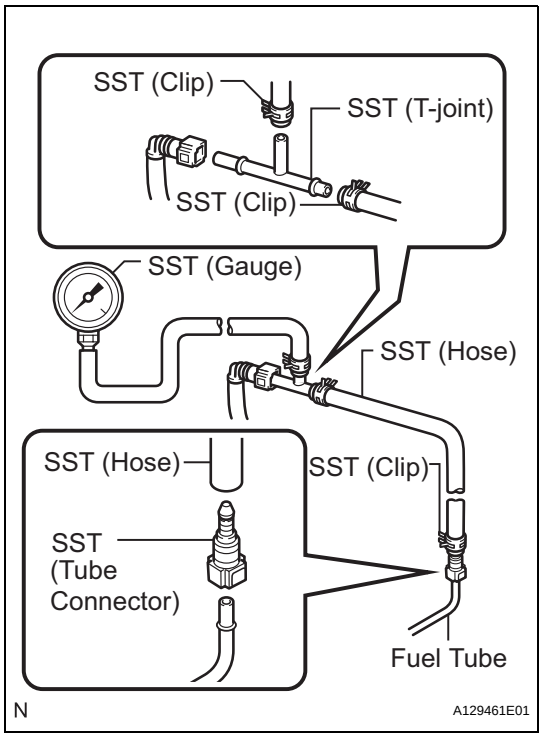

(e) Install SST (pressure gauge) using SST and a fuel tube connector as shown in the illustration.
SST 09268-31011 (09268-41500, 90467-13001, 95336-08070), 09268-45014 (09268-41200, 09268-41220, 09268-41250)

(f) Wipe up any gasoline.

(g) Connect the cable to the negative (-) battery terminal.

(h) Connect the intelligent tester to the DLC3.

(i) Select the following menu items: DIAGNOSIS / ENHANCED OBD II / ACTIVE TEST / FUEL PUMP / SPD.

(j) Measure the fuel pressure.
Fuel pressure:

304 to 343 kPa (3.1 to 3.5 kgf*cm^2, 44.1 to 49.7 psi)

- If the fuel pressure is greater than the standard value, replace the fuel pressure regulator.
- If the fuel pressure is less than the standard value, check the fuel hoses and connections, fuel pump, fuel filter and fuel pressure regulator.

(k) Disconnect the intelligent tester from the DLC3.

(l) Start the engine.

(m) Measure the fuel pressure at idle.
Fuel pressure:

304 to 343 kPa (3.1 to 3.5 kgf*cm^2, 44.1 to 49.7 psi)

(n) Stop the engine.

(o) Check that the fuel pressure remains as specified for 5 minutes after the engine stops.
Fuel pressure:

147 kPa (1.5 kgf*cm^2, 21 psi) or more

If the fuel pressure is not as specified, check the fuel pump, pressure regulator and/or fuel injectors.

(p) After checking the fuel pressure, disconnect the cable from the negative (-) battery terminal and carefully remove the SST to prevent gasoline from splashing.

(q) Reconnect the fuel tube to the main fuel tube (fuel tube connector).

(r) Install the No. 1 fuel pipe clamp to the fuel tube connector.

(s) Check for fuel leaks (step 1).

FU

REMOVAL

1. **DISCHARGE FUEL SYSTEM PRESSURE**
   HINT:
   See page FU-1.
2. **DISCONNECT CABLE FROM NEGATIVE BATTERY TERMINAL**
3. **DRAIN ENGINE COOLANT (See page CO-5)**
4. **REMOVE COOL AIR INTAKE DUCT SEAL (See page EM-22)**
5. **REMOVE ENGINE ROOM SIDE COVER LH (See page EM-22)**
6. **REMOVE ENGINE ROOM SIDE COVER RH (See page EM-22)**
7. **REMOVE FRONT SUSPENSION CENTER UPPER BRACE**
8. **REMOVE V-BANK COVER SUB-ASSEMBLY (See page EM-23)**
9. **REMOVE AIR CLEANER CAP SUB-ASSEMBLY (See page ES-519)**
10. **REMOVE INTAKE AIR SURGE TANK ASSEMBLY**
    (a) Disconnect the 2 water by-pass hoses from the throttle with motor body assembly. (*1)
    (b) Disconnect the vapor feed hose. (*2)
    (c) Disconnect the throttle with motor body assembly connector and clamp. (*3)

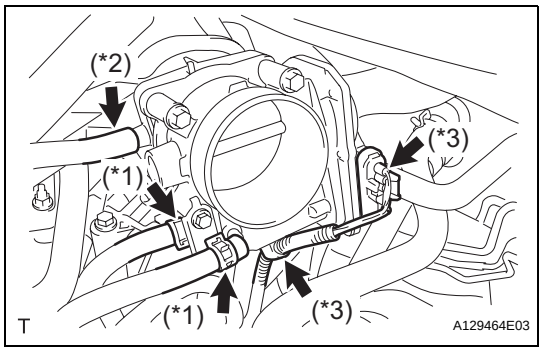

    (d) Disconnect the No. 1 ventilation hose. (*4)
    (e) Disconnect the union to check valve hose. (*5)

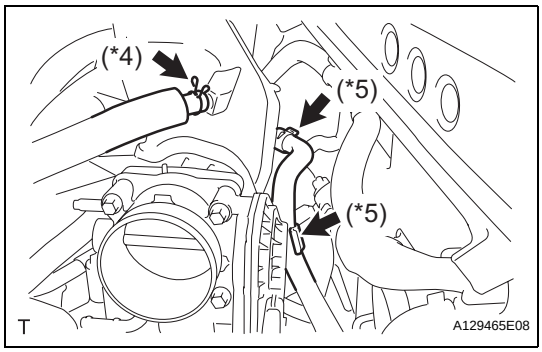

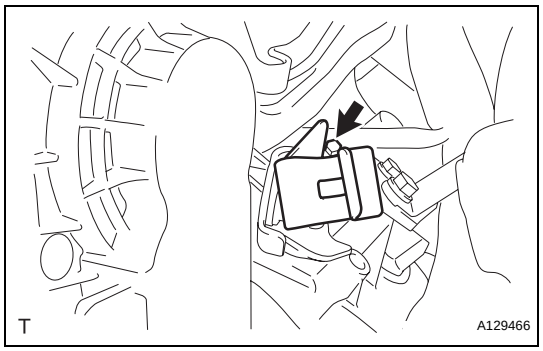

(f) Remove the bolt and vacuum hose clamp.

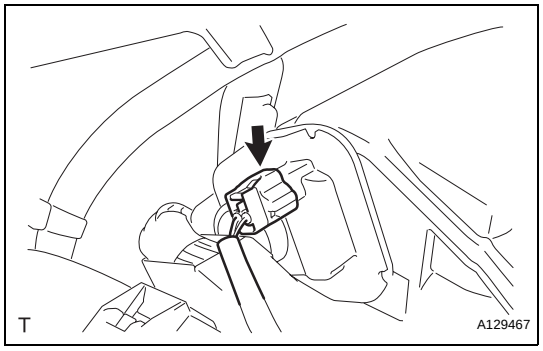

(g) Disconnect the connector.

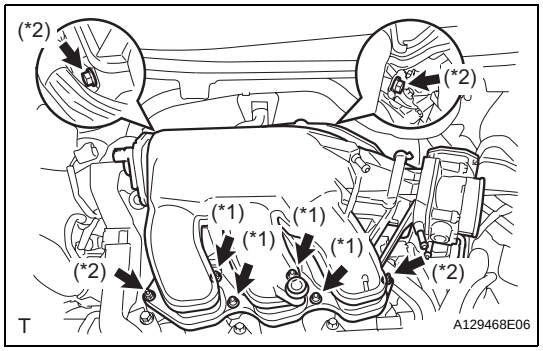

(h) Using a 5 mm socket hexagon wrench, remove the 4 bolts. (*1)
(i) Remove the 2 nuts, 2 bolts and intake air surge tank. (*2)
(j) Remove the gasket from the intake air surge tank.

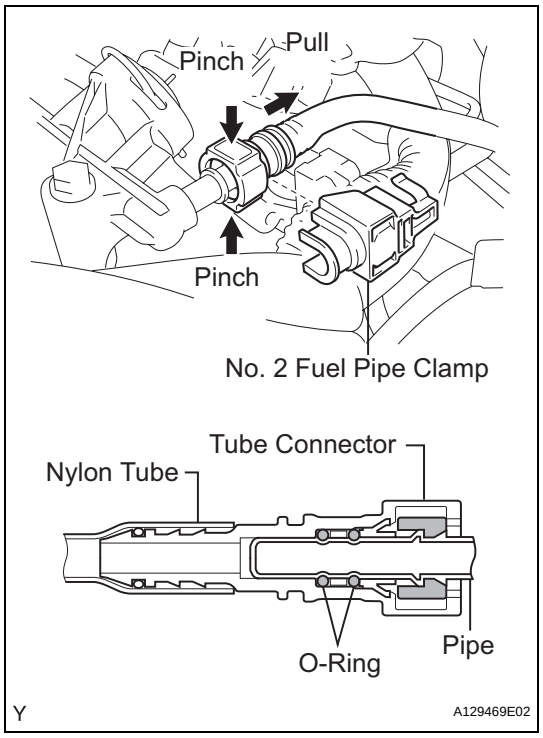

11. DISCONNECT FUEL TUBE SUB-ASSEMBLY

(a) Remove the No. 2 fuel pipe clamp.
(b) Pinch the tube connector and then pull out the fuel pipe.

NOTICE:

- **Check that there is no dirt or other foreign objects around the connector disconnecting it. Clean the connector as necessary.**
- **It is necessary to prevent mud or dirt from entering the quick connector. If mud or dirt gets in the connector, the O-rings may not seal properly.**
- **Only disconnect the quick connector by hand.**
- **Do not bend, kink or twist the nylon tubes. Protect the connector by covering it with a plastic bag.**
- **If the pipe and the connector are stuck, carefully try wiggling or pushing and pulling on the connector to release it. Pull the connector off the pipe carefully.**

12. REMOVE FUEL INJECTOR ASSEMBLY

(a) Disconnect the 6 fuel injector connectors.

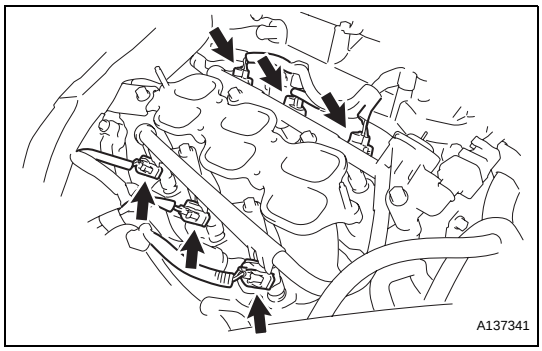

(b) Remove the 5 bolts and fuel delivery pipe together with the 6 fuel injectors.
NOTICE:
Be careful not to drop the fuel injectors when removing the fuel delivery pipe.

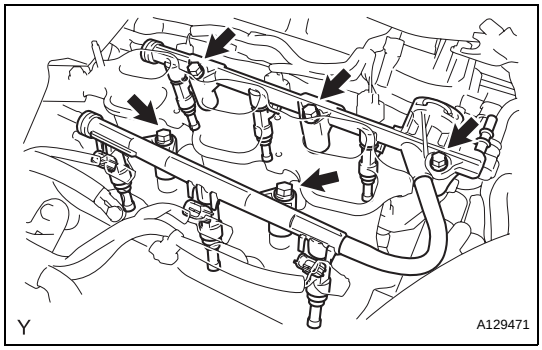

(c) Remove the 6 insulators from the intake manifold.

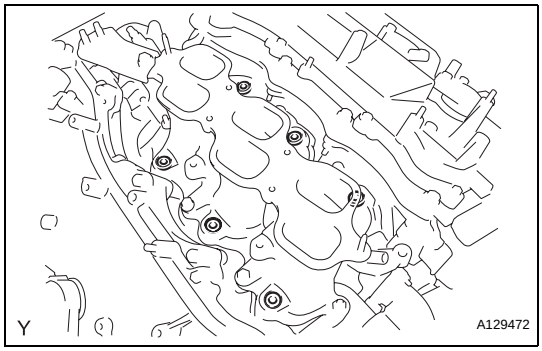

(d) Pull out the fuel injectors from the fuel delivery pipe.

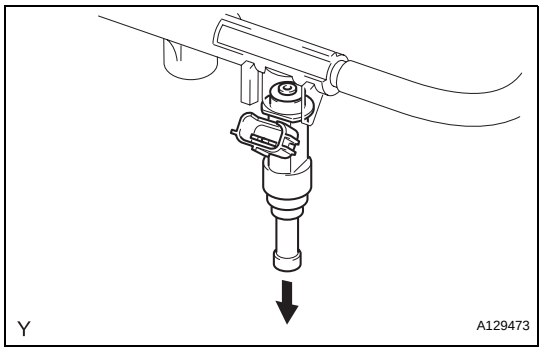

(e) Remove the 6 O-rings from the injectors.

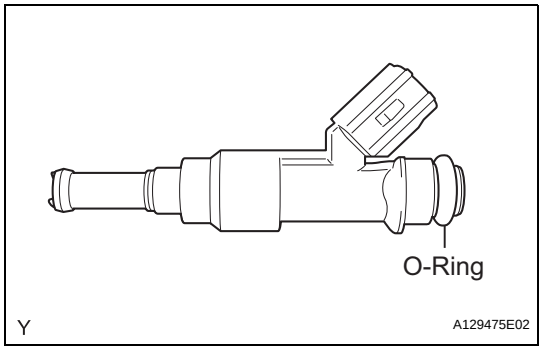

FUEL SYSTEM

PRECAUTION

1. PRECAUTION

(a) Before inspecting and repairing the fuel system, disconnect the cable from the negative (-) battery terminal.

(b) Do not smoke or work near fire when handling the fuel system.

(c) Keep gasoline away from rubber or leather parts.

2. DISCHARGE FUEL SYSTEM PRESSURE

CAUTION:

- **Perform the following procedures to prevent fuel from spilling out before removing any fuel system parts.**
- **Pressure will still remain in the fuel line even after performing the following procedures. When disconnecting the fuel line, cover it with a shop rag or a piece of cloth to prevent fuel from spraying or coming out.**

(a) Remove the rear seat cushion assembly.

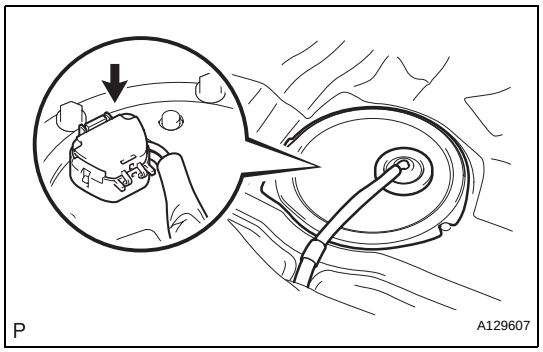

(b) Remove the rear floor service hole cover.

(c) Disconnect the fuel pump connector.

(d) Start the engine.

(e) After the engine stops, turn the engine switch off.
HINT:
DTC P0171/25 (fuel problem) may be detected.

(f) Crank the engine again. Check that the engine does not start.

(g) Remove the fuel tank cap to discharge pressure from the fuel tank.

(h) Disconnect the cable from the negative (-) battery terminal.

(i) Reconnect the fuel pump connector.

(j) Install the rear floor service hole cover.

(k) Install the rear seat.

3. FUEL SYSTEM

(a) When disconnecting the high pressure fuel line, a large amount of gasoline will spill out, so observe the following procedures:

(1) Discharge the fuel system pressure (step 2).

(2) Disconnect the fuel pump tube (See page FU-26).

(3) Drain the fuel that remains in the fuel pump tube.

FU

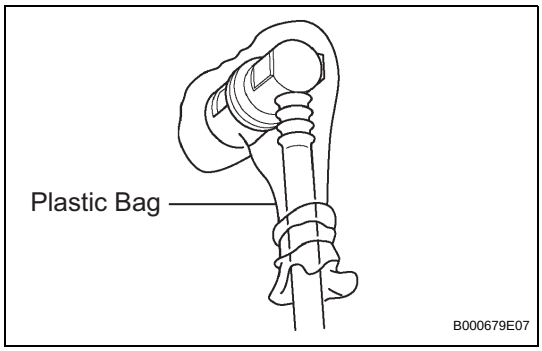

(4) To protect the disconnected fuel pump tube from damage and contamination, cover it with a plastic bag.
(5) Put a container under the connectors.

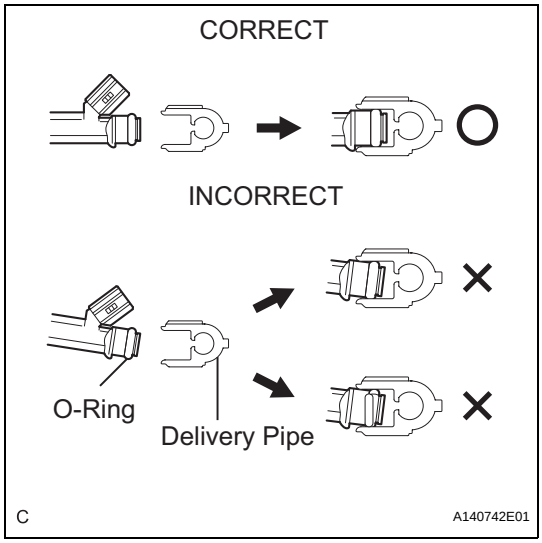

(b) Observe the following precautions when removing and installing the fuel injectors:
(1) Never reuse an O-ring.
(2) When placing a new O-ring on the injector, do not damage the O-ring.
(3) Coat a new O-ring with spindle oil or gasoline before installing it.
NOTICE:
Do not use engine oil, gear oil or brake fluid.

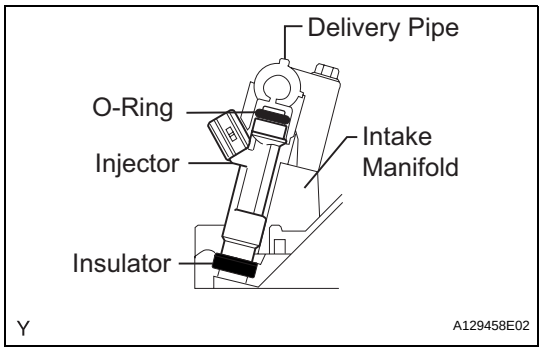

(c) Install the injector to the delivery pipe and the lower intake manifold as shown in the illustration.
NOTICE:
Before installing the injector, be sure to apply appropriate lubricant or gasoline to the place where the delivery pipe or cylinder head contacts the injector O-rings.

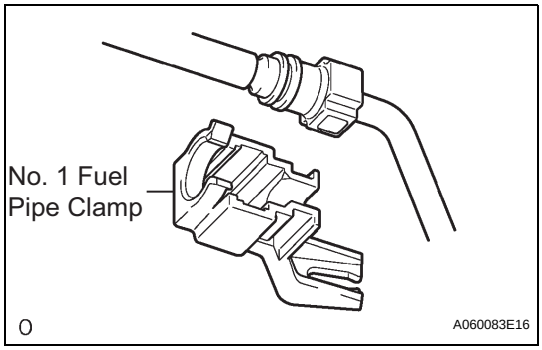

(d) Observe the following precautions when disconnecting the fuel tube connectors (Quick type A):
(1) Remove the No. 1 fuel pipe clamp.
(2) Check that there is no dirt or other foreign objects on the pipe and around the connector before disconnecting them. Clean them if necessary.

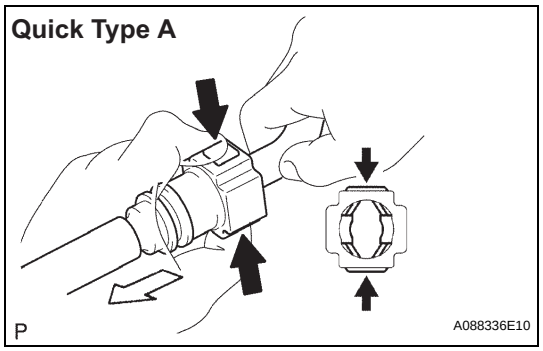

(3) Disconnect the connector from the pipe by hand.
(4) If the connector and the pipe are stuck, push in and pull on the connector to release it. Pull the connector out of the pipe carefully.
(5) Check that there is no dirt or other foreign objects on the sealing surface of the disconnected pipe. Clean the surfaces if necessary.

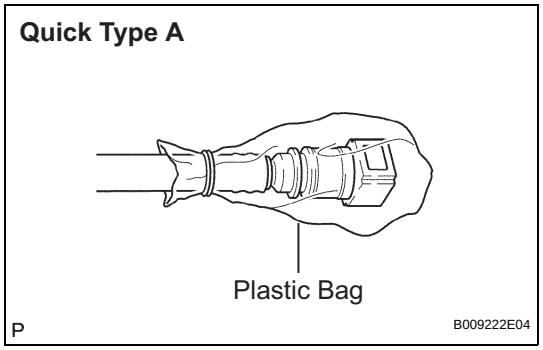

(6) Do not damage the disconnected pipe or connector. Prevent entry of foreign objects by covering the connectors with plastic bags.

FU

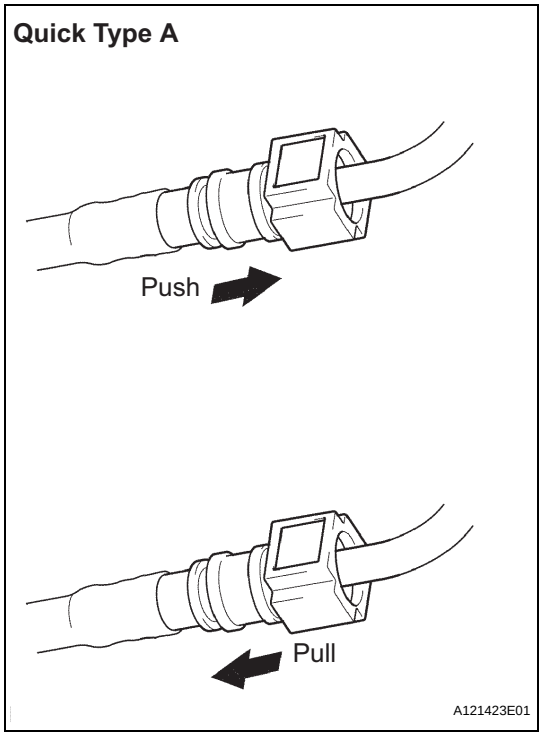

(e) Observe the following precautions when connecting the fuel tube connectors (Quick Type A):
(1) Check if there is any damage or foreign objects on the connecting parts of the pipes.
(2) Line up the two parts of the pipes to be connected, and push them together until the connector makes a "click" sound. If the pipe is difficult to push into the connector, apply a small amount of clean engine oil to the tip of the pipe and reinsert it.
(3) After connecting the pipes, check that the pipe and connector are securely connected by pulling on them.
(4) Check for fuel leaks.

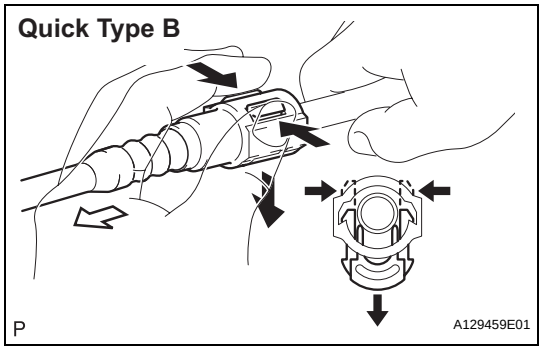

(f) Observe the following precautions when disconnecting the fuel tube connector (Quick type B):
(1) Before disconnecting the connector, clean off any dirt that may be present.
(2) Pinch the tabs of the fuel tube retainer to disengage the 2 claws. Push the retainer down as shown in the illustration.
HINT:
Be sure to disconnect the connector by hand.

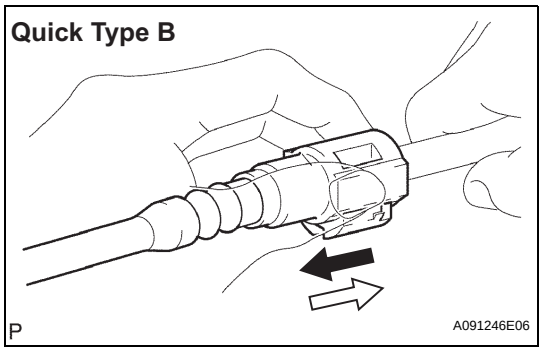

(3) If the connector and pipe are stuck, hold the fuel pipe by hand, and push and pull on the connector. Pull the two pipes apart to separate the connector.
(4) Check if there is any dirt or any other foreign objects on the sealing surfaces of the disconnected pipes. Clean the sealing surfaces if necessary.

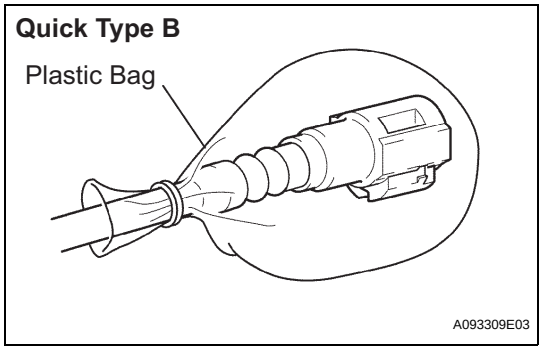

(5) Do not damage the disconnected pipe or connector. Prevent entry of foreign objects by covering the connectors with plastic bags.

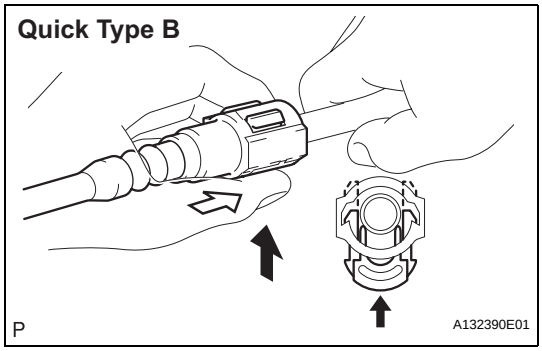

(g) Observe the following precautions when connecting the fuel tube connector (Quick Type B):
(1) Line up the two parts of the pipes to be connected, and fully push the fuel tube connector and pipe together until they are fully seated. Next, push the retainer into the connector until its claws lock. If the pipe is difficult to push in to the connector, apply a small amount of clean engine oil to the tip of the pipe and reinsert it.
(2) After connecting the pipes, check that the pipe and connector are securely connected by pulling on them.
(3) Check for fuel leaks.
(h) Observe the following precautions when handling a nylon tube:
CAUTION:
- **Do not twist the connector part of the nylon tube or the quick connector when connecting them.**
- **Do not bend or twist the nylon tube.**
- **Do not remove the EPDM protector on the outside of the nylon tube.**
- **Do not pinch or kink the nylon tubes to prevent fuel leakage.**

4. CHECK FOR FUEL LEAKS
(a) Check that there are no fuel leaks from the fuel system after doing any maintenance or repairs (See page FU-7).

ON-VEHICLE INSPECTION

1. CHECK FOR FUEL PUMP OPERATION AND FUEL LEAKS

(a) Check fuel pump operation.

(1) Connect the intelligent tester to the DLC3.

(2) Turn the engine switch on (IG) and push the intelligent tester main switch on.

NOTICE:

Do not start the engine.

(3) Select the following menu items: DIAGNOSIS / ENHANCED OBD II / ACTIVE TEST / FUEL PUMP / SPD.

(4) Check for pressure in the fuel inlet tube from the fuel line. Check that sound of fuel flowing in the fuel tank can be heard. If no sound can be heard, check the integration relay, fuel pump, ECM and wiring connector.

(b) Check for fuel leaks.

(1) Check that there are no fuel leaks anywhere on the system after performing maintenance. If there is a fuel leak, repair or replace parts as necessary.

(c) Turn the engine switch off.

(d) Disconnect the intelligent tester from the DLC3.

2. CHECK FUEL PRESSURE

(a) Discharge the fuel system pressure (See page FU-1).

(b) Using a voltmeter, measure the battery voltage.

Standard voltage:

11 to 14 V

(c) Disconnect the cable from the negative (-) battery terminal.

(d) Disconnect the fuel hose from the fuel main tube (See page FU-1).

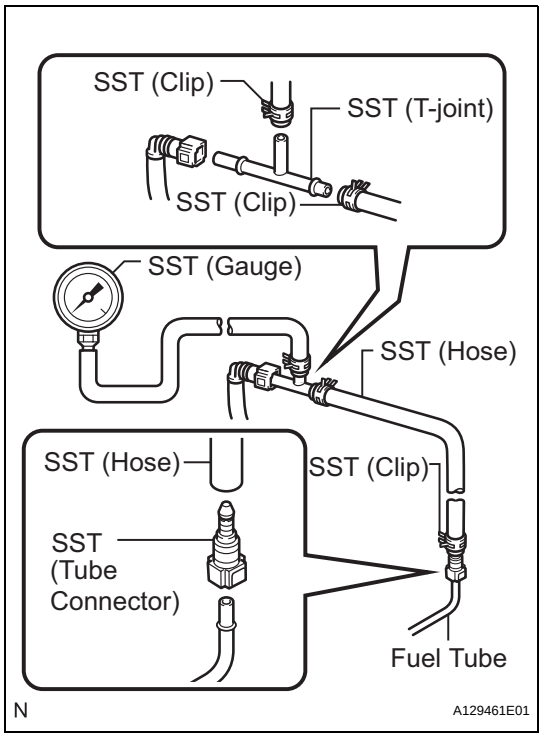

(e) Install SST (pressure gauge) using SST and a fuel tube connector as shown in the illustration.
SST 09268-31011 (09268-41500, 90467-13001, 95336-08070), 09268-45014 (09268-41200, 09268-41220, 09268-41250)

(f) Wipe up any gasoline.

(g) Connect the cable to the negative (-) battery terminal.

(h) Connect the intelligent tester to the DLC3.

(i) Select the following menu items: DIAGNOSIS / ENHANCED OBD II / ACTIVE TEST / FUEL PUMP / SPD.

(j) Measure the fuel pressure.
Fuel pressure:

304 to 343 kPa (3.1 to 3.5 kgf*cm^2, 44.1 to 49.7 psi)

- If the fuel pressure is greater than the standard value, replace the fuel pressure regulator.
- If the fuel pressure is less than the standard value, check the fuel hoses and connections, fuel pump, fuel filter and fuel pressure regulator.

(k) Disconnect the intelligent tester from the DLC3.

(l) Start the engine.

(m) Measure the fuel pressure at idle.
Fuel pressure:

304 to 343 kPa (3.1 to 3.5 kgf*cm^2, 44.1 to 49.7 psi)

(n) Stop the engine.

(o) Check that the fuel pressure remains as specified for 5 minutes after the engine stops.
Fuel pressure:

147 kPa (1.5 kgf*cm^2, 21 psi) or more

If the fuel pressure is not as specified, check the fuel pump, pressure regulator and/or fuel injectors.

(p) After checking the fuel pressure, disconnect the cable from the negative (-) battery terminal and carefully remove the SST to prevent gasoline from splashing.

(q) Reconnect the fuel tube to the main fuel tube (fuel tube connector).

(r) Install the No. 1 fuel pipe clamp to the fuel tube connector.

(s) Check for fuel leaks (step 1).

INSPECTION

1. INSPECT FUEL INJECTOR ASSEMBLY

(a) Inspect injector resistance.

(1) Using an ohmmeter, measure the resistance between the terminals.

Resistance:

11.6 to 12.4 Ω at 20°C (68°F)

If the resistance is not as specified, replace the injector.

(b) Inspect the injection volume.

CAUTION:

This test involves high-pressure fuel and electricity. Take every precaution regarding the safe handling of both fuel and electricity. Perform this test in a safe area, and avoid any sparks or flames. Do not smoke.

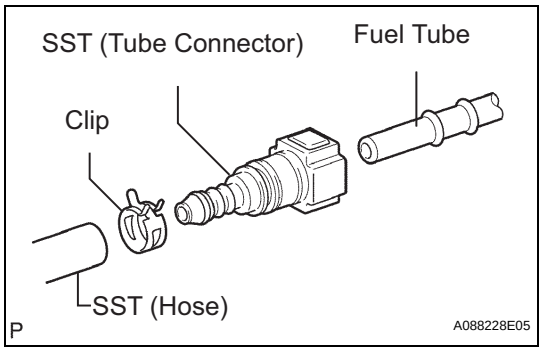

(1) Install the fuel tube connector to SST (hose), then connect the tube connector to the fuel pipe (vehicle side).

SST 09268-31011 (09268-41500, 90467-13001, 95336-08070)

(2) Install the O-ring to the fuel injector.

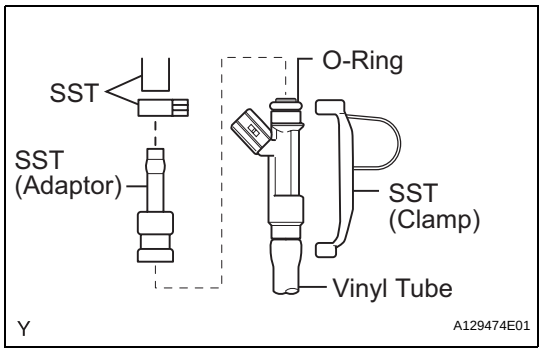

(3) Connect SST (adaptor and hose) to the injector, and hold the injector and union with SST (clamp).

SST 09268-31011 (90467-13001, 95336-08070), 09268-41140, 09268-41400

(4) Put the injector into the graduated cylinder.

CAUTION:

Install a suitable vinyl tube onto the injector to contain gasoline spray.

(5) Operate the fuel pump (See page FU-7).

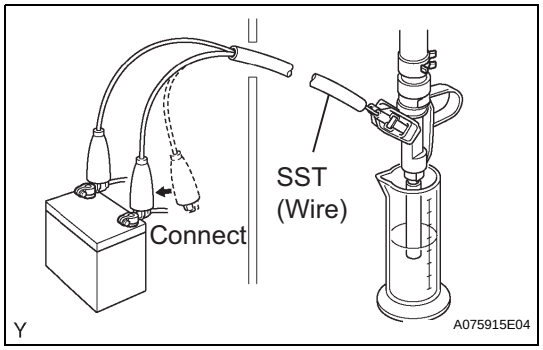

(6) Connect SST (wire) to the injector and the battery for 15 seconds, and measure the injection volume with the graduated cylinder. Test each injector 2 or 3 times.

SST 09842-30080

Volume:

84 to 100 cm^3 (5.1 to 6.0 cu in.) in 15 seconds

Difference between each injector:

16 cm^3 (0.98 cu in.) or less

If the injection volume is not as specified, replace the injector.

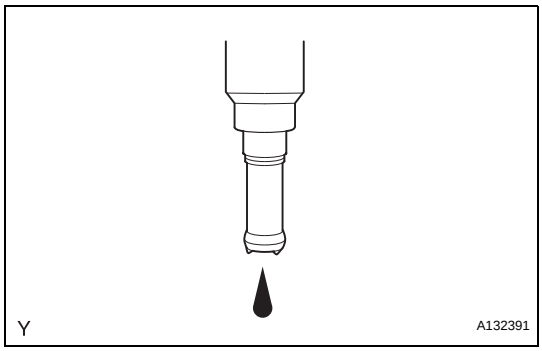

(c) Check for leakage.
  (1) In the condition above, disconnect the tester probes of SST (wire) from the battery and check for fuel leakage from the injector.
  Fuel drop:
  1 drop or less in 16 minutes

INSTALLATION

1. INSTALL FUEL INJECTOR ASSEMBLY

(a) Apply a light coat of spindle oil or gasoline to new O-rings, and install them to each injector.

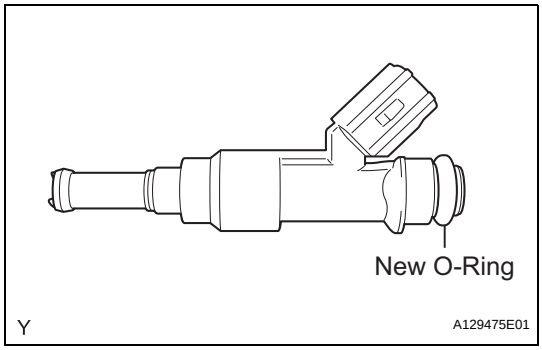

(b) Apply a light coat of spindle oil or gasoline where the fuel delivery pipe contacts the O-ring.
(c) Push the fuel injector while turning it to install the injector in the fuel delivery pipe.
(d) Position the fuel injector connector outward.
NOTICE:
- **Be careful not to twist the O-ring.**
- **After installing the fuel injector, check that it turns smoothly. If not, reinstall it with a new O-ring.**

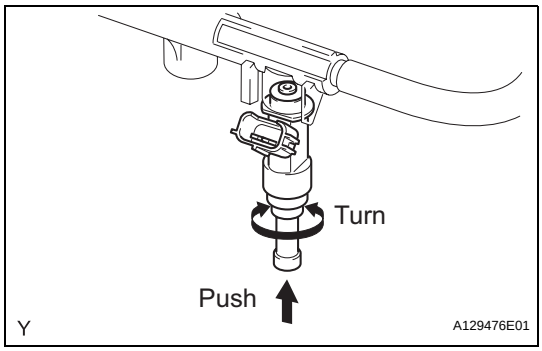

(e) Install 6 new insulators to the intake manifold.

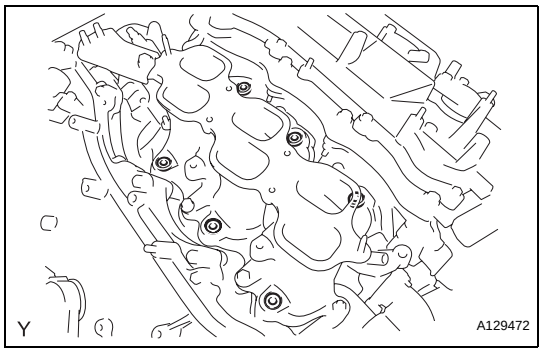

(f) Place the fuel delivery pipe which has the 6 fuel injectors installed to it in position on the intake manifold.
NOTICE:
Be careful not to drop the fuel injectors when installing the fuel delivery pipe.

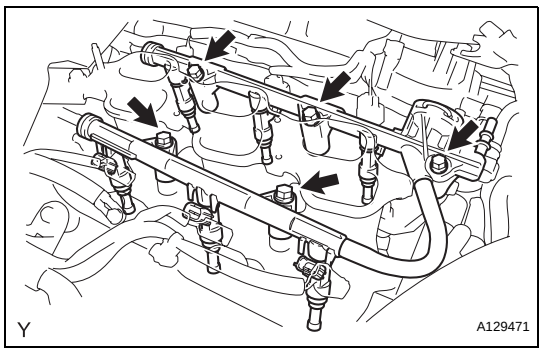

(g) Temporarily install the 5 bolts which are used to hold the fuel delivery pipe to the intake manifold.
NOTICE:
After installing the fuel injectors, check that they turn smoothly. If not, reinstall the injectors with new O-rings.

(h) Tighten the 5 bolts which are used to hold the fuel delivery pipe to the intake manifold.
Torque: 21 N*m (214 kgf*cm, 15 ft.*lbf)

(i) Connect the 6 fuel injector connectors.

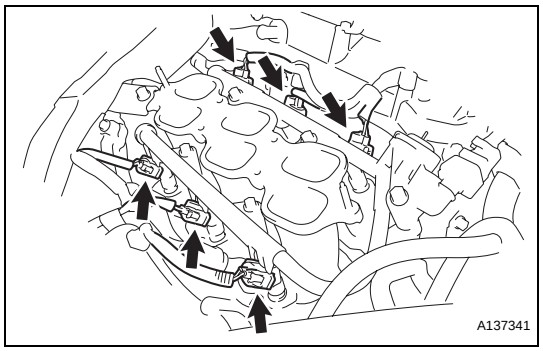

2. CONNECT FUEL TUBE SUB-ASSEMBLY

(a) Push in the tube connector onto the pipe until the tube connector makes a "click" sound.
NOTICE:
- **Before connecting the tube, make sure that it is not damaged. Make sure that there is no dirt present on the connecting surfaces.**
- **After connecting, check that the fuel tube connector and the pipe are securely connected by pulling on them.**

(b) Install the No. 2 fuel pipe clamp.

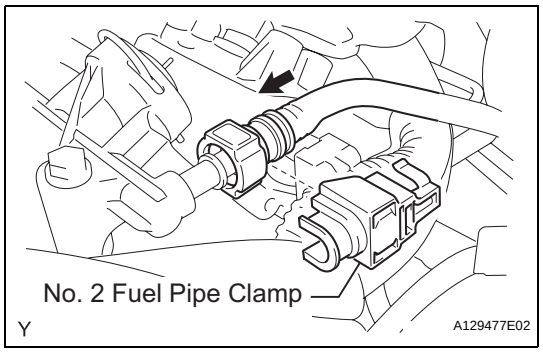

3. INSTALL INTAKE AIR SURGE TANK ASSEMBLY
NOTICE:
DO NOT apply oil to the bolts listed below:

Tightening Parts
Surge Tank and Intake Manifold
No. 1 Surge Tank Stay and Surge Tank
Throttle Body Bracket and Surge Tank

(a) Install a new gasket to the intake air surge tank.

(b) Using a 5 mm hexagon socket wrench, install the 4 bolts. (*1)
Torque: 18 N*m (184 kgf*cm, 13 ft.*lbf)

(c) Install the intake air surge tank with the 2 nuts and 2 bolts. (*2)
Torque: Nut
16 N*m (163 kgf*cm, 12 ft.*lbf)
Bolt
21 N*m (214 kgf*cm, 15 ft.*lbf)

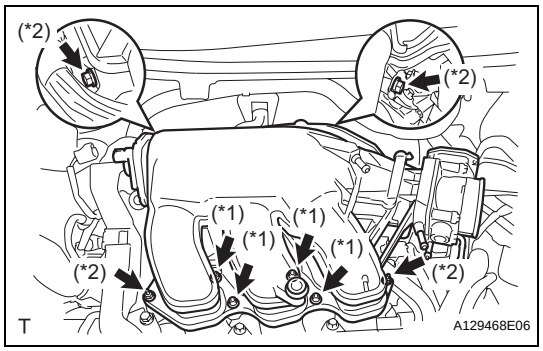

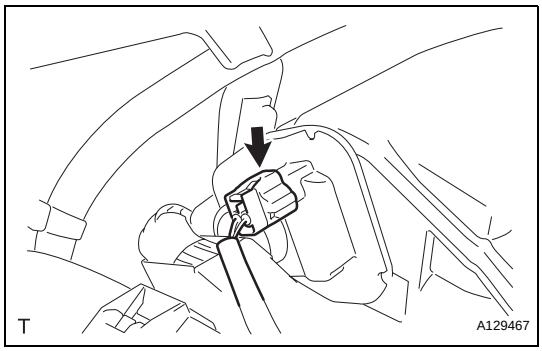

(d) Connect the connector.

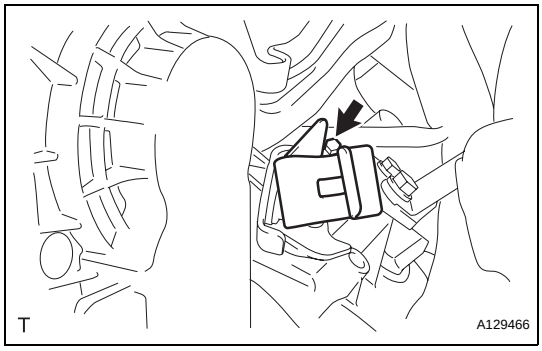

(e) Install the vacuum hose clamp with the bolt.
Torque: 5.4 N*m (55 kgf*cm, 48 in.*lbf)

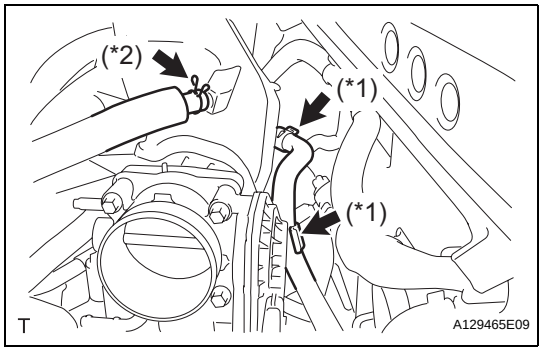

(f) Connect the union to check valve hose. (*1)
(g) Connect the No. 1 ventilation hose. (*2)

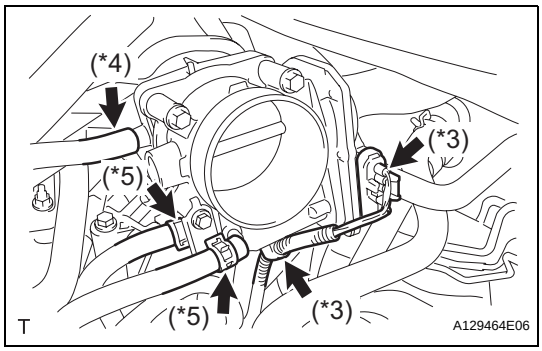

(h) Install the clamp and connect the throttle with motor body assembly connector. (*3)
(i) Connect the vapor feed hose. (*4)
(j) Connect the 2 water by-pass hoses to the throttle with motor body assembly. (*5)

4. **INSTALL AIR CLEANER CAP SUB-ASSEMBLY (See page ES-522)**
5. **ADD ENGINE COOLANT (See page CO-6)**
6. **CONNECT CABLE TO NEGATIVE BATTERY TERMINAL**
7. **CHECK FOR ENGINE COOLANT LEAKS (See page CO-1)**
8. **CHECK FOR FUEL LEAKS (See page FU-7)**
9. **INSTALL V-BANK COVER SUB-ASSEMBLY (See page EM-49)**
10. **INSTALL FRONT SUSPENSION CENTER UPPER BRACE**

11. **INSTALL ENGINE ROOM SIDE COVER RH (See page EM-50)**
12. **INSTALL ENGINE ROOM SIDE COVER LH (See page EM-50)**
13. **INSTALL COOL AIR INTAKE DUCT SEAL (See page EM-50)**
14. **PERFORM INITIALIZATION**
    (a) Perform initialization procedures (See page IN-33)
    HINT:
    Some systems need initialization after reconnecting the cable to the negative battery terminal.

FU

REMOVAL

1. **DISCHARGE FUEL SYSTEM PRESSURE**
   HINT:
   See page FU-1.
2. **DISCONNECT CABLE FROM NEGATIVE BATTERY TERMINAL**
3. **DRAIN ENGINE COOLANT (See page CO-5)**
4. **REMOVE COOL AIR INTAKE DUCT SEAL (See page EM-22)**
5. **REMOVE ENGINE ROOM SIDE COVER LH (See page EM-22)**
6. **REMOVE ENGINE ROOM SIDE COVER RH (See page EM-22)**
7. **REMOVE FRONT SUSPENSION CENTER UPPER BRACE**
8. **REMOVE V-BANK COVER SUB-ASSEMBLY (See page EM-23)**
9. **REMOVE AIR CLEANER CAP SUB-ASSEMBLY (See page ES-519)**
10. **REMOVE INTAKE AIR SURGE TANK ASSEMBLY**
    (a) Disconnect the 2 water by-pass hoses from the throttle with motor body assembly. (*1)
    (b) Disconnect the vapor feed hose. (*2)
    (c) Disconnect the throttle with motor body assembly connector and clamp. (*3)

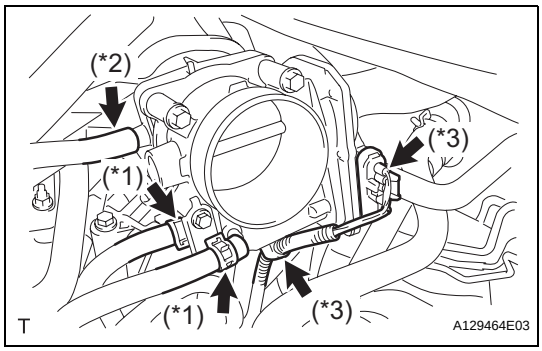

    (d) Disconnect the No. 1 ventilation hose. (*4)
    (e) Disconnect the union to check valve hose. (*5)

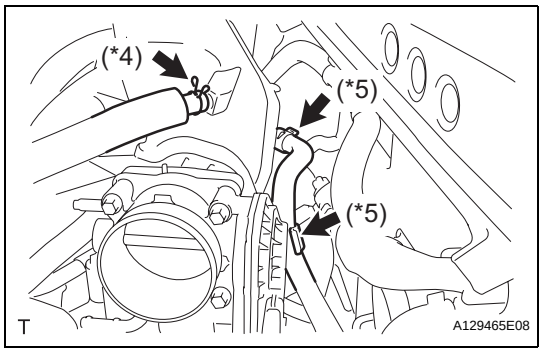

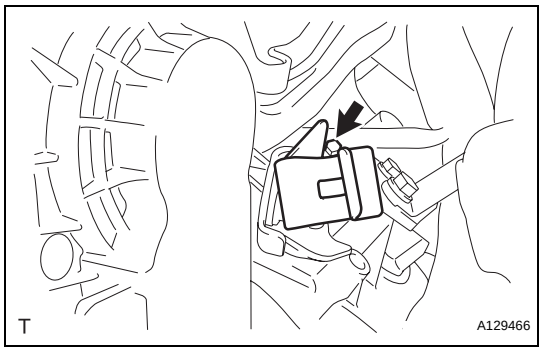

(f) Remove the bolt and vacuum hose clamp.

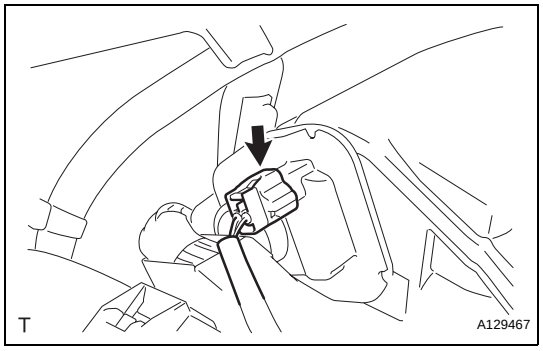

(g) Disconnect the connector.

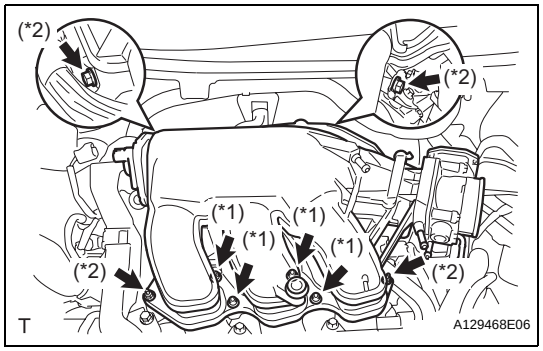

(h) Using a 5 mm socket hexagon wrench, remove the 4 bolts. (*1)
(i) Remove the 2 nuts, 2 bolts and intake air surge tank. (*2)
(j) Remove the gasket from the intake air surge tank.

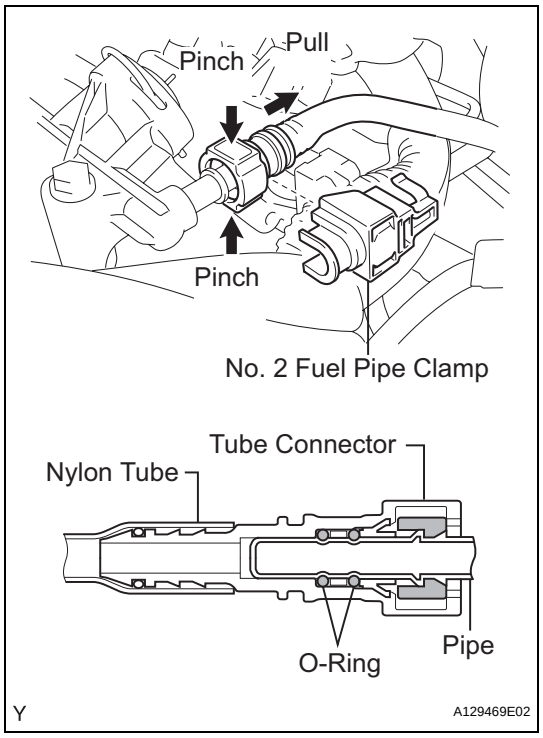

11. DISCONNECT FUEL TUBE SUB-ASSEMBLY

(a) Remove the No. 2 fuel pipe clamp.
(b) Pinch the tube connector and then pull out the fuel pipe.

NOTICE:

- **Check that there is no dirt or other foreign objects around the connector disconnecting it. Clean the connector as necessary.**
- **It is necessary to prevent mud or dirt from entering the quick connector. If mud or dirt gets in the connector, the O-rings may not seal properly.**
- **Only disconnect the quick connector by hand.**
- **Do not bend, kink or twist the nylon tubes. Protect the connector by covering it with a plastic bag.**
- **If the pipe and the connector are stuck, carefully try wiggling or pushing and pulling on the connector to release it. Pull the connector off the pipe carefully.**

12. REMOVE FUEL INJECTOR ASSEMBLY

(a) Disconnect the 6 fuel injector connectors.

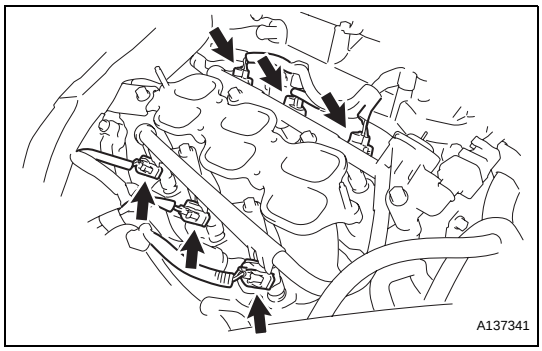

(b) Remove the 5 bolts and fuel delivery pipe together with the 6 fuel injectors.
NOTICE:
Be careful not to drop the fuel injectors when removing the fuel delivery pipe.

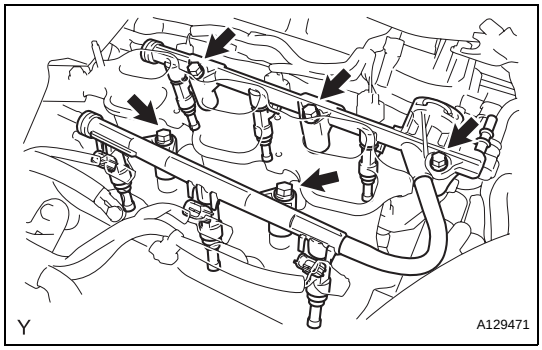

(c) Remove the 6 insulators from the intake manifold.

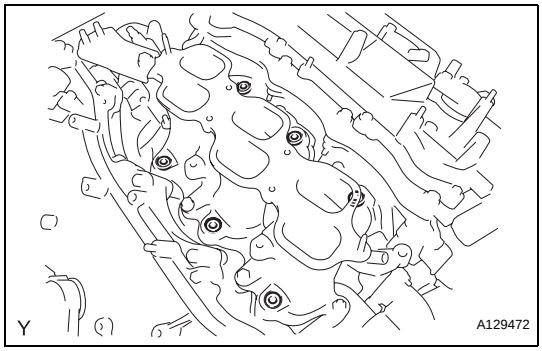

(d) Pull out the fuel injectors from the fuel delivery pipe.

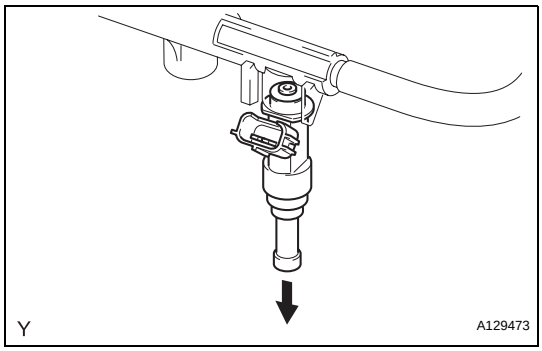

(e) Remove the 6 O-rings from the injectors.

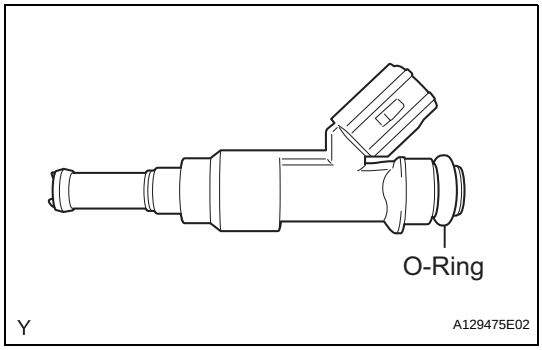

INSPECTION

1. INSPECT FUEL INJECTOR ASSEMBLY

(a) Inspect injector resistance.

(1) Using an ohmmeter, measure the resistance between the terminals.

Resistance:

11.6 to 12.4 Ω at 20°C (68°F)

If the resistance is not as specified, replace the injector.

(b) Inspect the injection volume.

CAUTION:

This test involves high-pressure fuel and electricity. Take every precaution regarding the safe handling of both fuel and electricity. Perform this test in a safe area, and avoid any sparks or flames. Do not smoke.

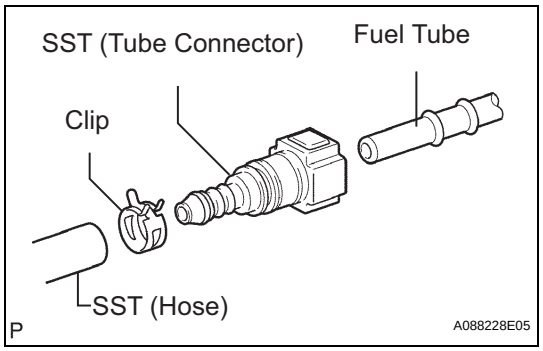

(1) Install the fuel tube connector to SST (hose), then connect the tube connector to the fuel pipe (vehicle side).

SST 09268-31011 (09268-41500, 90467-13001, 95336-08070)

(2) Install the O-ring to the fuel injector.

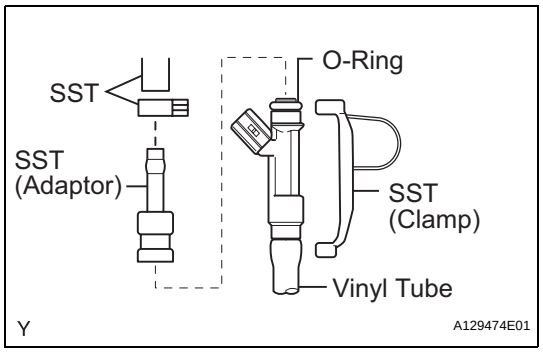

(3) Connect SST (adaptor and hose) to the injector, and hold the injector and union with SST (clamp).

SST 09268-31011 (90467-13001, 95336-08070), 09268-41140, 09268-41400

(4) Put the injector into the graduated cylinder.

CAUTION:

Install a suitable vinyl tube onto the injector to contain gasoline spray.

(5) Operate the fuel pump (See page FU-7).

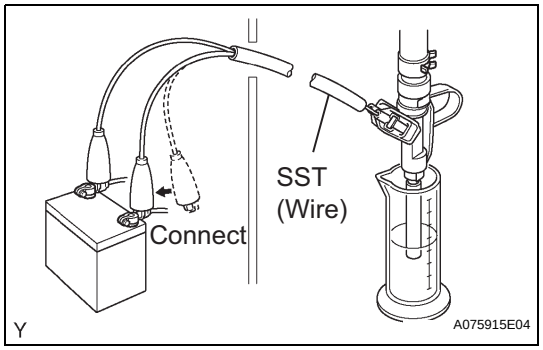

(6) Connect SST (wire) to the injector and the battery for 15 seconds, and measure the injection volume with the graduated cylinder. Test each injector 2 or 3 times.

SST 09842-30080

Volume:

84 to 100 cm^3 (5.1 to 6.0 cu in.) in 15 seconds

Difference between each injector:

16 cm^3 (0.98 cu in.) or less

If the injection volume is not as specified, replace the injector.

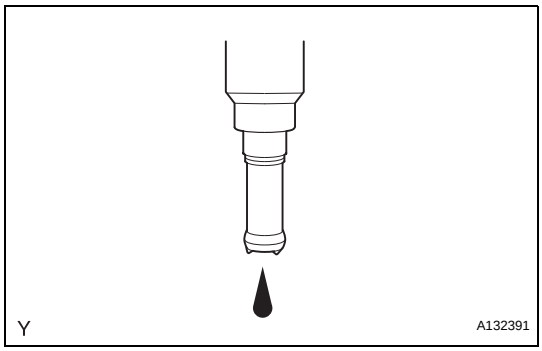

(c) Check for leakage.
  (1) In the condition above, disconnect the tester probes of SST (wire) from the battery and check for fuel leakage from the injector.
  Fuel drop:
  1 drop or less in 16 minutes

INSTALLATION

1. INSTALL FUEL INJECTOR ASSEMBLY

(a) Apply a light coat of spindle oil or gasoline to new O-rings, and install them to each injector.

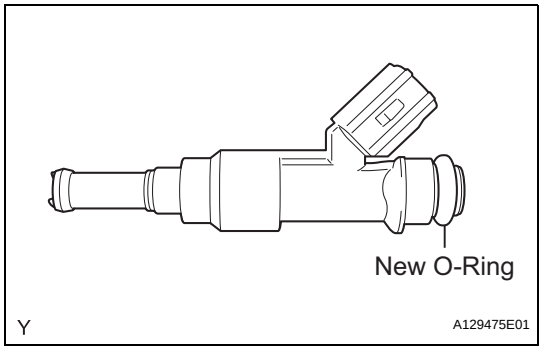

(b) Apply a light coat of spindle oil or gasoline where the fuel delivery pipe contacts the O-ring.
(c) Push the fuel injector while turning it to install the injector in the fuel delivery pipe.
(d) Position the fuel injector connector outward.
NOTICE:
- **Be careful not to twist the O-ring.**
- **After installing the fuel injector, check that it turns smoothly. If not, reinstall it with a new O-ring.**

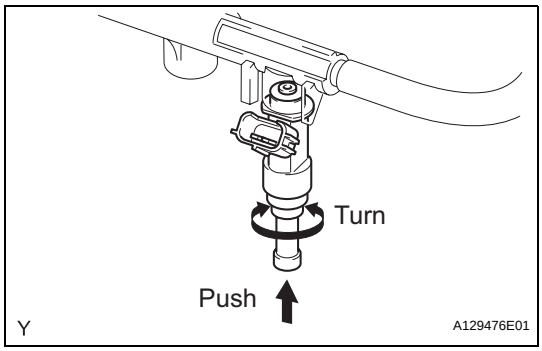

(e) Install 6 new insulators to the intake manifold.

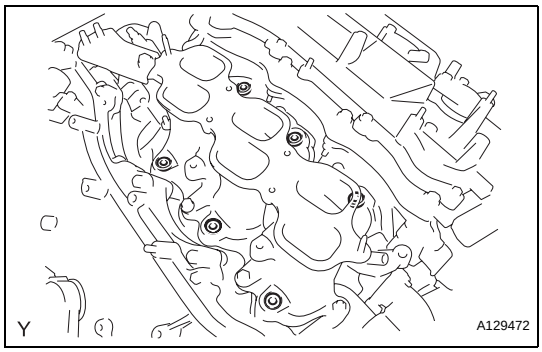

(f) Place the fuel delivery pipe which has the 6 fuel injectors installed to it in position on the intake manifold.
NOTICE:
Be careful not to drop the fuel injectors when installing the fuel delivery pipe.

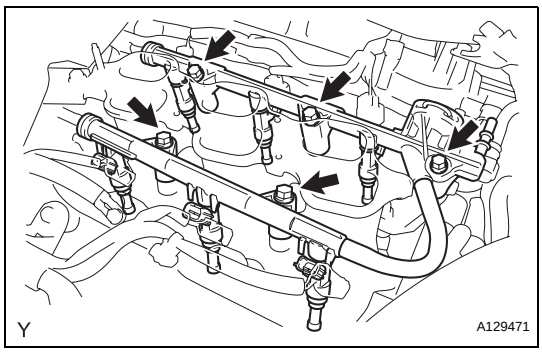

(g) Temporarily install the 5 bolts which are used to hold the fuel delivery pipe to the intake manifold.
NOTICE:
After installing the fuel injectors, check that they turn smoothly. If not, reinstall the injectors with new O-rings.

(h) Tighten the 5 bolts which are used to hold the fuel delivery pipe to the intake manifold.
Torque: 21 N*m (214 kgf*cm, 15 ft.*lbf)

(i) Connect the 6 fuel injector connectors.

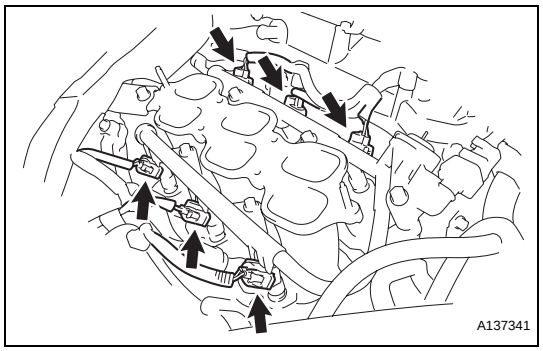

2. CONNECT FUEL TUBE SUB-ASSEMBLY

(a) Push in the tube connector onto the pipe until the tube connector makes a "click" sound.
NOTICE:
- **Before connecting the tube, make sure that it is not damaged. Make sure that there is no dirt present on the connecting surfaces.**
- **After connecting, check that the fuel tube connector and the pipe are securely connected by pulling on them.**

(b) Install the No. 2 fuel pipe clamp.

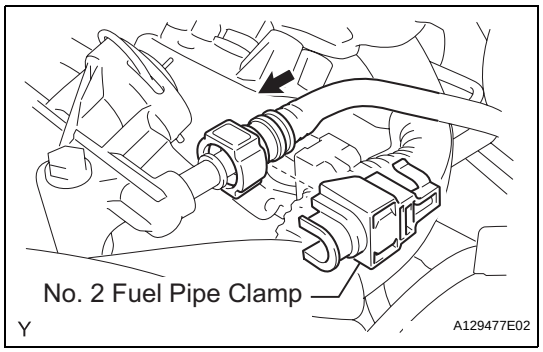

3. INSTALL INTAKE AIR SURGE TANK ASSEMBLY
NOTICE:
DO NOT apply oil to the bolts listed below:

Tightening Parts
Surge Tank and Intake Manifold
No. 1 Surge Tank Stay and Surge Tank
Throttle Body Bracket and Surge Tank

(a) Install a new gasket to the intake air surge tank.

(b) Using a 5 mm hexagon socket wrench, install the 4 bolts. (*1)
Torque: 18 N*m (184 kgf*cm, 13 ft.*lbf)

(c) Install the intake air surge tank with the 2 nuts and 2 bolts. (*2)
Torque: Nut
16 N*m (163 kgf*cm, 12 ft.*lbf)
Bolt
21 N*m (214 kgf*cm, 15 ft.*lbf)

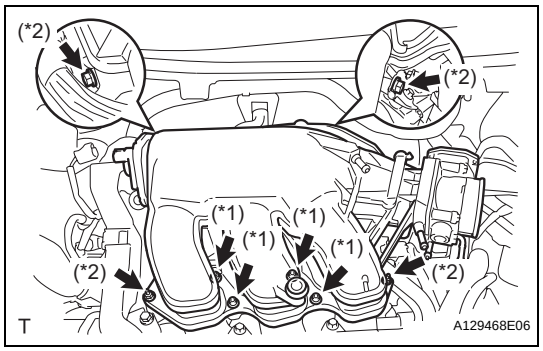

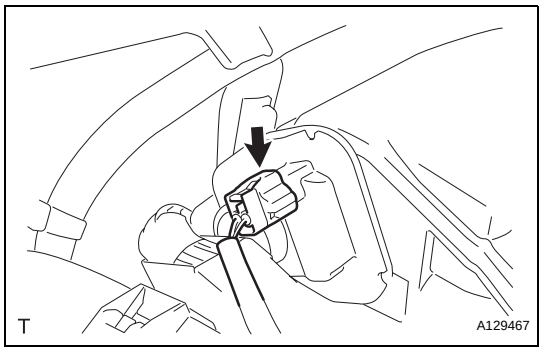

(d) Connect the connector.

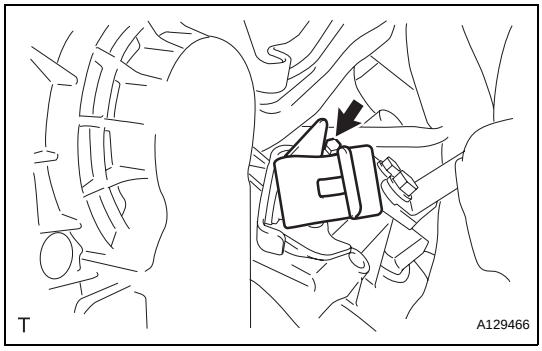

(e) Install the vacuum hose clamp with the bolt.
Torque: 5.4 N*m (55 kgf*cm, 48 in.*lbf)

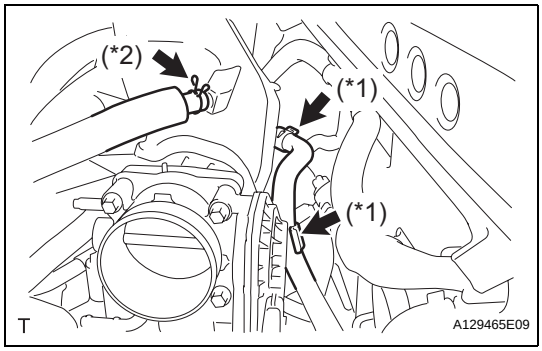

(f) Connect the union to check valve hose. (*1)
(g) Connect the No. 1 ventilation hose. (*2)

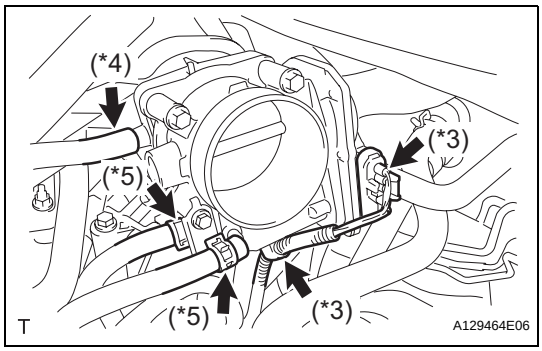

(h) Install the clamp and connect the throttle with motor body assembly connector. (*3)
(i) Connect the vapor feed hose. (*4)
(j) Connect the 2 water by-pass hoses to the throttle with motor body assembly. (*5)

4. **INSTALL AIR CLEANER CAP SUB-ASSEMBLY (See page ES-522)**
5. **ADD ENGINE COOLANT (See page CO-6)**
6. **CONNECT CABLE TO NEGATIVE BATTERY TERMINAL**
7. **CHECK FOR ENGINE COOLANT LEAKS (See page CO-1)**
8. **CHECK FOR FUEL LEAKS (See page FU-7)**
9. **INSTALL V-BANK COVER SUB-ASSEMBLY (See page EM-49)**
10. **INSTALL FRONT SUSPENSION CENTER UPPER BRACE**

11. **INSTALL ENGINE ROOM SIDE COVER RH (See page EM-50)**
12. **INSTALL ENGINE ROOM SIDE COVER LH (See page EM-50)**
13. **INSTALL COOL AIR INTAKE DUCT SEAL (See page EM-50)**
14. **PERFORM INITIALIZATION**
    (a) Perform initialization procedures (See page IN-33)
    HINT:
    Some systems need initialization after reconnecting the cable to the negative battery terminal.

FU

REMOVAL

1. **DISCHARGE FUEL SYSTEM PRESSURE**
   HINT:
   See page FU-1.
2. **DISCONNECT CABLE FROM NEGATIVE BATTERY TERMINAL**
3. **DRAIN ENGINE COOLANT (See page CO-5)**
4. **REMOVE COOL AIR INTAKE DUCT SEAL (See page EM-22)**
5. **REMOVE ENGINE ROOM SIDE COVER LH (See page EM-22)**
6. **REMOVE ENGINE ROOM SIDE COVER RH (See page EM-22)**
7. **REMOVE FRONT SUSPENSION CENTER UPPER BRACE**
8. **REMOVE V-BANK COVER SUB-ASSEMBLY (See page EM-23)**
9. **REMOVE AIR CLEANER CAP SUB-ASSEMBLY (See page ES-519)**
10. **REMOVE INTAKE AIR SURGE TANK ASSEMBLY (See page FU-12)**
11. **REMOVE FUEL PRESSURE PULSATION DAMPER ASSEMBLY**
    (a) Remove the clip.
    (b) Pull out the fuel pressure pulsation damper from the fuel delivery pipe.
    (c) Remove the O-ring from the fuel pressure pulsation damper.

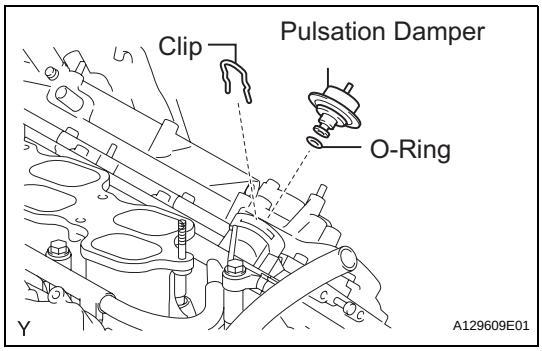

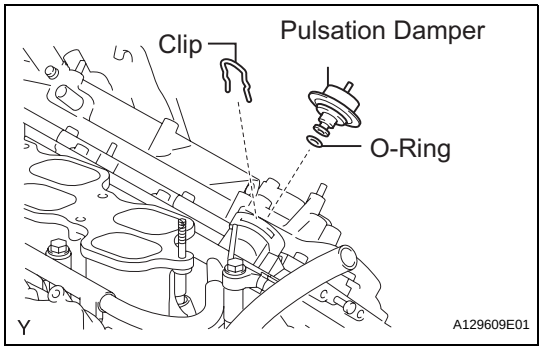

INSTALLATION

1. **INSTALL FUEL PRESSURE PULSATION DAMPER ASSEMBLY**
   (a) Apply a light coat of spindle oil or gasoline to a new O-ring and install it to the fuel pressure pulsation damper.
   (b) Install the fuel pressure pulsation damper to the fuel delivery pipe.
   (c) Install the clip.
2. **INSTALL INTAKE AIR SURGE TANK ASSEMBLY (See page FU-17)**
3. **INSTALL AIR CLEANER CAP SUB-ASSEMBLY (See page ES-522)**
4. **ADD ENGINE COOLANT (See page CO-6)**

5. **CONNECT CABLE TO NEGATIVE BATTERY TERMINAL**
6. **CHECK FOR ENGINE COOLANT LEAKS (See page CO-1)**
7. **CHECK FOR FUEL LEAKS (See page FU-7)**
8. **INSTALL V-BANK COVER SUB-ASSEMBLY (See page EM-49)**
9. **INSTALL FRONT SUSPENSION CENTER UPPER BRACE**
10. **INSTALL ENGINE ROOM SIDE COVER RH (See page EM-50)**
11. **INSTALL ENGINE ROOM SIDE COVER LH (See page EM-50)**
12. **INSTALL COOL AIR INTAKE DUCT SEAL (See page EM-50)**
13. **PERFORM INITIALIZATION**
    (a) Perform initialization procedures (See page IN-33)
    HINT:
    Some systems need initialization after reconnecting the cable to the negative battery terminal.

REMOVAL

1. DISCHARGE FUEL SYSTEM PRESSURE

HINT:

See page FU-1.

2. DISCONNECT CABLE FROM NEGATIVE BATTERY TERMINAL

3. REMOVE REAR SEAT CUSHION ASSEMBLY (See page SE-113)

4. REMOVE REAR FLOOR SERVICE HOLE COVER

(a) Remove the rear floor service hole cover.

(b) Disconnect the fuel pump connector.

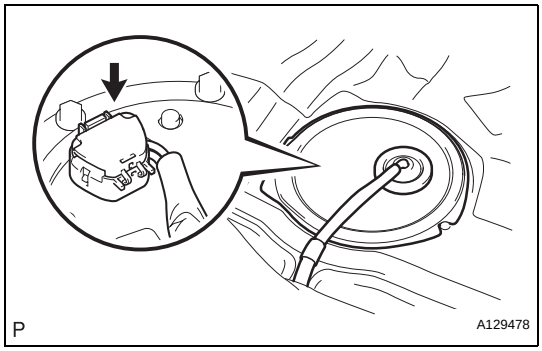

5. SEPARATE FUEL PUMP TUBE SUB-ASSEMBLY

(a) Remove the tube joint clip, and pull out the fuel pump tube.

NOTICE:

- **Check that there is no dirt or other foreign objects around the connector before disconnecting it. Clean the connector if necessary.**
- **It is necessary to prevent mud or dirt from entering the quick connector. If mud or dirt gets in the connector, the O-rings may not seal properly.**
- **Only disconnect the quick connector by hand.**
- **Do not bend, kink or twist the nylon tubes. Protect the connector by covering it with a plastic bag.**
- **If the pipe and connector are stuck, carefully try wiggling or pushing and pulling on the connector to release it. Pull the connector off carefully.**

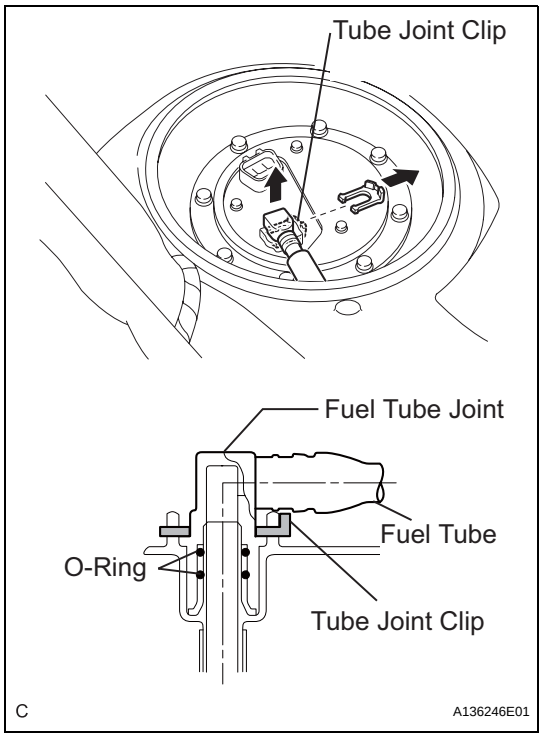

6. REMOVE FUEL TANK VENT TUBE SET PLATE

(a) Remove the 8 bolts and set plate.

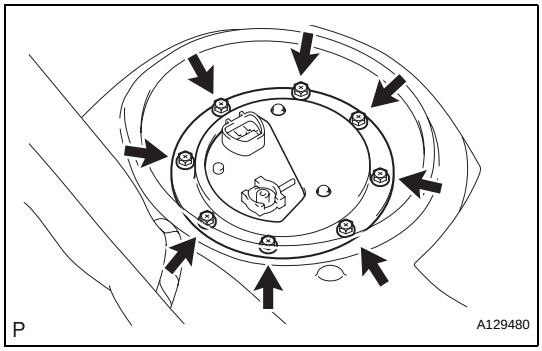

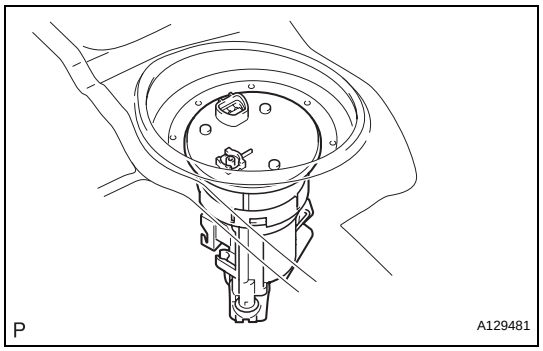

7. REMOVE FUEL SUCTION TUBE ASSEMBLY WITH PUMP AND GAUGE

(a) Pull out the fuel suction tube from the fuel tank.
NOTICE:
- **Do not damage the fuel pump filter.**
- **Be careful that the arm of the sender gauge does not bend.**

(b) Remove the gasket from the fuel suction tube.

DISASSEMBLY

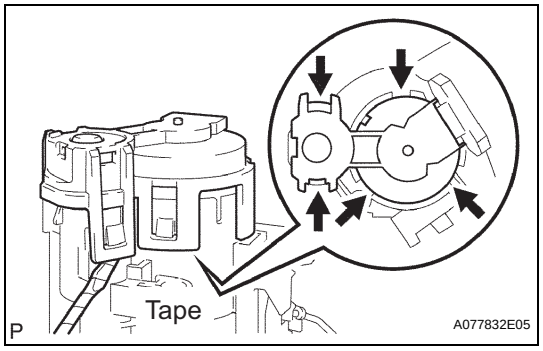

1. REMOVE NO. 2 FUEL SUCTION SUPPORT

(a) Using a screwdriver with its tip wrapped with tape, disengage the 5 snap claws from the claw holes, and remove the No. 2 fuel suction support.
NOTICE:
Do not damage the fuel suction support.

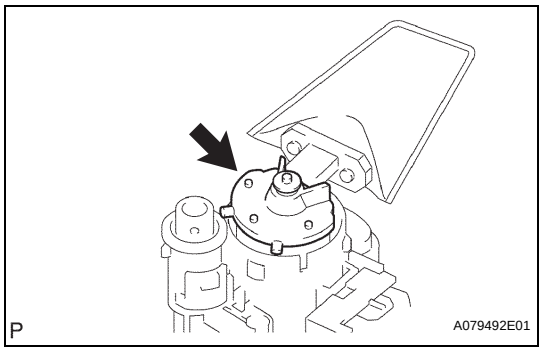

2. REMOVE FUEL PUMP CUSHION RUBBER

(a) Remove the fuel pump cushion rubber from the fuel pump.

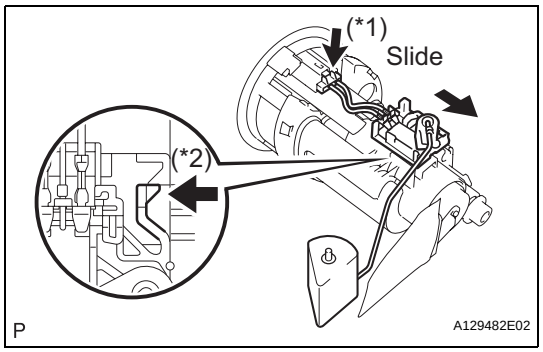

3. REMOVE FUEL SENDER GAUGE ASSEMBLY

(a) Disconnect the fuel sender gauge connector (*1).
(b) Unlock the fuel sender gauge, and slide it to remove (*2).

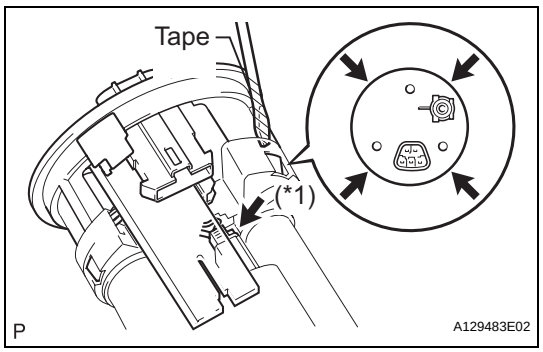

4. REMOVE FUEL SUCTION PLATE SUB-ASSEMBLY

(a) Disconnect the fuel pump connector (*1).
(b) Using a screwdriver with its tip wrapped with tape, disengage the 4 snap claws from the claw holes, and pull out the fuel suction plate.
NOTICE:
Do not damage the fuel suction support.

REMOVAL

1. DISCHARGE FUEL SYSTEM PRESSURE

HINT:

See page FU-1.

2. DISCONNECT CABLE FROM NEGATIVE BATTERY TERMINAL

3. REMOVE REAR SEAT CUSHION ASSEMBLY (See page SE-113)

4. REMOVE REAR FLOOR SERVICE HOLE COVER

(a) Remove the rear floor service hole cover.

(b) Disconnect the fuel pump connector.

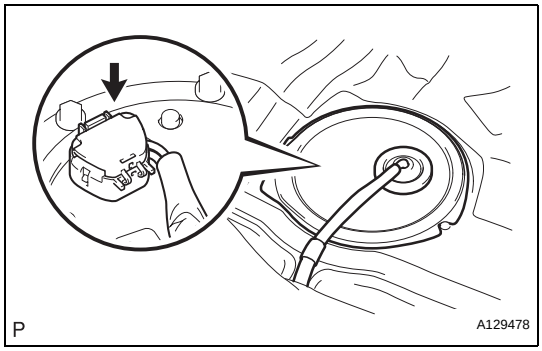

5. SEPARATE FUEL PUMP TUBE SUB-ASSEMBLY

(a) Remove the tube joint clip, and pull out the fuel pump tube.

NOTICE:

- **Check that there is no dirt or other foreign objects around the connector before disconnecting it. Clean the connector if necessary.**
- **It is necessary to prevent mud or dirt from entering the quick connector. If mud or dirt gets in the connector, the O-rings may not seal properly.**
- **Only disconnect the quick connector by hand.**
- **Do not bend, kink or twist the nylon tubes. Protect the connector by covering it with a plastic bag.**
- **If the pipe and connector are stuck, carefully try wiggling or pushing and pulling on the connector to release it. Pull the connector off carefully.**

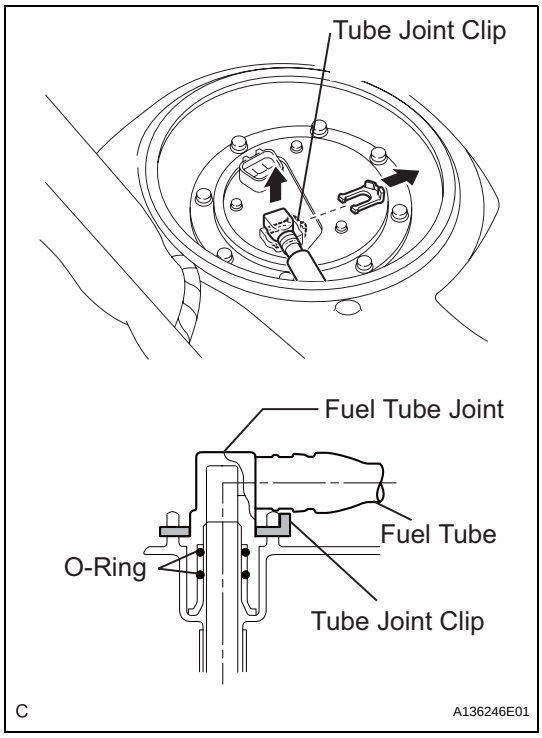

6. REMOVE FUEL TANK VENT TUBE SET PLATE

(a) Remove the 8 bolts and set plate.

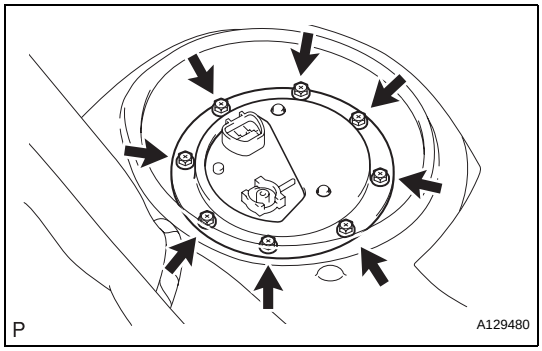

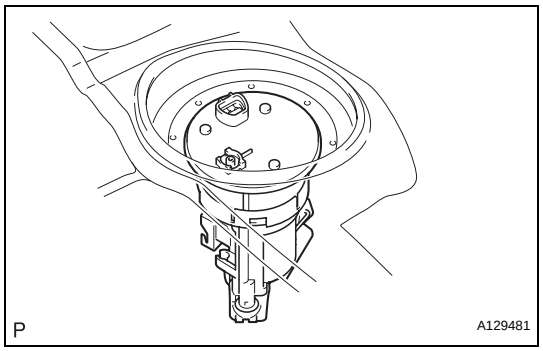

7. REMOVE FUEL SUCTION TUBE ASSEMBLY WITH PUMP AND GAUGE

(a) Pull out the fuel suction tube from the fuel tank.
NOTICE:
- **Do not damage the fuel pump filter.**
- **Be careful that the arm of the sender gauge does not bend.**

(b) Remove the gasket from the fuel suction tube.

DISASSEMBLY

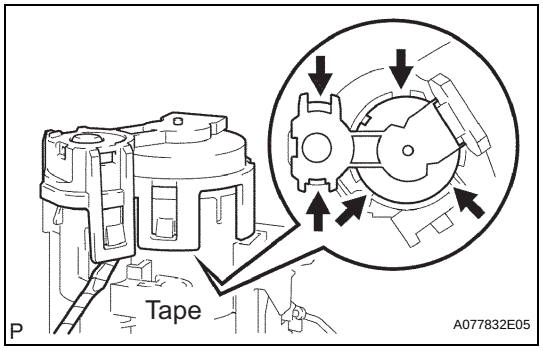

1. REMOVE NO. 2 FUEL SUCTION SUPPORT

(a) Using a screwdriver with its tip wrapped with tape, disengage the 5 snap claws from the claw holes, and remove the No. 2 fuel suction support.
NOTICE:
Do not damage the fuel suction support.

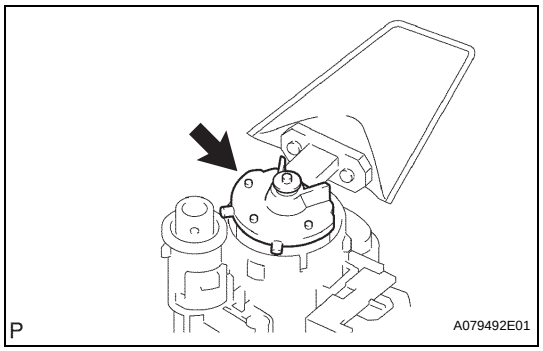

2. REMOVE FUEL PUMP CUSHION RUBBER

(a) Remove the fuel pump cushion rubber from the fuel pump.

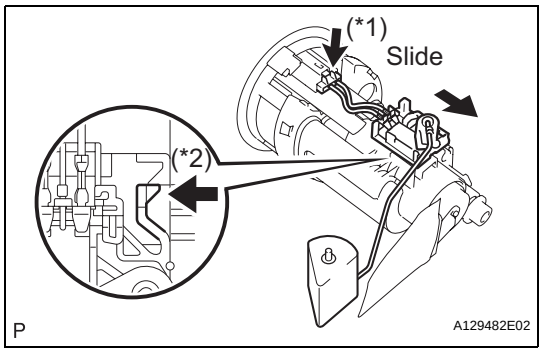

3. REMOVE FUEL SENDER GAUGE ASSEMBLY

(a) Disconnect the fuel sender gauge connector (*1).
(b) Unlock the fuel sender gauge, and slide it to remove (*2).

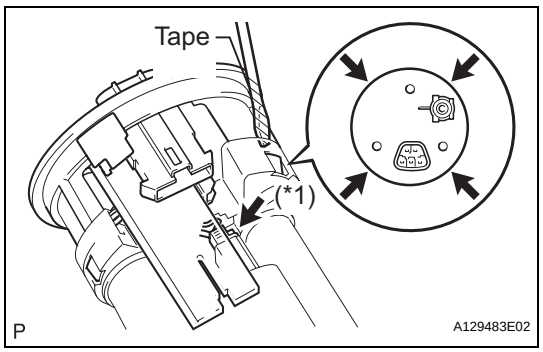

4. REMOVE FUEL SUCTION PLATE SUB-ASSEMBLY

(a) Disconnect the fuel pump connector (*1).
(b) Using a screwdriver with its tip wrapped with tape, disengage the 4 snap claws from the claw holes, and pull out the fuel suction plate.
NOTICE:
Do not damage the fuel suction support.

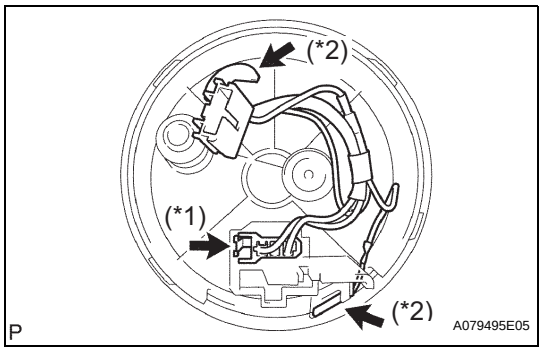

5. REMOVE FUEL PUMP HARNESS

(a) Disconnect the connector (*1).

(b) Using a screwdriver, pry out the fuel pump harness (*2).

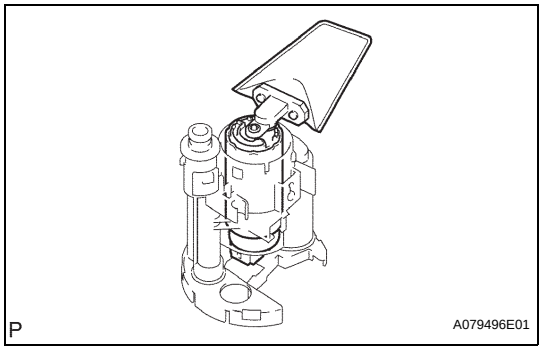

6. REMOVE FUEL PUMP

(a) Pull out the fuel pump from the fuel filter.

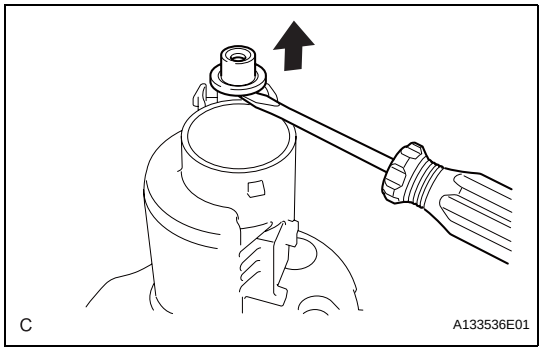

7. REMOVE FUEL PRESSURE REGULATOR ASSEMBLY

(a) Pull out the fuel pressure regulator from the fuel filter.

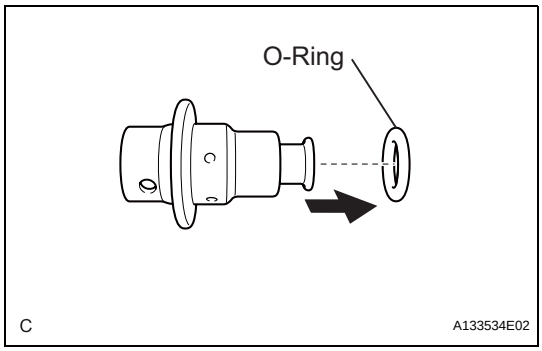

(b) Remove the O-ring from the fuel pressure regulator.

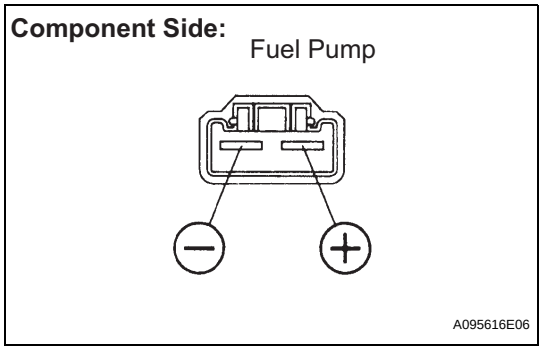

INSPECTION

1. INSPECT FUEL PUMP

(a) Inspect fuel pump resistance.

(1) Using an ohmmeter, measure the resistance between the terminals.

Resistance:

0.2 to 3.0 Ω at 20°C (68°F)

If the result is not as specified, replace the fuel pump assembly.

FU

(b) Inspect fuel pump operation.

(1) Apply battery voltage to both the terminals. Check that the pump operates.

NOTICE:

- **These tests must be done quickly (within 10 seconds) to prevent damage to the pump.**
- **Keep the fuel pump as far away from the battery as possible.**
- **Always switch the voltage on and off on the battery side, not on the fuel pump side.**

If the pump does not operate, replace the fuel pump assembly.

REASSEMBLY

1. INSTALL FUEL PRESSURE REGULATOR ASSEMBLY

(a) Apply a light coat of spindle oil or gasoline to a new O-ring, and install it to the fuel pressure regulator.

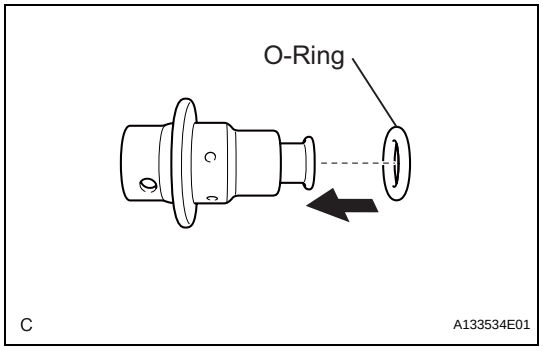

(b) Push in the fuel pressure regulator to the fuel filter.

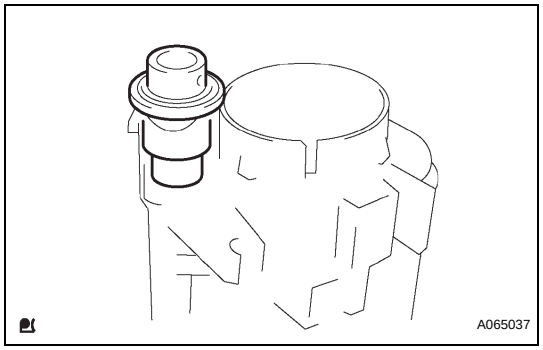

2. INSTALL FUEL PUMP

(a) Apply a light coat of gasoline or grease to the O-ring of the fuel pump.

(b) Push in the fuel pump to the fuel filter.

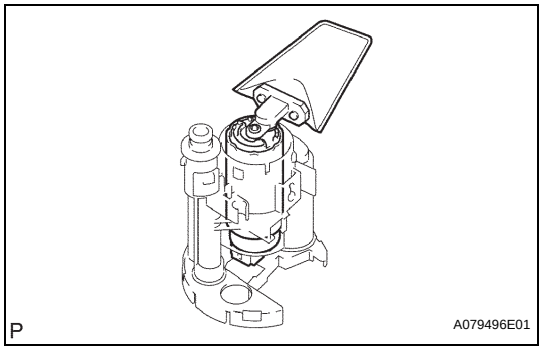

FU

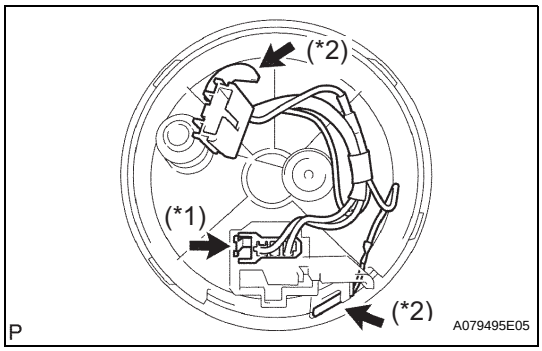

3. INSTALL FUEL PUMP HARNESS

(a) Connect the connector (*1).

(b) Install the fuel pump harness (*2).

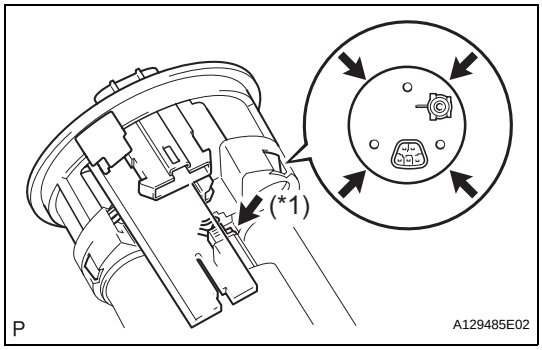

4. INSTALL FUEL SUCTION PLATE SUB-ASSEMBLY

(a) Connect the fuel pump connector (*1).

(b) Install the fuel suction plate.

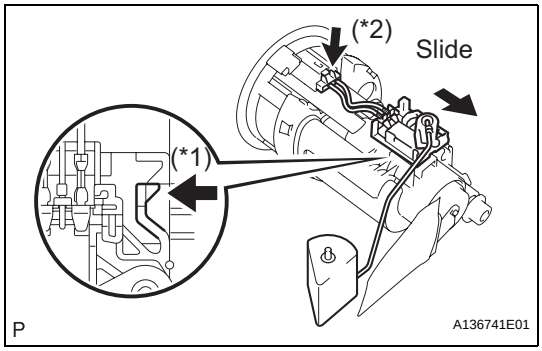

5. INSTALL FUEL SENDER GAUGE ASSEMBLY

(a) Slide the fuel sender gauge to engage with the claw (*1).

(b) Connect the fuel sender gauge connector (*2).

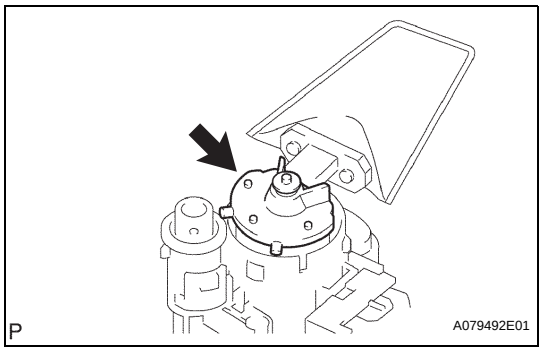

6. INSTALL FUEL PUMP CUSHION RUBBER

(a) Install the fuel pump cushion rubber to the fuel pump.

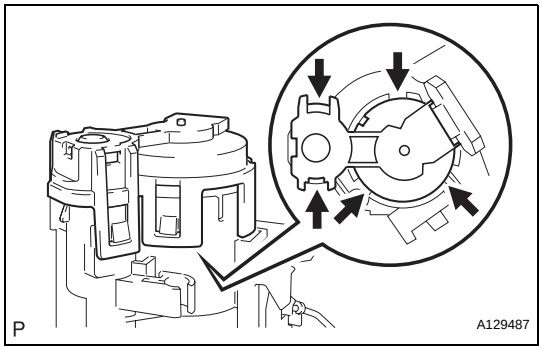

7. INSTALL NO. 2 FUEL SUCTION SUPPORT

(a) Install the No. 2 fuel suction support.

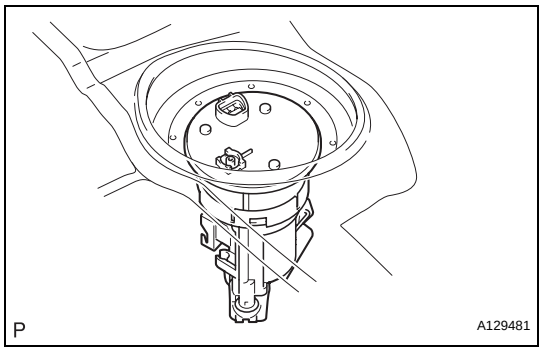

INSTALLATION

1. **INSTALL FUEL SUCTION TUBE ASSEMBLY WITH PUMP AND GAUGE**
   (a) Install a new gasket to the fuel suction tube.
   (b) Install the fuel suction tube.
   NOTICE:
   - **Do not damage the fuel pump filter.**
   - **Be careful that the arm of the sender gauge does not bend.**

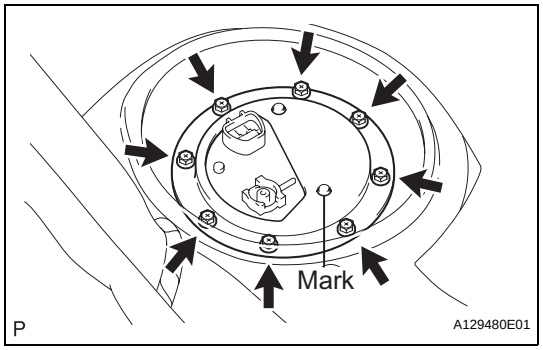

2. **INSTALL FUEL TANK VENT TUBE SET PLATE**
   (a) Align the mark of the set plate with the fuel suction tube.
   (b) Install the set plate with the 8 bolts.
   Torque: 5.9 N*m (60 kgf*cm, 52 in.*lbf)

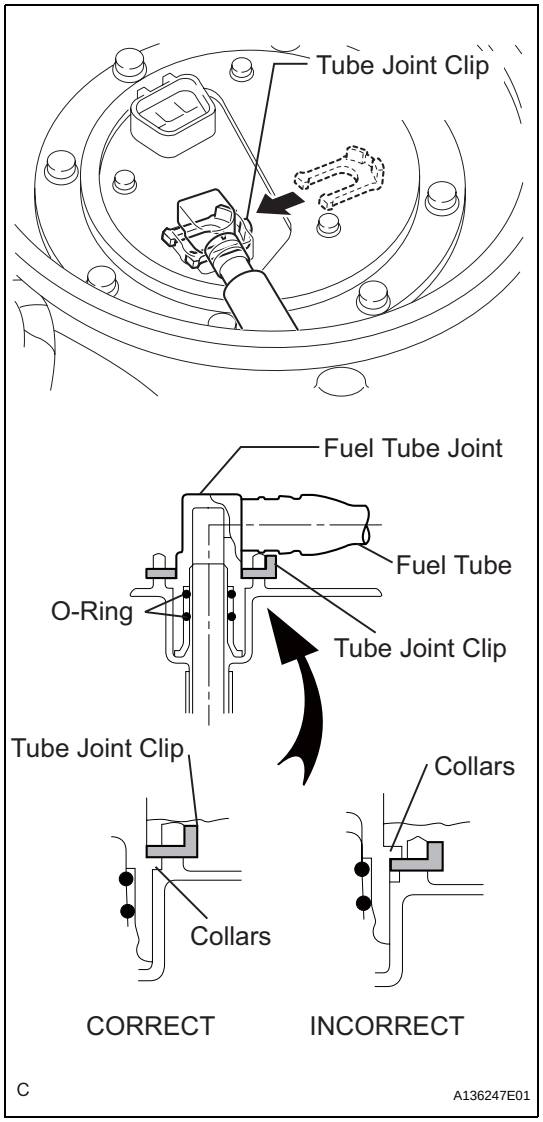

3. **CONNECT FUEL PUMP TUBE SUB-ASSEMBLY**
   (a) Install the fuel pump tube with the tube joint clip.
   NOTICE:
   - **Check that there are no scratches or foreign objects on the connecting part.**
   - **Check that the fuel tube joint is inserted securely.**
   - **Check that the tube joint clip is correctly located on the collar of the fuel tube joint.**
   - **After installing the tube joint clip, check that the fuel tube joint is pulled out of position.**
4. **CONNECT CABLE TO NEGATIVE BATTERY TERMINAL**
5. **CHECK FOR FUEL LEAKS (See page FU-7)**

FU

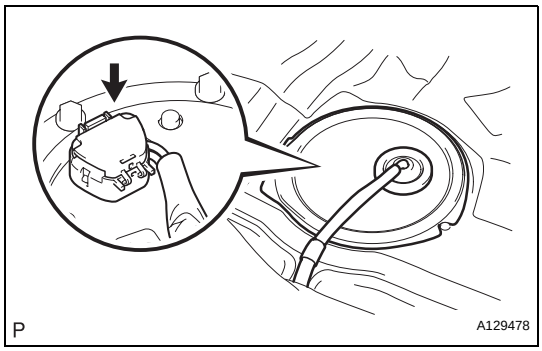

6. INSTALL REAR FLOOR SERVICE HOLE COVER

(a) Connect the fuel pump connector.

(b) Install the rear floor service hole cover with new butyl tape.

7. INSTALL REAR SEAT CUSHION ASSEMBLY (See page SE-121)

8. PERFORM INITIALIZATION

(a) Perform initialization procedures (See page IN-33)

HINT:

Some systems need initialization after reconnecting the cable to the negative battery terminal.

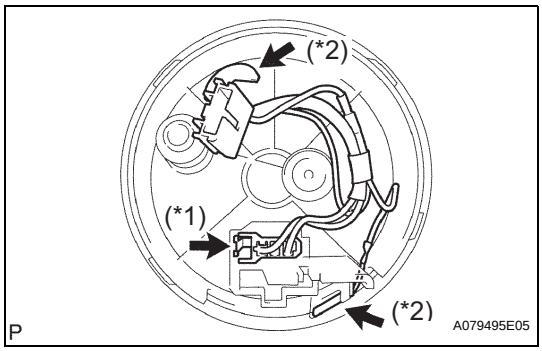

5. REMOVE FUEL PUMP HARNESS

(a) Disconnect the connector (*1).

(b) Using a screwdriver, pry out the fuel pump harness (*2).

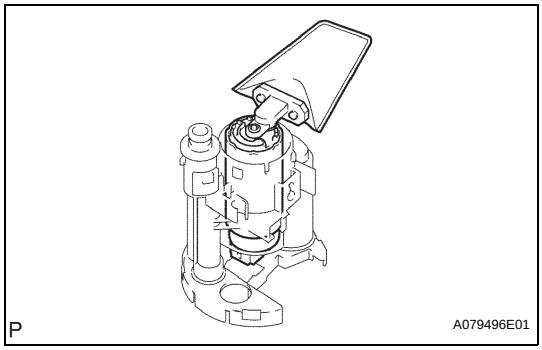

6. REMOVE FUEL PUMP

(a) Pull out the fuel pump from the fuel filter.

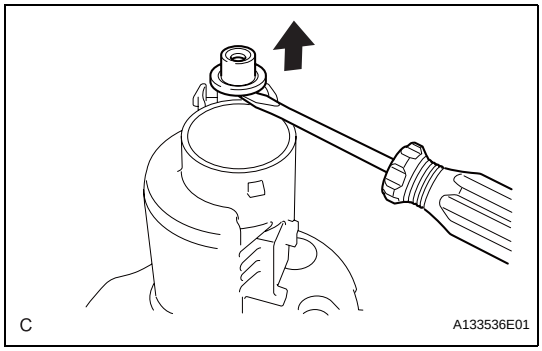

7. REMOVE FUEL PRESSURE REGULATOR ASSEMBLY

(a) Pull out the fuel pressure regulator from the fuel filter.

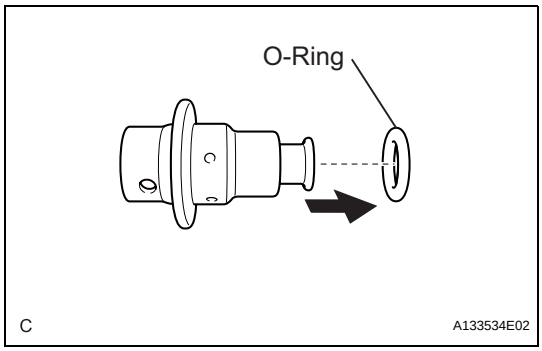

(b) Remove the O-ring from the fuel pressure regulator.

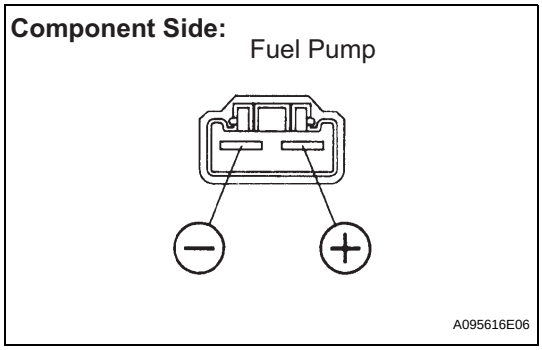

INSPECTION

1. INSPECT FUEL PUMP

(a) Inspect fuel pump resistance.

(1) Using an ohmmeter, measure the resistance between the terminals.

Resistance:

0.2 to 3.0 Ω at 20°C (68°F)

If the result is not as specified, replace the fuel pump assembly.

FU

(b) Inspect fuel pump operation.

(1) Apply battery voltage to both the terminals. Check that the pump operates.

NOTICE:

- **These tests must be done quickly (within 10 seconds) to prevent damage to the pump.**
- **Keep the fuel pump as far away from the battery as possible.**
- **Always switch the voltage on and off on the battery side, not on the fuel pump side.**

If the pump does not operate, replace the fuel pump assembly.

REASSEMBLY

1. INSTALL FUEL PRESSURE REGULATOR ASSEMBLY

(a) Apply a light coat of spindle oil or gasoline to a new O-ring, and install it to the fuel pressure regulator.

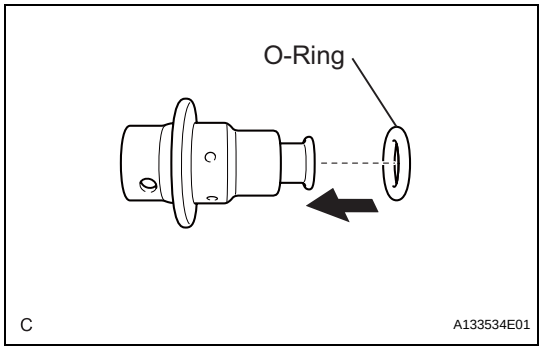

(b) Push in the fuel pressure regulator to the fuel filter.

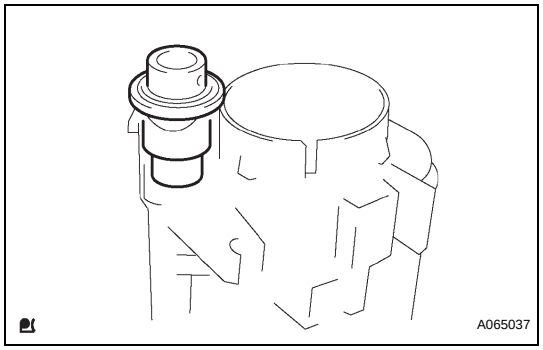

2. INSTALL FUEL PUMP

(a) Apply a light coat of gasoline or grease to the O-ring of the fuel pump.

(b) Push in the fuel pump to the fuel filter.

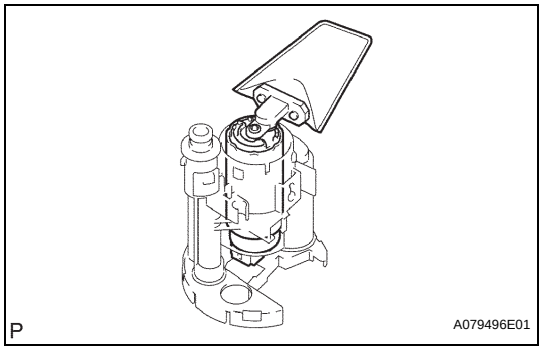

FU

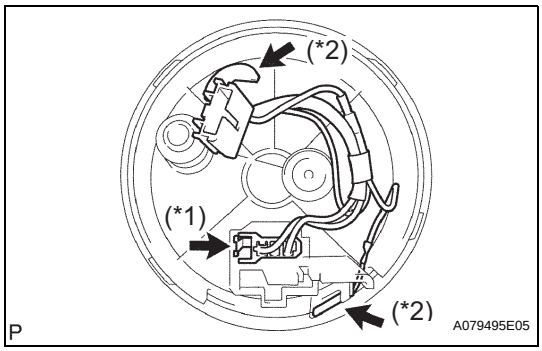

3. INSTALL FUEL PUMP HARNESS

(a) Connect the connector (*1).

(b) Install the fuel pump harness (*2).

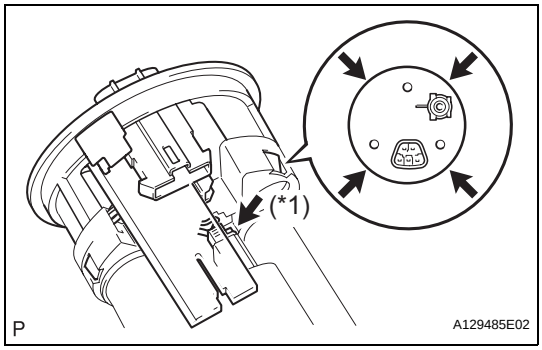

4. INSTALL FUEL SUCTION PLATE SUB-ASSEMBLY

(a) Connect the fuel pump connector (*1).

(b) Install the fuel suction plate.

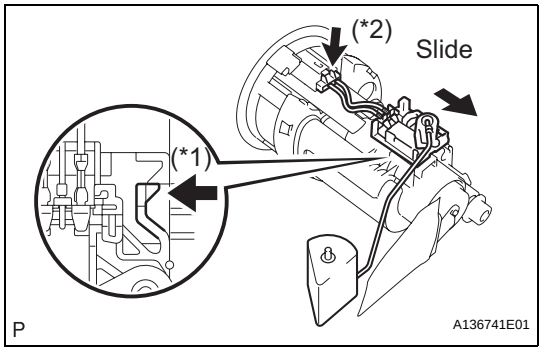

5. INSTALL FUEL SENDER GAUGE ASSEMBLY

(a) Slide the fuel sender gauge to engage with the claw (*1).

(b) Connect the fuel sender gauge connector (*2).

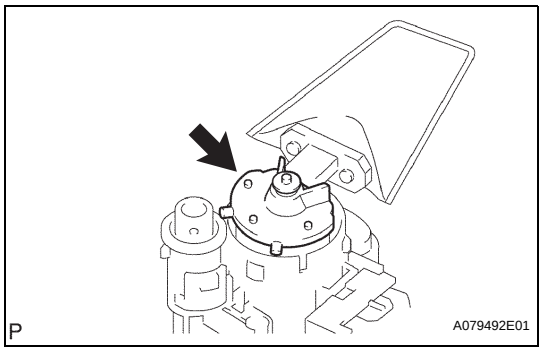

6. INSTALL FUEL PUMP CUSHION RUBBER

(a) Install the fuel pump cushion rubber to the fuel pump.

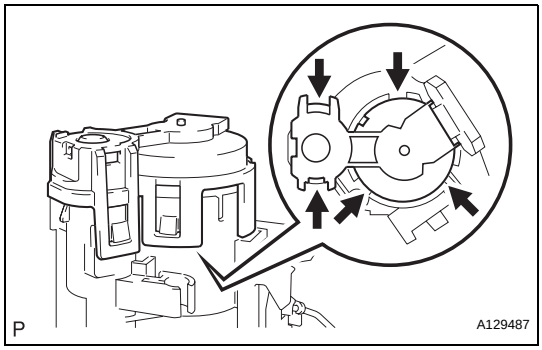

7. INSTALL NO. 2 FUEL SUCTION SUPPORT

(a) Install the No. 2 fuel suction support.

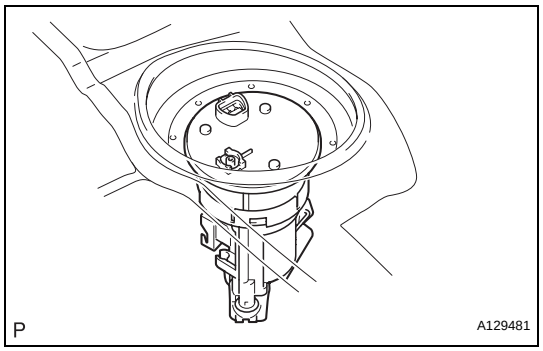

INSTALLATION

1. **INSTALL FUEL SUCTION TUBE ASSEMBLY WITH PUMP AND GAUGE**
   (a) Install a new gasket to the fuel suction tube.
   (b) Install the fuel suction tube.
   NOTICE:
   - **Do not damage the fuel pump filter.**
   - **Be careful that the arm of the sender gauge does not bend.**

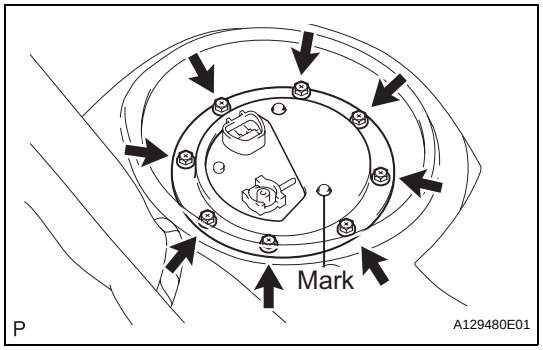

2. **INSTALL FUEL TANK VENT TUBE SET PLATE**
   (a) Align the mark of the set plate with the fuel suction tube.
   (b) Install the set plate with the 8 bolts.
   Torque: 5.9 N*m (60 kgf*cm, 52 in.*lbf)

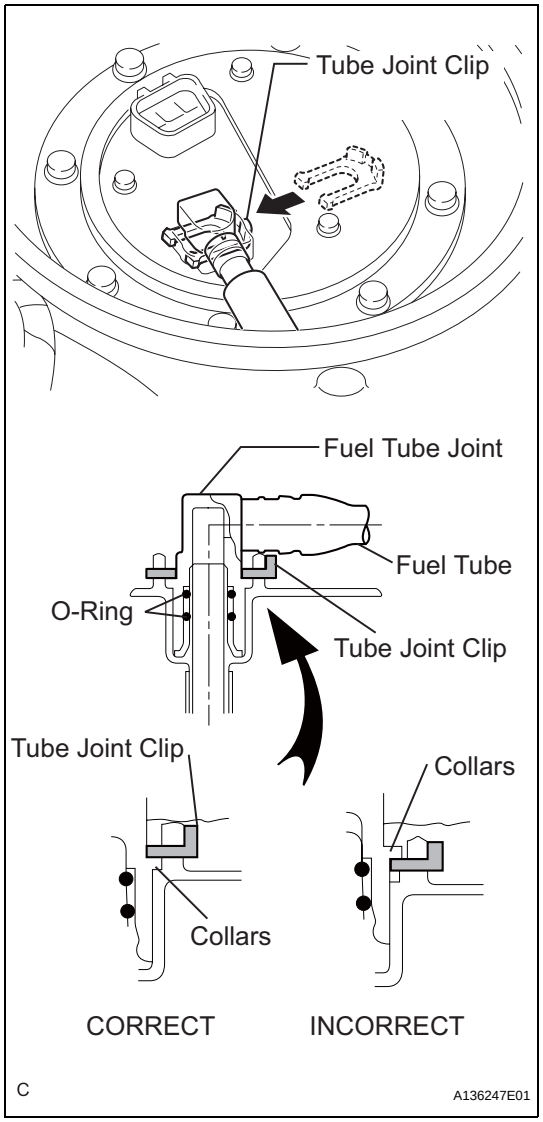

3. **CONNECT FUEL PUMP TUBE SUB-ASSEMBLY**
   (a) Install the fuel pump tube with the tube joint clip.
   NOTICE:
   - **Check that there are no scratches or foreign objects on the connecting part.**
   - **Check that the fuel tube joint is inserted securely.**
   - **Check that the tube joint clip is correctly located on the collar of the fuel tube joint.**
   - **After installing the tube joint clip, check that the fuel tube joint is pulled out of position.**
4. **CONNECT CABLE TO NEGATIVE BATTERY TERMINAL**
5. **CHECK FOR FUEL LEAKS (See page FU-7)**

FU

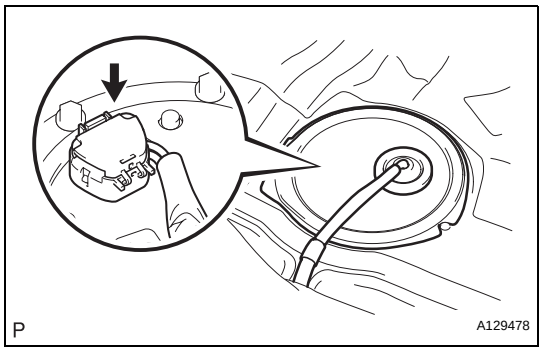

6. INSTALL REAR FLOOR SERVICE HOLE COVER

(a) Connect the fuel pump connector.

(b) Install the rear floor service hole cover with new butyl tape.

7. INSTALL REAR SEAT CUSHION ASSEMBLY (See page SE-121)

8. PERFORM INITIALIZATION

(a) Perform initialization procedures (See page IN-33)

HINT:

Some systems need initialization after reconnecting the cable to the negative battery terminal.

FU

REMOVAL

1. **DISCHARGE FUEL SYSTEM PRESSURE**
   HINT:
   See page FU-1.

2. **DISCONNECT CABLE FROM NEGATIVE BATTERY TERMINAL**

3. **REMOVE REAR SEAT CUSHION ASSEMBLY (See page SE-113)**

4. **REMOVE REAR FLOOR SERVICE HOLE COVER (See page FU-26)**

5. **SEPARATE FUEL PUMP TUBE SUB-ASSEMBLY (See page FU-26)**

6. **REMOVE FUEL TANK VENT TUBE SET PLATE (See page FU-26)**

7. **REMOVE FUEL SUCTION TUBE ASSEMBLY WITH PUMP AND GAUGE (See page FU-27)**

8. **DRAIN FUEL**

9. **REMOVE CENTER EXHAUST PIPE ASSEMBLY**
   See page EX-2

10. **REMOVE FRONT FLOOR BRACE RH**
    (a) Remove the bolt and 2 nuts, and remove the front floor brace RH.

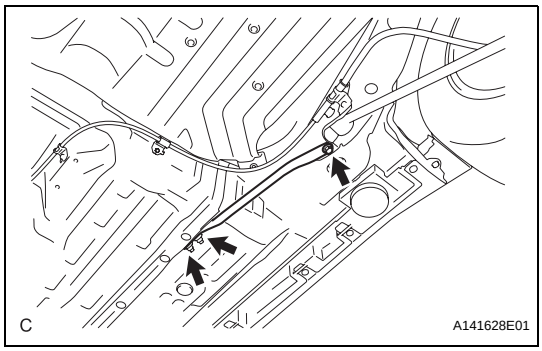

11. **REMOVE FRONT FLOOR BRACE LH**
    (a) Remove the bolt and 2 nuts, and remove the front floor brace LH.

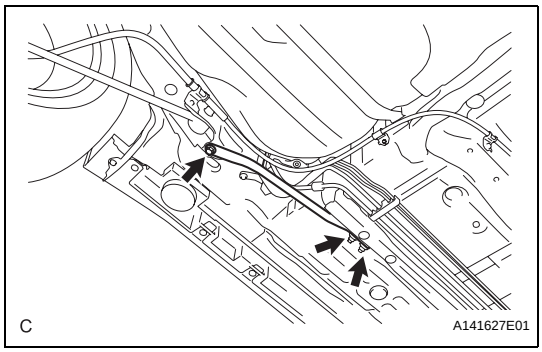

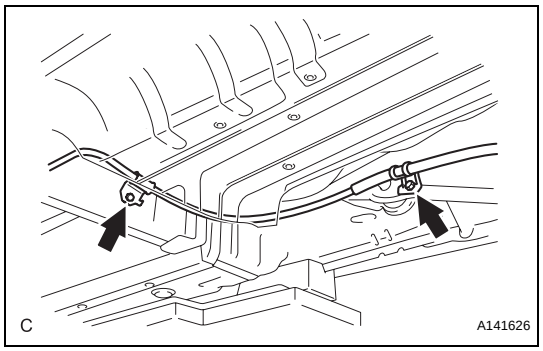

12. DISCONNECT NO. 2 PARKING BRAKE CABLE ASSEMBLY

(a) Remove the set bolt and set nut of the No. 2 parking brake cable assembly.

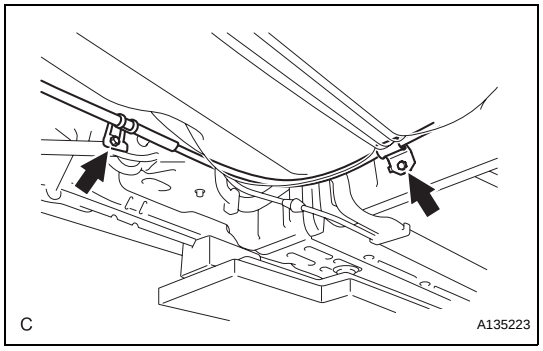

13. DISCONNECT NO. 3 PARKING BRAKE CABLE ASSEMBLY

(a) Remove the set bolt and set nut of the No. 3 parking brake cable assembly.

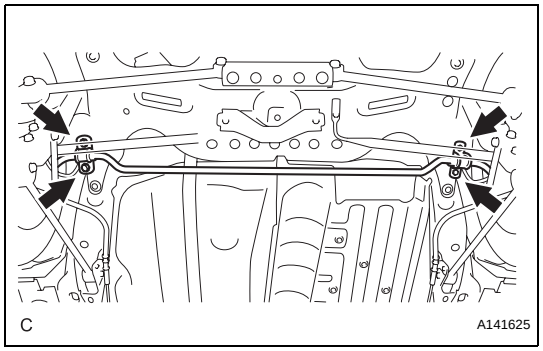

14. REMOVE REAR STABILIZER BAR NO. 1 BRACKET

(a) Remove the 4 bolts and 2 rear stabilizer bar No. 1 brackets.

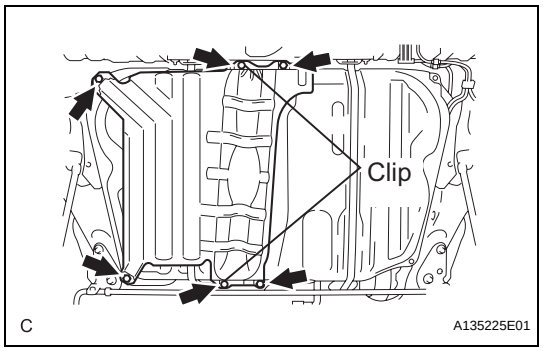

15. REMOVE FUEL TANK PROTECTOR LOWER CENTER

(a) Remove the 4 bolts and 2 clips.

(b) Remove the fuel tank protector.

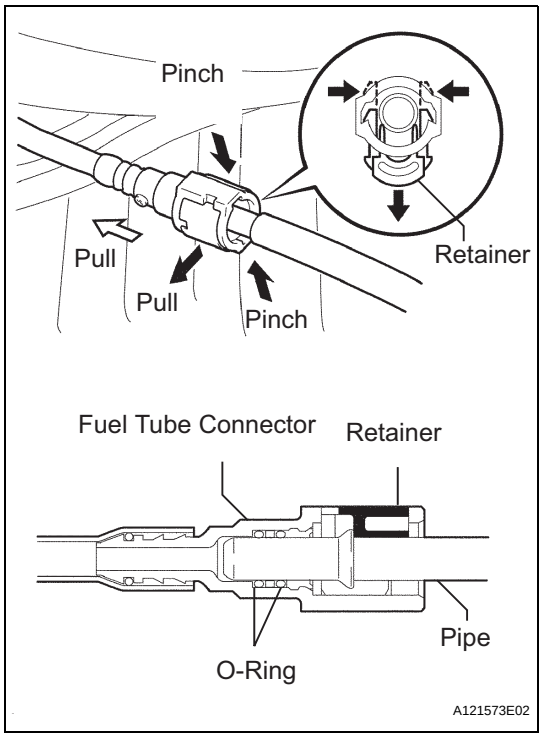

16. REMOVE FUEL TANK ASSEMBLY

(a) Disconnect the fuel pump tube.

(1) Pinch the tab of the retainer to disengage the lock claws and pull it down as shown in the illustration.

(2) Pull out the fuel tank main tube.

NOTICE:

- **Check that there is no dirt or other foreign objects around the connector before disconnecting it. Clean the connector if necessary.**
- **It is necessary to prevent mud or dirt from entering the quick connector. If mud or dirt gets in the connector, the O-rings may not seal properly.**
- **Only disconnect the quick connector by hand.**
- **Do not bend, kink or twist the nylon tubes. Protect the connector by covering it with a plastic bag.**
- **If the pipe and connector are stuck, carefully try wiggling or pushing and pulling the connector to release it. Pull the connector off the pipe carefully.**

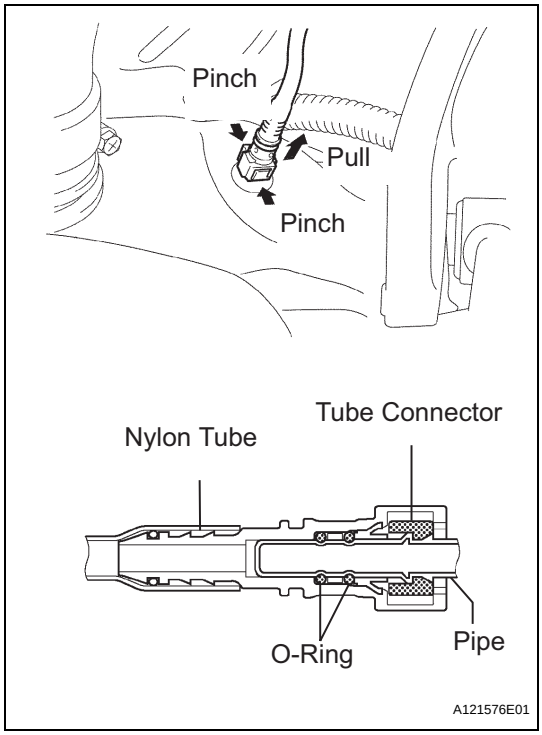

(b) Disconnect the No. 1 fuel tube.

(1) Pinch the tube connector and then pull out the No. 1 fuel tube.

NOTICE:

- **Check that there is no dirt or other foreign objects around the connector before disconnecting it. Clean the connector if necessary.**
- **It is necessary to prevent mud or dirt from entering the quick connector. If mud or dirt gets in the connector, the O-rings may not seal properly.**
- **Only disconnect the quick connector by hand.**
- **Do not bend, kink or twist the nylon tubes. Protect the connector by covering it with a plastic bag.**
- **If the pipe and connector are stuck, carefully try wiggling or pushing and pulling the connector to release it. Pull the connector off the pipe carefully.**

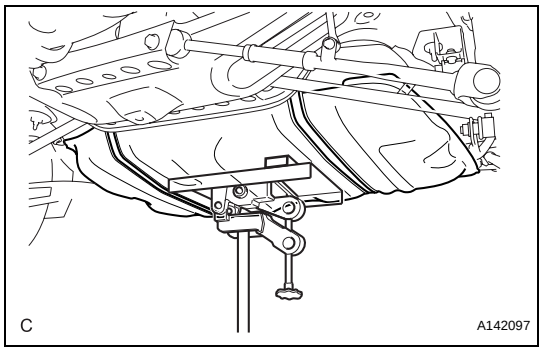

(c) Place a transmission jack under the fuel tank assembly.

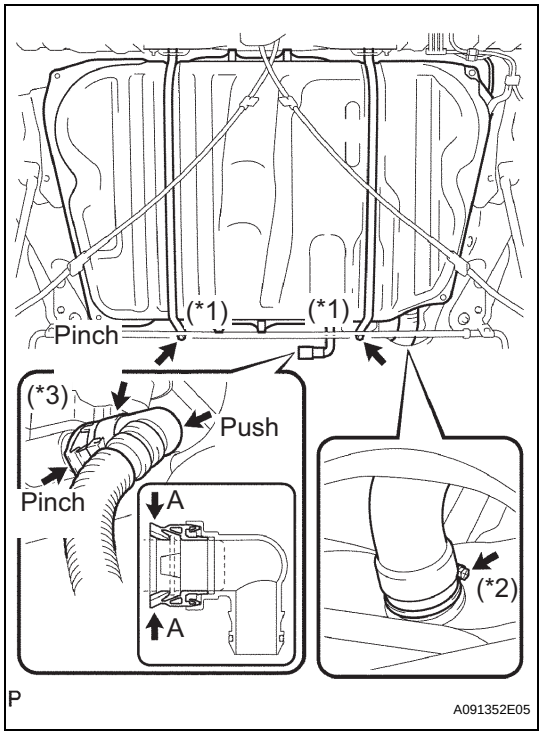

(d) Remove the 2 set bolts of the fuel tank bands. (*1)
(e) Remove the hose clamp and disconnect the fuel tank to filter pipe hose. (*2)
(f) Slightly lower the transmission jack.
(g) Disconnect the fuel tank vent hose from the charcoal canister. (*3)
  (1) Push the connector deep into the charcoal canister to release the locking pin.
  (2) Pinch portion A.
  (3) Pull out the connector.
(h) Remove the fuel tank.

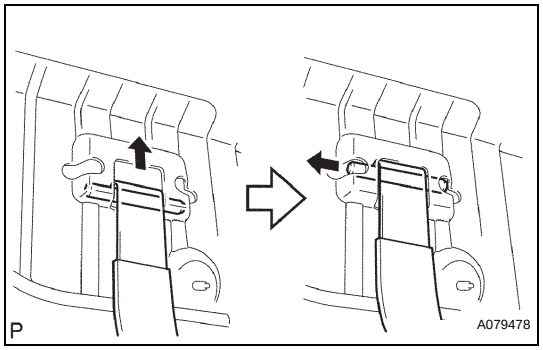

(i) Remove the 2 pins and 2 fuel tank bands as shown in the illustration.

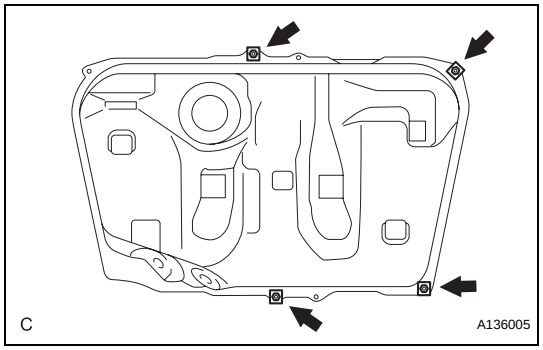

(j) Remove the 4 clip nuts.

FU

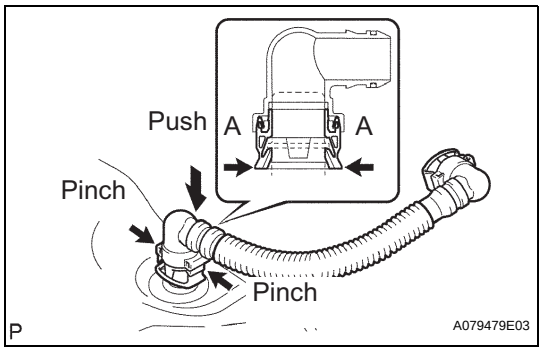

17. REMOVE FUEL TANK VENT HOSE

(a) Push the connector deep into the charcoal canister to release the locking pin.
(b) Pinch portion A.
(c) Pull out the connector.

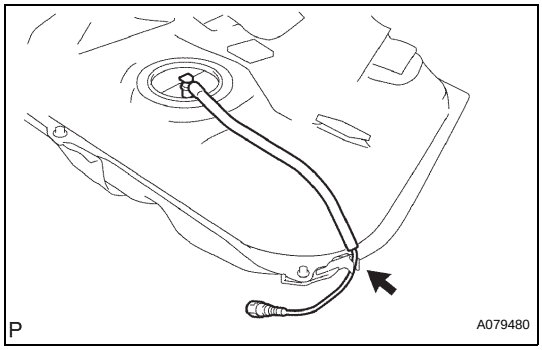

18. REMOVE FUEL PUMP TUBE SUB-ASSEMBLY

(a) Remove the fuel pump tube from the fuel main tube support.

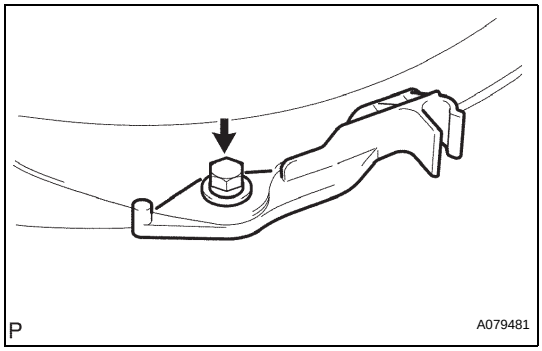

19. REMOVE FUEL MAIN TUBE SUPPORT

(a) Remove the bolt and tube support.

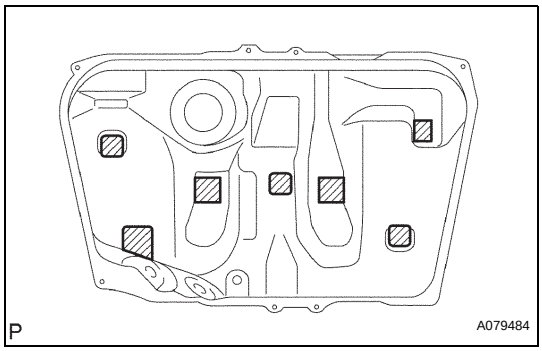

20. REMOVE NO. 2 FUEL TANK CUSHION

(a) Remove the 7 No. 2 fuel tank cushions.

INSTALLATION

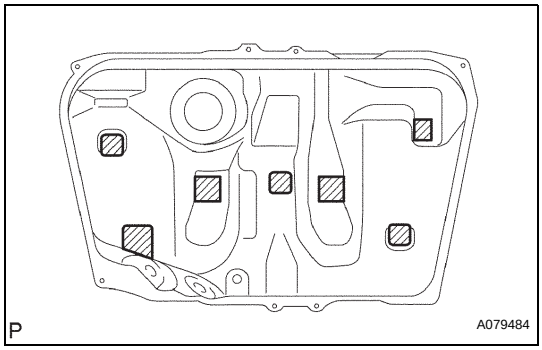

1. INSTALL NO. 2 FUEL TANK CUSHION

(a) Install 7 new No. 2 fuel tank cushions to the fuel tank.

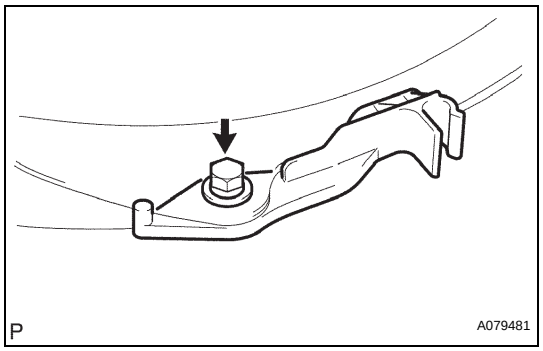

2. INSTALL FUEL MAIN TUBE SUPPORT

(a) Install the fuel main tube support with the bolt.
Torque: 5.4 N*m (55 kgf*cm, 48 in.*lbf)

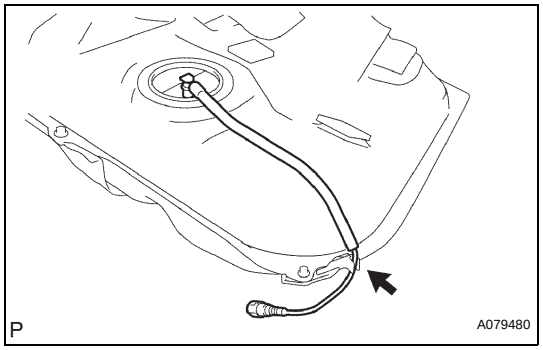

3. INSTALL FUEL PUMP TUBE SUB-ASSEMBLY

(a) Install the fuel pump tube to the fuel main tube support.

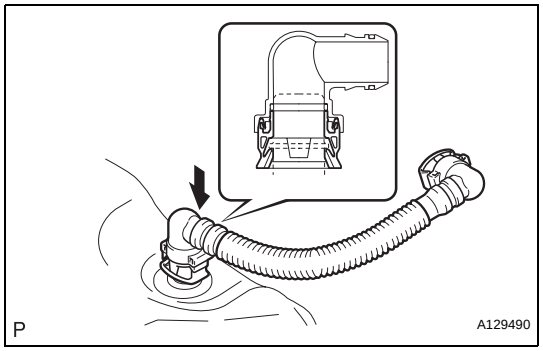

4. INSTALL FUEL TANK VENT HOSE

(a) Install the fuel tank vent hose.

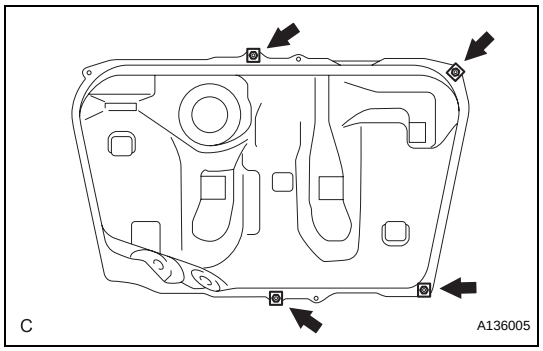

5. INSTALL FUEL TANK ASSEMBLY

(a) Install the 4 clip nuts.

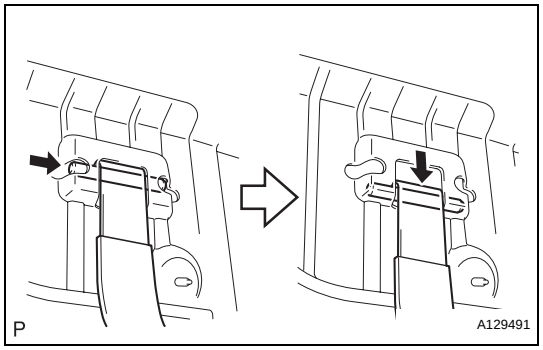

(b) Install the 2 fuel tank bands with the 2 pins.

(c) Set the fuel tank assembly onto the transmission jack.

FU

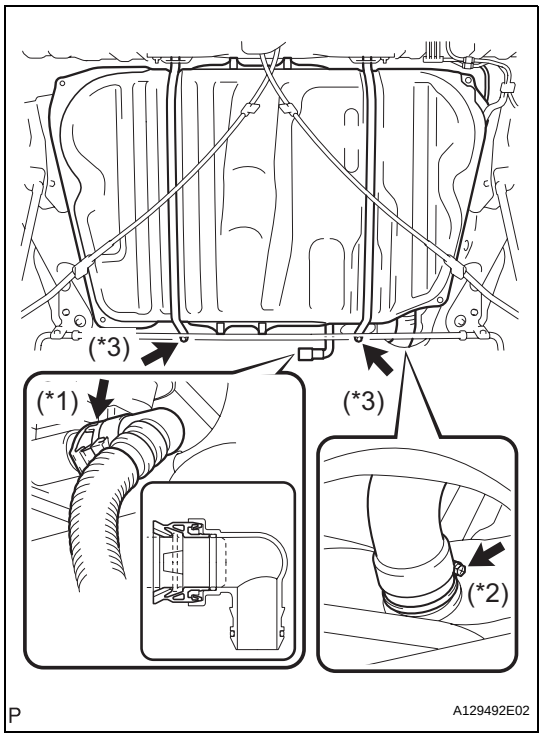

(d) Raise the transmission jack so that the fuel tank vent hose can be connected. (*1)
NOTICE:
Slowly raise the jack to prevent the fuel tank assembly from dropping.

(e) Connect the fuel tank inlet pipe with the fuel filter pipe clamp. (*2)

(f) Tighten the 2 set bolts of the fuel tank bands. (*3)
Torque: 39 N*m (400 kgf*cm, 29 ft.*lbf)

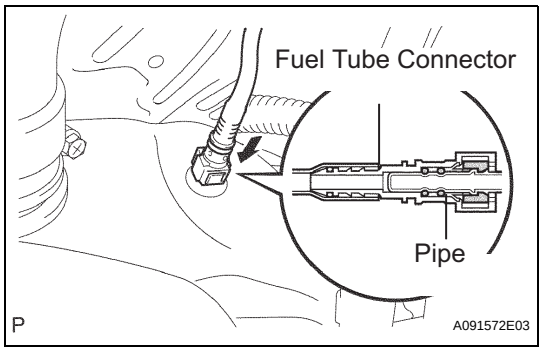

(g) Connect the No. 1 fuel tube.
(1) Push the fuel tube connector into the pipe until the fuel tube connector makes a "click" sound.
NOTICE:
- **Before connecting the tube, make sure that it is not damaged. Make sure that there is no dirt present on any part of the connector.**
- **After connecting the connector, check if the fuel tube connector and the pipe are securely connected by pulling on them.**

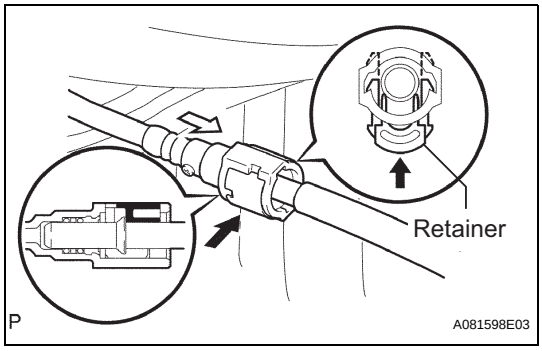

(h) Connect the fuel pump tube.
(1) Push the fuel tube connector into the pipe and push up the retainer so that the claws engage.
NOTICE:
- **Before connecting the tube, make sure that it is not damaged. Make sure that there is no dirt present on any part of the connector.**
- **After connecting the connector, check if the fuel tube connector and the pipe are securely connected by pulling on them.**

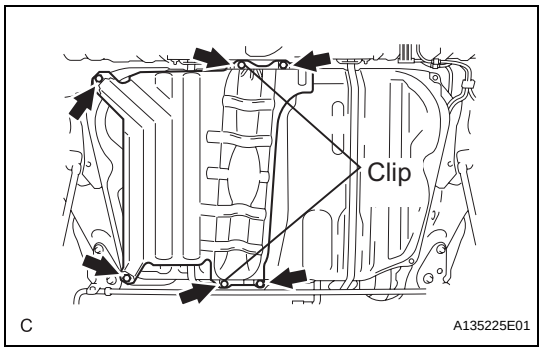

6. INSTALL FUEL TANK PROTECTOR LOWER CENTER

(a) Install the fuel tank protector with the 4 bolts and 2 clips.

Torque: Bolt
5.4 N*m (55 kgf*cm, 48 in.*lbf)

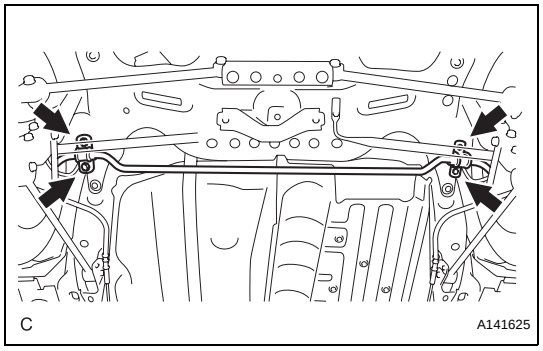

7. INSTALL REAR STABILIZER BAR NO. 1 BRACKET

(a) Install the 2 rear stabilizer bar No. 1 brackets with the 4 bolts.

Torque: 31 N*m (316 kgf*cm, 23 ft.*lbf)

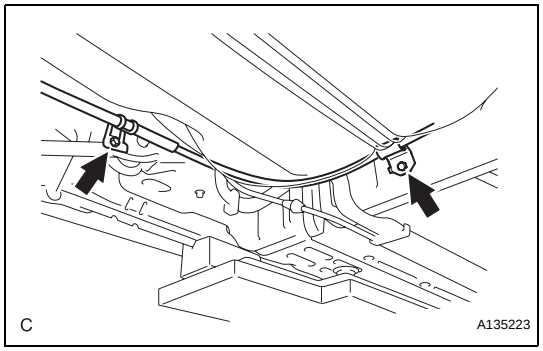

8. INSTALL NO. 3 PARKING BRAKE CABLE ASSEMBLY

(a) Install the No. 3 parking brake cable assembly with the bolt and nut.

Torque: Bolt
6.0 N*m (61 kgf*cm, 53 in.*lbf)
Nut
8.5 N*m (87 kgf*cm, 75 in.*lbf)

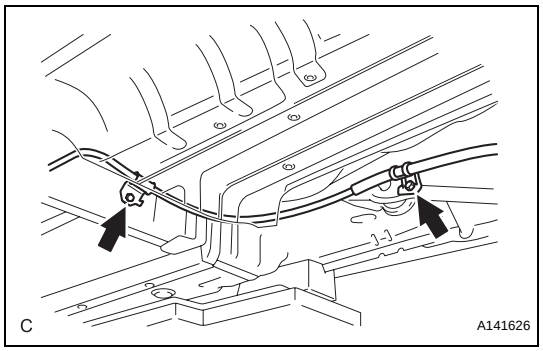

9. INSTALL NO. 2 PARKING BRAKE CABLE ASSEMBLY

(a) Install the No. 2 parking brake cable assembly with the bolt and nut.

Torque: Bolt
6.0 N*m (61 kgf*cm, 53 in.*lbf)
Nut
8.5 N*m (87 kgf*cm, 75 in.*lbf)

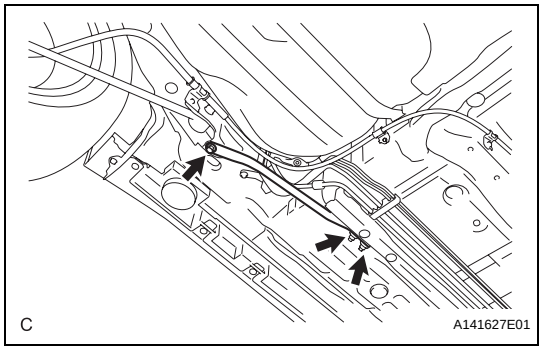

10. INSTALL FRONT FLOOR BRACE LH

(a) Install the front floor brace LH with the bolt and 2 nuts.

Torque: 56 N*m (571 kgf*cm, 41 ft.*lbf)

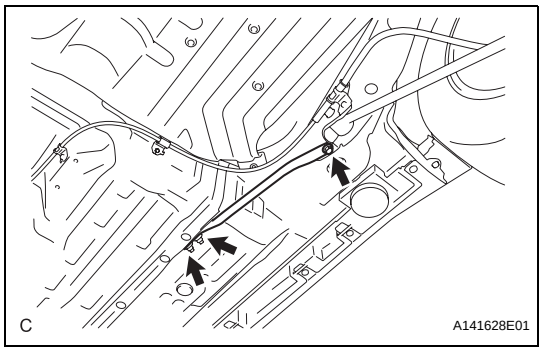

11. INSTALL FRONT FLOOR BRACE RH

(a) Install the front floor brace RH with the bolt and 2 nuts.
Torque: 56 N*m (571 kgf*cm, 41 ft.*lbf)

12. INSTALL CENTER EXHAUST PIPE ASSEMBLY

HINT:
See page EX-4.

13. INSTALL FUEL SUCTION TUBE ASSEMBLY WITH PUMP AND GAUGE (See page FU-31)

14. INSTALL FUEL TANK VENT TUBE SET PLATE (See page FU-31)

15. CONNECT FUEL PUMP TUBE SUB-ASSEMBLY (See page FU-31)

16. ADD FUEL

17. CONNECT CABLE TO NEGATIVE BATTERY TERMINAL

18. CHECK FOR FUEL LEAKS (See page FU-7)

19. CHECK FOR EXHAUST GAS LEAKS

20. INSTALL REAR FLOOR SERVICE HOLE COVER (See page FU-32)

21. INSTALL REAR SEAT CUSHION ASSEMBLY (See page SE-121)

22. PERFORM INITIALIZATION

(a) Perform initialization procedures (See page IN-33)
HINT:
Some systems need initialization after reconnecting the cable to the negative battery terminal.

FU

REMOVAL

1. **DISCHARGE FUEL SYSTEM PRESSURE**
   HINT:
   See page FU-1.

2. **DISCONNECT CABLE FROM NEGATIVE BATTERY TERMINAL**

3. **REMOVE REAR SEAT CUSHION ASSEMBLY (See page SE-113)**

4. **REMOVE REAR FLOOR SERVICE HOLE COVER (See page FU-26)**

5. **SEPARATE FUEL PUMP TUBE SUB-ASSEMBLY (See page FU-26)**

6. **REMOVE FUEL TANK VENT TUBE SET PLATE (See page FU-26)**

7. **REMOVE FUEL SUCTION TUBE ASSEMBLY WITH PUMP AND GAUGE (See page FU-27)**

8. **DRAIN FUEL**

9. **REMOVE CENTER EXHAUST PIPE ASSEMBLY**
   See page EX-2

10. **REMOVE FRONT FLOOR BRACE RH**
    (a) Remove the bolt and 2 nuts, and remove the front floor brace RH.

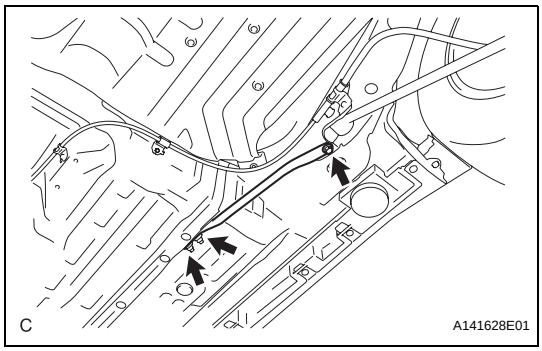

11. **REMOVE FRONT FLOOR BRACE LH**
    (a) Remove the bolt and 2 nuts, and remove the front floor brace LH.

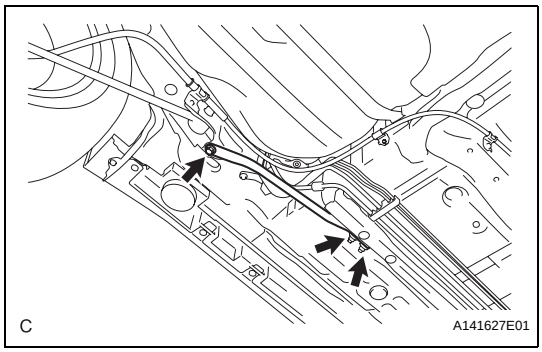

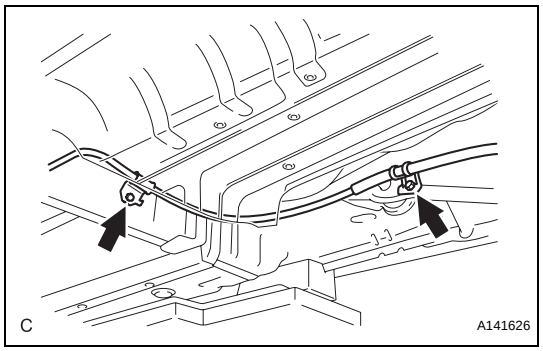

12. DISCONNECT NO. 2 PARKING BRAKE CABLE ASSEMBLY

(a) Remove the set bolt and set nut of the No. 2 parking brake cable assembly.

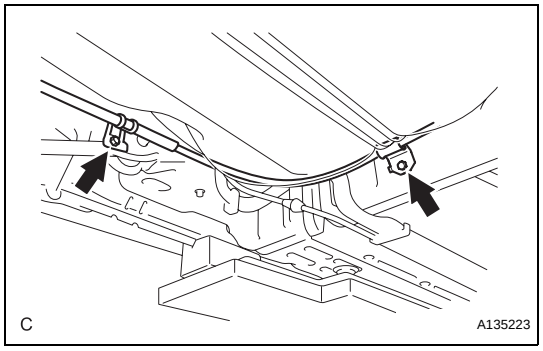

13. DISCONNECT NO. 3 PARKING BRAKE CABLE ASSEMBLY

(a) Remove the set bolt and set nut of the No. 3 parking brake cable assembly.

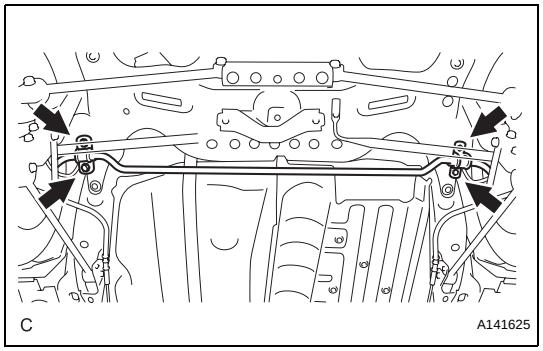

14. REMOVE REAR STABILIZER BAR NO. 1 BRACKET

(a) Remove the 4 bolts and 2 rear stabilizer bar No. 1 brackets.

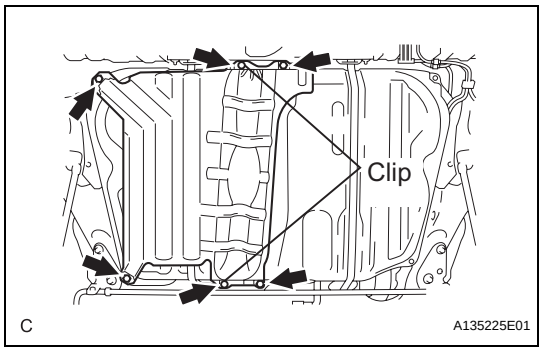

15. REMOVE FUEL TANK PROTECTOR LOWER CENTER

(a) Remove the 4 bolts and 2 clips.

(b) Remove the fuel tank protector.

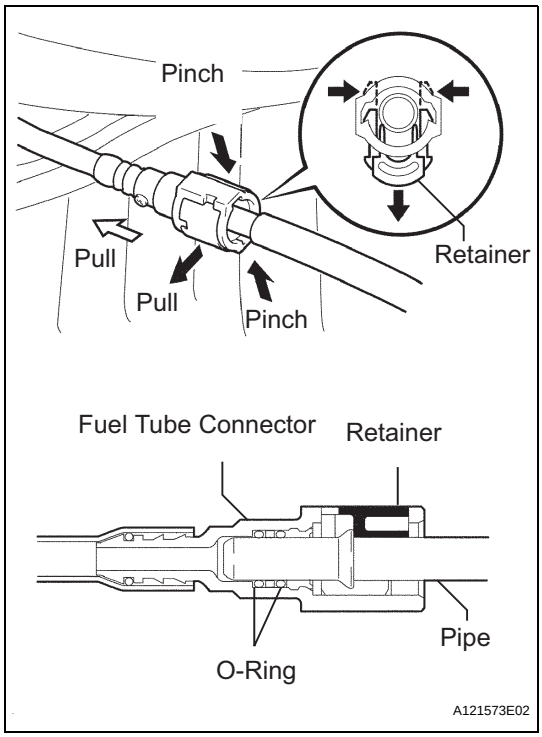

16. REMOVE FUEL TANK ASSEMBLY

(a) Disconnect the fuel pump tube.

(1) Pinch the tab of the retainer to disengage the lock claws and pull it down as shown in the illustration.

(2) Pull out the fuel tank main tube.

NOTICE:

- **Check that there is no dirt or other foreign objects around the connector before disconnecting it. Clean the connector if necessary.**
- **It is necessary to prevent mud or dirt from entering the quick connector. If mud or dirt gets in the connector, the O-rings may not seal properly.**
- **Only disconnect the quick connector by hand.**
- **Do not bend, kink or twist the nylon tubes. Protect the connector by covering it with a plastic bag.**
- **If the pipe and connector are stuck, carefully try wiggling or pushing and pulling the connector to release it. Pull the connector off the pipe carefully.**

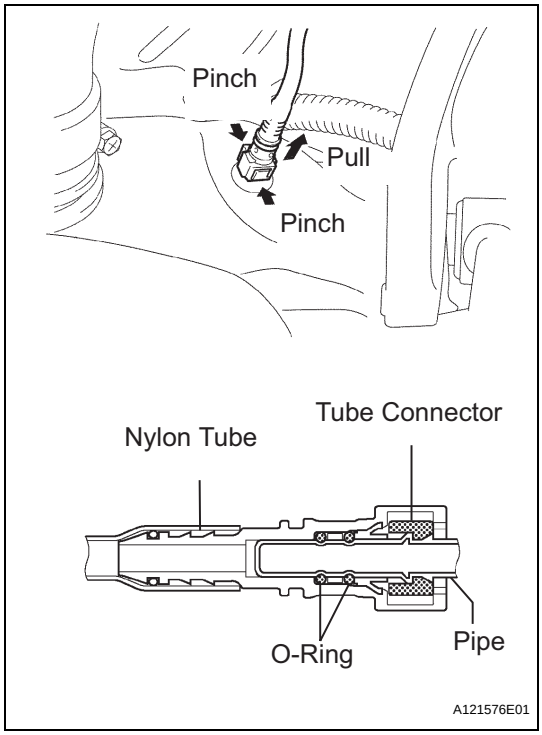

(b) Disconnect the No. 1 fuel tube.

(1) Pinch the tube connector and then pull out the No. 1 fuel tube.

NOTICE:

- **Check that there is no dirt or other foreign objects around the connector before disconnecting it. Clean the connector if necessary.**
- **It is necessary to prevent mud or dirt from entering the quick connector. If mud or dirt gets in the connector, the O-rings may not seal properly.**
- **Only disconnect the quick connector by hand.**
- **Do not bend, kink or twist the nylon tubes. Protect the connector by covering it with a plastic bag.**
- **If the pipe and connector are stuck, carefully try wiggling or pushing and pulling the connector to release it. Pull the connector off the pipe carefully.**

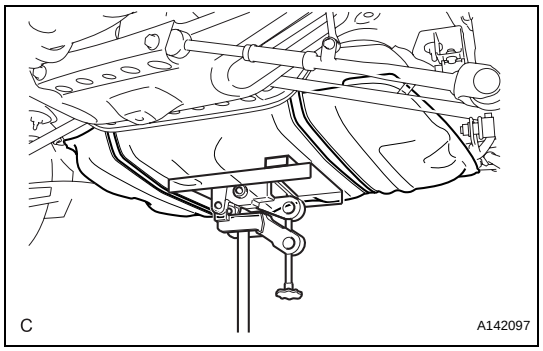

(c) Place a transmission jack under the fuel tank assembly.

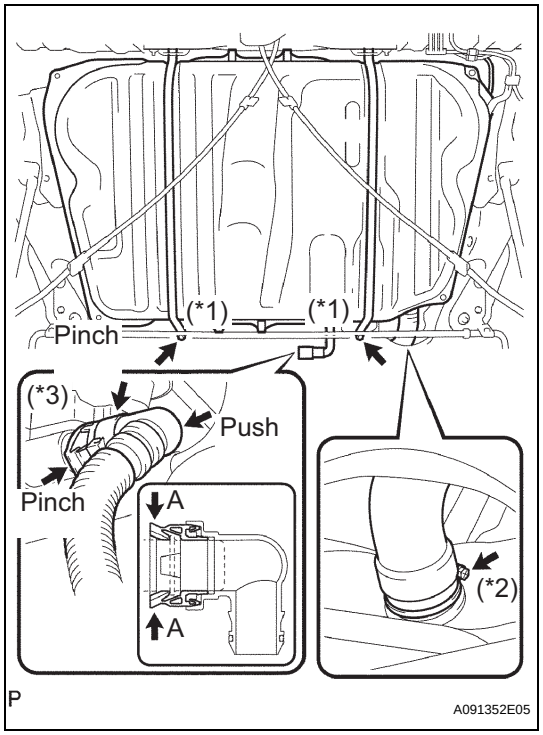

(d) Remove the 2 set bolts of the fuel tank bands. (*1)
(e) Remove the hose clamp and disconnect the fuel tank to filter pipe hose. (*2)
(f) Slightly lower the transmission jack.
(g) Disconnect the fuel tank vent hose from the charcoal canister. (*3)
  (1) Push the connector deep into the charcoal canister to release the locking pin.
  (2) Pinch portion A.
  (3) Pull out the connector.
(h) Remove the fuel tank.

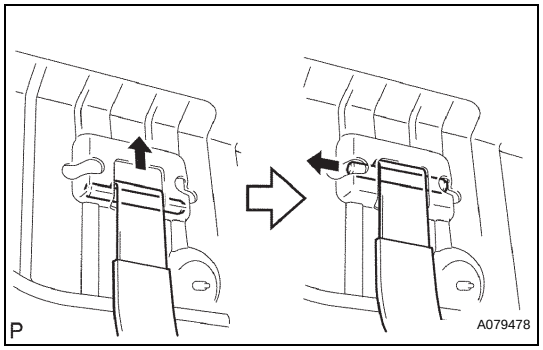

(i) Remove the 2 pins and 2 fuel tank bands as shown in the illustration.

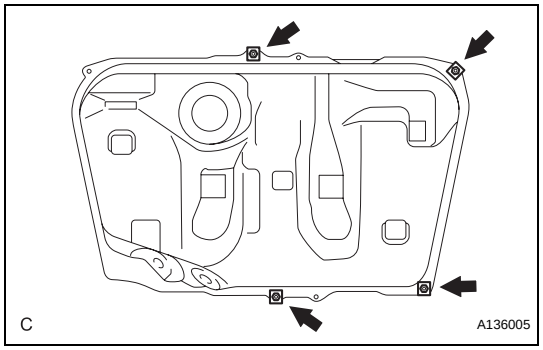

(j) Remove the 4 clip nuts.

FU

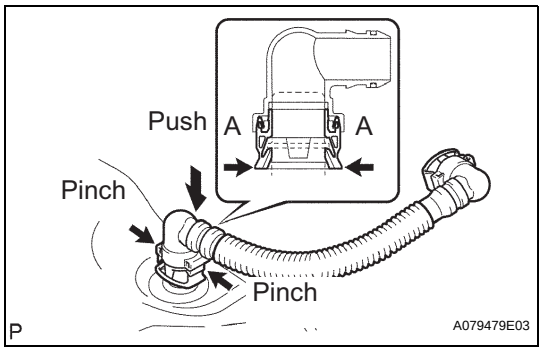

17. REMOVE FUEL TANK VENT HOSE

(a) Push the connector deep into the charcoal canister to release the locking pin.
(b) Pinch portion A.
(c) Pull out the connector.

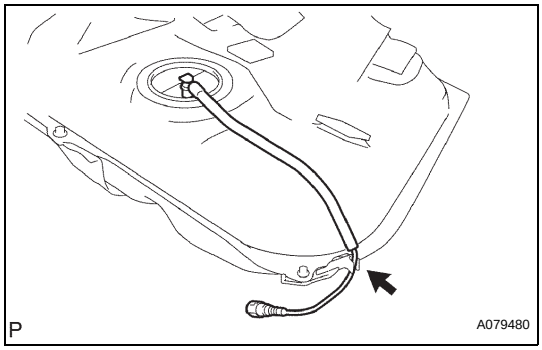

18. REMOVE FUEL PUMP TUBE SUB-ASSEMBLY

(a) Remove the fuel pump tube from the fuel main tube support.

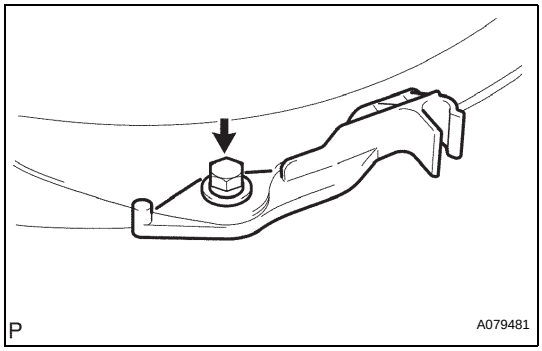

19. REMOVE FUEL MAIN TUBE SUPPORT

(a) Remove the bolt and tube support.

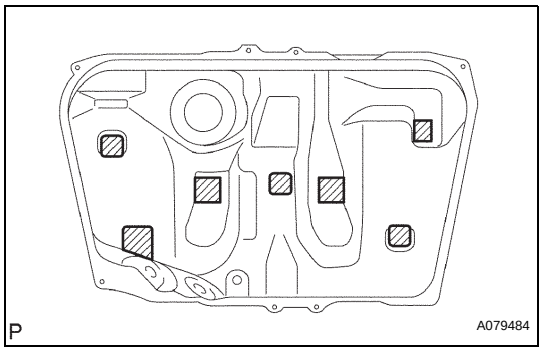

20. REMOVE NO. 2 FUEL TANK CUSHION

(a) Remove the 7 No. 2 fuel tank cushions.

INSTALLATION

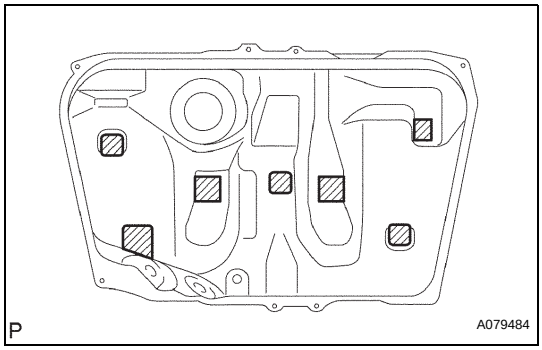

1. INSTALL NO. 2 FUEL TANK CUSHION

(a) Install 7 new No. 2 fuel tank cushions to the fuel tank.

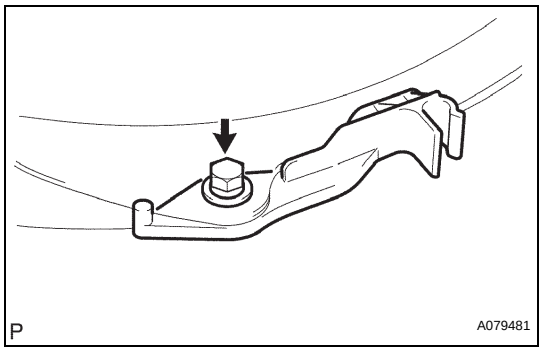

2. INSTALL FUEL MAIN TUBE SUPPORT

(a) Install the fuel main tube support with the bolt.
Torque: 5.4 N*m (55 kgf*cm, 48 in.*lbf)

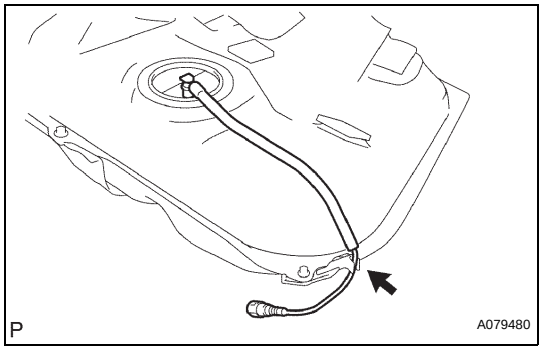

3. INSTALL FUEL PUMP TUBE SUB-ASSEMBLY

(a) Install the fuel pump tube to the fuel main tube support.

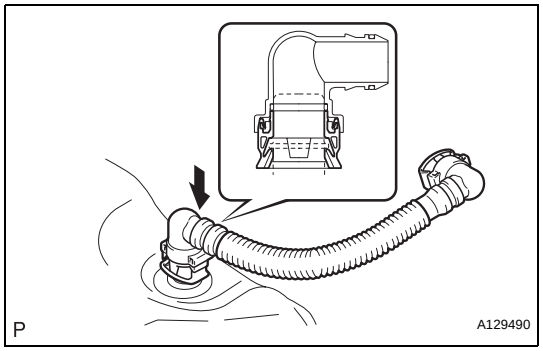

4. INSTALL FUEL TANK VENT HOSE

(a) Install the fuel tank vent hose.

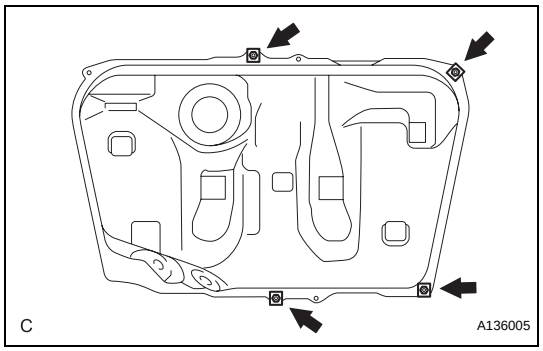

5. INSTALL FUEL TANK ASSEMBLY

(a) Install the 4 clip nuts.

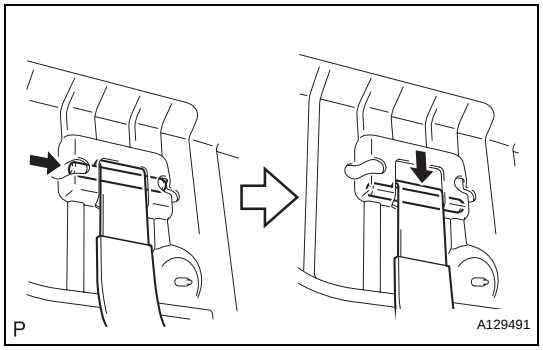

(b) Install the 2 fuel tank bands with the 2 pins.

(c) Set the fuel tank assembly onto the transmission jack.

FU

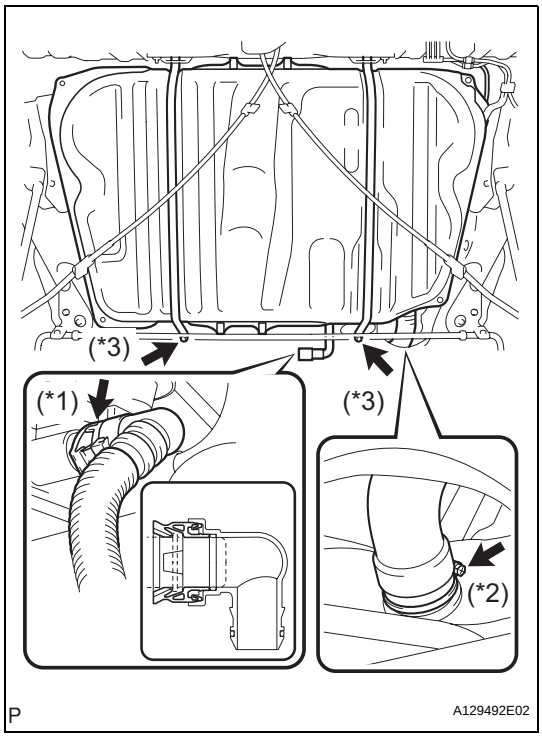

(d) Raise the transmission jack so that the fuel tank vent hose can be connected. (*1)
NOTICE:
Slowly raise the jack to prevent the fuel tank assembly from dropping.

(e) Connect the fuel tank inlet pipe with the fuel filter pipe clamp. (*2)

(f) Tighten the 2 set bolts of the fuel tank bands. (*3)
Torque: 39 N*m (400 kgf*cm, 29 ft.*lbf)

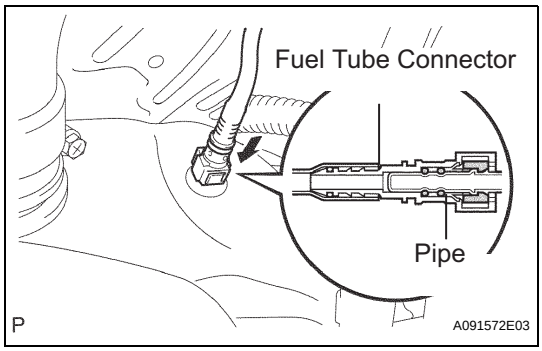

(g) Connect the No. 1 fuel tube.
(1) Push the fuel tube connector into the pipe until the fuel tube connector makes a "click" sound.
NOTICE:
- **Before connecting the tube, make sure that it is not damaged. Make sure that there is no dirt present on any part of the connector.**
- **After connecting the connector, check if the fuel tube connector and the pipe are securely connected by pulling on them.**

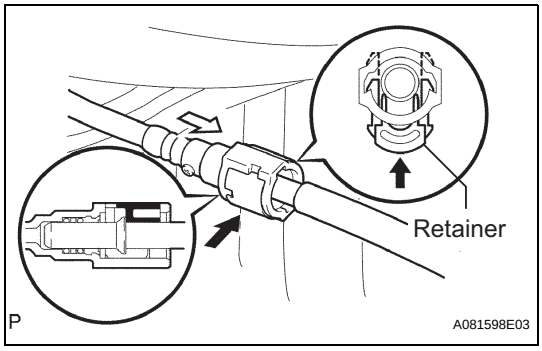

(h) Connect the fuel pump tube.
(1) Push the fuel tube connector into the pipe and push up the retainer so that the claws engage.
NOTICE:
- **Before connecting the tube, make sure that it is not damaged. Make sure that there is no dirt present on any part of the connector.**
- **After connecting the connector, check if the fuel tube connector and the pipe are securely connected by pulling on them.**

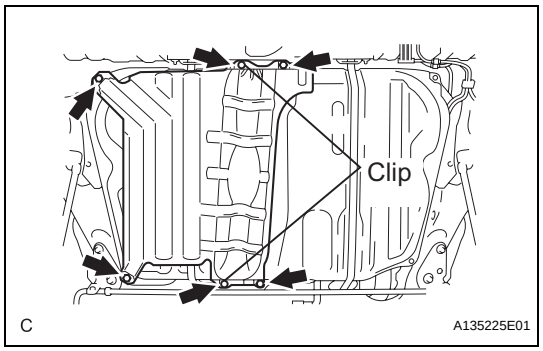

6. INSTALL FUEL TANK PROTECTOR LOWER CENTER

(a) Install the fuel tank protector with the 4 bolts and 2 clips.

Torque: Bolt
5.4 N*m (55 kgf*cm, 48 in.*lbf)

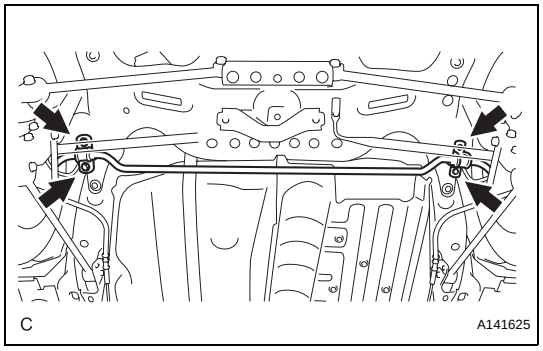

7. INSTALL REAR STABILIZER BAR NO. 1 BRACKET

(a) Install the 2 rear stabilizer bar No. 1 brackets with the 4 bolts.

Torque: 31 N*m (316 kgf*cm, 23 ft.*lbf)

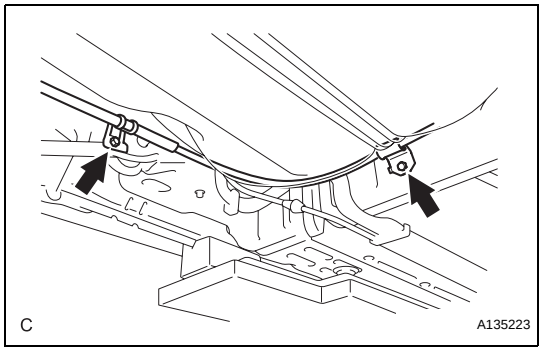

8. INSTALL NO. 3 PARKING BRAKE CABLE ASSEMBLY

(a) Install the No. 3 parking brake cable assembly with the bolt and nut.

Torque: Bolt
6.0 N*m (61 kgf*cm, 53 in.*lbf)
Nut
8.5 N*m (87 kgf*cm, 75 in.*lbf)

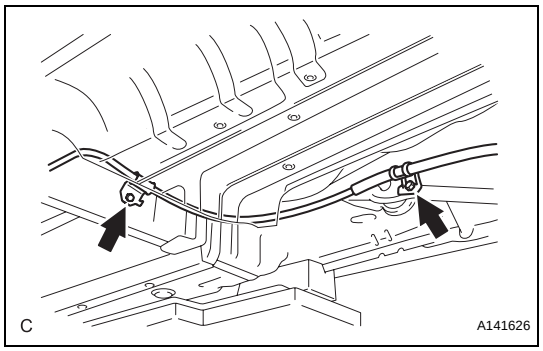

9. INSTALL NO. 2 PARKING BRAKE CABLE ASSEMBLY

(a) Install the No. 2 parking brake cable assembly with the bolt and nut.

Torque: Bolt
6.0 N*m (61 kgf*cm, 53 in.*lbf)
Nut
8.5 N*m (87 kgf*cm, 75 in.*lbf)

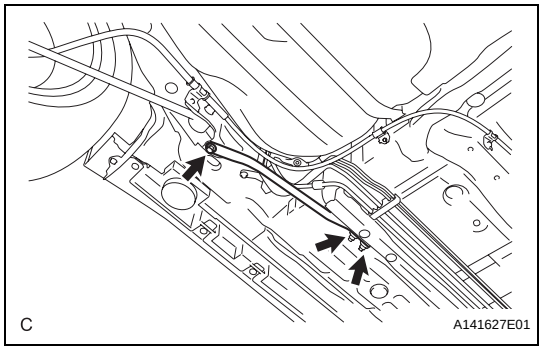

10. INSTALL FRONT FLOOR BRACE LH

(a) Install the front floor brace LH with the bolt and 2 nuts.

Torque: 56 N*m (571 kgf*cm, 41 ft.*lbf)

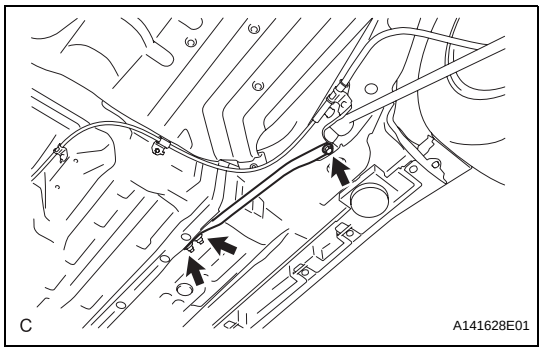

11. INSTALL FRONT FLOOR BRACE RH

(a) Install the front floor brace RH with the bolt and 2 nuts.
Torque: 56 N*m (571 kgf*cm, 41 ft.*lbf)

12. INSTALL CENTER EXHAUST PIPE ASSEMBLY

HINT:
See page EX-4.

13. INSTALL FUEL SUCTION TUBE ASSEMBLY WITH PUMP AND GAUGE (See page FU-31)

14. INSTALL FUEL TANK VENT TUBE SET PLATE (See page FU-31)

15. CONNECT FUEL PUMP TUBE SUB-ASSEMBLY (See page FU-31)

16. ADD FUEL

17. CONNECT CABLE TO NEGATIVE BATTERY TERMINAL

18. CHECK FOR FUEL LEAKS (See page FU-7)

19. CHECK FOR EXHAUST GAS LEAKS

20. INSTALL REAR FLOOR SERVICE HOLE COVER (See page FU-32)

21. INSTALL REAR SEAT CUSHION ASSEMBLY (See page SE-121)

22. PERFORM INITIALIZATION

(a) Perform initialization procedures (See page IN-33)
HINT:
Some systems need initialization after reconnecting the cable to the negative battery terminal.

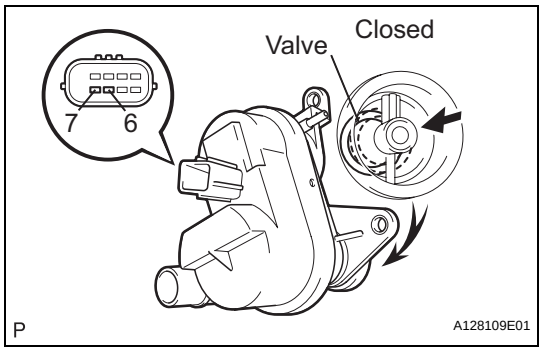

(3) Connect the positive (+) lead to terminal 7 and the negative (-) lead to terminal 6.
(4) Check that the valve is closed.
If the result is not as specified, replace the charcoal canister assembly.
(5) Install the detection pump.

INSTALLATION

1. INSTALL CHARCOAL CANISTER ASSEMBLY

(a) Install the 2 bolts, clip and charcoal canister.
Torque: 39 N*m (398 kgf*cm, 29 ft.*lbf)
(b) Connect the purge line hose to the charcoal canister.
(c) Connect the wire harness clamp.
(d) Connect the vapor pressure sensor connector.

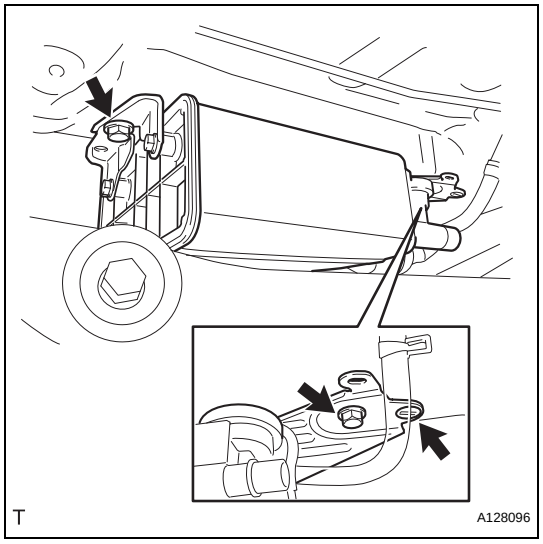

(e) Connect the charcoal canister filter sub-assembly to the charcoal canister.

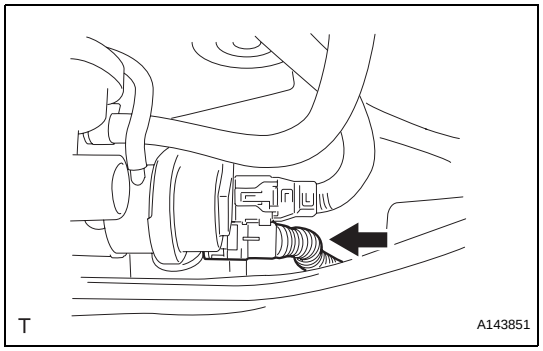

(f) Connect the fuel tank vent hose to the charcoal canister.

2. INSTALL FUEL TANK ASSEMBLY

HINT:
(See page FU-40)

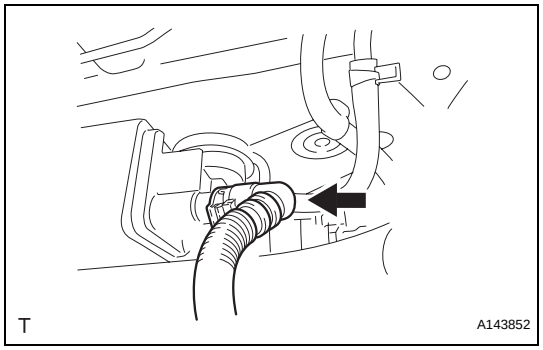

EC

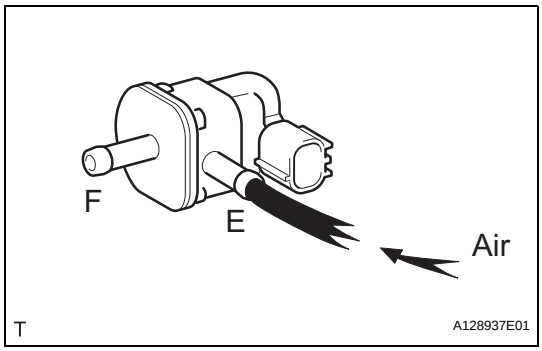

(b) Check VSV operation.
(1) Check that air does not flow from port E to port F.

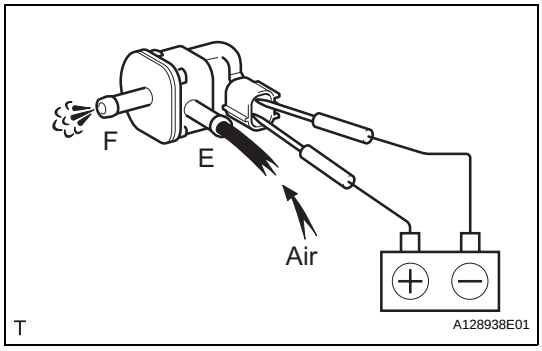

(2) Apply battery positive voltage across the terminals.
(3) Check that air flows from port E to port F. If the result is not as specified, replace the purge VSV.
If the result is not as specified, replace the VSV assembly.

INSTALLATION

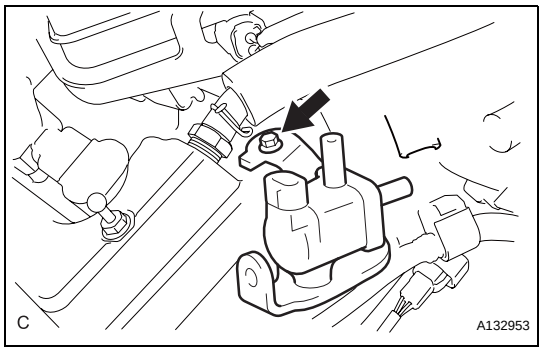

1. INSTALL NO. 1 VACUUM SWITCHING VALVE
(a) Install the No. 1 vacuum switching valve with the bolt.
Torque: 10 N*m (102 kgf*cm, 7 ft.*lbf)

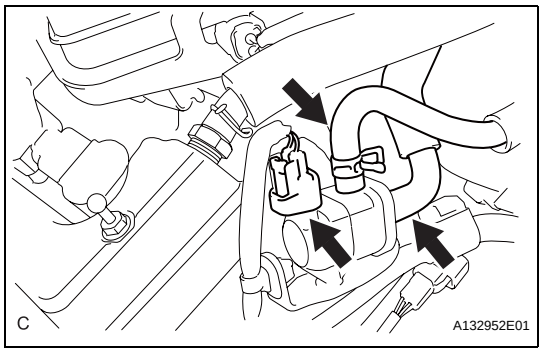

(b) Disconnect the 2 vacuum hoses and No. 1 vacuum switching valve connector.

2. INSTALL V-BANK COVER SUB-ASSEMBLY (See page EM-49)

ON-VEHICLE INSPECTION

1. INSPECT FUEL CUT-OFF RPM

(a) Increase the engine speed to at least 3,500 rpm.
(b) Use a sound scope to check for injector operating sounds.
(c) Check that when the throttle lever is released, injector operating sounds stop momentarily (at 2,500 rpm) and then resume (at 1,400 rpm).
Standard

Item	Specified Condition
Fuel cut off rpm	2,500 rpm
Fuel return rpm	1,400 rpm

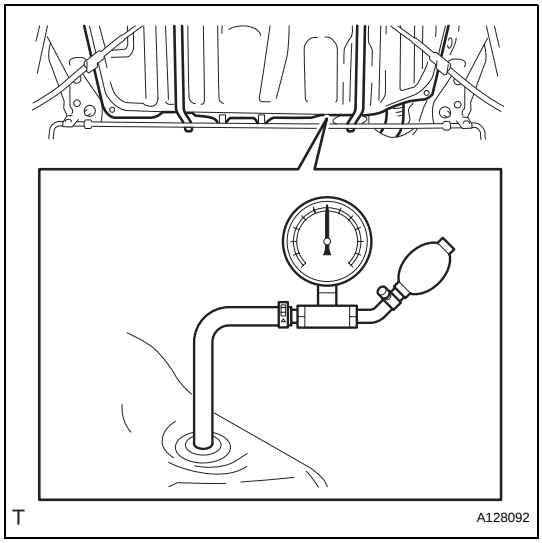

2. CHECK AIR TIGHTNESS IN FUEL TANK AND FILLER PIPE

(a) Disconnect the vent line hose from the fuel tank.
(b) Connect the pressure gauge to the fuel tank.
(c) Apply pressure to the fuel tank to create an internal pressure of 4 kPa (41 gf/cm^2, 0.58 psi).
(d) Check that the internal pressure of the fuel tank is maintained for 1 minute.
(e) Check the connected portions of each hose and pipe.
(f) Check the installed parts on the fuel tank.
If any malfunctions, damage or other problems are found, replace the fuel tank and filler pipe.
(g) Reconnect the vent line hose to the fuel tank.

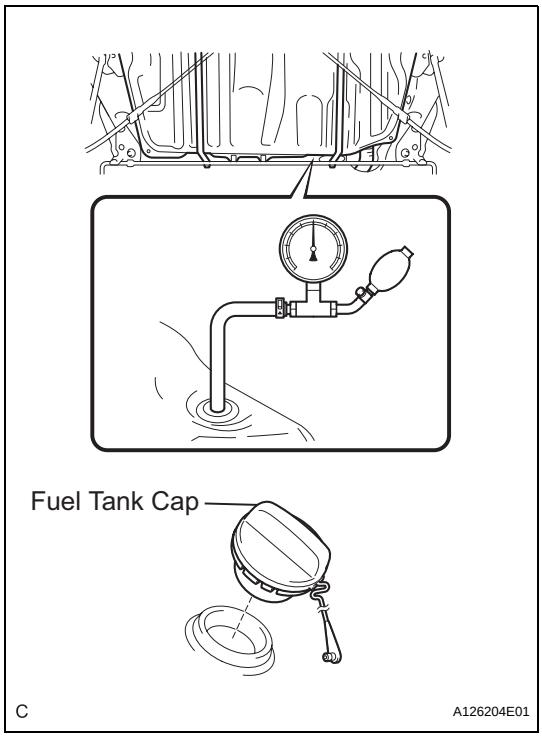

3. INSPECT FUEL CUT OFF VALVE AND FUEL CHECK VALVE

(a) Disconnect the vent line hose from the fuel tank.
(b) Connect the pressure gauge to the fuel tank.
(c) Fill the fuel tank with fuel.
(d) Apply pressure of 4 kPa (41 gf/cm^2, 0.58 psi) to the vent port of the fuel tank.
HINT:
Check the amount of fuel in the fuel tank. When the fuel tank is full, the float valve of the fuel check valve is closed and no air can pass through.
(e) Remove the fuel tank cap, and check that the pressure drops.
If the pressure does not drop, replace the fuel tank assembly.
(f) Reconnect the vent line hose to the fuel tank.

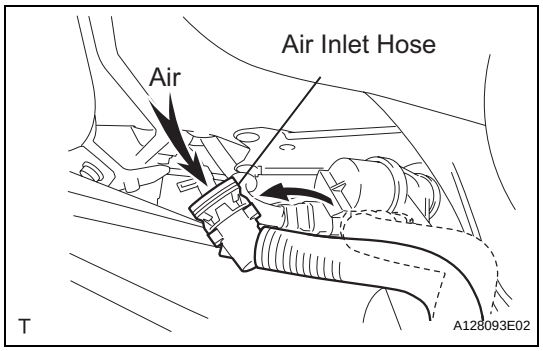

4. CHECK AIR INLET LINE

(a) Disconnect the air inlet line hose from the charcoal canister.

(b) Check that air can flow freely into the air inlet line. If air cannot flow freely into the air inlet line, repair or replace it.

(c) Reconnect the air inlet line hose to the charcoal canister.

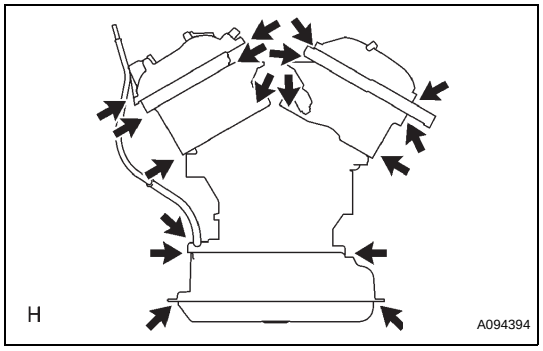

5. VISUALLY INSPECT HOSES, CONNECTIONS AND GASKETS

(a) Check for cracks, leaks or damage.
HINT:
Removal or problems with the engine oil dipstick, oil filler cap, PCV hose and other components may cause the engine to run improperly. Disconnection, looseness or cracks in the parts of the air induction system between the throttle body and cylinder head will allow air suction and cause the engine to run improperly.
If necessary, replace any damaged parts.

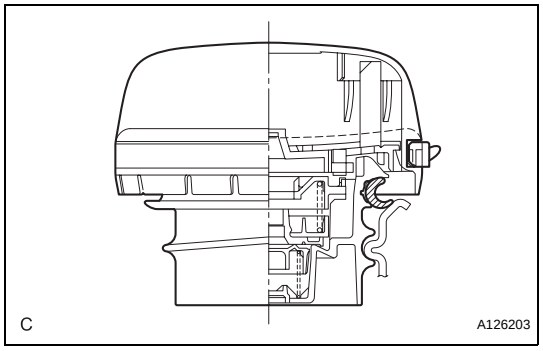

INSPECTION

1. INSPECT FUEL TANK CAP ASSEMBLY

(a) Visually check if the cap and gasket are deformed or damaged.
If necessary, replace the cap.

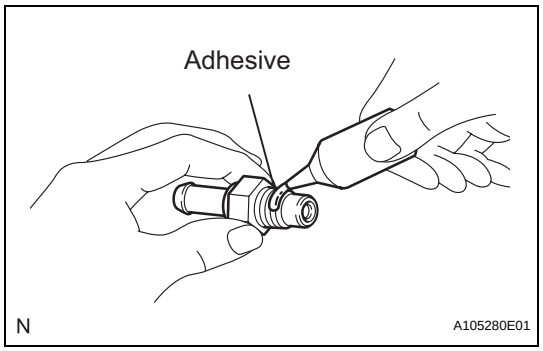

INSTALLATION

1. INSTALL VENTILATION VALVE

(a) Install the ventilation valve.

(1) Apply adhesive to 2 or 3 threads.

Adhesive:
Part No. 08833-00070, THREE BOND 1324 or equivalent.

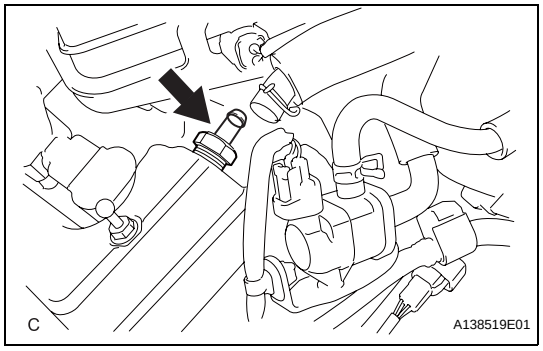

(2) Install the ventilation valve.

Torque: 27 N*m (275 kgf*cm, 20 ft.*lbf)
NOTICE:
Do not start the engine within 1 hour after installation.

EC

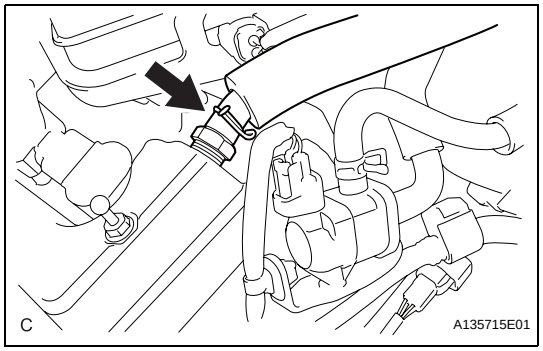

2. CONNECT VENTILATION HOSE

(a) Connect the ventilation hose to the ventilation valve.

3. INSTALL V-BANK COVER SUB-ASSEMBLY (See page EM-49)

CANISTER

COMPONENTS

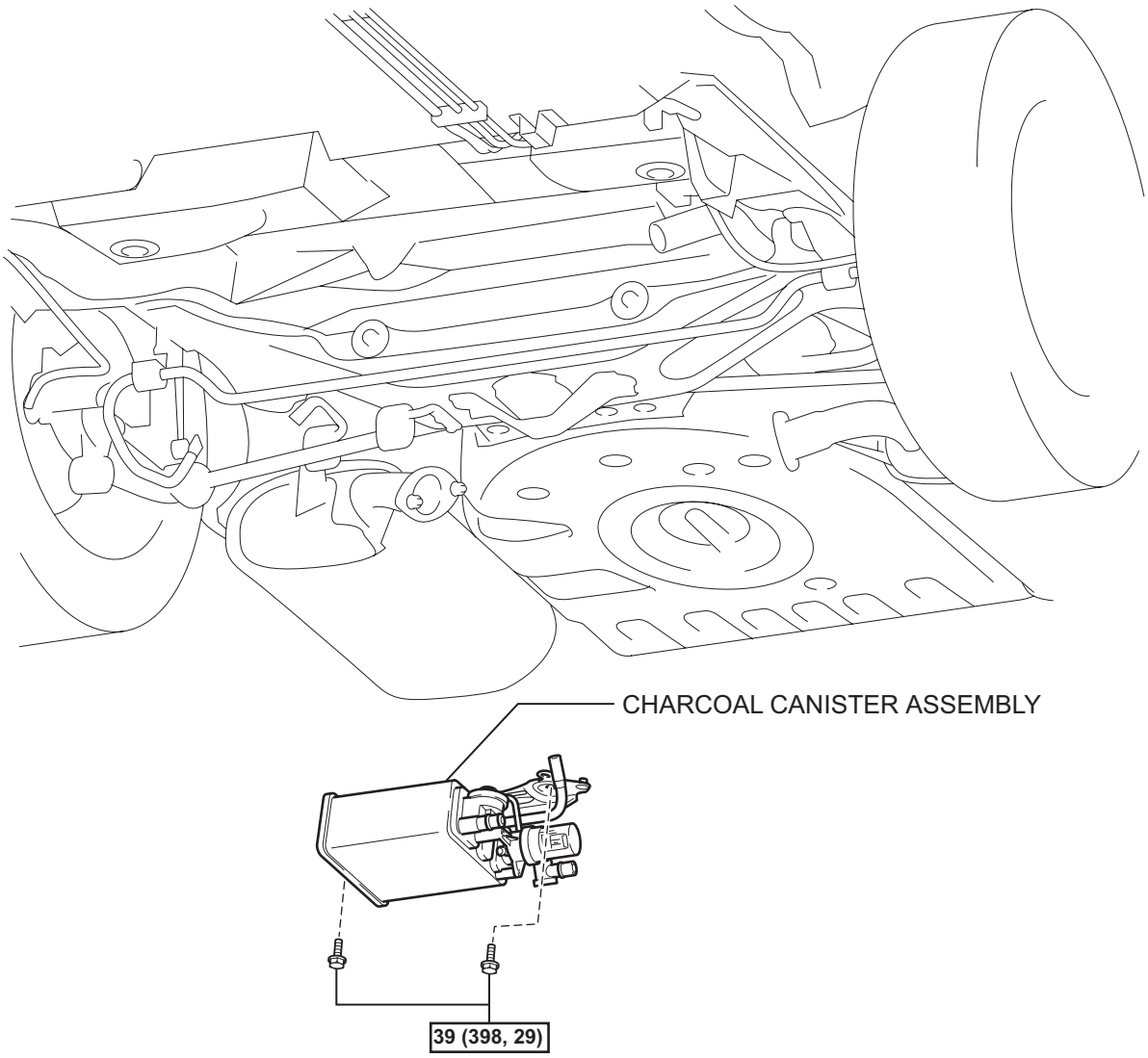

N*m (kgf*cm, ft.*lbf) : Specified torque

T

A135648E04

REMOVAL

1. REMOVE FUEL TANK ASSEMBLY

HINT:

(See page FU-35)

2. REMOVE CHARCOAL CANISTER ASSEMBLY

(a) Disconnect the fuel tank vent hose from the charcoal canister.
  (1) Push the connector deep inside.
  (2) Pinch portion A.
  (3) Pull out the connector.

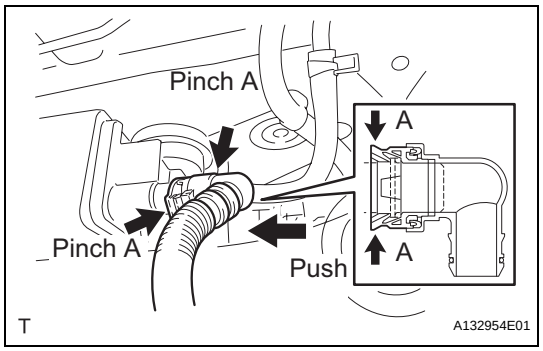

(b) Disconnect the charcoal canister filter sub-assembly from the charcoal canister.
  (1) Push the connector deep inside.
  (2) Pinch portion A.
  (3) Pull out the connector.

(c) Disconnect the vapor pressure sensor connector.

(d) Disconnect the wire harness clamp.

(e) Disconnect the purge line hose from the charcoal canister.

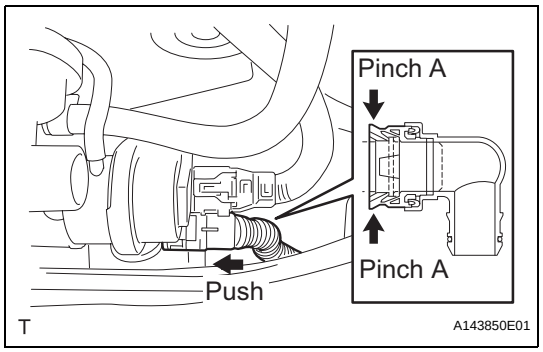

(f) Remove the 2 bolts, clip and charcoal canister.

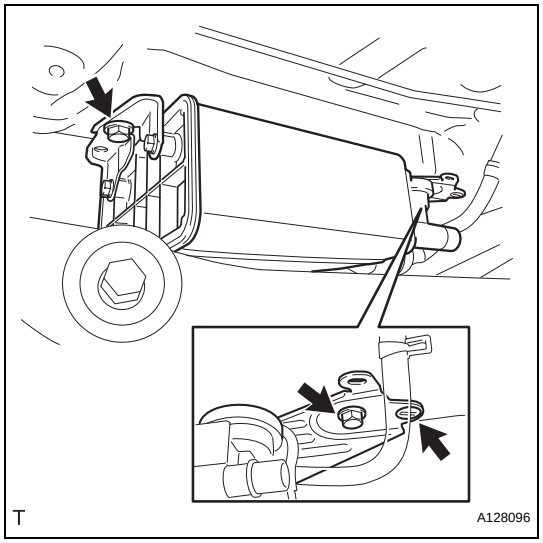

INSPECTION

1. INSPECT CHARCOAL CANISTER ASSEMBLY

(a) Visually check the charcoal canister for cracks or damage.
  If cracks or damage are found, replace the charcoal canister assembly.

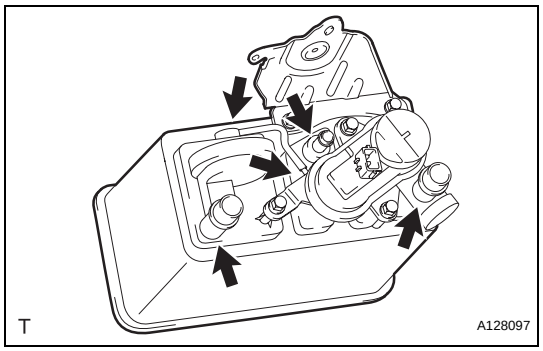

EC

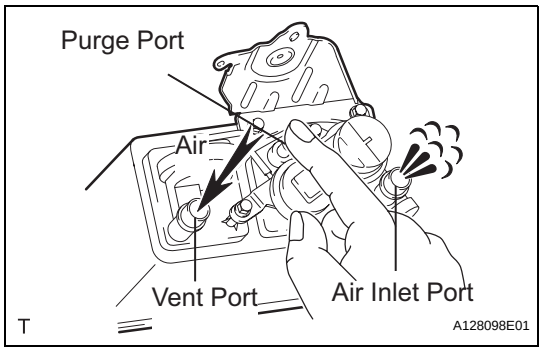

(b) Check charcoal canister operation.
(1) With the purge port closed, blow 1.67 kPa (17.0 gf/cm^2, 0.24 psi) of air into the vent port, and check that air flows from the air inlet port.
If the result is not as specified, replace the charcoal canister assembly.

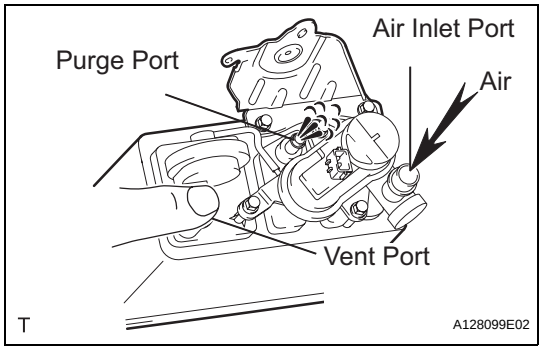

(2) With the vent port closed, blow 1.10 kPa (11.2 gf/cm^2, 0.16 psi) of air to the air inlet port, and check that air flows from the purge port.
If the result is not as specified, replace the charcoal canister assembly.

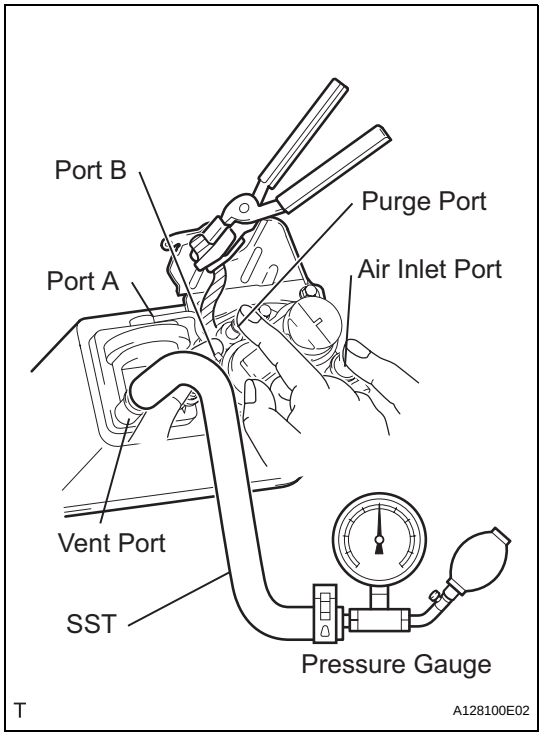

(c) Check for air leakage.
(1) Remove the air hose between ports A and B.
(2) Connect the SST (pressure gauge) to the vent port of the charcoal canister.
SST 09992-00242
(3) While holding port B, with the purge port and the air inlet port closed and port A open, apply 19.6 kPa (0.2 kgf/cm^2, 2.81 psi) of pressurized air into the vent port, then confirm that pressure is retained for 1 minute.
If the result is not as specified, replace the charcoal canister assembly.

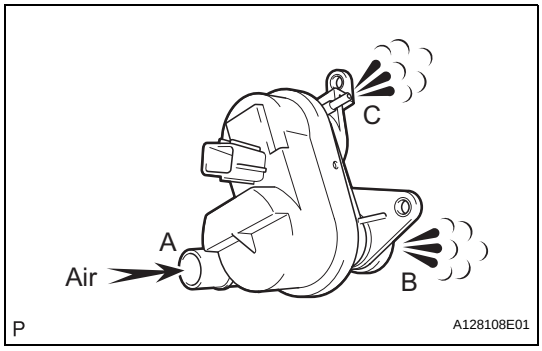

(d) Check the leak detection pump.
(1) Remove the detection pump from the charcoal canister.
(2) Check that air flows from port A to B and then C.
If the result is not as specified, replace the charcoal canister assembly.

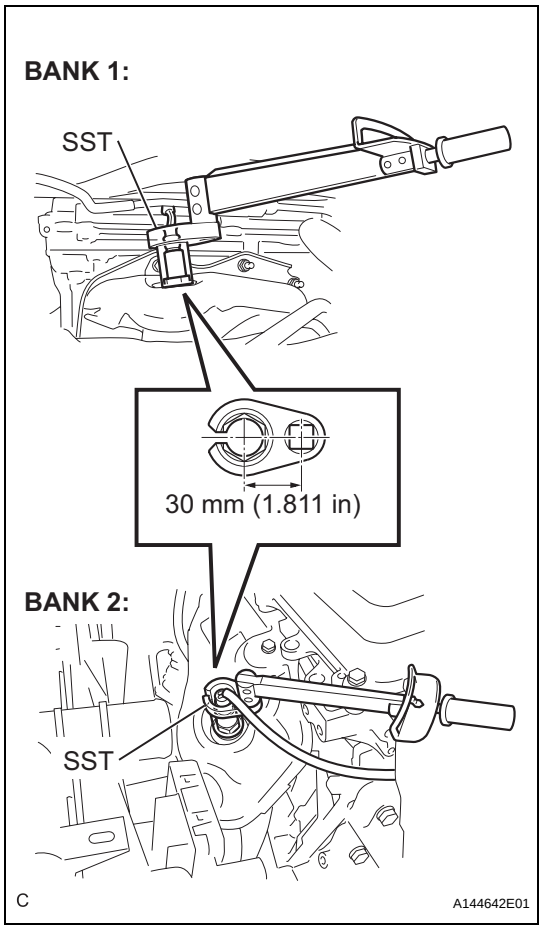

INSTALLATION

1. INSTALL AIR FUEL RATIO SENSOR

(a) Using SST, install the 2 air fuel ratio sensors to the front pipe assembly.
SST 09224-00010
Torque: 44 N*m (449 kgf*cm, 32 ft.*lbf)
NOTICE:
The torque shown above should be used for tightening without using SST. When the SST is used for tightening, the torque should be calculated based on the length of the SST (See page IN-5).

(b) Connect the 2 air fuel ratio sensor connectors.

VACUUM SWITCHING VALVE (for EVAP)

COMPONENTS

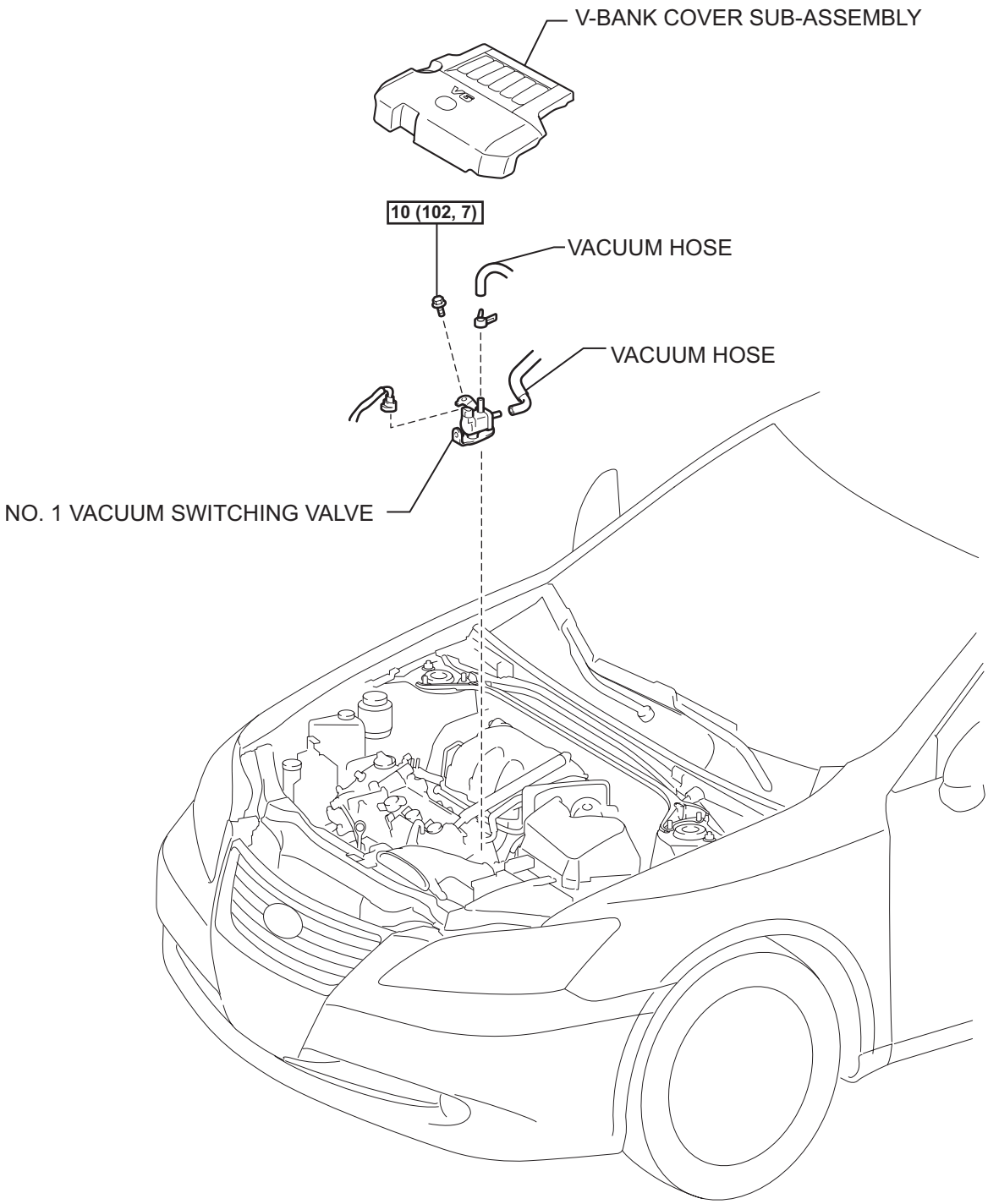

N*m (kgf*cm, ft.*lbf) : Specified torque

C

A142740E01

REMOVAL

1. REMOVE V-BANK COVER SUB-ASSEMBLY (See page EM-23)

2. REMOVE NO. 1 VACUUM SWITCHING VALVE

(a) Disconnect the 2 vacuum hoses and No. 1 vacuum switching valve connector.

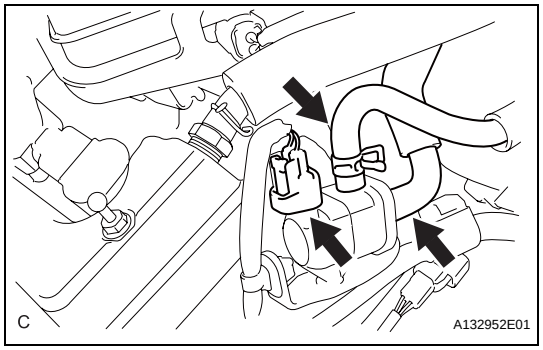

(b) Remove the bolt and No. 1 vacuum switching valve.

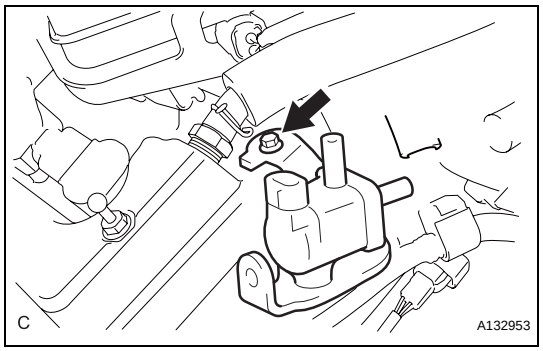

INSPECTION

1. INSPECT EVAP VSV

(a) Check the VSV for an open circuit.

(1) Measure the resistance.

Standard resistance

Tester Connection	Specified Condition
1 - 2	23 to 26 Ω at 20°C (68°F)
1 - Body ground 2 - Body ground	10 kΩ or higher

If the resistance is not as specified, replace the VSV assembly.

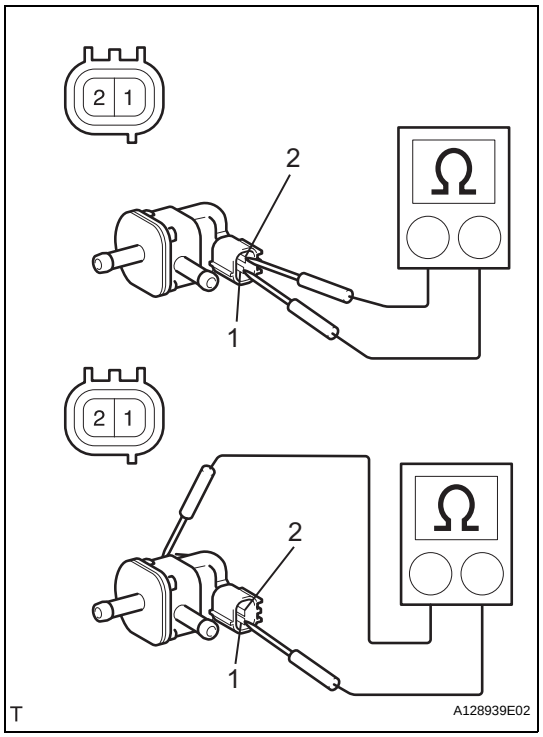

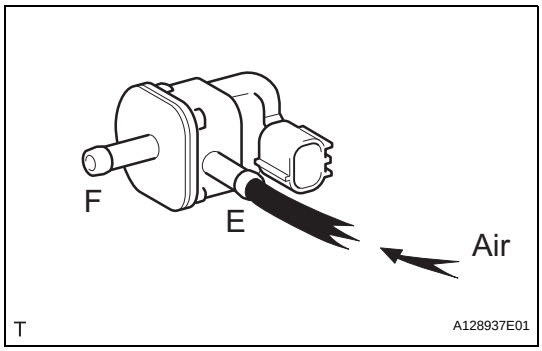

(b) Check VSV operation.
(1) Check that air does not flow from port E to port F.

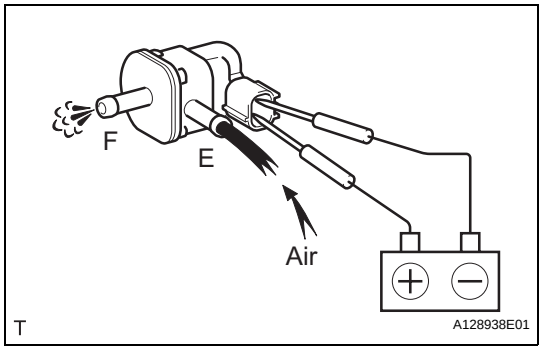

(2) Apply battery positive voltage across the terminals.
(3) Check that air flows from port E to port F. If the result is not as specified, replace the purge VSV.
If the result is not as specified, replace the VSV assembly.

INSTALLATION

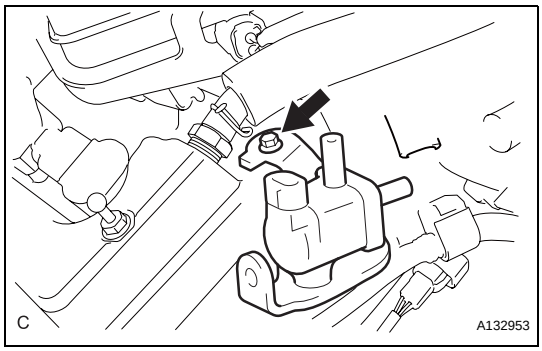

1. INSTALL NO. 1 VACUUM SWITCHING VALVE
(a) Install the No. 1 vacuum switching valve with the bolt.
Torque: 10 N*m (102 kgf*cm, 7 ft.*lbf)

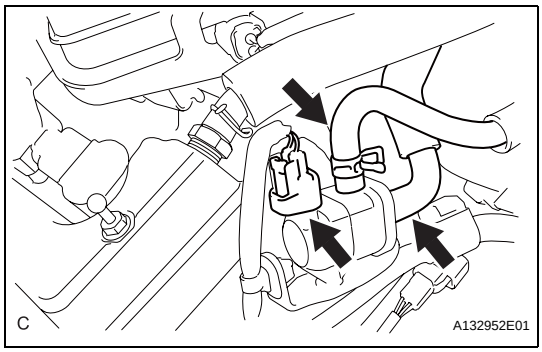

(b) Disconnect the 2 vacuum hoses and No. 1 vacuum switching valve connector.

2. INSTALL V-BANK COVER SUB-ASSEMBLY (See page EM-49)

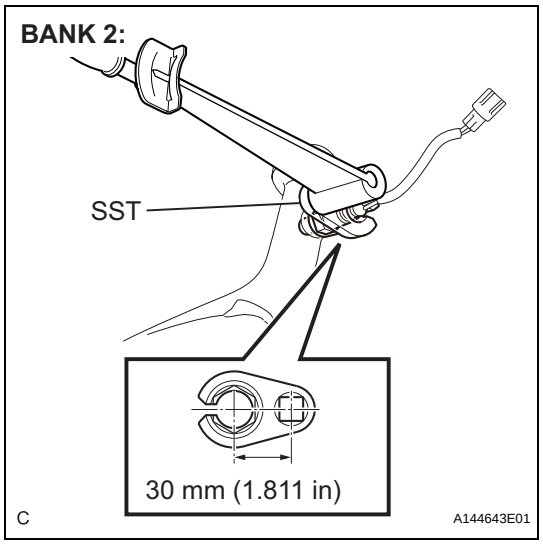

INSTALLATION

1. **INSTALL HEATED OXYGEN SENSOR (for Bank 2)**
   (a) Using SST, install the heated oxygen sensor.
   SST 09224-00010
   Torque: 44 N*m (449 kgf*cm, 32 ft.*lbf)
   NOTICE:
   The torque shown above should be used for tightening without using SST. When the SST is used for tightening, the torque should be calculated based on the length of the SST (See page IN-5).

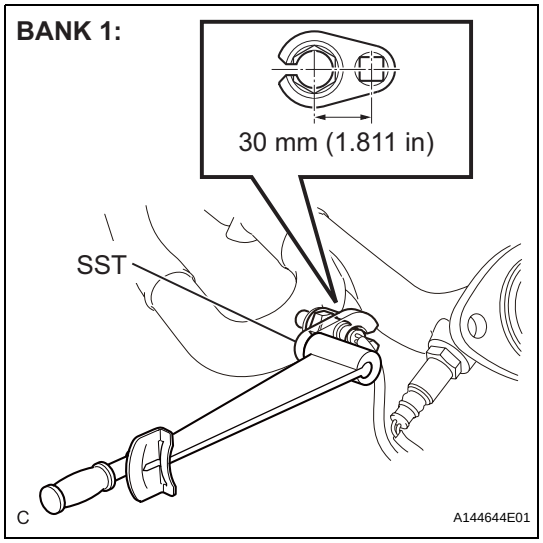

2. **INSTALL HEATED OXYGEN SENSOR (for Bank 1)**
   (a) Using SST, install the heated oxygen sensor.
   SST 09224-00010
   Torque: 44 N*m (449 kgf*cm, 32 ft.*lbf)
   NOTICE:
   The torque shown above should be used for tightening without using SST. When the SST is used for tightening, the torque should be calculated based on the length of the SST (See page IN-5).
3. **INSTALL FRONT EXHAUST PIPE ASSEMBLY (See page EX-4)**
4. **INSTALL EXHAUST PIPE NO. 1 SUPPORT BRACKET (See page EX-4)**
5. **INSTALL ENGINE UNDER COVER LH**
6. **INSTALL ENGINE UNDER COVER RH**

AIR FUEL RATIO SENSOR

COMPONENTS

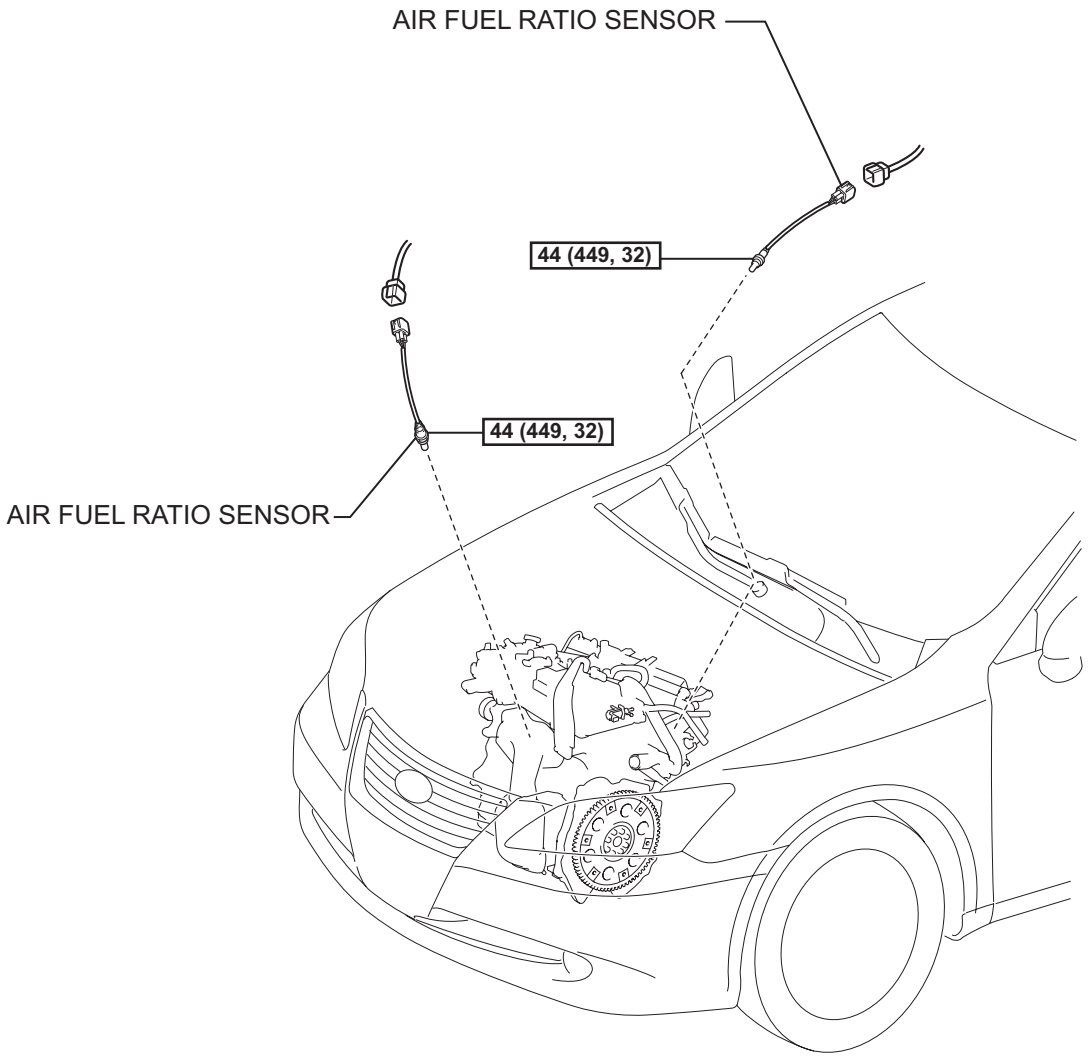

N*m (kgf*cm, ft.*lbf) : Specified torque

C

A128985E01

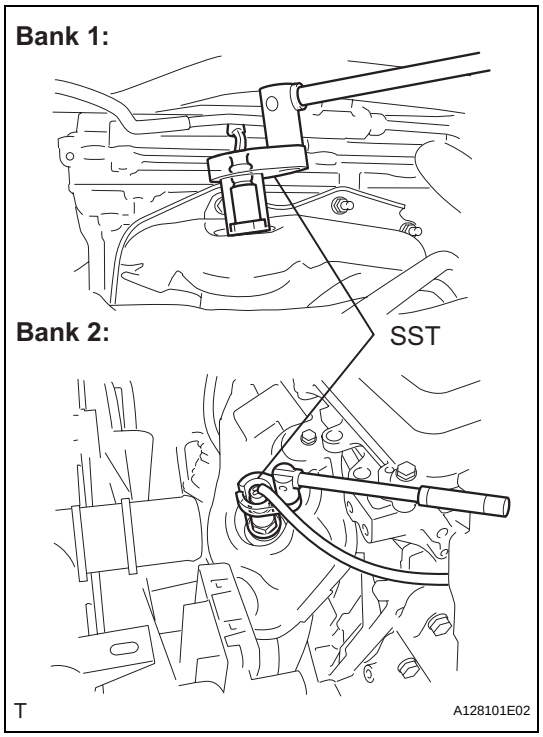

REMOVAL

1. REMOVE AIR FUEL RATIO SENSOR

(a) Disconnect the 2 air fuel ratio sensor connectors.

(b) Using SST, remove the 2 air fuel ratio sensors from the front pipe assembly.

SST 09224-00010

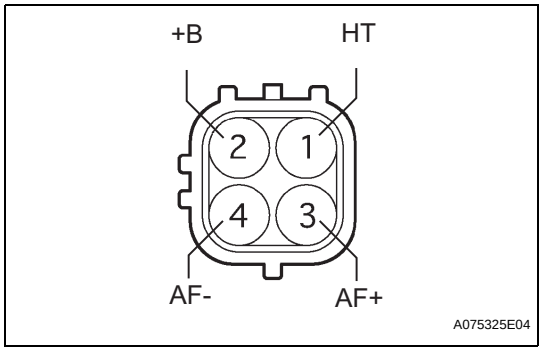

INSPECTION

1. INSPECT AIR FUEL RATIO SENSOR

(a) Measure the resistance between terminals 1 (HT) and 2 (+B).

Standard resistance

Condition	Specified Condition
20°C (68°F)	1.8 to 3.4 Ω

If the result is not as specified, replace the sensor.

EC

HEATED OXYGEN SENSOR

COMPONENTS

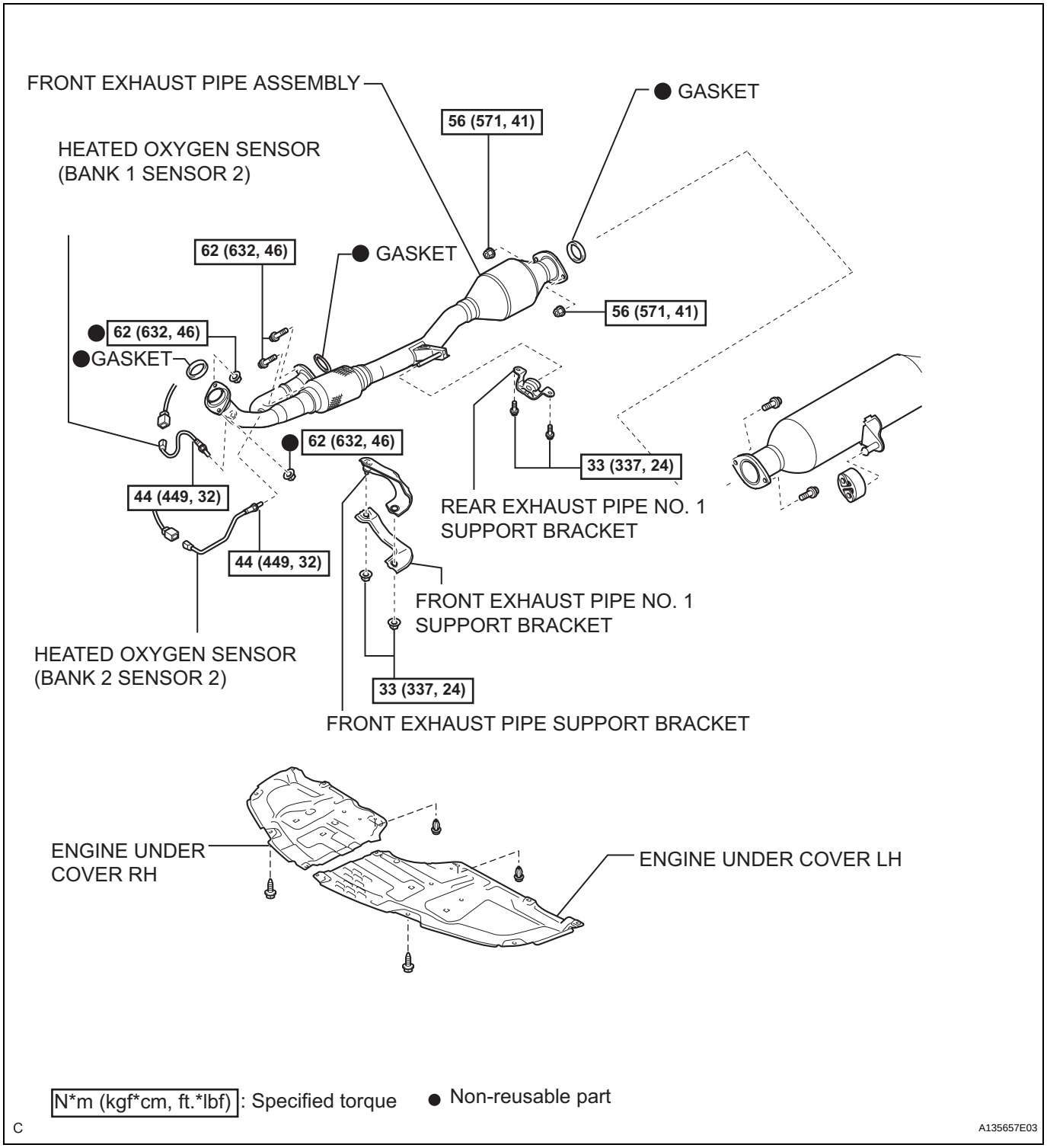

N*m (kgf*cm, ft.*lbf) : Specified torque ● Non-reusable part

C A135657E03

EC

REMOVAL

1. **REMOVE ENGINE UNDER COVER LH**
2. **REMOVE ENGINE UNDER COVER RH**
3. **REMOVE EXHAUST PIPE NO. 1 SUPPORT BRACKET (See page EX-3)**
4. **REMOVE FRONT EXHAUST PIPE ASSEMBLY (See page EX-3)**
5. **REMOVE HEATED OXYGEN SENSOR (for Bank 1)**
   (a) Using SST, remove the oxygen sensor.
   SST 09224-00010

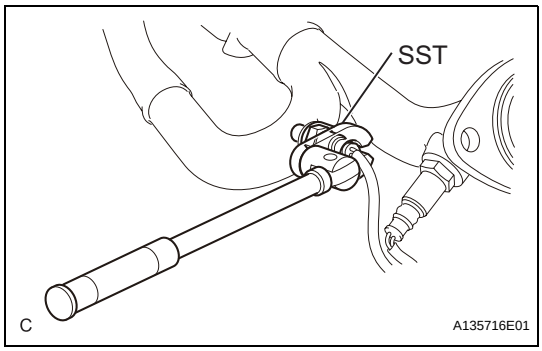

6. **REMOVE HEATED OXYGEN SENSOR (for Bank 2)**
   (a) Using SST, remove the oxygen sensor.
   SST 09224-00010

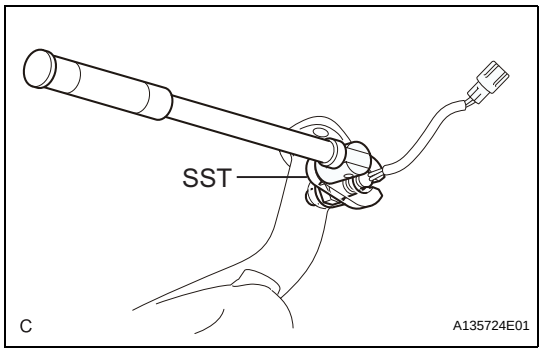

INSPECTION

1. **INSPECT HEATED OXYGEN SENSOR**
   (a) Measure the resistance between terminals 1 (HT) and 2 (+B).
   Standard resistance

Condition	Specified Condition
20°C (68°F)	11 to 16 Ω

If the result is not as specified, replace the sensor.

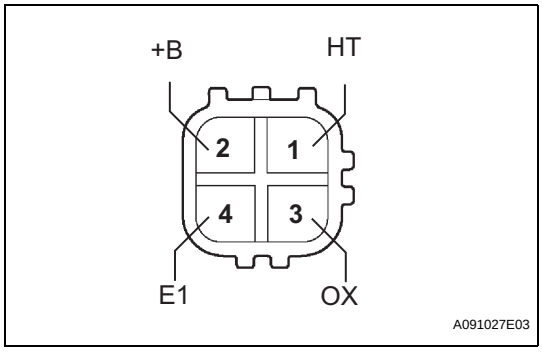

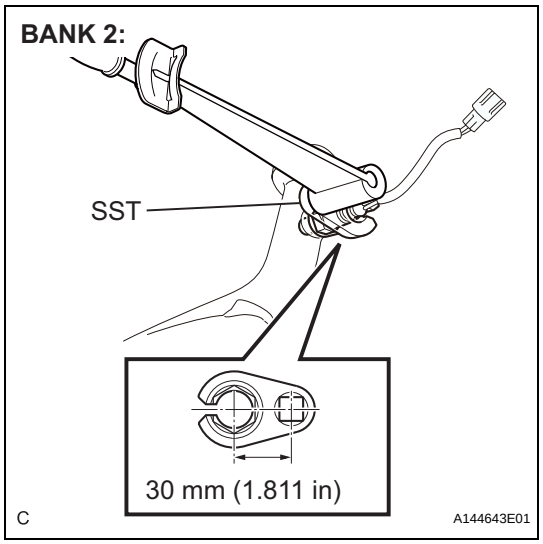

INSTALLATION

1. **INSTALL HEATED OXYGEN SENSOR (for Bank 2)**
   (a) Using SST, install the heated oxygen sensor.
   SST 09224-00010
   Torque: 44 N*m (449 kgf*cm, 32 ft.*lbf)
   NOTICE:
   The torque shown above should be used for tightening without using SST. When the SST is used for tightening, the torque should be calculated based on the length of the SST (See page IN-5).

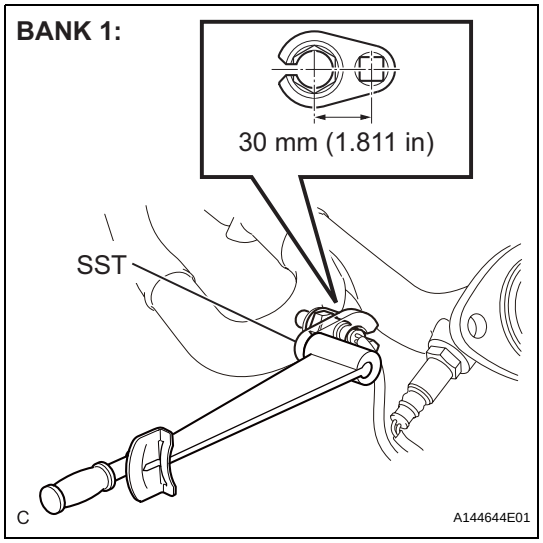

2. **INSTALL HEATED OXYGEN SENSOR (for Bank 1)**
   (a) Using SST, install the heated oxygen sensor.
   SST 09224-00010
   Torque: 44 N*m (449 kgf*cm, 32 ft.*lbf)
   NOTICE:
   The torque shown above should be used for tightening without using SST. When the SST is used for tightening, the torque should be calculated based on the length of the SST (See page IN-5).
3. **INSTALL FRONT EXHAUST PIPE ASSEMBLY (See page EX-4)**
4. **INSTALL EXHAUST PIPE NO. 1 SUPPORT BRACKET (See page EX-4)**
5. **INSTALL ENGINE UNDER COVER LH**
6. **INSTALL ENGINE UNDER COVER RH**

ON-VEHICLE INSPECTION

1. INSPECT INTAKE AIR CONTROL VALVE ASSEMBLY

(a) Inspection procedure when using the intelligent tester:

(1) Warm up the engine.

(2) Stop the engine.

(3) Connect the intelligent tester to the DLC3.

(4) Turn the engine switch on (IG).

(5) Turn the tester on.

(6) Select the following menu items: DIAGNOSIS / ENHANCED OBD II / ACTIVE TEST / INTAKE CTL VSV1. Press the right or left button.

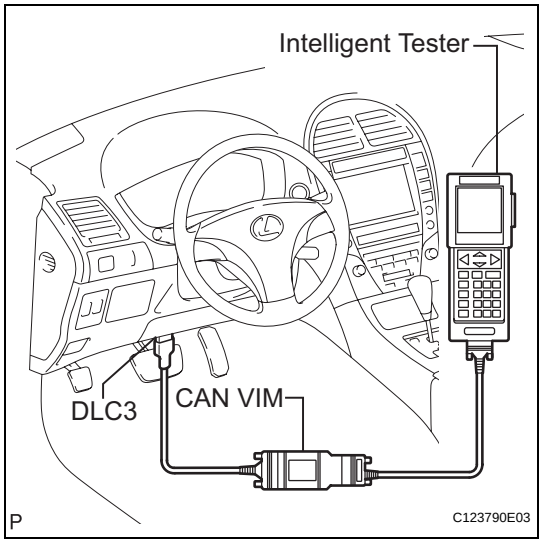

(7) Make sure that a clicking sound is heard from the intake air control valve when current flows. If the result is not as specified, replace the intake air surge tank.

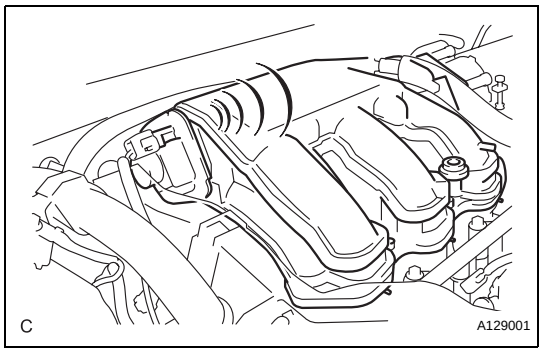

IT

INSPECTION

1. INSPECT INTAKE AIR CONTROL VALVE

(a) Inspection procedure when applying voltage between the terminals:

(1) Disconnect the connector from the intake air control valve.

(2) Apply battery voltage between terminals 1 (-) and 2 (+) of the intake air control valve. Check that a clicking sound is heard from the intake air control valve.
If the result is not as specified, replace the intake air surge tank.

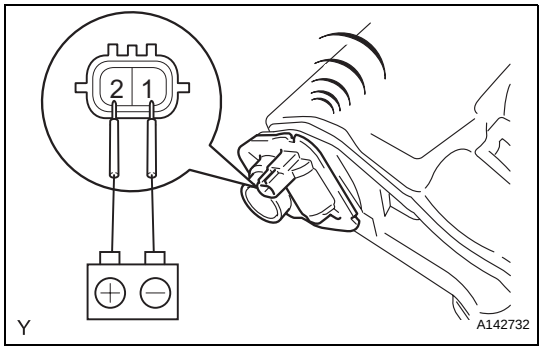

2. INSPECT AIR CLEANER ASSEMBLY

(a) Apply 26.6 kPa (200 mmHg, 7.9 in. Hg) of vacuum to the actuator. Check if the valve rotates open, as shown in the illustration.

(b) Apply vacuum for 1 minute. The actuator should continue to keep the valve open.
If the result is not as specified, replace the air cleaner assembly.

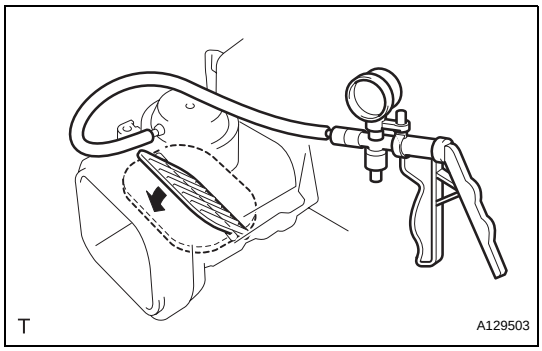

VACUUM SWITCHING VALVE

COMPONENTS

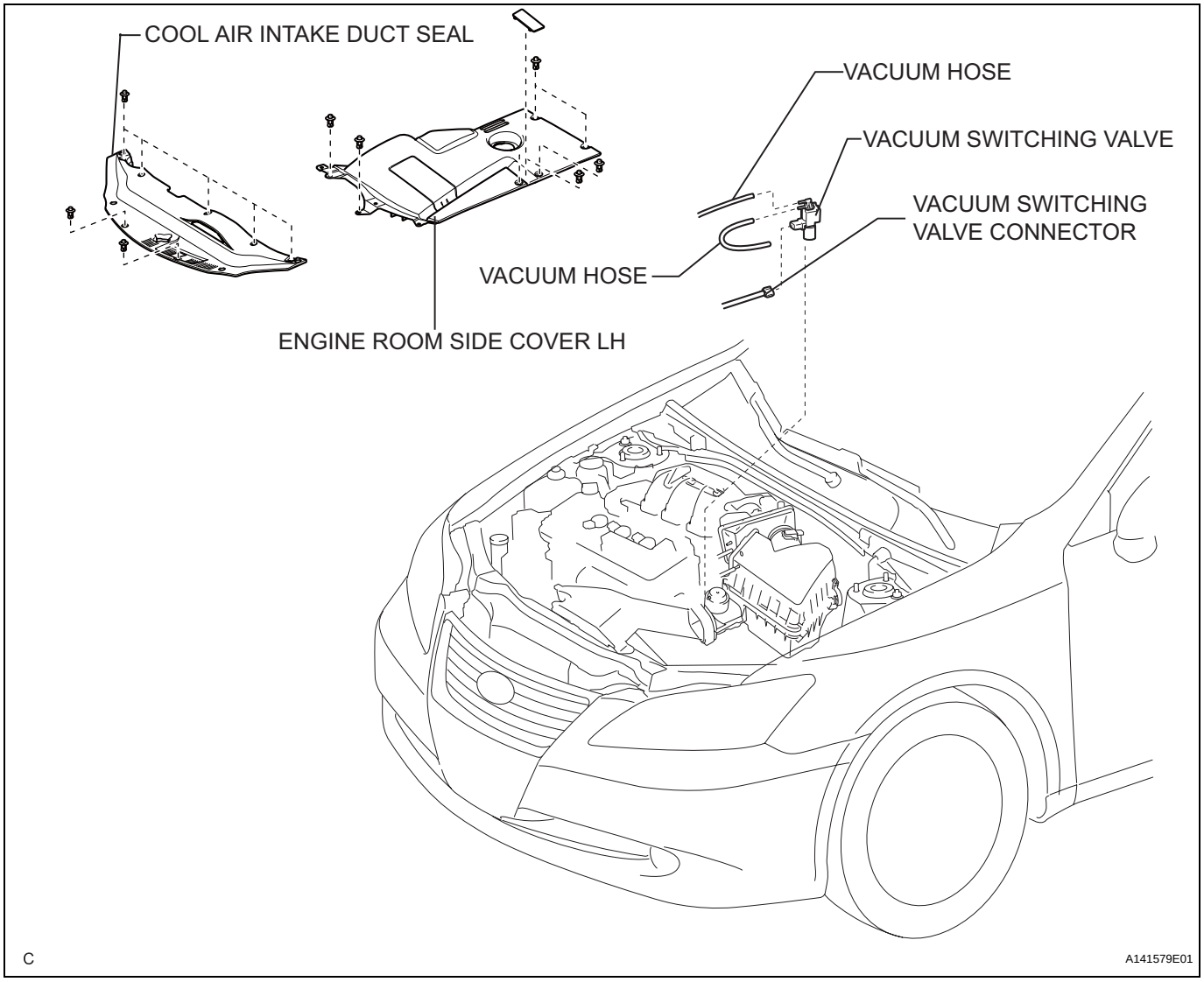

REMOVAL

1. **REMOVE COOL AIR INTAKE DUCT SEAL (See page EM-22)**

2. **REMOVE ENGINE ROOM SIDE COVER LH (See page EM-22)**

3. **REMOVE VACUUM SWITCHING VALVE**
   (a) Remove the 2 vacuum hoses and vacuum switching valve connector.

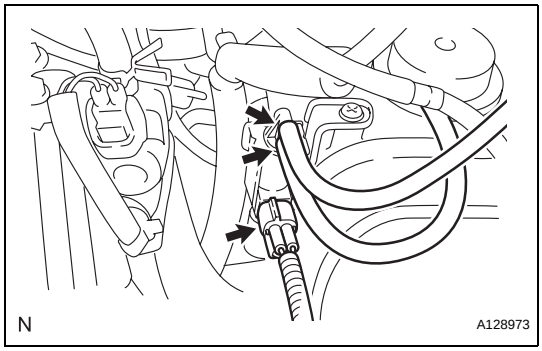

   (b) Remove the screw and vacuum switching valve.

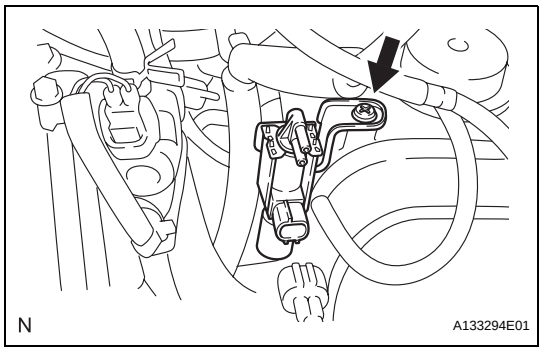

INSPECTION

1. **INSPECT VACUUM SWITCHING VALVE**
   (a) Measure the VSV resistance.
   Standard resistance

Tester Connection	Specified Condition
1-2	37 to 44 Ω at 20°C (68°F)
1 - Body ground 2 - Body ground	10 kΩ or higher

If the result is not as specified, replace the VSV.

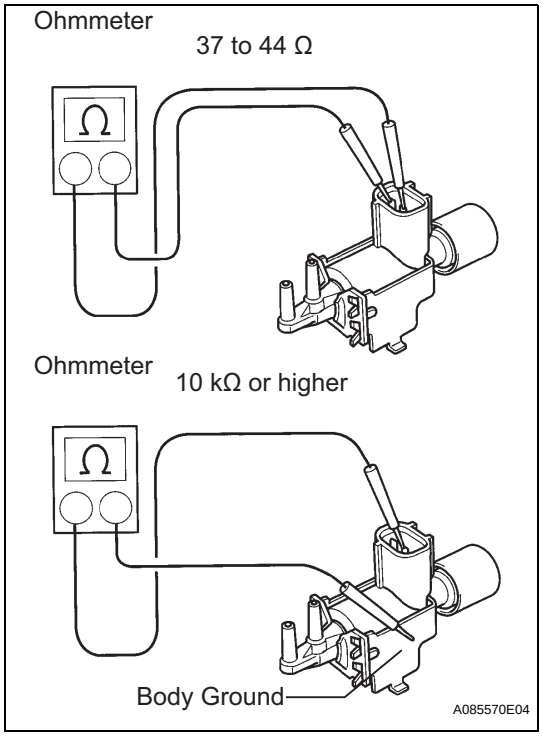

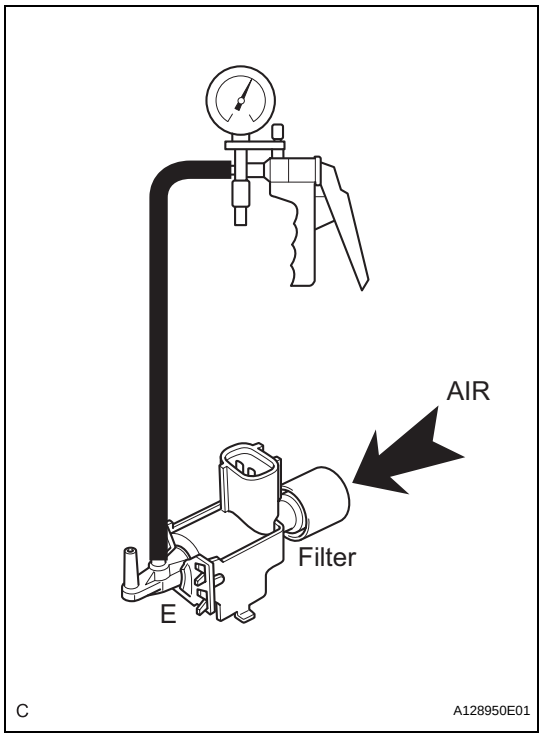

(b) Check VSV operation.
(1) When the vacuum is applied to the E port, check that air is sucked into the filter.
If the result is not as specified, replace the VSV.

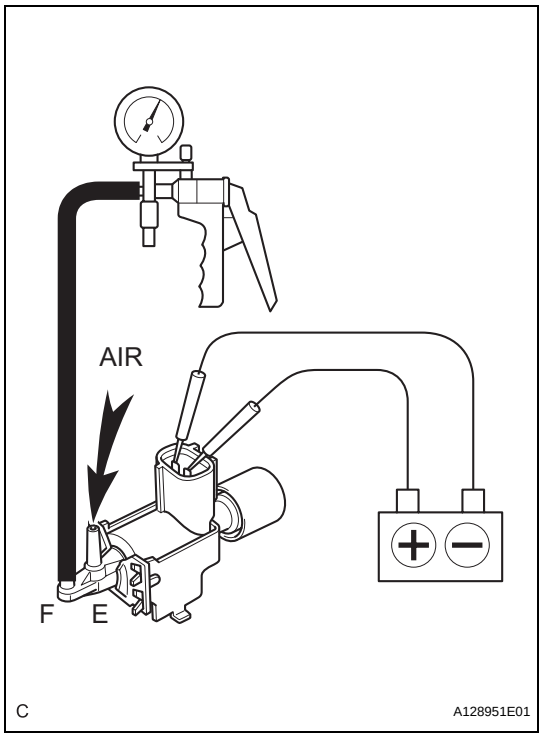

(2) Apply battery voltage across the terminals.
When the vacuum is applied to the F port, check that air is sucked into the E port.
If the result is not as specified, replace the VSV.

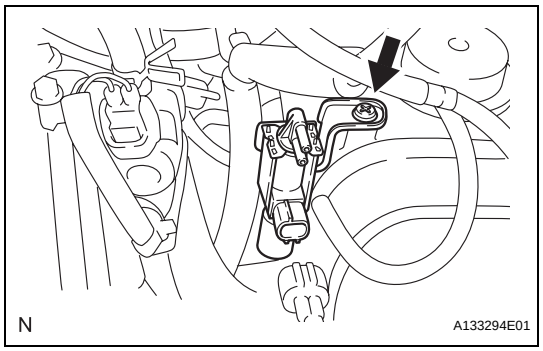

INSTALLATION

1. INSTALL VACUUM SWITCHING VALVE

(a) Install the vacuum switching valve with the screw.

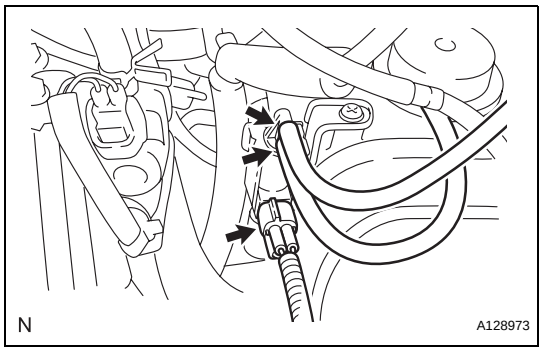

(b) Install the 2 vacuum hoses and vacuum switching valve connector.

2. INSTALL ENGINE ROOM SIDE COVER LH (See page EM-50)

3. INSTALL COOL AIR INTAKE DUCT SEAL (See page EM-50)

EXHAUST PIPE

COMPONENTS

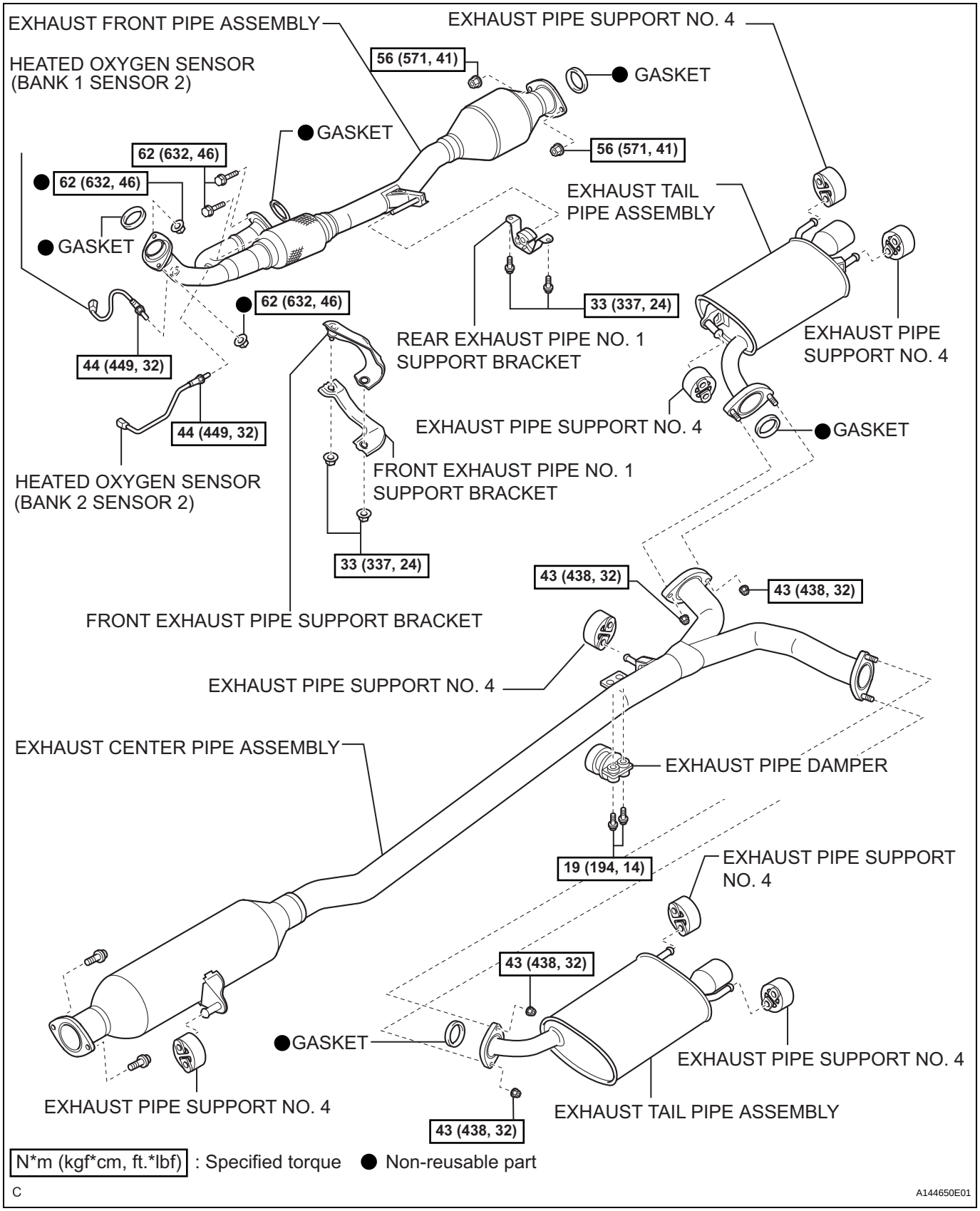

EX

REMOVAL

1. REMOVE EXHAUST TAIL PIPE ASSEMBLY

(a) Remove the 4 nuts and 2 exhaust tail pipes.

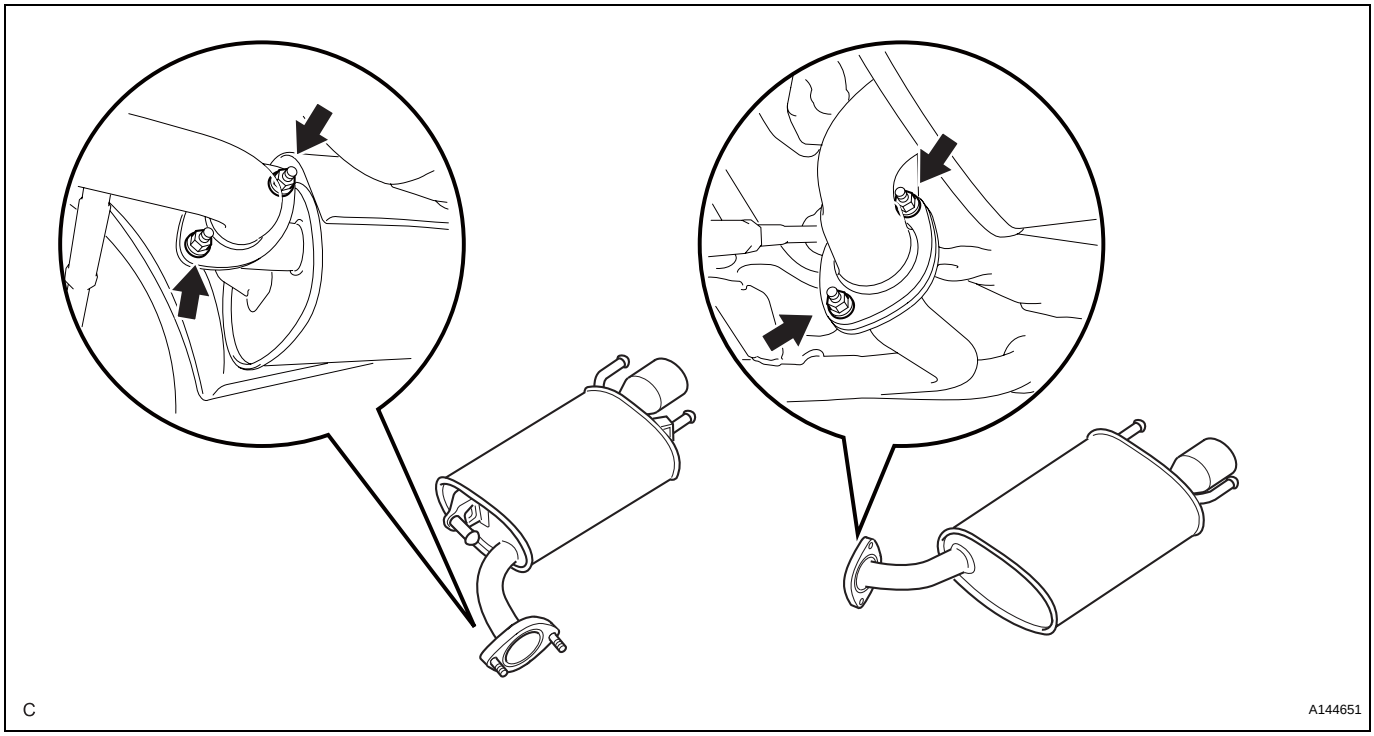

(b) Remove the 2 gaskets from the exhaust center pipe assembly.

2. REMOVE EXHAUST CENTER PIPE ASSEMBLY

(a) Remove the 2 bolts, 2 nuts and exhaust center pipe assembly.

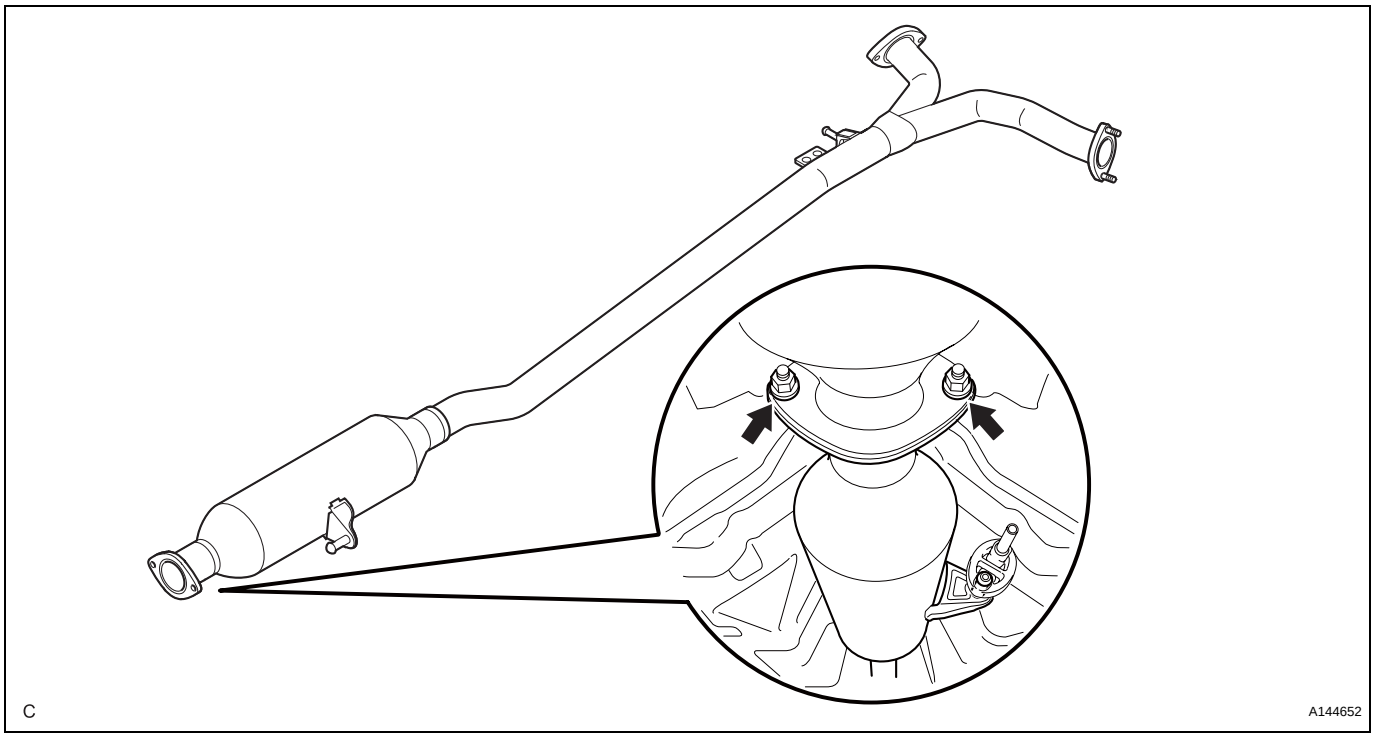

(b) Remove the gasket from the exhaust front pipe assembly.

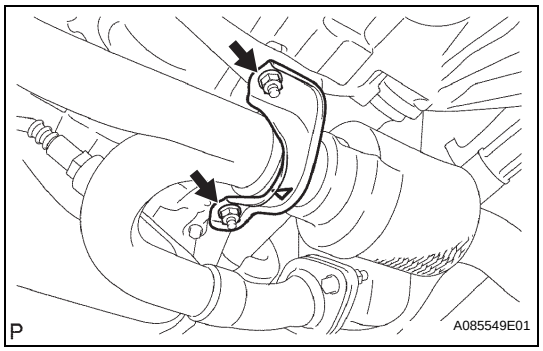

3. REMOVE FRONT EXHAUST PIPE NO. 1 SUPPORT BRACKET

(a) Remove the 2 nuts and front support brackets.

4. REMOVE EXHAUST FRONT PIPE ASSEMBLY

(a) Disconnect the 2 heated oxygen sensor (bank 1, 2 sensor 2) connectors.

(b) Remove the 2 nuts from the exhaust front pipe (left bank exhaust manifold side).

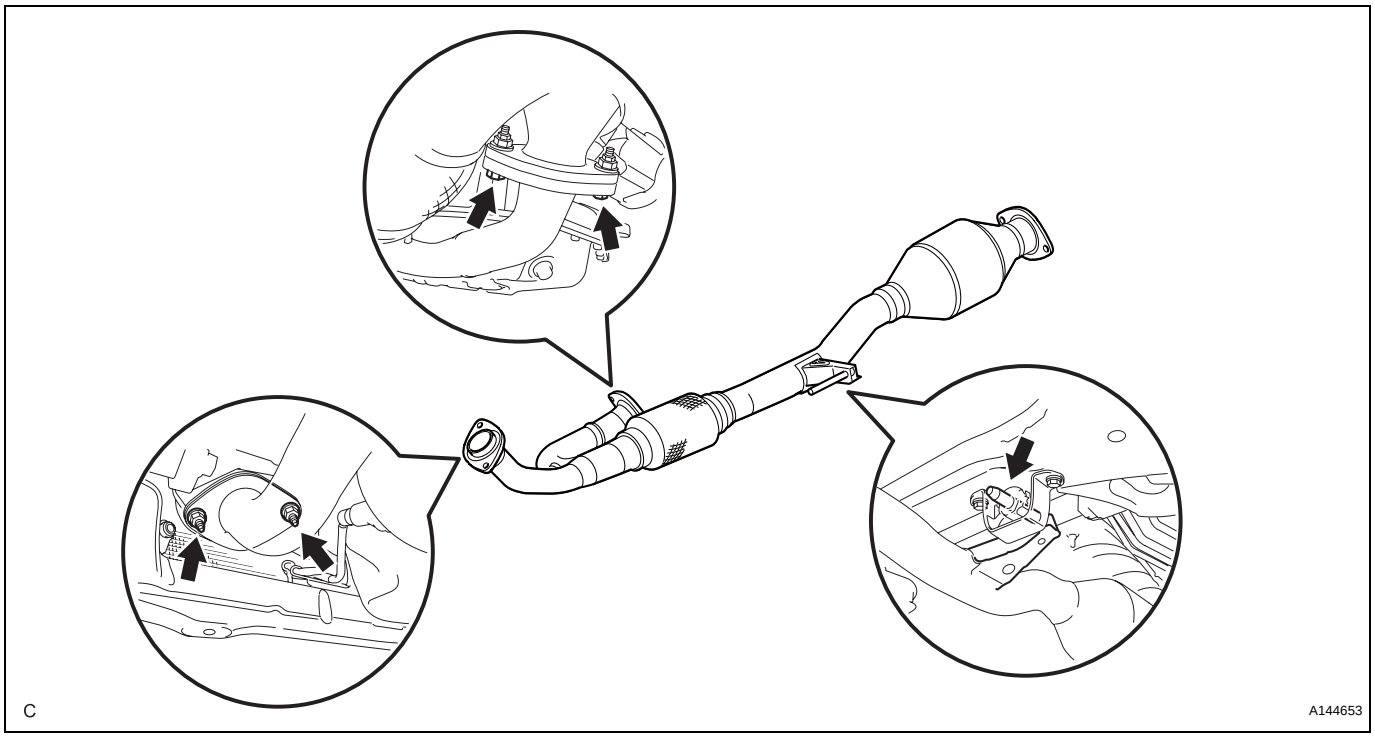

(c) Remove the 2 bolts from the exhaust front pipe (right bank exhaust pipe manifold side).

(d) Remove the exhaust front pipe.

(e) Remove the 2 gaskets from the exhaust front pipe.

5. REMOVE HEATED OXYGEN SENSOR (for Bank 1) (See page EC-22)

6. REMOVE HEATED OXYGEN SENSOR (for Bank 2) (See page EC-22)

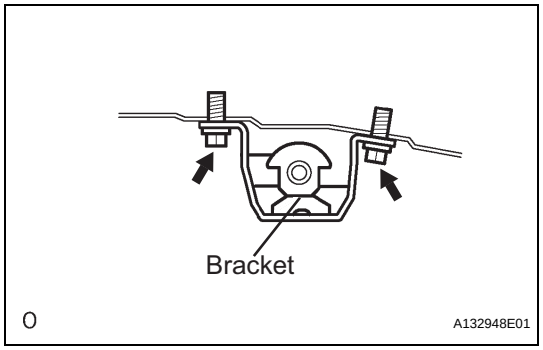

7. REMOVE REAR EXHAUST PIPE NO. 1 SUPPORT BRACKET

(a) Remove the 2 bolts and rear support bracket.

EX

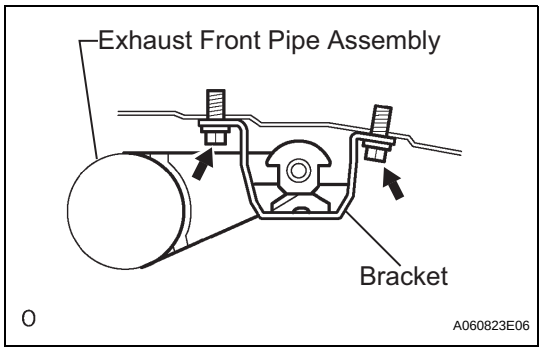

INSTALLATION

1. **INSTALL REAR EXHAUST PIPE NO. 1 SUPPORT BRACKET**
   (a) Install the rear support bracket with the 2 bolts.
   Torque: 33 N*m (337 kgf*cm, 24 ft.*lbf)
   NOTICE:
   Be sure to install the bracket in the correct direction.
2. **REMOVE HEATED OXYGEN SENSOR (for Bank 2) (See page EC-22)**
3. **INSTALL HEATED OXYGEN SENSOR (for Bank 1) (See page EC-23)**
4. **INSTALL EXHAUST FRONT PIPE ASSEMBLY**
   (a) Install 2 new gaskets to the exhaust front pipe.
   (b) Install the exhaust front pipe to the exhaust manifolds with the 2 nuts and 2 bolts.

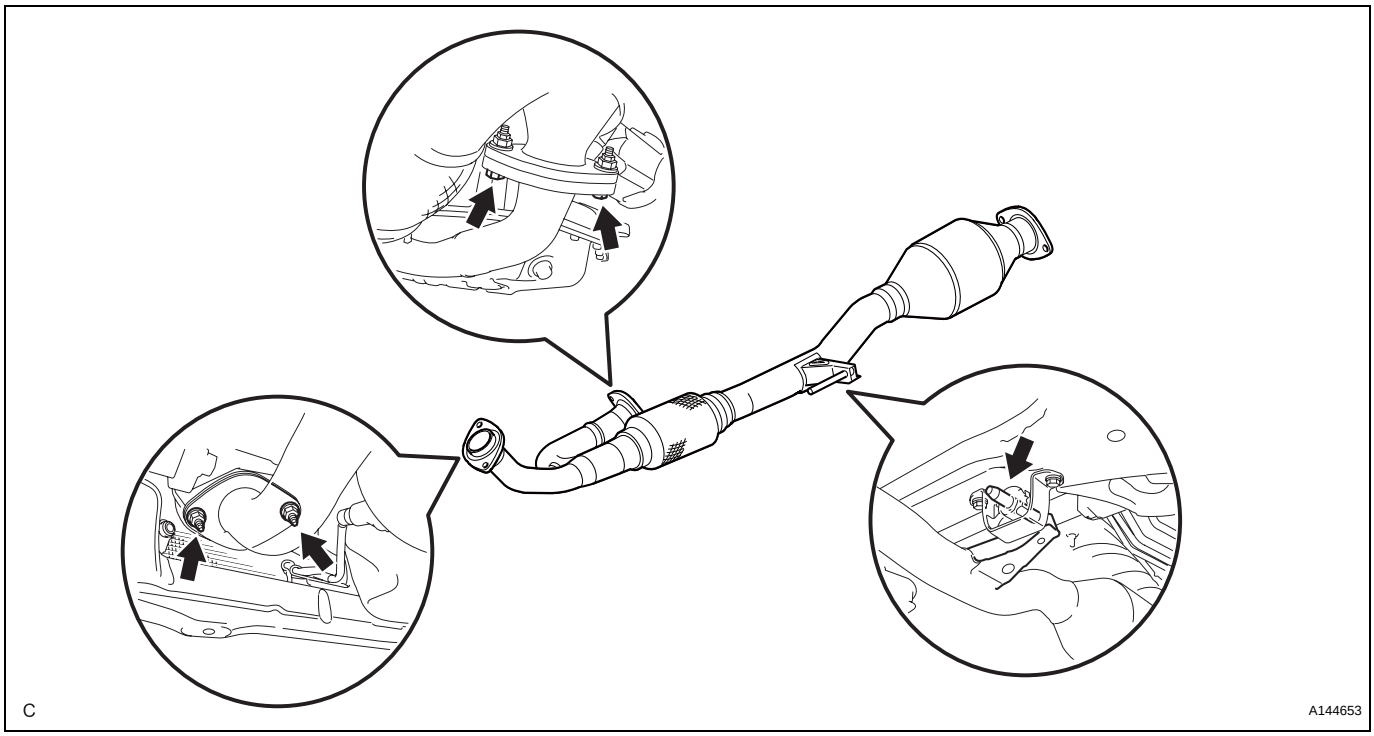

Torque: 62 N*m (632 kgf*cm, 46 ft.*lbf)

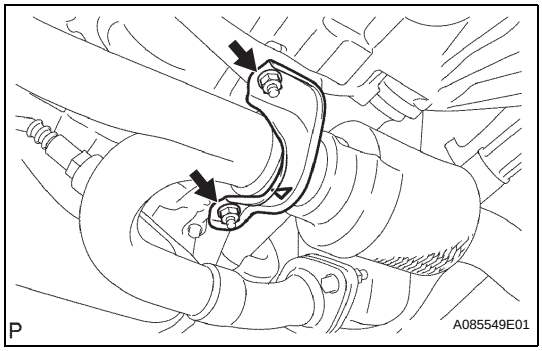

5. **INSTALL FRONT EXHAUST PIPE NO. 1 SUPPORT BRACKET**
   (a) Install the front support brackets with the 2 nuts.
   Torque: 33 N*m (337 kgf*cm, 24 ft.*lbf)
   NOTICE:
   Be sure to install the support brackets in the correct direction.
6. **INSTALL EXHAUST CENTER PIPE ASSEMBLY**
   (a) Install a new gasket to the exhaust center pipe assembly.

(b) Install the exhaust center pipe to the exhaust front pipe with the 2 nuts and 2 bolts.

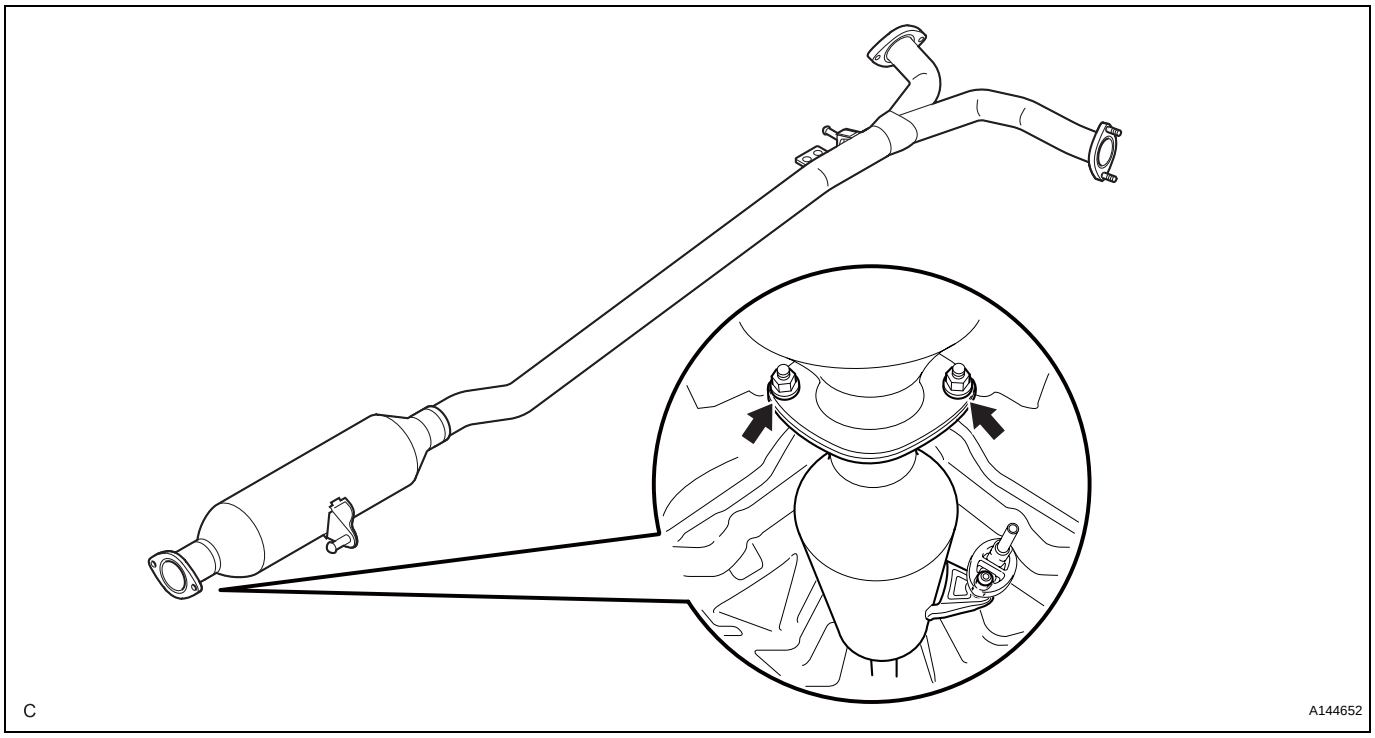

Torque: 56 N*m (571 kgf*cm, 41 ft.*lbf)

7. INSTALL EXHAUST TAIL PIPE ASSEMBLY

(a) Install 2 new gaskets to the exhaust tail pipes.

(b) Install the 2 exhaust tail pipes with the 4 nuts.

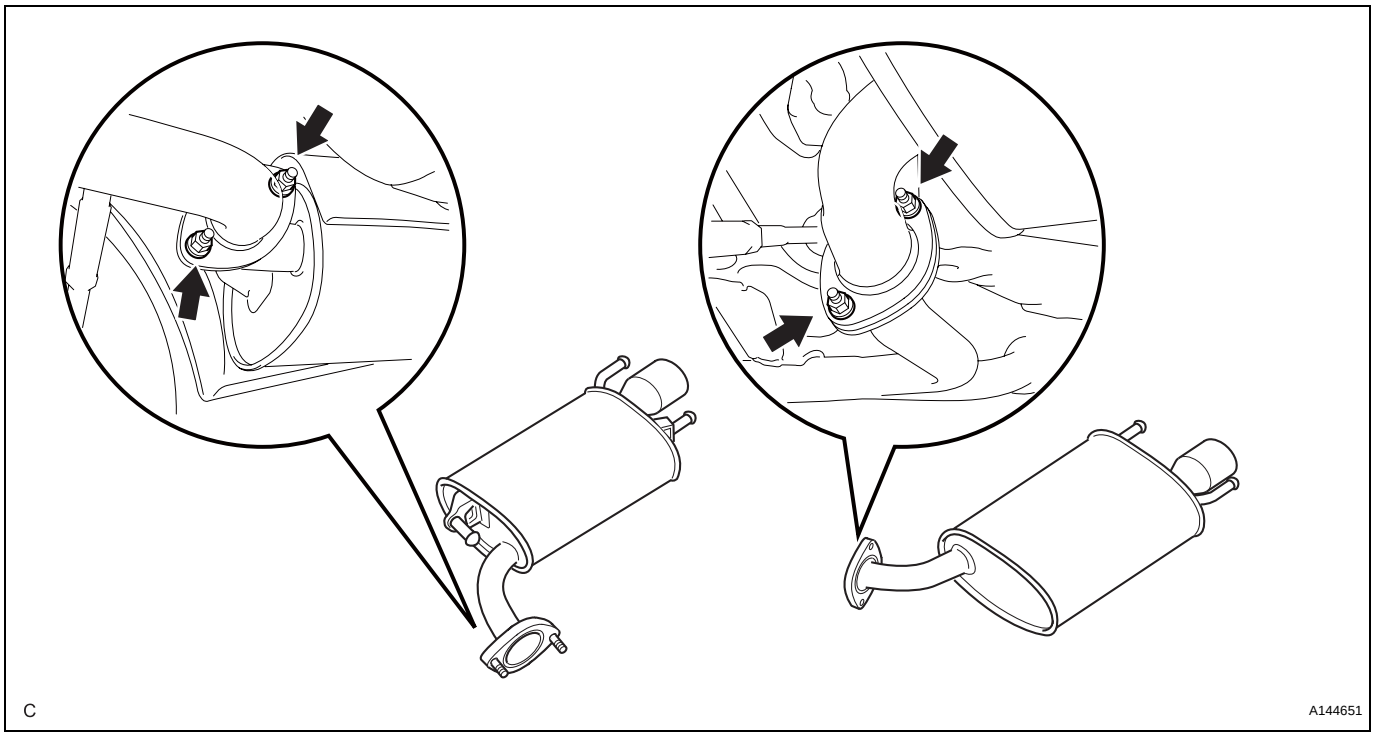

Torque: 43 N*m (438 kgf*cm, 32 ft.*lbf)

8. CHECK FOR EXHAUST GAS LEAKS

If gas is leaking, tighten the areas necessary to stop the leak. Replace the damaged parts as necessary.

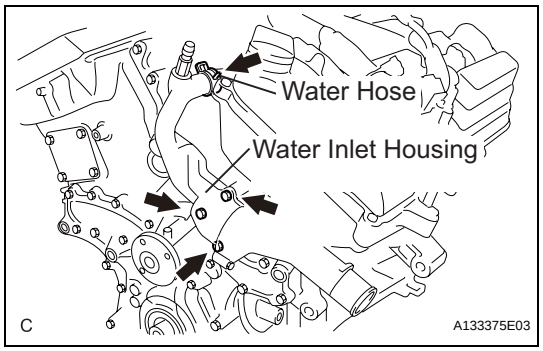

7. REMOVE WATER INLET HOUSING

(a) Disconnect the water hose.

(b) Remove the 2 bolts, nut and water inlet housing.

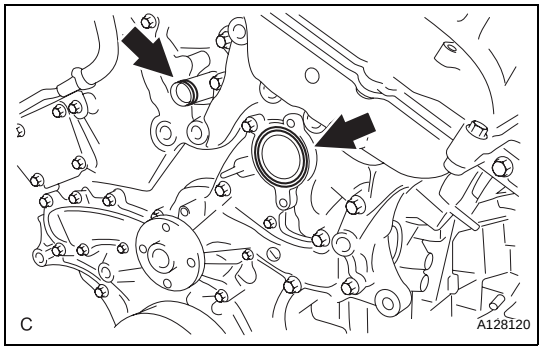

(c) Remove the water inlet housing gasket and water outlet pipe O-ring.

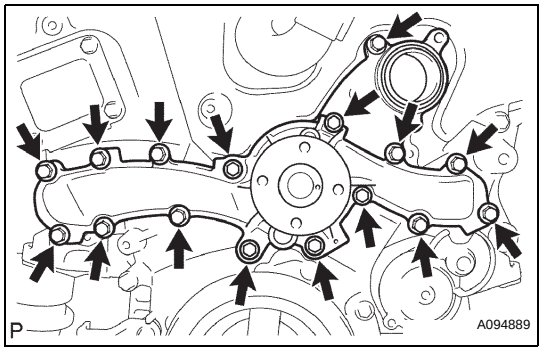

8. REMOVE WATER PUMP ASSEMBLY

(a) Remove the 16 bolts, water pump assembly and water pump gasket.

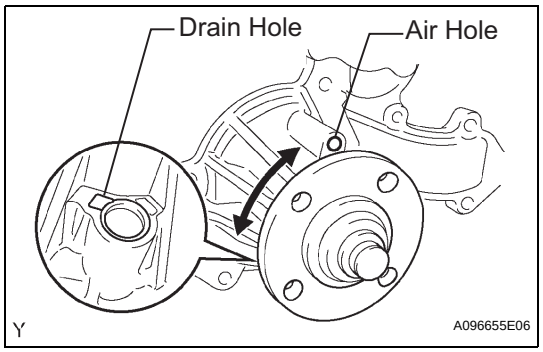

INSPECTION

1. INSPECT WATER PUMP ASSEMBLY

(a) Visually check the drain hole and air hole for coolant leakage.

(b) Turn the pulley, and check that the water pump bearing moves smoothly and noiselessly.
If the bearing does not move smoothly and noiselessly, replace the water pump.

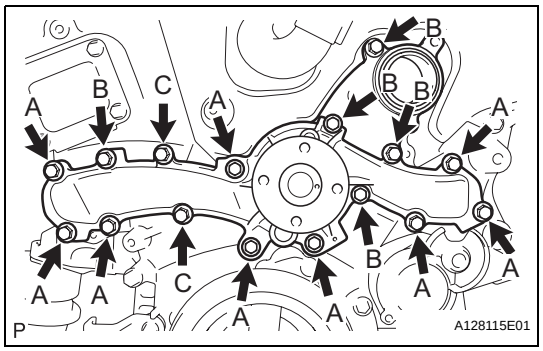

INSTALLATION

1. INSTALL WATER PUMP ASSEMBLY

(a) Install a new water pump gasket and the water pump assembly with the 16 bolts.

Torque: Bolt A
21 N*m (214 kgf*cm, 15 ft.*lbf)
Bolts B and C
9.1 N*m (93 kgf*cm, 81 in.*lbf)

NOTICE:

- **Make sure that there is no oil on the threads of bolts A.**

CO

- **Be sure to replace 2 bolts C with new ones or reuse them after applying adhesive 1344.**
  Adhesive:
  Toyota Genuine Adhesive 1344, Three Bond 1344 or Equivalent

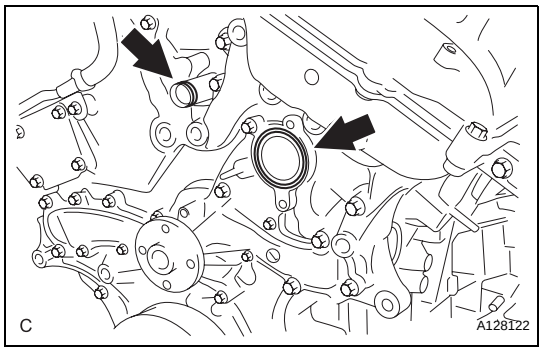

2. INSTALL WATER INLET HOUSING

(a) Install a new water inlet housing No. 1 gasket and water outlet pipe O-ring.

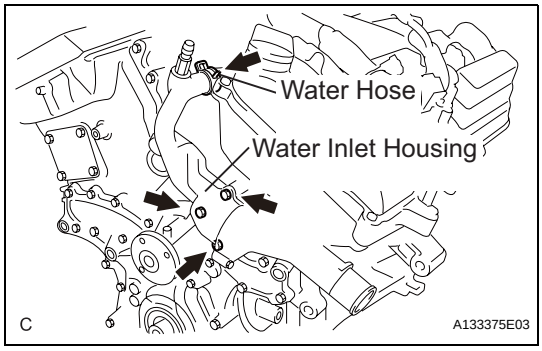

(b) Install the water inlet housing with the 2 bolts and nut.
Torque: 10 N*m (102 kgf*cm, 7 ft.*lbf)
NOTICE:
Be careful not to allow the O-ring to get caught between the parts.

(c) Connect the water hose.

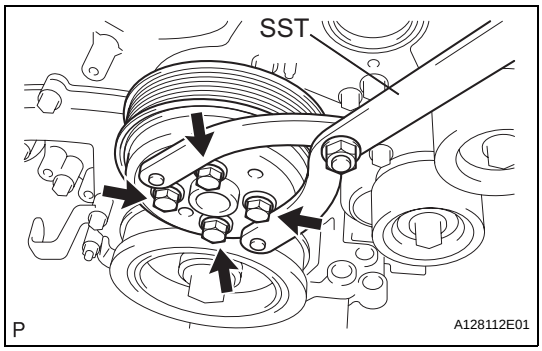

3. INSTALL WATER PUMP PULLEY

(a) Temporarily install the water pump pulley with the 4 bolts.

(b) Using SST, hold the water pump pulley.
SST 09960-10010 (09962-01000, 09963-00700)

(c) Tighten the 4 bolts.
Torque: 21 N*m (214 kgf*cm, 15 ft.*lbf)

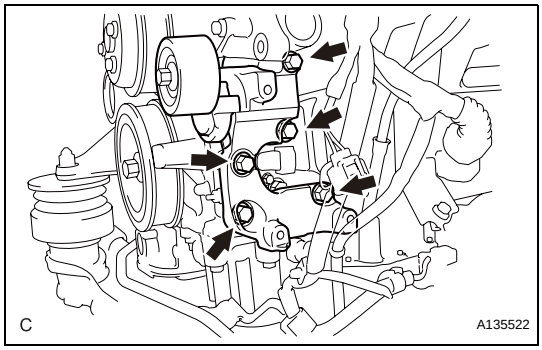

4. INSTALL V-RIBBED BELT TENSIONER ASSEMBLY

(a) Install the V-ribbed belt tensioner assembly with the 5 bolts.
Torque: 43 N*m (438 kgf*cm, 32 ft.*lbf)

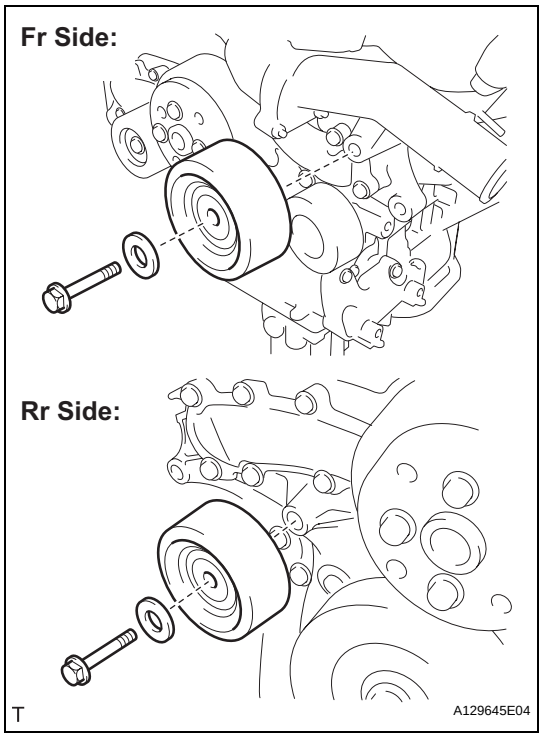

5. **INSTALL NO. 2 IDLER PULLEY SUB-ASSEMBLY**
   (a) Install the 2 idler pulley cover plates and idler pulley sub-assemblies with the 2 bolts.
   Torque: 43 N*m (438 kgf*cm, 32 ft.*lbf)

6. **INSTALL NO. 1 ENGINE MOUNTING BRACKET FRONT LH (See page EM-37)**

7. **REMOVE ENGINE STAND**

8. **INSTALL ENGINE ASSEMBLY WITH TRANSAXLE**
   HINT:
   See page EM-43.

9. **ADD ENGINE COOLANT (See page CO-6)**

10. **CHECK FOR ENGINE COOLANT LEAKS (See page CO-1)**

REMOVAL

1. **REMOVE FRONT WHEEL OPENING EXTENSION PAD LH**
2. **REMOVE FRONT WHEEL OPENING EXTENSION PAD RH**
3. **REMOVE ENGINE UNDER COVER LH**
4. **REMOVE ENGINE UNDER COVER RH**
5. **DRAIN ENGINE COOLANT (See page CO-5)**
6. **REMOVE V-BANK COVER SUB-ASSEMBLY (See page EM-23)**
7. **REMOVE COOL AIR INTAKE DUCT SEAL (See page EM-22)**
8. **REMOVE ENGINE ROOM SIDE COVER LH**
9. **REMOVE ENGINE ROOM SIDE COVER RH**
10. **REMOVE AIR CLEANER CAP SUB-ASSEMBLY (See page ES-519)**
11. **REMOVE AIR CLEANER INLET SUB-ASSEMBLY (See page EM-23)**
12. **REMOVE NO. 1 AIR CLEANER INLET (See page EM-23)**
13. **REMOVE FRONT BUMPER ASSEMBLY (See page ET-5)**
14. **REMOVE FRONT BUMPER ENERGY ABSORBER (See page ET-9)**
15. **REMOVE MILLIMETER WAVE RADAR SENSOR ASSEMBLY (w/ Dynamic Radar Cruise Control System)**
16. **SEPARATE RADIATOR RESERVE TANK HOSE**
    (a) Separate the radiator reserve tank hose from the radiator assembly.

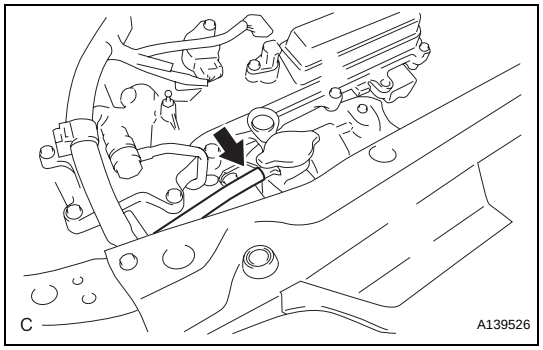

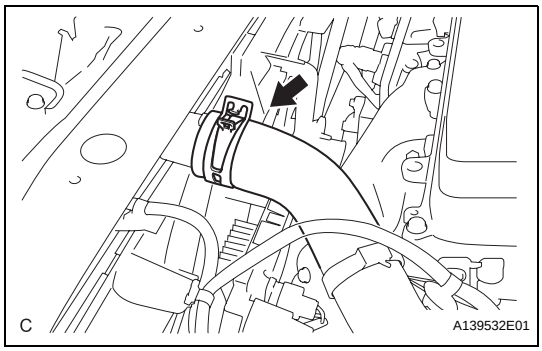

17. DISCONNECT RADIATOR HOSE INLET

(a) Separate the radiator hose inlet from the radiator assembly.

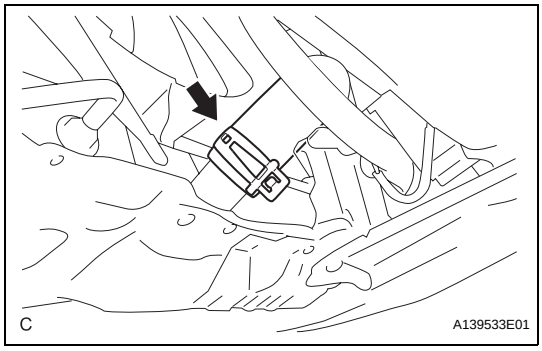

18. DISCONNECT RADIATOR HOSE OUTLET

(a) Separate the radiator hose outlet from the radiator assembly.

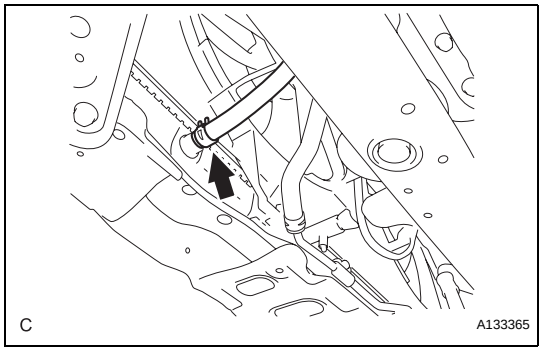

19. DISCONNECT NO. 1 OIL COOLER INLET HOSE

(a) Separate the No. 1 oil cooler inlet hose from the radiator assembly.

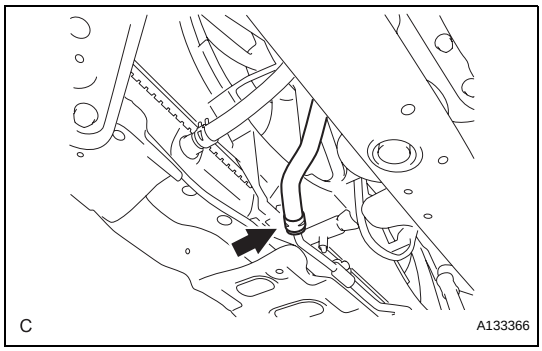

20. DISCONNECT NO. 1 OIL COOLER OUTLET HOSE

(a) Separate the No. 1 oil cooler outlet hose from the radiator assembly.

21. REMOVE RADIATOR SUPPORT UPPER

(a) Disconnect the horn connectors.

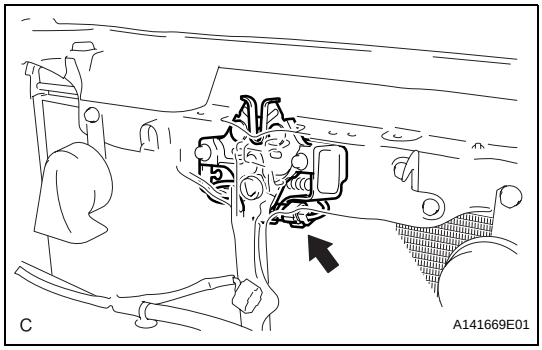

(b) Disconnect the connector.

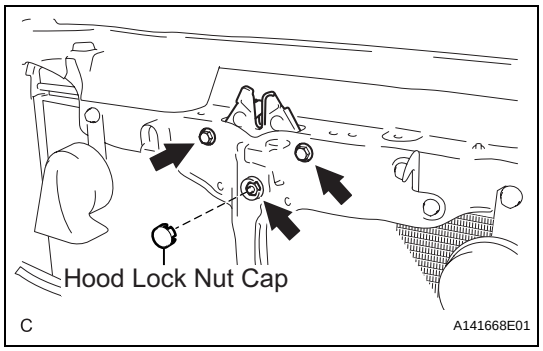

(c) Using a screwdriver, remove the hood lock nut cap.
(d) Remove the 2 bolts and nut, and separate the hood lock assembly from the radiator support upper.

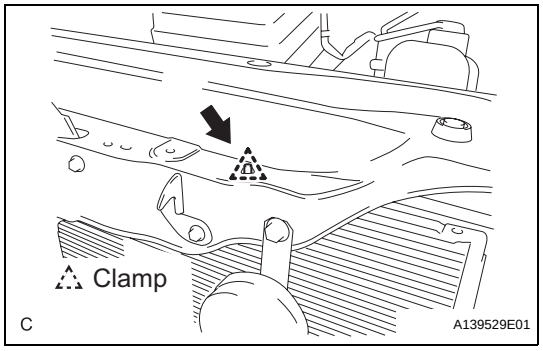

(e) Remove the clamp and separate the hood lock control cable from the radiator support upper.

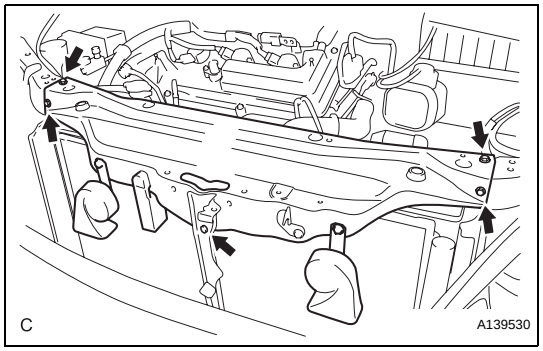

(f) Remove the 5 bolts and radiator support upper.

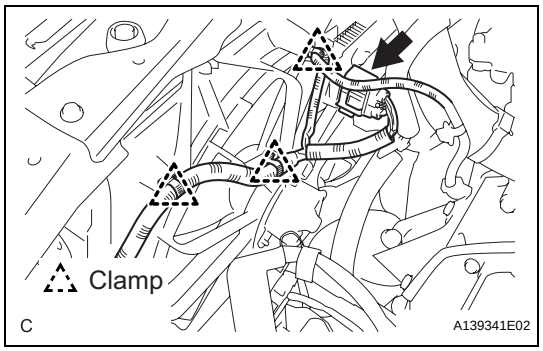

22. REMOVE FAN SHROUD

(a) Remove the 3 clamps and connector.

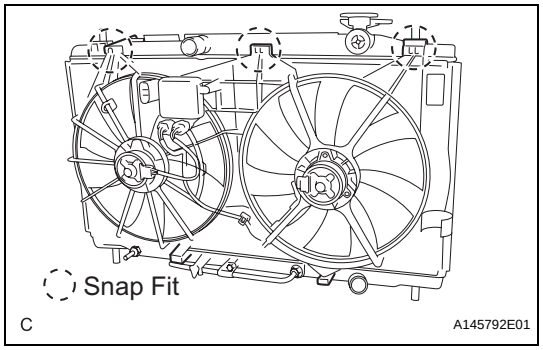

(b) Release the 3 snap fits and lift the fan assembly with motor from the radiator.

CO

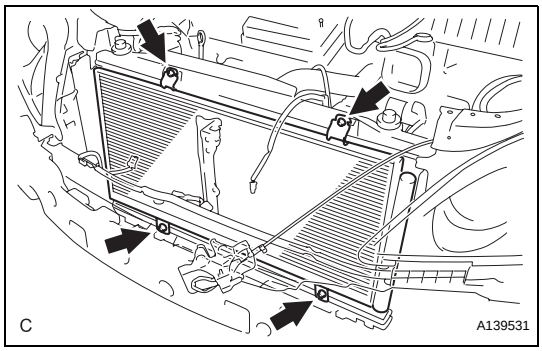

23. REMOVE RADIATOR ASSEMBLY

(a) Remove the 4 bolts and separate the condenser assembly from the radiator assembly.

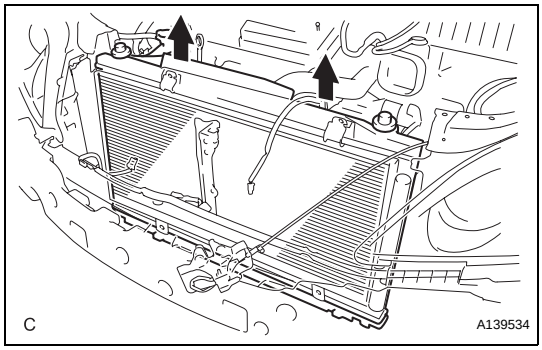

(b) Remove the radiator assembly from the body.

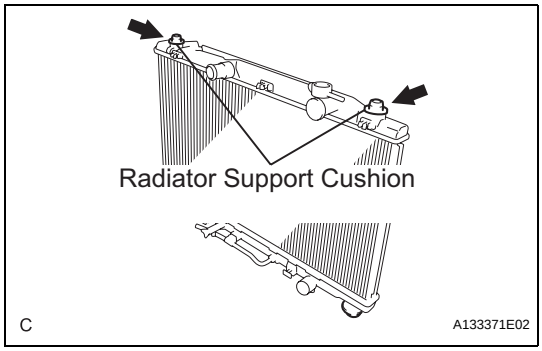

24. REMOVE RADIATOR SUPPORT CUSHION

(a) Remove the 2 radiator support cushions from the radiator assembly.

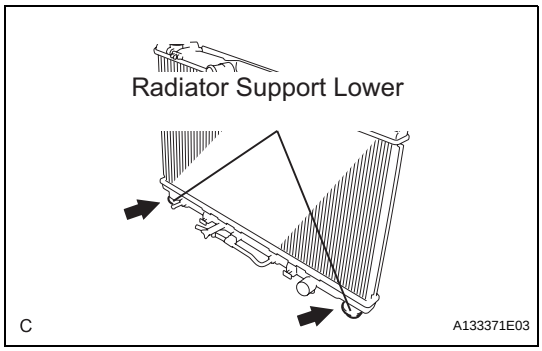

25. REMOVE RADIATOR SUPPORT LOWER

(a) Remove the 2 radiator support lowers from the radiator assembly.

COOLING SYSTEM

ON-VEHICLE INSPECTION

1. CHECK FOR ENGINE COOLANT LEAKS

CAUTION:

Do not remove the radiator cap while the engine and radiator are still hot. Pressurized, hot engine coolant and steam may be released and cause serious burns.

NOTICE:

Before performing each inspection, turn the A/C switch OFF.

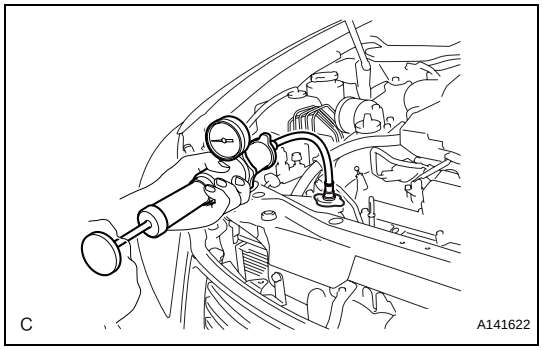

(a) Fill the radiator with coolant and attach a radiator cap tester.

(b) Warm up the engine.

(c) Using a radiator cap tester, increase the pressure inside the radiator to 118 kPa (1.2 kgf*cm, 17 psi), and check that the pressure does not drop.
If the pressure drops, check the hoses, radiator and water pump for leaks. If no external leaks are found, check the heater core, cylinder block and cylinder head.

2. INSPECT ENGINE COOLANT LEVEL IN RESERVOIR

(a) Check that the engine coolant level is between the LOW and FULL lines when the engine is cold.
If the engine coolant level is low, check for leaks and add "TOYOTA Super Long Life Coolant" or similar high quality ethylene glycol based non-silicate, non-amine, non-nitrite and non-borate coolant with long-life hybrid organic acid technology to the FULL line.
NOTICE:
Do not substitute plain water for engine coolant.

3. INSPECT ENGINE COOLANT QUALITY

(a) Remove the radiator cap.
CAUTION:
Do not remove the radiator cap while the engine and radiator are still hot. Pressurized, hot engine coolant and steam may be released and cause serious burns.

(b) Check if there are any excessive deposits of rust or scales around the radiator cap and radiator filler hole. Also, the coolant should be free of oil.
If excessively dirty, clean the coolant passage and replace the coolant.

(c) Install the radiator cap.

DISASSEMBLY

1. REMOVE DRAIN PLUG

(a) Remove the drain plug.

(b) Remove the O-ring.

2. REMOVE RADIATOR TANK UPPER

(a) Install the claw to the overhaul handle, inserting it in the hole in part A as shown in the illustration.
SST 09230-01010 (09231-01010, 09231-01030)

(b) While gripping the handle, adjust the stopper bolt so that dimension B is as shown in the illustration.
Dimension B:
0.2 to 0.3 mm (0.008 to 0.012 in.)
NOTICE:
If the stopper bolt is not adjusted, the claw may be damaged.

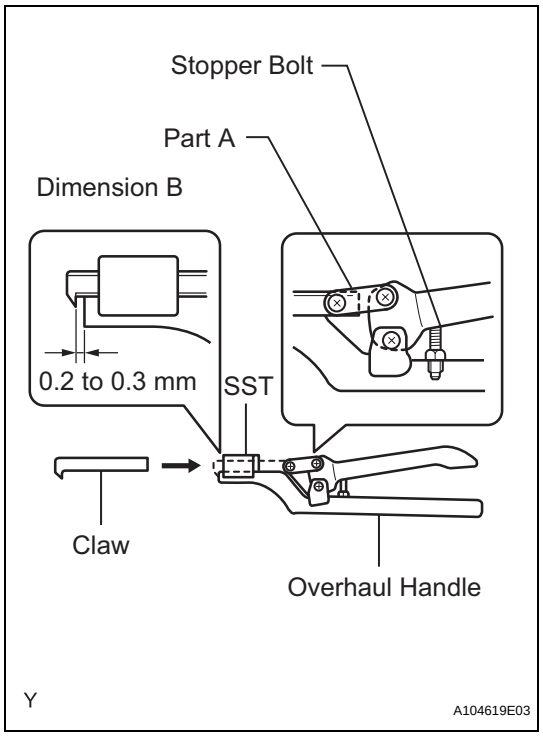

(c) Using SST to release the caulking, grip the handle until stopped by the stopper bolt.
SST 09230-01010 (09231-01010, 09231-01030)

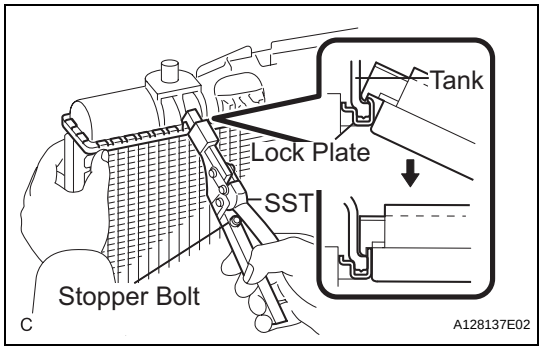

(d) Lightly tap the bracket of the radiator (or radiator hose inlet or outlet) with a soft-faced hammer and remove the tank.

(e) Remove the O-ring.

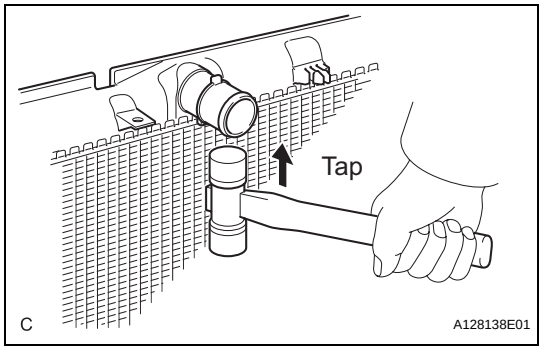

CO

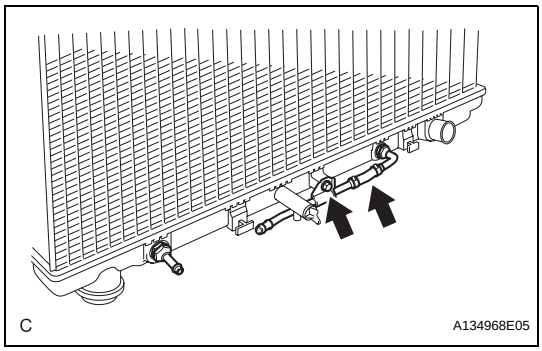

3. REMOVE RADIATOR TANK LOWER

(a) With hose:

(1) Remove the bolt, 2 clips and hose from the radiator assembly.

(b) Removal procedure of the radiator tank lower is the same as that of the radiator tank upper.

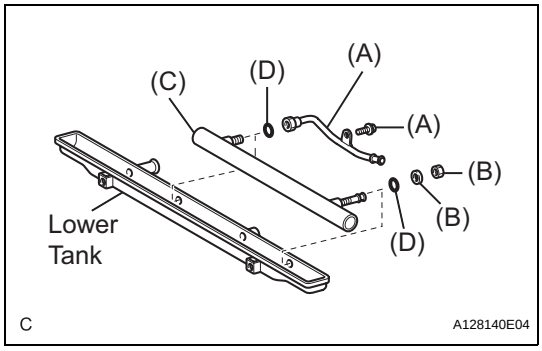

(c) Without hose:

(1) Remove the bolt and cooler pipe (A).

(2) Remove the nut and plate washer (B).

(3) Remove the oil cooler (C).

(4) Remove the 2 O-rings from the oil cooler (D).

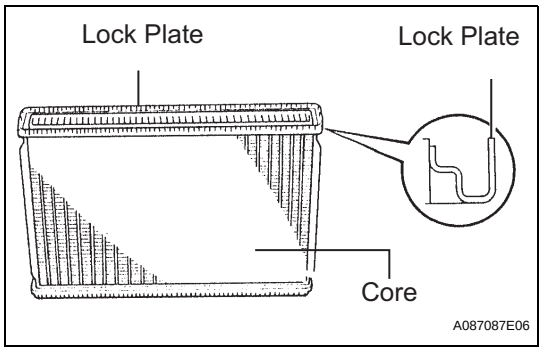

INSPECTION

1. INSPECT LOCK PLATE

(a) Inspect the lock plate for damage.

HINT:

- If the sides of the lock plate groove are deformed, reassembly of the tank will be impossible. Therefore, first correct the shape of the lock plate groove with pliers or a similar object, if necessary.
- Water leakage will result if the bottom of the lock plate groove is damaged or dented. Repair or replace the locking plate if necessary.

NOTICE:

The radiator can only be recaulked 2 times. After recaulking 2 times, the radiator core must be replaced.

REASSEMBLY

1. INSTALL RADIATOR TANK UPPER

(a) Install the punch assembly to the overhaul handle, inserting it in the hole in part A as shown in the illustration.
SST 09230-01010, 09231-14010

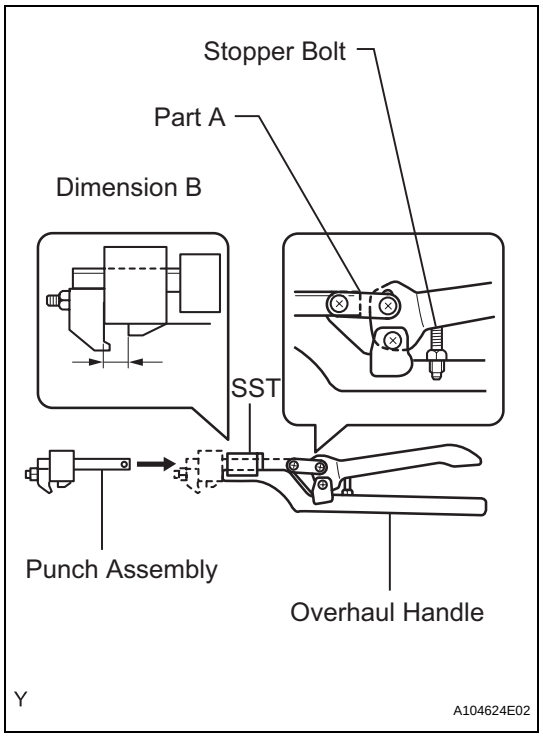

(b) After checking that there are no foreign objects in the lock plate groove, install a new O-ring without twisting it.
HINT:
When cleaning the lock plate groove, lightly rub it with sand paper without scratching it.

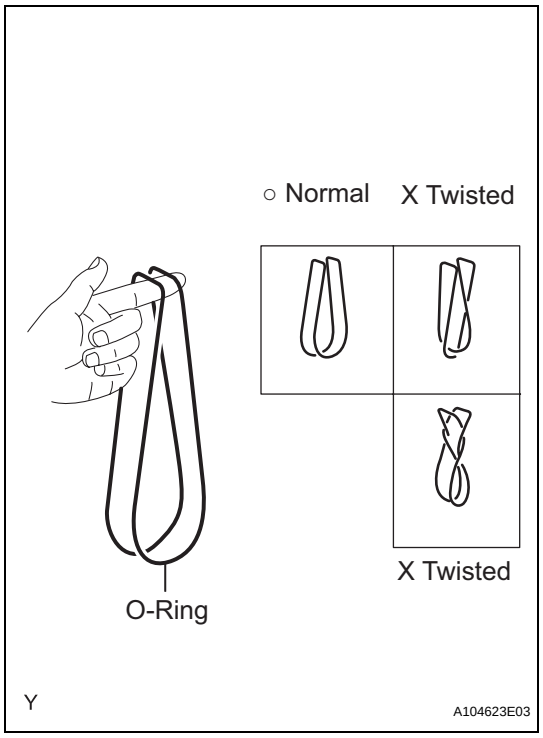

(c) Install the tank without damaging the O-ring.

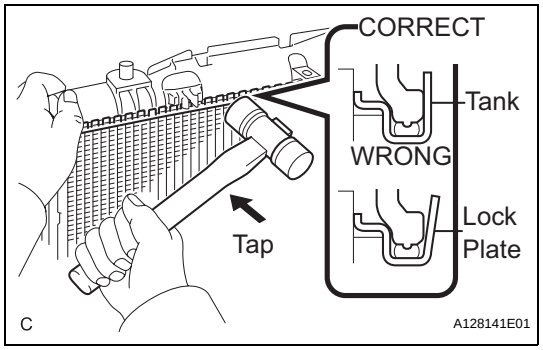

CO

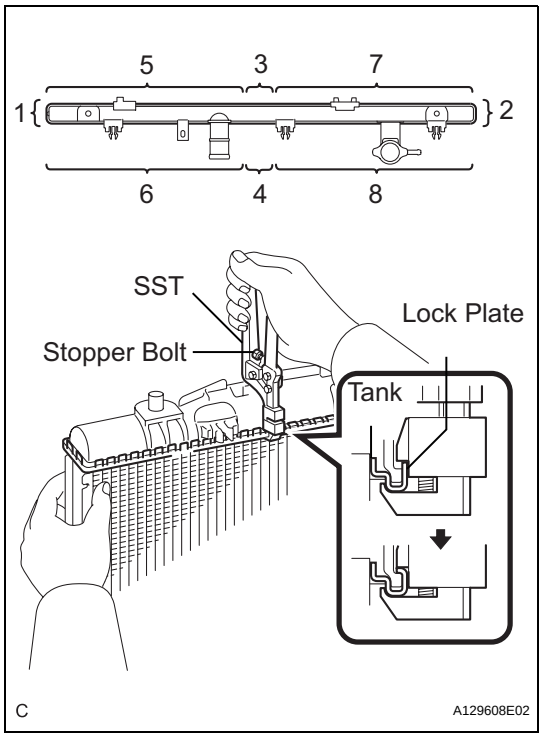

(d) Lightly press SST against the lock plate in the order shown in the illustration. After repeating this a few times, fully caulk the lock plate by gripping the handle until stopped by the stopper plate.
HINT:
- Do not tap the areas protruding around the pipes, brackets or tank ribs.
- The dotted circles shown in the illustration and parts of the oil cooler near the dotted circles cannot be tapped with the SST. Use pliers or similar objects and be careful not to damage the core plates.

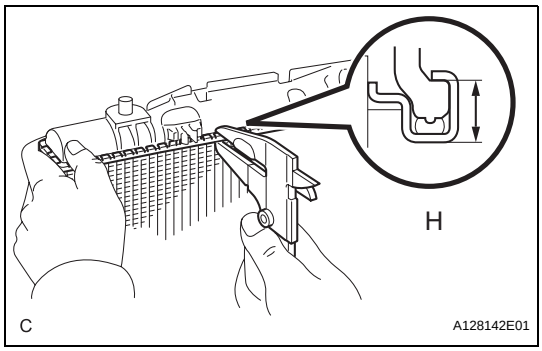

(e) Check the lock plate height (H) after completing caulking.
Plate height (H):
7.40 to 7.80 mm (0.2913 to 0.3071 in.)
If not within the specified height range, adjust the stopper bolt of the handle and caulk again.

(f) Tap the lock plate with a soft-faced hammer so that there is no gap between the lock plate and the tank.

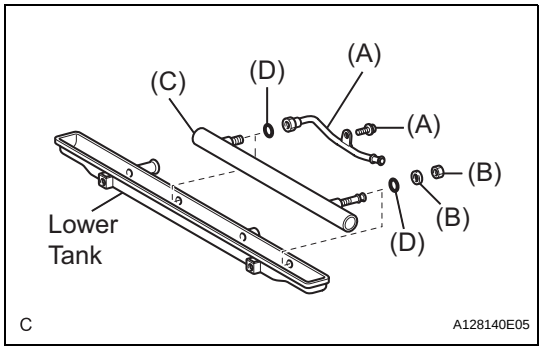

2. INSTALL RADIATOR TANK LOWER

(a) Without hose:
(1) Clean the O-ring contact surfaces of the lower tank and oil cooler.
(2) Install 2 new O-rings to the oil cooler (D).
(3) Install the oil cooler to the lower tank (C).
(4) Install the plate washer and nut (B).
Torque: 8.3 N*m (85 kgf*cm, 73 in.*lbf)
(5) Install the cooler pipe with the bolt (A).
Torque: 15 N*m (150 kgf*cm, 11 ft.*lbf)

(b) Installation procedure of the radiator tank lower is the same as that of the radiator tank upper.

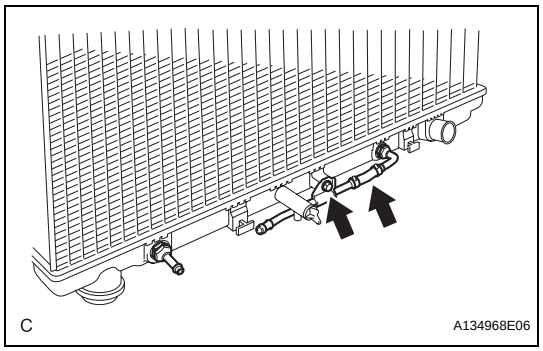

(c) With hose:
(1) Install the hose with the bolt and 2 clips.
Torque: 15 N*m (150 kgf*cm, 11 ft.*lbf)

3. INSTALL DRAIN PLUG
(a) Install a new O-ring to the drain plug.
(b) Install the drain plug.

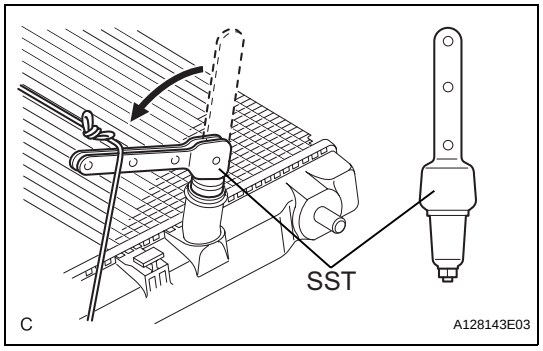

4. INSPECT FOR WATER LEAKS
(a) Plug the inlet and outlet pipes of the radiator with SST.
SST 09230-01010
(b) Using the radiator cap tester, apply pressure to the radiator.
Test pressure:
177 kPa (1.8 kgf/cm^2, 26 psi)
(c) Submerge the radiator in water.

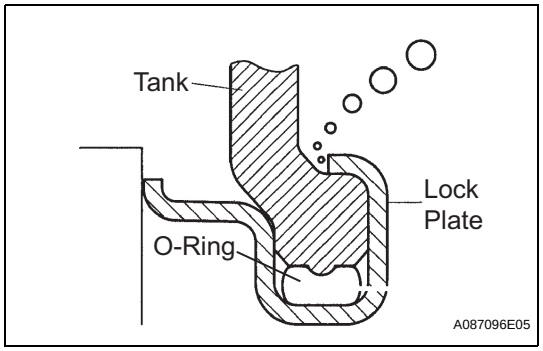

(d) Inspect for leaks.
HINT:
On radiators with resin tanks, there is clearance between the tank and lock plate where a minute amount of air will remain, giving the appearance of an air leak when the radiator is submerged in water. Therefore, before doing the water leak test, first swish the radiator around in the water until all air bubbles disappear.

INSTALLATION

1. INSTALL RADIATOR SUPPORT LOWER
(a) Install the 2 radiator support lowers to the radiator assembly.

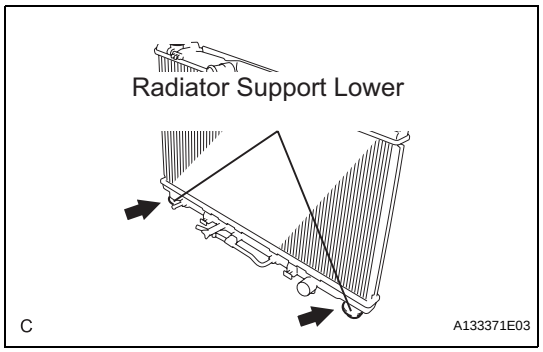

2. INSTALL RADIATOR SUPPORT CUSHION
(a) Install the 2 radiator support cushions to the radiator assembly.

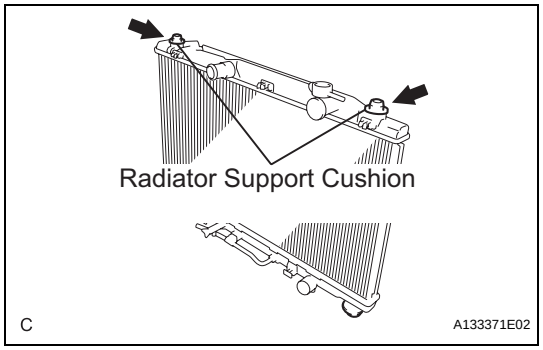

CO

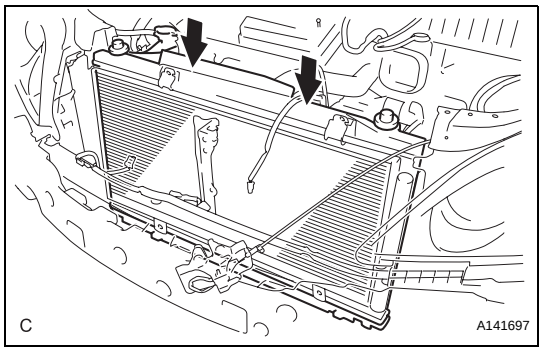

3. INSTALL RADIATOR ASSEMBLY

(a) Install the radiator to the body.

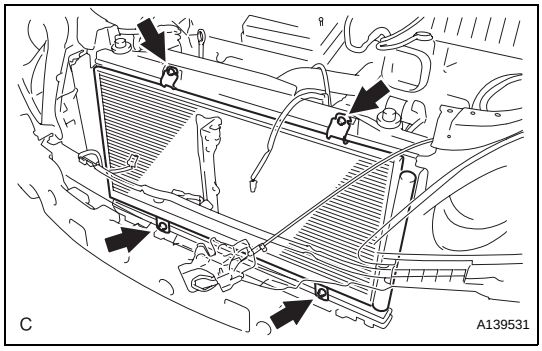

(b) Install the condenser assembly with the 4 bolts.
Torque: 5.0 N*m (51 kgf*cm, 44 in.*lbf)

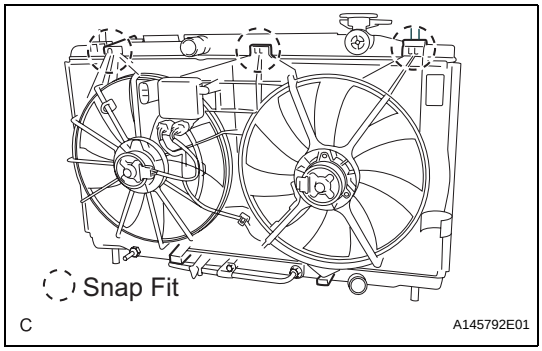

4. INSTALL FAN SHROUD

(a) Install the fan assembly with motor to the radiator with the 2 guides at the bottom and 3 snap fits on the top.

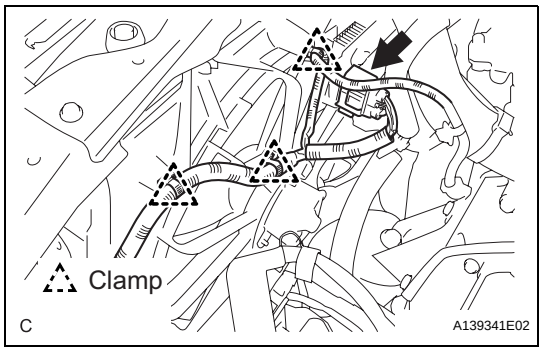

(b) Connect the fan motor connector and 3 clamps.

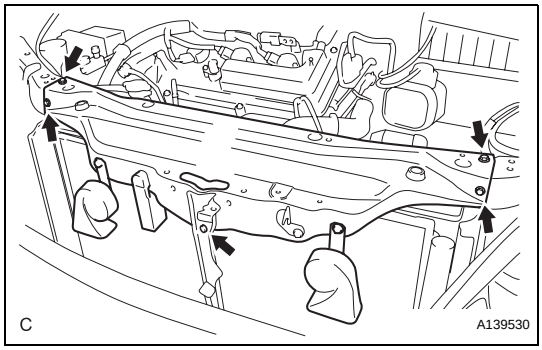

5. INSTALL RADIATOR SUPPORT UPPER

(a) Install the radiator support upper with the 5 bolts.
Torque: 7.0 N*m (71 kgf*cm, 62 in.*lbf)

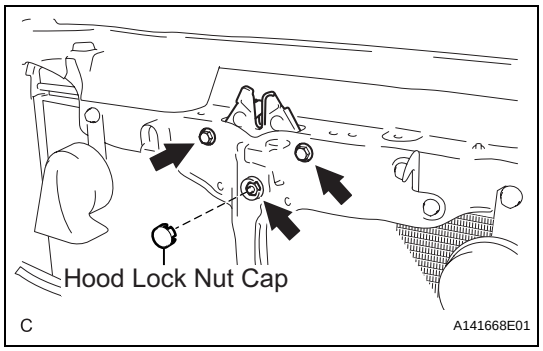

(b) Install the 2 bolts and the hood lock assembly to the radiator support sub-assembly upper.
Torque: 8.0 N*m (82 kgf*cm, 71 in.*lbf)

(c) Install the hood lock nut and the hood lock nut cap.
Torque: 8.0 N*m (82 kgf*cm, 71 in.*lbf)

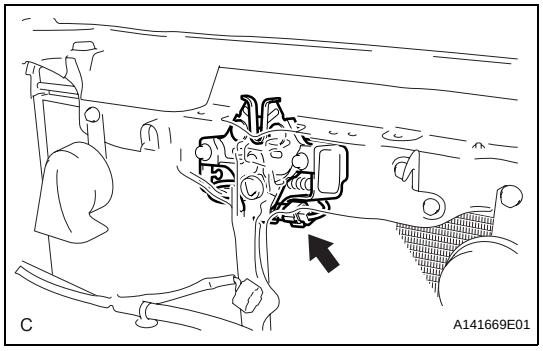

(d) Connect the connector.

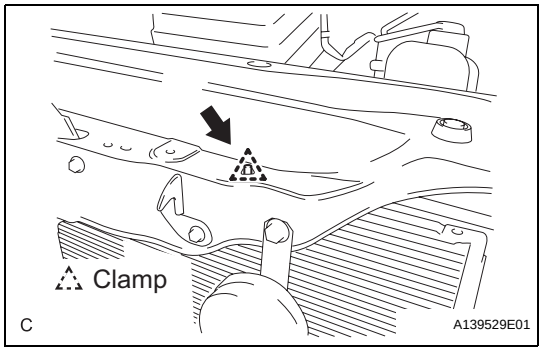

(e) Install the hood lock control cable assembly to the radiator support upper with the clamp.

(f) Connect the horn connectors.

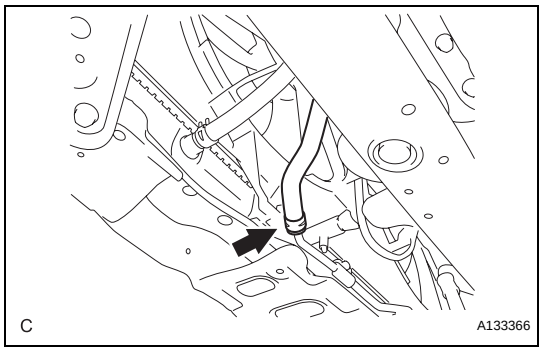

6. CONNECT NO. 1 OIL COOLER OUTLET TUBE

(a) Connect the No. 1 oil cooler outlet tube to the radiator assembly.

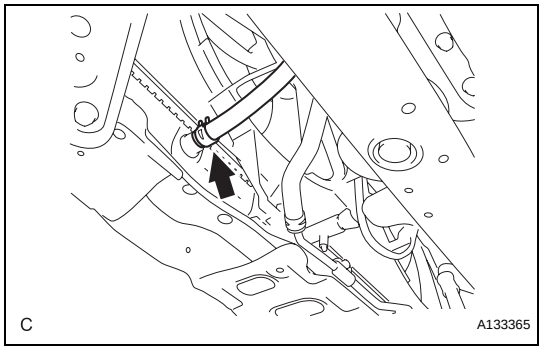

7. CONNECT NO. 1 OIL COOLER INLET TUBE

(a) Connect the No. 1 oil cooler inlet tube to the radiator assembly.

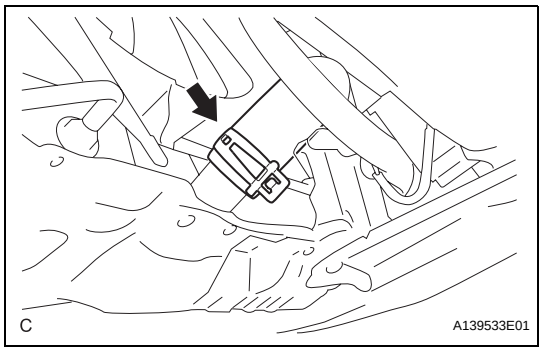

8. CONNECT RADIATOR HOSE OUTLET

(a) Connect the radiator hose outlet to the radiator assembly.

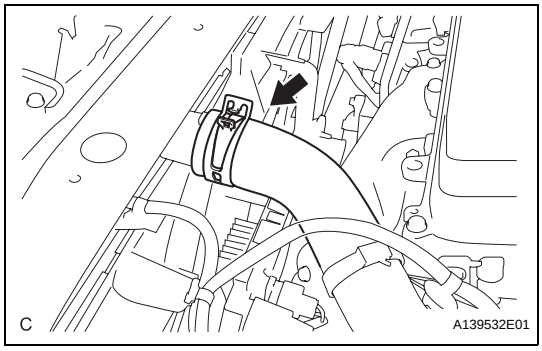

9. CONNECT RADIATOR HOSE INLET

(a) Connect the radiator hose inlet to the radiator assembly.

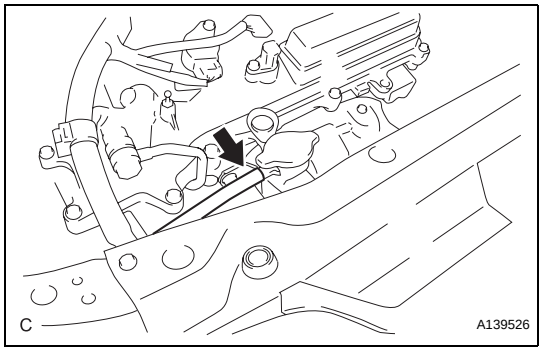

10. CONNECT RADIATOR RESERVOIR TANK HOSE

(a) Connect the radiator reservoir tank hose to the radiator assembly.

11. INSTALL MILLIMETER WAVE RADAR SENSOR ASSEMBLY (w/ Dynamic Radar Cruise Control System)

12. INSTALL FRONT BUMPER ENERGY ABSORBER (See page ET-10)

13. INSTALL FRONT BUMPER ASSEMBLY (See page ET-14)

14. INSTALL NO. 1 AIR CLEANER INLET (See page EM-48)

15. INSTALL AIR CLEANER INLET SUB-ASSEMBLY (See page EM-48)

16. INSTALL AIR CLEANER CAP SUB-ASSEMBLY (See page ES-522)

17. ADD ENGINE COOLANT (See page CO-6)

18. CHECK FOR ENGINE COOLANT LEAKS (See page CO-1)

19. INSTALL COOL AIR INTAKE DUCT SEAL (See page EM-50)

20. INSTALL ENGINE ROOM SIDE COVER LH

21. INSTALL ENGINE ROOM SIDE COVER RH

22. INSTALL V-BANK COVER SUB-ASSEMBLY (See page EM-49)

23. INSTALL ENGINE UNDER COVER LH

24. **INSTALL ENGINE UNDER COVER RH**
25. **INSTALL FRONT WHEEL OPENING EXTENSION PAD LH**
26. **INSTALL FRONT WHEEL OPENING EXTENSION PAD RH**

COOLANT

ON-VEHICLE INSPECTION

1. **REMOVE FRONT WHEEL OPENING EXTENSION PAD LH**
2. **REMOVE FRONT WHEEL OPENING EXTENSION PAD RH**
3. **REMOVE ENGINE UNDER COVER RH**
4. **REMOVE ENGINE UNDER COVER LH**
5. **REMOVE V-BANK COVER SUB-ASSEMBLY (See page EM-23)**
6. **REMOVE COOL AIR INTAKE DUCT SEAL (See page EM-22)**
7. **REMOVE ENGINE ROOM COVER SIDE RH**
8. **DRAIN ENGINE COOLANT**
   NOTICE:
   Do not remove the radiator cap sub-assembly while the engine and radiator are still hot. Pressurized, hot engine coolant and steam may be released and cause serious burns.
   (a) Remove the radiator cap sub-assembly from the radiator assembly.
   (b) Loosen the radiator drain cock plug and 2 cylinder block drain cock plugs, then drain the coolant.

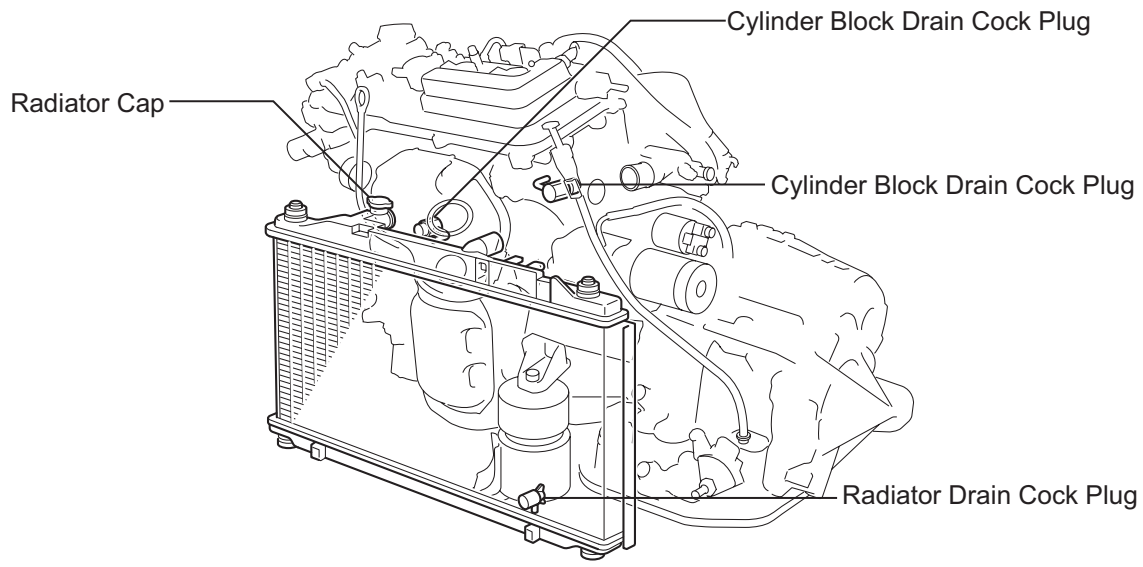

HINT:
Collect the coolant in a container and dispose of it according to the regulations in your area.

CO

9. ADD ENGINE COOLANT

(a) Close the radiator drain cock plug and 2 cylinder block drain cock plugs.
Torque: 13 N*m (130 kgf*cm, 9 ft.*lbf) for cylinder block drain cock plug

(b) Slowly fill the radiator with TOYOTA Super Long Life Coolant (SLLC).
Specified capacity:
9.0 liters (9.5 US qts, 7.9 Imp. qts)
HINT:
- TOYOTA vehicles are filled with TOYOTA SLLC at the factory. In order to avoid damage to the engine cooling system and other technical problems, only use TOYOTA SLLC or similar high quality ethylene glycol based non-silicate, non-amine, non-nitrite, non-borate coolant with long-life hybrid organic acid technology (coolant with long-life hybrid organic acid technology consists of a combination of low phosphates and organic acids).
- Contact your TOYOTA dealer for further details.

(c) Slowly pour coolant into the radiator reservoir tank until it reaches the FULL line.

(d) Press the inlet and outlet radiator hoses several times by hand, and then check the level of the coolant.
If the coolant level is low, add coolant.

(e) Install the radiator cap sub-assembly and reservoir tank cap.

(f) Start the engine, and warm it up.
HINT:
Adjust the air conditioner set temperature to MAX (HOT).

(g) Stop the engine, and wait until the engine coolant cools down.

(h) Add engine coolant to the FULL line on the radiator reservoir.

10. CHECK FOR ENGINE COOLANT LEAKS (See page CO-1)

11. INSTALL V-BANK COVER SUB-ASSEMBLY (See page EM-49)

12. INSTALL ENGINE UNDER COVER RH

13. INSTALL ENGINE UNDER COVER LH

14. INSTALL FRONT WHEEL OPENING EXTENSION PAD LH

15. INSTALL FRONT WHEEL OPENING EXTENSION PAD RH

16. INSTALL ENGINE ROOM COVER SIDE RH

17. INSTALL COOL AIR INTAKE DUCT SEAL (See page EM-50)

WATER PUMP

COMPONENTS

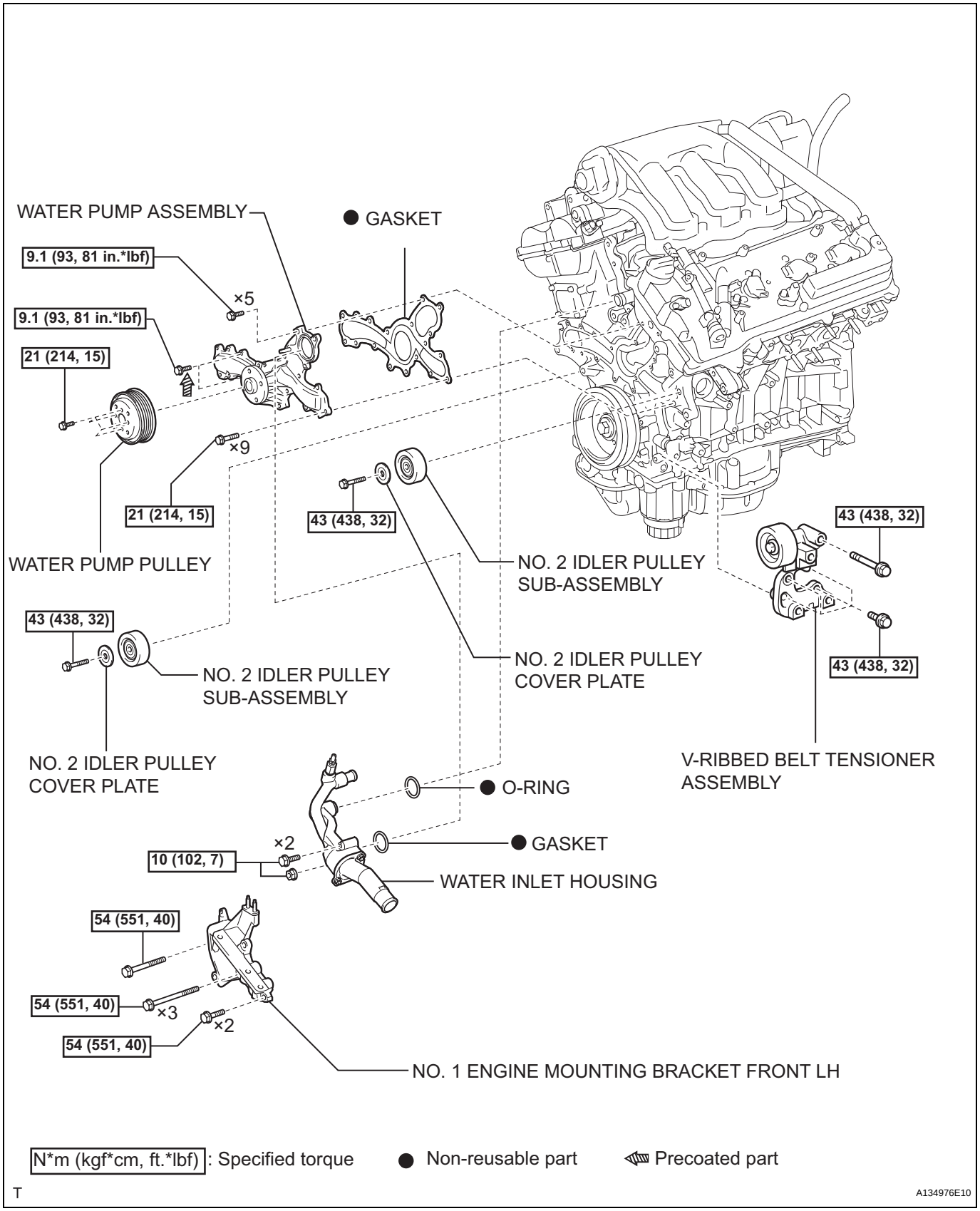

CO

REMOVAL

1. **REMOVE ENGINE ASSEMBLY WITH TRANSAXLE**
   HINT:
   See page EM-28.

2. **SECURE ENGINE STAND**
   HINT:
   See page EM-30.

3. **REMOVE NO. 1 ENGINE MOUNTING BRACKET FRONT LH (See page EM-33)**

4. **REMOVE NO. 2 IDLER PULLEY SUB-ASSEMBLY**
   (a) Remove the 2 bolts, 2 idler pulley cover plates and 2 idler pulley sub-assemblies.

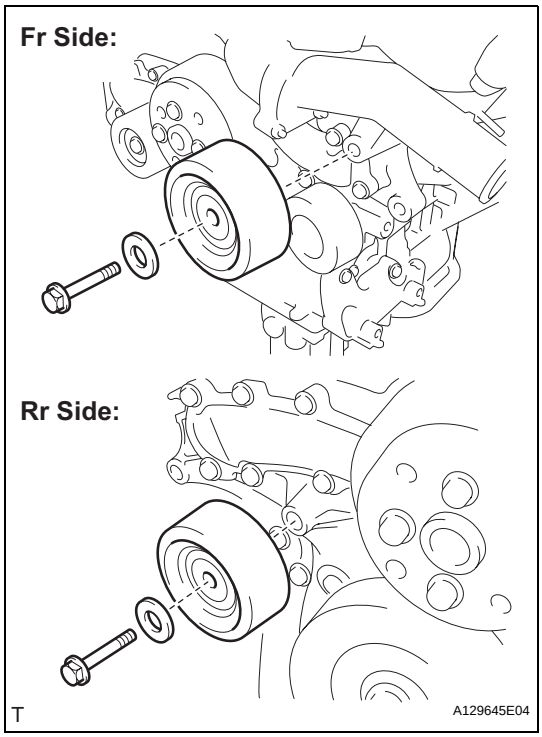

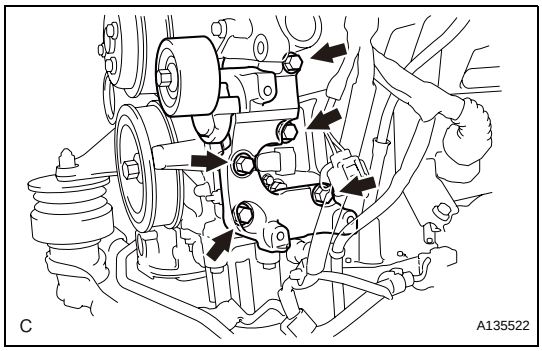

5. **REMOVE V-RIBBED BELT TENSIONER ASSEMBLY**
   (a) Remove the 5 bolts and the V-ribbed belt tensioner assembly.

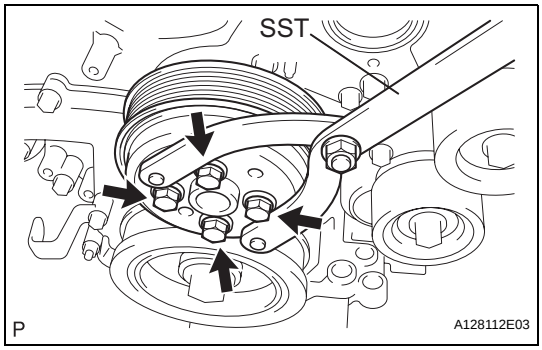

6. **REMOVE WATER PUMP PULLEY**
   (a) Using SST, hold the water pump pulley.
   SST 09960-10010 (09962-01000, 09963-00700)
   (b) Remove the 4 bolts and water pump pulley.

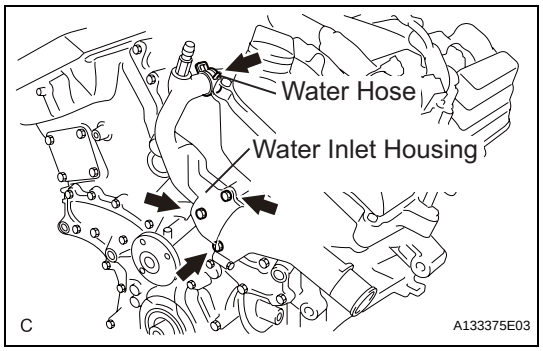

7. REMOVE WATER INLET HOUSING

(a) Disconnect the water hose.

(b) Remove the 2 bolts, nut and water inlet housing.

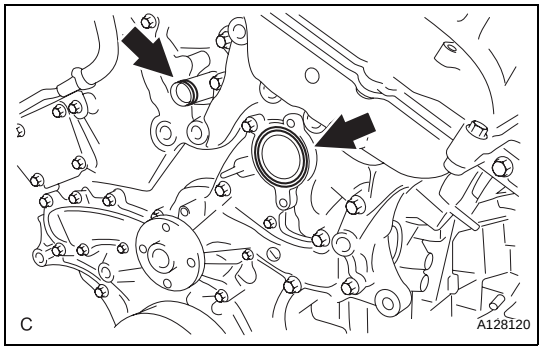

(c) Remove the water inlet housing gasket and water outlet pipe O-ring.

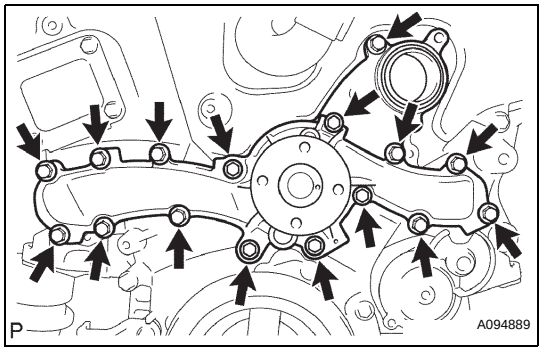

8. REMOVE WATER PUMP ASSEMBLY

(a) Remove the 16 bolts, water pump assembly and water pump gasket.

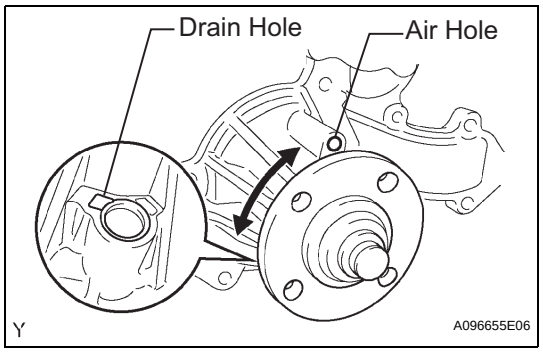

INSPECTION

1. INSPECT WATER PUMP ASSEMBLY

(a) Visually check the drain hole and air hole for coolant leakage.

(b) Turn the pulley, and check that the water pump bearing moves smoothly and noiselessly.
If the bearing does not move smoothly and noiselessly, replace the water pump.

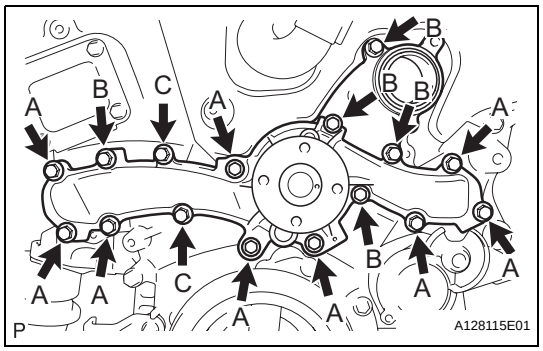

INSTALLATION

1. INSTALL WATER PUMP ASSEMBLY

(a) Install a new water pump gasket and the water pump assembly with the 16 bolts.

Torque: Bolt A
21 N*m (214 kgf*cm, 15 ft.*lbf)
Bolts B and C
9.1 N*m (93 kgf*cm, 81 in.*lbf)

NOTICE:

- **Make sure that there is no oil on the threads of bolts A.**

CO

- **Be sure to replace 2 bolts C with new ones or reuse them after applying adhesive 1344.**
  Adhesive:
  Toyota Genuine Adhesive 1344, Three Bond 1344 or Equivalent

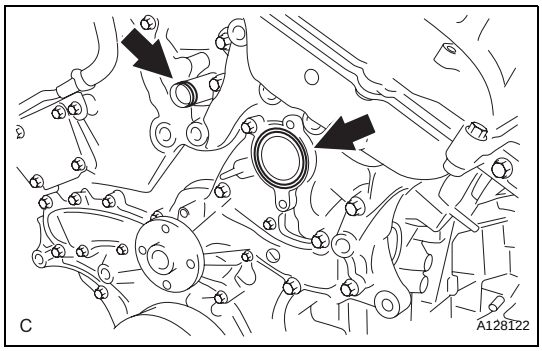

2. INSTALL WATER INLET HOUSING

(a) Install a new water inlet housing No. 1 gasket and water outlet pipe O-ring.

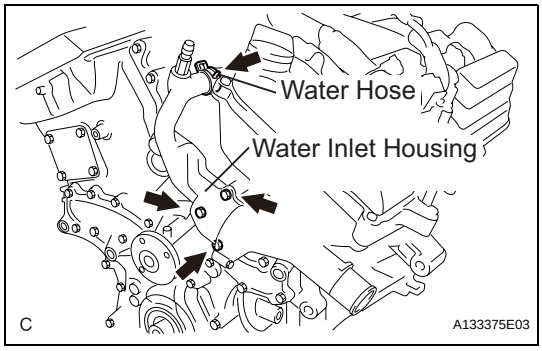

(b) Install the water inlet housing with the 2 bolts and nut.
Torque: 10 N*m (102 kgf*cm, 7 ft.*lbf)
NOTICE:
Be careful not to allow the O-ring to get caught between the parts.

(c) Connect the water hose.

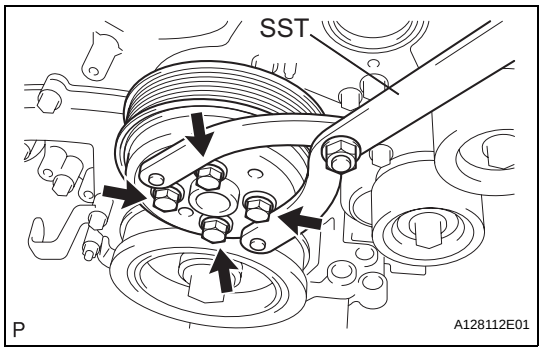

3. INSTALL WATER PUMP PULLEY

(a) Temporarily install the water pump pulley with the 4 bolts.

(b) Using SST, hold the water pump pulley.
SST 09960-10010 (09962-01000, 09963-00700)

(c) Tighten the 4 bolts.
Torque: 21 N*m (214 kgf*cm, 15 ft.*lbf)

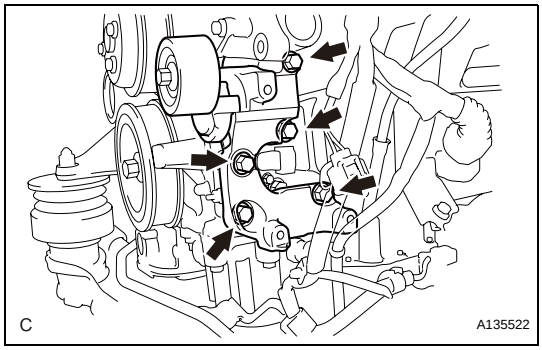

4. INSTALL V-RIBBED BELT TENSIONER ASSEMBLY

(a) Install the V-ribbed belt tensioner assembly with the 5 bolts.
Torque: 43 N*m (438 kgf*cm, 32 ft.*lbf)

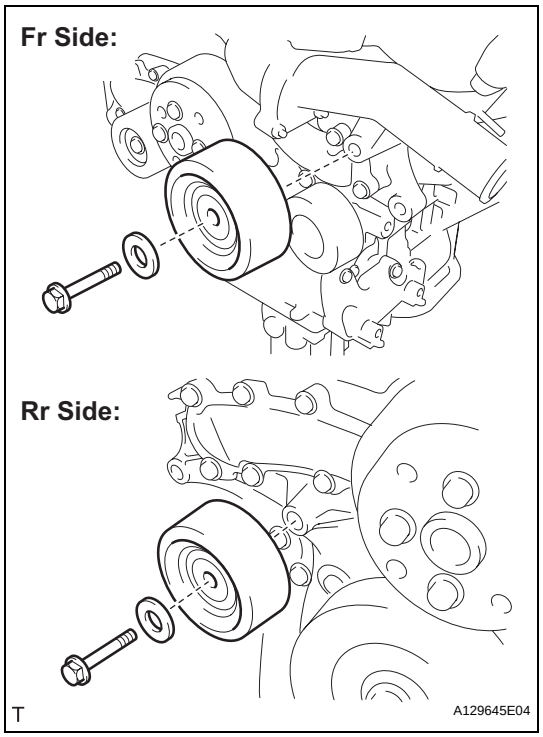

5. **INSTALL NO. 2 IDLER PULLEY SUB-ASSEMBLY**
   (a) Install the 2 idler pulley cover plates and idler pulley sub-assemblies with the 2 bolts.
   Torque: 43 N*m (438 kgf*cm, 32 ft.*lbf)

6. **INSTALL NO. 1 ENGINE MOUNTING BRACKET FRONT LH (See page EM-37)**

7. **REMOVE ENGINE STAND**

8. **INSTALL ENGINE ASSEMBLY WITH TRANSAXLE**
   HINT:
   See page EM-43.

9. **ADD ENGINE COOLANT (See page CO-6)**

10. **CHECK FOR ENGINE COOLANT LEAKS (See page CO-1)**

THERMOSTAT

COMPONENTS

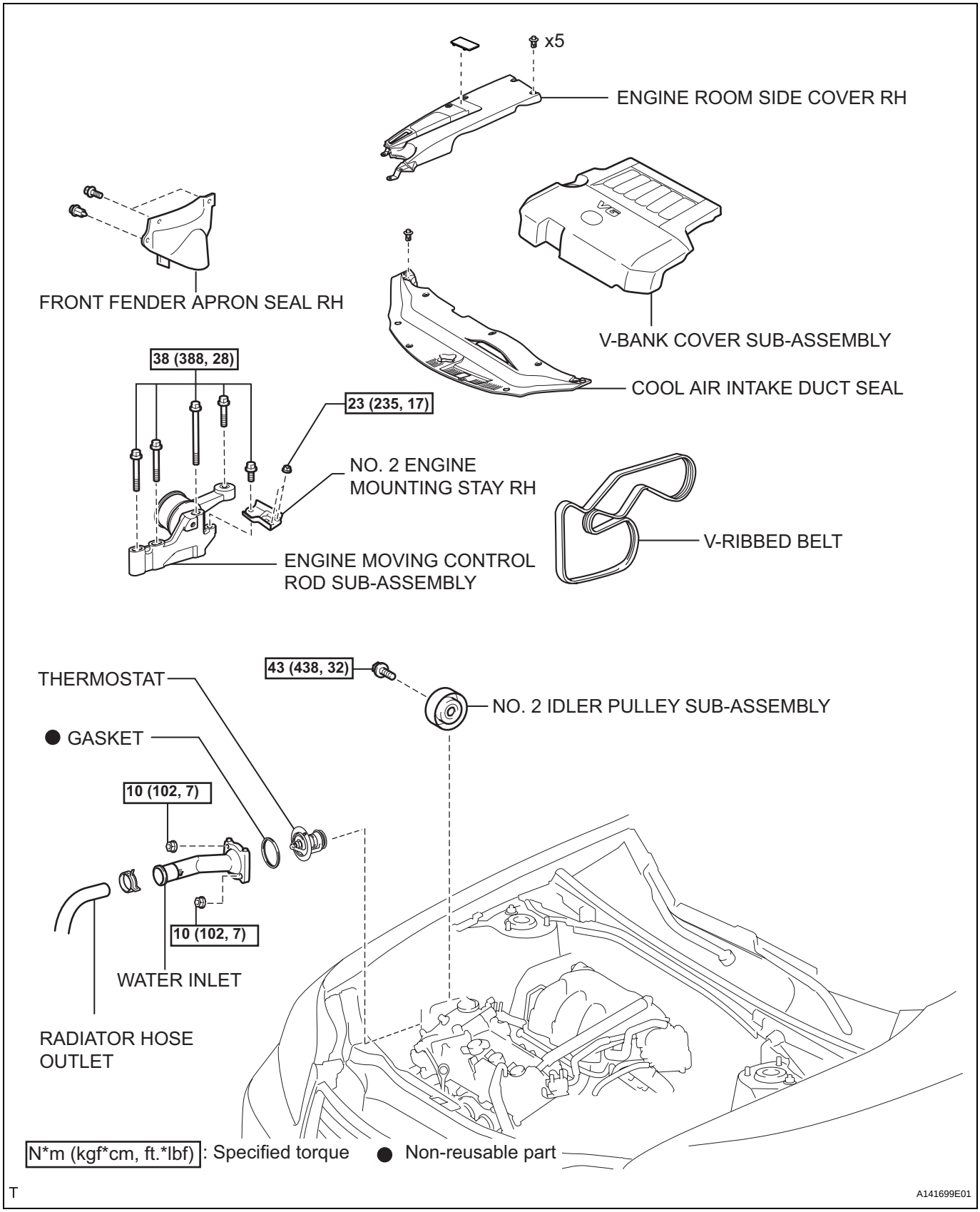

CO

REMOVAL

1. **DRAIN ENGINE COOLANT**
2. **REMOVE V-BANK COVER SUB-ASSEMBLY (See page EM-23)**
3. **REMOVE COOL AIR INTAKE DUCT SEAL**
4. **REMOVE ENGINE ROOM SIDE COVER RH**
5. **REMOVE FRONT FENDER APRON SEAL RH**
6. **REMOVE NO. 2 ENGINE MOUNTING STAY RH (See page EM-24)**
7. **REMOVE ENGINE MOVING CONTROL ROD SUB-ASSEMBLY (See page EM-24)**
8. **REMOVE V-RIBBED BELT (See page EM-6)**
9. **REMOVE NO. 2 IDLER PULLEY SUB-ASSEMBLY (See page EM-33)**
10. **DISCONNECT RADIATOR HOSE OUTLET (See page EM-25)**
11. **REMOVE WATER INLET**
    (a) Remove the 2 nuts and water inlet.
12. **REMOVE THERMOSTAT**
    (a) Remove the gasket from the thermostat.

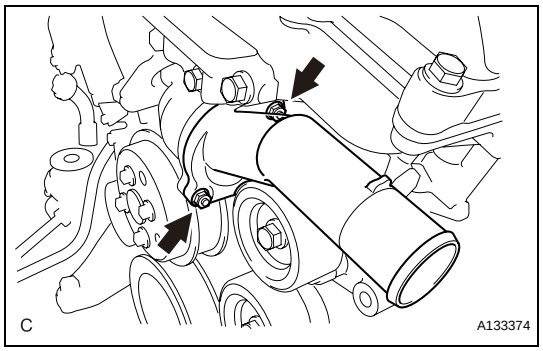

INSPECTION

1. **INSPECT THERMOSTAT**
    (a) Inspect the thermostat.
    HINT:
    The valve opening temperature is inscribed on the thermostat.

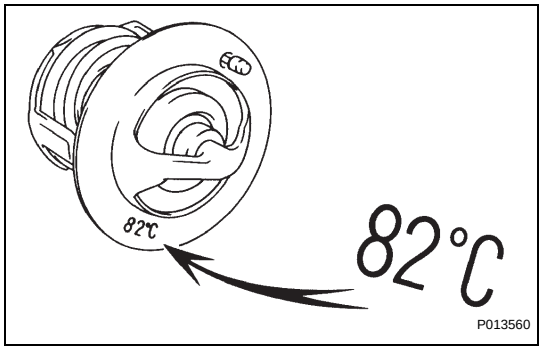

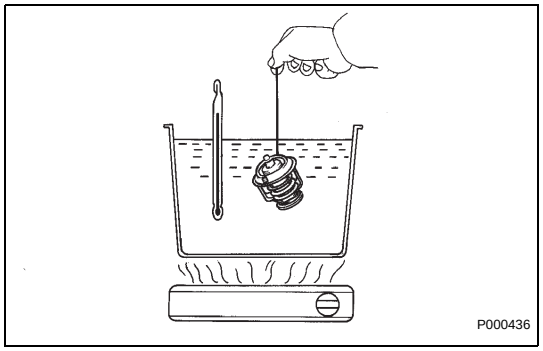

(b) Immerse the thermostat in water and gradually heat the water.
(c) Check the valve opening temperature.
Valve opening temperature:
80 to 84°C (176 to 183°F)
If the valve opening temperature is not as specified, replace the thermostat.

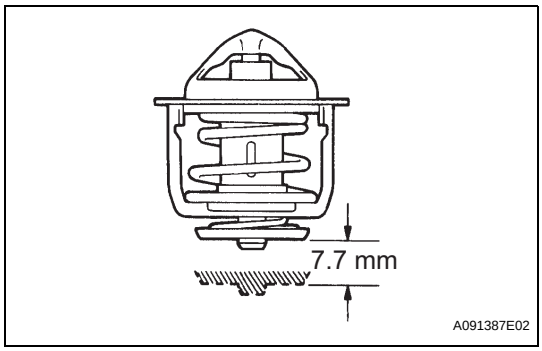

(d) Check the valve lift.
Valve lift:
7.7 mm (0.3031 in.) or more at 95°C (203°F)
If the valve lift is not as specified, replace the thermostat.

(e) Check that the valve is fully closed when the thermostat is at low temperatures (below 40°C (104°F)).
If it is not fully closed, replace the thermostat.

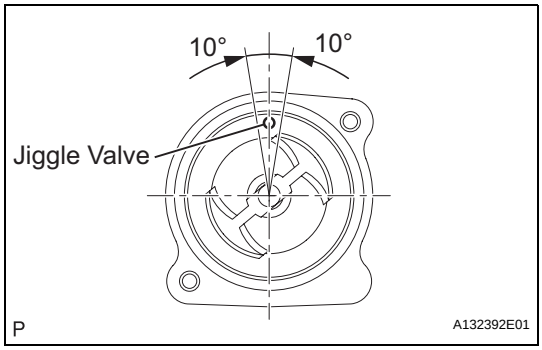

INSTALLATION

1. INSTALL THERMOSTAT

(a) Install a new gasket to the thermostat.

(b) Install the thermostat with the jiggle valve facing up.
HINT:
The jiggle valve may be set within 10° on either side of the prescribed position.

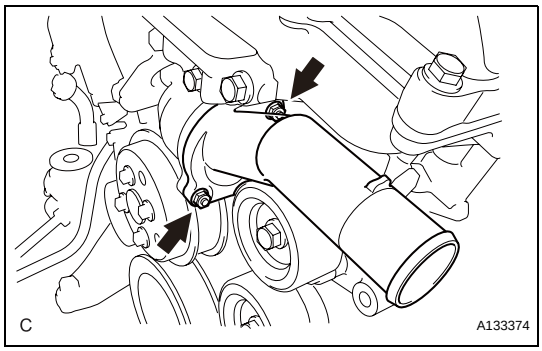

2. INSTALL WATER INLET

(a) Install the water inlet with the 2 nuts .
Torque: 10 N*m (102 kgf*cm, 7 ft.*lbf)

3. CONNECT RADIATOR HOSE OUTLET (See page EM-46)

4. INSTALL NO. 2 IDLER PULLEY SUB-ASSEMBLY (See page EM-37)

5. INSTALL V-RIBBED BELT (See page EM-7)

6. INSTALL ENGINE MOVING CONTROL ROD SUB-ASSEMBLY (See page EM-47)

7. INSTALL NO. 2 ENGINE MOUNTING STAY RH (See page EM-40)

8. INSTALL FRONT FENDER APRON SEAL RH

9. ADD ENGINE COOLANT (See page CO-6)

10. CHECK FOR ENGINE COOLANT LEAKS (See page CO-1)

11. INSTALL V-BANK COVER SUB-ASSEMBLY (See page EM-49)

12. INSTALL ENGINE ROOM SIDE COVER RH

13. INSTALL COOL AIR INTAKE DUCT SEAL

COOLING FAN MOTOR

ON-VEHICLE INSPECTION

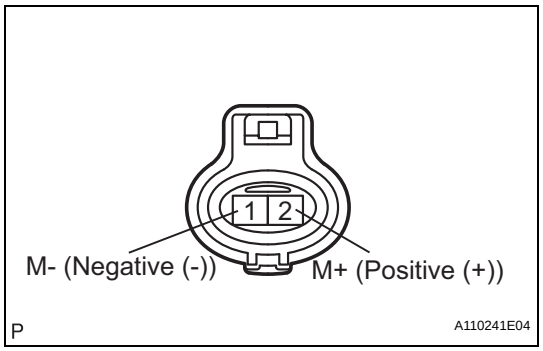

1. COOLING FAN MOTOR

(a) Check that the motor turns smoothly when the battery is connected to the fan motor connector.

(b) Measure the current while the motor is turning.

Standard current:

With trailer hitch:

11.8 to 14.8 A at 20°C (68°F)

Without trailer hitch:

6.8 to 9.8 A at 20°C (68°F)

If the result is not as specified, replace the cooling fan motor.

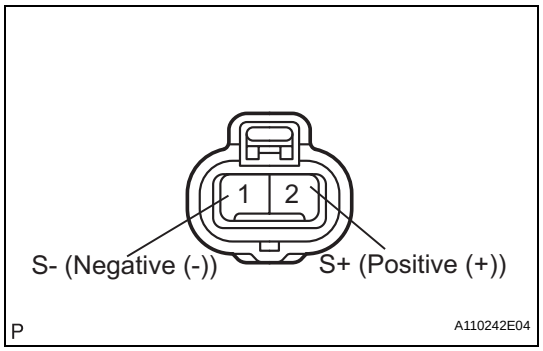

2. NO. 2 COOLING FAN MOTOR

(a) Check that the motor turns smoothly when the battery is connected to the fan motor connector.

(b) Measure the current while the motor is turning.

Standard current:

With trailer hitch:

6.8 to 9.8 A at 20°C (68°F)

Without trailer hitch:

6.8 to 9.8 A at 20°C (68°F)

If the result is not as specified, replace the cooling fan motor No. 2.

REMOVAL

1. **REMOVE FRONT WHEEL OPENING EXTENSION PAD LH**
2. **REMOVE FRONT WHEEL OPENING EXTENSION PAD RH**
3. **REMOVE ENGINE UNDER COVER LH**
4. **REMOVE ENGINE UNDER COVER RH**
5. **DRAIN ENGINE COOLANT (See page CO-5)**
6. **REMOVE V-BANK COVER SUB-ASSEMBLY (See page EM-23)**
7. **REMOVE COOL AIR INTAKE DUCT SEAL (See page EM-22)**
8. **REMOVE ENGINE ROOM SIDE COVER LH**
9. **REMOVE ENGINE ROOM SIDE COVER RH**
10. **REMOVE AIR CLEANER CAP SUB-ASSEMBLY (See page ES-519)**
11. **REMOVE AIR CLEANER INLET SUB-ASSEMBLY (See page EM-23)**
12. **REMOVE NO. 1 AIR CLEANER INLET (See page EM-23)**
13. **REMOVE FRONT BUMPER ASSEMBLY (See page ET-5)**
14. **REMOVE FRONT BUMPER ENERGY ABSORBER (See page ET-9)**
15. **REMOVE MILLIMETER WAVE RADAR SENSOR ASSEMBLY (w/ Dynamic Radar Cruise Control System)**
16. **SEPARATE RADIATOR RESERVE TANK HOSE**
    (a) Separate the radiator reserve tank hose from the radiator assembly.

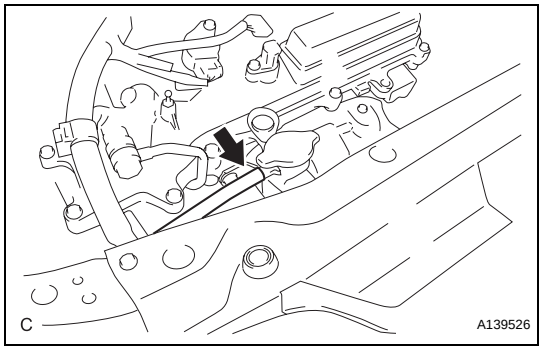

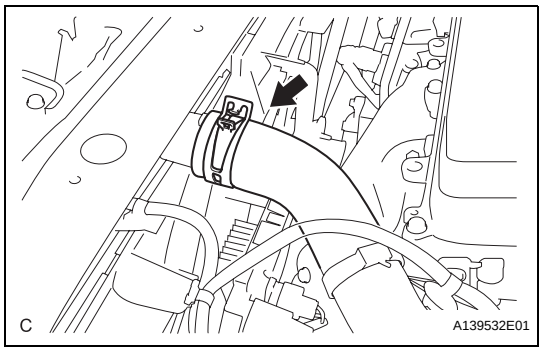

17. DISCONNECT RADIATOR HOSE INLET

(a) Separate the radiator hose inlet from the radiator assembly.

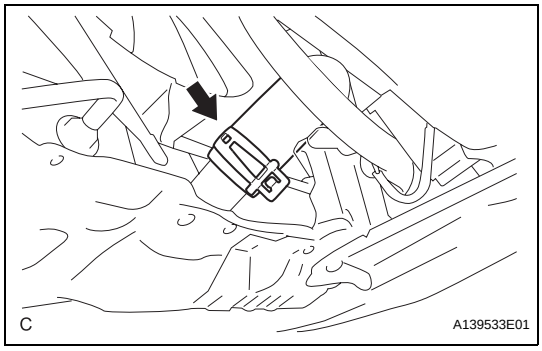

18. DISCONNECT RADIATOR HOSE OUTLET

(a) Separate the radiator hose outlet from the radiator assembly.

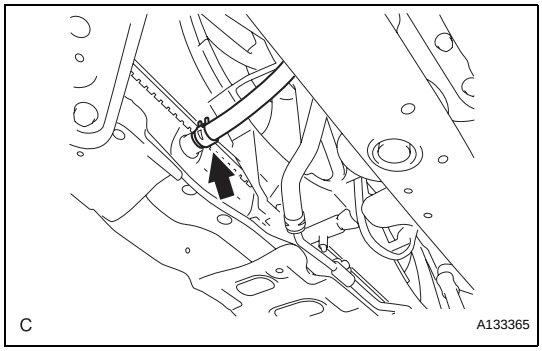

19. DISCONNECT NO. 1 OIL COOLER INLET HOSE

(a) Separate the No. 1 oil cooler inlet hose from the radiator assembly.

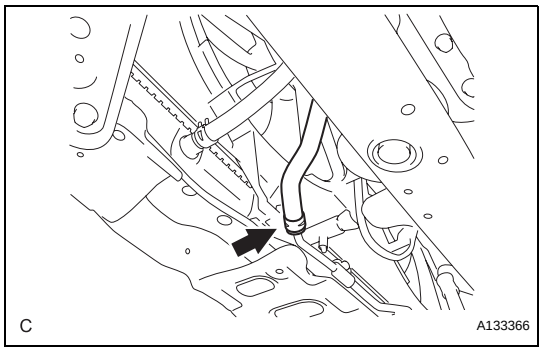

20. DISCONNECT NO. 1 OIL COOLER OUTLET HOSE

(a) Separate the No. 1 oil cooler outlet hose from the radiator assembly.

21. REMOVE RADIATOR SUPPORT UPPER

(a) Disconnect the horn connectors.

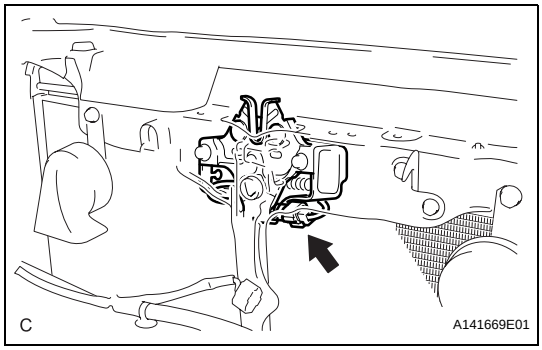

(b) Disconnect the connector.

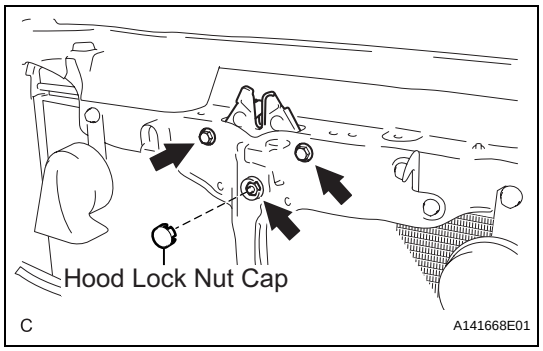

(c) Using a screwdriver, remove the hood lock nut cap.
(d) Remove the 2 bolts and nut, and separate the hood lock assembly from the radiator support upper.

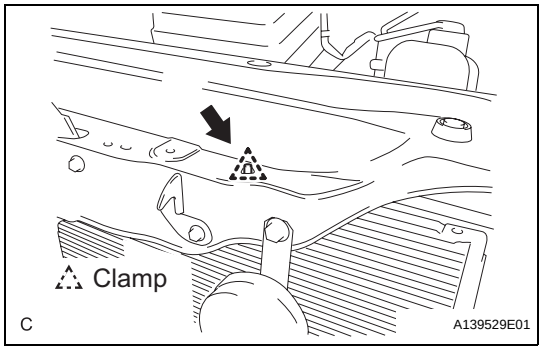

(e) Remove the clamp and separate the hood lock control cable from the radiator support upper.

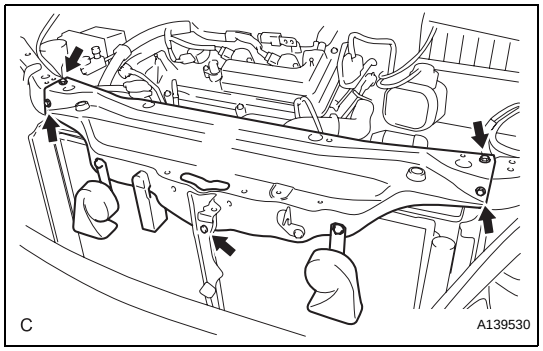

(f) Remove the 5 bolts and radiator support upper.

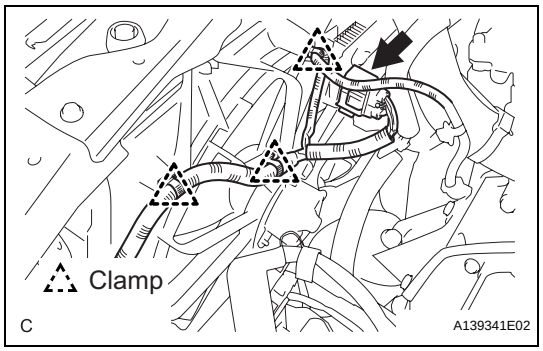

22. REMOVE FAN SHROUD

(a) Remove the 3 clamps and connector.

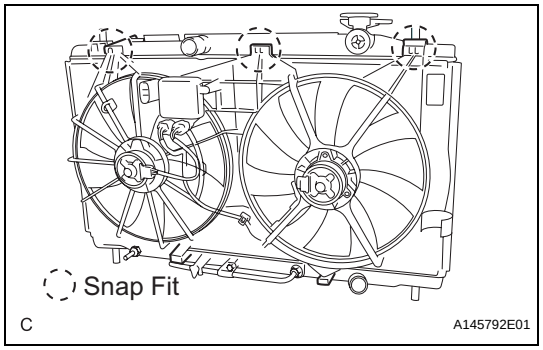

(b) Release the 3 snap fits and lift the fan assembly with motor from the radiator.

CO

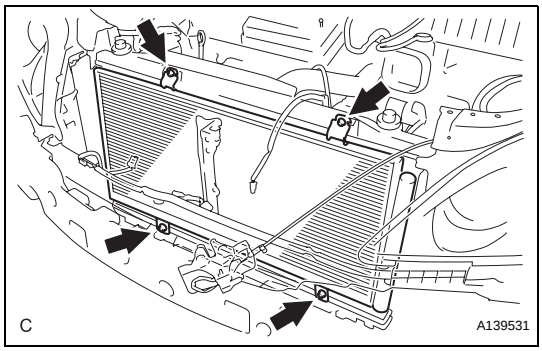

23. REMOVE RADIATOR ASSEMBLY

(a) Remove the 4 bolts and separate the condenser assembly from the radiator assembly.

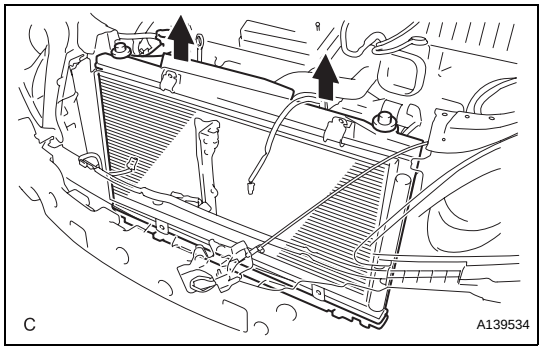

(b) Remove the radiator assembly from the body.

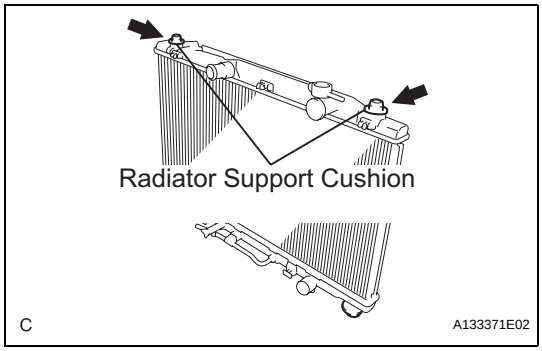

24. REMOVE RADIATOR SUPPORT CUSHION

(a) Remove the 2 radiator support cushions from the radiator assembly.

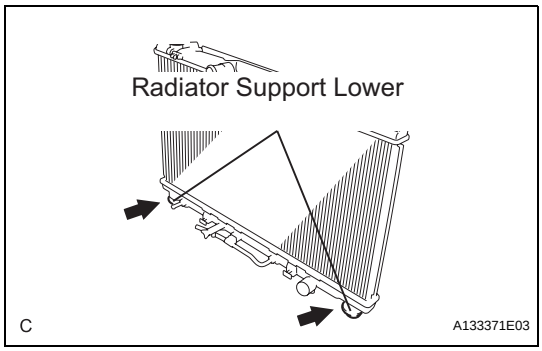

25. REMOVE RADIATOR SUPPORT LOWER

(a) Remove the 2 radiator support lowers from the radiator assembly.

REASSEMBLY

1. INSTALL RADIATOR TANK UPPER

(a) Install the punch assembly to the overhaul handle, inserting it in the hole in part A as shown in the illustration.
SST 09230-01010, 09231-14010

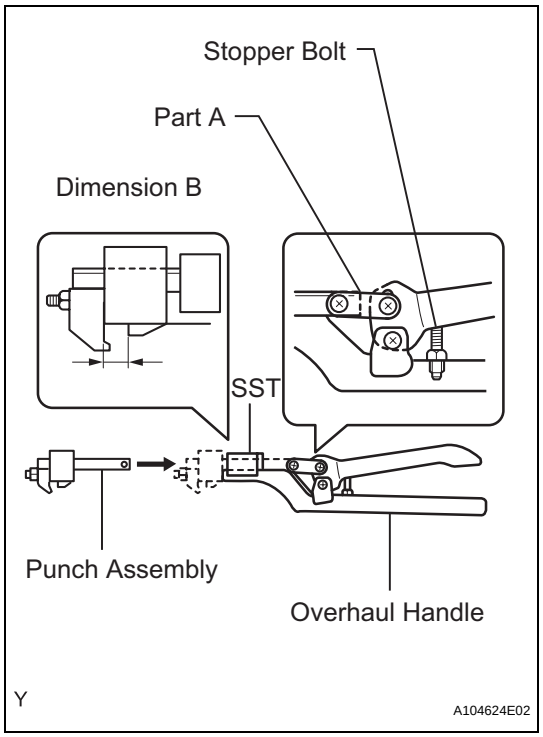

(b) After checking that there are no foreign objects in the lock plate groove, install a new O-ring without twisting it.
HINT:
When cleaning the lock plate groove, lightly rub it with sand paper without scratching it.

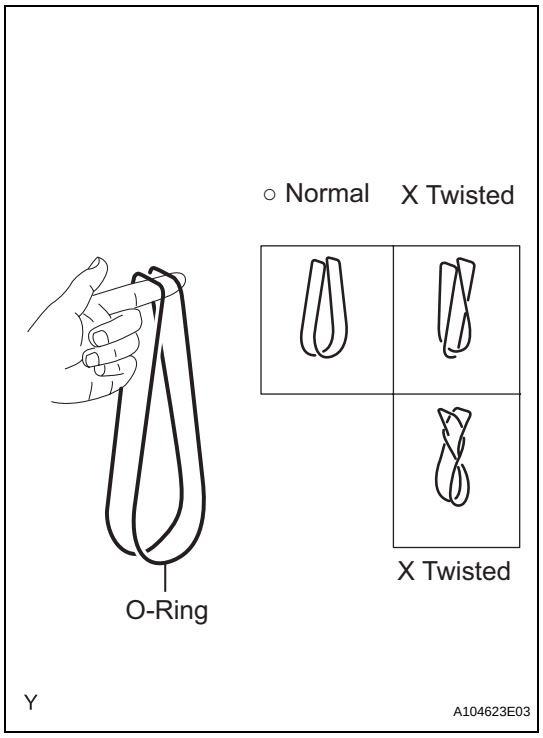

(c) Install the tank without damaging the O-ring.

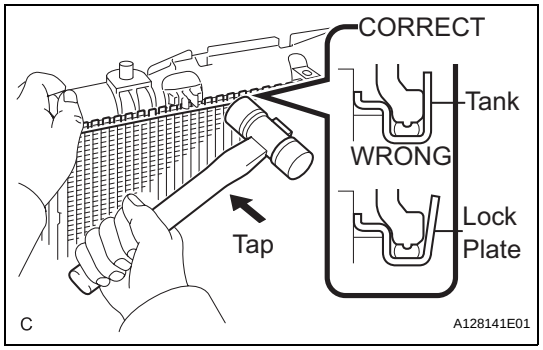

CO

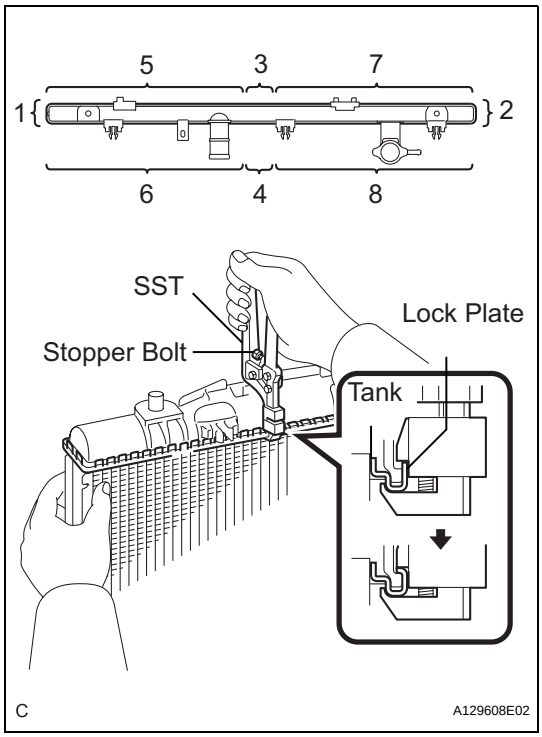

(d) Lightly press SST against the lock plate in the order shown in the illustration. After repeating this a few times, fully caulk the lock plate by gripping the handle until stopped by the stopper plate.
HINT:
- Do not tap the areas protruding around the pipes, brackets or tank ribs.
- The dotted circles shown in the illustration and parts of the oil cooler near the dotted circles cannot be tapped with the SST. Use pliers or similar objects and be careful not to damage the core plates.

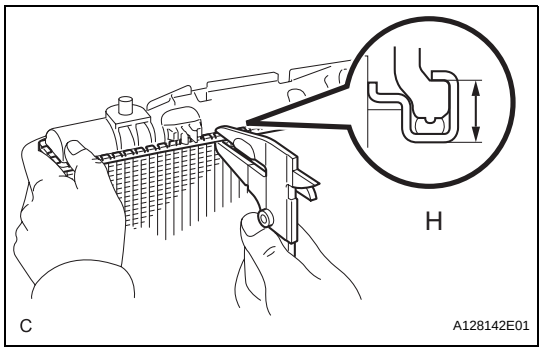

(e) Check the lock plate height (H) after completing caulking.
Plate height (H):
7.40 to 7.80 mm (0.2913 to 0.3071 in.)
If not within the specified height range, adjust the stopper bolt of the handle and caulk again.

(f) Tap the lock plate with a soft-faced hammer so that there is no gap between the lock plate and the tank.

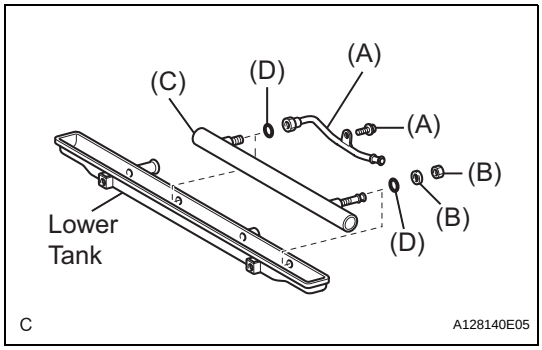

2. INSTALL RADIATOR TANK LOWER

(a) Without hose:
(1) Clean the O-ring contact surfaces of the lower tank and oil cooler.
(2) Install 2 new O-rings to the oil cooler (D).
(3) Install the oil cooler to the lower tank (C).
(4) Install the plate washer and nut (B).
Torque: 8.3 N*m (85 kgf*cm, 73 in.*lbf)
(5) Install the cooler pipe with the bolt (A).
Torque: 15 N*m (150 kgf*cm, 11 ft.*lbf)

(b) Installation procedure of the radiator tank lower is the same as that of the radiator tank upper.

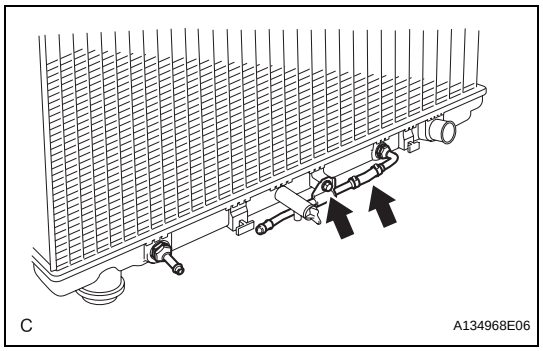

(c) With hose:
(1) Install the hose with the bolt and 2 clips.
Torque: 15 N*m (150 kgf*cm, 11 ft.*lbf)

3. INSTALL DRAIN PLUG
(a) Install a new O-ring to the drain plug.
(b) Install the drain plug.

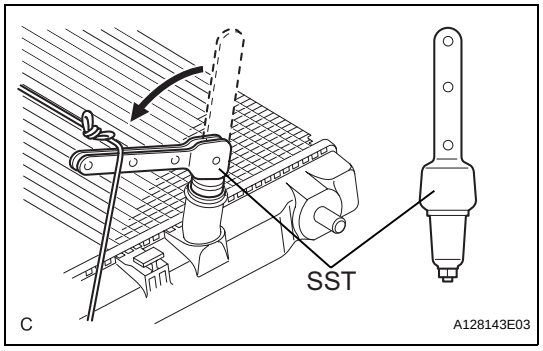

4. INSPECT FOR WATER LEAKS
(a) Plug the inlet and outlet pipes of the radiator with SST.
SST 09230-01010
(b) Using the radiator cap tester, apply pressure to the radiator.
Test pressure:
177 kPa (1.8 kgf/cm^2, 26 psi)
(c) Submerge the radiator in water.

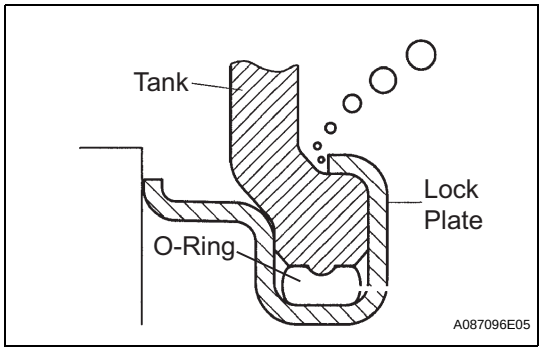

(d) Inspect for leaks.
HINT:
On radiators with resin tanks, there is clearance between the tank and lock plate where a minute amount of air will remain, giving the appearance of an air leak when the radiator is submerged in water. Therefore, before doing the water leak test, first swish the radiator around in the water until all air bubbles disappear.

INSTALLATION

1. INSTALL RADIATOR SUPPORT LOWER
(a) Install the 2 radiator support lowers to the radiator assembly.

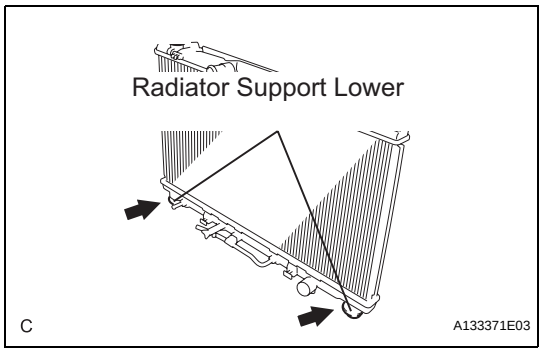

2. INSTALL RADIATOR SUPPORT CUSHION
(a) Install the 2 radiator support cushions to the radiator assembly.

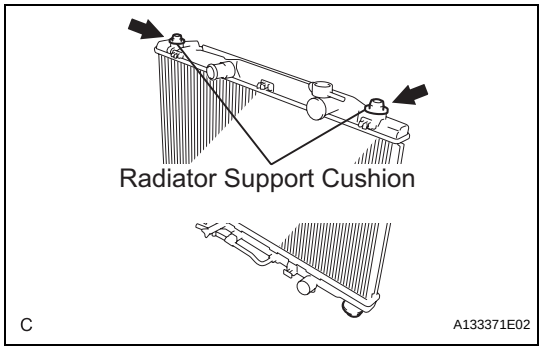

CO

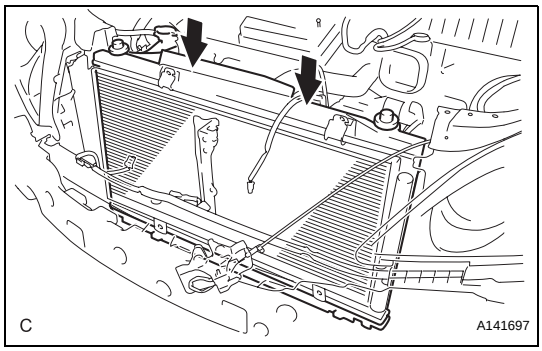

3. INSTALL RADIATOR ASSEMBLY

(a) Install the radiator to the body.

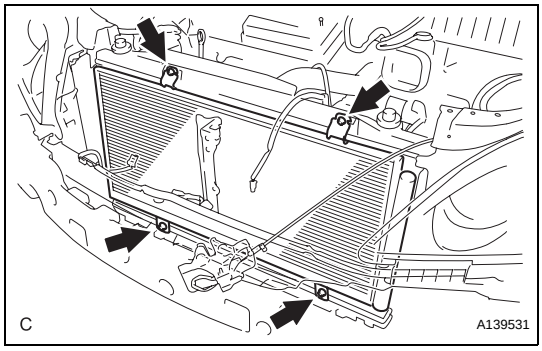

(b) Install the condenser assembly with the 4 bolts.
Torque: 5.0 N*m (51 kgf*cm, 44 in.*lbf)

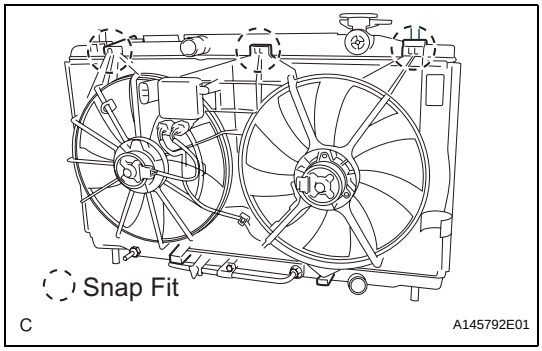

4. INSTALL FAN SHROUD

(a) Install the fan assembly with motor to the radiator with the 2 guides at the bottom and 3 snap fits on the top.

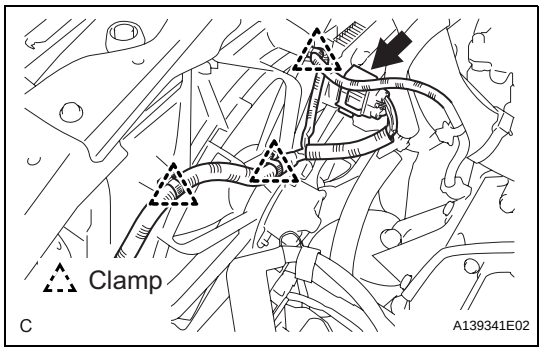

(b) Connect the fan motor connector and 3 clamps.

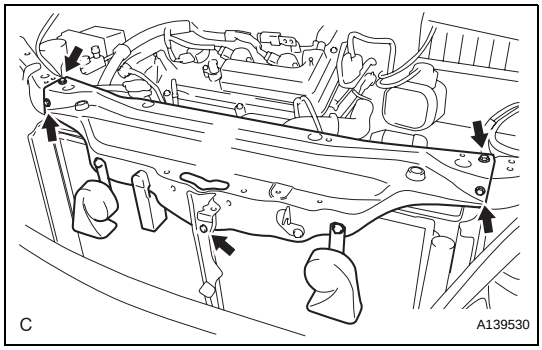

5. INSTALL RADIATOR SUPPORT UPPER

(a) Install the radiator support upper with the 5 bolts.
Torque: 7.0 N*m (71 kgf*cm, 62 in.*lbf)

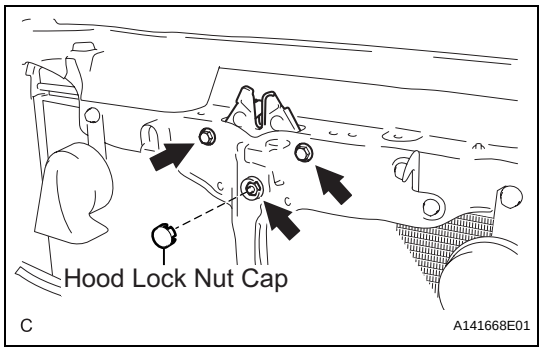

(b) Install the 2 bolts and the hood lock assembly to the radiator support sub-assembly upper.
Torque: 8.0 N*m (82 kgf*cm, 71 in.*lbf)

(c) Install the hood lock nut and the hood lock nut cap.
Torque: 8.0 N*m (82 kgf*cm, 71 in.*lbf)

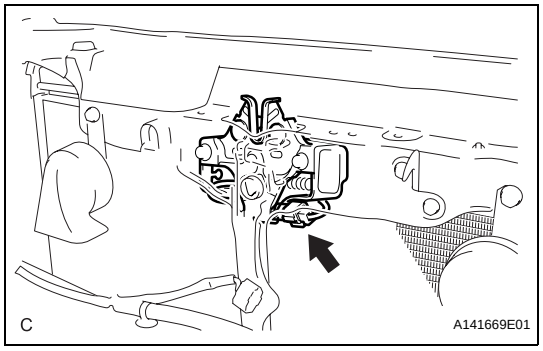

(d) Connect the connector.

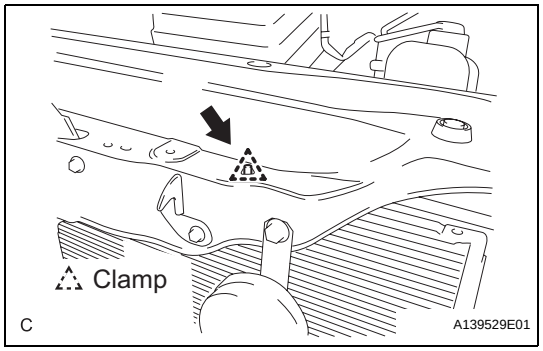

(e) Install the hood lock control cable assembly to the radiator support upper with the clamp.

(f) Connect the horn connectors.

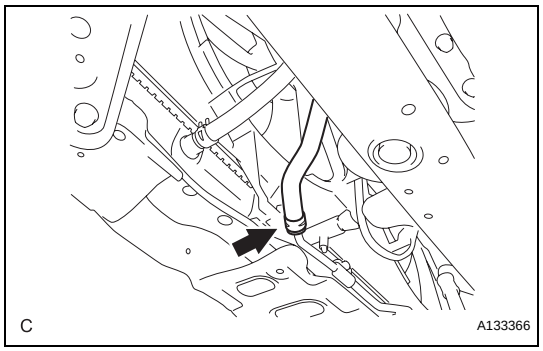

6. CONNECT NO. 1 OIL COOLER OUTLET TUBE

(a) Connect the No. 1 oil cooler outlet tube to the radiator assembly.

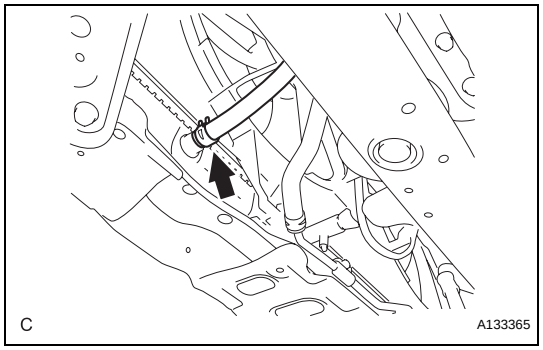

7. CONNECT NO. 1 OIL COOLER INLET TUBE

(a) Connect the No. 1 oil cooler inlet tube to the radiator assembly.

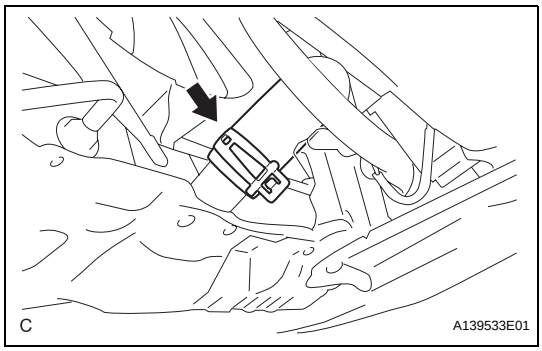

8. CONNECT RADIATOR HOSE OUTLET

(a) Connect the radiator hose outlet to the radiator assembly.

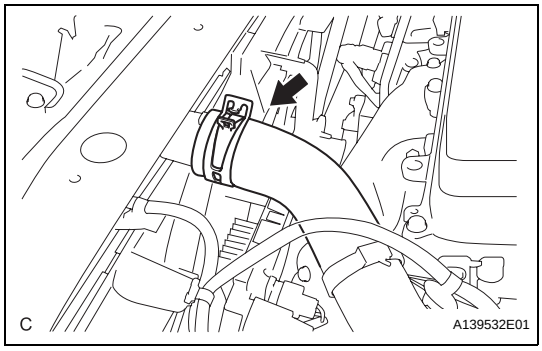

9. CONNECT RADIATOR HOSE INLET

(a) Connect the radiator hose inlet to the radiator assembly.

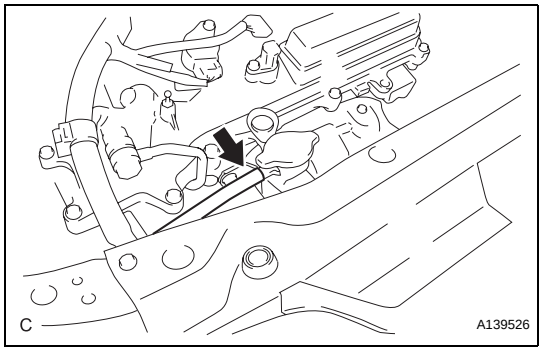

10. CONNECT RADIATOR RESERVOIR TANK HOSE

(a) Connect the radiator reservoir tank hose to the radiator assembly.

11. INSTALL MILLIMETER WAVE RADAR SENSOR ASSEMBLY (w/ Dynamic Radar Cruise Control System)

12. INSTALL FRONT BUMPER ENERGY ABSORBER (See page ET-10)

13. INSTALL FRONT BUMPER ASSEMBLY (See page ET-14)

14. INSTALL NO. 1 AIR CLEANER INLET (See page EM-48)

15. INSTALL AIR CLEANER INLET SUB-ASSEMBLY (See page EM-48)

16. INSTALL AIR CLEANER CAP SUB-ASSEMBLY (See page ES-522)

17. ADD ENGINE COOLANT (See page CO-6)

18. CHECK FOR ENGINE COOLANT LEAKS (See page CO-1)

19. INSTALL COOL AIR INTAKE DUCT SEAL (See page EM-50)

20. INSTALL ENGINE ROOM SIDE COVER LH

21. INSTALL ENGINE ROOM SIDE COVER RH

22. INSTALL V-BANK COVER SUB-ASSEMBLY (See page EM-49)

23. INSTALL ENGINE UNDER COVER LH

24. **INSTALL ENGINE UNDER COVER RH**
25. **INSTALL FRONT WHEEL OPENING EXTENSION PAD LH**
26. **INSTALL FRONT WHEEL OPENING EXTENSION PAD RH**

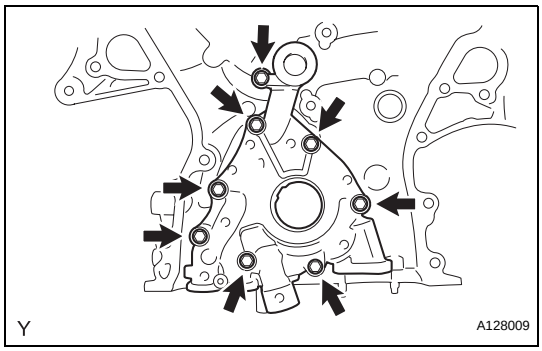

2. REMOVE OIL PUMP COVER

(a) Remove the 8 bolts, oil pump cover and oil pump rotor set.

INSPECTION

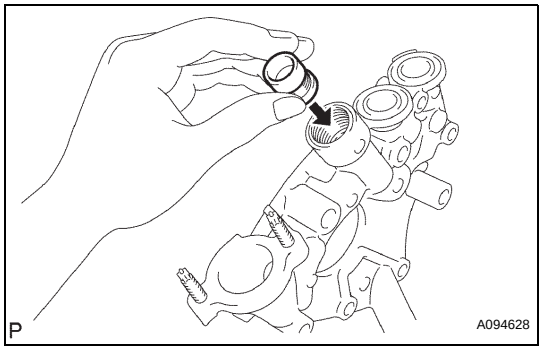

1. INSPECT OIL PUMP RELIEF VALVE

(a) Coat the relief valve with engine oil and check that it falls smoothly into the valve hole under its own weight.
If the valve does not fall smoothly, replace the relief valve. If necessary, replace the oil pump assembly.

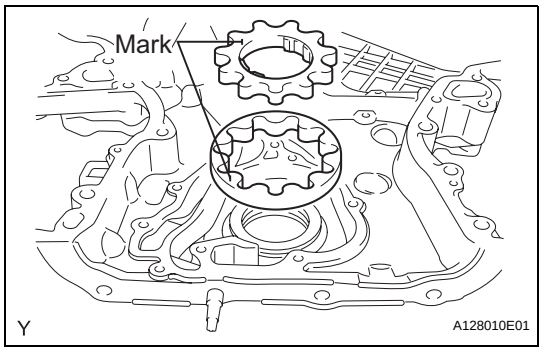

2. INSPECT OIL PUMP ROTOR SET

(a) Install the rotors to the timing chain cover with the rotors' marks facing outward. Check that the rotors revolve smoothly.

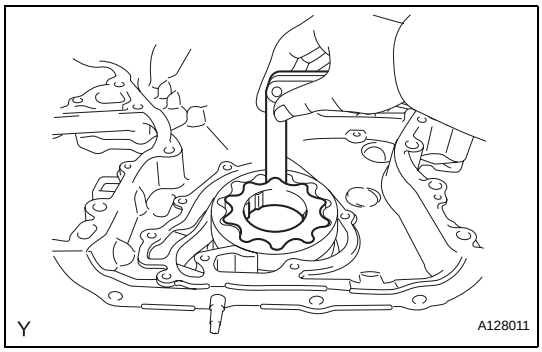

(b) Check the tip clearance.

(1) Using a feeler gauge, measure the clearance between the drive and driven rotors, as shown in the illustration.

Tip clearance

Standard	Maximum
0.060 to 0.160 mm (0.0024 to 0.0063 in.)	0.16 mm (0.0063 in.)

If the clearance is greater than the maximum, replace the drive and driven rotors.

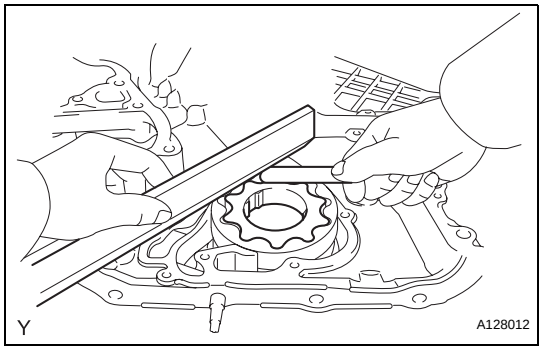

(c) Check the side clearance.

(1) Using a feeler gauge and precision straightedge, measure the clearance between the rotors and precision straightedge, as shown in the illustration.

Side clearance

Standard	Maximum
0.030 to 0.090 mm (0.0012 to 0.0035 in.)	0.090 mm (0.0035 in.)

If the side clearance is greater than the maximum, replace the timing chain cover.

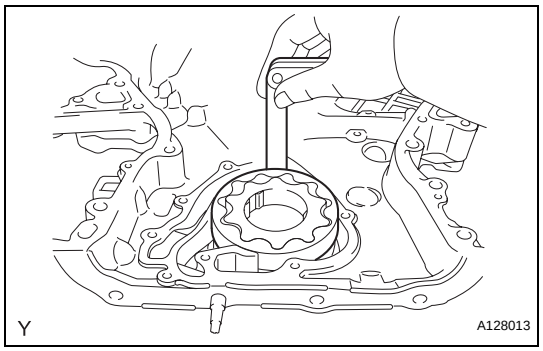

(d) Check the body clearance.
(1) Using a feeler gauge, measure the clearance between the timing chain cover and driven rotor, as shown in the illustration.
Body clearance

Standard	Maximum
0.250 to 0.325 mm (0.0098 to 0.0128 in.)	0.325 mm (0.0128 in.)

If the body clearance is greater than the maximum, replace the timing chain cover.

REASSEMBLY

1. INSTALL OIL PUMP COVER

(a) Coat the drive and driven rotors with engine oil and place them into the timing chain cover with the marks facing outward (oil pump cover side). Check that the rotors revolve smoothly.

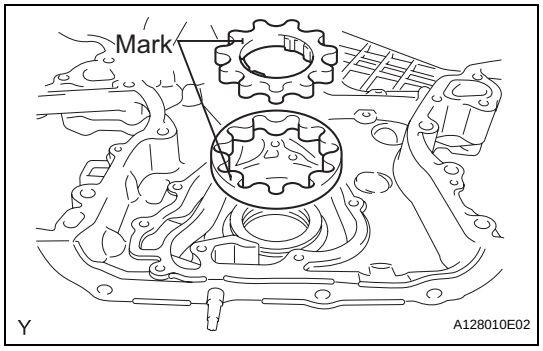

(b) Install the oil pump cover with the 8 bolts.
Torque: 9.1 N*m (93 kgf*cm, 81 in.*lbf)
Bolt length

Item	Length
Bolt A	22 mm (0.87 in.)
Bolt B	40 mm (1.58 in.)

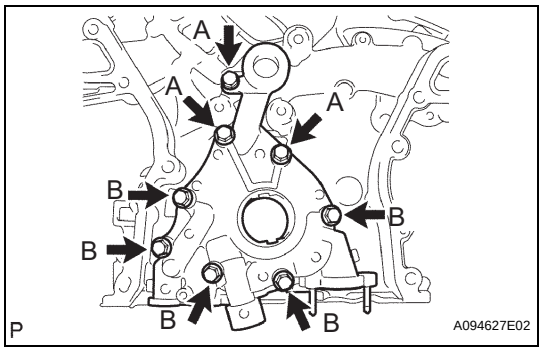

2. INSTALL OIL PUMP RELIEF VALVE

(a) Coat the oil pump relief valve with engine oil.
(b) Insert the relief valve and relief valve spring into the oil pump cover hole.
(c) Using a 27 mm socket wrench, install the plug.
Torque: 49 N*m (500 kgf*cm, 37 ft.*lbf)

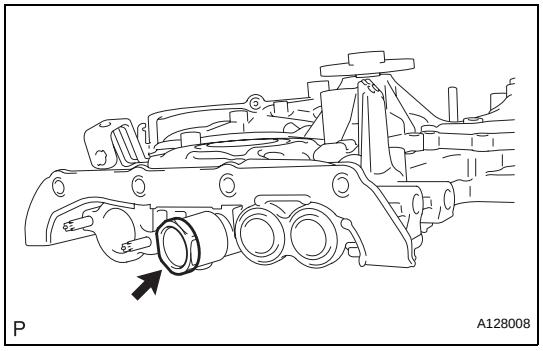

INSTALLATION

1. INSTALL TIMING CHAIN CASE OIL SEAL

(a) Using SST, tap in a new oil seal until its surface is flush with the timing chain case edge.
SST 09223-22010, 09506-35010
NOTICE:
- **Keep the lip free from foreign matter.**
- **Do not tap on the oil seal at an angle.**
- **Make sure that the oil seal edge does not stick out of the timing chain case.**

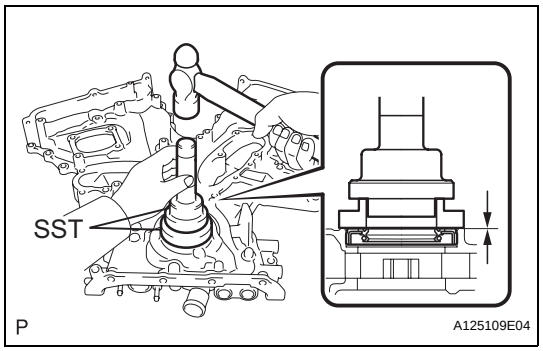

LU

2. INSTALL TIMING CHAIN COVER SUB-ASSEMBLY

(a) Apply seal packing in a continuous line to the engine unit as shown in the following illustration.

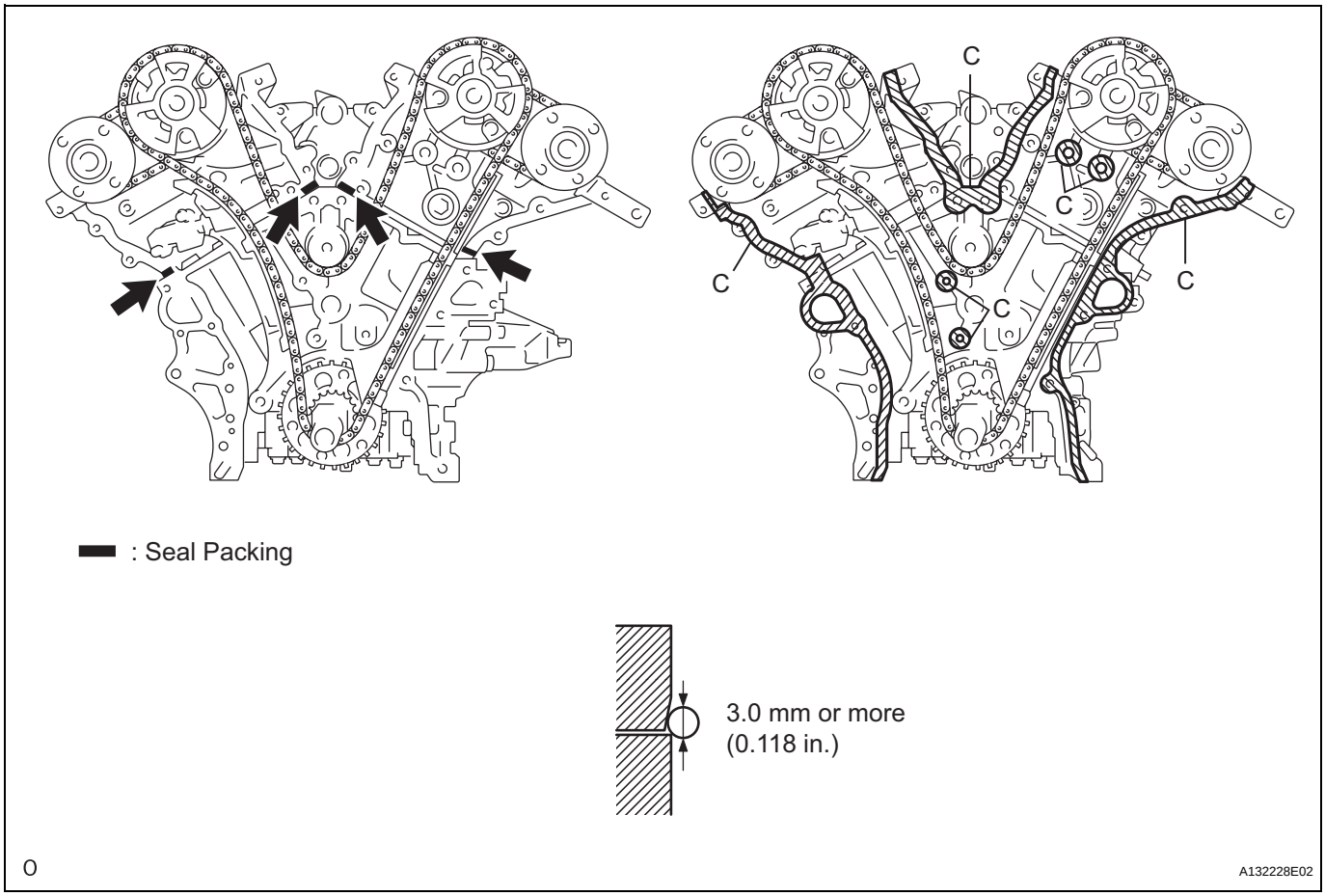

Seal packing:
Toyota Genuine Seal Packing Black, Three Bond 1207B or equivalent

Seal diameter:
3.0 mm (0.118 in.)

NOTICE:

- **Be sure to clean and degrease the contact surfaces, especially the surfaces indicated by C in the illustration.**
- **When the contact surfaces are wet, wipe them with oil-free cloth before applying seal packing.**
- **Install the chain cover within 3 minutes.**
- **Do not start the engine for at least 2 hours after installing.**

(b) Apply seal packing in a continuous line to the timing chain cover as shown in the following illustration.

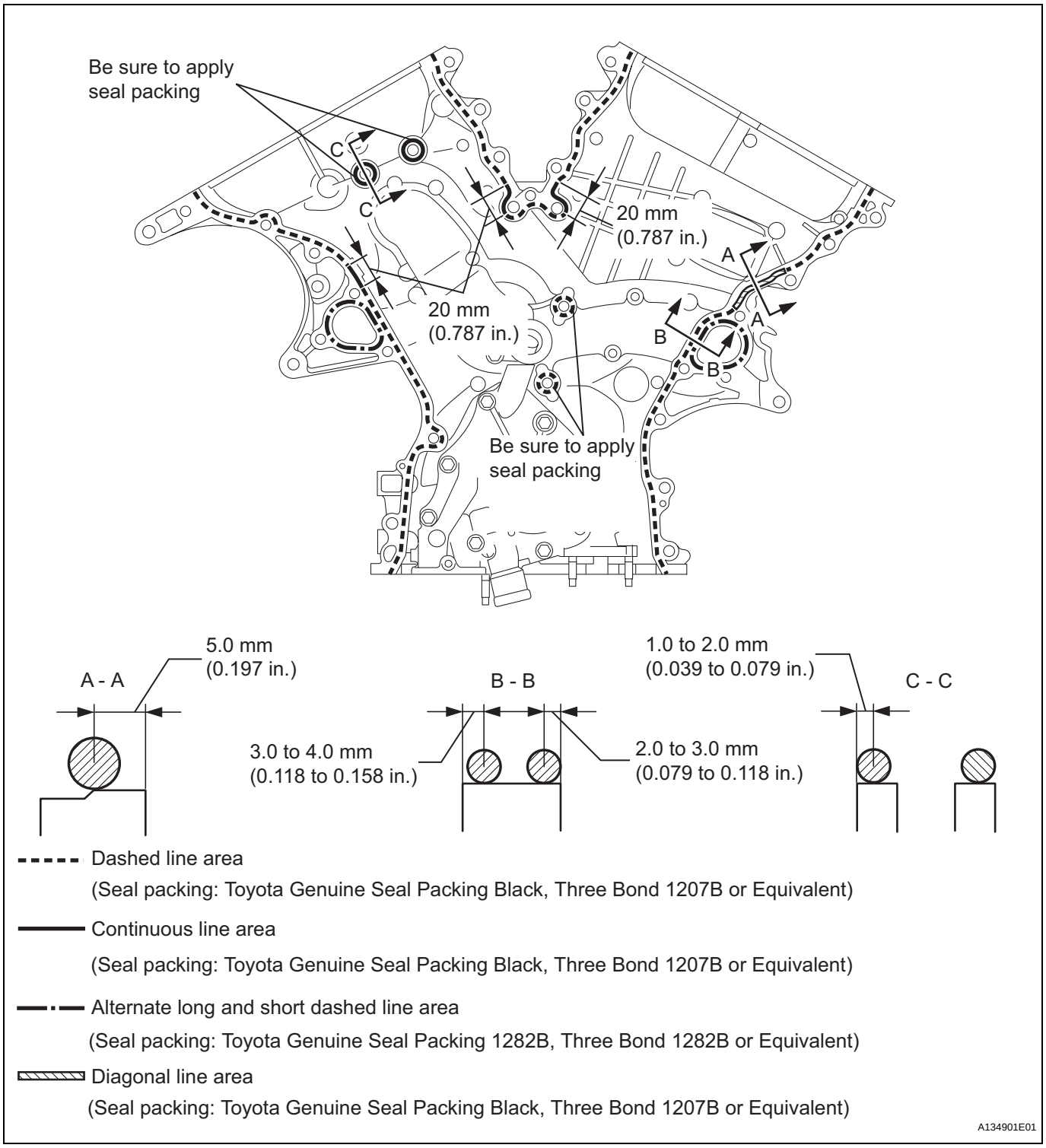

Seal packing:
Toyota Genuine Seal Packing Black, Three Bond 1207B or equivalent
Toyota Genuine Seal Packing Black 1282B, Three Bond 1282B or equivalent

LU

NOTICE:

- **When the contact surfaces are wet, wipe them with oil-free cloth before applying seal packing.**
- **Install the chain cover within 3 minutes and tighten the bolts within 15 minutes after applying seal packing.**
- **Do not start the engine for at least 2 hours after installing.**

Apply seal packing as follows

Area	Seal Packing Diameter	Application Position from Inside Seal Line
Continuous Line Area	4.5 mm or more (0.177 in.)	3.0 to 4.0 mm (0.118 to 0.158 in.)
Alternate Long and Short Dashed Line Area	3.5 mm or more (0.138 in.)	2.0 to 3.0 mm (0.079 to 0.118 in.)
Dashed Line Area	3.5 mm or more (0.138 in.)	3.0 to 4.0 mm (0.118 to 0.158 in.)
Diagonal Line Area	6.0 mm or more (0.236 in.)	5.0 mm (0.197 in.)

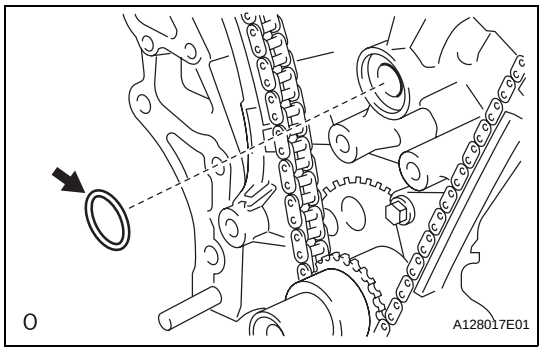

(c) Install a new gasket.

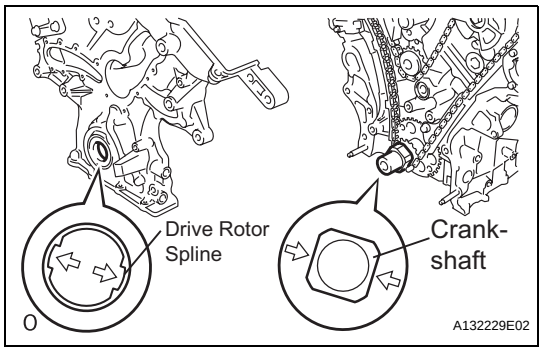

(d) Align the oil pump's drive rotor spline and the crankshaft as shown in the illustration. Install the spline and chain cover to the crankshaft.

(e) Temporarily tighten the timing chain cover with the 23 bolts and 2 nuts.

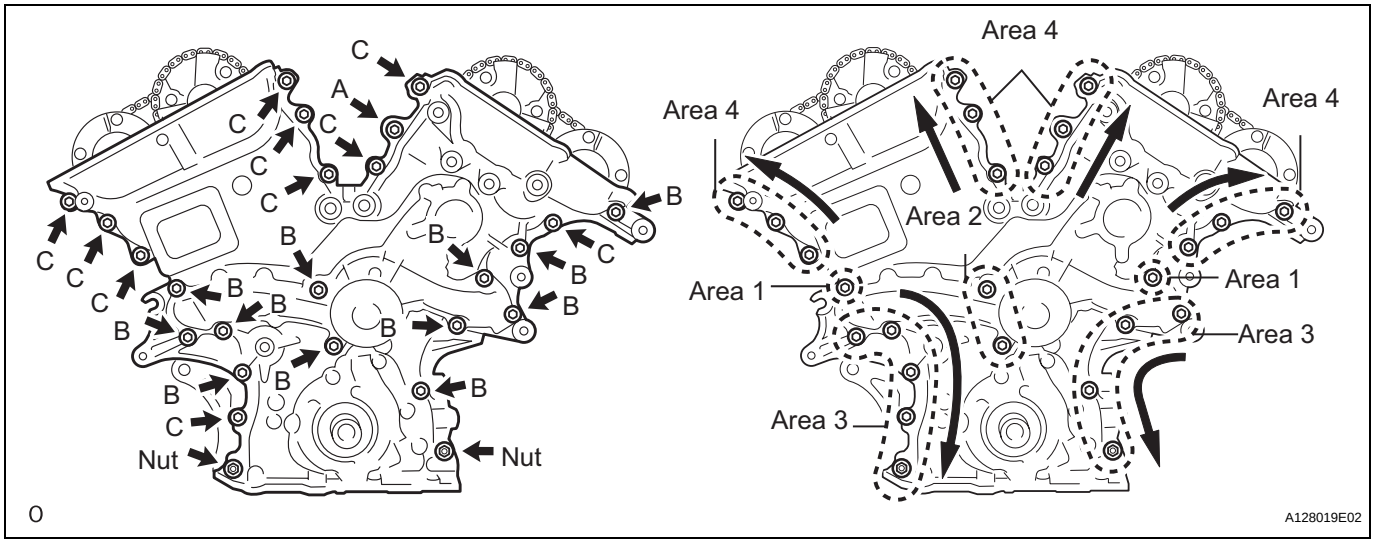

Bolt length

Item	Length
Bolt A	40 mm (1.57 in.)
Bolt B	55 mm (2.17 in.)
Bolt C	25 mm (0.98 in.)

NOTICE:
Make sure that there is no oil on the bolt threads.

(f) Fully tighten the bolts in this order: Area 1 and Area 2.
Torque: 21 N*m (214 kgf*cm, 15 ft.*lbf)

(g) Fully tighten the bolts and nuts in this order: Area 3.
Torque: 21 N*m (214 kgf*cm, 15 ft.*lbf)
HINT:
Tighten the bolts and nuts in the order of upper to lower as shown in the illustration.

(h) Fully tighten the bolts in this order: Area 4.
Torque: Bolt A
43 N*m (438 kgf*cm, 32 ft.*lbf)
Except bolt A
21 N*m (214 kgf*cm, 15 ft.*lbf)
HINT:
Tighten the bolts in the order of lower to upper as shown in the illustration.

3. **INSTALL WATER INLET HOUSING (See page EM-142)**
4. **INSTALL NO. 1 ENGINE MOUNTING BRACKET FRONT LH (See page EM-144)**
5. **INSTALL OIL PAN SUB-ASSEMBLY (See page EM-145)**
6. **INSTALL OIL STRAINER SUB-ASSEMBLY (See page EM-146)**
7. **INSTALL NO. 2 OIL PAN SUB-ASSEMBLY (See page EM-146)**
8. **INSTALL CYLINDER HEAD COVER SUB-ASSEMBLY RH (See page EM-147)**
9. **INSTALL CYLINDER HEAD COVER SUB-ASSEMBLY LH (See page EM-148)**
10. **INSTALL CRANKSHAFT PULLEY (See page EM-149)**
11. **INSTALL NO. 1 OIL PIPE (See page EM-151)**
12. **INSTALL OIL PIPE (See page EM-151)**
13. **INSTALL NO. 1 VACUUM SWITCHING VALVE (See page EM-36)**
14. **INSTALL RADIO SETTING CONDENSER (See page EM-37)**
15. **INSTALL WATER PUMP PULLEY (See page CO-10)**
16. **INSTALL NO. 2 IDLER PULLEY SUB-ASSEMBLY (See page EM-37)**

17. **INSTALL NO. 2 TIMING GEAR COVER (See page EM-38)**
18. **INSTALL V-RIBBED BELT TENSIONER ASSEMBLY (See page EM-38)**
19. **INSTALL ENGINE MOUNTING BRACKET RH (See page EM-38)**
20. **INSTALL EXHAUST MANIFOLD SUB-ASSEMBLY LH (See page EM-39)**
21. **INSTALL NO. 2 EXHAUST MANIFOLD HEAT INSULATOR (See page EM-39)**
22. **INSTALL NO. 2 MANIFOLD STAY (See page EM-39)**
23. **INSTALL OIL LEVEL GAUGE GUIDE SUB-ASSEMBLY (See page EM-39)**
24. **INSTALL EXHAUST MANIFOLD SUB-ASSEMBLY RH (See page EM-40)**
25. **INSTALL NO. 2 ENGINE MOUNTING STAY RH (See page EM-40)**
26. **INSTALL IGNITION COIL ASSEMBLY (See page EM-40)**
27. **INSTALL INTAKE AIR SURGE TANK ASSEMBLY (See page EM-40)**
28. **REMOVE ENGINE STAND**
29. **INSTALL DRIVE PLATE AND RING GEAR SUB-ASSEMBLY (See page EM-12)**
30. **INSTALL AUTOMATIC TRANSAXLE ASSEMBLY** (See page AX-222)
31. **INSTALL STARTER ASSEMBLY (See page ST-152)**
32. **INSTALL ENGINE WIRE**
33. **INSTALL FRONT DRIVE SHAFT ASSEMBLY LH (See page DS-16)**
34. **INSTALL FRONT DRIVE SHAFT ASSEMBLY RH (See page DS-16)**
35. **INSTALL FRONT FRAME ASSEMBLY (See page EM-42)**
36. **INSTALL VANE PUMP ASSEMBLY (See page EM-42)**
37. **INSTALL ENGINE ASSEMBLY WITH TRANSAXLE** (See page EM-43)

LUBRICATION SYSTEM

ON-VEHICLE INSPECTION

1. CHECK ENGINE OIL LEVEL

(a) Warm up the engine, stop it and wait 5 minutes. The oil level should be between the dipstick's low level mark and full level mark.
If low, check for leakage and add oil up to the full level mark.
NOTICE:
Do not fill above the full level mark.

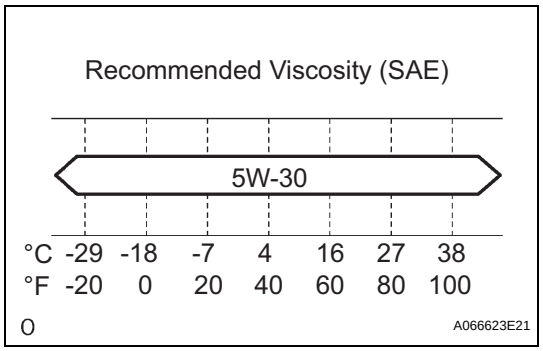

2. CHECK ENGINE OIL QUALITY

(a) Check the oil for deterioration, water contamination, discoloring or thinning.
If the quality is visibly poor, replace the oil.
Oil grade:
Use ILSAC multigrade engine oil. SAE 5W-30 engine oil may be used. However, SAE 5W-30 is the best choice for good fuel economy and good starting in cold weather.

3. CHECK OIL PRESSURE

(a) Remove the engine under cover LH.
(b) Remove the engine under cover RH.
(c) Disconnect the oil pressure switch connector.
(d) Using a 24 mm deep socket wrench, remove the oil pressure switch.

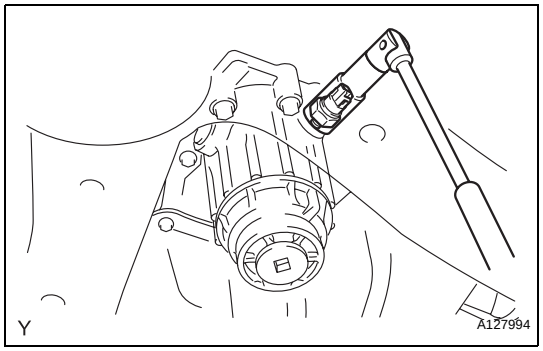

(e) Install the oil pressure gauge with adapter.
(f) Warm up the engine.
(g) Measure the oil pressure.
Standard oil pressure

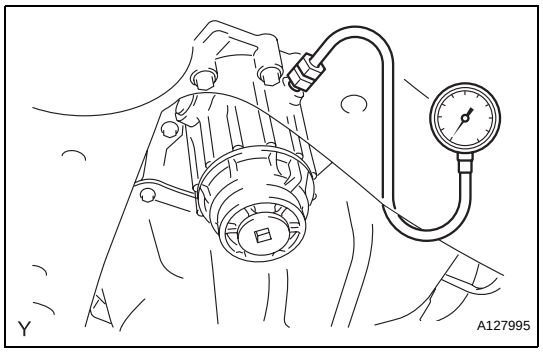

Engine Condition	Oil Pressure
Idle	80 kPa (0.8 kgf*cm^2, 11.6 psi) or more
6,000 rpm	380 kPa (3.9 kgf*cm^2, 55.5 psi) or more

If the oil pressure is not as specified, check the oil pump (See page LU-13).

LU

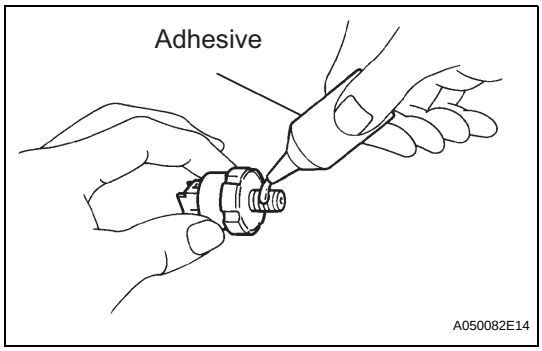

(h) Remove the oil pressure gauge.
(i) Apply adhesive to 2 or 3 threads of the oil pressure switch.
Adhesive:
Toyota Genuine Adhesive 1344, Three Bond 1344 or equivalent

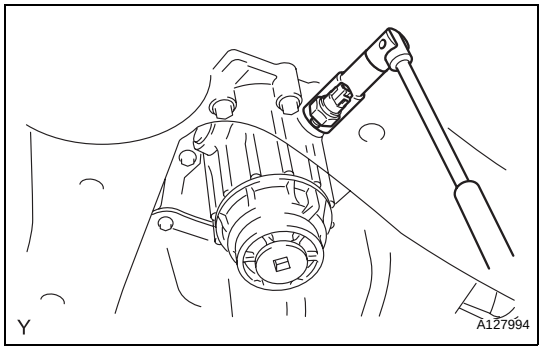

(j) Using a 24 mm deep socket wrench, install the oil pressure switch.
Torque: 15 N*m (153 kgf*cm, 11 ft.*lbf)
NOTICE:
Do not start the engine within 1 hour after installation.
(k) Connect the oil pressure switch connector.
(l) Check for engine oil leaks.
(m) Remove the engine under cover RH.
(n) Remove the engine under cover LH.

OIL FILTER

COMPONENTS

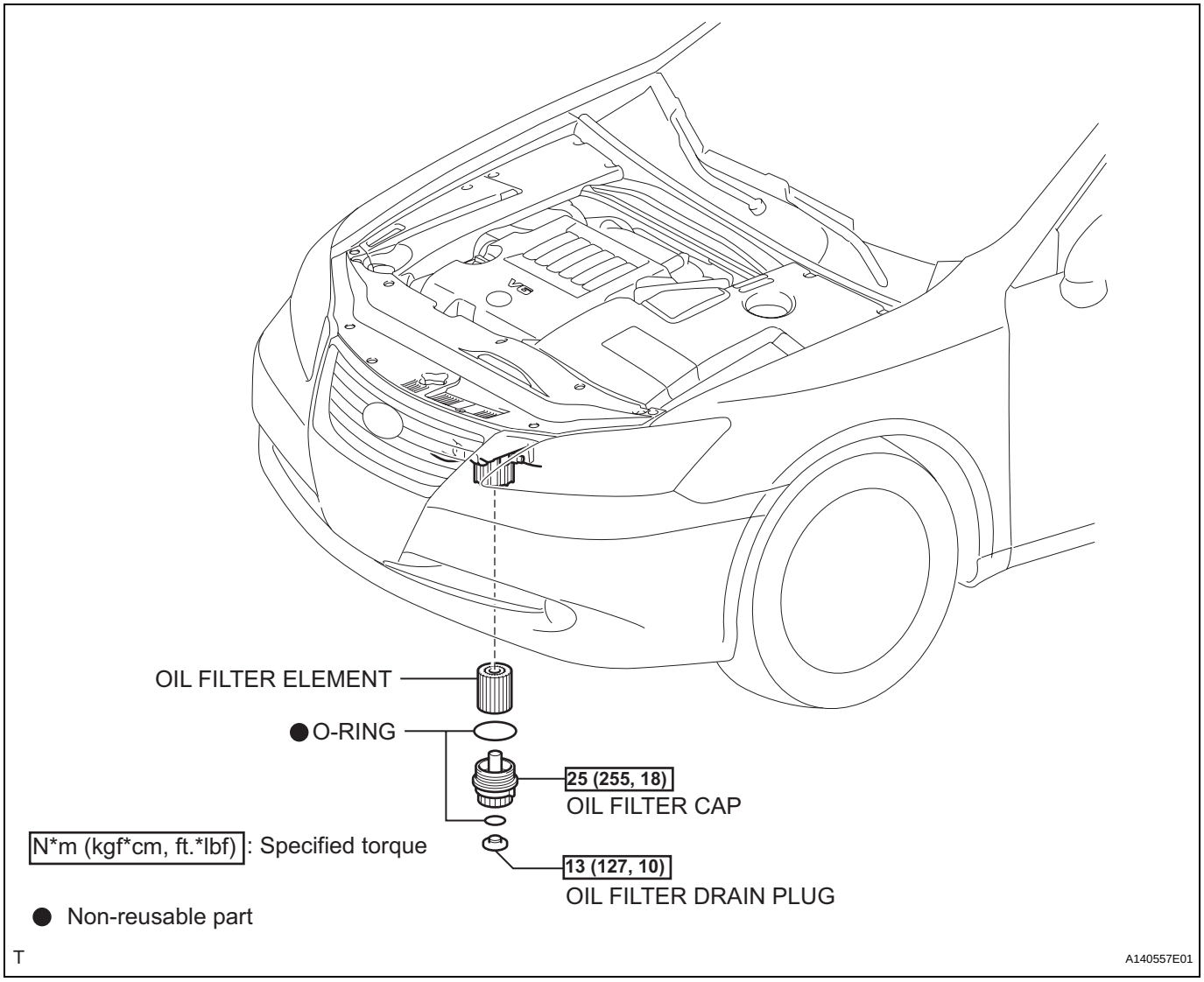

REPLACEMENT

CAUTION:

- **Prolonged and repeated contact with engine oil will result in the removal of natural oils from the skin, leading to dryness, irritation and dermatitis. In addition, used engine oil contains potentially harmful contaminants which may cause skin cancer.**
- **Precautions should be taken when replacing engine oil to minimize the risk of your skin making contact with used engine oil. Protective clothing and gloves that cannot be penetrated by oil should be worn. The skin should be washed with soap and water, or use water-less hand cleaner, to remove any used engine oil thoroughly. Do not use gasoline, thinners, or solvents.**
- **In order to preserve the environment, used oil and used oil filters must be disposed of at designated disposal sites.**

1. DRAIN ENGINE OIL

(a) Remove the oil filler cap.

(b) Remove the oil drain plug and drain the oil into a container.

2. REMOVE OIL FILTER ELEMENT

(a) Connect the hose with an inside diameter of 15 mm (0.59 in.) to the pipe.

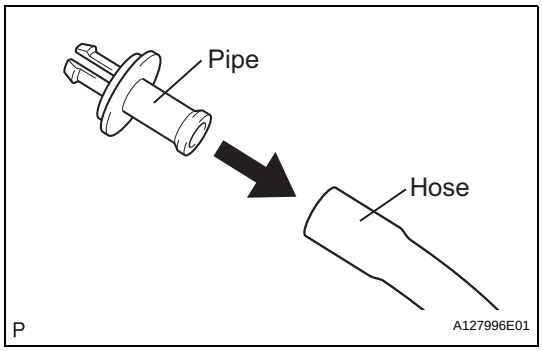

(b) Remove the oil filter drain plug from the oil filter cap.

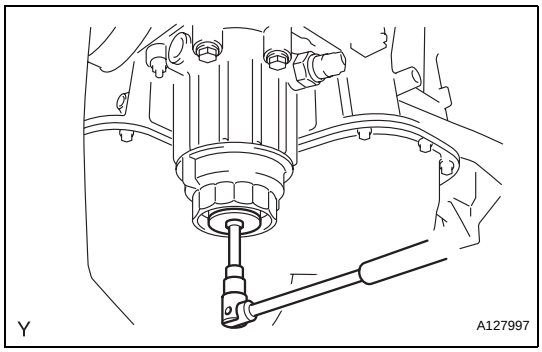

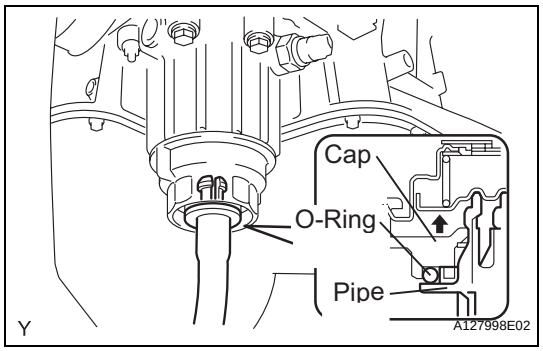

(c) Insert the pipe with the hose into the oil filter cap.
NOTICE:
Be sure to insert the pipe with the O-ring installed on the oil filter cap side.
HINT:
Place the hose end into a container before draining the oil from the hose.

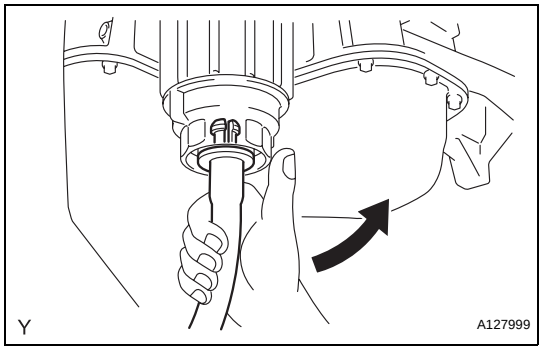

(d) Make sure that oil is completely drained, and remove the pipe and O-ring.
HINT:
Be sure to turn the pipe in the direction of the arrow to remove it.

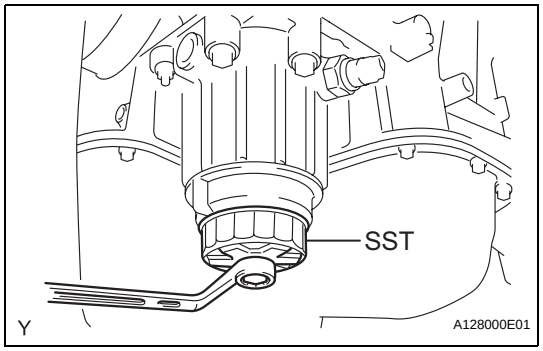

(e) Using SST, remove the oil filter cap.
SST 09228-06501

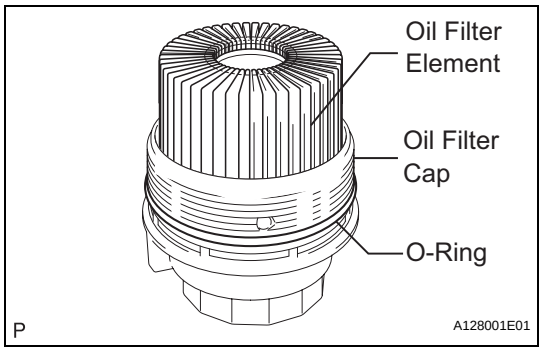

(f) Remove the oil filter element and O-ring from the oil filter cap.
NOTICE:
Do not use any tools to remove the O-ring in order to prevent the cap from being damaged. Be sure to remove it by hand.

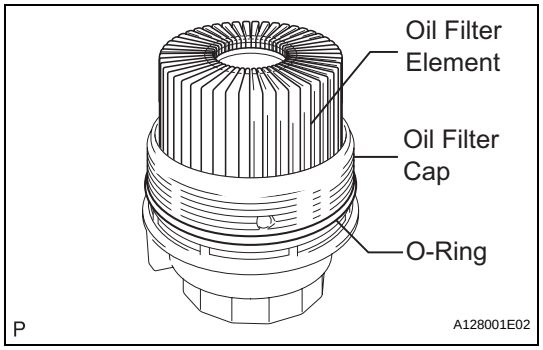

3. INSTALL OIL FILTER ELEMENT

(a) Clean the inside of the oil filter cap, threads, and O-ring groove.

(b) Apply a light coat of engine oil to a new O-ring and install it to the oil filter cap.
NOTICE:
Make sure that the O-ring does not get twisted on the groove.

(c) Install a new oil filter element to the oil filter cap.

(d) Remove all dirt and foreign matter from the installation surface and the inside of the cap on the engine side.

(e) Apply a light coat of engine oil to the O-ring again and install the oil filter cap.
NOTICE:
Make sure that the O-ring does not get caught between the parts.

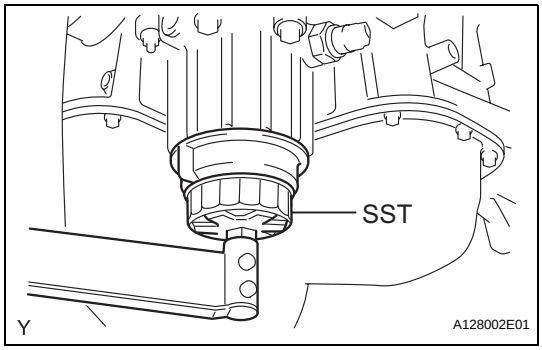

(f) Using SST, install the oil filter cap.
SST 09228-06501
Torque: 25 N*m (255 kgf*cm, 18 ft.*lbf)
NOTICE:
Make sure that there is no clearance between the parts after tightening the oil filter cap.

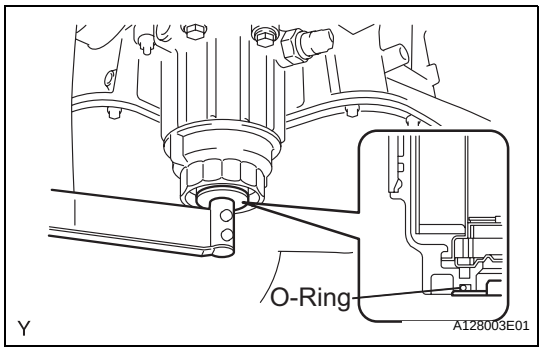

(g) Apply a light coat of engine oil to a new O-ring and install it to the oil filter cap.
NOTICE:
Remove all dirt and foreign matter from the installation surface.

(h) Install the oil filter drain plug to the oil filter cap.
Torque: 13 N*m (127 kgf*cm, 10 ft.*lbf)
NOTICE:
Make sure that the O-ring does not get caught between the parts.

4. ADD ENGINE OIL

(a) Clean and install the oil drain plug with a new gasket.
Torque: 40 N*m (408 kgf*cm, 30 ft.*lbf)

(b) Add new oil.
Standard capacity

Item	Standard Condition
Drain and refill with oil filter change	6.1 liters (6.4 US qts, 5.4 Imp. qts)
Drain and refill without oil filter change	5.7 liters (6.0 US qts, 5.0 Imp. qts)
Dry fill	6.5 liters (6.9 US qts, 5.7 Imp. qts)

(c) Install the oil filler cap.

5. CHECK FOR ENGINE OIL LEAKS

(a) Start the engine. Check for engine oil leaks from the connected parts of the oil filter cap and oil filter drain plug.

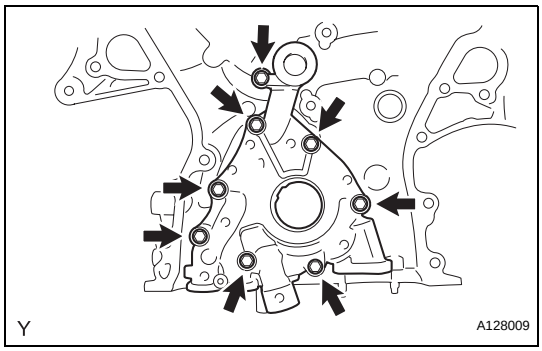

2. REMOVE OIL PUMP COVER

(a) Remove the 8 bolts, oil pump cover and oil pump rotor set.

INSPECTION

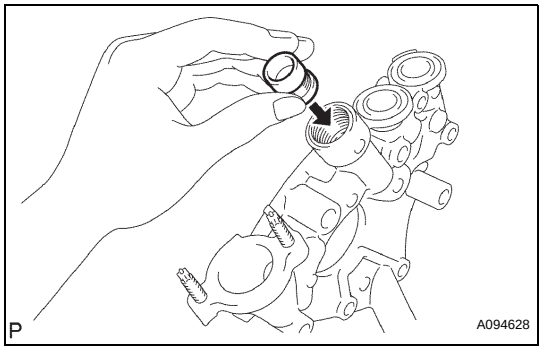

1. INSPECT OIL PUMP RELIEF VALVE

(a) Coat the relief valve with engine oil and check that it falls smoothly into the valve hole under its own weight.
If the valve does not fall smoothly, replace the relief valve. If necessary, replace the oil pump assembly.

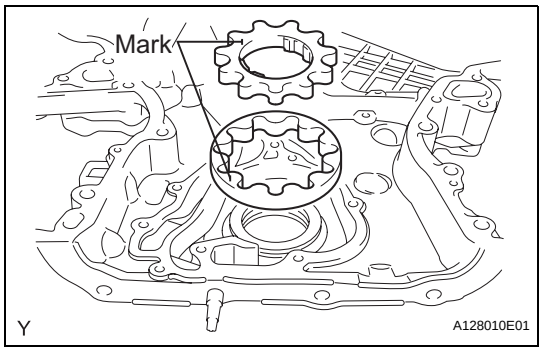

2. INSPECT OIL PUMP ROTOR SET

(a) Install the rotors to the timing chain cover with the rotors' marks facing outward. Check that the rotors revolve smoothly.

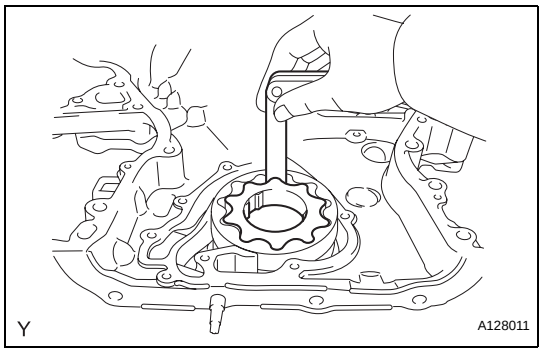

(b) Check the tip clearance.

(1) Using a feeler gauge, measure the clearance between the drive and driven rotors, as shown in the illustration.

Tip clearance

Standard	Maximum
0.060 to 0.160 mm (0.0024 to 0.0063 in.)	0.16 mm (0.0063 in.)

If the clearance is greater than the maximum, replace the drive and driven rotors.

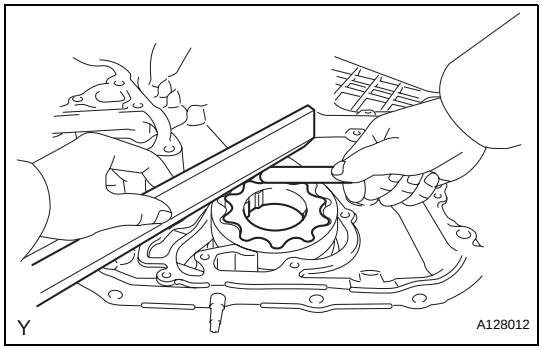

(c) Check the side clearance.

(1) Using a feeler gauge and precision straightedge, measure the clearance between the rotors and precision straightedge, as shown in the illustration.

Side clearance

Standard	Maximum
0.030 to 0.090 mm (0.0012 to 0.0035 in.)	0.090 mm (0.0035 in.)

If the side clearance is greater than the maximum, replace the timing chain cover.

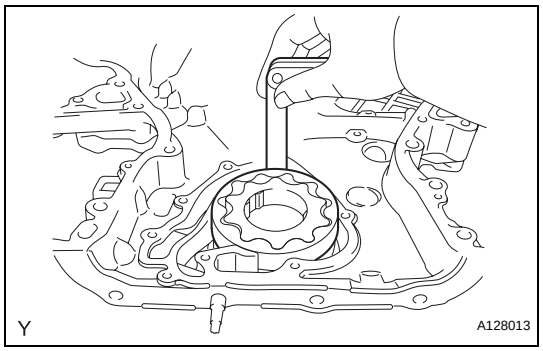

(d) Check the body clearance.
(1) Using a feeler gauge, measure the clearance between the timing chain cover and driven rotor, as shown in the illustration.
Body clearance

Standard	Maximum
0.250 to 0.325 mm (0.0098 to 0.0128 in.)	0.325 mm (0.0128 in.)

If the body clearance is greater than the maximum, replace the timing chain cover.

REASSEMBLY

1. INSTALL OIL PUMP COVER

(a) Coat the drive and driven rotors with engine oil and place them into the timing chain cover with the marks facing outward (oil pump cover side). Check that the rotors revolve smoothly.

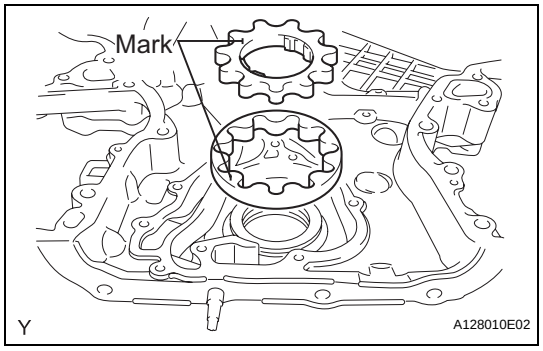

(b) Install the oil pump cover with the 8 bolts.
Torque: 9.1 N*m (93 kgf*cm, 81 in.*lbf)
Bolt length

Item	Length
Bolt A	22 mm (0.87 in.)
Bolt B	40 mm (1.58 in.)

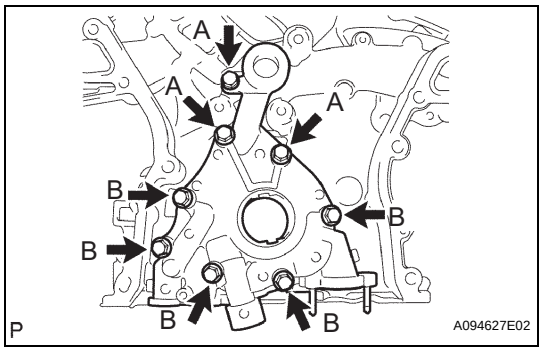

2. INSTALL OIL PUMP RELIEF VALVE

(a) Coat the oil pump relief valve with engine oil.
(b) Insert the relief valve and relief valve spring into the oil pump cover hole.
(c) Using a 27 mm socket wrench, install the plug.
Torque: 49 N*m (500 kgf*cm, 37 ft.*lbf)

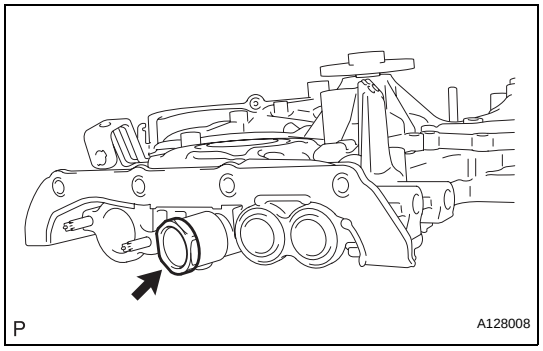

INSTALLATION

1. INSTALL TIMING CHAIN CASE OIL SEAL

(a) Using SST, tap in a new oil seal until its surface is flush with the timing chain case edge.
SST 09223-22010, 09506-35010
NOTICE:
- **Keep the lip free from foreign matter.**
- **Do not tap on the oil seal at an angle.**
- **Make sure that the oil seal edge does not stick out of the timing chain case.**

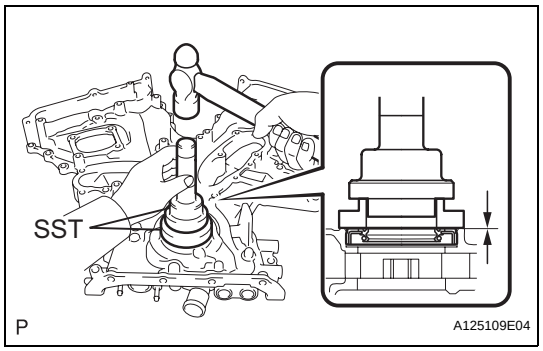

LU

2. INSTALL TIMING CHAIN COVER SUB-ASSEMBLY

(a) Apply seal packing in a continuous line to the engine unit as shown in the following illustration.

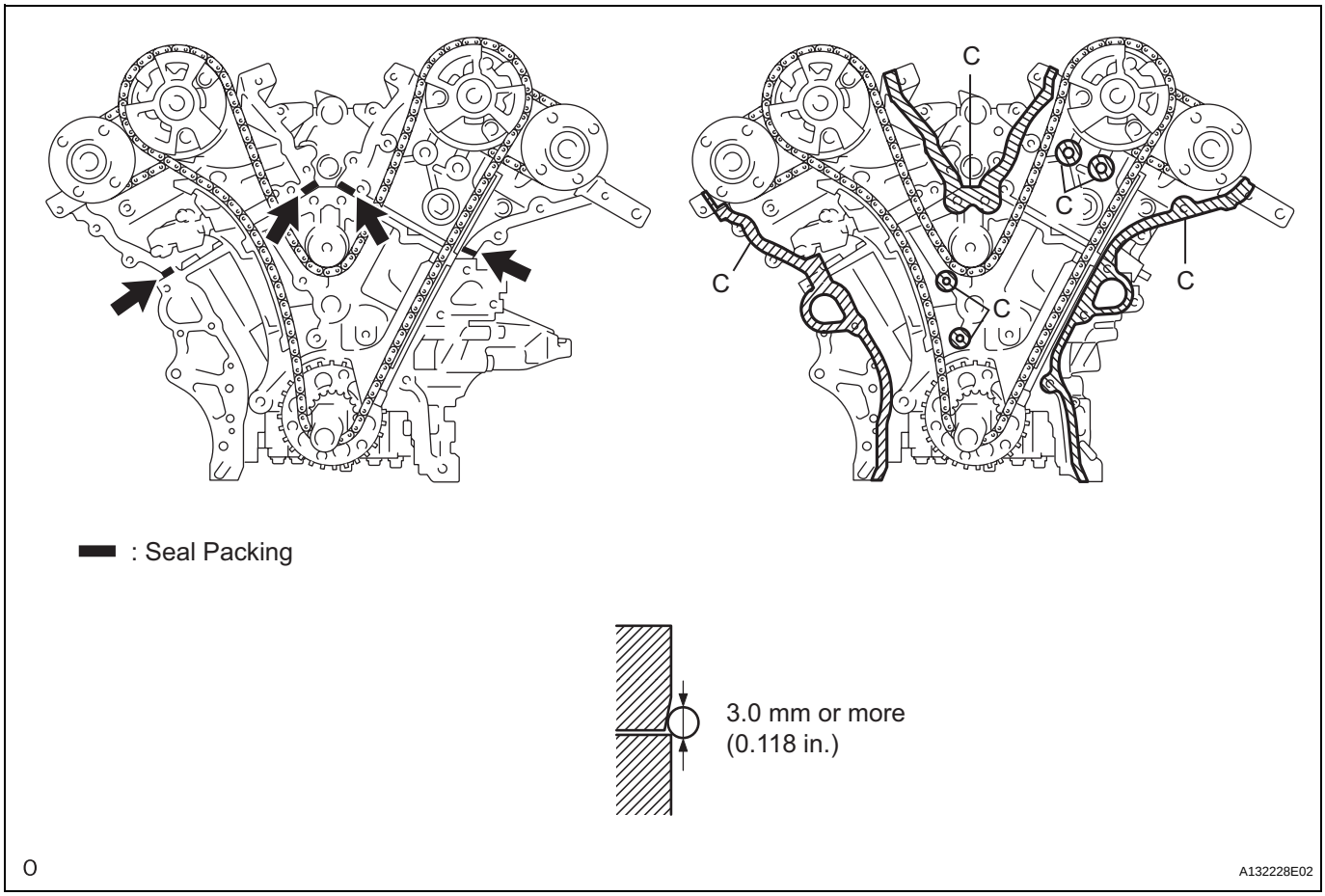

Seal packing:
Toyota Genuine Seal Packing Black, Three Bond 1207B or equivalent

Seal diameter:
3.0 mm (0.118 in.)

NOTICE:

- **Be sure to clean and degrease the contact surfaces, especially the surfaces indicated by C in the illustration.**
- **When the contact surfaces are wet, wipe them with oil-free cloth before applying seal packing.**
- **Install the chain cover within 3 minutes.**
- **Do not start the engine for at least 2 hours after installing.**

(b) Apply seal packing in a continuous line to the timing chain cover as shown in the following illustration.

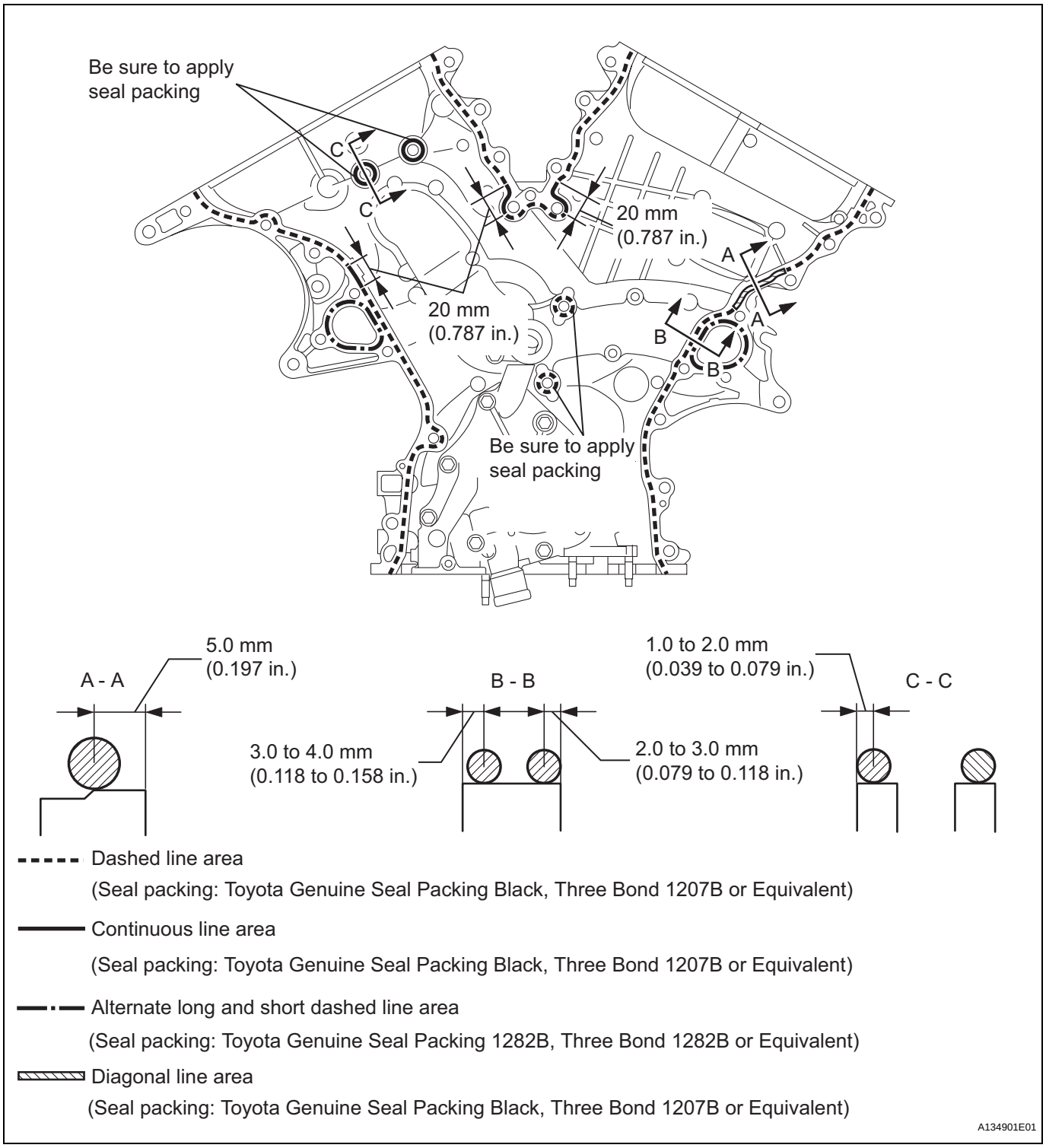

Seal packing:
Toyota Genuine Seal Packing Black, Three Bond 1207B or equivalent
Toyota Genuine Seal Packing Black 1282B, Three Bond 1282B or equivalent

LU

NOTICE:

- **When the contact surfaces are wet, wipe them with oil-free cloth before applying seal packing.**
- **Install the chain cover within 3 minutes and tighten the bolts within 15 minutes after applying seal packing.**
- **Do not start the engine for at least 2 hours after installing.**

Apply seal packing as follows

Area	Seal Packing Diameter	Application Position from Inside Seal Line
Continuous Line Area	4.5 mm or more (0.177 in.)	3.0 to 4.0 mm (0.118 to 0.158 in.)
Alternate Long and Short Dashed Line Area	3.5 mm or more (0.138 in.)	2.0 to 3.0 mm (0.079 to 0.118 in.)
Dashed Line Area	3.5 mm or more (0.138 in.)	3.0 to 4.0 mm (0.118 to 0.158 in.)
Diagonal Line Area	6.0 mm or more (0.236 in.)	5.0 mm (0.197 in.)

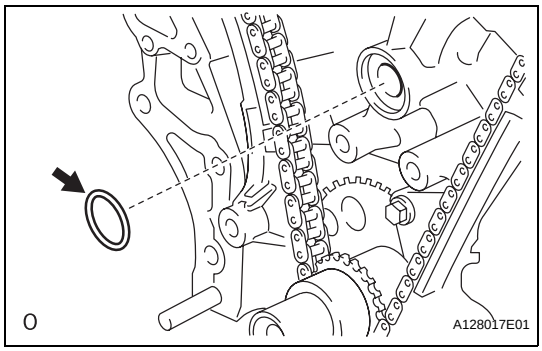

(c) Install a new gasket.

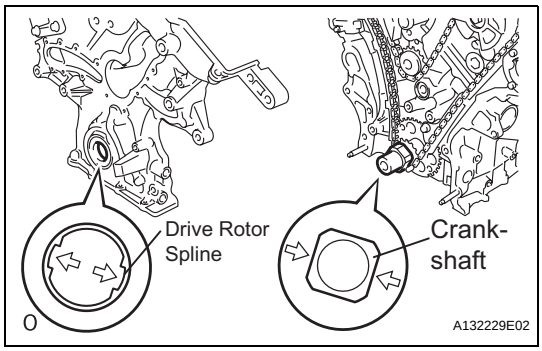

(d) Align the oil pump's drive rotor spline and the crankshaft as shown in the illustration. Install the spline and chain cover to the crankshaft.

(e) Temporarily tighten the timing chain cover with the 23 bolts and 2 nuts.

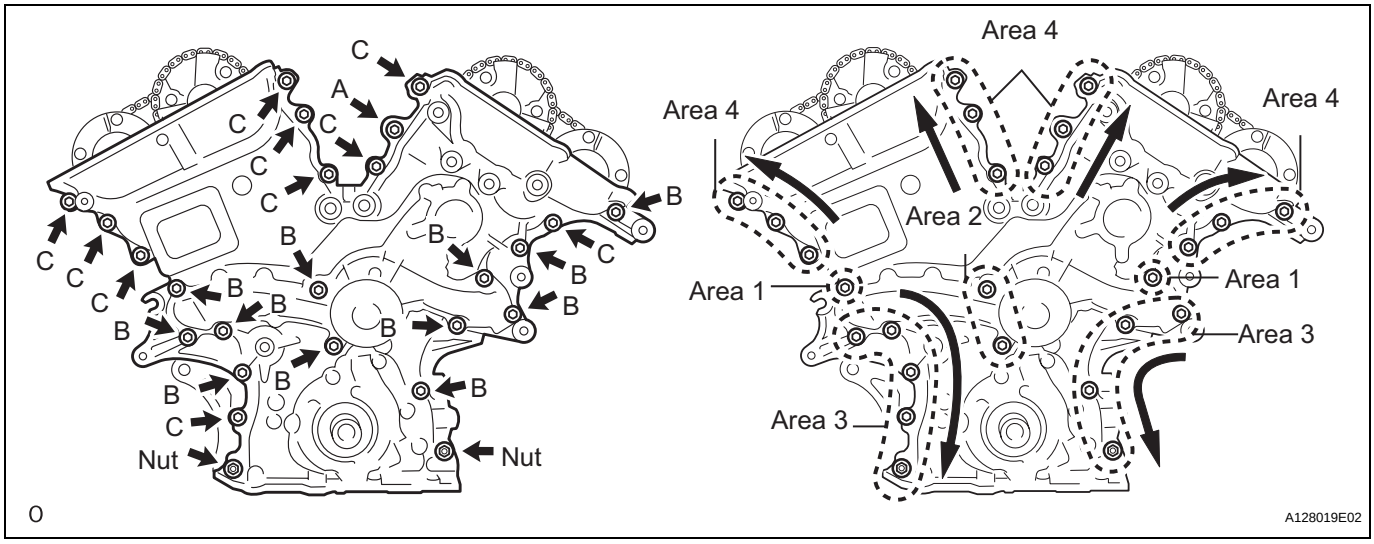

Bolt length

Item	Length
Bolt A	40 mm (1.57 in.)
Bolt B	55 mm (2.17 in.)
Bolt C	25 mm (0.98 in.)

NOTICE:
Make sure that there is no oil on the bolt threads.

(f) Fully tighten the bolts in this order: Area 1 and Area 2.
Torque: 21 N*m (214 kgf*cm, 15 ft.*lbf)

(g) Fully tighten the bolts and nuts in this order: Area 3.
Torque: 21 N*m (214 kgf*cm, 15 ft.*lbf)
HINT:
Tighten the bolts and nuts in the order of upper to lower as shown in the illustration.

(h) Fully tighten the bolts in this order: Area 4.
Torque: Bolt A
43 N*m (438 kgf*cm, 32 ft.*lbf)
Except bolt A
21 N*m (214 kgf*cm, 15 ft.*lbf)
HINT:
Tighten the bolts in the order of lower to upper as shown in the illustration.

3. **INSTALL WATER INLET HOUSING (See page EM-142)**
4. **INSTALL NO. 1 ENGINE MOUNTING BRACKET FRONT LH (See page EM-144)**
5. **INSTALL OIL PAN SUB-ASSEMBLY (See page EM-145)**
6. **INSTALL OIL STRAINER SUB-ASSEMBLY (See page EM-146)**
7. **INSTALL NO. 2 OIL PAN SUB-ASSEMBLY (See page EM-146)**
8. **INSTALL CYLINDER HEAD COVER SUB-ASSEMBLY RH (See page EM-147)**
9. **INSTALL CYLINDER HEAD COVER SUB-ASSEMBLY LH (See page EM-148)**
10. **INSTALL CRANKSHAFT PULLEY (See page EM-149)**
11. **INSTALL NO. 1 OIL PIPE (See page EM-151)**
12. **INSTALL OIL PIPE (See page EM-151)**
13. **INSTALL NO. 1 VACUUM SWITCHING VALVE (See page EM-36)**
14. **INSTALL RADIO SETTING CONDENSER (See page EM-37)**
15. **INSTALL WATER PUMP PULLEY (See page CO-10)**
16. **INSTALL NO. 2 IDLER PULLEY SUB-ASSEMBLY (See page EM-37)**

17. **INSTALL NO. 2 TIMING GEAR COVER (See page EM-38)**
18. **INSTALL V-RIBBED BELT TENSIONER ASSEMBLY (See page EM-38)**
19. **INSTALL ENGINE MOUNTING BRACKET RH (See page EM-38)**
20. **INSTALL EXHAUST MANIFOLD SUB-ASSEMBLY LH (See page EM-39)**
21. **INSTALL NO. 2 EXHAUST MANIFOLD HEAT INSULATOR (See page EM-39)**
22. **INSTALL NO. 2 MANIFOLD STAY (See page EM-39)**
23. **INSTALL OIL LEVEL GAUGE GUIDE SUB-ASSEMBLY (See page EM-39)**
24. **INSTALL EXHAUST MANIFOLD SUB-ASSEMBLY RH (See page EM-40)**
25. **INSTALL NO. 2 ENGINE MOUNTING STAY RH (See page EM-40)**
26. **INSTALL IGNITION COIL ASSEMBLY (See page EM-40)**
27. **INSTALL INTAKE AIR SURGE TANK ASSEMBLY (See page EM-40)**
28. **REMOVE ENGINE STAND**
29. **INSTALL DRIVE PLATE AND RING GEAR SUB-ASSEMBLY (See page EM-12)**
30. **INSTALL AUTOMATIC TRANSAXLE ASSEMBLY** (See page AX-222)
31. **INSTALL STARTER ASSEMBLY (See page ST-152)**
32. **INSTALL ENGINE WIRE**
33. **INSTALL FRONT DRIVE SHAFT ASSEMBLY LH (See page DS-16)**
34. **INSTALL FRONT DRIVE SHAFT ASSEMBLY RH (See page DS-16)**
35. **INSTALL FRONT FRAME ASSEMBLY (See page EM-42)**
36. **INSTALL VANE PUMP ASSEMBLY (See page EM-42)**
37. **INSTALL ENGINE ASSEMBLY WITH TRANSAXLE** (See page EM-43)

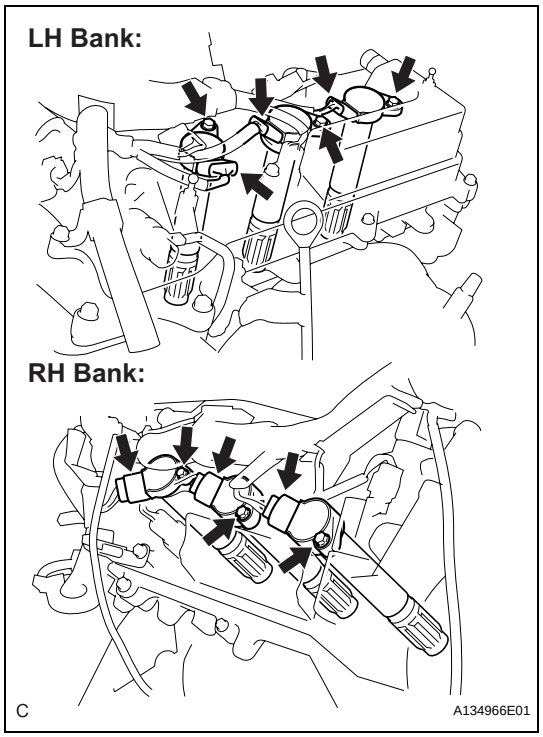

11. REMOVE IGNITION COIL ASSEMBLY

(a) Disconnect the 6 ignition coil connectors.

(b) Remove the 6 bolts and 6 ignition coils.

INSTALLATION

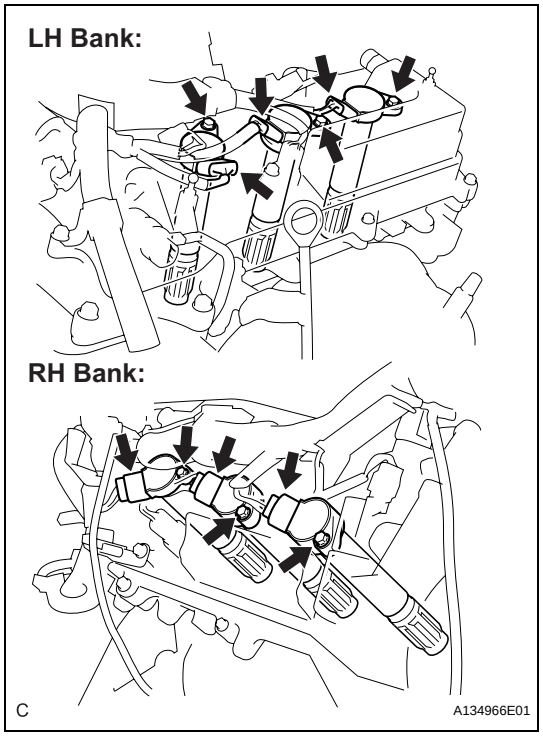

1. INSTALL IGNITION COIL ASSEMBLY

(a) Install the 6 ignition coils with the 6 bolts.
Torque: 10 N*m (102 kgf*cm, 7 ft.*lbf)

(b) Connect the 6 ignition coil connectors.

2. INSTALL NO. 1 SURGE TANK STAY

NOTICE:

DO NOT apply oil to the bolt listed below:

Tightening Parts
No. 1 Surge tank stay and Cylinder head cover

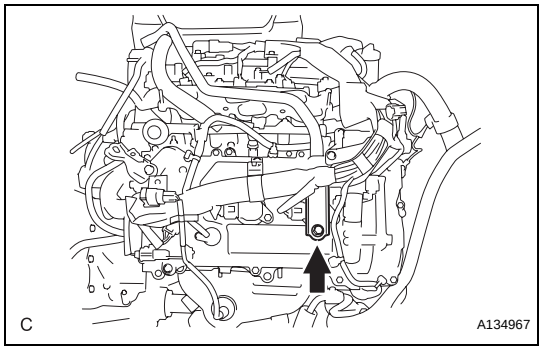

(a) Install the No. 1 surge tank stay with the bolt.
Torque: 21 N*m (214 kgf*cm, 15 ft.*lbf)

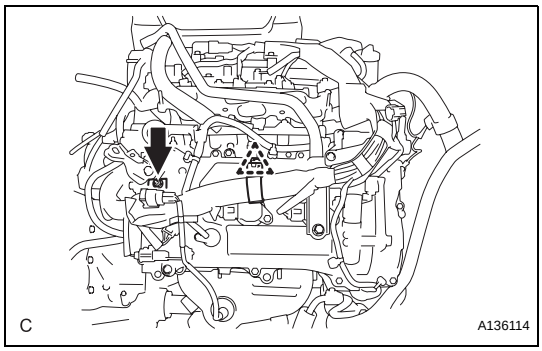

(b) Install the bolt and clamp.
Torque: 10 N*m (102 kgf*cm, 7 ft.*lbf)

3. **INSTALL INTAKE AIR SURGE TANK ASSEMBLY (See page FU-17)**
4. **INSTALL AIR CLEANER CAP SUB-ASSEMBLY (See page ES-522)**
5. **CONNECT CABLE TO NEGATIVE BATTERY TERMINAL (See page EM-49)**
6. **ADD ENGINE COOLANT (See page CO-6)**
7. **CHECK FOR ENGINE COOLANT LEAKS (See page CO-1)**
8. **INSTALL FRONT SUSPENSION UPPER CENTER BRACE (See page BR-25)**
9. **INSTALL V-BANK COVER SUB-ASSEMBLY (See page EM-49)**
10. **INSTALL ENGINE ROOM SIDE COVER LH (See page EM-50)**
11. **INSTALL ENGINE ROOM SIDE COVER RH (See page EM-50)**
12. **INSTALL COOL AIR INTAKE DUCT SEAL (See page EM-50)**
13. **PERFORM INITIALIZATION**
    (a) Perform initialization procedure (See page IN-33).
    NOTICE:
    Some vehicle systems require initialization after reconnecting the cable to the negative battery terminal.

ON-VEHICLE INSPECTION

NOTICE:
In this section, the terms "cold" and "hot" refer to the temperature of the coils. "Cold" means approximately -10°C (14°F) to 50°C (122°F). "Hot" means approximately 50°C (122°F) to 100°C (212°F).

1. INSPECT IGNITION COIL ASSEMBLY

(a) Check for DTCs.
NOTICE:
If any DTC is present, perform troubleshooting in accordance with the procedures for that DTC.

(b) Check that sparks occur.

(1) Remove the intake air surge tank (See page FU-12).

(2) Remove the No. 1 surge tank stay (see page IG-8).

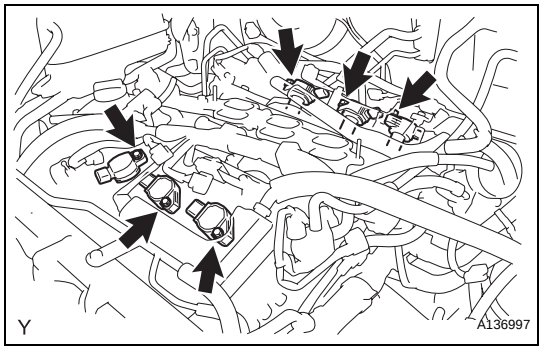

(3) Disconnect the 6 ignition coil connectors and remove the 6 bolts and 6 ignition coils.

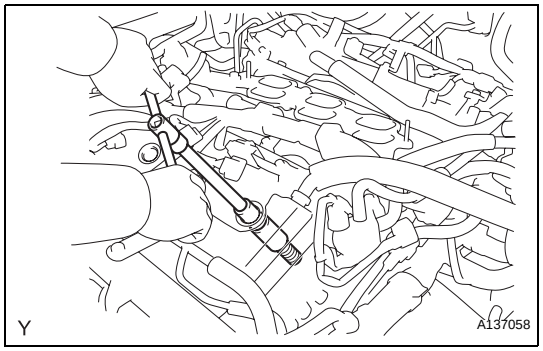

(4) Using a 16 mm (0.63 in.) plug wrench, remove the 6 spark plugs.

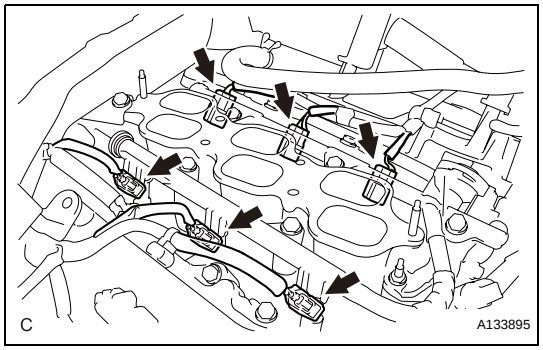

(5) Disconnect the 6 fuel injector connectors.

(6) Install the spark plugs to each ignition coil, and connect the ignition coil connectors.

IG

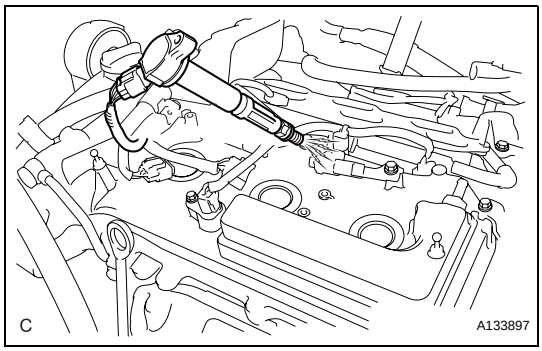

(7) Ground the spark plugs.

(8) Check if a spark occurs at each spark plug while the engine is being cranked.

NOTICE:

- **Be sure to ground the spark plugs when checking.**
- **Replace the ignition coil if it receives an impact.**
- **Do not crank the engine for more than 2 seconds.**

(c) Perform the spark test according to the flowchart below.

(1) Check that the ignition coil connector is securely connected.

Result

Result	Proceed to
NG	Connect securely
OK	Go to next step

(2) Perform a speak test on each ignition coil.

1. Replace the ignition coil with a normal one.
2. Perform the spark test again.

Result

Result	Proceed to
OK	Replace ignition coil
NG	Go to next step

IG

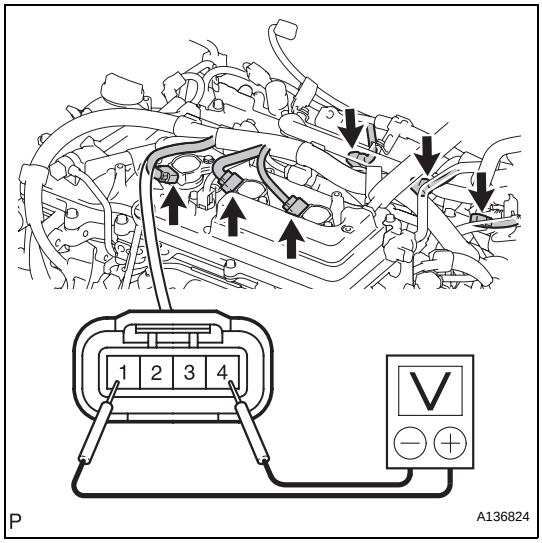

(3) Check the power supply to the ignition coil.

1. Turn the engine switch on (IG).
2. Measure the voltage between the terminals of the wire harness side connector.

Standard voltage

Tester Connection	Specified Condition
1 (+B) - 4 (GND)	9 to 14 V

Result

Result	Proceed to
NG	Check wiring between engine switch and ignition coil
OK	Go to next step

(4) Measure the resistance of the crankshaft position sensor.

Standard resistance

Temperature	Specified Condition
Cold	1,630 to 2,740 Ω
Hot	2,065 to 3,225 Ω

Result

Result	Proceed to
NG	Replace crankshaft position sensor
OK	Go to next step

(5) Check the IGT signal from the ECM.
Result

Result	Proceed to
NG	Check ECM (See page ES-230)
OK	Repair wiring between ignition coil and ECM

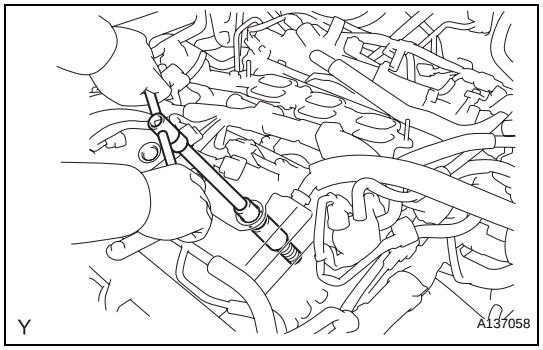

(d) Using a 16 mm (0.63 in.) plug wrench, install the spark plugs.
Torque: 18 N*m (184 kgf*cm, 13 ft.*lbf)

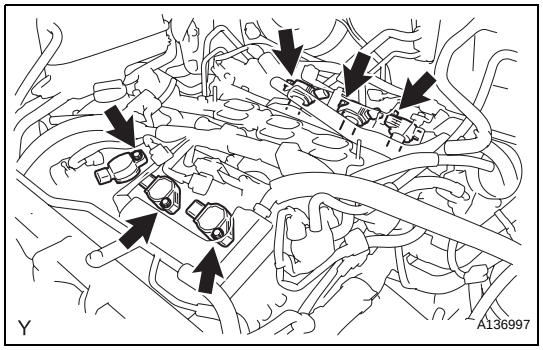

(e) Install the 6 ignition coils with the 6 bolts and connect the 6 ignition coil connectors.
Torque: 10 N*m (102 kgf*cm, 7 ft.*lbf)

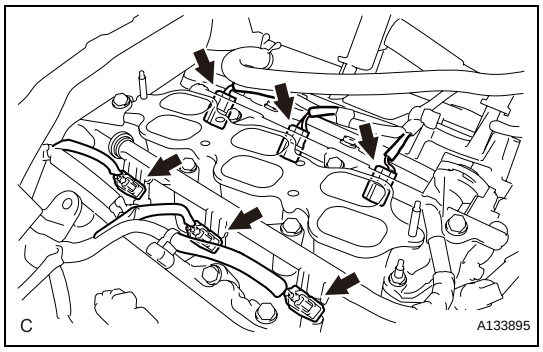

(f) Connect the 6 fuel injector connectors.
(g) Install the No. 1 surge tank stay (See page IG-9).
(h) Install the intake air surge tank (See page FU-17).

2. INSPECT SPARK PLUG
NOTICE:
- **Never use a wire brush for cleaning.**
- **Never attempt to adjust the electrode gap on a used spark plug.**

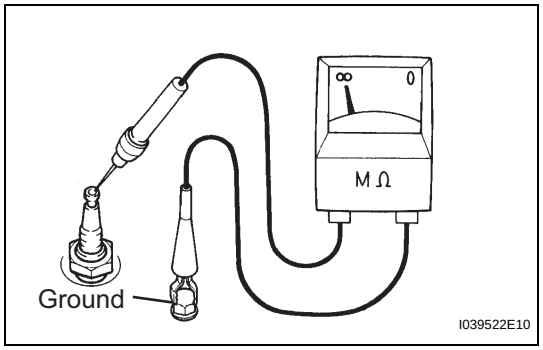

(a) Check the electrode.
(1) Using a megohmmeter, measure the insulation resistance.
Standard insulation resistance:
10 MΩ or higher
HINT:
- If the result is 10 MΩ or less, clean the plug and measure the resistance again.
- If a megohmmeter is not available, perform the following simple inspection instead.

(b) Alternative inspection method:
(1) Quickly accelerate the engine to 4,000 rpm 5 times.
(2) Remove the spark plugs.

IG

(3) Visually check the spark plug.
If the electrode is dry, the spark plug is functioning properly. If the electrode is damp, proceed to the next step.

(c) Check the spark plug for any damage to its threads and insulator. If there is damage, replace the spark plug.
Require spark plug

Manufacturer	Spark plug type
DENSO made	FK20HR11

NOTICE:
Use only the listed spark plug or equivalent to ensure engine performance and smooth driveability.

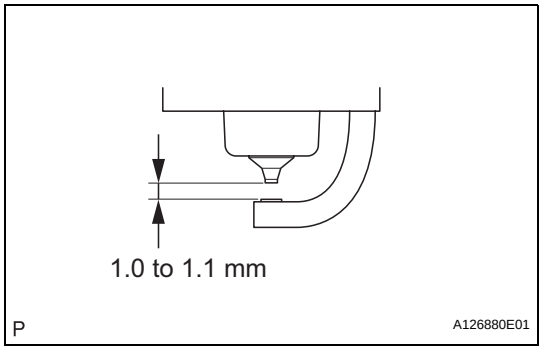

(d) Check the spark plug electrode gap.
Maximum electrode gap for a used spark plug:
1.4 mm (0.055 in.)
If the gap is greater than the maximum, replace the spark plug.
Electrode gap for a new spark plug:
1.0 to 1.1 mm (0.039 to 0.043 in.)

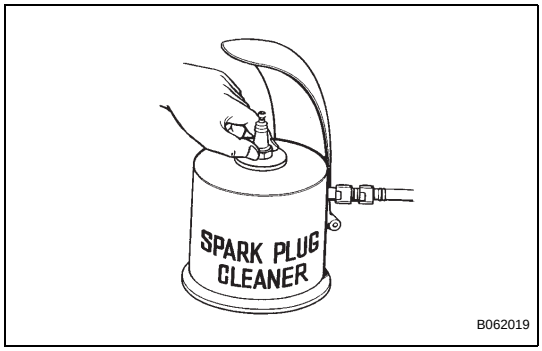

(e) Clean the spark plugs.
If the electrode has traces of wet carbon, clean the electrode with a spark plug cleaner and then dry it.
Standard air pressure:
588 kPa (6 kgf*cm^2, 85 psi)
Standard duration:
20 seconds or less
HINT:
Only use the spark plug cleaner when the electrode is free of oil. If the electrode has traces of oil, use gasoline to clean off the oil before using the spark plug cleaner.

IGNITION COIL

COMPONENTS

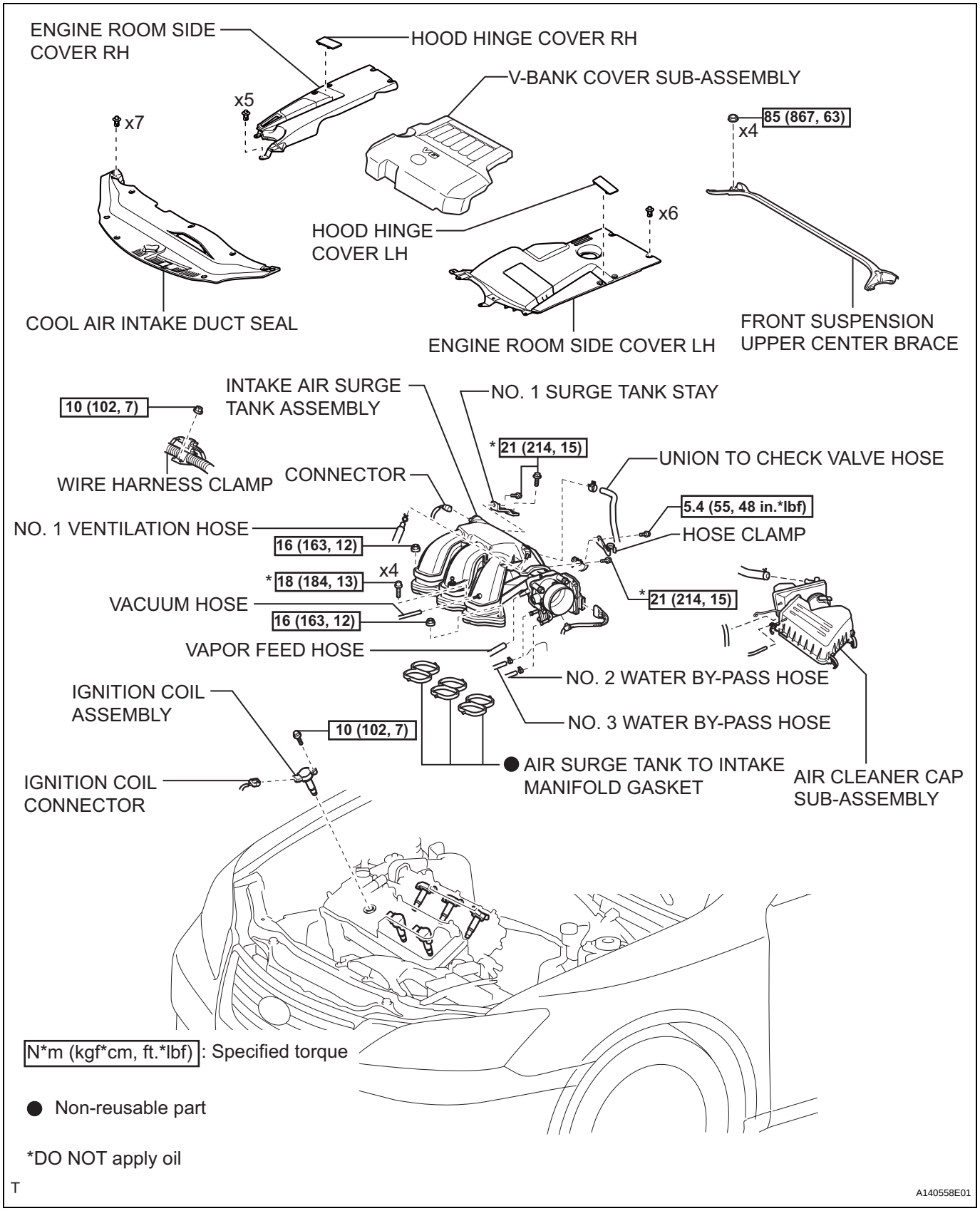

IG

REMOVAL

1. **DISCONNECT CABLE FROM NEGATIVE BATTERY TERMINAL**
2. **REMOVE COOL AIR INTAKE DUCT SEAL (See page EM-22)**
3. **REMOVE ENGINE ROOM SIDE COVER LH (See page EM-22)**
4. **REMOVE ENGINE ROOM SIDE COVER RH (See page EM-22)**
5. **REMOVE FRONT SUSPENSION UPPER CENTER BRACE (See page BR-22)**
6. **REMOVE V-BANK COVER SUB-ASSEMBLY (See page EM-23)**
7. **DRAIN ENGINE COOLANT (See page CO-5)**
8. **REMOVE AIR CLEANER CAP SUB-ASSEMBLY (See page ES-519)**
9. **REMOVE INTAKE AIR SURGE TANK ASSEMBLY (See page FU-12)**
10. **REMOVE NO. 1 SURGE TANK STAY**
    (a) Remove the bolt and disconnect the harness clamp.

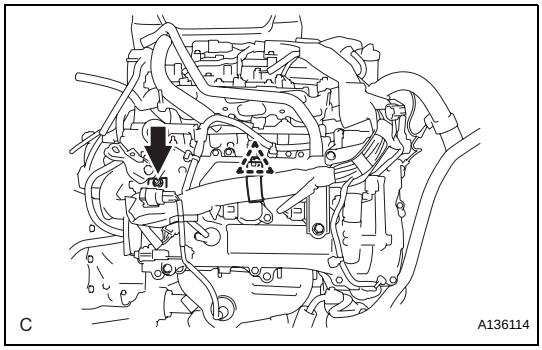

(b) Remove the bolt and No. 1 surge tank stay.

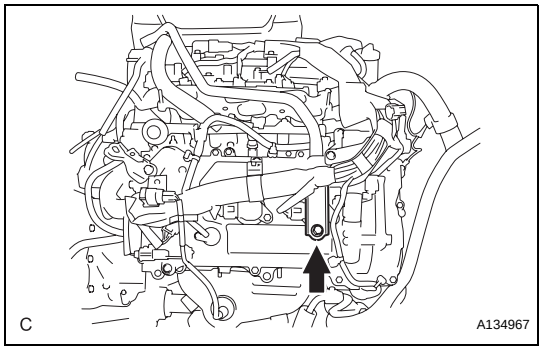

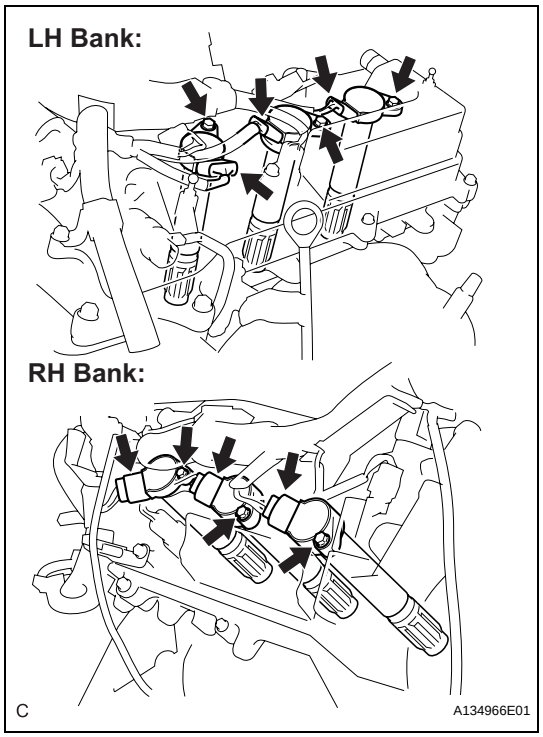

11. REMOVE IGNITION COIL ASSEMBLY

(a) Disconnect the 6 ignition coil connectors.

(b) Remove the 6 bolts and 6 ignition coils.

INSTALLATION

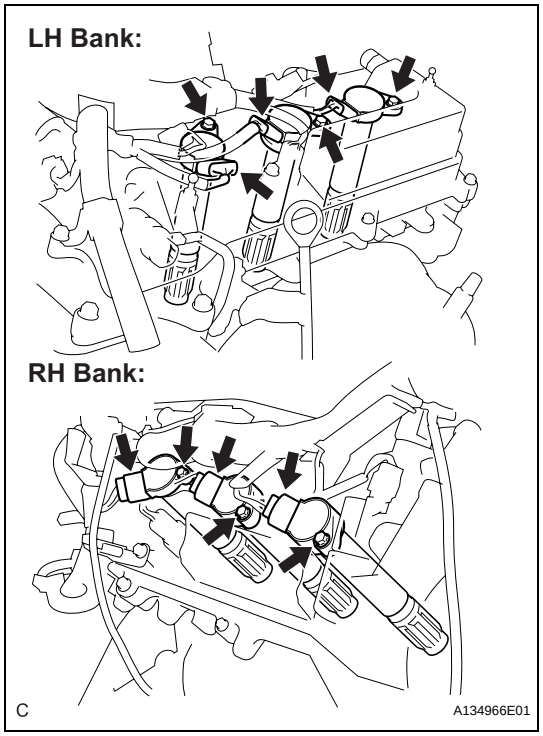

1. INSTALL IGNITION COIL ASSEMBLY

(a) Install the 6 ignition coils with the 6 bolts.
Torque: 10 N*m (102 kgf*cm, 7 ft.*lbf)

(b) Connect the 6 ignition coil connectors.

2. INSTALL NO. 1 SURGE TANK STAY

NOTICE:

DO NOT apply oil to the bolt listed below:

Tightening Parts
No. 1 Surge tank stay and Cylinder head cover

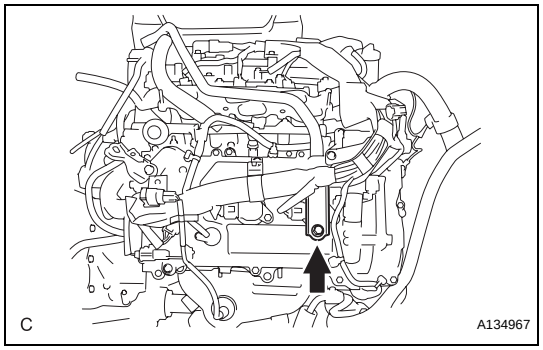

(a) Install the No. 1 surge tank stay with the bolt.
Torque: 21 N*m (214 kgf*cm, 15 ft.*lbf)

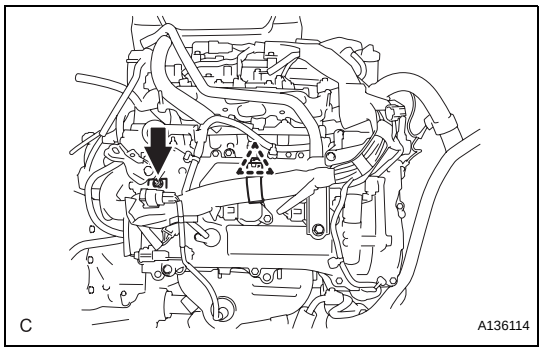

(b) Install the bolt and clamp.
Torque: 10 N*m (102 kgf*cm, 7 ft.*lbf)

3. **INSTALL INTAKE AIR SURGE TANK ASSEMBLY (See page FU-17)**
4. **INSTALL AIR CLEANER CAP SUB-ASSEMBLY (See page ES-522)**
5. **CONNECT CABLE TO NEGATIVE BATTERY TERMINAL (See page EM-49)**
6. **ADD ENGINE COOLANT (See page CO-6)**
7. **CHECK FOR ENGINE COOLANT LEAKS (See page CO-1)**
8. **INSTALL FRONT SUSPENSION UPPER CENTER BRACE (See page BR-25)**
9. **INSTALL V-BANK COVER SUB-ASSEMBLY (See page EM-49)**
10. **INSTALL ENGINE ROOM SIDE COVER LH (See page EM-50)**
11. **INSTALL ENGINE ROOM SIDE COVER RH (See page EM-50)**
12. **INSTALL COOL AIR INTAKE DUCT SEAL (See page EM-50)**
13. **PERFORM INITIALIZATION**
    (a) Perform initialization procedure (See page IN-33).
    NOTICE:
    Some vehicle systems require initialization after reconnecting the cable to the negative battery terminal.

SYSTEM DIAGRAM

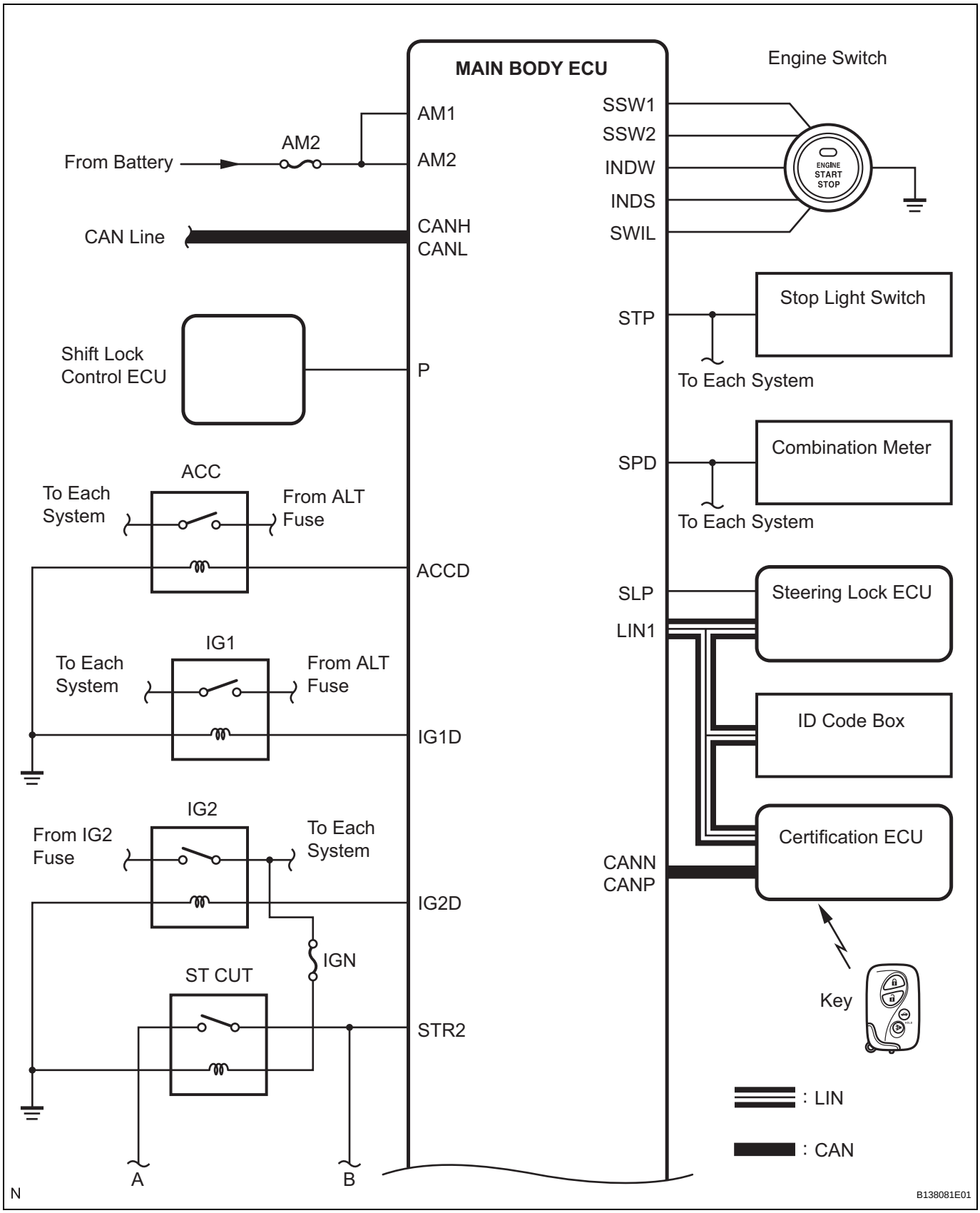

ST

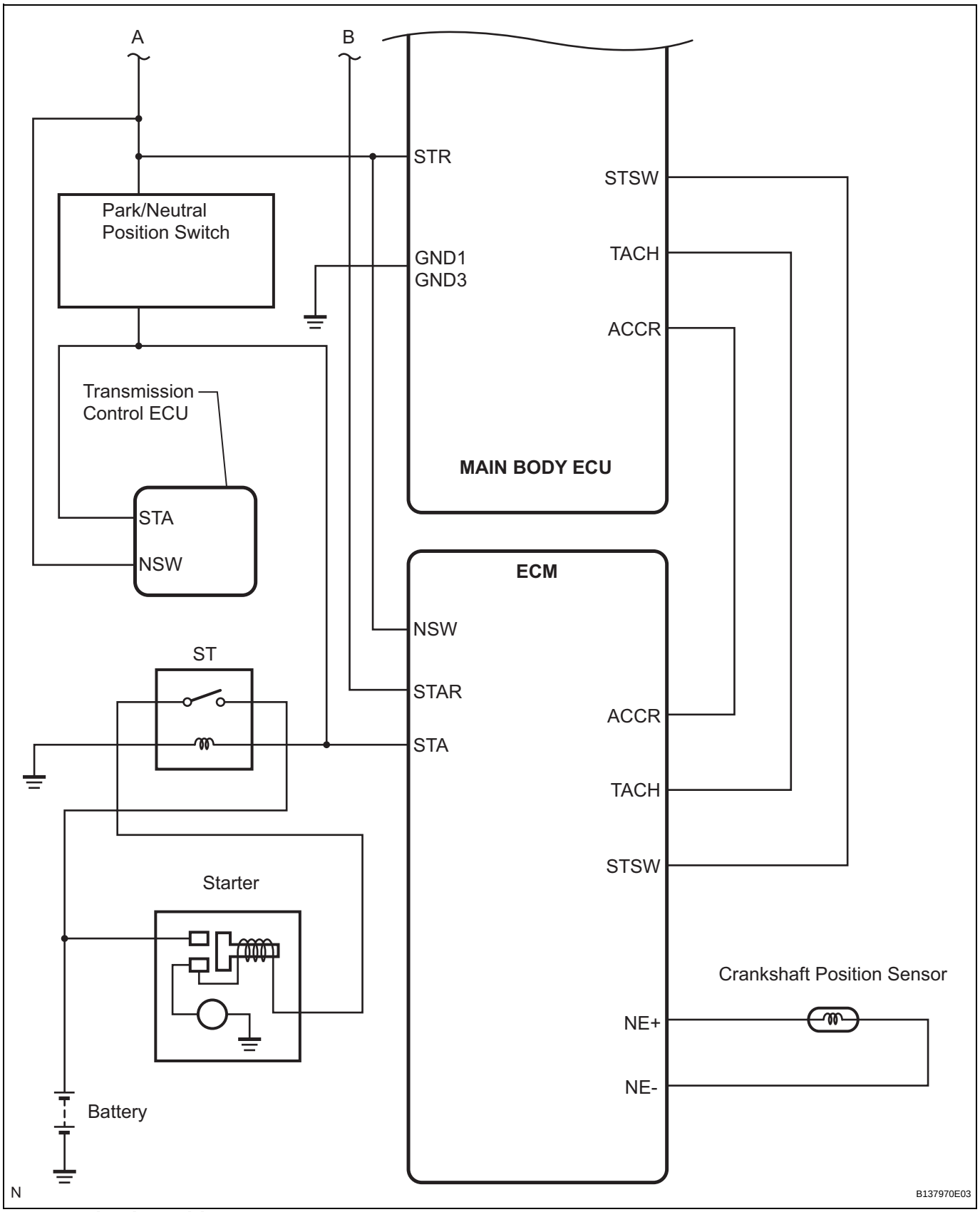

Communication table:

Transmitting ECU (Transmitter)	Receiving ECU (Receiver)	Signal	Communication method
Combination meter	Main body ECU	Vehicle speed signal	CAN/Local communication
Steering lock ECU	Main body ECU	Steering lock/unlock signal	LIN/Local communication

Transmitting ECU (Transmitter)	Receiving ECU (Receiver)	Signal	Communication method
ECM	Main body ECU	Starter signal	CAN
		Shift position signal	
		Engine revolution speed signal	
Main body ECU	Certification ECU	Engine switch position signal	CAN
		Courtesy light switch signal	
		Wireless door lock buzzer request signal	
Main body ECU	Combination meter	Entry start key signal	CAN
Main body ECU	Combination meter	Wireless door lock buzzer request signal	CAN
Certification ECU	Main body ECU	Illumination light request signal	CAN
Certification ECU	Driver seat ECU	Memory call replay request signal	CAN
Certification ECU	Main body ECU	Light answer back signal	CAN
Certification ECU	Combination meter	Meter buzzer single-shot request signal	CAN
		Meter buzzer intermittence request signal	
		Meter buzzer continuation request signal	
		Door open display signal	
		Key loss warning signal	
		Low key battery warning signal	
		Shift position warning signal	
		Steering lock abnormal warning	
		Steering lock unlock warning	
Combination meter	Certification ECU/Main body ECU	Vehicle speed signal	CAN
Certification ECU	Main body ECU	Key ID matching request signal	LIN
Main body ECU	Certification ECU	ID required signal	LIN

SYSTEM DESCRIPTION

1. PUSH-BUTTON START FUNCTION DESCRIPTION

(a) The push-button start function uses a push-type engine switch, which the driver can operate by merely carrying the electrical key. This system consists primarily of the main body ECU, engine switch, ID code box, steering lock ECU, electrical key, ACC relay, IG1 relay, IG2 relay and certification ECU. The main body ECU controls the function. This function operates in cooperation with the smart access system with push-button start.

2. FUNCTION OF COMPONENT

Component	Function
Engine Switch • Transponder Key Amplifier	• Transmits engine switch signal to main body ECU. • Informs driver of power source mode or system abnormality with illumination of indicator light. • Receives ID code and transmits it to certification ECU when key battery is low.
Electrical Key	Receives signals from oscillators and returns ID code to door control receiver.
Electrical Key Oscillator • Console and Rear Seat	Receives request signals from certification ECU and forms detection area in vehicle interior.
Steering Lock ECU	Receives lock/unlock request signals from certification ECU and main body ECU.
Door Control Receiver	Receives ID code from electrical key and transmits it to certification ECU.
Main body ECU	• Changes power source mode in 4 stages (off, on (ACC), on (IG), start) in accordance with shift position and state of stop light switch. • Controls push-button start function in accordance with signals received from switches and each ECU.
Certification ECU	Certifies ID code received from door control receiver and transmits certification results to ID code box and steering lock ECU.
Stop Light Switch	Outputs state of brake pedal to main body ECU.
ID Code Box	Receives steering unlock or engine immobiliser unset signals from certification ECU, certifies them, and transmits each unset signal to steering lock ECU or ECM.
ECM	• Receives engine start request signal from main body ECU, turns ON ST relay, and starts engine. • Receives signal from ID code box and performs engine ignition and injection.

3. SYSTEM FUNCTION

The electric controls of the push-button start function are described below:

Control	Outline
Engine switch control	• When driver operates engine switch with electrical key in driver's possession, certification ECU starts indoor electrical key oscillator, which transmits request signal to electrical key. Upon receiving this signal, the electrical key transmits ID code signal to main body ECU. • ID code box verifies check results received from certification ECU via LIN and sends them to main body ECU. Based on these results, main body ECU authorizes operation of engine switch.
Diagnosis	When main body ECU detects malfunction, main body ECU diagnoses and memorizes failed section.

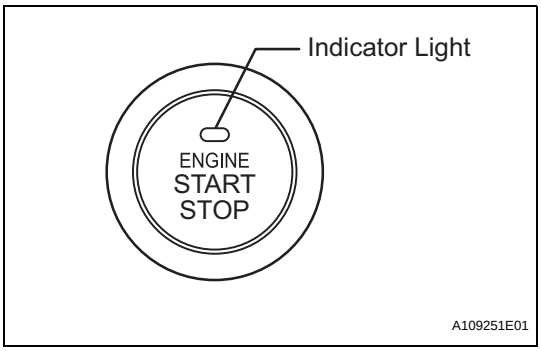

4. CONSTRUCTION AND OPERATION

(a) Engine Switch

The engine switch consists of a momentary type switch, 3 color (amber, green, greenish white) LEDs, and a transponder key amplifier.

- The greenish white LED is for illumination.
- The amber and green LEDs are for the indicator lights. The driver can check the present power source mode and whether the engine can start in accordance with the illumination state of the indicator light.
- When the main body ECU detects an abnormality in the push-button start function, it makes the amber indicator light flash. If the engine stopped in this state, it may not be possible to restart it.

(b) Indicator Light Condition

Engine switch indicator light condition:

Power Source Mode/Condition	Indicator Light Condition	
	Brake pedal released	**Brake pedal depressed, shift lever in P or N**
off	OFF	ON (Green) (When key and vehicle IDs match)
on (ACC, IG)	ON (Amber)	ON (Green)
Engine running	OFF	OFF
Steering lock not unlocked	Flashes (Green) for 15 sec.	Flashes (Green) for 15 sec.
System malfunction	Flashes (Amber) for 15 sec.	Flashes (Amber) for 15 sec.

(c) Main body ECU

The main body ECU consists of the IG1 and IG2 relay actuation circuits and CPU.

HINT:

Before removing the battery, make sure to turn the engine switch off. The main body ECU constantly stores the present power source mode in its memory. Therefore, if the main body ECU is interrupted by disconnecting the battery, the main body ECU restores the power source mode after the battery is reconnected. For this reason, if the battery is disconnected when the engine switch is not off, the power will be restored to the vehicle at the same time the power is restored to the main body ECU (by reconnecting the battery). After a new main body ECU is installed and the battery is reconnected, the power source mode will default to the engine switch on (IG) mode.

5. PUSH-BUTTON START FUNCTION OPERATION

(a) This system has different power source mode patterns depending on the brake pedal condition and shift lever position.

Brake Pedal	Shift Lever	Power Source Mode Pattern
Depressed	P or N position	When the engine switch is pushed once. • off → engine start • on (ACC) → engine start • on (IG) → engine start

Brake Pedal	Shift Lever	Power Source Mode Pattern
Not depressed	P position	Each time the engine switch is pushed. • off → on (ACC) → on (IG) → off
	Except P position	Each time the engine switch is pushed. • off → on (ACC) → on (IG) → on (ACC)
-	P position	When the engine switch is pushed with power source mode on (IG) (engine running). • on (IG) → off
-	Except P position	When the engine switch is pushed with power source mode on (IG) (engine running). • on (IG) → on (ACC)

When the battery of the key is low, the push-button start function can be operated by holding the key against the engine switch.

- After approximately 1 hour has passed with the engine switch on (ACC) and the shift position in P, the main body ECU will automatically cut the power supply (the power source mode changes to off).

- The illustration below shows the transition of power source modes.
  Transition of power source mode:

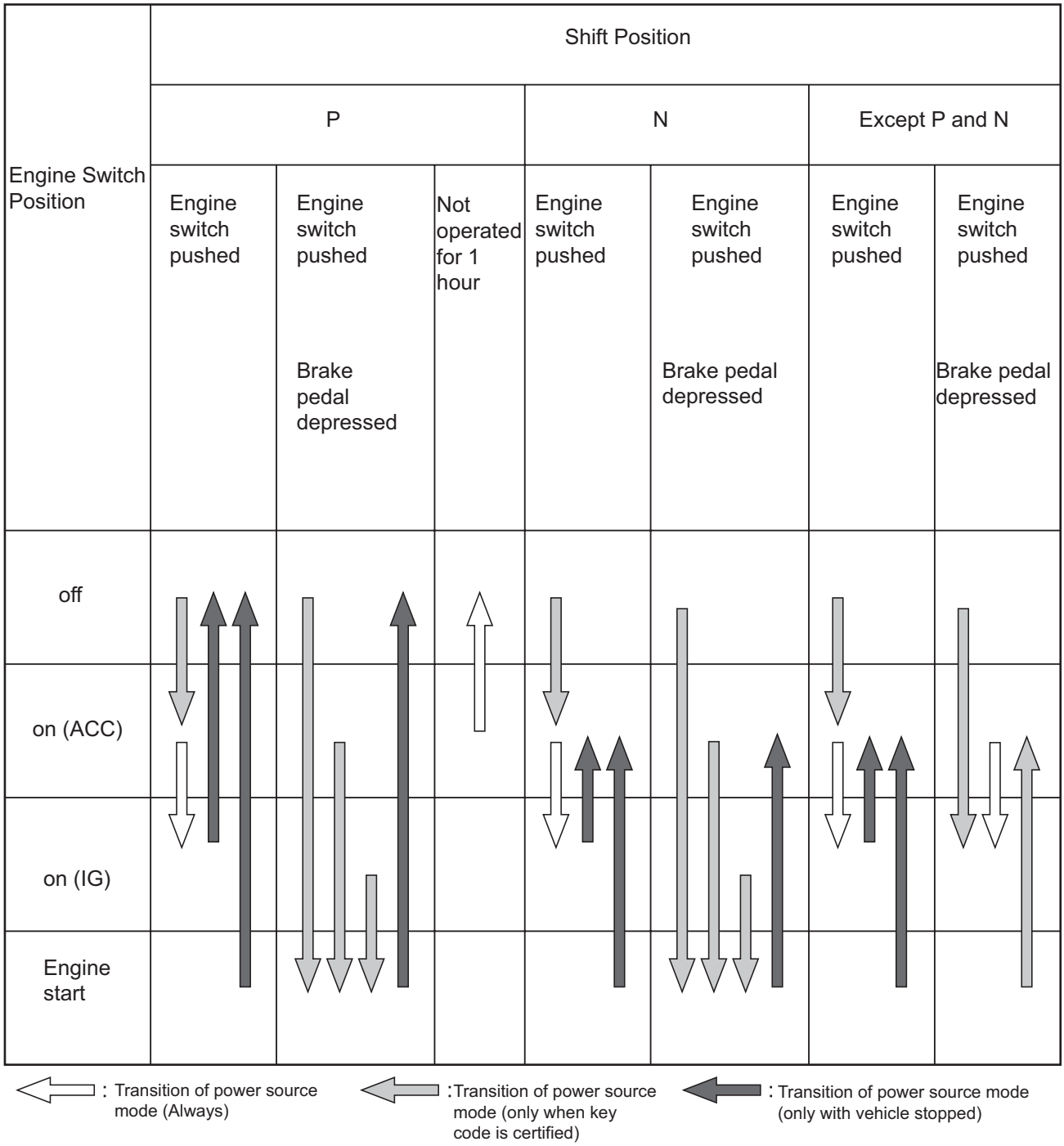

HINT:
While the vehicle is being driven normally, operation of the engine switch is disabled. However, if the engine must be stopped in an emergency while the vehicle is being driven, pressing the engine switch for 3 seconds or more stops the engine. Power source mode changes from start to on (ACC).

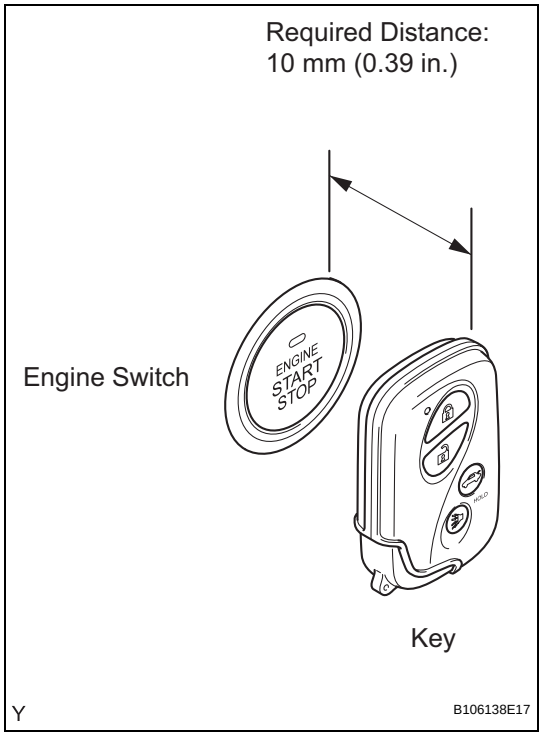

6. WHEN KEY BATTERY IS LOW

(a) To operate the push-button start function when the key battery is low, hold the key close to the engine switch with the brake pedal depressed.

(b) The main body ECU transmits a key verification request signal from the stop light switch to the certification ECU.

(c) The certification ECU does not receive an ID code response from the door control receiver, so it actuates the transponder key amplifier built into the engine switch.

(d) The transponder key amplifier outputs an engine immobiliser radio wave to the key.

(e) The key receives the radio wave, and returns a radio wave response to the transponder key amplifier.

(f) The transponder key amplifier combines the key ID codes with the radio wave response, and transmits it to the certification ECU.

(g) The certification ECU judges and verifies the ID code, and transmits a key verification OK signal to the main body ECU. The buzzer in the combination meter sounds at the same time.

(h) After the buzzer sounds, if the engine switch is pressed within 5 seconds with the brake pedal not depressed, the power source mode changes to on (ACC) or on (IG), the same as in the normal condition.

7. DIAGNOSIS

The main body ECU can detect malfunctions in the push-button start function when the power source mode is on (IG). When the ECU detects a malfunction, the amber indicator light of the engine switch flashes to warn the driver. At the same time, the ECU stores a 5-digit DTC (Diagnostic Trouble Code) in the memory.

- The indicator light warning continues for 15 seconds even after the power source mode is changed to off.
- The DTC can be read by connecting the intelligent tester to the DLC3.
- The push-button start function cannot be operated if a malfunction occurs.

HOW TO PROCEED WITH TROUBLESHOOTING

HINT:
- Use the following procedures to troubleshoot the push-button start function.
- The intelligent tester should be used in steps 4, 5 and 8.

1	VEHICLE BROUGHT TO WORKSHOP

NEXT

2	CUSTOMER PROBLEM ANALYSIS CHECK

HINT:
- In troubleshooting, confirm that the problem symptoms have been accurately identified. Preconceptions should be discarded in order to make an accurate judgment. To clearly understand what the problem symptoms are, it is extremely important to ask the customer about the problem and the conditions at the time the malfunction occurred.
- Gather as much information as possible for reference. Past problems that seem unrelated may also help in some cases.
- The following 5 items are important points in the problem analysis:

ST

What	Vehicle model, system name
When	Date, time, occurrence frequency
Where	Road conditions
Under what conditions?	Running conditions, driving conditions, weather conditions
How did it happen?	Problem symptoms

NEXT

3	INSPECT BATTERY VOLTAGE

Standard voltage:
11 to 14 V

If the voltage is below 11 V, recharge or replace the battery before proceeding.

NEXT

4	INSPECT COMMUNICATION FUNCTION OF CAN COMMUNICATION SYSTEM

(a) Use the intelligent tester to check if the CAN Communication System is functioning normally (See page CA-11).

Result

Result	Proceed to
CAN DTC is not output	A
CAN DTC is output	B

B → **GO TO CAN COMMUNICATION SYSTEM**

A

5 CHECK FOR DTC

(a) Check for DTCs and note any codes that are output (See page ST-26).
(b) Delete DTCs.
(c) Recheck for DTCs.

Result

Result	Proceed to
DTC does not reoccur	A
DTC reoccurs	B

B → **GO TO DIAGNOSTIC TROUBLE CODE CHART**

A

6 INSPECT BASIC OPERATION

ST

(a) Turn the engine switch on (START) and check that the engine starts normally. Make sure that the brake pedal is depressed and the shift position is P at this time.
(b) Check that the engine switch mode can be changed by pushing the engine switch.
HINT:
Without depressing the brake pedal, push the engine switch repeatedly. Engine switch mode should turn from off to on (ACC) to on (IG) and back to off.
With the brake pedal depressed, push the engine switch repeatedly. Engine switch mode should turn to ENGINE START from any status.
OK:
Engine can start normally.

NEXT

7 PROBLEM SYMPTOMS TABLE

Result

Result	Proceed to
Fault is not listed in the problem symptoms table	A
Fault is listed in the problem symptoms table	B

B → **Go to step 9**

A

8	**OVERALL ANALYSIS AND TROUBLESHOOTING**

(a) Terminals of ECU (See page ST-19)
(b) DATA LIST/ACTIVE TEST (See page ST-26)

NEXT

9	**REPAIR OR REPLACE**

NEXT

10	**CONFIRMATION TEST**

NEXT

END

HOW TO PROCEED WITH TROUBLESHOOTING

HINT:
- Use the following procedures to troubleshoot the push-button start function.
- The intelligent tester should be used in steps 4, 5 and 8.

1	VEHICLE BROUGHT TO WORKSHOP

NEXT

2	CUSTOMER PROBLEM ANALYSIS CHECK

HINT:
- In troubleshooting, confirm that the problem symptoms have been accurately identified. Preconceptions should be discarded in order to make an accurate judgment. To clearly understand what the problem symptoms are, it is extremely important to ask the customer about the problem and the conditions at the time the malfunction occurred.
- Gather as much information as possible for reference. Past problems that seem unrelated may also help in some cases.
- The following 5 items are important points in the problem analysis:

ST

What	Vehicle model, system name
When	Date, time, occurrence frequency
Where	Road conditions
Under what conditions?	Running conditions, driving conditions, weather conditions
How did it happen?	Problem symptoms

NEXT

3	INSPECT BATTERY VOLTAGE

Standard voltage:
11 to 14 V

If the voltage is below 11 V, recharge or replace the battery before proceeding.

NEXT

4	INSPECT COMMUNICATION FUNCTION OF CAN COMMUNICATION SYSTEM

(a) Use the intelligent tester to check if the CAN Communication System is functioning normally (See page CA-11).

Result

Result	Proceed to
CAN DTC is not output	A
CAN DTC is output	B

B → **GO TO CAN COMMUNICATION SYSTEM**

A

5 CHECK FOR DTC

(a) Check for DTCs and note any codes that are output (See page ST-26).
(b) Delete DTCs.
(c) Recheck for DTCs.

Result

Result	Proceed to
DTC does not reoccur	A
DTC reoccurs	B

B → **GO TO DIAGNOSTIC TROUBLE CODE CHART**

A

6 INSPECT BASIC OPERATION

ST

(a) Turn the engine switch on (START) and check that the engine starts normally. Make sure that the brake pedal is depressed and the shift position is P at this time.
(b) Check that the engine switch mode can be changed by pushing the engine switch.
HINT:
Without depressing the brake pedal, push the engine switch repeatedly. Engine switch mode should turn from off to on (ACC) to on (IG) and back to off.
With the brake pedal depressed, push the engine switch repeatedly. Engine switch mode should turn to ENGINE START from any status.
OK:
Engine can start normally.

NEXT

7 PROBLEM SYMPTOMS TABLE

Result

Result	Proceed to
Fault is not listed in the problem symptoms table	A
Fault is listed in the problem symptoms table	B

B → **Go to step 9**

A

8	**OVERALL ANALYSIS AND TROUBLESHOOTING**

(a) Terminals of ECU (See page ST-19)
(b) DATA LIST/ACTIVE TEST (See page ST-26)

NEXT

9	**REPAIR OR REPLACE**

NEXT

10	**CONFIRMATION TEST**

NEXT

END

PROBLEM SYMPTOMS TABLE

HINT:

- Use the table below to help determine the cause of the problem symptom. The potential causes of the symptoms are listed in order of probability in the "Suspected area" column of the table. Check each symptom by checking the suspected areas in the order they are listed. Replace parts as necessary.
- Inspect the fuses and relays related to the system before inspecting the suspected areas below.

PUSH-BUTTON START FUNCTION:

Symptom	Suspected Area	See page
Power does not turn on (neither ACC nor IG is possible).	1. AM2 Fuse	ST-118
	2. Engine Switch	-
	3. Wire Harness or Connector	-
	4. Smart Access System with Push-button Start (Entry Function)	-
	5. Main Body ECU (Instrument Panel J/B)	-
	6. Certification ECU	-
	7. ID Code Box	-
	8. Steering Lock ECU	-
Power is not turned on (only ACC is not turned on).	1. AM2 Fuse	ST-135
	2. ACC Relay	-
	3. Wire Harness or Connector	-
	4. Main Body ECU (Instrument Panel J/B)	-
Power is not turned on (only IG is not turned on).	1. AM2 Fuse	ST-126
	2. IG1 Relay	-
	3. IG2 Relay	-
	4. Wire Harness or Connector	-
	5. Main Body ECU (Instrument Panel J/B)	-
Engine does not start.	1. Smart Access System with Push-button Start (Entry Function)	ST-97
	2. Engine Switch	-
	3. Shift Lock Control ECU	-
	4. STOP Fuse	-
	5. Stop Light Switch	-
	6. Electrical Steering Lock Function	-
	7. ST Cut Relay	-
	8. Park/Neutral Position Switch	-
	9. ST Relay	-
	10. ECM	-
	11. Engine Immobiliser System	-
	12. Main Body ECU (Instrument Panel J/B)	-
	13. Wire Harness or Connector	-
Engine switch indicator light does not come on.	Engine Switch Indicator Light Circuit	ST-114

TERMINALS OF ECU

1. CHECK MAIN BODY ECU (INSTRUMENT PANEL J/B)

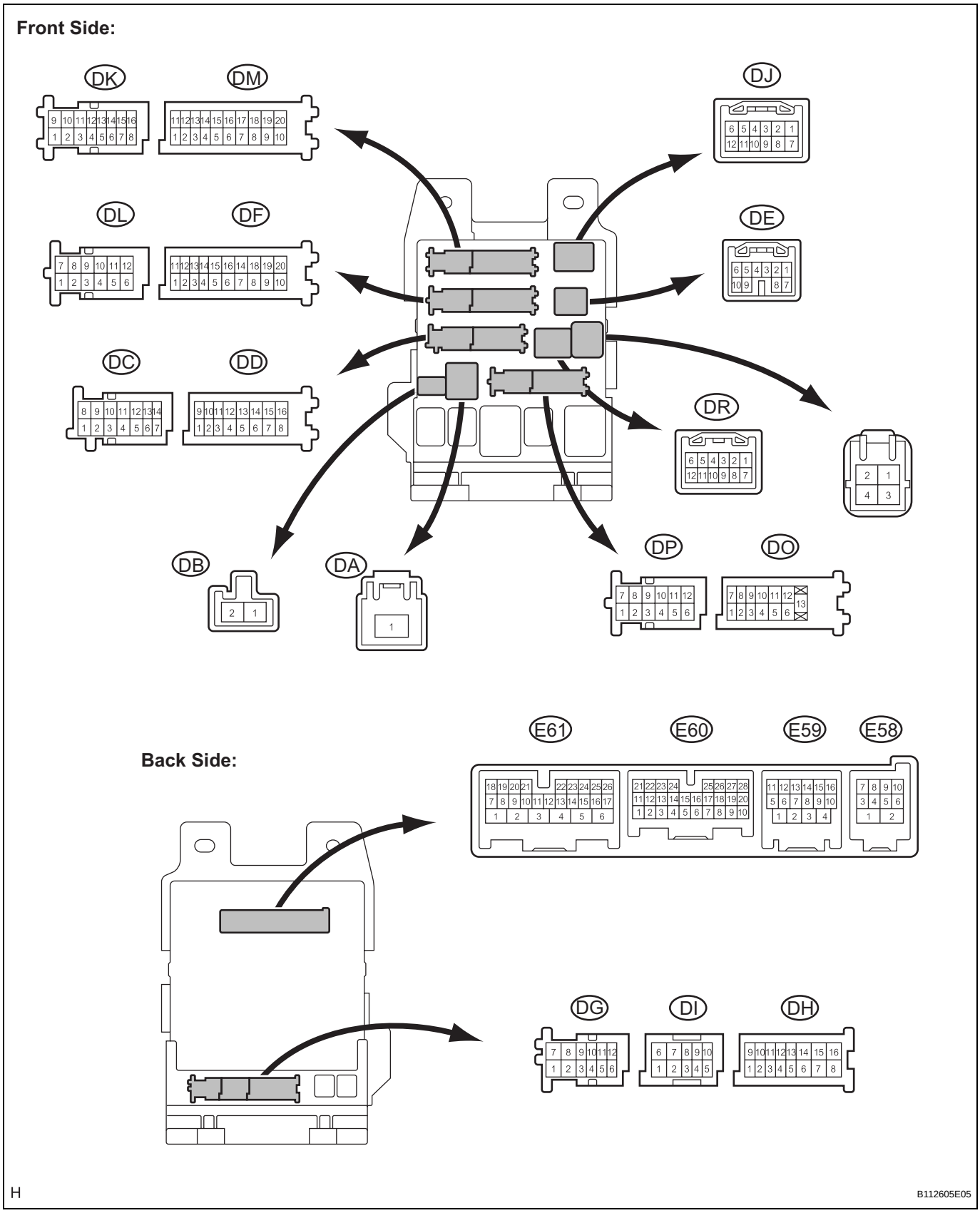

(a) Disconnect the DR, DA, DD, DF, E60, E61 and E59 ECU connectors.

(b) Measure the voltage and resistance of the wire harness side connector.

Symbols (Terminal No.)	Wiring Color	Terminal Description	Condition	Specified Condition
AM1 (E61-6) - Body ground	L - Body ground	+B power supply	Always	10 to 14 V
AM2 (E60-1) - Body ground	L - Body ground	+B power supply	Always	10 to 14 V
SSW1 (E61-17) - Body ground	L - Body ground	Engine switch signal	Engine switch pushed	Below 1 Ω
SSW1 (E61-17) - Body ground	L - Body ground	Engine switch signal	Engine switch not pushed	10 kΩ or higher
SSW2 (E61-16) - Body ground	V - Body ground	Engine switch signal	Engine switch pushed	Below 1 Ω
SSW2 (E61-16) - Body ground	V - Body ground	Engine switch signal	Engine switch not pushed	10 kΩ or higher
GND3 (E59-1) - Body ground	W-B - Body ground	Ground	Always	Below 1 Ω
LIN1 (DR-9) - Body ground	O - Body ground	LIN line	Always	10 kΩ or higher
BATB (DA-1) - Body ground	W - Body ground	+B Power supply	Always	10 to 14 V
GND1 (DF-10) - Body ground	W-B - Body ground	Ground	Always	Below 1 Ω
CANN (E59-15) - Body ground	W - Body ground	CAN Line	Always	10 kΩ or higher
CANP (E59-16) - Body ground	B - Body ground	CAN Line	Always	10 kΩ or higher
CANH (E59-5) - Body ground	BR - Body ground	CAN Line	Always	10 kΩ or higher
CANL (E59-6) - Body ground	GR - Body ground	CAN Line	Always	10 kΩ or higher
IG (DF-11) - Body ground	B - Body ground	IG power supply	Always	10 to 14 V
ALTB (DD-16) - Body ground	W - Body ground	+B Power supply	Always	10 to 14 V

If the result is not as specified, there may be a malfunction on the wire harness side.

(c) Reconnect the ECU connectors.

(d) Measure the voltage of the connector.

Symbols (Terminal No.)	Wiring Color	Terminal Description	Condition	Specified Condition
ACC (DF-2) - Body ground	L - Body ground	ACC power supply	Engine switch on (ACC)	10 to 14 V
ACCD (E61-22) - GND3 (E59-1)	R - W-B	ACC signal	Engine switch on (ACC)	Output voltage at terminal AM1 or AM2 is -2 V or more.
ACCD (E61-22) - GND3 (E59-1)	R - W-B	ACC signal	Engine switch off	Below 1 V
IG1D (E61-3) - GND3 (E59-1)	LG - W-B	IG1 signal	Engine switch on (IG)	Output voltage at terminal AM1 or AM2 is -2 V or more.
IG1D (E61-3) - GND3 (E59-1)	LG - W-B	IG1 signal	Engine switch on (ACC)	Below 1 V
IG2D (E60-11) - GND3 (E59-1)	O - W-B	IG2 signal	Engine switch on (IG)	Output voltage at terminal AM1 or AM2 is -2 V or more.
IG2D (E60-11) - GND3 (E59-1)	O - W-B	IG2 signal	Engine switch on (ACC)	Below 1 V
STP (DC-13) - GND3 (E59-1)	W - W-B	Stop light signal	Brake pedal depressed	Output voltage at terminal AM1 or AM2 is -2 V or more.
STP (DC-13) - GND3 (E59-1)	W - W-B	Stop light signal	Brake pedal released	Below 1 V
SLR+ (E61-19) - GND3 (E59-1)	BR - W-B	Steering lock motor signal	Steering lock motor operating	Below 1 V
SLR+ (E61-19) - GND3 (E59-1)	BR - W-B	Steering lock motor signal	Steering lock motor does not operate	Output voltage at terminal AM1 or AM2 is -2 V or more.
SLP (E61-18) - GND3 (E59-1)	GR - W-B	Steering lock actuator position signal	Steering lock is locked	Pulse generation (See waveform 3)
SLP (E61-18) - GND3 (E59-1)	GR - W-B	Steering lock actuator position signal	Steering lock is released	Pulse generation (See waveform 3)
SPD (E59-9) - GND3 (E59-1)	SB - W-B	Vehicle speed signal	Engine switch on (IG), rotate rear wheel slowly	Pulse generation (See waveform 1)
TACH (E59-8) - GND3 (E59-1)	B - W-B	Tachometer signal	Engine running	Pulse generation (See waveform 2)

Symbols (Terminal No.)	Wiring Color	Terminal Description	Condition	Specified Condition
P (E58-2) - GND3 (E59-1)	G - W-B	Shift lock signal	Shift lever P position	Output voltage at terminal AM1 or AM2 is -2 V or more.
P (E58-2) - GND3 (E59-1)	G - W-B	Shift lock signal	Shift lever not P position	Below 1 V
ACCR (E60-3) - GND3 (E59-1)	B - W-B	Starter assist signal	Brake pedal depressed, shift lever P position, engine switch is pushed once → on (IG)	0.1 to 0.8 V *1 → Output voltage at terminal AM1 or AM2 is -2 V or more.
STSW (E58-4) - GND3 (E59-1)	R - W-B	Starter activation request signal	Brake pedal depressed, engine switch held on (ST)	Output voltage at terminal AM1 or AM2 is -2 V or more.
STR (E61-8) - GND3 (E59-1)	G - W-B	Park/neutral position switch	Shift lever P or N position → except P or N position	Below 1 V → Pulse generation
STR2 (E58-6) - GND3 (E59-1)	V - W-B	Starter signal (Sub)	Brake pedal depressed, shift lever P or N position, engine switch on (ST)	Output voltage at terminal AM1 or AM2 is -3.5 V or more. *2
INDS (E61-15) - GND3 (E59-1)	Y - W-B	Vehicle condition signal	Brake pedal depressed, shift lever P position.	Output voltage at terminal AM1 or AM2 is -3 V or more.
INDW (E61-14) - GND3 (E59-1)	GR - W-B	Warning signal	Brake pedal depressed, shift lever P position, engine switch on (ACC, IG)	Output voltage at terminal AM1 or AM2 is -3 V or more.
SWIL (E61-25) - GND3 (E59-1)	R - W-B	Illumination signal	Light control switch TAIL or HEAD	Output voltage at terminal AM1 or AM2 is -2 V or more.

HINT:

*1: Voltage is output only when the engine is cranking.

*2: Voltage is output for 0.3 seconds when the engine is cranking to start. Disconnect the B12 connector from the ECM before measuring the voltage.
If the result is not as specified, the ECU may have a malfunction.

ST

(e) Using an oscilloscope, check the signal waveform of the ECU.

(1) Waveform 1

Waveform 1 (Reference):

Terminal No.	SPD (E59-9) - GND3 (E59-1)
Tool Setting	5 V/DIV., 10 ms./DIV.
Vehicle Condition	Driving at approx. 20 km/h (12 mph)

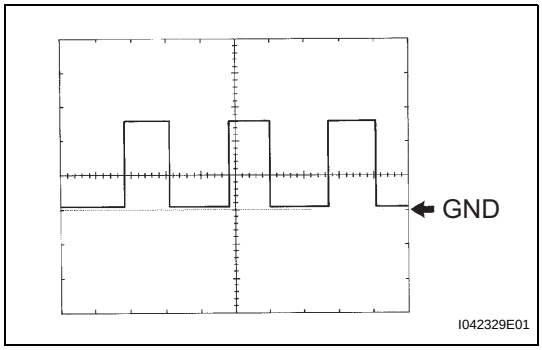

HINT:
As the vehicle speed increases, the wavelength shortens.

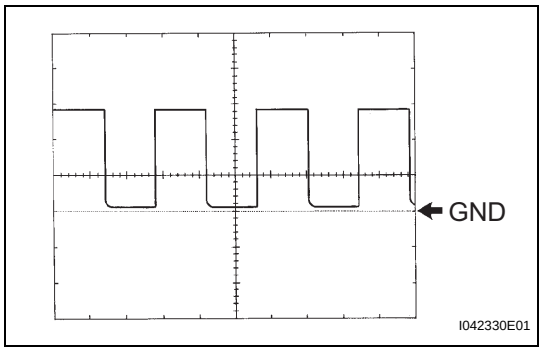

(2) Waveform 2

Waveform 2 (Reference):

Terminal No.	TACH (E59-8) - GND3 (E59-1)
Tool Setting	5 V/DIV., 10 ms./DIV.
Vehicle Condition	Engine idling

HINT:
As the engine revolution speed increases, the wavelength shortens.

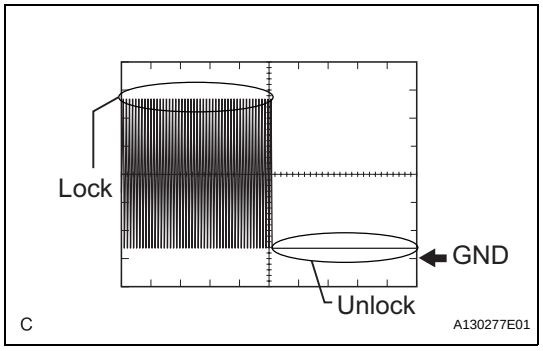

(3) Waveform 3

Waveform 3 (Reference):

Terminal No.	SLP (E61-18) - GND3 (E59-1)
Tool Setting	2 V/DIV., 100 ms./DIV.
Vehicle Condition	Steering lock/unlock

2. CHECK CERTIFICATION ECU

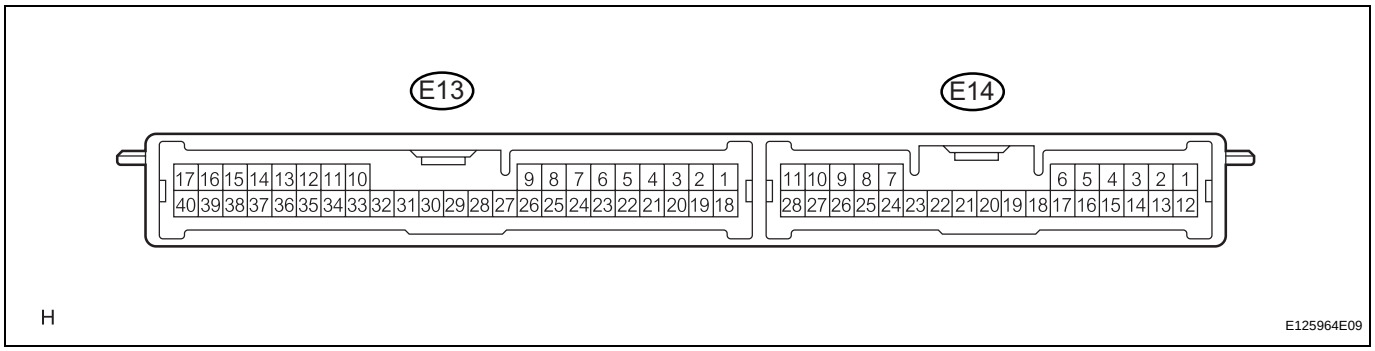

(a) Disconnect the E13 ECU connector.
(b) Measure the voltage and resistance of the wire harness side connector.

Symbols (Terminal No.)	Wiring Color	Terminal Description	Condition	Specified Condition
+B1 (E13-1) - Body ground	W - Body ground	+B power supply	Always	10 to 14 V
LIN (E13-10) - Body ground	O - Body ground	LIN line	Always	10 kΩ or higher
E (E13-17) - Body ground	W-B - Body ground	Ground	Always	Below 1 Ω

If the result is not as specified, there may be a malfunction on the wire harness side.

(c) Reconnect the E13 ECU connector.
(d) Measure the voltage of the connector.

Symbols (Terminal No.)	Wiring Color	Terminal Description	Condition	Specified Condition
IG (E13-18) - Body ground	LG - Body ground	Ignition power supply	Engine switch on (IG)	10 to 14 V
IG (E13-18) - Body ground	LG - Body ground	Ignition power supply	Engine switch off	Below 1 V

If the result is not as specified, the ECU may have a malfunction.

3. CHECK ECM

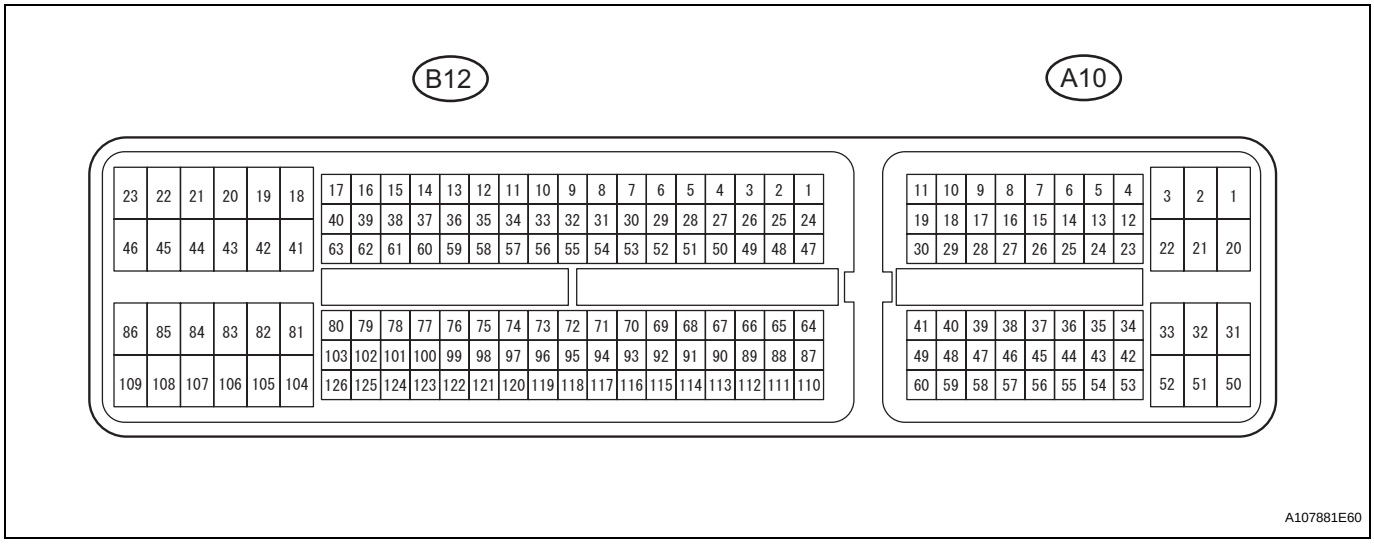

(a) Disconnect the B12 and A10 ECM connectors.
(b) Measure the voltage and resistance of the wire harness side connectors.

Symbols (Terminal No.)	Wiring Color	Terminal Description	Condition	Specified Condition
+B (A10-2) - Body ground	R - Body ground	Power source of ECM	Engine switch on (IG)	10 to 14 V
+B2 (A10-1) - Body ground	R - Body ground	Power source of ECM	Engine switch on (IG)	10 to 14 V
IGSW (A10-28) - Body ground	Y - Body ground	Ignition switch signal	Engine switch on (IG)	10 to 14 V
E01 (B12-22) - Body ground	W-B - Body ground	Ground	Always	Below 1 Ω
E02 (B12-21) - Body ground	B-W - Body ground	Ground	Always	Below 1 Ω
E03 (B12-104) - Body ground	B - Body ground	Ground	Always	Below 1 Ω
E04 (B12-23) - Body ground	W - Body ground	Ground	Always	Below 1 Ω
E05 (B12-46) - Body ground	W - Body ground	Ground	Always	Below 1 Ω
E1 (B12-81) - Body ground	W-B - Body ground	Ground	Always	Below 1 Ω
ME01 (B12-20) - Body ground	B - Body ground	Ground	Always	Below 1 Ω

If the result is not as specified, there may be a malfunction on the wire harness side.
(c) Reconnect the ECM connectors.
(d) Measure the voltage of the connectors.

Symbols (Terminal No.)	Wiring Color	Terminal Description	Condition	Specified Condition
STA (A10-48) - E1 (B12-81)	V - W-B	Starter relay operation signal	Cranking	10 to 14 V
ACCR (A10-13) - E1 (B12-81)	B - W-B	ACC relay cut signal (output)	Brake pedal depressed, shift lever P position, engine switch is pushed once → on (IG)	0.1 to 0.8 V *1 → Output voltage at terminal AM1 or AM2 is -2 V or more.
TACH (A10-15) - E1 (B12-81)	B - W-B	Engine revolution signal (output)	Idling	Pulse generation (see waveform 1)
STP (A10-36) - E1 (B12-81)	W - W-B	Stop light switch signal (input)	Brake pedal depressed	7.5 to 14 V
STP (A10-36) - E1 (B12-81)	W - W-B	Stop light switch signal (input)	Brake pedal released	Below 1.5 V
STAR (B12-63) - E1 (B12-81)	R - W-B	Starter signal (Main)	Brake pedal depressed, shift lever P or N position, engine switch on (ST)	10 to 14 V
NSW (B12-62) - E1 (B12-81)	L-B - W-B	Park / neutral position switch	Shift lever P or N position → except P or N position	Below 1 V → Pulse generation

ST

Symbols (Terminal No.)	Wiring Color	Terminal Description	Condition	Specified Condition
STSW (A10-14) - E1 (B12-81)	R - W-B	Starter activation request signal	Brake pedal depressed, engine switch held on (ST)	Output voltage at terminal AM1 or AM2 is - 2 V or more.

HINT:
*1: Voltage is output only when the engine is cranking.
If the result is not as specified, the ECM may have a malfunction.

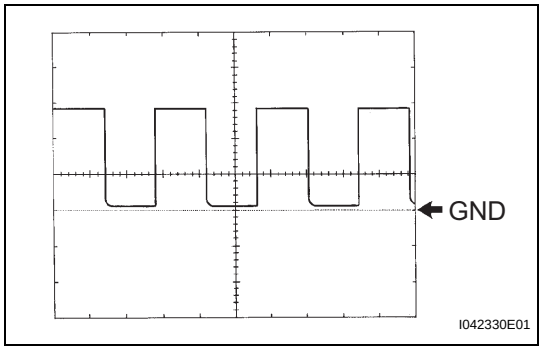

(e) Using an oscilloscope, check the signal waveform of the ECM.
Waveform 1 (Reference):

Terminal No.	TACH (A10-15) - E1 (B12-81)
Tool Setting	5 V/DIV., 10 ms./DIV.
Vehicle Condition	Engine idling

HINT:
As the vehicle speed increases, the wavelength shortens.

4. CHECK STEERING LOCK ECU

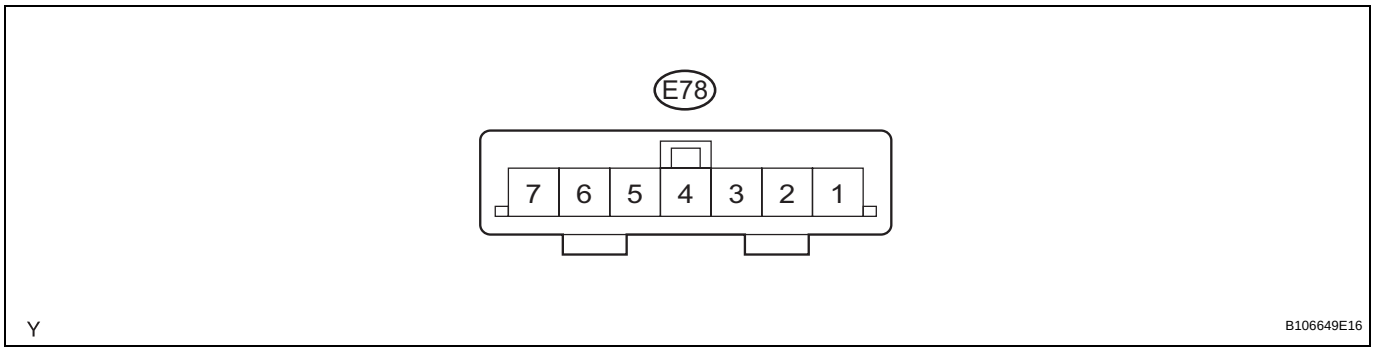

(a) Disconnect the E78 ECU connector.
(b) Measure the voltage and resistance of the wire harness side connector.

Symbols (Terminal No.)	Wiring Color	Terminal Description	Condition	Specified Condition
B (E78-7) - Body ground	B - Body ground	+B power supply	Always	10 to 14 V
IG2 (E78-6) - Body ground	B - Body ground	Ignition power supply	Engine switch on (IG)	10 to 14 V
IG2 (E78-6) - Body ground	B - Body ground	Ignition power supply	Engine switch off	Below 1 V
GND (E78-1) - Body ground	W-B - Body ground	Ground	Always	Below 1 Ω
SGND (E78-2) - Body ground	W-B - Body ground	Ground	Always	Below 1 Ω

If the result is not as specified, there may be a malfunction on the wire harness side.
(c) Reconnect the E78 ECU connector.
(d) Measure the voltage of the connector.

Symbols (Terminal No.)	Wiring Color	Terminal Description	Condition	Specified Condition
SLP1 (E78-4) - GND (E78-1)	GR - W-B	Steering lock actuator position signal	Steering is locked	10 to 14 V
SLP1 (E78-4) - GND (E78-1)	GR - W-B	Steering lock actuator position signal	Steering is released	Below 1 V

If the result is not as specified, the ECU may have a malfunction.

DIAGNOSIS SYSTEM

1. DESCRIPTION

(a) Push-button start function data and the Diagnostic Trouble Codes (DTCs) can be read through the Data Link Connector 3 (DLC3) of the vehicle. When the function seems to be malfunctioning, use the intelligent tester to check for malfunctions and perform repairs.

2. CHECK DLC3

HINT:
The ECU uses ISO 15765-4 communication protocol. The terminal arrangement of the DLC3 complies with SAE J1962 and matches the ISO 15765-4 format.

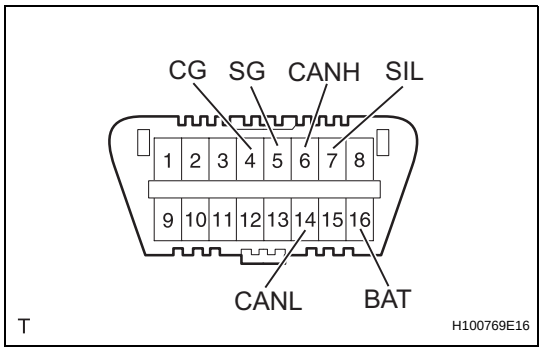

Symbols (Terminal No.)	Terminal Description	Condition	Specified Condition
CG (4) - Body ground	Chassis ground	Always	Below 1 Ω
SG (5) - Body ground	Signal ground	Always	Below 1 Ω
SIL (7) - SG (5)	Bus "+" line	During transmission	Pulse generation
BAT (16) - Body ground	Battery positive	Always	10 to 14 V
CANH (6) - CANL (14)	CAN bus line	Engine Switch OFF*	56 to 69 Ω
CANH (6) - CG (4)	HIGH-level CAN bus line	Engine Switch OFF*	200 Ω or more
CANL (14) - CG (4)	LOW-level CAN bus line	Engine Switch OFF*	200 Ω or more
CANH (6) - BAT (16)	HIGH-level CAN bus line	Engine Switch OFF*	6 kΩ or more
CANL (14) - BAT (16)	LOW-level CAN bus line	Engine Switch OFF*	6 kΩ or more

NOTICE:
***: Before measuring the resistance, leave the vehicle as is for at least 1 minute and do not operate the engine switch, any other switches or the doors.**
If the result is not as specified, the DLC3 may have a malfunction. Repair or replace the harness and connector.

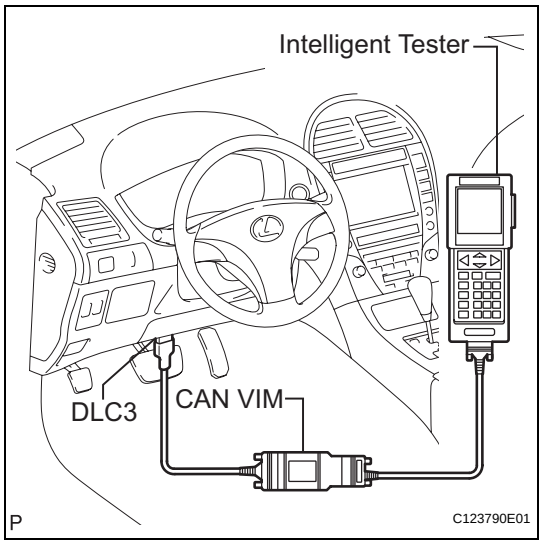

HINT:
Connect the cable of the intelligent tester to the DLC3, turn the engine switch on (IG) and attempt to use the tester. If the display indicates that a communication error has occurred, there is a problem either with the vehicle or with the tester.

- If communication is normal when the tester is connected to another vehicle, inspect the DLC3 of the original vehicle.
- If communication is still not possible when the tester is connected to another vehicle, the problem may be in the tester itself. Consult the Service Department listed in the tester's instruction manual.

3. INSPECT BATTERY VOLTAGE

Standard voltage:

11 to 14 V

If the voltage is below 11 V, recharge or replace the battery before proceeding.

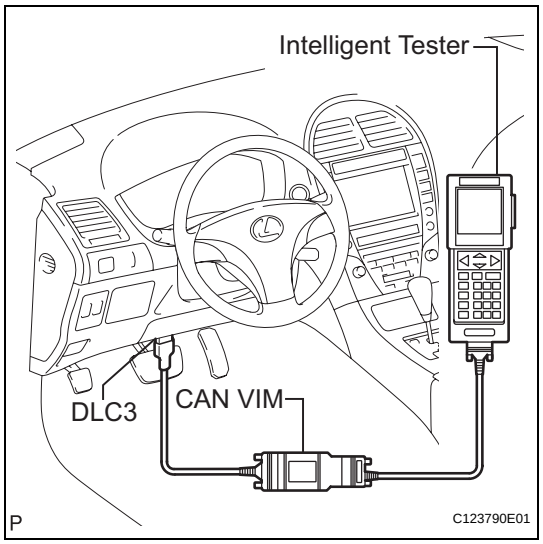

DTC CHECK / CLEAR

1. CHECK DTC

(a) Connect the intelligent tester to the DLC3.
(b) Turn the engine switch on (IG).
(c) Enter the following menu items: DIAGNOSIS / OBD/ MOBD / DTC INFO / CURRENT CODES.
(d) Read the DTC by following the prompts on the tester screen.
HINT:
Refer to the intelligent tester operator's manual for further details.

2. CLEAR DTC

(a) Connect the intelligent tester to the DLC3.
(b) Turn the engine switch on (IG).
(c) Enter the following menu items: DIAGNOSIS / OBD/ MOBD / DTC INFO / CLEAR CODES.
(d) Erase the DTC by following the directions on the tester screen.
HINT:
Refer to the intelligent tester operator's manual for further details.

DATA LIST / ACTIVE TEST

1. READ DATA LIST

HINT:
Using the intelligent tester to read the Data List allows the values or states of switches, sensors, actuators and other items to be read without removing any parts. This non-intrusive inspection can be very useful as intermittent conditions or signals may be discovered before parts or wiring is disturbed. Reading the DATA LIST information early in troubleshooting is one way to save diagnostic time.

(a) Connect the intelligent tester (with CAN VIM) to the DLC3.
When using the intelligent tester with the engine switch off, turn on and off any of the door courtesy light switches repeatedly at 1.5 or less second intervals until communication between the tester and vehicle starts.

(b) Turn the engine switch on (IG).

(c) Enter the following menus: DIAGNOSIS / OBD/ MOBD / DATA LIST.

(d) Read the DATA LIST.

MAIN BODY:

Tester Display	Measurement Item/Range	Normal Condition	Diagnostic Note
ACC SW	Engine switch on (ACC) / ON or OFF	ON: Engine switch on (ACC) OFF: Engine switch off	-
IG SW	Engine switch on (IG) / ON or OFF	ON: Engine switch on (IG) OFF: Engine switch off	-
SHIFT P SIG	Shift P position signal / ON or OFF	ON: Shift position is P OFF: Shift position is not P	-
STR UNLOCK SW	Steering lock condition / ON or OFF	ON: Steering is unlocked (Engine switch on (ACC)) OFF: Steering is locked (Engine switch off)	-
STOP LIGHT SW	Stop light switch / ON or OFF	ON: Brake pedal depressed OFF: Brake pedal released	-
STSW1	Start switch 1 / ON or OFF	ON: Engine switch is pushed OFF: Engine switch is not pushed	-
STSW2	Start switch 2 / ON or OFF	ON: Engine switch is pushed OFF: Engine switch is not pushed	-
N SW / C SW	Neutral start switch / ON or OFF	ON: Shift position is P or N OFF: Shift position is neither P nor N	-
LATCH CIRCUIT	Latch circuit / ON or OFF	ON: Engine switch on (IG) or engine running OFF: Engine switch off or on (ACC)	-
IG1 RELAY MON1	IG1 outer relay monitor / ON or OFF	ON: Engine switch on (IG) OFF: Engine switch off	-
IG1 RELAY MON2	IG1 inner relay monitor / ON or OFF	ON: Engine switch on (IG) OFF: Engine switch off	-
IG2 RELAY MON1	IG2 outer relay monitor / ON or OFF	ON: Engine switch on (IG) OFF: Engine switch off	-
IG2 RELAY MON2	IG2 inner relay monitor / ON or OFF	ON: Engine switch on (IG) OFF: Engine switch off	-
ST REQUEST SIG	Starter request signal monitor / ON or OFF	ON: ST relay is ON OFF: ST relay is OFF	Engine switch pressed and held with shift lever in P or N

Tester Display	Measurement Item/Range	Normal Condition	Diagnostic Note
ACC RELAY MON	ACC relay monitor / ON or OFF	ON: Engine switch on (ACC) OFF: Engine switch off	-
ACC CUT SIG	ACC relay cut signal / ON or OFF	ON: Engine is cranking OFF: Engine is not cranking	-
E/G COND	Engine condition / STOP or RUN	STOP: Engine is stopped RUN: Engine is running	-
VEHICLE SPD SIG	Vehicle speed signal / STOP or RUN	STOP: Vehicle is stopped RUN: Vehicle is running	-
PWR COND	Power supply condition / ALL, ACC ON, IG1 IG2, ST ON	ALL: All relays are OFF ACC ON: ACC relay is ON IG1: IG1 relay is ON IG2: IG2 relay is ON ST ON: ST request signal is ON	-
COM ENTRY&STRT	Communication for certification ECU / OK or STOP	OK: Communication STOP: No communication	-

2. PERFORM ACTIVE TEST

HINT:

Performing the intelligent tester's ACTIVE TEST allows the relay, VSV, actuator and other items to be operated without removing any parts. Performing the ACTIVE TEST early in troubleshooting is one way to save time. The DATA LIST can be displayed during the ACTIVE TEST.

(a) Connect the intelligent tester to the DLC3.
(b) Turn the engine switch on (IG).
(c) Enter the following menus: DIAGNOSIS / ENHANCED OBD II / ACTIVE TEST.
(d) Perform the ACTIVE TEST according to the display on the tester.

ST

MAIN BODY:

Tester Display	Test Part	Control Range	Diagnostic Note
LIGHTING IND	Indicator for lighting	ON / OFF	-
IND CONDITION	Engine switch indicator	Green / Amber / No Sig	-
STR LOCK PWR	Power supply for steering lock ECU	ON / OFF	-

DIAGNOSTIC TROUBLE CODE CHART

PUSH-BUTTON START FUNCTION:

DTC Code	Detection Item	Trouble Area	See page
B2271	Ignition Hold Monitor Malfunction	1. AM2 fuse 2. Main body ECU (Instrument panel J/B) 3. Wire harness or connector	ST-31
B2272	Ignition 1 Monitor Malfunction	1. IG1 relay 2. Main body ECU (Instrument panel J/B) 3. Wire harness or connector	ST-34
B2273	Ignition 2 Monitor Malfunction	1. IG2 relay 2. Main body ECU (Instrument panel J/B) 3. Wire harness or connector	ST-39
B2274	ACC Monitor Malfunction	1. Main body ECU (Instrument panel J/B) 2. ACC relay 3. Wire harness or connector	ST-43
B2275	STSW Monitor Malfunction	1. ECM 2. Main body ECU (Instrument panel J/B) 3. Wire harness or connector	ST-48
B2276	ACCR Signal Circuit Malfunction	1. Main body ECU (Instrument panel J/B) 2. ECM 3. Wire harness or connector	ST-51
B2277	Detecting Vehicle Submersion	Main body ECU (Instrument panel J/B)	ST-54
B2278	Engine Switch Circuit Malfunction	1. Engine switch 2. Main body ECU (Instrument panel J/B) 3. Wire harness or connector	ST-55
B2281	"P" Signal Malfunction	1. Main body ECU (Instrument panel J/B) 2. Shift lock control ECU 3. Wire harness or connector	ST-60
B2282	Vehicle Speed Signal Malfunction	1. CAN communication system 2. Combination meter system 3. Main body ECU (Instrument panel J/B) 4. Wire harness or connector	ST-63
B2283	Vehicle Speed Sensor Malfunction	1. DTC B2282 detection area 2. Combination meter 3. Speed sensor 4. Skid control ECU 5. Main body ECU (Instrument panel J/B) 6. Wire harness or connector	ST-69
B2284	Brake Signal Malfunction	1. Stop light switch 2. CAN communication system 3. ECM 4. Main body ECU (Instrument panel J/B) 5. Wire harness or connector	ST-74
B2285	Steering Lock Position Signal Circuit Malfunction	1. Main body ECU (Instrument panel J/B) 2. Steering lock ECU 3. Wire harness or connector	ST-79
B2286	Runnable Signal Malfunction	1. CAN communication system 2. ECM 3. Main body ECU (Instrument panel J/B) 4. Wire harness or connector	ST-83
B2287	LIN Communication Master Malfunction	1. Main body ECU (Instrument panel J/B) 2. Certification ECU 3. Wire harness or connector	ST-87
B2288	Steering Lock Signal Circuit Malfunction	1. Main body ECU (Instrument panel J/B) 2. Steering lock ECU 3. Wire harness or connector	ST-90
B2289	Key Collation Waiting Time Over	1. Main body ECU (Instrument panel J/B) 2. Engine immobiliser system 3. Wire harness or connector 4. Certification ECU	ST-93

ON-VEHICLE INSPECTION

1. CHECK POWER SOURCE MODE CHANGE FUNCTION

(a) Check the function of the engine switch.

(1) Check that power source mode changes in accordance with the conditions of the shift position and brake pedal.

Brake Pedal	Shift Lever	Power Source Mode Pattern
Depressed	P or N Position	When the engine switch is pushed once. • off → engine start • on (ACC) → engine start • on (IG) → engine start
Not depressed	P position	Each time the engine switch is pushed. • off → on (ACC) → on (IG) → off
	Except P Position	Each time the engine switch is pushed. • off → on (ACC) → on (IG) → on (ACC)
-	P Position	When the engine switch is pushed with power source mode on (IG) (engine running). • on (IG) → off
-	Except P Position	When the engine switch is pushed with power source mode on (IG) (engine running). • on (IG) → on (ACC)

(b) Check if power source mode changes without pressing the engine switch.

(1) With power source mode on (ACC) and the shift position in P, wait for at least 1 hour. Check that power source mode changes from on (ACC) to off automatically.

2. CHECK INDICATOR CONDITION

(a) Check the indicator on the engine switch.

(1) Check that the engine switch indicator turns on and changes color according to the table below.

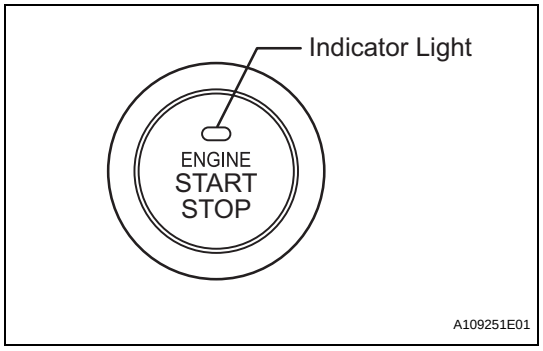

Power Source Mode/Condition	Indicator Light Condition	
	Brake pedal released	Brake pedal depressed, shift lever in P or N
off	OFF	ON (Green) (When key and vehicle IDs match)
on (ACC, IG)	ON (Amber)	ON (Green)
Engine running	OFF	OFF
Steering lock not unlocked	Flashes (Green) for 15 sec.	Flashes (Green) for 15 sec.
System malfunction	Flashes (Amber) for 15 sec.	Flashes (Amber) for 15 sec.

DTC	B2271	Ignition Hold Monitor Malfunction

DESCRIPTION

This DTC is output when a problem such as an open in the AM2 fuse, an open or short in the wire harness between the fuse and main body ECU, a short in the IG output circuit inside the main body ECU, a short between the main body ECU and relay, and a short in the relay is detected.
HINT:
When the main body ECU is replaced with a new one and the negative (-) battery terminal is connected, the power source mode becomes the IG-ON mode. When the battery is removed and reinstalled, the power source mode that was selected when the battery was removed is restored.
After the main body ECU is replaced, perform the registration procedures for the engine immobiliser system (See page EI-9).

DTC No.	DTC Detection Condition	Trouble Area
B2271	Hold circuit, IG1 relay actuation circuit or IG2 relay actuation circuit inside main body ECU is open or shorted	• AM2 fuse • Main body ECU • Wire harness or connector

WIRING DIAGRAM

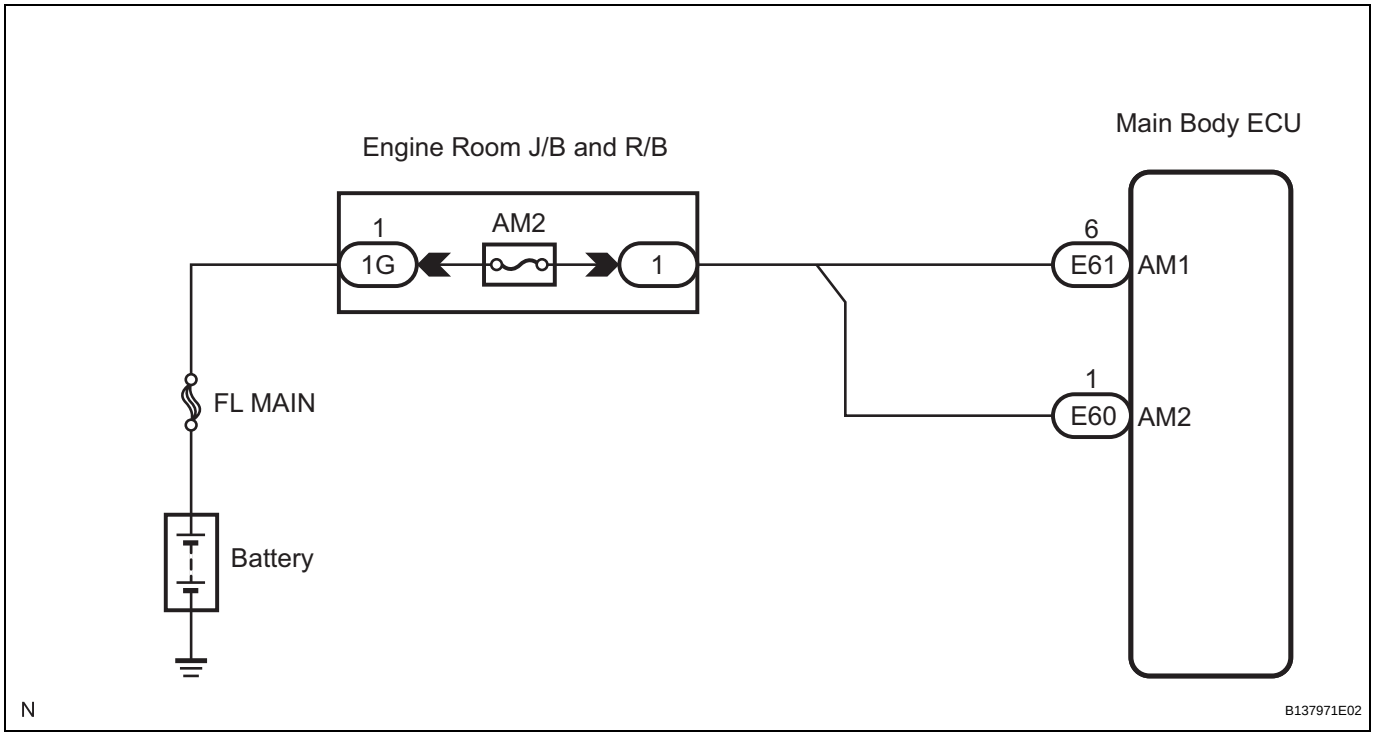

INSPECTION PROCEDURE

1	CHECK DTC OUTPUT

(a) Delete the DTCs (See page ST-26).
HINT:
After all DTCs are cleared, check if the trouble occurs again 6 seconds after the engine switch is turned on (IG).
(b) Check for DTCs again.

OK:
No DTC is output.

NG → **Go to step 2**

OK

CHECK INTERMITTENT PROBLEMS

2 INSPECT FUSE (AM2)

(a) Remove the AM2 fuse from the engine room J/B.
(b) Measure the resistance of the fuse.
Standard resistance:
Below 1 Ω

NG → **REPLACE FUSE**

OK

3 CHECK WIRE HARNESS (MAIN BODY ECU - BATTERY)

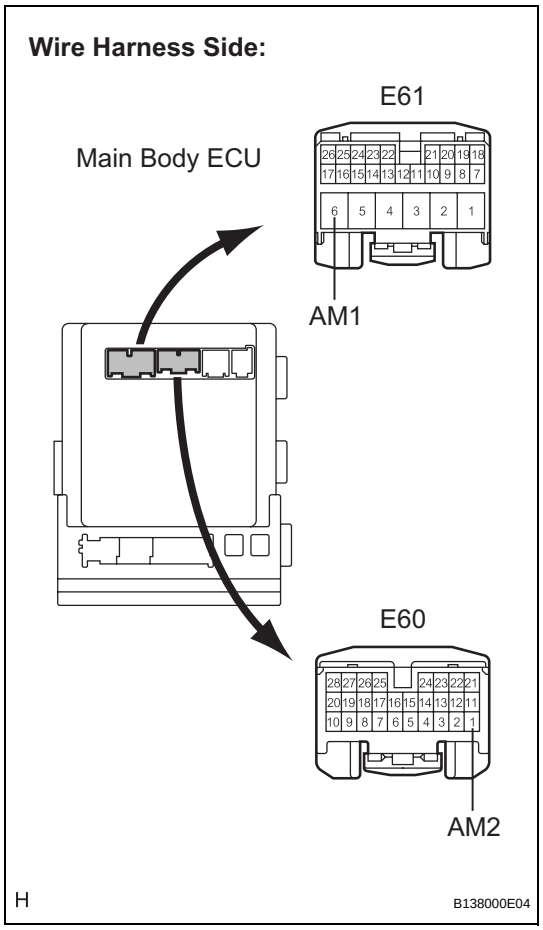

(a) Disconnect the E60 and E61 ECU connectors.
(b) Measure the voltage according to the value(s) in the table below.
Standard voltage

Terminal No. (Symbol)	Condition	Specified Condition
E61-6 (AM1) - Body ground	Always	10 to 14 V
E60-1 (AM2) - Body ground	Always	10 to 14 V

NG → **REPAIR OR REPLACE HARNESS OR CONNECTOR**

ST

OK

REPLACE MAIN BODY ECU

DTC	B2272	Ignition 1 Monitor Malfunction

DESCRIPTION

This DTC is output when there is a problem in the IG1D output circuit, which is from the inside of the main body ECU to the IG1 relay.
HINT:
When the main body ECU is replaced with a new one and the negative (-) battery terminal is connected, the power source mode becomes the IG-ON mode. When the battery is removed and reinstalled, the power source mode that was selected when the battery was removed is restored.
After the main body ECU is replaced, perform the registration procedures for the engine immobiliser system (See page EI-9).

DTC No.	DTC Detection Condition	Trouble Area
B2272	IG1 relay actuation circuit inside main body ECU or other related circuit is malfunctioning	• Main body ECU • IG1 relay • Wire harness or connector

WIRING DIAGRAM

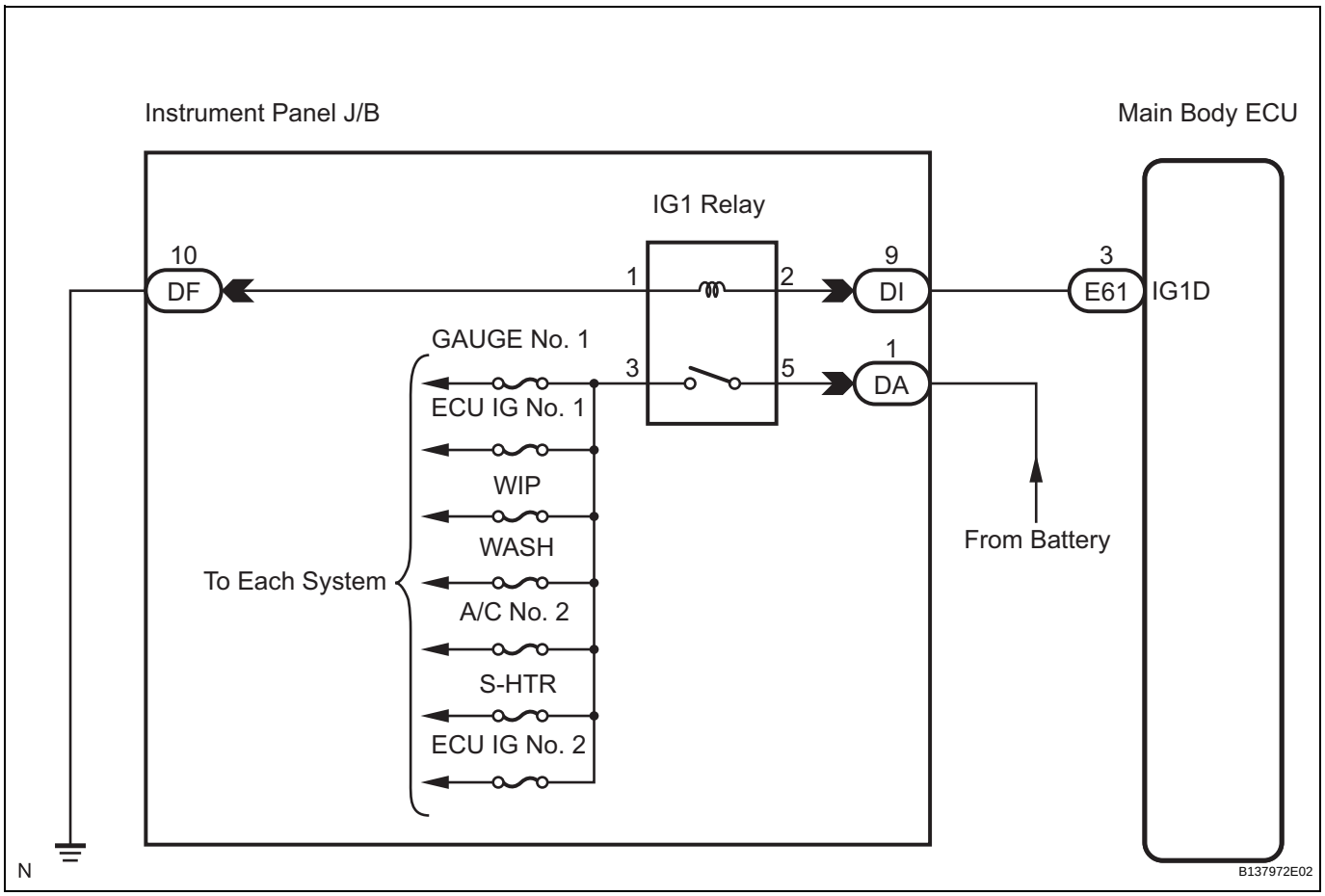

ST

INSPECTION PROCEDURE

1	READ VALUE OF INTELLIGENT TESTER

(a) Connect the intelligent tester to the DLC3.

(b) Turn the engine switch on (IG) and turn the intelligent tester main switch on.

(c) Select the item below in the Data List, and read the display on the tester.

HINT:

When using the intelligent tester with the engine switch off, turn on and off any of the door courtesy light switches repeatedly at 1.5 second intervals or less until communication between the tester and vehicle starts.

MAIN BODY:

Item	Measurement Item / Display (Range)	Normal Condition	Diagnostic Note
IG1 RELAY MON1	Status of IG1 relay monitor (outer) / ON or OFF	ON: Engine switch on (IG) (IG1 relay is ON) OFF: Engine switch off (IG1 relay is OFF)	-

ON:

"ON" (engine switch on (IG)) appears on the screen.

NG → **Go to step 3**

OK

2 CHECK ENGINE SWITCH CONDITION

(a) Check the power source mode change.

(1) When the key is inside the vehicle and the shift lever is in the P position, check that pressing the engine switch causes the power source mode to change as follows:

OK:

off → on (ACC) → on (IG) → off

HINT:

- If power mode does not change to ON (IG and ACC), (See page ST-118).
- If power mode does not change to ON (IG), (See page ST-126).

NG → **GO TO OTHER PROBLEM**

OK

ST

3 INSPECT RELAY (IG1 RELAY)

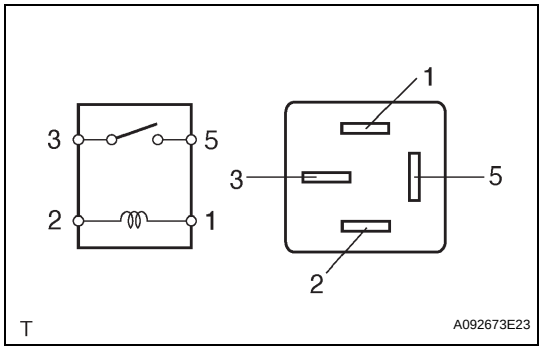

(a) Remove the IG1 relay from the instrument panel J/B.
(b) Measure the resistance according to the value(s) in the table below.

Standard resistance

Tester Connection	Specified Condition
3 - 5	10 kΩ or higher
3 - 5	Below 1 Ω (when battery voltage is applied to terminals 1 and 2)

NG → **REPLACE RELAY**

OK

4 CHECK WIRE HARNESS (INSTRUMENT PANEL J/B - MAIN BODY ECU)

(a) Disconnect the DI J/B connector.

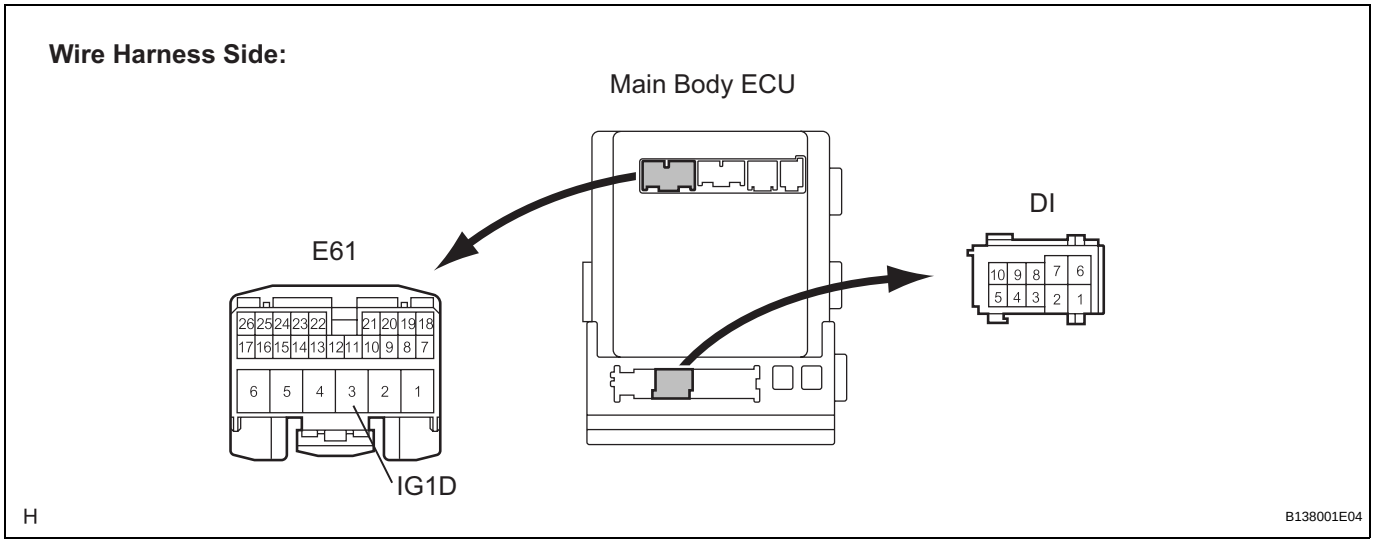

(b) Disconnect the E61 ECU connector.
(c) Measure the resistance according to the value(s) in the table below.

Standard resistance

Terminal No. (Symbol)	Condition	Specified Condition
DI-9 - E61-3 (IG1D)	Always	Below 1 Ω
E61-3 (IG1D) - Body ground	Always	10 kΩ or higher

NG → **REPAIR OR REPLACE HARNESS OR CONNECTOR**

OK

ST

5 CHECK WIRE HARNESS (INSTRUMENT PANEL J/B - BATTERY AND BODY GROUND)

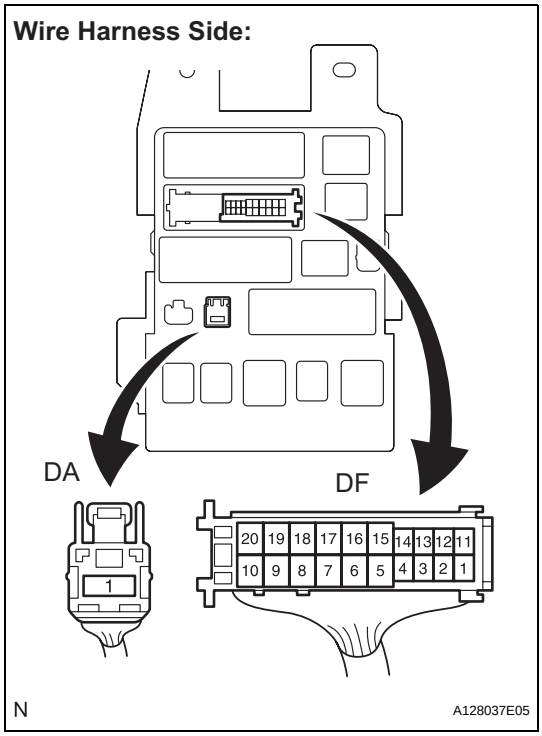

(a) Disconnect the DF and DA J/B connectors.

(b) Measure the resistance according to the value(s) in the table below.

Standard resistance

Terminal No.	Condition	Specified value
DF-10 - Body ground	Always	Below 1 Ω

(c) Measure the voltage according to the value(s) in the table below.

Standard voltage

Terminal No.	Condition	Specified value
DA-1 - Body ground	Always	10 to 14 V

NG → **REPAIR OR REPLACE HARNESS OR CONNECTOR**

OK

ST

6 INSPECT INSTRUMENT PANEL J/B

(a) Measure the resistance according to the value(s) in the table below.

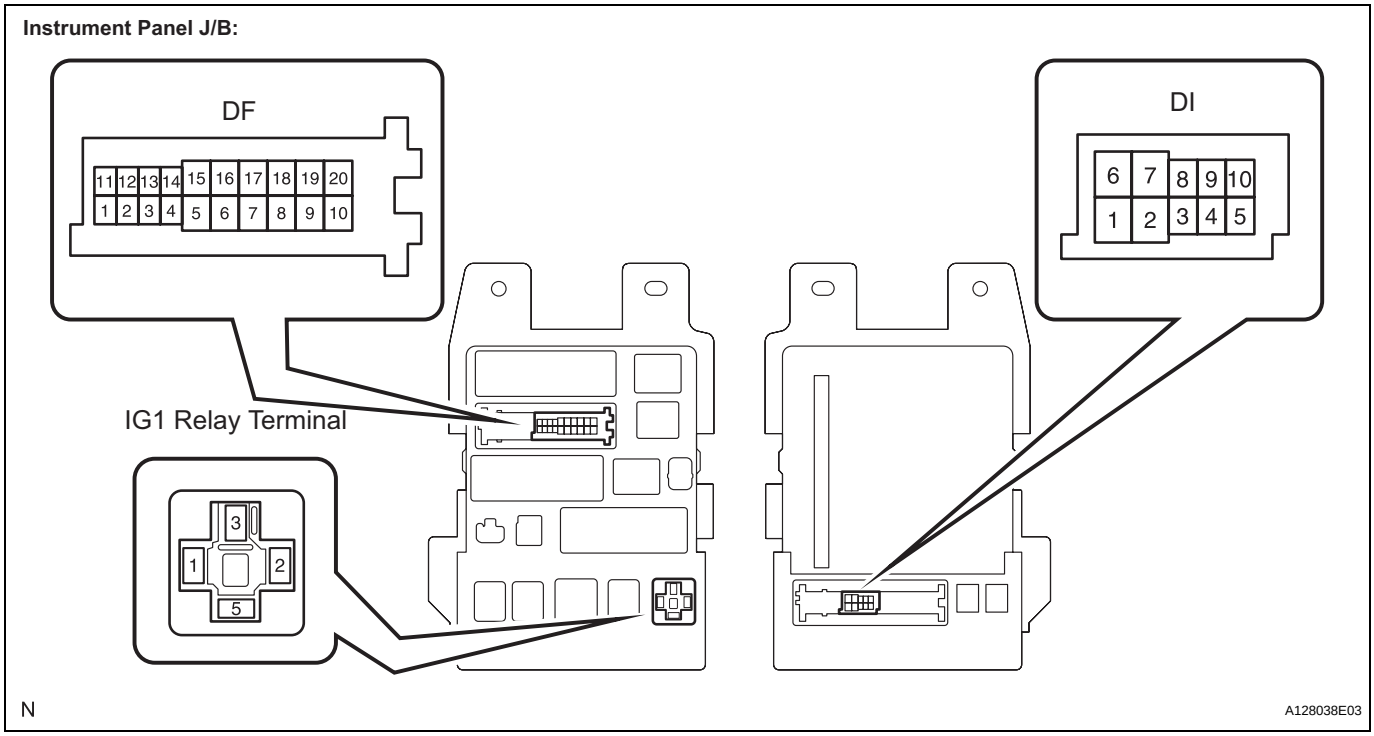

Standard resistance

Terminal No.	Condition	Specified value
DF-10 - IG1 relay terminal-1	Always	Below 1 Ω
DI-9 - IG1 relay terminal-2	Always	Below 1 Ω
DF-10 - Body ground	Always	10 kΩ or higher
DI-9 - Body ground	Always	10 kΩ or higher

NG → **REPLACE INSTRUMENT PANEL J/B**

OK

REPLACE MAIN BODY ECU

DTC	B2273	Ignition 2 Monitor Malfunction

DESCRIPTION

This DTC is output when there is a problem in the IG2D output circuit, which is from the inside of the main body ECU to the IG2 relay.
HINT:
When the main body ECU is replaced with a new one and the negative (-) battery terminal is connected, the power source mode becomes the IG-ON mode. When the battery is removed and reinstalled, the power source mode that was selected when the battery was removed is restored.
After the main body ECU is replaced, perform the registration procedures for the engine immobiliser system (See page EI-9).

DTC No.	DTC Detection Condition	Trouble Area
B2273	IG2 relay actuation circuit inside main body ECU or other related circuit is malfunctioning	• Main body ECU • IG2 relay • Wire harness or connector

WIRING DIAGRAM

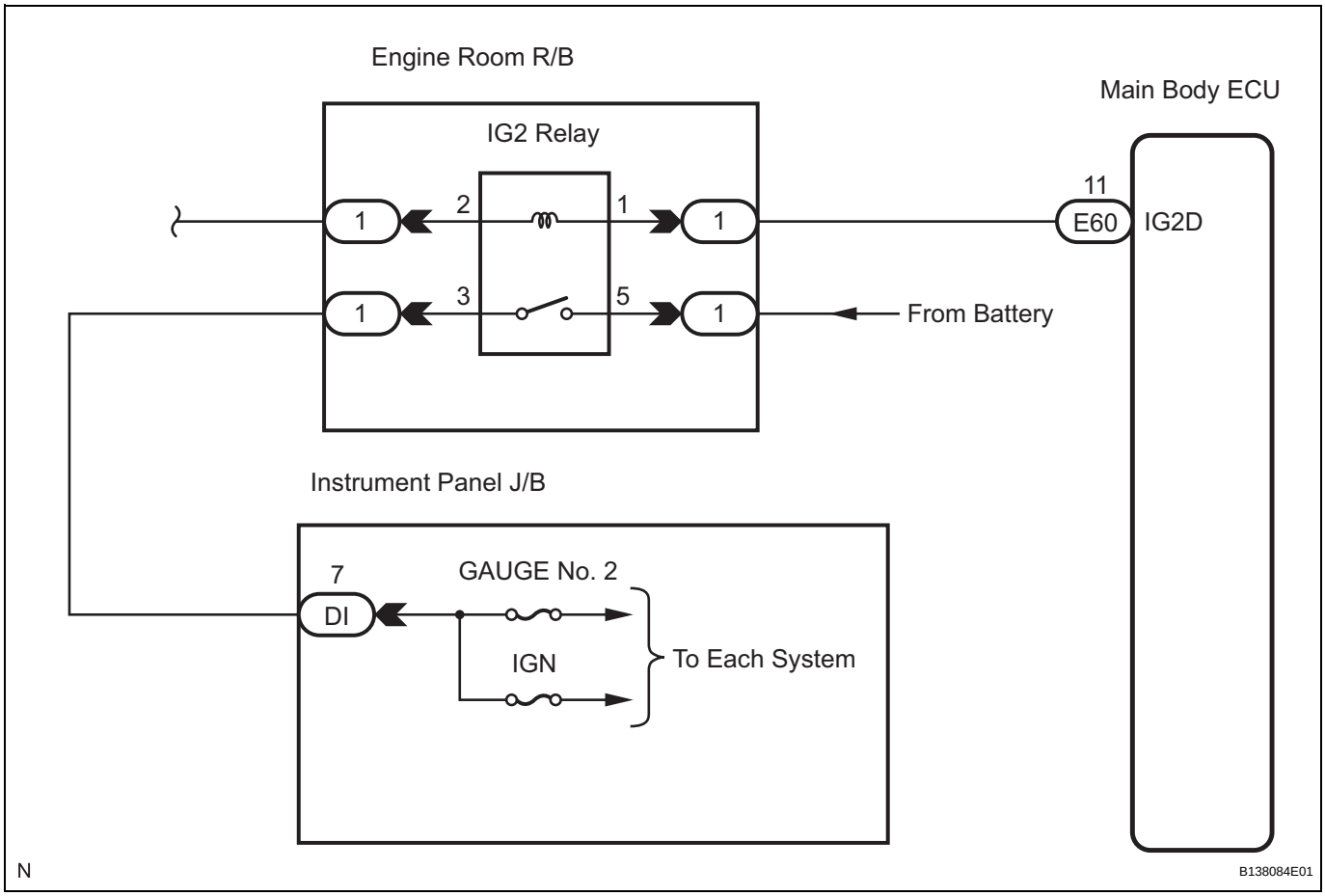

INSPECTION PROCEDURE

1	READ VALUE OF INTELLIGENT TESTER

(a) Connect the intelligent tester to the DLC3.

(b) Turn the engine switch on (IG) and turn the intelligent tester main switch on.

(c) Read the Data List according to the displays on the tester.

HINT:

When using the intelligent tester with the engine switch off, turn on and off any of the door courtesy light switches repeatedly at 1.5 second intervals or less until communication between the tester and vehicle starts.

MAIN BODY:

Item	Measurement Item / Display (Range)	Normal Condition	Diagnostic Note
IG2 RELAY MON1	Status of IG2 relay monitor (outer) / ON or OFF	ON: Engine switch on (IG) (IG2 relay is ON) OFF: Engine switch off (IG2 relay is OFF)	-

OK:

"ON" (Engine switch on (IG)) appears on the screen.

NG → **Go to step 3**

OK

2 CHECK ENGINE SWITCH CONDITION

(a) Check the power source mode change.

(1) When the key is inside the vehicle and the shift lever is in the P position, check that pressing the engine switch causes the power source mode to change as follows:

OK:

off → on (ACC) → on (IG) → off

HINT:

- If power mode does not change to ON (IG and ACC), (See page ST-118).
- If power mode does not change to ON (IG), (See page ST-126).
- If power mode does not change to ON (ACC), (See page ST-135).

NG → **GO TO OTHER PROBLEM**

OK

ST

3 INSPECT RELAY (IG2 RELAY)

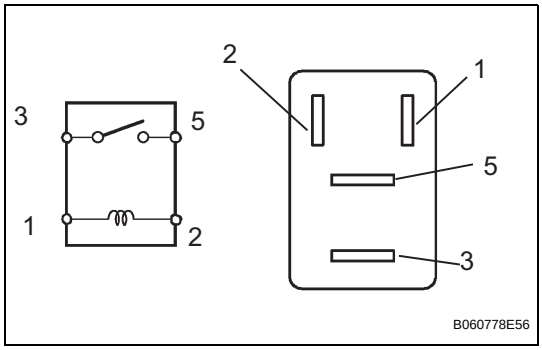

(a) Remove the IG2 relay from the engine room R/B.
(b) Measure the resistance according to the value(s) in the table below.

Standard resistance

Tester Connection	Specified Condition
3 - 5	10 kΩ or higher
3 - 5	Below 1 Ω (when battery voltage is applied to terminals 1 and 2)

NG → **REPLACE RELAY**

OK

4 CHECK WIRE HARNESS (ENGINE ROOM R/B - MAIN BODY ECU AND BODY GROUND)

(a) Remove the IG2 relay from the engine room R/B.

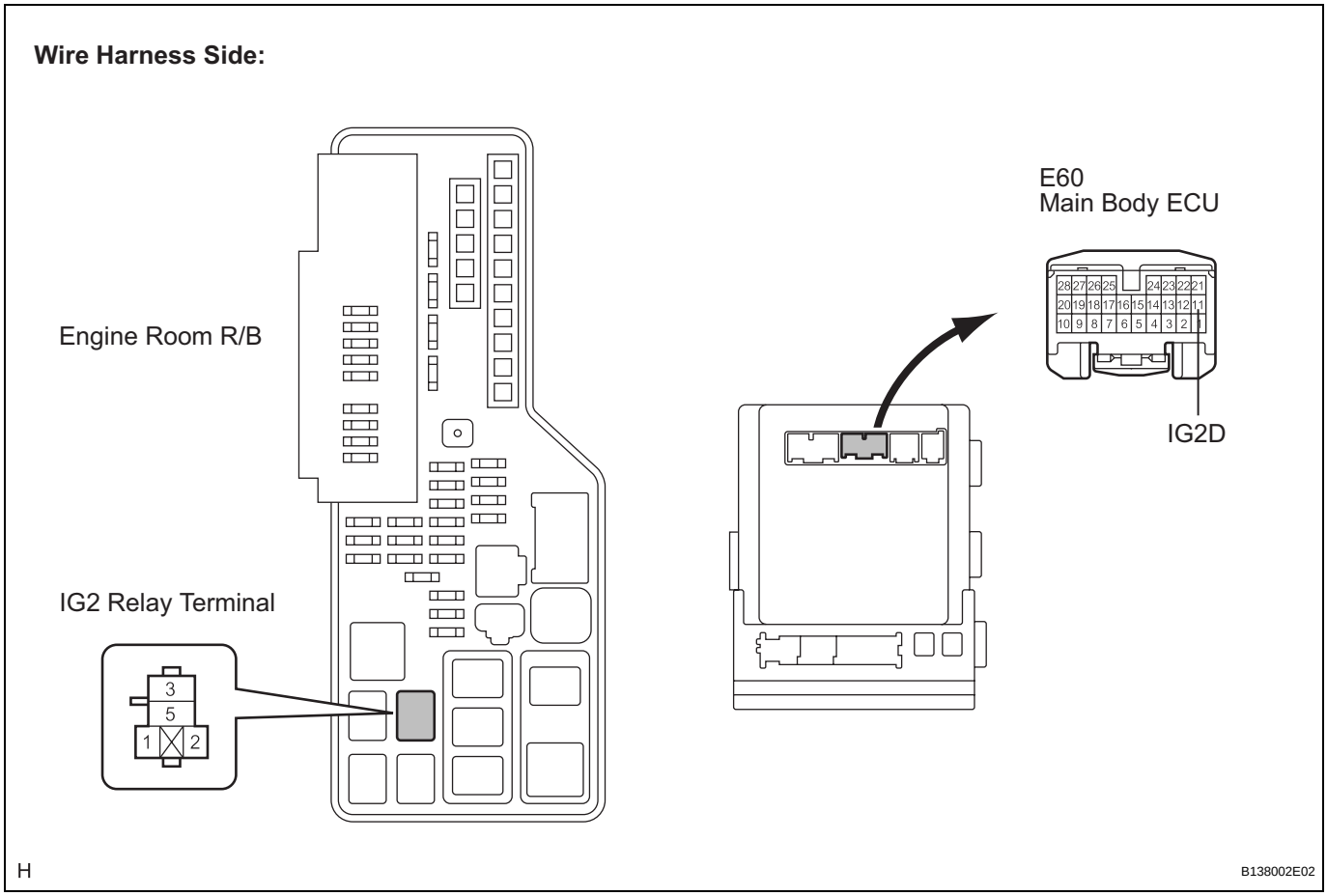

(b) Disconnect the E60 ECU connector.
(c) Measure the resistance according to the value(s) in the table below.

ST

Standard resistance

Terminal No. (Symbol)	Condition	Specified Condition
Engine Room R/B IG2 relay terminal 1 - E60-11 (IG2D)	Always	Below 1 Ω
Engine Room R/B IG2 relay terminal 2 - Body ground	Always	Below 1 Ω
E60-11 (IG2D) - Body ground	Always	10 kΩ or higher

NG → **REPAIR OR REPLACE HARNESS OR CONNECTOR**

OK

REPLACE MAIN BODY ECU

DTC	B2274	ACC Monitor Malfunction

DESCRIPTION

This DTC is output when there is a problem in the ACCD output circuit, which is from the inside of the main body ECU to the ACC relay.
HINT:
When the main body ECU is replaced with a new one and the negative (-) battery terminal is connected, the power source mode becomes the IG-ON mode. When the battery is removed and reinstalled, the power source mode that was selected when the battery was removed is restored.
After the main body ECU is replaced, perform the registration procedures for the engine immobiliser system (See page EI-9).

DTC No.	DTC Detection Condition	Trouble Area
B2274	ACC relay actuation circuit inside main body ECU or other related circuit is malfunctioning	• Main body ECU • ACC relay • Wire harness or connector

WIRING DIAGRAM

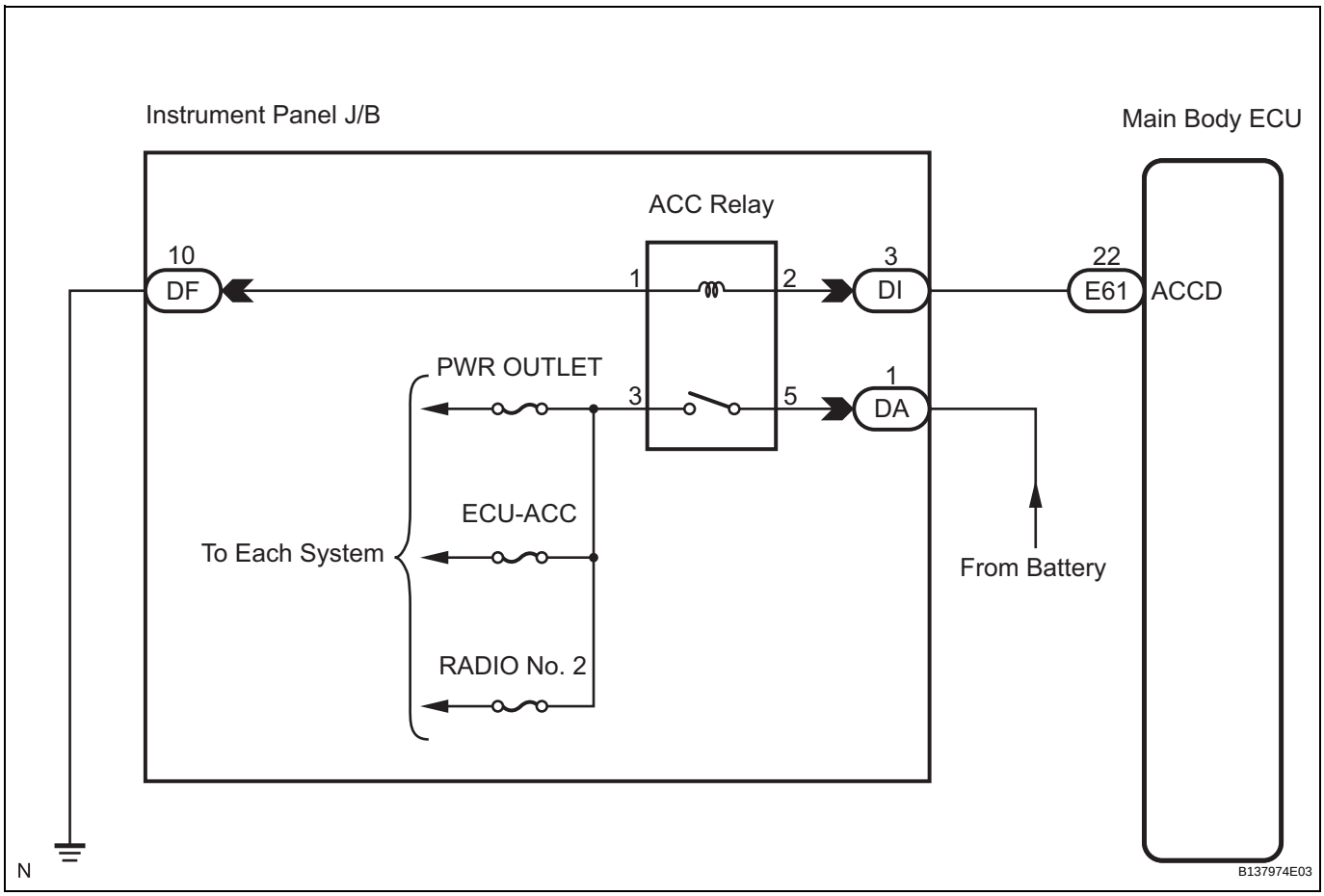

INSPECTION PROCEDURE

1	READ VALUE OF INTELLIGENT TESTER

(a) Connect the intelligent tester to the DLC3.

(b) Turn the engine switch on (IG) and turn the intelligent tester main switch on.

(c) Read the Data List according to the displays on the tester.

HINT:

When using the intelligent tester with the engine switch off, turn on and off any of the door courtesy light switches repeatedly at 1.5 second intervals or less until communication between the tester and vehicle starts.

MAIN BODY:

Item	Measurement Item / Display (Range)	Normal Condition	Diagnostic Note
ACC RELAY MON	Status of ACC Relay Monitor / ON or OFF	ON: Engine switch on (ACC) OFF: Engine switch off	-

OK:

"ON" (engine switch on (ACC)) appears on the screen.

NG → **Go to step 3**

OK

2 CHECK ENGINE SWITCH CONDITION

(a) Check the power source mode change.

(1) When the key is inside the vehicle and the shift lever is in the P position, check that pressing the engine switch causes the power source mode to change as follows:

OK:

off → on (ACC) → on (IG) → off

HINT:

- If power mode does not change to ON (IG and ACC), (See page ST-118).
- If power mode does not change to ON (IG), (See page ST-126).
- If power mode does not change to ON (ACC), (See page ST-135).

NG → **GO TO OTHER PROBLEM**

OK

ST

3 INSPECT RELAY (ACC RELAY)

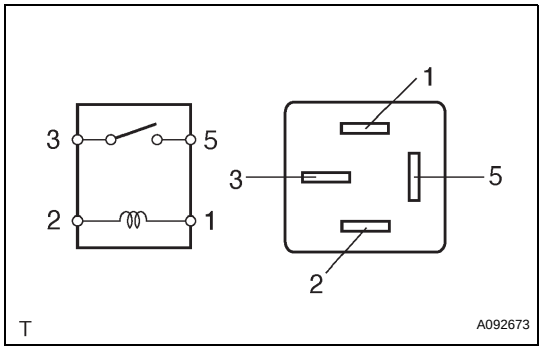

(a) Remove the ACC relay from the instrument panel J/B.
(b) Measure the resistance according to the value(s) in the table below.

Standard resistance

Tester Connection	Specified Condition
3 - 5	10 kΩ or higher
3 - 5	Below 1 Ω (when battery voltage is applied to terminals 1 and 2)

NG → **REPLACE RELAY**

OK

4 CHECK WIRE HARNESS (INSTRUMENT PANEL J/B - MAIN BODY ECU)

(a) Disconnect the E61 ECU connector.

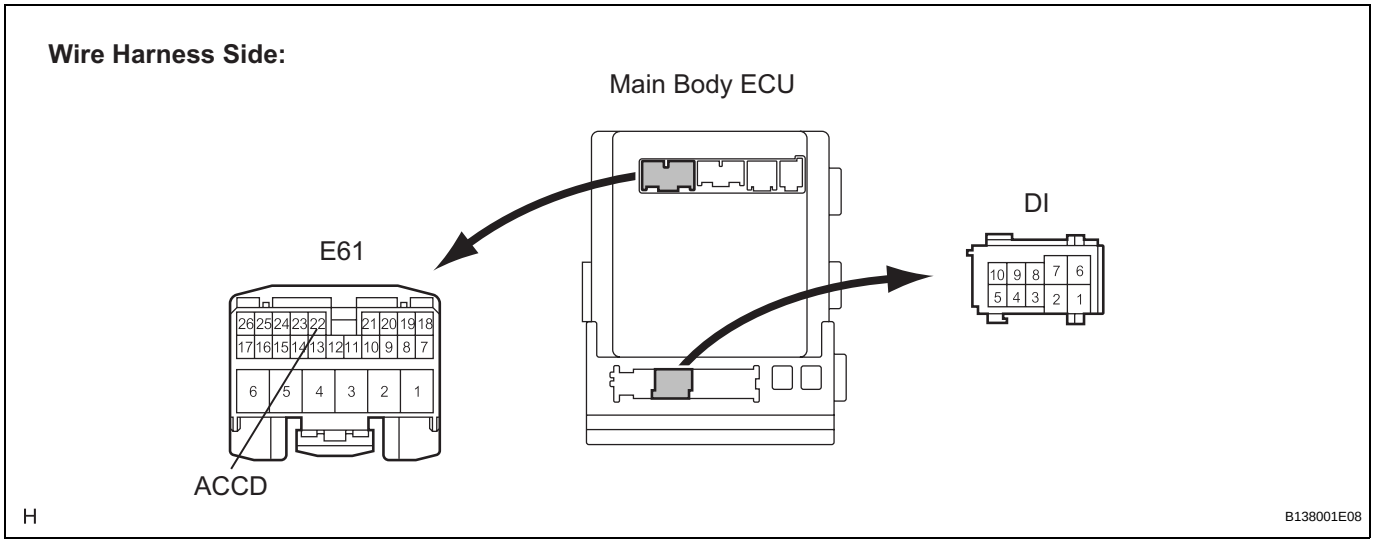

(b) Disconnect the DI J/B connector.
(c) Measure the resistance according to the value(s) in the table below.

Standard resistance

Terminal No. (Symbol)	Condition	Specified Condition
DI-3 - E61-22 (ACCD)	Always	Below 1 Ω
E61-22 (ACCD) or DI-3 - Body ground	Always	10 kΩ or higher

NG → **REPAIR OR REPLACE HARNESS OR CONNECTOR**

OK

ST

5 CHECK WIRE HARNESS (INSTRUMENT PANEL J/B - BATTERY AND BODY GROUND)

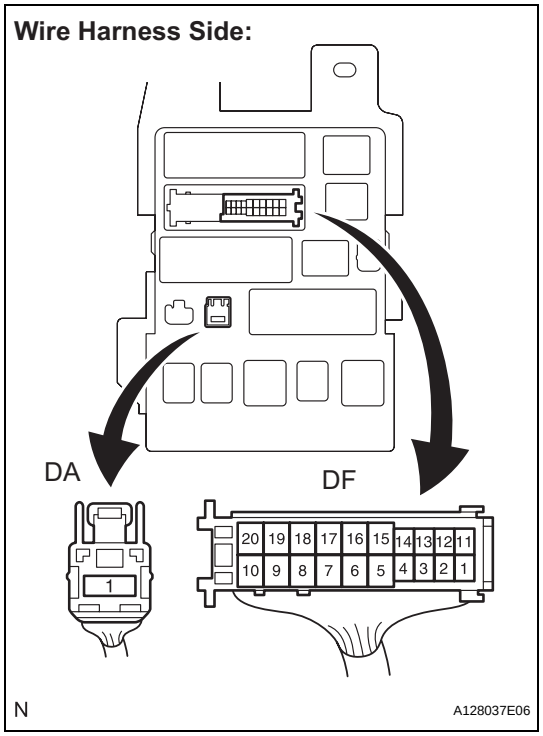

(a) Disconnect the DF and DA J/B connectors.

(b) Measure the resistance according to the value(s) in the table below.

Standard resistance

Terminal No.	Condition	Specified Condition
DF-10 - Body ground	Always	Below 1 Ω

(c) Measure the voltage according to the value(s) in the table below.

Standard voltage

Terminal No.	Condition	Specified Condition
DA-1 - Body ground	Always	10 to 14 V

NG → **REPAIR OR REPLACE HARNESS OR CONNECTOR**

OK

6 INSPECT INSTRUMENT PANEL J/B

ST

(a) Measure the resistance according to the value(s) in the table below.

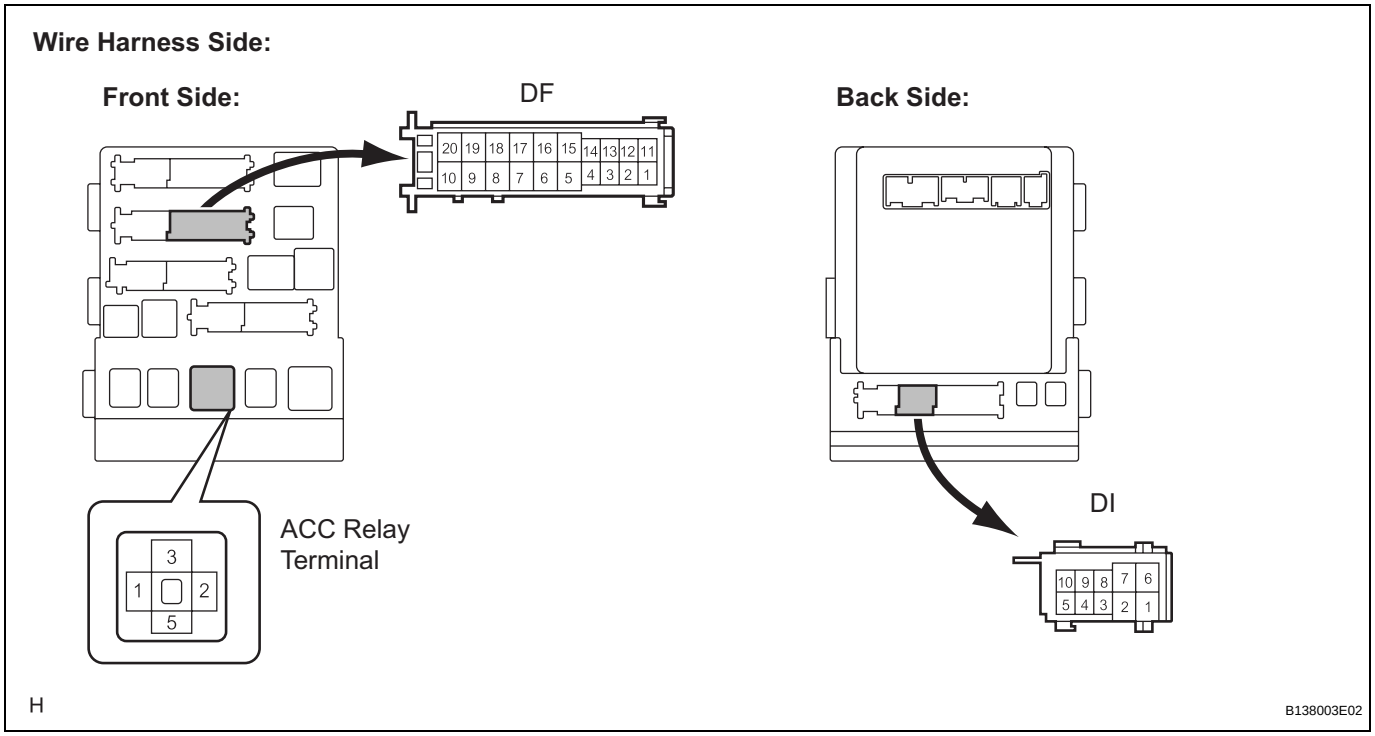

Standard resistance

Terminal No.	Condition	Specified Condition
ACC relay terminal 1 - DF-10	Always	Below 1 Ω
ACC relay terminal 2 - DI-3	Always	Below 1 Ω
DF-10 - Body ground	Always	10 kΩ or higher
DI-3 - Body ground	Always	10 kΩ or higher

NG → **REPLACE INSTRUMENT PANEL J/B**

OK

REPLACE MAIN BODY ECU

DTC	B2275	STSW Monitor Malfunction

DESCRIPTION

This DTC is output when there is an open, short, or any other problem in the engine start request output circuit inside the main body ECU or in the external circuit.
HINT:
When the main body ECU is replaced with a new one and the negative (-) battery terminal is connected, the power source mode becomes the IG-ON mode. When the battery is removed and reinstalled, the power source mode that was selected when the battery was removed is restored.
After the main body ECU is replaced, perform the registration procedures for the engine immobiliser system (See page EI-9).

DTC No.	DTC Detection Condition	Trouble Area
B2275	STSW output circuit (engine starting request signal circuit) inside main body ECU or other related circuit is malfunctioning	• Main body ECU • ECM • Wire harness or connector

WIRING DIAGRAM

INSPECTION PROCEDURE

1	CHECK DTC OUTPUT

(a) Delete the DTCs (See page ST-26).
HINT:
After all DTCs are cleared, turn the engine switch on (IG) and depress the brake pedal. After 15 seconds have elapsed, check if the trouble occurs again.

(b) Check for DTCs again.
OK:
No DTC is output.

NG	Go to step 2

ST

OK

CHECK INTERMITTENT PROBLEMS

2 CHECK WIRE HARNESS (MAIN BODY ECU - ECM)

(a) Disconnect the E58 ECU connector.

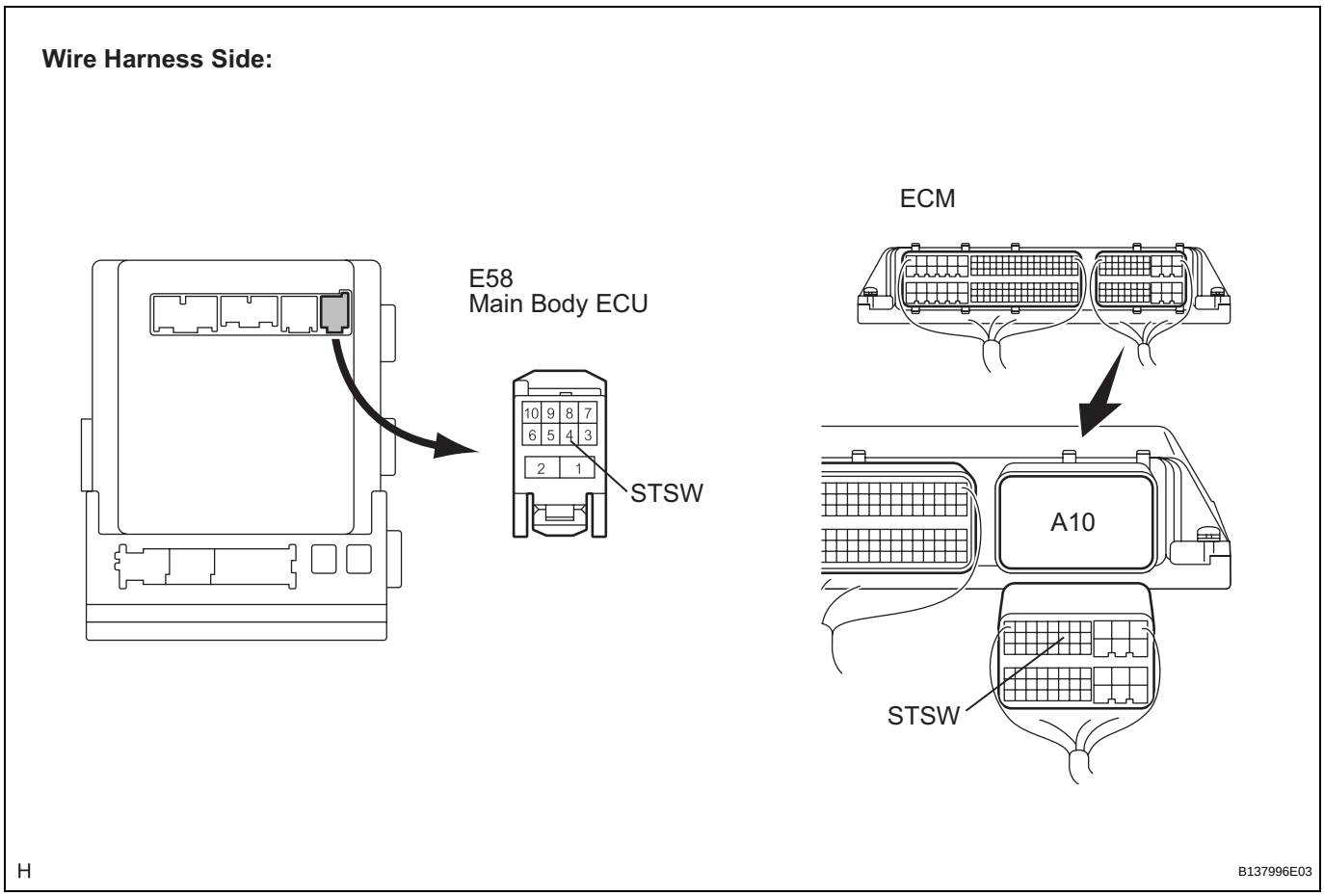

(b) Disconnect the A10 ECM connector.

(c) Measure the resistance according to the value(s) in the table below.

Standard resistance

Terminal No. (Symbol)	Condition	Specified Condition
E58-4 (STSW) - A10-14 (STSW)	Always	Below 1 Ω
E58-4 (STSW) - Body ground	Always	10 kΩ or higher

NG → **REPAIR OR REPLACE HARNESS OR CONNECTOR**

OK

ST

3 INSPECT MAIN BODY ECU

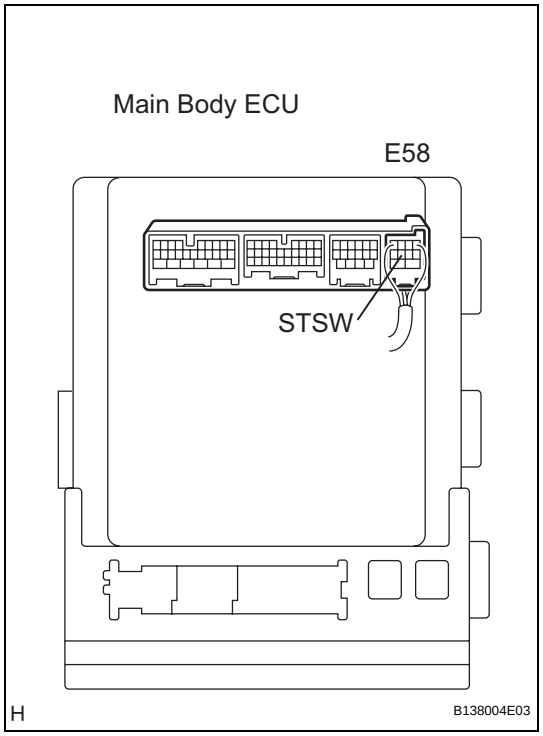

(a) Reconnect the connectors.
(b) Measure the voltage according to the value(s) in the table below.

Standard voltage

Terminal No. (Symbol)	Condition	Specified Condition
E58-4 (STSW) - Body ground	Brake pedal depressed, Engine switch hold on (ST)	Output voltage at terminal AM1 or AM2 is -2 V or more.

NG → **REPLACE MAIN BODY ECU**

OK

4 CHECK MAIN BODY ECU OPERATION

(a) After replacing the main body ECU with a normally functioning ECU, check that the engine can start. Make sure the brake pedal is depressed and the shift position is P at this time.
(b) Check that the engine switch mode can be changed by pushing the engine switch.
HINT:
Without depressing the brake pedal, push the engine switch repeatedly. Engine switch mode should turn from off to on (ACC) to on (IG) and back to off. With the brake pedal depressed, push the engine switch repeatedly. Engine switch mode should turn to ENGINE START from any status.
OK:
Engine can start normally.
HINT:
If engine does not start, (See page ST-97).

NG → **GO TO OTHER PROBLEM**

OK

END (MAIN BODY ECU DEFECTIVE)

ST

DTC	B2276	ACCR Signal Circuit Malfunction

DESCRIPTION

This DTC is output when the ACCR output circuit inside the main body ECU is open or shorted.
HINT:
When the main body ECU is replaced with a new one and the negative (-) battery terminal is connected, the power source mode becomes the IG-ON mode. When the battery is removed and reinstalled, the power source mode that was selected when the battery was removed is restored.
After the main body ECU is replaced, perform the registration procedures for the engine immobiliser system (See page EI-9).

DTC No.	DTC Detection Condition	Trouble Area
B2276	ACCR output circuit inside main body ECU or other related circuit is malfunctioning	• Main body ECU • ECM • Wire harness or connector

WIRING DIAGRAM

ST

INSPECTION PROCEDURE

1	CHECK DTC OUTPUT

(a) Delete the DTCs (See page ST-26).
HINT:
After all DTCs are cleared, check if the trouble occurs again 50 seconds after the engine switch is turned on (IG).

(b) Check for DTCs again.
OK:
No DTC is output.

NG → **Go to step 2**

OK

CHECK INTERMITTENT PROBLEMS

2	CHECK WIRE HARNESS (MAIN BODY ECU - ECM)

(a) Disconnect the E60 ECU connector.

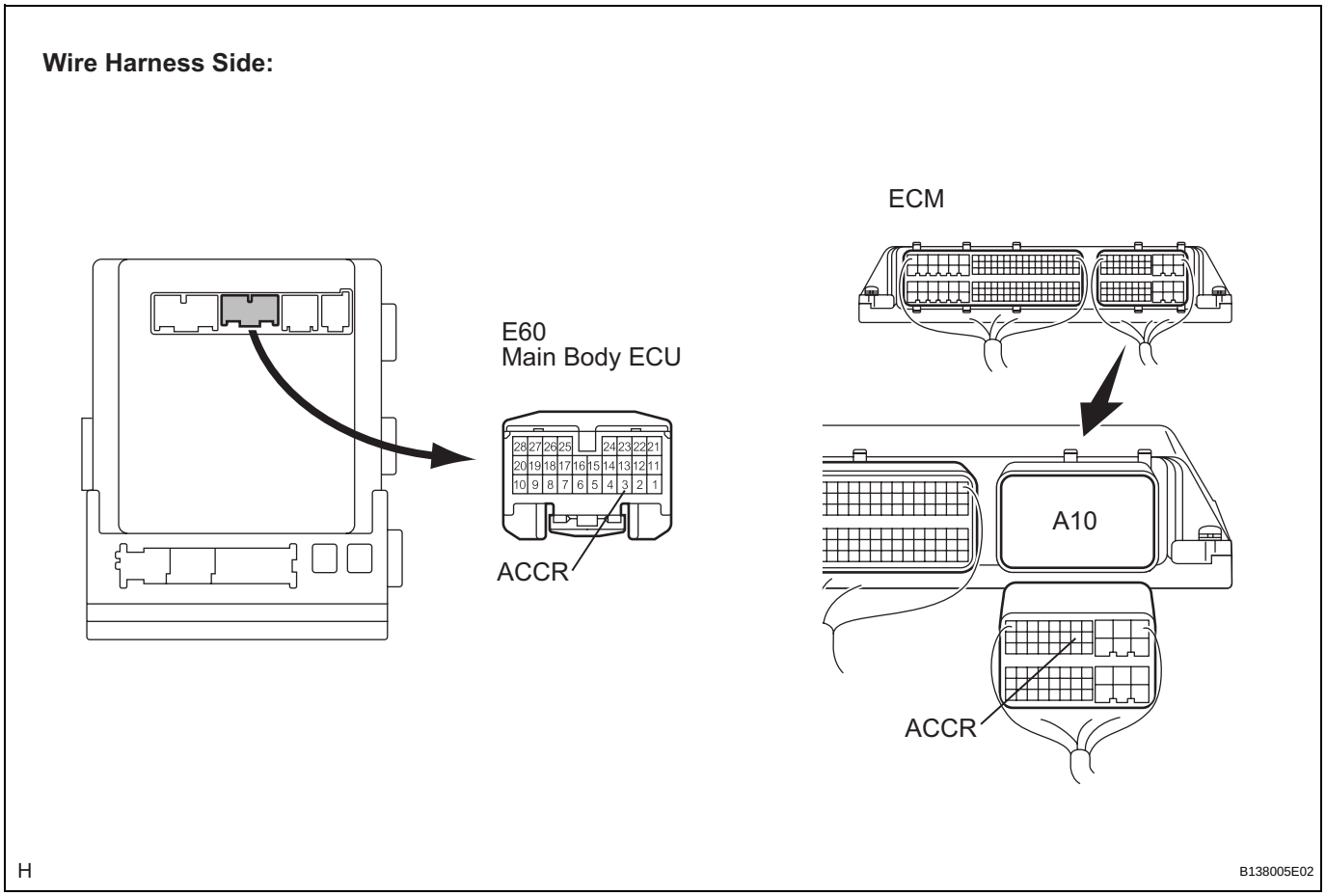

(b) Disconnect the A10 ECM connector.

(c) Measure the resistance according to the value(s) in the table below.

Standard resistance

Terminal No. (Symbol)	Condition	Specified Condition
E60-3 (ACCR) - A10-13 (ACCR)	Always	Below 1 Ω
E60-3 (ACCR) - Body ground	Always	10 kΩ or higher

NG → **REPAIR OR REPLACE HARNESS OR CONNECTOR**

OK

ST

3 INSPECT MAIN BODY ECU

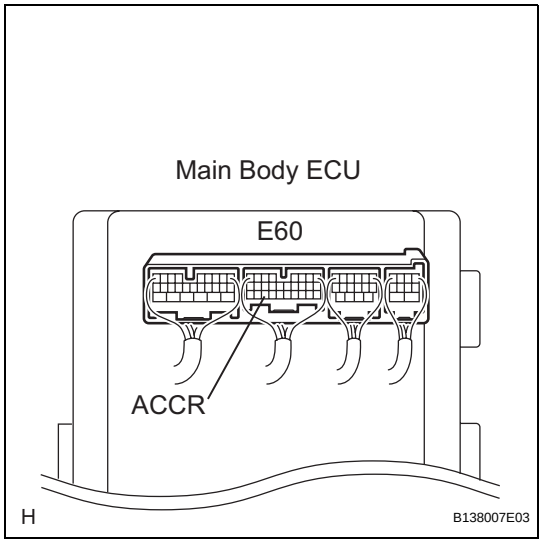

(a) Reconnect the connectors.
(b) Measure the voltage according to the value(s) in the table below.

Standard voltage

Terminal No. (Symbol)	Condition	Specified Condition
E60-3 (ACCR) - Body ground	Brake pedal depressed, shift P position, engine switch is pushed once → on (IG)	0.1 to 0.8 V (*1) Output voltage at terminal AM1 or AM2 is -2 V or more.

HINT:
*1: Voltage is output only when the engine is cranking.

NG → **REPLACE MAIN BODY ECU**

OK

4 CHECK MAIN BODY ECU OPERATION

(a) After replacing the main body ECU with a normally functioning ECU, check that the engine starts. Make sure the brake pedal is depressed and the shift position is P at this time.
(b) Check that the engine switch mode can be changed by pushing the engine switch.
HINT:
Without depressing the brake pedal, push the engine switch repeatedly. Engine switch mode should turn from off to on (ACC) to on (IG) and back to off. With the brake pedal depressed, push the engine switch repeatedly. Engine switch mode should turn to ENGINE START from any status.
OK:
Engine can start normally.
HINT:
If engine does not start, (See page ST-97).

NG → **GO TO OTHER PROBLEM**

OK

END (MAIN BODY ECU DEFECTIVE)

ST

DTC	B2277	Detecting Vehicle Submersion

DESCRIPTION

This DTC is output when the submersion circuit monitor inside the main body ECU detects that the vehicle is submerged in water.
HINT:
When the main body ECU is replaced with a new one and the negative (-) battery terminal is connected, the power source mode becomes the IG-ON mode. When the battery is removed and reinstalled, the power source mode that was selected when the battery was removed is restored.
After the main body ECU is replaced, perform the registration procedures for the engine immobiliser system (See page EI-9).

DTC No.	DTC Detection Condition	Trouble Area
B2277	Submersion circuit monitor inside main body ECU detects that vehicle is submerged in water	Main body ECU

INSPECTION PROCEDURE

1 CHECK FOR WATER DAMAGE

(a) Check the main body ECU, peripheral components, and wire harnesses for traces of water.
OK:
There are no traces of water.

NG → **TAKE APPROPRIATE MEASURES AGAINST CAUSE OF WATER DAMAGE AND REPLACE MAIN BODY ECU**

OK ↓

2 CHECK DTC OUTPUT

(a) Delete the DTCs (See page ST-26).
HINT:
After all DTCs are cleared, check if the trouble occurs again 30 seconds after the engine switch is turned on (IG).
(b) Check for DTCs again.
OK:
No DTC is output.

NG → **REPLACE MAIN BODY ECU**

OK ↓

END

ST

DTC	B2278	Engine Switch Circuit Malfunction

DESCRIPTION

This DTC is output when 1) a malfunction is detected between the main body ECU and the engine switch; or 2) either of the switches inside the engine switch is malfunctioning.

HINT:

When the main body ECU is replaced with a new one and the negative (-) battery terminal is connected, the power source mode becomes the IG-ON mode. When the battery is removed and reinstalled, the power source mode that was selected when the battery was removed is restored.

After the main body ECU is replaced, perform the registration procedures for the engine immobiliser system (See page EI-9).

DTC No.	DTC Detection Condition	Trouble Area
B2278	Communication is abnormal between the main body ECU and engine switch or the engine switch is defective	• Engine switch • Main body ECU • Wire harness or connector

WIRING DIAGRAM

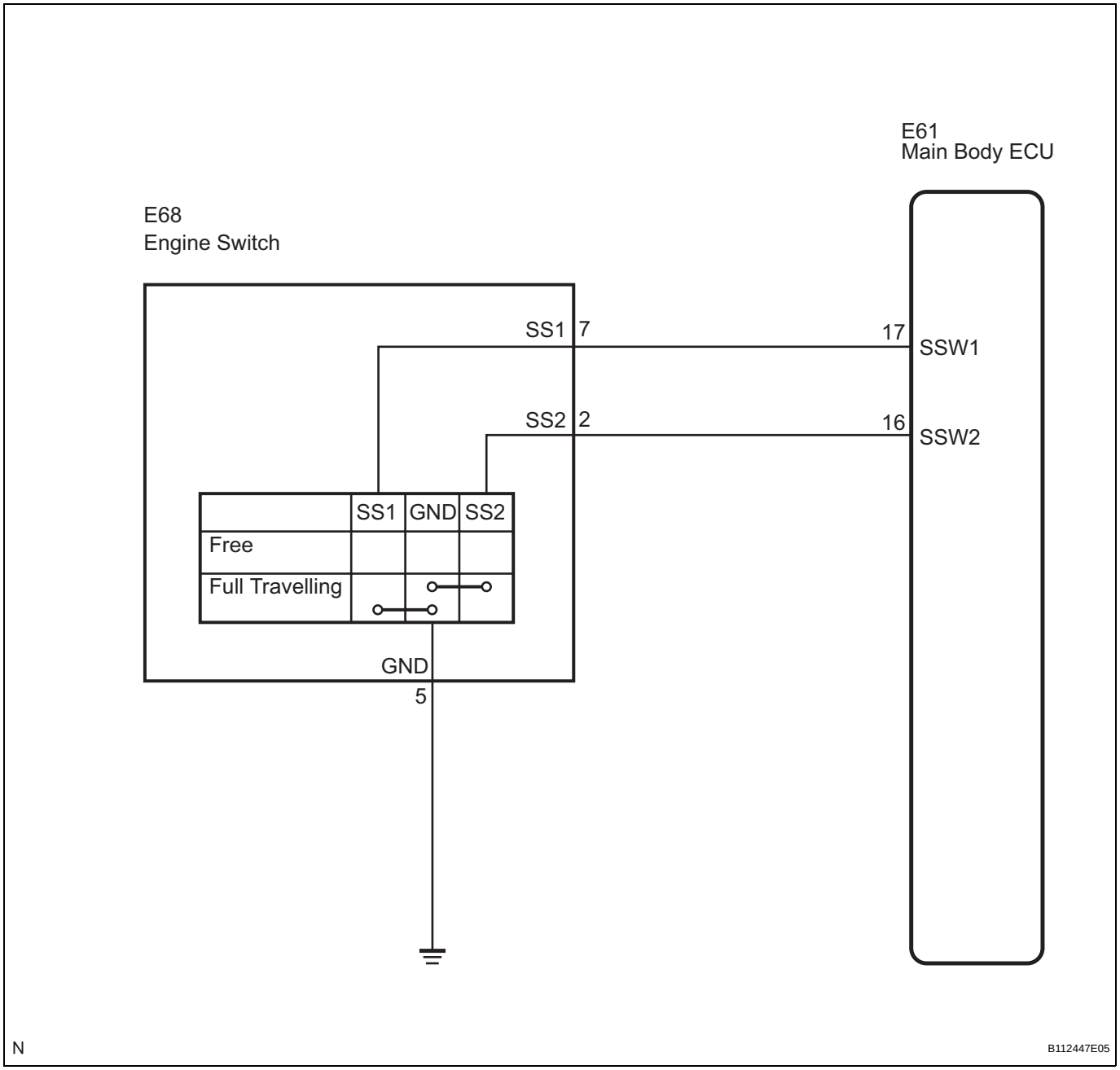

INSPECTION PROCEDURE

1	READ VALUE OF INTELLIGENT TESTER (START SWITCH)

(a) Connect the intelligent tester to the DLC3.
(b) Check the DATA LIST for proper functioning of the start switch.
HINT:
When using the intelligent tester with the engine switch off, turn on and off any of the door courtesy light switches repeatedly at 1.5 second intervals or less until communication between the tester and vehicle starts.

ST

MAIN BODY:

Item	Measurement Item/Display (Range)	Normal Condition	Diagnostic Note
STSW1	Start Switch 1/ON or OFF	ON: Engine switch on (IG) OFF: Engine switch off	-
STSW2	Start Switch 2/ON or OFF	ON: Engine switch on (IG) OFF: Engine switch off	-

OK:
ON (engine switch on (IG)) and OFF (engine switch off) appear on the screen.

NG → **Go to step 3**

OK

2 CHECK ENGINE SWITCH CONDITION

(a) Check the power source mode change.
(1) When the key is inside the vehicle and the shift lever is in the P position, check that pressing the engine switch causes the power source mode to change as follows.
OK:
off → on (ACC) → on (IG) → off
HINT:
- If power mode does not change to ON (IG and ACC), (See page ST-118).
- If power mode does not change to ON (IG), (See page ST-126).
- If power mode does not change to ON (ACC), (See page ST-135).

NG → **GO TO OTHER PROBLEM**

OK

END

3 INSPECT ENGINE SWITCH

(a) Remove the engine switch.

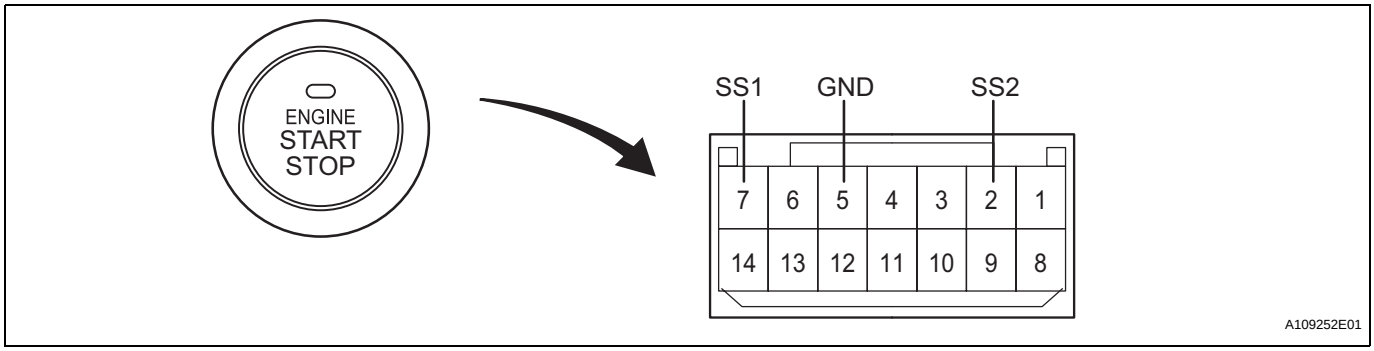

(b) Disconnect the switch connector.

ST

(c) Measure the resistance according to the value(s) in the table below.

Standard resistance

Tester Connection (Symbols)	Switch Condition	Specified Condition
7 (SS1) - 5 (GND)	Pushed	Below 1 Ω
2 (SS2) - 5 (GND)	Pushed	Below 1 Ω
7 (SS1) - 5 (GND)	Not pushed	10 kΩ or higher
2 (SS2) - 5 (GND)	Not pushed	10 kΩ or higher

HINT:
This switch is a momentary type switch.

NG → **REPLACE ENGINE SWITCH**

OK

4 CHECK WIRE HARNESS (ENGINE SWITCH - MAIN BODY ECU AND BODY GROUND)

(a) Disconnect the E61 ECU connector.

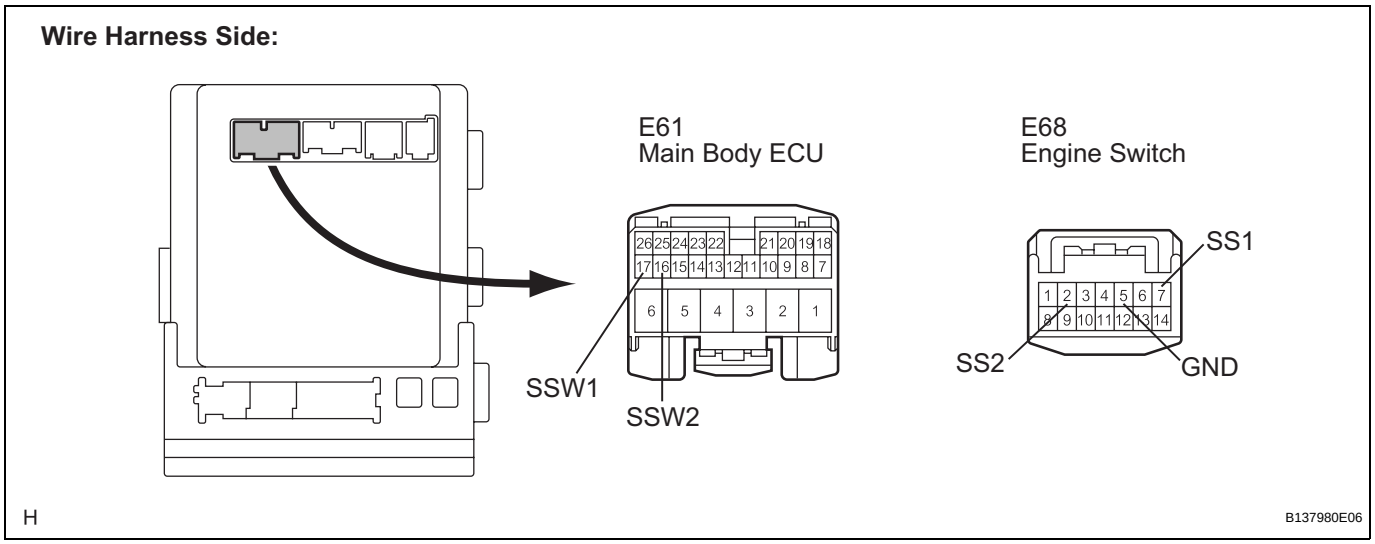

(b) Disconnect the E68 switch connector.

(c) Measure the resistance according to the value(s) in the table below.

Standard resistance

Tester Connection (Symbols)	Condition	Specified Condition
E68-7 (SS1) - E61-17 (SSW1)	Always	Below 1 Ω
E68-2 (SS2) - E61-16 (SSW2)	Always	Below 1 Ω
E68-5 (GND) - Body ground	Always	Below 1 Ω
E68-7 (SS1) or E61-17 (SSW1) - Body ground	Always	10 kΩ or higher
E68-2 (SS2) or E61-16 (SSW2) - Body ground	Always	10 kΩ or higher

ST

NG → **REPAIR OR REPLACE HARNESS OR CONNECTOR**

OK

REPLACE MAIN BODY ECU

DTC	B2281	"P" Signal Malfunction

DESCRIPTION

The ECM and the shift lock control ECU are connected by a cable and the CAN. If the cable information and CAN information are inconsistent, this DTC will be output.
HINT:
After the main body ECU is replaced, perform the registration procedures for the engine immobiliser system (See page EI-9).

DTC No.	DTC Detection Condition	Trouble Area
B2281	Cable information and CAN information between main body ECU and shift lock control ECU are inconsistent	• Main body ECU • Shift lock control ECU • Wire harness or connector

WIRING DIAGRAM

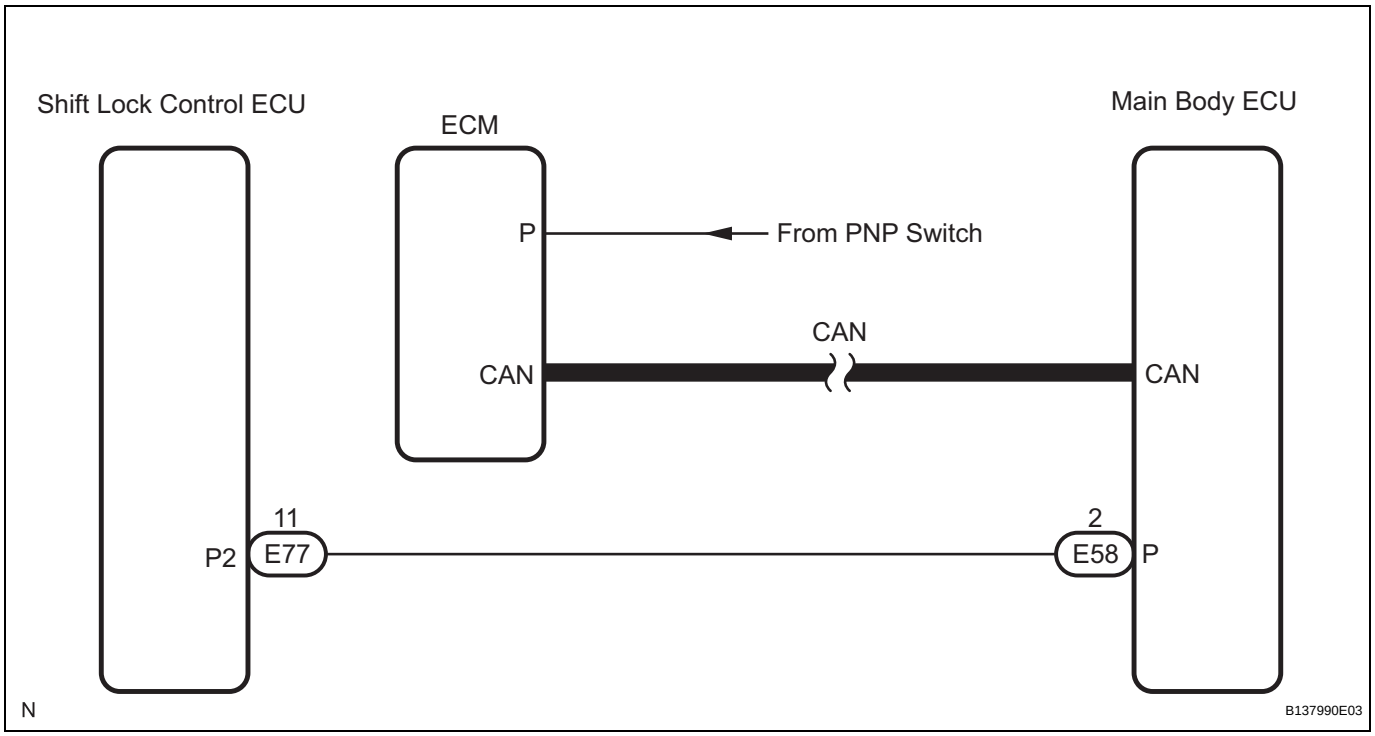

INSPECTION PROCEDURE

1	READ VALUE OF INTELLIGENT TESTER

(a) Connect the intelligent tester to the DLC3.
(b) Turn the engine switch on (IG) and turn the intelligent tester main switch on.
(c) Read the DATA LIST according to the displays on the tester.

MAIN BODY:

Item	Measurement Item / Range (Display)	Normal Condition	Diagnostic Note
SHIFT P SIG	Shift P Signal / ON or OFF	ON: Shift P signal ON (Shift position is P) OFF: Shift P signal OFF (Shift position is not P)	-

ST

OK:
"ON" (P signal is ON) and "OFF" (P signal is OFF) appears on the screen.
HINT:
If the result is not as specified, there may be a malfunction with the shift lock control ECU (See page SR-59).

NG → **Go to step 2**

OK

GO TO SHIFT CONTROL SYSTEM

2 CHECK WIRE HARNESS (MAIN BODY ECU - SHIFT LOCK CONTROL ECU)

(a) Disconnect the E58 and E77 ECU connectors.

Wire Harness Side:

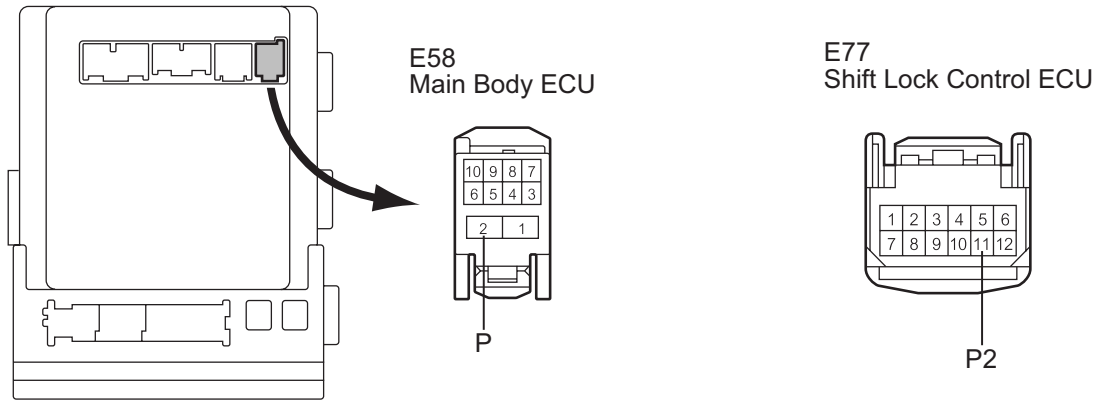

H B138006E02

(b) Measure the resistance according to the value(s) in the table below.
Standard resistance

Terminal No. (Symbol)	Condition	Specified Condition
E58-2 (P) - E77-11 (P2)	Always	Below 1 Ω
E58-2 (P) - Body ground	Always	10 kΩ or higher

NG → **REPAIR OR REPLACE HARNESS OR CONNECTOR**

OK

3	CHECK MAIN BODY ECU OPERATION

(a) After replacing the main body ECU with a normally functioning ECU, check that the engine can start normally. Make sure the brake pedal is depressed and the shift position is P at this time.

(b) Check that the engine switch mode can be changed by pushed the engine switch.

HINT:

Without depressing the brake pedal, push the engine switch repeatedly. Engine switch mode should turn from off to on (ACC) to on (IG) and back to off. With the brake pedal depressed, push the engine switch repeatedly. Engine switch mode should turn to ENGINE START from any status.

OK:

Engine can start normally.

HINT:

If engine does not start, (See page ST-97).

NG → **GO TO OTHER PROBLEM**

OK

END (MAIN BODY ECU DEFECTIVE)

DTC	B2282	Vehicle Speed Signal Malfunction

DESCRIPTION

The main body ECU and the combination meter are connected by a cable and the CAN. DTC B2282 is output when: 1) the cable information and CAN information are inconsistent; and 2) a malfunction is detected between the vehicle speed sensor and combination meter.

HINT:

When the main body ECU is replaced with a new one and the negative (-) battery terminal is connected, the power source mode becomes the IG-ON mode. When the battery is removed and reinstalled, the power source mode that was selected when the battery was removed is restored.

After the main body ECU is replaced, perform the registration procedures for the engine immobiliser system (See page EI-9).

DTC No.	DTC Detection Condition	Trouble Area
B2282	When both conditions below are met: • Cable information and CAN information between the main body ECU and the combination meter are inconsistent • Malfunction is detected between the vehicle speed sensor and the combination meter	• CAN communication system • Combination meter system • Main body ECU • Wire harness or connector

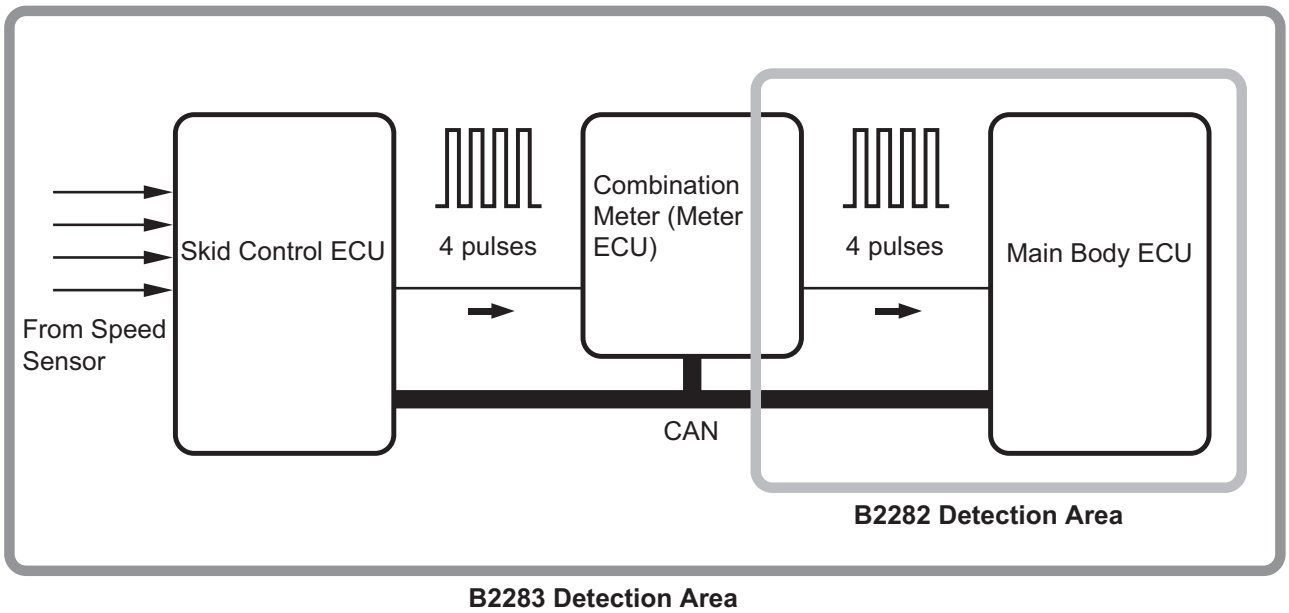

N B138069E01

ST

WIRING DIAGRAM

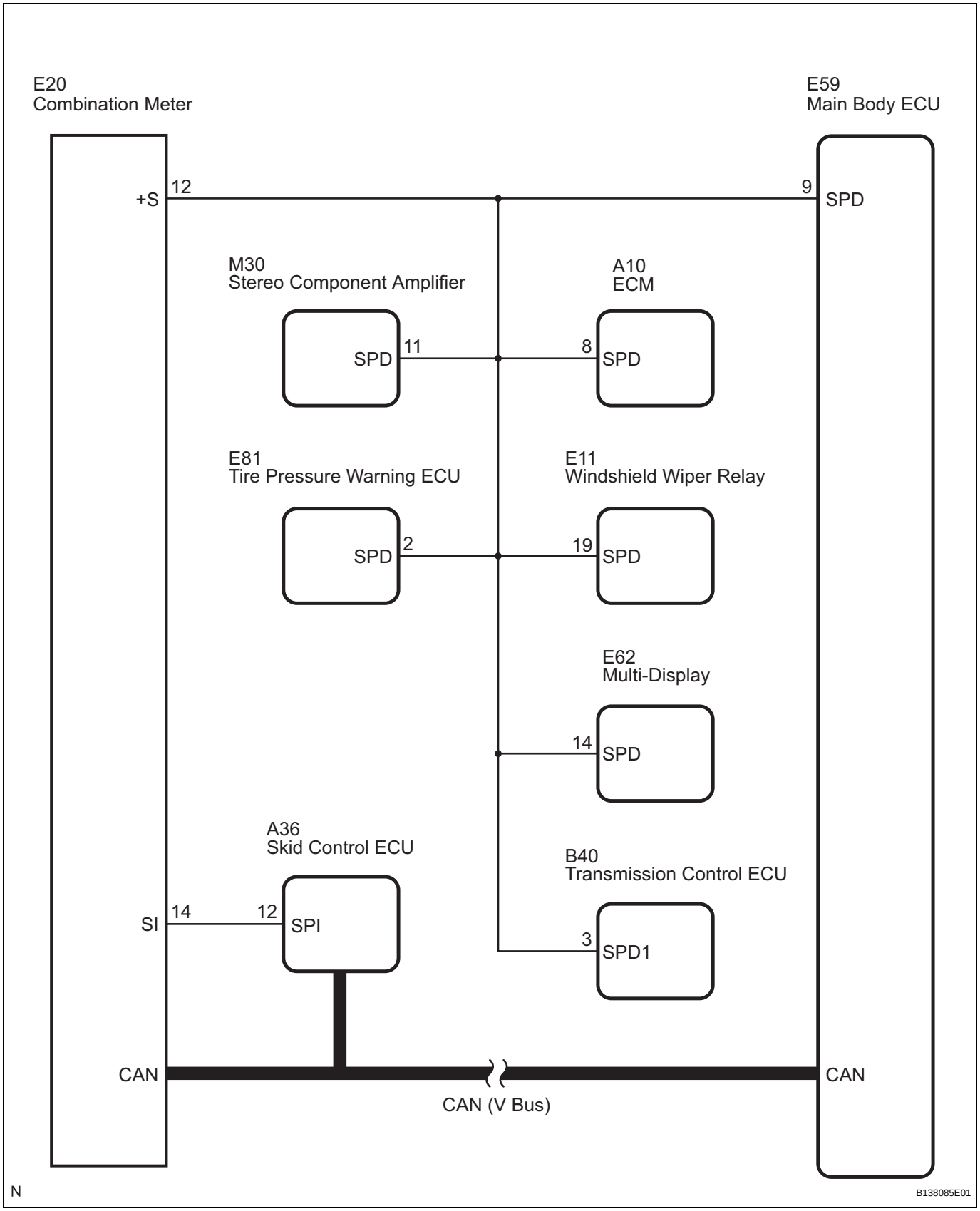

HINT:

- A voltage of 12 V or 5 V is output from each ECU and then input to the combination meter. The signal is changed to a pulse signal at the transistor in the combination meter. Each ECU controls the respective system based on the pulse signal.

ST

- If a short occurs in an ECU, all systems in the diagram above will not operate normally.

INSPECTION PROCEDURE

1	CHECK OPERATION OF SPEEDOMETER

(a) Drive the vehicle and check if the function of the speedometer in the combination meter is normal.
OK:
Actual vehicle speed and the speed indicated on the speedometer are the same.
HINT:
- The vehicle speed sensor is functioning normally when the indication on the speedometer is normal.
- The meter CPU receives vehicle speed signals from the skid control ECU via the CAN communication lines. The vehicle speed sensor detects the voltage that varies according to the vehicle speed. The skid control ECU supplies power to the vehicle speed sensor. The skid control ECU detects vehicle speed signals based on the pulses of the voltage.

OK → **Go to step 3**

NG

2	CHECK DTC OUTPUT (CAN COMMUNICATION SYSTEM)

ST

(a) Delete the DTCs (See page ST-26).
(b) Check for CAN communication system DTCs.
HINT:
If the DTCs for the CAN communication system malfunction are output, inspect those DTCs first (See page CA-49).
OK:
No DTC is output.

NG → **GO TO CAN COMMUNICATION SYSTEM**

OK

GO TO COMBINATION METER SYSTEM

3	CHECK WIRE HARNESS (MAIN BODY ECU - COMBINATION METER)

(a) Disconnect the E59 ECU connector.

Wire Harness Side:

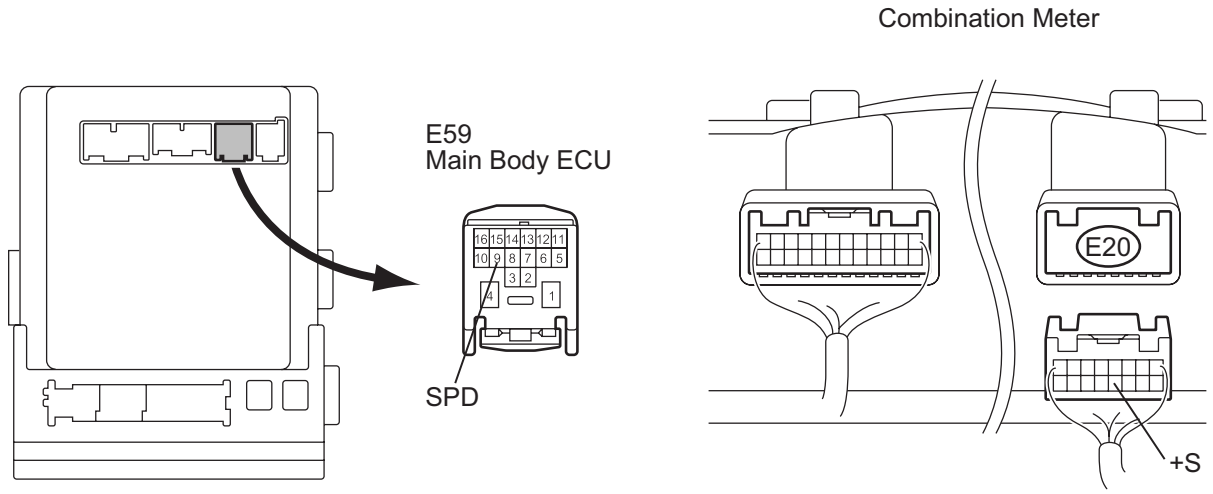

H B137982E02

(b) Disconnect the E20 meter connector.

(c) Measure the resistance according to the value(s) in the table below.

Standard resistance

Tester Connection (Symbols)	Condition	Specified Condition
E59-9 (SPD) - E20-12 (+S) - Body ground	Always	Below 1 Ω

ST

NG → **REPAIR OR REPLACE HARNESS OR CONNECTOR**

OK

4 CHECK WIRE HARNESS (MAIN BODY ECU - BODY GROUND)

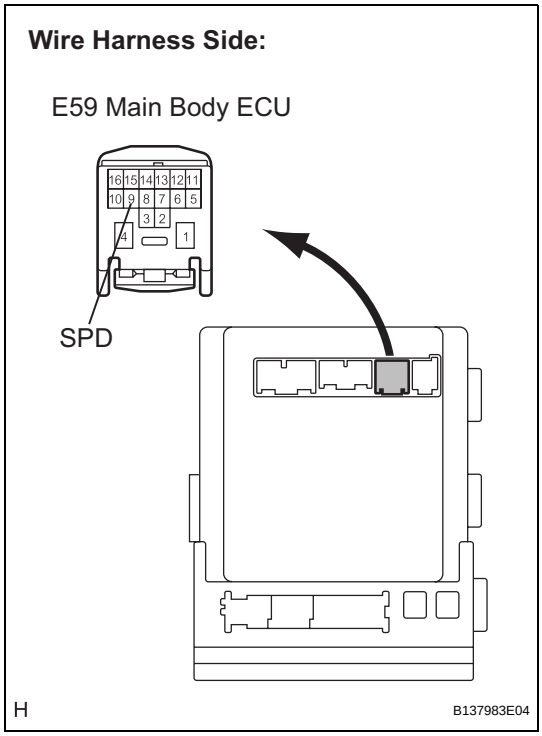

(a) Measure the resistance according to the value(s) in the table below.

Standard resistance

Tester Connection (Symbols)	Condition	Specified Condition
E59-9 (SPD) - Body ground	Always	10 kΩ or higher

HINT:
If the result of the inspection for a short circuit is not as specified, there may be a short in the ECU.

NG → **REPAIR OR REPLACE HARNESS, CONNECTOR OR EACH ECU**

OK

ST

5 INSPECT MAIN BODY ECU (SPEED SIGNAL)

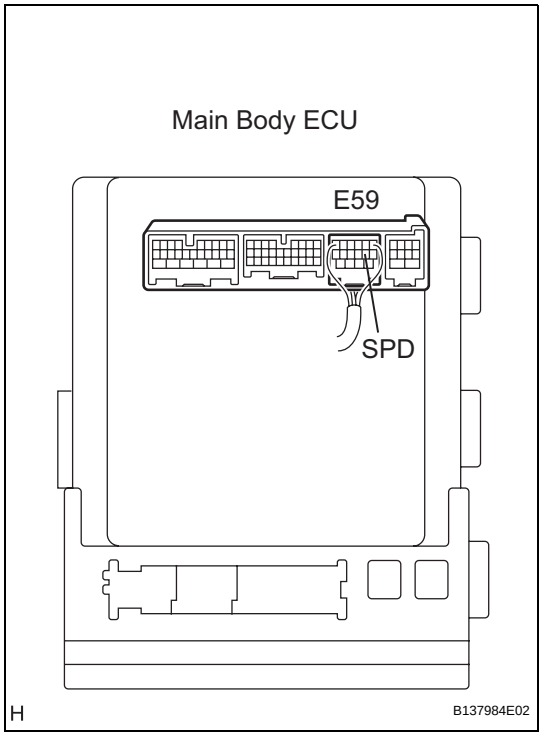

(a) Check the input signal waveform.
  (1) Reconnect the connectors.
  (2) Remove the combination meter assembly with the connector(s) still connected.
  (3) Connect an oscilloscope to terminal E59-9 (SPD) and body ground.
  (4) Turn the engine switch on (IG).
  (5) Turn the wheel slowly.

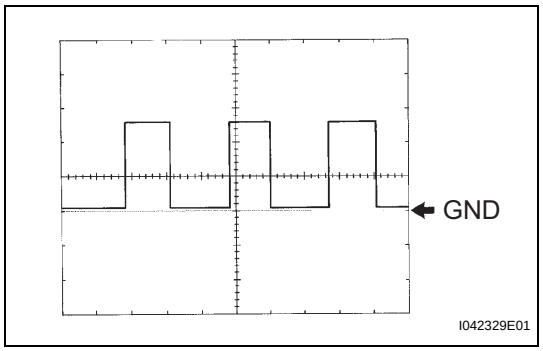

(6) Check the signal waveform according to the condition(s) in the table below.

Item	Condition
Tool setting	5 V/DIV., 10 ms./DIV.
Vehicle condition	Driving at approx. 20 km/h (12 mph)

OK:

The waveform is displayed as shown in the illustration.

HINT:

As the vehicle speed increases, the cycle of the signal waveform narrows.

NG → **REPLACE COMBINATION METER**

OK

REPLACE MAIN BODY ECU

DTC	B2283	Vehicle Speed Sensor Malfunction

DESCRIPTION

The skid control ECU converts these signals into 4-pulse signals and sends them to the combination meter. After this signal is converted into a more precise rectangular waveform by the waveform shaping circuit inside the combination meter, it is then transmitted to the main body ECU. The main body ECU determines the vehicle speed based on the frequency of these pulse signals.

HINT:

When the main body ECU is replaced with a new one and the negative (-) battery terminal is connected, the power source mode becomes the IG-ON mode. When the battery is removed and reinstalled, the power source mode that was selected when the battery was removed is restored.

After the main body ECU is replaced, perform the registration procedures for the engine immobiliser system (See page EI-9).

DTC No.	DTC Detection Condition	Trouble Area
B2283	When both conditions below are met: • Over-deceleration in vehicle speed • Vehicle speed and engine speed do not match	• DTC B2282 detection area • Combination meter • Speed sensor • Skid control ECU • Main body ECU • Wire harness or connector

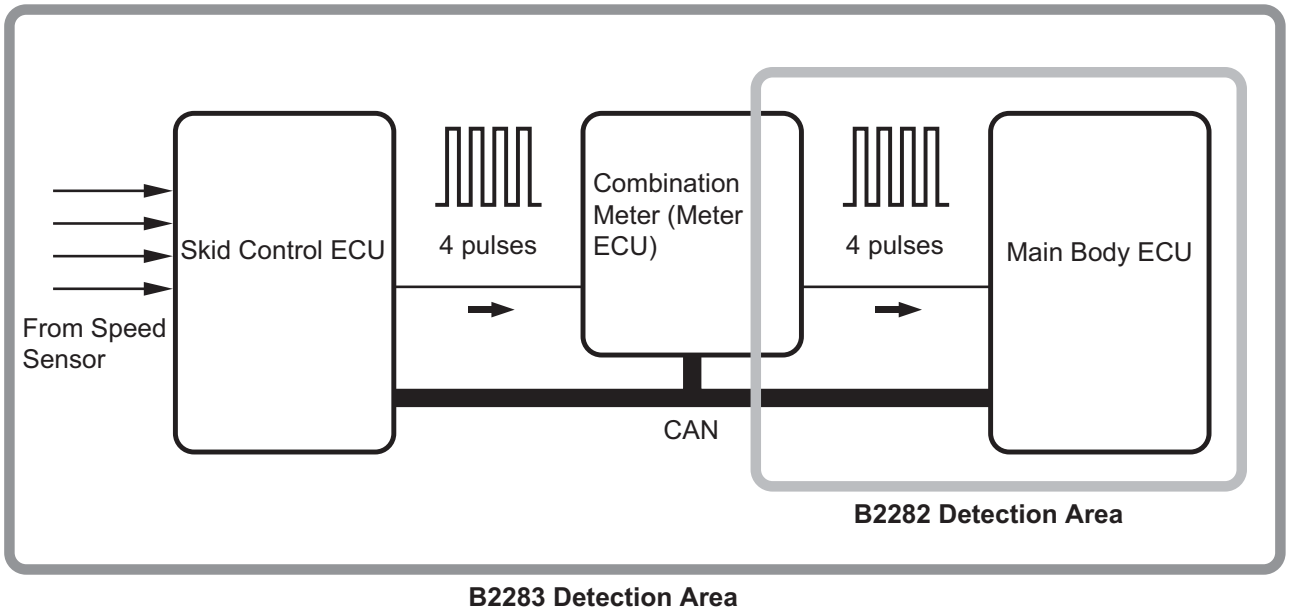

N B138069E01

ST

WIRING DIAGRAM

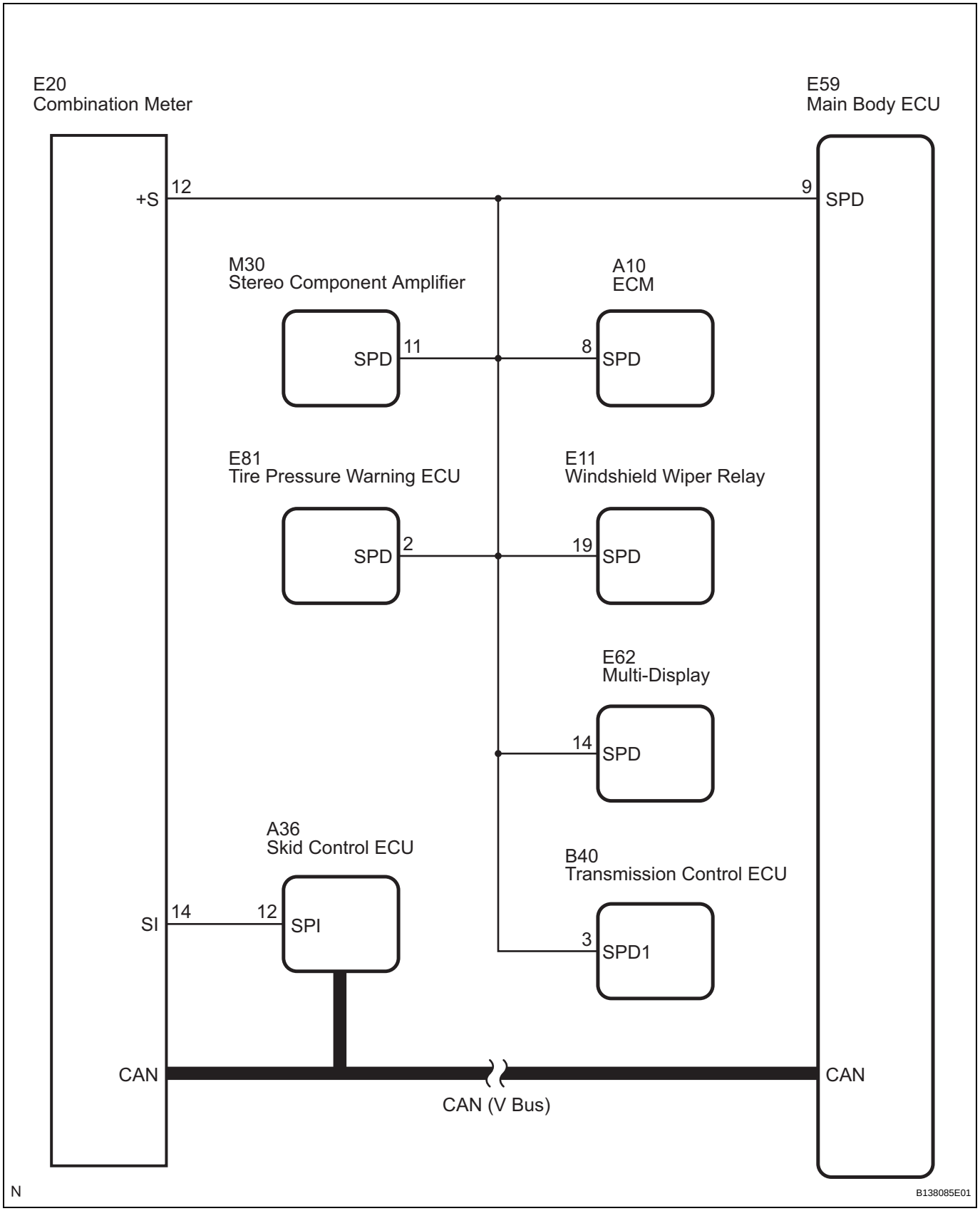

HINT:

- A voltage of 12 V or 5 V is output from each ECU and then input to the combination meter. The signal is changed to a pulse signal at the transistor in the combination meter. Each ECU controls the respective system based on the pulse signal.

ST

- If a short occurs in an ECU, all systems in the diagram above will not operate normally.

INSPECTION PROCEDURE

1	CHECK DTC OUTPUT (SMART ACCESS SYSTEM WITH PUSH-BUTTON START)

(a) Delete the DTCs (See page ST-26).
(b) After all DTCs are cleared, check if the trouble occurs again 320 seconds after the power switch is turned on (IG).
(c) Check for DTC B2282 (Vehicle speed signal malfunction) and DTC B2283 (Vehicle speed sensor malfunction).

Result

Display (DTC output)	Proceed to
"DTC B2283" only	A
"DTC B2283" and "DTC B2282"	B
No DTC	C

HINT:
If DTC B2282 and DTC B2283 are output, perform troubleshooting for DTC B2282 first (See page ST-63).

B → **GO TO DTC B2282**

C → **CHECK INTERMITTENT PROBLEMS**

A

ST

2	CHECK OPERATION OF SPEEDOMETER

(a) Drive the vehicle and check if the function of the speedometer in the combination meter is normal.
OK:
Actual vehicle speed and the speed indicated on the speedometer are the same.
HINT:
- The vehicle speed sensor is functioning normally when the indication on the speedometer is normal.
- The meter CPU receives vehicle speed signals from the skid control ECU via the CAN communication lines. The vehicle speed sensor detects the voltage that varies according to the vehicle speed. The skid control ECU supplies power to the vehicle speed sensor. The skid control ECU detects vehicle speed signals based on the pulses of the voltage.

OK → **Go to step 4**

NG

3	CHECK DTC OUTPUT (BRAKE CONTROL)

(a) Delete the DTCs (See page BC-43).
(b) Check for DTCs (See page BC-52).
OK:
No DTC is output.

NG → **GO TO BRAKE CONTROL SYSTEM**

OK

REPLACE MAIN BODY ECU

4	CHECK WIRE HARNESS (SKID CONTROL ECU - COMBINATION METER)

(a) Disconnect the E20 meter connector.

Skid Control ECU Harness Side Connector Front View:

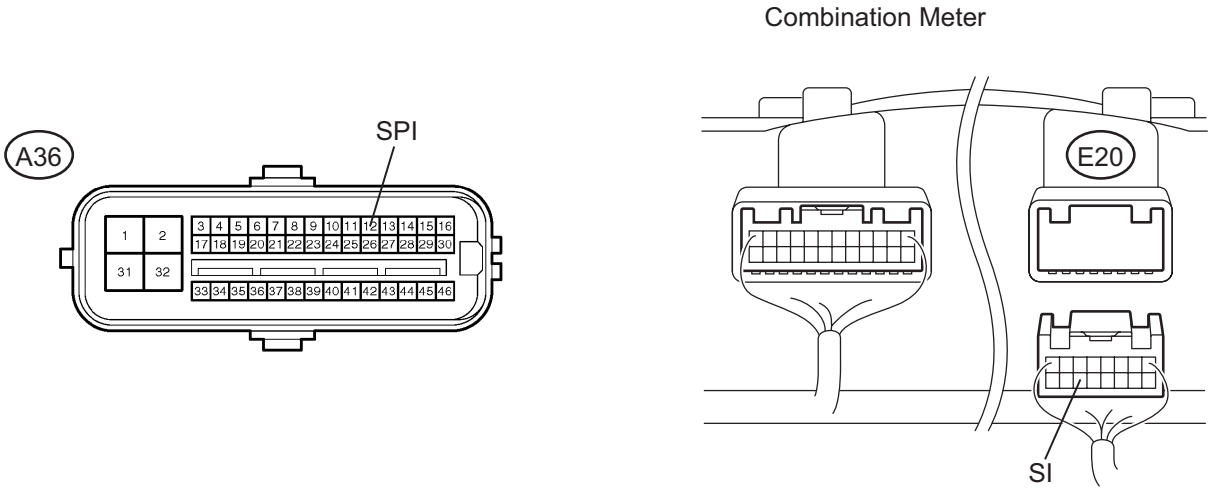

(b) Disconnect the A36 ECU connector.
(c) Measure the resistance according to the value(s) in the table below.
Standard resistance

Tester Connection (Symbols)	Condition	Specified Condition
A36-12 (SPI) - E20-14 (SI)	Always	Below 1 Ω
A36-12 (SPI) or E20-14 (SI) - Body ground	Always	10 kΩ or higher

NG → **REPAIR OR REPLACE HARNESS OR CONNECTOR**

ST

OK

5 INSPECT MAIN BODY ECU (SPEED SIGNAL)

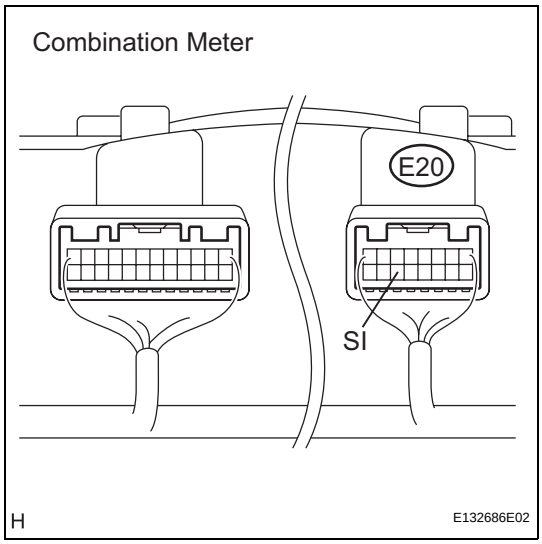

(a) Check the input signal waveform.
   (1) Reconnect the connectors.
   (2) Remove the combination meter assembly with the connector(s) still connected.
   (3) Connect an oscilloscope to terminal E20-14 (SI) and body ground.
   (4) Turn the engine switch on (IG).
   (5) Turn the wheel slowly.

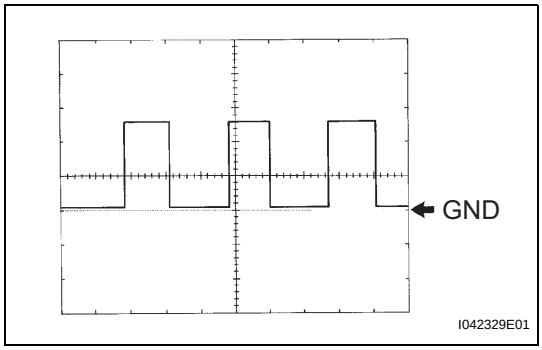

   (6) Check the signal waveform according to the condition(s) in the table below.

Item	Condition
Tool setting	5 V/DIV., 10 ms./DIV.
Vehicle condition	Driving at approx. 20 km/h (12 mph)

OK:
The waveform is displayed as shown in the illustration.
HINT:
As the vehicle speed increases, the cycle of the signal waveform narrows.

NG → **REPLACE SKID CONTROL ECU**

OK

REPLACE COMBINATION METER

ST

DTC	B2284	Brake Signal Malfunction

DESCRIPTION

This DTC is output when: 1) the brake signal circuit between the main body ECU and the stop light switch is malfunctioning; and 2) the CAN information is inconsistent.

HINT:

When the main body ECU is replaced with a new one and the negative (-) battery terminal is connected, the power source mode becomes the IG-ON mode. When the battery is removed and reinstalled, the power source mode that was selected when the battery was removed is restored.

After the main body ECU is replaced, perform the registration procedures for the engine immobiliser system (See page EI-9).

DTC No.	DTC Detection Condition	Trouble Area
B2284	Communication or communication line is abnormal between the main body ECU and the stop light switch	• Stop light switch • CAN communication system • ECM • Main body ECU • Wire harness or connector

WIRING DIAGRAM

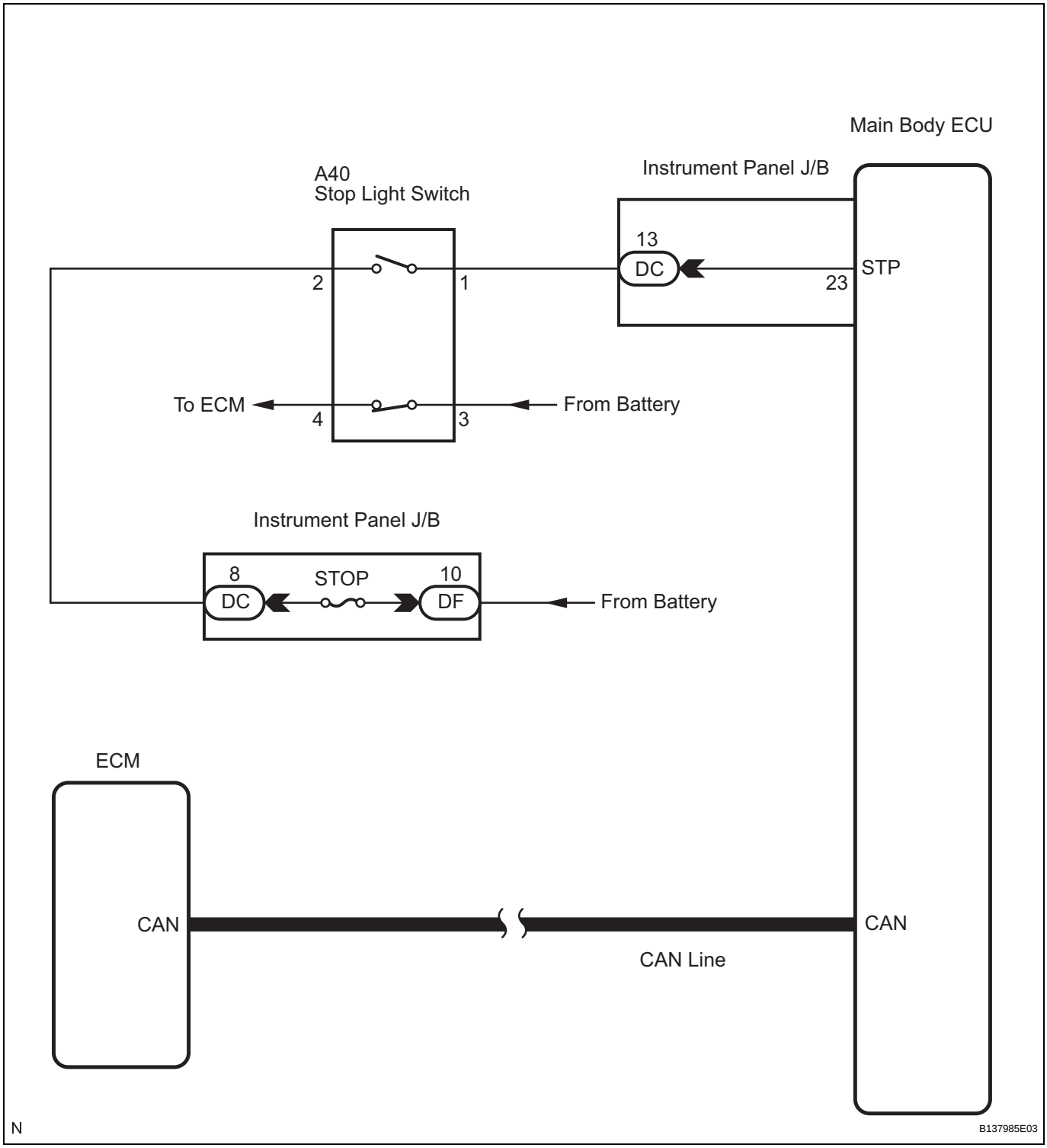

INSPECTION PROCEDURE

1. EMERGENCY ENGINE START CONTROL

(a) If there is a malfunction in the stop light switch or STOP fuse, their signals may not be correctly transmitted to the main body ECU. This may result in the engine not starting even if the engine switch is pressed while the brake pedal is depressed and the shift lever is in the P position.
To activate the starter:
(1) Turn the engine switch from off to on (ACC).
(2) Press and hold the engine switch for 15 seconds.

HINT:
Before performing the inspection, depress the brake pedal and check that the stop lights come on. If the stop lights do not come on when the brake pedal is depressed, refer to the page shown in the brackets (See page LI-32).

1 READ VALUE OF INTELLIGENT TESTER (STOP LIGHT SWITCH)

(a) Connect the intelligent tester to the DLC3.
(b) Turn the engine switch on (IG).
(c) Check the DATA LIST for proper functioning of the stop light switch.

MAIN BODY:

Item	Measurement Item/Display (Range)	Normal Condition	Diagnostic Note
STOP LIGHT SW	Stop light switch/ON or OFF	ON: Brake pedal depressed OFF: Brake pedal released	-

OK:
ON (brake pedal depressed) and OFF (brake pedal released) appear on the screen.

NG → **Go to step 4**

OK

2 CHECK DTC OUTPUT (CAN COMMUNICATION SYSTEM)

(a) Delete the DTCs (See page ST-26).
(b) Check for CAN communication system DTCs (See page CA-49).
HINT:
If the DTCs for the CAN communication system malfunction are output, inspect those DTCs first.
OK:
No DTC is output.

NG → **GO TO CAN COMMUNICATION SYSTEM**

OK

3 CHECK DTC OUTPUT (ENGINE CONTROL SYSTEM)

(a) Delete the DTCs (See page ES-41).
(b) Check for DTC P0500 (Vehicle speed sensor A) (See page ES-59).
OK:
No DTC is output.

NG → **GO TO ENGINE CONTROL SYSTEM**

OK

REPLACE MAIN BODY ECU

ST

4 INSPECT FUSE (STOP)

(a) Remove the STOP fuse from the instrument panel J/B.
(b) Measure the resistance of the fuse.
Standard resistance:
Below 1 Ω

NG → **REPLACE FUSE**

OK

5 CHECK WIRE HARNESS (BATTERY - MAIN BODY ECU)

Wire Harness Side:

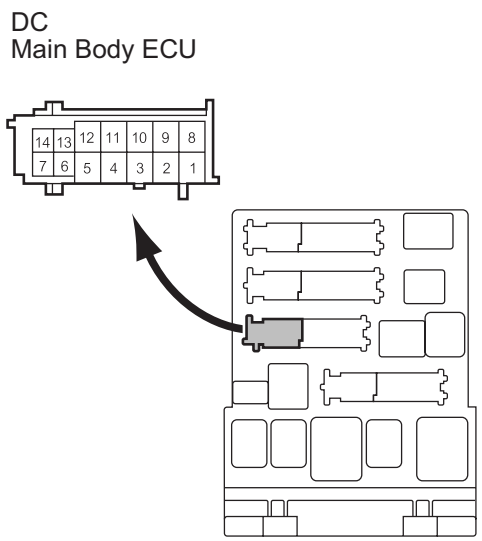

(a) Disconnect the DC ECU connector.
(b) Measure the volage according to the value(s) in the table below.
Standard voltage

Tester Connection	Condition	Specified Condition
DC-13 - Body ground	Brake pedal released	Below 1 V
DC-13 - Body ground	Brake pedal depressed	10 to 14 V

OK → **REPAIR OR REPLACE HARNESS OR CONNECTOR**

NG

6 INSPECT STOP LIGHT SWITCH

Stop Light Switch:

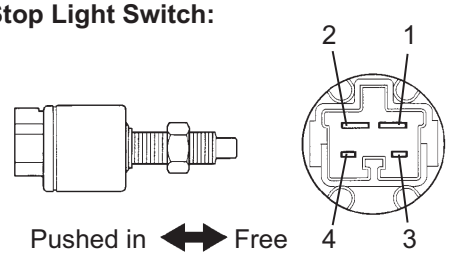

(a) Remove the switch.
(b) Measure the resistance of the switch.
Standard resistance

Tester Connection	Condition	Specified Condition
1 - 2	Switch pin free	Below 1 Ω
3 - 4	Switch pin free	10 kΩ or higher
1 - 2	Switch pin pushed in	10 kΩ or higher
3 - 4	Switch pin pushed in	Below 1 Ω

NG → **REPLACE STOP LIGHT SWITCH**

ST

OK

REPLACE MAIN BODY ECU

DTC	B2285	Steering Lock Position Signal Circuit Malfunction

DESCRIPTION

This DTC is output when serial communication signals and LIN communication signals in the circuit between the main body ECU and steering lock actuator (steering lock ECU) are inconsistent.
HINT:
When the main body ECU is replaced with a new one and the negative (-) battery terminal is connected, the power source mode becomes the IG-ON mode. When the battery is removed and reinstalled, the power source mode that was selected when the battery was removed is restored.
After the main body ECU or steering lock ECU is replaced, perform the registration procedures for the engine immobiliser system (See page EI-9).

DTC No.	DTC Detection Condition	Trouble Area
B2285	Cable and LIN information between the main body ECU and the steering lock ECU are inconsistent	• Main body ECU • Steering lock ECU • Wire harness or connector

WIRING DIAGRAM

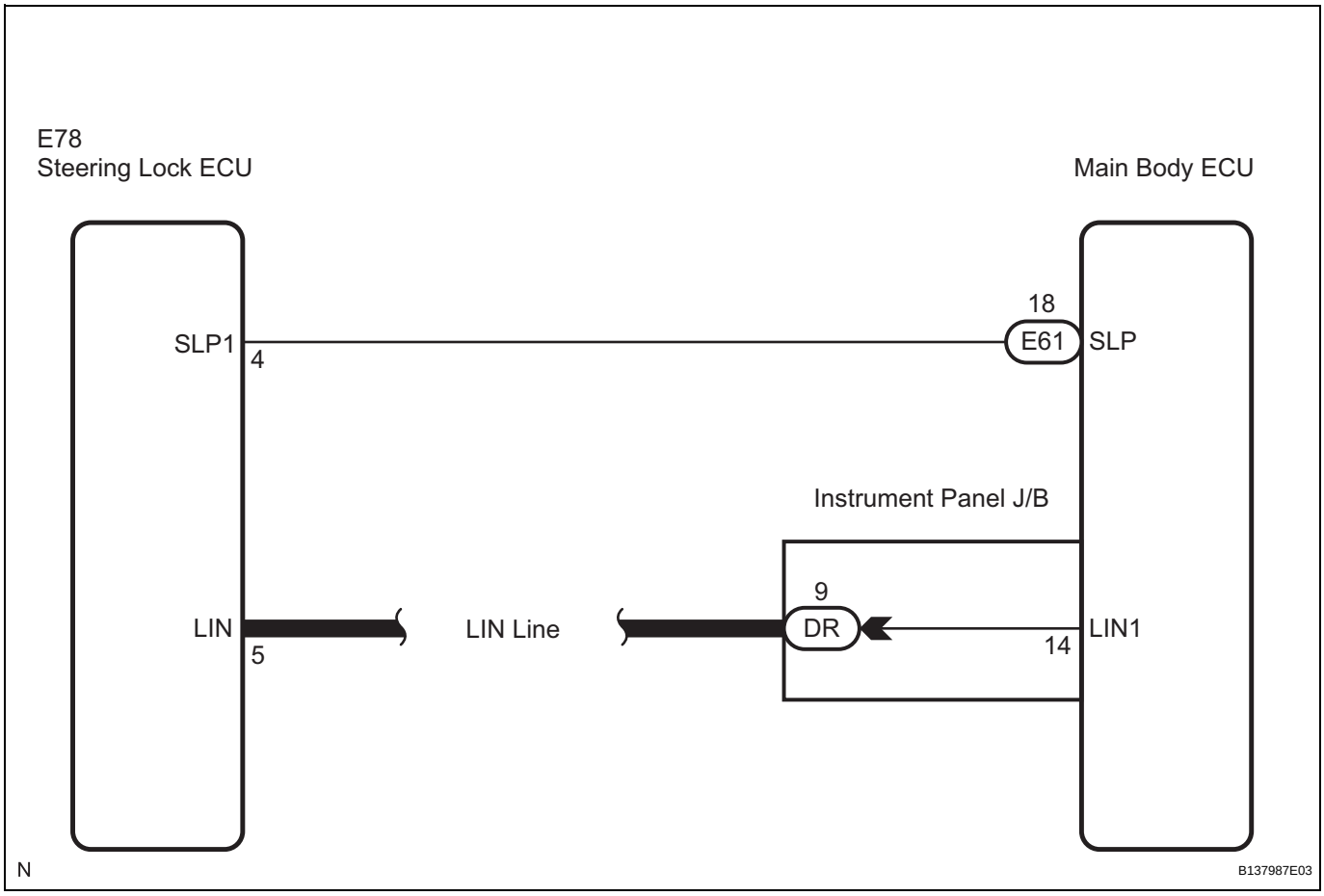

INSPECTION PROCEDURE

1	READ VALUE OF INTELLIGENT TESTER

(a) Connect the intelligent tester to the DLC3.

(b) Check the DATA LIST for proper functioning of the steering lock function.
HINT:
When using the intelligent tester with the engine switch off, turn on and off any of the door courtesy light switches repeatedly at 1.5 second intervals or less until communication between the tester and vehicle starts.

MAIN BODY:

Item	Measurement Item/Display (Range)	Normal Condition	Diagnostic Note
STR UNLOCK SW	Steering lock condition/ON or OFF	ON: Steering is unlocked (Engine switch on (ACC)) OFF: Steering is locked (Engine switch off)	-

OK:
ON (steering is unlocked) and OFF (steering is locked) appear on the screen.

NG → **Go to step 3**

OK

2 CHECK FOR DTCS

(a) Delete the DTCs (See page ST-26).
(b) Check for DTC B2285 (Steering lock position signal circuit malfunction) and DTC B2287 (LIN communication master malfunction) and DTC B2785 (Communication malfunction between ECUs connected by LIN).

Result

Display (DTC output)	Proceed to
"DTC B2285" only	**A**
"DTC B2287" and/or "DTC B2785"	**B**
No DTC	**C**

HINT:
- If DTC B2287 is output, (See page ST-87).
- If DTC B2285 is output, (See page EI-30).

B → **GO TO DTC CHART**

C → **CHECK INTERMITTENT PROBLEMS**

A

REPLACE MAIN BODY ECU

3 CHECK WIRE HARNESS (MAIN BODY ECU - STEERING LOCK ECU)

(a) Disconnect the E61, DR and E78 ECU connectors.

ST

Wire Harness Side:

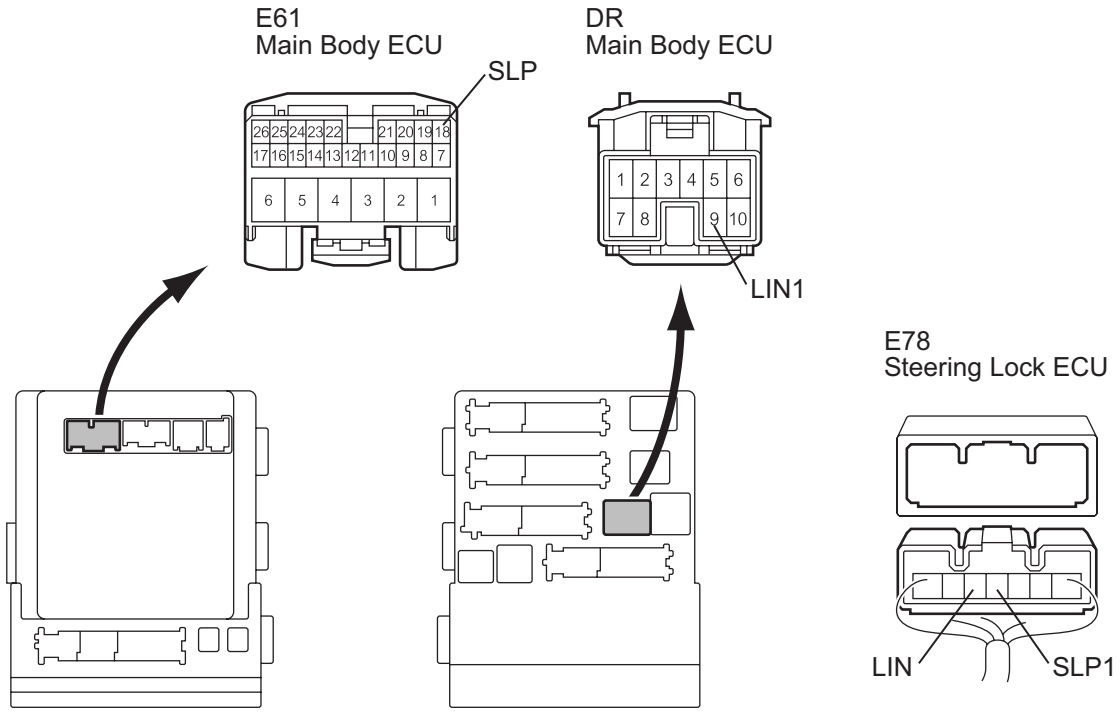

H B137995E02

(b) Measure the resistance according to the value(s) in the table below.

Standard resistance

Tester Connection (Symbols)	Condition	Specified Condition
E61-18 (SLP) - E78-4 (SLP1)	Always	Below 1 Ω
DR-9 (LIN1) - E78-5 (LIN)	Always	Below 1 Ω
E61-18 (SLP) or E78-4 (SLP1) - Body ground	Always	10 kΩ or higher
DR-9 (LIN1) or E78-5 (LIN) - Body ground	Always	10 kΩ or higher

NG → **REPAIR OR REPLACE HARNESS OR CONNECTOR**

OK

ST

4	CHECK MAIN BODY ECU OPERATION

(a) After replacing the main body ECU with a normally functioning ECU, check that the engine starts. Make sure the brake pedal is depressed and the shift position is P at this time.

(b) Check that the engine switch mode can be changed by pushing the engine switch.
HINT:
Without depressing the brake pedal, push the engine switch repeatedly. Engine switch mode should turn from off to on (ACC) to on (IG) and back to off. With the brake pedal depressed, push the engine switch repeatedly. Engine switch mode should turn to ENGINE START from any status.
OK:
Engine can start normally.

NG → **REPLACE STEERING LOCK ECU**

OK ↓

END (MAIN BODY ECU DEFECTIVE)

DTC	B2286	Runnable Signal Malfunction

DESCRIPTION

This DTC is output when serial communication signals and CAN communication signals in the circuit between the main body ECU and ECM are inconsistent.
HINT:
When the main body ECU is replaced with a new one and the negative (-) battery terminal is connected, the power source mode becomes the IG-ON mode. When the battery is removed and reinstalled, the power source mode that was selected when the battery was removed is restored.
After the main body ECU is replaced, perform the registration procedures for the engine immobiliser system (See page EI-9).

DTC No.	DTC Detection Condition	Trouble Area
B2286	Serial communication signals and CAN communication signals in the circuit between the main body ECU and ECM are inconsistent.	• CAN communication system • ECM • Main body ECU • Wire harness or connector

WIRING DIAGRAM

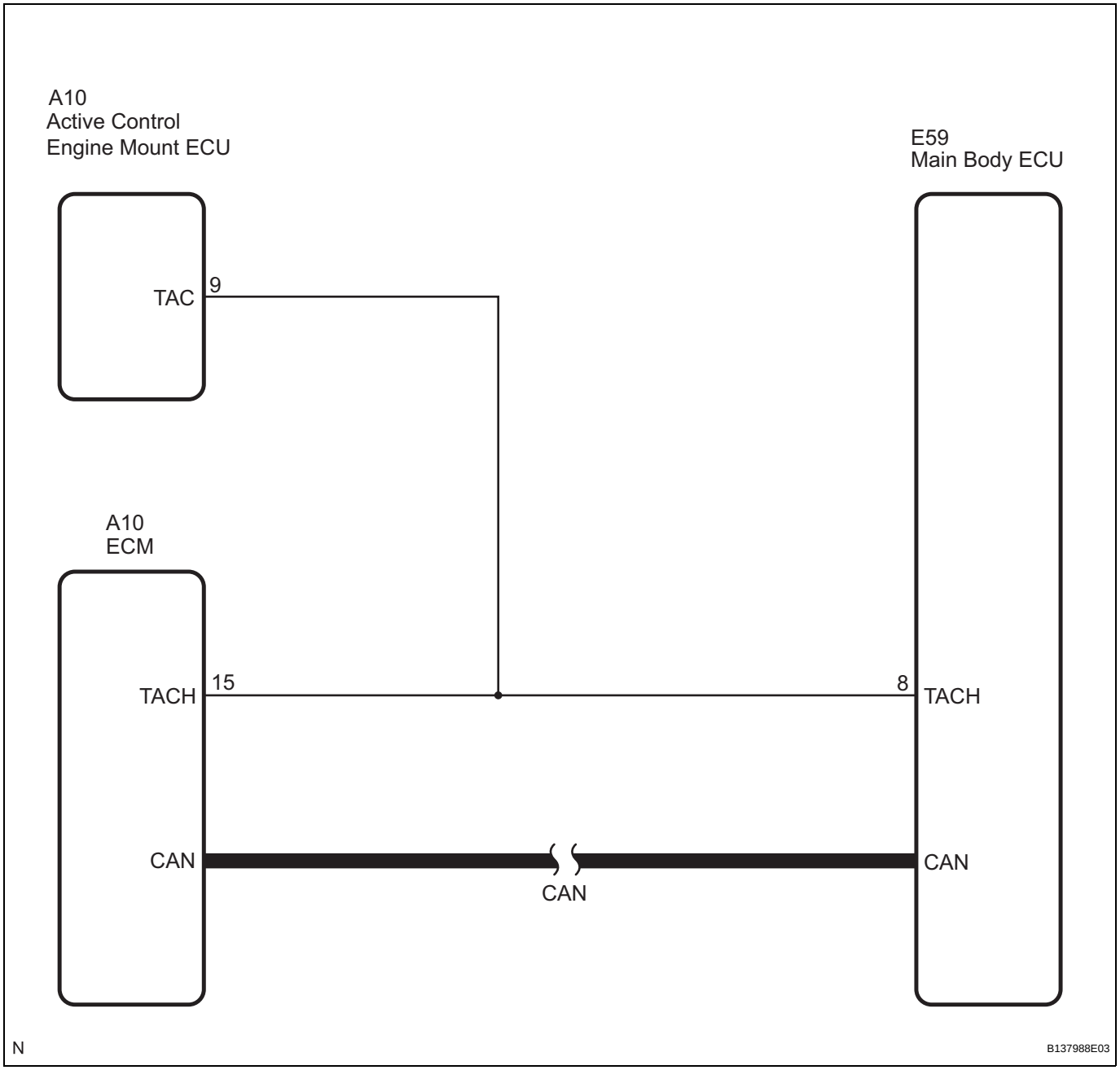

INSPECTION PROCEDURE

1	CHECK OPERATION OF TACHOMETER

(a) Run the engine and check if the function of the tachometer in the combination meter is normal.
OK:
Actual engine revolution speed and the revolution indicated on the tachometer are the same.

OK	Go to step 3

ST

NG

2	CHECK DTC OUTPUT (CAN COMMUNICATION SYSTEM)

(a) Delete the DTC (See page ST-26).
(b) Check for the CAN communication system DTC U0146.
HINT:
If the DTCs for the CAN communication system malfunction are output, inspect those DTCs first (See page CA-49).
OK:
No DTC is output.

NG → **GO TO CAN COMMUNICATION SYSTEM**

OK

GO TO COMBINATION METER SYSTEM

3	CHECK WIRE HARNESS (MAIN BODY ECU - ECM)

(a) Disconnect the A10 ECM connector.

Wire Harness Side:

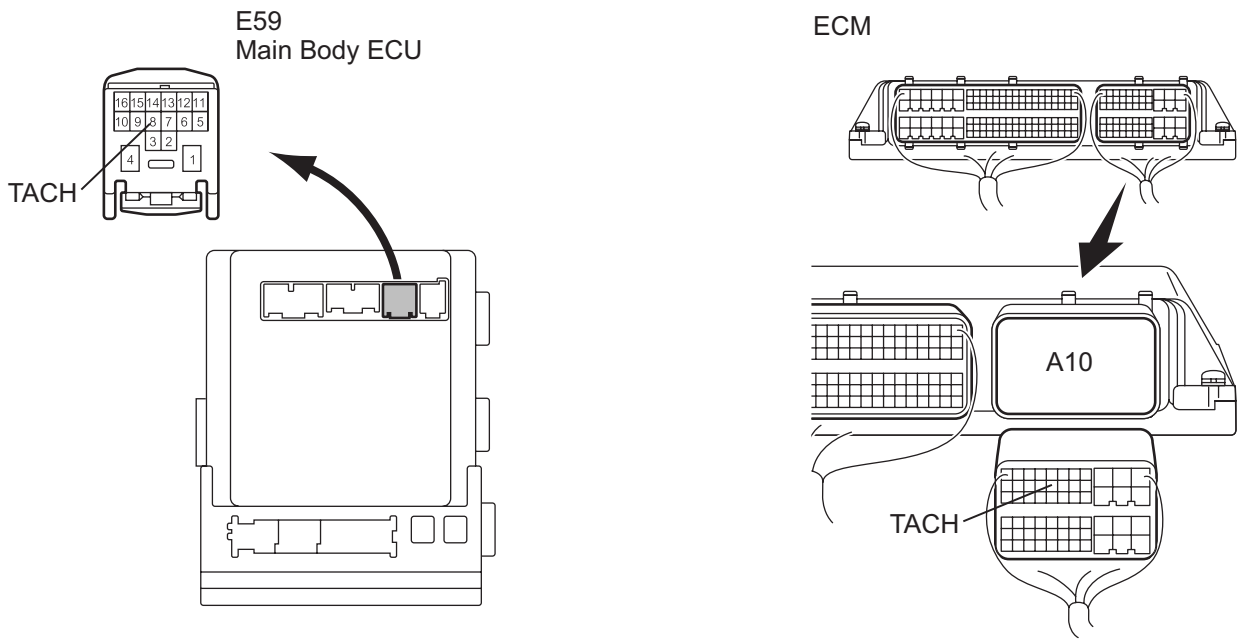

H B138064E02

(b) Disconnect the E59 ECU connector.

(c) Measure the resistance according to the value(s) in the table below.

Standard resistance

Tester Connection (Symbols)	Condition	Specified Condition
E59-8 (TACH) - A10-15 (TACH)	Always	Below 1 Ω
E59-8 (TACH) or A10-15 (TACH) - Body ground	Always	10 kΩ or higher

NG → **REPAIR OR REPLACE HARNESS OR CONNECTOR**

OK

4 READ VALUE OF INTELLIGENT TESTER

(a) Reconnect the connectors.
(b) Connect the intelligent tester to the DLC3.
(c) Check the DATA LIST for proper functioning of the engine.
HINT:
When using intelligent tester with the engine switch off, turn on and off any of the door courtesy light switches repeatedly at 1.5 second intervals or less until communication between the tester and vehicle starts.

MAIN BODY:

Item	Measurement Item/Display (Range)	Normal Condition	Diagnostic Note
E/G COND	Engine condition/STOP or RUN	STOP: Engine is stopped RUN: Engine is running	-

OK:
STOP (engine is stopped) and RUN (engine is running) appear on the screen.

NG → **REPLACE ECM**

OK

REPLACE MAIN BODY ECU

ST

DTC	B2287	LIN Communication Master Malfunction

DESCRIPTION

This DTC is output when there is a LIN communication problem between the main body ECU and certification ECU.
HINT:
When the main body ECU is replaced with a new one and the negative (-) battery terminal is connected, the power source mode becomes the IG-ON mode. When the battery is removed and reinstalled, the power source mode that was selected when the battery was removed is restored.
After the main body ECU or certification ECU is replaced, perform the registration procedures for the engine immobiliser system (See page EI-9).

DTC No.	DTC Detection Condition	Trouble Area
B2287	Communication or communication line is abnormal between the main body ECU and the certification ECU	• Main body ECU • Certification ECU • Wire harness or connector

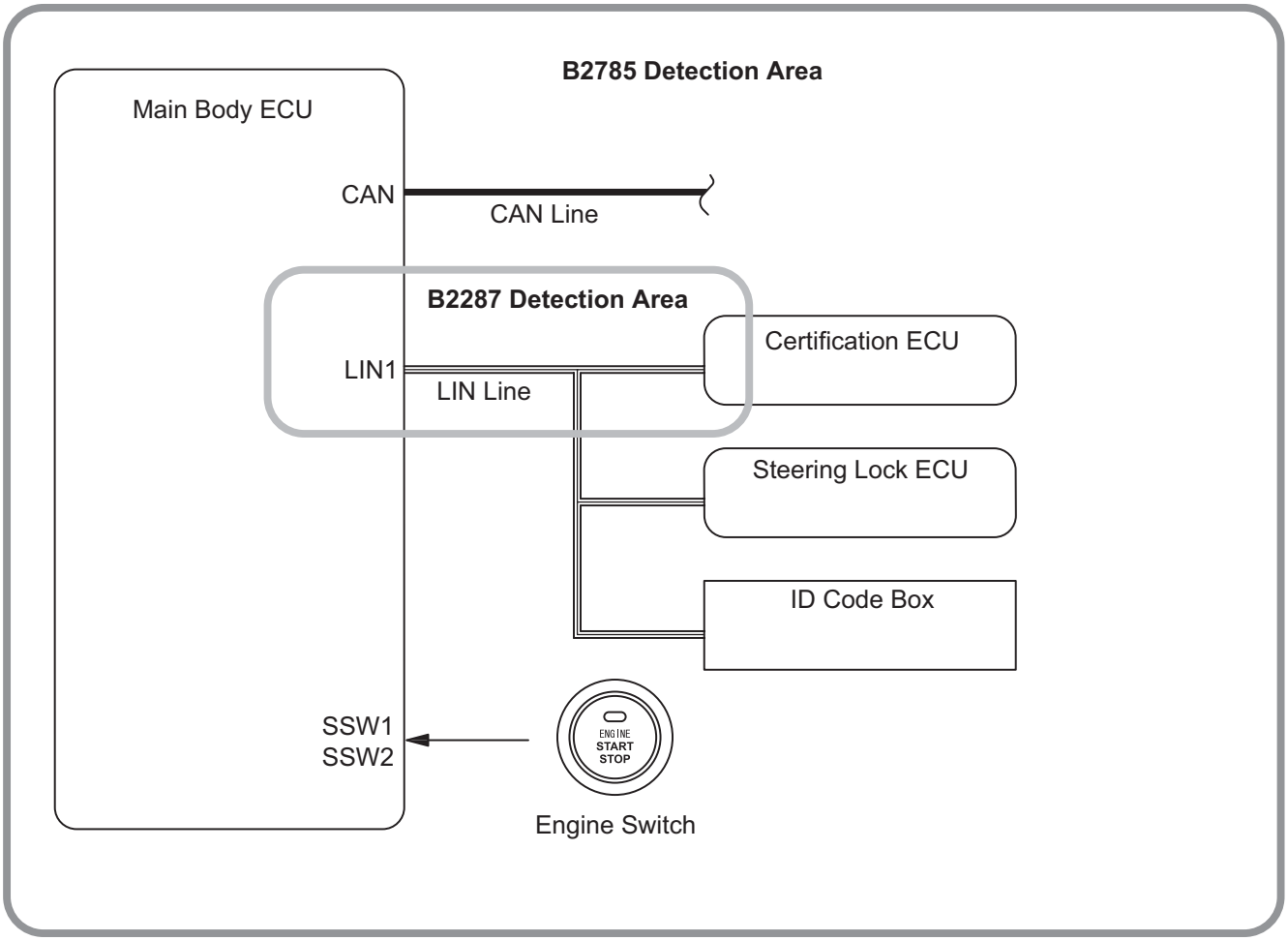

B137997E03

ST

WIRING DIAGRAM

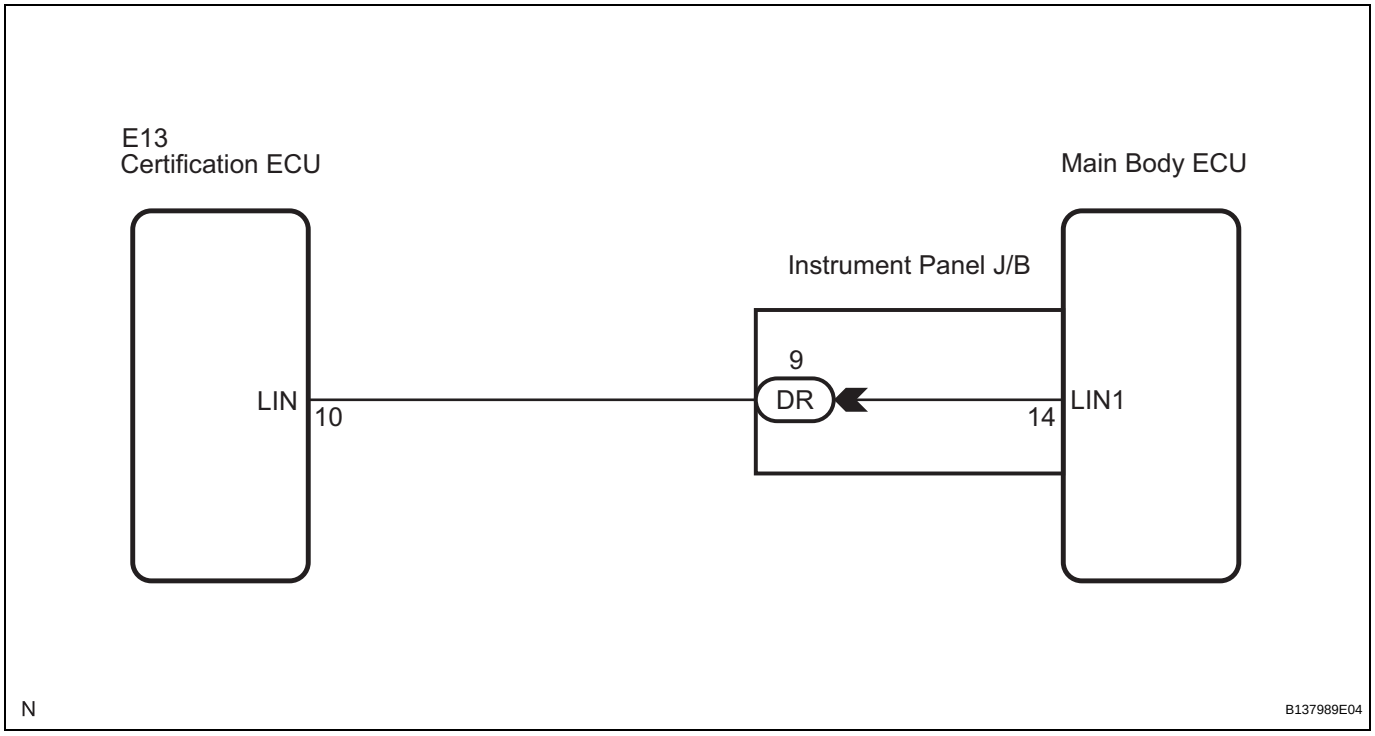

INSPECTION PROCEDURE

1	CHECK FOR DTCS

(a) Delete the DTCs (See page ST-26).
(b) Check for DTC B2287 (LIN communication master malfunction) and B2785 (Communication malfunction between ECUs connected by LIN).

Result

Display (DTC output)	Proceed to
"DTC B2287" only	A
"DTC B2287" and "DTC B2785"	B
No DTC	C

HINT:
If DTC B2785 is output, perform troubleshooting for DTC B2785 first (See page EI-30).

B → **GO TO DTC B2785**

C → **CHECK INTERMITTENT PROBLEMS**

A

2	CHECK WIRE HARNESS (MAIN BODY ECU - CERTIFICATION ECU)

(a) Disconnect the E13 and DR ECU connectors.

ST

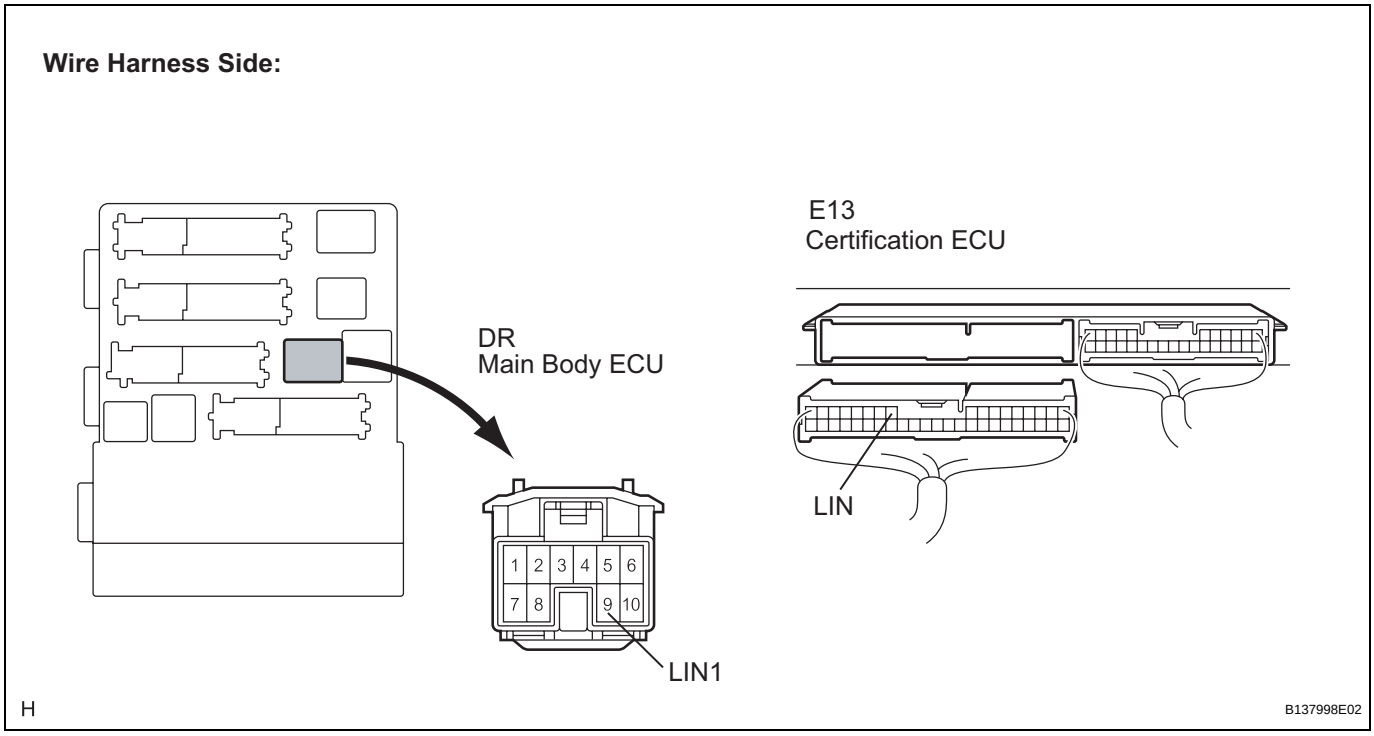

(b) Measure the resistance according to the value(s) in the table below.

Standard resistance

Tester Connection (Symbols)	Condition	Specified Condition
DR-9 (LIN1) - E13-10 (LIN)	Always	Below 1 Ω
DR-9 (LIN1) or E13-10 (LIN) - Body ground	Always	10 kΩ or higher

NG → **REPAIR OR REPLACE HARNESS OR CONNECTOR**

OK

3	CHECK MAIN BODY ECU OPERATION

(a) After replacing the main body ECU with a normally functioning ECU, check that the engine starts.

OK:

Engine can start normally.

NG → **REPLACE CERTIFICATION ECU**

OK

REPLACE END (MAIN BODY ECU DEFECTIVE)

ST

DTC	B2288	Steering Lock Signal Circuit Malfunction

DESCRIPTION

This DTC is output when the main body ECU cannot detect the unlock condition of the steering lock within a specified time.
HINT:
When the main body ECU is replaced with a new one and the negative (-) battery terminal is connected, the power source mode becomes the IG-ON mode. When the battery is removed and reinstalled, the power source mode that was selected when the battery was removed is restored.
After the main body ECU is replaced, perform the registration procedures for the engine immobiliser system (See page EI-9).

DTC No.	DTC Detection Condition	Trouble Area
B2288	After turning engine switch from off to on (IG), the steering wheel does not unlock for a certain period of time (ECU unlocks steering wheel only when it receives an unlock signal from LIN communication and cable)	• Main body ECU • Steering lock ECU • Wire harness or connector

WIRING DIAGRAM

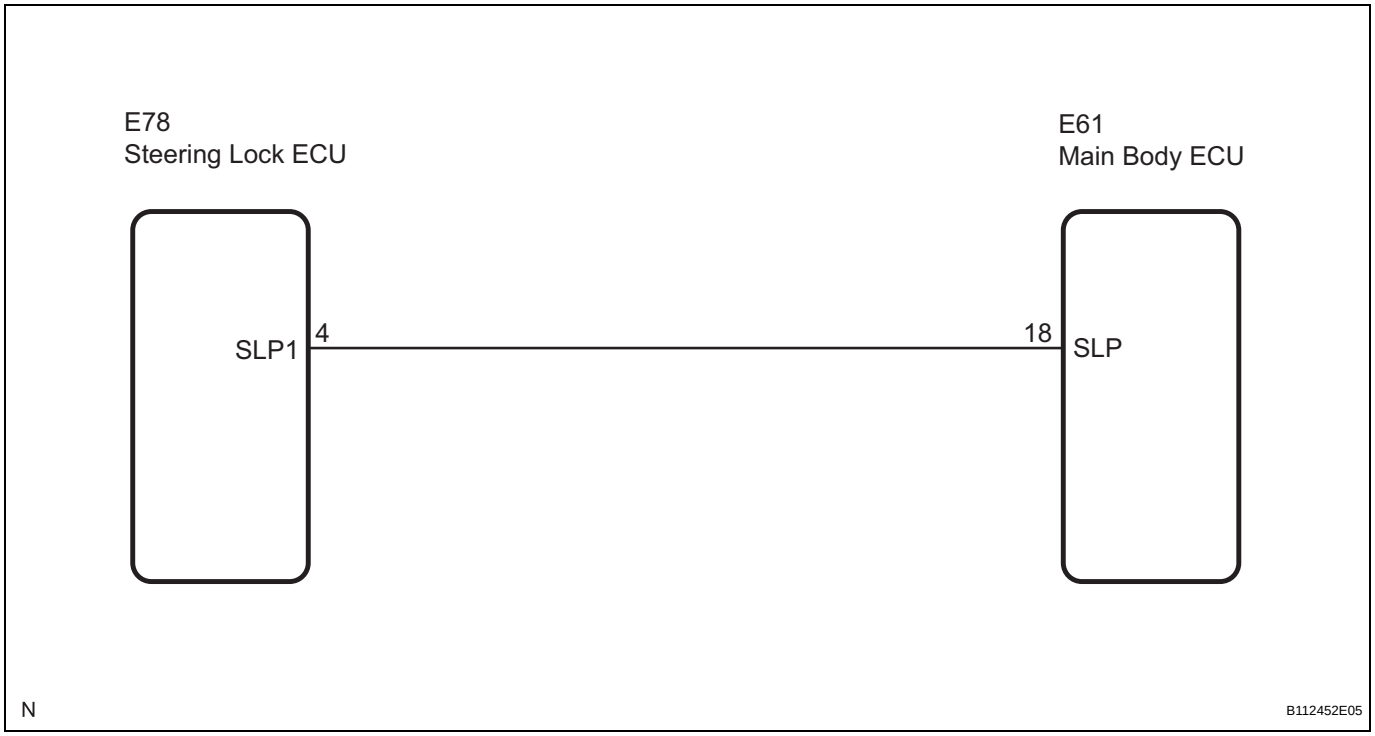

INSPECTION PROCEDURE

1	CHECK FOR DTCS

(a) Delete the DTCs (See page ST-26).
(b) After all DTCs are cleared, check if the trouble occurs again 5 seconds after the engine switch is turned on (IG).
(c) Check for DTCs again.

ST

OK:

DTC B2785 (Communication malfunction between ECUs connected by LIN), DTC B2287 (LIN communication master malfunction) and DTC B2781 (Open/short in steering lock ECU) are not output.

HINT:

- If DTC B2785 is output, (See page EI-30).
- If DTC B2287 is output, (See page ST-87).
- If DTC B2281 is output, (See page SR-61).

NG → **GO TO DTC CHART**

OK

2	CHECK WIRE HARNESS (MAIN BODY ECU - STEERING LOCK ECU)

(a) Disconnect the E61 and E78 ECU connectors.

Wire Harness Side:

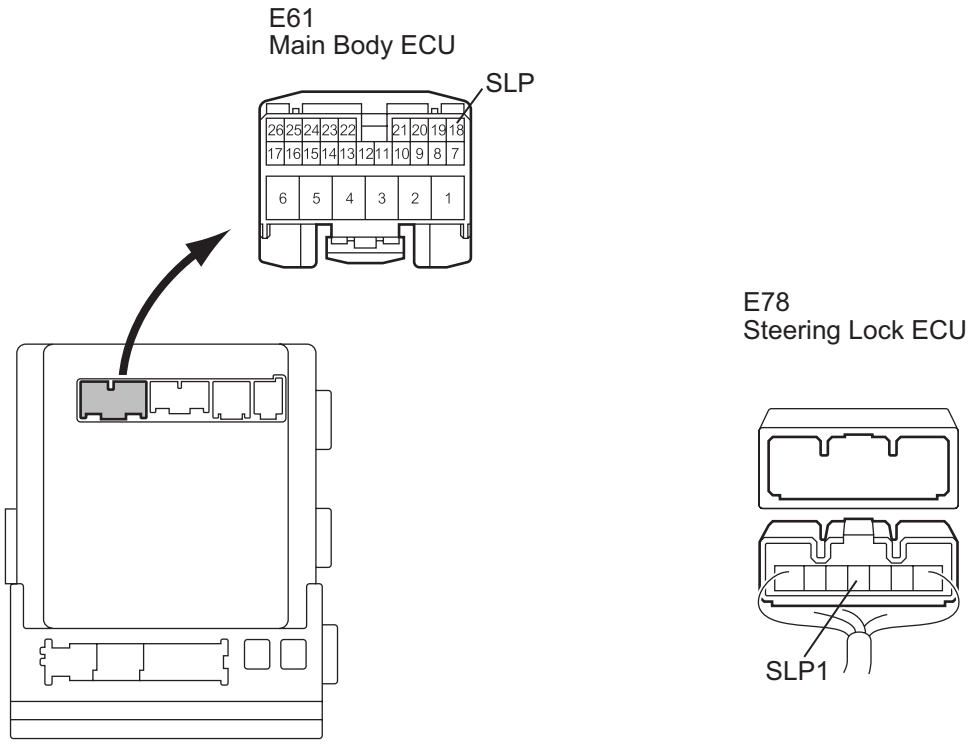

H B137999E02

(b) Measure the resistance according to the value(s) in the table below.

Standard resistance

Tester Connection	Condition	Specified Condition
E61-18 (SLP) - E78-4 (SLP1)	Always	Below 1 Ω
E61-18 (SLP) or E78-4 (SLP1) - Body ground	Always	10 kΩ or higher

NG → **REPAIR OR REPLACE HARNESS OR CONNECTOR**

OK

3	CHECK MAIN BODY ECU OPERATION

(a) After replacing the main body ECU with a normally functioning ECU, check that the engine starts.
OK:
Steering lock/unlock function operates normally.
HINT:
If steering lock/unlock function does not operate, refer to PROBLEM SYMPTOMS TABLE of the electrical steering lock (steering wheel cannot be unlocked) (See page SR-54).

NG → **GO TO ELECTRIC STEERING LOCK**

OK

END (MAIN BODY ECU DEFECTIVE)

DTC	B2289	Key Collation Waiting Time Over

DESCRIPTION

This DTC is output when there is a LIN communication problem between the main body ECU and certification ECU or when there is a problem in the engine immobiliser system.
HINT:
After the main body ECU is replaced, perform the registration procedures for the engine immobiliser system (See page EI-9).

DTC No.	DTC Detection Condition	Trouble Area
B2289	Either condition below is met: • Cable and CAN are abnormal between the main body ECU and the engine immobiliser system • The engine immobiliser system is malfunctioning	• Main body ECU • Engine immobiliser system • Wire harness or connector • Certification ECU

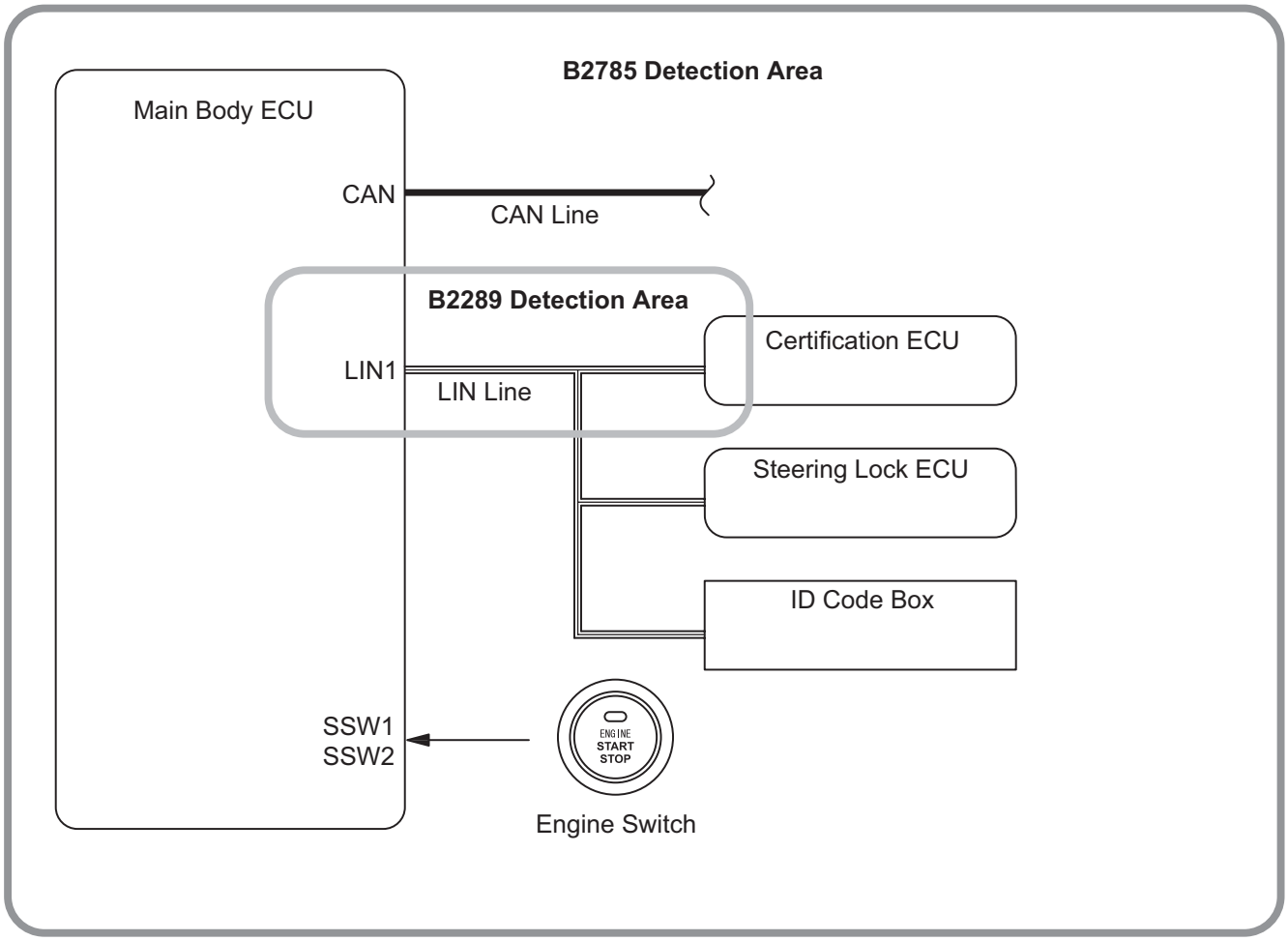

B137997E04

ST

WIRING DIAGRAM

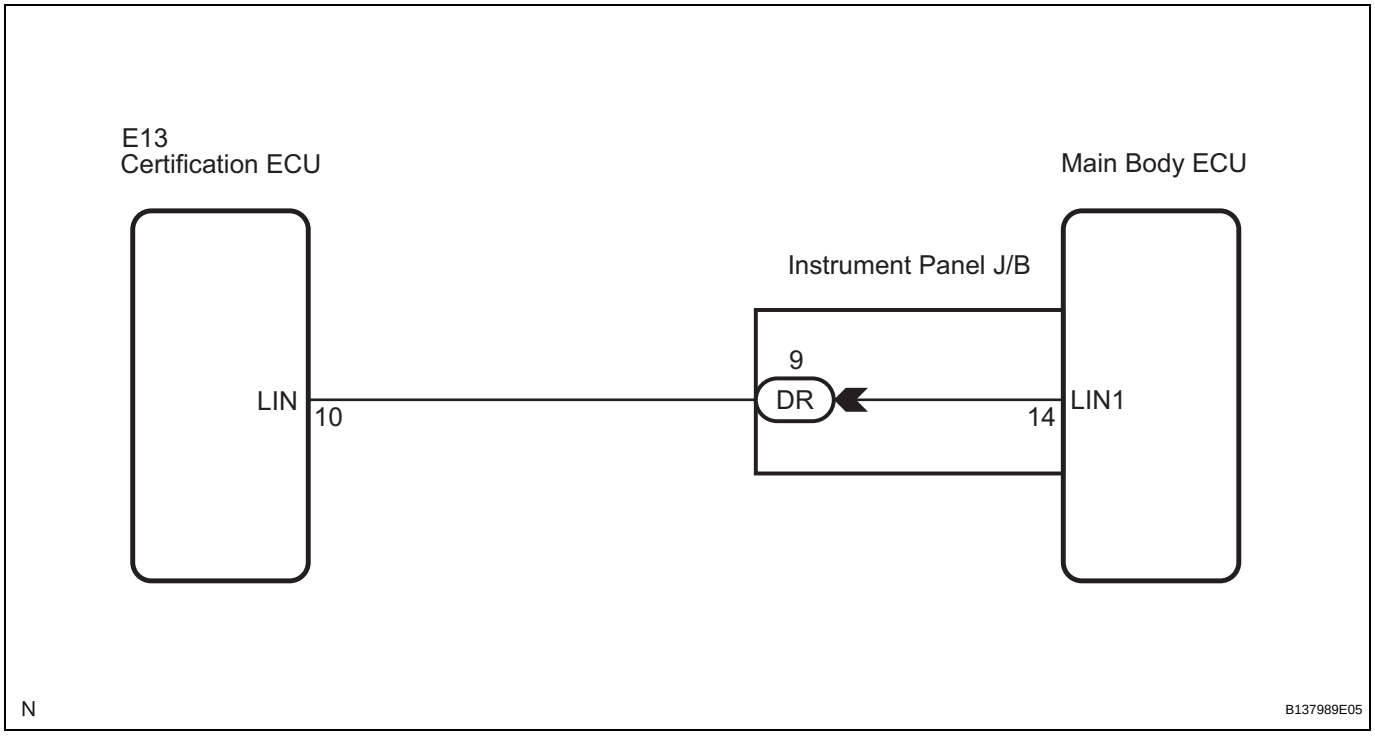

INSPECTION PROCEDURE

1	CHECK FOR DTCS

(a) Delete the DTCs (See page ST-26).
(b) Check for DTC B2289 (Key collection waiting time over) and B2785 (Communication malfunction between ECUs connected by LIN).

Result

Display (DTC output)	Proceed to
"DTC B2289" only	A
"DTC B2785" only	B
No DTC	C

HINT:
- If DTC B2785 is output, perform troubleshooting for DTC B2785 first (See page EI-30).

B → GO TO DTC B2785

C → CHECK INTERMITTENT PROBLEMS

A

2	CHECK WIRE HARNESS (MAIN BODY ECU - CERTIFICATION ECU)

(a) Disconnect the E13 and DR ECU connectors.

ST

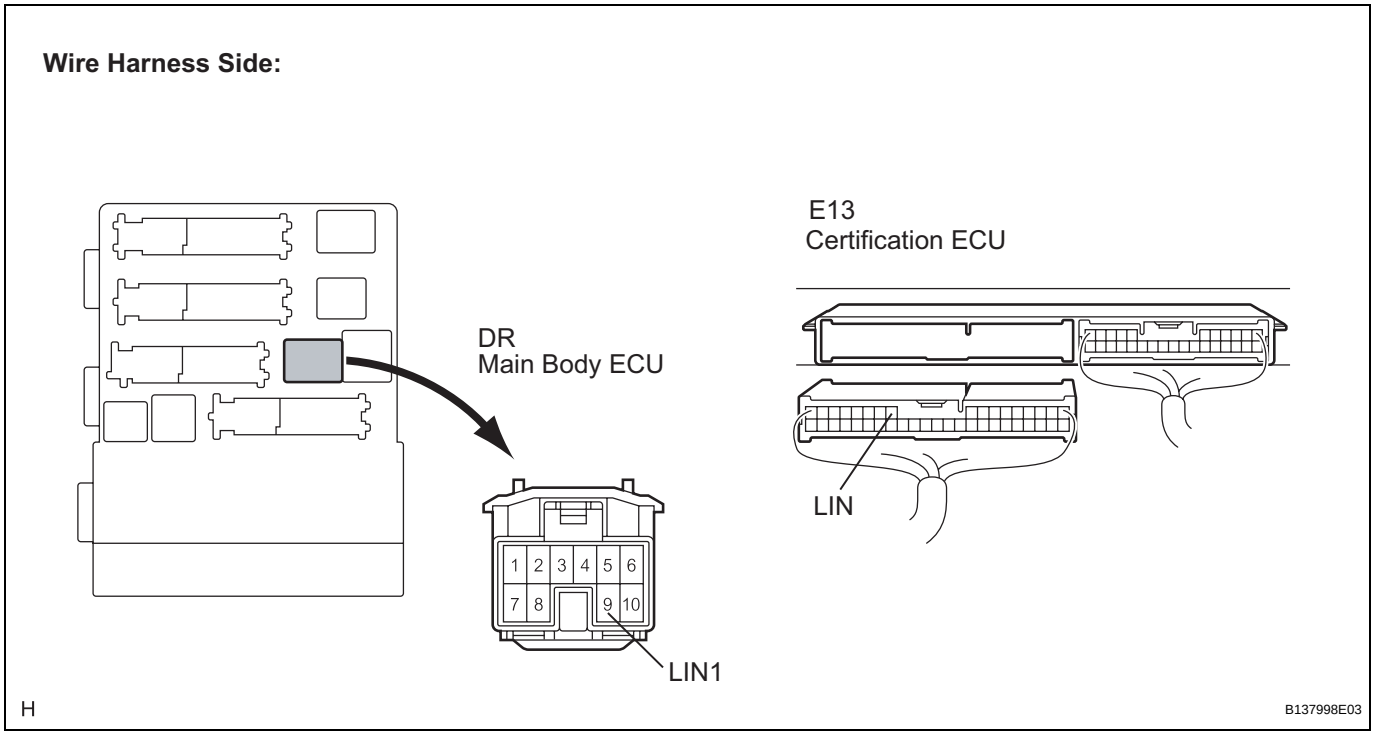

(b) Measure the resistance according to the value(s) in the table below.

Standard resistance

Tester Connection (Symbols)	Condition	Specified Condition
DR-9 (LIN1) - E13-10 (LIN)	Always	Below 1 Ω
DR-9 (LIN1) or E13-10 (LIN) - Body ground	Always	10 kΩ or higher

NG → **REPAIR OR REPLACE HARNESS OR CONNECTOR**

OK

3	CHECK MAIN BODY ECU DEFECTIVE

(a) After replacing the main body ECU with a normally functioning ECU, check that the engine starts.

OK:

Engine can start normally.

HINT:

If the engine does not start, refer to PROBLEM SYMPTOMS TABLE of the smart access system with push-button start (door lock function) (matching for the inside of the cabin cannot be performed) (See page DL-121).

NG → **GO TO SMART ACCESS SYSTEM WITH PUSH-BUTTON START (ENTRY)**

ST

OK

END (MAIN BODY ECU DEFECTIVE)

Engine does not Start

DESCRIPTION

1. ENGINE START SYSTEM FUNCTION

(a) If the engine switch is pressed with the shift lever in the P or N position and the brake pedal depressed, the main body ECU determines that it is an engine start request.
(b) The certification ECU and other ECUs perform key verification via the LIN communication line.
(c) The main body ECU activates the ACC relay.
(d) The main body ECU activates the IG1 and IG2 relays.
(e) The certification ECU outputs a steering UNLOCK signal. The signal is sent to the main body ECU via the steering lock ECU.
(f) The main body ECU sends an engine start request signal to the ECM.
(g) The ECM sends an ACC cut request signal to the main body ECU.
(h) The ECM and main body ECU activate the ST relay.
(i) The main body ECU deactivates the ACC relay until the ECU detects an engine start.
(j) When engine revolution speed reaches 1200 rpm, the ECU determines that the engine has been started.
The ECM stop sending an ACC cut request signal to the main body ECU.
The main body ECU reactivates the ACC relay and turns off the engine switch indicator light.

Symbols of main body ECU	Signals	
STP	Stop light switch ON signal	Input
SSW1/SSW2	Engine switch ON signal	Input
ACCD	ACC relay operation signal	Output
SLP	Shift lock actuator position signal	Input
STP	Stop light signal	Input
IG1D	IG1 relay operation signal	Output
P	Shift lock signal	Input
IG2D	IG2 relay operation signal	Output
STR2	ST relay operation signal (Sub)	Output
STR	Park / neutral position switch signal	Input
TACH	Engine start detection signal	Input
STSW	Starter activation request signal	Output
ACCR	ACC cut request signal	Input

Symbols of ECM	Signals	
ACCR	ACC cut request signal	Output
TACH	Engine revolution speed signal	Output
STSW	Starter activation request signal	Input
NSW	Park / neutral position switch signal	Input
STAR	ST relay operation signal (Main)	Output
STA	Starter activation signal	Input

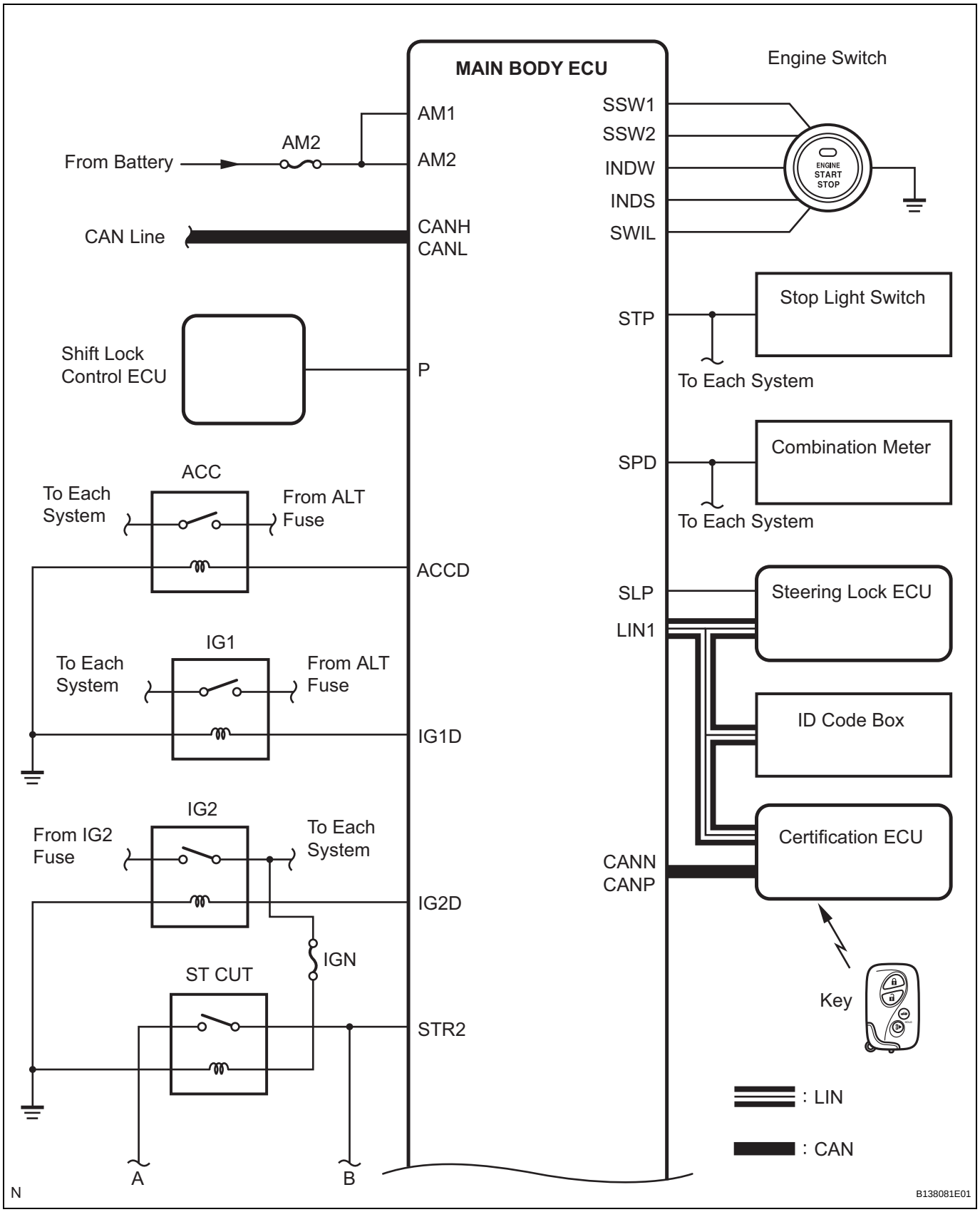
MAIN BODY ECU
Engine Switch
AM1
AM2
From Battery
AM2
CAN Line
CANH
CANL
SSW1
SSW2
INDW
INDS
SWIL
ENGINE START STOP
Stop Light Switch
STP
To Each System
Shift Lock Control ECU
P
Combination Meter
SPD
To Each System
ACC
To Each System
From ALT Fuse
ACCD
SLP
LIN1
Steering Lock ECU
IG1
To Each System
From ALT Fuse
IG1D
ID Code Box
IG2
From IG2 Fuse
To Each System
Certification ECU
CANN
CANP
IG2D
IGN
ST CUT
Key
STR2
: LIN
: CAN
A
B
N
B138081E01

ST

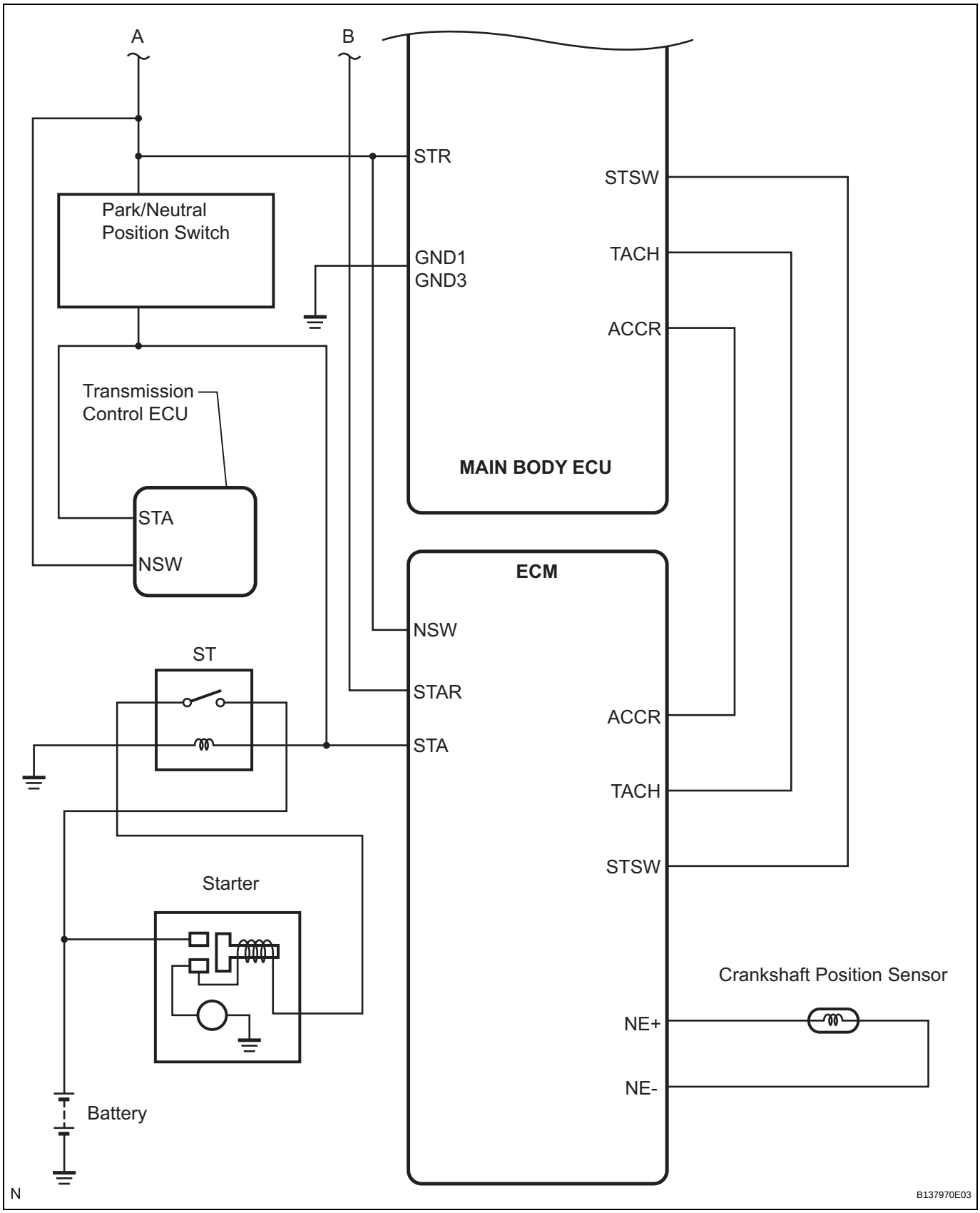

WIRING DIAGRAM

See CRANKING HOLDING FUNCTION CIRCUIT (See page ES-449).

ST

INSPECTION PROCEDURE

1. EMERGENCY ENGINE START CONTROL

(a) If there is a malfunction in the stop light switch or STOP fuse, their signals may not be correctly transmitted to the main body ECU. This may result in the engine not starting even if the engine switch is pressed while the brake pedal is depressed and the shift lever is in the P position.
To activate the starter:
(1) Turn the engine switch from off to on (ACC).
(2) Press and hold the engine switch for 15 seconds.

HINT:
After the main body ECU, certification ECU, steering lock ECU, ID code box and/or ECM are/is replaced, perform the registration procedures for the engine immobiliser system (See page EI-9).

1	CHECK ENTRY FUNCTION DETECTION AREA

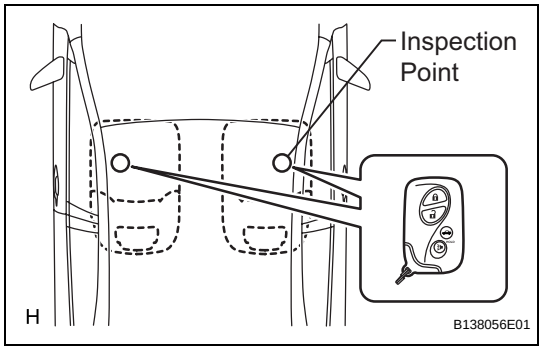

(a) Inspect entry detection area.
(1) When the electrical key is in either of the 2 inspection points in the illustration, the shift lever is in the P position and the brake pedal is depressed, check that the engine switch indicator illuminates in green.
OK:
Engine switch illuminates in green.
HINT:
If the engine switch does not illuminate, perform troubleshooting according to the PROBLEM SYMPTOMS TABLE of the smart access with push-button start (starting) (engine switch indicator light does not come on) (See page ST-17) and the smart access with push-button start (entry door lock) (matching for the inside of the cabin cannot be performed) (See page DL-121).

NG → **GO TO OTHER PROBLEM**

OK

2	CHECK IF ENGINE STARTS (INITIALIZE STEERING LOCK)

(a) Engine switch off.
(b) Make sure that the shift lever is in the P position.
(c) Open and close the driver's door.
(d) When the shift lever is in the P position and the brake pedal is depressed, check if the engine can be started.
OK:
Steering lock/unlock function operates normally and engine can be started.
HINT:
After the battery is discharged and then recharged, the engine may not start unless the steering lock is initialized using the above procedure (See page SR-53).

OK → **END**

ST

NG

3	CHECK FOR DTC

(a) Delete the DTCs (See page ST-26).
(b) Check for DTCs again.
OK:
No DTC is output.
HINT:
- If smart access system with push-button start (starting function) DTCs are output, (See page ST-28).
- If smart access system with push-button start (entry lock function) DTCs are output, (See page DL-134).
- If electrical steering lock DTCs are output, (See page SR-59).
- If engine immobiliser system DTCs are output, (See page EI-27).
- If engine control system DTCs output (2GR-FE), (See page ES-59).

NG → **GO TO DTC CHART**

OK

4	CHECK ENGINE SWITCH CONDITION

ST

(a) Check the power source mode change.
(1) When the key is inside the vehicle and the shift lever is in the P position, check that pressing the engine switch causes the power source mode to change as follows:
OK:
off → on (ACC) → on (IG) → off
HINT:
- If power mode does not change to ON (IG and ACC), (See page ST-118).
- If power mode does not change to ON (IG), (See page ST-126).
- If power mode does not change to ON (ACC), (See page ST-135).

NG → **GO TO OTHER PROBLEM**

OK

5	CHECK CRANKING FUNCTION

(a) Check the engine cranking function.
(1) When there is fuel in the fuel tank, the key is inside the vehicle, and the shift lever is in the P position, check that depressing the brake pedal and pressing the engine switch crank the engine.

OK:
Engine cranks.

OK → **Go to step 23**

NG

6 READ VALUE OF INTELLIGENT TESTER (P SIGNAL)

(a) Connect the intelligent tester to the DLC3.
(b) Turn the engine switch on (IG).
(c) Read the DATA LIST according to the displays on the tester screen.

MAIN BODY:

Item	Measurement Item/Range (Display)	Normal Condition	Diagnostic Note
SHIFT P SIG	Shift P signal / ON or OFF	ON: Shift position is P OFF: Shift position is not P	-

OK:
ON (P signal is ON) and OFF (P signal is OFF) appear on the screen.
HINT:
If the result is not as specified, perform troubleshooting for DTC B2281 ("P" signal malfunction) first (See page ST-60).

NG → **GO TO DTC B2281**

OK

ST

7 READ VALUE OF INTELLIGENT TESTER (STOP LIGHT SWITCH)

(a) Connect the intelligent tester to the DLC3.
(b) Turn the engine switch on (IG).
(c) Check the DATA LIST for proper functioning of the stop light switch.

MAIN BODY:

Item	Measurement Item/Display (Range)	Normal Condition	Diagnostic Note
STOP LIGHT SW	Stop light Switch / ON or OFF	ON: Brake pedal depressed OFF: Brake pedal released	-

OK:
ON (brake pedal depressed) and OFF (brake pedal released) appear on the screen.
HINT:
If the result is not as specified, perform troubleshooting for DTC B2284 (Brake signal malfunction) first (See page ST-74).

NG → **GO TO DTC B2284**

OK

8 READ VALUE OF INTELLIGENT TESTER (STEERING LOCK)

(a) Connect the intelligent tester to the DLC3.
(b) Turn the engine switch on (IG).

MAIN BODY:

Item	Measurement Item/Display (Range)	Normal Condition	Diagnostic Note
STR UNLOCK SW	Steering lock condition / ON or OFF	ON: Steering is unlocked (Engine switch on (ACC)) OFF: Steering is locked (Engine switch off)	-

OK:
ON (steering is unlocked) and OFF (steering is locked) appear on the screen.

HINT:
If the result is not as specified, perform troubleshooting for DTCs B2285 (Steering lock position signal circuit malfunction) and B2288 (Steering lock signal circuit malfunction) first (See page ST-28).

NG → **GO TO DTC B2285**

OK

9 CHECK STEERING LOCK

(a) Check if the steering lock is released when turning the engine switch on (ACC).
OK:
The steering lock is released.

NG → **Go to step 22**

OK

ST

10 INSPECT MAIN BODY ECU (STSW VOLTAGE)

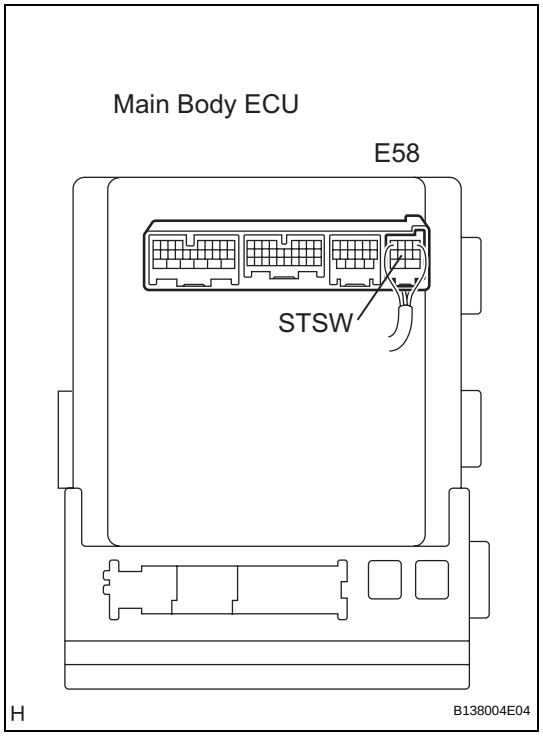

(a) Disconnect the A10 ECM connector.
(b) Measure the voltage according to the value(s) in the table below.

Standard voltage

Tester Connection (Symbols)	Condition	Specified Condition
E58-4 (STSW) - Body ground	Brake pedal depressed, engine switch held on (ST)	Output voltage at terminal AM1 or AM2 is -2 V or more.

HINT:
If the result is not as specified, perform troubleshooting for DTC B2275 (STSW monitor malfunction) first (See page ST-48).

NG → **GO TO DTC B2275**

OK

11 INSPECT ECM (ACCR VOLTAGE)

ST

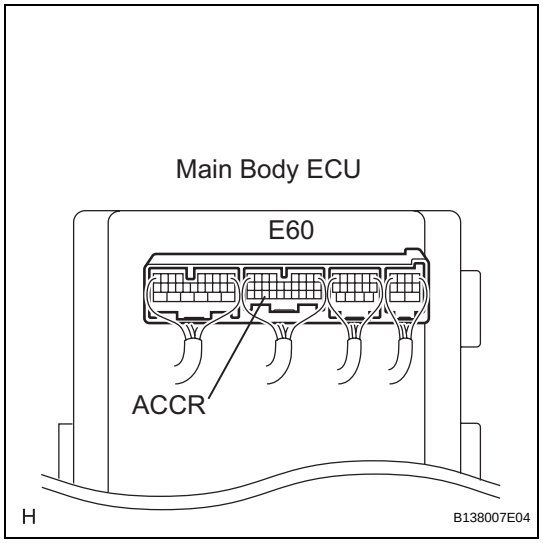

(a) Reconnect the connector.
(b) Measure the voltage according to the value(s) in the table below.

Standard voltage

Tester Connection (Symbols)	Condition	Specified Condition
E60-3 (ACCR) - Body ground	Brake pedal depressed, shift lever P position, engine switch is pushed once → on (IG)	0.1 to 0.8 V*1 → Output voltage at terminal AM1 or AM2 is -2 V or more.

*1: Voltage is output only when the engine is cranking.
HINT:
If the result is not as specified, perform troubleshooting for DTC B2276 (ACCR signal circuit malfunction) first (See page ST-51).

NG → **GO TO DTC B2276**

OK

12 INSPECT MAIN BODY ECU (STR VOLTAGE)

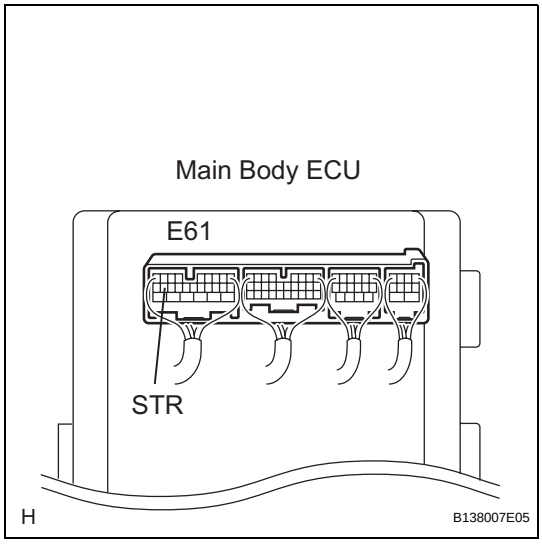

(a) Measure the voltage according to the value(s) in the table below.
Standard voltage

Tester Connection (Symbols)	Condition	Specified Condition
E61-8 (STR) - Body ground	Shift lever P or N position → except P or N position	Below 1 V → Pulse generation

OK → **Go to step 18**

NG

13 INSPECT RELAY (ST CUT)

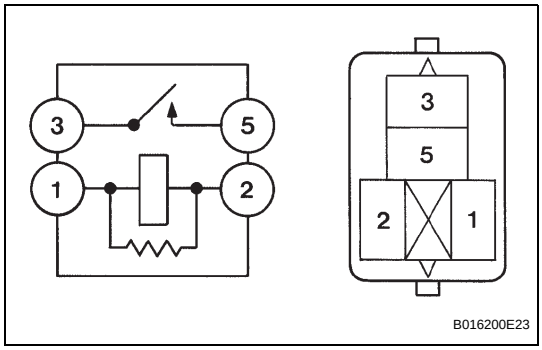

(a) Measure the resistance of the ST CUT relay.
Standard resistance

Tester Connection	Specified Condition
3 - 5	10 kΩ or higher
3 - 5	Below 1 Ω (when battery voltage is applied to terminals 1 and 2

NG → **REPLACE RELAY**

OK

ST

14 INSPECT PARK/NEUTRAL POSITION SWITCH

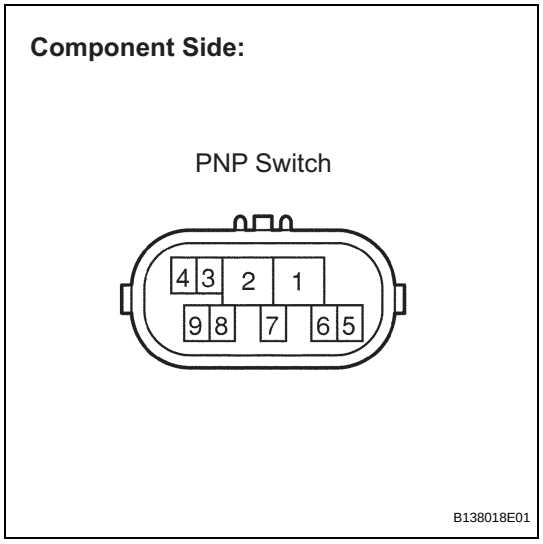

(a) Disconnect the park/neutral position (PNP) switch connector.

(b) Measure the resistance according the the value(s) in the table below.

Standard resistance

Shift Position	Tester Connection	Specified Condition
P	4 - 9	Below 1 Ω
N	4 - 9	Below 1 Ω
Except P and N	4 - 9	10 kΩ or higher

NG → **REPLACE PARK / NEUTRAL POSITION SWITCH**

OK

15 CHECK HARNESS AND CONNECTOR (PARK/NEUTRAL POSITION SWITCH - ECM, MAIN BODY ECU)

(a) Measure the resistance according to the value(s) in the table below.

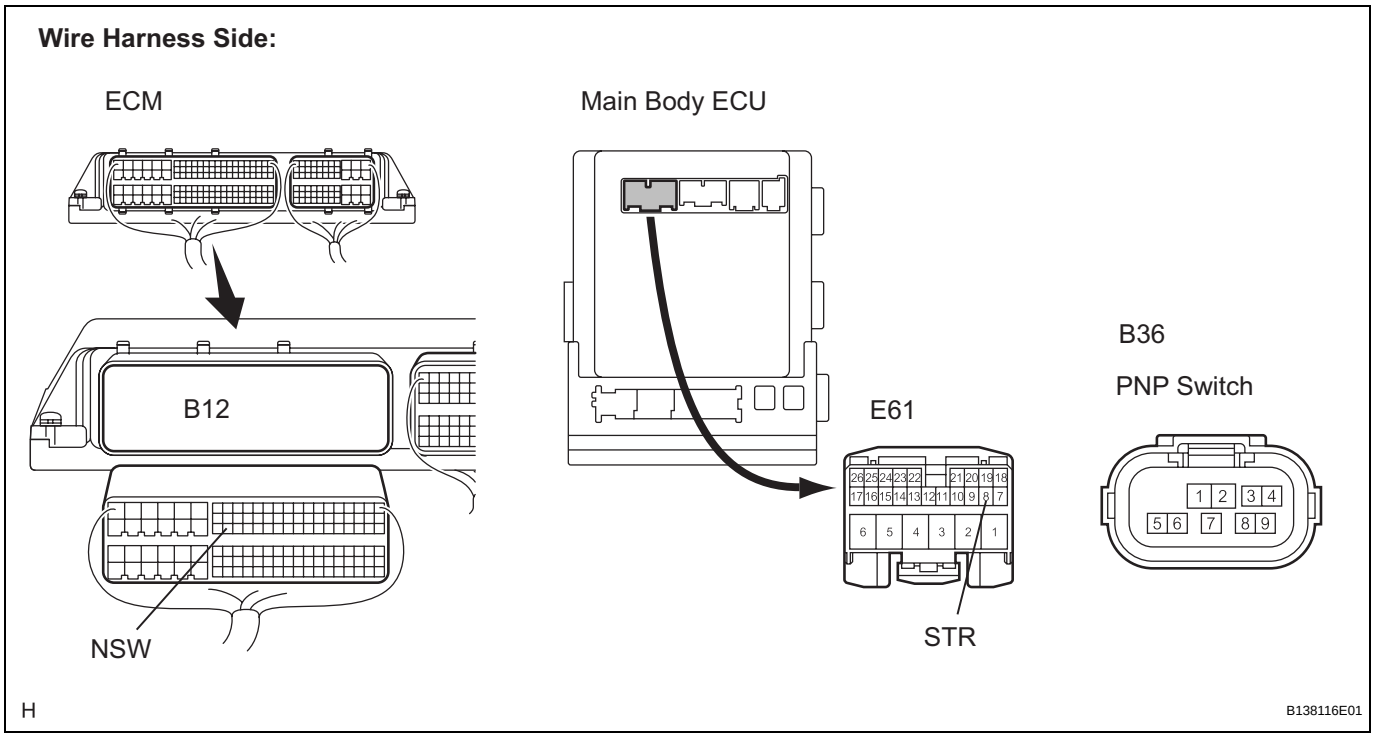

Standard resistance

Tester Connection (Symbols)	Condition	Specified Condition
B12-62 (NSW) - B36-4	Always	Below 1 Ω

ST

Tester Connection (Symbols)	Condition	Specified Condition
B12-62 (NSW) - E61-8 (STR)	Always	Below 1 Ω
B12-62 (NSW) - Body ground	Always	10 kΩ or higher

NG → **REPAIR OR REPLACE HARNESS OR CONNECTOR**

OK

16 INSPECT DRIVER SIDE JUNCTION BLOCK (STR2 VOLTAGE)

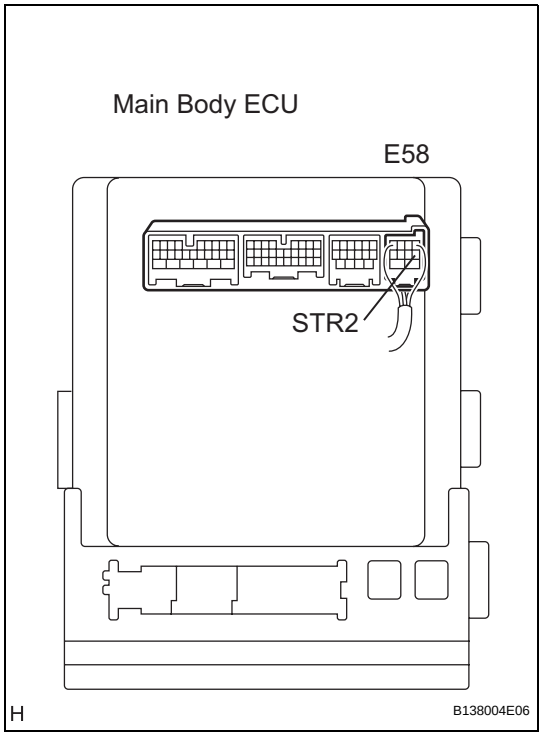

(a) Disconnect the B12 ECM connector.
(b) Measure the voltage according to the value(s) in the table below.

Standard voltage

Tester Connection (Symbols)	Condition	Specified Condition
E58-6 (STR2) - Body ground	Brake pedal depressed, shift lever P or N position, engine switch on (ST)	Output voltage at terminal AM1 or AM2 is - 3.5 V or more.*1

*1: Voltage is output for 0.3 seconds when the engine is cracking to start. Disconnect the B12 connector from the ECM before measuring the voltage.

NG → **REPLACE MAIN BODY ECU**

OK

17 CHECK WIRE HARNESS (MAIN BODY ECU - ECM - ENGINE ROOM R/B)

(a) Remove the ST CUT relay from the engine room R/B.

ST

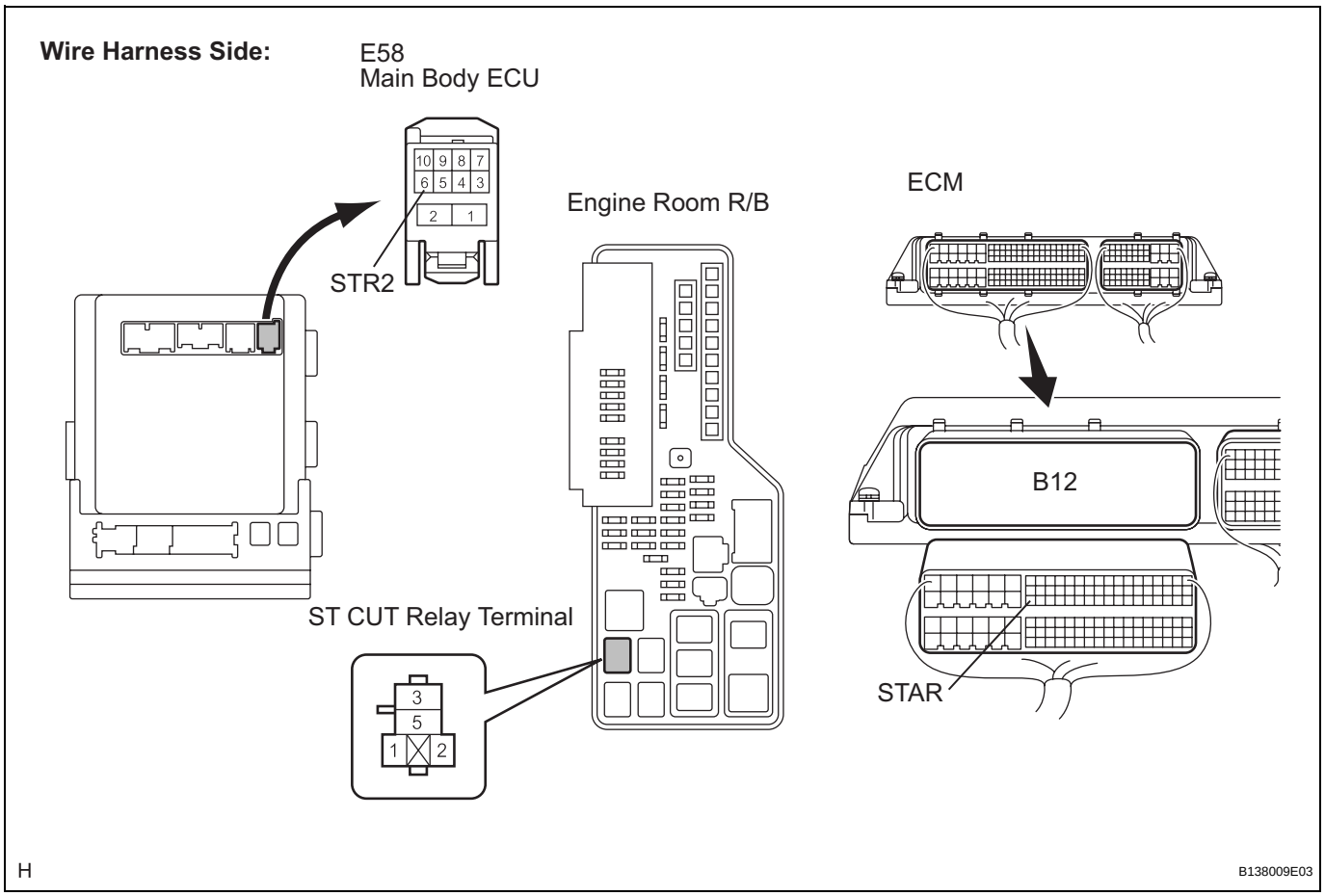

(b) Disconnect the E58 ECU connector.

(c) Measure the resistance according to the value(s) in the table below.

Standard resistance

Tester Connection (Symbols)	Condition	Specified Condition
B12-63 (STAR) - E58-6 (STR2)	Always	Below 1 Ω
B12-63 (STAR) - ST CUT relay terminal - 3	Always	Below 1 Ω
B12-63 (STAR) - Body ground	Always	10 kΩ or higher

NG → **REPAIR OR REPLACE HARNESS OR CONNECTOR**

OK

ST

18 INSPECT RELAY (ST)

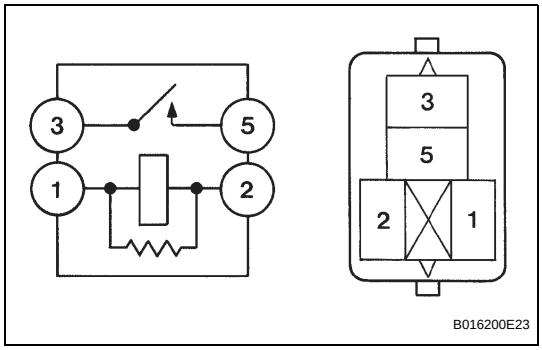

(a) Remove the starter relay from the engine room R/B.
(b) Measure the resistance of the starter relay.
Standard resistance

Tester Connection	Specified Condition
3 - 5	10 kΩ or higher
3 - 5	Below 1 Ω (when battery voltage applied to terminals 1 and 2)

NG → **REPLACE RELAY**

OK

19 CHECK HARNESS AND CONNECTOR (ECM - ST RELAY, PNP SWITCH)

(a) Disconnect the A10 ECM connector.

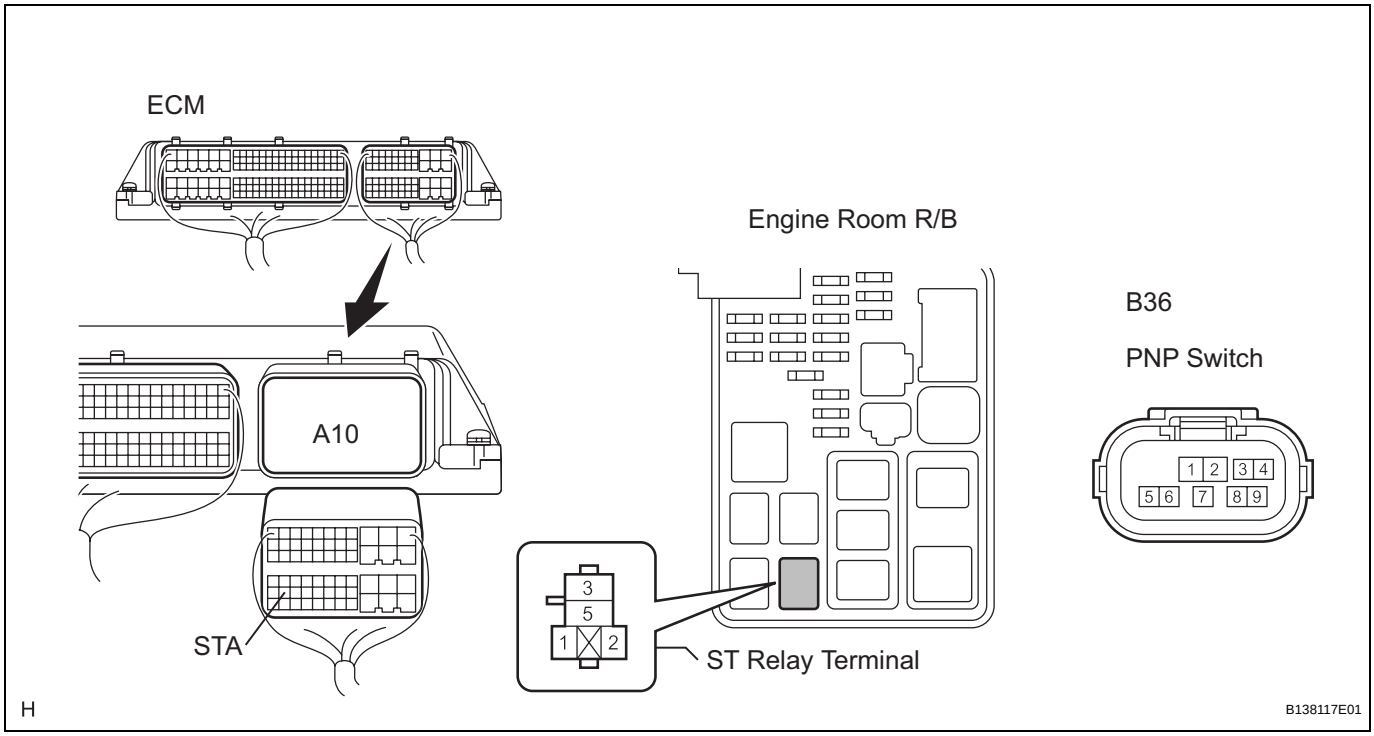

(b) Measure the resistance according the the value(s) in the table below.
Standard resistance

Tester Connection (Symbols)	Condition	Specified Condition
A10-48 (STA) - ST relay terminal - 1	Always	Below 1 Ω
A10-48 (STA) - B36-9	Always	Below 1 Ω
A10-48 (STA) - Body ground	Always	10 kΩ or higher

ST

NG → **REPAIR OR REPLACE HARNESS OR CONNECTOR**

OK

20 INSPECT ENGINE ROOM RELAY BLOCK (ST RELAY VOLTAGE)

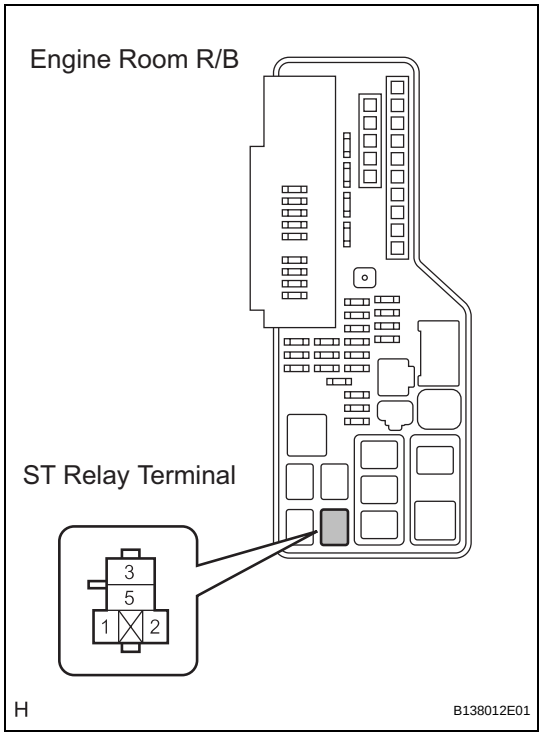

(a) Measure the voltage according to the value(s) in the table below.

Standard voltage

Tester Connection	Condition	Specified Condition
ST relay terminal - 5 - Body ground	Always	9 to 14 V
ST relay terminal - 2 - Body ground	Always	Below 1 V

NG → **REPAIR OR REPLACE HARNESS OR CONNECTOR**

OK

21 INSPECT STARTER ASSEMBLY

HINT:
See page ST-147.

NG → **REPAIR OR REPLACE STARTER ASSEMBLY**

OK

REPAIR OR REPLACE HARNESS OR CONNECTOR (STARTER - BATTERY, ST RELAY)

22 READ VALUE OF INTELLIGENT TESTER (L CODE)

(a) Reconnect the connectors.
(b) Connect the intelligent tester to the DLC3.
HINT:
When using the intelligent tester with the engine switch off, turn on and off any of the door courtesy light switches repeatedly at 1.5 second intervals or less until communication between the tester and vehicle starts.

(c) Turn the engine switch on (IG).

SMART ACCESS (Certification ECU):

Item	Measurement Item/Display (Range)	Normal Condition	Diagnostic Note
L CODE CHK	L code check / ON or NG	OK: Normal NG: Malfunction	Electrical key in the cabin

OK:

OK is displayed on the screen.

HINT:

If the result is not as specified, refer to PROBLEM SYMPTOMS TABLE of the electrical steering lock (steering wheel cannot be unlocked) (See page SR-54).

If the result is not as specified, there may be a malfunction with the steering lock ECU or the ID code box.

NG → **GO TO STEERING LOCK SYSTEM**

OK

23 READ VALUE OF INTELLIGENT TESTER (ENGINE START REQUEST)

(a) Connect the intelligent tester to the DLC3.

HINT:

When using the intelligent tester with the engine switch off, turn on and off any of the door courtesy light switches repeatedly at 1.5 second intervals or less until communication between the tester and vehicle starts.

(b) Turn the engine switch on (IG).

ST

SMART ACCESS (Certification ECU):

Item	Measurement Item/Display (Range)	Normal Condition	Diagnostic Note
START RQST	Start request signal response / OK or NG	OK: Received NG: Not received	-

OK:

OK (received) and NG (not received) appear on the screen.

NG → **REPLACE CERTIFICATION ECU**

OK

24 READ VALUE OF INTELLIGENT TESTER (S CODE)

(a) Connect the intelligent tester to the DLC3.

HINT:

When using the intelligent tester with the engine switch off, turn on and off any of the door courtesy light switches repeatedly at 1.5 second intervals or less until communication between the tester and vehicle starts.

(b) Turn the engine switch on (IG).

SMART ACCESS (Certification ECU):

Item	Measurement Item/Display (Range)	Normal Condition	Diagnostic Note
S CODE CHK	S code check / OK or NG	OK: Normal NG: Malfunction	-

OK:
OK is displayed on the screen.
HINT:
If the result is not as specified, there may be a malfunction with the certification ECU or the ID code box.

NG → **Go to step 26**

OK

25 INSPECT ID CODE BOX

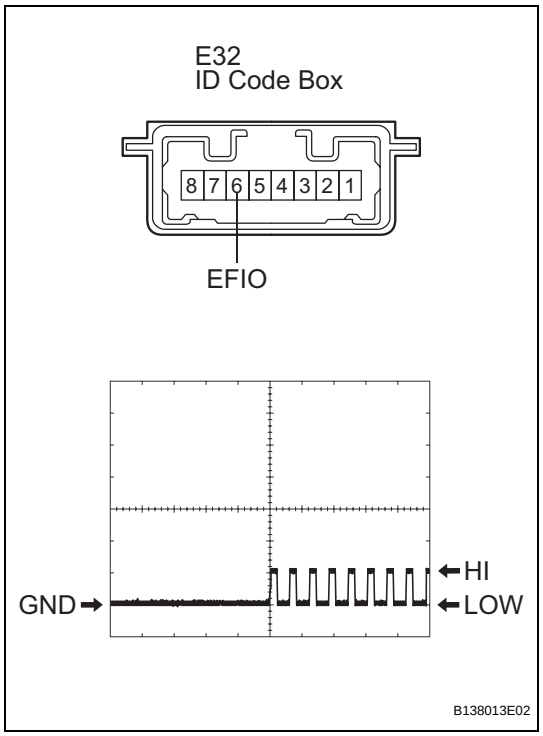

(a) Check the input signal waveform.
(1) Connect an oscilloscope to terminal E32-6 (EFIO) and body ground.
(2) Turn the engine switch on (IG).
(3) Check the signal waveform according to the condition(s) in the table below.

Item	Condition
Tool setting	10 V/DIV., 100 ms./DIV.
Vehicle condition	Engine switch on (IG)

NG → **REPLACE ID CODE BOX**

OK

END

26 REPLACE CERTIFICATION ECU

(a) Replace the certification ECU.
(b) Perform the registration procedures for the engine immobiliser system (See page EI-9).
(c) Check if the engine can be started.

ST

OK:
Engine can be started.

OK → **END (CERTIFICATION ECU IS DEFECTIVE)**

NG

REPLACE ID CODE BOX

Engine Switch Indicator Circuit

DESCRIPTION

Engine start conditions or system malfunctions can be checked by the status of the engine switch indicator light.

Engine switch indicator light condition:

Power Source Mode/Condition	Indicator Light Condition	
	Brake pedal released	**Brake pedal depressed, shift lever in P or N**
off	OFF	ON (Green) (When key and vehicle IDs match)
on (ACC, IG)	ON (Amber)	ON (Green)
Engine running	OFF	OFF
Steering lock not unlocked	Flashes (Green) for 15 sec.	Flashes (Green) for 15 sec.
System malfunction	Flashes (Amber) for 15 sec.	Flashes (Amber) for 15 sec.

WIRING DIAGRAM

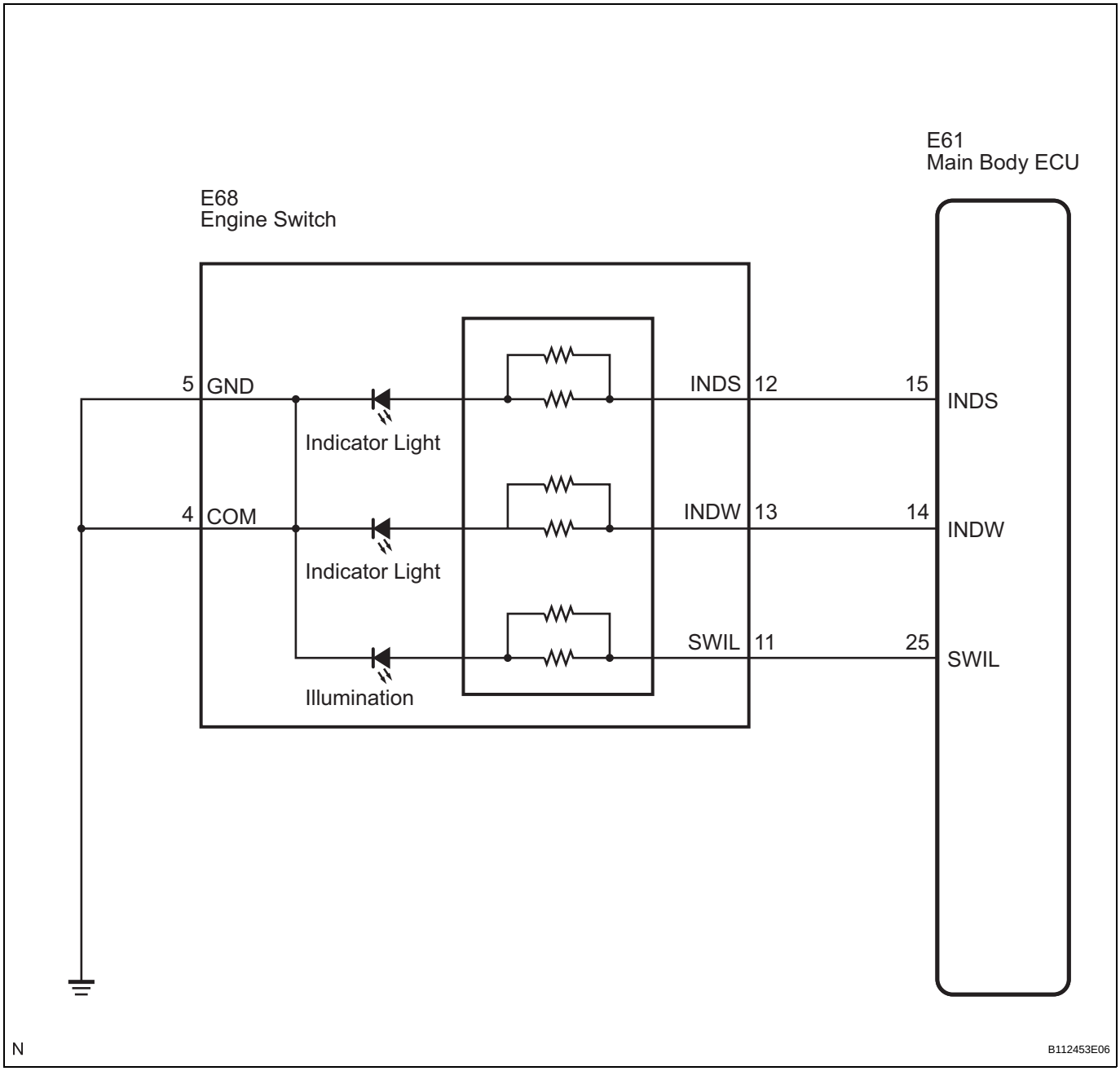

INSPECTION PROCEDURE

1	**INSPECT ENGINE SWITCH**

(a) Remove the engine switch.

ST

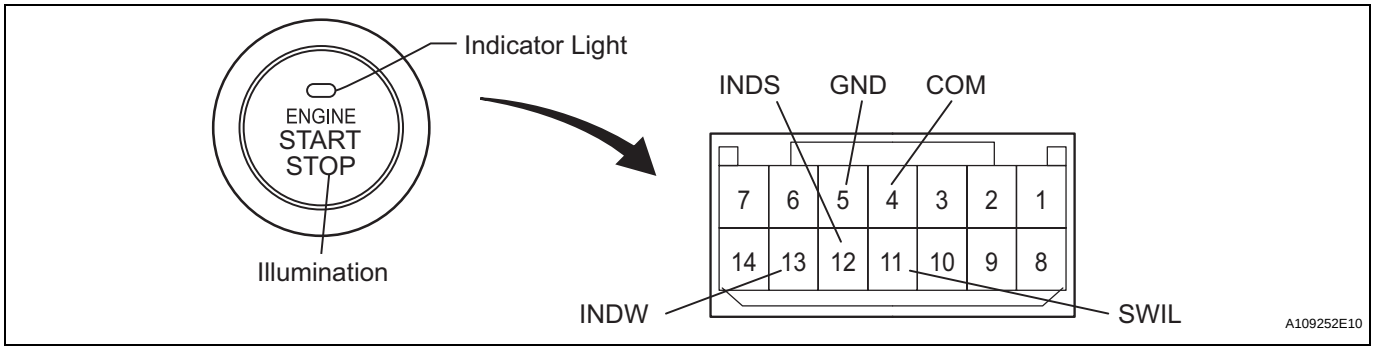

(b) Apply battery voltage between the terminals of the switch, and check the illumination condition of the switch.

NOTICE:

- **If the positive (+) lead and the negative (-) lead are incorrectly connected, the engine switch indicator will not illuminate.**
- **If the voltage is too low, the indicator will not illuminate.**

OK

Measurement Condition	Specified Condition
Battery positive (+) → Terminal 11 (SWIL) Battery negative (-) → Terminal 4 (COM) or 5 (GND)	Illuminates
Battery positive (+) → Terminal 12 (INDS) Battery negative (-) → Terminal 4 (COM) or 5 (GND)	Illuminates
Battery positive (+) → Terminal 13 (INDW) Battery negative (-) → Terminal 4 (COM) or 5 (GND)	Illuminates

NG → **REPLACE ENGINE SWITCH**

ST

OK

2 CHECK WIRE HARNESS (ENGINE SWITCH - MAIN BODY ECU AND BODY GROUND)

(a) Disconnect the E68 switch connector.

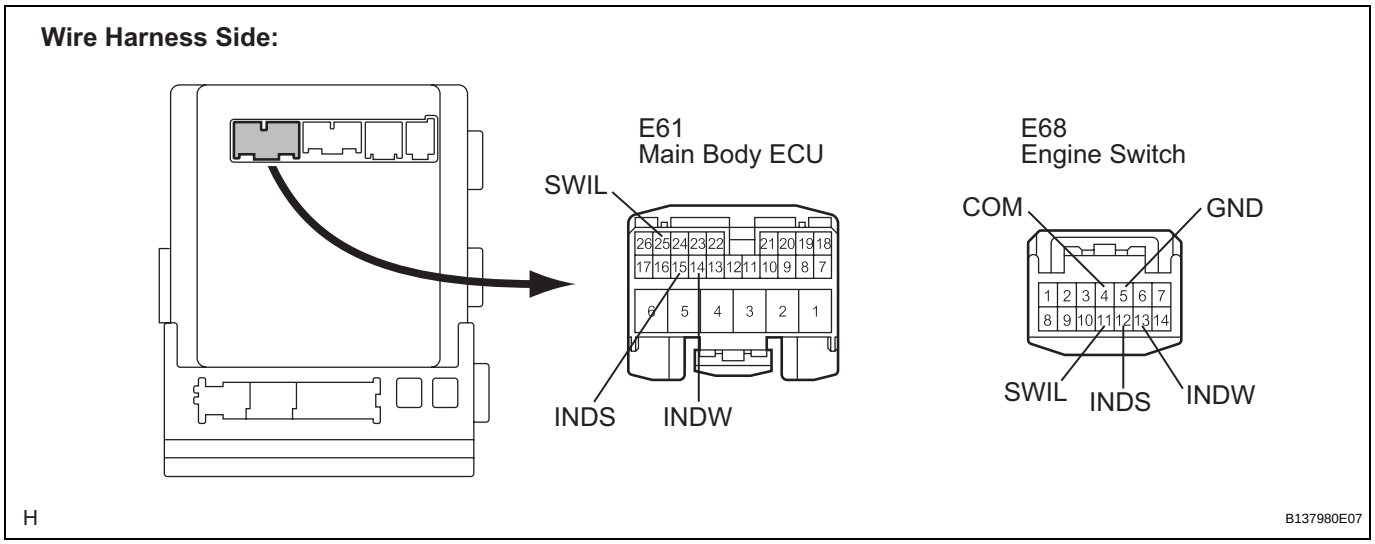

(b) Disconnect the E61 ECU connector.

(c) Measure the resistance according to the value(s) in the table below.

Standard resistance

Tester Connection	Condition	Specified Condition
E68-11 (SWIL) - E61-25 (SWIL)	Always	Below 1 Ω
E68-12 (INDS) - E61-15 (INDS)	Always	Below 1 Ω
E68-13 (INDW) - E61-14 (INDW)	Always	Below 1 Ω
E68-5 (GND) - Body ground	Always	Below 1 Ω
E68-4 (COM) - Body ground	Always	Below 1 Ω
E68-11 (SWIL) or E61-25 (SWIL) - Body ground	Always	10 kΩ or higher
E68-12 (INDS) or E61-15 (INDS) - Body ground	Always	10 kΩ or higher
E68-13 (INDW) or E61-14 (INDW) - Body ground	Always	10 kΩ or higher

NG → **REPAIR OR REPLACE HARNESS OR CONNECTOR**

OK

REPLACE MAIN BODY ECU

Power Source Mode does not Change to ON (IG and ACC)

DESCRIPTION

When the engine switch is pushed with the electrical key in the cabin, the main body ECU receives signals to switch the power source mode.

HINT:

To allow use of the intelligent tester to inspect the push-button start function when the engine switch is off, repeat opening and closing any of the doors. Opening and closing a door establishes communication between the intelligent tester and the main body ECU. (Opening and closing a door can also be simulated by operating a door courtesy light switch.)

WIRING DIAGRAM

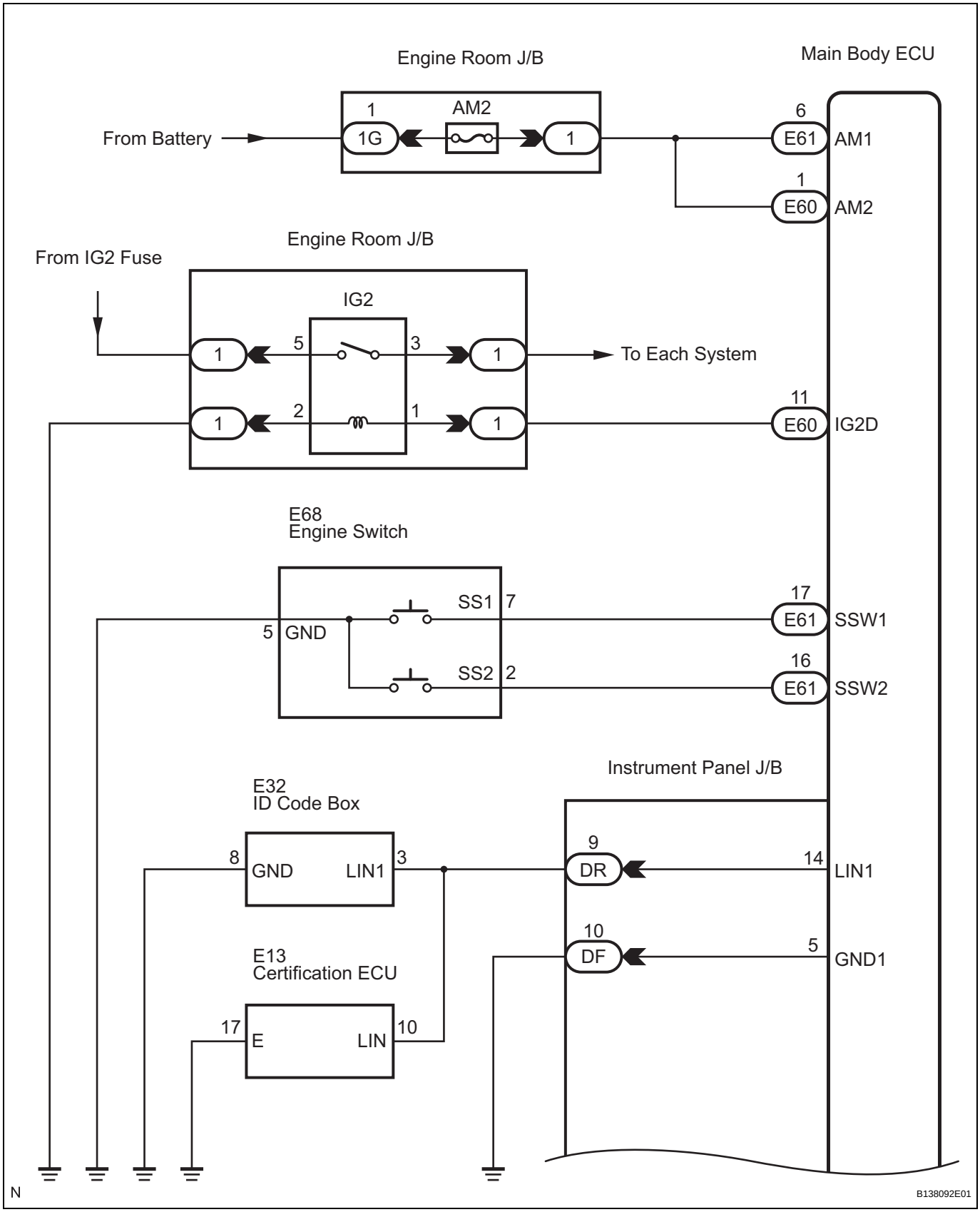

ST

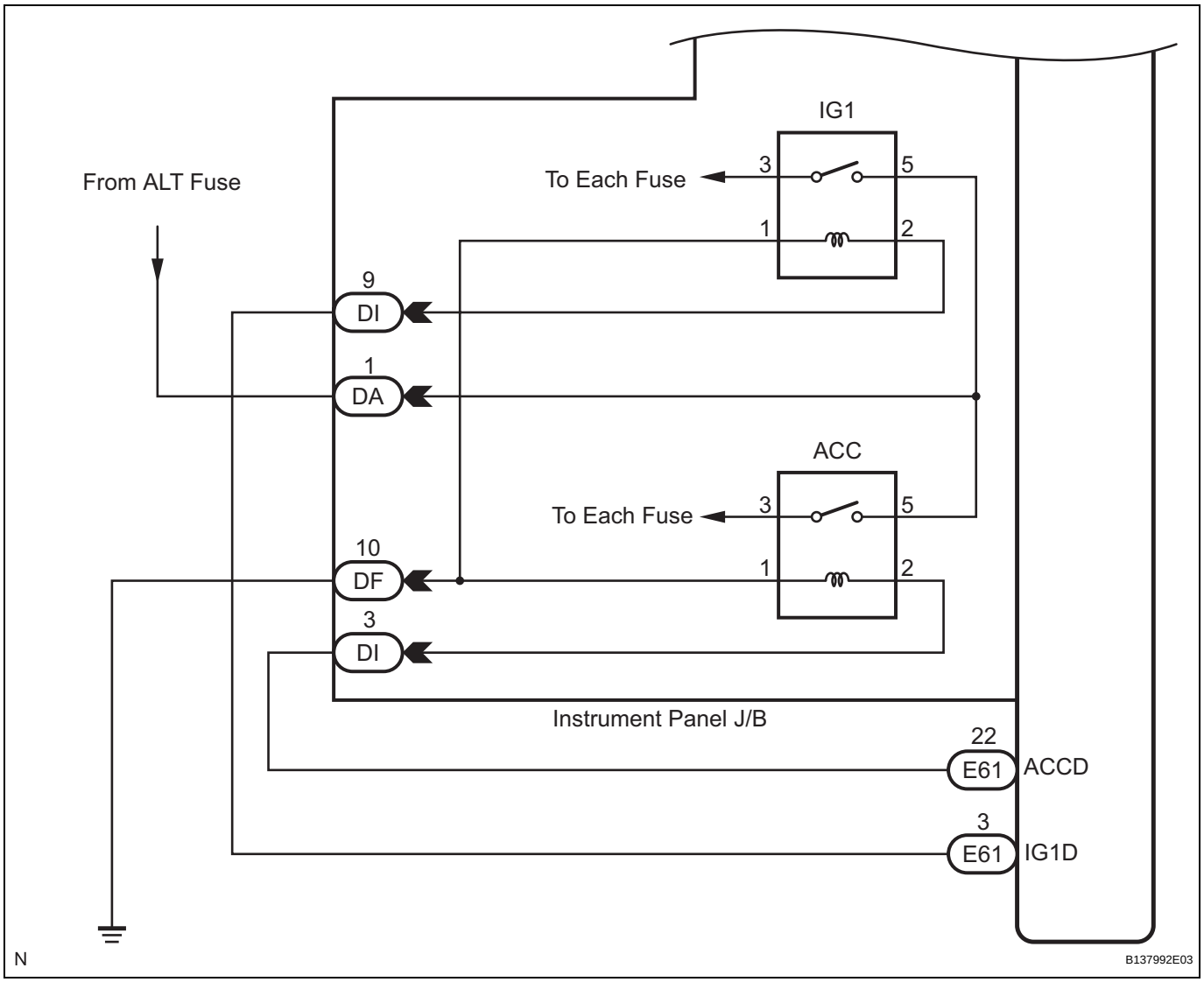

INSPECTION PROCEDURE

1	CHECK ENTRY FUNCTION DETECTION AREA

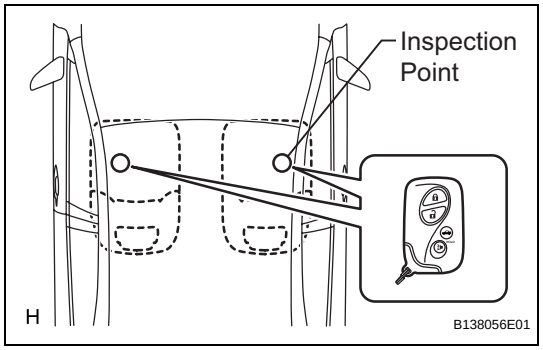

(a) Inspect entry detection area.
   (1) When the electrical key is in either of the 2 inspection points in the illustration, the shift lever is in the P position and the brake pedal is depressed, check that the engine switch indicator illuminates in green.
   OK:
   Engine switch illuminates in green.

ST

HINT:
If the engine switch does not illuminate, perform troubleshooting according to the PROBLEM SYMPTOMS TABLE of the smart access system with push-button start (starting) (engine switch indicator light does not come on) (See page ST-17) and the smart access system with push-button start (Door lock) (matching for inside of the cabin cannot be performed) (See page DL-121).

NG → **GO TO OTHER PROBLEM**

OK

2	INSPECT FUSE (AM2)

(a) Remove the AM2 fuse from the engine room J/B.
(b) Measure the resistance of the fuse.
Standard resistance:
Below 1 Ω

NG → **REPLACE FUSE**

OK

3	CHECK CONNECTORS

(a) Check that the connectors are securely connected and the terminals are not deformed or loose.
OK:
The connectors are securely connected and the terminals are not deformed or loose.

NG → **REPAIR OR REPLACE CONNECTORS**

OK

ST

4	CHECK WIRE HARNESS (MAIN BODY ECU - BATTERY)

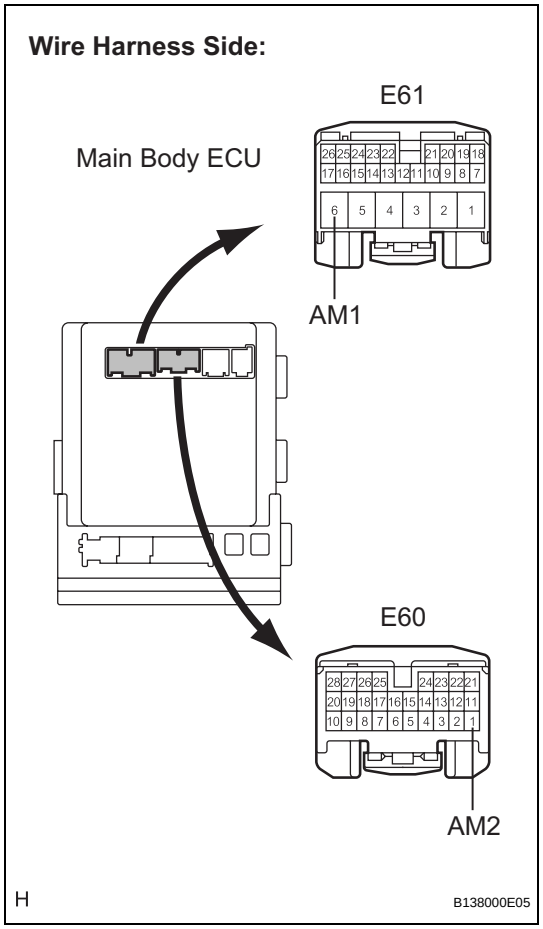

(a) Disconnect the E60 and E61 ECU connectors.

(b) Measure the voltage according to the value(s) in the table below.

Standard voltage

Tester Connection (Symbols)	Condition	Specified Condition
E61-6 (AM1) - Body ground	Always	10 to 14 V
E60-1 (AM2) - Body ground	Always	10 to 14 V

NG → **REPAIR OR REPLACE HARNESS OR CONNECTOR**

OK

ST

5 CHECK WIRE HARNESS (MAIN BODY ECU - BODY GROUND)

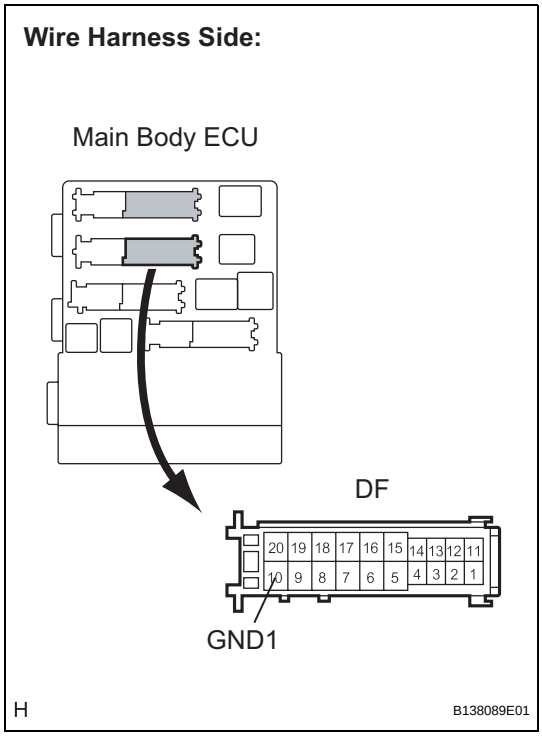

(a) Disconnect the DF ECU connector.
(b) Measure the resistance according to the value(s) in the table below.

Standard resistance

Tester Connection (Symbols)	Condition	Specified Condition
DF-10 (GND1) - Body ground	Always	Below 1 Ω

NG → **REPAIR OR REPLACE HARNESS OR CONNECTOR**

OK

ST

6 CHECK FOR DTCS

(a) Delete the DTCs (See page ST-26).
HINT:
After all the DTCs are cleared, check if the trouble occurs again 5 seconds after the engine switch is turned on (IG).
(b) Check for DTCs again.
HINT:
If the DTCs for the smart access system with push-button start malfunction are output, inspect those DTCs first (See page ST-28).
OK:
No DTC is output.

NG → **GO TO DTC CHART**

OK

7 READ VALUE OF INTELLIGENT TESTER

(a) Connect the intelligent tester to the DLC3.
(b) Turn the engine switch on (IG).
(c) Check the DATA LIST for proper functioning of the start switches 1 and 2.

HINT:
When using the intelligent tester with the engine switch off, turn on and off any of the door courtesy light switches repeatedly at 1.5 second intervals or less until communication between the tester and vehicle starts.

MAIN BODY:

Item	Measurement Item/Display (Range)	Normal Condition	Diagnostic Note
STSW1	Start Switch 1/ON or OFF	ON: Engine switch is pushed OFF: Engine switch is not pushed	-
STSW2	Start Switch 2/ON or OFF	ON: Engine switch is pushed OFF: Engine switch is not pushed	-

OK:
ON (engine switch is pushed) and OFF (engine switch is not pushed) appear on the screen.

OK → **REPLACE MAIN BODY ECU**

NG

8 INSPECT ENGINE SWITCH

(a) Remove the engine switch.

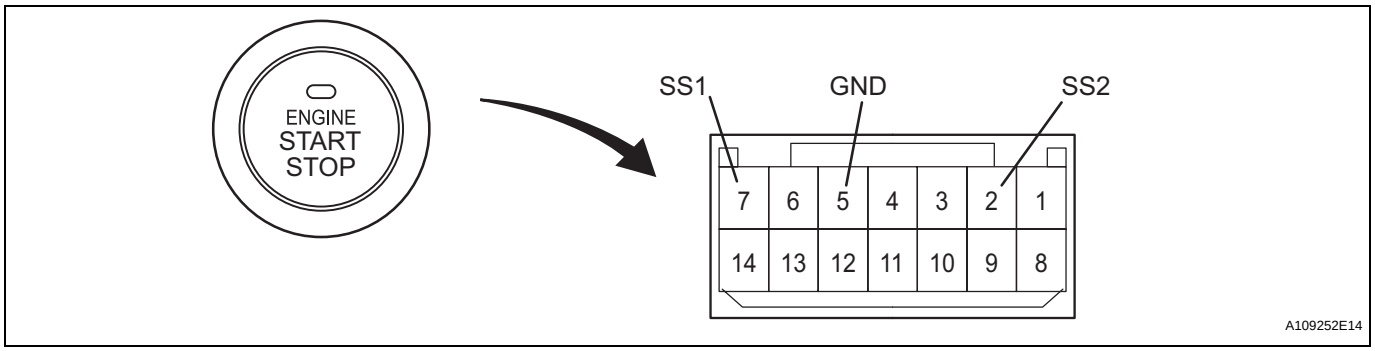

(b) Measure the resistance of the switch.
Standard resistance

Tester Connection	Switch Condition	Specified Condition
7 (SS1) - 5 (GND)	Pushed	Below 1 Ω
2 (SS2) - 5 (GND)	Pushed	Below 1 Ω
7 (SS1) - 5 (GND)	Not pushed	10 kΩ or higher
2 (SS2) - 5 (GND)	Not pushed	10 kΩ or higher

NG → **REPLACE ENGINE SWITCH**

OK

9 CHECK WIRE HARNESS (MAIN BODY ECU AND BODY GROUND - ENGINE SWITCH)

(a) Disconnect the E61 ECU connector.

ST

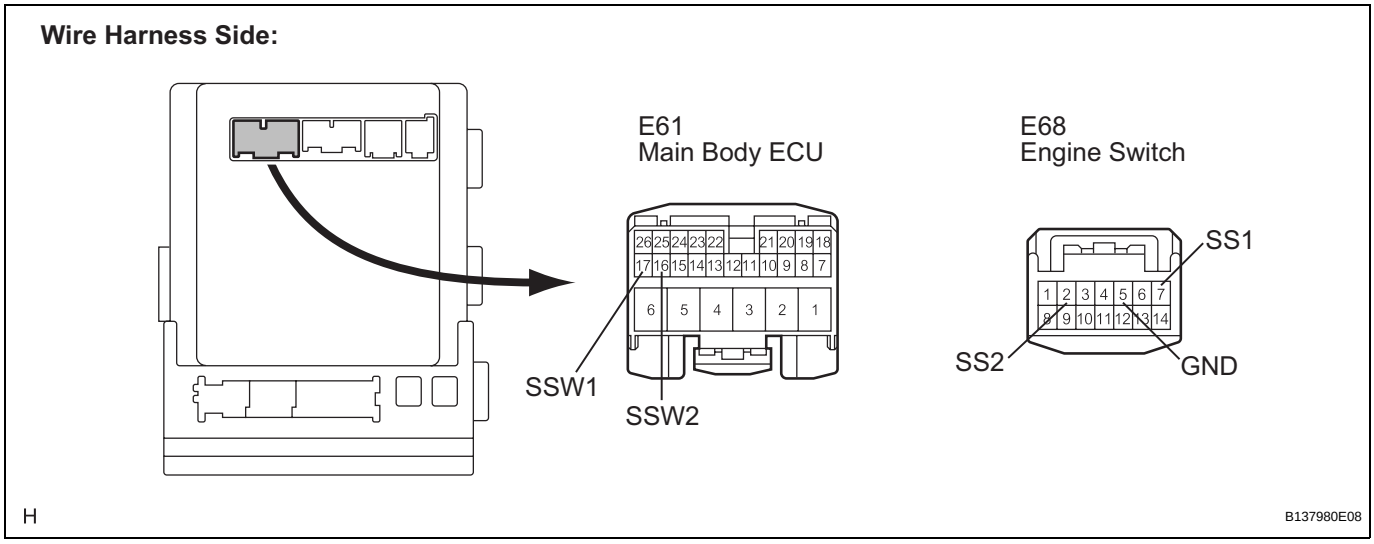

(b) Measure the resistance according to the value(s) in the table below.

Standard resistance

Tester Connection (Symbols)	Condition	Specified Condition
E68-7 (SS1) - E61-17 (SSW1)	Always	Below 1 Ω
E68-2 (SS2) - E61-16 (SSW2)	Always	Below 1 Ω
E68-5 (GND) - Body ground	Always	Below 1 Ω
E68-7 (SS1) or E61-17 (SSW1) - Body ground	Always	10 kΩ or higher
E68-2 (SS2) or E61-16 (SSW2) - Body ground	Always	10 kΩ or higher

NG → **REPAIR OR REPLACE HARNESS OR CONNECTOR**

OK

REPLACE MAIN BODY ECU

ST

Power Source Mode does not Change to ON (IG)

DESCRIPTION

When the engine switch is pushed with the electrical key in the cabin, the main body ECU receives signals to switch the power source mode.

HINT:

To allow use of the intelligent tester to inspect the push-button start function when the engine switch is off, repeat opening and closing any of the doors. Opening and closing a door establishes communication between the intelligent tester and the main body ECU. (Opening and closing a door can also be simulated by operating a door courtesy light switch.)

WIRING DIAGRAM

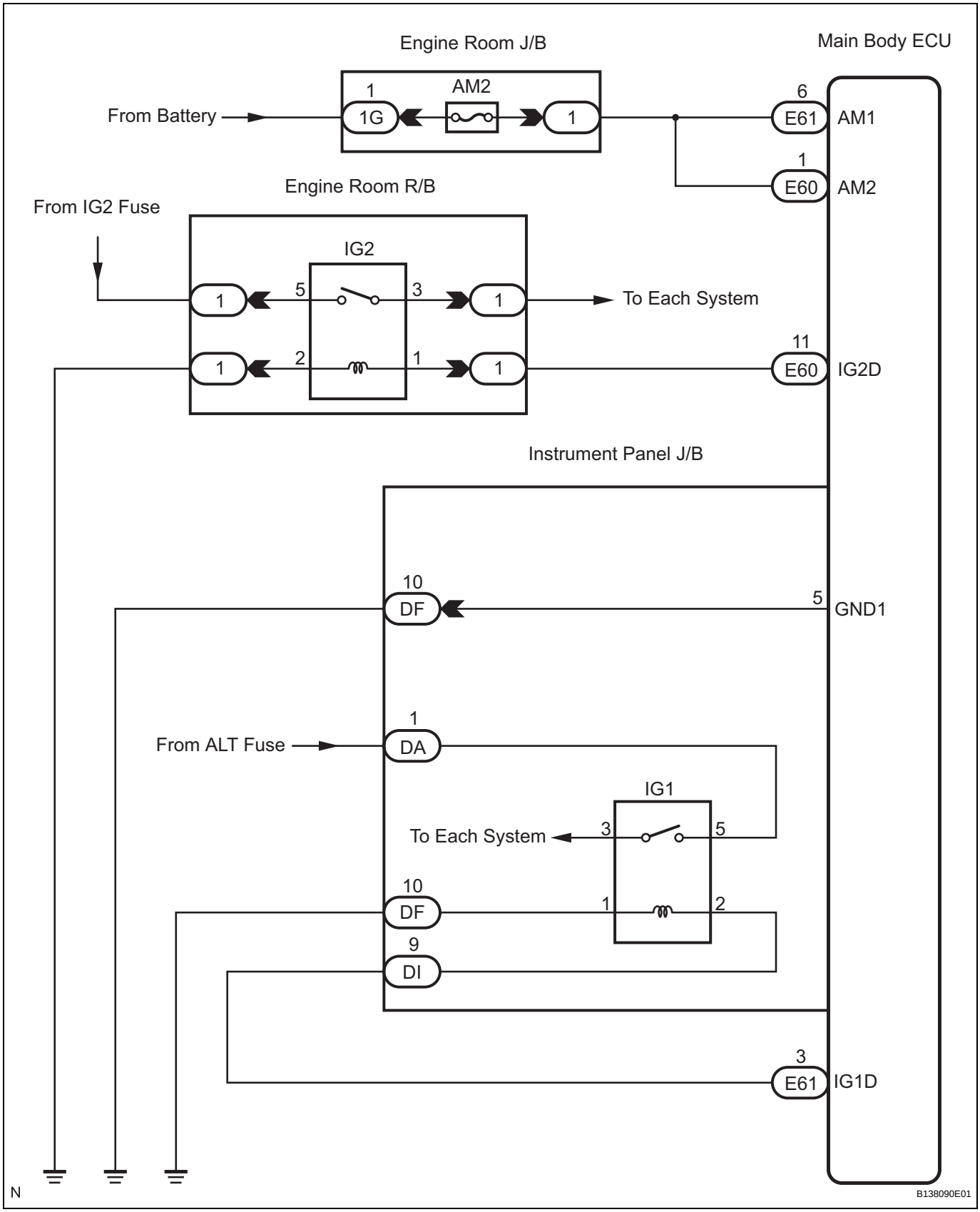

ST

INSPECTION PROCEDURE

1	INSPECT FUSE (AM2)

(a) Remove the AM2 fuse from the engine room J/B.
(b) Measure the resistance of the fuse.
Standard resistance:
Below 1 Ω

NG → **REPLACE FUSE**

OK

2	CHECK CONNECTORS

(a) Check that the connectors are securely connected and the terminals are not deformed or loose.
OK:
The connectors are securely connected and the terminals are not deformed or loose.

NG → **REPAIR OR REPLACE CONNECTORS**

OK

3	CHECK WIRE HARNESS (MAIN BODY ECU - BATTERY)

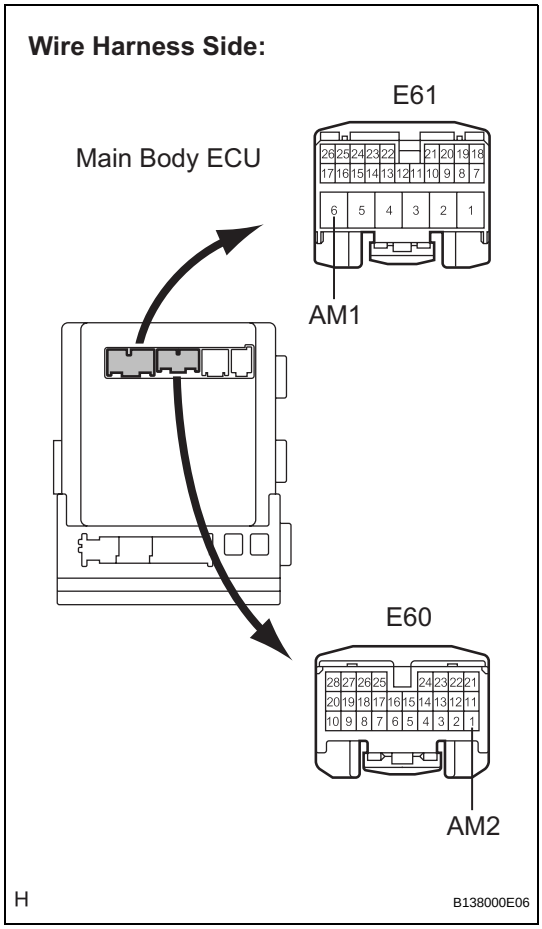

(a) Disconnect the E60 and E61 ECU connectors.

(b) Measure the voltage according to the value(s) in the table below.

Standard voltage

Tester Connection (Symbols)	Condition	Specified Condition
E61-6 (AM1) - Body ground	Always	10 to 14 V
E60-1 (AM2) - Body ground	Always	10 to 14 V

NG → **REPAIR OR REPLACE HARNESS OR CONNECTOR**

OK

ST

4 CHECK WIRE HARNESS (MAIN BODY ECU - BODY GROUND)

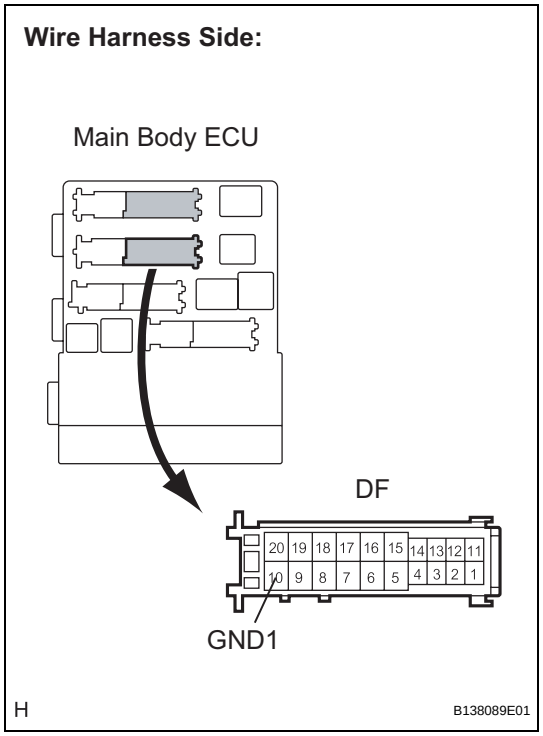

(a) Disconnect the DF ECU connector.
(b) Measure the resistance according to the value(s) in the table below.

Standard resistance

Tester Connection (Symbols)	Condition	Specified Condition
DF-10 (GND1) - Body ground	Always	Below 1 Ω

NG → **REPAIR OR REPLACE HARNESS OR CONNECTOR**

OK

5 INSPECT RELAY (IG2 RELAY)

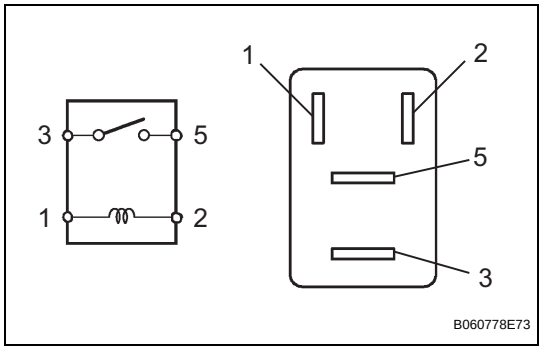

(a) Remove the IG2 relay from the engine room R/B No. 2.
(b) Measure the resistance according to the value(s) in the table below.

Standard resistance

Tester Connection	Specified Condition
3 - 5	10 kΩ or higher
3 - 5	Below 1 Ω (When battery voltage is applied to terminals 1 and 2)

NG → **REPLACE RELAY**

OK

6 CHECK WIRE HARNESS (ENGINE ROOM R/B - MAIN BODY ECU AND BODY GROUND)

(a) Remove the IG2 relay from the engine room R/B.

ST

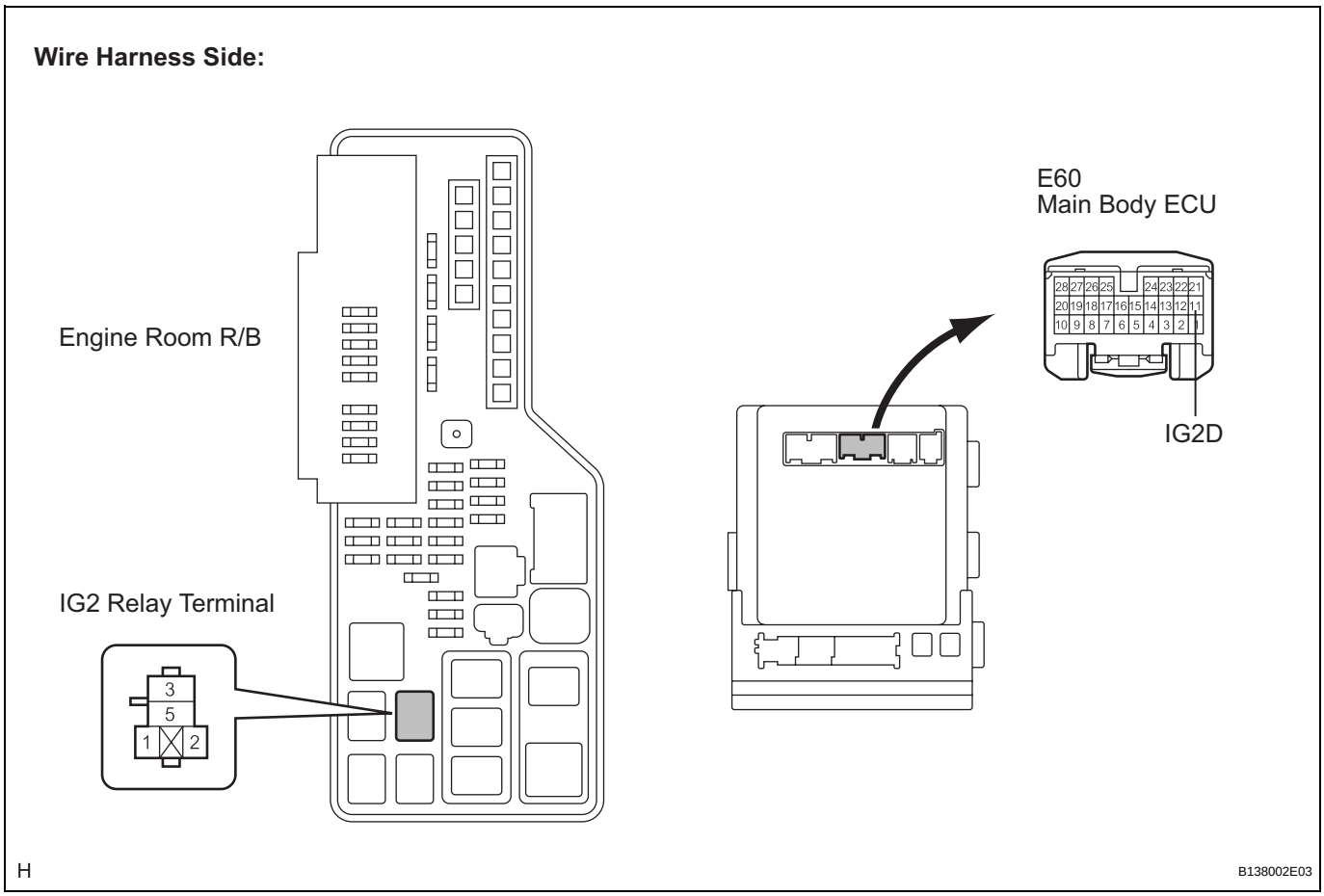

ST

(b) Disconnect the E60 ECU connector.

(c) Measure the resistance according to the value(s) in the table below.

Standard resistance

Terminal No. (Symbol)	Specified Condition
Engine room R/B IG2 relay terminal 1 - E60-11 (IG2D)	Below 1 Ω
Engine room R/B IG2 relay terminal 2 - Body ground	Below 1 Ω
E60-11 (IG2D) - Body ground	10 kΩ or higher

NG → **REPAIR OR REPLACE HARNESS OR CONNECTOR**

OK

7 INSPECT RELAY (IG1 RELAY)

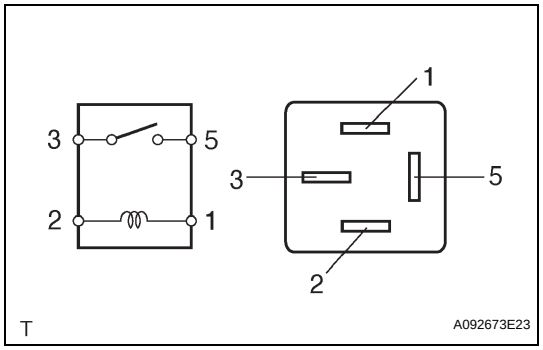

(a) Remove the IG1 relay from the instrument panel J/B.
(b) Measure the resistance according to the value(s) in the table below.

Standard resistance

Tester Connection	Specified Condition
3 - 5	10 kΩ or higher
3 - 5	Below 1 Ω (when battery voltage is applied to terminals 1 and 2)

NG → **REPLACE RELAY**

OK

8 CHECK WIRE HARNESS (INSTRUMENT PANEL J/B - MAIN BODY ECU)

(a) Disconnect the DI J/B connector.

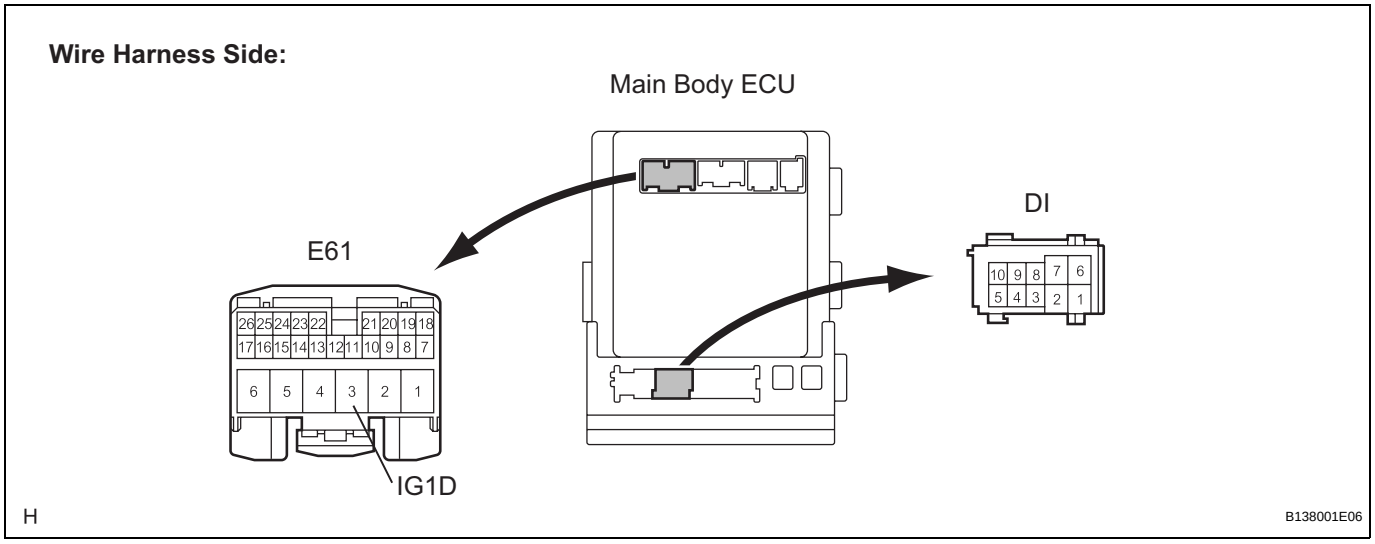

(b) Disconnect the E61 ECU connector.
(c) Measure the resistance according to the value(s) in the table below.

Standard resistance

Terminal No. (Symbol)	Condition	Specified Condition
DI-9 - E61-3 (IG1D)	Always	Below 1 Ω
E61-3 (IG1D) - Body ground	Always	10 kΩ or higher

NG → **REPAIR OR REPLACE HARNESS OR CONNECTOR**

OK

ST

9 CHECK WIRE HARNESS (INSTRUMENT PANEL J/B - BATTERY AND BODY GROUND)

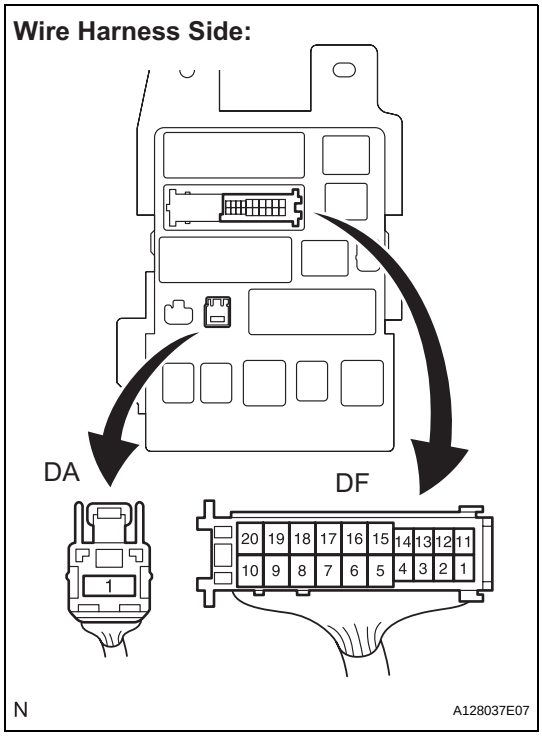

(a) Disconnect the DF and DA J/B connectors.

(b) Measure the resistance according to the value(s) in the table below.

Standard resistance

Terminal No.	Condition	Specified Condition
DF-10 - Body ground	Always	Below 1 Ω

(c) Measure the voltage according to the value(s) in the table below.

Standard voltage

Terminal No.	Condition	Specified Condition
DA-1 - Body ground	Always	10 to 14 V

NG → **REPAIR OR REPLACE HARNESS OR CONNECTOR**

OK

ST

10 INSPECT INSTRUMENT PANEL J/B

(a) Measure the resistance according to the value(s) in the table below.

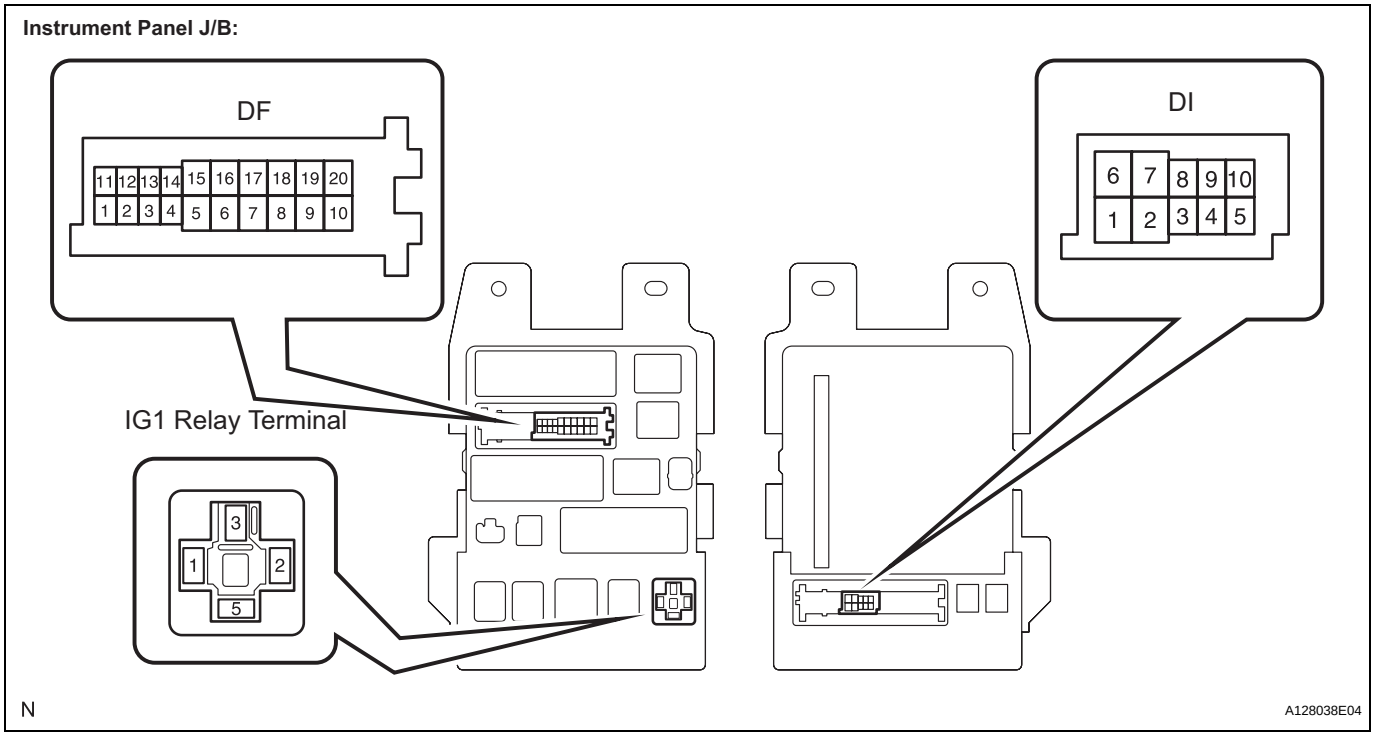

Standard resistance

Terminal No.	Condition	Specified Condition
DF-10 - IG1 relay terminal-1	Always	Below 1 Ω
DI-9 - IG1 relay terminal-2	Always	Below 1 Ω
DF-10 - Body ground	Always	10 kΩ or higher
DI-9 - Body ground	Always	10 kΩ or higher

OK → **REPLACE MAIN BODY ECU**

NG

REPLACE INSTRUMENT PANEL J/B

Power Source Mode does not Change to ON (ACC)

DESCRIPTION

When the engine switch is pushed with the electrical key in the cabin, the main body ECU receives signals to switch the power source mode.

HINT:

To allow use of the intelligent tester to inspect the push-button start function when the engine switch is off, repeat opening and closing any of the doors. Opening and closing a door establishes communication between the intelligent tester and the main body ECU. (Opening and closing a door can also be simulated by operating a door courtesy light switch.)

WIRING DIAGRAM

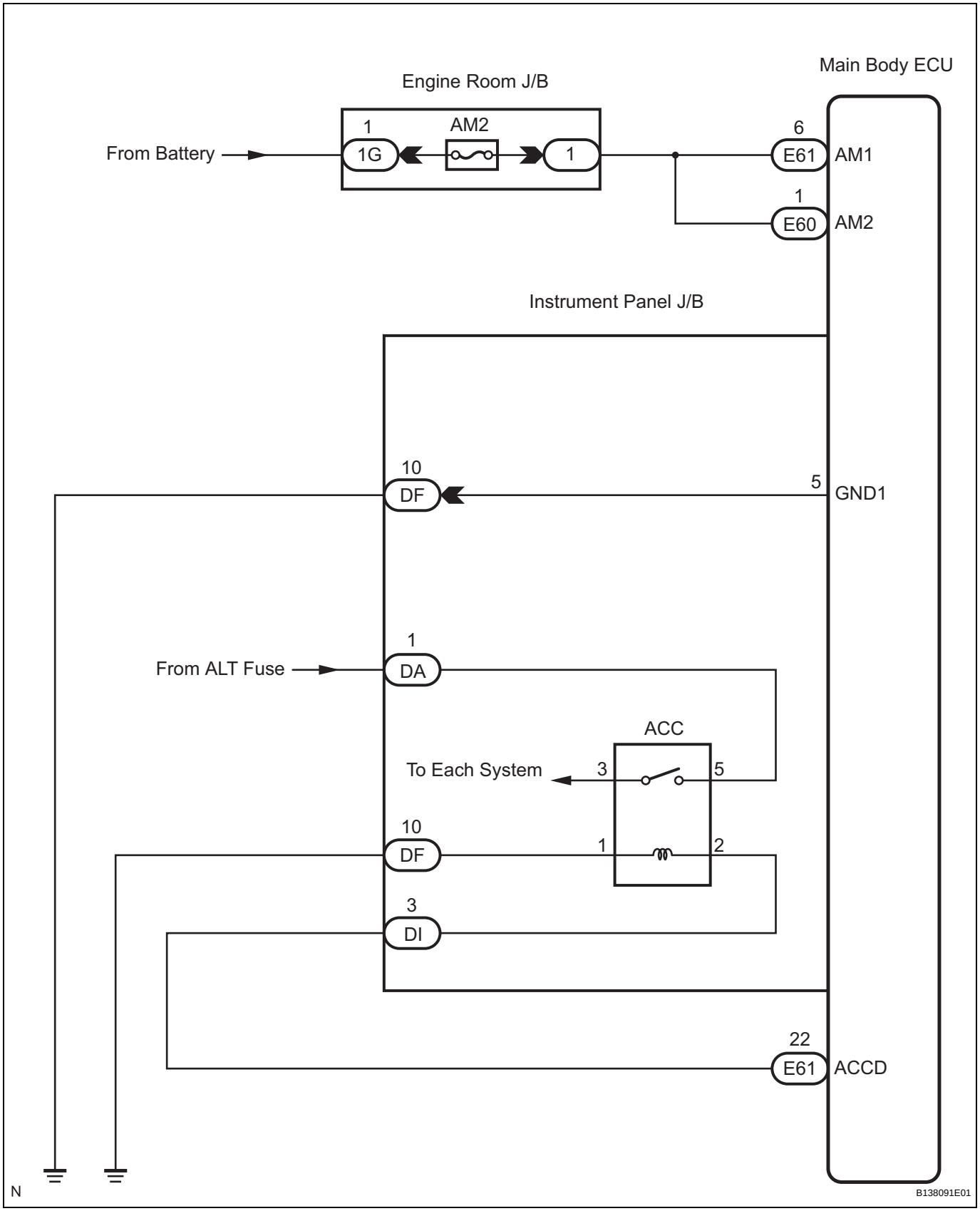

ST

INSPECTION PROCEDURE

1	INSPECT FUSE (AM2)

(a) Remove the AM2 fuse from the engine room J/B.
(b) Measure the resistance of the fuse.
Standard resistance:
Below 1 Ω

NG → **REPLACE FUSE**

OK

2	CHECK CONNECTORS

(a) Check that the connectors are securely connected and the terminals are not deformed or loose.
OK:
The connectors are securely connected and the terminals are not deformed or loose.

NG → **REPAIR OR REPLACE CONNECTORS**

OK

3 CHECK WIRE HARNESS (MAIN BODY ECU - BATTERY)

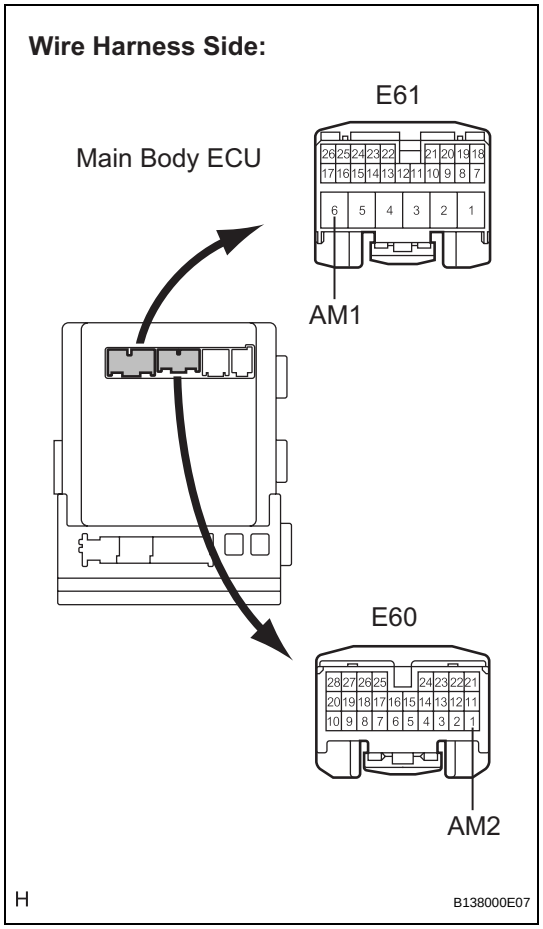

(a) Disconnect the E60 and E61 ECU connectors.

(b) Measure the voltage according to the value(s) in the table below.

Standard voltage

Tester Connection (Symbols)	Condition	Specified Condition
E61-6 (AM1) - Body ground	Always	10 to 14 V
E60-1 (AM2) - Body ground	Always	10 to 14 V

NG → **REPAIR OR REPLACE HARNESS OR CONNECTOR**

OK

ST

4 CHECK WIRE HARNESS (MAIN BODY ECU - BODY GROUND)

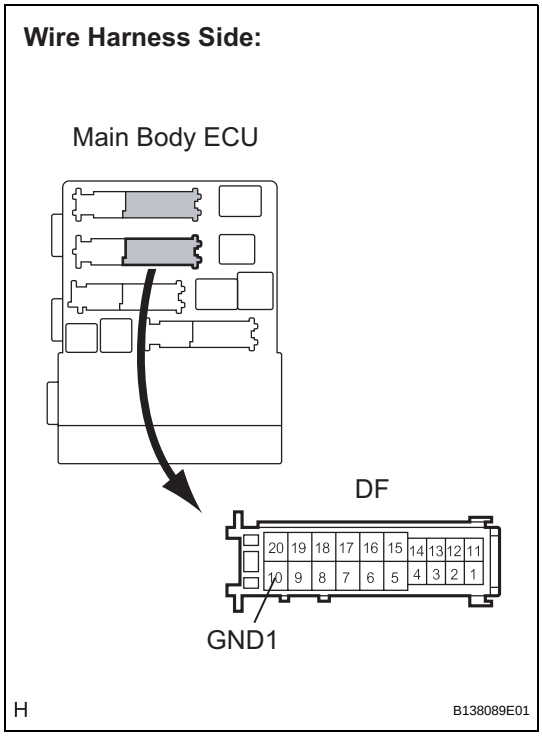

(a) Disconnect the DF ECU connector.
(b) Measure the resistance according to the value(s) in the table below.

Standard resistance

Tester Connection (Symbols)	Condition	Specified Condition
DF-10 (GND1) - Body ground	Always	Below 1 Ω

NG → **REPAIR OR REPLACE HARNESS OR CONNECTOR**

OK

ST

5 INSPECT RELAY (ACC RELAY)

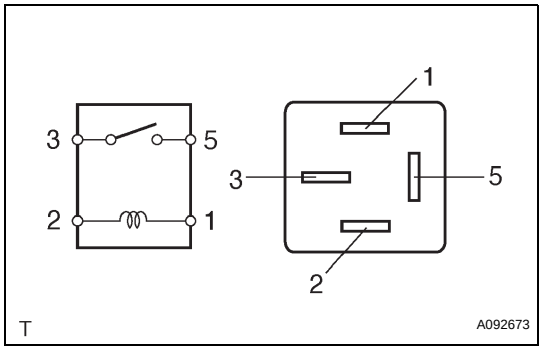

(a) Remove the ACC relay from the instrument panel J/B.
(b) Measure the resistance according to the value(s) in the table below.

Standard resistance

Tester Connection	Specified Condition
3 - 5	10 kΩ or higher
3 - 5	Below 1 Ω (when battery voltage is applied to terminals 1 and 2)

NG → **REPLACE RELAY**

OK

6 CHECK WIRE HARNESS (INSTRUMENT PANEL J/B - MAIN BODY ECU)

(a) Disconnect the E61 ECU connector.

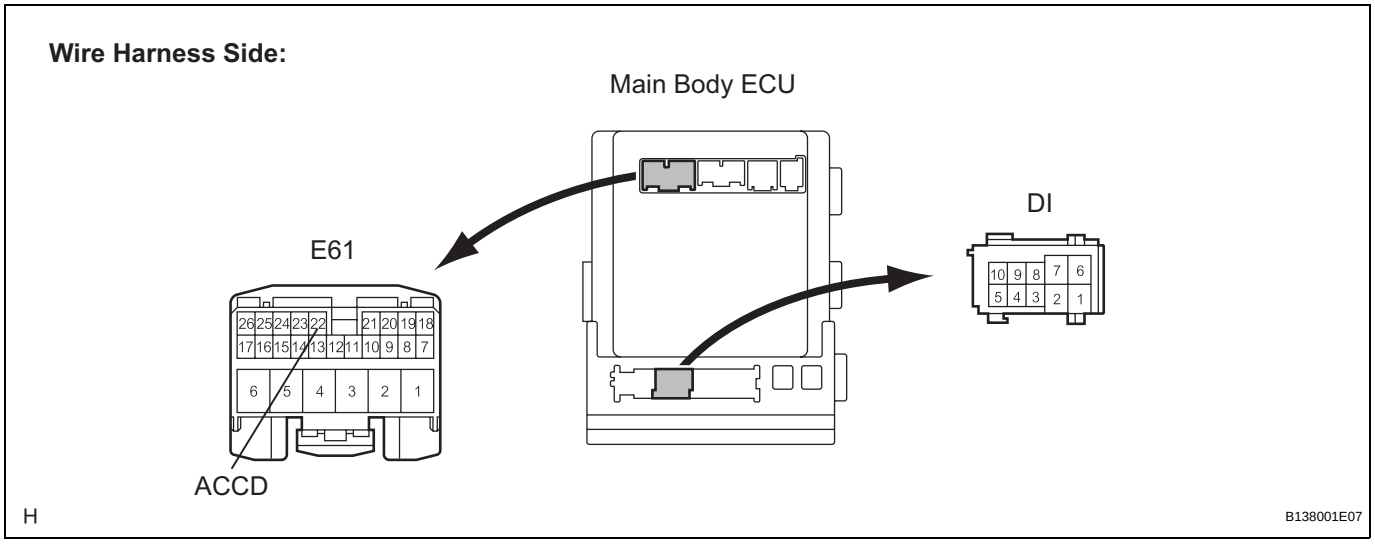

(b) Disconnect the DI J/B connector.

(c) Measure the resistance according to the value(s) in the table below.

Standard resistance

Terminal No. (Symbol)	Condition	Specified Condition
DI-3 - E61-22 (ACCD)	Always	Below 1 Ω
E61-22 or DI-3 - Body ground	Always	10 kΩ or higher

NG → **REPAIR OR REPLACE HARNESS OR CONNECTOR**

OK

7 CHECK WIRE HARNESS (INSTRUMENT PANEL J/B - BATTERY AND BODY GROUND)

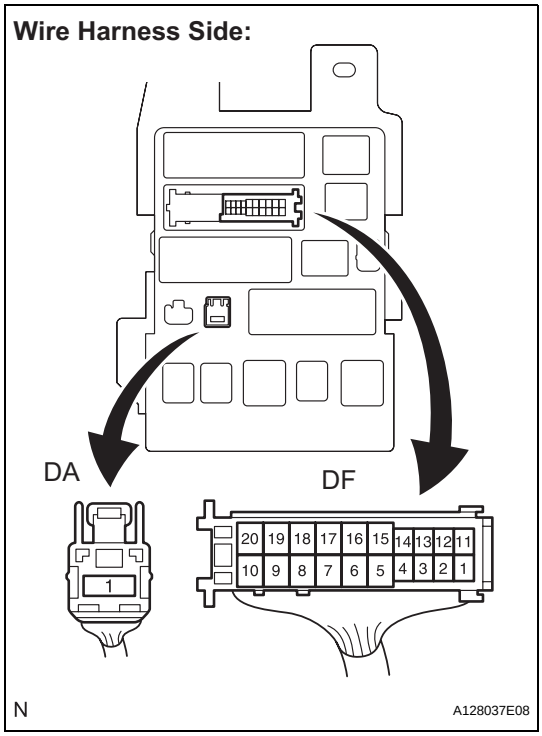

(a) Disconnect the DF and DA J/B connectors.

(b) Measure the resistance according to the value(s) in the table below.

Standard resistance

Terminal No.	Condition	Specified Condition
DF-10 - Body ground	Always	Below 1 Ω

(c) Measure the voltage according to the value(s) in the table below.

Standard voltage

Terminal No.	Condition	Specified Condition
DA-1 - Body ground	Always	10 to 14 V

NG → **REPAIR OR REPLACE HARNESS OR CONNECTOR**

OK

ST

8 INSPECT INSTRUMENT PANEL J/B

(a) Measure the resistance according to the value(s) in the table below.

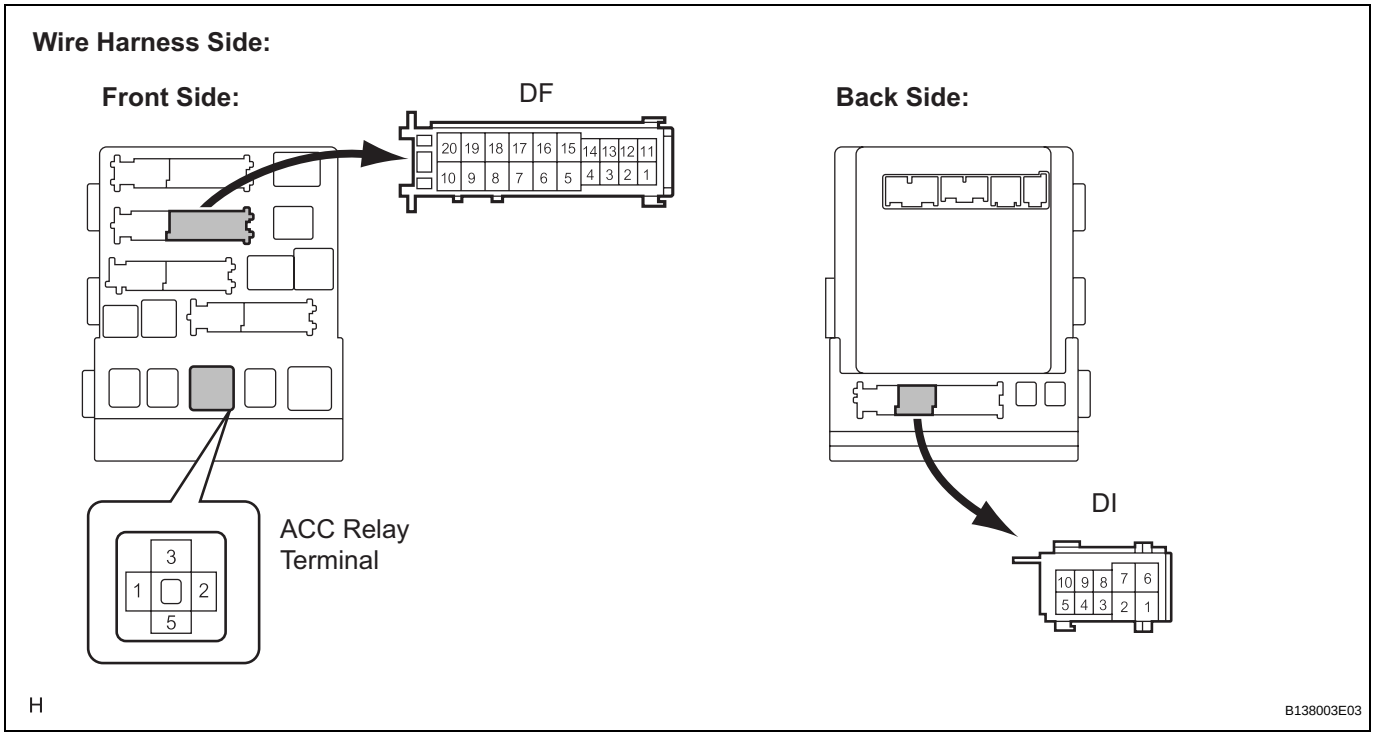

Standard resistance

Terminal No.	Condition	Specified Condition
ACC relay terminal 1 - DF-10	Always	Below 1 Ω
ACC relay terminal 2 - DI-3	Always	Below 1 Ω
DF-10 - Body ground	Always	10 kΩ or higher
DI-3 - Body ground	Always	10 kΩ or higher

NG → **REPLACE INSTRUMENT PANEL J/B**

OK

REPLACE MAIN BODY ECU

PROBLEM SYMPTOMS TABLE

HINT:

- Use the table below to help determine the cause of the problem symptom. The potential causes of the symptoms are listed in order of probability in the "Suspected area" column of the table. Check each symptom by checking the suspected areas in the order they are listed. Replace parts as necessary.
- Inspect the fuses and relays related to the system before inspecting the suspected areas below.

PUSH-BUTTON START FUNCTION:

Symptom	Suspected Area	See page
Power does not turn on (neither ACC nor IG is possible).	1. AM2 Fuse	ST-118
	2. Engine Switch	-
	3. Wire Harness or Connector	-
	4. Smart Access System with Push-button Start (Entry Function)	-
	5. Main Body ECU (Instrument Panel J/B)	-
	6. Certification ECU	-
	7. ID Code Box	-
	8. Steering Lock ECU	-
Power is not turned on (only ACC is not turned on).	1. AM2 Fuse	ST-135
	2. ACC Relay	-
	3. Wire Harness or Connector	-
	4. Main Body ECU (Instrument Panel J/B)	-
Power is not turned on (only IG is not turned on).	1. AM2 Fuse	ST-126
	2. IG1 Relay	-
	3. IG2 Relay	-
	4. Wire Harness or Connector	-
	5. Main Body ECU (Instrument Panel J/B)	-
Engine does not start.	1. Smart Access System with Push-button Start (Entry Function)	ST-97
	2. Engine Switch	-
	3. Shift Lock Control ECU	-
	4. STOP Fuse	-
	5. Stop Light Switch	-
	6. Electrical Steering Lock Function	-
	7. ST Cut Relay	-
	8. Park/Neutral Position Switch	-
	9. ST Relay	-
	10. ECM	-
	11. Engine Immobiliser System	-
	12. Main Body ECU (Instrument Panel J/B)	-
	13. Wire Harness or Connector	-
Engine switch indicator light does not come on.	Engine Switch Indicator Light Circuit	ST-114

TERMINALS OF ECU

1. CHECK MAIN BODY ECU (INSTRUMENT PANEL J/B)

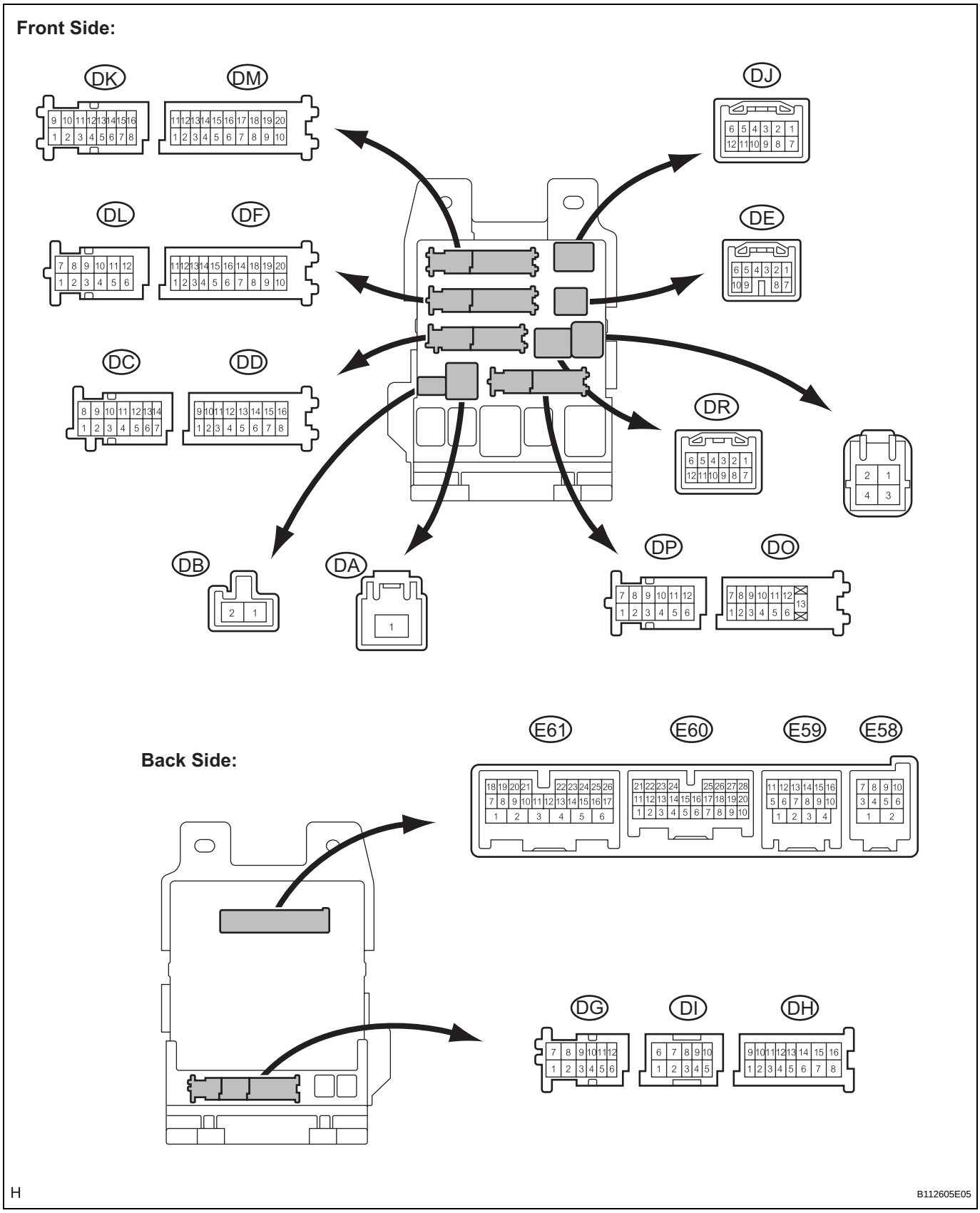

(a) Disconnect the DR, DA, DD, DF, E60, E61 and E59 ECU connectors.

(b) Measure the voltage and resistance of the wire harness side connector.

Symbols (Terminal No.)	Wiring Color	Terminal Description	Condition	Specified Condition
AM1 (E61-6) - Body ground	L - Body ground	+B power supply	Always	10 to 14 V
AM2 (E60-1) - Body ground	L - Body ground	+B power supply	Always	10 to 14 V
SSW1 (E61-17) - Body ground	L - Body ground	Engine switch signal	Engine switch pushed	Below 1 Ω
SSW1 (E61-17) - Body ground	L - Body ground	Engine switch signal	Engine switch not pushed	10 kΩ or higher
SSW2 (E61-16) - Body ground	V - Body ground	Engine switch signal	Engine switch pushed	Below 1 Ω
SSW2 (E61-16) - Body ground	V - Body ground	Engine switch signal	Engine switch not pushed	10 kΩ or higher
GND3 (E59-1) - Body ground	W-B - Body ground	Ground	Always	Below 1 Ω
LIN1 (DR-9) - Body ground	O - Body ground	LIN line	Always	10 kΩ or higher
BATB (DA-1) - Body ground	W - Body ground	+B Power supply	Always	10 to 14 V
GND1 (DF-10) - Body ground	W-B - Body ground	Ground	Always	Below 1 Ω
CANN (E59-15) - Body ground	W - Body ground	CAN Line	Always	10 kΩ or higher
CANP (E59-16) - Body ground	B - Body ground	CAN Line	Always	10 kΩ or higher
CANH (E59-5) - Body ground	BR - Body ground	CAN Line	Always	10 kΩ or higher
CANL (E59-6) - Body ground	GR - Body ground	CAN Line	Always	10 kΩ or higher
IG (DF-11) - Body ground	B - Body ground	IG power supply	Always	10 to 14 V
ALTB (DD-16) - Body ground	W - Body ground	+B Power supply	Always	10 to 14 V

If the result is not as specified, there may be a malfunction on the wire harness side.

(c) Reconnect the ECU connectors.

(d) Measure the voltage of the connector.

Symbols (Terminal No.)	Wiring Color	Terminal Description	Condition	Specified Condition
ACC (DF-2) - Body ground	L - Body ground	ACC power supply	Engine switch on (ACC)	10 to 14 V
ACCD (E61-22) - GND3 (E59-1)	R - W-B	ACC signal	Engine switch on (ACC)	Output voltage at terminal AM1 or AM2 is -2 V or more.
ACCD (E61-22) - GND3 (E59-1)	R - W-B	ACC signal	Engine switch off	Below 1 V
IG1D (E61-3) - GND3 (E59-1)	LG - W-B	IG1 signal	Engine switch on (IG)	Output voltage at terminal AM1 or AM2 is -2 V or more.
IG1D (E61-3) - GND3 (E59-1)	LG - W-B	IG1 signal	Engine switch on (ACC)	Below 1 V
IG2D (E60-11) - GND3 (E59-1)	O - W-B	IG2 signal	Engine switch on (IG)	Output voltage at terminal AM1 or AM2 is -2 V or more.
IG2D (E60-11) - GND3 (E59-1)	O - W-B	IG2 signal	Engine switch on (ACC)	Below 1 V
STP (DC-13) - GND3 (E59-1)	W - W-B	Stop light signal	Brake pedal depressed	Output voltage at terminal AM1 or AM2 is -2 V or more.
STP (DC-13) - GND3 (E59-1)	W - W-B	Stop light signal	Brake pedal released	Below 1 V
SLR+ (E61-19) - GND3 (E59-1)	BR - W-B	Steering lock motor signal	Steering lock motor operating	Below 1 V
SLR+ (E61-19) - GND3 (E59-1)	BR - W-B	Steering lock motor signal	Steering lock motor does not operate	Output voltage at terminal AM1 or AM2 is -2 V or more.
SLP (E61-18) - GND3 (E59-1)	GR - W-B	Steering lock actuator position signal	Steering lock is locked	Pulse generation (See waveform 3)
SLP (E61-18) - GND3 (E59-1)	GR - W-B	Steering lock actuator position signal	Steering lock is released	Pulse generation (See waveform 3)
SPD (E59-9) - GND3 (E59-1)	SB - W-B	Vehicle speed signal	Engine switch on (IG), rotate rear wheel slowly	Pulse generation (See waveform 1)
TACH (E59-8) - GND3 (E59-1)	B - W-B	Tachometer signal	Engine running	Pulse generation (See waveform 2)

Symbols (Terminal No.)	Wiring Color	Terminal Description	Condition	Specified Condition
P (E58-2) - GND3 (E59-1)	G - W-B	Shift lock signal	Shift lever P position	Output voltage at terminal AM1 or AM2 is -2 V or more.
P (E58-2) - GND3 (E59-1)	G - W-B	Shift lock signal	Shift lever not P position	Below 1 V
ACCR (E60-3) - GND3 (E59-1)	B - W-B	Starter assist signal	Brake pedal depressed, shift lever P position, engine switch is pushed once → on (IG)	0.1 to 0.8 V *1 → Output voltage at terminal AM1 or AM2 is -2 V or more.
STSW (E58-4) - GND3 (E59-1)	R - W-B	Starter activation request signal	Brake pedal depressed, engine switch held on (ST)	Output voltage at terminal AM1 or AM2 is -2 V or more.
STR (E61-8) - GND3 (E59-1)	G - W-B	Park/neutral position switch	Shift lever P or N position → except P or N position	Below 1 V → Pulse generation
STR2 (E58-6) - GND3 (E59-1)	V - W-B	Starter signal (Sub)	Brake pedal depressed, shift lever P or N position, engine switch on (ST)	Output voltage at terminal AM1 or AM2 is -3.5 V or more. *2
INDS (E61-15) - GND3 (E59-1)	Y - W-B	Vehicle condition signal	Brake pedal depressed, shift lever P position.	Output voltage at terminal AM1 or AM2 is -3 V or more.
INDW (E61-14) - GND3 (E59-1)	GR - W-B	Warning signal	Brake pedal depressed, shift lever P position, engine switch on (ACC, IG)	Output voltage at terminal AM1 or AM2 is -3 V or more.
SWIL (E61-25) - GND3 (E59-1)	R - W-B	Illumination signal	Light control switch TAIL or HEAD	Output voltage at terminal AM1 or AM2 is -2 V or more.

HINT:

*1: Voltage is output only when the engine is cranking.

*2: Voltage is output for 0.3 seconds when the engine is cranking to start. Disconnect the B12 connector from the ECM before measuring the voltage.
If the result is not as specified, the ECU may have a malfunction.

ST

(e) Using an oscilloscope, check the signal waveform of the ECU.

(1) Waveform 1

Waveform 1 (Reference):

Terminal No.	SPD (E59-9) - GND3 (E59-1)
Tool Setting	5 V/DIV., 10 ms./DIV.
Vehicle Condition	Driving at approx. 20 km/h (12 mph)

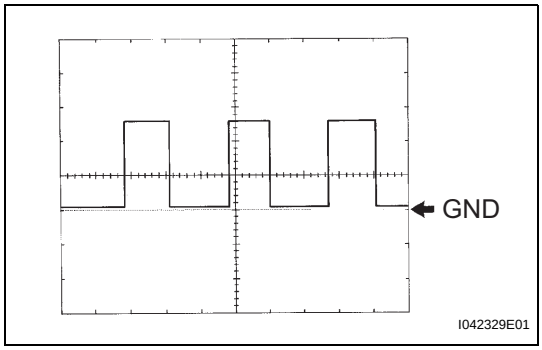

HINT:
As the vehicle speed increases, the wavelength shortens.

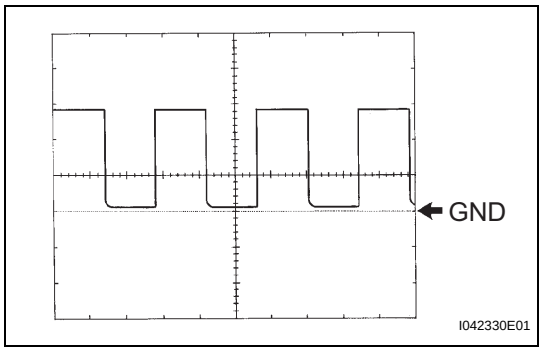

(2) Waveform 2

Waveform 2 (Reference):

Terminal No.	TACH (E59-8) - GND3 (E59-1)
Tool Setting	5 V/DIV., 10 ms./DIV.
Vehicle Condition	Engine idling

HINT:
As the engine revolution speed increases, the wavelength shortens.

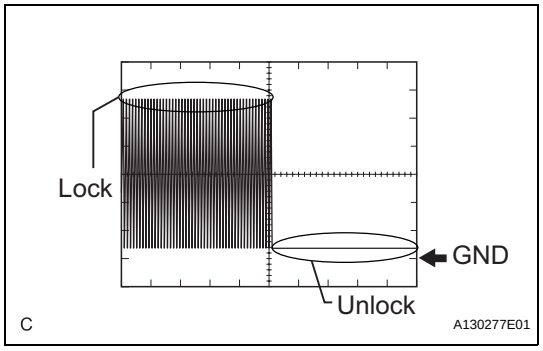

(3) Waveform 3

Waveform 3 (Reference):

Terminal No.	SLP (E61-18) - GND3 (E59-1)
Tool Setting	2 V/DIV., 100 ms./DIV.
Vehicle Condition	Steering lock/unlock

2. CHECK CERTIFICATION ECU

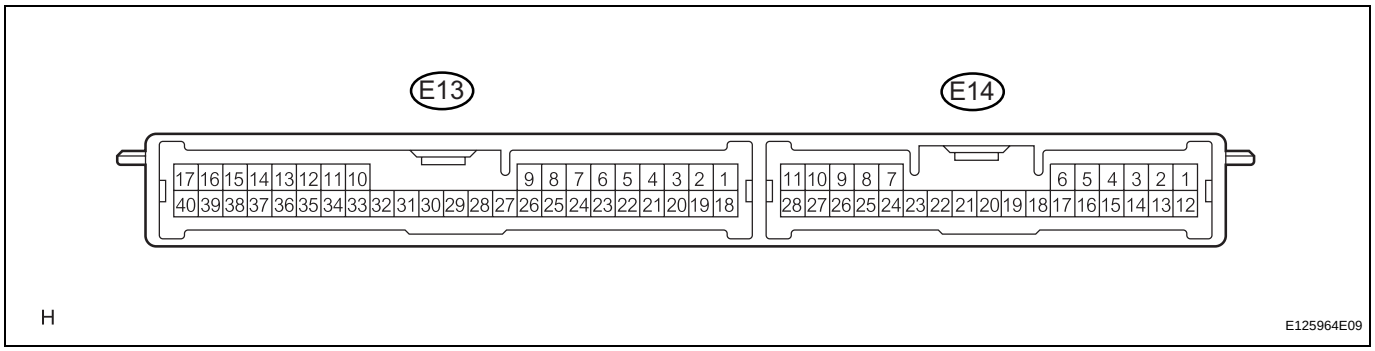

(a) Disconnect the E13 ECU connector.
(b) Measure the voltage and resistance of the wire harness side connector.

Symbols (Terminal No.)	Wiring Color	Terminal Description	Condition	Specified Condition
+B1 (E13-1) - Body ground	W - Body ground	+B power supply	Always	10 to 14 V
LIN (E13-10) - Body ground	O - Body ground	LIN line	Always	10 kΩ or higher
E (E13-17) - Body ground	W-B - Body ground	Ground	Always	Below 1 Ω

If the result is not as specified, there may be a malfunction on the wire harness side.

(c) Reconnect the E13 ECU connector.
(d) Measure the voltage of the connector.

Symbols (Terminal No.)	Wiring Color	Terminal Description	Condition	Specified Condition
IG (E13-18) - Body ground	LG - Body ground	Ignition power supply	Engine switch on (IG)	10 to 14 V
IG (E13-18) - Body ground	LG - Body ground	Ignition power supply	Engine switch off	Below 1 V

If the result is not as specified, the ECU may have a malfunction.

3. CHECK ECM

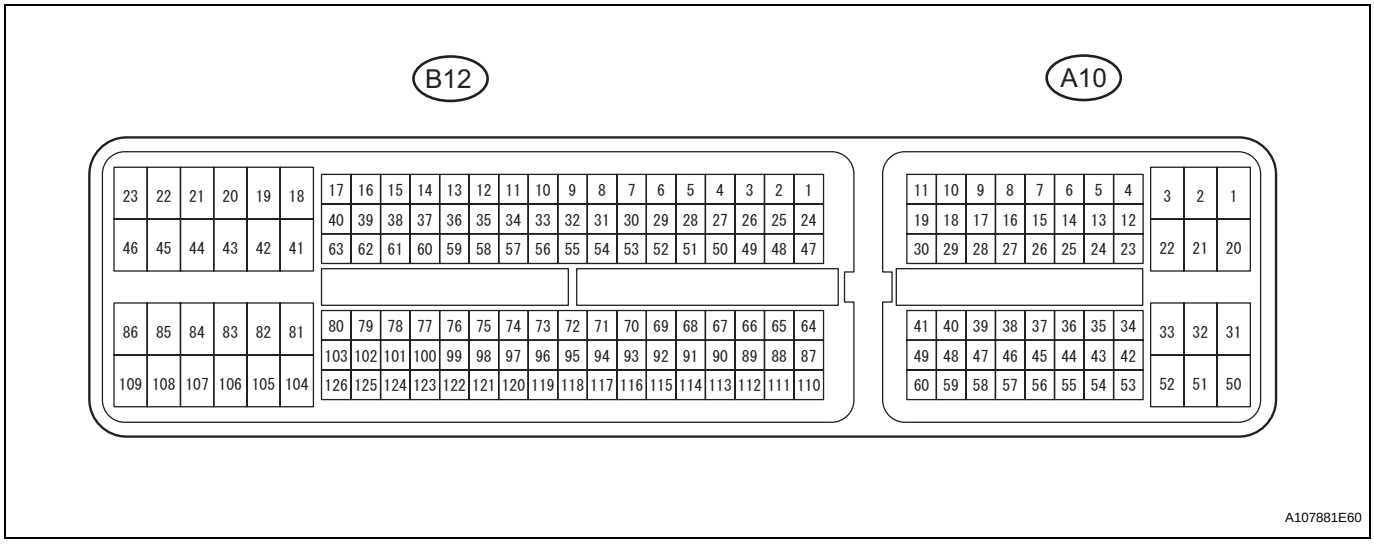

(a) Disconnect the B12 and A10 ECM connectors.
(b) Measure the voltage and resistance of the wire harness side connectors.

Symbols (Terminal No.)	Wiring Color	Terminal Description	Condition	Specified Condition
+B (A10-2) - Body ground	R - Body ground	Power source of ECM	Engine switch on (IG)	10 to 14 V
+B2 (A10-1) - Body ground	R - Body ground	Power source of ECM	Engine switch on (IG)	10 to 14 V
IGSW (A10-28) - Body ground	Y - Body ground	Ignition switch signal	Engine switch on (IG)	10 to 14 V
E01 (B12-22) - Body ground	W-B - Body ground	Ground	Always	Below 1 Ω
E02 (B12-21) - Body ground	B-W - Body ground	Ground	Always	Below 1 Ω
E03 (B12-104) - Body ground	B - Body ground	Ground	Always	Below 1 Ω
E04 (B12-23) - Body ground	W - Body ground	Ground	Always	Below 1 Ω
E05 (B12-46) - Body ground	W - Body ground	Ground	Always	Below 1 Ω
E1 (B12-81) - Body ground	W-B - Body ground	Ground	Always	Below 1 Ω
ME01 (B12-20) - Body ground	B - Body ground	Ground	Always	Below 1 Ω

If the result is not as specified, there may be a malfunction on the wire harness side.
(c) Reconnect the ECM connectors.
(d) Measure the voltage of the connectors.

Symbols (Terminal No.)	Wiring Color	Terminal Description	Condition	Specified Condition
STA (A10-48) - E1 (B12-81)	V - W-B	Starter relay operation signal	Cranking	10 to 14 V
ACCR (A10-13) - E1 (B12-81)	B - W-B	ACC relay cut signal (output)	Brake pedal depressed, shift lever P position, engine switch is pushed once → on (IG)	0.1 to 0.8 V *1 → Output voltage at terminal AM1 or AM2 is -2 V or more.
TACH (A10-15) - E1 (B12-81)	B - W-B	Engine revolution signal (output)	Idling	Pulse generation (see waveform 1)
STP (A10-36) - E1 (B12-81)	W - W-B	Stop light switch signal (input)	Brake pedal depressed	7.5 to 14 V
STP (A10-36) - E1 (B12-81)	W - W-B	Stop light switch signal (input)	Brake pedal released	Below 1.5 V
STAR (B12-63) - E1 (B12-81)	R - W-B	Starter signal (Main)	Brake pedal depressed, shift lever P or N position, engine switch on (ST)	10 to 14 V
NSW (B12-62) - E1 (B12-81)	L-B - W-B	Park / neutral position switch	Shift lever P or N position → except P or N position	Below 1 V → Pulse generation

ST

Symbols (Terminal No.)	Wiring Color	Terminal Description	Condition	Specified Condition
STSW (A10-14) - E1 (B12-81)	R - W-B	Starter activation request signal	Brake pedal depressed, engine switch held on (ST)	Output voltage at terminal AM1 or AM2 is - 2 V or more.

HINT:
*1: Voltage is output only when the engine is cranking.
If the result is not as specified, the ECM may have a malfunction.

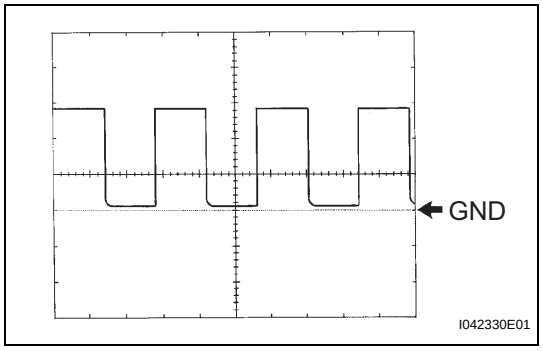

(e) Using an oscilloscope, check the signal waveform of the ECM.
Waveform 1 (Reference):

Terminal No.	TACH (A10-15) - E1 (B12-81)
Tool Setting	5 V/DIV., 10 ms./DIV.
Vehicle Condition	Engine idling

HINT:
As the vehicle speed increases, the wavelength shortens.

4. CHECK STEERING LOCK ECU

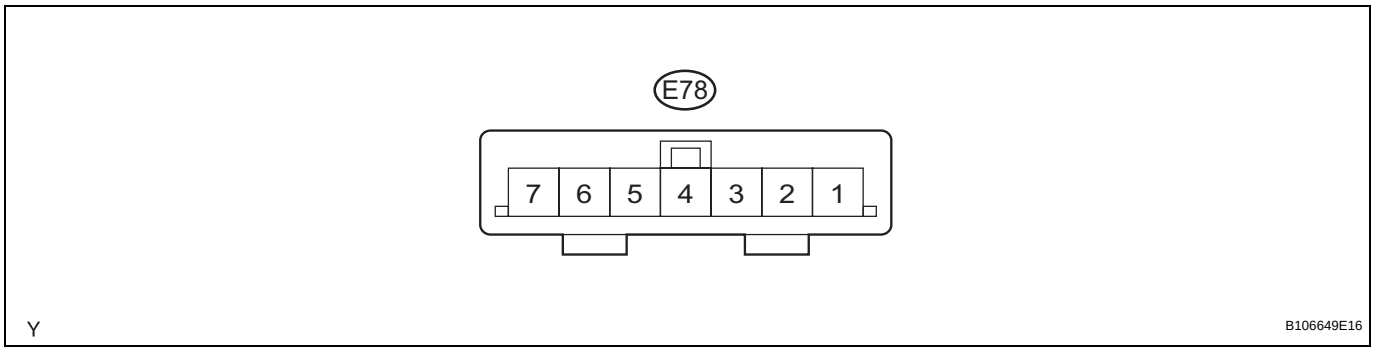

(a) Disconnect the E78 ECU connector.
(b) Measure the voltage and resistance of the wire harness side connector.

Symbols (Terminal No.)	Wiring Color	Terminal Description	Condition	Specified Condition
B (E78-7) - Body ground	B - Body ground	+B power supply	Always	10 to 14 V
IG2 (E78-6) - Body ground	B - Body ground	Ignition power supply	Engine switch on (IG)	10 to 14 V
IG2 (E78-6) - Body ground	B - Body ground	Ignition power supply	Engine switch off	Below 1 V
GND (E78-1) - Body ground	W-B - Body ground	Ground	Always	Below 1 Ω
SGND (E78-2) - Body ground	W-B - Body ground	Ground	Always	Below 1 Ω

If the result is not as specified, there may be a malfunction on the wire harness side.
(c) Reconnect the E78 ECU connector.
(d) Measure the voltage of the connector.

Symbols (Terminal No.)	Wiring Color	Terminal Description	Condition	Specified Condition
SLP1 (E78-4) - GND (E78-1)	GR - W-B	Steering lock actuator position signal	Steering is locked	10 to 14 V
SLP1 (E78-4) - GND (E78-1)	GR - W-B	Steering lock actuator position signal	Steering is released	Below 1 V

If the result is not as specified, the ECU may have a malfunction.

REMOVAL

1. **DISCONNECT CABLE FROM NEGATIVE BATTERY TERMINAL**
2. **REMOVE COOL AIR INTAKE DUCT SEAL (See page EM-22)**
3. **REMOVE ENGINE ROOM SIDE COVER LH (See page EM-22)**
4. **REMOVE V-BANK COVER SUB-ASSEMBLY (See page EM-23)**
5. **REMOVE NO. 2 AIR CLEANER INLET (See page EM-23)**
6. **REMOVE AIR CLEANER CAP SUB-ASSEMBLY (See page ES-519)**
7. **REMOVE AIR CLEANER CASE SUB-ASSEMBLY (See page EM-23)**
8. **REMOVE NO. 1 AIR CLEANER INLET (See page EM-23)**
9. **REMOVE STARTER ASSEMBLY**
   (a) Disconnect the terminal 50 connector from the starter assembly.
   (b) Remove the nut and disconnect the wire harness from terminal 30.
   (c) Remove the 2 bolts and starter assembly.

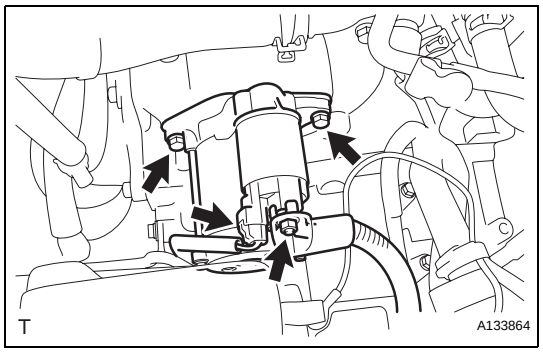

ST

DISASSEMBLY

1. **REMOVE MAGNETIC SWITCH ASSEMBLY**
   (a) Remove the nut and disconnect the lead wire from terminal C.

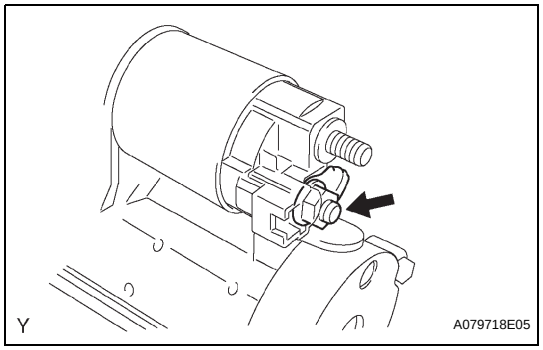

   (b) Remove the 2 screws that hold the magnetic switch assembly to the motor terminal starter kit.
   (c) Remove the magnetic switch assembly.
   (d) Remove the return spring and the plunger from the magnetic switch assembly.

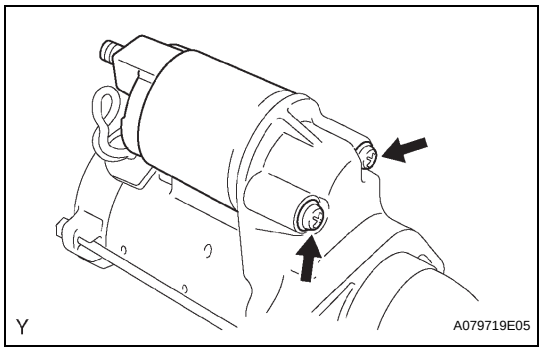

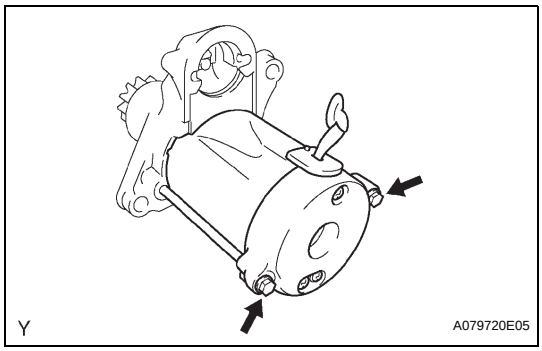

2. REMOVE STARTER YOKE ASSEMBLY

(a) Remove the 2 through bolts and pull out the starter yoke assembly together with the starter commutator end frame assembly.

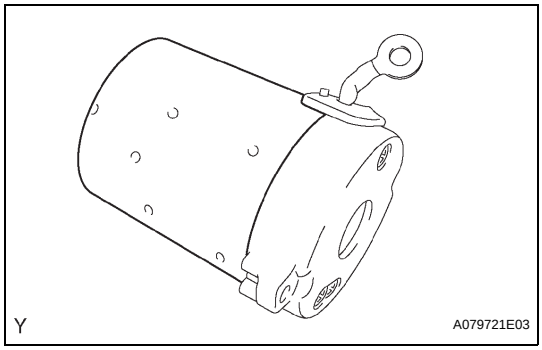

3. REMOVE STARTER COMMUTATOR END FRAME ASSEMBLY

(a) Remove the starter yoke assembly from the starter commutator end frame assembly.

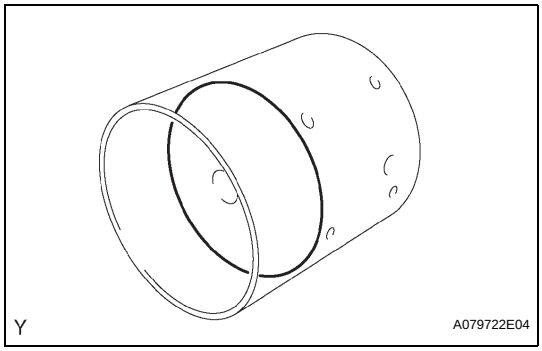

4. REMOVE STARTER ARMATURE PLATE

(a) Remove the starter armature plate from the starter yoke assembly.

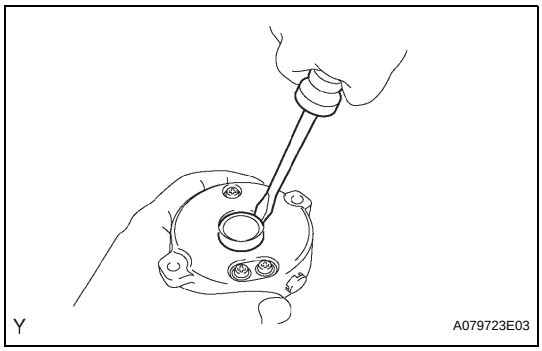

5. REMOVE STARTER COMMUTATOR END FRAME COVER

(a) Using a screwdriver, remove the starter commutator end frame cover.

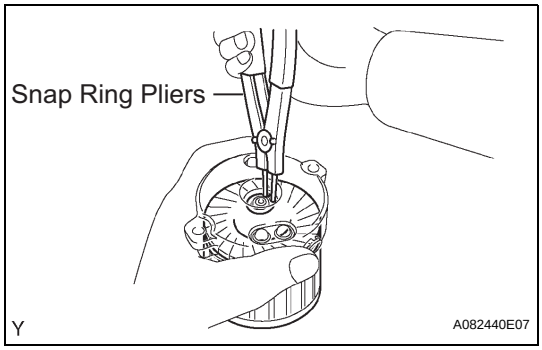

6. REMOVE STARTER ARMATURE ASSEMBLY

(a) Using snap ring pliers, remove the snap ring and plate washer.

(b) Remove the starter armature assembly from the commutator end frame assembly.

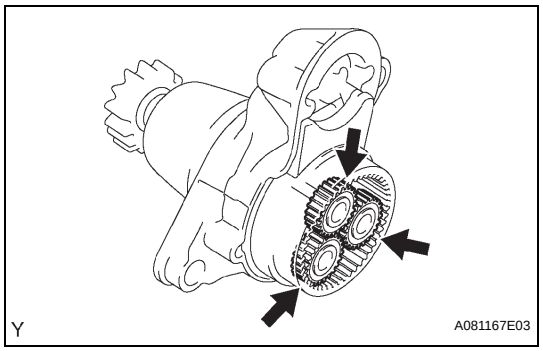

7. REMOVE PLANETARY GEAR

(a) Remove the 3 planetary gears from the starter drive housing assembly.

INSPECTION

1. INSPECT STARTER ASSEMBLY

CAUTION:
Make sure to complete each of the following tests within 5 seconds to prevent the coil from burning out.

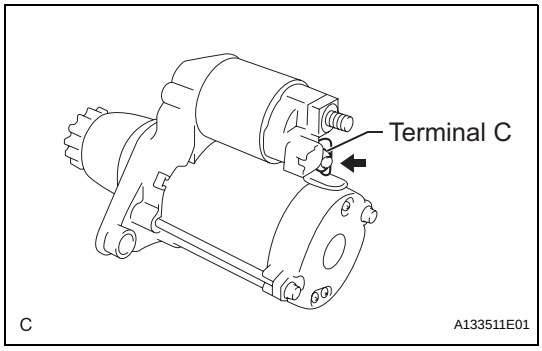

(a) Perform pull-in test:
(1) Disconnect the lead wire from terminal C.

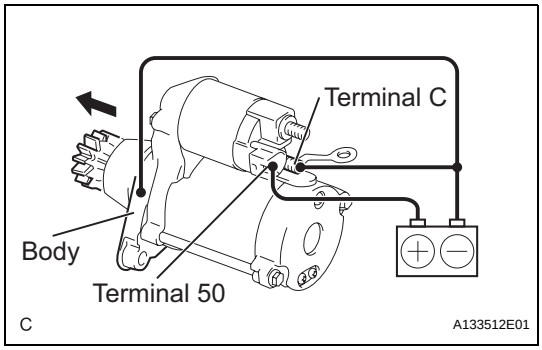

(2) Connect the battery to the magnetic switch as shown in the illustration. Check that the clutch pinion gear moves outward.
If the clutch pinion gear does not move outward, replace the repair service starter kit.

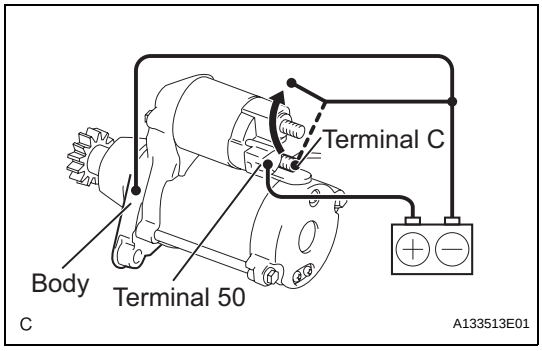

(b) Perform hold-in test:
(1) Disconnect the negative (-) terminal lead from terminal C under the conditions for pull-in test. Check that the pinion gear remains out.
If the clutch pinion gear moves inward, replace the repair service starter kit.

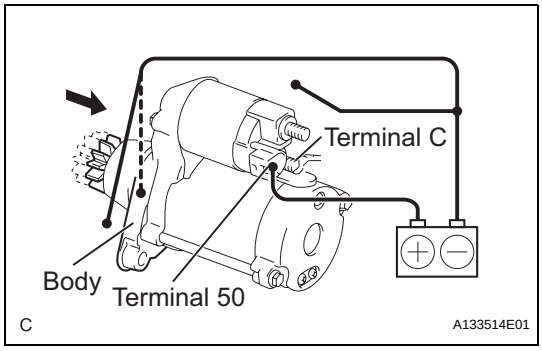

(c) Inspect clutch pinion gear return:
(1) Disconnect the negative (-) lead from the starter body. Check that the clutch pinion gear moves inward.
If the clutch pinion gear does not move inward, replace the repair service starter kit.

(d) Perform no-load performance test:
(1) Connect the field coil wire to terminal C with the nut. Make sure that the lead is not grounded.
Torque: 10 N*m (102 kgf*cm, 7 ft.*lbf)
(2) Clamp the starter in a vise.

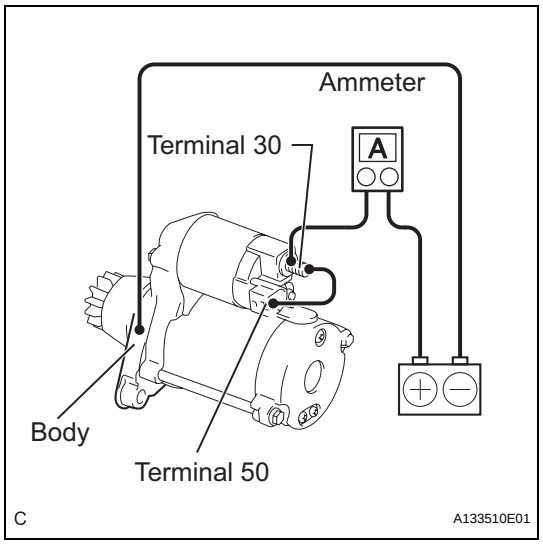

(3) Connect the battery and an ammeter to the starter as shown in the illustration.
(4) Check that the starter rotates smoothly and steadily with the clutch pinion gear extended. Check that the ammeter reads the specified current.
Specified current

Condition	Specified condition
at 11.5 V	90 A or less

If the result is not as specified, overhaul the starter assembly.

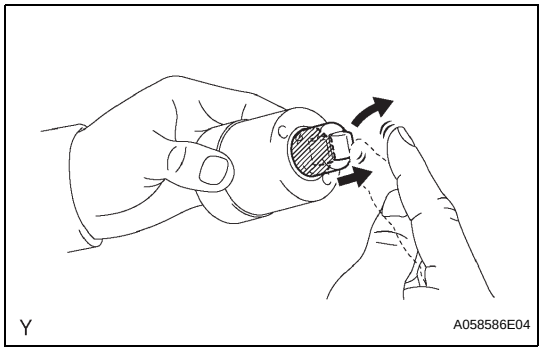

2. INSPECT MAGNETIC SWITCH ASSEMBLY
(a) Check the plunger.
(1) Push in the plunger and check that it returns quickly to its original position.
If necessary, replace the magnetic switch assembly.

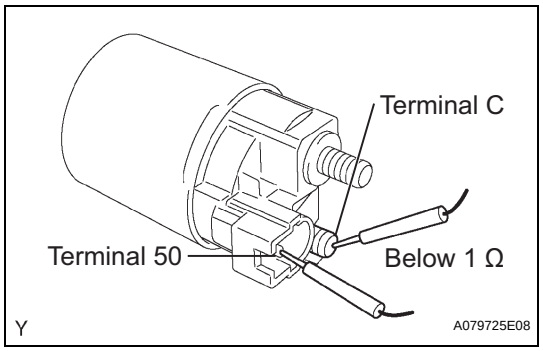

(b) Inspect the resistance of the pull-in coil.
(1) Using an ohmmeter, measure the resistance between terminals 50 and C.
Standard resistance

Tester connection	Specified condition
Terminal 50 - Terminal C	Below 1 Ω

If the resistance is not as specified, replace the magnetic switch assembly.

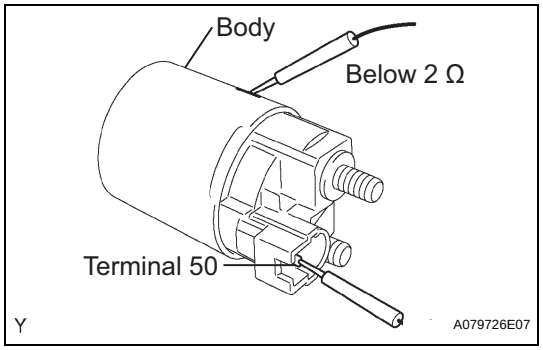

(c) Inspect the resistance of the hold-in coil.
(1) Using an ohmmeter, measure the resistance between terminal 50 and switch body.
Standard resistance

Tester connection	Specified condition
Terminal 50 - Switch body	Below 2 Ω

If the resistance is not as specified, replace the magnetic switch assembly.

3. INSPECT STARTER ARMATURE ASSEMBLY
(a) Check the commutator surface for dirt or burning.
If the surface is dirty or burnt, smooth the surface with 400-grit sandpaper or leather.

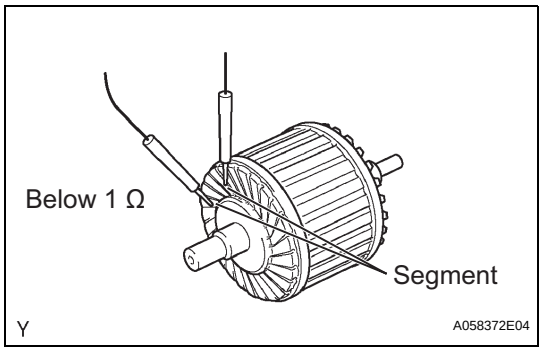

(b) Inspect the resistance of the commutator.
(1) Using an ohmmeter, measure the resistance between the segments of the commutator.
Standard resistance

Tester connection	Specified condition
Segment - Segment	Below 1 Ω

If the resistance is not as specified, replace the starter armature assembly.

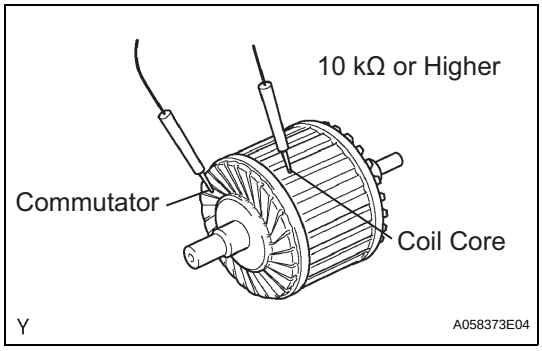

(2) Using an ohmmeter, measure the resistance between the commutator and armature coil core.
Standard resistance

Tester connection	Specified condition
Commutator - Armature coil core	10 kΩ or higher

If the resistance is not as specified, replace the starter armature assembly.

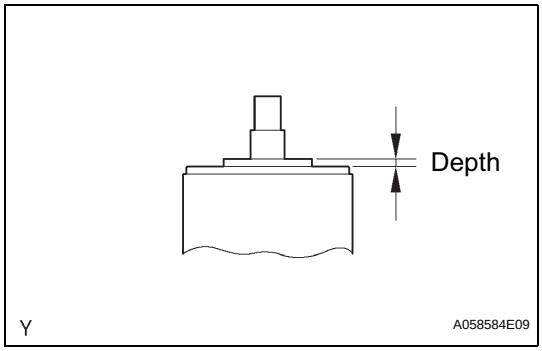

(c) Using vernier calipers, measure the commutator depth.
Specified depth:
3.1 mm (0.122 in.)
Maximum depth:
3.8 mm (0.150 in.)
If the depth is greater than the maximum, replace the starter armature assembly.

ST

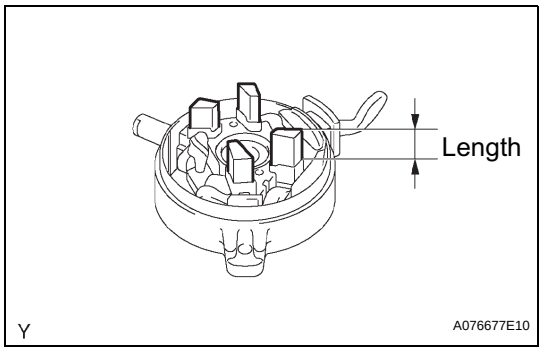

4. INSPECT STARTER COMMUTATOR END FRAME ASSEMBLY

(a) Check the brush length.
(1) Using vernier calipers, measure the brush length.
Specified length:
9.0 mm (0.354 in.)
Maximum length:
4.0 mm (0.157 in.)
If the length is less than the minimum, replace the starter commutator end frame assembly.

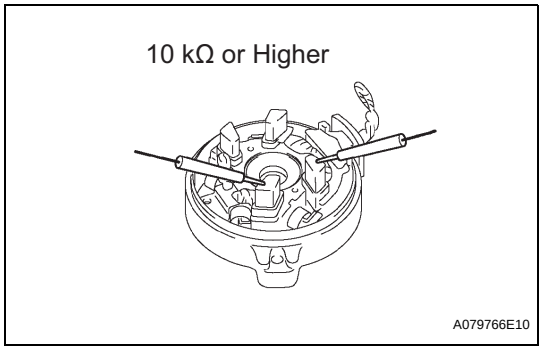

(b) Check the resistance.
(1) Using an ohmmeter, measure the resistance between the positive (+) and negative (-) brushes.
Resistance:
10 kΩ or higher
If the resistance is not as specified, repair or replace the starter commutator end frame assembly.

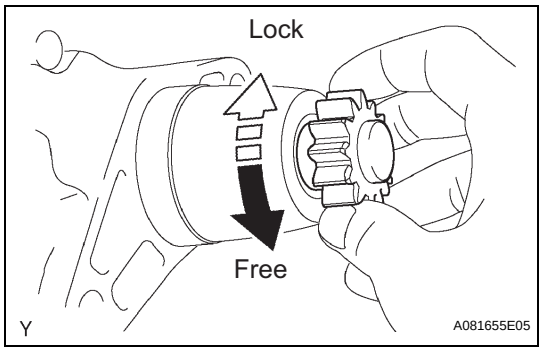

5. INSPECT STARTER CLUTCH

(a) Check the starter clutch.

(1) Rotate the clutch pinion gear counterclockwise and check that it turns freely. Try to rotate the clutch pinion gear clockwise and check that it locks.
If necessary, replace the starter drive housing assembly.

REASSEMBLY

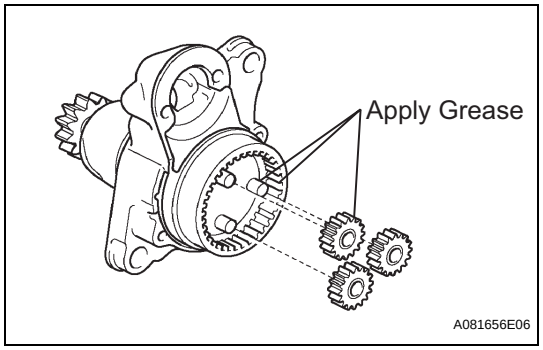

1. INSTALL PLANETARY GEAR

(a) Apply high-temperature grease to the planetary gears and pin parts of the planetary shaft.

(b) Install the 3 planetary gears to the starter drive housing assembly.

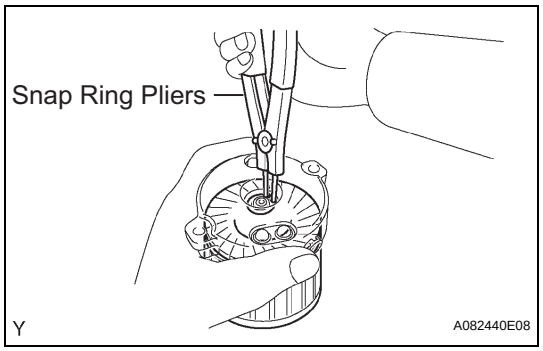

2. INSTALL STARTER ARMATURE ASSEMBLY

(a) Apply high-temperature grease to the plate washer and the armature shaft.

(b) Install the starter armature assembly to the starter commutator end frame assembly.

(c) Using snap ring pliers, install the plate washer and a new snap ring.

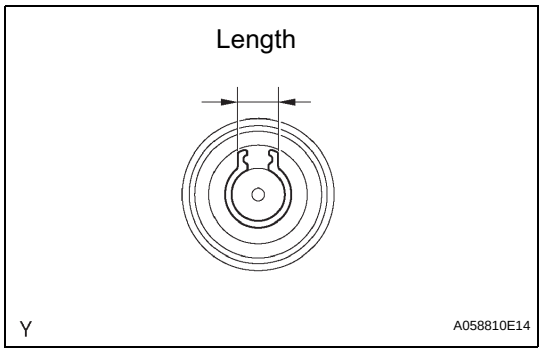

(d) Using vernier calipers, measure the snap ring.
Maximum length:
5.0 mm (0.197 in.)
If the length is greater than the maximum, replace the snap ring with a new one.

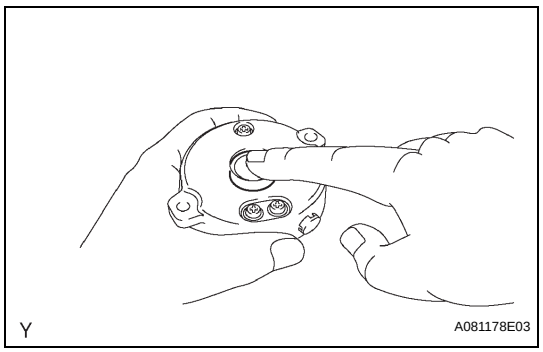

3. INSTALL STARTER COMMUTATOR END FRAME COVER

(a) Install the starter commutator end frame cover to the starter commutator end frame assembly.

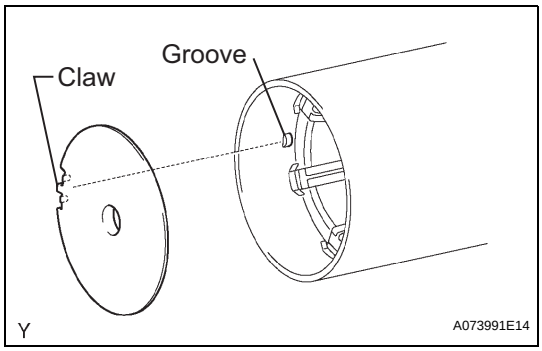

4. INSTALL STARTER ARMATURE PLATE

(a) Align the claw of the armature plate with the groove inside the starter yoke assembly, and install the starter armature plate.

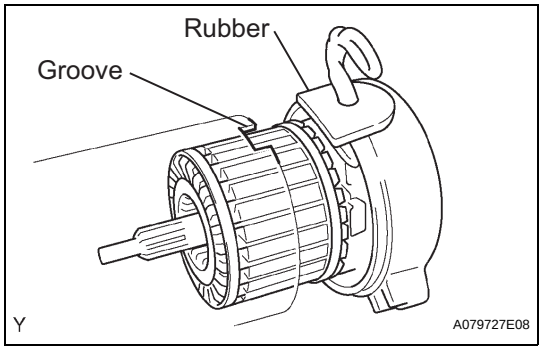

5. INSTALL STARTER COMMUTATOR END FRAME ASSEMBLY

(a) Align the starter commutator end frame rubber with the groove of the starter yoke assembly.

(b) Install the starter commutator end frame assembly to the starter yoke assembly.

NOTICE:

The magnet of the starter yoke assembly may attract the starter armature assembly when the starter commutator end frame assembly is installed, causing the magnet to break.

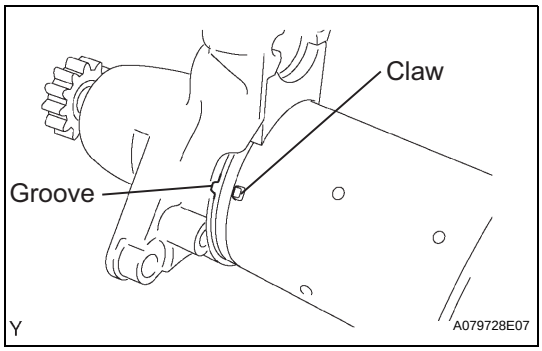

6. INSTALL STARTER YOKE ASSEMBLY

(a) Align the claw of the starter yoke with the groove inside the motor terminal starter kit.

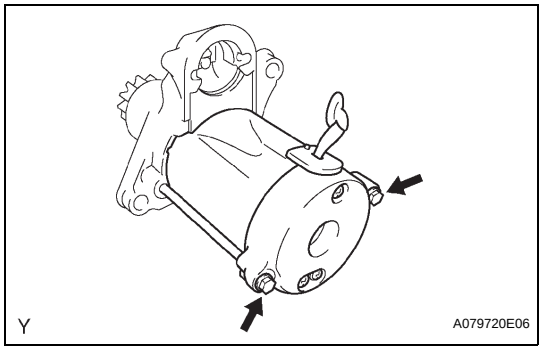

(b) Install the starter yoke with the 2 through bolts.

Torque: 6.0 N*m (61 kgf*cm, 53 in.*lbf)

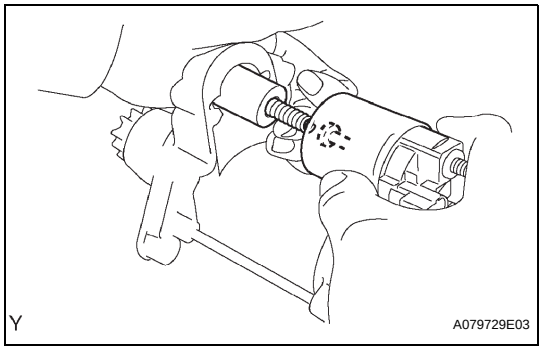

7. INSTALL MAGNETIC SWITCH ASSEMBLY

(a) Apply high-temperature grease to the plunger and the hook.

(b) Hang the plunger hook of the magnetic switch assembly to the drive lever hook.

(c) Install the plunger and the return spring.

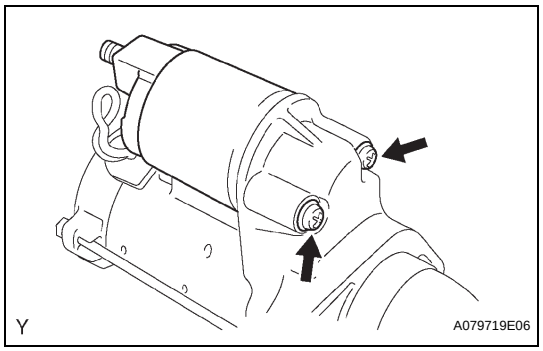

(d) Install the repair magnetic switch assembly with the 2 screws.
Torque: 7.5 N*m (76 kgf*cm, 66 in.*lbf)

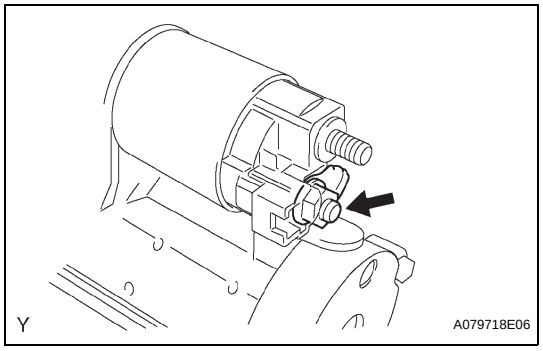

(e) Connect the lead wire to terminal C with the nut.
Torque: 10 N*m (102 kgf*cm, 7 ft.*lbf)

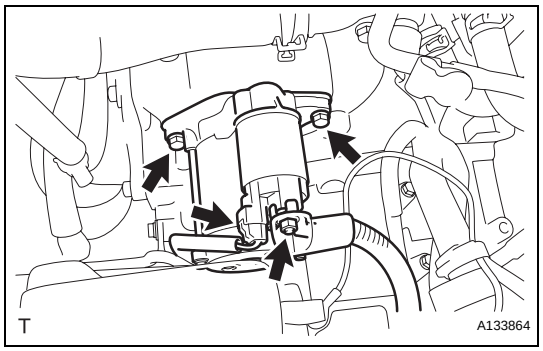

INSTALLATION

1. **INSTALL STARTER ASSEMBLY**
   (a) Install the starter assembly with the 2 bolts.
   Torque: 37 N*m (380 kgf*cm, 28 ft.*lbf)
   (b) Connect the wire harness to terminal 30 and install the nut. Then, attach the terminal cap.
   Torque: 9.8 N*m (100 kgf*cm, 87 in.*lbf)
   (c) Connect the terminal 50 connector to the starter assembly.
2. **INSTALL NO. 1 AIR CLEANER INLET (See page EM-48)**
3. **INSTALL AIR CLEANER CASE SUB-ASSEMBLY (See page EM-48)**
4. **INSTALL AIR CLEANER CAP SUB-ASSEMBLY (See page ES-522)**
5. **INSTALL NO. 2 AIR CLEANER INLET (See page EM-48)**
6. **INSTALL V-BANK COVER SUB-ASSEMBLY (See page EM-49)**
7. **INSTALL ENGINE ROOM SIDE COVER LH (See page EM-50)**
8. **INSTALL COOL AIR INTAKE DUCT SEAL (See page EM-50)**
9. **CONNECT CABLE TO NEGATIVE BATTERY TERMINAL (See page EM-49)**

10. PERFORM INITIALIZATION

(a) Perform initialization procedure (See page IN-33).

NOTICE:

Some vehicle systems require initialization after reconnecting the cable to the negative battery terminal.

DIAGNOSIS SYSTEM

1. DESCRIPTION

(a) Push-button start function data and the Diagnostic Trouble Codes (DTCs) can be read through the Data Link Connector 3 (DLC3) of the vehicle. When the function seems to be malfunctioning, use the intelligent tester to check for malfunctions and perform repairs.

2. CHECK DLC3

HINT:
The ECU uses ISO 15765-4 communication protocol. The terminal arrangement of the DLC3 complies with SAE J1962 and matches the ISO 15765-4 format.

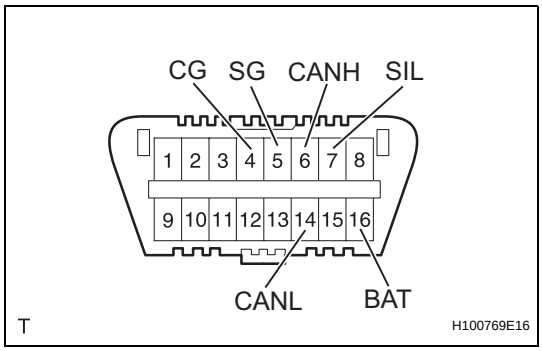

Symbols (Terminal No.)	Terminal Description	Condition	Specified Condition
CG (4) - Body ground	Chassis ground	Always	Below 1 Ω
SG (5) - Body ground	Signal ground	Always	Below 1 Ω
SIL (7) - SG (5)	Bus "+" line	During transmission	Pulse generation
BAT (16) - Body ground	Battery positive	Always	10 to 14 V
CANH (6) - CANL (14)	CAN bus line	Engine Switch OFF*	56 to 69 Ω
CANH (6) - CG (4)	HIGH-level CAN bus line	Engine Switch OFF*	200 Ω or more
CANL (14) - CG (4)	LOW-level CAN bus line	Engine Switch OFF*	200 Ω or more
CANH (6) - BAT (16)	HIGH-level CAN bus line	Engine Switch OFF*	6 kΩ or more
CANL (14) - BAT (16)	LOW-level CAN bus line	Engine Switch OFF*	6 kΩ or more

NOTICE:
***: Before measuring the resistance, leave the vehicle as is for at least 1 minute and do not operate the engine switch, any other switches or the doors.**
If the result is not as specified, the DLC3 may have a malfunction. Repair or replace the harness and connector.

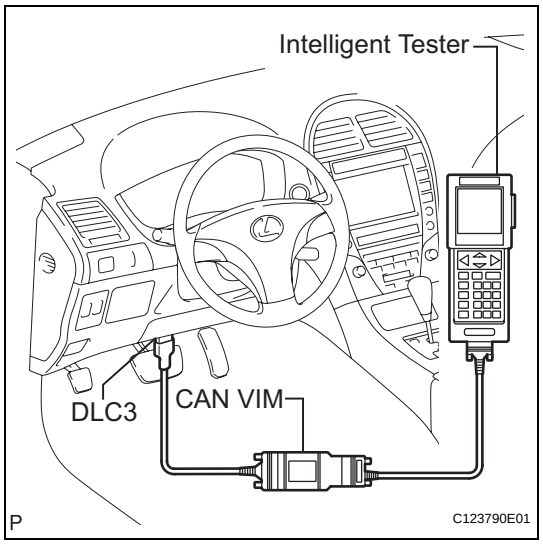

HINT:
Connect the cable of the intelligent tester to the DLC3, turn the engine switch on (IG) and attempt to use the tester. If the display indicates that a communication error has occurred, there is a problem either with the vehicle or with the tester.

- If communication is normal when the tester is connected to another vehicle, inspect the DLC3 of the original vehicle.
- If communication is still not possible when the tester is connected to another vehicle, the problem may be in the tester itself. Consult the Service Department listed in the tester's instruction manual.

3. INSPECT BATTERY VOLTAGE

Standard voltage:

11 to 14 V

If the voltage is below 11 V, recharge or replace the battery before proceeding.

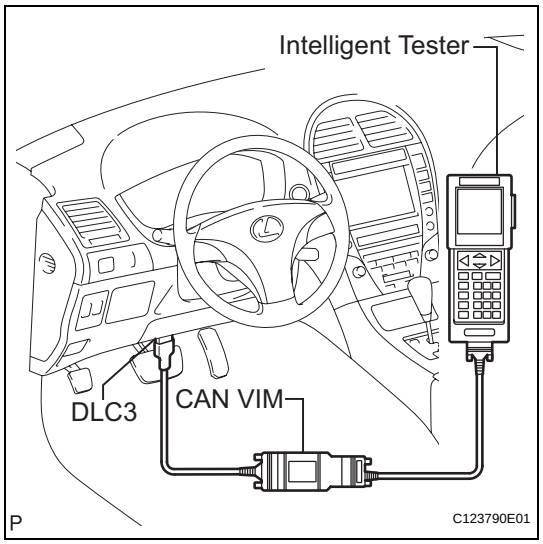

DTC CHECK / CLEAR

1. CHECK DTC

(a) Connect the intelligent tester to the DLC3.
(b) Turn the engine switch on (IG).
(c) Enter the following menu items: DIAGNOSIS / OBD/ MOBD / DTC INFO / CURRENT CODES.
(d) Read the DTC by following the prompts on the tester screen.
HINT:
Refer to the intelligent tester operator's manual for further details.

2. CLEAR DTC

(a) Connect the intelligent tester to the DLC3.
(b) Turn the engine switch on (IG).
(c) Enter the following menu items: DIAGNOSIS / OBD/ MOBD / DTC INFO / CLEAR CODES.
(d) Erase the DTC by following the directions on the tester screen.
HINT:
Refer to the intelligent tester operator's manual for further details.

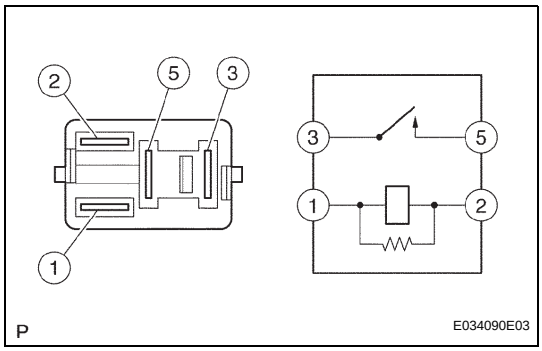

STARTER RELAY

ON-VEHICLE INSPECTION

1. INSPECT STARTER RELAY ASSEMBLY

(a) Using an ohmmeter, measure the resistance between each terminal.

Standard resistance

Tester Connection	Specified Condition
3 - 5	10 kΩ or higher
	Below 1 Ω (when battery voltage is applied to terminals 1 and 2)

If the result is not as specified, replace the starter relay assembly.

DATA LIST / ACTIVE TEST

1. READ DATA LIST

HINT:
Using the intelligent tester to read the Data List allows the values or states of switches, sensors, actuators and other items to be read without removing any parts. This non-intrusive inspection can be very useful as intermittent conditions or signals may be discovered before parts or wiring is disturbed. Reading the DATA LIST information early in troubleshooting is one way to save diagnostic time.

(a) Connect the intelligent tester (with CAN VIM) to the DLC3.
When using the intelligent tester with the engine switch off, turn on and off any of the door courtesy light switches repeatedly at 1.5 or less second intervals until communication between the tester and vehicle starts.

(b) Turn the engine switch on (IG).

(c) Enter the following menus: DIAGNOSIS / OBD/ MOBD / DATA LIST.

(d) Read the DATA LIST.

MAIN BODY:

Tester Display	Measurement Item/Range	Normal Condition	Diagnostic Note
ACC SW	Engine switch on (ACC) / ON or OFF	ON: Engine switch on (ACC) OFF: Engine switch off	-
IG SW	Engine switch on (IG) / ON or OFF	ON: Engine switch on (IG) OFF: Engine switch off	-
SHIFT P SIG	Shift P position signal / ON or OFF	ON: Shift position is P OFF: Shift position is not P	-
STR UNLOCK SW	Steering lock condition / ON or OFF	ON: Steering is unlocked (Engine switch on (ACC)) OFF: Steering is locked (Engine switch off)	-
STOP LIGHT SW	Stop light switch / ON or OFF	ON: Brake pedal depressed OFF: Brake pedal released	-
STSW1	Start switch 1 / ON or OFF	ON: Engine switch is pushed OFF: Engine switch is not pushed	-
STSW2	Start switch 2 / ON or OFF	ON: Engine switch is pushed OFF: Engine switch is not pushed	-
N SW / C SW	Neutral start switch / ON or OFF	ON: Shift position is P or N OFF: Shift position is neither P nor N	-
LATCH CIRCUIT	Latch circuit / ON or OFF	ON: Engine switch on (IG) or engine running OFF: Engine switch off or on (ACC)	-
IG1 RELAY MON1	IG1 outer relay monitor / ON or OFF	ON: Engine switch on (IG) OFF: Engine switch off	-
IG1 RELAY MON2	IG1 inner relay monitor / ON or OFF	ON: Engine switch on (IG) OFF: Engine switch off	-
IG2 RELAY MON1	IG2 outer relay monitor / ON or OFF	ON: Engine switch on (IG) OFF: Engine switch off	-
IG2 RELAY MON2	IG2 inner relay monitor / ON or OFF	ON: Engine switch on (IG) OFF: Engine switch off	-
ST REQUEST SIG	Starter request signal monitor / ON or OFF	ON: ST relay is ON OFF: ST relay is OFF	Engine switch pressed and held with shift lever in P or N

Tester Display	Measurement Item/Range	Normal Condition	Diagnostic Note
ACC RELAY MON	ACC relay monitor / ON or OFF	ON: Engine switch on (ACC) OFF: Engine switch off	-
ACC CUT SIG	ACC relay cut signal / ON or OFF	ON: Engine is cranking OFF: Engine is not cranking	-
E/G COND	Engine condition / STOP or RUN	STOP: Engine is stopped RUN: Engine is running	-
VEHICLE SPD SIG	Vehicle speed signal / STOP or RUN	STOP: Vehicle is stopped RUN: Vehicle is running	-
PWR COND	Power supply condition / ALL, ACC ON, IG1 IG2, ST ON	ALL: All relays are OFF ACC ON: ACC relay is ON IG1: IG1 relay is ON IG2: IG2 relay is ON ST ON: ST request signal is ON	-
COM ENTRY&STRT	Communication for certification ECU / OK or STOP	OK: Communication STOP: No communication	-

2. PERFORM ACTIVE TEST

HINT:

Performing the intelligent tester's ACTIVE TEST allows the relay, VSV, actuator and other items to be operated without removing any parts. Performing the ACTIVE TEST early in troubleshooting is one way to save time. The DATA LIST can be displayed during the ACTIVE TEST.

(a) Connect the intelligent tester to the DLC3.
(b) Turn the engine switch on (IG).
(c) Enter the following menus: DIAGNOSIS / ENHANCED OBD II / ACTIVE TEST.
(d) Perform the ACTIVE TEST according to the display on the tester.

ST

MAIN BODY:

Tester Display	Test Part	Control Range	Diagnostic Note
LIGHTING IND	Indicator for lighting	ON / OFF	-
IND CONDITION	Engine switch indicator	Green / Amber / No Sig	-
STR LOCK PWR	Power supply for steering lock ECU	ON / OFF	-

DIAGNOSTIC TROUBLE CODE CHART

PUSH-BUTTON START FUNCTION:

DTC Code	Detection Item	Trouble Area	See page
B2271	Ignition Hold Monitor Malfunction	1. AM2 fuse 2. Main body ECU (Instrument panel J/B) 3. Wire harness or connector	ST-31
B2272	Ignition 1 Monitor Malfunction	1. IG1 relay 2. Main body ECU (Instrument panel J/B) 3. Wire harness or connector	ST-34
B2273	Ignition 2 Monitor Malfunction	1. IG2 relay 2. Main body ECU (Instrument panel J/B) 3. Wire harness or connector	ST-39
B2274	ACC Monitor Malfunction	1. Main body ECU (Instrument panel J/B) 2. ACC relay 3. Wire harness or connector	ST-43
B2275	STSW Monitor Malfunction	1. ECM 2. Main body ECU (Instrument panel J/B) 3. Wire harness or connector	ST-48
B2276	ACCR Signal Circuit Malfunction	1. Main body ECU (Instrument panel J/B) 2. ECM 3. Wire harness or connector	ST-51
B2277	Detecting Vehicle Submersion	Main body ECU (Instrument panel J/B)	ST-54
B2278	Engine Switch Circuit Malfunction	1. Engine switch 2. Main body ECU (Instrument panel J/B) 3. Wire harness or connector	ST-55
B2281	"P" Signal Malfunction	1. Main body ECU (Instrument panel J/B) 2. Shift lock control ECU 3. Wire harness or connector	ST-60
B2282	Vehicle Speed Signal Malfunction	1. CAN communication system 2. Combination meter system 3. Main body ECU (Instrument panel J/B) 4. Wire harness or connector	ST-63
B2283	Vehicle Speed Sensor Malfunction	1. DTC B2282 detection area 2. Combination meter 3. Speed sensor 4. Skid control ECU 5. Main body ECU (Instrument panel J/B) 6. Wire harness or connector	ST-69
B2284	Brake Signal Malfunction	1. Stop light switch 2. CAN communication system 3. ECM 4. Main body ECU (Instrument panel J/B) 5. Wire harness or connector	ST-74
B2285	Steering Lock Position Signal Circuit Malfunction	1. Main body ECU (Instrument panel J/B) 2. Steering lock ECU 3. Wire harness or connector	ST-79
B2286	Runnable Signal Malfunction	1. CAN communication system 2. ECM 3. Main body ECU (Instrument panel J/B) 4. Wire harness or connector	ST-83
B2287	LIN Communication Master Malfunction	1. Main body ECU (Instrument panel J/B) 2. Certification ECU 3. Wire harness or connector	ST-87
B2288	Steering Lock Signal Circuit Malfunction	1. Main body ECU (Instrument panel J/B) 2. Steering lock ECU 3. Wire harness or connector	ST-90
B2289	Key Collation Waiting Time Over	1. Main body ECU (Instrument panel J/B) 2. Engine immobiliser system 3. Wire harness or connector 4. Certification ECU	ST-93

ON-VEHICLE INSPECTION

1. CHECK POWER SOURCE MODE CHANGE FUNCTION

(a) Check the function of the engine switch.

(1) Check that power source mode changes in accordance with the conditions of the shift position and brake pedal.

Brake Pedal	Shift Lever	Power Source Mode Pattern
Depressed	P or N Position	When the engine switch is pushed once. • off → engine start • on (ACC) → engine start • on (IG) → engine start
Not depressed	P position	Each time the engine switch is pushed. • off → on (ACC) → on (IG) → off
	Except P Position	Each time the engine switch is pushed. • off → on (ACC) → on (IG) → on (ACC)
-	P Position	When the engine switch is pushed with power source mode on (IG) (engine running). • on (IG) → off
-	Except P Position	When the engine switch is pushed with power source mode on (IG) (engine running). • on (IG) → on (ACC)

(b) Check if power source mode changes without pressing the engine switch.

(1) With power source mode on (ACC) and the shift position in P, wait for at least 1 hour. Check that power source mode changes from on (ACC) to off automatically.

2. CHECK INDICATOR CONDITION

(a) Check the indicator on the engine switch.

(1) Check that the engine switch indicator turns on and changes color according to the table below.

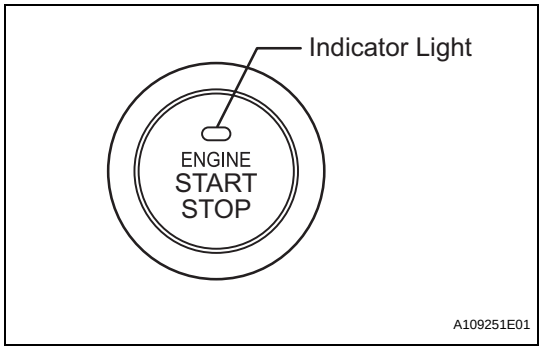

Power Source Mode/Condition	Indicator Light Condition	
	Brake pedal released	Brake pedal depressed, shift lever in P or N
off	OFF	ON (Green) (When key and vehicle IDs match)
on (ACC, IG)	ON (Amber)	ON (Green)
Engine running	OFF	OFF
Steering lock not unlocked	Flashes (Green) for 15 sec.	Flashes (Green) for 15 sec.
System malfunction	Flashes (Amber) for 15 sec.	Flashes (Amber) for 15 sec.

DTC	B2271	Ignition Hold Monitor Malfunction

DESCRIPTION

This DTC is output when a problem such as an open in the AM2 fuse, an open or short in the wire harness between the fuse and main body ECU, a short in the IG output circuit inside the main body ECU, a short between the main body ECU and relay, and a short in the relay is detected.
HINT:
When the main body ECU is replaced with a new one and the negative (-) battery terminal is connected, the power source mode becomes the IG-ON mode. When the battery is removed and reinstalled, the power source mode that was selected when the battery was removed is restored.
After the main body ECU is replaced, perform the registration procedures for the engine immobiliser system (See page EI-9).

DTC No.	DTC Detection Condition	Trouble Area
B2271	Hold circuit, IG1 relay actuation circuit or IG2 relay actuation circuit inside main body ECU is open or shorted	• AM2 fuse • Main body ECU • Wire harness or connector

WIRING DIAGRAM

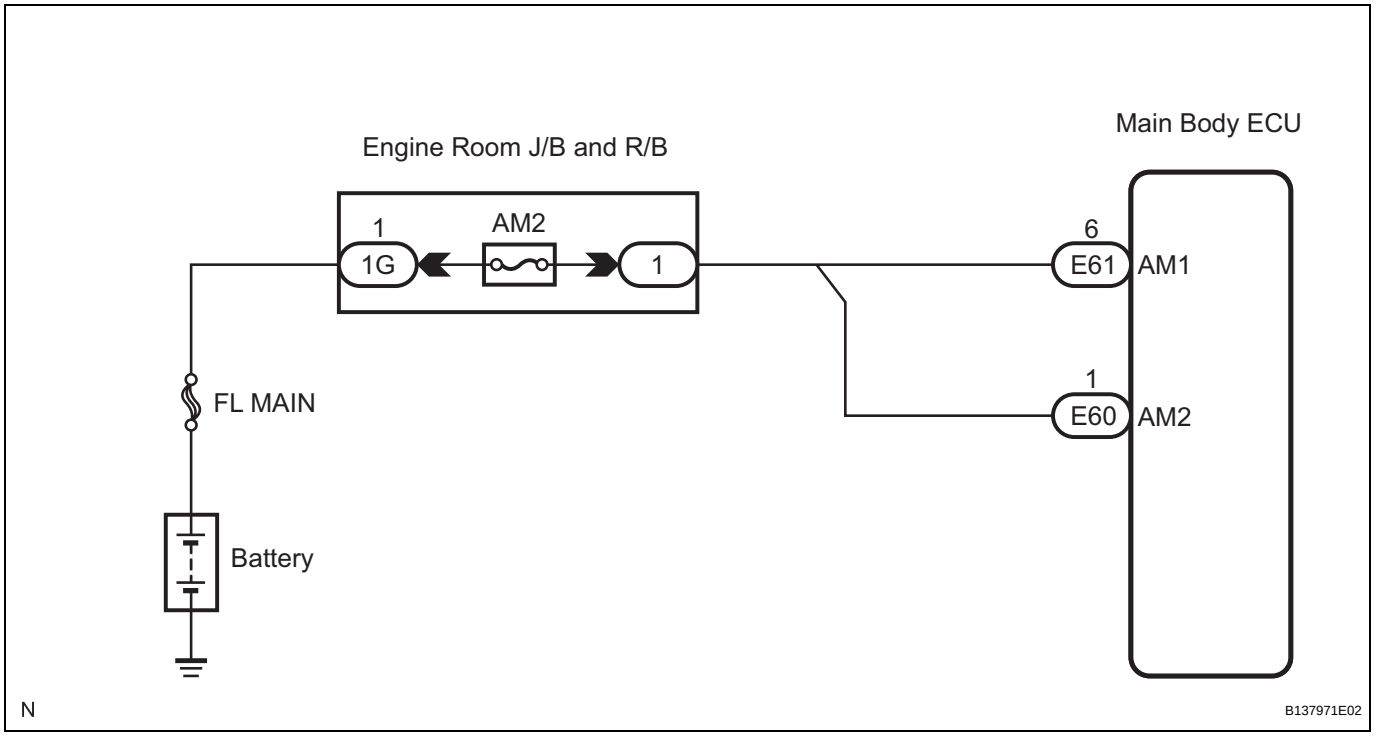

INSPECTION PROCEDURE

1	CHECK DTC OUTPUT

(a) Delete the DTCs (See page ST-26).
HINT:
After all DTCs are cleared, check if the trouble occurs again 6 seconds after the engine switch is turned on (IG).
(b) Check for DTCs again.

OK:
No DTC is output.

NG → **Go to step 2**

OK

CHECK INTERMITTENT PROBLEMS

2 INSPECT FUSE (AM2)

(a) Remove the AM2 fuse from the engine room J/B.
(b) Measure the resistance of the fuse.
Standard resistance:
Below 1 Ω

NG → **REPLACE FUSE**

OK

3 CHECK WIRE HARNESS (MAIN BODY ECU - BATTERY)

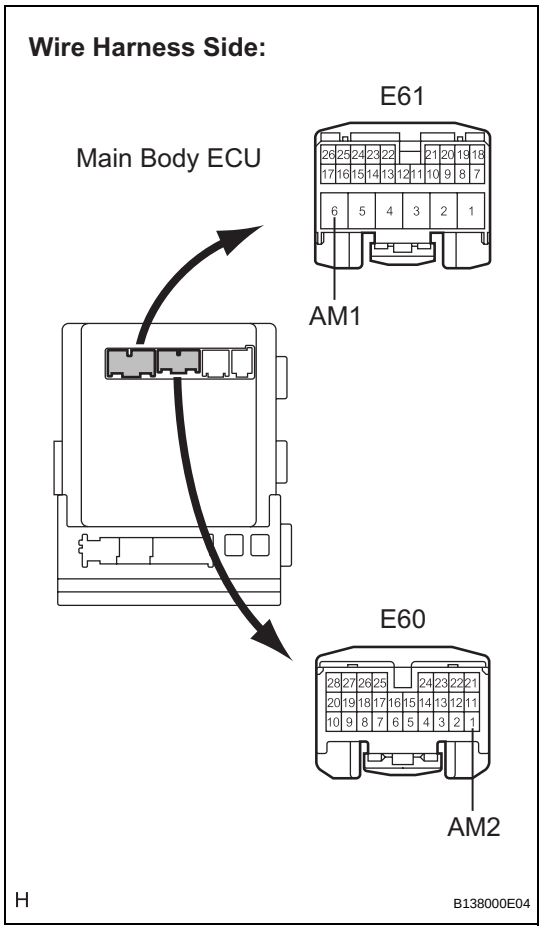

(a) Disconnect the E60 and E61 ECU connectors.
(b) Measure the voltage according to the value(s) in the table below.
Standard voltage

Terminal No. (Symbol)	Condition	Specified Condition
E61-6 (AM1) - Body ground	Always	10 to 14 V
E60-1 (AM2) - Body ground	Always	10 to 14 V

NG → **REPAIR OR REPLACE HARNESS OR CONNECTOR**

ST

OK

REPLACE MAIN BODY ECU

ENGINE SWITCH

COMPONENTS

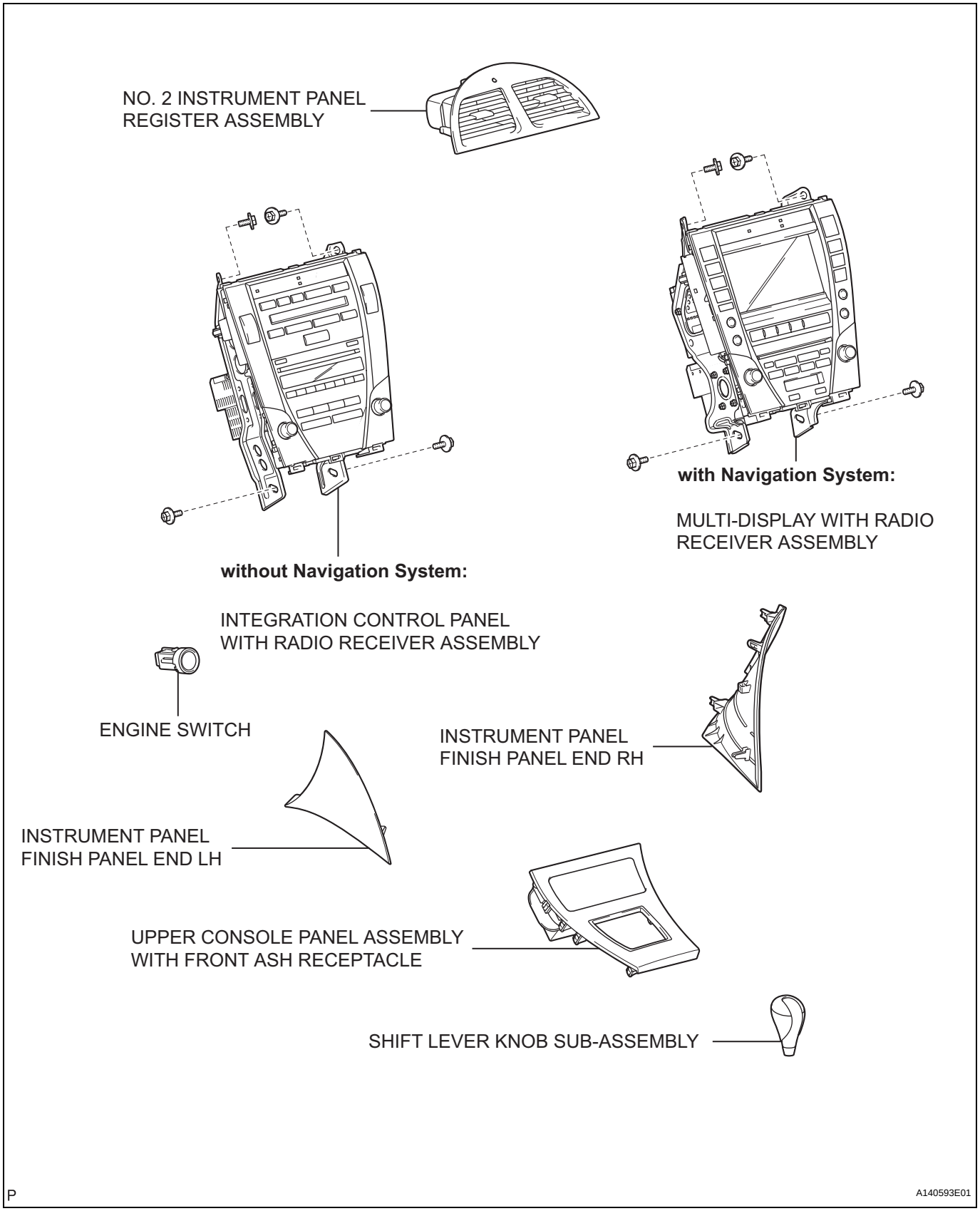

ST

REMOVAL

1. **REMOVE SHIFT LEVER KNOB SUB-ASSEMBLY (See page IP-16)**
2. **REMOVE UPPER CONSOLE PANEL ASSEMBLY WITH FRONT ASH RECEPTACLE (See page IP-16)**
3. **REMOVE INSTRUMENT PANEL FINISH PANEL END LH (See page IP-13)**
4. **REMOVE INSTRUMENT PANEL FINISH PANEL END RH (See page IP-15)**
5. **REMOVE NO. 2 INSTRUMENT PANEL REGISTER ASSEMBLY (See page IP-17)**
6. **REMOVE INTEGRATION CONTROL PANEL WITH RADIO RECEIVER ASSEMBLY (w/o Navigation System) (See page AV-168)**
7. **REMOVE MULTI-DISPLAY WITH RADIO RECEIVER ASSEMBLY (w/ Navigation System) (See page AV-170)**
8. **REMOVE ENGINE SWITCH**
   (a) Disconnect the switch connector.
   (b) Detach the 2 claws and remove the switch.

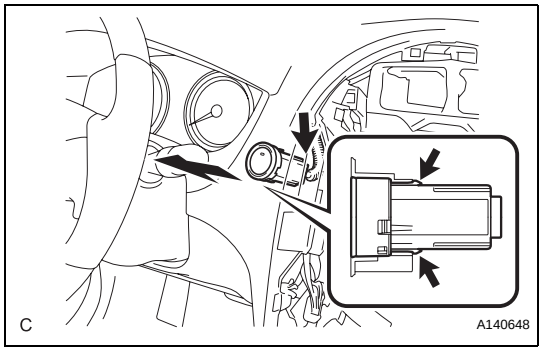

INSPECTION

1. INSPECT ENGINE SWITCH

(a) Measure the resistance according to the value(s) in the table below.

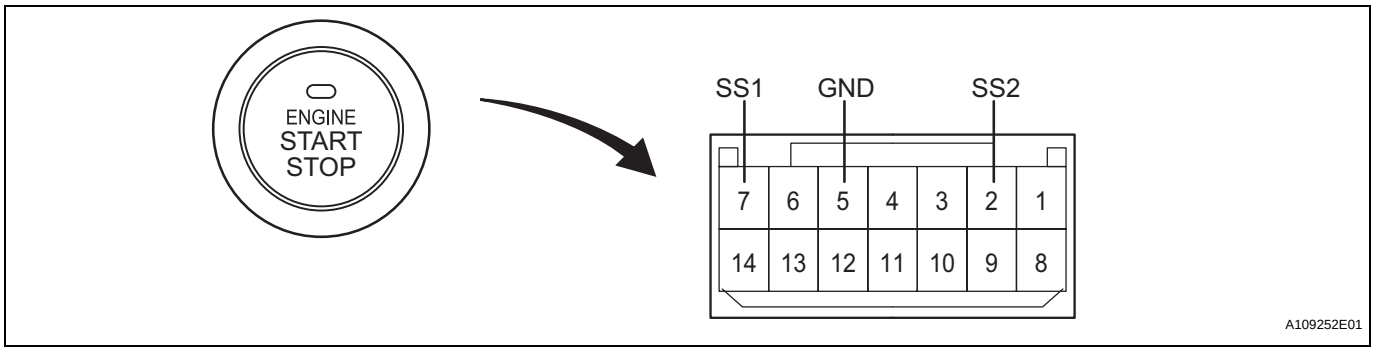

Standard resistance

Tester Connection	Switch Condition	Specified Condition
7 (SS1) - 5 (GND)	Pushed	Below 1 Ω
2 (SS2) - 5 (GND)	Pushed	Below 1 Ω
7 (SS1) - 5 (GND)	Not pushed	10 kΩ or higher
2 (SS2) - 5 (GND)	Not pushed	10 kΩ or higher

If the result is not as specified, replace the engine switch.

(b) Apply battery voltage between the terminals of the switch, and check the illumination condition of the switch.

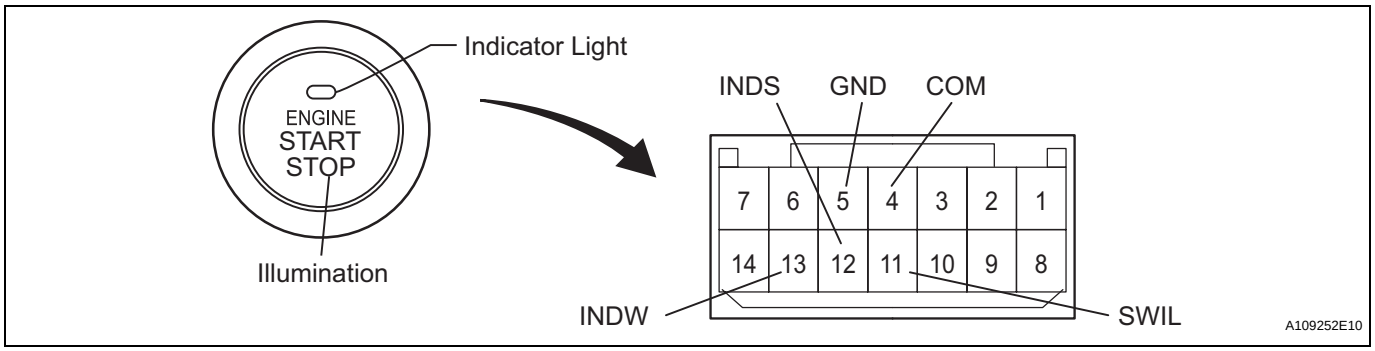

Standard resistance

Measurement Condition	Specified Condition
Battery positive (+) → Terminal 11 (SWIL) Battery negative (-) → Terminal 4 (COM) or 5 (GND)	Illuminates
Battery positive (+) → Terminal 12 (INDS) Battery negative (-) → Terminal 4 (COM) or 5 (GND)	Illuminates
Battery positive (+) → Terminal 13 (INDW) Battery negative (-) → Terminal 4 (COM) or 5 (GND)	Illuminates

If the result is not as specified, replace the engine switch.

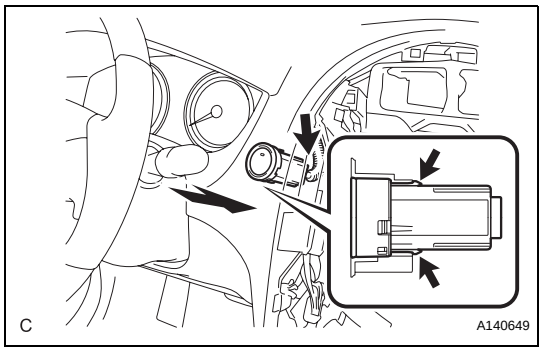

INSTALLATION

1. **INSTALL ENGINE SWITCH**
   (a) Attach the 2 claws to install the switch.
   (b) Connect the switch connector.
2. **INSTALL INTEGRATION CONTROL PANEL WITH RADIO RECEIVER ASSEMBLY (w/o Navigation System) (See page AV-172)**
3. **INSTALL MULTI-DISPLAY WITH RADIO RECEIVER ASSEMBLY (w/ Navigation System) (See page AV-173)**
4. **INSTALL INSTRUMENT PANEL FINISH PANEL END LH (See page IP-46)**
5. **INSTALL INSTRUMENT PANEL FINISH PANEL END RH (See page IP-44)**
6. **INSTALL UPPER CONSOLE PANEL ASSEMBLY WITH FRONT ASH RECEPTACLE (See page IP-42)**
7. **INSTALL NO. 2 INSTRUMENT PANEL REGISTER ASSEMBLY (See page IP-41)**
8. **INSTALL SHIFT LEVER KNOB SUB-ASSEMBLY (See page IP-42)**
9. **ADJUST CLOCK**

DTC	B2272	Ignition 1 Monitor Malfunction

DESCRIPTION

This DTC is output when there is a problem in the IG1D output circuit, which is from the inside of the main body ECU to the IG1 relay.
HINT:
When the main body ECU is replaced with a new one and the negative (-) battery terminal is connected, the power source mode becomes the IG-ON mode. When the battery is removed and reinstalled, the power source mode that was selected when the battery was removed is restored.
After the main body ECU is replaced, perform the registration procedures for the engine immobiliser system (See page EI-9).

DTC No.	DTC Detection Condition	Trouble Area
B2272	IG1 relay actuation circuit inside main body ECU or other related circuit is malfunctioning	• Main body ECU • IG1 relay • Wire harness or connector

WIRING DIAGRAM

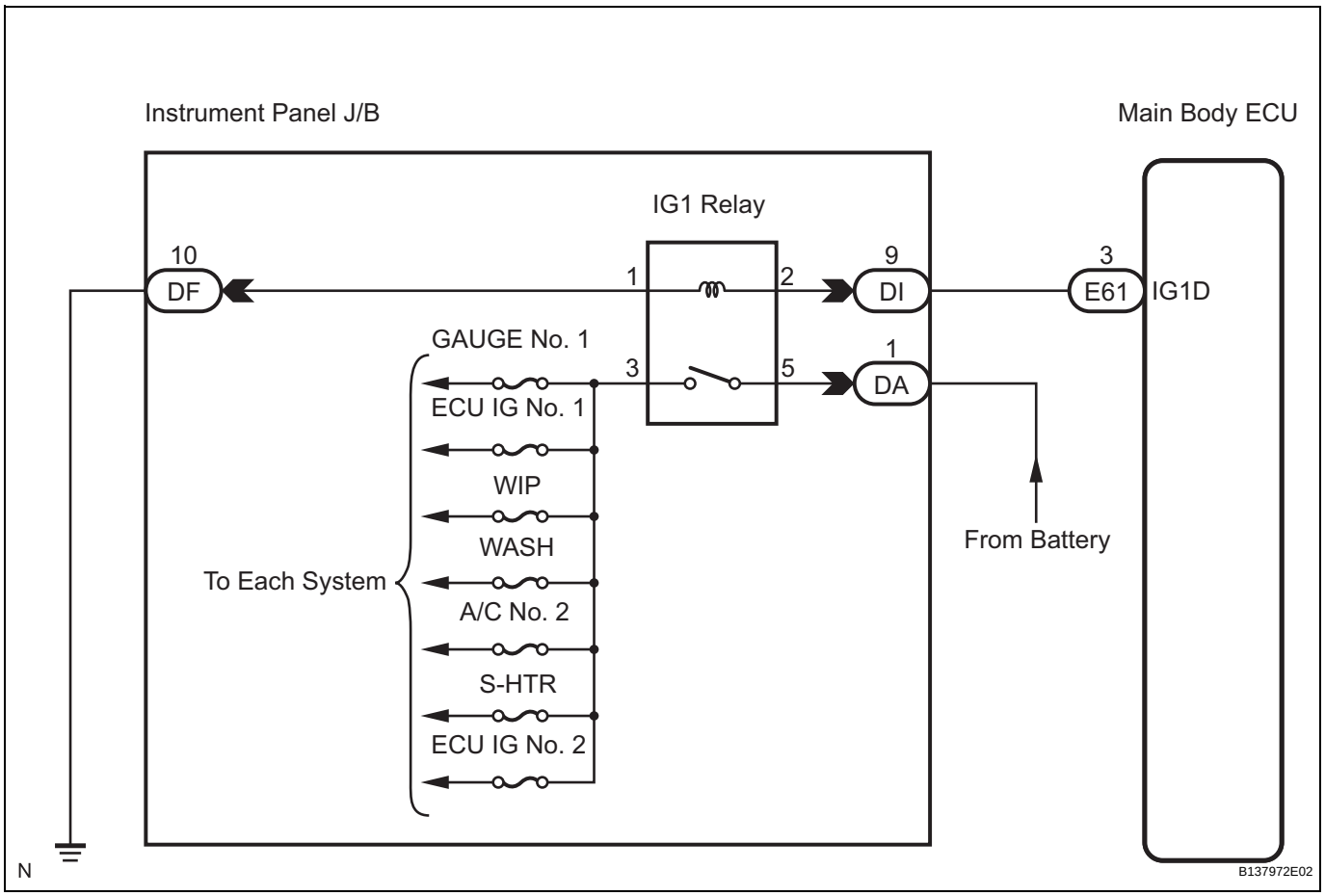

ST

INSPECTION PROCEDURE

1	READ VALUE OF INTELLIGENT TESTER

(a) Connect the intelligent tester to the DLC3.

(b) Turn the engine switch on (IG) and turn the intelligent tester main switch on.

(c) Select the item below in the Data List, and read the display on the tester.

HINT:

When using the intelligent tester with the engine switch off, turn on and off any of the door courtesy light switches repeatedly at 1.5 second intervals or less until communication between the tester and vehicle starts.

MAIN BODY:

Item	Measurement Item / Display (Range)	Normal Condition	Diagnostic Note
IG1 RELAY MON1	Status of IG1 relay monitor (outer) / ON or OFF	ON: Engine switch on (IG) (IG1 relay is ON) OFF: Engine switch off (IG1 relay is OFF)	-

ON:

"ON" (engine switch on (IG)) appears on the screen.

NG → **Go to step 3**

OK

2 CHECK ENGINE SWITCH CONDITION

(a) Check the power source mode change.

(1) When the key is inside the vehicle and the shift lever is in the P position, check that pressing the engine switch causes the power source mode to change as follows:

OK:

off → on (ACC) → on (IG) → off

HINT:

- If power mode does not change to ON (IG and ACC), (See page ST-118).
- If power mode does not change to ON (IG), (See page ST-126).

NG → **GO TO OTHER PROBLEM**

OK

ST

3 INSPECT RELAY (IG1 RELAY)

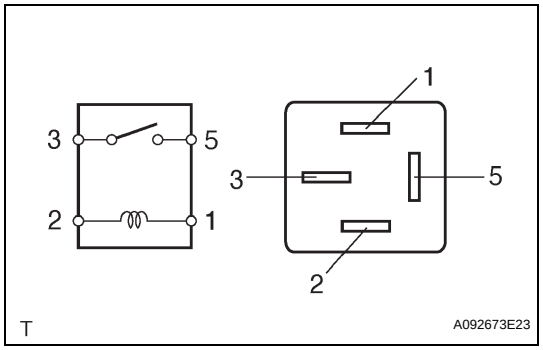

(a) Remove the IG1 relay from the instrument panel J/B.
(b) Measure the resistance according to the value(s) in the table below.

Standard resistance

Tester Connection	Specified Condition
3 - 5	10 kΩ or higher
3 - 5	Below 1 Ω (when battery voltage is applied to terminals 1 and 2)

NG → **REPLACE RELAY**

OK

4 CHECK WIRE HARNESS (INSTRUMENT PANEL J/B - MAIN BODY ECU)

(a) Disconnect the DI J/B connector.

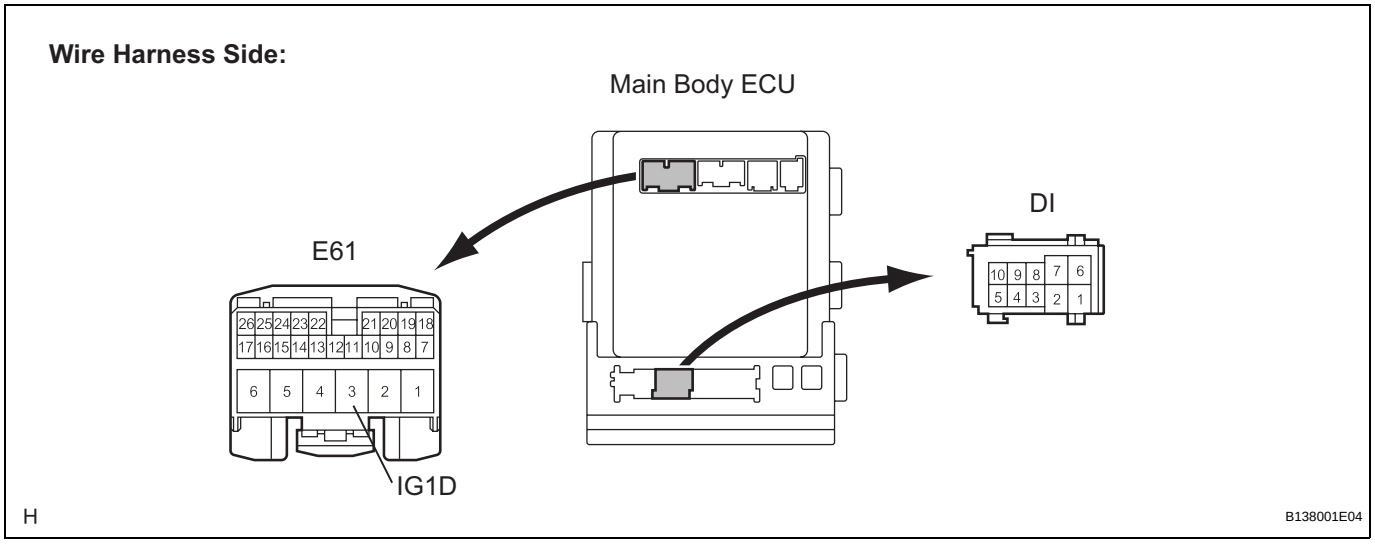

(b) Disconnect the E61 ECU connector.
(c) Measure the resistance according to the value(s) in the table below.

Standard resistance

Terminal No. (Symbol)	Condition	Specified Condition
DI-9 - E61-3 (IG1D)	Always	Below 1 Ω
E61-3 (IG1D) - Body ground	Always	10 kΩ or higher

NG → **REPAIR OR REPLACE HARNESS OR CONNECTOR**

OK

ST

5 CHECK WIRE HARNESS (INSTRUMENT PANEL J/B - BATTERY AND BODY GROUND)

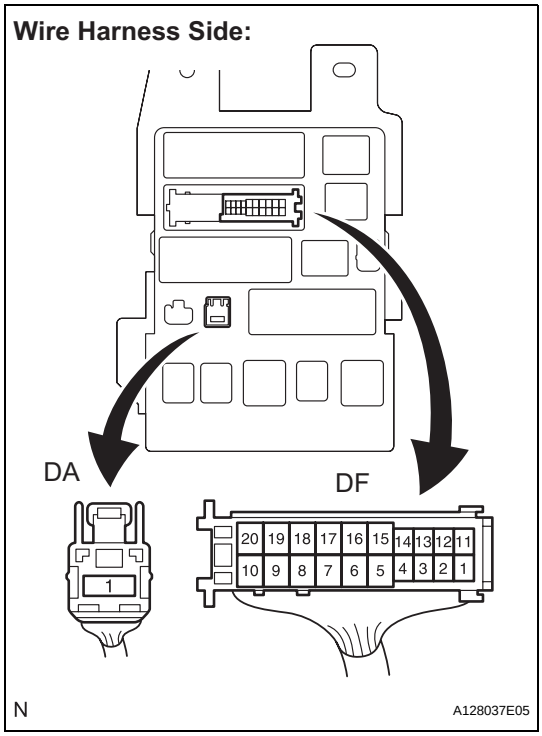

(a) Disconnect the DF and DA J/B connectors.

(b) Measure the resistance according to the value(s) in the table below.

Standard resistance

Terminal No.	Condition	Specified value
DF-10 - Body ground	Always	Below 1 Ω

(c) Measure the voltage according to the value(s) in the table below.

Standard voltage

Terminal No.	Condition	Specified value
DA-1 - Body ground	Always	10 to 14 V

NG → **REPAIR OR REPLACE HARNESS OR CONNECTOR**

OK

ST

6 INSPECT INSTRUMENT PANEL J/B

(a) Measure the resistance according to the value(s) in the table below.

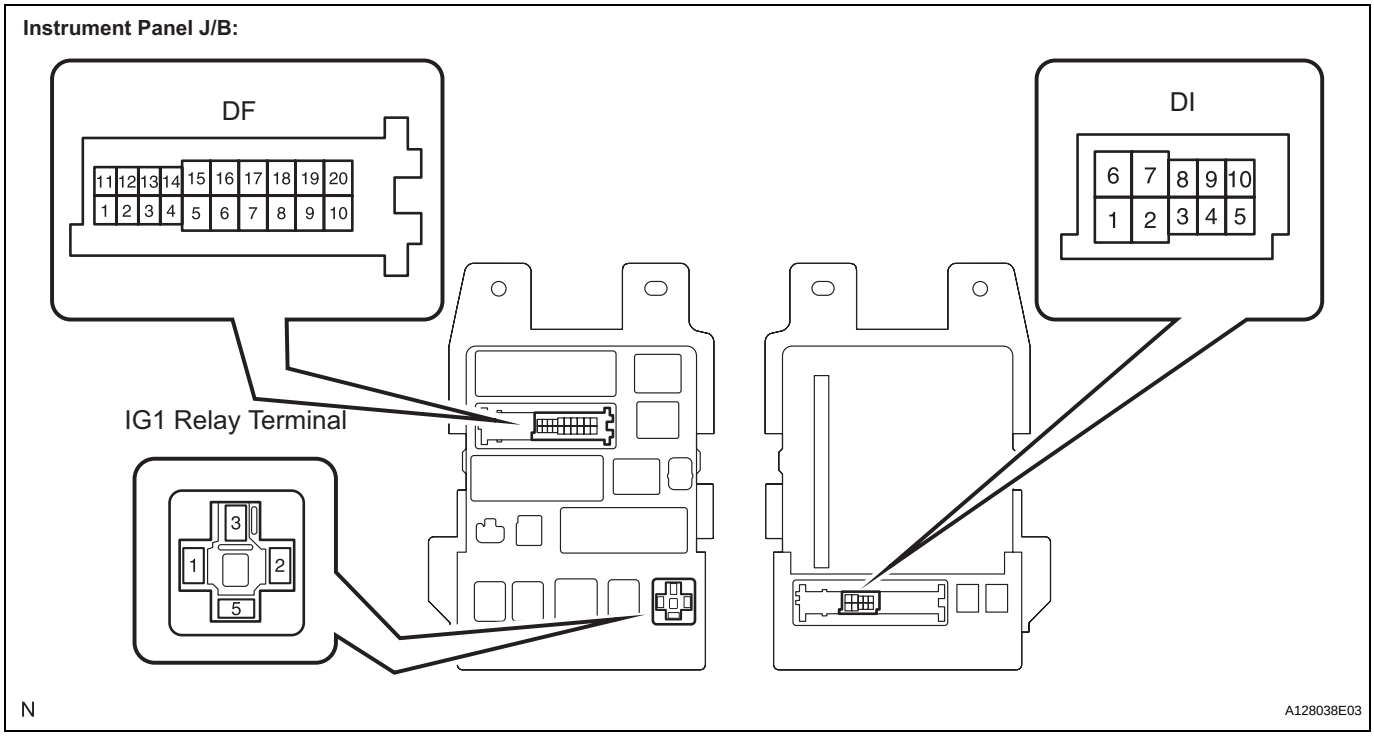

Standard resistance

Terminal No.	Condition	Specified value
DF-10 - IG1 relay terminal-1	Always	Below 1 Ω
DI-9 - IG1 relay terminal-2	Always	Below 1 Ω
DF-10 - Body ground	Always	10 kΩ or higher
DI-9 - Body ground	Always	10 kΩ or higher

NG → **REPLACE INSTRUMENT PANEL J/B**

OK

REPLACE MAIN BODY ECU

DTC	B2273	Ignition 2 Monitor Malfunction

DESCRIPTION

This DTC is output when there is a problem in the IG2D output circuit, which is from the inside of the main body ECU to the IG2 relay.
HINT:
When the main body ECU is replaced with a new one and the negative (-) battery terminal is connected, the power source mode becomes the IG-ON mode. When the battery is removed and reinstalled, the power source mode that was selected when the battery was removed is restored.
After the main body ECU is replaced, perform the registration procedures for the engine immobiliser system (See page EI-9).

DTC No.	DTC Detection Condition	Trouble Area
B2273	IG2 relay actuation circuit inside main body ECU or other related circuit is malfunctioning	• Main body ECU • IG2 relay • Wire harness or connector

WIRING DIAGRAM

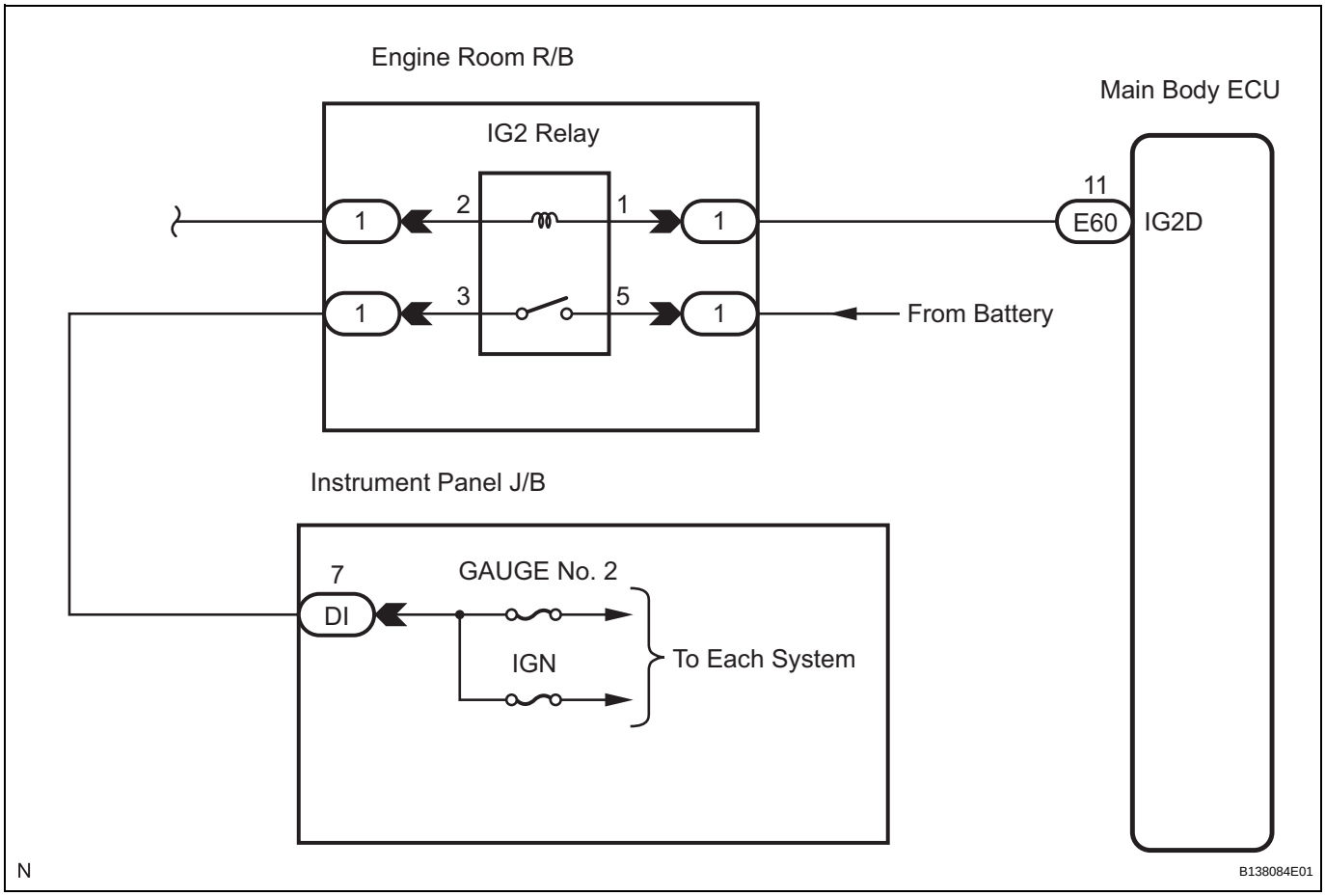

INSPECTION PROCEDURE

1	READ VALUE OF INTELLIGENT TESTER

(a) Connect the intelligent tester to the DLC3.

(b) Turn the engine switch on (IG) and turn the intelligent tester main switch on.

(c) Read the Data List according to the displays on the tester.

HINT:

When using the intelligent tester with the engine switch off, turn on and off any of the door courtesy light switches repeatedly at 1.5 second intervals or less until communication between the tester and vehicle starts.

MAIN BODY:

Item	Measurement Item / Display (Range)	Normal Condition	Diagnostic Note
IG2 RELAY MON1	Status of IG2 relay monitor (outer) / ON or OFF	ON: Engine switch on (IG) (IG2 relay is ON) OFF: Engine switch off (IG2 relay is OFF)	-

OK:

"ON" (Engine switch on (IG)) appears on the screen.

NG → **Go to step 3**

OK

2 CHECK ENGINE SWITCH CONDITION

(a) Check the power source mode change.

(1) When the key is inside the vehicle and the shift lever is in the P position, check that pressing the engine switch causes the power source mode to change as follows:

OK:

off → on (ACC) → on (IG) → off

HINT:

- If power mode does not change to ON (IG and ACC), (See page ST-118).
- If power mode does not change to ON (IG), (See page ST-126).
- If power mode does not change to ON (ACC), (See page ST-135).

NG → **GO TO OTHER PROBLEM**

OK

ST

3 INSPECT RELAY (IG2 RELAY)

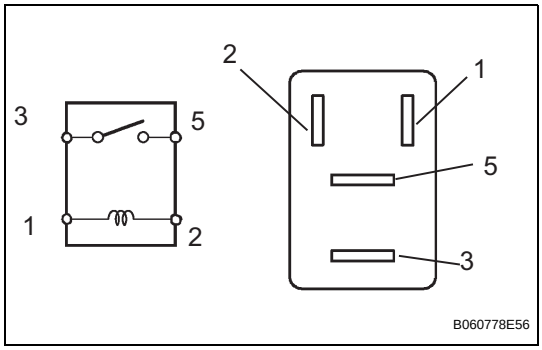

(a) Remove the IG2 relay from the engine room R/B.
(b) Measure the resistance according to the value(s) in the table below.

Standard resistance

Tester Connection	Specified Condition
3 - 5	10 kΩ or higher
3 - 5	Below 1 Ω (when battery voltage is applied to terminals 1 and 2)

NG → **REPLACE RELAY**

OK

4 CHECK WIRE HARNESS (ENGINE ROOM R/B - MAIN BODY ECU AND BODY GROUND)

(a) Remove the IG2 relay from the engine room R/B.

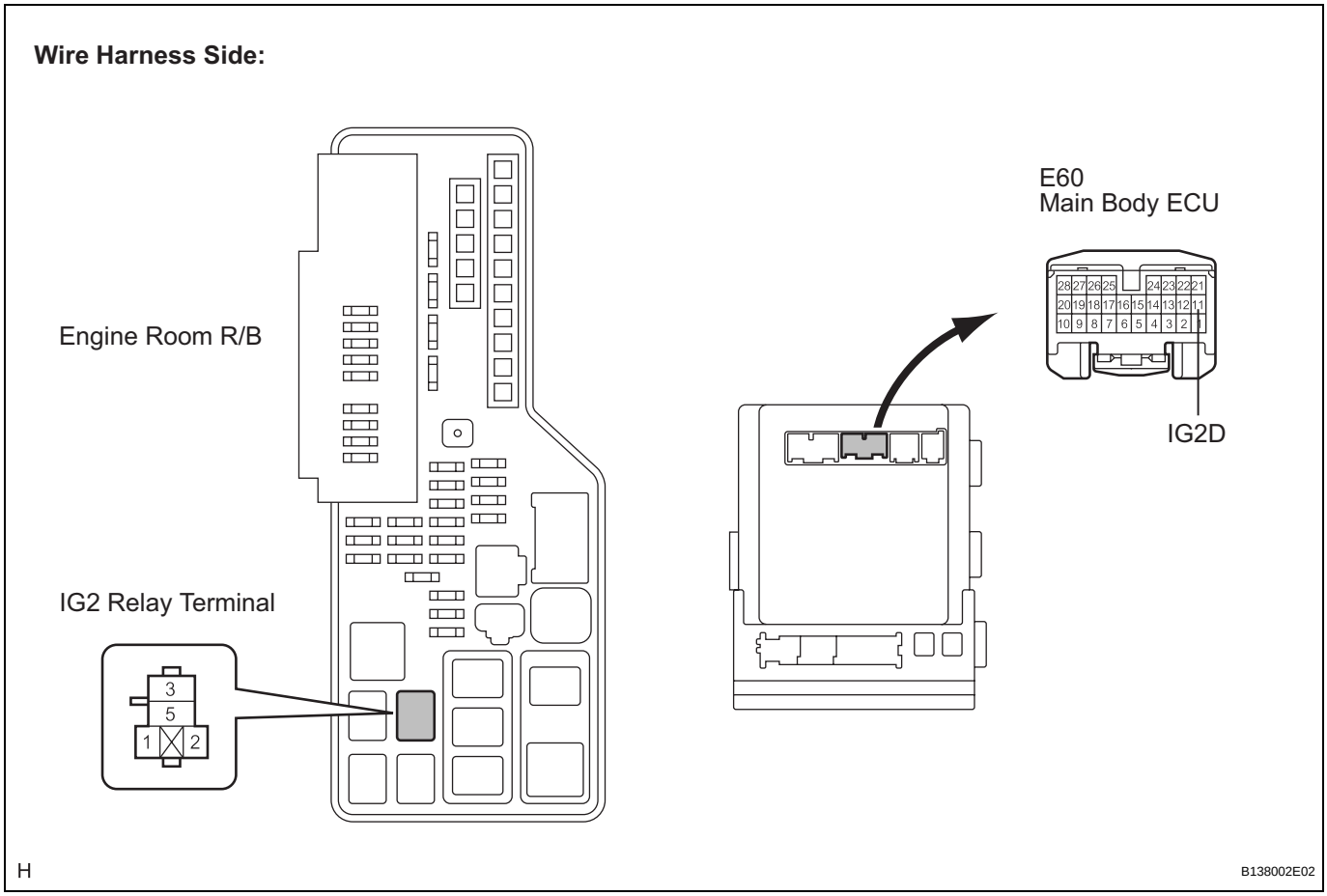

(b) Disconnect the E60 ECU connector.
(c) Measure the resistance according to the value(s) in the table below.

ST

Standard resistance

Terminal No. (Symbol)	Condition	Specified Condition
Engine Room R/B IG2 relay terminal 1 - E60-11 (IG2D)	Always	Below 1 Ω
Engine Room R/B IG2 relay terminal 2 - Body ground	Always	Below 1 Ω
E60-11 (IG2D) - Body ground	Always	10 kΩ or higher

NG → **REPAIR OR REPLACE HARNESS OR CONNECTOR**

OK

REPLACE MAIN BODY ECU

ON-VEHICLE INSPECTION

1. CHECK BATTERY ELECTROLYTE LEVEL

(a) Check the electrolyte level.

(1) If the electrolyte level is low, replace the battery (or add distilled water) and check the charging system.

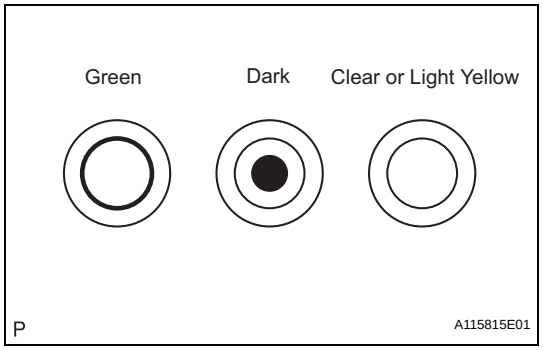

2. CHECK BATTERY SPECIFIC GRAVITY

(a) Check the color of the indicator.

Result

Indicator color	Condition
Green	Good
Dark	Charging necessary
Clear or light yellow	Replacement necessary

3. CHECK BATTERY VOLTAGE

(a) If it has not been 20 minutes since you drove the vehicle or since the engine was stopped, turn the engine switch on (IG) and turn on the electrical systems (headlight, blower motor, rear defogger, etc.) for 60 seconds. This will remove the surface charge from the battery.

(b) Turn off the engine switch and the electrical systems.

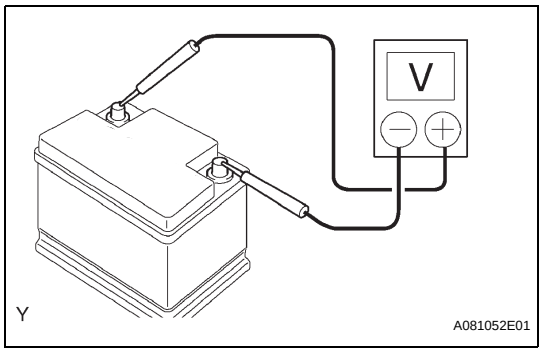

(c) Measure the battery voltage between the negative (-) and positive (+) terminals of the battery.

Standard voltage:

12.5 to 12.9 V at 20°C (68°F)

HINT:

If the voltage is below the specification, charge the battery.

4. CHECK BATTERY TERMINAL

(a) Check that the battery terminals are not loose or corroded.

If the terminals are corroded, clean them.

5. CHECK FUSES

(a) Measure the resistance of the ALT fuse, ALT-S fuse, GAUGE No. 1 fuse and GAUGE No. 2 fuse.

Standard resistance:

Below 1 Ω

If the result is not as specified, replace the fuses as necessary.

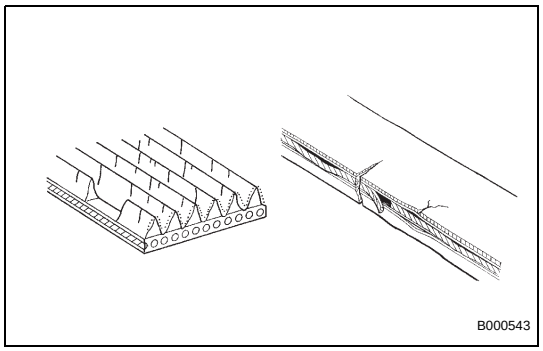

6. CHECK V-RIBBED BELT

(a) Check the belt for wear, cracks or other signs of damage.

If any of the following defects is found, replace the V-ribbed belt.

- The belt is worn out, cracked, or the cords are exposed.
- The cracks reach the cords in more than one place.
- The belt has chunks missing from the ribs.

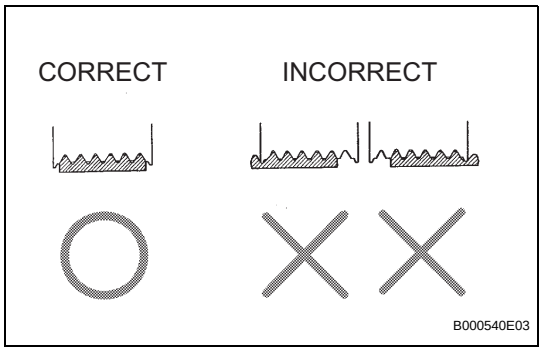

(b) Check that the belt fits properly in the ribbed grooves.
HINT:
Check with your hand to confirm that the belt has not slipped out of the groove on the bottom of the pulley.
If it has slipped out, replace the V-ribbed belt. Install a new V-ribbed belt correctly.

7. VISUALLY CHECK GENERATOR WIRING

(a) Check that the generator wiring is in good condition.
If the condition is not good, repair or replace the generator wire.

8. LISTEN FOR ABNORMAL NOISES FROM GENERATOR

(a) Check that there is no abnormal noise from the generator while the engine is running.
If there is abnormal noise, replace the pulley or generator.

9. CHECK CHARGE WARNING LIGHT CIRCUIT

(a) Turn the engine switch on (IG). Check that the charge warning light comes on.
(b) Start the engine and check that the light goes off.
If the light does not operate as specified, troubleshoot the charge warning light circuit.

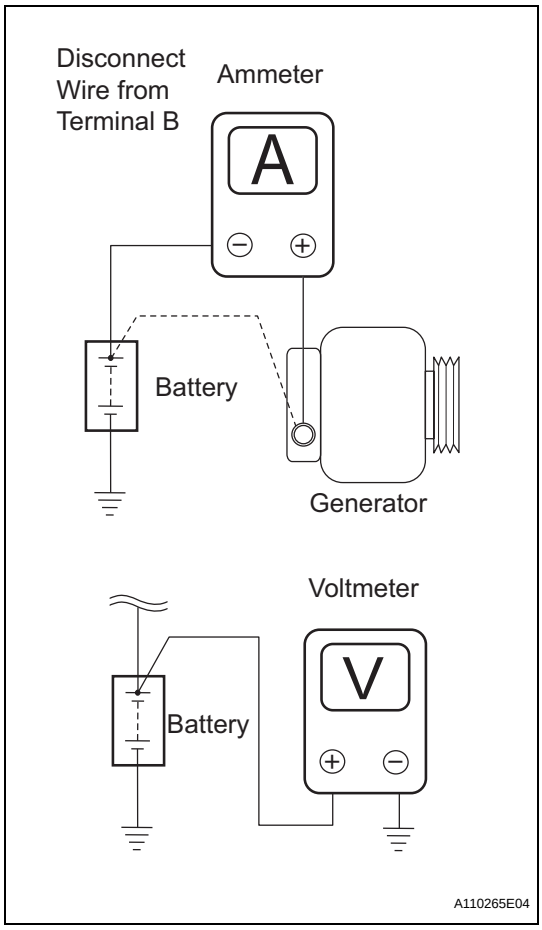

10. CHECK CHARGING CIRCUIT WITHOUT LOAD

(a) According to the following procedure, connect an ammeter and voltmeter as shown in the illustration.
(1) Disconnect the wire from terminal B of the generator and connect it to the negative (-) lead of the ammeter.
(2) Connect the positive (+) lead of the ammeter to terminal B of the generator.
(3) Connect the positive (+) lead of the voltmeter to the positive (+) terminal of the battery.
(4) Ground the negative (-) lead of the voltmeter.

(b) Check the charging circuit.
(1) While keeping the engine speed at 2,000 rpm, check the readings on the ammeter and voltmeter.
Standard amperage:
10 A or less
Standard voltage:
13.2 to 14.8 V
If the results are not as specified, replace the generator assembly.
HINT:
If the battery is not fully charged, the ammeter reading may be more than the standard amperage.

11. CHECK CHARGING CIRCUIT WITH LOAD

(a) Keep the engine speed at 2,000 rpm, turn on the high beam headlights, and turn the heater blower switch to the "HI" position.

(b) Check the reading on the ammeter.

Standard amperage:

30 A or more

If the ammeter reading is less than the standard amperage, replace the generator assembly.

HINT:

If the battery is fully charged, the ammeter reading may be less than the standard amperage. In this case, increase electrical load by operating devices such as the wiper motor and rear window defogger. Then, recheck the reading on the ammeter.

Charge Warning Light Comes ON while Driving

INSPECTION PROCEDURE

1	CHECK LOCK FUNCTION OF CLUTCH PULLEY

(a) Check the lock function with the pulley installed in the vehicle.
  (1) Visually check that the rotor in the generator operates with the engine started.

(b) Check the lock function with the pulley removed from the vehicle.
  (1) Remove the generator pulley cap. Using SST, hold the generator rotor.
  (2) Turn the clutch pulley clockwise and check that the outer ring locks.
  OK:
  The outer ring locks.

SST 09820-63020

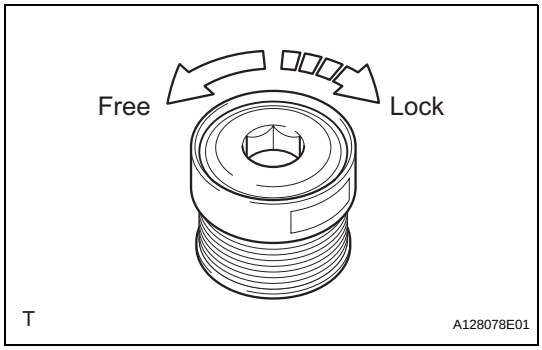

NG → **REPLACE CLUTCH PULLEY**

OK

2	CHECK LOCK OF CLUTCH PULLEY

(a) Start the engine and visually check for looseness of the clutch pulley.
  OK:
  The clutch pulley is not loose.

NG → **TIGHTEN CLUTCH PULLEY TO THE SPECIFIED TORQUE**

OK

REPLACE GENERATOR ASSEMBLY

CH

Noise Occurs from Generator while Engine is Running

INSPECTION PROCEDURE

1 CHECK LOOSENESS OF V-RIBBED BELT

(a) Check the tension of the belt by pushing it down with your finger.
OK:
The tension of the belt is enough.

NG → **REPLACE V-RIBBED BELT TENSIONER ASSEMBLY**

OK ↓

2 CHECK V-RIBBED BELT FOR WEAR

(a) Check the V-ribbed belt for wear.
OK:
The V-ribbed belt is not worn.

NG → **REPLACE V-RIBBED BELT**

OK ↓

3 CHECK CLUTCH PULLEY FOR WEAR

(a) Check the clutch pulley groove for wear or other defects.
OK:
The clutch pulley groove is not damaged.

NG → **REPLACE CLUTCH PULLEY**

OK ↓

4 CHECK FOR NOISE WHILE CLUTCH PULLEY IS OPERATING

(a) Perform a driving test and check if noise occurs when decelerating.
OK:
Noise does not occur.

NG → **REPLACE CLUTCH PULLEY**

OK ↓

REPLACE GENERATOR ASSEMBLY

ON-VEHICLE INSPECTION

1. CHECK BATTERY ELECTROLYTE LEVEL

(a) Check the electrolyte level.

(1) If the electrolyte level is low, replace the battery (or add distilled water) and check the charging system.

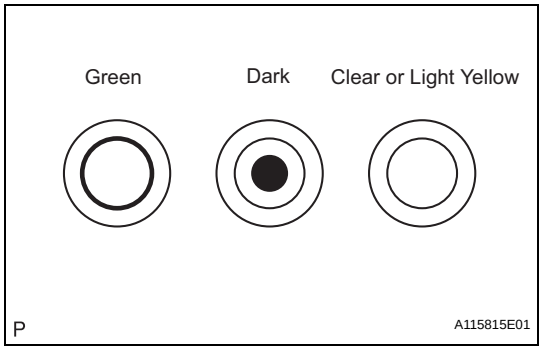

2. CHECK BATTERY SPECIFIC GRAVITY

(a) Check the color of the indicator.

Result

Indicator color	Condition
Green	Good
Dark	Charging necessary
Clear or light yellow	Replacement necessary

3. CHECK BATTERY VOLTAGE

(a) If it has not been 20 minutes since you drove the vehicle or since the engine was stopped, turn the engine switch on (IG) and turn on the electrical systems (headlight, blower motor, rear defogger, etc.) for 60 seconds. This will remove the surface charge from the battery.

(b) Turn off the engine switch and the electrical systems.

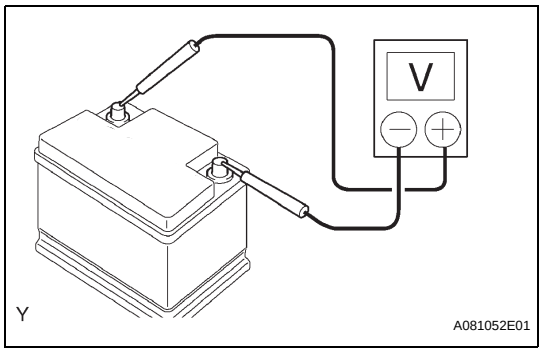

(c) Measure the battery voltage between the negative (-) and positive (+) terminals of the battery.

Standard voltage:

12.5 to 12.9 V at 20°C (68°F)

HINT:

If the voltage is below the specification, charge the battery.

4. CHECK BATTERY TERMINAL

(a) Check that the battery terminals are not loose or corroded.

If the terminals are corroded, clean them.

5. CHECK FUSES

(a) Measure the resistance of the ALT fuse, ALT-S fuse, GAUGE No. 1 fuse and GAUGE No. 2 fuse.

Standard resistance:

Below 1 Ω

If the result is not as specified, replace the fuses as necessary.

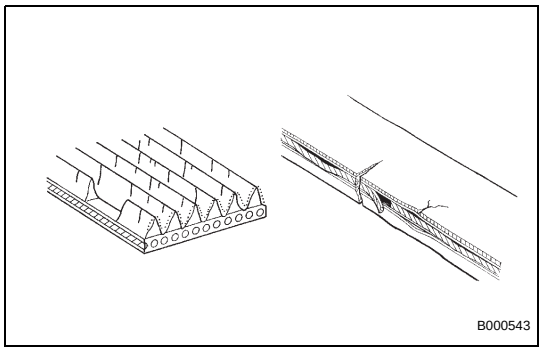

6. CHECK V-RIBBED BELT

(a) Check the belt for wear, cracks or other signs of damage.

If any of the following defects is found, replace the V-ribbed belt.

- The belt is worn out, cracked, or the cords are exposed.
- The cracks reach the cords in more than one place.
- The belt has chunks missing from the ribs.

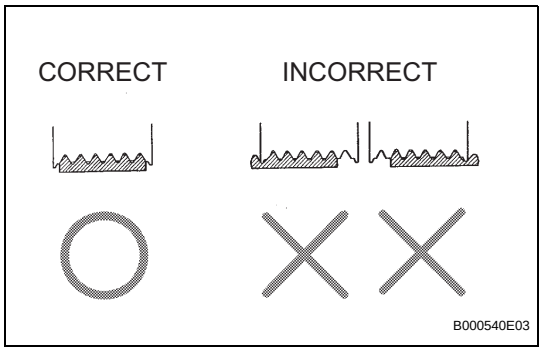

(b) Check that the belt fits properly in the ribbed grooves.
HINT:
Check with your hand to confirm that the belt has not slipped out of the groove on the bottom of the pulley.
If it has slipped out, replace the V-ribbed belt. Install a new V-ribbed belt correctly.

7. VISUALLY CHECK GENERATOR WIRING

(a) Check that the generator wiring is in good condition.
If the condition is not good, repair or replace the generator wire.

8. LISTEN FOR ABNORMAL NOISES FROM GENERATOR

(a) Check that there is no abnormal noise from the generator while the engine is running.
If there is abnormal noise, replace the pulley or generator.

9. CHECK CHARGE WARNING LIGHT CIRCUIT

(a) Turn the engine switch on (IG). Check that the charge warning light comes on.
(b) Start the engine and check that the light goes off.
If the light does not operate as specified, troubleshoot the charge warning light circuit.

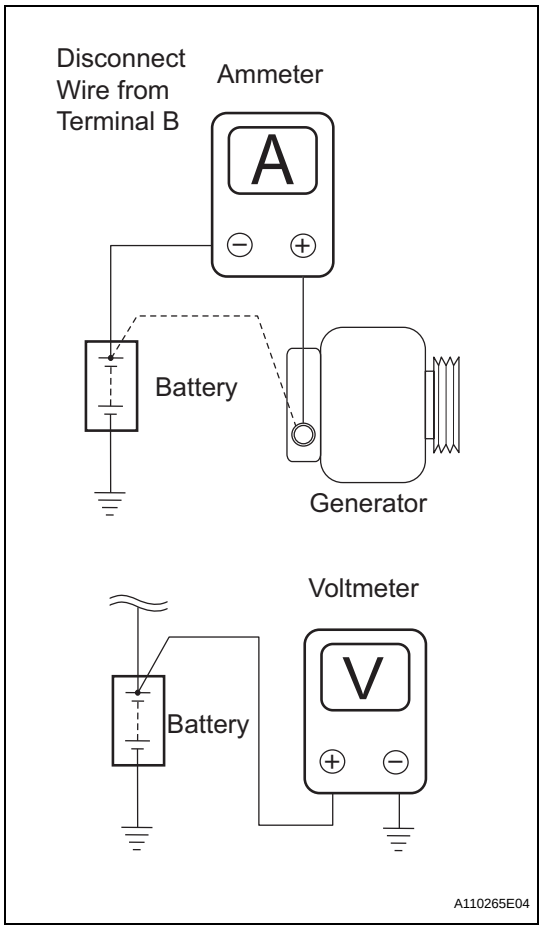

10. CHECK CHARGING CIRCUIT WITHOUT LOAD

(a) According to the following procedure, connect an ammeter and voltmeter as shown in the illustration.
(1) Disconnect the wire from terminal B of the generator and connect it to the negative (-) lead of the ammeter.
(2) Connect the positive (+) lead of the ammeter to terminal B of the generator.
(3) Connect the positive (+) lead of the voltmeter to the positive (+) terminal of the battery.
(4) Ground the negative (-) lead of the voltmeter.

(b) Check the charging circuit.
(1) While keeping the engine speed at 2,000 rpm, check the readings on the ammeter and voltmeter.
Standard amperage:
10 A or less
Standard voltage:
13.2 to 14.8 V
If the results are not as specified, replace the generator assembly.
HINT:
If the battery is not fully charged, the ammeter reading may be more than the standard amperage.

11. CHECK CHARGING CIRCUIT WITH LOAD

(a) Keep the engine speed at 2,000 rpm, turn on the high beam headlights, and turn the heater blower switch to the "HI" position.

(b) Check the reading on the ammeter.

Standard amperage:

30 A or more

If the ammeter reading is less than the standard amperage, replace the generator assembly.

HINT:

If the battery is fully charged, the ammeter reading may be less than the standard amperage. In this case, increase electrical load by operating devices such as the wiper motor and rear window defogger. Then, recheck the reading on the ammeter.

Charge Warning Light Comes ON while Driving

INSPECTION PROCEDURE

1	CHECK LOCK FUNCTION OF CLUTCH PULLEY

(a) Check the lock function with the pulley installed in the vehicle.
  (1) Visually check that the rotor in the generator operates with the engine started.

(b) Check the lock function with the pulley removed from the vehicle.
  (1) Remove the generator pulley cap. Using SST, hold the generator rotor.
  (2) Turn the clutch pulley clockwise and check that the outer ring locks.
  OK:
  The outer ring locks.

SST 09820-63020

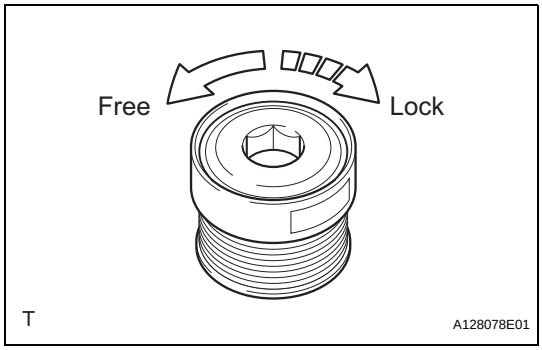

NG → **REPLACE CLUTCH PULLEY**

OK

2	CHECK LOCK OF CLUTCH PULLEY

(a) Start the engine and visually check for looseness of the clutch pulley.
  OK:
  The clutch pulley is not loose.

NG → **TIGHTEN CLUTCH PULLEY TO THE SPECIFIED TORQUE**

OK

REPLACE GENERATOR ASSEMBLY

CH

Noise Occurs from Generator while Engine is Running

INSPECTION PROCEDURE

1 CHECK LOOSENESS OF V-RIBBED BELT

(a) Check the tension of the belt by pushing it down with your finger.
OK:
The tension of the belt is enough.

NG → **REPLACE V-RIBBED BELT TENSIONER ASSEMBLY**

OK ↓

2 CHECK V-RIBBED BELT FOR WEAR

(a) Check the V-ribbed belt for wear.
OK:
The V-ribbed belt is not worn.

NG → **REPLACE V-RIBBED BELT**

OK ↓

3 CHECK CLUTCH PULLEY FOR WEAR

(a) Check the clutch pulley groove for wear or other defects.
OK:
The clutch pulley groove is not damaged.

NG → **REPLACE CLUTCH PULLEY**

OK ↓

4 CHECK FOR NOISE WHILE CLUTCH PULLEY IS OPERATING

(a) Perform a driving test and check if noise occurs when decelerating.
OK:
Noise does not occur.

NG → **REPLACE CLUTCH PULLEY**

OK ↓

REPLACE GENERATOR ASSEMBLY

REMOVAL

1. DISCONNECT CABLE FROM NEGATIVE BATTERY TERMINAL
2. REMOVE FRONT WHEEL RH
3. REMOVE COOL AIR INTAKE DUCT SEAL (See page EM-22)
4. REMOVE ENGINE ROOM SIDE COVER LH (See page EM-22)
5. REMOVE ENGINE ROOM SIDE COVER RH (See page EM-22)
6. REMOVE V-BANK COVER SUB-ASSEMBLY (See page EM-23)
7. REMOVE FRONT FENDER APRON SEAL RH
8. REMOVE FRONT WHEEL OPENING EXTENSION PAD LH
9. REMOVE FRONT WHEEL OPENING EXTENSION PAD RH
10. REMOVE ENGINE UNDER COVER LH
11. REMOVE ENGINE UNDER COVER RH
12. DRAIN ENGINE COOLANT (See page CO-5)
13. REMOVE AIR CLEANER CAP SUB-ASSEMBLY (See page ES-519)
14. REMOVE NO. 2 AIR CLEANER INLET (See page EM-23)
15. REMOVE NO. 1 AIR CLEANER INLET (See page EM-23)
16. REMOVE FRONT BUMPER ASSEMBLY (See page ET-5)
17. REMOVE FRONT BUMPER ENERGY ABSORBER (See page ET-9)
18. REMOVE MILLIMETER WAVE RADAR SENSOR ASSEMBLY (w/ Dynamic Radar Cruise Control System) (See page CC-122)
19. SEPARATE RADIATOR RESERVOIR TANK HOSE (See page CO-25)
20. DISCONNECT RADIATOR HOSE INLET (See page CO-25)
21. DISCONNECT RADIATOR HOSE OUTLET (See page CO-25)
22. DISCONNECT NO. 1 OIL COOLER INLET HOSE (See page CO-26)
23. DISCONNECT NO. 1 OIL COOLER OUTLET HOSE (See page CO-26)

24. REMOVE RADIATOR SUPPORT UPPER (See page CO-26)

25. REMOVE FAN SHROUD (See page CO-27)

26. REMOVE RADIATOR ASSEMBLY (See page CO-27)

27. REMOVE V-RIBBED BELT (See page EM-6)

28. REMOVE GENERATOR ASSEMBLY

(a) Remove the terminal cap.
(b) Remove the nut and disconnect the wire harness from terminal B.
(c) Disconnect the generator connector from the generator assembly.
(d) Disconnect the connector from the compressor and magnetic clutch.
(e) Disconnect the 2 wire harness clamps.

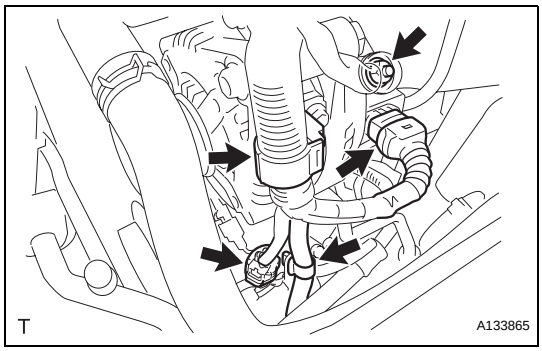

(f) Remove the 2 bolts.

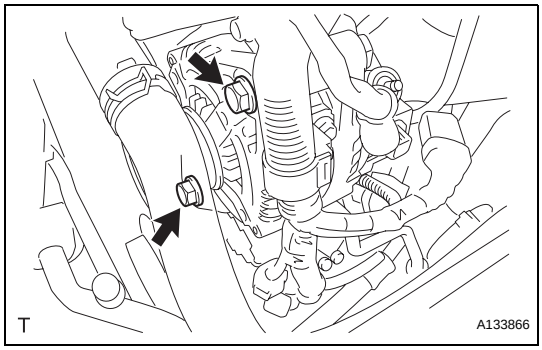

(g) Remove the bolt from the cylinder block.
(h) Disconnect the wire harness clamp and remove the generator assembly.

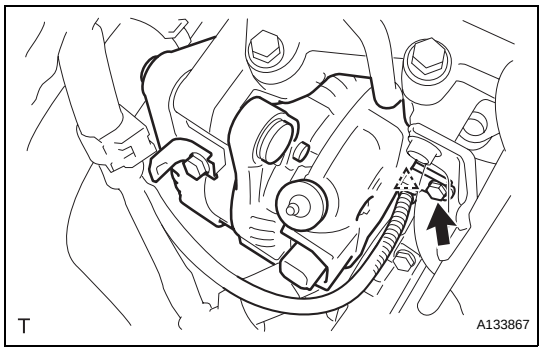

(i) Remove the bolt and wire harness clamp stay.

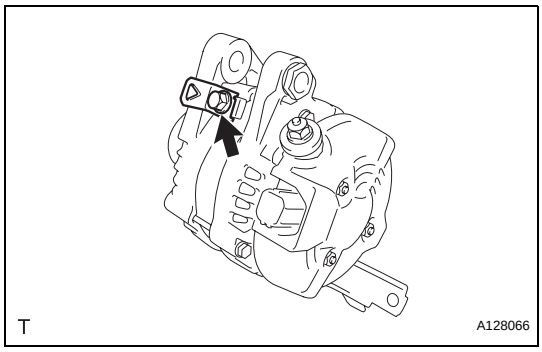

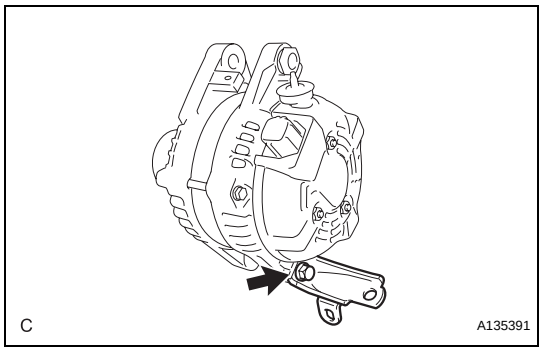

(j) Remove the bolt and bracket.

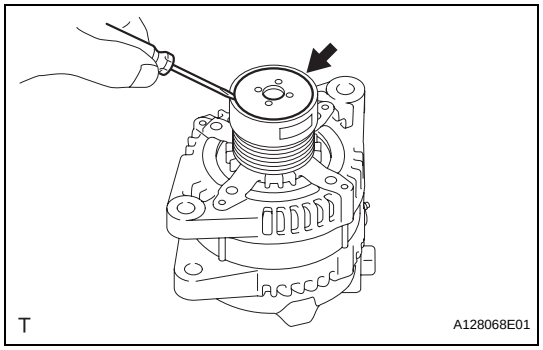

DISASSEMBLY

1. REMOVE GENERATOR CLUTCH PULLEY

(a) Using a screwdriver, remove the generator pulley cap.

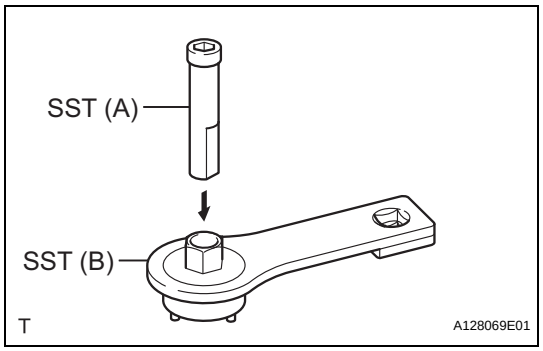

(b) Set SST (A) and (B).
SST 09820-63020

(c) Clamp SST (A) in a vise.

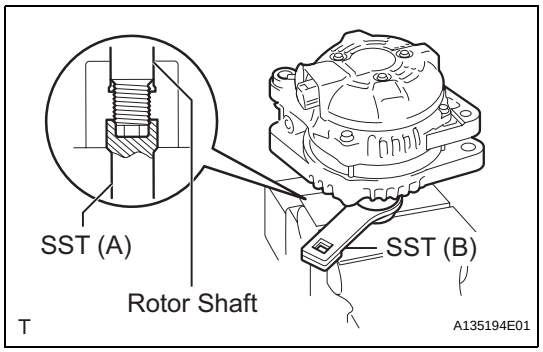

(d) Place the rotor shaft end into SST (A).

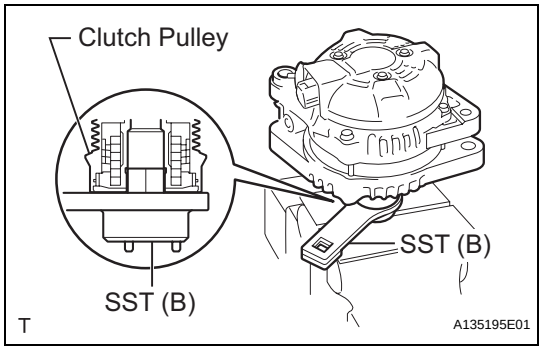

(e) Fit SST (B) to the clutch pulley.

CH

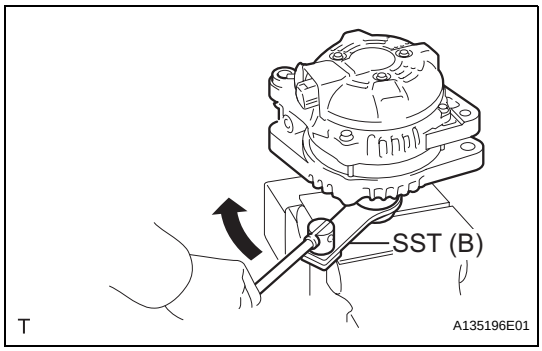

(f) Loosen the pulley by turning SST (B) in the direction shown in the illustration.
(g) Remove the generator assembly from the SST.
(h) Remove the clutch pulley from the rotor shaft.

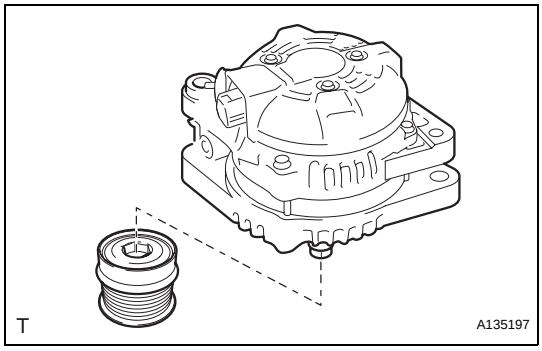

2. REMOVE GENERATOR REAR END COVER

(a) Place the generator assembly on the clutch pulley.

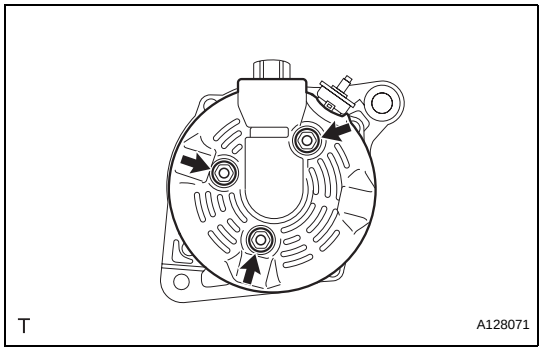

(b) Remove the 3 nuts and generator rear end cover.

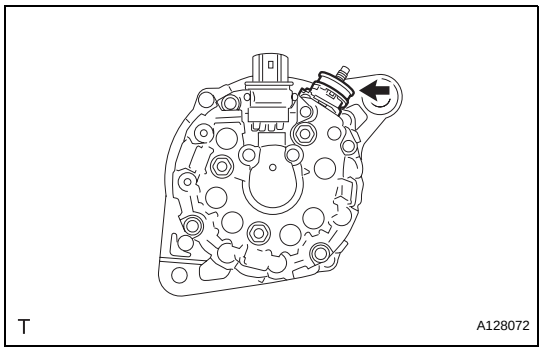

3. REMOVE GENERATOR TERMINAL INSULATOR

(a) Remove the terminal insulator from the generator coil.

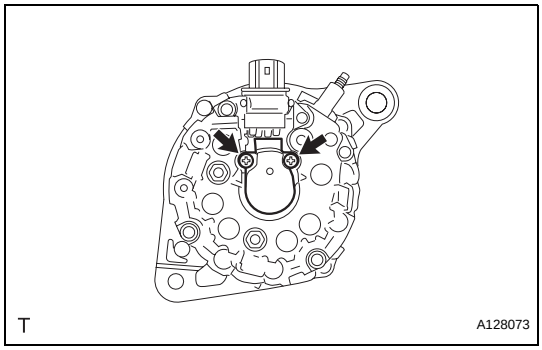

4. REMOVE GENERATOR BRUSH HOLDER ASSEMBLY

(a) Remove the 2 screws and brush holder from the generator coil.

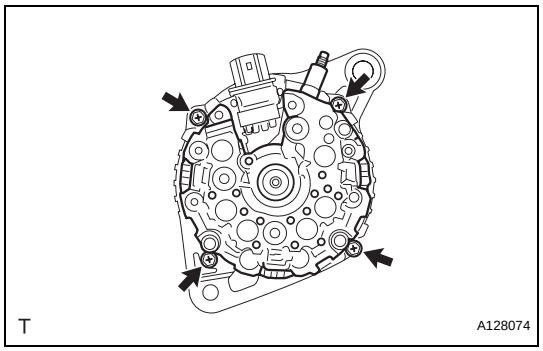

5. REMOVE GENERATOR COIL ASSEMBLY

(a) Remove the 4 bolts.

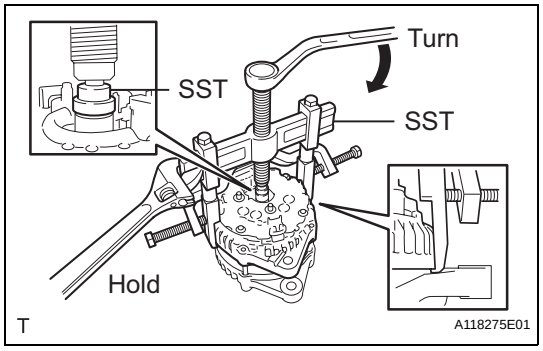

(b) Using SST, remove the generator coil assembly.

SST 09950-40011 (09951-04020, 09952-04010, 09953-04020, 09954-04010, 09955-04071, 09957-04010, 09958-04011)

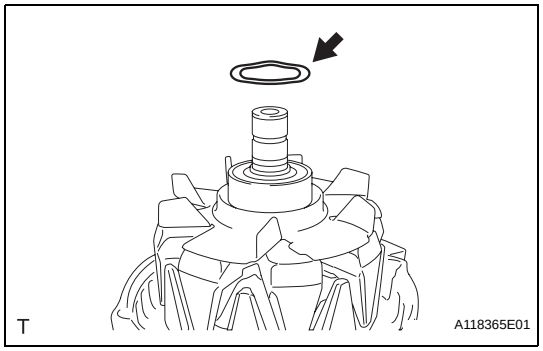

6. REMOVE GENERATOR ROTOR ASSEMBLY

(a) Remove the generator washer.

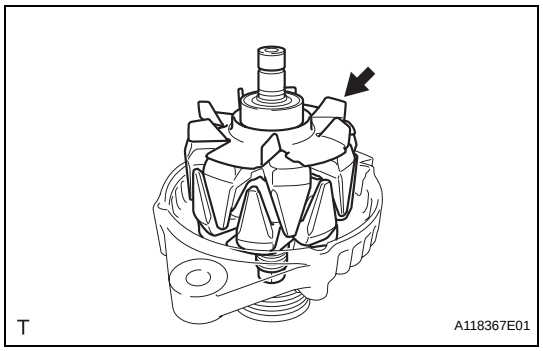

(b) Remove the generator rotor assembly.

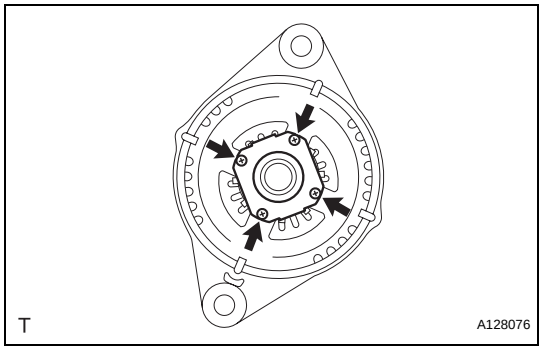

7. REMOVE GENERATOR DRIVE END FRAME BEARING

(a) Remove the 4 screws and retainer plate from the drive end frame.

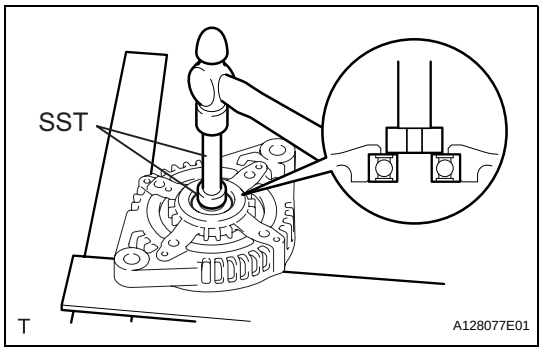

(b) Using SST and a hammer, tap out the drive end frame bearing from the drive end frame.
SST 09950-60010 (09951-00250), 09950-70010 (09951-07100)

INSPECTION

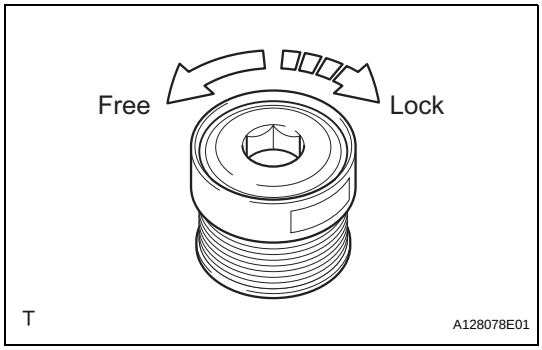

1. INSPECT GENERATOR CLUTCH PULLEY

(a) Hold the center of the pulley, and confirm that the outer ring turns counterclockwise and does not turn clockwise.
If the result is not as specified, replace the clutch pulley.

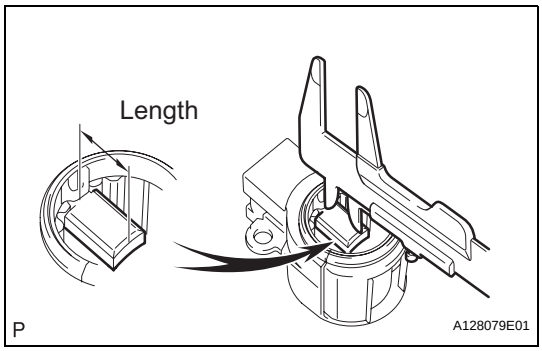

2. INSPECT GENERATOR BRUSH HOLDER ASSEMBLY

(a) Using vernier calipers, measure the length of the exposed brushes.
Standard exposed length:
9.5 to 11.5 mm (0.374 to 0.453 in.)
Minimum exposed length:
4.5 mm (0.177 in.)
If the exposed length is less than the minimum, replace the brush holder assembly.

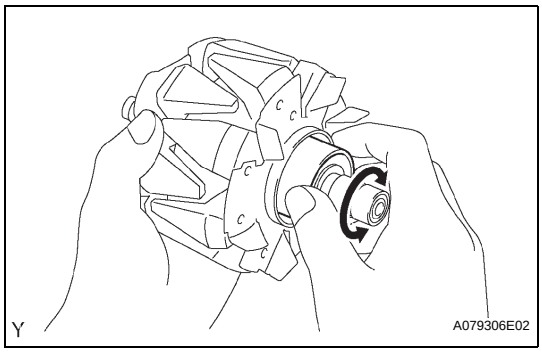

3. INSPECT GENERATOR ROTOR ASSEMBLY

(a) Check that the generator rotor bearing is not rough or worn.
If necessary, replace the generator rotor assembly.

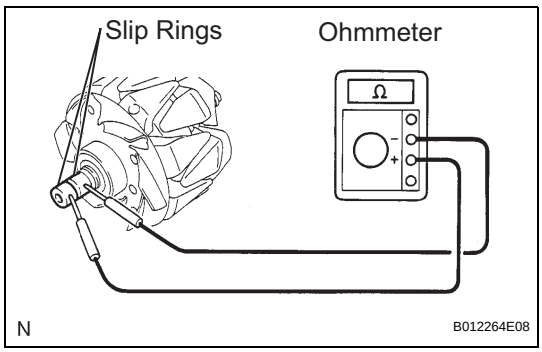

(b) Check the generator rotor for an open circuit.
(1) Using an ohmmeter, measure the resistance between the slip rings.
Standard resistance

Condition	Specified condition
Approx. 20°C (68°F)	2.3 to 2.7 Ω

If the result is not as specified, replace the generator rotor assembly.

CH

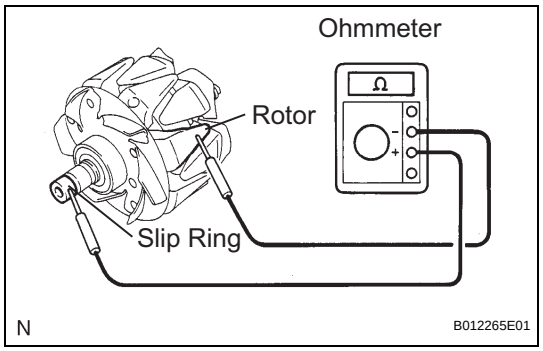

(c) Check the rotor for a short to ground.
(1) Using an ohmmeter, measure the resistance between the slip ring and rotor.
Standard resistance

Tester condition	Specified condition
Slip ring - Rotor	1 MΩ or higher

If the result is not as specified, replace the generator rotor assembly.

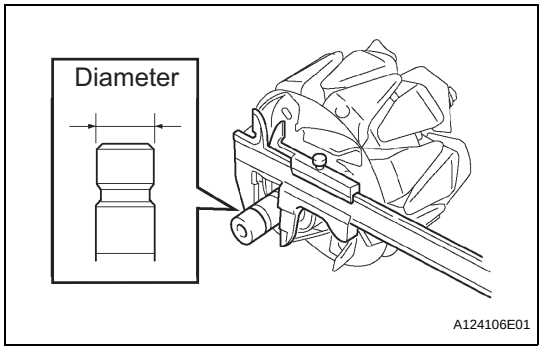

(d) Using vernier calipers, measure the slip ring diameter.
Standard diameter:
14.2 to 14.4 mm (0.559 to 0.567 in.)
Minimum diameter:
14.0 mm (0.551 in.)
If the diameter is less than the minimum, replace the generator rotor assembly.

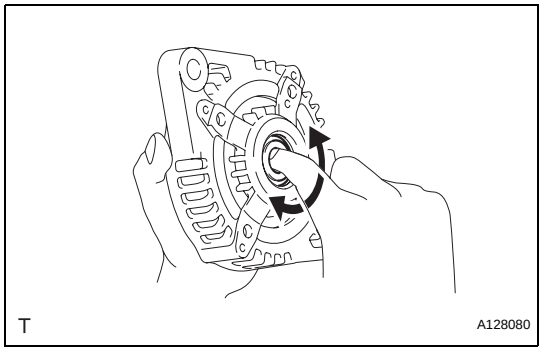

4. INSPECT GENERATOR DRIVE END FRAME BEARING
(a) Check that the drive end frame bearing is not rough or worn.
If necessary, replace the drive end frame bearing.

CH

REASSEMBLY

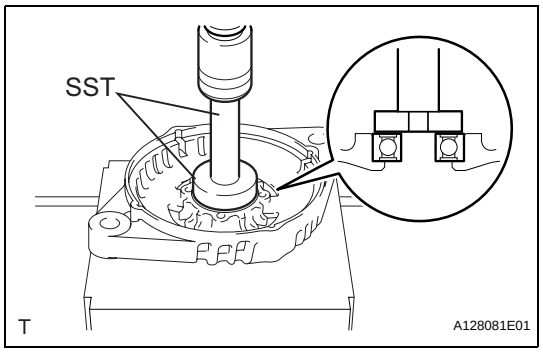

1. INSTALL GENERATOR DRIVE END FRAME BEARING
(a) Using SST and a press, press in a new generator drive end frame bearing.
SST 09950-60010 (09951-00470), 09950-70010 (09951-07100)

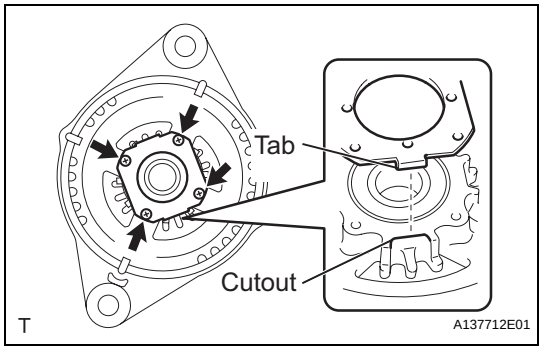

(b) Fit the tabs on the retainer plate into the cutouts on the drive end frame to install the retainer plate.
(c) Install the 4 screws.
Torque: 2.3 N*m (23 kgf*cm, 20 in.*lbf)

2. INSTALL GENERATOR ROTOR ASSEMBLY
(a) Place the drive end frame on the clutch pulley.

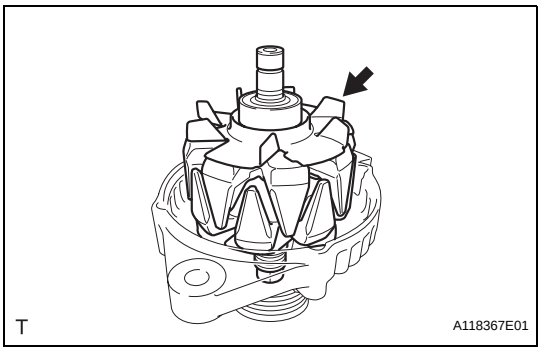

(b) Install the generator rotor assembly to the drive end frame.

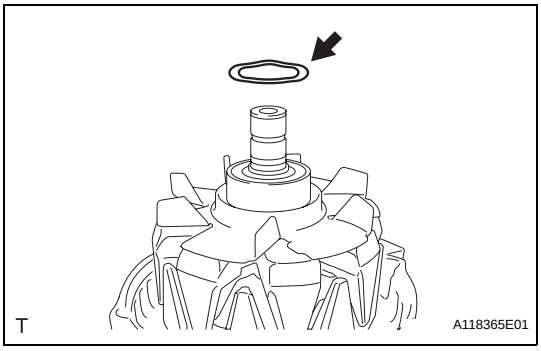

(c) Place a new generator washer on the generator rotor.

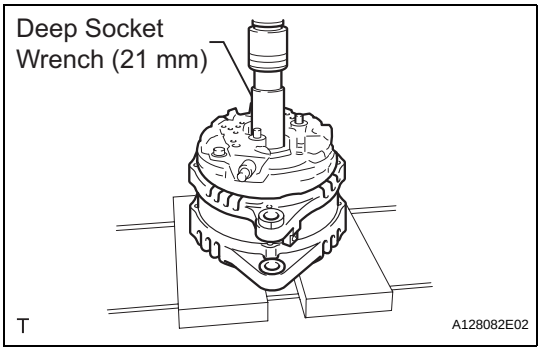

3. INSTALL GENERATOR COIL ASSEMBLY

(a) Using a deep socket wrench (21 mm) and a press, slowly press in the generator coil assembly.

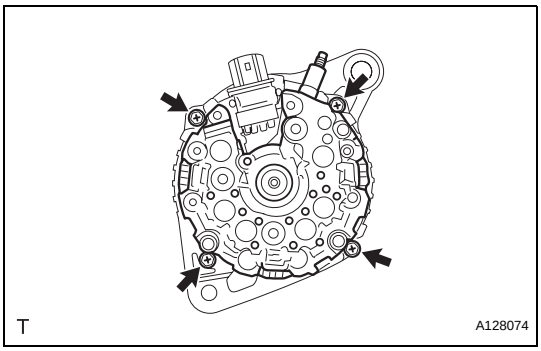

(b) Install the 4 bolts.
Torque: 5.8 N*m (59 kgf*cm, 51 in.*lbf)

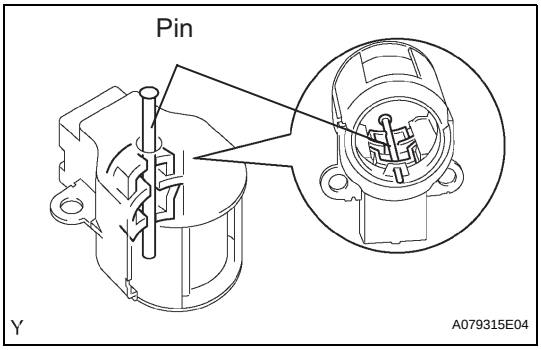

4. INSTALL GENERATOR BRUSH HOLDER ASSEMBLY

(a) While pushing the 2 brushes into the generator brush holder assembly, insert a ϕ1.0 mm (0.039 in.) pin into the brush holder hole.

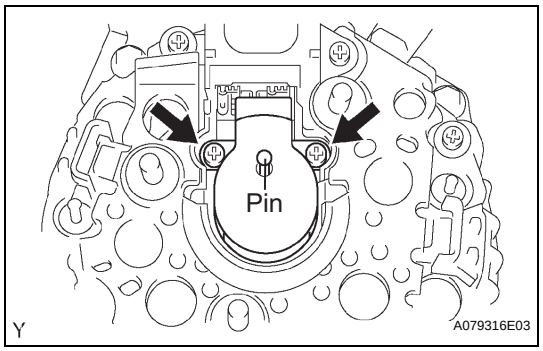

(b) Install the brush holder assembly to the generator coil with the 2 screws.
Torque: 1.8 N*m (18 kgf*cm, 16 in.*lbf)
(c) Pull out the pin from the generator brush holder.

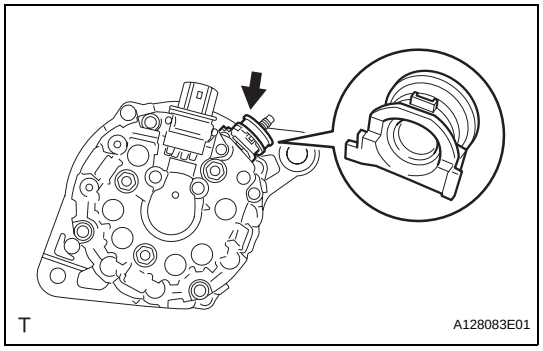

5. INSTALL GENERATOR TERMINAL INSULATOR
(a) Install the terminal insulator to the generator coil.
NOTICE:
Be sure to install the terminal insulator in the correct direction.

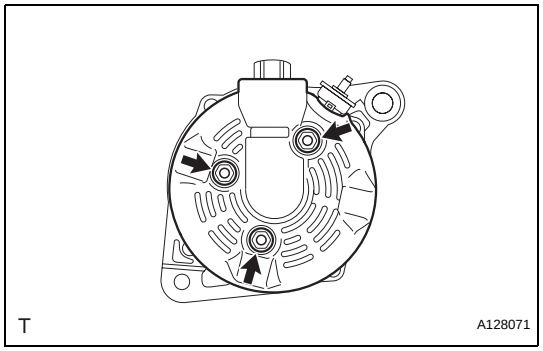

6. INSTALL GENERATOR REAR END COVER
(a) Install the generator rear end cover to the generator coil with the 3 nuts.
Torque: 4.6 N*m (47 kgf*cm, 41 in.*lbf)

7. INSTALL GENERATOR CLUTCH PULLEY
(a) Temporarily install the clutch pulley onto the rotor shaft.

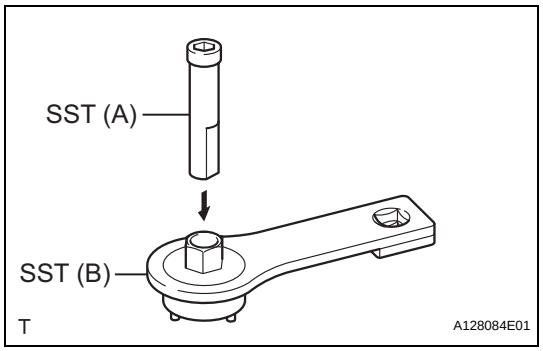

(b) Set SST (A) and (B).
SST 09820-63020

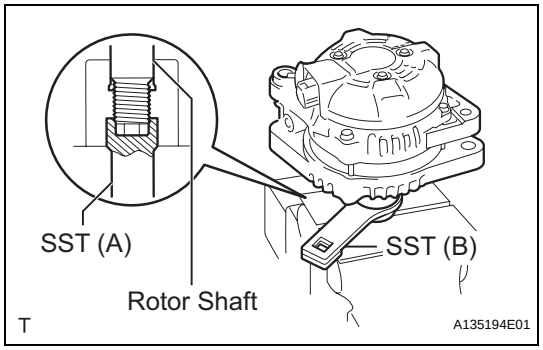

(c) Clamp SST (A) in a vise.
(d) Place the rotor shaft end into SST (A).

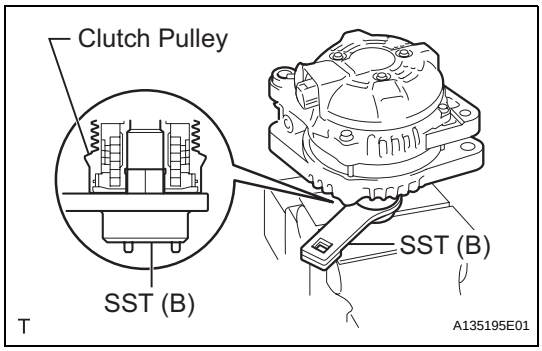

(e) Fit SST (B) to the clutch pulley.

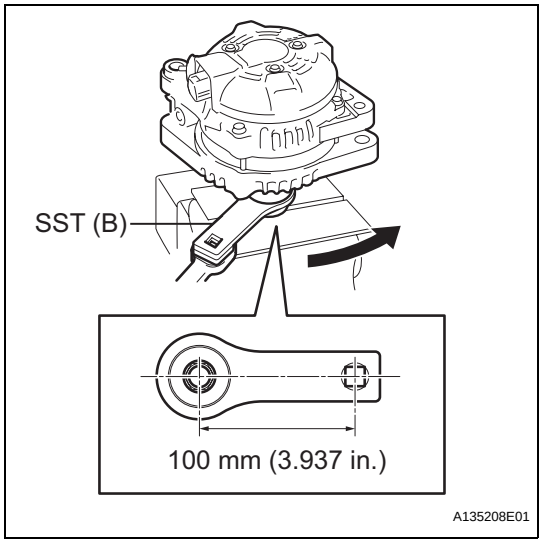

(f) Tighten the pulley by turning SST (B) in the direction shown in the illustration.
Torque: 111 N*m (1,125 kgf*cm, 81 ft.*lbf)
NOTICE:
The torque shown above should be used for tightening without using the SST. When the SST is used for tightening, the torque should be calculated based on the length of the SST (See page IN-5).

(g) Remove the generator assembly from the SST.

(h) Check that the clutch pulley rotates smoothly.

(i) Install a new clutch pulley cap to the clutch pulley.

INSTALLATION

1. INSTALL GENERATOR ASSEMBLY

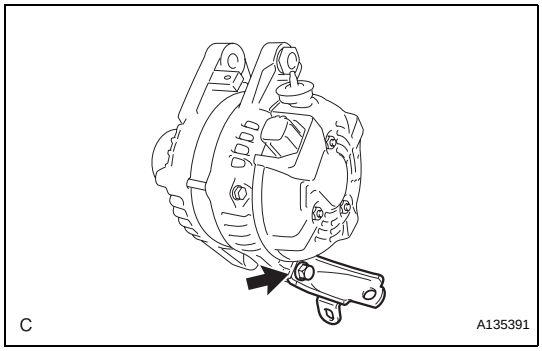

(a) Install the bracket with the bolt.
Torque: 20 N*m (204 kgf*cm, 15 ft.*lbf)

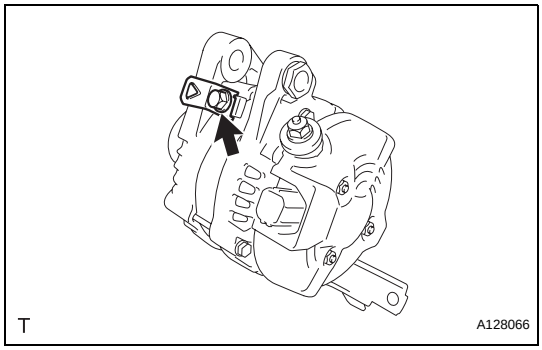

(b) Install the wire harness clamp stay with the bolt.
Torque: 8.4 N*m (86 kgf*cm, 74 in.*lbf)

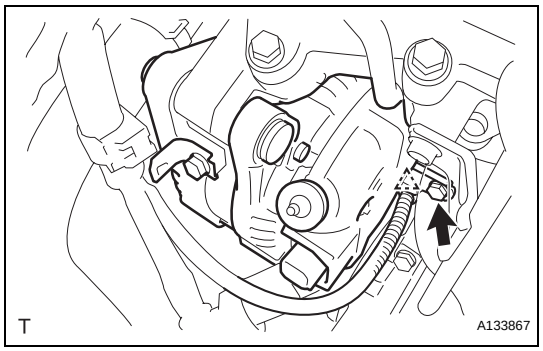

(c) Connect the wire harness clamp.
(d) Install the generator assembly to the cylinder block with the bolt.
Torque: 20 N*m (204 kgf*cm, 15 ft.*lbf)

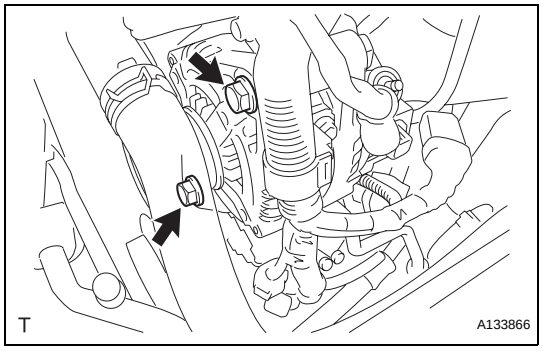

(e) Install the 2 bolts.
Torque: 43 N*m (438 kgf*cm, 32 ft.*lbf)

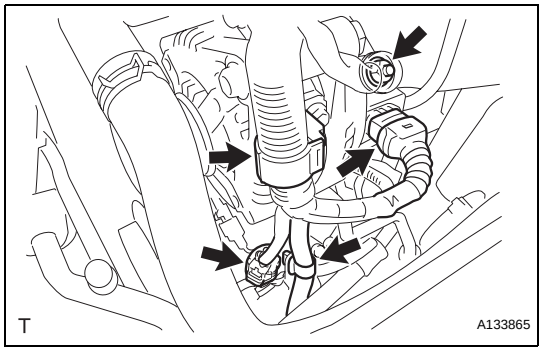

(f) Connect the generator connector to the generator assembly.
(g) Install the generator wire with the nut.
Torque: 9.8 N*m (100 kgf*cm, 87 in.*lbf)
(h) Install the terminal cap.
(i) Connect the 2 wire harness clamps.
(j) Connect the magnetic clutch connector to the compressor and magnetic clutch.

2. **INSTALL V-RIBBED BELT (See page EM-7)**
3. **INSTALL RADIATOR ASSEMBLY (See page CO-33)**
4. **INSTALL FAN SHROUD (See page CO-33)**
5. **INSTALL RADIATOR SUPPORT UPPER (See page CO-33)**
6. **CONNECT NO. 1 OIL COOLER OUTLET TUBE (See page CO-34)**
7. **CONNECT NO. 1 OIL COOLER INLET TUBE (See page CO-34)**
8. **CONNECT RADIATOR HOSE OUTLET (See page CO-35)**
9. **CONNECT RADIATOR HOSE INLET (See page CO-35)**
10. **CONNECT RADIATOR RESERVOIR TANK HOSE (See page CO-35)**
11. **INSTALL MILLIMETER WAVE RADAR SENSOR ASSEMBLY (w/ Dynamic Radar Cruise Control System) (See page CC-128)**
12. **INSTALL FRONT BUMPER ENERGY ABSORBER (See page ET-10)**

13. **INSTALL FRONT BUMPER ASSEMBLY (See page ET-14)**
14. **INSTALL NO. 1 AIR CLEANER INLET (See page EM-48)**
15. **INSTALL NO. 2 AIR CLEANER INLET (See page EM-48)**
16. **INSTALL AIR CLEANER CAP SUB-ASSEMBLY (See page ES-522)**
17. **CONNECT CABLE TO NEGATIVE BATTERY TERMINAL (See page EM-49)**
18. **ADD ENGINE COOLANT (See page CO-6)**
19. **CHECK FOR ENGINE COOLANT LEAKS (See page CO-1)**
20. **INSTALL ENGINE UNDER COVER LH**
21. **INSTALL ENGINE UNDER COVER RH**
22. **INSTALL FRONT WHEEL OPENING EXTENSION PAD LH**
23. **INSTALL FRONT WHEEL OPENING EXTENSION PAD RH**
24. **INSTALL FRONT FENDER APRON SEAL RH**
25. **INSTALL V-BANK COVER SUB-ASSEMBLY (See page EM-49)**
26. **INSTALL ENGINE ROOM SIDE COVER LH (See page EM-50)**
27. **INSTALL ENGINE ROOM SIDE COVER RH (See page EM-50)**
28. **INSTALL COOL AIR INTAKE DUCT SEAL (See page EM-50)**
29. **INSTALL FRONT WHEEL RH (See page EM-7)**
30. **PERFORM INITIALIZATION**
    (a) Perform initialization procedure (See page IN-33).
    NOTICE:
    Some vehicle systems require initialization after reconnecting the cable to the negative battery terminal.

REMOVAL

1. DISCONNECT CABLE FROM NEGATIVE BATTERY TERMINAL
2. REMOVE FRONT WHEEL RH
3. REMOVE COOL AIR INTAKE DUCT SEAL (See page EM-22)
4. REMOVE ENGINE ROOM SIDE COVER LH (See page EM-22)
5. REMOVE ENGINE ROOM SIDE COVER RH (See page EM-22)
6. REMOVE V-BANK COVER SUB-ASSEMBLY (See page EM-23)
7. REMOVE FRONT FENDER APRON SEAL RH
8. REMOVE FRONT WHEEL OPENING EXTENSION PAD LH
9. REMOVE FRONT WHEEL OPENING EXTENSION PAD RH
10. REMOVE ENGINE UNDER COVER LH
11. REMOVE ENGINE UNDER COVER RH
12. DRAIN ENGINE COOLANT (See page CO-5)
13. REMOVE AIR CLEANER CAP SUB-ASSEMBLY (See page ES-519)
14. REMOVE NO. 2 AIR CLEANER INLET (See page EM-23)
15. REMOVE NO. 1 AIR CLEANER INLET (See page EM-23)
16. REMOVE FRONT BUMPER ASSEMBLY (See page ET-5)
17. REMOVE FRONT BUMPER ENERGY ABSORBER (See page ET-9)
18. REMOVE MILLIMETER WAVE RADAR SENSOR ASSEMBLY (w/ Dynamic Radar Cruise Control System) (See page CC-122)
19. SEPARATE RADIATOR RESERVOIR TANK HOSE (See page CO-25)
20. DISCONNECT RADIATOR HOSE INLET (See page CO-25)
21. DISCONNECT RADIATOR HOSE OUTLET (See page CO-25)
22. DISCONNECT NO. 1 OIL COOLER INLET HOSE (See page CO-26)
23. DISCONNECT NO. 1 OIL COOLER OUTLET HOSE (See page CO-26)

24. REMOVE RADIATOR SUPPORT UPPER (See page CO-26)

25. REMOVE FAN SHROUD (See page CO-27)

26. REMOVE RADIATOR ASSEMBLY (See page CO-27)

27. REMOVE V-RIBBED BELT (See page EM-6)

28. REMOVE GENERATOR ASSEMBLY

(a) Remove the terminal cap.
(b) Remove the nut and disconnect the wire harness from terminal B.
(c) Disconnect the generator connector from the generator assembly.
(d) Disconnect the connector from the compressor and magnetic clutch.
(e) Disconnect the 2 wire harness clamps.

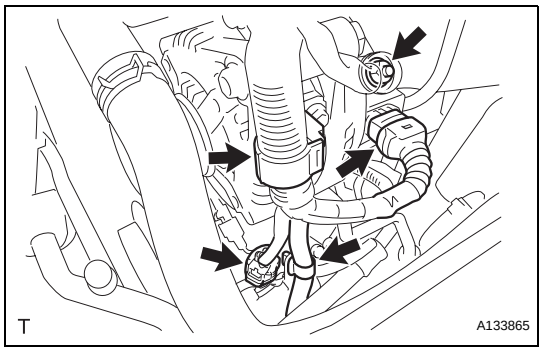

(f) Remove the 2 bolts.

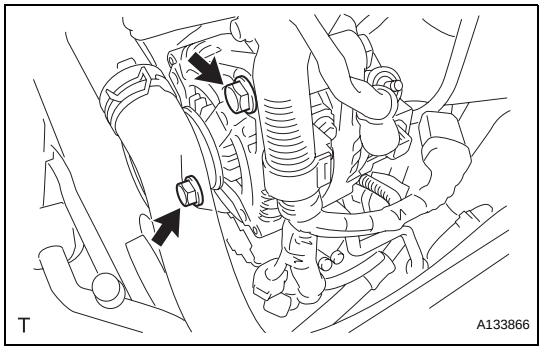

(g) Remove the bolt from the cylinder block.
(h) Disconnect the wire harness clamp and remove the generator assembly.

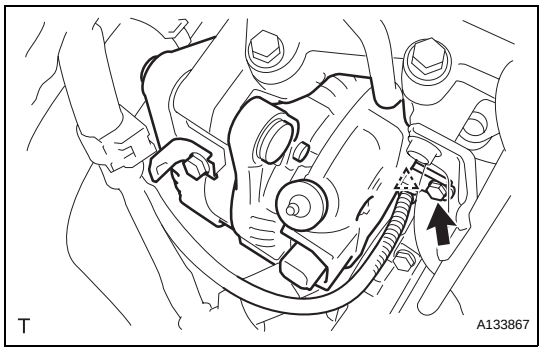

(i) Remove the bolt and wire harness clamp stay.

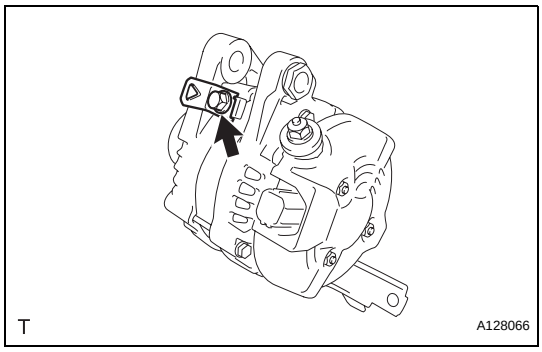

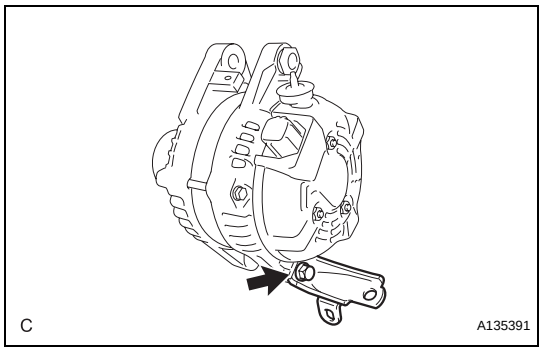

(j) Remove the bolt and bracket.

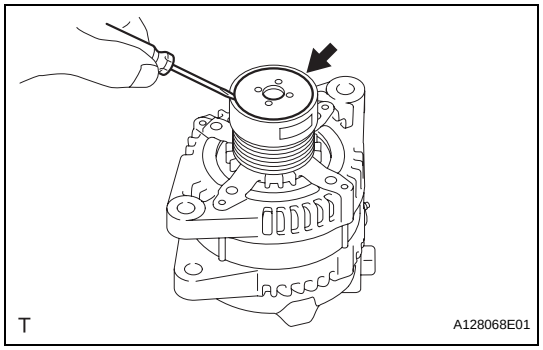

DISASSEMBLY

1. REMOVE GENERATOR CLUTCH PULLEY

(a) Using a screwdriver, remove the generator pulley cap.

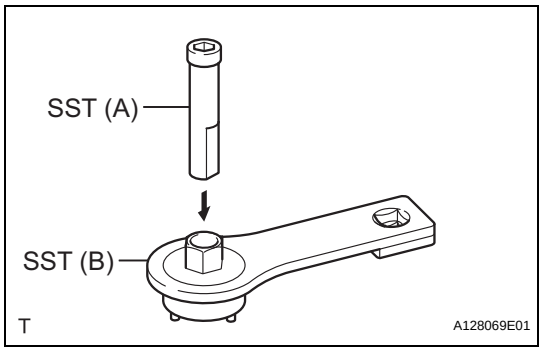

(b) Set SST (A) and (B).
SST 09820-63020

(c) Clamp SST (A) in a vise.

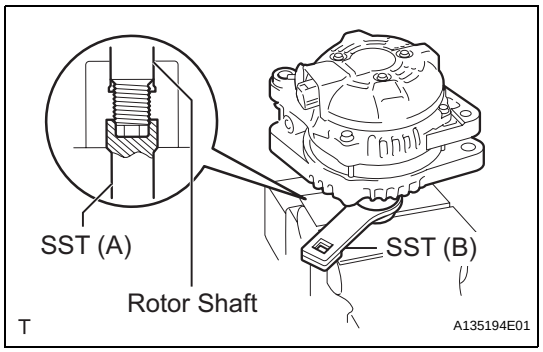

(d) Place the rotor shaft end into SST (A).

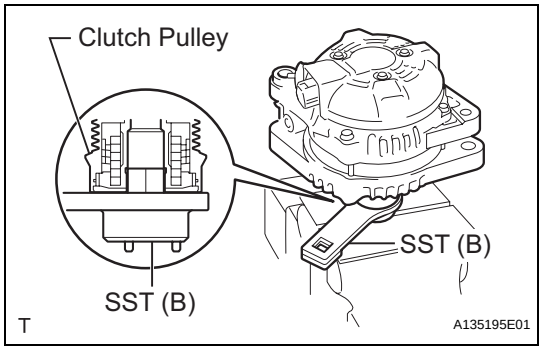

(e) Fit SST (B) to the clutch pulley.

CH

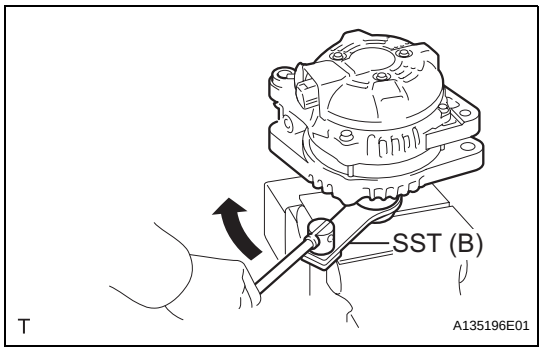

(f) Loosen the pulley by turning SST (B) in the direction shown in the illustration.
(g) Remove the generator assembly from the SST.
(h) Remove the clutch pulley from the rotor shaft.

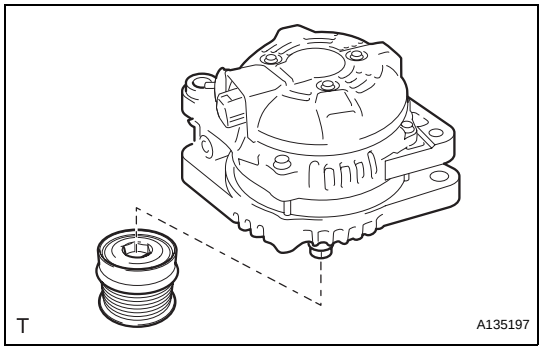

2. REMOVE GENERATOR REAR END COVER

(a) Place the generator assembly on the clutch pulley.

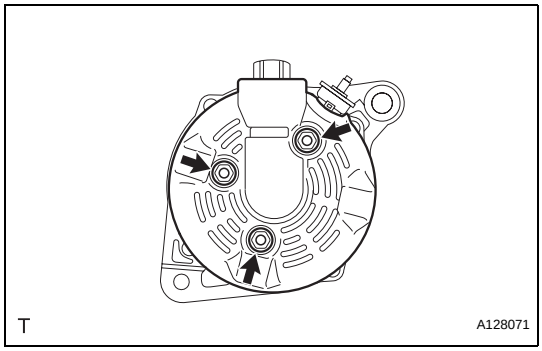

(b) Remove the 3 nuts and generator rear end cover.

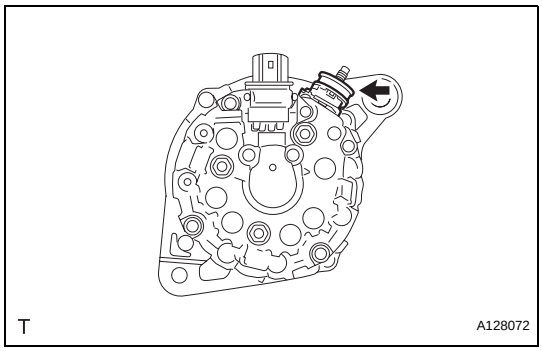

3. REMOVE GENERATOR TERMINAL INSULATOR

(a) Remove the terminal insulator from the generator coil.

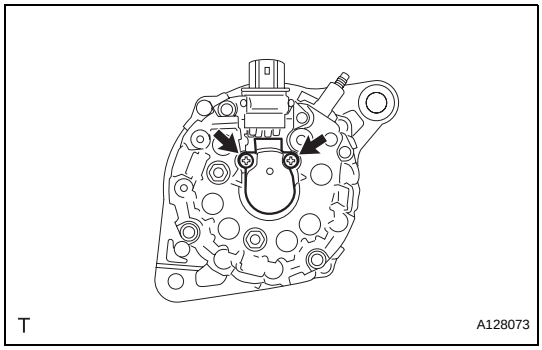

4. REMOVE GENERATOR BRUSH HOLDER ASSEMBLY

(a) Remove the 2 screws and brush holder from the generator coil.

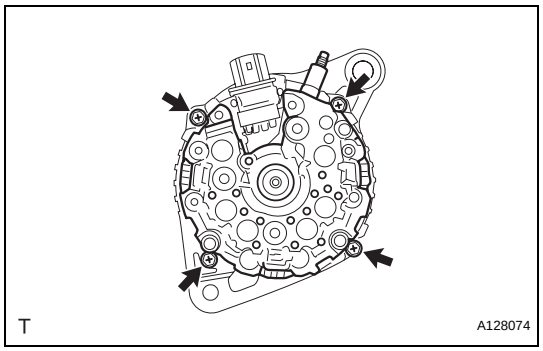

5. REMOVE GENERATOR COIL ASSEMBLY

(a) Remove the 4 bolts.

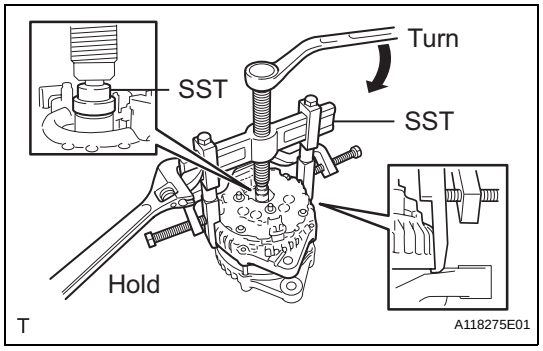

(b) Using SST, remove the generator coil assembly.

SST 09950-40011 (09951-04020, 09952-04010, 09953-04020, 09954-04010, 09955-04071, 09957-04010, 09958-04011)

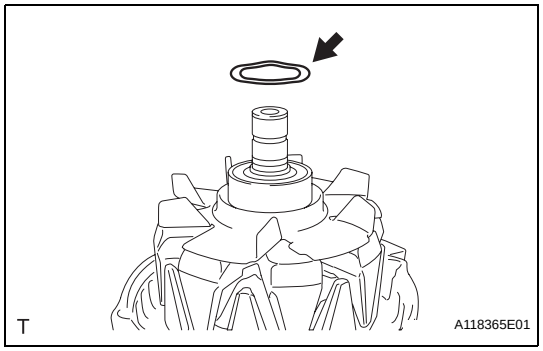

6. REMOVE GENERATOR ROTOR ASSEMBLY

(a) Remove the generator washer.

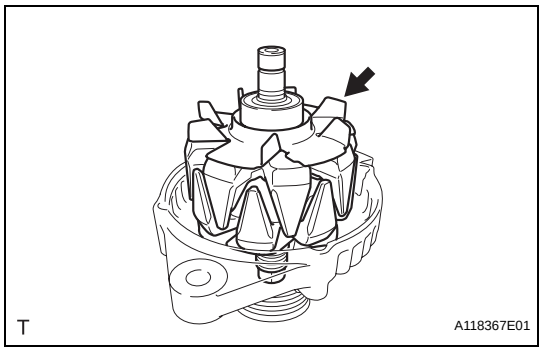

(b) Remove the generator rotor assembly.

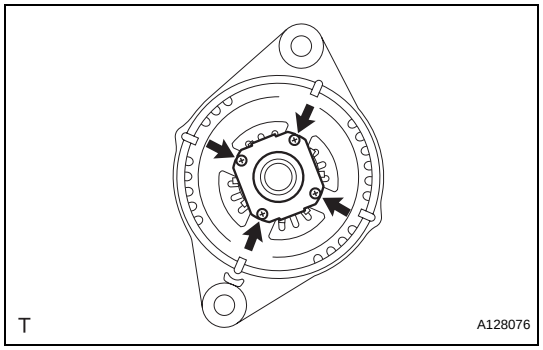

7. REMOVE GENERATOR DRIVE END FRAME BEARING

(a) Remove the 4 screws and retainer plate from the drive end frame.

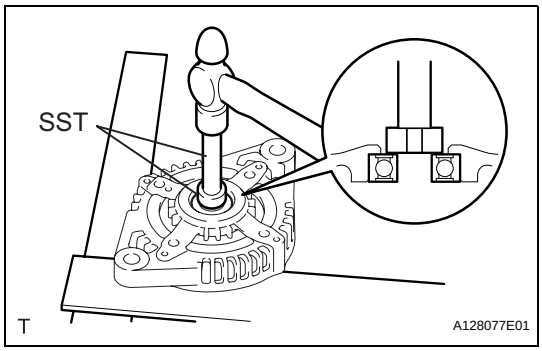

(b) Using SST and a hammer, tap out the drive end frame bearing from the drive end frame.
SST 09950-60010 (09951-00250), 09950-70010 (09951-07100)

INSPECTION

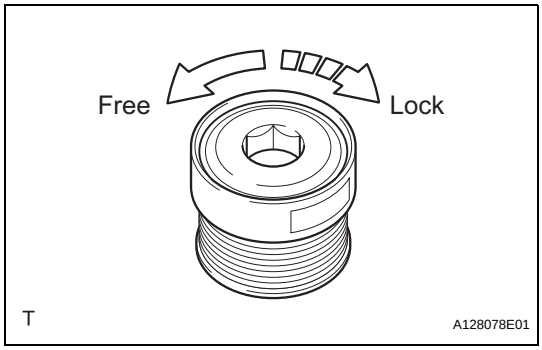

1. INSPECT GENERATOR CLUTCH PULLEY

(a) Hold the center of the pulley, and confirm that the outer ring turns counterclockwise and does not turn clockwise.
If the result is not as specified, replace the clutch pulley.

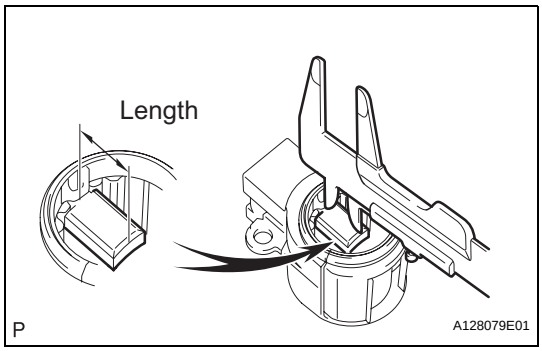

2. INSPECT GENERATOR BRUSH HOLDER ASSEMBLY

(a) Using vernier calipers, measure the length of the exposed brushes.
Standard exposed length:
9.5 to 11.5 mm (0.374 to 0.453 in.)
Minimum exposed length:
4.5 mm (0.177 in.)
If the exposed length is less than the minimum, replace the brush holder assembly.

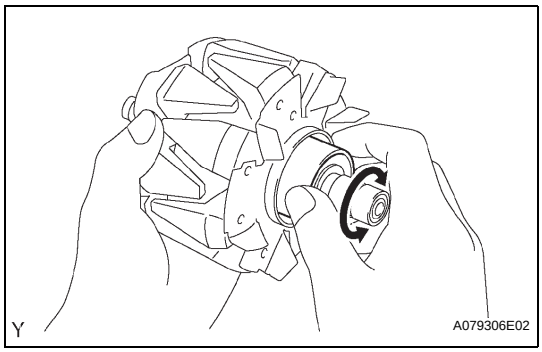

3. INSPECT GENERATOR ROTOR ASSEMBLY

(a) Check that the generator rotor bearing is not rough or worn.
If necessary, replace the generator rotor assembly.

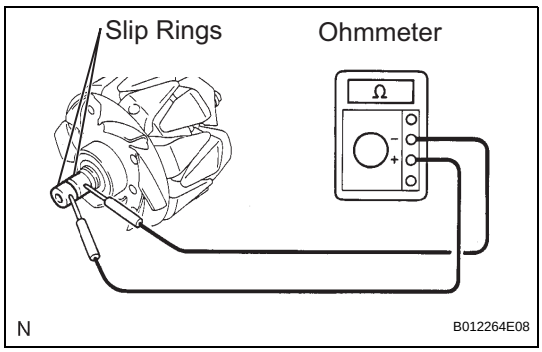

(b) Check the generator rotor for an open circuit.
(1) Using an ohmmeter, measure the resistance between the slip rings.
Standard resistance

Condition	Specified condition
Approx. 20°C (68°F)	2.3 to 2.7 Ω

If the result is not as specified, replace the generator rotor assembly.

CH

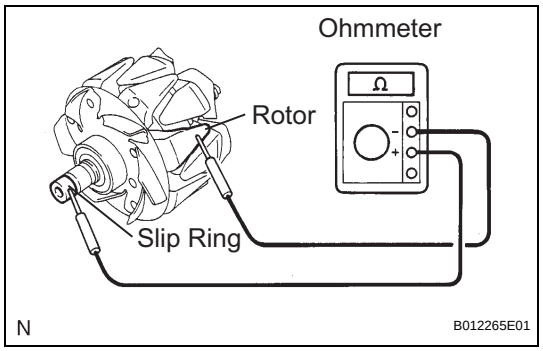

(c) Check the rotor for a short to ground.
(1) Using an ohmmeter, measure the resistance between the slip ring and rotor.
Standard resistance

Tester condition	Specified condition
Slip ring - Rotor	1 MΩ or higher

If the result is not as specified, replace the generator rotor assembly.

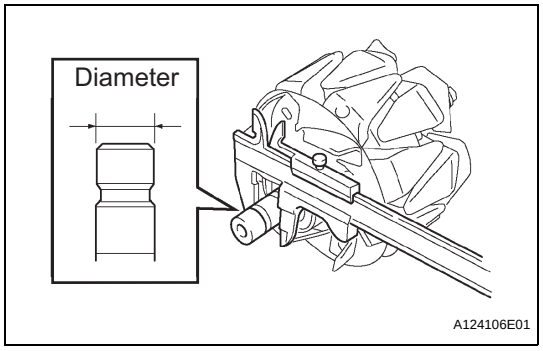

(d) Using vernier calipers, measure the slip ring diameter.
Standard diameter:
14.2 to 14.4 mm (0.559 to 0.567 in.)
Minimum diameter:
14.0 mm (0.551 in.)
If the diameter is less than the minimum, replace the generator rotor assembly.

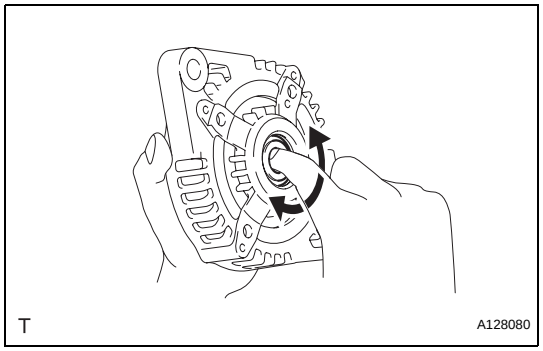

4. INSPECT GENERATOR DRIVE END FRAME BEARING
(a) Check that the drive end frame bearing is not rough or worn.
If necessary, replace the drive end frame bearing.

CH

REASSEMBLY

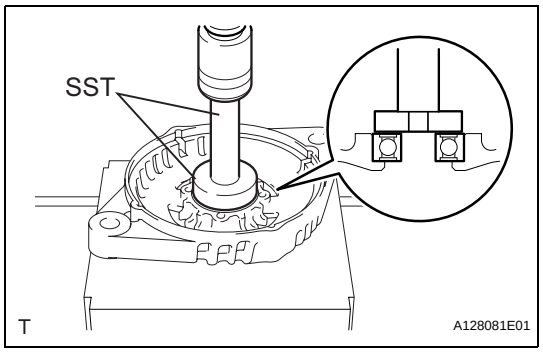

1. INSTALL GENERATOR DRIVE END FRAME BEARING
(a) Using SST and a press, press in a new generator drive end frame bearing.
SST 09950-60010 (09951-00470), 09950-70010 (09951-07100)

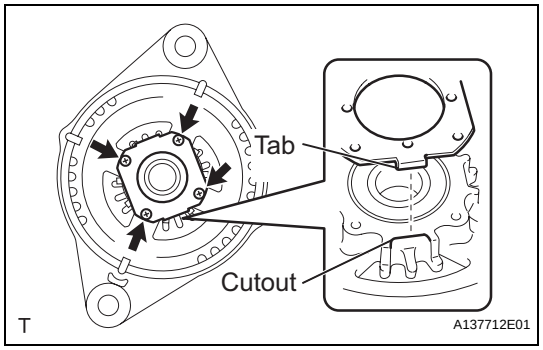

(b) Fit the tabs on the retainer plate into the cutouts on the drive end frame to install the retainer plate.
(c) Install the 4 screws.
Torque: 2.3 N*m (23 kgf*cm, 20 in.*lbf)

2. INSTALL GENERATOR ROTOR ASSEMBLY
(a) Place the drive end frame on the clutch pulley.

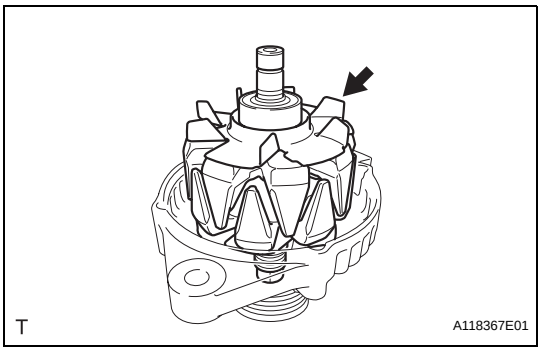

(b) Install the generator rotor assembly to the drive end frame.

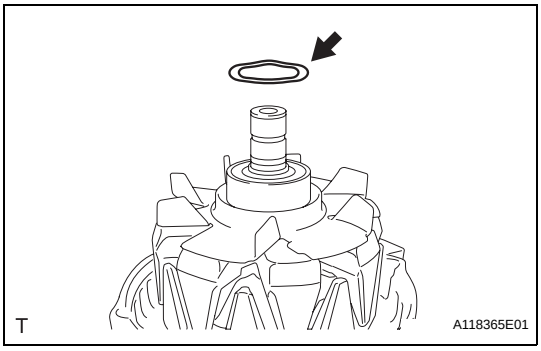

(c) Place a new generator washer on the generator rotor.

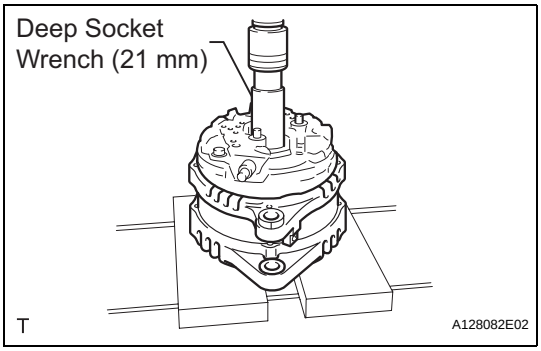

3. INSTALL GENERATOR COIL ASSEMBLY

(a) Using a deep socket wrench (21 mm) and a press, slowly press in the generator coil assembly.

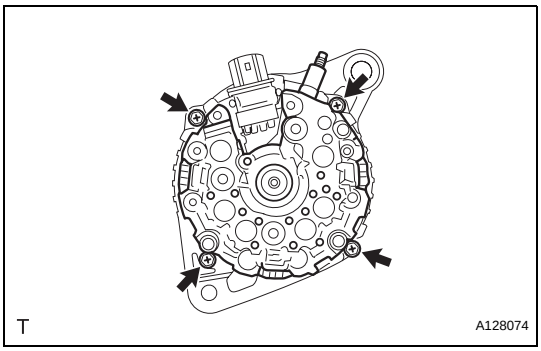

(b) Install the 4 bolts.
Torque: 5.8 N*m (59 kgf*cm, 51 in.*lbf)

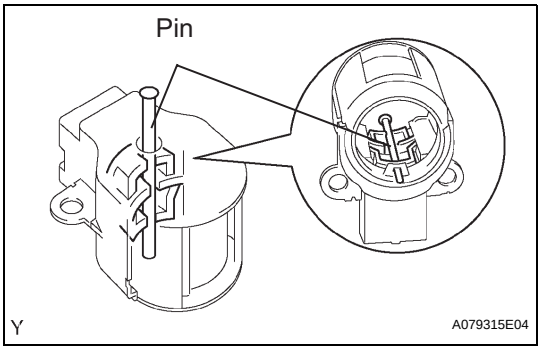

4. INSTALL GENERATOR BRUSH HOLDER ASSEMBLY

(a) While pushing the 2 brushes into the generator brush holder assembly, insert a ϕ1.0 mm (0.039 in.) pin into the brush holder hole.

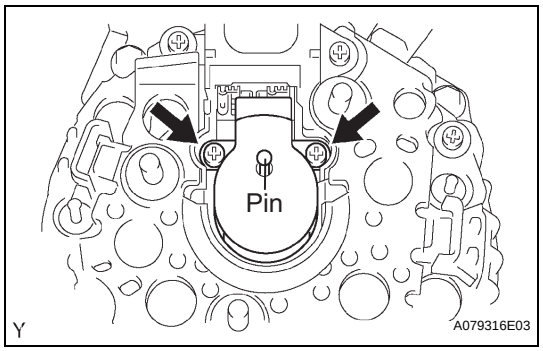

(b) Install the brush holder assembly to the generator coil with the 2 screws.
Torque: 1.8 N*m (18 kgf*cm, 16 in.*lbf)
(c) Pull out the pin from the generator brush holder.

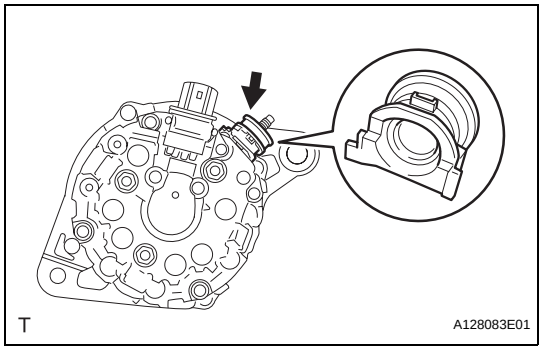

5. INSTALL GENERATOR TERMINAL INSULATOR
(a) Install the terminal insulator to the generator coil.
NOTICE:
Be sure to install the terminal insulator in the correct direction.

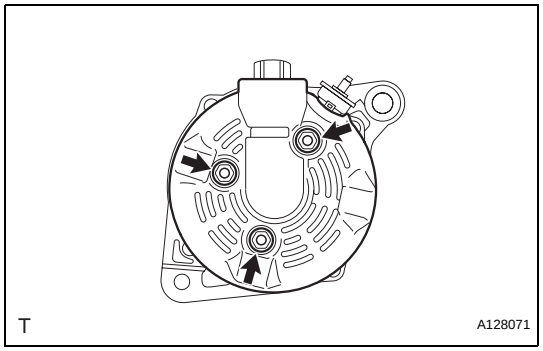

6. INSTALL GENERATOR REAR END COVER
(a) Install the generator rear end cover to the generator coil with the 3 nuts.
Torque: 4.6 N*m (47 kgf*cm, 41 in.*lbf)

7. INSTALL GENERATOR CLUTCH PULLEY
(a) Temporarily install the clutch pulley onto the rotor shaft.

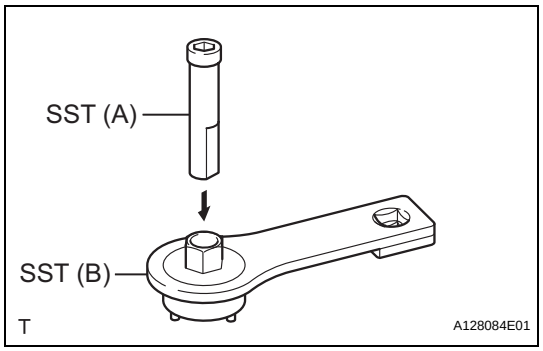

(b) Set SST (A) and (B).
SST 09820-63020

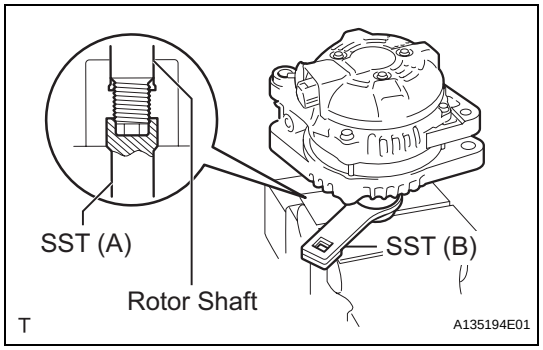

(c) Clamp SST (A) in a vise.
(d) Place the rotor shaft end into SST (A).

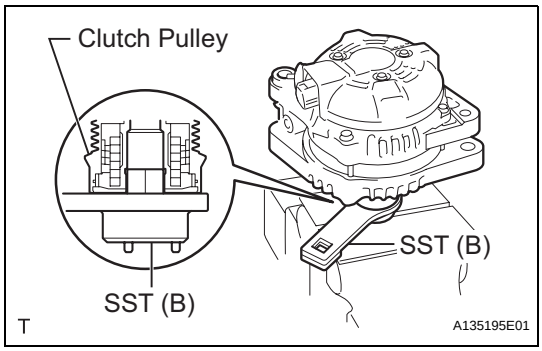

(e) Fit SST (B) to the clutch pulley.

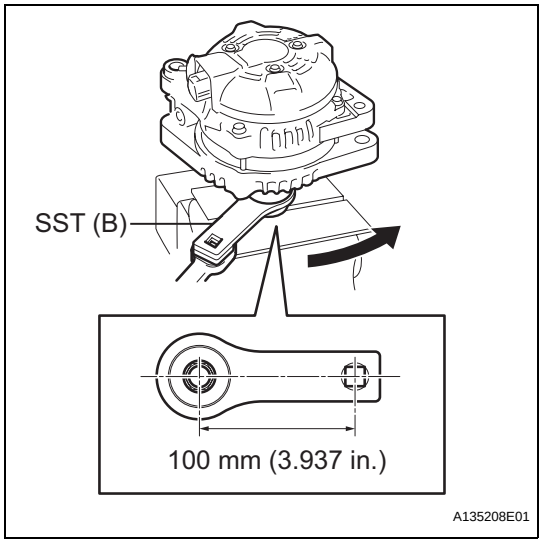

(f) Tighten the pulley by turning SST (B) in the direction shown in the illustration.
Torque: 111 N*m (1,125 kgf*cm, 81 ft.*lbf)
NOTICE:
The torque shown above should be used for tightening without using the SST. When the SST is used for tightening, the torque should be calculated based on the length of the SST (See page IN-5).

(g) Remove the generator assembly from the SST.

(h) Check that the clutch pulley rotates smoothly.

(i) Install a new clutch pulley cap to the clutch pulley.

INSTALLATION

1. INSTALL GENERATOR ASSEMBLY

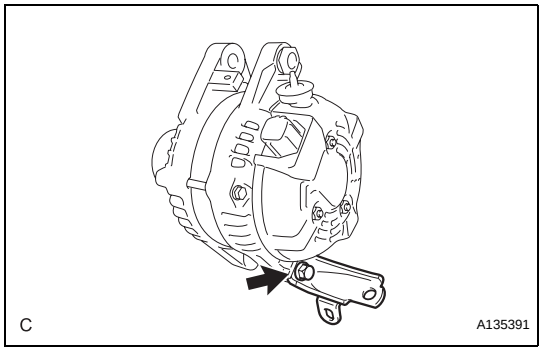

(a) Install the bracket with the bolt.
Torque: 20 N*m (204 kgf*cm, 15 ft.*lbf)

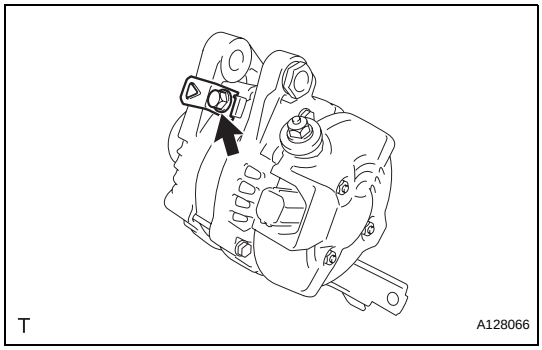

(b) Install the wire harness clamp stay with the bolt.
Torque: 8.4 N*m (86 kgf*cm, 74 in.*lbf)

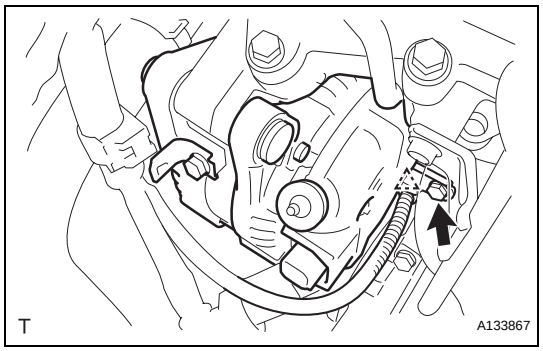

(c) Connect the wire harness clamp.
(d) Install the generator assembly to the cylinder block with the bolt.
Torque: 20 N*m (204 kgf*cm, 15 ft.*lbf)

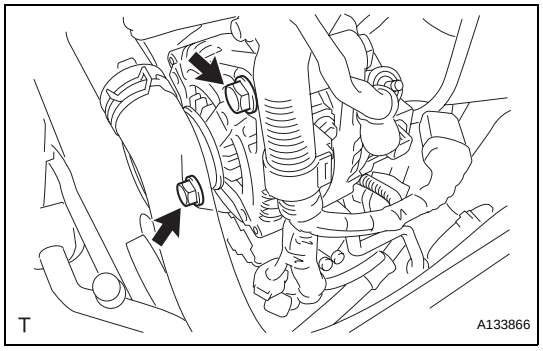

(e) Install the 2 bolts.
Torque: 43 N*m (438 kgf*cm, 32 ft.*lbf)

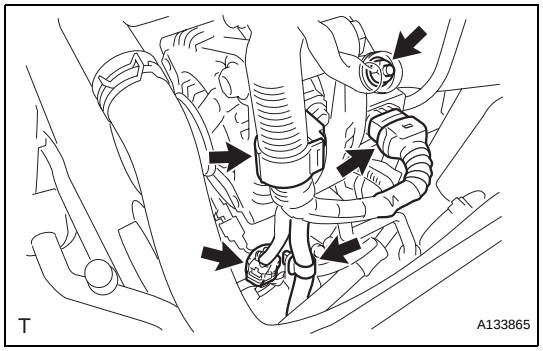

(f) Connect the generator connector to the generator assembly.
(g) Install the generator wire with the nut.
Torque: 9.8 N*m (100 kgf*cm, 87 in.*lbf)
(h) Install the terminal cap.
(i) Connect the 2 wire harness clamps.
(j) Connect the magnetic clutch connector to the compressor and magnetic clutch.

2. **INSTALL V-RIBBED BELT (See page EM-7)**
3. **INSTALL RADIATOR ASSEMBLY (See page CO-33)**
4. **INSTALL FAN SHROUD (See page CO-33)**
5. **INSTALL RADIATOR SUPPORT UPPER (See page CO-33)**
6. **CONNECT NO. 1 OIL COOLER OUTLET TUBE (See page CO-34)**
7. **CONNECT NO. 1 OIL COOLER INLET TUBE (See page CO-34)**
8. **CONNECT RADIATOR HOSE OUTLET (See page CO-35)**
9. **CONNECT RADIATOR HOSE INLET (See page CO-35)**
10. **CONNECT RADIATOR RESERVOIR TANK HOSE (See page CO-35)**
11. **INSTALL MILLIMETER WAVE RADAR SENSOR ASSEMBLY (w/ Dynamic Radar Cruise Control System) (See page CC-128)**
12. **INSTALL FRONT BUMPER ENERGY ABSORBER (See page ET-10)**

13. **INSTALL FRONT BUMPER ASSEMBLY (See page ET-14)**
14. **INSTALL NO. 1 AIR CLEANER INLET (See page EM-48)**
15. **INSTALL NO. 2 AIR CLEANER INLET (See page EM-48)**
16. **INSTALL AIR CLEANER CAP SUB-ASSEMBLY (See page ES-522)**
17. **CONNECT CABLE TO NEGATIVE BATTERY TERMINAL (See page EM-49)**
18. **ADD ENGINE COOLANT (See page CO-6)**
19. **CHECK FOR ENGINE COOLANT LEAKS (See page CO-1)**
20. **INSTALL ENGINE UNDER COVER LH**
21. **INSTALL ENGINE UNDER COVER RH**
22. **INSTALL FRONT WHEEL OPENING EXTENSION PAD LH**
23. **INSTALL FRONT WHEEL OPENING EXTENSION PAD RH**
24. **INSTALL FRONT FENDER APRON SEAL RH**
25. **INSTALL V-BANK COVER SUB-ASSEMBLY (See page EM-49)**
26. **INSTALL ENGINE ROOM SIDE COVER LH (See page EM-50)**
27. **INSTALL ENGINE ROOM SIDE COVER RH (See page EM-50)**
28. **INSTALL COOL AIR INTAKE DUCT SEAL (See page EM-50)**
29. **INSTALL FRONT WHEEL RH (See page EM-7)**
30. **PERFORM INITIALIZATION**
    (a) Perform initialization procedure (See page IN-33).
    NOTICE:
    Some vehicle systems require initialization after reconnecting the cable to the negative battery terminal.

SYSTEM DIAGRAM

The configuration of the electronic control system in the U660E automatic transaxle is as shown in the following chart.

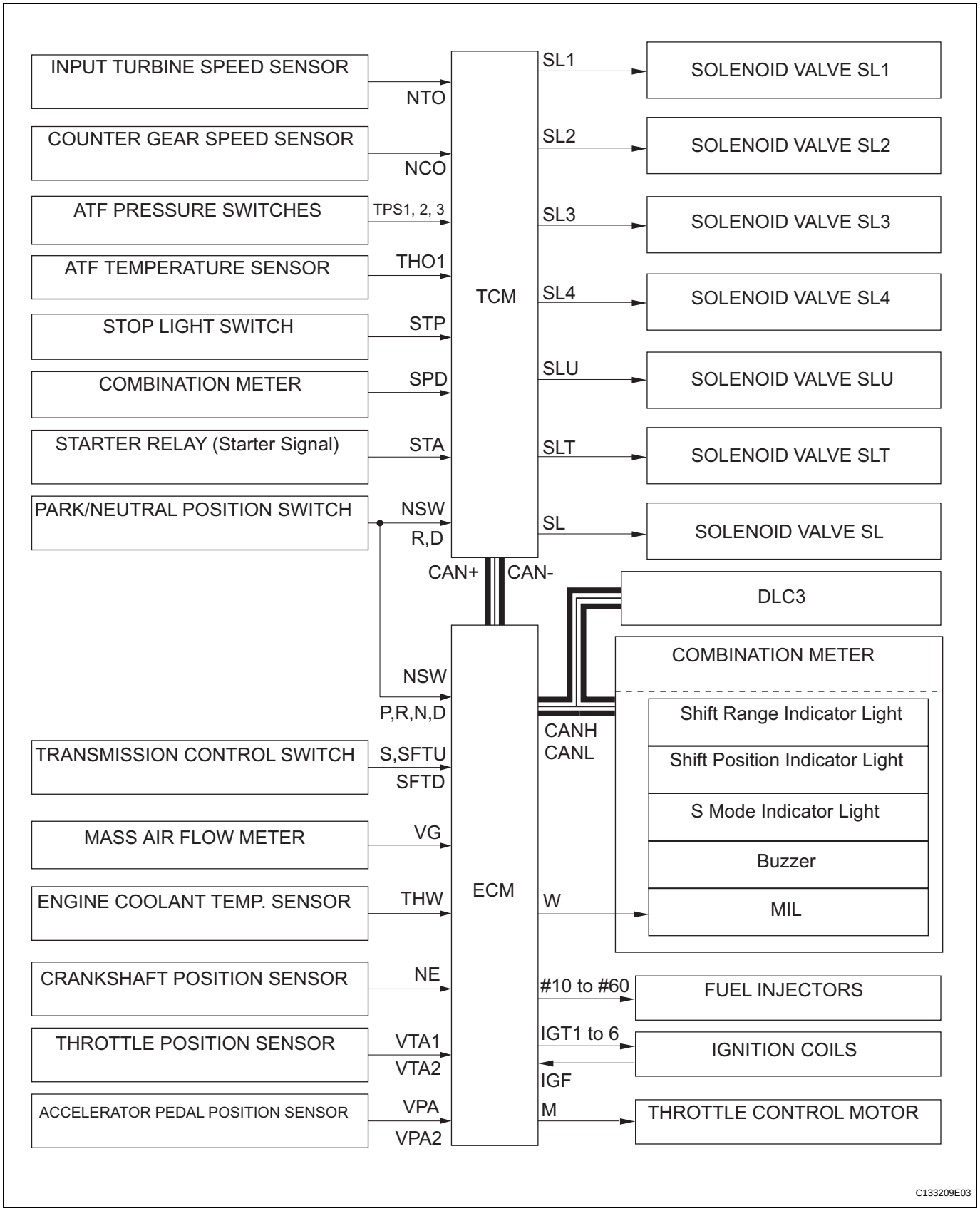

AX

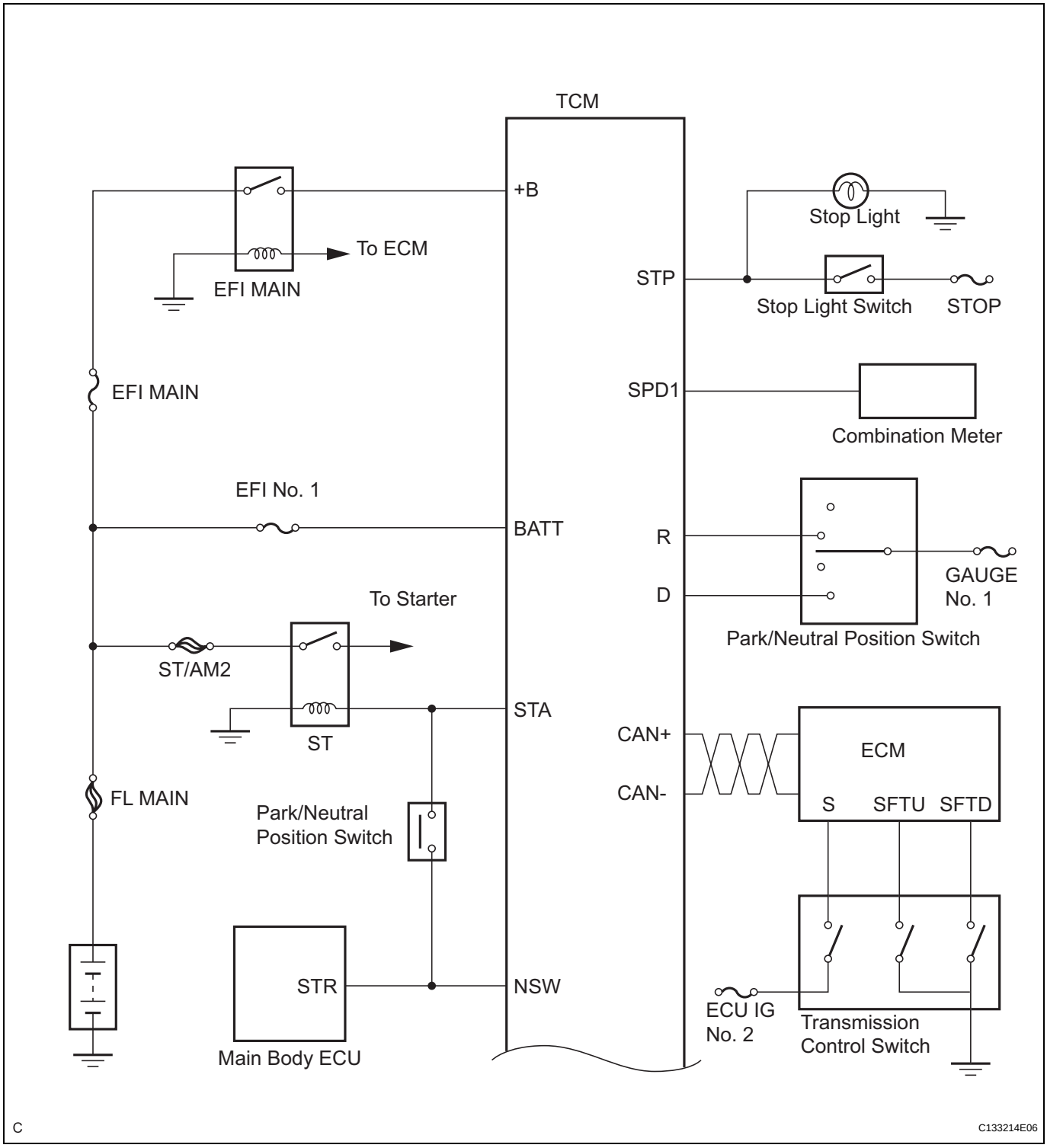
TCM
+B
To ECM
EFI MAIN
EFI MAIN
EFI No. 1
BATT
To Starter
ST/AM2
ST
STA
FL MAIN
Park/Neutral
Position Switch
STR
NSW
Main Body ECU
Stop Light
STP
Stop Light Switch
STOP
SPD1
Combination Meter
R
D
GAUGE
No. 1
Park/Neutral Position Switch
CAN+
CAN-
ECM
S
SFTU
SFTD
ECU IG
No. 2
Transmission
Control Switch
C
C133214E06

AX

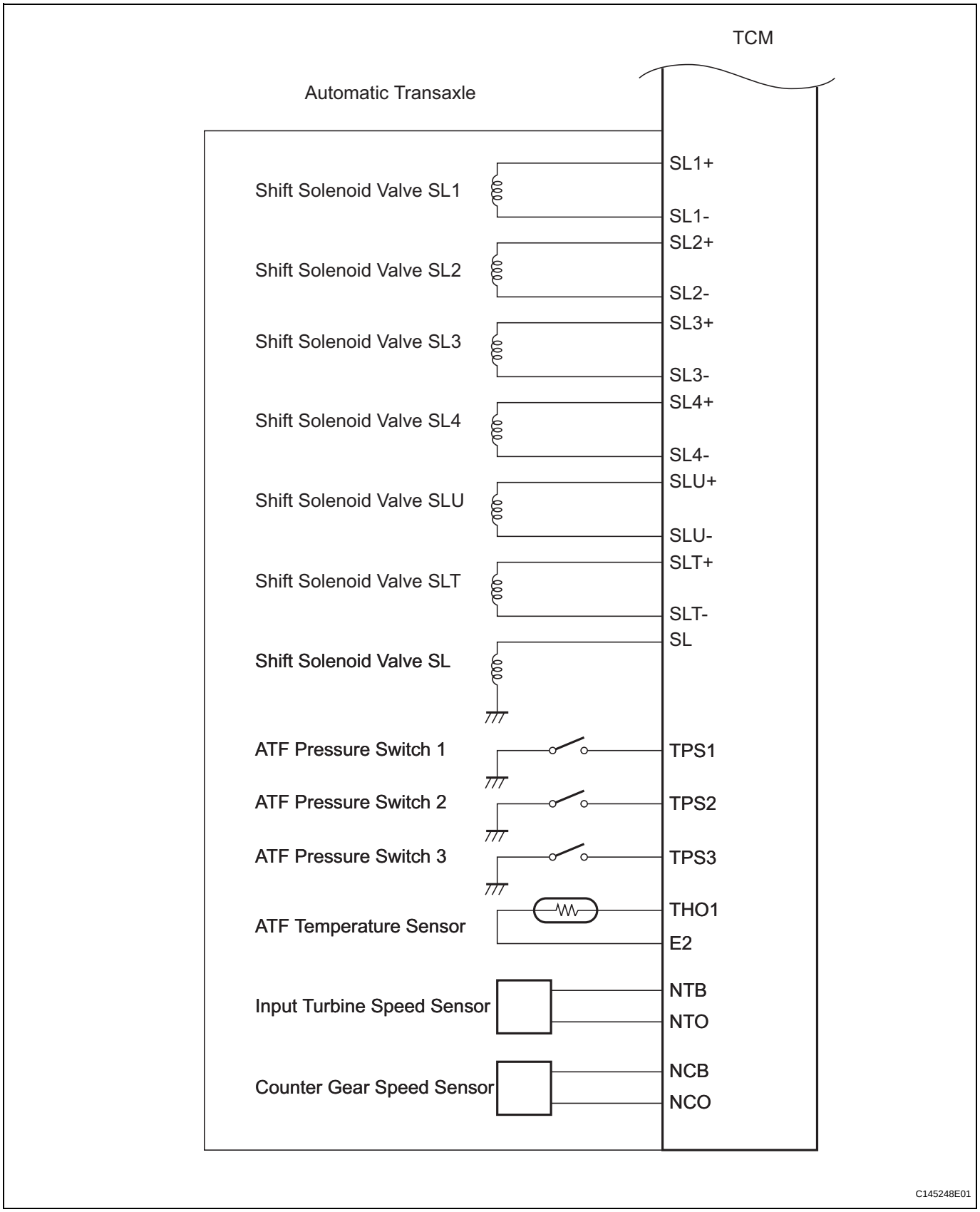
TCM
Automatic Transaxle
Shift Solenoid Valve SL1
SL1+
SL1-
Shift Solenoid Valve SL2
SL2+
SL2-
Shift Solenoid Valve SL3
SL3+
SL3-
Shift Solenoid Valve SL4
SL4+
SL4-
Shift Solenoid Valve SLU
SLU+
SLU-
Shift Solenoid Valve SLT
SLT+
SLT-
Shift Solenoid Valve SL
SL
ATF Pressure Switch 1
TPS1
ATF Pressure Switch 2
TPS2
ATF Pressure Switch 3
TPS3
ATF Temperature Sensor
THO1
E2
Input Turbine Speed Sensor
NTB
NTO
Counter Gear Speed Sensor
NCB
NCO
C145248E01

AX

SYSTEM DESCRIPTION

1. SYSTEM DESCRIPTION

(a) The ECT (Electronic controlled automatic transaxle) is an automatic transaxle that has its shift timing electronically controlled by the Transmission Control Module (TCM). The TCM detects electrical signals that indicate engine and driving conditions, and controls the shift point, based on driver's habits and road conditions. As a result, fuel efficiency and transaxle performance are improved.
Shift shock has been reduced by controlling the engine and transaxle simultaneously.
In addition, the ECT has features such as:
- Diagnostic function.
- Fail-safe function for use when a malfunction occurs.

HOW TO PROCEED WITH TROUBLESHOOTING

HINT:
- The TCM of this system is connected to the CAN communication system. Therefore, before starting troubleshooting, make sure to check that there is no trouble in the CAN communication system.
- *: Use the intelligent tester.

1	VEHICLE BROUGHT TO WORKSHOP

NEXT

2	CUSTOMER PROBLEM ANALYSIS

NEXT

3	INSPECT BATTERY VOLTAGE

Standard voltage:
11 to 14 V
If the voltage is below 11 V, recharge or replace the battery before proceeding.

NEXT

4	CONNECT INTELLIGENT TESTER TO DLC3*

NEXT

5	CHECK AND CLEAR DTCS AND FREEZE FRAME DATA*

(a) Refer to the DTC CHECK / CLEAR (See page AX-37).

NEXT

6	VISUAL INSPECTION

NEXT

7	SETTING CHECK MODE DIAGNOSIS*

(a) Refer to the CHECK MODE PROCEDURE (See page AX-38).

NEXT

8 PROBLEM SYMPTOM CONFIRMATION

(a) Refer to the ROAD TEST (See page AX-11).
Result

Result	Proceed to
Symptom does not occur	A
Symptom occurs	B

B → **GO TO STEP 10**

A

9 SYMPTOM SIMULATION

(a) Refer to the ELECTRONIC CIRCUIT INSPECTION PROCEDURE (See page IN-34).

NEXT

10 DTC CHECK*

(a) Refer to the DTC CHECK / CLEAR (See page AX-37).
Result

Result	Proceed to
DTC is not output	A
DTC is output	B

B → **GO TO STEP 18**

AX

A

11 BASIC INSPECTION

(a) Refer to the AUTOMATIC TRANSMISSION FLUID (See page AX-176).
(b) Refer to the PARK/NEUTRAL POSITION SWITCH (See page AX-184).
(c) Refer to the SHIFT LEVER ASSEMBLY (See page AX-232).

NG → **GO TO STEP 21**

OK

12 MECHANICAL SYSTEM TEST

(a) Refer to the MECHANICAL SYSTEM TEST (See page AX-14).

NG → **GO TO STEP 17**

OK

13	HYDRAULIC TEST

(a) Refer to the HYDRAULIC TEST (See page AX-16).

NG → GO TO STEP 17

OK

14	MANUAL SHIFTING TEST

(a) Refer to the MANUAL SHIFTING TEST (See page AX-17).

NG → GO TO STEP 16

OK

15	PROBLEM SYMPTOMS TABLE CHAPTER 1

(a) Refer to the PROBLEM SYMPTOMS TABLE (See page AX-28).

NG → GO TO STEP 19

OK

16	PROBLEM SYMPTOMS TABLE CHAPTER 2

(a) Refer to the PROBLEM SYMPTOMS TABLE (See page AX-28).

AX

NEXT

17	PART INSPECTION

NEXT → GO TO STEP 21

18	DTC CHART

(a) Refer to the DIAGNOSTIC TROUBLE CODE CHART (See page AX-45).

NEXT

19	CIRCUIT INSPECTION

NEXT

20	**IDENTIFICATION OF PROBLEM**

NEXT

21	**REPAIR OR REPLACE**

NEXT

22	**CONFIRMATION TEST**

NEXT

END

SYSTEM DESCRIPTION

1. SYSTEM DESCRIPTION

(a) The ECT (Electronic controlled automatic transaxle) is an automatic transaxle that has its shift timing electronically controlled by the Transmission Control Module (TCM). The TCM detects electrical signals that indicate engine and driving conditions, and controls the shift point, based on driver's habits and road conditions. As a result, fuel efficiency and transaxle performance are improved.
Shift shock has been reduced by controlling the engine and transaxle simultaneously.
In addition, the ECT has features such as:
- Diagnostic function.
- Fail-safe function for use when a malfunction occurs.

HOW TO PROCEED WITH TROUBLESHOOTING

HINT:
- The TCM of this system is connected to the CAN communication system. Therefore, before starting troubleshooting, make sure to check that there is no trouble in the CAN communication system.
- *: Use the intelligent tester.

1	VEHICLE BROUGHT TO WORKSHOP

NEXT

2	CUSTOMER PROBLEM ANALYSIS

NEXT

3	INSPECT BATTERY VOLTAGE

Standard voltage:
11 to 14 V
If the voltage is below 11 V, recharge or replace the battery before proceeding.

NEXT

4	CONNECT INTELLIGENT TESTER TO DLC3*

NEXT

5	CHECK AND CLEAR DTCS AND FREEZE FRAME DATA*

(a) Refer to the DTC CHECK / CLEAR (See page AX-37).

NEXT

6	VISUAL INSPECTION

NEXT

7	SETTING CHECK MODE DIAGNOSIS*

(a) Refer to the CHECK MODE PROCEDURE (See page AX-38).

NEXT

8 PROBLEM SYMPTOM CONFIRMATION

(a) Refer to the ROAD TEST (See page AX-11).
Result

Result	Proceed to
Symptom does not occur	A
Symptom occurs	B

B → **GO TO STEP 10**

A

9 SYMPTOM SIMULATION

(a) Refer to the ELECTRONIC CIRCUIT INSPECTION PROCEDURE (See page IN-34).

NEXT

10 DTC CHECK*

(a) Refer to the DTC CHECK / CLEAR (See page AX-37).
Result

Result	Proceed to
DTC is not output	A
DTC is output	B

B → **GO TO STEP 18**

AX

A

11 BASIC INSPECTION

(a) Refer to the AUTOMATIC TRANSMISSION FLUID (See page AX-176).
(b) Refer to the PARK/NEUTRAL POSITION SWITCH (See page AX-184).
(c) Refer to the SHIFT LEVER ASSEMBLY (See page AX-232).

NG → **GO TO STEP 21**

OK

12 MECHANICAL SYSTEM TEST

(a) Refer to the MECHANICAL SYSTEM TEST (See page AX-14).

NG → **GO TO STEP 17**

OK

13	HYDRAULIC TEST

(a) Refer to the HYDRAULIC TEST (See page AX-16).

NG → GO TO STEP 17

OK

14	MANUAL SHIFTING TEST

(a) Refer to the MANUAL SHIFTING TEST (See page AX-17).

NG → GO TO STEP 16

OK

15	PROBLEM SYMPTOMS TABLE CHAPTER 1

(a) Refer to the PROBLEM SYMPTOMS TABLE (See page AX-28).

NG → GO TO STEP 19

OK

16	PROBLEM SYMPTOMS TABLE CHAPTER 2

(a) Refer to the PROBLEM SYMPTOMS TABLE (See page AX-28).

AX

NEXT

17	PART INSPECTION

NEXT → GO TO STEP 21

18	DTC CHART

(a) Refer to the DIAGNOSTIC TROUBLE CODE CHART (See page AX-45).

NEXT

19	CIRCUIT INSPECTION

NEXT

20	**IDENTIFICATION OF PROBLEM**

NEXT

21	**REPAIR OR REPLACE**

NEXT

22	**CONFIRMATION TEST**

NEXT

END

ROAD TEST

1. PROBLEM SYMPTOM CONFIRMATION

(a) Based on the result of the customer problem analysis, try to reproduce the symptoms. If the problem is that the transaxle does not shift up or down, or the shift point is too high or too low, conduct the following road test referring to the automatic shift schedule and attempt to duplicate the problem symptoms.

2. ROAD TEST

NOTICE:

Perform the test at the ATF (Automatic Transmission Fluid) temperature 50 to 80°C (122 to 176°F) in the normal operation.

(a) D position test:

Shift into the D position, fully depress the accelerator pedal and check the following:

(1) Check up-shift operation.

Check that 1st to 2nd, 2nd to 3rd, 3rd to 4th, 4th to 5th and 5th to 6th up-shifts take place, and that the shift points conform to the automatic shift schedule (See page SS-23).

HINT:

6th Gear Up-shift Prohibition Control

- Engine coolant temperature is 60°C (140°F) or less and vehicle speed is 50 mph (80 km/h) or less.

5th Gear Up-shift Prohibition Control

- Engine coolant temperature is 55°C (131°F) or less and vehicle speed is 32 mph (51 km/h) or less.

4th Gear Up-shift Prohibition Control

- Engine coolant temperature is 47°C (117°F) or less and vehicle speed is 31 mph (49 km/h) or less.

Lock-up Prohibition Control

- Brake pedal is depressed.
- Accelerator pedal is released.
- Engine coolant temperature is 60°C (140°F) or less.

(2) Check for shift shock and slip.

Check for shock and slip at the 1st to 2nd, 2nd to 3rd, 3rd to 4th, 4th to 5th and 5th to 6th up-shifts.

(3) Check for abnormal noise and vibration.

Check for abnormal noise and vibration when up-shifting from 1st to 2nd, 2nd to 3rd, 3rd to 4th, 4th to 5th and 5th to 6th while driving with the shift lever in the D position, and also while driving in the lock-up condition.

HINT:

The check for the cause of abnormal noise and vibration must be done thoroughly as it could also be due to loss of balance in the differential, torque converter clutch, etc.

(4) Check kick-down operation.
Check vehicle speeds when the 6th to 5th, 5th to 4th, 5th to 3rd, 3rd to 2nd, and 2nd to 1st kick-downs take place while driving with the shift lever in the D position. Confirm that each speed is within the applicable vehicle speed range indicated in the automatic shift schedule (See page SS-23).

(5) Check for abnormal shock and slip at kick-down.

(6) Check the lock-up mechanism.
- Drive the vehicle with the shift lever in the D position (2nd, 3rd, 4th, 5th or 6th gear) at a steady speed (lock-up ON).
- Lightly depress the accelerator pedal and check that the engine speed does not change abruptly.

HINT:
- There is no lock-up function in the 1st gear.
- If there is a jump in engine speed, this indicates that lock-up is not operating.

(b) S position test
Shift to the S position, depress the accelerator pedal and check the following:

(1) Check shift operation.
- With the shift lever in the S position (while the vehicle is stopped), shift into the "+" position to check that the shift position on the combination meter changes as follows: 1 to 2, 2 to 3, 3 to 4, 4 to 5 and 5 to 6.
- While driving in the 5 (S) position and 5th gear (at a vehicle speed of approximately 34 to 40 mph (55 to 65 km/h)), shift into the "-" position and check if the 4th gear down-shift occurs and proper engine braking occurs.
- While driving in the 4 (S) position and 4th gear (at a vehicle speed of approximately 19 to 25 mph (30 to 40 km/h)), shift into the "-" position and check if the 3rd gear down-shift occurs and proper engine braking occurs.
- While driving in the 3 (S) position and 3rd gear (at a vehicle speed of approximately 12 to 19 mph (20 to 30 km/h)), shift into the "-" position and check if the 2nd gear down-shift occurs and proper engine braking occurs.
- While driving in the 2 (S) position and 2nd gear (at a vehicle speed of approximately 6 to 12 mph (10 to 20 km/h)), shift into the "-" position and check if the 1st gear down-shift occurs and proper engine braking occurs.

HINT:
Manual shift (S position) is prohibited under either of the following conditions:
- Down-shifting may cause engine overrun.

- The driver continuously down-shifts. (Down-shifting to 1st gear may not be performed.)

(c) R position test:
Shift into the R position, lightly depress the accelerator pedal, and check that the vehicle moves backward without any abnormal noise or vibration.
CAUTION:
Before conducting this test ensure that the test, area is free from people and obstruction.

(d) P position test:
Stop the vehicle on a grade (more than 5°) and after shifting into the P position, release the parking brake. Then, check that the parking lock pawl holds the vehicle in place.

MECHANICAL SYSTEM TESTS

1. PERFORM MECHANICAL SYSTEM TESTS

(a) Measure the stall speed.

The object of this test is to check the overall performance of the transaxle and engine by measuring the stall speeds in the D position.

NOTICE:

- **The driving test should be done on a paved road (a non-skid road).**
- **Perform the test at the normal operating ATF (Automatic Transmission Fluid) temperature: 50 to 80°C (122 to 176°F).**
- **Do not continuously run this test for longer than 5 seconds.**
- **To ensure safety, perform this test in a wide, clear level area which provides good traction.**
- **The stall test should always be carried out in pairs. One technician should observe the conditions of wheels or wheel stoppers from a safe location outside the vehicle while the other is doing the test.**

(1) Chock the 4 wheels.

(2) Connect the intelligent tester to the DLC3.

(3) Fully apply the parking brake.

(4) Keep your left foot pressed firmly on the brake pedal.

(5) Start the engine.

(6) Using the intelligent tester, shift into the D position and hold 3rd gear using active test. Press all the way down on the accelerator pedal with your right foot.

(7) Quickly read the stall speed at this time.

Stall speed:

2,520 +- 150 rpm

AX

Evaluation:

Problem	Possible cause
(a) Stall engine speed is low in D position	• Engine power output may be insufficient • Stator one-way clutch is not operating properly HINT: If the value is less than the specified value by 600 rpm or more, the torque converter could be faulty.
(b) Stall engine speed is high in D position	• Line pressure is too low • Clutch No. 1 (C_1) slipping • One-way clutch (F_1) is not operating properly • Improper fluid level

(b) Measure the time lag.

(1) When the shift lever is shifted while the engine is idling, there will be a certain time lapse or lag before the shock can be felt. This is used for checking the condition of the clutches and brakes.

NOTICE:

- **Perform the test at the normal operating ATF (Automatic Transmission Fluid) temperature: 50 to 80°C (122 to 176°F).**
- **Be sure to allow 1 minute interval between tests.**
- **Perform the test three times and measure the time lags. Calculate the average value of the three time lags.**

(2) Connect the intelligent tester to the DLC3.

(3) Fully apply the parking brake.

(4) Start and warm up the engine and check idle speed.

Idle speed:

approx. 650 rpm (In N position and A/C OFF)

(5) Shift the lever from the N to D position. Using a stop watch, measure the time from when the lever is shifted until the shock is felt.

Time lag:

N to D less than 1.2 seconds

(6) In the same way, measure the time lag for N to R.

Time lag:

N to R less than 1.5 seconds

Evaluation (If N to D or N to R time lag is longer than the specified time):

Problem	Possible cause
N to D time lag is longer	• Line pressure is too low • Clutch No. 1 (C_1) is worn • One-way clutch (F_1) is not operating properly
N to R time lag is longer	• Line pressure is too low • Brake No. 2 (B_2) is worn • Brake No. 3 (B_3) is worn

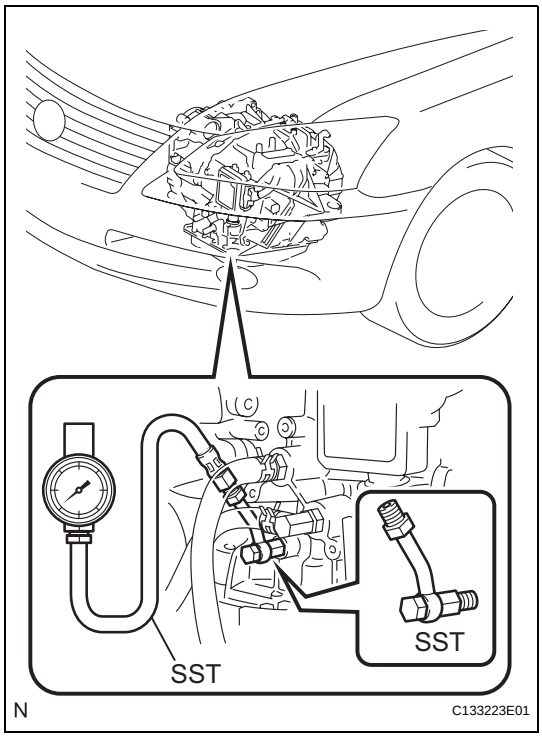

HYDRAULIC TEST

1. PERFORM HYDRAULIC TEST

(a) Measure the line pressure.

NOTICE:

- **Perform the test at the normal operating ATF (Automatic Transmission Fluid) temperature: 50 to 80°C (122 to 176°F).**
- **The line pressure test should always be carried out in pairs. One technician should observe the conditions of wheels or wheel stoppers outside the vehicle while the other is performing the test.**
- **Be sure to prevent SST hose from interfering with the exhaust pipe.**
- **This check must be conducted after checking and adjusting the engine.**
- **Perform the test when the A/C is OFF.**
- **When conducting the stall test, do not continue for more than 5 seconds.**

(1) Warm up the ATF (Automatic Transmission Fluid).

(2) Lift the vehicle up.

(3) Remove the engine under cover.

(4) Connect the intelligent tester to the DLC3.

(5) Remove the test plug on the transaxle case front left side and install the SST.

SST 09992-00095 (09992-00231, 09992-00271)

(6) Start the engine.

(7) Shift to the D position, and then use the intelligent tester to hold 3rd gear using active test. Measure the line pressure while the engine is idling.

AX

Specified line pressure:

Condition	D position kPa (kgf/cm^2, psi)
Idling	362 to 412 kPa (3.7 to 4.2 kgf/cm^2, 52 to 60 psi)

(8) Turn the engine switch off.

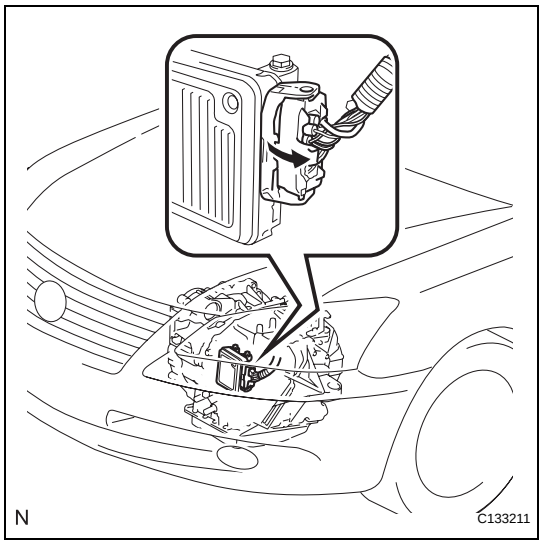

(9) Disconnect the connector of the TCM.
HINT:
Disconnect the connector only when performing the D position stall test.

(10) Start the engine.

(11) Firmly depress the brake pedal, shift to the D position, depress the accelerator pedal all the way down, and check the line pressure while the stall test is performed.

Specified line pressure:

Condition	D position kPa (kgf/cm^2, psi)
Stall test	1,160 to 1,350 kPa (11.8 to 13.8 kgf/cm^2, 168 to 196 psi)

(12) Turn the engine switch off.

(13) Connect the TCM connector, depress the brake pedal firmly, shift to the R position, and check that the line pressure while the engine is idling and during the stall test.

Specified line pressure:

Condition	R position kPa (kgf/cm^2, psi)
Idling	806 to 916 kPa (8.2 to 9.3 kgf/cm^2, 117 to 133 psi)
Stall test	1,890 to 2,000 kPa (19.3 to 20.4 kgf/cm^2, 274 to 290 psi)

(14) Remove the SST, and install the test plug.

(15) Clear the DTC.

Evaluation:

Problem	Possible cause
Measured values are higher than the specified value in all positions	• Shift solenoid valve (SLT) defective • Regulator valve defective
Measured values are lower than the specified value in all positions	• Shift solenoid valve (SLT) defective • Regulator valve defective • Oil pump defective
Pressure is low in the D position only	• D position circuit fluid leak • Clutch No. 1 (C_1) defective
Pressure is low in the R position only	• R position circuit fluid leak • Brake No. 2 (B_2) defective • Brake No. 3 (B_3) defective

MANUAL SHIFTING TEST

1. PERFORM MANUAL SHIFTING TEST

HINT:

- With this test, it can be determined whether trouble occurs in the electrical circuit. Also, trouble can be a mechanical problem in the transaxle.
- If any abnormalities are found in the following test, the problem is in the transaxle itself.

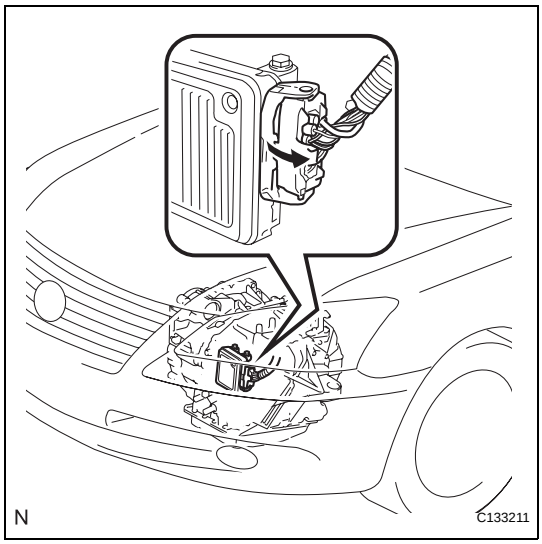

(a) Disconnect the TCM connector.

(b) Drive the vehicle with the TCM disconnected. Shifting the shift lever to the D position to check whether the shifting condition changes as shown in the table below.

Shift Position	Shifting Condition
D	No Shift (No Change)

HINT:
When driving the vehicle with the TCM disconnected, the gear position will be as follows:

- When the shift lever is in the D position, the transmission will stay in 3rd gear.
- When the shift lever is in the R or P position, the transmission will also be in the R or P position respectively.

(c) Connect the connector of the TCM.

(d) Clear the DTC (See page AX-37).

REGISTRATION

NOTICE:

- **When the automatic transaxle is replaced, the transaxle compensation code must be input into the TCM (Proceed to step 1). After the automatic transaxle is reinstalled, the QR code label will be positioned where the code cannot be read. Therefore, before reinstalling the automatic transaxle, record the transaxle compensation codes or input them in the intelligent tester.**
- **When the TCM is replaced, the existing transaxle compensation codes must be input into the new TCM (Proceed to step 2).**

1. INPUT TRANSAXLE COMPENSATION CODE INTO TCM

NOTICE:

Transaxle compensation codes are unique, 60-digit alphanumeric values printed on the QR label. If an incorrect transaxle compensation code is input into the TCM, shift shock may occur.

(a) Record the transaxle compensation code specified on the QR label.
HINT:
The transaxle compensation code is imprinted on the QR label.

(b) Shift the shift lever to the N or P position.

(c) Connect the intelligent tester to the DLC3.

(d) Turn the engine switch on (IG).

(e) Turn the tester on.
NOTICE:
Do not start the engine.

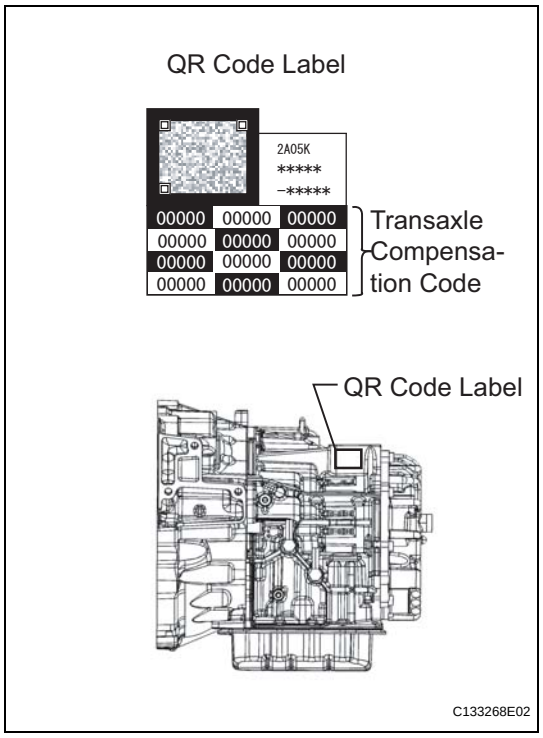

(f) Enter the menu items in this order: DIAGNOSIS / OBD/MOBD / ECT / AT CODE UTILITY.

(g) Press "ENTER".

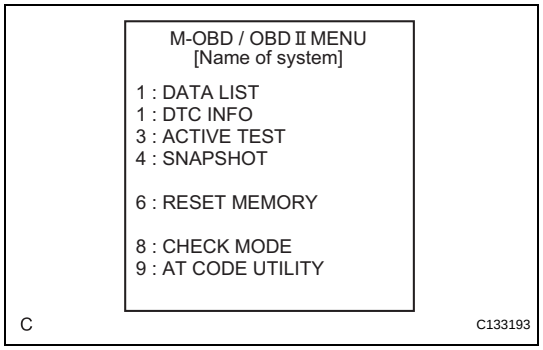

AX

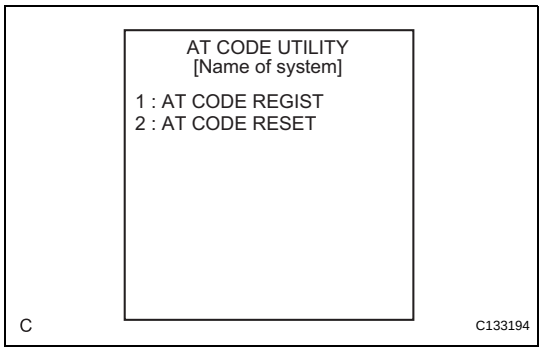

(h) Select "AT CODE REGIST".
(i) Press "ENTER".

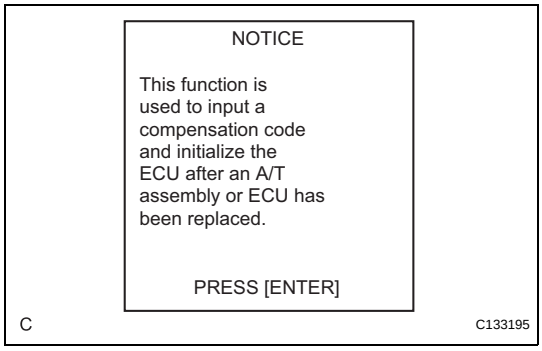

(j) Press "ENTER" again to proceed.

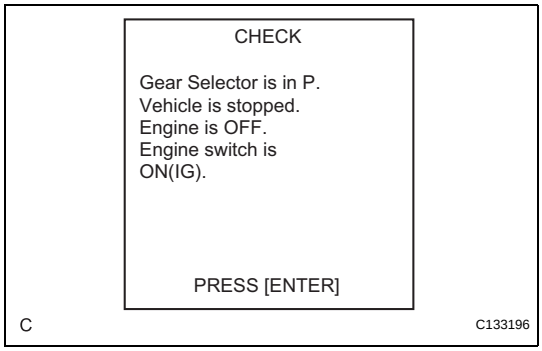

(k) Press "ENTER" again to proceed.

AX

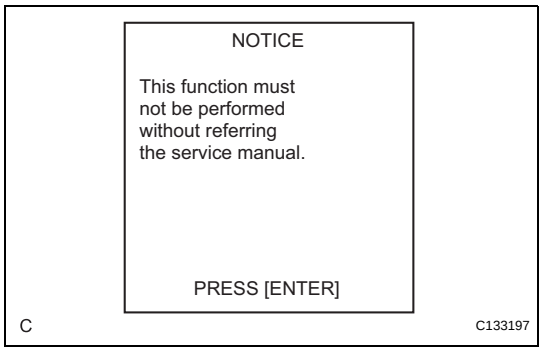

(l) Press "ENTER" again to proceed.

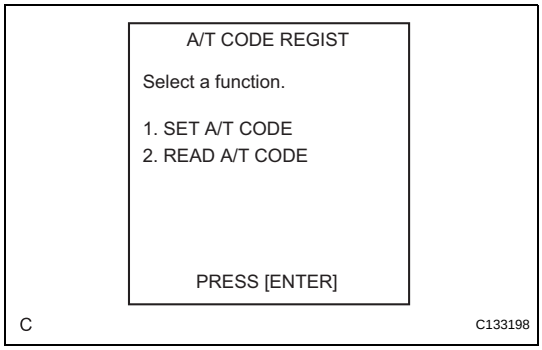

(m) Select "SET A/T CODE".
(n) Press "ENTER".

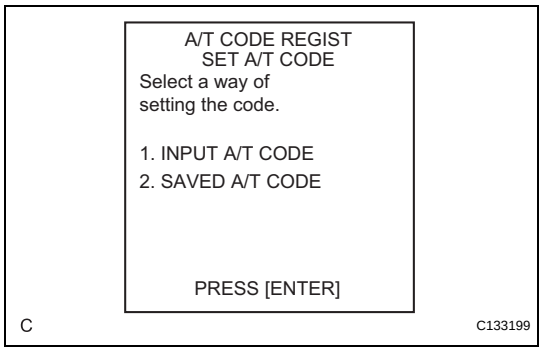

(o) Select "INPUT A/T CODE".
(p) Press "ENTER".

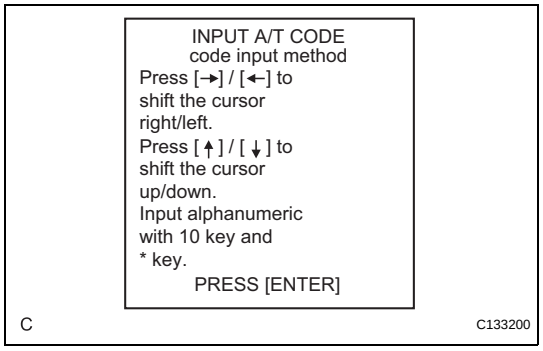

(q) Register the compensation code.
  (1) Press "ENTER".

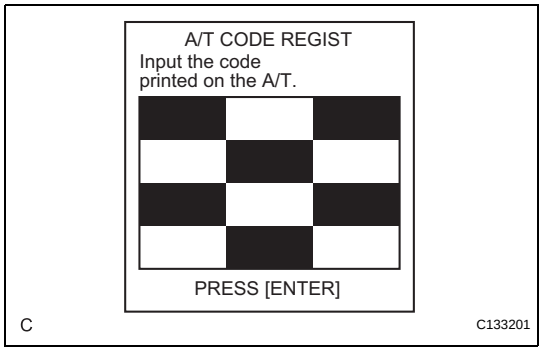

  (2) Manually input the transaxle compensation code. The code is a 60-digit alphanumeric value imprinted on the QR label.

(r) Check that the compensation code displayed on the screen is correct by comparing it with the 60-digit alphanumeric value on the QR label.
NOTICE:
If an incorrect transaxle compensation code is input into the TCM, shift shock will occur.
HINT:
Input alphabetical letters by operating the keys from 0 to 5 while pressing the * key.

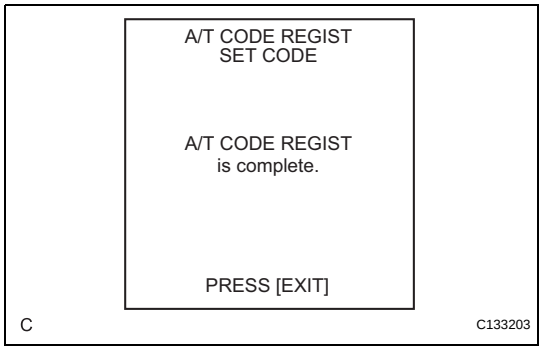

(s) Press "ENTER" to set the compensation code to the TCM.
HINT:
- If the registration process fails, the compensation code may be incorrect. Check the compensation code again.
- If the attempted compensation code is correct, a problem with the wire harness or a bad connection with the DLC3 may cause a registration failure. Check the wire harness and the DLC3 connection. If no problem is found, the TCM may be malfunctioning. Check the TCM and repeat this operation.

2. TRANSFER TRANSAXLE COMPENSATION CODE
NOTICE:
Transaxle compensation codes are 60-digit alphanumeric values imprinted on the QR label. If an incorrect transaxle compensation code is input into the TCM, shift shock may occur.

AX

HINT:
The following operation is available for use with TCMs that can transmit the registered transaxle compensation code to the intelligent tester.

(a) Shift the shift lever to the N or P position.
(b) Connect the intelligent tester to the DLC3.
(c) Turn the engine switch on (IG).
(d) Turn the tester on.
NOTICE:
Do not start the engine.
HINT:
The transaxle compensation code is imprinted on the QR label.

(e) Read the transaxle compensation code.
(1) Enter the menu items in this order:
DIAGNOSIS / OBD/MOBD / ECT / AT CODE UTILITY.
(2) Press "ENTER".

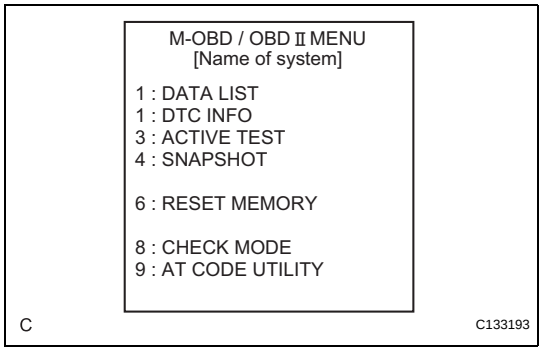

(3) Select "AT CODE REGIST".
(4) Press "ENTER".

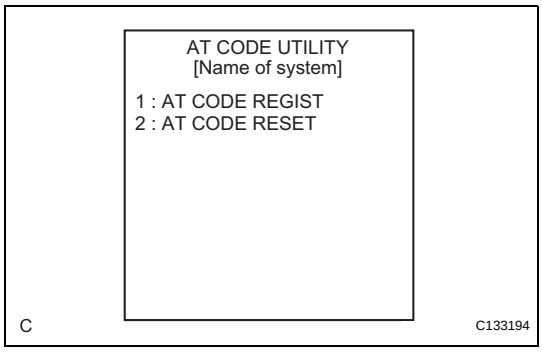

(5) Press "ENTER" again to proceed.

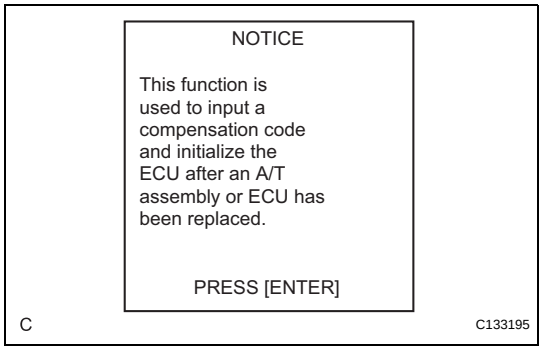

AX

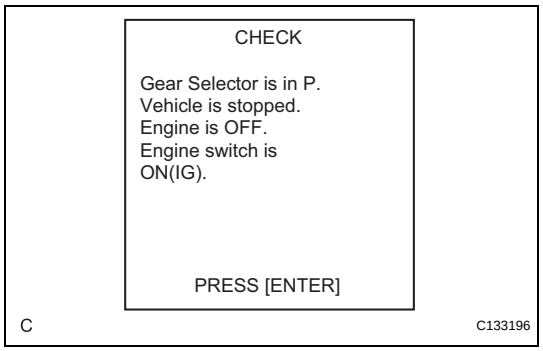

(6) Press "ENTER" again to proceed.

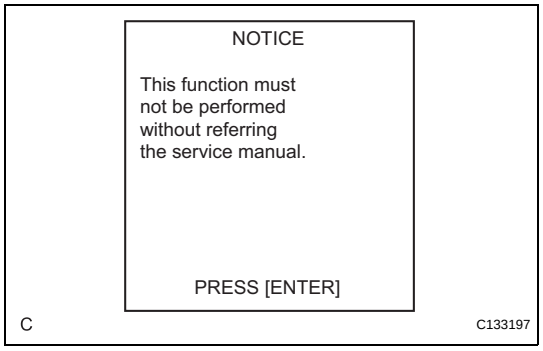

(7) Press "ENTER" again to proceed.

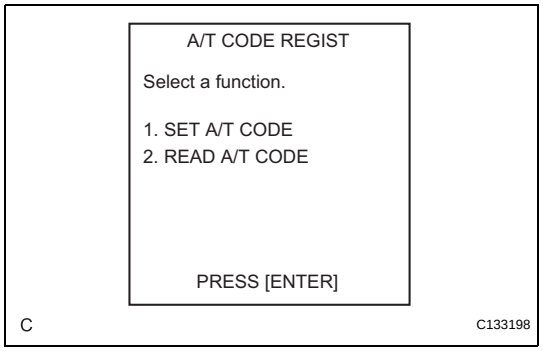

(8) Select "READ A/T CODE".
(9) Press "ENTER".

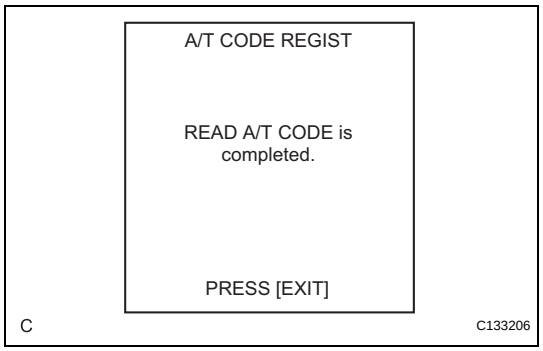

(10) Press "EXIT".
NOTICE:
Do not use the code specified on the transaxle QR label even if the transmission compensation code cannot be read using the intelligent tester. The code printed on an in-service transaxle may not match its current characteristics. Replace the TCM with a new one and perform a road test to allow the TCM to learn.
(11) Turn the engine switch off.

(f) Replace the TCM.

(g) Set the transaxle compensation code.
(1) Turn the engine switch on (IG).
(2) Turn the tester on.

AX

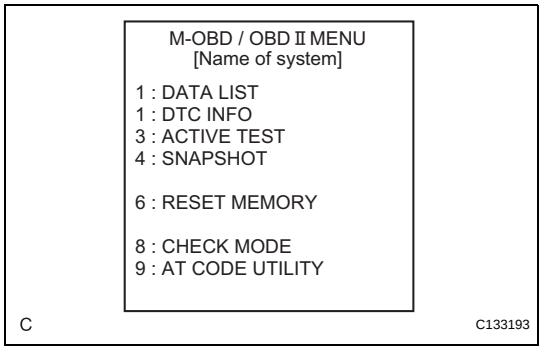

(3) Enter the menu items in this order: DIAGNOSIS / OBD/MOBD / ECT / AT CODE UTILITY.
(4) Press "ENTER".

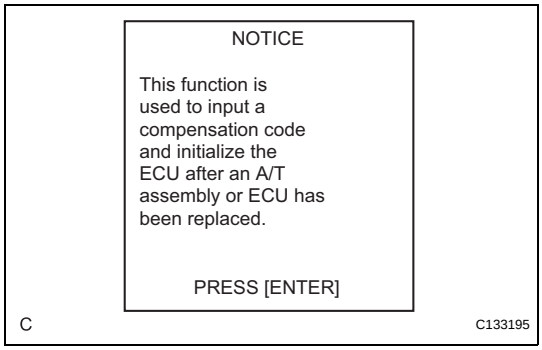

(5) Press "ENTER" again to proceed.

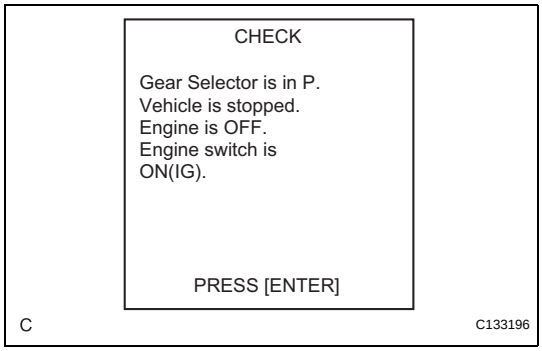

(6) Press "ENTER" again to proceed.

AX

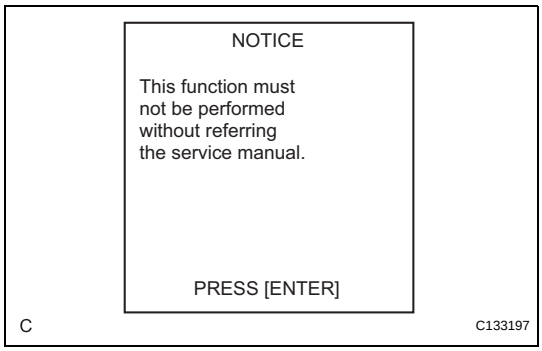

(7) Press "ENTER" again to proceed.

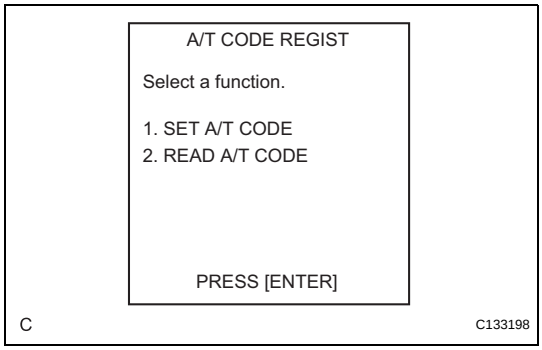

(8) Select "SET A/T CODE".
(9) Press "ENTER".

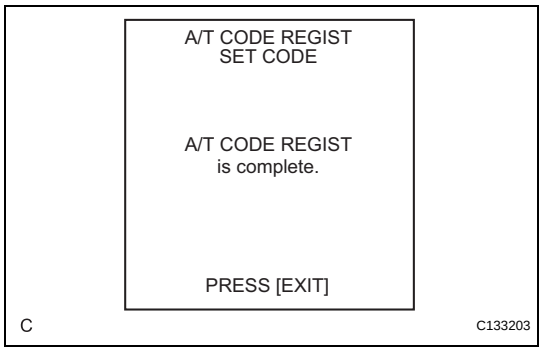

(10) Select "SAVED A/T CODE".
(11) Press "ENTER".

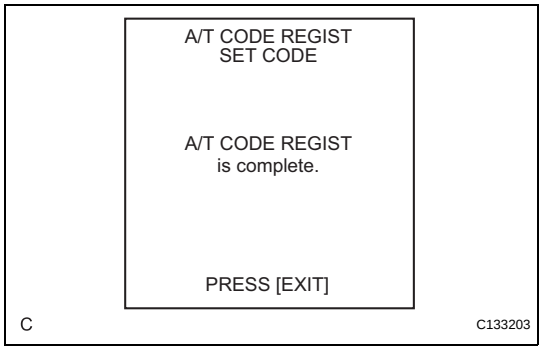

(12) Press "EXIT".

INITIALIZATION

1. RESET TRANSAXLE COMPENSATION CODE

NOTICE:

The transaxle compensation code can be reset only with the intelligent tester.

HINT:

The TCM memorizes the condition that the ECT controls the automatic transaxle assembly and engine assembly according to those characteristics. Therefore, when the automatic transaxle assembly, engine assembly, or TCM has been replaced, it is necessary to reset the memory so that the TCM can memorize the new information.

Reset procedure is as follows:

(a) Shift the shift lever to the N or P position.
(b) Turn the engine switch off.
(c) Connect the intelligent tester to the DLC3.
(d) Turn the engine switch on (IG) and push the intelligent tester main switch on.
(e) Enter the menu items in this order: DIAGNOSIS / OBD/MOBD / ECT / AT CODE UTILITY.

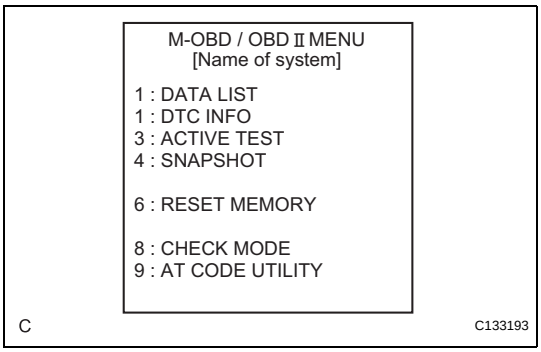

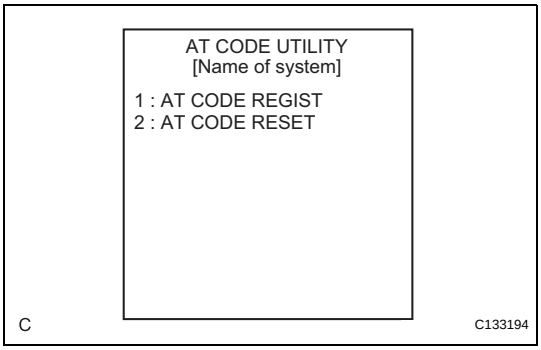

(f) Select "AT CODE RESET".
(g) Press the "ENTER".

CAUTION:

After the transaxle compensation code is reset, be sure to perform a road test to allow the TCM to learn.

2. PERFORM ROAD TEST TO ALLOW TCM TO LEARN

NOTICE:

Perform the following procedures while strictly observing all traffic laws and speed limits.

(a) Warm up the engine.
(b) From a standstill, achieve highest possible speed with the accelerator pedal opened 15% or less. Keep the accelerator pedal angle steady while driving the vehicle.
(c) Repeat the previous step until shift shock no longer occurs.
(d) From a standstill, achieve highest possible speed with the accelerator pedal opened 25% or more. Keep the accelerator pedal angle steady while driving the vehicle.
(e) Repeat the previous step until shift shock no longer occurs.

3. RESET MEMORY

NOTICE:

- **Perform the RESET MEMORY (AT initialization) when replacing the engine assembly.**
- **The RESET MEMORY can be performed only with the intelligent tester.**

HINT:

The ECM memorizes the condition that the ECT controls the automatic transaxle assembly and engine assembly according to those characteristics. Therefore, when the automatic transaxle assembly, engine assembly, or ECM has been replaced, it is necessary to reset the memory so that the ECM can memorize the new information.

(a) Reset procedure is as follows:

(1) Turn the engine switch off.

(2) Connect the intelligent tester to the DLC3.

(3) Turn the engine switch on (IG).

(4) Turn the intelligent tester main switch on.

(5) Select the items "DIAGNOSIS / OBD/MOBD / ECT / RESET MEMORY".

NOTICE:

After performing the RESET MEMORY, be sure to perform the ROAD TEST (See page AX-11) described previously.

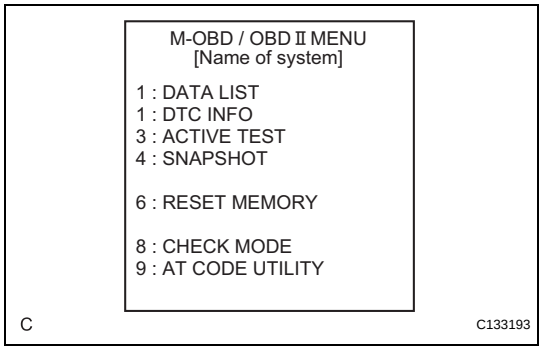

AX

MONITOR DRIVE PATTERN

1. MONITOR DRIVE PATTERN FOR ECT TEST

(a) Perform this drive pattern as one method to simulate the detection conditions of the ECT malfunctions. (The DTCs may not be detected due to differences from the actual driving conditions. Some codes may not be detected using this drive pattern.)

HINT:

Preparation for driving

- Warm up the engine sufficiently. (Engine coolant temperature should be 60°C (140°F) or higher.)
- Drive the vehicle when the atmospheric temperature is -10°C (14°F) or higher. (Malfunction may not be detected when the atmospheric temperature is less than -10°C (14°F).)

Notice on driving

- Drive the vehicle through all gears.
  Stop to 1st to 2nd to 3rd to 4th to 5th to 6th (lock-up ON).
- Confirm engine braking using the S position.
  While driving in the 6 (S) position and 6th gear lock-up, shift to the "-" position to down-shift from 6th to 5th, 5th to 4th, 4th to 3rd, 3rd to 2nd, 2nd to 1st.
  Check that proper engine braking occurs whenever down-shift takes place.
- Repeat the above driving pattern three times or more.

NOTICE:

- **The monitor status can be checked using the intelligent tester. When using the intelligent tester, monitor status can be found in "OBD/ MOBD / ECT / DATA LIST".**
- **In the event that the drive pattern must be interrupted (possibly due to traffic conditions or other factors), the drive pattern can be resumed and, in most cases, the monitor can be completed.**
- **Perform this drive pattern on a road with the fewest hills possible and strictly observe the posted speed limits and traffic laws while driving.**

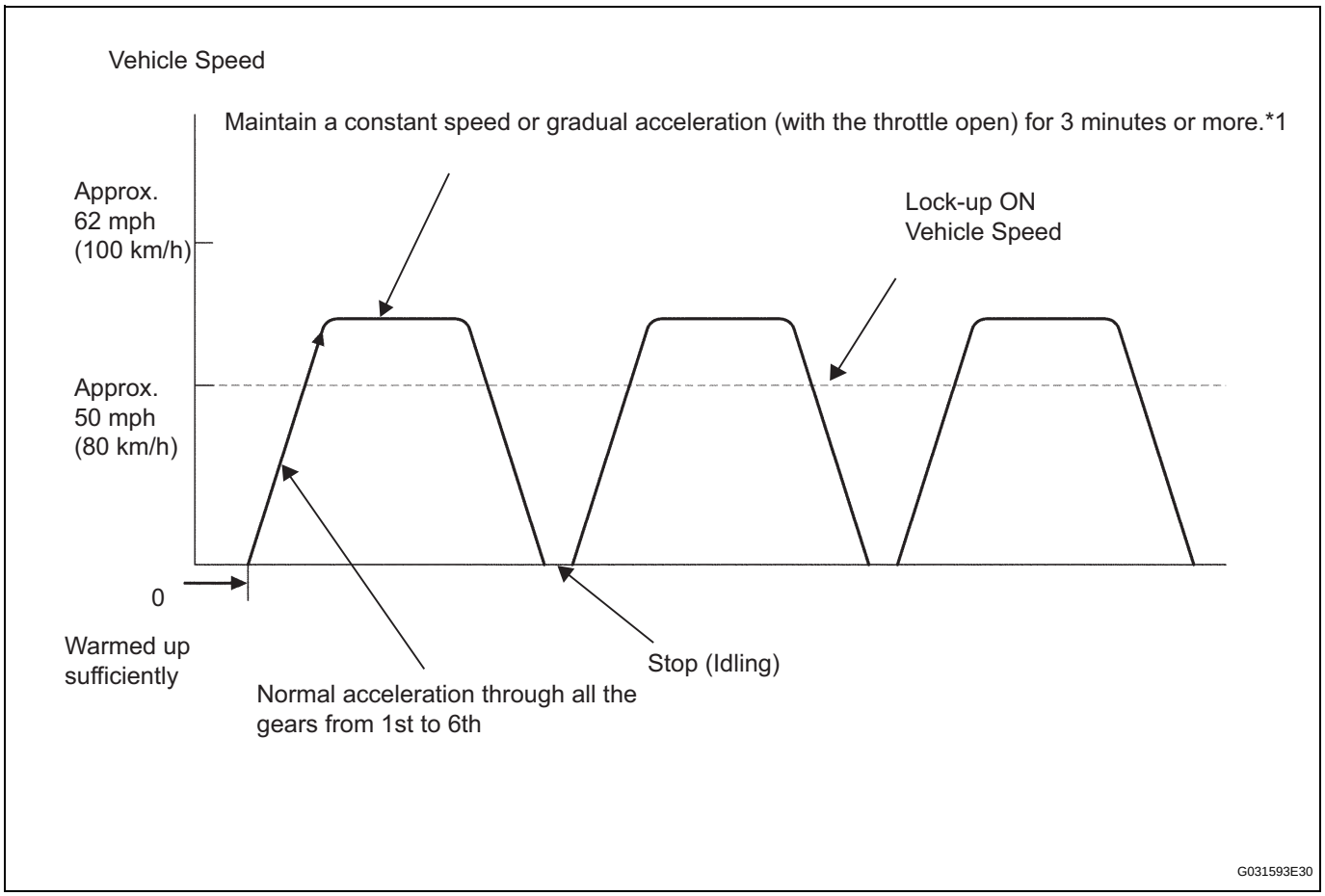

HINT:
*1: Drive the vehicle at a sufficient speed in the uppermost gear, to allow lock-up to engage. The vehicle can be driven at a speed lower than that in the above diagram under the lock-up condition.

NOTICE:
It is necessary to drive the vehicle for approximately 30 minutes to detect DTC P0711 (ATF temperature sensor malfunction).

PROBLEM SYMPTOMS TABLE

HINT:
If a normal code is displayed during the diagnostic trouble code check although the problem or symptom still occurs, check the electrical circuits for each symptom in the order given in the charts on the following pages. Proceed to the page given in the chart and perform troubleshooting.
The Matrix Chart is divided into 2 chapters.
Chapter 1:
Refer to the table below when the trouble cause is considered to be electrical.
If the instruction "Proceed to next circuit inspection shown on matrix chart" is given in the flow chart of each circuit, proceed to the circuit with the next highest number in the table to continue the check.
If the trouble still occurs even though there are no abnormalities in any of the other circuits, check and replace the TCM.
Chapter 2:
Chapter 2 covers on-and off-vehicle repair of the transaxle.
Contents specified in the table below may not match while fail-safe control is operating.

1. Chapter 1: Electronic Circuit Matrix Chart

Symptom	Suspected Area	See page
No up-shift (1st to 2nd)	1. Shift solenoid valve (SL3) circuit *1	AX-117
	2. TCM	IN-34
No up-shift (2nd to 3rd)	1. Shift solenoid valve (SL4) circuit *1	AX-160
	2. TCM	IN-34
No up-shift (3rd to 4th)	1. Shift solenoid valve (SL2) circuit *1	AX-104
	2. Engine coolant temp. sensor circuit *1	ES-141
	3. TCM	IN-34
No up-shift (4th to 5th)	1. Shift solenoid valve (SL1) circuit *1	AX-96
	2. Shift solenoid valve (SL4) circuit *1	AX-160
	3. Engine coolant temp. sensor circuit	ES-141
	4. TCM	IN-34
No up-shift (5th to 6th)	1. Engine coolant temp. sensor circuit *1	ES-141
	2. Shift solenoid valve (SL3) circuit *1	AX-117
	3. Shift solenoid valve (SL4) circuit *1	AX-160
	4. TCM	IN-34
No down-shift (6th to 5th)	1. Shift solenoid valve (SL4) circuit *1	AX-160
	2. TCM	IN-34
No down-shift (5th to 4th)	1. Shift solenoid valve (SL1) circuit *1	AX-96
	2. TCM	IN-34
No down-shift (4th to 3rd)	1. Shift solenoid valve (SL2) circuit *1	AX-104
	2. Shift solenoid valve (SL4) circuit *1	AX-160
	3. TCM	IN-34
No down-shift (3rd to 2nd)	1. Shift solenoid valve (SL4) circuit *1	AX-160
	2. Shift solenoid valve (SL3) circuit *1	AX-117
	3. TCM	IN-34
No down-shift (2nd to 1st)	1. Shift solenoid valve (SL3) circuit *1	AX-112
	2. TCM	IN-34

Symptom	Suspected Area	See page
No lock-up	1. Shift solenoid valve (SLU) circuit *1	AX-148
	2. Shift solenoid valve (SL) circuit	AX-151
	3. Engine coolant temp. sensor circuit *1	ES-141
	4. Stop light switch circuit *1	AX-83
	5. Speed sensor NT circuit *1	AX-78
	6. TCM	IN-34
No lock-up off	1. TCM	IN-34
Shift point too high or too low	1. Shift solenoid valve (SLT) circuit *1	AX-140
	2. Speed sensor NT circuit *1	AX-78
	3. Speed sensor NC circuit *1	AX-107
	4. Accelerator pedal position sensor circuit *1	ES-337
	5. ATF temperature sensor circuit *1	AX-67
	6. TCM	IN-34
Up-shift from 3rd to 4th while engine is cold	1. Engine coolant temp. sensor circuit *1	ES-141
	2. TCM	IN-34
Up-shift from 4th to 5th while engine is cold	1. Engine coolant temp. sensor circuit *1	ES-141
	2. TCM	IN-34
No gear change by shifting into "+" or "-" while shifting the lever	1. Transmission control switch circuit	AX-166
	2. TCM	IN-34
Harsh engagement (N to D)	1. Shift solenoid valve (SL1) circuit *1	AX-96
	2. TCM	IN-34
Harsh engagement (Lock-up)	1. Speed sensor NT circuit *1	AX-78
	2. Speed sensor NC circuit *1	AX-107
	3. Shift solenoid valve (SLU) circuit *1	AX-148
	4. TCM	IN-34
Harsh engagement (Any driving position)	1. Accelerator pedal position sensor circuit *1	ES-337
	2. Shift solenoid valve (SLT) circuit *1	AX-140
	3. Speed sensor NC circuit	AX-107
	4. Speed sensor NT circuit *1	AX-78
	5. TCM	IN-34
Poor acceleration	1. Shift solenoid valve (SLT) circuit *1	AX-140
	2. TCM	IN-34
No engine brake	1. TCM	IN-34
No kick-down	1. TCM	IN-34
Engine stalls when starting off or stopping	1. TCM	IN-34
Malfunction in shifting	1. Park/neutral position switch circuit *1	AX-170
	2. Transmission control switch circuit	AX-166
	3. TCM	IN-34
Slip or shudder (5th to 6th and 6th to 5th)	1. Shift solenoid valve (SLT) circuit *1	AX-140
Initial acceleration or subsequent acceleration is improper. Vehicle is stuck in a gear (1st to 6th).	1. Shift solenoid valve (SL1) circuit	AX-96
	2. Shift solenoid valve (SLT) circuit	AX-140
	3. TCM	IN-34
Acceleration is improper when the gear is 4th or higher.	1. Shift solenoid valve (SL2) circuit	AX-104
	2. Shift solenoid valve (SLT) circuit	AX-140
	3. TCM	IN-34
Initial acceleration or subsequent acceleration is improper. Vehicle does not shift down (from 4th to 3rd). Vehicle is stuck in a gear (1st to 6th).	1. Shift solenoid valve (SL2) circuit	AX-104
	2. TCM	IN-34
Acceleration is improper when the gear is 6th.	1. Shift solenoid valve (SL3) circuit	AX-117
	2. TCM	IN-34

Symptom	Suspected Area	See page
Acceleration is improper when the gear is 3rd or 5th.	1. Shift solenoid valve (SL4) circuit *1	AX-160
	2. Shift solenoid valve (SLT) circuit *1	AX-140
	3. TCM	IN-34
Initial acceleration or subsequent acceleration is improper. Vehicle does not shift down (from 3rd to 2nd). No up-shift (5th to 6th).	1. Shift solenoid valve (SL4) circuit *1	AX-160
	2. TCM	IN-34

HINT:
*1: When the circuit is defective, a DTC may be output.

2. Chapter 2: On-Vehicle Repair and Off-Vehicle Repair

Symptom	Suspected Area	See page
Vehicle does not move in any forward and reverse positions.	1. Valve body assembly	AX-192
	2. Torque converter clutch	AX-248
Vehicle does not move in R position.	1. Valve body assembly	AX-192
	2. Brake No. 2 (B2)	AX-283
	3. Brake No. 3 (B3)	AX-283
	4. Shift solenoid valve (SL4)*1	AX-154
No up-shift (1st to 2nd)	1. Valve body assembly	AX-192
	2. Brake No. 1 (B1)	AX-260
	3. Shift solenoid valve (SL3)*1	AX-112
No up-shift (2nd to 3rd)	1. Valve body assembly	AX-192
	2. Brake No. 3 (B3)	AX-283
	3. Shift solenoid valve (SL4)*1	AX-154
No up-shift (3rd to 4th)	1. Valve body assembly	AX-192
	2. Clutch No. 2 (C2)	AX-283
	3. Shift solenoid valve (SL2)*1	AX-99
No up-shift (4th to 5th	1. Valve body assembly	AX-192
	2. Brake No. 3 (B3)	AX-283
	3. Shift solenoid valve (SL4)*1	AX-154
	4. Shift solenoid valve (SL1)*1	AX-91
No up-shift (5th to 6th)	1.Valve body assembly	AX-192
	2. Brake No. 1 (B1)	AX-283
	3. Shift solenoid valve (SL3)*1	AX-112
	4. Shift solenoid valve (SL4)*1	AX-154
No down-shift (6th to 5th)	1. Valve body assembly	AX-192
	2. Brake No. 3 (B3)	AX-283
	3. Shift solenoid valve (SL4)*1	AX-154
No down-shift (5th to 4th)	1. Valve body assembly	AX-192
	2. Shift solenoid valve (SL1)*1	AX-283
	3. Clutch No. 1 (C1)	AX-91
No down-shift (4th to 3rd)	1. Valve body assembly	AX-192
	2. Brake No. 3 (B3)	AX-283
	3. Shift solenoid valve (SL4)*1	AX-154
	4. Shift solenoid valve (SL2)*1	AX-99
No down-shift (3rd to 2nd)	1. Valve body assembly	AX-192
	2. Brake No. 1 (B1)	AX-283
	3. Shift solenoid valve (SL3)*1	AX-112
	4. Shift solenoid valve (SL4)*1	AX-154
No down-shift (2nd to 1st)	1. Valve body assembly	AX-192
	2. Shift solenoid valve (SL3)*1	AX-112

Symptom	Suspected Area	See page
No lock-up, or no lock-up off	1. Valve body assembly	AX-192
	2. Torque converter clutch	AX-248
Harsh engagement (N to D)	1. Valve body assembly	AX-192
	2. C1 accumulator	AX-283
	3. One-way clutch No. 1 (F1)	AX-283
	4. Clutch No. 1 (C1)	AX-283
	5. Shift solenoid valve (SL1)*1	AX-91
Harsh engagement (Lock-up)	1. Valve body assembly	AX-192
	2. Torque converter clutch	AX-248
	3. Shift solenoid valve (SLU)*1	AX-143
Harsh engagement (N to R)	1. Valve body assembly	AX-192
	2. Brake No. 2 (B2)	AX-283
	3. Brake No. 3 (B3)	AX-283
	4. Shift solenoid valve (SL4)*1	AX-154
Harsh engagement (1 to 2 to 3 to 4 to 5 to 6)	1. Valve body assembly	AX-192
	2. Shift solenoid valve (SLT)*1	AX-133
Harsh engagement (1st to 2nd)	1. Valve body assembly	AX-192
	2. B1 accumulator	AX-283
	3. Brake No. 1 (B1)	AX-283
	4. Shift solenoid valve (SL3)*1	AX-112
Harsh engagement (2nd to 3rd)	1. Valve body assembly	AX-192
	2. B3 accumulator	AX-283
	3. Brake No. 3 (B3)	AX-283
	4. Shift solenoid valve (SL4)*1	AX-154
Harsh engagement (3rd to 4th)	1. Valve body assembly	AX-192
	2. C2 accumulator	AX-283
	3. Clutch No. 2 (C2)	AX-283
	4. Shift solenoid valve (SL2)*1	AX-99
Harsh engagement (4th to 5th)	1. Valve body assembly	AX-192
	2. B3 accumulator	AX-283
	3. Brake No. 3 (B3)	AX-283
	4. Shift solenoid valve (SL4)*1	AX-154
Harsh engagement (5th to 6th)	1. Valve body assembly	AX-192
	2. B1 accumulator	AX-283
	3. Brake No. 1 (B1)	AX-283
	4. Shift solenoid valve (SL3)*1	AX-112
Harsh engagement (6th to 5th)	1. Valve body assembly	AX-192
	2. B3 accumulator	AX-283
	3. Brake No. 3 (B3)	AX-283
	4. Shift solenoid valve (SL4)*1	AX-154
Slip or shudder (Forward and reverse: After warm-up)	1. Valve body assembly	AX-192
	2. Oil strainer	AX-192
	3. Brake No. 1 (B1)	AX-283
	4. Brake No. 2 (B2)	AX-283
	5. Brake No. 3 (B3)	AX-283
	6. One-way clutch No. 1 (F1)	AX-283
	7. Clutch No. 1 (C1)	AX-283
	8. Clutch No. 2 (C2)	AX-283
Slip or shudder (Particular position: just after engine starts)	1. Torque converter clutch	AX-248

Symptom	Suspected Area	See page
Slip or shudder (R position)	1. Brake No. 2 (B2)	AX-283
	2. Brake No. 3 (B3)	AX-283
Slip or shudder (1 position)	1. One-way clutch No. 1 (F1)	AX-283
	2. Clutch No. 1 (C1)	AX-283
Slip or shudder (2 position)	1. Brake No. 1 (B1)	AX-283
	2. Clutch No. 1 (C1)	AX-283
Slip or shudder (3 position)	1. Brake No. 3 (B3)	AX-283
	2. Clutch No. 1 (C1)	AX-283
Slip or shudder (4 position)	1. Clutch No. 1 (C1)	AX-283
	2. Clutch No. 2 (C2)	AX-283
Slip or shudder (5 position)	1. Brake No. 3 (B3)	AX-283
	2. Clutch No. 2 (C2)	AX-283
Slip or shudder (6 position)	1. Brake No. 3 (B3)	AX-283
	2. Clutch No. 2 (C2)	AX-283
No engine braking (1st position)	1. Valve body assembly	AX-192
	2. Brake No. 2 (B2)	AX-283
No engine braking (2nd position)	1. Valve body assembly	AX-192
	2. Brake No. 1 (B1)	AX-215
No engine braking (3rd position)	1. Valve body assembly	AX-192
	2. Brake No. 3 (B3)	AX-283
No engine braking (4th position)	1. Valve body assembly	AX-192
	2. Clutch No. 2 (C2)	AX-283
No kick-down	1. Valve body assembly	AX-192
Shift point too hight or too low	1. Valve body assembly	AX-192
Poor acceleration (All positions)	1. Valve body assembly	AX-192
	2. Torque converter clutch	AX-283
Poor acceleration (6th)	1. Brake No. 1 (B1)	AX-283
	2. Clutch No. 2 (C2)	AX-283
Engine stalls when starting off or stopping	1. Valve body assembly	AX-192
	2. Torque converter clutch	AX-248

HINT:
*1: When the circuit is defective, a DTC may be output.

7. CHECK MIL

(a) Check that the MIL illuminates when turning the engine switch on (IG).
If the MIL does not illuminate, there is a problem in the MIL circuit (See page ES-465).

(b) When the engine is started, the MIL should turn off.

DTC CHECK / CLEAR

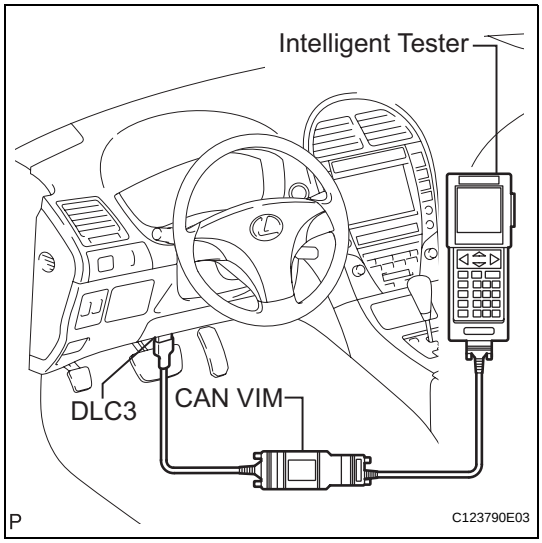

1. CHECK DTC

(a) DTCs which are stored in the TCM can be displayed with the intelligent tester.
These scan tools can display pending DTCs and current DTCs. Some DTCs are not stored if the TCM doesn't detect a malfunction during consecutive driving. However, the malfunction detected while a driving is stored as a pending DTC.

(1) Connect the intelligent tester to the Controller Area Network Vehicle Interface Module (CAN VIM). Then connect the CAN VIM to the Data Link Connector 3 (DLC3).

(2) Turn the engine switch on (IG).

(3) Enter the following menus: DIAGNOSIS / OBD / MOBD / ECT / DTC INFO / CURRENT CODES (or PENDING CODE).

(4) Confirm the DTCs and freeze frame data and then write them down.

(5) Confirm the details of the DTCs (See page AX-45).

NOTICE:
When a symptom has been duplicated using normal mode, use the intelligent tester to check for DTCs. For DTCs that are subject to "2-trip detection logic", perform the following steps:
Turn the engine switch OFF after the symptom has occurred once. Repeat the process of attempting to duplicate the symptom. When the problem or symptom happens for the second time and a DTC has been recorded, the MIL will illuminate, and the code will be stored.

2. CLEAR DTC

(a) Connect the intelligent tester to the CAN VIM. Then connect the CAN VIM to the DLC3.

(b) Turn the engine switch on (IG).

(c) Enter the following menus: DIAGNOSIS / OBD / MOBD / ECT / DTC INFO / CLEAR CODES and press YES.

CHECK MODE PROCEDURE

1. DESCRIPTION

(a) Check mode has a higher sensitivity to malfunctions and can detect malfunctions that normal mode cannot detect. Check mode can also detect all the malfunctions that normal mode can detect. In check mode, DTCs are detected with 1-trip detection logic.

2. CHECK MODE PROCEDURE

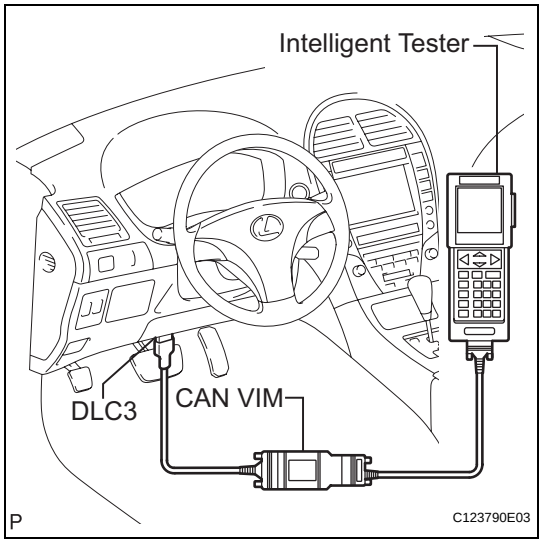

(a) Make sure that the items below are satisfied:
  (1) Battery positive voltage is 11 V or more
  (2) Throttle valve is fully closed
  (3) Transaxle is in the P or N position
  (4) A/C is switched OFF
(b) Turn the engine switch off.
(c) Connect the intelligent tester together with the Controller Area Network Vehicle Interface Module (CAN VIM) to the DLC3.
(d) Turn the engine switch on (IG).
(e) Enter the following menus: DIAGNOSIS / OBD/ MOBD / ECT / CHECK MODE.

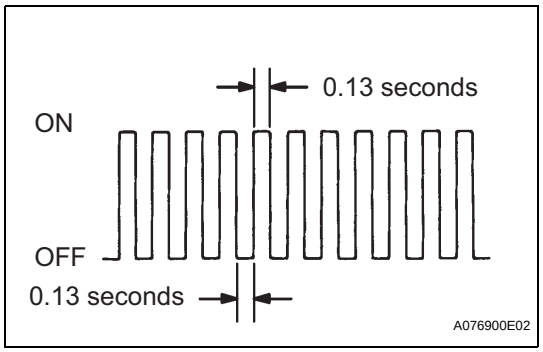

(f) Change the TCM to check mode. Make sure that the MIL flashes as shown in the illustration.
NOTICE:
All DTCs and freeze frame data recorded will be erased if: 1) the intelligent tester is used to change the TCM from normal mode to check mode or vice-versa; or 2) during check mode, the engine switch is turned from on (IG) to on (ACC) or off.
Before entering check mode, make notes of any DTCs and freeze frame data that are present.
(g) Start the engine. The MIL should turn off after the engine starts.
(h) Perform "MONITOR DRIVE PATTERN" for the ECT test (See page AX-26).
(Or, duplicate the conditions of the malfunction described by the customer.)
(i) After duplicating the malfunction conditions, use the intelligent tester diagnosis selector to check the DTC and freeze frame data.

FAIL-SAFE CHART

1. Fail-safe

This function minimizes the loss of operation when any abnormality occurs in a sensor or solenoid.

Fail-safe Control List

Malfunction Part	Function
Input Turbine Speed Sensor	Shifting to only either the 1st or 3rd gear is allowed.
Counter Gear Speed Sensor	• The counter gear speed is determined based on the signals from the skid control ECU (speed sensor signals). • Shifting between 1st to 4th gears is allowed.
ATF Temp. Sensor	Shifting between 1st to 4th gears is allowed.
ECT ECU Power Supply (Voltage is Low)	When the vehicle is being driven in 6th gear, the transaxle is fixed in 6th gear. When being driven in any of the 1st to 5th gears, the transaxle is fixed in 5th gear.
CAN Communication	Shifting to only either 1st or 3rd gear is allowed.
Knock Sensor	Shifting between 1st to 4th gear is allowed.
Solenoid Valve SL1, SL2, SL3 and SL4	The current to the failed solenoid valve is cut off and operating the other solenoid valves with normal operation performs shift control. (Shift controls in fail-safe mode are described in the table on the next page. For details, refer to Fail-Safe Control Chart)

Solenoid Valve Operation when Normal:

Gear Position		1st	2nd	3rd	4th	5th	6th
Solenoid	SL1	ON	ON	ON	ON	OFF	OFF
	SL2	OFF	OFF	OFF	ON	ON	ON
	SL3	OFF	ON	OFF	OFF	OFF	ON
	SL4	OFF	OFF	ON	OFF	ON	OFF

Fail-safe Control Chart:

	Gear Position in Normal Operation	1st	2nd	3rd	4th	5th	6th
SL1	ON Malfunction (without Fail-safe Control) *1	1st	2nd	3rd	4th	4th	4th
	OFF Malfunction (without Fail-safe Control)	1st to N	2nd to N	3rd to N	4th to N	5th	6th
	Fail-safe Control during OFF Malfunction	Fixed in 3rd or 5th					
	Fail-safe Control during OFF Malfunction (ATF Pressure Switches 1 and 2 Malfunctions)	Fixed in 3rd or 5th					
SL2	ON Malfunction (without Fail-safe Control) *1	1st to 4th	2nd to 4th	3rd to 4th	4th	5th	6th
	OFF Malfunction (without Fail-safe Control)	1st	2nd	3rd	4th to 1st	5th to N	6th to N
	Fail-safe Control during OFF malfunction	1st	2nd	3rd	3rd	3rd	3rd
	Fail-safe Control during OFF Malfunction (ATF Pressure Switches 1 and 2 Malfunctions)	Fixed in 2nd or 3rd					
SL3	ON Malfunction (without Fail-safe Control) *1	1st to 2nd	2nd	3rd	4th	5th	6th
	OFF Malfunction (without Fail-safe Control)	1st	2nd to 1st	3rd	4th	5th	6th to N
	Fail-safe Control during OFF malfunction	1st	3rd	3rd	4th	5th	5th
	Fail-safe Control during OFF Malfunction (ATF Pressure Switches 1 and 2 Malfunctions)	Fixed in 3rd					

	Gear Position in Normal Operation	1st	2nd	3rd	4th	5th	6th
SL4	ON Malfunction (without Fail-safe Control)*1	3rd	3rd	3rd	4th	5th	5th
	OFF Malfunction (without Fail-safe Control)	1st	2nd	3rd to 1st	4th	5th to N	6th
	Fail-safe Control during OFF malfunction	1st *2	2nd *2	4th*2	4th*2	6th	6th
	Fail-safe Control during OFF Malfunction (ATF Pressure Switches 1 and 2 Malfunctions)	Fixed in 2nd					

*1: Fail-safe control is not actuated when the ON malfunction occurs.

*2: Shifting to 5th and 6th gears is prohibited.

DATA LIST / ACTIVE TEST

1. DATA LIST

HINT:
Using the DATA LIST using the intelligent tester allows switch, sensor, actuator and other item values to be read without removing any parts. Reading the DATA LIST early in troubleshooting is one way to save labor time.

NOTICE:
In the table below, the values listed under "Normal Condition" are reference values. Do not depend solely on these reference values when deciding whether a part is faulty.

(a) Warm up the engine.
(b) Turn the engine switch off.
(c) Connect the intelligent tester together with the CAN VIM (Controller Area Network Vehicle Interface Module) to the DLC3.
(d) Turn the engine switch on (IG).
(e) Turn the tester on.
(f) Enter the following menus: "DIAGNOSIS / OBD/ MOBD / ECT / DATA LIST".
(g) According to the display on the tester, read "DATA LIST".

Tester Display	Measurement Item/Range	Normal Condition	Diagnostic Note
CALC LOAD	Calculated load by ECM: Min.: 0%, Max.: 100%	• 15.0 to 35.0%: Idling • 10.0 to 30.0%: Running without load (2,000 rpm)	-
ENGINE SPD	Engine speed: Min.: 0 rpm, Max.: 16,383.75 rpm	550 to 800 rpm: Idling	-
VEHICLE SPD	Vehicle speed: Min.: 0 km/h, Max.: 255 km/h	Actual vehicle load	-
COOLANT TEMP	Engine coolant temperature: Min.: -40°C (-40°F), Max.: 140°C (284°F)	80 to 105°C (176 to 221°F): After warming up	• If value is -40°C (-40°F): sensor circuit open • If value is 140°C (284°F): sensor circuit shorted
THROTTLE POS	Throttle position: Min.: 0%, Max.: 100%	10 to 22%: Idling	Calculated value based on VTA1
THROTTLE POS	Throttle position: Min.: 0%, Max.: 100%	• 0%: Accelerator pedal released • 64 to 96%: Accelerator pedal fully depressed	Recognition valve for throttle opening angle on ECM
SPD (NC)	Min.: 0 rpm, Max.: 12,750 rpm	-	-
SPD (NT)	Input turbine speed/ display: 50 r/min	HINT: • Lock-up ON (After warming up the engine): Input turbine speed (NT) equal to the engine speed. • Lock-up OFF (Idling at N position): Input turbine speed (NT) nearly equal to the engine speed.	-
CTP SW	Closed throttle position switch: ON or OFF	• ON: Throttle fully closed • OFF: Throttle open	-

Tester Display	Measurement Item/Range	Normal Condition	Diagnostic Note
PNP SW [NSW]	PNP switch status/ ON or OFF	Shift lever position is; P and N: ON Except P and N: OFF	When the shift lever position displayed on the intelligent tester differs from the actual position, adjustment of the PNP switch or the shift cable may be incorrect. HINT: When the failure still occurs even after adjusting these parts, see page AX-177.
STOP LIGHT SW	Stop light switch status/ ON or OFF	• Brake pedal is depressed: ON • Brake pedal is released: OFF	-
BATTERY VOLTAGE	Battery voltage: Min.: 0, Max.: 65.535 V	9 to 14 V: Idling	-
TC/TE1	TC and TE1 terminals of DLC3: ON or OFF	-	Active Test support data
FC IDL	Fuel cut idle: ON or OFF	ON: Fuel cut operating	FC IDL= "ON" when throttle valve fully closed and engine speed over 2,800 rpm
FC TAU	Fuel cut TAU (Fuel cut during very light load):	ON: Fuel cut operating	Fuel cut being performed under very light load to prevent engine combustion from becoming incomplete
SHIFT	ECM gear shift command/ 1st, 2nd, 3rd, 4th, 5th or 6th	Shift lever position is; • D: 1st, 2nd, 3rd, 4th, 5th or 6th • S: 1st, 2nd, 3rd, 4th, 5th or 6th	-
REVERSE	PNP switch status/ ON or OFF	Shift lever position is; R: ON Except R: OFF	When the shift lever position displayed on the intelligent tester differs from the actual position, adjustment of the PNP switch or the shift cable may be incorrect. HINT: When the failure still occurs even after adjusting these parts, see page AX-170.
PARKING	PNP switch status/ ON or OFF	Shift lever position is; P: ON Except P: OFF	When the shift lever position displayed on the intelligent tester differs from the actual position, adjustment of the PNP switch or the shift cable may be incorrect. HINT: When the failure still occurs even after adjusting these parts, see page AX-170.
NEUTRAL	PNP switch status/ ON or OFF	Shift lever position is; N: ON Except N: OFF	When the shift lever position displayed on the intelligent tester differs from the actual position, adjustment of the PNP switch or the shift cable may be incorrect. HINT: When the failure still occurs even after adjusting these parts, see page AX-170.
DRIVE	PNP switch status/ ON or OFF	Shift lever position is; D and S: ON Except D and S: OFF	When the shift lever position displayed on the intelligent tester differs from the actual position, adjustment of the PNP switch or the shift cable may be incorrect. HINT: When the failure still occurs even after adjusting these parts, see page AX-170.

Tester Display	Measurement Item/Range	Normal Condition	Diagnostic Note
SPORTS UP SW	Sport shift up switch status/ ON or OFF	• Press continuously "+" (Up shift): ON • Release "+" (Up shift): OFF	-
SPORTS DOWN SW	Sport shift down switch status/ ON or OFF	• Press continuously "-" (Down shift): ON • Release "-" (Down shift): OFF	-
MODE SELECT SW	Sport mode select switch status/ ON or OFF	Shift lever position is; S, "+" and "-": ON Except S, "+" and "-": OFF	-
TPS 1 SW	0: OFF / 1: ON	Gear position 1st, 2nd, 3rd or 4th: ON Gear position 5th or 6th: OFF	-
TPS 2 SW	0: OFF / 1: ON	Gear position 4th, 5th or 6th: ON Gear position 1st, 2nd or 3rd: OFF	-
TPS 3 SW	0: OFF / 1: ON	Shift solenoid valve SLU is ON: ON Shift solenoid valve SLU is OFF: OFF	-
A/T OIL TEMP 1	ATF temp. sensor value/ min.: -40°C (-40°F) max.: 215°C (419°F)	• After stall test; Approx. 80°C (176°F) • Equal to ambient temperature when cold soak	If the value is "-40°C (-40°F)" or "215°C (419°F)", ATF temp. sensor circuit is open or shorted.
NT SENS VOL	Min.: 0 V, Max.: 5 V	0.1 to 1.9 V	-
NC SENS VOL	Min.: 0 V, Max.: 5 V	0.1 to 1.9 V	-
ATF	0: OFF / 1: ON		-
LOCK UP	0: OFF / 1: ON	Lock up: ON	-
LOCK UP SOL	Lock up solenoid status/ ON or OFF	• Lock up: ON • Except lock up: OFF	-
SOLENOID (SLU)	Shift solenoid SLU status/ ON or OFF	• Lock up: ON • Except lock up: OFF	-
SOLENOID (SLT)	Shift solenoid SLT status/ ON or OFF	• Accelerator pedal is depressed: OFF • Accelerator pedal is released: ON	-
INTAKE AIR TEMP	Intake air temperature Min.: -40°C (-40°F), Max.: 215°C (419°F)	Equivalent to ambient air temperature	• If value is -40°C (-40°F): sensor circuit open • If value is 215°C (419°F): sensor circuit shorted
THROTTLE POS	Whether throttle position sensor detecting idle: ON or OFF	ON: Idling	-
ACCEL POS	Min.: 0%, Max.: 100%		-
#CODES	# of codes: Min.: 0, Max.: 255	-	Number of detected DTCs
CHECK MODE	Check mode: 0: OFF, 1: ON	ON: Check mode ON	-
SPD TEST	Check mode result for vehicle speed sensor: 0: COMPL, 1: INCMPL	-	-
MIL	MIL status: ON or OFF	ON: MIL ON	-
MIL ON RUN DIST	MIL ON run distance: Min.: 0 mile (65,535 km), Max.: 110,950 mile (178,552 km)	Distance after DTC detected	-
MIL ON RUN TIME	Running time from MIL ON: Min.: 0 minute, Max.: 65,535 minutes	Equivalent to running time after MIL ON	-

Tester Display	Measurement Item/Range	Normal Condition	Diagnostic Note
ENG RUN TIME	Engine run time: Min.: 0 second, Max.: 65,535 seconds	Time after engine start	-
TIME DTC CLEAR	Time after DTC cleared: Min.: 0 minute, Max.: 65,535 minutes	Equivalent to time after DTCs erased	-
DIST DTC CLEAR	Distance after DTC cleared: Min.: 0 km/h, Max.: 65,535 km/h	Equivalent to time after DTCs erased	-
WU CYC DTC CLEAR	Warm-up cycle after DTC cleared: Min.: 0, Max.: 255	-	Number of warm-up cycles after DTC cleared
OBD CERT	OBD requirement	OBD2	-
COMP ON	Comprehensive component monitor 0: NOT AVL, 1: AVAIL	-	Comprehensive component monitor
CCM ENA	Comprehensive component monitor UNABLE or ENABLE	-	-
CCM CMPL	Comprehensive component monitor COMPL or INCMPL	-	-
FUEL ENA	Fuel system monitor UNABLE or ENABLE	-	-
FUEL CMPL	Fuel system monitor COMPL or INCMPL	-	-
MISFIRE ENA	Misfire monitor UNABLE or ENABLE	-	-
MISFIRE CMPL	Misfire monitor COMPL or INCMPL	-	-
HTR ENA	O2S (A/FS) heater monitor UNABLE or ENABLE	-	-
HTR CMPL	O2S (A/FS) heater monitor COMPL or INCMPL	-	-
O2S(A/FS) ENA	O2S (A/FS) monitor UNABLE or ENABLE	-	-
O2S(A/FS) CMPL	O2S (A/FS) monitor COMPL or INCMPL	-	-
EVAP ENA	EVAP monitor UNABLE or ENABLE	-	-
EVAP CMPL	EVAP monitor COMPL or INCMPL	-	-
CAT ENA	Catalyst monitor: UNABLE or ENABLE	-	-
CAT CMPL	Catalyst monitor COMPL or INCMPL	-	-
TRANSMISSION	Transmission type	-	Identifying transmission type: 6 speed
SYSTEM	System identification	-	Identifying engine type: GASOLINE (gasoline engine)

2. ACTIVE TEST

HINT:

Performing the ACTIVE TEST using the intelligent tester allows relays, VSVs, actuators and other items to be operated without removing any parts. Performing the ACTIVE TEST as the first step in troubleshooting is one method to save labor time.

It is possible to display the DATA LIST during the ACTIVE TEST.

(a) Warm up the engine.
(b) Turn the engine switch off.
(c) Connect the intelligent tester together with the CAN VIM (Controller Area Network Vehicle Interface Module) to the DLC3.
(d) Turn the engine switch on (IG).
(e) Turn the intelligent tester on.
(f) Enter the following items: "DIAGNOSIS / OBD / MOBD / ECT / ACTIVE TEST".
(g) According to the display on tester, perform "ACTIVE TEST".

Tester Display	Test Part	Control Range	Diagnostic Note
SHIFT	[Test Details] Operate the shift solenoid valve and set each shift position by yourself. [Vehicle Condition] IDL: ON	[Shift Position] 0001: 1st 0010: 2nd 0011: 3rd 0100: 4th 0101: 5th 0110: 6th	Possible to check the operation of the shift solenoid valves. Upshifts and downshifts should be performed consecutively. A 10-second interval is required between gear changes. Do not downshift at high speeds. Doing so will damage the automatic transaxle.
LOCK UP	[Test Details] Control the shift solenoid SLU to set the automatic transaxle to the lock-up condition. [Vehicle Condition] • Throttle valve opening angle: Less than 35% • Vehicle speed: 37 mph (60 km/h) or more, and 6th gear	[Lock-up] 0: OFF 1: ON	Possible to check the SLU solenoid operation.
SOLENOID (SL1)	[Test Details] Operate the shift solenoid SL1 [Vehicle Condition] • Vehicle Stopped • Shift lever in P or N position	[Solenoid (SL1)] 0: OFF 1: ON	-
SOLENOID (SL2)	[Test Details] Operate the shift solenoid SL2 [Vehicle Condition] • Vehicle Stopped • Shift lever in P or N position	[Solenoid (SL2)] 0: OFF 1: ON	-
SOLENOID (SL3)	[Test Details] Operate the shift solenoid SL3 [Vehicle Condition] • Vehicle Stopped • Shift lever in P or N position	[Solenoid (SL3)] 0: OFF 1: ON	-
SOLENOID (SL4)	[Test Details] Operate the shift solenoid SL4 [Vehicle Condition] • Vehicle Stopped • Shift lever in P or N position	[Solenoid (SL4)] 0: OFF 1: ON	-
SOLENOID (SL)	[Test Details] Operate the shift solenoid SL [Vehicle Condition] • Vehicle Stopped • Shift lever in P or N position	[Solenoid (SL)] 0: OFF 1: ON	-

Tester Display	Test Part	Control Range	Diagnostic Note
SOLENOID (SLT)	[Test Details] Operate the shift solenoid SLT and raise the line pressure. [Vehicle Condition] • Vehicle Stopped • IDL: ON HINT: OFF: Line pressure up (When the active test of "SOLENOID (SLT)" is performed, the ECM commands the SLT solenoid to turn off). ON: No action (normal operation)	[Solenoid (SLT)] 0: OFF 1: ON	-
SOLENOID (SLU)	[Test Details] Operate the shift solenoid SLU and raise the line pressure. [Vehicle Condition] • Vehicle Stopped • IDL: ON HINT: OFF: Line pressure up (When the active test of "SOLENOID (SLU)" is performed, the ECM commands the SLU solenoid to turn off). ON: No action (normal operation)	[Solenoid (SLU)] 0: OFF 1: ON	-

*: "SOLENOID (SLT)" in the ACTIVE TEST is performed to check the line pressure changes by connecting the SST to the automatic transaxle. The same SST is used for the HYDRAULIC TEST (See page AX-16) as well.
HINT:
The pressure values in ACTIVE TEST and HYDRAULIC TEST will be different from each other.

DIAGNOSTIC TROUBLE CODE CHART

If a DTC is displayed during the DTC check, check the parts listed in the table below and proceed to the page given.

HINT:

- *1: MIL (Malfunction Indicator Lamp) comes on.
- *2: "DTC stored" mark means TCM memorizes the trouble code if the TCM detects that the DTC detection condition is satisfied.
- A DTC may be output when the clutch, brake and gear components, etc. inside the automatic transaxle are damaged.

DTC Code	Detection Item	Trouble Area	MIL*1	Memory*2	See page
P0500	Vehicle Speed Sensor "A"	1. Vehicle speed sensor 2. Vehicle speed sensor signal circuit 3. Combination meter 4. TCM	Comes on	DTC stored	AX-50
P0560	System Voltage	1. Open in TCM back-up power source circuit 2. TCM	Comes on	DTC stored	AX-53
P0617	Starter Relay Circuit High	1. Park/neutral Position (PNP) switch 2. Starter relay circuit 3. Cranking holding function circuit 4. TCM	Comes on	DTC stored	AX-56
P0705	Transmission Range Sensor Circuit Malfunction (PRNDL Input)	1. Short in park/ neutral position switch circuit 2. Park/neutral Position switch 3. TCM	Comes on	DTC stored	AX-59
P0710	Transmission Fluid Temperature Sensor "A" Circuit	1. Open or short in ATF temperature sensor circuit 2. Transmission wire (ATF temperature sensor) 3. TCM	Comes on	DTC stored	AX-67
P0711	Transmission Fluid Temperature Sensor "A" Performance	Transmission wire (ATF temperature sensor) Temperature	Comes on	DTC stored	AX-72
P0712	Transmission Fluid Temperature Sensor "A" Circuit Low Input	1. Short in ATF temperature sensor circuit 2. Transmission wire (ATF temperature sensor) 3. TCM	Comes on	DTC stored	AX-67
P0713	Transmission Fluid Temperature Sensor "A" Circuit High Input	1. Open in ATF temperature sensor circuit 2. Transmission wire (ATF temperature sensor) 3. TCM	Comes on	DTC stored	AX-67

DTC Code	Detection Item	Trouble Area	MIL*1	Memory*2	See page
P0715	Input / Turbine Speed Sensor Circuit Malfunction	1. Transmission revolution sensor (speed sensor NT) 2. TCM	Comes on	DTC stored	AX-78
P0717	Input Speed Sensor Circuit No Signal	1. Transmission revolution sensor (speed sensor NT) 2. TCM	Comes on	DTC stored	AX-78
P0724	Brake Switch "B" Circuit High	1. Short in stop light switch signal circuit 2. Stop light switch 3. TCM	Comes on	DTC stored	AX-83
P0741	Torque Converter Clutch Solenoid Performance (Shift Solenoid Valve SL)	1. Shift solenoid valve SL remains closed 2. Valve body is blocked 3. Torque converter clutch 4. Automatic transaxle (clutch, brake or gear etc.) 5. Line pressure is too low	Comes on	DTC stored	AX-86
P0746	Pressure Control Solenoid "A" Performance (Shift Solenoid Valve SL1)	1. Shift solenoid valve SL1 remains open or closed 2. Valve body is blocked 3. Automatic transaxle (clutch, brake or gear etc.)	Comes on	DTC stored	AX-91
P0748	Pressure Control Solenoid "A" Electrical (Shift Solenoid Valve SL1)	1. Open or short in shift solenoid valve SL1 circuit 2. Shift solenoid valve SL1 3. TCM	Comes on	DTC stored	AX-96
P0776	Pressure Control Solenoid "B" Performance (Shift Solenoid Valve SL2)	1. Shift solenoid valve SL2 remains open or closed 2. Valve body is blocked 3. Automatic transaxle (clutch, brake or gear etc.)	Comes on	DTC stored	AX-99
P0778	Pressure Control Solenoid "B" Electrical (Shift Solenoid Valve SL2)	1. Open or short in shift solenoid valve SL2 circuit 2. Shift solenoid valve SL2 3. TCM	Comes on	DTC stored	AX-104
P0791	Intermediate Shaft Speed Sensor "A" Circuit	1. Transmission revolution sensor (speed sensor NC) 2. TCM	Comes on	DTC stored	AX-107
P0793	Intermediate Shaft Speed Sensor "A"	1. Transmission revolution sensor (speed sensor NC) 2. TCM	Comes on	DTC stored	AX-107

DTC Code	Detection Item	Trouble Area	MIL*1	Memory*2	See page
P0796	Pressure Control Solenoid "C" Performance (Shift Solenoid Valve SL3)	1. Shift solenoid valve SL3 remains open or closed. 2. Valve body is blocked. 3. Automatic transaxle (clutch, brake or gear etc.)	Comes on	DTC stored	AX-112
P0798	Pressure Control Solenoid "C" Electrical (Shift Solenoid Valve SL3)	1. Open or short in shift solenoid valve SL3 circuit 2. Shift solenoid valve SL3 3. TCM	Comes on	DTC stored	AX-117
P0872	Transmission Fluid Pressure Switch No.1 Circuit Low	1. ATF temperature sensor assembly (ATF pressure switch No. 1) 2. Transmission wire 3. TCM	-	DTC stored	AX-120
P0873	Transmission Fluid Pressure Switch No.1 Circuit High	1. ATF temperature sensor assembly (ATF pressure switch No. 1) 2. Transmission wire 3. TCM	-	DTC stored	AX-120
P0877	Transmission Fluid Pressure Switch No.2 Circuit Low	1. ATF temperature sensor assembly (ATF pressure switch No. 2) 2. Transmission wire 3. TCM	-	DTC stored	AX-124
P0878	Transmission Fluid Pressure Switch No.2 Circuit High	1. ATF temperature sensor assembly (ATF pressure switch No. 2) 2. Transmission wire 3. TCM	-	DTC stored	AX-124
P0989	Transmission Fluid Pressure Switch No.3 Circuit Low	1. ATF temperature sensor assembly (ATF pressure switch No. 3) 2. Transmission wire 3. TCM	Comes on	DTC stored	AX-128
P0990	Transmission Fluid Pressure Switch No.3 Circuit High	1. ATF temperature sensor assembly (ATF pressure switch No. 3) 2. Transmission wire 3. TCM	Comes on	DTC stored	AX-128
P2714	Pressure Control Solenoid "D" Performance (Shift Solenoid Valve SLT)	1. Shift solenoid valve SLT remains open 2. Shift solenoid valve SL1, SL2, SL3 or SL4 remains open or closed 3. Valve body is blocked 4. Automatic transaxle (clutch, brake or gear, etc.)	Comes on	DTC stored	AX-133

DTC Code	Detection Item	Trouble Area	MIL*1	Memory*2	See page
P2716	Pressure Control Solenoid "D" Electrical (Shift Solenoid Valve SLT)	1. Open or short in shift solenoid valve SLT circuit 2. Shift solenoid valve SLT 3. TCM	Comes on	DTC stored	AX-140
P2757	Torque Converter Clutch Pressure Control Solenoid Performance (Shift Solenoid Valve SLU)	1. Shift solenoid valve SLU remains open or closed 2. Valve body is blocked 3. Torque converter clutch 4. Automatic transaxle (clutch, brake or gear, etc.) 5. Line pressure is too low	Comes on	DTC stored	AX-143
P2759	Torque Converter Clutch Pressure Control Solenoid Control Circuit Electrical (Shift Solenoid Valve SLU)	1. Open or short in shift solenoid valve SLU circuit 2. Shift solenoid valve SLU 3. TCM	Comes on	DTC stored	AX-148
P2769	Short in Torque Converter Clutch Solenoid Circuit (Shift Solenoid Valve SL)	1. Short in shift solenoid valve SL circuit 2. Shift solenoid valve SL 3. TCM	Comes on	DTC stored	AX-151
P2770	Open in Torque Converter Clutch Solenoid Circuit (Shift Solenoid Valve SL)	1. Open in shift solenoid valve SL circuit 2. Shift solenoid valve SL 3. TCM	Comes on	DTC stored	AX-151
P2808	Pressure Control Solenoid "G" Performance or Stuck OFF (Shift Solenoid Valve SL4)	1. Shift solenoid valve SL4 remains open or closed 2. Valve body is blocked 3. Automatic transaxle (clutch, brake or gear etc.)	Comes on	DTC stored	AX-154
P2810	Pressure Control Solenoid "G" Electrical (Shift Solenoid Valve SL4)	1. Open or short in shift solenoid valve SL4 circuit 2. Shift solenoid valve SL4 3. TCM	Comes on	DTC stored	AX-160
U0100	Lost Communication with ECM/PCM "A"	TCM	Comes on	DTC stored	AX-163

DTC	P0500	Vehicle Speed Sensor "A"

DESCRIPTION

The speed sensors detect the wheel speed and send the appropriate signals to the skid control ECU. The skid control ECU converts these wheel speed signals into a 4-pulse signal and outputs it to the TCM via the combination meter. The TCM determines the vehicle speed based on the frequency of these pulse signals.

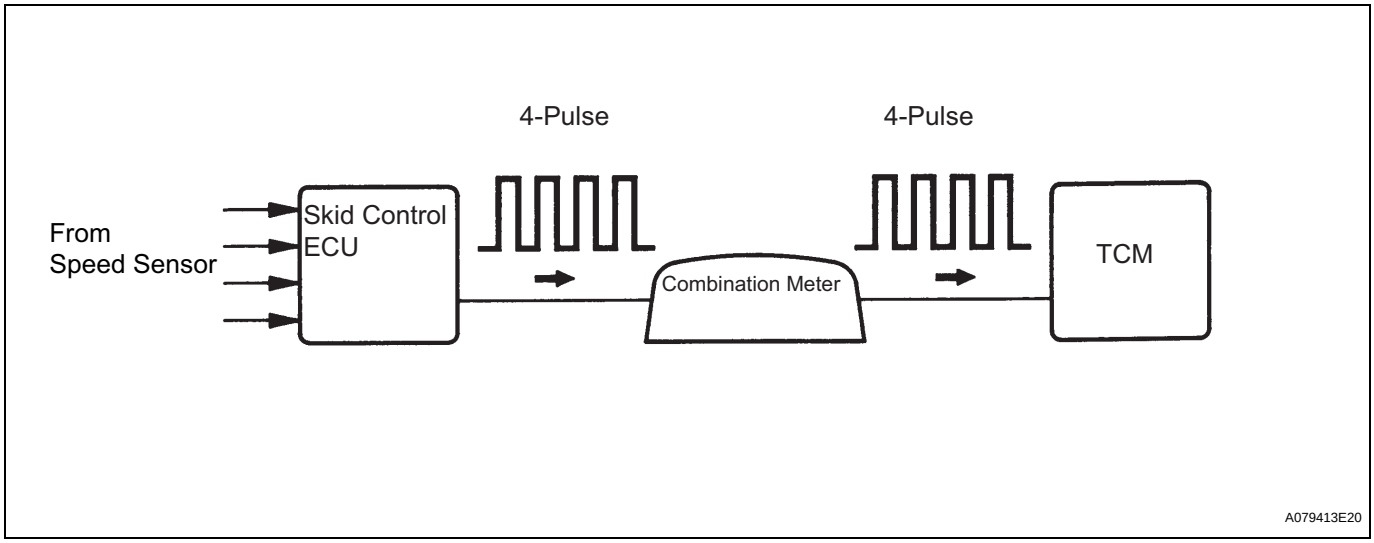

DTC No.	DTC Detection Condition	Trouble Area
P0500	When the ECT sensor is normal and the counter gear speed is 300 rpm or more, the vehicle speed signal is not input for 2 seconds or more.	• Vehicle speed sensor • Vehicle speed sensor signal circuit • Combination meter • TCM

MONITOR DESCRIPTION

AX

The TCM assumes that the vehicle is being driven when the transmission counter gear indicates more than 300 rpm and over 30 seconds have passed since the park/neutral position switch was turned off. If there is no signal from the vehicle speed sensor with these conditions satisfied, the TCM concludes that the vehicle speed sensor is malfunctioning. The TCM will turn on the MIL and a DTC will be set.

MONITOR STRATEGY

Related DTCs	P0500: Vehicle Speed Sensor Circuit
Required sensors/components (Main)	Vehicle speed sensor, Combination meter, Skid control ECU
Required sensors/components (Sub)	Counter gear Speed (CS) sensor, ECT sensor
Frequency of operation	Continuous
Duration	2 seconds
MIL operation	Immediately
Sequence operation	None

TYPICAL ENABLING CONDITIONS

Engine	Running
Transmission counter gear revolution	300 rpm or more
Battery voltage	8 V or more
Engine switch	ON
Starter	OFF

Either a or b is met (See below)	
a. All of the following conditions are met	
ECT	20°C (68°F) or more
ECT sensor fail	Not detected
Time after PNP switch ON to OFF	2 sec. or more
b. All of the following conditions are met	
ECT	Less than 20°C (68°F)
ECT sensor fail	Detected
Time after PNP switch ON to OFF	30 sec. or more

TYPICAL MALFUNCTION THRESHOLDS

Vehicle speed sensor signal	No pulse input

WIRING DIAGRAM

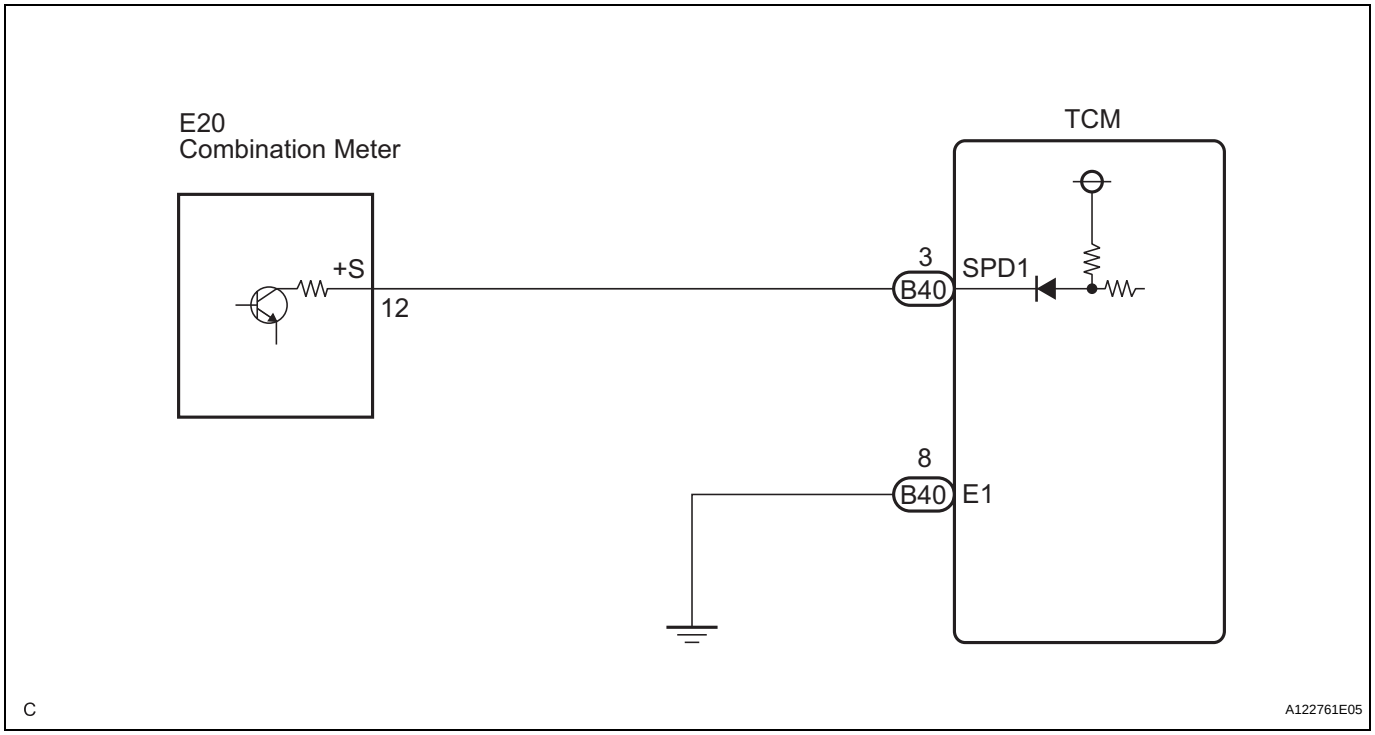

INSPECTION PROCEDURE

1	INSPECT SPEEDOMETER (METER OPERATION)

(a) Drive the vehicle and check if operation of the speedometer in the combination meter is normal.
HINT:
The vehicle speed sensor is operating normally if the speedometer display is normal.

NG → CHECK SPEEDOMETER CIRCUIT

OK

AX

2	INSPECT TCM

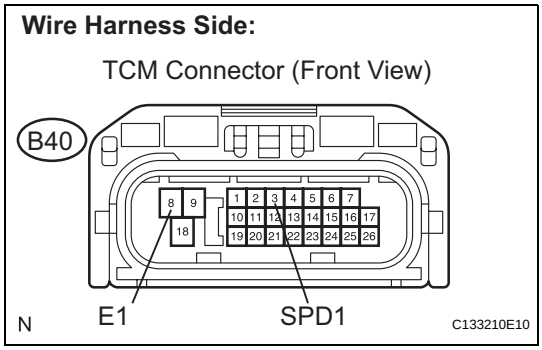

(a) Shift the lever to the neutral position.
(b) Jack up the vehicle.
(c) Disconnect the TCM connector.
(d) Turn the engine switch on (IG).

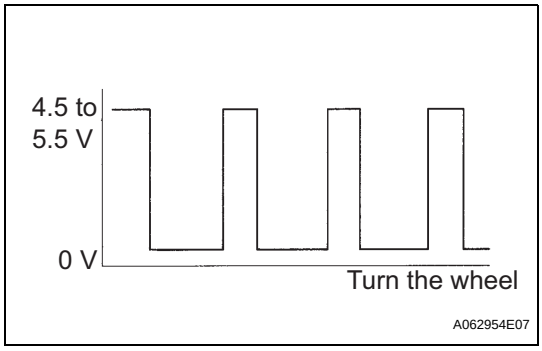

(e) Measure the voltage according to the value(s) in the table below as the wheel is turned slowly.

Standard

Tester Connection	Specified Condition
B40-3 (SPD1) - B40-8 (E1)	Voltage is generated intermittently

HINT:
The output voltage should fluctuate up and down similarly to the diagram when the wheel is turned slowly.

NG → **REPAIR OR REPLACE HARNESS OR CONNECTOR**

OK

REPLACE TCM

AX

DTC	P0560	System Voltage

DESCRIPTION

The battery supplies electricity to the TCM even when the engine switch is off. This power allows the TCM to store data such as DTC history, freeze frame data and fuel trim values. If the battery voltage falls below a minimum level, these memories are cleared and the TCM determines that there is a malfunction in the power supply circuit. When the engine is next started, the TCM will illuminate the MIL and set the DTC.

DTC No.	DTC Detection Condition	Trouble Area
P0560	Open in TCM back-up power source circuit (1 trip detection logic)	• Open in TCM back-up power source circuit • TCM

HINT:
If DTC P0560 is set, the TCM does not store other DTCs.

MONITOR STRATEGY

Related DTCs	P0560: TCM system voltage
Required Sensors/Components (Main)	TCM
Required Sensors/Components (Sub)	-
Frequency of Operation	Continuous
Duration	3 seconds
MIL Operation	Immediate (MIL illuminated after next engine start)
Sequence of Operation	None

TYPICAL ENABLING CONDITIONS

Monitor runs whenever following DTCs are not present:	None
Stand-by RAM	Initialized

TYPICAL MALFUNCTION THRESHOLDS

TCM power source	Less than 3.5 V

WIRING DIAGRAM

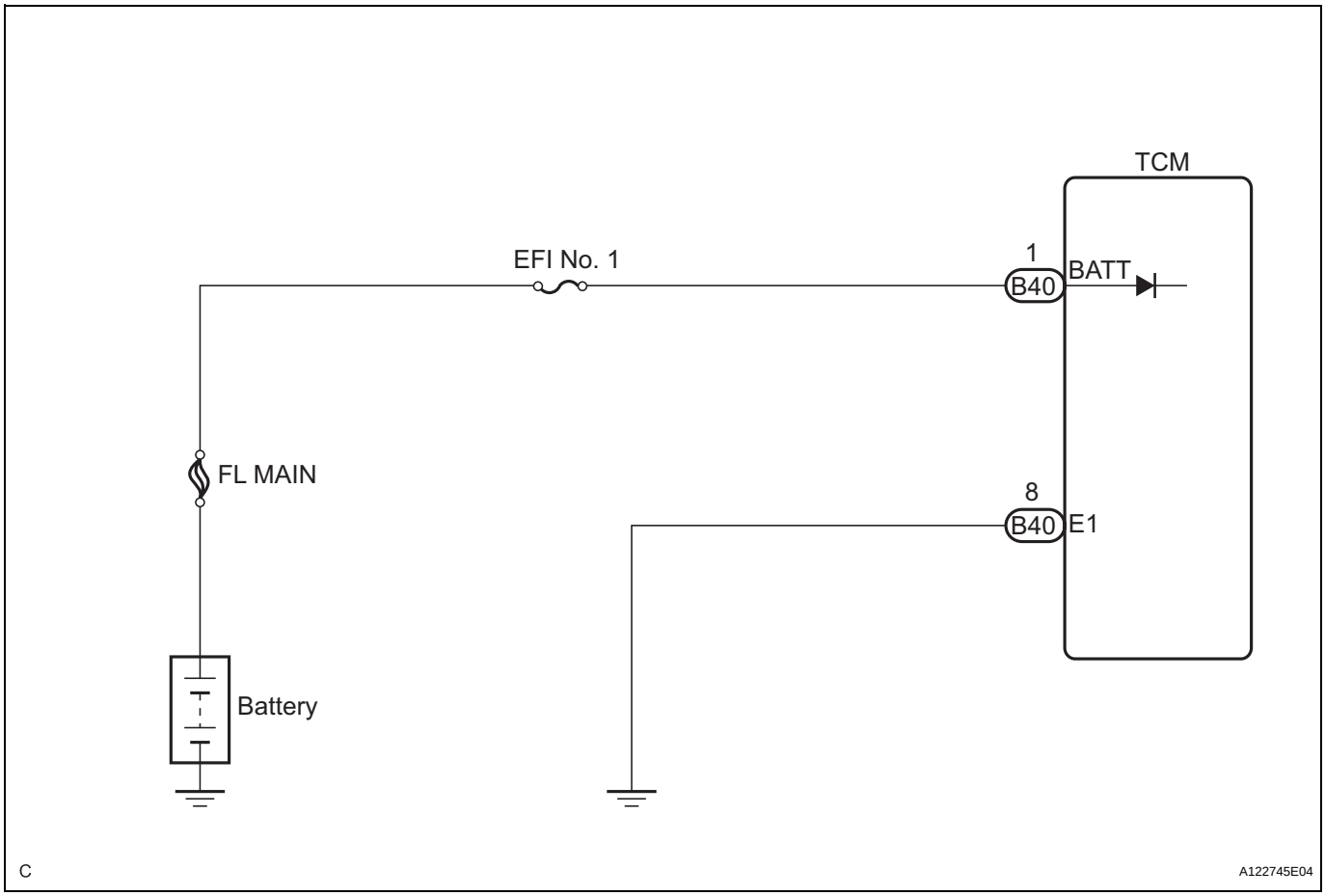

INSPECTION PROCEDURE

AX

1	INSPECT TERMINAL VOLTAGE (BATT VOLTAGE OF TCM)

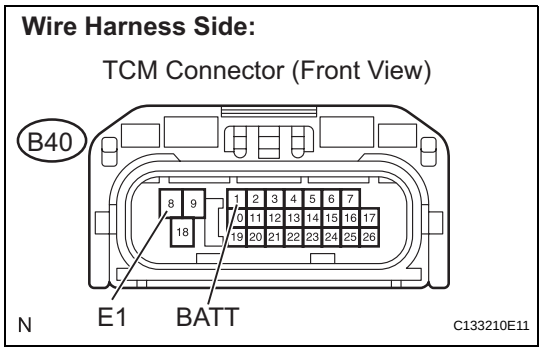

(a) Disconnect the TCM connector.
(b) Turn the engine switch on (IG).
(c) Measure the voltage according to the value(s) in the table below.

Standard voltage

Tester Connection	Specified Condition
BATT (B40-1) - E1 (B40-8)	10 to 14 V

NG → **REPAIR OR REPLACE HARNESS OR CONNECTOR (EFI NO. 1 FUSE - TCM)**

OK

2 CHECK HARNESS AND CONNECTOR

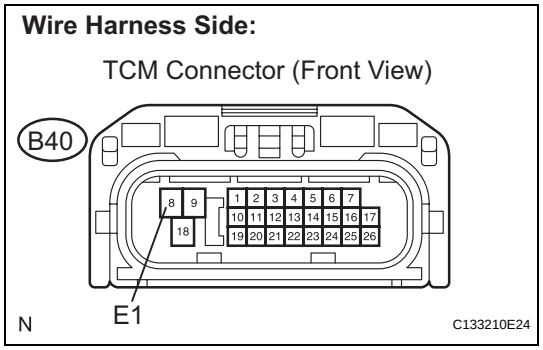

(a) Disconnect the TCM connector.
(b) Measure the resistance according to the value(s) in the table below.

Standard resistance

Tester Connection	Specified Condition
E1 (B40-8) - Body ground	Below 1 Ω

NG → **REPAIR OR REPLACE HARNESS OR CONNECTOR (TCM - BODY GROUND)**

OK

REPLACE TCM

AX

DTC	P0617	Starter Relay Circuit High

DESCRIPTION

While the engine is being cranked, the positive battery voltage is applied to terminal STA of the TCM. If the TCM detects the Starter Control (STA) signal while the vehicle is being driven, it determines that there is a malfunction in the STA circuit. The TCM then illuminates the MIL and sets the DTC.
This monitor runs when the vehicle is driven at 12.4 mph (20 km/h) for over 20 seconds.

DTC No.	DTC Detection Condition	Trouble Area
P0617	When conditions (a), (b) and (c) are met, positive (+B) battery voltage of 10.5 V or more is applied to TCM for 20 seconds (1 trip detection logic): (a) Vehicle speed more than 12.4 mph (20 km/h) (b) Engine speed more than 1,000 rpm (c) STA signal ON	• Park/Neutral Position switch • Starter relay circuit • Cranking holding function circuit • TCM

MONITOR STRATEGY

Related DTCs	P0617: Starter signal
Required Sensors/Components (Main)	STARTER relay, PMP switch, Engine switch
Required Sensors/Components (Sub)	Vehicle speed sensor (VSS), Crankshaft Position (CKP) sensor
Frequency of Operation	Continuous
Duration	20 seconds
MIL Operation	Immediate
Sequence of Operation	None

TYPICAL ENABLING CONDITIONS

Monitor runs whenever these DTCs are not present:	None
Battery voltage	10.5 V or more
Vehicle speed	12.43 mph (20 km/h) or more
Engine speed	1,000 rpm or more

TYPICAL MALFUNCTION THRESHOLDS

Starter signal	ON

WIRING DIAGRAM

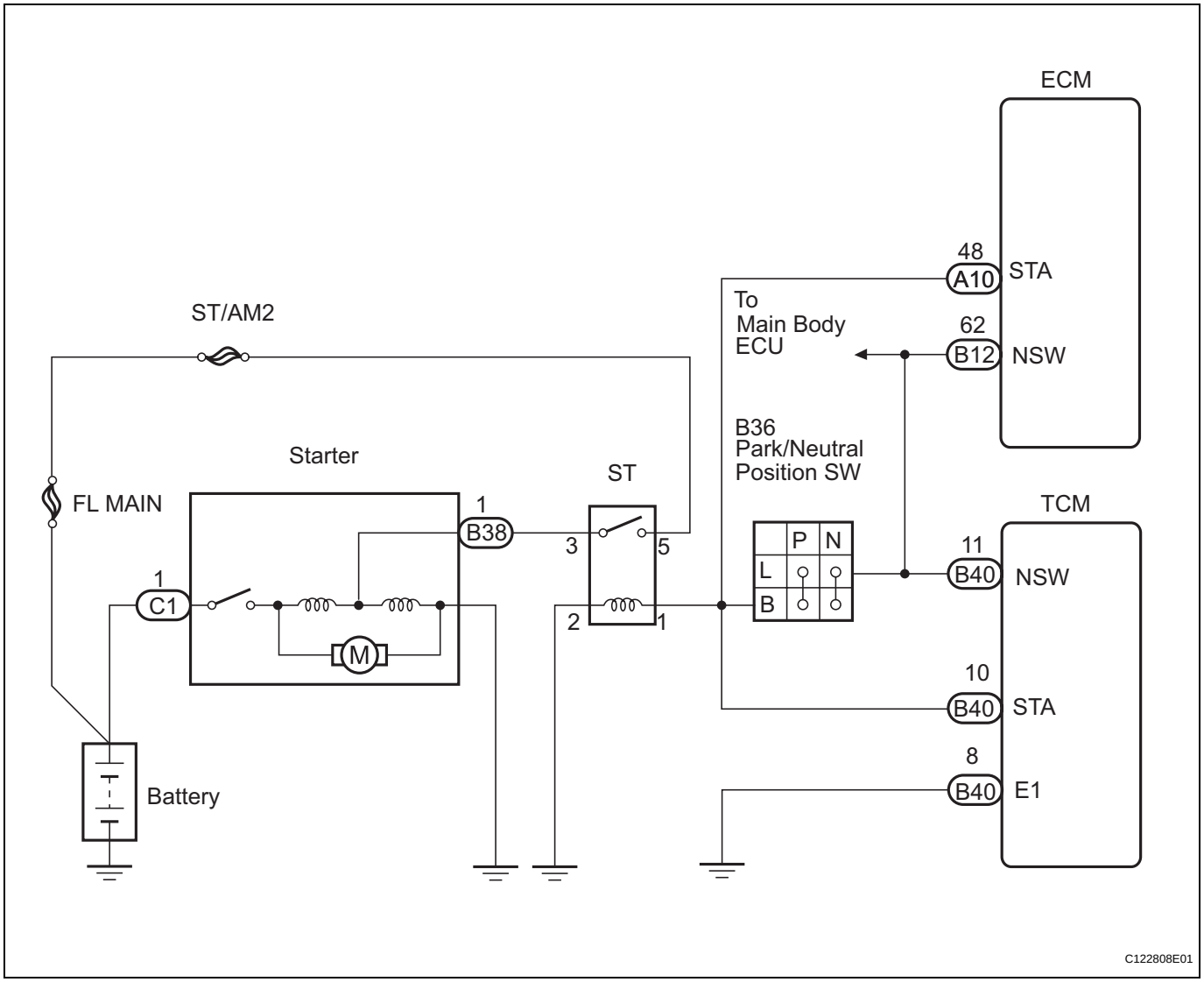

AX

INSPECTION PROCEDURE

HINT:

- The following troubleshooting flowchart is based on the premise that the engine is cranked normally. If the engine does not crank, proceed to the problem symptoms table (See page AX-251).
- Read freeze frame data using the intelligent tester. The TCM records vehicle and driving condition information as freeze frame data the moment a DTC is stored. When troubleshooting, freeze frame data can be helpful in determining whether the vehicle was running or stopped, whether the engine was warmed up or not, whether the air-fuel ratio was lean or rich, as well as other data recorded at the time of a malfunction (See page ES-41).

1	READ VALUE OF INTELLIGENT TESTER (STARTER SIGNAL)

(a) Connect the intelligent tester to the DLC3.
(b) Turn the engine switch on (IG) and turn the tester on.
(c) Enter the following menus: DIAGNOSIS / OBD / MOBD / ECT / DATA LIST.
(d) Check the value displayed on the tester when the engine switch is turned on (IG) and the engine is started.

OK

Engine Switch Condition	ON (IG)	ENGINE START
STARTER SIG	OFF	ON

OK → **Go to step 3**

NG

2 INSPECT PARK / NEUTRAL POSITION SWITCH ASSEMBLY

Component Side:

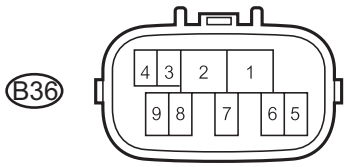

Park/Neutral Position Switch

A107908E08

(a) Inspect the Park / Neutral Position (PNP) switch.
  (1) Disconnect the B36 switch connector.
  (2) Measure the resistance according to the value(s) in the table below.

Standard resistance

Gear Selector Lever Position	Tester Connection	Specified Condition
P	4 - 5	Below 1 Ω
N	4 - 5	Below 1 Ω

  (3) Reconnect the PNP switch connector.

NG → **REPLACE PARK / NEUTRAL POSITION SWITCH (See page AX-184)**

OK

CHECK CRANKING HOLDING FUNCTION CIRCUIT (See page ES-449)

AX

3 CHECK HARNESS AND CONNECTOR

Wire Harness Side:

TCM Connector (Front View)

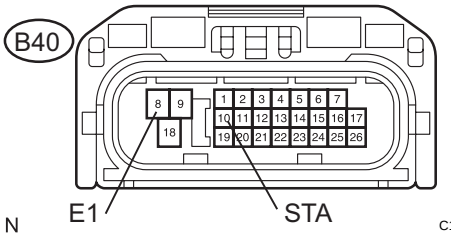

C133210E22

(a) Disconnect the B40 switch connector.
(b) Measure the voltage according to the value(s) in the table below when the shift lever is P or N position.

Standard voltage

Tester Connection	Specified Condition
8 - 10	Below 2 V

(c) Connect the B40 switch connector.

NG → **REPAIR OR REPLACE HARNESS OR CONNECTOR**

OK

REPLACE TCM (See page AX-251)

DTC	P0705	Transmission Range Sensor Circuit Malfunction (PRNDL Input)

DESCRIPTION

The park / neutral position switch detects the shift lever position and sends signals to the ECM.

DTC No.	DTC Detection Condition	Trouble Area
P0705	(A) Any 2 or more of the following conditions are met simultaneously (2-trip detection logic) • NSW input signal is ON. • R input signal is ON. • D input signal is ON. (B) All switches are OFF simultaneously for NSW, R and D.	• Short in park/neutral position switch circuit • Park/neutral position switch • TCM

MONITOR DESCRIPTION

These DTCs indicate a problem with the park/neutral position switch and the wire harness in the park/neutral position switch circuit.
The park/neutral position switch detects the shift lever position and sends a signal to the TCM.
For security, the park/neutral position switch detects the shift lever position so that engine can be started only when the shift lever is in the P or N position.
The park/neutral position switch sends a signal to the TCM according to the shift position (R or D). The TCM determines that there is a problem with the switch or related parts if it receives more than 1 position signal simultaneously. The TCM will turn on the MIL and store the DTC.

MONITOR STRATEGY

Related DTCs	P0705: Park/neutral position switch/Verify switch input
Required sensors/Components	Park/neutral position switch
Frequency of operation	Continuous
Duration	2 sec.
MIL operation	2 driving cycles
Sequence of operation	None

AX

TYPICAL ENABLING CONDITIONS

All:

The monitor will run whenever this DTC is not present.	None
Engine switch	ON
Battery voltage	10.5 V or more

Condition (C):

One of the following conditions is met:	Condition (a) or (b)
(a) Park Neutral position switch	ON
(b) R range position switch	ON

TYPICAL MALFUNCTION THRESHOLDS

1. One of the following conditions is met: Condition (A), (B) and (C)

Condition (A):

Number of the following signal input at the same time	2 or more
R range position switch	ON
D range position switch	ON

Condition (B):

Number of the following signal input at the same time	2 or more
Park neutral position switch	ON
R range switch	ON
D range switch	ON

Condition (C):

Park neutral position switch	OFF
R range switch	OFF
D range switch	OFF

COMPONENT OPERATING RANGE

Park/neutral Position switch	The park/neutral position switch sends only one signal to the TCM.

WIRING DIAGRAM

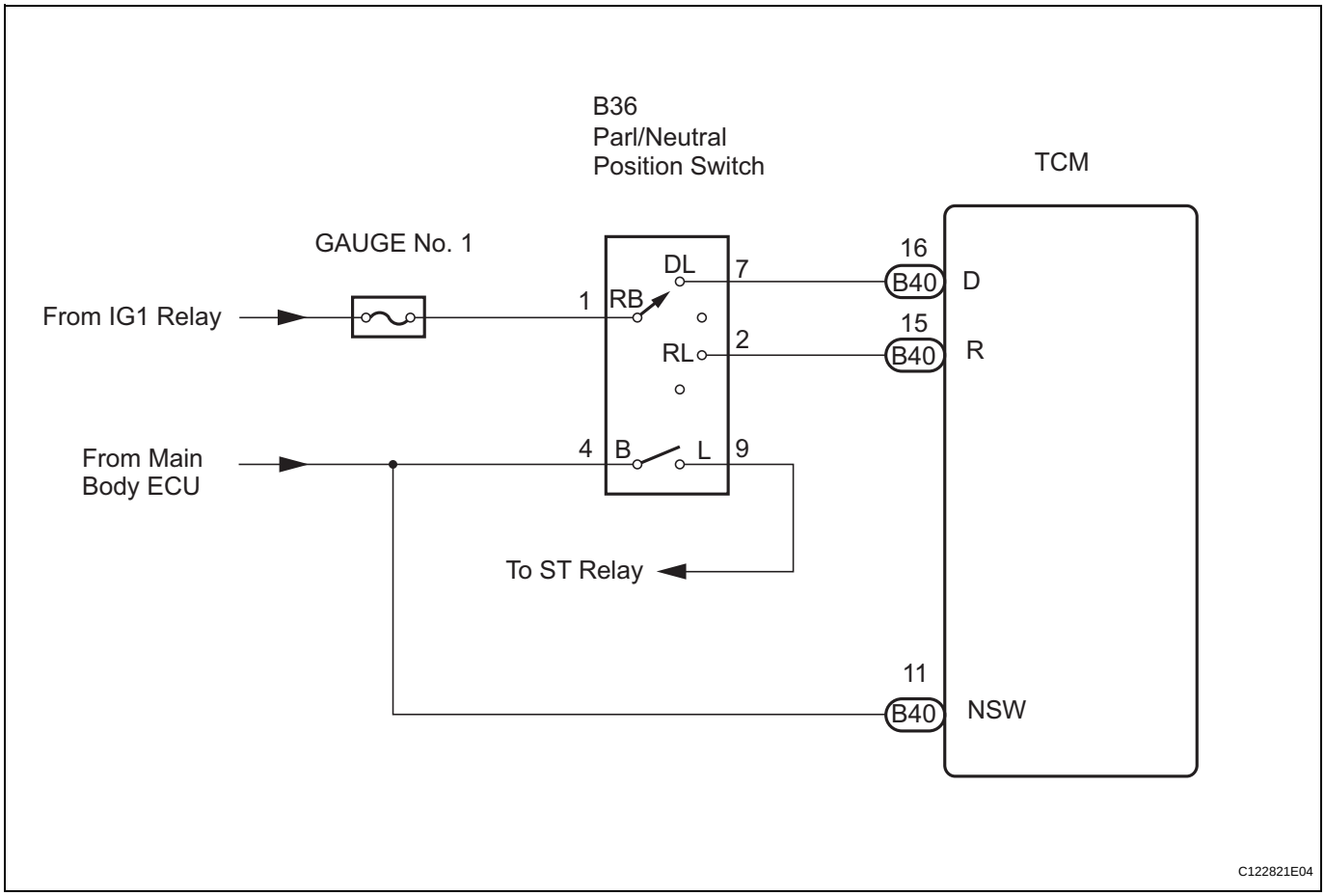

INSPECTION PROCEDURE

HINT:

According to the DATA LIST displayed by the intelligent tester, you can read the value of the switch, sensor, actuator and so on without parts removal. Reading the DATA LIST as the first step of troubleshooting is one method to shorten labor time.

NOTICE:

In the table below, the values listed under "Normal Condition" are reference values. Do not depend solely on these reference values when deciding whether a part is faulty or not.

AX

1. READ DATA LIST

(a) Turn the engine switch off.
(b) Connect the intelligent tester together with the CAN VIM (controller area network vehicle interface module) to the DLC3.
(c) Turn the engine switch on (IG).
(d) Turn on the tester.
(e) Select the item "DIAGNOSIS / OBD / MOBD / ECT / DATA LIST".
(f) According to the display on the tester, read the "DATA LIST".

Item	Measurement Item / Range (Display)	Normal Condition	Diagnostic Note
PNP SW [NSW]	PNP SW Status / ON or OFF	Shift lever position is; P and N: ON Except P or N: OFF	When the shift lever position displayed on the intelligent tester differs from the actual position, adjustment of the PNP switch or the shift cable may be incorrect.
REVERSE	PNP SW Status / ON or OFF	Shift lever position is; R: ON Except R: OFF	When the shift lever position displayed on the intelligent tester differs from the actual position, adjustment of the PNP switch or the shift cable may be incorrect.
DRIVE	PNP SW Status / ON or OFF	Shift lever position is; D and S: ON Except D or S: OFF	When the shift lever position displayed on the intelligent tester differs from the actual position, adjustment of the PNP switch or the shift cable may be incorrect.

1 CHECK HARNESS AND CONNECTOR (D, R POSITION CIRCUIT)

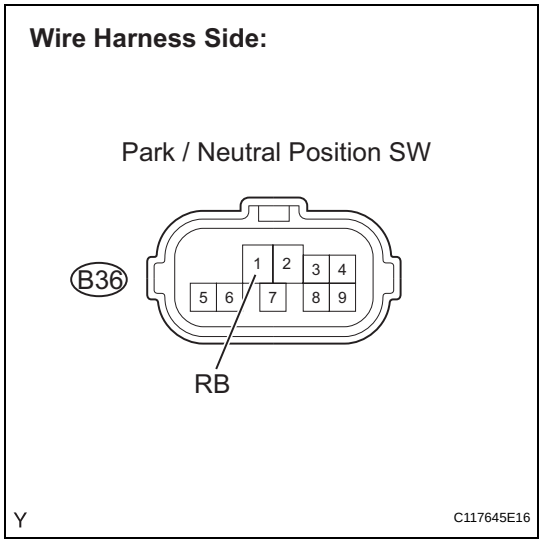

(a) Disconnect the park / neutral position switch connector.
(b) Turn the engine switch on (IG).
(c) Measure the voltage according to the value(s) in the table below.

Standard voltage

Tester Connection	Specified Condition
RB (B36-1) - Body ground	10 to 14 V

NG → **REPAIR OR REPLACE HARNESS OR CONNECTOR**

OK

AX

2	CHECK HARNESS AND CONNECTOR (NSW CIRCUIT)

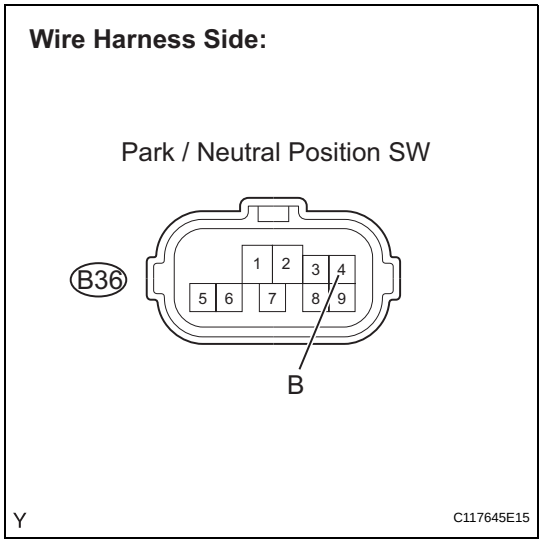

(a) Turn the engine switch on (IG).
(b) Measure the voltage according to the value(s) in the table below.

Standard voltage

Tester Connection	Specified Condition
B (B36-4) - Body ground	Below 3 V

NG → **Go to step 8**

OK

AX

3	CHECK HARNESS AND CONNECTOR (PARK/NEUTRAL POSITION SWITCH - ST RELAY)

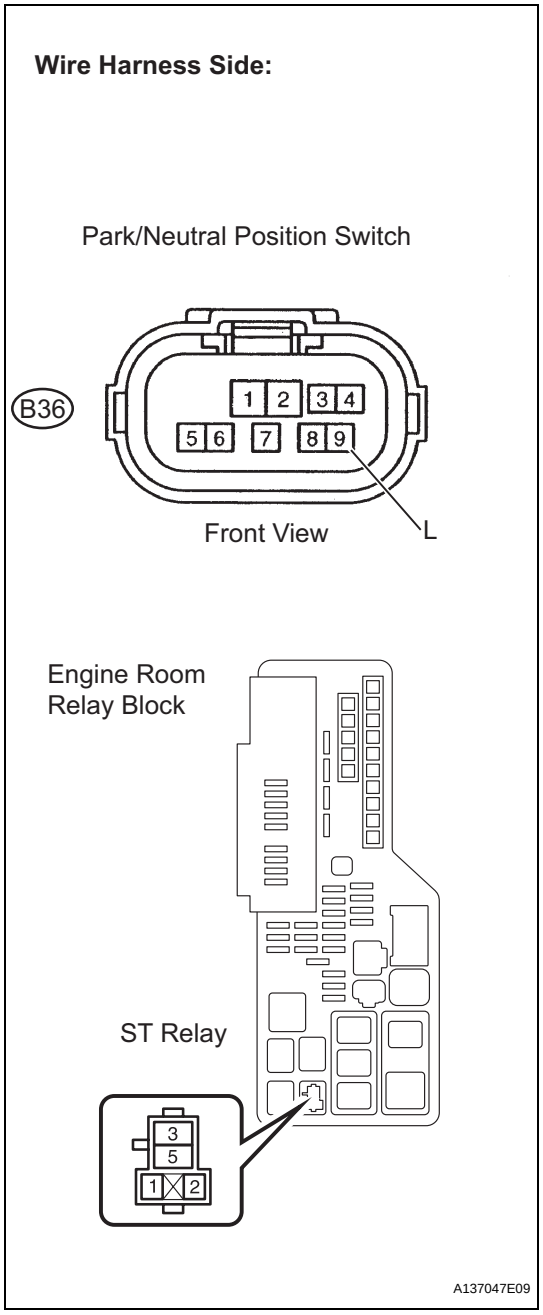

(a) Disconnect the park / neutral position switch connector.
(b) Remove the ST relay from the engine room relay block.
(c) Measure the resistance according to the value(s) in the table below.

Standard resistance

Tester Connection	Specified Condition
L (B36-9) - Body ground	Below 1 Ω

(d) Install the ST relay.
(e) Reconnect the park/neutral position switch connector.

NG → **REPAIR OR REPLACE HARNESS OR CONNECTOR**

OK

AX

4 INSPECT STARTER RELAY ASSEMBLY

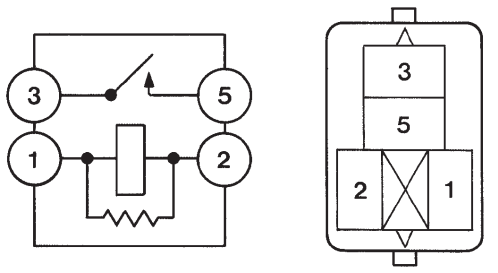

B016200E02

(a) Remove the ST relay from the engine room relay block.
(b) Measure the resistance according to the value(s) in the table below.
Standard resistance

Tester Connection	Specified Condition
3 - 5	10 kΩ or higher
3 - 5	Below 1 Ω or higher

(c) Install the ST relay.

NG → **REPLACE STARTER RELAY ASSEMBLY**

OK

5 CHECK HARNESS AND CONNECTOR (ST RELAY - BODY GROUND)

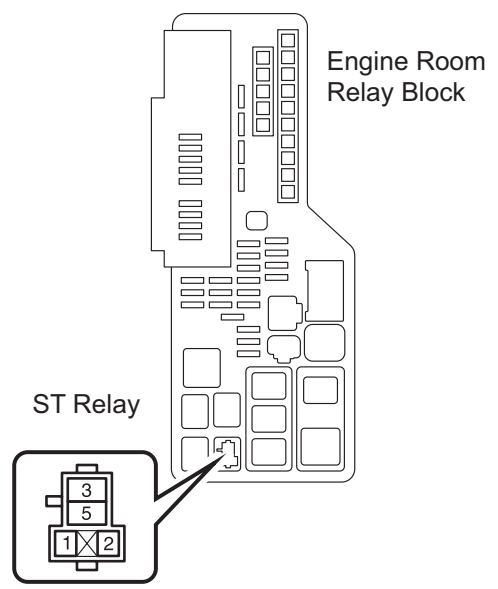

A137046E01

(a) Remove the ST relay from the engine room relay block.
(b) Measure the resistance according to the value(s) in the table below.
Standard resistance

Tester Connection	Specified Condition
ST relay terminal 2 - Body ground	10 kΩ or higher

(c) Install the ST relay.

NG → **REPAIR OR REPLACE HARNESS OR CONNECTOR**

OK

AX

6 INSPECT PARK/NEUTRAL POSITION SWITCH ASSEMBLY

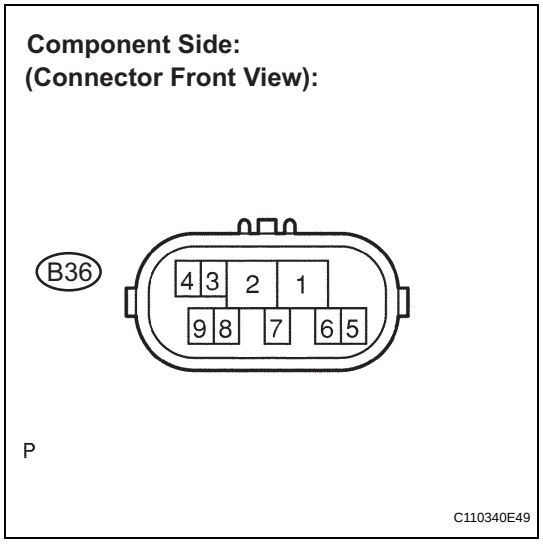

(a) Measure the resistance according to the value(s) in the table below when the shift lever is moved to each position.

Standard resistance

Shift Position	Tester Connection	Specified Condition
P	1 - 3 and 4 - 9	Below 1 Ω
Except P		10 kΩ or higher
R	1 - 2	Below 1 Ω
Except R		10 kΩ or higher
N	1 - 8 and 4 - 9	Below 1 Ω
Except N		10 kΩ or higher
D, S, "+" and "-"	1 - 7	Below 1 Ω
Except D, S, "+" and "-"		10 kΩ or higher

NG → **REPLACE PARK/NEUTRAL POSITION SWITCH (See page AX-184)**

OK

7 CHECK HARNESS AND CONNECTOR

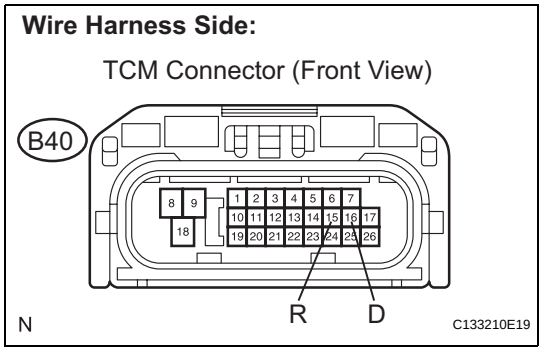

(a) Connect the park / neutral position switch connector.
(b) Disconnect the TCM connectors.
(c) Turn the engine switch on (IG), and measure the voltage according to the value(s) in the table below when the shift lever is moved to each position.

Standard voltage

Shift Position	Tester Connection	Specified Condition
R	R (B40-15) - Body ground	10 to 14 V *
Except R		Below 1 V
D	D (B40-16) - Body ground	10 to 14 V
Except D		Below 1 V

HINT:

*: The voltage will drop slightly due to lighting up of the back up light.

NG → **REPAIR OR REPLACE HARNESS OR CONNECTOR**

OK

REPLACE TCM (See page AX-251)

AX

8	CHECK HARNESS AND CONNECTOR (PARK / NEUTRAL POSITION SWITCH - TCM)

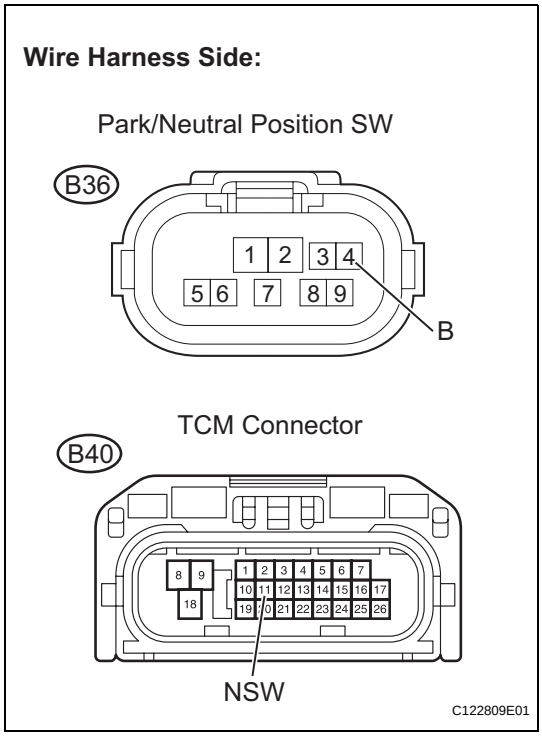

(a) Disconnect the TCM connectors.
(b) Turn the engine switch off.
(c) Measure the resistance according to the value(s) in the table below.

Standard resistance (Check for open)

Tester Connection	Specified Condition
B (B36-4) - NSW (B40-11)	Below 1 Ω

Standard resistance (Check for short)

Tester Connection	Specified Condition
B (B36-4) or NSW (B40-11) - Body ground	10 kΩ or higher

NG → **REPAIR OR REPLACE HARNESS OR CONNECTOR**

OK

REPLACE TCM (See page AX-251)

DTC	P0710	Transmission Fluid Temperature Sensor "A" Circuit

DTC	P0712	Transmission Fluid Temperature Sensor "A" Circuit Low Input

DTC	P0713	Transmission Fluid Temperature Sensor "A" Circuit High Input

DESCRIPTION

The ATF (Automatic Transmission Fluid) temperature sensor converts the fluid temperature into a resistance value for use by the TCM.

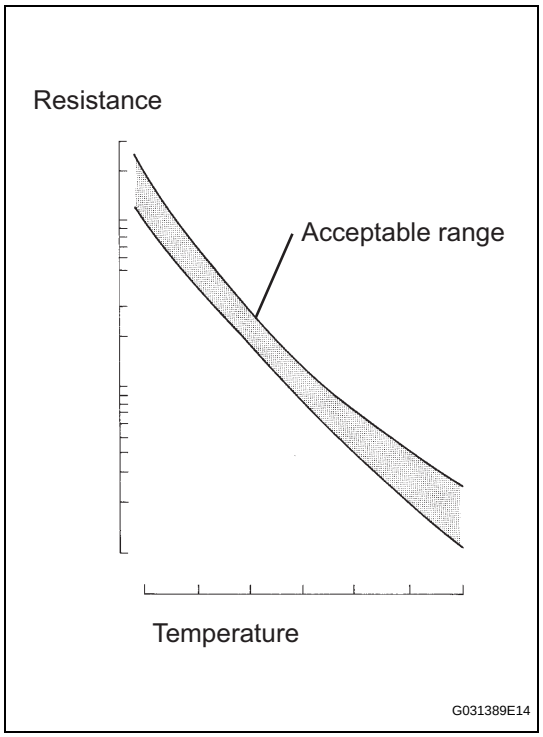

The TCM applies a voltage to the temperature sensor through terminal OIL of the TCM.
The sensor resistance changes with the transmission fluid temperature. As the temperature becomes higher, the sensor resistance decreases.
One terminal of the sensor is grounded so that the sensor resistance decreases and the voltage goes down as the temperature becomes higher.
The TCM calculates the fluid temperature based on the voltage signal.

DTC No.	DTC Detection Condition	Trouble Area
P0710	(a) and (b) are detected momentarily (within 0.5 sec.) when neither P0712 nor P0713 is detected (1-trip detection logic) (a) ATF temperature sensor resistance is less than 79 Ω. (b) ATF temperature sensor resistance is more than 156 kΩ. HINT: Within 0.5 sec., the malfunction switches from (a) to (b) or from (b) to (a)	• Open or short in ATF temperature sensor circuit • Transmission wire (ATF temperature sensor) • TCM

DTC No.	DTC Detection Condition	Trouble Area
P0712	ATF temperature sensor resistance is less than 79 Ω for 0.5 sec. or more (1-trip detection logic)	• Short in ATF temperature sensor circuit • Transmission wire (ATF temperature sensor) • TCM
P0713	ATF temperature sensor resistance is more than 156 kΩ when 15 minutes or more have elapsed after the engine starts DTC is detected for 0.5 sec. or more (1-trip detection logic)	• Open in ATF temperature sensor circuit • Transmission wire (ATF temperature sensor) • TCM

MONITOR DESCRIPTION

These DTCs indicate an open or short in the automatic transmission fluid (ATF) temperature sensor (TFT sensor) circuit. The automatic transmission fluid (ATF) temperature sensor converts ATF temperature into an electrical resistance value. Based on the resistance, the TCM determines the ATF temperature, and the TCM detects an open or short in the ATF temperature circuit. If the resistance value of the ATF temperature is less than 79 Ω*1 or more than 156 kΩ*2, the TCM interprets this as a fault in the ATF sensor or wiring. The TCM will turn on the MIL and store the DTC.
*1: 150°C (302°F) or more is indicated regardless of the actual ATF temperature.
*2: -40°C (-40°F) is indicated regardless of the actual ATF temperature.
HINT:
The ATF temperature can be checked on the intelligent tester display.

MONITOR STRATEGY

Related DTCs	P0710: ATF temperature sensor/Range check (Chattering) P0712: ATF temperature sensor/Range check (Low resistance) P0713: ATF temperature sensor/Range check (High resistance)
Required sensors/Components	ATF temperature sensor (TFT sensor)
Frequency of operation	Continuous
Duration	0.5 sec.
MIL operation	Immediately
Sequence of operation	None

AX

TYPICAL ENABLING CONDITIONS

P0710:

Range check (Chattering)

The monitor will run whenever this DTC is not present.	None
The typical enabling condition is not available.	-

P0712:

Range check (Low resistance)

The monitor will run whenever this DTC is not present.	None
The typical enabling condition is not available.	-

P0713:

Range check (High resistance)

The monitor will run whenever this DTC is not present.	None
Time after engine start	15 min. or more

TYPICAL MALFUNCTION THRESHOLDS

P0710:

Range check (Chattering)

TFT (transmission fluid temperature) sensor resistance	Less than 79 Ω or more than 156 kΩ

P0712:
Range check (Low resistance)

TFT sensor resistance	Less than 79 Ω

P0713:
Range check (High resistance)

TFT sensor resistance	More than 156 kΩ

COMPONENT OPERATING RANGE

TFT sensor	Atmospheric temperature to approx. 130°C (266°F)

WIRING DIAGRAM

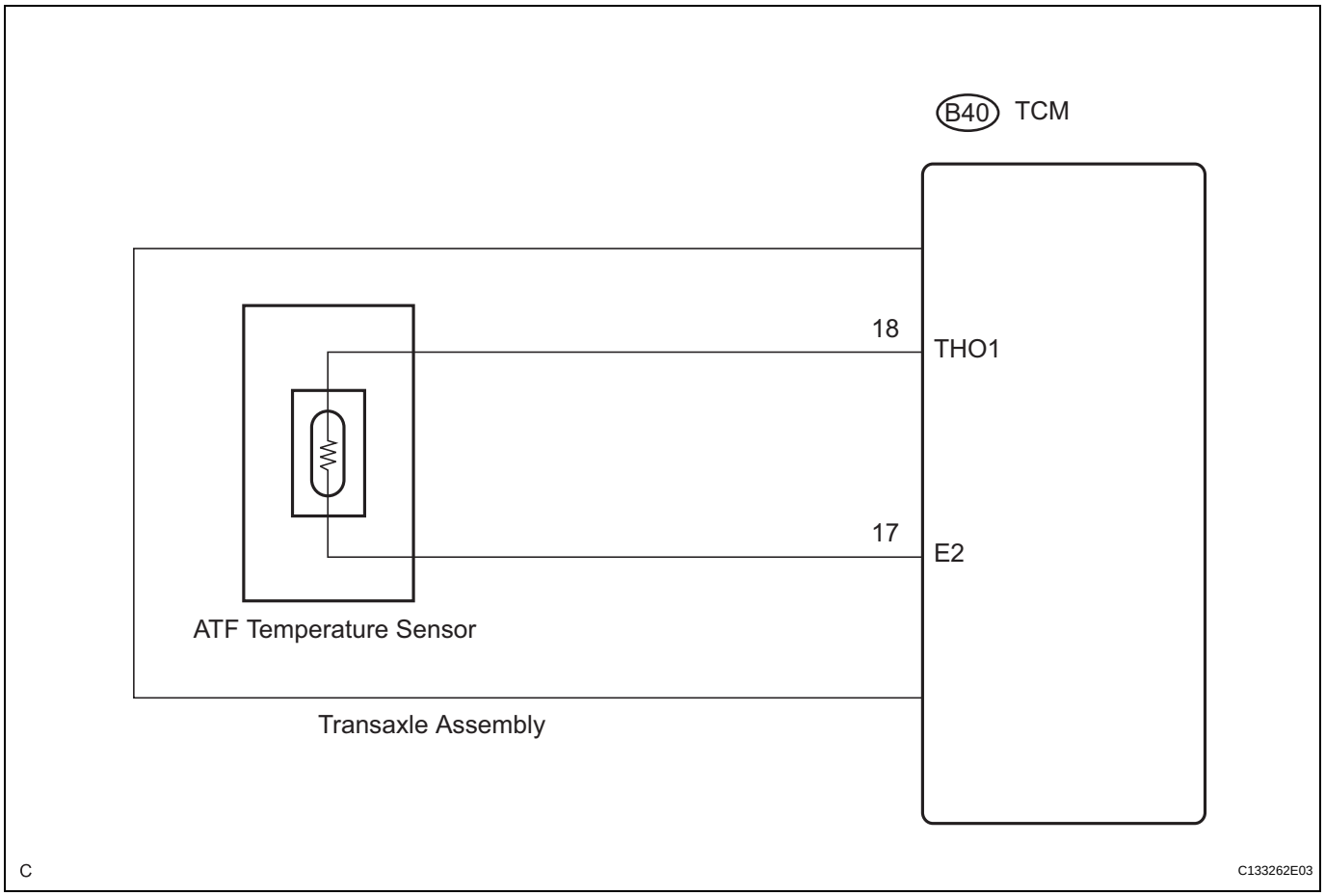

INSPECTION PROCEDURE

1. DATA LIST

HINT:
According to the DATA LIST displayed on the intelligent tester, you can read the value of switches, sensors, actuators and other items without removing any parts. Reading the DATA LIST as the first step in troubleshooting is one method to save labor time.

NOTICE:
In the table below, the values listed under "Normal Condition" are reference values. Do not depend solely on these reference values when deciding whether a part is faulty.

(a) Warm up the engine.
(b) Turn the engine switch off.

AX

(c) Connect the intelligent tester together with the CAN VIM (Controller Area Network Vehicle Interface Module) to the DLC3.
(d) Turn the engine switch on (IG).
(e) Turn on the tester.
(f) Enter the following items: "DIAGNOSIS / OBD/MOBD / ECT / DATA LIST".
(g) According to the display on the tester, read "DATA LIST".

Item	Measurement Item/ Range (display)	Normal Condition
AT OIL TEMP1	ATF Temp. Sensor Value/ min.: -40°C (-40°F) max.: 215°C (419°F)	• After Stall Test; Approx. 80°C (176°F) • Equal to ambient temperature when cold soak

HINT:
When DTC P0712 is output and the intelligent tester indicates 150°C (302°F) or more, there is a short circuit.
When DTC P0713 is output and the intelligent tester indicates -40°C (-40°F), there is an open circuit.
Measure the resistance between terminal OIL and body ground.

Temperature Displayed	Malfunction
-40°C (-40°F)	Open circuit
150°C (302°F) or more	Short circuit

HINT:
If the circuit related to the ATF temperature sensor becomes open, P0713 is immediately set (in 0.5 seconds). When P0713 is set, P0711 cannot be detected.
It is not necessary to inspect the circuit when P0711 is set.

1 INSPECT TRANSMISSION WIRE (ATF TEMPERATURE SENSOR)

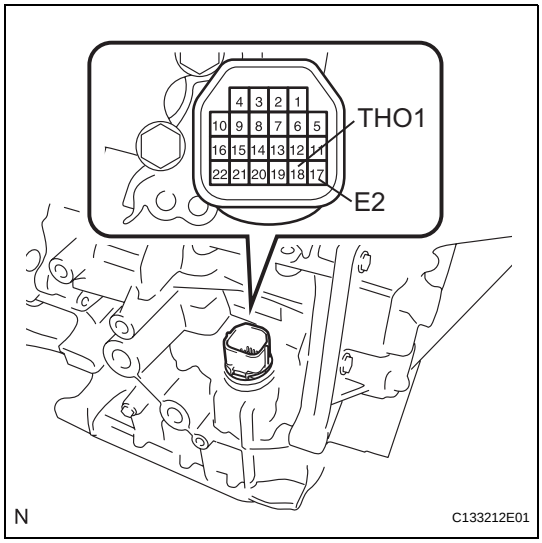

(a) Remove the TCM from the transaxle.
(b) Measure the resistance according to the value(s) in the table below.

Standard resistance

Tester Connection	Specified Condition
17 (E2) - 18 (THO1)	**90 Ω to 156 kΩ**
17 (E2) - Body ground	**10 kΩ or higher**
18 (THO1) - Body ground	**10 kΩ or higher**

HINT:
If the resistance is out of the specified range with the ATF temperature shown in the table below, the driveability of the vehicle may decrease.

Standard resistance

ATF Temperature	Specified Condition
10°C (50°F)	**5.8 to 7.1 kΩ**
110°C (230°F)	**0.23 to 0.26 kΩ**

OK → **REPLACE TCM**

NG

AX

2 INSPECT ATF TEMPERATURE SENSOR

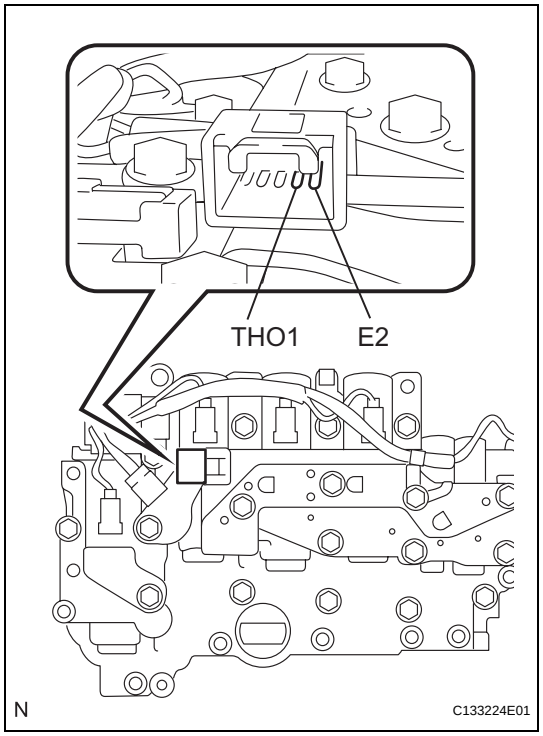

(a) Disconnect the ATF temperature sensor connector from the transmission wire.

(b) Measure the resistance according to the value(s) in the table below.

Standard resistance

Tester Connection	Specified Condition
E2 - THO1	90 Ω to 156 kΩ
E2 - Body ground	10 kΩ or higher
THO1 - Body ground	10 kΩ or higher

HINT:
If the resistance is out of the specified range with the ATF temperature shown in the table below, the driveability of the vehicle may decrease.

Standard resistance

ATF Temperature	Specified Condition
10°C (50°F)	5.8 to 7.1 kΩ
110°C (230°F)	0.22 to 0.28 kΩ

NG → **REPLACE ATF TEMPERATURE SENSOR ASSEMBLY**

OK

REPLACE TRANSMISSION WIRE

DTC	P0711	Transmission Fluid Temperature Sensor "A" Performance

DESCRIPTION

The ATF (Automatic Transmission Fluid) temperature sensor converts the fluid temperature into a resistance value for use by the TCM.

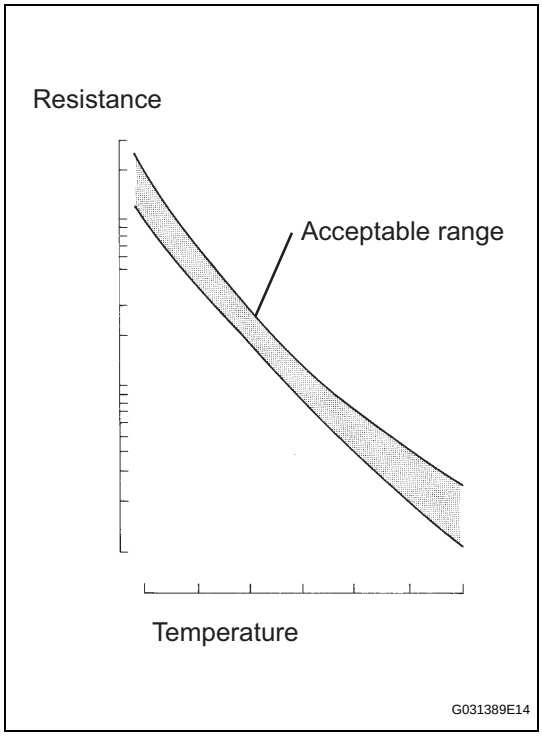

The TCM applies a voltage to the temperature sensor through terminal OIL of the TCM.
The sensor resistance changes with the transmission fluid temperature. As the temperature becomes higher, the sensor resistance decreases.
One terminal of the sensor is grounded so that the sensor resistance decreases and the voltage goes down as the temperature becomes higher.
The TCM calculates the fluid temperature based on the voltage signal.

DTC No.	DTC Detection Condition	Trouble Area
P0711	Both (a) and (b) are detected (2-trip detection logic): (a) Intake air and engine coolant temps. are more than -10°C (14°F) at engine start. (b) After normal driving for over 16 min. and 40 sec. and 5 mile (8 km) or more, ATF temp. is less than 20°C (68°F).	• Transmission wire (ATF temperature sensor) • TCM

MONITOR DESCRIPTION

This DTC indicates that there is a problem with output signals from the automatic transmission fluid (ATF) temperature sensor (TFT sensor) and that the sensor itself is defective. The ATF temperature sensor converts the ATF temperature into an electrical resistance value. Based on the resistance, the TCM determines the ATF temperature and detects an open or short in the ATF temperature circuit or a fault of the ATF temperature sensor.
After running the vehicle for a certain period, the ATF temperature should increase. If the ATF temperature is below 20°C (68°F) after running the vehicle for a certain period, the TCM interprets this as a fault, and turns on the MIL.

MONITOR STRATEGY

Related DTCs	P0711: ATF temperature sensor/Rationality check
Required sensors/Components	ATF temperature sensor (TFT sensor)
Frequency of operation	Continuous
Duration	3 sec.
MIL operation	2 driving cycles
Sequence of operation	None

TYPICAL ENABLING CONDITIONS

ALL:

The monitor will run whenever this DTC is not present	None
TFT (Transmission fluid temperature) sensor circuit	Circuit is not malfunctioning
ECT (Engine coolant temperature) sensor circuit	Circuit is not malfunctioning
IAT (Intake air temperature) sensor circuit	Circuit is not malfunctioning
Turbine speed sensor circuit	Circuit is not malfunctioning
Intermediate shaft speed sensor	Circuit is not malfunctioning
Shift solenoid valve SL1 circuit	Circuit is not malfunctioning
Shift solenoid valve SL2 circuit	Circuit is not malfunctioning
Shift solenoid valve SL3 circuit	Circuit is not malfunctioning
Shift solenoid valve SL4 circuit	Circuit is not malfunctioning
Knock control sensor circuit	Circuit is not malfunctioning
CAN communication system	Circuit is not malfunctioning
Electronic throttle system	Circuit is not malfunctioning
Time after engine start	16 min. and 40 sec. or more
ECT (Engine coolant temperature)	Above -15°C (5°F)

Condition A:

Time after engine start	18 min. and 20 sec.
Driving distance after engine start	5 miles (8 km) or more
IAT (12 sec. after engine start)	Above -10°C (14°F)
ECT (12 sec. after engine start)	Above -10°C (14°F)
Accumulated driving time *1	200 sec. or more
*1: Following conditions are met	
Engine speed - Turbine speed	50 rpm or more
Output speed	400 rpm or more
Throttle valve opening angle	3% or more
TFT (Transmission fluid temperature)	Less than 20°C (68°F)
Shift position	Not "N" or "P"

Condition B:

Time after engine start	30 min.
Driving distance after engine start	9.3 miles (15 km)
IAT (12 sec. after engine start)	-15°C (5°F) or more
ECT (12 sec. after engine start)	-15°C (5°F) or more
TFT (Transmission fluid temperature)	Less than 20°C (68°F)
Accumulated driving time *1	400 sec. or more

Condition C:

Time after engine start	40 min.
Driving distance after engine start	12.4 miles (20 km)
TFT (Transmission fluid temperature)	Less than 20°C (68°F)

Accumulated driving time *1	550 sec. or more

Condition D:

Time after ECT reaches 60°C (140°F)	10 sec. or more
TFT (12 sec. after engine start)	110°C (230°F) or more
ECT (12 sec. after engine start)	35°C (95°F) or less

TYPICAL MALFUNCTION THRESHOLDS

Condition A, B and C:

TFT	Less than 20°C (68°F) (THO = -10°C (14°F) at engine start) (Conditions vary with THO at engine)

Condition D:

TFT	110°C (230°F) or more

COMPONENT OPERATING RANGE

TFT	ATF temperature - approx. 130°C (266°F)

WIRING DIAGRAM

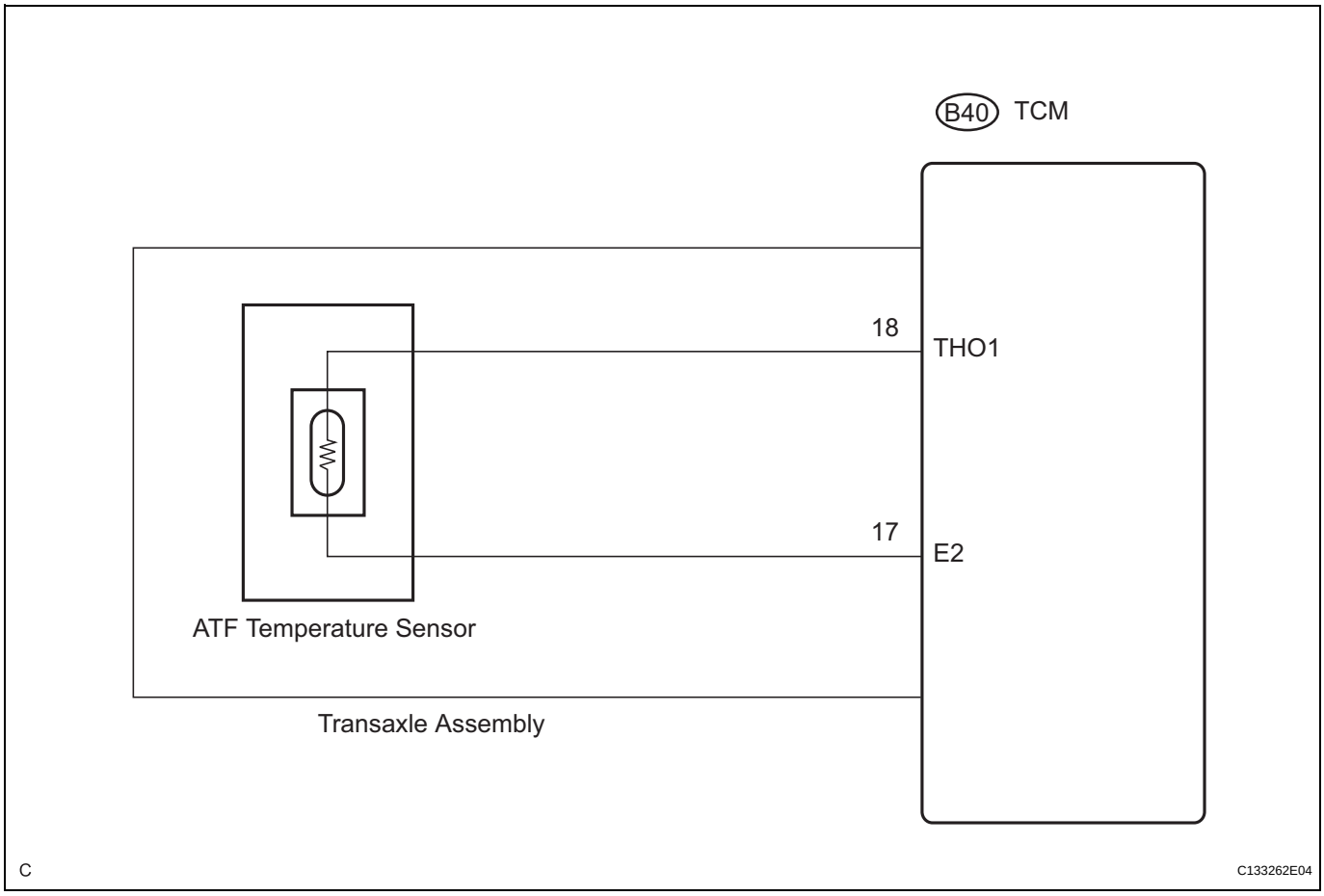

AX

INSPECTION PROCEDURE

1. DATA LIST

HINT:
According to the DATA LIST displayed on the intelligent tester, you can read the value of switches, sensors, actuators and other items without removing any parts. Reading the DATA LIST as the first step in troubleshooting is one method to save labor time.

NOTICE:
In the table below, the values listed under "Normal Condition" are reference values. Do not depend solely on these reference values when deciding whether a part is faulty.

(a) Warm up the engine.
(b) Turn the engine switch off.
(c) Connect the intelligent tester together with the CAN VIM (Controller Area Network Vehicle Interface Module) to the DLC3.
(d) Turn the engine switch on (IG).
(e) Turn on the tester.
(f) Enter the following items: "DIAGNOSIS / OBD / MOBD / ECT / DATA LIST".
(g) According to the display on the tester, read "DATA LIST".

Item	Measurement Item/ Range (display)	Normal Condition
AT OIL TEMP1	ATF Temp. Sensor Value/ min.: -40°C (-40°F) max.: 215°C (419°F)	• After Stall Test; Approx. 80°C (176°F) • Equal to ambient temperature when cold soak

HINT:
When DTC P0712 is output and the intelligent tester indicates 150°C (302°F) or more, there is a short circuit.
When DTC P0713 is output and the intelligent tester indicates -40°C (-40°F), there is an open circuit.
Measure the resistance between terminal THO1 (OT) and body ground.

Temperature Displayed	Malfunction
-40°C (-40°F)	Open circuit
150°C (302°F) or more	Short circuit

AX

HINT:
If a circuit related to the ATF temperature sensor becomes open, P0713 is immediately set (in 0.5 seconds). When P0713 is set, P0711 cannot be detected.
It is not necessary to inspect the circuit when P0711 is set.

1	CHECK OTHER DTCS OUTPUT (IN ADDITION TO DTC P0711)

(a) Connect the the intelligent tester to the DLC3.
(b) Turn the engine switch on (IG) and turn the the intelligent tester on.
(c) Select the items: "DIAGNOSIS / OBD/MOBD / ECT / DTC INFO / CURRENT CODES".
(d) Read the DTCs using the intelligent tester.

Result

Display (DTC output)	Proceed to
Only "P0711" is output	**A**
"P0711" and other DTCs	**B**

HINT:
If any other codes besides "P0711" are output, perform troubleshooting for those DTCs first.

B → **GO TO DTC CHART**

A

2 CHECK TRANSMISSION FLUID LEVEL

(a) Check the transmission fluid level.

OK:

Automatic transmission fluid level is correct.

NG → **ADD FLUID**

OK

3 INSPECT TRANSMISSION WIRE (ATF TEMPERATURE SENSOR)

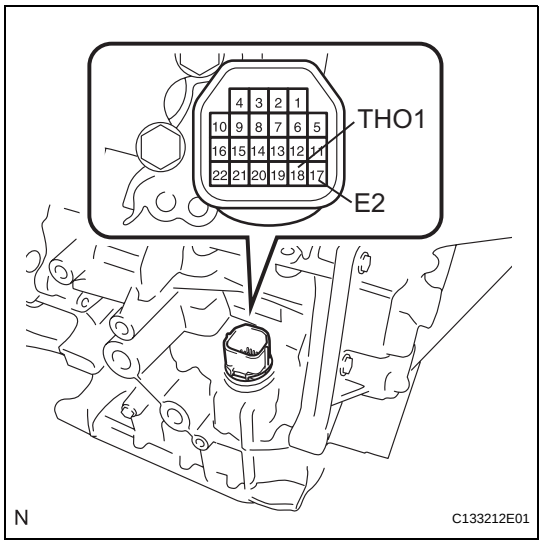

(a) Remove the TCM from the transaxle.

(b) Measure the resistance according to the value(s) in the table below.

Standard resistance

Tester Connection	Specified Condition
17 (E2) - 18 (THO1)	90 Ω to 156 kΩ
17 (E2) - Body ground	10 kΩ or higher
18 (THO1) - Body ground	10 kΩ or higher

HINT:
If the resistance is out of the specified range with the ATF temperature shown in the table below, the driveability of the vehicle may decrease.

Standard resistance

ATF Temperature	Specified Condition
10°C (50°F)	5.8 to 7.1 kΩ
110°C (230°F)	0.23 to 0.26 kΩ

OK → **REPLACE TCM**

NG

AX

4 CHECK ATF TEMPERATURE SENSOR

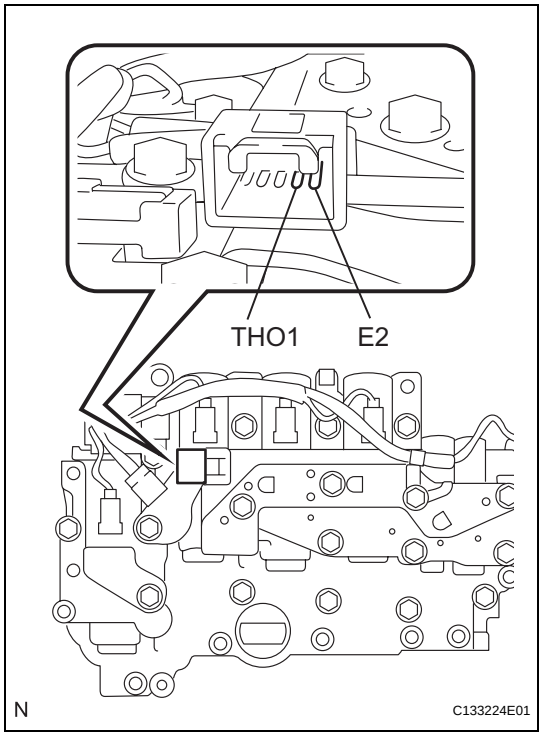

(a) Disconnect the ATF temperature sensor connector from the transmission wire.

(b) Measure the resistance according to the value(s) in the table below.

Standard resistance

Tester Connection	Specified Condition
E2 - THO1	90 Ω to 156 kΩ
E2 - Body ground	10 kΩ or higher
THO1 - Body ground	10 kΩ or higher

HINT:
If the resistance is out of the specified range with the ATF temperature shown in the table below, the driveability of the vehicle may decrease.

Standard resistance

ATF Temperature	Specified Condition
10°C (50°F)	5.8 to 7.1 kΩ
110°C (230°F)	0.23 to 0.26 kΩ

NG → **REPLACE ATF TEMPERATURE SENSOR ASSEMBLY**

OK

REPLACE TRANSMISSION WIRE

DTC	P0715	Input / Turbine Speed Sensor Circuit Malfunction

DTC	P0717	Input Speed Sensor Circuit No Signal

SYSTEM DESCRIPTION

This sensor detects the rotation speed of the turbine which shows the input revolution of transaxle. By comparing the input turbine speed signal (NT) with the counter gear speed sensor signal (NC), the TCM detects the shift timing of the gears and appropriately controls the engine torque and hydraulic pressure according to various conditions, thus, providing smooth gear shift.

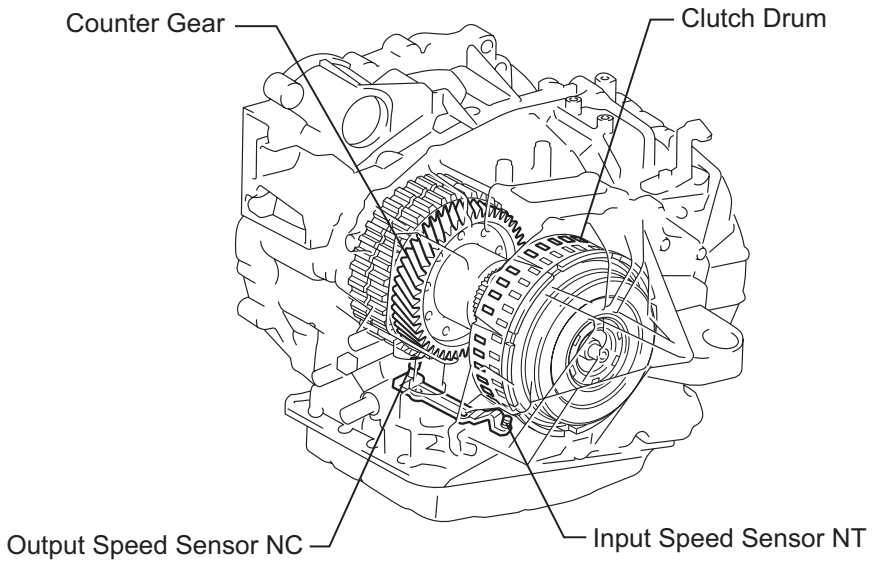

N C133216E01

AX

DTC No.	DTC Detection Condition	Trouble Area
P0715	When the speed sensor input voltage is either more than 1.9 V or less than 0.1 V for 4.5 seconds or more.	• Transmission revolution sensor (speed sensor NT) • TCM
P0717	ECM detects conditions (a), (b) and (c) continuously for 5 sec. or more (1-trip detection logic): (a) Vehicle speed: 31 mph (50 km/h) or more (b) Park/neutral position switch (STAR and R) is OFF (c) Speed sensor (NT): less than 300 rpm	

MONITOR DESCRIPTION

The NT terminal of the TCM detects a revolution signal from the speed sensor (NT) (input RPM). The TCM calculates a gearshift comparing the speed sensor (NT) with the speed sensor (NC).
While the vehicle is operating in 2nd, 3rd, 4th or 5th gear in the shift position of D, if the input shaft revolution is less than 300 rpm *1although the output shaft revolution is more than 1,000 rpm *2, the TCM interprets this as a fault, illuminates the MIL and stores the DTC.
*1: Pulse is not output or is irregularly output.
*2: The vehicle speed is 31 mph (50 km/h) or more.

MONITOR STRATEGY

Related DTCs	P0717: Speed sensor (NT)/Verify pulse input

Required sensors/Components	Speed sensor (NT), Speed sensor (NC)
Frequency of operation	Continuous
Duration	5 sec.
MIL operation	Immediate
Sequence of operation	None

TYPICAL ENABLING CONDITIONS

P0715:

Battery voltage	8 V or more
Engine switch	ON
Starter	OFF

P0717:

The monitor will run whenever this DTC is not present.	P0500 (VSS) P0748, P0778, P0798 (Shift solenoid valve (range))
Shift change	Shift change is completed before starting next shift change operation
TCM selected gear	2nd, 3rd, 4th, 5th or 6th
Output shaft rpm	1,000 rpm or more
STAR switch	OFF
R switch	OFF
Engine	Running
Battery voltage	8 V or more
Engine switch	ON
Starter	OFF

TYPICAL MALFUNCTION THRESHOLDS

P0715:

Sensor voltage	Less than 0.1 V or more than 1.9 V

P0717:

Sensor signal rpm	Less than 300 rpm

COMPONENT OPERATING RANGE

Speed sensor (NT)	Turbine speed is equal to engine speed with lock-up ON

WIRING DIAGRAM

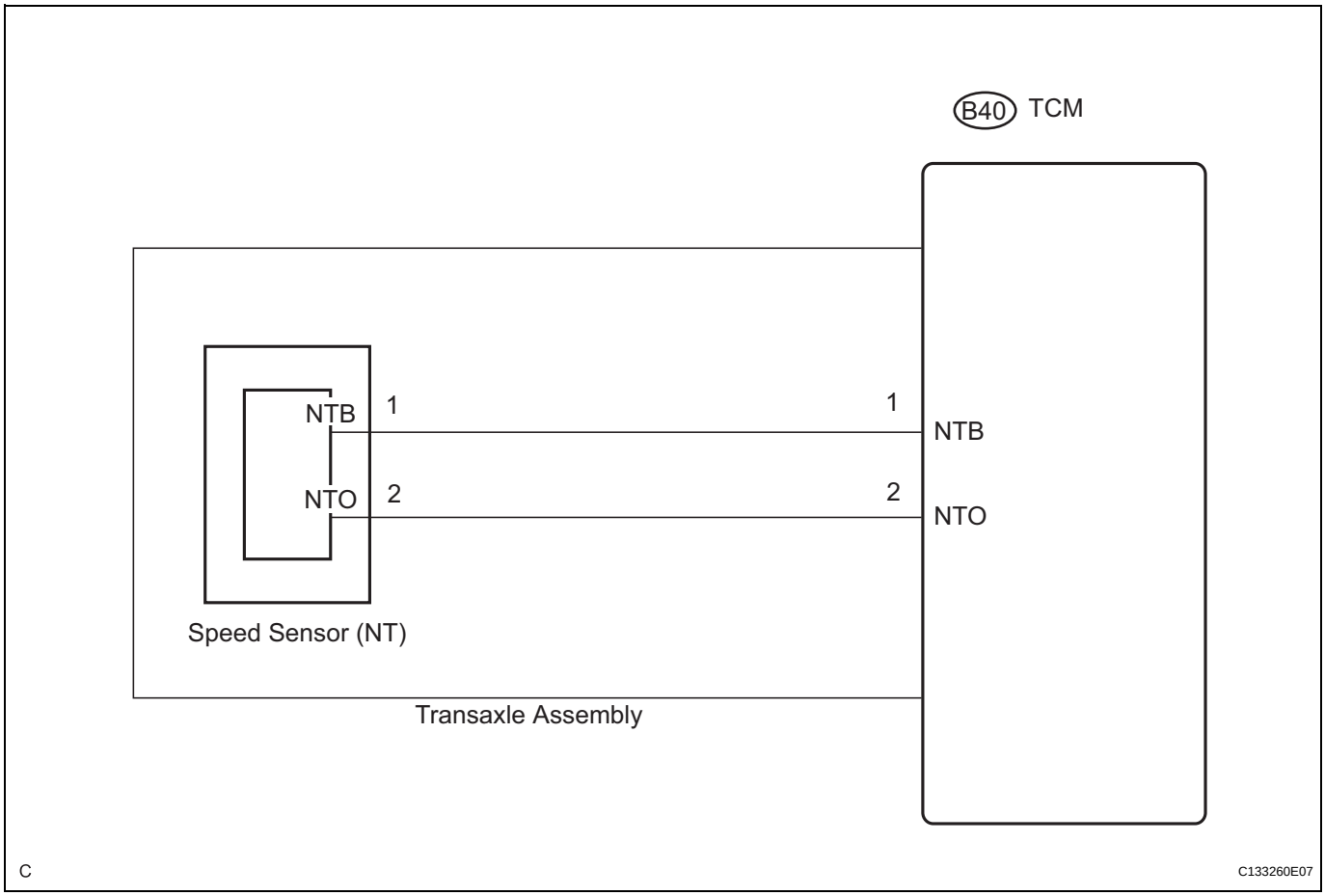

INSPECTION PROCEDURE

AX

1. DATA LIST

NOTICE:

In the table below, the values listed under "Normal Condition" are reference values. Do not depend solely on these reference values when deciding whether a part is faulty.

HINT:

According to the DATA LIST displayed on the intelligent tester, you can read the value of switches, sensors, actuators and other items without removing any parts. Reading the DATA LIST as the first step in troubleshooting is one method to save labor time.

(a) Warm up the engine.
(b) Turn the engine switch off.
(c) Connect the intelligent tester together with the CAN VIM (Controller Area Network Vehicle Interface Module) to the DLC3.
(d) Turn the engine switch on (IG).
(e) Turn on the tester.
(f) Enter the following items: "DIAGNOSIS / OBD / MOBD / ECT / DATA LIST".
(g) According to the display on the tester, read "DATA LIST".

Item	Measurement Item/ Range (display)	Normal Condition
SPD (NT)	Input Turbine Speed/display: 50 r/min	HINT: • Lock-up ON (after warming up the engine); input turbine speed (NT) is equal to the engine speed. • Lock-up OFF (idling at N position); input turbine speed (NT) is nearly equal to the engine speed.

HINT:
- SPD (NT) is always 0 while driving: Open or short in the sensor or circuit.
- SPD (NT) is always more than 0 and less than 300 rpm while driving the vehicle at 31 mph (50 km/h) or more: Sensor trouble, improper installation, or intermittent connection trouble of the circuit.

1 INSPECT SPEED SENSOR (SENSOR INSTALLATION)

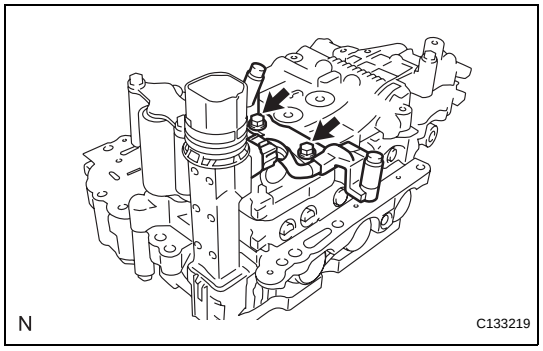

(a) Make sure that the connector is properly connected, and check the speed sensor installation.
OK:
The installation bolt is tightened properly and there is no clearance between the sensor and transaxle case.

NG → **REPAIR OR REPLACE SPEED SENSOR**

OK

2 CHECK TRANSMISSION WIRE

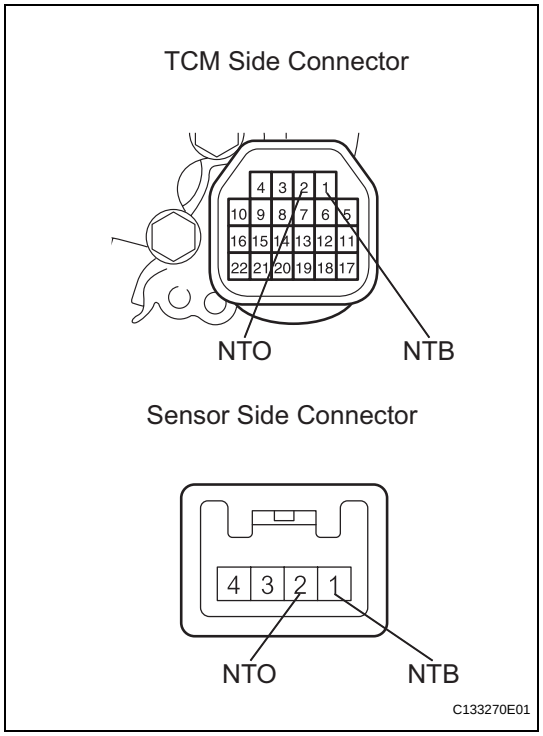

(a) Remove the TCM.
(b) Disconnect the speed sensor connector from the transmission wire.
(c) Measure the resistance according to the value(s) in the table below.
Standard resistance

Tester Condition	Specified Condition
NTO - NTO	Below 1 Ω
NTB - NTB	Below 1 Ω
NTO - NTB	10 kΩ or higher

NG → **REPLACE TRANSMISSION WIRE**

OK

3 REPLACE SPEED SENSOR

NEXT

AX

4	CHECK IF DTC OUTPUT RECURS (SEE IF DTC P0715 AND/OR P0717 IS OUTPUT AGAIN)

(a) Connect the intelligent tester to the DLC3.
(b) Start the engine and turn the intelligent tester main switch ON.
(c) Perform the monitor drive pattern (See page AX-26).
(d) When you use the intelligent tester:
Select the item "DIAGNOSIS / OBD / MOBD / ECT / DTC INFO / CURRENT CODES".
(e) Read the DTCs using the intelligent tester.

Result

Display (DTC output)	Proceed to
Only "P0715 or P0717" is output	A
No output	B

B → END

A

REPLACE TCM

DTC	P0724	Brake Switch "B" Circuit High

DESCRIPTION

The purpose of this circuit is to prevent the engine from stalling while driving in lock-up condition when brakes are suddenly applied.
When the brake pedal is depressed, this switch sends a signal to the TCM. Then the TCM cancels the operation of the lock-up clutch while braking is in progress.

DTC No.	DTC Detection Condition	Trouble Area
P0724	The stop light switch remains ON even when the vehicle is driven in a STOP (less than 2 mph (3 km/h)) and GO (19 mph (30 km/h) or more) fashion 5 times. (2-trip detection logic).	• Short in stop light switch signal circuit • Stop light switch • TCM

MONITOR DESCRIPTION

This DTC indicates that the stop light switch remains ON. When the stop light switch remains ON during "stop and go" driving, the TCM interprets this as a fault in the stop light switch, illuminates the MIL, and stores the DTC. The vehicle must stop (less than 2 mph (3 km/h)) and go (19 mph (30 km/h) or more) five times for two consecutive driving cycles in order to set this DTC.

MONITOR STRATEGY

Related DTCs	P0724: Stop light switch/Range check/Rationality
Required sensors/Components	Stop light switch
Frequency of operation	Continuous
Duration	GO and STOP 5 times
MIL operation	2 driving cycles
Sequence of operation	None

TYPICAL ENABLING CONDITIONS

The stop light switch remains ON during GO and STOP 10 times.

GO and STOP are defined as follows;

The monitor will run whenever this DTC is not present.	None
GO: (Vehicle speed is 18.63 mph (30 km/h) or more)	18.7 mph (30 km/h) or more
STOP: (Vehicle speed is less than 1.86 mph (3 km/h))	Less than 1.86 mph (3 km/h)
Starter	OFF
Battery voltage	8 V or more
Engine switch	ON

TYPICAL MALFUNCTION THRESHOLDS

Switch status	ON stuck

WIRING DIAGRAM

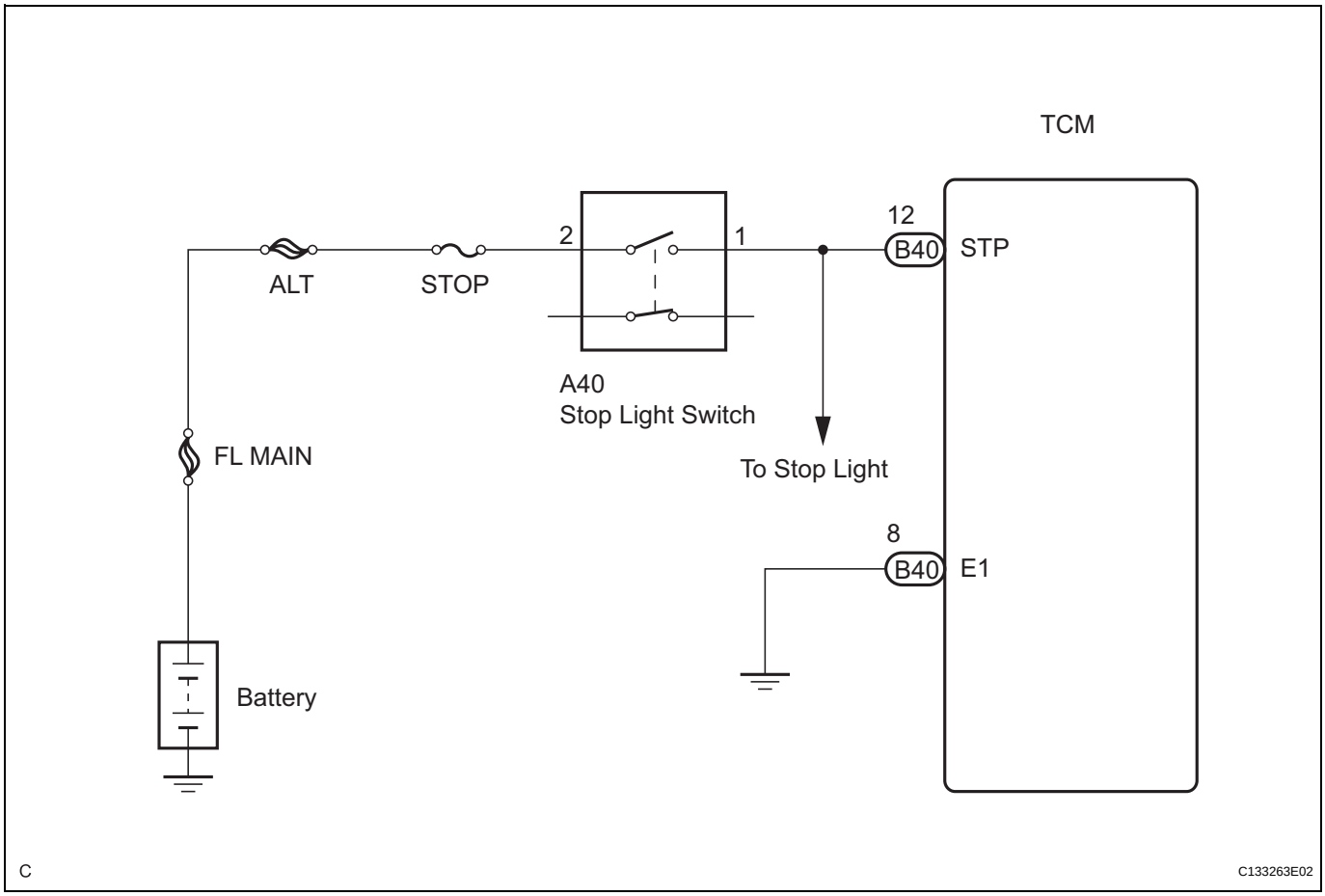

INSPECTION PROCEDURE

AX

1	READ VALUE OF DATA LIST (STP SIGNAL)

HINT:
According to the DATA LIST displayed on the intelligent tester, you can read the value of switches, sensors, actuators and other items without removing any parts. Reading the DATA LIST as the first step in troubleshooting is one method to save labor time.

(a) Turn the engine switch off.
(b) Connect the intelligent tester together with the CAN VIM (Controller Area Network Vehicle Interface Module) to the DLC3.
(c) Turn the engine switch on (IG).
(d) Turn on the tester.
(e) Enter the following items: "DIAGNOSIS / OBD / MOBD / ECT / DATA LIST".
(f) According to the display on the tester, read "DATA LIST".

Standard

Item	Measurement Item/ Range (display)	Normal Condition
STOP LIGHT SW	Stop light switch status/ ON or OFF	• Brake pedal is depressed: ON • Brake pedal is released: OFF

NOTICE:
In the table above, the conditions listed under "Normal Condition" are reference conditions. Do not depend solely on these reference conditions when deciding whether a part is faulty.

OK → **Go to step 3**

NG

2 INSPECT STOP LIGHT SWITCH ASSEMBLY

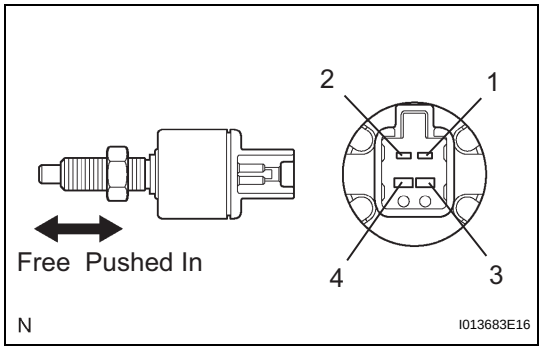

(a) Remove the stop light switch assembly.
(b) Measure the resistance according to the value(s) in the table below.

Standard resistance

Switch Position	Tester Connection	Specified Condition
Switch pin free	1 - 2	Below 1 Ω
Switch pin pushed in	1 - 2	10 kΩ or higher
Switch pin free	3 - 4	10 kΩ or higher
Switch pin pushed in	3 - 4	Below 1 Ω

NG → **REPLACE STOP LIGHT SWITCH ASSEMBLY**

OK

3 CHECK HARNESS AND CONNECTOR (STOP LIGHT SWITCH ASSEMBLY - TCM)

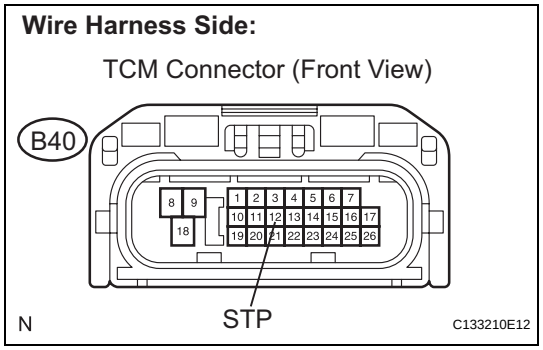

(a) Install the stop light switch assembly.
(b) Disconnect the TCM connector.
(c) Measure the voltage according to the value(s) in the table below when the brake pedal is depressed and released.

Standard voltage

Condition	Tester Connection	Specified Condition
Brake pedal is depressed	B40-12 (STP) - Body ground	10 to 14 V
Brake pedal is released	B40-12 (STP) - Body ground	Below 1 V

NG → **REPAIR OR REPLACE HARNESS OR CONNECTOR**

OK

REPLACE TCM

AX

DTC	P0741	Torque Converter Clutch Solenoid Performance (Shift Solenoid Valve SL)

SYSTEM DESCRIPTION

The TCM uses signals from the throttle position sensor, air-flow meter, turbine (input) speed sensor, intermediate (counter) speed sensor and crankshaft position sensor to help determine the engagement timing of the lock-up clutch. The TCM monitors the engagement of the clutch using the turbine (input) speed sensor, intermediate (counter) speed sensor and crankshaft position sensor.
Then the TCM compares the engagement condition of the lock-up clutch with the lock-up schedule in the TCM memory to detect shift solenoid valve SL, valve body and torque converter clutch mechanical problems.

DTC No.	DTC Detection Condition	Trouble Area
P0741	When both of the following are detected (2-trip detection logic): • Lock-up does not occur when requested. • Transmission fluid pressure switch No. 3 is ON.	• Shift solenoid valve SL (closed) • Valve body (blocked) • Torque converter clutch • Automatic transaxle (clutch, brake or gear etc.) • Line pressure is too low

MONITOR DESCRIPTION

Torque converter lock-up is controlled by the TCM based on the speed sensor (NT), speed sensor (NC), engine rpm, engine load, engine temperature, vehicle speed, transmission fluid temperature, and gear selection. The TCM determines the lock-up status of the torque converter by comparing the engine rpm (NE) to the input turbine rpm (NT). The TCM calculates the actual transmission gear by comparing the input turbine rpm (NT) to the counter gear rpm (NC). When conditions are appropriate, the TCM requests "lock-up" by applying control voltage to the shift solenoid SL. When the SL is turned on, it applies pressure to the lock-up relay valve and locks the torque converter clutch.
If the TCM detects no lock-up after lock-up has been requested or if it detects lock-up when it is not requested, the TCM interprets this as a fault in the shift solenoid valve SL or lock-up system performance. The TCM will turn on the MIL and store the DTC.
HINT:
Example:
When any of the following is met, the system judges it as a malfunction.

- There is a difference in rotation between the input side (engine speed) and output side (input turbine speed) of the torque converter when the TCM commands lock-up.
  (Engine speed is at least 70 rpm greater than the input turbine speed.)
- There is no difference in rotation between the input side (engine speed) and output side (input turbine speed) of the torque converter when the TCM commands lock-up off.
  (The difference between the engine speed and input turbine speed is less than 20 rpm.)

MONITOR STRATEGY

Related DTCs	P0741: Shift solenoid valve SL OFF malfunction Shift solenoid valve SL ON malfunction
Required sensors/Components	Shift solenoid valve SL, Speed sensor (NT), Speed sensor (NC), Crankshaft position sensor (NE), Throttle position sensor (VPA1), Mass air flow sensor (MAF), Transmission temperature sensor (THO1), Engine coolant temperature sensor (ECT)
Frequency of operation	Continuous
Duration	OFF malfunction 3.5 sec.
MIL operation	2 driving cycles
Sequence of operation	None

TYPICAL ENABLING CONDITIONS

ALL:

The monitor will run whenever this DTC is not present.	P0115 - P0118 (ECT sensor) P0125 (Insufficient ECT for closed loop) P0500 (VSS) P0748, P0778, P0798 (Shift solenoid valve (range))
ECT (Engine coolant temperature)	40°C (104°F) or more
Transmission range	"D"
TFT (Transmission fluid temperature)	-10°C (-14°F) or more
TFT sensor circuit	No circuit malfunction
ECT sensor circuit	No circuit malfunction
Turbine speed sensor circuit	No circuit malfunction
Intermediate shaft speed sensor circuit	No circuit malfunction
Torque converter clutch circuit	No circuit malfunction
Knock control sensor circuit	No circuit malfunction
Shift solenoid valve SL1 circuit	No circuit malfunction
Shift solenoid valve SL2 circuit	No circuit malfunction
Shift solenoid valve SL3 circuit	No circuit malfunction
Shift solenoid valve SL4 circuit	No circuit malfunction
Shift solenoid valve SLU circuit	No circuit malfunction
CAN communication circuit	No circuit malfunction
Electronic throttle system	No circuit malfunction
TCM selected gear	No 1st
Vehicle speed	15.5 miles (25 km)
Turbine speed/Output speed (NT/NO) with 1st	3.304 to 7.724
Turbine speed/Output speed (NT/NO) with 2nd	1.901 to 2.340
Turbine speed/Output speed (NT/NO) with 3rd	1.399 to 1.649
Turbine speed/Output speed (NT/NO) with 4th	0.998 to 1.138
Turbine speed/Output speed (NT/NO) with 5th	0.705 to 0.836
Turbine speed/Output speed (NT/NO) with 6th	0.568 to 0.695

TYPICAL MALFUNCTION THRESHOLDS

OFF malfunction:

Following conditions are met	(a) and (b)
(a) Engine Speed - Turbine speed	70 rpm or more
(b) Transmission fluid pressure switch	ON

INSPECTION PROCEDURE

HINT:

Performing the ACTIVE TEST using the intelligent tester allows relays, VSVs, actuators and so on to operate without removing any parts. Performing the ACTIVE TEST as the first step in troubleshooting is one method to save labor time.

It is possible to display the DATA LIST during the ACTIVE TEST.

1. PERFORM ACTIVE TEST

(a) Warm up the engine.
(b) Turn the engine switch off.
(c) Connect the intelligent tester to the DLC3.
(d) Turn the engine switch on (IG).
(e) Turn the intelligent tester on.
(f) When using the intelligent tester:
Enter the following items: "DIAGNOSIS / OBD/MOBD / ECT / ACTIVE TEST".

(g) According to the display on the tester, perform "ACTIVE TEST".

Item	Test Details	Diagnostic Note
LOCK UP	[Test Details] Control the shift solenoid SL to set the automatic transaxle to the lock-up condition. [Vehicle Condition] Vehicle Speed: 37 mph (60 km/h) or more	Possible to check the SL operation.

HINT:
- This test can be conducted when the vehicle speed is 37 mph (60 km/h) or more.
- This test can be conducted in the 6th gear.

(h) Lightly depress the accelerator pedal and check that the engine speed does not change abruptly.
HINT:
- When changing the accelerator pedal opening angle while driving, if the engine speed does not change, lock-up is on.
- Slowly release, but not fully, the accelerator pedal in order to decelerate. (Fully releasing the pedal will close the throttle valve and lock-up may be turned off.)

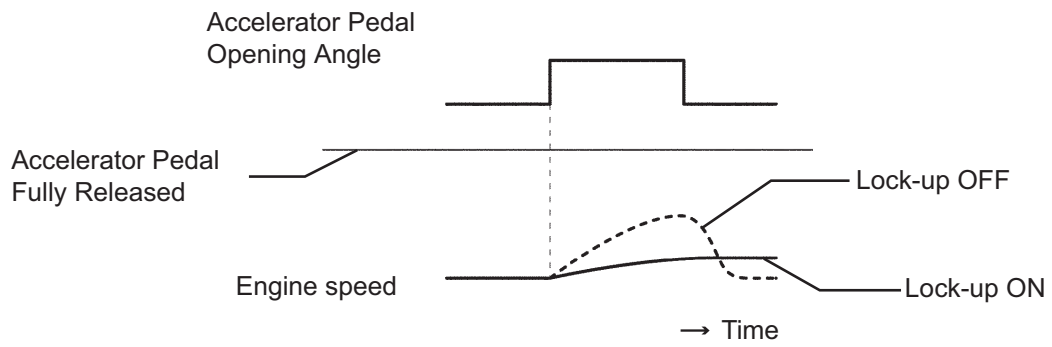

AX

1	CHECK OTHER DTCS OUTPUT (IN ADDITION TO DTC P0741)

(a) Connect the intelligent tester to the DLC3.
(b) Turn the engine switch on (IG) and turn the intelligent tester on.
(c) Enter the following items: "DIAGNOSIS / OBD/MOBD / ECT / DTC INFO / CURRENT CODES".
(d) Read the DTCs using the intelligent tester.

Result

Display (DTC output)	Proceed to
Only "P0741" is output	**A**
"P0741" and other DTCs	**B**

HINT:
If any other codes besides "P0741" are output, perform the troubleshooting for those DTCs first.

B → **GO TO DTC CHART**

A

2 CHECK TRANSMISSION WIRE

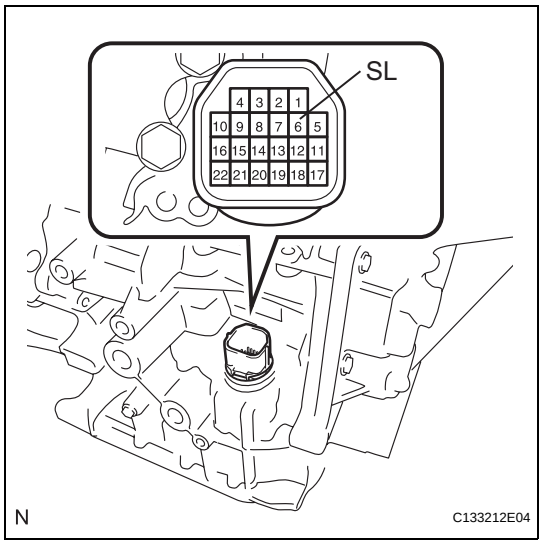

(a) Remove the TCM from the transaxle.
(b) Measure the resistance according to the value(s) in the table below.

Standard resistance

Tester Connection	Specified Condition 20°C (68°F)
6 (SL) - Body ground	11 to 15 Ω

OK → **Go to step 4**

NG

3 CHECK SHIFT SOLENOID VALVE SL (RESISTANCE)

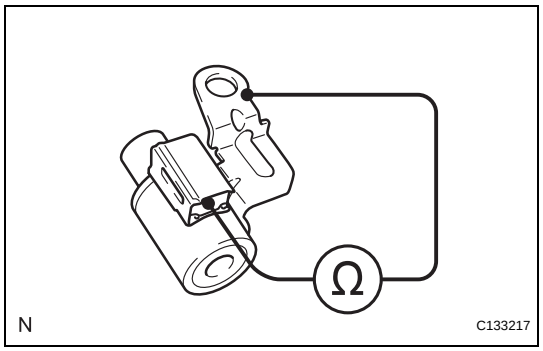

(a) Remove the shift solenoid valve SL.
(b) Measure the resistance according to the value(s) in the table below.

Standard resistance

Tester Connection	Specified Condition 20°C (68°F)
Solenoid Connector (SL) - Solenoid Body (SL)	11 to 15 Ω

NG → **REPLACE SHIFT SOLENOID VALVE SL**

OK

REPAIR OR REPLACE TRANSMISSION WIRE

AX

4	CHECK SHIFT SOLENOID VALVE SL (OPERATION)

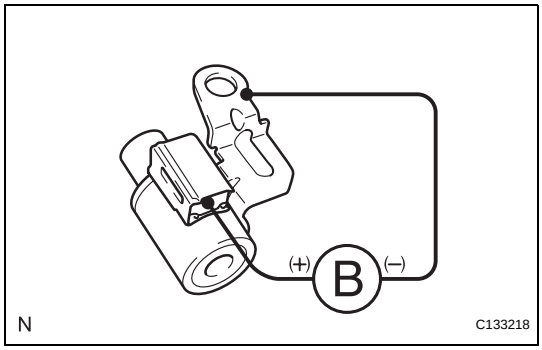

(a) Remove the shift solenoid valve SL.
(b) Connect a positive (+) lead to the terminal of the solenoid connector, and a negative (-) lead to the solenoid body.

OK:
The solenoid valve makes an operating noise.

NG → **REPLACE SHIFT SOLENOID VALVE SL**

OK

5	CHECK TRANSMISSION VALVE BODY ASSEMBLY

OK:
There are no foreign objects on each valve and they operate smoothly.

NG → **REPAIR OR REPLACE TRANSMISSION WIRE**

OK

6	CHECK TORQUE CONVERTER CLUTCH ASSEMBLY

OK:
The torque converter clutch operates normally.

NG → **REPLACE TORQUE CONVERTER CLUTCH ASSEMBLY**

OK

REPAIR OR REPLACE AUTOMATIC TRANSAXLE ASSEMBLY

DTC	P0746	Pressure Control Solenoid "A" Performance (Shift Solenoid Valve SL1)

SYSTEM DESCRIPTION

The TCM uses the vehicle speed signal to determine the actual gear position (1st, 2nd, 3rd, 4th, 5th or 6th gear).
Then the TCM compares the actual gear with the shift schedule in the TCM memory to detect mechanical problems of the shift solenoid valves and valve body.

DTC No.	DTC Detecting Condition	Trouble Area
P0746	The engine revs freely when 1st, 2nd, 3rd, or 4th gear is requested (2-trip detection logic). When either of the following is detected twice (2-trip detection logic): • When 5th gear is requested, 4th gear is engaged. • When 6th gear is requested, 4th gear is engaged.	• Shift solenoid valve SL1 (open or closed) • Valve body (blocked) • Automatic transaxle (clutch, brake or gear etc.)

MONITOR DESCRIPTION

The TCM commands gear shifts by turning the shift solenoid valves on or off. According to the input shaft revolution, intermediate (counter) shaft revolution and output shaft revolution, the TCM detects the actual gear position (1st, 2nd, 3rd, 4th, 5th or 6th gear position). When the gear position commanded by the TCM and the actual gear position are not the same, the TCM illuminates the MIL.

MONITOR STRATEGY

Related DTCs	P0746: Shift solenoid valve SL1 OFF malfunction Shift solenoid valve SL1 ON malfunction
Required sensors/Components	Shift solenoid valve SL1, Speed sensor (NT), Speed sensor (NC), Crankshaft position sensor (NE)
Frequency of operation	Continuous
Duration	ON malfunction: 0.8 sec. OFF malfunction: 0.5 sec.
MIL operation	2 driving cycles
Sequence of operation	None

AX

TYPICAL ENABLING CONDITIONS

ALL:

The monitor will run whenever this DTC is not present.	P0115 - P0118 (ECT sensor) P0125 (Insufficient ECT for closed loop) P0500 (VSS) P0748, P0778, P0798 (Shift solenoid valve (range))
Transmission range	"D"
TFT (Transmission fluid temperature)	-10°C (14°F) or more
ECT sensor circuit	Circuit is not malfunctioning
Turbine speed sensor circuit	Circuit is not malfunctioning
Intermediate shaft speed sensor circuit	Circuit is not malfunctioning
Knock control sensor circuit	Circuit is not malfunctioning
Shift solenoid valve SL1 circuit	Circuit is not malfunctioning
Shift solenoid valve SL2 circuit	Circuit is not malfunctioning
Shift solenoid valve SL3 circuit	Circuit is not malfunctioning
Shift solenoid valve SL4 circuit	Circuit is not malfunctioning
CAN communication circuit	Circuit is not malfunctioning
Electronic throttle system	Circuit is not malfunctioning

OFF malfunction:

TCM selected gear	1st, 2nd, 3rd or 4th
TCM indicated pressure value of SL1	1,200 kPa
Throttle valve opening angle	3% or more

ON malfunction:

TCM selected gear	5th or 6th
Vehicle speed	1.2 mph (2 km/h) or more
ECT (Engine coolant temperature)	40°C (104°F) or more
Throttle valve opening angle	4.5% or more at engine speed 2,000 rpm (Varies with engine speed)

TYPICAL MALFUNCTION THRESHOLDS

Either of the following conditions is met:

OFF malfunction:

Turbine speed - Output speed x Gear ratio	1,000 or more

ON malfunction:

Input (turbine) speed/Intermediate shaft speed when output speed less than 1,000 rpm	0.998 to 1.138

INSPECTION PROCEDURE

1	CHECK OTHER DTCS OUTPUT (IN ADDITION TO DTC P0746)

(a) Connect the intelligent tester to the DLC3.
(b) Start the engine and turn the intelligent tester on.
(c) Enter the following items: "DIAGNOSIS / OBD/MOBD / ECT / DTC INFO / CURRENT CODES".
(d) Read the DTCs using the intelligent tester.

AX

Result

Display (DTC output)	Proceed to
Only "P0746" is output	A
"P0746" and other DTCs	B

HINT:
If a solenoid is stuck OFF, DTCs for several solenoids including the malfunctioning solenoid will be detected.

A → **Go to step 3**

B

2	PERFORM ACTIVE TEST BY SHIFT

NOTICE:
This test should always be performed with at least 2 people.

(a) Connect the intelligent tester to the DLC3.
(b) Turn the engine switch on (IG) and turn the intelligent tester on.
(c) Enter the following items: "DIAGNOSIS / OBD/MOBD / ECT / ACTIVE TEST / SHIFT".

HINT:
Comparing the shift position commanded by the ACTIVE TEST with the actual shift position enables confirmation of the problem (See page AX-38).

Item	Test Details	Diagnostic Note
SHIFT	[Test Details] Operate the shift solenoid valve and set each shift position by yourself. [Others] • Press "←" button: Shift up • Press "→" button: Shift down	Possible to check the operation of the shift solenoid valves.

NOTICE:
- **This test can be conducted when the vehicle is stopped.**
- **When shifting gears using the Active Test function, do not operate the accelerator pedal for 2 seconds before and after shifting gears.**

HINT:
The shift position commanded by the TCM is shown in the DATA LIST/SHIFT display on the intelligent tester.

(d) Check the vehicle speed and the gear position when the engine speed is 1,000 rpm.

HINT:
Because the torque converter clutch has not engaged, it may be difficult to obtain the speeds specified in 4th, 5th, and 6th gear, however a difference of speed should still be evident following each gear change.

Standard

1st	2nd	3rd	4th	5th	6th
5 to 7.5 mph (8 to 12 km/h)	9.3 to 11.8 mph (15 to 19 km/h)	13.0 to 15.5 mph (21 to 25 km/h)	19.3 to 21.7 mph (31 to 35 km/h)	27.3 to 29.8 mph (44 to 48 km/h)	32.3 to 34.8 mph (52 to 56 km/h)

(e) Compare the TCM gear shift command and the actual gear position.

Result

Actuator gear position under malfunction		TCM gear shift command						Proceed to
		1st	2nd	3rd	4th	5th	6th	
Shift solenoid SL1	Stuck ON	1st	2nd	3rd	4th	4th	4th	A
	Stuck OFF	N*1	N*1	N*1	N*1	5th	6th	
Shift solenoid SL2	Stuck ON	4th	4th	4th	4th	5th	6th	B
	Stuck OFF	1st	2nd	3rd	1st	N*1	N*1	
Shift solenoid SL3	Stuck ON	2nd	2nd	3rd	4th	5th	6th	C
	Stuck OFF	1st	1st	3rd	4th	5th	N*1	
Shift solenoid SL4	Stuck ON*3	3rd	3rd	3rd	4th	5th	5th	D
	Stuck OFF	1st	2nd	1st	4th	N*1	6th	
Shift solenoid SLT	Stuck ON	N*2	N*2	N*2	N*2	N*2	N*2	E
	Stuck OFF*3	1st	2nd	3rd	4th	5th	6th	

HINT:
- *1: Neutral

AX

- *2: If the shift solenoid SLT is stuck on, the line pressure will be low. Therefore, the amount of torque that can be transmitted by each gear is lower than the normal limit. When the engine power exceeds this lowered limit, the engine speed will increase freely.
- *3: When the shift solenoid SLT is stuck OFF, gear shifting is normal.

B → **GO TO DTC CHART (RELATED SHIFT SOLENOID VALVE (SL2) PERFORMANCE DTC P0776)**

C → **GO TO DTC CHART (RELATED SHIFT SOLENOID VALVE (SL3) PERFORMANCE DTC P0796)**

D → **GO TO DTC CHART (RELATED SHIFT SOLENOID VALVE (SL4) PERFORMANCE DTC P2808)**

E → **GO TO DTC CHART (RELATED SHIFT SOLENOID VALVE (SLT) PERFORMANCE DTC P2714)**

A

3 INSPECT SHIFT SOLENOID VALVE (SL1)

Shift Solenoid Valve SL1:

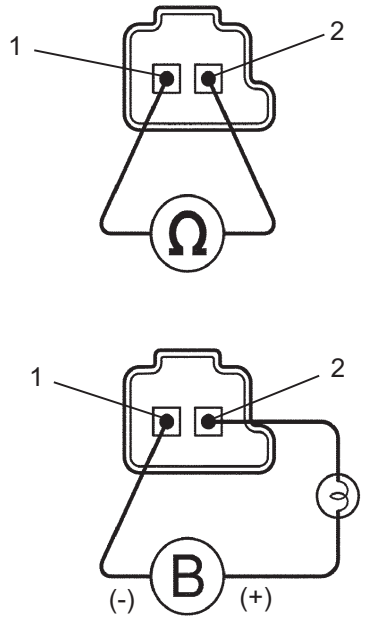

P G020767E05

(a) Remove the shift solenoid valve SL1.

(b) Measure the resistance according to the value(s) in the table below.

Standard resistance

Tester Connection	Specified Condition 20°C (68°F)
1 - 2	5.0 to 5.6 Ω

(c) Connect a positive (+) lead through a 21 W bulb to terminal 2 and a negative (-) lead to terminal 1 of the solenoid valve connector, then check the movement of the valve.

OK:

The solenoid makes an operating noise.

NG → **REPLACE SHIFT SOLENOID VALVE (SL1)**

OK

AX

4	INSPECT TRANSMISSION VALVE BODY ASSEMBLY

OK:
There are no foreign objects on each valve and they operate smoothly.

NG → **REPAIR OR REPLACE TRANSMISSION VALVE BODY ASSEMBLY**

OK

5	INSPECT TORQUE CONVERTER CLUTCH ASSEMBLY

OK:
The torque converter clutch operates normally.

NG → **REPLACE TORQUE CONVERTER CLUTCH ASSEMBLY**

OK

REPAIR OR REPLACE AUTOMATIC TRANSAXLE ASSEMBLY

DTC	P0748	Pressure Control Solenoid "A" Electrical (Shift Solenoid Valve SL1)

DESCRIPTION

Shifting from 1st to 6th is performed in combination with "ON" and "OFF" operation of the shift solenoid valves SL1, SL2, SL3, SL4 and SL which is controlled by the TCM. If an open or short circuit occurs in any of the shift solenoid valves, the TCM controls the remaining normal shift solenoid valves to allow the vehicle to be operated smoothly (See page AX-38).

DTC No.	DTC Detection Condition	Trouble Area
P0748	The TCM checks for an open or short in the shift solenoid valve SL1 circuit while driving and shifting between 4th and 5th gears. (1-trip detection logic) • Output signal duty equals 100%. (NOTE: SL1 output signal duty is less than 100% under normal condition.)	• Open or short in shift solenoid valve SL1 circuit • Shift solenoid valve SL1 • TCM

MONITOR DESCRIPTION

This DTC indicates an open or short in the shift solenoid valve SL1 circuit. The TCM causes gear shifts to occur by turning the shift solenoid valves on or off. When there is an open or short circuit in any shift solenoid valve circuit, the TCM detects the problem and illuminates the MIL and stores the DTC. The TCM also performs the fail-safe function and turns the other normal shift solenoid valves on or off. (In case of an open or short circuit, the TCM stops sending current to the circuit.)
While driving and shifting between 4th and 5th gears, if the TCM detects an open or short in the shift solenoid valve SL1 circuit, the TCM determines there is a malfunction (See page AX-38).

MONITOR STRATEGY

Related DTCs	P0748: Shift solenoid valve SL1/Range check
Required sensors/Components	Shift solenoid valve SL1
Frequency of operation	Continuous
Duration	1 sec.
MIL operation	Immediate
Sequence of operation	None

AX

TYPICAL ENABLING CONDITIONS

ALL:

The monitor will run whenever this DTC is not present	None
Engine switch	ON
Starter	OFF

Malfunction (A):

Battery voltage	12 V or more

Malfunction (B):

Battery voltage	10 V or more and less than 12 V
CPU commanded duty	Less than 75%

TYPICAL MALFUNCTION THRESHOLDS

Output signal duty	100% or more

WIRING DIAGRAM

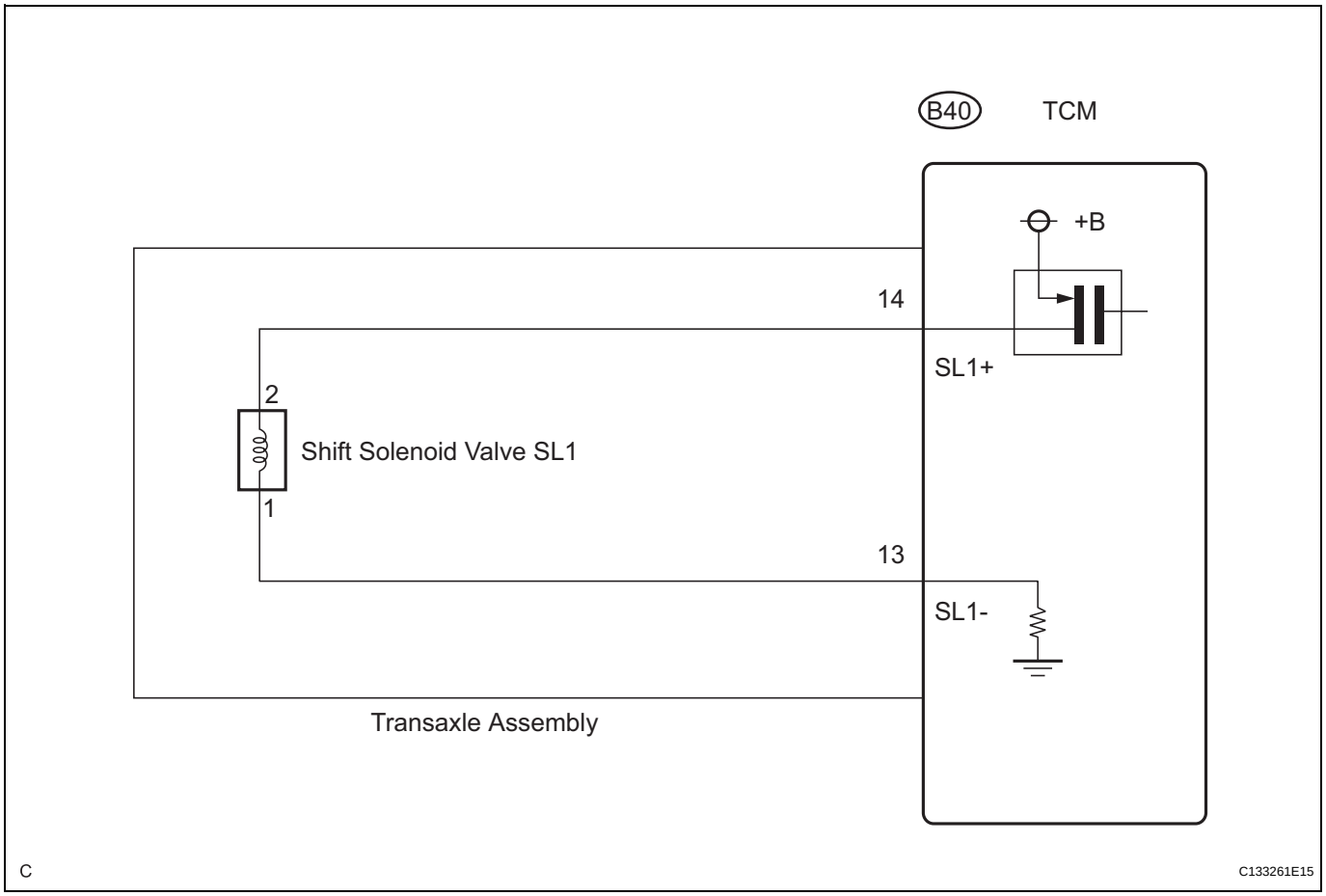

INSPECTION PROCEDURE

HINT:

The shift solenoid valve SL1 is turned on or off automatically when the shift lever is in the D position:

TCM command gearshift	1st	2nd	3rd	4th	5th	6th
Shift solenoid valve SL1	ON	ON	ON	ON	OFF	OFF

AX

1 INSPECT TRANSMISSION WIRE (SL1)

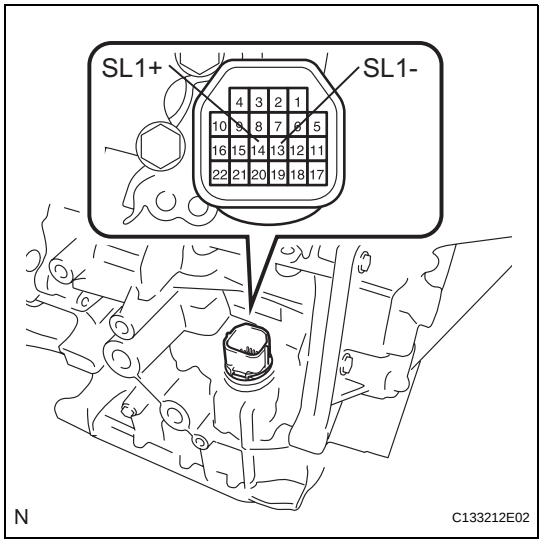

(a) Remove the TCM from the transaxle.
(b) Measure the resistance according to the value(s) in the table below.
Standard resistance

Tester Connection	Specified Condition 20°C (68°F)
14 (SL1+) - 13 (SL1-)	5.0 to 5.6 Ω

(c) Measure the resistance according to the value(s) in the table below.
Standard resistance:
Check for short

Tester Connection	Specified Condition
14 (SL1+) - Body ground	10 kΩ or higher
13 (SL1-) - Body ground	10 kΩ or higher

OK → **REPLACE TCM**

NG

2 INSPECT SHIFT SOLENOID VALVE SL1

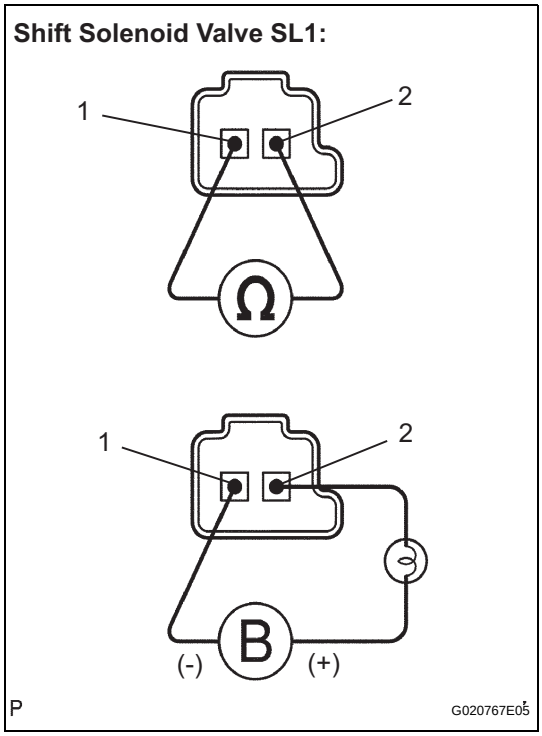

(a) Remove the shift solenoid valve SL1.
(b) Measure the resistance according to the value(s) in the table below.
Standard resistance

Tester Connection	Specified Condition 20°C (68°F)
1 - 2	5.0 to 5.6 Ω

(c) Connect a positive (+) lead through a 21 W bulb to terminal 2 and a negative (-) lead to terminal 1 of the solenoid valve connector, then check the movement of the valve.
OK:
The solenoid makes an operating sound.

NG → **REPLACE SHIFT SOLENOID VALVE SL1**

OK

REPLACE TRANSMISSION WIRE

AX

DTC	P0776	Pressure Control Solenoid "B" Performance (Shift Solenoid Valve SL2)

SYSTEM DESCRIPTION

The TCM uses the vehicle speed signal to detect the actual gear position (1st, 2nd, 3rd, 4th, 5th or 6th gear).
Then the TCM compares the actual gear with the shift schedule in the TCM memory to detect shift solenoid valves and valve body mechanical problems.

DTC No.	DTC Detecting Condition	Trouble Area
P0776	The engine revs freely when 4th, 5th, or 6th gear is requested (2-trip detection logic). When any of the following is detected twice (2-trip detection logic): • When 1st gear is requested, 4th gear is engaged. • When 2nd gear is requested, 4th gear is engaged. • When 3rd gear is requested, 4th gear is engaged.	• Shift solenoid valve SL2 (open or closed) • Valve body (blocked) • Automatic transaxle (clutch, brake or gear etc.)

MONITOR DESCRIPTION

The TCM commands gear shifts by turning the shift solenoid valves on or off. According to the input shaft revolution, intermediate (counter) shaft revolution and output shaft revolution, the TCM detects the actual gear position (1st, 2nd, 3rd, 4th, 5th or 6th gear position). When the gear position commanded by the TCM and the actual gear position are not the same, the TCM illuminates the MIL and stores the DTC.

MONITOR STRATEGY

Related DTCs	P0776: Shift solenoid valve SL2/OFF malfunction Shift solenoid valve SL2/ON malfunction
Required sensors/Components	Shift solenoid valve SL2, Speed sensor (NT), Speed sensor (NC), Crankshaft position sensor (NE)
Frequency of operation	Continuous
Duration	OFF malfunction 0.5 sec. ON malfunction 0.8 sec.
MIL operation	2 driving cycles
Sequence of operation	None

AX

TYPICAL ENABLING CONDITIONS

All:

The monitor will run whenever this DTC is not present.	P0115 - P0118 (ECT sensor) P0125 (Insufficient ECT for closed loop) P0500 (VSS) P0748, P0778, P0798 (Shift solenoid valve (range))
Transmission range	"D"
TFT (Transmission fluid temperature)	-10°C (-14°F) or more
Knock control sensor circuit	Circuit is not malfunctioning
ECT sensor circuit	Circuit is not malfunctioning
Turbine speed sensor circuit	Circuit is not malfunctioning
Intermediate shaft speed sensor circuit	Circuit is not malfunctioning
Shift solenoid valve SL1 circuit	Circuit is not malfunctioning
Shift solenoid valve SL2 circuit	Circuit is not malfunctioning
Shift solenoid valve SL3 circuit	Circuit is not malfunctioning
Shift solenoid valve SL4 circuit	Circuit is not malfunctioning

CAN communication system	Circuit is not malfunctioning
Electronic throttle system	Circuit is not malfunctioning

OFF malfunction:

TCM selected gear	4th, 5th or 6th
TCM indicated pressure value of SL2	1,200 kPa
Throttle valve opening angle	3% or more

ON malfunction (A):

TCM selected gear	1st
Vehicle speed	1.2 mph (2 km/h) to 25 mph (40 km/h)
ECT (Engine coolant temperature)	40°C (104°F) or more
Engine speed - Turbine speed	50 rpm or more

ON malfunction (B):

TCM selected gear	2nd
Throttle valve opening angle	4.5% or more at engine speed 2,000 rpm (Varies with engine speed)
Vehicle speed	1.2 mph (2 km/h) or more
ECT (Engine coolant temperature)	40°C (104°F) or more

ON malfunction (C):

TCM selected gear	3rd
Throttle valve opening angle	4.5% or more at engine speed 2,000 rpm (Varies with engine speed)
Vehicle speed	1.2 mph (2 km/h) or more
ECT (Engine coolant temperature)	40°C (104°F) or more

TYPICAL MALFUNCTION THRESHOLDS

OFF malfunction:

Input (turbine) speed-Intermediate shaft speed x Gear ratio	1,000 rpm or more

AX

ON malfunction:

Input (turbine) speed/Intermediate shaft speed when output speed less than 1,000 rpm	0.998 to 1.138

INSPECTION PROCEDURE

1	CHECK OTHER DTCS OUTPUT (IN ADDITION TO DTC P0776)

(a) Connect the intelligent tester to the DLC3.
(b) Turn the engine switch on (IG) and turn the intelligent tester on.
(c) Enter the following items: "DIAGNOSIS / OBD/MOBD / ECT / DTC INFO / CURRENT CODES".
(d) Read the DTCs using the intelligent tester.

Result

Display (DTC output)	Proceed to
Only "P0776" is output	**A**
"P0776" and other DTCs	**B**

HINT:
If a solenoid is stuck OFF, DTCs for several solenoids including the malfunctioning solenoid will be detected.

A → **Go to step 3**

B

2 PERFORM ACTIVE TEST BY INTELLIGENT TESTER

NOTICE:
This test should always be performed with at least 2 people.

(a) Connect the intelligent tester to the DLC3.
(b) Start the engine and turn the intelligent tester on.
(c) Enter the following items: "DIAGNOSIS / OBD/MOBD / ECT / ACTIVE TEST / SHIFT".
HINT:
Comparing the shift position commanded by the ACTIVE TEST with the actual shift position enables confirm of the problem (See page AX-38).

Item	Test Details	Diagnostic Note
SHIFT	[Test Details] Operate the shift solenoid valve and set each shift position by yourself. [Others] • Press "←" button: Shift up • Press "→" button: Shift down	Possible to check the operation of the shift solenoid valves.

NOTICE:
- **This test can be conducted when the vehicle is stopped.**
- **When shifting gears using the Active Test function, do not operate the accelerator pedal for 2 seconds before and after shifting gears.**

HINT:
The shift position commanded by the TCM is shown in the DATA LIST/SHIFT display on the intelligent tester.

(d) Check the vehicle speed and the gear position when the engine speed is 1,000 rpm.
HINT:
Because the torque converter clutch has not engaged, it may be difficult to obtain the speeds specified in 4th, 5th, and 6th gear, however a difference of speed should still be evident following each gear change.

Standard

1st	2nd	3rd	4th	5th	6th
5 to 7.5 mph (8 to 12 km/h)	9.3 to 11.8 mph (15 to 19 km/h)	13.0 to 15.5 mph (21 to 25 km/h)	19.3 to 21.7 mph (31 to 35 km/h)	27.3 to 29.8 mph (44 to 48 km/h)	32.3 to 34.8 mph (52 to 56 km/h)

(e) Compare the TCM gear shift command and the actual gear position.

AX

Result

Actuator gear position under malfunction		TCM gear shift command						Proceed to
		1st	2nd	3rd	4th	5th	6th	
Shift solenoid SL1	Stuck ON	1st	2nd	3rd	4th	4th	4th	A
	Stuck OFF	N*1	N*1	N*1	N*1	5th	6th	
Shift solenoid SL2	Stuck ON	4th	4th	4th	4th	5th	6th	B
	Stuck OFF	1st	2nd	3rd	1st	N*1	N*1	
Shift solenoid SL3	Stuck ON	2nd	2nd	3rd	4th	5th	6th	C
	Stuck OFF	1st	1st	3rd	4th	5th	N*1	
Shift solenoid SL4	Stuck ON*3	3rd	3rd	3rd	4th	5th	5th	D
	Stuck OFF	1st	2nd	1st	4th	N*1	6th	
Shift solenoid SLT	Stuck ON	N*2	N*2	N*2	N*2	N*2	N*2	E
	Stuck OFF*3	1st	2nd	3rd	4th	5th	6th	

HINT:
- *1: Neutral
- *2: If the shift solenoid SLT is stuck on, the line pressure will be low. Therefore, the amount of torque that can be transmitted by each gear is lower than the normal limit. When the engine power exceeds this lowered limit, the engine speed will increase freely.
- *3: When the shift solenoid SLT is stuck OFF, gear shifting is normal.

A → **GO TO DTC CHART (RELATED SHIFT SOLENOID VALVE (SL1) PERFORMANCE DTC P0746)**

C → **GO TO DTC CHART (RELATED SHIFT SOLENOID VALVE (SL3) PERFORMANCE DTC P0796)**

D → **GO TO DTC CHART (RELATED SHIFT SOLENOID VALVE (SL4) PERFORMANCE DTC P2808)**

E → **GO TO DTC CHART (RELATED SHIFT SOLENOID VALVE (SLT) PERFORMANCE DTC P2714)**

AX

B

3 INSPECT SHIFT SOLENOID VALVE (SL2)

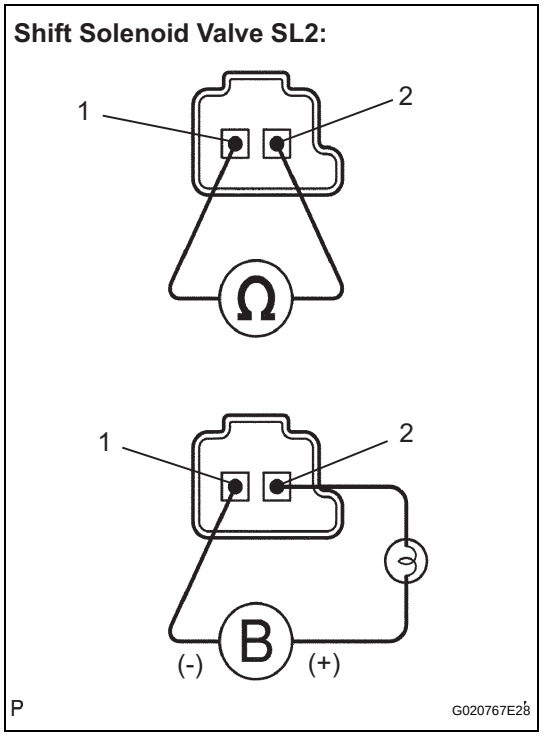

(a) Remove the shift solenoid valve SL2.

(b) Measure the resistance according to the value(s) in the table below.

Standard resistance

Tester Connection	Specified Condition 20°C (68°F)
1 - 2	5.0 to 5.6 Ω

(c) Connect a positive (+) lead through a 21 W bulb to terminal 2 and a negative (-) lead to terminal 1 of the solenoid valve connector, then check the movement of the valve.

OK:

The solenoid makes an operating noise.

NG → **REPLACE SHIFT SOLENOID VALVE (SL2)**

OK

4 INSPECT TRANSMISSION VALVE BODY ASSEMBLY

OK:

There are no foreign objects on each valve and they operate smoothly.

NG → **REPAIR OR REPLACE TRANSMISSION VALVE BODY ASSEMBLY**

OK

5 INSPECT TORQUE CONVERTER CLUTCH ASSEMBLY

OK:

The torque converter clutch operates normally.

NG → **REPLACE TORQUE CONVERTER CLUTCH ASSEMBLY**

OK

REPLACE AUTOMATIC TRANSAXLE ASSEMBLY

AX

DTC	P0778	Pressure Control Solenoid "B" Electrical (Shift Solenoid Valve SL2)

DESCRIPTION

Shifting from 1st to 6th is performed in combination with "ON" and "OFF" operation of the shift solenoid valves SL1, SL2, SL3, SL4 and SL which is controlled by the TCM. If an open or short circuit occurs in any of the shift solenoid valves, the TCM controls the remaining normal shift solenoid valves to allow the vehicle to be operated smoothly (See page AX-38).

DTC No.	DTC Detection Condition	Trouble Area
P0778	The TCM checks for an open or short in the shift solenoid valve SL2 circuit while driving and shifting gears. (1-trip detection logic) • Output signal duty equals to 100%. (NOTE: SL2 output signal duty is less than 100% under normal condition.)	• Open or short in shift solenoid valve SL2 circuit • Shift solenoid valve SL2 • TCM

MONITOR DESCRIPTION

This DTC indicates an open or short in the shift solenoid valve SL2 circuit. The TCM commands gear shifts by turning the shift solenoid valves on or off. When there is an open or short circuit in any of the shift solenoid valve circuits, the TCM detects the problem and illuminates the MIL and stores the DTC. The TCM also performs the fail-safe function and turns the other normal shift solenoid valves on or off. (In case of an open or short circuit, the TCM stops sending current to the circuit.)
While driving and shifting gears, if the TCM detects an open or short in the shift solenoid valve SL2 circuit, the TCM determines there is a malfunction (See page AX-38).

MONITOR STRATEGY

Related DTCs	P0778: Shift solenoid valve SL2/Range check
Required sensors/Components	Shift solenoid valve SL2
Frequency of operation	Continuous
Duration	1 sec.
MIL operation	Immediate
Sequence of operation	None

AX

TYPICAL ENABLING CONDITIONS

ALL:

The monitor will run whenever this DTC is not present	None
Engine switch	ON
Starter	OFF

Malfunction (A):

Battery voltage	12 V or more

Malfunction (B):

Battery voltage	10 V or more and less than 12 V
CPU commanded duty	Less than 75%

TYPICAL MALFUNCTION THRESHOLDS

Output signal duty	100% or more

WIRING DIAGRAM

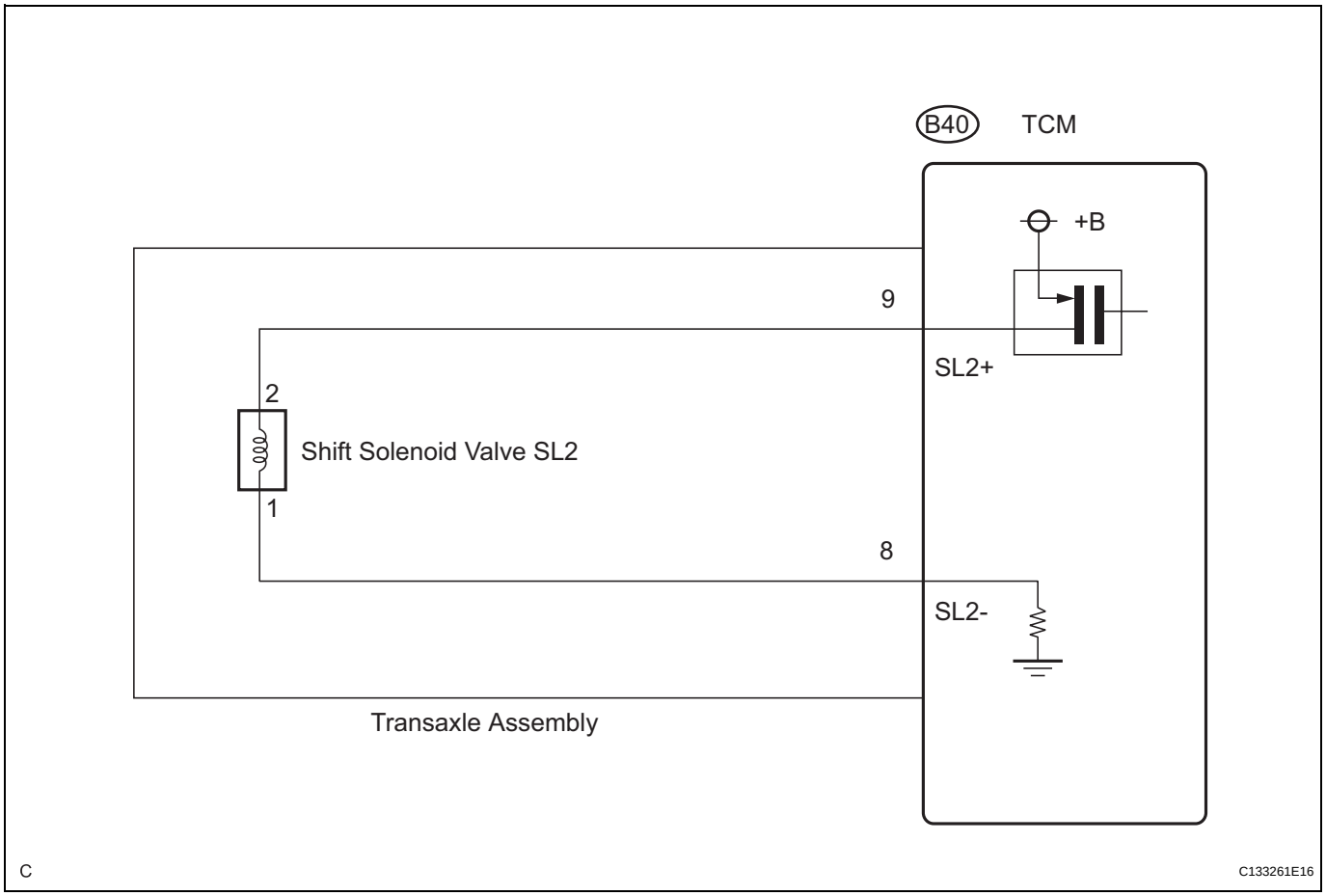

INSPECTION PROCEDURE

HINT:

The shift solenoid valve SL2 is turned on or off automatically when the shift lever is in the D position:

TCM command gearshift	1st	2nd	3rd	4th	5th	6th
Shift solenoid valve SL2	OFF	OFF	OFF	ON	ON	ON

AX

1 INSPECT TRANSMISSION WIRE (SL2)

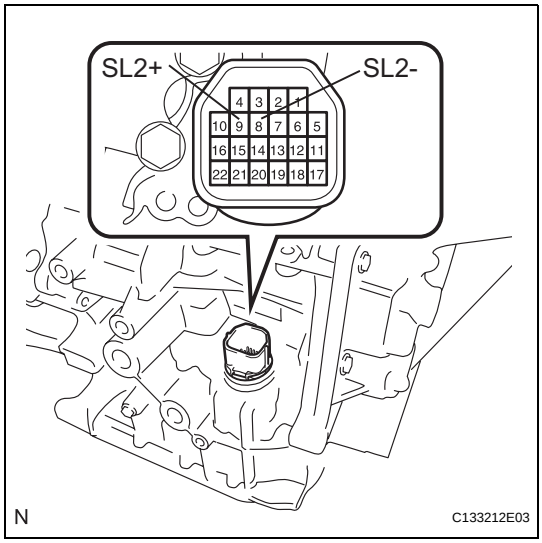

(a) Remove the TCM from the transaxle.

(b) Measure the resistance according to the value(s) in the table below.

Standard resistance

Tester Connection	Specified Condition 20°C (68°F)
9 (SL2+) - 8 (SL2-)	5.0 to 5.6 Ω

(c) Measure the resistance according to the value(s) in the table below.

Standard resistance:
Check for short

Tester Connection	Specified Condition
9 (SL2+) - Body ground	10 kΩ or higher
8 (SL2-) - Body ground	10 kΩ or higher

OK → **REPLACE TCM**

NG

2 INSPECT SHIFT SOLENOID VALVE SL2

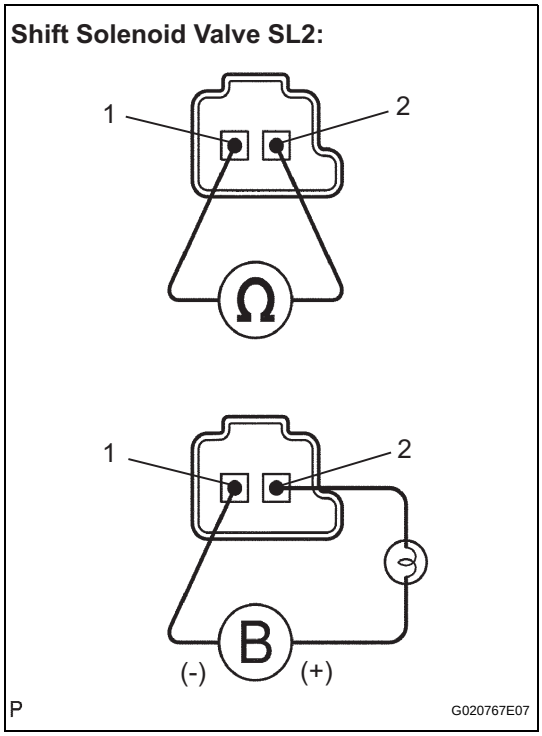

(a) Remove the shift solenoid valve SL2.

(b) Measure the resistance according to the value(s) in the table below.

Standard resistance

Tester Connection	Specified Condition 20°C (68°F)
1 - 2	5.0 to 5.6 Ω

(c) Connect a positive (+) lead through a 21 W bulb to terminal 2 and a negative (-) lead to terminal 1 of the solenoid valve connector, then check the movement of the valve.

OK:
The solenoid makes an operating sound.

NG → **REPLACE SHIFT SOLENOID VALVE SL2**

OK

REPLACE TRANSMISSION WIRE

AX

DTC	P0791	Intermediate Shaft Speed Sensor "A" Circuit

DTC	P0793	Intermediate Shaft Speed Sensor "A"

DESCRIPTION

This sensor detects the rotation speed of the turbine which shows the input speed of transaxle. By comparing the input turbine speed signal (NC) with the counter gear speed sensor signal (NC), the TCM detects the shift timing of the gears and appropriately controls the engine torque and hydraulic pressure according to various conditions, thus, providing smooth gear shift.

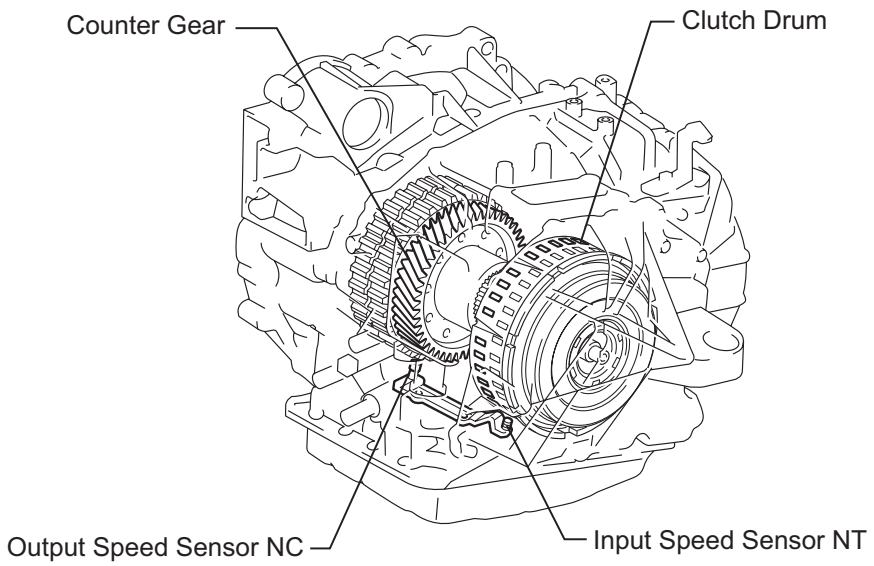

N C133216E01

AX

DTC No.	DTC Detection Condition	Trouble Area
P0791	When the speed sensor input voltage is either more than 1.9 V or less than 0.1 V for 2 seconds or more.	• Transmission revolution sensor (speed sensor NC) • TCM
P0793	When the vehicle speed is 15.5 mph (25 km/h) or higher, the counter gear speed is less than 300 rpm for 2 seconds or more.	

MONITOR DESCRIPTION

The NT terminal of the TCM detects a revolution signal from the speed sensor (NT) (input RPM). The TCM calculates a gearshift comparing the speed sensor (NT) with the speed sensor (NC).
While the vehicle is operating in 2nd, 3rd, 4th or 5th gear in the shift position of D, if the input shaft revolution is less than 300 rpm *1although the output shaft revolution is more than 1,000 rpm *2, the TCM interprets this as a fault, illuminates the MIL and stores the DTC.
*1: Pulse is not output or is irregularly output.
*2: The vehicle speed is 31 mph (50 km/h) or more.

MONITOR STRATEGY

Related DTCs	P0717: Speed sensor (NT) /Verify pulse input
Required sensors/Components	Speed sensor (NT), Speed sensor (NC)
Frequency of operation	Continuous

Duration	5 sec.
MIL operation	Immediate
Sequence of operation	None

TYPICAL ENABLING CONDITIONS

The monitor will run whenever this DTC is not present.	P0500 (VSS) P0748, P0778, P0798 (Shift solenoid valve (range))
Vehicle speed	15.5 mph (25 km/h) or more
Battery voltage	8 V or more
Engine switch	ON
Starter	OFF

TYPICAL MALFUNCTION THRESHOLDS

P0791:

Sensor voltage	Less than 0.1 V or more than 1.9 V

P0793:

Sensor signal rpm	Less than 300 rpm

WIRING DIAGRAM

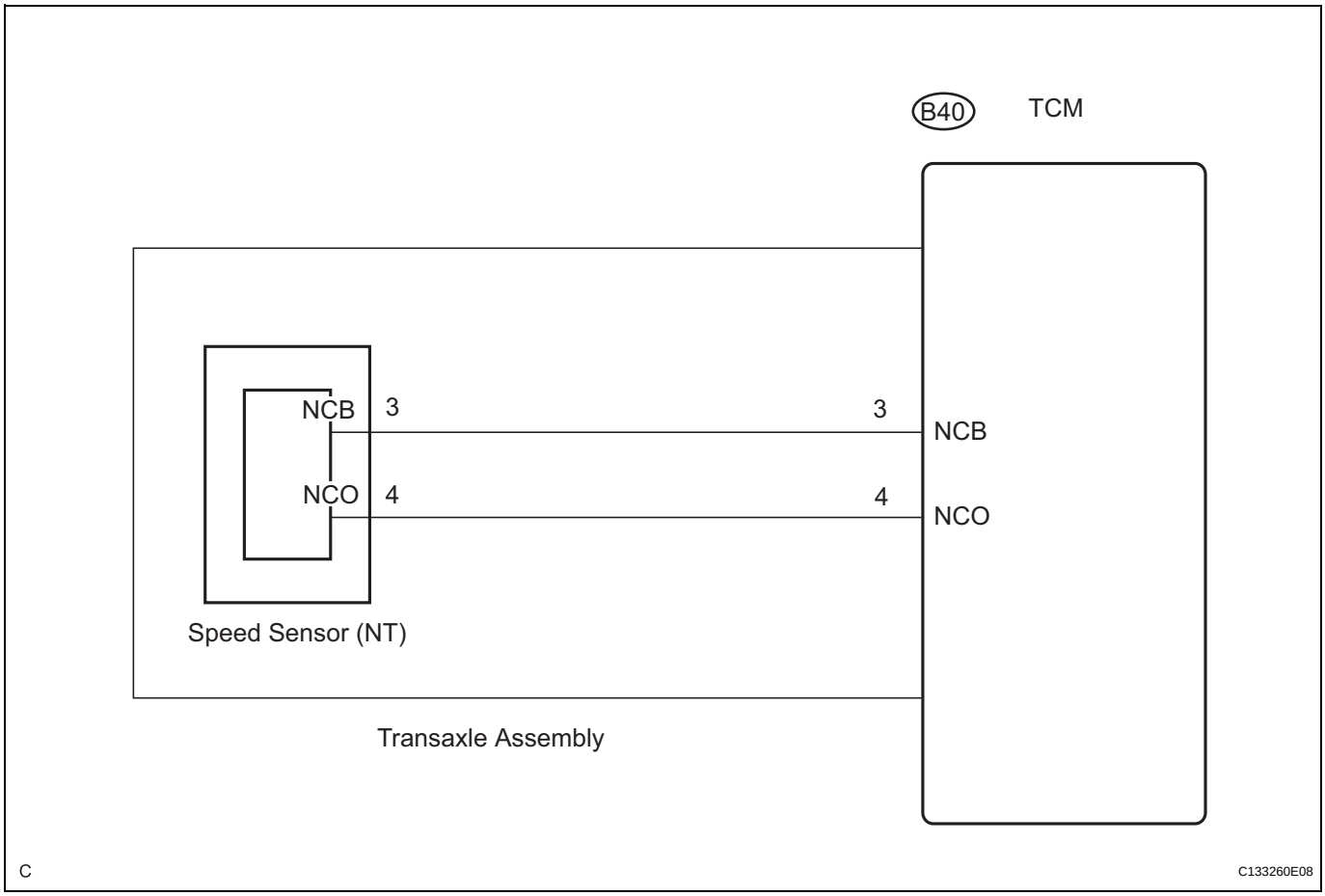

AX

INSPECTION PROCEDURE

1. DATA LIST

NOTICE:

In the table below, the values listed under "Normal Condition" are reference values. Do not depend solely on these reference values when deciding whether a part is faulty.

HINT:

According to the DATA LIST displayed on the intelligent tester, you can read the value of switches, sensors, actuators and other items without removing any parts. Reading the DATA LIST as the first step in troubleshooting is one method to save labor time.

(a) Warm up the engine.
(b) Turn the engine switch off.
(c) Connect the intelligent tester together with the CAN VIM (Controller Area Network Vehicle Interface Module) to the DLC3.
(d) Turn the engine switch on (IG).
(e) Turn on the tester.
(f) Enter the following items: "DIAGNOSIS / ENHANCED OBD / DATA LIST".
(g) According to the display on the tester, read "DATA LIST".

Item	Measurement Item/ Range (display)	Normal Condition
SPD (NC)	Counter Gear Speed/ display: 50 r/min	HINT: • Lock-up ON (after warming up the engine); input turbine speed (NC) is equal to the engine speed. • Lock-up OFF (Idling at N position); input turbine speed (NC) is nearly equal to the engine speed.

HINT:

- SPD (NC) is always 0 while driving: Open or short in the sensor or circuit.
- SPD (NC) is always more than 0 and less than 300 rpm while driving the vehicle at 31 mph (50 km/h) or more: Sensor trouble, improper installation, or intermittent connection trouble of the circuit.

1	INSPECT SPEED SENSOR (SENSOR INSTALLATION)

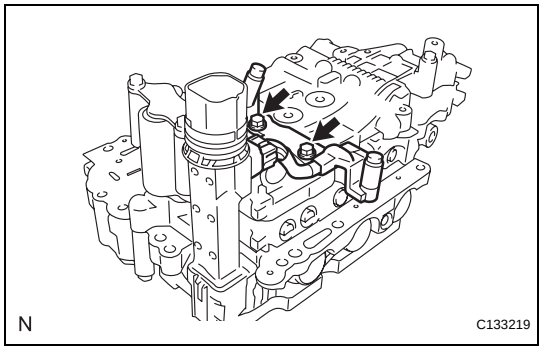

(a) Make sure that the connector is properly connected, and check the speed sensor installation.

OK:

The installation bolts are tightened properly and there is no clearance between the sensor and transaxle case.

NG → **REPAIR OR REPLACE SPEED SENSOR**

OK

AX

2 CHECK TRANSMISSION WIRE

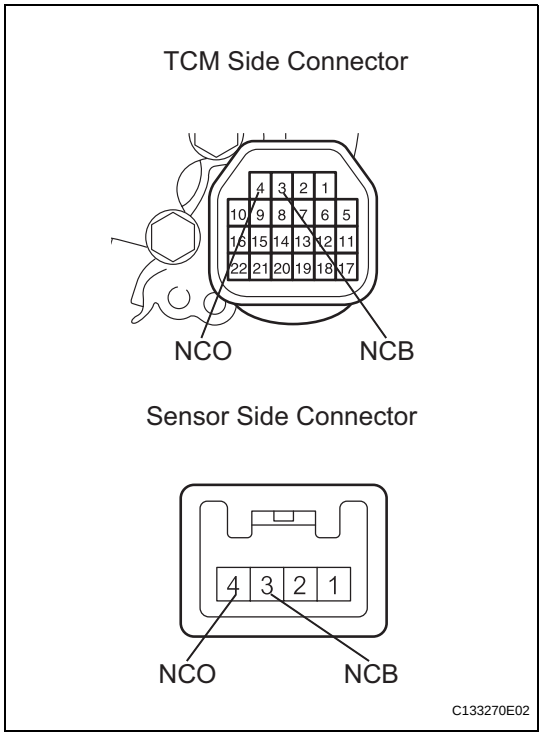

(a) Remove the TCM.
(b) Disconnect the speed sensor connector from the transmission wire.
(c) Measure the resistance according to the value(s) in the table below.

Standard resistance

Tester Condition	Specified Condition
NCO - NCO	Below 1 Ω
NCB - NCB	Below 1 Ω
NCO - NCB	10 kΩ or higher

NG → **REPLACE TRANSMISSION WIRE**

OK

3 REPLACE SPEED SENSOR

NEXT

AX

4 CHECK IF DTC OUTPUT RECURS (SEE IF DTC P0791 AND/OR P0793 IS OUTPUT AGAIN)

(a) Connect the intelligent tester to the DLC3.
(b) Start the engine and turn the intelligent tester main switch ON.
(c) Perform the monitor drive pattern (See page AX-26).
(d) When you use the intelligent tester:
Select the item "DIAGNOSIS / OBD/MOBD / ECT / DTC INFO / CURRENT CODES".
(e) Read the DTCs using the intelligent tester.

Result

Display (DTC output)	Proceed to
Only "P0791 or P0793" is output	A
No output	B

B → **END**

A

REPLACE TCM

DTC	P0796	Pressure Control Solenoid "C" Performance (Shift Solenoid Valve SL3)

SYSTEM DESCRIPTION

The TCM uses the vehicle speed signal to determine the actual gear position (1st, 2nd, 3rd, 4th, 5th or 6th gear).
Then the TCM compares the actual gear with the shift schedule in the TCM memory to detect shift solenoid valves and valve body mechanical problems.

DTC No.	DTC Detecting Condition	Trouble Area
P0796	The engine revs freely when 2nd or 6th gear is requested (2-trip detection logic). When the following is detected twice (2-trip detection logic): • When 1st gear is requested, 2nd gear is engaged.	• Shift solenoid valve SL3 (open or closed) • Valve body (blocked) • Automatic transaxle (clutch, brake or gear etc.)

MONITOR DESCRIPTION

The TCM commands gear shifts by turning the shift solenoid valves on or off. According to the input shaft revolution, intermediate (counter) shaft revolution and output shaft revolution, the TCM detects the actual gear position (1st, 2nd, 3rd, 4th, 5th or 6th gear position). When the gear position commanded by the TCM and the actual gear position are not the same, the TCM illuminates the MIL and stores the DTC.

MONITOR STRATEGY

Related DTCs	P0796: Shift solenoid valve SL3/OFF malfunction Shift solenoid valve SL3/ON malfunction
Required sensors/Components	Shift solenoid valve SL3, Speed sensor (NT), Speed sensor (NC), Crankshaft position sensor (NE)
Frequency of operation	Continuous
Duration	OFF malfunction (A) and (B) 0.5 sec. OFF malfunction (C) and (D) 0.8 sec.
MIL operation	2 driving cycles
Sequence of operation	None

AX

TYPICAL ENABLING CONDITIONS

All:

The monitor will run whenever this DTC is not present.	P0115 - P0118 (ECT sensor) P0125 (Insufficient ECT for closed loop) P0500 (VSS) P0748, P0778, P0798 (Shift solenoid valve (range))
Transmission range	"D"
TFT (Transmission fluid temperature)	Above -10°C (-14°F)
Knock control sensor circuit	Circuit is not malfunctioning
ECT sensor circuit	Circuit is not malfunctioning
Turbine speed sensor circuit	Circuit is not malfunctioning
Intermediate shaft speed sensor circuit	Circuit is not malfunctioning
Shift solenoid valve SL1 circuit	Circuit is not malfunctioning
Shift solenoid valve SL2 circuit	Circuit is not malfunctioning
Shift solenoid valve SL3 circuit	Circuit is not malfunctioning
Shift solenoid valve SL4 circuit	Circuit is not malfunctioning
CAN communication system	Circuit is not malfunctioning

Electronic throttle system	Circuit is not malfunctioning

OFF malfunction (A):

TCM selected gear	2nd
Throttle valve opening angle	3% or more
TCM indicated pressure value of SL1	1,200 kPa
TCM indicated pressure value of SL2	0 kPa
TCM indicated pressure value of SL3	1,200 kPa

OFF malfunction (B):

TCM selected gear	6th
Throttle valve opening angle	3% or more
TCM indicated pressure value of SL1	0 kPa
TCM indicated pressure value of SL2	1,200 kPa
TCM indicated pressure value of SL3	1,200 kPa

OFF malfunction (C):

TCM selected gear	2nd
Throttle valve opening angle:	
(When condition "D" is not detected)	4.5% or more at engine speed 2,000 rpm (condition varies with engine speed)
(When condition "D" is detected)	0.5% or more at engine speed 500 rpm (condition varies with engine speed)
ECT (engine coolant temperature)	40°C (104°F) or more

OFF malfunction (D):

Throttle valve opening angle	0.5% or more at engine speed 500 rpm (condition varies with engine speed)

ON malfunction:

TCM selected gear	1st
Vehicle speed	1.2 mph (2 km/h) or more
Engine speed - Turbine speed	50 rpm or more
ECT (engine coolant temperature)	Above 40°C (104°F)

TYPICAL MALFUNCTION THRESHOLDS

AX

Either of the following conditions is met: OFF malfunction (A) or (B) or ((C) and (D)), or ON malfunctions

2 detections are necessary per driving cycle:

1st detection; temporary flag ON

2nd detection; pending fault code ON

OFF malfunction (A):

Turbine speed - Output speed x 2nd gear ratio	1,000 rpm or more

OFF malfunction (B):

Turbine speed - Output speed x 6th gear ratio	1,000 rpm or more

OFF malfunction (C):

Input (turbine) speed/Intermediate shaft speed	3.304 to 7.724

OFF malfunction (D):

Input (turbine) speed/Intermediate shaft speed	3.304 to 7.724

ON malfunction:

Input (turbine) speed/Intermediate shaft speed	1.901 to 2.340

INSPECTION PROCEDURE

1	CHECK OTHER DTCS OUTPUT (IN ADDITION TO DTC P0796)

(a) Connect the intelligent tester to the DLC3.
(b) Turn the engine switch on (IG) and turn the intelligent tester on.
(c) Enter the following items: "DIAGNOSIS / OBD/MOBD / ECT / DTC INFO / CURRENT CODES".
(d) Read the DTCs using the intelligent tester.

Result

Display (DTC output)	Proceed to
Only "P0796" is output	A
"P0796" and other DTCs	B

HINT:
If a solenoid is stuck OFF, DTCs for several solenoids including the malfunctioning solenoid will be detected.

A → **Go to step 3**

B

2	PERFORM ACTIVE TEST BY INTELLIGENT TESTER

NOTICE:
This test should always be performed with at least 2 people.

(a) Connect the intelligent tester to the DLC3.
(b) Start the engine and turn the intelligent tester on.
(c) Enter the following items: "DIAGNOSIS / OBD/MOBD / ECT / ACTIVE TEST / SHIFT".
HINT:
Comparing the shift position commanded by the ACTIVE TEST with the actual shift position enables you to confirm the problem (See page AX-38).

Item	Test Details	Diagnostic Note
SHIFT	[Test Details] Operate the shift solenoid valve and set each shift position by yourself. [Others] • Press "←" button: Shift up • Press "→" button: Shift down	Possible to check the operation of the shift solenoid valves.

NOTICE:
- **This test can be conducted when the vehicle is stopped.**
- **When shifting gears using the Active Test function, do not operate the accelerator pedal for 2 seconds before and after shifting gears.**

HINT:
The shift position commanded by the TCM is shown in the DATA LIST/SHIFT display on the intelligent tester.

(d) Check the vehicle speed and the gear position when the engine speed is 1,000 rpm.

AX

HINT:
Because the torque converter clutch has not engaged, it may be difficult to obtain the speeds specified in 4th, 5th, and 6th gears, however a difference of speed should still be evident following each gear change.

Standard

1st	2nd	3rd	4th	5th	6th
5 to 7.5 mph (8 to 12 km/h)	9.3 to 11.8 mph (15 to 19 km/h)	13.0 to 15.5 mph (21 to 25 km/h)	19.3 to 21.7 mph (31 to 35 km/h)	27.3 to 29.8 mph (44 to 48 km/h)	32.3 to 34.8 mph (52 to 56 km/h)

(e) Compare the TCM gear shift command and the actual gear position.

Result

Actuator gear position under malfunction		TCM gear shift command						Proceed to
		1st	2nd	3rd	4th	5th	6th	
Shift solenoid SL1	Stuck ON	1st	2nd	3rd	4th	4th	4th	A
	Stuck OFF	N*1	N*1	N*1	N*1	5th	6th	
Shift solenoid SL2	Stuck ON	4th	4th	4th	4th	5th	6th	B
	Stuck OFF	1st	2nd	3rd	1st	N*1	N*1	
Shift solenoid SL3	Stuck ON	2nd	2nd	3rd	4th	5th	6th	C
	Stuck OFF	1st	1st	3rd	4th	5th	N*1	
Shift solenoid SL4	Stuck ON*3	3rd	3rd	3rd	4th	5th	5th	D
	Stuck OFF	1st	2nd	1st	4th	N*1	6th	
Shift solenoid SLT	Stuck ON	N*2	N*2	N*2	N*2	N*2	N*2	E
	Stuck OFF*3	1st	2nd	3rd	4th	5th	6th	

HINT:
- *1: Neutral
- *2: If the shift solenoid SLT is stuck on, the line pressure will be low. Therefore, the amount of torque that can be transmitted by each gear is lower than the normal limit. When the engine power exceeds this lowered limit, the engine speed will increase freely.
- *3: When shift solenoid SLT is stuck OFF, gear shifting is normal.

AX

A → **GO TO DTC CHART (RELATED SHIFT SOLENOID VALVE (SL1) PERFORMANCE DTC P0746)**

B → **GO TO DTC CHART (RELATED SHIFT SOLENOID VAVLE (SL2) PERFORMANCE DTC P0776)**

D → **GO TO DTC CHART (RELATED SHIFT SOLENOID VALVE (SL4) PERFORMANCE DTC P2808)**

E → **GO TO DTC CHART (RELATED SHIFT SOLENOID VAVLE (SLT) PERFORMANCE DTC P2714)**

C

3	INSPECT SHIFT SOLENOID VALVE (SL3)

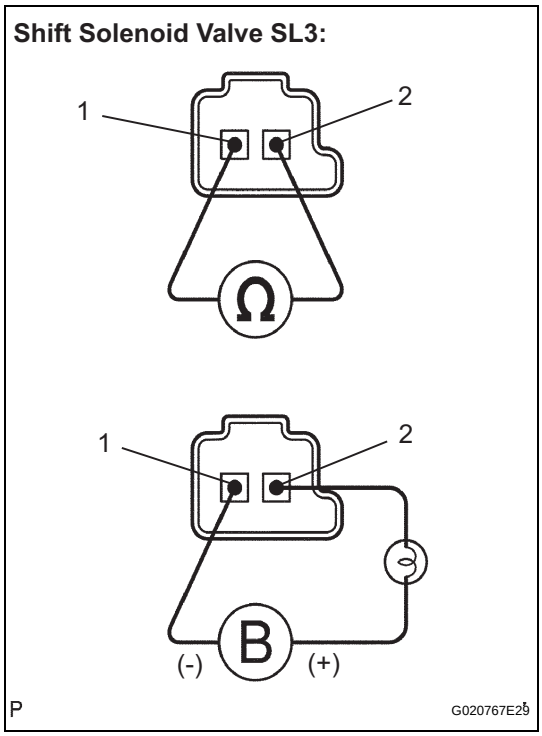

(a) Remove the shift solenoid valve SL3.
(b) Measure the resistance according to the value(s) in the table below.
Standard resistance

Tester Connection	Specified Condition 20°C (68°F)
1 - 2	5.0 to 5.6 Ω

(c) Connect a positive (+) lead through a 21 W bulb to terminal 2 and a negative (-) lead to terminal 1 of the solenoid valve connector, then check the movement of the valve.
OK:
The solenoid makes an operating noise.

NG → **REPLACE SHIFT SOLENOID VALVE (SL3)**

OK

4	INSPECT TRANSMISSION VALVE BODY ASSEMBLY

AX

OK:
There are no foreign objects on each valve and they operate smoothly.

NG → **REPAIR OR REPLACE TRANSMISSION VALVE BODY ASSEMBLY**

OK

5	INSPECT TORQUE CONVERTER CLUTCH ASSEMBLY

OK:
The torque converter clutch operates normally.

NG → **REPLACE TORQUE CONVERTER CLUTCH ASSEMBLY**

OK

REPLACE AUTOMATIC TRANSAXLE ASSEMBLY

DTC	P0798	Pressure Control Solenoid "C" Electrical (Shift Solenoid Valve SL3)

DESCRIPTION

Shifting gears from 1st through 5th is performed in combination with "ON" and "OFF" operation of the shift solenoid valves SL1, SL2, SL3 and SL4 which are controlled by the TCM. If an open or short circuit occurs in any of the shift solenoid valves, the TCM controls the remaining normal shift solenoid valves to allow the vehicle to be operated smoothly (Fail safe function).

DTC No.	DTC Detecting Condition	Trouble Area
P0798	The TCM checks for an open or short in the shift solenoid valve SL3 circuit while driving and shifting gears. (1-trip detection logic) • Output signal duty equals 100%. (NOTE: SL3 output signal duty is less than 100% under normal condition.)	• Open or short in shift solenoid valve SL3 circuit • Shift solenoid valve SL3 • TCM

MONITOR DESCRIPTION

The TCM commands gear shifts by turning the shift solenoid valves on or off. When there is an open or short circuit in any shift solenoid valve circuit, the TCM detects the problem and illuminates the MIL and stores the DTC. And the TCM performs the fail-safe function and turns the other normal shift solenoid valves on or off. (In case of an open or short circuit, the TCM stops sending current to the circuit.)
(See page AX-38)

MONITOR STRATEGY

Related DTCs	P0798: Shift solenoid valve SL3/Range check
Required sensors/Components	Shift solenoid valve SL3
Frequency of operation	Continuous
Duration	1 sec.
MIL operation	Immediate
Sequence of operation	None

AX

TYPICAL ENABLING CONDITIONS

ALL:

The monitor will run whenever this DTC is not present	None
Engine switch	ON
Starter	OFF

Malfunction (A):

Battery voltage	12 V or more

Malfunction (B):

Battery voltage	10 V or more and less than 12 V
CPU commanded duty	Less than 75%

TYPICAL MALFUNCTION THRESHOLDS

Output signal duty	100%

COMPONENT OPERATING RANGE

Output signal duty	Less than 100%

WIRING DIAGRAM

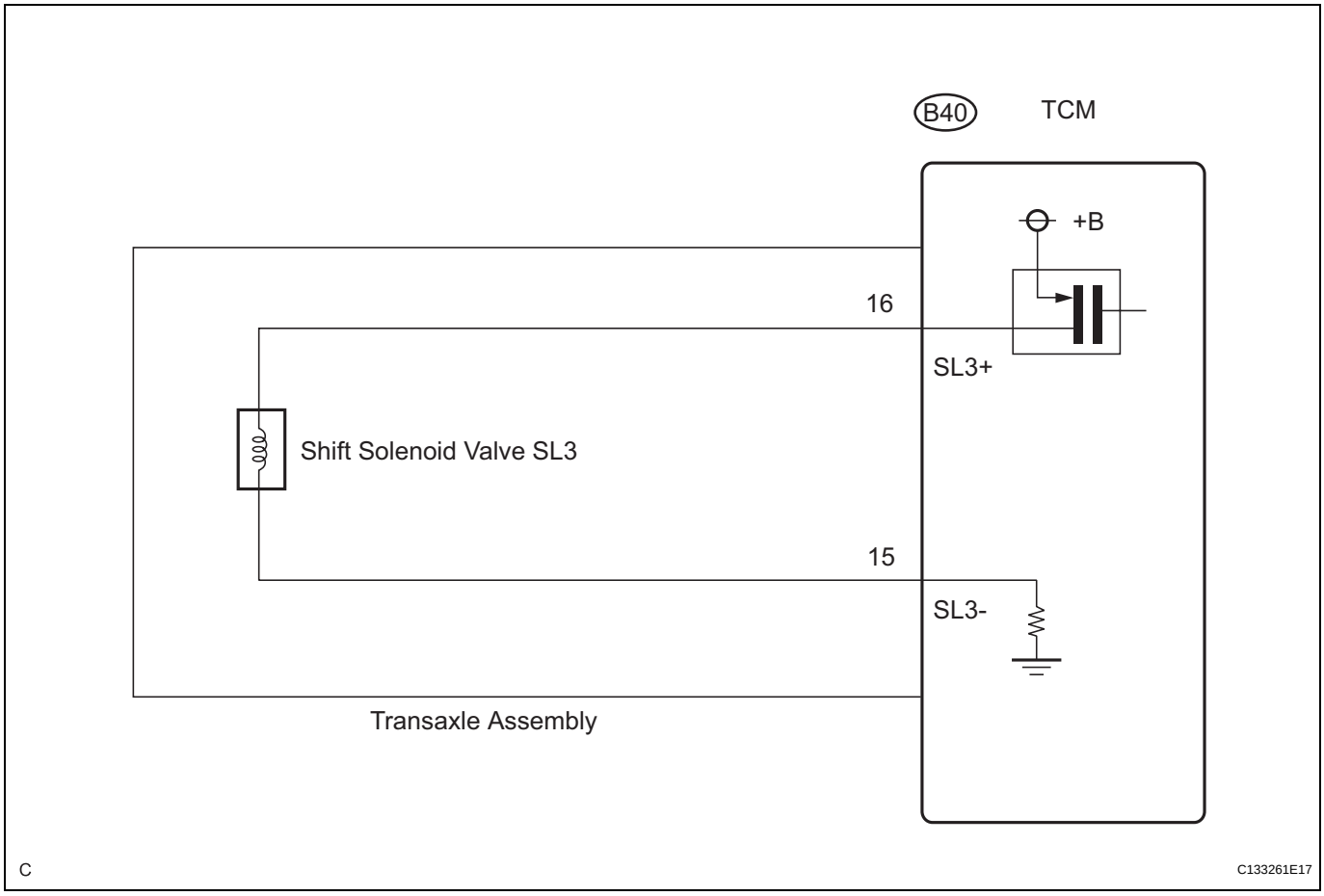

INSPECTION PROCEDURE

AX

1	INSPECT TRANSMISSION WIRE (SL3)

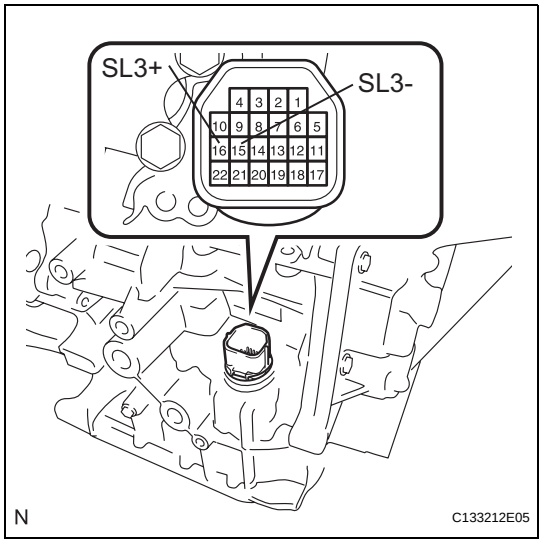

(a) Remove the TCM from the transaxle.

(b) Measure the resistance according to the value(s) in the table below.

Standard resistance

Tester Connection	Specified Condition 20°C (68°F)
16 (SL3+) - 15 (SL3-)	5.0 to 5.6 Ω

(c) Measure the resistance according to the value(s) in the table below.

Standard resistance:
Check for short

Tester Connection	Specified Condition
16 (SL3+) - Body ground	10 kΩ or higher
15 (SL3-) - Body ground	10 kΩ or higher

OK → **REPLACE TCM**

NG

2 INSPECT SHIFT SOLENOID VALVE (SL3)

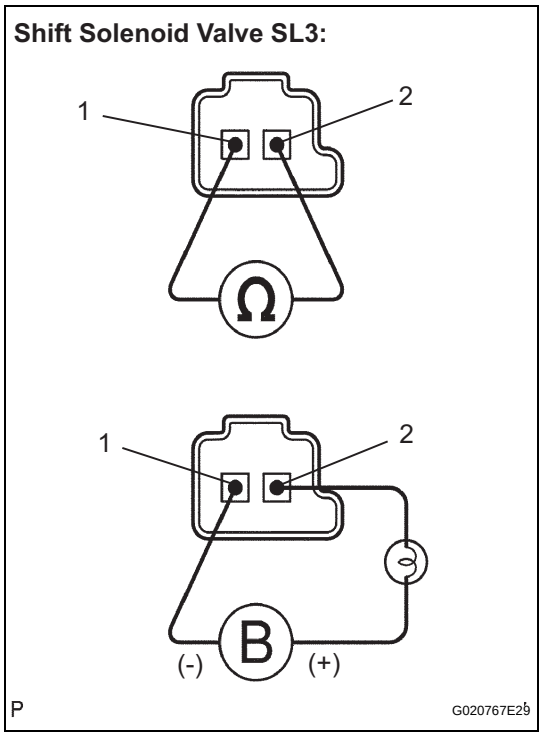

(a) Remove the shift solenoid valve SL3.

(b) Measure the resistance according to the value(s) in the table below.

Standard resistance

Tester Connection	Specified Condition 20°C (68°F)
1 - 2	5.0 to 5.6 Ω

(c) Connect a positive (+) lead through a 21 W bulb to terminal 2 and a negative (-) lead to terminal 1 of the solenoid valve connector, then check the movement of the valve.

OK:

The solenoid makes an operating noise.

NG → **REPLACE SHIFT SOLENOID VALVE (SL3)**

OK

REPLACE TRANSMISSION WIRE

AX

DTC	P0872	Transmission Fluid Pressure Switch No.1 Circuit Low

DTC	P0873	Transmission Fluid Pressure Switch No.1 Circuit High

DESCRIPTION

ATF pressure switch No. 1 is installed in the shift solenoid valve ATF output passage. This switch is used to identify the malfunctioning part when a fail-safe operation is performed. If the shift solenoid valve malfunctions when the ATF pressure switch has a malfunction, a fail-safe operation will be performed. This fail-safe operation is different from the fail-safe operation performed when the solenoid valve malfunctions and the ATF pressure switch is normal.

DTC No.	DTC Detecting Condition	Trouble Area
P0872	ATF pressure switch No. 1 OFF is detected twice when any of the gears from 1st to 4th engages normally.	• ATF temperature sensor assembly (ATF pressure switch No. 1) • Transmission wire • TCM
P0873	ATF pressure switch No. 1 ON is detected twice when 5th or 6th gear engages normally.	

WIRING DIAGRAM

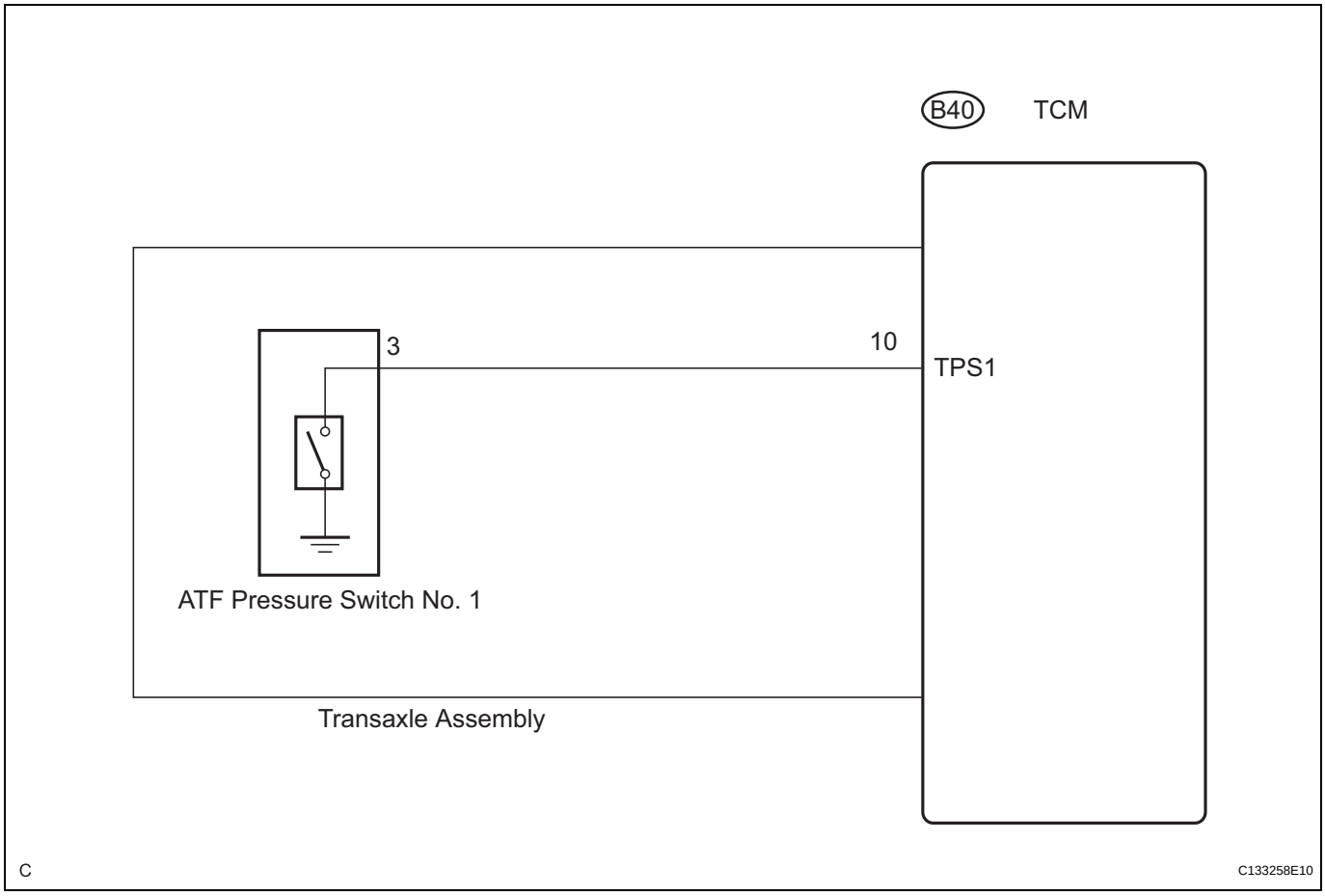

AX

INSPECTION PROCEDURE

1 CHECK OTHER DTC OUTPUT (IN ADDITION TO DTC P0872 OR P0873)

(a) Connect the intelligent tester to the DLC3.
(b) Turn the engine switch on (IG) and turn the intelligent tester on.
(c) Enter the following items: "DIAGNOSIS / OBD/MOBD / ECT / DTC INFO / CURRENT CODES".
(d) Read the DTCs using the intelligent tester.

Result

Display (DTC output)	Proceed to
Only "P0873" is output	A
Only "P0872" is output	B
"P0872 or P0873" and other DTCs	C

HINT:
If a solenoid is stuck OFF, DTCs for several solenoids including the malfunctioning solenoid will be detected.

B → **Go to step 4**

C → **GO TO DTC CHART**

A

2 CHECK TRANSMISSION WIRE (SHORT TO GROUND)

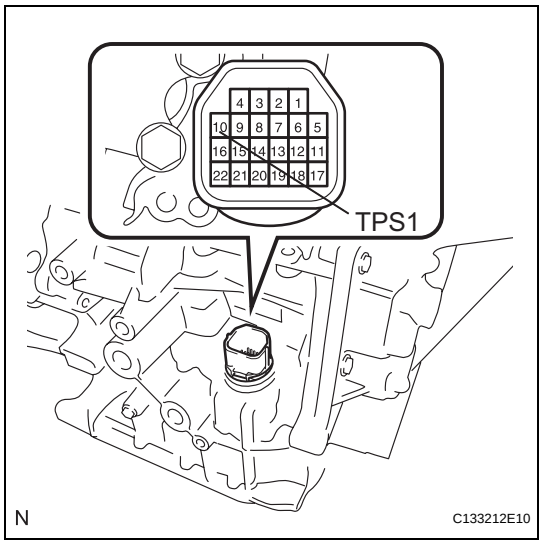

(a) Remove the TCM.
(b) Measure the resistance according to the value(s) in the table below.

Standard resistance

Tester Condition	Specified Condition
10 (TPS1) - Body ground (Valve body assembly)	10 kΩ or higher

OK → **REPLACE TCM**

NG

AX

3	CHECK ATF TEMPERATURE SENSOR ASSEMBLY (ATF PRESSURE SWITCH NO. 1)

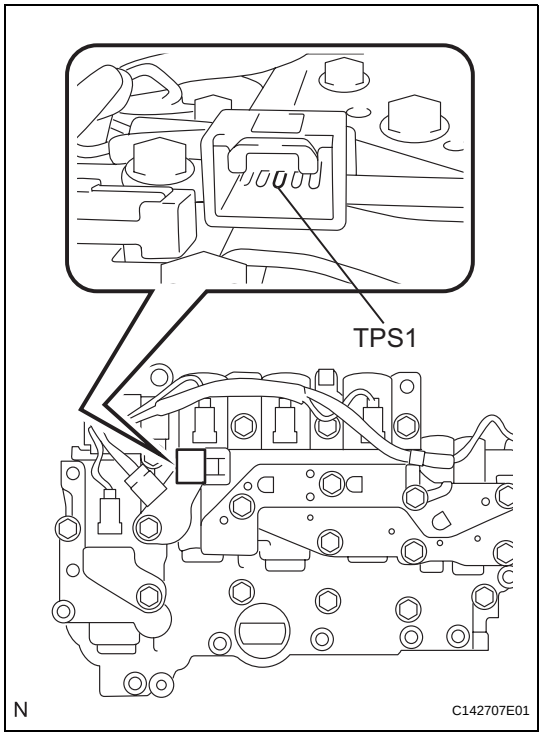

(a) Disconnect the transmission wire connector from the ATF temperature sensor assembly.

(b) Measure the resistance according to the value(s) in the table below.

Standard resistance

Tester Condition	Specified Condition
3 (TPS1) - Body ground (Valve body assembly)	10 kΩ or higher

NG → **REPLACE ATF TEMPERATURE SENSOR ASSEMBLY**

OK

REPLACE TRANSMISSION WIRE

4 CHECK TRANSMISSION WIRE

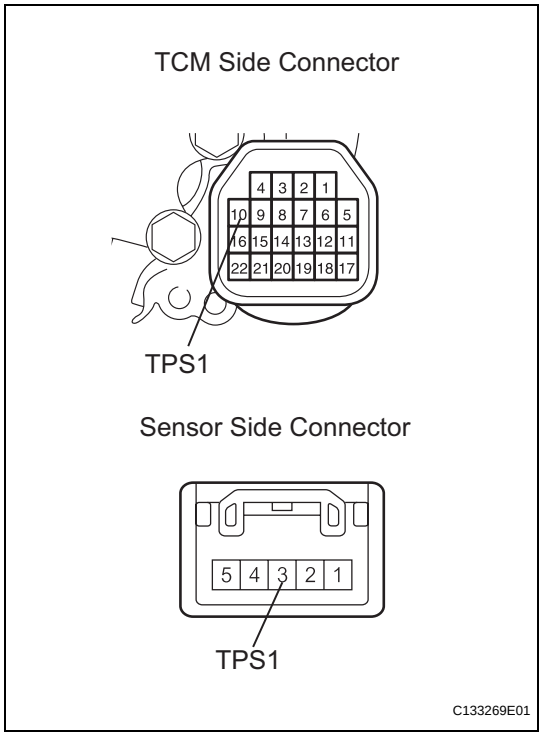

(a) Remove the TCM.
(b) Disconnect the connector from the ATF temperature sensor assembly.
(c) Measure the resistance according to the value(s) in the table below.

Standard resistance

Tester Condition	Specified Condition
10 (TPS1) - 3 (TPS1)	Below 1 Ω
10 (TPS1) or 3 (TPS1) - Body ground (Valve body assembly)	10 kΩ or higher

NG → **REPLACE TRANSMISSION WIRE**

OK

REPLACE ATF TEMPERATURE SENSOR ASSEMBLY

AX

DTC	P0877	Transmission Fluid Pressure Switch No.2 Circuit Low

DTC	P0878	Transmission Fluid Pressure Switch No.2 Circuit High

DESCRIPTION

ATF pressure switch No. 2 is installed in the shift solenoid valve ATF output passage. This switch is used to identify the malfunctioning part when a fail-safe operation is performed. If the shift solenoid valve malfunctions when the ATF pressure switch has a malfunction, a fail-safe operation will be performed. This fail-safe operation is different from the fail-safe operation performed when the solenoid valve malfunctions and the ATF pressure switch is normal.

DTC No.	DTC Detecting Condition	Trouble Area
P0877	ATF pressure switch No. 2 OFF is detected twice when any of the gears from 4th to 6th engages normally.	• ATF temperature sensor assembly (ATF pressure switch No. 2) • Transmission wire • TCM
P0878	ATF pressure switch No. 2 ON is detected twice when any of the gears from 1st to 3rd engages normally.	

WIRING DIAGRAM

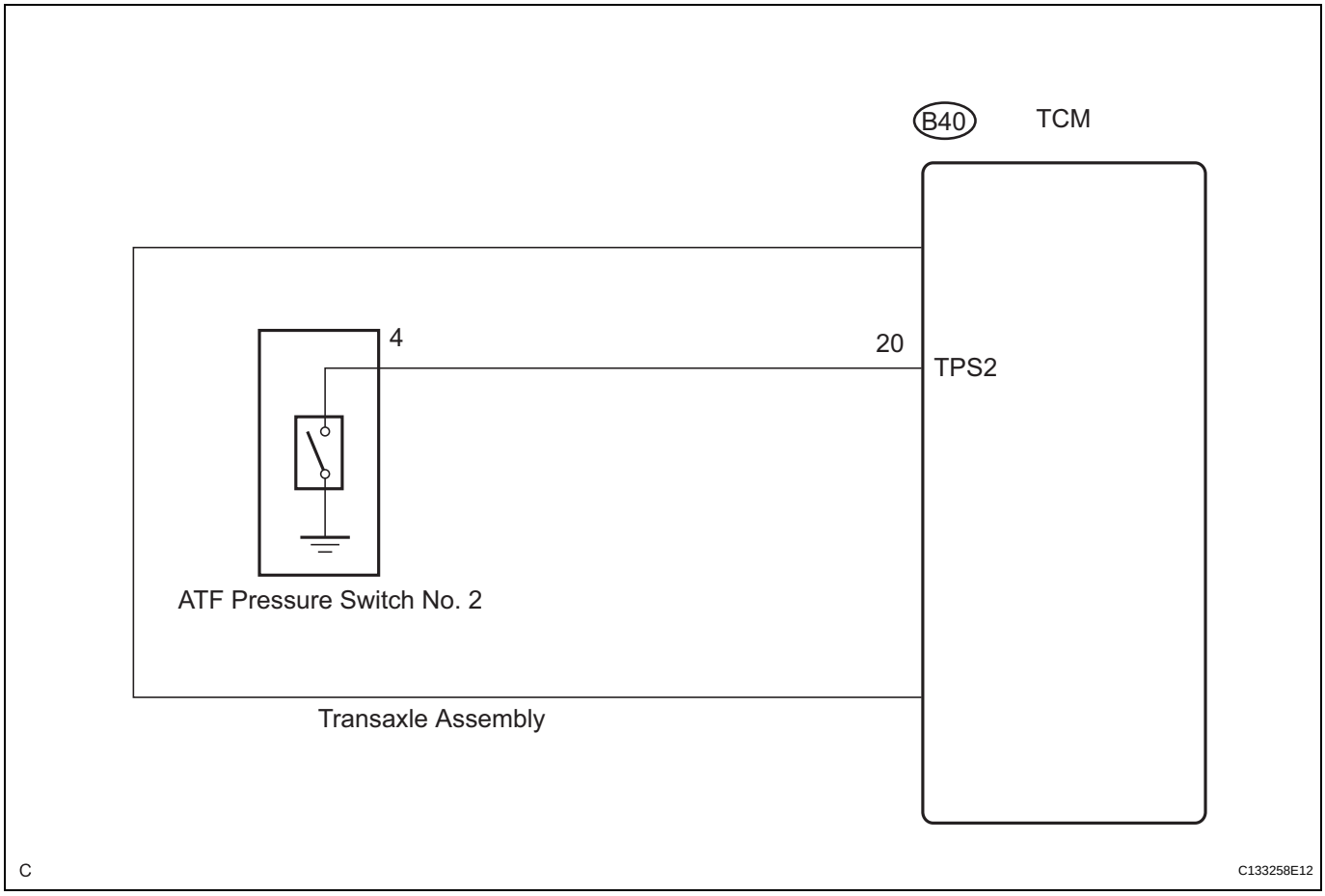

AX

INSPECTION PROCEDURE

1 CHECK OTHER DTC OUTPUT (IN ADDITION TO DTC P0877 OR P0878)

(a) Connect the intelligent tester to the DLC3.
(b) Turn the engine switch on (IG) and turn the intelligent tester on.
(c) Enter the following items: "DIAGNOSIS / OBD/MOBD / ECT / DTC INFO / CURRENT CODES".
(d) Read the DTCs using the intelligent tester.

Result

Display (DTC output)	Proceed to
Only "P0878" is output	A
Only "P0877" is output	B
"P0877 or P0878" and other DTCs	C

HINT:
If a solenoid is stuck OFF, DTCs for several solenoids including the malfunctioning solenoid will be detected.

B → **Go to step 4**

C → **GO TO DTC CHART**

A

2 CHECK TRANSMISSION WIRE (SHORT TO GROUND)

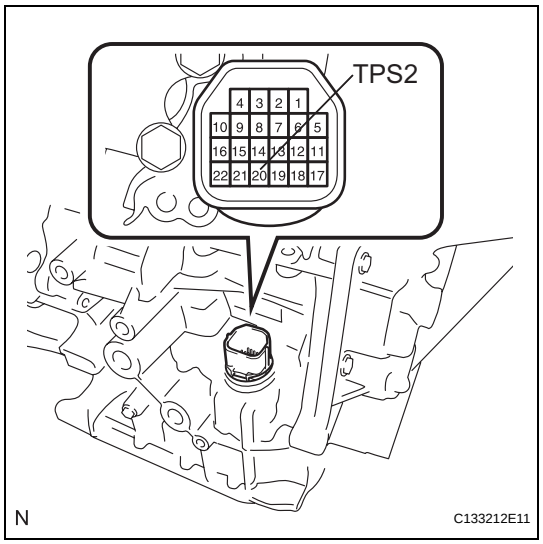

(a) Remove the TCM.
(b) Measure the resistance according to the value(s) in the table below.

Standard resistance

Tester Condition	Specified Condition
20 (TPS2) - Body ground (Valve body assembly)	10 kΩ or higher

OK → **REPAIR OR REPLACE TCM**

NG

AX

3	CHECK ATF TEMPERATURE SENSOR ASSEMBLY (ATF PRESSURE SWITCH NO. 2)

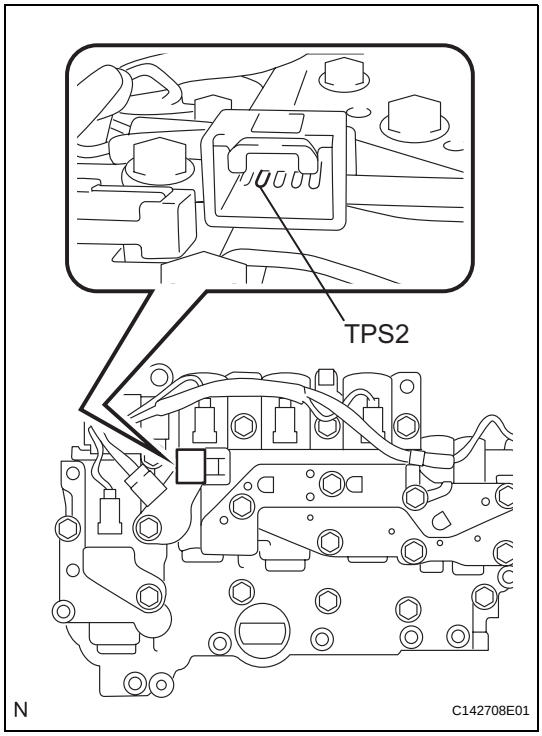

(a) Disconnect the transmission wire connector from the ATF temperature sensor assembly.

(b) Measure the resistance according to the value(s) in the table below.

Standard resistance

Tester Condition	Specified Condition
4 (TPS2) - Body ground (Valve body assembly)	10 kΩ or higher

NG → **REPLACE ATF TEMPERATURE SENSOR ASSEMBLY**

OK

REPLACE TRANSMISSION WIRE

4 CHECK TRANSMISSION WIRE

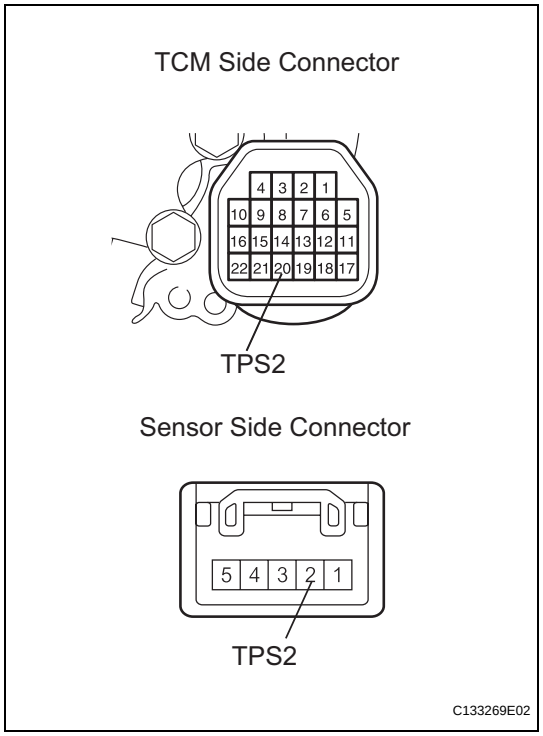

(a) Remove the TCM.
(b) Disconnect the connector from the ATF temperature sensor assembly.
(c) Measure the resistance according to the value(s) in the table below.

Standard resistance

Tester Condition	Specified Condition
20 (TPS2) - 2 (TPS2)	Below 1 Ω
20 (TPS2) or 2 (TPS2) - Body ground (Valve body assembly)	10 kΩ or higher

NG → **REPLACE TRANSMISSION WIRE**

OK

REPLACE ATF TEMPERATURE SENSOR ASSEMBLY

AX

DTC	P0989	Transmission Fluid Pressure Switch No.3 Circuit Low

DTC	P0990	Transmission Fluid Pressure Switch No.3 Circuit High

DESCRIPTION

ATF pressure switch No. 3 is installed in the lock-up solenoid ATF output passage and is used to detect a malfunction in the lock-up solenoid.

DTC No.	DTC Detection Condition	Trouble Area
P0989	Transmission fluid pressure switch No. 3 is OFF when lock-up occurs in response to a lock-up request (2 trip detection logic).	• ATF temperature sensor assembly (ATF pressure switch No. 3) • Transmission wire • TCM
P0990	When both of the following are detected (2 trip detection logic): • Transmission fluid pressure switch No. 3 is ON when lock-up does not occur. • Lock-up does not occur when shift solenoid valve (SLU) is requested to turn off in the lock-up range.	

MONITOR DESCRIPTION

The TCM illuminates the MIL and stores the DTC when the TCM detects that the ATF pressure switch is OFF with the lock-up solenoid ON or when the TCM detects that the ATF pressure switch is ON with the lock-up solenoid OFF.

MONITOR STRATEGY

Related DTCs	P0989: Transmission fluid pressure switch No. 3 OFF malfunction P0990: Transmission fluid pressure switch No. 3 ON malfunction
Required sensors/Components	Transmission fluid pressure switch No. 3
Frequency of operation	Continuous
Duration	P0989: 1.8 sec., P0990: 1.2 sec.
MIL operation	2 driving cycles
Sequence of operation	None

AX

TYPICAL ENABLING CONDITIONS

The following items are common to all conditions below.

The monitor will run whenever this DTC is not present.	None
Turbine speed sensor circuit	Circuit is not malfunctioning
Intermediate shaft speed sensor circuit	Circuit is not malfunctioning
Shift solenoid valve SL1 circuit	Circuit is not malfunctioning
Shift solenoid valve SL2 circuit	Circuit is not malfunctioning
Shift solenoid valve SL3 circuit	Circuit is not malfunctioning
Shift solenoid valve SL4 circuit	Circuit is not malfunctioning
Shift solenoid valve SLU circuit	Circuit is not malfunctioning
Knock sensor circuit	Circuit is not malfunctioning
ETCS (Electric throttle control system)	System is not down
Transmission shift position	"D"
ECT (Engine coolant temperature)	40°C (104°F) or more
Spark advance from Max. retard timing by KCS control	0°CA or more
TFT (Transmission fluid temperature)	-10°C (14°F) or more

TCM selected gear	Not 1st
Vehicle speed	15.5 mph (25 km/h) or more
Torque converter clutch circuit	Circuit is not malfunctioning
ECT circuit	Circuit is not malfunctioning
CAN communication system	Circuit is not malfunctioning
Turbine speed/Output speed (NT/NO) with 1st	3.304 to 7.724
Turbine speed/Output speed (NT/NO) with 2nd	1.901 to 2.340
Turbine speed/Output speed (NT/NO) with 3rd	1.399 to 1.649
Turbine speed/Output speed (NT/NO) with 4th	0.998 to 1.138
Turbine speed/Output speed (NT/NO) with 5th	0.705 to 0.836
Turbine speed/Output speed (NT/NO) with 6th	0.568 to 0.695

P0989:

TCM lock-up command	ON
Engine speed - Turbine speed	Less than 20 rpm
Throttle valve opening angle	7% or more
Vehicle speed	Less than 62 mph (100 km/h)
Shift solenoid valve SLU	Not ON malfunction

P0990:

TCM indicated pressure valve of SLU	Less than 4 kPa
TCM lock-up command	OFF
Shift solenoid valve SLU	Not malfunction
Shift solenoid valve SL	Not OFF malfunction

TYPICAL MALFUNCTION THRESHOLDS

P0989:

Transmission fluid pressure switch No. 3	OFF

P0990:

Following conditions are met	(a) and (b)
(a) Engine speed - Turbine speed	20 rpm or more
(b) Transmission fluid pressure switch No. 3	ON

WIRING DIAGRAM

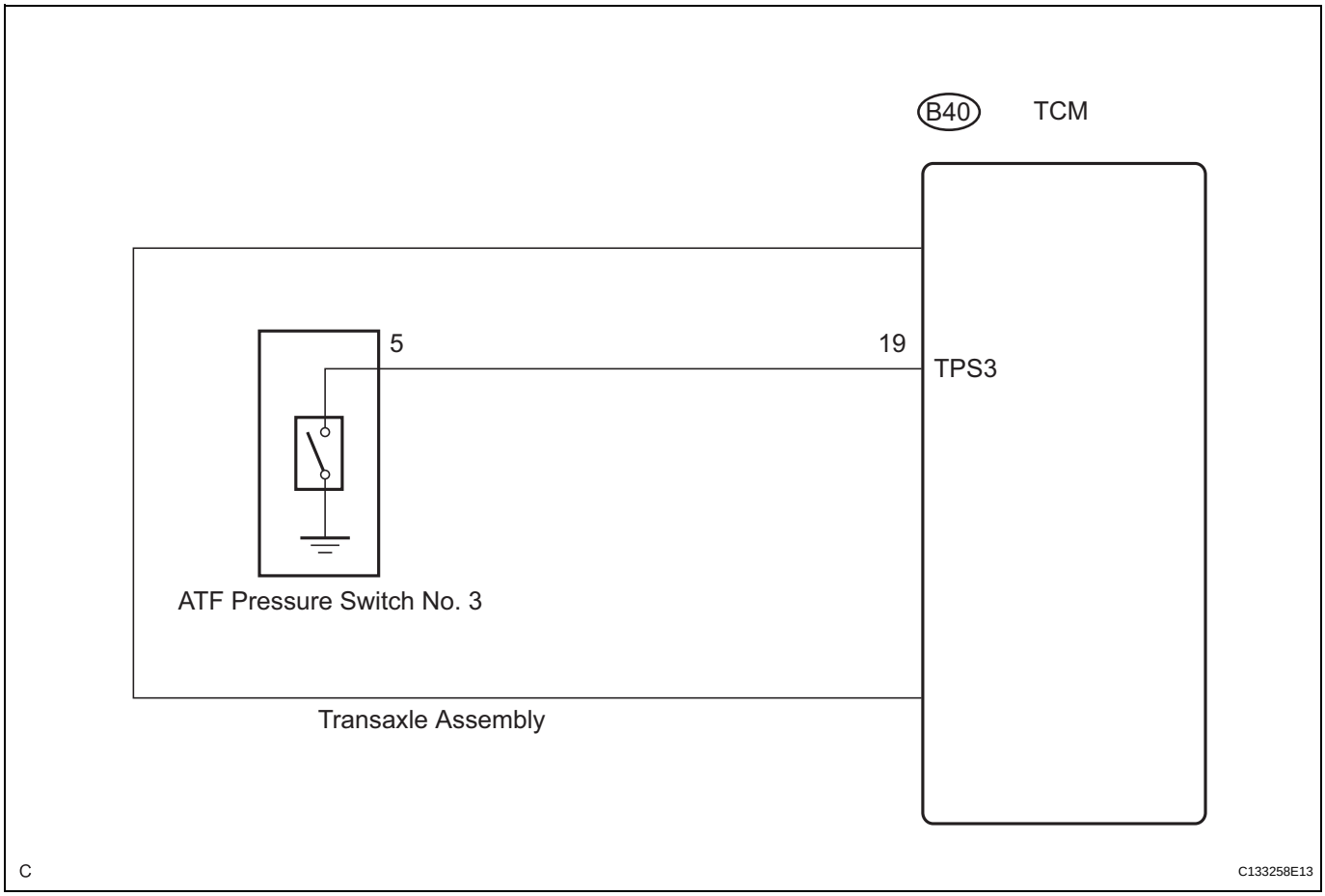

INSPECTION PROCEDURE

AX

1	CHECK OTHER DTC OUTPUT (IN ADDITION TO DTC P0989 OR P0990)

(a) Connect the intelligent tester to the DLC3.
(b) Turn the engine switch on (IG) and turn the intelligent tester on.
(c) Enter the following items: "DIAGNOSIS / OBD/MOBD / ECT / DTC INFO / CURRENT CODES".
(d) Read the DTCs using the intelligent tester.

Result

Display (DTC output)	Proceed to
Only "P0990" is output	A
Only "P0989" is output	B
"P0989 or P0990" and other DTCs	C

HINT:
If a solenoid is stuck OFF, DTCs for several solenoids including the malfunctioning solenoid will be detected.

B	Go to step 4
C	GO TO DTC CHART

A

2 CHECK TRANSMISSION WIRE (SHORT TO GROUND)

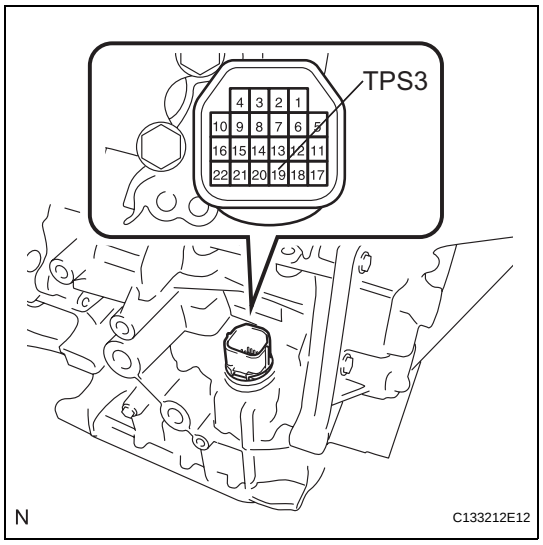

(a) Remove the TCM.
(b) Measure the resistance according to the value(s) in the table below.

Standard resistance

Tester Condition	Specified Condition
19 (TPS3) - Body ground (Valve body assembly)	10 kΩ or higher

OK → **REPLACE TCM**

NG

3 CHECK ATF TEMPERATURE SENSOR ASSEMBLY (ATF PRESSURE SWITCH NO. 3)

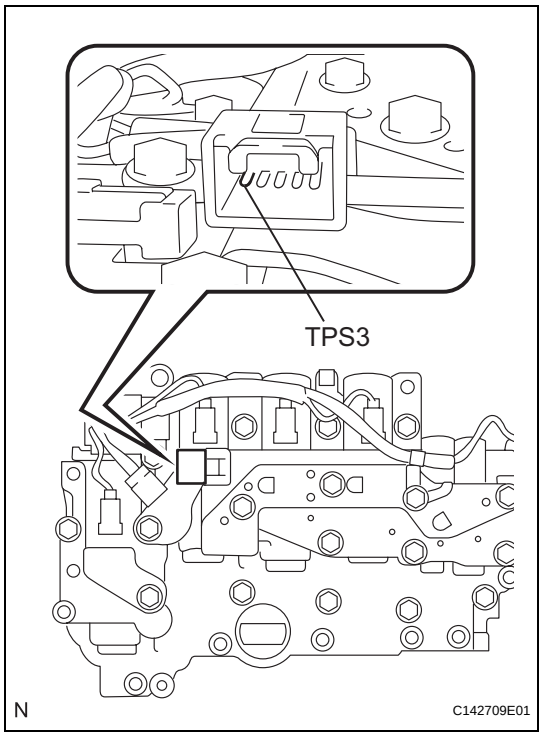

(a) Disconnect the connector from the ATF temperature sensor assembly.
(b) Measure the resistance according to the value(s) in the table below.

Standard resistance

Tester Condition	Specified Condition
5 (TPS3) - Body ground (Valve body assembly)	10 kΩ or higher

NG → **REPLACE ATF TEMPERATURE SENSOR ASSEMBLY**

OK

REPLACE TRANSMISSION WIRE

AX

4 CHECK TRANSMISSION WIRE

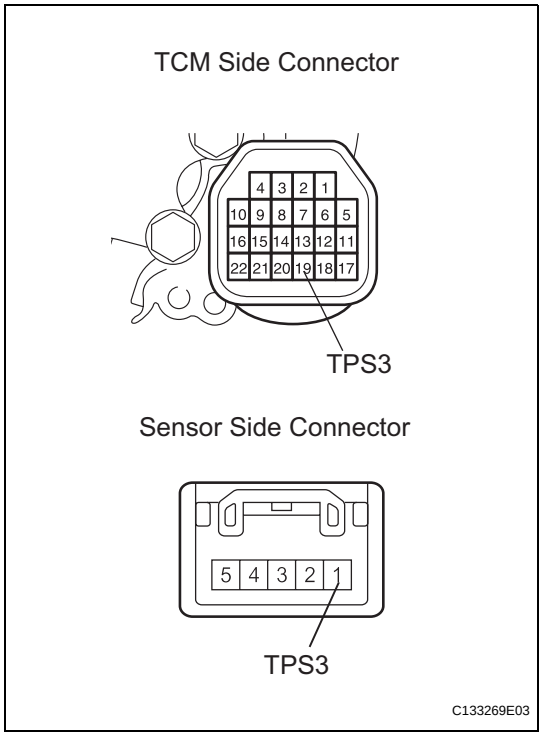

(a) Remove the TCM.
(b) Disconnect the connector from the ATF temperature sensor assembly.
(c) Measure the resistance according to the value(s) in the table below.

Standard resistance

Tester Condition	Specified Condition
19 (TPS3) - 1 (TPS3)	Below 1 Ω
19 (TPS3) or 1 (TPS3) - Body ground (Valve body assembly)	10 kΩ or higher

NG → **REPLACE TRANSMISSION WIRE**

OK

REPLACE ATF TEMPERATURE SENSOR ASSEMBLY

DTC	P2714	Pressure Control Solenoid "D" Performance (Shift Solenoid Valve SLT)

SYSTEM DESCRIPTION

The linear solenoid valve (SLT) controls the transmission line pressure for smooth transmission operation based on signals from the throttle position sensor and the vehicle speed sensor. The TCM adjusts the duty ratio (*) of the SLT solenoid valve to control hydraulic line pressure coming from the primary regulator valve. Appropriate line pressure assures smooth shifting with varying engine outputs.
(*): Duty Ratio
The duty ratio is the ratio of the period of continuity in one cycle. For example, if A is the period of continuity in one cycle, and B is the period of non-continuity, then
Duty Ratio = A/(A + B) x 100 (%)

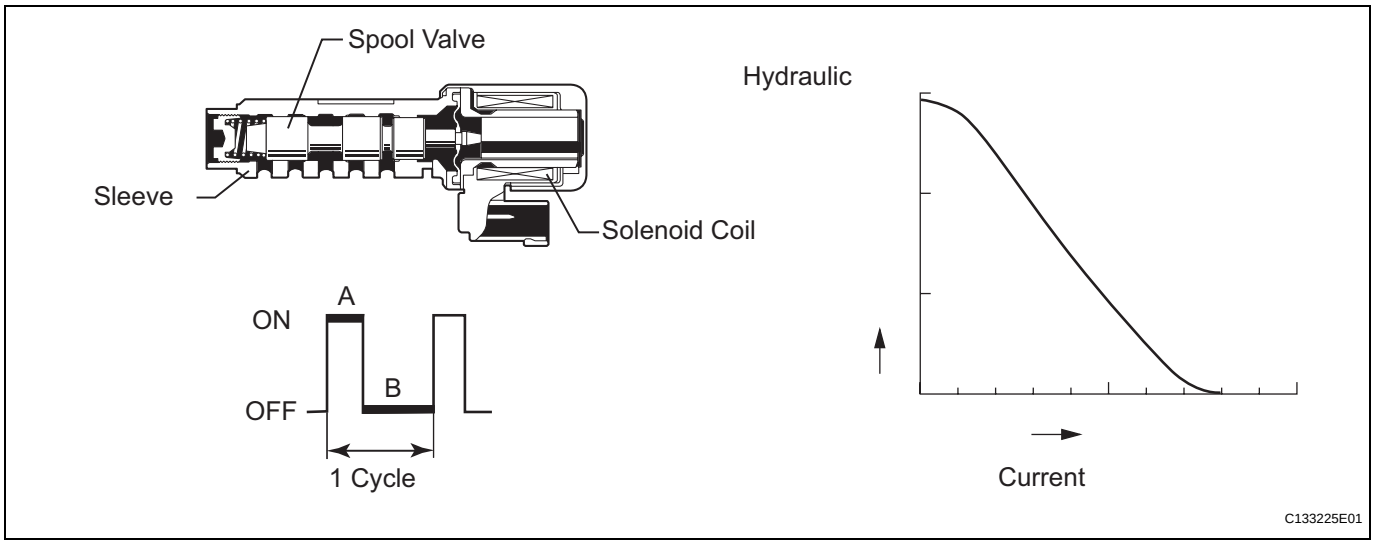

DTC No.	DTC Detection Condition	Trouble Area
P2714	The ECM detects a malfunction in the shift solenoid valve SLT (ON side) according to the difference in the speed between the turbine and the output shaft, and also by the transmission fluid pressure. (2-trip detection logic)	• Shift solenoid valve SLT (open) • Shift solenoid valve SL1, SL2, SL3 or SL4 (open or closed) • Valve body (blocked) • Automatic transaxle (clutch, brake or gear, etc.)

AX

MONITOR DESCRIPTION

The TCM calculates the amount of heat absorbed by the friction material based on the difference in revolution (clutch slippage) between the turbine and output shaft. The TCM turns on the MIL and outputs this DTC when the amount of heat absorption exceeds the specified value.
When the shift solenoid valve SLT remains on, oil pressure goes down and clutch engagement force decreases.
NOTICE:
If driving continues under these conditions, the clutches will burn out and the vehicle will no longer be drivable.

MONITOR STRATEGY

Related DTCs	P2714: Shift solenoid valve SLT/ON malfunction
Required sensors/Components	Shift solenoid valve SLT
Frequency of operation	Continuous
Duration	2 sec.
MIL operation	2 driving cycles
Sequence of operation	None

TYPICAL ENABLING CONDITIONS

ON malfunction:

The monitor will run whenever this DTC is not present.	None
Turbine speed sensor circuit	Circuit is not malfunctioning
TFT sensor circuit	Circuit is not malfunctioning
Shift solenoid valve SL1 circuit	Circuit is not malfunctioning
Shift solenoid valve SL2 circuit	Circuit is not malfunctioning
Shift solenoid valve SL3 circuit	Circuit is not malfunctioning
Shift solenoid valve SL4 circuit	Circuit is not malfunctioning
Shift solenoid valve SLT circuit	Circuit is not malfunctioning
ECT (Engine coolant temperature) sensor circuit	Circuit is not malfunctioning
Knock control sensor circuit	Circuit is not malfunctioning
ETCS (Electric throttle control system)	System is not down
Transmission range	"D"
Engine	Starting
TFT	-10°C (5°F) or more
Input turbine torque	100 N*m or more
Turbine speed	250 rpm or more
Output speed	250 rpm or more

TYPICAL MALFUNCTION THRESHOLDS

ON malfunction:

Detection criteria	Threshold
Turbine speed - Output speed x Gear ratio at output speed 1,000 rpm (Condition varies with output speed)	75 rpm or more

INSPECTION PROCEDURE

AX

1	CHECK OTHER DTCS OUTPUT (IN ADDITION TO DTC P2714)

(a) Connect the intelligent tester to the DLC3.
(b) Turn the engine switch on (IG) and turn the intelligent tester on.
(c) Enter the following items: "DIAGNOSIS / OBD/MOBD / ECT / DTC INFO / CURRENT CODES".
(d) Read the DTCs using the intelligent tester.

Result

Display (DTC output)	Proceed to
Only "P2714" is output	**A**
"P2714" and other DTCs	**B**

HINT:
If a solenoid is stuck ON, DTCs for several solenoids including the malfunctioning solenoid will be detected.

A → **INSPECT SHIFT SOLENOID VALVE SLT**

B

2	PERFORM ACTIVE TEST BY INTELLIGENT TESTER (SHIFT SOLENOID VALVE SLT)

NOTICE:

- **Perform the test at the normal operating ATF (Automatic Transmission Fluid) temperature: 50 to 80°C (122 to 176°F)**
- **Be sure to prevent SST hose from interfering with the exhaust pipe.**
- **This check must be conducted after checking and adjusting the engine.**
- **Perform the test with the A/C OFF.**

HINT:

Performing the ACTIVE TEST using the intelligent tester allows relays, VSVs, actuators and other items to operate without removing any parts. Performing the ACTIVE TEST as the first step in troubleshooting is one method to save labor time.

It is possible to display the DATA LIST during the ACTIVE TEST.

(a) Turn the engine switch off.
(b) Lift the vehicle up.
(c) Remove the test plug on the transmission case center right side and connect SST.
SST 09992-00095 (09992-00231, 09992-00271)
(d) Lower the vehicle.
(e) Fully apply the parking brake and chock the 4 wheels.
(f) Connect the intelligent tester together with the CAN VIM (Controller Area Network Vehicle Interface Module) to the DLC3.
(g) Start the engine.
(h) Warm up the ATF (Automatic Transmission Fluid).
(i) Measure the line pressure when the engine is idling.
(j) Turn on the tester.
(k) Enter the following items: DIAGNOSIS / OBD/MOBD / ECT / ACTIVE TEST / SOLENOID (SLT)".
(l) Follow the instructions on the tester and perform the ACTIVE TEST.
(m) Measure the line pressure with SST.

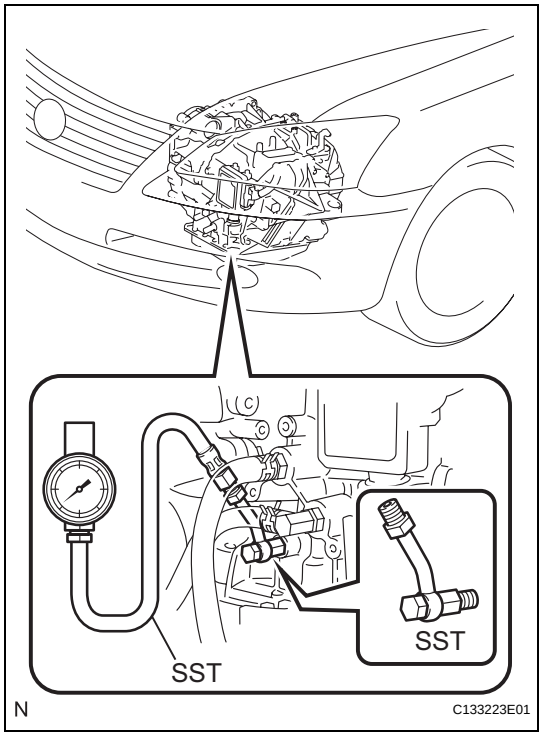

Item	Test Details
SOLENOID (SLT)*	[Test Details] Operate the shift solenoid SLT and raise the line pressure. [Vehicle Condition] • Vehicle Stopped. • IDL: ON HINT: OFF: Line pressure up (When the active test of "SOLENOID (SLT)" is performed, the TCM commands the SLT solenoid to turn off). ON: No action (normal operation)

AX

*: "SOLENOID (SLT)" in the ACTIVE TEST is performed to check that the line pressure changes by connecting the SST to the automatic transaxle. The same SST is used in the HYDRAULIC TEST (See page AX-16) as well.
HINT:
The pressure values in ACTIVE TEST and HYDRAULIC TEST are different from each other.
OK:
The line pressure changes as specified when performing the ACTIVE TEST.

NG → **Go to step 5**

OK

3 PERFORM ACTIVE TEST BY INTELLIGENT TESTER (SHIFTING TEST)

NOTICE:
This test should always be performed with at least 2 people.
HINT:
Performing the ACTIVE TEST using the intelligent tester allows relays, VSVs, actuators and other items to be operated without removing any parts. Performing the ACTIVE TEST as the first step in troubleshooting is one method to save labor time.
The DATA LIST can be displayed during the ACTIVE TEST.
(a) Warm up the engine.
(b) Turn the engine switch off.
(c) Connect the intelligent tester together with the CAN VIM (Controller Area Network Vehicle Interface Module) to the DLC3.
(d) Start the engine.
(e) Turn on the tester.
(f) Enter the following items: "DIAGNOSIS / OBD/MOBD / ECT / ACTIVE TEST".
(g) Follow the instructions on the tester and read the ACTIVE TEST.

AX

Item	Test Details	Diagnostic Note
SHIFT	[Test Details] Operate the shift solenoid valve and set each shift position by yourself. [Vehicle Condition] • IDL: ON [Others] • Press "→" button: Shift up • Press "←" button: Shift down	It is possible to check the operation of the shift solenoid valves.

NOTICE:
- **This test can be conducted when the vehicle is stopped.**
- **When shifting gears using the Active Test function, do not operate the accelerator pedal for 2 seconds before and after shifting gears.**

HINT:
The shift position commanded by the TCM is shown on the DATA LIST/SHIFT display on the intelligent tester.

(h) Check the vehicle speed and the gear position when the engine speed is 1,000 rpm.
HINT:
Because the torque converter clutch has not engaged, it may be difficult to obtain the speeds specified in 4th, 5th, and 6th gears, however a difference of speed should still be evident following each gear change.

Standard

1st	2nd	3rd	4th	5th	6th
5 to 7.5 mph (8 to 12 km/h)	9.3 to 11.8 mph (15 to 19 km/h)	13.0 to 15.5 mph (21 to 25 km/h)	19.3 to 21.7 mph (31 to 35 km/h)	27.3 to 29.8 mph (44 to 48 km/h)	32.3 to 34.8 mph (52 to 56 km/h)

(i) Compare the TCM gear shift command and the actual gear position.

Result

Actuator gear position under malfunction		TCM gear shift command						Proceed to
		1st	2nd	3rd	4th	5th	6th	
Shift solenoid SL1	Stuck ON	1st	2nd	3rd	4th	4th	4th	A
	Stuck OFF	N*1	N*1	N*1	N*1	5th	6th	
Shift solenoid SL2	Stuck ON	4th	4th	4th	4th	5th	6th	B
	Stuck OFF	1st	2nd	3rd	1st	N*1	N*1	
Shift solenoid SL3	Stuck ON	2nd	2nd	3rd	4th	5th	6th	C
	Stuck OFF	1st	1st	3rd	4th	5th	N*1	
Shift solenoid SL4	Stuck ON*3	3rd	3rd	3rd	4th	5th	5th	D
	Stuck OFF	1st	2nd	1st	4th	N*1	6th	
Shift solenoid SLT	Stuck ON	N*2	N*2	N*2	N*2	N*2	N*2	E
	Stuck OFF*3	1st	2nd	3rd	4th	5th	6th	

HINT:
- *1: Neutral
- *2: If the shift solenoid SLT is stuck on, the line pressure will be low. Therefore, the amount of torque that can be transmitted by each gear is lower than the normal limit. When the engine power exceeds this lowered limit, the engine speed will increase freely.
- *3: When the shift solenoid SLT is stuck OFF, gear shifting is normal.

A → **GO TO DTC CHART (RELATED SHIFT SOLENOID VALVE (SL1) PERFORMANCE DTC P0746)**

B → **GO TO DTC CHART (RELATED SHIFT SOLENOID VALVE (SL2) PERFORMANCE DTC P0776)**

C → **GO TO DTC CHART (RELATED SHIFT SOLENOID VALVE (SL3) PERFORMANCE DTC P0796)**

D → **GO TO DTC CHART (RELATED SHIFT SOLENOID VALVE (SL4) PERFORMANCE DTC P2808)**

E

4 INSPECT SHIFT SOLENOID VALVE SLT

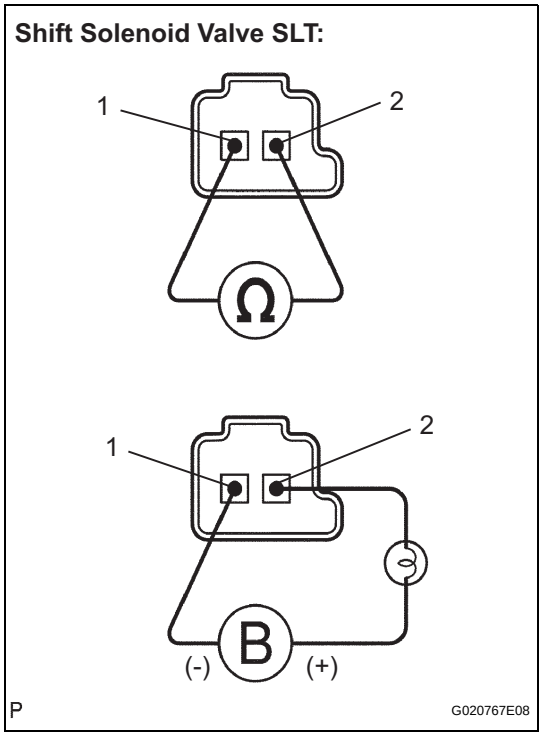

(a) Remove the shift solenoid valve SLT.

(b) Measure the resistance according to the value(s) in the table below.

Standard resistance

Tester Connection	Specified Condition 20°C (68°F)
1 - 2	5.0 to 5.6 Ω

(c) Connect a positive (+) lead through a 21 W bulb to terminal 2 and a negative (-) lead to terminal 1 of the solenoid valve connector, then check the movement of the valve.

OK:

The solenoid makes an operating sound.

NG → **REPLACE SHIFT SOLENOID VALVE SLT**

OK

5 INSPECT TRANSMISSION VALVE BODY ASSEMBLY

OK:

There are no foreign objects on each valve.

NG → **REPLACE TRANSMISSION VALVE BODY ASSEMBLY**

OK

6 INSPECT TORQUE CONVERTER CLUTCH ASSEMBLY

(a) Check the torque converter clutch assembly (See page AX-248).

OK:

The torque converter clutch operates normally.

AX

NG → **REPLACE TORQUE CONVERTER CLUTCH ASSEMBLY**

OK

REPLACE AUTOMATIC TRANSMISSION ASSEMBLY

DTC	P2716	Pressure Control Solenoid "D" Electrical (Shift Solenoid Valve SLT)

DESCRIPTION

Refer to DTC P2714 (See page AX-133).

DTC No.	DTC Detection Condition	Trouble Area
P2716	Open or short is detected in shift solenoid valve SLT circuit for 1 second or more while driving (1-trip detection logic).	• Open or short in shift solenoid valve SLT circuit • Shift solenoid valve SLT • TCM

MONITOR DESCRIPTION

When an open or short in the linear solenoid valve (SLT) circuit is detected, the TCM interprets this as a fault. The TCM will turn on the MIL and store the DTC.

MONITOR STRATEGY

Related DTCs	P2716: Shift solenoid valve SLT/Range check
Required sensors/Components	Shift solenoid valve SLT
Frequency of operation	Continuous
Duration	1 sec.
MIL operation	Immediate
Sequence of operation	None

TYPICAL ENABLING CONDITIONS

ALL:

The monitor will run whenever this DTC is not present	None
Solenoid current cut status	Not cut
Engine switch	ON
Starter	OFF

AX

Malfunction (A):

Battery voltage	10 V to 12 V

Malfunction (B):

Battery voltage	10 V or more and less than 12 V
Target current	0.75 A

Malfunction (C):

Battery voltage	8 V or more
Target current	1 A

Malfunction (D):

Battery voltage	11 V or more
Target current	1 A or more

Malfunction (E):

Battery voltage	11 V or more
Target current	0.1 A or more
Commanded voltage - Last commanded voltage	Less than 0.02 V

TYPICAL MALFUNCTION THRESHOLDS

Malfunction (A) and (B):

Output signal duty	100% or more

Malfunction (C):

Output signal duty	0% or less

Malfunction (D):

Output signal monitor	No signal

Malfunction (E):

Commanded voltage - Last commanded voltage	0.02 V or more

COMPONENT OPERATING RANGE

Output signal duty	Less than 100%

WIRING DIAGRAM

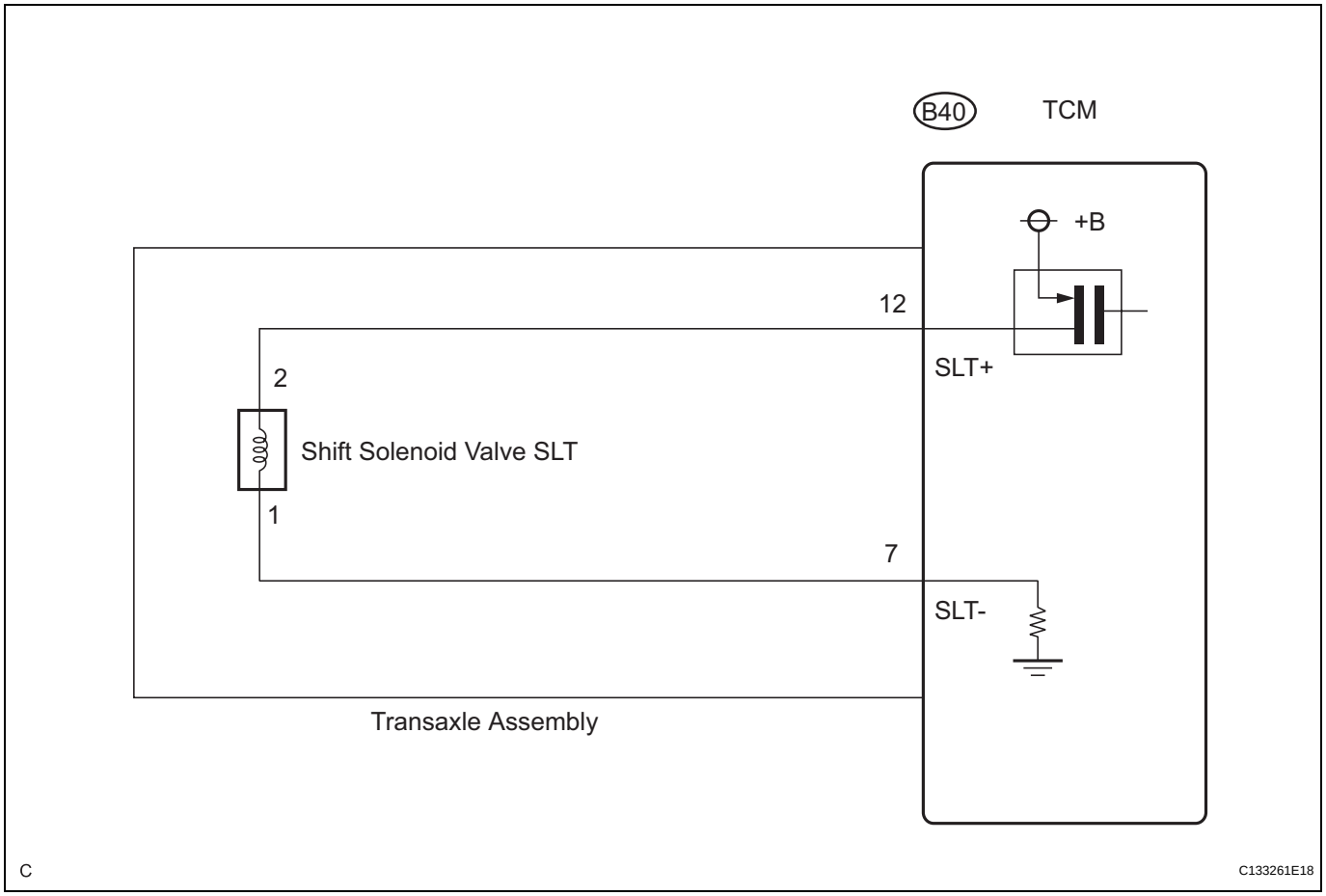

AX

INSPECTION PROCEDURE

1 INSPECT TRANSMISSION WIRE (SLT)

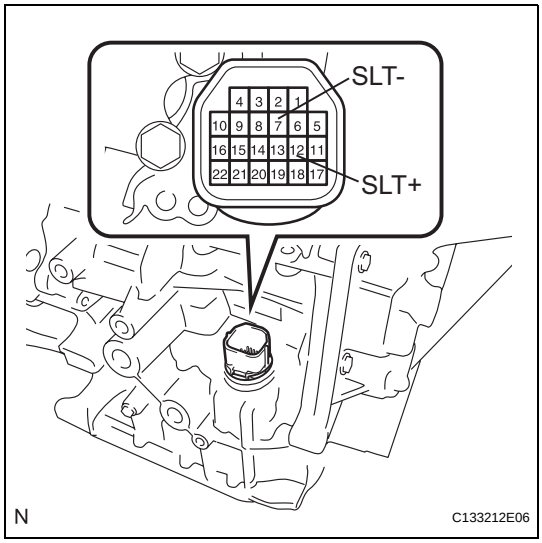

(a) Remove the TCM from the transaxle.
(b) Measure the resistance according to the value(s) in the table below.
Standard resistance

Tester Connection	Specified Condition 20°C (68°F)
12 (SLT+) - 7 (SLT-)	5.0 to 5.6 Ω

(c) Measure the resistance according to the value(s) in the table below.
Standard resistance:
Check for short

Tester Connection	Specified Condition
12 (SLT+) - Body ground	10 kΩ or higher
7 (SLT-) - Body ground	10 kΩ or higher

OK → **REPLACE TCM**

NG

2 INSPECT SHIFT SOLENOID VALVE SLT

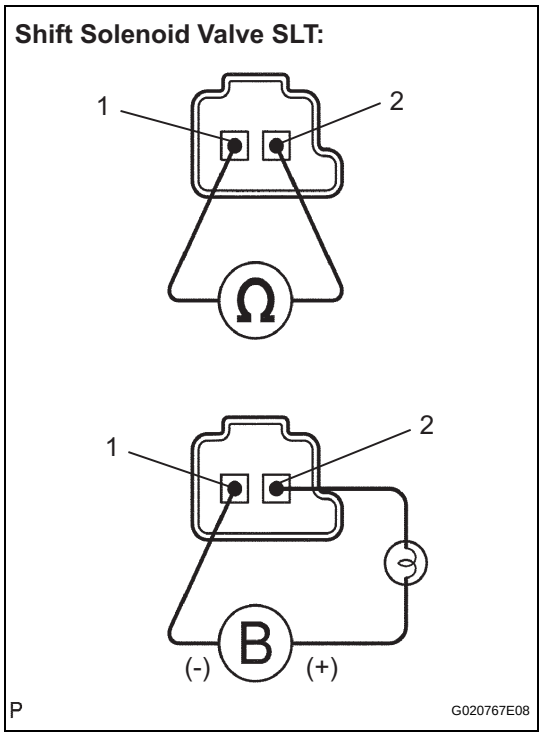

(a) Remove the shift solenoid valve SLT.
(b) Measure the resistance according to the value(s) in the table below.
Standard resistance

Tester Connection	Specified Condition 20°C (68°F)
1 - 2	5.0 to 5.6 Ω

(c) Connect a positive (+) lead through a 21 W bulb to terminal 2 and a negative (-) lead to terminal 1 of the solenoid valve connector, then check the movement of the valve.
OK:
The solenoid makes an operating sound.

NG → **REPLACE SHIFT SOLENOID VALVE SLT**

OK

REPLACE TRANSMISSION WIRE

AX

DTC	P2757	Torque Converter Clutch Pressure Control Solenoid Performance (Shift Solenoid Valve SLU)

SYSTEM DESCRIPTION

The TCM uses the signals from the throttle position sensor, air-flow meter, turbine (input) speed sensor, output speed sensor and crankshaft position sensor to monitor the engagement condition of the lock-up clutch.

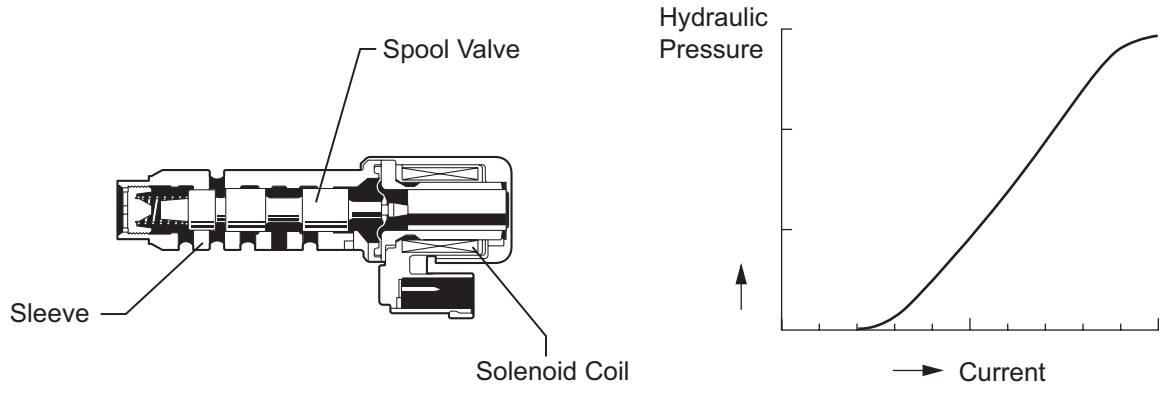

The TCM compares the engagement condition of the lock-up clutch with the lock-up schedule in the TCM memory to detect shift solenoid valve SLU, valve body and torque converter clutch mechanical problems.

DTC No.	DTC Detection Condition	Trouble Area
P2757	When both of the following are detected (2-trip detection logic): • Lock-up does not occur when requested. • Transmission fluid pressure switch No. 3 is OFF. When both of the following are detected (2-trip detection logic): • Transmission fluid pressure switch No. 3 is ON when lock-up does not occur. • Lock-up occurs when the shift solenoid valve SLU is requested to turn on in the lock-up range.	• Shift solenoid valve SLU (open or closed) • Valve body (blocked) • Torque converter clutch • Automatic transaxle (clutch, brake or gear, etc.) • Line pressure is too low

AX

MONITOR DESCRIPTION

Torque converter lock-up is controlled by the TCM based on the turbine (input) speed sensor NT, output speed sensor NC, engine rpm, engine load, engine temperature, vehicle speed, transmission fluid temperature, and gear selection. The TCM determines the lock-up status of the torque converter by comparing the engine rpm (NE) to the input turbine rpm (NT). The TCM calculates the actual transmission gear by comparing input turbine rpm (NT) to output shaft rpm (NC). When conditions are appropriate, the TCM requests "lock-up" by applying control voltage to the shift solenoid SLU. When the SLU is turned on, it applies pressure to the lock-up relay valve and locks the torque converter clutch.
If the TCM detects no lock-up after lock-up has been requested or if it detects lock-up when it is not requested, the TCM interprets this as a fault in the shift solenoid valve SLU or lock-up system performance.
The TCM will turn on the MIL and store the DTC.
Example:
When any of the following is met, the system judges it as a malfunction.

- There is a difference in rotation between the input side (engine speed) and output side (input turbine speed) of the torque converter when the TCM commands lock-up.
  (Engine speed is at least 70 rpm greater than input turbine speed.)
- There is no difference in rotation between the input side (engine speed) and output side (input turbine speed) of the torque converter when the TCM commands lock-up off.
  (The difference between engine speed and input turbine speed is less than 20 rpm.)

MONITOR STRATEGY

Related DTCs	P2757: Shift solenoid valve SLU OFF malfunction Shift solenoid valve SLU ON malfunction
Required sensors/Components	Shift solenoid valve SLU
Frequency of operation	Continuous
Duration	OFF malfunction (A): 3.5 sec. OFF malfunction (B): 0.05 sec. ON malfunction: 1.8 sec.
MIL operation	2 driving cycles
Sequence of operation	None

TYPICAL ENABLING CONDITIONS

The following items are common to all conditions below.

The monitor will run whenever this DTC is not present.	None
Turbine speed sensor circuit	Circuit is not malfunctioning
Intermediate shaft speed sensor circuit	Circuit is not malfunctioning
Shift solenoid valve SL1 circuit	Circuit is not malfunctioning
Shift solenoid valve SL2 circuit	Circuit is not malfunctioning
Shift solenoid valve SL3 circuit	Circuit is not malfunctioning
Shift solenoid valve SL4 circuit	Circuit is not malfunctioning
Shift solenoid valve SLU circuit	Circuit is not malfunctioning
Knock sensor circuit	Circuit is not malfunctioning
ETCS (Electric throttle control system)	System is not down
Transmission shift position	"D"
ECT (Engine coolant temperature)	40°C (104°F) or more
Spark advance from Max. retard timing by KCS control	0°CA or more
TFT (Transmission fluid temperature)	-10°C (14°F) or more
TCM selected gear	Not 1st
Vehicle speed	15.5 mph (25 km/h) or more
Torque converter clutch circuit	Circuit is not malfunctioning
ECT circuit	Circuit is not malfunctioning
CAN communication system	Circuit is not malfunctioning
Turbine speed/Output speed (NT/NO) with 1st	3.304 to 7.724
Turbine speed/Output speed (NT/NO) with 2nd	1.901 to 2.340
Turbine speed/Output speed (NT/NO) with 3rd	1.399 to 1.649
Turbine speed/Output speed (NT/NO) with 4th	0.998 to 1.138
Turbine speed/Output speed (NT/NO) with 5th	0.705 to 0.836
Turbine speed/Output speed (NT/NO) with 6th	0.568 to 0.695

OFF malfunction (A):

TCM lock-up command	ON
Duration time from lock-up on command	3 sec. or more
Shift solenoid valve SLU	ON malfunction not occuring

ON malfunction:

TCM lock-up command	OFF (SLU pressure: less than 4 kPa (0.04 kgfcm^2, 0.6 psi)
Duration time from lock-up on command	0.064 sec. or more
Throttle valve opening angle	7% or more
Vehicle speed	Less than 37.3 mph (60 km/h)

TYPICAL MALFUNCTION THRESHOLDS

OFF malfunction:

Following conditions are met	(a) and (b)
(a) Engine speed - Turbine speed	70 rpm or more
(b) Transmission fluid pressure switch	OFF

ON malfunction:

Following conditions are met	(a) and (b)
(a) Engine speed - Turbine speed	Less than 35 rpm
(b) Transmission fluid pressure switch	ON

COMPONENT OPERATING RANGE

Speed sensor (NT)	Input speed is equal to engine speed when lock-up is ON.

INSPECTION PROCEDURE

1. ACTIVE TEST

HINT:

Performing the ACTIVE TEST using the intelligent tester allows relays, VSVs, actuators and other items to be operated without removing any parts. Performing the ACTIVE TEST as the first step in troubleshooting is one method to save labor time.

It is possible to display the DATA LIST during the ACTIVE TEST.

(a) Warm up the engine.
(b) Turn the engine switch off.
(c) Connect the intelligent tester together with the CAN VIM (Controller Area Network Vehicle Interface Module) to the DLC3.
(d) Turn the engine switch on (IG).
(e) Turn on the tester.
(f) Enter the following items: "DIAGNOSIS / OBD/MOBD / ECT / ACTIVE TEST".
(g) According to the display on the tester, perform "ACTIVE TEST".

Item	Test Details	Diagnostic Note
LOCK UP	[Test Details] Control the shift solenoid SLU to set the automatic transaxle to the lock-up condition. [Vehicle Condition] • Throttle valve opening angle: Less than 35% • Vehicle Speed: 37 mph (60 km/h) or more	Possible to check the SLU operation.

HINT:

- This test can be conducted when the vehicle speed is 37 mph (60 km/h) or more.
- This test can be conducted with the 6th gear.

(h) Lightly depress the accelerator pedal and check that the engine speed does not change abruptly.

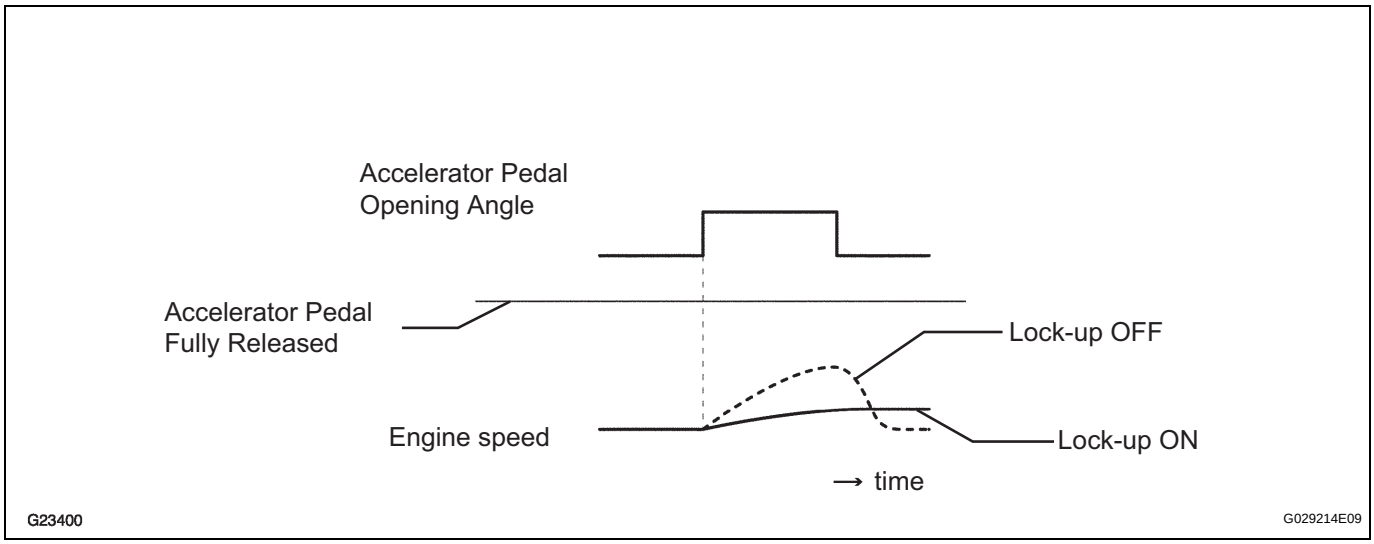

HINT:
- When changing the accelerator pedal opening angle while driving, if the engine speed does not change, lock-up is on.
- Slowly release, but not fully, the accelerator pedal in order to decelerate. (Fully releasing the pedal will close the throttle valve and lock-up may be turned off automatically.)

1	CHECK OTHER DTCS OUTPUT (IN ADDITION TO DTC P2757)

(a) Connect the intelligent tester to the DLC3.
(b) Turn the engine switch on (IG) and turn the intelligent tester on.
(c) Enter the following items: "DIAGNOSIS / OBD/MOBD / ECT / DTC INFO / CURRENT CODES".
(d) Read the DTCs using the intelligent tester.

AX

Result

Display (DTC output)	Proceed to
Only "P2757" is output	A
"P2757" and other DTCs	B

HINT:
If any other codes besides "P2757" are output, perform troubleshooting for those DTCs first.

B → **GO TO DTC CHART**

A

2 INSPECT SHIFT SOLENOID VALVE SLU

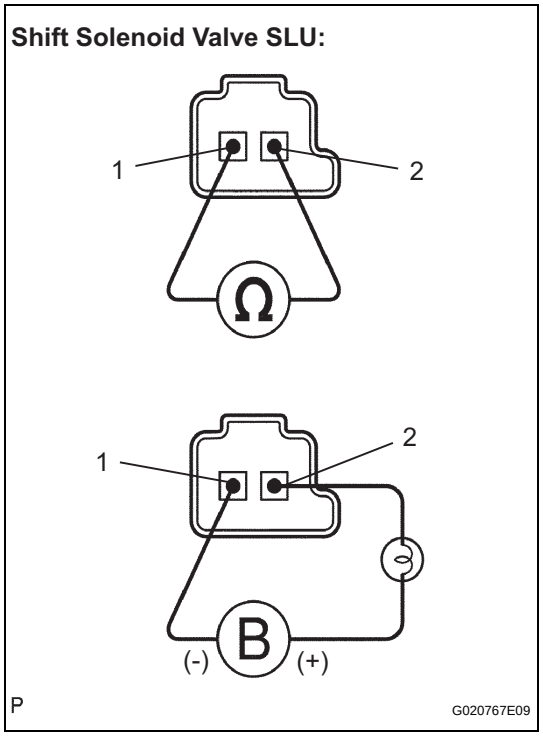

(a) Remove the shift solenoid valve SLU.

(b) Measure the resistance according to the value(s) in the table below.

Standard resistance

Tester Connection	Specified Condition 20°C (68°F)
1 - 2	5.0 to 5.6 Ω

(c) Connect a positive (+) lead through a 21 W bulb to terminal 2 and a negative (-) lead to terminal 1 of the solenoid valve connector, then check the movement of the valve.

OK:

The solenoid makes an operating sound.

NG → **REPLACE SHIFT SOLENOID VALVE SLU**

OK

3 INSPECT TRANSMISSION VALVE BODY ASSEMBLY

OK:

There are no foreign objects on each valve.

NG → **REPLACE TRANSMISSION VALVE BODY ASSEMBLY**

OK

4 INSPECT TORQUE CONVERTER CLUTCH ASSEMBLY

(a) Check the torque converter clutch assembly (See page AX-248).

OK:

The torque converter clutch operates normally.

NG → **REPLACE TORQUE CONVERTER CLUTCH ASSEMBLY**

OK

REPLACE AUTOMATIC TRANSMISSION ASSEMBLY

AX

DTC	P2759	Torque Converter Clutch Pressure Control Solenoid Control Circuit Electrical (Shift Solenoid Valve SLU)

DESCRIPTION

The amount of current flow to the solenoid is controlled by the (*) duty ratio of the TCM output signal. The higher the duty ratio becomes, the higher the lock-up hydraulic pressure becomes during the lock-up operation.

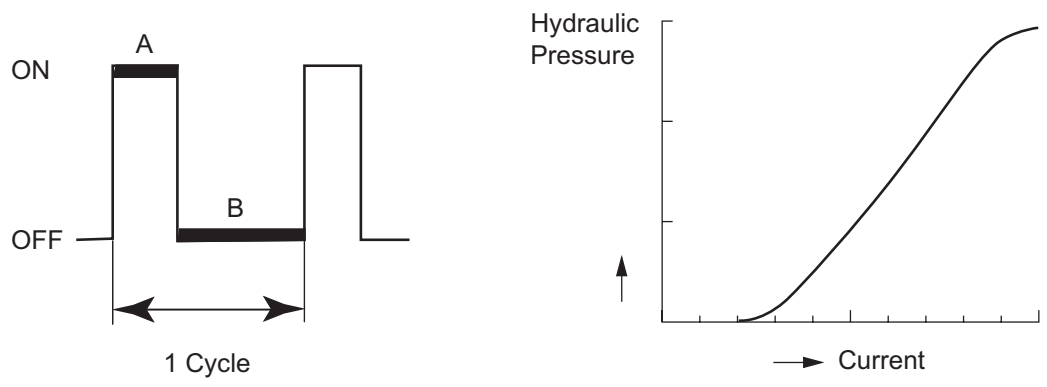

(*) Duty Ratio

The duty ratio is the ratio of the period of continuity in one cycle. For example, if A is the period of continuity in one cycle, and B is the period of non-continuity, then Duty Ratio = A/(A + B) x 100 (%).

DTC No.	DTC Detection Condition	Trouble Area
P2759	Open or short is detected in shift solenoid valve SLU circuit for 1 second or more while driving (1-trip detection logic).	• Open or short in shift solenoid valve SLU circuit • Shift solenoid valve SLU • TCM

AX

MONITOR DESCRIPTION

When an open or short in a shift solenoid valve (SLU) circuit is detected, the TCM determines there is a malfunction. The TCM will turn on the MIL and store this DTC.

MONITOR STRATEGY

Related DTCs	P2759: Shift solenoid valve SLU/Range check
Required sensors/Components	Shift solenoid valve SLU
Frequency of operation	Continuous
Duration	1 sec.
MIL operation	Immediate
Sequence of operation	None

TYPICAL ENABLING CONDITIONS

ALL:

The monitor will run whenever this DTC is not present	None
Engine switch	ON
Starter	OFF

Malfunction (A):

Battery voltage	12 V or more

Malfunction (A):

Battery voltage	10 V or more and less than 12 V
CPU commanded duty	Less than 75%

TYPICAL MALFUNCTION THRESHOLDS

Output signal duty	100% or more

COMPONENT OPERATING RANGE

Output signal duty	Less than 100%

WIRING DIAGRAM

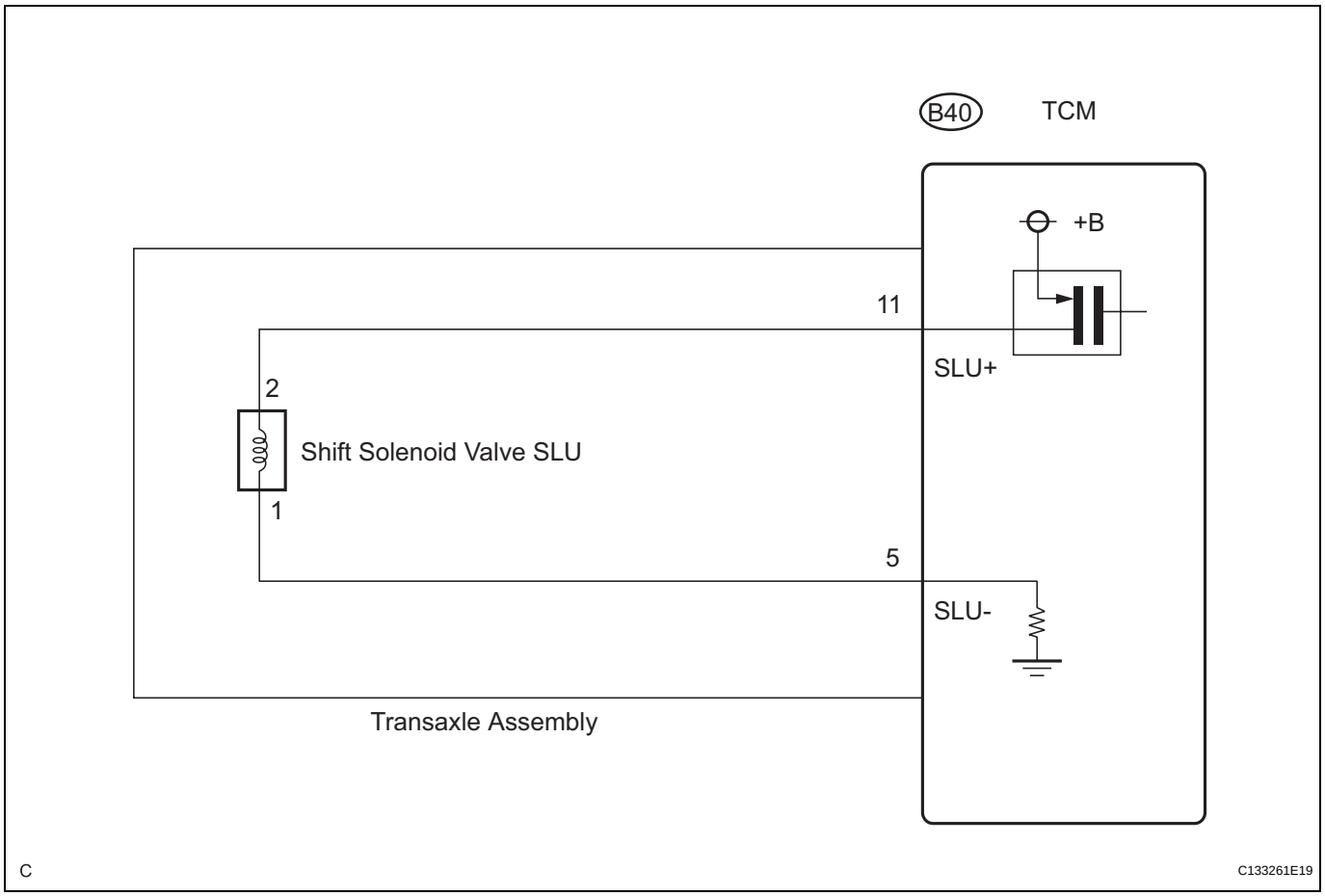

AX

INSPECTION PROCEDURE

1 INSPECT TRANSMISSION WIRE (SLU)

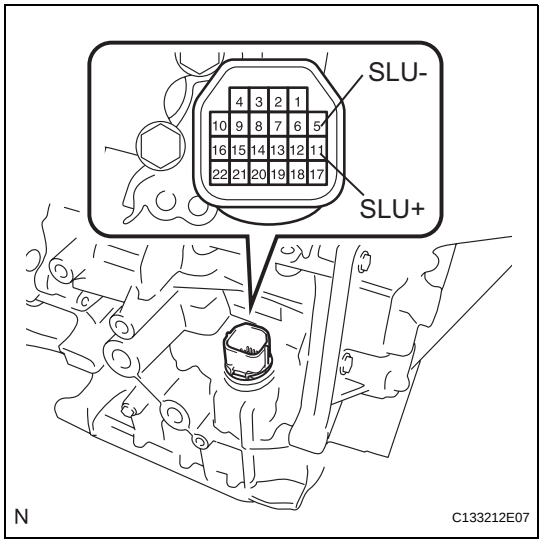

(a) Remove the TCM from the transaxle.
(b) Measure the resistance according to the value(s) in the table below.
Standard resistance

Tester Connection	Specified Condition 20°C (68°F)
11 (SLU+) - 5 (SLU-)	5.0 to 5.6 Ω

(c) Measure the resistance according to the value(s) in the table below.
Standard resistance:
Check for short

Tester Connection	Specified Condition
11 (SLU+) - Body ground	10 kΩ or higher
5 (SLU-) - Body ground	10 kΩ or higher

OK → **REPLACE TCM**

NG

2 INSPECT SHIFT SOLENOID VALVE SLU

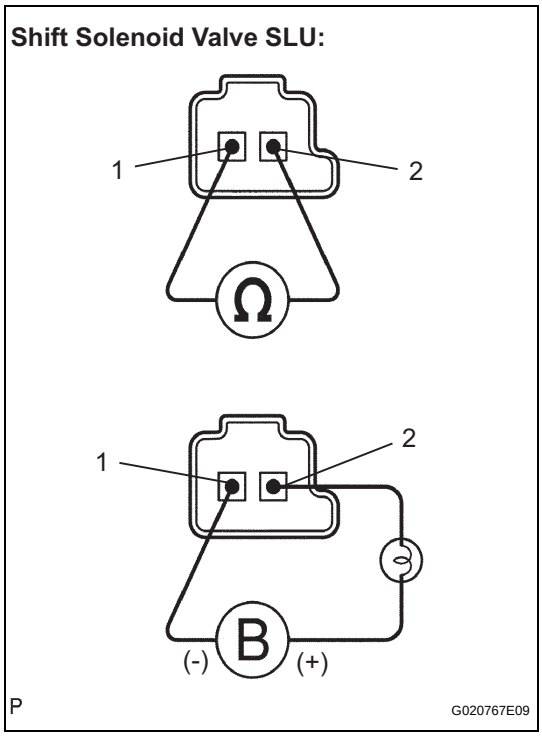

(a) Remove the shift solenoid valve SLU.
(b) Measure the resistance according to the value(s) in the table below.
Standard resistance

Tester Connection	Specified Condition 20°C (68°F)
1 - 2	5.0 to 5.6 Ω

(c) Connect a positive (+) lead through a 21 W bulb to terminal 2 and a negative (-) lead to terminal 1 of the solenoid valve connector, then check the movement of the valve.
OK:
The solenoid makes an operating sound.

NG → **REPLACE SHIFT SOLENOID VALVE SLU**

OK

REPLACE TRANSMISSION WIRE

AX

DTC	P2769	Short in Torque Converter Clutch Solenoid Circuit (Shift Solenoid Valve SL)

DTC	P2770	Open in Torque Converter Clutch Solenoid Circuit (Shift Solenoid Valve SL)

DESCRIPTION

The shift solenoid valve SL is turned ON or OFF by signals from the TCM to control the hydraulic pressure acting on the lock-up relay valve, which then controls operation of the lock-up clutch.

DTC No.	DTC Detection Condition	Trouble Area
P2769	TCM detects a short in the shift solenoid valve SL circuit when the shift solenoid valve SL is operated (2 trip detection logic).	• Short in shift solenoid valve SL circuit • Shift solenoid valve SL • TCM
P2770	TCM detects an open in the shift solenoid valve SL circuit when the shift solenoid valve SL is not operated (2 trip detection logic).	• Open in shift solenoid valve SL circuit • Shift solenoid valve SL • TCM

Fail-safe function:
If the TCM detects a malfunction, it turns the shift solenoid valve SL OFF.

MONITOR DESCRIPTION

Based on the signals from the throttle position sensor, the air flow meter and the crankshaft position sensor, the TCM sends a signal to the solenoid valve SL to regulate the hydraulic pressure and provide smoother torque converter clutch engagement. The shift solenoid valve SL responds to commands from the TCM. The valve controls the lock-up relay valve to perform the torque-converter lock-up function. If the TCM detects an open or short circuit for shift solenoid valve SL, it will illuminate the MIL.

MONITOR STRATEGY

Related DTCs	P2769: Shift solenoid valve SL/Range check (Low resistance) P2770: Shift solenoid valve SL/Range check (High resistance)
Required sensors/Components	Shift solenoid valve SL
Frequency of operation	Continuous
Duration	1 time
MIL operation	2 driving cycles
Sequence of operation	None

AX

TYPICAL ENABLING CONDITIONS

P2769: Range check (Low resistance):

The monitor will run whenever the following DTCs are not present	None
Solenoid	ON
Time after solenoid OFF to ON	More than 0.008 sec.

P2770: Range check (High resistance):

The monitor will run whenever the following DTCs are not present	None
Solenoid	ON
Time after solenoid ON to OFF	More than 0.008 sec.

TYPICAL MALFUNCTION THRESHOLDS

P2769: Range check (Low resistance):

Intelligent power MOS diagnosis fail signals detected while the solenoid is operated	Fail at solenoid resistance: 8 Ω or less

P2770: Range check (High resistance):

Intelligent power MOS diagnosis fail signals detected while the solenoid is not operated	Fail at solenoid resistance: 100 kΩ or more

COMPONENT OPERATING RANGE

Shift solenoid valve SL	Resistance: 11 to 15 Ω at 20°C (68°F)

WIRING DIAGRAM

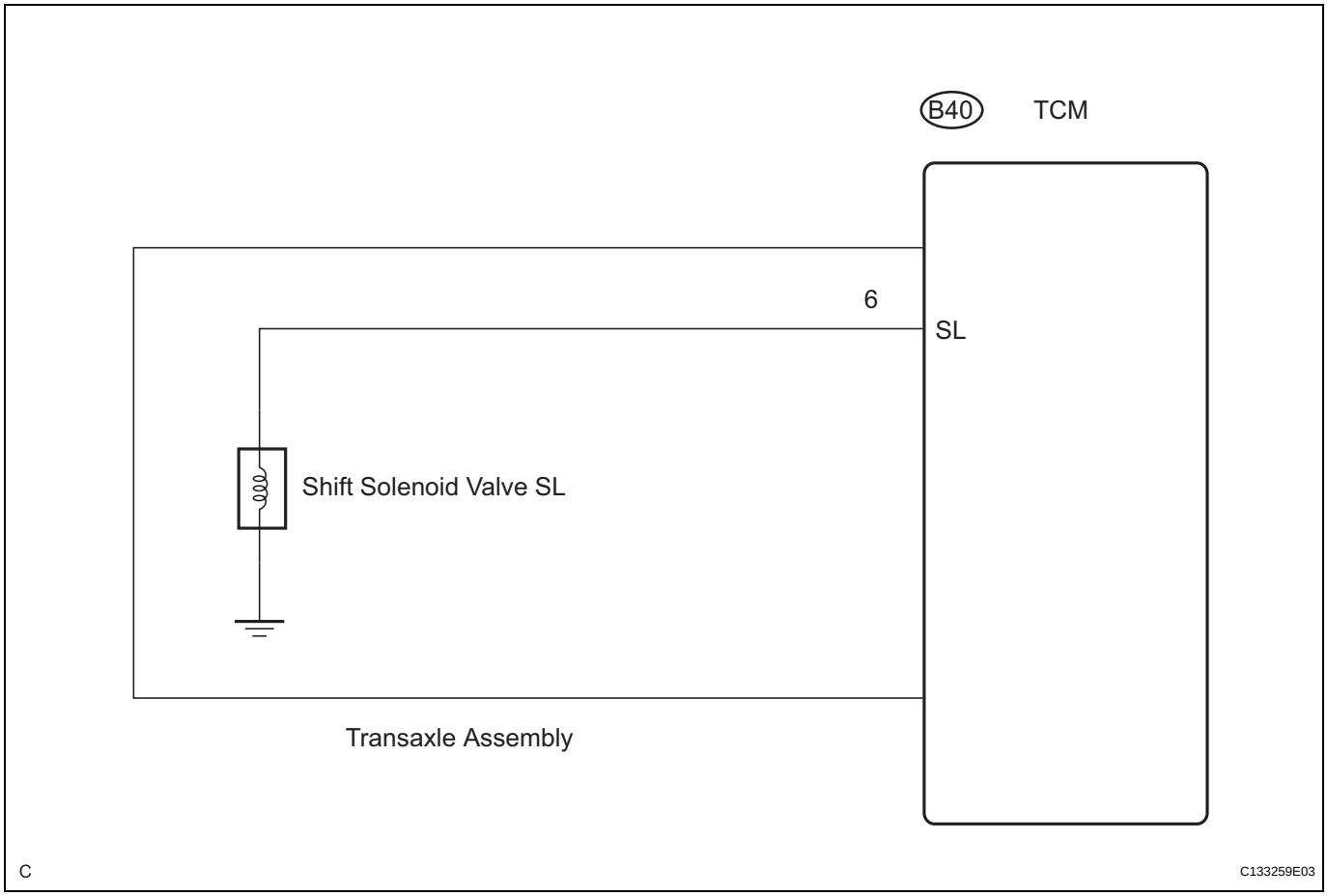

AX

INSPECTION PROCEDURE

1 INSPECT TRANSMISSION WIRE (SHIFT SOLENOID VALVE SL)

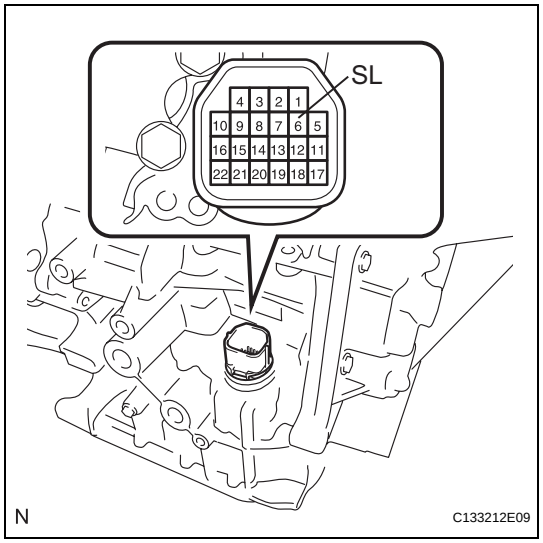

(a) Remove the TCM from the transaxle.
(b) Measure the resistance of the transmission wire.
Standard resistance

Tester Connection	Condition	Specified Condition
6 (SL) - Body ground	20°C (68°F)	11 to 15 Ω

OK → **REPLACE TCM**

NG

2 INSPECT SHIFT SOLENOID VALVE SL (RESISTANCE)

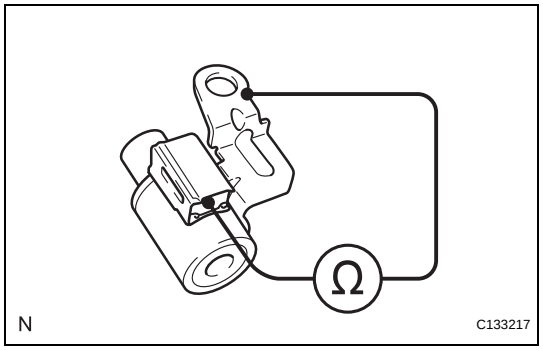

(a) Remove the shift solenoid valve SL.
(b) Measure the resistance between the solenoid valve terminal and solenoid valve body.
Standard resistance:
11 to 15 Ω at 20°C (68°F)

NG → **REPLACE SHIFT SOLENOID VALVE SL**

AX

OK

REPLACE TRANSMISSION WIRE

DTC	P2808	Pressure Control Solenoid "G" Performance or Stuck OFF (Shift Solenoid Valve SL4)

DESCRIPTION

The TCM uses the vehicle speed signal to determine the actual gear position (1st, 2nd, 3rd, 4th, 5th or 6th gear).
Then the TCM compares the actual gear with the shift schedule in the TCM memory to detect shift solenoid valves and valve body mechanical problems.

DTC No.	DTC Detecting Condition	Trouble Area
P2808	The engine revs freely when 3rd or 5th gear is requested. (2-trip detection logic) When any of the following is detected. In addition, the condition that 4th gear is engaged when 4th gear is requested occurs twice. (2-trip detection logic) • When 1st gear is requested, 3rd gear is engaged. • When 2nd gear is requested, 3rd gear is engaged. • When 6th gear is requested, 5th gear is engaged.	• Shift solenoid valve SL4 (open or closed) • Valve body (blocked) • Automatic transaxle (clutch, brake or gear etc.)

MONITOR DESCRIPTION

The TCM commands gear shifts by turning the shift solenoid valves on or off. According to the input shaft revolution, intermediate (counter) shaft revolution and output shaft revolution, the TCM detects the actual gear position (1st, 2nd, 3rd, 4th or 5th gear position). When the gear position commanded by the TCM and the actual gear position are not the same, the TCM illuminates the MIL and stores the DTC.

MONITOR STRATEGY

Related DTCs	P2808: Shift solenoid valve SL4/OFF malfunction Shift solenoid valve SL4/ON malfunction
Required sensors/Components	Shift solenoid valve SL4, Speed sensor (NT), Speed sensor (NC), Crankshaft position sensor (NE)
Frequency of operation	Continuous
Duration	OFF malfunction (A): 0.5 sec. OFF malfunction (B): 0.8 sec. ON malfunction: 0.8 sec.
MIL operation	2 driving cycles
Sequence of operation	None

AX

TYPICAL ENABLING CONDITIONS

All:

Turbine speed sensor circuit	Circuit is not malfunctioning
Intermediate shaft speed sensor circuit	Circuit is not malfunctioning
Shift solenoid valve SL1 circuit	Circuit is not malfunctioning
Shift solenoid valve SL2 circuit	Circuit is not malfunctioning
Shift solenoid valve SL3 circuit	Circuit is not malfunctioning
Shift solenoid valve SL4 circuit	Circuit is not malfunctioning
ECT (Engine coolant temperature) sensor circuit	Circuit is not malfunctioning
Knock control sensor circuit	Circuit is not malfunctioning
Electronic throttle system	Circuit is not malfunctioning
CAN communication system	Circuit is not malfunctioning
Transmission range	"D"
Transmission fluid temperature	Above -10°C (5°F)

OFF malfunction (A):

TCM select gear	3rd or 5th
Throttle valve opening angle	3% or more

OFF malfunction (B):

TCM select gear	3rd
Throttle valve opening angle	4.5% or more
Vehicle speed	1.2 mph (2 km/h) or more
ECT (Engine coolant temperature)	40°C (104°F) or more
Turbine speed/Output speed (NT/NO) with 1st	3.304 to 7.724
Turbine speed/Output speed (NT/NO) with 2nd	1.901 to 2.340
Turbine speed/Output speed (NT/NO) with 3rd	1.399 to 1.649
Turbine speed/Output speed (NT/NO) with 4th	0.998 to 1.138
Turbine speed/Output speed (NT/NO) with 5th	0.705 to 0.836
Turbine speed/Output speed (NT/NO) with 6th	0.568 to 0.695

ON malfunction (A):

TCM select gear	1st
Time after transmission to 1st gear	0.1 sec. or more
Vehicle speed	1.2 mph (2 km/h) to 25 mph (40 km/h)
ECT (Engine coolant temperature)	40°C (104°F) or more
Turbine speed/Output speed (NT/NO) with 1st	3.304 to 7.724
Turbine speed/Output speed (NT/NO) with 2nd	1.901 to 2.340
Turbine speed/Output speed (NT/NO) with 3rd	1.399 to 1.649
Turbine speed/Output speed (NT/NO) with 4th	0.998 to 1.138
Turbine speed/Output speed (NT/NO) with 5th	0.705 to 0.836
Turbine speed/Output speed (NT/NO) with 6th	0.568 to 0.695

ON malfunction (B):

TCM select gear	2nd
Throttle valve opening angle	4.5% or more at engine speed 2,000 rpm (condition varies with engine speed)
Vehicle speed	1.2 mph (2 km/h) or more
ECT (Engine coolant temperature)	40°C (104°F) or more
Turbine speed/Output speed (NT/NO) with 1st	3.304 to 7.724
Turbine speed/Output speed (NT/NO) with 2nd	1.901 to 2.340
Turbine speed/Output speed (NT/NO) with 3rd	1.399 to 1.649
Turbine speed/Output speed (NT/NO) with 4th	0.998 to 1.138
Turbine speed/Output speed (NT/NO) with 5th	0.705 to 0.836
Turbine speed/Output speed (NT/NO) with 6th	0.568 to 0.695

ON malfunction (C):

TCM select gear	6th
Throttle valve opening angle	4.5% or more at engine speed 2,000 rpm (condition varies with engine speed)
Vehicle speed	1.2 mph (2 km/h) or more
ECT (Engine coolant temperature)	40°C (104°F) or more
Turbine speed/Output speed (NT/NO) with 1st	3.304 to 7.724
Turbine speed/Output speed (NT/NO) with 2nd	1.901 to 2.340
Turbine speed/Output speed (NT/NO) with 3rd	1.399 to 1.649
Turbine speed/Output speed (NT/NO) with 4th	0.998 to 1.138
Turbine speed/Output speed (NT/NO) with 5th	0.705 to 0.836
Turbine speed/Output speed (NT/NO) with 6th	0.568 to 0.695

ON malfunction (D):

TCM select gear	4th
Throttle valve opening angle	4.5% or more at engine speed 2,000 rpm (condition varies with engine speed)
Vehicle speed	1.2 mph (2 km/h) or more
ECT (Engine coolant temperature)	40°C (104°F) or more
Turbine speed/Output speed (NT/NO) with 1st	3.304 to 7.724
Turbine speed/Output speed (NT/NO) with 2nd	1.901 to 2.340
Turbine speed/Output speed (NT/NO) with 3rd	1.399 to 1.649
Turbine speed/Output speed (NT/NO) with 4th	0.998 to 1.138
Turbine speed/Output speed (NT/NO) with 5th	0.705 to 0.836
Turbine speed/Output speed (NT/NO) with 6th	0.568 to 0.695

TYPICAL MALFUNCTION THRESHOLDS

OFF malfunction (A):

Engine speed - Turbine speed x Gear ratio	1,000 rpm or more

OFF malfunction (B):

Turbine speed / Output speed	3.304 to 7.724

ON malfunction (A) and (B):

Turbine speed / Output speed	1.399 to 1.649

ON malfunction (C):

Turbine speed / Output speed	0.705 to 0.836

ON malfunction (D):

Turbine speed / Output speed	0.998 to 1.138

INSPECTION PROCEDURE

AX

1	CHECK OTHER DTCS OUTPUT (IN ADDITION TO DTC P2808)

(a) Connect the intelligent tester to the DLC3.
(b) Turn the engine switch on (IG) and turn the intelligent tester on.
(c) Enter the following items: "DIAGNOSIS / OBD/MOBD / DTC INFO / CURRENT CODES".
(d) Read the DTCs using the intelligent tester.

Result

Display (DTC output)	Proceed to
Only "P2808" is output	A
"P2808" and other DTCs	B

HINT:
If a solenoid is stuck OFF, DTCs for several solenoids including the malfunctioning solenoid will be detected.

A → **Go to step 3**

B

2	PERFORM ACTIVE TEST BY INTELLIGENT TESTER

NOTICE:
This test should always be performed with at least 2 people.

(a) Connect the intelligent tester to the DLC3.
(b) Start the engine and turn the intelligent tester on.
(c) Enter the following items: "DIAGNOSIS / OBD/MOBD / ECT / ACTIVE TEST / SHIFT".
HINT:
While driving, the shift position can be forcibly changed with the intelligent tester.
Comparing the shift position commanded by the ACTIVE TEST with the actual shift position enables you to confirm the problem (See page AX-38).

Item	Test Details	Diagnostic Note
SHIFT	[Test Details] Operate the shift solenoid valve and set each shift position by yourself. [Others] • Press "←" button: Shift up • Press "→" button: Shift down	It is possible to check the operation of the shift solenoid valves.

NOTICE:
- **This test can be conducted when the vehicle is stopped.**
- **When shifting gears using the Active Test function, do not operate the accelerator pedal for 2 seconds before and after shifting gears.**

HINT:
The shift position commanded by the TCM is shown on the DATA LIST/SHIFT display on the intelligent tester.

(d) Check the vehicle speed and the gear position when the engine speed is 1,000 rpm.
HINT:
Because the torque converter clutch has not engaged, it may be difficult to obtain the speeds specified in 4th, 5th, and 6th gears, however a difference of speed should still be evident following each gear change.

Standard

1st	2nd	3rd	4th	5th	6th
5 to 7.5 mph (8 to 12 km/h)	9.3 to 11.8 mph (15 to 19 km/h)	13.0 to 15.5 mph (21 to 25 km/h)	19.3 to 21.7 mph (31 to 35 km/h)	27.3 to 29.8 mph (44 to 48 km/h)	32.3 to 34.8 mph (52 to 56 km/h)

(e) Compare the TCM gear shift command and the actual gear position.

Result

Actuator gear position under malfunction		TCM gear shift command						Proceed to
		1st	2nd	3rd	4th	5th	6th	
Shift solenoid SL1	Stuck ON	1st	2nd	3rd	4th	4th	4th	A
	Stuck OFF	N*1	N*1	N*1	N*1	5th	6th	
Shift solenoid SL2	Stuck ON	4th	4th	4th	4th	5th	6th	B
	Stuck OFF	1st	2nd	3rd	1st	N*1	N*1	

AX

Actuator gear position under malfunction		TCM gear shift command						Proceed to
		1st	2nd	3rd	4th	5th	6th	
Shift solenoid SL3	Stuck ON	2nd	2nd	3rd	4th	5th	6th	C
	Stuck OFF	1st	1st	3rd	4th	5th	N*1	
Shift solenoid SL4	Stuck ON*3	3rd	3rd	3rd	4th	5th	5th	D
	Stuck OFF	1st	2nd	1st	4th	N*1	6th	
Shift solenoid SLT	Stuck ON	N*2	N*2	N*2	N*2	N*2	N*2	E
	Stuck OFF*3	1st	2nd	3rd	4th	5th	6th	

HINT:
- *1: Neutral
- *2: If the shift solenoid SLT is stuck on, the line pressure will be low. Therefore, the amount of torque that can be transmitted by each gear is lower than the normal limit. When the engine power exceeds this lowered limit, the engine speed will increase freely.
- *3: When the shift solenoid SLT is stuck OFF, gear shifting is normal.

A → **GO TO DTC CHART (RELATED SHIFT SOLENOID VALVE (SL1) PERFORMANCE DTC P0746)**

B → **GO TO DTC CHART (RELATED SHIFT SOLENOID VALVE (SL2) PERFORMANCE DTC P0776)**

C → **GO TO DTC CHART (RELATED SHIFT SOLENOID VALVE (SL3) PERFORMANCE DTC P0796)**

E → **GO TO DTC CHART (RELATED SHIFT SOLENOID VALVE (SLT) PERFORMANCE DTC P2714)**

D

AX

3 INSPECT SHIFT SOLENOID VALVE SL4

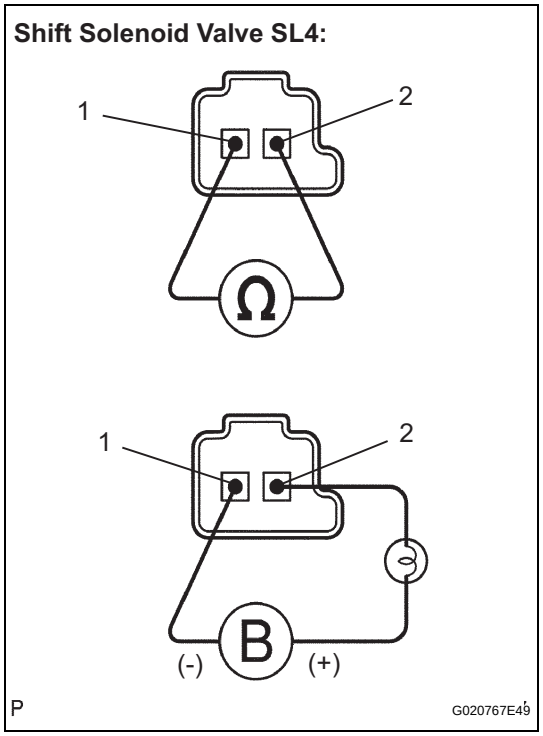

(a) Remove the shift solenoid valve SL4.

(b) Measure the resistance according to the value(s) in the table below.

Standard resistance

Tester Connection	Specified Condition 20°C (68°F)
1 - 2	5.0 to 5.6 Ω

(c) Connect a positive (+) lead through a 21 W bulb to terminal 2 and a negative (-) lead to terminal 1 of the solenoid valve connector, then check the movement of the valve.

OK:

The solenoid makes an operating noise.

NG → **REPLACE SHIFT SOLENOID VALVE SL4**

OK

4 INSPECT TRANSMISSION VALVE BODY ASSEMBLY

OK:

There are no foreign objects on each valve and they operate smoothly.

NG → **REPLACE TRANSMISSION VALVE BODY ASSEMBLY**

OK

5 TORQUE CONVERTER CLUTCH ASSEMBLY

OK:

The torque converter clutch operates normally.

NG → **REPLACE TORQUE CONVERTER CLUTCH ASSEMBLY**

OK

REPLACE AUTOMATIC TRANSAXLE ASSEMBLY

AX

DTC	P2810	Pressure Control Solenoid "G" Electrical (Shift Solenoid Valve SL4)

DESCRIPTION

Shifting gears from 1st through 5th is performed in combination with "ON" and "OFF" operation of the shift solenoid valves SL1, SL2, SL3 and SL4 which are controlled by the TCM. If an open or short circuit occurs in either of the shift solenoid valve, the TCM controls the remaining normal shift solenoid valves to allow the vehicle to be operated smoothly (Fail safe function).

DTC No.	DTC Detecting Condition	Trouble Area
P2810	The TCM checks for an open or short in the shift solenoid valve SL4 circuit while driving and shifting gears. (1-trip detection logic) • Output signal duty equals 100%. (NOTE: SL4 output signal duty is less than 100% under normal condition.)	• Open or short in shift solenoid valve SL4 circuit • Shift solenoid valve SL4 • TCM

MONITOR DESCRIPTION

The TCM commands gear shifts by turning the shift solenoid valves on or off. When there is an open or short circuit in any shift solenoid valve circuit, the TCM detects the problem and illuminates the MIL and stores the DTC. And the TCM performs the fail-safe function and turns the other normal shift solenoid valves on or off. (In case of an open or short circuit, the TCM stops sending current to the circuit.)
(See page AX-38)

MONITOR STRATEGY

Related DTCs	P0798: Shift solenoid valve SL3/Range check
Required sensors/Components	Shift solenoid valve SL3
Frequency of operation	Continuous
Duration	1 sec.
MIL operation	Immediate
Sequence of operation	None

AX

TYPICAL ENABLING CONDITIONS

ALL:

The monitor will run whenever this DTC is not present	None
Engine switch	ON
Starter	OFF

Malfunction (A):

Battery voltage	12 V or more

Malfunction (B):

Battery voltage	10 V or more and less than 12 V
CPU commanded duty	Less than 75%

TYPICAL MALFUNCTION THRESHOLDS

Output signal duty	100% or more

WIRING DIAGRAM

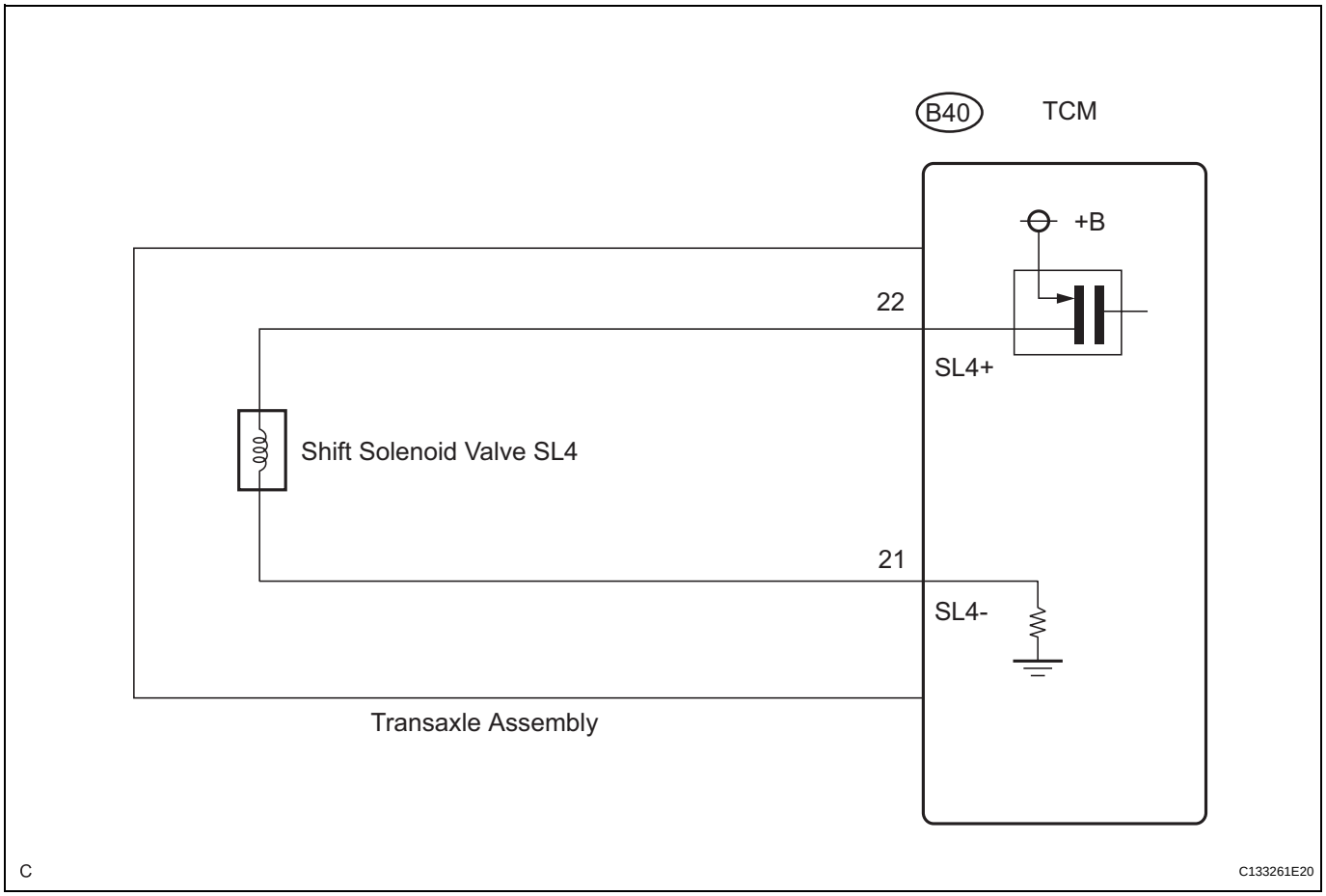

INSPECTION PROCEDURE

AX

1	INSPECT TRANSMISSION WIRE (SL4 CIRCUIT)

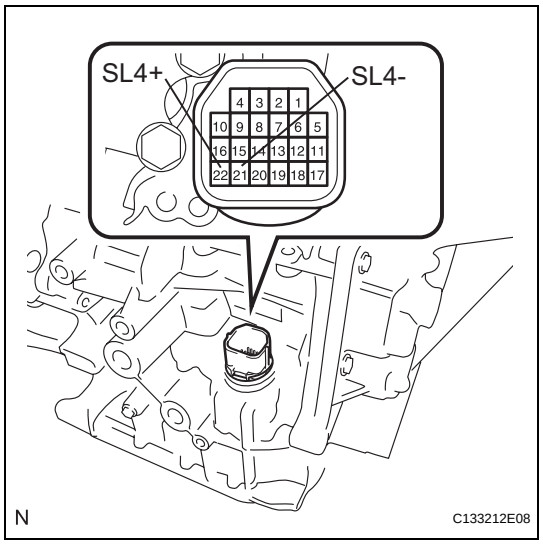

(a) Remove the TCM from the transaxle.

(b) Measure the resistance according to the value(s) in the table below.

Standard resistance

Tester Connection	Specified Condition 20°C (68°F)
22 (SL4+) - 21 (SL4-)	5.0 to 5.6 Ω

(c) Measure the resistance according to the value(s) in the table below.

Standard resistance:
Check for short

Tester Connection	Specified Condition
22 (SL4+) - Body ground	10 kΩ or higher
21 (SL4-) - Body ground	10 kΩ or higher

OK → **REPLACE TCM**

NG

2 INSPECT SHIFT SOLENOID VALVE SL4

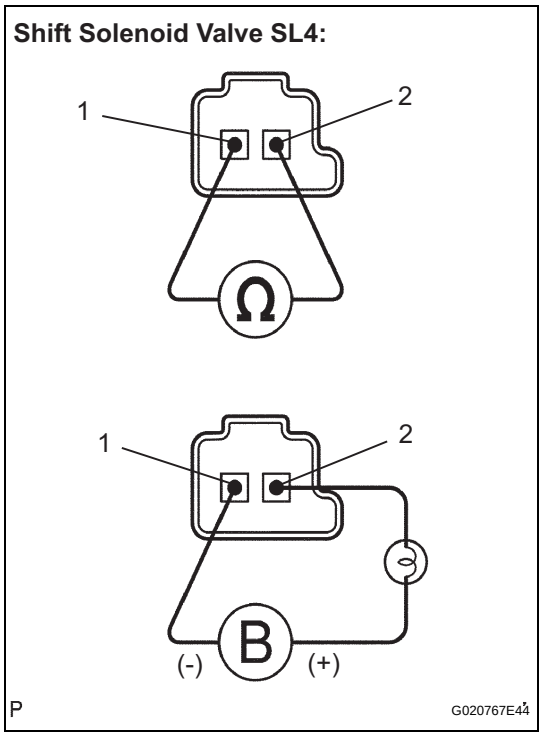

(a) Remove the shift solenoid valve SL4.

(b) Measure the resistance according to the value(s) in the table below.

Standard resistance

Tester Connection	Specified Condition 20°C (68°F)
1 - 2	5.0 to 5.6 Ω

(c) Connect a positive (+) lead through a 21 W bulb to terminal 2 and a negative (-) lead to terminal 1 of the solenoid valve connector, then check the movement of the valve.

OK:

The solenoid makes an operating noise.

NG → **REPLACE SHIFT SOLENOID VALVE SL4**

OK

REPLACE TRANSMISSION WIRE

DTC	U0100	Lost Communication with ECM/PCM "A"

DESCRIPTION

The engine control unit intercommunicates with the TCM with the Controller Area Network (CAN).
If there is a problem in this intercommunication, the TCM sets a DTC.

DTC No.	DTC Detection Condition	Trouble Area
U0100	Following conditions are met for 1.25 seconds (1 trip detection logic): • Engine switch on (IG) • Battery voltage is 10.5 V or more • No intercommunication between the ECM and TCM	TCM

MONITOR STRATEGY

Related DTCs	U0100: Verify communication
Required Sensors/Components (Main)	TCM
Required Sensors/Components (Related)	-
Frequency of Operation	Continuous
Duration	1.25 seconds
MIL Operation	Immediate
Sequence of Operation	None

TYPICAL ENABLING CONDITIONS

Monitor runs whenever following DTCs not present	None
Battery Voltage	10.5 V or more
Engine Switch	ON
Starter	OFF

TYPICAL MALFUNCTION THRESHOLDS

Communication between TCM and ECM	No communication

WIRING DIAGRAM

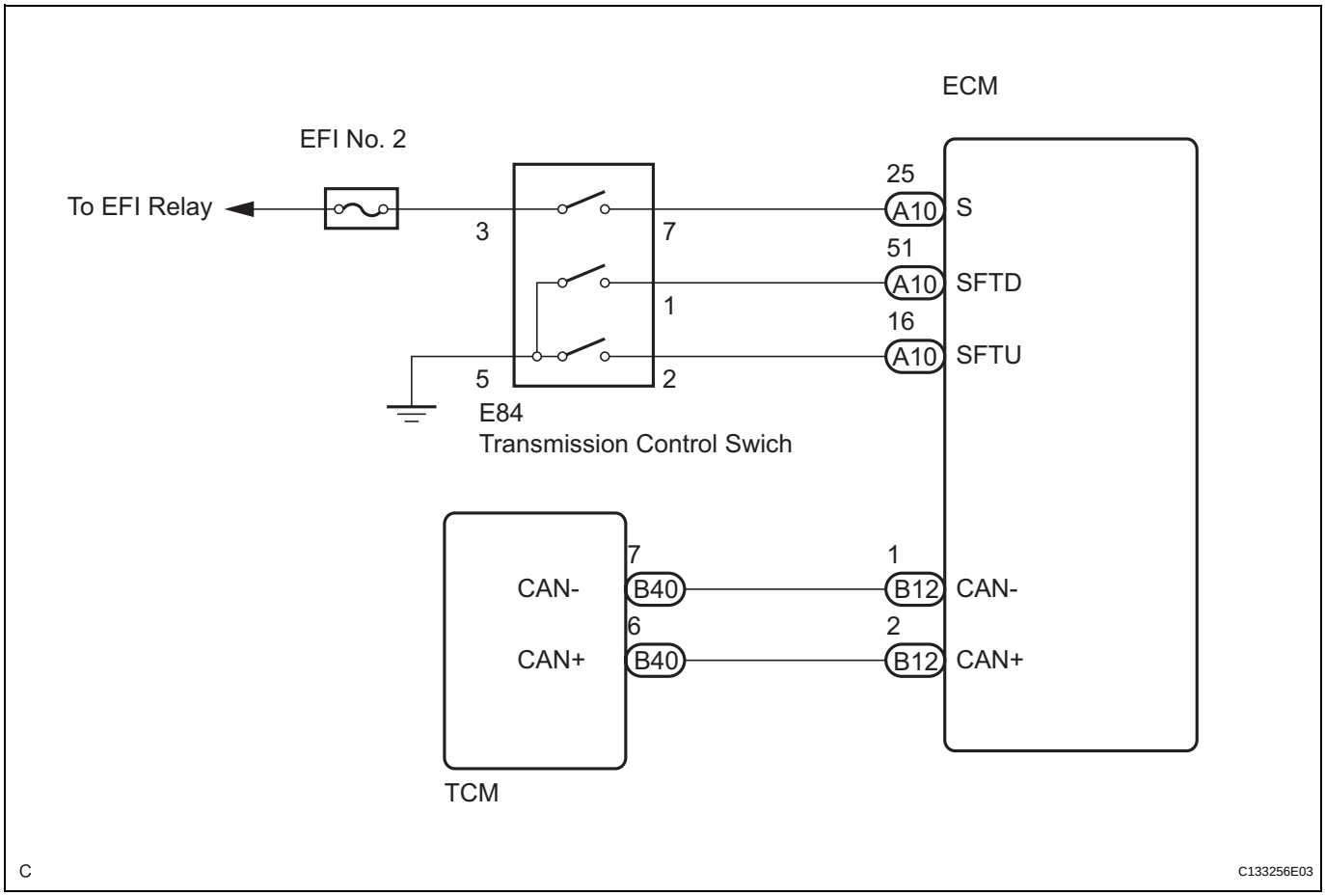

INSPECTION PROCEDURE

HINT:

- Refer to inspection procedure for CAN communication system (See page CA-11).
- If the CAN communication malfunctions, the TCM cannot receive the current data from the ECM. In this case, the freeze frame data output from the TCM has not been updated, so the data will not be useful for the inspection. However, reading the Data List as the first step in troubleshooting is effective to find malfunctions.
- The malfunction area can be checked using the BUS CHECK function on the intelligent tester (See page CA-41).

1	CHECK ECU TERMINAL VOLTAGE (+B AND E1 TERMINALS)

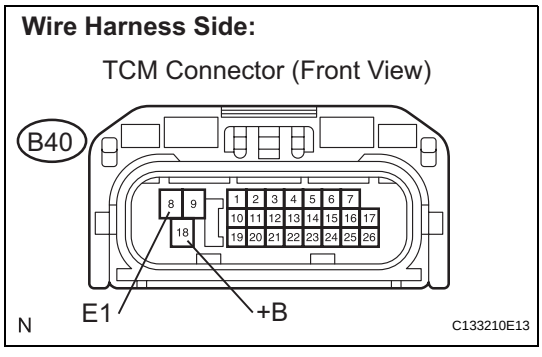

(a) Disconnect the TCM connector.
(b) Turn the engine switch on (IG).
(c) Measure the voltage of the TCM connector.

Standard voltage

Tester Connection	Specified Condition
B40-18 (+B) - B40-8 (E1)	9 to 14 V

(d) Turn the engine switch off.
(e) Measure the resistance of the TCM connector.

Standard resistance

Tester Connection	Specified Condition
B40-8 (E1) - Body ground	Below 1 Ω

NG → **REPAIR OR REPLACE HARNESS OR CONNECTOR**

OK

2 CHECK HARNESS AND CONNECTOR (TCM - ECM)

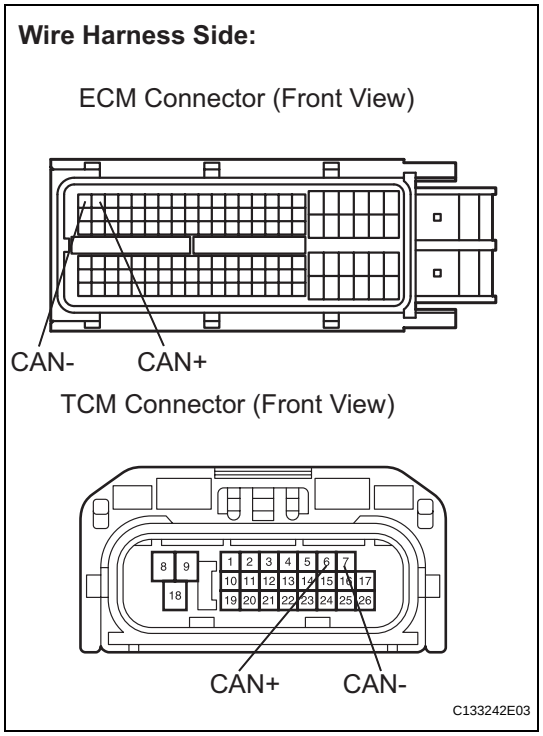

(a) Disconnect the B40 TCM connector.
(b) Disconnect the B12 ECM connector.
(c) Measure the resistance of the wire harness side connectors.

Standard resistance

Tester Connection	Specified Condition
B40-6 (CAN+) - B12-2 (CAN+)	Below 1 Ω
B40-7 (CAN-) - B12-1 (CAN-)	Below 1 Ω
B40-6 (CAN+) or B12-2 (CAN+) - Body ground	1 MΩ or more
B40-7 (CAN-) or B12-1 (CAN-) - Body ground	1 MΩ or more

NG → **REPAIR OR REPLACE HARNESS OR CONNECTOR**

OK

AX

3 CHECK IF DTC OUTPUT RECURS

(a) Connect the intelligent tester to the DLC3.
(b) Clear the DTC.
(c) Replace the TCM.
HINT:
Replace the TCM with the TCM of a normally functioning vehicle of the same model.
(d) Start the engine.
(e) Read the DTCs.

Result

Display (DTC Output)	Proceed to
P0100	A
No DTC	B

B → **REPLACE TCM**

A

REPLACE ECM

Transmission Control Switch Circuit

DESCRIPTION

When moving the shift lever into the S position using the transmission control switch, it is possible to switch the shift range position between "1" (first range) and "6" (sixth range).
Shifting up "+" once raises one shift range position, and shifting down "-" lowers one shift range position.

WIRING DIAGRAM

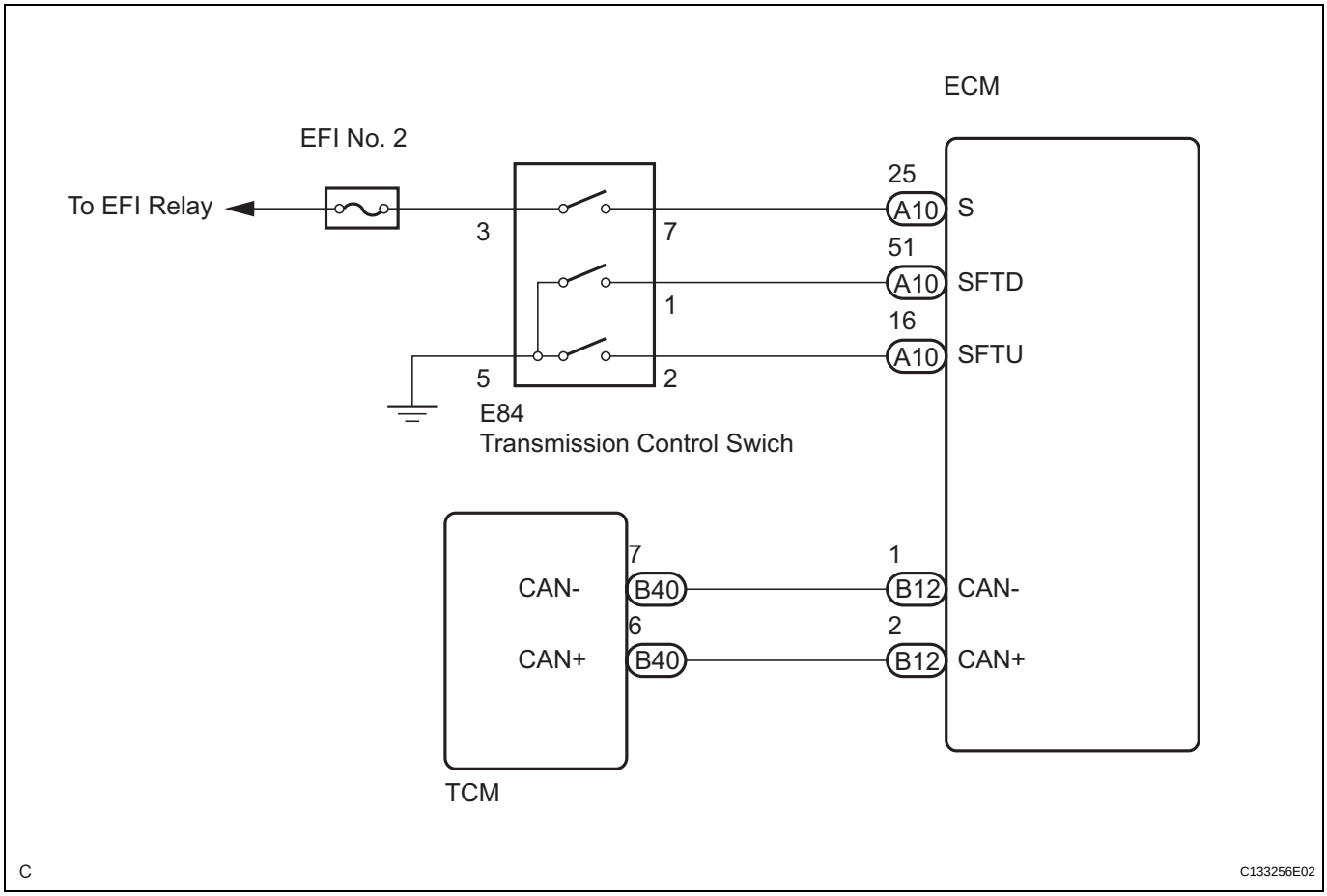

AX

INSPECTION PROCEDURE

1 CHECK HARNESS AND CONNECTOR (BATTERY - TRANSMISSION CONTROL SWITCH)

Wire Harness Side:
(Connector Front View):

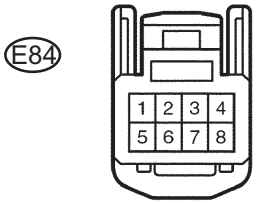

C110345E24

(a) Disconnect the transmission control switch connector of the shift lock control unit assembly.
(b) Measure the voltage according to the value(s) in the table below.
Standard voltage

Switch Condition	Tester Connection	Specified Condition
Engine switch on (IG)	3 - Body ground	10 to 14 V
Engine switch off		Below 1 V

NG → **REPAIR OR REPLACE HARNESS OR CONNECTOR**

OK

2 CHECK HARNESS AND CONNECTOR (TRANSMISSION CONTROL SWITCH - BODY GROUND)

Wire Harness Side:
(Connector Front View):

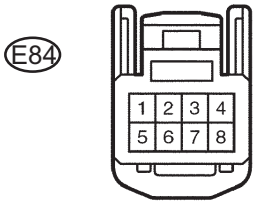

C110345E24

(a) Measure the resistance according to the value(s) in the table below.
Standard resistance

Tester Connection	Specified Condition
5 - Body ground	Below 1 Ω

NG → **REPAIR OR REPLACE HARNESS OR CONNECTOR**

OK

AX

3 INSPECT TRANSMISSION CONTROL SWITCH

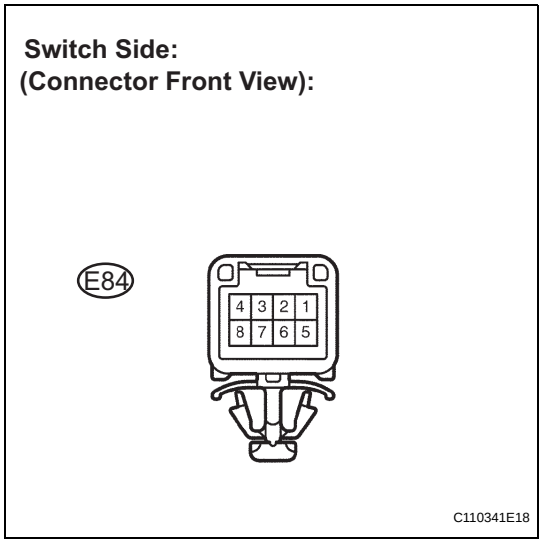

(a) Measure the resistance between each terminal of the shift lock control unit assembly when the shift lever is moved to each position.

Standard resistance

Shift Position	Tester Connection	Specified Condition
S, "+" and "-"	3 - 7	Below 1 Ω
Except S, "+" and "-"		10 kΩ or higher
Press continuously "+" (Up shift)	2 - 5	Below 1 Ω
S		10 kΩ or higher
Press continuously "-" (Down shift)	1 - 5	Below 1 Ω
S		10 kΩ or higher

NG → **REPLACE TRANSMISSION CONTROL SWITCH**

OK

4 CHECK HARNESS AND CONNECTOR (TRANSMISSION CONTROL SWITCH - ECM)

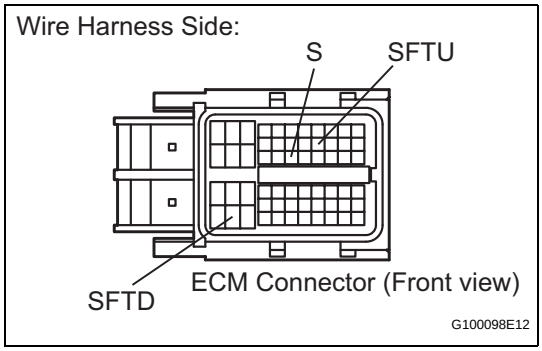

(a) Connect the transmission control switch connector of the shift lock control unit assembly.
(b) Disconnect the A10 ECM connector.
(c) Turn the engine switch on (IG), and measure the voltage according to the value(s) in the table below when the shift lever is moved to each position.

Standard voltage

Shift Position	Tester Connection	Specified Condition
S, "+" and "-"	A10-25 (S) - Body ground	10 to 14 V
Except S, "+" and "-"		Below 1 V

(d) Turn the engine switch off.
(e) Disconnect the ECM connector.
(f) Measure the resistance according to the value(s) in the table below when the shift lever is moved to each position.

Standard resistance

Shift Position	Tester Connection	Specified Condition
Press continuously "+" (Up shift)	A10-16 (SFTU) - Body ground	Below 1 Ω
S		10 kΩ or higher
Press continuously "-" (Down shift)	A10-51 (SFTD) - Body ground	Below 1 Ω
S		10 kΩ or higher

AX

NG → **REPAIR OR REPLACE HARNESS OR CONNECTOR**

OK

PROCEED TO NEXT CIRCUIT INSPECTION SHOWN IN PROBLEM SYMPTOMS TABLE

Park / Neutral Position Switch Circuit

DESCRIPTION

The park/neutral position switch detects the shift lever position and sends signals to the TCM.

WIRING DIAGRAM

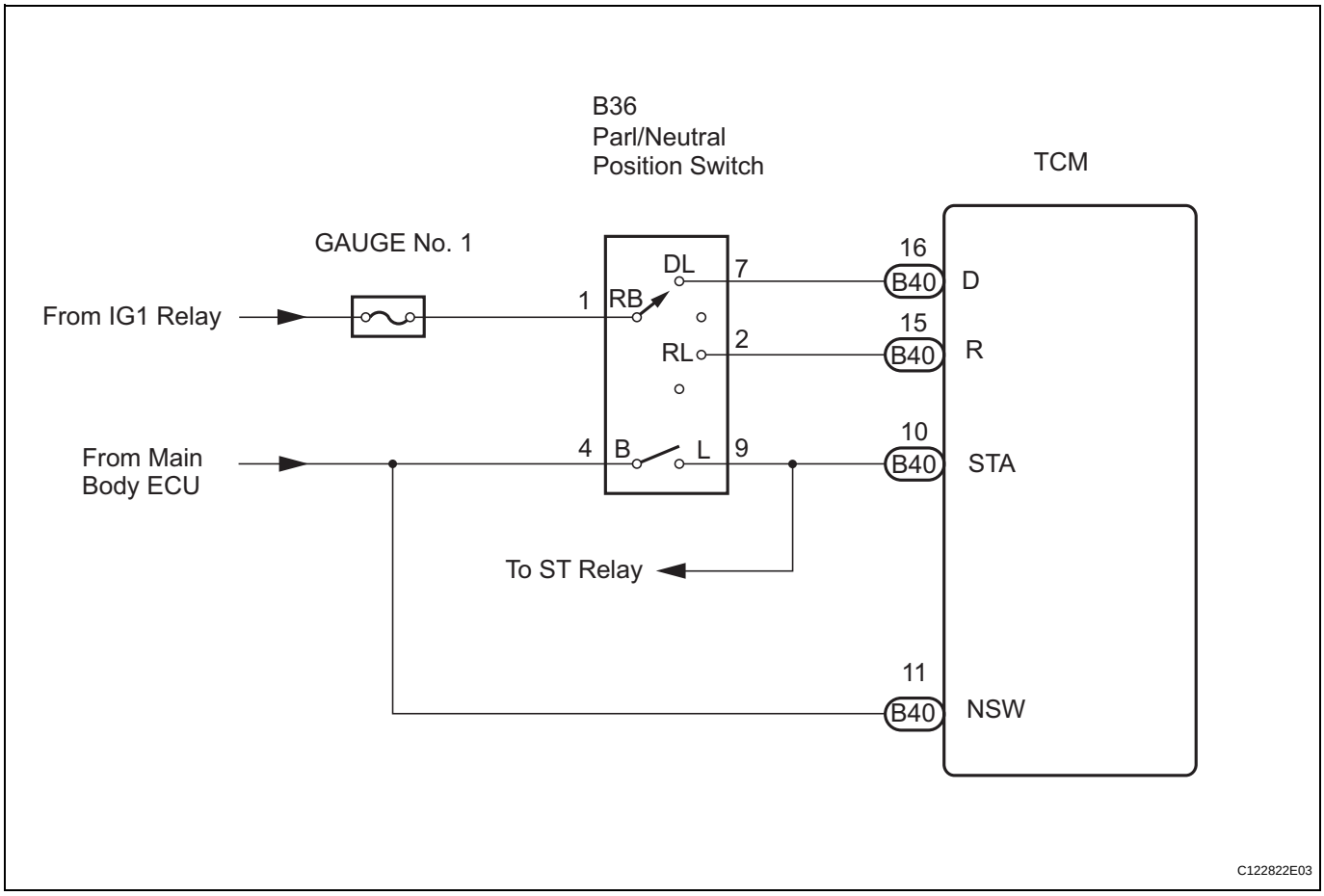

INSPECTION PROCEDURE

1. DATA LIST

HINT:

According to the DATA LIST displayed on the intelligent tester, you can read the value of switches, sensors, actuators and other items without removing any parts. Reading the DATA LIST as the first step in troubleshooting is one method to save labor time.

NOTICE:

In the table below, the values listed under "Normal Condition" are reference values. Do not depend solely on these reference values when deciding whether a part is faulty.

(a) Warm up the engine.
(b) Turn the engine switch off.
(c) Connect the intelligent tester together with the CAN VIM (Controller Area Network Vehicle Interface Module) to the DLC3.
(d) Turn the engine switch on (IG).
(e) Turn on the tester.
(f) Enter the following items: "DIAGNOSIS / OBD / MOBD / ECT / DATA LIST".

(g) According to the display on the tester, read "DATA LIST".

Item	Measurement Item/ Range (display)	Normal Condition	Diagnostic Note
PNP SW [NSW]	PNP Switch Status/ ON or OFF	Shift lever position is; P and N: ON Except P and N: OFF	When the shift lever position displayed on the intelligent tester differs from the actual position, adjustment of the PNP switch or the shift cable may be incorrect.
REVERSE	PNP Switch Status/ ON or OFF	Shift lever position is; R: ON Except R: OFF	When the shift lever position displayed on the intelligent tester differs from the actual position, adjustment of the PNP switch or the shift cable may be incorrect.
PARKING	PNP Switch Status/ ON or OFF	Shift lever position is; P: ON Except P: OFF	When the shift lever position displayed on the intelligent tester differs from the actual position, adjustment of the PNP switch or the shift cable may be incorrect.
NEUTRAL	PNP Switch Status/ ON or OFF	Shift lever position is; N: ON Except N: OFF	When the shift lever position displayed on the intelligent tester differs from the actual position, adjustment of the PNP switch or the shift cable may be incorrect.
DRIVE	PNP Switch Status/ ON or OFF	Shift lever position is; D and S: ON Except D and S: OFF	When the shift lever position displayed on the intelligent tester differs from the actual position, adjustment of the PNP switch or the shift cable may be incorrect.
MODE SELECT SW	Sport Mode Select Switch Status/ ON or OFF	Shift lever position is; S, "+" and "-": ON Except S, "+" and "-": OFF	-

1 INSPECT PARK/NEUTRAL POSITION SWITCH ASSEMBLY

Component Side:
(Connector Front View):

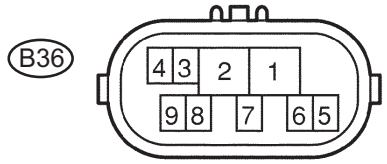

P

C110340E49

(a) Disconnect the park/neutral position switch connector.
(b) Measure the resistance according to the value(s) in the table below when the shift lever is moved to each position.

Standard resistance

Shift Position	Tester Connection	Specified Condition
P	**1 - 3 and 4 - 9**	**Below 1 Ω**
Except P		**10 kΩ or higher**
R	**1 - 2**	**Below 1 Ω**
Except R		**10 kΩ or higher**
N	**1 - 8 and 4 - 9**	**Below 1 Ω**
Except N		**10 kΩ or higher**
D, S, "+" and "-"	**1 - 7**	**Below 1 Ω**
Except D, S, "+" and "-"		**10 kΩ or higher**

NG → **REPLACE PARK/NEUTRAL POSITION SWITCH ASSEMBLY**

OK

AX

2 INSPECT TRANSMISSION CONTROL SWITCH

Switch Side:
(Connector Front View):

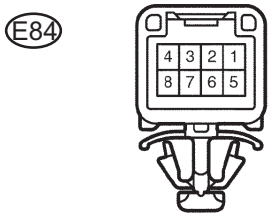

C110341E18

(a) Connect the park/neutral position switch connector.
(b) Disconnect the transmission control switch connector of the shift lock control unit assembly.
(c) Measure the resistance according to the value(s) in the table below when the shift lever is moved to each position.

Standard resistance

Shift Position	Tester Connection	Specified Condition
S, "+" and "-"	3 - 7	Below 1 Ω
Except S, "+" and "-"		10 kΩ or higher

NG → **REPLACE TRANSMISSION CONTROL SWITCH**

OK

3 CHECK ECU TERMINAL VOLTAGE (STA TERMINAL)

Wire Harness Side:

TCM Connector (Front View)

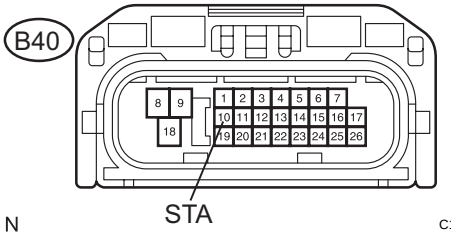

N C133210E14

(a) Connect the transmission control switch connector of the shift lock control unit assembly.
(b) Measure the voltage according to the value(s) in the table below while cranking the engine.

Standard voltage

Tester Connection	Specified Condition
STA (B40-10) - Body ground	9 to 14 V

NG → **REPAIR OR REPLACE HARNESS OR CONNECTOR (TCM - ECM)**

OK

AX

4 CHECK HARNESS AND CONNECTOR (PARK/NEUTRAL POSITION SWITCH - TCM)

Wire Harness Side:

TCM Connector (Front View)

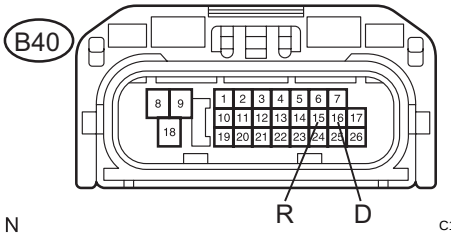

N C133210E15

(a) Disconnect the TCM connector.
(b) Turn the engine switch on (IG), and measure the voltage according to the value(s) in the table below when the shift lever is moved to each position.

Standard voltage

Shift Position	Tester Connection	Specified Condition
R	R (B40-15) - Body ground	10 to 14 V *
Except R		Below 1 V
D	D (B40-16) - Body ground	10 to 14 V
Except D		Below 1 V

HINT:
*: The voltage will drop slightly because the back up light is turned on.

NG → **REPAIR OR REPLACE HARNESS OR CONNECTOR (PARK/NEUTRAL POSITION SWITCH - TCM)**

OK

REPLACE TCM

ROAD TEST

1. PROBLEM SYMPTOM CONFIRMATION

(a) Based on the result of the customer problem analysis, try to reproduce the symptoms. If the problem is that the transaxle does not shift up or down, or the shift point is too high or too low, conduct the following road test referring to the automatic shift schedule and attempt to duplicate the problem symptoms.

2. ROAD TEST

NOTICE:

Perform the test at the ATF (Automatic Transmission Fluid) temperature 50 to 80°C (122 to 176°F) in the normal operation.

(a) D position test:

Shift into the D position, fully depress the accelerator pedal and check the following:

(1) Check up-shift operation.

Check that 1st to 2nd, 2nd to 3rd, 3rd to 4th, 4th to 5th and 5th to 6th up-shifts take place, and that the shift points conform to the automatic shift schedule (See page SS-23).

HINT:

6th Gear Up-shift Prohibition Control

- Engine coolant temperature is 60°C (140°F) or less and vehicle speed is 50 mph (80 km/h) or less.

5th Gear Up-shift Prohibition Control

- Engine coolant temperature is 55°C (131°F) or less and vehicle speed is 32 mph (51 km/h) or less.

4th Gear Up-shift Prohibition Control

- Engine coolant temperature is 47°C (117°F) or less and vehicle speed is 31 mph (49 km/h) or less.

Lock-up Prohibition Control

- Brake pedal is depressed.
- Accelerator pedal is released.
- Engine coolant temperature is 60°C (140°F) or less.

(2) Check for shift shock and slip.

Check for shock and slip at the 1st to 2nd, 2nd to 3rd, 3rd to 4th, 4th to 5th and 5th to 6th up-shifts.

(3) Check for abnormal noise and vibration.

Check for abnormal noise and vibration when up-shifting from 1st to 2nd, 2nd to 3rd, 3rd to 4th, 4th to 5th and 5th to 6th while driving with the shift lever in the D position, and also while driving in the lock-up condition.

HINT:

The check for the cause of abnormal noise and vibration must be done thoroughly as it could also be due to loss of balance in the differential, torque converter clutch, etc.

(4) Check kick-down operation.
Check vehicle speeds when the 6th to 5th, 5th to 4th, 5th to 3rd, 3rd to 2nd, and 2nd to 1st kick-downs take place while driving with the shift lever in the D position. Confirm that each speed is within the applicable vehicle speed range indicated in the automatic shift schedule (See page SS-23).

(5) Check for abnormal shock and slip at kick-down.

(6) Check the lock-up mechanism.
- Drive the vehicle with the shift lever in the D position (2nd, 3rd, 4th, 5th or 6th gear) at a steady speed (lock-up ON).
- Lightly depress the accelerator pedal and check that the engine speed does not change abruptly.

HINT:
- There is no lock-up function in the 1st gear.
- If there is a jump in engine speed, this indicates that lock-up is not operating.

(b) S position test
Shift to the S position, depress the accelerator pedal and check the following:

(1) Check shift operation.
- With the shift lever in the S position (while the vehicle is stopped), shift into the "+" position to check that the shift position on the combination meter changes as follows: 1 to 2, 2 to 3, 3 to 4, 4 to 5 and 5 to 6.
- While driving in the 5 (S) position and 5th gear (at a vehicle speed of approximately 34 to 40 mph (55 to 65 km/h)), shift into the "-" position and check if the 4th gear down-shift occurs and proper engine braking occurs.
- While driving in the 4 (S) position and 4th gear (at a vehicle speed of approximately 19 to 25 mph (30 to 40 km/h)), shift into the "-" position and check if the 3rd gear down-shift occurs and proper engine braking occurs.
- While driving in the 3 (S) position and 3rd gear (at a vehicle speed of approximately 12 to 19 mph (20 to 30 km/h)), shift into the "-" position and check if the 2nd gear down-shift occurs and proper engine braking occurs.
- While driving in the 2 (S) position and 2nd gear (at a vehicle speed of approximately 6 to 12 mph (10 to 20 km/h)), shift into the "-" position and check if the 1st gear down-shift occurs and proper engine braking occurs.

HINT:
Manual shift (S position) is prohibited under either of the following conditions:
- Down-shifting may cause engine overrun.

- The driver continuously down-shifts. (Down-shifting to 1st gear may not be performed.)

(c) R position test:
Shift into the R position, lightly depress the accelerator pedal, and check that the vehicle moves backward without any abnormal noise or vibration.
CAUTION:
Before conducting this test ensure that the test, area is free from people and obstruction.

(d) P position test:
Stop the vehicle on a grade (more than 5°) and after shifting into the P position, release the parking brake. Then, check that the parking lock pawl holds the vehicle in place.

AUTOMATIC TRANSAXLE FLUID

ADJUSTMENT

1. BEFORE FILLING TRANSAXLE WITH FLUID

- This transaxle requires Genuine ATF WS transmission fluid.
- After servicing the transaxle, you must refill the transaxle with the correct amount of fluid.
- Maintain the vehicle in a horizontal position while adjusting fluid level.
- Proceed to step 2 if the oil pan, valve body, drive shaft, and/or torque converter has been removed or if the oil seal has been replaced.
- Proceed to step 3 if oil leakage has been repaired or if the oil cooler and cooler hose have been removed.

2. FILL TRANSAXLE PAN WITH FLUID

(a) Remove the engine under cover LH.
(b) Remove the engine under cover RH.
(c) Remove the under front fender apron seal LH.
(d) Remove the refill plug and overflow plug.

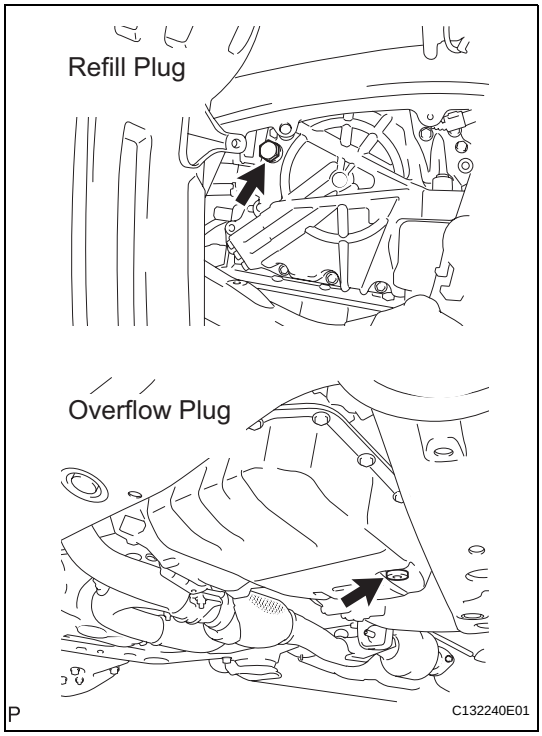

AX

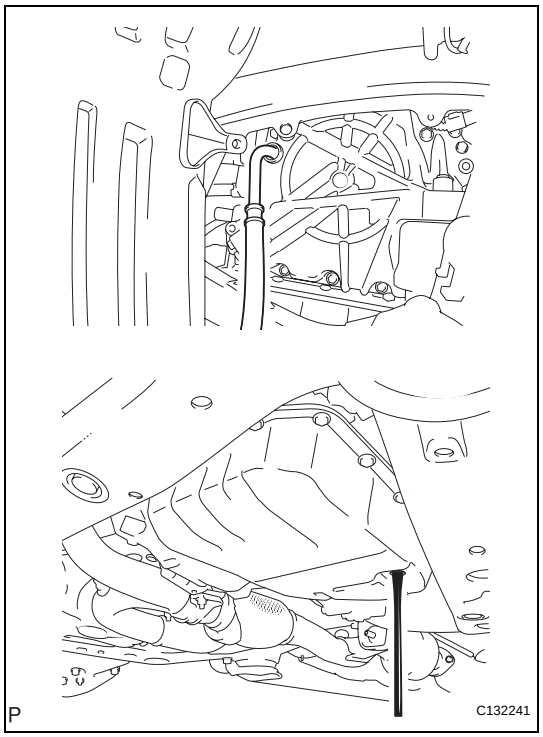

(e) Fill the transaxle through the refill hole until fluid begins to trickle out of the overflow tube.

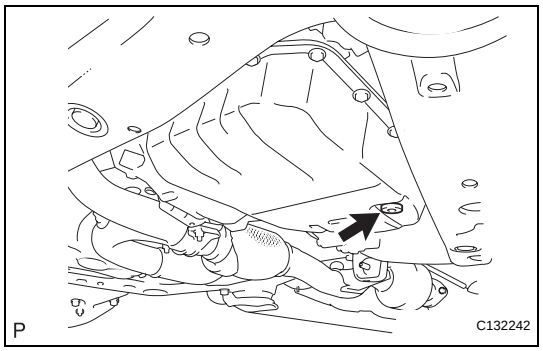

(f) Temporarily install the overflow plug.

3. FILL TRANSAXLE WITH FLUID

(a) Fill the transaxle with the correct amount of fluid as listed in the table below.

Standard capacity

Performed Repair	Fill Amount
Replacement of transaxle (a new torque converter is used)	5.3 liters (5.6 US qts, 4.7 Imp. qts)
Replacement of transaxle (the torque converter is reused)	3.4 liters (3.6 US qts, 3.0 Imp. qts)
Removal & installation of oil pan (including oil drain) Removal & installation of drive shaft	2.8 liters (3.0 US qts, 2.5 Imp. qts)
Removal & installation of valve body	3.2 liters (3.4 US qts, 2.8 Imp. qts)
Removal & installation of torque converter	4.8 liters (5.1 US qts, 4.2 Imp. qts)
Repair of oil leakage and removal of oil cooler and cooler hose	0.5 liters (0.5 US qts, 0.4 Imp. qts)

HINT:
If you cannot add the listed amount of fluid, do the following:
(1) Temporarily install the refill plug.
(2) Allow the engine to idle with the air conditioning OFF.
(3) Move the shift lever through entire gear range to circulate fluid.
(4) Move the shift lever to the P position.
(5) Wait for 30 seconds with the engine idling.
(6) Stop the engine.
(7) Remove the refill plug and add fluid.
(8) Reinstall the refill plug.

(b) Temporarily install the refill plug to avoid fluid splash.

4. CIRCULATE AUTOMATIC TRANSAXLE FLUID

(a) Allow the engine to idle with the air conditioning OFF.

(b) Move the shift lever through entire gear range to circulate the fluid.

5. CHECK FLUID TEMPERATURE

NOTICE:

The fluid temperature should be less than 40°C (104°F) before beginning the fluid temperature check.

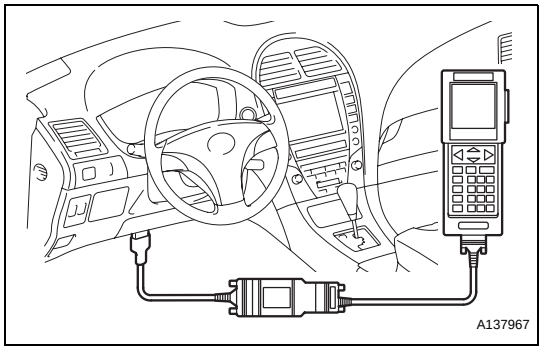

(a) With the intelligent tester:

(1) Connect the intelligent tester to the DLC3.

(2) Select the tester menus: OBD/MOBD, ENGINE, DATA LIST and A/T.

(3) Check A/T OIL TEMP.

(4) Allow the engine to idle until the fluid temperature reaches 39°C (102°F).

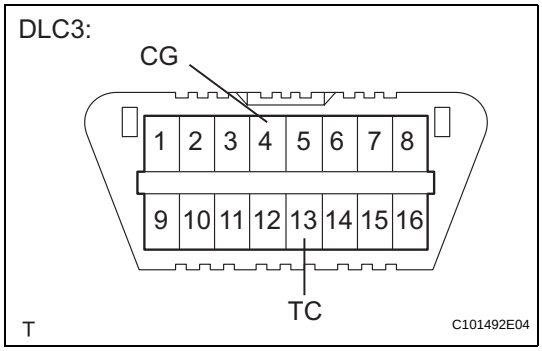

(b) Without the intelligent tester (Using D shift indicator):

(1) Connect terminals CG (4) and TC (13) of the DLC3 using SST.
SST 09843-18040

(2) Move the shift lever back and forth between N and D at 1.5 seconds interval for 6 seconds.

(3) The D shift indicator on the combination meter comes on for 2 seconds when the fluid temperature is within the appropriate temperature range.

(4) The D shift indicator will come on again when the fluid temperature reaches 40°C (104°F) and will blink when it exceeds 45°C (113°F).

(5) After confirming that the D shift indicator turns off, move the shift lever to the P position and remove the SST from terminals CG and TC.

6. CHECK TRANSAXLE FLUID LEVEL

NOTICE:

The fluid temperature must be between 40°C (104°F) and 45°C (113°F) to accurately check the fluid level.

(a) Remove the overflow plug with the engine idling.

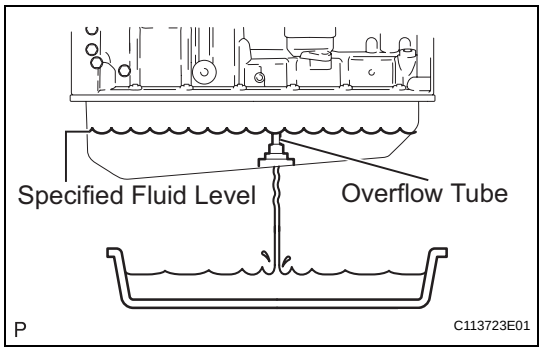

(b) Check that the fluid comes out of the overflow tube.
If fluid does not come out, proceed to step 7.
If fluid comes out, wait until the overflow slows to a trickle and proceed to step 8.

7. ADD FLUID

(a) Install the overflow plug.
(b) Remove the refill plug.
(c) Add fluid until it comes out of the overflow plug.
(d) Wait until the overflow slows to a trickle.
(e) Install the overflow plug with a new gasket.
(f) Install the refill plug with a new gasket.
(g) Stop the engine.

8. AFTER FILLING TRANSMISSION

(a) Install the overflow plug with a new gasket.
Torque: 40 N*m (408 kgf*cm, 30 ft.*lbf)
(b) Install the refill plug with a new gasket.
Torque: 49 N*m (500 kgf*cm, 36 ft.*lbf)
(c) Stop the engine.

MECHANICAL SYSTEM TESTS

1. PERFORM MECHANICAL SYSTEM TESTS

(a) Measure the stall speed.

The object of this test is to check the overall performance of the transaxle and engine by measuring the stall speeds in the D position.

NOTICE:

- **The driving test should be done on a paved road (a non-skid road).**
- **Perform the test at the normal operating ATF (Automatic Transmission Fluid) temperature: 50 to 80°C (122 to 176°F).**
- **Do not continuously run this test for longer than 5 seconds.**
- **To ensure safety, perform this test in a wide, clear level area which provides good traction.**
- **The stall test should always be carried out in pairs. One technician should observe the conditions of wheels or wheel stoppers from a safe location outside the vehicle while the other is doing the test.**

(1) Chock the 4 wheels.

(2) Connect the intelligent tester to the DLC3.

(3) Fully apply the parking brake.

(4) Keep your left foot pressed firmly on the brake pedal.

(5) Start the engine.

(6) Using the intelligent tester, shift into the D position and hold 3rd gear using active test. Press all the way down on the accelerator pedal with your right foot.

(7) Quickly read the stall speed at this time.

Stall speed:

2,520 +- 150 rpm

AX

Evaluation:

Problem	Possible cause
(a) Stall engine speed is low in D position	• Engine power output may be insufficient • Stator one-way clutch is not operating properly HINT: If the value is less than the specified value by 600 rpm or more, the torque converter could be faulty.
(b) Stall engine speed is high in D position	• Line pressure is too low • Clutch No. 1 (C_1) slipping • One-way clutch (F_1) is not operating properly • Improper fluid level

(b) Measure the time lag.

(1) When the shift lever is shifted while the engine is idling, there will be a certain time lapse or lag before the shock can be felt. This is used for checking the condition of the clutches and brakes.

NOTICE:

- **Perform the test at the normal operating ATF (Automatic Transmission Fluid) temperature: 50 to 80°C (122 to 176°F).**
- **Be sure to allow 1 minute interval between tests.**
- **Perform the test three times and measure the time lags. Calculate the average value of the three time lags.**

(2) Connect the intelligent tester to the DLC3.

(3) Fully apply the parking brake.

(4) Start and warm up the engine and check idle speed.

Idle speed:

approx. 650 rpm (In N position and A/C OFF)

(5) Shift the lever from the N to D position. Using a stop watch, measure the time from when the lever is shifted until the shock is felt.

Time lag:

N to D less than 1.2 seconds

(6) In the same way, measure the time lag for N to R.

Time lag:

N to R less than 1.5 seconds

Evaluation (If N to D or N to R time lag is longer than the specified time):

Problem	Possible cause
N to D time lag is longer	• Line pressure is too low • Clutch No. 1 (C_1) is worn • One-way clutch (F_1) is not operating properly
N to R time lag is longer	• Line pressure is too low • Brake No. 2 (B_2) is worn • Brake No. 3 (B_3) is worn

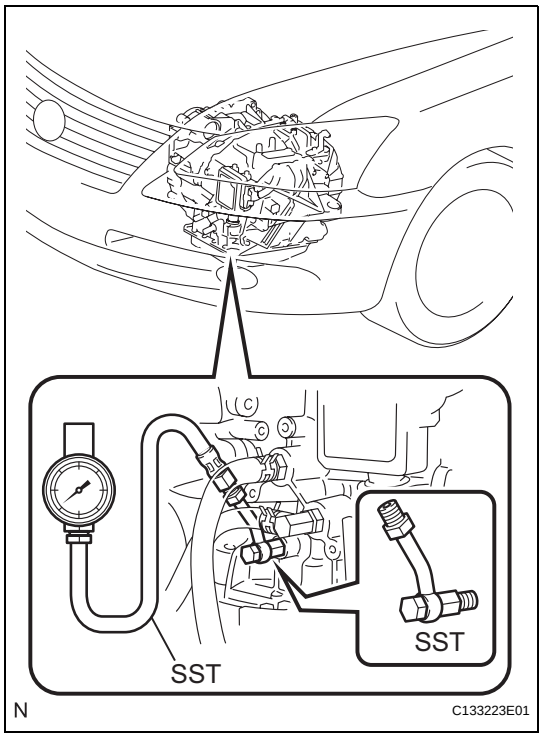

HYDRAULIC TEST

1. PERFORM HYDRAULIC TEST

(a) Measure the line pressure.

NOTICE:

- **Perform the test at the normal operating ATF (Automatic Transmission Fluid) temperature: 50 to 80°C (122 to 176°F).**
- **The line pressure test should always be carried out in pairs. One technician should observe the conditions of wheels or wheel stoppers outside the vehicle while the other is performing the test.**
- **Be sure to prevent SST hose from interfering with the exhaust pipe.**
- **This check must be conducted after checking and adjusting the engine.**
- **Perform the test when the A/C is OFF.**
- **When conducting the stall test, do not continue for more than 5 seconds.**

(1) Warm up the ATF (Automatic Transmission Fluid).

(2) Lift the vehicle up.

(3) Remove the engine under cover.

(4) Connect the intelligent tester to the DLC3.

(5) Remove the test plug on the transaxle case front left side and install the SST.

SST 09992-00095 (09992-00231, 09992-00271)

(6) Start the engine.

(7) Shift to the D position, and then use the intelligent tester to hold 3rd gear using active test. Measure the line pressure while the engine is idling.

AX

Specified line pressure:

Condition	D position kPa (kgf/cm^2, psi)
Idling	362 to 412 kPa (3.7 to 4.2 kgf/cm^2, 52 to 60 psi)

(8) Turn the engine switch off.

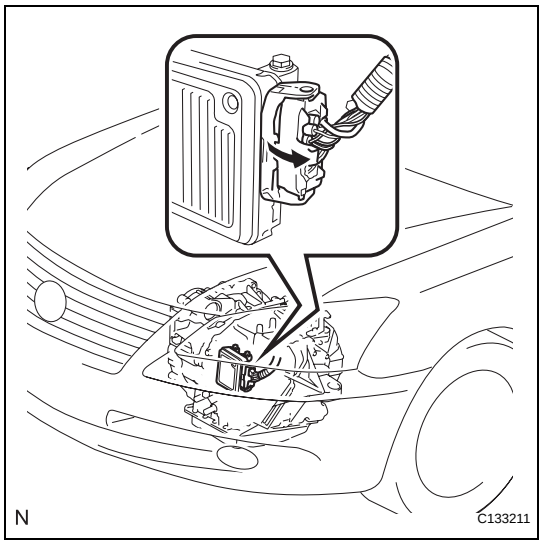

(9) Disconnect the connector of the TCM.
HINT:
Disconnect the connector only when performing the D position stall test.

(10) Start the engine.

(11) Firmly depress the brake pedal, shift to the D position, depress the accelerator pedal all the way down, and check the line pressure while the stall test is performed.

Specified line pressure:

Condition	D position kPa (kgf/cm^2, psi)
Stall test	1,160 to 1,350 kPa (11.8 to 13.8 kgf/cm^2, 168 to 196 psi)

(12) Turn the engine switch off.

(13) Connect the TCM connector, depress the brake pedal firmly, shift to the R position, and check that the line pressure while the engine is idling and during the stall test.

Specified line pressure:

Condition	R position kPa (kgf/cm^2, psi)
Idling	806 to 916 kPa (8.2 to 9.3 kgf/cm^2, 117 to 133 psi)
Stall test	1,890 to 2,000 kPa (19.3 to 20.4 kgf/cm^2, 274 to 290 psi)

(14) Remove the SST, and install the test plug.

(15) Clear the DTC.

Evaluation:

Problem	Possible cause
Measured values are higher than the specified value in all positions	• Shift solenoid valve (SLT) defective • Regulator valve defective
Measured values are lower than the specified value in all positions	• Shift solenoid valve (SLT) defective • Regulator valve defective • Oil pump defective
Pressure is low in the D position only	• D position circuit fluid leak • Clutch No. 1 (C_1) defective
Pressure is low in the R position only	• R position circuit fluid leak • Brake No. 2 (B_2) defective • Brake No. 3 (B_3) defective

MANUAL SHIFTING TEST

1. PERFORM MANUAL SHIFTING TEST

HINT:

- With this test, it can be determined whether trouble occurs in the electrical circuit. Also, trouble can be a mechanical problem in the transaxle.
- If any abnormalities are found in the following test, the problem is in the transaxle itself.

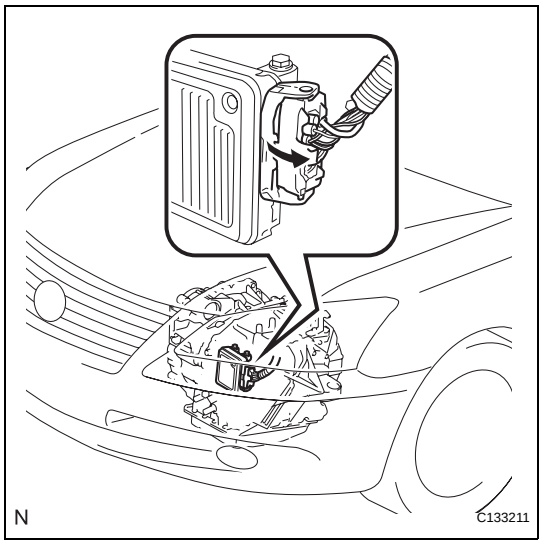

(a) Disconnect the TCM connector.

(b) Drive the vehicle with the TCM disconnected. Shifting the shift lever to the D position to check whether the shifting condition changes as shown in the table below.

Shift Position	Shifting Condition
D	No Shift (No Change)

HINT:
When driving the vehicle with the TCM disconnected, the gear position will be as follows:

- When the shift lever is in the D position, the transmission will stay in 3rd gear.
- When the shift lever is in the R or P position, the transmission will also be in the R or P position respectively.

(c) Connect the connector of the TCM.

(d) Clear the DTC (See page AX-37).

REGISTRATION

NOTICE:

- **When the automatic transaxle is replaced, the transaxle compensation code must be input into the TCM (Proceed to step 1). After the automatic transaxle is reinstalled, the QR code label will be positioned where the code cannot be read. Therefore, before reinstalling the automatic transaxle, record the transaxle compensation codes or input them in the intelligent tester.**
- **When the TCM is replaced, the existing transaxle compensation codes must be input into the new TCM (Proceed to step 2).**

1. INPUT TRANSAXLE COMPENSATION CODE INTO TCM

NOTICE:

Transaxle compensation codes are unique, 60-digit alphanumeric values printed on the QR label. If an incorrect transaxle compensation code is input into the TCM, shift shock may occur.

(a) Record the transaxle compensation code specified on the QR label.
HINT:
The transaxle compensation code is imprinted on the QR label.

(b) Shift the shift lever to the N or P position.

(c) Connect the intelligent tester to the DLC3.

(d) Turn the engine switch on (IG).

(e) Turn the tester on.
NOTICE:
Do not start the engine.

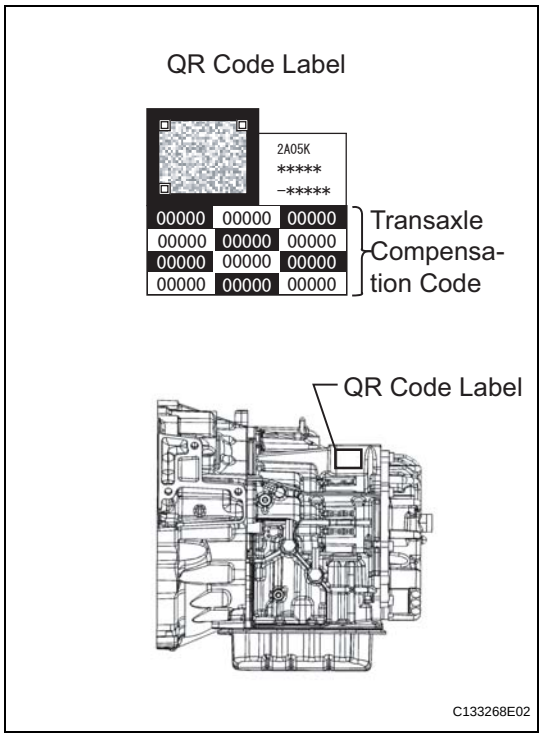

(f) Enter the menu items in this order: DIAGNOSIS / OBD/MOBD / ECT / AT CODE UTILITY.

(g) Press "ENTER".

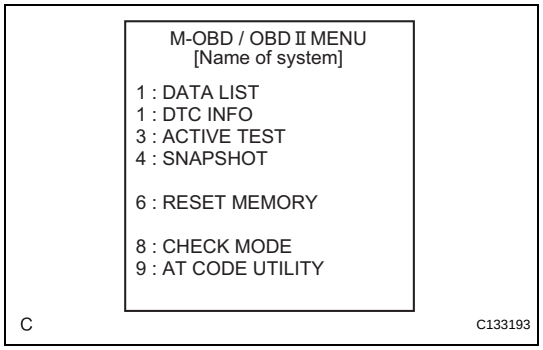

AX

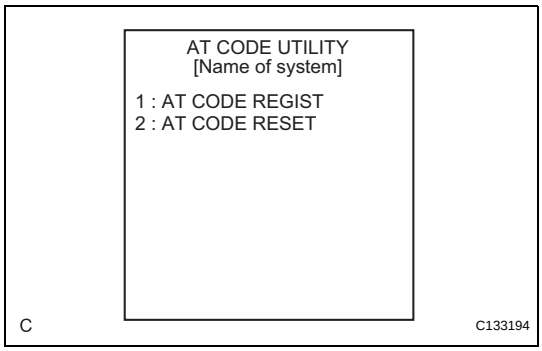

(h) Select "AT CODE REGIST".
(i) Press "ENTER".

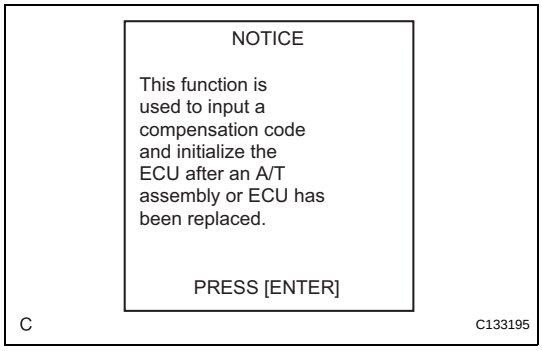

(j) Press "ENTER" again to proceed.

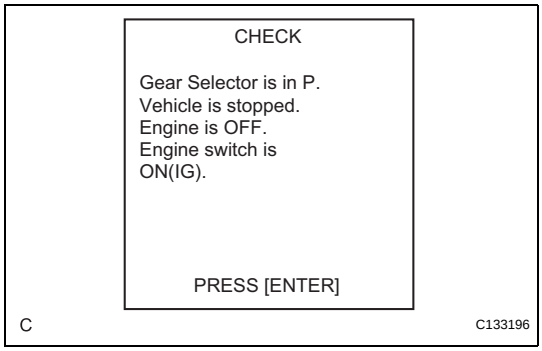

(k) Press "ENTER" again to proceed.

AX

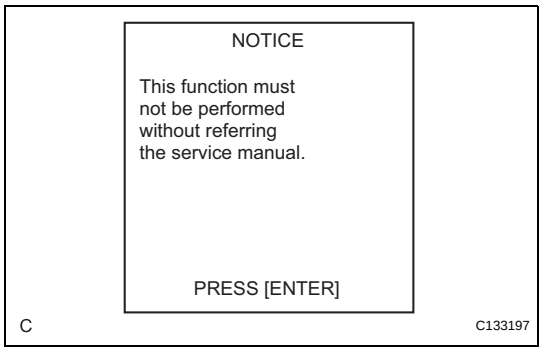

(l) Press "ENTER" again to proceed.

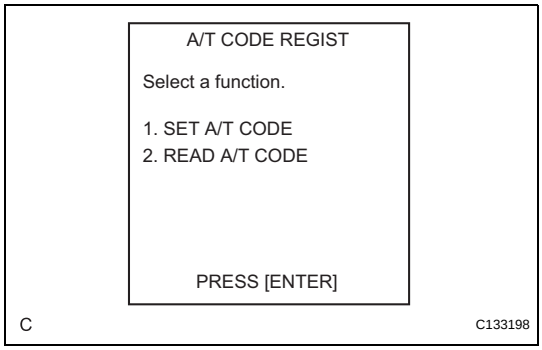

(m) Select "SET A/T CODE".
(n) Press "ENTER".

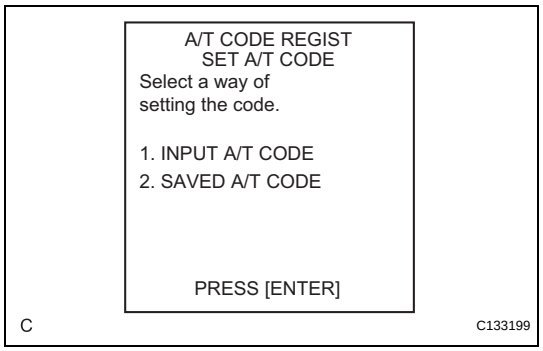

(o) Select "INPUT A/T CODE".
(p) Press "ENTER".

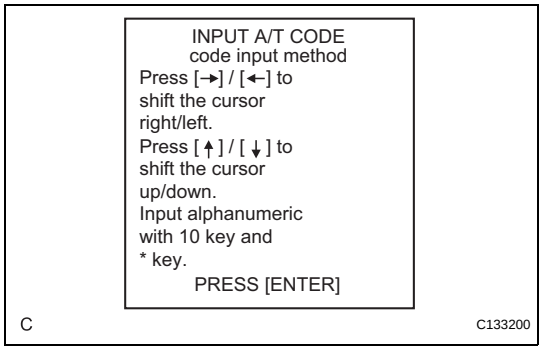

(q) Register the compensation code.
  (1) Press "ENTER".

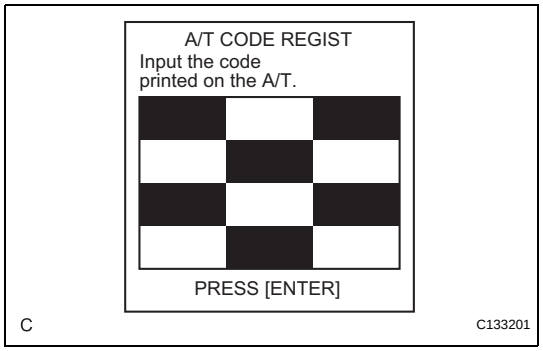

  (2) Manually input the transaxle compensation code. The code is a 60-digit alphanumeric value imprinted on the QR label.

(r) Check that the compensation code displayed on the screen is correct by comparing it with the 60-digit alphanumeric value on the QR label.
NOTICE:
If an incorrect transaxle compensation code is input into the TCM, shift shock will occur.
HINT:
Input alphabetical letters by operating the keys from 0 to 5 while pressing the * key.

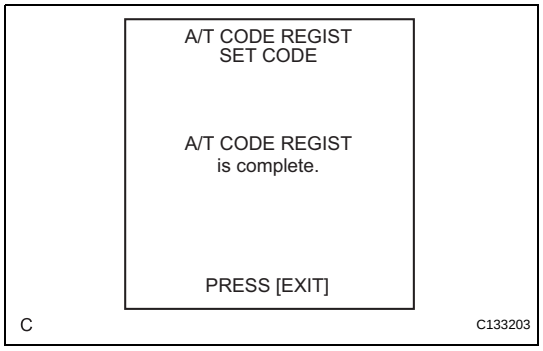

(s) Press "ENTER" to set the compensation code to the TCM.
HINT:
- If the registration process fails, the compensation code may be incorrect. Check the compensation code again.
- If the attempted compensation code is correct, a problem with the wire harness or a bad connection with the DLC3 may cause a registration failure. Check the wire harness and the DLC3 connection. If no problem is found, the TCM may be malfunctioning. Check the TCM and repeat this operation.

2. TRANSFER TRANSAXLE COMPENSATION CODE
NOTICE:
Transaxle compensation codes are 60-digit alphanumeric values imprinted on the QR label. If an incorrect transaxle compensation code is input into the TCM, shift shock may occur.

AX

HINT:
The following operation is available for use with TCMs that can transmit the registered transaxle compensation code to the intelligent tester.

(a) Shift the shift lever to the N or P position.
(b) Connect the intelligent tester to the DLC3.
(c) Turn the engine switch on (IG).
(d) Turn the tester on.
NOTICE:
Do not start the engine.
HINT:
The transaxle compensation code is imprinted on the QR label.

(e) Read the transaxle compensation code.
(1) Enter the menu items in this order:
DIAGNOSIS / OBD/MOBD / ECT / AT CODE UTILITY.
(2) Press "ENTER".

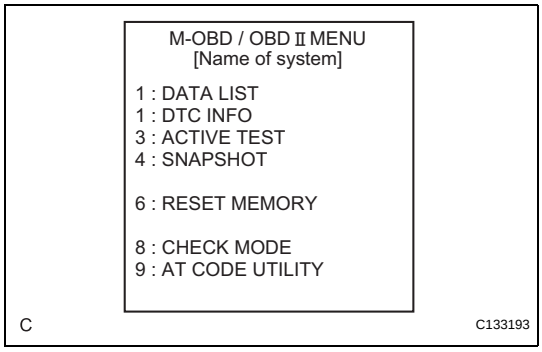

(3) Select "AT CODE REGIST".
(4) Press "ENTER".

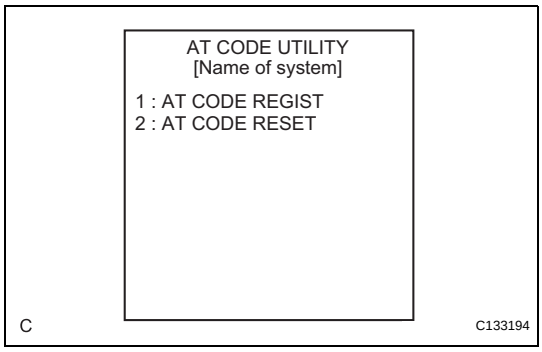

(5) Press "ENTER" again to proceed.

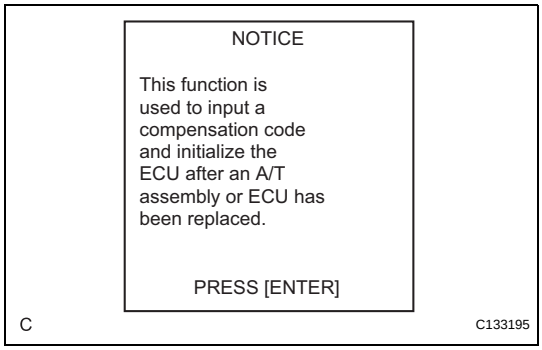

AX

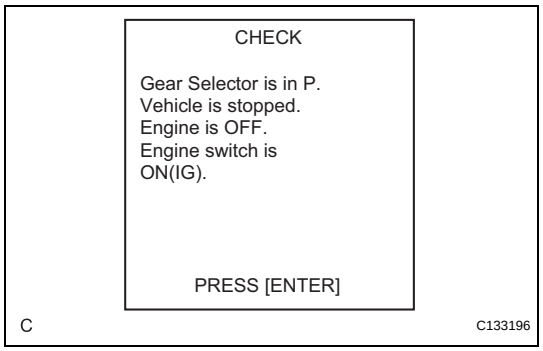

(6) Press "ENTER" again to proceed.

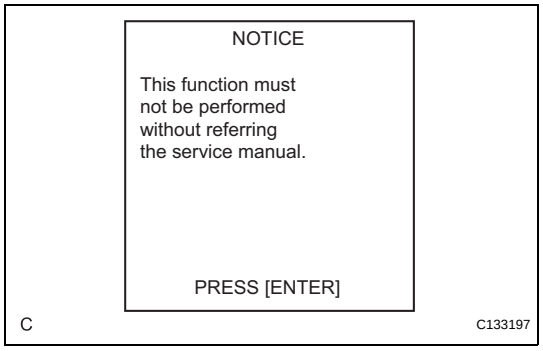

(7) Press "ENTER" again to proceed.

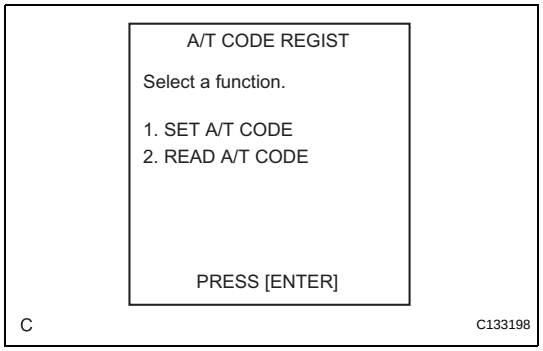

(8) Select "READ A/T CODE".
(9) Press "ENTER".

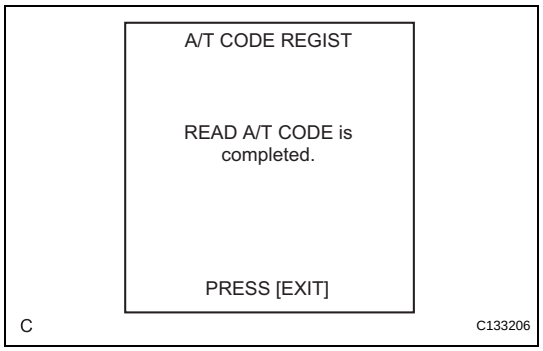

(10) Press "EXIT".
NOTICE:
Do not use the code specified on the transaxle QR label even if the transmission compensation code cannot be read using the intelligent tester. The code printed on an in-service transaxle may not match its current characteristics. Replace the TCM with a new one and perform a road test to allow the TCM to learn.
(11) Turn the engine switch off.

(f) Replace the TCM.

(g) Set the transaxle compensation code.
(1) Turn the engine switch on (IG).
(2) Turn the tester on.

AX

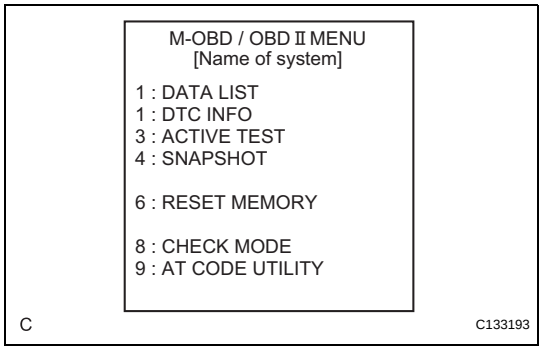

(3) Enter the menu items in this order: DIAGNOSIS / OBD/MOBD / ECT / AT CODE UTILITY.
(4) Press "ENTER".

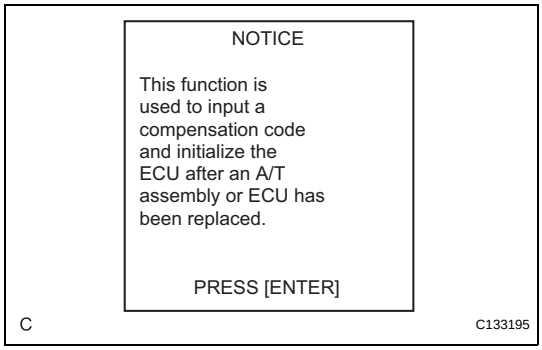

(5) Press "ENTER" again to proceed.

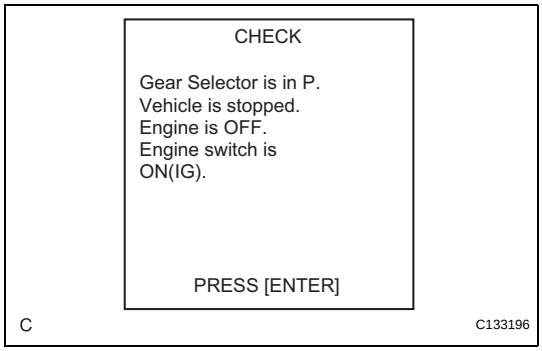

(6) Press "ENTER" again to proceed.

AX

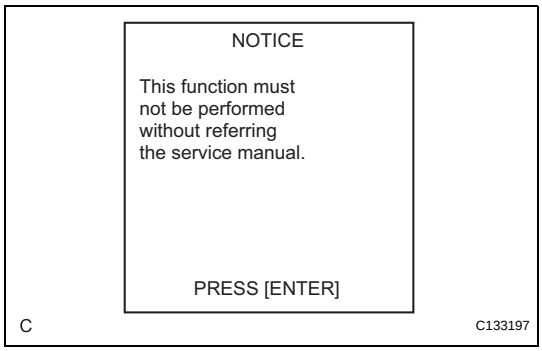

(7) Press "ENTER" again to proceed.

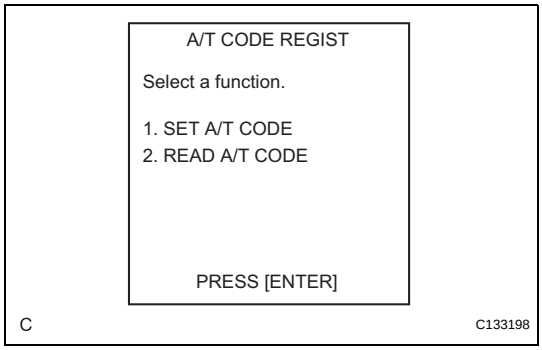

(8) Select "SET A/T CODE".
(9) Press "ENTER".

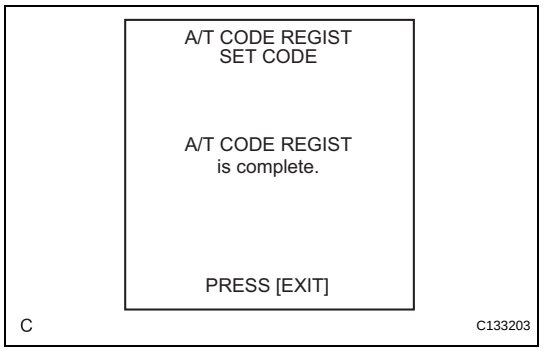

(10) Select "SAVED A/T CODE".
(11) Press "ENTER".

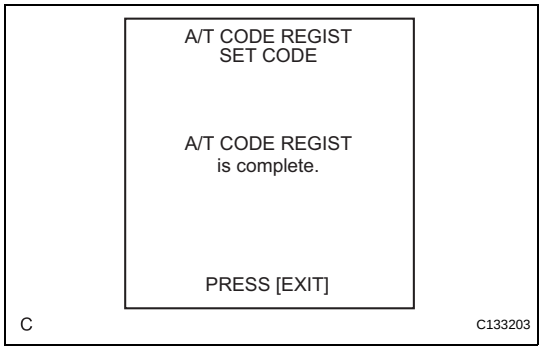

(12) Press "EXIT".

PARK / NEUTRAL POSITION SWITCH

COMPONENTS

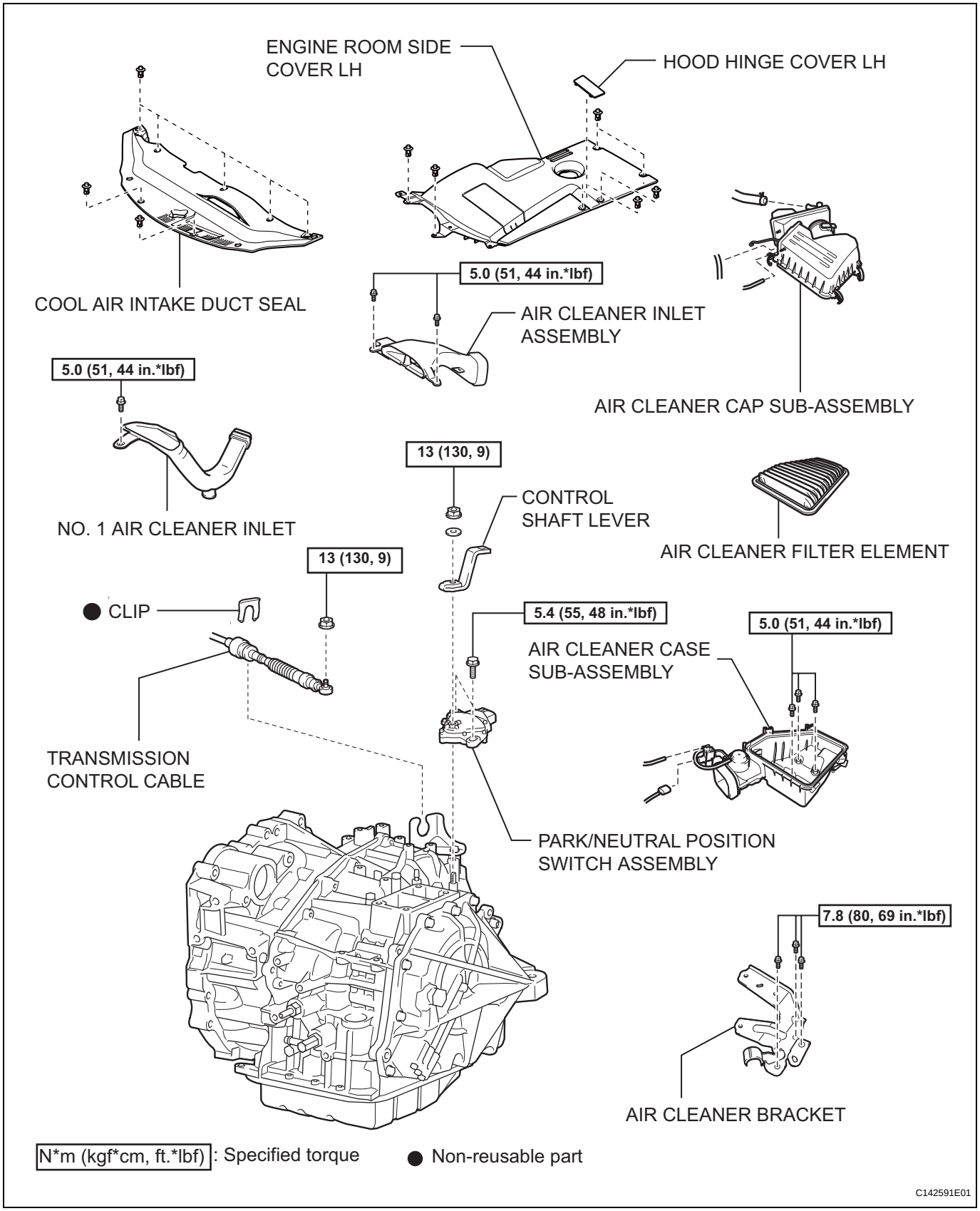

AX

ON-VEHICLE INSPECTION

1. INSPECT PARK/NEUTRAL POSITION SWITCH ASSEMBLY OPERATION

(a) Apply the parking brake.

(b) Turn the engine switch on (IG).

(c) Depress the brake pedal and check that the engine starts when the shift lever is set in the N or P position, but does not start in other positions.

(d) Check that the back-up light comes on and the reverse warning buzzer sounds when the shift lever is set in the R position, but the light and buzzer do not operate in other positions. If a failure is found, check the park/neutral position switch for continuity.

REMOVAL

1. **DISCONNECT CABLE FROM NEGATIVE BATTERY TERMINAL**
2. **REMOVE COOL AIR INTAKE DUCT SEAL (See page EM-22)**
3. **REMOVE ENGINE ROOM SIDE COVER LH (See page EM-22)**
4. **REMOVE AIR CLEANER INLET ASSEMBLY (See page EM-23)**
5. **REMOVE AIR CLEANER CAP SUB-ASSEMBLY**
6. **REMOVE AIR CLEANER CASE SUB-ASSEMBLY (See page EM-23)**
7. **REMOVE NO. 1 AIR CLEANER INLET (See page EM-23)**
8. **REMOVE AIR CLEANER BRACKET**
   (a) Separate the wire harness clamp.
   (b) Remove the 3 bolts and air cleaner bracket.

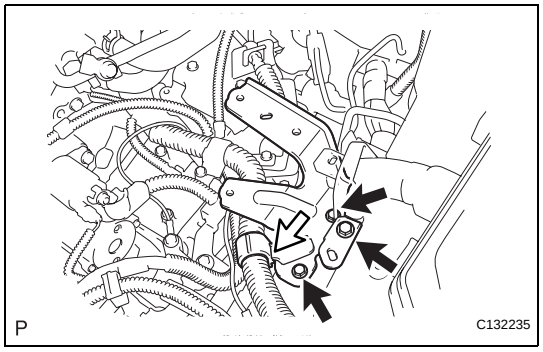

9. **REMOVE PARK/NEUTRAL POSITION SWITCH ASSEMBLY**
   (a) Remove the clip from the transmission cable bracket.

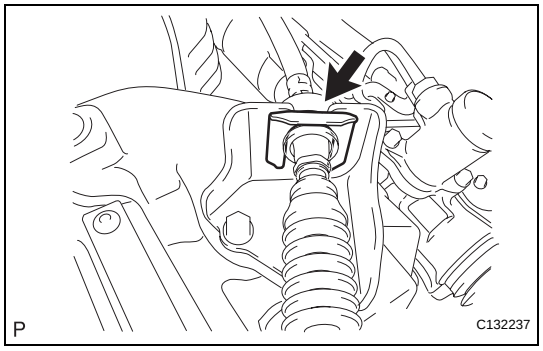

   (b) Remove the nut and transmission control cable from the control shaft lever.
   (c) Disconnect the connector from the park/neutral position switch.

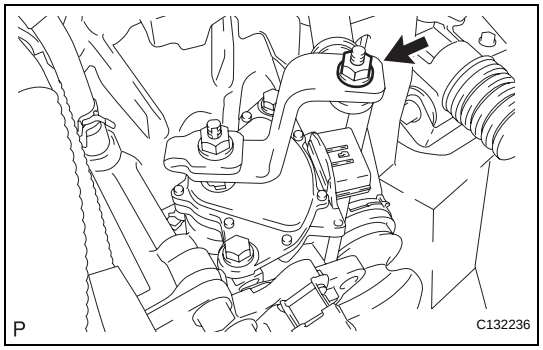

AX

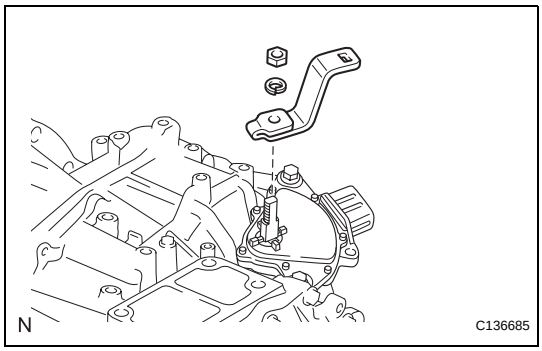

(d) Remove the nut, washer and control shaft lever from the control shaft.

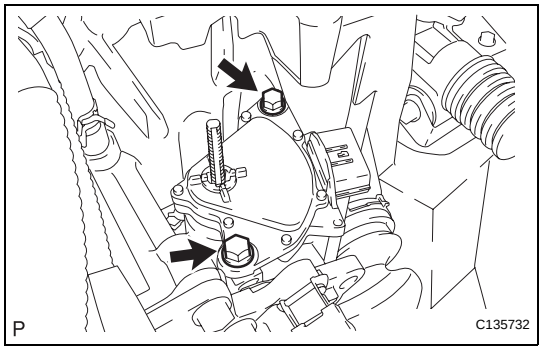

(e) Remove the 2 bolts and park/neutral position switch from the control shaft.

NOTICE:

Before removing the park/neutral position switch, remove any dirt or rust on the installation portion of the control shaft. Be sure to remove the switch straight along the shaft while being careful not to deform the plate spring that supports the shaft. If the plate spring is deformed, the park/neutral switch cannot be reinstalled correctly.

INSPECTION

1. INSPECT PARK/NEUTRAL POSITION SWITCH ASSEMBLY

(a) Measure the resistance according to the value(s) in the table below when the shift lever is moved to each position.

Standard resistance:

Shift Position	Tester Connection	Specified Condition
P	1 (RB) - 3 (PL) and 4 (B) - 9 (L)	Below 1 Ω
Except P	↑	10 kΩ or higher
R	2 (RL) - 1 (RB)	Below 1 Ω
Except R	↑	10 kΩ or higher
N	1 (RB) - 8 (NL) and 4 (B) - 9 (L)	Below 1 Ω
Except N	↑	10 kΩ or higher
D, S, "+" and "-"	1 (RB) - 7 (DL)	Below 1 Ω
Except D, S, "+" and "-"	↑	10 kΩ or higher

If operation cannot be done as specified, replace the park/neutral position switch.

Switch Side:

(Connector Front View):

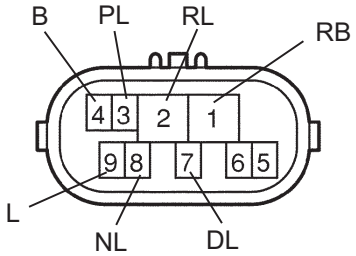

AX

INITIALIZATION

1. RESET TRANSAXLE COMPENSATION CODE

NOTICE:

The transaxle compensation code can be reset only with the intelligent tester.

HINT:

The TCM memorizes the condition that the ECT controls the automatic transaxle assembly and engine assembly according to those characteristics. Therefore, when the automatic transaxle assembly, engine assembly, or TCM has been replaced, it is necessary to reset the memory so that the TCM can memorize the new information.

Reset procedure is as follows:

(a) Shift the shift lever to the N or P position.
(b) Turn the engine switch off.
(c) Connect the intelligent tester to the DLC3.
(d) Turn the engine switch on (IG) and push the intelligent tester main switch on.
(e) Enter the menu items in this order: DIAGNOSIS / OBD/MOBD / ECT / AT CODE UTILITY.

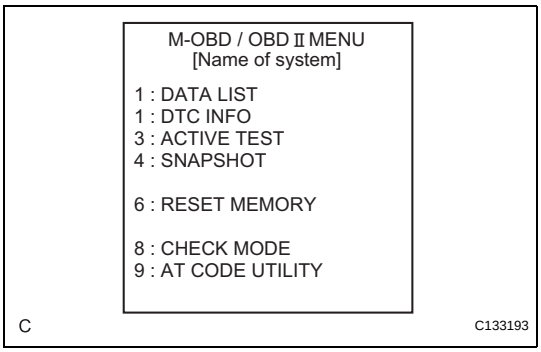

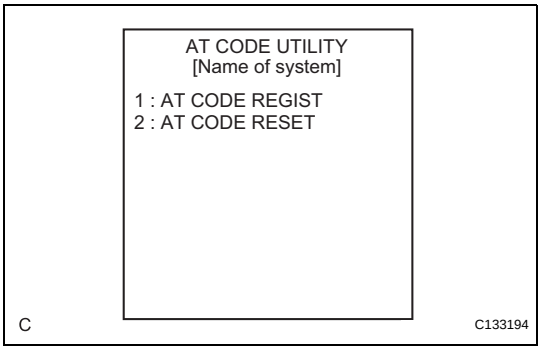

(f) Select "AT CODE RESET".
(g) Press the "ENTER".

CAUTION:

After the transaxle compensation code is reset, be sure to perform a road test to allow the TCM to learn.

2. PERFORM ROAD TEST TO ALLOW TCM TO LEARN

NOTICE:

Perform the following procedures while strictly observing all traffic laws and speed limits.

(a) Warm up the engine.
(b) From a standstill, achieve highest possible speed with the accelerator pedal opened 15% or less. Keep the accelerator pedal angle steady while driving the vehicle.
(c) Repeat the previous step until shift shock no longer occurs.
(d) From a standstill, achieve highest possible speed with the accelerator pedal opened 25% or more. Keep the accelerator pedal angle steady while driving the vehicle.
(e) Repeat the previous step until shift shock no longer occurs.

3. RESET MEMORY

NOTICE:

- **Perform the RESET MEMORY (AT initialization) when replacing the engine assembly.**
- **The RESET MEMORY can be performed only with the intelligent tester.**

HINT:

The ECM memorizes the condition that the ECT controls the automatic transaxle assembly and engine assembly according to those characteristics. Therefore, when the automatic transaxle assembly, engine assembly, or ECM has been replaced, it is necessary to reset the memory so that the ECM can memorize the new information.

(a) Reset procedure is as follows:

(1) Turn the engine switch off.

(2) Connect the intelligent tester to the DLC3.

(3) Turn the engine switch on (IG).

(4) Turn the intelligent tester main switch on.

(5) Select the items "DIAGNOSIS / OBD/MOBD / ECT / RESET MEMORY".

NOTICE:

After performing the RESET MEMORY, be sure to perform the ROAD TEST (See page AX-11) described previously.

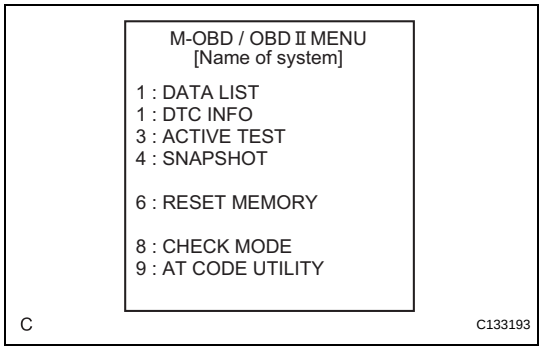

AX

MONITOR DRIVE PATTERN

1. MONITOR DRIVE PATTERN FOR ECT TEST

(a) Perform this drive pattern as one method to simulate the detection conditions of the ECT malfunctions. (The DTCs may not be detected due to differences from the actual driving conditions. Some codes may not be detected using this drive pattern.)

HINT:

Preparation for driving

- Warm up the engine sufficiently. (Engine coolant temperature should be 60°C (140°F) or higher.)
- Drive the vehicle when the atmospheric temperature is -10°C (14°F) or higher. (Malfunction may not be detected when the atmospheric temperature is less than -10°C (14°F).)

Notice on driving

- Drive the vehicle through all gears.
  Stop to 1st to 2nd to 3rd to 4th to 5th to 6th (lock-up ON).
- Confirm engine braking using the S position.
  While driving in the 6 (S) position and 6th gear lock-up, shift to the "-" position to down-shift from 6th to 5th, 5th to 4th, 4th to 3rd, 3rd to 2nd, 2nd to 1st.
  Check that proper engine braking occurs whenever down-shift takes place.
- Repeat the above driving pattern three times or more.

NOTICE:

- **The monitor status can be checked using the intelligent tester. When using the intelligent tester, monitor status can be found in "OBD/ MOBD / ECT / DATA LIST".**
- **In the event that the drive pattern must be interrupted (possibly due to traffic conditions or other factors), the drive pattern can be resumed and, in most cases, the monitor can be completed.**
- **Perform this drive pattern on a road with the fewest hills possible and strictly observe the posted speed limits and traffic laws while driving.**

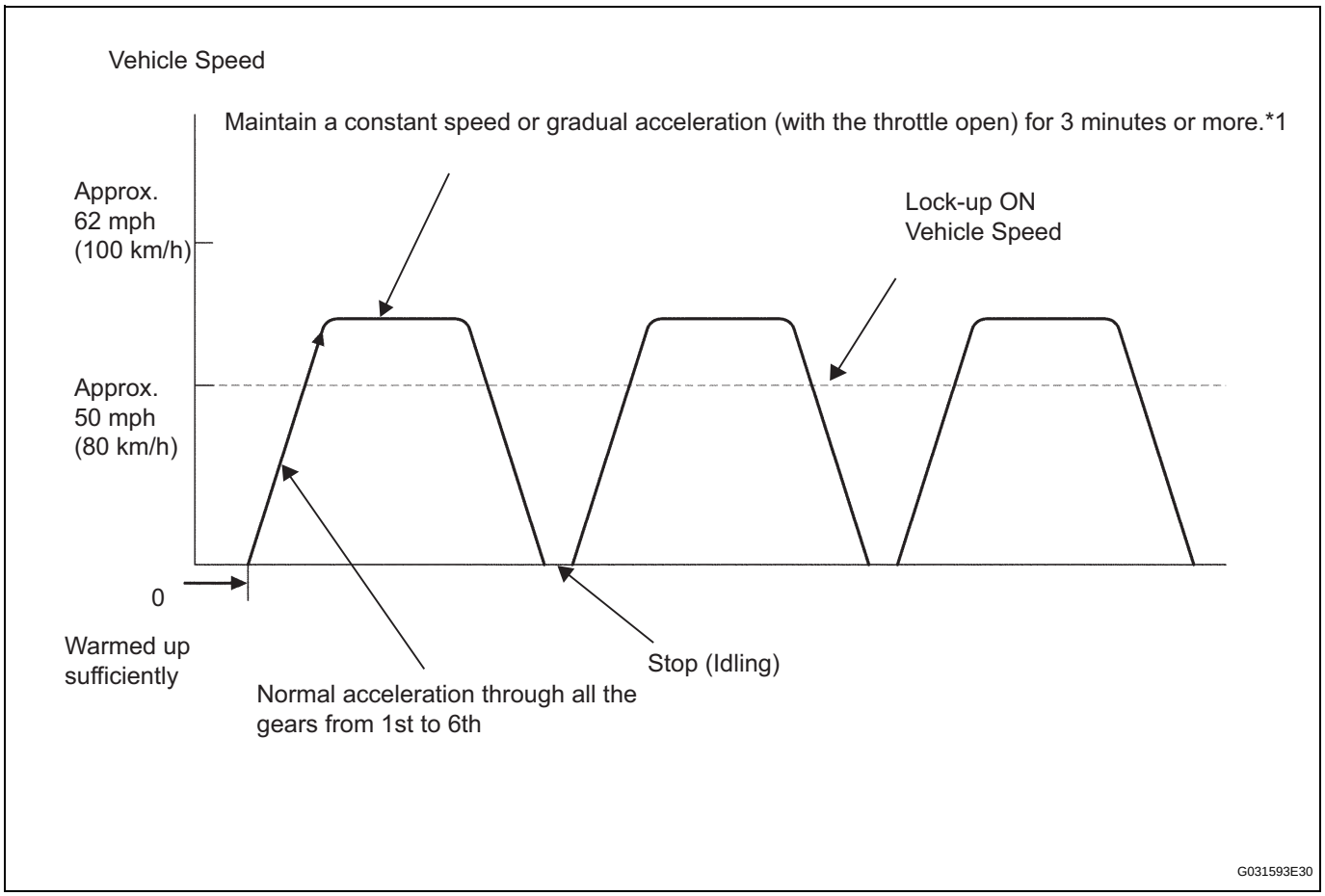

HINT:
*1: Drive the vehicle at a sufficient speed in the uppermost gear, to allow lock-up to engage. The vehicle can be driven at a speed lower than that in the above diagram under the lock-up condition.

NOTICE:
It is necessary to drive the vehicle for approximately 30 minutes to detect DTC P0711 (ATF temperature sensor malfunction).

VALVE BODY ASSEMBLY

COMPONENTS

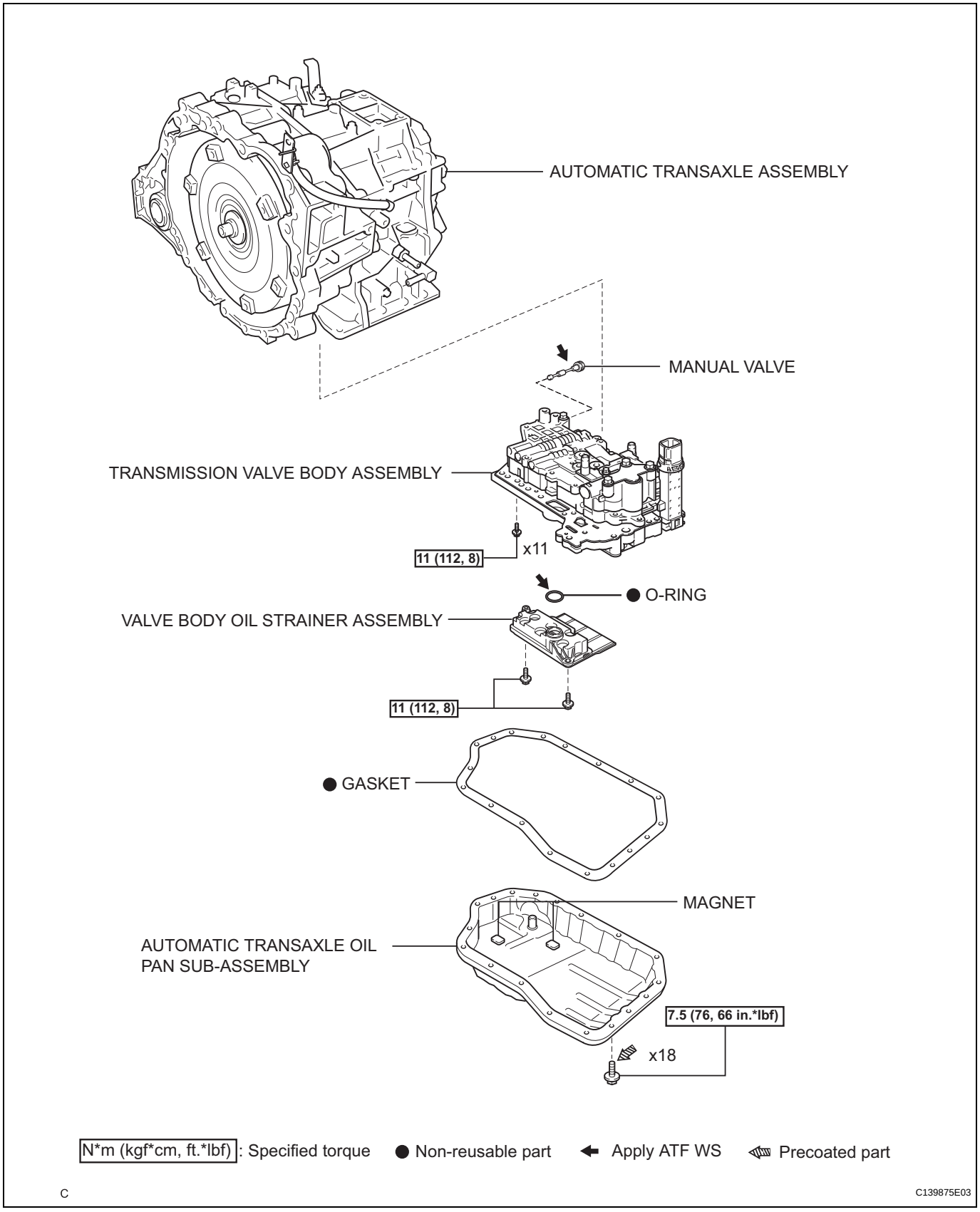

AX

REMOVAL

1. REMOVE AUTOMATIC TRANSAXLE ASSEMBLY

HINT:

(See page AX-215)

2. REMOVE AUTOMATIC TRANSAXLE OIL PAN SUB-ASSEMBLY

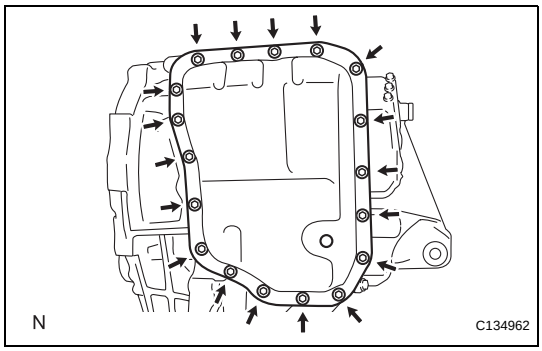

(a) Remove the 18 bolts and oil pan from the transaxle.

NOTICE:

Some fluid will remain in the oil pan. Remove all the pan bolts, and carefully remove the oil pan assembly.

(b) Remove the gasket from the oil pan.

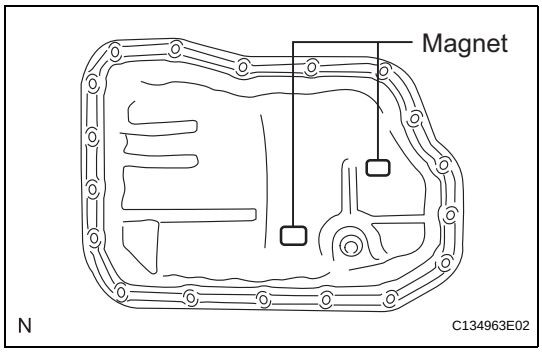

(c) Remove the 2 magnets from the oil pan.

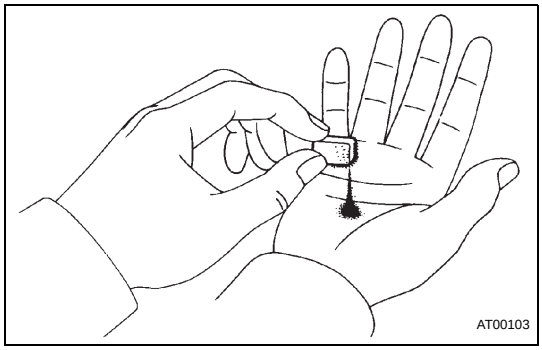

(d) Examine particles in the oil pan.

(1) Collect any steel chips with the removed magnets. Look carefully at the chips and particles in the oil pan and on the magnets to see the type of wear which might be found in the transaxle.

Result:

Steel (magnetic):

Bearing, gear and plate wear

Brass (non-magnetic):

Bearing wear

3. REMOVE VALVE BODY OIL STRAINER ASSEMBLY

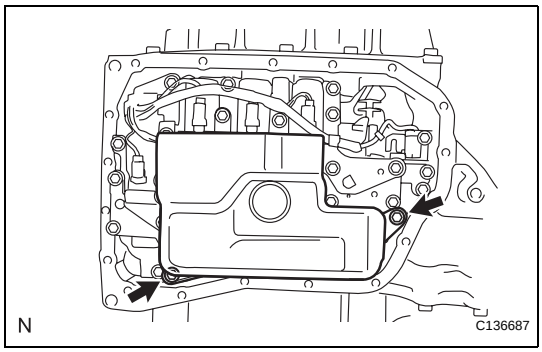

(a) Remove the 2 bolts and oil strainer from the valve body.

AX

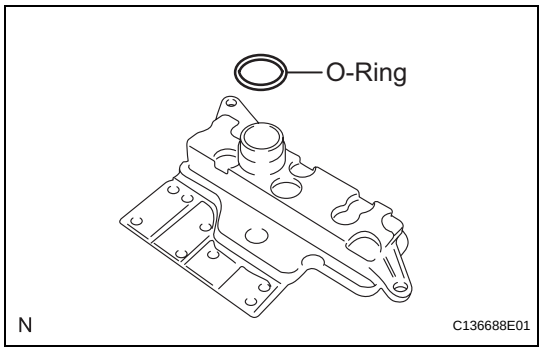

(b) Remove the O-ring from the oil strainer.

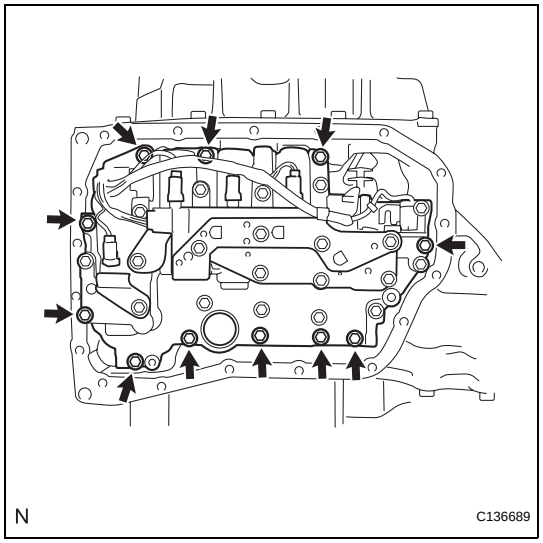

4. REMOVE TRANSMISSION VALVE BODY ASSEMBLY

(a) Remove the 11 bolts and valve body from the transaxle.

NOTICE:

When removing the transmission valve body assembly, be careful not to allow the transmission revolution sensor and the transaxle case to interfere with each other.

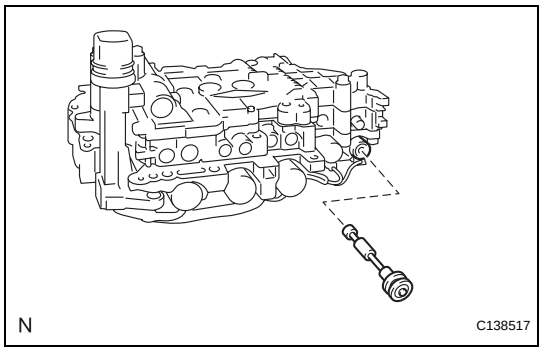

5. REMOVE MANUAL VALVE

(a) Remove the manual valve from the valve body.

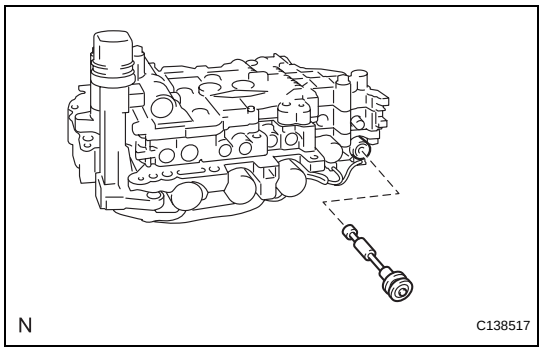

INSTALLATION

1. INSTALL MANUAL VALVE

(a) Coat the manual valve with ATF and install it to the valve body.

2. INSTALL TRANSMISSION VALVE BODY ASSEMBLY

(a) Coat the O-ring of the transmission wire with ATF.

AX

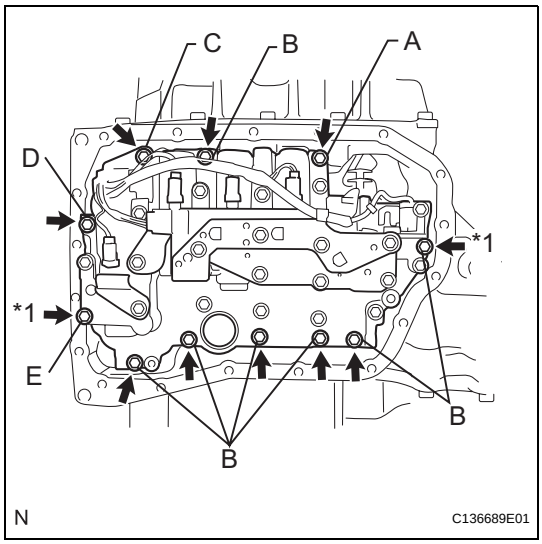

(b) Confirm that the manual valve lever is positioned as shown in the illustration and install the valve body assembly to the transaxle case with the 11 bolts.
Torque: 11 N*m (112 kgf*cm, 8 ft.*lbf)
Bolt length:
Bolt A:
25 mm (0.98 in.)
Bolt B:
30 mm (1.18 in.)
Bolt C:
35 mm (1.38 in.)
Bolt D:
45 mm (1.77 in.)
Bolt E:
55 mm (2.17 in.)
NOTICE:
- **When installing the transmission valve body assembly, be careful not to allow the transmission revolution sensor and transaxle case to interfere with each other.**
- **Be sure to insert the pin of the manual valve lever into the groove on the end of the manual valve.**
- **First, temporarily tighten the bolts marked by (*1) in the illustration because they are positioning bolts.**

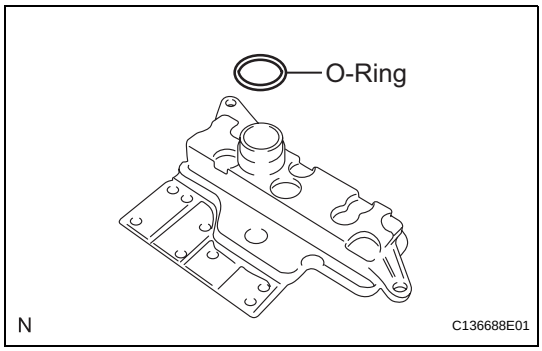

3. INSTALL VALVE BODY OIL STRAINER ASSEMBLY

(a) Coat a new O-ring with ATF and install it to the oil strainer.
NOTICE:
Ensure that the O-ring is not twisted or pinched.

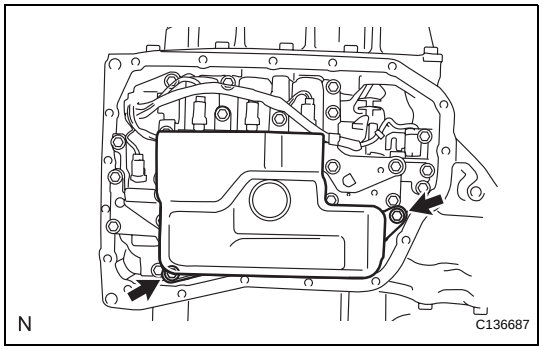

(b) Install the oil strainer to the valve body with the 2 bolts.
Torque: 11 N*m (112 kgf*cm, 8 ft.*lbf)

AX

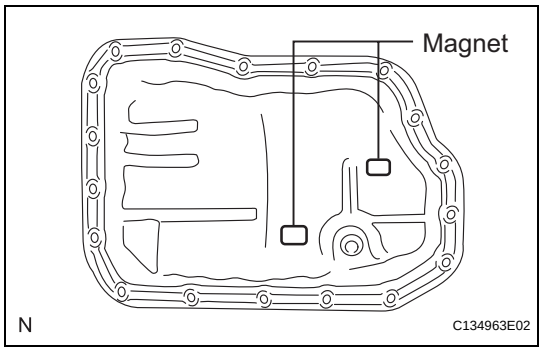

4. INSTALL AUTOMATIC TRANSAXLE OIL PAN SUB-ASSEMBLY

(a) Install the 2 magnets to the oil pan.

(b) Install a new gasket to the oil pan.

(c) Apply adhesive to the 18 bolts.

Adhesive:

Toyota Genuine Adhesive 1344, Three Bond 1344 or equivalent.

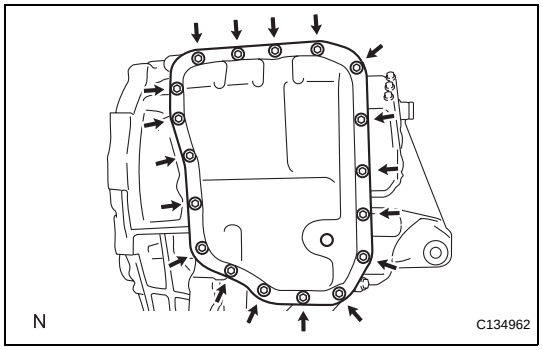

(d) Install the oil pan to the automatic transaxle with the 18 bolts.

Torque: 7.5 N*m (76 kgf*cm, 66 in.*lbf)

NOTICE:

- **In order to ensure proper sealing of the transmission oil pan bolts, apply sealant to the bolts and install them within 10 minutes of sealant application.**
- **Completely remove any oil or grease from the contact surface of the transaxle case and oil pan sub-assembly with the gasket before installation.**

5. INSTALL AUTOMATIC TRANSAXLE ASSEMBLY

HINT:

(See page AX-222)

PROBLEM SYMPTOMS TABLE

HINT:
If a normal code is displayed during the diagnostic trouble code check although the problem or symptom still occurs, check the electrical circuits for each symptom in the order given in the charts on the following pages. Proceed to the page given in the chart and perform troubleshooting.
The Matrix Chart is divided into 2 chapters.
Chapter 1:
Refer to the table below when the trouble cause is considered to be electrical.
If the instruction "Proceed to next circuit inspection shown on matrix chart" is given in the flow chart of each circuit, proceed to the circuit with the next highest number in the table to continue the check.
If the trouble still occurs even though there are no abnormalities in any of the other circuits, check and replace the TCM.
Chapter 2:
Chapter 2 covers on-and off-vehicle repair of the transaxle.
Contents specified in the table below may not match while fail-safe control is operating.

1. Chapter 1: Electronic Circuit Matrix Chart

Symptom	Suspected Area	See page
No up-shift (1st to 2nd)	1. Shift solenoid valve (SL3) circuit *1	AX-117
	2. TCM	IN-34
No up-shift (2nd to 3rd)	1. Shift solenoid valve (SL4) circuit *1	AX-160
	2. TCM	IN-34
No up-shift (3rd to 4th)	1. Shift solenoid valve (SL2) circuit *1	AX-104
	2. Engine coolant temp. sensor circuit *1	ES-141
	3. TCM	IN-34
No up-shift (4th to 5th)	1. Shift solenoid valve (SL1) circuit *1	AX-96
	2. Shift solenoid valve (SL4) circuit *1	AX-160
	3. Engine coolant temp. sensor circuit	ES-141
	4. TCM	IN-34
No up-shift (5th to 6th)	1. Engine coolant temp. sensor circuit *1	ES-141
	2. Shift solenoid valve (SL3) circuit *1	AX-117
	3. Shift solenoid valve (SL4) circuit *1	AX-160
	4. TCM	IN-34
No down-shift (6th to 5th)	1. Shift solenoid valve (SL4) circuit *1	AX-160
	2. TCM	IN-34
No down-shift (5th to 4th)	1. Shift solenoid valve (SL1) circuit *1	AX-96
	2. TCM	IN-34
No down-shift (4th to 3rd)	1. Shift solenoid valve (SL2) circuit *1	AX-104
	2. Shift solenoid valve (SL4) circuit *1	AX-160
	3. TCM	IN-34
No down-shift (3rd to 2nd)	1. Shift solenoid valve (SL4) circuit *1	AX-160
	2. Shift solenoid valve (SL3) circuit *1	AX-117
	3. TCM	IN-34
No down-shift (2nd to 1st)	1. Shift solenoid valve (SL3) circuit *1	AX-112
	2. TCM	IN-34

Symptom	Suspected Area	See page
No lock-up	1. Shift solenoid valve (SLU) circuit *1	AX-148
	2. Shift solenoid valve (SL) circuit	AX-151
	3. Engine coolant temp. sensor circuit *1	ES-141
	4. Stop light switch circuit *1	AX-83
	5. Speed sensor NT circuit *1	AX-78
	6. TCM	IN-34
No lock-up off	1. TCM	IN-34
Shift point too high or too low	1. Shift solenoid valve (SLT) circuit *1	AX-140
	2. Speed sensor NT circuit *1	AX-78
	3. Speed sensor NC circuit *1	AX-107
	4. Accelerator pedal position sensor circuit *1	ES-337
	5. ATF temperature sensor circuit *1	AX-67
	6. TCM	IN-34
Up-shift from 3rd to 4th while engine is cold	1. Engine coolant temp. sensor circuit *1	ES-141
	2. TCM	IN-34
Up-shift from 4th to 5th while engine is cold	1. Engine coolant temp. sensor circuit *1	ES-141
	2. TCM	IN-34
No gear change by shifting into "+" or "-" while shifting the lever	1. Transmission control switch circuit	AX-166
	2. TCM	IN-34
Harsh engagement (N to D)	1. Shift solenoid valve (SL1) circuit *1	AX-96
	2. TCM	IN-34
Harsh engagement (Lock-up)	1. Speed sensor NT circuit *1	AX-78
	2. Speed sensor NC circuit *1	AX-107
	3. Shift solenoid valve (SLU) circuit *1	AX-148
	4. TCM	IN-34
Harsh engagement (Any driving position)	1. Accelerator pedal position sensor circuit *1	ES-337
	2. Shift solenoid valve (SLT) circuit *1	AX-140
	3. Speed sensor NC circuit	AX-107
	4. Speed sensor NT circuit *1	AX-78
	5. TCM	IN-34
Poor acceleration	1. Shift solenoid valve (SLT) circuit *1	AX-140
	2. TCM	IN-34
No engine brake	1. TCM	IN-34
No kick-down	1. TCM	IN-34
Engine stalls when starting off or stopping	1. TCM	IN-34
Malfunction in shifting	1. Park/neutral position switch circuit *1	AX-170
	2. Transmission control switch circuit	AX-166
	3. TCM	IN-34
Slip or shudder (5th to 6th and 6th to 5th)	1. Shift solenoid valve (SLT) circuit *1	AX-140
Initial acceleration or subsequent acceleration is improper. Vehicle is stuck in a gear (1st to 6th).	1. Shift solenoid valve (SL1) circuit	AX-96
	2. Shift solenoid valve (SLT) circuit	AX-140
	3. TCM	IN-34
Acceleration is improper when the gear is 4th or higher.	1. Shift solenoid valve (SL2) circuit	AX-104
	2. Shift solenoid valve (SLT) circuit	AX-140
	3. TCM	IN-34
Initial acceleration or subsequent acceleration is improper. Vehicle does not shift down (from 4th to 3rd). Vehicle is stuck in a gear (1st to 6th).	1. Shift solenoid valve (SL2) circuit	AX-104
	2. TCM	IN-34
Acceleration is improper when the gear is 6th.	1. Shift solenoid valve (SL3) circuit	AX-117
	2. TCM	IN-34

Symptom	Suspected Area	See page
Acceleration is improper when the gear is 3rd or 5th.	1. Shift solenoid valve (SL4) circuit *1	AX-160
	2. Shift solenoid valve (SLT) circuit *1	AX-140
	3. TCM	IN-34
Initial acceleration or subsequent acceleration is improper. Vehicle does not shift down (from 3rd to 2nd). No up-shift (5th to 6th).	1. Shift solenoid valve (SL4) circuit *1	AX-160
	2. TCM	IN-34

HINT:
*1: When the circuit is defective, a DTC may be output.

2. Chapter 2: On-Vehicle Repair and Off-Vehicle Repair

Symptom	Suspected Area	See page
Vehicle does not move in any forward and reverse positions.	1. Valve body assembly	AX-192
	2. Torque converter clutch	AX-248
Vehicle does not move in R position.	1. Valve body assembly	AX-192
	2. Brake No. 2 (B2)	AX-283
	3. Brake No. 3 (B3)	AX-283
	4. Shift solenoid valve (SL4)*1	AX-154
No up-shift (1st to 2nd)	1. Valve body assembly	AX-192
	2. Brake No. 1 (B1)	AX-260
	3. Shift solenoid valve (SL3)*1	AX-112
No up-shift (2nd to 3rd)	1. Valve body assembly	AX-192
	2. Brake No. 3 (B3)	AX-283
	3. Shift solenoid valve (SL4)*1	AX-154
No up-shift (3rd to 4th)	1. Valve body assembly	AX-192
	2. Clutch No. 2 (C2)	AX-283
	3. Shift solenoid valve (SL2)*1	AX-99
No up-shift (4th to 5th	1. Valve body assembly	AX-192
	2. Brake No. 3 (B3)	AX-283
	3. Shift solenoid valve (SL4)*1	AX-154
	4. Shift solenoid valve (SL1)*1	AX-91
No up-shift (5th to 6th)	1.Valve body assembly	AX-192
	2. Brake No. 1 (B1)	AX-283
	3. Shift solenoid valve (SL3)*1	AX-112
	4. Shift solenoid valve (SL4)*1	AX-154
No down-shift (6th to 5th)	1. Valve body assembly	AX-192
	2. Brake No. 3 (B3)	AX-283
	3. Shift solenoid valve (SL4)*1	AX-154
No down-shift (5th to 4th)	1. Valve body assembly	AX-192
	2. Shift solenoid valve (SL1)*1	AX-283
	3. Clutch No. 1 (C1)	AX-91
No down-shift (4th to 3rd)	1. Valve body assembly	AX-192
	2. Brake No. 3 (B3)	AX-283
	3. Shift solenoid valve (SL4)*1	AX-154
	4. Shift solenoid valve (SL2)*1	AX-99
No down-shift (3rd to 2nd)	1. Valve body assembly	AX-192
	2. Brake No. 1 (B1)	AX-283
	3. Shift solenoid valve (SL3)*1	AX-112
	4. Shift solenoid valve (SL4)*1	AX-154
No down-shift (2nd to 1st)	1. Valve body assembly	AX-192
	2. Shift solenoid valve (SL3)*1	AX-112

Symptom	Suspected Area	See page
No lock-up, or no lock-up off	1. Valve body assembly	AX-192
	2. Torque converter clutch	AX-248
Harsh engagement (N to D)	1. Valve body assembly	AX-192
	2. C1 accumulator	AX-283
	3. One-way clutch No. 1 (F1)	AX-283
	4. Clutch No. 1 (C1)	AX-283
	5. Shift solenoid valve (SL1)*1	AX-91
Harsh engagement (Lock-up)	1. Valve body assembly	AX-192
	2. Torque converter clutch	AX-248
	3. Shift solenoid valve (SLU)*1	AX-143
Harsh engagement (N to R)	1. Valve body assembly	AX-192
	2. Brake No. 2 (B2)	AX-283
	3. Brake No. 3 (B3)	AX-283
	4. Shift solenoid valve (SL4)*1	AX-154
Harsh engagement (1 to 2 to 3 to 4 to 5 to 6)	1. Valve body assembly	AX-192
	2. Shift solenoid valve (SLT)*1	AX-133
Harsh engagement (1st to 2nd)	1. Valve body assembly	AX-192
	2. B1 accumulator	AX-283
	3. Brake No. 1 (B1)	AX-283
	4. Shift solenoid valve (SL3)*1	AX-112
Harsh engagement (2nd to 3rd)	1. Valve body assembly	AX-192
	2. B3 accumulator	AX-283
	3. Brake No. 3 (B3)	AX-283
	4. Shift solenoid valve (SL4)*1	AX-154
Harsh engagement (3rd to 4th)	1. Valve body assembly	AX-192
	2. C2 accumulator	AX-283
	3. Clutch No. 2 (C2)	AX-283
	4. Shift solenoid valve (SL2)*1	AX-99
Harsh engagement (4th to 5th)	1. Valve body assembly	AX-192
	2. B3 accumulator	AX-283
	3. Brake No. 3 (B3)	AX-283
	4. Shift solenoid valve (SL4)*1	AX-154
Harsh engagement (5th to 6th)	1. Valve body assembly	AX-192
	2. B1 accumulator	AX-283
	3. Brake No. 1 (B1)	AX-283
	4. Shift solenoid valve (SL3)*1	AX-112
Harsh engagement (6th to 5th)	1. Valve body assembly	AX-192
	2. B3 accumulator	AX-283
	3. Brake No. 3 (B3)	AX-283
	4. Shift solenoid valve (SL4)*1	AX-154
Slip or shudder (Forward and reverse: After warm-up)	1. Valve body assembly	AX-192
	2. Oil strainer	AX-192
	3. Brake No. 1 (B1)	AX-283
	4. Brake No. 2 (B2)	AX-283
	5. Brake No. 3 (B3)	AX-283
	6. One-way clutch No. 1 (F1)	AX-283
	7. Clutch No. 1 (C1)	AX-283
	8. Clutch No. 2 (C2)	AX-283
Slip or shudder (Particular position: just after engine starts)	1. Torque converter clutch	AX-248

Symptom	Suspected Area	See page
Slip or shudder (R position)	1. Brake No. 2 (B2)	AX-283
	2. Brake No. 3 (B3)	AX-283
Slip or shudder (1 position)	1. One-way clutch No. 1 (F1)	AX-283
	2. Clutch No. 1 (C1)	AX-283
Slip or shudder (2 position)	1. Brake No. 1 (B1)	AX-283
	2. Clutch No. 1 (C1)	AX-283
Slip or shudder (3 position)	1. Brake No. 3 (B3)	AX-283
	2. Clutch No. 1 (C1)	AX-283
Slip or shudder (4 position)	1. Clutch No. 1 (C1)	AX-283
	2. Clutch No. 2 (C2)	AX-283
Slip or shudder (5 position)	1. Brake No. 3 (B3)	AX-283
	2. Clutch No. 2 (C2)	AX-283
Slip or shudder (6 position)	1. Brake No. 3 (B3)	AX-283
	2. Clutch No. 2 (C2)	AX-283
No engine braking (1st position)	1. Valve body assembly	AX-192
	2. Brake No. 2 (B2)	AX-283
No engine braking (2nd position)	1. Valve body assembly	AX-192
	2. Brake No. 1 (B1)	AX-215
No engine braking (3rd position)	1. Valve body assembly	AX-192
	2. Brake No. 3 (B3)	AX-283
No engine braking (4th position)	1. Valve body assembly	AX-192
	2. Clutch No. 2 (C2)	AX-283
No kick-down	1. Valve body assembly	AX-192
Shift point too hight or too low	1. Valve body assembly	AX-192
Poor acceleration (All positions)	1. Valve body assembly	AX-192
	2. Torque converter clutch	AX-283
Poor acceleration (6th)	1. Brake No. 1 (B1)	AX-283
	2. Clutch No. 2 (C2)	AX-283
Engine stalls when starting off or stopping	1. Valve body assembly	AX-192
	2. Torque converter clutch	AX-248

HINT:
*1: When the circuit is defective, a DTC may be output.

TERMINALS OF ECU

1. TCM

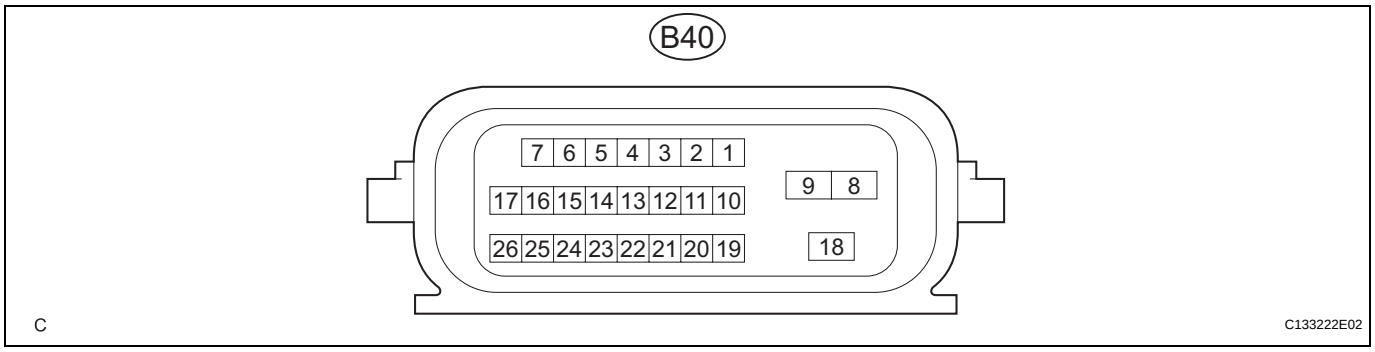

HINT:
Each TCM terminal's standard voltage is shown in the table below.
In the table, first follow the information under "Condition".
Look under "Symbols (Terminals No.)" for the terminals to be inspected. The standard voltage between the terminals is shown under "Specified Condition".
Use the illustration above as a reference for the TCM terminals.

Symbols (Terminals No.)	Wiring Color	Terminal Description	Condition	Specified Condition
R (B40-15) - E1 (B40-8)	W - B-W	R shift position switch signal	Engine switch on (IG) and shift lever in R position	10 to 14 V
			Engine switch on (IG) and shift lever in any position except R position	Below 1 V
D (B40-16) - E1 (B40-8)	R - B-W	D shift position switch signal	Engine switch on (IG) and shift lever in D or 3 position	10 to 14 V
			Engine switch on (IG) and shift lever in any position except D and 3 position	Below 1 V
STP (B40-12) - E1 (B40-8)	B - B-W	Stop light switch signal	Brake pedal is depressed	7.5 to 14 V
			Brake pedal is released	Below 1.5 V
NSW (B40-11) - E1 (B40-8)	L - B-W	Park/neutral switch signal	Engine switch on (IG) and shift lever in P or N position	Below 1 V
			Engine switch on (IG) and shift lever in any position except P or N position	Below 3 V
STA (B40-10) - E1 (B40-8)	Y - B-W	Starter signal	Cranking (shift lever position in P or N position, engine switch START)	10 to 14 V
			Engine switch on (IG) and shift lever in any position except P or N position	Below 2 V
SPD1 (B40-3) - E1 (B40-8)	BR - B-W	Speed signal from combination meter	Vehicle speed 12 mph (20 km/h)	Pulse generation (See waveform 1)
BATT (B40-1) - E1 (B40-8)	W-L - B-W	Battery (for measuring battery voltage and for TCM memory)	Always	9 to 14 V
IG2 (B40-13) - E1 (B40-8)	L-B - B-W	Engine switch	Engine switch on (IG)	9 to 14 V
+B (B40-18) - E1 (B40-8)	W - B-W	Power source of TCM	Engine switch on (IG)	9 to 14 V
CAN+ (B40-6) - E1 (B40-8)	B - B-W	CAN communication line	Engine switch on (IG)	Pulse generation (See waveform 2)

Symbols (Terminals No.)	Wiring Color	Terminal Description	Condition	Specified Condition
CAN- (B40-7) - E1 (B40-8)	Y - B-W	CAN communication line	Engine switch on (IG)	Pulse generation (See waveform 3)

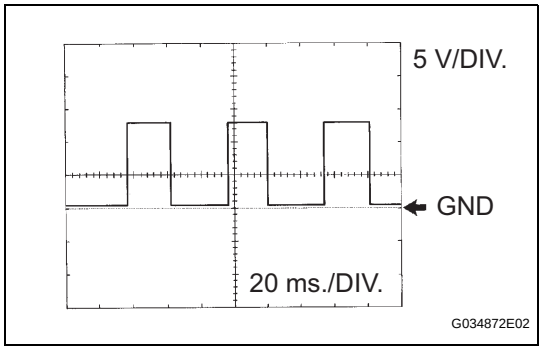

(a) Waveform 1
Reference:

Terminal	SPD1 - E1
Tool setting	2 V/DIV., 20 ms./DIV.
Vehicle condition	Vehicle speed 12 mph (20 km/h)

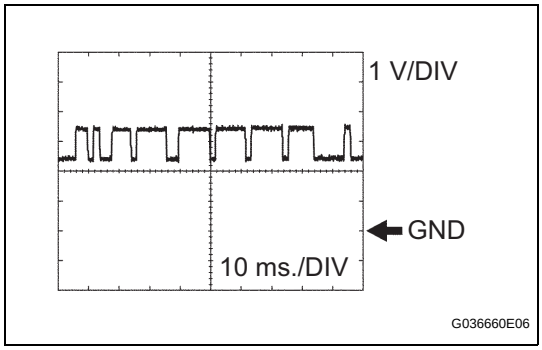

(b) Waveform 2
Reference:

Terminal	CAN+ - E1
Tool setting	1 V/DIV., 10 ms./DIV.
Vehicle condition	Engine is stopped, engine switch ON (IG)

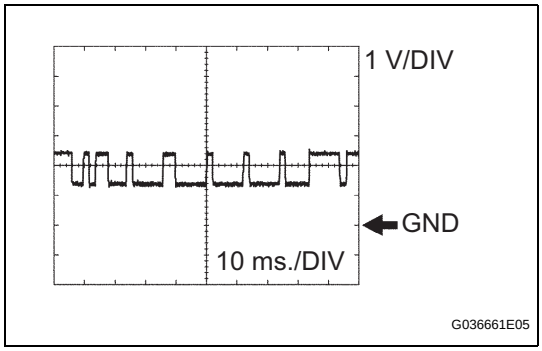

(c) Waveform 3
Reference:

Terminal	CAN- - E1
Tool setting	1 V/DIV., 10 ms./DIV.
Vehicle condition	Engine is stopped, engine switch ON (IG)

2. ECM

HINT:
Each ECM terminal's standard voltage is shown in the table below.
In the table, first follow the information under "Condition".
Look under "Symbols (Terminals No.)" for the terminals to be inspected. The standard voltage between the terminals is shown under "Specified Condition".
Use the illustration below as a reference for the ECM terminals.

AX

ECM:

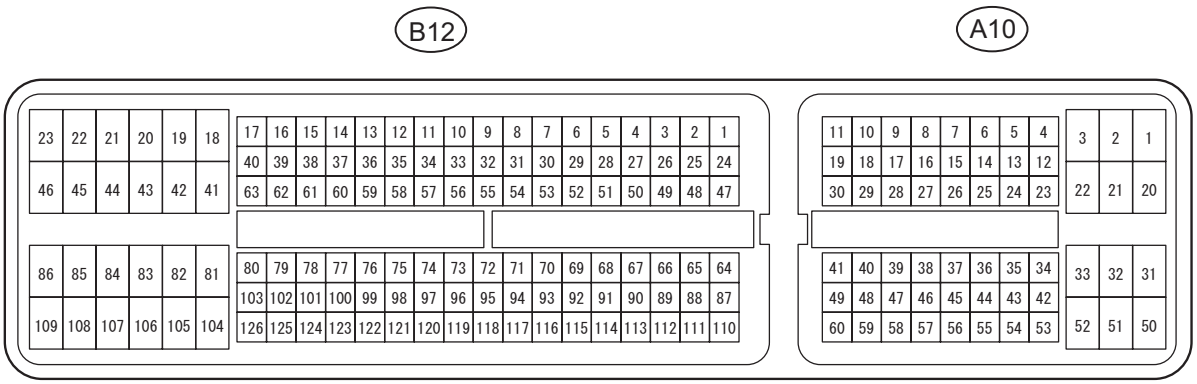

A107881E56

Symbols (Terminals No.)	Wiring Color	Terminal Description	Condition	Specified Condition
S (A10-25) - E1 (B12-81)	Y - W-B	S shift position switch signal	Engine switch on (IG) and shift lever in S position	10 to 14 V
			Engine switch on (IG) and shift lever in any position except S position	Below 1 V
SFTU (A10-16) - E1 (B12-81)	R - W-B	Up shift switch signal	Engine switch on (IG) and shift lever in S position	10 to 14 V
			Engine switch on (IG) and shift lever in "+" position (Up shift)	Below 1 V
SFTD (A10-51) - E1 (B12-81)	L - W-B	Down shift switch signal	Engine switch on (IG) and shift lever in S position	10 to 14 V
			Engine switch on (IG) and shift lever in "-" position (Down shift)	Below 1 V

ADJUSTMENT

1. INSPECT SHIFT LEVER POSITION

(a) When shifting from the P to the R position with the engine switch on (IG) and the brake pedal depressed, make sure that the shift lever moves smoothly and moves correctly into position.

(b) Start the engine and make sure that the vehicle moves forward when shifting from the N to the D position and moves rearward when shifting to the R position.
If operation cannot be done as specified, inspect the park/neutral position switch assembly and check the shift lever assembly installation condition.

2. ADJUST SHIFT LEVER POSITION

(a) Move the shift lever to the N position.

(b) Remove the nut and transmission control cable from the control shaft lever.

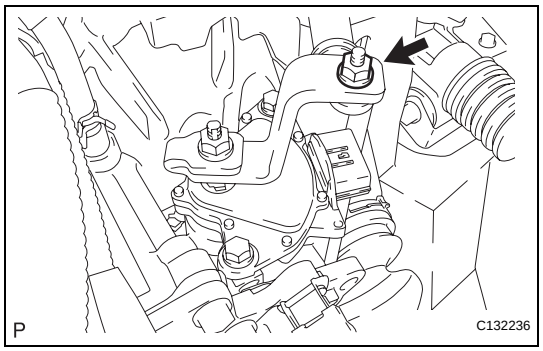

(c) Align the protrusions of the park/neutral position switch.

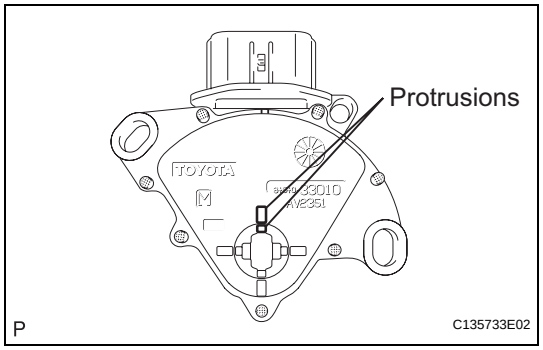

AX

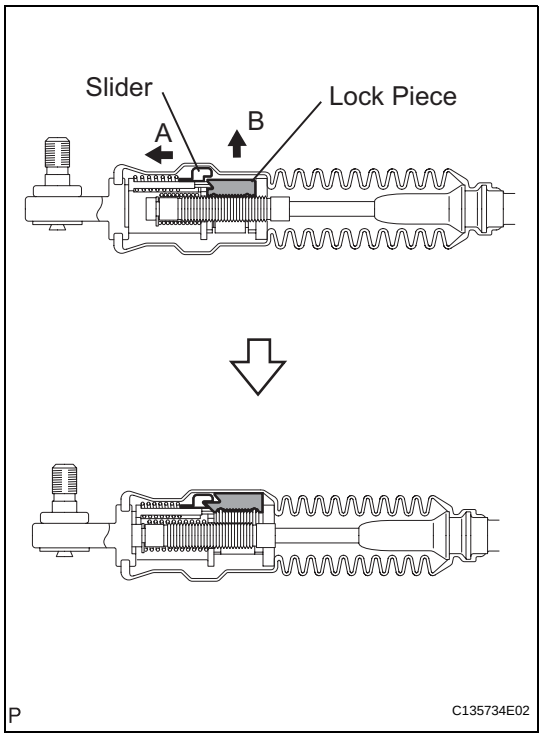

(d) Move the slider in the direction indicated by arrow A and pull up the lock piece in the direction indicated by arrow B.
NOTICE:
Do not damage the boot.

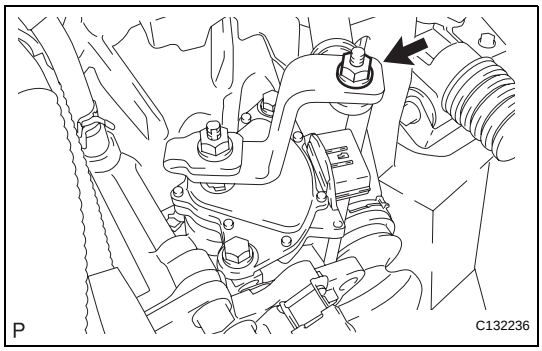

(e) Install the control cable to the control shaft with the nut.
Torque: 13 N*m (130 kgf*cm, 9 ft.*lbf)
NOTICE:
- **If the control cable end is excessively pushed up, the shift lever cannot be adjusted.**
- **When tightening the nu t, confirm that the control cable is properly stretched.**

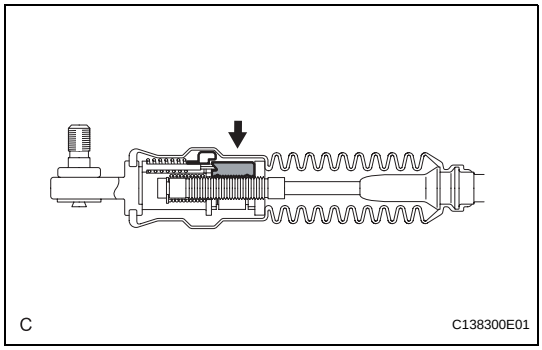

(f) Push in the lock piece.
NOTICE:
Firmly push in the lock piece until the slider lock is engaged.

(g) Start the engine and make sure that the vehicle moves forward when moving the lever from the N to the D position and moves rearward when moving it to the R position. If it becomes hard to move the shift lever, readjust the shift lever position.

DIAGNOSIS SYSTEM

1. DESCRIPTION

(a) When troubleshooting On-Board Diagnostic (OBD II) vehicles, the vehicle must be connected to the OBD II scan tool (complying with SAE J1987). Various data output from the vehicle's TCM can be read then.

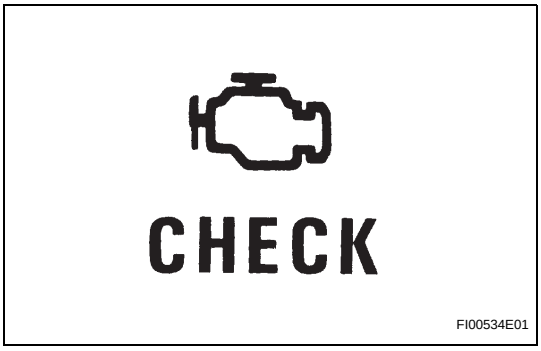

(b) OBD II regulations require that the vehicle's on-board computer illuminate the Malfunction Indicator Lamp (MIL) on the instrument panel when the computer detects a malfunction in:
(1) The emission control system/components
(2) The power train control components (which affect vehicle emissions)
(3) The computer
In addition, the applicable Diagnostic Trouble Codes (DTCs) prescribed by SAE J2012 are recorded in the TCM memory.
If the malfunction does not reoccur in 3 consecutive trips, the MIL turns off automatically but the DTCs remain recorded in the TCM memory.

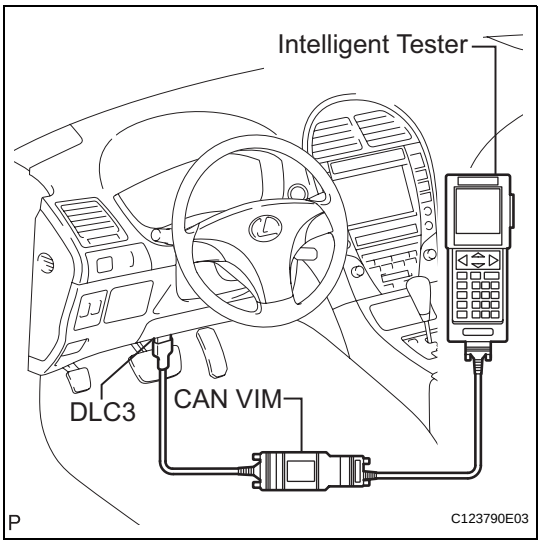

(c) To check DTCs, connect the intelligent tester to the Data Link Connector 3 (DLC3) of the vehicle. The intelligent tester displays DTCs, the freeze frame data and a variety of the engine data.
The DTCs and freeze frame data can be erased with the intelligent tester (See page AX-37).

2. NORMAL MODE AND CHECK MODE

(a) The diagnosis system operates in "normal mode" during normal vehicle use. In normal mode, "2 trip detection logic" is used to ensure accurate detection of malfunctions. "Check mode" is also available to technicians as an option. In check mode, "1 trip detection logic" is used for simulating malfunction symptoms and increasing the system's ability to detect malfunctions, including intermittent malfunctions.

3. 2 TRIP DETECTION LOGIC

(a) When a malfunction is first detected, the malfunction is temporarily stored in the TCM memory (1st trip). If the engine switch is turned off and then on (IG) again, and the same malfunction is detected again, the MIL will illuminate.

4. FREEZE FRAME DATA

(a) The TCM records vehicle and driving condition information as freeze frame data the moment a DTC is stored. When troubleshooting, freeze frame data can be helpful in determining whether the vehicle was running or stopped, whether the engine was warmed up or not, whether the air/fuel ratio was lean or rich, as well as other data recorded at the time of a malfunction.

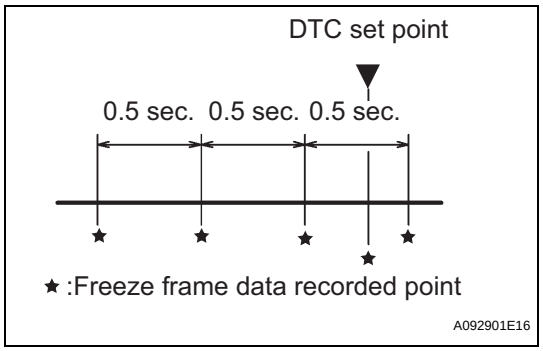

(b) The intelligent tester displays freeze frame data recorded at five different points: 1) 3 points before the DTC is set, 2) once when the DTC is set, and 3) once after the DTC is set. The data can be used to simulate the vehicle's condition around the time of the malfunction. The data may be helpful in determining the cause of a malfunction. It may also be helpful in determining whether a DTC is being caused by a temporary malfunction.

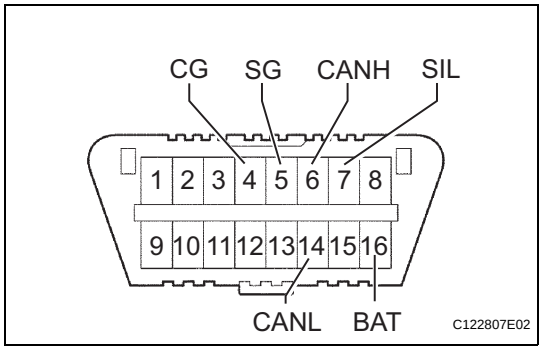

5. DLC3 (Data Link Connector 3)

(a) The vehicle's TCM uses the ISO 15765-4 for communication protocol. The terminal arrangement of the DLC3 complies with SAE J1962 and matches the ISO 15765-4 format.
HINT:
Connect the cable of the intelligent tester to the DLC3, turn the engine switch on (IG) and attempt to use the intelligent tester. If the screen displays a communication error message, a problem exists in the vehicle side or the tester side.
If the communication is normal when the tester is connected to another vehicle, inspect the DLC3 on the original vehicle.
If the communication is still impossible when the tester is connected to another vehicle, the problem is probably in the tester itself. Consult the Service Department listed in the tester's instruction manual.

Symbols (Terminal No.)	Terminal Description	Condition	Specified Condition
SIL (7) - SG (5)	Bus "+" line	During transmission	Pulse generation
CG (4) - Body ground	Chassis ground	Always	Below 1 Ω
SG (5) - Body ground	Signal ground	Always	Below 1 Ω
BAT (16) - Body ground	Battery positive	Always	11 to 14 V
CANH (6) - CANL (14)	CAN bus line	Engine switch off*	54 to 69 Ω
CANH (6) - CG (4)	HIGH-level CAN bus line	Engine switch off*	200 kΩ or higher
CANL (14) - CG (4)	LOW-level CAN bus line	Engine switch off*	200 kΩ or higher
CANH (6) - BAT (16)	HIGH-level CAN bus line	Engine switch off*	6 kΩ or higher
CANL (14) - BAT (16)	LOW-level CAN bus line	Engine switch off*	6 kΩ or higher

NOTICE:
***: Before measuring the resistance, leave the vehicle as is for at least 1 minute and do not operate the engine switch, any other switches or the doors.**

6. CHECK BATTERY VOLTAGE

Battery voltage:
11 to 14 V

(a) If the voltage is below 11 V, replace or recharge the battery before proceeding.

INSTALLATION

1. INSPECT TORQUE CONVERTER CLUTCH ASSEMBLY

HINT:

(See page AX-248)

2. INSTALL TORQUE CONVERTER CLUTCH ASSEMBLY

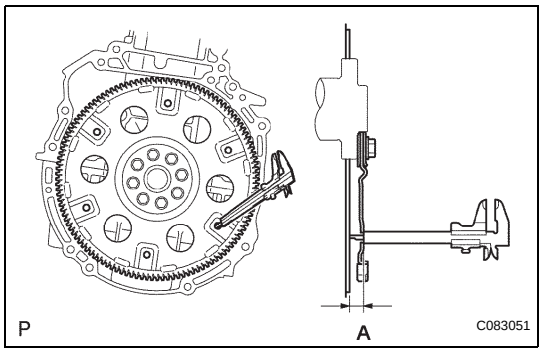

(a) Using vernier calipers and a straightedge, measure dimension "A" between the transaxle fitting part of the engine and the converter fitting part of the drive plate (*1).

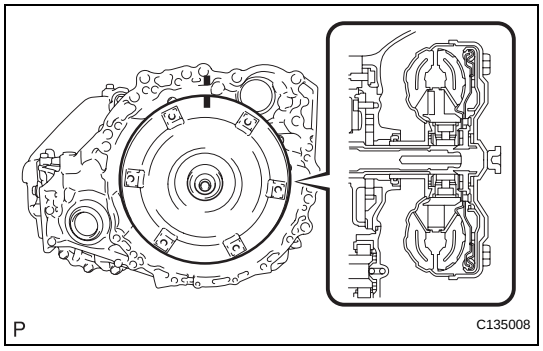

(b) Aligning the matchmarks on the transaxle case and torque converter clutch assembly, engage the splines of the input shaft and turbine runner.

NOTICE:

Do not push on the torque converter when aligning the matchmarks.

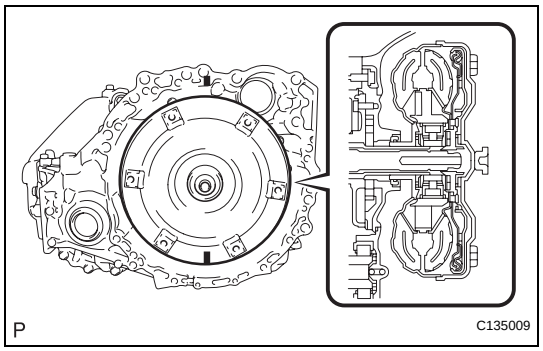

(c) Engage the splines of the stator shaft and the stator while turning the torque converter clutch assembly.

HINT:

Turn the torque converter clutch assembly approximately 180°.

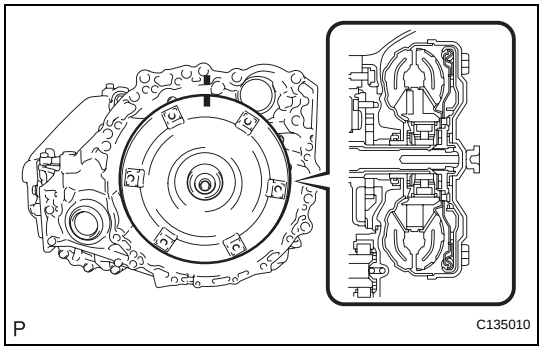

(d) Turn the torque converter clutch assembly and align the matchmarks on the torque converter clutch assembly and transaxle case to engage the key of the oil pump drive gear into the slot on the torque converter clutch assembly.

AX

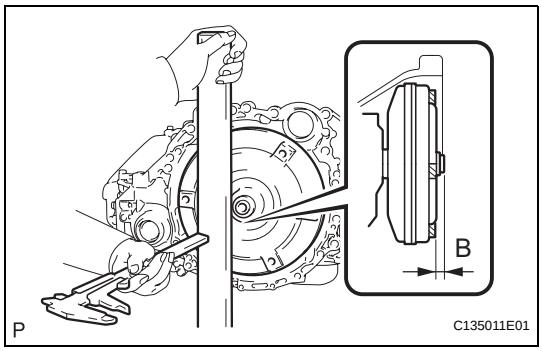

(e) Using vernier calipers and a straightedge, measure dimension "B" shown in the illustration and check that "B" is greater than "A" (measured in step (*1)).
Standard:
A + 1 mm (0.04 in.) or more
NOTICE:
Make sure to deduct the thickness of the straightedge.

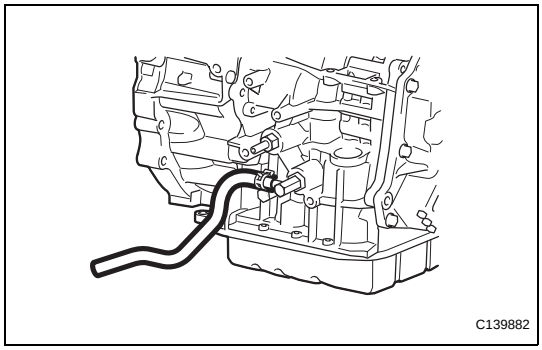

3. INSTALL NO. 1 OIL COOLER INLET HOSE
(a) Install the No. 1 oil cooler inlet hose.

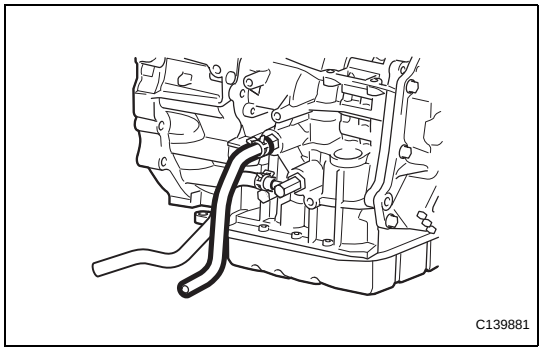

4. INSTALL NO. 1 OIL COOLER OUTLET HOSE
(a) Install the No. 1 oil cooler outlet hose.

AX

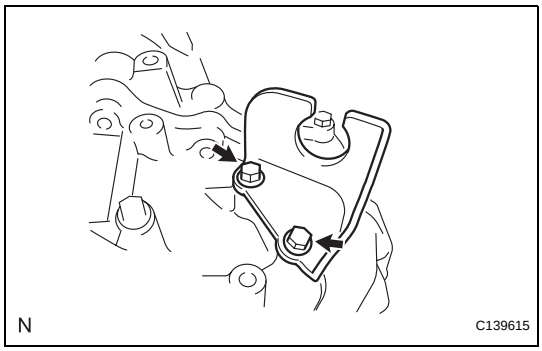

5. INSTALL NO. 1 TRANSMISSION CONTROL CABLE BRACKET
(a) Install the No. 1 transmission control cable bracket with the 2 bolts.
Torque: 12 N*m (122 kgf*cm, 9 ft.*lbf)

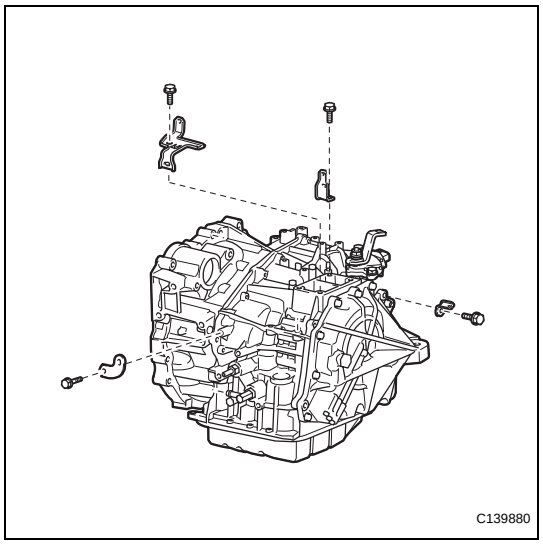

6. INSTALL WIRE HARNESS CLAMP BRACKET

(a) Install the 4 clamp brackets and 4 bolts.
Torque: 8.4 N*m (86 kgf*cm, 74 in.*lbf)

7. INSTALL SPEEDOMETER DRIVEN HOLE COVER SUB-ASSEMBLY

(a) Coat a new O-ring with ATF, and install it to the hole cover.

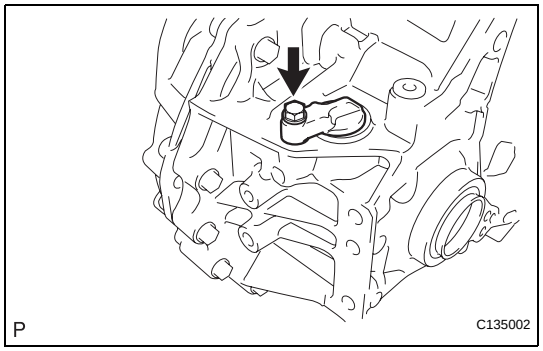

(b) Install the hole cover to the transaxle case with the bolt.
Torque: 5.5 N*m (56 kgf*cm, 49 in.*lbf)

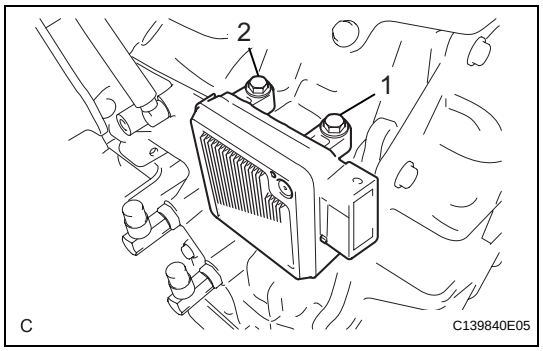

8. INSTALL TCM

(a) Install the TCM to the transaxle.
(b) Install and tighten the 2 bolts in the order shown in the illustration.
Torque: 11 N*m (115 kgf*cm, 8 ft.*lbf)

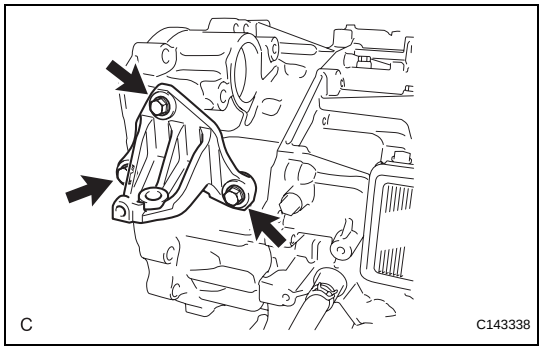

9. INSTALL ENGINE MOUNTING FRONT BRACKET

(a) Install the engine mounting front bracket to the automatic transaxle with the 3 bolts.
Torque: 64 N*m (653 kgf*cm, 47 ft.*lbf)

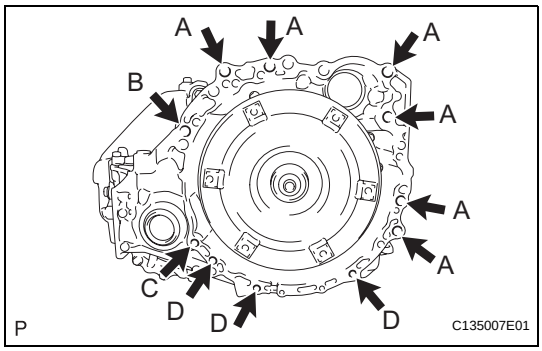

10. INSTALL AUTOMATIC TRANSAXLE ASSEMBLY

(a) Install the automatic transaxle to the engine with the 11 bolts.

Torque: Bolt A
64 N*m (653 kgf*cm, 47 ft.*lbf)
Bolt B
64 N*m (653 kgf*cm, 47 ft.*lbf)
Bolt C
46 N*m (469 kgf*cm, 34 ft.*lbf)
Bolt D
43 N*m (439 kgf*cm, 32 ft.*lbf)

(b) Install the breather bracket to the camshaft housing sub-assembly LH with the bolt.
Torque: 5.5 N*m (56 kgf*cm, 49 in.*lbf)

(c) Install the breather hose to the breather bracket.

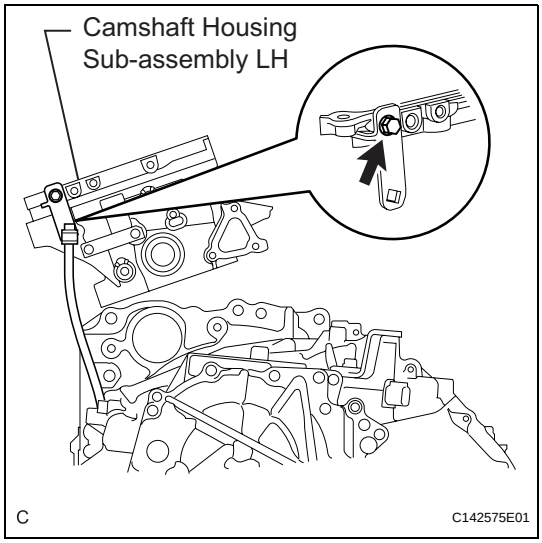

11. INSTALL STARTER ASSEMBLY (See page ST-152)

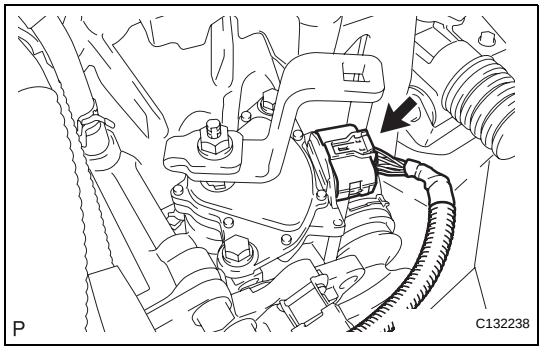

12. CONNECT CONNECTOR

(a) Connect the park/neutral position switch connector.

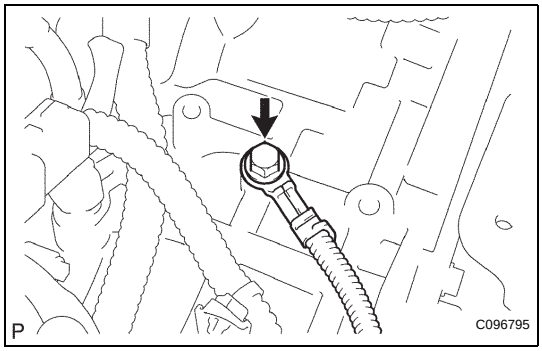

13. INSTALL WIRE HARNESS

(a) Connect the wire harness with the bolt.
Torque: 12 N*m (122 kgf*cm, 9 ft.*lbf)

14. INSTALL ENGINE WIRE

15. INSTALL FRONT DRIVE SHAFT ASSEMBLY LH (See page DS-16)

16. INSTALL FRONT DRIVE SHAFT ASSEMBLY RH (See page DS-16)

17. INSTALL FRONT FRAME ASSEMBLY (See page EM-42)

18. INSTALL VANE PUMP ASSEMBLY (See page EM-42)

19. INSTALL ENGINE ASSEMBLY WITH TRANSAXLE (See page EM-43)

20. INSTALL COOLER COMPRESSOR ASSEMBLY (See page EM-43)

21. INSTALL GENERATOR ASSEMBLY (See page CH-22)

22. INSTALL STEERING INTERMEDIATE SHAFT ASSEMBLY (See page PS-53)

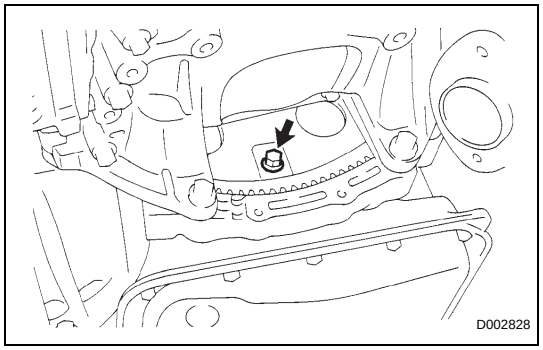

23. INSTALL DRIVE PLATE AND TORQUE CONVERTER CLUTCH SETTING BOLT

(a) Apply a few drops of adhesive to 2 threads on the tip of the 6 torque converter clutch mounting bolts.
Adhesive:
Toyota Genuine Adhesive 1324, Three Bond 1324 or equivalent

(b) Install the 6 torque converter clutch mounting bolts.
Torque: 41 N*m (418 kgf*cm, 30 ft.*lbf)
NOTICE:
First install the black colored bolt, and then the remaining 5 bolts.

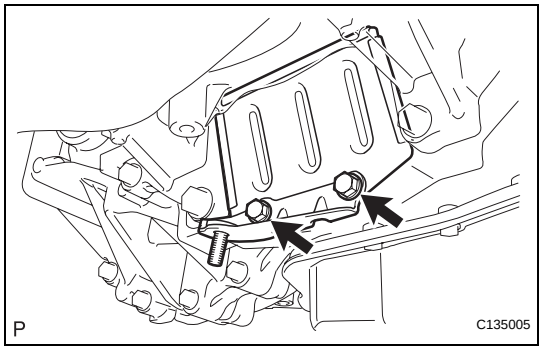

(c) Install the flywheel housing under cover to the automatic transaxle with the 2 bolts.
Torque: 7.8 N*m (80 kgf*cm, 69 in.*lbf)

24. INSTALL NO. 1 EXHAUST PIPE SUPPORT BRACKET (See page EM-43)

25. INSTALL FRONT AXLE ASSEMBLY LH (See page DS-16)

26. INSTALL FRONT AXLE ASSEMBLY RH
HINT:
Use the same procedures described for the LH side.

27. INSTALL FRONT SUSPENSION LOWER NO. 1 ARM LH (See page DS-16)

28. INSTALL FRONT SUSPENSION LOWER NO. 1 ARM RH
HINT:
Use the same procedures described for the LH side.

29. INSTALL TIE ROD ASSEMBLY LH (See page DS-16)

30. INSTALL TIE ROD ASSEMBLY RH
HINT:
Use the same procedures described for the LH side.

31. INSTALL FRONT SPEED SENSOR LH (See page DS-17)

32. INSTALL FRONT SPEED SENSOR RH
HINT:
Use the same procedures described for the LH side.

33. INSTALL FRONT STABILIZER LINK ASSEMBLY LH (See page DS-17)

34. INSTALL FRONT STABILIZER LINK ASSEMBLY RH
HINT:
Use the same procedures described for the LH side.

35. **INSTALL FRONT AXLE HUB NUT LH (See page DS-17)**
36. **INSTALL FRONT AXLE HUB NUT RH**
    HINT:
    Use the same procedures described for the LH side.
37. **INSTALL EXHAUST PIPE ASSEMBLY FRONT (See page EX-4)**
38. **INSTALL EXHAUST PIPE NO. 1 SUPPORT BRACKET (See page EX-4)**
39. **CONNECT OIL RESERVOIR TO PUMP HOSE (See page EM-44)**
40. **CONNECT RETURN TUBE SUB-ASSEMBLY (See page EM-44)**
41. **CONNECT FUEL TUBE SUB-ASSEMBLY (See page EM-44)**
42. **CONNECT TRANSMISSION CONTROL CABLE ASSEMBLY (See page EM-45)**
43. **CONNECT ENGINE WIRE (See page EM-45)**
44. **INSTALL RELAY BLOCK COVER UPPER**
45. **INSTALL ECM**
    (See page ES-544)
46. **CONNECT HEATER INLET WATER HOSE (See page EM-46)**
47. **CONNECT HEATER OUTLET WATER HOSE (See page EM-46)**
48. **CONNECT NO. 1 OIL COOLER INLET HOSE (See page EM-46)**
49. **CONNECT NO. 1 OIL COOLER OUTLET HOSE (See page EM-46)**
50. **INSTALL RADIATOR HOSE INLET (See page EM-46)**
51. **INSTALL RADIATOR HOSE OUTLET (See page EM-46)**
52. **CONNECT CHECK VALVE TO BRAKE BOOSTER HOSE (See page EM-46)**
53. **CONNECT NO. 1 FUEL VAPOR FEED HOSE (See page EM-47)**
54. **INSTALL ENGINE MOVING CONTROL ROD SUB-ASSEMBLY (See page EM-47)**
55. **INSTALL NO. 2 ENGINE MOUNTING STAY RH (See page EM-47)**
56. **INSTALL INTAKE AIR RESONATOR SUB-ASSEMBLY (See page EM-47)**
57. **INSTALL BATTERY (See page EM-47)**

58. **INSTALL NO. 1 AIR CLEANER INLET (See page EM-48)**
59. **INSTALL AIR CLEANER CASE SUB-ASSEMBLY (See page EM-48)**
60. **INSTALL AIR CLEANER CAP SUB-ASSEMBLY (See page ES-522)**
61. **INSTALL AIR CLEANER INLET ASSEMBLY (See page EM-48)**
62. **CONNECT VACUUM HOSES (See page EM-49)**
63. **INSTALL V-RIBBED BELT (See page EM-7)**
64. **INSTALL FRONT WHEELS (See page EM-49)**
65. **ADD ENGINE OIL**
66. **CONNECT CABLE TO NEGATIVE BATTERY TERMINAL (See page EM-49)**
67. **ADD ENGINE COOLANT (See page CO-6)**
68. **ADD AUTOMATIC TRANSAXLE FLUID**
    HINT:
    (See page AX-176)
69. **ADD POWER STEERING FLUID**
70. **BLEED POWER STEERING FLUID (See page PS-8)**
71. **CHECK FOR FUEL LEAKS (See page FU-7)**
72. **CHECK FOR ENGINE OIL LEAKS**
73. **CHECK FOR ENGINE COOLANT LEAKS (See page CO-1)**
74. **CHECK FOR EXHAUST GAS LEAKS**
75. **CHECK SHIFT LEVER POSITION (See page AX-232)**
76. **CHECK AND ADJUST FRONT WHEEL ALIGNMENT**
    HINT:
    (See page SP-4)
77. **CHECK IGNITION TIMING (See page EM-1)**
78. **CHECK ENGINE IDLE SPEED (See page EM-2)**
79. **CHECK CO/HC (See page EM-4)**
80. **CHECK FUNCTION OF THROTTLE BODY (See page ES-519)**
81. **INSTALL FRONT FENDER APRON SEAL RH**
82. **INSTALL ENGINE UNDER COVER LH**
83. **INSTALL ENGINE UNDER COVER RH**
84. **INSTALL V-BANK COVER SUB-ASSEMBLY (See page EM-49)**
85. **INSTALL ENGINE ROOM SIDE COVER LH (See page EM-50)**

86. INSTALL ENGINE ROOM SIDE COVER RH (See page EM-50)

87. INSTALL COOL AIR INTAKE DUCT SEAL (See page EM-50)

88. CHECK ABS SPEED SENSOR SIGNAL

HINT:
(See page BC-24)

89. PERFORM TCM REGISTRATION

HINT:
(See page AX-18)

90. PERFORM INITIALIZATION

(a) Perform initialization procedure (See page IN-33).
NOTICE:
Some systems need initialization after reconnecting the cable to the negative battery terminal.

REMOVAL

NOTICE:

- **When the automatic transaxle is replaced, the transaxle's compensation code must be input into the TCM (See page AX-18).**
- **When the TCM is replaced, the existing transaxle compensation codes must be input into the new TCM (See page AX-21).**
- **If the following parts have been replaced, initialize the TCM and perform a road test to allow the TCM to learn (See page AX-24).**
  - **Valve body assembly**
  - **Shift solenoid SL3**
  - **Shift solenoid SL4**
- **If the following parts have been replaced, perform a road test to allow the TCM to learn (See page AX-24).**
  - **Shift solenoid SL1**
  - **Shift solenoid SL2**
- **If the TCM or transaxle has been replaced, register the transmission compensation code in the TCM (See page AX-18).**
- **Perform RESET MEMORY (AT initialization) when replacing the automatic transmission assembly, engine assembly or ECM (See page AX-24).**

1. **DISCHARGE FUEL SYSTEM PRESSURE**
   HINT:
   (See page FU-1)
2. **DISCONNECT CABLE FROM NEGATIVE BATTERY TERMINAL**
3. **PLACE FRONT WHEELS FACING STRAIGHT AHEAD**
4. **REMOVE FRONT WHEELS**
5. **REMOVE ENGINE UNDER COVER LH**
6. **REMOVE ENGINE UNDER COVER RH**
7. **REMOVE FRONT FENDER APRON SEAL RH**
8. **DRAIN ENGINE OIL**
9. **DRAIN ENGINE COOLANT (See page CO-5)**
10. **DRAIN AUTOMATIC TRANSAXLE FLUID**
    (a) Remove the refill plug and gasket.

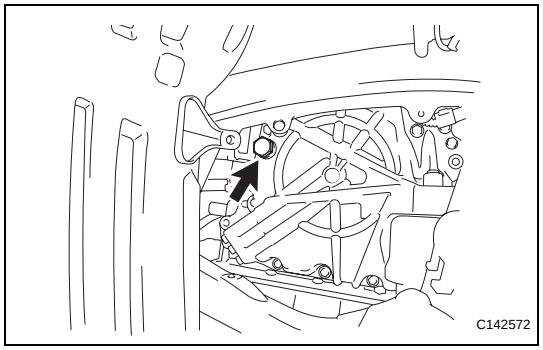

AX

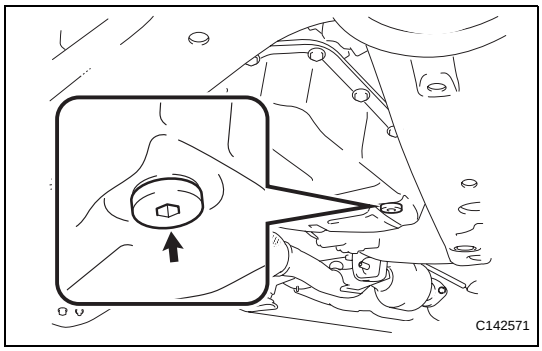

(b) Using a 6 mm socket hexagon wrench, remove the overflow plug and gasket.

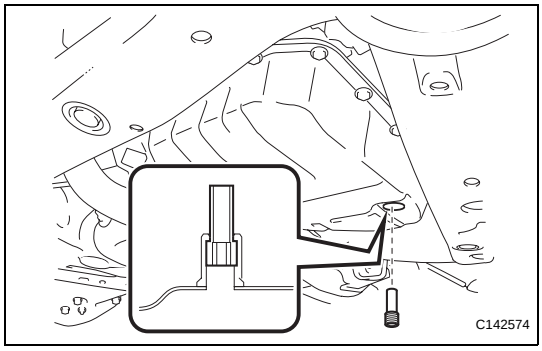

(c) Using a 6 mm socket hexagon wrench, remove the No. 1 transmission oil filler tube.

(d) Drain the automatic transaxle fluid.

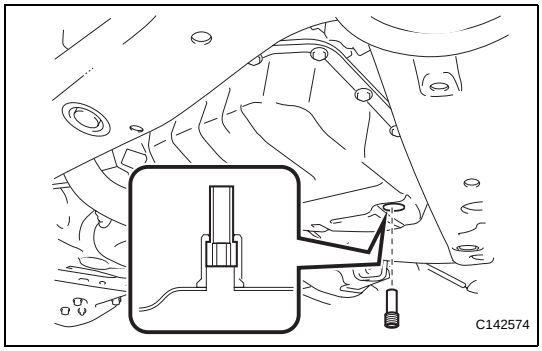

(e) Using a 6 mm socket hexagon wrench, install the No. 1 transmission oil filler tube.
Torque: 1.7 N*m (17 kgf*cm, 15 in.*lbf)

AX

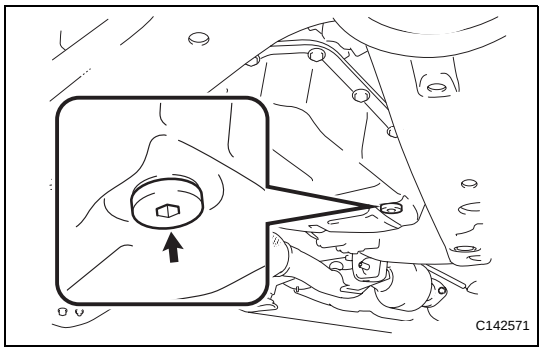

(f) Using a 6 mm socket hexagon wrench, install the overflow plug with a new gasket.
Torque: 40 N*m (408 kgf*cm, 30 ft.*lbf)

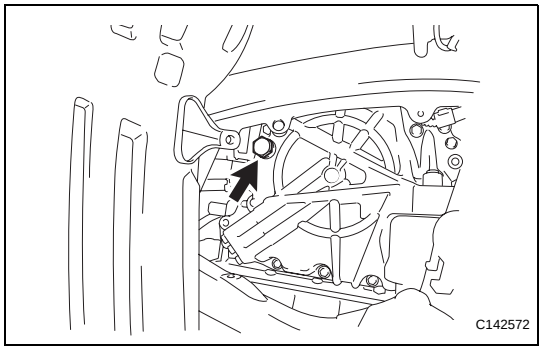

(g) Install the refill plug with a new gasket.
Torque: 49 N*m (500 kgf*cm, 36 ft.*lbf)

11. REMOVE COOL AIR INTAKE DUCT SEAL (See page EM-22)

12. REMOVE ENGINE ROOM SIDE COVER LH (See page EM-22)

13. REMOVE ENGINE ROOM SIDE COVER RH (See page EM-22)

14. **REMOVE V-BANK COVER SUB-ASSEMBLY (See page EM-23)**
15. **REMOVE V-RIBBED BELT (See page EM-6)**
16. **REMOVE AIR CLEANER INLET ASSEMBLY (See page EM-23)**
17. **REMOVE AIR CLEANER CAP SUB-ASSEMBLY (See page ES-519)**
18. **REMOVE AIR CLEANER CASE SUB-ASSEMBLY (See page EM-23)**
19. **REMOVE NO. 1 AIR CLEANER INLET (See page EM-23)**
20. **REMOVE BATTERY (See page EM-24)**
21. **REMOVE INTAKE AIR RESONATOR SUB-ASSEMBLY (See page EM-24)**
22. **REMOVE NO. 2 ENGINE MOUNTING STAY RH (See page EM-24)**
23. **REMOVE ENGINE MOVING CONTROL ROD SUB-ASSEMBLY (See page EM-24)**
24. **DISCONNECT NO. 1 FUEL VAPOR FEED HOSE (See page EM-24)**
25. **DISCONNECT CHECK VALVE TO BRAKE BOOSTER HOSE (See page EM-25)**
26. **REMOVE RADIATOR HOSE INLET (See page EM-25)**
27. **REMOVE RADIATOR HOSE OUTLET (See page EM-25)**
28. **DISCONNECT NO. 1 OIL COOLER INLET HOSE (See page EM-25)**
29. **DISCONNECT NO. 1 OIL COOLER OUTLET HOSE (See page EM-25)**
30. **DISCONNECT HEATER INLET WATER HOSE (See page EM-25)**
31. **DISCONNECT HEATER OUTLET WATER HOSE (See page EM-25)**
32. **REMOVE ECM (See page ES-543)**
33. **REMOVE RELAY BLOCK COVER UPPER**
34. **DISCONNECT ENGINE WIRE (See page EM-26)**

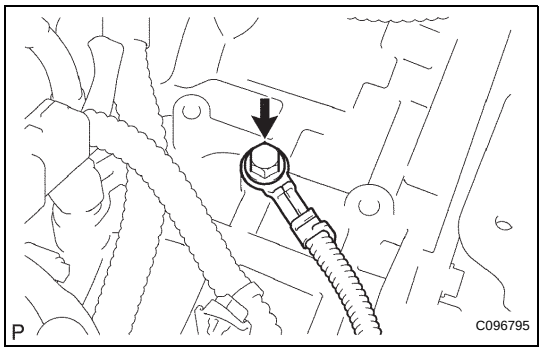

35. SEPARATE WIRE HARNESS

(a) Remove the bolt and disconnect the wire harness.

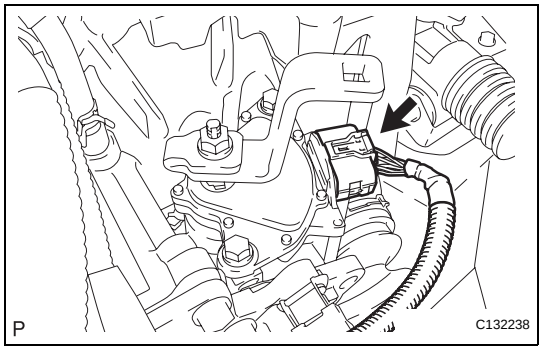

36. DISCONNECT CONNECTOR

(a) Disconnect the park/neutral position switch connector.

37. DISCONNECT TRANSMISSION CONTROL CABLE ASSEMBLY (See page EM-26)

38. SEPARATE FUEL TUBE SUB-ASSEMBLY (See page EM-27)

39. DISCONNECT OIL RESERVOIR TO PUMP HOSE (See page EM-27)

40. DISCONNECT RETURN TUBE SUB-ASSEMBLY (See page EM-27)

41. REMOVE EXHAUST PIPE NO. 1 SUPPORT BRACKET (See page EX-3)

42. REMOVE EXHAUST PIPE ASSEMBLY FRONT (See page EX-3)

43. REMOVE FRONT AXLE HUB NUT LH (See page DS-5)

AX

44. REMOVE FRONT AXLE HUB NUT RH

HINT:
Use the same procedures described for the LH side.

45. DISCONNECT FRONT STABILIZER LINK ASSEMBLY LH (See page DS-5)

46. DISCONNECT FRONT STABILIZER LINK ASSEMBLY RH

HINT:
Use the same procedures described for the LH side.

47. DISCONNECT FRONT SPEED SENSOR LH (See page DS-5)

48. DISCONNECT FRONT SPEED SENSOR RH

HINT:
Use the same procedures described for the LH side.

49. DISCONNECT TIE ROD ASSEMBLY LH (See page DS-6)

50. DISCONNECT TIE ROD ASSEMBLY RH

HINT:
Use the same procedures described for the LH side.

51. DISCONNECT FRONT SUSPENSION LOWER NO. 1 ARM LH (See page DS-6)

52. DISCONNECT FRONT SUSPENSION LOWER NO. 1 ARM RH

HINT:
Use the same procedures described for the LH side.

53. SEPARATE FRONT AXLE ASSEMBLY LH (See page DS-6)

54. SEPARATE FRONT AXLE ASSEMBLY RH

HINT:
Use the same procedures described for the LH side.

55. REMOVE NO. 1 EXHAUST PIPE SUPPORT BRACKET (See page EM-28)

56. REMOVE DRIVE PLATE AND TORQUE CONVERTER CLUTCH SETTING BOLT

(a) Remove the 2 bolts and flywheel housing under cover.

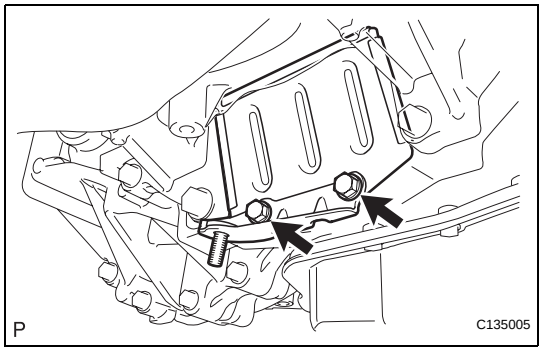

(b) Turn the crankshaft to gain access and remove the 6 bolts while holding the crankshaft pulley bolt with a wrench.

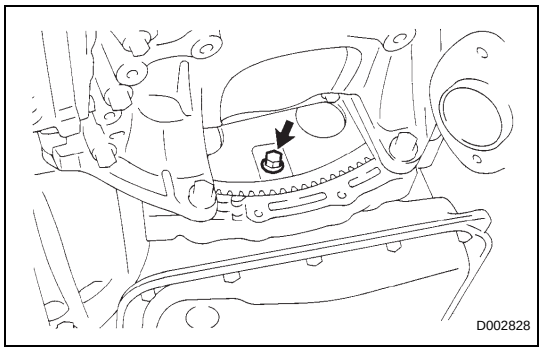

57. DISCONNECT STEERING INTERMEDIATE SHAFT ASSEMBLY (See page PS-28)

58. REMOVE GENERATOR ASSEMBLY (See page CH-14)

59. SEPARATE COOLER COMPRESSOR ASSEMBLY (See page EM-28)

60. REMOVE ENGINE ASSEMBLY WITH TRANSAXLE (See page EM-28)

61. REMOVE VANE PUMP ASSEMBLY (See page EM-29)

62. INSTALL ENGINE HANGER (See page EM-29)

63. REMOVE FRONT FRAME ASSEMBLY (See page EM-29)

64. REMOVE FRONT DRIVE SHAFT ASSEMBLY LH (See page DS-6)

65. REMOVE FRONT DRIVE SHAFT ASSEMBLY RH (See page DS-7)

66. REMOVE ENGINE WIRE

67. REMOVE STARTER ASSEMBLY (See page ST-145)

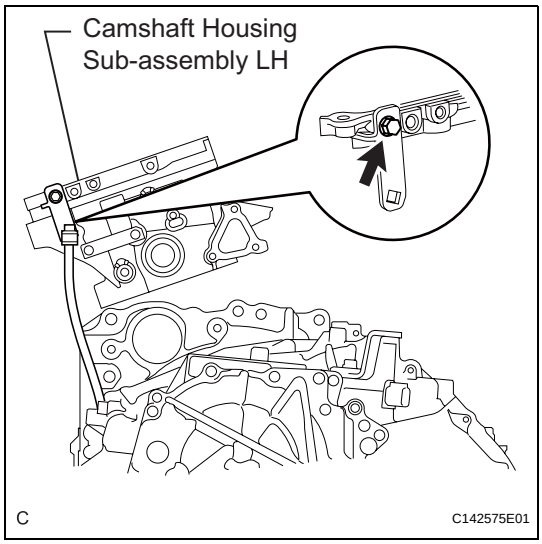

68. REMOVE AUTOMATIC TRANSAXLE ASSEMBLY

(a) Remove the bolt and breather bracket from the camshaft housing sub-assembly LH.

(b) Remove the breather hose from the breather bracket.

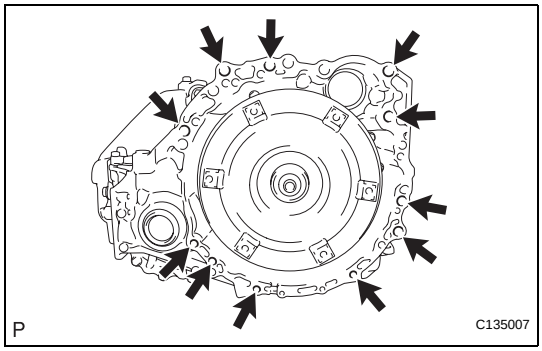

(c) Remove the 11 bolts.

(d) Separate and remove the automatic transaxle.

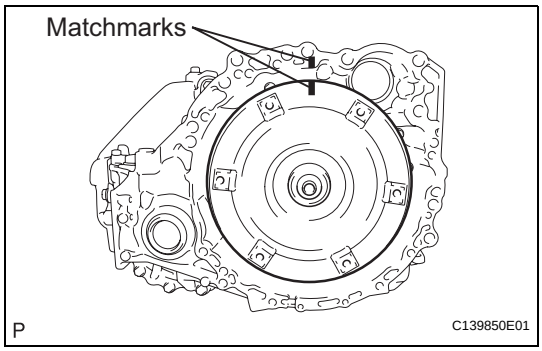

69. REMOVE TORQUE CONVERTER CLUTCH ASSEMBLY

(a) Put matchmarks on the transaxle housing and torque converter clutch assembly.

(b) Remove the torque converter clutch assembly from the automatic transaxle assembly.

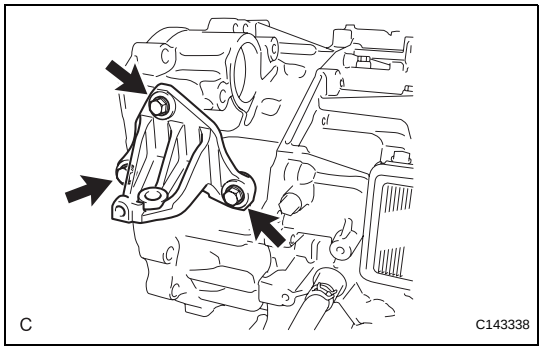

70. REMOVE ENGINE MOUNTING FRONT BRACKET

(a) Remove the 3 bolts and engine mounting front bracket.

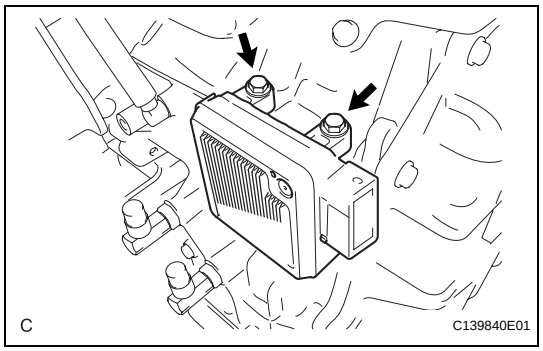

71. REMOVE TCM

(a) Remove the 2 bolts and TCM from the transaxle.

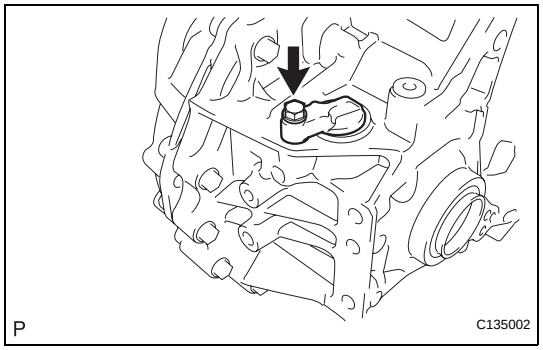

72. REMOVE SPEEDOMETER DRIVEN HOLE COVER SUB-ASSEMBLY

(a) Remove the bolt and hole cover from the transaxle case.

(b) Remove the O-ring from the hole cover.

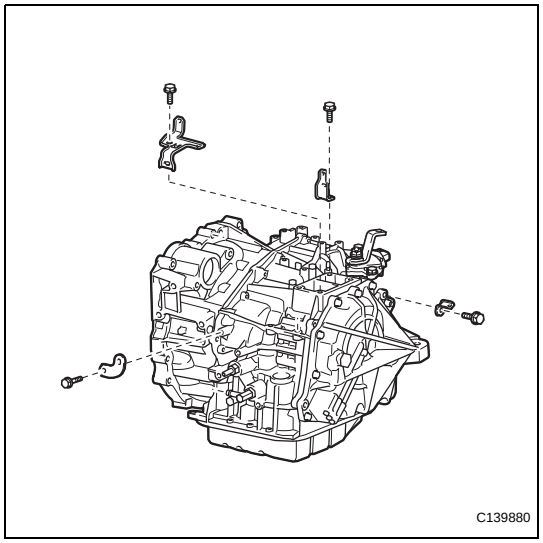

73. REMOVE WIRE HARNESS CLAMP BRACKET

(a) Remove the 4 bolts and 4 clamp brackets.

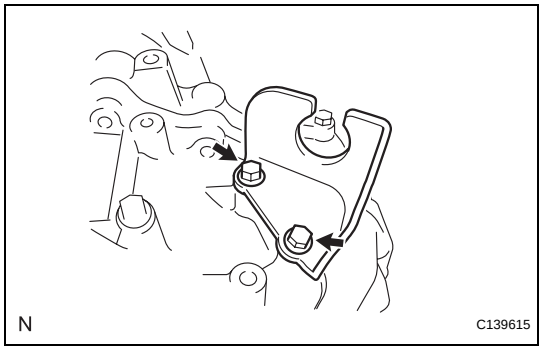

74. REMOVE NO. 1 TRANSMISSION CONTROL CABLE BRACKET

(a) Remove the 2 bolts and No. 1 transmission control cable bracket.

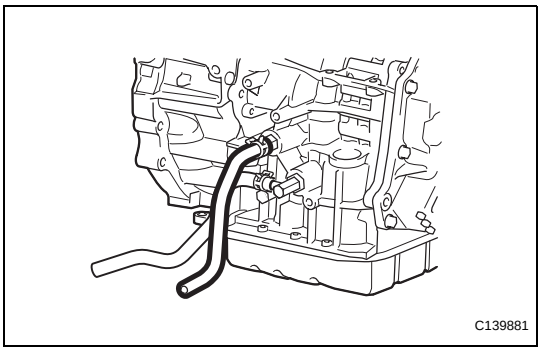

75. SEPARATE NO. 1 OIL COOLER OUTLET HOSE

(a) Separate the No. 1 oil cooler outlet hose.

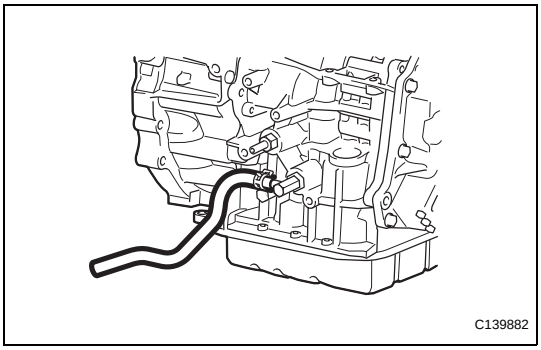

76. SEPARATE NO. 1 OIL COOLER INLET HOSE

(a) Separate the No. 1 oil cooler inlet hose.

INSTALLATION

1. INSPECT TORQUE CONVERTER CLUTCH ASSEMBLY

HINT:

(See page AX-248)

2. INSTALL TORQUE CONVERTER CLUTCH ASSEMBLY

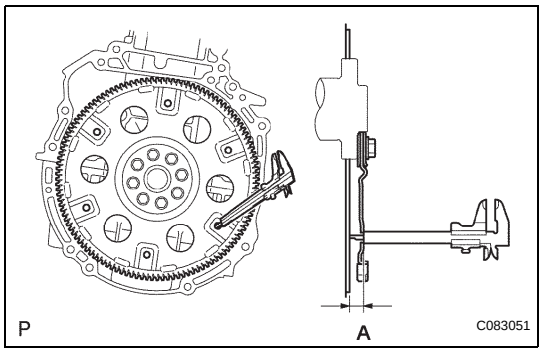

(a) Using vernier calipers and a straightedge, measure dimension "A" between the transaxle fitting part of the engine and the converter fitting part of the drive plate (*1).

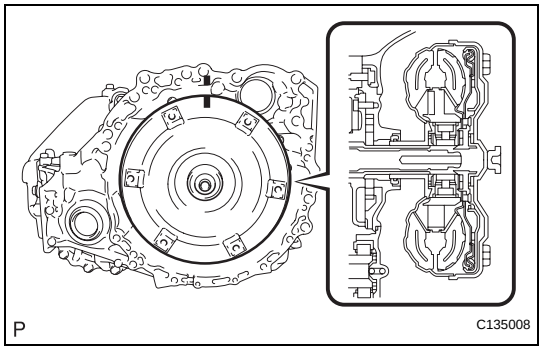

(b) Aligning the matchmarks on the transaxle case and torque converter clutch assembly, engage the splines of the input shaft and turbine runner.

NOTICE:

Do not push on the torque converter when aligning the matchmarks.

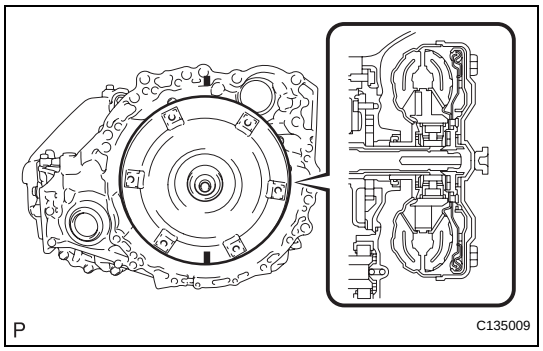

(c) Engage the splines of the stator shaft and the stator while turning the torque converter clutch assembly.

HINT:

Turn the torque converter clutch assembly approximately 180°.

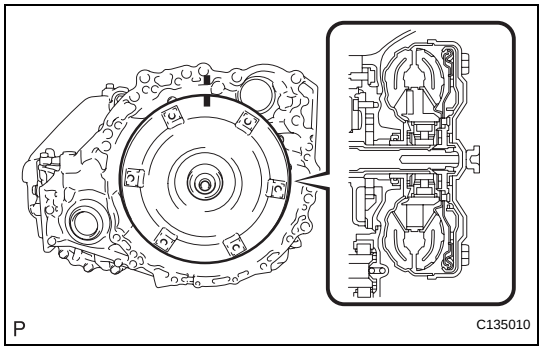

(d) Turn the torque converter clutch assembly and align the matchmarks on the torque converter clutch assembly and transaxle case to engage the key of the oil pump drive gear into the slot on the torque converter clutch assembly.

AX

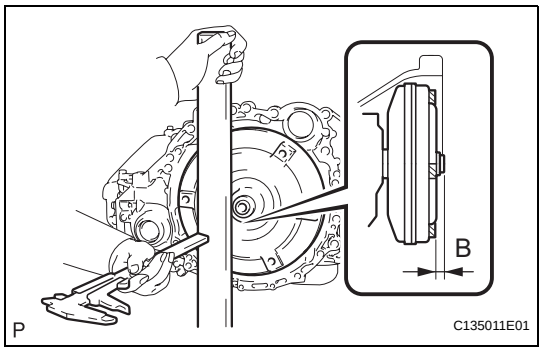

(e) Using vernier calipers and a straightedge, measure dimension "B" shown in the illustration and check that "B" is greater than "A" (measured in step (*1)).
Standard:
A + 1 mm (0.04 in.) or more
NOTICE:
Make sure to deduct the thickness of the straightedge.

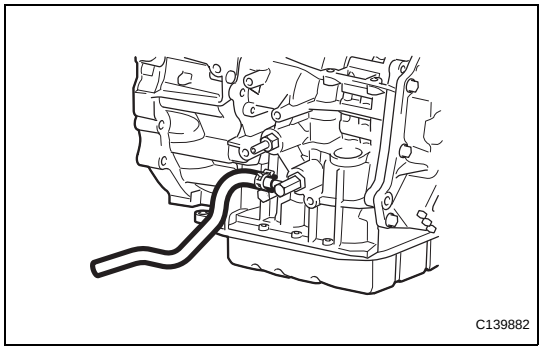

3. INSTALL NO. 1 OIL COOLER INLET HOSE
(a) Install the No. 1 oil cooler inlet hose.

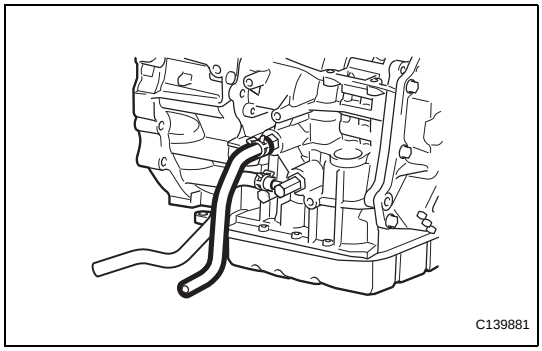

4. INSTALL NO. 1 OIL COOLER OUTLET HOSE
(a) Install the No. 1 oil cooler outlet hose.

AX

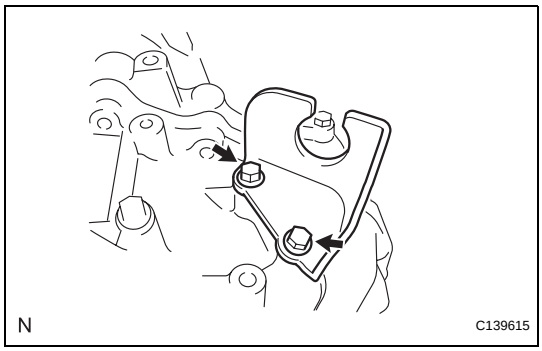

5. INSTALL NO. 1 TRANSMISSION CONTROL CABLE BRACKET
(a) Install the No. 1 transmission control cable bracket with the 2 bolts.
Torque: 12 N*m (122 kgf*cm, 9 ft.*lbf)

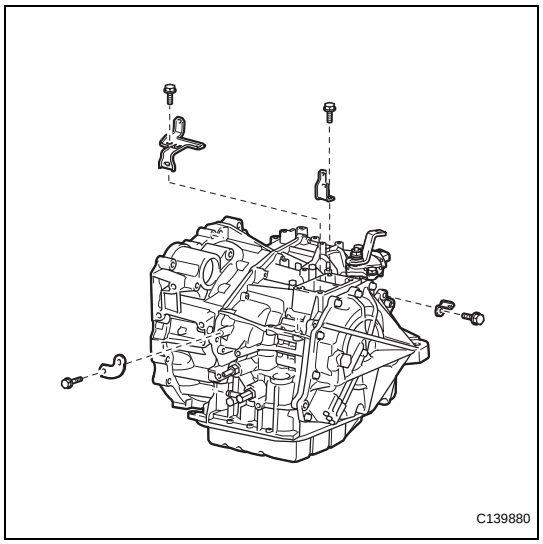

6. INSTALL WIRE HARNESS CLAMP BRACKET

(a) Install the 4 clamp brackets and 4 bolts.
Torque: 8.4 N*m (86 kgf*cm, 74 in.*lbf)

7. INSTALL SPEEDOMETER DRIVEN HOLE COVER SUB-ASSEMBLY

(a) Coat a new O-ring with ATF, and install it to the hole cover.

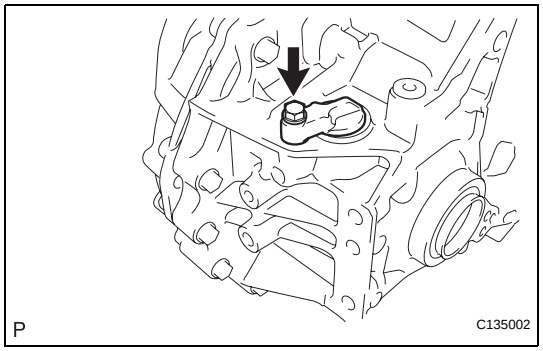

(b) Install the hole cover to the transaxle case with the bolt.
Torque: 5.5 N*m (56 kgf*cm, 49 in.*lbf)

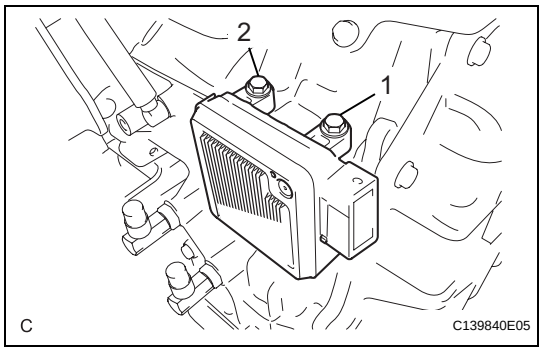

8. INSTALL TCM

(a) Install the TCM to the transaxle.
(b) Install and tighten the 2 bolts in the order shown in the illustration.
Torque: 11 N*m (115 kgf*cm, 8 ft.*lbf)

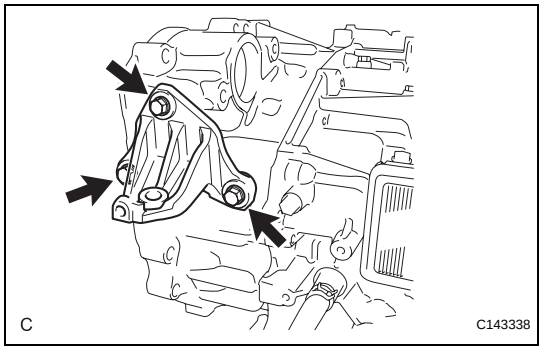

9. INSTALL ENGINE MOUNTING FRONT BRACKET

(a) Install the engine mounting front bracket to the automatic transaxle with the 3 bolts.
Torque: 64 N*m (653 kgf*cm, 47 ft.*lbf)

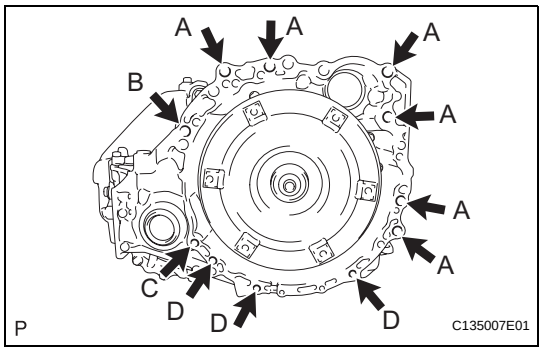

10. INSTALL AUTOMATIC TRANSAXLE ASSEMBLY

(a) Install the automatic transaxle to the engine with the 11 bolts.

Torque: Bolt A
64 N*m (653 kgf*cm, 47 ft.*lbf)
Bolt B
64 N*m (653 kgf*cm, 47 ft.*lbf)
Bolt C
46 N*m (469 kgf*cm, 34 ft.*lbf)
Bolt D
43 N*m (439 kgf*cm, 32 ft.*lbf)

(b) Install the breather bracket to the camshaft housing sub-assembly LH with the bolt.
Torque: 5.5 N*m (56 kgf*cm, 49 in.*lbf)

(c) Install the breather hose to the breather bracket.

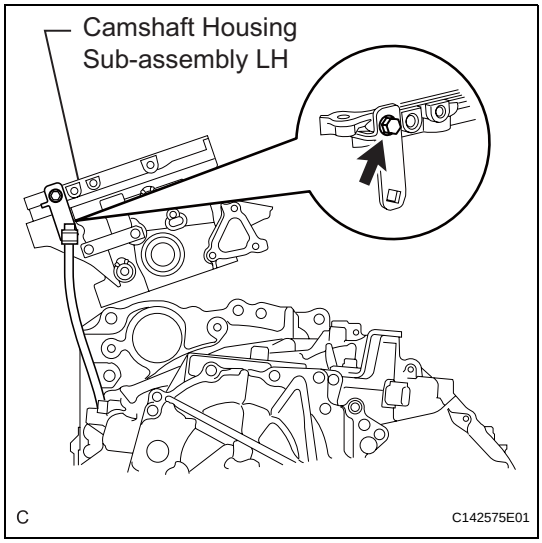

11. INSTALL STARTER ASSEMBLY (See page ST-152)

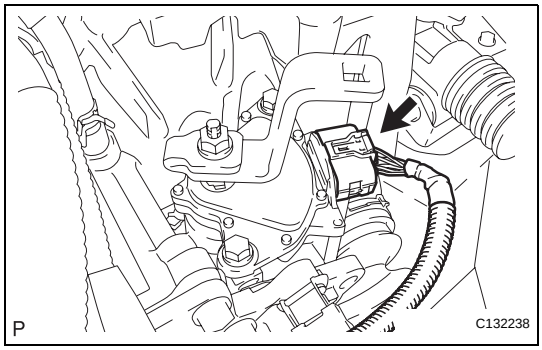

12. CONNECT CONNECTOR

(a) Connect the park/neutral position switch connector.

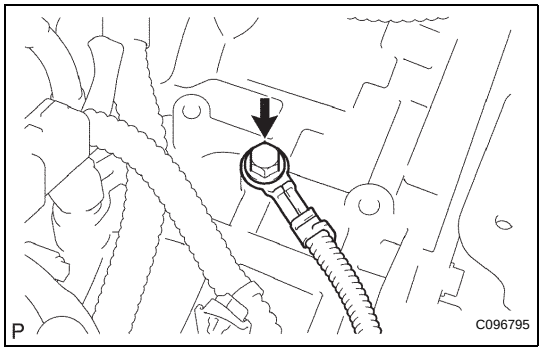

13. INSTALL WIRE HARNESS

(a) Connect the wire harness with the bolt.
Torque: 12 N*m (122 kgf*cm, 9 ft.*lbf)

14. INSTALL ENGINE WIRE

15. INSTALL FRONT DRIVE SHAFT ASSEMBLY LH (See page DS-16)

16. INSTALL FRONT DRIVE SHAFT ASSEMBLY RH (See page DS-16)

17. INSTALL FRONT FRAME ASSEMBLY (See page EM-42)

18. INSTALL VANE PUMP ASSEMBLY (See page EM-42)

19. INSTALL ENGINE ASSEMBLY WITH TRANSAXLE (See page EM-43)

20. INSTALL COOLER COMPRESSOR ASSEMBLY (See page EM-43)

21. INSTALL GENERATOR ASSEMBLY (See page CH-22)

22. INSTALL STEERING INTERMEDIATE SHAFT ASSEMBLY (See page PS-53)

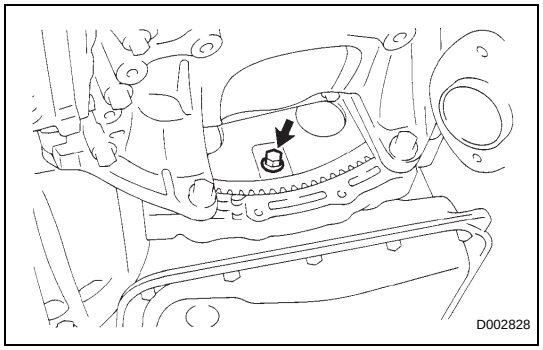

23. INSTALL DRIVE PLATE AND TORQUE CONVERTER CLUTCH SETTING BOLT

(a) Apply a few drops of adhesive to 2 threads on the tip of the 6 torque converter clutch mounting bolts.
Adhesive:
Toyota Genuine Adhesive 1324, Three Bond 1324 or equivalent

(b) Install the 6 torque converter clutch mounting bolts.
Torque: 41 N*m (418 kgf*cm, 30 ft.*lbf)
NOTICE:
First install the black colored bolt, and then the remaining 5 bolts.

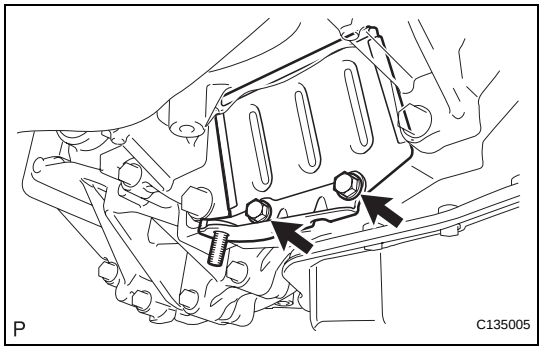

(c) Install the flywheel housing under cover to the automatic transaxle with the 2 bolts.
Torque: 7.8 N*m (80 kgf*cm, 69 in.*lbf)

24. INSTALL NO. 1 EXHAUST PIPE SUPPORT BRACKET (See page EM-43)

25. INSTALL FRONT AXLE ASSEMBLY LH (See page DS-16)

26. INSTALL FRONT AXLE ASSEMBLY RH
HINT:
Use the same procedures described for the LH side.

27. INSTALL FRONT SUSPENSION LOWER NO. 1 ARM LH (See page DS-16)

28. INSTALL FRONT SUSPENSION LOWER NO. 1 ARM RH
HINT:
Use the same procedures described for the LH side.

29. INSTALL TIE ROD ASSEMBLY LH (See page DS-16)

30. INSTALL TIE ROD ASSEMBLY RH
HINT:
Use the same procedures described for the LH side.

31. INSTALL FRONT SPEED SENSOR LH (See page DS-17)

32. INSTALL FRONT SPEED SENSOR RH
HINT:
Use the same procedures described for the LH side.

33. INSTALL FRONT STABILIZER LINK ASSEMBLY LH (See page DS-17)

34. INSTALL FRONT STABILIZER LINK ASSEMBLY RH
HINT:
Use the same procedures described for the LH side.

35. **INSTALL FRONT AXLE HUB NUT LH (See page DS-17)**
36. **INSTALL FRONT AXLE HUB NUT RH**
    HINT:
    Use the same procedures described for the LH side.
37. **INSTALL EXHAUST PIPE ASSEMBLY FRONT (See page EX-4)**
38. **INSTALL EXHAUST PIPE NO. 1 SUPPORT BRACKET (See page EX-4)**
39. **CONNECT OIL RESERVOIR TO PUMP HOSE (See page EM-44)**
40. **CONNECT RETURN TUBE SUB-ASSEMBLY (See page EM-44)**
41. **CONNECT FUEL TUBE SUB-ASSEMBLY (See page EM-44)**
42. **CONNECT TRANSMISSION CONTROL CABLE ASSEMBLY (See page EM-45)**
43. **CONNECT ENGINE WIRE (See page EM-45)**
44. **INSTALL RELAY BLOCK COVER UPPER**
45. **INSTALL ECM**
    (See page ES-544)
46. **CONNECT HEATER INLET WATER HOSE (See page EM-46)**
47. **CONNECT HEATER OUTLET WATER HOSE (See page EM-46)**
48. **CONNECT NO. 1 OIL COOLER INLET HOSE (See page EM-46)**
49. **CONNECT NO. 1 OIL COOLER OUTLET HOSE (See page EM-46)**
50. **INSTALL RADIATOR HOSE INLET (See page EM-46)**
51. **INSTALL RADIATOR HOSE OUTLET (See page EM-46)**
52. **CONNECT CHECK VALVE TO BRAKE BOOSTER HOSE (See page EM-46)**
53. **CONNECT NO. 1 FUEL VAPOR FEED HOSE (See page EM-47)**
54. **INSTALL ENGINE MOVING CONTROL ROD SUB-ASSEMBLY (See page EM-47)**
55. **INSTALL NO. 2 ENGINE MOUNTING STAY RH (See page EM-47)**
56. **INSTALL INTAKE AIR RESONATOR SUB-ASSEMBLY (See page EM-47)**
57. **INSTALL BATTERY (See page EM-47)**

58. **INSTALL NO. 1 AIR CLEANER INLET (See page EM-48)**
59. **INSTALL AIR CLEANER CASE SUB-ASSEMBLY (See page EM-48)**
60. **INSTALL AIR CLEANER CAP SUB-ASSEMBLY (See page ES-522)**
61. **INSTALL AIR CLEANER INLET ASSEMBLY (See page EM-48)**
62. **CONNECT VACUUM HOSES (See page EM-49)**
63. **INSTALL V-RIBBED BELT (See page EM-7)**
64. **INSTALL FRONT WHEELS (See page EM-49)**
65. **ADD ENGINE OIL**
66. **CONNECT CABLE TO NEGATIVE BATTERY TERMINAL (See page EM-49)**
67. **ADD ENGINE COOLANT (See page CO-6)**
68. **ADD AUTOMATIC TRANSAXLE FLUID**
    HINT:
    (See page AX-176)
69. **ADD POWER STEERING FLUID**
70. **BLEED POWER STEERING FLUID (See page PS-8)**
71. **CHECK FOR FUEL LEAKS (See page FU-7)**
72. **CHECK FOR ENGINE OIL LEAKS**
73. **CHECK FOR ENGINE COOLANT LEAKS (See page CO-1)**
74. **CHECK FOR EXHAUST GAS LEAKS**
75. **CHECK SHIFT LEVER POSITION (See page AX-232)**
76. **CHECK AND ADJUST FRONT WHEEL ALIGNMENT**
    HINT:
    (See page SP-4)
77. **CHECK IGNITION TIMING (See page EM-1)**
78. **CHECK ENGINE IDLE SPEED (See page EM-2)**
79. **CHECK CO/HC (See page EM-4)**
80. **CHECK FUNCTION OF THROTTLE BODY (See page ES-519)**
81. **INSTALL FRONT FENDER APRON SEAL RH**
82. **INSTALL ENGINE UNDER COVER LH**
83. **INSTALL ENGINE UNDER COVER RH**
84. **INSTALL V-BANK COVER SUB-ASSEMBLY (See page EM-49)**
85. **INSTALL ENGINE ROOM SIDE COVER LH (See page EM-50)**

86. INSTALL ENGINE ROOM SIDE COVER RH (See page EM-50)

87. INSTALL COOL AIR INTAKE DUCT SEAL (See page EM-50)

88. CHECK ABS SPEED SENSOR SIGNAL

HINT:
(See page BC-24)

89. PERFORM TCM REGISTRATION

HINT:
(See page AX-18)

90. PERFORM INITIALIZATION

(a) Perform initialization procedure (See page IN-33).
NOTICE:
Some systems need initialization after reconnecting the cable to the negative battery terminal.

ON-VEHICLE INSPECTION

1. INSPECT SHIFT LEVER POSITION

(a) When shifting from the P to the R position with the engine switch on (IG) and the brake pedal depressed, make sure that the shift lever moves smoothly and moves correctly into position.

(b) Start the engine and make sure that the vehicle moves forward when shifting from the N to the D position and moves rearward when shifting to the R position. If operation cannot be done as specified, inspect the park/neutral position switch assembly and check the shift lever assembly installation condition.

REMOVAL

1. **REMOVE INSTRUMENT PANEL FINISH PANEL END LH (See page IP-13)**
2. **REMOVE INSTRUMENT PANEL FINISH PANEL END RH (See page IP-15)**
3. **REMOVE SHIFT LEVER KNOB SUB-ASSEMBLY (See page IP-16)**
4. **REMOVE UPPER CONSOLE PANEL ASSEMBLY WITH FRONT ASH RECEPTACLE (See page IP-16)**
5. **REMOVE HEATER SEAT SWITCH CONSOLE BASE (w/o Seat Heater System) (See page IP-17)**
6. **REMOVE HEATER SEAT SWITCH CONSOLE BASE (w/ Seat Heater System) (See page IP-18)**
7. **REMOVE CONSOLE BOX POCKET (See page IP-18)**
8. **REMOVE CONSOLE BOX CARPET (See page IP-18)**
9. **REMOVE CONSOLE REAR END PANEL SUB-ASSEMBLY (See page IP-19)**
10. **REMOVE REAR CONSOLE BOX ASSEMBLY (See page IP-19)**
11. **REMOVE NO. 2 CONSOLE BOX DUCT (See page AC-149)**
12. **REMOVE NO. 3 CONSOLE BOX DUCT (See page AC-149)**
13. **DISCONNECT TRANSMISSION CONTROL CABLE ASSEMBLY**
    (a) Disconnect the end of the transmission control cable from the shift lever assembly.
    (b) Disconnect the transmission control cable assembly from the shift lever assembly while pushing the 2 claws of the floor shift cable.

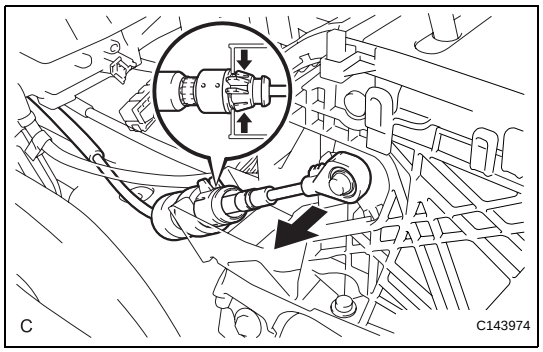

AX

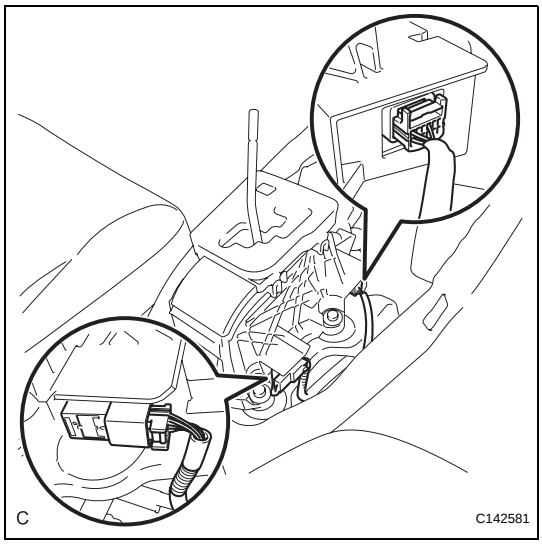

14. REMOVE SHIFT LEVER ASSEMBLY

(a) Disconnect the shift lock control ECU connector and transmission control switch wire connector.

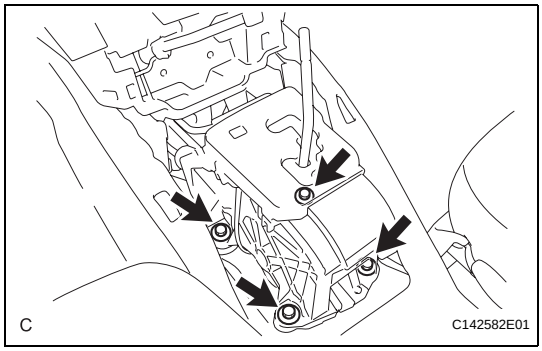

(b) Remove the 4 bolts and shift lever assembly.

DISASSEMBLY

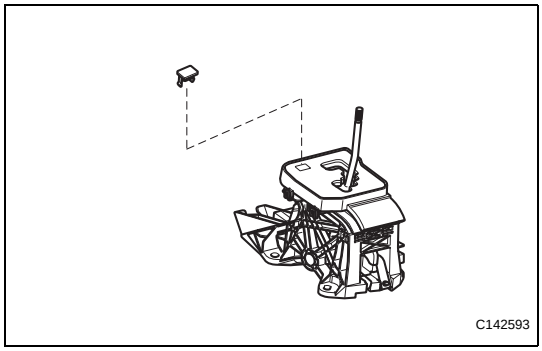

1. REMOVE SHIFT LOCK RELEASE BUTTON COVER

(a) Using a screwdriver, remove the shift lock release button cover from the position indicator housing assembly.

2. REMOVE INDICATOR LIGHT WIRE SUB-ASSEMBLY

(a) Turn the indicator light guide counterclockwise.

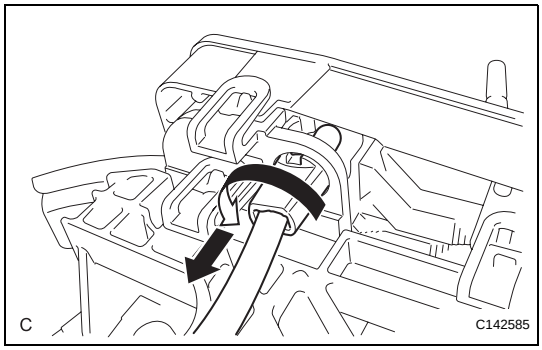

(b) Align the indicator light guide key with the groove on the shift lever assembly to remove the indicator light wire.

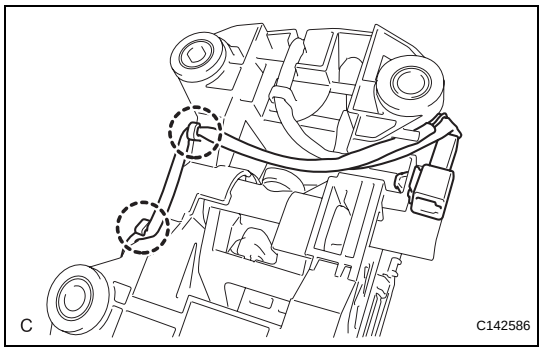

(c) Release the indicator light wire from the 2 clamps on the shift lever assembly.

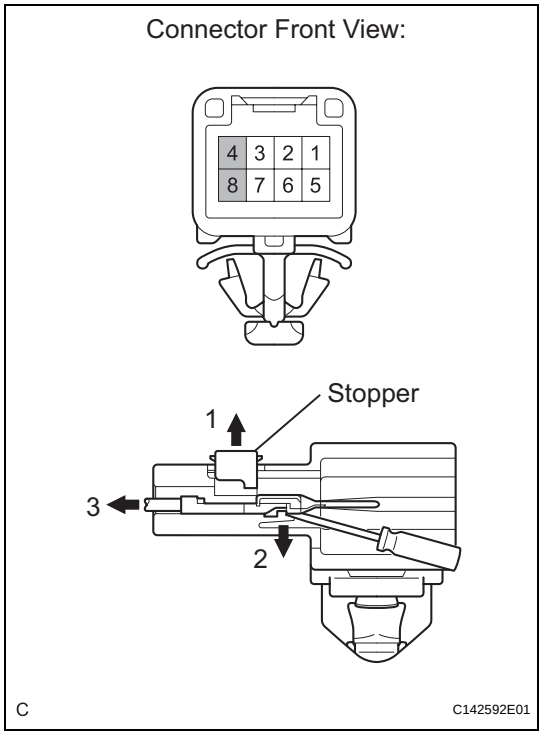

(d) Using a screwdriver, release the stopper.
(e) Using a screwdriver, disengage the locking lug of terminals (4) and (8), and pull the terminals out from the rear of the connector.
(f) Remove the bulb and cap.

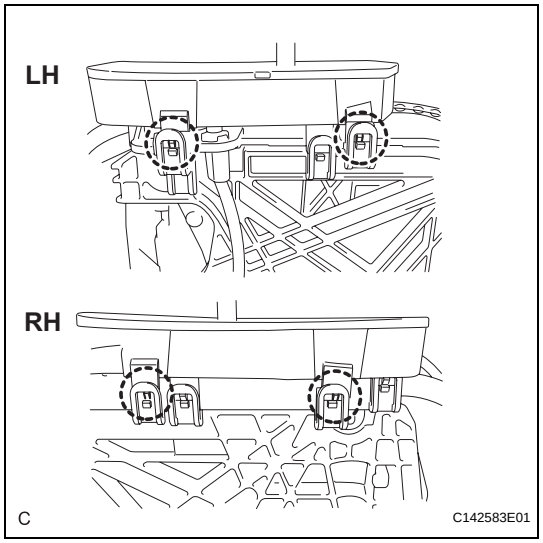

3. REMOVE POSITION INDICATOR HOUSING ASSEMBLY

(a) Detach the 4 claws and remove the position indicator housing assembly from the lower shift lever assembly.

AX

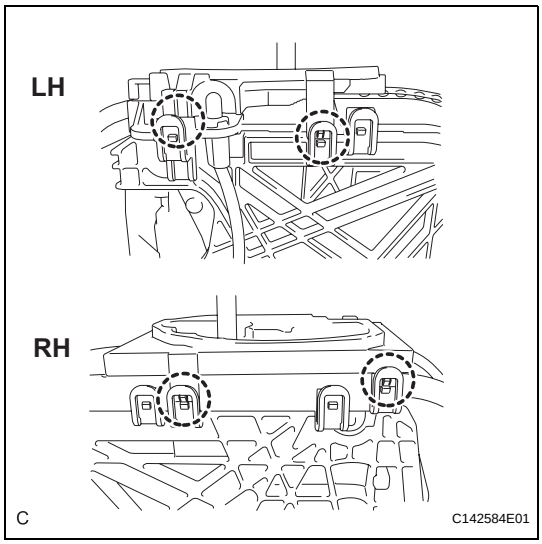

4. REMOVE POSITION INDICATOR LENS

(a) Detach the 4 claws and remove the position indicator lens from the lower shift lever assembly.

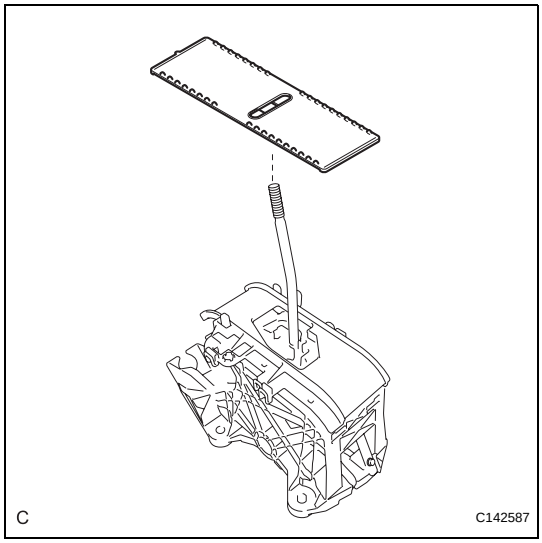

5. REMOVE POSITION INDICATOR SLIDE COVER

(a) Remove the position indicator slide cover from the lower shift lever assembly.

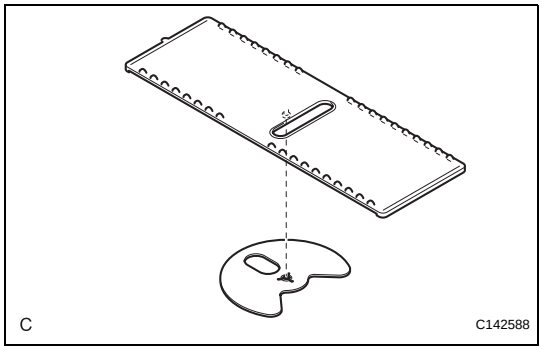

(b) Separate the No. 2 position indicator slide cover from the position indicator slide cover.

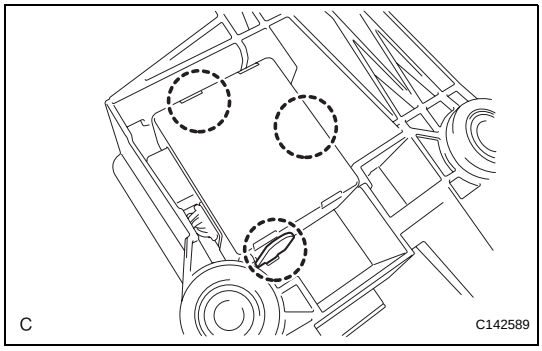

6. REMOVE SHIFT LOCK CONTROL ECU

(a) Detach the 3 claws and remove the shift lock control ECU from the lower shift lever assembly.

(b) Disconnect the shift lock solenoid connector.

ON-VEHICLE INSPECTION

1. INSPECT SHIFT LEVER POSITION

(a) When shifting from the P to the R position with the engine switch on (IG) and the brake pedal depressed, make sure that the shift lever moves smoothly and moves correctly into position.

(b) Start the engine and make sure that the vehicle moves forward when shifting from the N to the D position and moves rearward when shifting to the R position. If operation cannot be done as specified, inspect the park/neutral position switch assembly and check the shift lever assembly installation condition.

REMOVAL

1. **REMOVE INSTRUMENT PANEL FINISH PANEL END LH (See page IP-13)**
2. **REMOVE INSTRUMENT PANEL FINISH PANEL END RH (See page IP-15)**
3. **REMOVE SHIFT LEVER KNOB SUB-ASSEMBLY (See page IP-16)**
4. **REMOVE UPPER CONSOLE PANEL ASSEMBLY WITH FRONT ASH RECEPTACLE (See page IP-16)**
5. **REMOVE HEATER SEAT SWITCH CONSOLE BASE (w/o Seat Heater System) (See page IP-17)**
6. **REMOVE HEATER SEAT SWITCH CONSOLE BASE (w/ Seat Heater System) (See page IP-18)**
7. **REMOVE CONSOLE BOX POCKET (See page IP-18)**
8. **REMOVE CONSOLE BOX CARPET (See page IP-18)**
9. **REMOVE CONSOLE REAR END PANEL SUB-ASSEMBLY (See page IP-19)**
10. **REMOVE REAR CONSOLE BOX ASSEMBLY (See page IP-19)**
11. **REMOVE NO. 2 CONSOLE BOX DUCT (See page AC-149)**
12. **REMOVE NO. 3 CONSOLE BOX DUCT (See page AC-149)**
13. **DISCONNECT TRANSMISSION CONTROL CABLE ASSEMBLY**
    (a) Disconnect the end of the transmission control cable from the shift lever assembly.
    (b) Disconnect the transmission control cable assembly from the shift lever assembly while pushing the 2 claws of the floor shift cable.

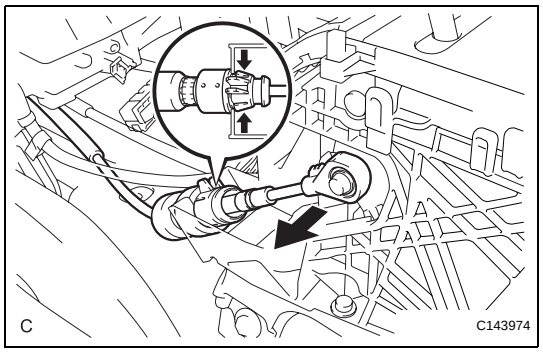

AX

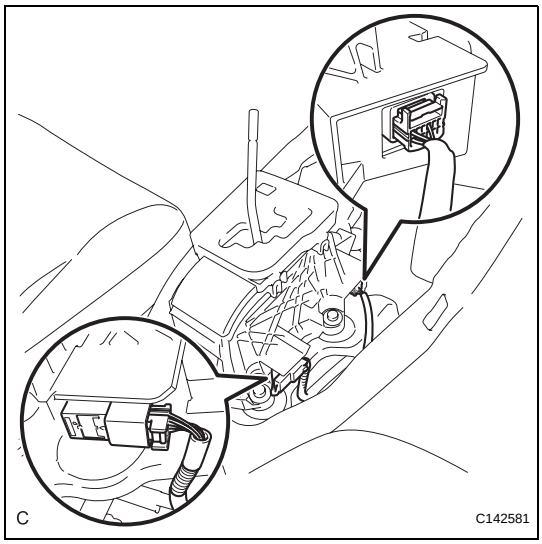

14. REMOVE SHIFT LEVER ASSEMBLY

(a) Disconnect the shift lock control ECU connector and transmission control switch wire connector.

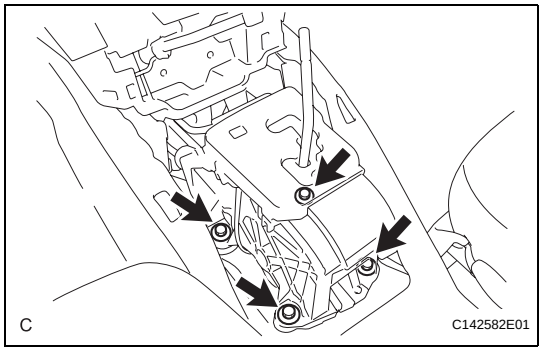

(b) Remove the 4 bolts and shift lever assembly.

DISASSEMBLY

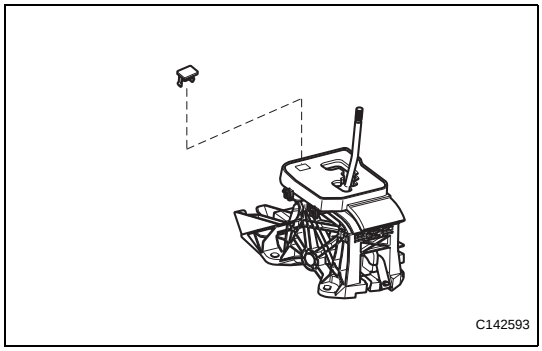

1. REMOVE SHIFT LOCK RELEASE BUTTON COVER

(a) Using a screwdriver, remove the shift lock release button cover from the position indicator housing assembly.

2. REMOVE INDICATOR LIGHT WIRE SUB-ASSEMBLY

(a) Turn the indicator light guide counterclockwise.

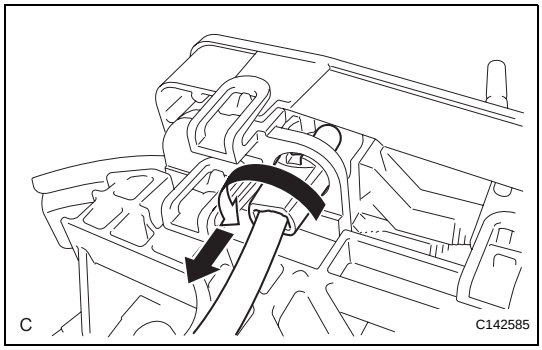

(b) Align the indicator light guide key with the groove on the shift lever assembly to remove the indicator light wire.

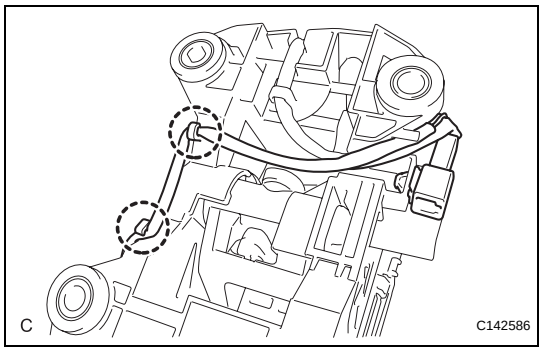

(c) Release the indicator light wire from the 2 clamps on the shift lever assembly.

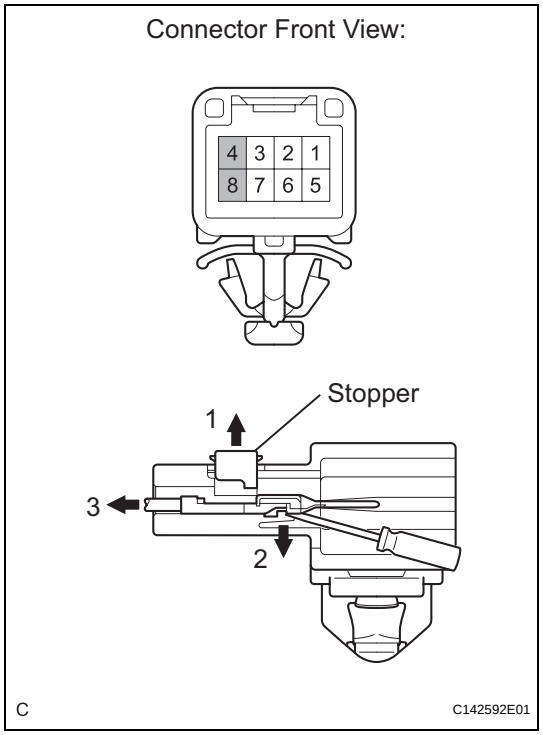

(d) Using a screwdriver, release the stopper.
(e) Using a screwdriver, disengage the locking lug of terminals (4) and (8), and pull the terminals out from the rear of the connector.
(f) Remove the bulb and cap.

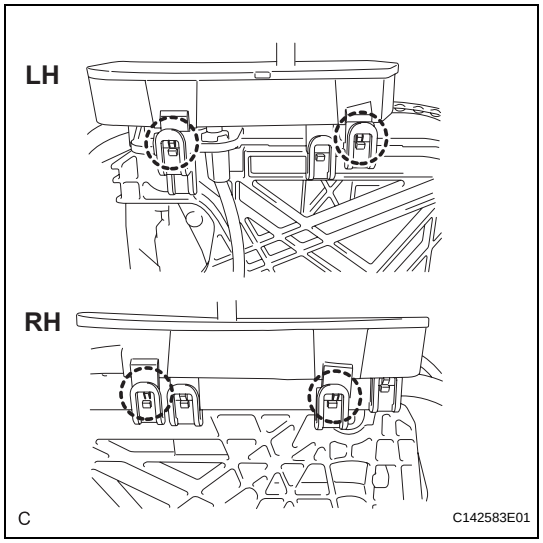

3. REMOVE POSITION INDICATOR HOUSING ASSEMBLY

(a) Detach the 4 claws and remove the position indicator housing assembly from the lower shift lever assembly.

AX

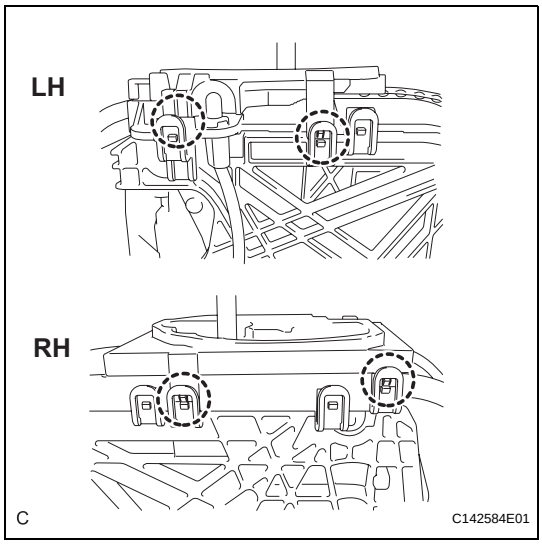

4. REMOVE POSITION INDICATOR LENS

(a) Detach the 4 claws and remove the position indicator lens from the lower shift lever assembly.

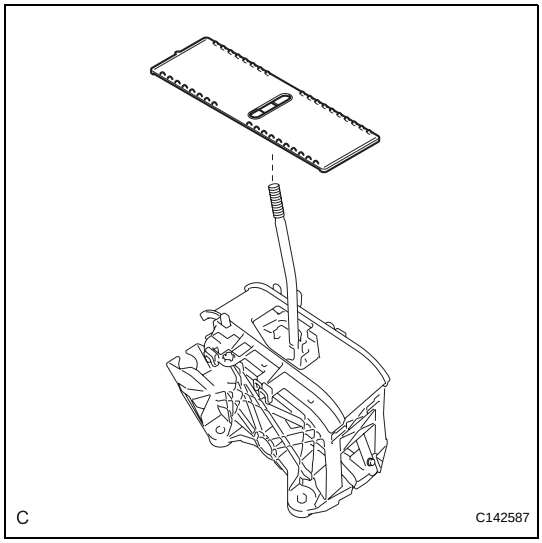

5. REMOVE POSITION INDICATOR SLIDE COVER

(a) Remove the position indicator slide cover from the lower shift lever assembly.

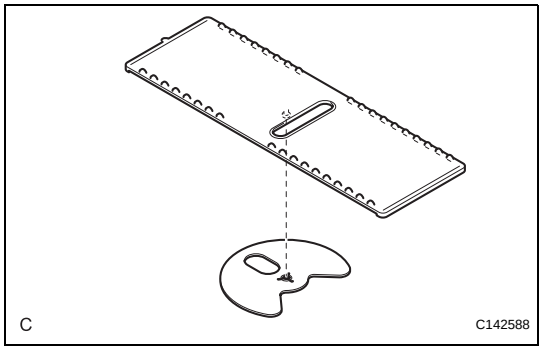

(b) Separate the No. 2 position indicator slide cover from the position indicator slide cover.

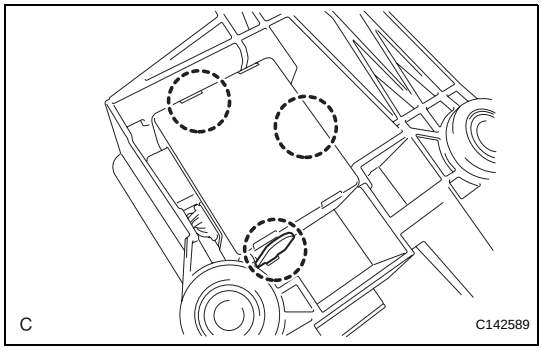

6. REMOVE SHIFT LOCK CONTROL ECU

(a) Detach the 3 claws and remove the shift lock control ECU from the lower shift lever assembly.

(b) Disconnect the shift lock solenoid connector.

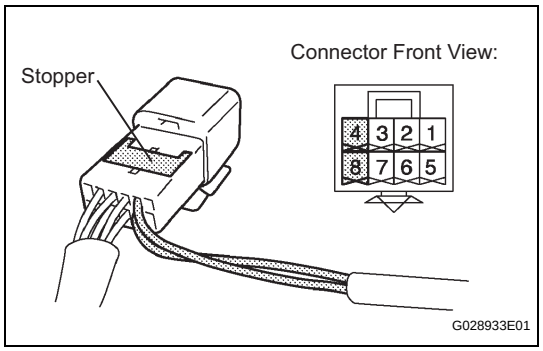

(b) Connect terminals (4) and (8) of the indicator light wire.
(c) Push the stopper.

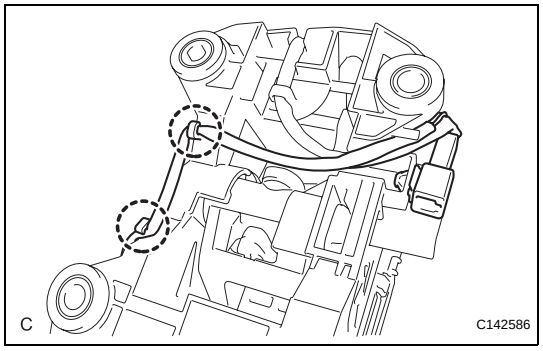

(d) Install the indicator light wire to the 2 clamps on the lower shift lever assembly.

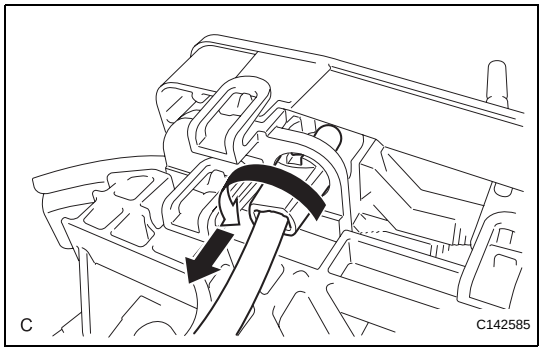

(e) Install the indicator light wire into the shift lever assembly while aligning the groove on the unit with the indicator light guide key.
(f) Install the indicator light guide by turning it clockwise until it securely locks.

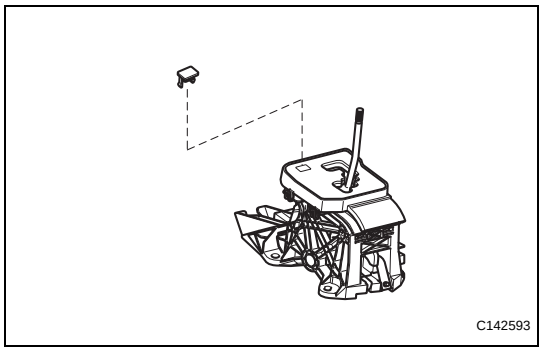

6. INSTALL SHIFT LOCK RELEASE BUTTON COVER
(a) Install the shift lock release button cover to the position indicator housing assembly.

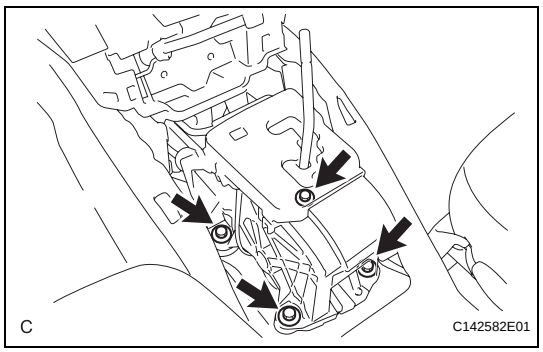

INSTALLATION

1. INSTALL SHIFT LEVER ASSEMBLY
(a) Install the 4 bolts and shift lever assembly.
Torque: 12 N*m (122 kgf*cm, 9 ft.*lbf)

AX

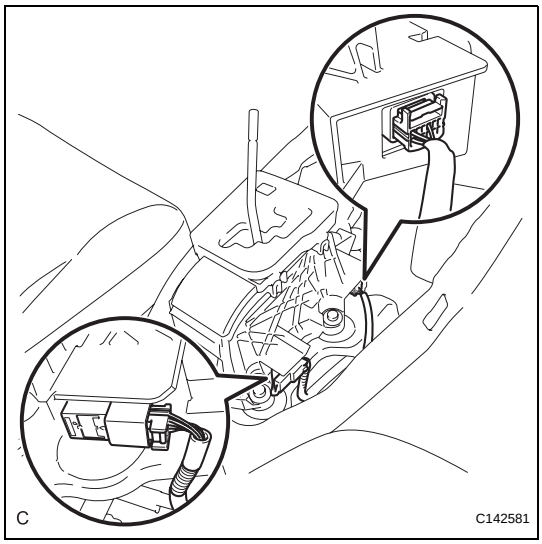

(b) Connect the shift lock control ECU connector and transmission control switch wire connector.

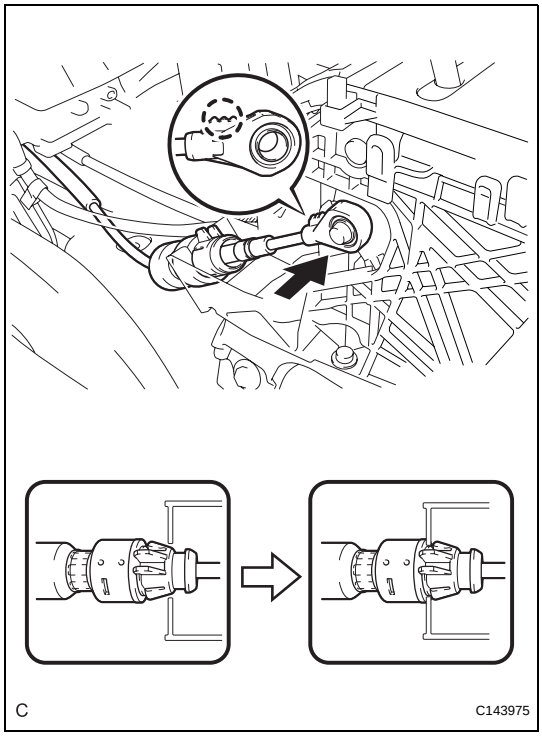

2. INSTALL TRANSMISSION CONTROL CABLE ASSEMBLY

(a) Install the transmission control cable assembly as shown in the illustration.
HINT:
- Install the floor shift cable with the uneven surface facing up.
- Securely engage the claws of the floor shift cable.

3. INSTALL NO. 3 CONSOLE BOX DUCT (See page AC-163)

4. INSTALL NO. 2 CONSOLE BOX DUCT (See page AC-163)

5. INSTALL REAR CONSOLE BOX ASSEMBLY (See page IP-39)

6. INSTALL CONSOLE REAR END PANEL SUB-ASSEMBLY (See page IP-40)

7. INSTALL CONSOLE BOX CARPET (See page IP-41)

8. INSTALL CONSOLE BOX POCKET (See page IP-41)

9. INSTALL HEATER SEAT SWITCH CONSOLE BASE (w/o Seat Heater System) (See page IP-41)

10. INSTALL HEATER SEAT SWITCH CONSOLE BASE (w/ Seat Heater System) (See page IP-41)

11. INSTALL UPPER CONSOLE PANEL ASSEMBLY WITH FRONT ASH RECEPTACLE (See page IP-42)

12. INSTALL SHIFT LEVER KNOB SUB-ASSEMBLY (See page IP-42)

13. INSTALL INSTRUMENT PANEL FINISH PANEL END RH (See page IP-44)

14. INSTALL INSTRUMENT PANEL FINISH PANEL END LH (See page IP-46)

15. INSPECT SHIFT LEVER POSITION (See page AX-200)

16. ADJUST SHIFT LEVER POSITION (See page AX-200)

Switch Side:

(Connector Front View):

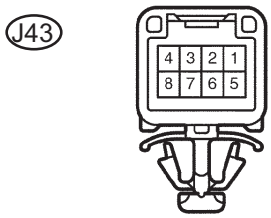

C110341E15

INSPECTION

1. INSPECT TRANSMISSION CONTROL SWITCH

(a) Measure the resistance between each terminal of the shift lever assembly when the shift lever is moved to each position.

Standard resistance

Shift Position	Tester Connection	Specified Condition
S, "+" and "-"	3 - 7	Below 1 Ω
Except S, "+" and "-"	3 - 7	10 kΩ or higher
Press continuously "+" (Upshift)	2 - 5	Below 1 Ω
S	2 - 5	10 kΩ or higher
Press continuously "-" (Downshift)	1 - 5	Below 1 Ω
S	1 - 5	10 kΩ or higher

If the resistance value is not as specified, replace the shift lock control ECU.

ADJUSTMENT

1. ADJUST SHIFT LEVER POSITION

(a) Move the shift lever to the N position.

(b) Remove the nut and transmission control cable from the control shaft lever.

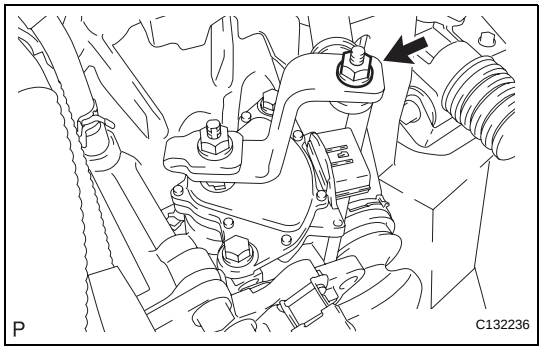

(c) Align the protrusions of the park/neutral position switch.

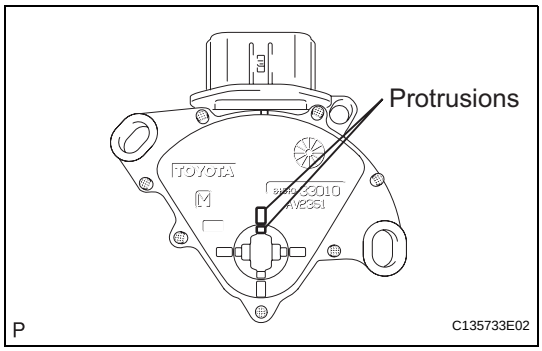

(d) Move the slider in the direction indicated by arrow A and pull up the lock piece in the direction indicated by arrow B.
NOTICE:
Do not damage the boot.

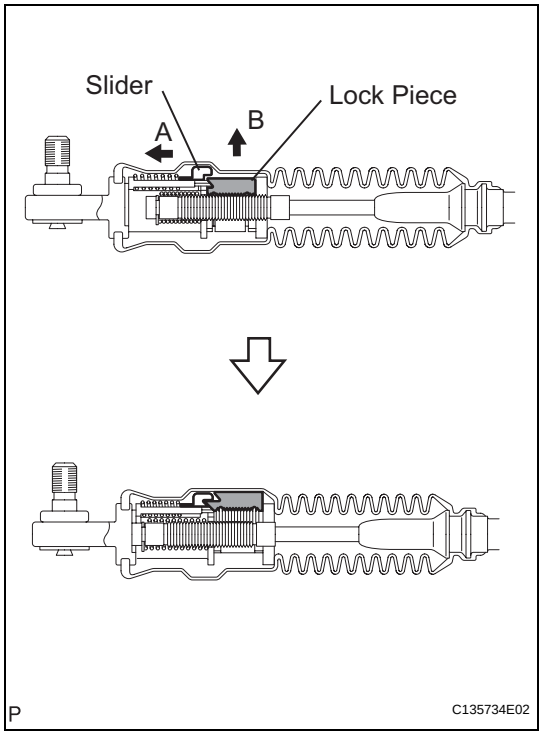

AX

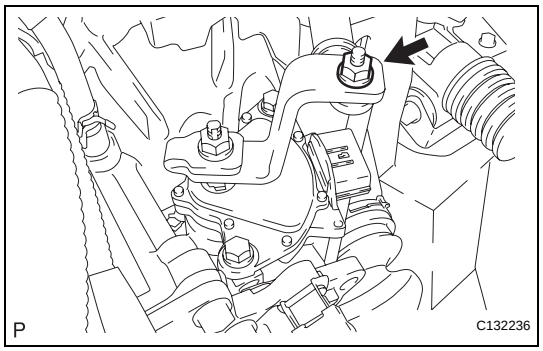

(e) Connect the transmission control cable assembly to the control shaft lever with the nut.
Torque: 13 N*m (130 kgf*cm, 9 ft.*lbf)

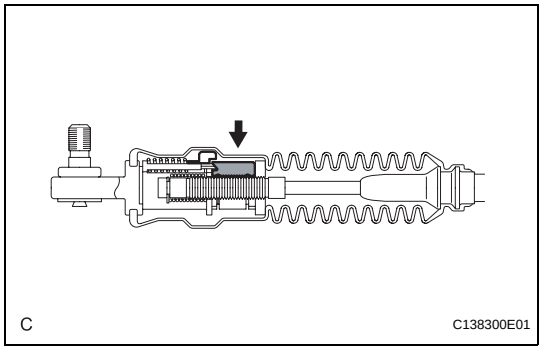

(f) Push in the lock piece.
NOTICE:
Firmly push in the lock piece until the slider lock is engaged.

(g) Start the engine and make source that the vehicle moves forward when moving the lever from the N to the D position and moves rearward when moving it to the R position.
If it becomes hard to move the shift lever, readjust the shift lever position.

REASSEMBLY

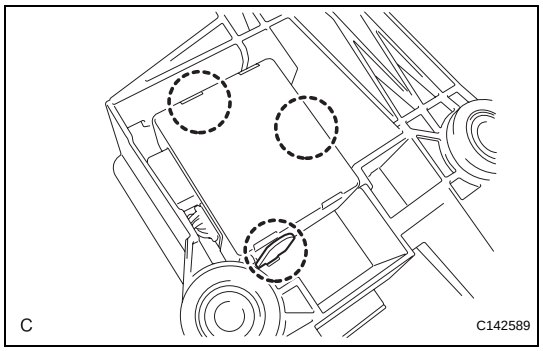

1. INSTALL SHIFT LOCK CONTROL ECU

(a) Connect the shift lock solenoid connector.

(b) Attach the shift lock control ECU to the lower shift lever assembly with the 3 claws.

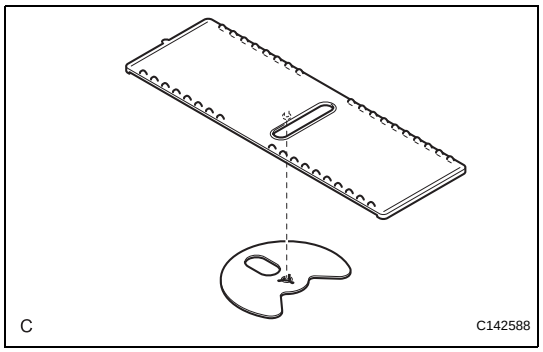

2. INSTALL POSITION INDICATOR SLIDE COVER

(a) Connect the No. 2 position indicator slide cover to the position indicator slide cover.

AX

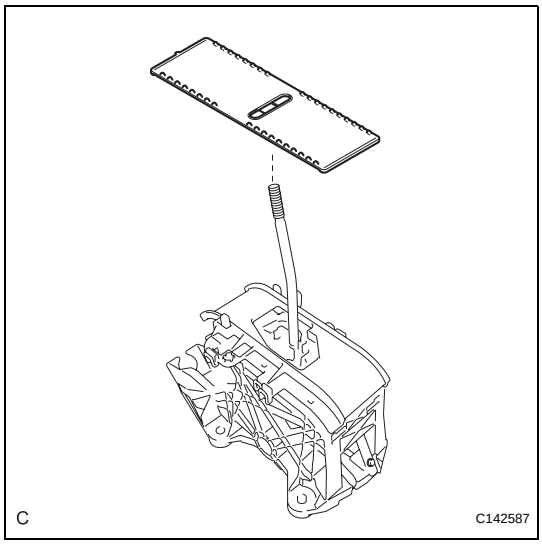

(b) Install the position indicator slide cover to the lower shift lever assembly.

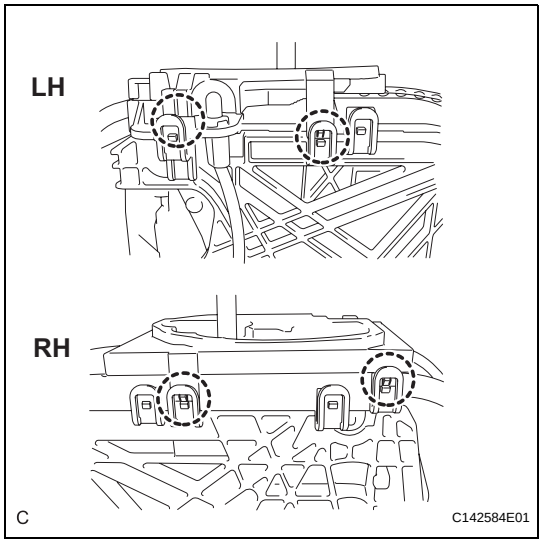

3. INSTALL POSITION INDICATOR LENS

(a) Attach the position indicator lens to the lower shift lever assembly with the 4 claws.

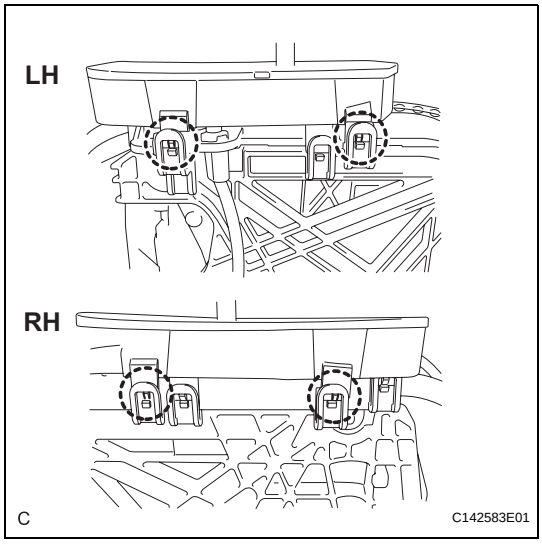

4. INSTALL POSITION INDICATOR HOUSING ASSEMBLY

(a) Attach the position indicator housing assembly to the lower shift lever assembly with the 4 claws.

5. INSTALL INDICATOR LIGHT WIRE SUB-ASSEMBLY

(a) Install the bulb and cap.

REMOVAL

1. REMOVE TORQUE CONVERTER CLUTCH ASSEMBLY

HINT:

(See page AX-215)

INSPECTION

1. INSPECT TORQUE CONVERTER CLUTCH ASSEMBLY

(a) Inspect the one-way clutch.

(1) Set SST into the inner race of the one-way clutch.

SST 09350-32014 (09351-32010)

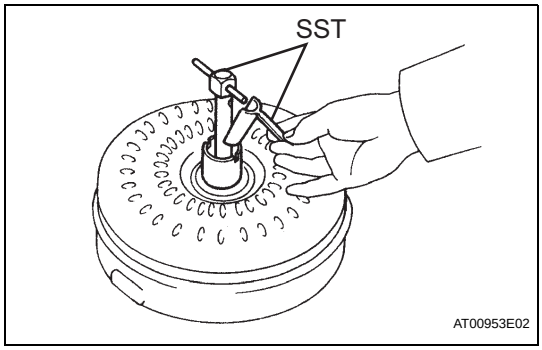

(2) Install SST so that it fits in the notch of the converter hub and the outer race of the one-way clutch.

SST 09350-32014 (09351-32010, 09351-32020)

(3) Stand the torque converter up and turn the SST.

Standard:

If the one-way clutch is turned clockwise, it rotates freely and if turned counterclockwise, it locks.

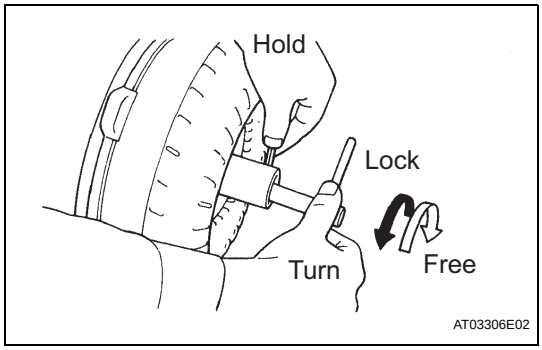

(b) Determine the condition of the torque converter clutch assembly.

(1) If the inspection result of the torque converter clutch assembly satisfies the following conditions, replace the torque converter clutch assembly.

Malfunction item:

A metallic sound is emitted from the torque converter clutch assembly during the stall test or when the shift lever is moved to the N position.

The one-way clutch is free or locked in both directions.

The amount of powder in the ATF is greater than the sample shown in the illustration (see the sample).

HINT:

The sample shows ATF of approximately 0.25 liters (0.26 US qts, 0.22 Imp. qts) that is taken out from the removed torque converter clutch.

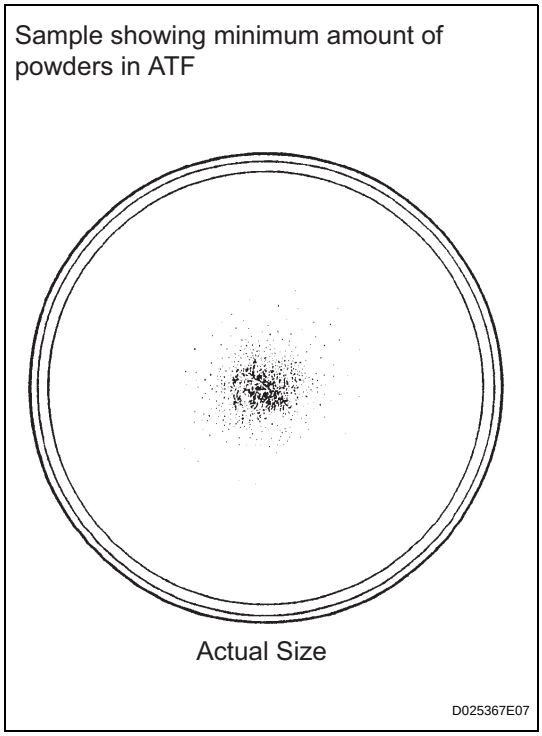

(c) Exchange the ATF in the torque converter clutch.

(1) If the ATF is discolored and/or has a foul odor, completely stir the ATF in the torque converter clutch and drain it.

AX

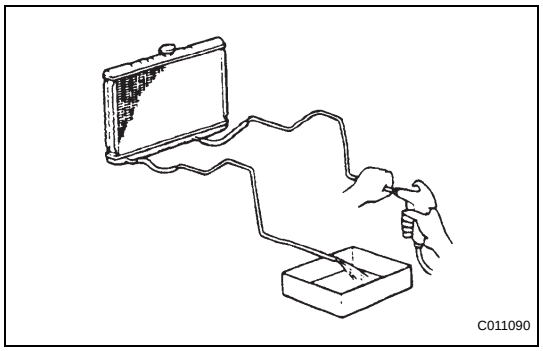

(d) Clean and check the oil cooler and oil pipe line.
   (1) If the torque converter clutch is inspected or the ATF is exchanged, clean the oil cooler and oil pipe line.
   HINT:
   - Spray compressed air of 196 kPa (2 kgf/cm^2, 28 psi) from the inlet hose.
   - If plenty of fine powders are identified in the ATF, add new ATF using a bucket pump and clean it again.
   (2) If the ATF is cloudy, inspect the oil cooler (radiator).

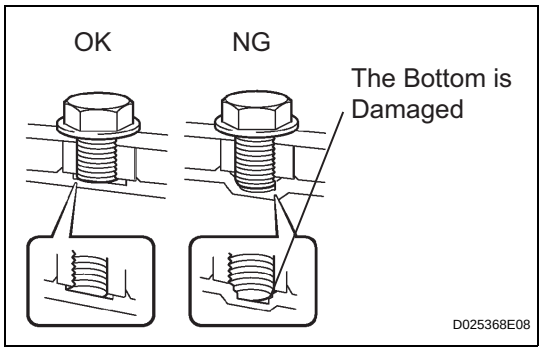

(e) Prevent deformation of the torque converter clutch and damage to the oil pump gear.
   (1) When there is any damage to the end of the bolt for the torque converter clutch and to the bottom of the bolt hole, replace the bolt and the torque converter clutch.
   (2) All of the bolts must be the same length.
   (3) Bolts with washers must be used.

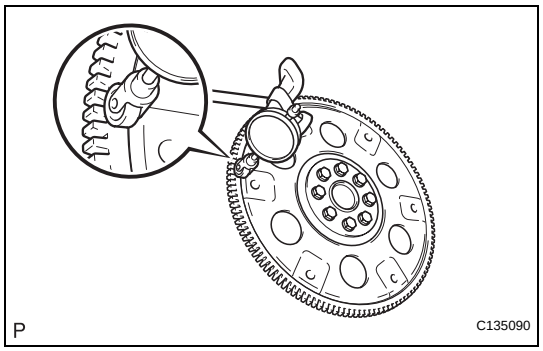

2. INSPECT DRIVE PLATE AND RING GEAR SUB-ASSEMBLY

(a) Set up a dial indicator with a roller instrument and measure the drive plate runout.
   Maximum runout:
   0.20 mm (0.0079 in.)
(b) Check for damage of the ring gear.
   If runout is not within specification or the ring gear is damaged, replace the drive plate.

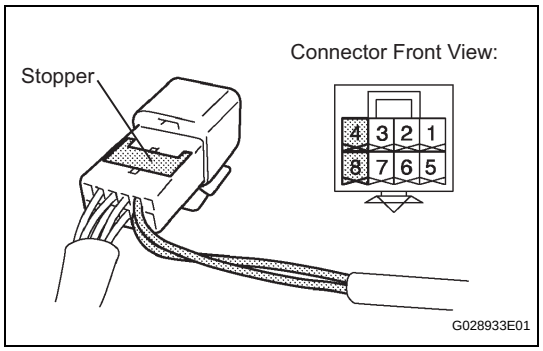

(b) Connect terminals (4) and (8) of the indicator light wire.
(c) Push the stopper.

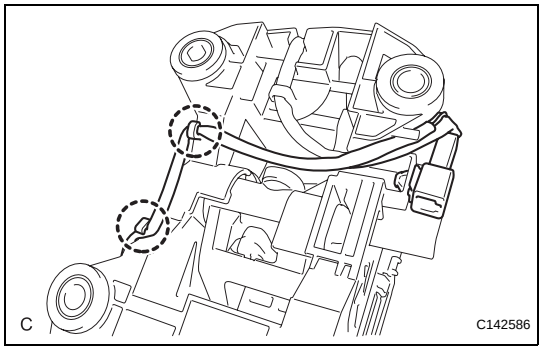

(d) Install the indicator light wire to the 2 clamps on the lower shift lever assembly.

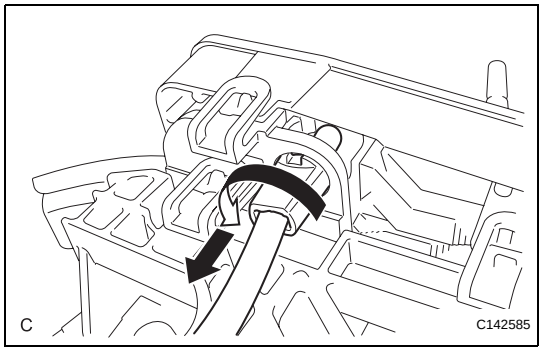

(e) Install the indicator light wire into the shift lever assembly while aligning the groove on the unit with the indicator light guide key.
(f) Install the indicator light guide by turning it clockwise until it securely locks.

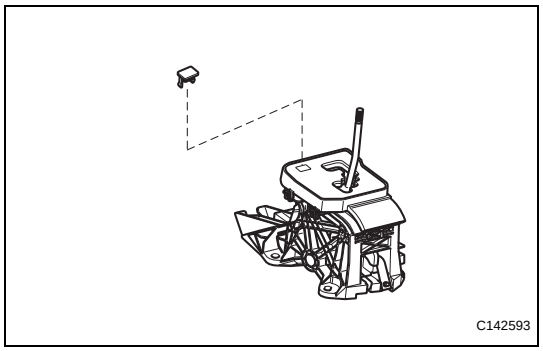

6. INSTALL SHIFT LOCK RELEASE BUTTON COVER
(a) Install the shift lock release button cover to the position indicator housing assembly.

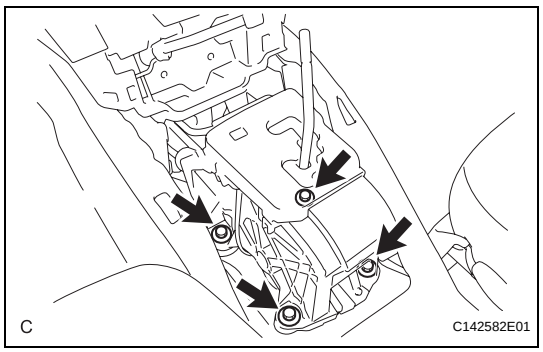

INSTALLATION

1. INSTALL SHIFT LEVER ASSEMBLY
(a) Install the 4 bolts and shift lever assembly.
Torque: 12 N*m (122 kgf*cm, 9 ft.*lbf)

AX

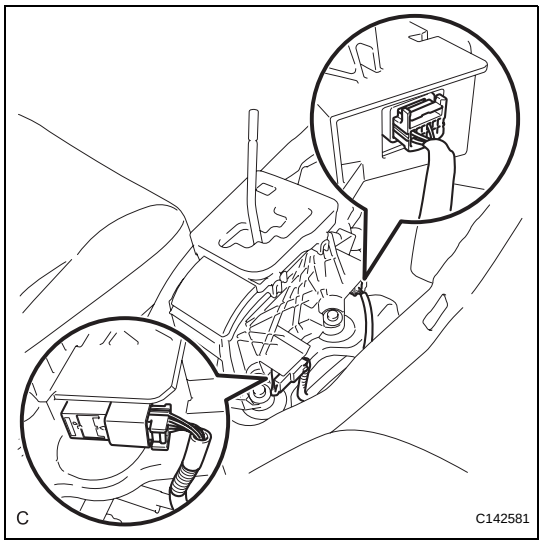

(b) Connect the shift lock control ECU connector and transmission control switch wire connector.

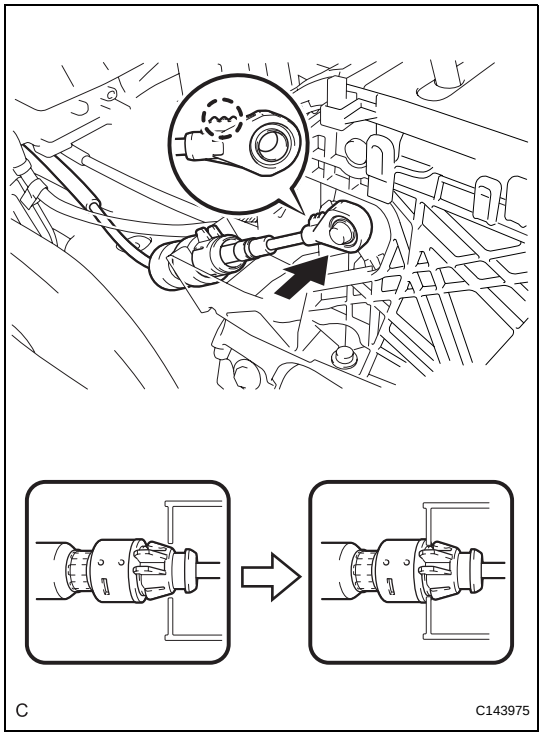

2. INSTALL TRANSMISSION CONTROL CABLE ASSEMBLY

(a) Install the transmission control cable assembly as shown in the illustration.
HINT:
- Install the floor shift cable with the uneven surface facing up.
- Securely engage the claws of the floor shift cable.

3. INSTALL NO. 3 CONSOLE BOX DUCT (See page AC-163)

4. INSTALL NO. 2 CONSOLE BOX DUCT (See page AC-163)

5. INSTALL REAR CONSOLE BOX ASSEMBLY (See page IP-39)

6. INSTALL CONSOLE REAR END PANEL SUB-ASSEMBLY (See page IP-40)

7. INSTALL CONSOLE BOX CARPET (See page IP-41)

8. INSTALL CONSOLE BOX POCKET (See page IP-41)

9. INSTALL HEATER SEAT SWITCH CONSOLE BASE (w/o Seat Heater System) (See page IP-41)

10. INSTALL HEATER SEAT SWITCH CONSOLE BASE (w/ Seat Heater System) (See page IP-41)

11. INSTALL UPPER CONSOLE PANEL ASSEMBLY WITH FRONT ASH RECEPTACLE (See page IP-42)

12. INSTALL SHIFT LEVER KNOB SUB-ASSEMBLY (See page IP-42)

13. INSTALL INSTRUMENT PANEL FINISH PANEL END RH (See page IP-44)

14. INSTALL INSTRUMENT PANEL FINISH PANEL END LH (See page IP-46)

15. INSPECT SHIFT LEVER POSITION (See page AX-200)

16. ADJUST SHIFT LEVER POSITION (See page AX-200)

TCM

COMPONENTS

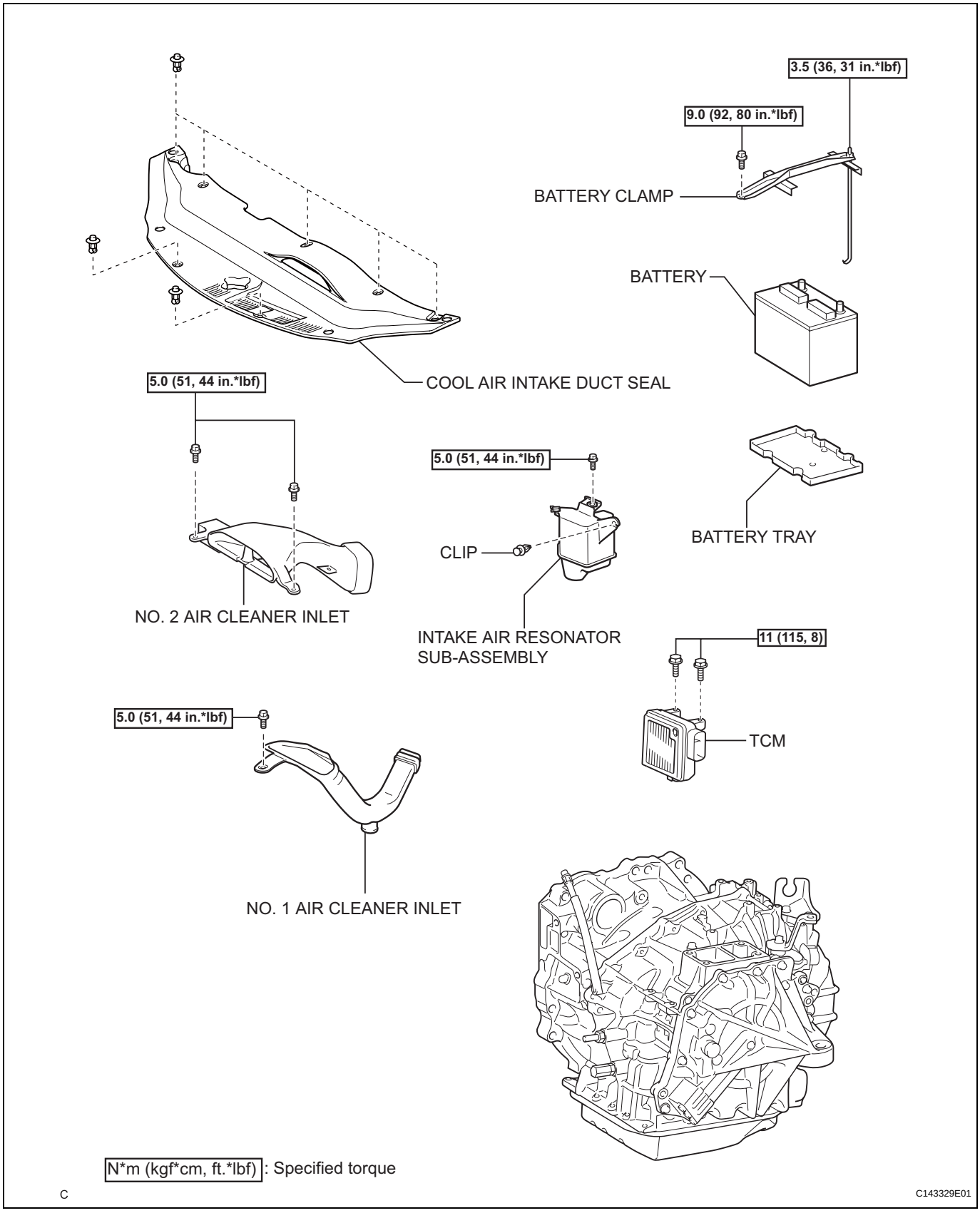

AX

REMOVAL

NOTICE:
When the TCM is replaced, the existing transaxle compensation codes must be input into the new TCM (See page AX-21).

1. **REMOVE COOL AIR INTAKE DUCT SEAL (See page EM-22)**
2. **REMOVE BATTERY (See page EM-24)**
3. **REMOVE AIR CLEANER INLET ASSEMBLY (See page EM-23)**
4. **REMOVE NO. 1 AIR CLEANER INLET (See page EM-23)**
5. **REMOVE INTAKE AIR RESONATOR SUB-ASSEMBLY (See page EM-24)**
6. **REMOVE TCM**
   (a) Turn the lock lever and disconnect the connector from the TCM.

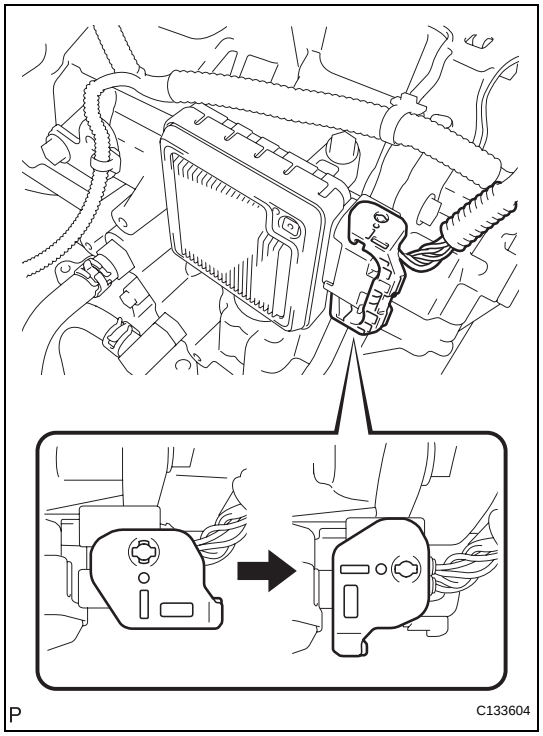

   (b) Remove the 2 bolts and TCM from the transaxle.

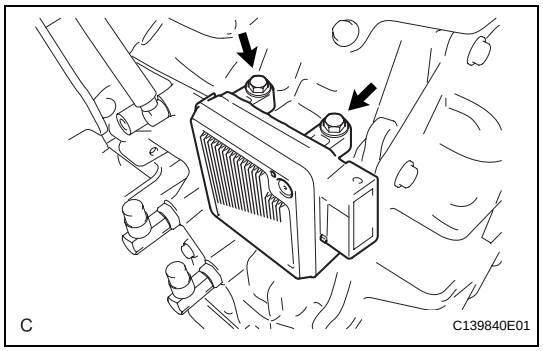

AX

REMOVAL

1. REMOVE TORQUE CONVERTER CLUTCH ASSEMBLY

HINT:

(See page AX-215)

INSPECTION

1. INSPECT TORQUE CONVERTER CLUTCH ASSEMBLY

(a) Inspect the one-way clutch.

(1) Set SST into the inner race of the one-way clutch.

SST 09350-32014 (09351-32010)

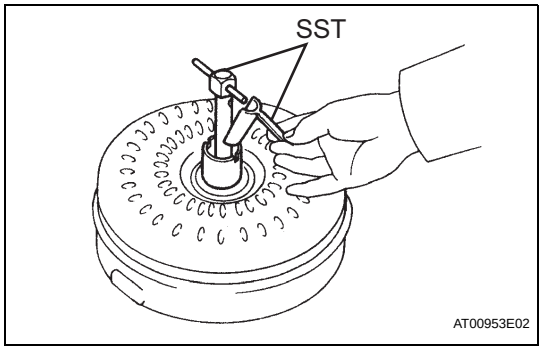

(2) Install SST so that it fits in the notch of the converter hub and the outer race of the one-way clutch.

SST 09350-32014 (09351-32010, 09351-32020)

(3) Stand the torque converter up and turn the SST.

Standard:

If the one-way clutch is turned clockwise, it rotates freely and if turned counterclockwise, it locks.

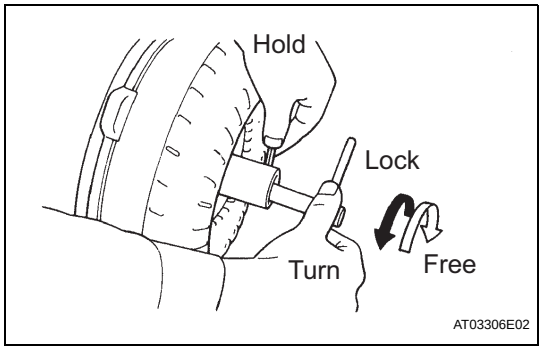

(b) Determine the condition of the torque converter clutch assembly.

(1) If the inspection result of the torque converter clutch assembly satisfies the following conditions, replace the torque converter clutch assembly.

Malfunction item:

A metallic sound is emitted from the torque converter clutch assembly during the stall test or when the shift lever is moved to the N position.

The one-way clutch is free or locked in both directions.

The amount of powder in the ATF is greater than the sample shown in the illustration (see the sample).

HINT:

The sample shows ATF of approximately 0.25 liters (0.26 US qts, 0.22 Imp. qts) that is taken out from the removed torque converter clutch.

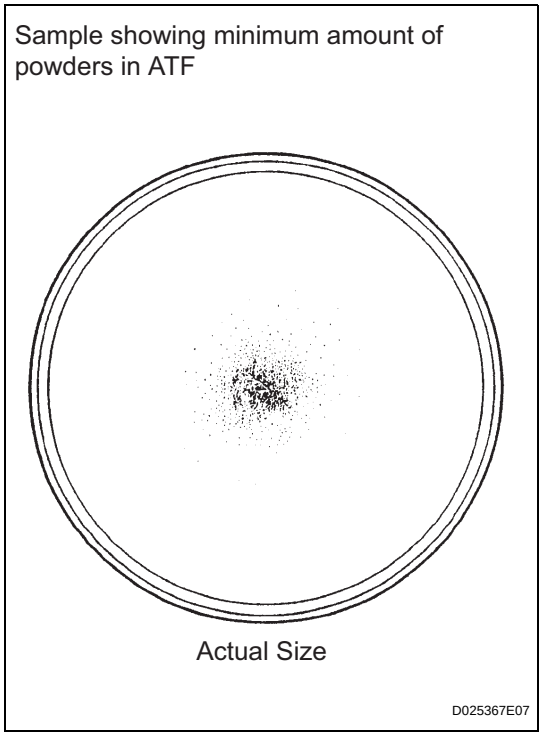

(c) Exchange the ATF in the torque converter clutch.

(1) If the ATF is discolored and/or has a foul odor, completely stir the ATF in the torque converter clutch and drain it.

AX

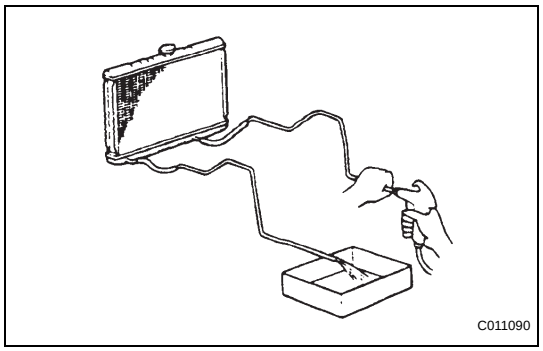

(d) Clean and check the oil cooler and oil pipe line.
   (1) If the torque converter clutch is inspected or the ATF is exchanged, clean the oil cooler and oil pipe line.
   HINT:
   - Spray compressed air of 196 kPa (2 kgf/cm^2, 28 psi) from the inlet hose.
   - If plenty of fine powders are identified in the ATF, add new ATF using a bucket pump and clean it again.
   (2) If the ATF is cloudy, inspect the oil cooler (radiator).

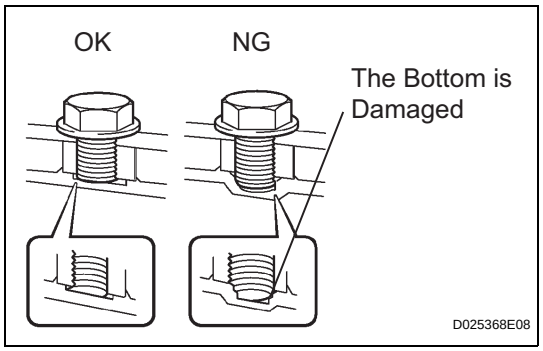

(e) Prevent deformation of the torque converter clutch and damage to the oil pump gear.
   (1) When there is any damage to the end of the bolt for the torque converter clutch and to the bottom of the bolt hole, replace the bolt and the torque converter clutch.
   (2) All of the bolts must be the same length.
   (3) Bolts with washers must be used.

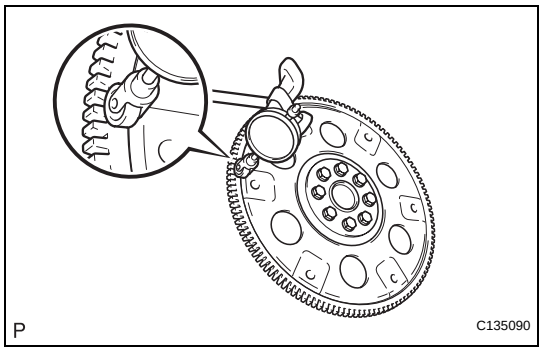

2. INSPECT DRIVE PLATE AND RING GEAR SUB-ASSEMBLY

(a) Set up a dial indicator with a roller instrument and measure the drive plate runout.
   Maximum runout:
   0.20 mm (0.0079 in.)
(b) Check for damage of the ring gear.
   If runout is not within specification or the ring gear is damaged, replace the drive plate.

DISASSEMBLY

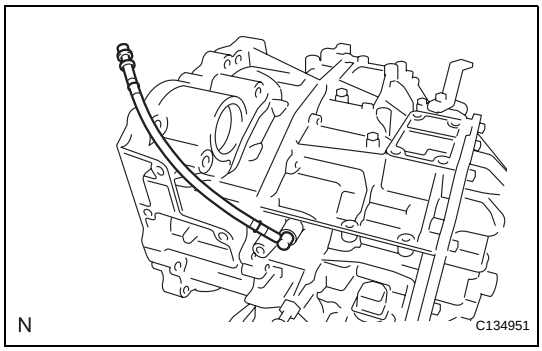

1. REMOVE NO. 2 BREATHER PLUG

(a) Using a screwdriver, remove the breather plug hose from the transaxle case.

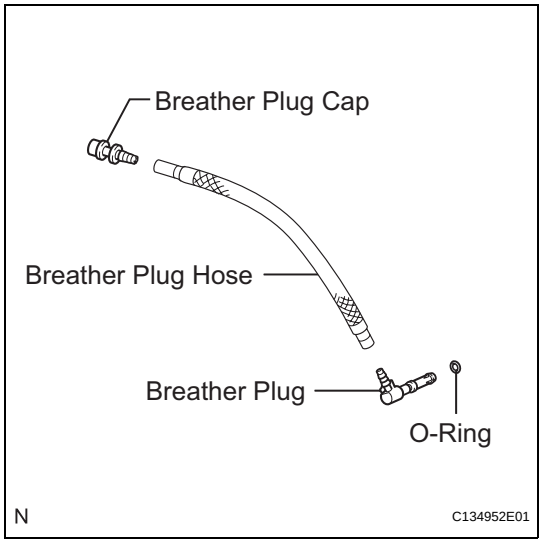

(b) Using a screwdriver, remove the breather plug from the breather plug hose.

(c) Using a screwdriver, remove the O-ring from the breather plug.

(d) Using a screwdriver, remove the breather plug cap from the breather breather plug hose.

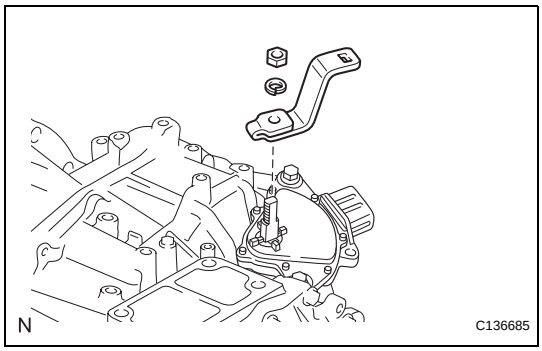

2. REMOVE PARK/NEUTRAL POSITION SWITCH ASSEMBLY

(a) Remove the nut, washer, and control shaft lever from the control shaft.

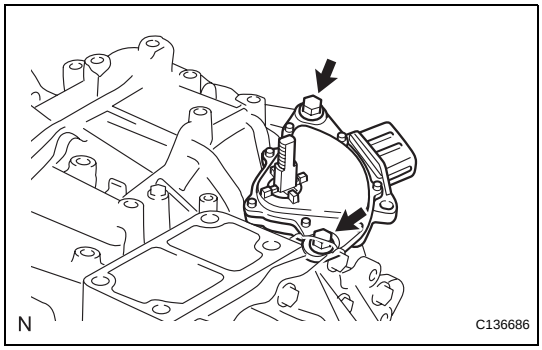

(b) Remove the 2 bolts and the park/neutral position switch assembly from the transaxle case.

NOTICE:

Before removing the park/neutral position switch, remove any dirt or rust on the installation portion of the control shaft. Be sure to remove the switch straight along the shaft while being careful not to deform the plate spring that supports the shaft. If the plate spring is deformed, the park/neutral switch cannot be reinstalled correctly.

AX

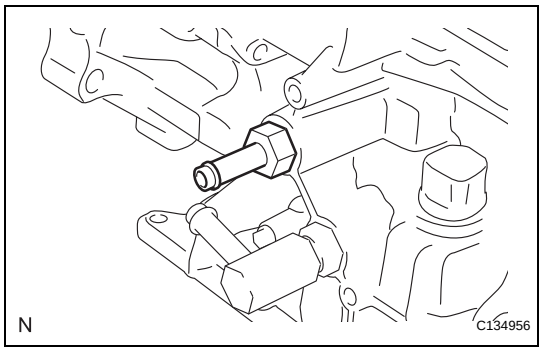

3. REMOVE OIL COOLER TUBE UNION (INLET OIL COOLER UNION)

(a) Loosen the nut while holding the oil cooler tube union (inlet oil cooler union).
(b) Remove the oil cooler tube union (inlet oil cooler union) from the transaxle case.
(c) Remove the O-ring from the oil cooler tube union (inlet oil cooler union).

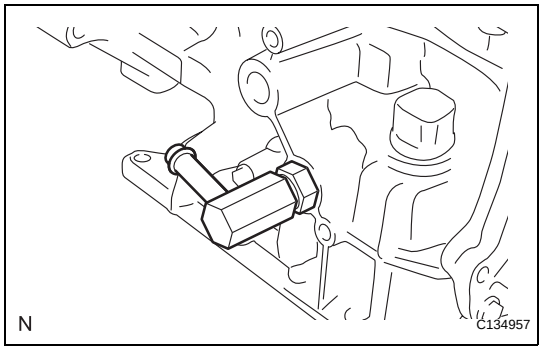

4. REMOVE OIL COOLER TUBE UNION (OUTLET OIL COOLER UNION)

(a) Loosen the nut while holding the oil cooler tube union (outlet oil cooler union).
(b) Remove the oil cooler tube union (outlet oil cooler union) from the transaxle case.
(c) Remove the O-ring from the oil cooler tube union (outlet oil cooler union).

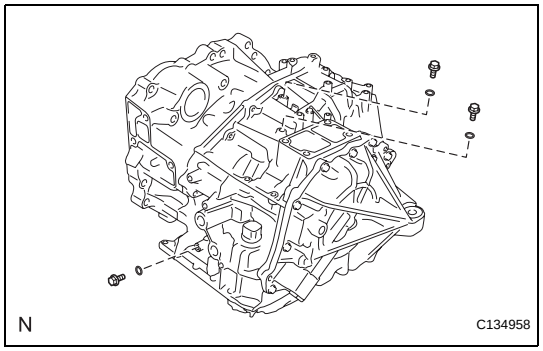

5. REMOVE NO. 1 TRANSAXLE CASE PLUG

(a) Remove the 3 No. 1 transaxle case plugs from the transaxle case.
(b) Using a screwdriver, remove the 3 O-rings from the 3 No. 1 transaxle case plugs.

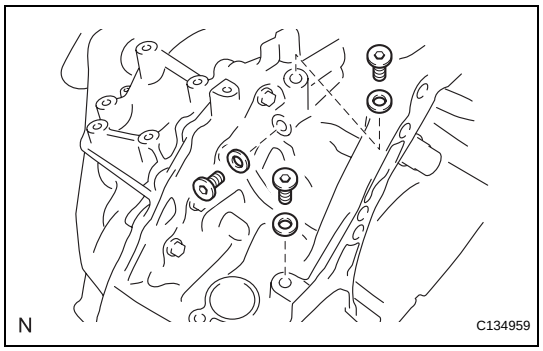

(c) Using a hexagon wrench (6 mm), remove the 3 hexagon bolts from the transaxle housing.
(d) Remove the 3 gaskets from the 3 hexagon bolts.

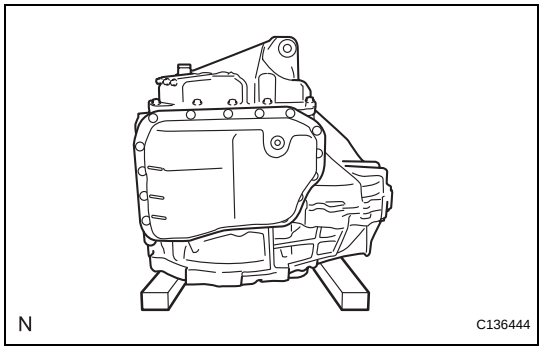

6. FIX AUTOMATIC TRANSAXLE ASSEMBLY

(a) Secure the transaxle assembly on wooden blocks.

AX

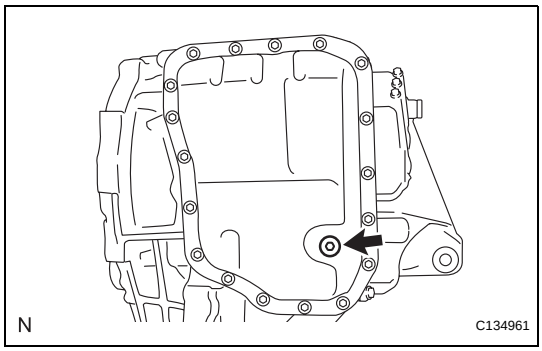

7. REMOVE AUTOMATIC TRANSAXLE OIL PAN SUB-ASSEMBLY

(a) Using a hexagon wrench (6 mm), remove the overflow plug from the automatic transaxle oil pan sub-assembly.

(b) Remove the gasket from the overflow plug.

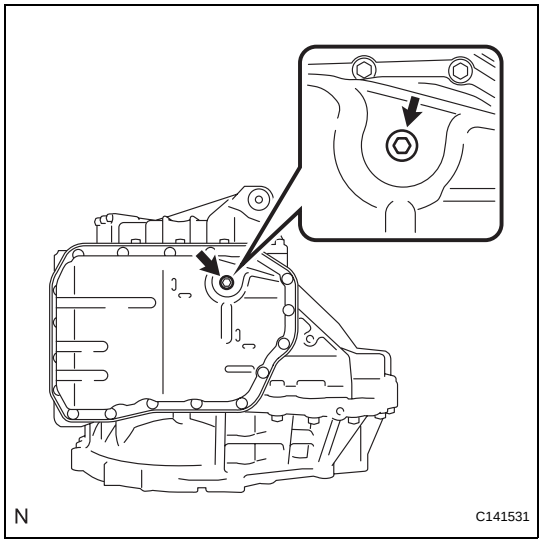

(c) Using a hexagon wrench (6 mm), remove the No. 1 oil filler tube from the automatic transaxle assembly.

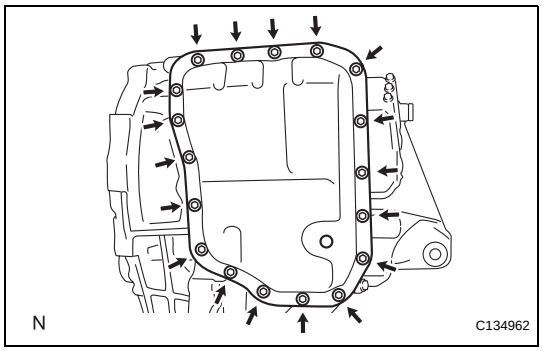

(d) Remove the 18 bolts, automatic transaxle oil pan sub-assembly, and gasket from the automatic transaxle assembly.

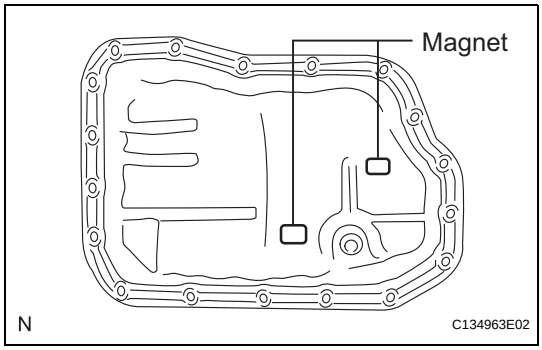

(e) Remove the 2 magnets from the automatic transaxle oil pan sub-assembly.

8. INSPECT TRANSMISSION OIL CLEANER MAGNET (See page AX-283)

AX

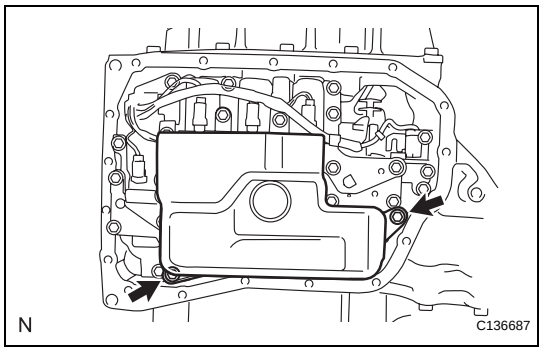

9. REMOVE VALVE BODY OIL STRAINER ASSEMBLY

(a) Remove the 2 bolts and oil strainer assembly from the valve body assembly.

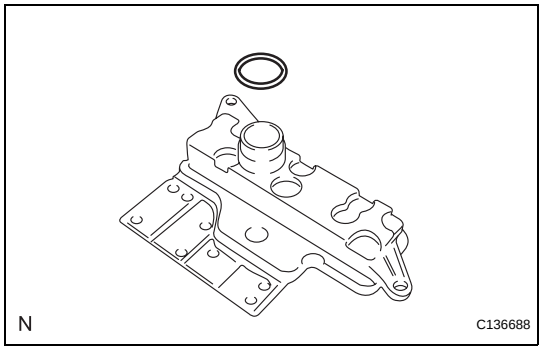

(b) Remove the O-ring from the oil strainer assembly.

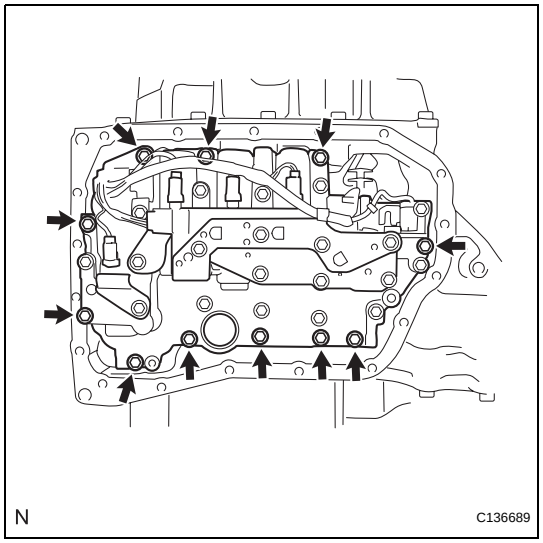

10. REMOVE TRANSMISSION VALVE BODY ASSEMBLY

(a) Remove the 11 bolts and valve body assembly from the transaxle case.

NOTICE:

When removing the transmission valve body assembly, be careful not to allow the transmission revolution sensor and the transaxle case to interfere each other.

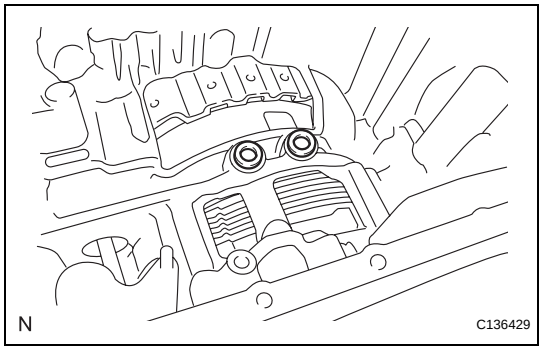

11. REMOVE TRANSAXLE CASE GASKET

(a) Remove the 2 gaskets from the transaxle case.

12. INSPECT INPUT SHAFT SUB-ASSEMBLY (See page AX-284)

AX

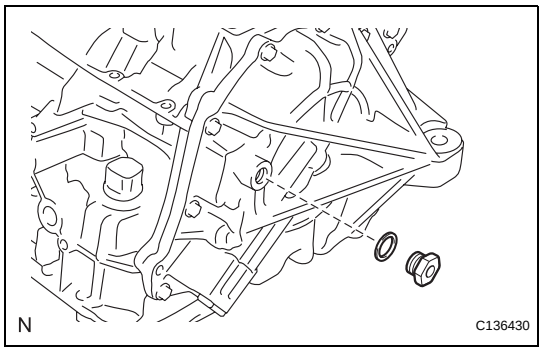

13. REMOVE TRANSAXLE REAR COVER SUB-ASSEMBLY

(a) Remove the refill plug from the transaxle rear cover.
(b) Remove the gasket from the refill plug.

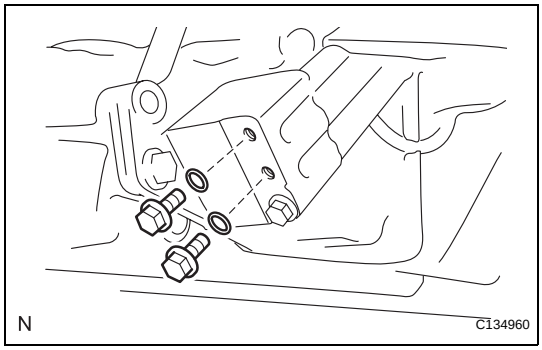

(c) Remove the 2 No. 1 automatic transaxle case plugs from the transaxle rear cover.
(d) Using a screwdriver, remove the 2 O-rings from the 2 No. 1 automatic transaxle case plugs.

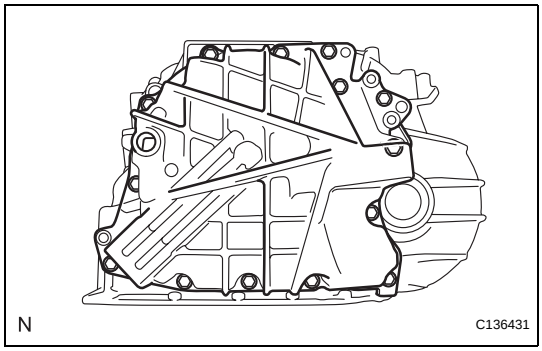

(e) Remove the 14 bolts from the transaxle rear cover.
(f) Using a brass bar and hammer, tap on the circumference of the rear transaxle cover, to remove the transaxle rear cover from the transaxle case.

AX

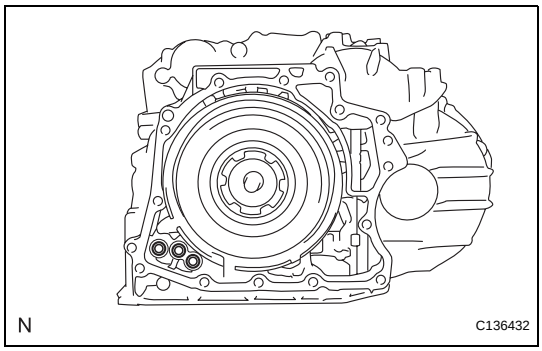

(g) Using a screwdriver, remove the 3 O-rings from the transaxle case.

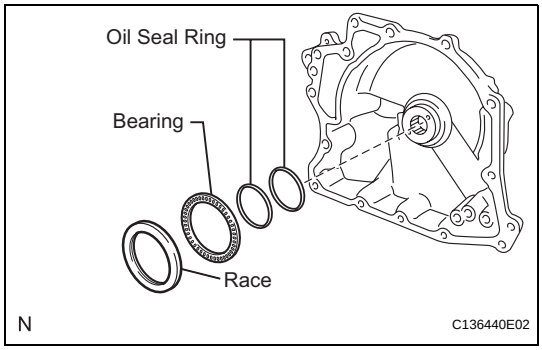

(h) Using a screwdriver, remove the 2 oil seal rings from the transaxle rear cover.
(i) Remove the thrust needle roller bearing and thrust needle roller race from the transaxle rear cover.

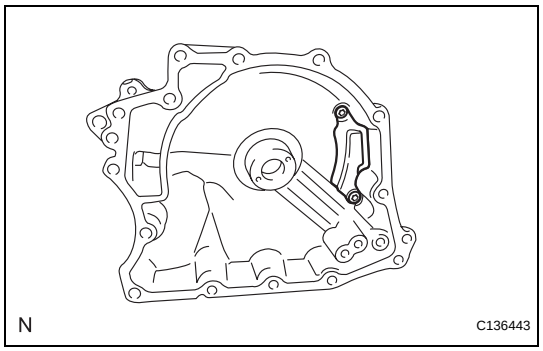

(j) Using a "TORX" wrench (T30), remove the 2 "TORX" screws and transaxle rear cover plate from the transaxle rear cover.

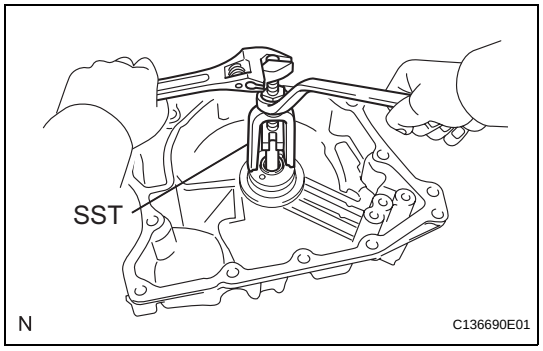

(k) Using SST, remove the needle roller bearing from the transaxle rear cover.
SST 09319-60020

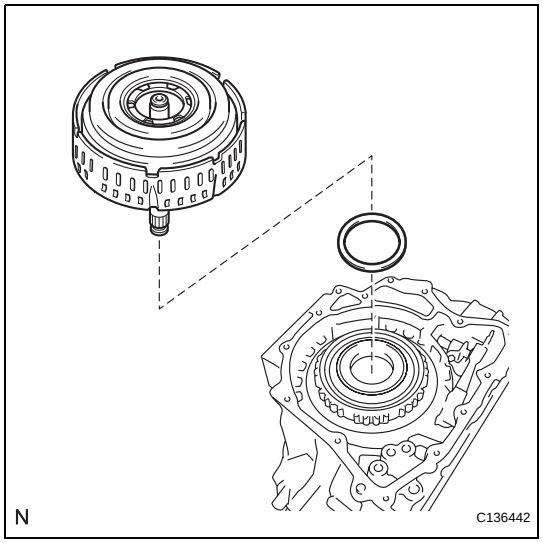

14. REMOVE DIRECT MULTIPLE DISC CLUTCH ASSEMBLY

(a) Remove the direct multiple disc clutch assembly from the transaxle case.

(b) Remove the thrust needle roller bearing from the direct multiple disc clutch assembly.

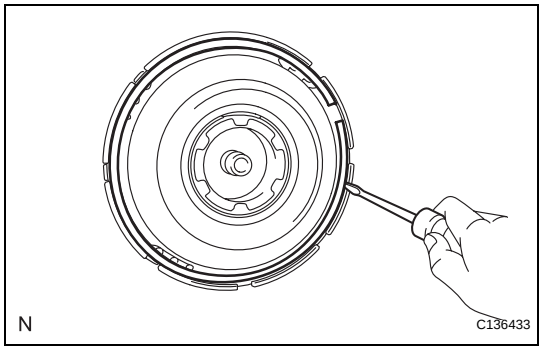

15. REMOVE DIRECT MULTIPLE DISC CLUTCH SNAP RING

(a) Using 2 screwdrivers, remove the snap ring from the direct multiple disc clutch assembly.

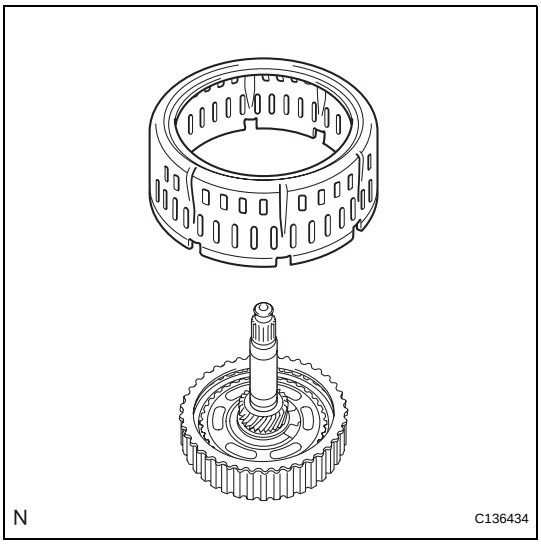

(b) Remove the No. 2 direct clutch piston from the direct multiple disc clutch assembly.

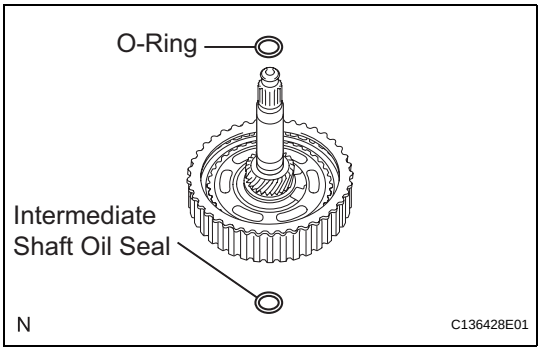

(c) Using a screwdriver, remove the intermediate shaft oil seal ring from the direct No. 2 direct clutch piston.
(d) Using a screwdriver, remove the O-ring from the direct multiple disc clutch assembly.

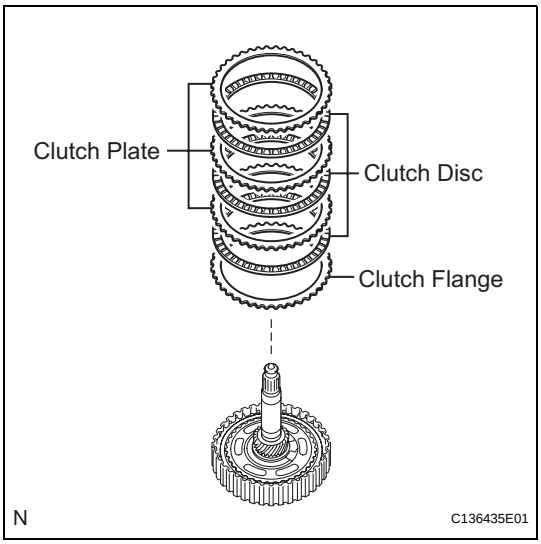

16. REMOVE NO. 2 DIRECT MULTIPLE DISC CLUTCH FLANGE

(a) Remove the flange, 3 clutch discs and 3 clutch plates from the direct multiple disc clutch assembly.

17. INSPECT NO. 2 CLUTCH DISC (See page AX-284)

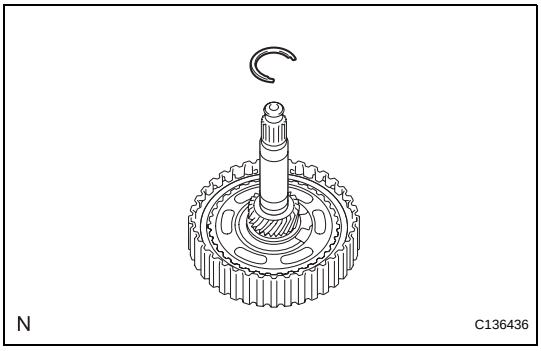

18. REMOVE REAR PLANETARY SUN GEAR ASSEMBLY

(a) Using a snap ring expander, remove the snap ring from the direct multiple disc clutch assembly.

AX

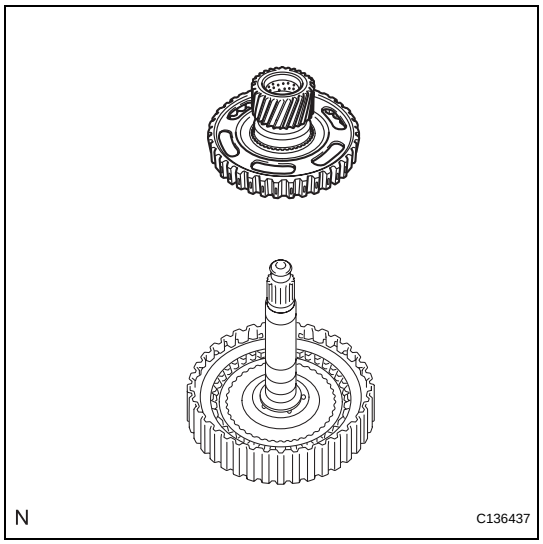

(b) Remove the rear planetary sun gear from the direct multiple disc clutch assembly.

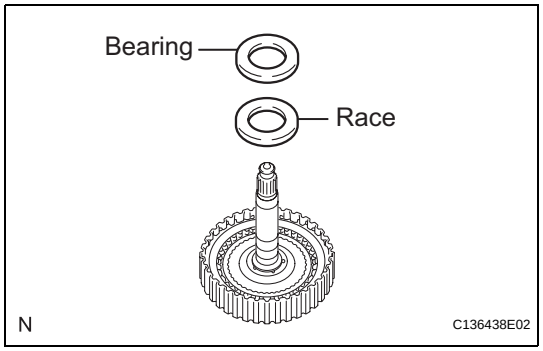

(c) Remove the thrust needle roller bearing and thrust needle roller race from the direct multiple disc clutch assembly.

19. INSPECT REAR PLANETARY SUN GEAR ASSEMBLY (See page AX-285)

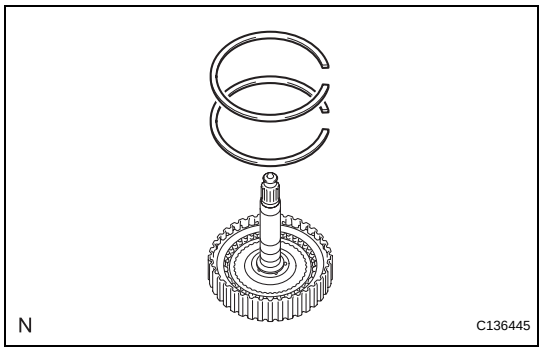

20. REMOVE NO. 1 DIRECT MULTIPLE DISC CLUTCH FLANGE

(a) Using 2 screwdrivers, remove the 2 snap rings from the direct multiple disc clutch assembly.

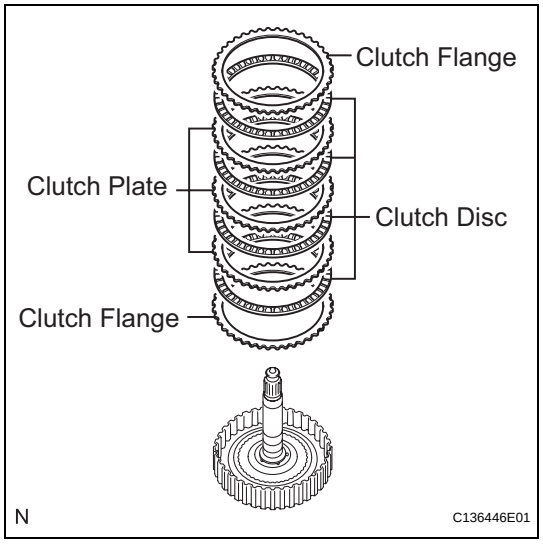

(b) Remove the flange, 4 clutch discs, and 4 clutch plates from the direct multiple disc clutch assembly.

21. INSPECT NO. 1 CLUTCH DISC (See page AX-284)

AX

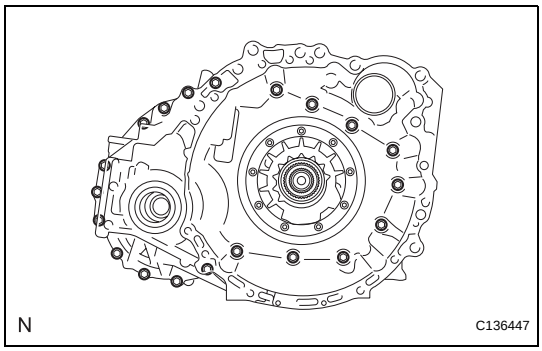

22. REMOVE TRANSAXLE HOUSING

(a) Remove the 20 bolts from the transaxle housing.

(b) Using a brass bar and hammer, tap on the circumference of the transaxle housing to remove the transaxle housing from the transaxle case.

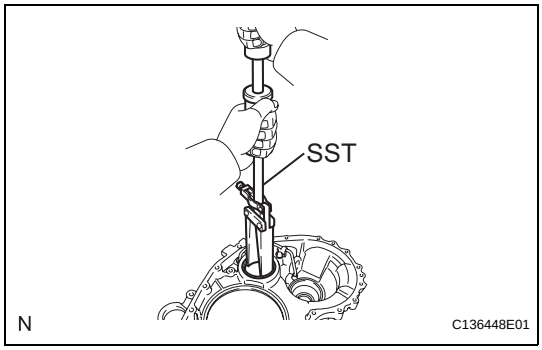

23. REMOVE COUNTER DRIVEN GEAR FRONT TAPERED ROLLER BEARING OUTER RACE

(a) Using SST, remove the counter driven gear front tapered roller bearing outer race and shim from the transaxle housing.
SST 09308-00010

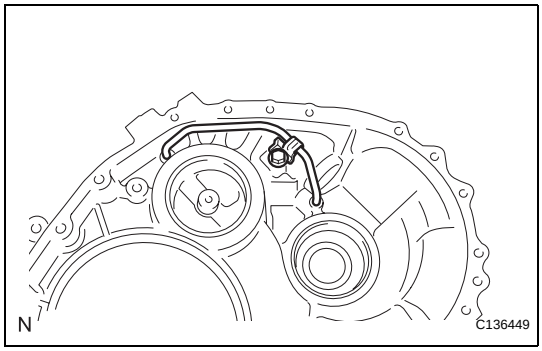

24. REMOVE DIFFERENTIAL GEAR LUBE APPLY TUBE

(a) Remove the bolt, clamp, and differential gear lube apply tube from the transaxle housing.

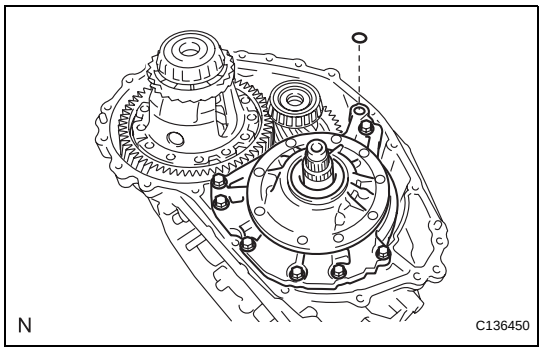

25. REMOVE FRONT OIL PUMP AND GEAR BODY SUB-ASSEMBLY

(a) Remove the 7 bolts and oil pump from the transaxle case.

(b) Remove the O-ring from the oil pump assembly.

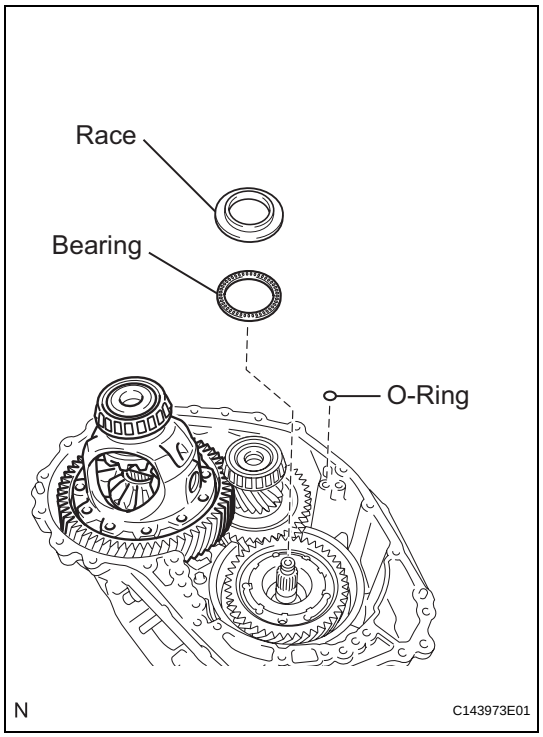

(c) Remove the thrust needle roller bearing and thrust needle roller race from the carrier lock nut.
(d) Remove the O-ring from the transaxle case.

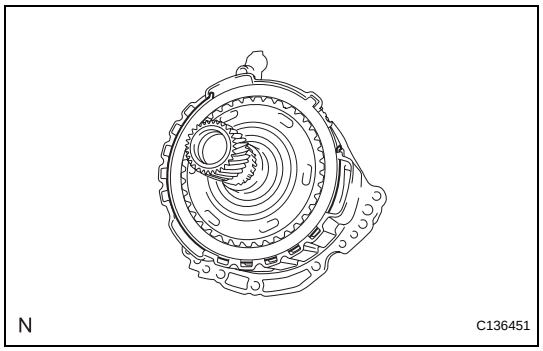

26. REMOVE NO. 3 BRAKE DISC

(a) Using a screwdriver, remove the snap ring from the oil pump assembly.

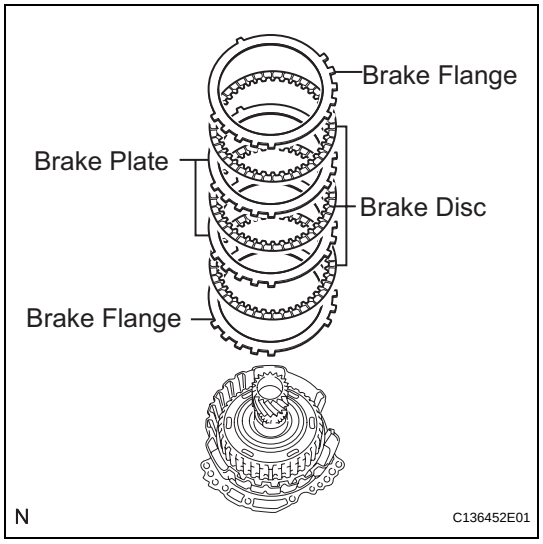

(b) Remove the 2 brake flanges, 3 brake discs, and 2 brake plates from the oil pump assembly.

27. INSPECT NO. 3 BRAKE DISC (See page AX-285)

AX

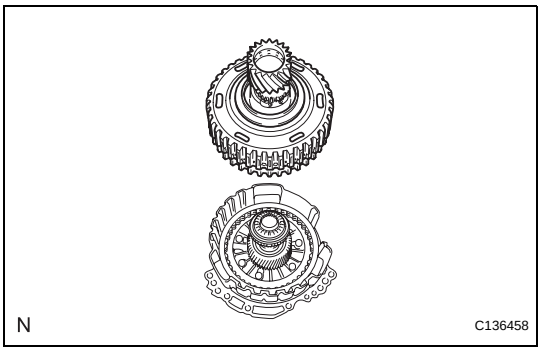

28. REMOVE UNDERDRIVE PLANETARY GEAR ASSEMBLY

(a) Remove the underdrive planetary gear assembly from the oil pump assembly.

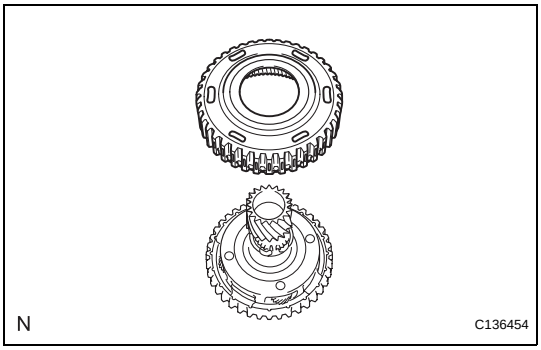

29. REMOVE NO. 3 BRAKE HUB

(a) Remove the No. 3 brake hub from the underdrive planetary gear assembly.

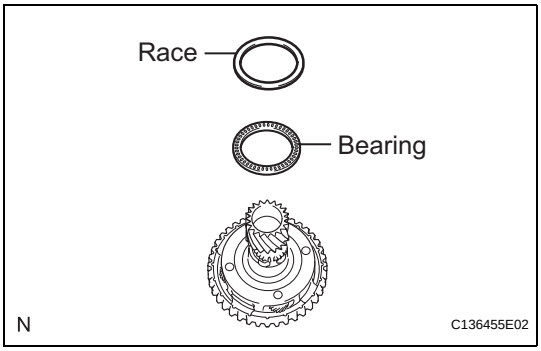

(b) Remove the thrust needle roller bearing and thrust needle roller race from the underdrive planetary gear assembly.

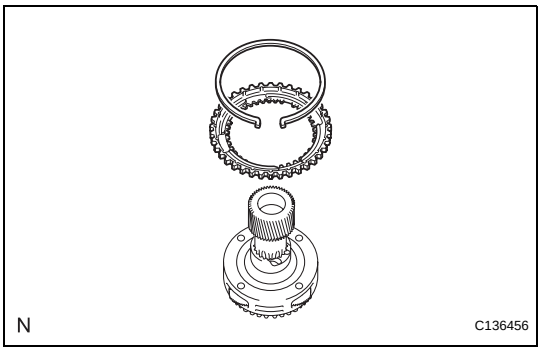

30. REMOVE UNDERDRIVE PLANETARY RING GEAR

(a) Using needle-nose pliers, remove the snap ring from the underdrive planetary ring gear.

(b) Remove the underdrive planetary ring gear from the underdrive planetary gear assembly.

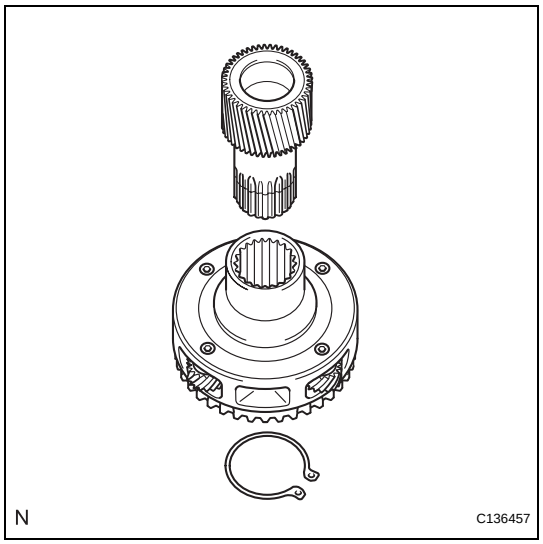

31. REMOVE PLANETARY SUN GEAR SUB-ASSEMBLY

(a) While expanding the snap ring with snap ring pliers, remove the front planetary sun gear from the underdrive planetary gear assembly.

(b) Remove the snap ring from the underdrive planetary gear assembly.

32. INSPECT UNDERDRIVE PLANETARY GEAR ASSEMBLY (See page AX-285)

33. INSPECT PLANETARY SUN GEAR SUB-ASSEMBLY (See page AX-284)

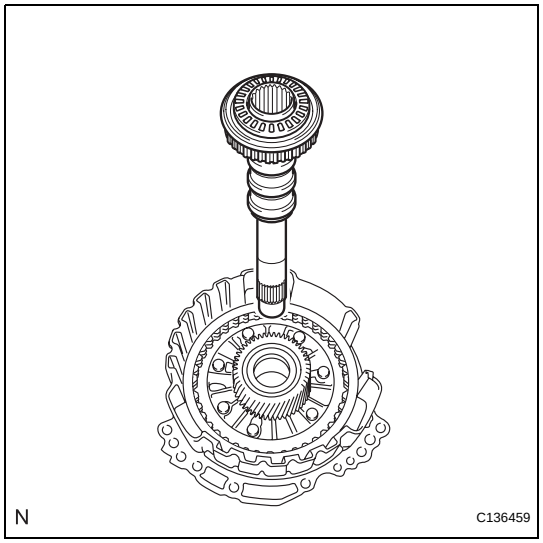

34. REMOVE INPUT SHAFT SUB-ASSEMBLY

(a) Remove the input shaft from the oil pump assembly.

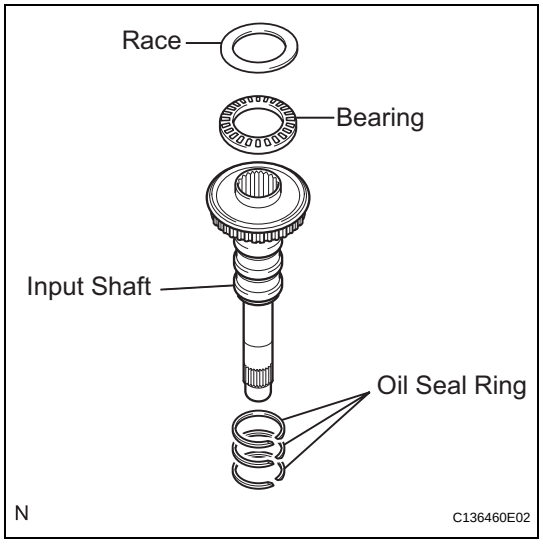

(b) Remove the thrust needle roller bearing and thrust needle roller race from the input shaft.

(c) Using a screwdriver, remove the 3 input shaft oil seal rings from the input shaft.

AX

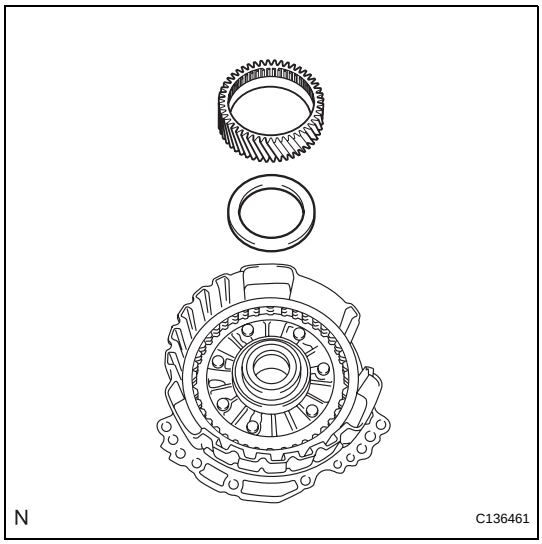

35. REMOVE UNDERDRIVE PLANETARY SUN GEAR

(a) Remove the underdrive planetary sun gear from the oil pump assembly.

(b) Remove the thrust needle roller bearing from the oil pump assembly.

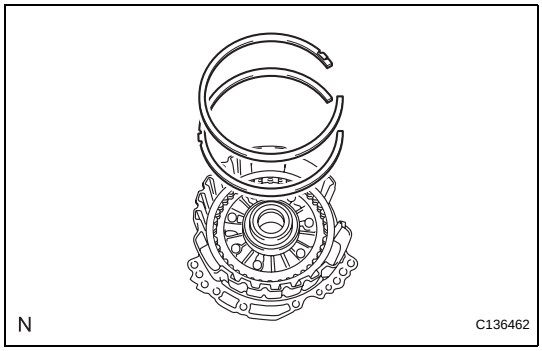

36. REMOVE NO. 1 BRAKE DISC

(a) Using a screwdriver, remove the 2 snap rings from the oil pump assembly.

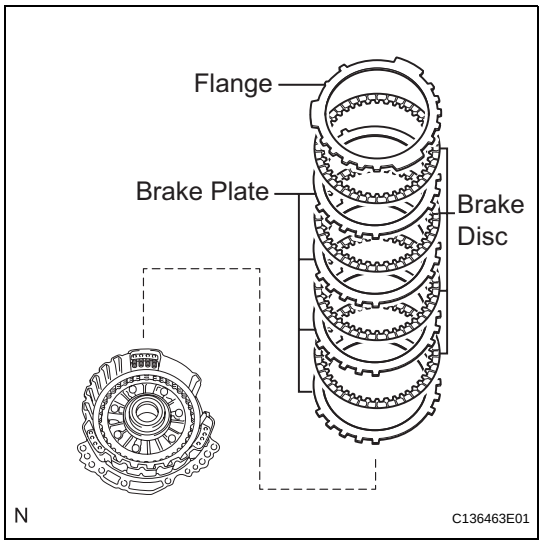

(b) Remove the flange, 4 brake discs, and 4 brake plates from the oil pump assembly.

37. INSPECT NO. 1 BRAKE DISC (See page AX-286)

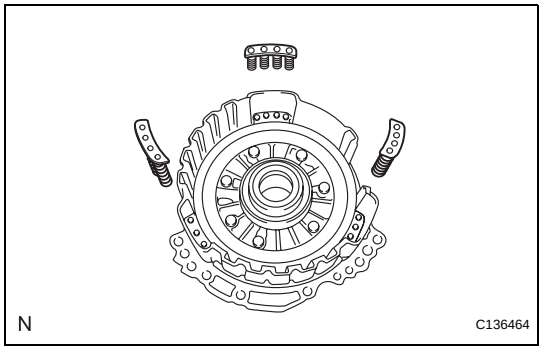

38. REMOVE 2ND BRAKE PISTON RETURN SPRING SUB-ASSEMBLY

(a) Remove the 3 2nd brake piston return springs from the oil pump assembly.

39. INSPECT 2ND BRAKE PISTON RETURN SPRING SUB-ASSEMBLY (See page AX-286)

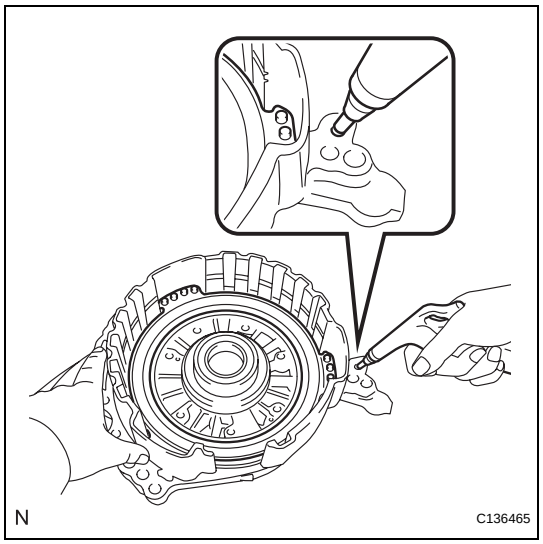

40. REMOVE NO. 1 BRAKE PISTON

(a) Holding the oil pump assembly by hand, apply compressed air (392 kPa, 4.0 kgf/cm^2, 57 psi) to the oil pump assembly to remove the No. 1 brake piston.

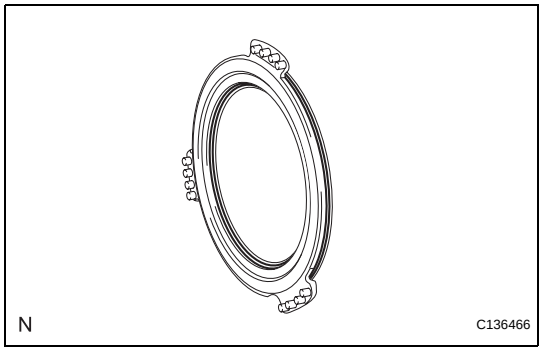

(b) Using a screwdriver, remove the 2 O-rings from the No. 1 brake piston.

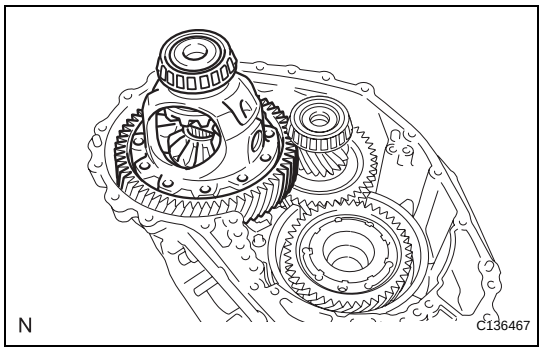

41. REMOVE FRONT DIFFERENTIAL CASE

(a) Remove the differential case sub-assembly from the transaxle case.

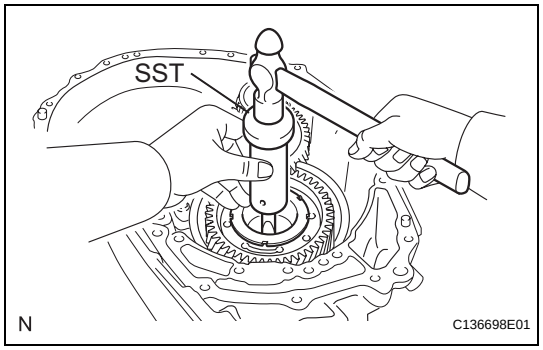

42. REMOVE COUNTER DRIVE GEAR NUT

(a) Using a SST and hammer, unstake the nut.
SST 09930-00010

AX

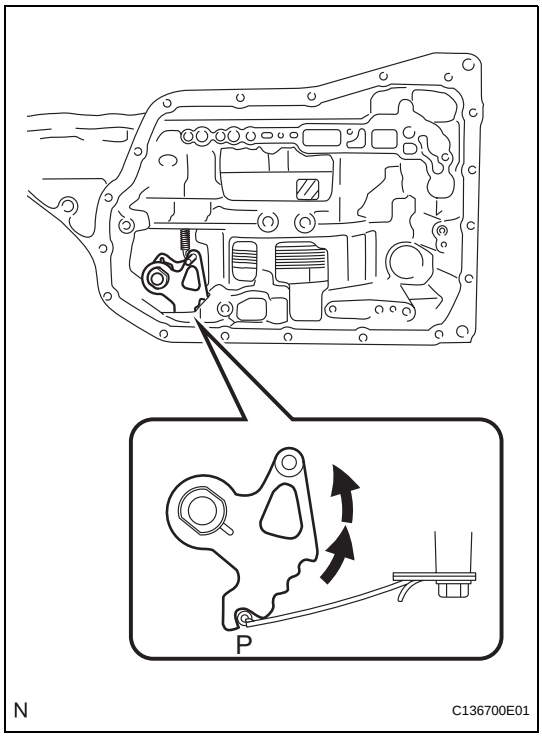

(b) Turn the manual valve lever 2 notches counterclockwise to set it in the P position as shown in the illustration.

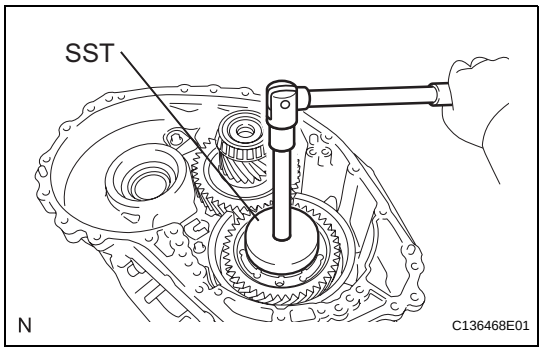

(c) Using SST, remove the nut from the planetary gear assembly.
SST 09387-00130

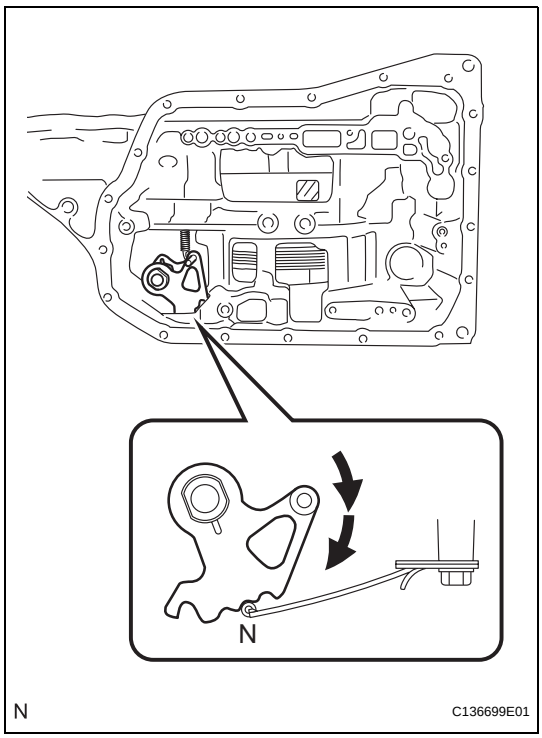

43. REMOVE COUNTER DRIVEN GEAR

(a) Turn the manual valve lever 2 notches clockwise to set it in the N position as shown in the illustration.

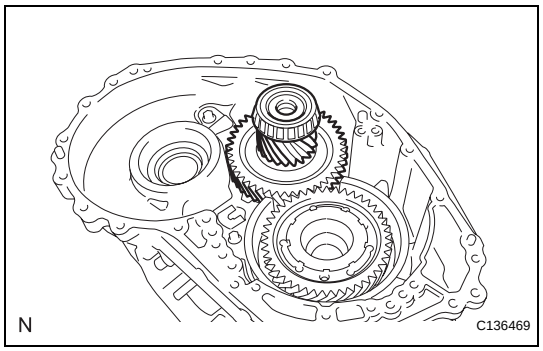

(b) Remove the counter driven gear sub-assembly from the transaxle case.

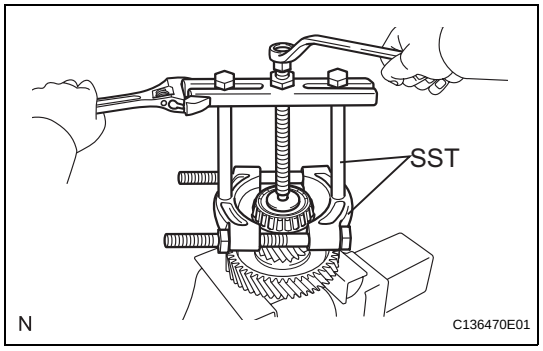

44. REMOVE COUNTER DRIVEN GEAR FRONT TAPERED ROLLER BEARING

(a) Using SST, remove the counter driven gear front tapered roller bearing from the counter driven gear sub-assembly.

SST 09950-00020, 09950-00030, 09950-60010 (09951-00400)

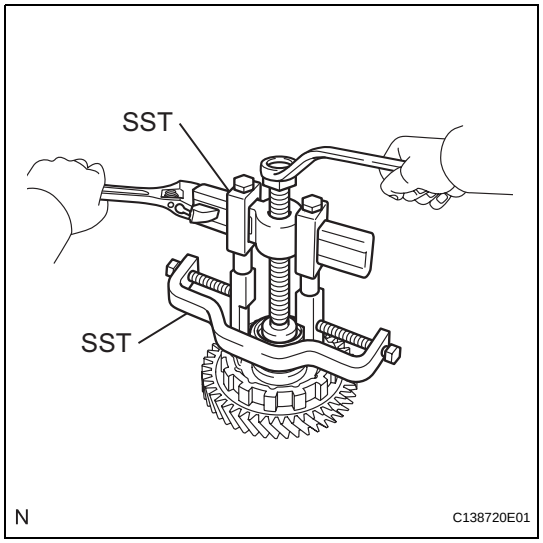

45. REMOVE COUNTER DRIVEN GEAR REAR TAPERED ROLLER BEARING

(a) Using SST, remove the counter driven gear rear tapered roller bearing and differential drive pinion from the counter driven gear.

SST 09950-40011 (09951-04010, 09952-04010, 09954-04010, 09953-04020, 09955-04071, 09957-04010, 09958-04011), 09950-60010 (09951-00320)

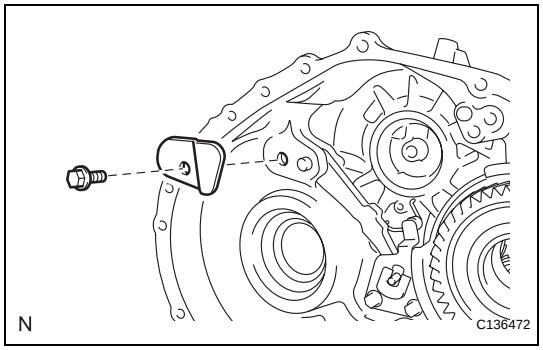

46. REMOVE PAWL SHAFT CLAMP

(a) Remove the bolt and pawl shaft clamp from the transaxle case.

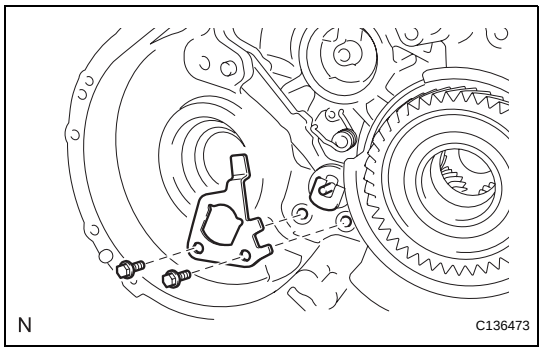

47. REMOVE PAWL STOPPER PLATE

(a) Remove the 2 bolts and pawl stopper plate from the transaxle case.

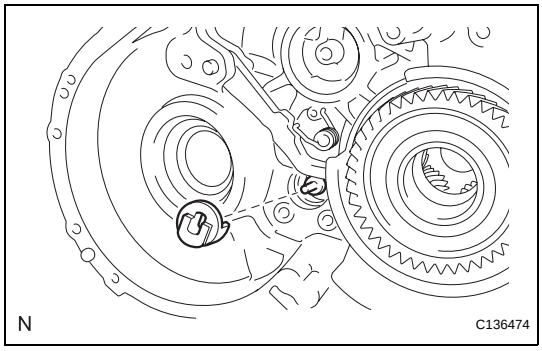

48. REMOVE PARKING LOCK SLEEVE

(a) Remove the parking lock sleeve from the transaxle case.

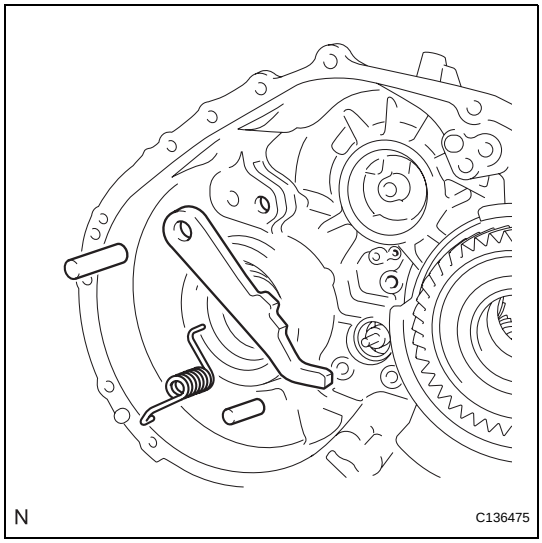

49. REMOVE PARKING LOCK PAWL

(a) Remove the spring, parking lock pawl pin, parking lock pawl shaft, and parking lock pawl from the transaxle case.

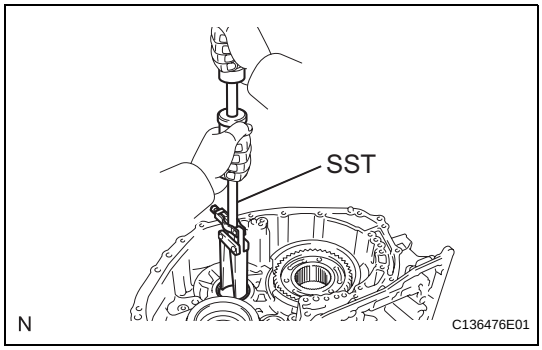

50. REMOVE COUNTER DRIVEN GEAR REAR TAPERED ROLLER BEARING OUTER RACE

(a) Using SST, remove the counter driven gear rear tapered roller bearing outer race from the transaxle case.

SST 09308-00010

AX

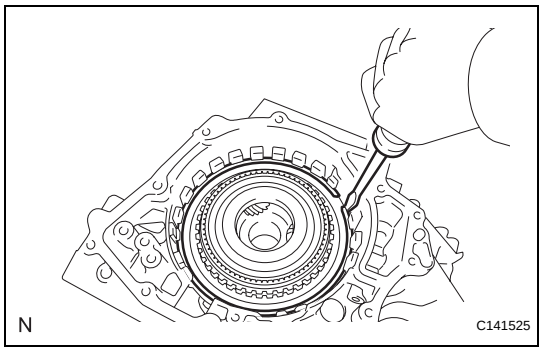

51. REMOVE ONE-WAY CLUTCH ASSEMBLY

(a) Using a screwdriver, remove the snap ring from the transaxle case.

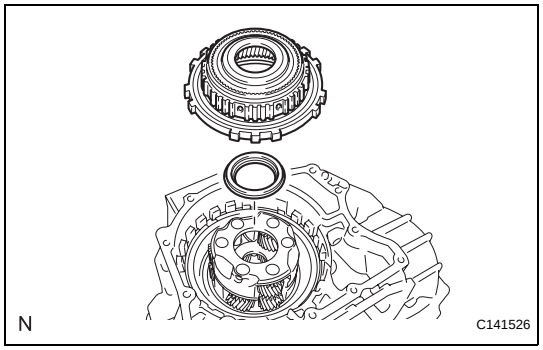

(b) Remove the one-way clutch assembly with planetary ring gear from the transaxle case.

(c) Remove the thrust needle roller bearing from the transaxle case.

52. INSPECT ONE-WAY CLUTCH ASSEMBLY (See page AX-286)

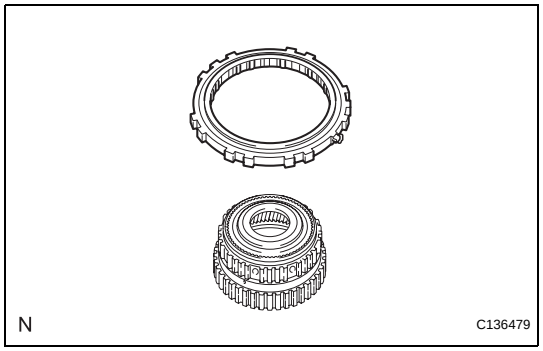

53. REMOVE PLANETARY RING GEAR

(a) Remove the planetary ring gear from the one-way clutch assembly.

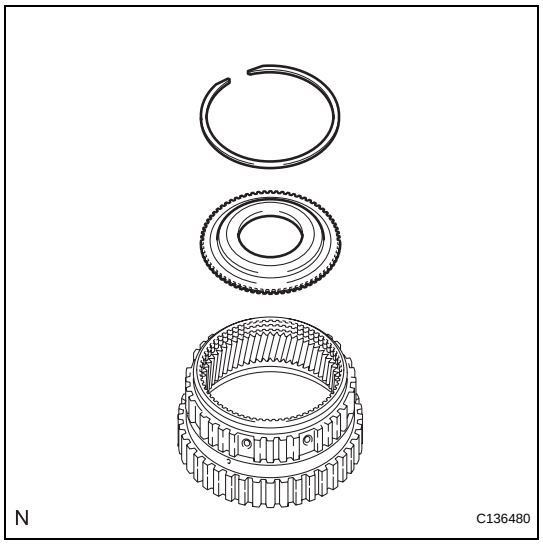

54. REMOVE PLANETARY RING GEAR FLANGE

(a) Using a screwdriver, remove the snap ring from the planetary ring gear.

(b) Remove the planetary ring gear flange from the planetary ring gear.

AX

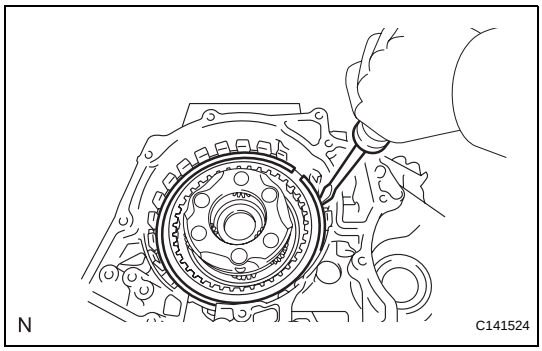

55. REMOVE NO. 2 BRAKE DISC

(a) Using a screwdriver, remove the snap ring from the transaxle case.

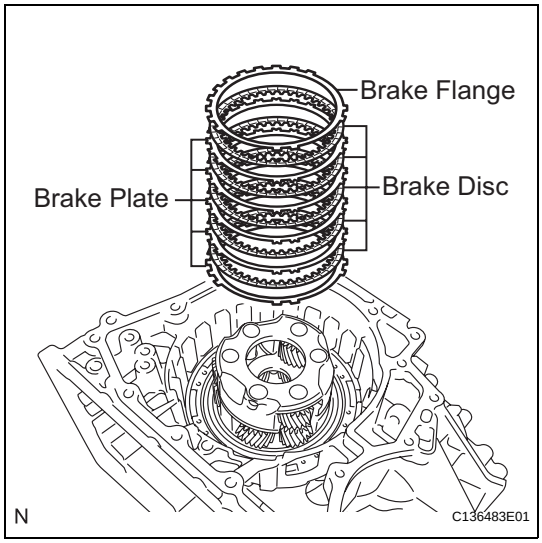

(b) Remove the brake flange, 5 brake discs, and 5 brake plates from the transaxle case.

56. INSPECT NO. 2 BRAKE DISC (See page AX-287)

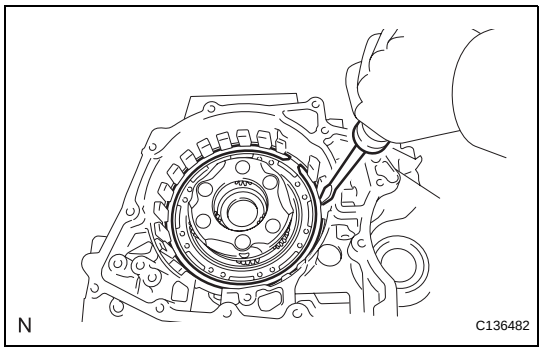

57. REMOVE 1ST AND REVERSE BRAKE RETURN SPRING SUB-ASSEMBLY

(a) Using a screwdriver, remove the snap ring from the transaxle case.

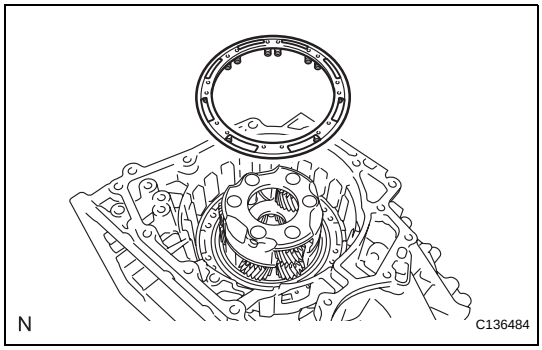

(b) Remove the 1st and reverse brake return spring from the transaxle case.

58. INSPECT 1ST AND REVERSE BRAKE RETURN SPRING SUB-ASSEMBLY (See page AX-287)

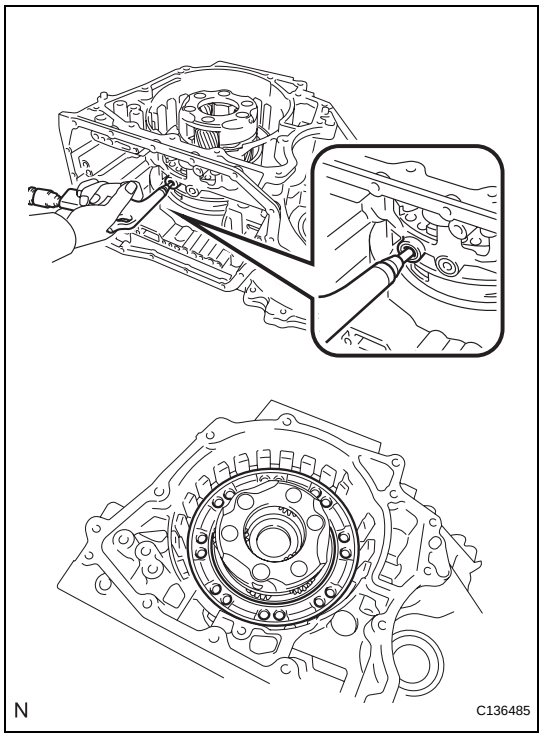

59. REMOVE NO. 2 BRAKE PISTON

(a) Apply compressed air (392 kPa, 4.0 kgf/cm^2, 57 psi) to the ATF hole indicated by the arrow to remove the No. 2 brake piston assembly from the transaxle case.

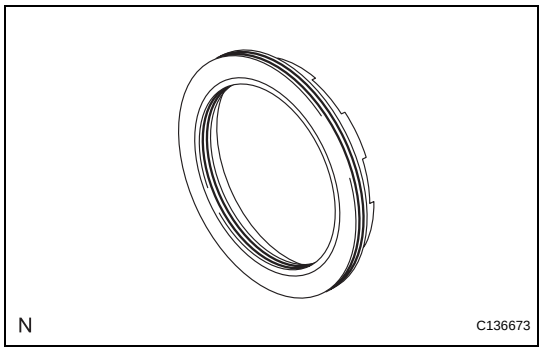

(b) Using a screwdriver, remove the 2 O-rings from the No. 2 brake piston.

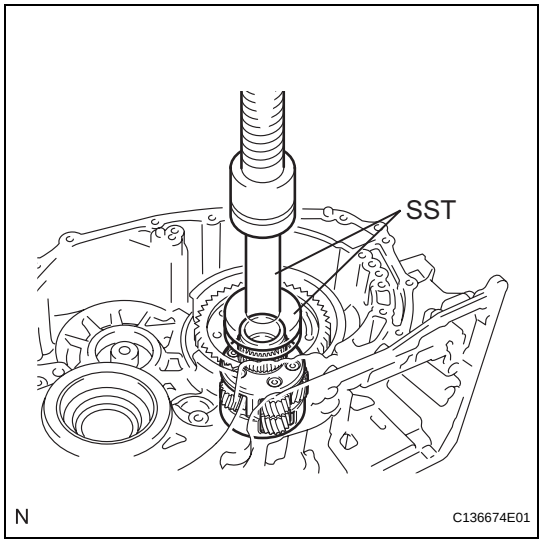

60. REMOVE PLANETARY GEAR ASSEMBLY

(a) Using SST and a press, remove the planetary gear assembly from the transaxle case.

SST 09950-60010 (09951-00580), 09950-70010 (09951-07100)

AX

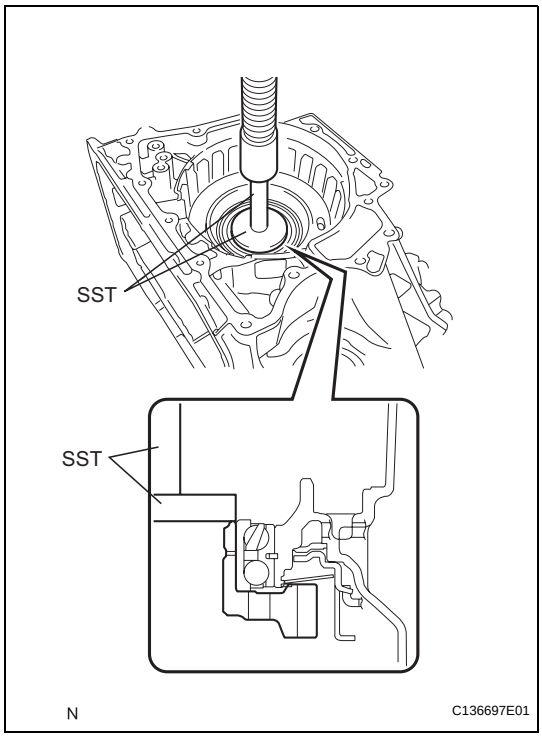

61. REMOVE COUNTER DRIVE GEAR

(a) Using SST and a press, remove the counter drive gear and bearing inner race (rear side) from the transaxle case.

SST 09950-60020 (09951-00710), 09950-70010 (09951-07100)

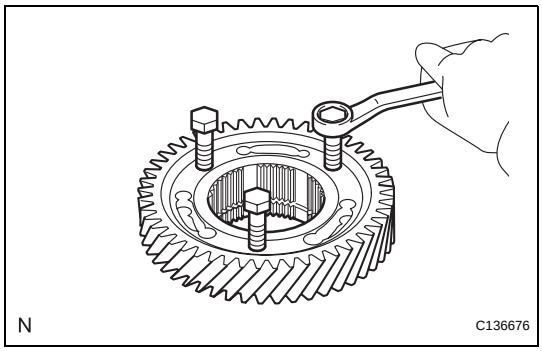

(b) As shown in the illustration, tighten the 3 bolts evenly and leave a clearance of approximately 20.0 mm (0.797 in.) between the counter drive gear and inner race.

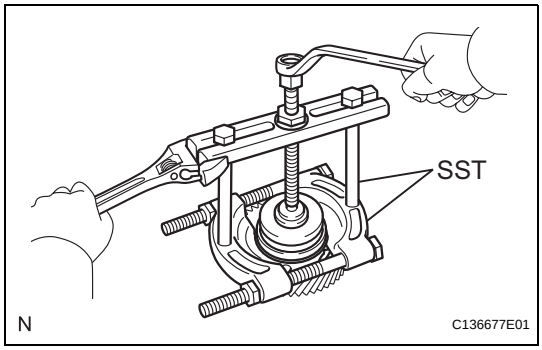

(c) Using SST, remove the bearing inner race (front side) from the counter drive gear.

SST 09950-00020, 09950-00030, 09950-60020 (09951-00710)

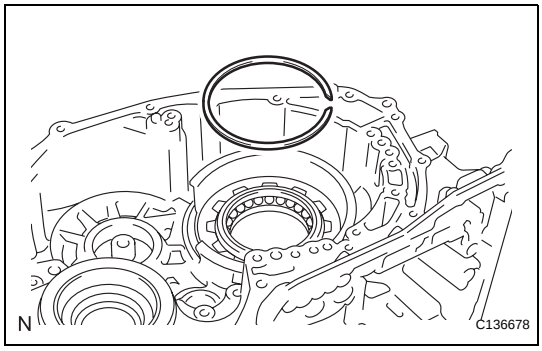

62. REMOVE NO. 3 BRAKE PISTON

(a) Using a screwdriver, remove the snap ring from the transaxle case.

AX

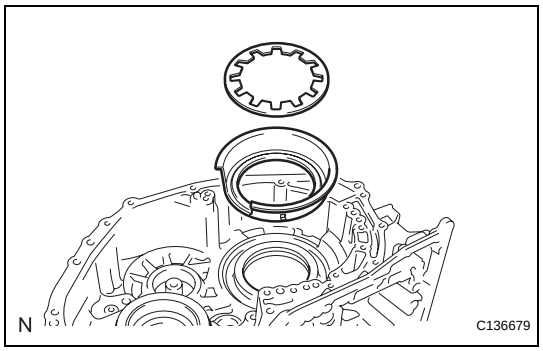

(b) Remove the brake piston return spring from the transaxle case.
(c) Remove the No. 3 brake piston from the transaxle case.

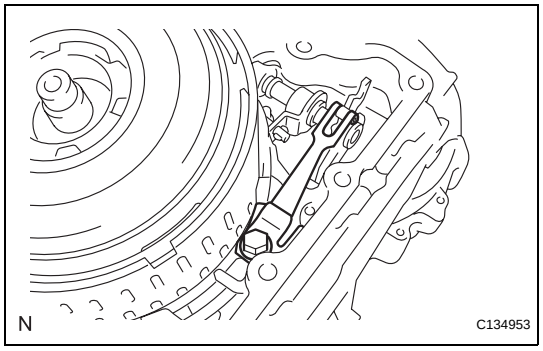

63. REMOVE MANUAL DETENT SPRING SUB-ASSEMBLY

(a) Remove the bolt, cover, and manual detent spring sub-assembly from the transaxle case.

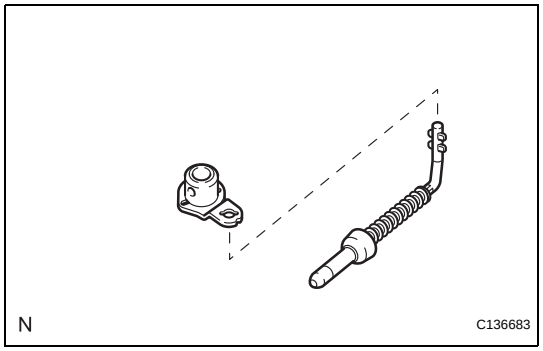

64. REMOVE PARKING LOCK ROD SUB-ASSEMBLY

(a) Remove the parking lock rod sub-assembly from the parking lock lever sub-assembly.
HINT:
Align the dial with the notches on the parking lock lever sub-assembly to remove the parking lock rod sub-assembly.

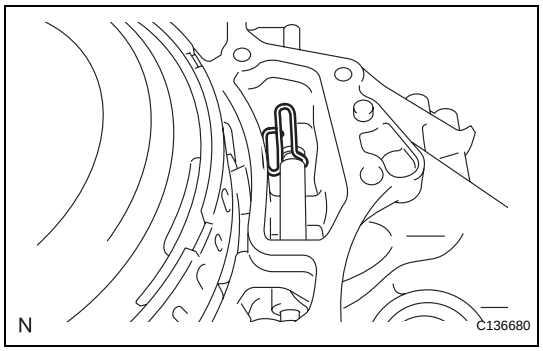

65. REMOVE MANUAL VALVE LEVER SHAFT

(a) Using needle-nose pliers, remove the manual valve lever shaft retainer spring from the transaxle case.

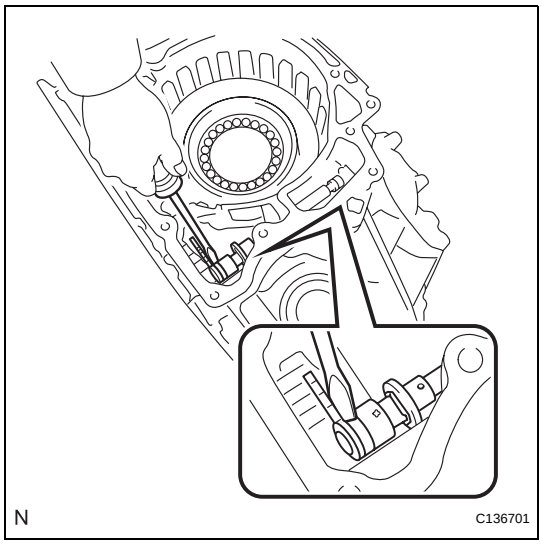

(b) Using a screwdriver, slide the spacer of the manual valve lever sub-assembly.

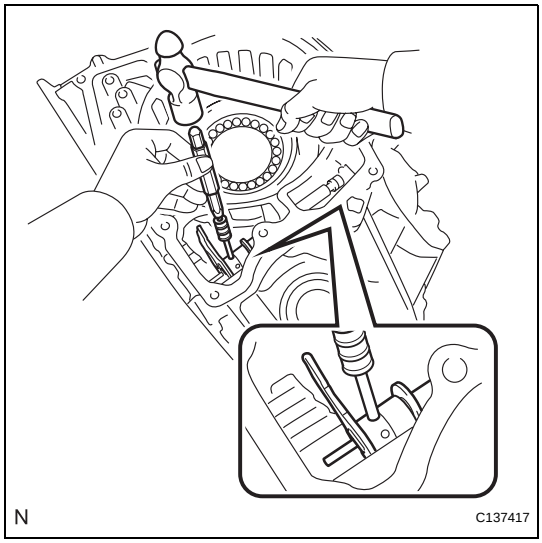

(c) Using a pin punch (3 mm) and hammer, drive out the slotted spring pin from the manual valve lever sub-assembly.
HINT:
Slowly drive out the pin so that it will not fall into the transaxle case.

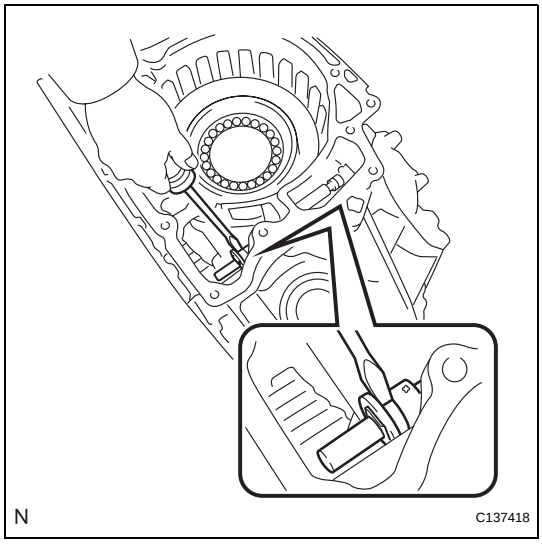

(d) Using a screwdriver, slide the spacer of the parking lock lever sub-assembly.

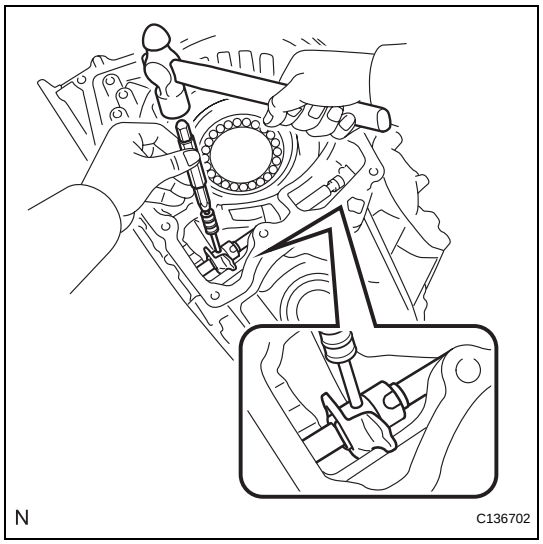

(e) Using a pin punch (3 mm) and hammer, drive out the slotted spring pin from the parking lock lever sub-assembly.
HINT:
Slowly drive out the pin so that it will not fall into the transaxle case.

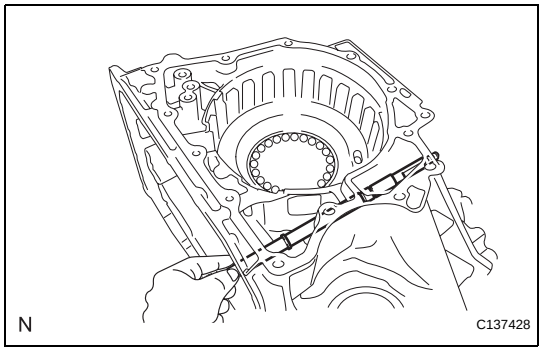

(f) Remove the manual valve lever shaft, manual valve lever sub-assembly, parking lock lever sub-assembly and 2 spacers from the transaxle case.

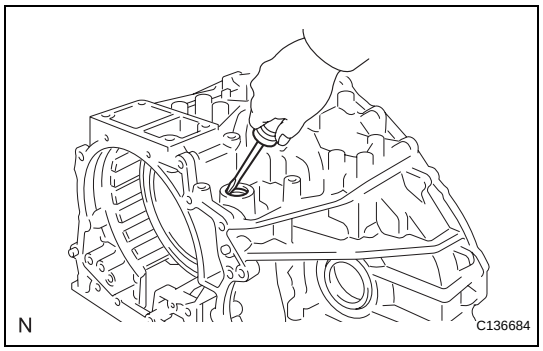

66. REMOVE MANUAL VALVE LEVER SHAFT OIL SEAL

(a) Using a screwdriver, remove the manual valve lever shaft oil seal from the transaxle case.

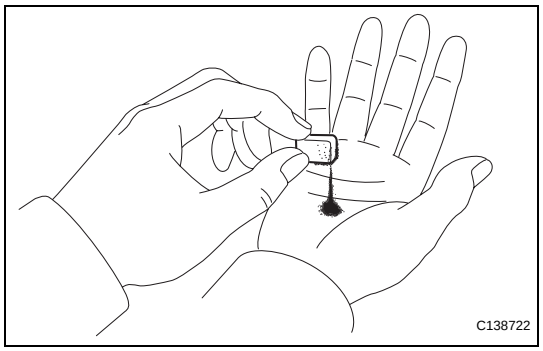

INSPECTION

1. INSPECT TRANSMISSION OIL CLEANER MAGNET

(a) Use the removed magnets to collect any steel chips. Examine the chips and particles in the pan and on the magnets to determine what type of wear has occurred in the transaxle:

Result:

Steel (magnetic):
Bearing, gear and plate wear
Brass (non-magnetic):
Bearing wear

AX

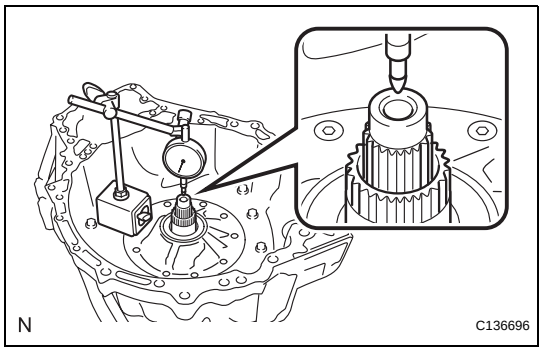

2. INSPECT INPUT SHAFT SUB-ASSEMBLY

(a) Using a dial indicator, measure the input shaft end play.

End play:

0.012 to 1.250 mm (0.0005 to 0.0492 in.)

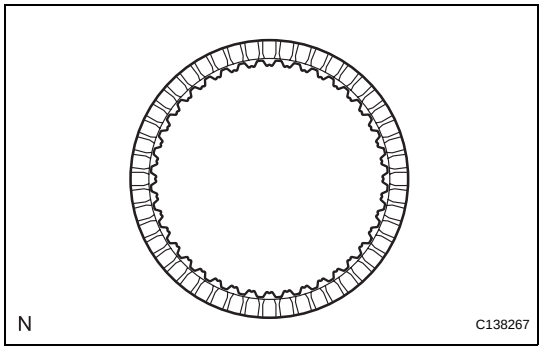

3. INSPECT NO. 2 CLUTCH DISC

(a) Check if the sliding surfaces of the discs, plates, and flange are worn or burnt. If necessary, replace them.

NOTICE:

If the linings of the discs are peeled off or discolored, or even if a part of the groove is damaged, replace all discs.

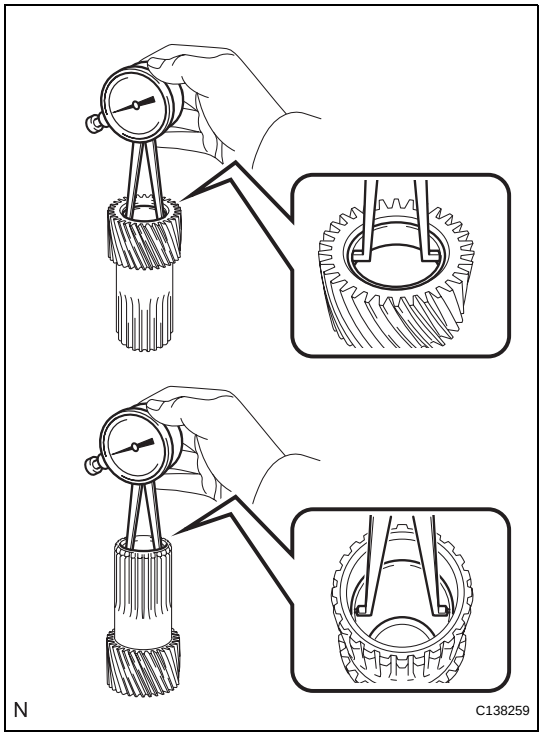

4. INSPECT PLANETARY SUN GEAR SUB-ASSEMBLY

(a) Using a dial indicator, measure the inside diameter of the bushings of the planetary sun gear.

Standard inside diameter:

25.525 to 25.546 mm (1.0049 to 1.0057 in.)

Maximum inside diameter:

25.546 mm (1.0057 in.)

If the inside diameter is greater than the maximum, replace the planetary gear sun gear.

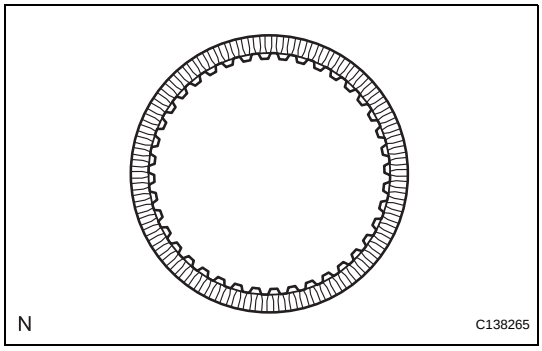

5. INSPECT NO. 1 CLUTCH DISC

(a) Check if the sliding surfaces of the discs, plates, and flange are worn or burnt. If necessary, replace them.

NOTICE:

If the linings of the discs are peeled off or discolored, or even if a part of the groove is damaged, replace all discs.

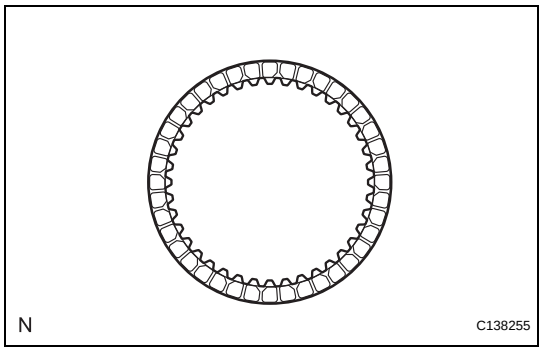

6. INSPECT NO. 3 BRAKE DISC

(a) Check if the sliding surfaces of the discs, plates, and flange are worn or burnt. If necessary, replace them.

NOTICE:

If the linings of the discs are peeled off or discolored, or even if a part of the groove is damaged, replace all discs.

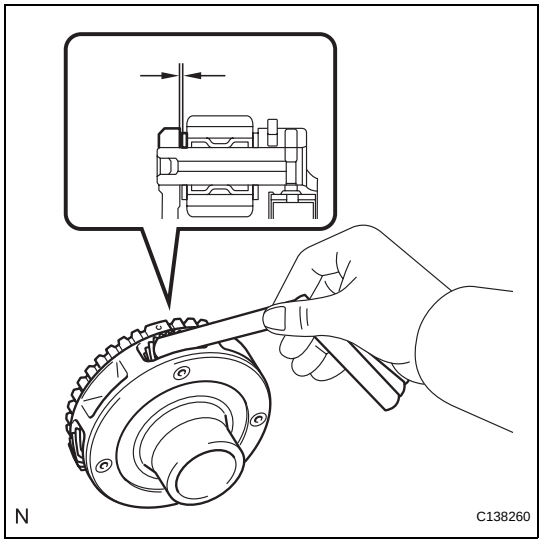

7. INSPECT UNDERDRIVE PLANETARY GEAR ASSEMBLY

(a) Using a feeler gauge, measure the clearance between the underdrive planetary gear and the pinion gear at 4 points.

Standard clearance:

0.18 to 0.54 mm (0.0071 to 0.0213 in.)

If the clearance is greater than the standard clearance, replace the underdrive planetary gear sun gear.

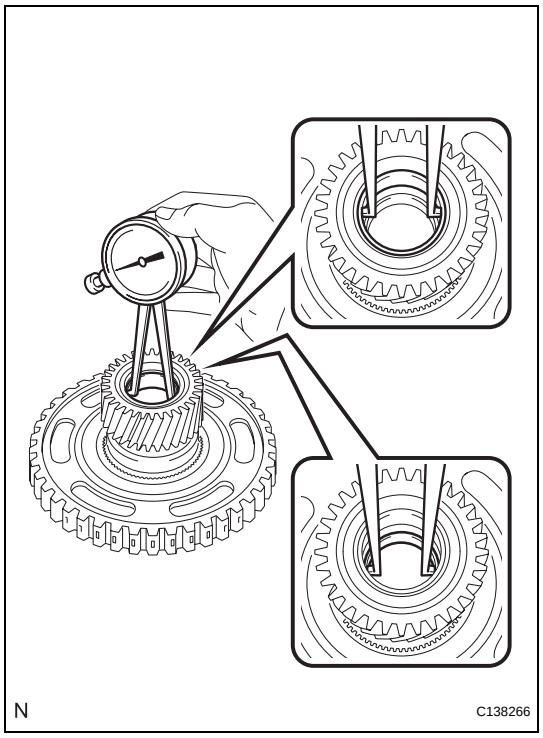

8. INSPECT REAR PLANETARY SUN GEAR ASSEMBLY

(a) Using a dial indicator, measure the inside diameter of the bushing of the rear planetary sun gear sub-assembly.

Standard inside diameter:

25.580 to 25.601 mm (1.0071 to 1.0079 in.)

Maximum inside diameter:

25.601 mm (1.0079 in.)

If the inside diameter is greater than the maximum, replace the rear planetary sun gear sub-assembly.

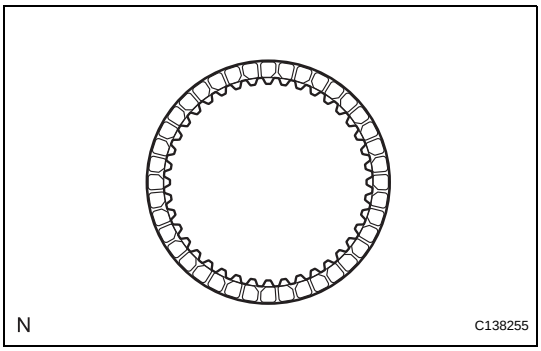

9. INSPECT NO. 1 BRAKE DISC

(a) Check if the sliding surfaces of the discs, plates, and flange are worn or burnt. If necessary, replace them.

NOTICE:

If the linings of the discs are peeled off or discolored, or even if a part of the groove is damaged, replace all discs.

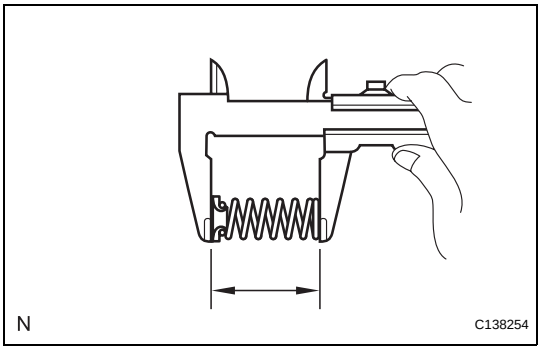

10. INSPECT 2ND BRAKE PISTON RETURN SPRING SUB-ASSEMBLY

(a) Using vernier calipers, measure the free length of the 3 2nd brake piston return springs including the spring seats.

Standard free length:

23.85 mm (0.9390 in.)

If the free length is shorter than the standard free length, replace the 2nd brake piston return spring.

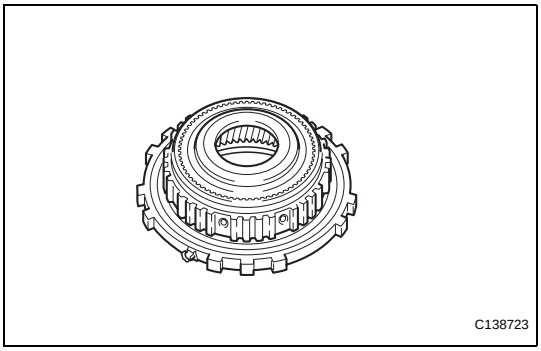

11. INSPECT ONE-WAY CLUTCH ASSEMBLY

(a) Temporarily install the one-way clutch assembly to the planetary ring gear.

(b) Rotate the one-way clutch assembly to check the rotating direction for lock or free operation.

If the one-way clutch assembly does not operate normally, replace it.

AX

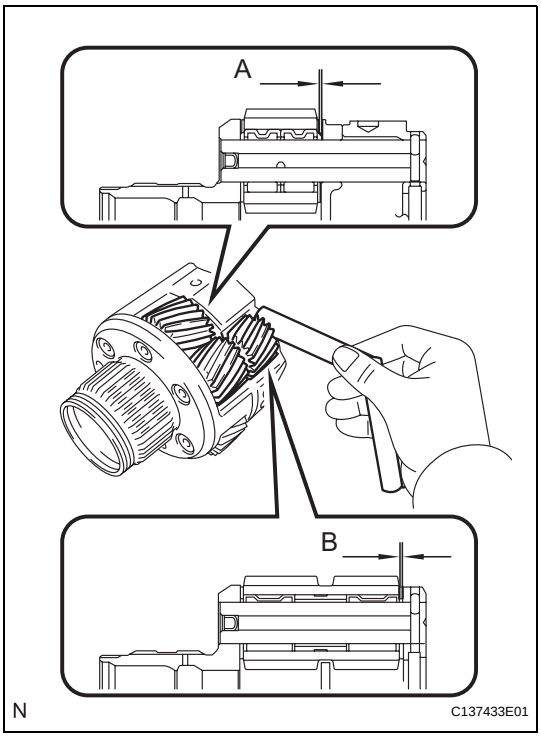

12. INSPECT PLANETARY GEAR ASSEMBLY

(a) Using a feeler gauge, measure the clearance between the planetary gear case and each pinion gear at points A and B.

-	Standard Clearance
A point	0.23 to 0.59 mm (0.0091 to 0.0232 in.)
B point	0.16 to 0.66 mm (0.0063 to 0.02598 in.)

If the clearance is greater than the standard clearance, replace the planetary gear assembly.

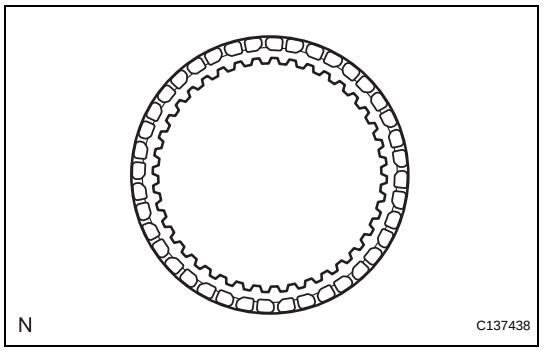

13. INSPECT NO. 2 BRAKE DISC

(a) Check if the sliding surfaces of the discs, plates, and flange are worn or burnt. If necessary, replace them.

NOTICE:

If the linings of the discs are peeled off or discolored, or even if a part of the groove is damaged, replace all discs.

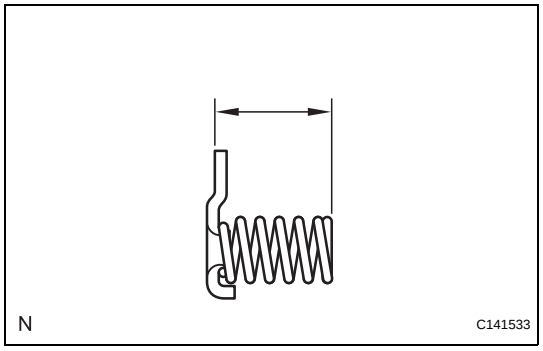

14. INSPECT 1ST AND REVERSE BRAKE RETURN SPRING SUB-ASSEMBLY

(a) Using vernier calipers, measure the free length of the 1st and reverse brake return spring together with the spring seat.

Standard free length:

15.79 mm (0.6217 in.)

If the free length is shorter than the standard free length, replace the 1st and reverse brake return spring.

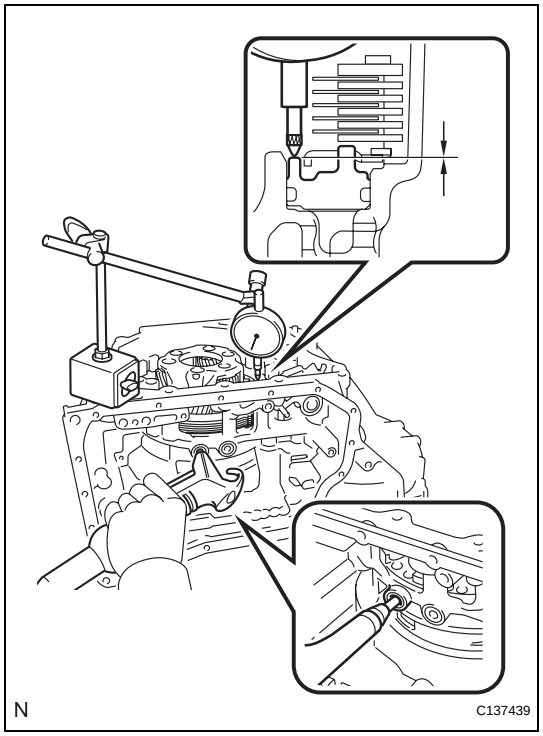

15. INSPECT CLEARANCE OF NO. 2 BRAKE

(a) Using a dial indicator, measure the clearance of the No. 2 brake while applying compressed air (200 kPa, 2.0 kgf/cm^2, 29 psi).

Standard clearance:

0.884 to 1.196 mm (0.0348 to 0.0471 in.)

HINT:

Measure the clearance at 3 points where the brake piston diameter is approximately 140 mm (5.51 in.) and calculate the average.

If the clearance is not as specified, select an appropriate No. 2 brake flange so that the clearance will be within the specified range.

HINT:

There are 5 different thicknesses of flanges available.

No. 2 brake flange thickness: mm (in)

Thickness	Thickness
4.0 (0.157)	4.3 (0.169)
4.1 (0.161)	4.4 (0.173)
4.2 (0.165)	-

AX

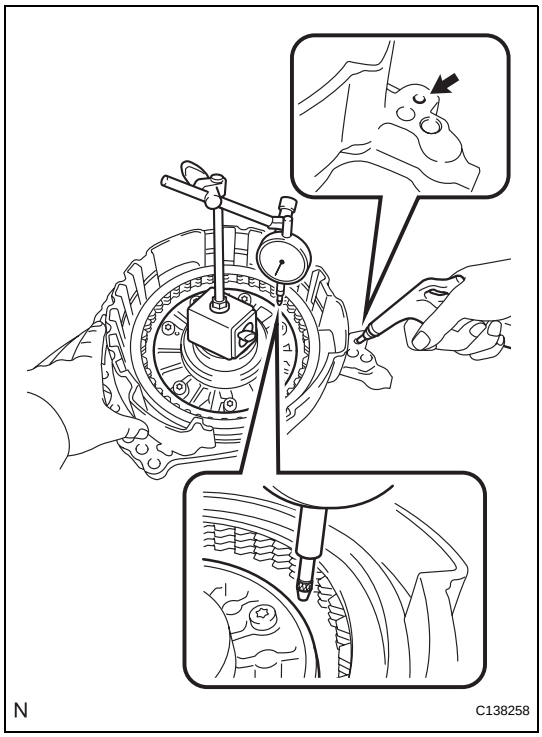

16. INSPECT CLEARANCE OF NO. 1 BRAKE

(a) Using a dial indicator, measure the clearance of the No. 1 brake while applying compressed air (200 kPa, 2.0 kgf/cm^2, 29 psi).

Standard clearance:

0.807 to 0.974 mm (0.0318 to 0.0383 in.)

HINT:

Measure the clearance at 3 points where the brake piston diameter is approximately 140 mm (5.51 in.) and calculate the average.

If the clearance is not as specified, select an appropriate No. 1 brake flange so that the clearance will be within the specified range.

HINT:

There are 6 different thicknesses of flanges available.

No. 1 brake flange thickness: mm (in.)

Thickness	Thickness
3.0 (0.118)	3.3 (0.130)
3.1 (0.122)	3.4 (0.134)
3.2 (0.126)	3.5 (0.138)

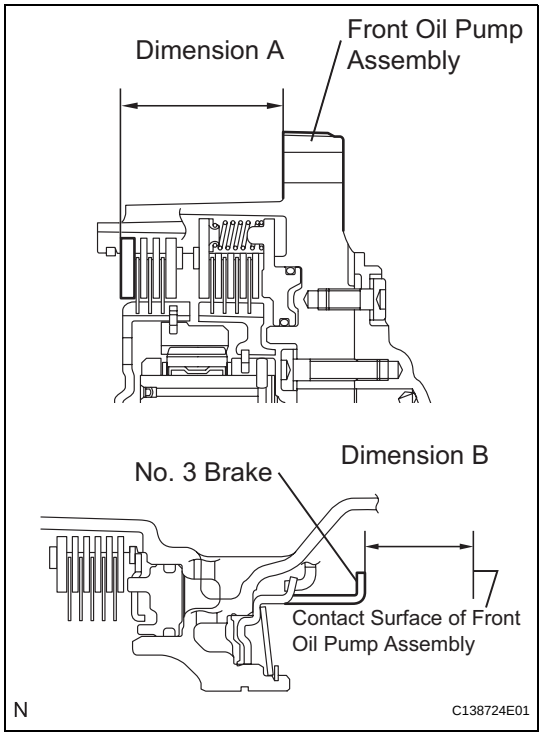

17. INSPECT CLEARANCE OF NO. 3 BRAKE

(a) Using vernier calipers and a straight edge, measure the distance shown in the illustration (Dimension A) while a load of 500 N (51 kgf, 112 lbf) is being applied to the flange.

HINT:

Measure dimension A at 3 points where the flange diameter is approximately 166 mm (6.54 in.) and calculate the average.

(b) Using vernier calipers and a straight edge, measure the distance shown in the illustration. (Dimension B).

HINT:

Measure dimension B at 3 points where the No. 3 brake diameter is approximately 166 mm (6.54 in.) and calculate the average.

(c) Calculate the clearance value using the following formula:

clearance = Dimension B - Dimension A

Standard clearance:

0.599 to 0.761 mm (0.0236 to 0.0300 in.)

If the clearance is not as specified, select an appropriate brake flange so that the clearance will be within the specified range.

HINT:

There are 6 different thicknesses of flanges available.

No. 3 brake flange thickness: mm (in.)

Thickness	Thickness
3.80 (0.150)	4.10 (0.161)
3.90 (0.154)	4.20 (0.165)
4.00 (0.157)	4.30 (0.169)

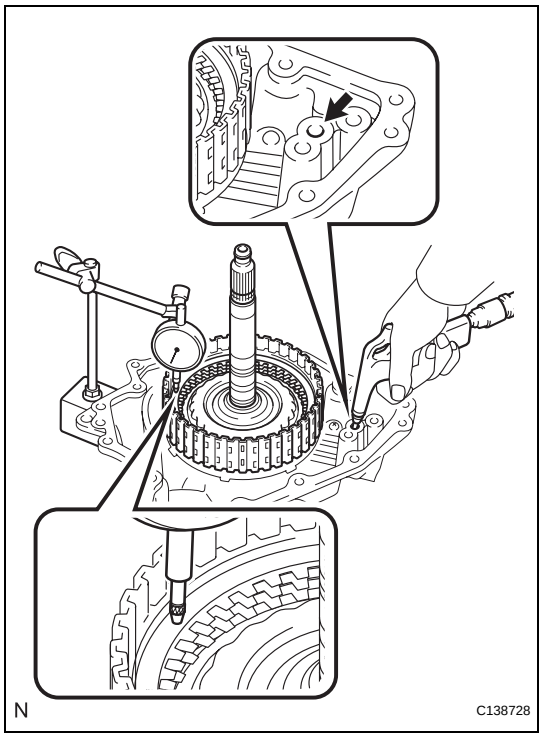

18. INSPECT CLEARANCE OF NO. 1 CLUTCH DISC

(a) Install the direct multiple disc clutch assembly onto the transaxle rear cover.

(b) Using a dial indicator, measure the No. 1 clutch pack clearance while applying and releasing compressed air (200 kPa, 2.0 kgf/cm^2, 29 psi).

HINT:

Measure the clearance at 3 points where the flange diameter is approximately 152 mm (5.98 in.) and calculate the average.

Pack clearance:

0.806 to 0.974 mm (0.0317 to 0.0383 in.)

If the pack clearance is not as specified, inspect the discs, plates and flange.

HINT:

There are 6 different thicknesses of flanges available.

No. 1 clutch flange thickness: mm (in.)

Thickness	Thickness
3.0 (0.118)	3.3 (0.130)
3.1 (0.122)	3.4 (0.134)
3.2 (0.126)	3.5 (0.138)

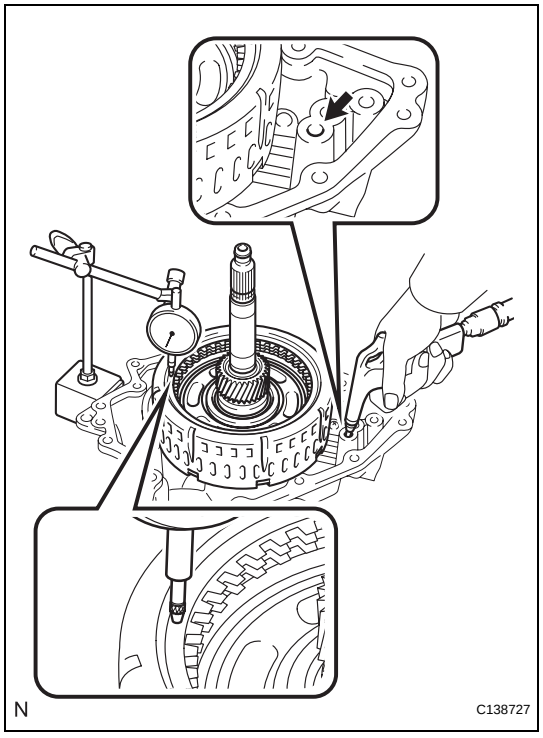

19. INSPECT CLEARANCE OF NO. 2 CLUTCH DISC

(a) Install the direct multiple disc clutch assembly onto the transaxle rear cover.

(b) Using a dial indicator, measure the No. 2 clutch pack clearance while applying and releasing compressed air (200 kPa, 2.0 kgf/cm^2, 29 psi).

HINT:

Measure the clearance at 3 points where the diameter of the No. 2 direct multiple clutch piston is approximately 152 mm (5.98 in.) and calculate the average.

Pack clearance:

0.544 to 0.744 mm (0.0214 to 0.0293 in.)

If the pack clearance is not as specified, inspect the discs, plates and flange.

HINT:

There are 6 different thicknesses of flanges available.

No. 2 clutch flange thickness: mm (in.)

Thickness	Thickness
3.0 (0.118)	3.3 (0.130)
3.1 (0.122)	3.4 (0.134)
3.2 (0.126)	3.5 (0.138)

INSTALLATION

1. INSTALL TORQUE CONVERTER CLUTCH ASSEMBLY

HINT:

(See page AX-222)

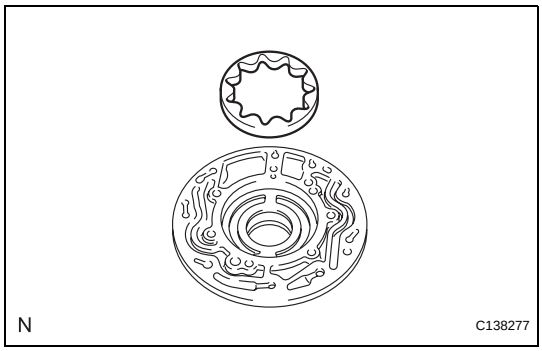

6. REMOVE FRONT OIL PUMP DRIVEN GEAR

(a) Remove the front oil pump driven gear from the oil pump body.

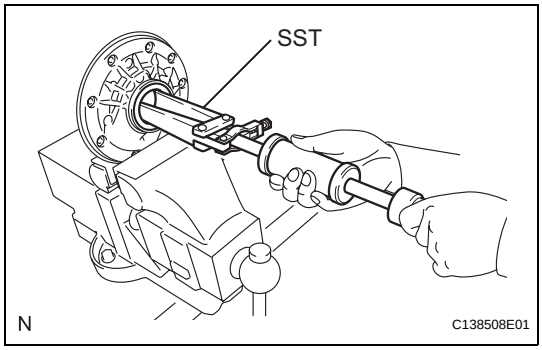

7. REMOVE FRONT OIL PUMP OIL SEAL

(a) Mount the oil pump in a soft jaw vise.

(b) Using SST, remove the oil seal from the oil pump body.

SST 09308-00010

INSPECTION

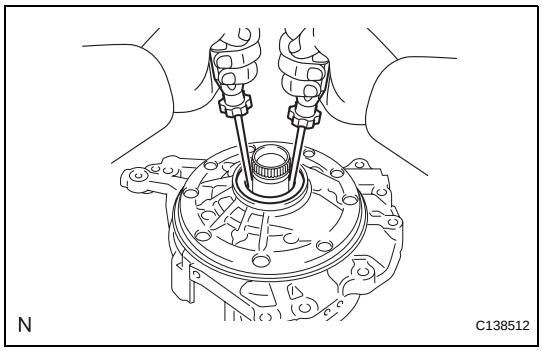

1. INSPECT FRONT OIL PUMP AND GEAR BODY SUB-ASSEMBLY

(a) Turn the drive gear with 2 screwdrivers and make sure that it rotates smoothly.

NOTICE:

Be careful not to damage the oil seal lip.

AX

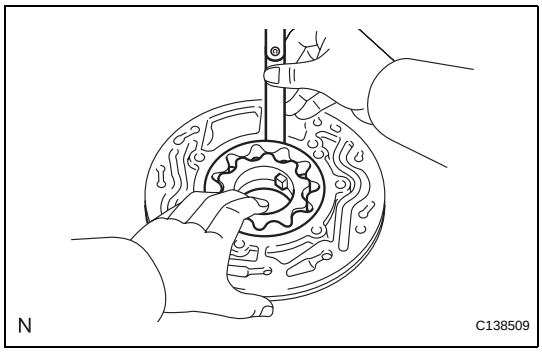

2. INSPECT CLEARANCE OF FRONT OIL PUMP AND GEAR BODY SUB-ASSEMBLY

(a) Push the driven gear to one side of the body.

(b) Using a feeler gauge, measure the clearance.

Standard clearance:

0.08 to 0.15 mm (0.0031 to 0.0059 in.)

Maximum clearance:

0.15 mm (0.0059 in.)

If the clearance is greater than the maximum, replace the oil pump body sub-assembly.

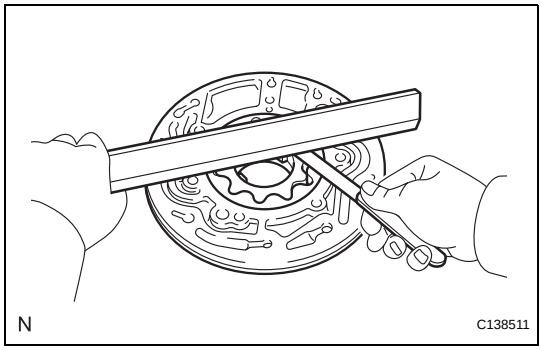

(c) Using a straight edge and feeler gauge, measure the side clearance of both gears.

Standard side clearance:

0.025 to 0.04 mm (0.0010 to 0.0016 in.)

Maximum side clearance:

0.04 mm (0.0016 in.)

Drive gear thickness:

Mark	Thickness
-	11.547 to 11.555 mm (0.4546 to 0.4549 in.)
-	11.555 to 11.563 mm (0.4549 to 0.4552 in.)
-	11.564 to 11.571 mm (0.4553 to 0.4556 in.)

Mark	Thickness
-	11.572 to 11.579 mm (0.4556 to 0.4559 in.)
-	11.580 to 11.587 mm (0.4559 to 0.4562 in.)

Driven gear thickness:

Mark	Thickness
-	11.547 to 11.555 mm (0.4546 to 0.4549 in.)
-	11.555 to 11.563 mm (0.4549 to 0.4552 in.)
-	11.564 to 11.571 mm (0.4553 to 0.4556 in.)
-	11.572 to 11.579 mm (0.4556 to 0.4559 in.)
-	11.580 to 11.587 mm (0.4559 to 0.4562 in.)

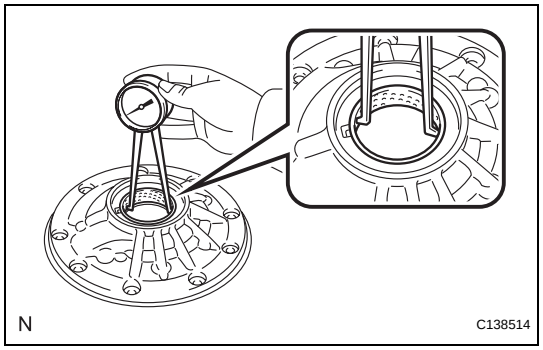

3. INSPECT FRONT OIL PUMP AND GEAR BODY SUB-ASSEMBLY

(a) Using a dial indicator, measure the inside diameter of the oil pump body bushing.
Standard inside diameter:
43.113 to 43.138 mm (1.6974 to 1.6983 in.)
Maximum inside diameter:
43.188 mm (1.7003 in.)
If the inside diameter is greater than the maximum, replace the oil pump body sub-assembly.

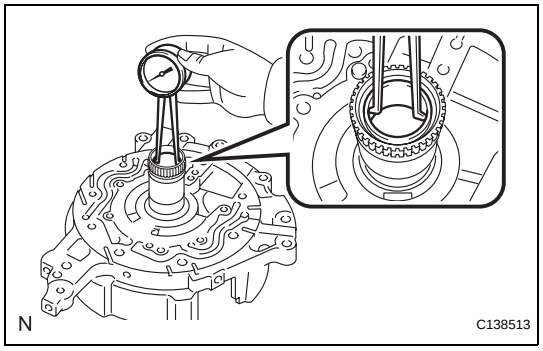

4. INSPECT STATOR SHAFT ASSEMBLY

(a) Using a dial indicator, measure the inside diameter of the oil pump body bushing.
Standard inside diameter:
22.500 to 22.526 mm (0.8858 to 0.8868 in.)
Maximum inside diameter:
22.570 mm (0.8886 in.)
If the inside diameter is greater than the maximum, replace the oil pump body sub-assembly.

AX

REASSEMBLY

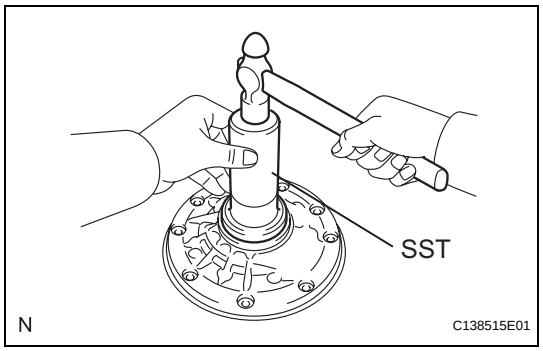

1. INSTALL FRONT OIL PUMP OIL SEAL

(a) Using SST and a hammer, install a new oil seal to the oil pump body.
SST 09350-32014 (09351-32140)
NOTICE:
The seal end should be level with the outer edge of the oil pump.

(b) Coat the lip of the oil seal with MP grease.

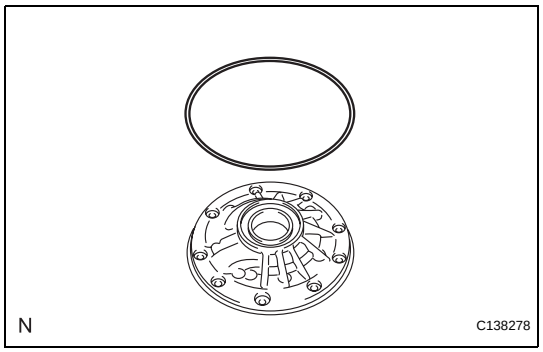

2. INSTALL FRONT OIL PUMP BODY O-RING

(a) Coat a new O-ring with ATF and install it to the oil pump body.
NOTICE:
Ensure that the O-ring is not twisted.

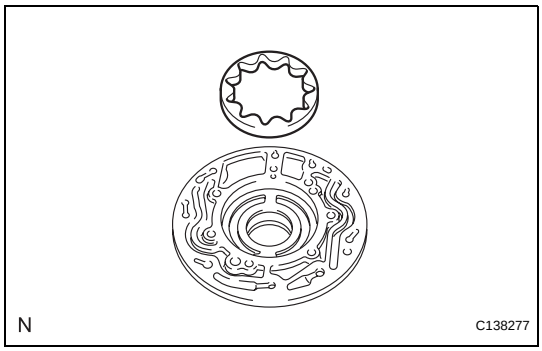

3. INSTALL FRONT OIL PUMP DRIVEN GEAR

(a) Coat the front oil pump driven gear with ATF and install it to the oil pump body with the marked side up.

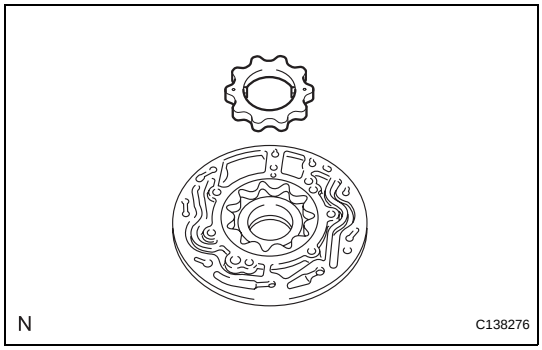

4. INSTALL FRONT OIL PUMP DRIVE GEAR

(a) Coat the front oil pump drive gear with ATF, and install it to the oil pump body with the marked side up.

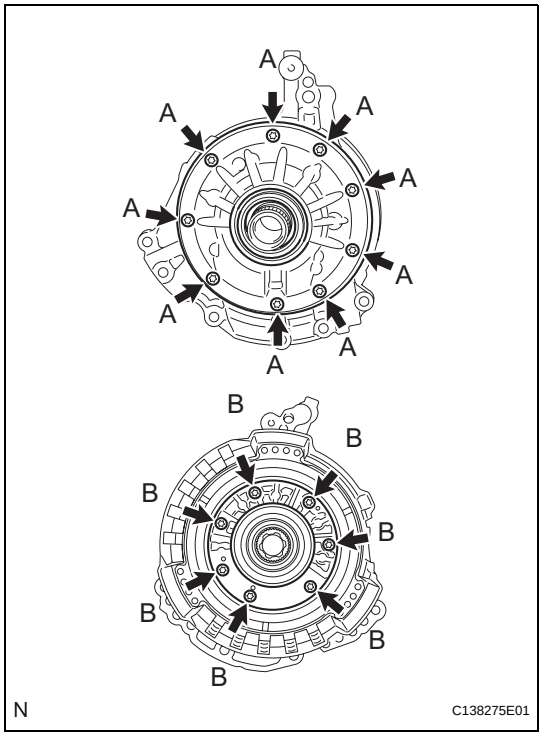

5. INSTALL STATOR SHAFT ASSEMBLY

(a) Align each knock pin of the stator shaft with the holes in the oil pump body and install the stator shaft to the oil pump body with the 16 bolts.

(b) Using a "TORX" socket (T30), install the 11 bolts.
Torque: 9.3 N*m (95 kgf*cm, 82 in.*lbf)

-	Bolt length:
Bolt A	14 mm (0.55 in)
Bolt B	26 mm (1.02 in)

6. INSPECT FRONT OIL PUMP AND GEAR BODY SUB-ASSEMBLY (See page AX-326)

AX

INSTALLATION

1. INSTALL TCM

(a) Install the TCM to the transaxle.

(b) Install and tighten the 2 bolts in the order shown in the illustration.
Torque: 11 N*m (115 kgf*cm, 8 ft.*lbf)

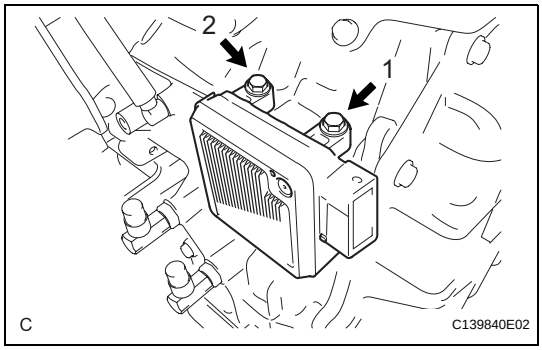

(c) Connect the connector to the TCM.

(d) Turn the lock lever and secure the connector with the lock lever.

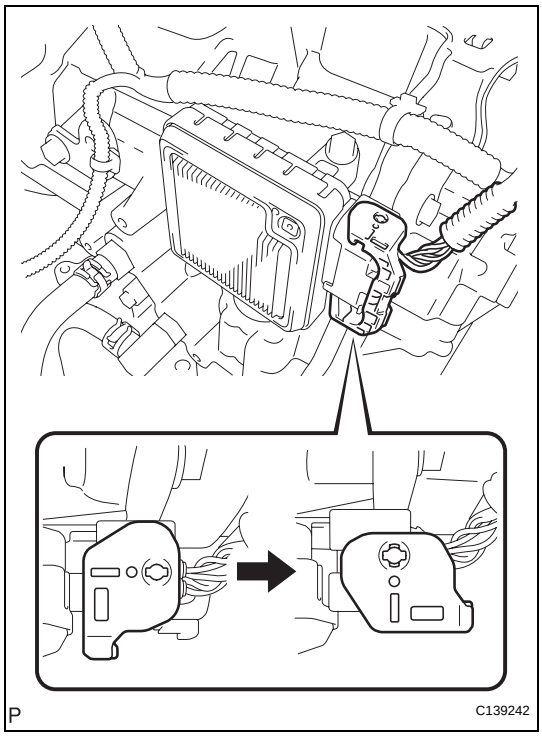

2. INSTALL INTAKE AIR RESONATOR SUB-ASSEMBLY (See page EM-47)

3. INSTALL NO. 1 AIR CLEANER INLET (See page EM-48)

4. INSTALL AIR CLEANER INLET ASSEMBLY (See page EM-48)

5. INSTALL BATTERY (See page EM-47)

6. INSTALL COOL AIR INTAKE DUCT SEAL (See page EM-50)

7. PERFORM TCM REGISTRATION

HINT:
(See page AX-18)

8. PERFORM INITIALIZATION

(a) Perform initialization procedure (See page IN-33).
NOTICE:
Some systems need initialization after reconnecting the cable to the negative battery terminal.

DISASSEMBLY

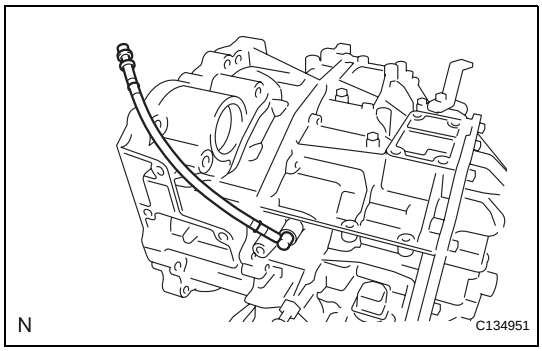

1. REMOVE NO. 2 BREATHER PLUG

(a) Using a screwdriver, remove the breather plug hose from the transaxle case.

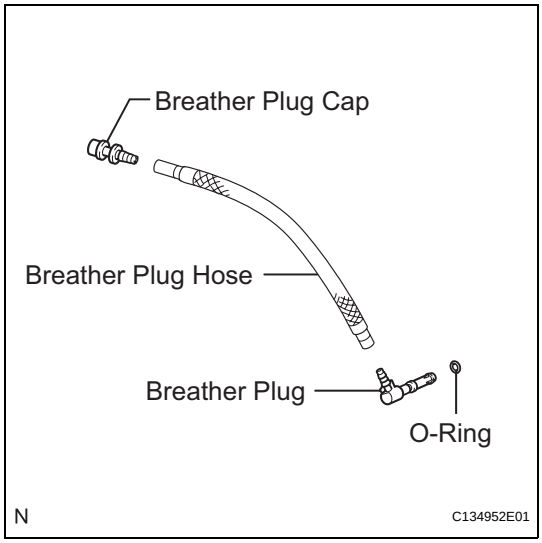

(b) Using a screwdriver, remove the breather plug from the breather plug hose.

(c) Using a screwdriver, remove the O-ring from the breather plug.

(d) Using a screwdriver, remove the breather plug cap from the breather breather plug hose.

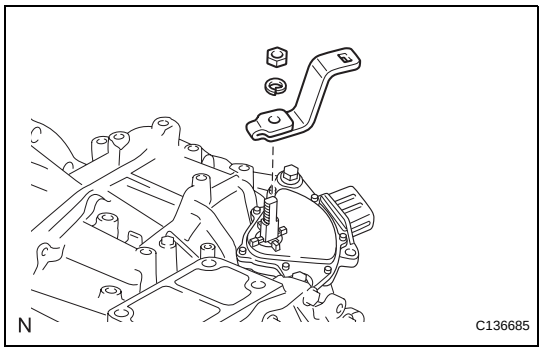

2. REMOVE PARK/NEUTRAL POSITION SWITCH ASSEMBLY

(a) Remove the nut, washer, and control shaft lever from the control shaft.

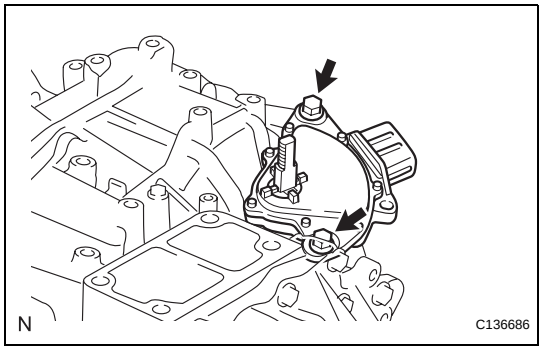

(b) Remove the 2 bolts and the park/neutral position switch assembly from the transaxle case.

NOTICE:

Before removing the park/neutral position switch, remove any dirt or rust on the installation portion of the control shaft. Be sure to remove the switch straight along the shaft while being careful not to deform the plate spring that supports the shaft. If the plate spring is deformed, the park/neutral switch cannot be reinstalled correctly.

AX

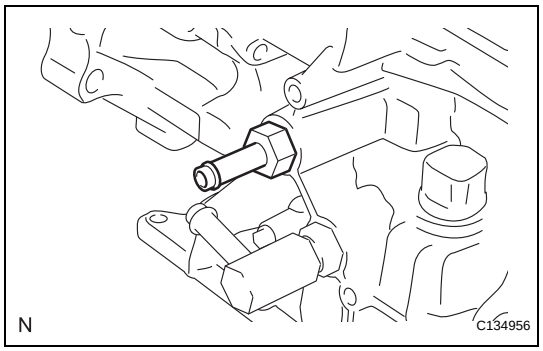

3. REMOVE OIL COOLER TUBE UNION (INLET OIL COOLER UNION)

(a) Loosen the nut while holding the oil cooler tube union (inlet oil cooler union).
(b) Remove the oil cooler tube union (inlet oil cooler union) from the transaxle case.
(c) Remove the O-ring from the oil cooler tube union (inlet oil cooler union).

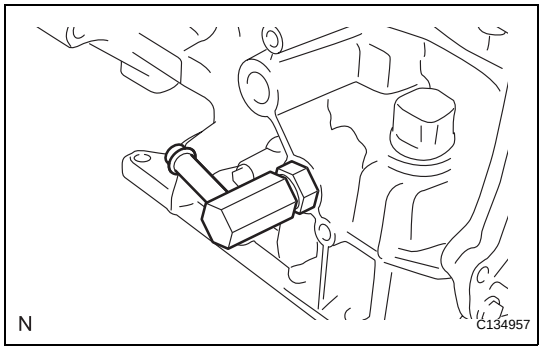

4. REMOVE OIL COOLER TUBE UNION (OUTLET OIL COOLER UNION)

(a) Loosen the nut while holding the oil cooler tube union (outlet oil cooler union).
(b) Remove the oil cooler tube union (outlet oil cooler union) from the transaxle case.
(c) Remove the O-ring from the oil cooler tube union (outlet oil cooler union).

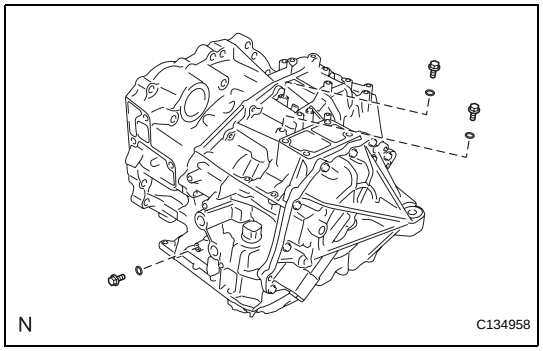

5. REMOVE NO. 1 TRANSAXLE CASE PLUG

(a) Remove the 3 No. 1 transaxle case plugs from the transaxle case.
(b) Using a screwdriver, remove the 3 O-rings from the 3 No. 1 transaxle case plugs.

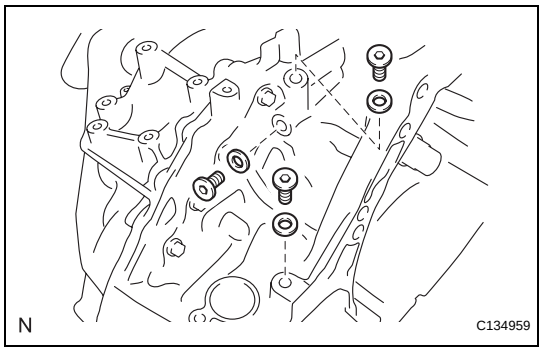

(c) Using a hexagon wrench (6 mm), remove the 3 hexagon bolts from the transaxle housing.
(d) Remove the 3 gaskets from the 3 hexagon bolts.

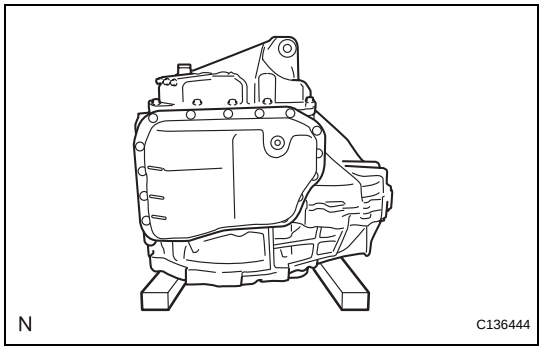

6. FIX AUTOMATIC TRANSAXLE ASSEMBLY

(a) Secure the transaxle assembly on wooden blocks.

AX

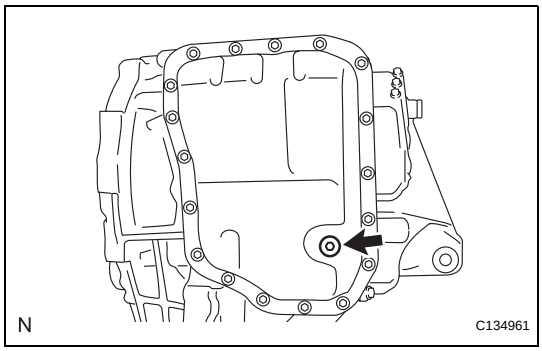

7. REMOVE AUTOMATIC TRANSAXLE OIL PAN SUB-ASSEMBLY

(a) Using a hexagon wrench (6 mm), remove the overflow plug from the automatic transaxle oil pan sub-assembly.

(b) Remove the gasket from the overflow plug.

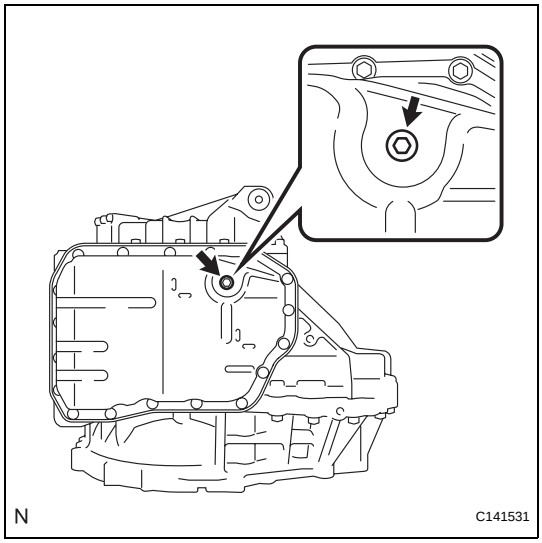

(c) Using a hexagon wrench (6 mm), remove the No. 1 oil filler tube from the automatic transaxle assembly.

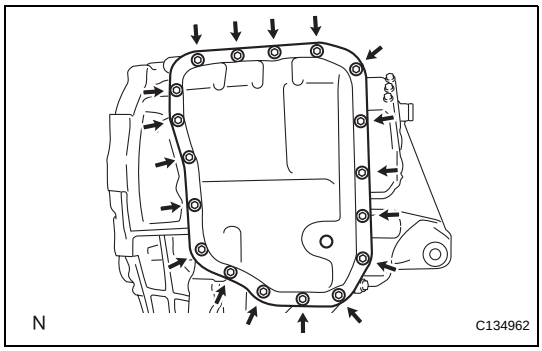

(d) Remove the 18 bolts, automatic transaxle oil pan sub-assembly, and gasket from the automatic transaxle assembly.

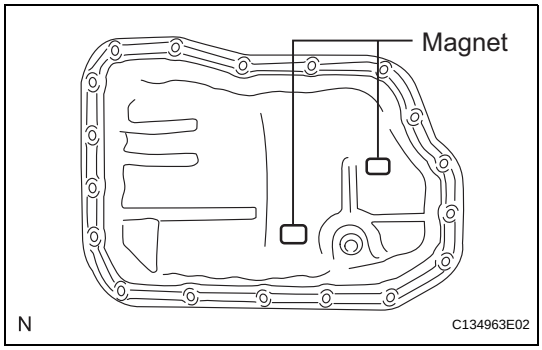

(e) Remove the 2 magnets from the automatic transaxle oil pan sub-assembly.

8. INSPECT TRANSMISSION OIL CLEANER MAGNET (See page AX-283)

AX

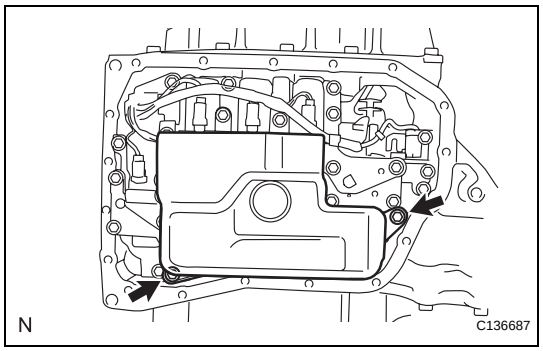

9. REMOVE VALVE BODY OIL STRAINER ASSEMBLY

(a) Remove the 2 bolts and oil strainer assembly from the valve body assembly.

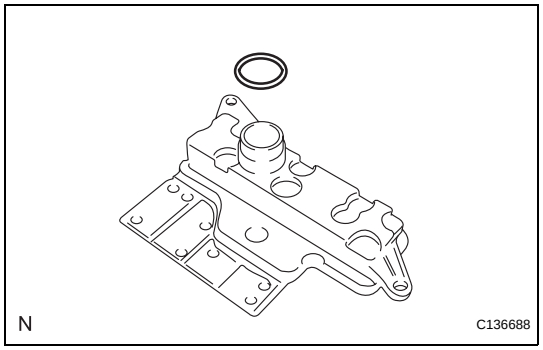

(b) Remove the O-ring from the oil strainer assembly.

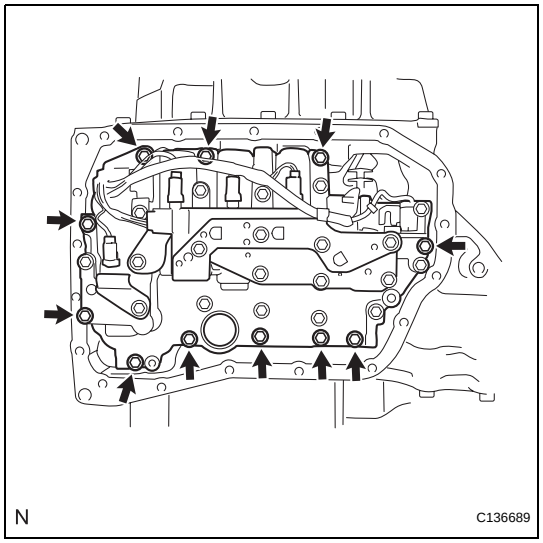

10. REMOVE TRANSMISSION VALVE BODY ASSEMBLY

(a) Remove the 11 bolts and valve body assembly from the transaxle case.

NOTICE:

When removing the transmission valve body assembly, be careful not to allow the transmission revolution sensor and the transaxle case to interfere each other.

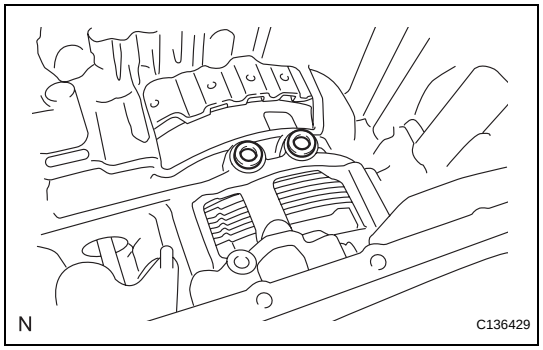

11. REMOVE TRANSAXLE CASE GASKET

(a) Remove the 2 gaskets from the transaxle case.

12. INSPECT INPUT SHAFT SUB-ASSEMBLY (See page AX-284)

AX

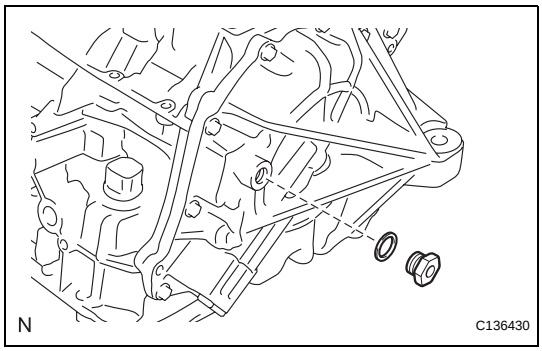

13. REMOVE TRANSAXLE REAR COVER SUB-ASSEMBLY

(a) Remove the refill plug from the transaxle rear cover.
(b) Remove the gasket from the refill plug.

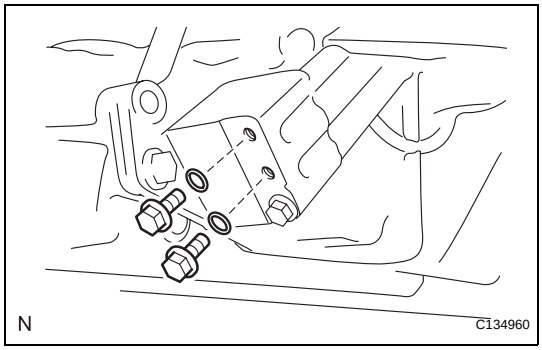

(c) Remove the 2 No. 1 automatic transaxle case plugs from the transaxle rear cover.
(d) Using a screwdriver, remove the 2 O-rings from the 2 No. 1 automatic transaxle case plugs.

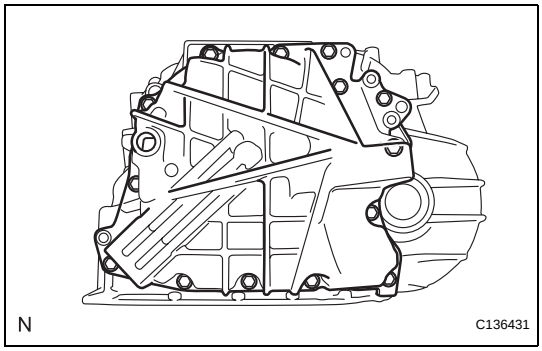

(e) Remove the 14 bolts from the transaxle rear cover.
(f) Using a brass bar and hammer, tap on the circumference of the rear transaxle cover, to remove the transaxle rear cover from the transaxle case.

AX

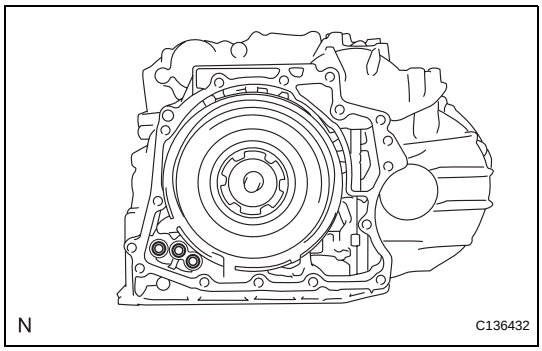

(g) Using a screwdriver, remove the 3 O-rings from the transaxle case.

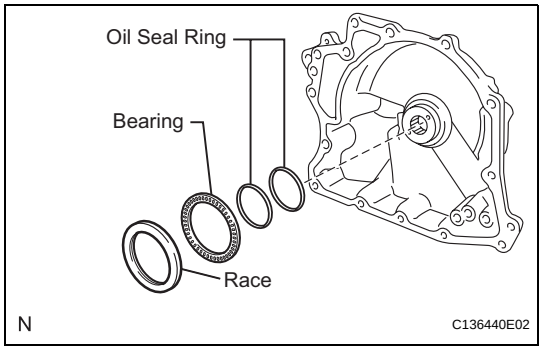

(h) Using a screwdriver, remove the 2 oil seal rings from the transaxle rear cover.
(i) Remove the thrust needle roller bearing and thrust needle roller race from the transaxle rear cover.

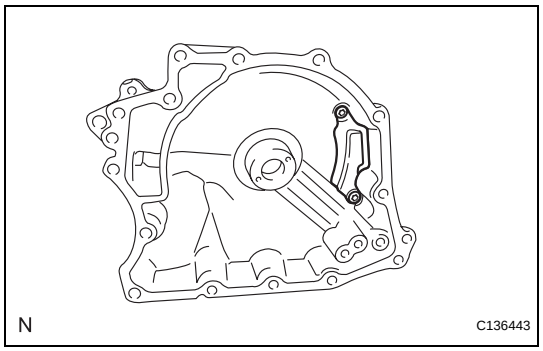

(j) Using a "TORX" wrench (T30), remove the 2 "TORX" screws and transaxle rear cover plate from the transaxle rear cover.

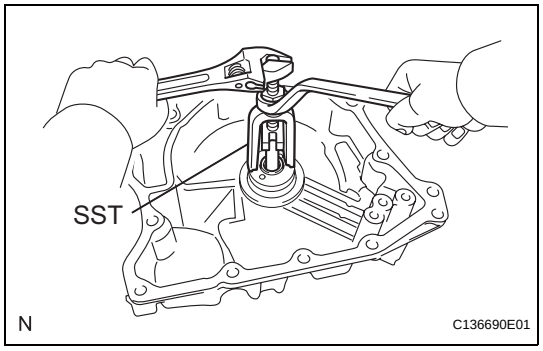

(k) Using SST, remove the needle roller bearing from the transaxle rear cover.
SST 09319-60020

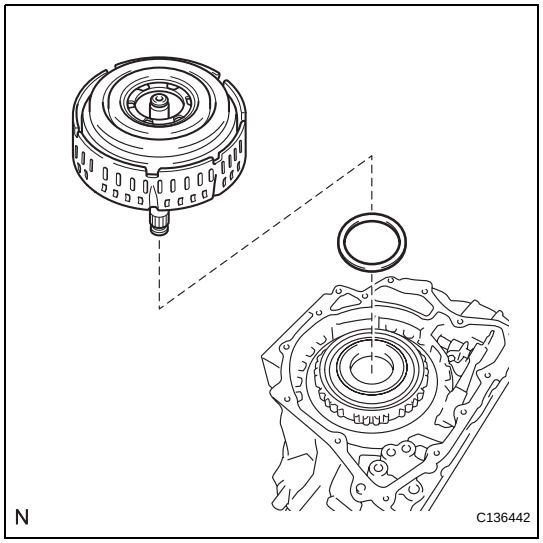

14. REMOVE DIRECT MULTIPLE DISC CLUTCH ASSEMBLY

(a) Remove the direct multiple disc clutch assembly from the transaxle case.

(b) Remove the thrust needle roller bearing from the direct multiple disc clutch assembly.

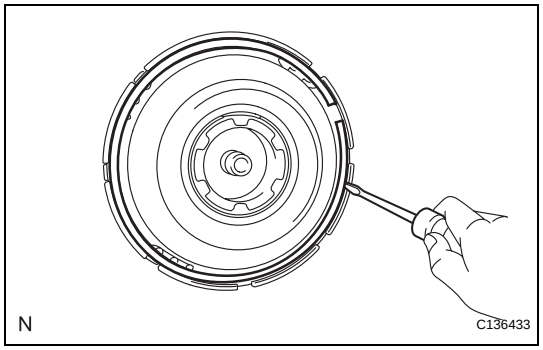

15. REMOVE DIRECT MULTIPLE DISC CLUTCH SNAP RING

(a) Using 2 screwdrivers, remove the snap ring from the direct multiple disc clutch assembly.

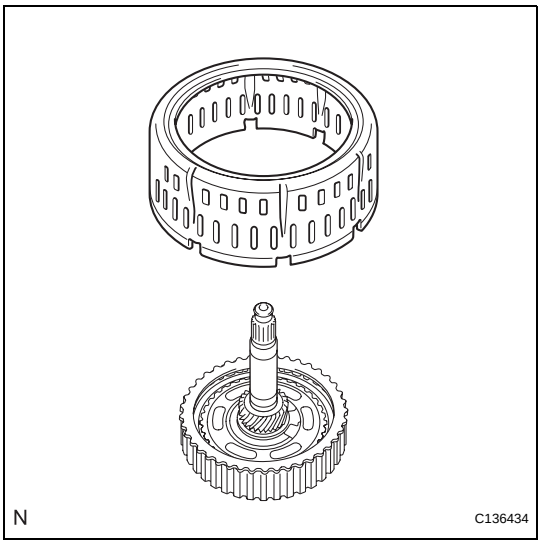

(b) Remove the No. 2 direct clutch piston from the direct multiple disc clutch assembly.

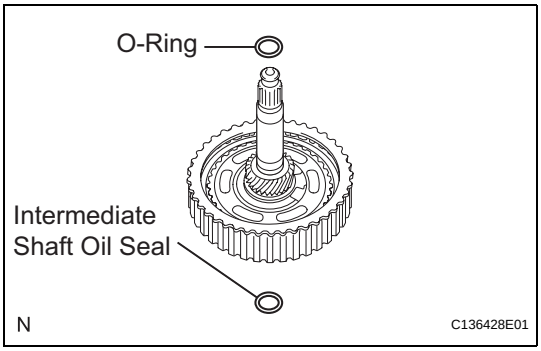

(c) Using a screwdriver, remove the intermediate shaft oil seal ring from the direct No. 2 direct clutch piston.
(d) Using a screwdriver, remove the O-ring from the direct multiple disc clutch assembly.

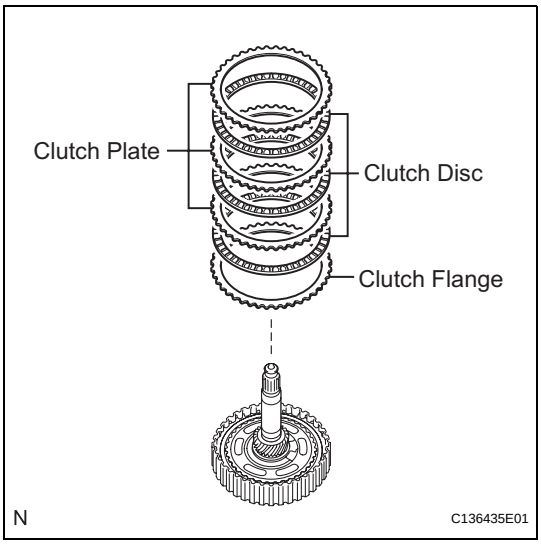

16. REMOVE NO. 2 DIRECT MULTIPLE DISC CLUTCH FLANGE

(a) Remove the flange, 3 clutch discs and 3 clutch plates from the direct multiple disc clutch assembly.

17. INSPECT NO. 2 CLUTCH DISC (See page AX-284)

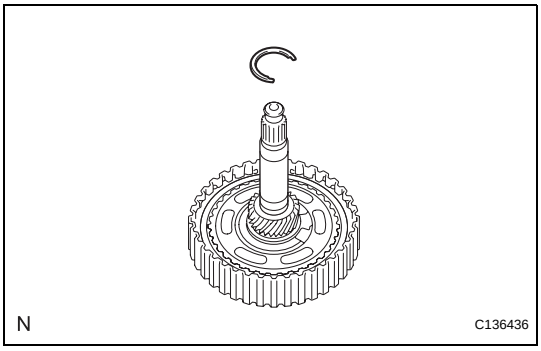

18. REMOVE REAR PLANETARY SUN GEAR ASSEMBLY

(a) Using a snap ring expander, remove the snap ring from the direct multiple disc clutch assembly.

AX

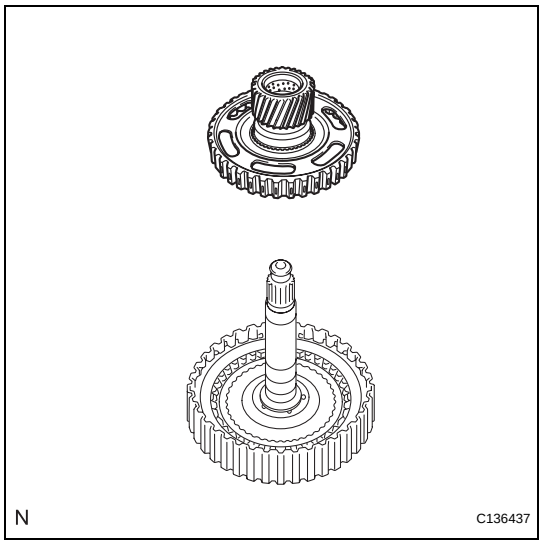

(b) Remove the rear planetary sun gear from the direct multiple disc clutch assembly.

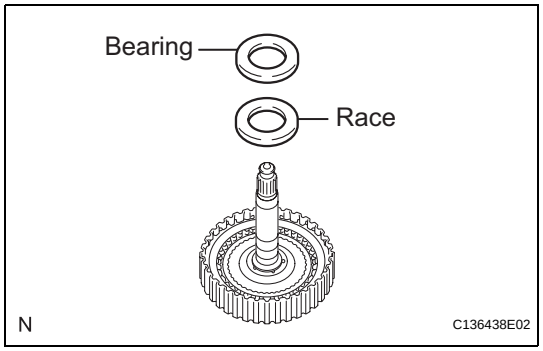

(c) Remove the thrust needle roller bearing and thrust needle roller race from the direct multiple disc clutch assembly.

19. INSPECT REAR PLANETARY SUN GEAR ASSEMBLY (See page AX-285)

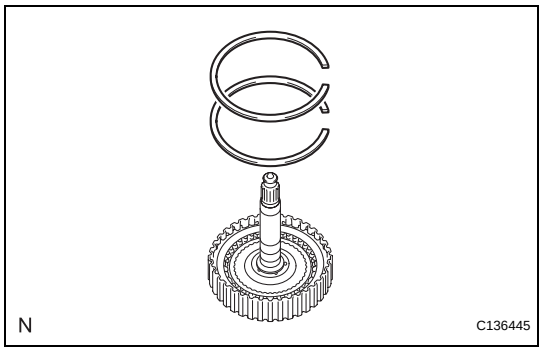

20. REMOVE NO. 1 DIRECT MULTIPLE DISC CLUTCH FLANGE

(a) Using 2 screwdrivers, remove the 2 snap rings from the direct multiple disc clutch assembly.

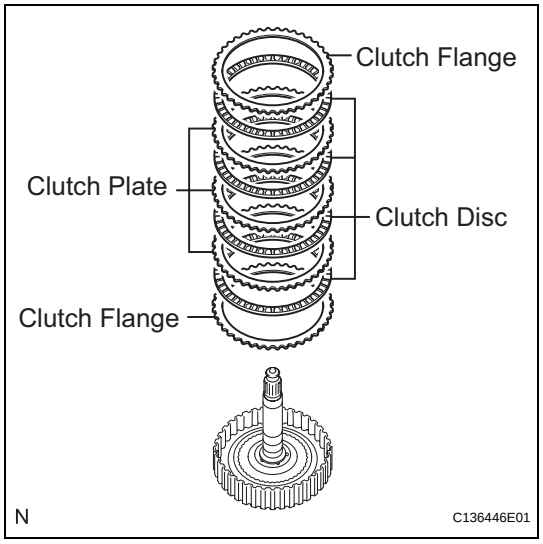

(b) Remove the flange, 4 clutch discs, and 4 clutch plates from the direct multiple disc clutch assembly.

21. INSPECT NO. 1 CLUTCH DISC (See page AX-284)

AX

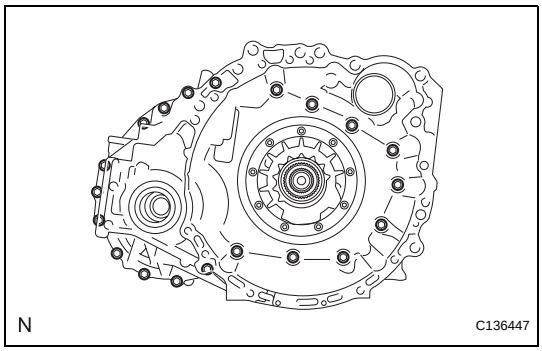

22. REMOVE TRANSAXLE HOUSING

(a) Remove the 20 bolts from the transaxle housing.

(b) Using a brass bar and hammer, tap on the circumference of the transaxle housing to remove the transaxle housing from the transaxle case.

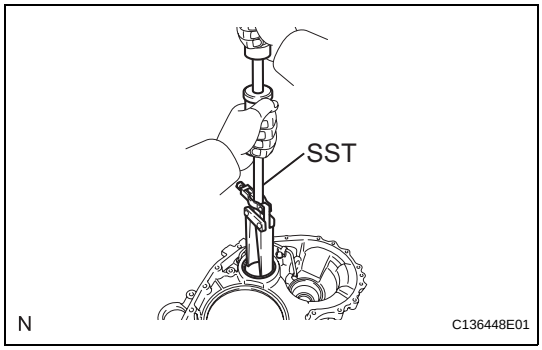

23. REMOVE COUNTER DRIVEN GEAR FRONT TAPERED ROLLER BEARING OUTER RACE

(a) Using SST, remove the counter driven gear front tapered roller bearing outer race and shim from the transaxle housing.
SST 09308-00010

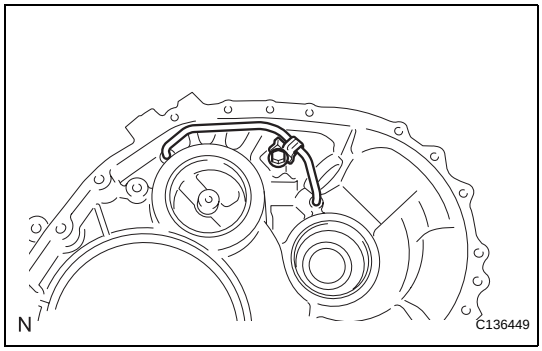

24. REMOVE DIFFERENTIAL GEAR LUBE APPLY TUBE

(a) Remove the bolt, clamp, and differential gear lube apply tube from the transaxle housing.

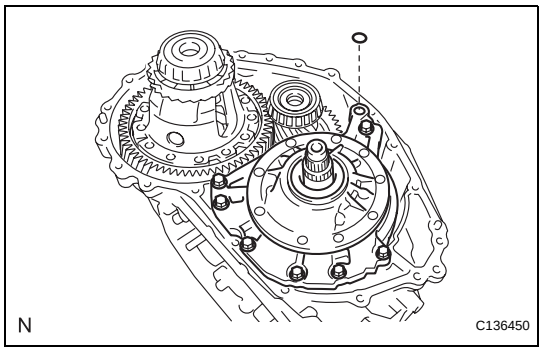

25. REMOVE FRONT OIL PUMP AND GEAR BODY SUB-ASSEMBLY

(a) Remove the 7 bolts and oil pump from the transaxle case.

(b) Remove the O-ring from the oil pump assembly.

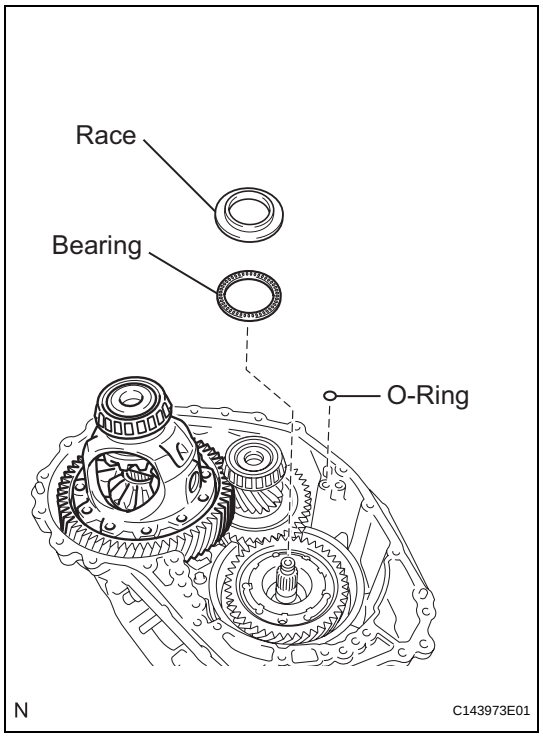

(c) Remove the thrust needle roller bearing and thrust needle roller race from the carrier lock nut.
(d) Remove the O-ring from the transaxle case.

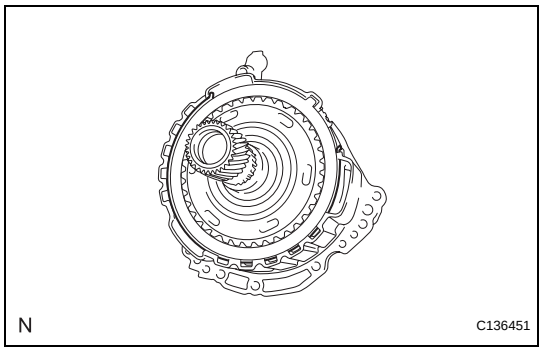

26. REMOVE NO. 3 BRAKE DISC

(a) Using a screwdriver, remove the snap ring from the oil pump assembly.

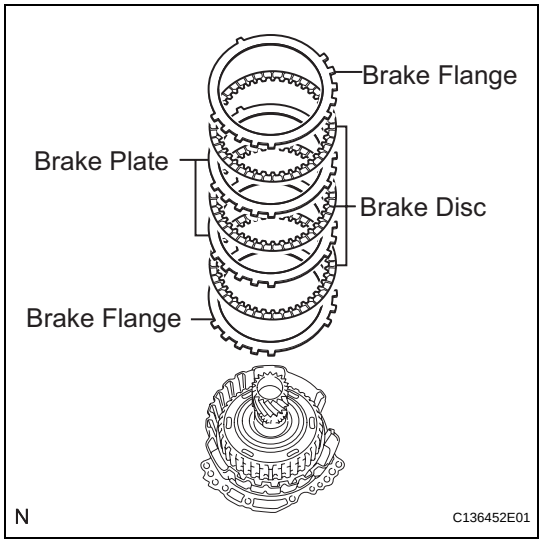

(b) Remove the 2 brake flanges, 3 brake discs, and 2 brake plates from the oil pump assembly.

27. INSPECT NO. 3 BRAKE DISC (See page AX-285)

AX

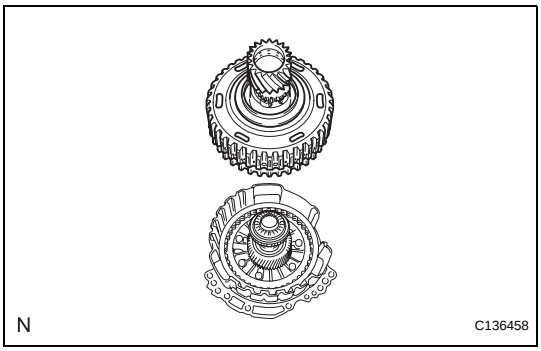

28. REMOVE UNDERDRIVE PLANETARY GEAR ASSEMBLY

(a) Remove the underdrive planetary gear assembly from the oil pump assembly.

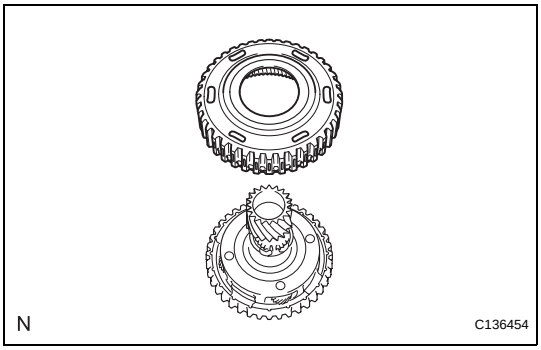

29. REMOVE NO. 3 BRAKE HUB

(a) Remove the No. 3 brake hub from the underdrive planetary gear assembly.

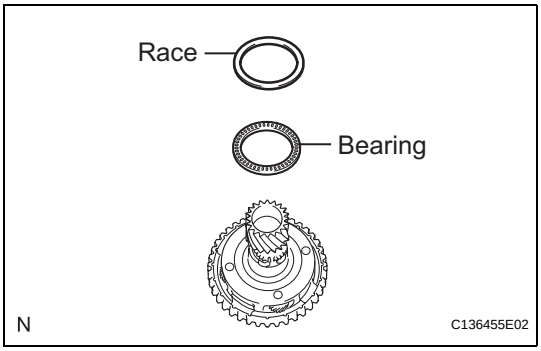

(b) Remove the thrust needle roller bearing and thrust needle roller race from the underdrive planetary gear assembly.

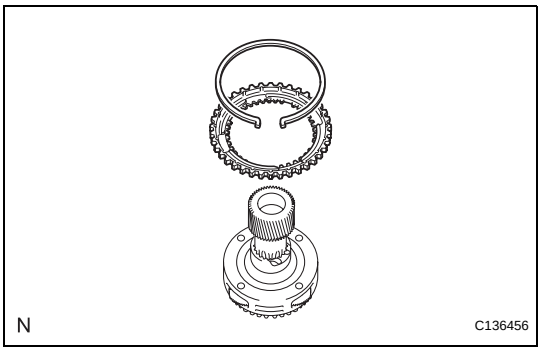

30. REMOVE UNDERDRIVE PLANETARY RING GEAR

(a) Using needle-nose pliers, remove the snap ring from the underdrive planetary ring gear.

(b) Remove the underdrive planetary ring gear from the underdrive planetary gear assembly.

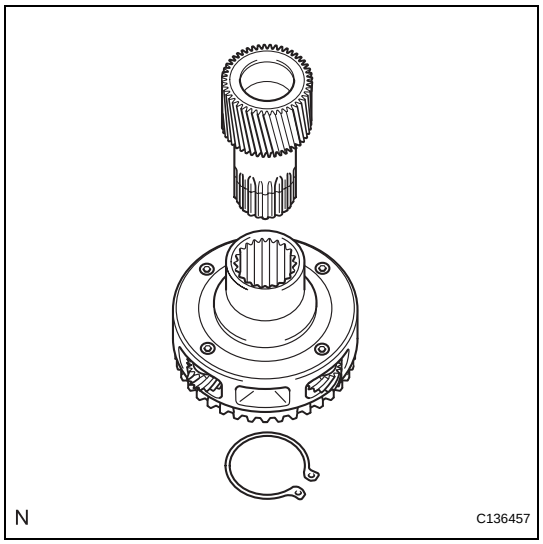

31. REMOVE PLANETARY SUN GEAR SUB-ASSEMBLY

(a) While expanding the snap ring with snap ring pliers, remove the front planetary sun gear from the underdrive planetary gear assembly.

(b) Remove the snap ring from the underdrive planetary gear assembly.

32. INSPECT UNDERDRIVE PLANETARY GEAR ASSEMBLY (See page AX-285)

33. INSPECT PLANETARY SUN GEAR SUB-ASSEMBLY (See page AX-284)

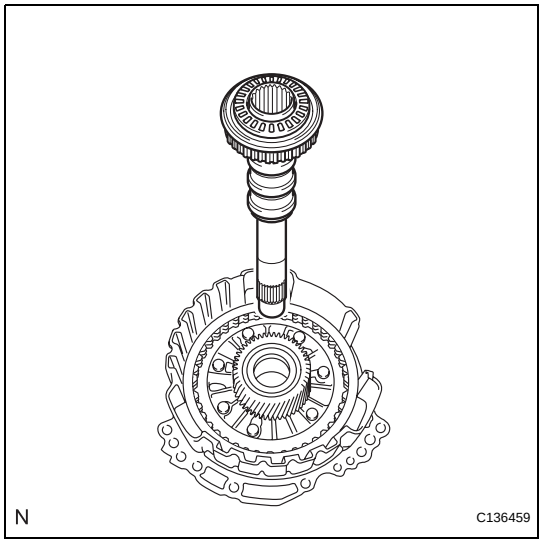

34. REMOVE INPUT SHAFT SUB-ASSEMBLY

(a) Remove the input shaft from the oil pump assembly.

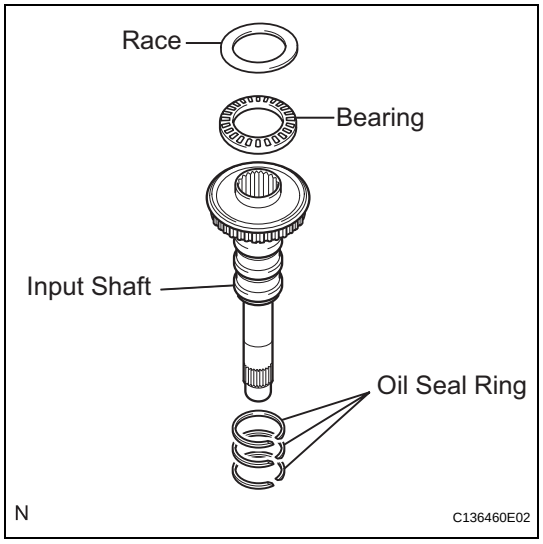

(b) Remove the thrust needle roller bearing and thrust needle roller race from the input shaft.

(c) Using a screwdriver, remove the 3 input shaft oil seal rings from the input shaft.

AX

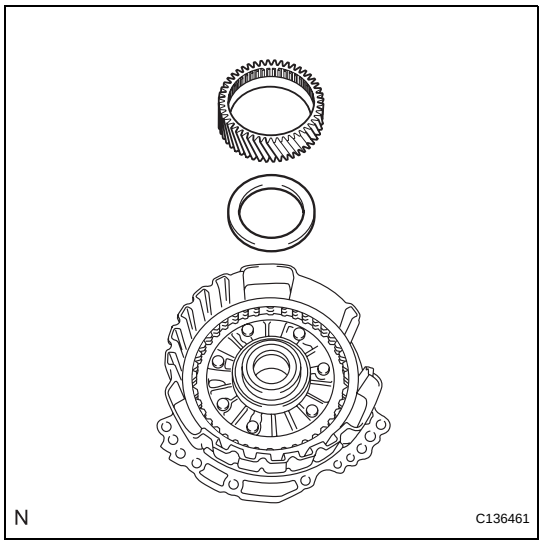

35. REMOVE UNDERDRIVE PLANETARY SUN GEAR

(a) Remove the underdrive planetary sun gear from the oil pump assembly.

(b) Remove the thrust needle roller bearing from the oil pump assembly.

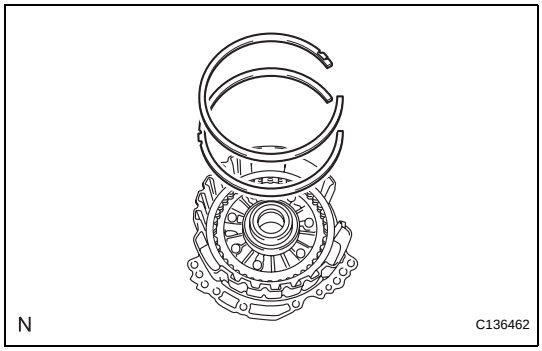

36. REMOVE NO. 1 BRAKE DISC

(a) Using a screwdriver, remove the 2 snap rings from the oil pump assembly.

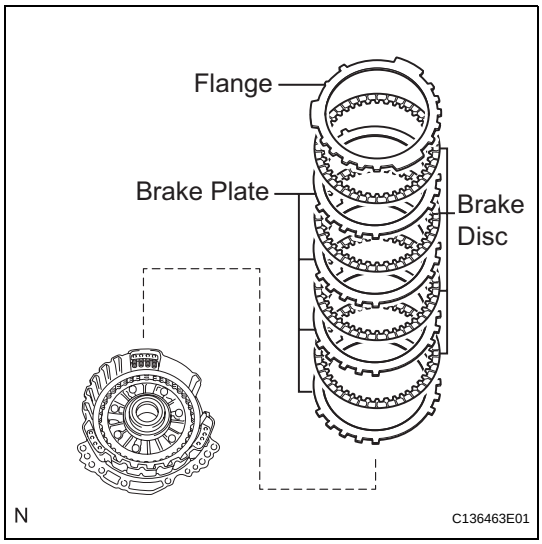

(b) Remove the flange, 4 brake discs, and 4 brake plates from the oil pump assembly.

37. INSPECT NO. 1 BRAKE DISC (See page AX-286)

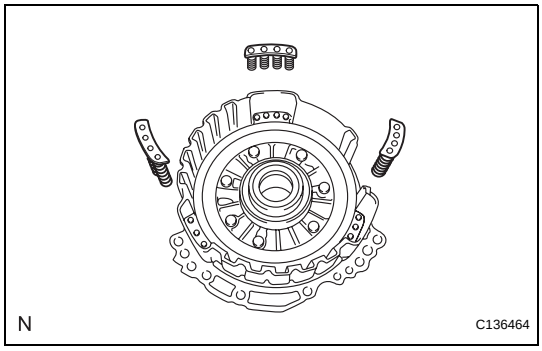

38. REMOVE 2ND BRAKE PISTON RETURN SPRING SUB-ASSEMBLY

(a) Remove the 3 2nd brake piston return springs from the oil pump assembly.

39. INSPECT 2ND BRAKE PISTON RETURN SPRING SUB-ASSEMBLY (See page AX-286)

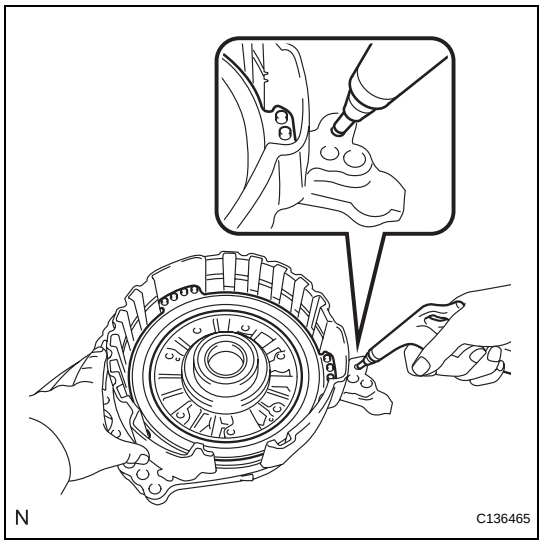

40. REMOVE NO. 1 BRAKE PISTON

(a) Holding the oil pump assembly by hand, apply compressed air (392 kPa, 4.0 kgf/cm^2, 57 psi) to the oil pump assembly to remove the No. 1 brake piston.

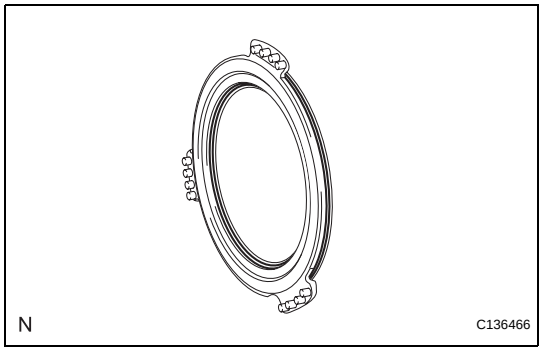

(b) Using a screwdriver, remove the 2 O-rings from the No. 1 brake piston.

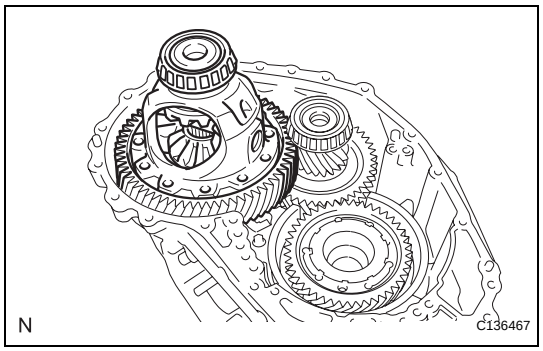

41. REMOVE FRONT DIFFERENTIAL CASE

(a) Remove the differential case sub-assembly from the transaxle case.

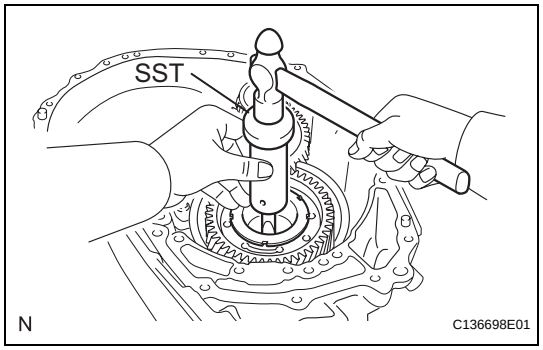

42. REMOVE COUNTER DRIVE GEAR NUT

(a) Using a SST and hammer, unstake the nut.
SST 09930-00010

AX

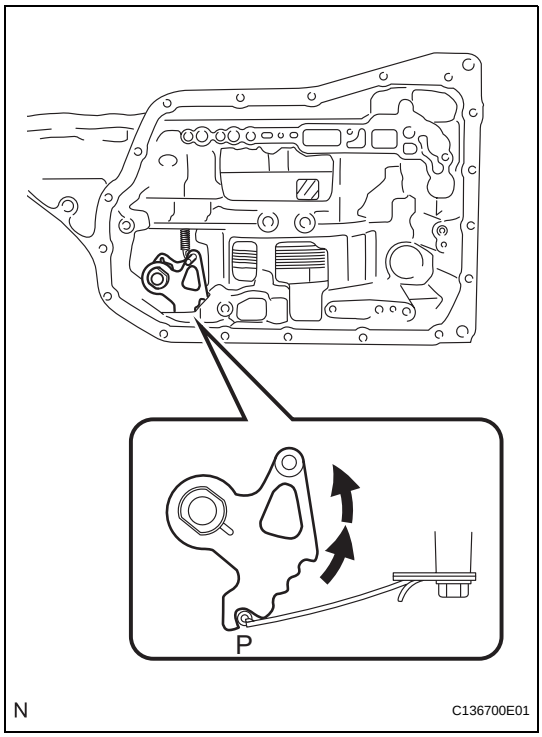

(b) Turn the manual valve lever 2 notches counterclockwise to set it in the P position as shown in the illustration.

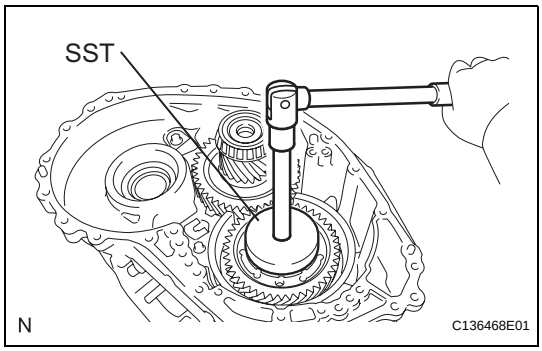

(c) Using SST, remove the nut from the planetary gear assembly.
SST 09387-00130

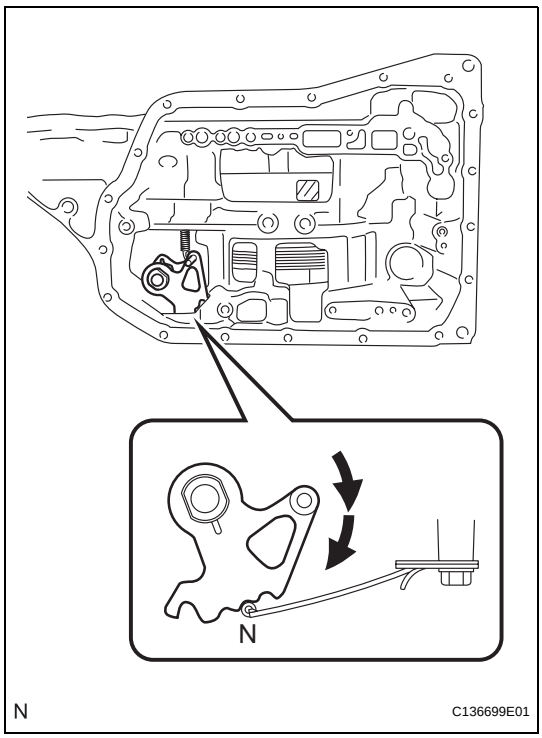

43. REMOVE COUNTER DRIVEN GEAR

(a) Turn the manual valve lever 2 notches clockwise to set it in the N position as shown in the illustration.

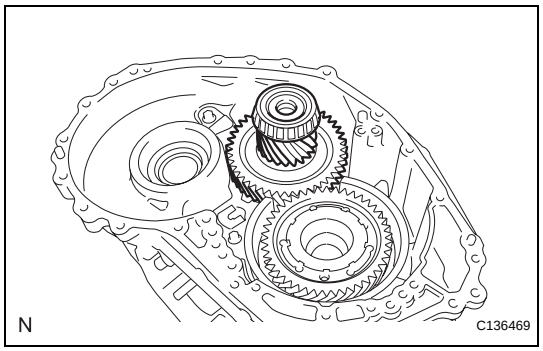

(b) Remove the counter driven gear sub-assembly from the transaxle case.

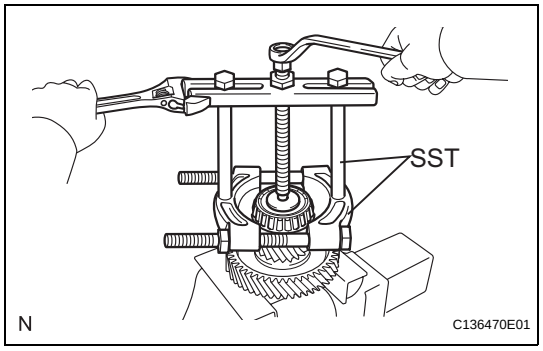

44. REMOVE COUNTER DRIVEN GEAR FRONT TAPERED ROLLER BEARING

(a) Using SST, remove the counter driven gear front tapered roller bearing from the counter driven gear sub-assembly.

SST 09950-00020, 09950-00030, 09950-60010 (09951-00400)

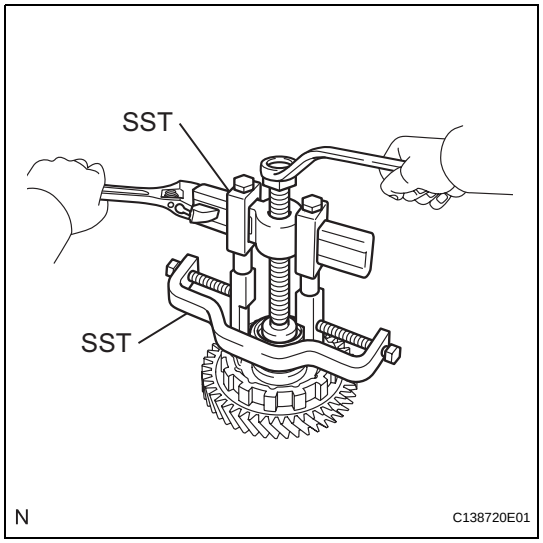

45. REMOVE COUNTER DRIVEN GEAR REAR TAPERED ROLLER BEARING

(a) Using SST, remove the counter driven gear rear tapered roller bearing and differential drive pinion from the counter driven gear.

SST 09950-40011 (09951-04010, 09952-04010, 09954-04010, 09953-04020, 09955-04071, 09957-04010, 09958-04011), 09950-60010 (09951-00320)

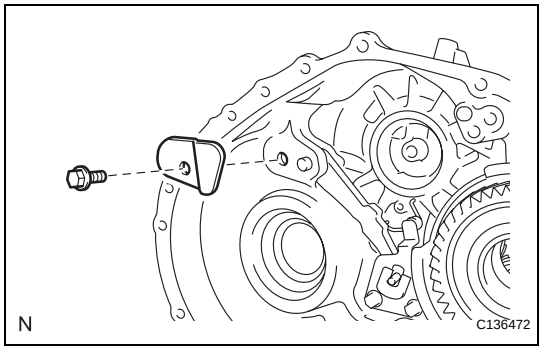

46. REMOVE PAWL SHAFT CLAMP

(a) Remove the bolt and pawl shaft clamp from the transaxle case.

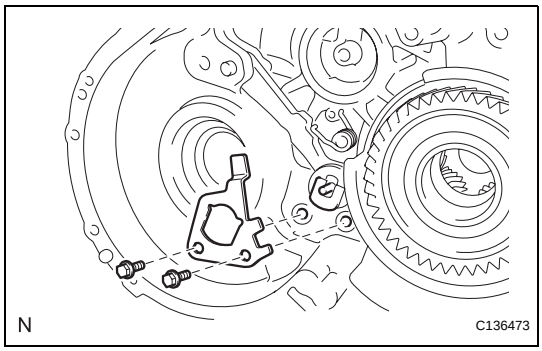

47. REMOVE PAWL STOPPER PLATE

(a) Remove the 2 bolts and pawl stopper plate from the transaxle case.

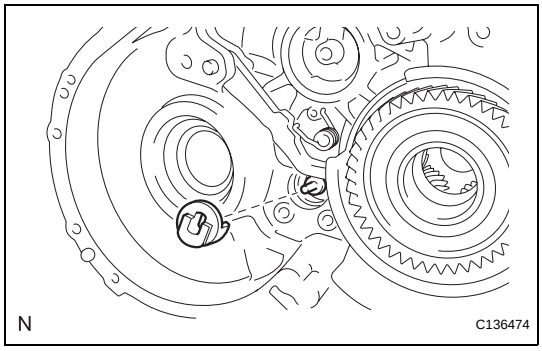

48. REMOVE PARKING LOCK SLEEVE

(a) Remove the parking lock sleeve from the transaxle case.

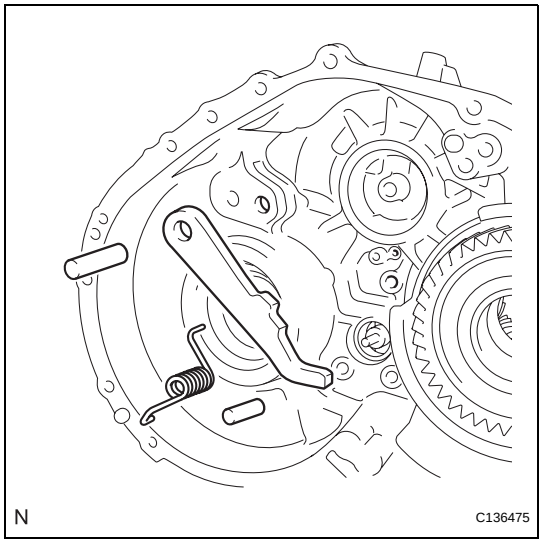

49. REMOVE PARKING LOCK PAWL

(a) Remove the spring, parking lock pawl pin, parking lock pawl shaft, and parking lock pawl from the transaxle case.

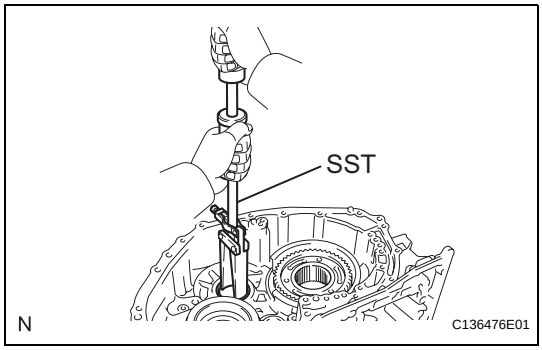

50. REMOVE COUNTER DRIVEN GEAR REAR TAPERED ROLLER BEARING OUTER RACE

(a) Using SST, remove the counter driven gear rear tapered roller bearing outer race from the transaxle case.

SST 09308-00010

AX

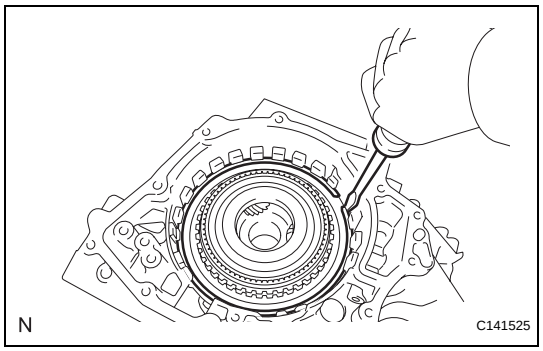

51. REMOVE ONE-WAY CLUTCH ASSEMBLY

(a) Using a screwdriver, remove the snap ring from the transaxle case.

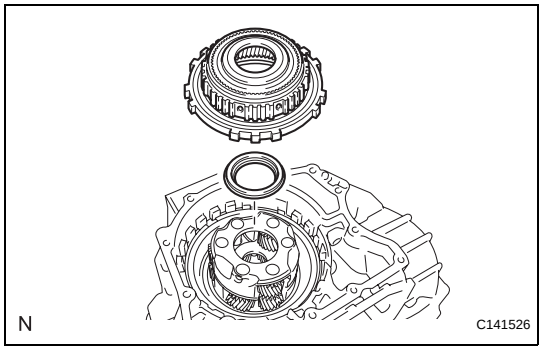

(b) Remove the one-way clutch assembly with planetary ring gear from the transaxle case.

(c) Remove the thrust needle roller bearing from the transaxle case.

52. INSPECT ONE-WAY CLUTCH ASSEMBLY (See page AX-286)

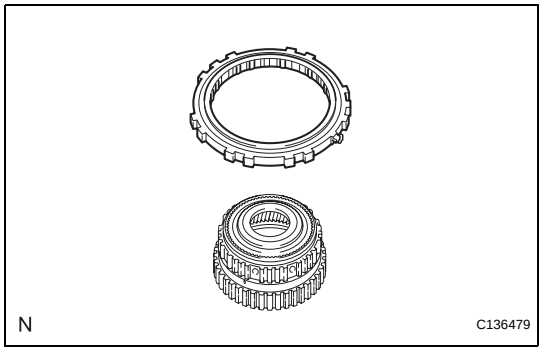

53. REMOVE PLANETARY RING GEAR

(a) Remove the planetary ring gear from the one-way clutch assembly.

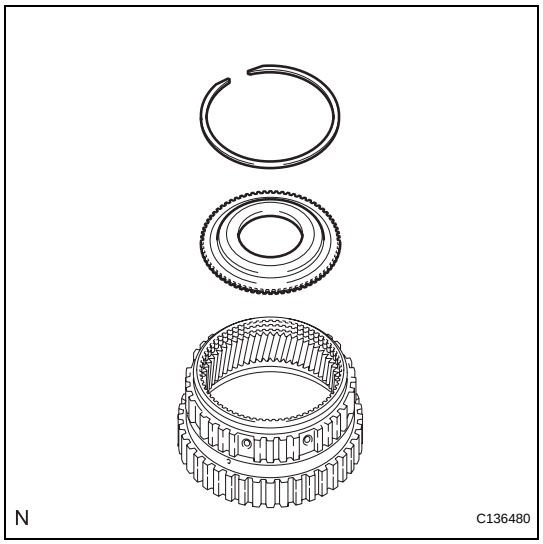

54. REMOVE PLANETARY RING GEAR FLANGE

(a) Using a screwdriver, remove the snap ring from the planetary ring gear.

(b) Remove the planetary ring gear flange from the planetary ring gear.

AX

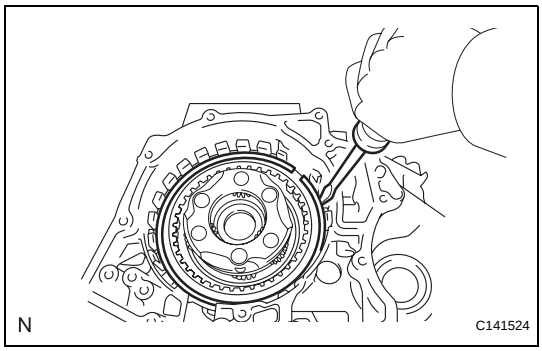

55. REMOVE NO. 2 BRAKE DISC

(a) Using a screwdriver, remove the snap ring from the transaxle case.

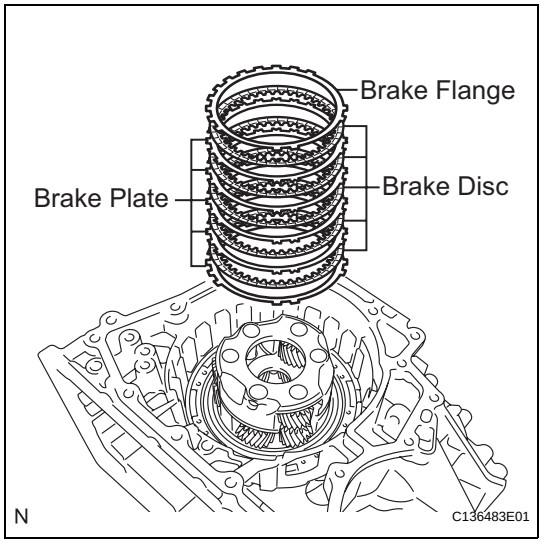

(b) Remove the brake flange, 5 brake discs, and 5 brake plates from the transaxle case.

56. INSPECT NO. 2 BRAKE DISC (See page AX-287)

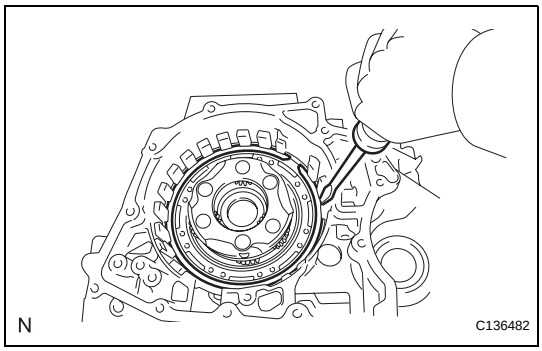

57. REMOVE 1ST AND REVERSE BRAKE RETURN SPRING SUB-ASSEMBLY

(a) Using a screwdriver, remove the snap ring from the transaxle case.

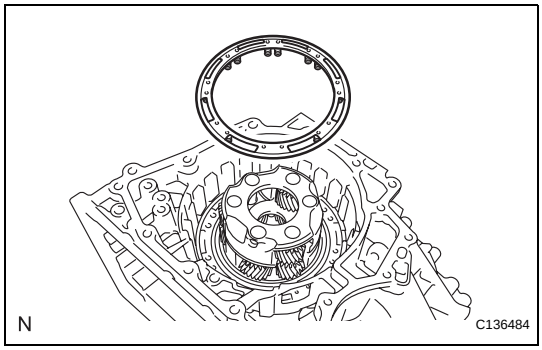

(b) Remove the 1st and reverse brake return spring from the transaxle case.

58. INSPECT 1ST AND REVERSE BRAKE RETURN SPRING SUB-ASSEMBLY (See page AX-287)

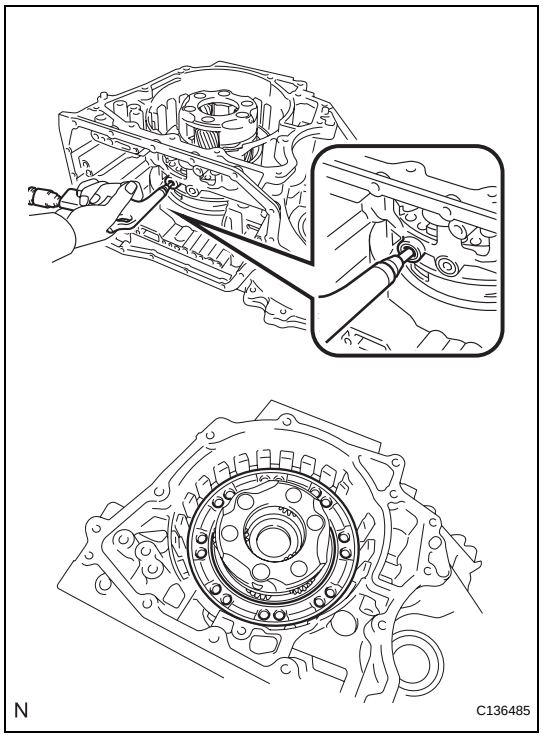

59. REMOVE NO. 2 BRAKE PISTON

(a) Apply compressed air (392 kPa, 4.0 kgf/cm^2, 57 psi) to the ATF hole indicated by the arrow to remove the No. 2 brake piston assembly from the transaxle case.

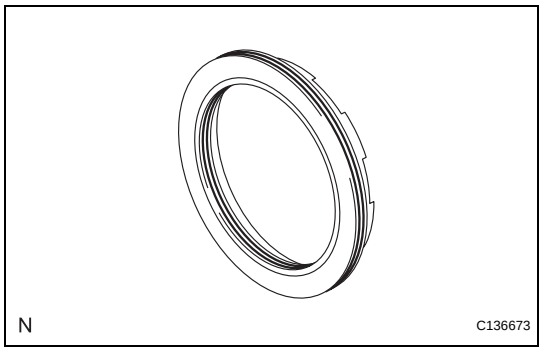

(b) Using a screwdriver, remove the 2 O-rings from the No. 2 brake piston.

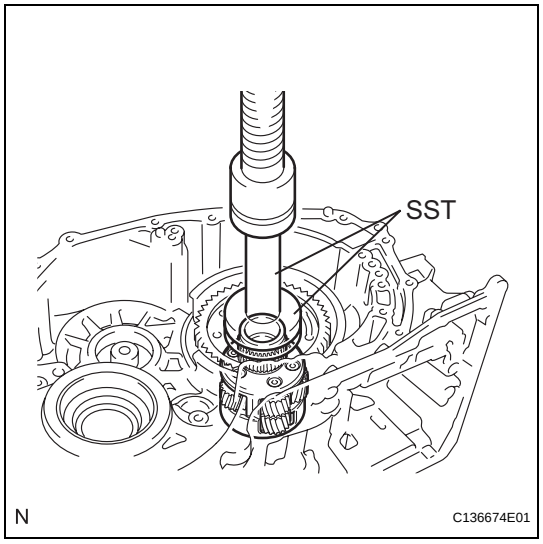

60. REMOVE PLANETARY GEAR ASSEMBLY

(a) Using SST and a press, remove the planetary gear assembly from the transaxle case.

SST 09950-60010 (09951-00580), 09950-70010 (09951-07100)

AX

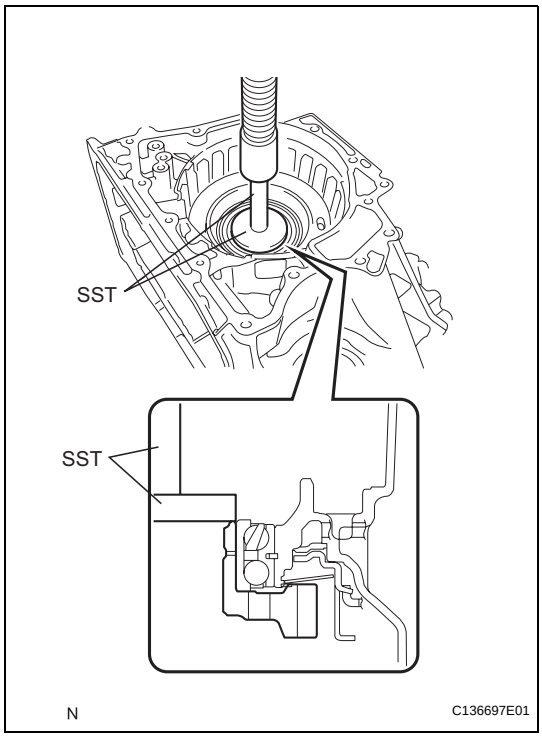

61. REMOVE COUNTER DRIVE GEAR

(a) Using SST and a press, remove the counter drive gear and bearing inner race (rear side) from the transaxle case.

SST 09950-60020 (09951-00710), 09950-70010 (09951-07100)

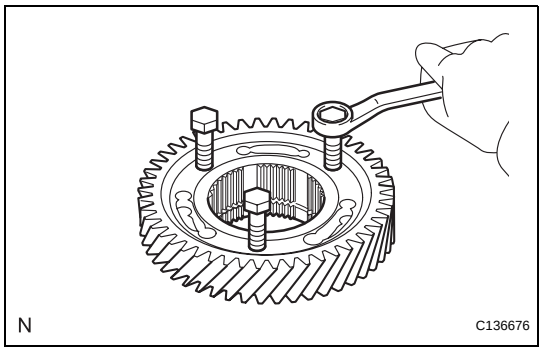

(b) As shown in the illustration, tighten the 3 bolts evenly and leave a clearance of approximately 20.0 mm (0.797 in.) between the counter drive gear and inner race.

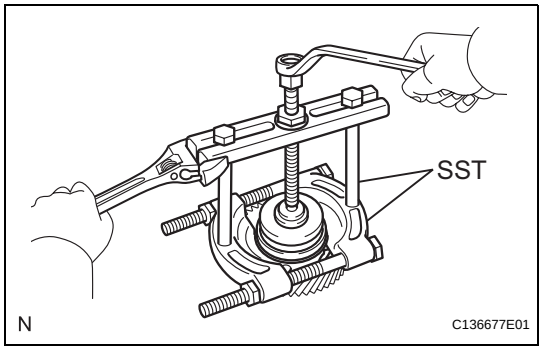

(c) Using SST, remove the bearing inner race (front side) from the counter drive gear.

SST 09950-00020, 09950-00030, 09950-60020 (09951-00710)

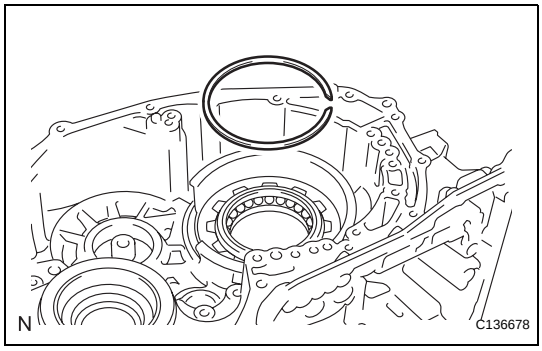

62. REMOVE NO. 3 BRAKE PISTON

(a) Using a screwdriver, remove the snap ring from the transaxle case.

AX

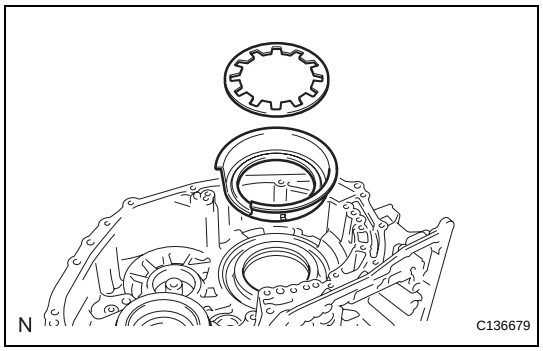

(b) Remove the brake piston return spring from the transaxle case.
(c) Remove the No. 3 brake piston from the transaxle case.

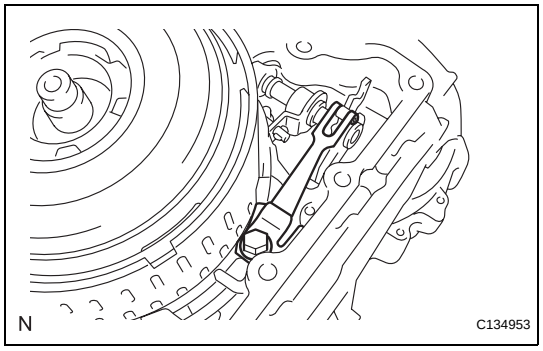

63. REMOVE MANUAL DETENT SPRING SUB-ASSEMBLY

(a) Remove the bolt, cover, and manual detent spring sub-assembly from the transaxle case.

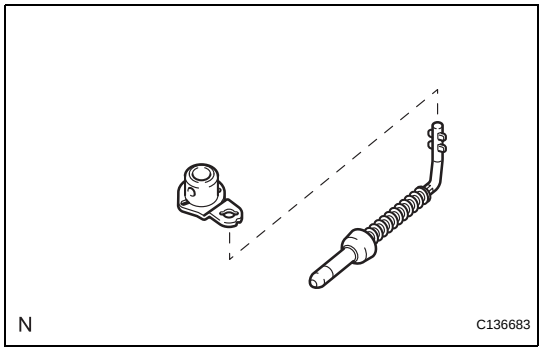

64. REMOVE PARKING LOCK ROD SUB-ASSEMBLY

(a) Remove the parking lock rod sub-assembly from the parking lock lever sub-assembly.
HINT:
Align the dial with the notches on the parking lock lever sub-assembly to remove the parking lock rod sub-assembly.

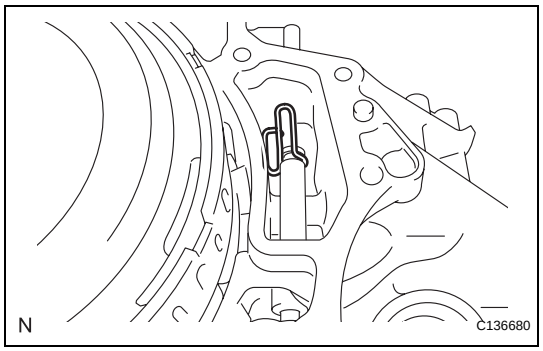

65. REMOVE MANUAL VALVE LEVER SHAFT

(a) Using needle-nose pliers, remove the manual valve lever shaft retainer spring from the transaxle case.

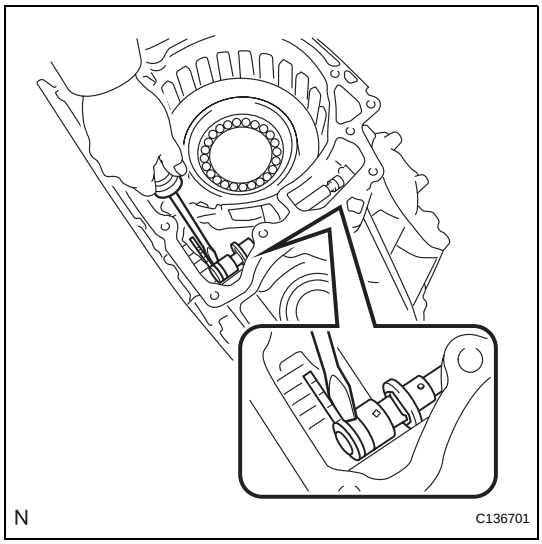

(b) Using a screwdriver, slide the spacer of the manual valve lever sub-assembly.

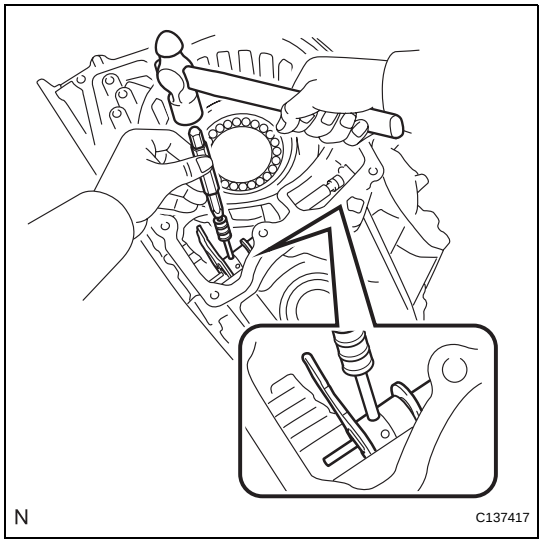

(c) Using a pin punch (3 mm) and hammer, drive out the slotted spring pin from the manual valve lever sub-assembly.
HINT:
Slowly drive out the pin so that it will not fall into the transaxle case.

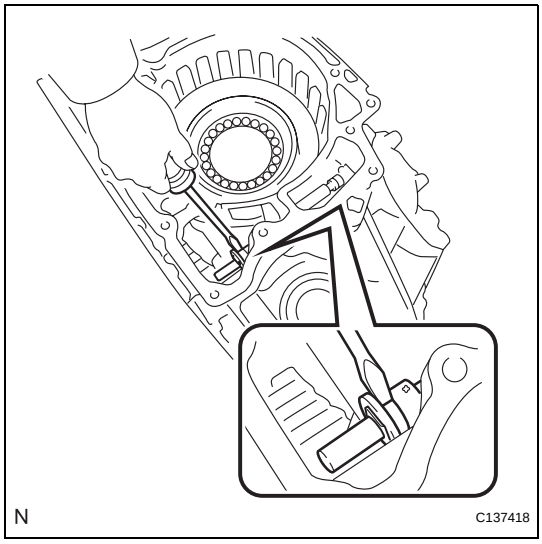

(d) Using a screwdriver, slide the spacer of the parking lock lever sub-assembly.

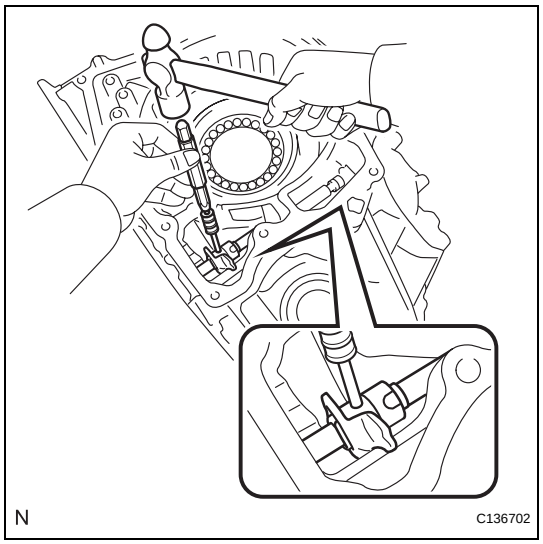

(e) Using a pin punch (3 mm) and hammer, drive out the slotted spring pin from the parking lock lever sub-assembly.
HINT:
Slowly drive out the pin so that it will not fall into the transaxle case.

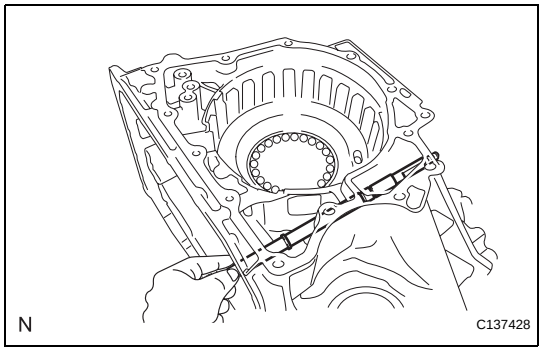

(f) Remove the manual valve lever shaft, manual valve lever sub-assembly, parking lock lever sub-assembly and 2 spacers from the transaxle case.

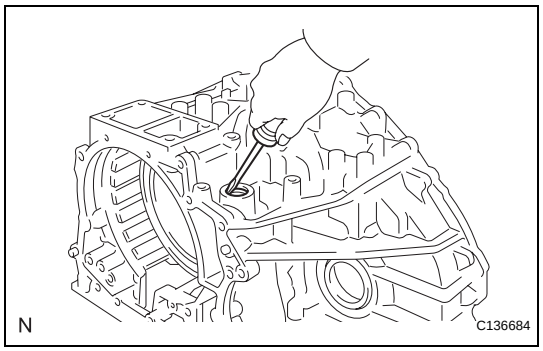

66. REMOVE MANUAL VALVE LEVER SHAFT OIL SEAL

(a) Using a screwdriver, remove the manual valve lever shaft oil seal from the transaxle case.

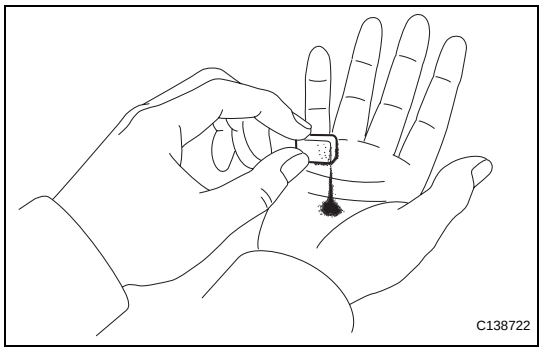

INSPECTION

1. INSPECT TRANSMISSION OIL CLEANER MAGNET

(a) Use the removed magnets to collect any steel chips. Examine the chips and particles in the pan and on the magnets to determine what type of wear has occurred in the transaxle:

Result:

Steel (magnetic):
Bearing, gear and plate wear
Brass (non-magnetic):
Bearing wear

AX

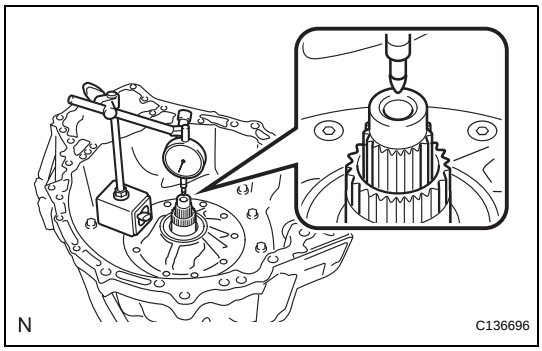

2. INSPECT INPUT SHAFT SUB-ASSEMBLY

(a) Using a dial indicator, measure the input shaft end play.

End play:

0.012 to 1.250 mm (0.0005 to 0.0492 in.)

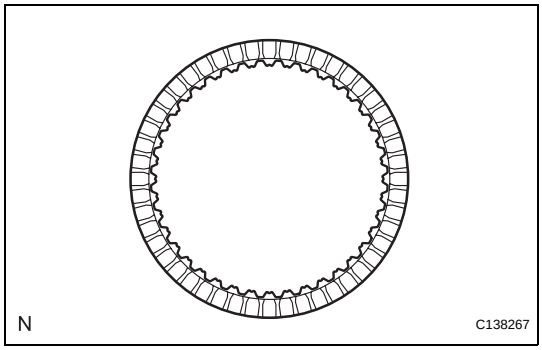

3. INSPECT NO. 2 CLUTCH DISC

(a) Check if the sliding surfaces of the discs, plates, and flange are worn or burnt. If necessary, replace them.

NOTICE:

If the linings of the discs are peeled off or discolored, or even if a part of the groove is damaged, replace all discs.

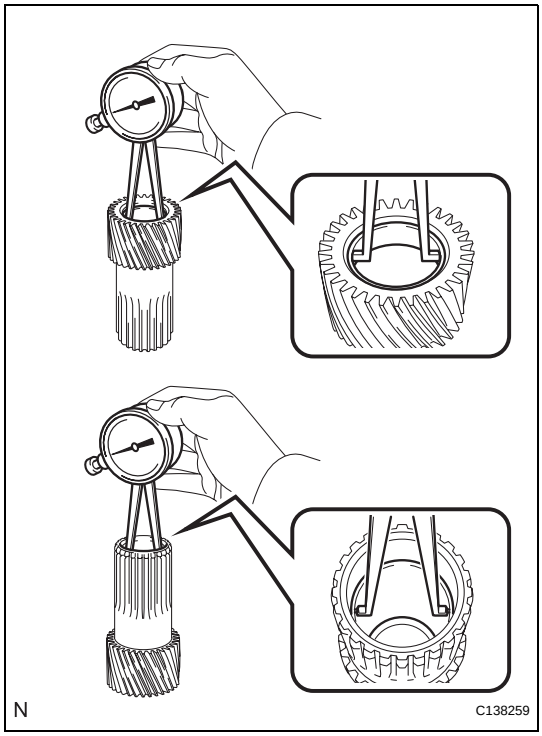

4. INSPECT PLANETARY SUN GEAR SUB-ASSEMBLY

(a) Using a dial indicator, measure the inside diameter of the bushings of the planetary sun gear.

Standard inside diameter:

25.525 to 25.546 mm (1.0049 to 1.0057 in.)

Maximum inside diameter:

25.546 mm (1.0057 in.)

If the inside diameter is greater than the maximum, replace the planetary gear sun gear.

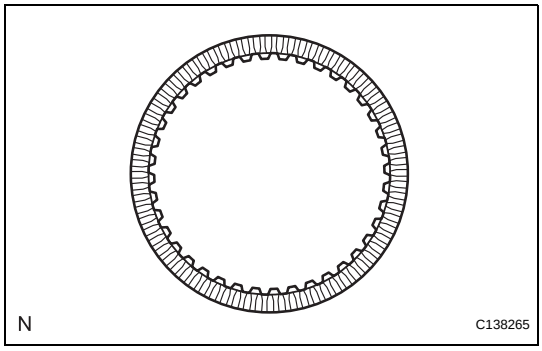

5. INSPECT NO. 1 CLUTCH DISC

(a) Check if the sliding surfaces of the discs, plates, and flange are worn or burnt. If necessary, replace them.

NOTICE:

If the linings of the discs are peeled off or discolored, or even if a part of the groove is damaged, replace all discs.

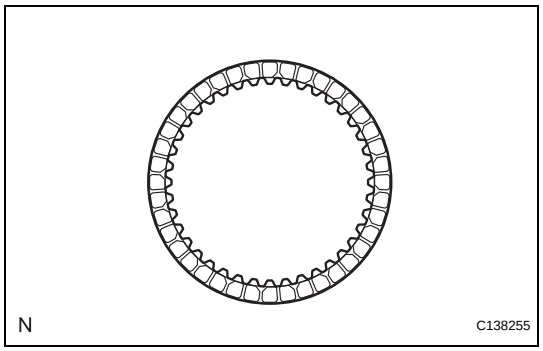

6. INSPECT NO. 3 BRAKE DISC

(a) Check if the sliding surfaces of the discs, plates, and flange are worn or burnt. If necessary, replace them.

NOTICE:

If the linings of the discs are peeled off or discolored, or even if a part of the groove is damaged, replace all discs.

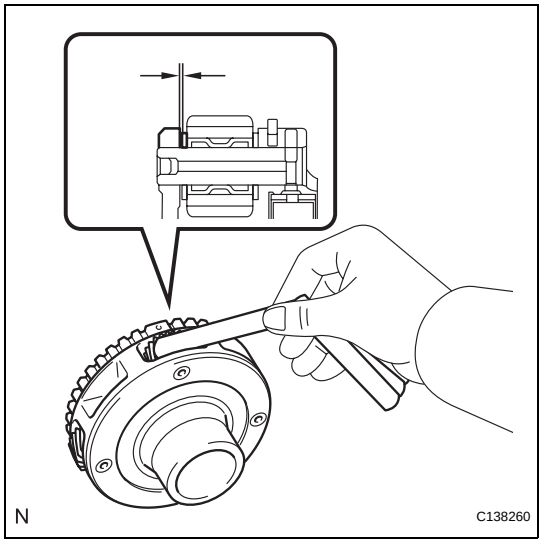

7. INSPECT UNDERDRIVE PLANETARY GEAR ASSEMBLY

(a) Using a feeler gauge, measure the clearance between the underdrive planetary gear and the pinion gear at 4 points.

Standard clearance:

0.18 to 0.54 mm (0.0071 to 0.0213 in.)

If the clearance is greater than the standard clearance, replace the underdrive planetary gear sun gear.

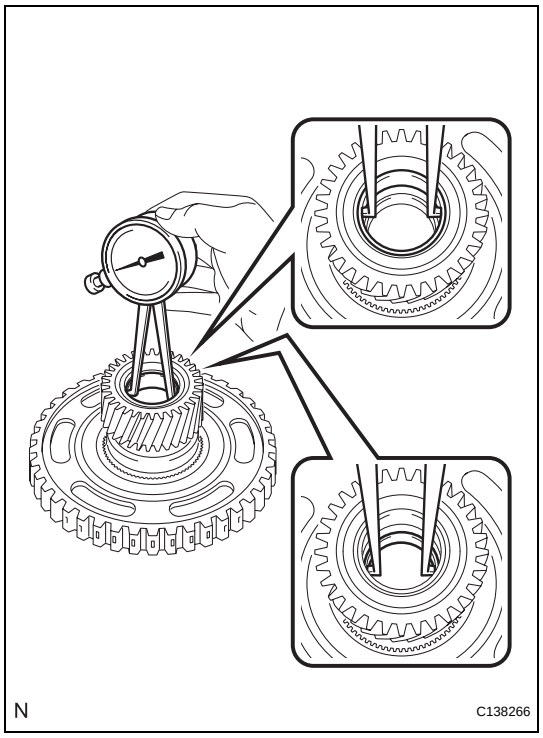

8. INSPECT REAR PLANETARY SUN GEAR ASSEMBLY

(a) Using a dial indicator, measure the inside diameter of the bushing of the rear planetary sun gear sub-assembly.

Standard inside diameter:

25.580 to 25.601 mm (1.0071 to 1.0079 in.)

Maximum inside diameter:

25.601 mm (1.0079 in.)

If the inside diameter is greater than the maximum, replace the rear planetary sun gear sub-assembly.

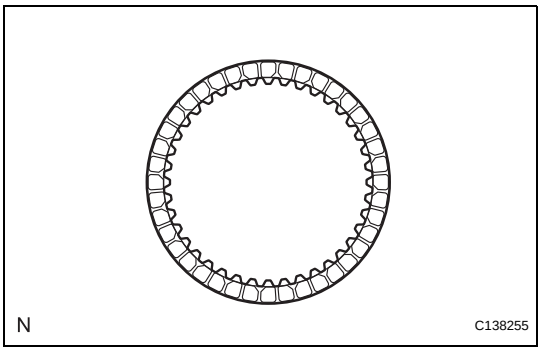

9. INSPECT NO. 1 BRAKE DISC

(a) Check if the sliding surfaces of the discs, plates, and flange are worn or burnt. If necessary, replace them.

NOTICE:

If the linings of the discs are peeled off or discolored, or even if a part of the groove is damaged, replace all discs.

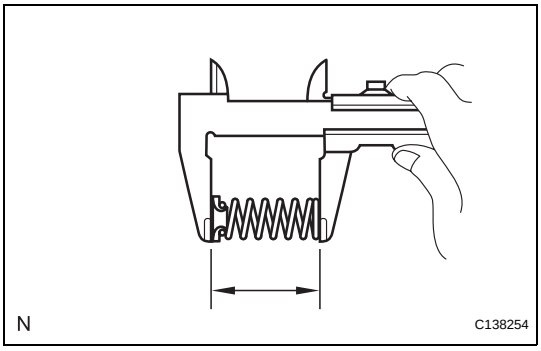

10. INSPECT 2ND BRAKE PISTON RETURN SPRING SUB-ASSEMBLY

(a) Using vernier calipers, measure the free length of the 3 2nd brake piston return springs including the spring seats.

Standard free length:

23.85 mm (0.9390 in.)

If the free length is shorter than the standard free length, replace the 2nd brake piston return spring.

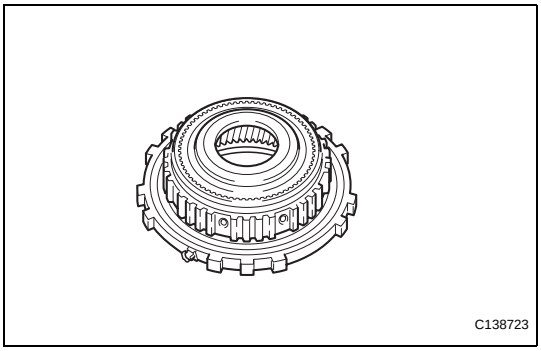

11. INSPECT ONE-WAY CLUTCH ASSEMBLY

(a) Temporarily install the one-way clutch assembly to the planetary ring gear.

(b) Rotate the one-way clutch assembly to check the rotating direction for lock or free operation.

If the one-way clutch assembly does not operate normally, replace it.

AX

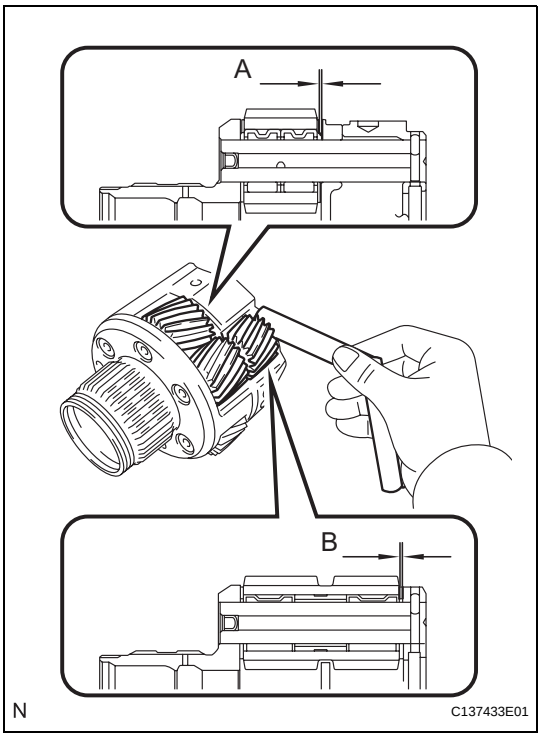

12. INSPECT PLANETARY GEAR ASSEMBLY

(a) Using a feeler gauge, measure the clearance between the planetary gear case and each pinion gear at points A and B.

-	Standard Clearance
A point	0.23 to 0.59 mm (0.0091 to 0.0232 in.)
B point	0.16 to 0.66 mm (0.0063 to 0.02598 in.)

If the clearance is greater than the standard clearance, replace the planetary gear assembly.

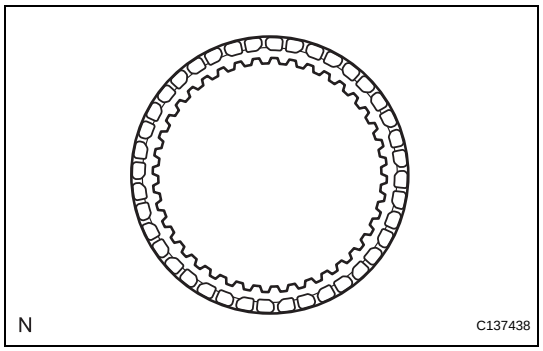

13. INSPECT NO. 2 BRAKE DISC

(a) Check if the sliding surfaces of the discs, plates, and flange are worn or burnt. If necessary, replace them.

NOTICE:

If the linings of the discs are peeled off or discolored, or even if a part of the groove is damaged, replace all discs.

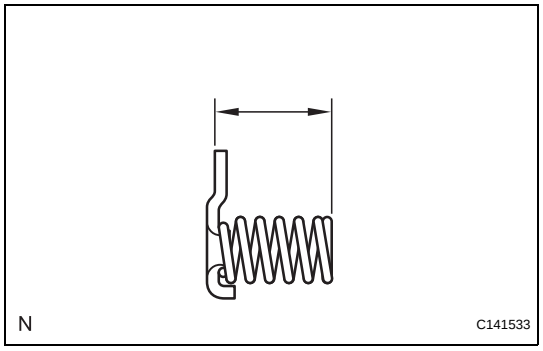

14. INSPECT 1ST AND REVERSE BRAKE RETURN SPRING SUB-ASSEMBLY

(a) Using vernier calipers, measure the free length of the 1st and reverse brake return spring together with the spring seat.

Standard free length:

15.79 mm (0.6217 in.)

If the free length is shorter than the standard free length, replace the 1st and reverse brake return spring.

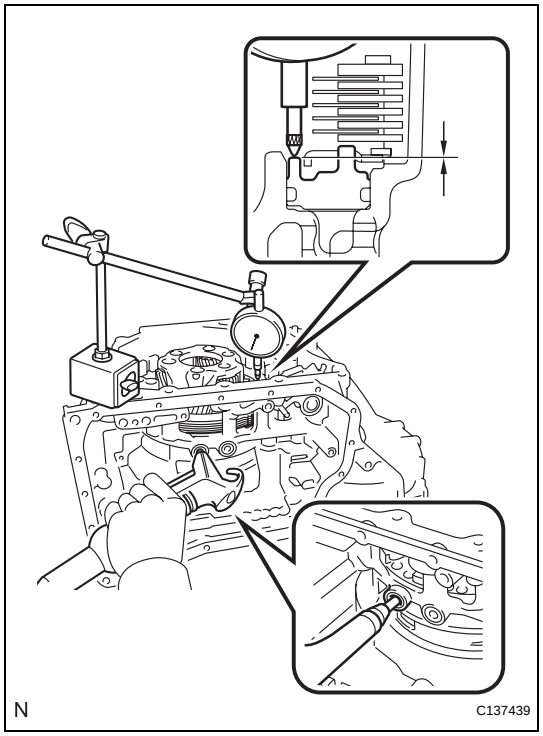

15. INSPECT CLEARANCE OF NO. 2 BRAKE

(a) Using a dial indicator, measure the clearance of the No. 2 brake while applying compressed air (200 kPa, 2.0 kgf/cm^2, 29 psi).

Standard clearance:

0.884 to 1.196 mm (0.0348 to 0.0471 in.)

HINT:

Measure the clearance at 3 points where the brake piston diameter is approximately 140 mm (5.51 in.) and calculate the average.

If the clearance is not as specified, select an appropriate No. 2 brake flange so that the clearance will be within the specified range.

HINT:

There are 5 different thicknesses of flanges available.

No. 2 brake flange thickness: mm (in)

Thickness	Thickness
4.0 (0.157)	4.3 (0.169)
4.1 (0.161)	4.4 (0.173)
4.2 (0.165)	-

AX

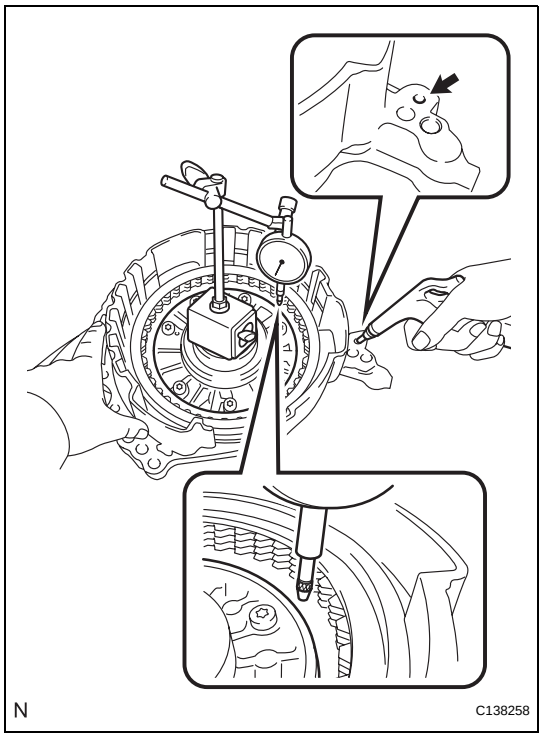

16. INSPECT CLEARANCE OF NO. 1 BRAKE

(a) Using a dial indicator, measure the clearance of the No. 1 brake while applying compressed air (200 kPa, 2.0 kgf/cm^2, 29 psi).

Standard clearance:

0.807 to 0.974 mm (0.0318 to 0.0383 in.)

HINT:

Measure the clearance at 3 points where the brake piston diameter is approximately 140 mm (5.51 in.) and calculate the average.

If the clearance is not as specified, select an appropriate No. 1 brake flange so that the clearance will be within the specified range.

HINT:

There are 6 different thicknesses of flanges available.

No. 1 brake flange thickness: mm (in.)

Thickness	Thickness
3.0 (0.118)	3.3 (0.130)
3.1 (0.122)	3.4 (0.134)
3.2 (0.126)	3.5 (0.138)

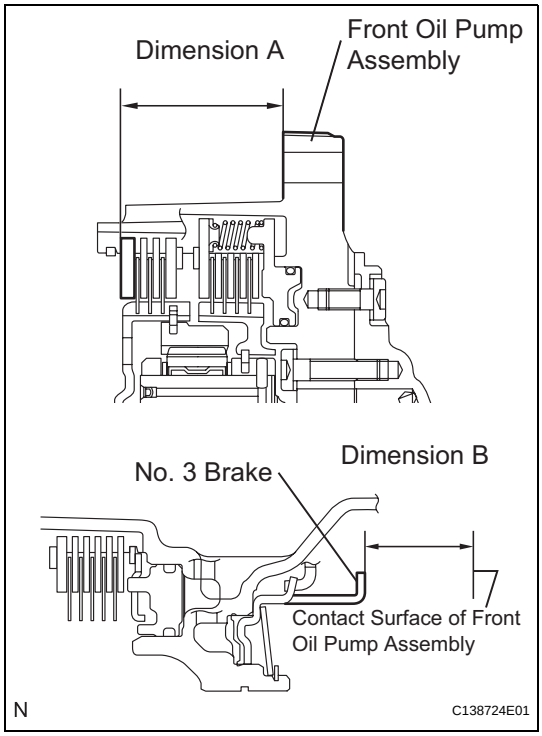

17. INSPECT CLEARANCE OF NO. 3 BRAKE

(a) Using vernier calipers and a straight edge, measure the distance shown in the illustration (Dimension A) while a load of 500 N (51 kgf, 112 lbf) is being applied to the flange.

HINT:

Measure dimension A at 3 points where the flange diameter is approximately 166 mm (6.54 in.) and calculate the average.

(b) Using vernier calipers and a straight edge, measure the distance shown in the illustration. (Dimension B).

HINT:

Measure dimension B at 3 points where the No. 3 brake diameter is approximately 166 mm (6.54 in.) and calculate the average.

(c) Calculate the clearance value using the following formula:

clearance = Dimension B - Dimension A

Standard clearance:

0.599 to 0.761 mm (0.0236 to 0.0300 in.)

If the clearance is not as specified, select an appropriate brake flange so that the clearance will be within the specified range.

HINT:

There are 6 different thicknesses of flanges available.

No. 3 brake flange thickness: mm (in.)

Thickness	Thickness
3.80 (0.150)	4.10 (0.161)
3.90 (0.154)	4.20 (0.165)
4.00 (0.157)	4.30 (0.169)

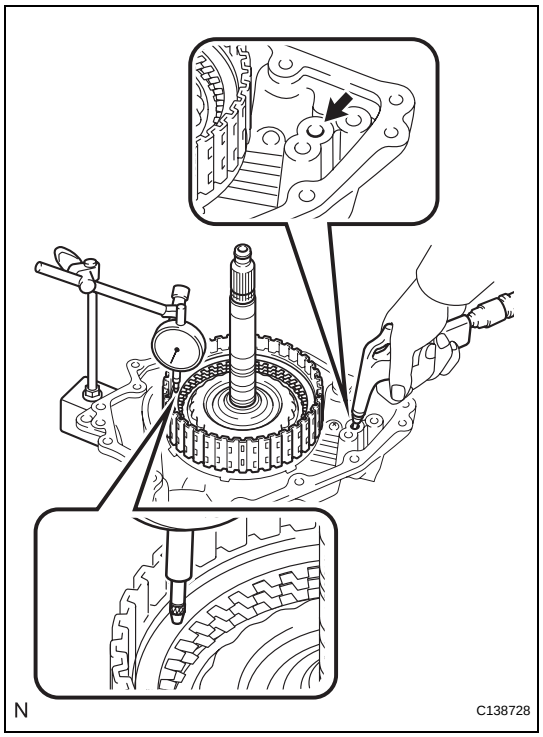

18. INSPECT CLEARANCE OF NO. 1 CLUTCH DISC

(a) Install the direct multiple disc clutch assembly onto the transaxle rear cover.

(b) Using a dial indicator, measure the No. 1 clutch pack clearance while applying and releasing compressed air (200 kPa, 2.0 kgf/cm^2, 29 psi).

HINT:

Measure the clearance at 3 points where the flange diameter is approximately 152 mm (5.98 in.) and calculate the average.

Pack clearance:

0.806 to 0.974 mm (0.0317 to 0.0383 in.)

If the pack clearance is not as specified, inspect the discs, plates and flange.

HINT:

There are 6 different thicknesses of flanges available.

No. 1 clutch flange thickness: mm (in.)

Thickness	Thickness
3.0 (0.118)	3.3 (0.130)
3.1 (0.122)	3.4 (0.134)
3.2 (0.126)	3.5 (0.138)

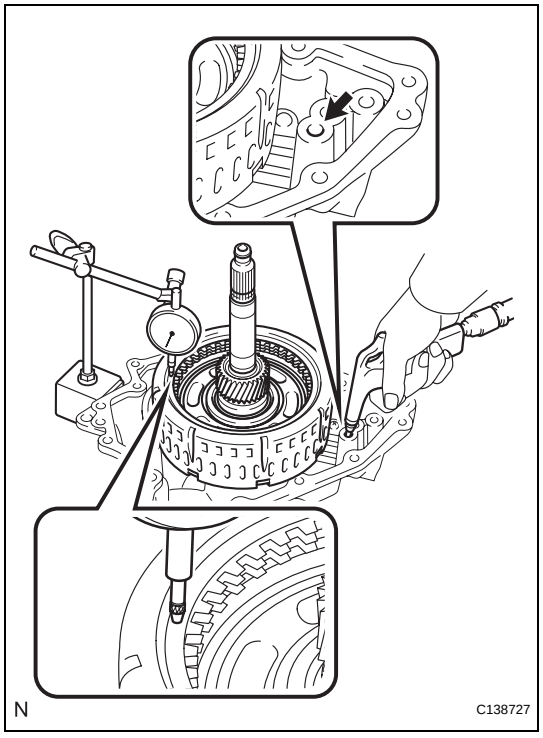

19. INSPECT CLEARANCE OF NO. 2 CLUTCH DISC

(a) Install the direct multiple disc clutch assembly onto the transaxle rear cover.

(b) Using a dial indicator, measure the No. 2 clutch pack clearance while applying and releasing compressed air (200 kPa, 2.0 kgf/cm^2, 29 psi).

HINT:

Measure the clearance at 3 points where the diameter of the No. 2 direct multiple clutch piston is approximately 152 mm (5.98 in.) and calculate the average.

Pack clearance:

0.544 to 0.744 mm (0.0214 to 0.0293 in.)

If the pack clearance is not as specified, inspect the discs, plates and flange.

HINT:

There are 6 different thicknesses of flanges available.

No. 2 clutch flange thickness: mm (in.)

Thickness	Thickness
3.0 (0.118)	3.3 (0.130)
3.1 (0.122)	3.4 (0.134)
3.2 (0.126)	3.5 (0.138)

DIFFERENTIAL CASE

COMPONENTS

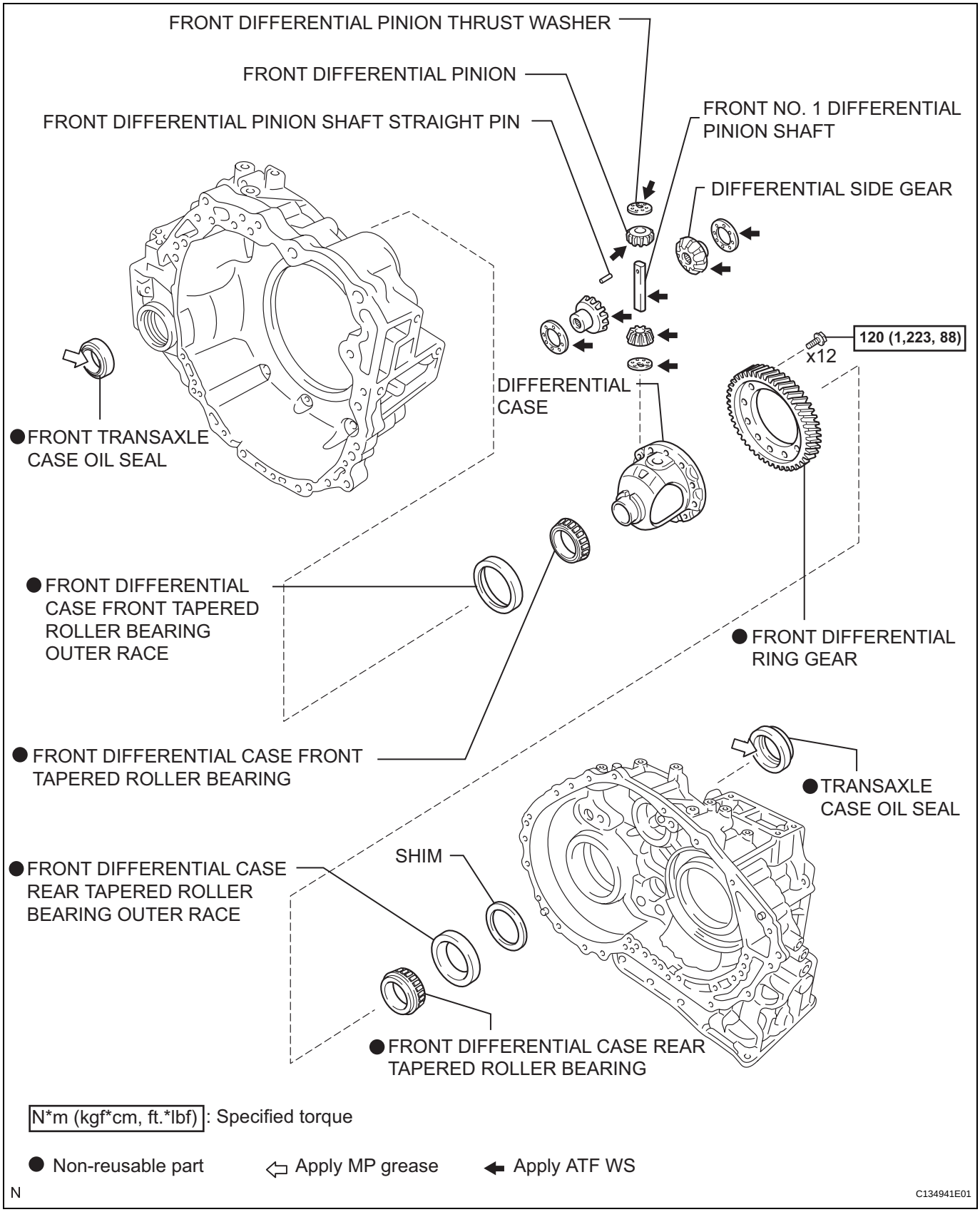

AX

DISASSEMBLY

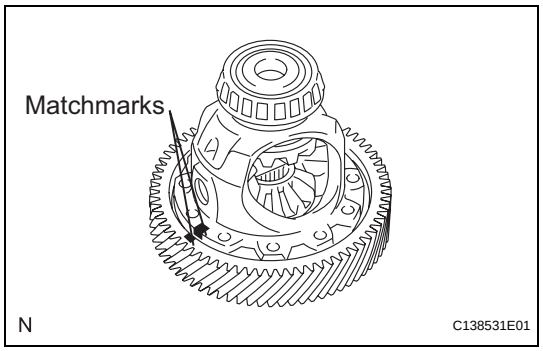

1. REMOVE FRONT DIFFERENTIAL RING GEAR

(a) Put matchmarks on the front differential ring gear and differential case.

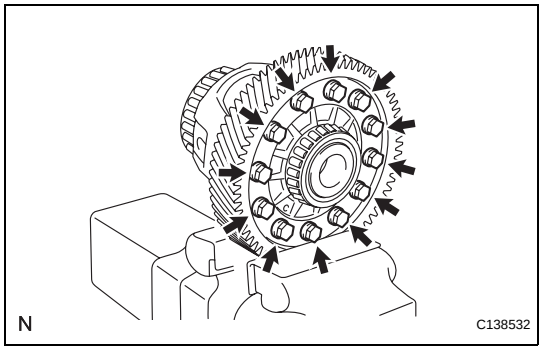

(b) Remove the 12 bolts.

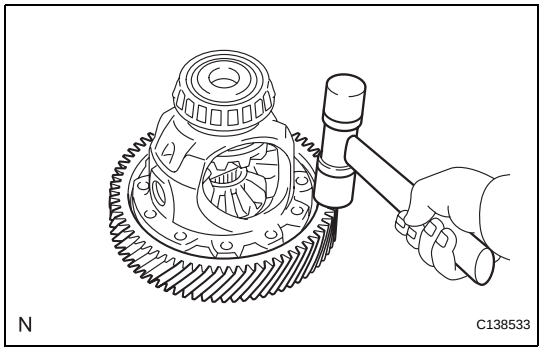

(c) Using a plastic hammer, tap on the front differential ring gear to remove it from the case.

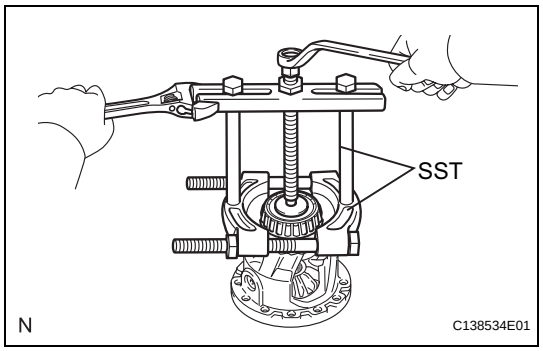

2. REMOVE FRONT DIFFERENTIAL CASE FRONT TAPERED ROLLER BEARING

(a) Using SST, remove the front differential case front tapered roller bearing from the differential case.
SST 09950-00020, 09950-00030, 09950-60010 (09951-00480)

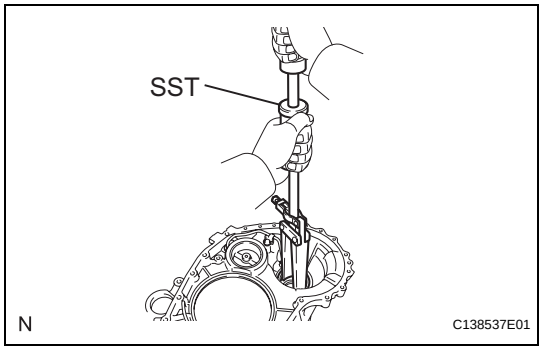

(b) Using SST, remove the front differential case front tapered roller bearing outer race and shim from the transaxle housing.
SST 09308-00010

AX

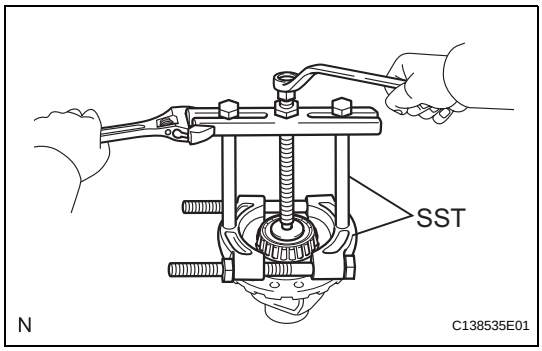

3. REMOVE FRONT DIFFERENTIAL CASE REAR TAPERED ROLLER BEARING

(a) Using SST, remove the front differential case rear tapered roller bearing from the differential case.
SST 09950-00020, 09950-00030, 09950-60010 (09951-00480)

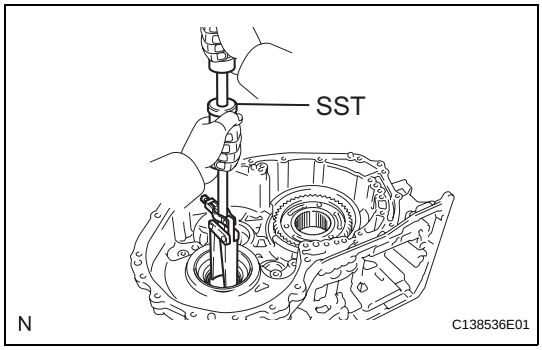

(b) Using SST, remove the front differential case rear tapered roller bearing outer race from the transaxle case.
SST 09308-00010

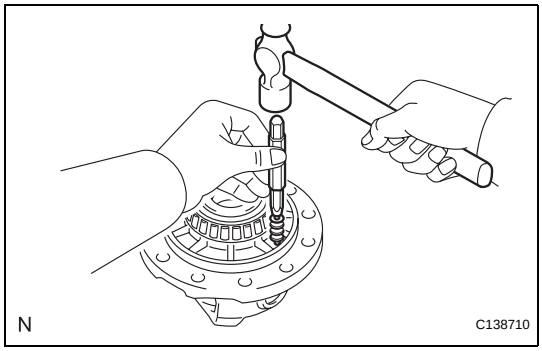

4. REMOVE FRONT DIFFERENTIAL PINION SHAFT STRAIGHT PIN

(a) Using a pin punch (3 mm) and hammer, remove the straight pin.
NOTICE:
Before removing the straight pin, unstake it with a pin punch.

AX

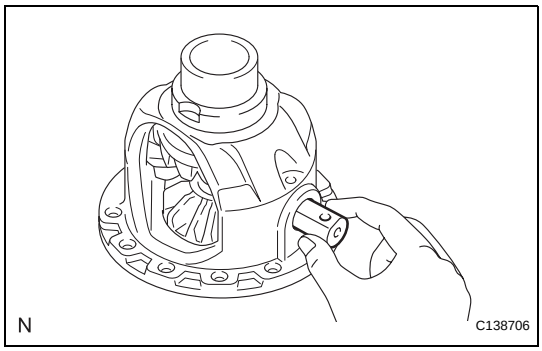

5. REMOVE FRONT NO. 1 DIFFERENTIAL PINION SHAFT

(a) Remove the front No. 1 differential pinion shaft from the differential case.

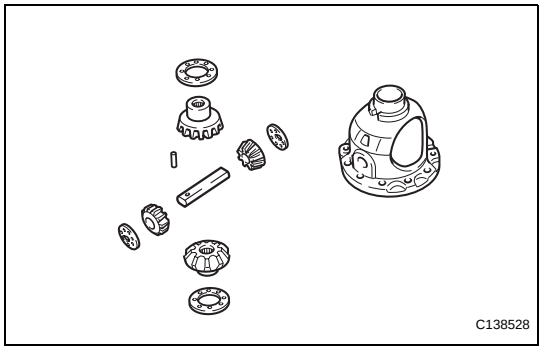

6. REMOVE DIFFERENTIAL SIDE GEAR

(a) Remove the 2 front differential pinions, 2 pinion thrust washers, 2 front differential side gears, and 2 side gear thrust washers from the differential case.

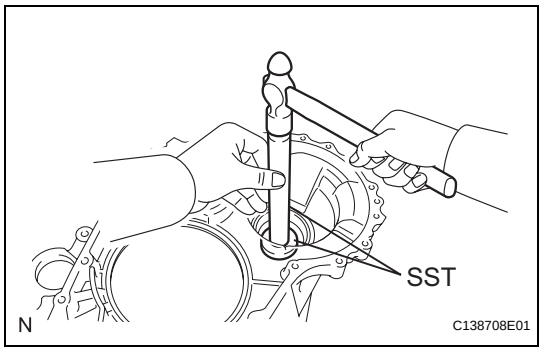

7. REMOVE FRONT TRANSAXLE CASE OIL SEAL

(a) Using SST and a hammer, remove the front transaxle case oil seal from the transaxle housing.
SST 09950-60010 (09951-00540), 09950-70010 (09951-07200)

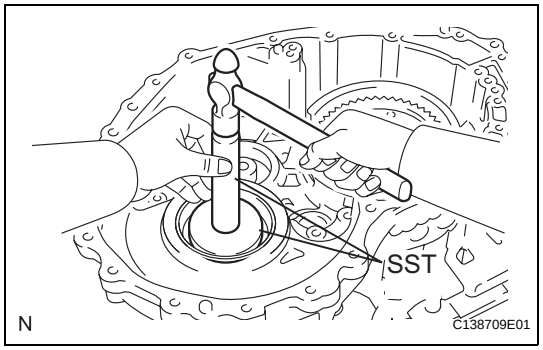

8. REMOVE TRANSAXLE CASE OIL SEAL

(a) Using SST and a hammer, remove the transaxle case oil seal from transaxle case.
SST 09950-60010 (09951-00650), 09950-70010 (09951-07100)

INSPECTION

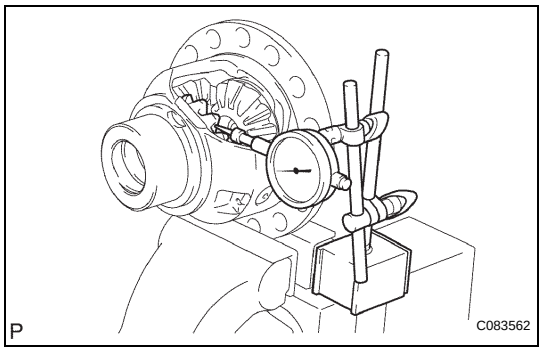

1. INSPECT DIFFERENTIAL SIDE GEAR BACKLASH

(a) Hold the differential case in a vise between aluminum plates.
NOTICE:
Do not overtighten the vise.

(b) Place a dial indicator on the tip of the side gear tooth at a right angle.

(c) Hold the pinion gear in the differential case and measure the backlash of the side gear.
Standard backlash:
0 to 0.15 mm (0 to 0.0059 in.)
Thrust washer thickness

Thickness	Thickness
1.50 mm (0.0591 in.)	1.75 mm (0.0689 in.)
1.55 mm (0.0610 in.)	1.80 mm (0.0709 in.)
1.60 mm (0.0630 in.)	1.85 mm (0.07283 in.)
1.65 mm (0.0650 in.)	1.90 mm (0.07480 in.)
1.70 mm (0.0669 in.)	-

If the backlash is greater than the standard range, select another side gear thrust washer.

REASSEMBLY

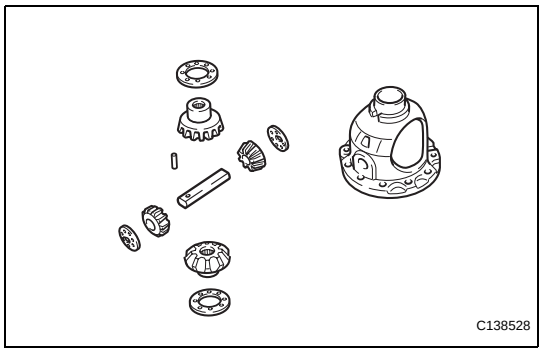

1. INSTALL DIFFERENTIAL SIDE GEAR

(a) Coat the 2 front differential side gears, 2 side gear thrust washers, 2 front differential pinions and 2 pinion thrust washers with ATF and install them to the differential case.

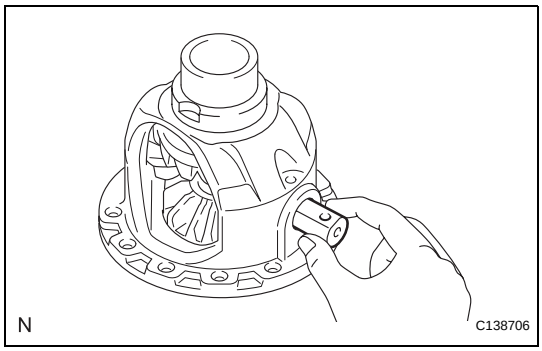

2. INSTALL FRONT NO. 1 DIFFERENTIAL PINION SHAFT

(a) Coat the front No. 1 differential pinion shaft with ATF, and install it to the differential case.

3. INSPECT DIFFERENTIAL SIDE GEAR BACKLASH (See page AX-343)

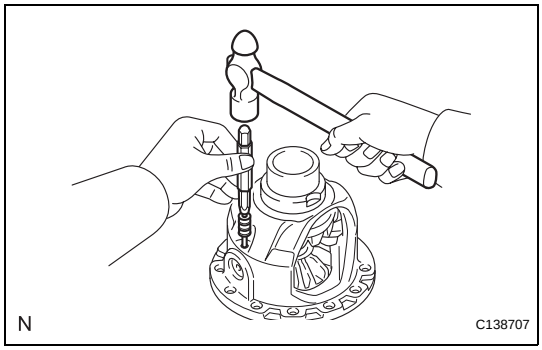

4. INSTALL FRONT DIFFERENTIAL PINION SHAFT STRAIGHT PIN

(a) Using a pin punch (3 mm) and hammer, install the pinion shaft straight pin.
NOTICE:
Align the holes, and install the pinion shaft straight pin.

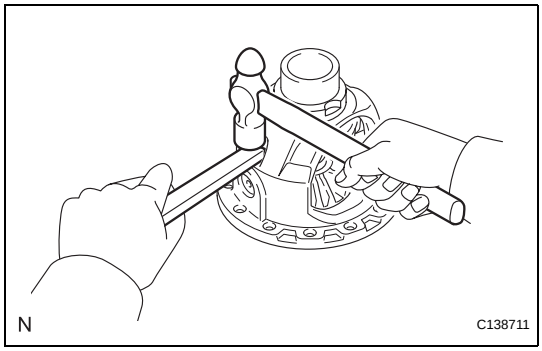

(b) Using a chisel and hammer, stake the differential case.
NOTICE:
Stake the differential case after adjusting the backlash.

AX

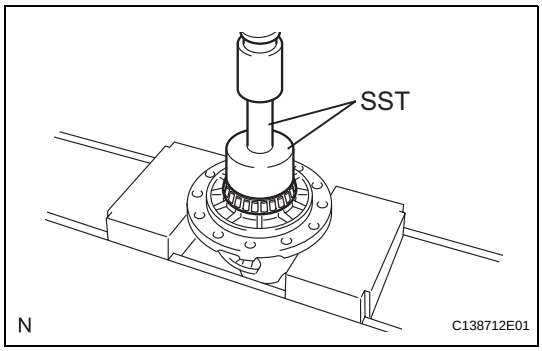

5. INSTALL FRONT DIFFERENTIAL CASE REAR TAPERED ROLLER BEARING

(a) Using SST and a press, install the front differential case rear tapered roller bearing to the differential case.
SST 09710-04081, 09950-60010 (09951-00480), 09950-70010 (09951-07100)
NOTICE:
Do not damage the bearing cage during bearing inner race installation.

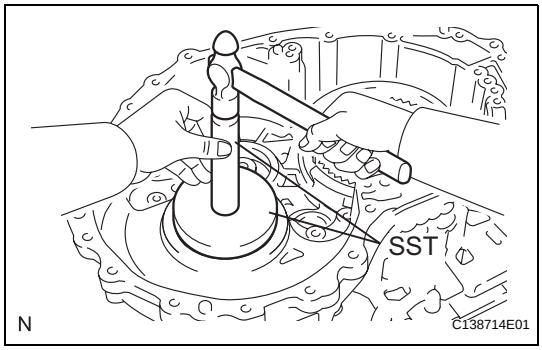

(b) Using SST and a hammer, install the front differential case rear tapered roller bearing outer race to the transaxle case.
SST 09950-70010 (09951-07150), 09950-60020 (09951-00790)
NOTICE:
Ensure that there is no clearance between the bearing and transaxle case.

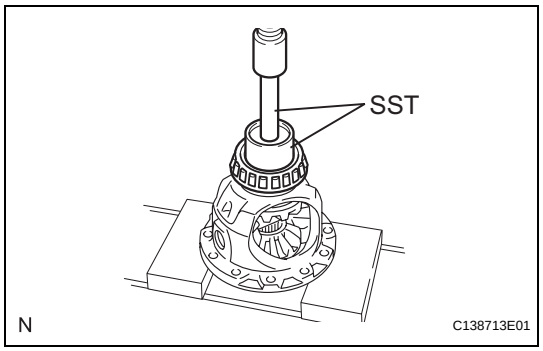

6. INSTALL FRONT DIFFERENTIAL CASE FRONT TAPERED ROLLER BEARING

(a) Using SST and a press, install the front differential case front tapered roller bearing to the differential case.

SST 09710-04081, 09950-60010 (09951-00480), 09950-70010 (09951-07100)

NOTICE:
Do not damage the bearing cage during bearing inner race installation.

(b) Install the shim to the transaxle housing.

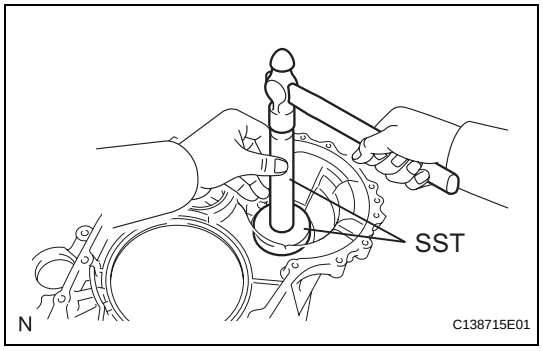

(c) Using SST and a hammer, install the front differential case front tapered roller bearing outer race to the transaxle housing.

NOTICE:
Ensure that there is no clearance between the bearing and transaxle housing.

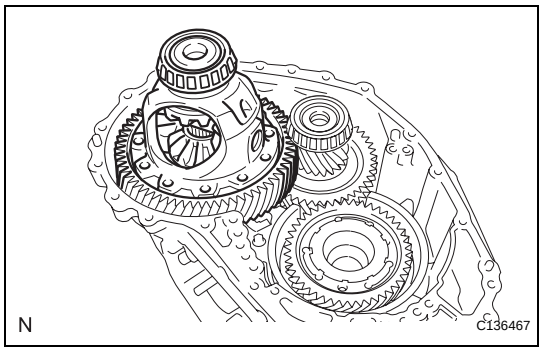

7. ADJUST DIFFERENTIAL SIDE BEARING PRELOAD

(a) Install the differential assembly to the transaxle case.

(b) Clean the contact surfaces of the transaxle case and transaxle housing.

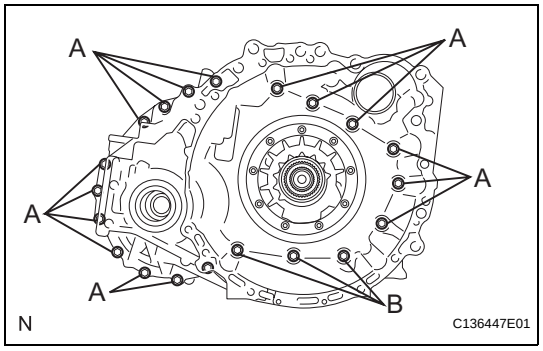

(c) Install the transaxle housing to the transaxle case with the 20 bolts.

Torque: Bolt A
31 N*m (316 kgf*cm, 23 ft.*lbf)
Bolt B
23 N*m (234 kgf*cm, 17 ft.*lbf)

AX

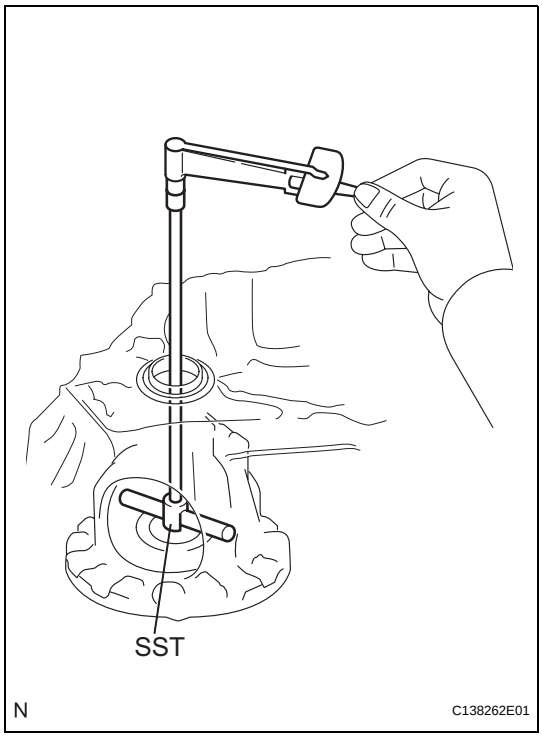

(d) Using SST, turn the differential assembly right and left 2 or 3 times to settle the bearing.
SST 09564-33010

(e) Using SST and a torque wrench, measure the turning torque of the differential side bearing while rotating SST at 10 rpm.
SST 09564-33010
Turning torque:
1.05 to 1.93 N*m (10.70 to 19.67 kgf*cm, 9.29 to 17.08 in.*lbf)
If the turning torque is not within the specified range, refer to the table below to select a shim so that the turning torque is within the specified range.
Shim thickness: mm (in.)

Thickness	Thickness	Thickness	Thickness
2.000 (0.0787)	2.225 (0.0876)	2.450 (0.0965)	2.675 (0.1054)
2.025 (0.0797)	2.250 (0.0886)	2.475 (0.0974)	2.700 (0.1063)
2.050 (0.0807)	2.275 (0.0896)	2.500 (0.0984)	2.725 (0.1073)
2.075 (0.0817)	2.300 (0.0906)	2.525 (0.0994)	2.750 (0.1083)
2.100 (0.0827)	2.325 (0.0915)	2.550 (0.1004)	2.775 (0.1093)
2.125 (0.0837)	2.350 (0.0925)	2.575 (0.1014)	2.800 (0.1102)
2.150 (0.0847)	2.375 (0.0935)	2.600 (0.1024)	2.825 (0.1112)
2.175 (0.0856)	2.400 (0.0945)	2.625 (0.1034)	2.850 (0.1122)
2.200 (0.0866)	2.425 (0.0955)	2.650 (0.1043)	2.875 (0.1132)

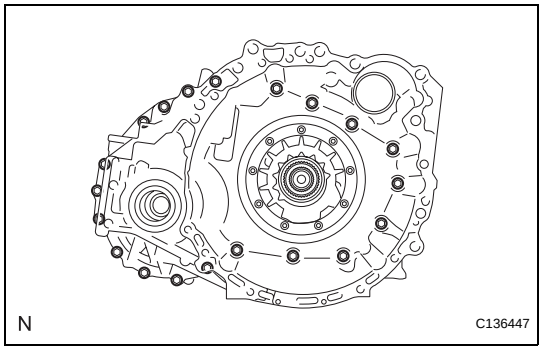

(f) Remove the 20 bolts and the transaxle housing from the transaxle case.

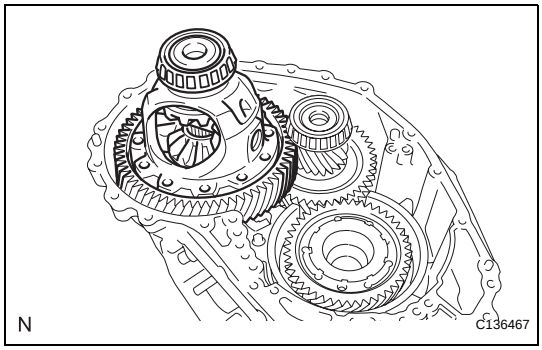

(g) Remove the differential assembly from the transaxle case.

AX

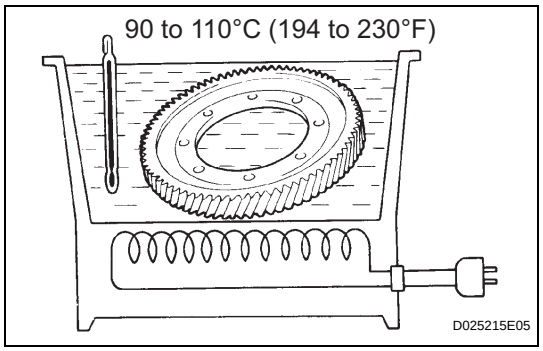

8. INSTALL FRONT DIFFERENTIAL RING GEAR

(a) Using ATF and a heater, heat the front differential ring gear to 90 to 110°C (194.0 to 230.0°F).
NOTICE:
Do not heat the ring gear to more than 110°C (230.0°F).

(b) Clean the contact surface of the front differential case.

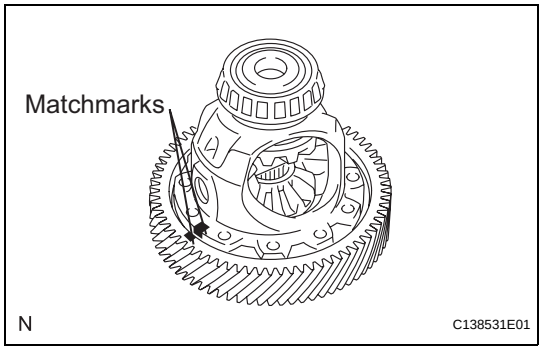

(c) Align the matchmarks, and install the front differential ring gear case quickly.
NOTICE:
Do not install the bolts while the ring gear is hot.

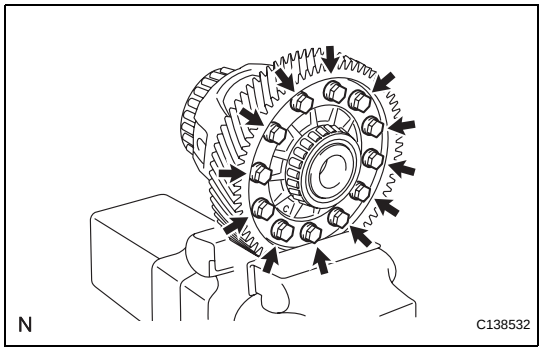

(d) Tighten the 12 bolts.
Torque: 120 N*m (1,223 kgf*cm, 88 ft.*lbf)
NOTICE:
Tighten the bolts a little at a time in diagonal order.

9. INSTALL TRANSAXLE CASE OIL SEAL

(a) Coat the lip of a new oil seal with MP grease.

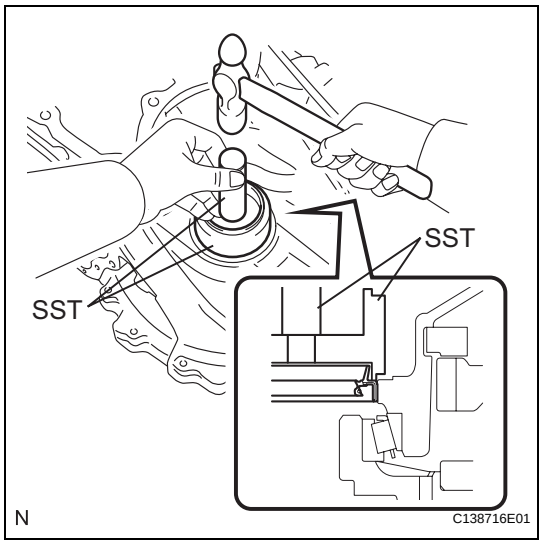

(b) Using SST and a hammer, install the oil seal.
SST 09316-10010, 09950-70010 (09951-07100)
Oil seal drive in depth:
-0.5 to 0.5 mm (-0.0197 to 0.0197 in.)

10. INSTALL FRONT TRANSAXLE CASE OIL SEAL

(a) Coat the lip of a new oil seal with MP grease.

AX

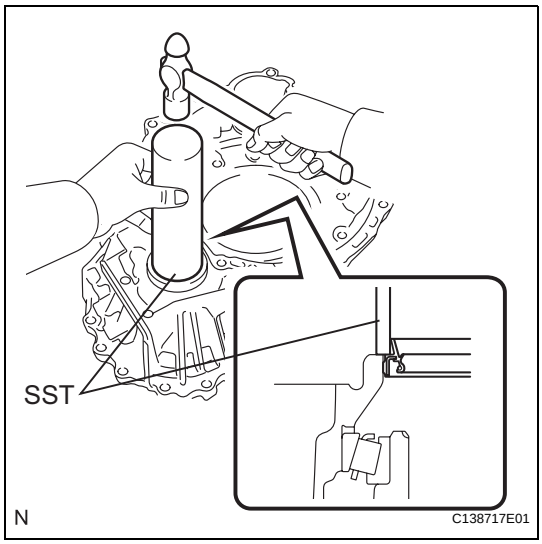

(b) Using SST and a hammer, install the oil seal.
SST 09308-14010
Oil seal drive in depth:
-0.5 to 0.5 mm (-0.0197 to 0.0197 in.)

REASSEMBLY

1. BEARING POSITION

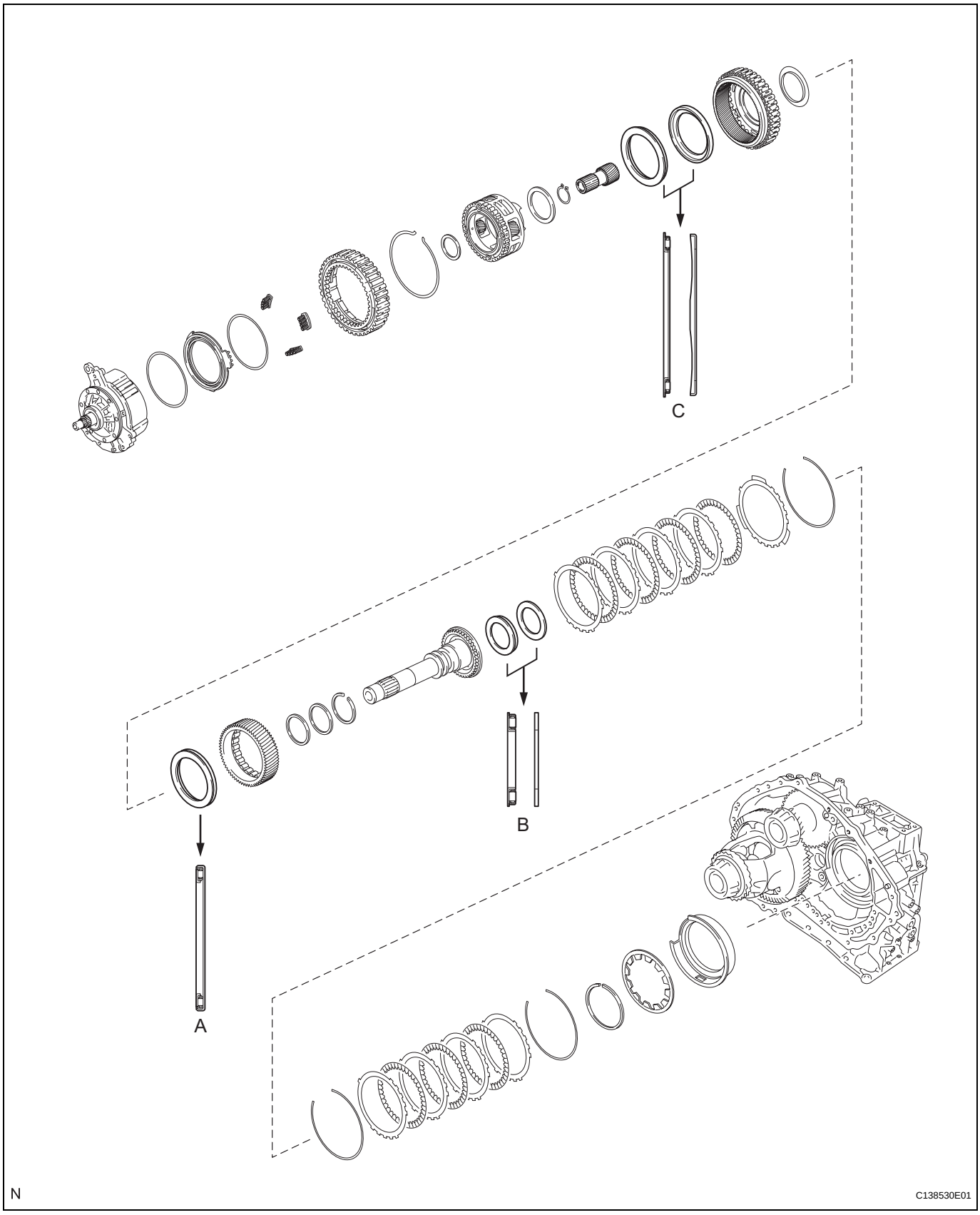

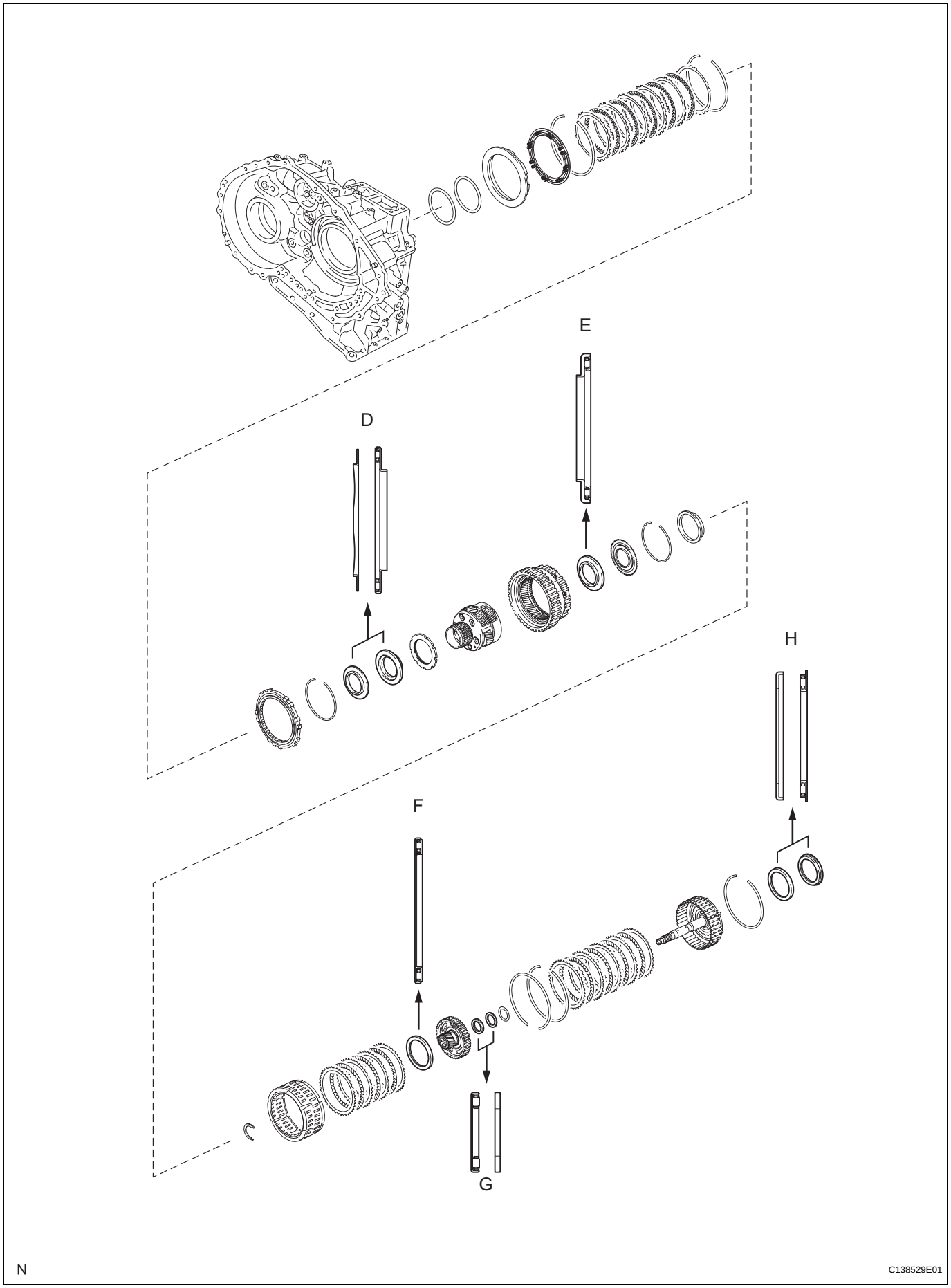
E
D
H
F
G
N
C138529E01

Mark	Front Race Diameter Inside / Outside mm (in.)	Thrust Bearing Diameter Inside / Outside mm (in.)	Rear Race Diameter Inside / Outside mm (in.)
A	-	57.7 (2.271) / 75.2 (2.961)	-
B	-	29.1 (1.146) / 48.6 (1.913)	30.7 (1.209) / 48.3 (1.902)
C	65.9 (2.594) / 80.3 (3.161)	62.6 (2.465) / 82.4 (3.244)	-
D	59.4 (2.339) / 77 (3.032)	53.1 (2.091) / 79 (3.110)	-
E	-	56.1 (2.209) / 80.9 (3.185)	-
F	-	61.2 (2.409) / 79 (3.110)	-
G	-	28 (1.102) / 47.1 (1.854)	26.1 (1.028) / 44 (1.732)
H	52.2 (2.055) / 70.4 (2.772)	48.9 (1.925) / 72.0 (2.835)	-

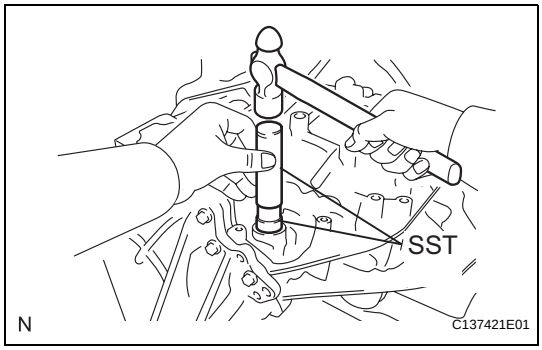

2. INSTALL MANUAL VALVE LEVER SHAFT OIL SEAL

(a) Coat the lip of a new manual valve lever shaft oil seal with MP grease.

(b) Using SST and a hammer, install the manual valve lever shaft oil seal to the transaxle case.

SST 09950-60010 (09951-00230), 09950-70010 (09951-07100)

Oil seal installation depth:
-0.5 to 0.5 mm (-0.0197 to 0.0197 in.)

3. INSTALL MANUAL VALVE LEVER SHAFT

(a) Install a new spacer to the parking lock lever sub-assembly.

(b) Install the parking lock lever sub-assembly to the manual valve lever shaft.

(c) Install a new spacer to the manual valve lever sub-assembly.

(d) Install the manual valve lever sub-assembly to the manual valve lever shaft.

(e) Install the manual valve lever shaft to the transaxle case.

NOTICE:
Do not damage the manual valve lever shaft oil seal while installing the manual valve lever shaft to the transaxle case.

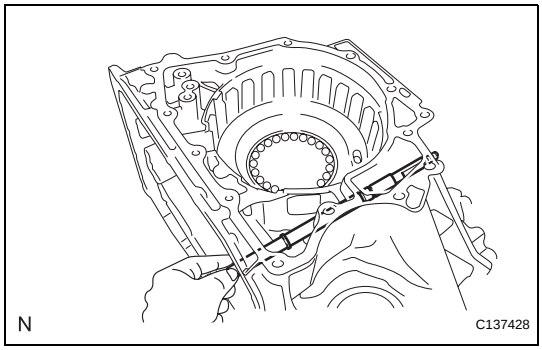

AX

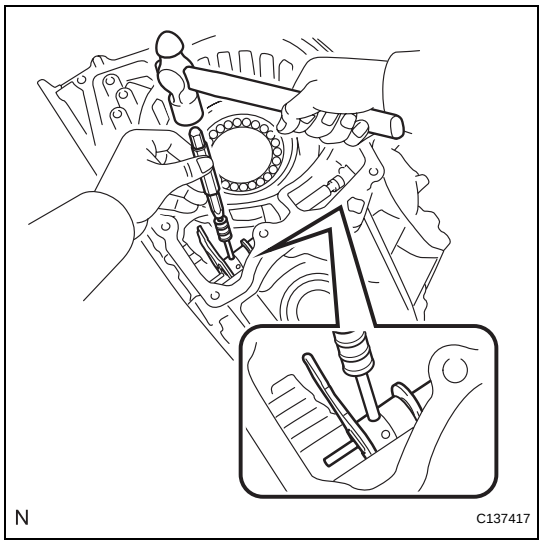

(f) Using a pin punch (3 mm) and hammer, install a new slotted spring pin to the parking lock lever sub-assembly.

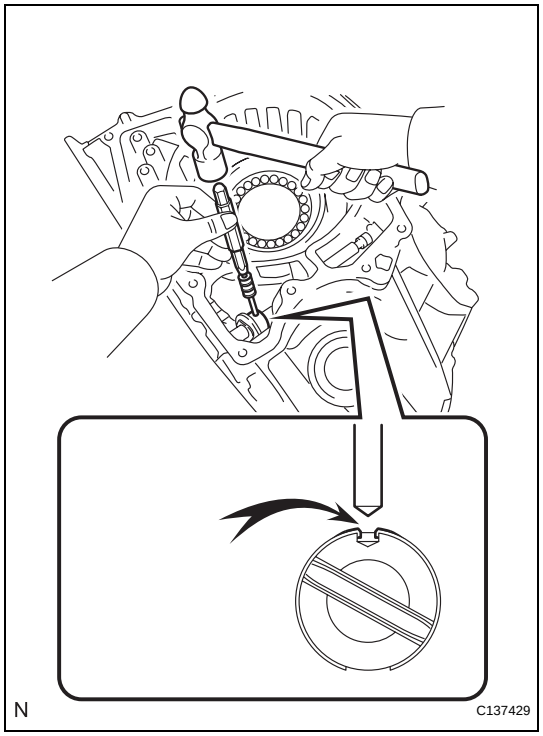

(g) Turn the spacer and the lever shaft to align the smaller hole of the spacer with the staking position mark on the lever shaft.
(h) Using a pin punch, stake the spacer through the small hole.
(i) Check that the spacer does not turn.

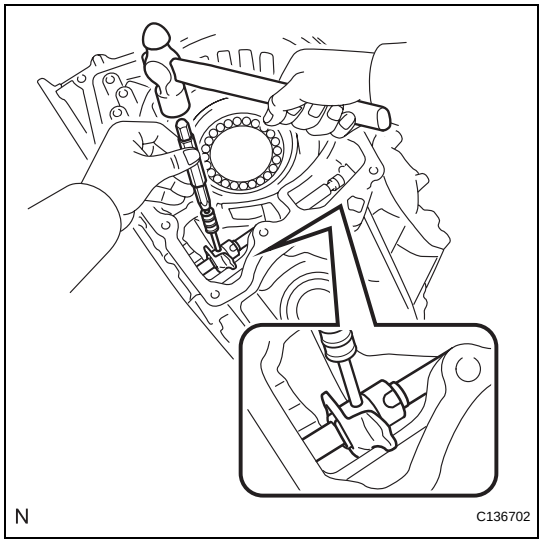

(j) Using a pin punch (3 mm) and hammer, install a new slotted spring pin to the manual valve lever sub-assembly.

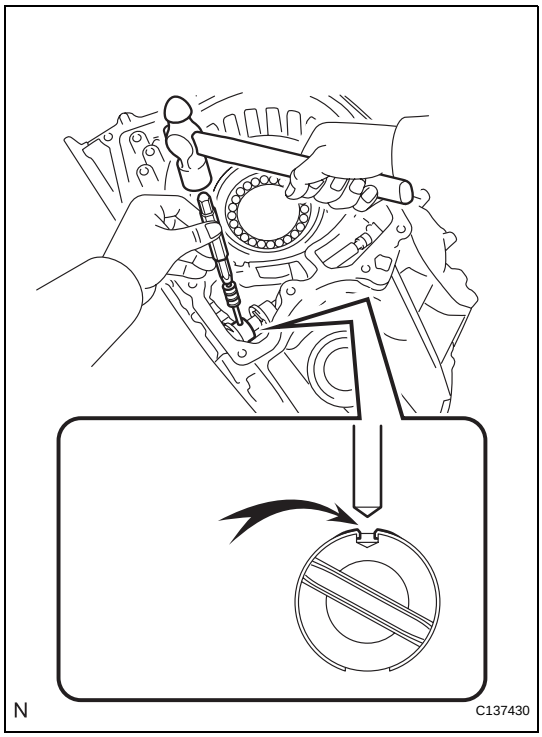

(k) Turn the spacer and the lever shaft to align the smaller hole of the spacer with the staking position mark on the lever shaft.
(l) Using a pin punch, stake the spacer through the small hole.
(m) Check that the spacer does not turn.

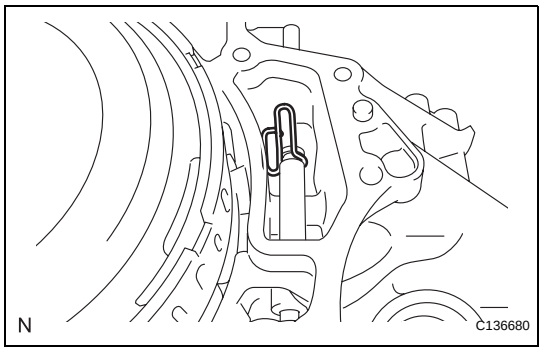

(n) Using needle-nose pliers, install the manual valve shaft retainer spring to the transaxle case.

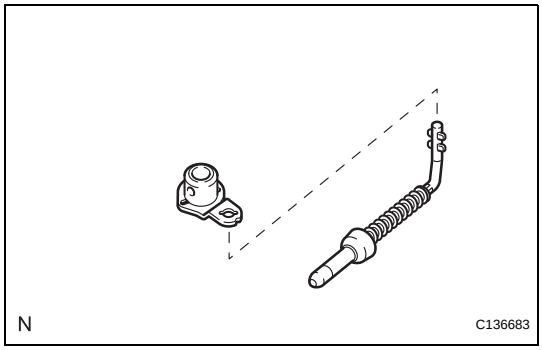

4. INSTALL PARKING LOCK ROD SUB-ASSEMBLY

(a) Align the dial with the notches on the parking lock lever sub-assembly and install the parking lock rod sub-assembly.

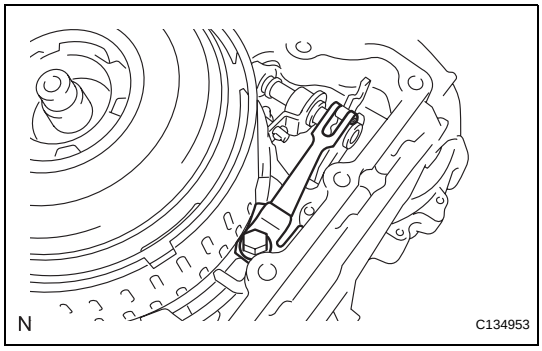

5. INSTALL MANUAL DETENT SPRING SUB-ASSEMBLY

(a) Install the manual detent spring sub-assembly and cover to the transaxle case with the bolt.
Torque: 23 N*m (234 kgf*cm, 17 ft.*lbf)
NOTICE:
Make sure to install the manual detent spring first and then the cover.

6. INSTALL COUNTER DRIVE GEAR BEARING

NOTICE:

Perform this procedure only when the counter drive gear bearing or transaxle case is replaced.

(a) Using SST and a press, install a new counter drive gear bearing and snap ring to the transaxle case.

SST 09950-60020 (09951-01030), 09950-70010 (09951-07100)

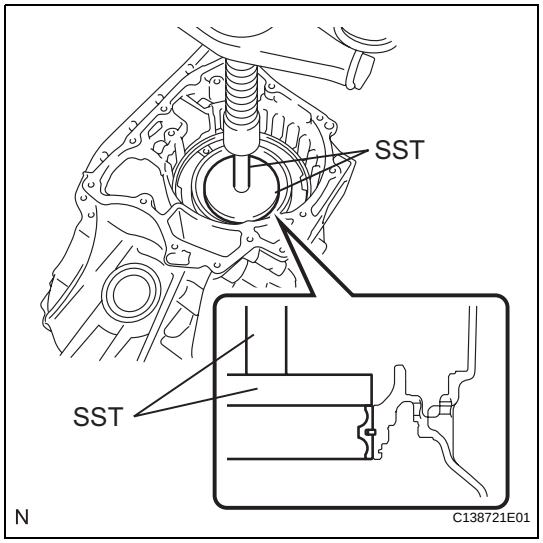

7. INSTALL NO. 3 BRAKE PISTON

(a) Coat the contact surface of the transaxle case with ATF.

(b) Coat the lip seal of the No. 3 brake piston with ATF.

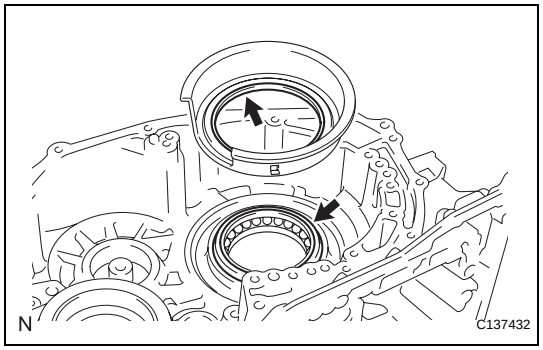

(c) Temporarily install the pawl stopper plate to the transaxle case with the 2 bolts.

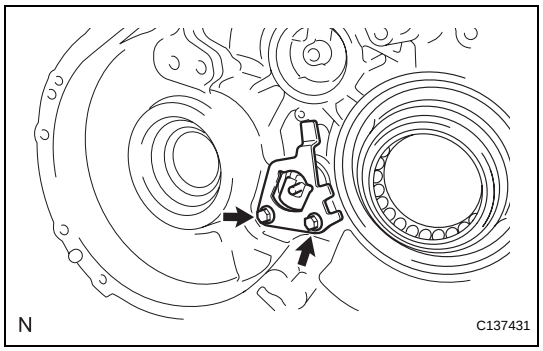

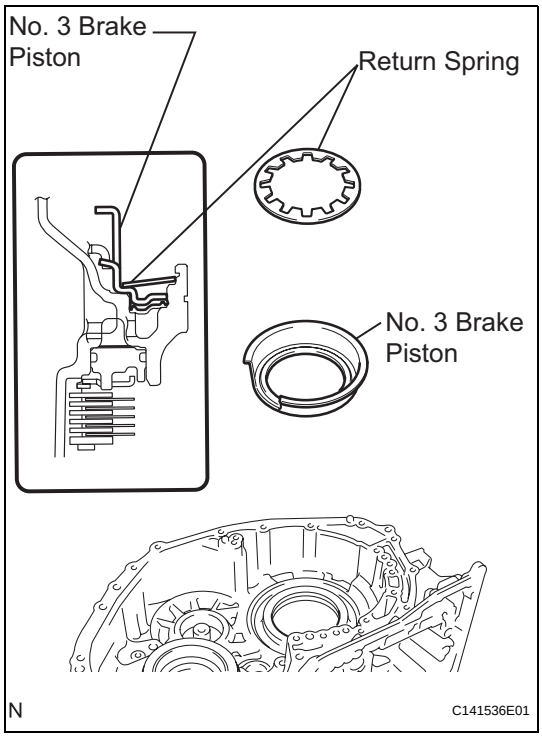

(d) Press the return spring installation surface to install the No. 3 brake piston to the transaxle case.

NOTICE:

- **Make sure that the lip of the No. 3 brake piston is not twisted and does not get caught in the transaxle case.**
- **After installing, make sure that the protrusions on the No. 3 brake piston and the grooves on the pawl stopper plate are aligned.**

(e) Install the return spring to the transaxle case.

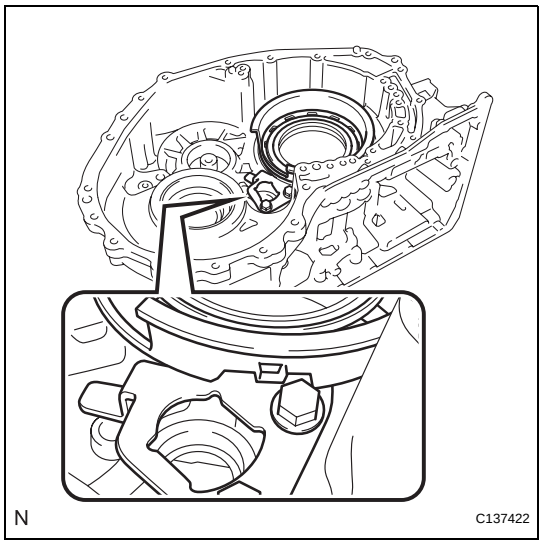

(f) Remove the 2 bolts and pawl stopper plate from the transaxle case.

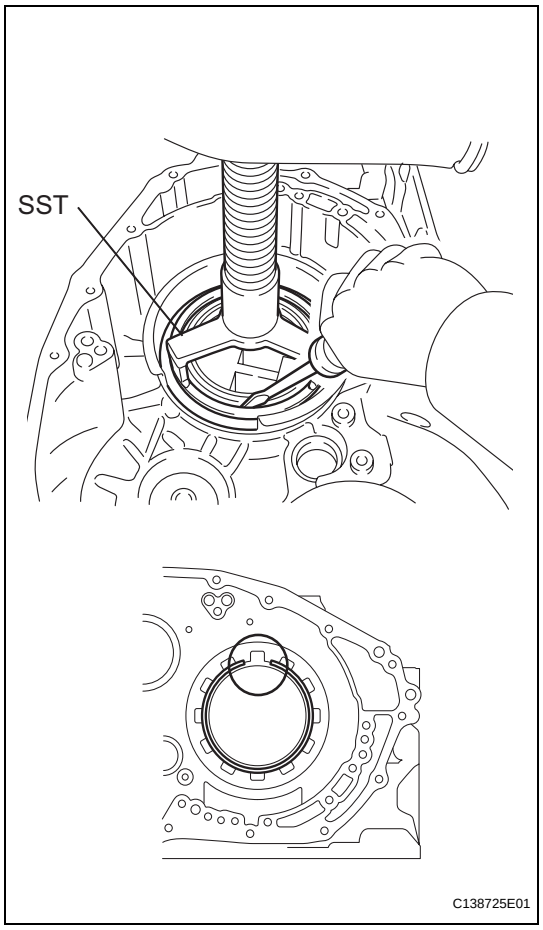

(g) Place SST on the brake piston return spring and compress the brake piston return spring with a press.
SST 09387-00070
NOTICE:
Stop the press when the brake piston return spring is flush with the snap ring groove. This prevents the brake piston return spring from being deformed.

(h) Using a screwdriver, install the snap ring to the transaxle case as shown in the illustration.
NOTICE:
- **Confirm that the snap ring is secured in the groove of the transaxle case.**
- **Be sure to align the opening ends of the snap ring with the protrusions on the brake piston return spring as shown in the illustration.**

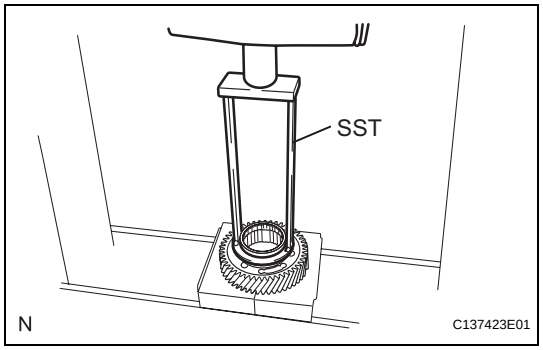

8. INSTALL COUNTER DRIVE GEAR

(a) Using SST and a press, install the bearing inner race (front side) to the counter drive gear.
SST 09387-00020

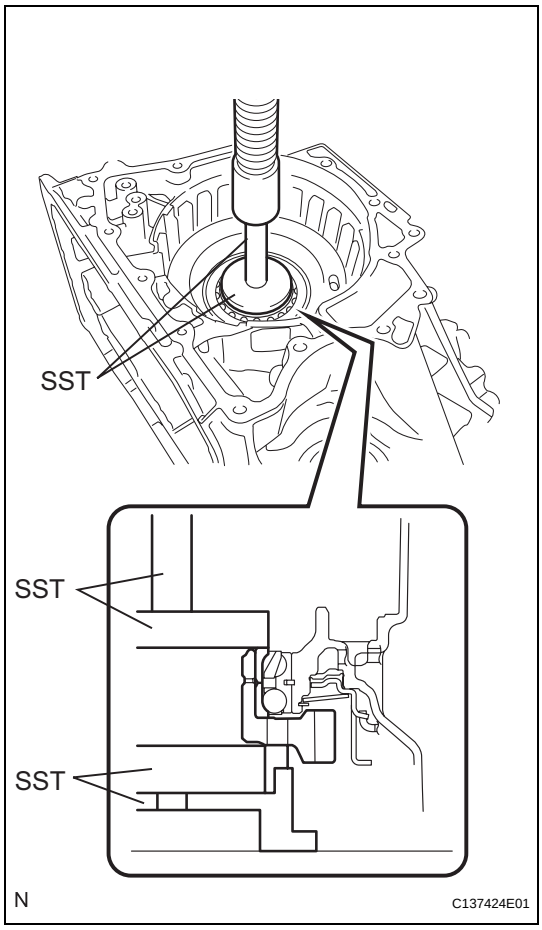

(b) Install the bearing inner race (rear side) and counter drive gear to the transaxle case.
SST 09223-15030, 09527-17011, 09950-60020 (09951-00810), 09950-70010 (09951-07100)
NOTICE:
There should not be any clearance between the bearing inner race (front side) and counter drive gear.

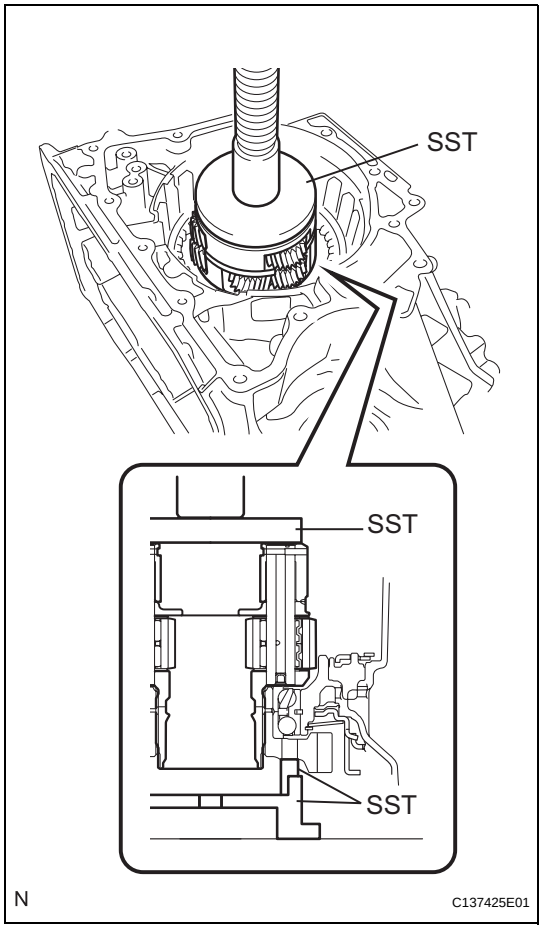

9. INSTALL FRONT PLANETARY GEAR ASSEMBLY

(a) Using SST and a press, press in the planetary gear assembly to the transaxle case.
SST 09223-15030, 09527-17011, 09951-01100

AX

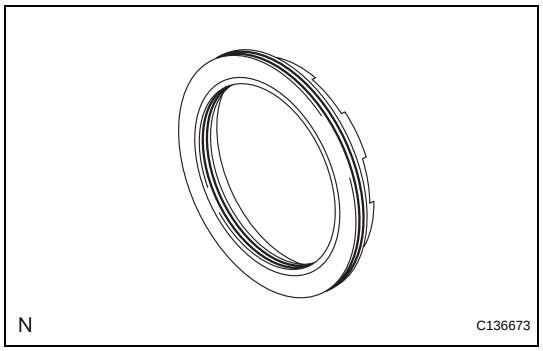

10. INSTALL NO. 2 BRAKE PISTON

(a) Coat 2 new O-rings with ATF and install them to the No. 2 brake piston.
NOTICE:
Ensure that the 2 O-rings are not twisted.

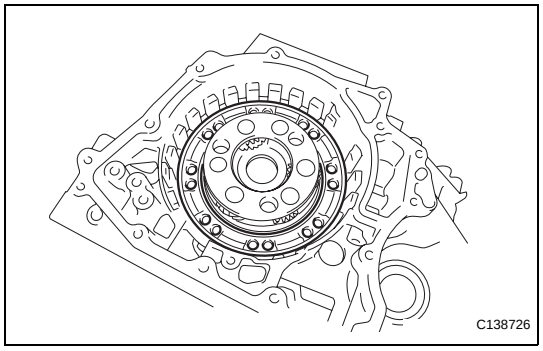

(b) Install the No. 2 brake piston to the transaxle case.
NOTICE:
Be careful not to damage the O-rings.

11. INSTALL 1ST AND REVERSE BRAKE RETURN SPRING SUB-ASSEMBLY

(a) Install the 1st and reverse brake return spring to the transaxle case.

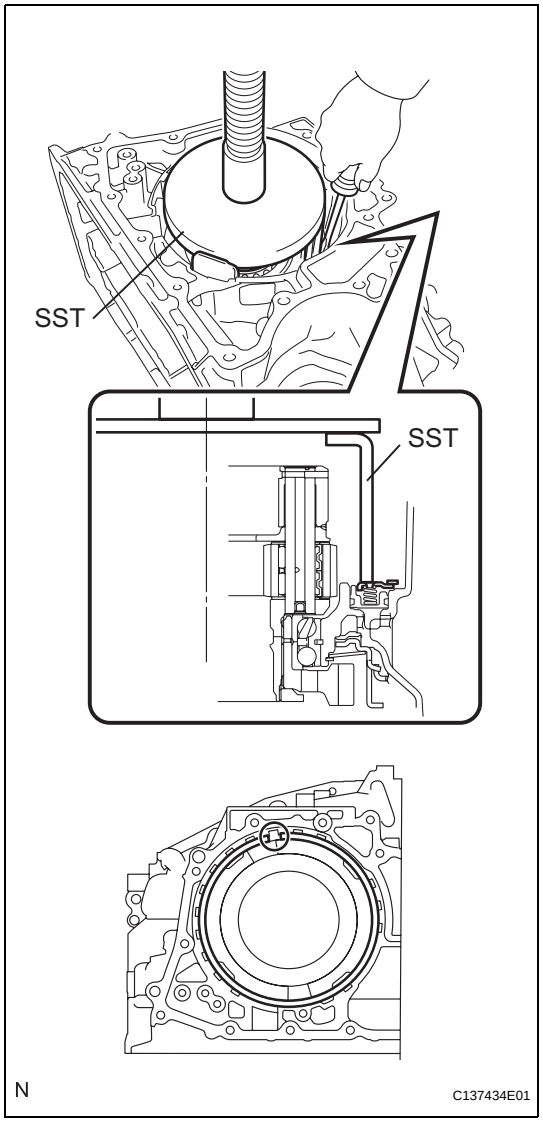

(b) Place SST on the 1st and reverse brake return spring and compress the 1st and reverse brake return spring with a press.
SST 09387-00060
NOTICE:
Stop the press when the 1st and reverse brake return spring is flush with the snap ring groove. This prevents the 1st and reverse brake return spring from being deformed.

(c) Using a screwdriver, install the snap ring to the transaxle case as shown in the illustration.
NOTICE:
- **Confirm that the snap ring is secured in the groove of the transaxle case.**
- **Be sure to align the opening ends of the snap ring with the protrusions on the transaxle case as shown in the illustration.**

AX

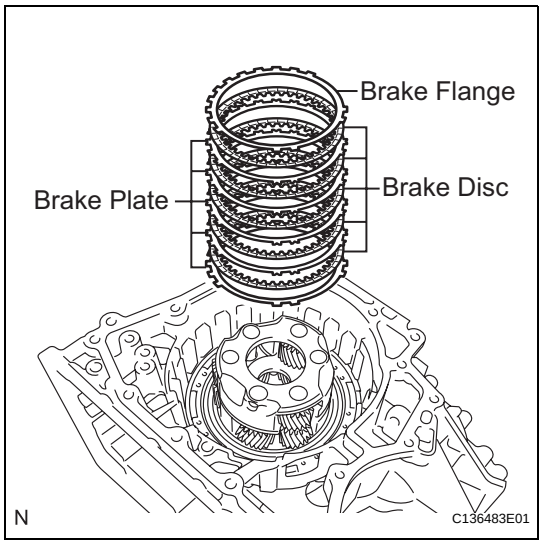

12. INSTALL NO. 2 BRAKE DISC

(a) Install the 5 brake discs, 5 brake plates, and brake flange to the transaxle case.

NOTICE:

Make sure that the discs, plates, and flange are installed in the correct order.

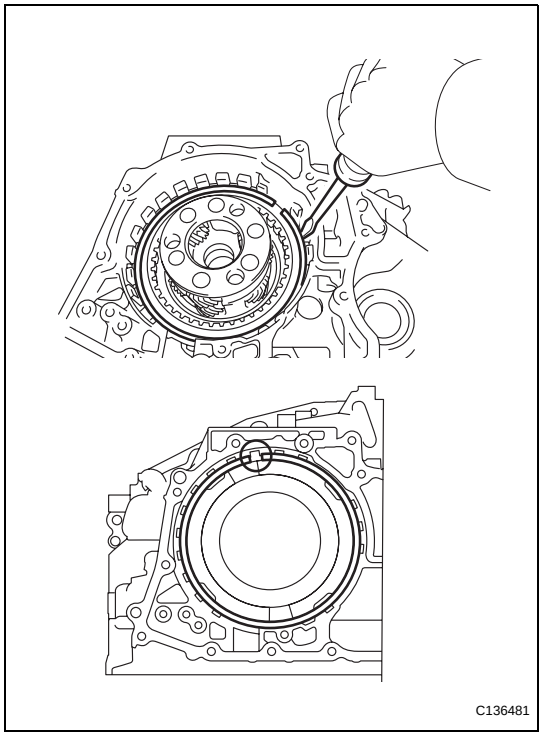

(b) Using a screwdriver, install the snap ring to the transaxle case.

NOTICE:

- **Confirm that the snap ring is secured in the groove of the transaxle case.**
- **Be sure to align the opening ends of the snap ring with the protrusions on the transaxle case as shown in the illustration.**

13. INSPECT CLEARANCE OF NO. 2 BRAKE (See page AX-287)

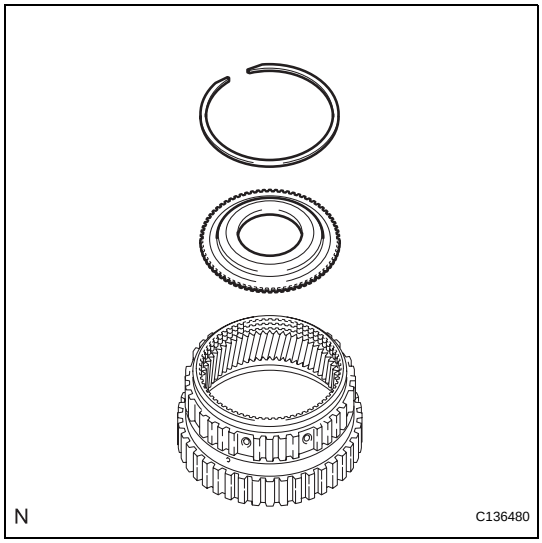

14. INSTALL PLANETARY RING GEAR FLANGE

(a) Install the planetary ring gear flange to the planetary ring gear.

(b) Using a screwdriver, install the snap ring to the planetary ring gear.

NOTICE:

Confirm that the snap ring is secured in the groove of the planetary ring gear.

AX

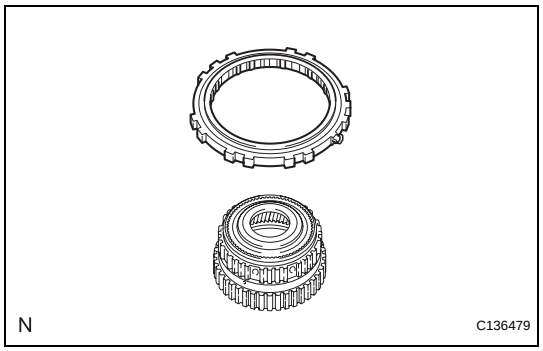

15. INSTALL PLANETARY RING GEAR

(a) Install the planetary ring gear to the one-way clutch assembly.

NOTICE:

Make sure that the one-way clutch assembly is positioned in the correct direction as shown in the illustration.

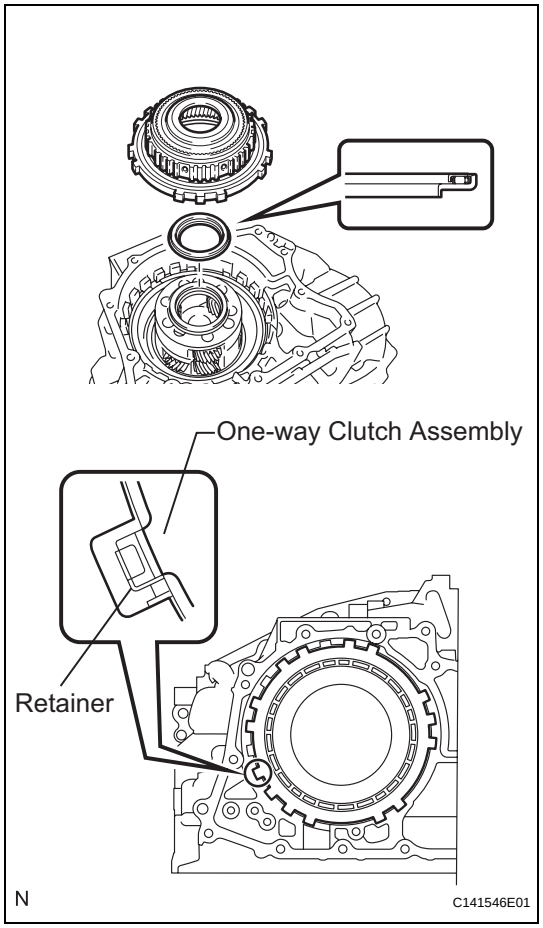

16. INSTALL ONE-WAY CLUTCH ASSEMBLY

(a) Coat the thrust needle roller bearing with ATF, and install it onto the planetary gear assembly.

Bearing diameter: mm (in.)

-	Inside	Outside
Bearing	56.1 (2.209)	80.9 (3.185)

NOTICE:

Install the thrust needle roller bearing properly so that the temper colored side of the race will be visible.

(b) Install the one-way clutch assembly to the transaxle case.

NOTICE:

Make sure that there is no clearance between the retainer and the claw on the one-way clutch assembly. If there is any clearance, the spring of the retainer will be deformed.

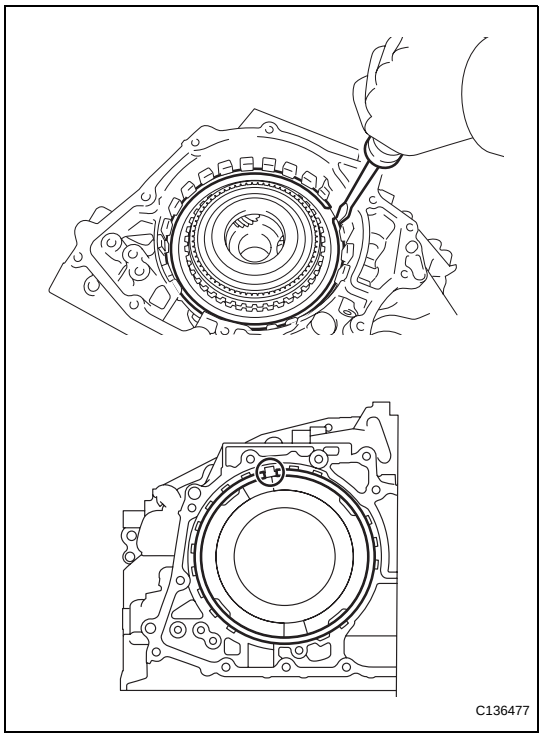

(c) Using a screwdriver, install the snap ring to the transaxle case.

NOTICE:

- **Confirm that the snap ring is secured in the groove of the transaxle case.**
- **Be sure to align the opening ends of the snap ring with the protrusions on the transaxle case.**

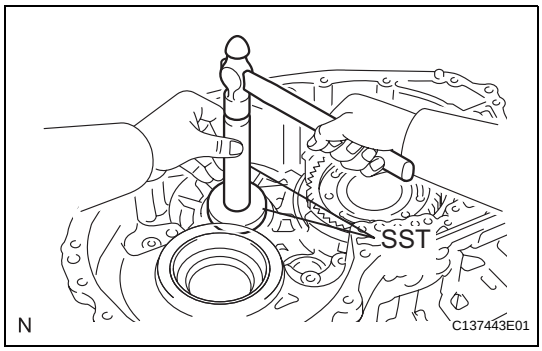

17. INSTALL COUNTER DRIVEN GEAR REAR TAPERED ROLLER BEARING OUTER RACE

(a) Using SST and a hammer, install the counter driven gear rear tapered roller bearing outer race to the transaxle case.

SST 09950-60010 (09951-00650), 09950-70010 (09951-07100)

NOTICE:

Be sure to install the counter driven gear rear tapered roller bearing outer race so that there is no clearance between the bearing outer race and the transaxle case. If there is any clearance, the turning torque of the counter drive gear cannot be measured correctly.

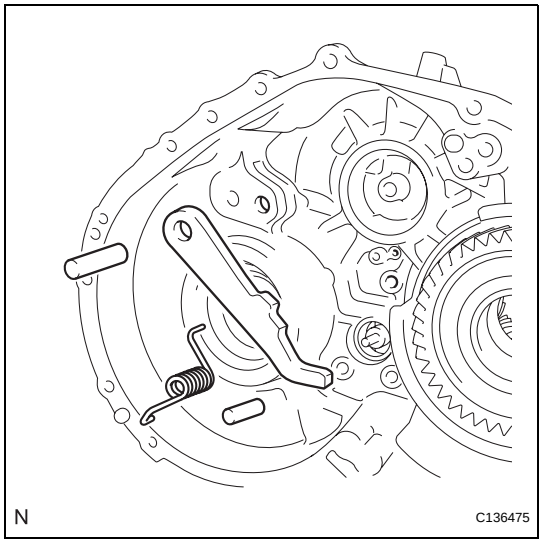

18. INSTALL PARKING LOCK PAWL

(a) Install the parking lock pawl to the transaxle case with the parking lock pawl shaft.

(b) Install the parking lock pawl pin to the transaxle case.

AX

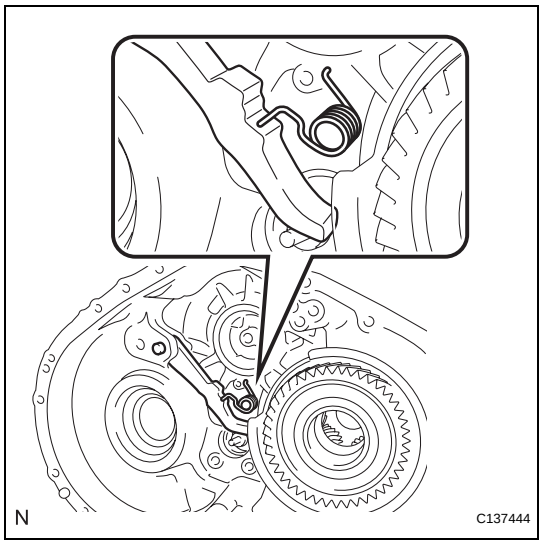

(c) Install the torsion spring to the parking lock pawl.
NOTICE:
Make sure that one end of the spring is fixed in the hole of the transaxle case and the other end is positioned on the parking lock pawl as shown in the illustration.

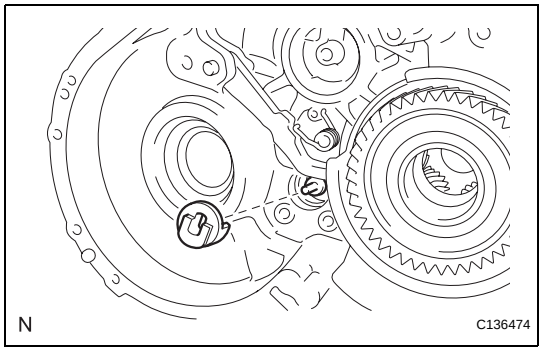

19. INSTALL PARKING LOCK SLEEVE

(a) Install the parking lock sleeve to the transaxle case.

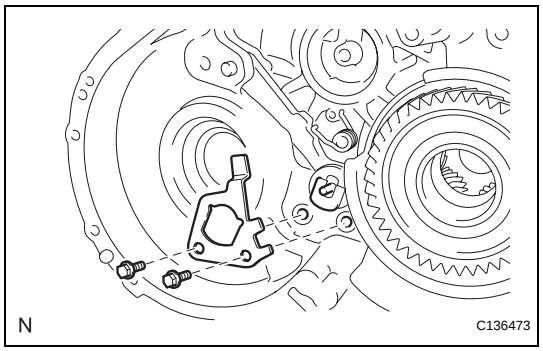

20. INSTALL PAWL STOPPER PLATE

(a) Install the pawl stopper plate to the transaxle case with the 2 bolts.
Torque: 23 N*m (234 kgf*cm, 17 ft.*lbf)

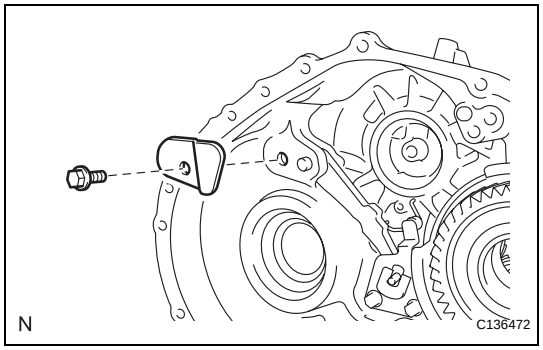

21. INSTALL PAWL SHAFT CLAMP

(a) Install the pawl shaft clamp to the transaxle case with the bolt.
Torque: 23 N*m (234 kgf*cm, 17 ft.*lbf)

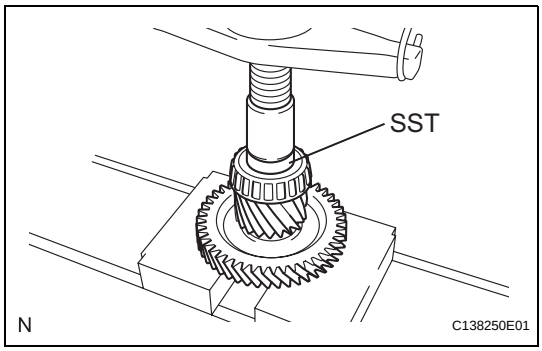

22. INSTALL COUNTER DRIVEN GEAR FRONT TAPERED ROLLER BEARING

(a) Using SST and a press, install a new the counter driven gear front tapered roller bearing to the counter driven gear sub-assembly.
SST 09950-60010 (09951-00530)
NOTICE:
Be sure to install the counter driven gear front tapered roller bearing so that there is no clearance between the bearing and the counter driven gear. If there is any clearance, the turning torque of the counter drive gear cannot be measured correctly.

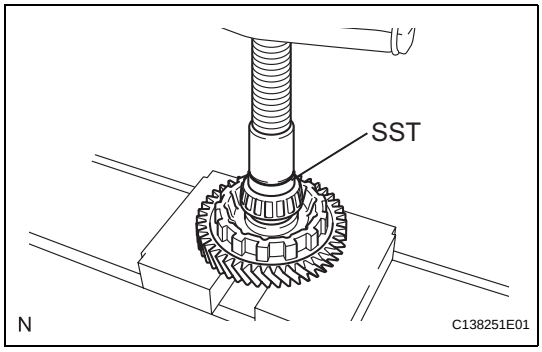

23. INSTALL COUNTER DRIVEN GEAR REAR TAPERED ROLLER BEARING

(a) Using SST and a press, install a new the counter driven gear rear tapered roller bearing to the counter driven gear sub-assembly.
SST 09950-60010 (09951-00420)
NOTICE:
Be sure to install the counter driven gear rear tapered roller bearing and the differential drive pinion so that there is no clearance between each of them and the counter driven gear.

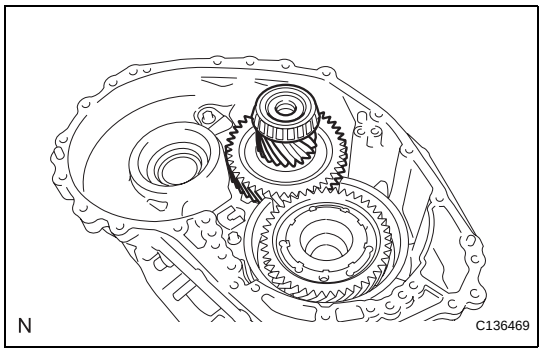

24. INSTALL COUNTER DRIVEN GEAR

(a) Install the counter driven gear sub-assembly to the transaxle case.

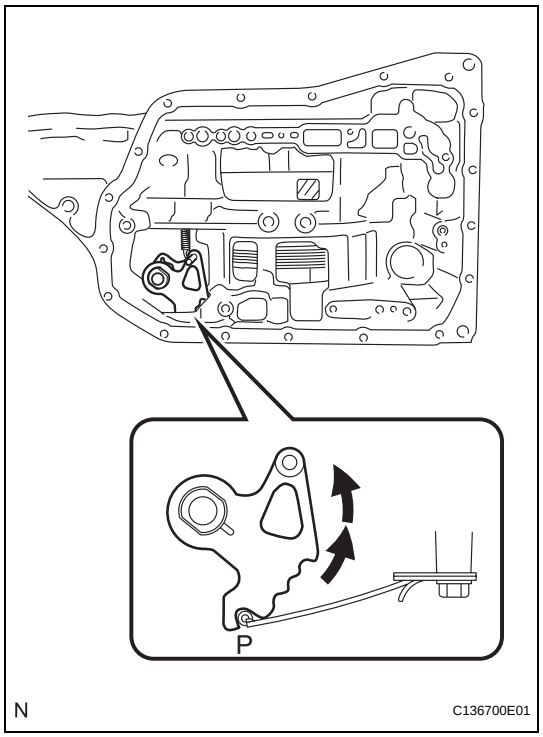

25. INSTALL COUNTER DRIVE GEAR NUT

(a) Turn the manual shaft lever 2 notches counterclockwise to set it in the P position as shown in the illustration.

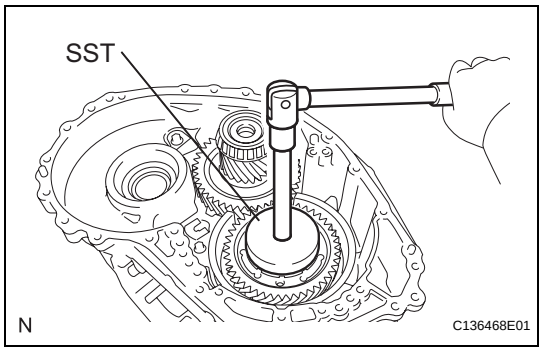

(b) Using SST, install a new nut.
SST 09387-00130
Torque: 120 N*m (1,223 kgf*cm, 88 ft.*lbf)

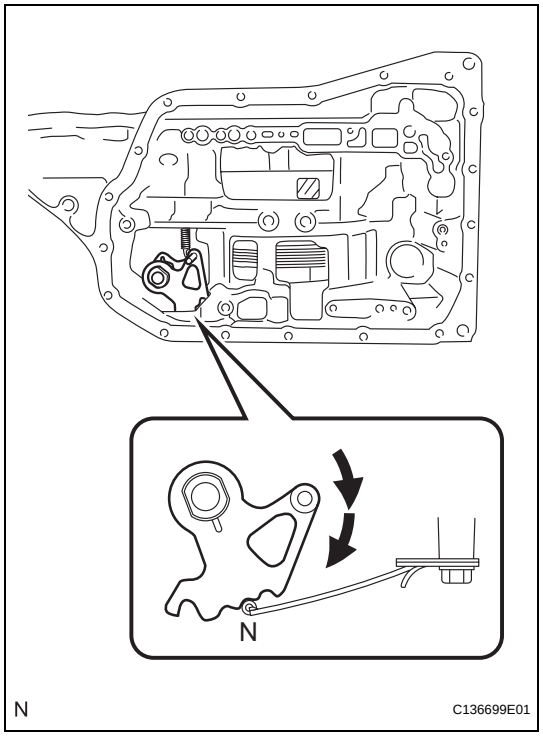

(c) Turn the manual shaft lever 2 notches clockwise to set it in the N position as shown in the illustration.

AX

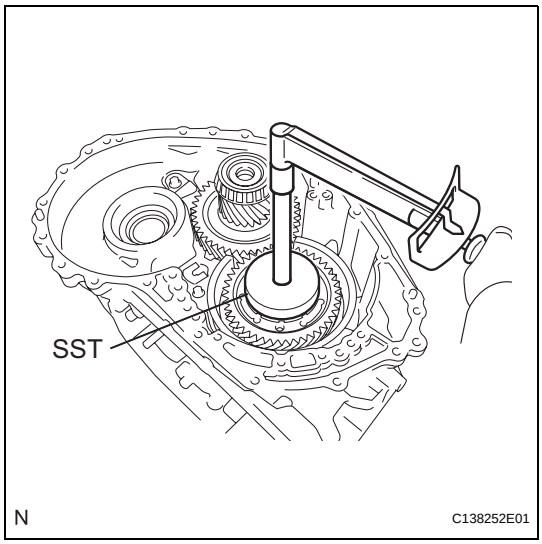

(d) Using SST and a torque wrench, measure the turning torque of the bearing while rotating SST at 60 rpm.
SST 09387-00130
Turning torque:
0.10 to 0.22 N*m (1.02 to 2.24 kgf*cm, 0.89 to 1.94 in.*lbf)
When the measured value is not within the specified range, gradually tighten the nut until the turning toque falls within the specified range.
Maximum torque:
180 N*m (1,835 kgf*cm, 132 ft.*lbf)

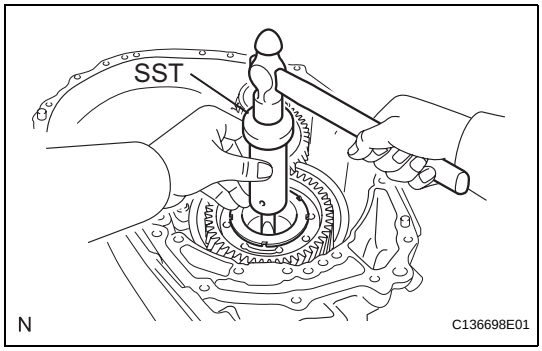

(e) Using SST and a hammer, stake the planetary gear assembly.
SST 09930-00010

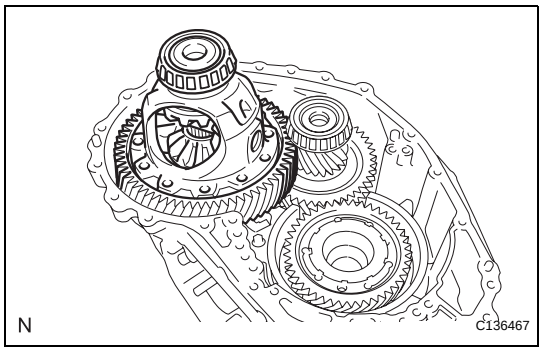

26. INSTALL FRONT DIFFERENTIAL CASE
(a) Install the differential case sub-assembly to the transaxle case.

27. INSPECT DIFFERENTIAL SIDE GEAR (See page AX-343)

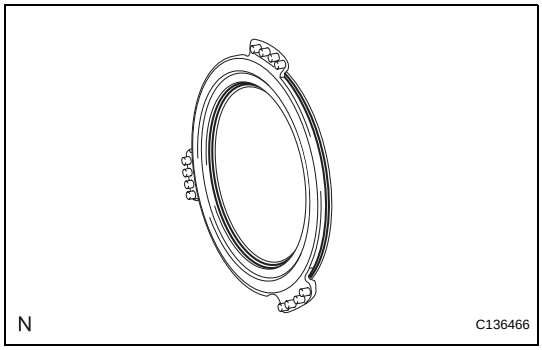

28. INSTALL NO. 1 BRAKE PISTON
(a) Coat 2 new O-rings with ATF and install them to the No. 1 brake piston.
NOTICE:
Ensure that the 2 O-rings are not twisted.

AX

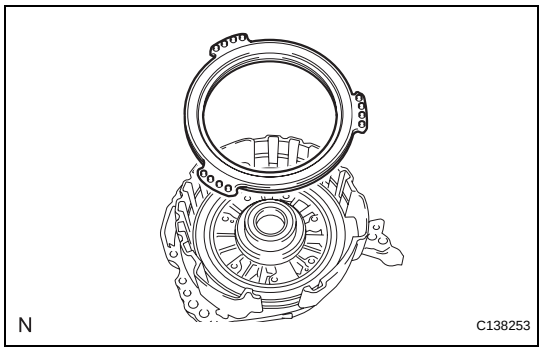

(b) Install the No. 1 brake piston to the oil pump assembly.
NOTICE:
Be careful not to damage the O-rings.

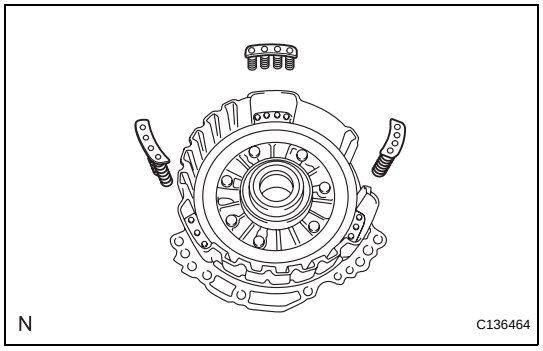

29. INSTALL 2ND BRAKE PISTON RETURN SPRING SUB-ASSEMBLY

(a) Install the 3 2nd brake piston return springs to the oil pump assembly.
NOTICE:
Make sure that the 3 2nd brake piston return springs are installed straight through the protrusions on the oil pump assembly.

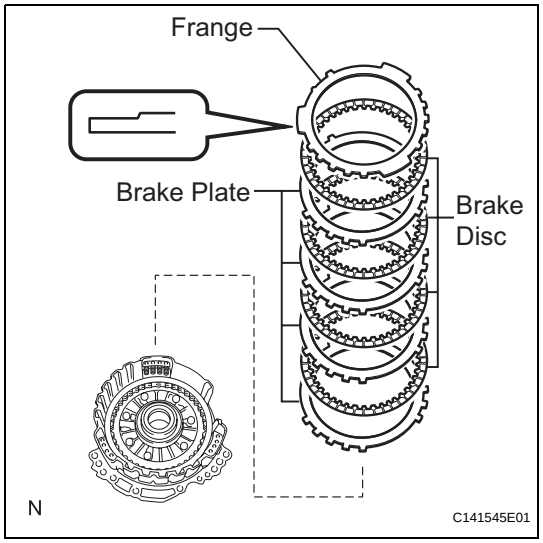

30. INSTALL NO. 1 BRAKE DISC

(a) Install the 4 brake discs, 4 brake plates, and brake flange to the oil pump assembly.
NOTICE:
- **Make sure that the discs, plates, and flange are installed in the correct order.**
- **Be sure to install the flange in the correct direction.**

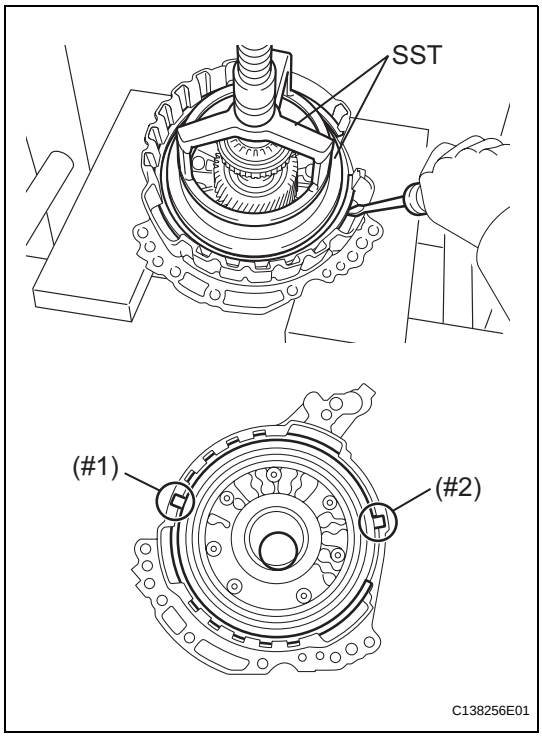

(b) Place SST on the flange and compress the flange with a press.
SST 09387-00070, 09495-65040
NOTICE:
Stop the press when the brake piston return spring is flush with the snap ring groove. This prevents the brake piston return spring from being deformed.

(c) Using a screwdriver, install the snap ring to the oil pump assembly as shown in the illustration (#1).
NOTICE:
- **Confirm the snap ring is fixed in the groove of the oil pump assembly.**
- **Be sure to align the opening ends of the snap ring with the protrusions on the oil pump assembly as shown in the illustration.**

(d) Using a screwdriver, install the snap ring to the oil pump assembly as shown in the illustration (#2).
NOTICE:
- **Confirm that the snap ring is secured in the groove of the oil pump assembly.**
- **Be sure to align the opening ends of the snap ring with the protrusions on the oil pump assembly as shown in the illustration.**

31. INSPECT CLEARANCE OF NO. 1 BRAKE (See page AX-288)

32. INSTALL UNDERDRIVE PLANETARY SUN GEAR

(a) Coat the thrust needle roller bearing with ATF, and install it to the oil pump assembly.
Bearing diameter: mm (in.)

-	Inside	Outside
Bearing	57.7 (2.272)	75.2 (2.961)

NOTICE:
Install the thrust needle roller bearing properly so that the temper colored side of the race will be visible.

(b) Install the underdrive planetary sun gear to the oil pump assembly.

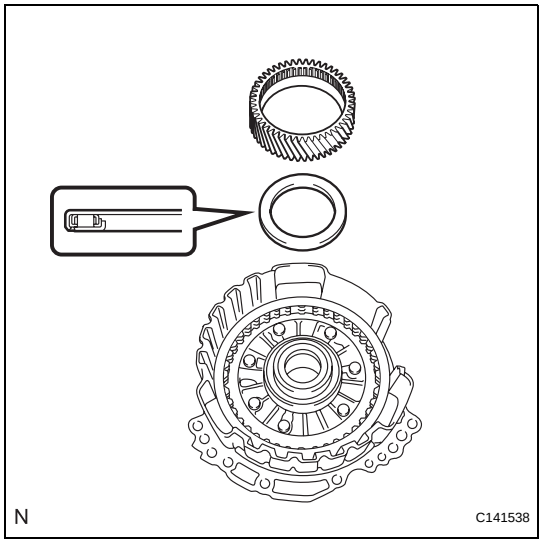

AX

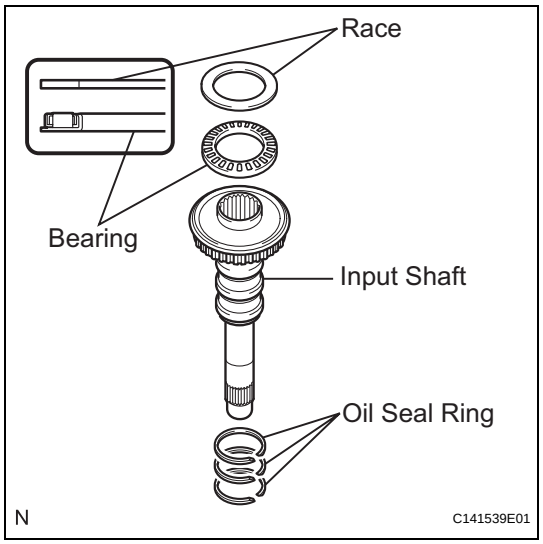

33. INSTALL INPUT SHAFT SUB-ASSEMBLY

(a) Coat the 3 input shaft oil seal rings with ATF and install them to the input shaft.

NOTICE:
Do not expand the gap of the oil seal ring too much.

(b) Coat the thrust needle roller bearing and thrust needle roller race with ATF, and install them on the oil pump assembly.

Bearing diameter: mm (in.)

-	Inside	Outside
Bearing	29.1 (1.146)	48.6 (1.913)
Race	30.7 (1.209)	48.3 (1.902)

NOTICE:
Be sure to install the thrust needle roller bearing in the correct direction.

(c) Install the input shaft to the oil pump assembly.

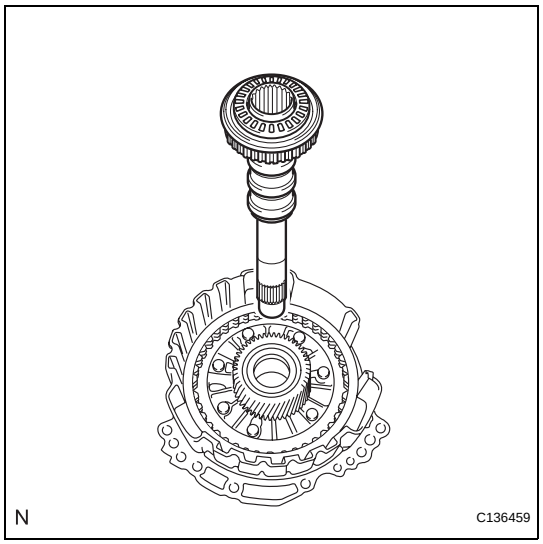

AX

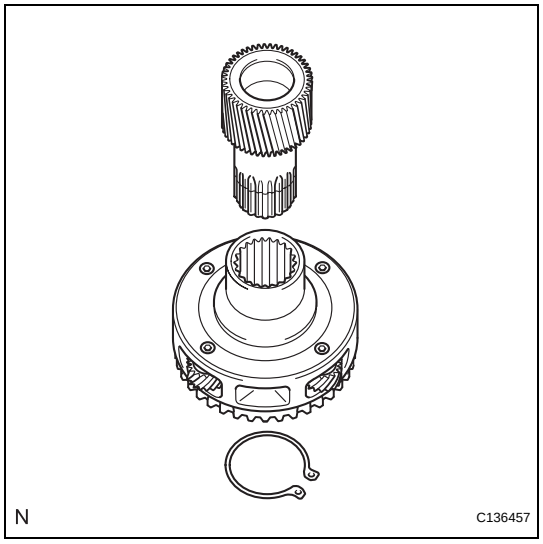

34. INSTALL PLANETARY SUN GEAR SUB-ASSEMBLY

(a) Using a snap ring expander, install the snap ring to the underdrive planetary gear assembly.

(b) Using a snap ring expander, install the front planetary sun gear sub-assembly to the underdrive planetary gear assembly with the snap ring expanded.

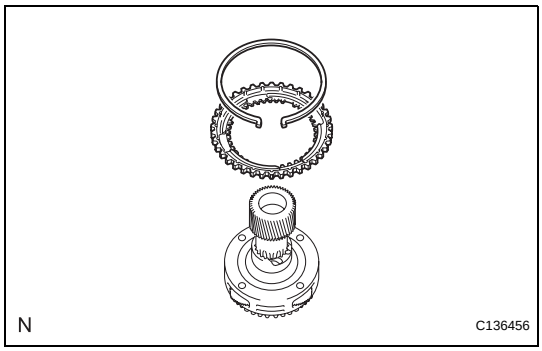

35. INSTALL UNDERDRIVE PLANETARY RING GEAR

(a) Install the underdrive planetary ring gear to the underdrive planetary gear assembly.

(b) Using needle-nose pliers, install the snap ring to the underdrive planetary ring gear.

NOTICE:

Confirm that the snap ring is secured in the groove of the underdrive planetary ring gear.

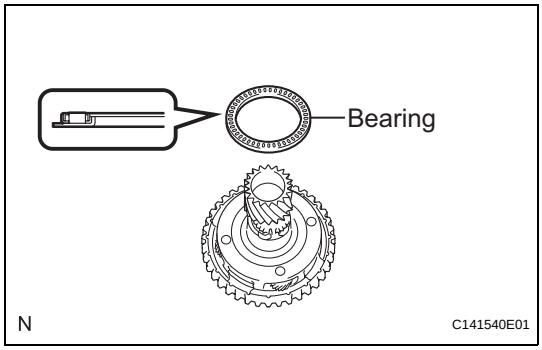

36. INSTALL NO. 3 BRAKE HUB

(a) Coat the thrust needle roller bearing with ATF and install it on the underdrive planetary gear assembly.

Bearing diameter: mm (in.)

-	Inside	Outside
Bearing	62.6 (2.464)	82.9 (3.263)
Race	65.9 (2.594)	80.3 (3.161)

NOTICE:

Install the thrust needle roller bearing properly so that the temper colored side of the race will be visible.

(b) Coat the race with MP grease and install it to the No. 3 brake hub.

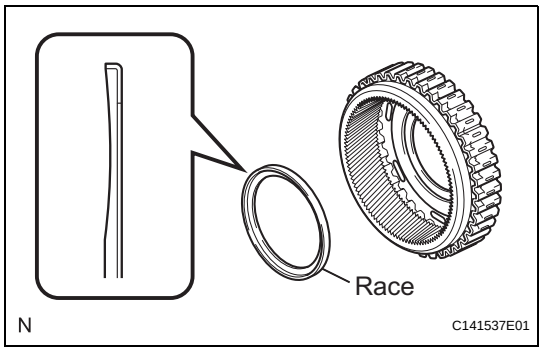

(c) Install the No. 3 brake hub to the underdrive planetary gear assembly.

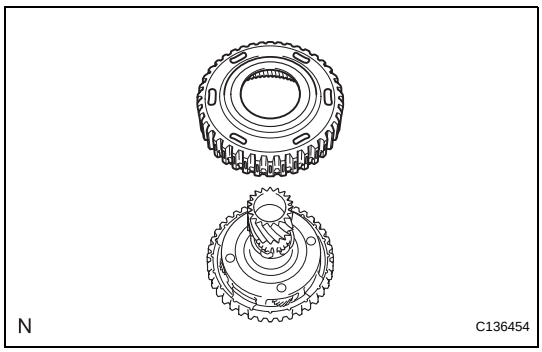

AX

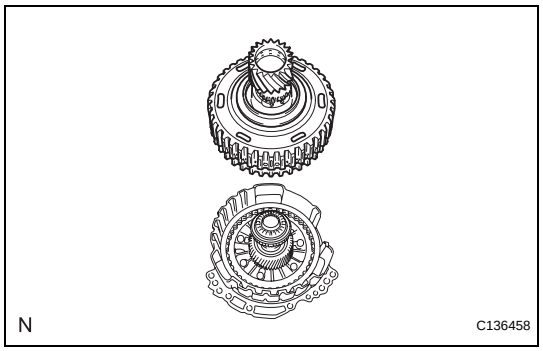

37. INSTALL UNDERDRIVE PLANETARY GEAR ASSEMBLY

(a) Install the underdrive planetary gear assembly to the oil pump assembly.

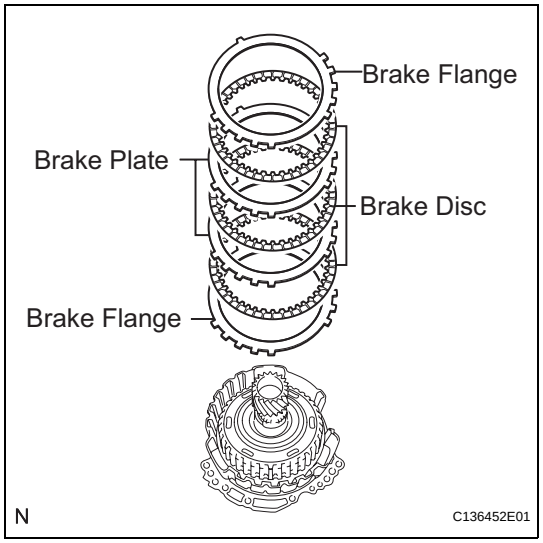

38. INSTALL NO. 3 BRAKE DISC

(a) Install the 2 brake flanges, 3 brake discs, and 2 brake plates to the oil pump assembly.
NOTICE:
Make sure that the discs, plates, and flange are installed in the correct order.

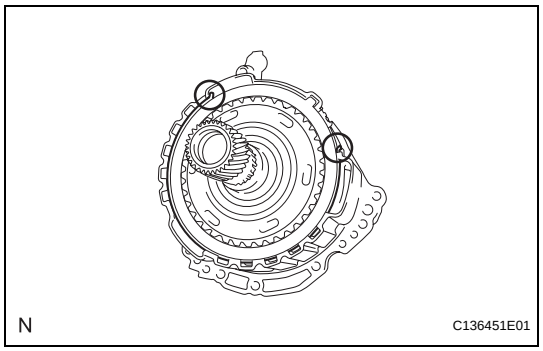

(b) Using a screwdriver, install the snap ring to the oil pump assembly.
NOTICE:
- **Confirm the snap ring is fixed in the groove of the oil pump.**
- **Be sure to align the opening ends of the snap ring with the protrusions on the brake piston return spring as shown in the illustration.**

39. INSPECT CLEARANCE OF NO. 3 BRAKE

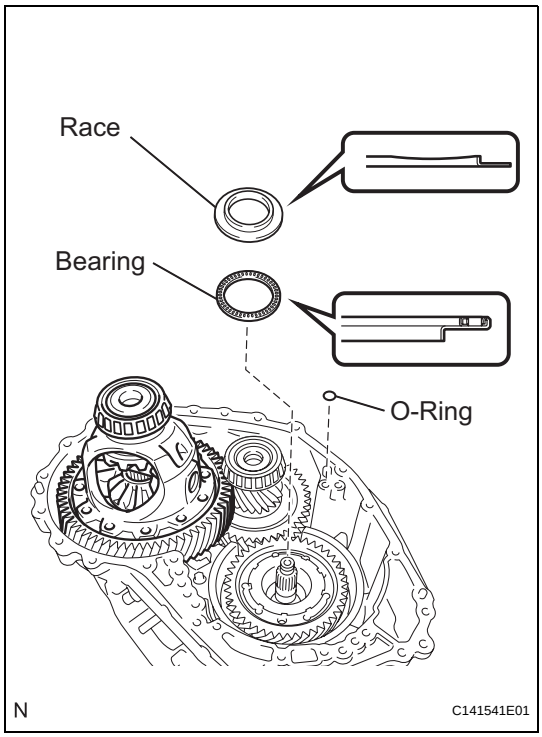

40. INSTALL FRONT OIL PUMP AND GEAR BODY SUB-ASSEMBLY

(a) Coat the O-ring with ATF and install it to the transaxle case.

(b) Coat the thrust needle roller bearing and thrust needle roller race with ATF and install them on the underdrive planetary gear assembly.
Bearing and race diameter: mm (in.)

-	Inside	Outside
Bearing	53.1 (2.091)	79 (3.11)
Race	59.4 (2.339)	77 (3.03)

NOTICE:
Install the thrust needle roller bearing properly so that the temper colored side of the race will be visible.

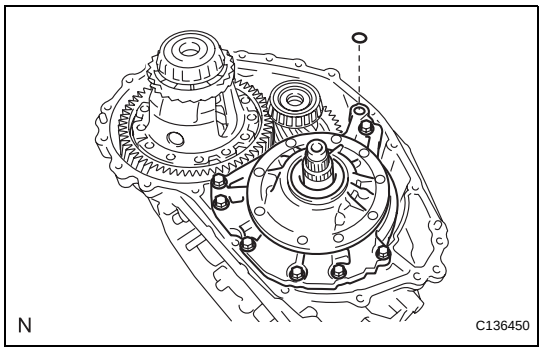

(c) Coat the O-ring with ATF and install it to the oil pump.

(d) Install the oil pump assembly to the transaxle case with the 7 bolts.
Torque: 23 N*m (234 kgf*cm, 17 ft.*lbf)

AX

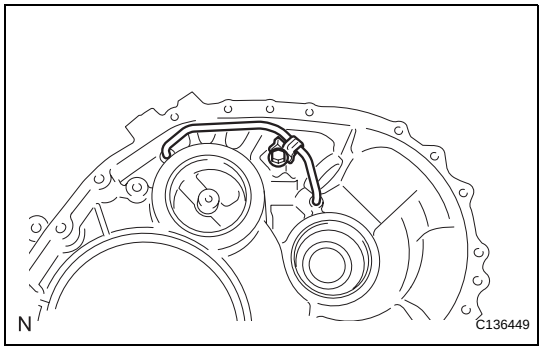

41. INSTALL DIFFERENTIAL GEAR LUBE APPLY TUBE

(a) Install the differential gear lube apply tube to the transaxle housing.
NOTICE:
Insert the differential lube apply tube into the transaxle case until it makes contact with the stopper.

(b) Install the apply tube clamp to the differential gear lube apply tube with the bolt.
Torque: 23 N*m (234 kgf*cm, 17 ft.*lbf)
NOTICE:
There should be clearance between the differential lube apply tube and apply tube clamp.

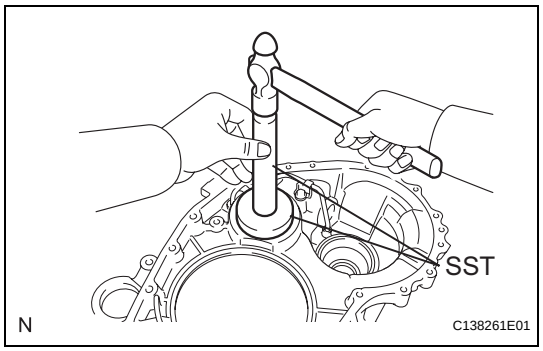

42. INSTALL COUNTER DRIVEN GEAR FRONT TAPERED ROLLER BEARING OUTER RACE

(a) Install the shim to the transaxle housing.

(b) Using SST, install a new counter driven gear front tapered roller bearing outer race to the transaxle housing.

SST 09950-60020 (09951-00810), 09950-70010 (09951-07100)

NOTICE:

Be sure to install the counter driven gear front tapered roller bearing outer race so that there is no clearance between the shim and the transaxle housing.

43. INSTALL TRANSAXLE HOUSING

(a) Remove packing material from the contact surface between the transaxle housing and case.

NOTICE:

Make sure that there is no ATF on the contact surface.

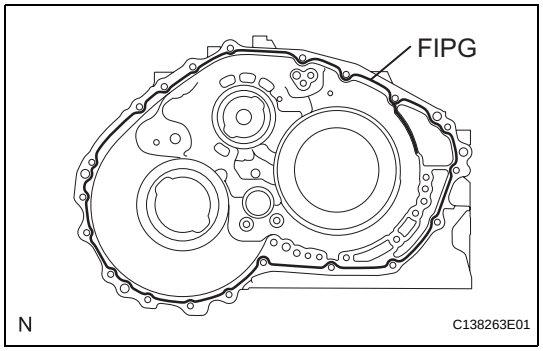

(b) Apply FIPG to the transaxle case.

FIPG:

Toyota Genuine Seal Packing 1281, Three Bond 1281 or equivalent.

NOTICE:

Apply a bead of FIPG (width 1.2 mm (0.047 in.)) along the sealing surface.

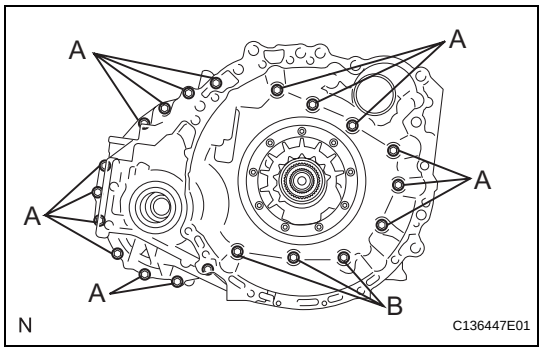

(c) Install the transaxle housing to the transaxle case with the 20 bolts.

Torque: Bolt A
31 N*m (316 kgf*cm, 23 ft.*lbf)
Bolt B
23 N*m (234 kgf*cm, 17 ft.*lbf)

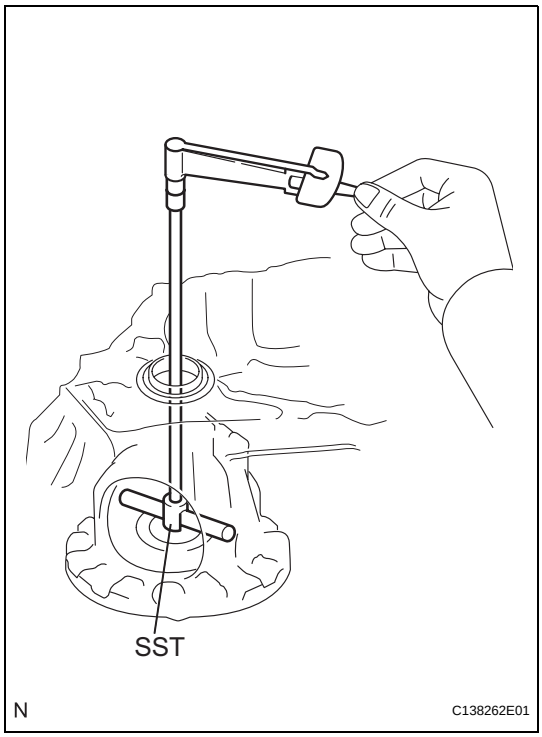

44. ADJUST COUNTER DRIVEN GEAR PRELOAD

(a) Using SST and a torque wrench, measure the turning torque of the counter driven gear while rotating SST at 10 rpm.

SST 09564-33010

Turning torque:

Differential side bearing preload 3.29 to 6.07 N*m (33.53 to 61.86 kgf*cm, 2.42 to 4.46 ft.*lbf)

If the turning torque is not within the specified range, refer to the table below to select a shim of the counter driven gear front tapered roller bearing outer race so that the turning torque is within the specified range.

Thickness	Thickness	Thickness	Thickness
2.000 (0.0787)	2.275 (0.0896)	2.525 (0.0994)	2.775 (0.1093)
2.025 (0.0797)	2.300 (0.0906)	2.550 (0.1004)	2.800 (0.1102)
2.050 (0.0807)	2.325 (0.0915)	2.575 (0.1014)	2.825 (0.1112)
2.075 (0.0817)	2.350 (0.0925)	2.600 (0.1024)	2.850 (0.1122)
2.100 (0.0827)	2.375 (0.0935)	2.625 (0.1034)	2.875 (0.1132)
2.125 (0.0837)	2.400 (0.0945)	2.650 (0.1043)	2.900 (0.1142)
2.150 (0.0847)	2.425 (0.0955)	2.675 (0.1053)	2.925 (0.1152)
2.175 (0.0856)	2.450 (0.0965)	2.700 (0.1063)	2.950 (0.1161)
2.200 (0.0866)	2.475 (0.0974)	2.725 (0.1073)	2.975 (0.1171)
2.225 (0.0876)	2.500 (0.0984)	2.750 (0.1083)	3.000 (0.1181)
2.250 (0.0886)	-	-	-

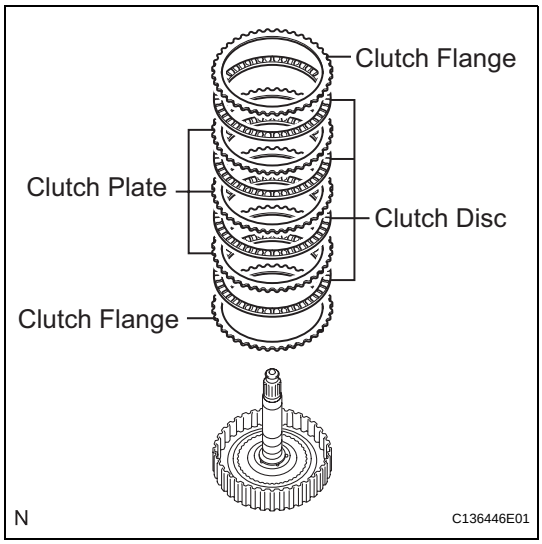

45. INSTALL NO. 1 CLUTCH DISC

(a) Install the clutch flange, 4 clutch discs, and 4 clutch plates to the direct multiple disc clutch assembly.

NOTICE:

Make sure that the flange, discs, and plates are installed in the correct order.

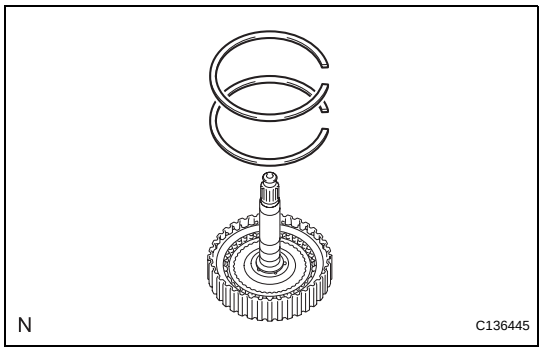

(b) Using a screwdriver, install the 2 snap rings to the direct multiple disc clutch assembly.

NOTICE:

Confirm that the snap ring is secured in the groove of the direct multiple disc clutch assembly.

46. INSPECT CLEARANCE OF NO. 1 CLUTCH DISC (See page AX-289)

AX

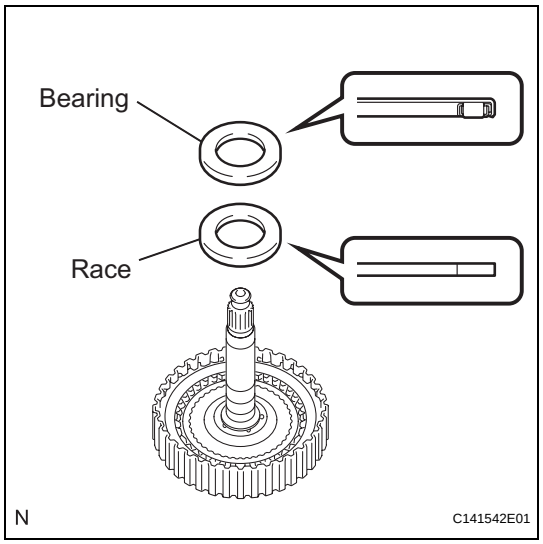

47. INSTALL REAR PLANETARY SUN GEAR ASSEMBLY

(a) Coat the thrust needle roller bearing and thrust needle roller race with ATF, and install them to the direct multiple disc clutch assembly.

Bearing and race diameter: mm (in.)

-	Inside	Outside
Bearing	28 (1.10)	47.1 (1.854)
Race	26.1 (1.028)	44 (1.73)

NOTICE:
Install the thrust needle roller bearing properly so that the temper colored side of the race will be visible.

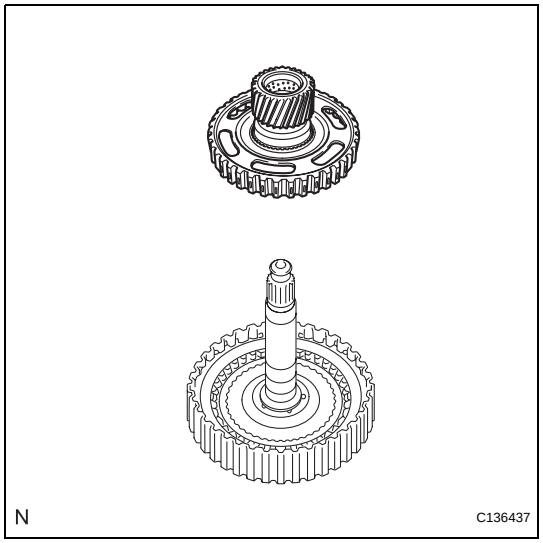

(b) Install the rear planetary sun gear to the direct multiple disc clutch assembly.

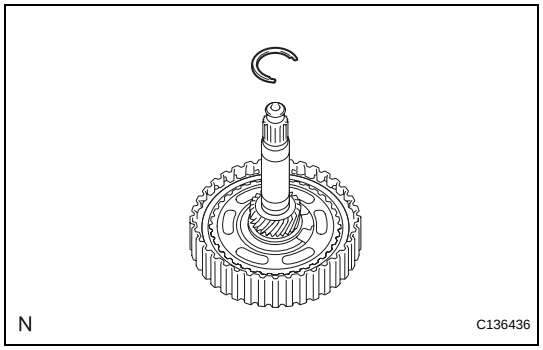

(c) Using a snap ring expander, install the snap ring to the direct multiple disc clutch assembly.

AX

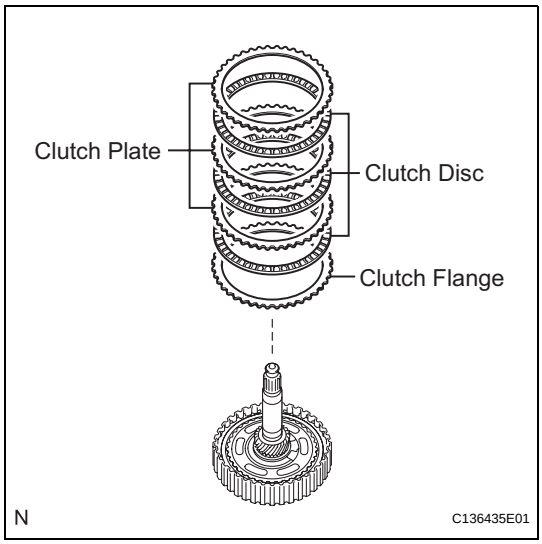

48. INSTALL NO. 2 CLUTCH DISC

(a) Install the clutch flange, 3 clutch discs, and 3 clutch plates to the direct multiple disc clutch assembly.
NOTICE:
Make sure that the flange, discs, and plates are installed in the correct order.

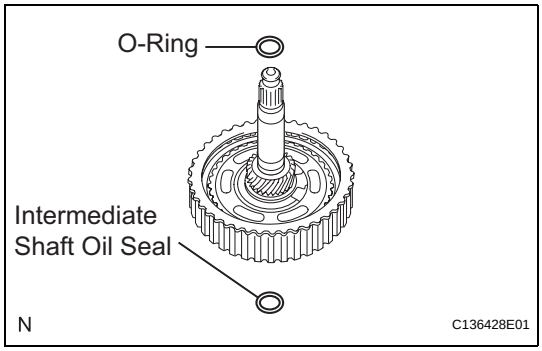

49. INSTALL DIRECT MULTIPLE DISC CLUTCH SNAP RING

(a) Coat a new O-ring with ATF and install it to the direct multiple disc clutch assembly.

(b) Coat a new intermediate shaft oil seal ring with ATF and install it to the intermediate shaft.

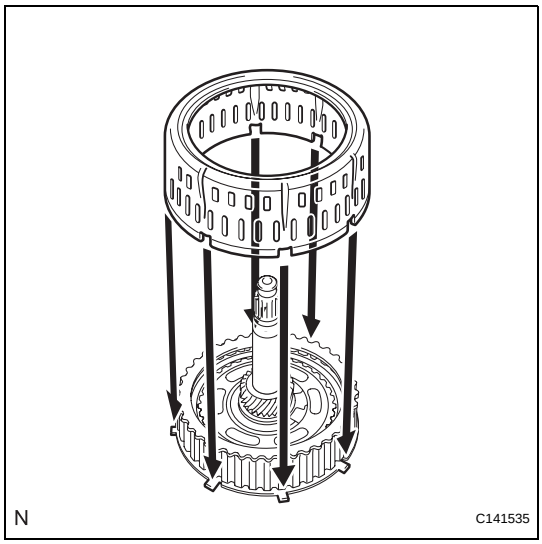

(c) Install the No. 2 direct clutch piston to the direct multiple disc clutch assembly.
NOTICE:
Be sure to engage the claws on the direct multiple disc clutch assembly to the grooves on the No. 2 direct clutch piston.

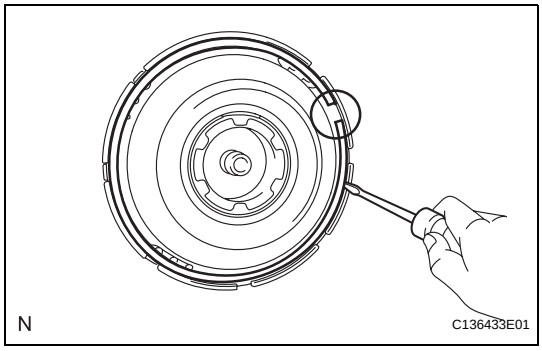

(d) Using a screwdriver, install the snap ring to the direct multiple disc clutch assembly.
NOTICE:
Position the opening of the snap ring as shown in the illustration.

50. INSPECT CLEARANCE OF NO. 2 CLUTCH DISC (See page AX-289)

AX

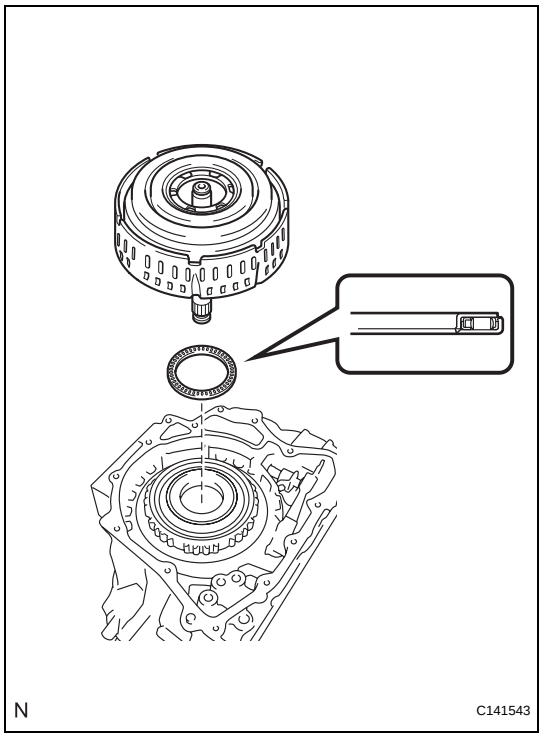

51. INSTALL REAR MULTIPLE DISC CLUTCH ASSEMBLY

(a) Coat the thrust needle roller bearing with ATF and install it on the transaxle case.
Bearing diameter: mm (in.)

-	Inside	Outside
Bearing	61.2 (2.409)	79 (3.11)

(b) Install the direct multiple disc clutch assembly to the transaxle case.

(c) Clean the contact surface of the transaxle case and transaxle rear cover.

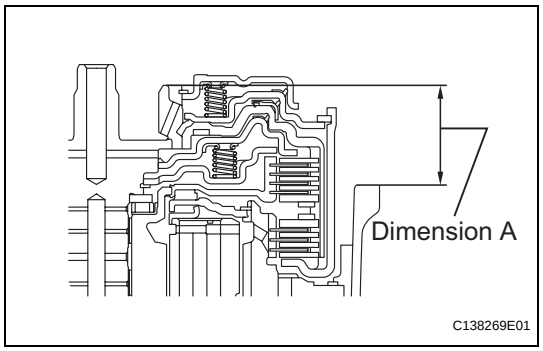

(d) As shown in the illustration, place a straight edge on the multiple direct clutch drum and measure the distance between the transaxle case and the straight edge using vernier calipers (Dimension A).

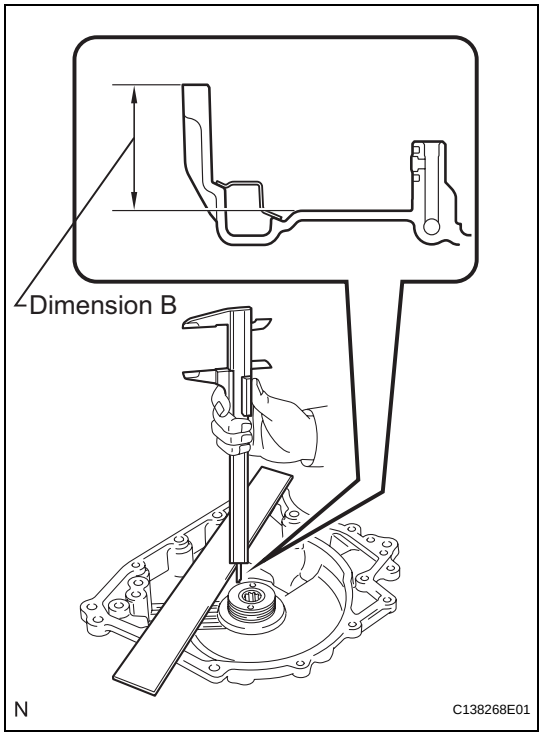

(e) Using vernier calipers and a straight edge, measure the distance shown in the illustration. (Dimension B)

(f) Calculate the end play value using the following formula:
End play = Dimension B - Dimension A
End play:
0.007 to 1.113 mm (0.0003 to 0.0438 in.)

AX

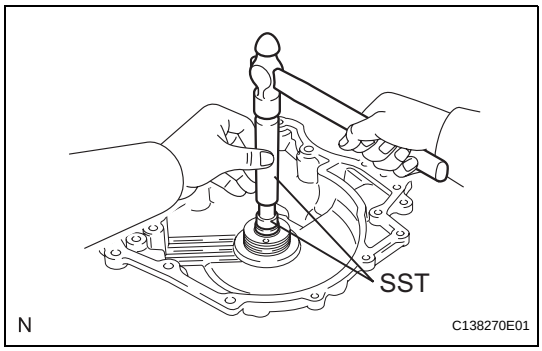

52. INSTALL TRANSAXLE REAR COVER SUB-ASSEMBLY

(a) Using SST and a hammer, install the needle roller bearing into the transaxle rear cover.
SST 09950-60010 (09951-00220), 09950-70010 (09951-07100)
Press installation depth:
21.5 to 21.9 mm (0.8464 to 08622 in.)

(b) Apply adhesive to the 2 "TORX" screws.
Adhesive:
Toyota Genuine Adhesive 1324, Three Bond 1324 or equivalent

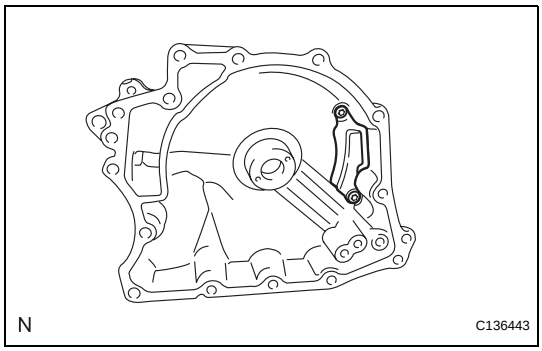

(c) Using a "TORX" wrench (T30), install the transaxle rear cover plate to the transaxle rear cover with the 2 "TORX" screws.
Torque: 7.5 N*m (76 kgf*cm, 66 in.*lbf)

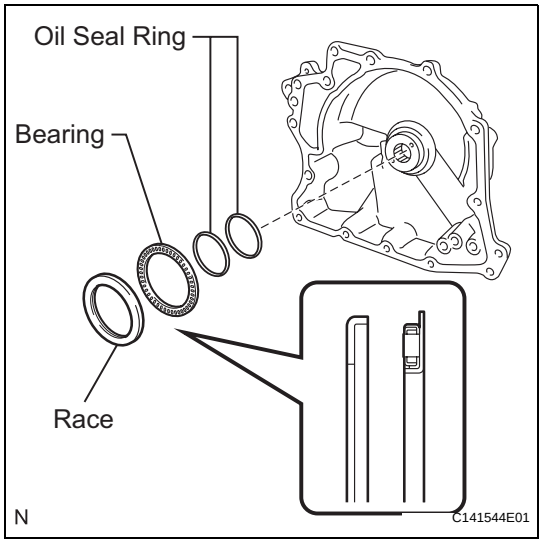

(d) Coat the thrust needle roller bearing and thrust needle roller race with ATF and install it on the transaxle case.
Bearing diameter: mm (in.)

-	Inside	Outside
Bearing	48.9 (1.925)	72.0 (2.835)
Race	52.2 (2.055)	70.4 (2.772)

(e) Coat the 2 new oil seals with ATF and install them to the transaxle rear cover.

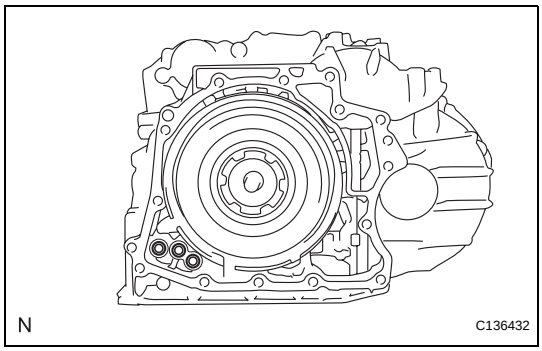

(f) Coat the 3 O-rings with ATF and install them to the transaxle case.
NOTICE:
Ensure that the 3 O-rings are not twisted.

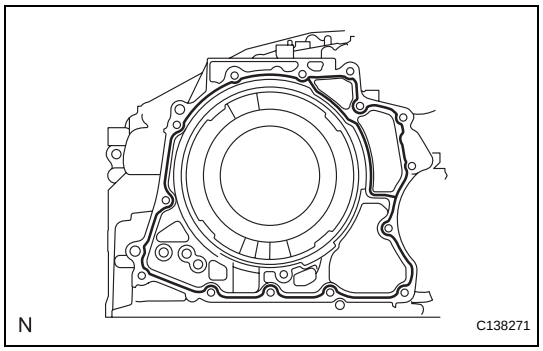

(g) Remove packing material from the contact surfaces between the transaxle rear cover and transaxle case.
NOTICE:
Make sure that there is no ATF on the contact surface.
FIPG:
Toyota Genuine Seal Packing 1281, Three Bond 1281 or equivalent.

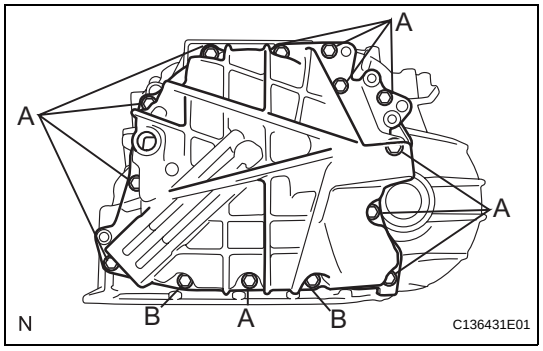

(h) Install the transaxle rear cover to the transaxle case with the 14 bolts.
Torque: Bolt A
23 N*m (234 kgf*cm, 17 ft.*lbf)
Bolt B
17 N*m (173 kgf*cm, 12 ft.*lbf)

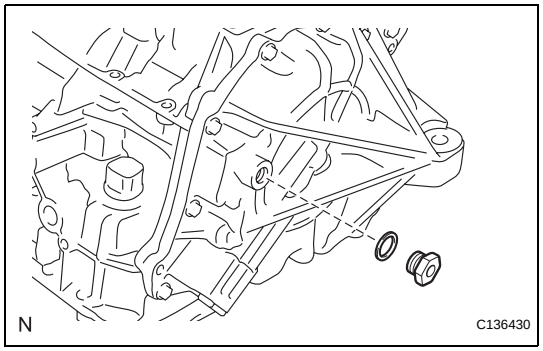

(i) Install a new gasket to the refill plug.
(j) Install the refill plug to the transaxle rear cover.
Torque: 49 N*m (500 kgf*cm, 36 ft.*lbf)

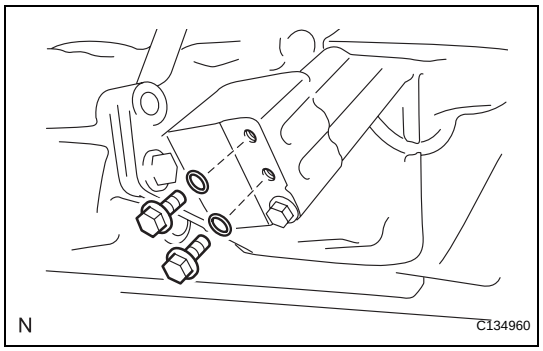

(k) Coat 2 new O-rings with ATF and install them to the 2 No. 1 automatic transaxle case plugs.
(l) Install the 2 No. 1 automatic transaxle case plugs to the transaxle rear cover.
Torque: 7.4 N*m (75 kgf*cm, 65 in.*lbf)

53. INSPECT INPUT SHAFT END PLAY (See page AX-284)

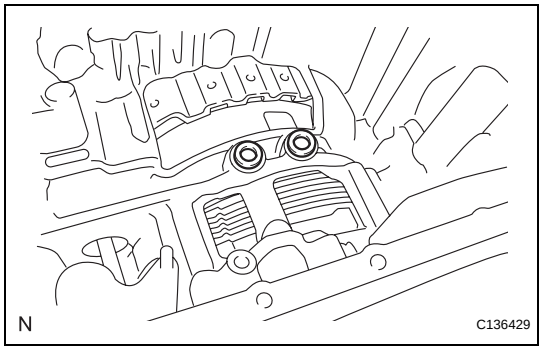

54. INSTALL TRANSAXLE CASE GASKET
(a) Coat the 2 gaskets with ATF and install them to the transaxle case.

AX

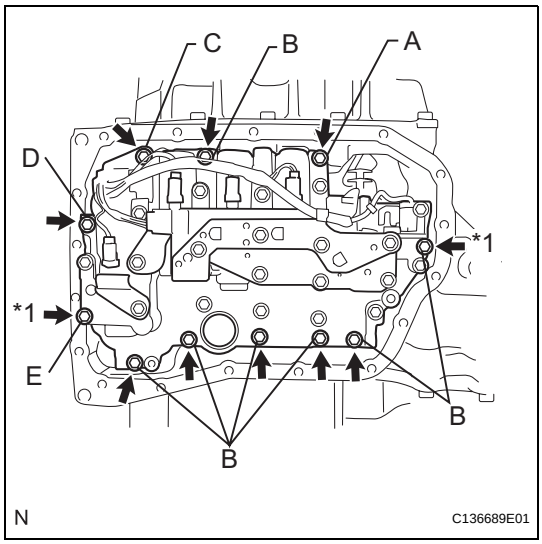

55. INSTALL TRANSMISSION VALVE BODY ASSEMBLY

(a) Install the valve body assembly to the transaxle case with the 11 bolts.
Torque: 11 N*m (112 kgf*cm, 8 ft.*lbf)

-	Bolt length
Bolt A	25 mm (0.98 in.)
Bolt B	30 mm (1.18 in.)
Bolt C	35 mm (1.38 in.)
Bolt D	45 mm (1.77 in.)
Bolt E	55 mm (2.17 in.)

NOTICE:
- **When installing the transmission valve body assembly, be careful not to allow the transmission revolution sensor and transaxle case to interfere each other.**
- **Be sure to insert the pin of the manual valve lever into the groove on the end of the manual valve.**
- **First, temporarily tighten the bolts marked by (*1) in the illustration because they are positioning bolts.**

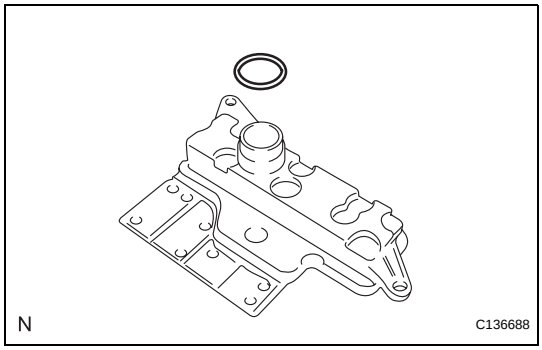

56. INSTALL VALVE BODY OIL STRAINER ASSEMBLY

(a) Coat a new O-ring with ATF and install it to the oil strainer assembly.
NOTICE:
Ensure that the O-ring is not twisted or pinched.

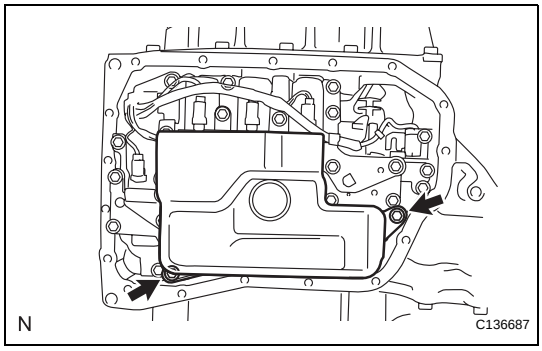

(b) Install the oil strainer assembly to the valve body assembly with the 2 bolts.
Torque: 11 N*m (112 kgf*cm, 8 ft.*lbf)

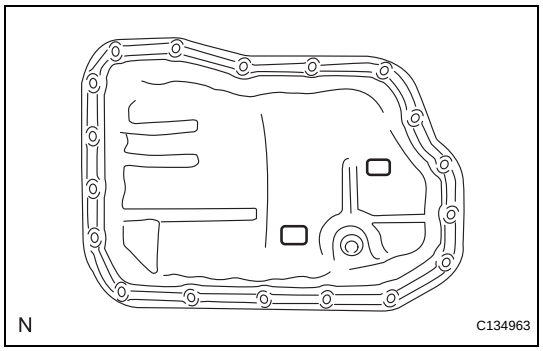

57. INSTALL AUTOMATIC TRANSAXLE OIL PAN SUB-ASSEMBLY

(a) Install the 2 magnets in the automatic transaxle oil pan sub-assembly.

(b) Apply adhesive to the 18 bolts.

Adhesive:

Toyota Genuine Adhesive 1344, Three Bond 1344 or equivalent.

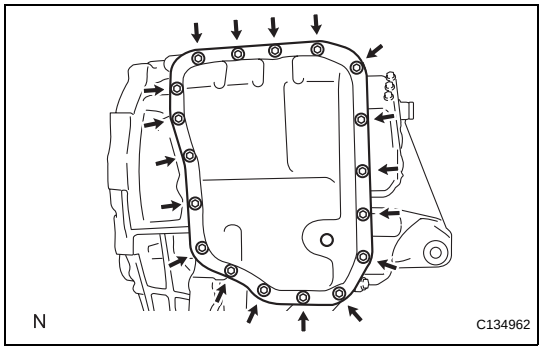

(c) Install the automatic transaxle oil pan sub-assembly and a new gasket to the transaxle case with the 18 bolts.

Torque: 7.5 N*m (76 kgf*cm, 66 in.*lbf)

NOTICE:

- **In order to ensure proper sealing of the transmission pan bolts, apply adhesive to the bolts and install them within 10 minutes of adhesive application.**
- **Completely remove any oil or grease from the contact surface of the transaxle case and oil pan sub-assembly with the gasket before installation.**

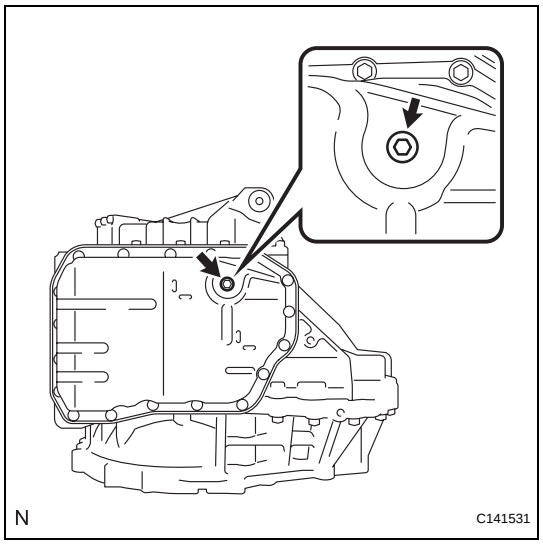

(d) Install the No. 1 oil filler tube from the automatic transaxle assembly.

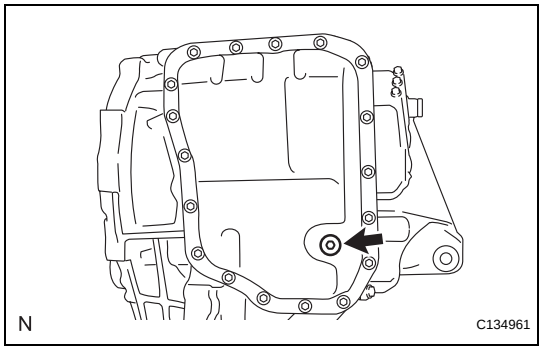

(e) Install the overflow plug and a new gasket to the oil pun sub-assembly.

Torque: 40 N*m (408 kgf*cm, 30 ft.*lbf)

58. INSTALL NO. 1 TRANSAXLE CASE PLUG

(a) Install the 3 gaskets to the 3 hexagon bolts.

(b) Apply adhesive to the 3 hexagon bolts.

Adhesive:

Toyota Genuine Adhesive 1344, Three Bond 1344 or equivalent.

NOTICE:

In order to ensure proper sealing of the hexagon bolts, apply adhesive to the bolts and install them within 10 minutes of adhesive application.

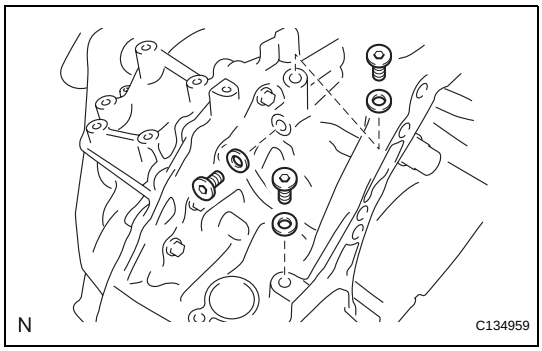

(c) Install the 3 hexagon bolts to the transaxle housing with the gaskets.
Torque: 29 N*m (296 kgf*cm, 21 ft.*lbf)

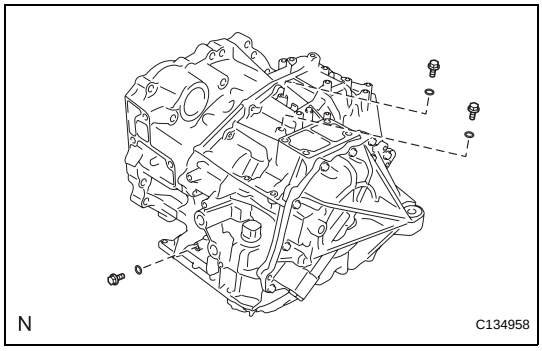

(d) Coat 3 new O-rings with the ATF and install them to the 3 No. 1 transaxle case plugs.
(e) Install the 3 No. 1 transaxle case plugs to the transaxle case.
Torque: 7.4 N*m (75 kgf*cm, 65 in.*lbf)

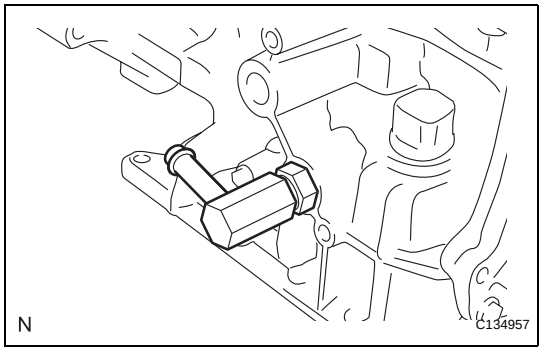

59. INSTALL OIL COOLER TUBE UNION (OUTLET OIL COOLER UNION)
(a) Coat a new O-ring with ATF and install it to the oil cooler tube union (outlet oil cooler union).
(b) Install the oil cooler tube union (outlet oil cooler union) to the transaxle case as shown in the illustration.
Torque: 27 N*m (275 kgf*cm, 20 ft.*lbf)

AX

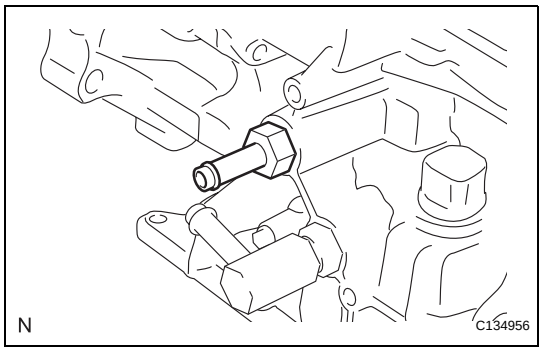

60. INSTALL OIL COOLER TUBE UNION (INLET OIL COOLER UNION)
(a) Coat a new O-ring with ATF and install it to the oil cooler tube union (inlet oil cooler union).
(b) Install the oil cooler tube union (inlet oil cooler union) to the transaxle case.
Torque: 27 N*m (275 kgf*cm, 20 ft.*lbf)

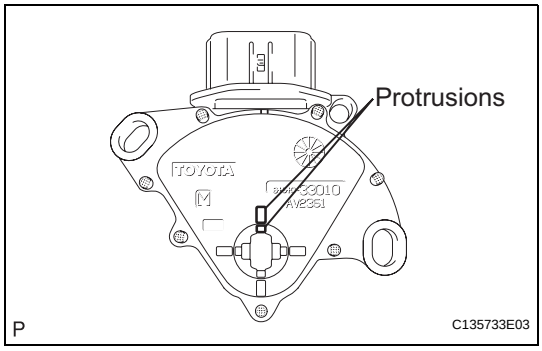

61. INSTALL PARK/NEUTRAL POSITION SWITCH ASSEMBLY
(a) Align the protrusions of the park/neutral position switch.

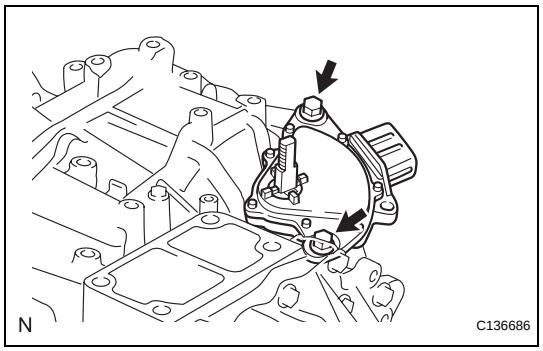

(b) Install the park/neutral position switch to the control shaft with the 2 bolts.
Torque: 5.4 N*m (55 kgf*cm, 48 in.*lbf)
NOTICE:
- **Before installing the park/neutral position switch, remove any dirt or rust on the installation portion of the control shaft. Be sure to install the switch straight along the shaft while being careful not to deform the plate spring that supports the shaft. If the plate spring is deformed, the park/neutral switch cannot be reinstalled correctly.**
- **After installing the park/neutral position switch, confirm that the 2 protrusions on the switch are aligned.**

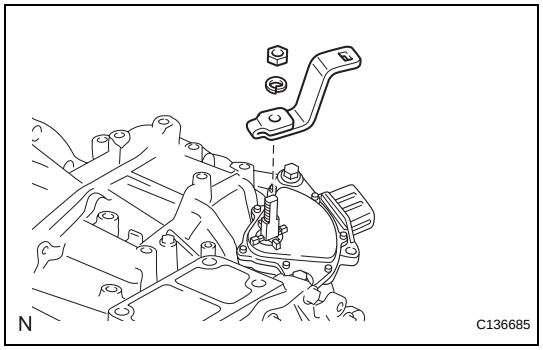

(c) Install the control shaft lever to the control shaft with the washer and nut.
Torque: 13 N*m (130 kgf*cm, 9 ft.*lbf)

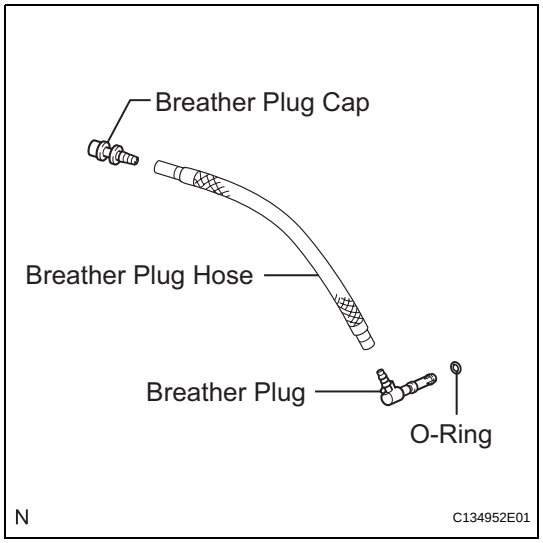

62. INSTALL BREATHER PLUG HOSE
(a) Install a new O-ring to the breather plug.
(b) Install the breather plug to the breather plug hose.
(c) Install the breather plug cap to the breather plug hose.

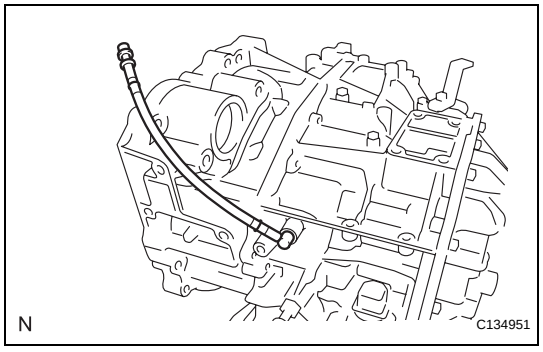

(d) Install the breather plug hose to the transaxle case.

AX

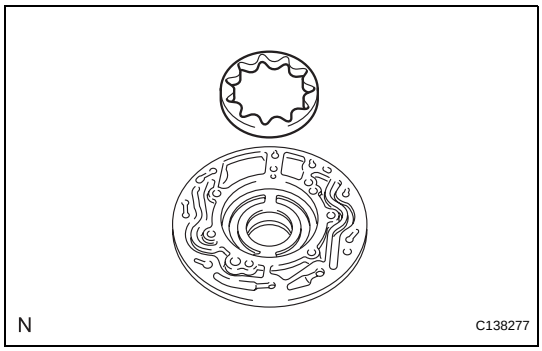

6. REMOVE FRONT OIL PUMP DRIVEN GEAR

(a) Remove the front oil pump driven gear from the oil pump body.

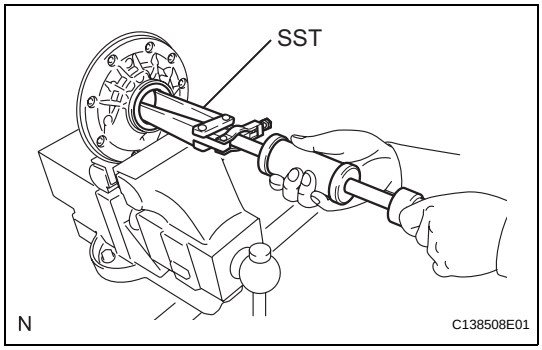

7. REMOVE FRONT OIL PUMP OIL SEAL

(a) Mount the oil pump in a soft jaw vise.

(b) Using SST, remove the oil seal from the oil pump body.

SST 09308-00010

INSPECTION

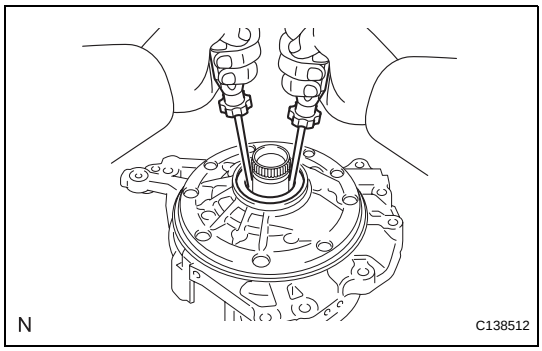

1. INSPECT FRONT OIL PUMP AND GEAR BODY SUB-ASSEMBLY

(a) Turn the drive gear with 2 screwdrivers and make sure that it rotates smoothly.

NOTICE:

Be careful not to damage the oil seal lip.

AX

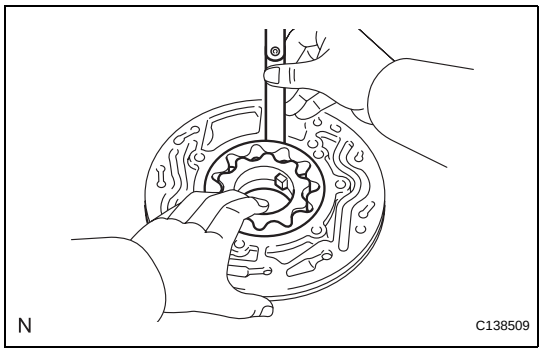

2. INSPECT CLEARANCE OF FRONT OIL PUMP AND GEAR BODY SUB-ASSEMBLY

(a) Push the driven gear to one side of the body.

(b) Using a feeler gauge, measure the clearance.

Standard clearance:

0.08 to 0.15 mm (0.0031 to 0.0059 in.)

Maximum clearance:

0.15 mm (0.0059 in.)

If the clearance is greater than the maximum, replace the oil pump body sub-assembly.

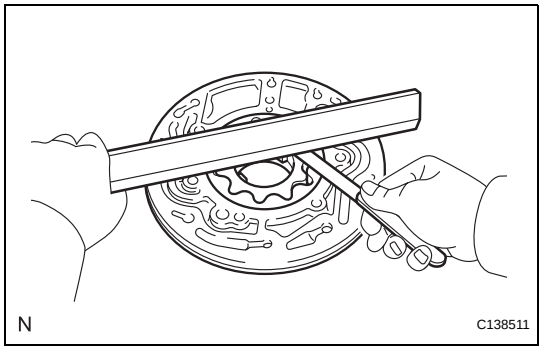

(c) Using a straight edge and feeler gauge, measure the side clearance of both gears.

Standard side clearance:

0.025 to 0.04 mm (0.0010 to 0.0016 in.)

Maximum side clearance:

0.04 mm (0.0016 in.)

Drive gear thickness:

Mark	Thickness
-	11.547 to 11.555 mm (0.4546 to 0.4549 in.)
-	11.555 to 11.563 mm (0.4549 to 0.4552 in.)
-	11.564 to 11.571 mm (0.4553 to 0.4556 in.)

Mark	Thickness
-	11.572 to 11.579 mm (0.4556 to 0.4559 in.)
-	11.580 to 11.587 mm (0.4559 to 0.4562 in.)

Driven gear thickness:

Mark	Thickness
-	11.547 to 11.555 mm (0.4546 to 0.4549 in.)
-	11.555 to 11.563 mm (0.4549 to 0.4552 in.)
-	11.564 to 11.571 mm (0.4553 to 0.4556 in.)
-	11.572 to 11.579 mm (0.4556 to 0.4559 in.)
-	11.580 to 11.587 mm (0.4559 to 0.4562 in.)

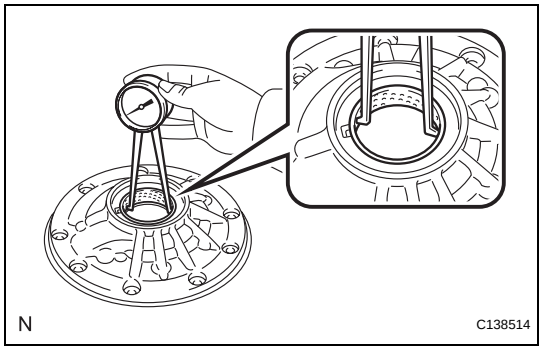

3. INSPECT FRONT OIL PUMP AND GEAR BODY SUB-ASSEMBLY

(a) Using a dial indicator, measure the inside diameter of the oil pump body bushing.
Standard inside diameter:
43.113 to 43.138 mm (1.6974 to 1.6983 in.)
Maximum inside diameter:
43.188 mm (1.7003 in.)
If the inside diameter is greater than the maximum, replace the oil pump body sub-assembly.

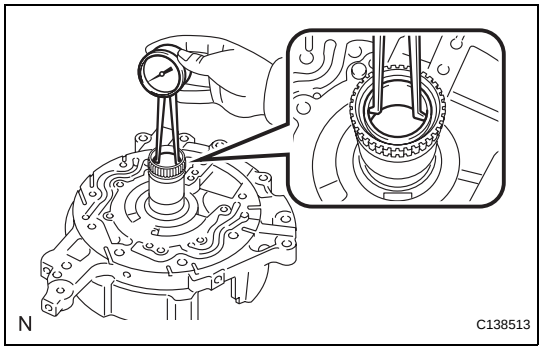

4. INSPECT STATOR SHAFT ASSEMBLY

(a) Using a dial indicator, measure the inside diameter of the oil pump body bushing.
Standard inside diameter:
22.500 to 22.526 mm (0.8858 to 0.8868 in.)
Maximum inside diameter:
22.570 mm (0.8886 in.)
If the inside diameter is greater than the maximum, replace the oil pump body sub-assembly.

AX

REASSEMBLY

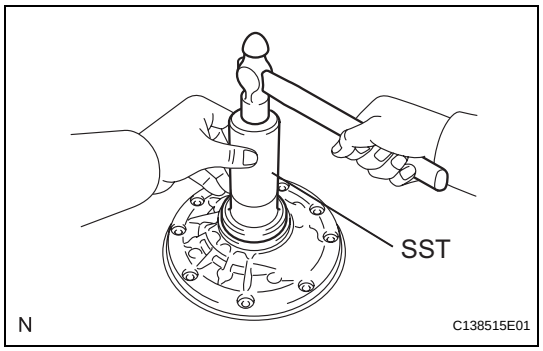

1. INSTALL FRONT OIL PUMP OIL SEAL

(a) Using SST and a hammer, install a new oil seal to the oil pump body.
SST 09350-32014 (09351-32140)
NOTICE:
The seal end should be level with the outer edge of the oil pump.

(b) Coat the lip of the oil seal with MP grease.

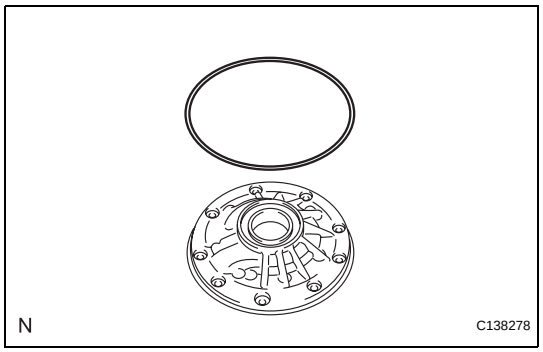

2. INSTALL FRONT OIL PUMP BODY O-RING

(a) Coat a new O-ring with ATF and install it to the oil pump body.
NOTICE:
Ensure that the O-ring is not twisted.

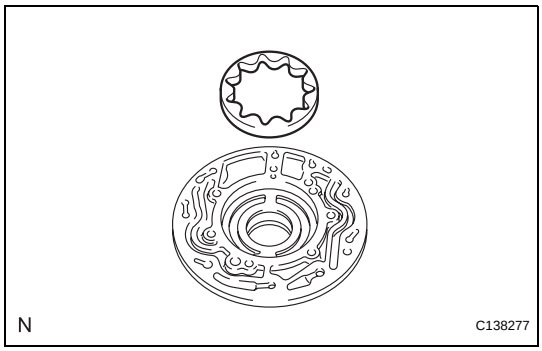

3. INSTALL FRONT OIL PUMP DRIVEN GEAR

(a) Coat the front oil pump driven gear with ATF and install it to the oil pump body with the marked side up.

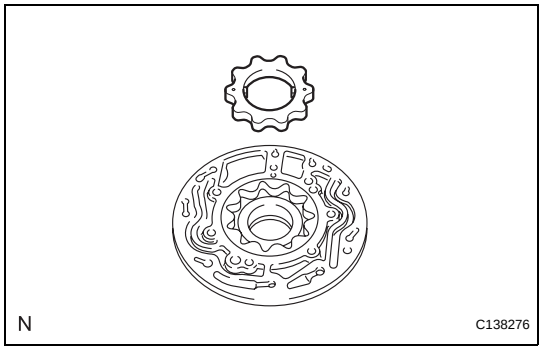

4. INSTALL FRONT OIL PUMP DRIVE GEAR

(a) Coat the front oil pump drive gear with ATF, and install it to the oil pump body with the marked side up.

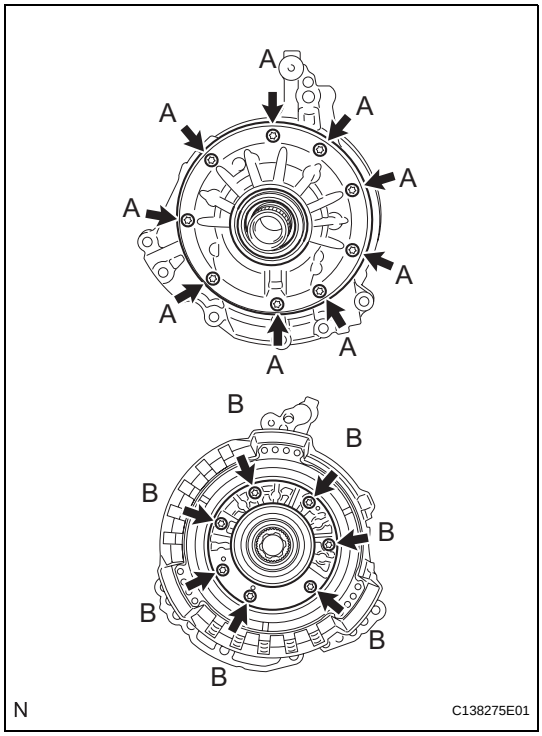

5. INSTALL STATOR SHAFT ASSEMBLY

(a) Align each knock pin of the stator shaft with the holes in the oil pump body and install the stator shaft to the oil pump body with the 16 bolts.

(b) Using a "TORX" socket (T30), install the 11 bolts.
Torque: 9.3 N*m (95 kgf*cm, 82 in.*lbf)

-	Bolt length:
Bolt A	14 mm (0.55 in)
Bolt B	26 mm (1.02 in)

6. INSPECT FRONT OIL PUMP AND GEAR BODY SUB-ASSEMBLY (See page AX-326)

AX

REMOVAL

HINT:
- Use the same procedures for the RH side and LH side.
- The procedures listed below are for the LH side.

1. DRAIN AUTOMATIC TRANSAXLE FLUID (See page AX-215)

2. REMOVE FRONT WHEEL

3. REMOVE FRONT AXLE HUB NUT

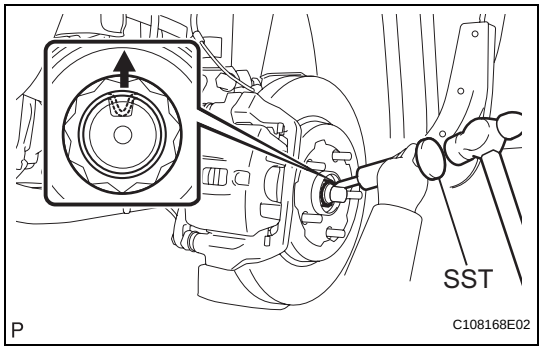

(a) Using SST and a hammer, release the staked part of the front axle hub nut.
SST 09930-00010
NOTICE:
Loosen the staked part of the nut completely, otherwise the thread of the drive shaft may be damaged.

(b) While applying the brakes, remove the front axle hub nut.

4. SEPARATE FRONT STABILIZER LINK ASSEMBLY

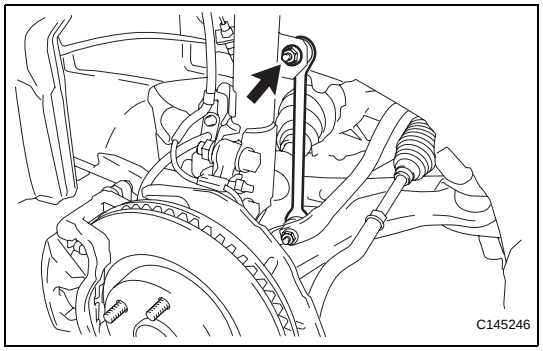

(a) Remove the nut and separate the front stabilizer link assembly.
HINT:
If the ball joint turns together with the nut, use a hexagon wrench (6 mm) to hold the stud.

5. SEPARATE FRONT SPEED SENSOR

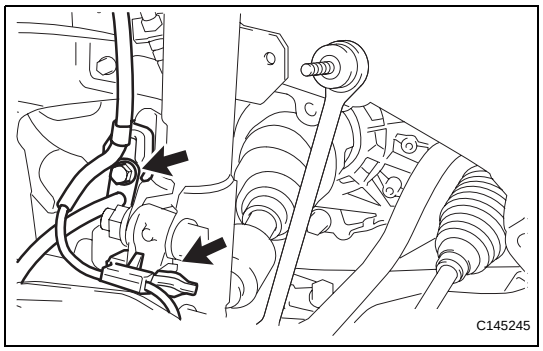

(a) Remove the bolt and clamp, and separate the speed sensor wire and flexible hose from the shock absorber.

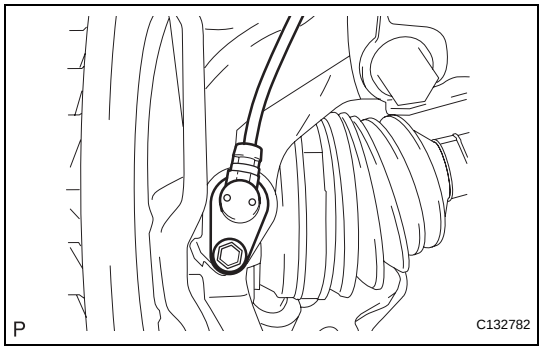

(b) Remove the bolt and separate the speed sensor from the steering knuckle.
NOTICE:
- **Prevent foreign matter from adhering to the speed sensor.**
- **Be careful not to damage the speed sensor.**

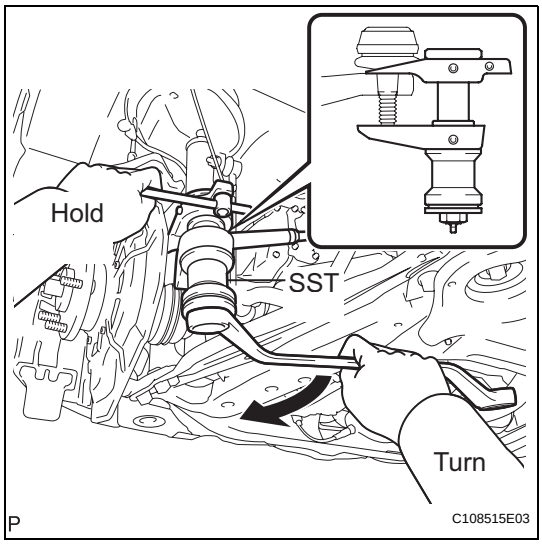

6. SEPARATE TIE ROD END SUB-ASSEMBLY

(a) Remove the cotter pin and nut.

(b) Using SST, separate the tie rod end sub-assembly from the steering knuckle.

SST 09628-00011

NOTICE:

- **Make sure that the string of the SST is securely tied to the vehicle.**
- **Be careful not to damage the ball joint dust cover.**
- **Be careful not to damage the steering knuckle.**
- **Be careful not to damage the front disc brake dust cover.**

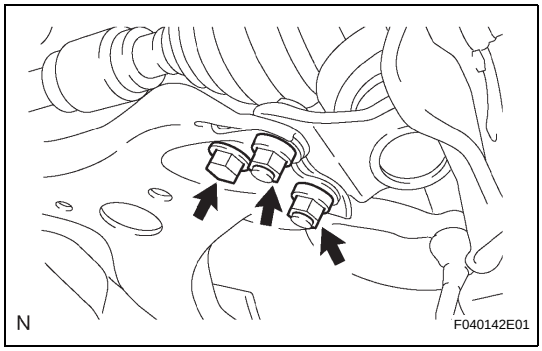

7. SEPARATE FRONT SUSPENSION LOWER NO. 1 ARM

(a) Remove the bolt and 2 nuts, and separate the front suspension lower No. 1 arm from the lower ball joint.

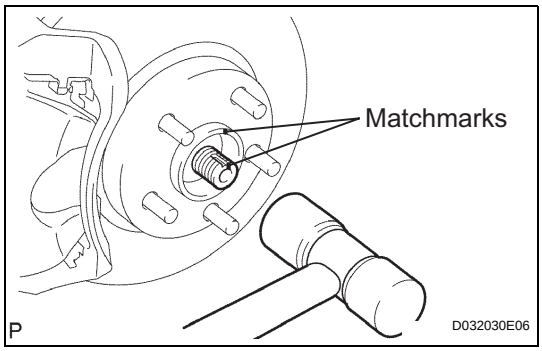

8. SEPARATE FRONT AXLE ASSEMBLY

(a) Put matchmarks on the front drive shaft assembly and the axle hub.

(b) Using a plastic hammer, separate the front drive shaft assembly from the front axle assembly.

NOTICE:

Be careful not to damage the drive shaft boot or speed sensor rotor.

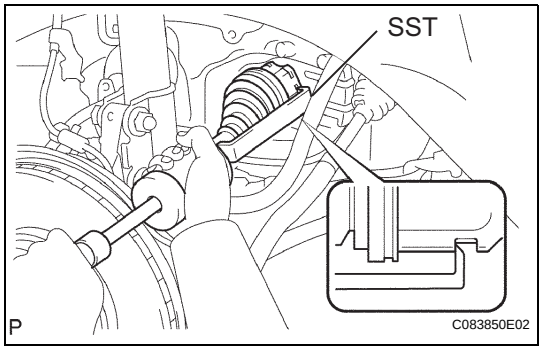

9. REMOVE FRONT DRIVE SHAFT ASSEMBLY LH

(a) Using SST, remove the front drive shaft assembly LH.

SST 09520-01010, 09520-24010 (09520-32040)

NOTICE:

- **Be careful not to damage the drive shaft dust cover, boot, or oil seal.**
- **Be careful not to drop the drive shaft assembly.**

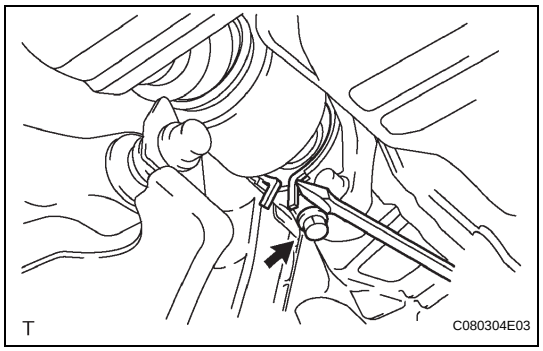

10. REMOVE FRONT DRIVE SHAFT ASSEMBLY RH

(a) Using a screwdriver, remove the bearing bracket hole snap ring.

(b) Remove the bolt and front drive shaft assembly RH from the drive shaft bearing bracket.

NOTICE:

Do not damage the boot or oil seal.

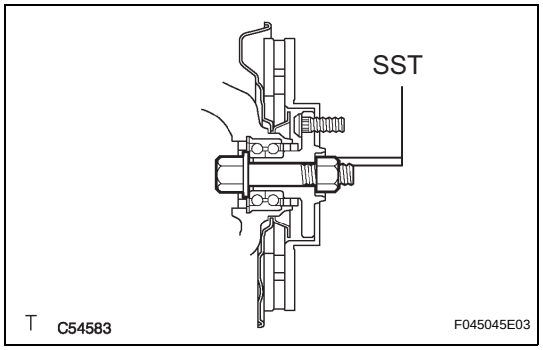

11. SECURE FRONT AXLE HUB SUB-ASSEMBLY

(a) Secure the front axle hub bearing.

SST 09608-16042 (09608-02021, 09608-02041)

NOTICE:

The hub bearing may be damaged if it is subjected to the vehicle's full weight, such as moving the vehicle with the drive shaft removed. If it is necessary to place the vehicle's weight on the hub bearing, first support it with SST.

12. INSPECT FRONT DRIVE SHAFT ASSEMBLY (See page DS-10)

DISASSEMBLY

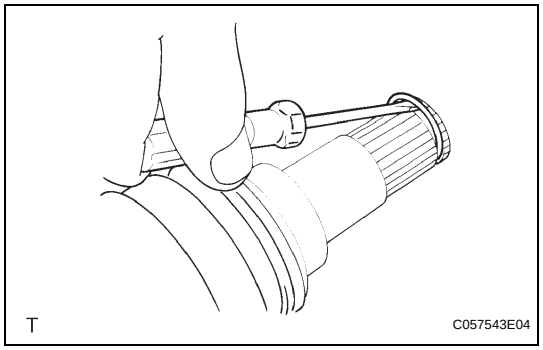

1. REMOVE FRONT DRIVE SHAFT LH HOLE SNAP RING

(a) Using a screwdriver, remove the front drive shaft LH hole snap ring.

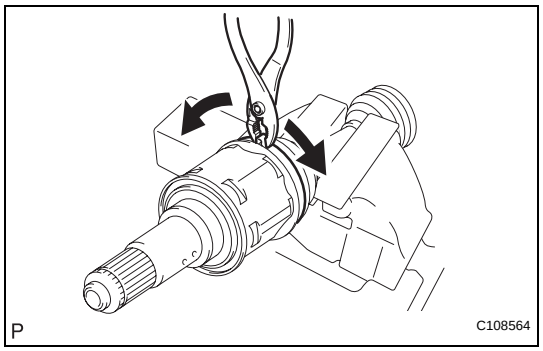

2. REMOVE NO. 2 FRONT AXLE INBOARD JOINT BOOT CLAMP

(a) Using pliers, remove the No. 2 front axle inboard joint boot clamp as shown in the illustration.

3. REMOVE FRONT AXLE INBOARD JOINT BOOT CLAMP

(a) Remove the front axle inboard joint boot clamp.

HINT:

Perform the same procedures as for the No. 2 front axle inboard joint boot clamp.

4. SEPARATE FRONT AXLE INBOARD JOINT BOOT

(a) Separate the front axle inboard joint boot from the inboard joint assembly.

5. REMOVE FRONT DRIVE INBOARD JOINT ASSEMBLY

(a) Remove the grease from the inboard joint assembly.

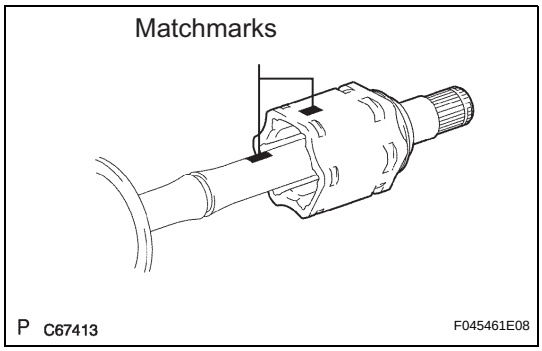

(b) Put matchmarks on the inboard joint assembly and outboard joint shaft.
NOTICE:
Do not use a punch for the marks.

(c) Remove the inboard joint assembly from the outboard joint shaft.

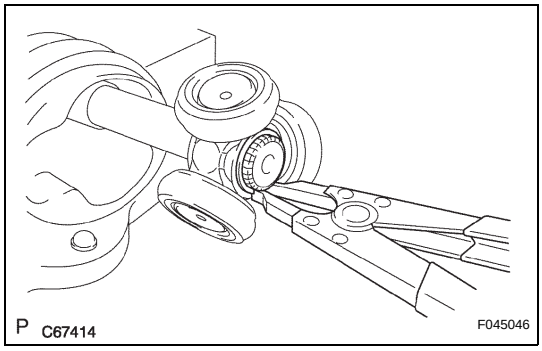

(d) Using a snap ring expander, remove the shaft snap ring.

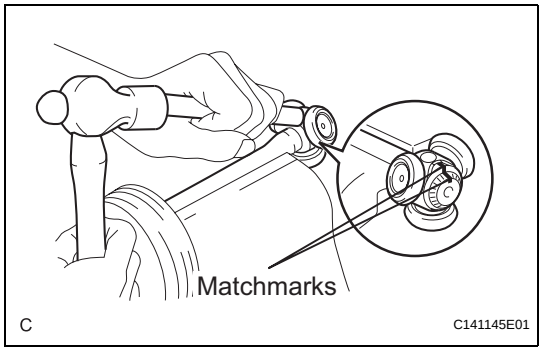

(e) Put matchmarks on the outboard joint shaft and tripod joint.
NOTICE:
Do not use a punch for the marks.

(f) Using a brass bar and a hammer, remove the tripod joint from the outboard joint shaft.
NOTICE:
Do not tap the roller.

6. REMOVE FRONT AXLE INBOARD JOINT BOOT

(a) Remove the inboard joint boot from the outboard joint shaft.

7. REMOVE FRONT DRIVE SHAFT DAMPER LH

(a) Using pliers, remove the drive shaft damper clamp as shown in the illustration.

(b) Remove the drive shaft damper.

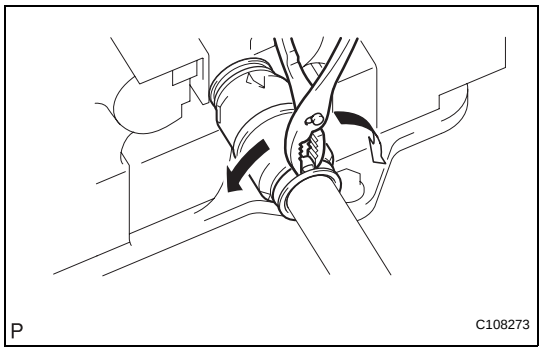

8. REMOVE FRONT DRIVE SHAFT DAMPER RH

(a) Remove the front drive shaft damper RH.
HINT:
Perform the same procedures as for the front drive shaft damper LH.

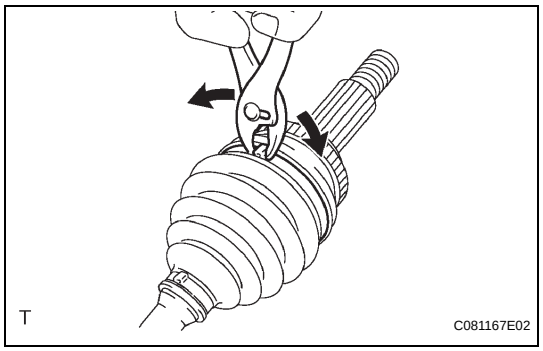

9. REMOVE NO. 2 FRONT AXLE OUTBOARD JOINT BOOT CLAMP

(a) Using pliers, remove the No. 2 front axle outboard joint boot clamp as shown in the illustration.

10. REMOVE FRONT AXLE OUTBOARD JOINT BOOT CLAMP

(a) Remove the front axle outboard joint boot clamp.
HINT:
Perform the same procedures as for the No. 2 front axle outboard joint boot clamp.

11. REMOVE FRONT AXLE OUTBOARD JOINT BOOT

(a) Remove the outboard joint boot from the outboard joint shaft.

(b) Remove the grease from the outboard joint.

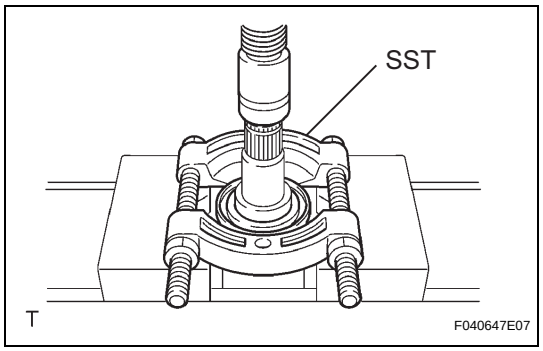

12. REMOVE FRONT DRIVE SHAFT DUST COVER LH

(a) Using SST and a press, remove the drive shaft dust cover LH.
SST 09950-00020
NOTICE:
Be careful not to drop the inboard joint assembly.

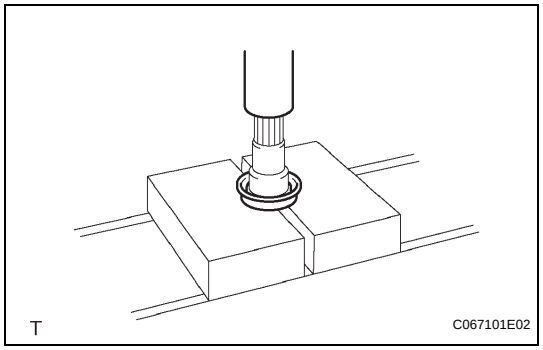

13. REMOVE FRONT DRIVE SHAFT DUST COVER RH

(a) Using a press, remove the drive shaft dust cover RH.

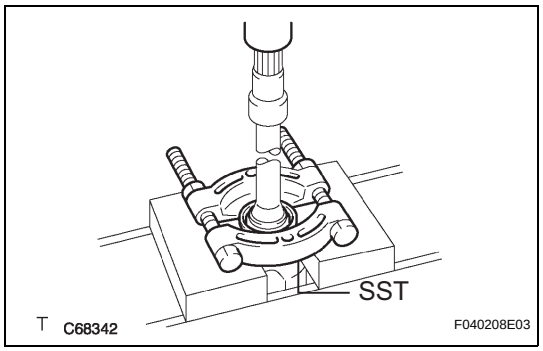

14. REMOVE FRONT DRIVE SHAFT DUST COVER

(a) Using SST and a press, remove the drive shaft dust cover.
SST 09950-00020

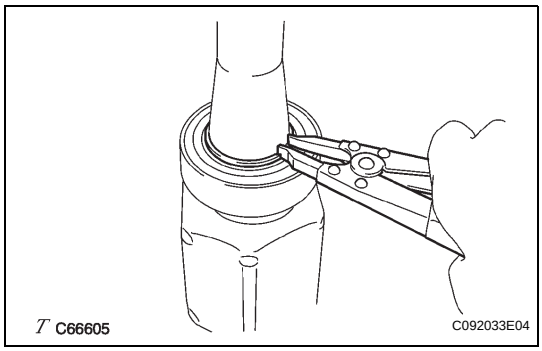

15. REMOVE FRONT DRIVE SHAFT BEARING

(a) Using a snap ring expander, remove the drive shaft hole snap ring.

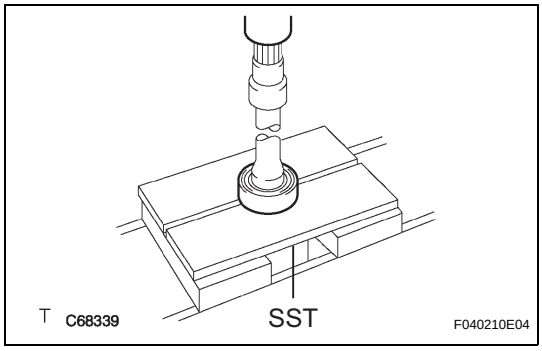

(b) Using SST and a press, remove the bearing.
SST 09527-10011

(c) Remove the bearing bracket hole snap ring.
NOTICE:
Be careful not to drop the inboard joint assembly.

INSPECTION

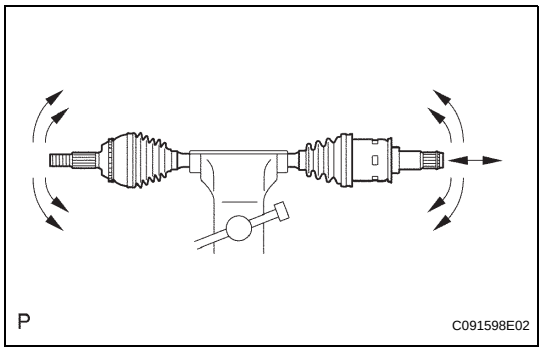

1. INSPECT FRONT DRIVE SHAFT ASSEMBLY

(a) Check that there is no excessive play in the outboard joint.

(b) Check that the inboard joint slides smoothly in the thrust direction.

(c) Check that there is no excessive play in the radial directions of the inboard joint.

(d) Check the boots for damage.

REASSEMBLY

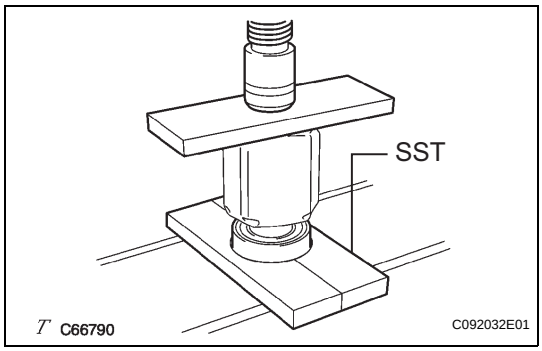

1. INSTALL FRONT DRIVE SHAFT BEARING

(a) Install a new bearing bracket hole snap ring to the front drive shaft assembly RH.

(b) Using SST and a steel plate, install a new front drive shaft bearing.
SST 09527-30010, 09527-10011
NOTICE:
The bearing should be completely installed.

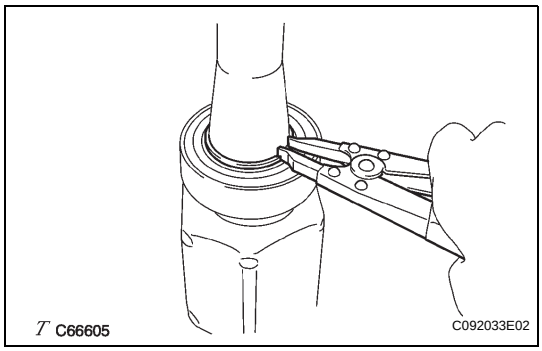

(c) Using a snap ring expander, install a new drive shaft hole snap ring.

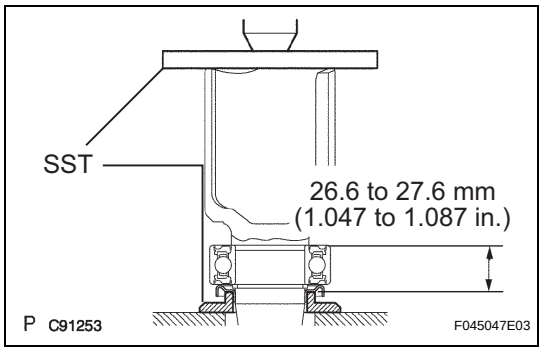

2. INSTALL FRONT DRIVE SHAFT DUST COVER

(a) Using SST and a press, install a new drive shaft dust cover.
SST 09726-40010, 09527-10011
NOTICE:
- **The dust cover should be completely installed.**
- **Be careful not to damage the dust cover.**

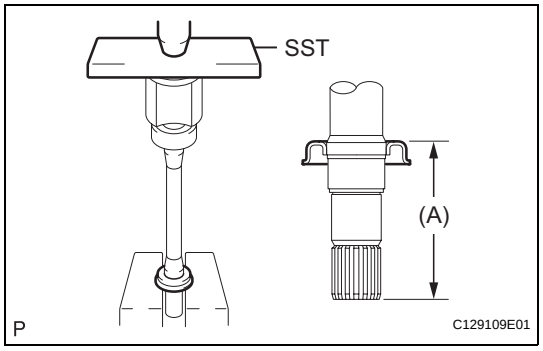

3. INSTALL FRONT DRIVE SHAFT DUST COVER RH

(a) Using SST and a press, install a new drive shaft dust cover RH until distance (A) from the tip of the center drive shaft to the drive shaft dust cover RH meets the specification.
SST 09527-10011
Distance (A):
110.0 to 111.0 mm (4.3307 to 4.3701 in.)
NOTICE:
- **The dust cover should be completely installed.**
- **Be careful not to damage the dust cover.**

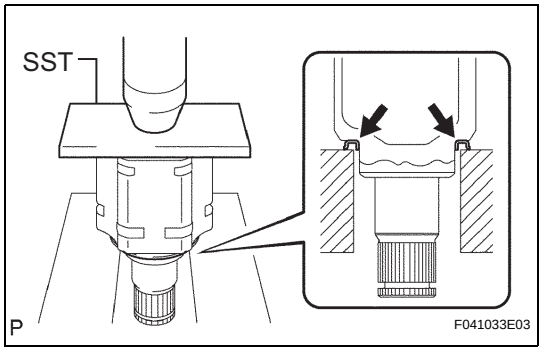

4. INSTALL FRONT DRIVE SHAFT DUST COVER LH

(a) Using SST and a press, install a new drive shaft dust cover LH.
SST 09527-10011
NOTICE:
- **The dust cover should be completely installed.**
- **Be careful not to damage the dust cover.**

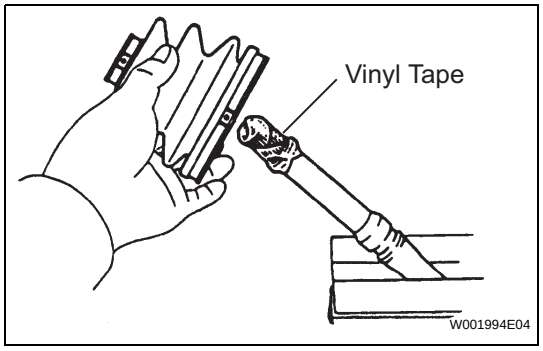

5. INSTALL FRONT AXLE OUTBOARD JOINT BOOT

(a) Hold the drive shaft lightly in a vise between aluminium plates.
HINT:
Before installing the boots, wrap the spline of the drive shaft with vinyl tape to prevent the boots from being damaged.

(b) Temporarily install a new outboard joint boot to the drive shaft with the 2 clamps.

(c) Pack the outboard joint shaft and boot with grease.
Grease capacity:
164 to 184 g (5.8 to 6.5 oz.)

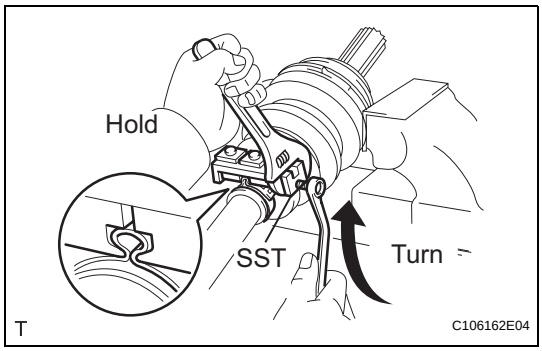

6. INSTALL FRONT AXLE OUTBOARD JOINT BOOT CLAMP

(a) Hold the drive shaft lightly in a vise between aluminum plates.
NOTICE:
Do not overtighten the vise.

(b) Install the 2 outboard joint boot clamps onto the boot.

(c) Place SST onto the outboard joint boot clamp.
SST 09521-24010

(d) Tighten the SST so that the outboard joint boot clamp is pinched.
NOTICE:
Do not overtighten the SST.

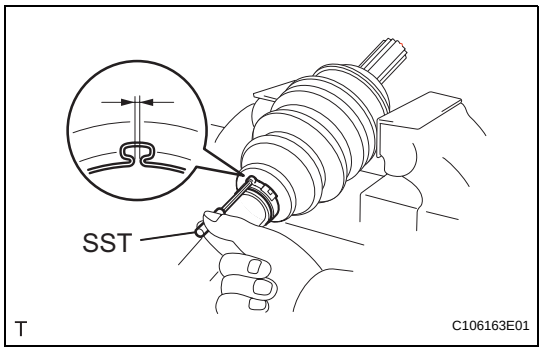

(e) Using SST, measure the clearance of the outboard joint boot clamp.
SST 09240-00020
Clearance:
0.5 to 1.5 mm (0.0197 to 0.0591 in.)
NOTICE:
If the measured value is greater than the specified value, retighten the clamp.

7. INSTALL NO. 2 FRONT AXLE OUTBOARD JOINT BOOT CLAMP

(a) Install the No. 2 outboard joint boot clamp onto the boot.

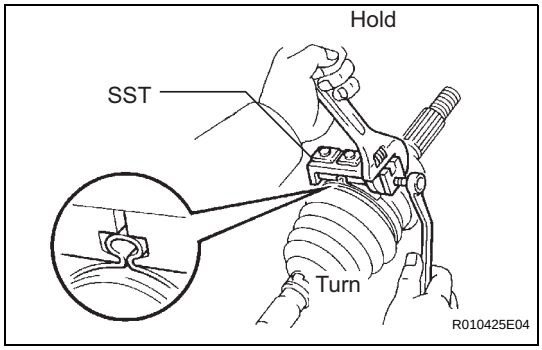

(b) Place SST onto the No. 2 outboard joint boot clamp.
SST 09521-24010

(c) Tighten the SST so that the No. 2 outboard joint boot clamp is pinched.
NOTICE:
Do not overtighten the SST.

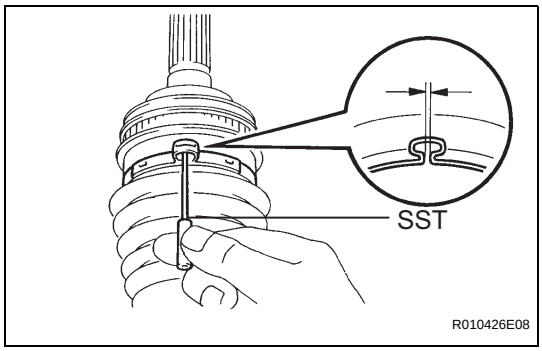

(d) Using SST, measure the clearance of the No. 2 outboard joint boot clamp.
SST 09240-00020
Clearance:
0.5 to 1.5 mm (0.0197 to 0.0591 in.)
NOTICE:
If the measured value is greater than the specified value, retighten the clamp.

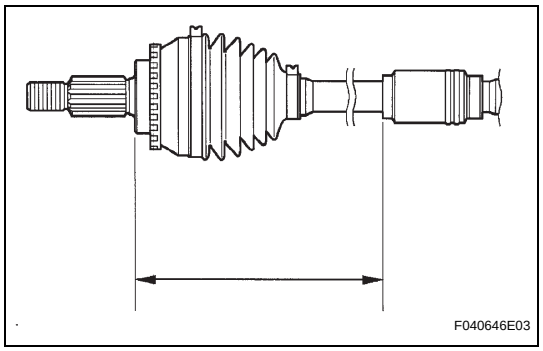

8. INSTALL FRONT DRIVE SHAFT DAMPER LH

(a) Install the drive shaft damper to the drive shaft.

(b) Make sure that the damper is on the shaft groove.

(c) Set the distance as specified below.
Distance:
228.0 to 232.0 mm (8.976 to 9.134 in.)

(d) Install the drive shaft damper clamp onto the drive shaft damper.
NOTICE:
Be sure to install the clamp in the correct position.

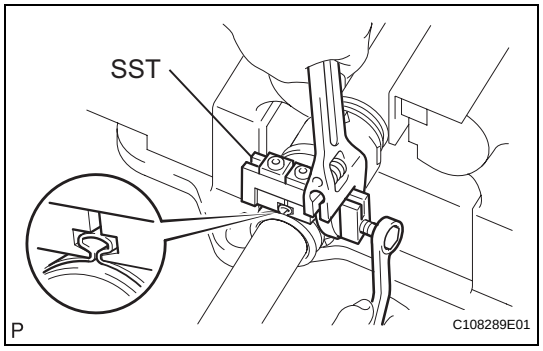

(e) Place SST onto the drive shaft damper clamp.
SST 09521-24010

(f) Tighten the SST so that the clamp is pinched.
NOTICE:
Do not overtighten the SST.

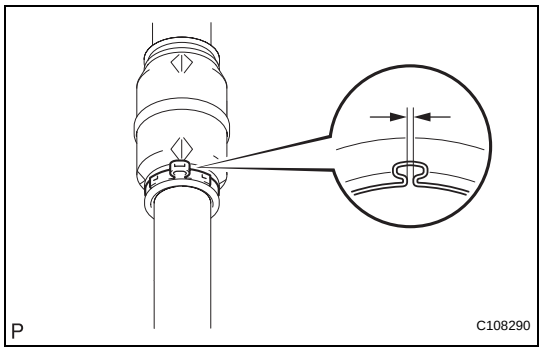

(g) Using SST, measure the clearance of the drive shaft damper clamp.
SST 09240-00020
Clearance:
0.5 to 1.5 mm (0.0197 to 0.0591 in.)
NOTICE:
If the measured value is greater than the specified value, retighten the clamp.

9. INSTALL FRONT DRIVE SHAFT DAMPER RH

(a) Install the front drive shaft damper RH.
HINT:
Perform the same procedures as for the front drive shaft damper LH.

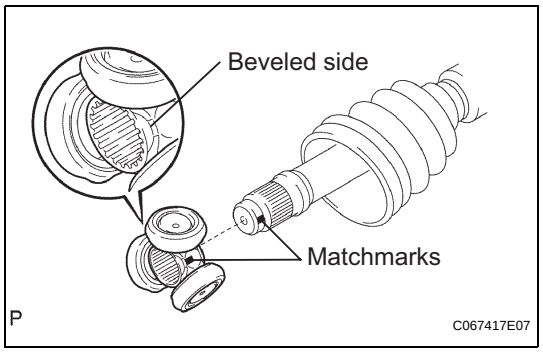

10. INSTALL FRONT DRIVE INBOARD JOINT ASSEMBLY

(a) Temporarily install a new inboard joint boot to the drive shaft with the 2 clamps.

(b) Place the beveled side of the tripod joint axial spline toward the outboard joint shaft.

(c) Align the matchmarks.

(d) Using a brass bar and hammer, tap in the tripod joint to the outboard joint shaft.
NOTICE:
- **Do not tap the roller.**
- **Be sure to install the tripod joint assembly in the correct direction.**

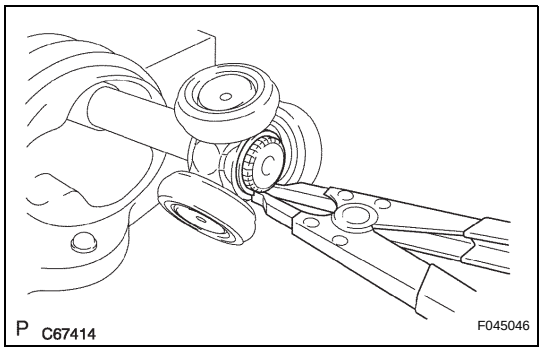

(e) Using a snap ring expander, install a new shaft snap ring.

(f) Coat the outboard joint shaft and boot with grease.
Grease capacity:
155 to 175 g (5.5 to 6.2 oz.)

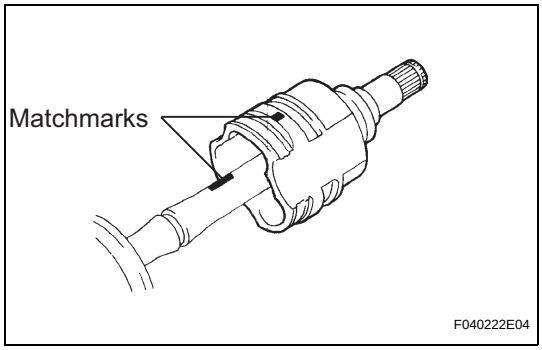

(g) Align the matchmarks and install the inboard joint assembly to the outboard joint shaft assembly.

11. INSTALL FRONT AXLE INBOARD JOINT BOOT

(a) Install the inboard joint boot to the inboard joint assembly.

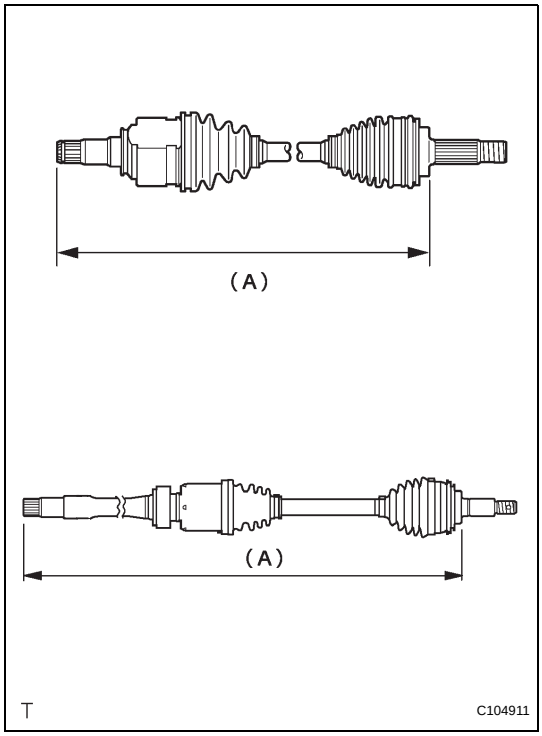

(b) Check whether the drive shaft dimensions are within the following specifications.
HINT:
The following table shows dimension (A) of the drive shaft.
Dimension (A) :

LH	585.5 to 589.5 mm (23.05 to 23.21 in.)
RH	904.4 to 908.4 mm (35.61 to 35.76 in.)

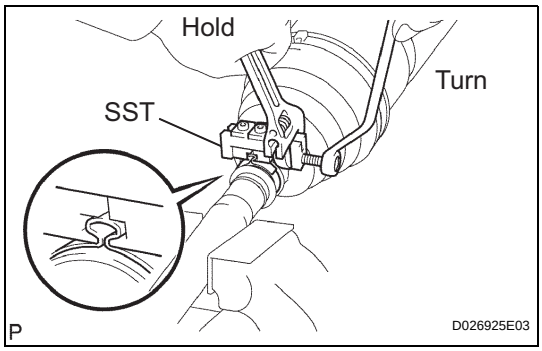

12. INSTALL FRONT AXLE INBOARD JOINT BOOT CLAMP

(a) Hold the drive shaft lightly in a vise between aluminum plates.
NOTICE:
Do not overtighten the vise.

(b) Install the 2 inboard joint boot clamps onto the boot.

(c) Place SST onto the inboard joint boot clamp.
SST 09521-24010

(d) Tighten the SST so that the inboard joint boot clamp is pinched.
NOTICE:
Do not overtighten the SST.

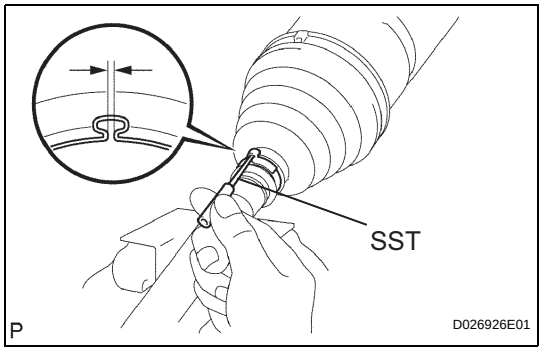

(e) Using SST, measure the clearance of the inboard joint boot clamp.
SST 09240-00020
Clearance:
0.5 to 1.5 mm (0.0197 to 0.0591 in.)
NOTICE:
If the measured value is greater than the specified value, retighten the clamp.

13. INSTALL NO. 2 FRONT AXLE INBOARD JOINT BOOT CLAMP

(a) Hold the inboard joint shaft assembly in a vise between aluminium plates.
NOTICE:
Do not overtighten the vise.

(b) Install the No. 2 front axle inboard joint boot clamp onto the boot.

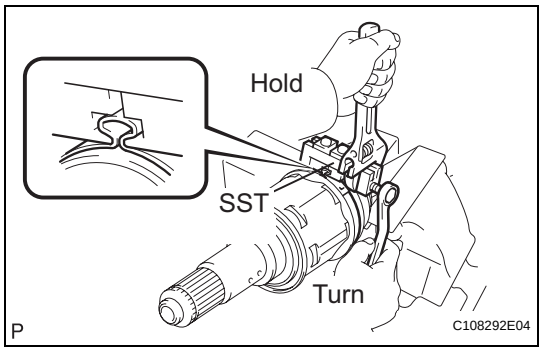

(c) Place SST onto the No. 2 front axle inboard joint boot clamp.
SST 09521-24010

(d) Tighten the SST so that the No. 2 front axle inboard joint boot clamp is pinched.
NOTICE:
Do not overtighten the SST.

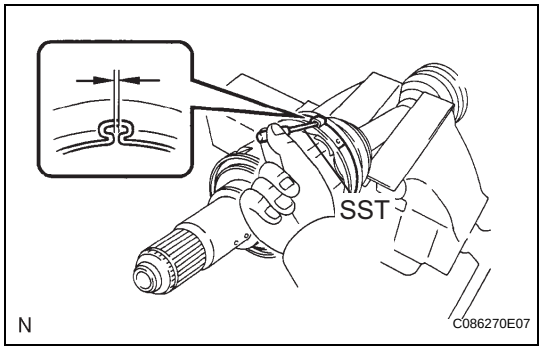

(e) Using SST, measure the clearance of the No. 2 front axle inboard joint boot clamp.
SST 09240-00020
Clearance:
0.5 to 1.5 mm (0.0197 to 0.0591 in.)
NOTICE:
If the measured value is greater than the specified value, retighten the clamp.

14. INSTALL FRONT DRIVE SHAFT LH HOLE SNAP RING

(a) Install a new hole snap ring.

15. INSPECT FRONT DRIVE SHAFT ASSEMBLY (See page DS-10)

INSTALLATION

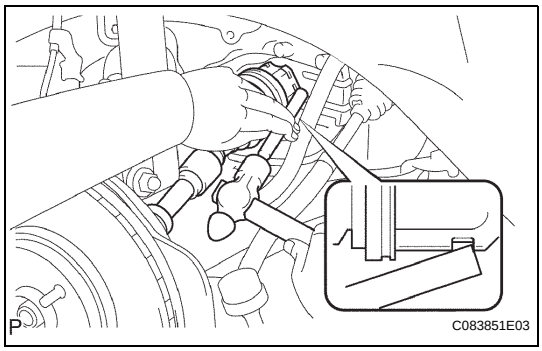

1. INSTALL FRONT DRIVE SHAFT ASSEMBLY LH

(a) Coat the spline of the inboard joint shaft assembly with ATF.

(b) Align the shaft splines and install the drive shaft assembly LH with a brass bar and hammer.

NOTICE:

- **Set the shaft snap ring with the opening side facing down.**
- **Be careful not to damage the drive shaft dust cover, boot, or oil seal.**
- **Move the drive shaft assembly while keeping it level.**

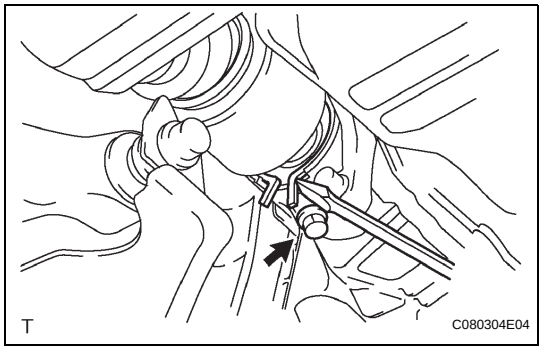

2. INSTALL FRONT DRIVE SHAFT ASSEMBLY RH

(a) Coat the spline of the inboard joint shaft assembly with ATF.

(b) Install the front drive shaft the assembly RH.

(c) Using a screwdriver, install a new bearing bracket hole snap ring.

NOTICE:

- **Do not damage the boot or oil seal.**
- **Move the drive shaft assembly while keeping it level.**

(d) Install a new bolt.

Torque: 32 N*m (330 kgf*cm, 24 ft.*lbf)

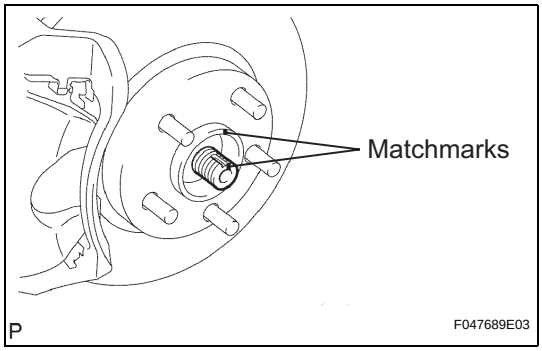

3. INSTALL FRONT AXLE ASSEMBLY

(a) Align the matchmarks and install the front drive shaft assembly to the front axle hub sub-assembly.

NOTICE:

Be careful not to damage the drive shaft boot and speed sensor rotor.

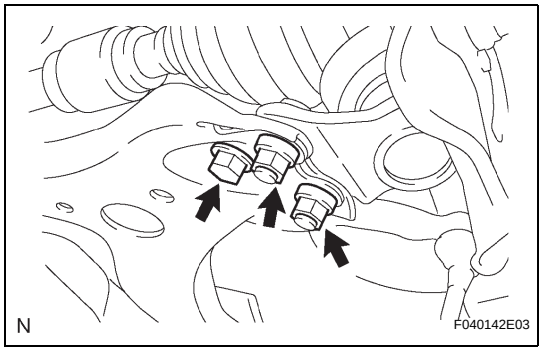

4. INSTALL FRONT SUSPENSION LOWER NO. 1 ARM

(a) Install the lower ball joint to the front suspension lower No. 1 arm with the bolt and 2 nuts.

Torque: 75 N*m (765 kgf*cm, 55 ft.*lbf)

5. INSTALL TIE ROD END SUB-ASSEMBLY

(a) Install the tie rod end sub-assembly to the steering knuckle with the nut.

Torque: 49 N*m (500 kgf*cm, 36 ft.*lbf)

(b) Install a new cotter pin.

NOTICE:

If the holes for the cotter pin are not aligned, tighten the nut up to 60° further.

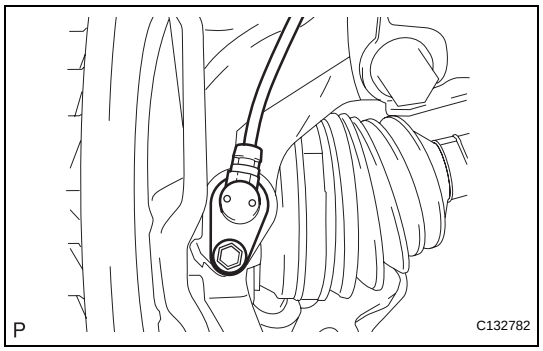

6. INSTALL FRONT SPEED SENSOR

(a) Install the front speed sensor to the steering knuckle with the bolt.
Torque: 8.0 N*m (82 kgf*cm, 71 in.*lbf)
NOTICE:
- **Prevent foreign matter from adhering to the speed sensor.**
- **Be careful not to damage the speed sensor.**

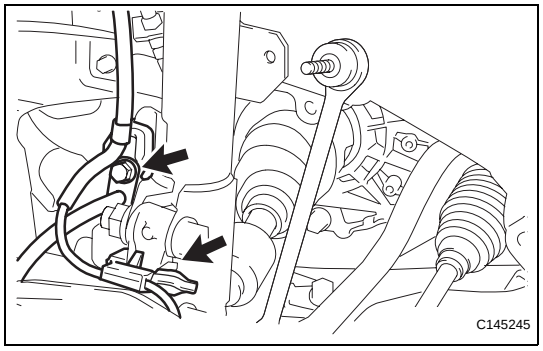

(b) Install the flexible hose and the speed sensor wire to the shock absorber with the bolt and set the clamp of the sensor on the knuckle.
Torque: 19 N*m (192 kgf*cm, 14 ft.*lbf)
NOTICE:
- **Be careful not to damage the speed sensor.**
- **Prevent foreign matter from adhering to the speed sensor.**
- **Do not twist the sensor wire when installing the speed sensor.**

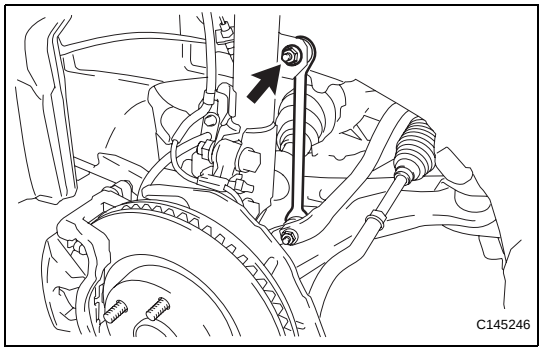

7. INSTALL FRONT STABILIZER LINK ASSEMBLY

(a) Install the stabilizer link assembly with the nut.
Torque: 74 N*m (755 kgf*cm, 55 ft.*lbf)
HINT:
If the ball joint turns together with the nut, use a hexagon wrench (6 mm) to hold the stud.

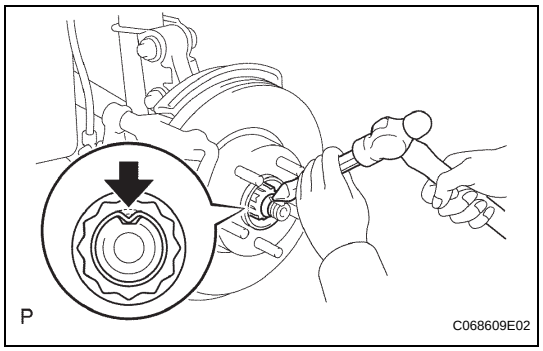

8. INSTALL FRONT AXLE HUB NUT

(a) Using a socket wrench (30 mm), install a new axle hub nut.
Torque: 294 N*m (3,000 kgf*cm, 217 ft.*lbf)

(b) Using a chisel and hammer, stake the front axle hub nut.

9. INSTALL FRONT WHEEL
Torque: 103 N*m (1,050 kgf*cm, 76 ft.*lbf)

10. ADD AUTOMATIC TRANSAXLE FLUID
HINT:
See page AX-176

11. ADJUST FRONT WHEEL ALIGNMENT
HINT:
See page SP-4

12. CHECK ABS SPEED SENSOR SIGNAL
HINT:
See page BC-24

REMOVAL

HINT:
- Use the same procedures for the RH side and LH side.
- The procedures listed below are for the LH side.

1. **REMOVE REAR WHEEL**
2. **SEPARATE REAR DISC BRAKE CALIPER ASSEMBLY (See page AH-18)**
3. **REMOVE REAR DISC (See page PB-38)**
4. **DISCONNECT SKID CONTROL SENSOR CONNECTOR (See page BC-192)**
5. **REMOVE REAR AXLE HUB AND BEARING ASSEMBLY**
   (a) Disconnect the skid control sensor connector.
   (b) Remove the 4 bolts and hub and bearing assembly.

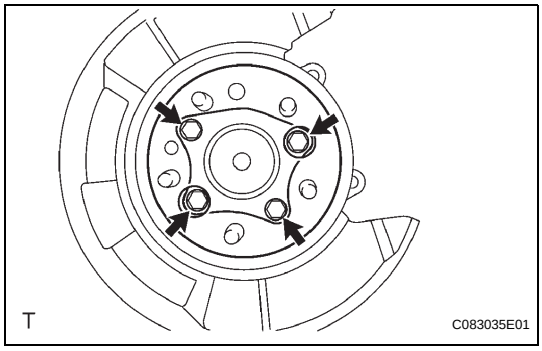

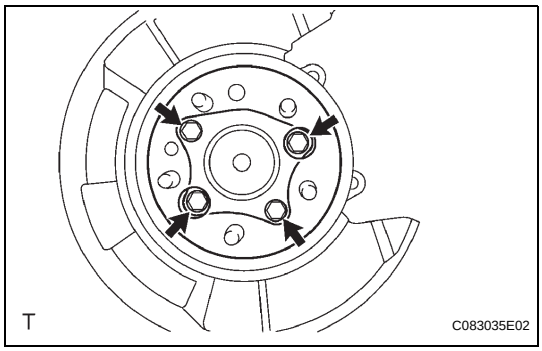

INSTALLATION

1. **INSTALL REAR AXLE HUB AND BEARING ASSEMBLY**
   (a) Install the hub and bearing assembly with the 4 bolts.
   Torque: 80 N*m (816 kgf*cm, 59 ft.*lbf)
   (b) Connect the skid control sensor connector.
   NOTICE:
   Do not twist the sensor wire when connecting it.
2. **INSPECT REAR AXLE HUB BEARING LOOSENESS (See page AH-15)**
3. **INSPECT REAR AXLE HUB RUNOUT (See page AH-15)**
4. **INSTALL REAR DISC (See page PB-43)**
5. **INSTALL REAR DISC BRAKE CALIPER ASSEMBLY (See page AH-20)**
6. **CONNECT SKID CONTROL SENSOR CONNECTOR (See page BC-194)**
7. **INSTALL REAR WHEEL**
   Torque: 103 N*m (1,050 kgf*cm, 76 ft.*lbf)
8. **CHECK ABS SPEED SENSOR SIGNAL**
   HINT:
   See page BC-24

ON-VEHICLE INSPECTION

1. **REMOVE FRONT WHEEL**
2. **SEPARATE FRONT DISC BRAKE CALIPER ASSEMBLY (See page AH-6)**
3. **REMOVE FRONT DISC (See page BR-37)**
4. **INSPECT FRONT AXLE HUB BEARING LOOSENESS**
   (a) Using a dial indicator, check for looseness near the center of the axle hub.
   Maximum:
   0.05 mm (0.0020 in.)
   NOTICE:
   Ensure that the dial indicator is set perpendicular to the measurement surface.
   HINT:
   If looseness exceeds the maximum, replace the bearing.

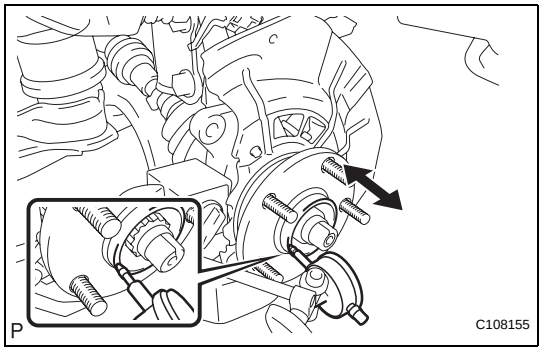

5. **INSPECT FRONT AXLE HUB RUNOUT**
   (a) Using a dial indicator, check for runout on the surface of the axle hub outside the hub bolt.
   Maximum:
   0.05 mm (0.0020 in.)
   NOTICE:
   Ensure that the dial indicator is set perpendicular to the measurement surface.
   HINT:
   If runout exceeds the maximum, replace the axle hub.

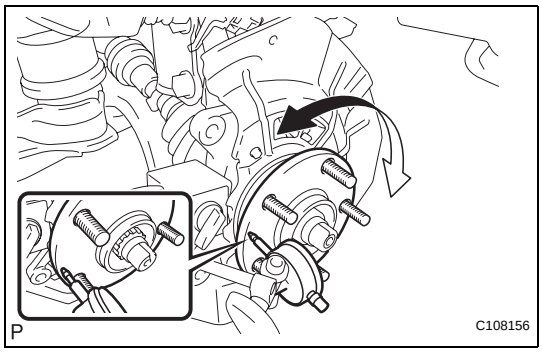

6. **INSTALL FRONT DISC (See page BR-39)**
7. **INSTALL FRONT DISC BRAKE CALIPER ASSEMBLY (See page AH-10)**
8. **INSTALL FRONT WHEEL**
   Torque: 103 N*m (1,050 kgf*cm, 76 ft.*lbf)

REMOVAL

HINT:
- Use the same procedures for the RH side and LH side.
- The procedures listed below are for the LH side.

1. REMOVE FRONT WHEEL

2. REMOVE FRONT AXLE HUB NUT (See page DS-5)

3. SEPARATE FRONT SPEED SENSOR (See page DS-5)

4. SEPARATE FRONT DISC BRAKE CALIPER ASSEMBLY

(a) Remove the 2 bolts and separate the front disc brake caliper assembly from the steering knuckle.
NOTICE:
Use wire or an equivalent tool to keep the brake caliper from hanging by its flexible hose.

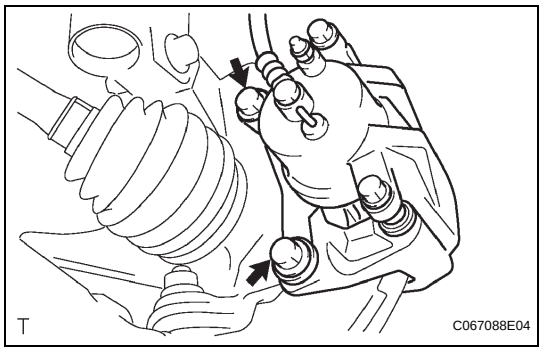

5. REMOVE FRONT DISC (See page BR-37)

6. SEPARATE TIE ROD END SUB-ASSEMBLY (See page DS-6)

7. SEPARATE FRONT SUSPENSION LOWER NO. 1 ARM (See page DS-6)

8. REMOVE FRONT AXLE ASSEMBLY

(a) Put matchmarks on the front drive shaft assembly and the front axle hub sub-assembly.

(b) Using a plastic hammer, separate the front drive shaft assembly from the front axle assembly.
NOTICE:
Be careful not to damage the drive shaft boot or speed sensor rotor.

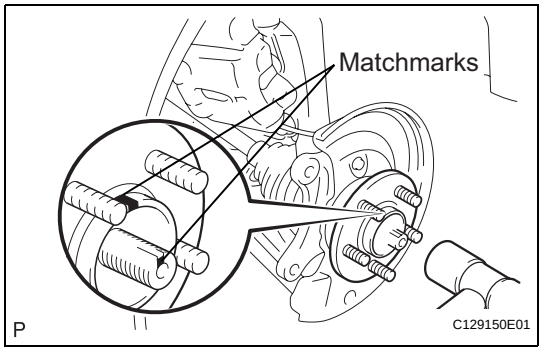

(c) Remove the 2 bolts, 2 nuts, and front axle assembly.

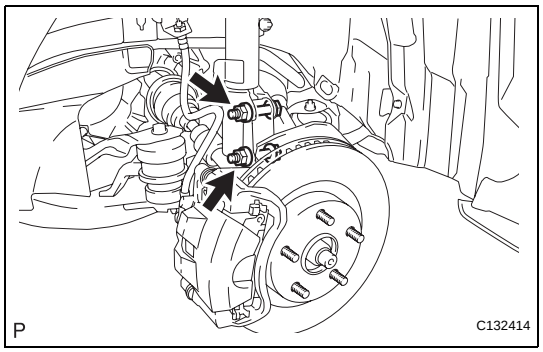

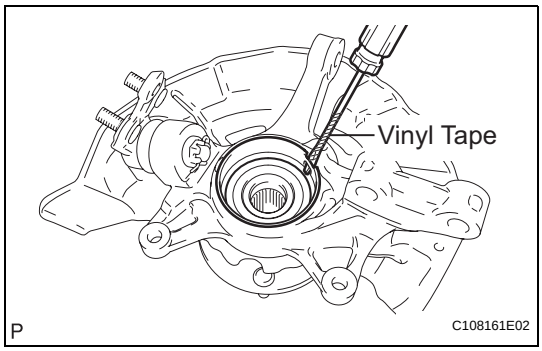

9. REMOVE NO. 1 FRONT WHEEL BEARING DUST DEFLECTOR

(a) Using a screwdriver with its tip wrapped with vinyl tape, remove the No. 1 front wheel bearing dust deflector.
NOTICE:
Be careful not to damage the steering knuckle.

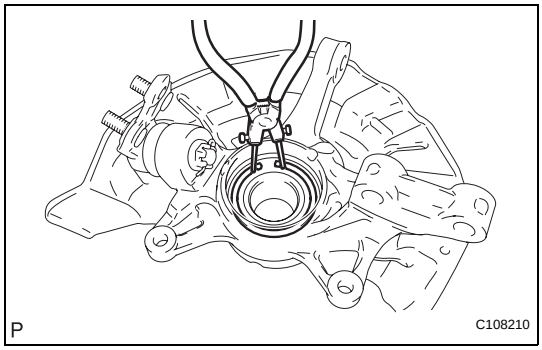

10. REMOVE FRONT AXLE HUB HOLE SNAP RING

(a) Using snap ring pliers, remove the front axle hub hole snap ring.

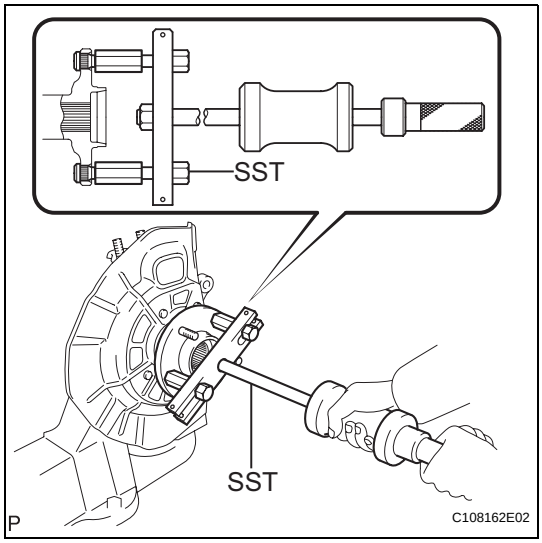

11. REMOVE FRONT AXLE HUB SUB-ASSEMBLY

(a) Hold the front axle assembly between aluminium plates in a vise.
NOTICE:
Do not overtighten the vise.

(b) Using SST, remove the front axle hub sub-assembly.
SST 09520-00031

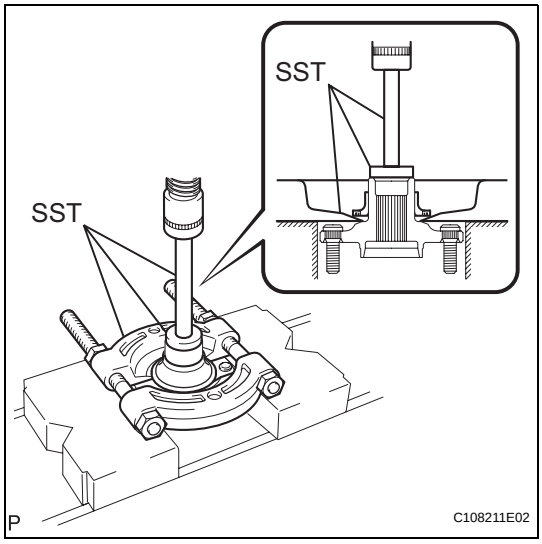

(c) Using SST and a press, remove the bearing inner race (outside) from the front axle hub sub-assembly.
SST 09555-55010, 09950-60010 (09951-00430), 09950-70010 (09951-07100)
NOTICE:
Be careful not to drop the front axle hub sub-assembly.

12. REMOVE FRONT DISC BRAKE DUST COVER

(a) Remove the 4 bolts and disc brake dust cover from the steering knuckle.

13. REMOVE FRONT LOWER BALL JOINT ASSEMBLY
(See page SP-25)

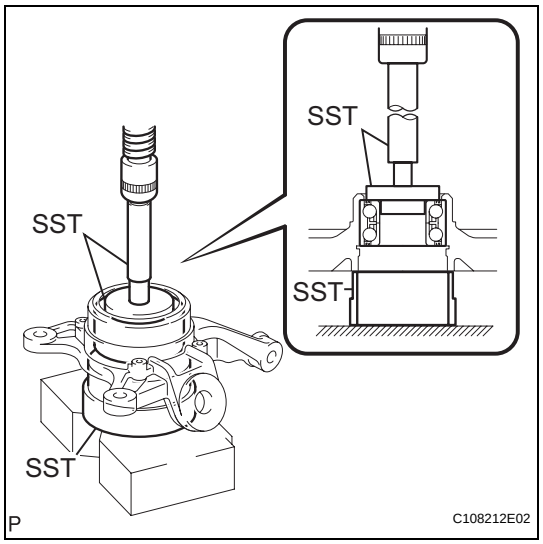

14. REMOVE FRONT AXLE HUB BEARING

(a) Place the bearing inner race (outside) on the front axle hub bearing.

(b) Using SST and a press, press the front axle hub bearing until it contacts the SST.

SST 09527-17011, 09950-60010 (09951-00600, 09951-00400, 09952-06010), 09950-70010 (09951-07100)

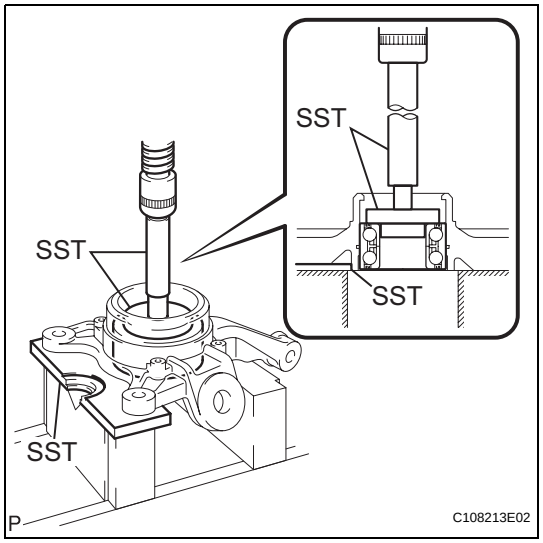

(c) Using SST, support the steering knuckle horizontally. Place it on the V-blocks as shown in the illustration.

SST 09527-20011, 09950-60010 (09951-00600, 09951-00400, 09952-06010), 09950-70010 (09951-07100)

(d) Using SST and a press, remove the front axle hub bearing from the steering knuckle.

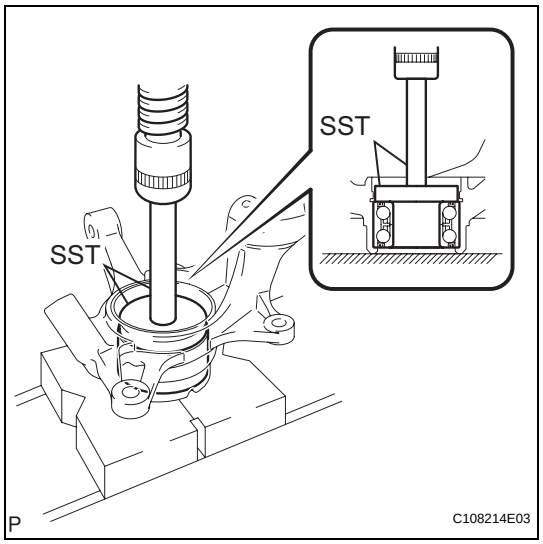

INSTALLATION

1. INSTALL FRONT AXLE HUB BEARING

(a) Using SST and a press, install a new front axle hub bearing to the steering knuckle.

SST 09950-60020 (09951-00810), 09950-70010 (09951-07100)

2. INSTALL FRONT LOWER BALL JOINT ASSEMBLY (See page SP-26)

3. INSTALL FRONT DISC BRAKE DUST COVER

(a) Install the disc brake dust cover to the steering knuckle with the 4 bolts.

Torque: 8.3 N*m (85 kgf*cm, 73 in.*lbf)

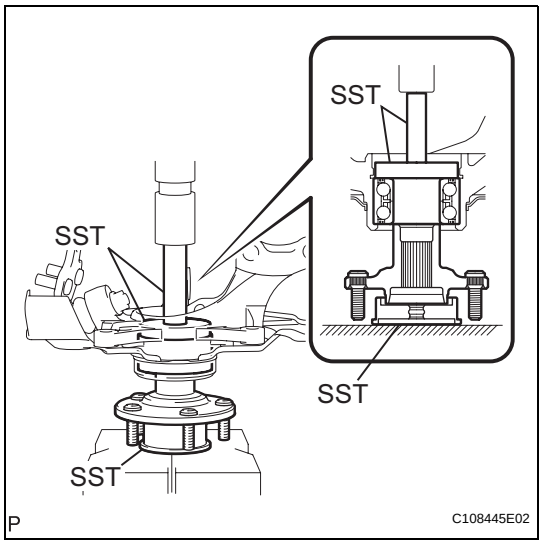

4. INSTALL FRONT AXLE HUB SUB-ASSEMBLY

(a) Using SST and a press, install the front axle hub sub-assembly.

SST 09608-32010, 09950-60020 (09951-00810), 09950-70010 (09951-07100)

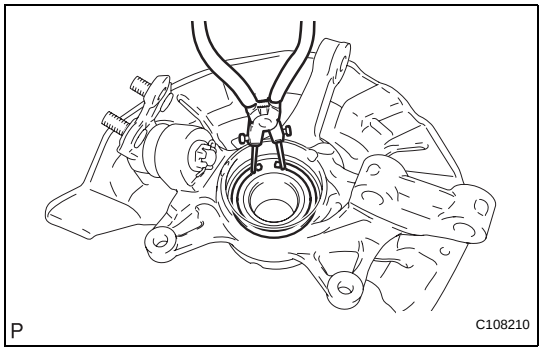

5. INSTALL FRONT AXLE HUB HOLE SNAP RING

(a) Using snap ring pliers, install a new front axle hub hole snap ring.

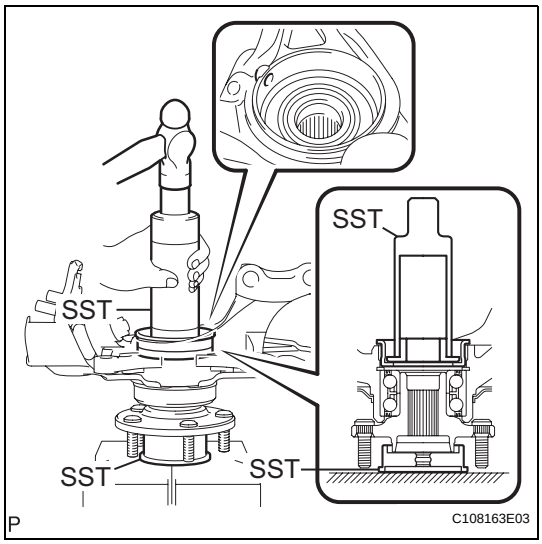

6. INSTALL NO. 1 FRONT WHEEL BEARING DUST DEFLECTOR

(a) Using SST and a hammer, install a new No. 1 front wheel bearing dust deflector.

SST 09316-60011 (09316-00011, 09316-00031), 09608-32010

HINT:

Align the hole for the speed sensor in the No. 1 front wheel bearing dust deflector with the steering knuckle.

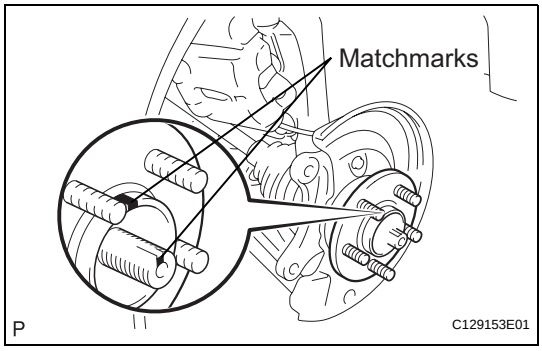

7. INSTALL FRONT AXLE ASSEMBLY

(a) Align the matchmarks and install the front drive shaft assembly to the front axle hub sub-assembly.

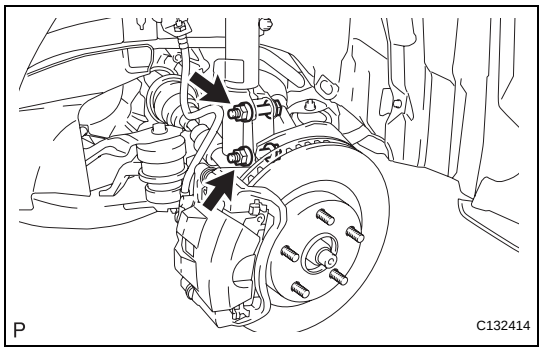

(b) Install the steering knuckle with the front axle assembly to the front shock absorber with the 2 bolts and 2 nuts.
Torque: 210 N*m (2,140 kgf*cm, 155 ft.*lbf)
NOTICE:
- **If the bolts and nuts are reused, apply a small amount of engine oil to the threads of the nuts.**
- **Be careful not to damage the drive shaft boot or speed sensor rotor.**

8. INSTALL FRONT SUSPENSION LOWER NO. 1 ARM (See page DS-16)

9. INSTALL TIE ROD END SUB-ASSEMBLY (See page DS-16)

10. INSTALL FRONT DISC (See page BR-39)

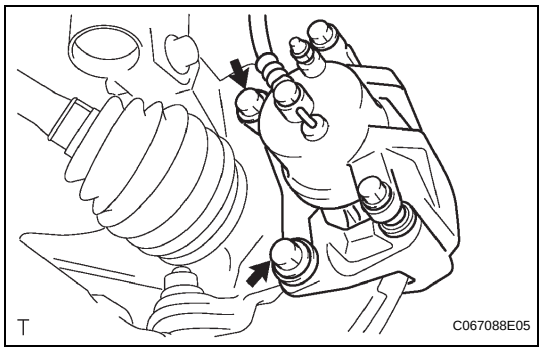

11. INSTALL FRONT DISC BRAKE CALIPER ASSEMBLY
(a) Install the front disc brake caliper assembly to the steering knuckle with the 2 bolts.
Torque: 107 N*m (1,090 kgf*cm, 79 ft.*lbf)
NOTICE:
Do not twist the brake hose when installing the front disc brake caliper assembly.

12. INSTALL FRONT AXLE HUB NUT
(a) Using a socket wrench (30 mm), install a new axle hub nut.
Torque: 294 N*m (3,000 kgf*cm, 217 ft.*lbf)
HINT:
Stake the nut after inspecting for looseness and runout in the following steps.

13. SEPARATE FRONT DISC BRAKE CALIPER ASSEMBLY
(a) Remove the 2 bolts and separate the front disc brake caliper assembly from the steering knuckle.
NOTICE:
Use wire or an equivalent tool to keep the brake caliper from hanging by its flexible hose.

14. REMOVE FRONT DISC (See page BR-37)

15. INSPECT FRONT AXLE HUB BEARING LOOSENESS (See page AH-5)

16. INSPECT FRONT AXLE HUB RUNOUT (See page AH-6)

17. INSTALL FRONT DISC (See page BR-39)

18. INSTALL FRONT DISC BRAKE CALIPER ASSEMBLY
(a) Install the front disc brake caliper assembly to the steering knuckle with the 2 bolts.
Torque: 107 N*m (1,090 kgf*cm, 79 ft.*lbf)
NOTICE:
Do not twist the brake hose when installing the front disc brake caliper assembly.

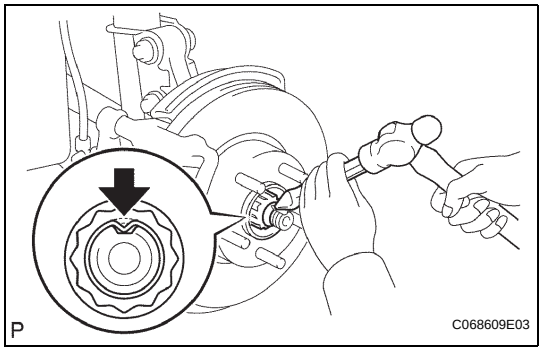

19. INSTALL FRONT SPEED SENSOR (See page DS-17)

20. INSTALL FRONT AXLE HUB NUT

(a) Using a chisel and hammer, stake the axle hub nut.

21. INSTALL FRONT WHEEL

Torque: 103 N*m (1,050 kgf*cm, 76 ft.*lbf)

22. ADJUST FRONT WHEEL ALIGNMENT

HINT:

See page SP-4

23. CHECK ABS SPEED SENSOR SIGNAL

HINT:

See page BC-24

REAR AXLE HUB AND BEARING

COMPONENTS

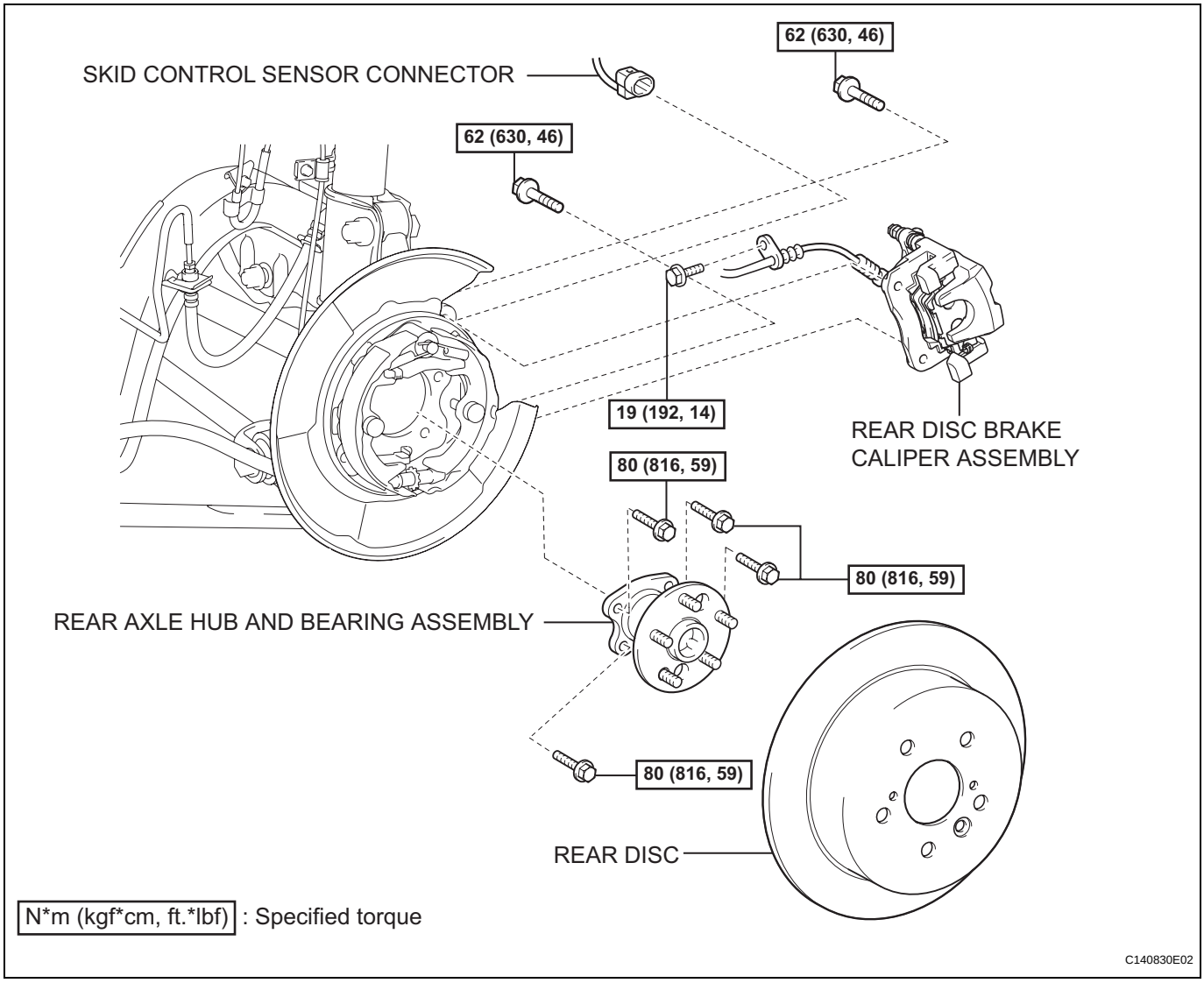

ON-VEHICLE INSPECTION

1. **REMOVE REAR WHEEL**
2. **SEPARATE REAR DISC BRAKE CALIPER ASSEMBLY (See page AH-18)**
3. **REMOVE REAR DISC (See page BR-37)**
4. **INSPECT REAR AXLE HUB BEARING LOOSENESS**
   (a) Using a dial indicator, check for looseness near the center of the axle hub.
   Maximum:
   0.05 mm (0.0020 in.)
   NOTICE:
   Ensure that the dial indicator is set perpendicular to the measurement surface.
   If looseness exceeds the maximum, replace the axle hub assembly.

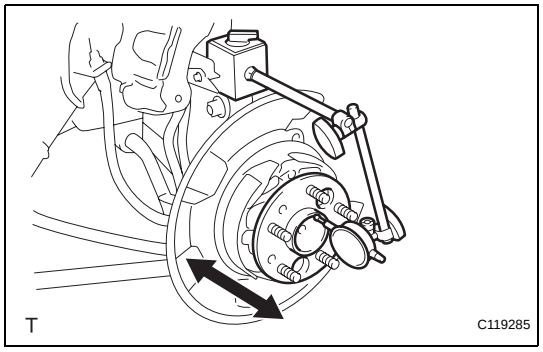

5. **INSPECT REAR AXLE HUB RUNOUT**
   (a) Using a dial indicator, check for runout on the surface of the axle hub outside the hub bolt.
   Maximum:
   0.07 mm (0.0027 in.)
   NOTICE:
   Ensure that the dial indicator is set perpendicular to the measurement surface.
   If runout exceeds the maximum, replace the axle hub assembly.

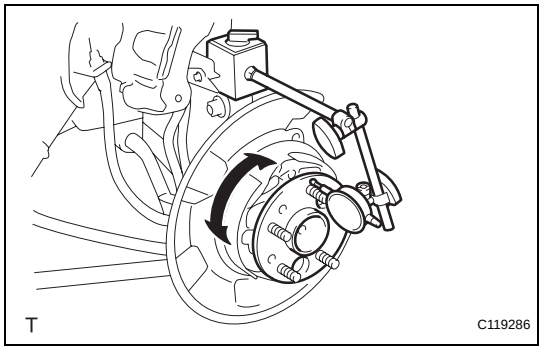

6. **INSTALL REAR DISC (See page PB-43)**
7. **INSTALL REAR DISC BRAKE CALIPER ASSEMBLY (See page AH-20)**
8. **INSTALL REAR WHEEL**
   Torque: 103 N*m (1,050 kgf*cm, 76 ft.*lbf)

REMOVAL

HINT:
- Use the same procedures for the RH side and LH side.
- The procedures listed below are for the LH side.

1. **REMOVE REAR WHEEL**
2. **SEPARATE REAR DISC BRAKE CALIPER ASSEMBLY (See page AH-18)**
3. **REMOVE REAR DISC (See page PB-38)**
4. **DISCONNECT SKID CONTROL SENSOR CONNECTOR (See page BC-192)**
5. **REMOVE REAR AXLE HUB AND BEARING ASSEMBLY**
   (a) Disconnect the skid control sensor connector.
   (b) Remove the 4 bolts and hub and bearing assembly.

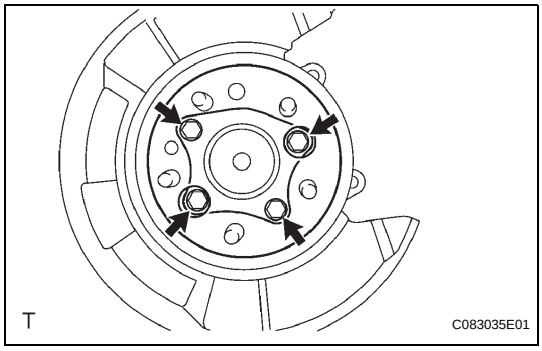

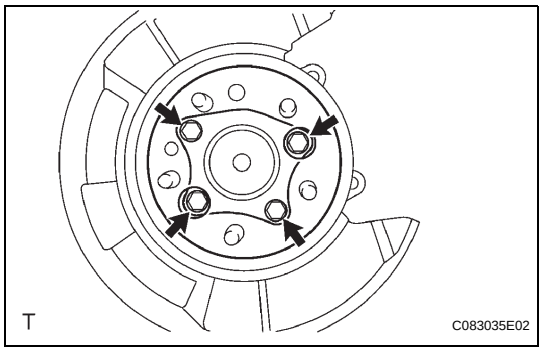

INSTALLATION

1. **INSTALL REAR AXLE HUB AND BEARING ASSEMBLY**
   (a) Install the hub and bearing assembly with the 4 bolts.
   Torque: 80 N*m (816 kgf*cm, 59 ft.*lbf)
   (b) Connect the skid control sensor connector.
   NOTICE:
   Do not twist the sensor wire when connecting it.
2. **INSPECT REAR AXLE HUB BEARING LOOSENESS (See page AH-15)**
3. **INSPECT REAR AXLE HUB RUNOUT (See page AH-15)**
4. **INSTALL REAR DISC (See page PB-43)**
5. **INSTALL REAR DISC BRAKE CALIPER ASSEMBLY (See page AH-20)**
6. **CONNECT SKID CONTROL SENSOR CONNECTOR (See page BC-194)**
7. **INSTALL REAR WHEEL**
   Torque: 103 N*m (1,050 kgf*cm, 76 ft.*lbf)
8. **CHECK ABS SPEED SENSOR SIGNAL**
   HINT:
   See page BC-24

REAR AXLE CARRIER

COMPONENTS

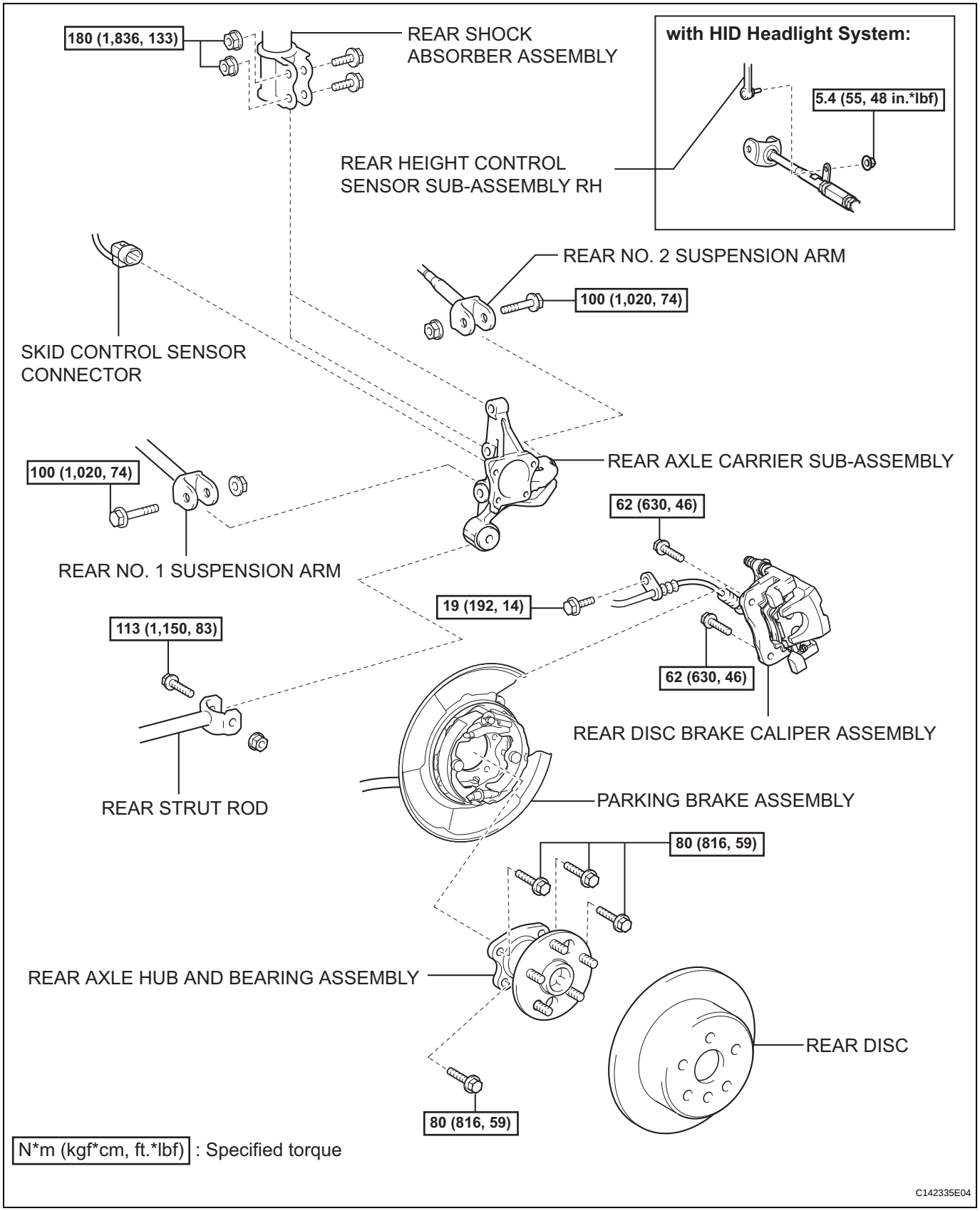

AH

REMOVAL

1. REMOVE REAR WHEEL

2. SEPARATE REAR DISC BRAKE CALIPER ASSEMBLY

(a) Remove the bolt and separate the flexible hose from the shock absorber.

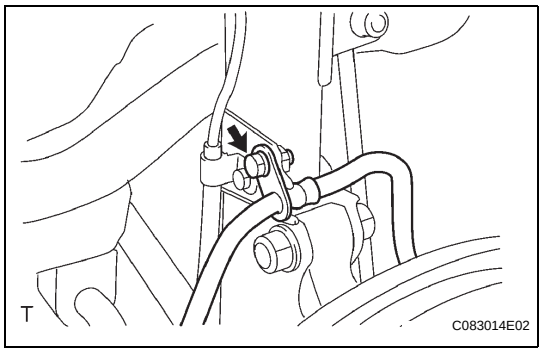

(b) Remove the 2 bolts and separate the rear disc brake caliper assembly.

NOTICE:
Use wire or an equivalent tool to keep the brake caliper from hanging by its flexible hose.

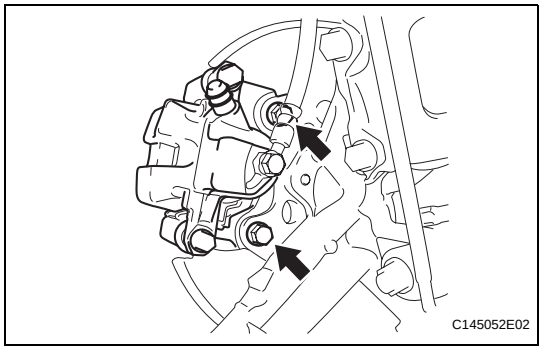

3. REMOVE REAR DISC (See page PB-38)

4. DISCONNECT SKID CONTROL SENSOR CONNECTOR (See page BC-192)

5. REMOVE REAR AXLE HUB AND BEARING ASSEMBLY (See page AH-15)

6. SEPARATE REAR HEIGHT CONTROL SENSOR SUB-ASSEMBLY RH (w/ HID Headlight System)

HINT:
Perform the procedure only when removing the RH side.
(See page SP-60)

7. SEPARATE REAR STRUT ROD

(a) Remove the bolt and nut, and separate the rear strut rod (rear axle carrier side) from the rear axle carrier sub-assembly.

HINT:
When removing the bolt, keep the nut from rotating.

8. SEPARATE REAR NO. 2 SUSPENSION ARM

(a) Remove the bolt and nut, and separate the rear No. 2 suspension arm (rear axle carrier side) from the rear axle carrier sub-assembly.

HINT:
When removing the bolt, keep the nut from rotating.

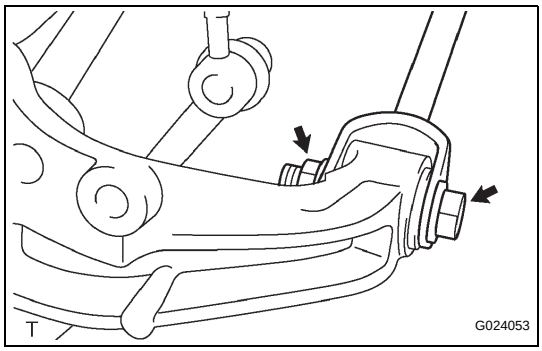

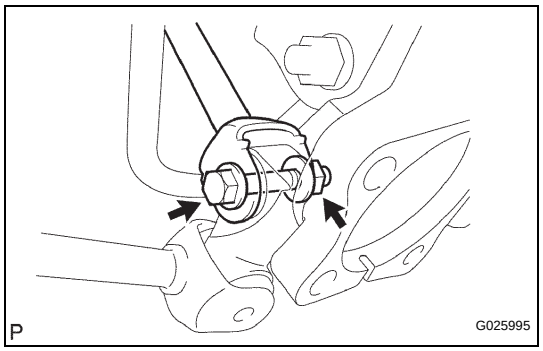

9. SEPARATE REAR NO. 1 SUSPENSION ARM

(a) Remove the bolt and nut, and separate the rear No. 1 suspension arm (rear axle carrier side) from the rear axle carrier sub-assembly.
HINT:
When removing the bolt, keep the nut from rotating.

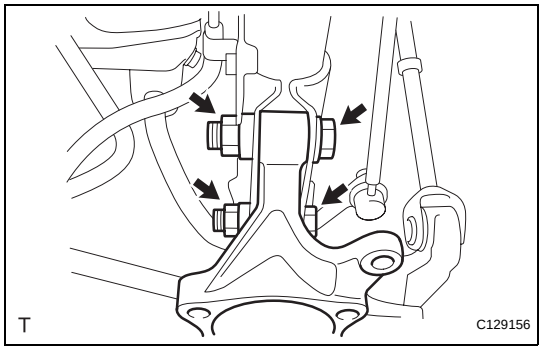

10. REMOVE REAR AXLE CARRIER SUB-ASSEMBLY

(a) Remove the 2 bolts and 2 nuts, and remove the rear axle carrier sub-assembly from the shock absorber.

INSTALLATION

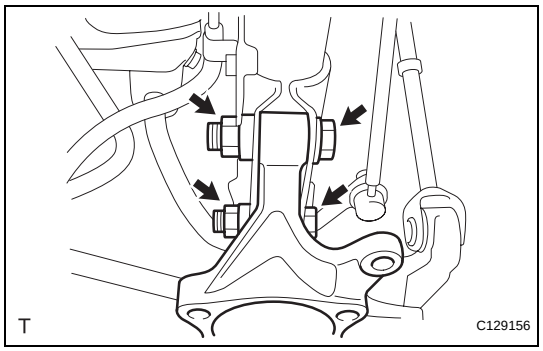

1. INSTALL REAR AXLE CARRIER SUB-ASSEMBLY

(a) Install the rear axle carrier sub-assembly to the shock absorber with the 2 bolts and 2 nuts.
Torque: 180 N*m (1,836 kgf*cm, 133 ft.*lbf)

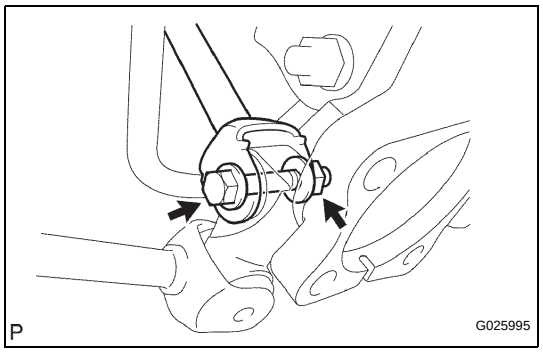

2. TEMPORARILY TIGHTEN REAR NO. 1 SUSPENSION ARM

(a) Temporarily tighten the rear No. 1 suspension arm with the bolt and nut.
HINT:
Insert the bolt from the rear side of the vehicle and temporarily tighten the bolt.

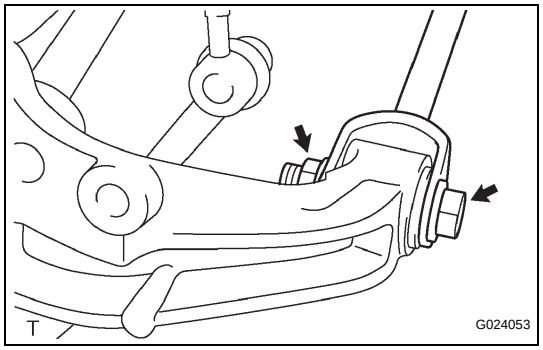

3. TEMPORARILY TIGHTEN REAR NO. 2 SUSPENSION ARM

(a) Temporarily tighten the rear No. 2 suspension arm with the bolt and nut.
HINT:
Insert the bolt from the rear side of the vehicle and temporarily tighten the bolt.

4. TEMPORARILY TIGHTEN REAR STRUT ROD

(a) Temporarily tighten the rear strut rod with the bolt and nut.
HINT:
Insert the bolt from the inside of the vehicle and temporarily tighten the bolt.

5. INSTALL REAR AXLE HUB AND BEARING ASSEMBLY (See page AH-16)

6. INSPECT REAR AXLE HUB BEARING LOOSENESS (See page AH-15)

7. INSPECT REAR AXLE HUB RUNOUT (See page AH-15)

8. INSTALL REAR DISC (See page PB-43)

9. INSTALL REAR DISC BRAKE CALIPER ASSEMBLY

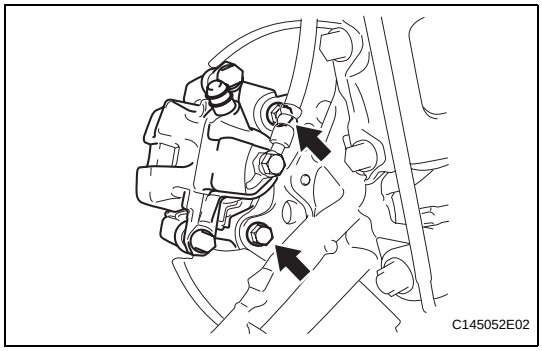

(a) Install the rear disc brake caliper with the 2 bolts.
Torque: 62 N*m (630 kgf*cm, 46 ft.*lbf)
NOTICE:
Do not twist the brake hose when installing the rear disc brake caliper assembly LH.

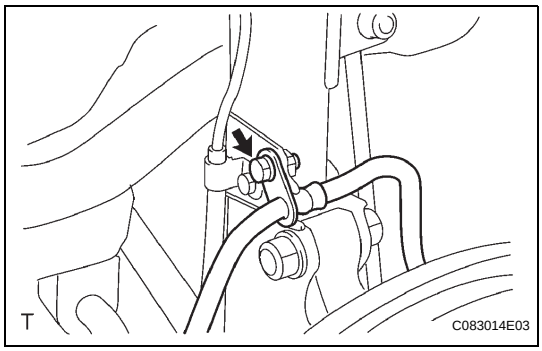

(b) Install the rear flexible hose with the bolt.
Torque: 19 N*m (192 kgf*cm, 14 ft.*lbf)

10. INSTALL REAR WHEEL
Torque: 103 N*m (1,050 kgf*cm, 76 ft.*lbf)

11. STABILIZE SUSPENSION (See page SP-48)

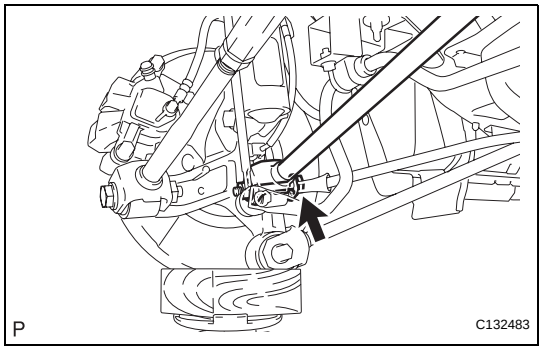

12. FULLY TIGHTEN REAR NO. 1 SUSPENSION ARM

(a) Fully tighten the bolt.
Torque: 100 N*m (1,020 kgf*cm, 74 ft.*lbf)

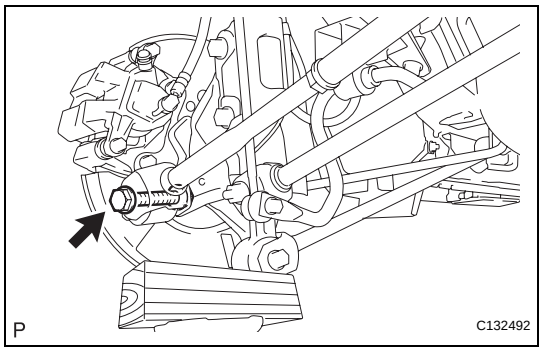

13. FULLY TIGHTEN REAR NO. 2 SUSPENSION ARM

(a) Fully tighten the bolt.
Torque: 100 N*m (1,020 kgf*cm, 74 ft.*lbf)

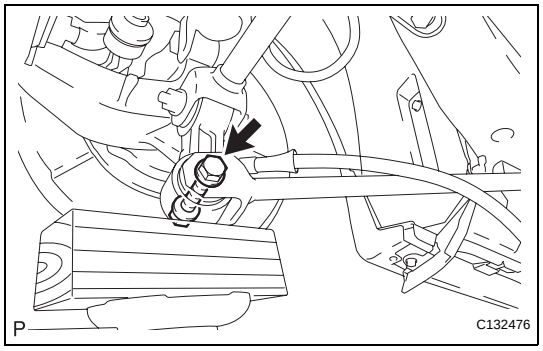

14. FULLY TIGHTEN REAR STRUT ROD

(a) Fully tighten the bolt.
Torque: 113 N*m (1,150 kgf*cm, 83 ft.*lbf)

15. CONNECT SKID CONTROL SENSOR CONNECTOR (See page BC-194)

16. INSTALL REAR HEIGHT CONTROL SENSOR SUB-ASSEMBLY RH (w/ HID Headlight System)

HINT:
Perform the procedure only when installing the RH side.
(See page SP-62)

17. ADJUST REAR WHEEL ALIGNMENT

HINT:
See page SP-11

18. CHECK ABS SPEED SENSOR SIGNAL

HINT:
See page BC-24

19. HEIGHT CONTROL SENSOR SIGNAL INITIALIZATION (w/ HID Headlight System)

HINT:
See page LI-30

REMOVAL

HINT:
- Use the same procedures for the RH side and the LH side.
- The procedures listed below are for the LH side.

1. REMOVE FRONT WHEEL

2. REMOVE ENGINE ROOM SIDE COVER LH (See page EM-22)

3. REMOVE ENGINE ROOM SIDE COVER RH (See page EM-22)

4. REMOVE V-BANK COVER SUB-ASSEMBLY (See page EM-23)

5. SEPARATE FRONT STABILIZER LINK ASSEMBLY

(a) Support the front No. 1 suspension lower arm with a jack using a wooden block to avoid damage.

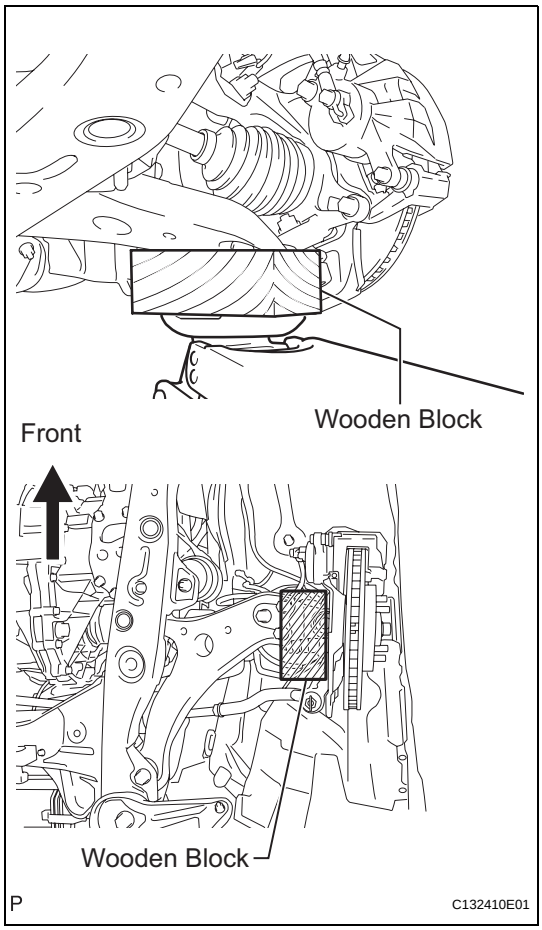

(b) Remove the nut and separate the front stabilizer link assembly from the front shock absorber.
HINT:
If the ball joint turns together with the nut, use a hexagon wrench (6 mm) to hold the stud.

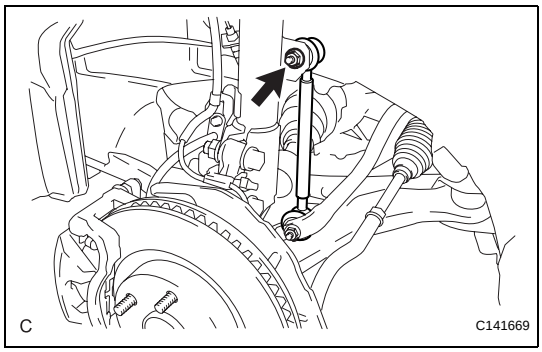

SP

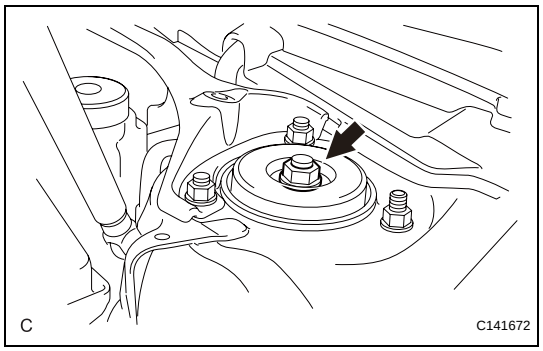

6. REMOVE FRONT SHOCK ABSORBER WITH COIL SPRING

(a) Loosen the lock nut of the front shock absorber with coil spring.

NOTICE:

- **Do not remove the lock nut.**
- **Only loosen the nut when disassembling the front shock absorber with coil spring.**

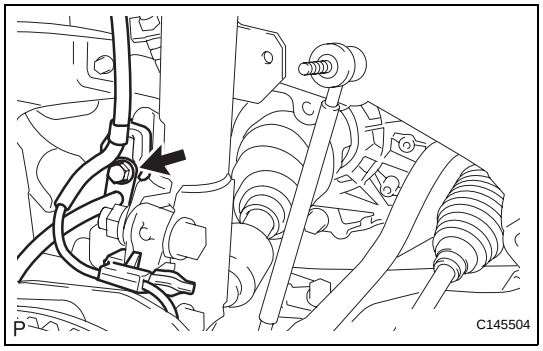

(b) Remove the bolt and disconnect the front flexible hose and front speed sensor wire harness from the front shock absorber with coil spring.

NOTICE:

Be sure to remove the front speed sensor from the front shock absorber with coil spring.

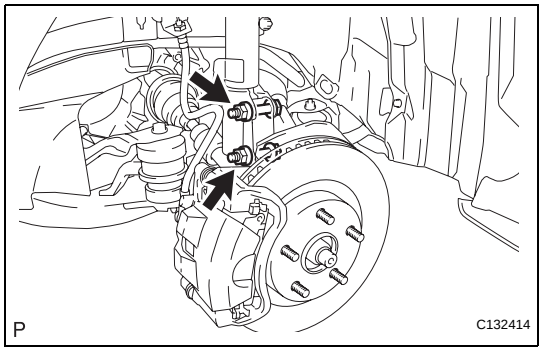

(c) Remove the 2 nuts on the lower side of the front shock absorber with coil spring.

NOTICE:

- **When removing the nuts, keep the bolts from rotating.**
- **Keep the bolts inserted to secure the front axle assembly.**

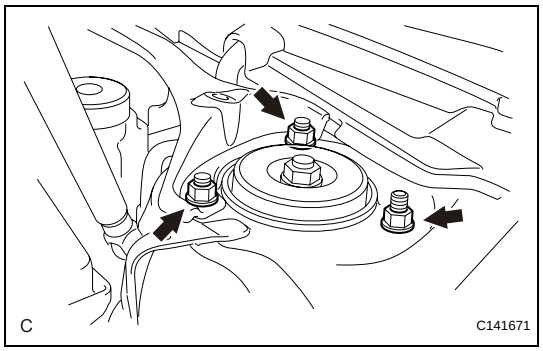

(d) Remove the 3 nuts on the upper side of the front shock absorber with coil spring.

(e) Lower the front axle assembly, and remove the 2 bolts on the lower side of the front shock absorber.

(f) Remove the front shock absorber with coil spring.

NOTICE:

Make sure that the front speed sensor is disconnected from the front shock absorber with coil spring.

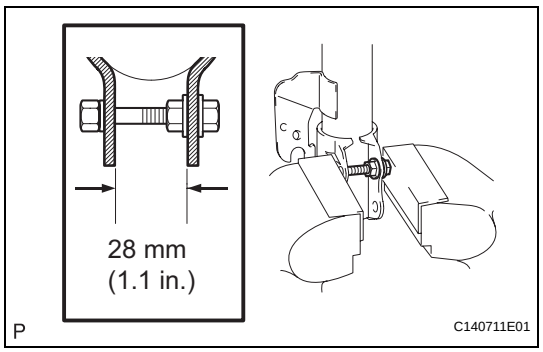

DISASSEMBLY

1. FIX FRONT SHOCK ABSORBER WITH COIL SPRING

(a) As shown in the illustration, secure the front shock absorber with coil spring in a vise using aluminum plates by clamping onto a double nutted bolt affixed to the bracket at the bottom of the absorber.

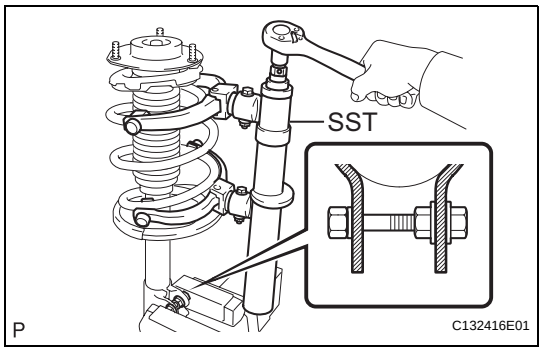

2. REMOVE FRONT SHOCK ABSORBER

(a) Using SST, compress the front coil spring.

SST 09727-30021 (09727-00010, 09727-00021, 09727-00031)

NOTICE:

Do not use an impact wrench.

HINT:

If the front coil spring is compressed at an angle, using 2 SST will make the work easier.

(b) Remove the front suspension support sub-assembly, front suspension support bearing, front coil spring upper seat, front coil spring upper insulator, front coil spring, front spring bumper, and front coil spring lower insulator from the front shock absorber.

INSPECTION

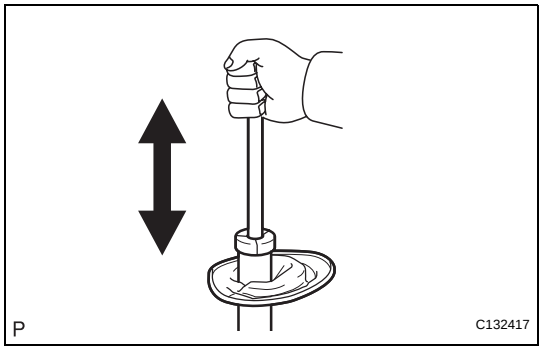

1. INSPECT FRONT SHOCK ABSORBER

(a) Compress and extend the shock absorber rod 4 or more times.

Standard:

There is no abnormal resistance or sound and operation resistance is normal.

HINT:

If there is any abnormality, replace the front shock absorber with a new one.

REASSEMBLY

1. INSTALL FRONT SHOCK ABSORBER

(a) Install the front spring bumper to the piston rod.

(b) Install the front coil spring lower insulator onto the front shock absorber.
NOTICE:
Align the 2 protrusions of the front coil spring lower insulator and the 2 holes in the front shock absorber.

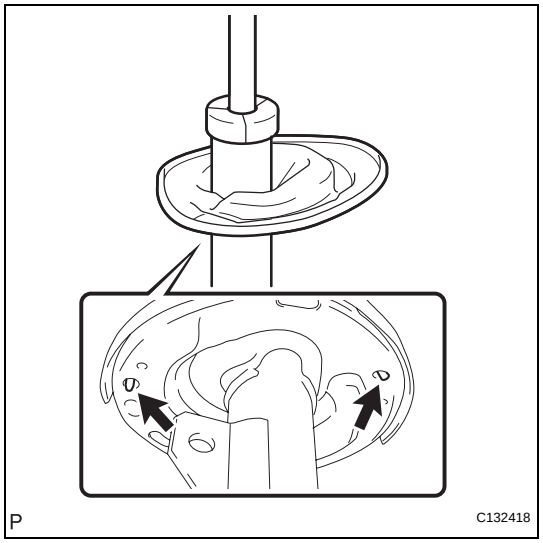

(c) Using SST, compress the front coil spring.
SST 09727-30021 (09727-00010, 09727-00021, 09727-00031)
NOTICE:
Do not use an impact wrench.
HINT:
If the front coil spring is compressed at an angle, using 2 SST will make the work easier.

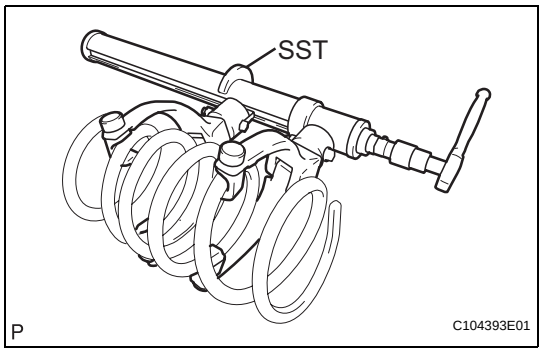

(d) Install the front coil spring to the front shock absorber.
NOTICE:
The smaller diameter end of the front coil spring must face upward.
HINT:
Fit the lower end of the front coil spring into the gap of the insulator.

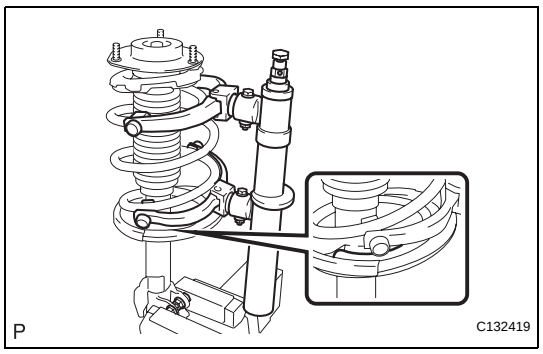

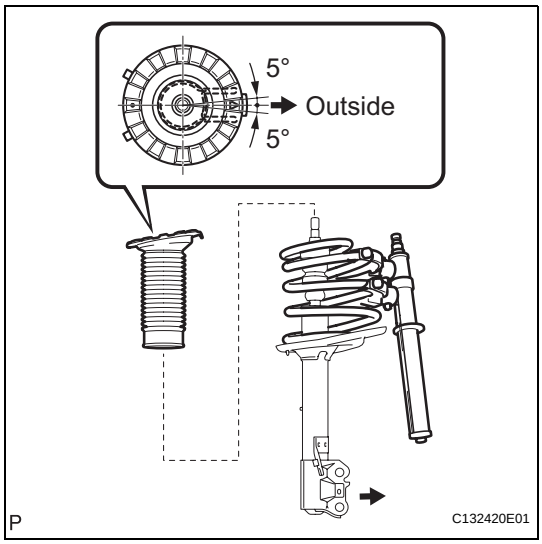

(e) Install the front coil spring upper insulator as shown in the illustration.
HINT:
Any misalignment between the front shock absorber lower bracket and the matchmark must be +-5°.

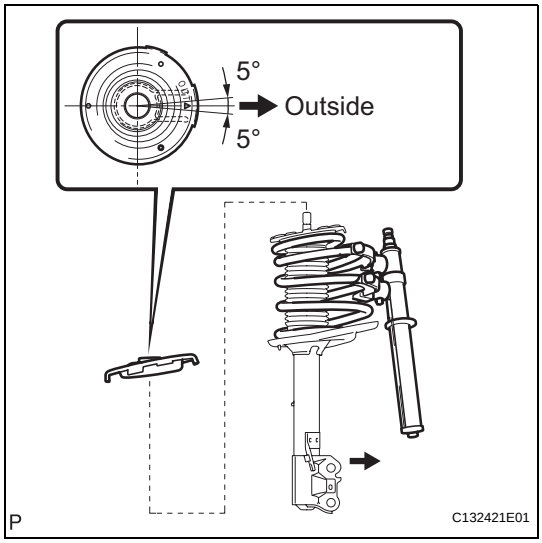

(f) Install the front coil spring upper seat with the mark facing to the outside of the vehicle.
HINT:
Any misalignment between the front shock absorber lower bracket and the matchmark must be +-5°.

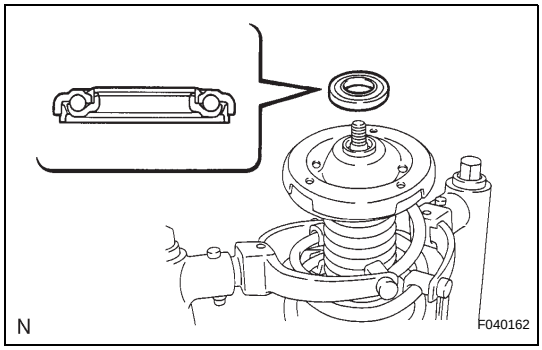

(g) Install a new front suspension support bearing as shown in the illustration.
HINT:
If there is foreign matter inside the front suspension support bearing, replace it with a new one.

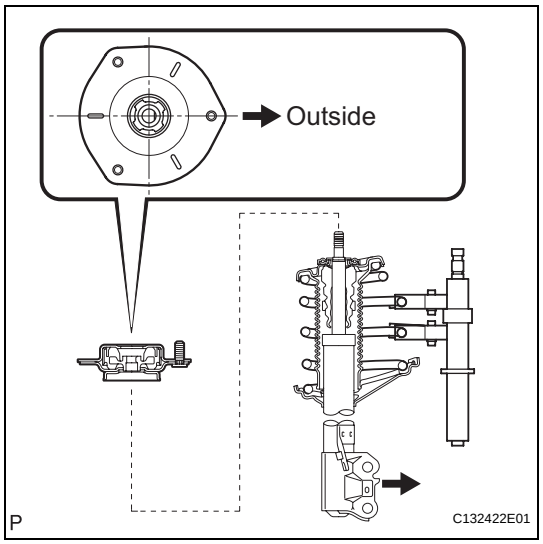

(h) Install the front suspension support sub-assembly. Temporarily tighten a new lock nut.
NOTICE:
Check that the flats on the piston rod and the flats on the front suspension support sub-assembly are aligned.

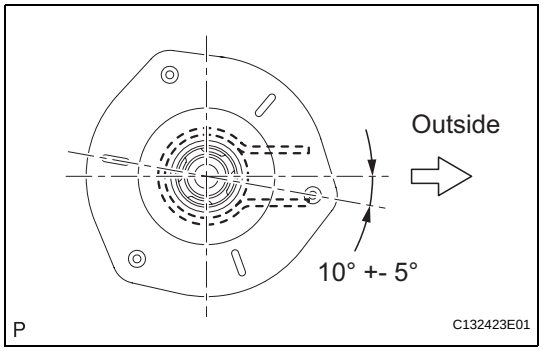

(i) Remove the SST slowly in order to release the coil spring.
NOTICE:
Do not use an impact wrench.
HINT:
Any misalignment between the front shock absorber lower bracket and the arrows must be +-5°.

INSTALLATION

1. INSTALL FRONT SHOCK ABSORBER WITH COIL SPRING

(a) Install the front shock absorber with coil spring to the front axle assembly and insert the 2 bolts from the front side of the vehicle.

(b) Slowly jack up the vehicle using a wooden block and install the front shock absorber with coil spring (upper side) to the vehicle.

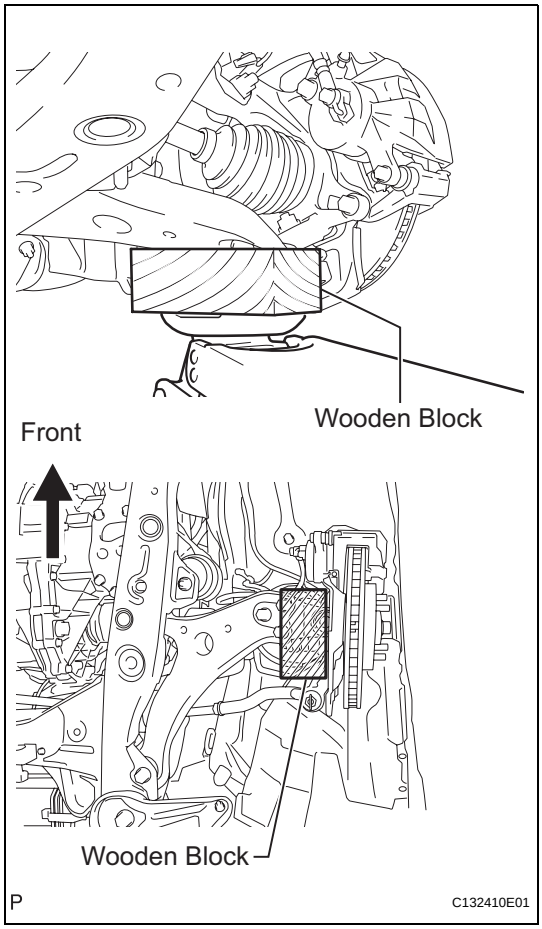

(c) Install the 3 nuts to the upper side of the front shock absorber with coil spring.
Torque: 85 N*m (867 kgf*cm, 63 ft.*lbf)

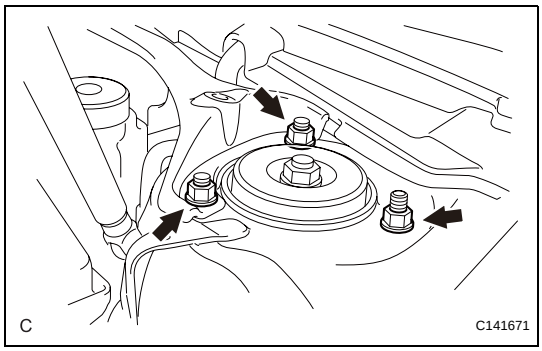

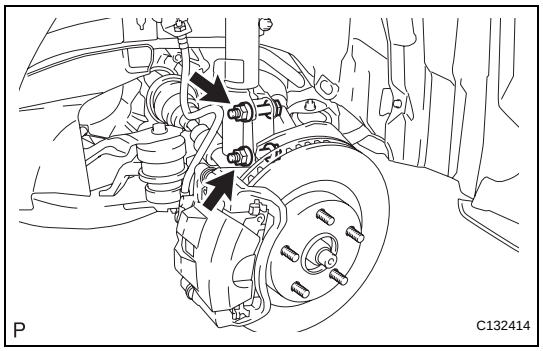

(d) Install the 2 nuts to the lower side of the front shock absorber with coil spring.
Torque: 210 N*m (2,140 kgf*cm, 155 ft.*lbf)
NOTICE:
When installing the nuts, keep the bolts from rotating.

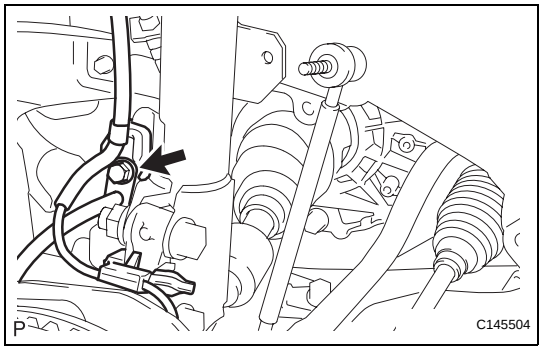

(e) Install the front flexible hose and front speed sensor wire harness with the bolt.
Torque: 19 N*m (194 kgf*cm, 14 ft.*lbf)
NOTICE:
Do not twist the front speed sensor wire harness when installing it.

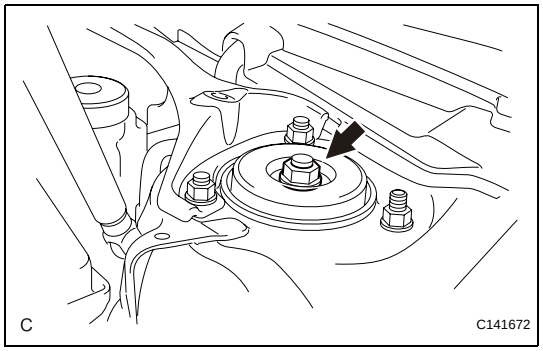

(f) Fully tighten the lock nut.
Torque: 70 N*m (714 kgf*cm, 52 ft.*lbf)

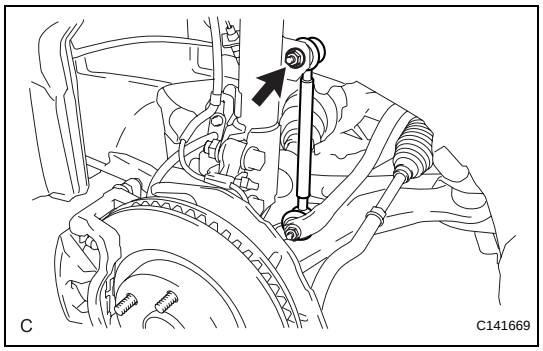

2. INSTALL FRONT STABILIZER LINK ASSEMBLY

(a) Install the front stabilizer link assembly with the nut.
Torque: 74 N*m (755 kgf*cm, 55 ft.*lbf)
HINT:
If the ball joint turns together with the nut, use a hexagon wrench (6 mm) to hold the stud.

3. INSTALL FRONT WHEEL
Torque: 103 N*m (1,050 kgf*cm, 76 ft.*lbf)

4. INSTALL V-BANK COVER SUB-ASSEMBLY (See page EM-49)

5. INSTALL ENGINE ROOM SIDE COVER LH (See page EM-50)

6. INSTALL ENGINE ROOM SIDE COVER RH (See page EM-50)

7. INSPECT AND ADJUST FRONT WHEEL ALIGNMENT
(See page SP-4)

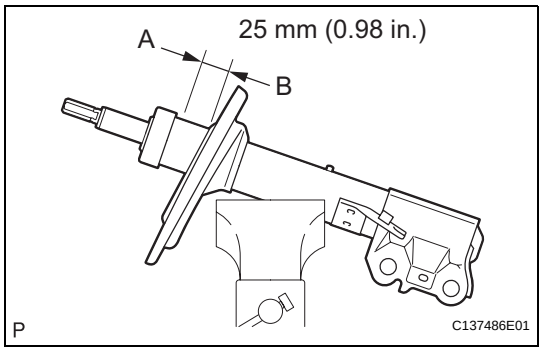

DISPOSAL

1. DISPOSE OF FRONT SHOCK ABSORBER

(a) Fully extend the shock absorber rod.

(b) Using a drill, make a hole in the cylinder between A and B as shown in the illustration to discharge the gas inside.

CAUTION:

- **Be careful when drilling because shards of metal may fly about. Always use the proper safety equipment.**
- **The gas is colorless, odorless and non-poisonous.**

FRONT WHEEL ALIGNMENT

ADJUSTMENT

1. INSPECT TIRES
(See page TW-3)

2. MEASURE VEHICLE HEIGHT

(a) Bounce the vehicle up and down at the corners to stabilize the suspension. Inspect the vehicle height.
Vehicle height

Front A - B	Rear C - D
126 mm (4.96 in.)	57 mm (2.24 in.)

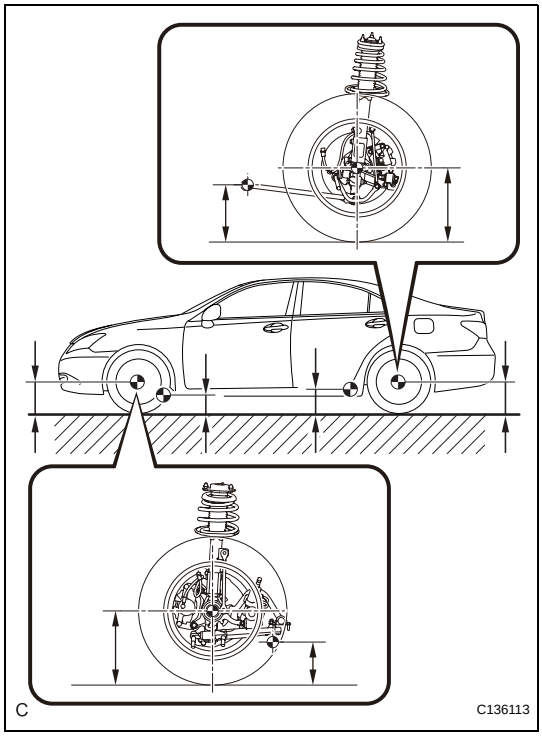

Measuring points:
A:
Ground clearance of front wheel center
B:
Ground clearance of lower suspension arm No. 2 bushing set bolt head center
C:
Ground clearance of rear wheel center
D:
Ground clearance of strut rod set bolt center

NOTICE:
- **Before inspecting the wheel alignment, adjust the vehicle height to the specified value.**
- **Be sure to perform measurement on a level surface.**
- **If it is necessary to go under the vehicle for measurement, confirm that the parking brake is applied and the vehicle is secured with chocks.**

3. INSPECT TOE-IN

(a) Bounce the vehicle up and down at the corners to stabilize the suspension.
(b) Release the parking brake and move the shift lever to the neutral position.
(c) Push the vehicle straight ahead approximately 5 m (16.4 ft). (*1)
(d) Put tread center marks on the rearmost points of the front wheels and measure the distance between the marks (dimension B).
(e) Slowly push the vehicle straight ahead to cause the front wheels to rotate 180° using the front tire valve as a reference point.
HINT:
Do not allow the wheels to rotate more than 180°. If the wheels rotate more than 180°, perform the procedure from *1 again.

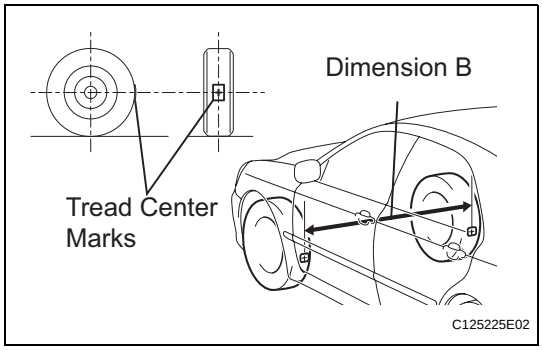

SP

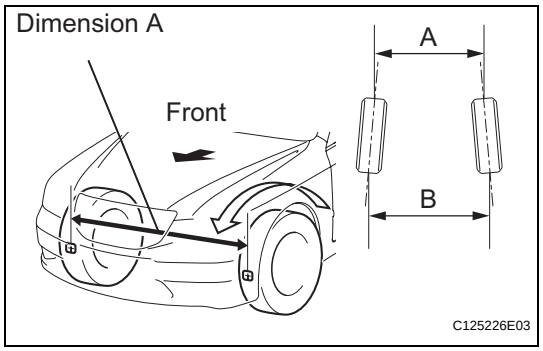

(f) Measure the distance between the tread center marks on the front side of the wheels.
Toe-in

Toe-in (total)	**-**
A - B:	**0 +- 2 mm (0 +- 0.08 in.)**

HINT:
If toe-in is not within the specified range, adjust it at the rack ends.

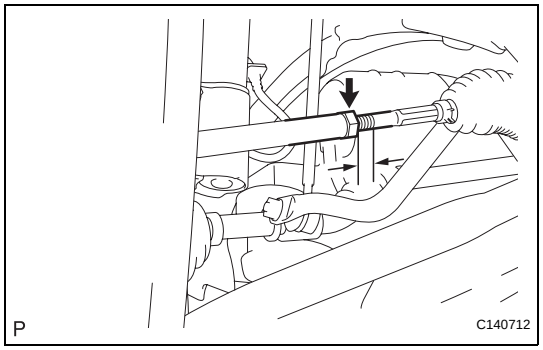

4. ADJUST TOE-IN

(a) Measure the thread lengths of the right and left rack ends.
Standard:
Difference in thread length between the right and left rack ends is 1.5 mm (0.06 in.) or less.

(b) Remove the rack boot set clips.

(c) Loosen the tie rod end lock nuts.

(d) Adjust the rack ends if the difference in thread length between the right and left rack ends is not within the specified range.
(1) Extend the shorter rack end if the measured toe-in deviates toward the outside.
(2) Shorten the longer rack end if the measured toe-in deviates toward the inside.

(e) Turn the right and left rack ends by equal amounts to adjust the toe-in.
HINT:
Try to adjust the toe-in to the center of the specified range.

(f) Make sure that the lengths of the right and left rack ends are the same.

(g) Tighten the tie rod end lock nuts.
Torque: 74 N*m (755 kgf*cm, 55 ft.*lbf)
NOTICE:
Temporarily tighten the lock nut while holding the hexagonal part of the steering rack end so that the lock nut and the steering rack end do not turn together. Hold the flats on the tie rod end and tighten the lock nut.

(h) Place the boots on the seats and install the clips.
HINT:
Make sure that the boots are not twisted.

5. INSPECT WHEEL ANGLE

(a) Put tread center marks on the rearmost points of the turning radius gauge.

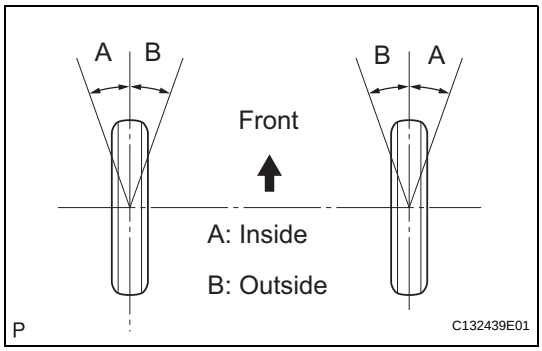

(b) Turn the steering wheel fully to the left and right and measure the turning angle.

Wheel turning angle

Inside wheel	Outside wheel reference
38°31' +-2° (38.52° +-2°)	33°43' (33.72°)

If the right and left inside wheel angles differ from the specified value, check the right and left rack end lengths.

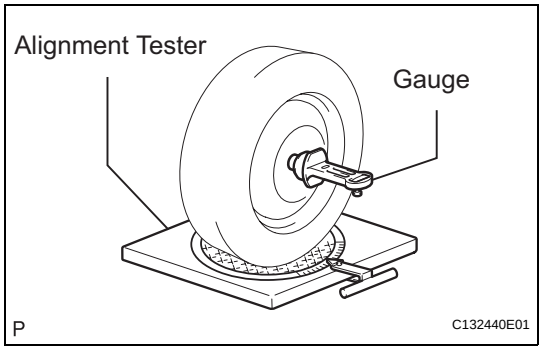

6. INSPECT CAMBER, CASTER AND STEERING AXIS INCLINATION

(a) Put the front wheel on the center of the alignment tester.

(b) Remove the center ornament.

(c) Set the camber-caster-king pin gauge and attachment at the center of the axle hub or drive shaft.

(d) Inspect the camber, caster, and steering axis inclination.

Camber

Camber	Right-left difference
-0°43' +-45' (-0.72° +-0.75°)	45' (0.75°) or less

Caster

Caster	Right-left difference
2°57' +-45' (2.95° +-0.75°)	45' (0.75°) or less

Steering axis inclination

Steering axis inclination
12°20' (12.33°)

NOTICE:

- **Perform the inspection while the vehicle is unloaded.**
- **The maximum tolerance of the right and left difference for the camber and caster is 45' (0.75°) or less.**

(e) Remove the camber-caster-king pin gauge and attachment.

(f) Install the center ornament.

(g) If the caster and steering axis inclination are not within the specified range after the camber has been correctly adjusted, recheck the suspension parts for damage and/or wear.

7. ADJUST CAMBER

NOTICE:

Inspect toe-in after the camber has been adjusted.

(a) Remove the front wheel.

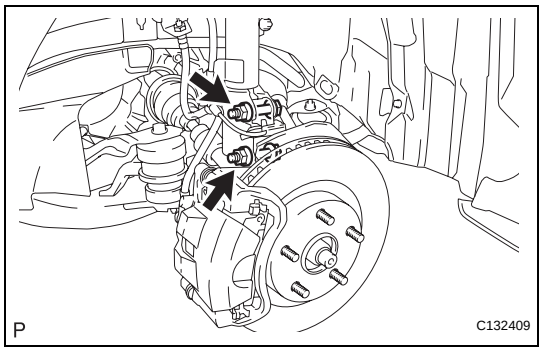

(b) Remove the 2 nuts on the lower side of the front shock absorber.
NOTICE:
Keep the bolts inserted.

(c) Clean the installation surfaces of the front shock absorber and the steering knuckle.

(d) Temporarily install the 2 nuts (Step A).

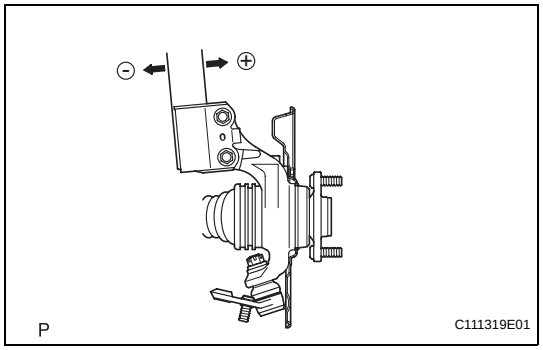

(e) Fully push or pull the front axle hub in the direction of the required adjustment (Step B).

(f) Tighten the nuts.
Torque: 210 N*m (2,141 kgf*cm, 155 ft.*lbf)
NOTICE:
Keep the bolts from rotating when tightening the nuts.

(g) Install the front wheel.
Torque: 103 N*m (1,050 kgf*cm, 76 ft.*lbf)

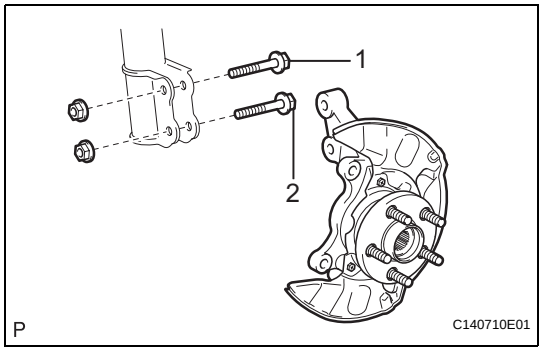

(h) Check the camber.
If the measured value is not within the specification, calculate the required adjustment amount using the formula below.
Camber adjustment amount = center of the specified range center - measured value
Check the combination of installed bolts. Select appropriate bolts from the table below to adjust the camber to the specified values.
HINT:
Try to adjust the camber to the center of the specified values.

Move the axle toward (+) in step (B)	Move the axle toward (-) in step (B)
Refer to table (1) (Move the axle toward the positive side)	Refer to table (2) (Move the axle toward the negative side)

Table (1) (Move the axle toward the positive side)

Installed Bolt / Adjusting Value	1						
	90105-17012	90105-17012	90105-17012	90105-17012	90105-17013	90105-17014	90105-17015
2	90105-17012	90105-17013	90105-17014	90105-17015	90105-17015	90105-17015	90105-17015
-1°30' to -1°15' (-1.50° to -1.25°)							G
-1°15' to -1°00' (-1.25° to -1°)						G	A
-1°00' to -0°45' (-1° to -0.75°)					G	A	B
-0°45' to -0°30' (-0.75° to -0.5°)				G	A	B	C
-0°30' to -0°15' (-0.5° to -0.25°)			G	A	B	C	D
-0°15' to 0° (-0.25° to 0°)		G	A	B	C	D	E
0° to 0°15' (0° to 0.25°)	A	B	C	D	E	F	
0°15' to 0°30' (0.25° to 0.5°)	B	C	D	E	F		
0°30' to 0°45' (0.50° to 0.75°)	C	D	E	F			
0°45' to 1°00' (0.75° to 1°)	D	E	F				
1°00' to 1°15' (1° to 1.25°)	E	F					
1°15' to 1°30' (1.25° to 1.5°)	F						

Selected Bolt Combination

	A	B	C	D	E	F	G
1	90105-17012	90105-17012	90105-17012	90105-17013	90105-17014	90105-17015	90105-17012
2	90105-17013	90105-17014	90105-17015	90105-17015	90105-17015	90105-17015	90105-17012

C138332E01

SP

Table (2) (Move the axle toward the negative side)

Installed Bolt / Adjusting Value	1	2
	90105-17012	90105-17012
	90105-17012	90105-17013
	90105-17012	90105-17014
	90105-17012	90105-17015
	90105-17013	90105-17015
	90105-17014	90105-17015
	90105-17015	90105-17015
-1°30' to -1°15' (-1.50° to -1.25°)	F	
-1°15' to -1°00' (-1.25° to -1°)	E	F
-1°00' to -0°45' (-1° to -0.75°)	D	E	F
-0°45' to -0°30' (-0.75° to -0.5°)	C	D	E	F
-0°30' to -0°15' (-0.5° to -0.25°)	B	C	D	E	F
-0°15' to 0° (-0.25° to 0°)	A	B	C	D	E	F
0° to 0°15' (0° to 0.25°)	G	A	B	C	D	E
0°15' to 0°30' (0.25° to 0.5°)	G	A	B	C	D
0°30' to 0°45' (0.50° to 0.75°)	G	A	B	C
0°45' to 1°00' (0.75° to 1°)	G	A	B
1°00' to 1°15' (1° to 1.25°)	G	A
1°15' to 1°30' (1.25° to 1.5°)	G

Selected Bolt Combination

	A	B	C	D	E	F	G
1	90105-17012	90105-17012	90105-17012	90105-17013	90105-17014	90105-17015	90105-17012
2	90105-17013	90105-17014	90105-17015	90105-17015	90105-17015	90105-17015	90105-17012

C138332E02

SP

The body and suspension may be damaged if the camber is not correctly adjusted according to the above table.

NOTICE:

Replace the nut with a new one when replacing the bolt.

(i) Repeat the steps mentioned above. In step (A), replace 1 or 2 selected bolts.

HINT:

Replace one bolt at a time when replacing 2 bolts.

INSTALLATION

1. INSTALL FRONT SUSPENSION LOWER NO. 1 ARM

(a) Install the front lower arm bushing stopper.

(b) Install the front suspension lower No. 1 arm to the front frame assembly with the 3 bolts and the nut, but do not tighten them yet.

(c) Tighten the 3 bolts in numerical order shown in the illustration.

Torque: 200 N*m (2,040 kgf*cm, 148 ft.*lbf) (bolt A)
206 N*m (2,100 kgf*cm, 152 ft.*lbf) (bolt B)

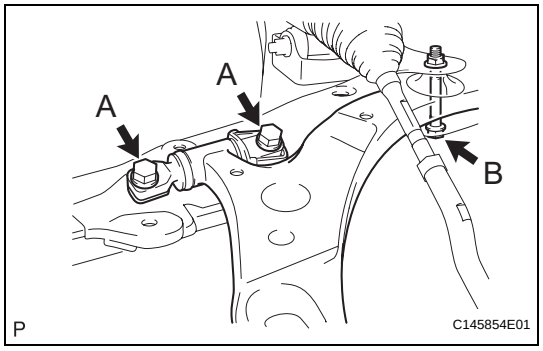

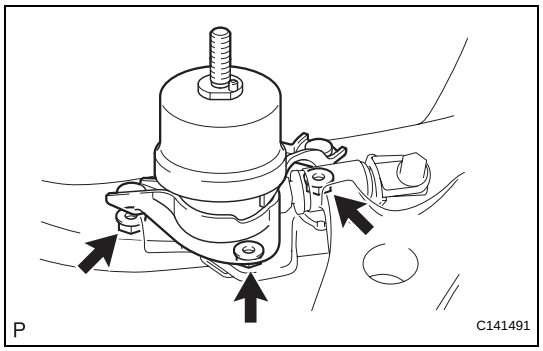

2. INSTALL ENGINE MOUNTING INSULATOR

(a) Install the engine mounting insulator with the 3 nuts.

Torque: 87 N*m (887 kgf*cm, 64 ft.*lbf)

3. INSTALL ENGINE ASSEMBLY WITH TRANSAXLE

HINT:

Refer to the instructions for removal of the engine assembly (See page EM-43).

REAR WHEEL ALIGNMENT

ADJUSTMENT

1. INSPECT TIRES
(See page TW-3)

2. MEASURE VEHICLE HEIGHT (See page SP-4)

3. INSPECT TOE-IN

(a) Bounce the vehicle up and down at the corners to stabilize the suspension. Inspect the toe-in.
Toe-in

Toe-in (total)	-
A + B: C - D:	0° +- 24' (0° +- 0.4°) 4 +- 2 mm (0.16 +- 0.08 in.)

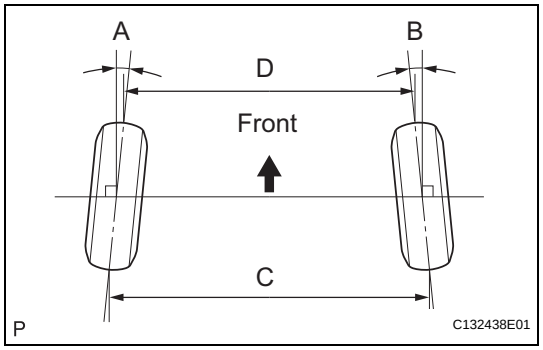

If the toe-in is not within the specified range, inspect the suspension parts and replace them if necessary.

4. ADJUST TOE-IN

(a) Measure the lengths of the right and left rear No. 2 suspension arms.
Difference in the length between the right and left rear No. 2 suspension arms:
1.5 mm (0.06 in.) or less
If the left-right difference is larger than 1.5 mm (0.06 in.), adjust it by following the procedures below.

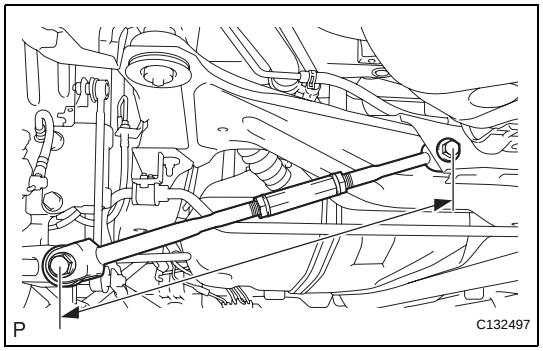

(b) Loosen the lock nuts.

(c) Turn the right and left adjusting tubes by an equal amount to adjust toe-in.
HINT:
- Try to adjust toe-in to the center of the specified range.
- One turn of each adjusting tube will adjust toe-in by approximately 10.8 mm (0.425 in.).

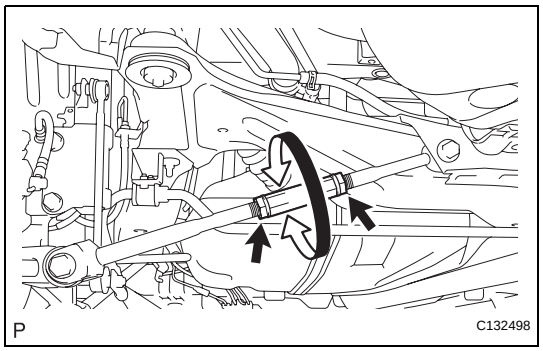

(d) Tighten the lock nuts.
Torque: 56 N*m (571 kgf*cm, 41 ft.*lbf)

5. INSPECT CAMBER
Camber

Camber	Right-left difference
-1°21' +-45' (-1.35° +-0.75°)	45' (0.75°) or less

HINT:
Camber is not adjustable. If the measurement is not within the specification range, inspect the suspension parts for damage and/or wear, and replace them if necessary.

SP

REMOVAL

HINT:
- Use the same procedures for the RH side and the LH side.
- The procedures listed below are for the LH side.

1. **REMOVE FRONT WHEEL**
2. **REMOVE FRONT AXLE HUB NUT (See page DS-5)**
3. **SEPARATE FRONT SPEED SENSOR (See page DS-5)**
4. **SEPARATE FRONT DISC BRAKE CALIPER ASSEMBLY (See page AH-6)**
5. **REMOVE FRONT DISC (See page BR-37)**
6. **SEPARATE TIE ROD END SUB-ASSEMBLY (See page DS-6)**
7. **SEPARATE FRONT SUSPENSION LOWER NO. 1 ARM (See page DS-6)**
8. **REMOVE FRONT AXLE ASSEMBLY (See page AH-6)**
9. **REMOVE FRONT WHEEL NO. 1 BEARING DUST DEFLECTOR (See page AH-8)**
10. **REMOVE FRONT AXLE HUB HOLE SNAP RING (See page AH-7)**
11. **REMOVE FRONT AXLE HUB (See page AH-7)**
12. **REMOVE FRONT DISC BRAKE DUST COVER (See page AH-8)**
13. **REMOVE FRONT AXLE HUB BEARING (See page AH-8)**
14. **REMOVE FRONT LOWER BALL JOINT**
    (a) Secure the steering knuckle in a vise using aluminum plates.
    (b) Remove the cotter pin and nut.
    (c) Using SST, remove the front lower ball joint.
    SST 09628-62011
    NOTICE:
    - **Do not damage the dust cover of the ball joint.**
    - **Do not damage the steering knuckle.**

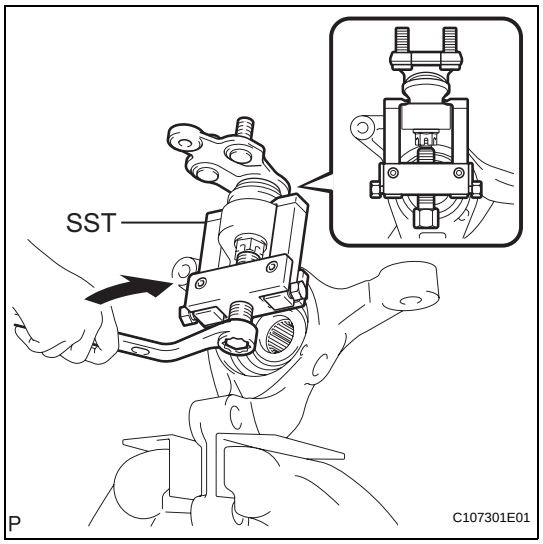

SP

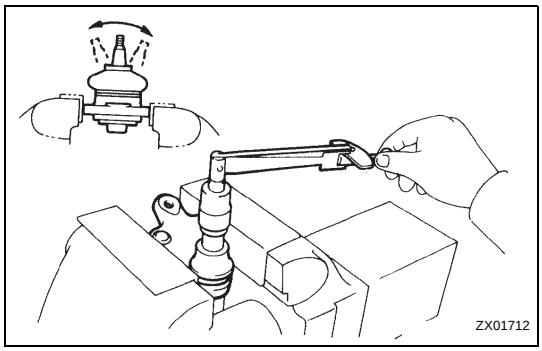

INSPECTION

1. INSPECT FRONT LOWER BALL JOINT

(a) Inspect the turning of the ball joint.

(1) Secure the front lower ball joint assembly in a vise using aluminum plates.

(2) Install the nut to the front lower ball joint assembly stud.

(3) Using a torque wrench, turn the nut continuously at a rate of 3 to 5 seconds per turn and take the torque reading on the 5th turn.

Torque: Turning torque
1.0 to 3.4 N*m (10 to 35 kgf*cm, 9 to 30 in.*lbf)

HINT:
If the turning torque is not within the specified range, replace the front lower ball joint assembly with a new one.

(b) Inspect the dust cover.

(1) Check that the dust cover is not cracked and that there is no grease on it.

REMOVAL

HINT:
- Use the same procedures for the RH side and the LH side.
- The procedures listed below are for the LH side.

1. REMOVE FRONT WHEEL

2. REMOVE ENGINE ROOM SIDE COVER LH (See page EM-22)

3. REMOVE ENGINE ROOM SIDE COVER RH (See page EM-22)

4. REMOVE V-BANK COVER SUB-ASSEMBLY (See page EM-23)

5. SEPARATE FRONT STABILIZER LINK ASSEMBLY

(a) Support the front No. 1 suspension lower arm with a jack using a wooden block to avoid damage.

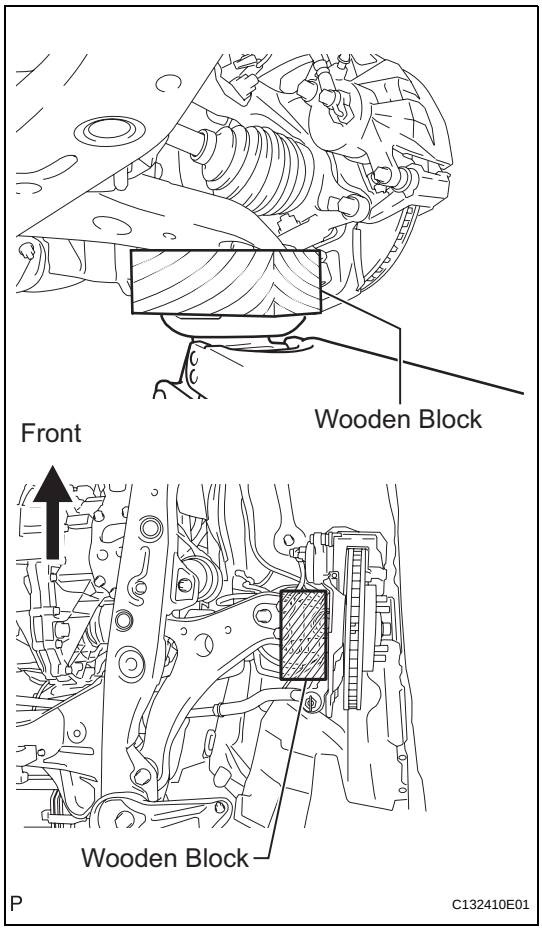

(b) Remove the nut and separate the front stabilizer link assembly from the front shock absorber.
HINT:
If the ball joint turns together with the nut, use a hexagon wrench (6 mm) to hold the stud.

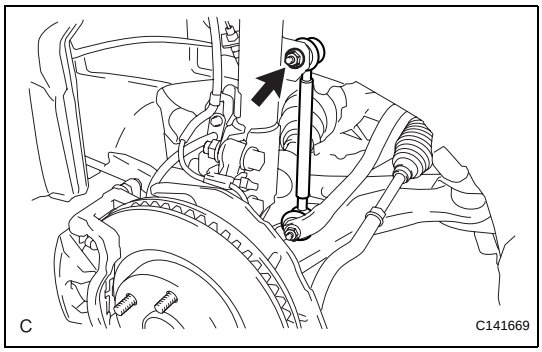

SP

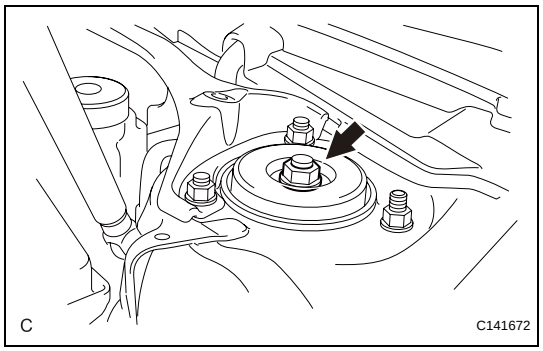

6. REMOVE FRONT SHOCK ABSORBER WITH COIL SPRING

(a) Loosen the lock nut of the front shock absorber with coil spring.

NOTICE:

- **Do not remove the lock nut.**
- **Only loosen the nut when disassembling the front shock absorber with coil spring.**

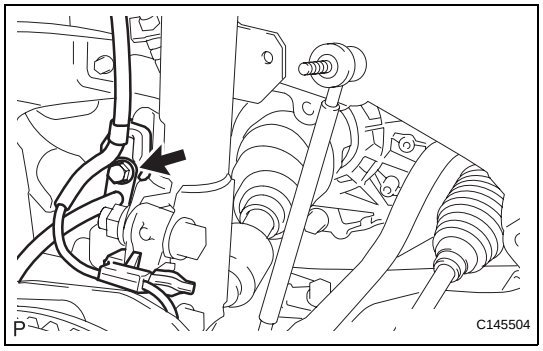

(b) Remove the bolt and disconnect the front flexible hose and front speed sensor wire harness from the front shock absorber with coil spring.

NOTICE:

Be sure to remove the front speed sensor from the front shock absorber with coil spring.

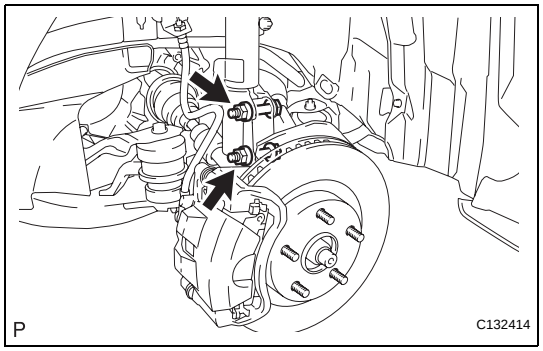

(c) Remove the 2 nuts on the lower side of the front shock absorber with coil spring.

NOTICE:

- **When removing the nuts, keep the bolts from rotating.**
- **Keep the bolts inserted to secure the front axle assembly.**

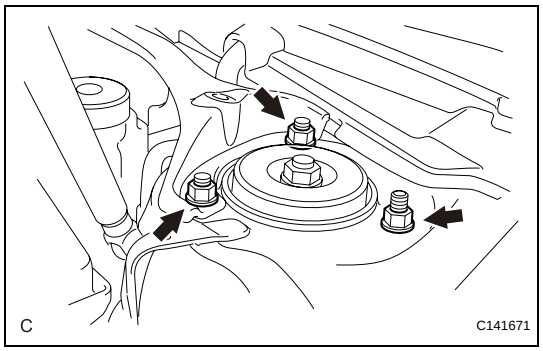

(d) Remove the 3 nuts on the upper side of the front shock absorber with coil spring.

(e) Lower the front axle assembly, and remove the 2 bolts on the lower side of the front shock absorber.

(f) Remove the front shock absorber with coil spring.

NOTICE:

Make sure that the front speed sensor is disconnected from the front shock absorber with coil spring.

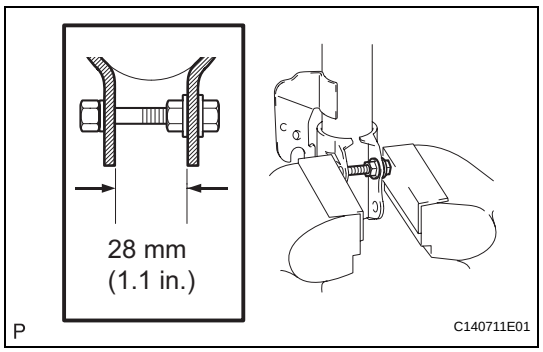

DISASSEMBLY

1. FIX FRONT SHOCK ABSORBER WITH COIL SPRING

(a) As shown in the illustration, secure the front shock absorber with coil spring in a vise using aluminum plates by clamping onto a double nutted bolt affixed to the bracket at the bottom of the absorber.

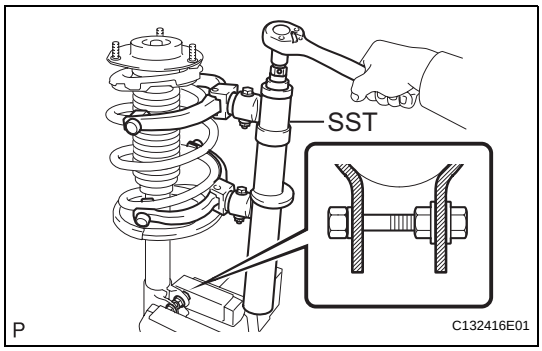

2. REMOVE FRONT SHOCK ABSORBER

(a) Using SST, compress the front coil spring.

SST 09727-30021 (09727-00010, 09727-00021, 09727-00031)

NOTICE:

Do not use an impact wrench.

HINT:

If the front coil spring is compressed at an angle, using 2 SST will make the work easier.

(b) Remove the front suspension support sub-assembly, front suspension support bearing, front coil spring upper seat, front coil spring upper insulator, front coil spring, front spring bumper, and front coil spring lower insulator from the front shock absorber.

INSPECTION

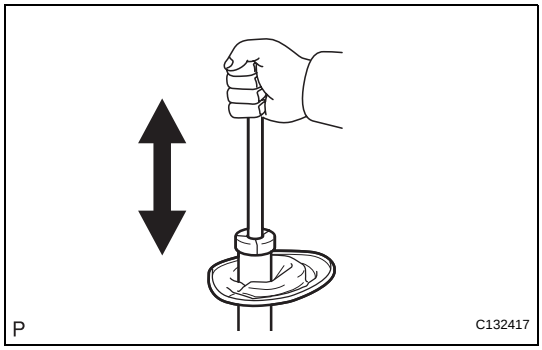

1. INSPECT FRONT SHOCK ABSORBER

(a) Compress and extend the shock absorber rod 4 or more times.

Standard:

There is no abnormal resistance or sound and operation resistance is normal.

HINT:

If there is any abnormality, replace the front shock absorber with a new one.

INSTALLATION

1. INSTALL FRONT SHOCK ABSORBER WITH COIL SPRING

(a) Install the front shock absorber with coil spring to the front axle assembly and insert the 2 bolts from the front side of the vehicle.

(b) Slowly jack up the vehicle using a wooden block and install the front shock absorber with coil spring (upper side) to the vehicle.

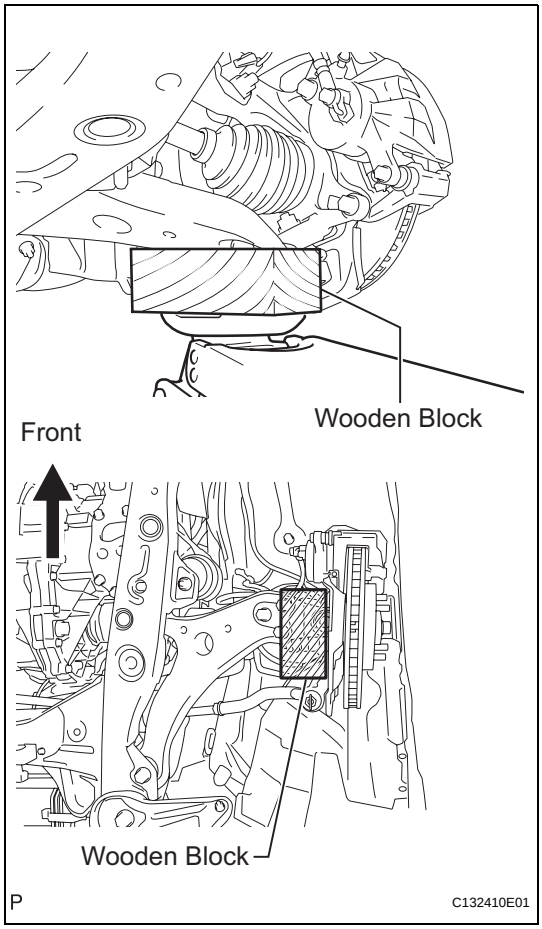

(c) Install the 3 nuts to the upper side of the front shock absorber with coil spring.
Torque: 85 N*m (867 kgf*cm, 63 ft.*lbf)

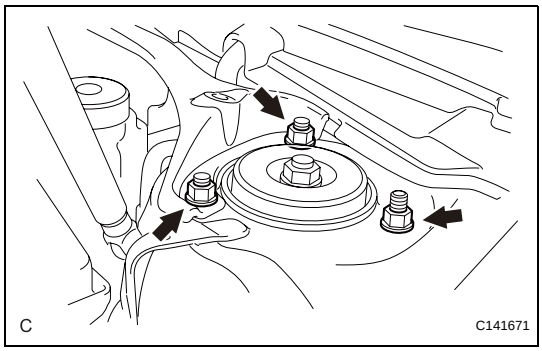

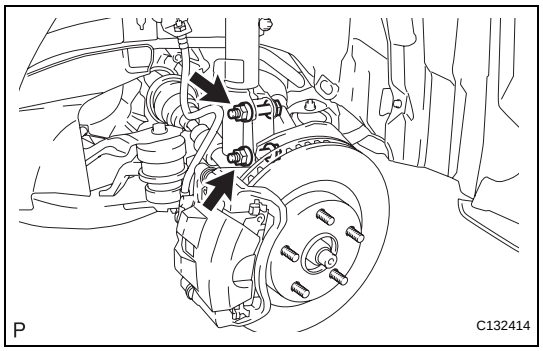

(d) Install the 2 nuts to the lower side of the front shock absorber with coil spring.
Torque: 210 N*m (2,140 kgf*cm, 155 ft.*lbf)
NOTICE:
When installing the nuts, keep the bolts from rotating.

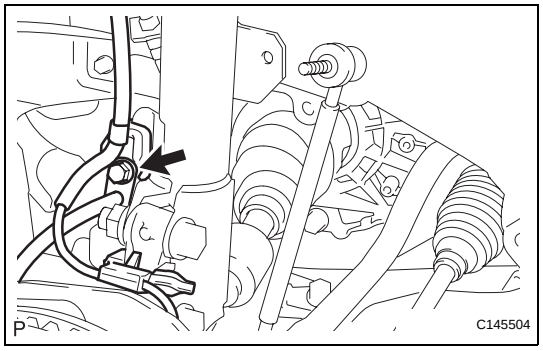

(e) Install the front flexible hose and front speed sensor wire harness with the bolt.
Torque: 19 N*m (194 kgf*cm, 14 ft.*lbf)
NOTICE:
Do not twist the front speed sensor wire harness when installing it.

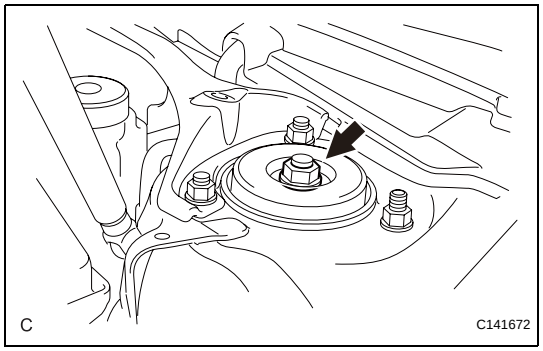

(f) Fully tighten the lock nut.
Torque: 70 N*m (714 kgf*cm, 52 ft.*lbf)

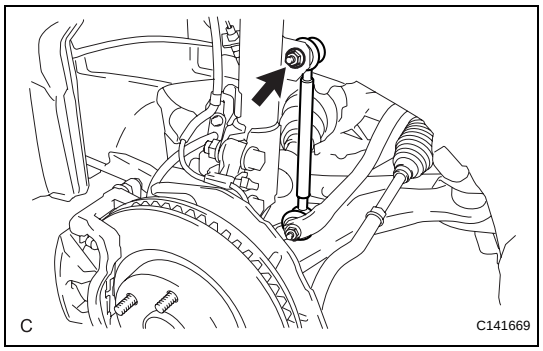

2. INSTALL FRONT STABILIZER LINK ASSEMBLY

(a) Install the front stabilizer link assembly with the nut.
Torque: 74 N*m (755 kgf*cm, 55 ft.*lbf)
HINT:
If the ball joint turns together with the nut, use a hexagon wrench (6 mm) to hold the stud.

3. INSTALL FRONT WHEEL
Torque: 103 N*m (1,050 kgf*cm, 76 ft.*lbf)

4. INSTALL V-BANK COVER SUB-ASSEMBLY (See page EM-49)

5. INSTALL ENGINE ROOM SIDE COVER LH (See page EM-50)

6. INSTALL ENGINE ROOM SIDE COVER RH (See page EM-50)

7. INSPECT AND ADJUST FRONT WHEEL ALIGNMENT
(See page SP-4)

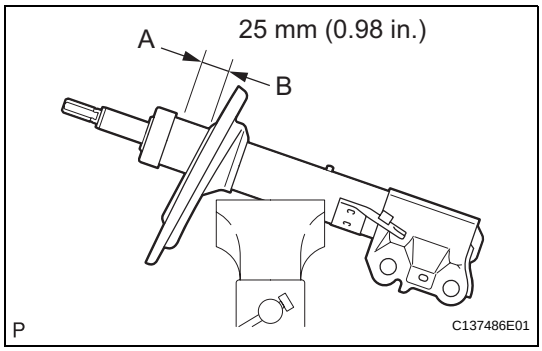

DISPOSAL

1. DISPOSE OF FRONT SHOCK ABSORBER

(a) Fully extend the shock absorber rod.

(b) Using a drill, make a hole in the cylinder between A and B as shown in the illustration to discharge the gas inside.

CAUTION:

- **Be careful when drilling because shards of metal may fly about. Always use the proper safety equipment.**
- **The gas is colorless, odorless and non-poisonous.**

INSTALLATION

1. **INSTALL FRONT LOWER BALL JOINT**
   (a) Install the front lower ball joint to the steering knuckle with the nut.
   Torque: 123 N*m (1,250 kgf*cm, 91 ft.*lbf)
   NOTICE:
   Prevent oil from adhering to the screw and tapered parts.
   (b) Install a new cotter pin.
   NOTICE:
   If the holes for the cotter pin are not aligned, tighten the nut further up to 60°.
2. **INSTALL FRONT AXLE HUB BEARING (See page AH-9)**
3. **INSTALL FRONT DISC BRAKE DUST COVER (See page AH-9)**
4. **INSTALL FRONT AXLE HUB (See page AH-9)**
5. **INSTALL FRONT AXLE HUB HOLE SNAP RING (See page AH-9)**
6. **INSTALL FRONT WHEEL NO. 1 BEARING DUST DEFLECTOR (See page AH-10)**
7. **INSTALL FRONT AXLE ASSEMBLY (See page AH-10)**
8. **INSTALL FRONT SUSPENSION LOWER NO. 1 ARM (See page DS-16)**
9. **CONNECT TIE ROD END SUB-ASSEMBLY (See page DS-16)**
10. **INSTALL FRONT DISC (See page BR-39)**
11. **INSTALL FRONT DISC BRAKE CALIPER ASSEMBLY (See page AH-10)**
12. **INSTALL FRONT SPEED SENSOR (See page DS-17)**
13. **INSTALL FRONT AXLE HUB NUT (See page AH-11)**
14. **SEPARATE FRONT DISC BRAKE CALIPER ASSEMBLY (See page AH-11)**
15. **REMOVE FRONT DISC (See page BR-37)**
16. **INSPECT FRONT AXLE HUB BEARING LOOSENESS (See page AH-5)**
17. **INSPECT FRONT AXLE HUB RUNOUT (See page AH-6)**
18. **INSTALL FRONT DISC (See page BR-39)**
19. **INSTALL FRONT DISC BRAKE CALIPER ASSEMBLY (See page AH-11)**
20. **INSTALL FRONT AXLE HUB NUT (See page AH-11)**
21. **CHECK ABS SPEED SENSOR SIGNAL**
    (See page BC-24)

22. **INSTALL FRONT WHEEL**
    Torque: 103 N*m (1,050 kgf*cm, 76 ft.*lbf)

23. **INSPECT AND ADJUST FRONT WHEEL ALIGNMENT**
    (See page SP-4)

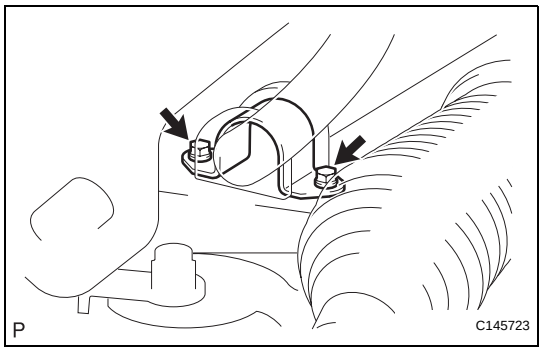

10. REMOVE FRONT NO. 1 STABILIZER BRACKET RH

(a) Remove the 2 bolts and the front No. 1 stabilizer bracket RH from the front frame assembly.

11. REMOVE FRONT NO. 1 STABILIZER BAR BUSHING

(a) Remove the 2 front No. 1 stabilizer bar bushings from the front stabilizer bar.

12. REMOVE FRONT STABILIZER BAR

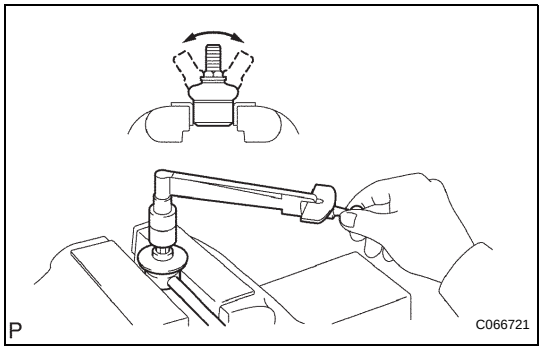

INSPECTION

1. INSPECT FRONT STABILIZER LINK ASSEMBLY

(a) Inspect the turning of the ball joint.

(1) Secure the front stabilizer link assembly in a vise using aluminum plates.

(2) Install the nut to the front stabilizer link assembly stud.

(3) Using a torque wrench, turn the nut continuously at a rate of 3 to 5 seconds per turn and take the torque reading on the 5th turn.

Torque: Turning torque
0.05 to 2.0 N*m (0.5 to 20 kgf*cm, 0.4 to 18 in.*lbf)

HINT:
If the turning torque is not within the specified range, replace the front stabilizer link assembly with a new one.

(b) Inspect the dust cover.

(1) Check that the dust cover is not cracked and that there is no grease on it.

INSTALLATION

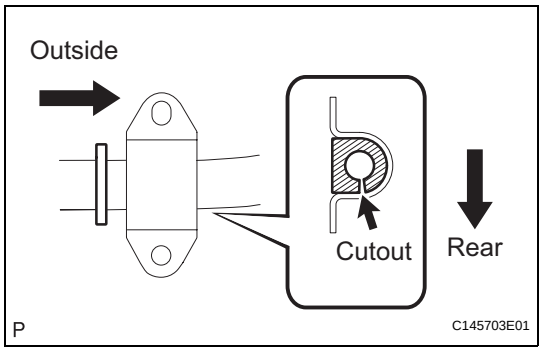

1. INSTALL FRONT NO. 1 STABILIZER BAR BUSHING

(a) Install the 2 front stabilizer bar bushings No. 1 to the outside of the bushing stopper on the front stabilizer bar.

NOTICE:
Make sure that the cutout of the front stabilizer bar bushing No. 1 faces the rear side as shown in the illustration.

2. INSTALL FRONT NO. 1 STABILIZER BRACKET LH

(a) Install the front No. 1 stabilizer bracket LH.

3. INSTALL FRONT NO. 1 STABILIZER BRACKET RH

(a) Install the front No. 1 stabilizer bracket RH.

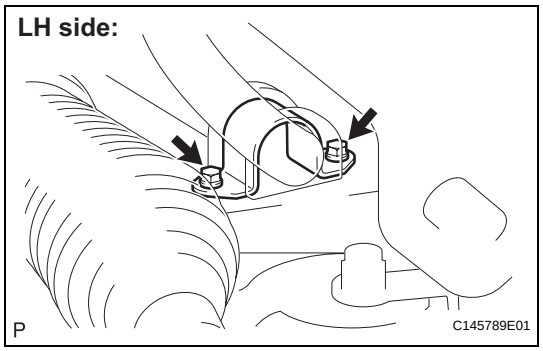

4. INSTALL FRONT STABILIZER BAR

(a) Install the front stabilizer bar with the 2 bolts. (LH Side)
Torque: 27 N*m (275 kgf*cm, 20 ft.*lbf)

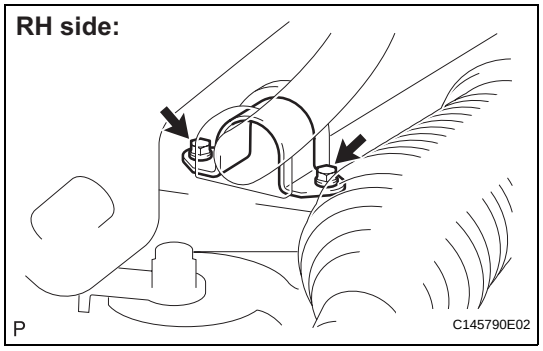

(b) Install the front stabilizer bar with the 2 bolts. (RH Side)
Torque: 27 N*m (275 kgf*cm, 20 ft.*lbf)

5. INSTALL ENGINE ASSEMBLY WITH TRANSAXLE

HINT:
Refer to the instructions for installation of the engine assembly (See page EM-43).

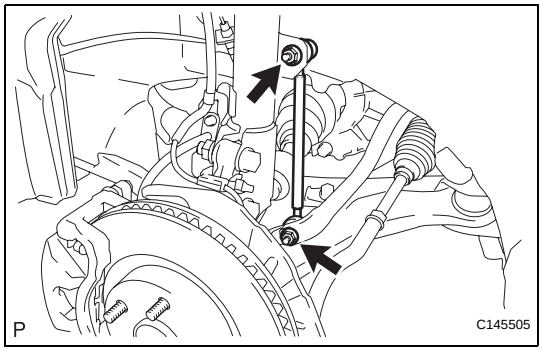

6. INSTALL FRONT STABILIZER LINK ASSEMBLY LH

(a) Install the front stabilizer link assembly LH with the 2 nuts.
Torque: 74 N*m (755 kgf*cm, 55 ft.*lbf)
HINT:
If the ball joint turns together with the nut, use a hexagon (6 mm) wrench to hold the stud.

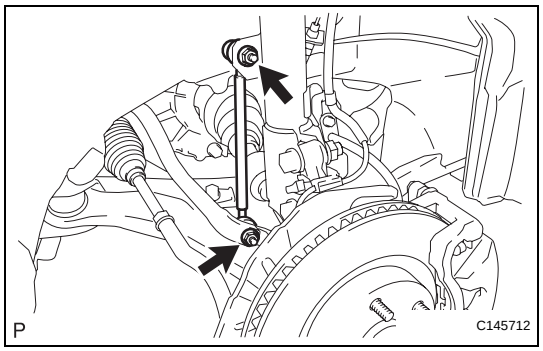

7. INSTALL FRONT STABILIZER LINK ASSEMBLY RH

(a) Install the front stabilizer link assembly RH with the 2 nuts.
Torque: 74 N*m (755 kgf*cm, 55 ft.*lbf)
HINT:
If the ball joint turns together with the nut, use a hexagon (6 mm) wrench to hold the stud.

8. CONNECT TIE ROD END SUB-ASSEMBLY (See page DS-16)

9. CONNECT STEERING INTERMEDIATE SHAFT ASSEMBLY (See page SR-84)

10. PLACE FRONT WHEELS FACING STRAIGHT

11. INSTALL FRONT WHEELS
Torque: 103 N*m (1,050 kgf*cm, 76 ft.*lbf)

12. CONNECT CABLE TO NEGATIVE BATTERY TERMINAL

13. INSPECT AND ADJUST FRONT WHEEL ALIGNMENT
(See page SP-4)

REMOVAL

HINT:
- Use the same procedures for the RH side and the LH side.
- The procedures listed below are for the LH side.

1. **REMOVE FRONT WHEEL**
2. **REMOVE FRONT AXLE HUB NUT (See page DS-5)**
3. **SEPARATE FRONT SPEED SENSOR (See page DS-5)**
4. **SEPARATE FRONT DISC BRAKE CALIPER ASSEMBLY (See page AH-6)**
5. **REMOVE FRONT DISC (See page BR-37)**
6. **SEPARATE TIE ROD END SUB-ASSEMBLY (See page DS-6)**
7. **SEPARATE FRONT SUSPENSION LOWER NO. 1 ARM (See page DS-6)**
8. **REMOVE FRONT AXLE ASSEMBLY (See page AH-6)**
9. **REMOVE FRONT WHEEL NO. 1 BEARING DUST DEFLECTOR (See page AH-8)**
10. **REMOVE FRONT AXLE HUB HOLE SNAP RING (See page AH-7)**
11. **REMOVE FRONT AXLE HUB (See page AH-7)**
12. **REMOVE FRONT DISC BRAKE DUST COVER (See page AH-8)**
13. **REMOVE FRONT AXLE HUB BEARING (See page AH-8)**
14. **REMOVE FRONT LOWER BALL JOINT**
    (a) Secure the steering knuckle in a vise using aluminum plates.
    (b) Remove the cotter pin and nut.
    (c) Using SST, remove the front lower ball joint.
    SST 09628-62011
    NOTICE:
    - **Do not damage the dust cover of the ball joint.**
    - **Do not damage the steering knuckle.**

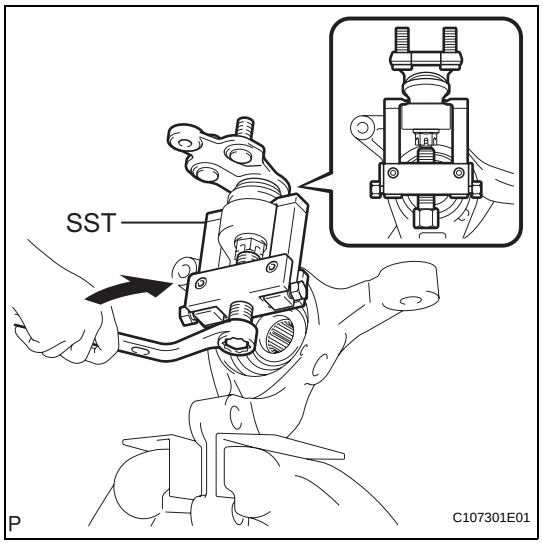

SP

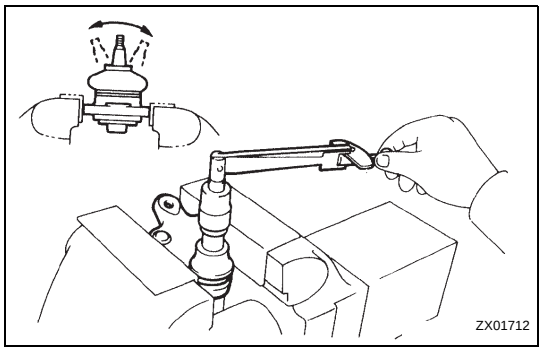

INSPECTION

1. INSPECT FRONT LOWER BALL JOINT

(a) Inspect the turning of the ball joint.

(1) Secure the front lower ball joint assembly in a vise using aluminum plates.

(2) Install the nut to the front lower ball joint assembly stud.

(3) Using a torque wrench, turn the nut continuously at a rate of 3 to 5 seconds per turn and take the torque reading on the 5th turn.

Torque: Turning torque
1.0 to 3.4 N*m (10 to 35 kgf*cm, 9 to 30 in.*lbf)

HINT:
If the turning torque is not within the specified range, replace the front lower ball joint assembly with a new one.

(b) Inspect the dust cover.

(1) Check that the dust cover is not cracked and that there is no grease on it.

INSTALLATION

1. **INSTALL FRONT LOWER BALL JOINT**
   (a) Install the front lower ball joint to the steering knuckle with the nut.
   Torque: 123 N*m (1,250 kgf*cm, 91 ft.*lbf)
   NOTICE:
   Prevent oil from adhering to the screw and tapered parts.
   (b) Install a new cotter pin.
   NOTICE:
   If the holes for the cotter pin are not aligned, tighten the nut further up to 60°.
2. **INSTALL FRONT AXLE HUB BEARING (See page AH-9)**
3. **INSTALL FRONT DISC BRAKE DUST COVER (See page AH-9)**
4. **INSTALL FRONT AXLE HUB (See page AH-9)**
5. **INSTALL FRONT AXLE HUB HOLE SNAP RING (See page AH-9)**
6. **INSTALL FRONT WHEEL NO. 1 BEARING DUST DEFLECTOR (See page AH-10)**
7. **INSTALL FRONT AXLE ASSEMBLY (See page AH-10)**
8. **INSTALL FRONT SUSPENSION LOWER NO. 1 ARM (See page DS-16)**
9. **CONNECT TIE ROD END SUB-ASSEMBLY (See page DS-16)**
10. **INSTALL FRONT DISC (See page BR-39)**
11. **INSTALL FRONT DISC BRAKE CALIPER ASSEMBLY (See page AH-10)**
12. **INSTALL FRONT SPEED SENSOR (See page DS-17)**
13. **INSTALL FRONT AXLE HUB NUT (See page AH-11)**
14. **SEPARATE FRONT DISC BRAKE CALIPER ASSEMBLY (See page AH-11)**
15. **REMOVE FRONT DISC (See page BR-37)**
16. **INSPECT FRONT AXLE HUB BEARING LOOSENESS (See page AH-5)**
17. **INSPECT FRONT AXLE HUB RUNOUT (See page AH-6)**
18. **INSTALL FRONT DISC (See page BR-39)**
19. **INSTALL FRONT DISC BRAKE CALIPER ASSEMBLY (See page AH-11)**
20. **INSTALL FRONT AXLE HUB NUT (See page AH-11)**
21. **CHECK ABS SPEED SENSOR SIGNAL**
    (See page BC-24)

22. **INSTALL FRONT WHEEL**
    Torque: 103 N*m (1,050 kgf*cm, 76 ft.*lbf)

23. **INSPECT AND ADJUST FRONT WHEEL ALIGNMENT**
    (See page SP-4)

REMOVAL

HINT:
- Use the same procedures for the RH side and the LH side.
- The procedures listed below are for the LH side.

1. **DISCONNECT CABLE FROM NEGATIVE BATTERY TERMINAL**
2. **REMOVE REAR SEAT CUSHION ASSEMBLY (See page SE-113)**
3. **REMOVE REAR SEAT HEADREST ASSEMBLY**
4. **REMOVE REAR SEAT CENTER HEADREST ASSEMBLY**
5. **REMOVE REAR SEATBACK ASSEMBLY (See page SE-113)**
6. **REMOVE REAR DOOR SCUFF PLATE LH (See page IR-40)**
7. **REMOVE REAR DOOR SCUFF PLATE RH (See page IR-42)**
8. **REMOVE REAR SEAT SIDE GARNISH LH (w/o Rear Seat Side Airbag) (See page IR-41)**
9. **REMOVE REAR SEAT SIDE GARNISH RH (w/o Rear Seat Side Airbag) (See page IR-43)**
10. **REMOVE REAR SEAT AIRBAG LH (w/ Rear Seat Side Airbag) (See page RS-460)**
11. **REMOVE REAR SEAT AIRBAG RH (w/ Rear Seat Side Airbag) (See page RS-460)**
12. **REMOVE ROOF SIDE INNER GARNISH LH (See page IR-42)**
13. **REMOVE ROOF SIDE INNER GARNISH RH (See page IR-43)**
14. **DISCONNECT REAR SEAT 3 POINT TYPE BELT ASSEMBLY LH (See page SB-40)**
15. **DISCONNECT REAR SEAT 3 POINT TYPE BELT ASSEMBLY RH (See page SB-40)**
16. **DISCONNECT REAR SEAT INNER WITH CENTER BELT ASSEMBLY RH (See page SB-40)**
17. **REMOVE REAR SEAT SHOULDER BELT HOLE COVER (See page SB-41)**
18. **REMOVE PACKAGE TRAY TRIM PANEL ASSEMBLY (w/o Rear Sunshade) (See page SB-41)**
19. **REMOVE PACKAGE TRAY TRIM PANEL ASSEMBLY (w/ Rear Sunshade) (See page IR-20)**
20. **REMOVE REAR SEAT 3 POINT TYPE BELT ASSEMBLY LH (See page SB-49)**
21. **REMOVE REAR WHEEL**

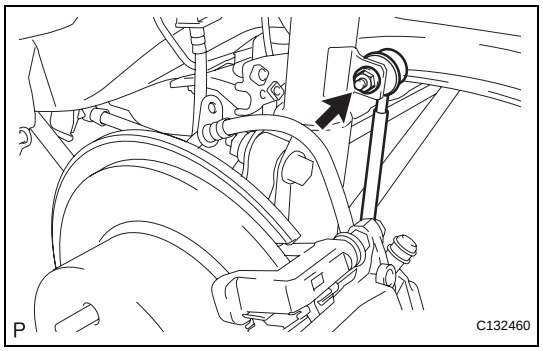

22. SEPARATE REAR STABILIZER LINK ASSEMBLY LH

(a) Remove the nut and separate the rear stabilizer link assembly from the front shock absorber LH.
HINT:
If the ball joint turns together with the nut, use a hexagon wrench (5 mm) to hold the stud.

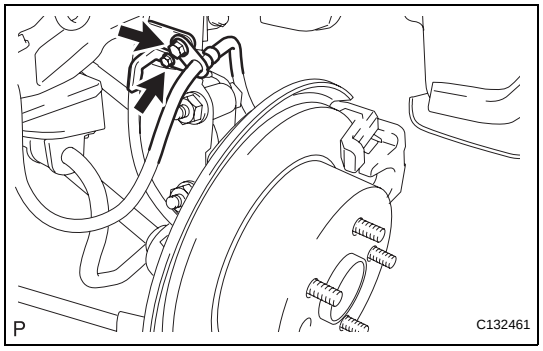

23. SEPARATE REAR SPEED SENSOR

(a) Remove the 2 bolts, and disconnect the rear brake flexible hose and rear speed sensor from the rear shock absorber with coil spring and rear axle carrier.
NOTICE:
Be sure to remove the rear speed sensor from the rear shock absorber with coil spring.

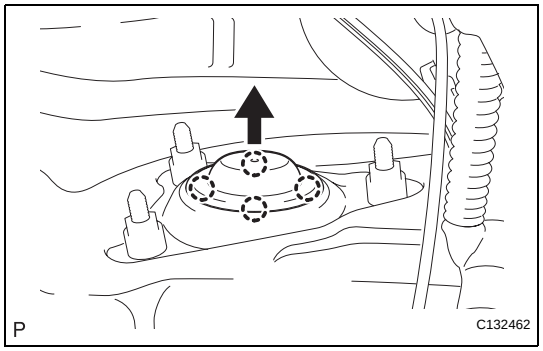

24. REMOVE REAR SUSPENSION SUPPORT NO. 1 COVER

(a) Remove the 4 claws and the rear suspension support No. 1 cover.

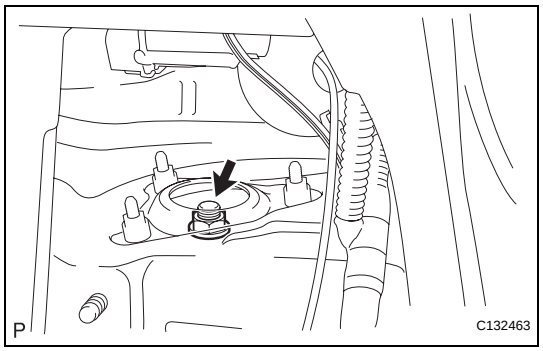

25. REMOVE REAR SHOCK ABSORBER WITH COIL SPRING

(a) Loosen the lock nut of the rear shock absorber with coil spring.
NOTICE:
- **Do not remove the lock nut.**
- **Only loosen the nut when disassembling the rear shock absorber with coil spring.**

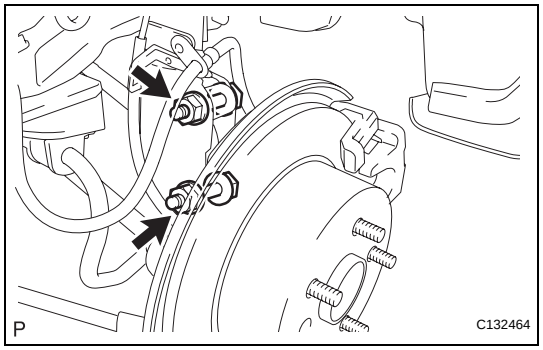

(b) Remove the 2 nuts and 2 bolts on the lower side of the rear shock absorber with coil spring.
NOTICE:
- **When removing the nuts, keep the bolts from rotating.**
- **Keep one bolt inserted to secure the hub and disc rotor.**

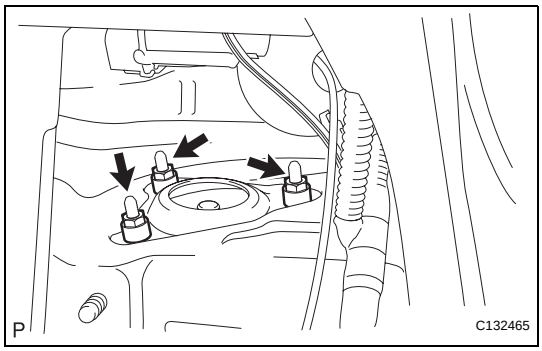

(c) Remove the 3 nuts on the upper side of the rear shock absorber with coil spring.

(d) Lower the rear axle carrier, and remove the 2 bolts on the lower side of the rear shock absorber with coil spring.

NOTICE:

Make sure that the rear speed sensor is disconnected from the rear shock absorber with coil spring.

DISASSEMBLY

1. FIX REAR SHOCK ABSORBER WITH COIL SPRING

(a) As shown in the illustration, secure the rear shock absorber with coil spring in a vise using aluminum plates by closing the vise onto the double nutted bolt affixed to the bracket at the bottom of the absorber.

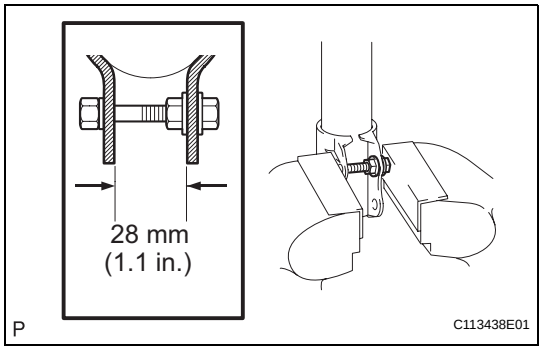

2. REMOVE REAR SHOCK ABSORBER

(a) Using SST, compress the rear coil spring.

SST 09727-30021 (09727-00010, 09727-00021, 09727-00031)

NOTICE:

Do not use an impact wrench.

HINT:

If the front coil spring is compressed at an angle, using 2 SST will make the work easier.

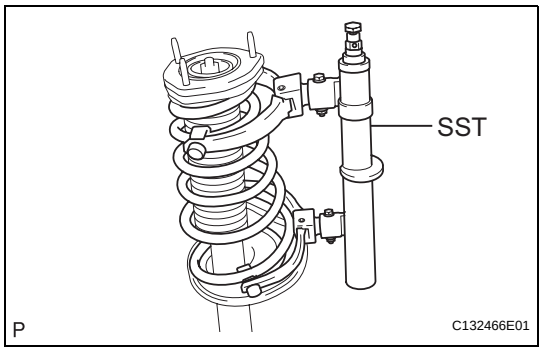

(b) Remove the nut, rear shock absorber collar and rear suspension support assembly.

(c) Remove the rear coil spring, rear No. 1 spring bumper, and rear coil spring lower insulator.

INSPECTION

1. INSPECT REAR SHOCK ABSORBER

(a) Compress and extend the shock absorber rod 4 or more times.

Standard:

There is no abnormal resistance or sound and operation resistance is normal.

HINT:

If there is any abnormality, replace the rear shock absorber with a new one.

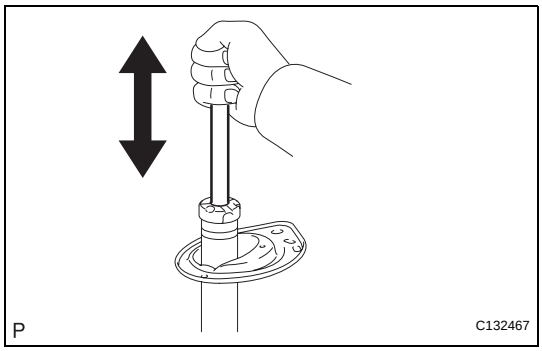

FRONT STABILIZER BAR

COMPONENTS

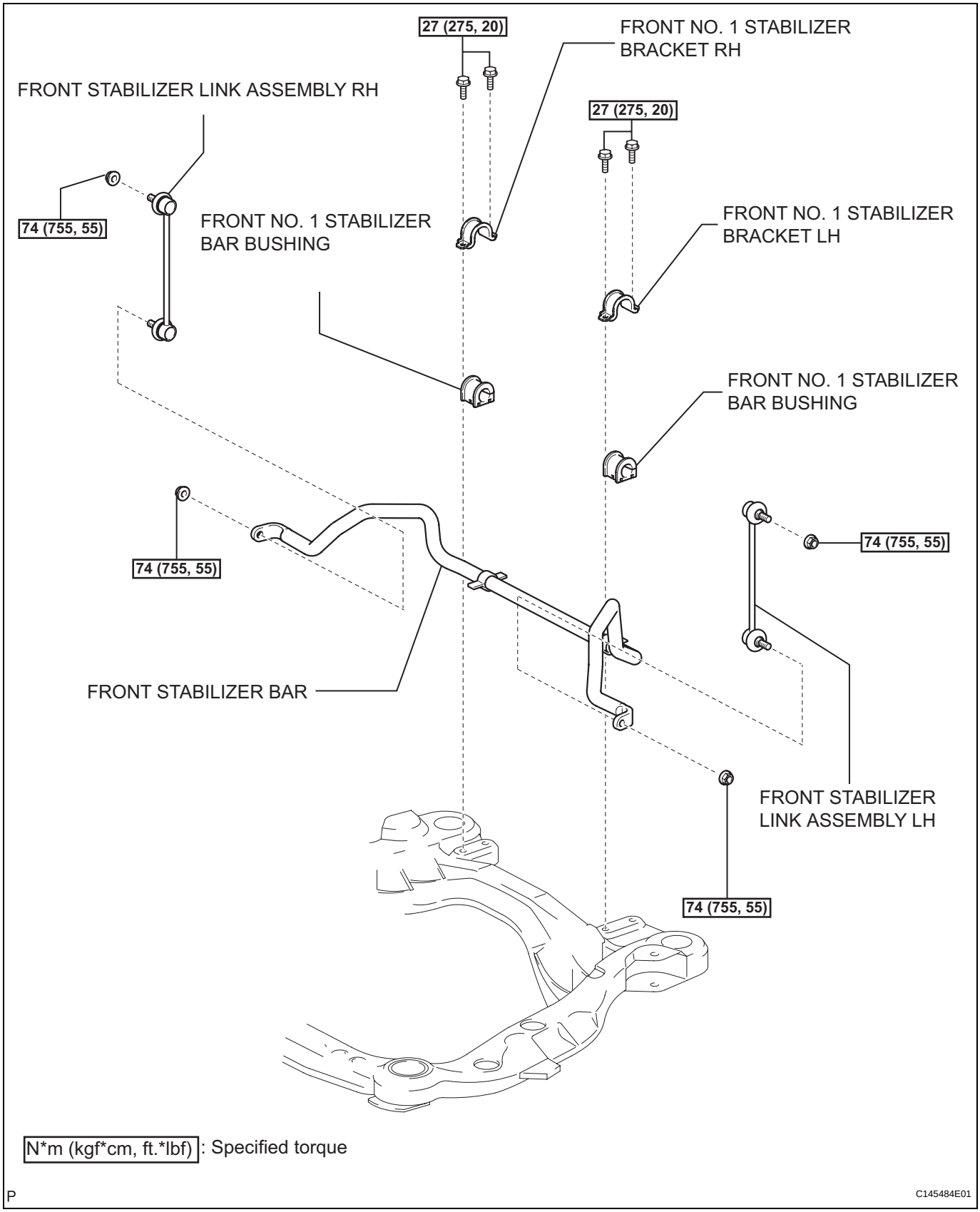

SP

REMOVAL

1. **DISCONNECT CABLE FROM NEGATIVE BATTERY TERMINAL**
2. **PLACE FRONT WHEELS FACING STRAIGHT AHEAD**
3. **REMOVE FRONT WHEELS**
4. **SEPARATE STEERING INTERMEDIATE SHAFT ASSEMBLY (See page SR-81)**
5. **SEPARATE TIE ROD END SUB-ASSEMBLY (See page DS-6)**
6. **REMOVE FRONT STABILIZER LINK ASSEMBLY LH**
   (a) Remove the 2 nuts and the front stabilizer link assembly LH.
   HINT:
   If the ball joint turns together with the nut, use a hexagon wrench (6 mm) to hold the stud.

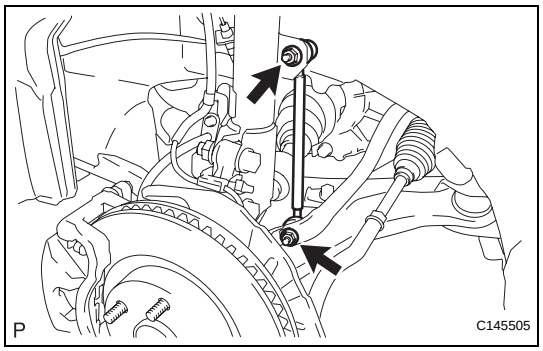

7. **REMOVE FRONT STABILIZER LINK ASSEMBLY RH**
   (a) Remove the 2 nuts and the front stabilizer link assembly RH.
   HINT:
   If the ball joint turns together with the nut, use a hexagon wrench (6 mm) to hold the stud.

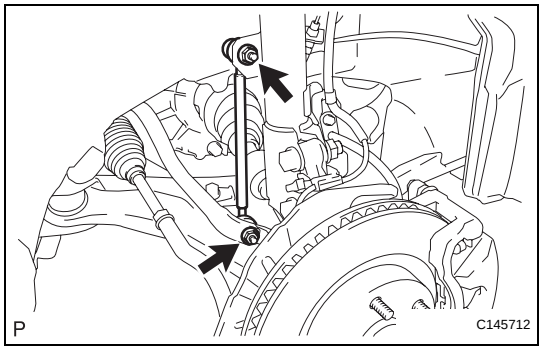

8. **REMOVE ENGINE ASSEMBLY WITH TRANSAXLE**
   HINT:
   Refer to the instructions for removal of the engine assembly (See page EM-28).
9. **REMOVE FRONT NO. 1 STABILIZER BRACKET LH**
   (a) Remove the 2 bolts and the front No. 1 stabilizer bracket LH from the front frame assembly.

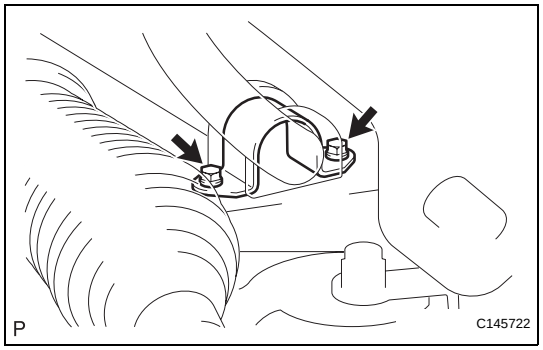

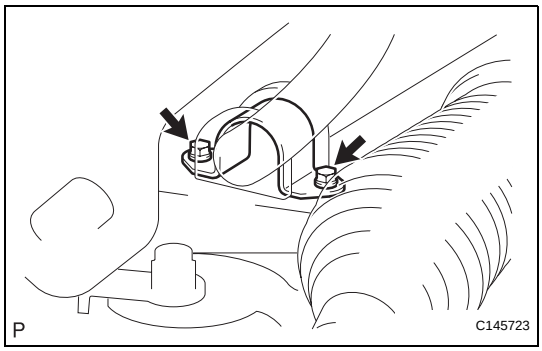

10. REMOVE FRONT NO. 1 STABILIZER BRACKET RH

(a) Remove the 2 bolts and the front No. 1 stabilizer bracket RH from the front frame assembly.

11. REMOVE FRONT NO. 1 STABILIZER BAR BUSHING

(a) Remove the 2 front No. 1 stabilizer bar bushings from the front stabilizer bar.

12. REMOVE FRONT STABILIZER BAR

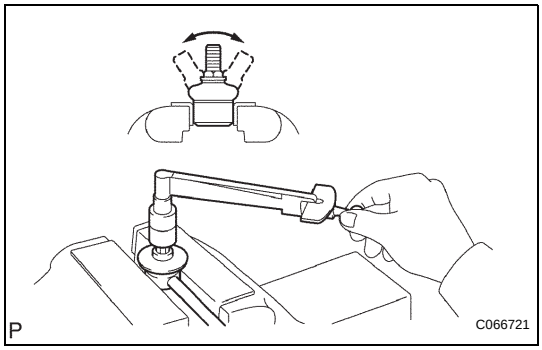

INSPECTION

1. INSPECT FRONT STABILIZER LINK ASSEMBLY

(a) Inspect the turning of the ball joint.

(1) Secure the front stabilizer link assembly in a vise using aluminum plates.

(2) Install the nut to the front stabilizer link assembly stud.

(3) Using a torque wrench, turn the nut continuously at a rate of 3 to 5 seconds per turn and take the torque reading on the 5th turn.

Torque: Turning torque
0.05 to 2.0 N*m (0.5 to 20 kgf*cm, 0.4 to 18 in.*lbf)

HINT:
If the turning torque is not within the specified range, replace the front stabilizer link assembly with a new one.

(b) Inspect the dust cover.

(1) Check that the dust cover is not cracked and that there is no grease on it.

INSTALLATION

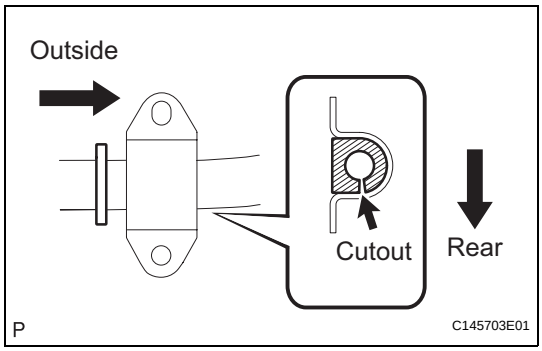

1. INSTALL FRONT NO. 1 STABILIZER BAR BUSHING

(a) Install the 2 front stabilizer bar bushings No. 1 to the outside of the bushing stopper on the front stabilizer bar.

NOTICE:
Make sure that the cutout of the front stabilizer bar bushing No. 1 faces the rear side as shown in the illustration.

2. INSTALL FRONT NO. 1 STABILIZER BRACKET LH

(a) Install the front No. 1 stabilizer bracket LH.

3. INSTALL FRONT NO. 1 STABILIZER BRACKET RH

(a) Install the front No. 1 stabilizer bracket RH.

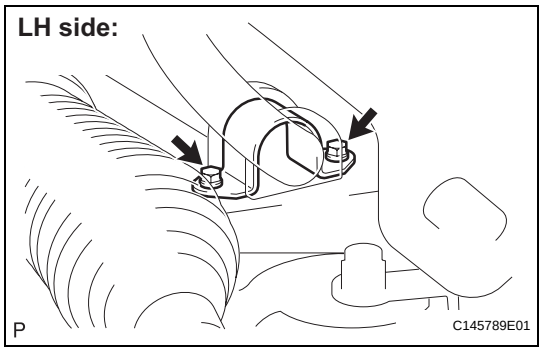

4. INSTALL FRONT STABILIZER BAR

(a) Install the front stabilizer bar with the 2 bolts. (LH Side)
Torque: 27 N*m (275 kgf*cm, 20 ft.*lbf)

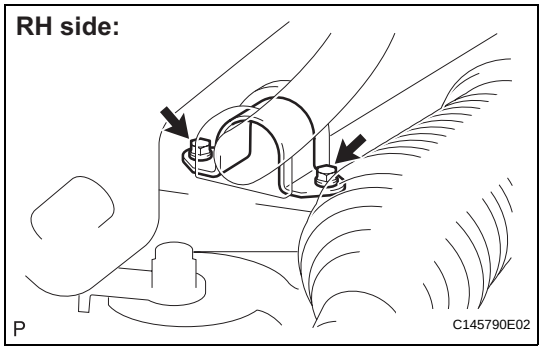

(b) Install the front stabilizer bar with the 2 bolts. (RH Side)
Torque: 27 N*m (275 kgf*cm, 20 ft.*lbf)

5. INSTALL ENGINE ASSEMBLY WITH TRANSAXLE

HINT:
Refer to the instructions for installation of the engine assembly (See page EM-43).

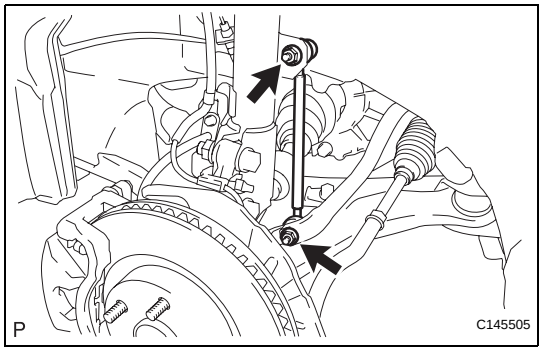

6. INSTALL FRONT STABILIZER LINK ASSEMBLY LH

(a) Install the front stabilizer link assembly LH with the 2 nuts.
Torque: 74 N*m (755 kgf*cm, 55 ft.*lbf)
HINT:
If the ball joint turns together with the nut, use a hexagon (6 mm) wrench to hold the stud.

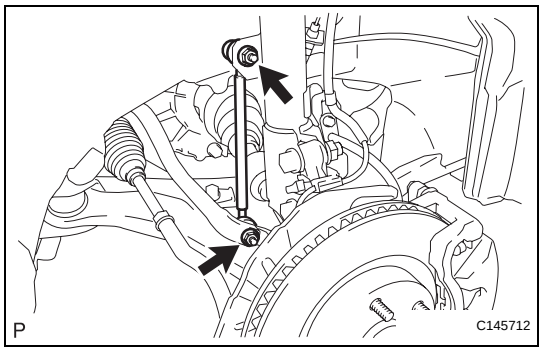

7. INSTALL FRONT STABILIZER LINK ASSEMBLY RH

(a) Install the front stabilizer link assembly RH with the 2 nuts.
Torque: 74 N*m (755 kgf*cm, 55 ft.*lbf)
HINT:
If the ball joint turns together with the nut, use a hexagon (6 mm) wrench to hold the stud.

8. CONNECT TIE ROD END SUB-ASSEMBLY (See page DS-16)

9. CONNECT STEERING INTERMEDIATE SHAFT ASSEMBLY (See page SR-84)

10. PLACE FRONT WHEELS FACING STRAIGHT

11. INSTALL FRONT WHEELS
Torque: 103 N*m (1,050 kgf*cm, 76 ft.*lbf)

12. CONNECT CABLE TO NEGATIVE BATTERY TERMINAL

13. INSPECT AND ADJUST FRONT WHEEL ALIGNMENT
(See page SP-4)

REASSEMBLY

1. INSTALL REAR SHOCK ABSORBER

(a) Install the rear No. 1 spring bumper to the piston rod.

(b) Install the rear coil spring lower insulator onto the rear shock absorber.

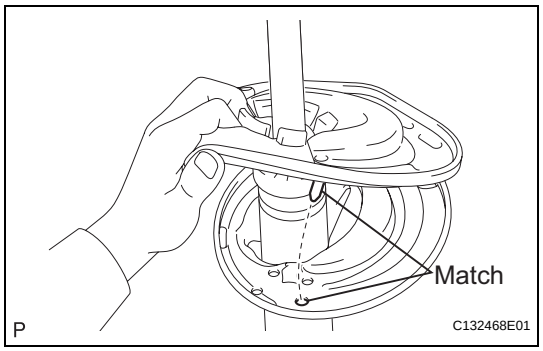

(c) Using SST, compress the rear coil spring.
SST 09727-30021 (09727-00010, 09727-00021, 09727-00031)
NOTICE:
Do not use an impact wrench.

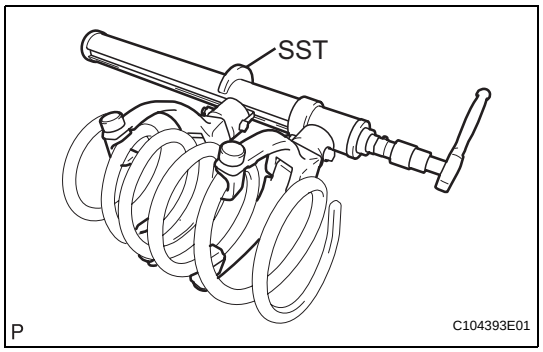

(d) Install the rear coil spring to the rear shock absorber.
NOTICE:
The smaller diameter end must face upward.
HINT:
- Fit the lower end of the rear coil spring into the gap of the lower seat.
- If the front coil spring is compressed at an angle, using 2 SST will make the work easier.

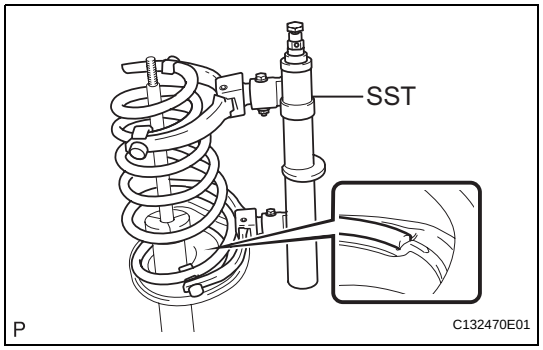

(e) Install the rear suspension support assembly.
NOTICE:
Align the notches of the piston rod and the rear suspension support assembly as shown in the illustration before installing the rear suspension support assembly.

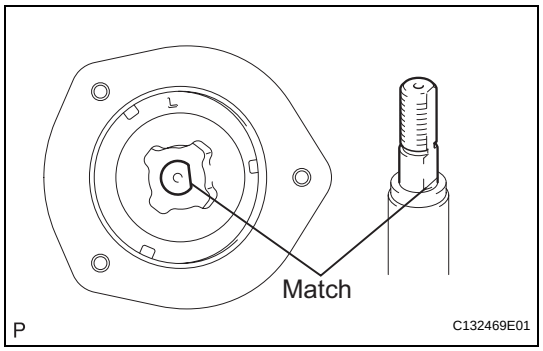

SP

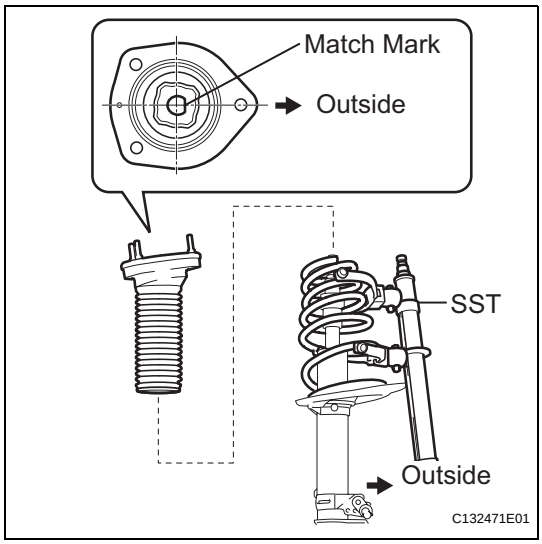

(f) Align the notches of the shock absorber with the notch of the rear suspension support assembly so that the notches face the outside of the vehicle.
(g) Install the rear shock absorber collar.
(h) Loosely tighten a new lock nut to the rear suspension piston rod.

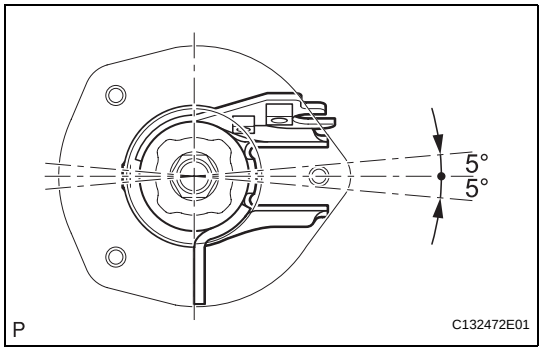

(i) Release the spring while adjusting the rear suspension support assembly to the position shown in the illustration, and remove the SST from the rear coil spring.
NOTICE:
Do not use an impact wrench.
HINT:
When lining up the rear suspension support assembly's stud bolts at the middle point between the two sides of the bracket, the maximum permissible degree of error is plus or minus 5°.

REMOVAL

HINT:
- Use the same procedures for the RH side and the LH side.
- The procedures listed below are for the LH side.

1. **DISCONNECT CABLE FROM NEGATIVE BATTERY TERMINAL**
2. **REMOVE REAR SEAT CUSHION ASSEMBLY (See page SE-113)**
3. **REMOVE REAR SEAT HEADREST ASSEMBLY**
4. **REMOVE REAR SEAT CENTER HEADREST ASSEMBLY**
5. **REMOVE REAR SEATBACK ASSEMBLY (See page SE-113)**
6. **REMOVE REAR DOOR SCUFF PLATE LH (See page IR-40)**
7. **REMOVE REAR DOOR SCUFF PLATE RH (See page IR-42)**
8. **REMOVE REAR SEAT SIDE GARNISH LH (w/o Rear Seat Side Airbag) (See page IR-41)**
9. **REMOVE REAR SEAT SIDE GARNISH RH (w/o Rear Seat Side Airbag) (See page IR-43)**
10. **REMOVE REAR SEAT AIRBAG LH (w/ Rear Seat Side Airbag) (See page RS-460)**
11. **REMOVE REAR SEAT AIRBAG RH (w/ Rear Seat Side Airbag) (See page RS-460)**
12. **REMOVE ROOF SIDE INNER GARNISH LH (See page IR-42)**
13. **REMOVE ROOF SIDE INNER GARNISH RH (See page IR-43)**
14. **DISCONNECT REAR SEAT 3 POINT TYPE BELT ASSEMBLY LH (See page SB-40)**
15. **DISCONNECT REAR SEAT 3 POINT TYPE BELT ASSEMBLY RH (See page SB-40)**
16. **DISCONNECT REAR SEAT INNER WITH CENTER BELT ASSEMBLY RH (See page SB-40)**
17. **REMOVE REAR SEAT SHOULDER BELT HOLE COVER (See page SB-41)**
18. **REMOVE PACKAGE TRAY TRIM PANEL ASSEMBLY (w/o Rear Sunshade) (See page SB-41)**
19. **REMOVE PACKAGE TRAY TRIM PANEL ASSEMBLY (w/ Rear Sunshade) (See page IR-20)**
20. **REMOVE REAR SEAT 3 POINT TYPE BELT ASSEMBLY LH (See page SB-49)**
21. **REMOVE REAR WHEEL**

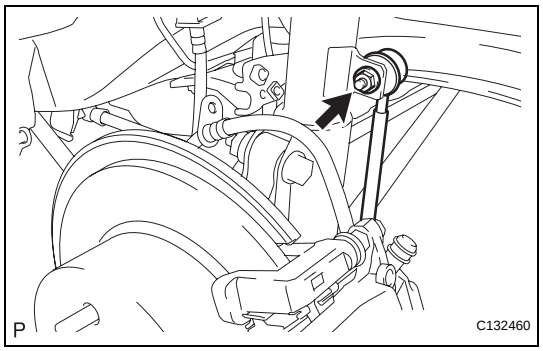

22. SEPARATE REAR STABILIZER LINK ASSEMBLY LH

(a) Remove the nut and separate the rear stabilizer link assembly from the front shock absorber LH.
HINT:
If the ball joint turns together with the nut, use a hexagon wrench (5 mm) to hold the stud.

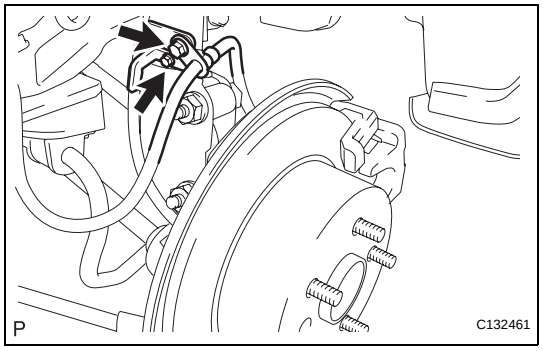

23. SEPARATE REAR SPEED SENSOR

(a) Remove the 2 bolts, and disconnect the rear brake flexible hose and rear speed sensor from the rear shock absorber with coil spring and rear axle carrier.
NOTICE:
Be sure to remove the rear speed sensor from the rear shock absorber with coil spring.

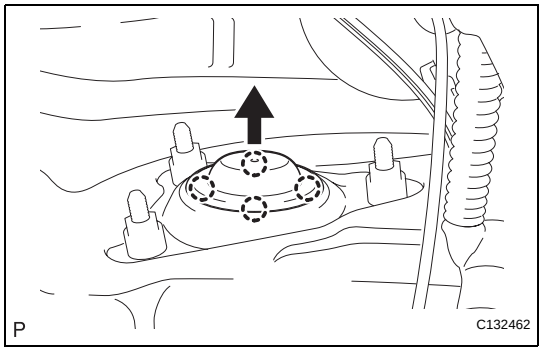

24. REMOVE REAR SUSPENSION SUPPORT NO. 1 COVER

(a) Remove the 4 claws and the rear suspension support No. 1 cover.

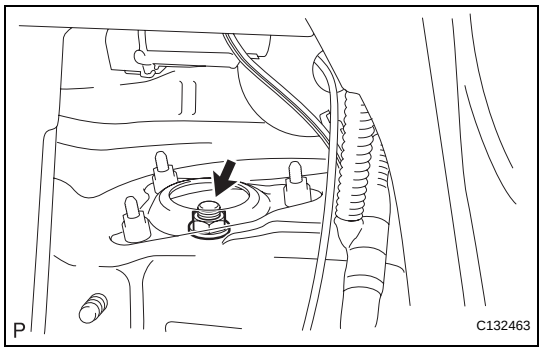

25. REMOVE REAR SHOCK ABSORBER WITH COIL SPRING

(a) Loosen the lock nut of the rear shock absorber with coil spring.
NOTICE:
- **Do not remove the lock nut.**
- **Only loosen the nut when disassembling the rear shock absorber with coil spring.**

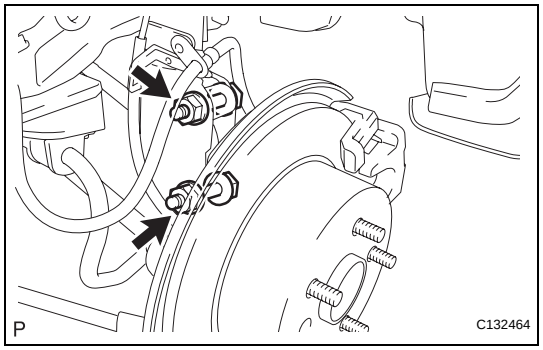

(b) Remove the 2 nuts and 2 bolts on the lower side of the rear shock absorber with coil spring.
NOTICE:
- **When removing the nuts, keep the bolts from rotating.**
- **Keep one bolt inserted to secure the hub and disc rotor.**

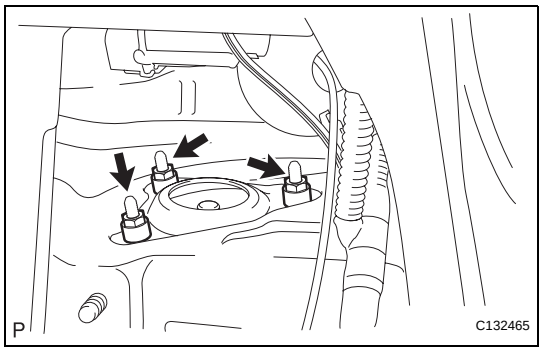

(c) Remove the 3 nuts on the upper side of the rear shock absorber with coil spring.

(d) Lower the rear axle carrier, and remove the 2 bolts on the lower side of the rear shock absorber with coil spring.

NOTICE:

Make sure that the rear speed sensor is disconnected from the rear shock absorber with coil spring.

DISASSEMBLY

1. FIX REAR SHOCK ABSORBER WITH COIL SPRING

(a) As shown in the illustration, secure the rear shock absorber with coil spring in a vise using aluminum plates by closing the vise onto the double nutted bolt affixed to the bracket at the bottom of the absorber.

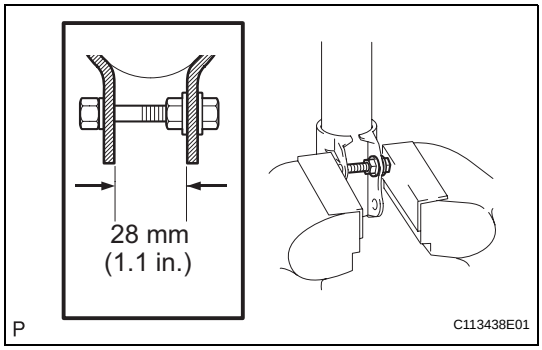

2. REMOVE REAR SHOCK ABSORBER

(a) Using SST, compress the rear coil spring.

SST 09727-30021 (09727-00010, 09727-00021, 09727-00031)

NOTICE:

Do not use an impact wrench.

HINT:

If the front coil spring is compressed at an angle, using 2 SST will make the work easier.

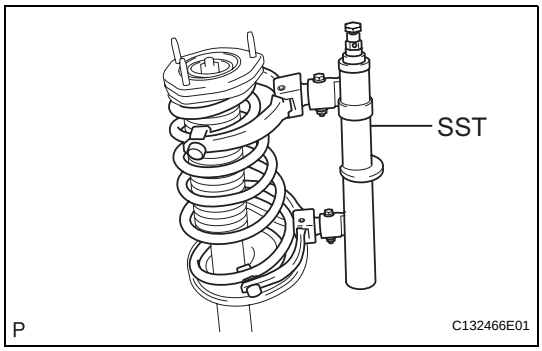

(b) Remove the nut, rear shock absorber collar and rear suspension support assembly.

(c) Remove the rear coil spring, rear No. 1 spring bumper, and rear coil spring lower insulator.

INSPECTION

1. INSPECT REAR SHOCK ABSORBER

(a) Compress and extend the shock absorber rod 4 or more times.

Standard:

There is no abnormal resistance or sound and operation resistance is normal.

HINT:

If there is any abnormality, replace the rear shock absorber with a new one.

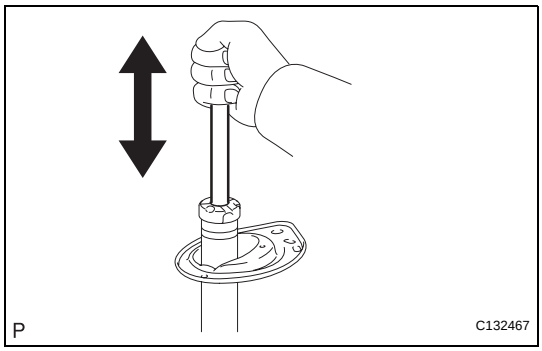

INSTALLATION

1. INSTALL REAR SHOCK ABSORBER WITH COIL SPRING

(a) Install the rear shock absorber with coil spring to the rear axle carrier assembly and insert the 2 bolts from the rear of the vehicle.

(b) Slowly jack up the vehicle using a wooden block and install the rear shock absorber with coil spring (upper side) to the vehicle.

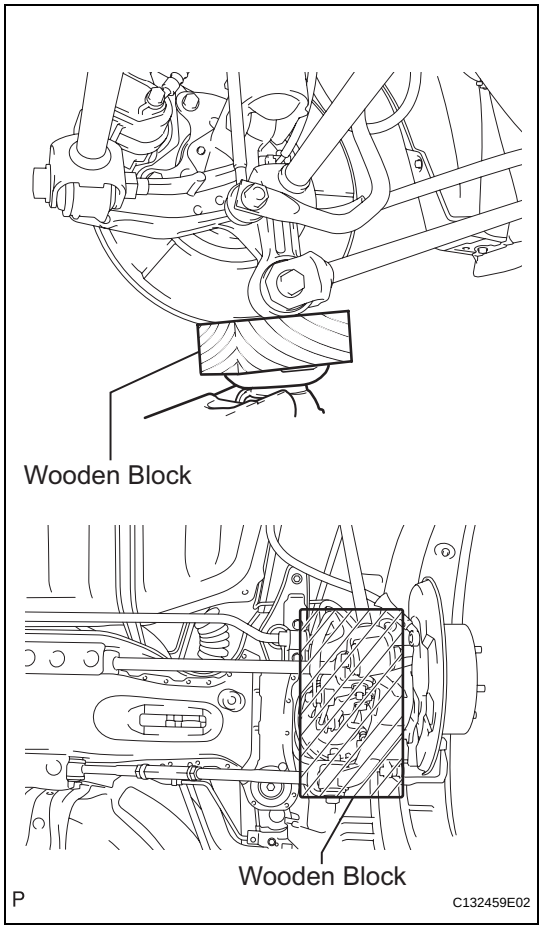

(c) Install the 3 nuts to the upper side of the rear shock absorber with coil spring.
Torque: 39 N*m (398 kgf*cm, 29 ft.*lbf)

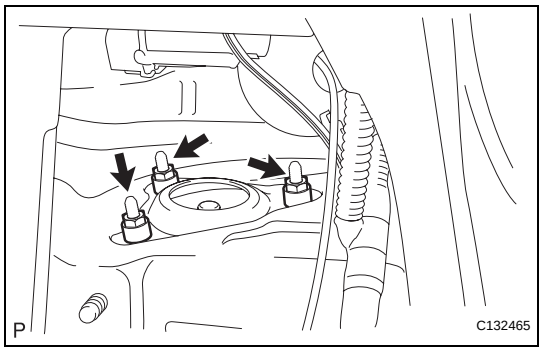

SP

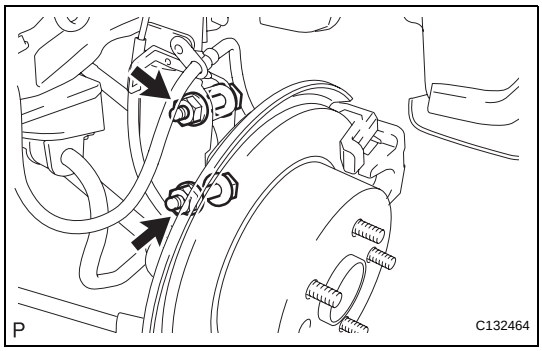

(d) Install the 2 nuts and 2 bolts to the lower side of the rear shock absorber with coil spring.
Torque: 180 N*m (1,840 kgf*cm, 133 ft.*lbf)
NOTICE:
When installing the nuts, keep the bolts from rotating.

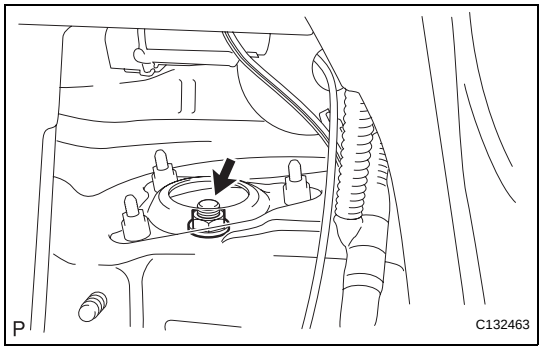

(e) Fully tighten the lock nut.
Torque: 55 N*m (561 kgf*cm, 41 ft.*lbf)

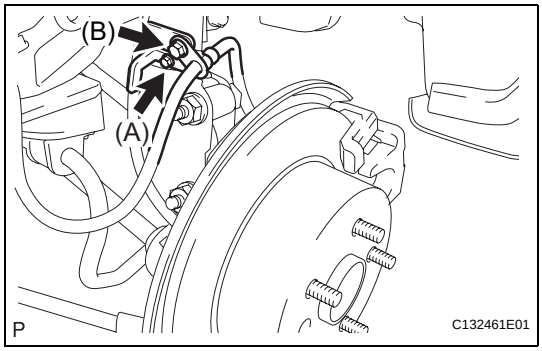

2. CONNECT REAR SPEED SENSOR

(a) Install the rear brake flexible hose and rear speed sensor wire harness with the 2 bolts.
Torque: 5.0 N*m (51 kgf*cm, 44 in.*lbf) (bolt A)
19 N*m (194 kgf*cm, 14 ft.*lbf) (bolt B)

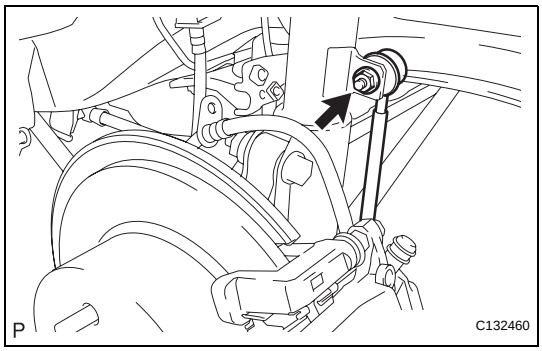

3. INSTALL REAR STABILIZER LINK ASSEMBLY LH

(a) Install the rear stabilizer link assembly LH to the rear shock absorber with the nut.
Torque: 39 N*m (398 kgf*cm, 29 ft.*lbf)
HINT:
If the ball joint turns together with the nut, use a hexagon wrench (5 mm) to hold the stud.

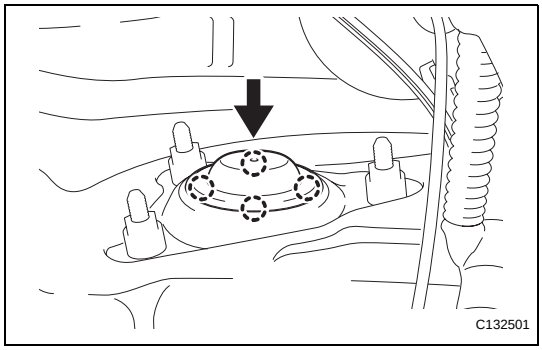

4. INSTALL REAR SUSPENSION SUPPORT NO. 1 COVER

(a) Engage the 4 claws and install the rear suspension support No. 1 cover.

5. INSTALL REAR SEAT 3 POINT TYPE BELT ASSEMBLY LH (See page SB-49)

6. INSTALL PACKAGE TRAY TRIM PANEL ASSEMBLY (w/o Rear Sunshade) (See page SB-42)

7. **INSTALL PACKAGE TRAY TRIM PANEL ASSEMBLY (w/ Rear Sunshade) (See page IR-23)**
8. **INSTALL REAR SEAT SHOULDER BELT HOLE COVER (See page SB-42)**
9. **INSTALL REAR SEAT INNER WITH CENTER BELT ASSEMBLY RH (See page SB-42)**
10. **CONNECT REAR SEAT 3 POINT TYPE BELT ASSEMBLY LH (See page SB-42)**
11. **CONNECT REAR SEAT 3 POINT TYPE BELT ASSEMBLY RH (See page SB-43)**
12. **INSTALL ROOF SIDE INNER GARNISH LH (See page IR-62)**
13. **INSTALL ROOF SIDE INNER GARNISH RH (See page IR-65)**
14. **INSTALL REAR SEAT AIRBAG LH (w/ Rear Seat Side Airbag) (See page RS-460)**
15. **INSTALL REAR SEAT AIRBAG RH (w/ Rear Seat Side Airbag) (See page IR-65)**
16. **INSTALL REAR SEAT SIDE GARNISH LH (w/o Rear Seat Side Airbag) (See page IR-62)**
17. **INSTALL REAR SEAT SIDE GARNISH RH (w/o Rear Seat Side Airbag) (See page IR-65)**
18. **INSTALL REAR DOOR SCUFF PLATE LH (See page IR-63)**
19. **INSTALL REAR DOOR SCUFF PLATE RH (See page IR-65)**
20. **INSTALL REAR SEATBACK ASSEMBLY (See page SE-121)**
21. **INSTALL REAR SEAT CENTER HEADREST ASSEMBLY**
22. **INSTALL REAR SEAT HEADREST ASSEMBLY**
23. **INSTALL REAR SEAT CUSHION ASSEMBLY (See page SE-121)**
24. **INSTALL REAR WHEEL**
    Torque: 103 N*m (1,050 kgf*cm, 76 ft.*lbf)
25. **CONNECT CABLE TO NEGATIVE BATTERY TERMINAL**
26. **PERFORM INITIALIZATION**
    NOTICE:
    Some systems need initialization after reconnecting the cable to the negative battery terminal (See page IN-33).
27. **CHECK ABS SPEED SENSOR SIGNAL**
    (See page BC-24)

28. INSPECT SRS WARNING LIGHT
(See page RS-37)

29. INSPECT AND ADJUST REAR WHEEL ALIGNMENT
(See page SP-11)

DISPOSAL

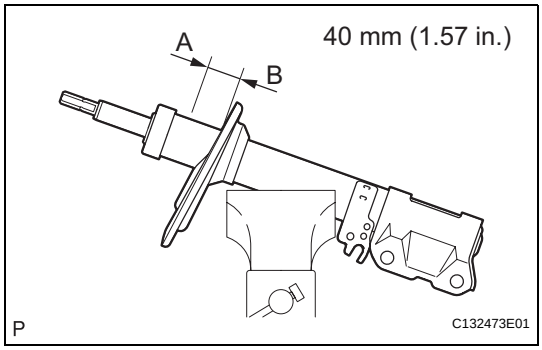

1. DISPOSE OF REAR SHOCK ABSORBER

(a) Fully extend the shock absorber piston rod.

(b) Using a drill, make a hole in the cylinder between A and B as shown in the illustration to discharge the gas inside.

CAUTION:

- **Be careful when drilling because shards of metal may fly about. Always use the proper safety equipment.**
- **The gas is colorless, odorless and non-poisonous.**

REAR STRUT ROD

COMPONENTS

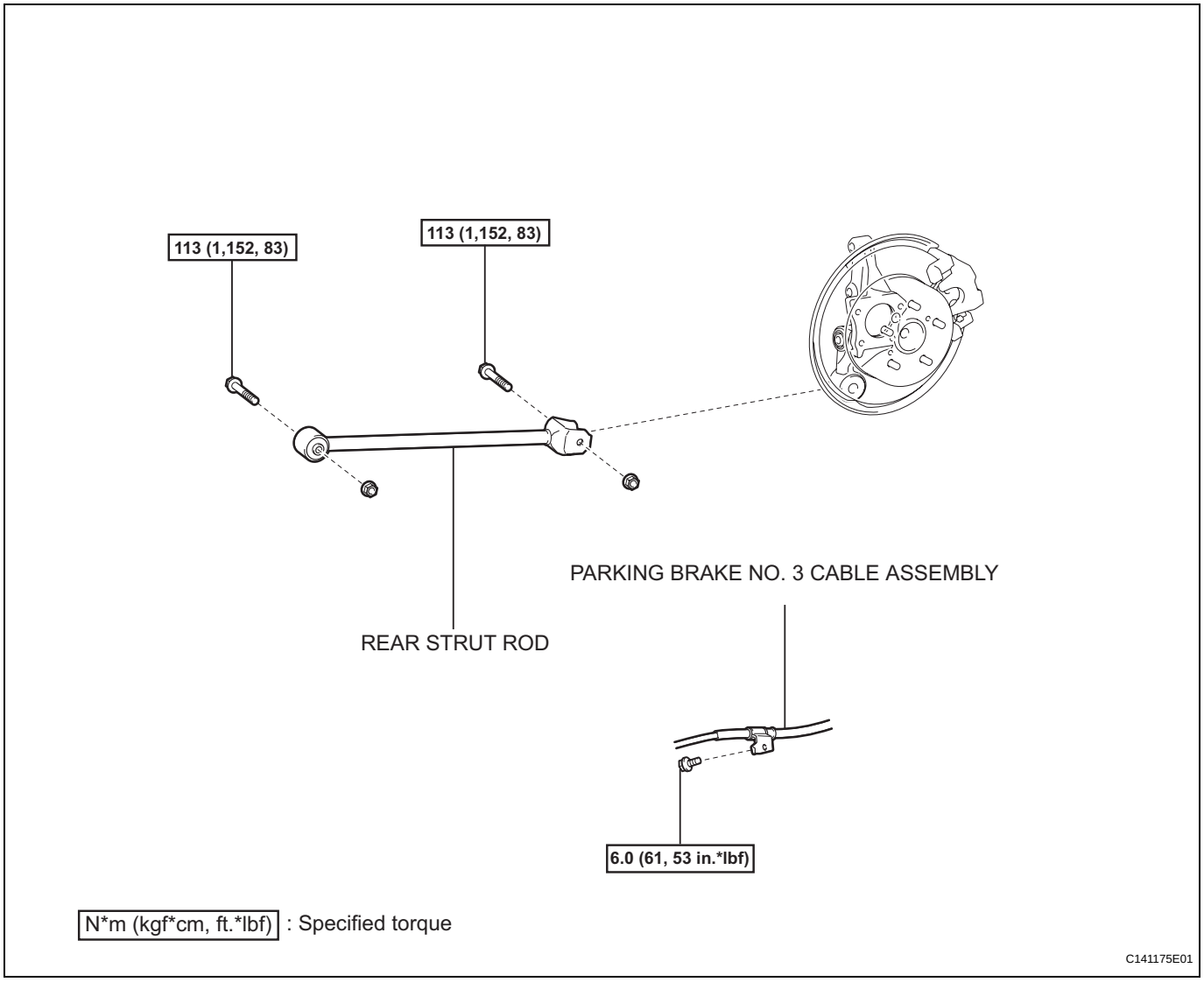

REMOVAL

1. REMOVE REAR WHEEL

2. SEPARATE PARKING BRAKE NO. 3 CABLE ASSEMBLY

(a) Remove the bolt, and separate the parking brake No. 3 cable assembly.

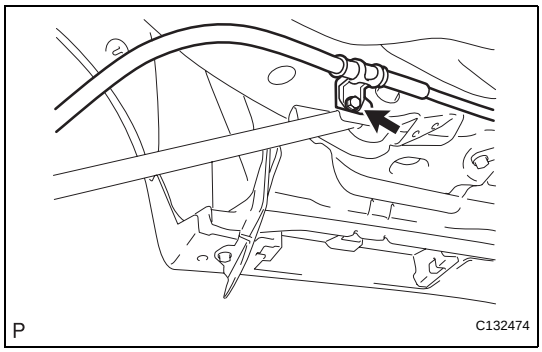

3. REMOVE REAR STRUT ROD

(a) Support the rear axle carrier with a jack.

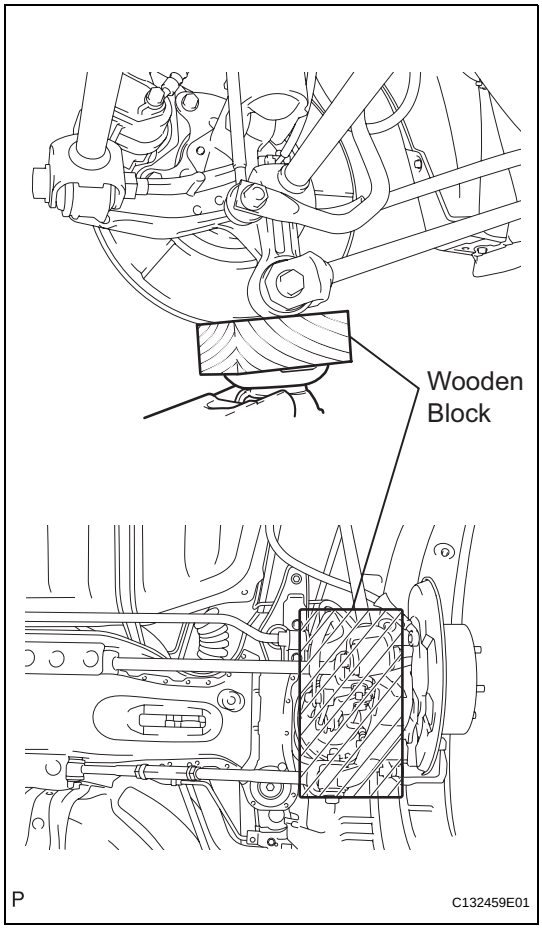

(b) Remove the bolt and nut, and disconnect the strut rod (front side).

NOTICE:

When removing the bolt, keep the nut from rotating.

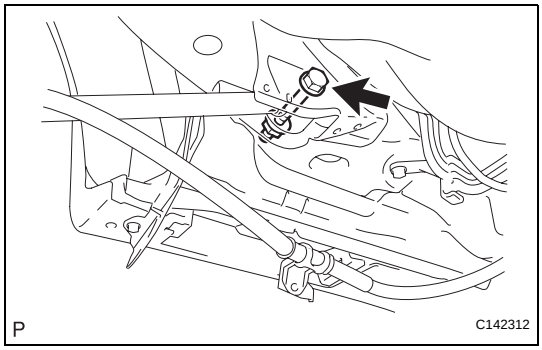

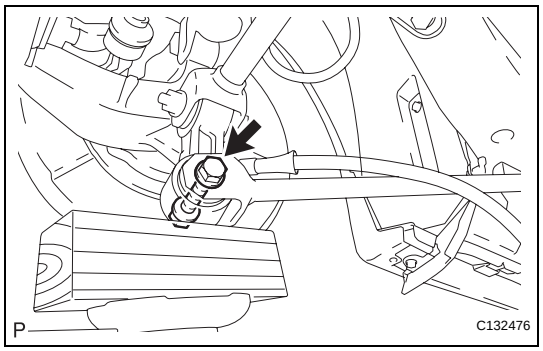

(c) Remove the bolt, nut and strut rod from the rear axle carrier.
NOTICE:
When removing the bolt, keep the nut from rotating.

INSTALLATION

1. TEMPORARILY TIGHTEN REAR STRUT ROD

(a) Install the rear strut rod (rear side), bolt and nut, and temporarily tighten the bolt.
NOTICE:
When temporarily tightening the bolt, keep the nut from rotating.

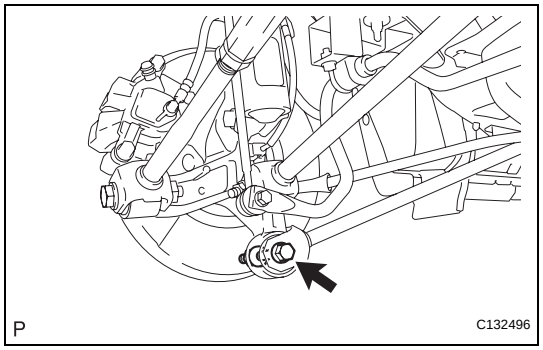

(b) Support the rear axle carrier.

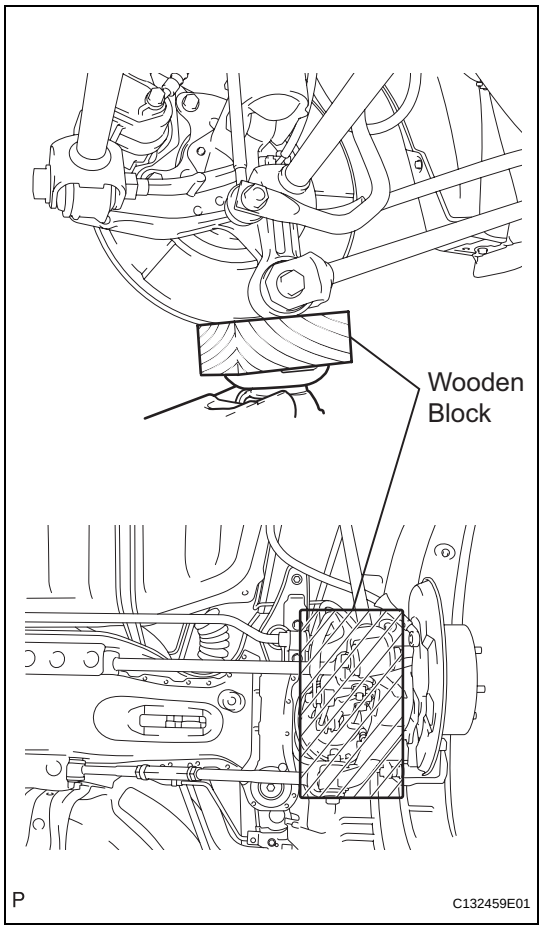

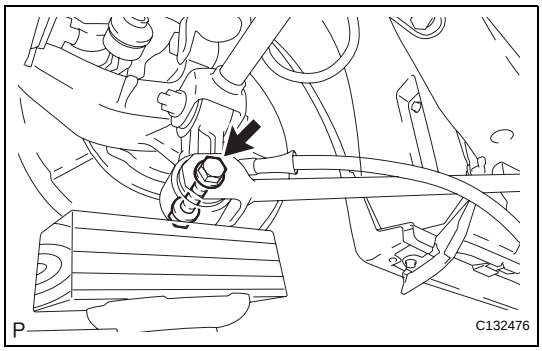

(c) Connect the rear strut rod (inner side) with the bolt and nut.
NOTICE:
When temporarily tightening the bolt, keep the nut from rotating.

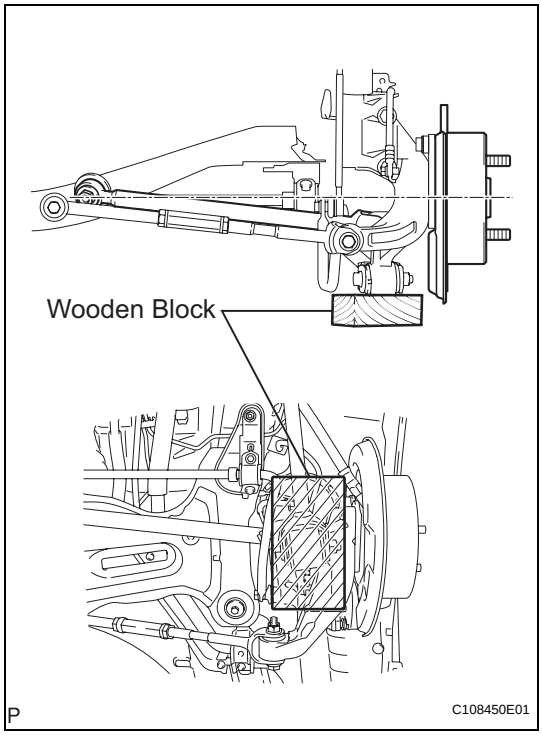

2. STABILIZE SUSPENSION

(a) Jack up the rear axle carrier, placing a wooden block to avoid damage. Apply load to the suspension so that the installed bolt of the rear suspension No. 1 arm (inner side of vehicle) is horizontally aligned with the center of the rear axle hub.

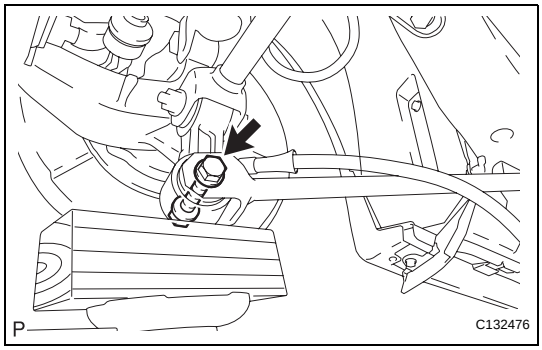

3. FULLY TIGHTEN REAR STRUT ROD

(a) Fully tighten the bolt.
Torque: 113 N*m (1,152 kgf*cm, 83 ft.*lbf)

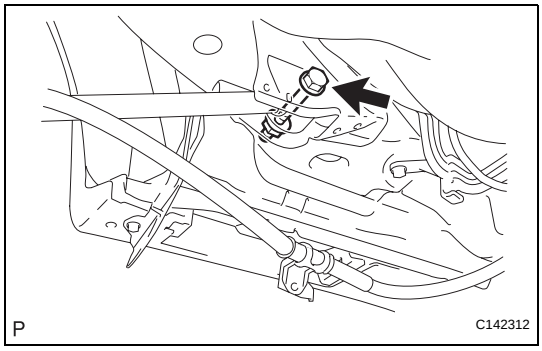

(b) Fully tighten the bolt.
Torque: 113 N*m (1,152 kgf*cm, 83 ft.*lbf)

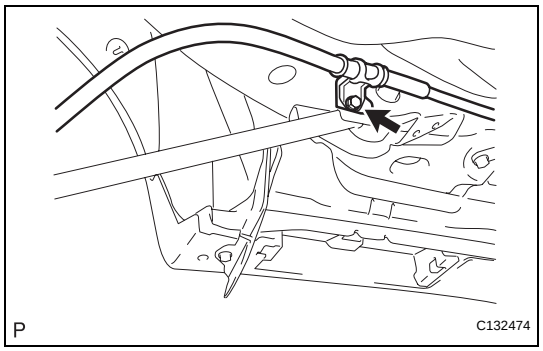

4. CONNECT PARKING BRAKE NO. 3 CABLE ASSEMBLY

(a) Install the parking brake No. 3 cable assembly with the bolt.
Torque: 6.0 N*m (61 kgf*cm, 53 in.*lbf)

5. INSTALL REAR WHEEL
Torque: 103 N*m (1,050 kgf*cm, 76 ft.*lbf)

INSTALLATION

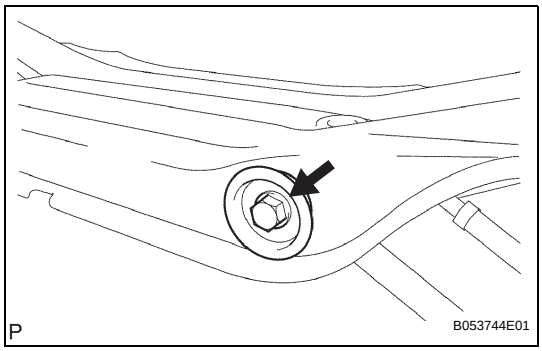

1. INSTALL REAR NO. 1 SUSPENSION ARM LH

(a) Install the rear No. 1 suspension arm (inner side) with the bolt, and temporarily tighten the bolt.

(1) Install the rear No. 1 suspension arm so that the bracket leans toward the front side of the vehicle as shown in the illustration.
Torque: 100 N*m (1,020 kgf*cm, 74 ft.*lbf)

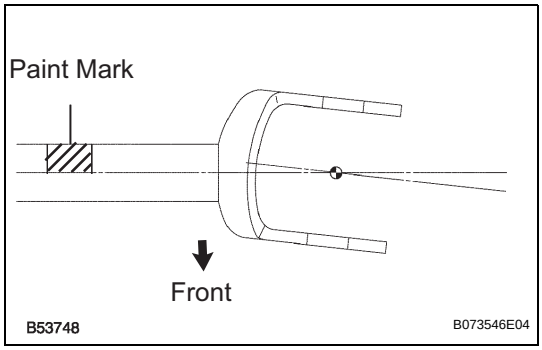

NOTICE:
Ensure that the paint mark faces the rear side of the vehicle.

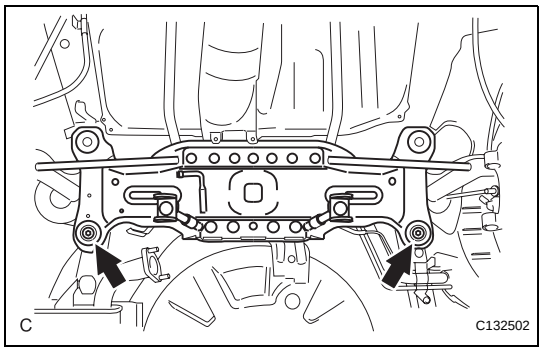

2. INSTALL REAR SUSPENSION MEMBER SUB-ASSEMBLY

(a) Raise the rear suspension member with a jack.

(b) Install the rear suspension member with the 2 bolts.
Torque: 56 N*m (571 kgf*cm, 41 ft.*lbf)

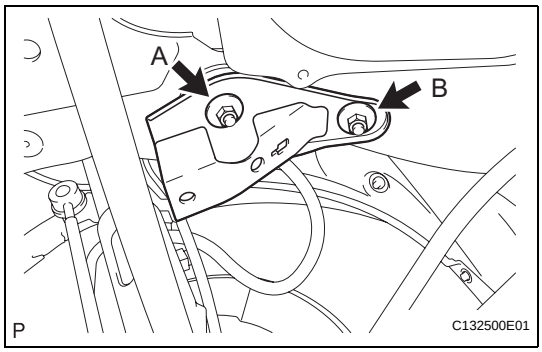

3. INSTALL REAR SUSPENSION MEMBER LOWER STOPPER LH

(a) Install the rear suspension member lower stopper LH with the 2 nuts.
Torque: Nut A
55 N*m (561 kgf*cm, 41 ft.*lbf)
Nut B
38 N*m (388 kgf*cm, 28 ft.*lbf)

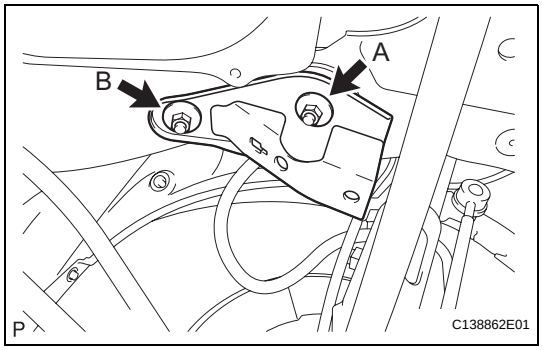

4. INSTALL REAR SUSPENSION MEMBER LOWER STOPPER RH

(a) Install the rear suspension member lower stopper RH with the 2 nuts.
Torque: Nut A
55 N*m (561 kgf*cm, 41 ft.*lbf)
Nut B
38 N*m (388 kgf*cm, 28 ft.*lbf)

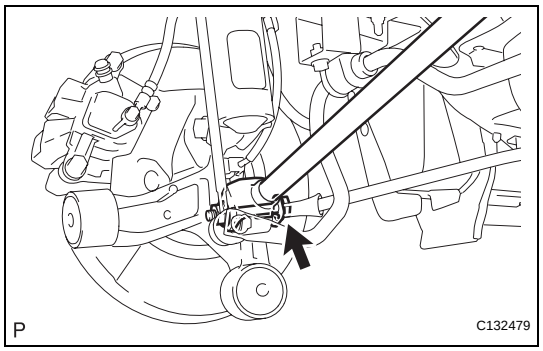

5. TEMPORARILY TIGHTEN REAR NO. 1 SUSPENSION ARM LH

(a) Connect the rear No. 1 suspension arm (outer side) to the rear axle carrier with the bolt and nut and temporarily tighten the bolt and nut.

NOTICE:

When temporarily tightening the bolt, keep the nut from rotating.

HINT:

Insert the bolt from the front of the vehicle and temporarily install the bolt.

6. TEMPORARILY TIGHTEN REAR NO. 1 SUSPENSION ARM RH

HINT:

Temporarily tighten the RH side using the same procedures as for the LH side.

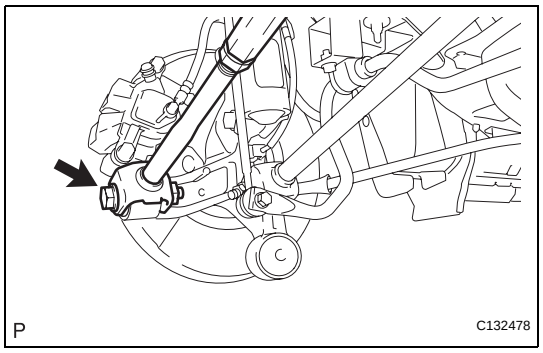

7. TEMPORARILY TIGHTEN REAR NO. 2 SUSPENSION ARM LH

(a) Connect the rear No. 2 suspension arm (outer side) to the rear axle carrier with the bolt and nut and temporarily tighten the bolt.

NOTICE:

When temporarily tightening the bolt, keep the nut from rotating.

HINT:

Insert the bolt from the rear of the vehicle and temporarily install the bolt.

8. TEMPORARILY TIGHTEN REAR NO. 2 SUSPENSION ARM RH

HINT:

Temporarily tighten the RH side using the same procedures as for the LH side.

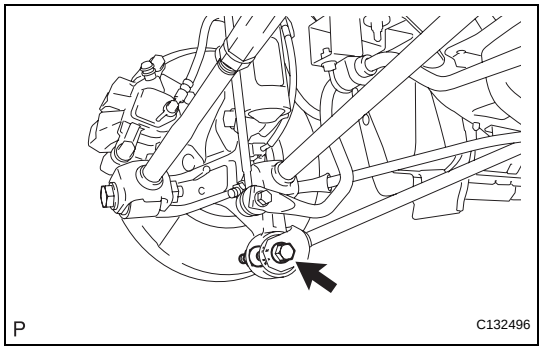

9. TEMPORARILY TIGHTEN REAR STRUT ROD

(a) Connect the strut rod assembly rear to the axle carrier with the bolt and nut and temporarily tighten the bolt.

NOTICE:

When temporarily tightening the bolt, keep the nut from rotating.

HINT:

Insert the bolt from the inside of the vehicle and temporarily install the bolt.

10. STABILIZE SUSPENSION (See page SP-48)

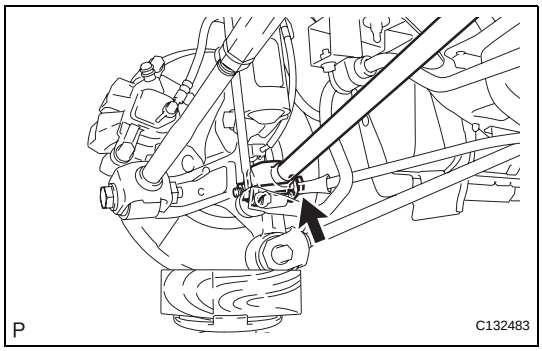

11. FULLY TIGHTEN REAR NO. 1 SUSPENSION ARM LH
(a) Fully tighten the bolt.
Torque: 100 N*m (1,020 kgf*cm, 74 ft.*lbf)

12. FULLY TIGHTEN REAR NO. 1 SUSPENSION ARM RH
HINT:
Fully tighten the RH side using the same procedures as for the LH side.

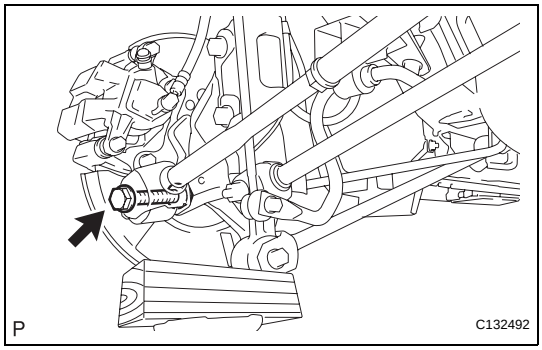

13. FULLY TIGHTEN REAR NO. 2 SUSPENSION ARM LH
(a) Fully tighten the bolt.
Torque: 100 N*m (1,020 kgf*cm, 74 ft.*lbf)

14. FULLY TIGHTEN REAR NO. 2 SUSPENSION ARM RH
HINT:
Fully tighten the RH side using the same procedures as for the LH side.

15. FULLY TIGHTEN REAR STRUT ROD (See page SP-48)

16. INSTALL REAR STABILIZER BUSHING (See page SP-66)

17. INSTALL REAR STABILIZER BAR NO. 1 BRACKET (See page SP-66)

18. INSTALL REAR STABILIZER BAR

19. INSTALL REAR STABILIZER LINK ASSEMBLY LH (See page SP-67)

20. INSTALL REAR STABILIZER LINK ASSEMBLY RH (See page SP-67)

21. INSTALL CENTER EXHAUST PIPE ASSEMBLY (See page EX-4)

22. INSTALL TAIL EXHAUST PIPE ASSEMBLY (See page EX-5)

23. INSTALL REAR WHEEL
Torque: 103 N*m (1,050 kgf*cm, 76 ft.*lbf)

24. CHECK FOR EXHAUST GAS LEAKAGE (See page EX-5)

25. INSPECT AND ADJUST REAR WHEEL ALIGNMENT
(See page SP-11)

REMOVAL

NOTICE:
Check if an old gasket still remains on the pipe. If so, remove it. Also, check if any bolts or nuts are rusted. If so, replace them.

1. **REMOVE REAR WHEEL**
2. **REMOVE TAIL EXHAUST PIPE ASSEMBLY (See page EX-2)**
3. **REMOVE CENTER EXHAUST PIPE ASSEMBLY (See page EX-2)**
4. **SEPARATE REAR STABILIZER LINK ASSEMBLY LH**
   (a) Remove the nut and separate the rear stabilizer link assembly LH (lower side) from the rear stabilizer bar.
   HINT:
   If the ball joint turns together with the nut, use a hexagon wrench (5 mm) to hold the stud.

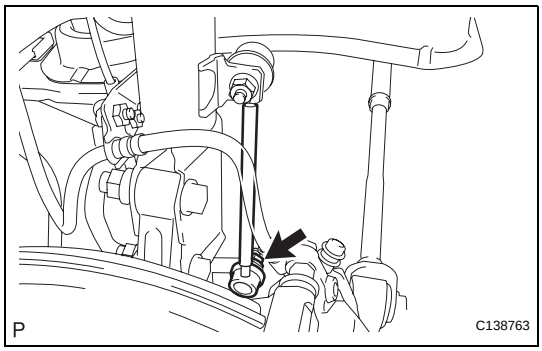

5. **SEPARATE REAR STABILIZER LINK ASSEMBLY RH**
   HINT:
   Separate the RH side using the same procedures as for the LH side.
6. **REMOVE REAR STABILIZER BAR NO. 1 BRACKET (See page SP-65)**
7. **REMOVE REAR STABILIZER BAR**
8. **REMOVE REAR STABILIZER BUSHING (See page SP-65)**
9. **SEPARATE REAR STRUT ROD**
   (a) Remove the bolt, nut and separate the rear strut rod from the rear axle carrier.
   NOTICE:
   When removing the bolt, keep the nut from rotating.

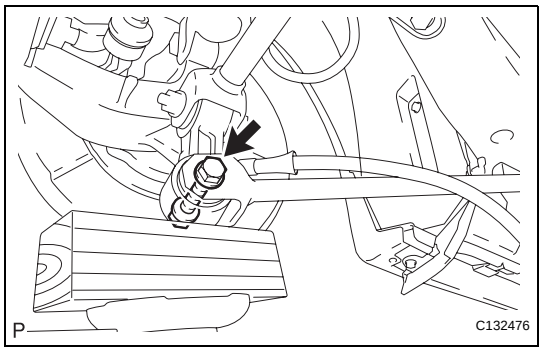

10. **SEPARATE REAR NO. 2 SUSPENSION ARM LH**
    (a) Remove the bolt nut, and separate the rear suspension No. 2 arm (outer side) from the rear axle carrier.
    NOTICE:
    When removing the bolt, keep the nut from rotating.

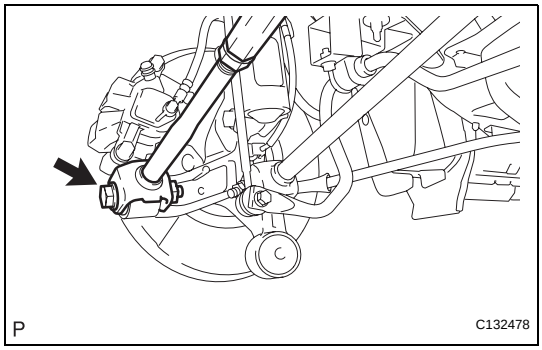

11. **SEPARATE REAR NO. 2 SUSPENSION ARM RH**
    HINT:
    Separate the RH side using the same procedures as for the LH side.

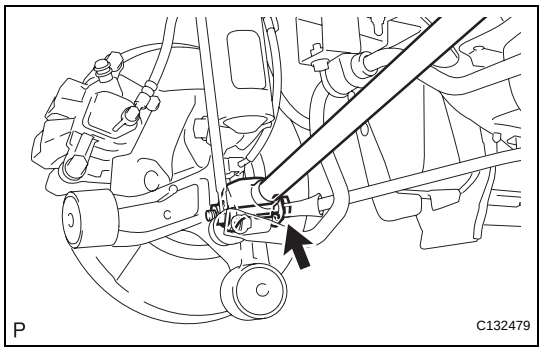

12. SEPARATE REAR NO. 1 SUSPENSION ARM LH

(a) Remove the bolt, nut and the rear No. 1 suspension arm (outer side) from the rear axle carrier.
NOTICE:
When removing the bolt, keep the nut from rotating.

13. SEPARATE REAR NO. 1 SUSPENSION ARM RH

HINT:
Separate the RH side using the same procedures as for the LH side.

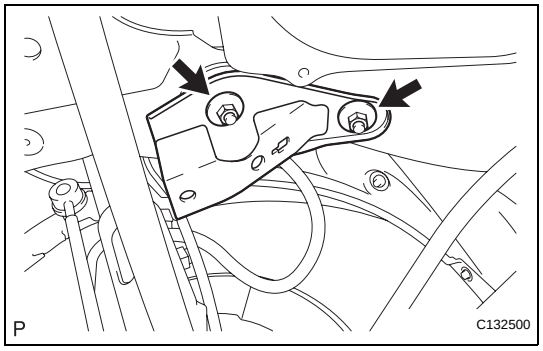

14. REMOVE REAR SUSPENSION MEMBER LOWER STOPPER LH

(a) Remove the 2 nuts and the rear suspension member lower stopper LH.

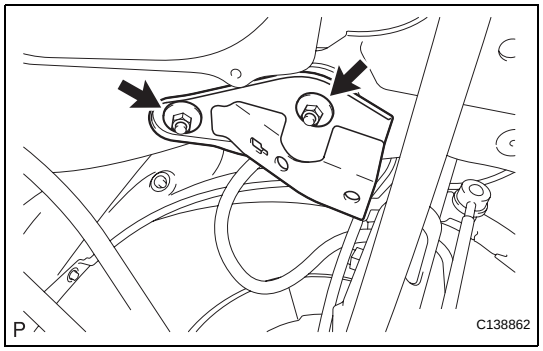

15. REMOVE REAR SUSPENSION MEMBER LOWER STOPPER RH

(a) Remove the 2 nuts and the rear suspension member lower stopper RH.

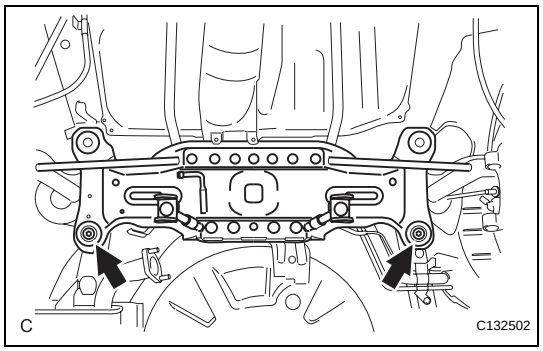

16. REMOVE REAR SUSPENSION MEMBER SUB-ASSEMBLY

(a) Support the rear suspension member with a jack.
(b) Remove the 2 bolts, and the rear suspension member sub-assembly.

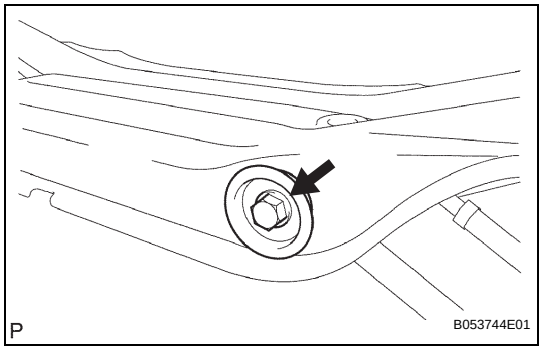

17. REMOVE REAR NO. 1 SUSPENSION ARM LH

(a) Remove the bolt and rear No. 1 suspension arm assembly LH.

INSTALLATION

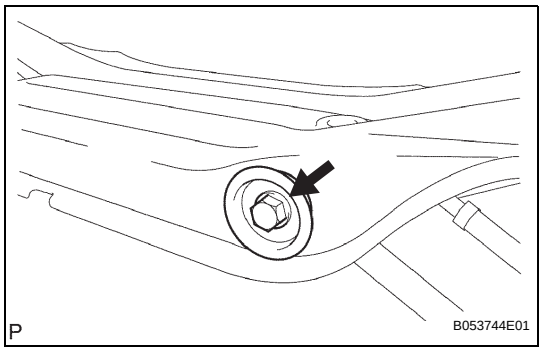

1. INSTALL REAR NO. 1 SUSPENSION ARM LH

(a) Install the rear No. 1 suspension arm (inner side) with the bolt, and temporarily tighten the bolt.

(1) Install the rear No. 1 suspension arm so that the bracket leans toward the front side of the vehicle as shown in the illustration.
Torque: 100 N*m (1,020 kgf*cm, 74 ft.*lbf)

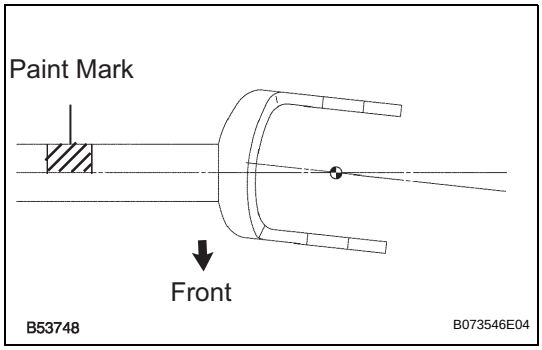

NOTICE:
Ensure that the paint mark faces the rear side of the vehicle.

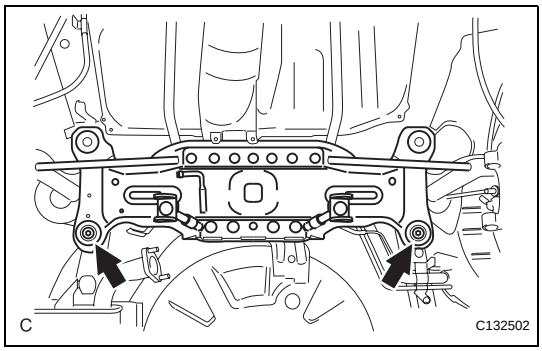

2. INSTALL REAR SUSPENSION MEMBER SUB-ASSEMBLY

(a) Raise the rear suspension member with a jack.

(b) Install the rear suspension member with the 2 bolts.
Torque: 56 N*m (571 kgf*cm, 41 ft.*lbf)

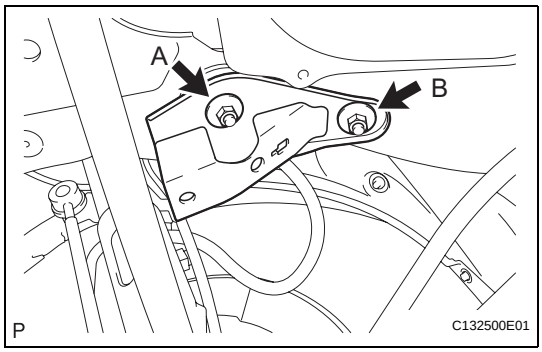

3. INSTALL REAR SUSPENSION MEMBER LOWER STOPPER LH

(a) Install the rear suspension member lower stopper LH with the 2 nuts.
Torque: Nut A
55 N*m (561 kgf*cm, 41 ft.*lbf)
Nut B
38 N*m (388 kgf*cm, 28 ft.*lbf)

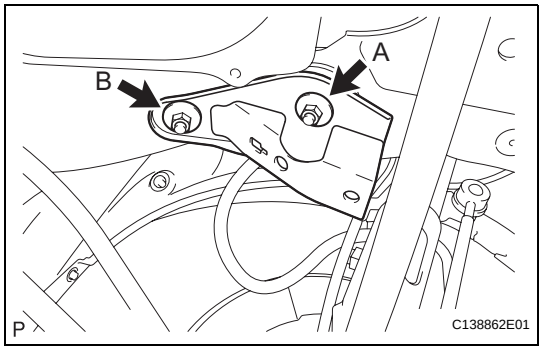

4. INSTALL REAR SUSPENSION MEMBER LOWER STOPPER RH

(a) Install the rear suspension member lower stopper RH with the 2 nuts.
Torque: Nut A
55 N*m (561 kgf*cm, 41 ft.*lbf)
Nut B
38 N*m (388 kgf*cm, 28 ft.*lbf)

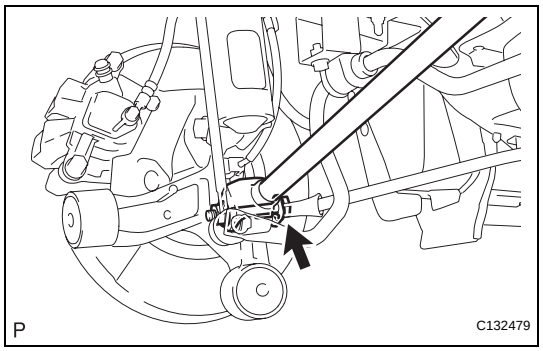

5. TEMPORARILY TIGHTEN REAR NO. 1 SUSPENSION ARM LH

(a) Connect the rear No. 1 suspension arm (outer side) to the rear axle carrier with the bolt and nut and temporarily tighten the bolt and nut.

NOTICE:

When temporarily tightening the bolt, keep the nut from rotating.

HINT:

Insert the bolt from the front of the vehicle and temporarily install the bolt.

6. TEMPORARILY TIGHTEN REAR NO. 1 SUSPENSION ARM RH

HINT:

Temporarily tighten the RH side using the same procedures as for the LH side.

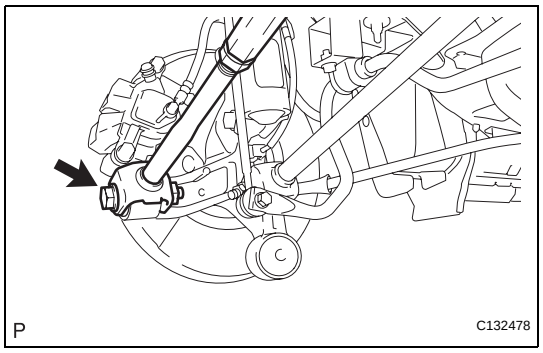

7. TEMPORARILY TIGHTEN REAR NO. 2 SUSPENSION ARM LH

(a) Connect the rear No. 2 suspension arm (outer side) to the rear axle carrier with the bolt and nut and temporarily tighten the bolt.

NOTICE:

When temporarily tightening the bolt, keep the nut from rotating.

HINT:

Insert the bolt from the rear of the vehicle and temporarily install the bolt.

8. TEMPORARILY TIGHTEN REAR NO. 2 SUSPENSION ARM RH

HINT:

Temporarily tighten the RH side using the same procedures as for the LH side.

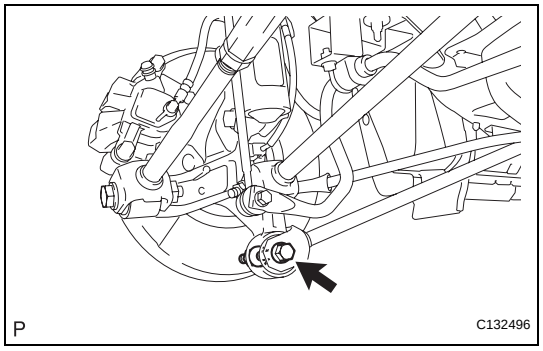

9. TEMPORARILY TIGHTEN REAR STRUT ROD

(a) Connect the strut rod assembly rear to the axle carrier with the bolt and nut and temporarily tighten the bolt.

NOTICE:

When temporarily tightening the bolt, keep the nut from rotating.

HINT:

Insert the bolt from the inside of the vehicle and temporarily install the bolt.

10. STABILIZE SUSPENSION (See page SP-48)

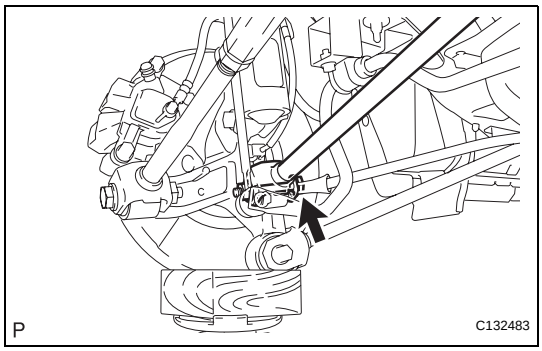

11. FULLY TIGHTEN REAR NO. 1 SUSPENSION ARM LH
(a) Fully tighten the bolt.
Torque: 100 N*m (1,020 kgf*cm, 74 ft.*lbf)

12. FULLY TIGHTEN REAR NO. 1 SUSPENSION ARM RH
HINT:
Fully tighten the RH side using the same procedures as for the LH side.

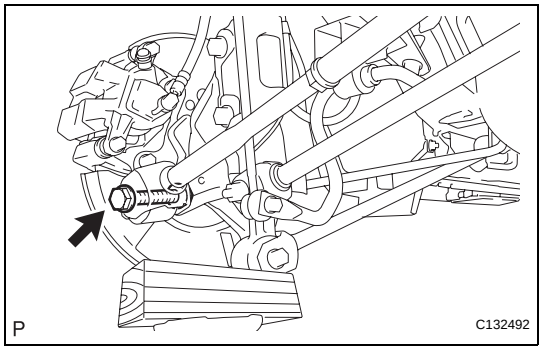

13. FULLY TIGHTEN REAR NO. 2 SUSPENSION ARM LH
(a) Fully tighten the bolt.
Torque: 100 N*m (1,020 kgf*cm, 74 ft.*lbf)

14. FULLY TIGHTEN REAR NO. 2 SUSPENSION ARM RH
HINT:
Fully tighten the RH side using the same procedures as for the LH side.

15. FULLY TIGHTEN REAR STRUT ROD (See page SP-48)

16. INSTALL REAR STABILIZER BUSHING (See page SP-66)

17. INSTALL REAR STABILIZER BAR NO. 1 BRACKET (See page SP-66)

18. INSTALL REAR STABILIZER BAR

19. INSTALL REAR STABILIZER LINK ASSEMBLY LH (See page SP-67)

20. INSTALL REAR STABILIZER LINK ASSEMBLY RH (See page SP-67)

21. INSTALL CENTER EXHAUST PIPE ASSEMBLY (See page EX-4)

22. INSTALL TAIL EXHAUST PIPE ASSEMBLY (See page EX-5)

23. INSTALL REAR WHEEL
Torque: 103 N*m (1,050 kgf*cm, 76 ft.*lbf)

24. CHECK FOR EXHAUST GAS LEAKAGE (See page EX-5)

25. INSPECT AND ADJUST REAR WHEEL ALIGNMENT
(See page SP-11)

REMOVAL

NOTICE:
Check if an old gasket still remains on the pipe. If so, remove it. Also, check if any bolts or nuts are rusted. If so, replace them.

1. **REMOVE REAR WHEEL**
2. **REMOVE TAIL EXHAUST PIPE ASSEMBLY (See page EX-2)**
3. **REMOVE CENTER EXHAUST PIPE ASSEMBLY (See page EX-2)**
4. **SEPARATE REAR STABILIZER LINK ASSEMBLY LH (See page SP-52)**
5. **SEPARATE REAR STABILIZER LINK ASSEMBLY RH**
6. **REMOVE REAR STABILIZER BAR NO. 1 BRACKET (See page SP-65)**
7. **REMOVE REAR STABILIZER BAR**
8. **REMOVE REAR STABILIZER BUSHING (See page SP-65)**
9. **SEPARATE REAR HEIGHT CONTROL SENSOR SUB-ASSEMBLY RH (w/ HID Headlight System)**
   (a) Remove the nut and separate the rear height control sensor sub-assembly RH from the rear No. 2 suspension arm RH.

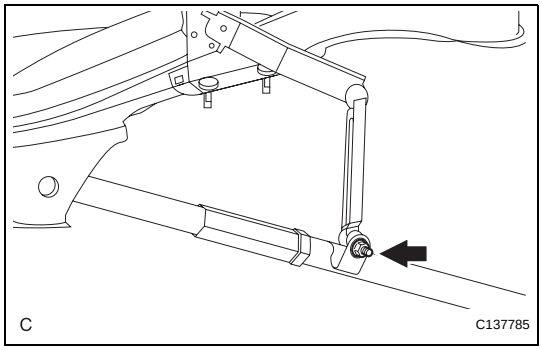

10. **SEPARATE REAR STRUT ROD (See page SP-52)**
11. **SEPARATE REAR NO. 2 SUSPENSION ARM LH (See page SP-52)**
12. **SEPARATE REAR NO. 2 SUSPENSION ARM RH (See page SP-52)**
13. **SEPARATE REAR NO. 1 SUSPENSION ARM LH (See page SP-53)**
14. **SEPARATE REAR NO. 1 SUSPENSION ARM RH (See page SP-53)**
15. **REMOVE REAR SUSPENSION MEMBER LOWER STOPPER LH (See page SP-53)**
16. **REMOVE REAR SUSPENSION MEMBER LOWER STOPPER RH (See page SP-53)**
17. **REMOVE REAR SUSPENSION MEMBER SUB-ASSEMBLY (See page SP-53)**

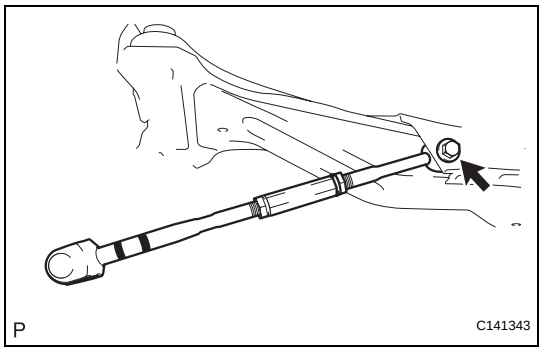

18. REMOVE REAR NO. 2 SUSPENSION ARM LH

(a) Remove the bolt, and the rear No. 2 suspension arm LH.

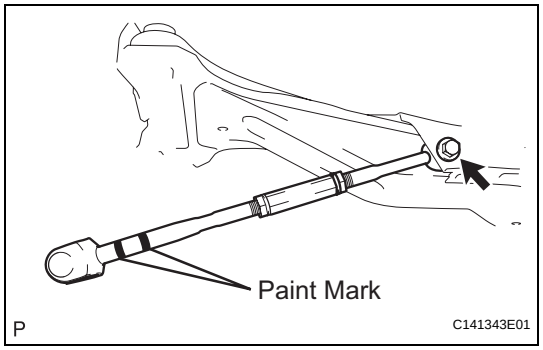

INSTALLATION

1. INSTALL REAR NO. 2 SUSPENSION ARM LH

(a) Install the rear No. 2 suspension arm (inside) with the bolt, and temporarily tighten the bolt.
HINT:
Ensure that the paint mark faces to the rear of the vehicle.

2. INSTALL REAR SUSPENSION MEMBER SUB-ASSEMBLY (See page SP-54)

3. INSTALL REAR SUSPENSION MEMBER LOWER STOPPER LH (See page SP-54)

4. INSTALL REAR SUSPENSION MEMBER LOWER STOPPER RH (See page SP-54)

5. TEMPORARILY TIGHTEN REAR NO. 1 SUSPENSION ARM LH (See page SP-55)

6. TEMPORARILY TIGHTEN REAR NO. 1 SUSPENSION ARM RH (See page SP-55)

7. TEMPORARILY TIGHTEN REAR NO. 2 SUSPENSION ARM LH (See page SP-55)

8. TEMPORARILY TIGHTEN REAR NO. 2 SUSPENSION ARM RH (See page SP-55)

9. TEMPORARILY TIGHTEN REAR STRUT ROD (See page SP-55)

10. STABILIZE SUSPENSION (See page SP-48)

11. FULLY TIGHTEN REAR NO. 1 SUSPENSION ARM LH (See page SP-56)

12. FULLY TIGHTEN REAR NO. 1 SUSPENSION ARM RH (See page SP-56)

13. FULLY TIGHTEN REAR NO. 2 SUSPENSION ARM LH (See page SP-56)

14. FULLY TIGHTEN REAR NO. 2 SUSPENSION ARM RH (See page SP-56)

15. FULLY TIGHTEN REAR STRUT ROD (See page SP-48)

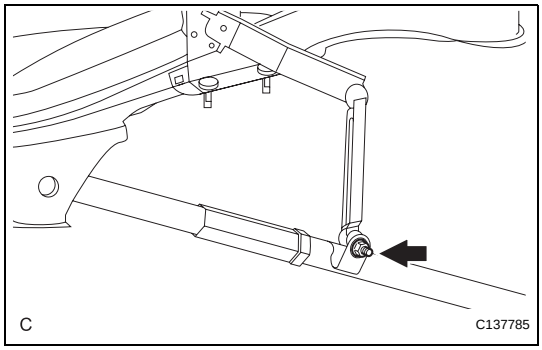

16. **INSTALL REAR HEIGHT CONTROL SENSOR SUB-ASSEMBLY RH (w/ HID Headlight System)**
    (a) Install the rear height control sensor sub-assembly RH with the nut.
    Torque: 5.4 N*m (55 kgf*cm, 48 in.*lbf)
17. **INSTALL REAR STABILIZER BUSHING (See page SP-66)**
18. **INSTALL REAR STABILIZER BAR NO. 1 BRACKET (See page SP-66)**
19. **INSTALL REAR STABILIZER BAR (See page SP-66)**
20. **INSTALL REAR STABILIZER LINK ASSEMBLY LH (See page SP-67)**
21. **INSTALL REAR STABILIZER LINK ASSEMBLY RH (See page SP-67)**
22. **INSTALL CENTER EXHAUST PIPE ASSEMBLY (See page EX-4)**
23. **INSTALL TAIL EXHAUST PIPE ASSEMBLY (See page EX-5)**
24. **INSTALL REAR WHEEL**
    Torque: 103 N*m (1,050 kgf*cm, 76 ft.*lbf)
25. **INSPECT AND ADJUST REAR WHEEL ALIGNMENT**
    (See page SP-11)
26. **INSTALL EXHAUST GAS LEAK (See page EX-5)**
27. **HEIGHT CONTROL SENSOR SIGNAL INITIALIZATION (w/ HID Headlight System)**
    (See page LI-30)

REMOVAL

NOTICE:
Check if an old gasket still remains on the pipe. If so, remove it. Also, check if any bolts or nuts are rusted. If so, replace them.

1. **REMOVE REAR WHEEL**
2. **REMOVE TAIL EXHAUST PIPE ASSEMBLY (See page EX-2)**
3. **REMOVE CENTER EXHAUST PIPE ASSEMBLY (See page EX-2)**
4. **SEPARATE REAR STABILIZER LINK ASSEMBLY LH (See page SP-52)**
5. **SEPARATE REAR STABILIZER LINK ASSEMBLY RH**
6. **REMOVE REAR STABILIZER BAR NO. 1 BRACKET (See page SP-65)**
7. **REMOVE REAR STABILIZER BAR**
8. **REMOVE REAR STABILIZER BUSHING (See page SP-65)**
9. **SEPARATE REAR HEIGHT CONTROL SENSOR SUB-ASSEMBLY RH (w/ HID Headlight System)**
   (a) Remove the nut and separate the rear height control sensor sub-assembly RH from the rear No. 2 suspension arm RH.

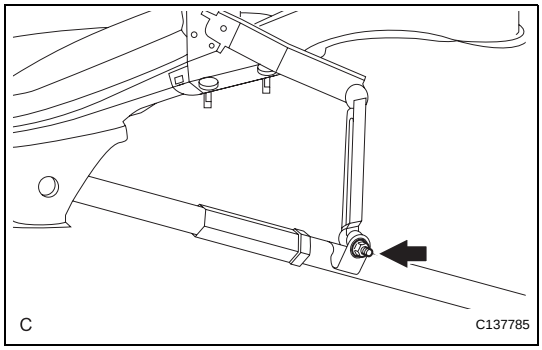

10. **SEPARATE REAR STRUT ROD (See page SP-52)**
11. **SEPARATE REAR NO. 2 SUSPENSION ARM LH (See page SP-52)**
12. **SEPARATE REAR NO. 2 SUSPENSION ARM RH (See page SP-52)**
13. **SEPARATE REAR NO. 1 SUSPENSION ARM LH (See page SP-53)**
14. **SEPARATE REAR NO. 1 SUSPENSION ARM RH (See page SP-53)**
15. **REMOVE REAR SUSPENSION MEMBER LOWER STOPPER LH (See page SP-53)**
16. **REMOVE REAR SUSPENSION MEMBER LOWER STOPPER RH (See page SP-53)**
17. **REMOVE REAR SUSPENSION MEMBER SUB-ASSEMBLY (See page SP-53)**

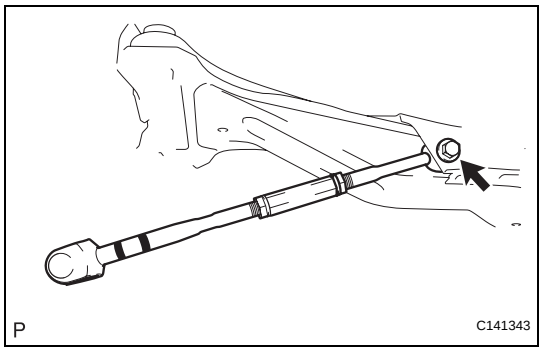

18. REMOVE REAR NO. 2 SUSPENSION ARM LH

(a) Remove the bolt, and the rear No. 2 suspension arm LH.

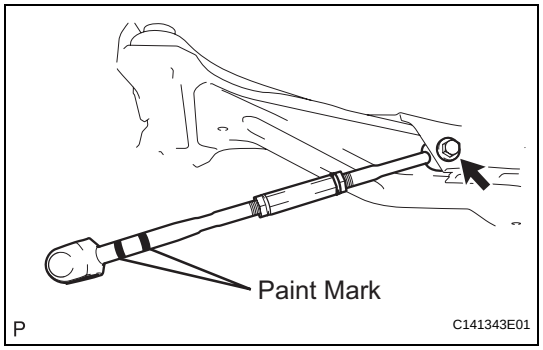

INSTALLATION

1. INSTALL REAR NO. 2 SUSPENSION ARM LH

(a) Install the rear No. 2 suspension arm (inside) with the bolt, and temporarily tighten the bolt.
HINT:
Ensure that the paint mark faces to the rear of the vehicle.

2. INSTALL REAR SUSPENSION MEMBER SUB-ASSEMBLY (See page SP-54)

3. INSTALL REAR SUSPENSION MEMBER LOWER STOPPER LH (See page SP-54)

4. INSTALL REAR SUSPENSION MEMBER LOWER STOPPER RH (See page SP-54)

5. TEMPORARILY TIGHTEN REAR NO. 1 SUSPENSION ARM LH (See page SP-55)

6. TEMPORARILY TIGHTEN REAR NO. 1 SUSPENSION ARM RH (See page SP-55)

7. TEMPORARILY TIGHTEN REAR NO. 2 SUSPENSION ARM LH (See page SP-55)

8. TEMPORARILY TIGHTEN REAR NO. 2 SUSPENSION ARM RH (See page SP-55)

9. TEMPORARILY TIGHTEN REAR STRUT ROD (See page SP-55)

10. STABILIZE SUSPENSION (See page SP-48)

11. FULLY TIGHTEN REAR NO. 1 SUSPENSION ARM LH (See page SP-56)

12. FULLY TIGHTEN REAR NO. 1 SUSPENSION ARM RH (See page SP-56)

13. FULLY TIGHTEN REAR NO. 2 SUSPENSION ARM LH (See page SP-56)

14. FULLY TIGHTEN REAR NO. 2 SUSPENSION ARM RH (See page SP-56)

15. FULLY TIGHTEN REAR STRUT ROD (See page SP-48)

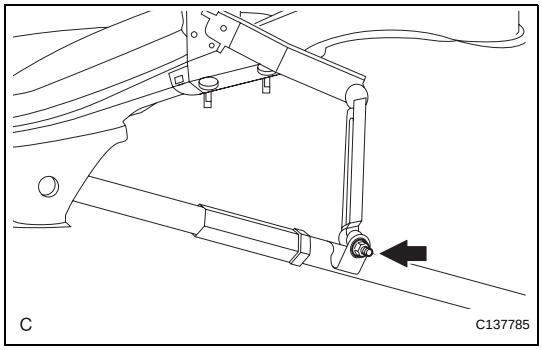

16. **INSTALL REAR HEIGHT CONTROL SENSOR SUB-ASSEMBLY RH (w/ HID Headlight System)**
    (a) Install the rear height control sensor sub-assembly RH with the nut.
    Torque: 5.4 N*m (55 kgf*cm, 48 in.*lbf)
17. **INSTALL REAR STABILIZER BUSHING (See page SP-66)**
18. **INSTALL REAR STABILIZER BAR NO. 1 BRACKET (See page SP-66)**
19. **INSTALL REAR STABILIZER BAR (See page SP-66)**
20. **INSTALL REAR STABILIZER LINK ASSEMBLY LH (See page SP-67)**
21. **INSTALL REAR STABILIZER LINK ASSEMBLY RH (See page SP-67)**
22. **INSTALL CENTER EXHAUST PIPE ASSEMBLY (See page EX-4)**
23. **INSTALL TAIL EXHAUST PIPE ASSEMBLY (See page EX-5)**
24. **INSTALL REAR WHEEL**
    Torque: 103 N*m (1,050 kgf*cm, 76 ft.*lbf)
25. **INSPECT AND ADJUST REAR WHEEL ALIGNMENT**
    (See page SP-11)
26. **INSTALL EXHAUST GAS LEAK (See page EX-5)**
27. **HEIGHT CONTROL SENSOR SIGNAL INITIALIZATION (w/ HID Headlight System)**
    (See page LI-30)

REMOVAL

NOTICE:
Check if an old gasket still remains on the pipe. If so, remove it. Also, check if any bolts or nuts are rusted. If so, replace them.

1. **REMOVE REAR WHEELS**
2. **REMOVE TAIL EXHAUST PIPE ASSEMBLY (See page EX-2)**
3. **REMOVE CENTER EXHAUST PIPE ASSEMBLY (See page EX-2)**
4. **REMOVE REAR STABILIZER LINK ASSEMBLY LH**
   (a) Remove the 2 nuts and rear stabilizer link assembly LH.
   HINT:
   If the ball joint turns together with the nut, use a hexagon wrench (5 mm) to hold the stud.

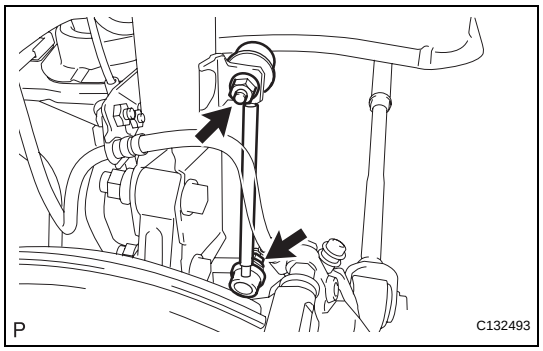

5. **REMOVE REAR STABILIZER LINK ASSEMBLY RH**
   (a) Remove the 2 nuts and rear stabilizer link assembly RH.
   HINT:
   If the ball joint turns together with the nut, use a hexagon wrench (5 mm) to hold the stud.

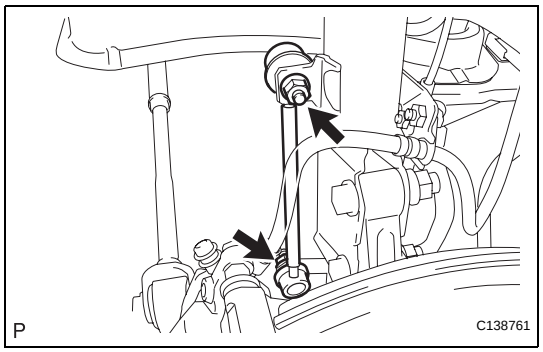

6. **REMOVE REAR STABILIZER BAR NO. 1 BRACKET**
   (a) Remove the 2 bolts and rear stabilizer bar No. 1 bracket. (LH side)

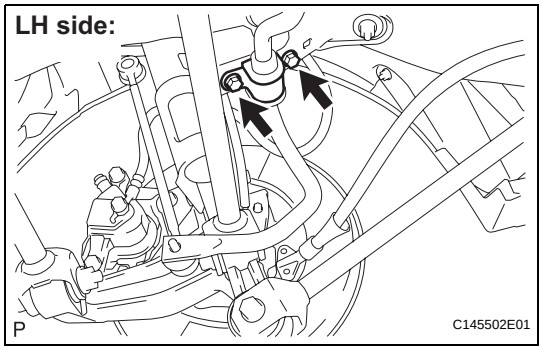

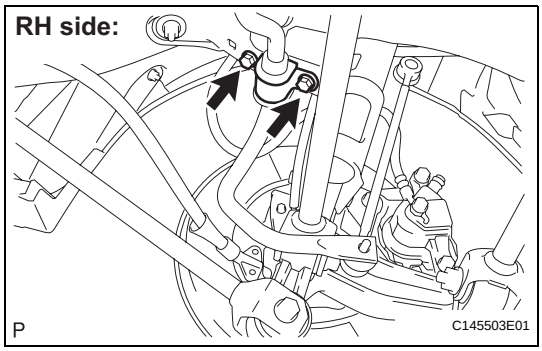

(b) Remove the 2 bolts and rear stabilizer bar No. 1 bracket. (RH side)

7. REMOVE REAR STABILIZER BUSHING

(a) Remove the 2 rear stabilizer bushings from the rear stabilizer bar.

8. REMOVE REAR STABILIZER BAR

INSPECTION

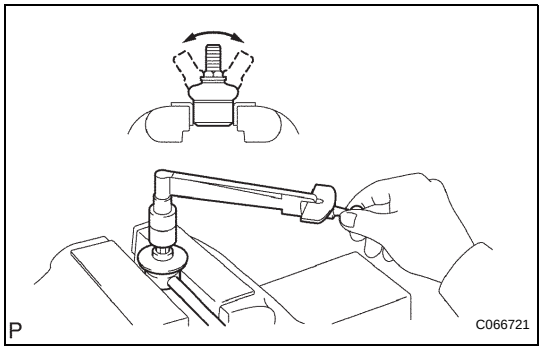

1. INSPECT REAR STABILIZER LINK ASSEMBLY

(a) Inspect the turning of the ball joint.

(1) Secure the rear stabilizer link assembly in a vise using aluminum plates.

(2) Install the nut to the rear stabilizer link assembly stud.

(3) Using a torque wrench, turn the nut continuously at a rate of 3 to 5 seconds per turn and take the torque reading on the 5th turn.

Torque: Turning torque
0.05 to 1.0 N*m (0.5 to 10 kgf*cm, 0.4 to 8.9 in.*lbf)

HINT:
If the turning torque is not within the specified range, replace the rear stabilizer link assembly with a new one.

(b) Inspect the dust cover.

(1) Check that the dust cover is not cracked and that there is no grease on it.

INSTALLATION

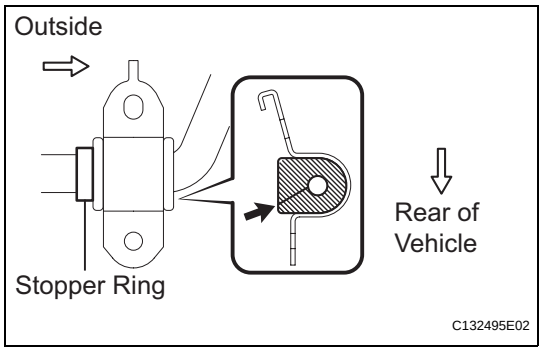

1. INSTALL REAR STABILIZER BUSHING

(a) Install the 2 rear stabilizer bushings to the outside of the stopper ring on the stabilizer bar.

2. INSTALL REAR STABILIZER BAR NO. 1 BRACKET

(a) Install the rear stabilizer bar No. 1 bracket.

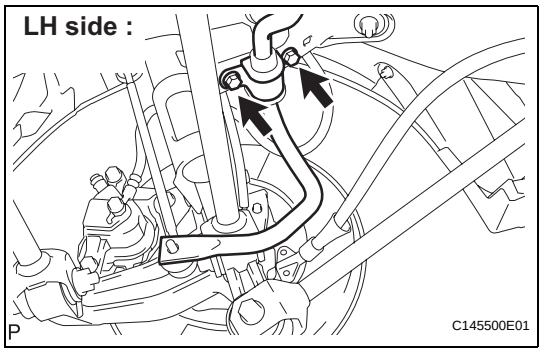

3. INSTALL REAR STABILIZER BAR

(a) Install the rear stabilizer bar with the 2 bolts. (LH Side)

Torque: 31 N*m (316 kgf*cm, 23 ft.*lbf)

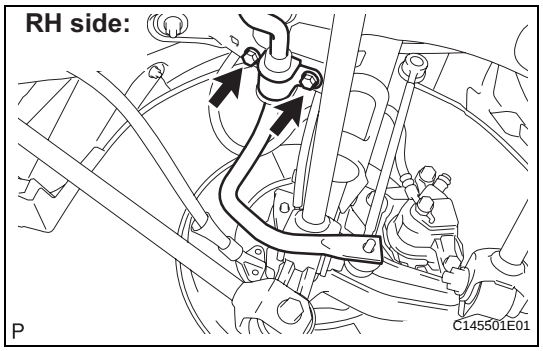

(b) Install the rear stabilizer bar with the 2 bolts. (RH Side)
Torque: 31 N*m (316 kgf*cm, 23 ft.*lbf)

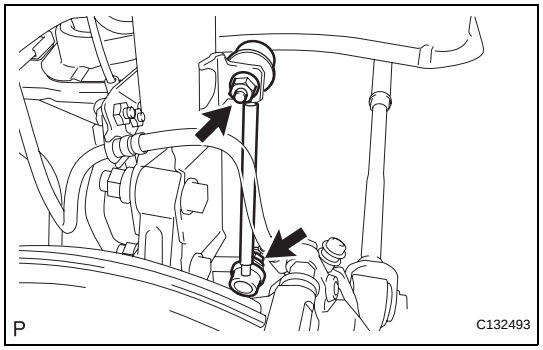

4. INSTALL REAR STABILIZER LINK ASSEMBLY LH

(a) Install the rear stabilizer link assembly LH with the 2 nuts.
Torque: 39 N*m (398 kgf*cm, 29 ft.*lbf)
HINT:
If the ball joint turns together with the nut, use a hexagon wrench (5 mm) to hold the stud.

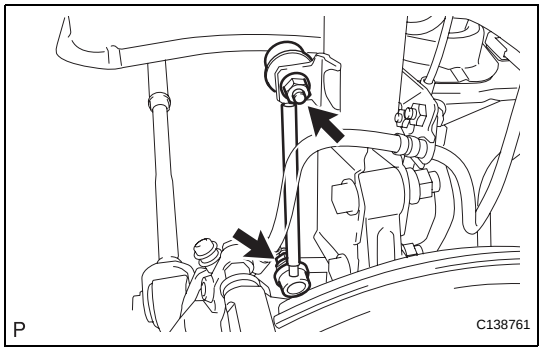

5. INSTALL REAR STABILIZER LINK ASSEMBLY RH

(a) Install the rear stabilizer link assembly RH with the 2 nuts.
Torque: 39 N*m (398 kgf*cm, 29 ft.*lbf)
HINT:
If the ball joint turns together with the nut, use a hexagon wrench (5 mm) to hold the stud.

6. INSTALL CENTER EXHAUST PIPE ASSEMBLY (See page EX-4)

7. INSTALL TAIL EXHAUST PIPE ASSEMBLY (See page EX-5)

8. INSTALL REAR WHEELS
Torque: 103 N*m (1,050 kgf*cm, 76 ft.*lbf)

9. INSPECT EXHAUST GAS LEAK (See page EX-5)

REMOVAL

NOTICE:
Check if an old gasket still remains on the pipe. If so, remove it. Also, check if any bolts or nuts are rusted. If so, replace them.

1. **REMOVE REAR WHEELS**
2. **REMOVE TAIL EXHAUST PIPE ASSEMBLY (See page EX-2)**
3. **REMOVE CENTER EXHAUST PIPE ASSEMBLY (See page EX-2)**
4. **REMOVE REAR STABILIZER LINK ASSEMBLY LH**
   (a) Remove the 2 nuts and rear stabilizer link assembly LH.
   HINT:
   If the ball joint turns together with the nut, use a hexagon wrench (5 mm) to hold the stud.

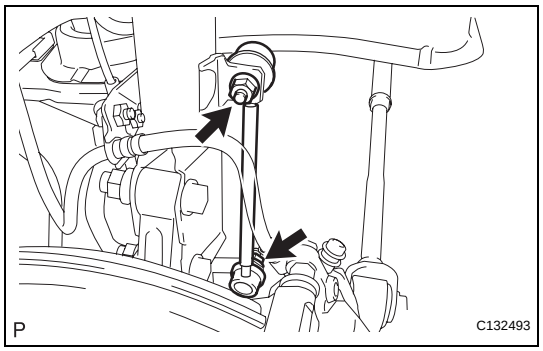

5. **REMOVE REAR STABILIZER LINK ASSEMBLY RH**
   (a) Remove the 2 nuts and rear stabilizer link assembly RH.
   HINT:
   If the ball joint turns together with the nut, use a hexagon wrench (5 mm) to hold the stud.

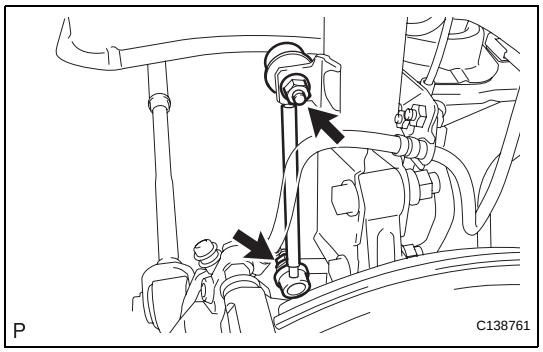

6. **REMOVE REAR STABILIZER BAR NO. 1 BRACKET**
   (a) Remove the 2 bolts and rear stabilizer bar No. 1 bracket. (LH side)

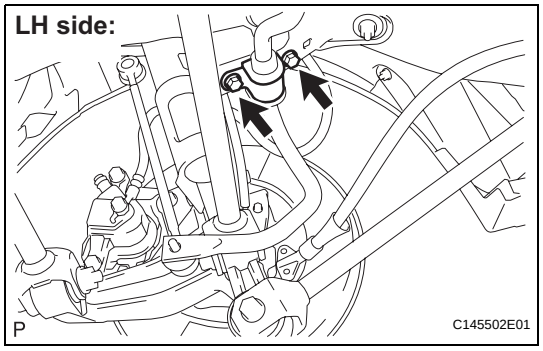

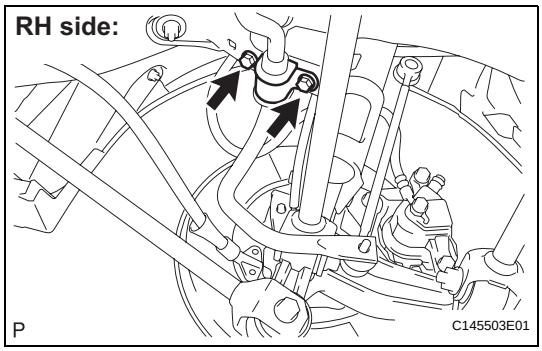

(b) Remove the 2 bolts and rear stabilizer bar No. 1 bracket. (RH side)

7. REMOVE REAR STABILIZER BUSHING

(a) Remove the 2 rear stabilizer bushings from the rear stabilizer bar.

8. REMOVE REAR STABILIZER BAR

INSPECTION

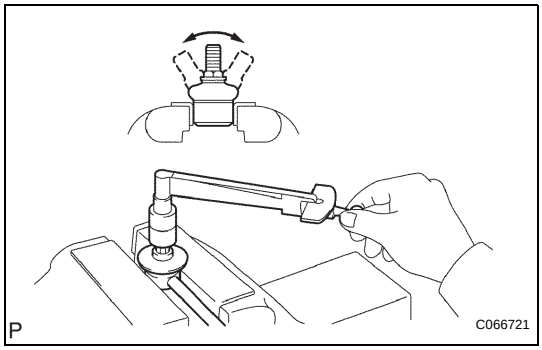

1. INSPECT REAR STABILIZER LINK ASSEMBLY

(a) Inspect the turning of the ball joint.

(1) Secure the rear stabilizer link assembly in a vise using aluminum plates.

(2) Install the nut to the rear stabilizer link assembly stud.

(3) Using a torque wrench, turn the nut continuously at a rate of 3 to 5 seconds per turn and take the torque reading on the 5th turn.

Torque: Turning torque
0.05 to 1.0 N*m (0.5 to 10 kgf*cm, 0.4 to 8.9 in.*lbf)

HINT:
If the turning torque is not within the specified range, replace the rear stabilizer link assembly with a new one.

(b) Inspect the dust cover.

(1) Check that the dust cover is not cracked and that there is no grease on it.

INSTALLATION

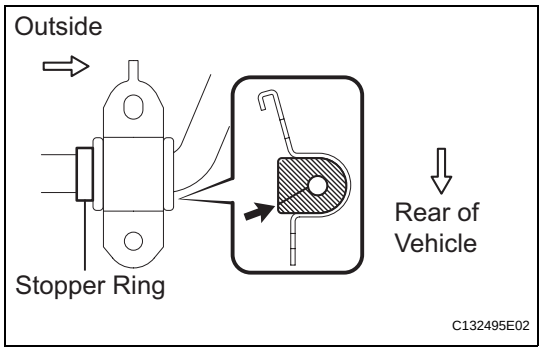

1. INSTALL REAR STABILIZER BUSHING

(a) Install the 2 rear stabilizer bushings to the outside of the stopper ring on the stabilizer bar.

2. INSTALL REAR STABILIZER BAR NO. 1 BRACKET

(a) Install the rear stabilizer bar No. 1 bracket.

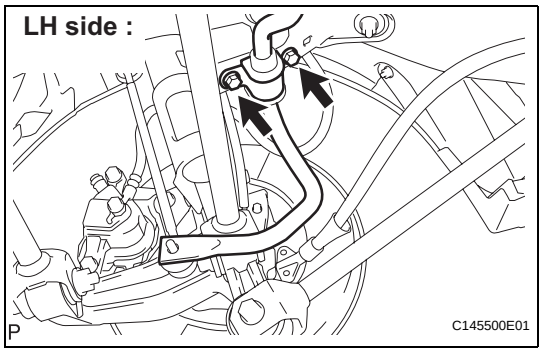

3. INSTALL REAR STABILIZER BAR

(a) Install the rear stabilizer bar with the 2 bolts. (LH Side)

Torque: 31 N*m (316 kgf*cm, 23 ft.*lbf)

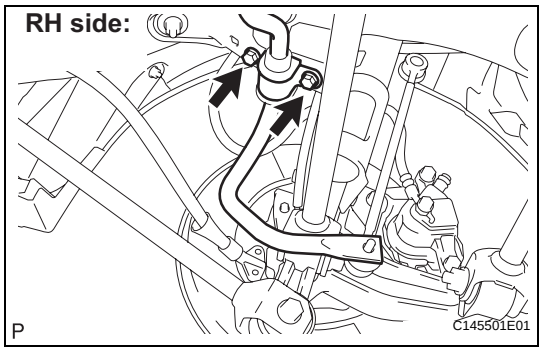

(b) Install the rear stabilizer bar with the 2 bolts. (RH Side)
Torque: 31 N*m (316 kgf*cm, 23 ft.*lbf)

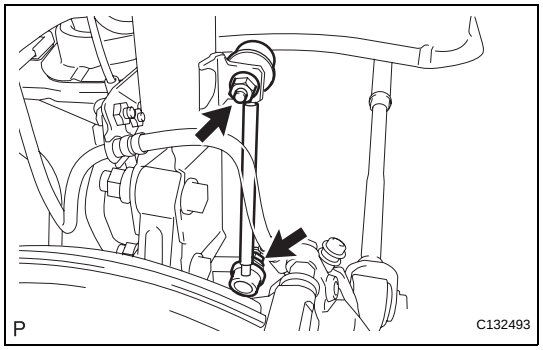

4. INSTALL REAR STABILIZER LINK ASSEMBLY LH

(a) Install the rear stabilizer link assembly LH with the 2 nuts.
Torque: 39 N*m (398 kgf*cm, 29 ft.*lbf)
HINT:
If the ball joint turns together with the nut, use a hexagon wrench (5 mm) to hold the stud.

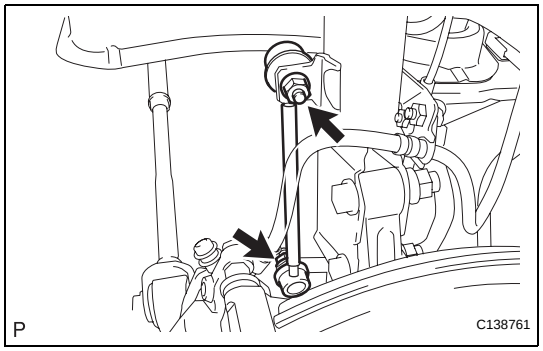

5. INSTALL REAR STABILIZER LINK ASSEMBLY RH

(a) Install the rear stabilizer link assembly RH with the 2 nuts.
Torque: 39 N*m (398 kgf*cm, 29 ft.*lbf)
HINT:
If the ball joint turns together with the nut, use a hexagon wrench (5 mm) to hold the stud.

6. INSTALL CENTER EXHAUST PIPE ASSEMBLY (See page EX-4)

7. INSTALL TAIL EXHAUST PIPE ASSEMBLY (See page EX-5)

8. INSTALL REAR WHEELS
Torque: 103 N*m (1,050 kgf*cm, 76 ft.*lbf)

9. INSPECT EXHAUST GAS LEAK (See page EX-5)

PARTS LOCATION

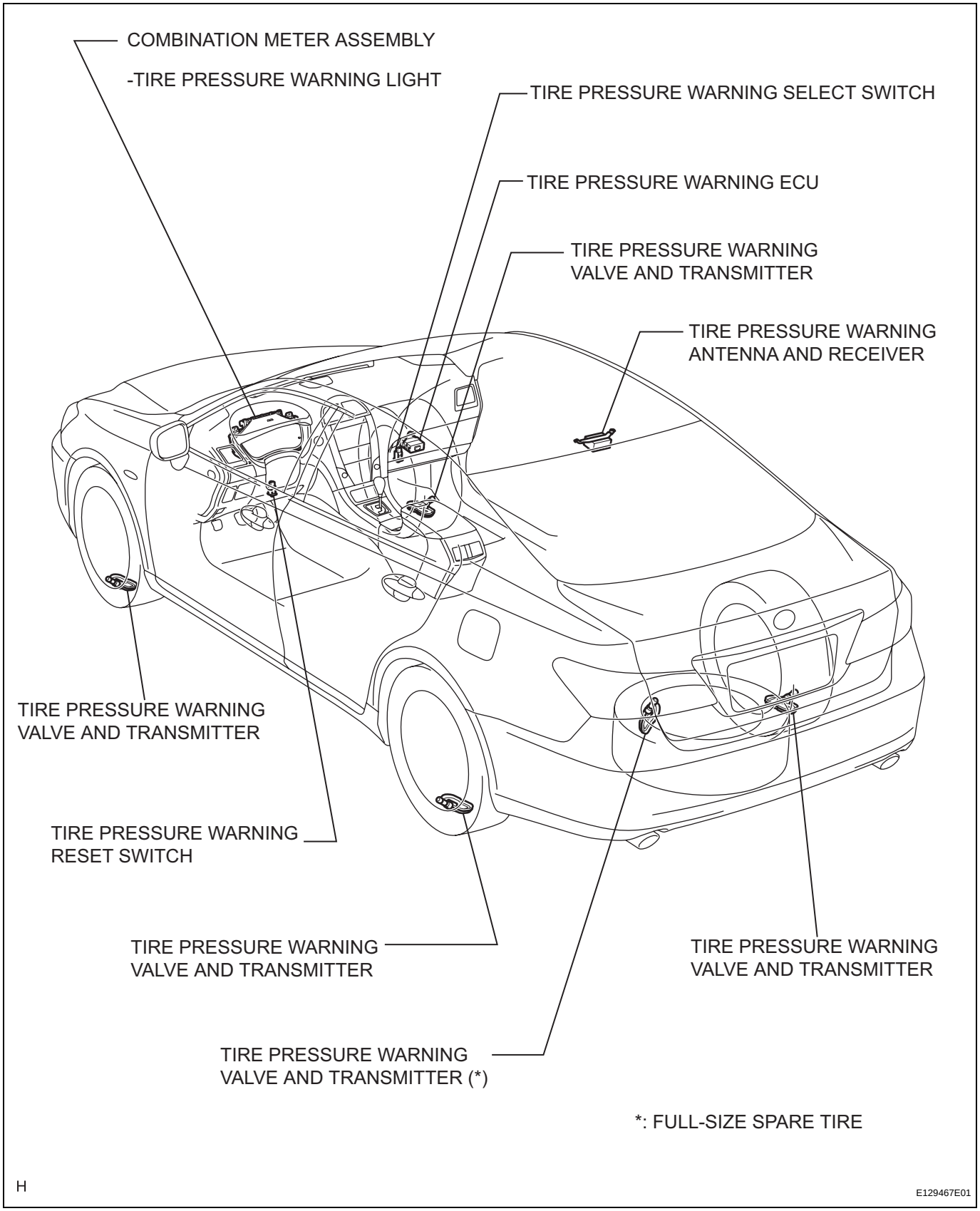

TW

SYSTEM DIAGRAM

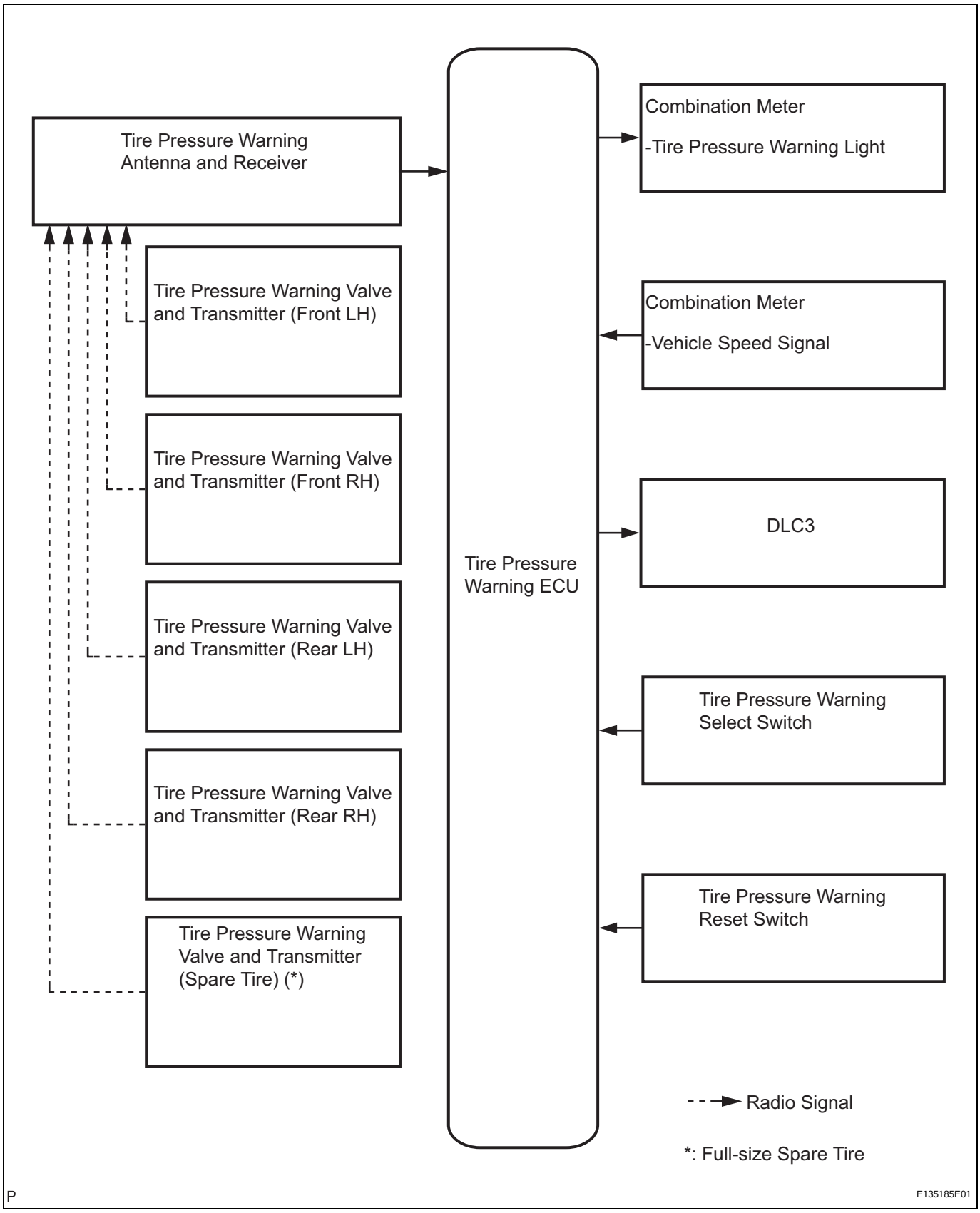

TW

SYSTEM DESCRIPTION

1. DESCRIPTION OF SYSTEM

(a) A tire pressure warning valve and transmitter is equipped with a tire pressure sensor and a transmitter and is installed in a tire wheel assembly. The sensor measures the tire pressure. The measured value and transmitter ID are transmitted to the tire pressure warning antenna and receiver on the body as radio waves and then sent to the tire pressure warning ECU from the tire pressure warning antenna and receiver. If the transmitter ID has already been registered, the ECU compares the measured air pressure value with the standard value. When the value is less than the standard value registered in the tire pressure warning ECU, the warning light on the combination meter comes on.

- For the differences in the air pressure settings by the type of tires, a tire pressure warning reset switch has been adopted.

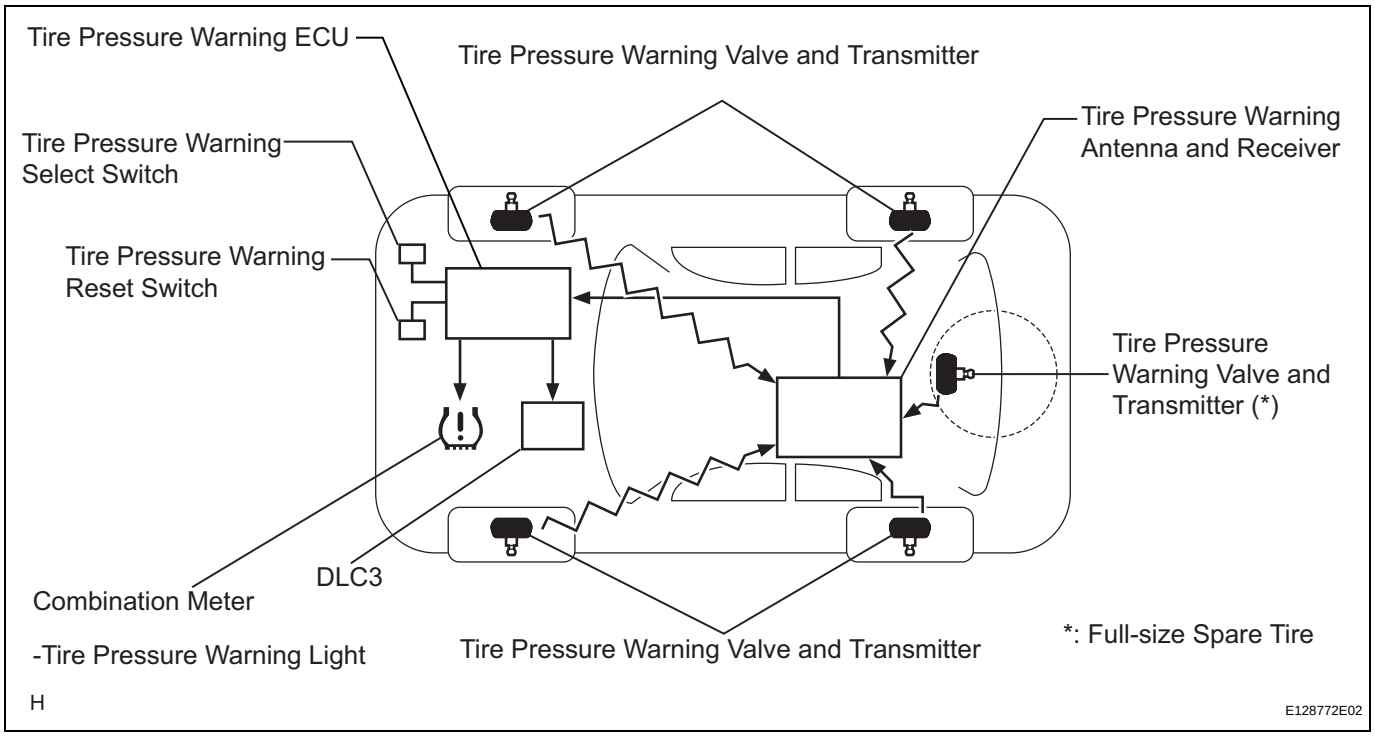

2. WHEN TIRE PRESSURE WARNING LIGHT IS LIT

(a) When the tire pressure warning light does not go off, or when it comes on during driving, check tire pressure. If the tire pressure warning light comes on within several hours after adjusting the tire pressure, the tire may have a slow air leak.

(b) Under the following conditions, the system may not function properly.

- Facilities or devices that use similar radio frequencies are located in the vicinity of the vehicle.

- A radio device of similar frequency is used in the vehicle.
- A large amount of snow or ice is stuck to the vehicle, especially onto the wheels and around the wheel houses.
- The battery of the sensor has been depleted.
- The tires without tire pressure warning valve and transmitter are used.
- Tire chains are used.
- When the full-size spare tire is not within the receivable range of the electric wave, a signal may not be received because the full-size spare tire is fixed. Accordingly, the system may not function properly. If there is a possibility that the tire pressure warning system does not receive a signal from the full-size spare tire, rotate the tire 90°.
- If any wheels other than the specified ones are used, the system may not function properly because interference may prevent the radio waves from being correctly transmitted from the tire pressure sensor.
- Depending on the tire type, the system may not function properly even though the specified wheels are used.

(c) The average usage life of the grommet of the tire pressure warning valve and transmitter is approximately 5 years, at which time it must be replaced.
Re-tighten the valve nut if the valve is leaking air, although it is less than 5 years old and there is no problem with grommets.

(d) After removing and installing the ECU or a sensor, check for a diagnostic trouble code and verify that it is a normal code.

3. FUNCTION OF COMPONENTS

Components	Function
Tire pressure warning valve and transmitter	Combined as a single unit with a disc wheel air valve, it measures tire pressure and temperature and transmits an ID number for measurement value and identification. Built-in the battery.
Tire pressure warning antenna and receiver	Receives and transmits a necessary signal from the transmitter to the tire pressure warning ECU.
Tire pressure warning ECU	Receives the signal from the receiver and identifies it as vehicle's own signal. If the measured value is equal to or lower than the specified value, it transmits a signal so that the air pressure warning light on the combination meter comes on.
Tire pressure warning light	Located in the combination meter, it informs the driver of lowered tire air pressure and system failure.
Tire pressure warning reset switch	Enters the initialization mode for tire or wheel replacement.
Tire pressure warning select switch	When 2 sets of ID are registered in the tire pressure warning ECU, either of the sets can be selected by changing the switch between "MAIN" and "2nd".

4. TIRE PRESSURE WARNING RESET SWITCH

- By operating the tire pressure warning reset switch, the tire pressure warning ECU can be set to issue a warning at an inflation pressure that corresponds to the type of tires.
  Therefore, the dealer must set the warning threshold to the proper value in order to comply with the local regulations.
- Operate the tire pressure warning reset switch only after the inflation pressures of all tires (including the full-size spare tire) have been adjusted on the vehicle.
- To initialize the system, press and hold the tire pressure warning reset switch for 3 seconds or longer with the engine switch on (IG). After the initialization process has started, the warning light blinks 3 times (1 second on, 1 second off).
- During initialization, the tire pressure warning valve and transmitter measures the inflation pressure of the tires, and registers the signals that are transmitted into the tire pressure warning ECU at a frequency of once per minute. The initialization process is completed when signals from the all tires (including the full-size spare tire) have been received.

5. TIRE PRESSURE WARNING SELECT SWITCH

- This switch is installed at the base of the instrument panel on the front passenger seat side.
- The control ECU can be used to register two sets of the tire select switch. Consequently, there is no need to log the ID again each time a tire is changed.
- Make sure ID registration is performed by your car dealer.

INSPECTION

1. INSPECT TIRE

(a) Check the tires for wear and proper inflation pressure.

Cold tire inflation pressure

Tire size	Front kPa (kgf*cm^2, psi)	Rear kPa (kgf*cm^2, psi)
P215/55R17 93V	210 (2.1, 31)	210 (2.1, 31)

When driving under the above vehicle conditions at sustained high speeds above 160 km/h (100 mph), in countries where such speeds are permitted by law, inflate the front and rear tires to 240 kPa (2.4 kgf*cm^2, 35 psi) provided that it does not exceed the maximum cold tire inflation pressure molded on the tire sidewall.

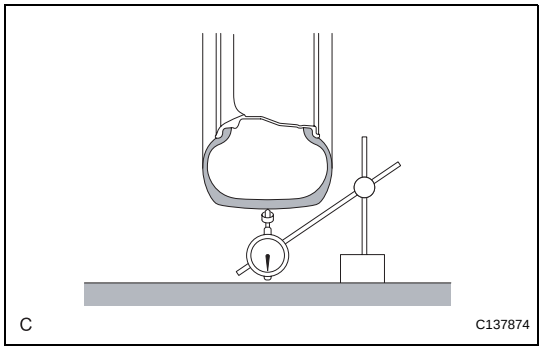

(b) Using a dial indicator, check the runout of the tires.
Tire runout:
1.4 mm (0.055 in.) or less

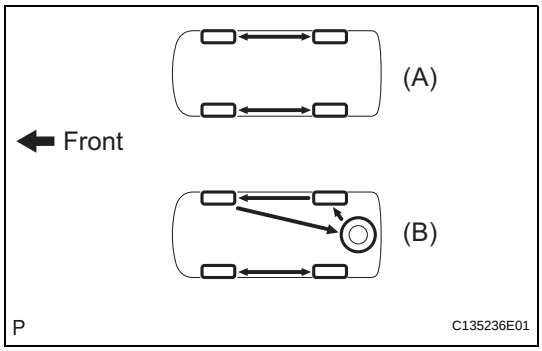

2. ROTATE TIRES

(a) Rotate the tires as shown in illustration (A). If the vehicle is equipped with a grand spare tire, rotate the tires as shown in illustration (B).

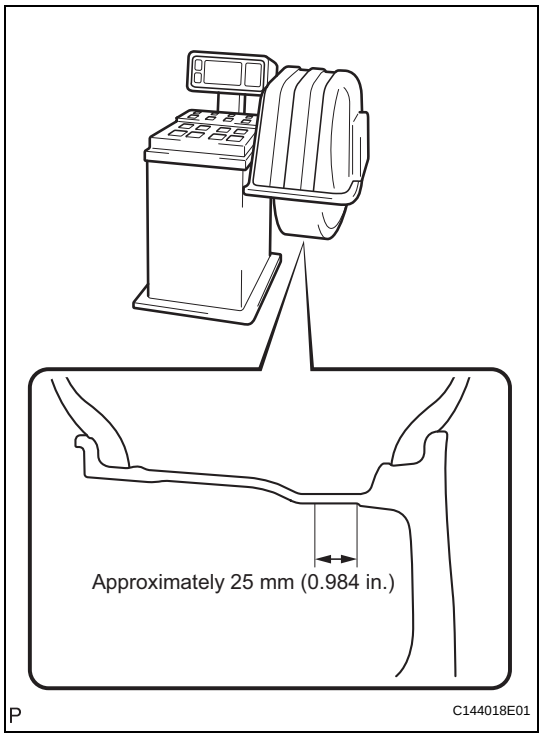

3. INSPECT WHEEL BALANCE

(a) Check and adjust the off-the-car balance.

Imbalance after adjustment:
8.0 g (0.018 lb.) or less.

NOTICE:

- **Remove dirt, oil, and water from the surface where the balance weight is to be adhered with a cleaning detergent.**
- **Do not touch the sticking surface of the tape.**
- **Adhere the sticking type balance weight to the flat position shown in the illustration.**
- **Push the balance weight securely with a finger to adhere it to the indicated position.**
- **Do not reuse balance weights.**
- **Use the LEXUS genuine adhesive type balance weights.**

HINT:

- The inner side balance weight should be installed by clipping it to the rim.
- If necessary, check and adjust the on-the-car balance.

4. INSPECT FRONT AXLE HUB BEARING LOOSENESS

HINT:
(See page AH-5)

5. INSPECT REAR AXLE HUB BEARING LOOSENESS

HINT:
(See page AH-14)

6. INSPECT FRONT AXLE HUB RUNOUT

HINT:
(See page AH-5)

7. INSPECT REAR AXLE HUB RUNOUT

HINT:
(See page AH-14)

HOW TO PROCEED WITH TROUBLESHOOTING

HINT:
- Use the following procedures to troubleshoot the tire pressure warning system
- *: Use the intelligent tester.

1	VEHICLE BROUGHT TO WORKSHOP

NEXT

2	CUSTOMER PROBLEM ANALYSIS

NEXT

3	CHECK TIRE PRESSURE WARNING LIGHT AND INDICATOR CONDITION

(a) Turn the engine switch on (IG).
(b) Record the condition of the tire pressure warning light on the combination meter assembly.
(c) Refer to the "TIRE PRESSURE WARNING LIGHT AND INDICATOR CHART" section of the DIAGNOSIS SYSTEM for checking the condition of the tire pressure warning light (See page TW-25).

NEXT

4	DTC CHECK AND CLEAR*

Result

Result	Proceed to
DTC is output	A
DTC is not output	B

TW

A → Go to step 5

B → Go to step 6

5	DTC CHART

NEXT

Go to step 8

6	PROBLEM SYMPTOM CONFIRMATION

Result

Result	Proceed to
Symptom does not occur	A
Symptom occurs	B

A → Go to step 7

B → Go to step 8

7	SYMPTOM SIMULATION

NEXT

Go to step 6

8	PROBLEM SYMPTOMS TABLE

NEXT

9	CIRCUIT INSPECTION*

NEXT

10	REPAIR

NEXT

11	CONFIRMATION TEST

(a) Check for a DTC (See page TW-29).
(b) Perform initialization (See page TW-18).
(c) Confirm that the initialization has been completed.

NEXT

End

TIRE PRESSURE WARNING SYSTEM

PRECAUTION

NOTICE:
Some systems need to be initialized after reconnecting the negative (-) battery terminal (See page IN-33).

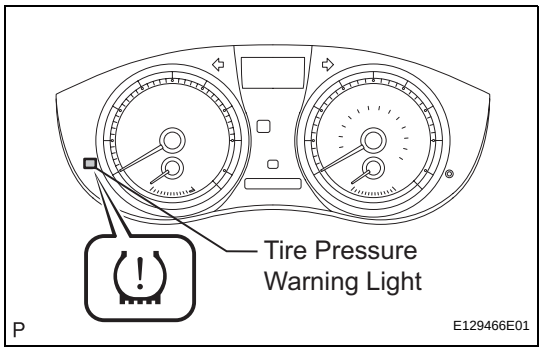

1. TIRE PRESSURE WARNING SYSTEM PRECAUTION

(a) When the tire pressure warning light comes on, immediately check the tire pressure of the tire and adjust it to the specified value. (The tire pressure warning light will blink (come on after blinking for 1 minute) if there is an open in the tire pressure warning light circuit.)
NOTICE:
Make sure to adjust the tire pressure for the full-size spare tire because this system monitors tire pressure for all the tires including the spare tire.

Cold tire inflation pressure

Tire size	Front kPa (kgf/cm^2, psi)	Rear kPa (kgf/cm^2, psi)
P215/55R17 93V	210 (2.1, 30)	210 (2.1, 30)

(b) When the tire pressure warning light blinks (comes on after blinking for 1 minute), there is a malfunction in the system. Check for DTCs.

(c) It is necessary to register the transmitter ID in the tire pressure warning ECU after replacing the tire pressure warning valve and transmitter and/or tire pressure warning ECU (See page TW-15).

(d) When replacing the tire pressure warning ECU;
(1) Using the DATA LIST, read the transmitter IDs registered in the ECU and make a note of them before removing the tire pressure warning ECU.
(2) Register the transmitter IDs after installing a new tire pressure warning ECU.

(e) When replacing the tire pressure warning valve and transmitter;

(1) Take a note of the 7 digit number (transmitter ID) written on the new tire pressure warning valve and transmitter when replacing it. Register the transmitter IDs in the tire pressure warning ECU after replacing the tire pressure warning valve and transmitter and installing the tires and wheels on the vehicle.

Tire pressure warning valve and transmitter:

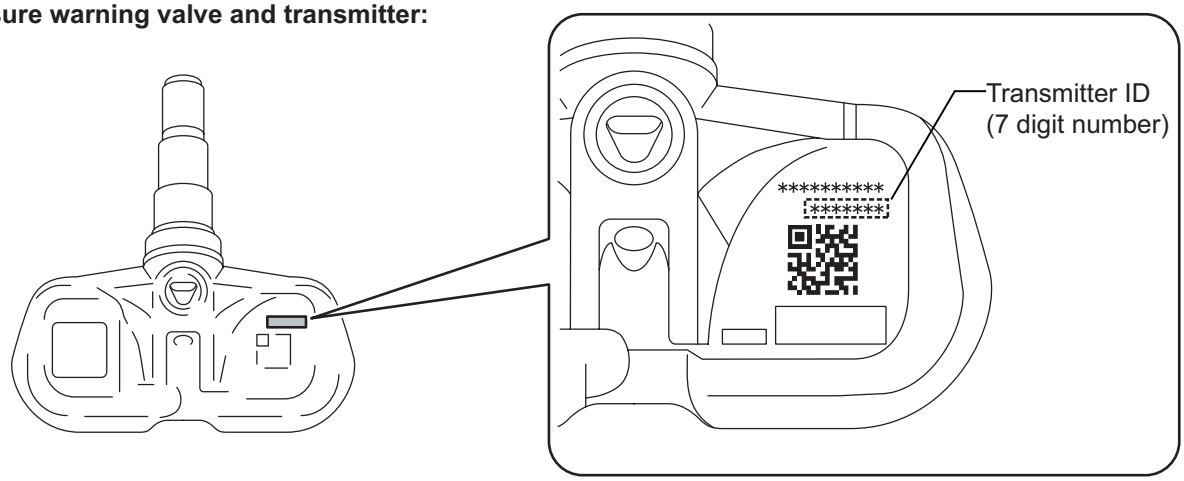

H E128762E02

NOTICE:
The transmitter ID is written on the tire pressure warning valve and transmitter. It will be unable to be read after installing the tire pressure warning valve and transmitter on the tire and wheel. Therefore, take a note of the transmitter ID before installing the tire pressure warning valve and transmitter.

(f) When replacing the tire pressure warning ECU and the tire pressure warning valves and transmitters; It is necessary to perform the initialization (See page TW-18) after the registration (See page TW-15).

(g) Precautions about the tire pressure;

- The tire pressures decrease naturally.
- In winter, tire pressure may decrease due to low ambient temperatures (tire pressure decreases by approximately 10 kPa (0.2 kgf/cm^2, 1.45 psi) for every 10°C (50°F) drop in the ambient temperature). Therefore, the tire pressure warning is more likely to operate if the tire pressures are not adjusted appropriately. If the daily temperature variation is large, pressurize the tires high so that the tire pressures are suitable under cold conditions. Incorrect tire pressure warning operation becomes less likely.

2. IN CASE OF TIRE AND WHEEL REPLACEMENT

(a) When tires and wheels are replaced, always ensure that each transmitter ID is correctly registered.

3. IN CASE OF REPLACEMENT OF TIRE PRESSURE WARNING ECU, TIRE PRESSURE WARNING VALVE AND TRANSMITTER, OR TIRE(S) WITH DIFFERENT TIRE PRESSURE

(a) Initialize the tire pressure warning system after any of the following is performed:
- Replacing the tire pressure warning ECU or the tire pressure warning valve and transmitter
- Installing tire(s) which require different tire pressure

HINT:
The tire pressure warning system will not operate properly if it is not initialized (See page TW-18).

4. FAIL-SAFE FUNCTION

(a) When a system malfunction occurs in the tire pressure warning system, the tire pressure warning light blinks (comes on after blinking for 1 minute) and informs the driver of the system failure.

(b) The result of this diagnosis is stored in the tire pressure warning ECU.

REGISTRATION

1. DESCRIPTION OF CODE REGISTRATION

It is necessary to register the transmitter ID in the tire pressure warning ECU when replacing the tire pressure warning valve and transmitter and/or tire pressure warning ECU.

(a) Before registration

(1) In case of tire pressure warning ECU replacement.

- Read the registered transmitter IDs that are stored in the old ECU using the intelligent tester and note them down.
- If reading stored transmitter IDs is impossible due to malfunctions of components such as the tire pressure warning antenna and receiver, remove the tires from the wheels and check the IDs located on the tire pressure warning valves and transmitters (See page TW-6).

(2) In case of tire pressure warning valve and transmitter replacement.

- When replacing the tire pressure warning valves and transmitters, note down the IDs written on the tire pressure warning valves and transmitters.

2. REGISTER TRANSMITTER ID

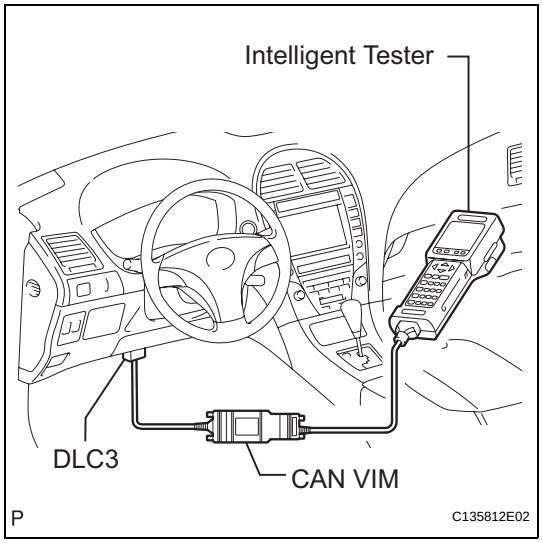

(a) Connect the intelligent tester to DLC3 (Procedure "A").

(b) Turn the engine switch on (IG) (Procedure "B").

(c) Select the REGIST TIRE following the intelligent tester screen (UTILITY - REGIST TIRE) (Procedure "C").

(d) Select the registration mode "MAIN" (Procedure "D").

HINT:

- Check that tire pressure warning select switch is "MAIN".
- When registering second set, select the registration mode "2nd" after changing tire pressure warning select switch to "2nd".

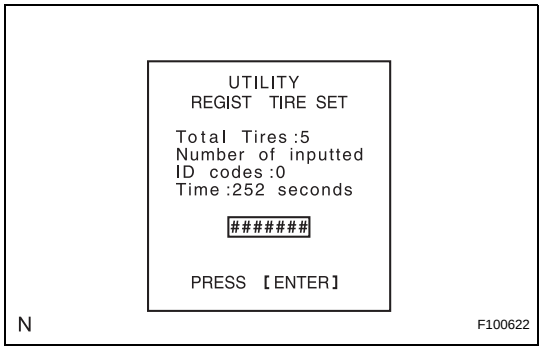

(e) Input the IDs (ID1 to ID4 or ID5) using the intelligent tester and transmit them to the tire pressure warning ECU (Procedure "E").

TW

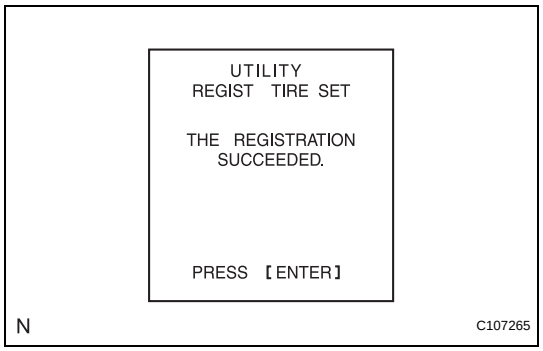

(f) Set the ID transmission condition to "ID Registration is complete" (Procedure "F").
HINT:
- The previously registered IDs will be deleted from the memory when the registration is completed.
- If the procedures "C" to "E" are not completed within 5 min. , the mode will return to the normal operation mode.
- When the system is in initialization mode after the tire pressure warning reset switch has been operated, the registration is disabled until the initialization process is canceled or completed.

Registration Procedure

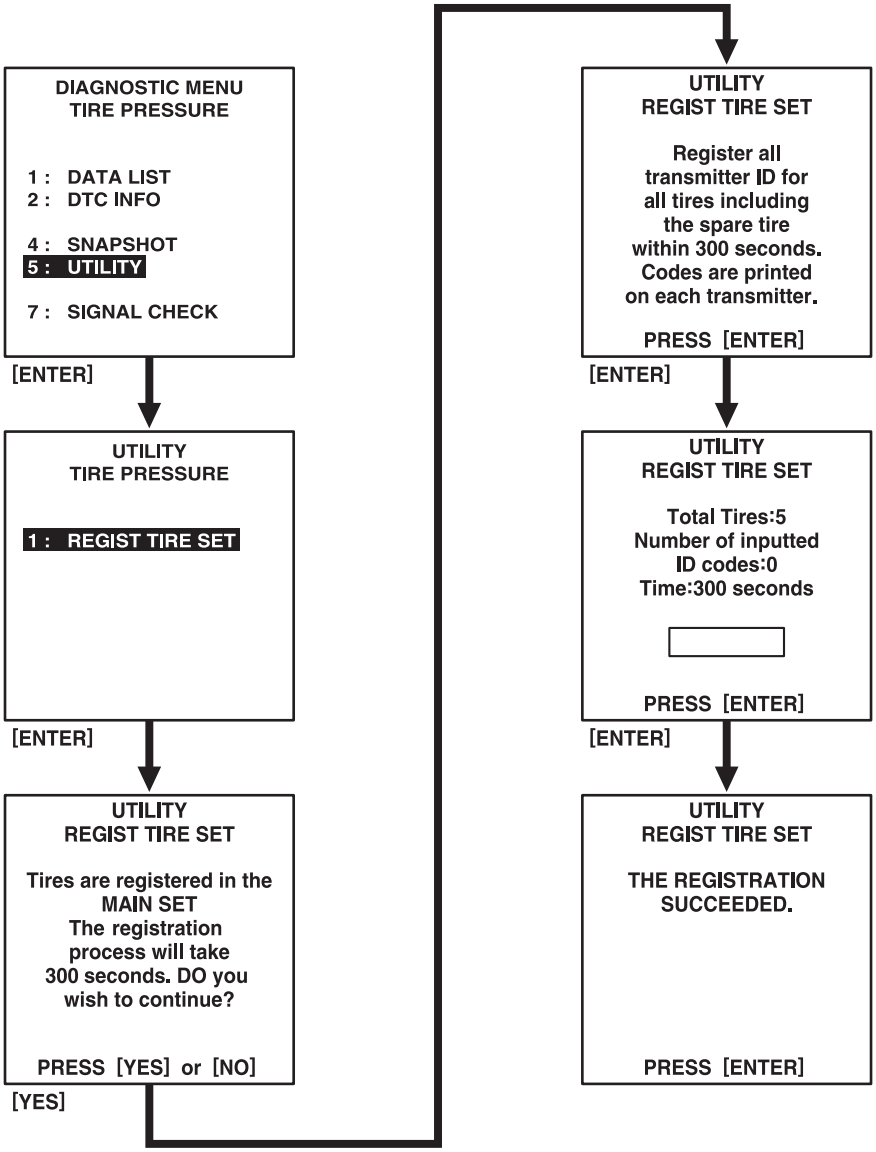

F101083E01

TW

3. CONFIRMATION OF TRANSMITTER ID REGISTRATION

(a) Connect the intelligent tester to DLC3 (engine switch is off).

(b) Turn the engine switch on (IG).

(c) Select "TIREPRESS" by following the prompts displayed on the intelligent tester.

(d) Confirm that the data of tire pressure of all tires (including the full-size spare tire) are displayed on the intelligent tester screen.

NOTICE:

- **It may take up to 1 minute or more to update the tire pressure data.**
- **If the IDs have not been registered, some of DTC C2171/71 is set in the tire pressure warning ECU after 51 minutes or more.**

INITIALIZATION

1. DESCRIPTION OF INITIALIZATION

(a) Perform initialization in the following cases:
- Before delivery of a new vehicle.
- After replacement of the tire pressure ECU.*
- After replacement of the tire pressure warning valve and transmitter.
- Specified tire pressure changes depending on the size or type of the tire.

*: Perform initialization after the transmitter ID registration is completed (See page TW-15).

(b) Before initialization

(1) Set the air pressure of all wheels, including the full-size spare tire, to the specified value.

Cold tire inflation pressure

Tire size	Front kPa (kgf/cm^2, psi)	Rear kPa (kgf/cm^2, psi)
P215/55R17 93V	210 (2.1, 30)	210 (2.1, 30)

NOTICE:
Perform the tire pressure adjustment after the vehicle has sufficiently cooled down. If the vehicle is not sufficiently cooled down, increase the air pressure by 20 to 30 kPa (0.2 to 0.3 kgf/cm^2, 2.9 to 4.3 psi) above the specified value.

2. INITIALIZATION PROCEDURE

(a) Keep the tire pressure warning reset switch pressed for 3 seconds or more with the engine switch on (IG).

(b) Check that the tire pressure warning light blinks 3 times (1 second ON, 1 second OFF).
HINT:
Initialization will be completed if signals are received from all the wheels.

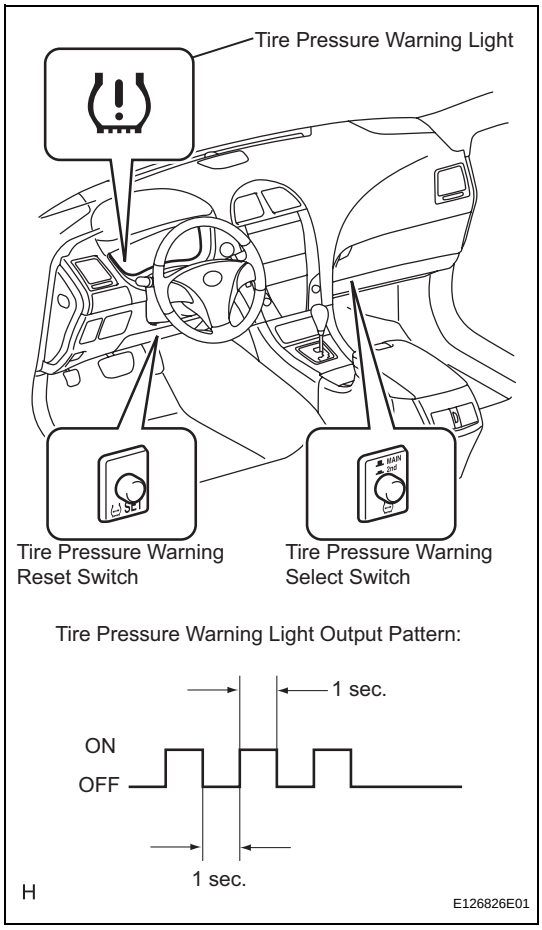

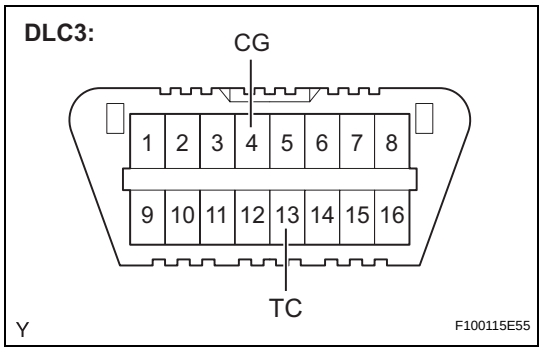

(c) Wait for 2 or 3 minutes with the engine switch on (IG).

NOTICE:

- **The initialization is normally completed within 2 to 3 minutes.**
- **If the initialization has not been completed successfully, DTC C2177/77 is set approximately 20 minutes.**
- **The initialization can be terminated by making a short circuit between terminals TC and CG of the DLC3 connector.**

(d) Confirm that the initialization has been completed using the intelligent tester.

(1) Change the mode to test mode using intelligent tester and check that tire pressure warning light tire pressure warning light blinks at 0.125 second intervals.

HINT:

Tire pressure warning light will not blink until the system initialization is complete.

NOTICE:

The following operations can be used instead of above procedure

1. **Turn the engine switch from off to on (IG).**
2. **Monitor the tire pressure values of all the wheels using the intelligent tester.**
3. **If the tire pressure values cannot be displayed on the intelligent tester screen, the initialization has failed.**
4. **It takes 2 to 3 minutes to display the tire pressure data.**

HINT:

- In winter, as the tire pressure may decrease depending on the ambient temperature, increase the tire pressure by 20 to 30 kPa (0.2 to 0.3 kgf/cm^2, 2.9 to 4.3 psi) above the specified value after confirming that the initialization has been completed.

TEST MODE PROCEDURE

1. ENTER TEST MODE

HINT:

- Operation of the tire pressure warning reset switch can be checked in TEST MODE.
- During TEST MODE, the system is not initialized by pushing the tire pressure warning reset switch. The circuit of the tire pressure warning reset switch can be inspected during this mode.

(a) Make sure that the engine switch is off.
(b) Connect the intelligent tester to DLC3.
(c) Turn the engine switch on (IG).
(d) Check that the tire pressure warning light comes on for 3 seconds and then goes off.

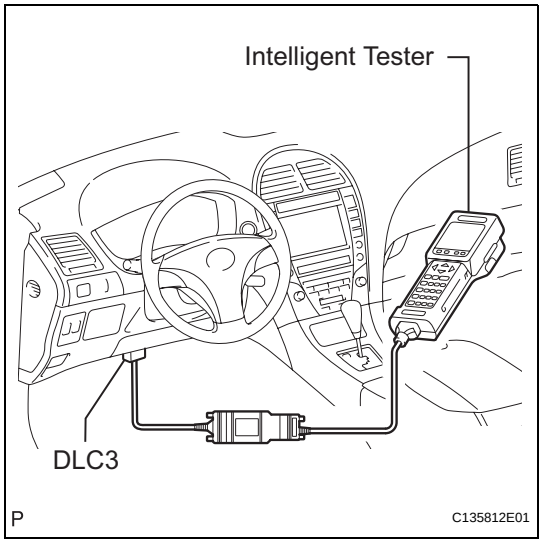

(e) Select the TEST MODE on the intelligent tester.

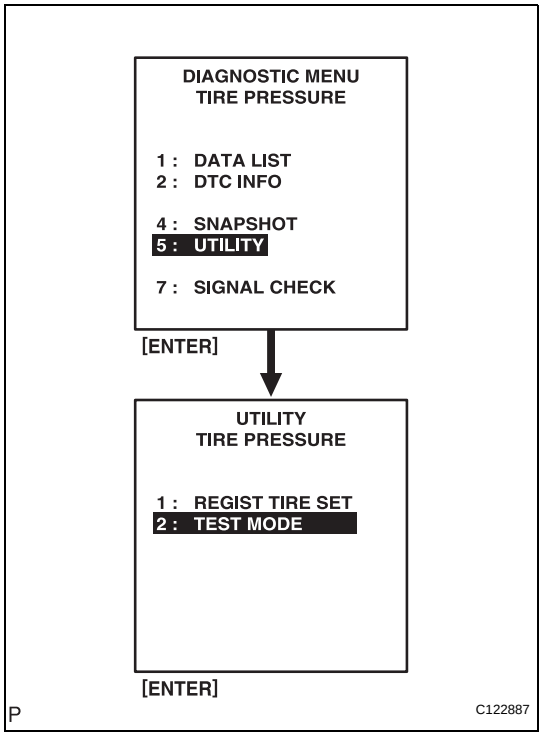

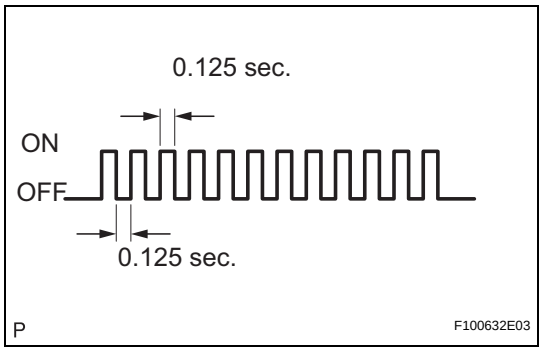

(f) Confirm that the tire pressure warning light in the combination meter blinks at 0.125 second intervals.

2. PERFORM SIGNAL CHECK

HINT:

- When entering signal check mode, the tire pressure warning ECU sets all the signal check DTCs first. After completing signal check for each inspection item, the DTCs for systems that are determined to be normal by the tire pressure warning ECU will be erased.
  The DTCs for other inspection items may not be erased when only a certain signal is inspected.
- When signal check returns to normal mode, all the signal check DTCs will be erased.

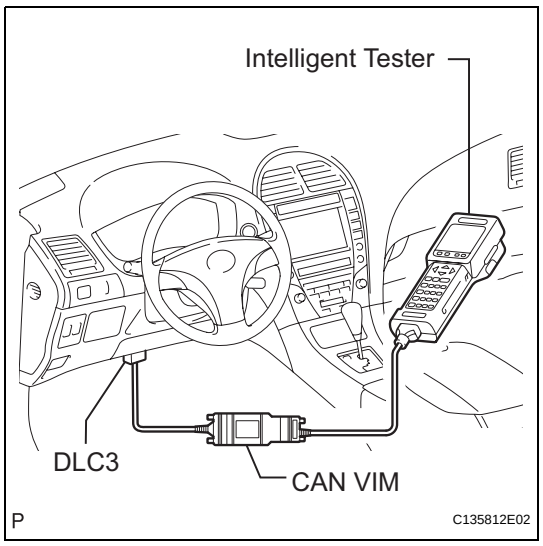

(a) Make sure that the engine switch is off.
(b) Connect the intelligent tester to DLC3.
(c) Turn the engine switch on (IG).
(d) Select the SIGNAL CHECK on the intelligent tester.
HINT:
Every time the test mode DTC erasure conditions are satisfied, the tire pressure warning light comes on for 1 second. Then, the tire pressure warning light blinks at 0.125 second intervals.

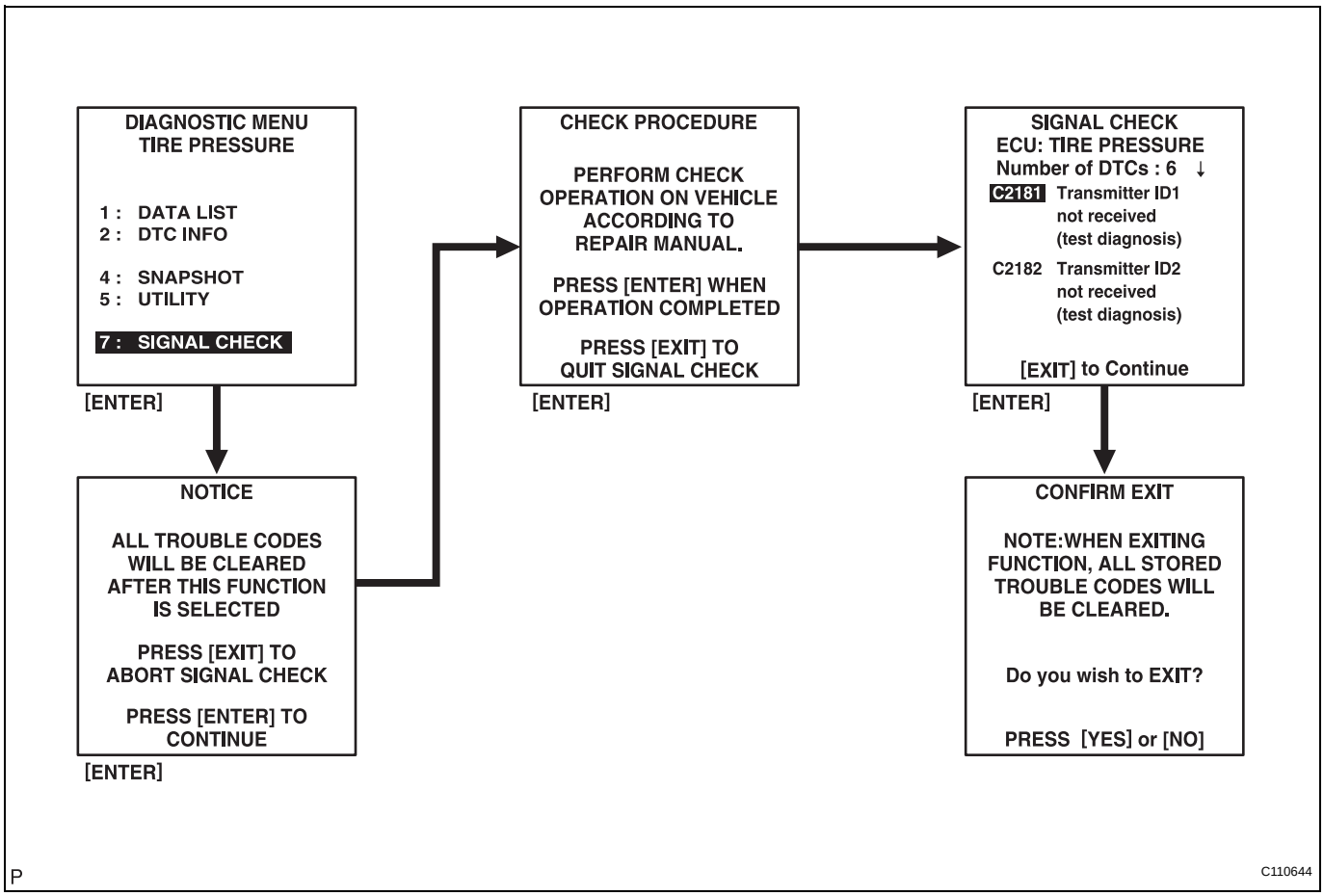

(e) Drive the vehicle at 12 mph (20 km/h) or more for 10 seconds or more. To check the vehicle speed signal (C2191/91).

(f) Loosen the valve core and rapidly reduce the pressure (at least 40 kPa (0.41 kg/cm^2, 5.8 psi) within 30 seconds or more). To check the transmitter data (C2181/81 to C2185/85).
HINT:
The transmitter ID can be transmitted by rapidly reducing the tire pressure.

(g) Turn the select switch from off (main) to on (second) and then to off (main) to check the select switch signal (C2192/92).

(h) Check that the tire pressure warning system test mode DTCs are erased.

Test Mode DTC	Test Signal	Test mode DTC Clear Condition
C2181/81 to C2185/85	Transmitter Data	Receive data from the transmitter which has a registered ID in the tire pressure warning ECU
C2191/91	Vehicle Speed Signal	Vehicle speed of 12 mph (20 km/h) or more is detected for 3 seconds or more
C2192/92	Tire Pressure Warning Select Switch	Change the mode by pressing the tire pressure warning select switch in the following order: MAIN→2nd→MAIN

(i) Check the tire pressure warning reset switch.
(1) Press the tire pressure warning reset switch.

(2) Check the tire pressure warning indicator light.

Test Signal	Normal Condition
Tire Pressure Warning Reset Switch	• Switch ON: TPWS indicator comes on • Switch OFF: TPWS indicator blinks

(j) Result

HINT:

After the signal check is completed, check for a signal check DTC to confirm the system status.

Condition	Procedure
SIGNAL CHECK DTC is output	Repair the faulty part and enter SIGNAL CHECK again
SIGNAL CHECK DTCs are cleared	No problem

(k) End of SIGNAL CHECK

After completing the test mode (SIGNAL CHECK), turn the engine switch off and disconnect the tester.

DTC of SIGNAL CHECK (TEST DIAGNOSIS) function:

If a trouble code is displayed during the test mode DTC check, check the circuit listed for that code. For details of each code, refer to the relevant page listed under respective "DTC No." in the chart.

DTC No.	Detection Item	Trouble Area
C2181/81 (TW-40)	Transmitter ID1 not received	• Tire pressure warning valve and transmitter • Tire pressure warning antenna and receiver • Wire harness or connector • Tire pressure warning ECU
C2182/82 (TW-40)	Transmitter ID2 not received	• Tire pressure warning valve and transmitter • Tire pressure warning antenna and receiver • Wire harness or connector • Tire pressure warning ECU
C2183/83 (TW-40)	Transmitter ID3 not received	• Tire pressure warning valve and transmitter • Tire pressure warning antenna and receiver • Wire harness or connector • Tire pressure warning ECU
C2184/84 (TW-40)	Transmitter ID4 not received	• Tire pressure warning valve and transmitter • Tire pressure warning antenna and receiver • Wire harness or connector • Tire pressure warning ECU
C2185/85 (TW-40)	Transmitter ID5 not received	• Tire pressure warning valve and transmitter • Tire pressure warning antenna and receiver • Wire harness or connector • Tire pressure warning ECU
C2191/91 (TW-63)	Vehicle speed signal error	• Vehicle speed sensor • Combination meter assembly • Wire harness or connector • Tire pressure warning ECU
C2192/92 (TW-65)	Tire pressure warning select switch malfunctions	• Tire pressure warning select switch • Tire pressure warning ECU • Wire harness or connector

PROBLEM SYMPTOMS TABLE

HINT:

- Use the table below to help determine the cause of the problem symptom. The potential causes of the symptoms are listed in order of probability in the "Suspected Area" column of the table. Check each symptom by checking the suspected areas in the order they are listed. Replace parts as necessary.
- Inspect the fuses and relays related to this system before inspecting the suspected areas below.

TIRE PRESSURE WARNING SYSTEM

Symptom	Suspected Area	See page
Tire pressure warning system does not operate.	1. Tire pressure warning valve and transmitter	-
	2. Tire pressure warning receiver with antenna	TW-57
	3. Power source circuit	TW-73
	4. TC and CG terminal circuit	TW-75
	5. Combination meter assembly	ME-14
	6. Tire pressure warning ECU	TW-85
DTC check cannot be done.	1. Power source circuit	TW-73
	2. TC and CG terminal circuit	TW-75
	3. Tire pressure warning ECU	TW-85
Tire pressure warning light malfunctions (Does not light up).	1. Power source circuit	TW-73
	2. Tire pressure warning light circuit	TW-71
	3. Combination meter assembly	ME-14
	4. Tire pressure warning ECU	TW-85
Tire pressure warning light malfunctions (Remains on).	1. Tire pressure check	TW-3
	2. Initialization	TW-18
	3. Tire pressure warning light circuit	TW-71
	4. Combination meter assembly	ME-14
	5. Tire pressure warning ECU	TW-85
Tire pressure warning light malfunctions (Blinking).	1. Check DTC	TW-29
	2. Tire pressure warning ECU connector poorly connected	-
	3. TC and CG terminal circuit	TW-75
	4. Test mode (SIGNAL CHECK)	TW-20
	5. Tire pressure warning ECU	TW-85
Initialization cannot be done.	1. Test mode (SIGNAL CHECK)	TW-20
	2. Tire pressure warning reset switch	TW-68
	3. Tire pressure warning ECU	TW-85
Cannot be switched between "Main" and "2nd".	1. Tire pressure warning select switch	TW-65
	2. Wire harness or connector	TW-65
	3. Tire pressure warning ECU	TW-85

TERMINALS OF ECU

HINT:
Inspect the connectors from the back side while the connectors are connected.

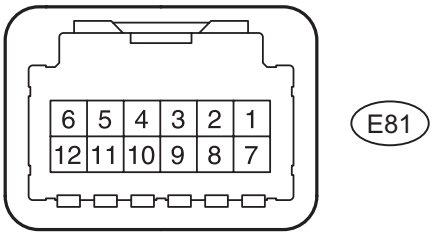

P

E129452E04

Symbols (Terminal No.)	Wiring Color	Terminal Description	Condition	Specified Condition
CLSW (E81-1) - GND (E81-9)	O - W-B	Tire pressure warning reset switch	• Engine switch off • Tire pressure warning reset switch off	8 to 15V
			• Engine switch on (IG) • Tire pressure warning reset switch on	Below 1.5 V
SPD (E81-2) - GND (E81-9)	SB - W-B	Vehicle speed signal	Engine switch on (IG)	Pulse generation (See waveform 1)
TC (E81-3) - GND (E81-9)	W - W-B	TC terminal	When terminal TC is not connected	8 to 15 V
IND (E81-5) - GND (E81-9)	L - W-B	Tire pressure warning light signal	Engine switch on (IG)	Below 0.5 V
RF5V (E81-6) - GND (E81-9)	P - W-B	Tire pressure warning antenna and receiver power source	Engine switch on (IG)	4.5 to 5.5 V
IG (E81-7) - GND (E81-9)	B - W-B	IG power source	Engine switch on (IG)	10 to 16 V
IDSW (E81-8) - GND (E81-9)	R - W-B	Tire pressure warning select switch input signal	• Engine switch off • Tire pressure warning select switch off	8 to 15 V
			• Engine switch on (IG) • Tire pressure warning select switch on	Below 1.5 V
SIL (E81-10) - GND (E81-9)	W - W-B	Diagnostic communication terminal	• Engine switch on (IG) • Intelligent tester is connected to DLC3	Pulse generation (See waveform 2)
GND2 (E81-11) - GND (E81-9)	BR - W-B	Tire pressure warning antenna and receiver ground	Always	Below 1 Ω
RDA (E81-12) - GND (E81-9)	G - W-B	Tire pressure warning antenna and receiver signal	• Engine switch on (IG) • The Tire pressure warning antenna and receiver is not connected	9 to 16 V

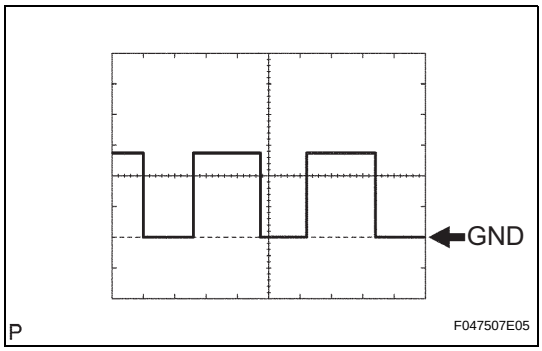

1. Waveform 1 (Reference)

(a) Waveform

Item	Contents
Terminal	SPD - GND
Tool setting	5 V/DIV, 200 ms/DIV.
Vehicle condition	While driving at approximately 20 km/h (12 mph).

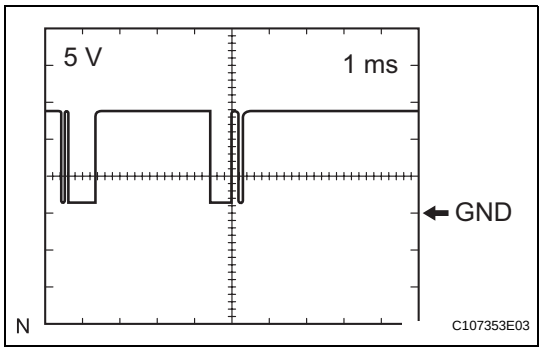

2. Waveform 2 (Reference)

(a) Waveform

Item	Contents
Terminal	SIL - Body ground
Tool setting	5 V/DIV., 1 ms/DIV.
Vehicle condition	Communicating using intelligent tester

DIAGNOSIS SYSTEM

1. CHECK BATTERY VOLTAGE

Standard voltage:

11 to 14 V

If the voltage is below 11 V, recharge the battery before proceeding.

2. CHECK DLC3

(a) The ECU uses the ISO 15765-4 for communication protocol. The terminal arrangement of the DLC3 complies with SAE J1962 and matches the ISO 15765-4 format.

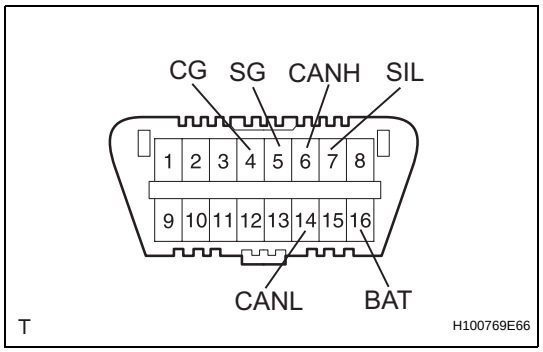

Symbols (Terminal NO.)	Terminal Description	Condition	Specified Condition
SIL (7) - SG (5)	Bus "+" line	During transmission	Pulse generation
CG (4) - Body ground	Chassis ground	Always	Below 1 Ω
SG (5) - Body ground	Signal ground	Always	Below 1 Ω
BAT (16) - Body ground	Battery positive	Always	11 to 14 V
CANH (6) - CANL (14)	CAN bus line	Engine switch off*	54 to 69 Ω
CANH (6) - CG (4)	HIGH-level CAN bus line	Engine switch off*	200 Ω or higher
CANL (14) - CG (4)	LOW-level CAN bus line	Engine switch off*	200 Ω or higher
CANH (6) - BAT (16)	HIGH-level CAN bus line	Engine switch off*	6 kΩ or higher
CANL (14) - BAT (16)	LOW-level CAN bus line	Engine switch off*	6 kΩ or higher

NOTICE:

***Before measuring the resistance, leave the vehicle as is for at least 1 minute and do not operate the engine switch, or any other switches or the doors.**

(b) If the result is not as specified, DLC3 may have a malfunction. Repair or replace the harness and connector.

HINT:

Connect the cable of the intelligent tester to DLC3, turn the engine switch on (IG) and attempt to use the tester. If the display indicates that a communication error has occurred, there is a problem either with the vehicle or with the tester.

- If communication is normal when the tester is connected to another vehicle, inspect DLC3 of the original vehicle.
- If communication is still not possible when the tester is connected to another vehicle, the problem may be in the tester itself. Consult the Service Department listed in the tester's instruction manual.

3. DIAGNOSIS SYSTEM

(a) DTCs (Normal mode)

(1) DTCs are memorized in the tire pressure warning ECU and read by the blinks of the tire pressure warning light or by using the intelligent tester (See page TW-29).

(b) Test mode

(1) By switching from normal mode into test mode (input signal check), you can inspect the tire pressure warning antenna and receiver, each tire pressure warning valve and transmitter, tire pressure warning select switch, and vehicle speed sensor (See page TW-20).

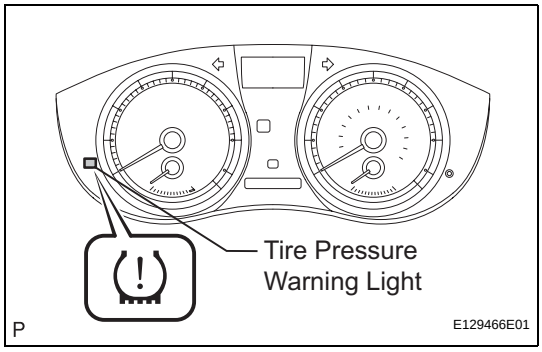

4. CHECK WARNING LIGHT

(a) Turn the engine switch on (IG).

(b) Check that the tire pressure warning light comes on for 3 seconds.

If the warning check result is not normal, proceed to the troubleshooting for the tire pressure warning light circuit.

Trouble Area	See procedure
Tire pressure warning light circuit	TW-71

5. TIRE PRESSURE WARNING LIGHT AND INDICATOR CHART

HINT:

The table below indicates the state of the tire pressure warning light and indicator after the engine switch is turned on (IG).

	Immediately after turning the engine switch on (IG)	Always						
		Warning light output pattern						
	Comes on for 3 sec.	Goes off	Comes on	Blinks (*1)	Blinks (*2)	Blinks (*3)	Blinks (*4)	Outputs DTC
Normal	○	○	-	-	-	-	-	-
Low tire pressure	○	-	○	-	-	-	-	-
System fail	○	-	-	○	-	-	-	-
Test mode	○	-	-	-	○	-	-	-
Initialization	○	-	-	-	-	○	-	-
ECU connector poorly connected	-	-	-	○	-	-	-	-
TC ground (DTC is output)	○	-	-	-	-	-	-	○
TC ground (DTC is not output)	○	-	-	-	-	-	○	-

TW

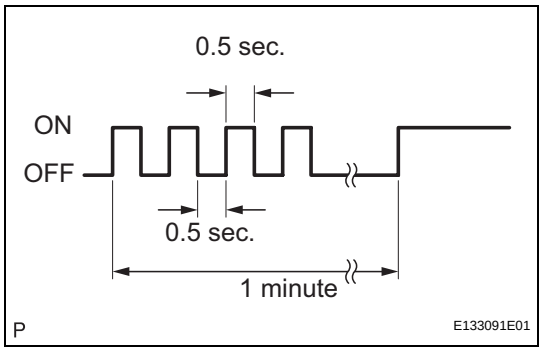

*1: Comes on and goes off repeatedly at 0.5 second intervals, and comes on after 1 minute.

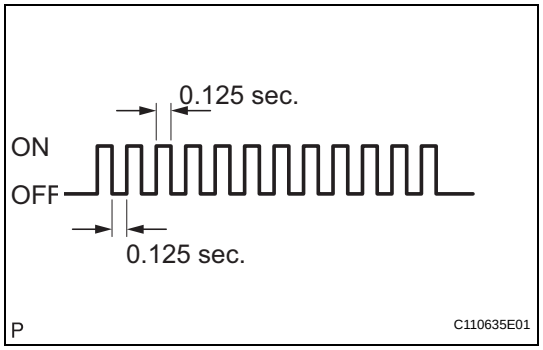

*2: Comes on and goes off repeatedly at 0.125 second intervals.

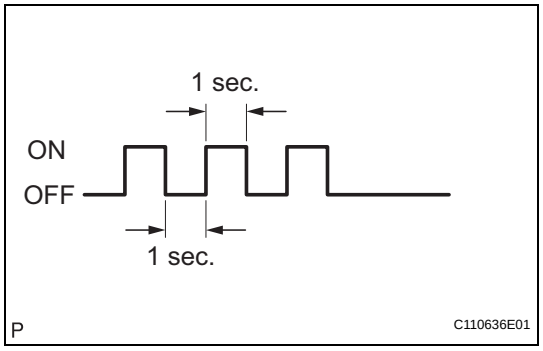

*3: Blinks 3 times (1 second on, 1 second off).

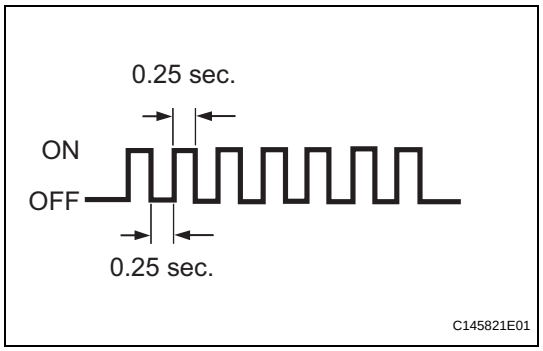

*4: Comes on and goes off repeatedly at 0.25 second intervals.

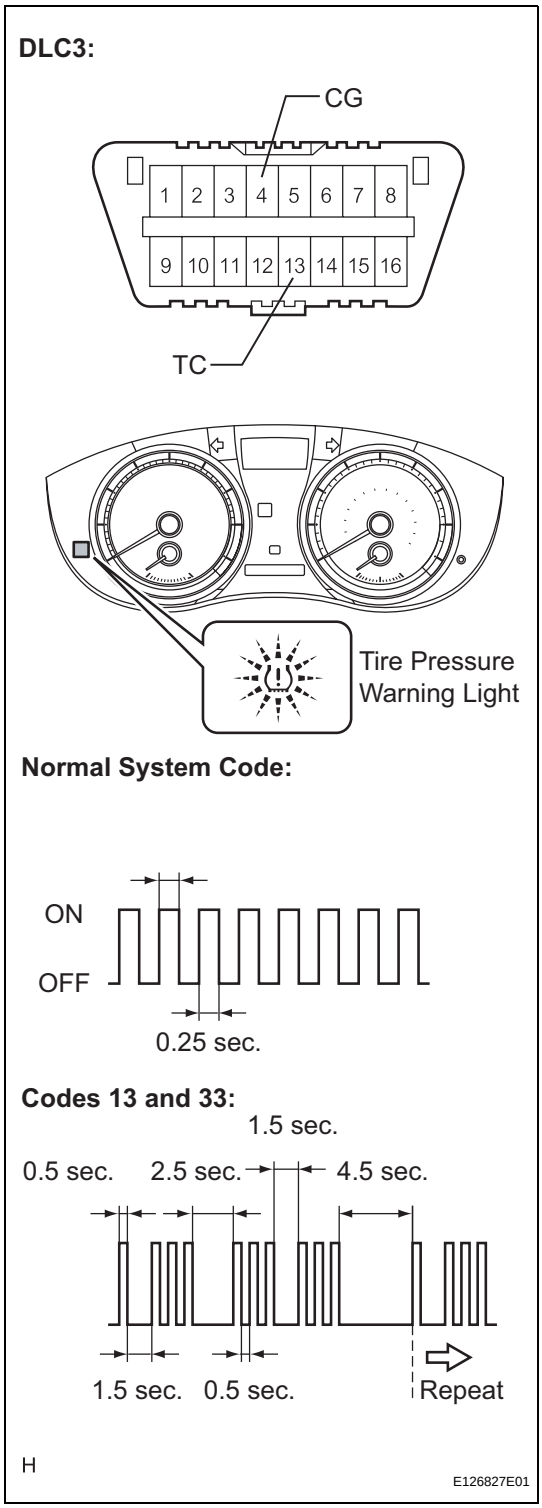

DTC CHECK / CLEAR

1. DTC CHECK (USING SST CHECK WIRE)

(a) Check DTCs.

(1) Using SST, connect terminals TC and CG of DLC3.
SST 09843-18040

(2) Turn the engine switch on (IG).

(3) Read and record any DTCs from the tire pressure warning light on the combination meter. Refer to the illustration on the left for examples of a normal system code and codes 13 and 33.
HINT:
- If the tire pressure warning light does not indicate any DTCs or the normal system code, inspect the tire pressure warning light circuit or TC and CG terminal circuit.

Trouble Area	See procedure
Tire pressure warning light circuit	TW-71
TC and CG terminal circuit	TW-75

- If 2 or more malfunctions are indicated at the same time, the lowest numbered DTC is displayed first.

(4) Refer to the Diagnostic Trouble Code Chart (See page TW-32) for DTC information.

(5) After completing the check, turn the engine switch off and remove the SST from DLC3.
SST 09843-18040

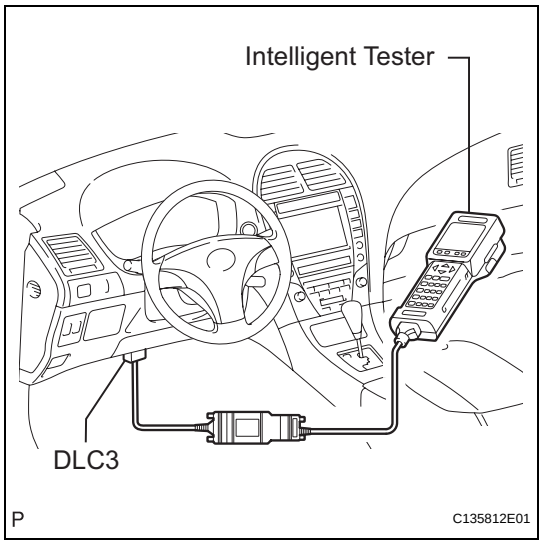

2. DTC CHECK (USING INTELLIGENT TESTER)

(a) Check DTCs.

(1) Connect the intelligent tester to the DLC3.

(2) Turn the engine switch on (IG).

(3) Read the DTCs following the prompts on the tester screen.

HINT:

Refer to the intelligent tester operator's manual for further details.

(b) Clear the DTCs.

HINT:

After repairing the malfunctions, clear the DTCs.

(1) Connect the intelligent tester to DLC3.

(2) Turn the engine switch on (IG).

(3) Clear the DTCs following the prompts on the tester screen.

HINT:

Refer to the intelligent tester operator's manual for further details.

DATA LIST / ACTIVE TEST

1. DATA LIST

(a) Connect the intelligent tester to DLC3.
(b) Turn the engine switch on (IG).
(c) Following the display on the intelligent tester, read "DATA LIST".

TIRE PRESSURE:

Tester Display	Measurement Item/Range	Normal Condition	Diagnostic Note
MODE STATUS	Tire pressure warning system mode/NORMAL or REG 2nd or REG M or TEST	NORMAL: Normal mode TEST: Test mode	-
MAIN TIRE	Number of main tire ID to be registered/ 0 or 1 or 2 or 3 or 4 or 5	0 to 5 should be displayed	-
2ND TIRE	Number of 2nd tire ID to be registered/ 0 or 1 or 2 or 3 or 4 or 5	0 to 5 should be displayed	-
SELECT SW	Tire Pressure Warning Select Switch Status	Not pressed: MAIN Pressed: 2nd	-
VEHICLE SPEED	Vehicle speed reading/ min.: 0 km/h (0 mph), max.: 255 km/h (158 mph)	Actual vehicle speed	Speed indicated on the combination meter
REGIT ID1 CODE	Registered ID1 code/min.: 0, max.: FFFFFFF	The ID No. registered in the transmitter ID1 is displayed	-
REGIT ID2 CODE	Registered ID2 code/min.: 0, max.: FFFFFFF	The ID No. registered in the transmitter ID2 is displayed	-
REGIT ID3 CODE	Registered ID3 code/min.: 0, max.: FFFFFFF	The ID No. registered in the transmitter ID3 is displayed	-
REGIT ID4 CODE	Registered ID4 code/min.: 0, max.: FFFFFFF	The ID No. registered in the transmitter ID4 is displayed	-
REGIT ID5 CODE	Registered ID5 code/min.: 0, max.: FFFFFFF	The ID No. registered in the transmitter ID5 is displayed	-
TRANS STATUS	ID code transmission status/ FINISH or NOW	FINISH or NOW	-
INITIAL SW	Tire pressure warning reset switch/ON, OFF	ON: Switch on OFF: Switch off	-
TIREPRESS1	ID1 tire inflation pressure/ min.: 0 kPa (0 kgf/cm^2, 0 psi), max.: 637.5 kPa (6.48 kgf/cm^2, 92.2 psi)	Actual tire inflation pressure	-
TIREPRESS2	ID2 tire inflation pressure/ min.: 0 kPa (0 kgf/cm^2, 0 psi), max.: 637.5 kPa (6.48 kgf/cm^2, 92.2 psi)	Actual tire inflation pressure	-
TIREPRESS3	ID3 tire inflation pressure/ min.: 0 kPa (0 kgf/cm^2, 0 psi), max.: 637.5 kPa (6.48 kgf/cm^2, 92.2 psi)	Actual tire inflation pressure	-
TIREPRESS4	ID4 tire inflation pressure/ min.: 0 kPa (0 kgf/cm^2, 0 psi), max.: 637.5 kPa (6.48 kgf/cm^2, 92.2 psi)	Actual tire inflation pressure	-
TIREPRESS5	ID5 tire inflation pressure/ min.: 0 kPa (0 kgf/cm^2, 0 psi), max.: 637.5 kPa (6.48 kgf/cm^2, 92.2 psi)	Actual tire inflation pressure	-
TIRE TEMP1	ID1 temperature in tire/ min.: -40°C (-40°F), max.: 215°C (419°F)	Actual tire temperature	-
TIRE TEMP2	ID2 temperature in tire/ min.: -40°C (-40°F), max.: 215°C (419°F)	Actual tire temperature	-

Tester Display	Measurement Item/Range	Normal Condition	Diagnostic Note
TIRE TEMP3	ID3 temperature in tire/ min.: -40°C (-40°F), max.: 215°C (419°F)	Actual tire temperature	-
TIRE TEMP4	ID4 temperature in tire/ min.: -40°C (-40°F), max.: 215°C (419°F)	Actual tire temperature	-
TIRE TEMP5	ID5 temperature in tire/ min.: -40°C (-40°F), max.: 215°C (419°F)	Actual tire temperature	-
BATT VOLT1	ID1 battery voltage/ OVER or LESS	OVER	-
BATT VOLT2	ID2 battery voltage/ OVER or LESS	OVER	-
BATT VOLT3	ID3 battery voltage/ OVER or LESS	OVER	-
BATT VOLT4	ID4 battery voltage/ OVER or LESS	OVER	-
BATT VOLT5	ID5 battery voltage/ OVER or LESS	OVER	-
SELECT SW INFO	Tire Pressure Warning Select switch setting information/ WITH or WITHOUT	WITH	-
INITIAL SW INFO	Tire pressure warning reset switch setting information/ WITH or WITHOUT	WITH	-
INIT THRESHOLD1	ID1 initial threshold of low-pressure/ min.: 0 kPa (0 kgf/cm^2, 0 psi), max.: 637.5 kPa (6.48 kgf/cm^2, 92.2 psi)	Tire pressure after initialization	-
INIT THRESHOLD2	ID2 initial threshold of low-pressure/ min.: 0 kPa (0 kgf/cm^2, 0 psi), max.: 637.5 kPa (6.48 kgf/cm^2, 92.2 psi)	Tire pressure after initialization	-
INIT THRESHOLD3	ID3 initial threshold of low-pressure/ min.: 0 kPa (0 kgf/cm^2, 0 psi), max.: 637.5 kPa (6.48 kgf/cm^2, 92.2 psi)	Tire pressure after initialization	-
INIT THRESHOLD4	ID4 initial threshold of low-pressure/ min.: 0 kPa (0 kgf/cm^2, 0 psi), max.: 637.5 kPa (6.48 kgf/cm^2, 92.2 psi)	Tire pressure after initialization	-
INIT THRESHOLD5	ID5 initial threshold of low-pressure/ min.: 0 kPa (0 kgf/cm^2, 0 psi), max.: 637.5 kPa (6.48 kgf/cm^2, 92.2 psi)	Tire pressure after initialization	-
# CODES	Number of DTC recorded/ min.: 0, max.: 255	Min.: 0, Max.: -	-

METER:

Tester Display	Measurement Item/Range	Normal Condition	Diagnostic Note
SPEED METER	Vehicle speed/Min.: 0 km/h (0 mph), Max.: 255 km/h (158 mph)	Almost same as actual vehicle speed (When driving)	-

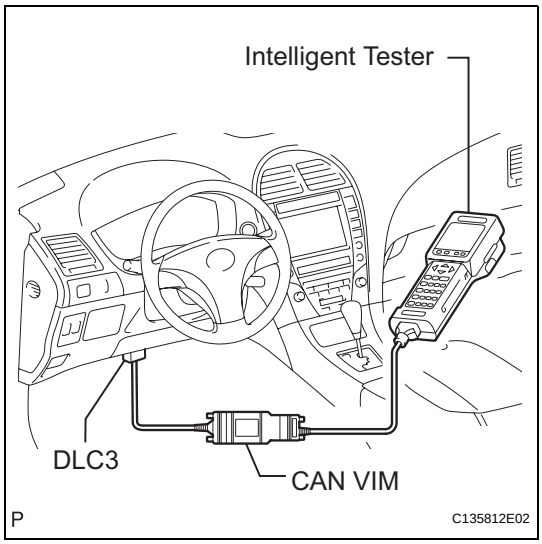

2. ACTIVE TEST

Performing the ACTIVE TEST using the intelligent tester allows the meters, indicators and so on to operate without parts removal. Performing the ACTIVE TEST as the first step of troubleshooting is one way to save diagnostic time. It is possible to display the DATA LIST on the intelligent tester during the ACTIVE TEST.

(a) Connect the intelligent tester to the DLC3.
(b) Turn the engine switch on (IG).
(c) Enter the following menus: DIAGNOSIS / OBD/ MOBD / METER / ACTIVE TEST.

METER:

Tester Display	Test Part	Control Range	Diagnostic Note
TIRE PRESS WARN	Tire Pressure warning Light	TIRE PRESS warning light is OFF/ON	Confirm that the vehicle is stopped with the engine idling

DIAGNOSTIC TROUBLE CODE CHART

HINT:

- If no abnormality is found when the parts are inspected, inspect the tire pressure warning ECU.
- If a malfunction code is displayed during the DTC check, inspect the circuit listed for that code. For details of each code, refer to the relevant page listed under respective "DTC No." in the DTC chart.

TIRE PRESSURE WARNING SYSTEM

DTC Code	Detection Item	Trouble Area	See page
C2111/11	Transmitter ID1 Operation Stop	1. Tire pressure warning valve and transmitter 2. Tire pressure warning ECU	TW-36
C2112/12	Transmitter ID2 Operation Stop	1. Tire pressure warning valve and transmitter 2. Tire pressure warning ECU	TW-36
C2113/13	Transmitter ID3 Operation Stop	1. Tire pressure warning valve and transmitter 2. Tire pressure warning ECU	TW-36
C2114/14	Transmitter ID4 Operation Stop	1. Tire pressure warning valve and transmitter 2. Tire pressure warning ECU	TW-36
C2115/15	Transmitter ID5 Operation Stop	1. Tire pressure warning valve and transmitter 2. Tire pressure warning ECU	TW-36
C2121/21	No Signal from Transmitter ID1 in Main Mode	1. Tire pressure warning valve and transmitter 2. Wire harness or connector 3. Tire pressure warning ECU 4. Tire pressure warning antenna and receiver	TW-40
C2122/22	No Signal from Transmitter ID2 in Main Mode	1. Tire pressure warning valve and transmitter 2. Wire harness or connector 3. Tire pressure warning ECU 4. Tire pressure warning antenna and receiver	TW-40
C2123/23	No Signal from Transmitter ID3 in Main Mode	1. Tire pressure warning valve and transmitter 2. Wire harness or connector 3. Tire pressure warning ECU 4. Tire pressure warning antenna and receiver	TW-40
C2124/24	No Signal from Transmitter ID4 in Main Mode	1. Tire pressure warning valve and transmitter 2. Wire harness or connector 3. Tire pressure warning ECU 4. Tire pressure warning antenna and receiver	TW-40
C2125/25	No Signal from Transmitter ID5 in Main Mode	1. Tire pressure warning valve and transmitter 2. Wire harness or connector 3. Tire pressure warning ECU 4. Tire pressure warning antenna and receiver	TW-40
C2131/31	No Signal from Transmitter ID1 in 2nd Mode	1. Tire pressure warning valve and transmitter 2. Wire harness or connector 3. Tire pressure warning ECU 4. Tire pressure warning antenna and receiver	TW-40

DTC Code	Detection Item	Trouble Area	See page
C2132/32	No Signal from Transmitter ID2 in 2nd Mode	1. Tire pressure warning valve and transmitter 2. Wire harness or connector 3. Tire pressure warning ECU 4. Tire pressure warning antenna and receiver	TW-40
C2133/33	No Signal from Transmitter ID3 in 2nd Mode	1. Tire pressure warning valve and transmitter 2. Wire harness or connector 3. Tire pressure warning ECU 4. Tire pressure warning antenna and receiver	TW-40
C2134/34	No Signal from Transmitter ID4 in 2nd Mode	1. Tire pressure warning valve and transmitter 2. Wire harness or connector 3. Tire pressure warning ECU 4. Tire pressure warning antenna and receiver	TW-40
C2135/35	No Signal from Transmitter ID5 in 2nd Mode	1. Tire pressure warning valve and transmitter 2. Wire harness or connector 3. Tire pressure warning ECU 4. Tire pressure warning antenna and receiver	TW-40
C2141/41	Transmitter ID1 Error	1. Tire pressure warning valve and transmitter 2. Tire pressure warning ECU	TW-49
C2142/42	Transmitter ID2 Error	1. Tire pressure warning valve and transmitter 2. Tire pressure warning ECU	TW-49
C2143/43	Transmitter ID3 Error	1. Tire pressure warning valve and transmitter 2. Tire pressure warning ECU	TW-49
C2144/44	Transmitter ID4 Error	1. Tire pressure warning valve and transmitter 2. Tire pressure warning ECU	TW-49
C2145/45	Transmitter ID5 Error	1. Tire pressure warning valve and transmitter 2. Tire pressure warning ECU	TW-49
C2165/65	Abnormal Temperature Inside ID1 Tire	1. Tires 2. Tire pressure warning valve and transmitter 3. Tire pressure warning ECU	TW-52
C2166/66	Abnormal Temperature Inside ID2 Tire	1. Tires 2. Tire pressure warning valve and transmitter 3. Tire pressure warning ECU	TW-52
C2167/67	Abnormal Temperature Inside ID3 Tire	1. Tires 2. Tire pressure warning valve and transmitter 3. Tire pressure warning ECU	TW-52
C2168/68	Abnormal Temperature Inside ID4 Tire	1. Tires 2. Tire pressure warning valve and transmitter 3. Tire pressure warning ECU	TW-52
C2169/69	Abnormal Temperature Inside ID5 Tire	1. Tires 2. Tire pressure warning valve and transmitter 3. Tire pressure warning ECU	TW-52
C2171/71	Transmitter ID not Registered in Main Mode	1. Tire pressure warning light	TW-55
C2172/72	Transmitter ID not Registered in 2nd Mode	1. Tire pressure warning light	TW-55

DTC Code	Detection Item	Trouble Area	See page
C2176/76	Receiver Error	1. Tire pressure warning antenna and receiver 2. Wire harness or connector 3. Tire pressure warning ECU	TW-57
C2177/77	Initialization not Completed	1. Tire pressure warning valve and transmitter 2. Tire pressure warning ECU	TW-60
C2181/81	Transmitter ID1 not Received (Test Mode DTC)	1. Tire pressure warning valve and transmitter 2. Wire harness or connector 3. Tire pressure warning ECU 4. Tire pressure warning antenna and receiver	TW-40
C2182/82	Transmitter ID2 not Received (Test Mode DTC)	1. Tire pressure warning valve and transmitter 2. Wire harness or connector 3. Tire pressure warning ECU 4. Tire pressure warning antenna and receiver	TW-40
C2183/83	Transmitter ID3 not Received (Test Mode DTC)	1. Tire pressure warning valve and transmitter 2. Wire harness or connector 3. Tire pressure warning ECU 4. Tire pressure warning antenna and receiver	TW-40
C2184/84	Transmitter ID4 not Received (Test Mode DTC)	1. Tire pressure warning valve and transmitter 2. Wire harness or connector 3. Tire pressure warning ECU 4. Tire pressure warning antenna and receiver	TW-40
C2185/85	Transmitter ID5 not Received (Test Mode DTC)	1. Tire pressure warning valve and transmitter 2. Wire harness or connector 3. Tire pressure warning ECU 4. Tire pressure warning antenna and receiver	TW-40
C2191/91	Vehicle Speed Signal Error (Test Mode DTC)	1. Vehicle speed sensor 2. Combination meter 3. Wire harness or connector 4. Tire pressure warning ECU	TW-63
C2192/92	Select Switch Error (Test Mode DTC)	1. Tire pressure warning select switch 2. Wire harness or connector 3. Tire pressure warning ECU	TW-65

DTC	C2111/11	Transmitter ID1 Operation Stop

DTC	C2112/12	Transmitter ID2 Operation Stop

DTC	C2113/13	Transmitter ID3 Operation Stop

DTC	C2114/14	Transmitter ID4 Operation Stop

DTC	C2115/15	Transmitter ID5 Operation Stop

DESCRIPTION

The tire pressure warning valve and transmitters that are installed in the tire and wheel assemblies measure the air pressures of the tires. The measured values are transmitted to the tire pressure warning antenna and receiver on the body as radio waves and then sent to the tire pressure warning ECU. The ECU compares the measured air pressure values with the air pressure threshold. When the measured air pressure value is less than this threshold, the warning light in the combination meter comes on. The tire pressure warning ECU stores a DTC when the tire pressure warning valve and transmitter stops transmitting signals. At this time, forcibly transmit the signals by releasing the tire pressure rapidly. The stored DTC is cleared when the signal transmission is resumed.

DTC No.	DTC Detecting Condition	Trouble Area
C2111/11 C2112/12 C2113/13 C2114/14 C2115/15	Tire pressure warning valve and transmitters stop transmitting signals	• Tire pressure warning valve and transmitter • Tire pressure warning ECU

HINT:
- It is necessary to perform the procedure to identify the tire pressure warning valve and transmitter that is malfunctioning because it cannot be identified by the output DTC.
- DTC C2115/15 are used only when the vehicle is equipped with a full-size spare tire.

INSPECTION PROCEDURE

NOTICE:
- **When replacing the tire pressure warning ECU, read the IDs stored in the old ECU using the intelligent tester and write them down before removal.**
- **It is necessary to perform initialization (See page TW-18) after registration (See page TW-15) of the transmitter IDs into the tire pressure warning ECU after the ECU and / or valve and transmitter has been replaced.**

TW

1	PERFORM FORCED TRANSMISSION OF TRANSMITTER ID OF ALL WHEELS

(a) Set the tire pressure to the specified value.

Cold tire inflation pressure

Tire size	Front kPa (kgf/cm^2, psi)	Rear kPa (kgf/cm^2, psi)
P215/55R17 93V	210 (2.1, 30)	210 (2.1, 30)

(b) Connect the intelligent tester to the DLC3.
(c) Turn the engine switch on (IG) and turn the tester on.

(d) Select "TIREPRESS" by following the prompts displayed on the intelligent tester.

TIRE PRESSURE:

Tester Display	Measurement Item/Range	Normal Condition	Diagnostic Note
TIREPRESS1	ID1 tire inflation pressure / min.: 0 kPa (0 kgf/cm^2, 0 psi), max.: 637.5 kPa (6.48 kgf/cm^2, 92.2 psi)	Actual tire inflation pressure	-
TIREPRESS2	ID2 tire inflation pressure / min.: 0 kPa (0 kgf/cm^2, 0 psi), max.: 637.5 kPa (6.48 kgf/cm^2, 92.2 psi)	Actual tire inflation pressure	-
TIREPRESS3	ID3 tire inflation pressure / min.: 0 kPa (0 kgf/cm^2, 0 psi), max.: 637.5 kPa (6.48 kgf/cm^2, 92.2 psi)	Actual tire inflation pressure	-
TIREPRESS4	ID4 tire inflation pressure / min.: 0 kPa (0 kgf/cm^2, 0 psi), max.: 637.5 kPa (6.48 kgf/cm^2, 92.2 psi)	Actual tire inflation pressure	-
TIREPRESS5	ID5 tire inflation pressure / min.: 0 kPa (0 kgf/cm^2, 0 psi), max.: 637.5 kPa (6.48 kgf/cm^2, 92.2 psi)	Actual tire inflation pressure	-

(e) Rapidly release the pressures from each wheel by approximately 40 kPa (0.4 kgf/cm^2, 5.8 psi) /30 seconds or more.

(1) Check that each tire pressure data displayed on the intelligent tester screen has changed.

NOTICE:

- **It takes about 1 minute or more to display the updated tire pressure data.**
- **When the "TIREPRESS" data has not changed, reset the tire pressure to the appropriate specified value and rotate the tire 90 to 270 degrees (including the full-size spare tire). Then rapidly release the tire pressure and recheck it.**

(2) After confirming that all of the tire pressure data displayed on the intelligent tester screen have changed, set the tire pressure to the appropriate specified values.

HINT:

If the tire pressure data displayed on the intelligent tester screen has not changed after rechecking, go to other problem procedure (For malfunction in transmission or reception function (See page TW-23)

TW

Result

Condition	Proceed to
All tire pressure readings are equal to specified values	**A**
Any of tire pressure valves are not displayed	**B**
All tire pressure values are not displayed	**C**

A → **END**

B → **INSPECT OTHER PROBLEM (MALFUNCTION IN TRANSMISSION OR RECEPTION FUNCTION)**

C

2 SWITCH TIRE PRESSURE WARNING SELECT SWITCH

(a) Switch tire pressure warning select switch to the other position (MAIN to 2nd or 2nd to MAIN).
(b) Set the tire pressure to the specified value.

Cold tire inflation pressure

Tire size	Front kPa (kgf/cm^2, psi)	Rear kPa (kgf/cm^2, psi)
P215/55R17 93V	210 (2.1, 30)	210 (2.1, 30)

(c) Connect the intelligent tester to the DLC3.
(d) Turn the engine switch on (IG) and turn the tester on.
(e) Select "TIREPRESS" by following the prompts displayed on the intelligent tester.

Tester Display	Measurement Item/Range	Normal Condition	Diagnostic Note
TIREPRESS1	ID1 tire inflation pressure / min.:0 kPa (0 kgf/cm^2, 0 psi), max.: 637.5 kPa (6.48 kgf / cm^2, 92.2 psi)	Actual tire inflation pressure	-
TIREPRESS2	ID2 tire inflation pressure / min.:0 kPa (0 kgf/cm^2, 0 psi), max.: 637.5 kPa (6.48 kgf / cm^2, 92.2 psi)	Actual tire inflation pressure	-
TIREPRESS3	ID3 tire inflation pressure / min.:0 kPa (0 kgf/cm^2, 0 psi), max.: 637.5 kPa (6.48 kgf / cm^2, 92.2 psi)	Actual tire inflation pressure	-
TIREPRESS4	ID4 tire inflation pressure / min.:0 kPa (0 kgf/cm^2, 0 psi), max.: 637.5 kPa (6.48 kgf / cm^2, 92.2 psi)	Actual tire inflation pressure	-
TIREPRESS5	ID5 tire inflation pressure / min.:0 kPa (0 kgf/cm^2, 0 psi), max.: 637.5 kPa (6.48 kgf / cm^2, 92.2 psi)	Actual tire inflation pressure	-

(f) Rapidly release the pressures from each wheel by approximately 40 kPa (0.4 kgf / cm^2, 5.8 psi) /30 seconds or more.
(1) Check that each tire pressure data displayed on the intelligent tester screen has changed.
NOTICE:
- **It takes about 1 minute or more to display the updated tire pressure data.**

- **When the "TIREPRESS" data has not changed, reset the tire pressure to the appropriate specified value and rotate the tire 90 to 270 degrees (including the full-size spare tire). Then rapidly release the tire pressure and recheck it.**

(2) After confirming that all of the tire pressure data displayed on the intelligent tester screen have changed, set the tire pressure to the appropriate specified values.

Result

Condition	Proceed to
All tire pressure readings are equal to specified values	A
Tire pressure values are not displayed	B

A → **END**

B

3	RETURN TIRE PRESSURE WARNING SELECT SWITCH TO ORIGINAL POSITION

NEXT

INSPECT OTHER PROBLEM (MALFUNCTION IN TRANSMISSION OR RECEPTION FUNCTION)

DTC	C2121/21	No Signal from Transmitter ID1 in Main Mode
DTC	C2122/22	No Signal from Transmitter ID2 in Main Mode
DTC	C2123/23	No Signal from Transmitter ID3 in Main Mode
DTC	C2124/24	No Signal from Transmitter ID4 in Main Mode
DTC	C2125/25	No Signal from Transmitter ID5 in Main Mode
DTC	C2131/31	No Signal from Transmitter ID1 in 2nd Mode
DTC	C2132/32	No Signal from Transmitter ID2 in 2nd Mode
DTC	C2133/33	No Signal from Transmitter ID3 in 2nd Mode
DTC	C2134/34	No Signal from Transmitter ID4 in 2nd Mode
DTC	C2135/35	No Signal from Transmitter ID5 in 2nd Mode
DTC	C2181/81	Transmitter ID1 not Received (Test Mode DTC)
DTC	C2182/82	Transmitter ID2 not Received (Test Mode DTC)
DTC	C2183/83	Transmitter ID3 not Received (Test Mode DTC)
DTC	C2184/84	Transmitter ID4 not Received (Test Mode DTC)
DTC	C2185/85	Transmitter ID5 not Received (Test Mode DTC)

DESCRIPTION

The tire pressure warning valve and transmitters that are installed in the tire and wheel assemblies measure the air pressure of the tires. The measured values are transmitted to the tire pressure warning antenna and receiver on the body as radio waves and then sent to the tire pressure warning ECU. The ECU compares the measured air pressure values with the air pressure threshold. When the measured air pressure value is less than this threshold, the warning light in the combination meter comes on.
The tire pressure warning valve and transmitters constantly send radio waves to the tire pressure warning antenna and receiver.
Under the following conditions below, the tire pressure warning antenna and receiver is unable to receive the signals from the tire pressure warning valves and transmitters, and a DTC is stored.

- Facilities or devices that use similar radio frequencies are located in the vicinity of the vehicle.
- Devices using similar radio frequencies are used in the vehicle.

HINT:
When no signals are received for 51 minutes or more, a DTC is output.

DTCs from C2121/21 to C2135/35 can only be cleared by using the tester. DTCs from C2181/81 to C2185/85 can be cleared when the transmitter in the tire pressure warning valve and transmitter sends a forced transmission signal or when the test mode ends. DTCs from C2181/81 to C2185/85 are output only in test mode.

DTC No.	DTC Detecting Condition	Trouble Area
C2121/21 C2122/22 C2123/23 C2124/24 C2125/25 C2131/31 C2132/32 C2133/33 C2134/34 C2135/35	These DTCs are detected when no signals are received for 51 minutes or more.	• Tire pressure warning valve and transmitter • Wire harness or connector • Tire pressure warning ECU
C2181/81 C2182/82 C2183/83 C2184/84 C2185/85	Malfunction in the transmitting/receiving circuit	• Tire pressure warning valve and transmitter • Wire harness or connector • Tire pressure warning ECU

HINT:

- It is necessary to perform the procedure to identify the tire pressure warning valve and transmitter that is malfunctioning because it cannot be identified by the output DTC.
- DTCs C2125/25, C2135/35 and C2185/85 are used only when the vehicle is equipped with a full-size spare tire.

WIRING DIAGRAM

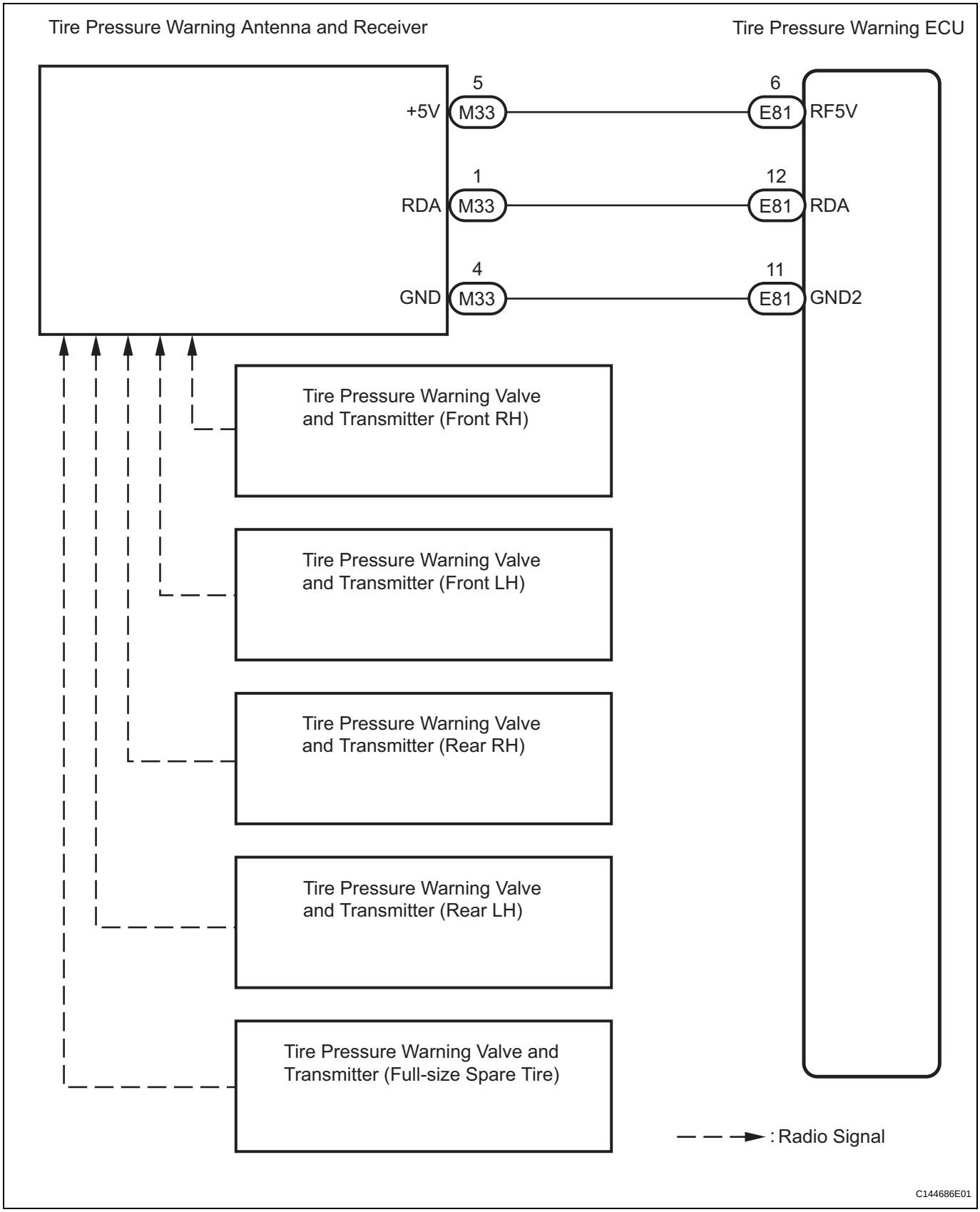

INSPECTION PROCEDURE

NOTICE:

- **When replacing the tire pressure warning ECU, read the IDs stored in the old ECU using the intelligent tester and write them down before removal.**
- **It is necessary to perform initialization (See page TW-18) after registration (See page TW-15) of the transmitter IDs into the tire pressure warning ECU after the ECU and/or valve and transmitter has been replaced.**

1 CHECK FREQUENCY RECEIVING CONDITION

(a) Check if the vehicle is not located in areas such as described below:

(1) Facilities or devices that use similar radio frequencies are located in the vicinity of the vehicle.
HINT:
If the vehicle is located in areas described above, the tire pressure warning light may come on only in a particular area.

(2) Devices using similar radio frequencies are used in the vehicle.
OK:
Facilities, or devices that use similar radio frequencies are not located in the vicinity of the vehicle.
HINT:
Radio frequency may be interrupted due to surroundings or devices installed by the user.

NG → **CHECK IF ANY DEVICE IS INSTALLED BY USER**

OK

2 IDENTIFY TRANSMITTER CORRESPONDING TO DTC

(a) Set the tire pressure to the appropriate specified values.

Cold tire inflation pressure

Tire size	Front kPa (kgf/cm^2, psi)	Rear kPa (kgf/cm^2, psi)
P215/55R17 93V	210 (2.1, 30)	210 (2.1, 30)

TW

(b) Select "TIREPRESS" by following the prompts displayed on the intelligent tester.

TIRE PRESSURE:

Tester Display	Measurement Item/Range	Normal Condition	Diagnostic Note
TIREPRESS1	ID1 tire inflation pressure/ min.: 0 kPa (0 kgf/cm^2, 0 psi), max.: 637.5 kPa (6.48 kgf/cm^2, 92.2 psi)	Actual tire inflation pressure	-
TIREPRESS2	ID2 tire inflation pressure/ min.: 0 kPa (0 kgf/cm^2, 0 psi), max.: 637.5 kPa (6.48 kgf/cm^2, 92.2 psi)	Actual tire inflation pressure	-
TIREPRESS3	ID3 tire inflation pressure/ min.: 0 kPa (0 kgf/cm^2, 0 psi), max.: 637.5 kPa (6.48 kgf/cm^2, 92.2 psi)	Actual tire inflation pressure	-

Tester Display	Measurement Item/Range	Normal Condition	Diagnostic Note
TIREPRESS4	ID4 tire inflation pressure/ min.: 0 kPa (0 kgf/cm^2, 0 psi), max.: 637.5 kPa (6.48 kgf/cm^2, 92.2 psi)	Actual tire inflation pressure	-
TIREPRESS5	ID5 tire inflation pressure/ min.: 0 kPa (0 kgf/cm^2, 0 psi), max.: 637.5 kPa (6.48 kgf/cm^2, 92.2 psi)	Actual tire inflation pressure	-

(c) Rapidly reduce the tire pressure for each wheel at least 40 kPa (0.41 kg/cm^2, 5.8 psi) within 30 seconds.

(d) Check the DATA LIST.

NOTICE:

- **It takes about 1 minute or more to display the updated tire pressure data.**
- **When no "TIREPRESS" data has changed, reset the tire pressure to the appropriate specified value and rotate the tire 90 to 270 degrees. Then rapidly release the tire pressure and recheck it.**
- **Record the transmitter ID of which "TIREPRESS" data corresponds to each tire.**

(e) After confirming that one of "TIREPRESS" data for one tire (ID1 to ID4 or ID5) has changed, repeat this procedure one by one. Identify the transmitter that corresponds to DTC.

Result

Condition	Proceed to
All tire pressure readings are equal to specified values	A
Any of tire pressure values are not displayed	B
All tire pressure values are not displayed	C

A → END

B → Go to step 6

C

3 SWITCH TIRE PRESSURE WARNING SELECT SWITCH

TW

(a) Switch tire pressure warning select switch to the other position (MAIN to 2nd or 2nd to MAIN).

(b) Set the tire pressure to the appropriate specified values.

Cold tire inflation pressure

Tire size	Front kPa (kgf/cm^2, psi)	Rear kPa (kgf/cm^2, psi)
P215/55R17 93V	210 (2.1, 30)	210 (2.1, 30)

(c) Select "TIREPRESS" by following the prompts displayed on the intelligent tester.

TIRE PRESSURE:

Tester Display	Measurement Item/Range	Normal Condition	Diagnostic Note
TIREPRESS1	ID1 tire inflation pressure/ min.: 0 kPa (0 kgf/cm^2, 0 psi), max.: 637.5 kPa (6.48 kgf/cm^2, 92.2 psi)	Actual tire inflation pressure	-

Tester Display	Measurement Item/Range	Normal Condition	Diagnostic Note
TIREPRESS2	ID2 tire inflation pressure/ min.: 0 kPa (0 kgf/cm^2, 0 psi), max.: 637.5 kPa (6.48 kgf/cm^2, 92.2 psi)	Actual tire inflation pressure	-
TIREPRESS3	ID3 tire inflation pressure/ min.: 0 kPa (0 kgf/cm^2, 0 psi), max.: 637.5 kPa (6.48 kgf/cm^2, 92.2 psi)	Actual tire inflation pressure	-
TIREPRESS4	ID4 tire inflation pressure/ min.: 0 kPa (0 kgf/cm^2, 0 psi), max.: 637.5 kPa (6.48 kgf/cm^2, 92.2 psi)	Actual tire inflation pressure	-
TIREPRESS5	ID5 tire inflation pressure/ min.: 0 kPa (0 kgf/cm^2, 0 psi), max.: 637.5 kPa (6.48 kgf/cm^2, 92.2 psi)	Actual tire inflation pressure	-

(d) Rapidly reduce the tire pressure for each wheel at least 40 kPa (0.41 kg/cm^2, 5.8 psi) within 30 seconds.

(e) Check the DATA LIST.

NOTICE:

- **It takes about 1 minute or more to display the updated tire pressure data.**
- **When no "TIREPRESS" data has changed, reset the tire pressure to the appropriate specified value and rotate the tire 90 to 270 degrees. Then rapidly release the tire pressure and recheck it.**
- **Record the transmitter ID of which "TIREPRESS" data corresponds to each tire.**

(f) After confirming that one of "TIREPRESS" data for one tire (ID1 to ID4 or ID5) has changed, repeat this procedure one by one. Identify the transmitter that corresponds to DTC.

Result

Condition	Proceed to
All tire pressure readings are equal to specified values	A
Tire pressure values are not displayed	B

A → **END**

B

4	RETURN TIRE PRESSURE WARNING SELECT SWITCH TO ORIGINAL POSITION

NEXT

5 CHECK HARNESS AND CONNECTOR (ECU - RECEIVER)

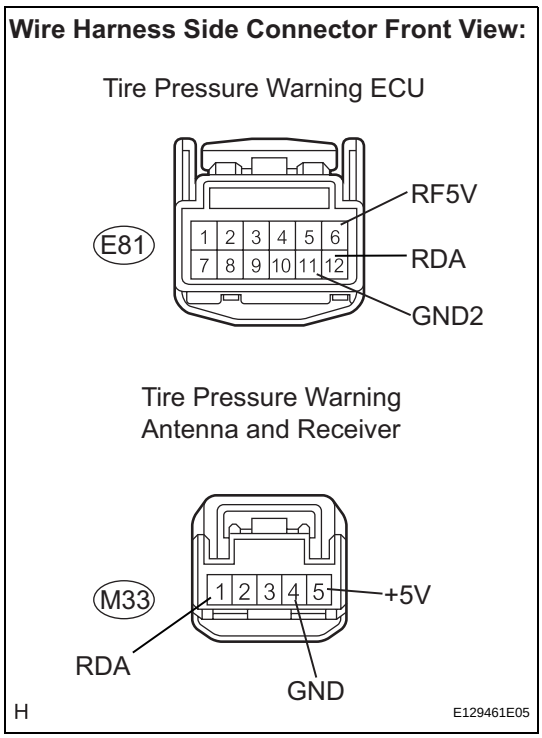

(a) Disconnect the E81 ECU connector.
(b) Disconnect the M33 receiver connector.
(c) Measure the resistance according to the value(s) in the table below.

Standard resistance

Tester Connection	Specified Condition
E81-12 (RDA) - M33-1 (RDA)	Below 1 Ω
E81-11 (GND2) - M33-4 (GND)	
E81-6 (RF5V) - M33-5 (+5V)	
E81-12 (RDA) - Body ground	10 kΩ or higher
E81-11 (GND2) - Body ground	
E81-6 (RF5V) - Body ground	

NG → **REPAIR OR REPLACE HARNESS OR CONNECTOR**

OK

6 INSPECT TIRE PRESSURE WARNING ANTENNA AND RECEIVER

(a) Select REGIT ID CODE by following the prompts displayed on the intelligent tester.

TIRE PRESSURE:

Tester Display	Measurement Item/Range	Normal Condition	Diagnostic Note
REGIT ID1 CODE	Registered ID1 code/ min.: 0, max.: FFFFFF*	The ID No. registered in the transmitter ID1 is displayed	*: Displayed only when the ID No. is not registered.
REGIT ID2 CODE	Registered ID2 code/ min.: 0, max.: FFFFFF*	The ID No. registered in the transmitter ID2 is displayed	*: Displayed only when the ID No. is not registered.
REGIT ID3 CODE	Registered ID3 code/ min.: 0, max.: FFFFFF*	The ID No. registered in the transmitter ID3 is displayed	*: Displayed only when the ID No. is not registered.
REGIT ID4 CODE	Registered ID4 code/ min.: 0, max.: FFFFFF*	The ID No. registered in the transmitter ID4 is displayed	*: Displayed only when the ID No. is not registered.
REGIT ID5 CODE	Registered ID5 code/ min.: 0, max.: FFFFFF*	The ID No. registered in the transmitter ID5 is displayed	*: Displayed only when the ID No. is not registered.

(b) Check the ID number on the identified transmitter by removing it from the tire and wheel.

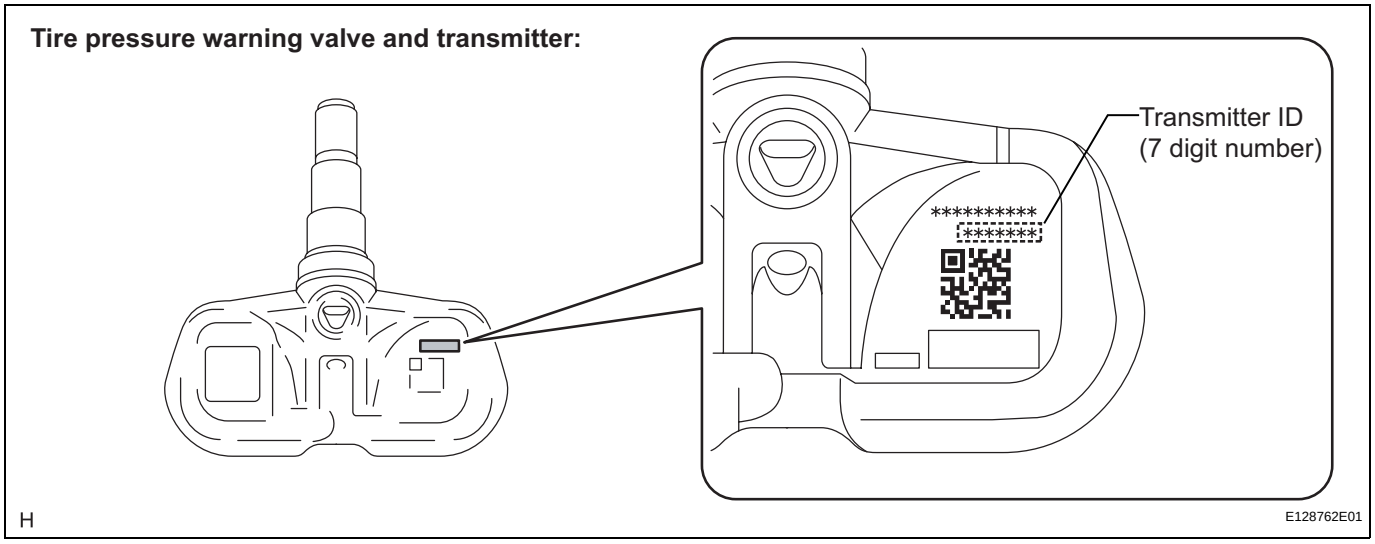

(c) Confirm that the ID number on the transmitter and recorded transmitter ID match.

Result

Result	Proceed to
Match	A
Do not match	B

B → **Go to step 8**

A

7 REPLACE TIRE PRESSURE WARNING VALVE AND TRANSMITTER

HINT:
(See page TW-80)

NEXT

8 REGISTRATION OF TRANSMITTER ID

(a) Perform registration (See page TW-15).
(b) Set the tire air pressure appropriate specified values.

Cold tire inflation pressure

Tire size	Front kPa (kgf/cm^2, psi)	Rear kPa (kgf/cm^2, psi)
P215/55R17 93V	210 (2.1, 30)	210 (2.1, 30)

NEXT

9 PERFORM INITIALIZATION

(a) Perform initialization (See page TW-18).

NEXT

10 READ VALUE OF DATA LIST

(a) Turn the engine switch off, and then turn it on (IG).
(b) Select "TIREPRESS" by following the prompts displayed on the intelligent tester.
HINT:
It may take up to 1 minute or more to display the tire pressure data.

Result

Condition	Proceed to
All tire pressure readings are equal to specified values.	A
Tire pressure values are not displayed.	B

A → **END**

B

11 REPLACE TIRE PRESSURE WARNING ANTENNA AND RECEIVER

(a) Replace the tire pressure warning antenna and receiver (See page TW-77).

NEXT

12 READ VALUE OF DATA LIST

(a) Turn the engine switch off, and then turn it on (IG).
(b) Select "TIREPRESS" by following the prompts displayed on the intelligent tester.
HINT:
It may take up to 1 minute or more to display the tire pressure data.

Result

Condition	Proceed to
All tire pressure readings are equal to specified values.	A
Tire pressure values are not displayed.	B

B → **REPLACE TIRE PRESSURE WARNING ECU (See page TW-85)**

A

END

DTC	C2141/41	Transmitter ID1 Error

DTC	C2142/42	Transmitter ID2 Error

DTC	C2143/43	Transmitter ID3 Error

DTC	C2144/44	Transmitter ID4 Error

DTC	C2145/45	Transmitter ID5 Error

DESCRIPTION

The tire pressure warning valve and transmitters that are installed in the tire and wheel assemblies measure the air pressure of the tires. The measured values are transmitted to the tire pressure warning antenna and receiver on the body as radio waves and then sent to the tire pressure warning ECU. The ECU compares the measured air pressure values with the air pressure threshold. When the measured air pressure value is less than this threshold, the warning light in the combination meter comes on.
When the internal circuit of the tire pressure warning valve and transmitter is malfunctioning, this DTC is output.

DTC No.	DTC Detecting Condition	Trouble Area
C2141/41 C2142/42 C2143/43 C2144/44 C2145/45	If an "ERROR" signal is received 3 times consecutively, the tire pressure warning valve and transmitter will be judged as defective and a DTC will be output. This will happen in situations where the inflation pressure is outside the range 0 to 637.5 kPa (0 to 6.48 kgf/cm^2, 0 psi to 92.2 psi), the temperature inside the tire is outside the specified range -40 to 120°C (-40 to 253°F), or an error occurs in the tire pressure warning valve and transmitter or the surrounding area.	• Tire pressure warning valve and transmitter • Tire pressure warning ECU

HINT:
- It is necessary to perform the procedure to identify the tire pressure warning valve and transmitter that is malfunctioning because it cannot be identified by the output DTC.
- DTC 2145/45 is used only when the vehicle is equipped with the full-size spare tire.

INSPECTION PROCEDURE

NOTICE:
- **When replacing the tire pressure warning ECU, read the IDs stored in the old ECU using the intelligent tester and write them down before removal.**
- **It is necessary to perform initialization (See page TW-18) after registration (See page TW-15) of the transmitter IDs into the tire pressure warning ECU after the ECU and/or valve and transmitter has been replaced.**

TW

1	IDENTIFY TRANSMITTER CORRESPONDING TO DTC

(a) Set the tire pressure to the specified value.

Cold tire inflation pressure

Tire size	Front kPa (kgf/cm^2, psi)	Rear kPa (kgf/cm^2, psi)
P215/55R17 93V	210 (2.1, 30)	210 (2.1, 30)

(b) Display the "TIREPRESS" data for each wheel using the intelligent tester.

(c) Rapidly reduce the tire pressure for each wheel at least 40 kPa (0.41 kg/cm^2, 5.8 psi) within 30 seconds. If "TIREPRESS" displayed on the tester (ID1 to ID4 or ID5) does not change, the tire pressure warning valve and transmitter corresponds to the DTC that was detected.
HINT:
- Identify the malfunctioning tire pressure warning valve and transmitter by repeatedly decreasing the tire pressure for each tire.
- Record which "TIREPRESS" data (ID1 to ID4 or ID5) corresponds to each tire.

TIRE PRESSURE:

Tester Display	Measurement Item/Range	Normal Condition	Diagnostic Note
TIREPRESS1	ID1 tire inflation pressure/ min.: 0 kPa (0 kgf/cm^2, 0 psi), max.: 637.5 kPa (6.48 kgf/cm^2, 92.2 psi)	Actual tire inflation pressure	-
TIREPRESS2	ID2 tire inflation pressure/ min.: 0 kPa (0 kgf/cm^2, 0 psi), max.: 637.5 kPa (6.48 kgf/cm^2, 92.2 psi)	Actual tire inflation pressure	-
TIREPRESS3	ID3 tire inflation pressure/ min.: 0 kPa (0 kgf/cm^2, 0 psi), max.: 637.5 kPa (6.48 kgf/cm^2, 92.2 psi)	Actual tire inflation pressure	-
TIREPRESS4	ID4 tire inflation pressure/ min.: 0 kPa (0 kgf/cm^2, 0 psi), max.: 637.5 kPa (6.48 kgf/cm^2, 92.2 psi)	Actual tire inflation pressure	-
TIREPRESS5	ID5 tire inflation pressure/ min.: 0 kPa (0 kgf/cm^2, 0 psi), max.: 637.5 kPa (6.48 kgf/cm^2, 92.2 psi)	Actual tire inflation pressure	-

(d) Check the DATA LIST.

Result

Condition	Detection Condition
One of "TIREPRESS" data (ID1 to ID4 or ID5) changed.	**Normal**
"TIREPRESS" data did not change.	**Transmitter corresponding to DTC**

NOTICE:
- **When "TIREPRESS" data has not changed, reset the tire pressure to the appropriate specified value and rotate the tire 90 to 270 degrees. Then forcibly transmit the transmitter ID and recheck.**
- **Record the transmitter ID and position of transmitters that are normal.**

(e) When the "TIREPRESS" data (ID1 to ID4 or ID5) has changed, repeat this procedure to identify the tire pressure warning valve and transmitter that corresponds to a DTC.

(f) When all of the "TIREPRESS" data (ID1 to ID4 or ID5) have changed, identify the malfunctioning tire pressure warning valve and transmitter using recorded ID numbers and output DTC.

(g) Set the tire pressures to the appropriate specified values.

NEXT

2 REPLACE TIRE PRESSURE WARNING VALVE AND TRANSMITTER

(a) Replace the identified tire pressure warning valve and transmitter with a new one.
HINT:
- Before installing a new tire pressure warning valve and transmitter, read and write down its transmitter ID.
- The IDs for the tire pressure warning valve and transmitter not be replaced should be checked using the tester and recorded.

NEXT

3 REGISTRATION OF TRANSMITTER ID

(a) Register the transmitter ID for all wheels (See page TW-15).
(b) Set the tire air pressure to the specified value.

Result

Condition	Detection Condition
One of "TIREPRESS" data (ID1 to ID4 or ID5) changed.	Normal
"TIREPRESS" data did not change.	Transmitter corresponding to DTC

NEXT

4 PERFORM INITIALIZATION

(a) Perform initialization (See page TW-18).

NEXT

5 CHECK DTC

(a) Check for a DTC (See page TW-29).

Result

Condition	Proceed to
Any of the DTCs from C2141/41 to C2144/44 or C2145/45 are output.	A
Any of the DTCs from C2141/41 to C2144/44 or C2145/45 are not output.	B

B → END

A

REPLACE TIRE PRESSURE WARNING ECU (See page TW-85)

TW

DTC	C2165/65	Abnormal Temperature Inside ID1 Tire

DTC	C2166/66	Abnormal Temperature Inside ID2 Tire

DTC	C2167/67	Abnormal Temperature Inside ID3 Tire

DTC	C2168/68	Abnormal Temperature Inside ID4 Tire

DTC	C2169/69	Abnormal Temperature Inside ID5 Tire

DESCRIPTION

Each tire pressure warning valve and transmitter measures the internal temperature of its tire as well as tire pressure, and transmits the information to the tire pressure warning ECU along with the transmitter ID. If the measured temperature is out of the specified range, the tire pressure warning ECU recognizes it as a malfunction, outputs DTCs, and blinks (come on after blinking for 1 minute) the tire pressure warning light.

DTC No.	DTC Detecting Condition	Trouble Area
C2165/65 C2166/66 C2167/67 C2168/68 C2169/69	Temperature inside the tire exceeds 119°C (246.2°F) more than once.	• Tires • Tire pressure warning valve and transmitter • Tire pressure warning ECU

HINT:
- It is necessary to perform the procedure to identify the tire pressure warning valve and transmitter that is malfunctioning because it cannot be identified by the output DTC.
- DTC 2169/69 is used only when the vehicle is equipped with a full-size spare tire.

INSPECTION PROCEDURE

NOTICE:
- **When replacing the tire pressure warning ECU, read the IDs stored in the old ECU using the intelligent tester and note them down before removal.**
- **It is necessary to perform initialization (See page TW-18) after registration (See page TW-15) of the transmitter IDs into the tire pressure warning ECU after the ECU and/or valve and transmitter has been replaced.**

TW

1	CHECK TIRES

(a) Check the tire is not flat, and there is no indication of air pressure drop.
OK:
Tire is normal.
HINT:
If a tire is damaged, the tire pressure warning valve and transmitter may also have been damaged at the same time.

NG → **REPLACE TIRE AND TIRE PRESSURE WARNING VALVE AND TRANSMITTER**

OK

2	IDENTIFY TRANSMITTER CORRESPONDING TO DTC

(a) Set the tire pressure to the specified value.

Cold tire inflation pressure

Tire size	Front kPa (kgf/cm^2, psi)	Rear kPa (kgf/cm^2, psi)
P215/55R17 93V	210 (2.1, 30)	210 (2.1, 30)

(b) Display the "TIREPRESS" data for each wheel using the intelligent tester.

(c) Rapidly reduce the tire pressure for each wheel at least 40 kPa (0.41 kg/cm^2, 5.8 psi) within 30 seconds.

(d) Check the DATA LIST

TIRE PRESSURE:

Tester Display	Measurement Item/Range	Normal Condition	Diagnostic Note
TIREPRESS1	ID1 tire inflation pressure/ min.: 0 kPa (0 kgf/cm^2, 0 psi), max.: 637.5 kPa (6.48 kgf/cm^2, 92.2 psi)	Actual tire inflation pressure	-
TIREPRESS2	ID2 tire inflation pressure/ min.: 0 kPa (0 kgf/cm^2, 0 psi), max.: 637.5 kPa (6.48 kgf/cm^2, 92.2 psi)	Actual tire inflation pressure	-
TIREPRESS3	ID3 tire inflation pressure/ min.: 0 kPa (0 kgf/cm^2, 0 psi), max.: 637.5 kPa (6.48 kgf/cm^2, 92.2 psi)	Actual tire inflation pressure	-
TIREPRESS4	ID4 tire inflation pressure/ min.: 0 kPa (0 kgf/cm^2, 0 psi), max.: 637.5 kPa (6.48 kgf/cm^2, 92.2 psi)	Actual tire inflation pressure	-
TIREPRESS5	ID5 tire inflation pressure/ min.: 0 kPa (0 kgf/cm^2, 0 psi), max.: 637.5 kPa (6.48 kgf/cm^2, 92.2 psi)	Actual tire inflation pressure	-

Result

Condition	Detection Condition
One of "TIREPRESS" data (ID1 to ID4 or ID5) changed.	**Normal**
No "TIREPRESS" data changed.	**Transmitter corresponding to DTC**

NOTICE:

- **It takes about 1 minute or more to display the updated data.**
- **When no "TIREPRESS" data has changed, reset the tire pressure to the appropriate specified value and rotate the tire 90 to 270 degrees. Then forcibly transmit the transmitter ID and recheck it.**
- **Record the transmitter ID and position that is normal condition.**

(e) When the "TIREPRESS" data (ID1 to ID4 or ID5) has changed, repeat this procedure to identify the tire pressure warning valve and transmitter that corresponds to a DTC.

(f) When all of the "TIREPRESS" data (ID1 to ID4 or ID5) has changed, identify the malfunctioning tire pressure warning valve and transmitter based on the recorded ID numbers and output DTC.

NEXT

3	REPLACE TIRE PRESSURE WARNING VALVE AND TRANSMITTER

(a) Replace the identified tire pressure warning valve and transmitter with a new one (See page TW-80).

HINT:

- Before installing a new tire pressure warning valve and transmitter, read and write down its transmitter ID.
- The IDs for the tire pressure warning valve and transmitter not be replaced should be checked using the tester and recorded.

NEXT

4	CHECK REGISTRATION OF TRANSMITTER ID

(a) Register the transmitter ID for 4 or 5 wheels (See page TW-15).

(b) Set the tire pressure of all wheels to the specified value.

Cold tire inflation pressure

Tire size	Front kPa (kgf/cm^2, psi)	Rear kPa (kgf/cm^2, psi)
P215/55R17 93V	210 (2.1, 30)	210 (2.1, 30)

NEXT

5	PERFORM INITIALIZATION

(a) Perform initialization (See page TW-18).

NEXT

6	CHECK DTC

(a) Check for a DTC (See page TW-18).

TW

Result

Condition	Proceed to
Any of the DTCs from C2165/65 to C2168/68 or C2169/69 are output.	A
Any of the DTCs from C2165/65 to C2168/68 or C2169/69 are not output.	B

B → END

A

REPLACE TIRE PRESSURE WARNING ECU (See page TW-85)

DTC	C2171/71	Transmitter ID not Registered in Main Mode

DTC	C2172/72	Transmitter ID not Registered in 2nd Mode

DESCRIPTION

The IDs of each tire pressure warning valve and transmitter are registered to the tire pressure warning ECU. When the ECU detects that an ID is not the one of registered IDs, or cannot receive an ID signal, a DTC is output.

DTC No.	DTC Detection Condition	Trouble Area
C2171/71 C2172/72	Transmitter ID code is not registered. (When an ID code is unregistered for 51 minutes or more)	Tire pressure warning ECU

INSPECTION PROCEDURE

NOTICE:

- **When replacing the tire pressure warning ECU, read the IDs stored in the old ECU using the intelligent tester and note them down before removal.**
- **It is necessary to perform initialization (See page TW-18) after registration (See page TW-15) of the transmitter IDs into the tire pressure warning ECU after the ECU and/valve and transmitter has been replaced.**

1 CONFIRM REGISTRATION CONDITION (REGISTERED ID CODES)

(a) Connect the intelligent tester to the DLC3 connector.
(b) Turn the engine switch on (IG) and turn the tester on.
(c) Select REGIT ID CODE by following the prompts displayed on the intelligent tester.
OK:
The registered transmitter ID codes are displayed on the intelligent tester.

OK → **REPLACE TIRE PRESSURE WARNING ECU (See page TW-85)**

NG ↓

2 PERFORM REGISTRATION

(a) Register the transmitter IDs for all the wheels (See page TW-15).
(b) Set the tire pressure of all the wheels to the appropriate specified values.

NEXT ↓

3 READ VALUE ON INTELLIGENT TESTER

(a) Check the DATA LIST (See page TW-30)
(b) Select "TIREPRESS" by following the prompts displayed on the intelligent tester.

TW

HINT:
It may take up to 1 minute or more to display the tire pressure data.

Result

Condition	Proceed to
All tire pressure readings are equal to specified values.	A
Tire pressure values are not displayed	B

B → **REPLACE TIRE PRESSURE WARNING ECU (See page TW-85)**

A

END

DTC	C2176/76	Receiver Error

DESCRIPTION

The signals are transmitted to the tire pressure warning antenna and receiver on the body as radio waves and then sent to the tire pressure warning ECU.

DTC No.	DTC Detection Condition	Trouble Area
C2176/76	DTC is stored when any of the following is detected: • Malfunction in the tire pressure warning ECU internal circuit. • Terminal RF5V is shorted to ground. • Malfunction in the tire pressure warning antenna and receiver internal circuit.	• Tire pressure warning antenna and receiver • Wire harness or connector • Tire pressure warning ECU

WIRING DIAGRAM

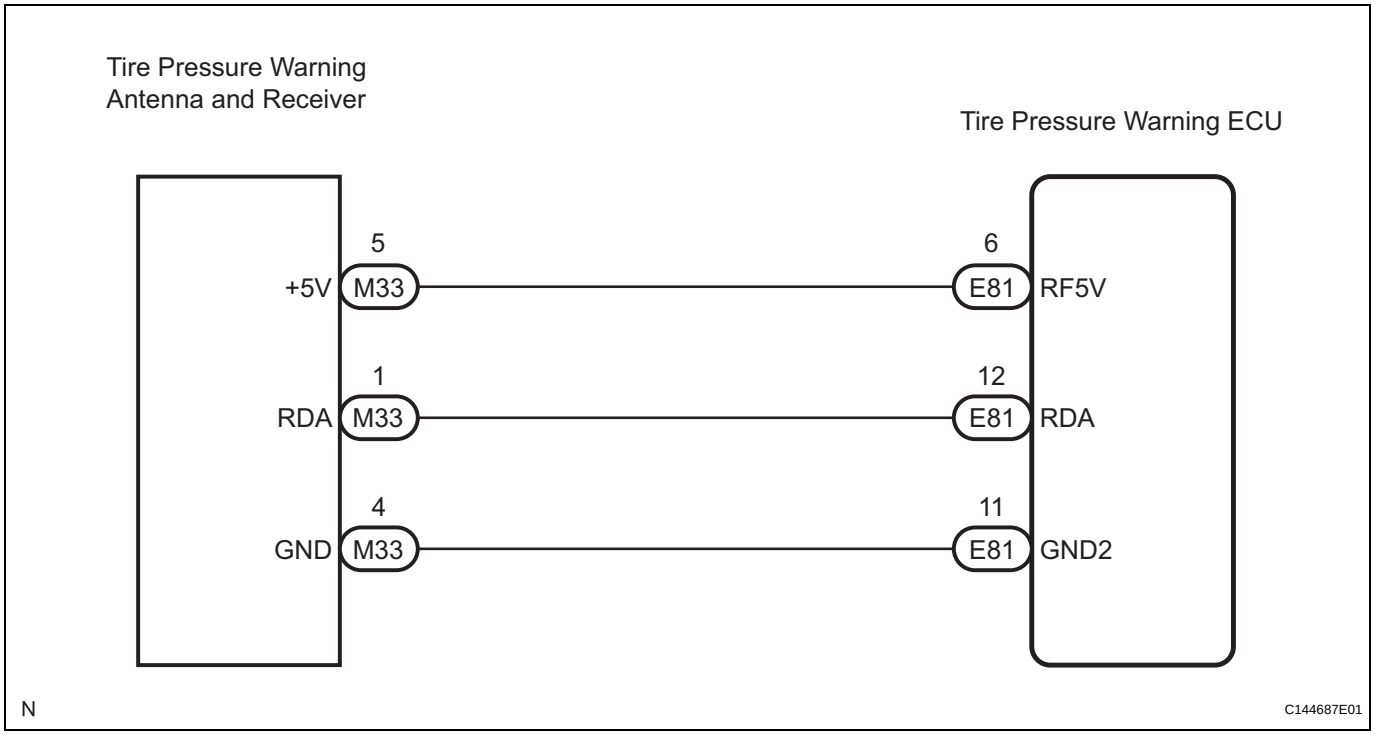

INSPECTION PROCEDURE

NOTICE:

- **When replacing the tire pressure warning ECU, read the IDs stored in the ECU using the intelligent tester and write them down before removal.**
- **It is necessary to perform initialization (See page TW-18) after registration (See page TW-15) of the transmitter IDs into the tire pressure warning ECU after the ECU and/or valve and transmitter has been replaced.**

TW

1 CHECK TIRE PRESSURE WARNING ECU

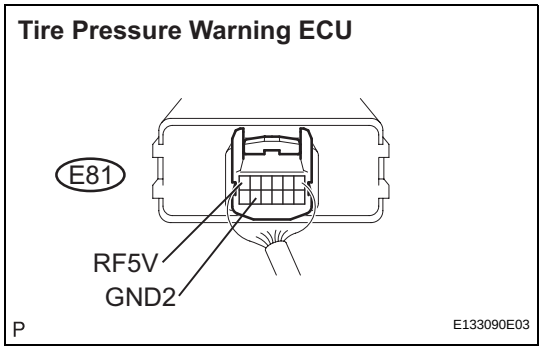

(a) Measure the voltage according to the value(s) in the table below.

Standard voltage

Tester Connection	Switch Condition	Specified Condition
E81-6 (RF5V) - E81-11 (GND2)	Engine switch on (IG)	4.5 to 5.5 V

NG → **Go to step 5**

OK

2 CHECK WIRE HARNESS (ECU - RECEIVER)

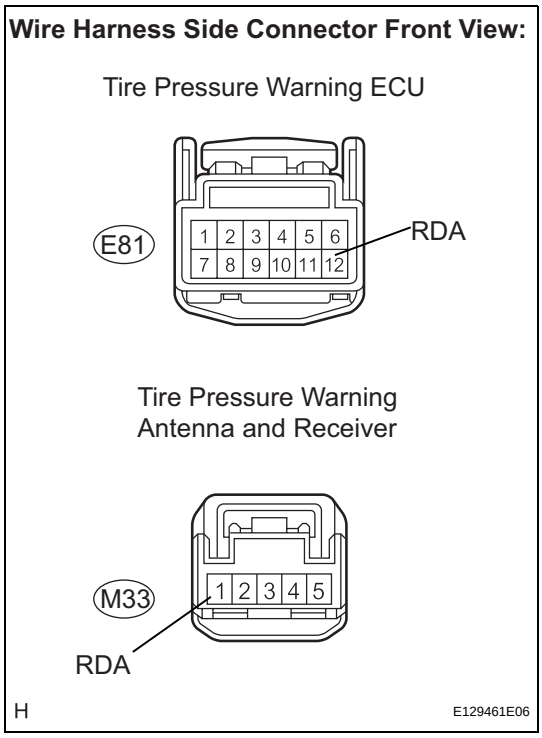

(a) Disconnect the E81 ECU connector.
(b) Disconnect the M33 receiver connector.
(c) Measure the resistance according to the value(s) in the table below.

Standard resistance

Tester Connection	Specified Condition
E81-12 (RDA) - M33-1 (RDA)	Below 1 Ω
E81-12 - Body ground	

NG → **REPAIR OR REPLACE HARNESS OR CONNECTOR**

OK

3 REPLACE TIRE PRESSURE WARNING ANTENNA AND RECEIVER

HINT:
Replace tire pressure warning antenna and receiver (See page TW-77).

NEXT

TW

4	CHECK DTC

(a) Check for DTC (See page TW-29).
OK:
DTC is not output.
HINT:
- It is necessary to register IDs when replacing the tire pressure warning ECU (See page TW-15).
- Read the IDs on the DATA LIST before removing the tire pressure warning ECU. Register the ID in the new tire pressure warning ECU.

NG → **REPLACE TIRE PRESSURE WARNING ECU**

OK

END

5	CHECK HARNESS AND CONNECTOR (ECU - RECEIVER)

Wire Harness Side Connector Front View:

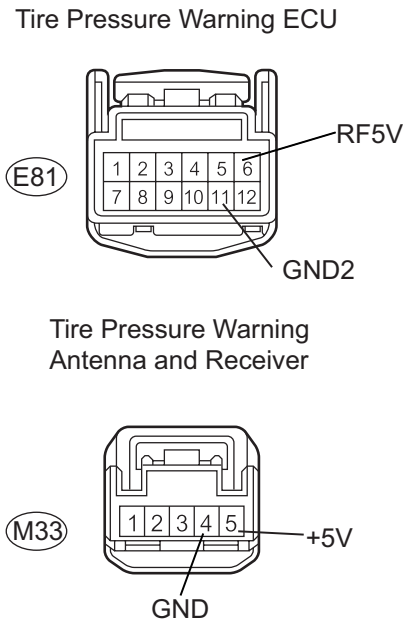

(a) Disconnect the E81 ECU connector.
(b) Disconnect the M33 receiver connector.
(c) Measure the resistance according to the value(s) in the table below.

Standard resistance

Tester Connection	Specified Condition
E81-11 (GND2) - M33-4 (GND)	Below 1 Ω
E81-6 (RF5V) - M33-5 (+5V)	
E81-11 (GND2) - Body ground	10 kΩ or higher
E81-6 (RF5V) - Body ground	

Result

Result	Proceed to
OK	A
OK (When troubleshooting in accordance with PROBLEM SYMPTOMS TABLE)	B
NG	C

A → **REPLACE TIRE PRESSURE WARNING ECU (See page TW-85)**

C → **REPAIR OR REPLACE HARNESS OR CONNECTOR AND REPLACE TIRE PRESSURE WARNING ECU (See page TW-85)**

B

PROCEED TO NEXT CIRCUIT INSPECTION SHOWN IN PROBLEM SYMPTOMS TABLE

TW

DTC	C2177/77	Initialization not Completed

DESCRIPTION

Initialization is necessary after replacing any of the ECU, tires with different tire pressure, or tire pressure warning valve and transmitter, after rotating the tires or when a new vehicle is delivered.

DTC No.	DTC Detection Condition	Trouble Area
C2177/77	Initialization is not completed after vehicle speed of 5 mph (8 km/h) or more continues for 20 minutes or more (total).	• Tire pressure warning valve and transmitter • Tire pressure warning ECU • Tire pressure warning reset switch

INSPECTION PROCEDURE

NOTICE:

- **When replacing the tire pressure warning ECU, read the IDs stored in the old ECU using the intelligent tester and write them down before removal.**
- **It is necessary to perform initialization (See page TW-18) after registration (See page TW-15) of the transmitter IDs into the tire pressure warning ECU after the ECU and/or valve and transmitter has been replaced.**

1 CHECK FREQUENCY RECEIVING CONDITION

(a) Check if the vehicle is not located in areas such as described below:

(1) Facilities or devices that use similar radio frequencies are located in the vicinity of the vehicle.
HINT:
If the vehicle is located in areas described above, the tire pressure warning light may come on only in a particular area.

(2) Devices using similar radio frequencies are used in the vehicle.
OK:
Facilities, or devices that use similar radio frequencies are not located in the vicinity of the vehicle.
HINT:
Radio frequency may be interrupted due to surroundings or devices installed by the user.

NG → **CHECK IF ANY DEVICE IS INSTALLED BY USER**

OK

2 CHECK TIRE PRESSURE WARNING SELECT SWITCH

(a) Check that the position of the tire pressure warning select switch (MAIN or 2nd).
OK:
Tire pressure warning select switch position is the same as the type of registration ID of the wheels being used.

TW

NG → **CHANGE TIRE PRESSURE WARNING SELECT SWITCH POSITION**

OK

3 PERFORM INITIALIZATION

(a) Perform initialization (See page TW-18).
NOTICE:
Signals from a tire pressure warning valve and transmitter may be interrupted depending on the position of the valve. If initialization is not completed, rotate the tire 90 to 270 degrees and perform initialization again.

OK → **END**

NG

4 INSPECT TIRE PRESSURE WARNING VALVE AND TRANSMITTER

(a) Select REGIT ID CODE by following the prompts displayed on the intelligent tester.

TIRE PRESSURE:

Tester Display	Measurement Item/Range	Normal Condition	Diagnostic Note
TIREPRESS1	ID1 tire inflation pressure/ min.: 0 kPa (0 kgf/cm^2, 0 psi), max.: 637.5 kPa (6.48 kgf/cm^2, 92.2 psi)	Actual tire inflation pressure	-
TIREPRESS2	ID2 tire inflation pressure/ min.: 0 kPa (0 kgf/cm^2, 0 psi), max.: 637.5 kPa (6.48 kgf/cm^2, 92.2 psi)	Actual tire inflation pressure	-
TIREPRESS3	ID3 tire inflation pressure/ min.: 0 kPa (0 kgf/cm^2, 0 psi), max.: 637.5 kPa (6.48 kgf/cm^2, 92.2 psi)	Actual tire inflation pressure	-
TIREPRESS4	ID4 tire inflation pressure/ min.: 0 kPa (0 kgf/cm^2, 0 psi), max.: 637.5 kPa (6.48 kgf/cm^2, 92.2 psi)	Actual tire inflation pressure	-
TIREPRESS5	ID5 tire inflation pressure/ min.: 0 kPa (0 kgf/cm^2, 0 psi), max.: 637.5 kPa (6.48 kgf/cm^2, 92.2 psi)	Actual tire inflation pressure	-

(b) Check the ID number on the identified transmitter by removing it from the tire and wheel.

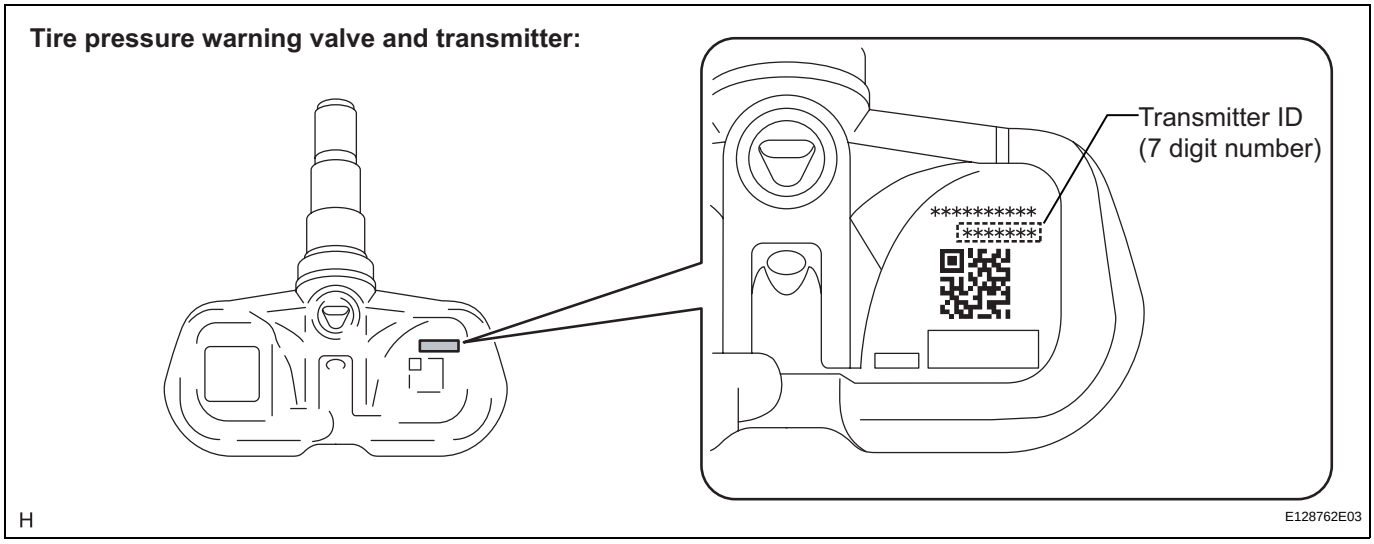

Result

Result	Proceed to
Matched	A
Not matched	B

NG → **REGISTRATION OF TRANSMITTER ID (See page TW-15)**

OK

5 CHECK DTC

(a) Check for a DTC (See page TW-29).

Result

Condition	Proceed to
Only DTC C2177/77 is output.	A
DTC C2177/77 and any of the DTCs from C2121/21 to C2125/25 are output.	B

B → **REPAIR CIRCUITS INDICATED BY OUTPUT DTCS (See page TW-40)**

TW

A

REPAIR OR REPLACE TIRE PRESSURE WARNING ECU (See page TW-85)

DTC	C2191/91	Vehicle Speed Signal Error (Test Mode DTC)

DESCRIPTION

The tire pressure warning ECU receives a speed signal from the combination meter. This DTC is stored upon entering test mode, and cleared when a vehicle speed signal of 12 mph (20 km/h) is detected for 3 seconds or more. This DTC is output only in test mode.

DTC No.	DTC Detecting Condition	Trouble Area
C2191/91	Speed sensor circuit malfunction	• Vehicle speed sensor • Tire pressure warning ECU • Combination meter • Wire harness or connector

WIRING DIAGRAM

INSPECTION PROCEDURE

NOTICE:

- **When replacing the tire pressure warning ECU, read the IDs stored in the ECU using the intelligent tester and write them down before removal.**
- **It is necessary to perform initialization (See page TW-18) after registration (See page TW-15) of the transmitter IDs into the tire pressure warning ECU after the ECU and/or valve and transmitter has been replaced.**

TW

1	READ VALUE ON INTELLIGENT TESTER

(a) Connect the intelligent tester to DLC3.
(b) Turn the engine switch on (IG), and turn the intelligent tester on.
(c) Select the item below in the Data List, and read the value displayed on the intelligent tester.

HINT:
Enter the following menus: DIAGNOSIS / OBD/MOBD / METER / DATA LIST.

Tester Display	Measurement Item/Range	Normal Condition	Diagnostic Note
VEHICLE SPD	Vehicle speed/Min.:0 km/h (0 mph) MAX.:255 km/h (158 mph)	Almost same as actual vehicle speed	-

(d) Check that the values indicated on the tester and on the combination meter are the same.
OK:
Vehicle speed indicated on the intelligent tester indicates the actual speed.

NG → **GO TO METER / GAUGE SYSTEM**

OK

2 CHECK HARNESS AND CONNECTOR (ECU - COMBINATION METER)

Wire Harness Side Connector Front View:

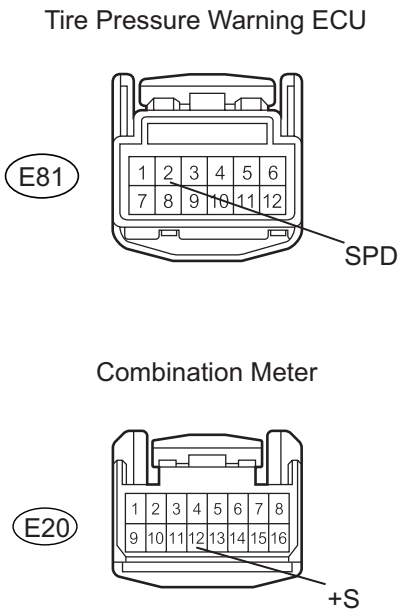

(a) Disconnect the E81 ECU connector.
(b) Disconnect the E20 meter connector.
(c) Measure the resistance according to the value(s) in the table below.
Standard resistance

Tester Connection	Specified Condition
E81-2 (SPD) - E20-12 (+S)	**Below 1 Ω**
E81-2 (SPD) - Body ground	**10 kΩ or higher**

NG → **REPAIR OR REPLACE HARNESS OR CONNECTOR**

TW

OK

REPLACE TIRE PRESSURE WARNING ECU (See page TW-85)

DTC	C2192/92	Select Switch Error (Test Mode DTC)

DESCRIPTION

The tire pressure warning select switch has 2 positions: "MAIN" and "2nd". 2 sets of ID (2 sets of tires) for the tire pressure warning valve and transmitter can be registered to the tire pressure warning ECU.

DTC No.	DTC Detecting Condition	Trouble Area
C2192/92	In test mode, switch position is not detected in the order: "MAIN", "2nd", "MAIN"	• Tire pressure warning select switch • Wire harness or connector • Tire pressure warning ECU

WIRING DIAGRAM

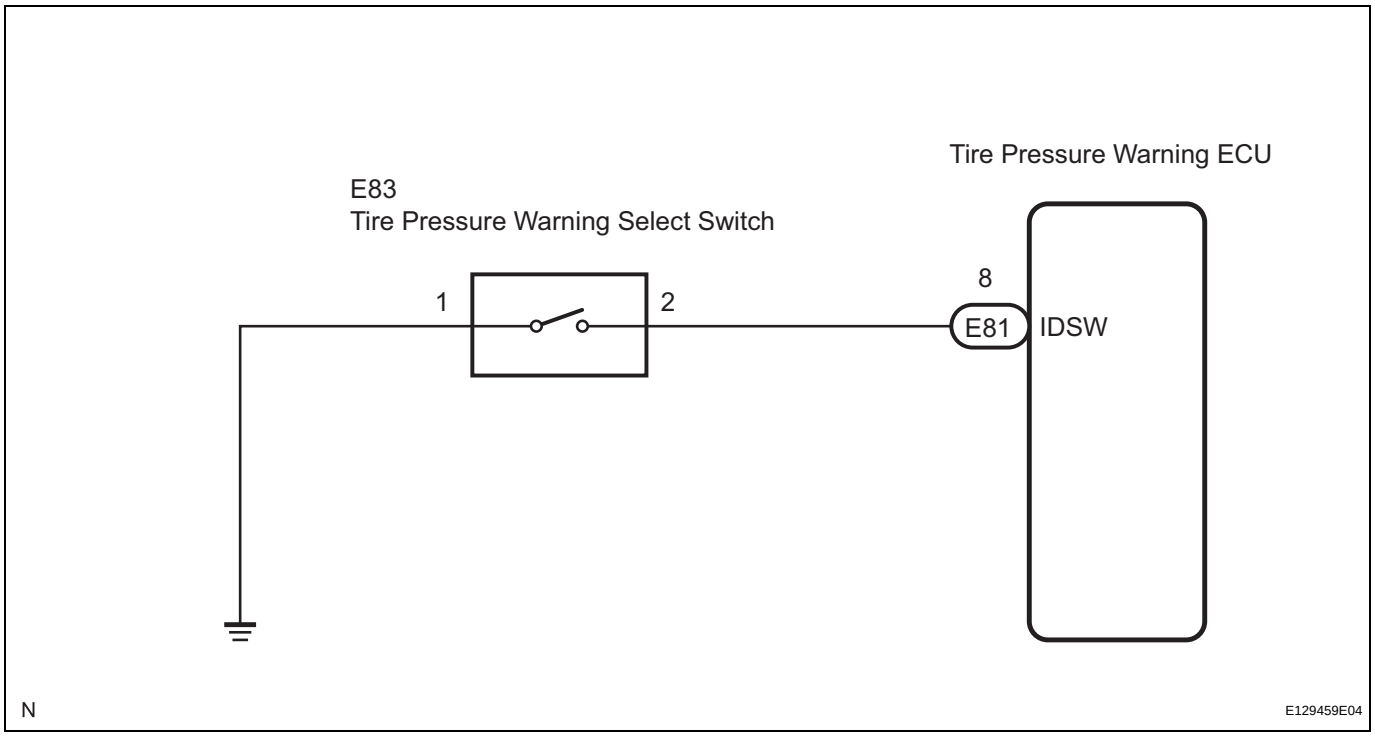

INSPECTION PROCEDURE

NOTICE:

- **When replacing the tire pressure warning ECU, read the IDs stored in the old ECU using the intelligent tester and write them down before removal.**
- **It is necessary to perform initialization (See page TW-18) after registration (See page TW-15) of the transmitter IDs into the tire pressure warning ECU after the ECU and/or valve and transmitter has been replaced.**

TW

1	READ VALUE ON INTELLIGENT TESTER

(a) Connect the intelligent tester to the DLC3.
(b) Turn the engine switch on (IG).
(c) Select the item below in the DATA LIST, and read its value displayed on the intelligent tester.

TIRE PRESSURE

Tester Display	Measurement Item/Range	Normal Condition	Diagnostic Note
SELECT SW	Tire pressure warning select switch status	No pressing: MAIN Pressing: 2nd	-

TIRE PRESSURE

Item	Normal Condition
SELECT SW	Not pressing: MAIN Pressing: 2nd

(d) Check that the value displayed on the intelligent tester changes when pressing the tire pressure warning select switch.
OK:
Tire pressure warning select switch value changes.

OK → **END**

NG

2 INSPECT TIRE PRESSURE WARNING SELECT SWITCH

Tire Pressure Warning Select Switch:

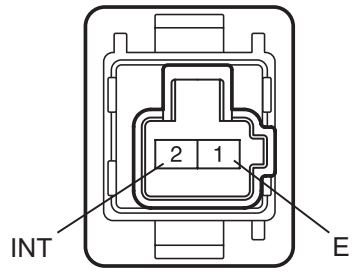

P C111007E02

(a) Disconnect the tire pressure warning select switch E83 connector.
(b) Measure the resistance according to the value(s) in the table below.
Standard resistance

Switch Position	Tester Connection	Specified Condition
MAIN	2 (INT) - 1 (E)	10 kΩ or higher
2nd	2 (INT) - 1 (E)	Below 1 Ω

NG → **REPLACE TIRE PRESSURE WARNING SELECT SWITCH**

OK

TW

3	CHECK HARNESS AND CONNECTOR (TIRE PRESSURE WARNING ECU-TIRE PRESSURE SELECT SWITCH)

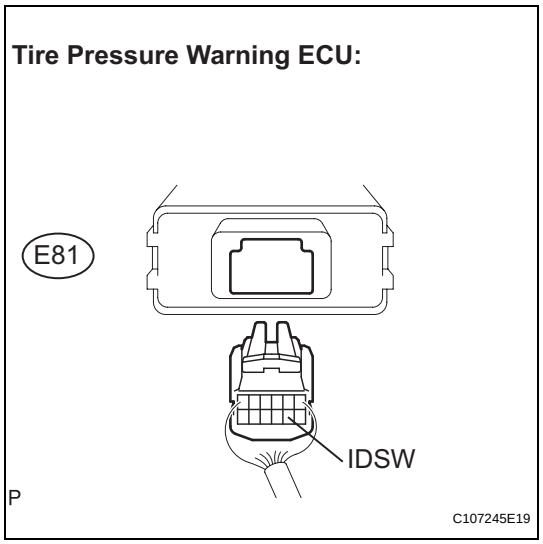

(a) Disconnect the tire pressure warning ECU E81 connector.

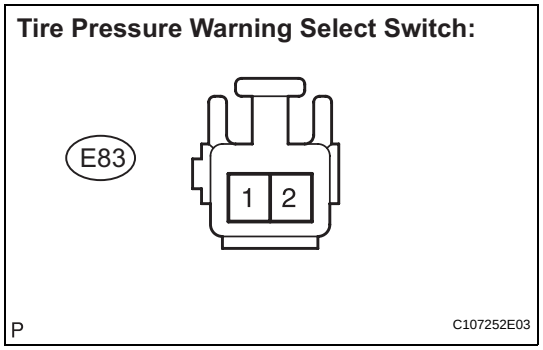

(b) Measure the resistance according to the value(s) in the table below.

Standard resistance

Tester Connection	Specified Condition
E81-8 (IDSW) - E83-2	Below 1 Ω
E81-8 (IDSW) - Body ground	10 kΩ or higher

NG → **REPAIR OR REPLACE HARNESS OR CONNECTOR**

OK

4	CHECK HARNESS AND CONNECTOR (TIRE PRESSURE WARNING SELECT SWITCH-BODY GROUND)

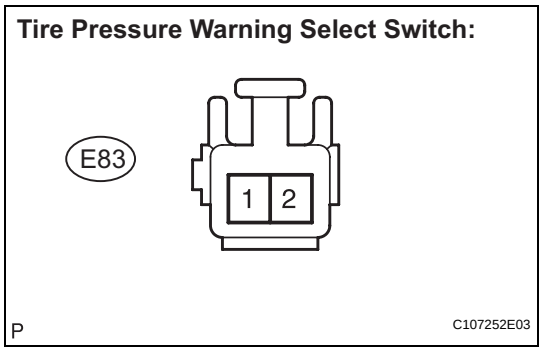

(a) Measure the resistance according to the value(s) in the table below.

Standard resistance

Tester Connection	Specified Condition
E83-1 - Body ground	Below 1 Ω

NG → **REPAIR OR REPLACE HARNESS OR CONNECTOR**

OK

REPLACE TIRE PRESSURE WARNING ECU (See page TW-85)

TW

Tire Pressure Warning Reset Switch Circuit

DESCRIPTION

Receiving a signal from the tire pressure warning reset switch, the tire pressure warning ECU and receiver indicates the initialization of the tire pressure warning system.

WIRING DIAGRAM

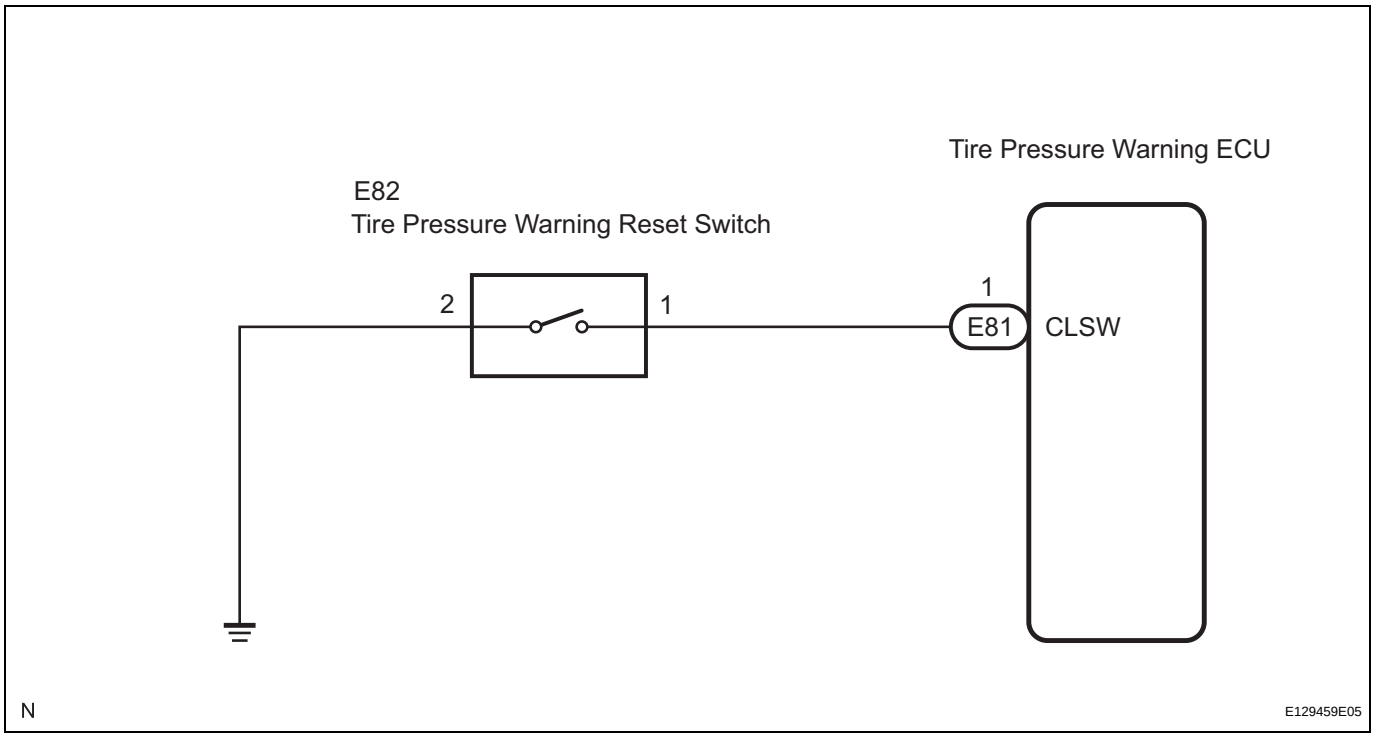

INSPECTION PROCEDURE

NOTICE:

- **When replacing the tire pressure warning ECU, read the IDs stored in the old ECU using the intelligent tester and write them down before removal.**
- **It is necessary to perform initialization (See page TW-18) after registration (See page TW-15) of the transmitter IDs into the tire pressure warning ECU after the ECU and/or valve and transmitter has been replaced.**

TW

1	CHECK TIRE PRESSURE WARNING RESET SWITCH FUNCTION

(a) Perform the tire pressure warning reset switch test in TEST MODE PROCEDURE (See page TW-20).

OK:

Reset switch ON:

Tire pressure warning light comes on.

Reset switch OFF:

Tire pressure warning light blinks.

NG	Go to step 2

OK

END

2 INSPECT TIRE PRESSURE WARNING RESET SWITCH

Tire Pressure Warning Reset Switch:

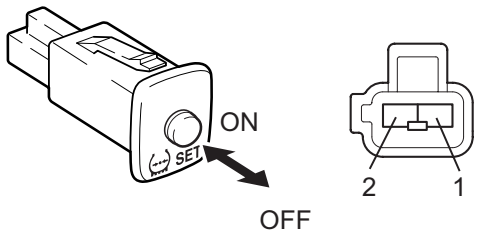

(a) Disconnect the tire pressure warning reset switch connector.

(b) Measure the resistance between terminals 1 and 2 of the tire pressure warning reset switch when the tire pressure warning switch is ON and OFF.

Standard resistance

Switch Condition	Specified Condition
ON	Below 1 Ω
OFF	10 kΩ or higher

NG → **REPLACE TIRE PRESSURE WARNING RESET SWITCH (See page TW-87)**

OK

3 CHECK HARNESS AND CONNECTOR (RESET SWITCH - ECU)

Tire Pressure Warning Reset Switch: (harness side connector)

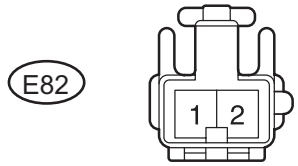

Tire Pressure Warning ECU:

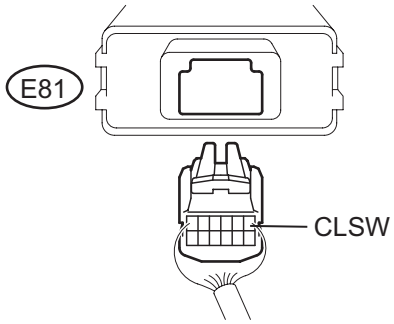

(a) Disconnect the tire pressure warning reset switch E82 connector and tire pressure warning ECU E81 connector.

(b) Measure the resistance according to the value(s) in the table below.

Standard resistance

Switch Condition	Specified Condition
E81-1 (CLSW) - E82-1	Below 1 Ω
E81-1 (CLSW) - Body ground	10 kΩ or higher
E82-2 - Body ground	Below 1 Ω

NG → **REPAIR OR REPLACE HARNESS OR CONNECTOR**

OK

REPLACE TIRE PRESSURE WARNING ECU (See page TW-85)

Tire Pressure Warning Light Circuit

DESCRIPTION

If the ECU detects trouble, the tire pressure warning light blinks (comes on after blinking for 1 minute) and tire pressure warning system operation is cancelled at the same time. At this time, the ECU records a DTC in the memory.
Connect terminals TC and CG of DLC3 to make the tire pressure warning light blink and output the DTC.

WIRING DIAGRAM

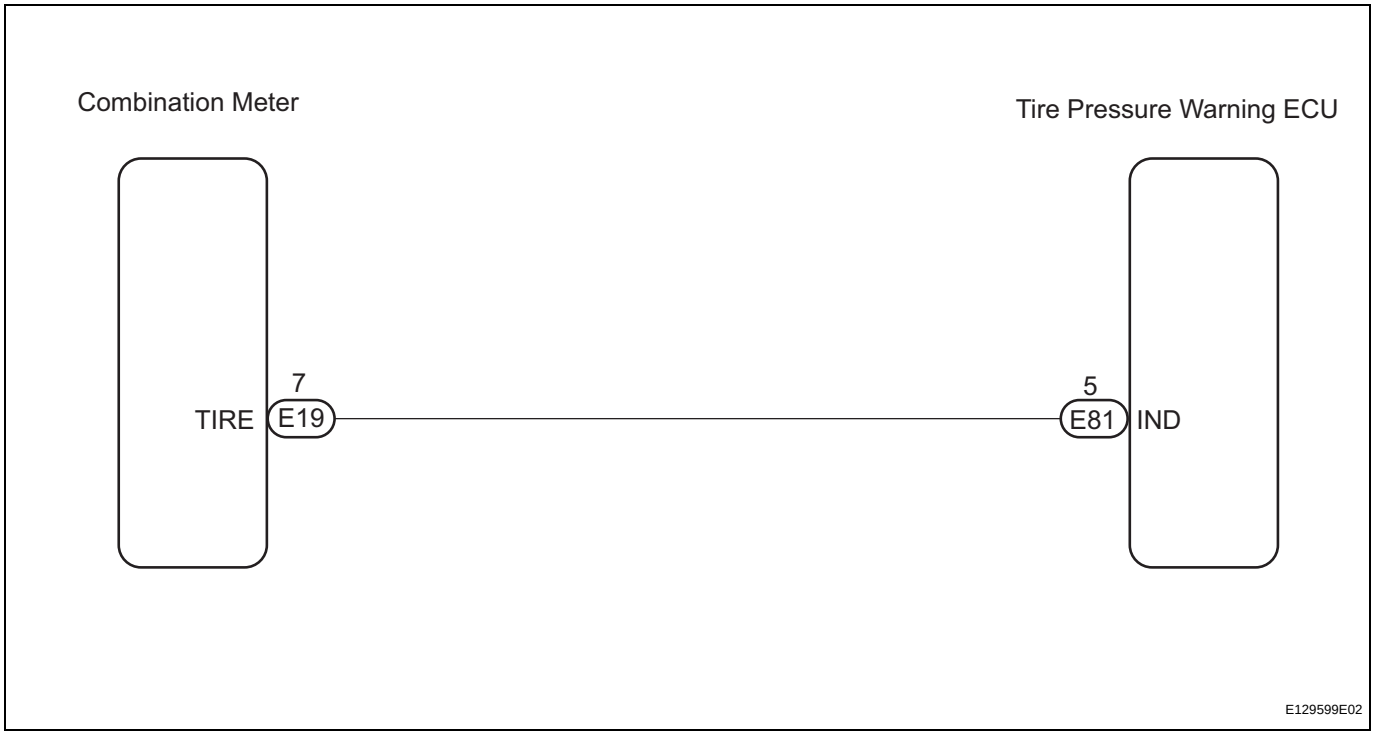

INSPECTION PROCEDURE

NOTICE:

- **When replacing the tire pressure warning ECU, read the IDs stored in the old ECU using the intelligent tester and write them down before removal.**
- **It is necessary to perform initialization (See page TW-18) after registration (See page TW-15) of the transmitter IDs into the tire pressure warning ECU after the ECU and/or valve and transmitter has been replaced.**

HINT:
This procedure must be performed according to the PROBLEM SYMPTOMS TABLE.

1 CHECK HARNESS AND CONNECTOR (COMBINATION METER - TIRE PRESSURE WARNING ECU)

Combination Meter Wire Harness View:

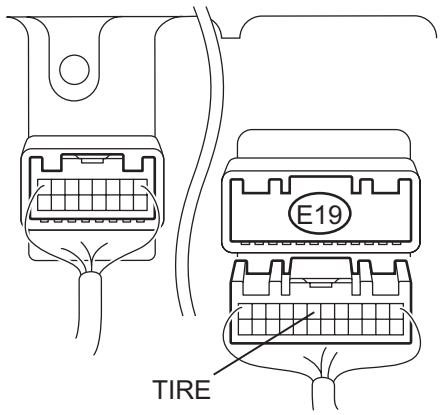

(a) Disconnect the E19 combination meter connector.

Tire Pressure Warning ECU

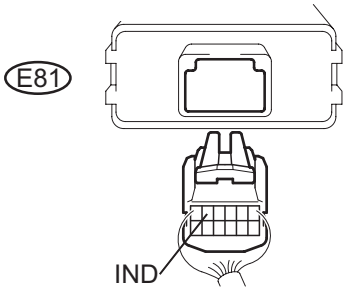

(b) Disconnect the E81 tire pressure warning ECU connector.

(c) Measure the resistance according to the value(s) in the table below.

Standard resistance

Tester Connection	Specified Condition
E19-7 (TIRE) - E81-5 (IND)	Below 1 Ω
E19-7 (TIRE) - Body ground	10 kΩ or higher

NG → **REPAIR OR REPLACE HARNESS OR CONNECTOR**

OK

2 INSPECT COMBINATION METER

Tire Pressure Warning ECU

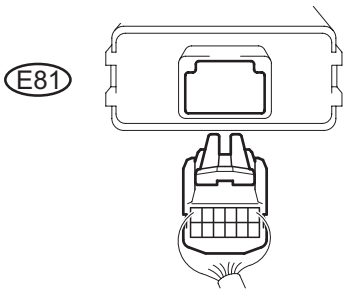

(a) Disconnect the connector from the tire pressure warning ECU.

(b) Turn the engine switch on (IG), and check the condition of the tire pressure warning light illumination.

Result

Condition	Proceed to
Illuminates	A
Does not illuminate	B

B → **REPLACE COMBINATION METER**

A

REPLACE TIRE PRESSURE WARNING ECU (See page TW-85)

TW

ECU Power Source Circuit

DESCRIPTION

This is the power source for the tire pressure warning ECU.

WIRING DIAGRAM

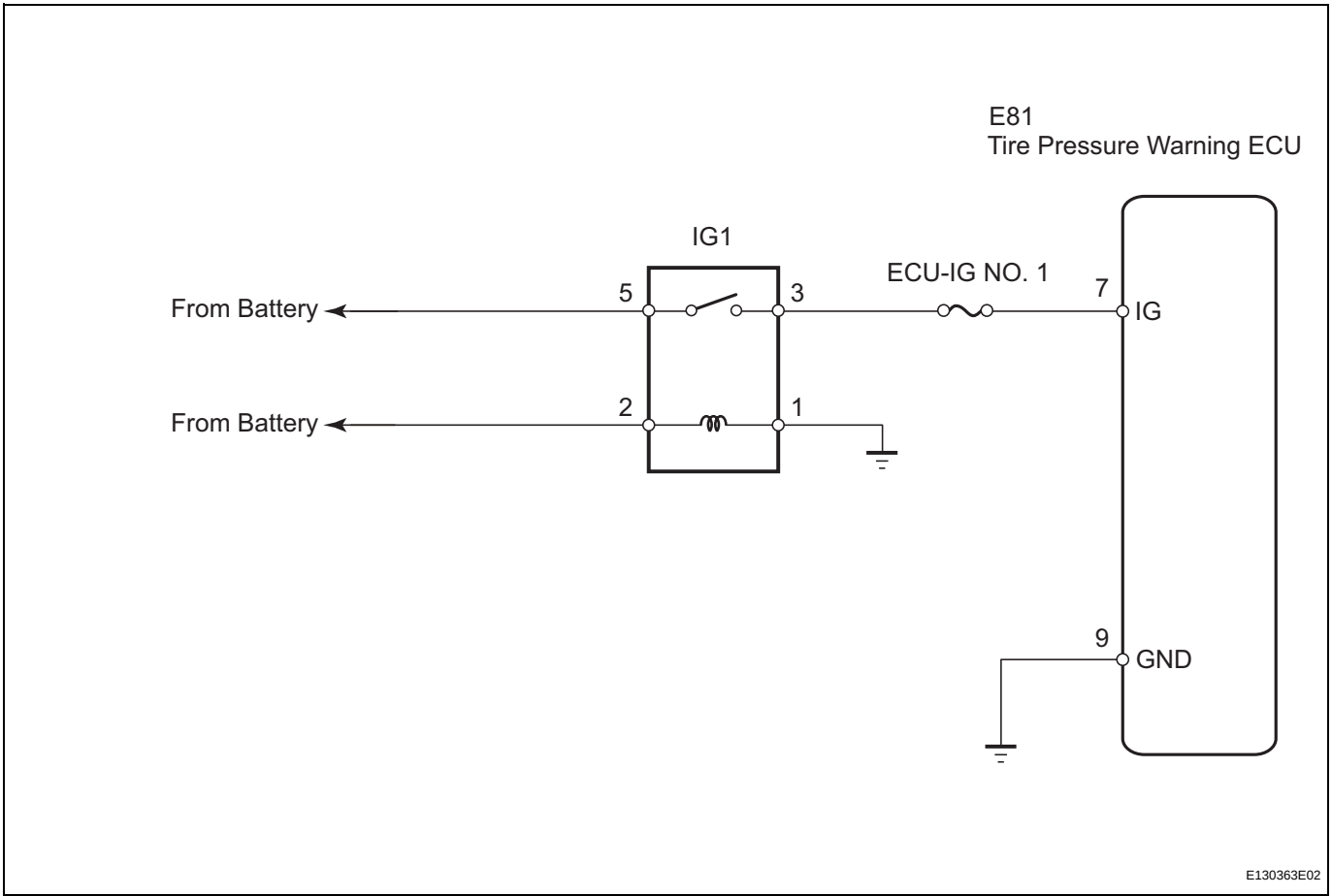

INSPECTION PROCEDURE

NOTICE:

- **When replacing the tire pressure warning ECU, read the IDs stored in the old ECU using the intelligent tester and write them down before removal.**
- **It is necessary to perform initialization (See page TW-18) after registration (See page TW-15) of the transmitter IDs into the tire pressure warning ECU after the ECU and/or valve and transmitter has been replaced.**

TW

1	INSPECT FUSE (ECU-IG NO. 1)

(a) Remove the ECU-IG NO. 1 fuse from the instrument panel junction block.

(b) Measure the resistance of the fuse.

Standard resistance:

Below 1 Ω

NG	REPLACE FUSE

OK

2 INSPECT IG1 RELAY

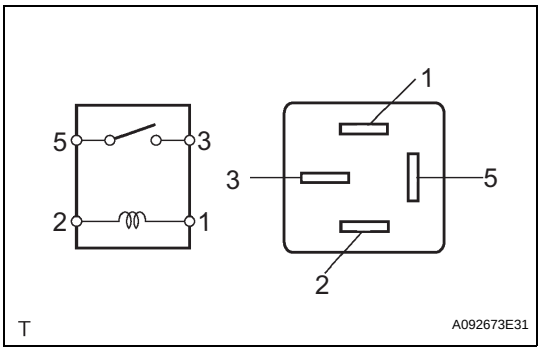

(a) Remove the IG1 relay from the instrument panel junction block.

(b) Measure the resistance according to the value(s) in the table below.

Standard resistance

Tester Connection	Specified Condition
3 - 5	10 kΩ or higher
	Below 1 Ω (When battery voltage is applied to terminals 1 and 2)

NG → **REPLACE IG1 RELAY**

OK

3 CHECK HARNESS AND CONNECTOR (ECU - BATTERY AND BODY GROUND)

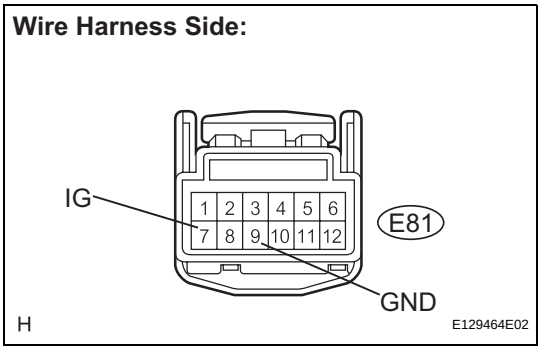

(a) Disconnect the E81 ECU connector.

(b) Measure the voltage according to the value(s) in the table below.

Standard voltage

Tester Connection	Switch Condition	Specified Condition
E81-7 (IG) - Body ground	Engine switch on (IG)	10 to 14 V
	Engine switch off	Below 1 V

(c) Measure the resistance according to the value(s) in the table below.

Standard resistance

Tester Connection	Specified Condition
E81-9 (GND) - Body ground	Below 1 Ω

NG → **REPAIR OR REPLACE HARNESS OR CONNECTOR**

TW

OK

PROCEED TO NEXT CIRCUIT INSPECTION SHOWN IN PROBLEM SYMPTOMS TABLE

TC and CG Terminal Circuit

DESCRIPTION

DTC output mode is set by connecting terminals 13 (TC) and 4 (CG) of the DLC3. The DTCs are indicated by the blinking of the tire pressure warning light.

WIRING DIAGRAM

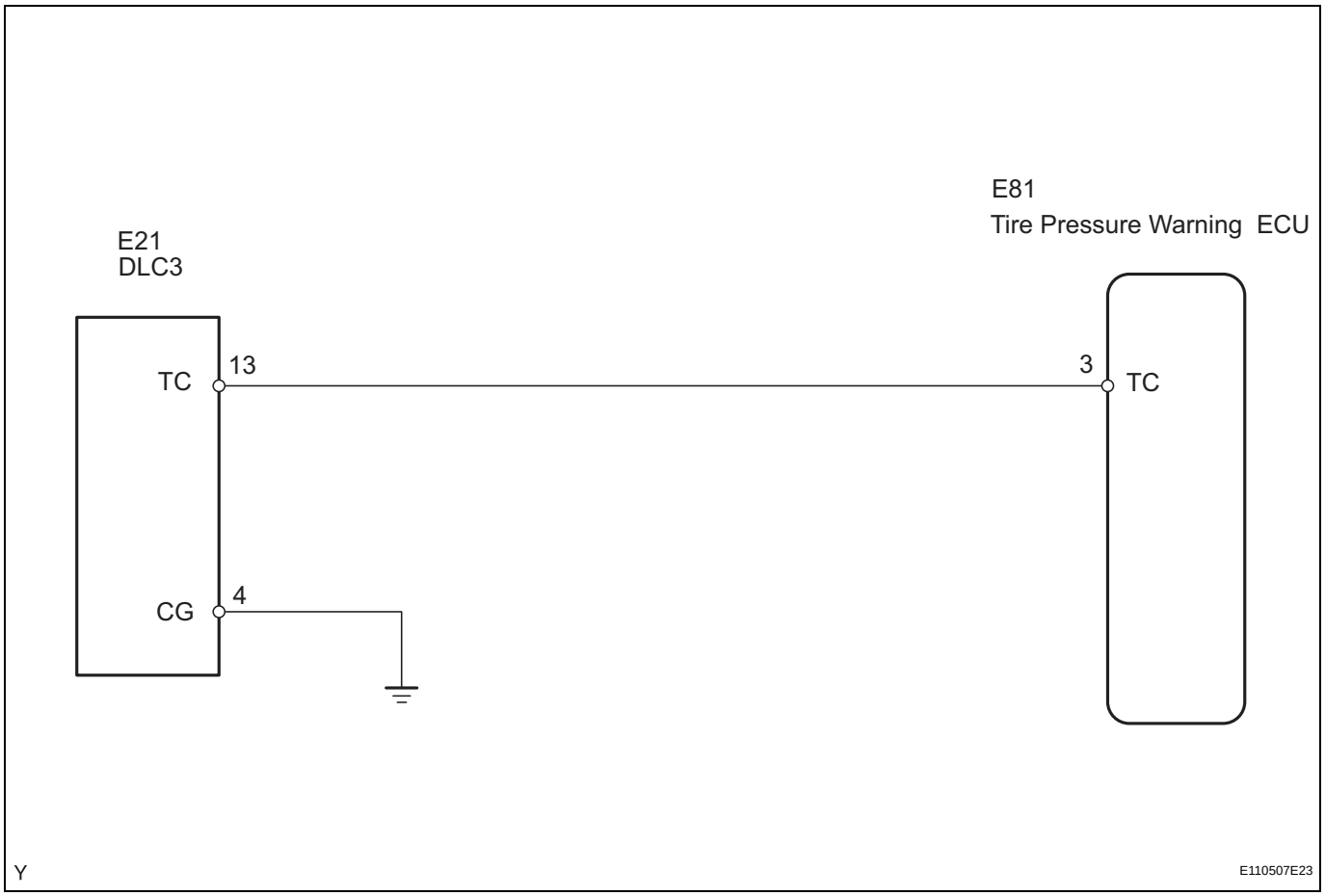

HINT:
When each warning light blinks continuously, a ground short in the wiring of terminal TC of the DLC3 or an internal ground short in an ECU connected to this circuit may have occurred.

TW

INSPECTION PROCEDURE

NOTICE:

- **When replacing the tire pressure warning ECU, read the IDs stored in the old ECU using the intelligent tester and write them down before removal.**
- **It is necessary to perform initialization (See page TW-18) after registration (See page TW-15) of the transmitter IDs into the tire pressure warning ECU after the ECU and/or valve and transmitter has been replaced.**

1	CHECK HARNESS AND CONNECTOR (DLC3 - TIRE PRESSURE WARNING ECU)

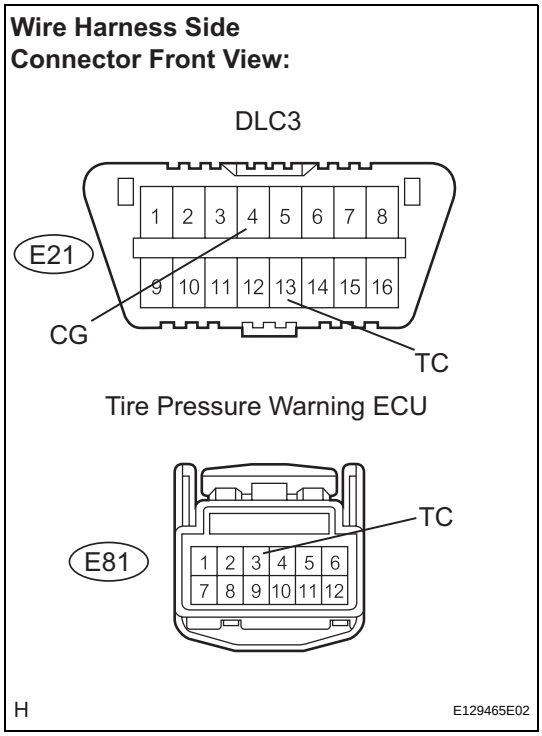

(a) Disconnect the E81 ECU connector.
(b) Measure the resistance according to the value(s) in the table below.

Standard resistance

Tester Connection	Specified Condition
E81-3 (TC) - E21-13 (TC)	Below 1 Ω
E21-4 (CG) - Body ground	

NG → **REPAIR OR REPLACE HARNESS OR CONNECTOR**

OK

PROCEED TO NEXT CIRCUIT INSPECTION SHOWN IN PROBLEM SYMPTOMS TABLE

REGISTRATION

1. DESCRIPTION OF CODE REGISTRATION

It is necessary to register the transmitter ID in the tire pressure warning ECU when replacing the tire pressure warning valve and transmitter and/or tire pressure warning ECU.

(a) Before registration

(1) In case of tire pressure warning ECU replacement.

- Read the registered transmitter IDs that are stored in the old ECU using the intelligent tester and note them down.
- If reading stored transmitter IDs is impossible due to malfunctions of components such as the tire pressure warning antenna and receiver, remove the tires from the wheels and check the IDs located on the tire pressure warning valves and transmitters (See page TW-6).

(2) In case of tire pressure warning valve and transmitter replacement.

- When replacing the tire pressure warning valves and transmitters, note down the IDs written on the tire pressure warning valves and transmitters.

2. REGISTER TRANSMITTER ID

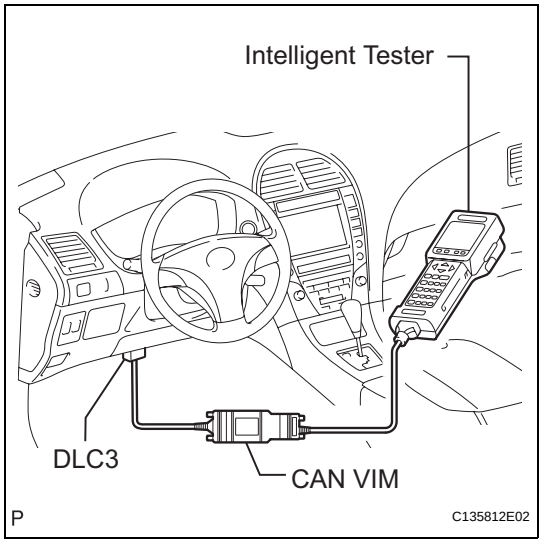

(a) Connect the intelligent tester to DLC3 (Procedure "A").

(b) Turn the engine switch on (IG) (Procedure "B").

(c) Select the REGIST TIRE following the intelligent tester screen (UTILITY - REGIST TIRE) (Procedure "C").

(d) Select the registration mode "MAIN" (Procedure "D").

HINT:

- Check that tire pressure warning select switch is "MAIN".
- When registering second set, select the registration mode "2nd" after changing tire pressure warning select switch to "2nd".

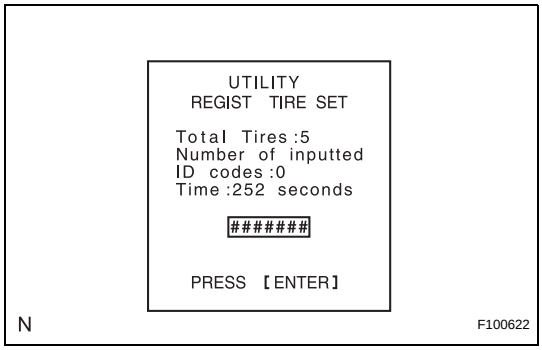

(e) Input the IDs (ID1 to ID4 or ID5) using the intelligent tester and transmit them to the tire pressure warning ECU (Procedure "E").

TW

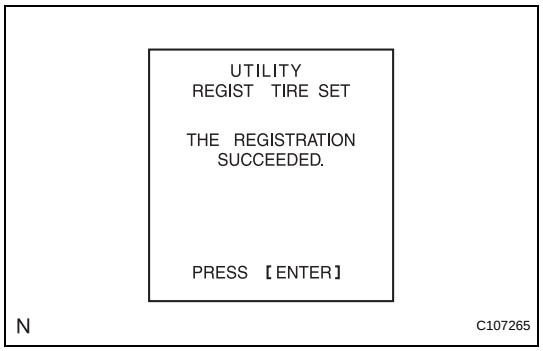

(f) Set the ID transmission condition to "ID Registration is complete" (Procedure "F").
HINT:
- The previously registered IDs will be deleted from the memory when the registration is completed.
- If the procedures "C" to "E" are not completed within 5 min. , the mode will return to the normal operation mode.
- When the system is in initialization mode after the tire pressure warning reset switch has been operated, the registration is disabled until the initialization process is canceled or completed.

Registration Procedure

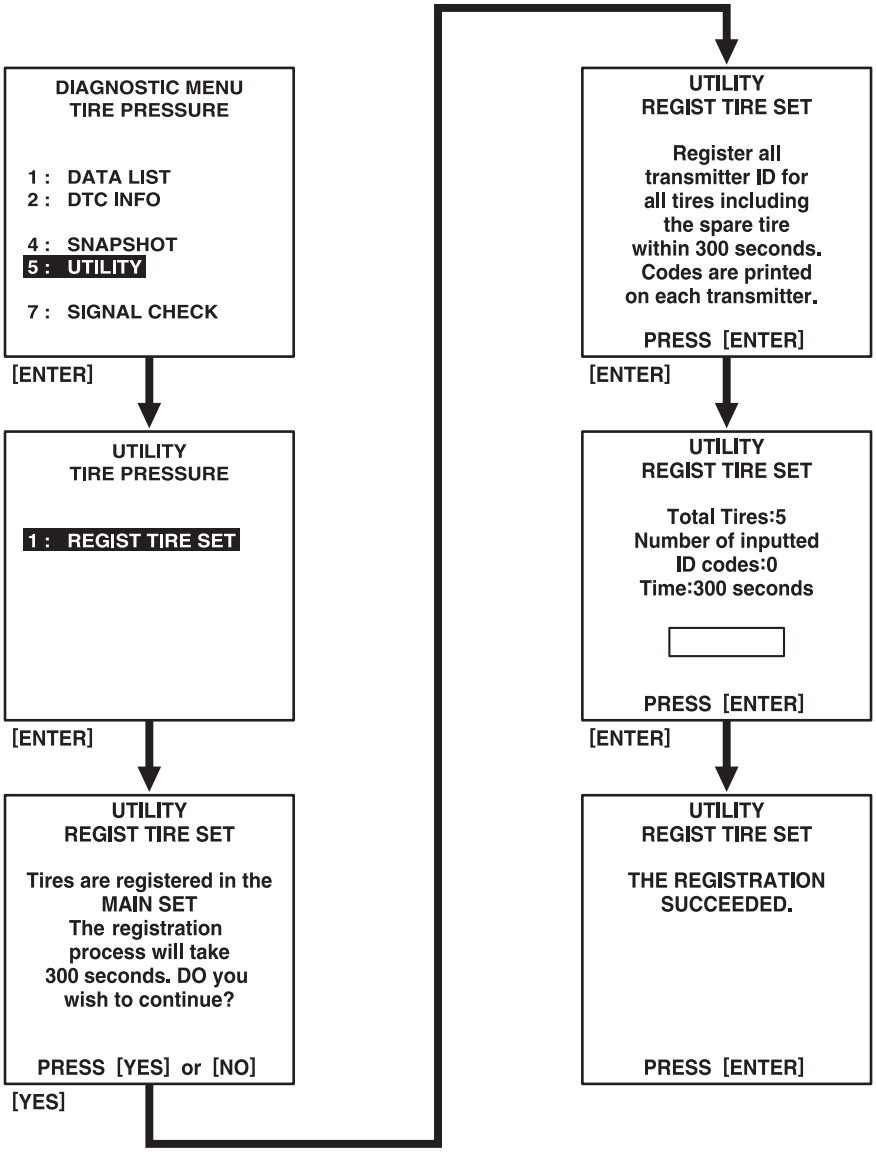

F101083E01

TW

3. CONFIRMATION OF TRANSMITTER ID REGISTRATION

(a) Connect the intelligent tester to DLC3 (engine switch is off).

(b) Turn the engine switch on (IG).

(c) Select "TIREPRESS" by following the prompts displayed on the intelligent tester.

(d) Confirm that the data of tire pressure of all tires (including the full-size spare tire) are displayed on the intelligent tester screen.

NOTICE:

- **It may take up to 1 minute or more to update the tire pressure data.**
- **If the IDs have not been registered, some of DTC C2171/71 is set in the tire pressure warning ECU after 51 minutes or more.**

TIRE PRESSURE WARNING RECEIVER (w/ Antenna)

COMPONENTS

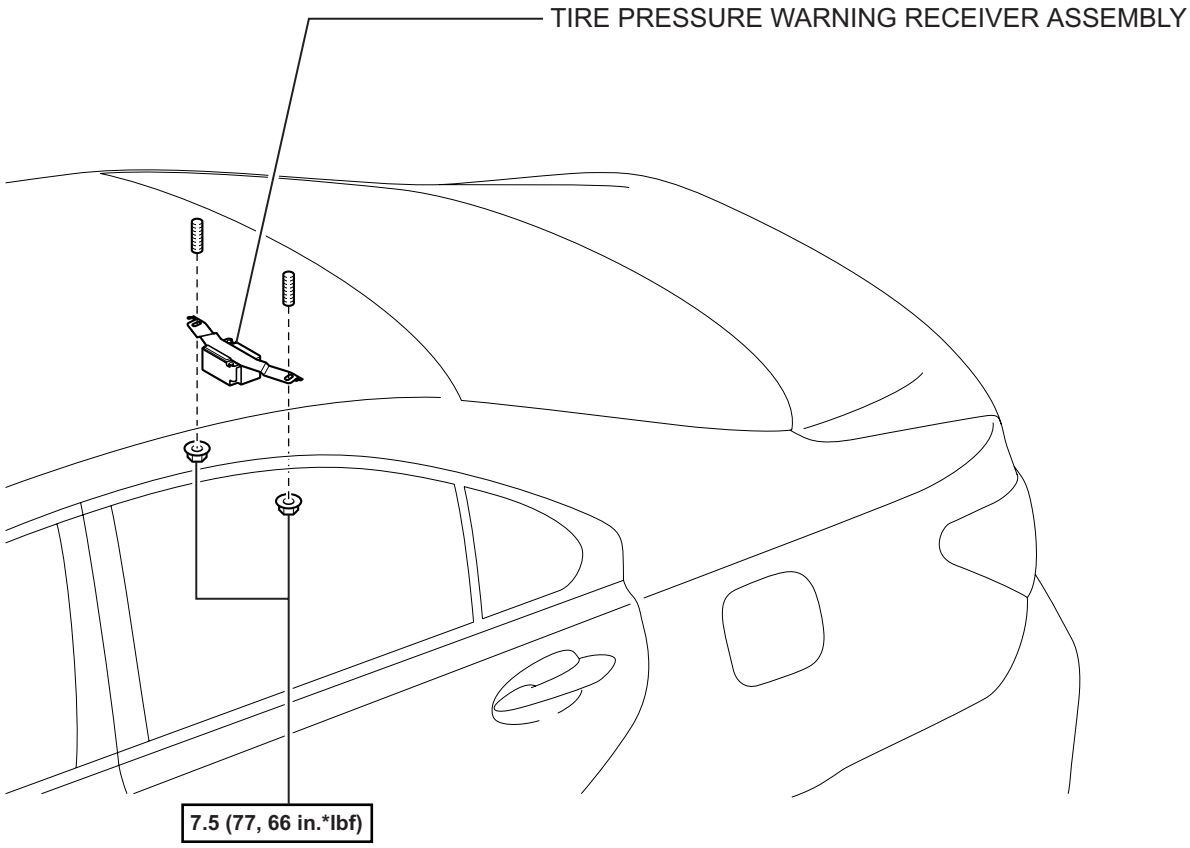

N*m (kgf*cm, ft.*lbf) : Specified torque

C

C137872E01

REMOVAL

1. **DISCONNECT CABLE FROM NEGATIVE BATTERY TERMINAL**

2. **REMOVE ROOF HEADLINING ASSEMBLY**
   HINT:
   Refer to the instructions for REMOVAL of the ROOF HEADLINING (See page IR-38).

3. **REMOVE TIRE PRESSURE WARNING RECEIVER ASSEMBLY**
   (a) Disconnect the connector.
   (b) Remove the 2 nuts and the tire pressure warning receiver assembly.

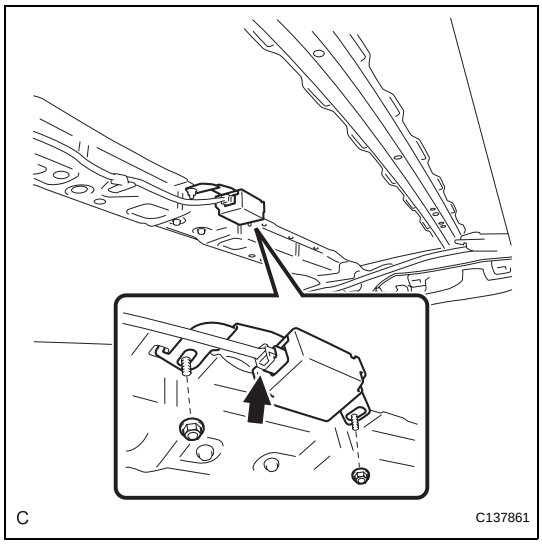

INSTALLATION

1. **INSTALL TIRE PRESSURE WARNING RECEIVER ASSEMBLY**
   (a) Install the tire pressure warning receiver assembly with the 2 nuts.
   Torque: 7.5 N*m (77 kgf*cm, 66 in.*lbf)
   (b) Connect the connector.

2. **INSTALL ROOF HEADLINING ASSEMBLY**
   HINT:
   Refer to the instructions for INSTALLATION of the ROOF HEADLINING (See page IR-52).

3. **CONNECT CABLE TO NEGATIVE BATTERY TERMINAL**

4. **PERFORM INITIALIZATION**
   NOTICE:
   Some systems need initialization after reconnecting the cable to the negative battery terminal (See page IN-33).

5. **INSPECT TIRE PRESSURE WARNING SYSTEM**
   HINT:
   (See page TW-20)

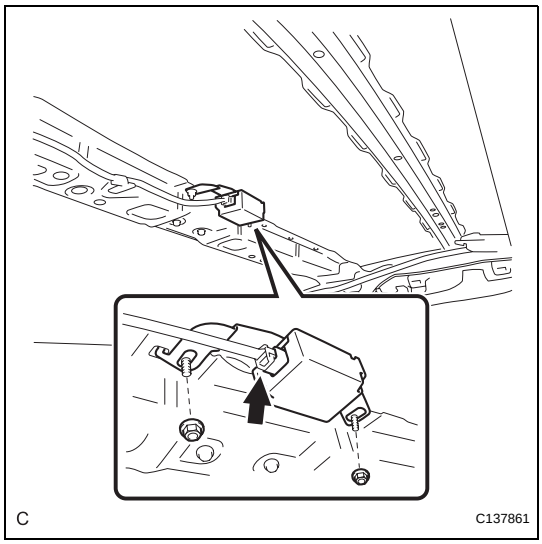

INITIALIZATION

1. DESCRIPTION OF INITIALIZATION

(a) Perform initialization in the following cases:
- Before delivery of a new vehicle.
- After replacement of the tire pressure ECU.*
- After replacement of the tire pressure warning valve and transmitter.
- Specified tire pressure changes depending on the size or type of the tire.

*: Perform initialization after the transmitter ID registration is completed (See page TW-15).

(b) Before initialization

(1) Set the air pressure of all wheels, including the full-size spare tire, to the specified value.

Cold tire inflation pressure

Tire size	Front kPa (kgf/cm^2, psi)	Rear kPa (kgf/cm^2, psi)
P215/55R17 93V	210 (2.1, 30)	210 (2.1, 30)

NOTICE:
Perform the tire pressure adjustment after the vehicle has sufficiently cooled down. If the vehicle is not sufficiently cooled down, increase the air pressure by 20 to 30 kPa (0.2 to 0.3 kgf/cm^2, 2.9 to 4.3 psi) above the specified value.

2. INITIALIZATION PROCEDURE

(a) Keep the tire pressure warning reset switch pressed for 3 seconds or more with the engine switch on (IG).

(b) Check that the tire pressure warning light blinks 3 times (1 second ON, 1 second OFF).
HINT:
Initialization will be completed if signals are received from all the wheels.

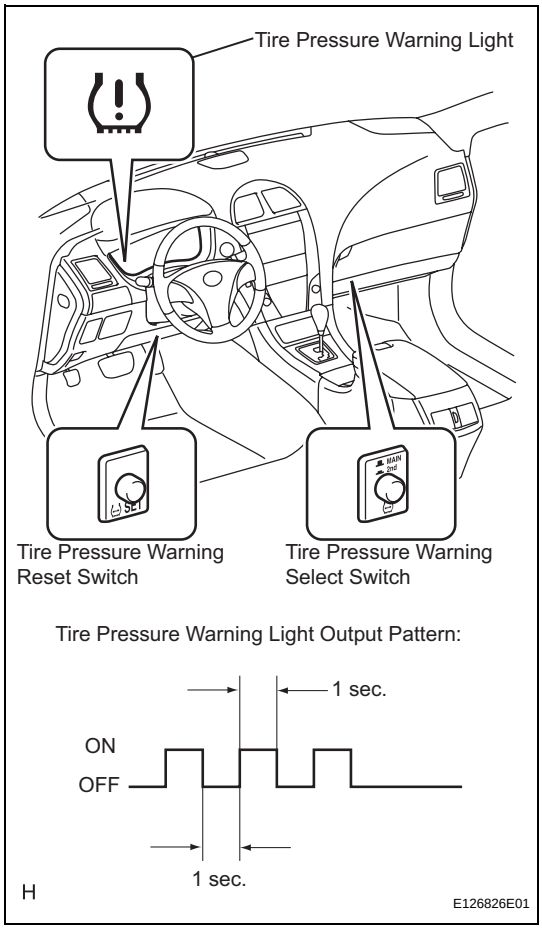

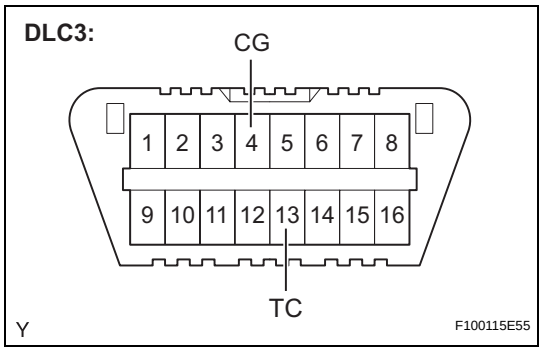

(c) Wait for 2 or 3 minutes with the engine switch on (IG).

NOTICE:

- **The initialization is normally completed within 2 to 3 minutes.**
- **If the initialization has not been completed successfully, DTC C2177/77 is set approximately 20 minutes.**
- **The initialization can be terminated by making a short circuit between terminals TC and CG of the DLC3 connector.**

(d) Confirm that the initialization has been completed using the intelligent tester.

(1) Change the mode to test mode using intelligent tester and check that tire pressure warning light tire pressure warning light blinks at 0.125 second intervals.

HINT:

Tire pressure warning light will not blink until the system initialization is complete.

NOTICE:

The following operations can be used instead of above procedure

1. **Turn the engine switch from off to on (IG).**
2. **Monitor the tire pressure values of all the wheels using the intelligent tester.**
3. **If the tire pressure values cannot be displayed on the intelligent tester screen, the initialization has failed.**
4. **It takes 2 to 3 minutes to display the tire pressure data.**

HINT:

- In winter, as the tire pressure may decrease depending on the ambient temperature, increase the tire pressure by 20 to 30 kPa (0.2 to 0.3 kgf/cm^2, 2.9 to 4.3 psi) above the specified value after confirming that the initialization has been completed.

TIRE PRESSURE WARNING VALVE AND TRANSMITTER

COMPONENTS

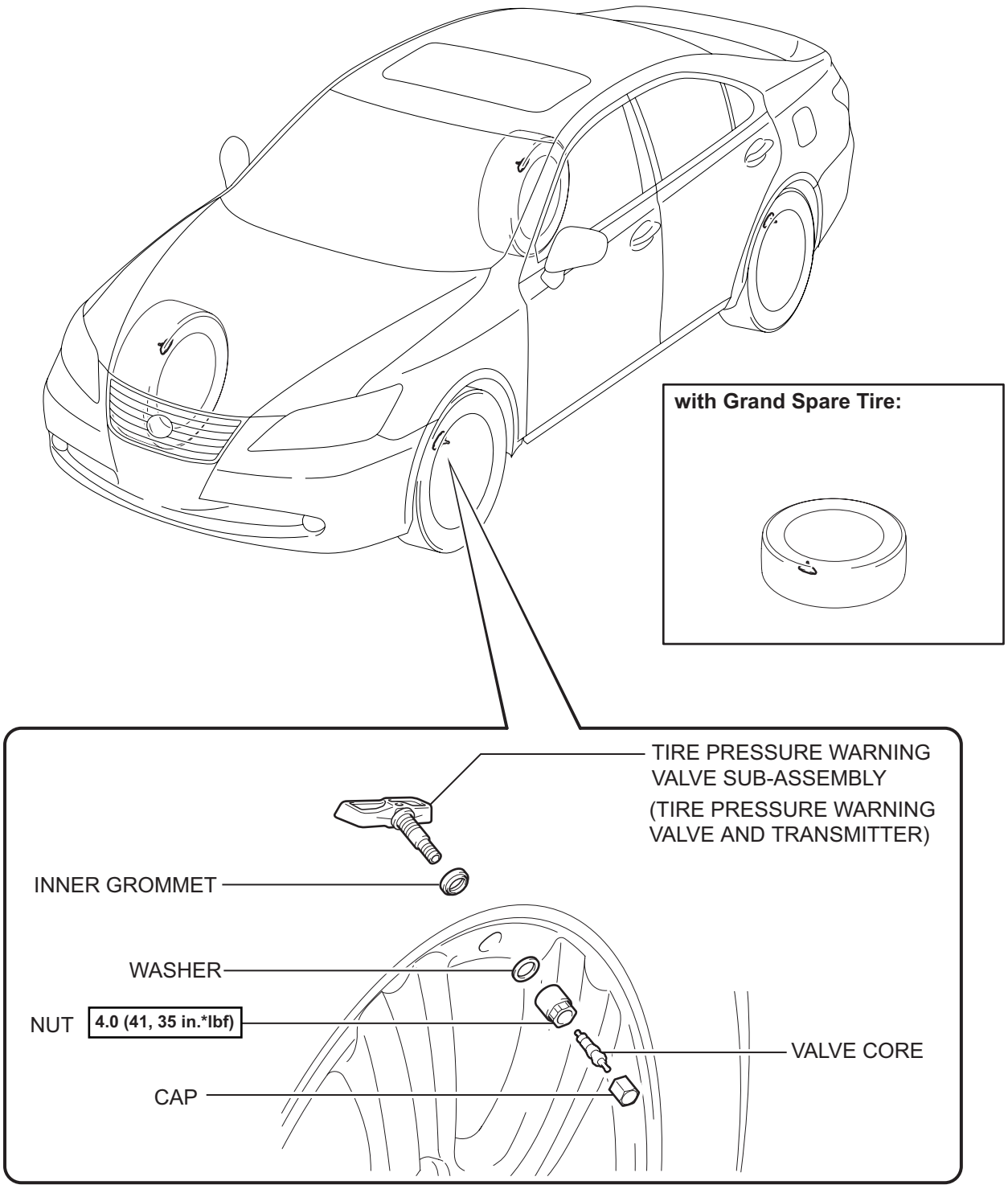

N*m (kgf*cm, ft.*lbf) : Specified torque

C

C137873E01

TW

REMOVAL

1. REMOVE FRONT WHEEL

2. REMOVE REAR WHEEL

3. REMOVE GRAND SPARE TIRE (w/ Grand Spare Tire)

4. REMOVE TIRE PRESSURE WARNING VALVE SUB-ASSEMBLY

(a) Remove the valve core and cap, and release the air from the tire.

(b) After ensuring that a sufficient amount of air has been released, remove the nut and washer that are used to secure the tire pressure warning valve and transmitter. Drop the tire pressure warning valve and transmitter inside the tire.
HINT:
Keep the removed cap, valve core, nut, and washer.

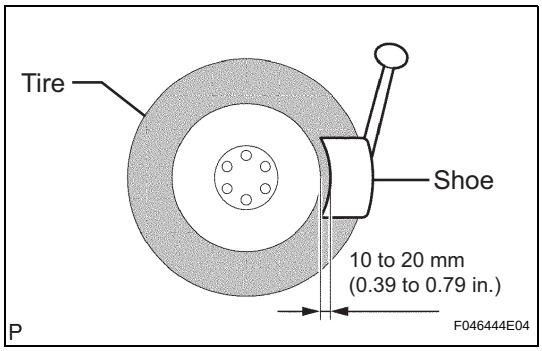

(c) After dropping the tire pressure warning valve and transmitter into the tire, disengage the bead using the shoe of the tire remover.
NOTICE:
Be careful not to damage the tire pressure warning valve and transmitter due to interference between the valve and the tire bead.

(d) Remove the bead on the upper side in the usual way.

(e) Take out the tire pressure warning valve and transmitter from the tire and remove the bead on the lower side in the usual way.
HINT:
Check that no cracks or damage are identified on the grommet. If any damage is found, replace the grommet, washer and nut.

TEST MODE PROCEDURE

1. ENTER TEST MODE

HINT:

- Operation of the tire pressure warning reset switch can be checked in TEST MODE.
- During TEST MODE, the system is not initialized by pushing the tire pressure warning reset switch. The circuit of the tire pressure warning reset switch can be inspected during this mode.

(a) Make sure that the engine switch is off.
(b) Connect the intelligent tester to DLC3.
(c) Turn the engine switch on (IG).
(d) Check that the tire pressure warning light comes on for 3 seconds and then goes off.

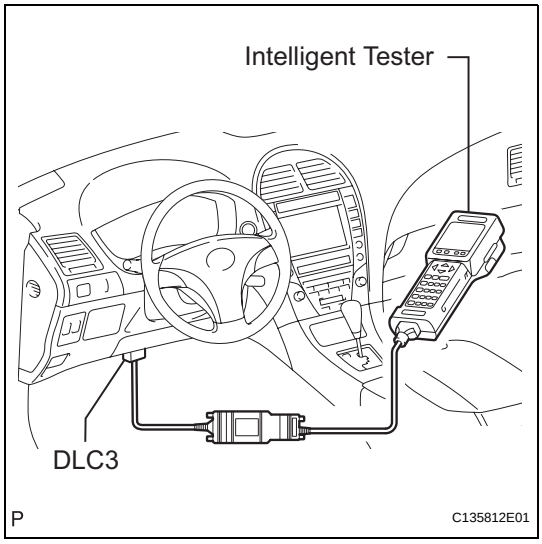

(e) Select the TEST MODE on the intelligent tester.

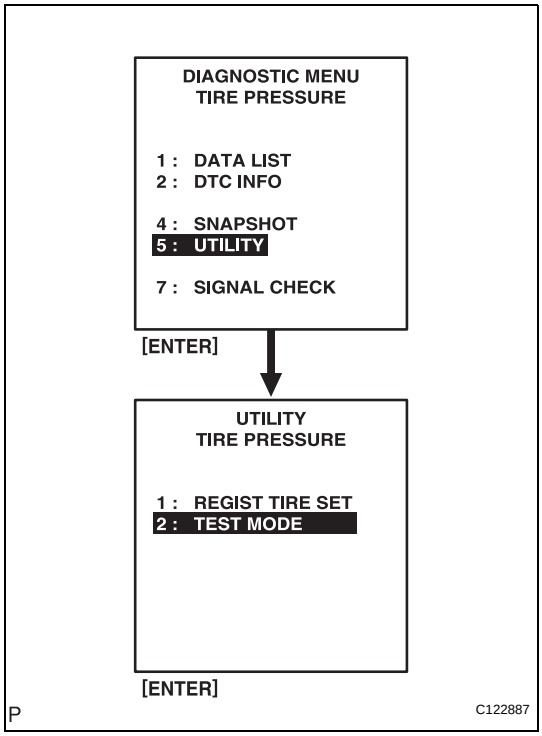

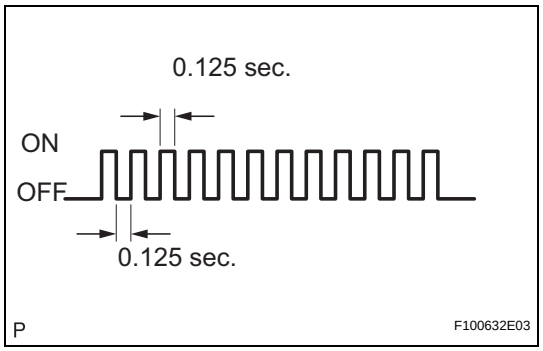

(f) Confirm that the tire pressure warning light in the combination meter blinks at 0.125 second intervals.

2. PERFORM SIGNAL CHECK

HINT:

- When entering signal check mode, the tire pressure warning ECU sets all the signal check DTCs first. After completing signal check for each inspection item, the DTCs for systems that are determined to be normal by the tire pressure warning ECU will be erased.
  The DTCs for other inspection items may not be erased when only a certain signal is inspected.
- When signal check returns to normal mode, all the signal check DTCs will be erased.

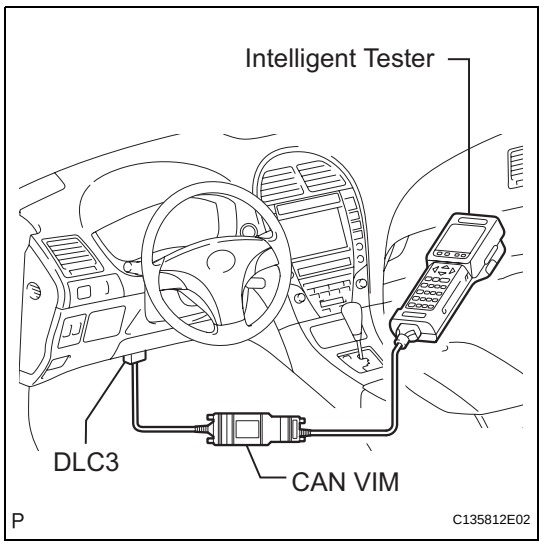

(a) Make sure that the engine switch is off.
(b) Connect the intelligent tester to DLC3.
(c) Turn the engine switch on (IG).
(d) Select the SIGNAL CHECK on the intelligent tester.
HINT:
Every time the test mode DTC erasure conditions are satisfied, the tire pressure warning light comes on for 1 second. Then, the tire pressure warning light blinks at 0.125 second intervals.

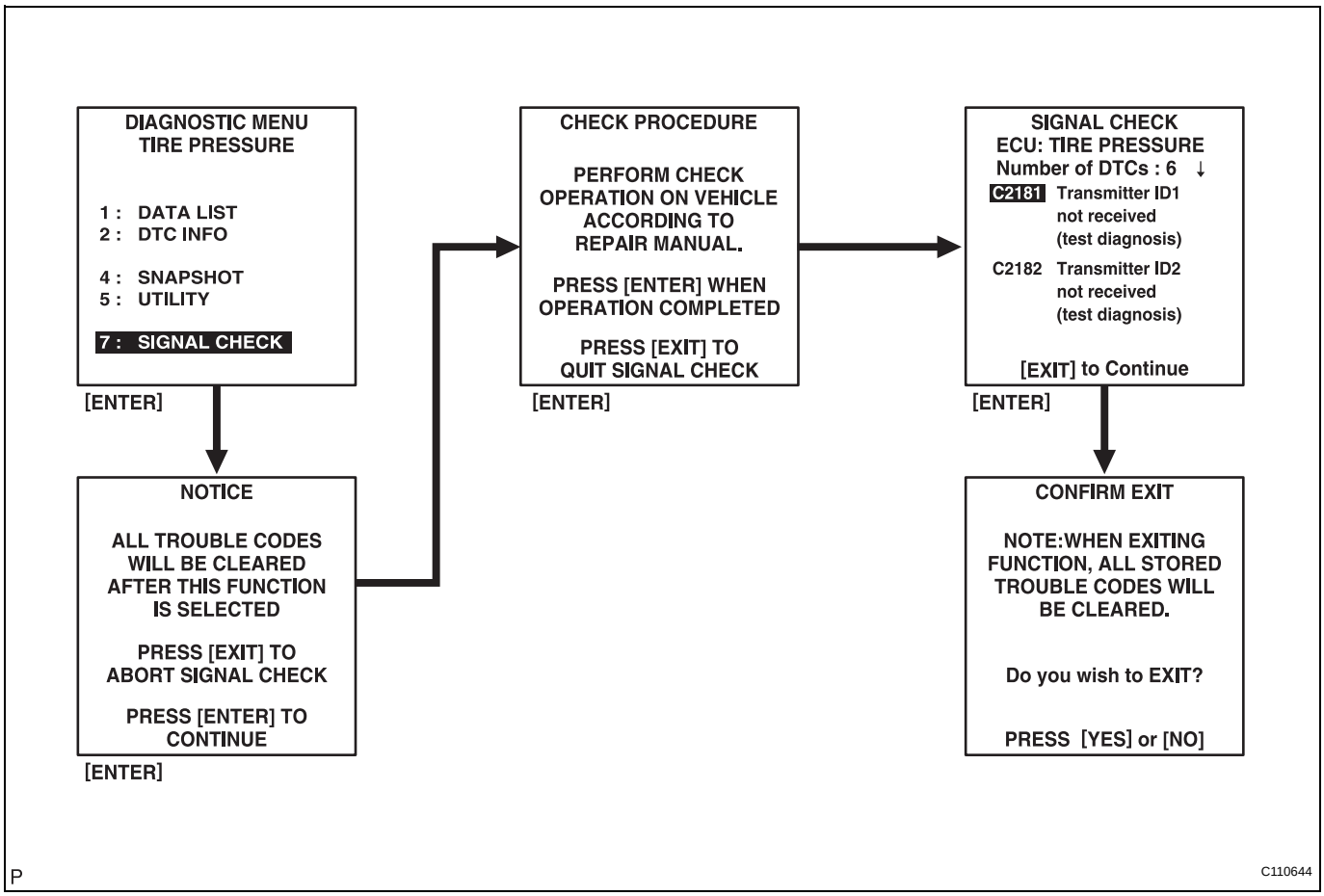

(e) Drive the vehicle at 12 mph (20 km/h) or more for 10 seconds or more. To check the vehicle speed signal (C2191/91).

(f) Loosen the valve core and rapidly reduce the pressure (at least 40 kPa (0.41 kg/cm^2, 5.8 psi) within 30 seconds or more). To check the transmitter data (C2181/81 to C2185/85).
HINT:
The transmitter ID can be transmitted by rapidly reducing the tire pressure.

(g) Turn the select switch from off (main) to on (second) and then to off (main) to check the select switch signal (C2192/92).

(h) Check that the tire pressure warning system test mode DTCs are erased.

Test Mode DTC	Test Signal	Test mode DTC Clear Condition
C2181/81 to C2185/85	Transmitter Data	Receive data from the transmitter which has a registered ID in the tire pressure warning ECU
C2191/91	Vehicle Speed Signal	Vehicle speed of 12 mph (20 km/h) or more is detected for 3 seconds or more
C2192/92	Tire Pressure Warning Select Switch	Change the mode by pressing the tire pressure warning select switch in the following order: MAIN→2nd→MAIN

(i) Check the tire pressure warning reset switch.
(1) Press the tire pressure warning reset switch.

(2) Check the tire pressure warning indicator light.

Test Signal	Normal Condition
Tire Pressure Warning Reset Switch	• Switch ON: TPWS indicator comes on • Switch OFF: TPWS indicator blinks

(j) Result

HINT:

After the signal check is completed, check for a signal check DTC to confirm the system status.

Condition	Procedure
SIGNAL CHECK DTC is output	Repair the faulty part and enter SIGNAL CHECK again
SIGNAL CHECK DTCs are cleared	No problem

(k) End of SIGNAL CHECK

After completing the test mode (SIGNAL CHECK), turn the engine switch off and disconnect the tester.

DTC of SIGNAL CHECK (TEST DIAGNOSIS) function:

If a trouble code is displayed during the test mode DTC check, check the circuit listed for that code. For details of each code, refer to the relevant page listed under respective "DTC No." in the chart.

DTC No.	Detection Item	Trouble Area
C2181/81 (TW-40)	Transmitter ID1 not received	• Tire pressure warning valve and transmitter • Tire pressure warning antenna and receiver • Wire harness or connector • Tire pressure warning ECU
C2182/82 (TW-40)	Transmitter ID2 not received	• Tire pressure warning valve and transmitter • Tire pressure warning antenna and receiver • Wire harness or connector • Tire pressure warning ECU
C2183/83 (TW-40)	Transmitter ID3 not received	• Tire pressure warning valve and transmitter • Tire pressure warning antenna and receiver • Wire harness or connector • Tire pressure warning ECU
C2184/84 (TW-40)	Transmitter ID4 not received	• Tire pressure warning valve and transmitter • Tire pressure warning antenna and receiver • Wire harness or connector • Tire pressure warning ECU
C2185/85 (TW-40)	Transmitter ID5 not received	• Tire pressure warning valve and transmitter • Tire pressure warning antenna and receiver • Wire harness or connector • Tire pressure warning ECU
C2191/91 (TW-63)	Vehicle speed signal error	• Vehicle speed sensor • Combination meter assembly • Wire harness or connector • Tire pressure warning ECU
C2192/92 (TW-65)	Tire pressure warning select switch malfunctions	• Tire pressure warning select switch • Tire pressure warning ECU • Wire harness or connector

TIRE PRESSURE WARNING ECU

COMPONENTS

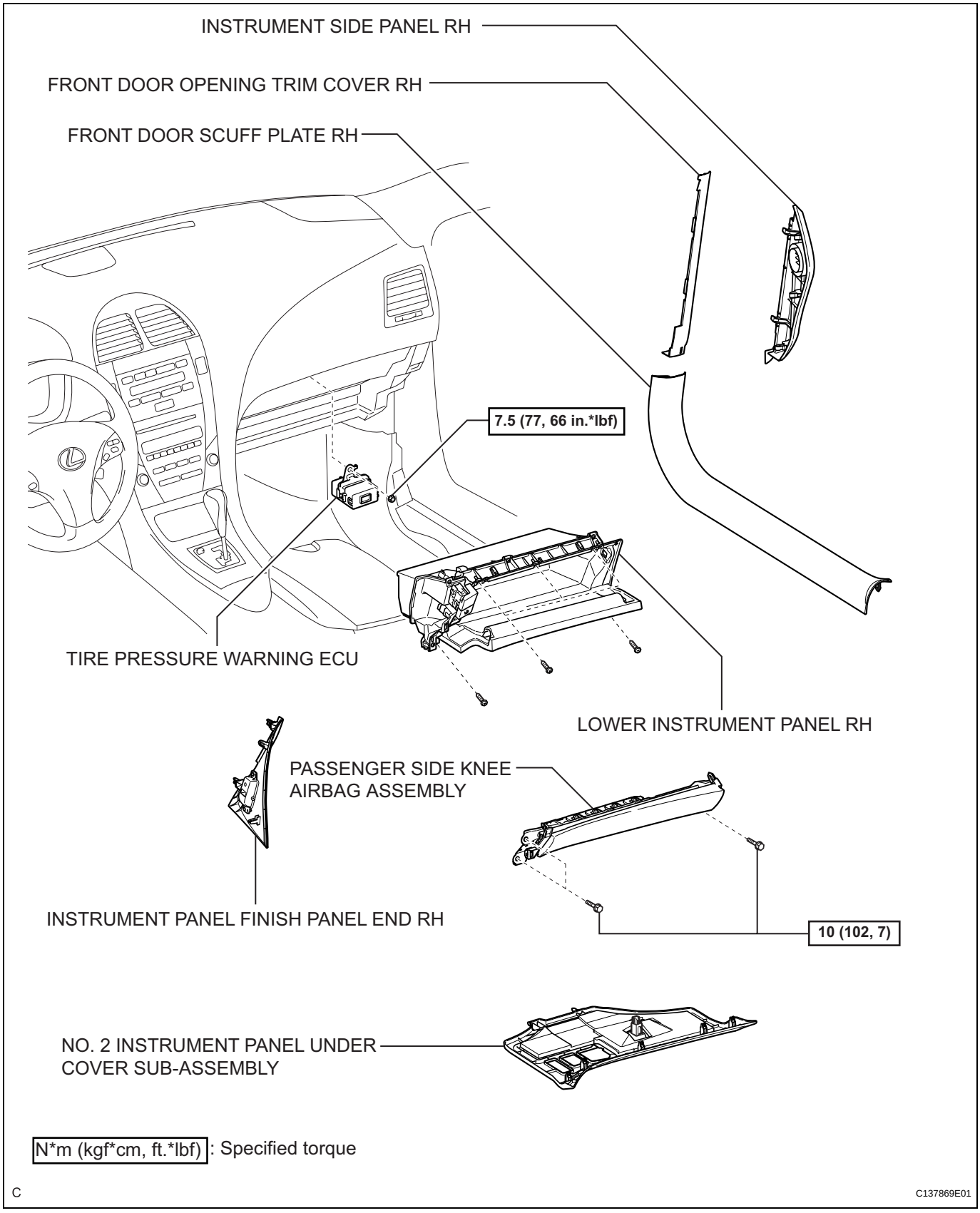

TW

REMOVAL

NOTICE:
Before removing the tire pressure warning ECU, read the registered transmitter IDs of all wheels and write them down to use for re-registration of transmitter IDs (See page TW-15).

1. **DISCONNECT CABLE FROM NEGATIVE BATTERY TERMINAL**
   CAUTION:
   Wait at least 90 seconds after disconnecting the cable from the negative (-) battery terminal to prevent airbag and seat belt pretensioner activation.
2. **REMOVE FRONT DOOR SCUFF PLATE RH (See page IR-42)**
3. **REMOVE FRONT DOOR OPENING TRIM COVER RH (See page IR-42)**
4. **REMOVE INSTRUMENT SIDE PANEL RH (See page IP-15)**
5. **REMOVE INSTRUMENT PANEL FINISH PANEL END RH (See page IP-15)**
6. **REMOVE NO. 2 INSTRUMENT PANEL UNDER COVER SUB-ASSEMBLY (See page IP-15)**
7. **REMOVE PASSENGER SIDE KNEE AIRBAG ASSEMBLY (See page RS-396)**
8. **REMOVE LOWER INSTRUMENT PANEL RH (See page IP-16)**
9. **REMOVE TIRE PRESSURE WARNING ECU**
   (a) Remove the nut.
   (b) Disconnect the connector and remove the tire pressure warning ECU.

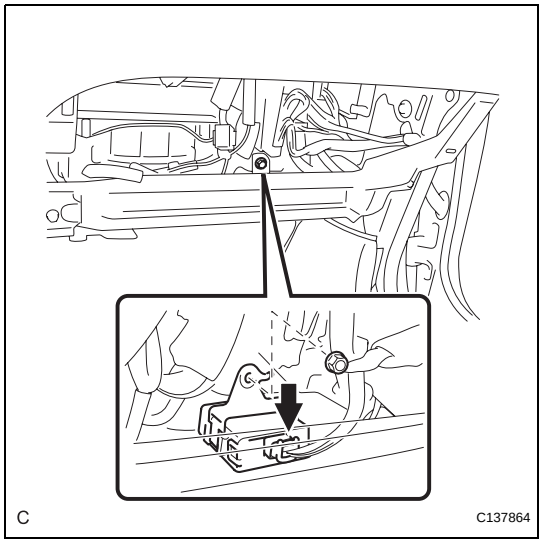

TW

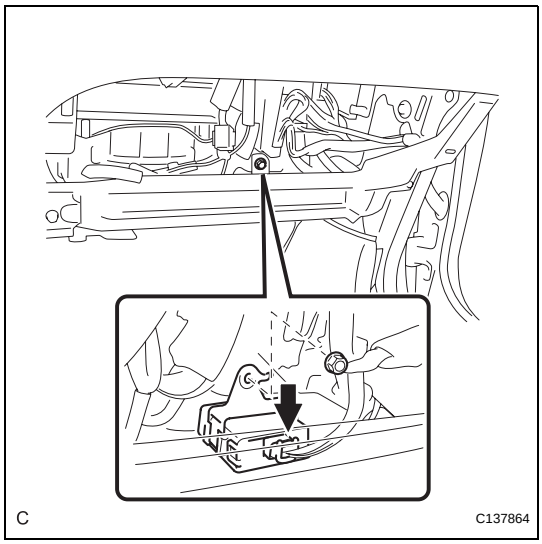

INSTALLATION

1. **INSTALL TIRE PRESSURE WARNING ECU**
   (a) Connect the connector to the tire pressure warning ECU.
   (b) Install the tire pressure warning ECU with the nut.
   Torque: 7.5 N*m (77 kgf*cm, 66 in.*lbf)
2. **INSTALL LOWER INSTRUMENT PANEL RH (See page IP-42)**
3. **INSTALL PASSENGER SIDE KNEE AIRBAG ASSEMBLY (See page RS-396)**
4. **INSTALL NO. 2 INSTRUMENT PANEL UNDER COVER SUB-ASSEMBLY (See page IP-44)**
5. **INSTALL INSTRUMENT PANEL FINISH PANEL END RH (See page IP-44)**
6. **INSTALL INSTRUMENT SIDE PANEL RH (See page IP-43)**
7. **INSTALL FRONT DOOR OPENING TRIM COVER RH (See page IR-65)**
8. **INSTALL FRONT DOOR SCUFF PLATE RH (See page IR-65)**
9. **CONNECT CABLE TO BATTERY NEGATIVE TERMINAL**
10. **PERFORM INITIALIZATION**
    NOTICE:
    Some systems need initialization after reconnecting the cable to the negative battery terminal (See page IN-33).
11. **REGISTER TRANSMITTER ID**
    HINT:
    (See page TW-15)
12. **INSPECT TIRE PRESSURE WARNING SYSTEM**
    HINT:
    (See page TW-20)
13. **INITIALIZE SYSTEM**
    NOTICE:
    - **Be sure to register the transmitter IDs of all tires including the grand spare tire in the ECU before initialization.**
    - **Be sure to inflate all tires including the grand spare tire to the proper inflation pressure before initialization.**

    HINT:
    (See page TW-18)

PROBLEM SYMPTOMS TABLE

HINT:

- Use the table below to help determine the cause of the problem symptom. The potential causes of the symptoms are listed in order of probability in the "Suspected Area" column of the table. Check each symptom by checking the suspected areas in the order they are listed. Replace parts as necessary.
- Inspect the fuses and relays related to this system before inspecting the suspected areas below.

TIRE PRESSURE WARNING SYSTEM

Symptom	Suspected Area	See page
Tire pressure warning system does not operate.	1. Tire pressure warning valve and transmitter	-
	2. Tire pressure warning receiver with antenna	TW-57
	3. Power source circuit	TW-73
	4. TC and CG terminal circuit	TW-75
	5. Combination meter assembly	ME-14
	6. Tire pressure warning ECU	TW-85
DTC check cannot be done.	1. Power source circuit	TW-73
	2. TC and CG terminal circuit	TW-75
	3. Tire pressure warning ECU	TW-85
Tire pressure warning light malfunctions (Does not light up).	1. Power source circuit	TW-73
	2. Tire pressure warning light circuit	TW-71
	3. Combination meter assembly	ME-14
	4. Tire pressure warning ECU	TW-85
Tire pressure warning light malfunctions (Remains on).	1. Tire pressure check	TW-3
	2. Initialization	TW-18
	3. Tire pressure warning light circuit	TW-71
	4. Combination meter assembly	ME-14
	5. Tire pressure warning ECU	TW-85
Tire pressure warning light malfunctions (Blinking).	1. Check DTC	TW-29
	2. Tire pressure warning ECU connector poorly connected	-
	3. TC and CG terminal circuit	TW-75
	4. Test mode (SIGNAL CHECK)	TW-20
	5. Tire pressure warning ECU	TW-85
Initialization cannot be done.	1. Test mode (SIGNAL CHECK)	TW-20
	2. Tire pressure warning reset switch	TW-68
	3. Tire pressure warning ECU	TW-85
Cannot be switched between "Main" and "2nd".	1. Tire pressure warning select switch	TW-65
	2. Wire harness or connector	TW-65
	3. Tire pressure warning ECU	TW-85

TERMINALS OF ECU

HINT:
Inspect the connectors from the back side while the connectors are connected.

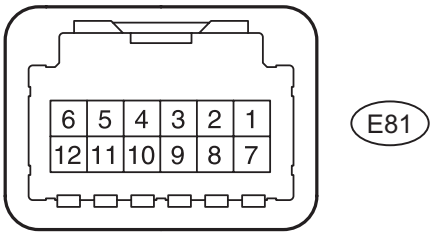

P

E129452E04

Symbols (Terminal No.)	Wiring Color	Terminal Description	Condition	Specified Condition
CLSW (E81-1) - GND (E81-9)	O - W-B	Tire pressure warning reset switch	• Engine switch off • Tire pressure warning reset switch off	8 to 15V
			• Engine switch on (IG) • Tire pressure warning reset switch on	Below 1.5 V
SPD (E81-2) - GND (E81-9)	SB - W-B	Vehicle speed signal	Engine switch on (IG)	Pulse generation (See waveform 1)
TC (E81-3) - GND (E81-9)	W - W-B	TC terminal	When terminal TC is not connected	8 to 15 V
IND (E81-5) - GND (E81-9)	L - W-B	Tire pressure warning light signal	Engine switch on (IG)	Below 0.5 V
RF5V (E81-6) - GND (E81-9)	P - W-B	Tire pressure warning antenna and receiver power source	Engine switch on (IG)	4.5 to 5.5 V
IG (E81-7) - GND (E81-9)	B - W-B	IG power source	Engine switch on (IG)	10 to 16 V
IDSW (E81-8) - GND (E81-9)	R - W-B	Tire pressure warning select switch input signal	• Engine switch off • Tire pressure warning select switch off	8 to 15 V
			• Engine switch on (IG) • Tire pressure warning select switch on	Below 1.5 V
SIL (E81-10) - GND (E81-9)	W - W-B	Diagnostic communication terminal	• Engine switch on (IG) • Intelligent tester is connected to DLC3	Pulse generation (See waveform 2)
GND2 (E81-11) - GND (E81-9)	BR - W-B	Tire pressure warning antenna and receiver ground	Always	Below 1 Ω
RDA (E81-12) - GND (E81-9)	G - W-B	Tire pressure warning antenna and receiver signal	• Engine switch on (IG) • The Tire pressure warning antenna and receiver is not connected	9 to 16 V

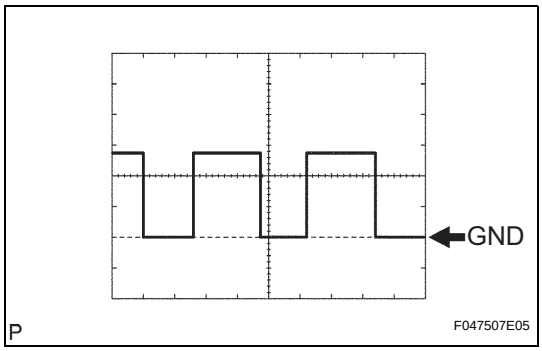

1. Waveform 1 (Reference)

(a) Waveform

Item	Contents
Terminal	SPD - GND
Tool setting	5 V/DIV, 200 ms/DIV.
Vehicle condition	While driving at approximately 20 km/h (12 mph).

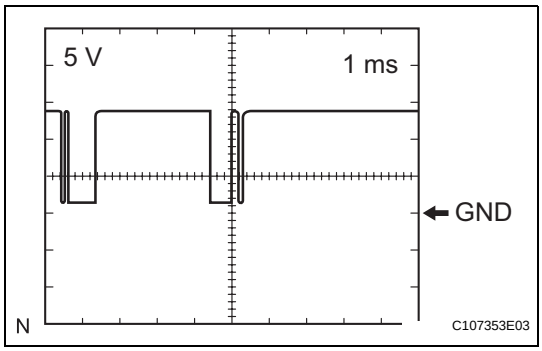

2. Waveform 2 (Reference)

(a) Waveform

Item	Contents
Terminal	SIL - Body ground
Tool setting	5 V/DIV., 1 ms/DIV.
Vehicle condition	Communicating using intelligent tester

TIRE PRESSURE WARNING RESET SWITCH

COMPONENTS

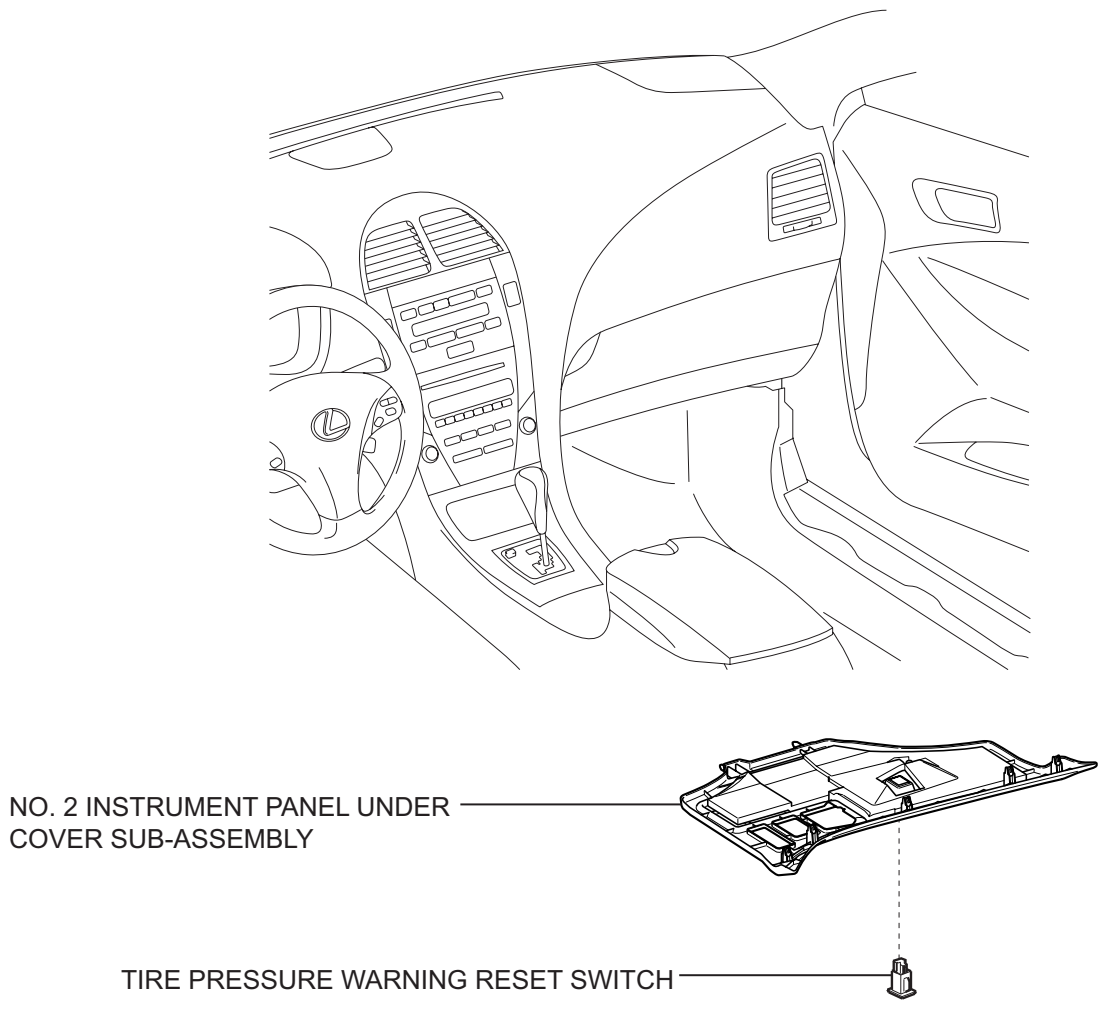

REMOVAL

1. **DISCONNECT CABLE FROM NEGATIVE BATTERY TERMINAL**
2. **REMOVE NO. 2 INSTRUMENT PANEL UNDER COVER SUB-ASSEMBLY (See page IP-15)**
3. **REMOVE TIRE PRESSURE WARNING RESET SWITCH**
   (a) Disengage the 2 claws and remove the tire pressure warning reset switch from the No. 2 instrument panel under cover sub-assembly.

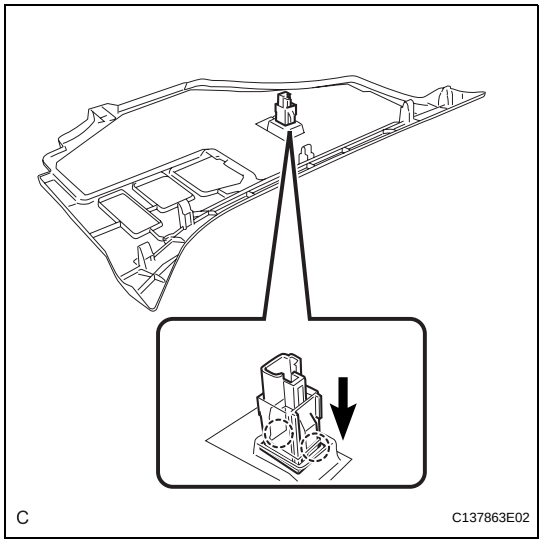

INSPECTION

1. **INSPECT TIRE PRESSURE WARNING RESET SWITCH**
   (a) Remove the tire pressure warning reset switch.
   (b) Measure the resistance between terminals 1 and 2 of the tire pressure warning reset switch when the tire pressure warning switch is ON and OFF.
   Standard resistance

Switch Condition	Specified Condition
ON	Below 1Ω
OFF	10 kΩ or higher

If the result is not as specified, replace the tire pressure warning reset switch.

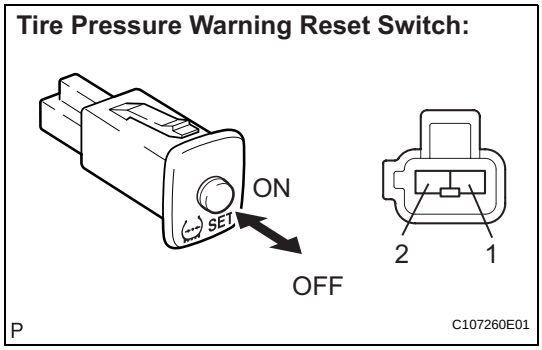

INSTALLATION

1. **INSTALL TIRE PRESSURE WARNING RESET SWITCH**
   (a) Engage the 2 claws to install the tire pressure warning reset switch to the No. 2 instrument panel under cover sub-assembly.
2. **INSTALL NO. 2 INSTRUMENT PANEL UNDER COVER SUB-ASSEMBLY (See page IP-44)**
3. **CONNECT CABLE TO NEGATIVE BATTERY TERMINAL**
4. **PERFORM INITIALIZATION**
   NOTICE:
   Some systems need initialization after reconnecting the cable to the negative battery terminal (See page IN-33).

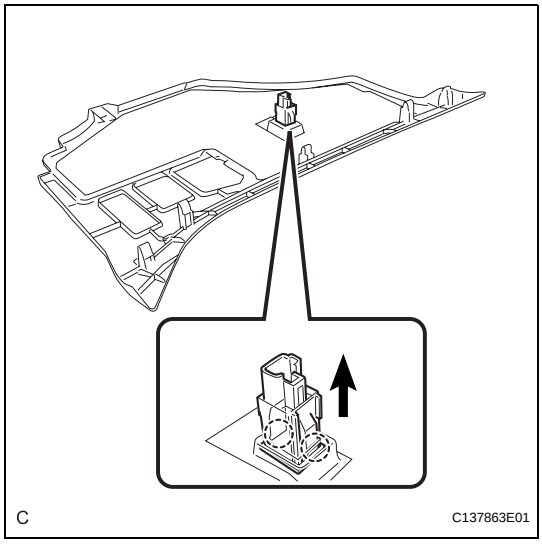

TW

5. INSPECT TIRE PRESSURE WARNING SYSTEM

HINT:

(See page TW-20)

DIAGNOSIS SYSTEM

1. CHECK BATTERY VOLTAGE

Standard voltage:

11 to 14 V

If the voltage is below 11 V, recharge the battery before proceeding.

2. CHECK DLC3

(a) The ECU uses the ISO 15765-4 for communication protocol. The terminal arrangement of the DLC3 complies with SAE J1962 and matches the ISO 15765-4 format.

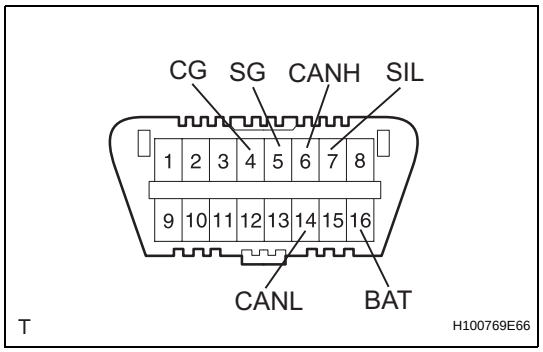

Symbols (Terminal NO.)	Terminal Description	Condition	Specified Condition
SIL (7) - SG (5)	Bus "+" line	During transmission	Pulse generation
CG (4) - Body ground	Chassis ground	Always	Below 1 Ω
SG (5) - Body ground	Signal ground	Always	Below 1 Ω
BAT (16) - Body ground	Battery positive	Always	11 to 14 V
CANH (6) - CANL (14)	CAN bus line	Engine switch off*	54 to 69 Ω
CANH (6) - CG (4)	HIGH-level CAN bus line	Engine switch off*	200 Ω or higher
CANL (14) - CG (4)	LOW-level CAN bus line	Engine switch off*	200 Ω or higher
CANH (6) - BAT (16)	HIGH-level CAN bus line	Engine switch off*	6 kΩ or higher
CANL (14) - BAT (16)	LOW-level CAN bus line	Engine switch off*	6 kΩ or higher

NOTICE:

***Before measuring the resistance, leave the vehicle as is for at least 1 minute and do not operate the engine switch, or any other switches or the doors.**

(b) If the result is not as specified, DLC3 may have a malfunction. Repair or replace the harness and connector.

HINT:

Connect the cable of the intelligent tester to DLC3, turn the engine switch on (IG) and attempt to use the tester. If the display indicates that a communication error has occurred, there is a problem either with the vehicle or with the tester.

- If communication is normal when the tester is connected to another vehicle, inspect DLC3 of the original vehicle.
- If communication is still not possible when the tester is connected to another vehicle, the problem may be in the tester itself. Consult the Service Department listed in the tester's instruction manual.

3. DIAGNOSIS SYSTEM

(a) DTCs (Normal mode)

(1) DTCs are memorized in the tire pressure warning ECU and read by the blinks of the tire pressure warning light or by using the intelligent tester (See page TW-29).

(b) Test mode

(1) By switching from normal mode into test mode (input signal check), you can inspect the tire pressure warning antenna and receiver, each tire pressure warning valve and transmitter, tire pressure warning select switch, and vehicle speed sensor (See page TW-20).

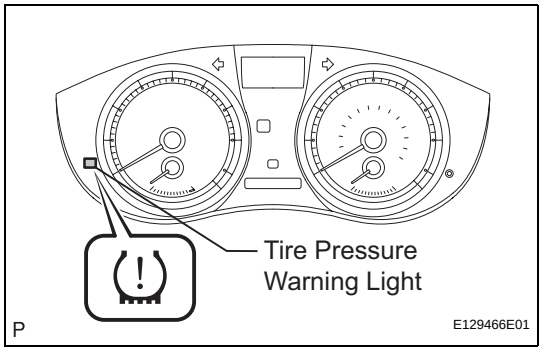

4. CHECK WARNING LIGHT

(a) Turn the engine switch on (IG).

(b) Check that the tire pressure warning light comes on for 3 seconds.

If the warning check result is not normal, proceed to the troubleshooting for the tire pressure warning light circuit.

Trouble Area	See procedure
Tire pressure warning light circuit	TW-71

5. TIRE PRESSURE WARNING LIGHT AND INDICATOR CHART

HINT:

The table below indicates the state of the tire pressure warning light and indicator after the engine switch is turned on (IG).

	Immediately after turning the engine switch on (IG)	Always						
		Warning light output pattern						
	Comes on for 3 sec.	Goes off	Comes on	Blinks (*1)	Blinks (*2)	Blinks (*3)	Blinks (*4)	Outputs DTC
Normal	○	○	-	-	-	-	-	-
Low tire pressure	○	-	○	-	-	-	-	-
System fail	○	-	-	○	-	-	-	-
Test mode	○	-	-	-	○	-	-	-
Initialization	○	-	-	-	-	○	-	-
ECU connector poorly connected	-	-	-	○	-	-	-	-
TC ground (DTC is output)	○	-	-	-	-	-	-	○
TC ground (DTC is not output)	○	-	-	-	-	-	○	-

TW

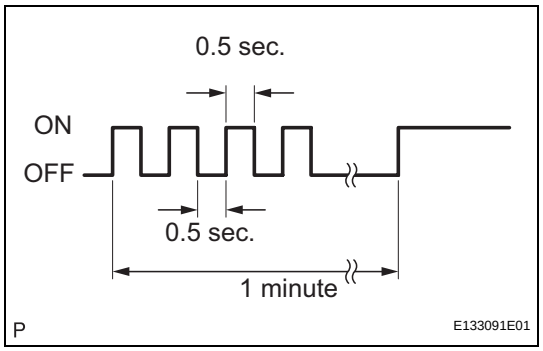

*1: Comes on and goes off repeatedly at 0.5 second intervals, and comes on after 1 minute.

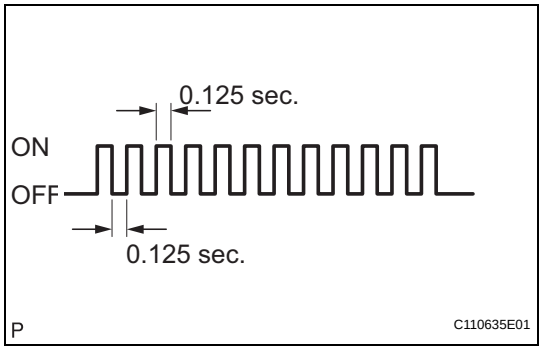

*2: Comes on and goes off repeatedly at 0.125 second intervals.

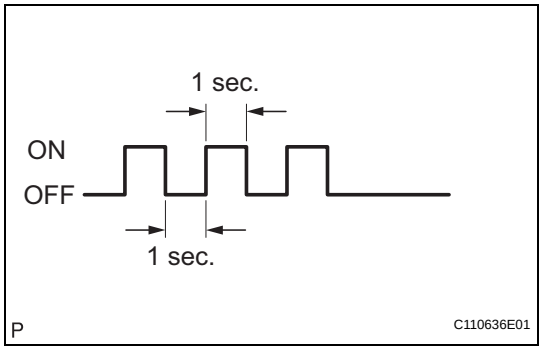

*3: Blinks 3 times (1 second on, 1 second off).

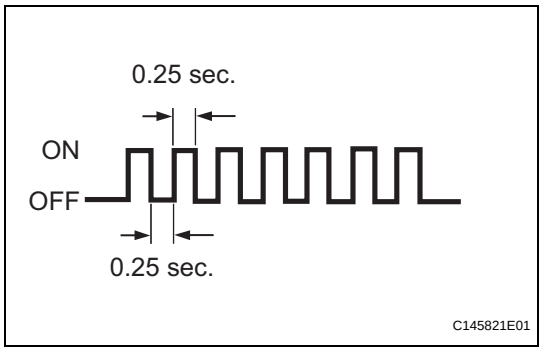

*4: Comes on and goes off repeatedly at 0.25 second intervals.

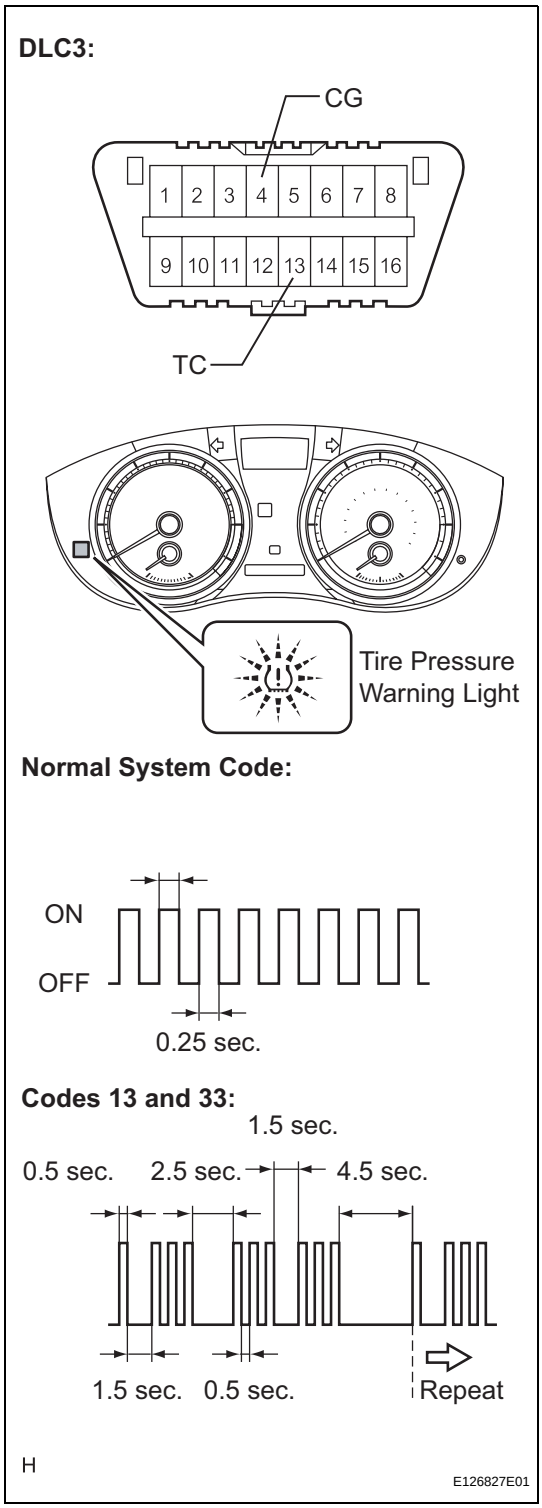

DTC CHECK / CLEAR

1. DTC CHECK (USING SST CHECK WIRE)

(a) Check DTCs.

(1) Using SST, connect terminals TC and CG of DLC3.
SST 09843-18040

(2) Turn the engine switch on (IG).

(3) Read and record any DTCs from the tire pressure warning light on the combination meter. Refer to the illustration on the left for examples of a normal system code and codes 13 and 33.
HINT:
- If the tire pressure warning light does not indicate any DTCs or the normal system code, inspect the tire pressure warning light circuit or TC and CG terminal circuit.

Trouble Area	See procedure
Tire pressure warning light circuit	TW-71
TC and CG terminal circuit	TW-75

- If 2 or more malfunctions are indicated at the same time, the lowest numbered DTC is displayed first.

(4) Refer to the Diagnostic Trouble Code Chart (See page TW-32) for DTC information.

(5) After completing the check, turn the engine switch off and remove the SST from DLC3.
SST 09843-18040

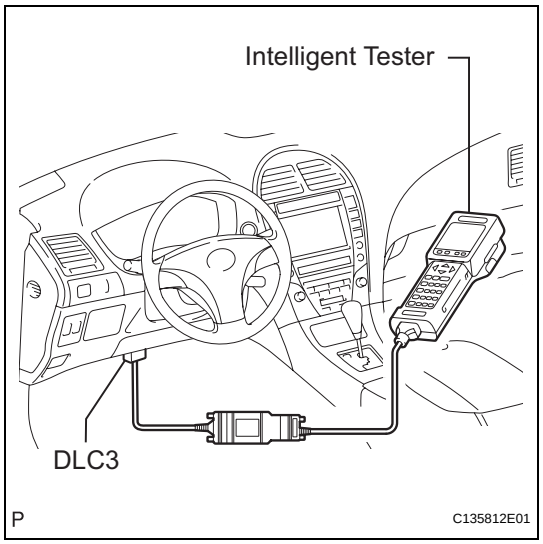

2. DTC CHECK (USING INTELLIGENT TESTER)

(a) Check DTCs.

(1) Connect the intelligent tester to the DLC3.

(2) Turn the engine switch on (IG).

(3) Read the DTCs following the prompts on the tester screen.

HINT:

Refer to the intelligent tester operator's manual for further details.

(b) Clear the DTCs.

HINT:

After repairing the malfunctions, clear the DTCs.

(1) Connect the intelligent tester to DLC3.

(2) Turn the engine switch on (IG).

(3) Clear the DTCs following the prompts on the tester screen.

HINT:

Refer to the intelligent tester operator's manual for further details.

DATA LIST / ACTIVE TEST

1. DATA LIST

(a) Connect the intelligent tester to DLC3.
(b) Turn the engine switch on (IG).
(c) Following the display on the intelligent tester, read "DATA LIST".

TIRE PRESSURE:

Tester Display	Measurement Item/Range	Normal Condition	Diagnostic Note
MODE STATUS	Tire pressure warning system mode/NORMAL or REG 2nd or REG M or TEST	NORMAL: Normal mode TEST: Test mode	-
MAIN TIRE	Number of main tire ID to be registered/ 0 or 1 or 2 or 3 or 4 or 5	0 to 5 should be displayed	-
2ND TIRE	Number of 2nd tire ID to be registered/ 0 or 1 or 2 or 3 or 4 or 5	0 to 5 should be displayed	-
SELECT SW	Tire Pressure Warning Select Switch Status	Not pressed: MAIN Pressed: 2nd	-
VEHICLE SPEED	Vehicle speed reading/ min.: 0 km/h (0 mph), max.: 255 km/h (158 mph)	Actual vehicle speed	Speed indicated on the combination meter
REGIT ID1 CODE	Registered ID1 code/min.: 0, max.: FFFFFFF	The ID No. registered in the transmitter ID1 is displayed	-
REGIT ID2 CODE	Registered ID2 code/min.: 0, max.: FFFFFFF	The ID No. registered in the transmitter ID2 is displayed	-
REGIT ID3 CODE	Registered ID3 code/min.: 0, max.: FFFFFFF	The ID No. registered in the transmitter ID3 is displayed	-
REGIT ID4 CODE	Registered ID4 code/min.: 0, max.: FFFFFFF	The ID No. registered in the transmitter ID4 is displayed	-
REGIT ID5 CODE	Registered ID5 code/min.: 0, max.: FFFFFFF	The ID No. registered in the transmitter ID5 is displayed	-
TRANS STATUS	ID code transmission status/ FINISH or NOW	FINISH or NOW	-
INITIAL SW	Tire pressure warning reset switch/ON, OFF	ON: Switch on OFF: Switch off	-
TIREPRESS1	ID1 tire inflation pressure/ min.: 0 kPa (0 kgf/cm^2, 0 psi), max.: 637.5 kPa (6.48 kgf/cm^2, 92.2 psi)	Actual tire inflation pressure	-
TIREPRESS2	ID2 tire inflation pressure/ min.: 0 kPa (0 kgf/cm^2, 0 psi), max.: 637.5 kPa (6.48 kgf/cm^2, 92.2 psi)	Actual tire inflation pressure	-
TIREPRESS3	ID3 tire inflation pressure/ min.: 0 kPa (0 kgf/cm^2, 0 psi), max.: 637.5 kPa (6.48 kgf/cm^2, 92.2 psi)	Actual tire inflation pressure	-
TIREPRESS4	ID4 tire inflation pressure/ min.: 0 kPa (0 kgf/cm^2, 0 psi), max.: 637.5 kPa (6.48 kgf/cm^2, 92.2 psi)	Actual tire inflation pressure	-
TIREPRESS5	ID5 tire inflation pressure/ min.: 0 kPa (0 kgf/cm^2, 0 psi), max.: 637.5 kPa (6.48 kgf/cm^2, 92.2 psi)	Actual tire inflation pressure	-
TIRE TEMP1	ID1 temperature in tire/ min.: -40°C (-40°F), max.: 215°C (419°F)	Actual tire temperature	-
TIRE TEMP2	ID2 temperature in tire/ min.: -40°C (-40°F), max.: 215°C (419°F)	Actual tire temperature	-

Tester Display	Measurement Item/Range	Normal Condition	Diagnostic Note
TIRE TEMP3	ID3 temperature in tire/ min.: -40°C (-40°F), max.: 215°C (419°F)	Actual tire temperature	-
TIRE TEMP4	ID4 temperature in tire/ min.: -40°C (-40°F), max.: 215°C (419°F)	Actual tire temperature	-
TIRE TEMP5	ID5 temperature in tire/ min.: -40°C (-40°F), max.: 215°C (419°F)	Actual tire temperature	-
BATT VOLT1	ID1 battery voltage/ OVER or LESS	OVER	-
BATT VOLT2	ID2 battery voltage/ OVER or LESS	OVER	-
BATT VOLT3	ID3 battery voltage/ OVER or LESS	OVER	-
BATT VOLT4	ID4 battery voltage/ OVER or LESS	OVER	-
BATT VOLT5	ID5 battery voltage/ OVER or LESS	OVER	-
SELECT SW INFO	Tire Pressure Warning Select switch setting information/ WITH or WITHOUT	WITH	-
INITIAL SW INFO	Tire pressure warning reset switch setting information/ WITH or WITHOUT	WITH	-
INIT THRESHOLD1	ID1 initial threshold of low-pressure/ min.: 0 kPa (0 kgf/cm^2, 0 psi), max.: 637.5 kPa (6.48 kgf/cm^2, 92.2 psi)	Tire pressure after initialization	-
INIT THRESHOLD2	ID2 initial threshold of low-pressure/ min.: 0 kPa (0 kgf/cm^2, 0 psi), max.: 637.5 kPa (6.48 kgf/cm^2, 92.2 psi)	Tire pressure after initialization	-
INIT THRESHOLD3	ID3 initial threshold of low-pressure/ min.: 0 kPa (0 kgf/cm^2, 0 psi), max.: 637.5 kPa (6.48 kgf/cm^2, 92.2 psi)	Tire pressure after initialization	-
INIT THRESHOLD4	ID4 initial threshold of low-pressure/ min.: 0 kPa (0 kgf/cm^2, 0 psi), max.: 637.5 kPa (6.48 kgf/cm^2, 92.2 psi)	Tire pressure after initialization	-
INIT THRESHOLD5	ID5 initial threshold of low-pressure/ min.: 0 kPa (0 kgf/cm^2, 0 psi), max.: 637.5 kPa (6.48 kgf/cm^2, 92.2 psi)	Tire pressure after initialization	-
# CODES	Number of DTC recorded/ min.: 0, max.: 255	Min.: 0, Max.: -	-

METER:

Tester Display	Measurement Item/Range	Normal Condition	Diagnostic Note
SPEED METER	Vehicle speed/Min.: 0 km/h (0 mph), Max.: 255 km/h (158 mph)	Almost same as actual vehicle speed (When driving)	-

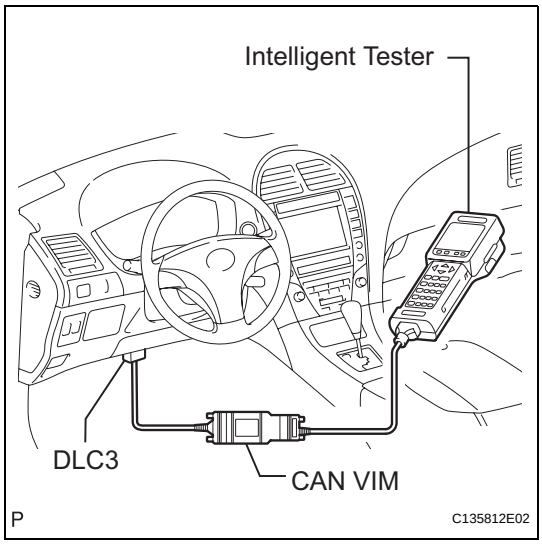

2. ACTIVE TEST

Performing the ACTIVE TEST using the intelligent tester allows the meters, indicators and so on to operate without parts removal. Performing the ACTIVE TEST as the first step of troubleshooting is one way to save diagnostic time. It is possible to display the DATA LIST on the intelligent tester during the ACTIVE TEST.

(a) Connect the intelligent tester to the DLC3.
(b) Turn the engine switch on (IG).
(c) Enter the following menus: DIAGNOSIS / OBD/ MOBD / METER / ACTIVE TEST.

METER:

Tester Display	Test Part	Control Range	Diagnostic Note
TIRE PRESS WARN	Tire Pressure warning Light	TIRE PRESS warning light is OFF/ON	Confirm that the vehicle is stopped with the engine idling

SYSTEM DIAGRAM

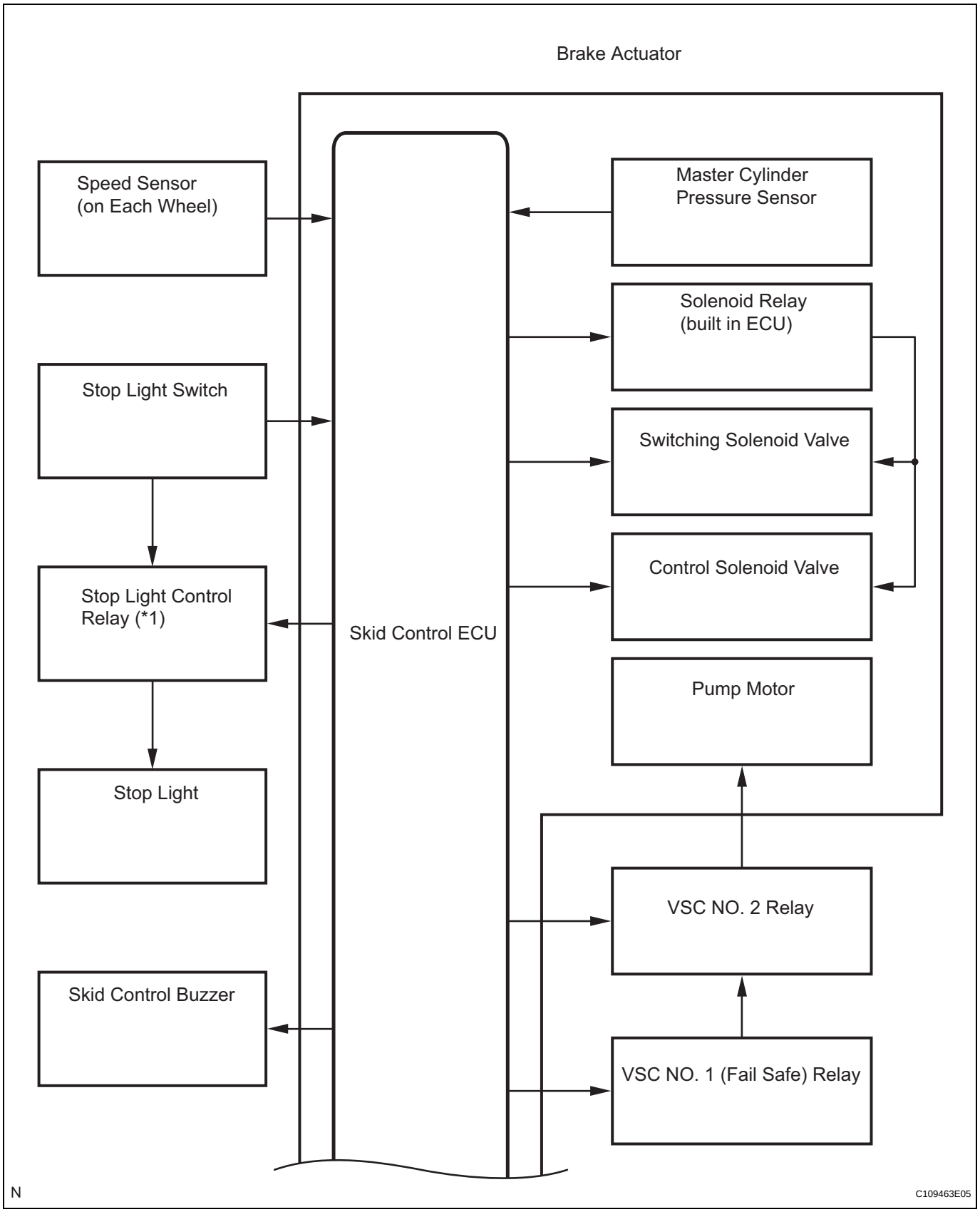

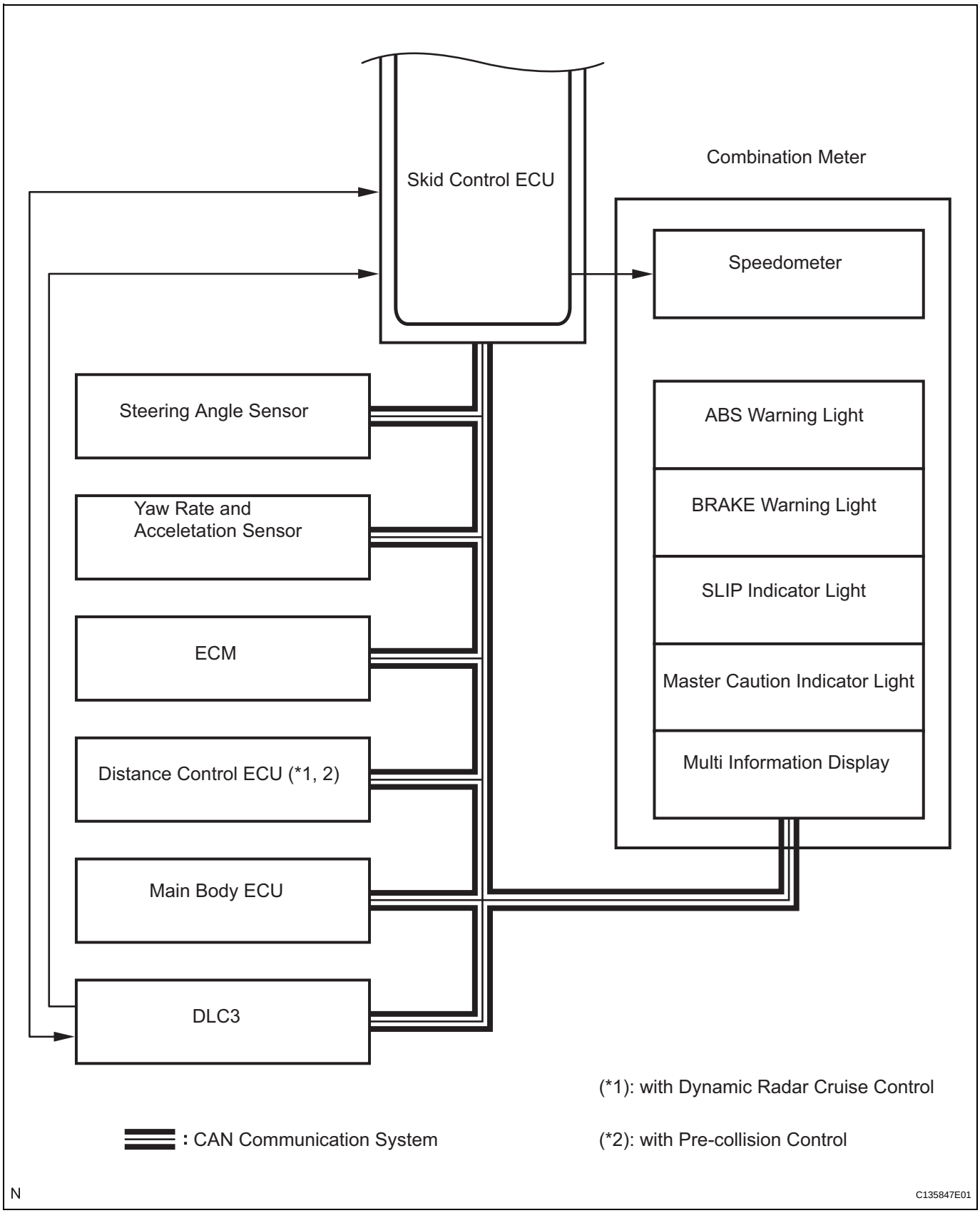

Transmitting ECU (transmitter)	Receiving ECU	Signals	Communication method
Skid control ECU	Steering angle sensor	Steering angle sensor request signal	CAN communication system
Skid control ECU	Yaw rate and acceleration sensor	Yaw rate and acceleration request signal	CAN communication system

Transmitting ECU (transmitter)	Receiving ECU	Signals	Communication method
Skid control ECU	ECM	• Wheel speed signal • VSC data signal	CAN communication system
ECM	Skid control ECU	• Shift position signal • Throttle position signal • Engine revolution signal • Intake air temperature signal • Engine torque request signal • Accelerator pedal position signal	CAN communication system
Distance control ECU (*1)	Skid control ECU	Brake control request signal	CAN communication system
Main body ECU	Skid control ECU	Parking brake switch signal	CAN communication system
Skid control ECU	Combination meter	• ABS warning light ON signal • BRAKE warning light ON signal • VSC warning (multi information display) ON signal • SLIP indicator light ON signal • Master caution indicator light ON signal • Wheel speed signal	CAN communication system

(*1): with dynamic radar cruise control or pre-collision control

SYSTEM DESCRIPTION

1. FUNCTION DESCRIPTION

HINT:

- The skid control ECU is located within the brake actuator assembly.
- The yaw rate sensor and acceleration sensor are combined in a single unit. This unit communicates with the skid control ECU through CAN communication.

(a) ABS (Anti-lock Brake System)
The ABS helps prevent the wheels from locking when the brakes are applied firmly or when braking on a slippery surface.

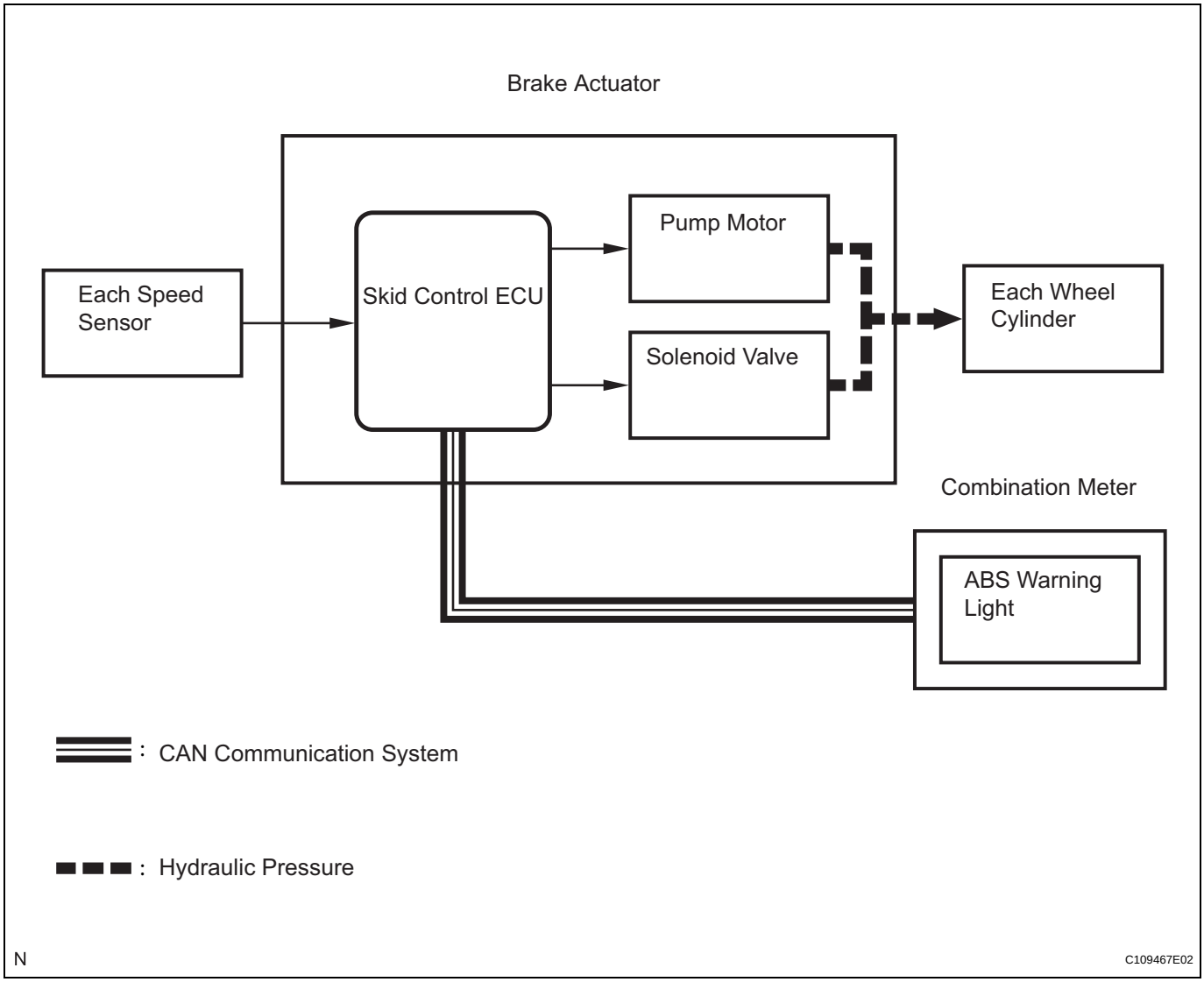

(1) Operation description
The skid control ECU detects wheel lock based on speed signals it receives from the wheel speed sensors. Based on this information, the skid control ECU controls the pump motor and solenoid valves. The pump motor and solenoid valves are used to prevent wheel lock by controlling the hydraulic pressure applied to the brakes at each wheel. The ABS warning light will come on when the system is malfunctioning.

(b) EBD (Electronic Brake force Distribution)
The EBD control utilizes ABS, and performs proper brake force distribution between the front and rear wheels in accordance with driving conditions.
When braking while cornering, it also controls the brake forces of the right and left wheels, helping to maintain vehicle behavior.

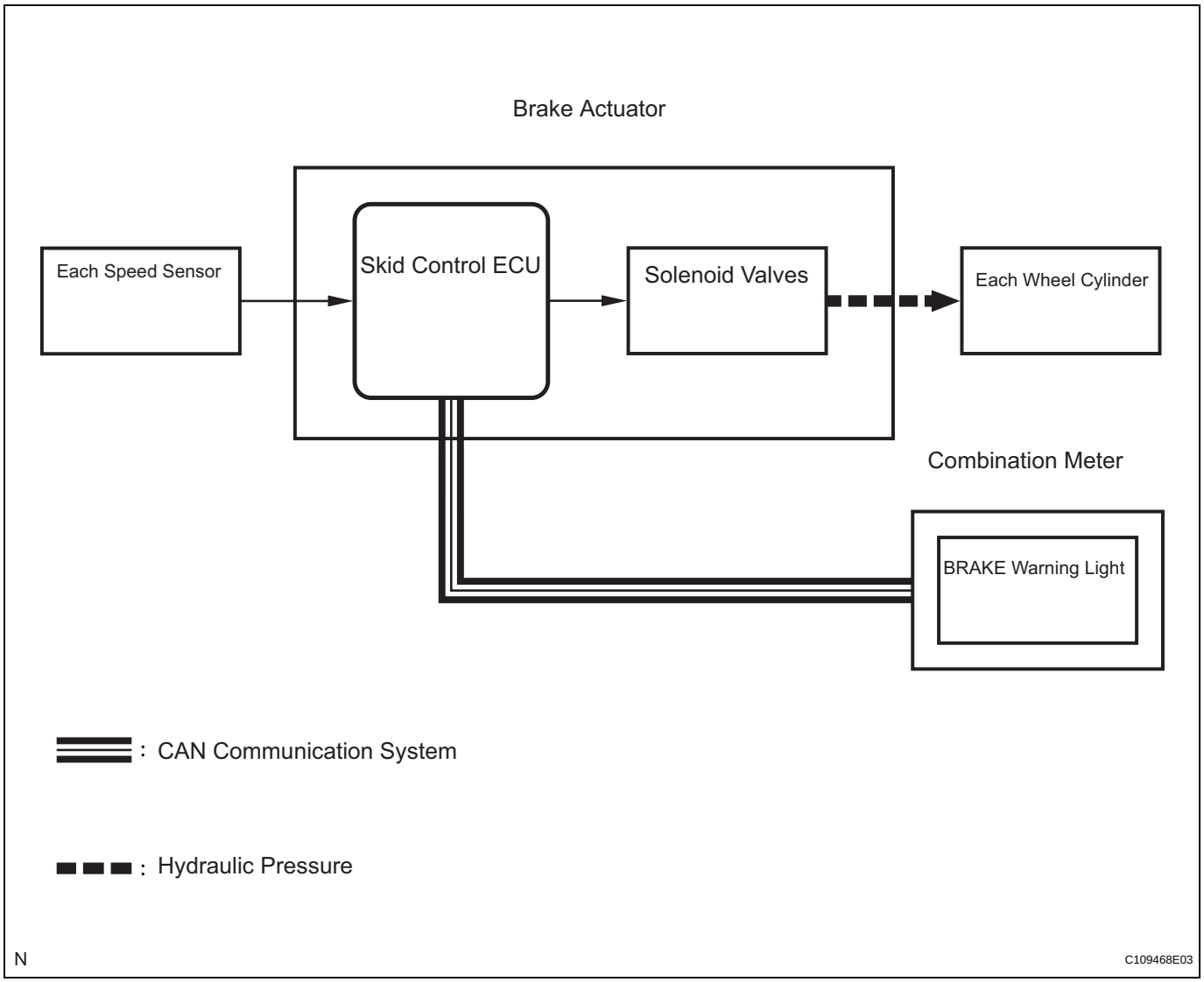

(1) Operation description
The skid control ECU receives a speed signal from each wheel speed sensor, and uses these signals to detect locking of the wheels. The ECU uses this information in order to determine appropriate control of the solenoid valves.
The solenoid valves control the hydraulic pressure applied to the brake cylinder at each wheel. In this way, the solenoid valves are used to control the brake power split between the front and rear, and left and right wheels. The BRAKE warning light will come on if there is a malfunction in the EBD system.

(c) BA (Brake Assist)
The primary purpose of the brake assist system is to provide auxiliary brake force to assist the driver who cannot generate a large enough brake force during emergency braking, thus helping to maximize the brake performance of the vehicle.

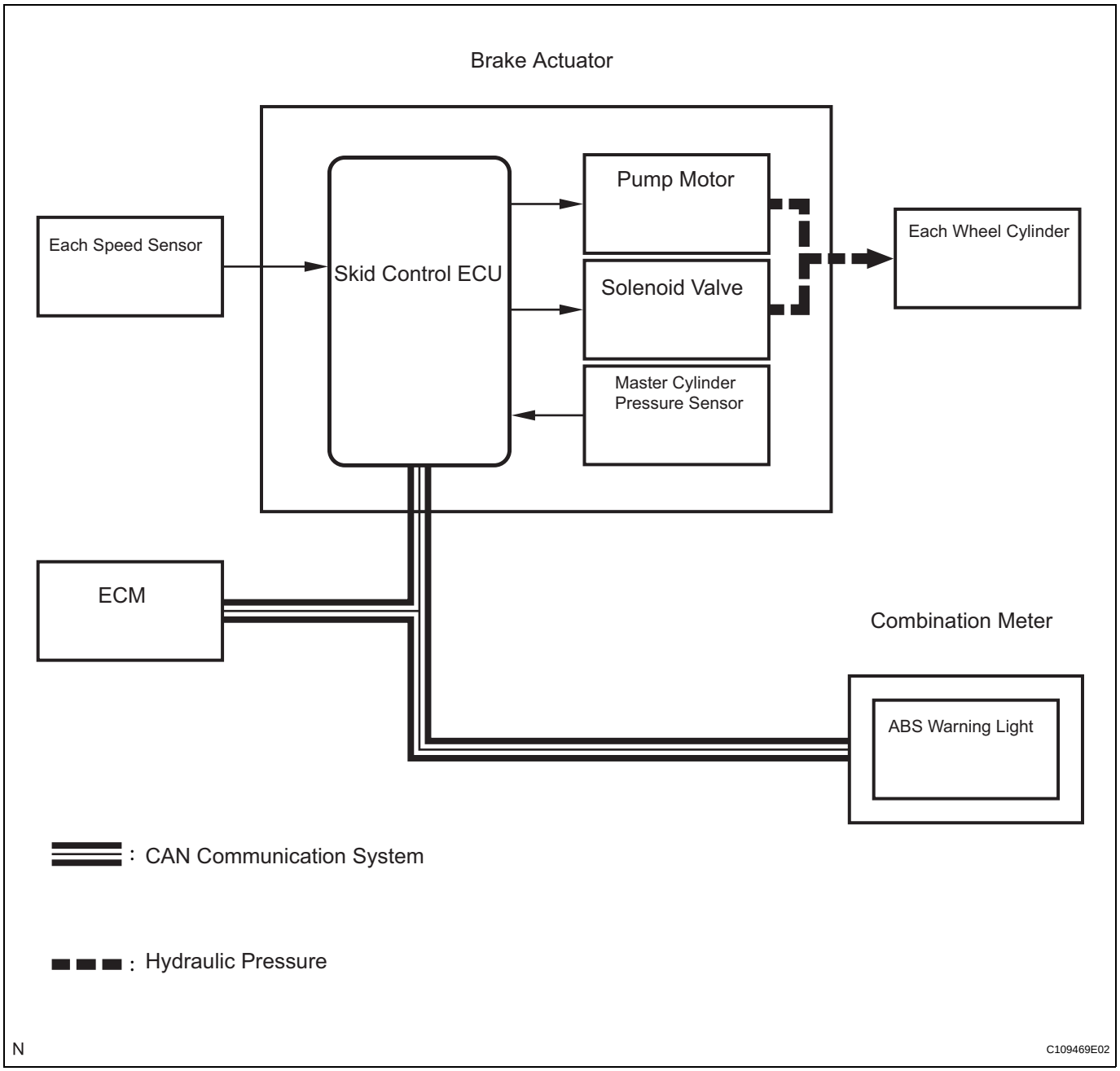

(1) Operation description
The skid control ECU receives the speed signal from each speed sensor and the fluid pressure signal from the master cylinder pressure sensor to determine whether brake assist is necessary. If brake assist is necessary, the skid control ECU sends control signals to the pump motor and solenoid. The pump and the solenoid valve then control the pressure applied to each wheel cylinder.
The ABS warning light comes on to indicate a malfunction in the BA system.

(d) TRAC (Traction Control)
The TRAC system helps prevent the drive wheels from slipping when the driver depresses the accelerator pedal excessively when starting off or accelerating on a slippery surface.

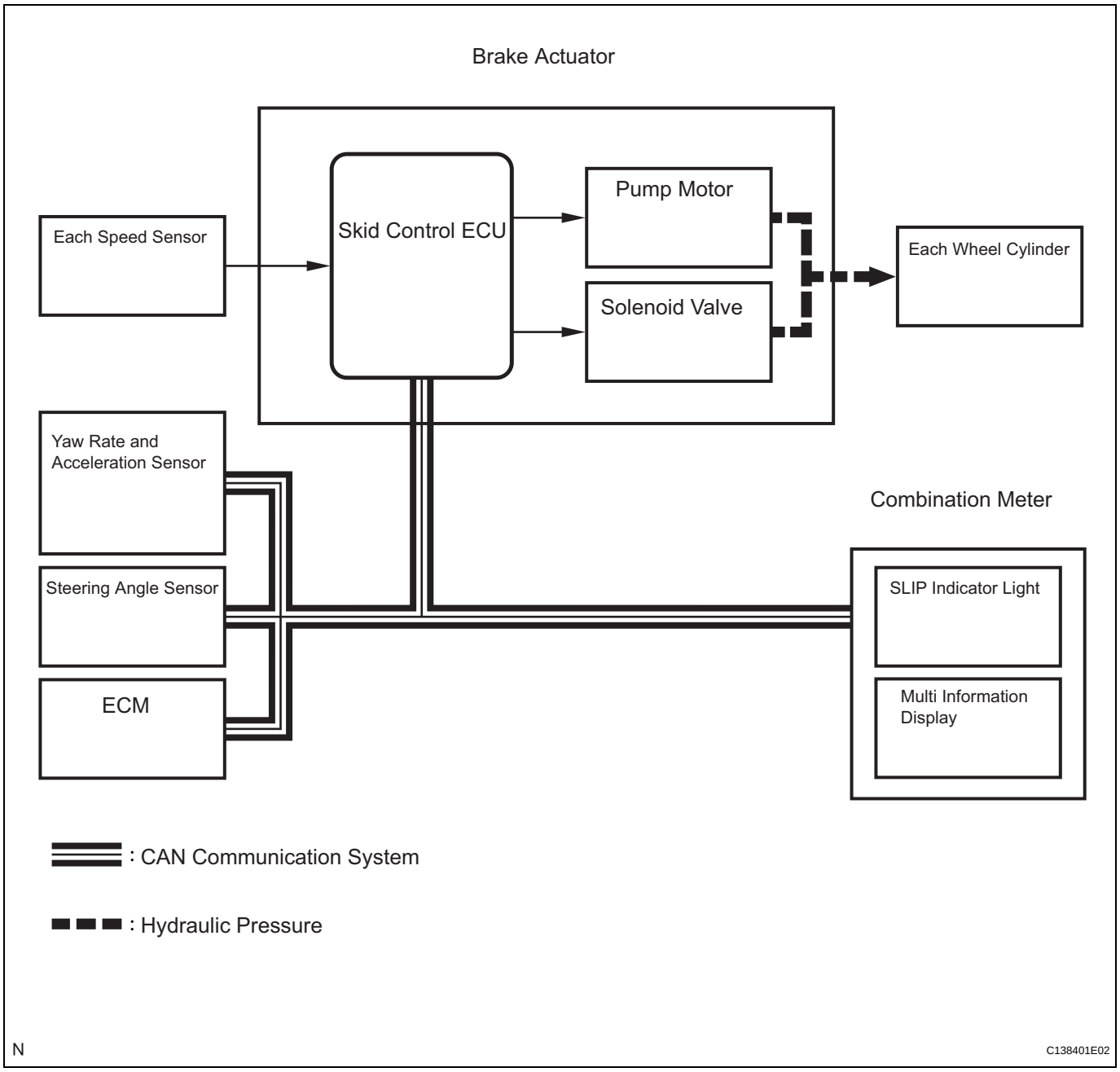

(1) Operation description

The skid control ECU detects the wheelspin by receiving signals from each speed sensor and the ECM via CAN communication. The skid control ECU controls engine torque with the ECM via CAN communication and brake hydraulic pressure through the pump and solenoid valve.

The SLIP indicator light blinks when the system is operating. When there is a malfunction in the TRAC system, SLIP indicator light will come on and the DTC will be displayed on the multi information display.

(e) VSC (Vehicle Stability Control)
The VSC system helps prevent the vehicle from slipping sideways as a result of strong front or rear wheel skid during cornering.

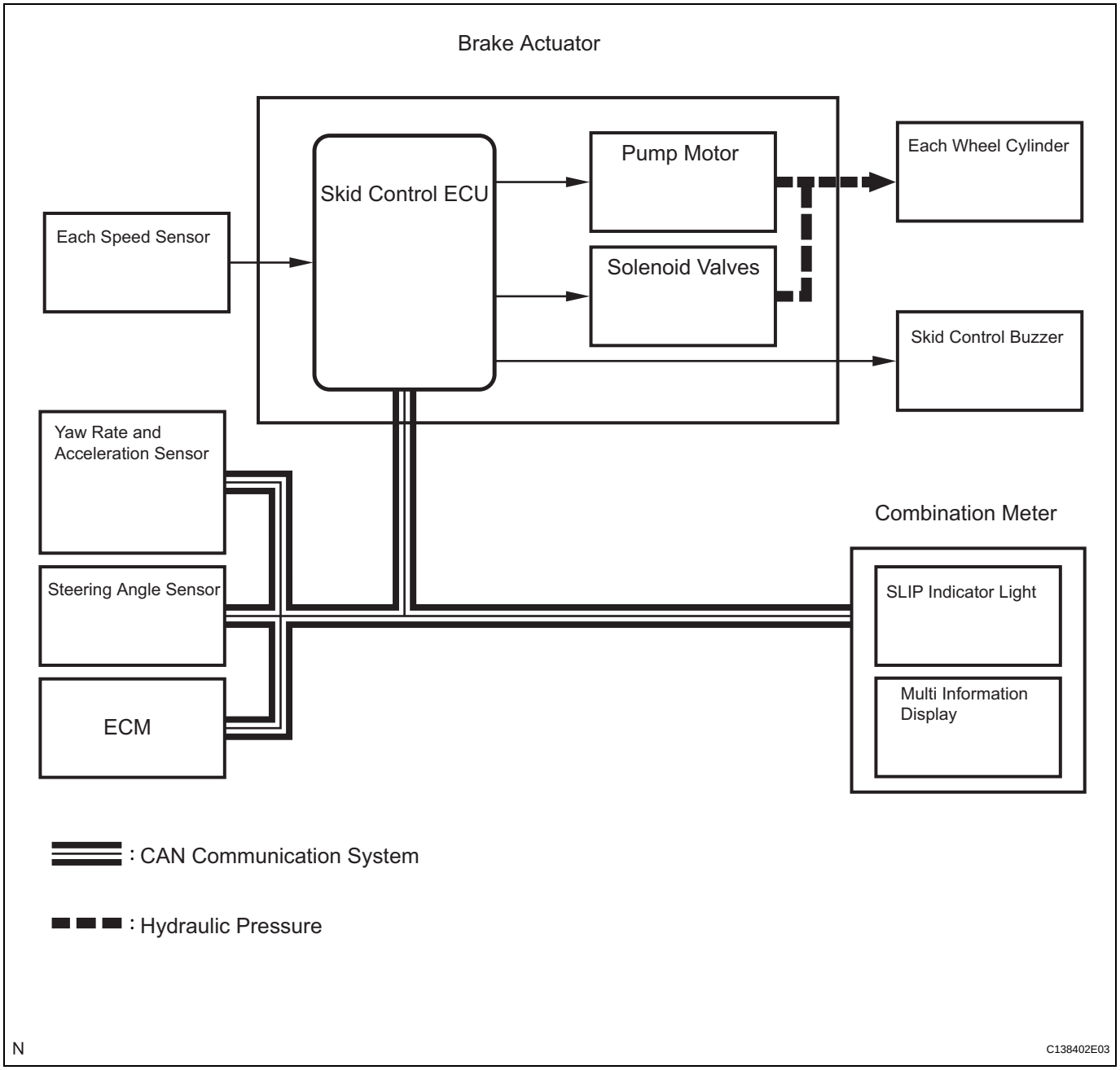

(1) Operation description
The skid control ECU determines the vehicle operating conditions based on signals received from the wheel speed sensors, yaw rate and acceleration sensor, and steering angle sensor. The skid control ECU sends signals via CAN communication to the ECM in order to control engine torque. The skid control ECU controls brake hydraulic pressure using the pump and solenoid valves.
The SLIP indicator light will blink, and the skid control buzzer will sound when the system is operating. If a malfunction occurs in the VSC system, the SLIP indicator light will come on. In addition, the DTC will appear on the multi information display.

2. DYNAMIC RADAR CRUISE CONTROL (with DYNAMIC RADAR CRUISE CONTROL)

(a) When a greater deceleration than usual is required while driving in vehicle control mode, braking force is generated by the brake hydraulic pressure control in accordance with the signal from the distance control ECU.

3. PRE-COLLISION CONTROL (with PRE-COLLISION CONTROL)

(a) The pre-collision system predicts frontal collisions with other vehicles or obstructions. By winding up the seat belts prior to collision, and performing brake control and brake assist control, it lessens the impact during the collision.

(b) The extremely high frequency radar recognizes if there is a vehicle or obstruction on the road ahead, and the distance control ECU makes a judgement on whether a collision is unavoidable from the position of the object, the speed and the road surface.

(c) The distance control ECU sends this information via a CAN communication to the seat belt control ECU, suspension control ECU and skid control ECU, to operate each control element of the pre-collision system.

4. ABS with EBD, BA, TRAC and VSC OPERATION

(a) The skid control ECU calculates vehicle stability tendency based on the signals from the speed sensor, yaw rate and acceleration sensor, and steering angle sensor. In addition, it evaluates the results of the calculations to determine whether any control actions (control of the engine output torque by electronic throttle control and of the wheel brake pressure by the brake actuator assembly) should be implemented.

(b) The SLIP indicator blinks and the skid control buzzer sounds to inform the driver that the VSC system is operating. The SLIP indicator also blinks when traction control is operating, and the operation being performed is displayed.

5. FAIL SAFE

(a) When a failure occurs in the ABS with BA, TRAC and VSC systems, the ABS warning, and SLIP indicator lights come on and the DTC will be displayed on the multi information display and ABS with BA, TRAC and VSC operations are prohibited. In addition, when there is a failure that disables the EBD operation, the BRAKE warning light also comes on and the EBD operation is prohibited.

(b) If control is prohibited due to a malfunction during operation, control will be disabled gradually. This is to avoid sudden vehicle instability.

6. INITIAL CHECK

(a) When the vehicle speed first becomes approximately 6 km/h (4 mph) or more after the engine switch is turned on (IG), each solenoid valve and motor of the brake actuator is sequentially activated to perform an electrical check. During the initial check, the operating sound of solenoid valve and motor can be heard from the engine compartment, but this is not a malfunction.

7. INSPECTION MODE

(a) VSC operation can be disabled by operating the intelligent tester (See page IN-5).
HINT:
Refer to the intelligent tester operator's manual for further details.

8. FUNCTION OF COMPONENTS

Components	Function
Speed sensor	Detects the wheel speed and sends the signal to the skid control ECU.
Skid control ECU (housed in brake actuator assembly)	• Processes the signals sent from each sensor to control the ABS, BA, TRAC, and VSC. • Sends and receives the control signals to or from the ECM, yaw rate and acceleration sensor, and steering angle sensor, etc. via CAN communication.
Brake actuator assembly	• Consists of the master cylinder cut solenoid valve, retention solenoid valve, pressure reduction solenoid valve, pump motor, and reservoir, and adjusts the brake fluid pressure applied to each wheel cylinder. • Houses the skid control ECU.
Solenoid relay	• Supplies power to each solenoid. • Housed in the skid control ECU.
Motor relay (VSC NO. 2 relay)	Supplies power to the pump motor.
Fail safe relay (VSC NO. 1 relay)	Cuts off power to the motor when the pump motor circuit malfunctions.
Steering angle sensor	• Installed in the combination switch. • Detects the steering amount and direction and sends the signals to the skid control ECU via CAN communication. • Has the magnetic resistance element which detects the rotation of the magnet housed in the detection gear in order to detect the changes of magnetic resistance and the steering amount and direction.

Components	Function
Yaw rate and acceleration sensor	• Acceleration sensor measures the capacity of the condenser that changes the distance between the electrodes depending on G force, which occurs when the vehicle is accelerated, and converts the measured value into electrical signals. • Yaw rate sensor detects the vehicle's angular velocity (yaw rate) in the vertical direction based on the amount and direction of the piezoelectric ceramics deflection. • Sends signals to the skid control ECU via CAN communication.
Master cylinder pressure sensor	• Detects the fluid pressure in the master cylinder. • Housed in the brake actuator assembly.
Stop light switch	Detects the brake operating conditions and inputs the results to the skid control ECU.
ECM	Controls the engine output when TRAC and VSC are operating with the skid control ECU via CAN communication.
Skid control buzzer	Intermittently sounds to inform the driver that the VSC is operating.
ABS warning light	• Comes on to inform the driver that a malfunction in the ABS or BA has occurred. • Blinks to output DTC.
BRAKE warning light	• Comes on to inform the driver that the parking brake is ON when the system is normal, or the brake fluid has decreased. • Comes on to inform the driver that a malfunction in the EBD has occurred.
SLIP indicator light	Blinks to inform the driver that TRAC and VSC are operating.
Master caution indicator light	Comes on to inform the driver that a malfunction in the VSC system has occurred.
Multi information display	• Displays to inform the driver that a malfunction in the VSC system has occurred. • Displays to output DTC.

HOW TO PROCEED WITH TROUBLESHOOTING

HINT:
*: Use the intelligent tester.

1	VEHICLE BROUGHT TO WORKSHOP

NEXT

2	CUSTOMER PROBLEM ANALYSIS

(a) Interview the customer and confirm the trouble (See page IN-39).

NEXT

3	CHECK DTC AND FREEZE FRAME DATA*

(a) Check and record a DTC and Freeze Frame Data.
(b) Clear the DTC and Freeze Frame Data (See page BC-43 for DTC Check/Clear, or BC-45 for Freeze Frame Data).
(c) Reconfirm the DTC.
(1) Reconfirm the DTC based on the recorded DTC and Freeze Frame Data (See page BC-43 for DTC Check/Clear, or BC-45 for Freeze Frame Data).
HINT:
If any of the DTCs U0100/65, U0123/62, U0124/95, and U0126/63 is output together with a CAN communication DTC, first check the appropriate sensor for a momentary open circuit (See page BC-19).

Result

Condition	Proceed to
DTC is output	A
DTC is not output (Problem symptom does not occur)	B
DTC is not output (Problem symptom occurs)	C

B → GO TO STEP 5

C → GO TO STEP 6

A

4	DIAGNOSTIC TROUBLE CODE CHART

(a) Proceed to Diagnostic Trouble Code Chart (See page BC-52).

NEXT

GO TO STEP 7

5	SYMPTOM SIMULATION

(a) Proceed to Diagnosis System (See page BC-39).

NEXT

6	PROBLEM SYMPTOMS TABLE

(a) Proceed to Problem Symptoms Table (See page BC-35).

NEXT

7	CIRCUIT INSPECTION*

NEXT

8	IDENTIFICATION OF PROBLEM

NEXT

9	REPAIR OR REPLACEMENT

NEXT

10	CONFIRMATION TEST*

NEXT

END

CHECK FOR INTERMITTENT PROBLEMS

1. CHECK FOR INTERMITTENT PROBLEMS

HINT:
A momentary interruption (open circuit) in the connectors and/or wire harness between the sensors and ECUs can be detected using the ECU Data List function of the intelligent tester.

(a) Turn the engine switch off and connect the intelligent tester to the DLC3.

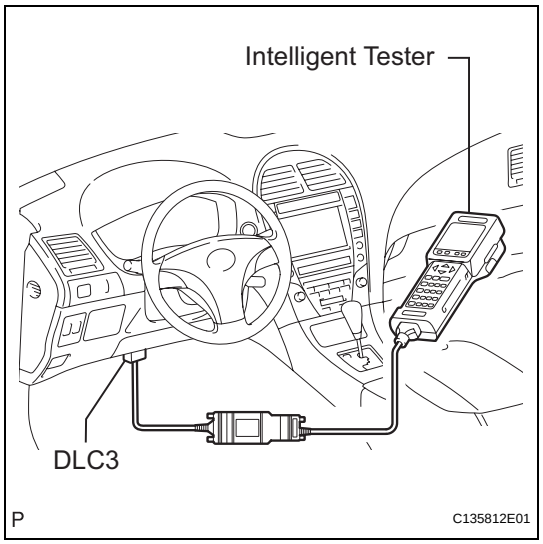

(b) Turn the engine switch on (IG). Follow the directions on the intelligent tester to display the Data List and select areas where momentary interruption should be monitored.
HINT:
- A momentary interruption (open circuit) cannot be detected for 3 seconds after the engine switch is turned on (IG) (initial check).
- If the status remains on (ERROR displayed), check the continuity between the ECU and the sensors, or between ECUs.
- The ERROR display on the intelligent tester remains on for 1 second after the harness signal changes from momentary interruption (open circuit) to normal condition.

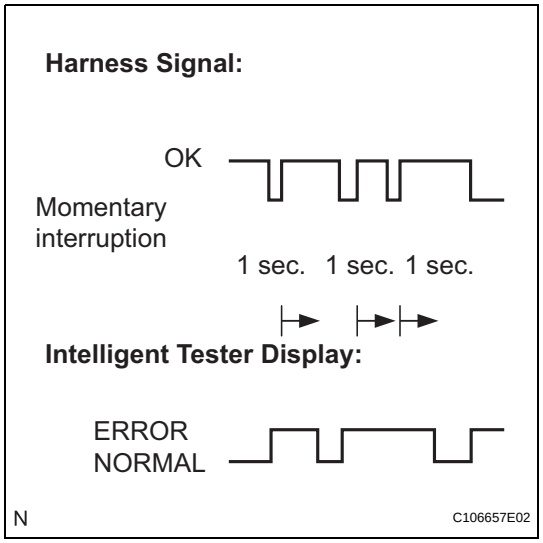

Tester Display	Measurement Item/Range	Normal Condition	Diagnostic Note
FR SPD OPN	FR speed sensor open detection / ERROR or NORMAL	ERROR: Momentary interruption NORMAL: Normal	-
FL SPD OPN	FL speed sensor open detection / ERROR or NORMAL	ERROR: Momentary interruption NORMAL: Normal	-
RR SPD OPN	RR speed sensor open detection / ERROR or NORMAL	ERROR: Momentary interruption NORMAL: Normal	-
RL SPD OPN	RL speed sensor open detection / ERROR or NORMAL	ERROR: Momentary interruption NORMAL: Normal	-
EFI COM OPN	EFI communication open detection / ERROR or NORMAL	ERROR: Momentary interruption NORMAL: Normal	-
YAW RATE OPN	Yaw rate sensor open detection / ERROR or NORMAL	ERROR: Momentary interruption NORMAL: Normal	-

Tester Display	Measurement Item/Range	Normal Condition	Diagnostic Note
DECELERAT OPN	Acceleration sensor open detection / ERROR or NORMAL	ERROR: Momentary interruption NORMAL: Normal	-
STEERING OPN	Steering angle sensor open detection / ERROR or NORMAL	ERROR: Momentary interruption NORMAL: Normal	-
M/C OPN	Master cylinder pressure sensor open detection / ERROR or NORMAL	ERROR: Momentary interruption NORMAL: Normal	-

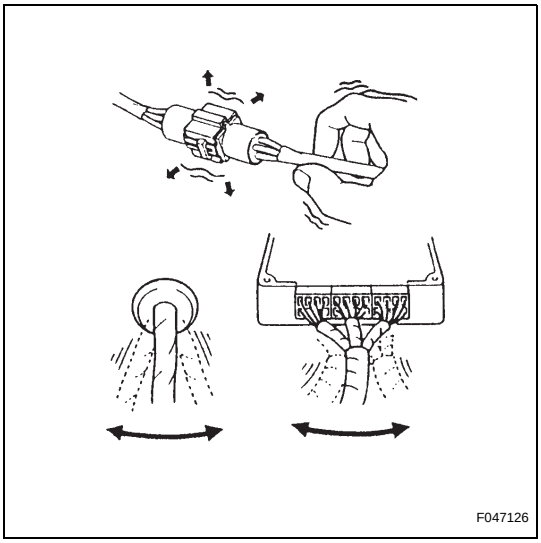

(c) While observing the screen, gently jiggle the connector or wire harness between the ECU and sensors, or between ECUs.

Result:

ERROR display does not change.

HINT:

The connector and/or wire harness will be in momentary interruption (open circuit) if the display changes. Repair or replace the connector and/or wire harness as one of them is faulty.

CALIBRATION

1. DESCRIPTION

- After replacing the VSC relevant components or performing "Front wheel alignment adjustment", clear and read the sensor calibration data.
- Follow the chart to perform calibration.

Replacing Parts / Operation	Necessary Operation
Skid control ECU	Yaw rate and acceleration sensor zero point calibration.
Yaw rate and acceleration sensor	1. Clearing zero point calibration data. 2. Yaw rate and acceleration sensor zero point calibration.
Front wheel alignment adjustment	1. Clearing zero point calibration data. 2. Yaw rate and acceleration sensor zero point calibration.

2. OBTAIN ZERO POINT OF YAW RATE AND ACCELERATION SENSOR (INTELLIGENT TESTER)

NOTICE:

- **While obtaining the zero point, keep the vehicle stationary and do not vibrate, tilt, move, or shake it. (Do not start the engine.)**
- **Be sure to perform this procedure on a level surface (with an inclination of less than 1 degree).**

(a) Clear the zero point calibration data.
(1) Turn the engine switch off.
(2) Connect the intelligent tester to the DLC3.
(3) Check that the steering wheel is centered and move the shift lever to the P position.
(4) Turn the engine switch on (IG).

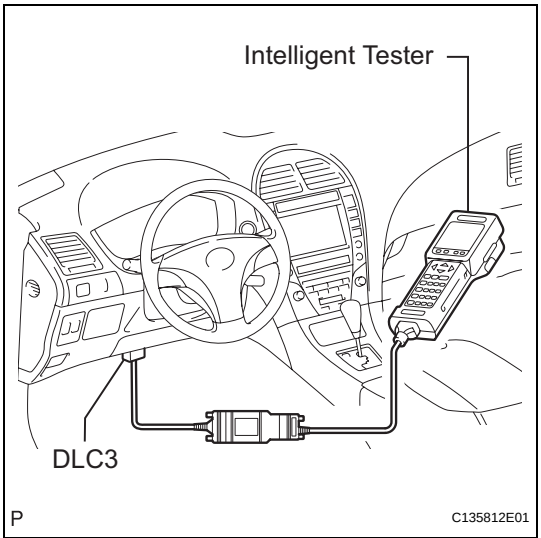

(5) Operate the intelligent tester to erase the codes (select "RESET MEMORY").
HINT:
Refer to the intelligent tester operator's manual for further details.

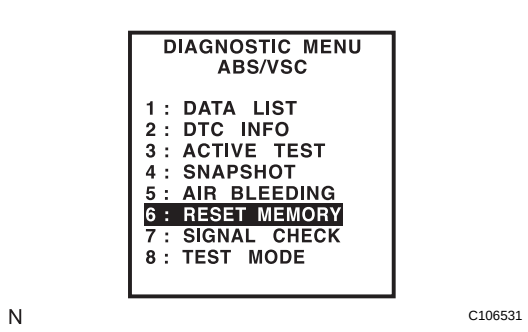

BC

(6) Turn the engine switch off.
NOTICE:
If the engine switch is turned on (IG) for more than 15 seconds with the shift lever in the P position after zero point of the yaw rate and acceleration sensor has been cleared, only the zero point of the yaw rate sensor will be stored. If the vehicle is driven under these conditions, the skid control ECU will store the zero point calibration for the acceleration sensor as not being completed. The skid control ECU will then also indicate this as a malfunction of the VSC system using the multi information display.

(b) Perform zero point calibration of the yaw rate and acceleration sensor.
(1) Turn the engine switch off.
(2) Check that the steering wheel is centered and move the shift lever to the P position.
NOTICE:
DTCs C1210/36 and C1336/39 will be recorded if the shift lever is not in the P position (See page BC-89).

(3) Connect the intelligent tester to the DLC3.
(4) Turn the engine switch on (IG).

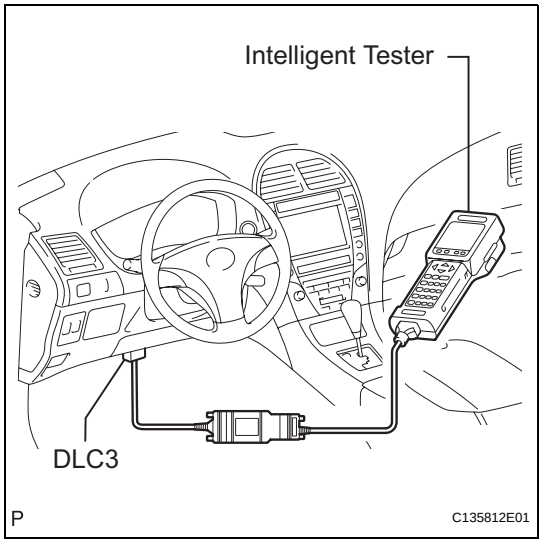

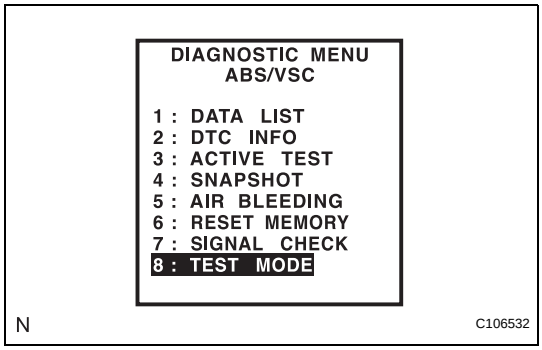

(5) Set the intelligent tester to Test Mode (select "TEST MODE").
HINT:
Refer to the intelligent tester operator's manual for further details.
(6) After the Test Mode has been entered, keep the vehicle stationary on a level surface for 2 seconds or more.

Display in TEST MODE:

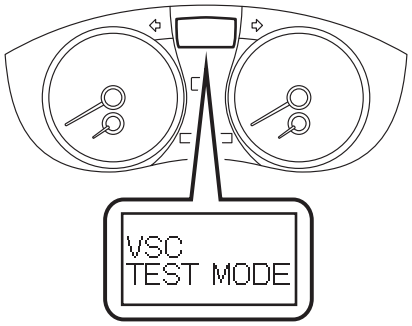

N C135814E01

(7) Check that the "VSC TEST MODE" is displayed on the multi information display (Test Mode).
HINT:
- The SLIP indicator light remains on during Test Mode because TRAC is prohibited.
- If the "VSC TEST MODE" is not displayed on the multi information display, perform zero point calibration again.
- The zero point calibration is performed only once after the system enters the Test Mode.
- Calibration cannot be performed again until the stored data is cleared.

(8) Turn the engine switch off and disconnect the intelligent tester.

3. OBTAIN ZERO POINT OF YAW RATE AND ACCELERATION SENSOR (SST CHECK WIRE)
NOTICE:
- **While obtaining the zero point, keep the vehicle stationary and do not vibrate, tilt, move, or shake it. (Do not start the engine.)**
- **Be sure to perform this procedure on a level surface (with an inclination of less than 1 degree).**

DLC3:

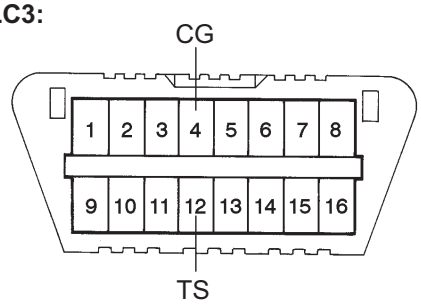

G022987E07

(a) Clear the zero point calibration data.
(1) Turn the engine switch off.
(2) Check that the steering wheel is centered and move the shift lever to the P position.
(3) Turn the engine switch on (IG).
(4) The warning light and indicator light come on for 3 seconds to indicate that the initial check is completed.
(5) Using SST, connect and disconnect terminals TS and CG of the DLC3 4 times or more within 8 seconds.
SST 09843-18040

Display in Normal System Code:

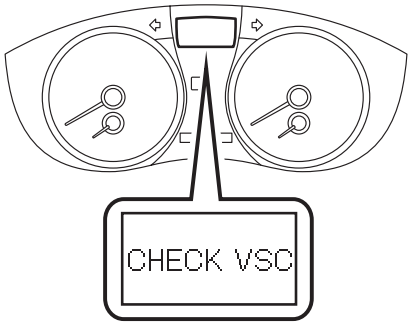

N C135815E01

(6) Check that the "CHECK VSC" is displayed on the multi information display.
NOTICE:
If the engine switch is turned on (IG) for more than 15 seconds with the shift lever in the P position after zero point of the yaw rate and acceleration sensor has been cleared, only the zero point of the yaw rate sensor will be stored. If the vehicle is driven under these conditions, the skid control ECU will store the zero point calibration for the acceleration sensor as not being completed. The skid control ECU will then also indicate this as a malfunction of the VSC system using the multi information display.

(b) Perform zero point calibration of the yaw rate and acceleration sensor.
(1) Turn the engine switch off.

(2) Check that the steering wheel is centered and move the shift lever to the P position.
NOTICE:
DTCs C1210/36 and C1336/39 will be recorded if the shift lever is not in the P position (See page BC-89).

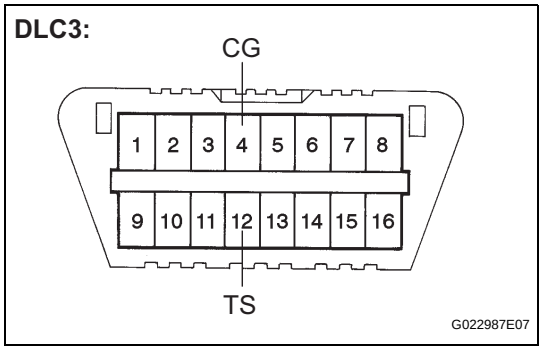

(3) Using SST, connect terminals TS and CG of the DLC3.
SST 09843-18040
(4) Turn the engine switch on (IG).
(5) Keep the vehicle stationary on a level surface for 2 seconds or more.

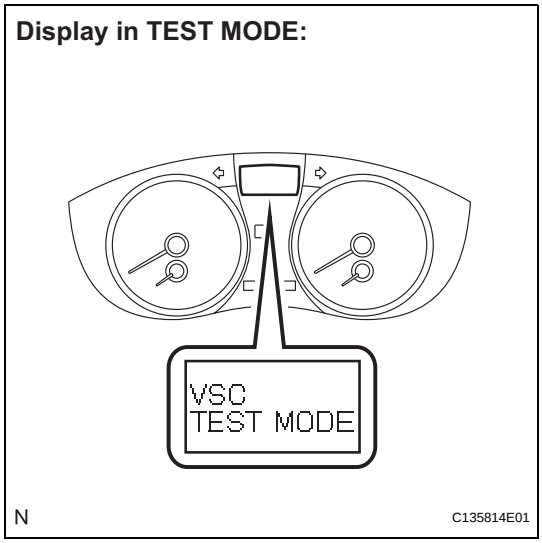

(6) Check that the "VSC TEST MODE" is displayed on the multi information display (Test Mode).
HINT:
- The SLIP indicator light remains on during Test Mode because TRAC is prohibited.
- If the "VSC TEST MODE" is not displayed on the multi information display, perform zero point calibration again.
- The zero point calibration is performed only once after the system enters the Test Mode.
- Calibration cannot be performed again until the stored data is cleared.

(7) Turn the engine switch off and disconnect the SST from the DLC3.

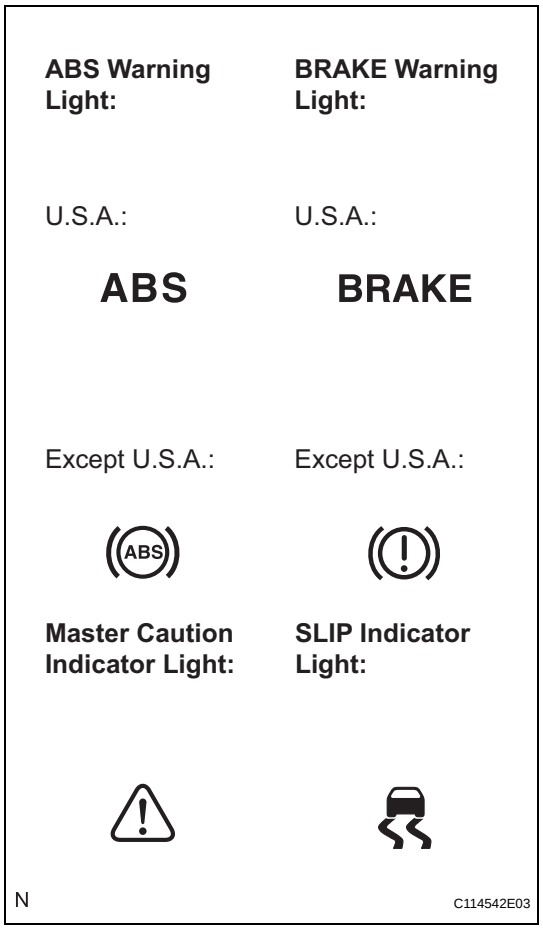

TEST MODE PROCEDURE

1. WARNING LIGHT AND INDICATOR LIGHT INITIAL CHECK

(a) Release the parking brake.

NOTICE:

Before releasing the parking brake, move the shift lever to the P position for safety.

HINT:

When the parking brake is applied or the level of the brake fluid is low, the BRAKE warning light comes on.

(b) When the engine switch is turned on (IG), check that the ABS warning, BRAKE warning, SLIP indicator, and master caution indicator lights come on for approximately 3 seconds.

(c) Make sure that the message on the multi information display changes from "CHECK" to "COMPLETED" for 2 seconds.

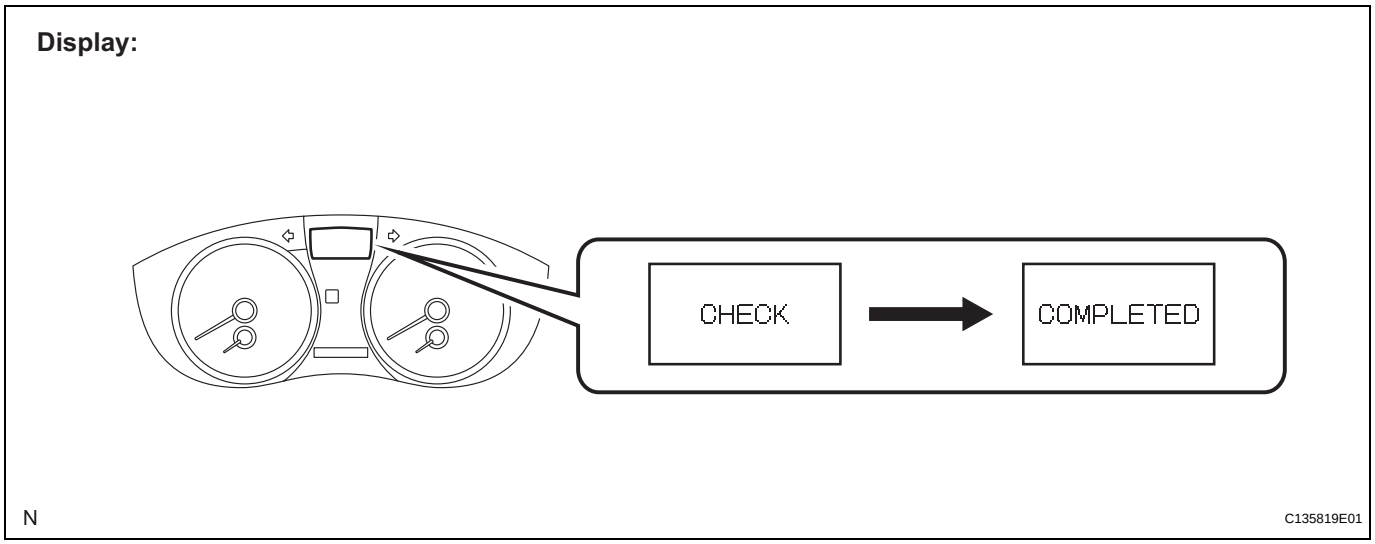

HINT:

If the ECU stores a DTC, the ABS warning, BRAKE warning and SLIP indicator lights will come on.

If the vehicle is equipped with a multi information display, and the vehicle stores a DTC, the master caution indicator light will illuminate, and the multi information display will indicate a malfunction. In this case, the ABS warning, BRAKE warning, and SLIP indicator lights will also come on.

If the indicator remains on or does not come on, proceed to troubleshooting for the light circuits listed below.

Trouble Area	See procedure
ABS warning light circuit	BC-141 or BC-146
BRAKE warning light circuit	BC-154 or BC-162
VSC warning light circuit	BC-148 or BC-152
SLIP indicator light circuit	BC-164 or BC-168

2. SENSOR CHECK USING TEST MODE (SIGNAL CHECK) (INTELLIGENT TESTER)

NOTICE:

After replacement of the brake actuator assembly and/or yaw rate and acceleration sensor, perform zero point calibration of the yaw rate and acceleration sensor.

HINT:

- If the engine switch is turned from on (IG) to on (ACC) or off during Test Mode (signal check), DTCs of the signal check function will be erased.
- During Test Mode (signal check), the skid control ECU records all DTCs of the signal check function. By performing the Test Mode (signal check), the codes are erased if a normal condition is confirmed. The remaining codes are the codes where an abnormality was found.

(a) Procedure to enter Test Mode.

(1) Turn the engine switch off.

(2) Connect the intelligent tester to the DLC3.

(3) Check that the steering wheel is centered and move the shift lever to the P position.

(4) Turn the engine switch on (IG).

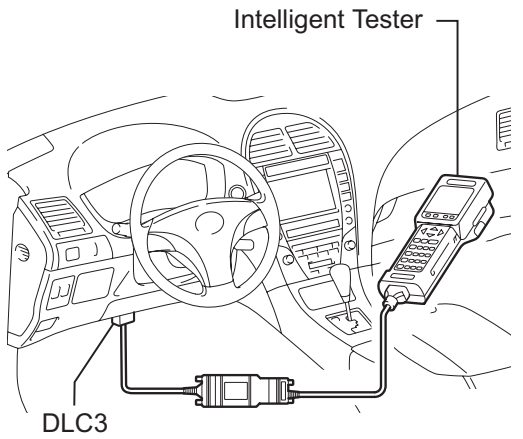

P C135812E01

(5) Set the intelligent tester to Test Mode (select "SIGNAL CHECK").

HINT:

Refer to the intelligent tester operator's manual for further details.

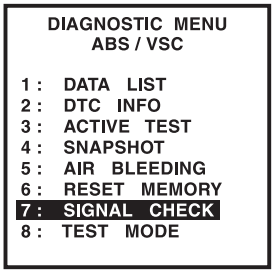

N C106533

BC

TEST MODE

Blinking Pattern:

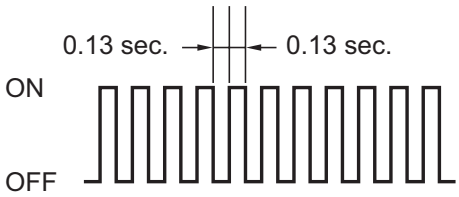

Display:

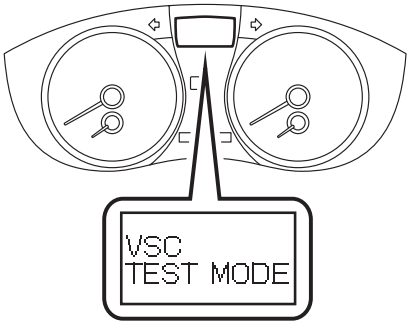

C139028E01

(6) Check that the ABS warning light blinks and "VSC TEST MODE" is displayed on the multi information display (Test Mode).
HINT:
- The SLIP indicator light remains on during Test Mode because TRAC is prohibited.
- If the ABS and VSC warning (multi information display) lights do not blink, inspect the TS and CG terminal circuit, and ABS and VSC warning light circuits.

Trouble Area	See procedure
TS and CG terminal circuit	BC-176
ABS warning light circuit	BC-146
VSC warning light circuit	BC-152

Blinking Pattern in TEST MODE:

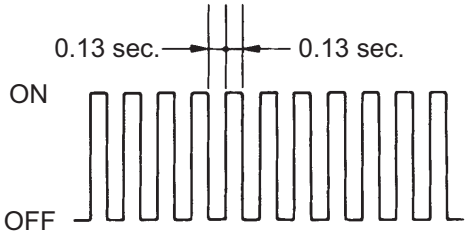

BR03904E16

(7) Check the ABS sensor.
HINT:
Check that the ABS warning light is blinking in Test Mode and perform the check.

3. ACCELERATION SENSOR CHECK (INTELLIGENT TESTER)

(a) Keep the vehicle stationary on a level surface for 1 second or more.
HINT:
Acceleration sensor check can be performed with the master cylinder pressure sensor check below.

4. MASTER CYLINDER PRESSURE SENSOR CHECK (INTELLIGENT TESTER)

(a) Leave the vehicle in a stationary condition and release the brake pedal for 1 second or more, and quickly and continuously depress the brake pedal with a force of 98 N (10 kgf, 22 lbf) or more for 1 second.

(b) Check that the ABS warning light stays on for 3 seconds.
HINT:
- Ensure that the ABS warning light comes on.
- While the ABS warning light stays on, continue to depress the brake pedal with a force of 98 N (10 kgf, 22 lbf) or more.

- The ABS warning light comes on for 3 seconds every time brake pedal operation above is performed.
- If the check of the master cylinder pressure sensor is not completed, depressing the brake pedal causes further decrease in the negative pressure, making the sensor check difficult to be completed.
- If the negative pressure is insufficient, the master cylinder pressure sensor check may not be completed. In this case, run the engine at idle to obtain sufficient negative pressure.
- If the brake pedal is strongly depressed when the negative pressure is insufficient, the BRAKE warning light may come on in accordance with the booster pressure control. In this case, run the engine at idle to obtain sufficient negative pressure.

5. SPEED SENSOR CHECK (INTELLIGENT TESTER)

(a) Check the speed sensor signal.

(1) Drive the vehicle straight ahead.

Accelerate the vehicle to a speed of 45 km/h (28 mph) or more for several seconds and check that the ABS warning light goes off.

HINT:

The sensor check may not be completed if wheelspin occurs.

(b) Stop the vehicle.

NOTICE:

- **Before performing the speed sensor check, complete the acceleration sensor and master cylinder pressure sensor checks.**
- **The speed sensor check may not be completed if the speed sensor check is started while turning the steering wheel or spinning the wheels.**
- **After the ABS warning light goes off and if the vehicle speed exceeds 80 km/h (50 mph), a signal check code will be stored again. Accelerate or stop the vehicle before the speed reaches 80 km/h (50 mph).**
- **If the signal check has not been completed, the ABS warning light blinks while driving and the ABS system does not operate.**

HINT:

When the sensor check has been completed, the ABS warning light goes off while driving and blinks in the Test Mode pattern while stationary.

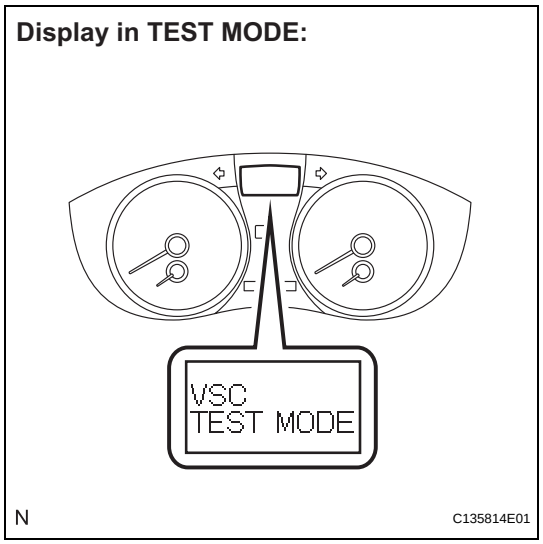

(c) Check the VSC sensor.
Check that the "VSC TEST MODE" is displayed on the multi information display, and perform the check.

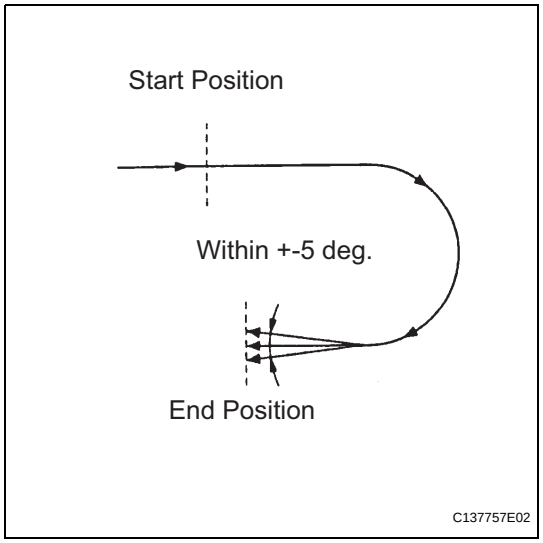

6. YAW RATE SENSOR CHECK (INTELLIGENT TESTER)

(a) Check the output of the yaw rate sensor.
(1) Keep the vehicle in a stationary condition on a level surface for 1 second or more.
(2) Move the shift lever from P to the D position and drive the vehicle at a speed of approximately 5 km/h (3 mph), and turn the steering wheel either to the left or right 90° or more until the vehicle makes a 180° turn.
(3) Stop the vehicle and move the shift lever to the P position. Check that the skid control buzzer sounds for 3 seconds.
HINT:
- If the skid control buzzer sounds, the sensor check is completed normally.
- If the skid control buzzer does not sound, check the skid control buzzer circuit (See page BC-170), then perform the sensor check again.
- If the skid control buzzer still does not sound, there is a malfunction in the yaw rate sensor, so check the DTC.
- Make a 180° turn. At the end of the turn, the direction of the vehicle should be within 180° +-5° of its start position.
- Do not spin the wheels.
- Do not turn the engine switch off while turning.
- Do not move the shift lever to the P position while turning, but changing in the vehicle speed, stopping, or driving in reverse is possible.
- Complete the turn within 20 seconds.

Blinking Pattern in TEST MODE:

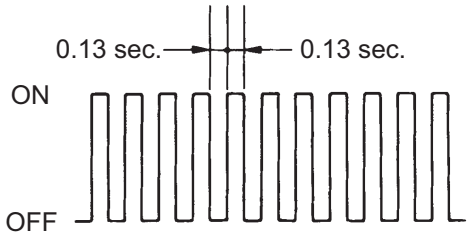

BR03904E16

7. END OF SENSOR CHECK (INTELLIGENT TESTER)

(a) If the sensor check is completed, the ABS warning light blinks (Test Mode) when the vehicle stops and the ABS warning light is off while the vehicle is driving.

NOTICE:

- **When the yaw rate sensor, acceleration sensor, speed sensor, and master cylinder pressure sensor checks are completed, the sensor check is completed.**
- **If the sensor check is not completed, the ABS warning light blinks even while the vehicle is driving and the ABS does not operate.**

8. READ DTC OF SIGNAL CHECK FUNCTION (INTELLIGENT TESTER)

(a) Read the DTC(s) by following the tester screen.

NOTICE:

- **If only the DTCs are displayed, repair the malfunction area and clear the DTCs.**
- **If the DTCs or Test Mode codes (DTC of signal check function) are displayed, repair the malfunction area, clear the DTCs and perform the Test Mode inspection.**

HINT:

See the list of DTC (See procedure "A").

9. SENSOR CHECK USING TEST MODE (SIGNAL CHECK) (SST CHECK WIRE)

NOTICE:

After replacement of the brake actuator assembly and/or yaw rate and acceleration sensor, perform zero point calibration of the yaw rate and acceleration sensor.

HINT:

- If the engine switch is turned from on (IG) to on (ACC) or off during Test Mode (signal check), DTCs of the signal check function will be erased.
- During Test Mode (signal check), the skid control ECU records all DTCs of the signal check function. By performing the Test Mode (signal check), the codes are erased if a normal condition is confirmed. The remaining codes are the codes where an abnormality was found.

(a) Procedure to enter Test Mode.

(1) Turn the engine switch off.

(2) Check that the steering wheel is centered and move the shift lever to the P position.

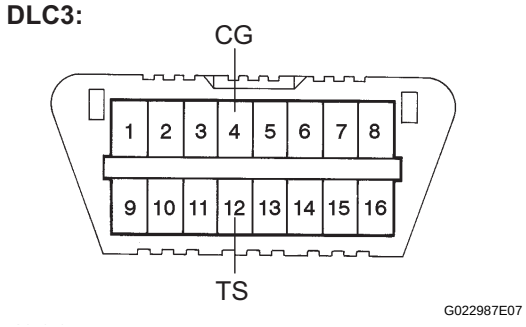

(3) Using SST, connect terminals TS and CG of the DLC3.
SST 09843-18040

(4) Turn the engine switch on (IG).

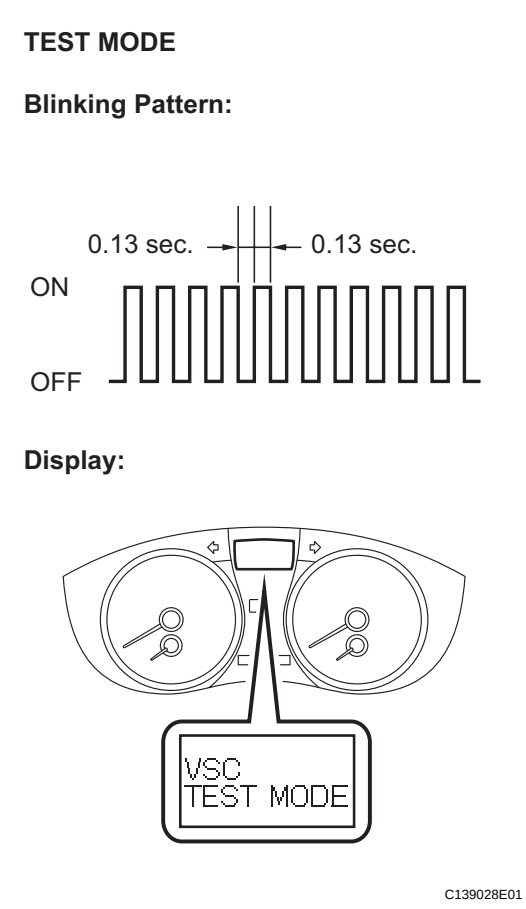

(5) Check that the ABS warning light blinks and "VSC TEST MODE" is displayed on the multi information display (Test Mode).
HINT:
- The SLIP indicator light remains on during Test Mode because TRAC is prohibited.
- If the ABS and VSC warning (multi information display) lights do not blink, inspect the TS and CG terminal circuit, and ABS and VSC warning light circuits.

Trouble Area	See procedure
TS and CG terminal circuit	BC-176
ABS warning light circuit	BC-146
VSC warning light circuit	BC-152

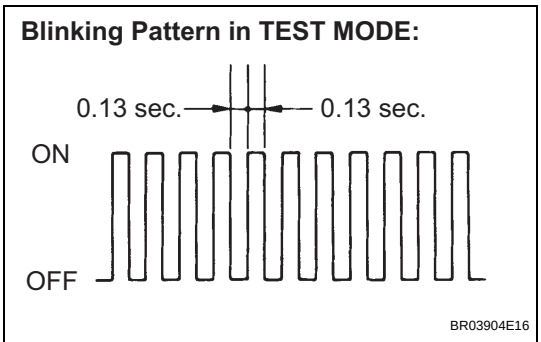

(6) Check the ABS sensor.
HINT:
Check that the ABS warning light is blinking in Test Mode and perform the check.

10. ACCELERATION SENSOR CHECK (SST CHECK WIRE)

(a) Keep the vehicle stationary on a level surface for 1 second or more.
HINT:
Acceleration sensor check can be performed with the master cylinder pressure sensor check below.

11. MASTER CYLINDER PRESSURE SENSOR CHECK (SST CHECK WIRE)

(a) Leave the vehicle in a stationary condition and release the brake pedal for 1 second or more, and quickly and continuously depress the brake pedal with a force of 98 N (10 kgf, 22 lbf) or more for 1 second.

(b) Check that the ABS warning light stays on for 3 seconds.

HINT:

- Ensure that the ABS warning light comes on.
- While the ABS warning light stays on, continue to depress the brake pedal with a force of 98 N (10 kgf, 22 lbf) or more.
- The ABS warning light comes on for 3 seconds every time the brake pedal operation above is performed.
- If the check of the master cylinder pressure sensor is not completed, depressing the brake pedal causes further decrease in the negative pressure, making the sensor check difficult to be completed.
- If the negative pressure is insufficient, the master cylinder pressure sensor check may not be completed. In this case, run the engine at idle to obtain sufficient negative pressure.
- If the brake pedal is strongly depressed when the negative pressure is insufficient, the BRAKE warning light may come on in accordance with the booster pressure control. In this case, run the engine at idle to obtain sufficient negative pressure.

12. SPEED SENSOR CHECK (SST CHECK WIRE)

(a) Check the speed sensor signal.

(1) Drive the vehicle straight ahead.

Accelerate the vehicle to a speed of 45 km/h (28 mph) or more for several seconds and check that the ABS warning light goes off.

HINT:

The sensor check may not be completed if wheelspin occurs.

(b) Stop the vehicle.

NOTICE:

- **Before performing the speed sensor check, complete the acceleration sensor and master cylinder pressure sensor checks.**
- **The speed sensor check may not be completed if the speed sensor check is started while turning the steering wheel or spinning the wheels.**

- **After the ABS warning light goes off, if vehicle speed exceeds 80 km/h (50 mph), a signal check code will be stored again. Accelerate or stop the vehicle before the speed reaches 80 km/h (50 mph).**
- **If the signal check has not been completed, the ABS warning light blinks while driving and the ABS system does not operate.**

HINT:
When the sensor check has been completed, the ABS warning light goes off while driving and blinks in the Test Mode pattern while stationary.

(c) Check the VSC sensor.
Check that the "VSC TEST MODE" is displayed on the multi information display, and perform the check.

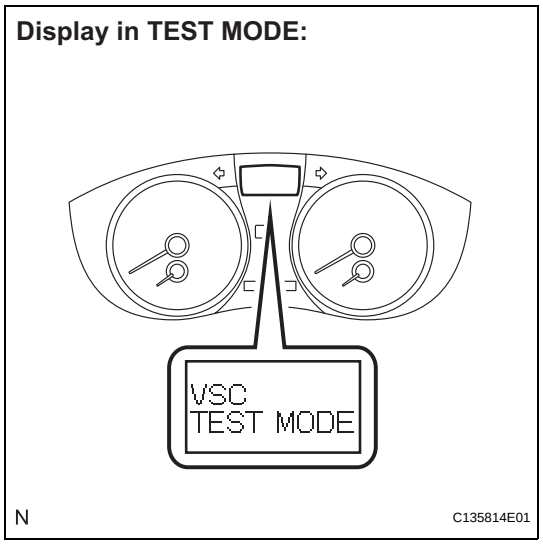

13. YAW RATE SENSOR CHECK (SST CHECK WIRE)

(a) Check the output of the yaw rate sensor.
(1) Keep the vehicle stationary on a level surface for 1 second or more.
(2) Move the shift lever from P to the D position and drive the vehicle at a vehicle speed of approximately 5 km/h (3 mph) and turn the steering wheel either to the left or right 90° or more and until the vehicle makes a 180° turn.
(3) Stop the vehicle and move the shift lever to the P position. Check that the skid control buzzer sounds for 3 seconds.
HINT:
- If the skid control buzzer sounds, the sensor check is completed normally.
- If the skid control buzzer does not sound, check the skid control buzzer circuit (See page BC-170), then perform the sensor check again.
- If the skid control buzzer still does not sound, there is a malfunction in the yaw rate sensor, so check the DTC.
- Make a 180° turn. At the end of the turn, the direction of the vehicle should be within 180° +-5° of its start position.
- Do not spin the wheels.

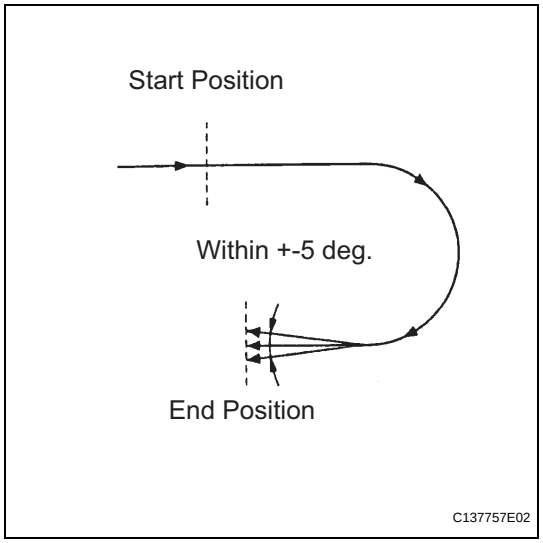

- Do not turn the engine switch off while turning.
- Do not move the shift lever to the P position while turning, but changing in the vehicle speed, stopping, or driving in reverse is possible.
- Complete the turn within 20 seconds.

Blinking Pattern in TEST MODE:

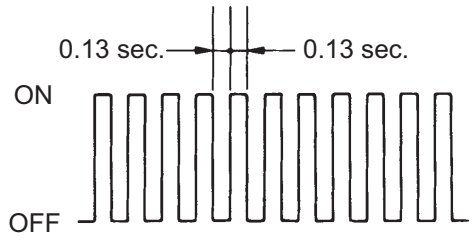

BR03904E16

14. END OF SENSOR CHECK (SST CHECK WIRE)

(a) If the sensor check is completed, the ABS warning light blinks (Test Mode) when the vehicle stops and the ABS warning light is off while the vehicle is driving.

NOTICE:

- **When the yaw rate sensor, acceleration sensor, speed sensor, and master cylinder pressure sensor checks are completed, the sensor check is completed.**
- **If the sensor check is not completed, the ABS warning light blinks even while the vehicle is driving and the ABS does not operate.**

DLC3:

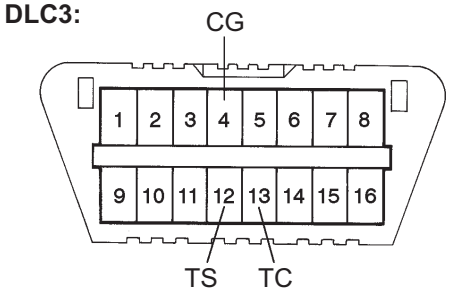

G022988E01

15. READ DTC OF SIGNAL CHECK FUNCTION (SST CHECK WIRE)

(a) Using SST, connect terminals TC and CG of the DLC3.

SST 09843-18040

(b) Count the number of blinks of the ABS warning light and read "DIAG VSC" on the multi information display.

Blinking Pattern in Normal System Code:

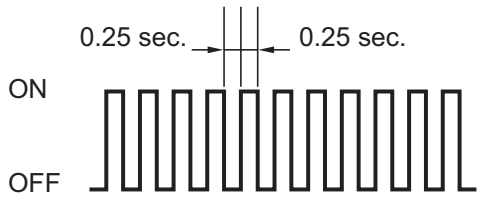

Display of Normal System Code:

Blinking Pattern in Trouble Code (Example Codes 71 and 72):

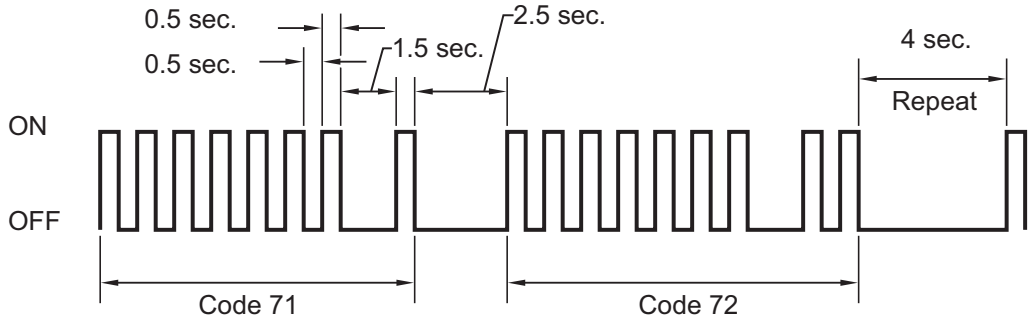

Display of Trouble Code (Example Code 71):

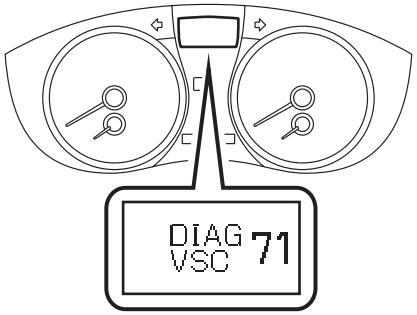

N C135816E03

BC

NOTICE:

- **If only the DTCs are displayed, repair the malfunction area and clear the DTCs.**
- **If the DTCs or Test Mode codes (DTC of signal check function) are displayed, repair the malfunction area, clear the DTCs and perform the Test Mode inspection.**

HINT:

- If more than 1 malfunction is detected at the same time, the lowest numbered code will be displayed first.
- See the list of DTC (See procedure "A").

(c) After performing the check, disconnect the SST from terminals TS and CG, and TC and CG of the DLC3 and turn the engine switch off.

(d) Turn the engine switch on (IG).
HINT:
- If the engine switch is not turned on (IG) after the SST is removed from the DLC3, the previous Test Mode will continue.
- If the engine switch is turned on (IG) with terminals TS and CG shorted, the previous Test Mode will continue.

16. DTC OF TEST MODE (SIGNAL CHECK) FUNCTION (Procedure "A")

ABS sensor:

DTC Code	Detection Item	Trouble Area
C1271/71	Low output signal of front speed sensor RH	• Front speed sensor RH • Sensor installation • Speed sensor rotor
C1272/72	Low output signal of front speed sensor LH	• Front speed sensor LH • Sensor installation • Speed sensor rotor
C1273/73	Low output signal of rear speed sensor RH	• Rear speed sensor RH • Sensor installation • Speed sensor rotor
C1274/74	Low output signal of rear speed sensor LH	• Rear speed sensor LH • Sensor installation • Speed sensor rotor
C1275/75	Abnormal change in output signal of front speed sensor RH	Speed sensor rotor
C1276/76	Abnormal change in output signal of front speed sensor LH	Speed sensor rotor
C1277/77	Abnormal change in output signal of rear speed sensor RH	Speed sensor rotor
C1278/78	Abnormal change in output signal of rear speed sensor LH	Speed sensor rotor
C1279/79	Acceleration sensor output voltage malfunction	• Yaw rate and acceleration sensor • Sensor installation
C1281/81	Master cylinder pressure sensor output malfunction	• Stop light switch • Master cylinder pressure sensor

VSC sensor:

DTC Code	Detection Item	Trouble Area
C0371/71	Yaw rate sensor	Yaw rate and acceleration sensor

HINT:
The codes in this table are output only in Test Mode (signal check).

PROBLEM SYMPTOMS TABLE

If there are no DTCs output and the problem still occurs, check the circuits for each problem symptom in the order given in the table below and proceed to the relevant troubleshooting page.

HINT:

- Inspect the fuse and relay before investigating the suspected areas as shown in the table below.
- Inspect each malfunction circuit in numerical order for the corresponding symptom.

Vehicle Stability Control System:

Symptom	Suspected Area	See page
ABS, BA and/or EBD does not operate	1. Check the DTC again and make sure that the normal system code is output.	BC-43
	2. IG power source circuit	BC-107
	3. Front speed sensor circuit	BC-58
	4. Rear speed sensor circuit	BC-66
	5. Check the brake actuator assembly with the intelligent tester. (Check brake actuator assembly operation using the Active Test function.) If abnormal, check the hydraulic circuit for leakage.	BC-180
	6. If the symptoms still occur even after the above circuits in suspected areas have been inspected and proved to be normal, replace the brake actuator assembly (skid control ECU).	BC-181
ABS, BA and/or EBD does not operate efficiently	1. Check the DTC again and make sure that the normal system code is output.	BC-43
	2. Front speed sensor circuit	BC-58
	3. Rear speed sensor circuit	BC-66
	4. Stop light switch circuit	BC-114
	5. Check the brake actuator assembly with the intelligent tester. (Check brake actuator assembly operation using the Active Test function.) If abnormal, check the hydraulic circuit for leakage.	BC-180
	6. If the symptoms still occur even after the above circuits in suspected areas have been inspected and proved to be normal, replace the brake actuator assembly (skid control ECU).	BC-181
ABS sensor DTC check cannot be done	1. Check the DTC again and make sure that the normal system code is output.	BC-43
	2. TC and CG terminal circuit	BC-173
	3. If the symptoms still occur even after the above circuit in suspected areas has been inspected and proved to be normal, replace the brake actuator assembly (skid control ECU).	BC-181
ABS warning light abnormal (Remains on)	1. ABS warning light circuit	BC-141
	2. Brake actuator assembly (Skid control ECU)	BC-181
ABS warning light abnormal (Does not come on)	1. ABS warning light circuit	BC-146
	2. Brake actuator assembly (Skid control ECU)	BC-181
BRAKE warning light abnormal (Remains on)	1. BRAKE warning light circuit	BC-154
	2. Brake actuator assembly (Skid control ECU)	BC-181
BRAKE warning light abnormal (Does not come on)	1. BRAKE warning light circuit	BC-162
	2. Brake actuator assembly (Skid control ECU)	BC-181

Symptom	Suspected Area	See page
VSC and/or TRAC does not operate	1. Check the DTC again and make sure that the normal system code is output.	BC-43
	2. IG power source circuit	BC-107
	3. Check the hydraulic circuit for leakage	-
	4. Front speed sensor circuit	BC-58
	5. Rear speed sensor circuit	BC-66
	6. Yaw rate and acceleration sensor circuit	BC-94
	7. Steering angle sensor circuit	BC-91
	8. If the symptoms still occur even after the above circuits in suspected areas have been inspected and proved to be normal, replace the brake actuator assembly (skid control ECU).	BC-181
VSC sensor DTC check cannot be done	1. Check the DTC again and make sure that the normal system code is output.	BC-43
	2. TC and CG terminal circuit	BC-173
	3. If the symptoms still occur even after the above circuit in suspected areas has been inspected and proved to be normal, replace the brake actuator assembly (skid control ECU).	BC-181
VSC warning (multi information display) abnormal (Remains on)	1. VSC warning light circuit	BC-148
	2. Brake actuator assembly (Skid control ECU)	BC-181
VSC warning (multi information display) abnormal (Does not come on)	1. VSC warning light circuit	BC-152
	2. Brake actuator assembly (Skid control ECU)	BC-181
SLIP indicator light abnormal (Remains on)	1. SLIP indicator light circuit	BC-164
	2. Brake actuator assembly (Skid control ECU)	BC-181
SLIP indicator light abnormal (Does not come on)	1. SLIP indicator light circuit	BC-168
	2. Brake actuator assembly (Skid control ECU)	BC-181
Sensor check cannot be done	1. TS and CG terminal circuit	BC-176
	2. Brake actuator assembly (Skid control ECU)	BC-181
Skid control buzzer abnormal	1. Skid control buzzer circuit	BC-170
	2. Brake actuator assembly (Skid control ECU)	BC-181

DIAGNOSIS SYSTEM

1. DESCRIPTION

When troubleshooting a vehicle with the diagnosis system, the only difference from the usual troubleshooting procedure is connecting the intelligent tester to the vehicle and reading various data output from the vehicle's skid control ECU.

The skid control ECU records DTCs when the computer detects a malfunction in the computer itself or in its circuits.

To check the DTCs, connect the intelligent tester to the DLC3 on the vehicle. The intelligent tester enables you to erase the DTCs, activate the various actuators, and check the Freeze Frame Data and Data List.

(a) Check the battery voltage.

Standard voltage:

11 to 14 V

If the voltage is below 11 V, recharge the battery before proceeding.

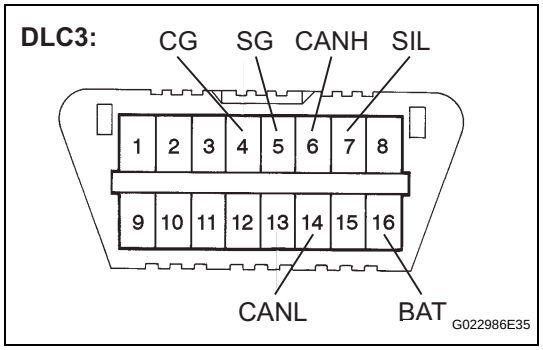

(b) Check the DLC3.

The ECU uses ISO 15765-4 for communication. The terminal arrangement of the DLC3 complies with SAE J1962 and matches the ISO 15765-4 format.

If the result is not as specified, the DLC3 may have a malfunction. Repair or replace the harness and connector.

Verify the conditions listed in the table below.

Symbols (Terminal No.)	Terminal Description	Condition	Specified Condition
SIL (7) - SG (5)	Bus "+" line	During transmission	Pulse generation
CG (4) - Body ground	Chassis ground	Always	Below 1 Ω
SG (5) - Body ground	Signal ground	Always	Below 1 Ω
BAT (16) - Body ground	Battery positive	Always	11 to 14 V
CANH (6) - CANL (14)	CAN bus line	Engine switch off*	54 to 69 Ω
CANH (6) - CG (4)	HIGH-level CAN bus line	Engine switch off*	200 Ω or higher
CANL (14) - CG (4)	LOW-level CAN bus line	Engine switch off*	200 Ω or higher
CANH (6) - BAT (16)	HIGH-level CAN bus line	Engine switch off*	6 kΩ or higher
CANL (14) - BAT (16)	LOW-level CAN bus line	Engine switch off*	6 kΩ or higher

NOTICE:

***: Before measuring the resistance, leave the vehicle as is for at least 1 minute and do not operate the engine switch, any other switches or the doors.**

HINT:

Connect the cable of the intelligent tester to the DLC3, turn the engine switch on (IG) and attempt to use the tester. If the display indicates that a communication error has occurred, there is a problem either with the vehicle or with the tester.

- If communication is normal when the tester is connected to another vehicle, inspect the DLC3 on the original vehicle.
- If communication is still not possible when the tester is connected to another vehicle, the problem may be in the tester itself. Consult the Service Department listed in the tester operator's manual.

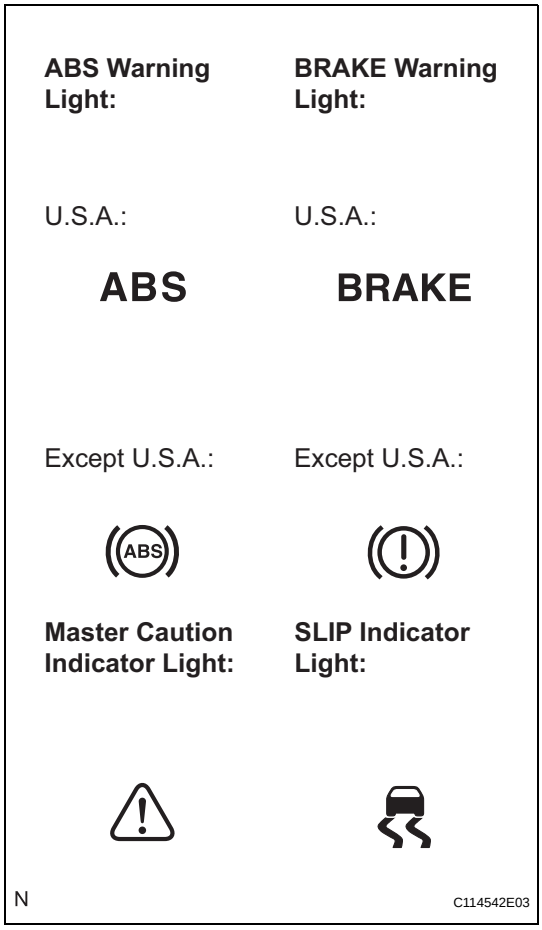

2. DIAGNOSIS

(a) If the skid control ECU detects a malfunction, the ABS warning, BRAKE warning, SLIP indicator, and master caution indicator lights will come on and the multi information display shows warning messages, in order to warn the driver.
The table below indicates which lights will come on when there is a malfunction in a particular function.

Item / Trouble Area	ABS	EBD	BA	TRAC	VSC
ABS warning light	○	○	○	-	-
BRAKE warning light	-	○	-	-	-
VSC warning (multi information display)	○	○	○	○	○
SLIP indicator light	○	○	○	○	○

○: Light ON
-: Light OFF

- The DTCs are simultaneously stored in the memory. The DTCs can be read by connecting the SST between terminals TC and CG of the DLC3 and observing the blinking pattern of the ABS warning light or multi information display, by reading the multi information display, or by connecting the intelligent tester.

- This system has a Test Mode (signal check) function (See page BC-24).
  The DTC can be read by connecting the intelligent tester and observing the blinking pattern of the ABS warning light or by reading the multi information display.

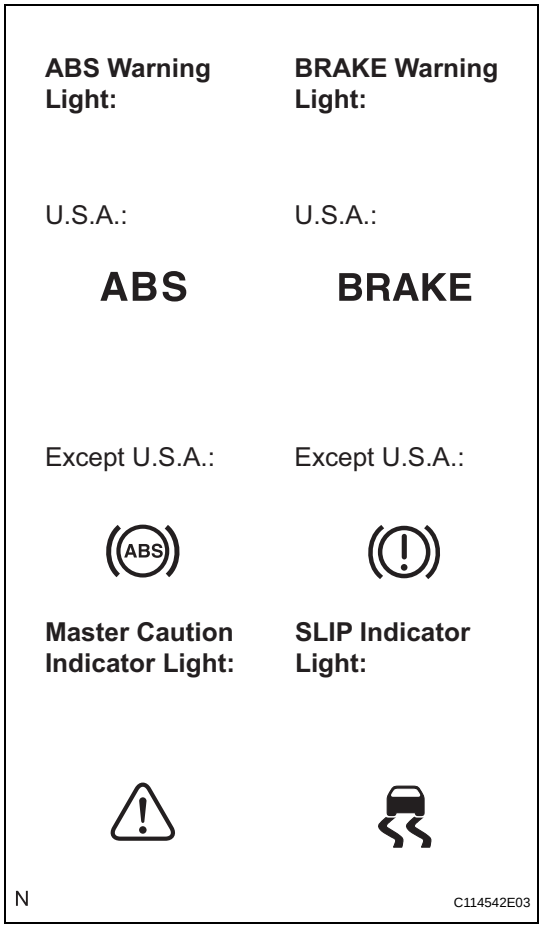

3. WARNING LIGHT AND INDICATOR LIGHT CHECK

(a) Release the parking brake.
NOTICE:
When releasing the parking brake, move the shift lever to the P position for safety.
HINT:
When the parking brake is applied or the level of the brake fluid is low, the BRAKE warning light comes on.

(b) When the engine switch is turned on (IG), check that the ABS warning, BRAKE warning, SLIP indicator, and master caution indicator lights come on for approximately 3 seconds.

(c) Make sure that the message on the multi information display changes from "CHECK" to "COMPLETED" for 2 seconds.

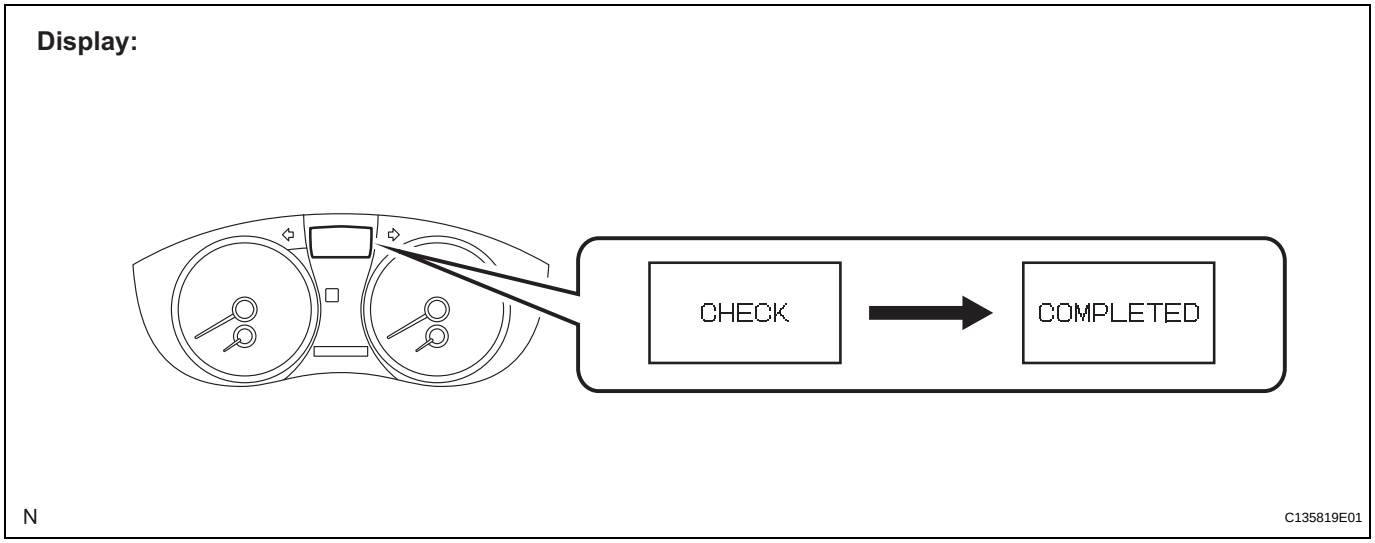

HINT:
If the warning light and indicator light check result is not normal, proceed to troubleshooting for the ABS, BRAKE and VSC warning light circuits and SLIP indicator light circuit.

BC

If the indicator remains on, proceed to troubleshooting for the light circuit below.

Trouble Area	See procedure
ABS warning light circuit	BC-141
BRAKE warning light circuit	BC-154
VSC warning light circuit	BC-148
SLIP indicator light circuit	BC-164

4. SYMPTOM SIMULATION

HINT:
The most difficult case in troubleshooting is when no symptoms occur. In such cases, a thorough customer problem analysis must be carried out. Then the same or similar conditions and environment in which the problem occurred in the customer's vehicle should be reproduced. No matter how experienced or skilled a technician may be, if he proceeds to troubleshoot without confirming the problem symptoms, he will likely overlook something important and make a wrong guess at some points in the repair operation. This leads to a standstill in troubleshooting.

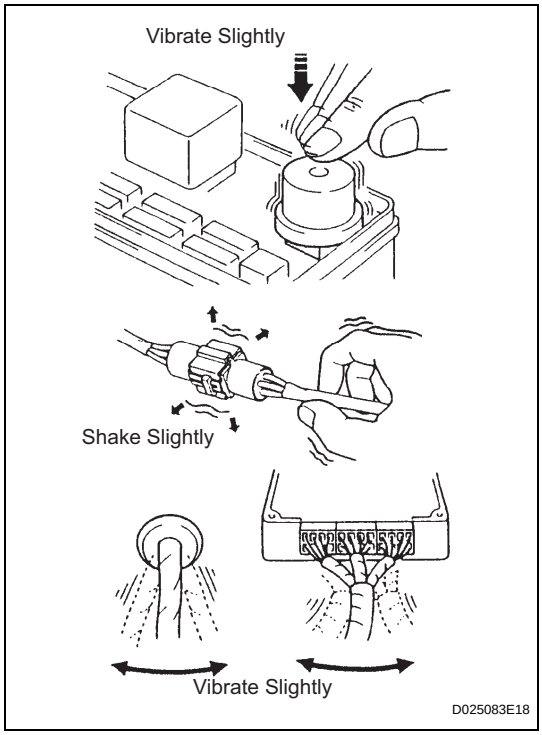

(a) Vibration method: When vibration seems to be the major cause.
HINT:
Perform the simulation method only during the primary check period (for approximately 6 seconds after the engine switch is on (IG)).
(1) Slightly vibrate the part of the sensor considered to be the problem cause with your fingers and check whether the malfunction occurs.
(2) Slightly shake the connector vertically and horizontally.
HINT:
Shaking the relays too strongly may result in open relays.
(3) Slightly shake the wire harness vertically and horizontally. The connector joint and fulcrum of the vibration are the major areas to be checked thoroughly.

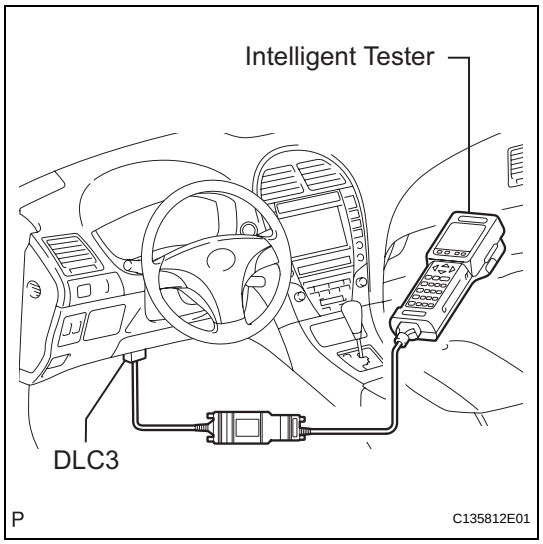

DTC CHECK / CLEAR

1. DTC CHECK/CLEAR (INTELLIGENT TESTER)

(a) Check the DTC.
(1) Connect the intelligent tester to the DLC3.
(2) Turn the engine switch on (IG).
(3) Read the DTCs following the prompts on the tester screen.

(b) Clear the DTC.
(1) Connect the intelligent tester to the DLC3.
(2) Turn the engine switch on (IG).
(3) Operate the intelligent tester to clear the codes.
HINT:
Refer to the intelligent tester operator's manual for further details.

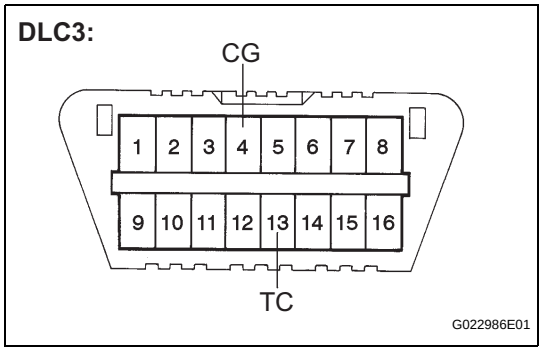

2. DTC CHECK/CLEAR (SST CHECK WIRE)

(a) Check the DTC.
(1) Using SST, connect terminals TC and CG of the DLC3.
SST 09843-18040
(2) Turn the engine switch on (IG).
(3) Observe the blinking pattern of the ABS warning light and read the multi information display in order to identify the DTC.
HINT:
If no code appears, inspect the TC and CG terminal circuit, and ABS and VSC warning light circuits.

Trouble Area	See procedure
TC and CG terminal circuit	BC-173
ABS warning light circuit	BC-141 or BC-146
VSC warning light circuit	BC-148 or BC-152

(4) As an example, the illustration below shows the blinking patterns of the normal system code and trouble codes 11 and 21 for ABS, and display of the normal system code and trouble code 43 for the VSC on the multi information display.

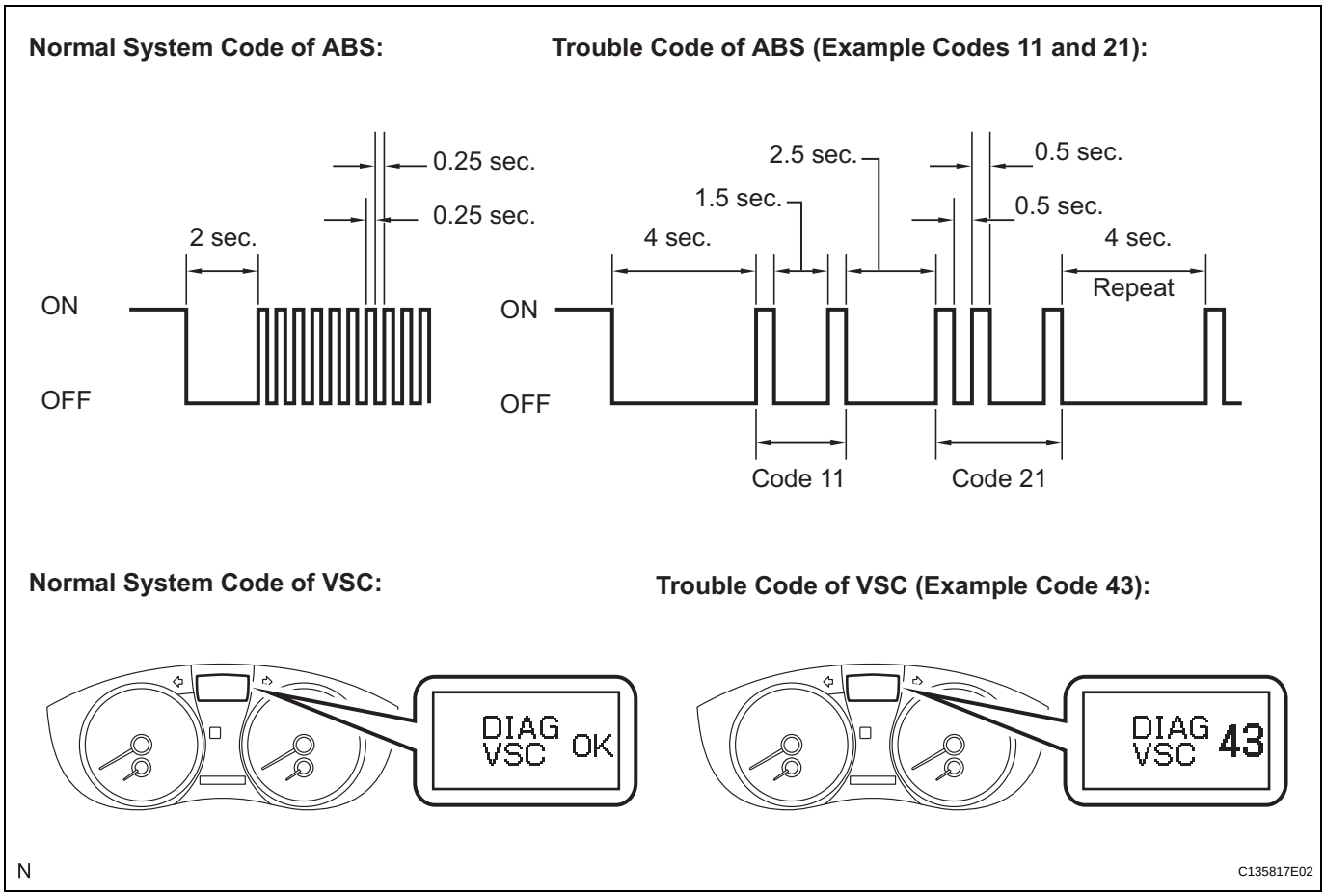

(5) The codes are explained in the code table (See page BC-52).

(6) After completing the check, disconnect terminals TC and CG of the DLC3, and turn off the display. If 2 or more DTCs are detected at the same time, the DTCs will be displayed in ascending order.

BC

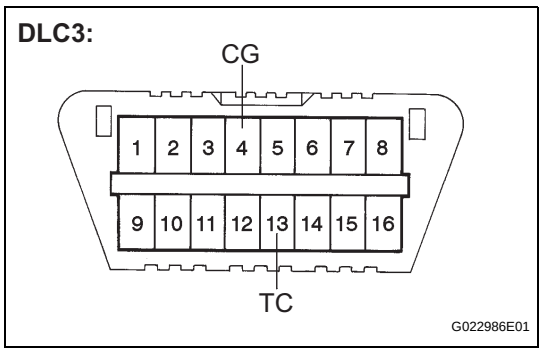

(b) Clear the DTC.

(1) Using SST, connect terminals TC and CG of the DLC3.
SST 09843-18040

(2) Turn the engine switch on (IG).

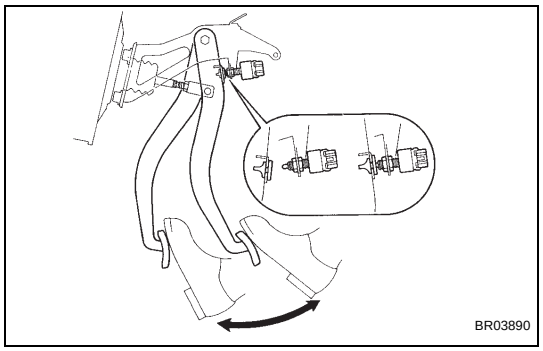

(3) Clear the DTCs stored in the ECU by depressing the brake pedal 8 times or more within 5 seconds.
(4) Check that the multi information display indicates the normal system code.
(5) Remove the SST from the terminals of the DLC3.
HINT:
Clearing the DTCs cannot be performed by disconnecting the battery terminal or the ECU-IG NO. 2 fuse.

3. END OF DTC CHECK/CLEAR

(a) Turn the engine switch on (IG).
(b) Check that the ABS warning light goes off within approximately 3 seconds.

FREEZE FRAME DATA

1. FREEZE FRAME DATA

(a) Whenever an ABS DTC is detected, the skid control ECU stores the current vehicle (sensor) state as Freeze Frame Data.

(b) The skid control ECU stores the number of times (maximum: 31) the engine switch has been turned from off to on (IG) since the last time the ABS was activated.

HINT:

- However, if the vehicle is stopped or at a low speed (7 km/h (4.3 mph) or less), or if a DTC is detected, the skid control ECU will stop counting the number.
- Freeze Frame Data at the time the ABS operates:
  The skid control ECU stores and updates data whenever the ABS system operates.
  When the ECU stores data at the time a DTC is detected, the data stored during ABS operation is erased.
- Freeze Frame Data at the time a DTC is detected:
  When the skid control ECU stores data at the time a DTC is detected, no updates will be performed until the data is cleared.

2. CHECK FREEZE FRAME DATA

(a) Connect the intelligent tester to the DLC3.

(b) Turn the engine switch on (IG).

(c) On the tester display, select the Freeze Frame Data.

Tester Display	Measurement Item	Reference Value
VEHICLE SPD	Vehicle speed reading	Min.: 0 km/h (0 mph), Max.: 326.4 km/h (202 mph)
STOP LAMP SW	Stop light switch signal	Stop light switch ON: ON, OFF: OFF
#IG ON	Number of operations of engine switch on (IG) after storing Freeze Frame Data	0 to 31
MAS CYL PRESS 1	Master cylinder pressure sensor reading	Brake pedal released: 0.3 to 0.5 V
M/C PRESS GRADE	Master cylinder pressure sensor change	Min.: -30 MPa/s, Max.: 225 MPa/s
YAW RATE	Yaw rate sensor reading	Min.: -128 deg/s, Max.: 127 deg/s
STEERING SEN	Steering angle sensor reading	Left turn: Increase Right turn: Decrease
FORWARD&REA G	Forward and backward G	Min.: -25.11 m/s^2, Max.: 24.91 m/s^2
SPD GRADE	Vehicle speed grade	Min.: -25.11 m/s^2, Max.: 24.91 m/s^2
BUZZER	Skid control buzzer signal	Skid control buzzer ON: ON, OFF: OFF
ACCELERATOR %	Accelerator opening angle %	Min.: 0 %, Max.: 128 %
PARKING BRAKE SW	Parking brake switch signal	Parking brake switch ON: ON, OFF: OFF
ENGINE TORQUE	Real engine torque	Min.: -1024 N*m, Max.: 1023 N*m
FR WHEEL SPD	FR wheel speed	Min.: 0 km/h (0 mph), Max.: 326.4 km/h (202 mph)
FL WHEEL SPD	FL wheel speed	Min.: 0 km/h (0 mph), Max.: 326.4 km/h (202 mph)
RR WHEEL SPD	RR wheel speed	Min.: 0 km/h (0 mph), Max.: 326.4 km/h (202 mph)

Tester Display	Measurement Item	Reference Value
RL WHEEL SPD	RL wheel speed	Min.: 0 km/h (0 mph), Max.: 326.4 km/h (202 mph)
LATERAL G	Lateral G	Min.: -25.11 m/s^2, Max.: 24.91 m/s^2
GEAR POSITION	Gear position information	FAIL 1st 2nd 3rd 4th 5th 6th P, N R NOT R
LEVER POSITION	Shift lever position information	FAIL 1st 2nd 3rd 4th 5th 6th/B D/M P, N R
OPERATED SYSTEM	Operated system status	ABS activated: ABS VSC activated: VSC TRAC activated: TRAC BA activated: BA HAB activated: HAB PBA activated: PBA PB activated: PB Fail safe mode activated: FAIL No system activated: NON System prohibited: SYS
FREEZE TIME	Elapsed time after freeze trigger	Min.: 0 ms, Max.: 500 ms
TROUBLE CODE	Freeze frame DTC	Displays to output DTC
INSPECTION MODE	Inspection mode	OTHER: Normal, INSPECT: Service

3. CLEAR FREEZE FRAME DATA

NOTICE:

Clearing the DTC will also clear the Freeze Frame Data.

(a) Connect the intelligent tester to the DLC3.

(b) Turn the engine switch on (IG).

(c) Clear the DTC and Freeze Frame Data.

HINT:

Refer to the intelligent tester operator's manual for further details.

DIAGNOSTIC TROUBLE CODE CHART

- If a trouble code is displayed during the DTC check, check the circuit indicated by the DTC. For details of each code, refer to the page for the respective "DTC Code" in the DTC chart.
- Inspect the fuse and relay before investigating the trouble areas as shown in the table below.

DTC chart of ABS:

DTC Code	Detection Item	Trouble Area	See page
C0200/31 (*1)	Front Speed Sensor RH Circuit	1. Front speed sensor RH 2. Speed sensor circuit 3. Speed sensor rotor 4. Sensor installation 5. Brake actuator assembly (Skid control ECU)	BC-58
C0205/32 (*1)	Front Speed Sensor LH Circuit	1. Front speed sensor LH 2. Speed sensor circuit 3. Speed sensor rotor 4. Sensor installation 5. Brake actuator assembly (Skid control ECU)	BC-58
C0210/33 (*1)	Rear Speed Sensor RH Circuit	1. Rear speed sensor RH 2. Speed sensor circuit 3. Speed sensor rotor 4. Sensor installation 5. Brake actuator assembly (Skid control ECU)	BC-66
C0215/34 (*1)	Rear Speed Sensor LH Circuit	1. Rear speed sensor LH 2. Speed sensor circuit 3. Speed sensor rotor 4. Sensor installation 5. Brake actuator assembly (Skid control ECU)	BC-66
C0226/21	SFR Solenoid Circuit	1. Brake actuator assembly 2. SFRH or SFRR circuit	BC-74
C0236/22	SFL Solenoid Circuit	1. Brake actuator assembly 2. SFLH or SFLR circuit	BC-74
C0246/23	SRR Solenoid Circuit	1. Brake actuator assembly 2. SRRH or SRRR circuit	BC-74
C0256/24	SRL Solenoid Circuit	1. Brake actuator assembly 2. SRLH or SRLR circuit	BC-74
C0273/13 (*1)	Open in ABS Motor Relay Circuit	1. ABS NO. 1 fuse 2. VSC NO. 2 relay 3. VSC NO. 2 relay circuit 4. Brake actuator assembly	BC-77
C0274/14	Short to B+ in ABS Motor Relay Circuit	1. ABS NO. 1 fuse 2. VSC NO. 2 relay 3. VSC NO. 2 relay circuit 4. Brake actuator assembly	BC-77
C0278/11	Open in ABS Solenoid Relay Circuit	1. ABS NO. 2 fuse 2. ABS solenoid relay 3. ABS solenoid relay circuit 4. Brake actuator assembly	BC-84
C0279/12	Short to B+ in ABS Solenoid Relay Circuit	Brake actuator assembly	BC-84
C1225/25	SM Solenoid Circuit	1. Brake actuator assembly 2. SM1 or SM2 circuit	BC-74
C1235/35	Foreign Object is Attached on Tip of Front Speed Sensor RH	1. Front speed sensor RH 2. Speed sensor rotor 3. Sensor installation 4. Brake actuator assembly (Skid control ECU)	BC-98

DTC Code	Detection Item	Trouble Area	See page
C1236/36	Foreign Object is Attached on Tip of Front Speed Sensor LH	1. Front speed sensor LH 2. Speed sensor rotor 3. Sensor installation 4. Brake actuator assembly (Skid control ECU)	BC-98
C1238/38	Foreign Object is Attached on Tip of Rear Speed Sensor RH	1. Rear speed sensor RH 2. Speed sensor rotor 3. Sensor installation 4. Brake actuator assembly (Skid control ECU)	BC-98
C1239/39	Foreign Object is Attached on Tip of Rear Speed Sensor LH	1. Rear speed sensor LH 2. Speed sensor rotor 3. Sensor installation 4. Brake actuator assembly (Skid control ECU)	BC-98
C1241/41	Low Battery Positive Voltage	1. ECU-IG NO. 2 fuse 2. Battery 3. Charging system 4. Power source circuit 5. Internal power supply circuit of the skid control ECU	BC-107
C1243/43 (*1)	Acceleration Sensor Stuck Malfunction	1. Yaw rate and acceleration sensor 2. Yaw rate and acceleration sensor circuit	BC-94
C1244/44	Open or Short in Acceleration Sensor Circuit	1. Yaw rate and acceleration sensor 2. Yaw rate and acceleration sensor circuit	BC-94
C1245/45 (*1)	Acceleration Sensor Output Malfunction	1. Yaw rate and acceleration sensor 2. Yaw rate and acceleration sensor circuit	BC-94
C1246/46 (*2)	Master Cylinder Pressure Sensor Malfunction	1. Master cylinder pressure sensor 2. Master cylinder pressure sensor circuit 3. Stop light switch circuit 4. Brake actuator assembly	BC-111
C1249/49	Open in Stop Light Switch Circuit	1. STOP fuse 2. Stop light switch 3. Stop light switch circuit 4. Stop light control relay (*3) 5. Stop light control relay circuit (*3) 6. Brake actuator assembly (Skid control ECU)	BC-114
C1251/51 (*1)	Open in Pump Motor Circuit	1. Brake actuator assembly (GND circuit) 2. Brake actuator assembly (Motor circuit)	BC-126
C1361/91	Short Circuit in ABS Motor Fail Safe Relay Circuit	1. ABS NO. 1 fuse 2. VSC NO. 1 (fail safe) relay 3. VSC NO. 1 (fail safe) relay circuit 4. Brake actuator assembly	BC-77
C1381/97	Yaw Rate and / or Acceleration Sensor Power Supply Voltage Malfunction	1. Yaw rate and acceleration sensor 2. Yaw rate and acceleration sensor power source circuit	BC-94
U0073/94	Control Module Communication Bus OFF	CAN communication system	BC-136

DTC Code	Detection Item	Trouble Area	See page
U0124/95	Lost Communication with Lateral Acceleration Sensor Module	CAN communication system (Skid control ECU to yaw rate and acceleration sensor)	BC-136

(*1, *2):
Even after the trouble areas are repaired, the ABS warning light will not go off unless the following operations are performed:

- (*1):
  (a) Drive the vehicle at 20 km/h (12 mph) for 30 seconds or more and check that the ABS warning light goes off.
  (b) Clear the DTC.
- (*2):
  (a) Keep the vehicle stationary for 5 seconds or more and depress the brake pedal lightly 2 or 3 times.
  (b) Drive the vehicle at the vehicle speed of 50 km/h (31 mph) and keep depressing the brake pedal strongly for approximately 3 seconds.
  (c) Repeat the above operation 3 times or more and check that the ABS warning light goes off.
  (d) Clear the DTC.

HINT:
In some cases, the intelligent tester cannot be used when the ABS warning light remains on.
(*3): with dynamic radar cruise control

DTC chart of VSC:

DTC Code	Detection Item	Trouble Area	See page
43	ABS Control System Malfunction	ABS control system	BC-57
C1201/51	Engine Control System Malfunction	Engine control system	BC-87
C1203/53	ECM Communication Circuit Malfunction	ECM	BC-88
C1210/36	Zero Point Calibration of Yaw Rate Sensor Undone	1. Brake actuator assembly (Skid control ECU) 2. Yaw rate and acceleration sensor 3. Zero point calibration undone	BC-89
C1231/31	Steering Angle Sensor Circuit Malfunction	1. Steering angle sensor 2. Steering angle sensor circuit 3. Steering angle sensor power supply 4. Brake actuator assembly (Skid control ECU)	BC-91
C1232/32	Stuck in Acceleration Sensor	1. Yaw rate and acceleration sensor 2. Yaw rate and acceleration sensor circuit	BC-94
C1234/34	Yaw Rate Sensor Malfunction	1. Yaw rate and acceleration sensor 2. Yaw rate and acceleration sensor circuit	BC-94
C1290/66	Steering Angle Sensor Zero Point Malfunction	1. Yaw rate and acceleration sensor zero point calibration incomplete 2. Poor adjustment of the centered position of the steering wheel 3. Poor adjustment of front wheel alignment	BC-129

DTC Code	Detection Item	Trouble Area	See page
C1336/39	Zero Point Calibration of Acceleration Sensor Undone	1. Brake actuator assembly (Skid control ECU) 2. Yaw rate and acceleration sensor 3. Zero point calibration undone	BC-89
C1380/64 (*3)	Stop Light Control Relay Malfunction	1. STOP fuse 2. Stop light switch 3. Stop light switch circuit 4. Stop light control relay 5. Stop light control relay circuit 6. Brake actuator assembly (Skid control ECU)	BC-131
U0100/65	Lost Communication with ECM / PCM	CAN communication system (Skid control ECU to ECM)	BC-136
U0123/62	Lost Communication with Yaw Rate Sensor Module	CAN communication system (Skid control ECU to yaw rate and acceleration sensor)	BC-136
U0126/63	Lost Communication with Steering Angle Sensor Module	CAN communication system (Skid control ECU to steering angle sensor)	BC-136

HINT:
In some cases, the intelligent tester cannot be used when the VSC warning (multi information display) remains on.
(*3): with dynamic radar cruise control

Test Mode DTC of ABS:

DTC Code	Detection Item	Trouble Area	See page
C1271/71	Low Output Signal of Front Speed Sensor RH (Test Mode DTC)	1. Front speed sensor RH 2. Sensor installation 3. Speed sensor rotor	BC-58
C1272/72	Low Output Signal of Front Speed Sensor LH (Test Mode DTC)	1. Front speed sensor LH 2. Sensor installation 3. Speed sensor rotor	BC-58
C1273/73	Low Output Signal of Rear Speed Sensor RH (Test Mode DTC)	1. Rear speed sensor RH 2. Sensor installation 3. Speed sensor rotor	BC-66
C1274/74	Low Output Signal of Rear Speed Sensor LH (Test Mode DTC)	1. Rear speed sensor LH 2. Sensor installation 3. Speed sensor rotor	BC-66
C1275/75	Abnormal Change in Output Signal of Front Speed Sensor RH (Test Mode DTC)	Speed sensor rotor	BC-98
C1276/76	Abnormal Change in Output Signal of Front Speed Sensor LH (Test Mode DTC)	Speed sensor rotor	BC-98
C1277/77	Abnormal Change in Output Signal of Rear Speed Sensor RH (Test Mode DTC)	Speed sensor rotor	BC-98
C1278/78	Abnormal Change in Output Signal of Rear Speed Sensor LH (Test Mode DTC)	Speed sensor rotor	BC-98
C1279/79	Acceleration Sensor Output Voltage Malfunction (Test Mode DTC)	1. Yaw rate and acceleration sensor 2. Sensor installation	BC-94
C1281/81	Master Cylinder Pressure Sensor Output Malfunction (Test Mode DTC)	1. Stop light switch 2. Master cylinder pressure sensor	BC-111

Test Mode DTC of VSC:

DTC Code	Detection Item	Trouble Area	See page
C0371/71	Yaw Rate Sensor (Test Mode DTC)	Yaw rate and acceleration sensor	BC-94

DTC	43	ABS Control System Malfunction

DESCRIPTION

This DTC is output when the VSC system detects a malfunction in the ABS control system.

DTC Code	DTC Detection Condition	Trouble Area
43	Malfunction in the ABS control system.	ABS control system

INSPECTION PROCEDURE

NOTICE:

When replacing the brake actuator assembly, perform zero point calibration (See page BC-20).

1 CHECK ABS CONTROL SYSTEM

(a) Clear the DTC (See page BC-43).
(b) Turn the engine switch on (IG).
(c) Check if the same DTC is recorded (See page BC-43).

Result

Condition	Proceed to
DTC (ABS control system DTC) is not output	A
DTC (ABS control system DTC) is output	B

B → **REPAIR CIRCUIT INDICATED BY OUTPUT DTC (See page BC-52)**

A

2 RECONFIRM DTC

(a) Turn the engine switch off.
(b) Clear the DTC (See page BC-43).
(c) Turn the engine switch on (IG).
(d) Check if the same DTC is recorded (See page BC-43).

Result

Condition	Proceed to
DTC (43) is not output	A
DTC (43) is output	B

B → **REPLACE BRAKE ACTUATOR ASSEMBLY**

A

CHECK FOR INTERMITTENT PROBLEMS (SYMPTOM SIMULATION)

DTC	C0200/31	Front Speed Sensor RH Circuit

DTC	C0205/32	Front Speed Sensor LH Circuit

DTC	C1271/71	Low Output Signal of Front Speed Sensor RH (Test Mode DTC)

DTC	C1272/72	Low Output Signal of Front Speed Sensor LH (Test Mode DTC)

DESCRIPTION

The speed sensors detect wheel speed and transmit the signals to the ECU. These signals are used for control of the ABS control system. Each of the front and rear rotors have 48 serrations. When the rotors rotate, the magnetic filed generated by the permanent magnet in the speed sensor induces an AC voltage.

Since the frequency of this AC voltage changes in direct proportion to the speed of the rotor, the frequency is used by the ECU to detect the speed of each wheel.

DTCs C1271/71 and C1272/72 can be deleted when the speed sensor sends a wheel speed signal or the Test Mode ends. DTCs C1271/71 and C1272/72 are output only in the Test Mode.

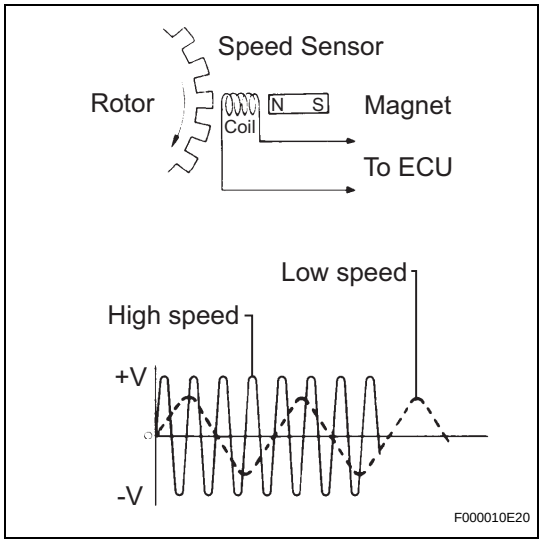

DTC Code	DTC Detection Condition	Trouble Area
C0200/31 C0205/32	When any of the following is detected: 1. At a vehicle speed of 10 km/h (6 mph) or more, an open or short in the sensor signal circuit continues for 1 second or more. 2. Momentary interruption of the sensor signal from the abnormal wheel occurs 7 times or more. 3. An open in the speed sensor signal circuit continues for 0.5 seconds or more.	• Front speed sensor RH/LH • Speed sensor circuit • Speed sensor rotor • Sensor installation • Brake actuator assembly (Skid control ECU)
C1271/71 C1272/72	Detected only during Test Mode.	• Front speed sensor RH/LH • Sensor installation • Speed sensor rotor

HINT:
- DTCs C0200/31 and C1271/71 are for the front speed sensor RH.
- DTCs C0205/32 and C1272/72 are for the front speed sensor LH.

WIRING DIAGRAM

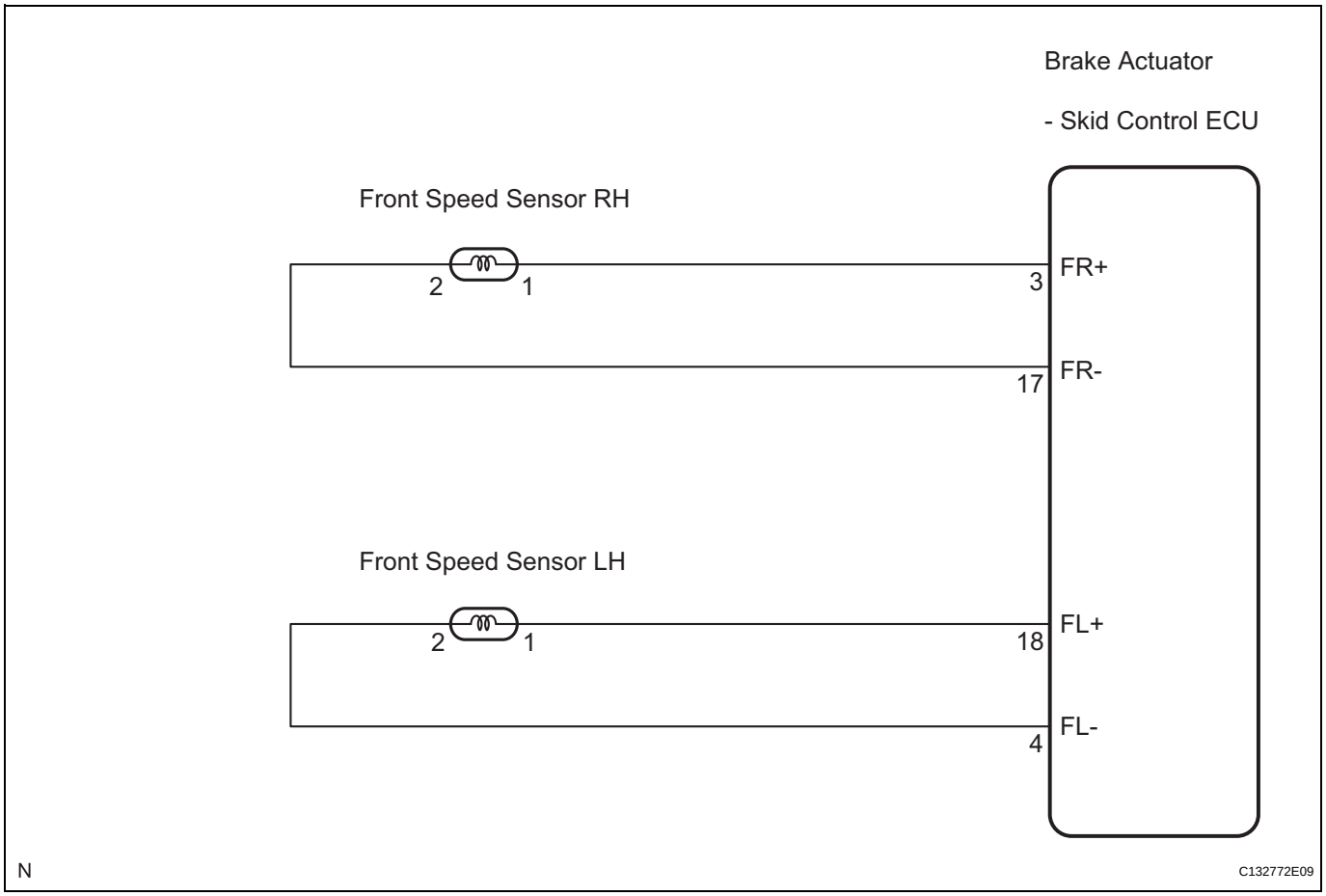

INSPECTION PROCEDURE

NOTICE:

When replacing the brake actuator assembly, perform zero point calibration (See page BC-20).

1	CHECK HARNESS AND CONNECTOR (MOMENTARY INTERRUPTION)

(a) Using the intelligent tester, check for any momentary interruption in the wire harness and connector corresponding to a DTC (See page BC-19).

ABS / VSC:

Tester Display	Measurement Item/Range	Normal Condition
FR SPD OPN	FR speed sensor open detection / ERROR or NORMAL	ERROR: Momentary interruption NORMAL: Normal
FL SPD OPN	FL speed sensor open detection / ERROR or NORMAL	ERROR: Momentary interruption NORMAL: Normal

BC

Result

Condition	Proceed to
There are no momentary interruptions	**A**
There are momentary interruptions	**B**
There is a constant open circuit	**C**

HINT:
Perform the above inspection before removing the sensor and connector.

B → Go to step 11

C → Go to step 5

A

2 READ VALUE OF INTELLIGENT TESTER (FRONT SPEED SENSOR)

(a) Turn the engine switch off.
(b) Connect the intelligent tester to the DLC3.
(c) Start the engine.
(d) Select the Data List mode on the intelligent tester.

ABS / VSC:

Tester Display	Measurement Item/Range	Normal Condition
FR WHEEL SPD	FR wheel speed sensor reading / min.: 0 km/h (0 mph), max.: 326 km/h (202 mph)	Actual wheel speed
FL WHEEL SPD	FL wheel speed sensor reading / min.: 0 km/h (0 mph), max.: 326 km/h (202 mph)	Actual wheel speed

(e) Check that there is no difference between the speed value output from the speed sensor displayed on the intelligent tester and the speed value displayed on the speedometer when driving the vehicle.
OK:
The speed value output from the speed sensor displayed on the intelligent tester is the same as the actual vehicle speed.

NG → Go to step 5

OK

3 PERFORM TEST MODE (SIGNAL CHECK)

(a) Perform sensor check in the Test Mode procedure (See page BC-24).
OK:
All Test Mode DTCs are erased.

NG → Go to step 5

BC

OK

4 RECONFIRM DTC

(a) Turn the engine switch off.
(b) Clear the DTC (See page BC-43).
(c) Start the engine.
(d) Drive the vehicle at the speed of 32 km/h (20 mph) or more for at least 60 seconds.
(e) Check if the same DTC is recorded (See page BC-43).

Result

Condition	Proceed to
DTCs (C0200/31 and/or C0205/32) are not output	A
DTCs (C0200/31 and/or C0205/32) are output	B

HINT:
If troubleshooting has been carried out according to the Problem Symptoms Table, refer back to the table and proceed to the next step (See page BC-35).

B → **Go to step 7**

A

CHECK FOR INTERMITTENT PROBLEMS (SYMPTOM SIMULATION)

5 CHECK FRONT SPEED SENSOR INSTALLATION

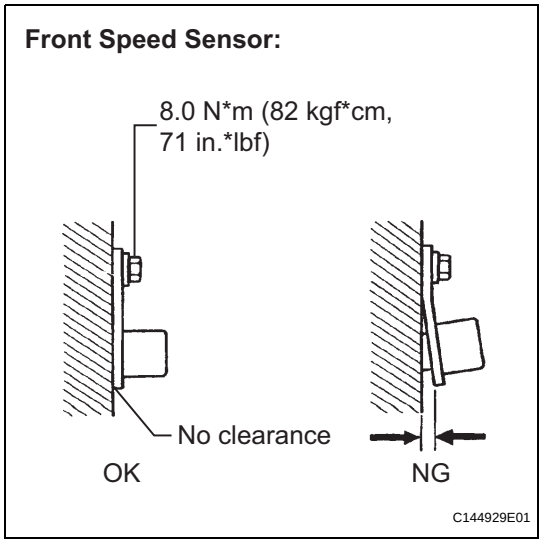

(a) Turn the engine switch off.
(b) Check the speed sensor installation.
OK:
There is no clearance between the sensor and the front steering knuckle.
The installation bolt is tightened properly.
Torque: 8.0 N*m (82 kgf*cm, 71 in.*lbf)

NG → **INSTALL FRONT SPEED SENSOR CORRECTLY**

OK

6 CHECK FRONT SPEED SENSOR TIP

(a) Remove the front speed sensor (See page BC-187).
(b) Check the speed sensor tip.
OK:
No scratches or foreign matter on the sensor tip.
NOTICE:
Check the speed sensor signal after cleaning or replacement (See page BC-24).

NG → **CLEAN OR REPLACE FRONT SPEED SENSOR**

OK

BC

7 INSPECT FRONT SPEED SENSOR

Front Speed Sensor:

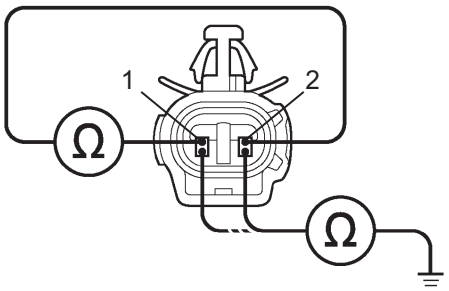

C136017E03

(a) Turn the engine switch off.
(b) Install the front speed sensor.
(c) Disconnect the front speed sensor connector.
(d) Measure the resistance according to the value(s) in the table below.

Standard resistance:

RH

Tester Connection	Condition	Specified Condition
1 (FR+) - 2 (FR-)	Always	1.4 to 1.8 kΩ at 20°C (68°F)
1 (FR+) - Body ground	Always	10 kΩ or higher
2 (FR-) - Body ground	Always	10 kΩ or higher

LH

Tester Connection	Condition	Specified Condition
1 (FL+) - 2 (FL-)	Always	1.4 to 1.8 kΩ at 20°C (68°F)
1 (FL+) - Body ground	Always	10 kΩ or higher
2 (FL-) - Body ground	Always	10 kΩ or higher

NOTICE:
Check the speed sensor signal after replacement (See page BC-24).

NG → **REPLACE FRONT SPEED SENSOR**

OK

8 CHECK HARNESS AND CONNECTOR (SKID CONTROL ECU - FRONT SPEED SENSOR)

Skid Control ECU Harness Side Connector Front View:

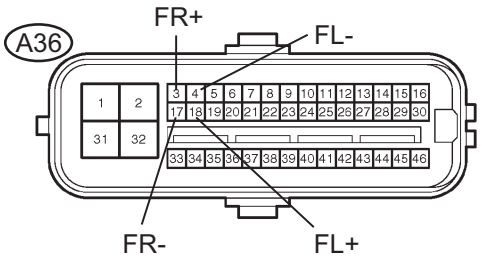

Front Speed Sensor Harness Side Connector Front View:

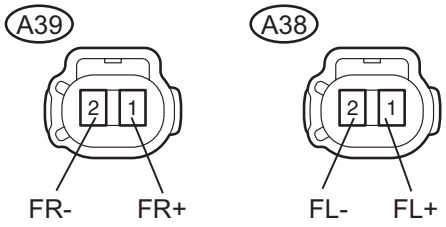

C136018E02

(a) Disconnect the skid control ECU connector.

(b) Measure the resistance according to the value(s) in the table below.

Standard resistance:

RH

Tester Connection	Condition	Specified Condition
A36-3 (FR+) - A39-1 (FR+)	Always	Below 1 Ω
A36-3 (FR+) - Body ground	Always	10 kΩ or higher
A36-17 (FR-) - A39-2 (FR-)	Always	Below 1 Ω
A36-17 (FR-) - Body ground	Always	10 kΩ or higher

LH

Tester Connection	Condition	Specified Condition
A36-18 (FL+) - A38-1 (FL+)	Always	Below 1 Ω
A36-18 (FL+) - Body ground	Always	10 kΩ or higher
A36-4 (FL-) - A38-2 (FL-)	Always	Below 1 Ω
A36-4 (FL-) - Body ground	Always	10 kΩ or higher

NG → **REPAIR OR REPLACE HARNESS OR CONNECTOR**

OK

9 CHECK SPEED SENSOR AND SPEED SENSOR ROTOR SERRATIONS

Skid Control ECU Harness Side Connector Front View:

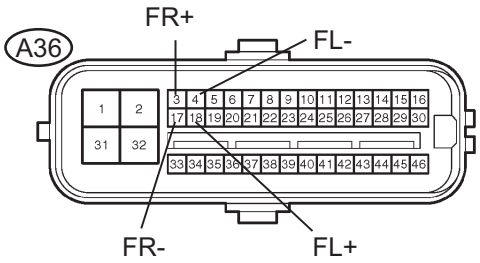

Normal Signal Waveform:

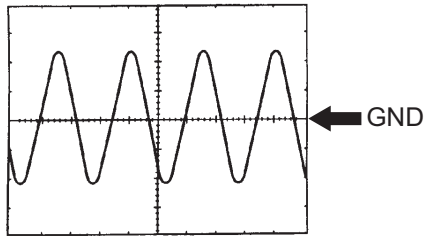

1 V/Division, 2 ms/Division

C136019E06

(a) Reconnect the front speed sensor connector.
(b) Connect the oscilloscope to the front speed sensor terminal of the skid control ECU.
(c) Check that a waveform is output when the tires are rotated (by the sensor circuit).

OK:

The same waveform is output from all the 4 wheels and there is no noise or interference in the waveform.

HINT:

- As the vehicle speed (wheel revolution speed) increases, a cycle of the waveform narrows and the output voltage becomes greater.
- When noise is identified in the waveform on the oscilloscope, the erratic signals are generated due to speed sensor rotor's scratches, looseness or foreign matter attached to it.

NOTICE:

Check the speed sensor signal after cleaning or replacement (See page BC-24).

NG → **CLEAN OR REPLACE SPEED SENSOR OR SPEED SENSOR ROTOR**

OK

10 RECONFIRM DTC

(a) Turn the engine switch off.
(b) Reconnect the skid control ECU connector.
(c) Clear the DTC (See page BC-43).
(d) Start the engine.
(e) Drive the vehicle at the speed of 32 km/h (20 mph) or more for at least 60 seconds.
(f) Check if the same DTC is recorded (See page BC-43).

Result

Condition	Proceed to
DTCs (C0200/31 and/or C0205/32) are not output	A
DTCs (C0200/31 and/or C0205/32) are output	B

HINT:

If troubleshooting has been carried out according to the Problem Symptoms Table, refer back to the table and proceed to the next step (See page BC-35).

B → **REPLACE BRAKE ACTUATOR ASSEMBLY**

A

CHECK FOR INTERMITTENT PROBLEMS (SYMPTOM SIMULATION)

11	REPAIR OR REPLACE HARNESS OR CONNECTOR (SKID CONTROL ECU - FRONT SPEED SENSOR)

(a) Turn the engine switch off.
(b) Repair or replace the harness or connector.
(c) Check for any momentary interruption between the skid control ECU and front speed sensor (See page BC-19).
(d) Check that there is no momentary interruption.

NEXT

12	RECONFIRM DTC

(a) Turn the engine switch off.
(b) Clear the DTC (See page BC-43).
(c) Start the engine.
(d) Drive the vehicle at the speed of 32 km/h (20 mph) or more for at least 60 seconds.
(e) Check if the same DTC is recorded (See page BC-43).

Result

Condition	Proceed to
DTCs (C0200/31 and/or C0205/32) are not output	A
DTCs (C0200/31 and/or C0205/32) are output	B

HINT:
If troubleshooting has been carried out according to the Problem Symptoms Table, refer back to the table and proceed to the next step (See page BC-35).

B → **Go to step 2**

A

END

DTC	C0210/33	Rear Speed Sensor RH Circuit

DTC	C0215/34	Rear Speed Sensor LH Circuit

DTC	C1273/73	Low Output Signal of Rear Speed Sensor RH (Test Mode DTC)

DTC	C1274/74	Low Output Signal of Rear Speed Sensor LH (Test Mode DTC)

DESCRIPTION

The speed sensors detect wheel speed and transmit the signals to the ECU. These signals are used for control of the ABS control system. Each of the front and rear rotors have 48 serrations.
When the rotors rotate, the magnetic field generated by the permanent magnet in the speed sensor induces an AC voltage.
Since the frequency of this AC voltage changes in direct proportion to the speed of the rotor, the frequency is used by the ECU to detect the speed of each wheel.
DTCs C1273/73 and C1274/74 can be deleted when the speed sensor sends a wheel speed signal or the Test Mode ends. DTCs C1273/73 and C1274/74 are output only in the Test Mode.

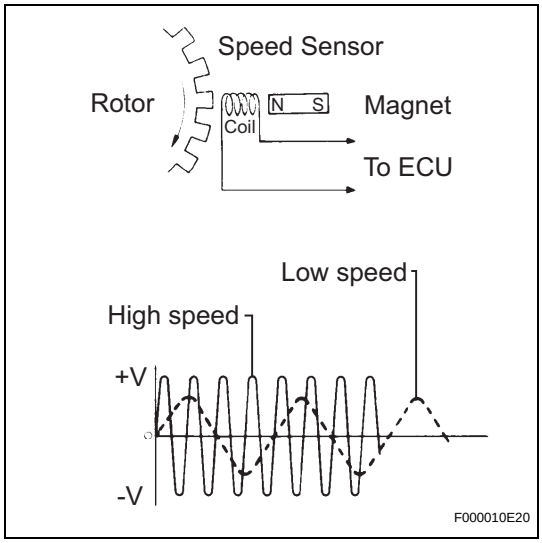

DTC Code	DTC Detection Condition	Trouble Area
C0210/33 C0215/34	When any of the following is detected: 1. At a vehicle speed of 10 km/h (6 mph) or more, an open or short in the sensor signal circuit continues for 1 second or more. 2. Momentary interruption of the sensor signal from the abnormal wheel occurs 7 times or more. 3. An open in the speed sensor signal circuit continues for 0.5 seconds or more.	• Rear speed sensor RH/LH • Speed sensor circuit • Speed sensor rotor • Sensor installation • Brake actuator assembly (Skid control ECU)
C1273/73 C1274/74	Detected only during Test Mode.	• Rear speed sensor RH/LH • Sensor installation • Speed sensor rotor

HINT:
- DTCs C0210/33 and C1273/73 are for the rear speed sensor RH.
- DTCs C0215/34 and C1274/74 are for the rear speed sensor LH.

WIRING DIAGRAM

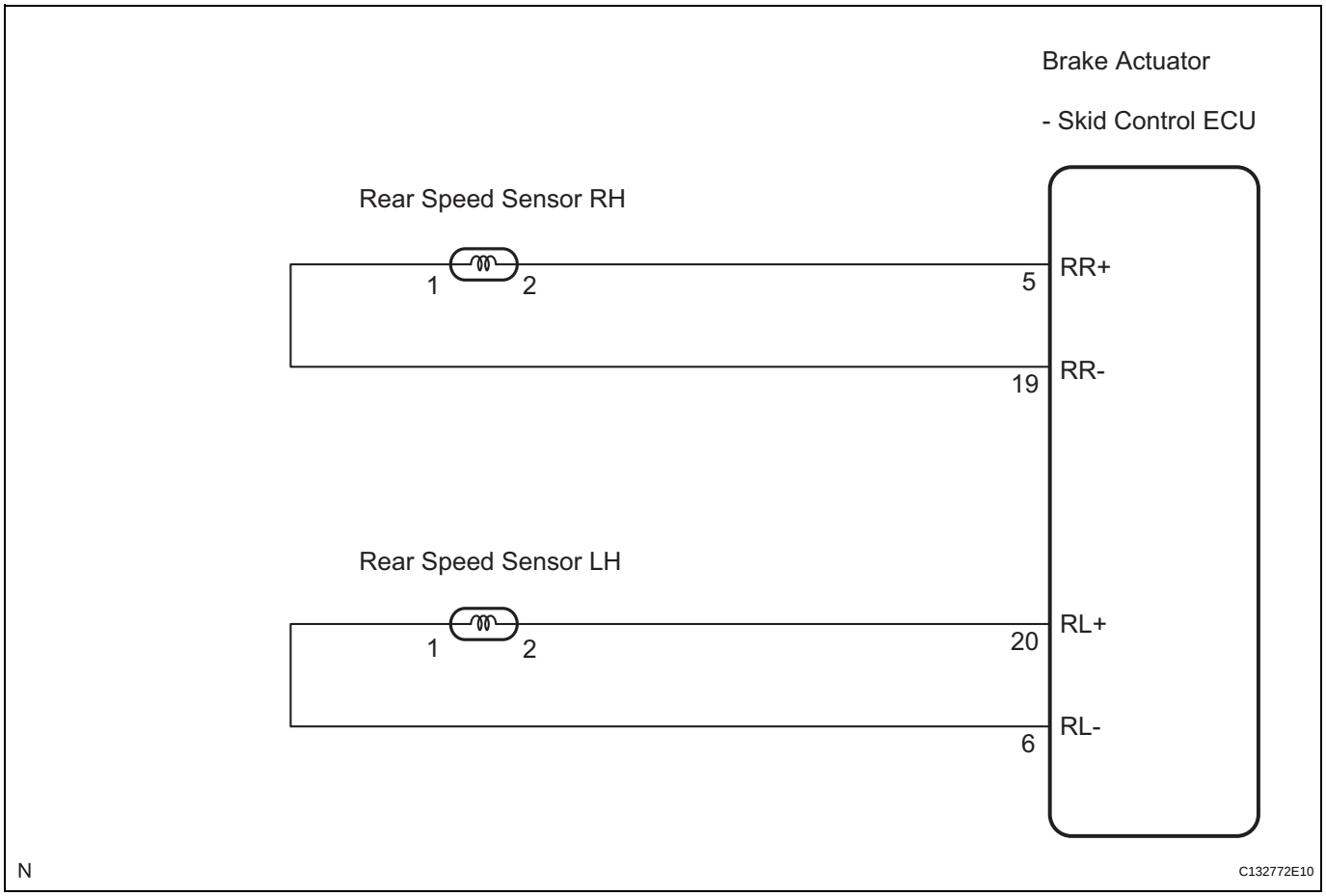

INSPECTION PROCEDURE

NOTICE:

When replacing the brake actuator assembly, perform zero point calibration (See page BC-20).

1	CHECK HARNESS AND CONNECTOR (MOMENTARY INTERRUPTION)

(a) Using the intelligent tester, check for any momentary interruption in the wire harness and connector corresponding to a DTC (See page BC-19).

ABS / VSC:

Tester Display	Measurement Item/Range	Normal Condition
RR SPD OPN	RR speed sensor open detection / ERROR or NORMAL	ERROR: Momentary interruption NORMAL: Normal
RL SPD OPN	RL speed sensor open detection / ERROR or NORMAL	ERROR: Momentary interruption NORMAL: Normal

BC

Result

Condition	Proceed to
There are no momentary interruptions	**A**
There are momentary interruptions	**B**
There is a constant open circuit	**C**

HINT:
Perform the above inspection before removing the sensor and connector.

B → Go to step 11

C → Go to step 5

A

2 READ VALUE OF INTELLIGENT TESTER (REAR SPEED SENSOR)

(a) Turn the engine switch off.
(b) Connect the intelligent tester to the DLC3.
(c) Start the engine.
(d) Select the Data List mode on the intelligent tester.

ABS / VSC:

Tester Display	Measurement Item/Range	Normal Condition
RR WHEEL SPD	RR wheel speed sensor reading / min.: 0 km/h (0 mph), max.: 326 km/h (202 mph)	Actual wheel speed
RL WHEEL SPD	RL wheel speed sensor reading / min.: 0 km/h (0 mph), max.: 326 km/h (202 mph)	Actual wheel speed

(e) Check that there is no difference between the speed value output from the speed sensor displayed on the intelligent tester and the speed value displayed on the speedometer when driving the vehicle.
OK:
The speed value output from the speed sensor displayed on the intelligent tester is the same as the actual vehicle speed.

NG → Go to step 5

OK

3 PERFORM TEST MODE (SIGNAL CHECK)

(a) Perform sensor check in the Test Mode procedure (See page BC-24).
OK:
All Test Mode DTCs are erased.

NG → Go to step 5

BC

OK

4 RECONFIRM DTC

(a) Turn the engine switch off.
(b) Clear the DTC (See page BC-43).
(c) Start the engine.
(d) Drive the vehicle at the speed of 32 km/h (20 mph) or more for at least 60 seconds.
(e) Check if the same DTC is recorded (See page BC-43).

Result

Condition	Proceed to
DTCs (C0210/33 and/or C0215/34) are not output	A
DTCs (C0210/33 and/or C0215/34) are output	B

HINT:
If troubleshooting has been carried out according to the Problem Symptoms Table, refer back to the table and proceed to the next step (See page BC-35).

B → **Go to step 6**

A

CHECK FOR INTERMITTENT PROBLEMS (SYMPTOM SIMULATION)

5 CHECK REAR SPEED SENSOR INSTALLATION

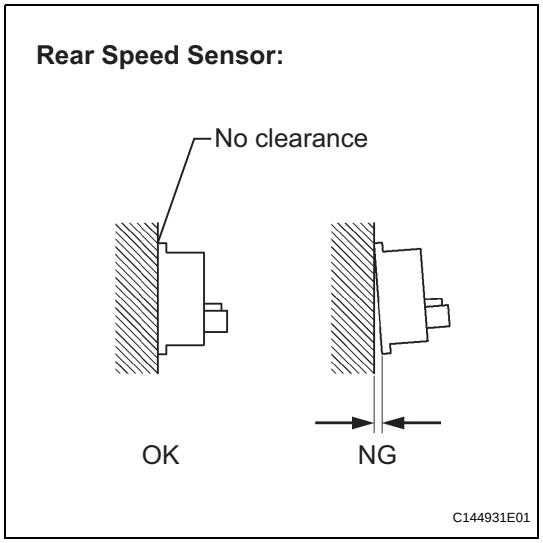

(a) Turn the engine switch off.
(b) Check the speed sensor installation.
OK:
There is no clearance between the sensor and rear axle carrier.

NG → **INSTALL REAR SPEED SENSOR CORRECTLY**

OK

6 INSPECT REAR SPEED SENSOR

Rear Speed Sensor:

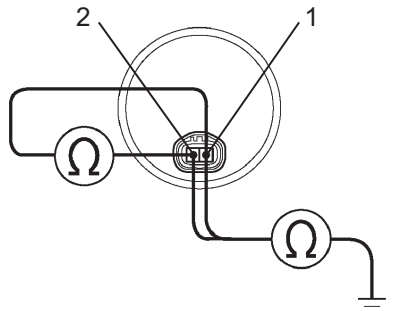

(a) Turn the engine switch off.
(b) Disconnect the rear speed sensor connector.
(c) Measure the resistance according to the value(s) in the table below.

Standard resistance:

RH

Tester Connection	Condition	Specified Condition
2 (RR+) - 1 (RR-)	Always	0.9 to 2.1 kΩ
2 (RR+) - Body ground	Always	10 kΩ or higher
1 (RR-) - Body ground	Always	10 kΩ or higher

LH

Tester Connection	Condition	Specified Condition
2 (RL+) - 1 (RL-)	Always	0.9 to 2.1 kΩ
2 (RL+) - Body ground	Always	10 kΩ or higher
1 (RL-) - Body ground	Always	10 kΩ or higher

NOTICE:
Check the speed sensor signal after replacement (See page BC-24).

NG → **REPLACE REAR SPEED SENSOR**

OK

7 CHECK HARNESS AND CONNECTOR (SKID CONTROL SENSOR WIRE)

Skid Control Sensor Wire:

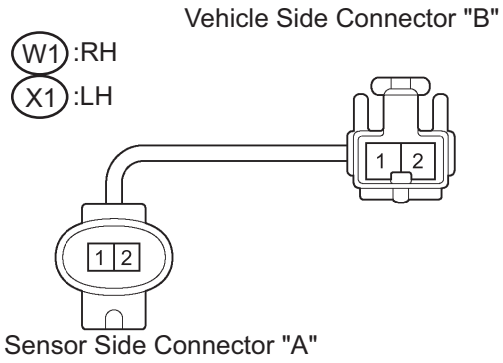

(a) Disconnect the skid control sensor wire.
(b) Measure the resistance according to the value(s) in the table below.

Standard resistance:

RH

Tester Connection	Condition	Specified Condition
W1 ("A"-1) - W1 ("B"-2)	Always	Below 1 Ω
W1 ("A"-1) - W1 ("B"-1)	Always	10 kΩ or higher
W1 ("A"-1) - Body ground	Always	10 kΩ or higher
W1 ("A"-2) - W1 ("B"-1)	Always	Below 1 Ω
W1 ("A"-2) - W1 ("B"-2)	Always	10 kΩ or higher
W1 ("A"-2) - Body ground	Always	10 kΩ or higher

LH

Tester Connection	Condition	Specified Condition
X1 ("A"-1) - X1 ("B"-2)	Always	Below 1 Ω
X1 ("A"-1) - X1 ("B"-1)	Always	10 kΩ or higher
X1 ("A"-1) - Body ground	Always	10 kΩ or higher
X1 ("A"-2) - X1 ("B"-1)	Always	Below 1 Ω
X1 ("A"-2) - X1 ("B"-2)	Always	10 kΩ or higher
X1 ("A"-2) - Body ground	Always	10 kΩ or higher

NOTICE:
Check the speed sensor signal after replacement (See page BC-24).

NG → **REPLACE SKID CONTROL SENSOR WIRE**

OK

8 CHECK HARNESS AND CONNECTOR (SKID CONTROL ECU - REAR SPEED SENSOR)

Skid Control ECU Harness Side Connector Front View:

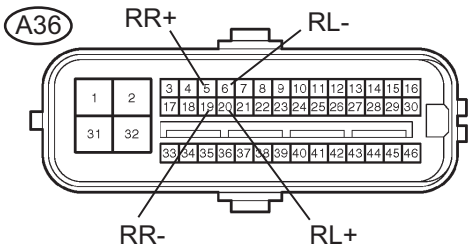

Rear Speed Sensor Harness Side Connector Front View:

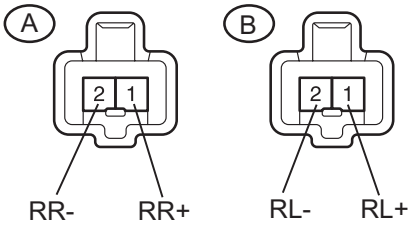

N C136020E02

(a) Disconnect the skid control ECU connector.
(b) Measure the resistance according to the value(s) in the table below.

Standard resistance:

RH

Tester Connection	Condition	Specified Condition
A36-5 (RR+) - A-1 (RR+)	Always	Below 1 Ω
A36-5 (RR+) - Body ground	Always	10 kΩ or higher
A36-19 (RR-) - A-2 (RR-)	Always	Below 1 Ω
A36-19 (RR-) - Body ground	Always	10 kΩ or higher

LH

Tester Connection	Condition	Specified Condition
A36-20 (RL+) - B-1 (RL+)	Always	Below 1 Ω
A36-20 (RL+) - Body ground	Always	10 kΩ or higher
A36-6 (RL-) - B-2 (RL-)	Always	Below 1 Ω
A36-6 (RL-) - Body ground	Always	10 kΩ or higher

NG → **REPAIR OR REPLACE HARNESS OR CONNECTOR**

OK

9 CHECK SPEED SENSOR AND SPEED SENSOR ROTOR SERRATIONS

Skid Control ECU Harness Side Connector Front View:

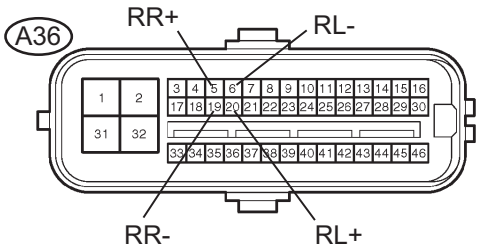

Normal Signal Waveform:

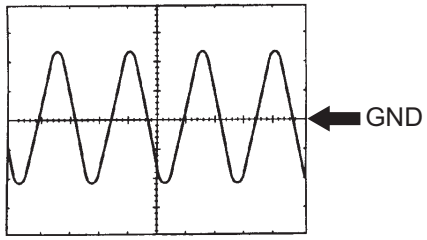

1 V/Division, 2 ms/Division

C136019E07

(a) Reconnect the skid control sensor wire.
(b) Reconnect the rear speed sensor connector.
(c) Connect the oscilloscope to the rear speed sensor terminal of the skid control ECU.
(d) Check that waveform is output when the tires are rotated (by the sensor circuit).

OK:

The same waveform is output from all the 4 wheels and there is no noise or interference in the waveform.

HINT:

- As the vehicle speed (wheel revolution speed) increases, a cycle of the waveform narrows and the output voltage becomes greater.
- When noise is identified in the waveform on the oscilloscope, the erratic signals are generated due to speed sensor rotor's scratches, looseness or foreign matter attached to it.

NOTICE:

Check the speed sensor signal after cleaning or replacement (See page BC-24).

NG → **CLEAN OR REPLACE SPEED SENSOR OR SPEED SENSOR ROTOR**

OK

10 RECONFIRM DTC

(a) Turn the engine switch off.
(b) Reconnect the skid control ECU connector.
(c) Clear the DTC (See page BC-43).
(d) Start the engine.
(e) Drive the vehicle at the speed of 32 km/h (20 mph) or more for at least 60 seconds.
(f) Check if the same DTC is recorded (See page BC-43).

Result

Condition	Proceed to
DTCs (C0210/33 and/or C0215/34) are not output	A
DTCs (C0210/33 and/or C0215/34) are output	B

HINT:

If troubleshooting has been carried out according to the Problem Symptoms Table, refer back to the table and proceed to the next step (See page BC-35).

B → **REPLACE BRAKE ACTUATOR ASSEMBLY**

A

CHECK FOR INTERMITTENT PROBLEMS (SYMPTOM SIMULATION)

11	REPAIR OR REPLACE HARNESS OR CONNECTOR (SKID CONTROL ECU - REAR SPEED SENSOR)

(a) Turn the engine switch off.
(b) Repair or replace the harness or connector.
(c) Check for any momentary interruption between the skid control ECU and rear speed sensor (See page BC-19).
(d) Check that there is no momentary interruption.

NEXT

12	RECONFIRM DTC

(a) Turn the engine switch off.
(b) Clear the DTC (See page BC-43).
(c) Start the engine.
(d) Drive the vehicle at the speed of 32 km/h (20 mph) or more for at least 60 seconds.
(e) Check if the same DTC is recorded (See page BC-43).

Result

Condition	Proceed to
DTCs (C0210/33 and/or C0215/34) are not output	A
DTCs (C0210/33 and/or C0215/34) are output	B

HINT:
If troubleshooting has been carried out according to the Problem Symptoms Table, refer back to the table and proceed to the next step (See page BC-35).

B → **Go to step 2**

A

END

BC

DTC	C0226/21	SFR Solenoid Circuit

DTC	C0236/22	SFL Solenoid Circuit

DTC	C0246/23	SRR Solenoid Circuit

DTC	C0256/24	SRL Solenoid Circuit

DTC	C1225/25	SM Solenoid Circuit

DESCRIPTION

These solenoids turn on when signals are received from the skid control ECU and they control the pressure acting on the wheel cylinders to control the braking force.

DTC Code	DTC Detection Condition	Trouble Area
C0226/21 C0236/22 C0246/23 C0256/24	Open or short in the solenoid circuit continues for 0.05 seconds or more.	• Brake actuator assembly • Solenoid circuit
C1225/25	When any of the following is detected: • While outputting switching solenoid (SM1 or SM2) ON, overcurrent continues for 0.05 seconds or more. • While outputting switching solenoid (SM1 or SM2) OFF, an open circuit continues for 0.05 seconds or more. • While outputting switching solenoid (SM1 or SM2) ON, an open circuit continues for 0.1 second or more. • While outputting switching solenoid (SM1 or SM2) OFF, current continues to be applied for 0.1 second or more. • Short to GND in the switching solenoid (SM1 or SM2) continues for 0.1 second or more. • Switching solenoids SM1 and SM2 are shorted for 0.1 second or more.	• Brake actuator assembly • SM1 or SM2 circuit

WIRING DIAGRAM

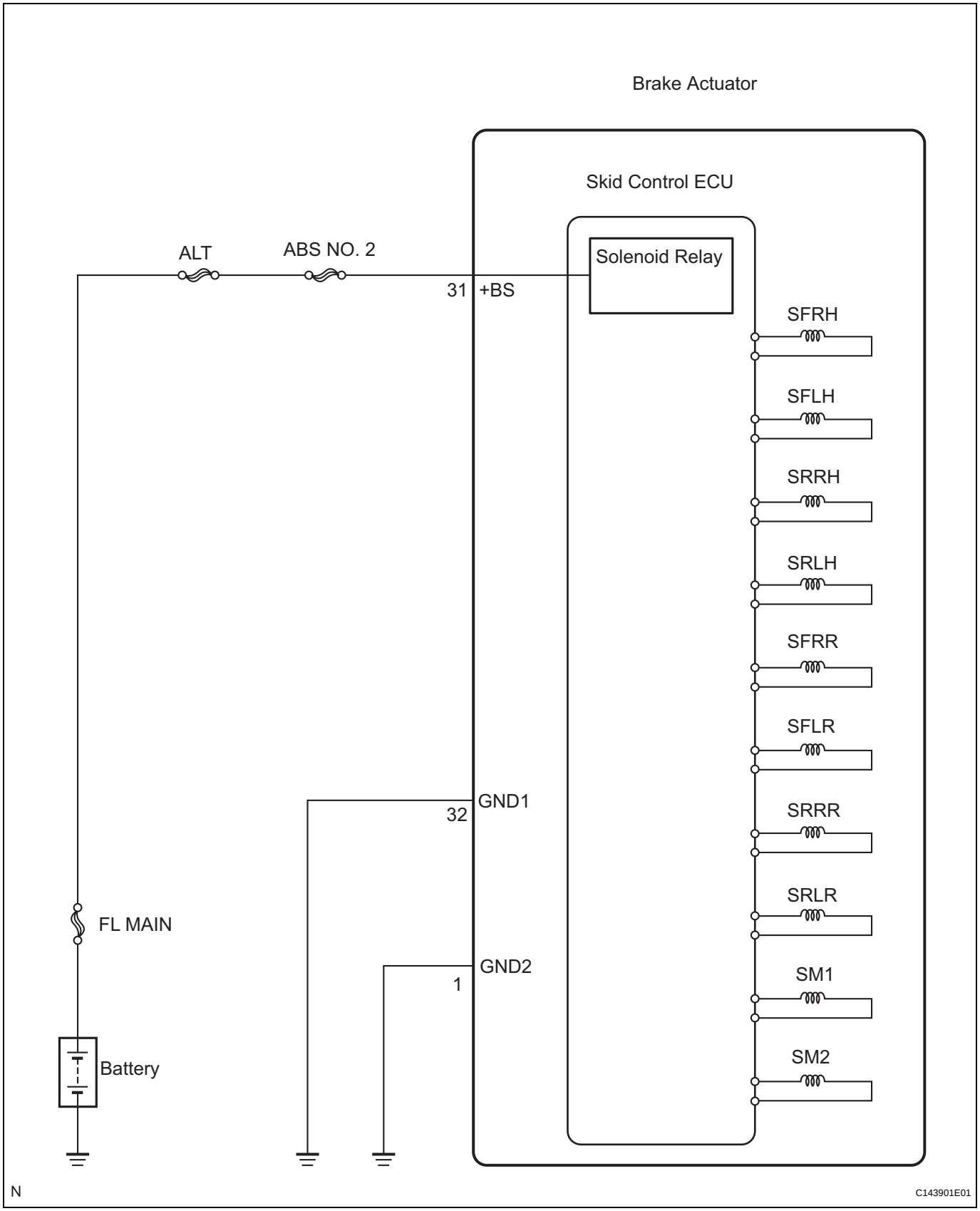

INSPECTION PROCEDURE

NOTICE:

When replacing the brake actuator assembly, perform zero point calibration (See page BC-20).

BC

1	RECONFIRM DTC

HINT:
These codes are detected when a problem is determined in the brake actuator assembly.
The solenoid circuits are in the brake actuator assembly. Therefore, solenoid circuit inspection and solenoid unit inspection cannot be performed. Be sure to check if any DTC code is output before replacing the brake actuator assembly.

(a) Clear the DTC (See page BC-43).
(b) Start the engine.
(c) Drive the vehicle at the speed of 6 km/h (4 mph) or more.
(d) Check if the same DTC is recorded (See page BC-43).

Result

Condition	Proceed to
DTCs (C0226/21, C0236/22, C0246/23, C0256/24 and/or C1225/25) are not output	A
DTCs (C0226/21, C0236/22, C0246/23, C0256/24 and/or C1225/25) are output	B

HINT:
- If a speed signal of 6 km/h (4 mph) or more is input to the skid control ECU, with the engine switch on (IG) and the stop light switch off, the ECU performs self diagnosis of the motor and solenoid circuits.
- If the normal system code is output (the trouble code is not output), slightly jiggle the connectors, wire harness, and fuses of the brake actuator assembly. Make sure that no DTCs are output.
- If any DTCs are output while jiggling a connector or wire harness of the brake actuator assembly (skid control ECU), inspect and repair the connector or wire harness.

B → **REPLACE BRAKE ACTUATOR ASSEMBLY**

A

CHECK FOR INTERMITTENT PROBLEMS (SYMPTOM SIMULATION)

DTC	C0273/13	Open in ABS Motor Relay Circuit

DTC	C0274/14	Short to B+ in ABS Motor Relay Circuit

DTC	C1361/91	Short Circuit in ABS Motor Fail Safe Relay Circuit

DESCRIPTION

If a DTC of the motor line is stored, the VSC NO. 1 (fail safe) relay cuts off the power supply to the VSC NO. 2 relay and performs fail safe.
While any of the ABS, TRAC, VSC, or BA is operating, the skid control ECU (housed in the actuator assembly) turns the VSC NO. 2 relay on and activates the pump motor in the brake actuator.
This code may be stored if the motor relay (BM) voltage becomes lower than the DTC detecting condition due to insufficient output from the battery or alternator.

DTC Code	DTC Detection Condition	Trouble Area
C0273/13	When any of the following (1 or 2) is detected: 1. All of the following conditions continue for 0.12 seconds or more. – The IG1 terminal voltage is between 9.5 and 17.2 V. – During initial check and ABS, BA, TRAC, or VSC are operating. – Relay contact is open when the relay is ON. 2. All of the following conditions continue for 0.12 seconds. – The IG1 terminal voltage is 9.5 V or less. – Relay contact remains open when the relay is ON.	• ABS NO. 1 fuse • VSC NO. 2 relay • VSC NO. 2 relay circuit • Brake actuator assembly
C0274/14	When the motor relay is OFF, the VSC NO. 2 relay remains closed for 4 seconds or more.	• ABS NO. 1 fuse • VSC NO. 2 relay • VSC NO. 2 relay circuit • Brake actuator assembly
C1361/91	Immediately after the engine switch is turned on (IG), the relay contact is closed for 4 seconds when the VSC NO. 1 (fail safe) relay is OFF.	• ABS NO. 1 fuse • VSC NO. 1 (fail safe) relay • VSC NO. 1 (fail safe) relay circuit • Brake actuator assembly

WIRING DIAGRAM

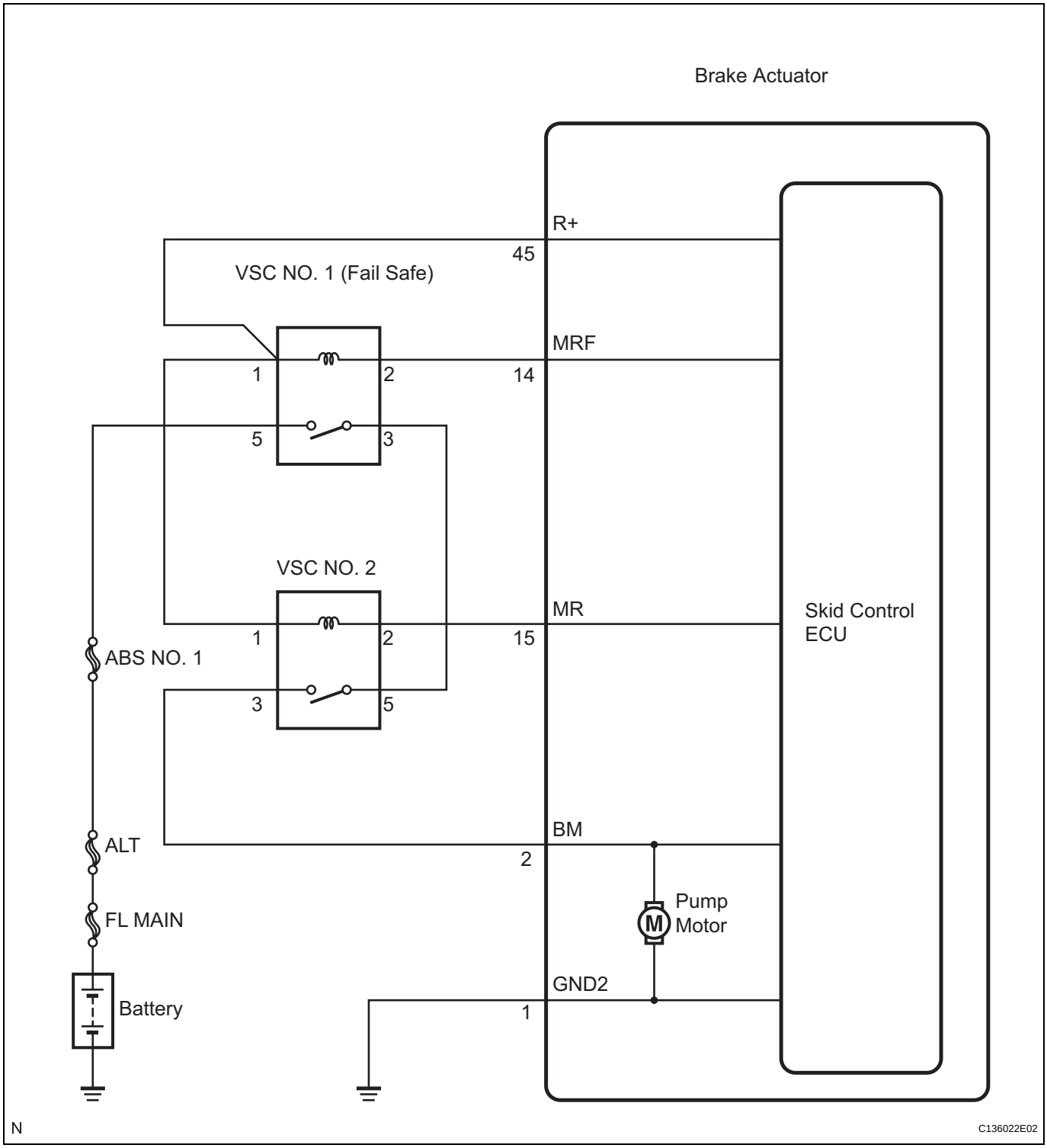

INSPECTION PROCEDURE

NOTICE:

When replacing the brake actuator assembly, perform zero point calibration (See page BC-20).

1	**INSPECT ABS NO. 1 FUSE**

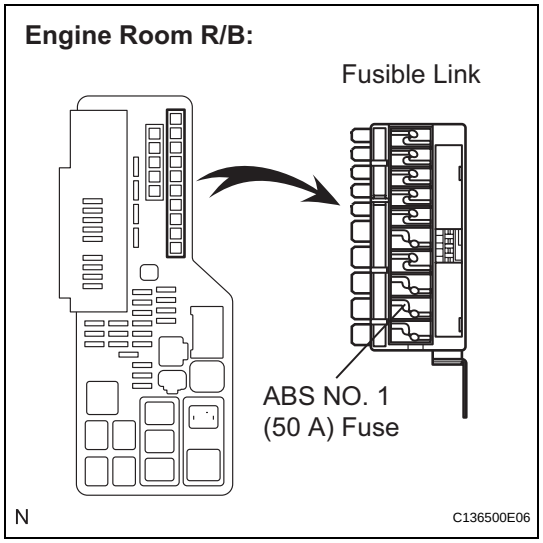

(a) Remove the fusible link from the engine room R/B.

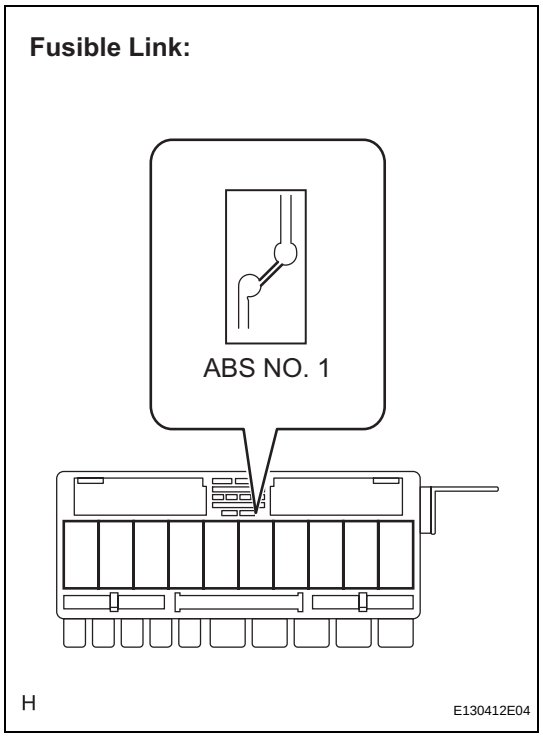

(b) Check if the fusible link is melted.
OK:
The fusible link is melted.

(c) Install the fusible link to the engine room R/B with the nut.
Torque: 5.4 N*m (55 kgf*cm, 48 in.*lbf)

NG → **REPLACE FUSIBLE LINK (ABS NO. 1 FUSE)**

OK

BC

2 INSPECT ABS MOTOR RELAY (VSC NO. 2 RELAY)

VSC NO. 2 Relay:

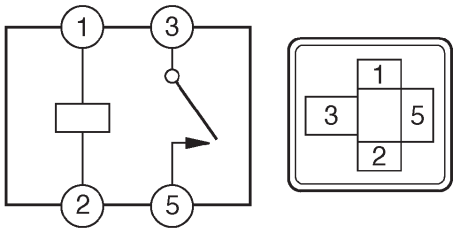

C144829E02

(a) Remove the VSC NO. 2 relay.
(b) Measure the resistance according to the value(s) in the table below.

Standard resistance

Tester Connection	Condition	Specified Condition
3 - 5	Always	10 kΩ or higher
3 - 5	Apply B+ between terminals 1 and 2	Below 1 Ω

NG → **REPLACE ABS MOTOR RELAY (VSC NO. 2 RELAY)**

OK

3 INSPECT ABS MOTOR RELAY (VSC NO. 1 (FAIL SAFE) RELAY)

VSC NO. 1 (Fail Safe) Relay:

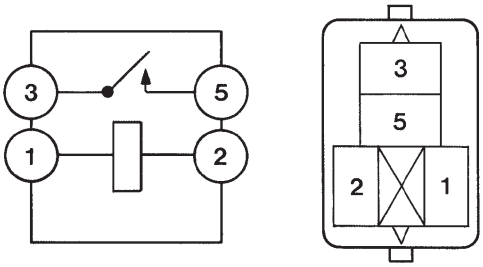

C143433E03

(a) Remove the VSC NO. 1 (fail safe) relay.
(b) Measure the resistance according to the value(s) in the table below.

Standard resistance

Tester Connection	Condition	Specified Condition
3 - 5	Always	10 kΩ or higher
3 - 5	Apply B+ between terminals 1 and 2	Below 1 Ω

NG → **REPLACE ABS MOTOR RELAY (VSC NO. 1 (FAIL SAFE) RELAY)**

OK

4 INSPECT ENGINE ROOM RELAY BLOCK (POWER SOURCE TERMINAL)

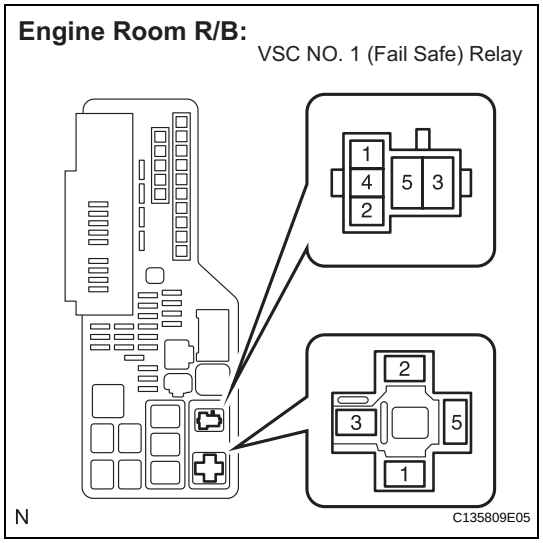

(a) Measure the voltage according to the value(s) in the table below.

Standard voltage

Tester Connection	Condition	Specified Condition
VSC NO. 1 (fail safe) relay terminal 5 - Body ground	Always	10 to 14 V

NG → **REPAIR OR REPLACE HARNESS OR CONNECTOR (POWER SOURCE CIRCUIT)**

OK

5 INSPECT ENGINE ROOM RELAY BLOCK

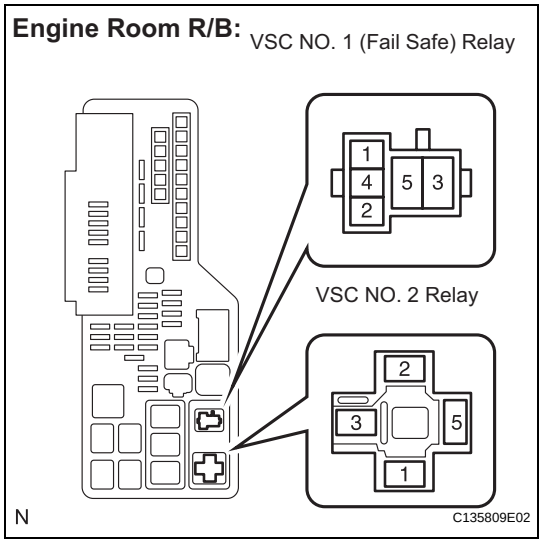

(a) Measure the resistance according to the value(s) in the table below.

Standard resistance

Tester Connection	Condition	Specified Condition
VSC NO. 1 (fail safe) relay terminal 3 - VSC NO. 2 relay terminal 5	Always	Below 1 Ω
VSC NO. 1 (fail safe) relay terminal 3 - Body ground	Always	10 kΩ or higher

NG → **REPAIR OR REPLACE ENGINE ROOM RELAY BLOCK**

OK

6 CHECK HARNESS AND CONNECTOR (SKID CONTROL ECU - ENGINE ROOM RELAY BLOCK)

Skid Control ECU Harness Side Connector Front View:

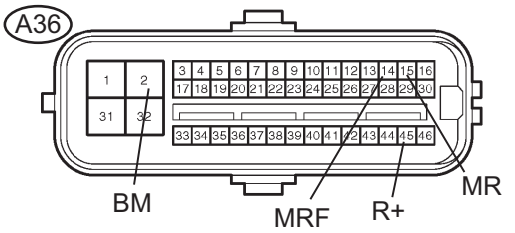

Engine Room R/B:

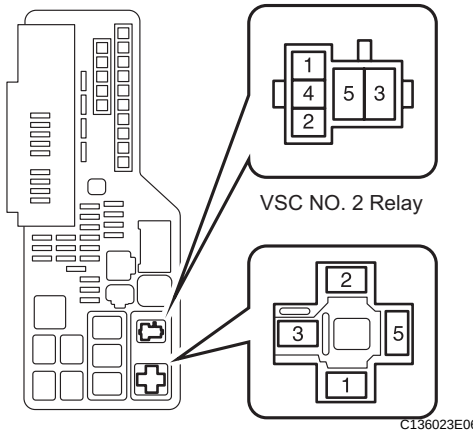

(a) Disconnect the skid control ECU connector.
(b) Measure the resistance according to the value(s) in the table below.

Standard resistance

Tester Connection	Condition	Specified Condition
A36-2 (BM) - VSC NO. 2 relay terminal 3	Always	Below 1 Ω
A36-2 (BM) - Body ground	Always	10 kΩ or higher
A36-14 (MRF) - VSC NO. 1 (fail safe) relay terminal 2	Always	Below 1 Ω
A36-14 (MRF) - Body ground	Always	10 kΩ or higher
A36-15 (MR) - VSC NO. 2 relay terminal 2	Always	Below 1 Ω
A36-15 (MR) - Body ground	Always	10 kΩ or higher
A36-45 (R+) - VSC NO. 1 (fail safe) relay terminal 1	Always	Below 1 Ω
A36-45 (R+) - Body ground	Always	10 kΩ or higher

NG → **REPAIR OR REPLACE HARNESS OR CONNECTOR**

OK

7 RECONFIRM DTC

(a) Clear the DTC (See page BC-43).
(b) Start the engine.
(c) Drive the vehicle at the speed of 6 km/h (4 mph) or more.
(d) Check if the same DTC is recorded (See page BC-43).
HINT:
Reinstall the relays, connectors, etc. and restore the vehicle to its prior condition before rechecking for DTCs.

Result

Condition	Proceed to
DTCs (C0273/13, C0274/14 and/or C1361/91) are not output	A
DTCs (C0273/13, C0274/14 and/or C1361/91) are output	B

HINT:
- If a speed signal of 6 km/h (4 mph) or more is input to the skid control ECU, with the engine switch on (IG) and the stop light switch off, the ECU performs self diagnosis of the motor and solenoid circuits.

- If the normal system code is output (the trouble code is not output), slightly jiggle the connectors, wire harness, and fuses of the brake actuator assembly. Make sure that no DTCs are output.
- If any DTCs are output while jiggling a connector or wire harness of the brake actuator assembly (skid control ECU), inspect and repair the connector or wire harness.

B → **REPLACE BRAKE ACTUATOR ASSEMBLY**

A

CHECK FOR INTERMITTENT PROBLEMS (SYMPTOM SIMULATION)

DTC	C0278/11	Open in ABS Solenoid Relay Circuit

DTC	C0279/12	Short to B+ in ABS Solenoid Relay Circuit

DESCRIPTION

The ABS solenoid relay supplies power to the ABS solenoid and TRAC solenoid.
The solenoid relay is turned on 1.5 seconds after the engine switch is turned on (IG), and is turned off if an open or short in the solenoid is detected by self diagnosis performed when the vehicle starts running.
The ABS solenoid relay is housed in the skid control ECU in the actuator assembly.
HINT:
If a speed signal of 6 km/h (4 mph) or more is input to the skid control ECU, with the engine switch turned on (IG) and the stop light switch off, the ECU performs self diagnosis of the motor and solenoid circuits.

DTC Code	DTC Detection Condition	Trouble Area
C0278/11	When any of the following (1 or 2) is detected: 1. Both of the following conditions continue for 0.2 seconds or more. – The IG1 terminal voltage is between 9.5 and 17.2 V. – The solenoid relay contact is open when the relay is ON. 2. Both of the following conditions continue for 0.2 seconds or more. – IG1 terminal voltage becomes lower than 9.5 V or less when the relay is turned on. – The relay contact remains open.	• ABS NO. 2 fuse • ABS solenoid relay • ABS solenoid relay circuit • Brake actuator assembly
C0279/12	Immediately after the engine switch is turned on (IG), the solenoid relay contact is closed for 0.2 seconds when the relay is turned off.	Brake actuator assembly

WIRING DIAGRAM

Refer to DTCs C0226/21, C0236/22, C0246/23, C0256/24 and C1225/25 (See page BC-75).

INSPECTION PROCEDURE

NOTICE:
When replacing the brake actuator assembly, perform zero point calibration (See page BC-20).

1	INSPECT ABS NO. 2 FUSE

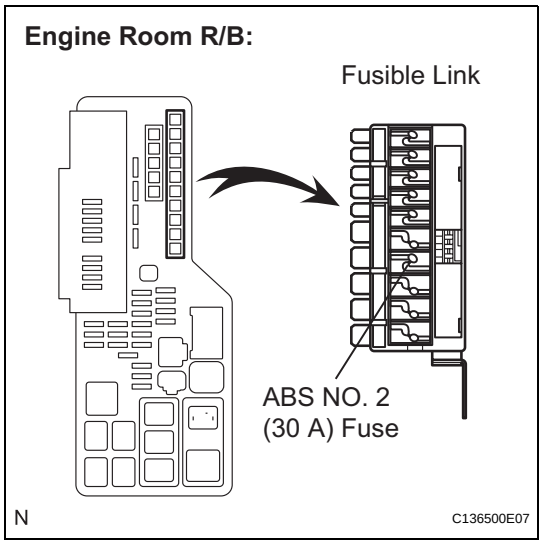

(a) Remove the fusible link from the engine room R/B.

BC

Fusible Link:

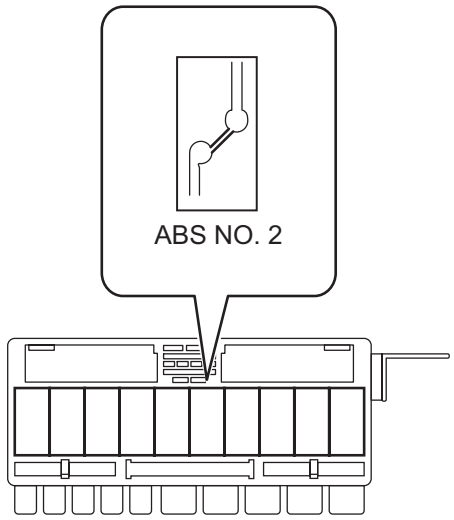

H E130412E05

(b) Check if the fusible link is melted.
OK:
The fusible link is melted.

(c) Install the fusible link to the engine room R/B with the nut.
Torque: 5.4 N*m (55 kgf*cm, 48 in.*lbf)

NG → **REPLACE FUSIBLE LINK (ABS NO. 2 FUSE)**

OK

2 INSPECT SKID CONTROL ECU (+BS TERMINAL)

Skid Control ECU Harness Side Connector Front View:

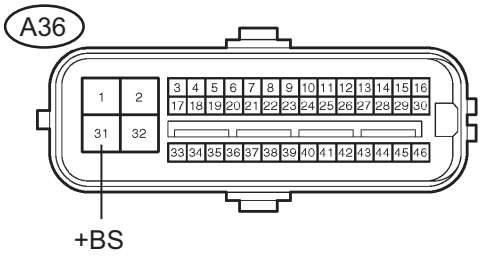

C141673E04

(a) Disconnect the skid control ECU connector.

(b) Measure the voltage according to the value(s) in the table below.
Standard voltage

Tester Connection	Condition	Specified Condition
A36-31 (+BS) - Body ground	Always	10 to 14 V

NG → **REPAIR OR REPLACE HARNESS OR CONNECTOR (+BS CIRCUIT)**

OK

3 INSPECT SKID CONTROL ECU (GND TERMINAL)

Skid Control ECU Harness Side Connector Front View:

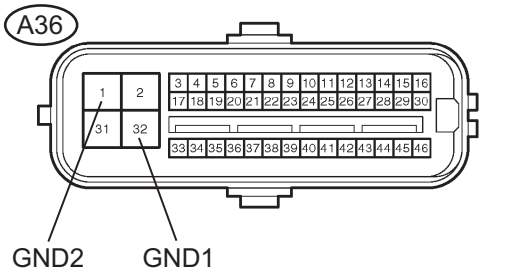

(a) Measure the resistance according to the value(s) in the table below.

Standard resistance

Tester Connection	Condition	Specified Condition
A36-32 (GND1) - Body ground	Always	Below 1 Ω
A36-1 (GND2) - Body ground	Always	Below 1 Ω

NG → **REPAIR OR REPLACE HARNESS OR CONNECTOR (GND CIRCUIT)**

OK

4 RECONFIRM DTC

(a) Reconnect the skid control ECU connector.
(b) Clear the DTC (See page BC-43).
(c) Start the engine.
(d) Drive the vehicle at the speed of 6 km/h (4 mph) or more.
(e) Check if the same DTC is recorded (See page BC-43).

Result

Condition	Proceed to
DTCs (C0278/11 and/or C0279/12) are not output	A
DTCs (C0278/11 and/or C0279/12) are output	B

HINT:
- If a speed signal of 6 km/h (4 mph) or more is input to the skid control ECU, with the engine switch on (IG) and the stop light switch off, the ECU performs self diagnosis of the motor and solenoid circuits.
- If the normal system code is output (the trouble code is not output), slightly jiggle the connectors, wire harnesses, and fuses of the brake actuator assembly. Make sure that no DTCs are output.
- If any DTCs are output while jiggling a connector or wire harness of the brake actuator assembly (skid control ECU), inspect and repair the connector or wire harness.

B → **REPLACE BRAKE ACTUATOR ASSEMBLY**

A

CHECK FOR INTERMITTENT PROBLEMS (SYMPTOM SIMULATION)

DTC	C1201/51	Engine Control System Malfunction

DESCRIPTION

If a malfunction in the engine control system is detected, the operations of VSC and TRAC are prohibited by the fail safe function. When the signals from the engine are input normally, the fail safe is cancelled and the DTC is not stored.

DTC Code	DTC Detection Condition	Trouble Area
C1201/51	Engine control system malfunction signal continues for 5 seconds.	Engine control system

INSPECTION PROCEDURE

1	CHECK ENGINE CONTROL SYSTEM

(a) Check if the engine control system DTC is output (See page ES-41).

Result

Condition	Proceed to
DTC is not output	A
DTC is output	B

B → INSPECT ENGINE CONTROL SYSTEM

A

REPLACE ECM

DTC	C1203/53	ECM Communication Circuit Malfunction

DESCRIPTION

The circuit is used to send TRAC and VSC control information from the skid control ECU to the ECM, and engine control information from the ECM to the skid control ECU through the CAN communication system.

DTC Code	DTC Detection Condition	Trouble Area
C1203/53	Engine, drive source and destination variations that are sent from the ECM do not match the ones of the skid control ECU.	ECM

INSPECTION PROCEDURE

1 CHECK PART NUMBER (ECM AND BRAKE ACTUATOR ASSEMBLY)

(a) Check that the proper ECM and brake actuator assembly (skid control ECU) are installed.
OK:
Proper ECUs are installed.

NG → **REPLACE ECUS WITH PROPER ONES**

OK

REPLACE ECM

DTC	C1210/36	Zero Point Calibration of Yaw Rate Sensor Undone

DTC	C1336/39	Zero Point Calibration of Acceleration Sensor Undone

DESCRIPTION

The skid control ECU receives signals from the yaw rate and acceleration sensor via the CAN communication system.
The yaw rate sensor has the built in acceleration sensor and detects the vehicle's condition using 2 circuits (GL1, GL2). If there is trouble in the bus lines between the yaw rate and acceleration sensor and the CAN communication system, the DTCs U0123/62 (yaw rate sensor communication trouble) and U0124/95 (acceleration sensor communication trouble) are output.
The DTCs are also output when the calibration has not been completed.

DTC Code	DTC Detection Condition	Trouble Area
C1210/36	Zero point calibration of yaw rate sensor undone.	• Brake actuator assembly (Skid control ECU) • Yaw rate and acceleration sensor • Zero point calibration undone (Perform zero point calibration and check DTC. If DTC is not output again, the sensor is normal)
C1336/39	When either of the following is detected: 1. The vehicle runs in the normal mode with zero point calibration undone. 2. After the zero point has been obtained, the zero point voltage of the sensor is not between 2.38 and 2.62 V.	• Brake actuator assembly (Skid control ECU) • Yaw rate and acceleration sensor • Zero point calibration undone (Perform zero point calibration and check DTC. If DTC is not output again, the sensor is normal)

INSPECTION PROCEDURE

NOTICE:

When replacing the brake actuator assembly, perform zero point calibration (See page BC-20).

HINT:

When U0123/62, U0124/95 or U0126/63 is output along with C1210/36 or C1336/39, inspect and repair trouble areas indicated by U0123/62, U0124/95 or U0126/63 first.

1	PERFORM ZERO POINT CALIBRATION OF YAW RATE AND ACCELERATION SENSOR

(a) Perform zero point calibration of the yaw rate and acceleration sensor (See page BC-20).

NEXT

BC

2	RECONFIRM DTC

(a) Turn the engine switch off.
(b) Clear the DTC (See page BC-43).
(c) Turn the engine switch on (IG).
(d) Check if the same DTCs are recorded (See page BC-43).

Result

Condition	Proceed to
DTCs (C1210/36 and/or C1336/39) are output	A
DTCs (C1210/36 and/or C1336/39) are not output	B

HINT:
- The DTCs are recorded because zero point calibration has not been completed.
- End the procedure as the same DTCs are not recorded after completion of zero point calibration.

B → **END**

A

3	CHECK YAW RATE AND ACCELERATION SENSOR INSTALLATION

(a) Turn the engine switch off.
(b) Check that the yaw rate and acceleration sensor has been installed properly (See page BC-196).
OK:
The sensor should be tightened to the specified torque.
The sensor should not be tilted.

NG → **INSTALL YAW RATE AND ACCELERATION SENSOR CORRECTLY**

OK

REPLACE BRAKE ACTUATOR ASSEMBLY

DTC	C1231/31	Steering Angle Sensor Circuit Malfunction

DESCRIPTION

The steering angle sensor signal is sent to the skid control ECU via the CAN communication system. When there is a malfunction in the CAN communication system, it will be detected by the steering angle sensor zero point malfunction diagnostic function.

DTC Code	DTC Detection Condition	Trouble Area
C1231/31	When ECU IG1 terminal voltage is 9.5 V or more, the steering angle sensor malfunction signal is received.	• Steering angle sensor • Steering angle sensor circuit • Steering angle sensor power supply • Brake actuator assembly (Skid control ECU)

WIRING DIAGRAM

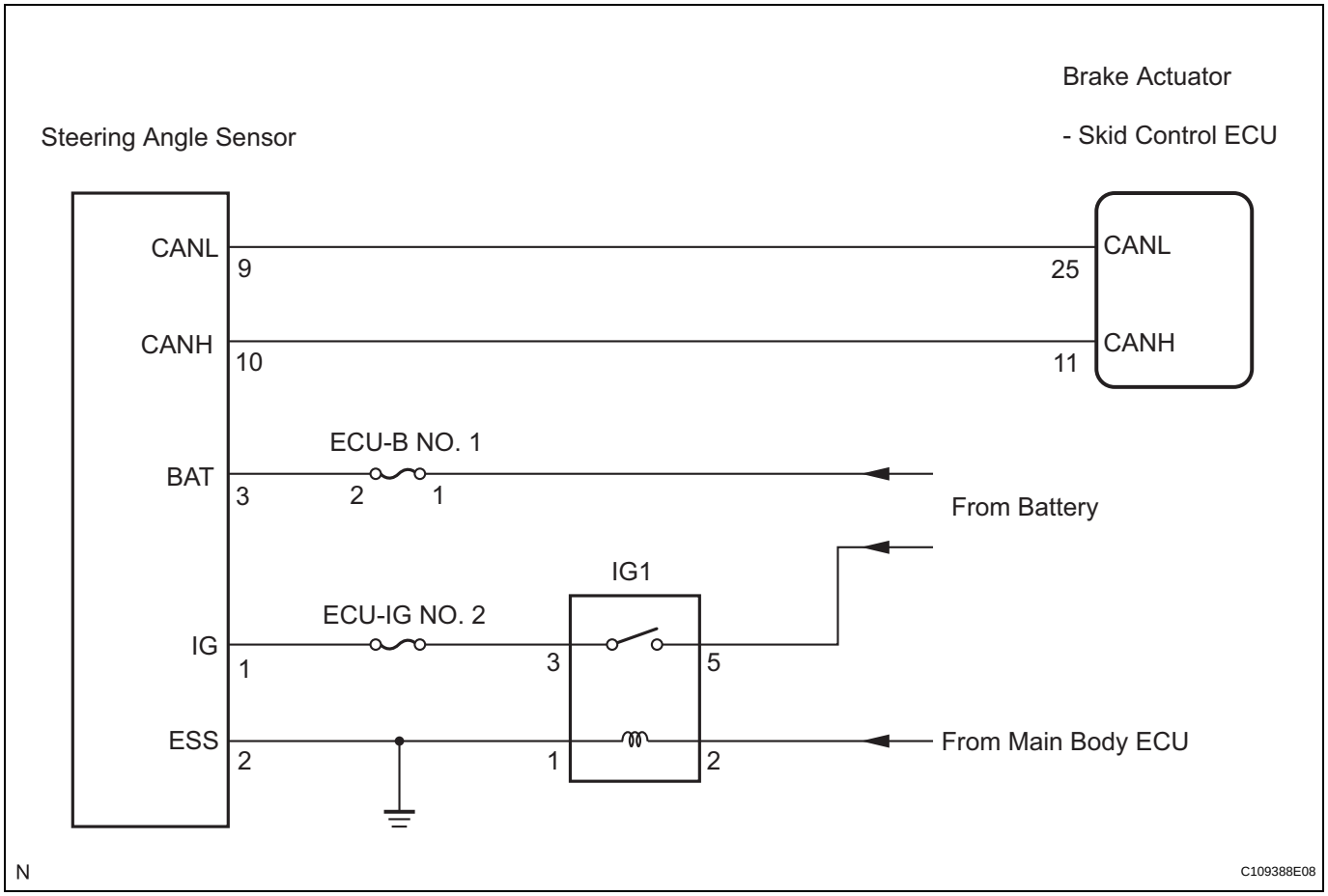

BC

INSPECTION PROCEDURE

HINT:

- When U0073/94, U0123/62, U0124/95 or U0126/63 is output together with C1231/31, inspect and repair the trouble areas indicated by U0073/94, U0123/62, U0124/95 or U0126/63 first.
- When the speed sensor or the yaw rate sensor has trouble, DTCs for the steering angle sensor may be output even when the steering angle sensor is normal. When DTCs for the speed sensor or yaw rate sensor are output together with other DTCs for the steering angle sensor, inspect and repair the speed sensor and yaw rate sensor first, and then inspect and repair the steering angle sensor.

1 CHECK DTC

(a) Clear the DTC (See page BC-43).
(b) Turn the engine switch off.
(c) Turn the engine switch on (IG) again and check that no CAN communication system DTC is output.
(d) Drive the vehicle and turn the steering wheel to the right and left at the speed of 35 km/h (22 mph) and check that no speed sensor and yaw rate sensor DTCs are output.

Result

Condition	Proceed to
No CAN communication system DTC and the speed sensor or yaw rate sensor DTC are output	A
CAN communication system DTC is output	B
Speed sensor or yaw rate sensor DTC is output	C

HINT:
- If there is a malfunction in the speed sensor or the yaw rate sensor, an abnormal value may be output although the steering angle sensor is normal.
- If the speed sensor and the yaw rate sensor DTCs are output simultaneously, repair the sensors and inspect the steering angle sensor.

B → **INSPECT CAN COMMUNICATION SYSTEM**

C → **REPAIR CIRCUIT INDICATED BY OUTPUT DTC (See page BC-52)**

A

2 INSPECT STEERING ANGLE SENSOR (POWER SOURCE TERMINAL)

Steering Angle Sensor Wire Harness View:

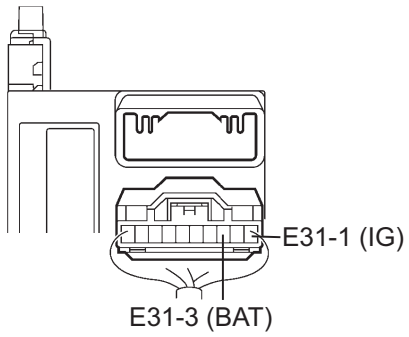

G030156E22

(a) Turn the engine switch off.
(b) Remove the steering wheel and the column cover lower.
(c) Disconnect the steering angle sensor connector.
(d) Measure the voltage according to the value(s) in the table below.

Standard voltage

Tester Connection	Condition	Specified Condition
E31-1 (IG) - Body ground	Engine switch on (IG)	10 to 14 V
E31-3 (BAT) - Body ground	Always	10 to 14 V

NG → **REPAIR OR REPLACE HARNESS OR CONNECTOR (POWER SOURCE CIRCUIT)**

OK

BC

3	INSPECT STEERING ANGLE SENSOR (GROUND TERMINAL)

Steering Angle Sensor Wire Harness View:

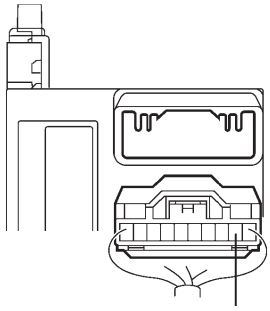

G030156E23

(a) Turn the engine switch off.
(b) Measure the resistance according to the value(s) in the table below.

Standard resistance

Tester Connection	Condition	Specified Condition
E31-2 (ESS) - Body ground	Always	Below 1 Ω

HINT:
If troubleshooting has been carried out according to the Problem Symptoms Table, refer back to the table and proceed to the next step (See page BC-35).

NG → **REPAIR OR REPLACE HARNESS OR CONNECTOR (GROUND CIRCUIT)**

OK

REPLACE STEERING ANGLE SENSOR

DTC	C1232/32	Stuck in Acceleration Sensor

DTC	C0371/71	Yaw Rate Sensor (Test Mode DTC)

DTC	C1234/34	Yaw Rate Sensor Malfunction

DTC	C1243/43	Acceleration Sensor Stuck Malfunction

DTC	C1244/44	Open or Short in Acceleration Sensor Circuit

DTC	C1245/45	Acceleration Sensor Output Malfunction

DTC	C1279/79	Acceleration Sensor Output Voltage Malfunction (Test Mode DTC)

DTC	C1381/97	Yaw Rate and / or Acceleration Sensor Power Supply Voltage Malfunction

DESCRIPTION

The skid control ECU receives signals from the yaw rate and acceleration sensor via the CAN communication system.
The yaw rate sensor has a built in acceleration sensor and detects the vehicle's condition using 2 circuits (GL1, GL2).
If there is trouble in the bus lines between the yaw rate and acceleration sensor and the CAN communication system, the DTC U0123/62 (malfunction in CAN communication with the yaw rate sensor) and U0124/95 (malfunction in CAN communication with the acceleration sensor) are output.
These DTCs are also output when calibration has not been completed.
DTCs C0371/71 and C1279/79 can be deleted when the yaw rate and acceleration sensor sends a yaw rate and/or acceleration signal or the Test Mode ends. DTCs C0371/71 and C1279/79 are output only in the Test Mode.

DTC Code	DTC Detection Condition	Trouble Area
C1232/32	At a vehicle speed of 10 km/h (6 mph) or more, either GL1 or GL2 (input signal) does not change for 30 seconds or more.	• Yaw rate and acceleration sensor • Yaw rate and acceleration sensor circuit
C1234/34	Sensor malfunction signal is received from the yaw rate sensor.	• Yaw rate and acceleration sensor • Yaw rate and acceleration sensor circuit
C1243/43	While the vehicle speed changes from 30 km/h (19 mph) to 0 km/h (0 mph), the condition that the values of GL1 and GL2 do not change occurs 16 times or more.	• Yaw rate and acceleration sensor • Yaw rate and acceleration sensor circuit
C1244/44	When either of the following is detected: 1. A data malfunction signal is received from the acceleration sensor. 2. After the difference between GL1 and GL2 becomes 0.6 G or more with the vehicle stationary, the difference remains 0.4 G or more for 60 seconds or more.	• Yaw rate and acceleration sensor • Yaw rate and acceleration sensor circuit
C1245/45	At a vehicle speed of 30 km/h (19 mph) or more, the difference between the forward and backward G calculated from the acceleration sensor value and that calculated from the vehicle speed sensor exceeds 0.35 G for 60 seconds or more.	• Yaw rate and acceleration sensor • Yaw rate and acceleration sensor circuit
C1381/97	At a vehicle speed of more than 3 km/h (2 mph), the acceleration sensor power source malfunction signal is received for 10 seconds or more.	• Yaw rate and acceleration sensor • Yaw rate and acceleration sensor power source circuit

DTC Code	DTC Detection Condition	Trouble Area
C0371/71	Detected only during Test Mode.	Yaw rate and acceleration sensor
C1279/79	Detected only during Test Mode.	• Yaw rate and acceleration sensor • Sensor installation

WIRING DIAGRAM

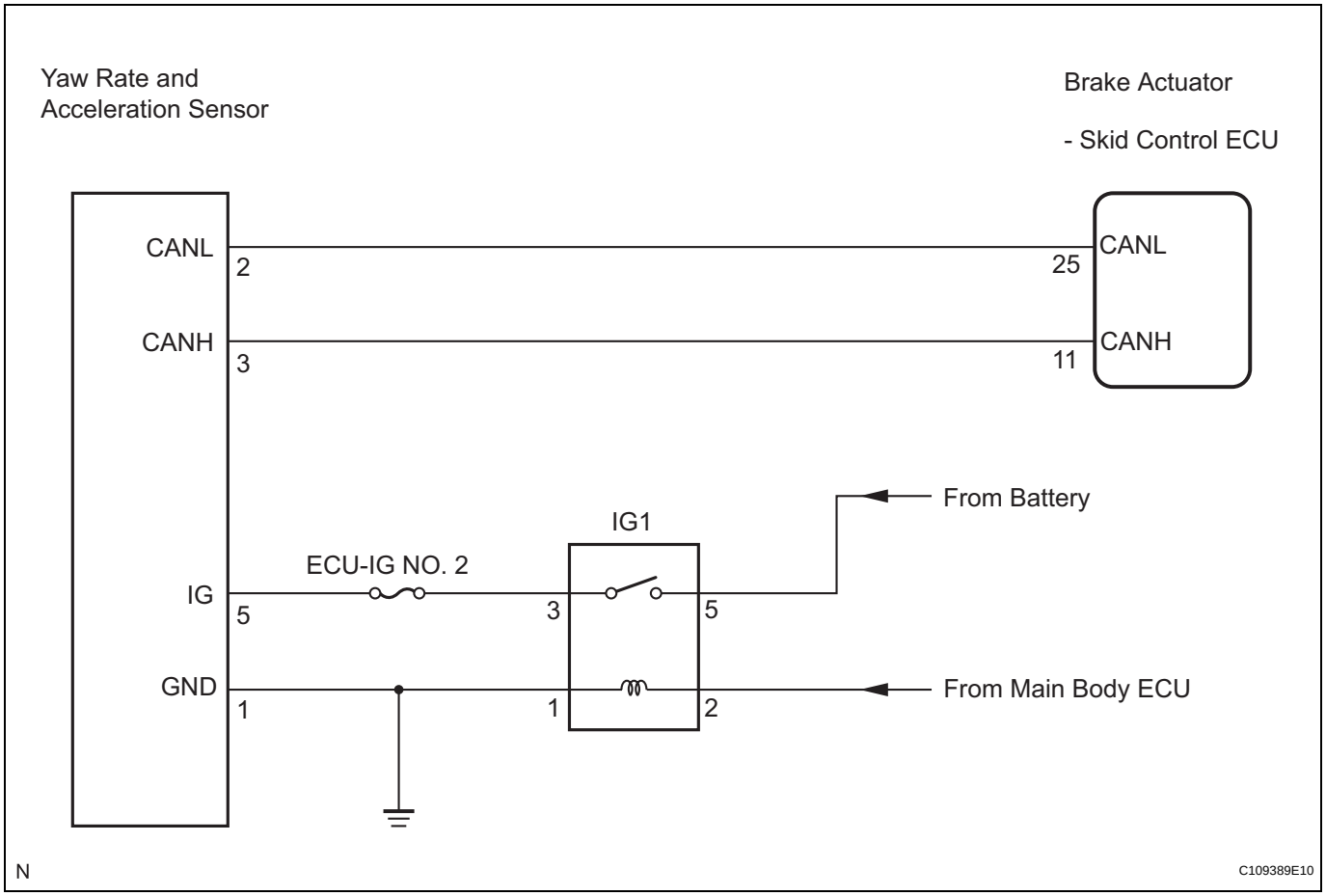

INSPECTION PROCEDURE

NOTICE:

When replacing the yaw rate and acceleration sensor, perform zero point calibration (See page BC-20).

HINT:

When U0123/62, U0124/95 or U0126/63 is output together with C1232/32, C1234/34, C1243/43, C1244/44, C1245/45, or C1381/97, inspect and repair the trouble areas indicated by U0123/62, U0124/95 or U0126/63 first.

BC

1	CHECK DTC

(a) Clear the DTC (See page BC-43).
(b) Turn the engine switch off.
(c) At a speed of 30 km/h (19 mph) or more, drive the vehicle, turn the steering wheel, and decelerate the vehicle (depress the brake pedal).
(d) Turn the engine switch on (IG) again and check that no CAN communication system DTC is output.

(e) Check if DTCs for zero point calibration of the yaw rate sensor undone (C1210/36) or for zero point calibration of the acceleration sensor undone (C1336/39) are output.

Result

Condition	Proceed to
DTCs (C1210/36, C1336/39 and/or CAN communication system DTC) are not output	A
CAN communication system DTC is output	B
DTCs (C1210/36 and/or C1336/39) are output	C

B → **INSPECT CAN COMMUNICATION SYSTEM**

C → **REPAIR CIRCUIT INDICATED BY OUTPUT DTC (See page BC-52)**

A

2 CHECK YAW RATE AND ACCELERATION SENSOR INSTALLATION

(a) Turn the engine switch off.
(b) Check that the yaw rate and acceleration sensor has been installed properly (See page BC-196).
OK:
The sensor is tightened to the specified torque.
The sensor is not tilted.

NG → **INSTALL YAW RATE AND ACCELERATION SENSOR CORRECTLY**

OK

3 INSPECT YAW RATE AND ACCELERATION SENSOR (IG TERMINAL)

Yaw Rate and Acceleration Sensor Harness Side Connector Front View:

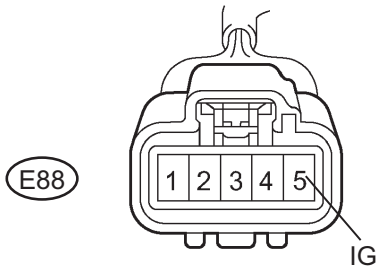

(a) Disconnect the yaw rate and acceleration sensor connector.
(b) Turn the engine switch on (IG).
(c) Measure the voltage according to the value(s) in the table below.
Standard voltage

Tester Connection	Condition	Specified Condition
E88-5 (IG) - Body ground	Engine switch on (IG)	10 to 14 V

NG → **REPAIR OR REPLACE HARNESS OR CONNECTOR (IG CIRCUIT)**

OK

BC

4 INSPECT YAW RATE AND ACCELERATION SENSOR (GND TERMINAL)

Yaw Rate and Acceleration Sensor Harness Side Connector Front View:

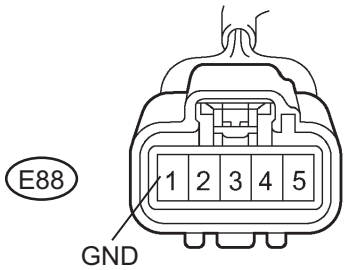

C141994E02

(a) Turn the engine switch off.

(b) Measure the resistance according to the value(s) in the table below.

Standard resistance

Tester Connection	Condition	Specified Condition
E88-1 (GND) - Body ground	Always	Below 1 Ω

NOTICE:

Check the yaw rate and acceleration sensor signal after replacement (See page BC-24).

HINT:

If troubleshooting has been carried out according to the Problem Symptoms Table, refer back to the table and proceed to the next step (See page BC-35).

NG → **REPAIR OR REPLACE HARNESS OR CONNECTOR (GND CIRCUIT)**

OK

REPLACE YAW RATE AND ACCELERATION SENSOR

DTC	C1235/35	Foreign Object is Attached on Tip of Front Speed Sensor RH
DTC	C1236/36	Foreign Object is Attached on Tip of Front Speed Sensor LH
DTC	C1238/38	Foreign Object is Attached on Tip of Rear Speed Sensor RH
DTC	C1239/39	Foreign Object is Attached on Tip of Rear Speed Sensor LH
DTC	C1275/75	Abnormal Change in Output Signal of Front Speed Sensor RH (Test Mode DTC)
DTC	C1276/76	Abnormal Change in Output Signal of Front Speed Sensor LH (Test Mode DTC)
DTC	C1277/77	Abnormal Change in Output Signal of Rear Speed Sensor RH (Test Mode DTC)
DTC	C1278/78	Abnormal Change in Output Signal of Rear Speed Sensor LH (Test Mode DTC)

DESCRIPTION

The speed sensors detect wheel speed and transmit the signals to the ECU. These signals are used for control of the ABS control system. Each of the front and rear rotors have 48 serrations. When the rotors rotate, the magnetic field generated by the permanent magnet in the speed sensor induces an AC voltage.

Since the frequency of this AC voltage changes in direct proportion to the speed of the rotor, the frequency is used by the ECU to detect the speed of each wheel.

When foreign matter adheres to the speed sensor tip or speed sensor rotor, or the rotor teeth are chipped, these DTCs are output. An abnormal waveform input from the sensor determines these conditions.

These DTCs may be detected when a malfunction occurs in the connector terminals or wire harness of the speed sensor circuit.

DTCs C1275/75 to C1278/78 can be deleted when the speed sensor sends a vehicle speed signal or the Test Mode ends. DTCs from C1275/75 to C1278/78 are output only in the Test Mode.

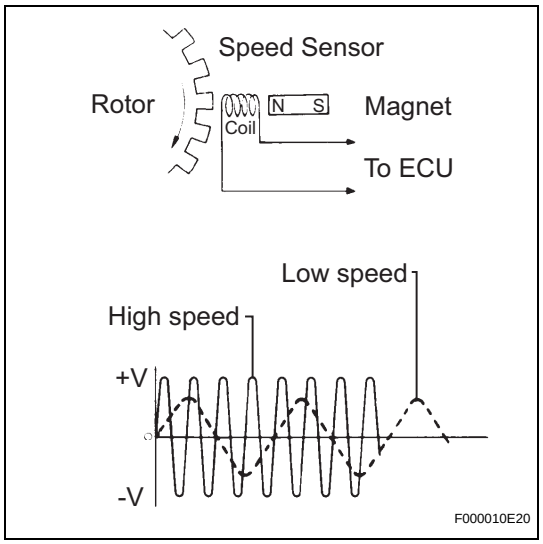

DTC Code	DTC Detection Condition	Trouble Area
C1235/35 C1236/36 C1238/38 C1239/39	At a vehicle speed of 20 km/h (12 mph) or more, noise occurs in the sensor signal from the abnormal wheel for 5 seconds or more.	• Speed sensor • Speed sensor rotor • Sensor installation • Brake actuator assembly (Skid control ECU)
C1275/75 C1276/76 C1277/77 C1278/78	Detected only during Test Mode.	Speed sensor rotor

HINT:
- DTCs C1235/35 and C1275/75 are for the front speed sensor RH.
- DTCs C1236/36 and C1276/76 are for the front speed sensor LH.
- DTCs C1238/38 and C1277/77 are for the rear speed sensor RH.
- DTCs C1239/39 and C1278/78 are for the rear speed sensor LH.

WIRING DIAGRAM

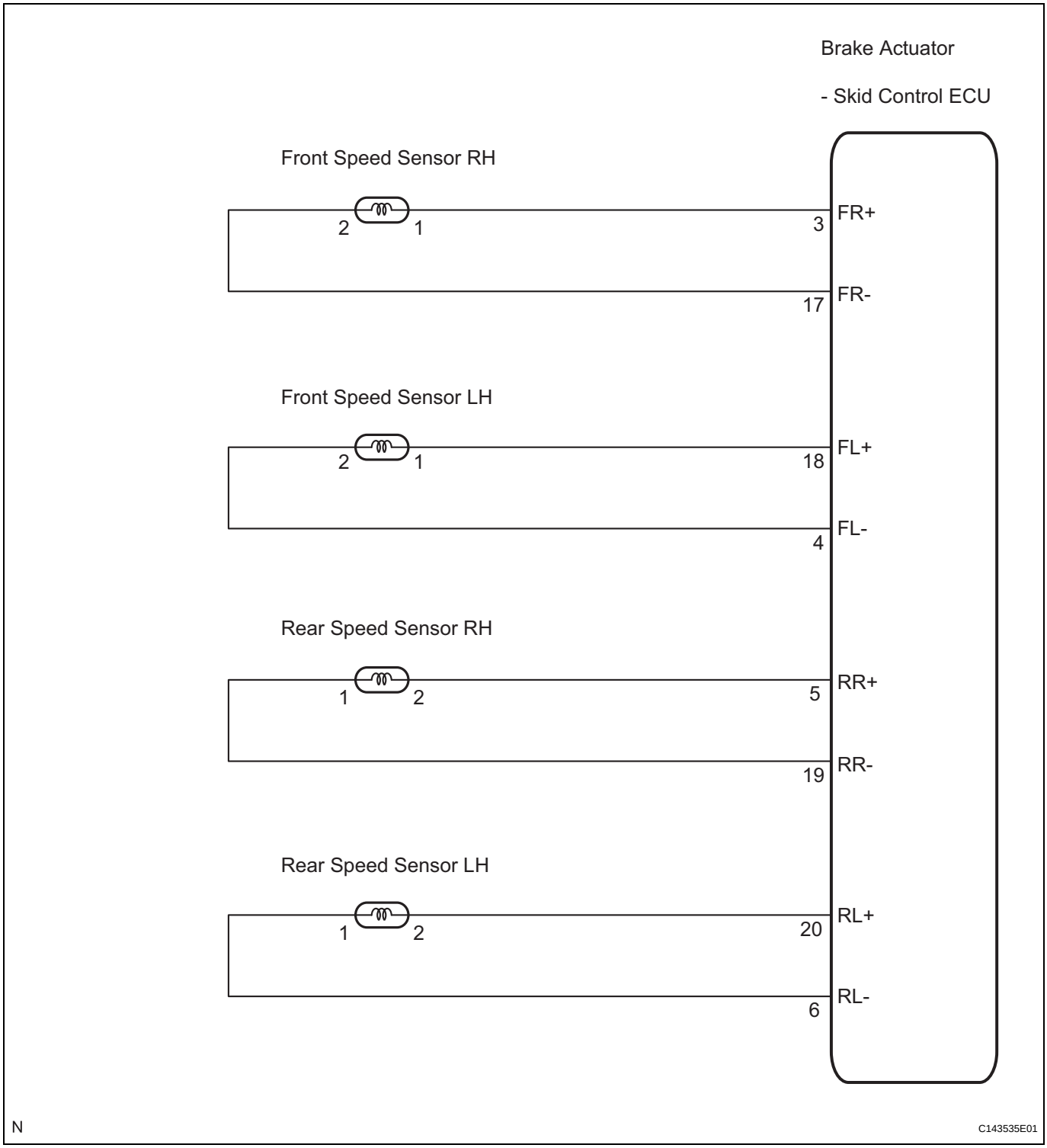

INSPECTION PROCEDURE

NOTICE:

When replacing the brake actuator assembly, perform zero point calibration (See page BC-20).

HINT:

When C0200/31, C0205/32, C0210/33, or C0215/34 is output together with C1235/35, C1236/36, C1238/38, or C1239/39, inspect and repair the trouble areas indicated by C0200/31, C0205/32, C0210/33, or C0215/34 first.

1 CHECK SPEED SENSOR AND SPEED SENSOR ROTOR SERRATIONS

Skid Control ECU Harness Side Connector Front View:

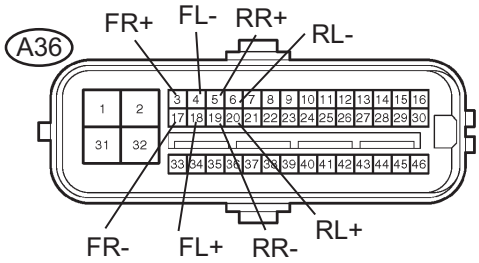

Normal Signal Waveform:

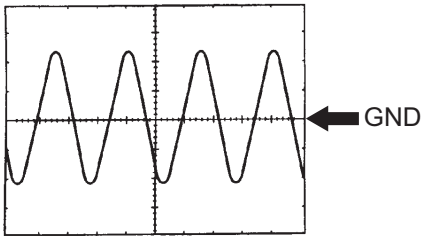

1 V/Division, 2 ms/Division

C136019E08

(a) Disconnect the skid control ECU connector.
(b) Connect the oscilloscope to each speed sensor terminal of the skid control ECU.
(c) Check that a waveform is output when the tires are rotated (by the sensor circuit).
OK:
The same waveform is output from all the 4 wheels and there is no noise or waveform.
(d) Check that the waveform does not change while jiggling a connector or a wire harness.
OK:
The waveform does not change.
HINT:
- As the vehicle speed (wheel revolution speed) increases, a cycle of the waveform narrows and the output voltage becomes greater.
- When noise is identified in the waveform on the oscilloscope, the erratic signals are generated due to speed sensor rotor's scratches, looseness or foreign matter attached to it.

NG → **Go to step 3**

OK

2 RECONFIRM DTC

(a) Turn the engine switch off.
(b) Reconnect the skid control ECU connector.
(c) Clear the DTC (See Page BC-43).
(d) Start the engine.
(e) Drive the vehicle at the speed of 20 km/h (12 mph) or more for at least 60 seconds.
(f) Check if the same DTC is recorded (See page BC-43).

BC

Result

Condition	Proceed to
DTCs (C1235/35, C1236/36, C1238/38 and/or C1239/39) are not output	A
DTCs (C1235/35, C1236/36, C1238/38 and/or C1239/39) are output	B

B → **REPLACE BRAKE ACTUATOR ASSEMBLY**

A

CHECK FOR INTERMITTENT PROBLEMS (SYMPTOM SIMULATION)

3 INSPECT EACH SPEED SENSOR

Front Speed Sensor:

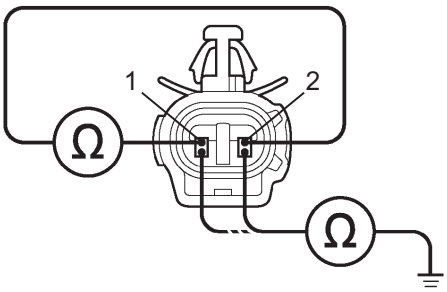

Rear Speed Sensor:

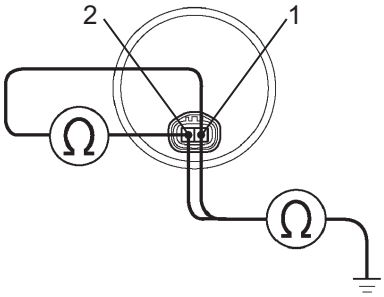

C136027E04

(a) Turn the engine switch off.
(b) Disconnect each speed sensor connector.
(c) Measure the resistance according to the value(s) in the table below.

Standard resistance:

RH

Tester Connection	Condition	Specified Condition
1 (FR+) - 2 (FR-)	Always	1.4 to 1.8 kΩ at 20°C (68°F)
1 (FR+) - Body ground	Always	10 kΩ or higher
2 (FR-) - Body ground	Always	10 kΩ or higher
2 (RR+) - 1 (RR-)	Always	0.9 to 2.1 kΩ
2 (RR+) - Body ground	Always	10 kΩ or higher
1 (RR-) - Body ground	Always	10 kΩ or higher

LH

Tester Connection	Condition	Specified Condition
1 (FL+) - 2 (FL-)	Always	1.4 to 1.8 kΩ at 20°C (68°F)
1 (FL+) - Body ground	Always	10 kΩ or higher
2 (FL-) - Body ground	Always	10 kΩ or higher
2 (RL+) - 1 (RL-)	Always	0.9 to 2.1 kΩ
2 (RL+) - Body ground	Always	10 kΩ or higher
1 (RL-) - Body ground	Always	10 kΩ or higher

Result

Result	Proceed to
OK (for rear)	A
OK (for front)	B
NG	C

BC

B → Go to step 5

C → REPLACE EACH SPEED SENSOR

A

4 CHECK HARNESS AND CONNECTOR (SKID CONTROL SENSOR WIRE)

Skid Control Sensor Wire:

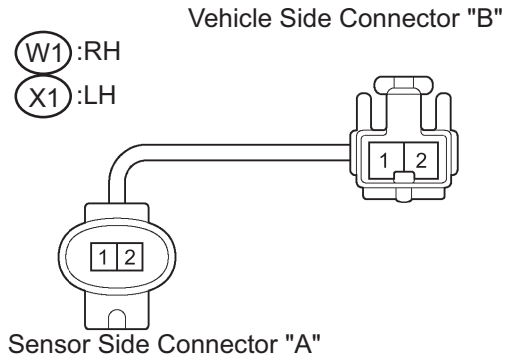

(a) Disconnect the skid control sensor wire.

(b) Measure the resistance according to the value(s) in the table below.

Standard resistance:

RH

Tester Connection	Condition	Specified Condition
W1 ("A"-1) - W1 ("B"-2)	Always	Below 1 Ω
W1 ("A"-1) - W1 ("B"-1)	Always	10 kΩ or higher
W1 ("A"-1) - Body ground	Always	10 kΩ or higher
W1 ("A"-2) - W1 ("B"-1)	Always	Below 1 Ω
W1 ("A"-2) - W1 ("B"-2)	Always	10 kΩ or higher
W1 ("A"-2) - Body ground	Always	10 kΩ or higher

LH

Tester Connection	Condition	Specified Condition
X1 ("A"-1) - X1 ("B"-2)	Always	Below 1 Ω
X1 ("A"-1) - X1 ("B"-1)	Always	10 kΩ or higher
X1 ("A"-1) - Body ground	Always	10 kΩ or higher
X1 ("A"-2) - X1 ("B"-1)	Always	Below 1 Ω
X1 ("A"-2) - X1 ("B"-2)	Always	10 kΩ or higher
X1 ("A"-2) - Body ground	Always	10 kΩ or higher

NOTICE:
Check the speed sensor signal after replacement (See page BC-24).

NG → **REPLACE SKID CONTROL SENSOR WIRE**

OK

5 CHECK HARNESS AND CONNECTOR (SKID CONTROL ECU - EACH SPEED SENSOR)

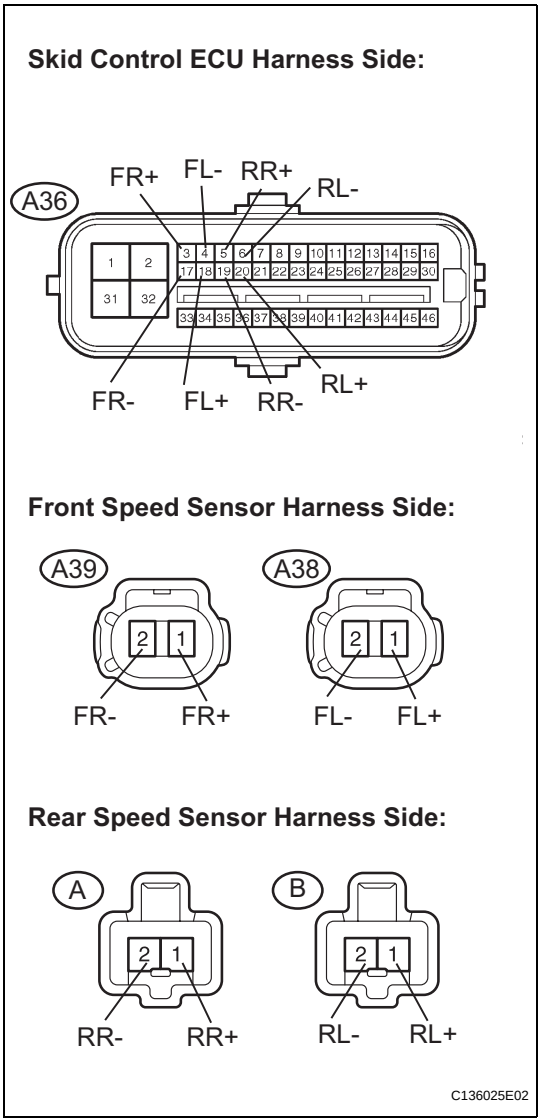

(a) Measure the resistance according to the value(s) in the table below.

Standard resistance:

RH

Tester Connection	Condition	Specified Condition
A36-3 (FR+) - A39-1 (FR+)	Always	Below 1 Ω
A36-3 (FR+) - Body ground	Always	10 kΩ or higher
A36-17 (FR-) - A39-2 (FR-)	Always	Below 1 Ω
A36-17 (FR-) - Body ground	Always	10 kΩ or higher
A36-5 (RR+) - A-1 (RR+)	Always	Below 1 Ω
A36-5 (RR+) - Body ground	Always	10 kΩ or higher
A36-19 (RR-) - A-2 (RR-)	Always	Below 1 Ω
A36-19 (RR-) - Body ground	Always	10 kΩ or higher

LH

Tester Connection	Condition	Specified Condition
A36-18 (FL+) - A38-1 (FL+)	Always	Below 1 Ω
A36-18 (FL+) - Body ground	Always	10 kΩ or higher
A36-4 (FL-) - A38-2 (FL-)	Always	Below 1 Ω
A36-4 (FL-) - Body ground	Always	10 kΩ or higher
A36-20 (RL+) - B-1 (RL+)	Always	Below 1 Ω
A36-20 (RL+) - Body ground	Always	10 kΩ or higher
A36-6 (RL-) - B-2 (RL-)	Always	Below 1 Ω
A36-6 (RL-) - Body ground	Always	10 kΩ or higher

NG → **REPAIR OR REPLACE HARNESS OR CONNECTOR**

OK

6 RECONFIRM DTC

(a) Reconnect the skid control sensor wire.
(b) Reconnect the skid control ECU connector and the speed sensor connector.
(c) Clear the DTC (See page BC-43).
(d) Start the engine.
(e) Drive the vehicle at the speed of 20 km/h (12 mph) or more for at least 60 seconds.
(f) Check if the same DTC is recorded (See page BC-43).

Result

Condition	Proceed to
DTCs (C1235/35, C1236/36, C1238/38 and/or C1239/39) are output (for front)	A
DTCs (C1235/35, C1236/36, C1238/38 and/or C1239/39) are output (for rear)	B

Condition	Proceed to
DTCs (C1235/35, C1236/36, C1238/38 and/or C1239/39) are not output	C

B → **Go to step 8**

C → **CHECK FOR INTERMITTENT PROBLEMS (SYMPTOM SIMULATION)**

A

7 CHECK FRONT SPEED SENSOR TIP

(a) Turn the engine switch off.
(b) Remove the front speed sensor (See page BC-187).
(c) Check the speed sensor tip.
OK:
No scratches or foreign matter on the sensor tip.
NOTICE:
Check the speed sensor signal after cleaning or replacement (See page BC-24).

NG → **CLEAN OR REPLACE FRONT SPEED SENSOR**

OK

8 CHECK EACH SPEED SENSOR ROTOR

(a) Turn the engine switch off.
(b) Remove each speed sensor rotor (See page DS-4 for front, or AH-15 for rear).
(c) Check the speed sensor rotor.
OK:
No scratches, missing teeth, or foreign matter on the rotors.
NOTICE:
Check the speed sensor signal after cleaning or replacement (See page BC-24).

NG → **CLEAN OR REPLACE EACH SPEED SENSOR ROTOR**

BC

OK

9 RECONFIRM DTC

(a) Install the front speed sensor and the speed sensor rotor.
(b) Clear the DTC (See page BC-43).
(c) Start the engine.
(d) Drive the vehicle at the speed of 20 km/h (12 mph) or more for at least 60 seconds.
(e) Check if the same DTC is recorded (See page BC-43).

Result

Condition	Proceed to
DTCs (C1235/35, C1236/36, C1238/38 and/or C1239/39) are not output	A
DTCs (C1235/35, C1236/36, C1238/38 and/or C1239/39) are output	B

B → **REPLACE BRAKE ACTUATOR ASSEMBLY**

A

CHECK FOR INTERMITTENT PROBLEMS (SYMPTOM SIMULATION)

DTC	C1241/41	Low Battery Positive Voltage

DESCRIPTION

If a malfunction is detected in the power supply circuit, the skid control ECU (housed in the actuator assembly) stores this DTC and the fail safe function prohibits ABS operation.
This DTC is stored when the IG1 terminal voltage deviates from the DTC detection condition due to a malfunction in the power supply or charging circuit such as the battery or alternator circuit, etc.
The DTC is cancelled when the IG1 terminal voltage returns to normal.

DTC Code	DTC Detection Condition	Trouble Area
C1241/41	When any of the following is detected: 1. At a vehicle speed of 3 km/h (2 mph) or more, the IG1 terminal voltage is 9.5 V or less for 10 seconds or more. 2. When the solenoid relay remains ON and the IG1 terminal voltage is 9.5 V or less, the relay contact is open for 0.2 seconds or more. 3. While the VSC NO. 1 (fail safe) relay is ON after VSC NO. 2 relay ON, the IG1 terminal voltage is 9.5 V or less and the actuator pump drive motor is OFF for 0.1 second or more.	• ECU-IG NO. 2 fuse • Battery • Charging system • Power source circuit • Internal power supply circuit of the skid control ECU

WIRING DIAGRAM

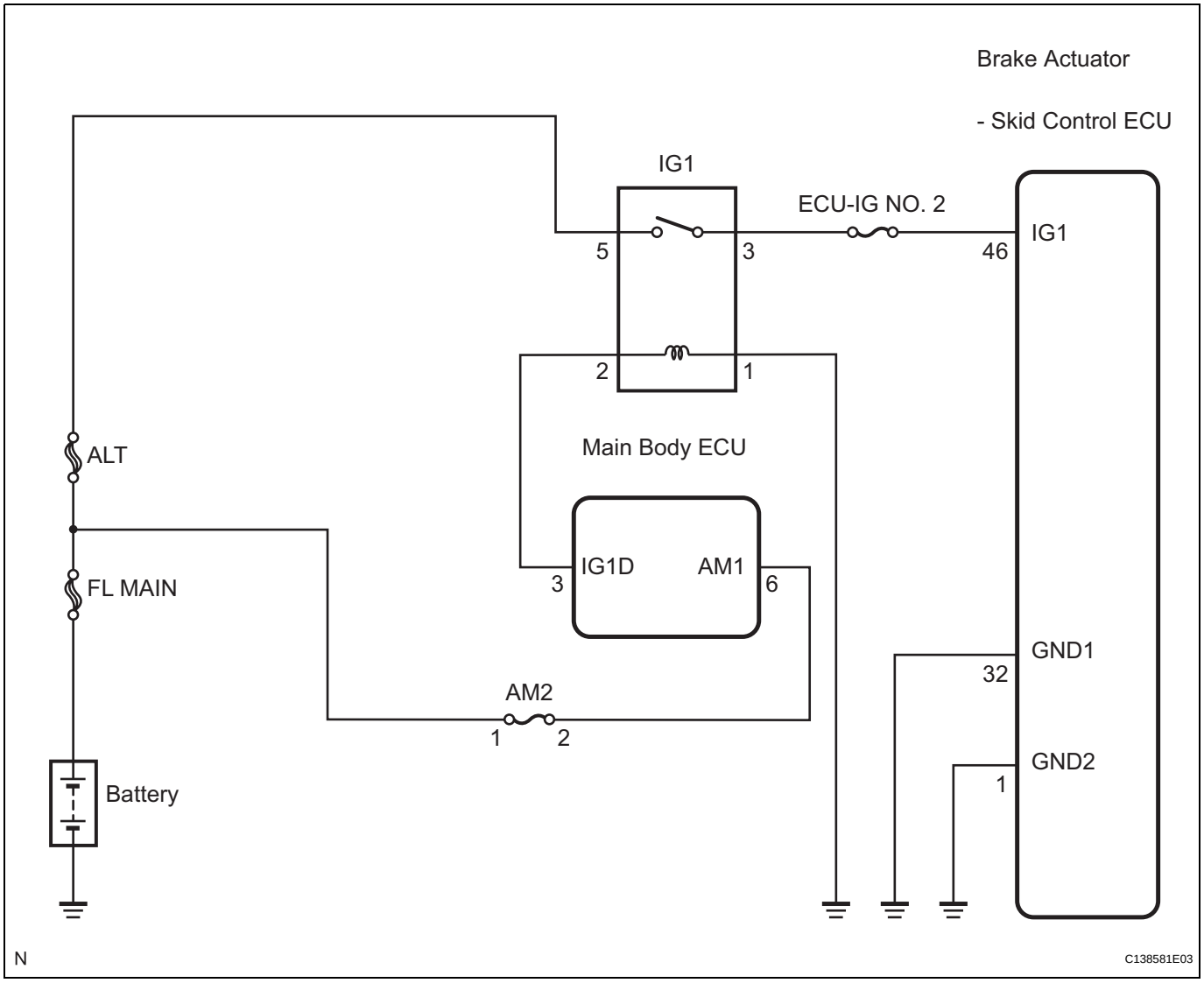

BC

INSPECTION PROCEDURE

NOTICE:

When replacing the brake actuator assembly, perform zero point calibration (See page BC-20).

1 INSPECT ECU-IG NO. 2 FUSE

Main Body ECU:

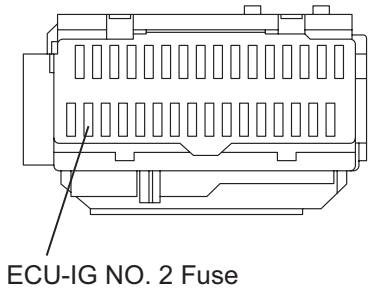

N C135806E01

(a) Remove the ECU-IG NO. 2 fuse from the main body ECU.

(b) Measure the resistance according to the value(s) in the table below.

Standard resistance

Tester Connection	Condition	Specified Condition
ECU-IG NO. 2 (7.5 A) fuse	Always	Below 1 Ω

NG → **REPLACE ECU-IG NO. 2 FUSE**

OK

2 CHECK BATTERY

(a) Install the ECU-IG NO. 2 fuse.

(b) Check the battery voltage.

Standard voltage:

11 to 14 V

NG → **CHECK AND REPLACE CHARGING SYSTEM OR BATTERY**

OK

3 INSPECT SKID CONTROL ECU (IG1 TERMINAL)

Skid Control ECU Harness Side Connector Front View:

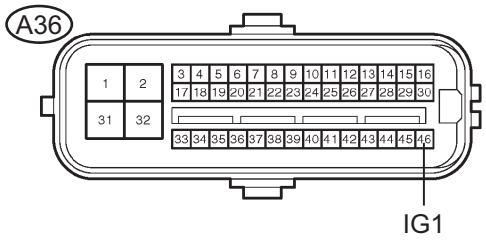

C141673E03

(a) Disconnect the skid control ECU connector.
(b) Turn the engine switch on (IG).
(c) Measure the voltage according to the value(s) in the table below.

Standard voltage

Tester Connection	Condition	Specified Condition
A36-46 (IG1) - Body ground	Engine switch on (IG)	10 to 14 V

NG → **REPAIR OR REPLACE HARNESS OR CONNECTOR (IG1 CIRCUIT)**

OK

4 INSPECT SKID CONTROL ECU (GND TERMINAL)

Skid Control ECU Harness Side Connector Front View:

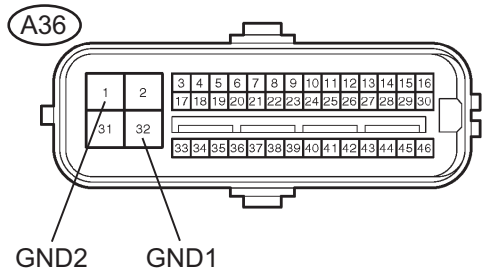

C141673E02

(a) Turn the engine switch off.
(b) Measure the resistance according to the value(s) in the table below.

Standard resistance

Tester Connection	Condition	Specified Condition
A36-32 (GND1) - Body ground	Always	Below 1 Ω
A36-1 (GND2) - Body ground	Always	Below 1 Ω

NG → **REPAIR OR REPLACE HARNESS OR CONNECTOR (GND CIRCUIT)**

OK

5 RECONFIRM DTC

(a) Reconnect the skid control ECU connector.
(b) Clear the DTC (See page BC-43).
(c) Turn the engine switch on (IG).
(d) Check if the same DTC is recorded (See page BC-43).

Result

Condition	Proceed to
DTC (C1241/41) is not output	A
DTC (C1241/41) is output	B

HINT:
If troubleshooting has been carried out according to the Problem Symptoms Table, refer back to the table and proceed to the next step (See page BC-35).

B → **REPLACE BRAKE ACTUATOR ASSEMBLY**

A

CHECK FOR INTERMITTENT PROBLEMS (SYMPTOM SIMULATION)

DTC	C1246/46	Master Cylinder Pressure Sensor Malfunction

DTC	C1281/81	Master Cylinder Pressure Sensor Output Malfunction (Test Mode DTC)

DESCRIPTION

Master cylinder pressure sensor is connected to the skid control ECU in the brake actuator assembly. DTC C1281/81 can be deleted when the master cylinder pressure sensor sends a master cylinder pressure signal or the Test Mode ends. DTC C1281/81 is output only in the Test Mode.

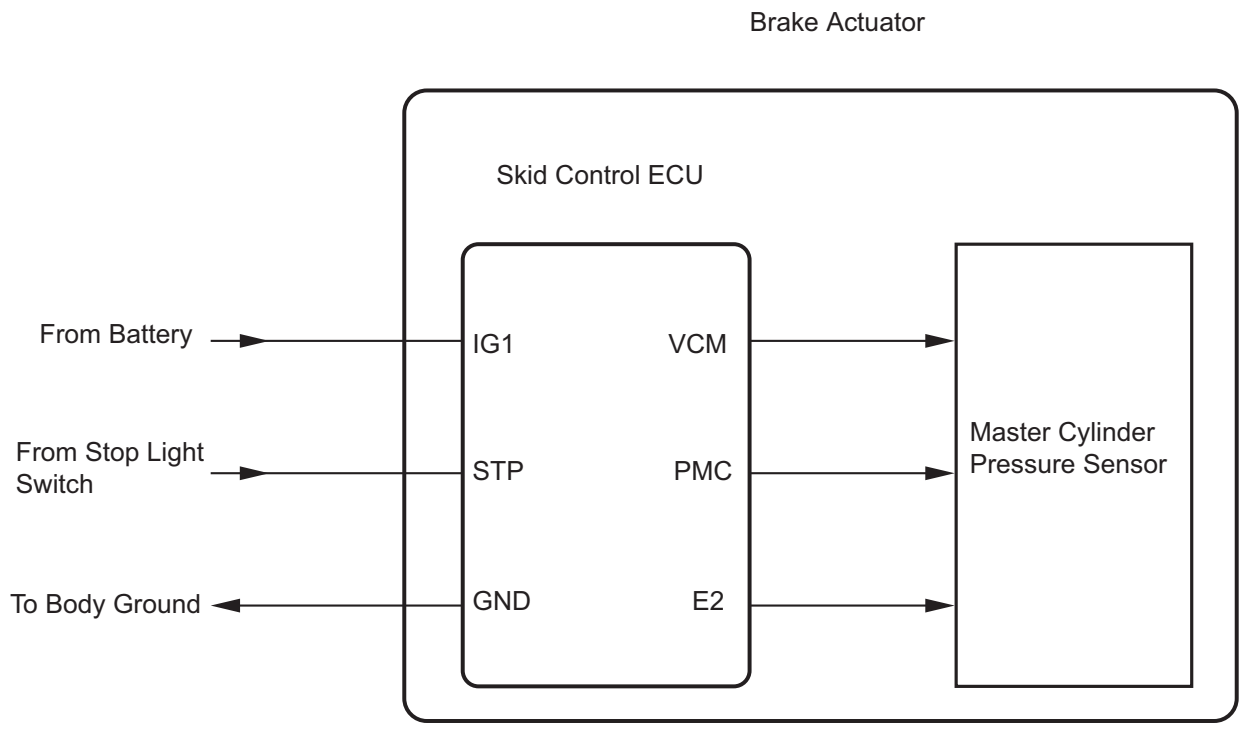

VCM: Power Supply for Master Cylinder Pressure Sensor

PMC: Master Cylinder Pressure Sensor Input

E2: Master Cylinder Pressure Sensor Ground

N

C106656E06

BC

DTC Code	DTC Detection Condition	Trouble Area
C1246/46	When any of the following is detected: • At a vehicle speed of 7 km/h (4.3 mph) or more, when the PMC terminal voltage is over 0.86 V, it does not change by 0.005 V or more for 30 seconds. • Noise occurs in the PMC terminal 7 times or more within 5 seconds. • When the stop light switch is OFF, the PMC terminal voltage is more than 0.86 V or less than 0.3 V for 5 seconds or more. • With the IG1 terminal voltage between 9.5 and 17.2 V, the VCM terminal voltage is not between 4.4 and 5.6 V for 1.2 seconds or more. • When the VCM terminal voltage is between 4.4 and 5.6 V, the PCM terminal voltage is not between 0.14 and 4.85 V for 1.2 seconds or more.	• Master cylinder pressure sensor • Master cylinder pressure sensor circuit • Stop light switch circuit • Brake actuator assembly
C1281/81	Detected only during Test Mode.	• Stop light switch • Master cylinder pressure sensor

INSPECTION PROCEDURE

NOTICE:

When replacing the brake actuator assembly, perform zero point calibration (See page BC-20).

1 CHECK STOP LIGHT OPERATION

(a) Check that the stop light comes on when the brake pedal is depressed, and goes off when the brake pedal is released.

OK

Condition	Illumination Condition
Brake pedal depressed	**ON**
Brake pedal released	**OFF**

NG → **INSPECT STOP LIGHT CIRCUIT**

OK

2 READ VALUE OF INTELLIGENT TESTER (MASTER CYLINDER PRESSURE SENSOR)

(a) Connect the intelligent tester to the DLC3.
(b) Start the engine.
(c) Select the Data List mode on the intelligent tester.

BC

ABS / VSC:

Tester Display	Measurement Item/Range	Normal Condition
MAS CYL PRESS 1	Master cylinder pressure sensor 1 reading / min.: 0 V, max.: 5 V	When brake pedal is released: 0.3 to 0.5 V

(d) Check that the brake fluid pressure value of the master cylinder pressure sensor observed on the intelligent tester changes when the brake pedal is depressed.

OK:

When the pedal is depressed, voltage displayed on the intelligent tester increases.

NG → **REPLACE BRAKE ACTUATOR ASSEMBLY**

OK

3	READ VALUE OF INTELLIGENT TESTER (STOP LIGHT SWITCH)

(a) Select the Data List mode on the intelligent tester.

ABS / VSC:

Tester Display	Measurement Item/Range	Normal Condition
STOP LAMP SW	Stop light switch / ON or OFF	ON: Brake pedal depressed OFF: Brake pedal released

(b) Check that the stop light condition observed on the intelligent tester changes when the brake pedal is depressed.

OK:

When the brake pedal is depressed, the intelligent tester displays "ON".

NG → **REPLACE BRAKE ACTUATOR ASSEMBLY**

OK

4	RECONFIRM DTC

(a) Turn the engine switch off.
(b) Clear the DTC (See page BC-43).
(c) Start the engine.
(d) At a speed of 30 km/h (18 mph) or more, drive the vehicle and perform braking test (decelerate the vehicle by depressing the brake pedal).
(e) Check if the same DTC is recorded (See page BC-43).

Result

Condition	Proceed to
DTC (C1246/46) is not output	A
DTC (C1246/46) is output	B

B → **REPLACE BRAKE ACTUATOR ASSEMBLY**

A

CHECK FOR INTERMITTENT PROBLEMS (SYMPTOM SIMULATION)

DTC	C1249/49	Open in Stop Light Switch Circuit

DESCRIPTION

The skid control ECU (housed in the actuator assembly) inputs the stop light switch signal and the condition of brake operation.
The skid control ECU has an open detection circuit, which outputs this DTC when detecting an open in the stop light input line while the stop light switch is OFF.

DTC Code	DTC Detection Condition	Trouble Area
C1249/49	When IG1 terminal voltage is 9.5 to 17.2 V, an open circuit of the stop light switch continues for 0.3 seconds or more.	• STOP fuse • Stop light switch • Stop light switch circuit • Stop light control relay (*1) • Stop light control relay circuit (*1) • Brake actuator assembly (Skid control ECU)

(*1): with dynamic radar cruise control

WIRING DIAGRAM

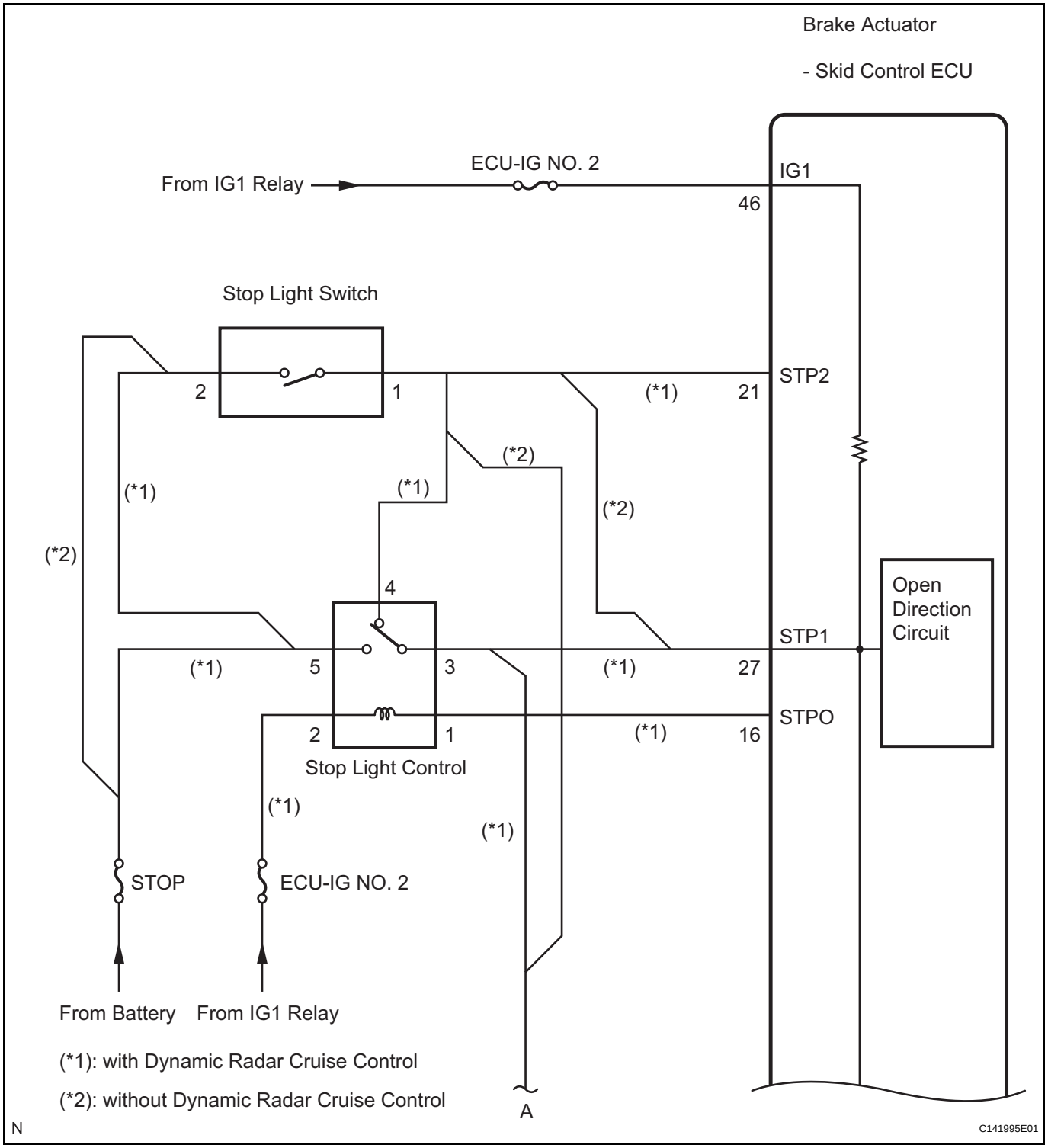

BC

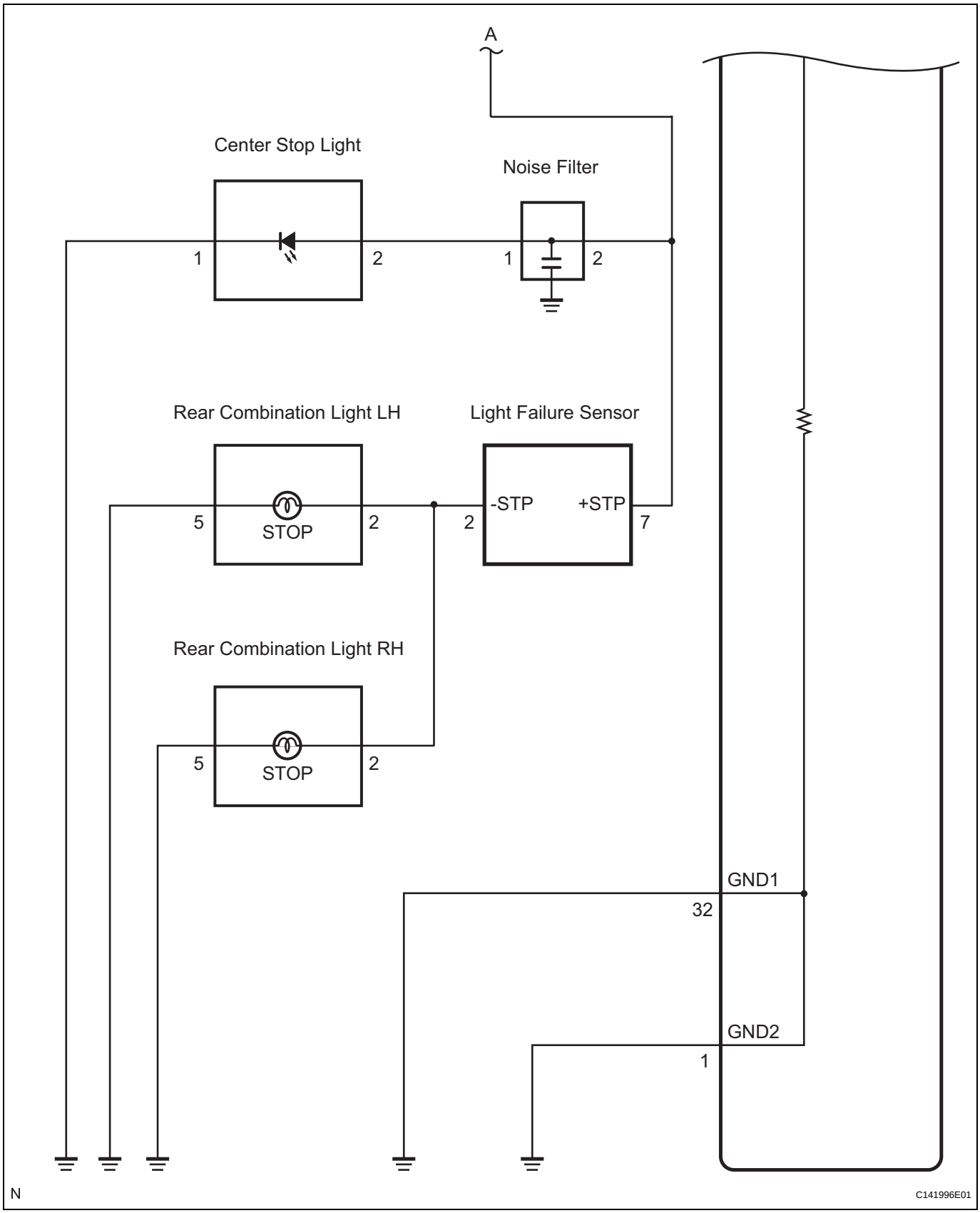

INSPECTION PROCEDURE

NOTICE:

When replacing the brake actuator assembly, perform zero point calibration (See page BC-20).

1 INSPECT STOP FUSE

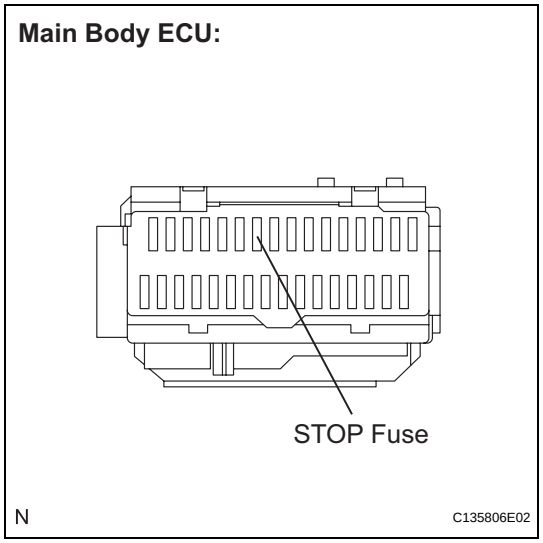

(a) Remove the STOP fuse from the main body ECU.
(b) Measure the resistance according to the value(s) in the table below.

Standard resistance

Tester Connection	Condition	Specified Condition
STOP (10 A) fuse	Always	Below 1 Ω

NG → **REPLACE STOP FUSE**

OK

2 CHECK STOP LIGHT OPERATION

(a) Install the STOP fuse.
(b) Check that the stop light comes on when the brake pedal is depressed, and goes off when the brake pedal is released.

OK

Condition	Illumination Condition
Brake pedal depressed	ON
Brake pedal released	OFF

NG → **Go to step 7**

OK

3 INSPECT SKID CONTROL ECU (STP1 TERMINAL)

Skid Control ECU Harness Side Connector Front View:

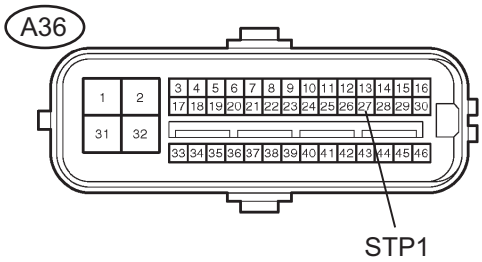

C141673E05

(a) Disconnect the skid control ECU connector.
(b) Measure the voltage according to the value(s) in the table below.

Standard voltage

Tester Connection	Condition	Specified Condition
A36-27 (STP1) - Body ground	Stop light switch ON (Brake pedal depressed)	8 to 14 V
A36-27 (STP1) - Body ground	Stop light switch OFF (Brake pedal released)	Below 1.5 V

NG → **REPAIR OR REPLACE HARNESS OR CONNECTOR (STP1 CIRCUIT)**

OK

4 INSPECT SKID CONTROL ECU (IG1 TERMINAL)

Skid Control ECU Harness Side Connector Front View:

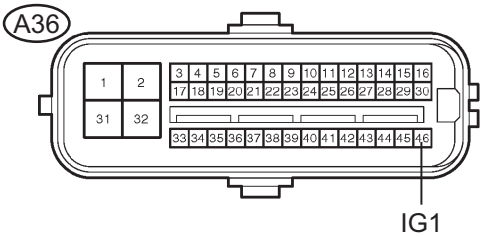

C141673E03

(a) Turn the engine switch on (IG).
(b) Measure the voltage according to the value(s) in the table below.

Standard voltage

Tester Connection	Condition	Specified Condition
A36-46 (IG1) - Body ground	Engine switch on (IG)	10 to 14 V

NG → **REPAIR OR REPLACE HARNESS OR CONNECTOR (IG1 CIRCUIT)**

OK

5 INSPECT SKID CONTROL ECU (GND TERMINAL)

Skid Control ECU Harness Side Connector Front View:

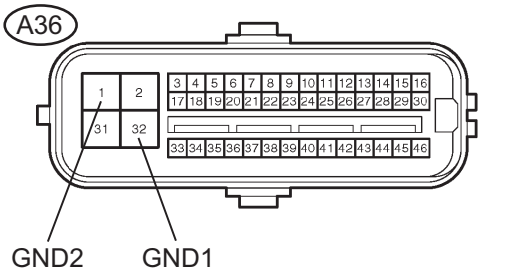

(a) Turn the engine switch off.
(b) Measure the resistance according to the value(s) in the table below.

Standard resistance

Tester Connection	Condition	Specified Condition
A36-32 (GND1) - Body ground	Always	Below 1 Ω
A36-1 (GND2) - Body ground	Always	Below 1 Ω

NG → **REPAIR OR REPLACE HARNESS OR CONNECTOR (GND CIRCUIT)**

OK

6 RECONFIRM DTC

(a) Reconnect the skid control ECU connector.
(b) Clear the DTC (See page BC-43).
(c) Start the engine.
(d) Depress the brake pedal several times to test the stop light circuit.
(e) Check if the same DTC is recorded (See page BC-43).

Result

Condition	Proceed to
DTC (C1249/49) is not output	A
DTC (C1249/49) is output	B

HINT:
If troubleshooting has been carried out according to the Problem Symptoms Table, refer back to the table and proceed to the next step (See page BC-35).

B → **REPLACE BRAKE ACTUATOR ASSEMBLY**

A

CHECK FOR INTERMITTENT PROBLEMS (SYMPTOM SIMULATION)

7 INSPECT STOP LIGHT SWITCH (POWER SOURCE TERMINAL)

Stop Light Switch Harness Side Connector Front View:

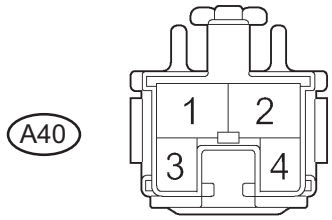

C142000E01

(a) Disconnect the stop light switch connector.
(b) Measure the voltage according to the value(s) in the table below.

Standard voltage

Tester Connection	Condition	Specified Condition
A40-2 - Body ground	Always	10 to 14 V

NG → **REPAIR OR REPLACE HARNESS OR CONNECTOR (POWER SOURCE CIRCUIT)**

OK

8 INSPECT STOP LIGHT SWITCH

Stop Light Switch:

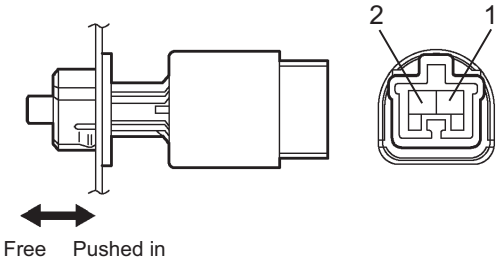

C124796E03

(a) Measure the resistance according to the value(s) in the table below.

Standard resistance

Tester Connection	Condition	Specified Condition
1 - 2	Switch pin free	Below 1 Ω
1 - 2	Switch pin pushed in	10 kΩ or higher

BC

Result

Result	Proceed to
OK (with dynamic radar cruise control)	A
OK (without dynamic radar cruise control)	B
NG	C

B → **Go to step 13**

C → **REPLACE STOP LIGHT SWITCH**

A

9 INSPECT STOP LIGHT CONTROL RELAY

Stop Light Control Relay:

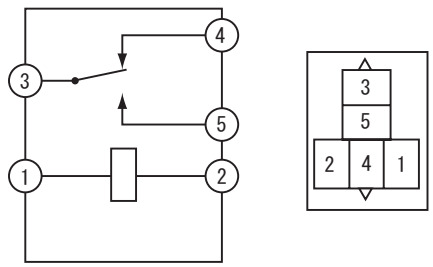

C126459E01

(a) Remove the stop light control relay.
(b) Measure the resistance according to the value(s) in the table below.

Standard resistance

Tester Connection	Condition	Specified Condition
3 - 4	Always	Below 1 Ω

NG → **REPLACE STOP LIGHT CONTROL RELAY**

OK

10	CHECK HARNESS AND CONNECTOR (STOP LIGHT SWITCH - ENGINE ROOM RELAY BLOCK)

Stop Light Switch Harness Side Connector Front View:

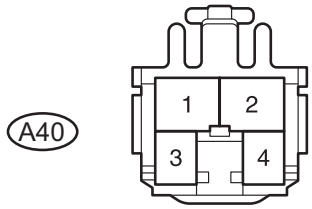

Engine Room R/B:

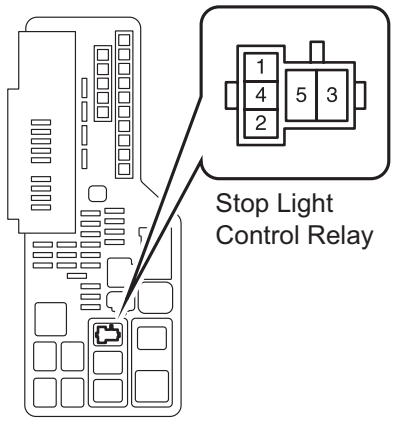

N

C141997E02

(a) Measure the resistance according to the value(s) in the table below.

Standard resistance

Tester Connection	Condition	Specified Condition
A40-1 - Stop light control relay terminal 4	Always	Below 1 Ω
A40-1 - Body ground	Always	10 kΩ or higher

NG → **REPAIR OR REPLACE HARNESS OR CONNECTOR**

OK

11 CHECK HARNESS AND CONNECTOR (SKID CONTROL ECU - ENGINE ROOM RELAY BLOCK)

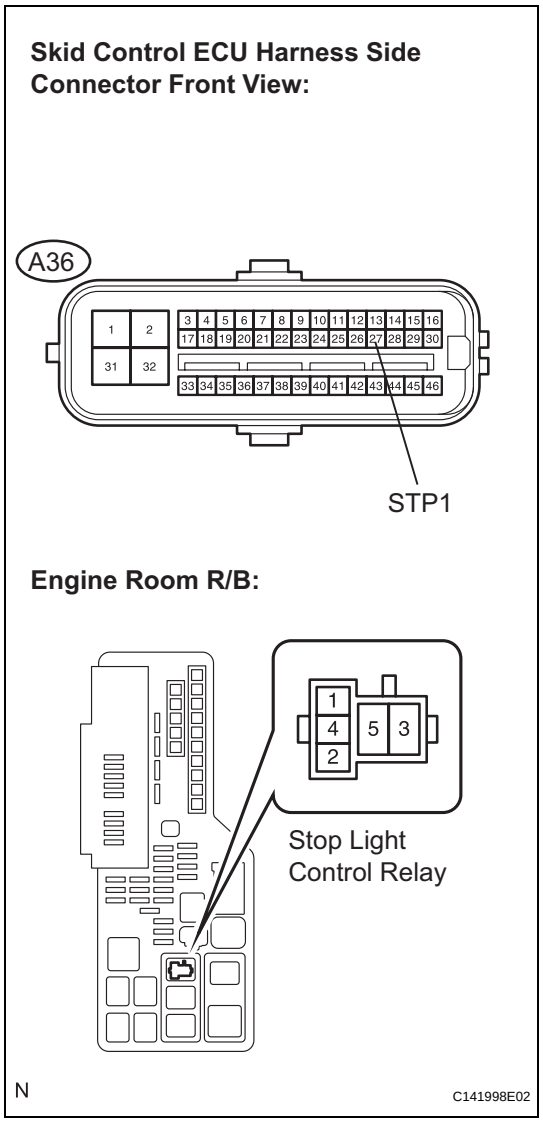

(a) Disconnect the skid control ECU connector.
(b) Measure the resistance according to the value(s) in the table below.

Standard resistance

Tester Connection	Condition	Specified Condition
A36-27 (STP1) - Stop light control relay terminal 3	Always	Below 1 Ω
A36-27 (STP1) - Body ground	Always	10 kΩ or higher

NG → **REPAIR OR REPLACE HARNESS OR CONNECTOR**

OK

12 RECONFIRM DTC

BC

(a) Clear the DTC (See page BC-43).
(b) Start the engine.
(c) Depress the brake pedal several times to test the stop light circuit.
(d) Check if the same DTC is recorded (See page BC-43).
HINT:
Reinstall the relay, connectors, etc. and restore the vehicle to its prior condition before rechecking for DTCs.

Result

Condition	Proceed to
DTC (C1249/49) is not output	A
DTC (C1249/49) is output	B

HINT:
If troubleshooting has been carried out according to the Problem Symptoms Table, refer back to the table and proceed to the next step (See page BC-35).

B → **REPLACE BRAKE ACTUATOR ASSEMBLY**

A

INSPECT LIGHTING SYSTEM (STOP LIGHT CIRCUIT)

13 CHECK HARNESS AND CONNECTOR (SKID CONTROL ECU - STOP LIGHT SWITCH)

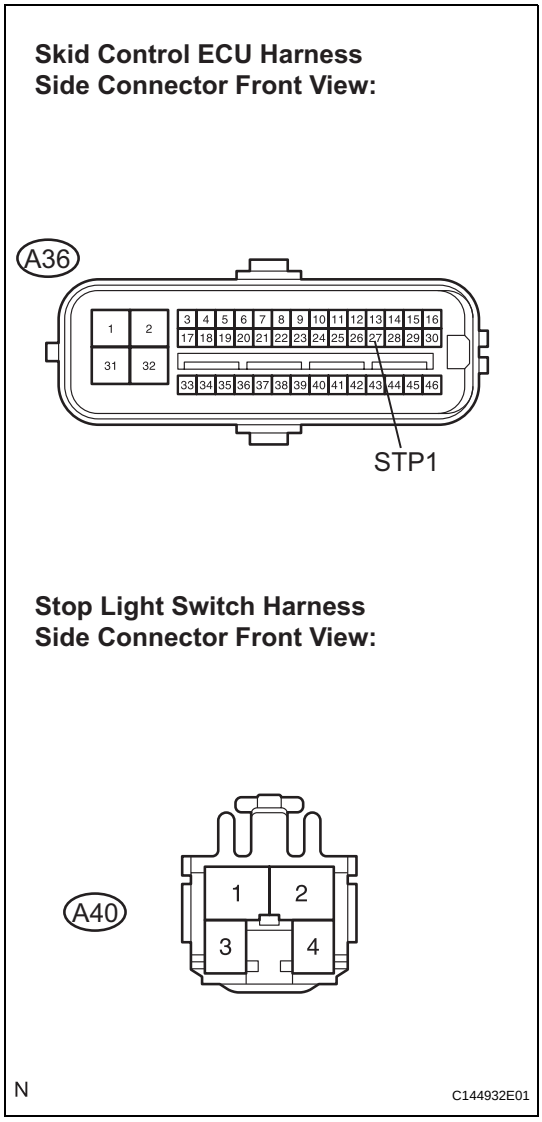

(a) Disconnect the skid control ECU connector.
(b) Measure the resistance according to the value(s) in the table below.

Standard resistance

Tester Connection	Condition	Specified Condition
A36-27 (STP1) - A40-1	Always	Below 1 Ω
A36-27 (STP1) - Body ground	Always	10 kΩ or higher

NG → **REPAIR OR REPLACE HARNESS OR CONNECTOR**

OK

14 RECONFIRM DTC

(a) Reconnect the skid control ECU connector and the stop light switch connector.

BC

(b) Clear the DTC (See page BC-43).
(c) Start the engine.
(d) Depress the brake pedal several times to test the stop light circuit.
(e) Check if the same DTC is recorded (See page BC-43).

Result

Condition	Proceed to
DTC (C1249/49) is not output	A
DTC (C1249/49) is output	B

HINT:
If troubleshooting has been carried out according to the Problem Symptoms Table, refer back to the table and proceed to the next step (See page BC-35).

B → **REPLACE BRAKE ACTUATOR ASSEMBLY**

A

INSPECT LIGHTING SYSTEM (STOP LIGHT CIRCUIT)

DTC	C1251/51	Open in Pump Motor Circuit

DESCRIPTION

DTC Code	DTC Detection Condition	Trouble Area
C1251/51	• Actuator pump motor does not operate properly. • Open in actuator pump motor circuit continues for at least 2 seconds.	• Brake actuator assembly (GND circuit) • Brake actuator assembly (Motor circuit)

WIRING DIAGRAM

Refer to DTCs C0273/13, C0274/14 and C1361/91 (See page BC-78).

INSPECTION PROCEDURE

NOTICE:

When replacing the brake actuator assembly, perform zero point calibration (See page BC-20).

1	PERFORM ACTIVE TEST BY INTELLIGENT TESTER (ABS MOTOR RELAY)

(a) Connect the intelligent tester to the DLC3.
(b) Start the engine.
(c) Select the Active Test mode on the intelligent tester.

ABS / VSC:

Tester Display	Test Part	Control Range	Diagnostic Note
MOTOR RELAY	ABS motor relay	Relay ON / OFF	Operating sound of relay (clicking sound) and motor can be heard

(d) Check the operating sound of the ABS motor relay and motor when operating it with the intelligent tester.
OK:
The operating sound of the ABS motor relay and motor can be heard.

OK → **Go to step 3**

NG

2 INSPECT SKID CONTROL ECU (GND2 TERMINAL)

Skid Control ECU Harness Side Connector Front View:

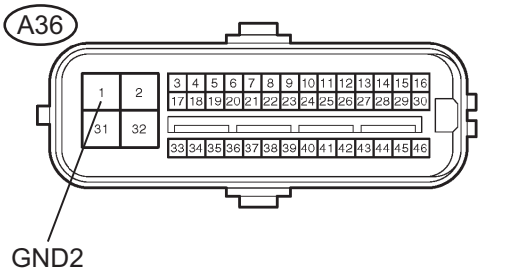

(a) Turn the engine switch off.
(b) Disconnect the skid control ECU connector.
(c) Measure the resistance according to the value(s) in the table below.

Standard resistance

Tester Connection	Condition	Specified Condition
A36-1 (GND2) - Body ground	Always	Below 1 Ω

NG → **REPAIR OR REPLACE HARNESS OR CONNECTOR (GND2 CIRCUIT)**

OK

3 RECONFIRM DTC

(a) Reconnect the skid control ECU connector.
(b) Turn the engine switch off.
(c) Clear the DTC (See page BC-43).
(d) Start the engine.
(e) Drive the vehicle at the speed of 7 km/h (4.3 mph) or more.
(f) Check if the same DTC is recorded (See page BC-43).

Result

Condition	Proceed to
DTC (C1251/51) is not output	A
DTC (C1251/51) is output	B

HINT:
- If a speed signal of 6 km/h (4 mph) or more is input to the skid control ECU, with the engine switch on (IG) and the stop light switch off, the ECU performs self diagnosis of the motor and solenoid circuits.
- If a normal system code is output (the trouble code is not output), slightly jiggle the connectors, wire harness, and fuses of the brake actuator assembly. Make sure that no DTCs are output.
- If any DTCs are output while jiggling a connector or wire harness of the brake actuator assembly (skid control ECU), inspect and repair the connector or wire harness.

B → **REPLACE BRAKE ACTUATOR ASSEMBLY**

A

CHECK FOR INTERMITTENT PROBLEMS (SYMPTOM SIMULATION)

DTC	C1290/66	Steering Angle Sensor Zero Point Malfunction

DESCRIPTION

The skid control ECU acquires steering angle sensor zero point every time the engine switch is turned on (IG) and the vehicle is driven at 35 km/h (22 mph) or more for approximately 5 seconds. The ECU also stores the previous zero point.
If front wheel alignment or steering wheel position is adjusted without disconnecting the negative battery terminal, or if yaw rate and acceleration sensor zero point is not acquired after the adjustments have been completed, the skid control ECU detects the difference between the previous zero point and newly acquired zero point and outputs this DTC to indicate a poor adjustment.
Warning of the steering angle sensor zero point malfunction will be cancelled by turning the engine switch off.

DTC Code	DTC Detection Condition	Trouble Area
C1290/66	The steering angle sensor zero point calibration position vastly differs from the recorded value	• Yaw rate and acceleration sensor zero point calibration incomplete • Poor adjustment of the centered position of the steering wheel • Poor adjustment of front wheel alignment

INSPECTION PROCEDURE

NOTICE:
When replacing the brake actuator assembly, perform zero point calibration (See page BC-20).

1	PERFORM ZERO POINT CALIBRATION OF YAW RATE AND ACCELERATION SENSOR

(a) Perform zero point calibration of the yaw rate and acceleration sensor (See page BC-20).
HINT:
- When the stored zero point of the yaw rate and acceleration sensor is erased, steering angle sensor zero point will also be erased.
- If the zero point and output value of the yaw rate and acceleration sensor and the output value of the speed sensors are not normal, steering angle sensor zero point cannot be acquired normally even if the vehicle is driven straight ahead at 35 km/h (22 mph) or more.

NEXT

2	CHECK STEERING ANGLE SENSOR ZERO POINT CALIBRATION

BC

(a) Drive the vehicle straight ahead at 35 km/h (22 mph) or more for at least 5 seconds.
(b) Check that the centered position of the steering wheel is correctly set while driving straight ahead.
HINT:
If front wheel alignment and steering position are adjusted as a result of abnormal centered position of the steering wheel, acquire yaw rate and acceleration sensor zero point again after the adjustments are completed.

OK:
The centered position of the steering wheel is correctly set.

NG → **ADJUST FRONT WHEEL ALIGNMENT OR STEERING POSITION**

OK

3	RECONFIRM DTC

(a) Turn the engine switch off.
(b) Clear the DTC (See page BC-43).
(c) Start the engine.
(d) Drive the vehicle and turn the steering wheel to the right and left at the speed of 35 km/h (22 mph) or more.
(e) Check if the same DTC is recorded (See page BC-43).

Result

Condition	Proceed to
DTC (C1290/66) is not output	A
DTC (C1290/66) is output	B

B → **REPLACE BRAKE ACTUATOR ASSEMBLY**

A

END

DTC	C1380/64	Stop Light Control Relay Malfunction

DESCRIPTION

Upon receiving the dynamic radar cruise control operating signal from the skid control ECU, the relay contact turns on and the stop light comes on.

DTC Code	DTC Detection Condition	Trouble Area
C1380/64 (*1)	When either of the following is detected: • When the voltage at the IG1 terminal is between 10 to 14 V and the stop light control relay drive output (STPO) is ON, a signal has not been input to the STP terminal for 5 seconds or more. • When the voltage at the IG1 terminal is between 10 to 14 V and the stop light control relay drive output (STPO) is OFF, the signal at the STP1 is different from the input signal at the STP2 for 5 seconds or more.	• STOP fuse • Stop light switch • Stop light switch circuit • Stop light control relay • Stop light control relay circuit • Brake actuator assembly (Skid control ECU)

(*1): with dynamic radar cruise control

WIRING DIAGRAM

Refer to DTC C1249/49 (See page BC-115).

INSPECTION PROCEDURE

NOTICE:

When replacing the brake actuator assembly, perform zero point calibration (See page BC-20).

HINT:

When C1249/49 is output together with C1380/64, inspect and repair the trouble areas indicated by C1249/49 first.

1 INSPECT STOP FUSE

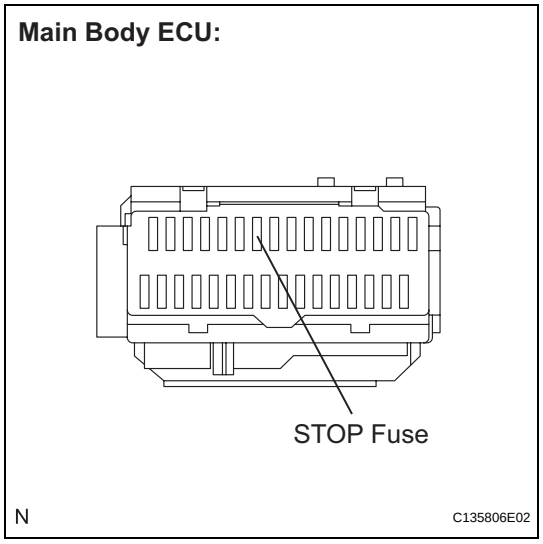

(a) Remove the STOP fuse from the main body ECU.

(b) Measure the resistance according to the value(s) in the table below.

Standard resistance

Tester Connection	Condition	Specified Condition
STOP (10 A) fuse	Always	Below 1 Ω

NG → **REPLACE STOP FUSE**

OK

2 CHECK STOP LIGHT OPERATION

(a) Install the STOP fuse.

BC

(b) Check that the stop light comes on when the brake pedal is depressed, and goes off when the brake pedal is released.

OK

Condition	Illumination Condition
Brake pedal depressed	ON
Brake pedal released	OFF

NG → **INSPECT STOP LIGHT CIRCUIT**

OK

3 INSPECT SKID CONTROL ECU (STP1 TERMINAL)

Skid Control ECU Harness Side Connector Front View:

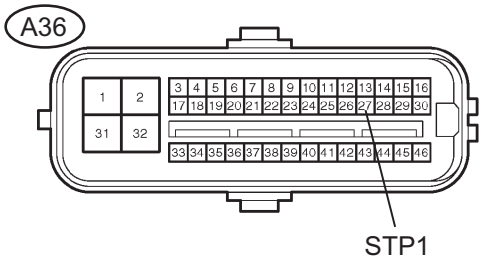

C141673E05

(a) Disconnect the skid control ECU connector.
(b) Measure the voltage according to the value(s) in the table below.

Standard voltage

Tester Connection	Condition	Specified Condition
A36-27 (STP1) - Body ground	Stop light switch ON (Brake pedal depressed)	8 to 14 V
A36-27 (STP1) - Body ground	Stop light switch OFF (Brake pedal released)	Below 1.5 V

NG → **REPAIR OR REPLACE HARNESS OR CONNECTOR (STP1 CIRCUIT)**

OK

4 INSPECT SKID CONTROL ECU (STP2 TERMINAL)

Skid Control ECU Harness Side Connector Front View:

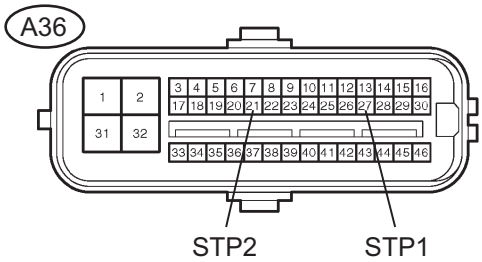

C141673E07

(a) Measure the resistance according to the value(s) in the table below.

Standard resistance

Tester Connection	Condition	Specified Condition
A36-27 (STP1) - A36-21 (STP2)	Always	Below 1 Ω

NG → **REPAIR OR REPLACE HARNESS OR CONNECTOR (STP2 CIRCUIT)**

BC

OK

5 PERFORM ACTIVE TEST BY INTELLIGENT TESTER (STOP LIGHT CONTROL RELAY)

(a) Reconnect the skid control ECU connector.
(b) Connect the intelligent tester to the DLC3.
(c) Start the engine.
(d) Select the Active Test mode on the intelligent tester.

ABS / VSC:

Tester Display	Test Part	Control Range	Diagnostic Note
STOP LAMP RELAY	Stop light control relay	Relay ON / OFF	Stop light comes on (Does not come on for 5 seconds or more)

(e) Check that the "ON" and "OFF" of the stop light can be shown on the rear combination light by the intelligent tester.
OK:
The stop light turns on or off in accordance with the intelligent tester.

OK → **Go to step 9**

NG

6 INSPECT STOP LIGHT CONTROL RELAY

Stop Light Control Relay:

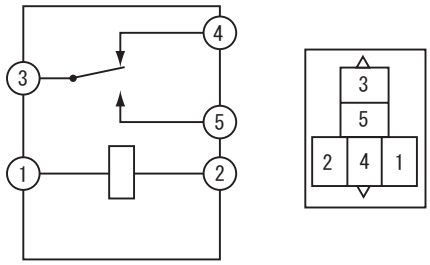

C126459E01

(a) Turn the engine switch off.
(b) Remove the stop light control relay.
(c) Measure the resistance according to the value(s) in the table below.
Standard resistance

Tester Connection	Condition	Specified Condition
3 - 4	Always	Below 1 Ω
3 - 5	Always	10 kΩ or higher
3 - 4	When battery positive voltage is applied to terminal 1 and battery negative voltage to terminal 2	10 kΩ or higher
3 - 5	When battery positive voltage is applied to terminal 1 and battery negative voltage to terminal 2	Below 1 Ω

NG → **REPLACE STOP LIGHT CONTROL RELAY**

OK

BC

7 INSPECT ENGINE ROOM RELAY BLOCK (POWER SOURCE TERMINAL)

Engine Room R/B:

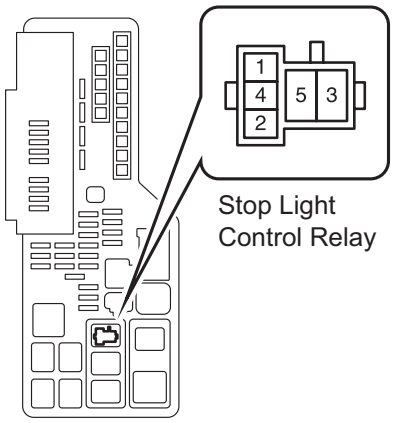

N C142010E02

(a) Measure the voltage according to the value(s) in the table below.

Standard voltage

Tester Connection	Condition	Specified Condition
Stop light control relay terminal 5 - Body ground	Always	8 to 14 V
Stop light control relay terminal 2 - Body ground	Engine switch on (IG)	8 to 14 V

NG → **REPAIR OR REPLACE HARNESS OR CONNECTOR (POWER SOURCE CIRCUIT)**

OK

8 INSPECT SKID CONTROL ECU (STPO TERMINAL)

Skid Control ECU Harness Side Connector Front View:

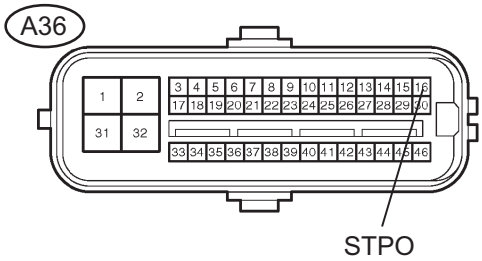

C141673E08

(a) Turn the engine switch off.
(b) Install the stop light control relay.
(c) Disconnect the skid control ECU connector.
(d) Turn the engine switch on (IG).
(e) Measure the voltage according to the value(s) in the table below.

Standard voltage

Tester Connection	Condition	Specified Condition
A36-16 (STPO) - Body ground	Engine switch on (IG)	10 to 14 V

NG → **REPAIR OR REPLACE HARNESS OR CONNECTOR (STPO CIRCUIT)**

BC

OK

9 RECONFIRM DTC

(a) Turn the engine switch off.
(b) Reconnect the skid control ECU connector.
(c) Clear the DTC (See page BC-43).
(d) Perform a road test (See page CC-50).
(e) Check if the same DTC is recorded (See page BC-43).

Result

Condition	Proceed to
DTC (C1380/64) is not output	A

Condition	Proceed to
DTC (C1380/64) is output	B

B → **REPLACE BRAKE ACTUATOR ASSEMBLY**

A

CHECK FOR INTERMITTENT PROBLEMS (SYMPTOM SIMULATION)

DTC	U0073/94	Control Module Communication Bus OFF

DTC	U0100/65	Lost Communication with ECM / PCM

DTC	U0123/62	Lost Communication with Yaw Rate Sensor Module

DTC	U0124/95	Lost Communication with Lateral Acceleration Sensor Module

DTC	U0126/63	Lost Communication with Steering Angle Sensor Module

DESCRIPTION

The skid control ECU receives the signals from the ECM, steering angle sensor, and yaw rate and acceleration sensor via the CAN communication system.

DTC Code	DTC Detection Condition	Trouble Area
U0073/94	When any of the following is detected: 1. With the IG1 terminal voltage 10 V or more, after the output of data from the skid control ECU is completed, the sending continues for 5 seconds or more. 2. With the IG1 terminal voltage 10 V or more, the condition that bus OFF state occurs once or more within 100 ms occurs 10 times in succession. (Sent signals cannot be received.) 3. With the IG1 terminal voltage 10 V or more, a delay in receiving data from the yaw rate and acceleration sensor and steering angle sensor continues for 1 second or more. 4. With the IG1 terminal voltage 10 V or more, the condition that a delay in receiving data from the yaw rate and acceleration sensor and the steering angle sensor occurs more than once within 5 seconds occurs 10 times in succession within 60 seconds.	CAN communication system
U0100/65	When either of the following is detected: 1. With the IG1 terminal voltage 10 V or more and the vehicle speed 15 km/h (9 mph) or more, data cannot be sent to the ECM for 2 seconds or more. 2. The IG1 terminal voltage 10 V or more and the vehicle speed 15 km/h (9 mph) or more for 2 seconds or more.	CAN communication system (Skid control ECU to ECM)
U0123/62	When either of the following is detected: 1. With the IG1 terminal voltage 10 V or more, data from the yaw rate sensor cannot be received for 1 second or more. 2. With the IG1 terminal voltage 10 V or more, the following occurs 10 times in succession within 60 seconds. • The condition that data from the yaw rate sensor cannot be received occurs once or more within 5 seconds.	CAN communication system (Skid control ECU to yaw rate and acceleration sensor)
U0124/95	When either of the following is detected: 1. With the IG1 terminal voltage 10 V or more, data from the acceleration sensor cannot be received for 1 second or more. 2. With the IG1 terminal voltage 10 V or more, the following occurs 10 times in succession within 60 seconds. • The condition that data from the acceleration sensor cannot be received occurs once or more within 5 seconds.	CAN communication system (Skid control ECU to yaw rate and acceleration sensor)

DTC Code	DTC Detection Condition	Trouble Area
U0126/63	When either of the following is detected: 1. With the IG1 terminal voltage 10 V or more, data from the steering angle sensor cannot be received for 1 second or more. 2. With the IG1 terminal voltage 10 V or more, the following occurs 10 times in succession within 60 seconds. • The condition that data from the steering angle sensor cannot be received occurs once or more within 5 seconds.	CAN communication system (Skid control ECU to steering angle sensor)

WIRING DIAGRAM

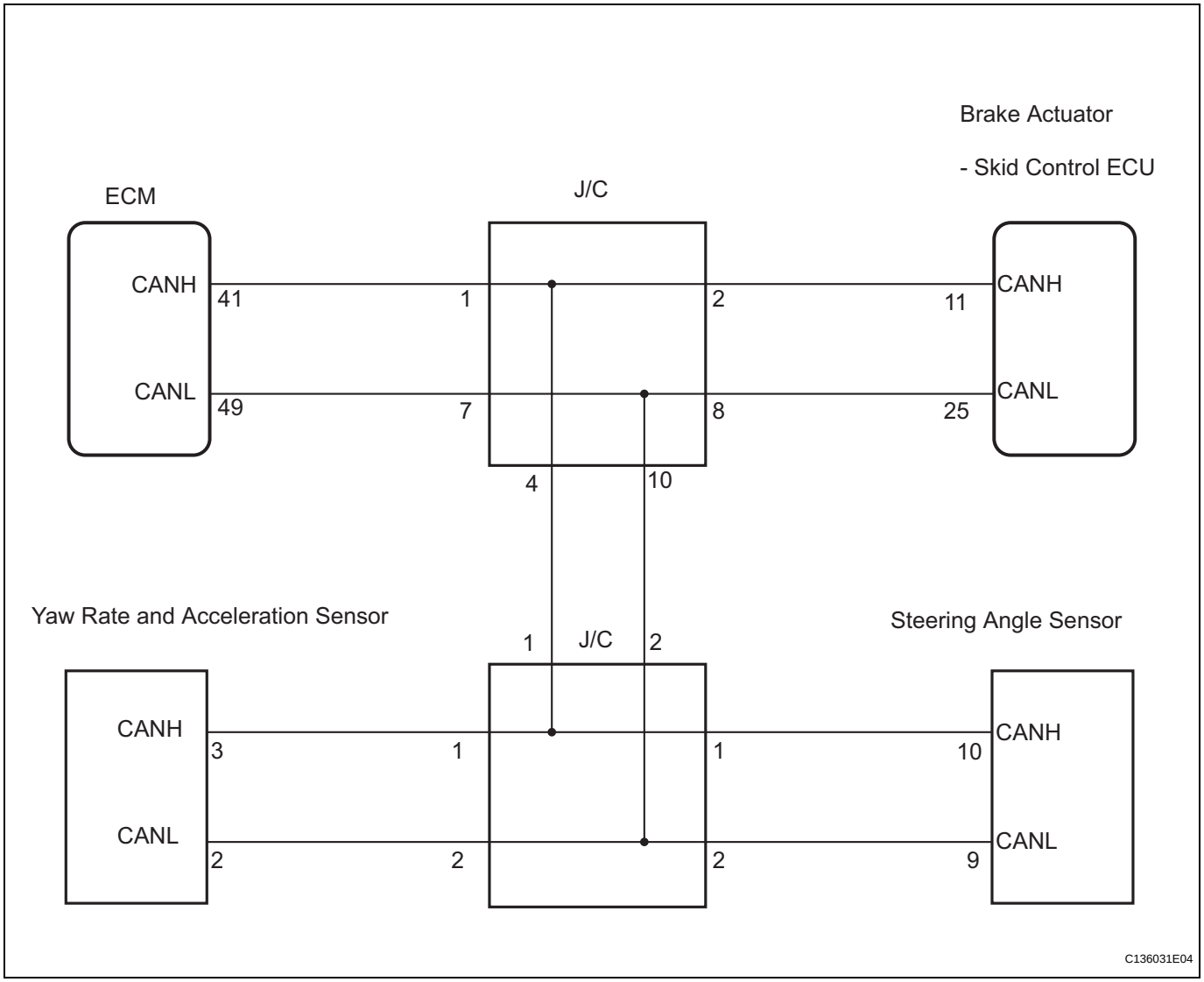

BC

INSPECTION PROCEDURE

1	CHECK HARNESS AND CONNECTOR (MOMENTARY INTERRUPTION)

(a) Using the intelligent tester, check for any momentary interruption in the wire harness and connector corresponding to a DTC (See page BC-19).

ABS / VSC:

Tester Display	Measurement Item/Range	Normal Condition
EFI COM OPN	EFI communication open detection / ERROR or NORMAL	ERROR: Momentary interruption NORMAL: Normal
STEERING OPN	Steering sensor open detection / ERROR or NORMAL	ERROR: Momentary interruption NORMAL: Normal
YAW RATE OPN	Yaw rate sensor open detection / ERROR or NORMAL	ERROR: Momentary interruption NORMAL: Normal

Result

Condition	Proceed to
There is a constant open circuit	**A**
There are no momentary interruptions	**B**
There are momentary interruptions	**C**

HINT:
Perform the above inspection before removing the sensor and connector.

B → **Go to step 3**

C → **Go to step 4**

A

2	CHECK IF EACH SENSOR AND ECM CONNECTOR IS SECURELY CONNECTED

(a) Turn the engine switch off.
(b) Check if each sensor or ECM connector is securely connected.
OK:
The connector should be securely connected.

NG → **CONNECT CONNECTOR TO EACH SENSOR OR ECM CORRECTLY**

BC

OK

3	RECONFIRM DTC

(a) Turn the engine switch off.
(b) Record the output DTCs (for ABS, VSC, and CAN communication).

HINT:
If the CAN communication system DTC and the relevant sensor DTCs are output simultaneously, troubleshoot the relevant sensor DTCs (for ABS and VSC) after the CAN communication system returns to normal.

Result

Condition	Proceed to
DTC (CAN communication system DTC) is output	A
DTC (ABS and/or VSC DTC) is output	B
DTC is not output	C

B → **REPAIR CIRCUIT INDICATED BY OUTPUT DTC (See page BC-52)**

C → **CHECK FOR INTERMITTENT PROBLEMS (SYMPTOM SIMULATION)**

A

INSPECT CAN COMMUNICATION SYSTEM

4 REPAIR OR REPLACE HARNESS OR CONNECTOR

(a) Turn the engine switch off.
(b) Repair or replace the harness or connector.
(c) Check for any momentary interruption between the skid control ECU and each sensor or ECM (See page BC-19).
(d) Check that there is no momentary interruption.

NEXT

5 RECONFIRM DTC

(a) Turn the engine switch off.
(b) Clear the DTC (See page BC-43).
(c) Start the engine.
(d) Drive the vehicle and turn the steering wheel to the right and left at a speed of 15 km/h (9 mph) or more.
(e) Check that no CAN communication system DTC is output.
(f) If ABS and VSC DTCs are output, record them.

Result

Condition	Proceed to
DTC output for the CAN communication system	A
No DTC is output (ABS and/or VSC DTC is output)	B
No DTC is output (No ABS and/or VSC DTC is output)	C

HINT:
The CAN communication system must be normal when repairing each sensor DTC (for ABS and VSC).

B → **REPAIR CIRCUIT INDICATED BY OUTPUT DTC (See page BC-52)**

C → **END**

A

INSPECT CAN COMMUNICATION SYSTEM

ABS Warning Light Remains ON

DESCRIPTION

The skid control ECU is connected to the combination meter via CAN communication.
If any of the following is detected, the ABS warning light remains on.

- The skid control ECU connectors are disconnected from the skid control ECU.
- There is a malfunction in the skid control ECU internal circuit.
- There is an open in the harness between the combination meter and the skid control ECU.

HINT:
In some cases, the intelligent tester cannot be used when the skid control ECU is abnormal.

WIRING DIAGRAM

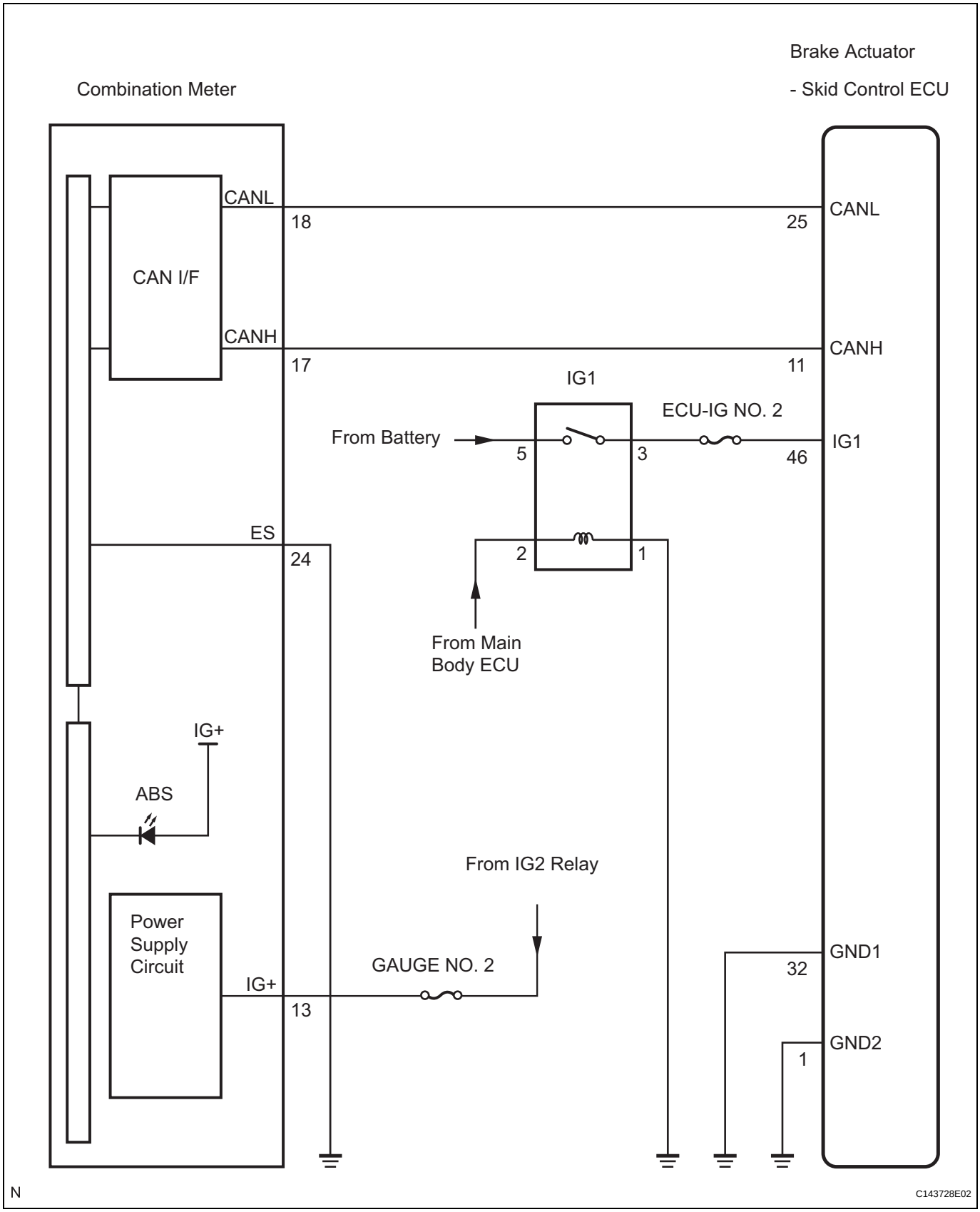

INSPECTION PROCEDURE

NOTICE:

When replacing the brake actuator assembly, perform zero point calibration (See page BC-20).

BC

1	CHECK CAN COMMUNICATION SYSTEM

(a) Check if the CAN communication system DTC is output (See page CA-41).

Result

Condition	Proceed to
DTC is not output	A
DTC is output	B

B → **INSPECT CAN COMMUNICATION SYSTEM**

A

2	CHECK IF SKID CONTROL ECU CONNECTOR IS SECURELY CONNECTED

(a) Check if the skid control ECU connector is securely connected.
OK:
The connector should be securely connected.

NG → **CONNECT CONNECTOR TO ECU CORRECTLY**

OK

3	CHECK BATTERY

(a) Check the battery voltage.
Standard voltage:
11 to 14 V

NG → **CHECK AND REPLACE CHARGING SYSTEM OR BATTERY**

OK

4 INSPECT SKID CONTROL ECU (IG1 TERMINAL)

Skid Control ECU Harness Side Connector Front View:

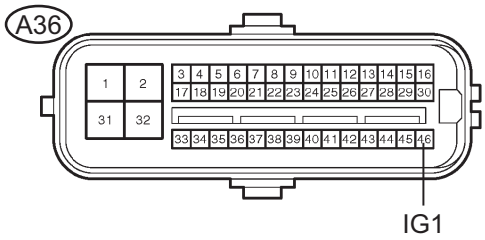

(a) Disconnect the skid control ECU connector.
(b) Turn the engine switch on (IG).
(c) Measure the voltage according to the value(s) in the table below.

Standard voltage

Tester Connection	Condition	Specified Condition
A36-46 (IG1) - Body ground	Engine switch on (IG)	10 to 14 V

NG → **REPAIR OR REPLACE HARNESS OR CONNECTOR (IG1 CIRCUIT)**

OK

5 INSPECT SKID CONTROL ECU (GND TERMINAL)

Skid Control ECU Harness Side Connector Front View:

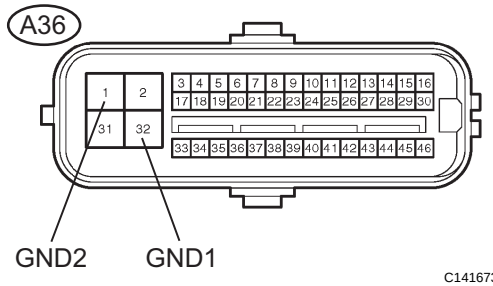

(a) Turn the engine switch off.
(b) Measure the resistance according to the value(s) in the table below.

Standard resistance

Tester Connection	Condition	Specified Condition
A36-32 (GND1) - Body ground	Always	Below 1 Ω
A36-1 (GND2) - Body ground	Always	Below 1 Ω

NG → **REPAIR OR REPLACE HARNESS OR CONNECTOR (GND CIRCUIT)**

BC

OK

6 INSPECT COMBINATION METER ASSEMBLY

(a) Reconnect the skid control ECU connector.
(b) Perform Active Test of the combination meter (meter CPU) using the intelligent tester (See page ME-29).

OK:

The ABS warning light turns on or off in accordance with the intelligent tester.

HINT:
If troubleshooting has been carried out according to the Problem Symptoms Table, refer back to the table and proceed to the next step before replacing the part (See page BC-35).

NG → **REPLACE COMBINATION METER ASSEMBLY**

OK

REPLACE BRAKE ACTUATOR ASSEMBLY

ABS Warning Light does not Come ON

DESCRIPTION

The skid control ECU is connected to the combination meter via CAN communication.

WIRING DIAGRAM

Refer to ABS Warning Light Remains ON (See page BC-142).

INSPECTION PROCEDURE

NOTICE:

When replacing the brake actuator assembly, perform zero point calibration (See page BC-20).

1 CHECK CAN COMMUNICATION SYSTEM

(a) Check if the CAN communication system DTC is output (See page CA-41).

Result

Condition	Proceed to
DTC is not output	A
DTC is output	B

B → **INSPECT CAN COMMUNICATION SYSTEM**

A

2 CHECK ABS WARNING LIGHT

(a) Disconnect the skid control ECU connector.
(b) Turn the engine switch on (IG).
(c) Check that the ABS warning light comes on.
OK:
The ABS warning light comes on.
HINT:
If troubleshooting has been carried out according to the Problem Symptoms Table, refer back to the table and proceed to the next step before replacing the part (See page BC-35).

OK → **REPLACE BRAKE ACTUATOR ASSEMBLY**

NG

3 INSPECT COMBINATION METER ASSEMBLY

(a) Turn the engine switch off.
(b) Reconnect the skid control ECU connector.
(c) Perform Active Test of the combination meter (meter CPU) using the intelligent tester (See page ME-29).
OK:
The ABS warning light turns on or off in accordance with the intelligent tester.

HINT:
If troubleshooting has been carried out according to the Problem Symptoms Table, refer back to the table and proceed to the next step (See page BC-35).

NG → **REPLACE COMBINATION METER ASSEMBLY**

OK

REPLACE BRAKE ACTUATOR ASSEMBLY

VSC Warning Light Remains ON

DESCRIPTION

The skid control ECU communicates with the combination meter via CAN communication. If the ECU stores a DTC, the DTC will be displayed on the multi information display in the combination meter.

WIRING DIAGRAM

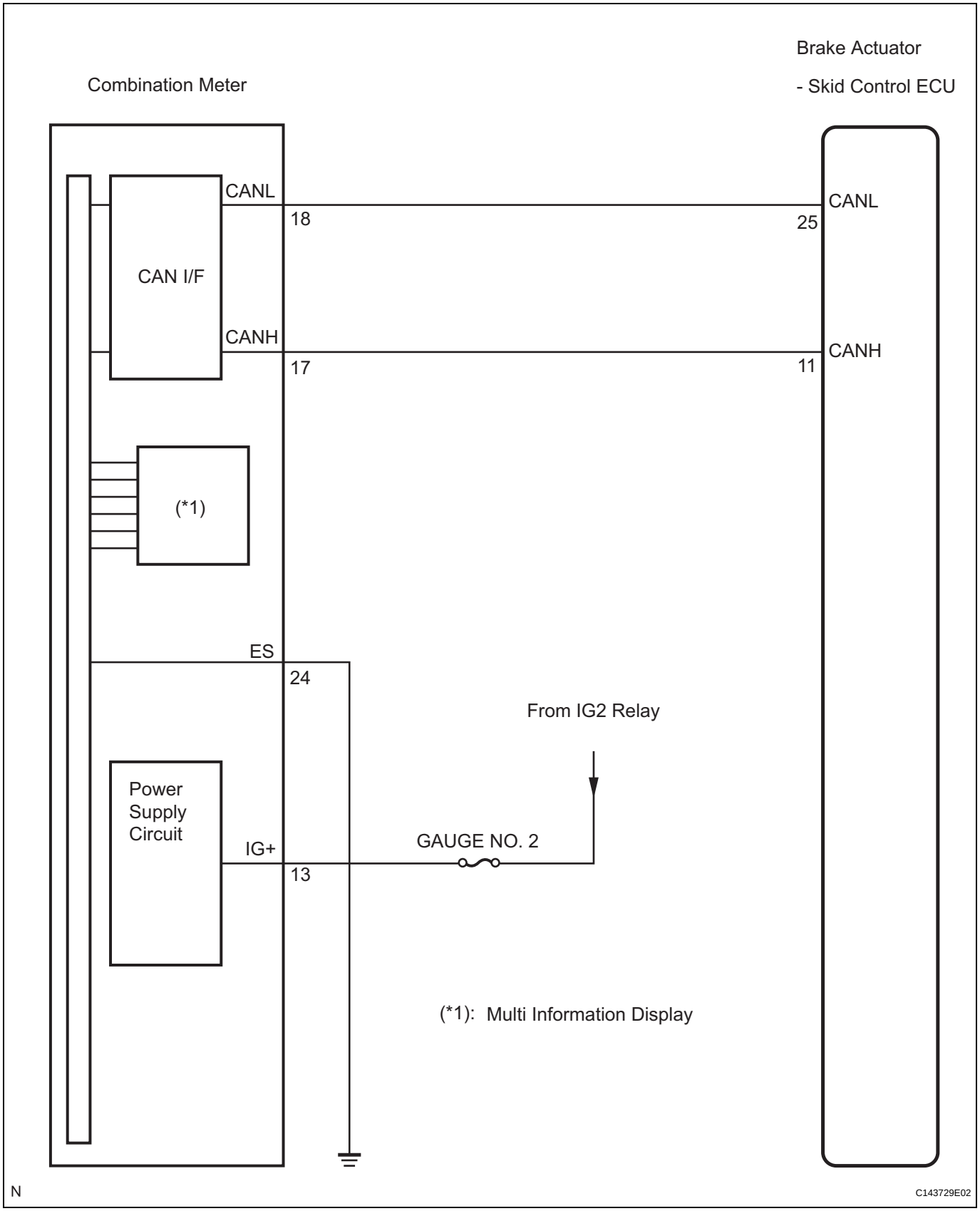

INSPECTION PROCEDURE

NOTICE:

When replacing the brake actuator assembly, perform zero point calibration (See page BC-20).

BC

1 CHECK CAN COMMUNICATION SYSTEM

(a) Check if the CAN communication system DTC is output (See page CA-41).

Result

Condition	Proceed to
DTC is not output	A
DTC is output	B

B → **INSPECT CAN COMMUNICATION SYSTEM**

A

2 CHECK IF SKID CONTROL ECU CONNECTOR IS SECURELY CONNECTED

(a) Check if the skid control ECU connector is securely connected.
OK:
The connector should be securely connected.

NG → **CONNECT CONNECTOR TO ECU CORRECTLY**

OK

3 CHECK BATTERY

(a) Check the battery voltage.
Standard voltage:
11 to 14 V

NG → **CHECK AND REPLACE CHARGING SYSTEM OR BATTERY**

OK

4 INSPECT COMBINATION METER ASSEMBLY

BC

(a) Perform Active Test of the combination meter (meter CPU) using the intelligent tester (See page ME-29).
OK:
The VSC warning (multi information display) turns on or off in accordance with the intelligent tester.
HINT:
If troubleshooting has been carried out according to the Problem Symptoms Table, refer back to the table and proceed to the next step before replacing the part (See page BC-35).

NG → **REPLACE COMBINATION METER ASSEMBLY**

OK

REPLACE BRAKE ACTUATOR ASSEMBLY

VSC Warning Light does not Come ON

DESCRIPTION

The skid control ECU communicates with the combination meter via CAN communication. If the ECU stores a DTC, the DTC will be displayed on the multi information display in the combination meter.

WIRING DIAGRAM

Refer to VSC Warning Light Remains ON (See page BC-149).

INSPECTION PROCEDURE

NOTICE:

When replacing the brake actuator assembly, perform zero point calibration (See page BC-20).

1 CHECK CAN COMMUNICATION SYSTEM

(a) Check if the CAN communication system DTC is output (See page CA-41).

Result

Condition	Proceed to
DTC is not output	A
DTC is output	B

B → **INSPECT CAN COMMUNICATION SYSTEM**

A

2 CHECK VSC WARNING LIGHT

(a) Connect the intelligent tester to the DLC3.
(b) Start the engine.
(c) Select "VSC WARN LAMP" in the Active Test and operate the VSC warning (multi information display) using the intelligent tester.

ABS / VSC:

Tester Display	Test Part	Control Range	Diagnostic Note
VSC WARN LAMP	VSC warning (multi information display)	Warning (display) ON / OFF	Observe combination meter

BC

(d) Check that "ON" and "OFF" of the VSC warning (multi information display) are indicated on the combination meter when using the intelligent tester.

OK:

The VSC warning (multi information display) turns on or off in accordance with the intelligent tester.

HINT:

If troubleshooting has been carried out according to the Problem Symptoms Table, refer back to the table and proceed to the next step before replacing the part (See page BC-35).

OK → **REPLACE BRAKE ACTUATOR ASSEMBLY**

NG

3	**INSPECT COMBINATION METER ASSEMBLY**

(a) Turn the engine switch off.
(b) Perform Active Test of the combination meter (meter CPU) using the intelligent tester (See page ME-29).
OK:
The VSC warning (multi information display) turns on or off in accordance with the intelligent tester.
HINT:
If troubleshooting has been carried out according to the Problem Symptoms Table, refer back to the table and proceed to the next step (See page BC-35).

NG → **REPLACE COMBINATION METER ASSEMBLY**

OK

REPLACE BRAKE ACTUATOR ASSEMBLY

Brake Warning Light Remains ON

DESCRIPTION

The skid control ECU is connected to the combination meter via CAN communication.
If any of the following is detected, the BRAKE warning light remains on:

- The skid control ECU connector is disconnected from the skid control ECU.
- The brake fluid level is insufficient.
- The parking brake is applied.
- EBD operation is not possible.

WIRING DIAGRAM

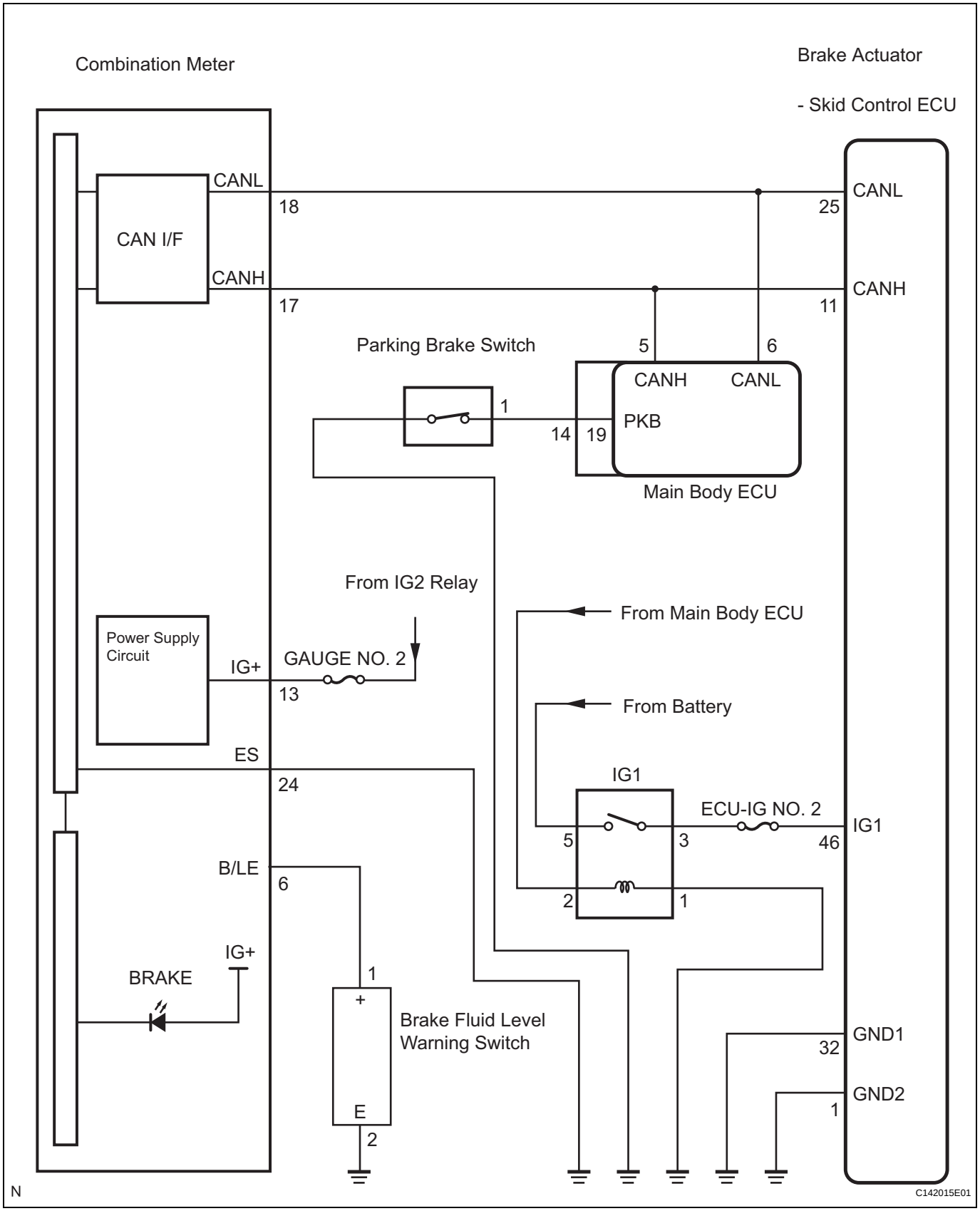

INSPECTION PROCEDURE

NOTICE:

When replacing the brake actuator assembly, perform zero point calibration (See page BC-20).

BC

1	CHECK CAN COMMUNICATION SYSTEM

(a) Check if the CAN communication system DTC is output (See page CA-41).

Result

Condition	Proceed to
DTC is not output	A
DTC is output	B

B → **INSPECT CAN COMMUNICATION SYSTEM**

A

2	CHECK IF SKID CONTROL ECU CONNECTOR IS SECURELY CONNECTED

(a) Check if the skid control ECU connector is securely connected.
OK:
The connector should be securely connected.

NG → **CONNECT CONNECTOR TO ECU CORRECTLY**

OK

3	CHECK BATTERY

(a) Check the battery voltage.
Standard voltage:
11 to 14 V

NG → **CHECK AND REPLACE CHARGING SYSTEM OR BATTERY**

OK

4 INSPECT SKID CONTROL ECU (IG1 TERMINAL)

Skid Control ECU Harness Side Connector Front View:

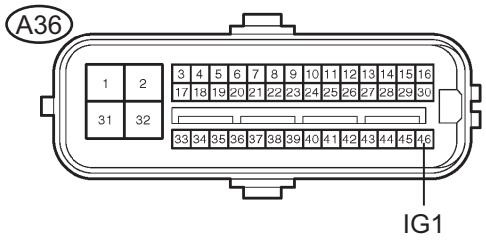

C141673E03

(a) Disconnect the skid control ECU connector.
(b) Turn the engine switch on (IG).
(c) Measure the voltage according to the value(s) in the table below.

Standard voltage

Tester Connection	Condition	Specified Condition
A36-46 (IG1) - Body ground	Engine switch on (IG)	10 to 14 V

NG → **REPAIR OR REPLACE HARNESS OR CONNECTOR (IG1 CIRCUIT)**

OK

5 INSPECT SKID CONTROL ECU (GND TERMINAL)

Skid Control ECU Harness Side Connector Front View:

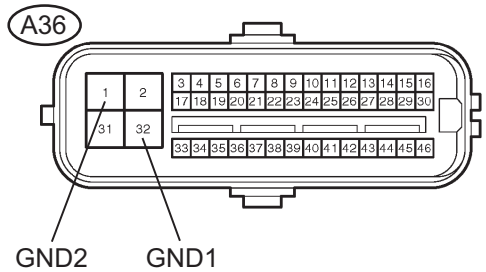

C141673E02

(a) Turn the engine switch off.
(b) Measure the resistance according to the value(s) in the table below.

Standard resistance

Tester Connection	Condition	Specified Condition
A36-32 (GND1) - Body ground	Always	Below 1 Ω
A36-1 (GND2) - Body ground	Always	Below 1 Ω

NG → **REPAIR OR REPLACE HARNESS OR CONNECTOR (GND CIRCUIT)**

OK

6 INSPECT PARKING BRAKE SWITCH

Parking Brake Switch:

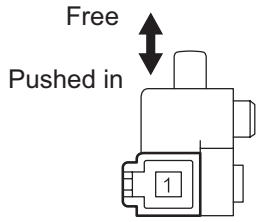

H C106667E03

(a) Disconnect the parking brake switch connector.
(b) Measure the resistance according to the value(s) in the table below.

Standard resistance

Tester Connection	Condition	Specified Condition
1 - Body ground	Parking brake switch ON (Switch pin free)	Below 1 Ω
1 - Body ground	Parking brake switch OFF (Switch pin pushed in)	10 kΩ or higher

NG → **REPLACE PARKING BRAKE SWITCH**

OK

7 CHECK HARNESS AND CONNECTOR (MAIN BODY ECU - PARKING BRAKE SWITCH)

Main Body ECU Harness Side Connector Front View:

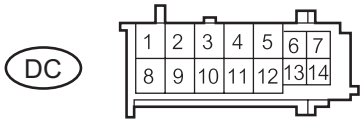

Parking Brake Switch Harness Side Connector Front View:

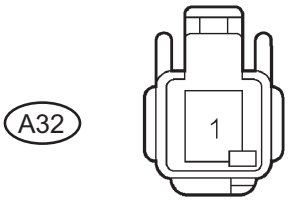

C141686E01

(a) Disconnect the main body ECU connector.
(b) Measure the resistance according to the value(s) in the table below.

Standard resistance

Tester Connection	Condition	Specified Condition
DC-14 (PKB) - A32-1	Always	Below 1 Ω
DC-14 (PKB) - Body ground	Always	10 kΩ or higher

NG → **REPAIR OR REPLACE HARNESS OR CONNECTOR**

OK

BC

8	INSPECT BRAKE FLUID LEVEL WARNING SWITCH

Brake Fluid Level Warning Switch:

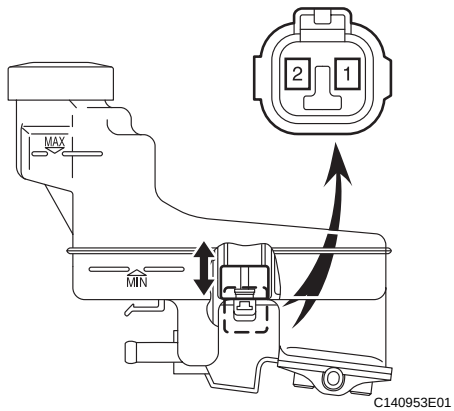

(a) Remove the reservoir tank cap and strainer.
(b) Disconnect the brake fluid level warning switch connector.
(c) Measure the resistance according to the value(s) in the table below.
HINT:
A float is located inside the reservoir. Its position can be changed by increasing or decreasing the level of brake fluid.

Standard resistance

Tester Connection	Condition	Specified Condition
1 - 2	Float up (Switch OFF)	1.9 to 2.1 kΩ
1 - 2	Float down (Switch ON)	Below 1 Ω

HINT:
If there is no problem after finishing the above check, adjust the brake fluid level to the MAX level.

NG → **REPLACE BRAKE MASTER CYLINDER RESERVOIR SUB-ASSEMBLY (BRAKE FLUID LEVEL WARNING SWITCH)**

OK

9	CHECK HARNESS AND CONNECTOR (COMBINATION METER - BRAKE FLUID LEVEL WARNING SWITCH)

Combination Meter Wire Harness View:

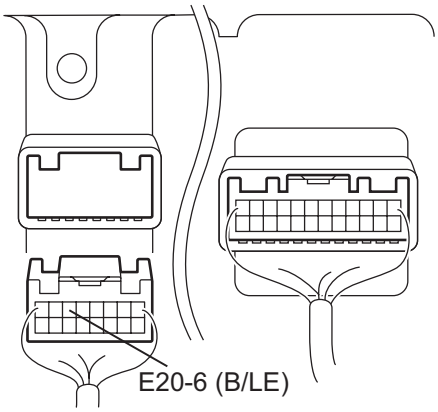

Brake Fluid Level Warning Switch Harness Side Connector Front View:

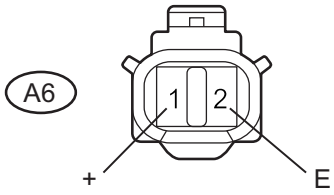

(a) Disconnect the combination meter connector.
(b) Measure the resistance according to the value(s) in the table below.

Standard resistance

Tester Connection	Condition	Specified Condition
E20-6 (B/LE) - A6-1 (+)	Always	Below 1 Ω
E20-6 (B/LE) - Body ground	Always	10 kΩ or higher
A6-2 (E) - Body ground	Always	Below 1 Ω

NG → **REPAIR OR REPLACE HARNESS OR CONNECTOR**

OK

10	INSPECT COMBINATION METER ASSEMBLY

(a) Perform Active Test of the combination meter (meter CPU) using the intelligent tester (See page ME-29).

OK:

The BRAKE warning light turns on or off in accordance with the intelligent tester.

HINT:

- Reinstall the connectors and restore the vehicle to its prior condition before checking the combination meter.
- If troubleshooting has been carried out according to the Problem Symptoms Table, refer back to the table and proceed to the next step before replacing the part (See page BC-35).

NG → **REPLACE COMBINATION METER ASSEMBLY**

BC

OK

REPLACE BRAKE ACTUATOR ASSEMBLY

Brake Warning Light does not Come ON

DESCRIPTION

The skid control ECU is connected to the combination meter via CAN communication.

WIRING DIAGRAM

Refer to Brake Warning Light Remains ON (See page BC-155).

INSPECTION PROCEDURE

NOTICE:

When replacing the brake actuator assembly, perform zero point calibration (See page BC-20).

1 CHECK CAN COMMUNICATION SYSTEM

(a) Check if the CAN communication system DTC is output (See page CA-41).

Result

Condition	Proceed to
DTC is not output	A
DTC is output	B

B → **INSPECT CAN COMMUNICATION SYSTEM**

A

2 CHECK BRAKE WARNING LIGHT

(a) Disconnect the skid control ECU connector.
(b) Turn the engine switch on (IG).
(c) Check that the BRAKE warning light comes on.
OK:
The BRAKE warning light comes on.
HINT:
If troubleshooting has been carried out according to the Problem Symptoms Table, refer back to the table and proceed to the next step before replacing the part (See page BC-35).

OK → **REPLACE BRAKE ACTUATOR ASSEMBLY**

NG

3 INSPECT COMBINATION METER ASSEMBLY

(a) Turn the engine switch off.
(b) Reconnect the skid control ECU connector.
(c) Perform Active Test of the combination meter (meter CPU) using the intelligent tester (See page ME-29).
OK:
The BRAKE warning light turns on or off in accordance with the intelligent tester.

HINT:
If troubleshooting has been carried out according to the Problem Symptoms Table, refer back to the table and proceed to the next step (See page BC-35).

NG → **REPLACE COMBINATION METER ASSEMBLY**

OK

REPLACE BRAKE ACTUATOR ASSEMBLY

Slip Indicator Light Remains ON

DESCRIPTION

The skid control ECU is connected to the combination meter via CAN communication.
The SLIP indicator light blinks during VSC and/or TRAC operation.
When the system fails, the SLIP indicator light comes on to warn the driver (See page BC-39).

WIRING DIAGRAM

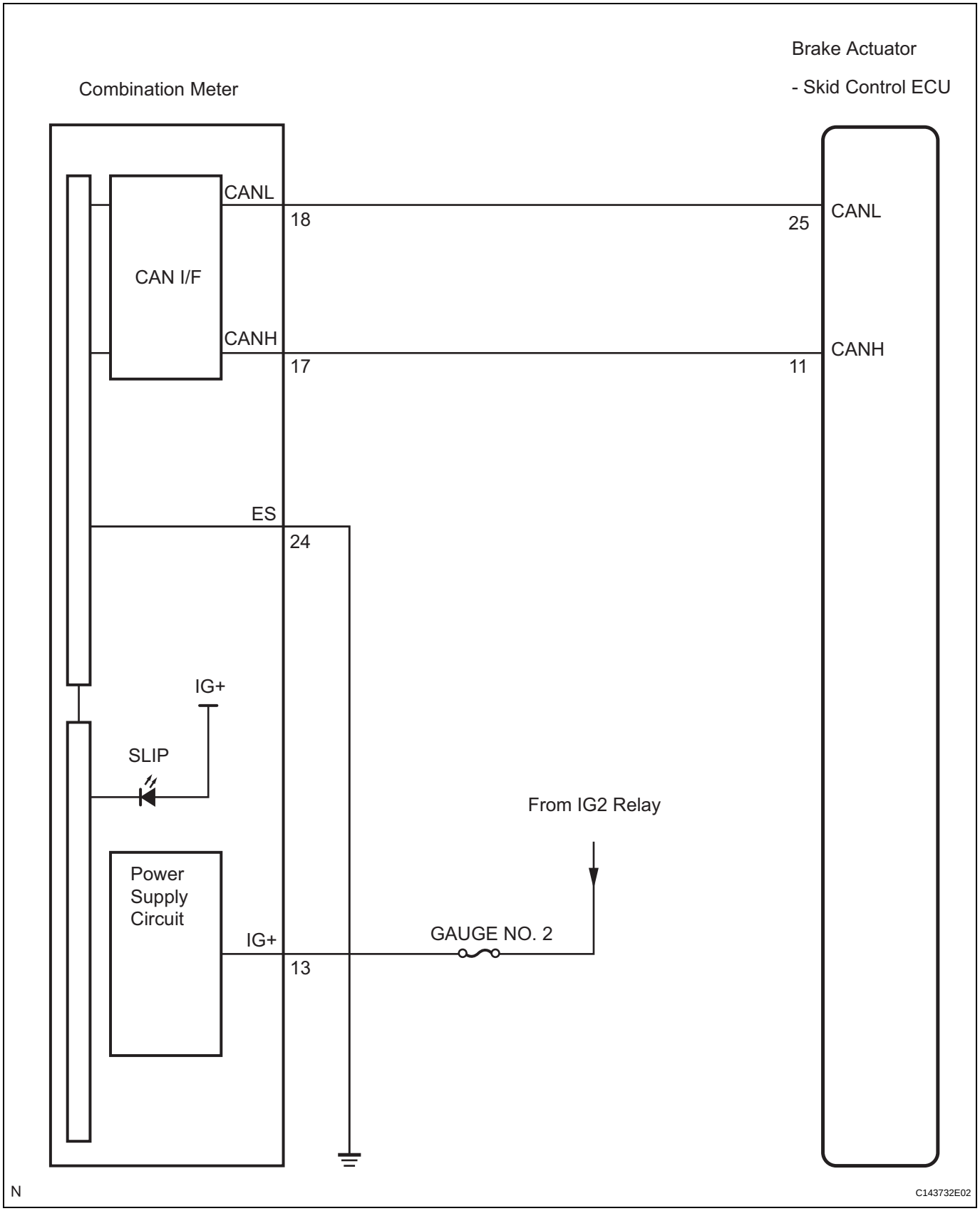

INSPECTION PROCEDURE

NOTICE:

When replacing the brake actuator assembly, perform zero point calibration (See page BC-20).

BC

1	CHECK CAN COMMUNICATION SYSTEM

(a) Check if the CAN communication system DTC is output (See page CA-41).

Result

Condition	Proceed to
DTC is not output	A
DTC is output	B

B → **INSPECT CAN COMMUNICATION SYSTEM**

A

2	CHECK IF SKID CONTROL ECU CONNECTOR IS SECURELY CONNECTED

(a) Check if the skid control ECU connector is securely connected.
OK:
The connector should be securely connected.

NG → **CONNECT CONNECTOR TO ECU CORRECTLY**

OK

3	CHECK BATTERY

(a) Check the battery voltage.
Standard voltage:
11 to 14 V

NG → **CHECK AND REPLACE CHARGING SYSTEM OR BATTERY**

OK

4	INSPECT COMBINATION METER ASSEMBLY

BC

(a) Perform Active Test of the combination meter (meter CPU) using the intelligent tester (See page ME-29).
OK:
The SLIP indicator light turns on or off in accordance with the intelligent tester.
HINT:
If troubleshooting has been carried out according to the Problem Symptoms Table, refer back to the table and proceed to the next step before replacing the part (See page BC-35).

NG → **REPLACE COMBINATION METER ASSEMBLY**

OK

REPLACE BRAKE ACTUATOR ASSEMBLY

Slip Indicator Light does not Come ON

DESCRIPTION

The skid control ECU is connected to the combination meter via CAN communication.
The SLIP indicator light blinks during VSC and/or TRAC operation.
When the system fails, the SLIP indicator light comes on to warn the driver (See page BC-39).

WIRING DIAGRAM

Refer to Slip Indicator Light Remains ON (See page BC-165).

INSPECTION PROCEDURE

NOTICE:
When replacing the brake actuator assembly, perform zero point calibration (See page BC-20).

1 CHECK CAN COMMUNICATION SYSTEM

(a) Check if the CAN communication system DTC is output (See page CA-41).

Result

Condition	Proceed to
DTC is not output	A
DTC is output	B

B → **INSPECT CAN COMMUNICATION SYSTEM**

A

2 CHECK SLIP INDICATOR LIGHT

(a) Connect the intelligent tester to the DLC3.
(b) Start the engine.
(c) Select "SLIP INDI LAMP" in the Active Test and operate the SLIP indicator light using the intelligent tester.

ABS / VSC:

Tester Display	Test Part	Control Range	Diagnostic Note
SLIP INDI LAMP	SLIP indicator light	Indicator light ON / OFF	Observe combination meter

(d) Check that "ON" and "OFF" of the SLIP indicator light are indicated on the combination meter when using the intelligent tester.
OK:
The SLIP indicator light turns on or off in accordance with the intelligent tester.
HINT:
If troubleshooting has been carried out according to the Problem Symptoms Table, refer back to the table and proceed to the next step before replacing the part (See page BC-35).

OK → **REPLACE BRAKE ACTUATOR ASSEMBLY**

NG

3	**INSPECT COMBINATION METER ASSEMBLY**

(a) Turn the engine switch off.
(b) Perform Active Test of the combination meter (meter CPU) using the intelligent tester (See page ME-29).
OK:
The SLIP indicator light turns on or off in accordance with the intelligent tester.
HINT:
If troubleshooting has been carried out according to the Problem Symptoms Table, refer back to the table and proceed to the next step (See page BC-35).

NG → **REPLACE COMBINATION METER ASSEMBLY**

OK

REPLACE BRAKE ACTUATOR ASSEMBLY

Skid Control Buzzer Circuit

DESCRIPTION

The skid control buzzer sounds while the accumulator pressure is abnormally low or when an abnormality causing low fluid pressure occurs, and then the VSC is activated.

WIRING DIAGRAM

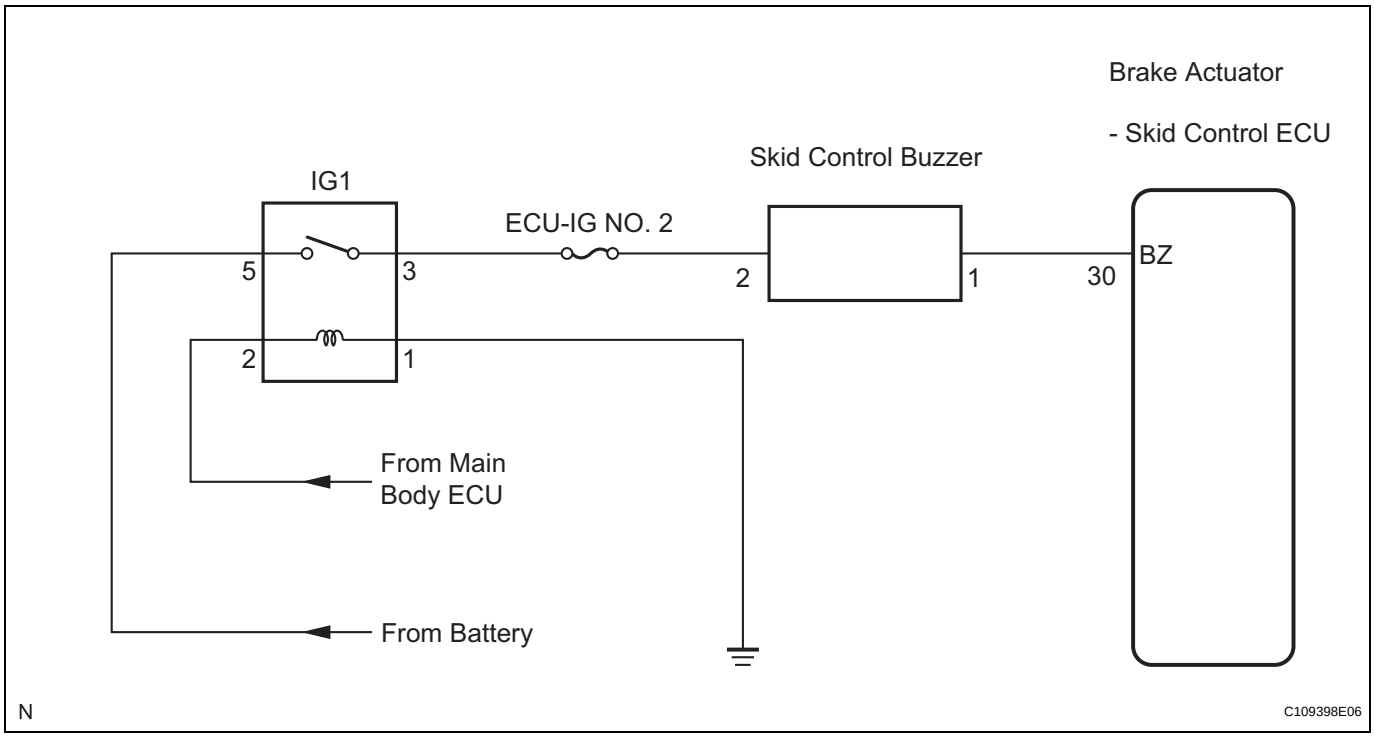

INSPECTION PROCEDURE

NOTICE:

When replacing the brake actuator assembly, perform zero point calibration (See page BC-20).

1	PERFORM ACTIVE TEST BY INTELLIGENT TESTER (SKID CONTROL BUZZER)

(a) Connect the intelligent tester to the DLC3.
(b) Start the engine.
(c) Select the Active Test mode on the intelligent tester.

BC

ABS / VSC:

Tester Display	Test Part	Control Range	Diagnostic Note
BUZZER	Skid control buzzer	Buzzer ON / OFF	Buzzer can be heard

(d) Check that the buzzer sounds/stops when turning the skid control buzzer on/off by using the intelligent tester.

Result

Condition	Proceed to
Buzzer does not sound or sounds constantly	**A**
Buzzer sounds/stops	**B**

HINT:
If troubleshooting has been carried out according to the Problem Symptoms Table, refer back to the table and proceed to the next step (See page BC-35).

B → **END**

A

2 INSPECT SKID CONTROL BUZZER (POWER SOURCE TERMINAL)

Skid Control Buzzer Harness Side Connector Front View:

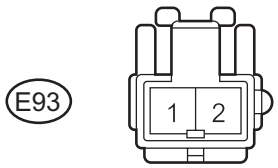

H C142646E01

(a) Turn the engine switch off.
(b) Disconnect the skid control buzzer connector.
(c) Turn the engine switch on (IG).
(d) Measure the voltage according to the value(s) in the table below.

Standard voltage

Tester Connection	Condition	Specified Condition
E93-2 - Body ground	Engine switch on (IG)	10 to 14 V

NG → **REPAIR OR REPLACE HARNESS OR CONNECTOR (POWER SOURCE CIRCUIT)**

OK

3 INSPECT SKID CONTROL BUZZER

Skid Control Buzzer:

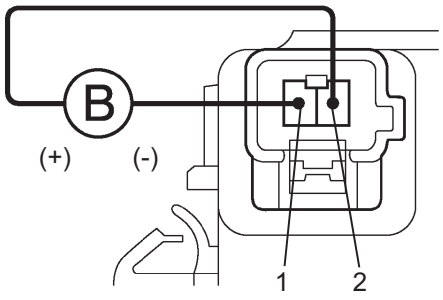

C125130E01

(a) Apply battery negative voltage to terminal 1, and battery positive voltage to terminal 2 of the skid control buzzer, and then check that the buzzer sounds.

OK:
The skid control buzzer sounds.

NG → **REPLACE SKID CONTROL BUZZER**

OK

BC

4	CHECK HARNESS AND CONNECTOR (SKID CONTROL ECU - SKID CONTROL BUZZER)

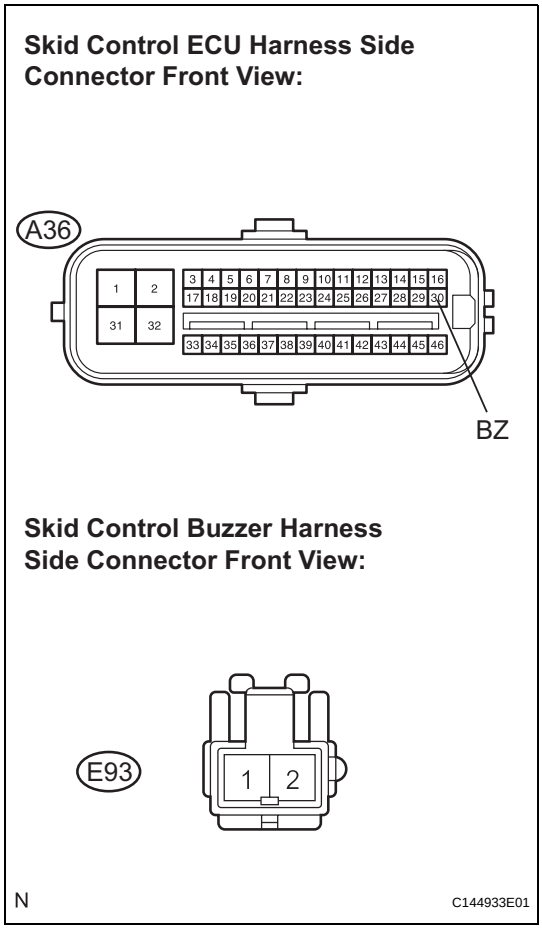

(a) Turn the engine switch off.
(b) Disconnect the skid control ECU connector.
(c) Measure the resistance according to the value(s) in the table below.

Standard resistance

Tester Connection	Condition	Specified Condition
A36-30 (BZ) - E93-1	Always	Below 1 Ω
A36-30 (BZ) - Body ground	Always	10 kΩ or higher

HINT:
If troubleshooting has been carried out according to the Problem Symptoms Table, refer back to the table and proceed to the next step before replacing the part (See page BC-35).

NG → **REPAIR OR REPLACE HARNESS OR CONNECTOR**

OK

REPLACE BRAKE ACTUATOR ASSEMBLY

TC and CG Terminal Circuit

DESCRIPTION

Connecting terminals TC and CG of the DLC3 causes the ECU to display the DTC by blinking the ABS warning light.

WIRING DIAGRAM

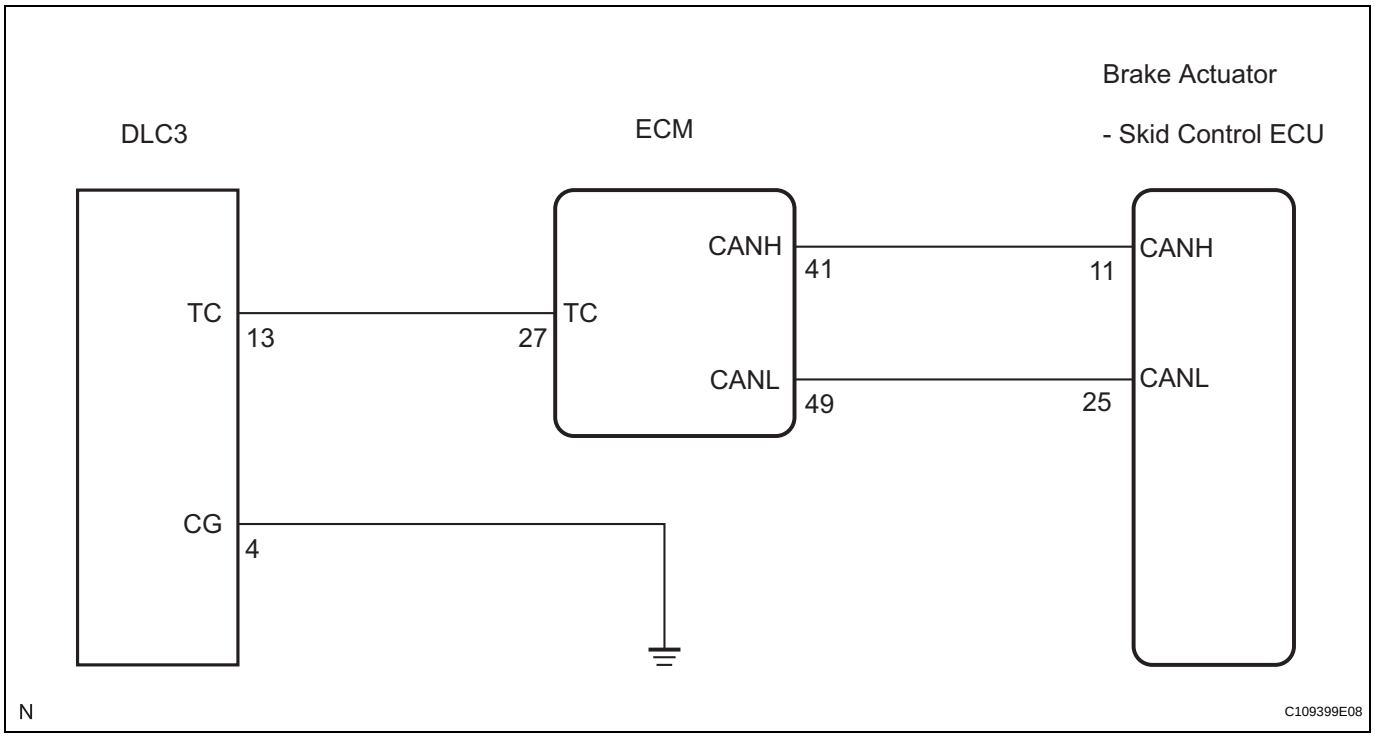

INSPECTION PROCEDURE

NOTICE:

When replacing the brake actuator assembly, perform zero point calibration (See page BC-20).

1	CHECK CAN COMMUNICATION SYSTEM

(a) Check if the CAN communication system DTC is output (See page CA-41).

Result

Condition	Proceed to
DTC is not output	A
DTC is output	B

B → INSPECT CAN COMMUNICATION SYSTEM

A

BC

2 INSPECT DLC3

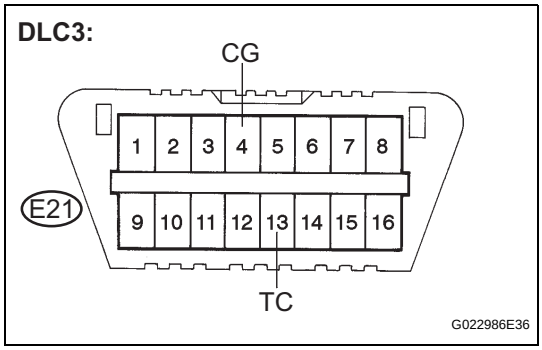

(a) Turn the engine switch on (IG).
(b) Measure the voltage according to the value(s) in the table below.

Standard voltage

Tester Connection	Condition	Specified Condition
E21-13 (TC) - E21-4 (CG)	Engine switch on (IG)	10 to 14 V

OK → **Go to step 5**

NG

3 CHECK HARNESS AND CONNECTOR (TC of DLC3 - ECM)

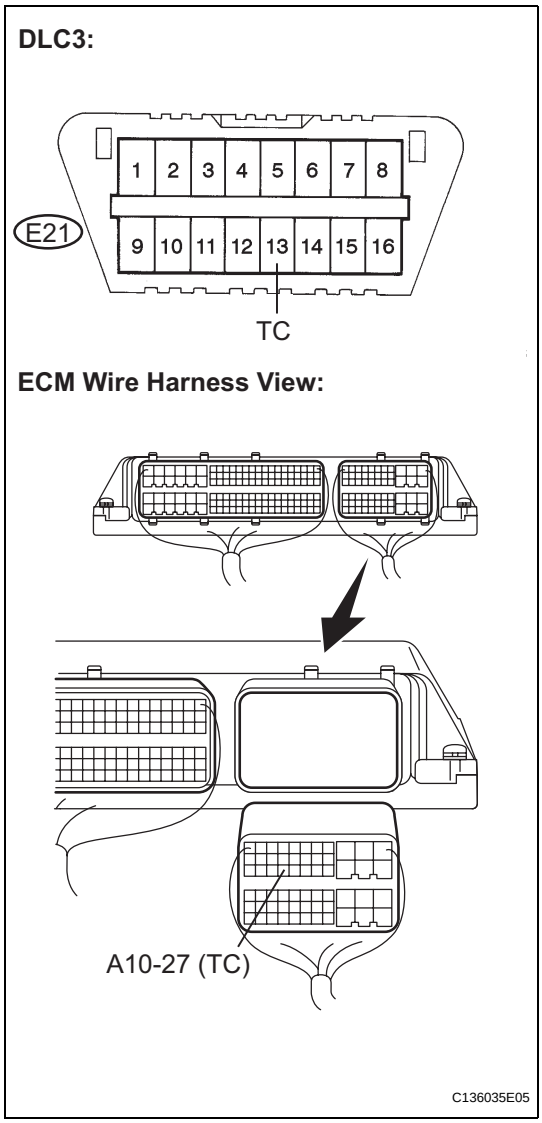

(a) Turn the engine switch off.
(b) Disconnect the ECM connector.
(c) Measure the resistance according to the value(s) in the table below.

Standard resistance

Tester Connection	Condition	Specified Condition
E21-13 (TC) - A10-27 (TC)	Always	Below 1 Ω
E21-13 (TC) - Body ground	Always	10 kΩ or higher

NG → **REPAIR OR REPLACE HARNESS OR CONNECTOR**

OK

BC

4 CHECK HARNESS AND CONNECTOR (CG of DLC3 - BODY GROUND)

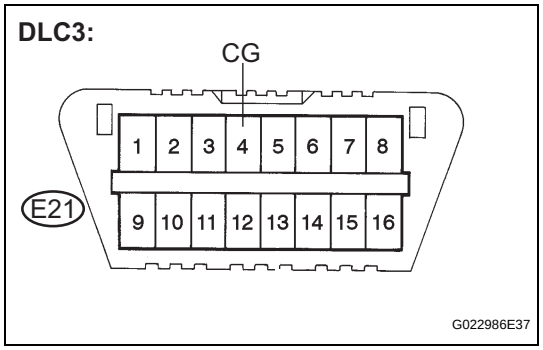

(a) Measure the resistance according to the value(s) in the table below.

Standard resistance

Tester Connection	Condition	Specified Condition
E21-4 (CG) - Body ground	Always	Below 1 Ω

NG → **REPAIR OR REPLACE HARNESS OR CONNECTOR**

OK

5 CHECK ECM (TC of DLC3 INPUT)

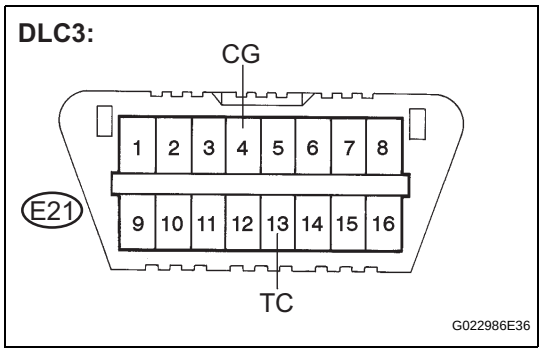

(a) Turn the engine switch off.
(b) Reconnect the ECM connector.
(c) Using SST, connect terminals TC and CG of the DLC3.
(d) Turn the engine switch on (IG).
(e) Check that the check engine warning light is blinking.

Result

Condition	Proceed to
Check engine warning light is blinking	A
Check engine warning light is not blinking	B

HINT:
If troubleshooting has been carried out according to the Problem Symptoms Table, refer back to the table and proceed to the next step before replacing the part (See page BC-35).

B → **REPAIR OR REPLACE WIRE HARNESS OR ECM (TC of ECM CIRCUIT)**

A

REPLACE BRAKE ACTUATOR ASSEMBLY

TS and CG Terminal Circuit

DESCRIPTION

In the Test Mode (signal check), a malfunction of the speed sensor that cannot be detected when the vehicle is stopped can be detected while driving.
Transition to the sensor check mode can be performed by connecting terminals TS and CG of the DLC3 and turning the engine switch from off to on (IG).

WIRING DIAGRAM

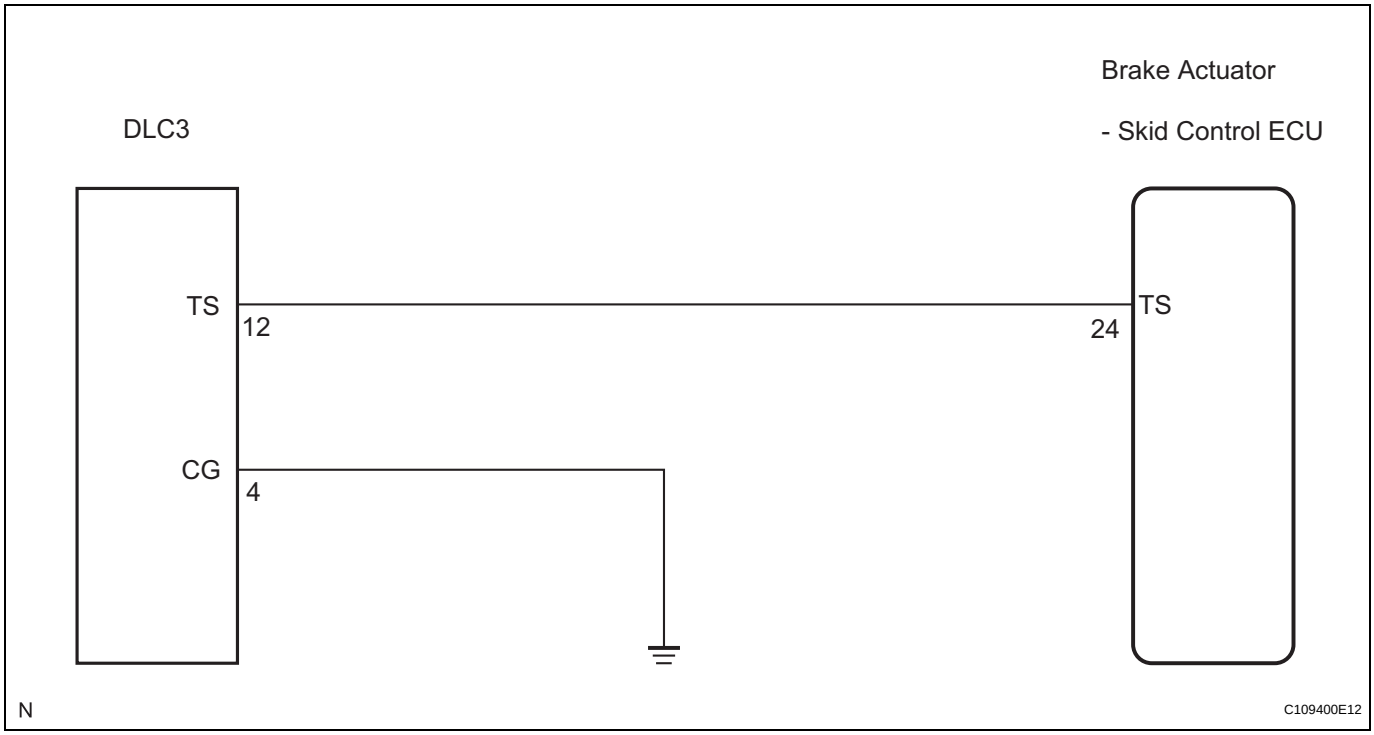

INSPECTION PROCEDURE

NOTICE:

When replacing the brake actuator assembly, perform zero point calibration (See page BC-20).

1 CHECK HARNESS AND CONNECTOR (SKID CONTROL ECU - TS of DLC3)

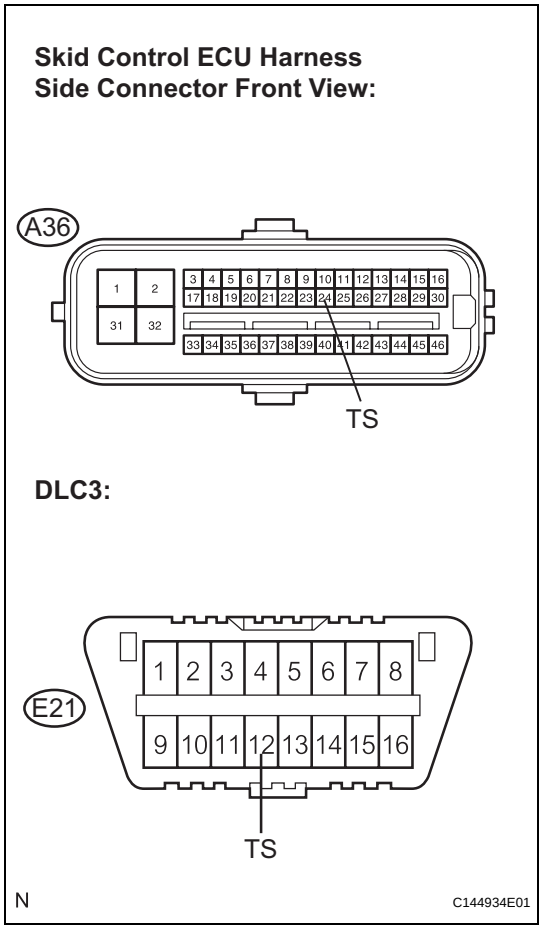

(a) Disconnect the skid control ECU connector.
(b) Measure the resistance according to the value(s) in the table below.

Standard resistance

Tester Connection	Condition	Specified Condition
A36-24 (TS) - E21-12 (TS)	Always	Below 1 Ω

NG → **REPAIR OR REPLACE HARNESS OR CONNECTOR**

OK

2 CHECK HARNESS AND CONNECTOR (CG of DLC3 - BODY GROUND)

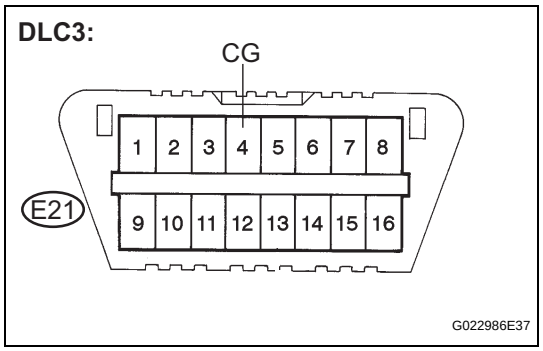

(a) Measure the resistance according to the value(s) in the table below.

Standard resistance

Tester Connection	Condition	Specified Condition
E21-4 (CG) - Body ground	Always	Below 1 Ω

NG → **REPAIR OR REPLACE HARNESS OR CONNECTOR**

OK

BC

3	CHECK HARNESS AND CONNECTOR (TS of DLC3 - BODY GROUND)

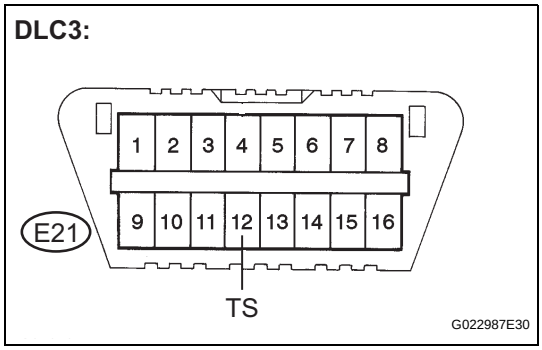

(a) Measure the resistance according to the value(s) in the table below.

Standard resistance

Tester Connection	Condition	Specified Condition
E21-12 (TS) - Body ground	Always	10 kΩ or higher

HINT:
If troubleshooting has been carried out according to the Problem Symptoms Table, refer back to the table and proceed to the next step before replacing the part (See page BC-35).

NG → **REPAIR OR REPLACE HARNESS OR CONNECTOR**

OK

REPLACE BRAKE ACTUATOR ASSEMBLY

HOW TO PROCEED WITH TROUBLESHOOTING

HINT:
*: Use the intelligent tester.

1	VEHICLE BROUGHT TO WORKSHOP

NEXT

2	CUSTOMER PROBLEM ANALYSIS

(a) Interview the customer and confirm the trouble (See page IN-39).

NEXT

3	CHECK DTC AND FREEZE FRAME DATA*

(a) Check and record a DTC and Freeze Frame Data.
(b) Clear the DTC and Freeze Frame Data (See page BC-43 for DTC Check/Clear, or BC-45 for Freeze Frame Data).
(c) Reconfirm the DTC.
(1) Reconfirm the DTC based on the recorded DTC and Freeze Frame Data (See page BC-43 for DTC Check/Clear, or BC-45 for Freeze Frame Data).
HINT:
If any of the DTCs U0100/65, U0123/62, U0124/95, and U0126/63 is output together with a CAN communication DTC, first check the appropriate sensor for a momentary open circuit (See page BC-19).

Result

Condition	Proceed to
DTC is output	A
DTC is not output (Problem symptom does not occur)	B
DTC is not output (Problem symptom occurs)	C

B → GO TO STEP 5

C → GO TO STEP 6

A

4	DIAGNOSTIC TROUBLE CODE CHART

(a) Proceed to Diagnostic Trouble Code Chart (See page BC-52).

NEXT

GO TO STEP 7

5	SYMPTOM SIMULATION

(a) Proceed to Diagnosis System (See page BC-39).

NEXT

6	PROBLEM SYMPTOMS TABLE

(a) Proceed to Problem Symptoms Table (See page BC-35).

NEXT

7	CIRCUIT INSPECTION*

NEXT

8	IDENTIFICATION OF PROBLEM

NEXT

9	REPAIR OR REPLACEMENT

NEXT

10	CONFIRMATION TEST*

NEXT

END

BRAKE ACTUATOR

COMPONENTS

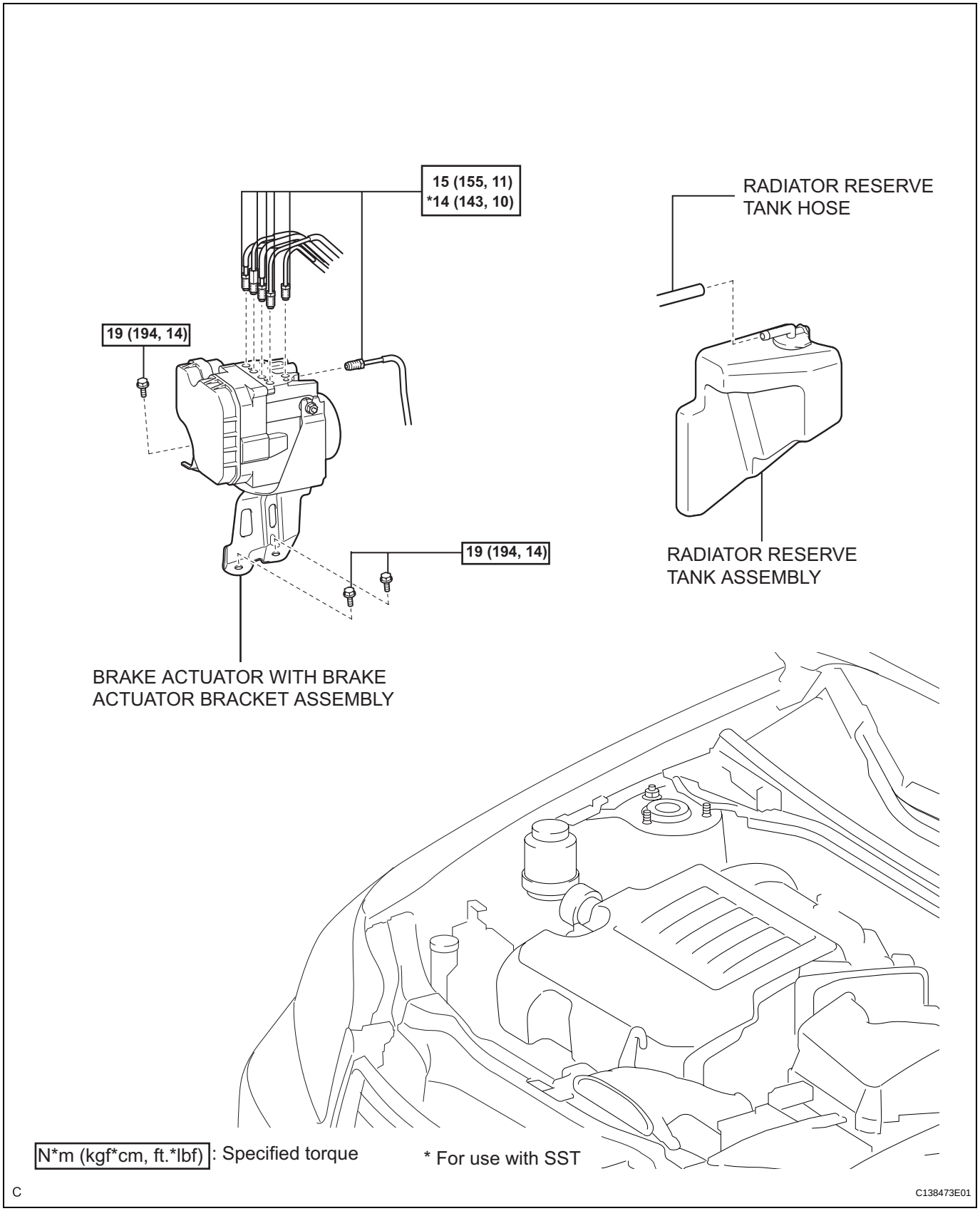

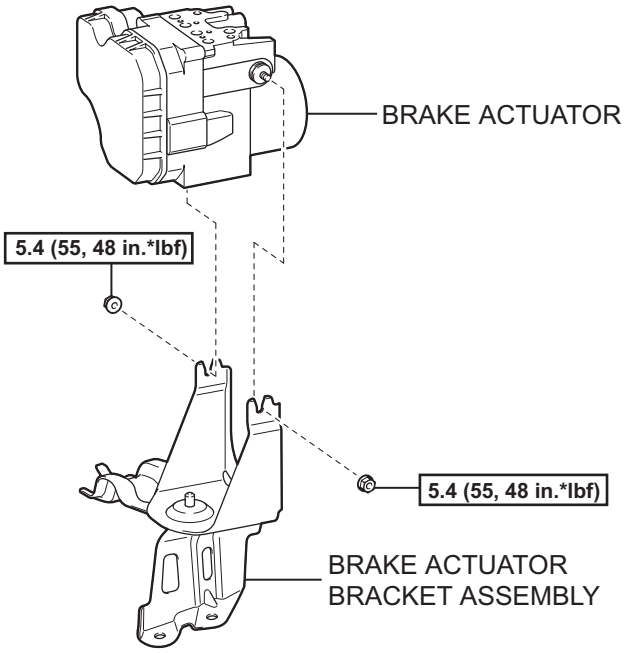

N*m (kgf*cm, ft.*lbf) : Specified torque

C144097E04

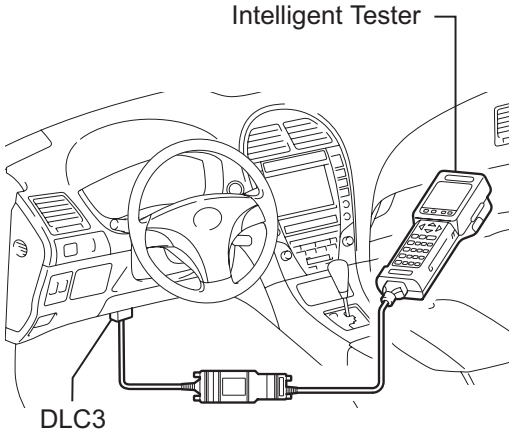

P C135812E01

ON-VEHICLE INSPECTION

1. CONNECT INTELLIGENT TESTER

(a) Connect the intelligent tester to the DLC3.
(b) Start the engine and run it at idle.
(c) Select the Active Test mode on the intelligent tester.
HINT:
Refer to the intelligent tester operator's manual for further details.

2. INSPECT ACTUATOR MOTOR OPERATION

NOTICE:
Do not keep a motor relay on continuously for more than 5 seconds. When operating it continuously, set an interval of more than 20 seconds.

(a) With the motor relay on, check the actuator motor operation sounds.
(b) Turn the motor relay off.
(c) Depress the brake pedal and hold it for approximately 15 seconds. Check that the brake pedal cannot be depressed farther.
(d) With the motor relay on, check that the pedal does not pulsate.
(e) Turn the motor relay off and release the brake pedal.

3. INSPECT RIGHT FRONT WHEEL OPERATION

NOTICE:

Do not turn on a solenoid in a manner different than described below.

(a) Depress the brake pedal and hold it.

(b) Turn the SFRH and SFRR solenoids on simultaneously, and check that the pedal cannot be depressed.

(c) Turn the SFRH and SFRR solenoids off simultaneously, and check that the pedal can be depressed.

NOTICE:

Do not keep a motor relay on continuously for more than 5 seconds. When operating them continuously, set an interval of more than 20 seconds.

(d) Turn the motor relay on and check that the pedal returns.

NOTICE:

Do not keep a motor relay on continuously for more than 5 seconds. When operating it continuously, set an interval of more than 20 seconds.

(e) Turn the motor relay off and release the brake pedal.

4. INSPECT OTHER WHEEL OPERATION

(a) Using the same procedure, check the solenoids of the other wheels.

HINT:

- Left front wheel: SFLH, SFLR
- Right rear wheel: SRRH, SRRR
- Left rear wheel: SRLH, SRLR

REMOVAL

1. DISCONNECT CABLE FROM NEGATIVE BATTERY TERMINAL

2. REMOVE RADIATOR RESERVE TANK ASSEMBLY

(a) Separate the radiator reserve tank hose.

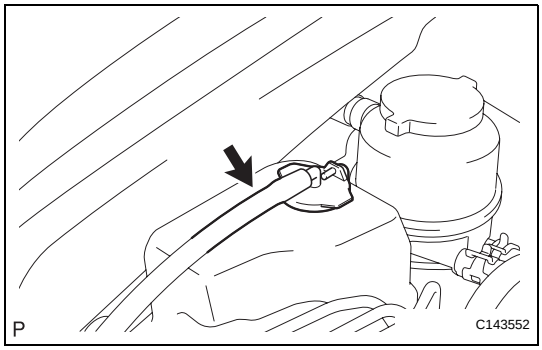

(b) Remove the radiator reserve tank assembly.

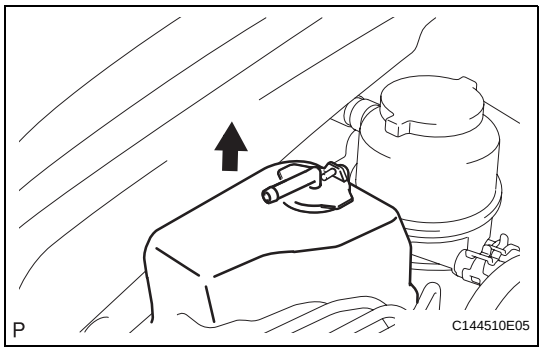

3. DRAIN BRAKE FLUID

NOTICE:
If brake fluid leaks onto any painted surface, immediately clean it off completely.

4. REMOVE BRAKE ACTUATOR WITH BRAKE ACTUATOR BRACKET ASSEMBLY

(a) Release the lock lever and disconnect the brake actuator connector.

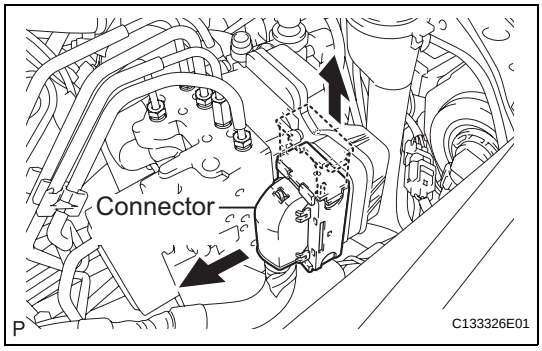

(b) Using SST, disconnect the 6 brake lines from the brake actuator with brake actuator bracket assembly.
SST 09023-00101

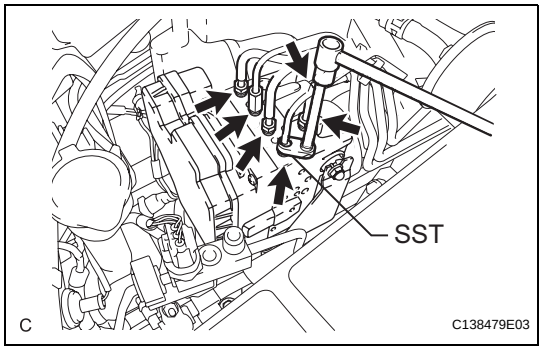

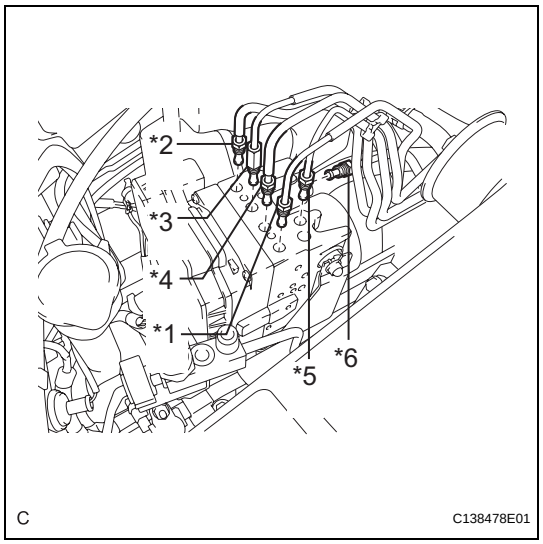

(c) Use tags or make a memo to identify the places to reconnect.
HINT:
- *1: To Front Wheel Cylinder RH
- *2: To Front Wheel Cylinder LH
- *3: To Rear Wheel Cylinder RH
- *4: To Rear Wheel Cylinder LH
- *5: From 1st Master Cylinder
- *6: From 2nd Master Cylinder

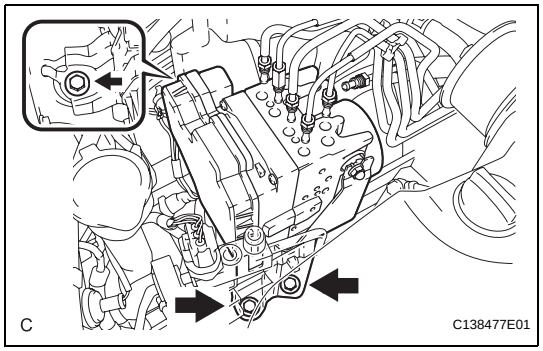

(d) Remove the 3 bolts and the brake actuator with brake actuator bracket assembly from the body.
NOTICE:
Do not damage the brake lines and wire harness.

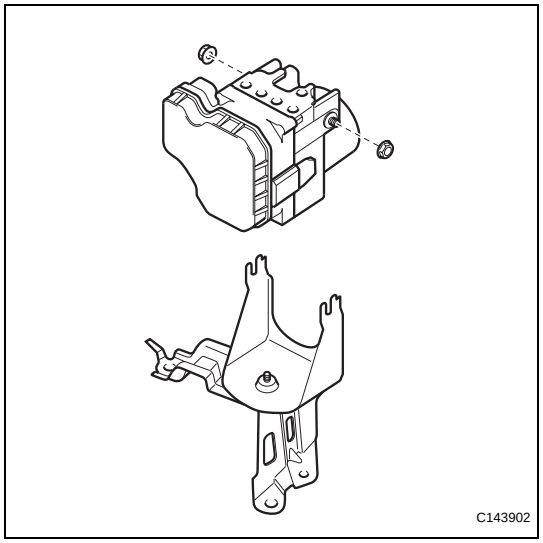

DISASSEMBLY

1. REMOVE BRAKE ACTUATOR

(a) Remove the 2 nuts and the brake actuator from the brake actuator bracket assembly.

CHECK FOR INTERMITTENT PROBLEMS

1. CHECK FOR INTERMITTENT PROBLEMS

HINT:
A momentary interruption (open circuit) in the connectors and/or wire harness between the sensors and ECUs can be detected using the ECU Data List function of the intelligent tester.

(a) Turn the engine switch off and connect the intelligent tester to the DLC3.

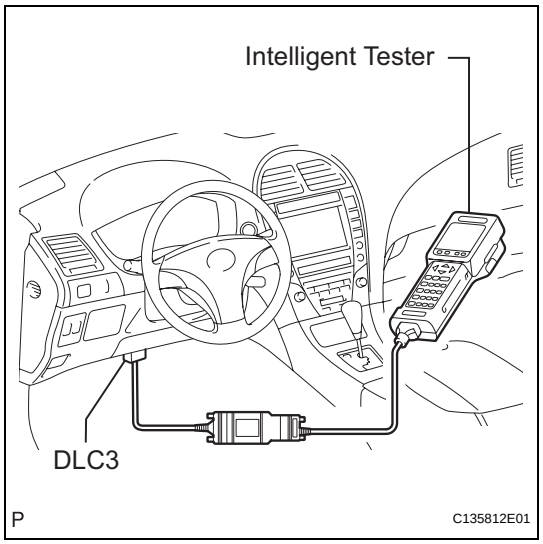

(b) Turn the engine switch on (IG). Follow the directions on the intelligent tester to display the Data List and select areas where momentary interruption should be monitored.
HINT:
- A momentary interruption (open circuit) cannot be detected for 3 seconds after the engine switch is turned on (IG) (initial check).
- If the status remains on (ERROR displayed), check the continuity between the ECU and the sensors, or between ECUs.
- The ERROR display on the intelligent tester remains on for 1 second after the harness signal changes from momentary interruption (open circuit) to normal condition.

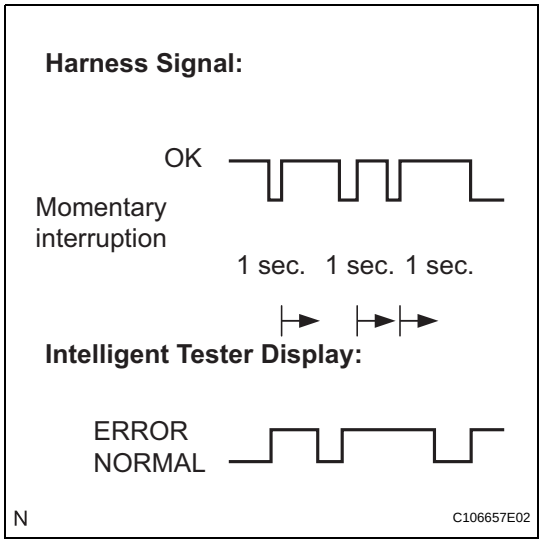

Tester Display	Measurement Item/Range	Normal Condition	Diagnostic Note
FR SPD OPN	FR speed sensor open detection / ERROR or NORMAL	ERROR: Momentary interruption NORMAL: Normal	-
FL SPD OPN	FL speed sensor open detection / ERROR or NORMAL	ERROR: Momentary interruption NORMAL: Normal	-
RR SPD OPN	RR speed sensor open detection / ERROR or NORMAL	ERROR: Momentary interruption NORMAL: Normal	-
RL SPD OPN	RL speed sensor open detection / ERROR or NORMAL	ERROR: Momentary interruption NORMAL: Normal	-
EFI COM OPN	EFI communication open detection / ERROR or NORMAL	ERROR: Momentary interruption NORMAL: Normal	-
YAW RATE OPN	Yaw rate sensor open detection / ERROR or NORMAL	ERROR: Momentary interruption NORMAL: Normal	-

Tester Display	Measurement Item/Range	Normal Condition	Diagnostic Note
DECELERAT OPN	Acceleration sensor open detection / ERROR or NORMAL	ERROR: Momentary interruption NORMAL: Normal	-
STEERING OPN	Steering angle sensor open detection / ERROR or NORMAL	ERROR: Momentary interruption NORMAL: Normal	-
M/C OPN	Master cylinder pressure sensor open detection / ERROR or NORMAL	ERROR: Momentary interruption NORMAL: Normal	-

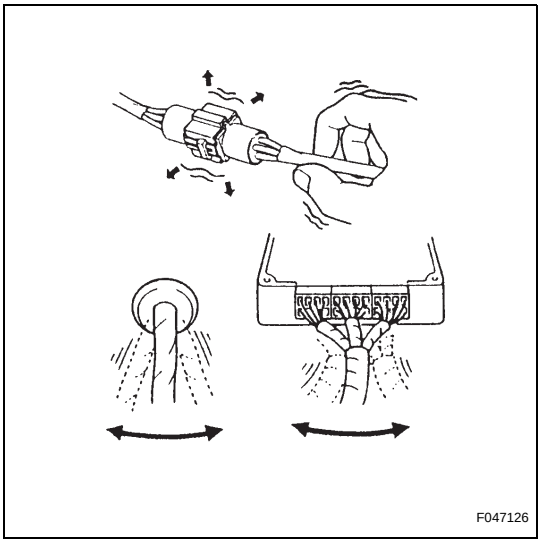

(c) While observing the screen, gently jiggle the connector or wire harness between the ECU and sensors, or between ECUs.

Result:

ERROR display does not change.

HINT:

The connector and/or wire harness will be in momentary interruption (open circuit) if the display changes. Repair or replace the connector and/or wire harness as one of them is faulty.

FRONT SPEED SENSOR

COMPONENTS

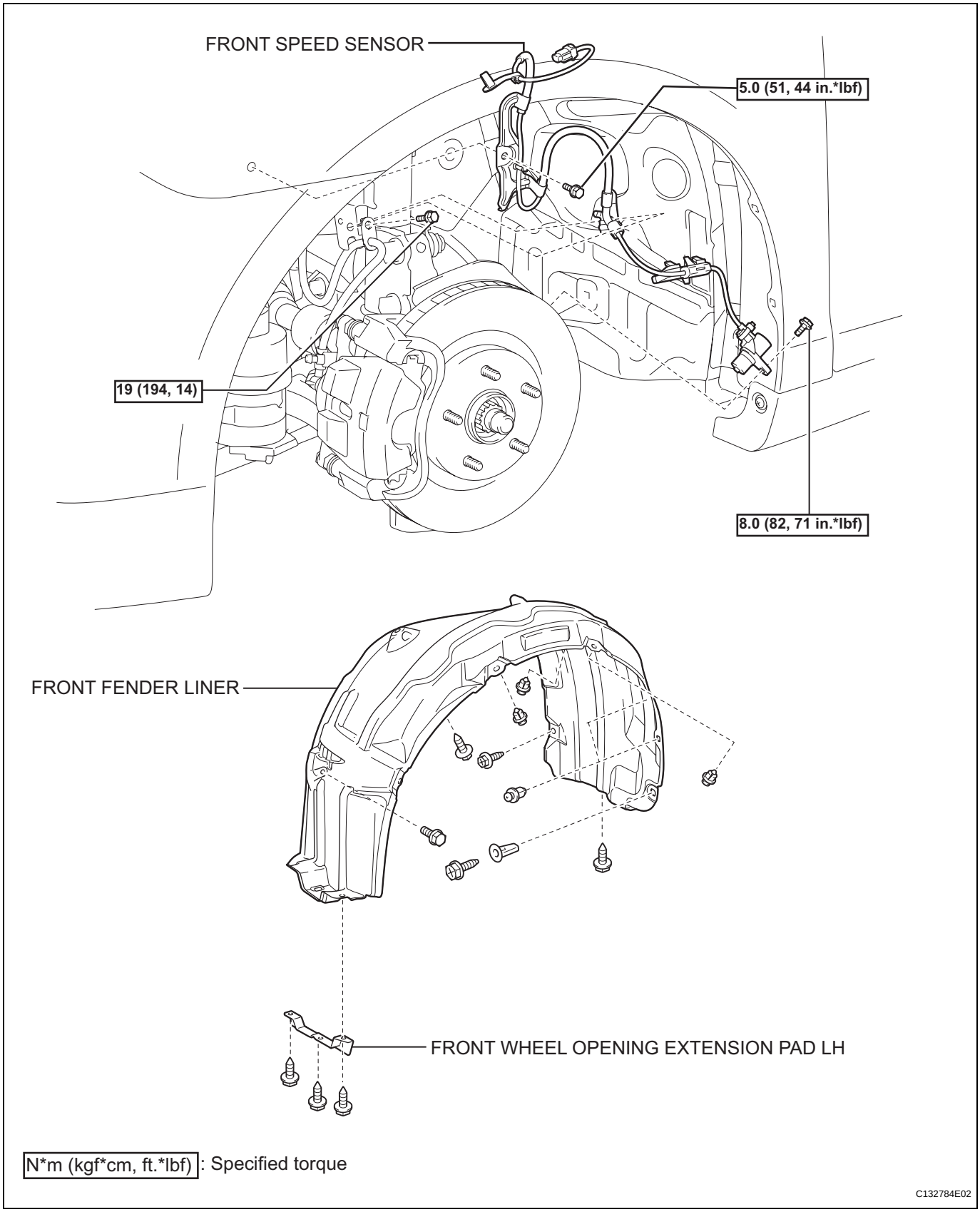

REMOVAL

HINT:
- Use the same procedure for the RH side and LH side.
- The procedures listed below are for the LH side.

1. REMOVE FRONT WHEEL

2. REMOVE FRONT WHEEL OPENING EXTENSION PAD LH (See page ED-24)

3. REMOVE FRONT FENDER LINER (See page ED-24)

4. REMOVE FRONT SPEED SENSOR

(a) Disconnect the front speed sensor connector and clamp.

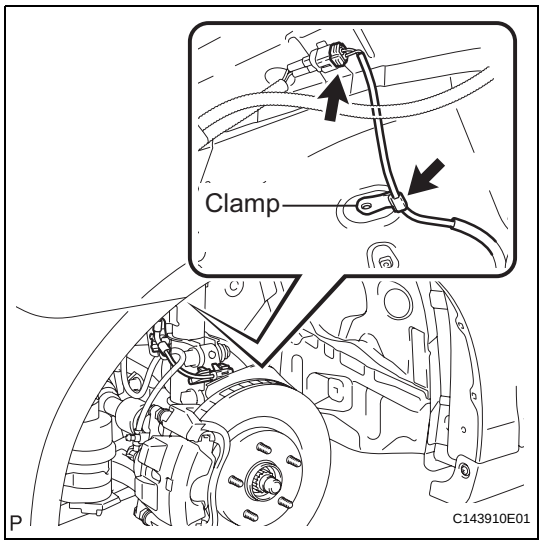

(b) Remove the 2 bolts from the body and the shock absorber assembly.

(c) Disengage the 2 claws from the steering knuckle and body.

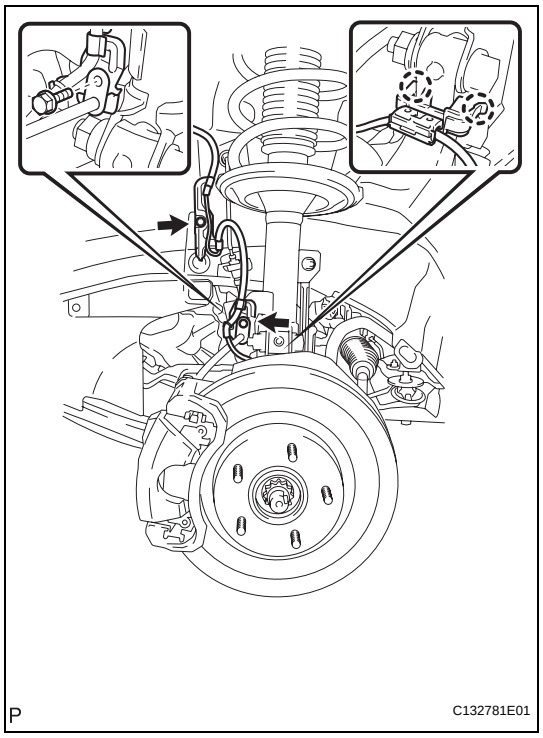

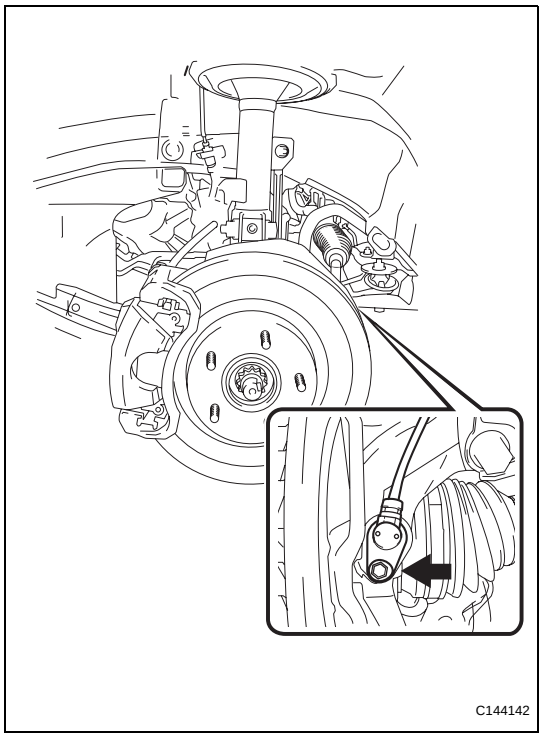

(d) Remove the bolt and the front speed sensor.
NOTICE:
- **Prevent foreign matter from attaching to the sensor tip.**
- **Clean the installation hole and the surface for the speed sensor every time the speed sensor is removed.**

CALIBRATION

1. DESCRIPTION

- After replacing the VSC relevant components or performing "Front wheel alignment adjustment", clear and read the sensor calibration data.
- Follow the chart to perform calibration.

Replacing Parts / Operation	Necessary Operation
Skid control ECU	Yaw rate and acceleration sensor zero point calibration.
Yaw rate and acceleration sensor	1. Clearing zero point calibration data. 2. Yaw rate and acceleration sensor zero point calibration.
Front wheel alignment adjustment	1. Clearing zero point calibration data. 2. Yaw rate and acceleration sensor zero point calibration.

2. OBTAIN ZERO POINT OF YAW RATE AND ACCELERATION SENSOR (INTELLIGENT TESTER)

NOTICE:

- **While obtaining the zero point, keep the vehicle stationary and do not vibrate, tilt, move, or shake it. (Do not start the engine.)**
- **Be sure to perform this procedure on a level surface (with an inclination of less than 1 degree).**

(a) Clear the zero point calibration data.
(1) Turn the engine switch off.
(2) Connect the intelligent tester to the DLC3.
(3) Check that the steering wheel is centered and move the shift lever to the P position.
(4) Turn the engine switch on (IG).

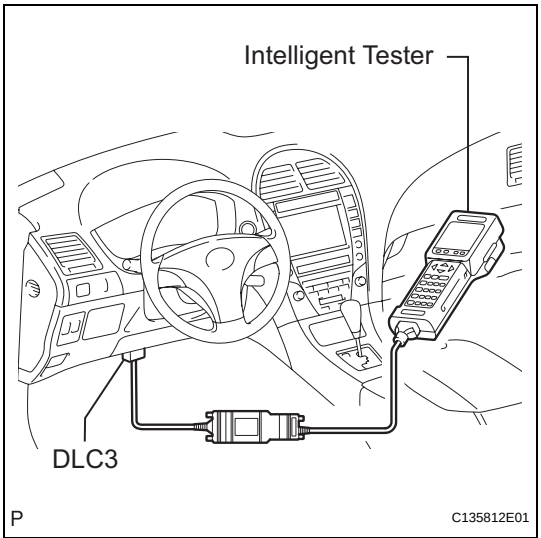

(5) Operate the intelligent tester to erase the codes (select "RESET MEMORY").
HINT:
Refer to the intelligent tester operator's manual for further details.

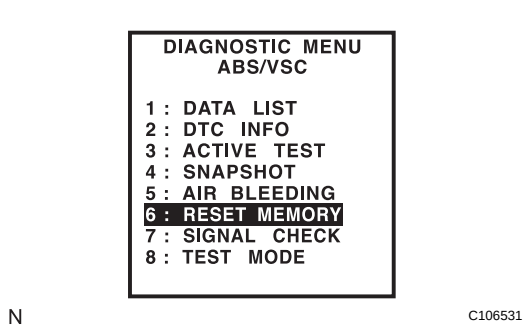

BC

(6) Turn the engine switch off.
NOTICE:
If the engine switch is turned on (IG) for more than 15 seconds with the shift lever in the P position after zero point of the yaw rate and acceleration sensor has been cleared, only the zero point of the yaw rate sensor will be stored. If the vehicle is driven under these conditions, the skid control ECU will store the zero point calibration for the acceleration sensor as not being completed. The skid control ECU will then also indicate this as a malfunction of the VSC system using the multi information display.

(b) Perform zero point calibration of the yaw rate and acceleration sensor.
(1) Turn the engine switch off.
(2) Check that the steering wheel is centered and move the shift lever to the P position.
NOTICE:
DTCs C1210/36 and C1336/39 will be recorded if the shift lever is not in the P position (See page BC-89).

(3) Connect the intelligent tester to the DLC3.
(4) Turn the engine switch on (IG).

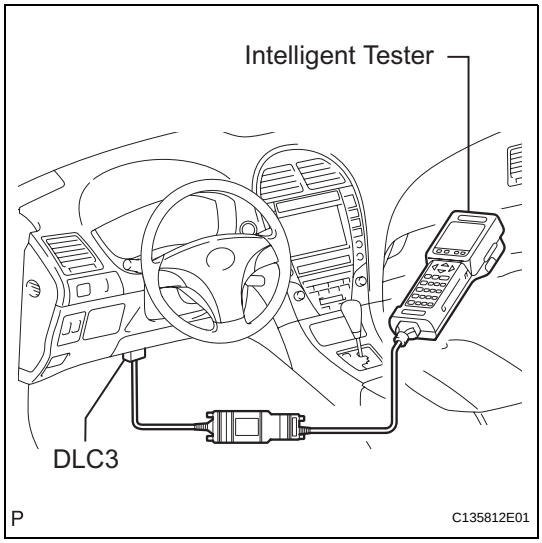

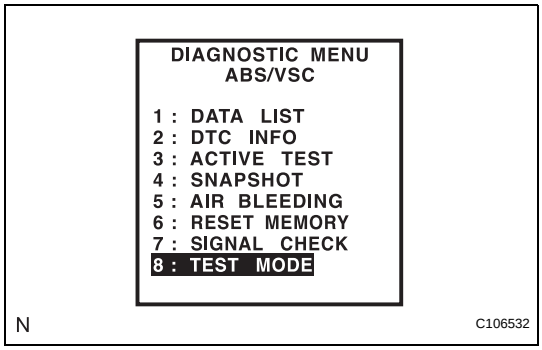

(5) Set the intelligent tester to Test Mode (select "TEST MODE").
HINT:
Refer to the intelligent tester operator's manual for further details.
(6) After the Test Mode has been entered, keep the vehicle stationary on a level surface for 2 seconds or more.

Display in TEST MODE:

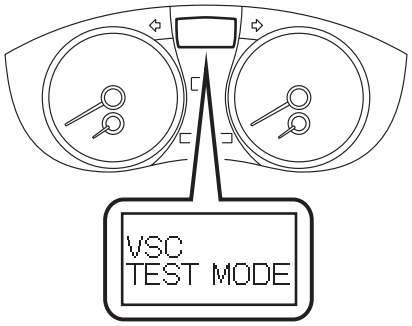

N C135814E01

(7) Check that the "VSC TEST MODE" is displayed on the multi information display (Test Mode).
HINT:
- The SLIP indicator light remains on during Test Mode because TRAC is prohibited.
- If the "VSC TEST MODE" is not displayed on the multi information display, perform zero point calibration again.
- The zero point calibration is performed only once after the system enters the Test Mode.
- Calibration cannot be performed again until the stored data is cleared.

(8) Turn the engine switch off and disconnect the intelligent tester.

3. OBTAIN ZERO POINT OF YAW RATE AND ACCELERATION SENSOR (SST CHECK WIRE)
NOTICE:
- **While obtaining the zero point, keep the vehicle stationary and do not vibrate, tilt, move, or shake it. (Do not start the engine.)**
- **Be sure to perform this procedure on a level surface (with an inclination of less than 1 degree).**

DLC3:

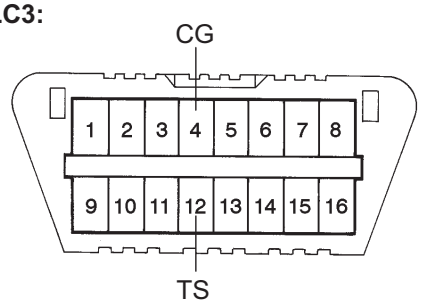

G022987E07

(a) Clear the zero point calibration data.
(1) Turn the engine switch off.
(2) Check that the steering wheel is centered and move the shift lever to the P position.
(3) Turn the engine switch on (IG).
(4) The warning light and indicator light come on for 3 seconds to indicate that the initial check is completed.
(5) Using SST, connect and disconnect terminals TS and CG of the DLC3 4 times or more within 8 seconds.
SST 09843-18040

Display in Normal System Code:

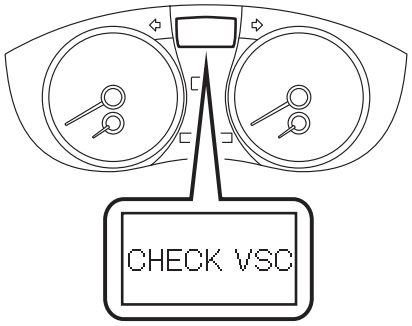

N C135815E01

(6) Check that the "CHECK VSC" is displayed on the multi information display.
NOTICE:
If the engine switch is turned on (IG) for more than 15 seconds with the shift lever in the P position after zero point of the yaw rate and acceleration sensor has been cleared, only the zero point of the yaw rate sensor will be stored. If the vehicle is driven under these conditions, the skid control ECU will store the zero point calibration for the acceleration sensor as not being completed. The skid control ECU will then also indicate this as a malfunction of the VSC system using the multi information display.

(b) Perform zero point calibration of the yaw rate and acceleration sensor.
(1) Turn the engine switch off.

(2) Check that the steering wheel is centered and move the shift lever to the P position.
NOTICE:
DTCs C1210/36 and C1336/39 will be recorded if the shift lever is not in the P position (See page BC-89).

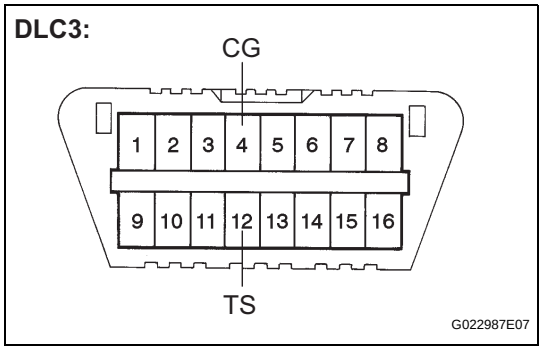

(3) Using SST, connect terminals TS and CG of the DLC3.
SST 09843-18040
(4) Turn the engine switch on (IG).
(5) Keep the vehicle stationary on a level surface for 2 seconds or more.

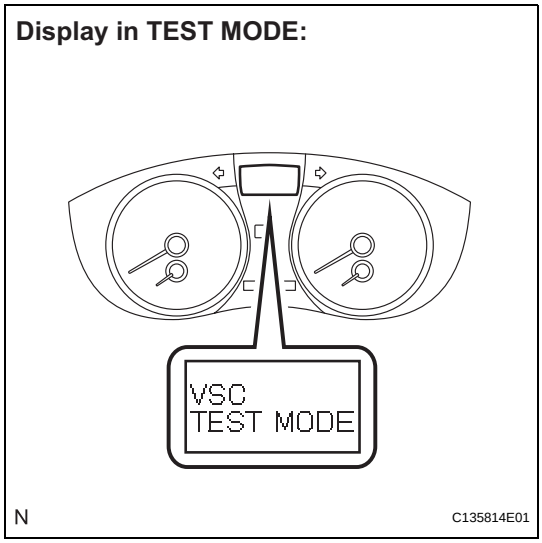

(6) Check that the "VSC TEST MODE" is displayed on the multi information display (Test Mode).
HINT:
- The SLIP indicator light remains on during Test Mode because TRAC is prohibited.
- If the "VSC TEST MODE" is not displayed on the multi information display, perform zero point calibration again.
- The zero point calibration is performed only once after the system enters the Test Mode.
- Calibration cannot be performed again until the stored data is cleared.

(7) Turn the engine switch off and disconnect the SST from the DLC3.

SKID CONTROL SENSOR

COMPONENTS

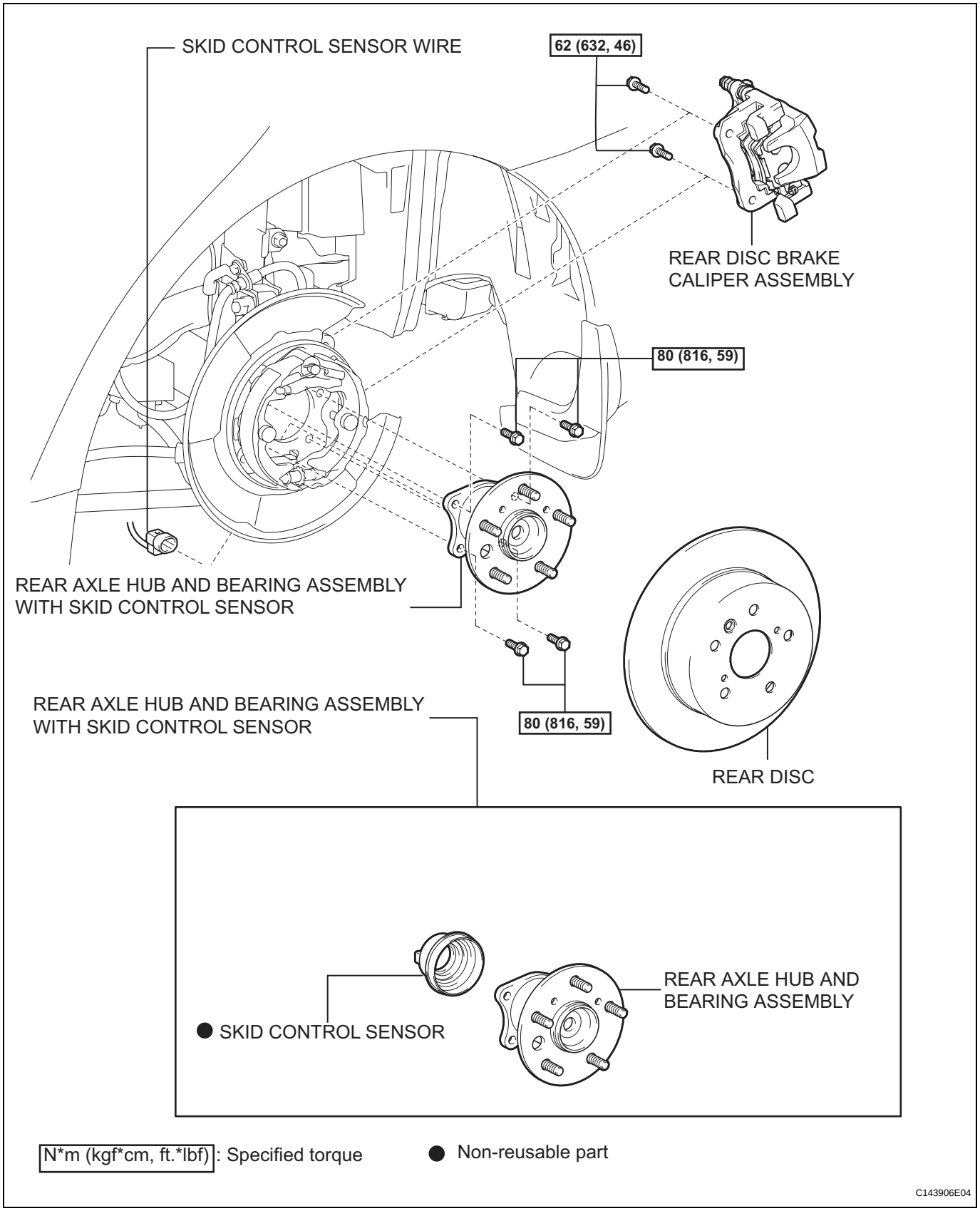

BC

REMOVAL

HINT:
- Use the same procedure for the RH side and LH side.
- The procedures listed below are for the LH side.

1. REMOVE REAR WHEEL

2. DISCONNECT SKID CONTROL SENSOR WIRE

(a) Disconnect the connector from the skid control sensor.

NOTICE:
Be careful not to damage the skid control speed sensor.

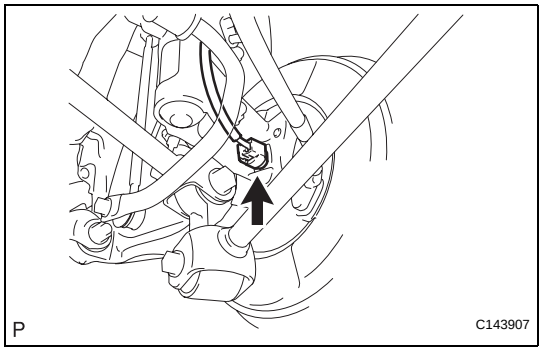

3. REMOVE REAR DISC BRAKE CALIPER ASSEMBLY (See page AH-18)

4. REMOVE REAR DISC (See page BR-49)

5. REMOVE REAR AXLE HUB AND BEARING ASSEMBLY WITH SKID CONTROL SENSOR (See page AH-15)

6. REMOVE SKID CONTROL SENSOR

(a) Mount the rear axle hub and bearing assembly in a vise using aluminum plates.

NOTICE:
Replace the rear axle hub and bearing assembly if it is dropped or receives a strong shock.

(b) Using a pin punch and hammer, drive out the 2 pins and remove the 2 attachments from SST.

SST 09520-00031 (09521-00010, 09520-00040), 09521-00020

(c) Using SST and 2 bolts (Diameter: 12 mm, pitch: 1.5 mm), remove the skid control sensor from the rear axle hub and bearing assembly.

SST 09520-00031 (09521-00010, 09520-00040), 09521-00020, 09950-00020

NOTICE:
- **Keep the skid control sensor away from magnets.**
- **Pull the skid control sensor off straight, taking care not to make contact with the skid control sensor rotor.**
- **If the skid control speed sensor rotor is damaged or deformed, replace the rear axle hub and bearing assembly.**
- **Do not scratch the contact surface between rear axle hub and bearing assembly and the skid control sensor.**
- **Do not attach foreign matter to the skid control speed sensor rotor and tip.**

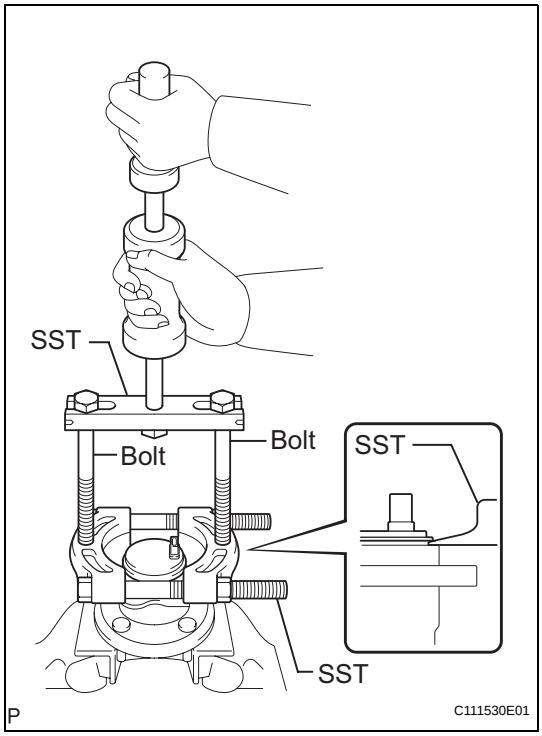

INSPECTION

1. INSPECT SKID CONTROL SENSOR

(a) Inspect the skid control sensor. If any of the following occurs, replace the skid control sensor with a new one:
- The surface of the skid control sensor is cracked, dented, or chipped off.
- The connector is scratched, cracked, or damaged.
- The skid control sensor has been dropped.

(b) Measure the resistance according to the value(s) in the table below.
Standard resistance:
RH

Tester Connection	Condition	Specified Condition
2 (RR+) - 1 (RR-)	Always	0.9 to 2.1 kΩ
2 (RR+) - Body ground	Always	10 kΩ or higher
1 (RR-) - Body ground	Always	10 kΩ or higher

LH

Tester Connection	Condition	Specified Condition
2 (RL+) - 1 (RL-)	Always	0.9 to 2.1 kΩ
2 (RL+) - Body ground	Always	10 kΩ or higher
1 (RL-) - Body ground	Always	10 kΩ or higher

If the value is not as specified, replace the skid control sensor.

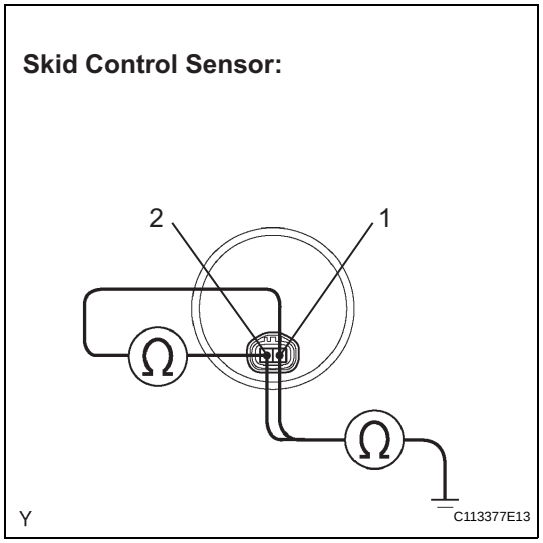

INSTALLATION

1. INSTALL SKID CONTROL SENSOR

(a) Clean the contact surface between the axle hub and a new skid control sensor.
NOTICE:
Prevent foreign matter from attaching to the sensor rotor.

(b) Place the skid control sensor on the axle hub so that the connector is positioned as shown in the illustration.

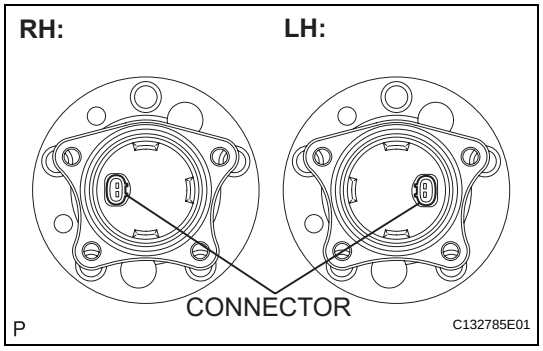

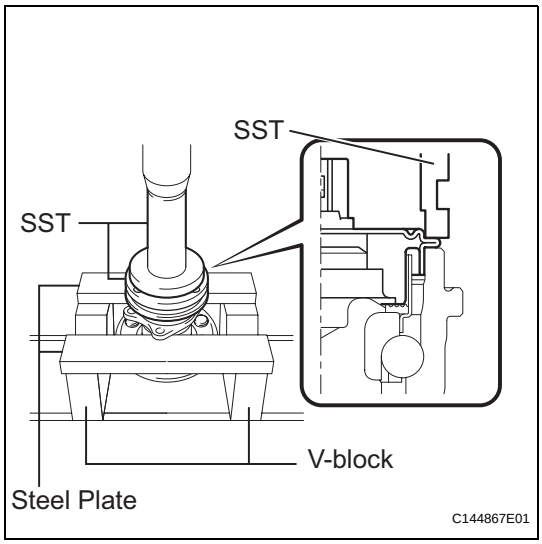

(c) Using SST, a press, 2 V-blocks, and 2 steel plates, install the skid control sensor to the axle hub.
SST 09309-36010, 09213-58013
NOTICE:
- **Keep the sensor away from magnets.**
- **Do not use a hammer on the skid control sensor.**
- **Check that there is no foreign matter such as iron chips on the detecting portion of the skid control sensor.**
- **Slowly press the skid control sensor straight.**

2. INSTALL REAR AXLE HUB AND BEARING ASSEMBLY WITH SKID CONTROL SENSOR (See page AH-16)

3. INSPECT REAR AXLE HUB BEARING LOOSENESS (See page AH-15)

4. INSPECT REAR AXLE HUB RUNOUT (See page AH-15)

5. INSTALL REAR DISC (See page BR-50)

6. INSTALL REAR DISC BRAKE CALIPER ASSEMBLY (See page AH-20)

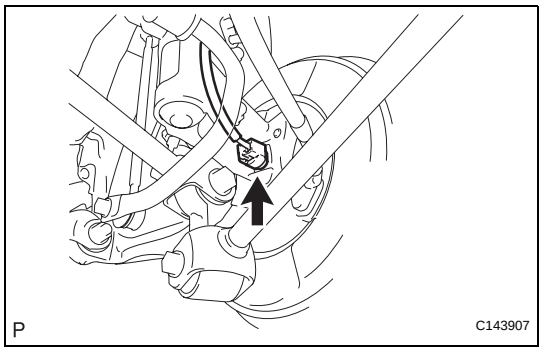

7. CONNECT SKID CONTROL SENSOR WIRE
(a) Connect the connector to the skid control sensor.

8. INSTALL REAR WHEEL
Torque: 103 N*m (1,050 kgf*cm, 76 ft.*lbf)

9. INSPECT AND ADJUST REAR WHEEL ALIGNMENT
HINT:
(See page SP-11)

10. CHECK SPEED SENSOR SIGNAL
HINT:
(See page BC-24)

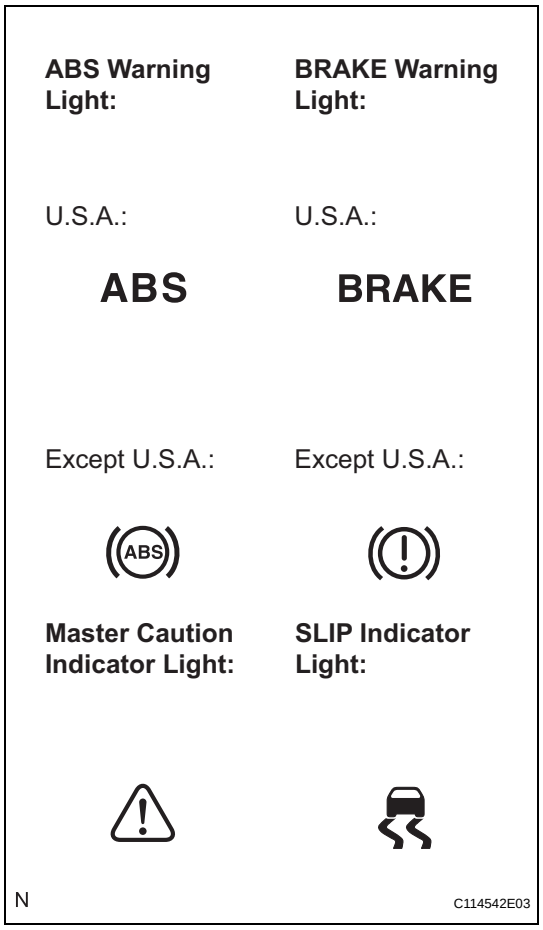

TEST MODE PROCEDURE

1. WARNING LIGHT AND INDICATOR LIGHT INITIAL CHECK

(a) Release the parking brake.

NOTICE:

Before releasing the parking brake, move the shift lever to the P position for safety.

HINT:

When the parking brake is applied or the level of the brake fluid is low, the BRAKE warning light comes on.

(b) When the engine switch is turned on (IG), check that the ABS warning, BRAKE warning, SLIP indicator, and master caution indicator lights come on for approximately 3 seconds.

(c) Make sure that the message on the multi information display changes from "CHECK" to "COMPLETED" for 2 seconds.

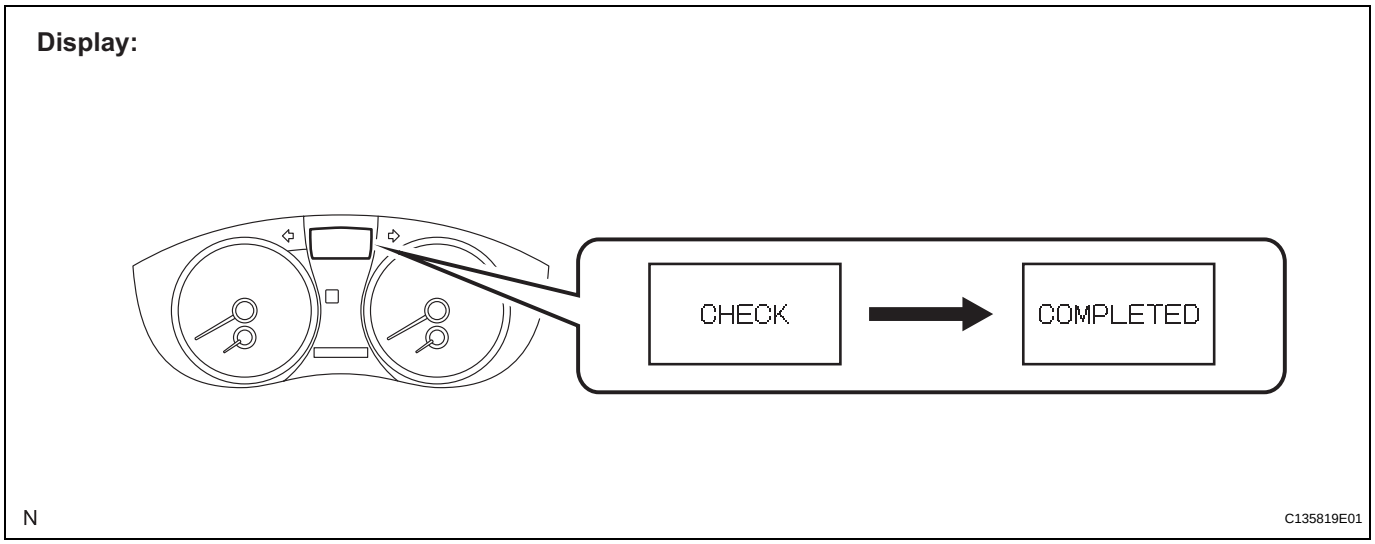

HINT:

If the ECU stores a DTC, the ABS warning, BRAKE warning and SLIP indicator lights will come on.

If the vehicle is equipped with a multi information display, and the vehicle stores a DTC, the master caution indicator light will illuminate, and the multi information display will indicate a malfunction. In this case, the ABS warning, BRAKE warning, and SLIP indicator lights will also come on.

If the indicator remains on or does not come on, proceed to troubleshooting for the light circuits listed below.

Trouble Area	See procedure
ABS warning light circuit	BC-141 or BC-146
BRAKE warning light circuit	BC-154 or BC-162
VSC warning light circuit	BC-148 or BC-152
SLIP indicator light circuit	BC-164 or BC-168

2. SENSOR CHECK USING TEST MODE (SIGNAL CHECK) (INTELLIGENT TESTER)

NOTICE:

After replacement of the brake actuator assembly and/or yaw rate and acceleration sensor, perform zero point calibration of the yaw rate and acceleration sensor.

HINT:

- If the engine switch is turned from on (IG) to on (ACC) or off during Test Mode (signal check), DTCs of the signal check function will be erased.
- During Test Mode (signal check), the skid control ECU records all DTCs of the signal check function. By performing the Test Mode (signal check), the codes are erased if a normal condition is confirmed. The remaining codes are the codes where an abnormality was found.

(a) Procedure to enter Test Mode.

(1) Turn the engine switch off.

(2) Connect the intelligent tester to the DLC3.

(3) Check that the steering wheel is centered and move the shift lever to the P position.

(4) Turn the engine switch on (IG).

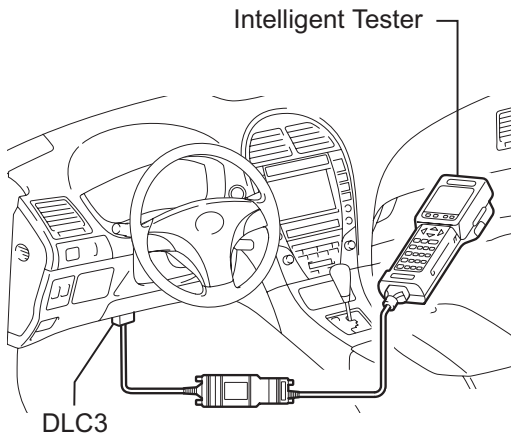

P C135812E01

(5) Set the intelligent tester to Test Mode (select "SIGNAL CHECK").

HINT:

Refer to the intelligent tester operator's manual for further details.

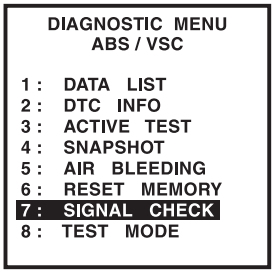

N C106533

BC

TEST MODE

Blinking Pattern:

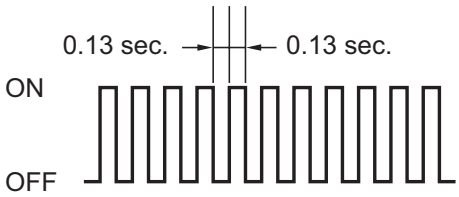

Display:

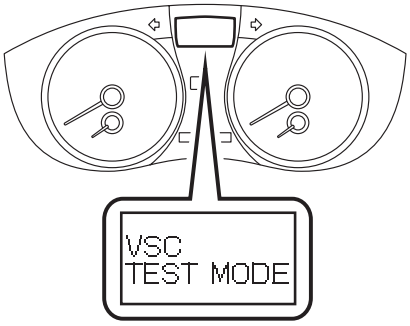

C139028E01

(6) Check that the ABS warning light blinks and "VSC TEST MODE" is displayed on the multi information display (Test Mode).
HINT:
- The SLIP indicator light remains on during Test Mode because TRAC is prohibited.
- If the ABS and VSC warning (multi information display) lights do not blink, inspect the TS and CG terminal circuit, and ABS and VSC warning light circuits.

Trouble Area	See procedure
TS and CG terminal circuit	BC-176
ABS warning light circuit	BC-146
VSC warning light circuit	BC-152

Blinking Pattern in TEST MODE:

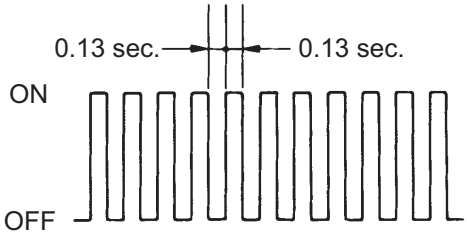

BR03904E16

(7) Check the ABS sensor.
HINT:
Check that the ABS warning light is blinking in Test Mode and perform the check.

3. ACCELERATION SENSOR CHECK (INTELLIGENT TESTER)

(a) Keep the vehicle stationary on a level surface for 1 second or more.
HINT:
Acceleration sensor check can be performed with the master cylinder pressure sensor check below.

4. MASTER CYLINDER PRESSURE SENSOR CHECK (INTELLIGENT TESTER)

(a) Leave the vehicle in a stationary condition and release the brake pedal for 1 second or more, and quickly and continuously depress the brake pedal with a force of 98 N (10 kgf, 22 lbf) or more for 1 second.

(b) Check that the ABS warning light stays on for 3 seconds.
HINT:
- Ensure that the ABS warning light comes on.
- While the ABS warning light stays on, continue to depress the brake pedal with a force of 98 N (10 kgf, 22 lbf) or more.

- The ABS warning light comes on for 3 seconds every time brake pedal operation above is performed.
- If the check of the master cylinder pressure sensor is not completed, depressing the brake pedal causes further decrease in the negative pressure, making the sensor check difficult to be completed.
- If the negative pressure is insufficient, the master cylinder pressure sensor check may not be completed. In this case, run the engine at idle to obtain sufficient negative pressure.
- If the brake pedal is strongly depressed when the negative pressure is insufficient, the BRAKE warning light may come on in accordance with the booster pressure control. In this case, run the engine at idle to obtain sufficient negative pressure.

5. SPEED SENSOR CHECK (INTELLIGENT TESTER)

(a) Check the speed sensor signal.

(1) Drive the vehicle straight ahead.

Accelerate the vehicle to a speed of 45 km/h (28 mph) or more for several seconds and check that the ABS warning light goes off.

HINT:

The sensor check may not be completed if wheelspin occurs.

(b) Stop the vehicle.

NOTICE:

- **Before performing the speed sensor check, complete the acceleration sensor and master cylinder pressure sensor checks.**
- **The speed sensor check may not be completed if the speed sensor check is started while turning the steering wheel or spinning the wheels.**
- **After the ABS warning light goes off and if the vehicle speed exceeds 80 km/h (50 mph), a signal check code will be stored again. Accelerate or stop the vehicle before the speed reaches 80 km/h (50 mph).**
- **If the signal check has not been completed, the ABS warning light blinks while driving and the ABS system does not operate.**

HINT:

When the sensor check has been completed, the ABS warning light goes off while driving and blinks in the Test Mode pattern while stationary.

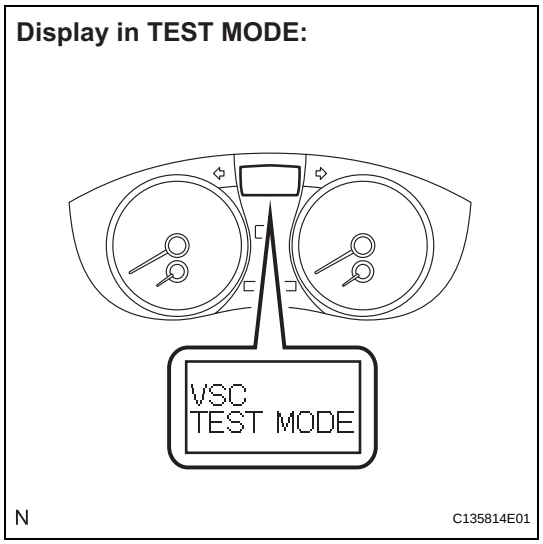

(c) Check the VSC sensor.
Check that the "VSC TEST MODE" is displayed on the multi information display, and perform the check.

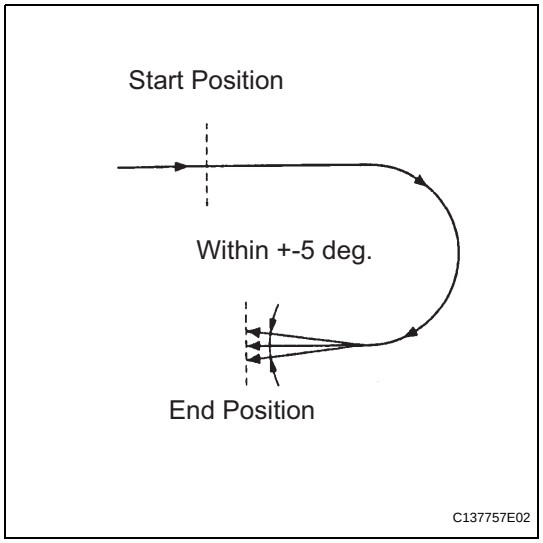

6. YAW RATE SENSOR CHECK (INTELLIGENT TESTER)

(a) Check the output of the yaw rate sensor.
(1) Keep the vehicle in a stationary condition on a level surface for 1 second or more.
(2) Move the shift lever from P to the D position and drive the vehicle at a speed of approximately 5 km/h (3 mph), and turn the steering wheel either to the left or right 90° or more until the vehicle makes a 180° turn.
(3) Stop the vehicle and move the shift lever to the P position. Check that the skid control buzzer sounds for 3 seconds.
HINT:
- If the skid control buzzer sounds, the sensor check is completed normally.
- If the skid control buzzer does not sound, check the skid control buzzer circuit (See page BC-170), then perform the sensor check again.
- If the skid control buzzer still does not sound, there is a malfunction in the yaw rate sensor, so check the DTC.
- Make a 180° turn. At the end of the turn, the direction of the vehicle should be within 180° +-5° of its start position.
- Do not spin the wheels.
- Do not turn the engine switch off while turning.
- Do not move the shift lever to the P position while turning, but changing in the vehicle speed, stopping, or driving in reverse is possible.
- Complete the turn within 20 seconds.

Blinking Pattern in TEST MODE:

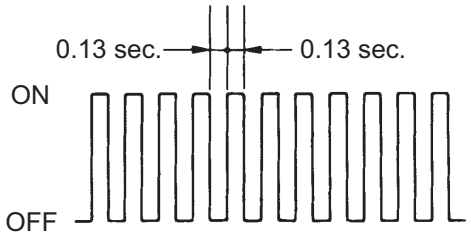

BR03904E16

7. END OF SENSOR CHECK (INTELLIGENT TESTER)

(a) If the sensor check is completed, the ABS warning light blinks (Test Mode) when the vehicle stops and the ABS warning light is off while the vehicle is driving.

NOTICE:

- **When the yaw rate sensor, acceleration sensor, speed sensor, and master cylinder pressure sensor checks are completed, the sensor check is completed.**
- **If the sensor check is not completed, the ABS warning light blinks even while the vehicle is driving and the ABS does not operate.**

8. READ DTC OF SIGNAL CHECK FUNCTION (INTELLIGENT TESTER)

(a) Read the DTC(s) by following the tester screen.

NOTICE:

- **If only the DTCs are displayed, repair the malfunction area and clear the DTCs.**
- **If the DTCs or Test Mode codes (DTC of signal check function) are displayed, repair the malfunction area, clear the DTCs and perform the Test Mode inspection.**

HINT:

See the list of DTC (See procedure "A").

9. SENSOR CHECK USING TEST MODE (SIGNAL CHECK) (SST CHECK WIRE)

NOTICE:

After replacement of the brake actuator assembly and/or yaw rate and acceleration sensor, perform zero point calibration of the yaw rate and acceleration sensor.

HINT:

- If the engine switch is turned from on (IG) to on (ACC) or off during Test Mode (signal check), DTCs of the signal check function will be erased.
- During Test Mode (signal check), the skid control ECU records all DTCs of the signal check function. By performing the Test Mode (signal check), the codes are erased if a normal condition is confirmed. The remaining codes are the codes where an abnormality was found.

(a) Procedure to enter Test Mode.

(1) Turn the engine switch off.

(2) Check that the steering wheel is centered and move the shift lever to the P position.

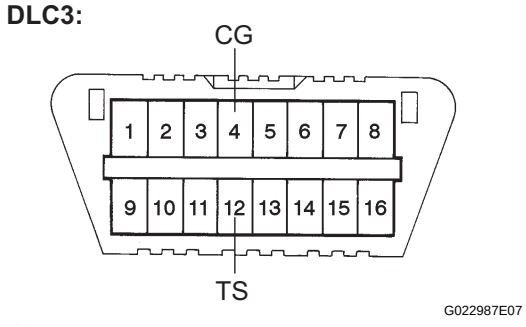

(3) Using SST, connect terminals TS and CG of the DLC3.
SST 09843-18040

(4) Turn the engine switch on (IG).

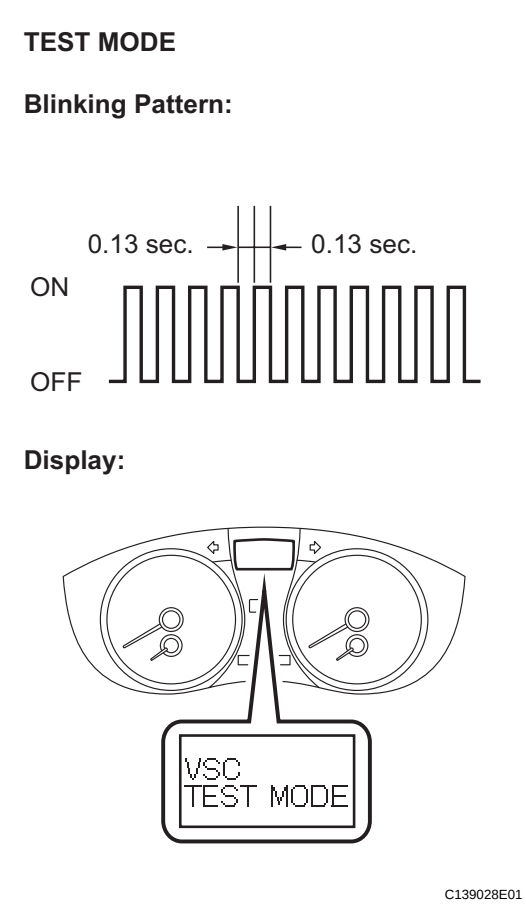

(5) Check that the ABS warning light blinks and "VSC TEST MODE" is displayed on the multi information display (Test Mode).
HINT:
- The SLIP indicator light remains on during Test Mode because TRAC is prohibited.
- If the ABS and VSC warning (multi information display) lights do not blink, inspect the TS and CG terminal circuit, and ABS and VSC warning light circuits.

Trouble Area	See procedure
TS and CG terminal circuit	BC-176
ABS warning light circuit	BC-146
VSC warning light circuit	BC-152

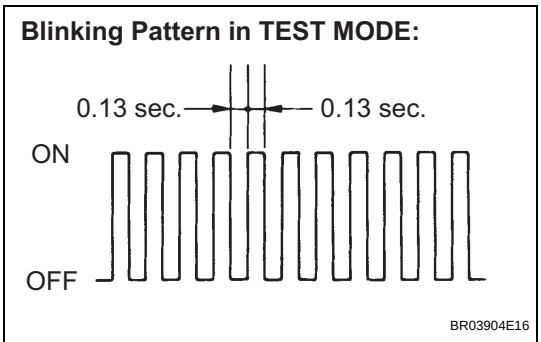

(6) Check the ABS sensor.
HINT:
Check that the ABS warning light is blinking in Test Mode and perform the check.

10. ACCELERATION SENSOR CHECK (SST CHECK WIRE)

(a) Keep the vehicle stationary on a level surface for 1 second or more.
HINT:
Acceleration sensor check can be performed with the master cylinder pressure sensor check below.

11. MASTER CYLINDER PRESSURE SENSOR CHECK (SST CHECK WIRE)

(a) Leave the vehicle in a stationary condition and release the brake pedal for 1 second or more, and quickly and continuously depress the brake pedal with a force of 98 N (10 kgf, 22 lbf) or more for 1 second.

(b) Check that the ABS warning light stays on for 3 seconds.

HINT:

- Ensure that the ABS warning light comes on.
- While the ABS warning light stays on, continue to depress the brake pedal with a force of 98 N (10 kgf, 22 lbf) or more.
- The ABS warning light comes on for 3 seconds every time the brake pedal operation above is performed.
- If the check of the master cylinder pressure sensor is not completed, depressing the brake pedal causes further decrease in the negative pressure, making the sensor check difficult to be completed.
- If the negative pressure is insufficient, the master cylinder pressure sensor check may not be completed. In this case, run the engine at idle to obtain sufficient negative pressure.
- If the brake pedal is strongly depressed when the negative pressure is insufficient, the BRAKE warning light may come on in accordance with the booster pressure control. In this case, run the engine at idle to obtain sufficient negative pressure.

12. SPEED SENSOR CHECK (SST CHECK WIRE)

(a) Check the speed sensor signal.

(1) Drive the vehicle straight ahead.

Accelerate the vehicle to a speed of 45 km/h (28 mph) or more for several seconds and check that the ABS warning light goes off.

HINT:

The sensor check may not be completed if wheelspin occurs.

(b) Stop the vehicle.

NOTICE:

- **Before performing the speed sensor check, complete the acceleration sensor and master cylinder pressure sensor checks.**
- **The speed sensor check may not be completed if the speed sensor check is started while turning the steering wheel or spinning the wheels.**

- **After the ABS warning light goes off, if vehicle speed exceeds 80 km/h (50 mph), a signal check code will be stored again. Accelerate or stop the vehicle before the speed reaches 80 km/h (50 mph).**
- **If the signal check has not been completed, the ABS warning light blinks while driving and the ABS system does not operate.**

HINT:
When the sensor check has been completed, the ABS warning light goes off while driving and blinks in the Test Mode pattern while stationary.

(c) Check the VSC sensor.
Check that the "VSC TEST MODE" is displayed on the multi information display, and perform the check.

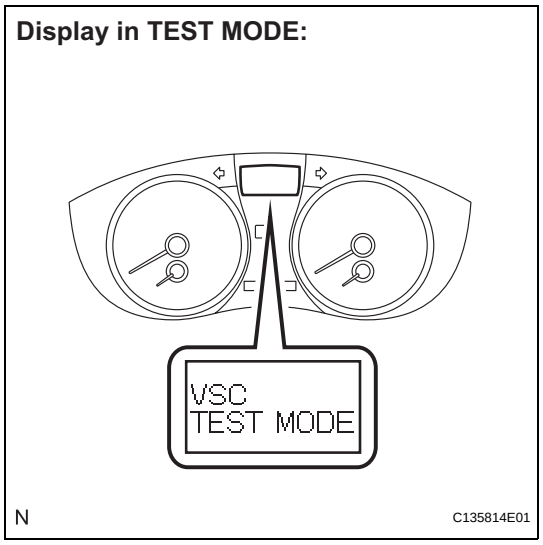

13. YAW RATE SENSOR CHECK (SST CHECK WIRE)

(a) Check the output of the yaw rate sensor.
(1) Keep the vehicle stationary on a level surface for 1 second or more.
(2) Move the shift lever from P to the D position and drive the vehicle at a vehicle speed of approximately 5 km/h (3 mph) and turn the steering wheel either to the left or right 90° or more and until the vehicle makes a 180° turn.
(3) Stop the vehicle and move the shift lever to the P position. Check that the skid control buzzer sounds for 3 seconds.
HINT:
- If the skid control buzzer sounds, the sensor check is completed normally.
- If the skid control buzzer does not sound, check the skid control buzzer circuit (See page BC-170), then perform the sensor check again.
- If the skid control buzzer still does not sound, there is a malfunction in the yaw rate sensor, so check the DTC.
- Make a 180° turn. At the end of the turn, the direction of the vehicle should be within 180° +-5° of its start position.
- Do not spin the wheels.

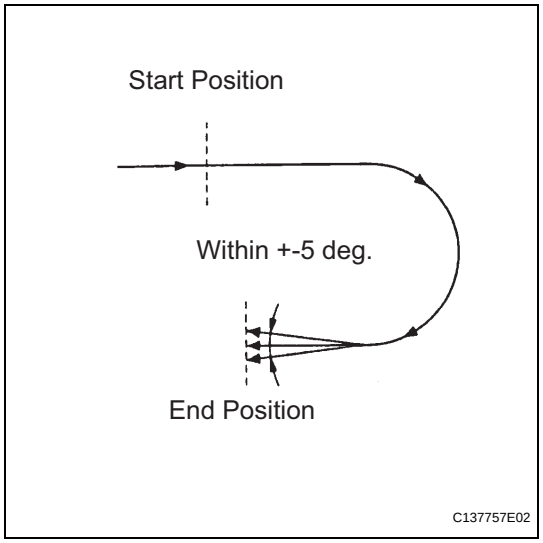

- Do not turn the engine switch off while turning.
- Do not move the shift lever to the P position while turning, but changing in the vehicle speed, stopping, or driving in reverse is possible.
- Complete the turn within 20 seconds.

Blinking Pattern in TEST MODE:

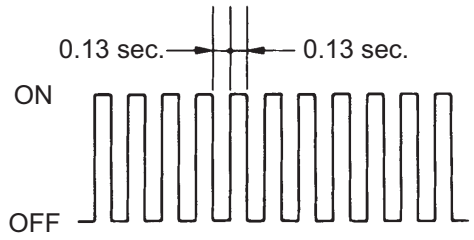

BR03904E16

14. END OF SENSOR CHECK (SST CHECK WIRE)

(a) If the sensor check is completed, the ABS warning light blinks (Test Mode) when the vehicle stops and the ABS warning light is off while the vehicle is driving.

NOTICE:

- **When the yaw rate sensor, acceleration sensor, speed sensor, and master cylinder pressure sensor checks are completed, the sensor check is completed.**
- **If the sensor check is not completed, the ABS warning light blinks even while the vehicle is driving and the ABS does not operate.**

DLC3:

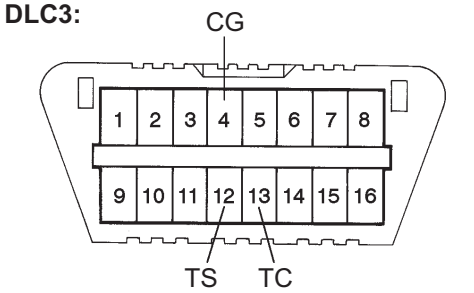

G022988E01

15. READ DTC OF SIGNAL CHECK FUNCTION (SST CHECK WIRE)

(a) Using SST, connect terminals TC and CG of the DLC3.

SST 09843-18040

(b) Count the number of blinks of the ABS warning light and read "DIAG VSC" on the multi information display.

Blinking Pattern in Normal System Code:

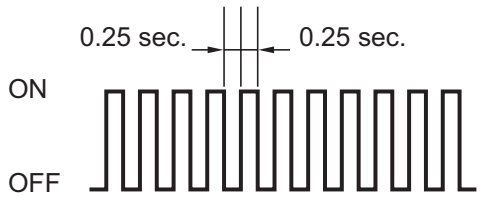

Display of Normal System Code:

Blinking Pattern in Trouble Code (Example Codes 71 and 72):

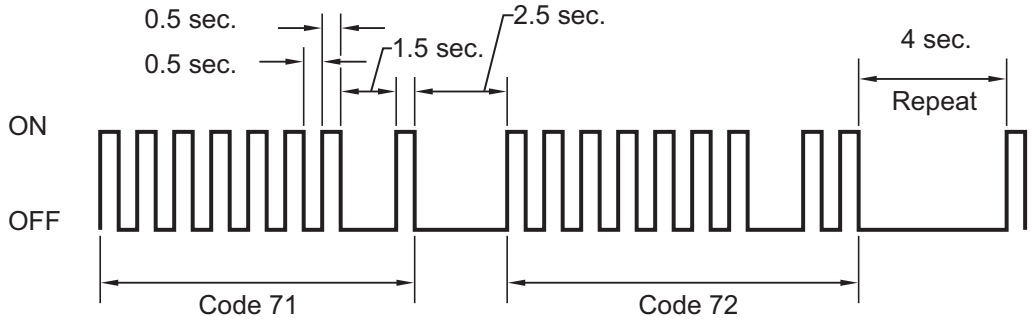

Display of Trouble Code (Example Code 71):

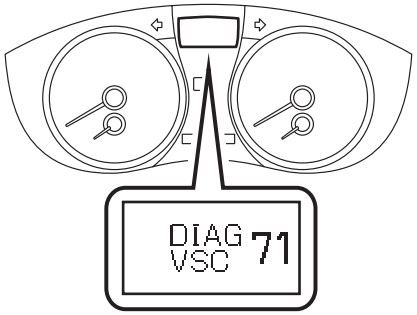

N C135816E03

BC

NOTICE:

- **If only the DTCs are displayed, repair the malfunction area and clear the DTCs.**
- **If the DTCs or Test Mode codes (DTC of signal check function) are displayed, repair the malfunction area, clear the DTCs and perform the Test Mode inspection.**

HINT:

- If more than 1 malfunction is detected at the same time, the lowest numbered code will be displayed first.
- See the list of DTC (See procedure "A").

(c) After performing the check, disconnect the SST from terminals TS and CG, and TC and CG of the DLC3 and turn the engine switch off.

(d) Turn the engine switch on (IG).
HINT:
- If the engine switch is not turned on (IG) after the SST is removed from the DLC3, the previous Test Mode will continue.
- If the engine switch is turned on (IG) with terminals TS and CG shorted, the previous Test Mode will continue.

16. DTC OF TEST MODE (SIGNAL CHECK) FUNCTION (Procedure "A")

ABS sensor:

DTC Code	Detection Item	Trouble Area
C1271/71	Low output signal of front speed sensor RH	• Front speed sensor RH • Sensor installation • Speed sensor rotor
C1272/72	Low output signal of front speed sensor LH	• Front speed sensor LH • Sensor installation • Speed sensor rotor
C1273/73	Low output signal of rear speed sensor RH	• Rear speed sensor RH • Sensor installation • Speed sensor rotor
C1274/74	Low output signal of rear speed sensor LH	• Rear speed sensor LH • Sensor installation • Speed sensor rotor
C1275/75	Abnormal change in output signal of front speed sensor RH	Speed sensor rotor
C1276/76	Abnormal change in output signal of front speed sensor LH	Speed sensor rotor
C1277/77	Abnormal change in output signal of rear speed sensor RH	Speed sensor rotor
C1278/78	Abnormal change in output signal of rear speed sensor LH	Speed sensor rotor
C1279/79	Acceleration sensor output voltage malfunction	• Yaw rate and acceleration sensor • Sensor installation
C1281/81	Master cylinder pressure sensor output malfunction	• Stop light switch • Master cylinder pressure sensor

VSC sensor:

DTC Code	Detection Item	Trouble Area
C0371/71	Yaw rate sensor	Yaw rate and acceleration sensor

HINT:
The codes in this table are output only in Test Mode (signal check).

YAW RATE AND ACCELERATION SENSOR

COMPONENTS

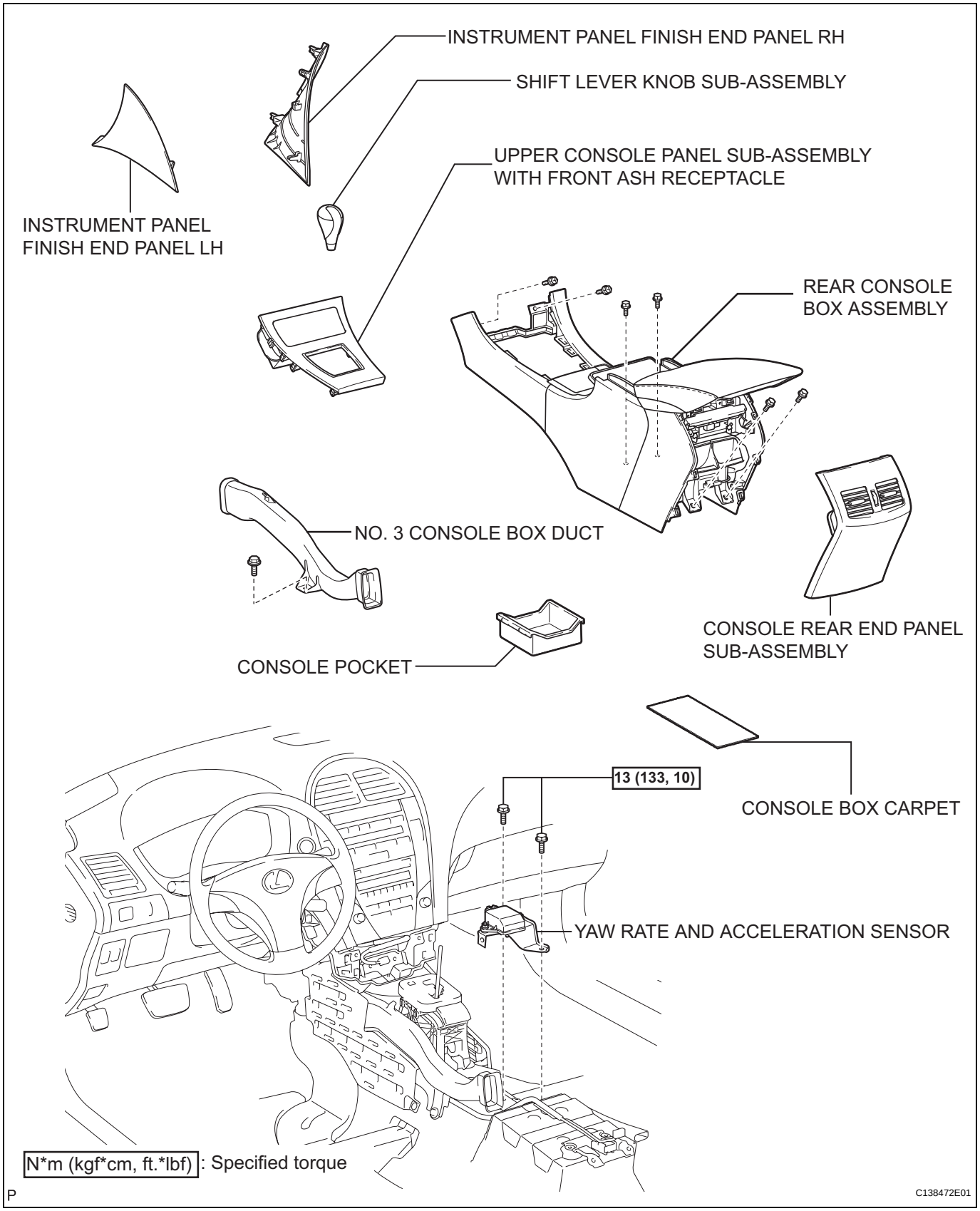

BC

REMOVAL

1. **DISCONNECT CABLE FROM NEGATIVE BATTERY TERMINAL**
2. **REMOVE SHIFT LEVER KNOB SUB-ASSEMBLY (See page IP-16)**
3. **REMOVE UPPER CONSOLE PANEL SUB-ASSEMBLY WITH FRONT ASH RECEPTACLE (See page IP-16)**
4. **REMOVE INSTRUMENT PANEL FINISH END PANEL LH (See page IP-13)**
5. **REMOVE INSTRUMENT PANEL FINISH END PANEL RH (See page IP-15)**
6. **REMOVE CONSOLE POCKET (See page IP-52)**
7. **REMOVE CONSOLE BOX CARPET (See page IP-52)**
8. **REMOVE CONSOLE REAR END PANEL SUB-ASSEMBLY (See page IP-53)**
9. **REMOVE REAR CONSOLE BOX ASSEMBLY (See page IP-53)**
10. **REMOVE NO. 3 CONSOLE BOX DUCT (See page PB-12)**
11. **REMOVE YAW RATE AND ACCELERATION SENSOR**
    (a) Disconnect the yaw rate sensor connector and clamp.
    (b) Remove the 2 bolts and yaw rate sensor.
    NOTICE:
    Do not remove the sensor from the bracket.

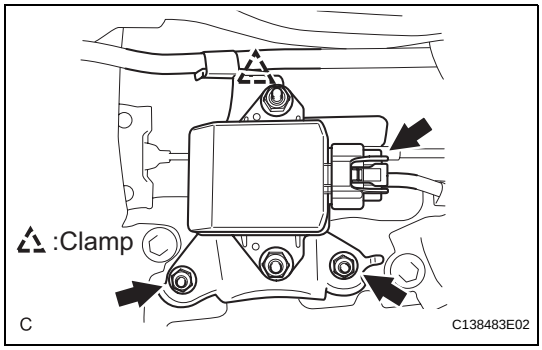

INSPECTION

1. INSPECT YAW RATE AND ACCELERATION SENSOR

(a) Inspect the yaw rate and acceleration sensor. If any of the following occurs, replace the yaw rate and acceleration sensor with a new one:
- The surface of the yaw rate and acceleration sensor is cracked, dented, or chipped off.
- The connector is scratched, cracked, or damaged.
- The yaw rate and acceleration sensor has been dropped.

INSTALLATION

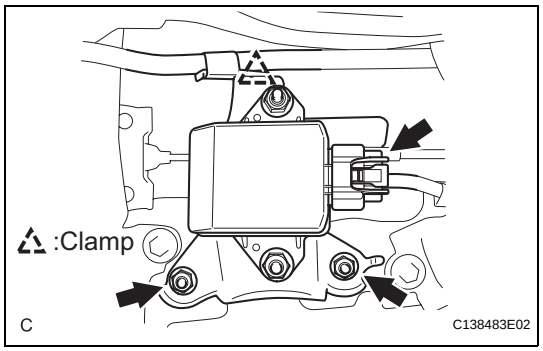

1. INSTALL YAW RATE AND ACCELERATION SENSOR

(a) Install the yaw rate and acceleration sensor with the 2 bolts.
Torque: 13 N*m (133 kgf*cm, 10 ft.*lbf)
NOTICE:
- **Do not damage the yaw rate and acceleration sensor.**
- **Make sure that the yaw rate and acceleration sensor is installed securely.**

(b) Connect the yaw rate and acceleration sensor connector and clamp.

2. INSTALL NO. 3 CONSOLE BOX DUCT (See page PB-19)

3. INSTALL REAR CONSOLE BOX ASSEMBLY (See page IP-58)

4. INSTALL CONSOLE REAR END PANEL SUB-ASSEMBLY (See page IP-59)

5. INSTALL CONSOLE BOX CARPET (See page IP-59)

6. INSTALL CONSOLE POCKET (See page IP-59)

7. INSTALL INSTRUMENT PANEL FINISH END PANEL LH (See page IP-46)

8. INSTALL INSTRUMENT PANEL FINISH END PANEL RH (See page IP-44)

9. INSTALL UPPER CONSOLE PANEL SUB-ASSEMBLY WITH FRONT ASH RECEPTACLE (See page IP-42)

10. INSTALL SHIFT LEVER KNOB SUB-ASSEMBLY (See page IP-42)

11. PERFORM YAW RATE SENSOR ZERO POINT CALIBRATION
HINT:
(See page BC-20)

12. INSPECT SENSOR SIGNAL
HINT:
(See page BC-24)

PROBLEM SYMPTOMS TABLE

If there are no DTCs output and the problem still occurs, check the circuits for each problem symptom in the order given in the table below and proceed to the relevant troubleshooting page.

HINT:

- Inspect the fuse and relay before investigating the suspected areas as shown in the table below.
- Inspect each malfunction circuit in numerical order for the corresponding symptom.

Vehicle Stability Control System:

Symptom	Suspected Area	See page
ABS, BA and/or EBD does not operate	1. Check the DTC again and make sure that the normal system code is output.	BC-43
	2. IG power source circuit	BC-107
	3. Front speed sensor circuit	BC-58
	4. Rear speed sensor circuit	BC-66
	5. Check the brake actuator assembly with the intelligent tester. (Check brake actuator assembly operation using the Active Test function.) If abnormal, check the hydraulic circuit for leakage.	BC-180
	6. If the symptoms still occur even after the above circuits in suspected areas have been inspected and proved to be normal, replace the brake actuator assembly (skid control ECU).	BC-181
ABS, BA and/or EBD does not operate efficiently	1. Check the DTC again and make sure that the normal system code is output.	BC-43
	2. Front speed sensor circuit	BC-58
	3. Rear speed sensor circuit	BC-66
	4. Stop light switch circuit	BC-114
	5. Check the brake actuator assembly with the intelligent tester. (Check brake actuator assembly operation using the Active Test function.) If abnormal, check the hydraulic circuit for leakage.	BC-180
	6. If the symptoms still occur even after the above circuits in suspected areas have been inspected and proved to be normal, replace the brake actuator assembly (skid control ECU).	BC-181
ABS sensor DTC check cannot be done	1. Check the DTC again and make sure that the normal system code is output.	BC-43
	2. TC and CG terminal circuit	BC-173
	3. If the symptoms still occur even after the above circuit in suspected areas has been inspected and proved to be normal, replace the brake actuator assembly (skid control ECU).	BC-181
ABS warning light abnormal (Remains on)	1. ABS warning light circuit	BC-141
	2. Brake actuator assembly (Skid control ECU)	BC-181
ABS warning light abnormal (Does not come on)	1. ABS warning light circuit	BC-146
	2. Brake actuator assembly (Skid control ECU)	BC-181
BRAKE warning light abnormal (Remains on)	1. BRAKE warning light circuit	BC-154
	2. Brake actuator assembly (Skid control ECU)	BC-181
BRAKE warning light abnormal (Does not come on)	1. BRAKE warning light circuit	BC-162
	2. Brake actuator assembly (Skid control ECU)	BC-181

Symptom	Suspected Area	See page
VSC and/or TRAC does not operate	1. Check the DTC again and make sure that the normal system code is output.	BC-43
	2. IG power source circuit	BC-107
	3. Check the hydraulic circuit for leakage	-
	4. Front speed sensor circuit	BC-58
	5. Rear speed sensor circuit	BC-66
	6. Yaw rate and acceleration sensor circuit	BC-94
	7. Steering angle sensor circuit	BC-91
	8. If the symptoms still occur even after the above circuits in suspected areas have been inspected and proved to be normal, replace the brake actuator assembly (skid control ECU).	BC-181
VSC sensor DTC check cannot be done	1. Check the DTC again and make sure that the normal system code is output.	BC-43
	2. TC and CG terminal circuit	BC-173
	3. If the symptoms still occur even after the above circuit in suspected areas has been inspected and proved to be normal, replace the brake actuator assembly (skid control ECU).	BC-181
VSC warning (multi information display) abnormal (Remains on)	1. VSC warning light circuit	BC-148
	2. Brake actuator assembly (Skid control ECU)	BC-181
VSC warning (multi information display) abnormal (Does not come on)	1. VSC warning light circuit	BC-152
	2. Brake actuator assembly (Skid control ECU)	BC-181
SLIP indicator light abnormal (Remains on)	1. SLIP indicator light circuit	BC-164
	2. Brake actuator assembly (Skid control ECU)	BC-181
SLIP indicator light abnormal (Does not come on)	1. SLIP indicator light circuit	BC-168
	2. Brake actuator assembly (Skid control ECU)	BC-181
Sensor check cannot be done	1. TS and CG terminal circuit	BC-176
	2. Brake actuator assembly (Skid control ECU)	BC-181
Skid control buzzer abnormal	1. Skid control buzzer circuit	BC-170
	2. Brake actuator assembly (Skid control ECU)	BC-181

STEERING ANGLE SENSOR

COMPONENTS

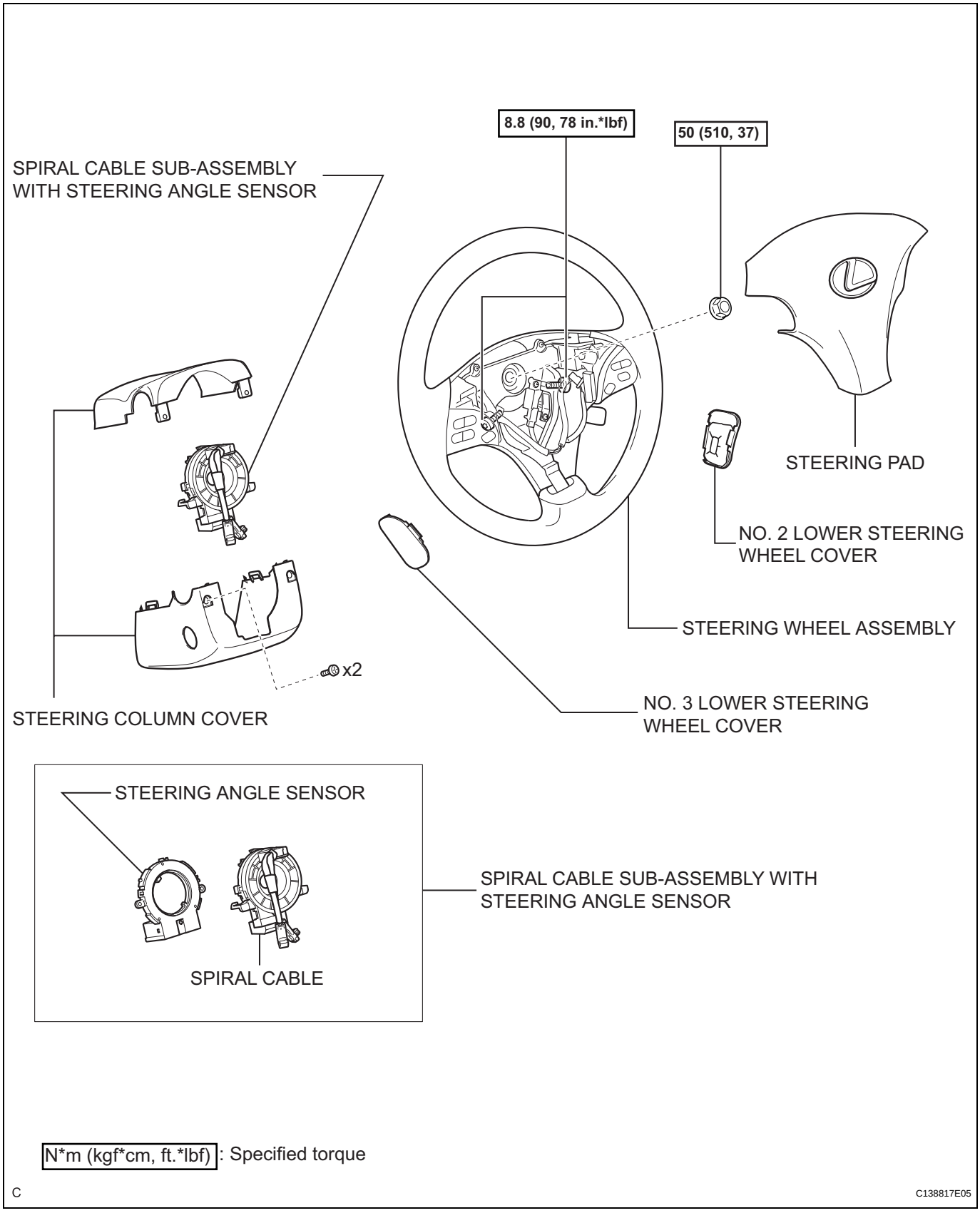

BC

REMOVAL

1. **PRECAUTION**
   CAUTION:
   Be sure to read "PRECAUTION" thoroughly before servicing (See page RS-1).
2. **DISCONNECT CABLE FROM NEGATIVE BATTERY TERMINAL**
   CAUTION:
   Wait for 90 seconds after disconnecting the cable to prevent airbag deployment.
3. **PLACE FRONT WHEELS FACING STRAIGHT AHEAD**
   NOTICE:
   When reconnecting the cable to the negative battery terminal after installing the steering sensor, check that the front tires and steering wheel are kept aligned straight ahead before and after connecting the cable to the negative battery terminal.
4. **REMOVE NO. 2 LOWER STEERING WHEEL COVER (See page RS-367)**
5. **REMOVE NO. 3 LOWER STEERING WHEEL COVER (See page RS-367)**
6. **REMOVE STEERING PAD (See page RS-367)**
7. **REMOVE STEERING WHEEL ASSEMBLY (See page SR-80)**
8. **REMOVE STEERING COLUMN COVER (See page SR-80)**
9. **REMOVE SPIRAL CABLE SUB-ASSEMBLY WITH STEERING ANGLE SENSOR (See page RS-379)**
10. **REMOVE STEERING ANGLE SENSOR**
    (a) Disengage the claws and remove the steering angle sensor from the spiral cable.

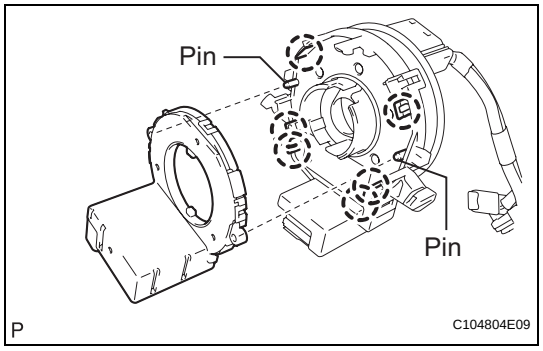

BC

TERMINALS OF ECU

1. Terminal of ECU

Skid Control ECU:

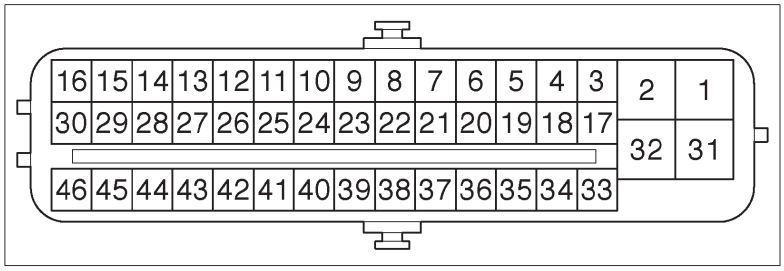

N

F045080E06

Symbols (Terminal No.)	Terminal Description
GND2 (1)	Pump motor ground
BM (2)	Motor relay input
FR+ (3)	Front wheel speed RH signal (+) input
FL- (4)	Front wheel speed LH signal (-) input
RR+ (5)	Rear wheel speed RH signal (+) input
RL- (6)	Rear wheel speed LH signal (-) input
CANH (11)	CAN communication line H
SP1 (12)	Speed signal output for combination meter
D/G (13)	Diagnosis tester communication line
MRF (14)	Fail safe motor relay output
MR (15)	Motor relay output
STPO (16) (*1)	Stop light control relay output
FR- (17)	Front wheel speed RH signal (-) input
FL+ (18)	Front wheel speed LH signal (+) input
RR- (19)	Rear wheel speed RH signal (-) input
RL+ (20)	Rear wheel speed LH signal (+) input
STP2 (21) (*1)	Stop light control relay input
TS (24)	Test mode (signal check) input
CANL (25)	CAN communication line L
STP1 (27)	Stop light switch input
BZ (30)	Skid control buzzer output
+BS (31)	Solenoid relay power supply
GND1 (32)	Skid control ECU ground
WFSE (42)	WFSE input
R+ (45)	Power supply for motor relay
IG1 (46)	IG1 power supply

(*1): with dynamic radar cruise control

2. Terminal Inspection

(a) Disconnect the connector and measure the voltage or resistance on the wire harness side.

Skid Control ECU Harness Side Connector Front View:

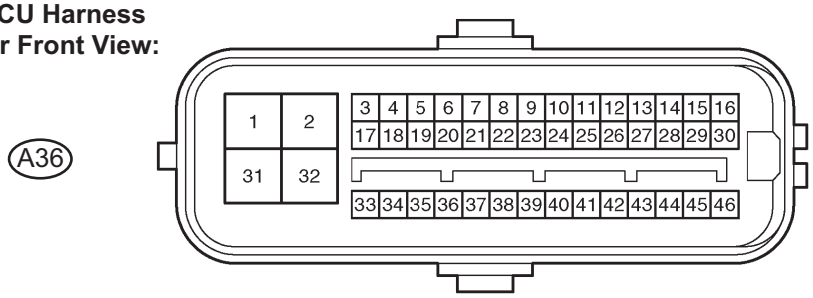

HINT:
Voltage cannot be measured with the connector connected to the skid control ECU because the connector is watertight.

Standard

Symbols (Terminal No.)	Wiring Color	Terminal Description	Condition	Specified Condition
GND2 (A36-1) - Body ground	W-B - Body ground	Pump motor ground	Engine switch off	Below 1 Ω
STP1 (A36-27) - Body ground	P (*1), B (*2) - Body ground	Stop light switch input	Stop light switch ON → OFF (Brake pedal depressed → released)	8 to 14 V → Below 1.5 V
BZ (A36-30) - Body ground	R - Body ground	Buzzer output	Engine switch on (IG), when buzzer not sounding	6 to 10 V
+BS (A36-31) - Body ground	L - Body ground	Solenoid relay power supply	Always	10 to 14 V
GND1 (A36-32) - Body ground	W-B - Body ground	Skid control ECU ground	Always	Below 1 Ω
IG1 (A36-46) - Body ground	P - Body ground	IG1 power supply	Engine switch on (IG)	10 to 14 V

(*1): with dynamic radar cruise control
(*2): without dynamic radar cruise control

DIAGNOSIS SYSTEM

1. DESCRIPTION

When troubleshooting a vehicle with the diagnosis system, the only difference from the usual troubleshooting procedure is connecting the intelligent tester to the vehicle and reading various data output from the vehicle's skid control ECU.

The skid control ECU records DTCs when the computer detects a malfunction in the computer itself or in its circuits.

To check the DTCs, connect the intelligent tester to the DLC3 on the vehicle. The intelligent tester enables you to erase the DTCs, activate the various actuators, and check the Freeze Frame Data and Data List.

(a) Check the battery voltage.

Standard voltage:

11 to 14 V

If the voltage is below 11 V, recharge the battery before proceeding.

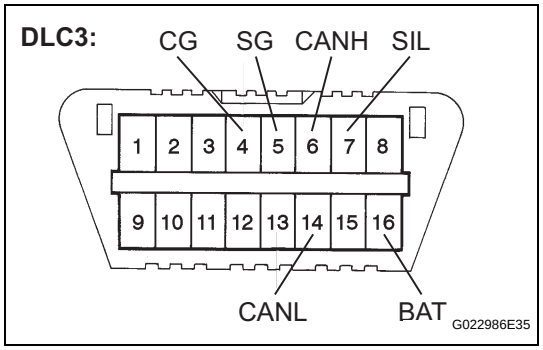

(b) Check the DLC3.

The ECU uses ISO 15765-4 for communication. The terminal arrangement of the DLC3 complies with SAE J1962 and matches the ISO 15765-4 format.

If the result is not as specified, the DLC3 may have a malfunction. Repair or replace the harness and connector.

Verify the conditions listed in the table below.

Symbols (Terminal No.)	Terminal Description	Condition	Specified Condition
SIL (7) - SG (5)	Bus "+" line	During transmission	Pulse generation
CG (4) - Body ground	Chassis ground	Always	Below 1 Ω
SG (5) - Body ground	Signal ground	Always	Below 1 Ω
BAT (16) - Body ground	Battery positive	Always	11 to 14 V
CANH (6) - CANL (14)	CAN bus line	Engine switch off*	54 to 69 Ω
CANH (6) - CG (4)	HIGH-level CAN bus line	Engine switch off*	200 Ω or higher
CANL (14) - CG (4)	LOW-level CAN bus line	Engine switch off*	200 Ω or higher
CANH (6) - BAT (16)	HIGH-level CAN bus line	Engine switch off*	6 kΩ or higher
CANL (14) - BAT (16)	LOW-level CAN bus line	Engine switch off*	6 kΩ or higher

NOTICE:

***: Before measuring the resistance, leave the vehicle as is for at least 1 minute and do not operate the engine switch, any other switches or the doors.**

HINT:

Connect the cable of the intelligent tester to the DLC3, turn the engine switch on (IG) and attempt to use the tester. If the display indicates that a communication error has occurred, there is a problem either with the vehicle or with the tester.

- If communication is normal when the tester is connected to another vehicle, inspect the DLC3 on the original vehicle.
- If communication is still not possible when the tester is connected to another vehicle, the problem may be in the tester itself. Consult the Service Department listed in the tester operator's manual.

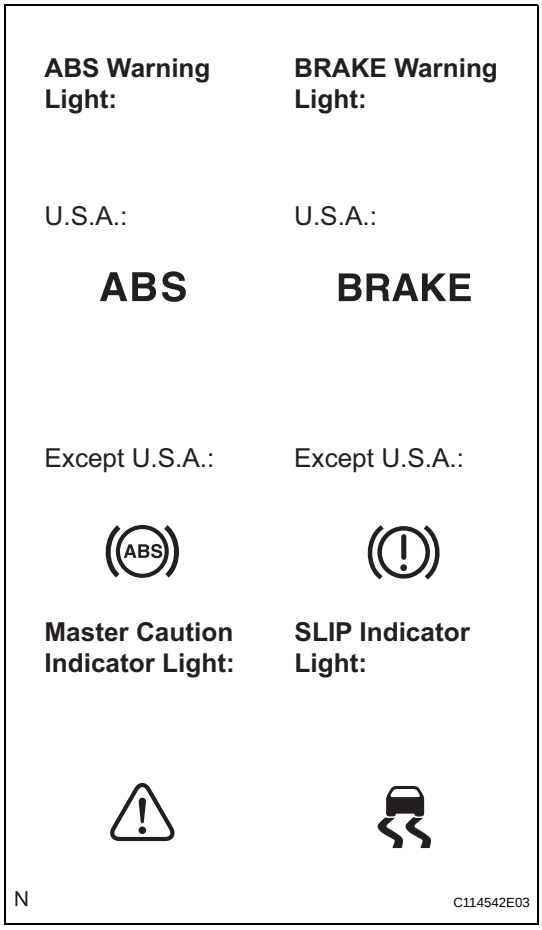

2. DIAGNOSIS

(a) If the skid control ECU detects a malfunction, the ABS warning, BRAKE warning, SLIP indicator, and master caution indicator lights will come on and the multi information display shows warning messages, in order to warn the driver.
The table below indicates which lights will come on when there is a malfunction in a particular function.

Item / Trouble Area	ABS	EBD	BA	TRAC	VSC
ABS warning light	○	○	○	-	-
BRAKE warning light	-	○	-	-	-
VSC warning (multi information display)	○	○	○	○	○
SLIP indicator light	○	○	○	○	○

○: Light ON
-: Light OFF

- The DTCs are simultaneously stored in the memory. The DTCs can be read by connecting the SST between terminals TC and CG of the DLC3 and observing the blinking pattern of the ABS warning light or multi information display, by reading the multi information display, or by connecting the intelligent tester.

- This system has a Test Mode (signal check) function (See page BC-24).
  The DTC can be read by connecting the intelligent tester and observing the blinking pattern of the ABS warning light or by reading the multi information display.

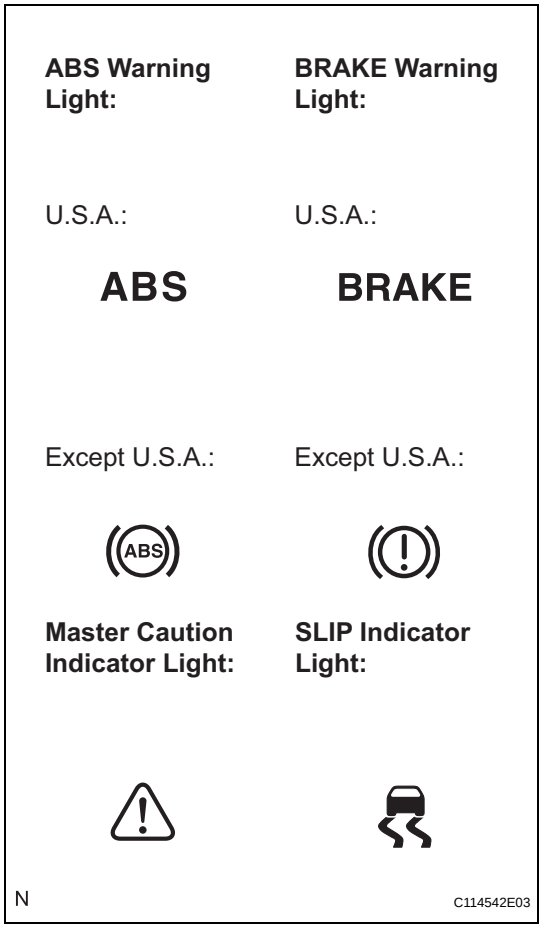

3. WARNING LIGHT AND INDICATOR LIGHT CHECK

(a) Release the parking brake.
NOTICE:
When releasing the parking brake, move the shift lever to the P position for safety.
HINT:
When the parking brake is applied or the level of the brake fluid is low, the BRAKE warning light comes on.

(b) When the engine switch is turned on (IG), check that the ABS warning, BRAKE warning, SLIP indicator, and master caution indicator lights come on for approximately 3 seconds.

(c) Make sure that the message on the multi information display changes from "CHECK" to "COMPLETED" for 2 seconds.

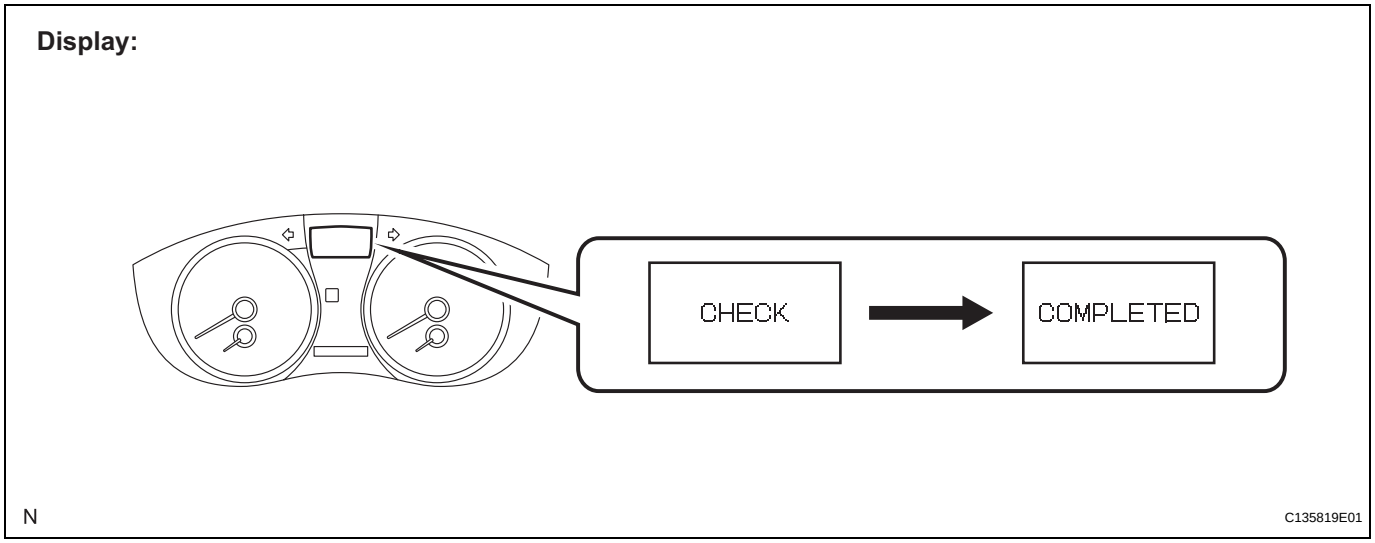

HINT:
If the warning light and indicator light check result is not normal, proceed to troubleshooting for the ABS, BRAKE and VSC warning light circuits and SLIP indicator light circuit.

BC

If the indicator remains on, proceed to troubleshooting for the light circuit below.

Trouble Area	See procedure
ABS warning light circuit	BC-141
BRAKE warning light circuit	BC-154
VSC warning light circuit	BC-148
SLIP indicator light circuit	BC-164

4. SYMPTOM SIMULATION

HINT:
The most difficult case in troubleshooting is when no symptoms occur. In such cases, a thorough customer problem analysis must be carried out. Then the same or similar conditions and environment in which the problem occurred in the customer's vehicle should be reproduced. No matter how experienced or skilled a technician may be, if he proceeds to troubleshoot without confirming the problem symptoms, he will likely overlook something important and make a wrong guess at some points in the repair operation. This leads to a standstill in troubleshooting.

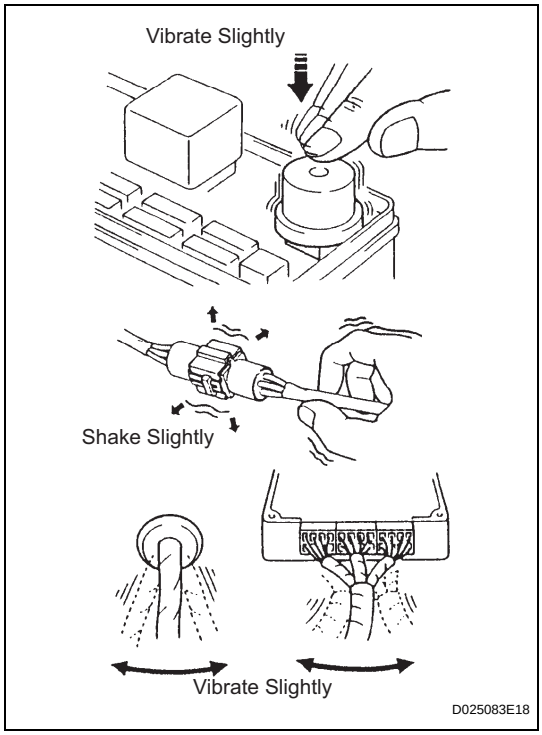

(a) Vibration method: When vibration seems to be the major cause.
HINT:
Perform the simulation method only during the primary check period (for approximately 6 seconds after the engine switch is on (IG)).
(1) Slightly vibrate the part of the sensor considered to be the problem cause with your fingers and check whether the malfunction occurs.
(2) Slightly shake the connector vertically and horizontally.
HINT:
Shaking the relays too strongly may result in open relays.
(3) Slightly shake the wire harness vertically and horizontally. The connector joint and fulcrum of the vibration are the major areas to be checked thoroughly.

STOP LIGHT CONTROL RELAY (w/ Dynamic Radar Cruise Control System)

ON-VEHICLE INSPECTION

1. INSPECT STOP LIGHT CONTROL RELAY

(a) Remove the stop light control relay.

(b) Measure the resistance according to the value(s) in the table below.

Standard resistance

Tester Connection	Condition	Specified Condition
3 - 4	Always	Below 1 Ω
3 - 5	Always	10 kΩ or higher
3 - 4	When battery positive voltage is applied to terminal 1 and battery negative voltage to terminal 2	10 kΩ or higher
3 - 5	When battery positive voltage is applied to terminal 1 and battery negative voltage to terminal 2	Below 1 Ω

If the value is not as specified, replace the stop light control relay.

Stop Light Control Relay:

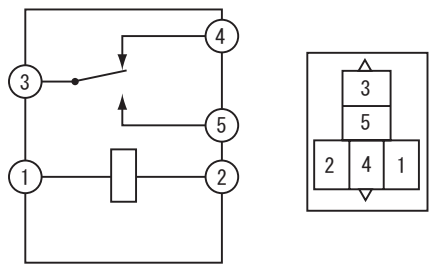

C126459E03

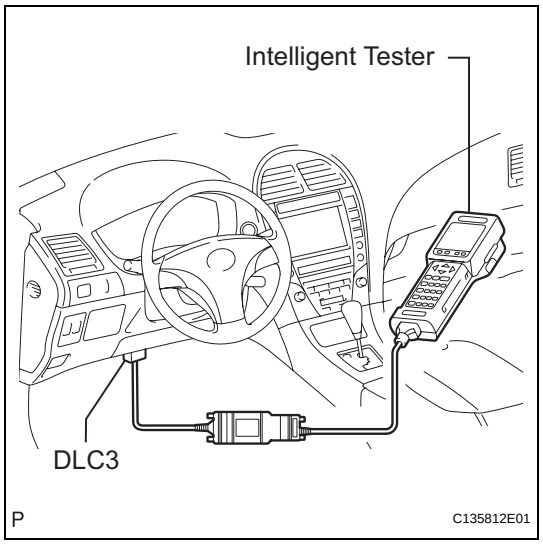

DTC CHECK / CLEAR

1. DTC CHECK/CLEAR (INTELLIGENT TESTER)

(a) Check the DTC.
(1) Connect the intelligent tester to the DLC3.
(2) Turn the engine switch on (IG).
(3) Read the DTCs following the prompts on the tester screen.

(b) Clear the DTC.
(1) Connect the intelligent tester to the DLC3.
(2) Turn the engine switch on (IG).
(3) Operate the intelligent tester to clear the codes.
HINT:
Refer to the intelligent tester operator's manual for further details.

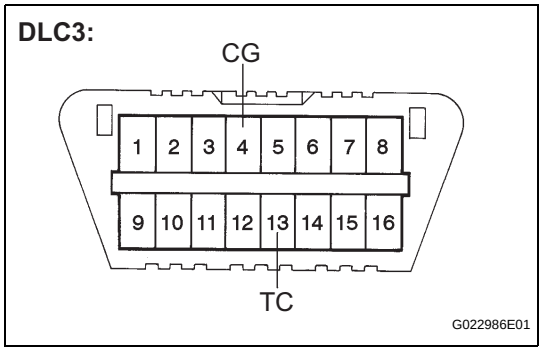

2. DTC CHECK/CLEAR (SST CHECK WIRE)

(a) Check the DTC.
(1) Using SST, connect terminals TC and CG of the DLC3.
SST 09843-18040
(2) Turn the engine switch on (IG).
(3) Observe the blinking pattern of the ABS warning light and read the multi information display in order to identify the DTC.
HINT:
If no code appears, inspect the TC and CG terminal circuit, and ABS and VSC warning light circuits.

Trouble Area	See procedure
TC and CG terminal circuit	BC-173
ABS warning light circuit	BC-141 or BC-146
VSC warning light circuit	BC-148 or BC-152

(4) As an example, the illustration below shows the blinking patterns of the normal system code and trouble codes 11 and 21 for ABS, and display of the normal system code and trouble code 43 for the VSC on the multi information display.

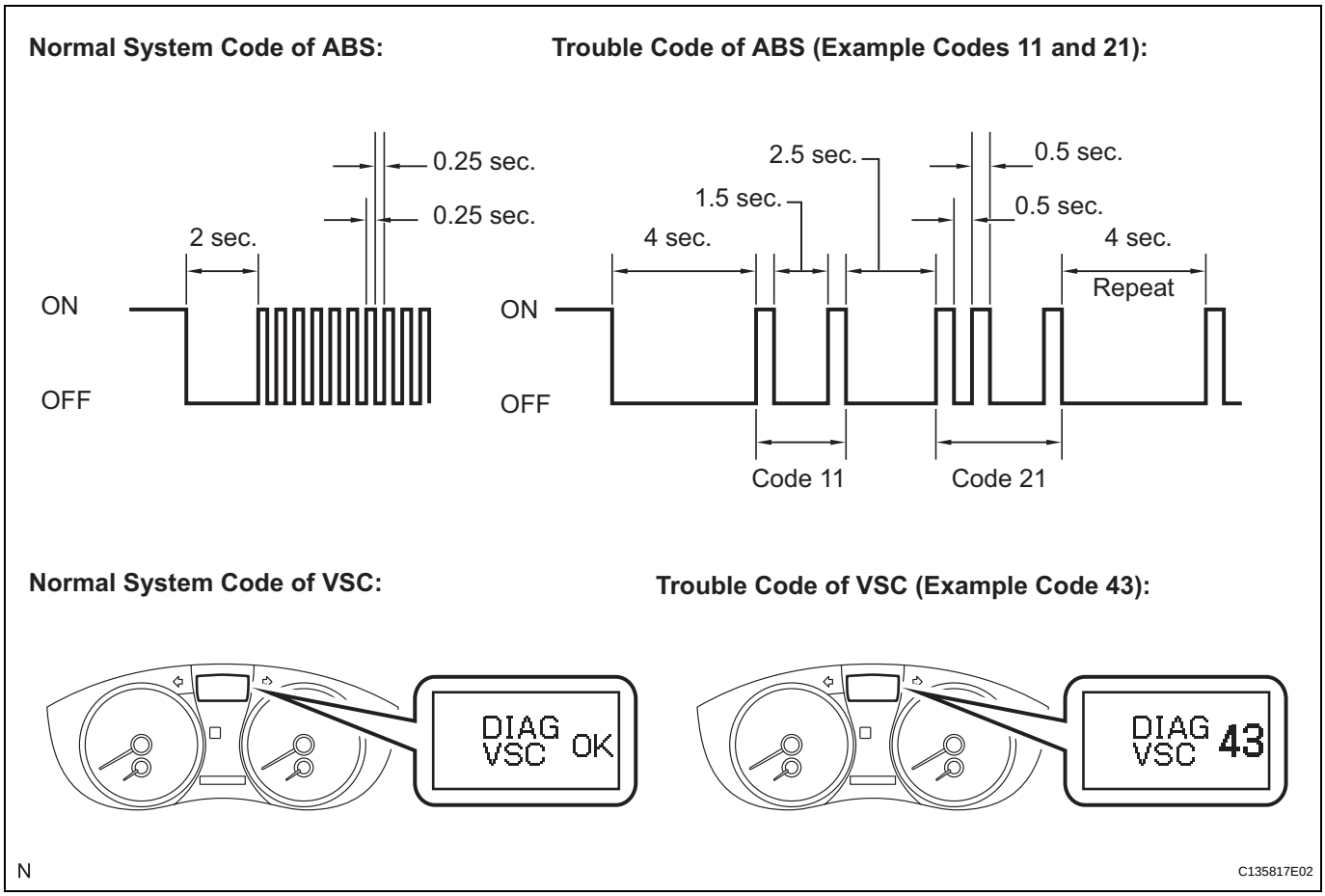

(5) The codes are explained in the code table (See page BC-52).

(6) After completing the check, disconnect terminals TC and CG of the DLC3, and turn off the display. If 2 or more DTCs are detected at the same time, the DTCs will be displayed in ascending order.

BC

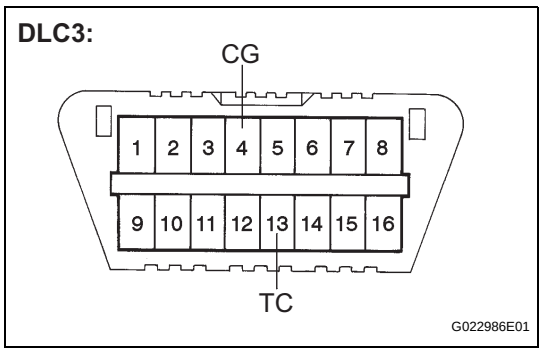

(b) Clear the DTC.

(1) Using SST, connect terminals TC and CG of the DLC3.
SST 09843-18040

(2) Turn the engine switch on (IG).

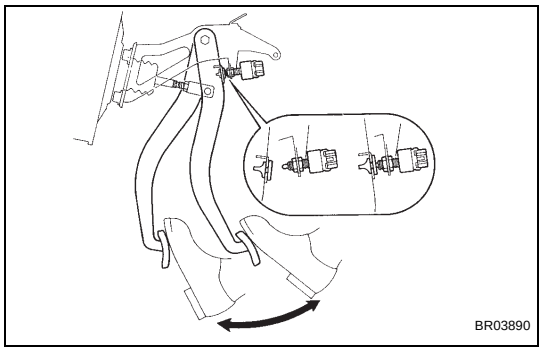

(3) Clear the DTCs stored in the ECU by depressing the brake pedal 8 times or more within 5 seconds.
(4) Check that the multi information display indicates the normal system code.
(5) Remove the SST from the terminals of the DLC3.
HINT:
Clearing the DTCs cannot be performed by disconnecting the battery terminal or the ECU-IG NO. 2 fuse.

3. END OF DTC CHECK/CLEAR

(a) Turn the engine switch on (IG).
(b) Check that the ABS warning light goes off within approximately 3 seconds.

REMOVAL

1. REMOVE INSTRUMENT PANEL REINFORCEMENT ASSEMBLY

HINT:
Refer to the procedures up to "REMOVE AIR CONDITIONING UNIT". (See page AC-144)

2. REMOVE AFS ECU (See page LI-227)

3. REMOVE BRAKE PEDAL RETURN SPRING

(a) Remove the brake pedal return spring.

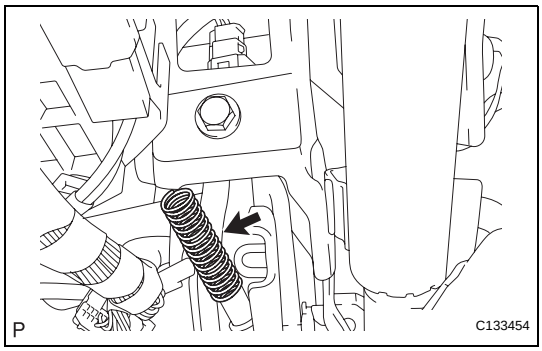

4. SEPARATE BRAKE MASTER CYLINDER PUSH ROD CLEVIS

(a) Remove the clip and push rod pin.

(b) Separate the brake master cylinder push rod clevis from the brake pedal sub-assembly.

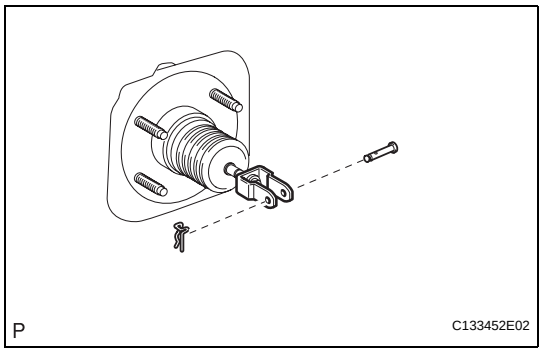

5. REMOVE BRAKE PEDAL SUPPORT ASSEMBLY

(a) Disconnect the stop light switch connector and disengage the 2 clamps.

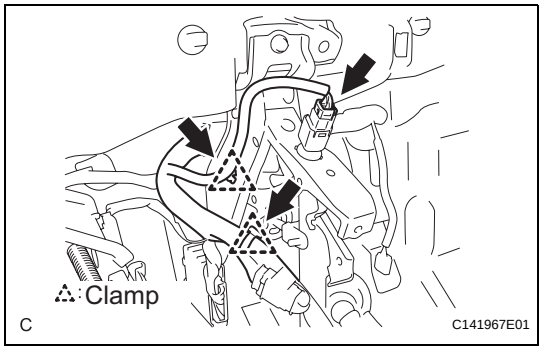

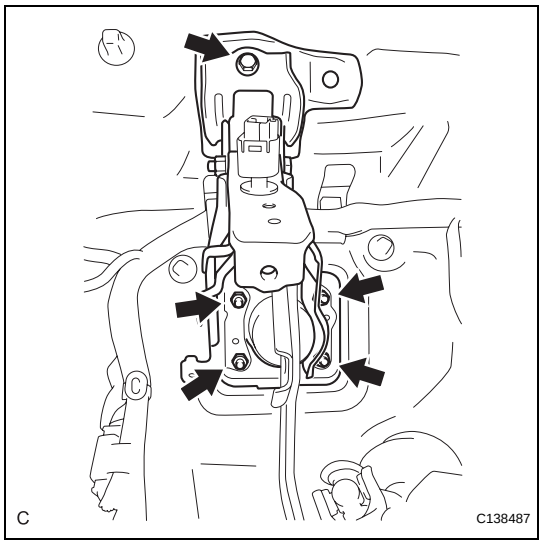

(b) Remove the 4 nuts, bolt, and the brake pedal support assembly.

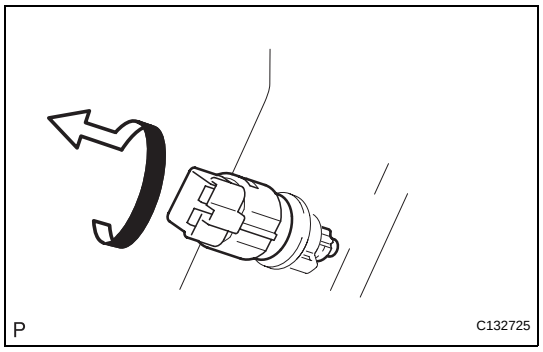

DISASSEMBLY

1. REMOVE STOP LIGHT SWITCH ASSEMBLY

(a) Turn the stop light switch assembly and remove it as shown in the illustration.

2. REMOVE STOP LIGHT SWITCH MOUNTING ADJUSTER

(a) Remove the stop light switch mounting adjuster from the brake pedal support assembly.

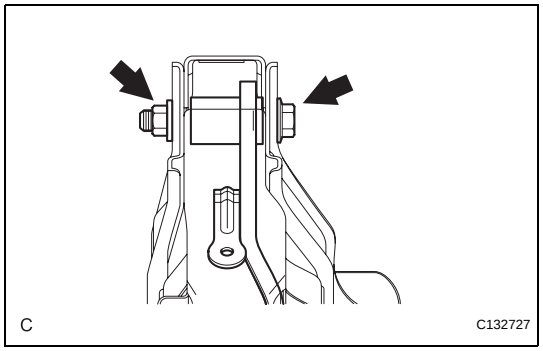

3. REMOVE BRAKE PEDAL SUB-ASSEMBLY

(a) Remove the bolt and the nut.

(b) Remove the 2 brake pedal bushings, the brake pedal shaft collar, and the brake pedal sub-assembly.

4. REMOVE BRAKE PEDAL PAD

(a) Remove the brake pedal pad.

ADJUSTMENT

1. INSPECT AND ADJUST BRAKE PEDAL HEIGHT

(a) Inspect the brake pedal height.
Pedal height from dash panel:
129.9 to 139.9 mm (5.114 to 5.508 in.)

(b) Adjust the brake pedal height.
(1) Disconnect the connector from the stop light switch assembly.
(2) Remove the stop light switch.
(3) Loosen the push rod clevis lock nut.
(4) Adjust the pedal height by turning the push rod.
(5) Tighten the clevis lock nut.
Torque: 26 N*m (265 kgf*cm, 19 ft.*lbf)

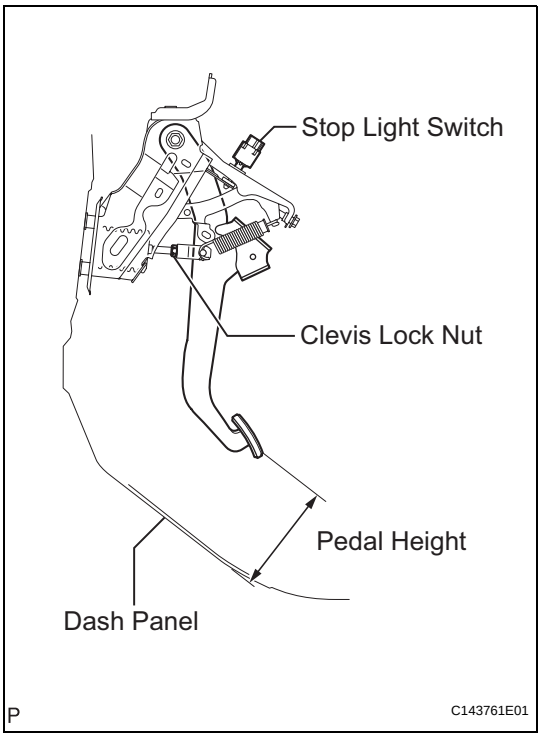

(6) Insert the switch into the adjuster until the switch body touches the pedal.
NOTICE:
Do not depress the pedal.

(7) Rotate the switch a quarter turn clockwise.
Torque: 1.5 N*m (15 kgf*cm, 13 in.*lbf) or less
NOTICE:
Do not depress the pedal.

(8) Connect the connector.

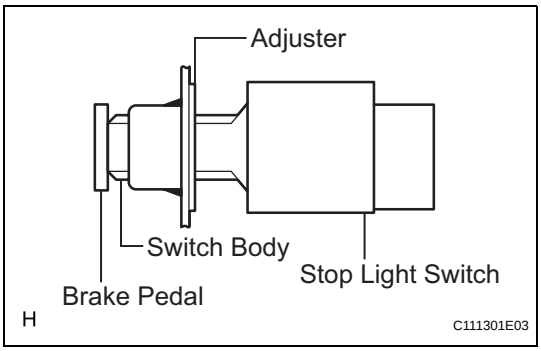

(9) Check the switch clearance.
Standard stop light switch clearance:
1.5 to 2.5 mm (0.059 to 0.098 in.)

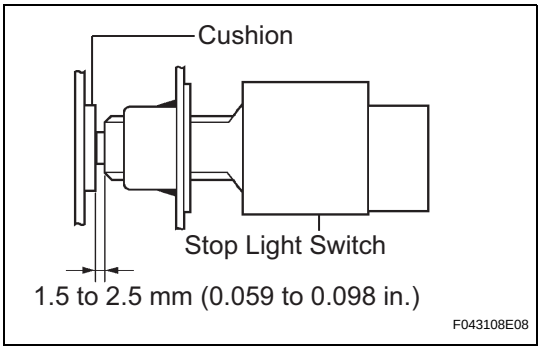

2. INSPECT PEDAL FREE PLAY

(a) Stop the engine. Press the pedal several times until no vacuum is left in the booster. Release the pedal.

(b) Depress the pedal until a slight resistance is felt. Measure the distance as shown in the illustration.
Pedal free play:
1.0 to 6.0 mm (0.039 to 0.236 in.)
If the pedal free play is not as specified, check the switch clearance in the next step. If the pedal free play is as specified, proceed to the "CHECK PEDAL RESERVE DISTANCE" procedure.

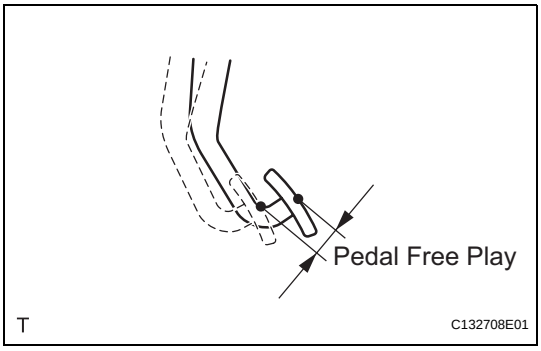

(c) Check the switch clearance.
Standard stop light clearance:
1.5 to 2.5 mm (0.059 to 0.098 in.)
If the clearance is not as specified, reinstall the switch and recheck the pedal free play. If the clearance is as specified, troubleshoot the brake system and proceed to the "CHECK PEDAL RESERVE DISTANCE" procedure.

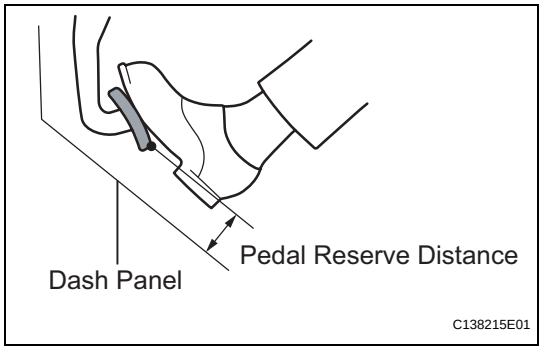

3. INSPECT PEDAL RESERVE DISTANCE

(a) Release the parking brake pedal or parking brake lever.

(b) With the engine running, depress the brake pedal and measure the pedal reserve distance as shown in the illustration.
Pedal reserve distance from the dash panel at 500 N (51 kgf, 112 lbf):
61 mm (2.402 in.)
If the distance is not as specified, troubleshoot the brake system.

REASSEMBLY

1. INSTALL BRAKE PEDAL PAD

(a) Install brake pedal pad.

2. INSTALL BRAKE PEDAL SUB-ASSEMBLY

(a) Apply lithium soap base glycol grease to 2 new brake pedal bushings.

(b) Install the brake pedal sub-assembly, the 2 brake pedal bushings, and the brake pedal shaft collar to the brake pedal support assembly with the bolt and the nut as shown in the illustration.
Torque: 37 N*m (377 kgf*cm, 27 ft.*lbf)

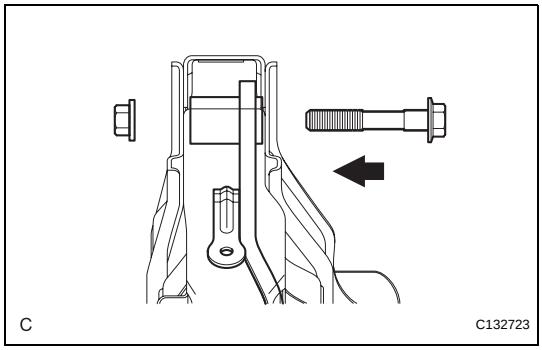

3. INSTALL STOP LIGHT SWITCH MOUNTING ADJUSTER

(a) Install the stop light switch mounting adjuster.

4. TEMPORARILY TIGHTEN STOP LIGHT SWITCH ASSEMBLY

(a) Temporarily tighten the stop light switch assembly as shown in the illustration.
Torque: 1.5 N*m (15 kgf*cm, 13 in.*lbf) or less
HINT:
Completely install the stop light switch assembly after adjusting the brake pedal height.

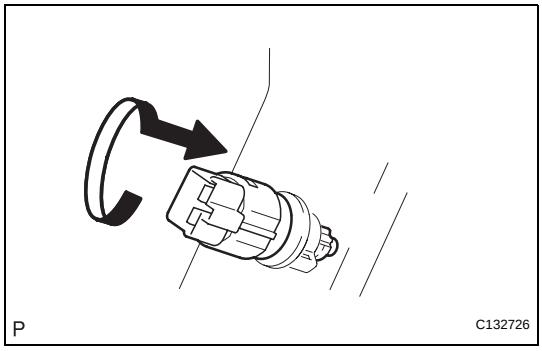

INSTALLATION

1. INSTALL BRAKE PEDAL SUPPORT ASSEMBLY

(a) Install the brake pedal support assembly with the 4 nuts and the bolt.
Torque: Nut
13 N*m (133 kgf*cm, 10 ft.*lbf)
Bolt
19 N*m (194 kgf*cm, 14 ft.*lbf)

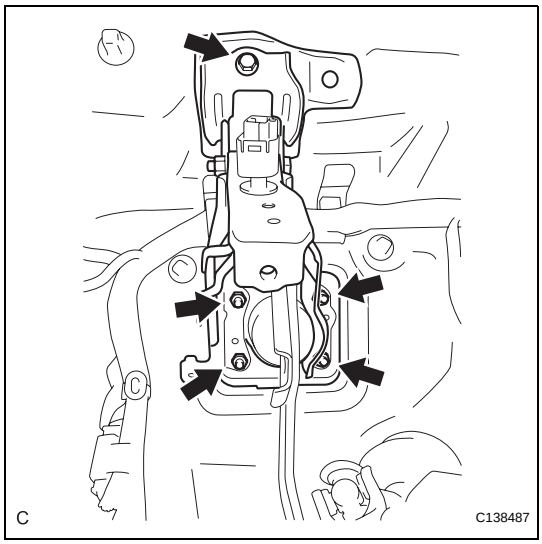

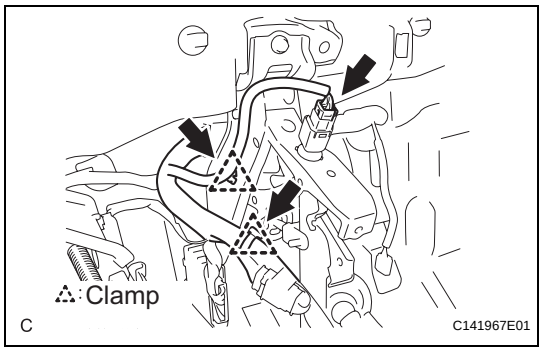

(b) Engage the 2 clamps and connect the stop light switch connector.

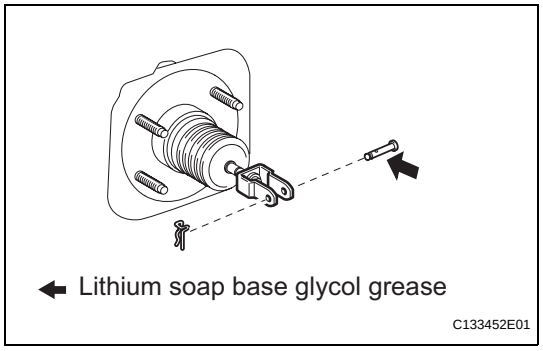

2. INSTALL BRAKE MASTER CYLINDER PUSH ROD CLEVIS

(a) Apply the lithium soap base glycol grease to the push rod pin.

(b) Connect the brake master cylinder push rod clevis to the brake pedal sub-assembly with the push rod pin and a new clip as shown in the illustration.

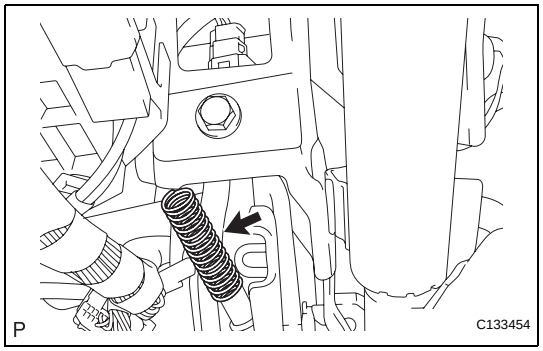

3. INSTALL BRAKE PEDAL RETURN SPRING

(a) Install the brake pedal return spring.

4. INSTALL AFS ECU (See page LI-227)

5. INSTALL INSTRUMENT PANEL REINFORCEMENT ASSEMBLY

HINT:

Refer to the procedures up to "INSTALL AIR CONDITIONING UNIT". (See page AC-159)

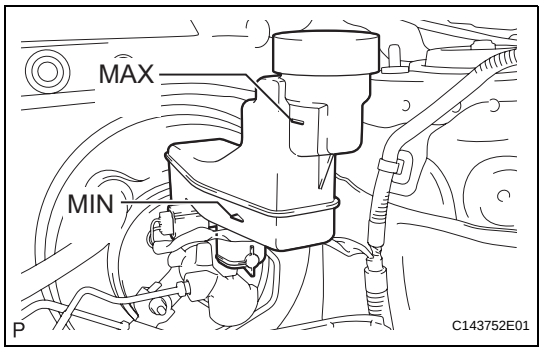

BRAKE FLUID

ON-VEHICLE INSPECTION

1. INSPECT FLUID LEVEL IN RESERVOIR

(a) Inspect the fluid level.
If brake fluid level is low, check for leakage and inspect the disc brake pad. If necessary, refill the reservoir with brake fluid after repair and replacement.
Fluid:
SAE J1703 or FMVSS No. 116 DOT 3

BLEEDING

HINT:
If any work is performed on the brake system or if air in the brake lines is suspected, bleed the air from the brake system.
NOTICE:
- **Move the shift lever to the P position and apply the parking brake before bleeding the brakes.**
- **Add brake fluid to keep the level between the MIN and MAX lines of the reservoir while bleeding the brakes.**
- **If brake fluid leaks onto any painted surface, wash off and remove it completely.**

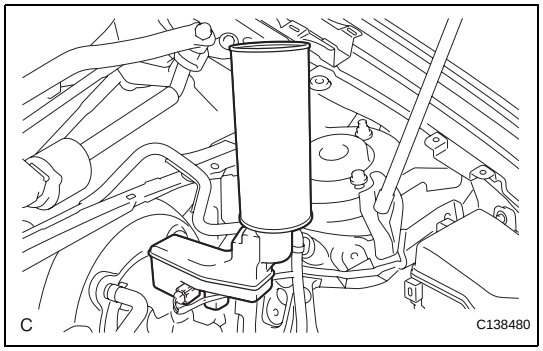

1. FILL RESERVOIR WITH BRAKE FLUID
(a) Fill the reservoir with brake fluid.
Fluid:
SAE J1703 or FMVSS No. 116 DOT3

2. BLEED MASTER CYLINDER
HINT:
- If the master cylinder is reinstalled or if the reservoir becomes empty, bleed the air from the master cylinder.
- To avoid brake fluid from adhering, cover the painted surface with a shop rag or piece of cloth.

(a) Using SST, disconnect the 2 brake lines from the master cylinder.
SST 09023-00101

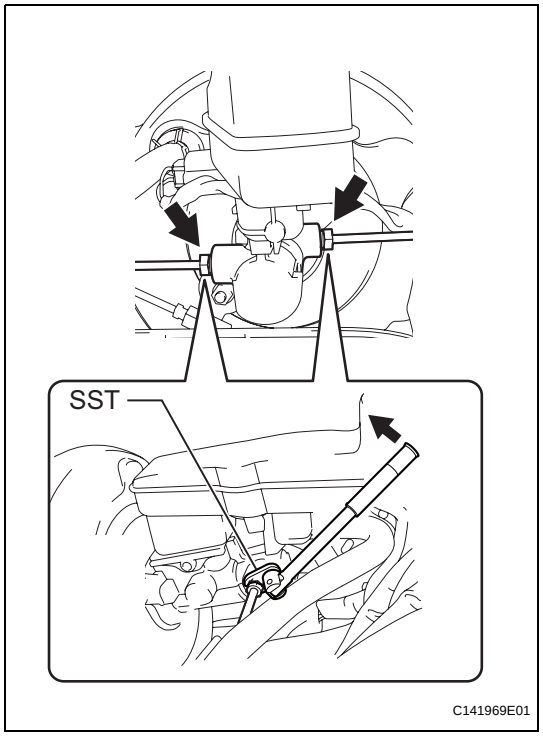

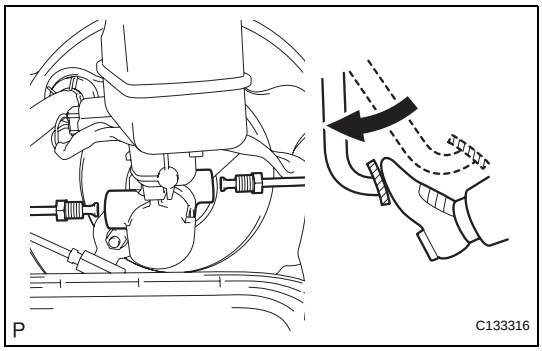

(b) Slowly depress the brake pedal and hold it (*1).

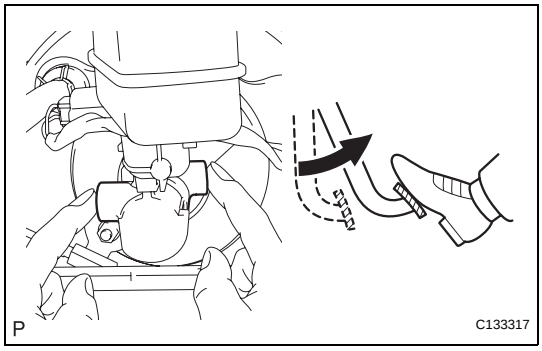

(c) Cover the 2 outer holes with fingers, and release the brake pedal (*2).
(d) Repeat (*1) and (*2) 3 or 4 times.

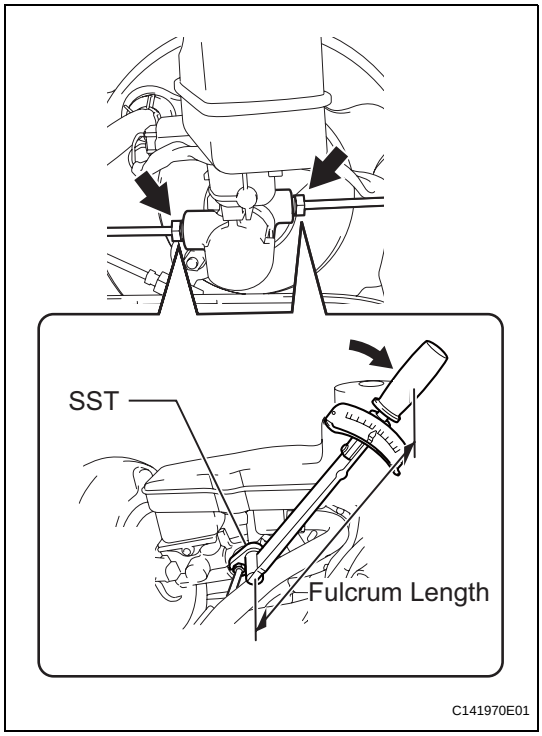

(e) Using SST, connect the brake lines to the master cylinder.
SST 09023-00101
Torque: Without SST
15 N*m (155 kgf*cm, 11 ft.*lbf)
With SST
14 N*m (143 kgf*cm, 10 ft.*lbf)
NOTICE:
- **Use a torque wrench with a fulcrum length of 250 mm (9.84 in.).**
- **This torque value is effective when SST is parallel to a torque wrench.**

3. BLEED BRAKE LINE
NOTICE:
Bleed the air from the brake line of the wheel farthest from the master cylinder.

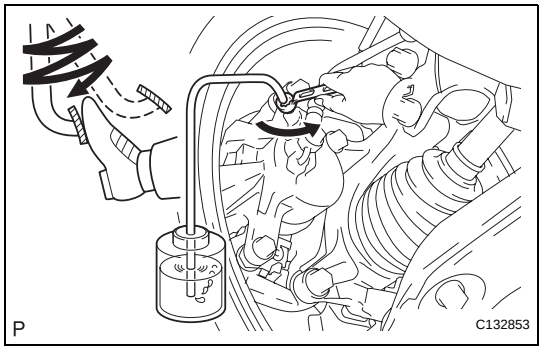

(a) Connect a vinyl tube to the bleeder plug.
(b) Depress the brake pedal several times, then loosen the bleeder plug with the pedal depressed (*3).

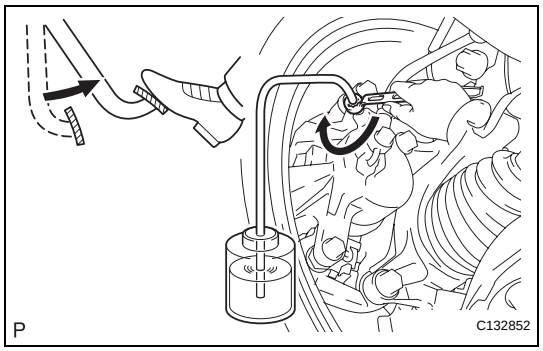

(c) When fluid stops coming out, tighten the bleeder plug, then release the brake pedal (*4).
(d) Repeat (*3) and (*4) until all the air in the fluid is completely bled out.
(e) Tighten the bleeder plug completely.
Torque: 8.3 N*m (85 kgf*cm, 73 in.*lbf)
(f) Repeat the above procedures for each wheel to bleed the air from the brake line.

4. BLEED BRAKE ACTUATOR ASSEMBLY

NOTICE:
After bleeding the air from the brake system, if the height or feel of the brake pedal cannot be obtained, bleed the air from the brake actuator assembly with the intelligent tester by following the procedure below.

(a) Depress the brake pedal more than 20 times with the engine switch off.

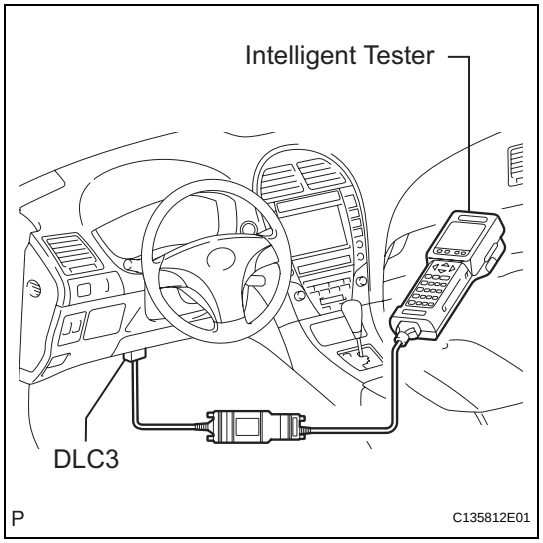

(b) Connect the intelligent tester to the DLC3, then turn the engine switch on (IG).
NOTICE:
Do not start the engine.
(c) Turn the intelligent tester on and select "AIR BLEEDING" on the screen.
NOTICE:
- **Refer to the intelligent tester operator's manual for farther details.**
- **Perform air bleeding by following the steps displayed on the intelligent tester.**

(d) Perform air bleeding according to "Step 1: Increase" on the intelligent tester display.
NOTICE:
Make sure that the master cylinder reservoir tank does not become empty of brake fluid.

(1) Connect a vinyl tube to either one of the bleeder plugs.
(2) Depress the brake pedal several times, then loosen the bleeder plug connected to the vinyl tube with the pedal depressed (*5).

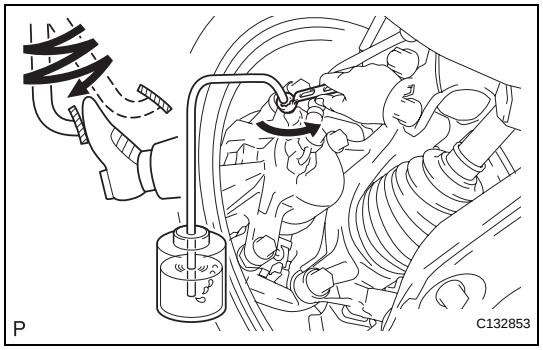

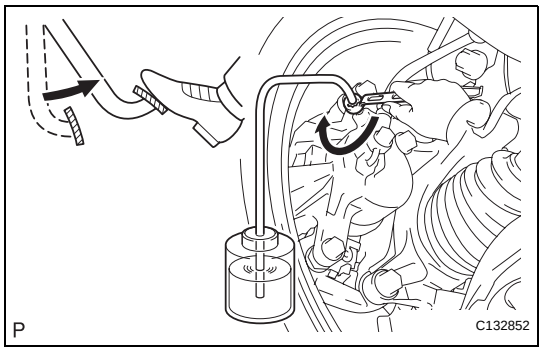

(3) When fluid stops coming out, tighten the bleeder plug, then release the brake pedal (*6).
(4) Repeat (*5) and (*6) until all the air in the fluid is completely bled out.
(5) Tighten the bleeder plug completely.
Torque: 8.3 N*m (85 kgf*cm, 73 in.*lbf)
(6) Repeat the above procedures for the rest of the wheels to bleed the air from the brake line.

(e) Bleed the air from the suction line according to "Step 2: Inhalation" on the intelligent tester display.
NOTICE:
- **Bleed the suction line by following the steps displayed on the intelligent tester.**
- **Make sure that the master cylinder reservoir tank does not become empty of brake fluid.**

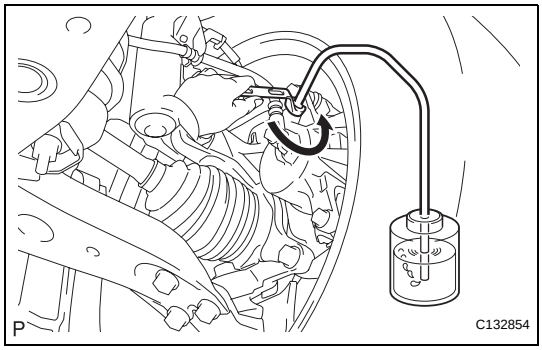

(1) Connect a vinyl tube to the bleeder plug at the right front wheel or the right rear wheel and loosen the bleeder plug.
(2) Operate the brake actuator assembly to perform air bleeding using the intelligent tester (*7).
NOTICE:
- **The operation stops automatically in 4 seconds.**
- **At this time, be sure to release the brake pedal.**

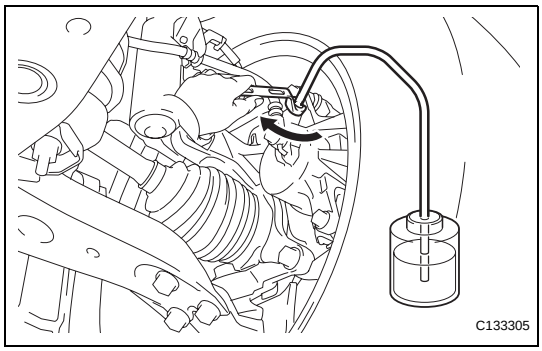

(3) Check that the operation has stopped by referring to the intelligent tester display and tighten the bleeder plug (*8).
(4) Repeat (*7) and (*8) until all the air in the fluid is completely bled out.
(5) Tighten the bleeder plug completely.
Torque: 8.3 N*m (85 kgf*cm, 73 in.*lbf)
(6) For the rest of the wheels, perform air bleeding in the same way as stated in the above procedure.

(f) Bleed the air from the pressure reduction line according to "Step 3: Decrease" on the intelligent tester display.
NOTICE:
- **Bleed the pressure reduction line by following the steps displayed on the intelligent tester.**
- **Make sure that the master cylinder reservoir tank does not become empty of brake fluid.**

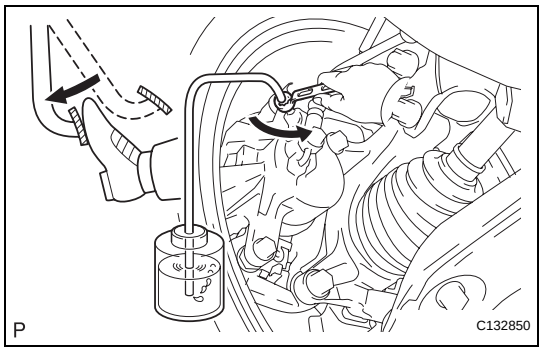

(1) Connect a vinyl tube to either one of the bleeder plugs.
(2) Loosen the bleeder plug (*9).
(3) Using the intelligent tester, operate the brake actuator assembly, completely depress the brake pedal, and hold it.
NOTICE:
- **The operation stops automatically in 4 seconds. When performing this procedure continuously, an interval of at least 20 seconds is required.**
- **When the operation is completed, the brake pedal goes down slightly. This is a normal phenomenon when the solenoid opens.**
- **During this procedure, the pedal seems heavy, but completely depress it so that the brake fluid comes out from the bleeder plug.**
- **Be sure to keep the brake pedal depressed. Never depress and release the pedal repeatedly.**

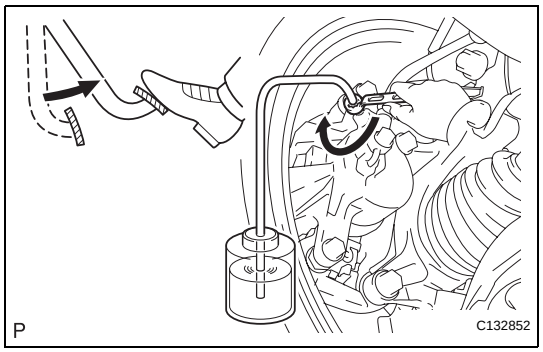

(4) Tighten the bleeder plug, then release the brake pedal (*10).
(5) Repeat (*9) to (*10) until all the air in the fluid is completely bled out.
(6) Tighten the bleeder plug completely.
Torque: 8.3 N*m (85 kgf*cm, 73 in.*lbf)
(7) Repeat the above procedures for the rest of the brakes to bleed the air from the brake line.

(g) Bleed the air from the brake line again according to "Step 4: Increase" on the intelligent tester display.
NOTICE:
- **Bleed the brake line by following the steps displayed on the intelligent tester.**
- **Make sure that the master cylinder reservoir tank does not become empty of brake fluid.**

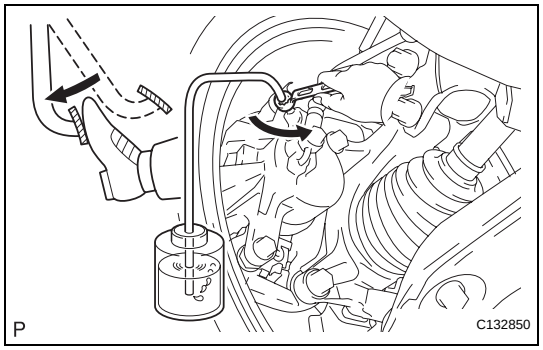

(1) Connect a vinyl tube to either one of the bleeder plugs.
(2) Depress the brake pedal several times, then loosen the bleeder plug connected to the vinyl tube with the pedal depressed (*11).

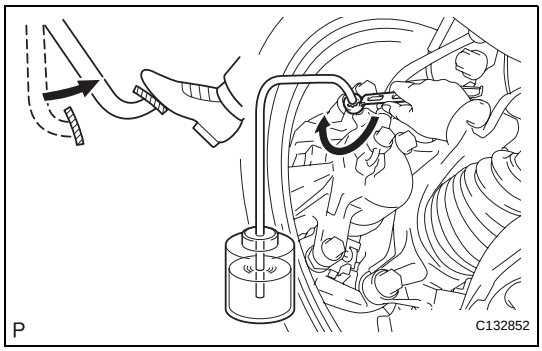

(3) When fluid stops coming out, tighten the bleeder plug, then release the brake pedal (*12).
(4) Repeat (*11) and (*12) until all the air in the fluid is completely bled out.
(5) Tighten the bleeder plug completely.
Torque: 8.3 N*m (85 kgf*cm, 73 in.*lbf)
(6) Repeat the above procedures for each brake to bleed the air from the brake line.

(h) Finish "AIR BLEEDING" on the intelligent tester and turn off the tester.
(i) Disconnect the intelligent tester from the DLC3.
(j) Turn the engine switch off.

5. INSPECT FLUID LEVEL IN RESERVOIR

(a) Check the fluid level and add fluid if necessary.
Fluid:
SAE J1703 or FMVSS No. 116 DOT3
If fluid leaks, tighten or replace the leaking part.

REMOVAL

NOTICE:

- **The structure of the master cylinder allows the piston to pop out, so observe the following:**
  - **(a) The master cylinder requires careful handling. Do not allow the master cylinder to receive any impact, such as from being dropped. Do not reuse a master cylinder that has been dropped.**
  - **(b) Do not scratch or damage the circumference of the piston. For the seal to function correctly, all sliding surfaces must not have any damage.**
  - **(c) Do not pull out the master cylinder piston.**
  - **(d) Make sure to release the vacuum from the brake booster (by removing a vacuum hose, etc.) before removing the master cylinder from the brake booster.**
  - **(e) When installing the master cylinder, remove the protectors for the piston and the discharge port.**
  - **(f) Apply the supplied grease to the outer diameter of the piston and the inner diameter of the brake booster.**

1. **DRAIN BRAKE FLUID**
   NOTICE:
   - **Stop the engine and depress the brake pedal several times until no vacuum is left in the brake booster.**
   - **If the brake fluid leaks onto any painted surface, wash off and remove the brake fluid completely.**
2. **REMOVE COOL AIR INTAKE DUCT SEAL (See page EM-22)**
3. **REMOVE HOOD HINGE COVER (for LH Side) (See page WW-38)**
4. **REMOVE HOOD HINGE COVER (for RH Side) (See page WW-39)**
5. **REMOVE ENGINE ROOM SIDE COVER LH (See page EM-22)**
6. **REMOVE ENGINE ROOM SIDE COVER RH (See page EM-22)**
7. **REMOVE AIR CLEANER CAP SUB-ASSEMBLY (See page ES-519)**
8. **REMOVE AIR CLEANER FILTER ELEMENT SUB-ASSEMBLY**

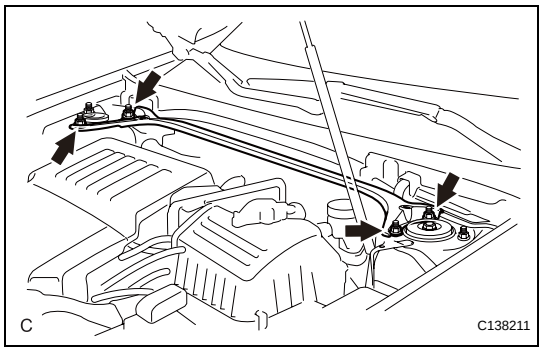

9. REMOVE FRONT SUSPENSION UPPER CENTER BRACE

(a) Remove the 4 nuts and the front suspension upper center brace.

10. REMOVE FRONT WIPER ARM AND BLADE ASSEMBLY LH (See page WW-39)

11. REMOVE FRONT WIPER ARM AND BLADE ASSEMBLY RH (See page WW-39)

12. REMOVE COWL TOP VENTILATOR LOUVER SUB-ASSEMBLY (See page WW-40)

13. REMOVE WINDSHIELD WIPER MOTOR AND LINK ASSEMBLY (See page WW-40)

14. REMOVE BRAKE MASTER CYLINDER SUB-ASSEMBLY

(a) Disconnect the connector.

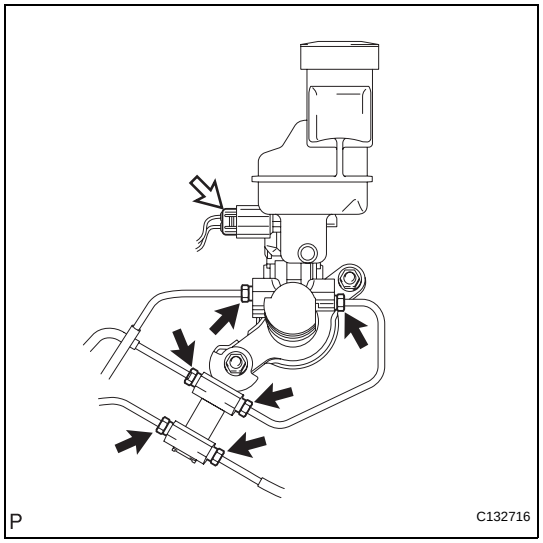

(b) Using SST, disconnect the 6 brake lines and remove the brake master cylinder to way tube.
SST 09023-00101

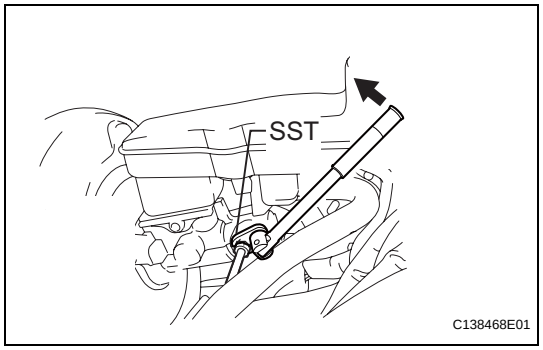

(c) Remove the 2 nuts, the front brake tube way, the O-ring and the brake master cylinder sub-assembly.

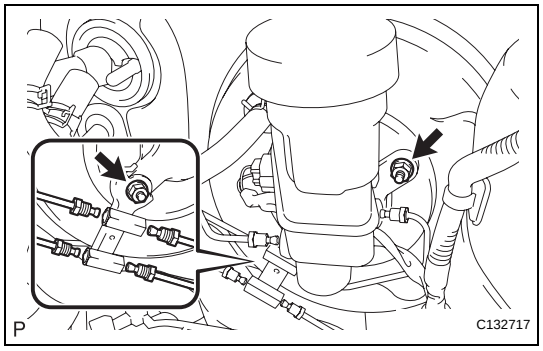

ADJUSTMENT

1. INSPECT AND ADJUST BRAKE PEDAL HEIGHT

(a) Inspect the brake pedal height.
Pedal height from dash panel:
129.9 to 139.9 mm (5.114 to 5.508 in.)

(b) Adjust the brake pedal height.
(1) Disconnect the connector from the stop light switch assembly.
(2) Remove the stop light switch.
(3) Loosen the push rod clevis lock nut.
(4) Adjust the pedal height by turning the push rod.
(5) Tighten the clevis lock nut.
Torque: 26 N*m (265 kgf*cm, 19 ft.*lbf)

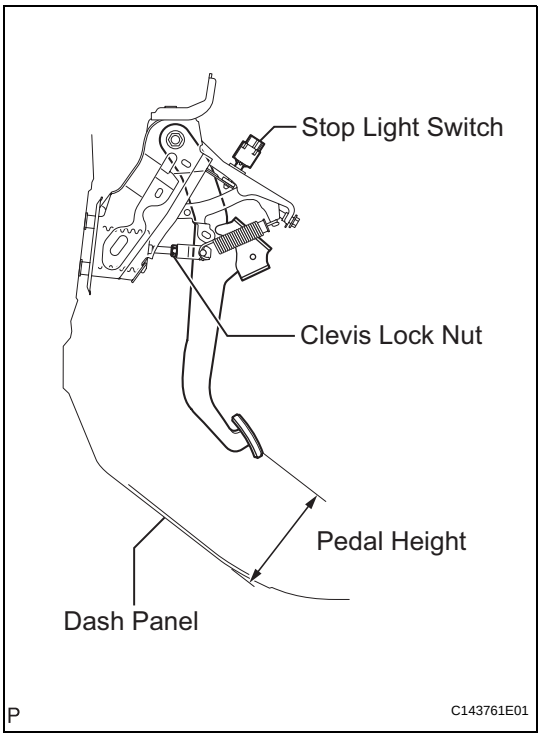

(6) Insert the switch into the adjuster until the switch body touches the pedal.
NOTICE:
Do not depress the pedal.

(7) Rotate the switch a quarter turn clockwise.
Torque: 1.5 N*m (15 kgf*cm, 13 in.*lbf) or less
NOTICE:
Do not depress the pedal.

(8) Connect the connector.

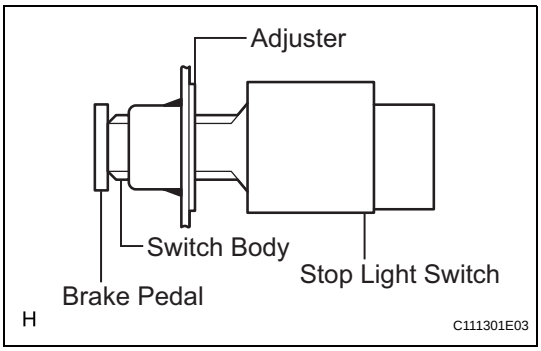

(9) Check the switch clearance.
Standard stop light switch clearance:
1.5 to 2.5 mm (0.059 to 0.098 in.)

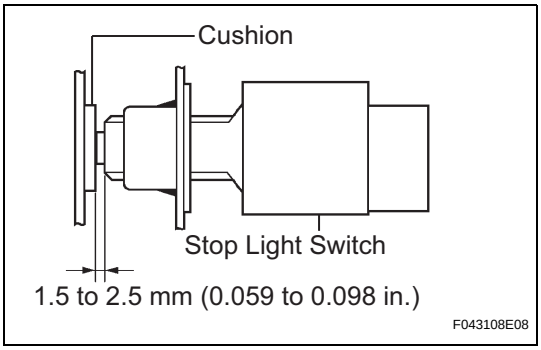

2. INSPECT PEDAL FREE PLAY

(a) Stop the engine. Press the pedal several times until no vacuum is left in the booster. Release the pedal.

(b) Depress the pedal until a slight resistance is felt. Measure the distance as shown in the illustration.
Pedal free play:
1.0 to 6.0 mm (0.039 to 0.236 in.)
If the pedal free play is not as specified, check the switch clearance in the next step. If the pedal free play is as specified, proceed to the "CHECK PEDAL RESERVE DISTANCE" procedure.

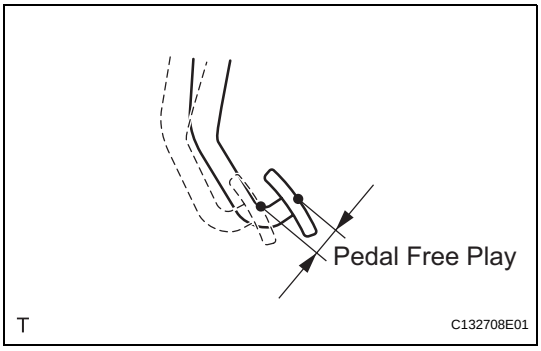

(c) Check the switch clearance.
Standard stop light clearance:
1.5 to 2.5 mm (0.059 to 0.098 in.)
If the clearance is not as specified, reinstall the switch and recheck the pedal free play. If the clearance is as specified, troubleshoot the brake system and proceed to the "CHECK PEDAL RESERVE DISTANCE" procedure.

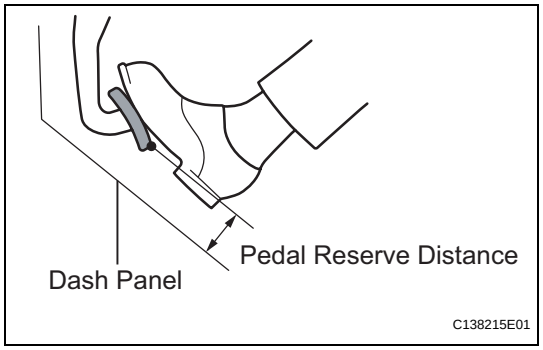

3. INSPECT PEDAL RESERVE DISTANCE

(a) Release the parking brake pedal or parking brake lever.

(b) With the engine running, depress the brake pedal and measure the pedal reserve distance as shown in the illustration.
Pedal reserve distance from the dash panel at 500 N (51 kgf, 112 lbf):
61 mm (2.402 in.)
If the distance is not as specified, troubleshoot the brake system.

INSTALLATION

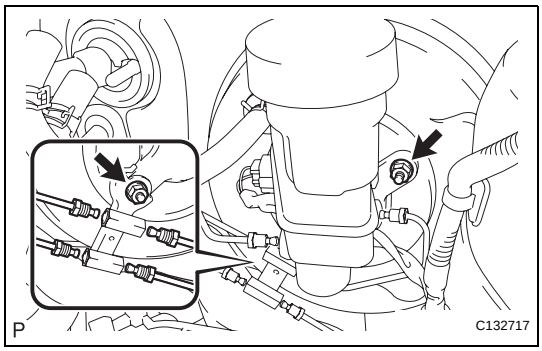

1. **INSTALL BRAKE MASTER CYLINDER SUB-ASSEMBLY**
   (a) Install a new O-ring, the brake master cylinder sub-assembly and the front brake tube way with the 2 nuts .
   Torque: 13 N*m (133 kgf*cm, 10 ft.*lbf)

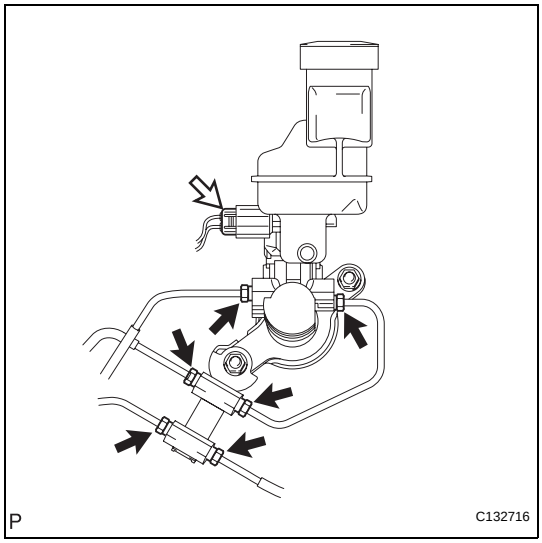

   (b) Temporarily tighten the 6 brake lines and connect the connector.

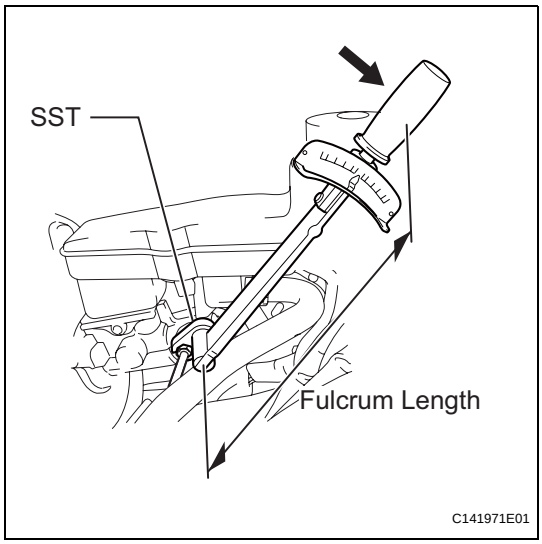

   (c) Using SST, fully tighten the 6 brake lines
   SST 09023-00101
   Torque: without SST
   15 N*m (155 kgf*cm, 11 ft.*lbf)
   with SST
   14 N*m (143 kgf*cm, 10 ft.*lbf)
   NOTICE:
   - **Use a torque wrench with a fulcrum length of 250 mm (9.84 in.).**
   - **This torque value is effective when SST is parallel to a torque wrench.**

2. **FILL RESERVOIR WITH BRAKE FLUID (See page BR-6)**
3. **BLEED MASTER CYLINDER (See page BR-6)**
4. **BLEED BRAKE LINE (See page BR-8)**
5. **BLEED BRAKE ACTUATOR ASSEMBLY (See page BR-8)**
6. **INSPECT FLUID LEVEL IN RESERVOIR (See page BR-6)**
7. **CHECK FOR BRAKE FLUID LEAKS**
8. **INSTALL WINDSHIELD WIPER MOTOR AND LINK ASSEMBLY (See page WW-43)**

9. **INSTALL COWL TOP VENTILATOR LOUVER SUB-ASSEMBLY (See page WW-44)**
10. **INSTALL FRONT FENDER TO COWL SIDE SEAL LH (See page WW-43)**
11. **INSTALL FRONT FENDER TO COWL SIDE SEAL RH (See page WW-43)**
12. **INSTALL FRONT WIPER ARM AND BLADE ASSEMBLY LH (See page WW-44)**
13. **INSTALL FRONT WIPER ARM AND BLADE ASSEMBLY RH (See page WW-45)**
14. **INSTALL AIR CLEANER FILTER ELEMENT SUB-ASSEMBLY**
15. **INSTALL AIR CLEANER CAP SUB-ASSEMBLY (See page ES-522)**
16. **INSTALL FRONT SUSPENSION UPPER CENTER BRACE**
    (a) Install the front suspension upper center brace with the 4 nuts.
    Torque: 85 N*m (867 kgf*cm, 63 ft.*lbf)

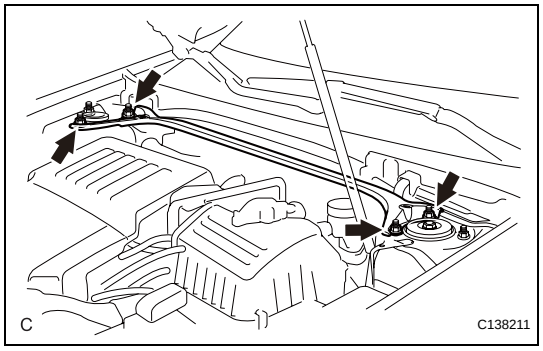

17. **INSTALL ENGINE ROOM SIDE COVER LH (See page EM-50)**
18. **INSTALL ENGINE ROOM SIDE COVER RH (See page EM-50)**
19. **INSTALL HOOD HINGE COVER (for LH Side) (See page WW-47)**
20. **INSTALL HOOD HINGE COVER (for RH Side) (See page WW-47)**
21. **INSTALL COOL AIR INTAKE DUCT SEAL (See page EM-50)**

REMOVAL

NOTICE:

- **The structure of the master cylinder allows the piston to pop out, so observe the following:**
  - **(a) The master cylinder requires careful handling. Do not allow the master cylinder to receive any impact, such as from being dropped. Do not reuse a master cylinder that has been dropped.**
  - **(b) Do not scratch or damage the circumference of the piston. For the seal to function correctly, all sliding surfaces must not have any damage.**
  - **(c) Do not pull out the master cylinder piston.**
  - **(d) Make sure to release the vacuum from the brake booster (by removing a vacuum hose, etc.) before removing the master cylinder from the brake booster.**
  - **(e) When installing the master cylinder, remove the protectors for the piston and the discharge port.**
  - **(f) Apply the supplied grease to the outer diameter of the piston and the inner diameter of the brake booster.**

1. **DRAIN BRAKE FLUID**
   NOTICE:
   - **Stop the engine and depress the brake pedal several times until no vacuum is left in the brake booster.**
   - **If the brake fluid leaks onto any painted surface, wash off and remove the brake fluid completely.**
2. **REMOVE COOL AIR INTAKE DUCT SEAL (See page EM-22)**
3. **REMOVE HOOD HINGE COVER (for LH Side) (See page WW-38)**
4. **REMOVE HOOD HINGE COVER (for RH Side) (See page WW-39)**
5. **REMOVE ENGINE ROOM SIDE COVER LH (See page EM-22)**
6. **REMOVE ENGINE ROOM SIDE COVER RH (See page EM-22)**
7. **REMOVE AIR CLEANER CAP SUB-ASSEMBLY (See page ES-519)**
8. **REMOVE AIR CLEANER FILTER ELEMENT SUB-ASSEMBLY**

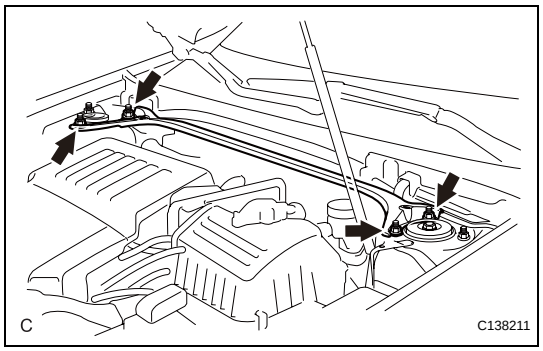

9. REMOVE FRONT SUSPENSION UPPER CENTER BRACE

(a) Remove the 4 nuts and the front suspension upper center brace.

10. REMOVE FRONT WIPER ARM AND BLADE ASSEMBLY LH (See page WW-39)

11. REMOVE FRONT WIPER ARM AND BLADE ASSEMBLY RH (See page WW-39)

12. REMOVE COWL TOP VENTILATOR LOUVER SUB-ASSEMBLY (See page WW-40)

13. REMOVE WINDSHIELD WIPER MOTOR AND LINK ASSEMBLY (See page WW-40)

14. REMOVE BRAKE MASTER CYLINDER SUB-ASSEMBLY

(a) Disconnect the connector.

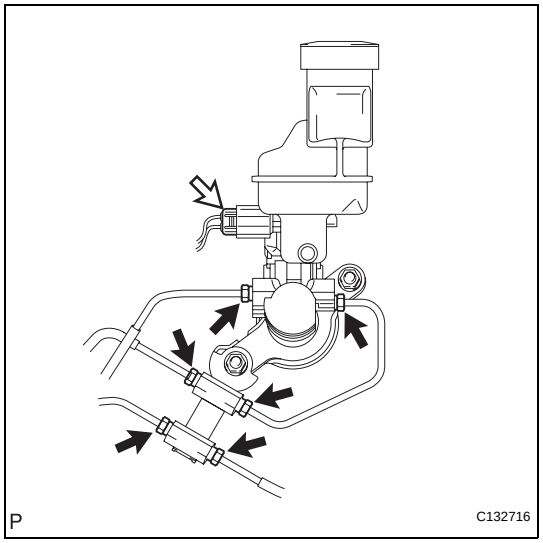

(b) Using SST, disconnect the 6 brake lines and remove the brake master cylinder to way tube.
SST 09023-00101

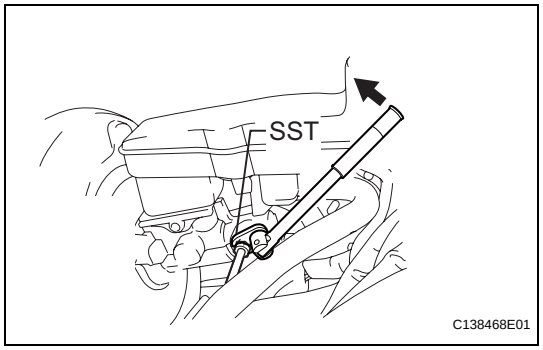

(c) Remove the 2 nuts, the front brake tube way, the O-ring and the brake master cylinder sub-assembly.

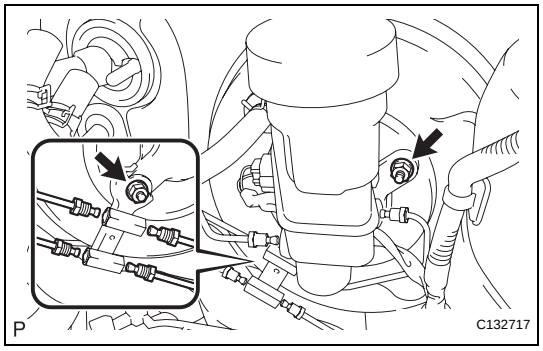

INSTALLATION

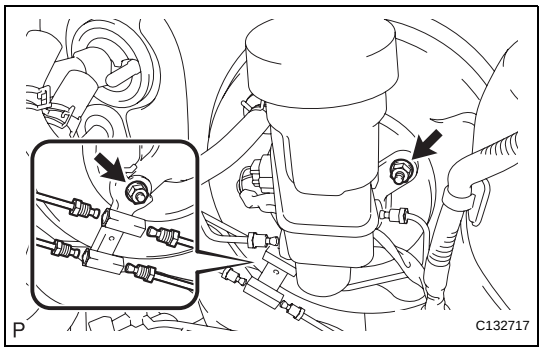

1. **INSTALL BRAKE MASTER CYLINDER SUB-ASSEMBLY**
   (a) Install a new O-ring, the brake master cylinder sub-assembly and the front brake tube way with the 2 nuts .
   Torque: 13 N*m (133 kgf*cm, 10 ft.*lbf)

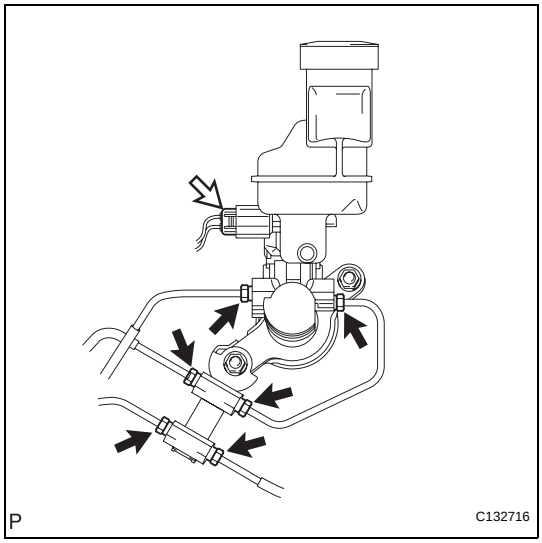

   (b) Temporarily tighten the 6 brake lines and connect the connector.

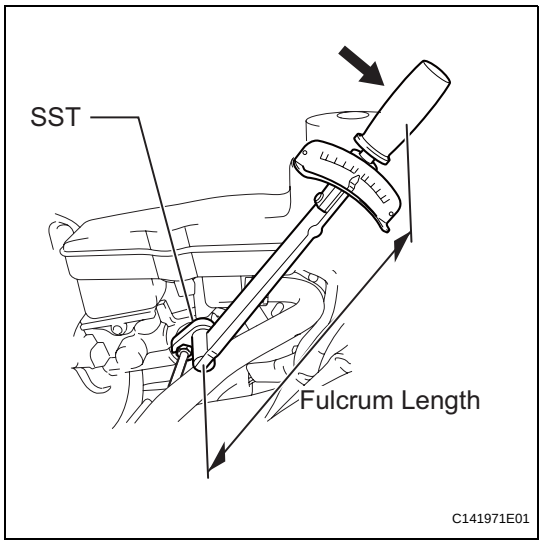

   (c) Using SST, fully tighten the 6 brake lines
   SST 09023-00101
   Torque: without SST
   15 N*m (155 kgf*cm, 11 ft.*lbf)
   with SST
   14 N*m (143 kgf*cm, 10 ft.*lbf)
   NOTICE:
   - **Use a torque wrench with a fulcrum length of 250 mm (9.84 in.).**
   - **This torque value is effective when SST is parallel to a torque wrench.**

2. **FILL RESERVOIR WITH BRAKE FLUID (See page BR-6)**
3. **BLEED MASTER CYLINDER (See page BR-6)**
4. **BLEED BRAKE LINE (See page BR-8)**
5. **BLEED BRAKE ACTUATOR ASSEMBLY (See page BR-8)**
6. **INSPECT FLUID LEVEL IN RESERVOIR (See page BR-6)**
7. **CHECK FOR BRAKE FLUID LEAKS**
8. **INSTALL WINDSHIELD WIPER MOTOR AND LINK ASSEMBLY (See page WW-43)**

9. **INSTALL COWL TOP VENTILATOR LOUVER SUB-ASSEMBLY (See page WW-44)**
10. **INSTALL FRONT FENDER TO COWL SIDE SEAL LH (See page WW-43)**
11. **INSTALL FRONT FENDER TO COWL SIDE SEAL RH (See page WW-43)**
12. **INSTALL FRONT WIPER ARM AND BLADE ASSEMBLY LH (See page WW-44)**
13. **INSTALL FRONT WIPER ARM AND BLADE ASSEMBLY RH (See page WW-45)**
14. **INSTALL AIR CLEANER FILTER ELEMENT SUB-ASSEMBLY**
15. **INSTALL AIR CLEANER CAP SUB-ASSEMBLY (See page ES-522)**
16. **INSTALL FRONT SUSPENSION UPPER CENTER BRACE**
    (a) Install the front suspension upper center brace with the 4 nuts.
    Torque: 85 N*m (867 kgf*cm, 63 ft.*lbf)

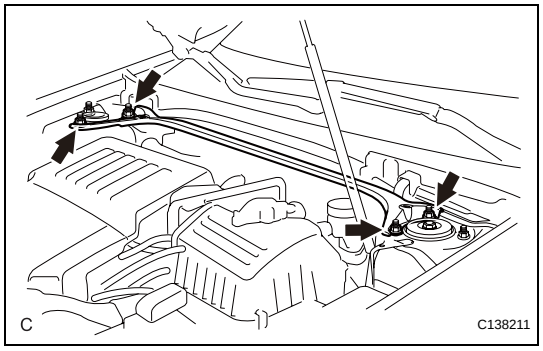

17. **INSTALL ENGINE ROOM SIDE COVER LH (See page EM-50)**
18. **INSTALL ENGINE ROOM SIDE COVER RH (See page EM-50)**
19. **INSTALL HOOD HINGE COVER (for LH Side) (See page WW-47)**
20. **INSTALL HOOD HINGE COVER (for RH Side) (See page WW-47)**
21. **INSTALL COOL AIR INTAKE DUCT SEAL (See page EM-50)**

INSPECTION

1. INSPECT VACUUM CHECK VALVE

(a) Inspect the vacuum check valve.

(1) Slide the clip and disconnect the vacuum hose.

(2) Remove the vacuum check valve.

(3) Check that there is ventilation from the booster to the engine, and no ventilation from the engine to the booster. If the results are not as specified, replace the brake booster assembly.

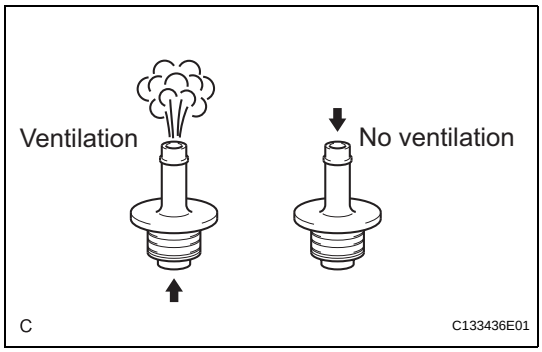

INSTALLATION

1. INSTALL BRAKE MASTER CYLINDER PUSH ROD CLEVIS

(a) Temporarily install the lock nut and the brake master cylinder push rod clevis to the brake booster assembly.
NOTICE:
Fully tighten the lock nut after adjusting the pedal height.
Torque: 26 N*m (265 kgf*cm, 19 ft.*lbf)

2. INSTALL BRAKE BOOSTER GASKET

(a) Install a new brake booster gasket.

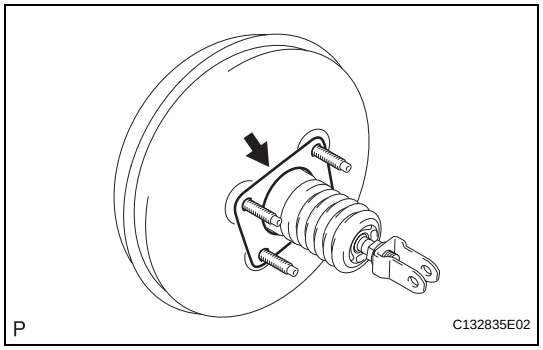

3. INSTALL BRAKE BOOSTER ASSEMBLY

(a) Install the brake booster assembly and the gasket with the 4 nuts.
Torque: 13 N*m (133 kgf*cm, 10 ft.*lbf)
NOTICE:
Do not damage the brake lines.

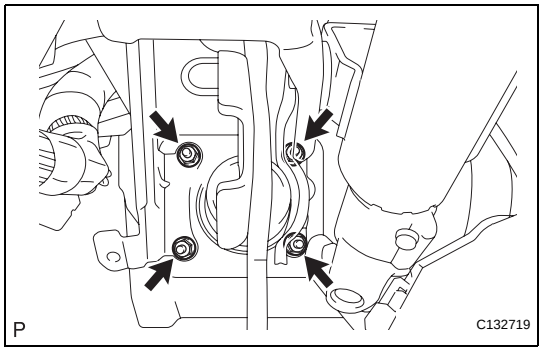

4. CONNECT BRAKE MASTER CYLINDER PUSH ROD CLEVIS

(a) Apply the lithium soap base glycol grease to the push rod pin.
(b) Connect the brake master cylinder push rod clevis to the brake pedal with the push rod pin and a new clip as shown in the illustration.

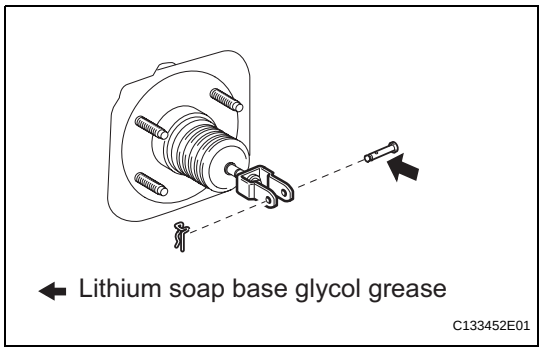

5. INSTALL BRAKE PEDAL RETURN SPRING

(a) Install the brake pedal return spring.

6. INSTALL BRAKE MASTER CYLINDER SUB-ASSEMBLY

HINT:
Refer to the procedures up to "INSTALL BRAKE MASTER CYLINDER". (See page BR-23)

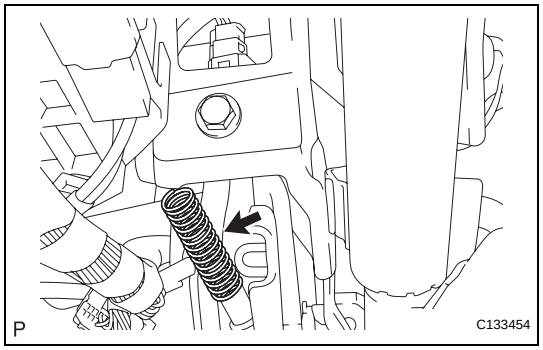

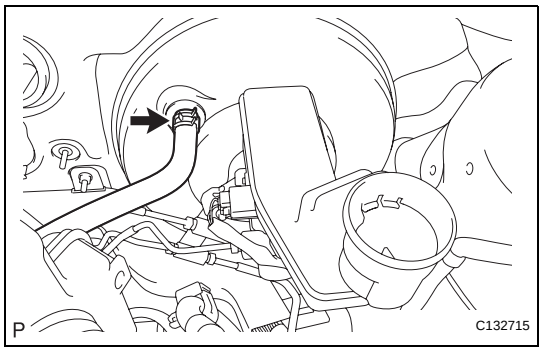

7. CONNECT NO. 2 VACUUM HOSE

(a) Connect the No. 2 vacuum hose and move the clip.

8. INSPECT AND ADJUST BRAKE PEDAL HEIGHT (See page BR-16)

BRAKE BOOSTER

COMPONENTS

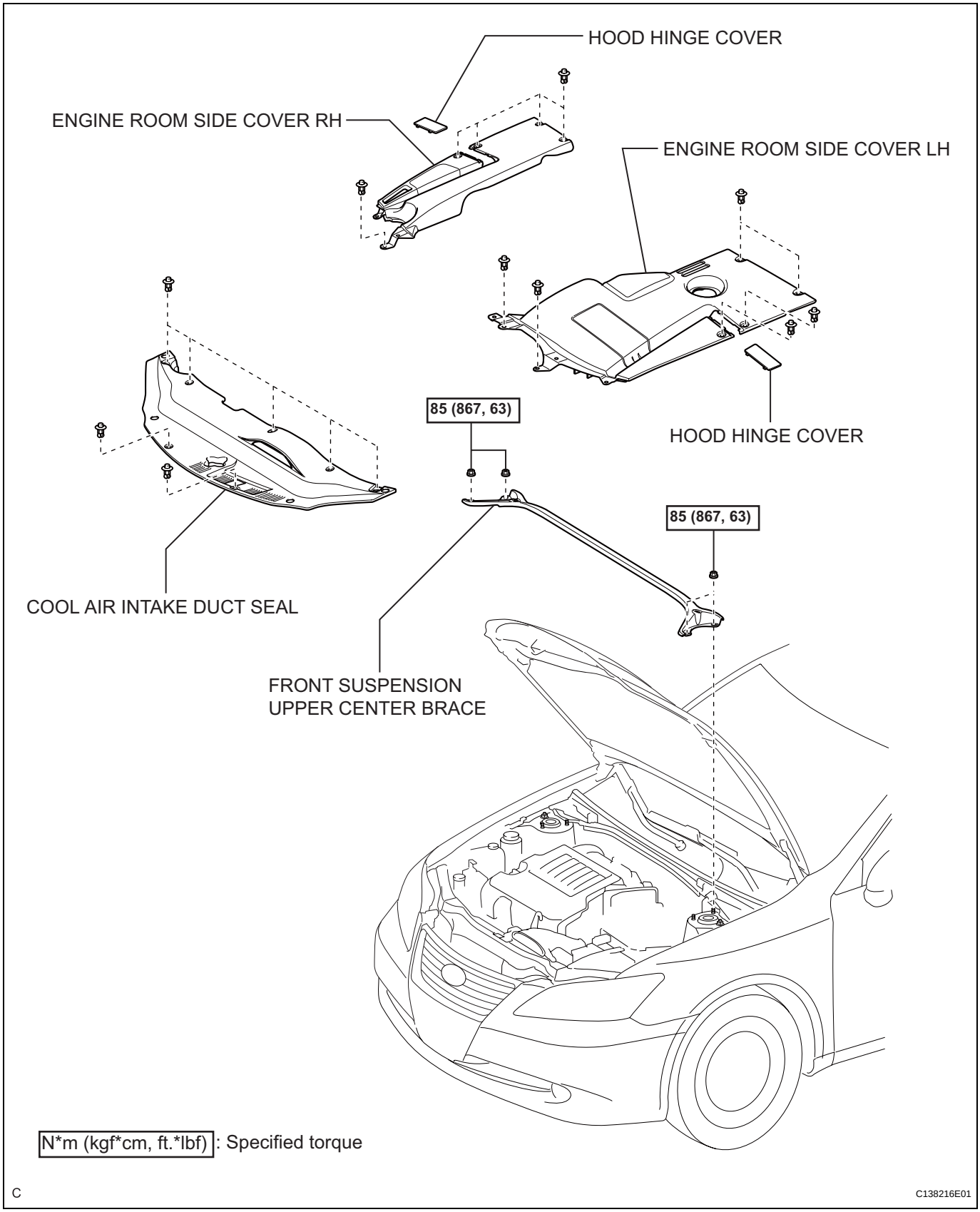

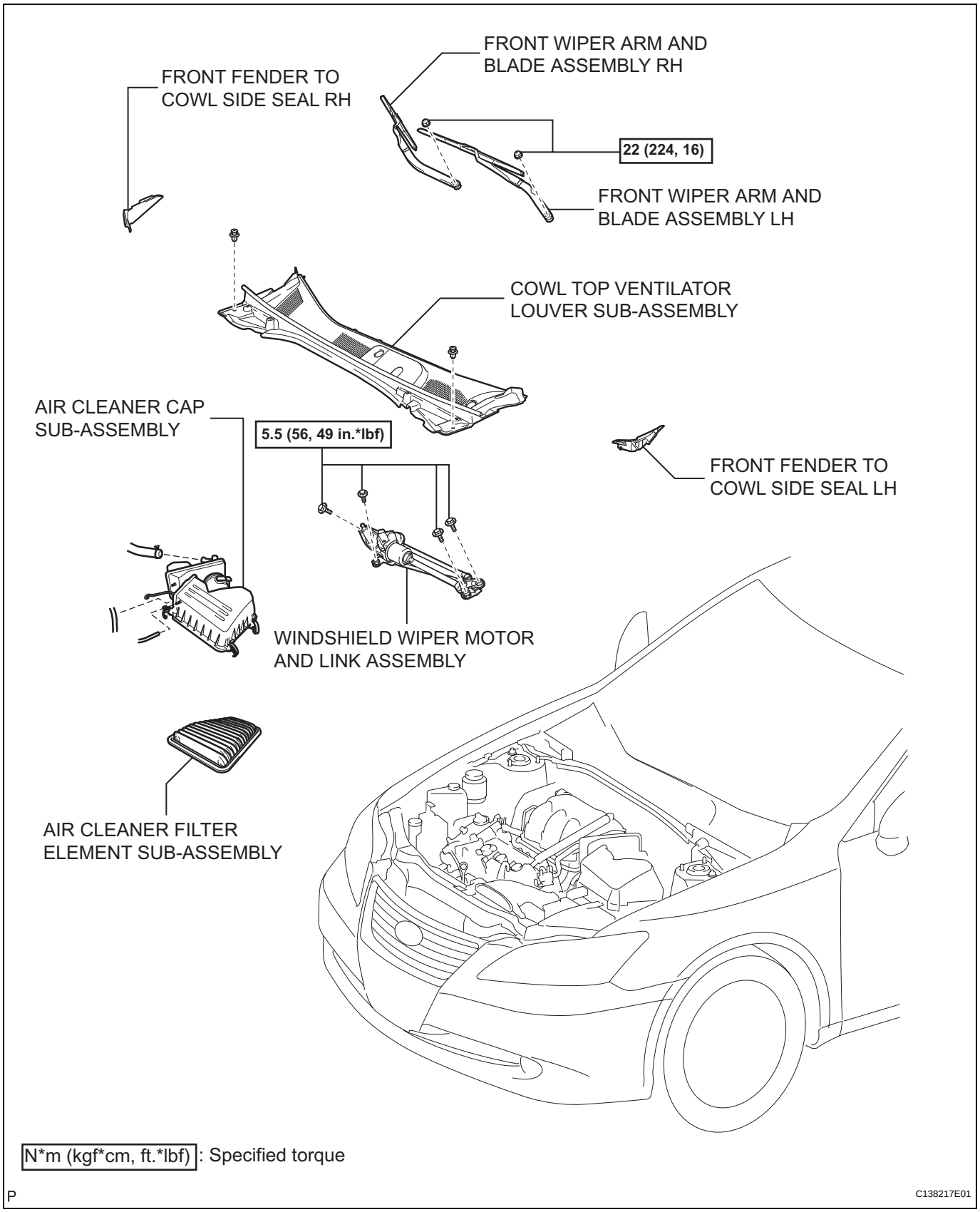
FRONT WIPER ARM AND BLADE ASSEMBLY RH
FRONT FENDER TO COWL SIDE SEAL RH
22 (224, 16)
FRONT WIPER ARM AND BLADE ASSEMBLY LH
COWL TOP VENTILATOR LOUVER SUB-ASSEMBLY
AIR CLEANER CAP SUB-ASSEMBLY
5.5 (56, 49 in.*lbf)
FRONT FENDER TO COWL SIDE SEAL LH
WINDSHIELD WIPER MOTOR AND LINK ASSEMBLY
AIR CLEANER FILTER ELEMENT SUB-ASSEMBLY
N*m (kgf*cm, ft.*lbf) : Specified torque
P
C138217E01

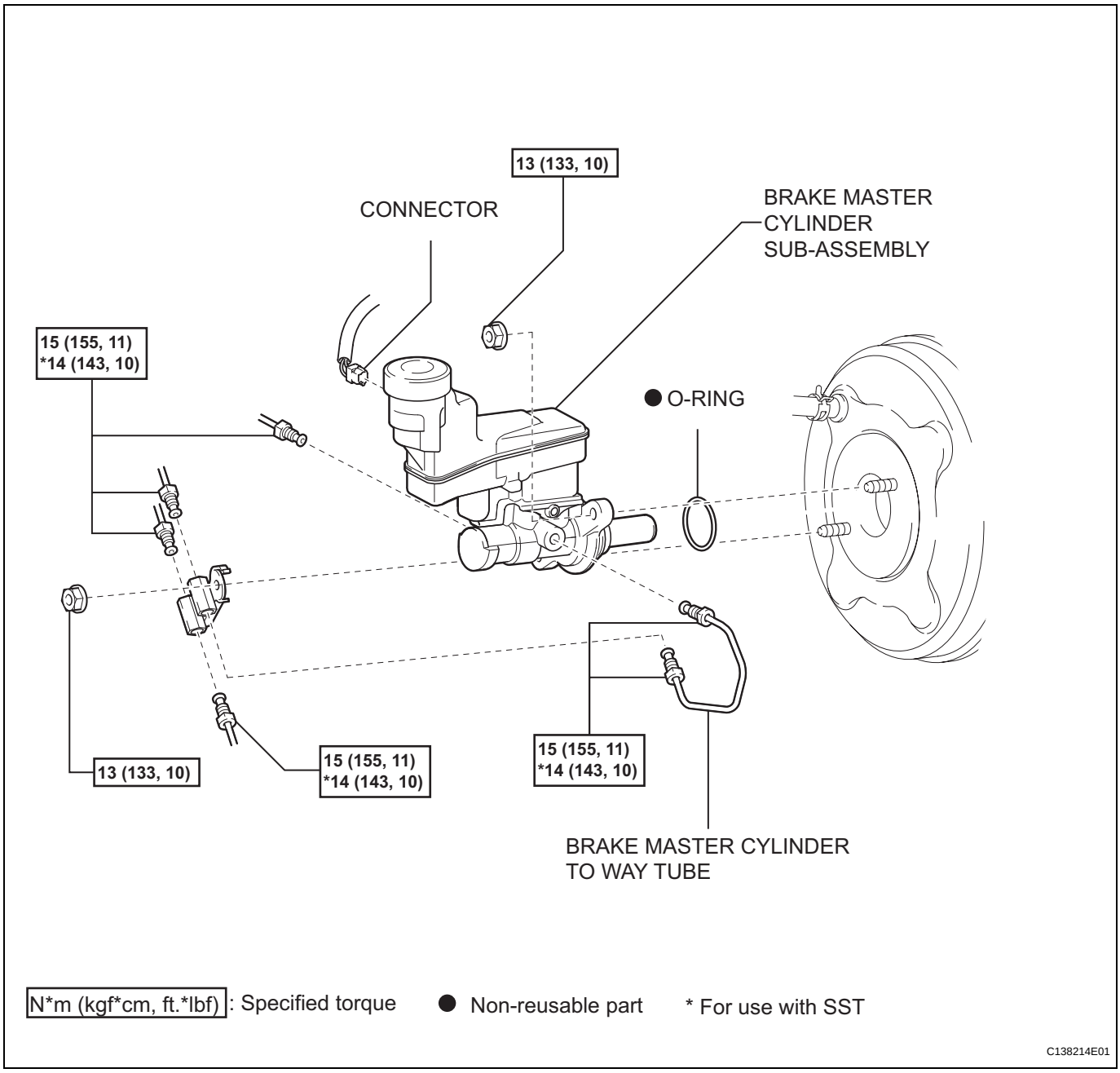
13 (133, 10)
CONNECTOR
BRAKE MASTER CYLINDER SUB-ASSEMBLY
15 (155, 11)
*14 (143, 10)
● O-RING
13 (133, 10)
15 (155, 11)
*14 (143, 10)
15 (155, 11)
*14 (143, 10)
BRAKE MASTER CYLINDER TO WAY TUBE
N*m (kgf*cm, ft.*lbf): Specified torque
● Non-reusable part
* For use with SST
C138214E01

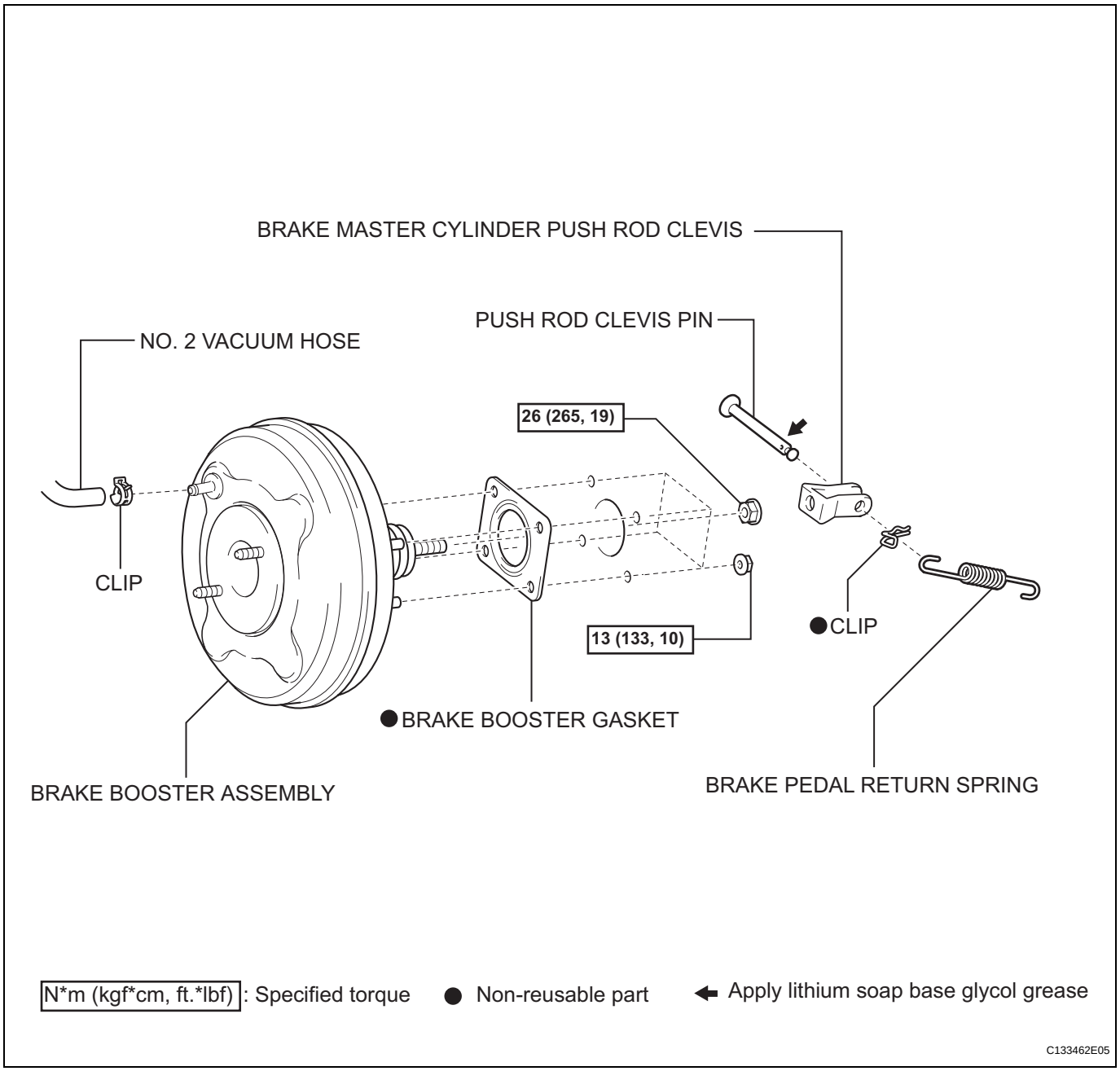

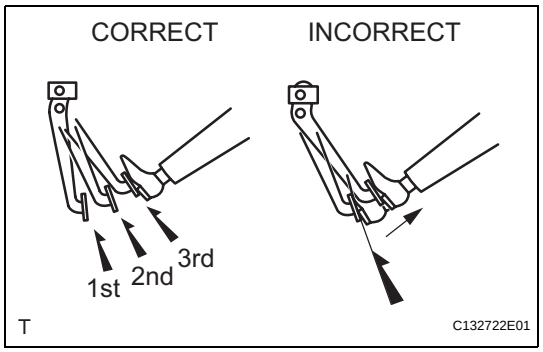

ON-VEHICLE INSPECTION

1. INSPECT BRAKE BOOSTER ASSEMBLY

(a) Airtightness check.

(1) Start the engine and stop it after 1 or 2 minutes. Slowly depress the brake pedal several times.
HINT:
If the pedal can be depressed to the floor on the first time, but on the 2nd and 3rd time cannot be depressed as far, the booster is airtight.

(2) Depress the brake pedal while the engine is running, and stop the engine with the pedal depressed.
HINT:
If there is no change in the pedal reserve distance while holding the pedal for 30 seconds, the booster is airtight.

(b) Operation check.

(1) Depress the brake pedal several times with the engine switch off and check that there is no change in the pedal reserve distance when the pedal is depressed.

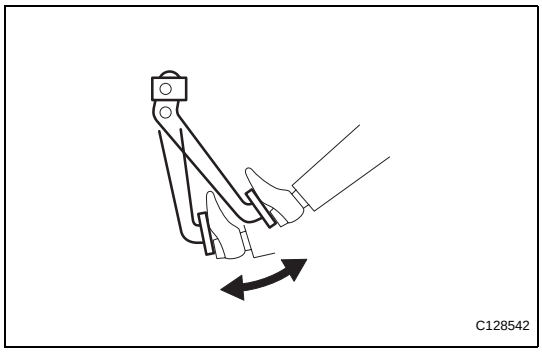

(2) Depress and hold down the pedal, and start the engine.
HINT:
If the pedal goes down slightly, operation is normal.

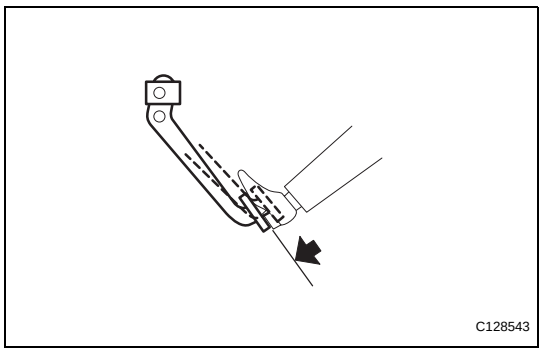

REMOVAL

1. REMOVE BRAKE PEDAL RETURN SPRING

(a) Remove the brake pedal return spring.

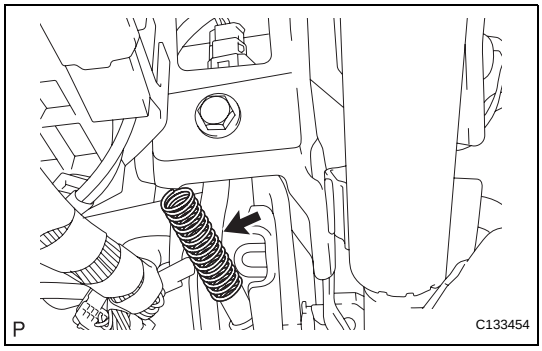

2. SEPARATE BRAKE MASTER CYLINDER PUSH ROD CLEVIS

(a) Remove the clip and push rod pin, and separate the brake master cylinder push rod clevis from the brake pedal sub-assembly.

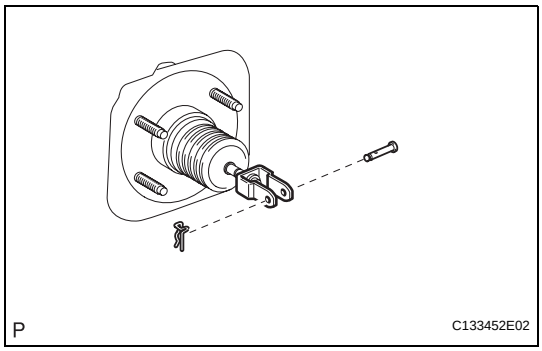

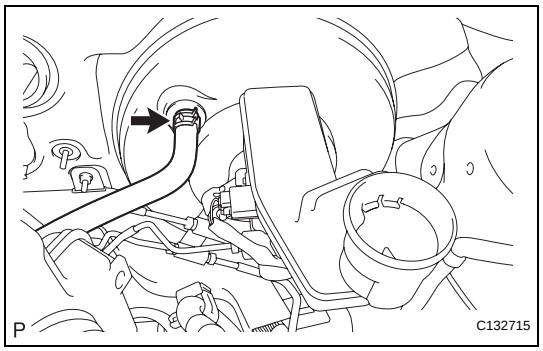

3. DISCONNECT NO. 2 VACUUM HOSE

(a) Move the clip and disconnect the No. 2 vacuum hose.

4. REMOVE BRAKE MASTER CYLINDER SUB-ASSEMBLY

HINT:
Refer to the procedures up to "REMOVE MASTER CYLINDER". (See page BR-21)

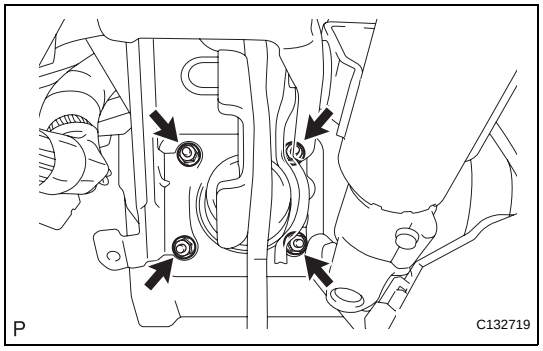

5. REMOVE BRAKE BOOSTER ASSEMBLY

(a) Remove the 4 nuts and the brake booster assembly.
NOTICE:
Do not damage the brake lines.

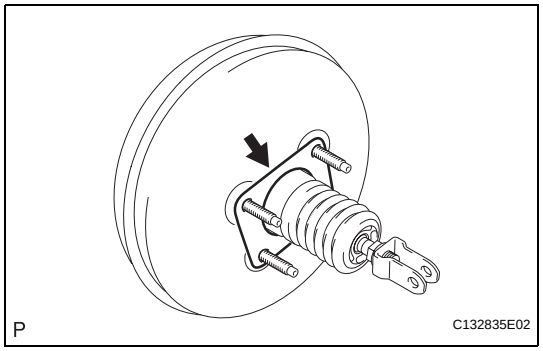

6. REMOVE BRAKE BOOSTER GASKET

(a) Remove the brake booster gasket.

7. REMOVE BRAKE MASTER CYLINDER PUSH ROD CLEVIS

(a) Loosen the lock nut.
(b) Remove the brake master cylinder push rod clevis and the lock nut.

REMOVAL

HINT:
- Use the same procedures for the RH side and LH side.
- The procedures listed below are for the LH side.

1. REMOVE FRONT WHEEL

2. DRAIN BRAKE FLUID
NOTICE:
If brake fluid leaks onto any painted surface of the vehicle, wash off and remove it completely.

3. REMOVE DISC BRAKE CYLINDER ASSEMBLY

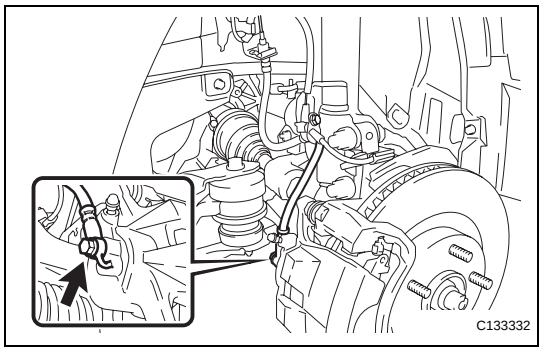

(a) Remove the union bolt and disconnect the front brake flexible hose from the disc brake cylinder assembly.
(b) Remove the gasket from the front brake flexible hose.

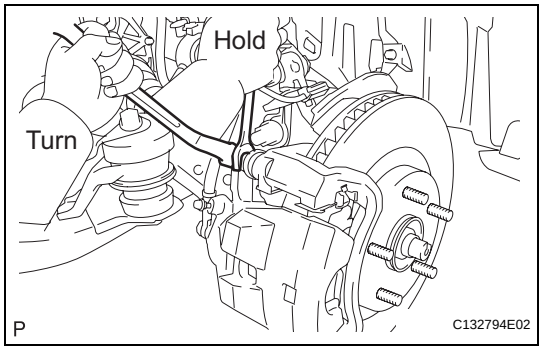

(c) Hold the front disc brake cylinder slide pin and remove the 2 bolts and disc brake cylinder assembly.

DISASSEMBLY

1. REMOVE FRONT BRAKE PAD

(a) Remove the 2 anti-squeal springs.

(b) Remove the 2 brake pads from the front disc brake cylinder mounting.

2. REMOVE FRONT ANTI-SQUEAL SHIM

(a) Remove the 2 anti-squeal shims and the 2 pad wear indicators from each pad.

3. REMOVE FRONT DISC BRAKE PAD SUPPORT PLATE

(a) Remove the 4 front disc brake pad support plates from the front disc brake cylinder mounting.

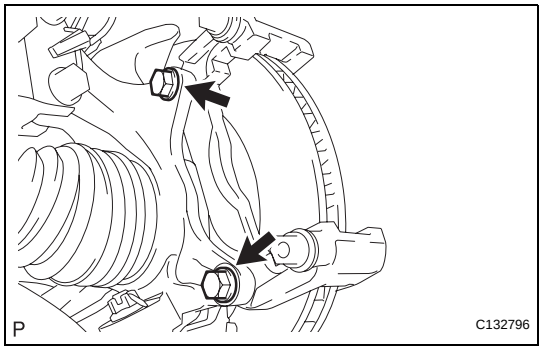

4. REMOVE FRONT DISC BRAKE CYLINDER MOUNTING

(a) Remove the 2 bolts and front disc brake cylinder mounting from the steering knuckle.

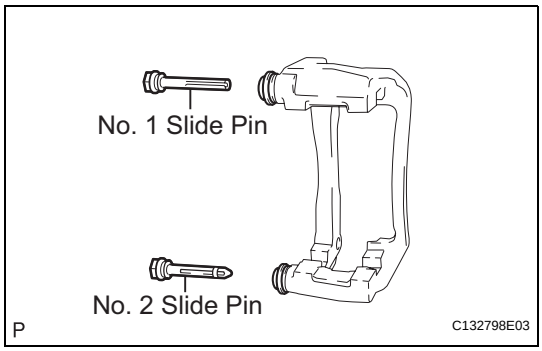

5. REMOVE NO. 1 FRONT DISC BRAKE CYLINDER SLIDE PIN

(a) Remove the No. 1 front disc brake cylinder slide pin from the front disc brake cylinder mounting.

6. REMOVE NO. 2 FRONT DISC BRAKE CYLINDER SLIDE PIN

(a) Remove the No. 2 front disc brake cylinder slide pin from the front disc brake cylinder mounting.

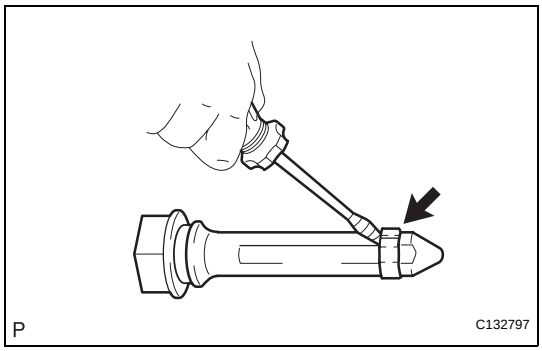

7. REMOVE FRONT DISC BRAKE CYLINDER SLIDE BUSHING

(a) Using a screwdriver, remove the front disc brake cylinder slide bushing from the No. 2 front disc brake cylinder slide pin.

NOTICE:

Do not damage the No. 2 front disc brake cylinder slide pin.

HINT:

Tape the screwdriver tip before use.

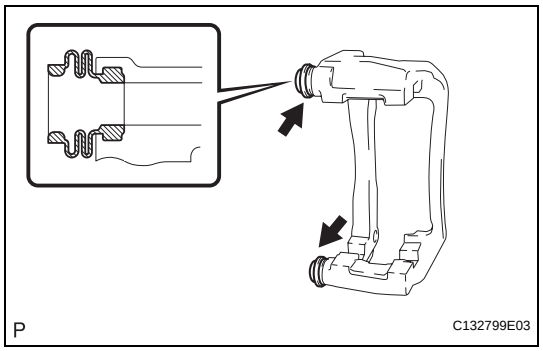

8. REMOVE FRONT DISC BRAKE BUSHING DUST BOOT

(a) Remove the 2 front disc brake bushing dust boots from the front disc brake cylinder mounting.

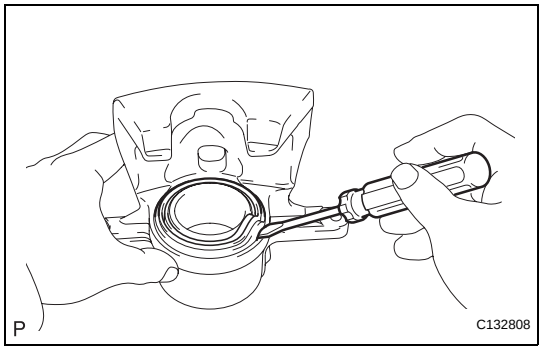

9. REMOVE CYLINDER BOOT

(a) Using a screwdriver, remove the cylinder boot set ring and the cylinder boot.
NOTICE:
Be careful not to damage the brake piston and cylinder.

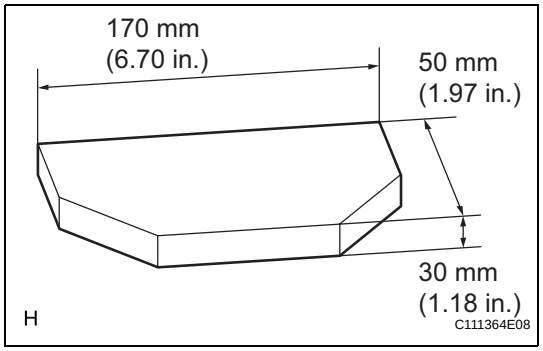

10. REMOVE FRONT DISC BRAKE PISTON

(a) Prepare a wooden plate to hold the front disc brake piston.

(b) Place the wooden plate between the front disc brake piston and the disc brake cylinder assembly.

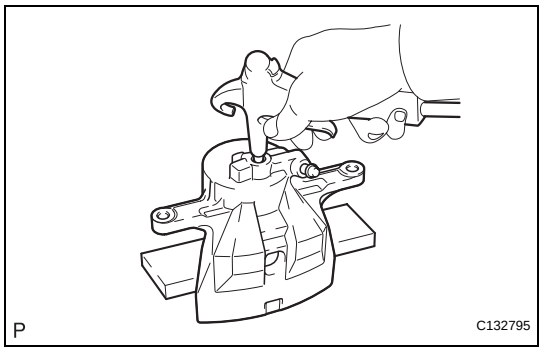

(c) Use compressed air to remove the front disc brake piston from the disc brake cylinder assembly.
CAUTION:
Do not place your fingers in front of the front disc brake piston when using compressed air.
NOTICE:
Do not spatter the brake fluid.

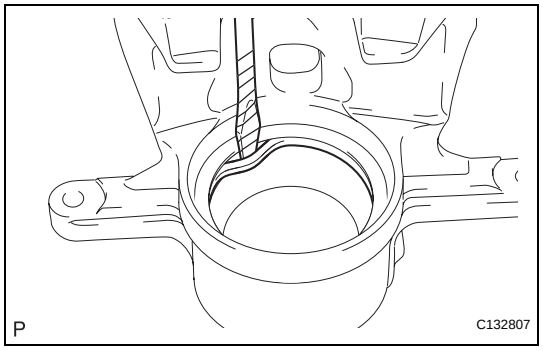

11. REMOVE PISTON SEAL

(a) Using a screwdriver, remove the piston seal from the disc brake cylinder assembly.
NOTICE:
Do not damage the inner cylinder or cylinder groove.
HINT:
Tape the screwdriver tip before use.

12. REMOVE FRONT DISC BRAKE BLEEDER PLUG CAP

13. REMOVE FRONT DISC BRAKE BLEEDER PLUG

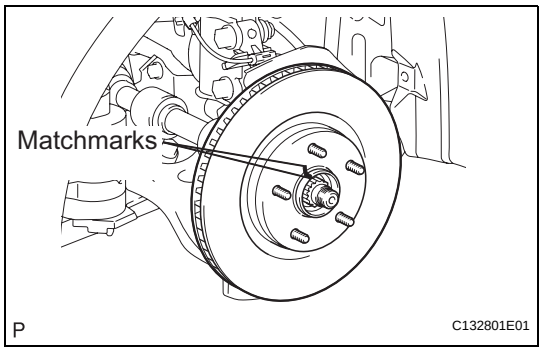

14. REMOVE FRONT DISC

(a) Remove the front disc.
HINT:
Put matchmarks on the disc and the axle hub.

INSPECTION

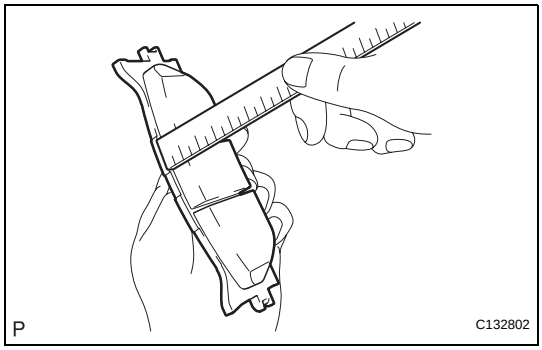

1. INSPECT PAD LINING THICKNESS

(a) Using a ruler, measure the pad lining thickness.
Standard thickness:
12.0 mm (0.472 in.)
Minimum thickness:
1.0 mm (0.039 in.)
If the pad lining thickness is less than the minimum, replace the brake pads.
HINT:
Be sure to check wear of the front disc after replacing the brake pad with a new one.

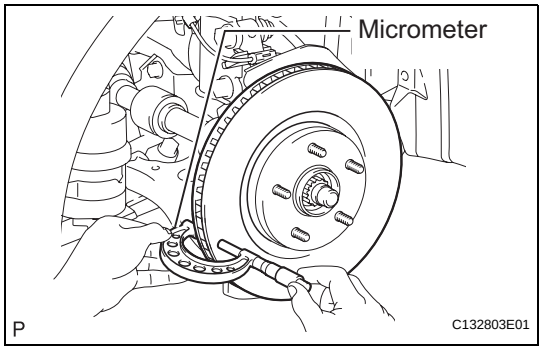

2. INSPECT DISC THICKNESS

(a) Using a micrometer, measure the disc thickness.
Standard thickness:
28.0 mm (1.102 in.)
Minimum thickness :
25.0 mm (0.983 in.)
If the disc thickness is less than the minimum, replace the front disc.

3. INSPECT BRAKE CYLINDER AND PISTON

(a) Check the cylinder bore and piston for rust or scoring. If necessary, replace the disc brake cylinder assembly and piston.

4. INSPECT FRONT DISC BRAKE PAD SUPPORT PLATE

(a) Inspect the front disc brake pad support plate. If necessary, replace the front brake pad support plate.
HINT:
Make sure that the pad support plate has sufficient rebound, has no deformation, cracks or wear, and that all rust and dirt are cleaned off.

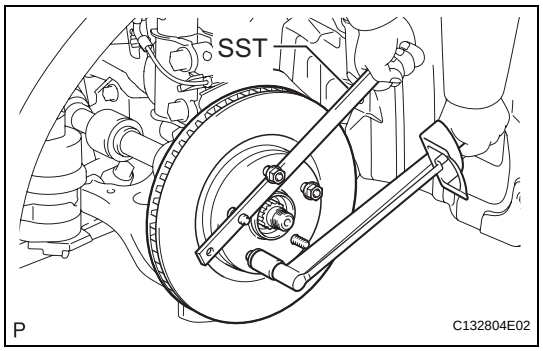

5. INSPECT DISC RUNOUT

(a) Using SST to hold the disc, tighten the disc with the 3 hub nuts.
SST 09330-00021
Torque: 103 N*m (1,050 kgf*cm, 76 ft.*lbf)
HINT:
Use the SST to hold the disc while tightening the nuts.

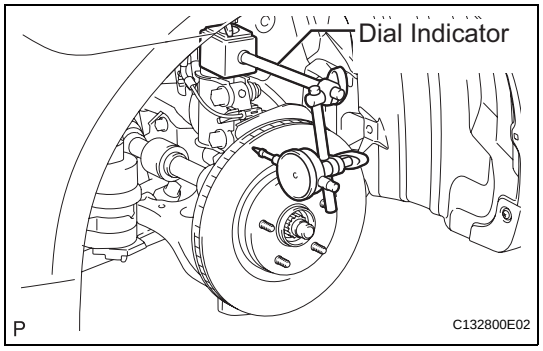

(b) Using a dial indicator, measure the disc runout 10 mm (0.39 in.) away from the outer edge of the front disc.
Maximum disc runout:
0.05 mm (0.0020 in.)
NOTICE:
- **Keep the magnet of the dial indicator away from the axle hub and speed sensor.**
- **Install the dial indicator to the shock absorber.**

(c) If the runout exceeds the maximum value, change the installation positions of the disc and axle so that the runout will become minimal. If the runout exceeds the maximum even after the installation positions are changed, check the bearing play in the axial direction and the axle hub runout (See page AH-11). If the bearing play and the axle hub runout are normal and if the disc thickness is not within the specified range, grind the disc. If the disc thickness is less than the minimum, replace the disc.

(d) Remove the 3 hub nuts and the front disc.

REASSEMBLY

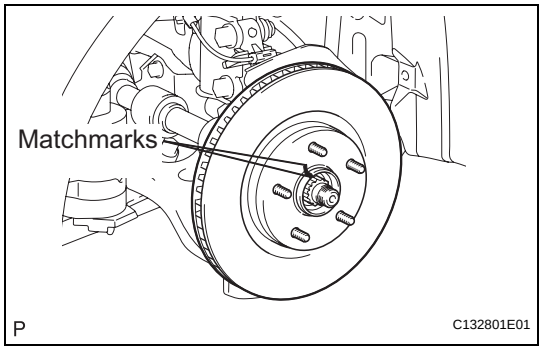

1. INSTALL FRONT DISC

(a) Align the matchmarks and install the front disc.
NOTICE:
When replacing the disc with a new one, select the installation position where the front disc has the minimum runout.

2. TEMPORARILY TIGHTEN FRONT DISC BRAKE BLEEDER PLUG

(a) Temporarily tighten the front disc brake bleeder plug to the disc brake cylinder sub-assembly.

3. INSTALL FRONT DISC BRAKE BLEEDER PLUG CAP

(a) Install the bleeder plug cap to the front disc brake bleeder plug.

4. INSTALL PISTON SEAL

(a) Apply lithium soap base glycol grease to a new piston seal.

(b) Install the piston seal to the disc brake cylinder assembly.

5. INSTALL FRONT DISC BRAKE PISTON

(a) Apply lithium soap base glycol grease to the front disc brake piston and a new cylinder boot.

(b) Install the cylinder boot to the front disc brake piston.

(c) Install the front disc brake piston to the disc brake cylinder assembly.
NOTICE:
Do not install the front disc brake piston forcibly in the disc brake cylinder assembly.

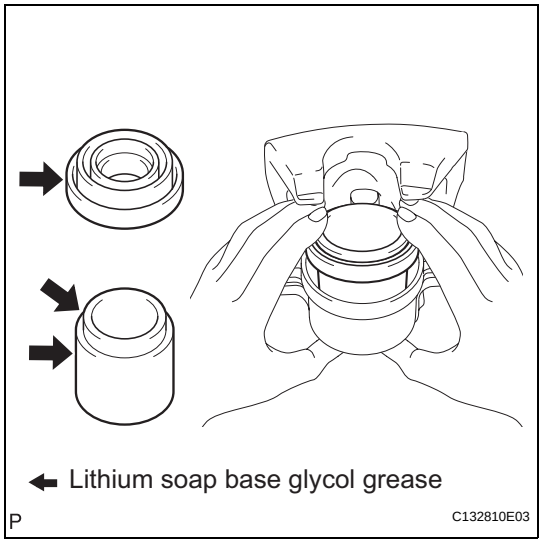

6. INSTALL CYLINDER BOOT

(a) Install the cylinder boot to the disc brake cylinder assembly.
NOTICE:
Install the boot securely to the grooves of the cylinder and piston.

(b) Using a screwdriver, install a new cylinder boot set ring.
NOTICE:
- **Install the cylinder boot set ring securely to the grooves of the cylinder boot.**
- **Do not damage the cylinder boot.**

HINT:
Tape the screwdriver tip before use.

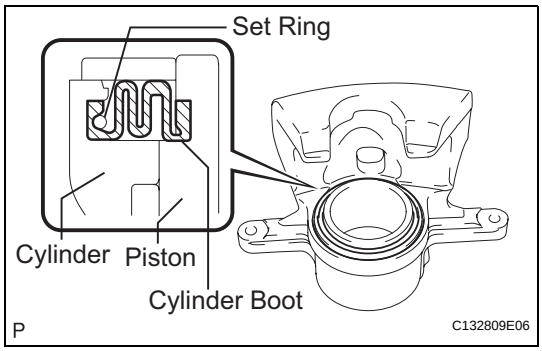

7. INSTALL FRONT DISC BRAKE BUSHING DUST BOOT

(a) Apply lithium soap base glycol grease to the seal surface of 2 new front disc brake bushing dust boots.

(b) Install the 2 front disc brake bushing dust boots to the front disc brake cylinder mounting.

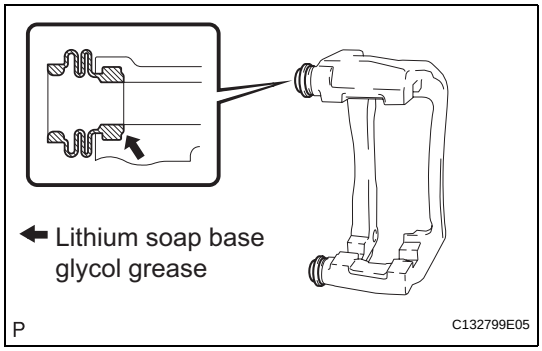

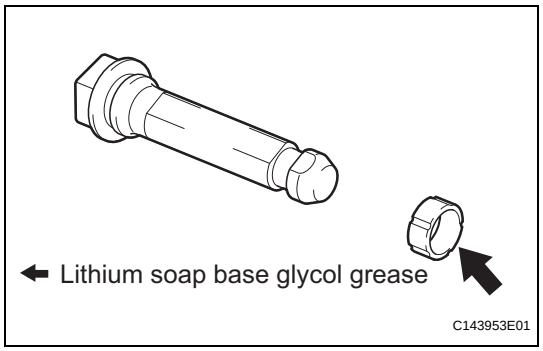

8. INSTALL FRONT DISC BRAKE CYLINDER SLIDE BUSHING

(a) Apply lithium soap base glycol grease to a new front disc brake cylinder slide bushing.

(b) Install the front disc brake cylinder slide bushing to the No. 2 front disc brake cylinder slide pin.

9. INSTALL NO. 2 FRONT DISC BRAKE CYLINDER SLIDE PIN

(a) Apply the lithium soap base glycol grease to the sliding part and the seal surface of the No. 2 front disc brake cylinder slide pin.

(b) Install the No. 2 front disc brake cylinder slide pin to the bottom side of the front disc brake cylinder mounting.

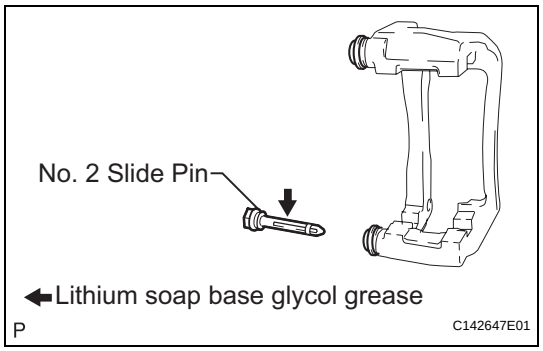

10. INSTALL NO. 1 FRONT DISC BRAKE CYLINDER SLIDE PIN

(a) Apply the lithium soap base glycol grease to the sliding part and the seal surface of the No. 1 front disc brake cylinder slide pin.

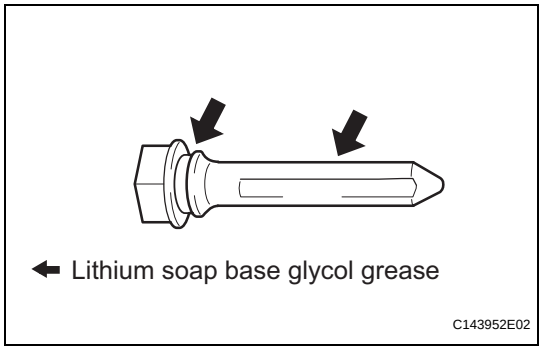

(b) Install the No. 1 front disc brake cylinder slide pin.

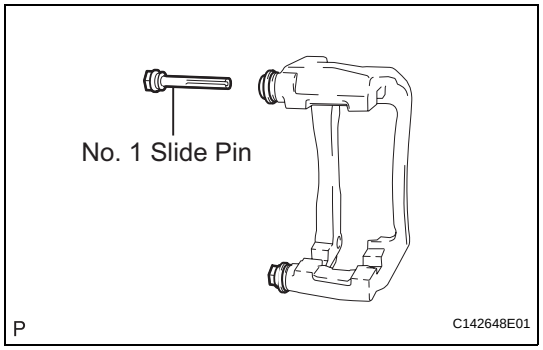

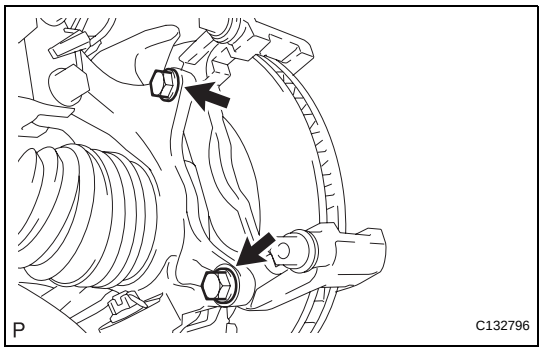

11. INSTALL FRONT DISC BRAKE CYLINDER MOUNTING

(a) Install the front disc brake cylinder mounting to the steering knuckle with the 2 bolts.
Torque: 107 N*m (1,090 kgf*cm, 79 ft.*lbf)

12. INSTALL FRONT DISC BRAKE PAD SUPPORT PLATE

(a) Install the front disc brake pad support plate to the front disc brake cylinder mounting.

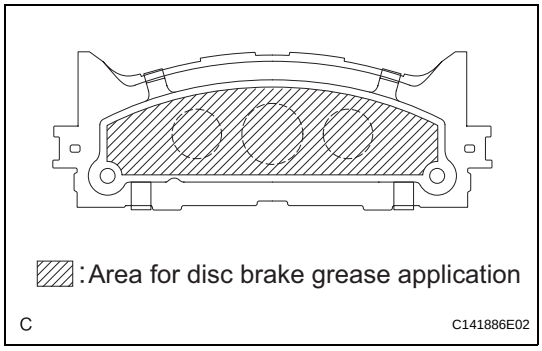

13. INSTALL FRONT ANTI-SQUEAL SHIM

(a) Apply disc brake grease to the front anti-squeal shim.
NOTICE:
- **When replacing worn pads, the front anti-squeal shim must be replaced together with the pad.**
- **Install the shim in the correct positions and directions.**
- **Apply disc brake grease to the area that contacts the front anti-squeal shim.**
- **Disc brake grease can come out slightly from the area where the front anti-squeal shim is installed.**
- **Make sure that disc brake grease is not applied onto the lining surface.**

(b) Install the 2 front anti-squeal shims and the 2 pad wear indicators to each pad.
NOTICE:
Install the shims in the correct positions and directions.
NOTICE:
Install the pad wear indicator in the correct positions and directions.

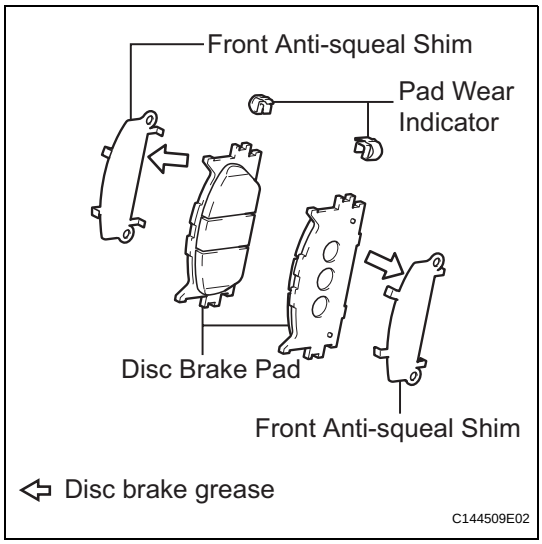

14. INSTALL FRONT BRAKE PAD

(a) Install the 2 front brake pads with front anti-squeal shim to the front disc brake cylinder mounting.
(b) Install the 2 anti-squeal springs.

BR

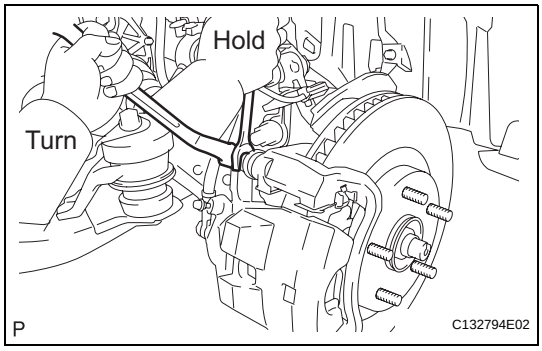

INSTALLATION

1. INSTALL DISC BRAKE CYLINDER ASSEMBLY

(a) Install the disc brake cylinder assembly with the 2 bolts.
Torque: 34 N*m (350 kgf*cm, 25 ft.*lbf)
(b) Install a new gasket to the front brake flexible hose.

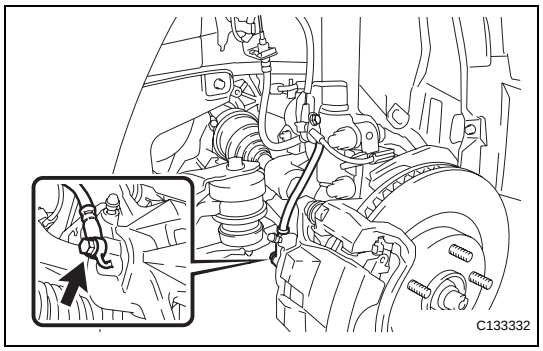

(c) Connect the front brake flexible hose with the union bolt to the disc brake cylinder assembly.
Torque: 29 N*m (300 kgf*cm, 21 ft.*lbf)
NOTICE:
Install the front brake flexible hose lock securely in the lock hole in the disc brake cylinder assembly.

2. **FILL RESERVOIR WITH BRAKE FLUID (See page BR-6)**
3. **BLEED BRAKE LINE (See page BR-8)**
4. **BLEED BRAKE ACTUATOR ASSEMBLY (See page BR-8)**
5. **INSPECT BRAKE FLUID LEVEL IN RESERVOIR (See page BR-11)**
6. **CHECK FOR BRAKE FLUID LEAKS**
7. **INSTALL FRONT WHEEL**
Torque: 103 N*m (1,050 kgf*cm, 76 ft.*lbf)

REMOVAL

HINT:
- Use the same procedures for the RH side and LH side.
- The procedures listed below are for the LH side.

1. REMOVE FRONT WHEEL

2. DRAIN BRAKE FLUID
NOTICE:
If brake fluid leaks onto any painted surface of the vehicle, wash off and remove it completely.

3. REMOVE DISC BRAKE CYLINDER ASSEMBLY

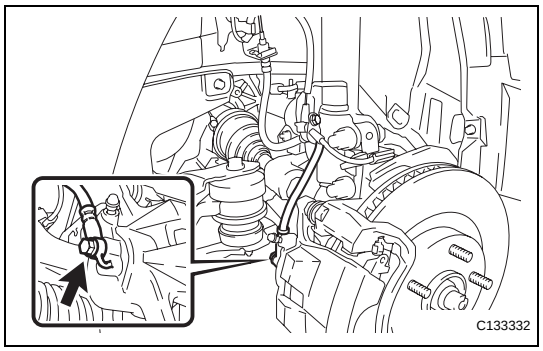

(a) Remove the union bolt and disconnect the front brake flexible hose from the disc brake cylinder assembly.
(b) Remove the gasket from the front brake flexible hose.

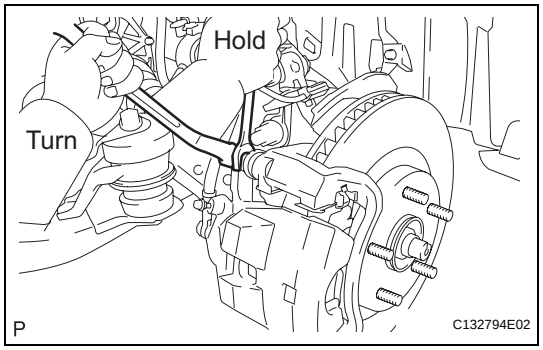

(c) Hold the front disc brake cylinder slide pin and remove the 2 bolts and disc brake cylinder assembly.

DISASSEMBLY

1. REMOVE FRONT BRAKE PAD

(a) Remove the 2 anti-squeal springs.

(b) Remove the 2 brake pads from the front disc brake cylinder mounting.

2. REMOVE FRONT ANTI-SQUEAL SHIM

(a) Remove the 2 anti-squeal shims and the 2 pad wear indicators from each pad.

3. REMOVE FRONT DISC BRAKE PAD SUPPORT PLATE

(a) Remove the 4 front disc brake pad support plates from the front disc brake cylinder mounting.

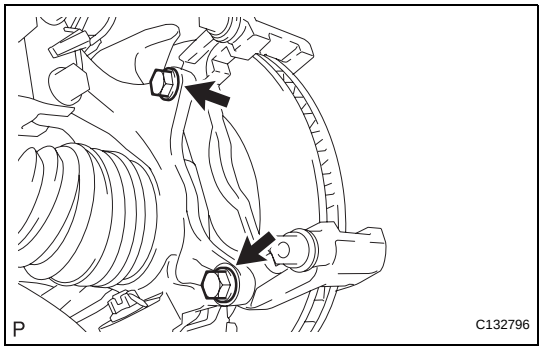

4. REMOVE FRONT DISC BRAKE CYLINDER MOUNTING

(a) Remove the 2 bolts and front disc brake cylinder mounting from the steering knuckle.

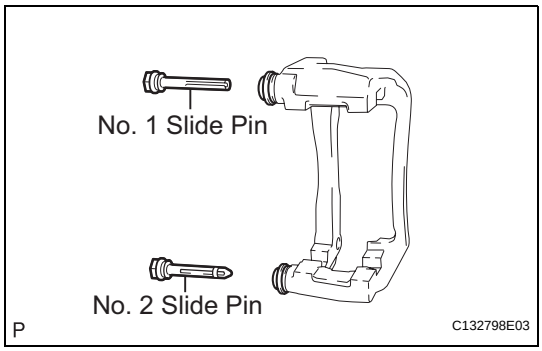

5. REMOVE NO. 1 FRONT DISC BRAKE CYLINDER SLIDE PIN

(a) Remove the No. 1 front disc brake cylinder slide pin from the front disc brake cylinder mounting.

6. REMOVE NO. 2 FRONT DISC BRAKE CYLINDER SLIDE PIN

(a) Remove the No. 2 front disc brake cylinder slide pin from the front disc brake cylinder mounting.

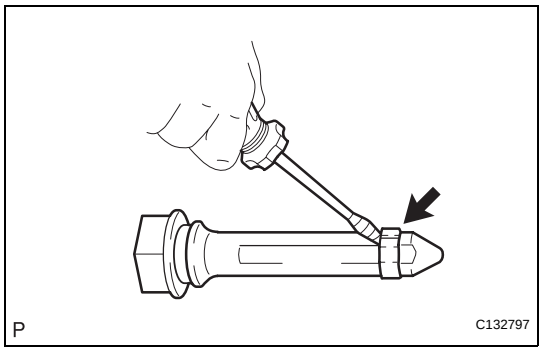

7. REMOVE FRONT DISC BRAKE CYLINDER SLIDE BUSHING

(a) Using a screwdriver, remove the front disc brake cylinder slide bushing from the No. 2 front disc brake cylinder slide pin.

NOTICE:

Do not damage the No. 2 front disc brake cylinder slide pin.

HINT:

Tape the screwdriver tip before use.

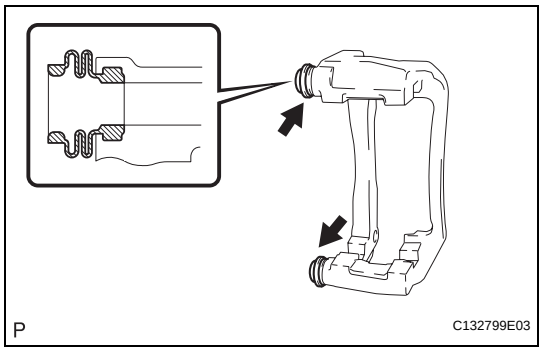

8. REMOVE FRONT DISC BRAKE BUSHING DUST BOOT

(a) Remove the 2 front disc brake bushing dust boots from the front disc brake cylinder mounting.

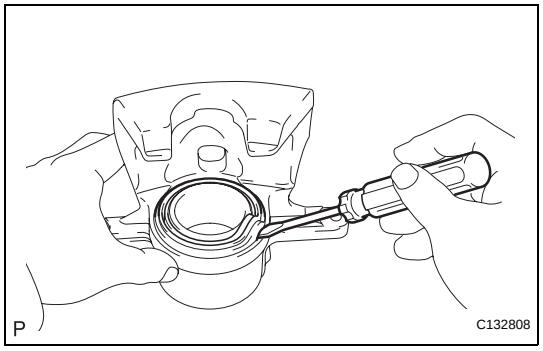

9. REMOVE CYLINDER BOOT

(a) Using a screwdriver, remove the cylinder boot set ring and the cylinder boot.
NOTICE:
Be careful not to damage the brake piston and cylinder.

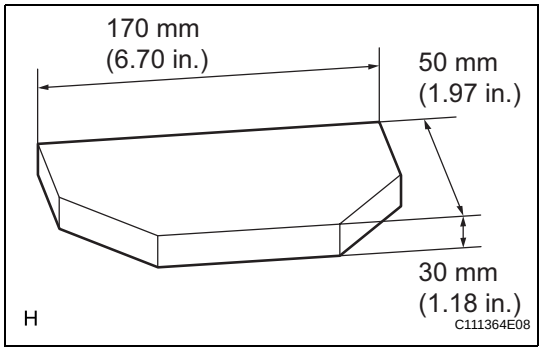

10. REMOVE FRONT DISC BRAKE PISTON

(a) Prepare a wooden plate to hold the front disc brake piston.

(b) Place the wooden plate between the front disc brake piston and the disc brake cylinder assembly.

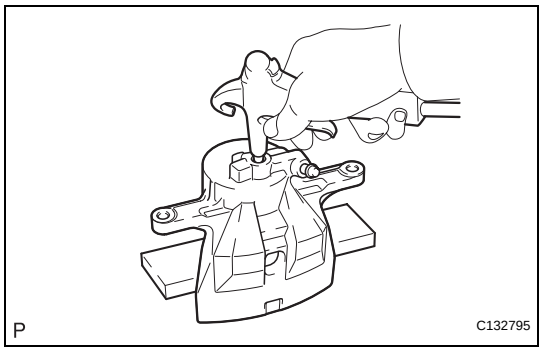

(c) Use compressed air to remove the front disc brake piston from the disc brake cylinder assembly.
CAUTION:
Do not place your fingers in front of the front disc brake piston when using compressed air.
NOTICE:
Do not spatter the brake fluid.

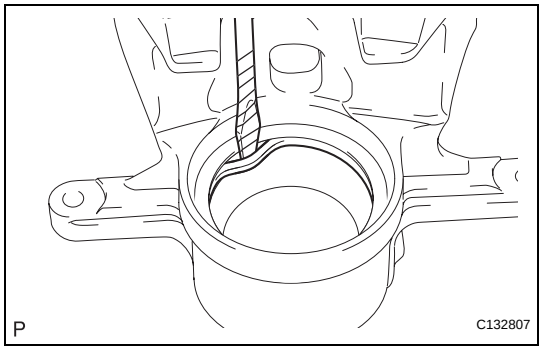

11. REMOVE PISTON SEAL

(a) Using a screwdriver, remove the piston seal from the disc brake cylinder assembly.
NOTICE:
Do not damage the inner cylinder or cylinder groove.
HINT:
Tape the screwdriver tip before use.

12. REMOVE FRONT DISC BRAKE BLEEDER PLUG CAP

13. REMOVE FRONT DISC BRAKE BLEEDER PLUG

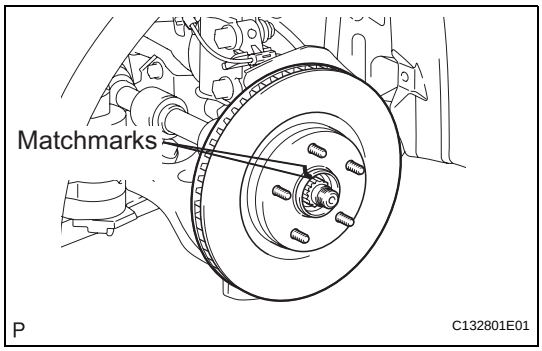

14. REMOVE FRONT DISC

(a) Remove the front disc.
HINT:
Put matchmarks on the disc and the axle hub.

INSPECTION

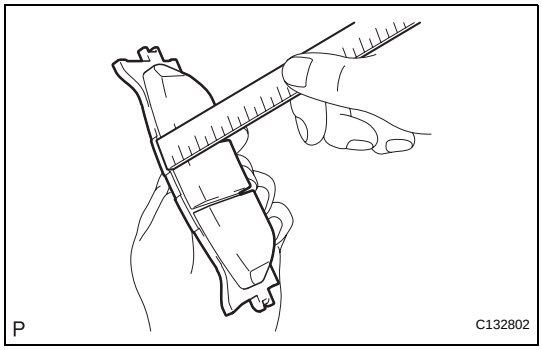

1. INSPECT PAD LINING THICKNESS

(a) Using a ruler, measure the pad lining thickness.
Standard thickness:
12.0 mm (0.472 in.)
Minimum thickness:
1.0 mm (0.039 in.)
If the pad lining thickness is less than the minimum, replace the brake pads.
HINT:
Be sure to check wear of the front disc after replacing the brake pad with a new one.

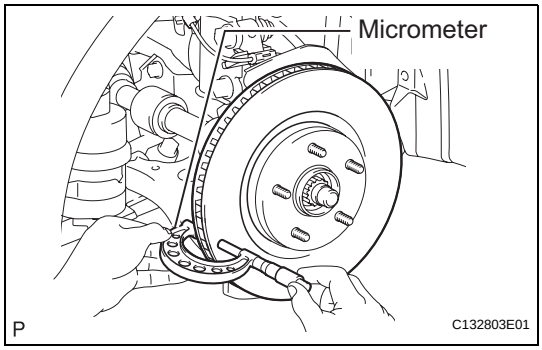

2. INSPECT DISC THICKNESS

(a) Using a micrometer, measure the disc thickness.
Standard thickness:
28.0 mm (1.102 in.)
Minimum thickness :
25.0 mm (0.983 in.)
If the disc thickness is less than the minimum, replace the front disc.

3. INSPECT BRAKE CYLINDER AND PISTON

(a) Check the cylinder bore and piston for rust or scoring. If necessary, replace the disc brake cylinder assembly and piston.

4. INSPECT FRONT DISC BRAKE PAD SUPPORT PLATE

(a) Inspect the front disc brake pad support plate. If necessary, replace the front brake pad support plate.
HINT:
Make sure that the pad support plate has sufficient rebound, has no deformation, cracks or wear, and that all rust and dirt are cleaned off.

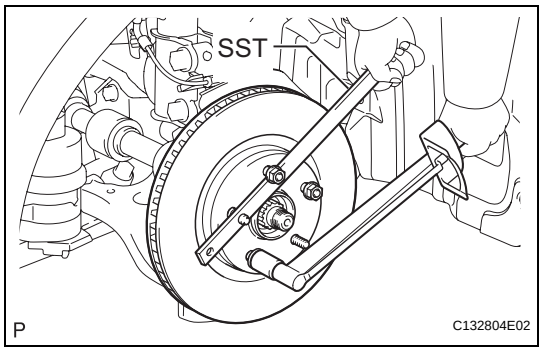

5. INSPECT DISC RUNOUT

(a) Using SST to hold the disc, tighten the disc with the 3 hub nuts.
SST 09330-00021
Torque: 103 N*m (1,050 kgf*cm, 76 ft.*lbf)
HINT:
Use the SST to hold the disc while tightening the nuts.

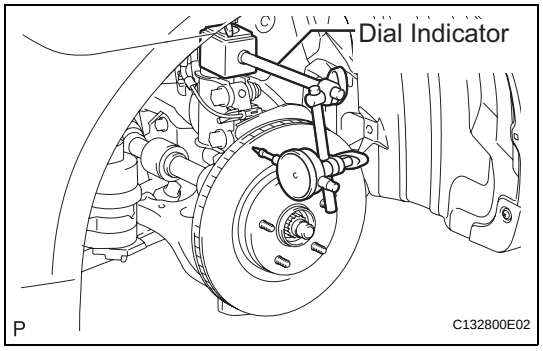

(b) Using a dial indicator, measure the disc runout 10 mm (0.39 in.) away from the outer edge of the front disc.
Maximum disc runout:
0.05 mm (0.0020 in.)
NOTICE:
- **Keep the magnet of the dial indicator away from the axle hub and speed sensor.**
- **Install the dial indicator to the shock absorber.**

(c) If the runout exceeds the maximum value, change the installation positions of the disc and axle so that the runout will become minimal. If the runout exceeds the maximum even after the installation positions are changed, check the bearing play in the axial direction and the axle hub runout (See page AH-11). If the bearing play and the axle hub runout are normal and if the disc thickness is not within the specified range, grind the disc. If the disc thickness is less than the minimum, replace the disc.

(d) Remove the 3 hub nuts and the front disc.

REASSEMBLY

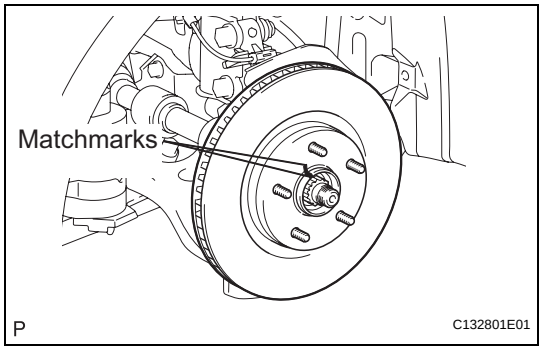

1. INSTALL FRONT DISC

(a) Align the matchmarks and install the front disc.
NOTICE:
When replacing the disc with a new one, select the installation position where the front disc has the minimum runout.

2. TEMPORARILY TIGHTEN FRONT DISC BRAKE BLEEDER PLUG

(a) Temporarily tighten the front disc brake bleeder plug to the disc brake cylinder sub-assembly.

3. INSTALL FRONT DISC BRAKE BLEEDER PLUG CAP

(a) Install the bleeder plug cap to the front disc brake bleeder plug.

4. INSTALL PISTON SEAL

(a) Apply lithium soap base glycol grease to a new piston seal.

(b) Install the piston seal to the disc brake cylinder assembly.

5. INSTALL FRONT DISC BRAKE PISTON

(a) Apply lithium soap base glycol grease to the front disc brake piston and a new cylinder boot.

(b) Install the cylinder boot to the front disc brake piston.

(c) Install the front disc brake piston to the disc brake cylinder assembly.
NOTICE:
Do not install the front disc brake piston forcibly in the disc brake cylinder assembly.

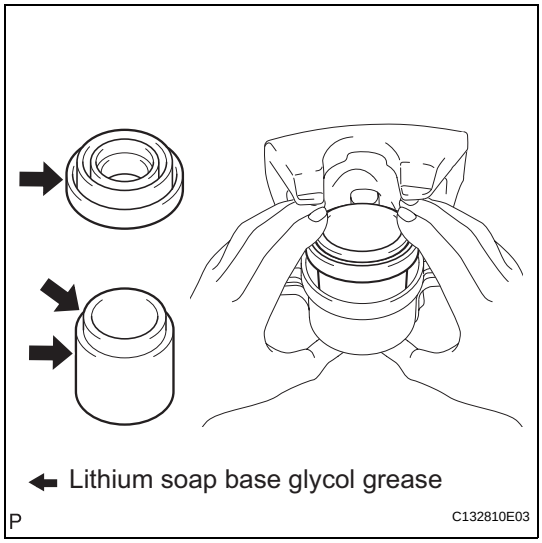

6. INSTALL CYLINDER BOOT

(a) Install the cylinder boot to the disc brake cylinder assembly.
NOTICE:
Install the boot securely to the grooves of the cylinder and piston.

(b) Using a screwdriver, install a new cylinder boot set ring.
NOTICE:
- **Install the cylinder boot set ring securely to the grooves of the cylinder boot.**
- **Do not damage the cylinder boot.**

HINT:
Tape the screwdriver tip before use.

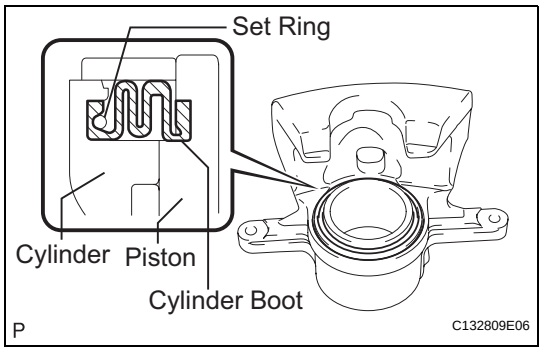

7. INSTALL FRONT DISC BRAKE BUSHING DUST BOOT

(a) Apply lithium soap base glycol grease to the seal surface of 2 new front disc brake bushing dust boots.

(b) Install the 2 front disc brake bushing dust boots to the front disc brake cylinder mounting.

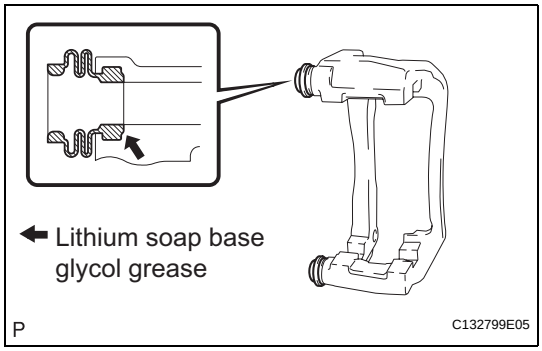

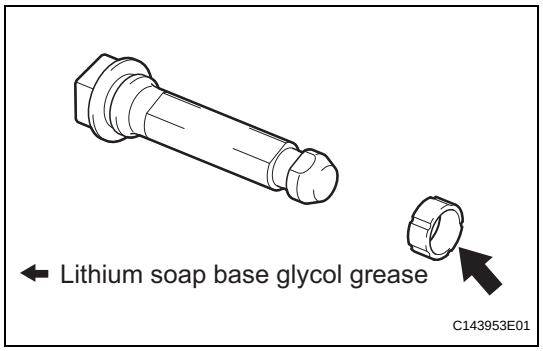

8. INSTALL FRONT DISC BRAKE CYLINDER SLIDE BUSHING

(a) Apply lithium soap base glycol grease to a new front disc brake cylinder slide bushing.

(b) Install the front disc brake cylinder slide bushing to the No. 2 front disc brake cylinder slide pin.

9. INSTALL NO. 2 FRONT DISC BRAKE CYLINDER SLIDE PIN

(a) Apply the lithium soap base glycol grease to the sliding part and the seal surface of the No. 2 front disc brake cylinder slide pin.

(b) Install the No. 2 front disc brake cylinder slide pin to the bottom side of the front disc brake cylinder mounting.

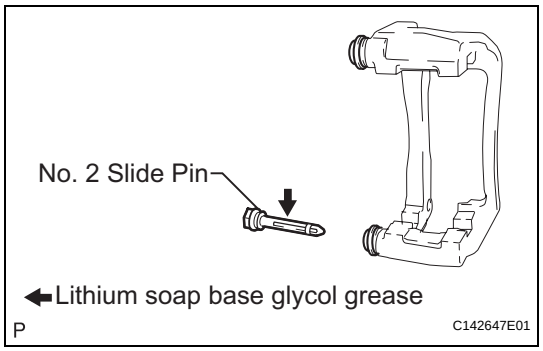

10. INSTALL NO. 1 FRONT DISC BRAKE CYLINDER SLIDE PIN

(a) Apply the lithium soap base glycol grease to the sliding part and the seal surface of the No. 1 front disc brake cylinder slide pin.

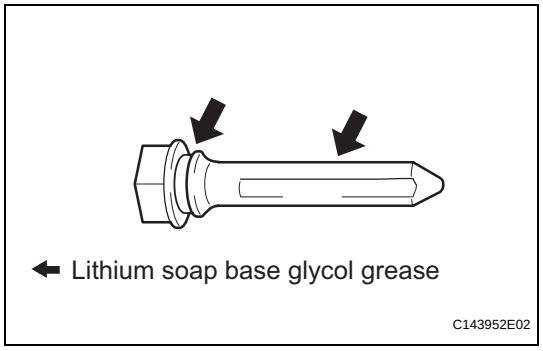

(b) Install the No. 1 front disc brake cylinder slide pin.

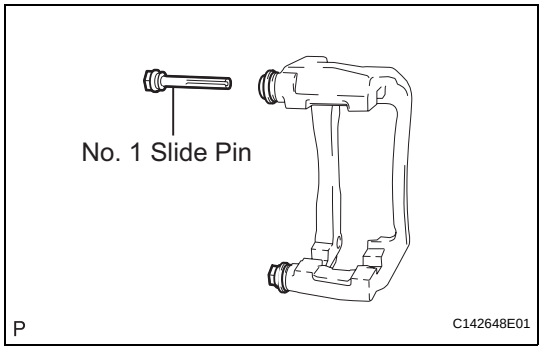

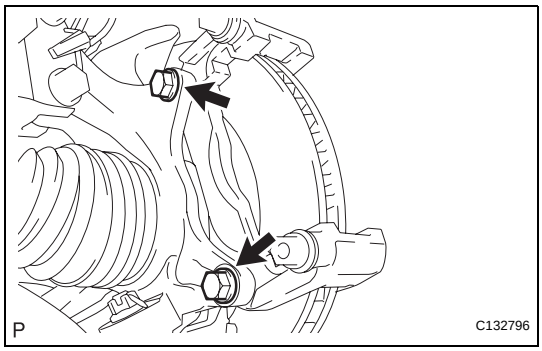

11. INSTALL FRONT DISC BRAKE CYLINDER MOUNTING

(a) Install the front disc brake cylinder mounting to the steering knuckle with the 2 bolts.
Torque: 107 N*m (1,090 kgf*cm, 79 ft.*lbf)

12. INSTALL FRONT DISC BRAKE PAD SUPPORT PLATE

(a) Install the front disc brake pad support plate to the front disc brake cylinder mounting.

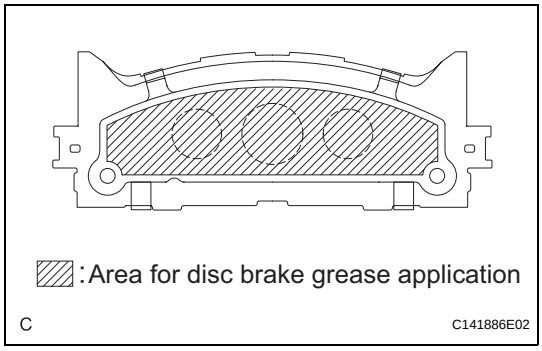

13. INSTALL FRONT ANTI-SQUEAL SHIM

(a) Apply disc brake grease to the front anti-squeal shim.
NOTICE:
- **When replacing worn pads, the front anti-squeal shim must be replaced together with the pad.**
- **Install the shim in the correct positions and directions.**
- **Apply disc brake grease to the area that contacts the front anti-squeal shim.**
- **Disc brake grease can come out slightly from the area where the front anti-squeal shim is installed.**
- **Make sure that disc brake grease is not applied onto the lining surface.**

(b) Install the 2 front anti-squeal shims and the 2 pad wear indicators to each pad.
NOTICE:
Install the shims in the correct positions and directions.
NOTICE:
Install the pad wear indicator in the correct positions and directions.

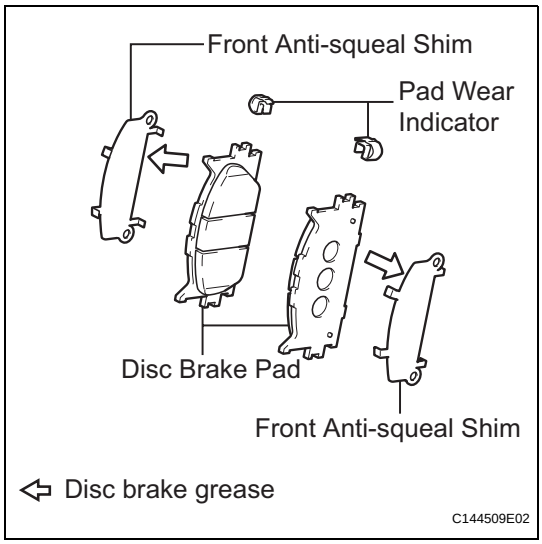

14. INSTALL FRONT BRAKE PAD

(a) Install the 2 front brake pads with front anti-squeal shim to the front disc brake cylinder mounting.
(b) Install the 2 anti-squeal springs.

BR

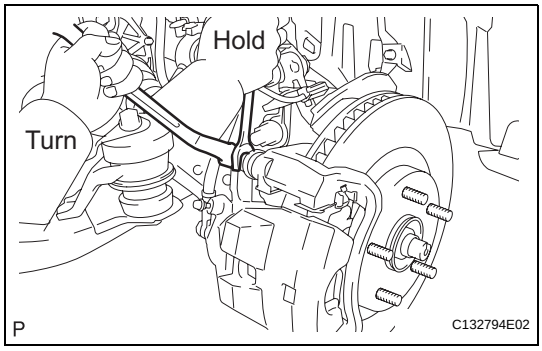

INSTALLATION

1. INSTALL DISC BRAKE CYLINDER ASSEMBLY

(a) Install the disc brake cylinder assembly with the 2 bolts.
Torque: 34 N*m (350 kgf*cm, 25 ft.*lbf)
(b) Install a new gasket to the front brake flexible hose.

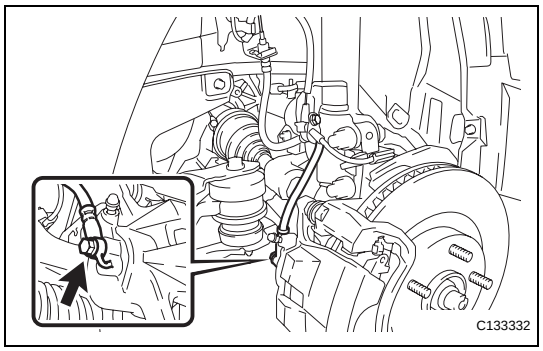

(c) Connect the front brake flexible hose with the union bolt to the disc brake cylinder assembly.
Torque: 29 N*m (300 kgf*cm, 21 ft.*lbf)
NOTICE:
Install the front brake flexible hose lock securely in the lock hole in the disc brake cylinder assembly.

2. **FILL RESERVOIR WITH BRAKE FLUID (See page BR-6)**
3. **BLEED BRAKE LINE (See page BR-8)**
4. **BLEED BRAKE ACTUATOR ASSEMBLY (See page BR-8)**
5. **INSPECT BRAKE FLUID LEVEL IN RESERVOIR (See page BR-11)**
6. **CHECK FOR BRAKE FLUID LEAKS**
7. **INSTALL FRONT WHEEL**
Torque: 103 N*m (1,050 kgf*cm, 76 ft.*lbf)

REMOVAL

1. REMOVE REAR WHEEL

2. DRAIN BRAKE FLUID

NOTICE:
If brake fluid leaks onto any painted surface, wash off and remove it completely.

3. DISCONNECT REAR BRAKE FLEXIBLE HOSE

(a) Remove the union bolt and the gasket from the rear disc brake cylinder assembly, then disconnect the flexible hose.

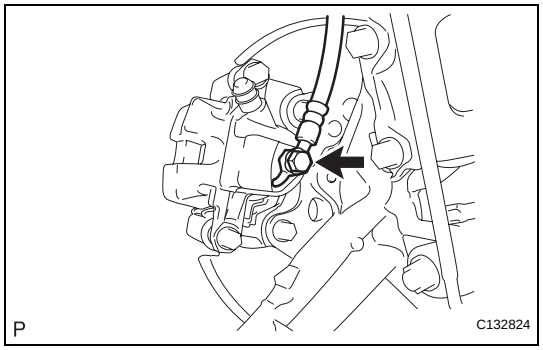

4. REMOVE REAR DISC BRAKE CYLINDER ASSEMBLY

(a) Hold the 2 rear disc brake cylinder slide pins and remove the 2 bolts and rear disc brake cylinder assembly.

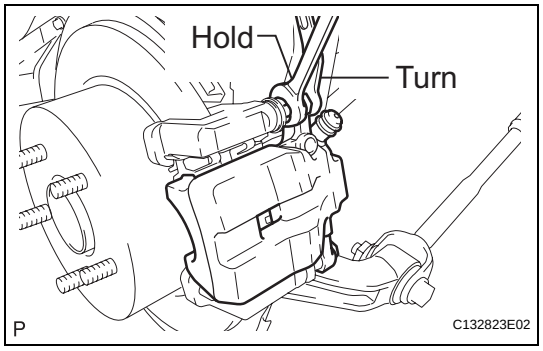

DISASSEMBLY

1. REMOVE REAR BRAKE PAD

(a) Remove the 2 brake pads with the rear anti-squeal shim.

2. REMOVE REAR ANTI-SQUEAL SHIM

(a) Remove the 2 rear anti-squeal shims and the 2 pad wear indicator from each pad.

3. REMOVE NO. 1 REAR DISC BRAKE PAD SUPPORT PLATE

(a) Remove the No. 1 rear disc brake pad support plate from the rear disc brake cylinder mounting.

4. REMOVE NO. 2 REAR DISC BRAKE PAD SUPPORT PLATE

(a) Remove the No. 2 rear disc brake pad support plate from the rear disc brake cylinder mounting.

5. REMOVE REAR DISC BRAKE CYLINDER MOUNTING

(a) Remove the 2 bolts and the rear disc brake cylinder mounting.

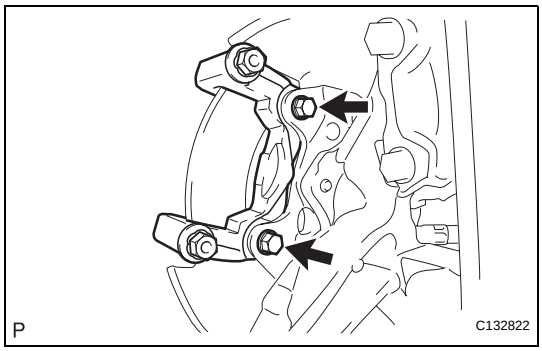

6. REMOVE REAR DISC BRAKE CYLINDER SLIDE PIN

(a) Remove the 2 rear disc brake cylinder slide pins (upper and lower) from the rear disc brake cylinder mounting.

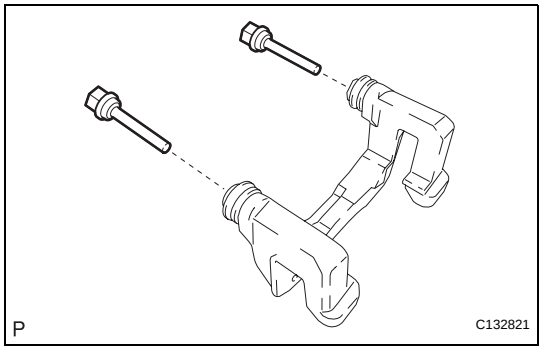

7. REMOVE REAR DISC BRAKE BUSHING DUST BOOT

(a) Remove the 2 rear disc brake bushing dust boots from the rear disc brake cylinder mounting.

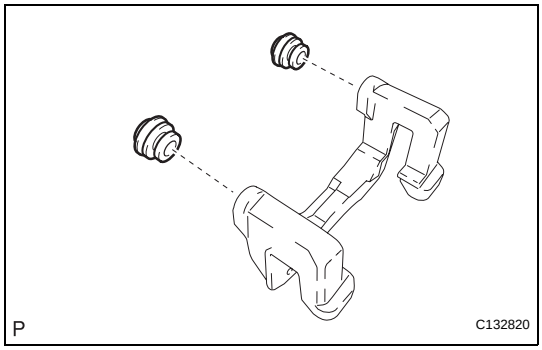

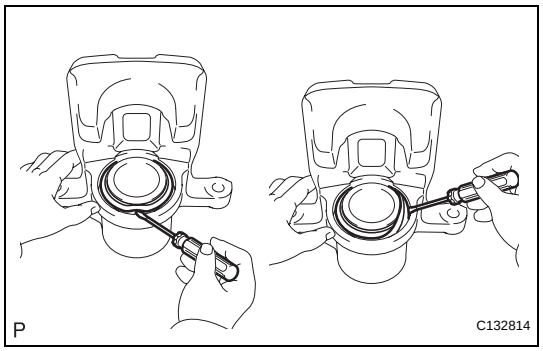

8. REMOVE CYLINDER BOOT

(a) Using a screwdriver, pry out the brake cylinder boot set ring and cylinder boot.
NOTICE:
Be careful not to damage the rear disc brake piston and the rear disc brake cylinder assembly.
HINT:
Tape the screwdriver tip before use.

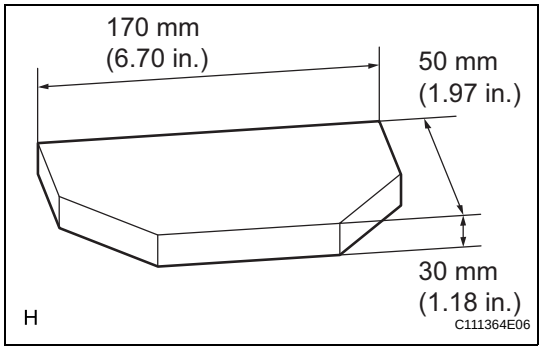

9. REMOVE REAR DISC BRAKE PISTON

(a) Prepare a wooden plate to hold the rear disc brake piston.

(b) Place the wooden plate between the rear disc brake piston and the rear disc brake cylinder assembly.

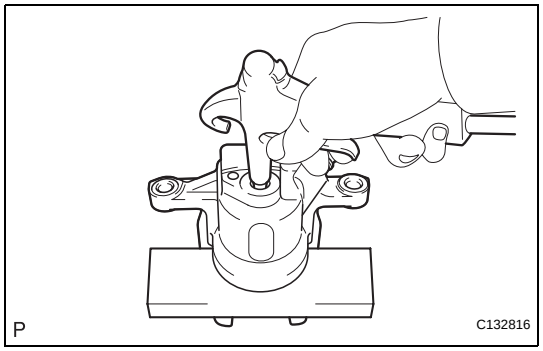

(c) Use compressed air to remove the rear disc brake piston from the rear disc brake cylinder assembly.
CAUTION:
Do not place your fingers in front of the rear disc brake piston when using compressed air.
NOTICE:
Be careful not to spatter the brake fluid.

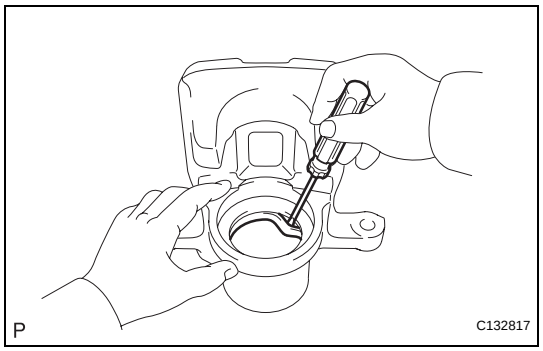

10. REMOVE PISTON SEAL

(a) Using a screwdriver, remove the rear disc brake piston seal from the rear disc brake cylinder assembly.
NOTICE:
Be careful not to damage the inner cylinder and cylinder groove.
HINT:
Tape the screwdriver tip before use.

11. REMOVE REAR DISC BRAKE BLEEDER PLUG CAP

(a) Remove the bleeder plug cap from the rear disc brake bleeder plug.

12. REMOVE REAR DISC BRAKE BLEEDER PLUG

(a) Remove the rear disc brake bleeder plug from the rear disc brake cylinder assembly.

13. REMOVE PARKING BRAKE SHOE ADJUSTING HOLE PLUG

(a) Remove the parking brake shoe adjusting hole plug.

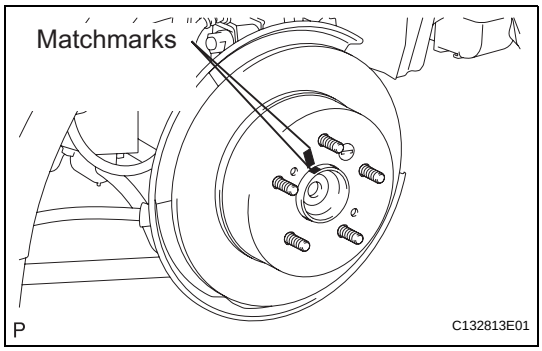

14. REMOVE REAR DISC

(a) Put matchmarks on the rear disc and the axle hub.

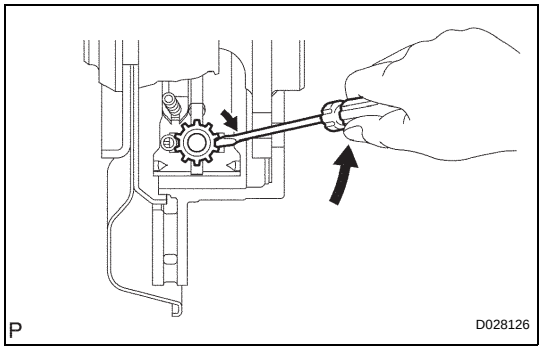

(b) Release the parking brake and remove the rear disc.
HINT:
If the disc cannot be removed easily, turn and press firmly the shoe adjuster until the wheel comes free.

INSPECTION

1. INSPECT BRAKE CYLINDER AND PISTON

(a) Inspect the cylinder bore and the piston for rust or scoring. If necessary, replace the rear disc brake cylinder assembly and piston.

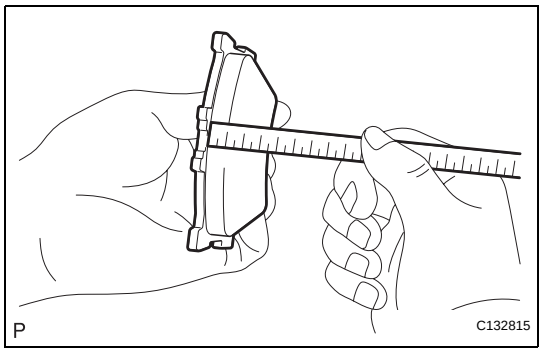

2. INSPECT PAD LINING THICKNESS

(a) Using a ruler, measure the pad lining thickness.
Standard thickness:
11.0 mm (0.433 in.)
Minimum thickness:
1.0 mm (0.039 in.)
If the pad lining thickness is less than the minimum, replace the brake pads.
HINT:
Be sure to check wear of the rear disc after replacing the brake pad with a new one.

3. INSPECT NO. 1 REAR DISC BRAKE PAD SUPPORT PLATE

(a) Inspect the No. 1 rear disc brake pad support plate. If necessary, replace the No. 1 rear disc brake pad support plate.
HINT:
Make sure that it has sufficient rebound, and has no deformation, cracks or wear, and all rust and dirt are cleaned off.

4. INSPECT NO. 2 REAR DISC BRAKE PAD SUPPORT PLATE

HINT:
Inspect the No. 2 rear disc brake pad support plate using the same procedure with the No. 1 rear disc brake pad support plate. If necessary, replace the No. 2 rear disc brake pad support plate.

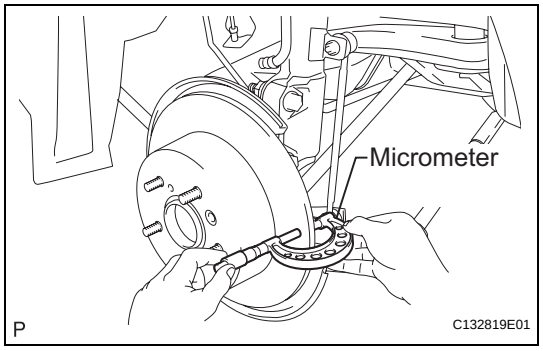

5. INSPECT DISC THICKNESS

(a) Using a micrometer, measure the disc thickness.
Standard thickness:
10.0 mm (0.390 in.)
Minimum thickness:
8.5 mm (0.334 in.)
If the disc thickness is less than the minimum, replace the rear disc.

6. INSPECT DISC RUNOUT

(a) Install the rear disc. (See page BR-50)
(b) Temporarily fasten the rear disc with the 3 hub nuts.
Torque: 103 N*m (1,050 kgf*cm, 76 ft.*lbf)

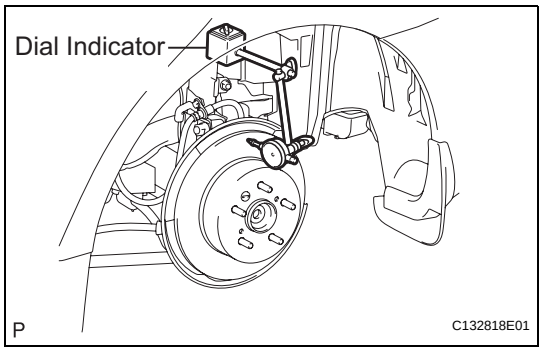

(c) Using a dial indicator, measure the disc runout 10 mm (0.39 in.) away from the outer edge of the rear disc.
Maximum disc runout:
0.15 mm (0.0059 in.)
NOTICE:
- **Keep the magnet of the dial indicator away from the axle hub and speed sensor.**
- **Install the dial indicator to the shock absorber.**

(d) If the runout exceeds the maximum value, change the installation positions of the disc and axle so that the runout will become minimal. If the runout exceeds the maximum even after the installation positions are changed, check the bearing play in the axial direction and the axle hub runout (See page AH-16). If the bearing play and the axle hub runout are normal and if the disc thickness is not within the specified range, grind the disc. If the disc thickness is less than the minimum, replace the disc.

(e) Remove the 3 hub nuts.

(f) Remove the rear disc. (See Page BR-49)

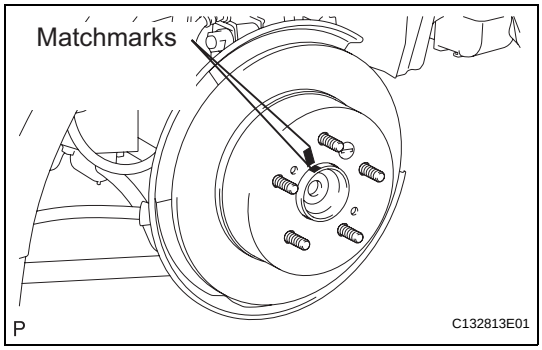

REASSEMBLY

1. INSTALL REAR DISC

(a) Aligning the matchmarks, install the rear disc.
NOTICE:
When replacing the rear disc with a new one, select the installation position where the rear disc has the minimum runout.

2. ADJUST PARKING BRAKE SHOE CLEARANCE
(See page PB-43)
HINT:
Hold the rear disc with hub nuts by the parking brake pedal (or lever) before adjusting the parking brake shoe clearance.

3. INSTALL PARKING BRAKE SHOE ADJUSTING HOLE PLUG

(a) Install the parking brake shoe adjusting hole plug.

4. TEMPORARILY TIGHTEN REAR DISC BRAKE BLEEDER PLUG

(a) Temporarily install the rear disc brake bleeder plug to the rear disc brake cylinder assembly.

5. INSTALL REAR DISC BRAKE BLEEDER PLUG CAP

(a) Install the rear disc brake bleeder plug cap to the rear disc brake bleeder plug.

6. INSTALL PISTON SEAL

(a) Apply lithium soap base glycol grease to a new piston seal.

(b) Install the piston seal to the rear disc brake cylinder sub-assembly.

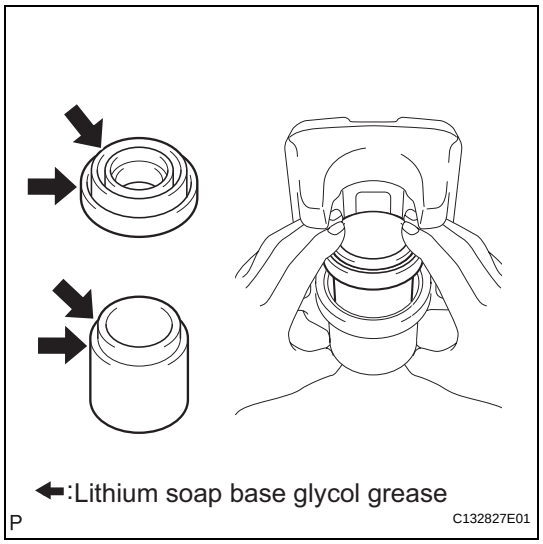

7. INSTALL REAR DISC BRAKE PISTON

(a) Apply lithium soap base glycol grease to the rear disc brake piston and a new cylinder boot.

(b) Install the cylinder boot to the rear disc brake piston.

(c) Install the rear disc brake piston to the rear disc brake cylinder assembly.

NOTICE:

Do not install the rear disc piston forcibly in the rear disc brake cylinder assembly.

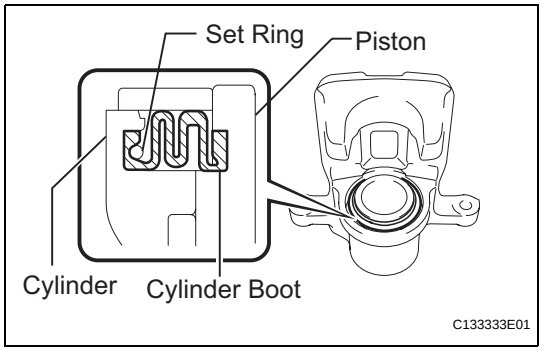

8. INSTALL CYLINDER BOOT

(a) Install the cylinder boot to the rear disc brake cylinder assembly.

NOTICE:

- **Install the boot securely onto the grooves of the cylinder and the piston.**
- **Do not damage the cylinder boot.**

(b) Using a screwdriver, install the brake cylinder boot set ring.

CAUTION:

Be careful not to damage the cylinder boot.

HINT:

Tape the screwdriver tip before using.

9. INSTALL REAR DISC BRAKE BUSHING DUST BOOT

(a) Apply lithium soap base glycol grease to the seal surface of 2 new rear disc brake bushing dust boots.

(b) Install the 2 rear disc brake bushing dust boots to the rear disc brake cylinder mounting.

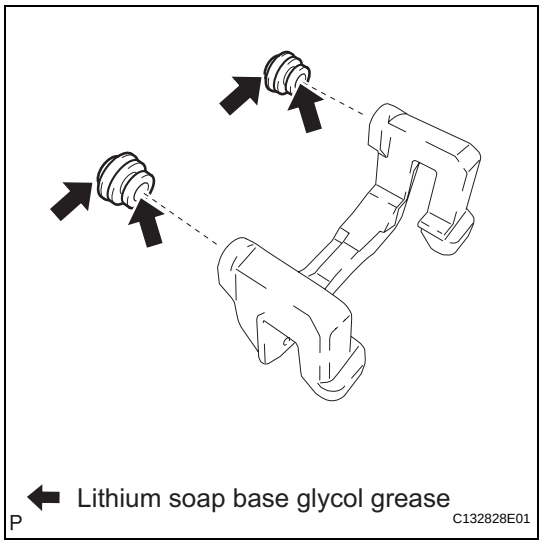

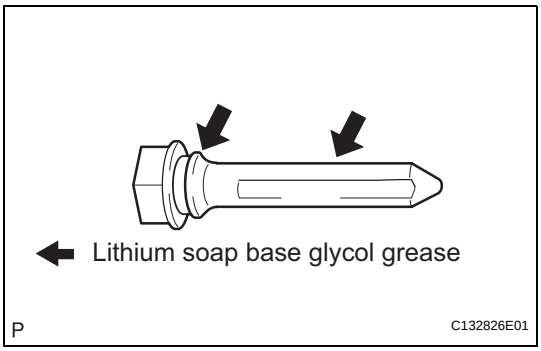

10. INSTALL REAR DISC BRAKE CYLINDER SLIDE PIN

(a) Apply the lithium soap base glycol grease to the sliding part and the seal surface of the rear disc brake cylinder slide pin.

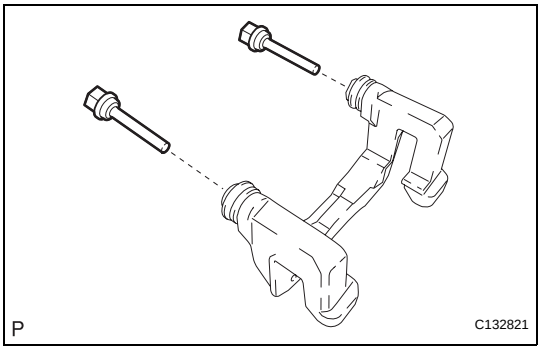

(b) Install the 2 rear disc brake cylinder slide pins (upper and lower) to the rear brake cylinder mounting.

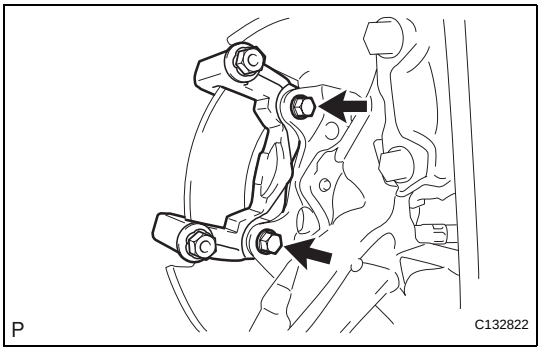

11. INSTALL REAR DISC BRAKE CYLINDER MOUNTING

(a) Install the rear disc brake cylinder mounting with the 2 bolts.
Torque: 62 N*m (632 kgf*cm, 46 ft.*lbf)

12. INSTALL NO. 1 REAR DISC BRAKE PAD SUPPORT PLATE

(a) Install the No. 1 rear disc brake pad support plate to the rear disc brake cylinder mounting.

13. INSTALL NO. 2 REAR DISC BRAKE PAD SUPPORT PLATE

(a) Install the No. 2 rear disc brake pad support plate to the rear disc brake cylinder mounting.

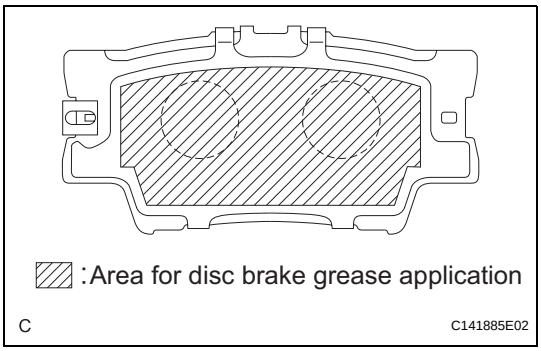

14. INSTALL REAR ANTI-SQUEAL SHIM KIT

(a) Apply disc brake grease to the inside of the 2 rear anti-squeal shims and install them and the 2 pad wear indicators to each of the 2 brake pads.
NOTICE:
- **When replacing worn pads, the rear anti-squeal shims must be replaced together with the pads.**
- **Apply disc brake grease to the area that contacts the rear anti-squeal shim.**
- **Disc brake grease can come out slightly from the area where the rear anti-squeal shim is installed.**
- **Make sure that disc brake grease is not applied onto the lining surface.**

REMOVAL

1. REMOVE REAR WHEEL

2. DRAIN BRAKE FLUID

NOTICE:
If brake fluid leaks onto any painted surface, wash off and remove it completely.

3. DISCONNECT REAR BRAKE FLEXIBLE HOSE

(a) Remove the union bolt and the gasket from the rear disc brake cylinder assembly, then disconnect the flexible hose.

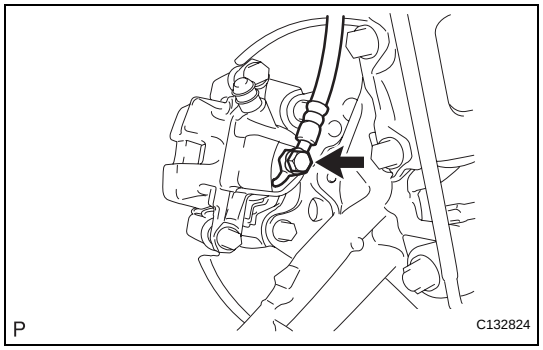

4. REMOVE REAR DISC BRAKE CYLINDER ASSEMBLY

(a) Hold the 2 rear disc brake cylinder slide pins and remove the 2 bolts and rear disc brake cylinder assembly.

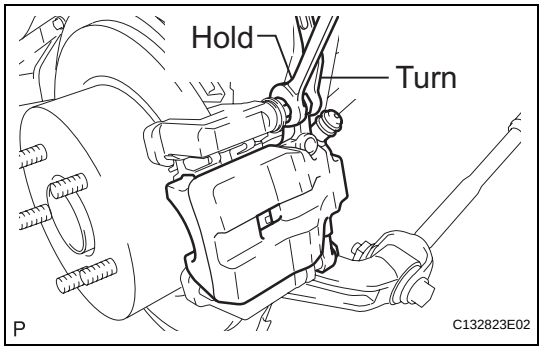

DISASSEMBLY

1. REMOVE REAR BRAKE PAD

(a) Remove the 2 brake pads with the rear anti-squeal shim.

2. REMOVE REAR ANTI-SQUEAL SHIM

(a) Remove the 2 rear anti-squeal shims and the 2 pad wear indicator from each pad.

3. REMOVE NO. 1 REAR DISC BRAKE PAD SUPPORT PLATE

(a) Remove the No. 1 rear disc brake pad support plate from the rear disc brake cylinder mounting.

4. REMOVE NO. 2 REAR DISC BRAKE PAD SUPPORT PLATE

(a) Remove the No. 2 rear disc brake pad support plate from the rear disc brake cylinder mounting.

5. REMOVE REAR DISC BRAKE CYLINDER MOUNTING

(a) Remove the 2 bolts and the rear disc brake cylinder mounting.

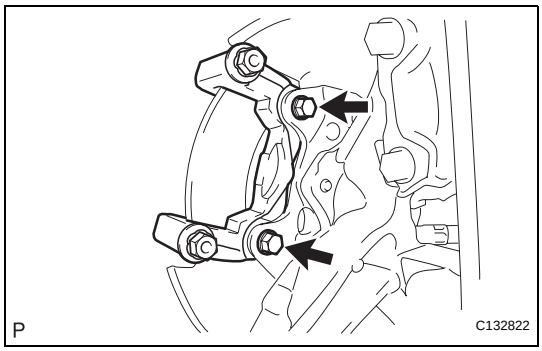

6. REMOVE REAR DISC BRAKE CYLINDER SLIDE PIN

(a) Remove the 2 rear disc brake cylinder slide pins (upper and lower) from the rear disc brake cylinder mounting.

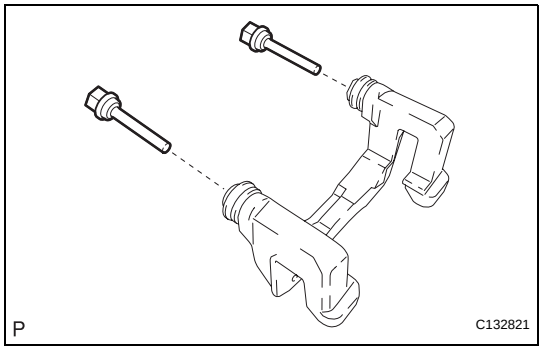

7. REMOVE REAR DISC BRAKE BUSHING DUST BOOT

(a) Remove the 2 rear disc brake bushing dust boots from the rear disc brake cylinder mounting.

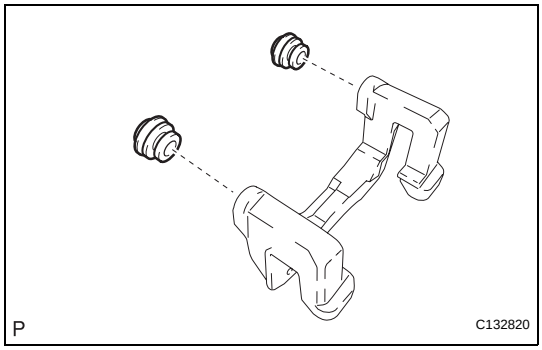

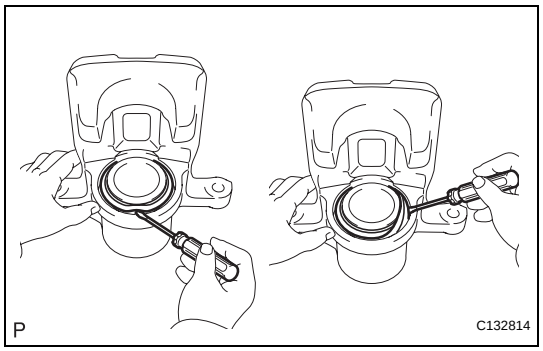

8. REMOVE CYLINDER BOOT

(a) Using a screwdriver, pry out the brake cylinder boot set ring and cylinder boot.
NOTICE:
Be careful not to damage the rear disc brake piston and the rear disc brake cylinder assembly.
HINT:
Tape the screwdriver tip before use.

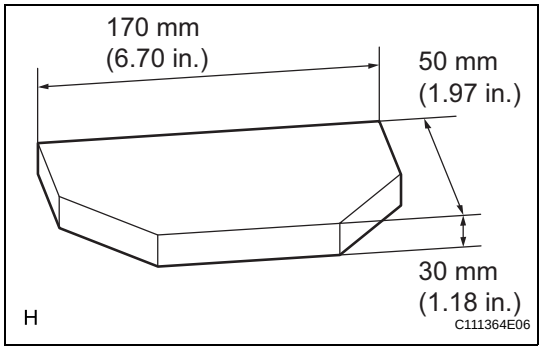

9. REMOVE REAR DISC BRAKE PISTON

(a) Prepare a wooden plate to hold the rear disc brake piston.

(b) Place the wooden plate between the rear disc brake piston and the rear disc brake cylinder assembly.

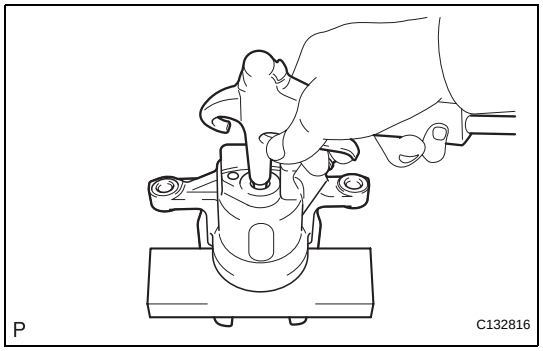

(c) Use compressed air to remove the rear disc brake piston from the rear disc brake cylinder assembly.
CAUTION:
Do not place your fingers in front of the rear disc brake piston when using compressed air.
NOTICE:
Be careful not to spatter the brake fluid.

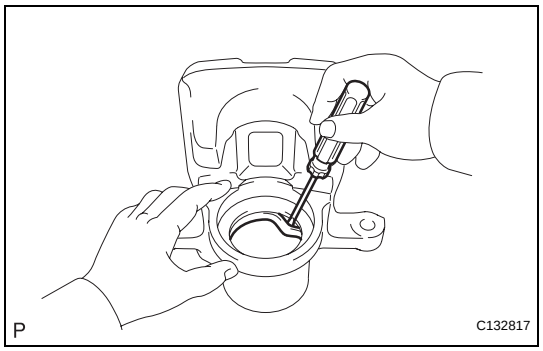

10. REMOVE PISTON SEAL

(a) Using a screwdriver, remove the rear disc brake piston seal from the rear disc brake cylinder assembly.
NOTICE:
Be careful not to damage the inner cylinder and cylinder groove.
HINT:
Tape the screwdriver tip before use.

11. REMOVE REAR DISC BRAKE BLEEDER PLUG CAP

(a) Remove the bleeder plug cap from the rear disc brake bleeder plug.

12. REMOVE REAR DISC BRAKE BLEEDER PLUG

(a) Remove the rear disc brake bleeder plug from the rear disc brake cylinder assembly.

13. REMOVE PARKING BRAKE SHOE ADJUSTING HOLE PLUG

(a) Remove the parking brake shoe adjusting hole plug.

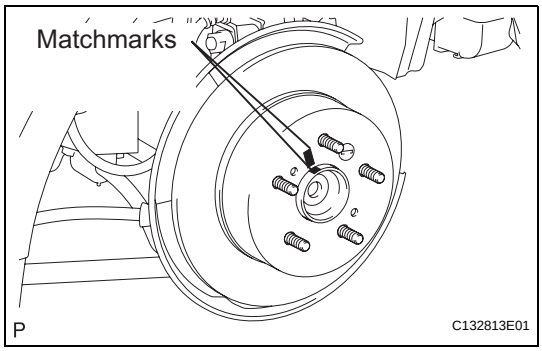

14. REMOVE REAR DISC

(a) Put matchmarks on the rear disc and the axle hub.

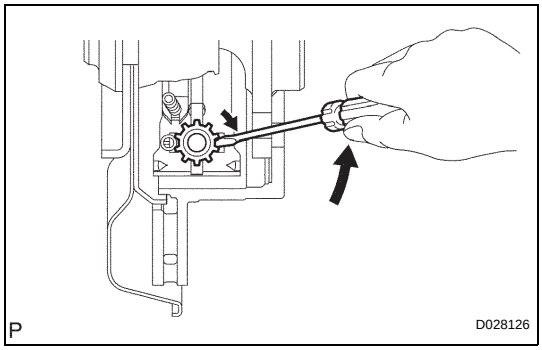

(b) Release the parking brake and remove the rear disc.
HINT:
If the disc cannot be removed easily, turn and press firmly the shoe adjuster until the wheel comes free.

INSPECTION

1. INSPECT BRAKE CYLINDER AND PISTON

(a) Inspect the cylinder bore and the piston for rust or scoring. If necessary, replace the rear disc brake cylinder assembly and piston.

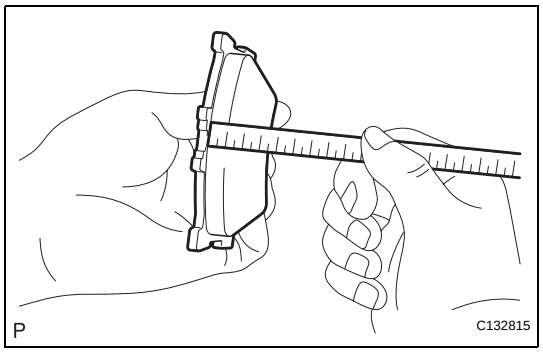

2. INSPECT PAD LINING THICKNESS

(a) Using a ruler, measure the pad lining thickness.
Standard thickness:
11.0 mm (0.433 in.)
Minimum thickness:
1.0 mm (0.039 in.)
If the pad lining thickness is less than the minimum, replace the brake pads.
HINT:
Be sure to check wear of the rear disc after replacing the brake pad with a new one.

3. INSPECT NO. 1 REAR DISC BRAKE PAD SUPPORT PLATE

(a) Inspect the No. 1 rear disc brake pad support plate. If necessary, replace the No. 1 rear disc brake pad support plate.
HINT:
Make sure that it has sufficient rebound, and has no deformation, cracks or wear, and all rust and dirt are cleaned off.

4. INSPECT NO. 2 REAR DISC BRAKE PAD SUPPORT PLATE

HINT:
Inspect the No. 2 rear disc brake pad support plate using the same procedure with the No. 1 rear disc brake pad support plate. If necessary, replace the No. 2 rear disc brake pad support plate.

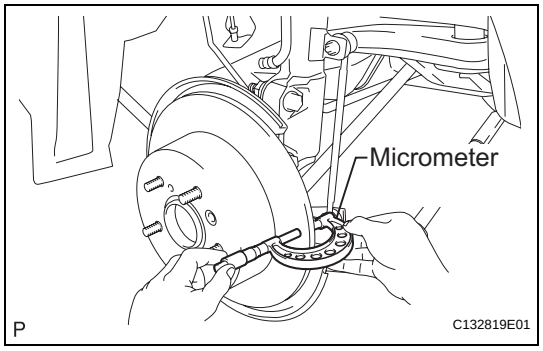

5. INSPECT DISC THICKNESS

(a) Using a micrometer, measure the disc thickness.
Standard thickness:
10.0 mm (0.390 in.)
Minimum thickness:
8.5 mm (0.334 in.)
If the disc thickness is less than the minimum, replace the rear disc.

6. INSPECT DISC RUNOUT

(a) Install the rear disc. (See page BR-50)
(b) Temporarily fasten the rear disc with the 3 hub nuts.
Torque: 103 N*m (1,050 kgf*cm, 76 ft.*lbf)

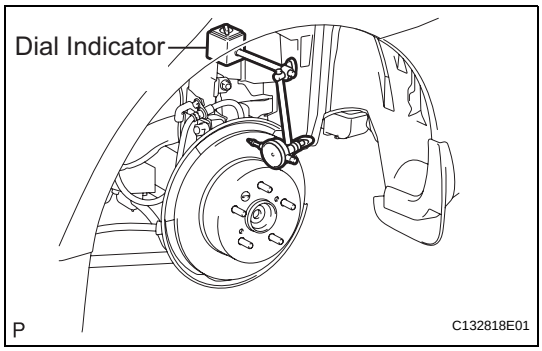

(c) Using a dial indicator, measure the disc runout 10 mm (0.39 in.) away from the outer edge of the rear disc.
Maximum disc runout:
0.15 mm (0.0059 in.)
NOTICE:
- **Keep the magnet of the dial indicator away from the axle hub and speed sensor.**
- **Install the dial indicator to the shock absorber.**

(d) If the runout exceeds the maximum value, change the installation positions of the disc and axle so that the runout will become minimal. If the runout exceeds the maximum even after the installation positions are changed, check the bearing play in the axial direction and the axle hub runout (See page AH-16). If the bearing play and the axle hub runout are normal and if the disc thickness is not within the specified range, grind the disc. If the disc thickness is less than the minimum, replace the disc.

(e) Remove the 3 hub nuts.

(f) Remove the rear disc. (See Page BR-49)

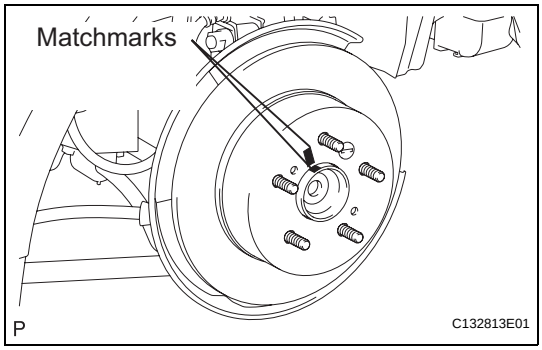

REASSEMBLY

1. INSTALL REAR DISC

(a) Aligning the matchmarks, install the rear disc.
NOTICE:
When replacing the rear disc with a new one, select the installation position where the rear disc has the minimum runout.

2. ADJUST PARKING BRAKE SHOE CLEARANCE
(See page PB-43)
HINT:
Hold the rear disc with hub nuts by the parking brake pedal (or lever) before adjusting the parking brake shoe clearance.

3. INSTALL PARKING BRAKE SHOE ADJUSTING HOLE PLUG

(a) Install the parking brake shoe adjusting hole plug.

4. TEMPORARILY TIGHTEN REAR DISC BRAKE BLEEDER PLUG

(a) Temporarily install the rear disc brake bleeder plug to the rear disc brake cylinder assembly.

5. INSTALL REAR DISC BRAKE BLEEDER PLUG CAP

(a) Install the rear disc brake bleeder plug cap to the rear disc brake bleeder plug.

6. INSTALL PISTON SEAL

(a) Apply lithium soap base glycol grease to a new piston seal.

(b) Install the piston seal to the rear disc brake cylinder sub-assembly.

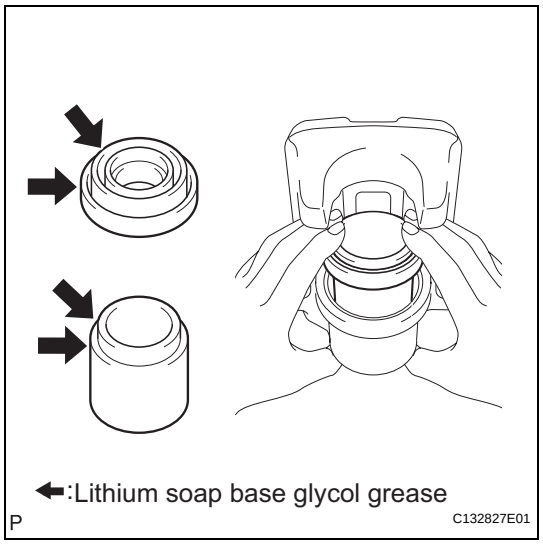

7. INSTALL REAR DISC BRAKE PISTON

(a) Apply lithium soap base glycol grease to the rear disc brake piston and a new cylinder boot.

(b) Install the cylinder boot to the rear disc brake piston.

(c) Install the rear disc brake piston to the rear disc brake cylinder assembly.

NOTICE:

Do not install the rear disc piston forcibly in the rear disc brake cylinder assembly.

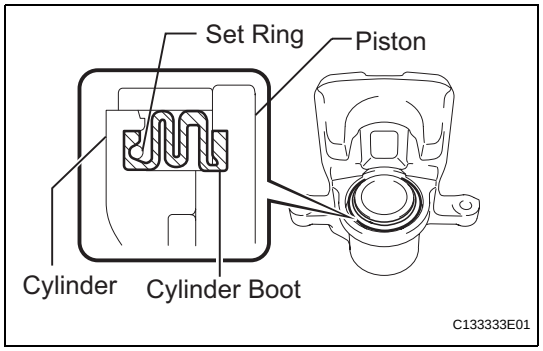

8. INSTALL CYLINDER BOOT

(a) Install the cylinder boot to the rear disc brake cylinder assembly.

NOTICE:

- **Install the boot securely onto the grooves of the cylinder and the piston.**
- **Do not damage the cylinder boot.**

(b) Using a screwdriver, install the brake cylinder boot set ring.

CAUTION:

Be careful not to damage the cylinder boot.

HINT:

Tape the screwdriver tip before using.

9. INSTALL REAR DISC BRAKE BUSHING DUST BOOT

(a) Apply lithium soap base glycol grease to the seal surface of 2 new rear disc brake bushing dust boots.

(b) Install the 2 rear disc brake bushing dust boots to the rear disc brake cylinder mounting.

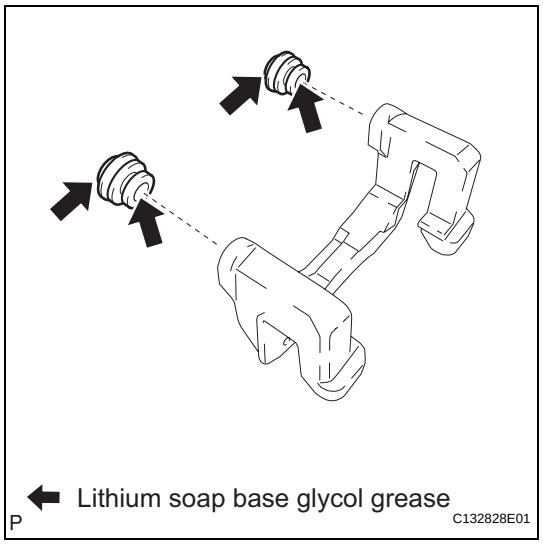

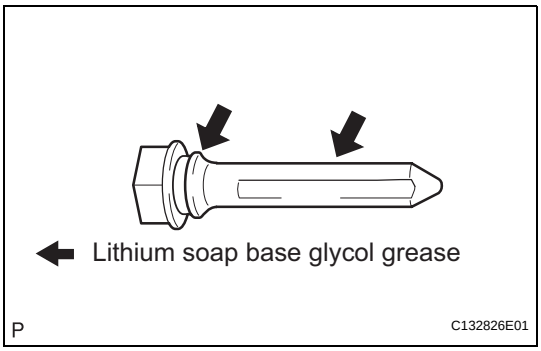

10. INSTALL REAR DISC BRAKE CYLINDER SLIDE PIN

(a) Apply the lithium soap base glycol grease to the sliding part and the seal surface of the rear disc brake cylinder slide pin.

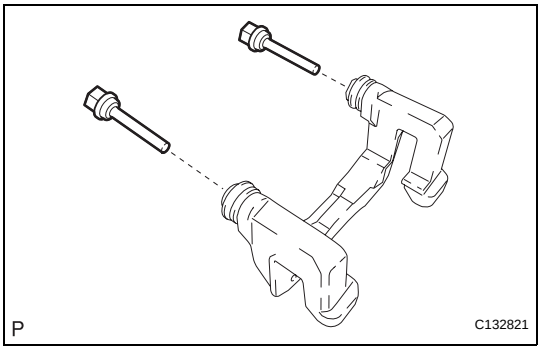

(b) Install the 2 rear disc brake cylinder slide pins (upper and lower) to the rear brake cylinder mounting.

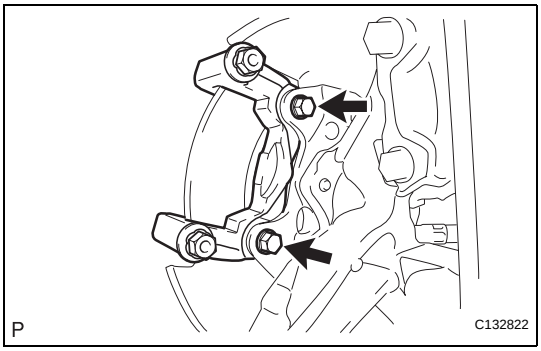

11. INSTALL REAR DISC BRAKE CYLINDER MOUNTING

(a) Install the rear disc brake cylinder mounting with the 2 bolts.
Torque: 62 N*m (632 kgf*cm, 46 ft.*lbf)

12. INSTALL NO. 1 REAR DISC BRAKE PAD SUPPORT PLATE

(a) Install the No. 1 rear disc brake pad support plate to the rear disc brake cylinder mounting.

13. INSTALL NO. 2 REAR DISC BRAKE PAD SUPPORT PLATE

(a) Install the No. 2 rear disc brake pad support plate to the rear disc brake cylinder mounting.

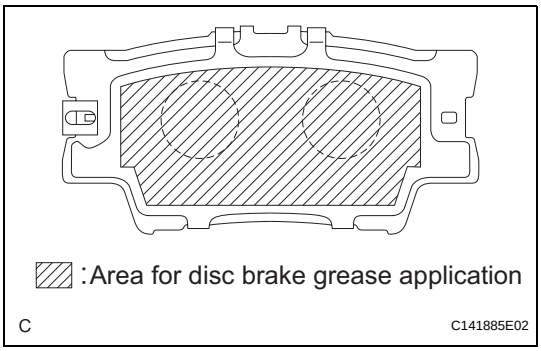

14. INSTALL REAR ANTI-SQUEAL SHIM KIT

(a) Apply disc brake grease to the inside of the 2 rear anti-squeal shims and install them and the 2 pad wear indicators to each of the 2 brake pads.
NOTICE:
- **When replacing worn pads, the rear anti-squeal shims must be replaced together with the pads.**
- **Apply disc brake grease to the area that contacts the rear anti-squeal shim.**
- **Disc brake grease can come out slightly from the area where the rear anti-squeal shim is installed.**
- **Make sure that disc brake grease is not applied onto the lining surface.**

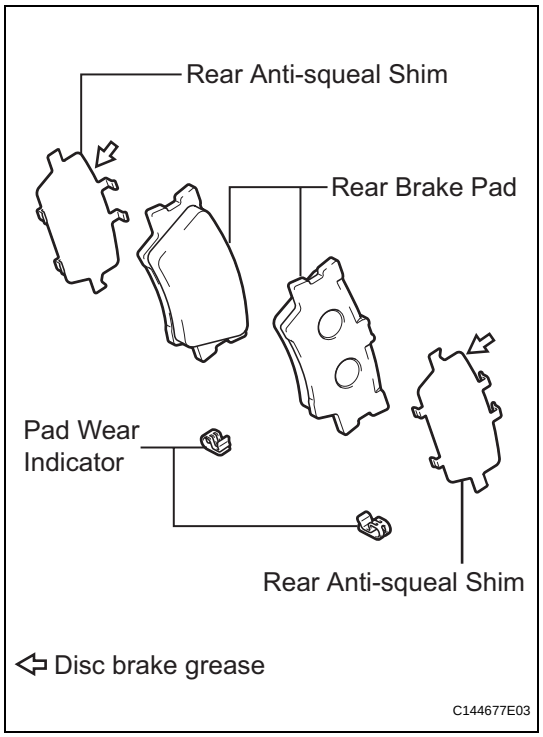

(b) Install the 2 rear anti-squeal shims and the pad wear indicators to each of the 2 rear brake pads.
NOTICE:
Install the pad wear indicator and rear anti-squeal shim in the correct positions and directions.

15. INSTALL REAR BRAKE PAD

(a) Install the 2 rear brake pads with rear anti-squeal shims to the rear disc brake cylinder mounting.

INSTALLATION

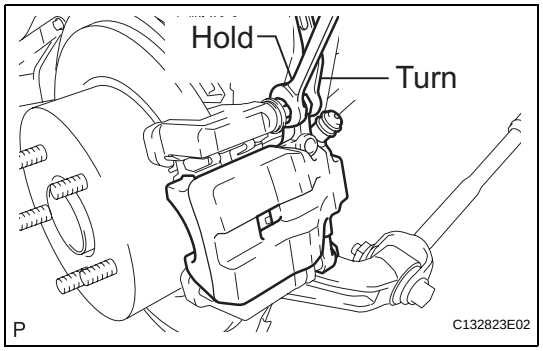

1. INSTALL REAR DISC BRAKE CYLINDER ASSEMBLY

(a) Install the disc brake cylinder assembly with the 2 bolts.
Torque: 27 N*m (273 kgf*cm, 20 ft.*lbf)
NOTICE:
Install the rear disc brake bushing dust boot onto the groove of the rear disc brake cylinder.

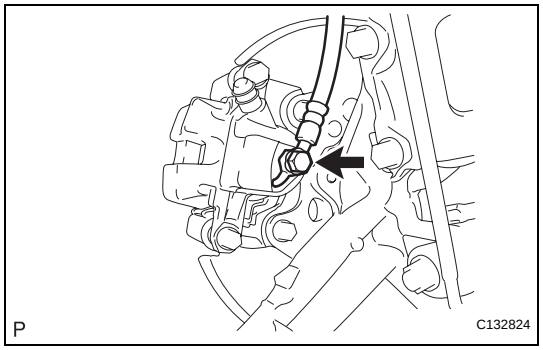

2. CONNECT REAR BRAKE FLEXIBLE HOSE

(a) Connect the flexible hose with the union bolt and a new gasket.
Torque: 33 N*m (337 kgf*cm, 24 ft.*lbf)

3. FILL RESERVOIR WITH BRAKE FLUID (See page BR-6)

4. BLEED BRAKE LINE (See page BR-8)

5. BLEED BRAKE ACTUATOR ASSEMBLY (See page BR-8)

6. INSPECT FLUID LEVEL IN RESERVOIR (See page BR-11)

7. CHECK FOR BRAKE FLUID LEAKS

8. INSTALL REAR WHEEL
Torque: 103 N*m (1,050 kgf*cm, 76 ft.*lbf)

STOP LIGHT SWITCH

COMPONENTS

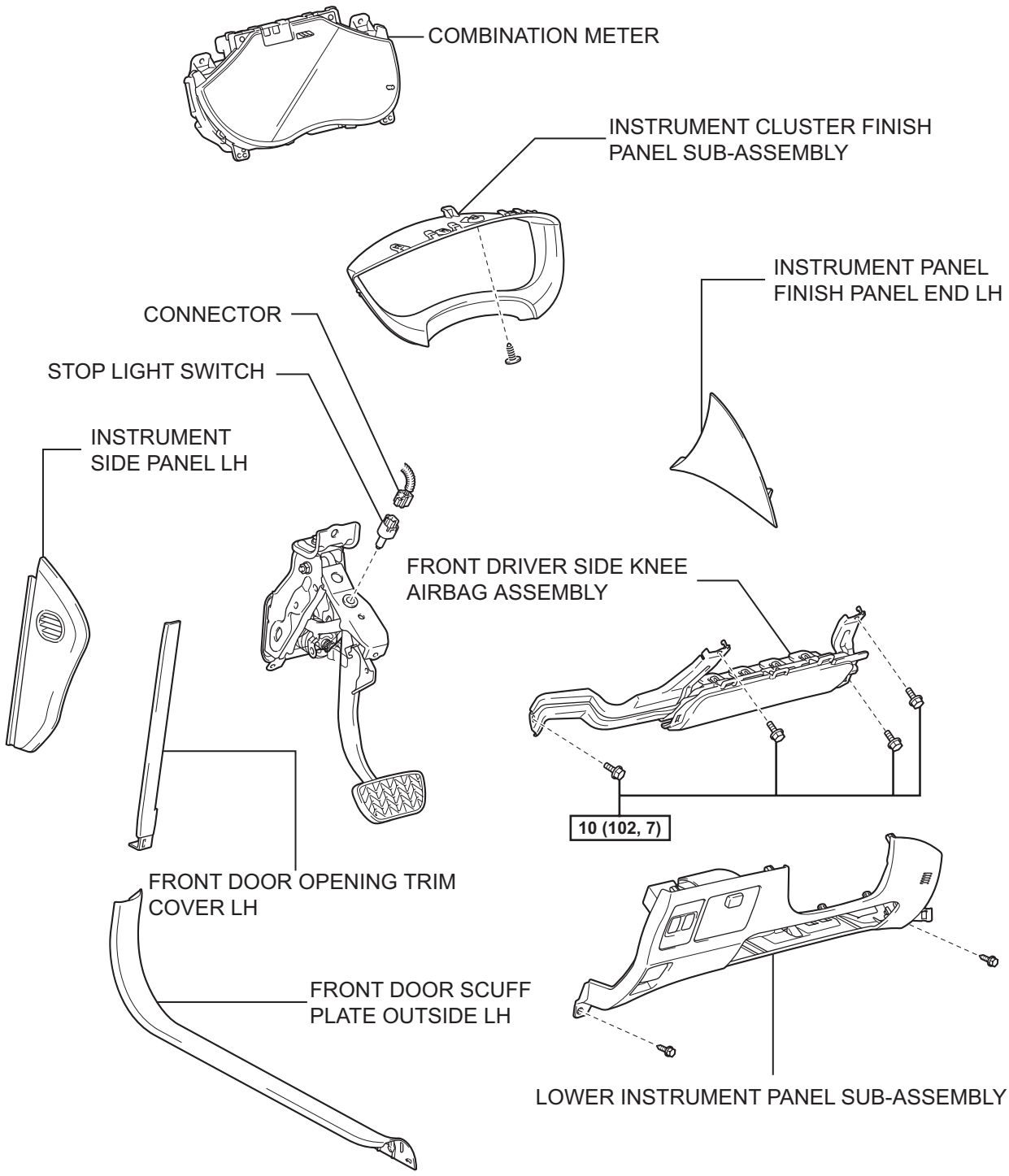

N*m (kgf*cm, ft.*lbf) : Specified torque

P

C138470E01

BR

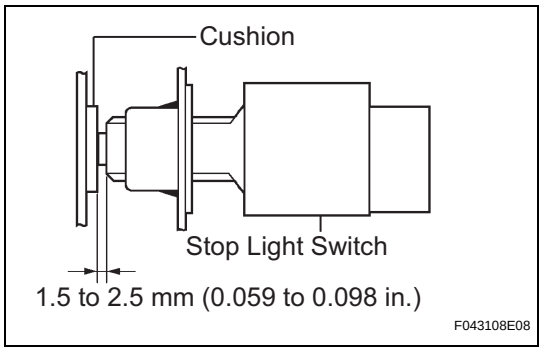

ON-VEHICLE INSPECTION

1. INSPECT STOP LIGHT SWITCH

(a) Check the protrusion of the rod.

Protrusion of the rod:

1.5 to 2.5 mm (0.059 to 0.098 in.)

If the protrusion is not within the specified range, adjust it.

NOTICE:

Do not depress the brake pedal.

REMOVAL

1. **PRECAUTION (See page RS-366)**
2. **DISCONNECT CABLE FROM NEGATIVE BATTERY TERMINAL (See page RS-366)**
3. **REMOVE FRONT DOOR SCUFF PLATE OUTSIDE LH (See page IR-39)**
4. **REMOVE INSTRUMENT SIDE PANEL LH (See page IP-14)**
5. **REMOVE FRONT DOOR OPENING TRIM COVER LH (See page IR-39)**
6. **REMOVE INSTRUMENT PANEL FINISH PANEL END LH (See page IP-13)**
7. **REMOVE LOWER INSTRUMENT PANEL SUB-ASSEMBLY (See page IP-13)**
8. **REMOVE FRONT DRIVER SIDE KNEE AIRBAG ASSEMBLY (See page RS-386)**
9. **REMOVE INSTRUMENT CLUSTER FINISH PANEL SUB-ASSEMBLY (See page ME-68)**
10. **REMOVE COMBINATION METER (See page ME-69)**
11. **REMOVE STOP LIGHT SWITCH**
    (a) Disconnect the stop light switch connector from the stop light switch.

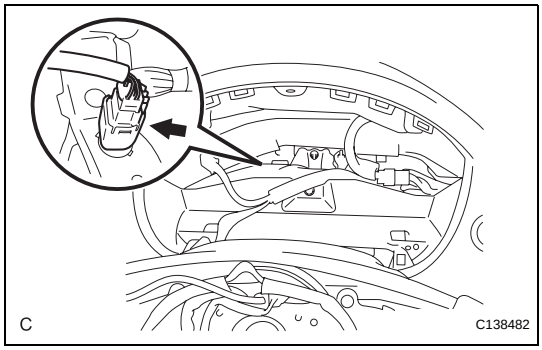

    (b) Turn the stop light switch counterclockwise and remove the stop light switch.

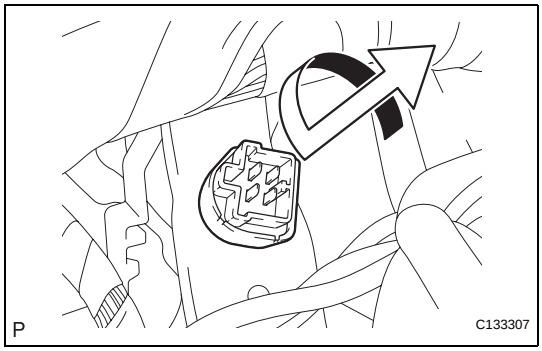

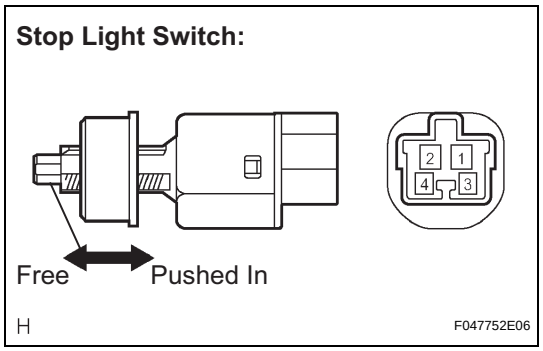

INSPECTION

1. INSPECT STOP LIGHT SWITCH

(a) Measure the resistance according to the value(s) in the table below.

Standard resistance

Tester Connection	Switch Condition	Specified Condition
1 - 2	Switch pin free	Below 1 Ω
1 - 2	Switch pin pushed in	10 kΩ or higher

If the measurement result is not normal, replace the stop light switch.

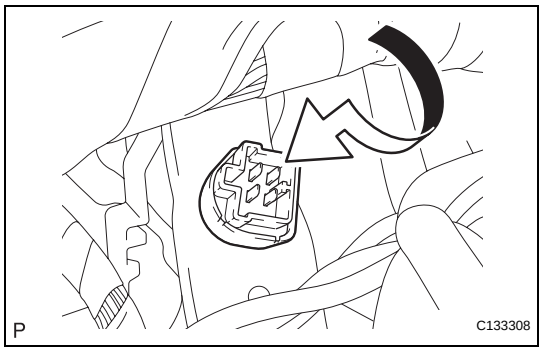

INSTALLATION

1. INSTALL STOP LIGHT SWITCH

(a) Insert the stop light switch until the body hits the cushion.

NOTICE:

When inserting the stop light switch, support the pedal from behind so that the pedal is not pushed in.

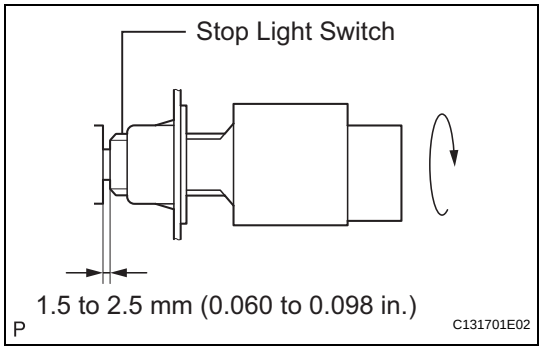

(b) Make a quarter turn clockwise to install the stop light switch.

Torque: 1.5 N*m (15 kgf*cm, 13 in.*lbf) or less

NOTICE:

When inserting the stop light switch, support the pedal from behind so that the pedal is not pushed in.

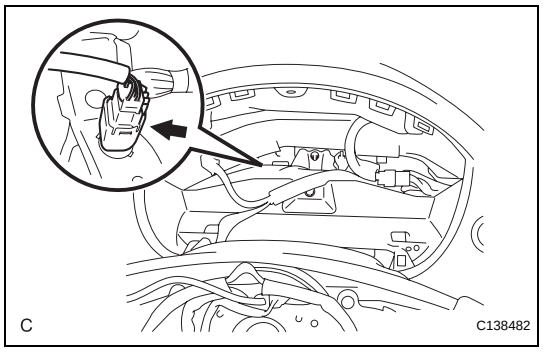

(c) Connect the stop light switch connector to the stop light switch.

(d) Check the protrusion of the rod (See page BR-59).

2. INSTALL COMBINATION METER (See page ME-70)

3. INSTALL INSTRUMENT CLUSTER FINISH PANEL SUB-ASSEMBLY (See page ME-71)

4. INSTALL FRONT DRIVER SIDE KNEE AIRBAG ASSEMBLY (See page RS-387)

5. INSTALL LOWER INSTRUMENT PANEL SUB-ASSEMBLY (See page IP-46)

6. INSTALL INSTRUMENT PANEL FINISH PANEL END LH (See page IP-46)

7. INSTALL INSTRUMENT SIDE PANEL LH (See page IP-47)

8. INSTALL FRONT DOOR OPENING TRIM COVER LH (See page IR-64)

9. **INSTALL FRONT DOOR SCUFF PLATE OUTSIDE LH (See page IR-65)**

10. **CONNECT CABLE TO NEGATIVE BATTERY TERMINAL**

11. **INSPECT SRS WARNING LIGHT**
    HINT:
    (See page RS-37)

12. **PERFORM INITIALIZATION**
    Some systems need initialization after reconnecting the negative battery terminal. (See Page IN-33)

REMOVAL

HINT:
- Use the same procedures for the No. 2 parking brake cable assembly and No. 3 parking brake cable assembly.
- The procedures listed below are for the No. 3 parking brake cable assembly.

1. REMOVE PARKING BRAKE PEDAL ASSEMBLY

HINT:
Refer to the procedures up to "REMOVE PARKING BRAKE PEDAL". (See page PB-10)

2. REMOVE NO. 1 PARKING BRAKE CABLE ASSEMBLY (See page PB-14)

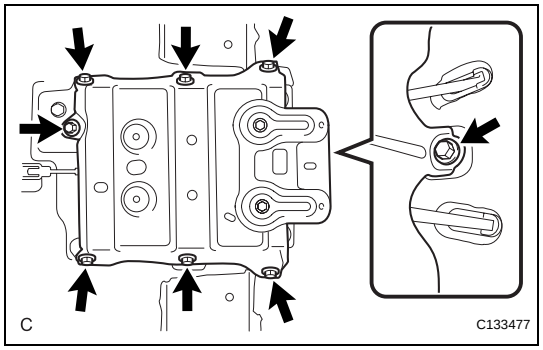

3. REMOVE CROSS MEMBER FLOOR NO. 4 REINFORCEMENT SUB-ASSEMBLY

(a) Remove the 8 bolts and the cross member floor No. 4 reinforcement sub-assembly.

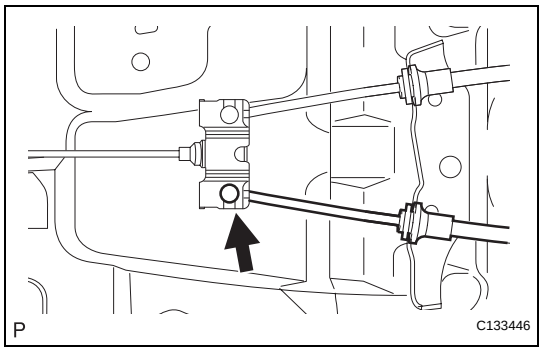

4. SEPARATE NO. 3 PARKING BRAKE CABLE ASSEMBLY

(a) Separate the No. 3 parking brake cable assembly from the parking brake equalizer.

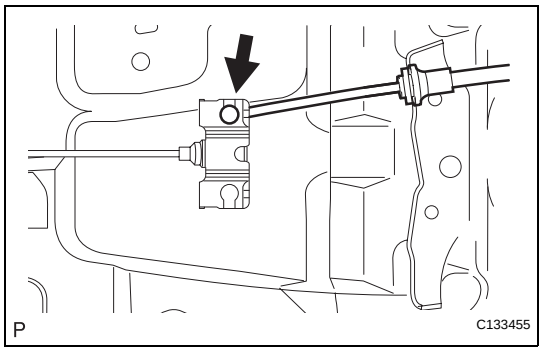

5. SEPARATE NO. 2 PARKING BRAKE CABLE ASSEMBLY

(a) Separate the No. 2 parking brake cable assembly from the parking brake equalizer.

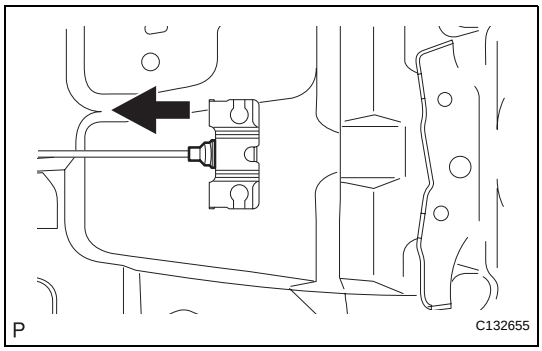

6. REMOVE NO. 4 PARKING BRAKE CABLE ASSEMBLY

(a) Slide the rubber boot as shown in the illustration.

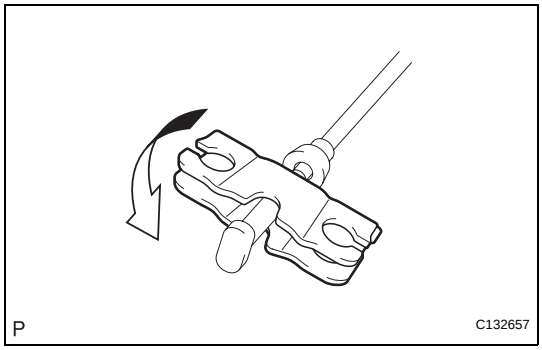

(b) Remove the No. 4 parking brake cable assembly from the parking brake equalizer as shown in the illustration.

7. REMOVE EXHAUST TAIL PIPE ASSEMBLY (See page EX-2)

8. REMOVE EXHAUST CENTER PIPE ASSEMBLY (See page EX-2)

9. REMOVE REAR WHEEL

10. SEPARATE REAR DISC BRAKE CALIPER ASSEMBLY (See page PB-38)

11. REMOVE REAR DISC (See page PB-38)

12. REMOVE PARKING BRAKE SHOE RETURN TENSION NO. 1 SPRING (See page PB-38)

13. REMOVE PARKING BRAKE SHOE STRUT (See page PB-38)

14. REMOVE NO. 1 PARKING BRAKE SHOE ASSEMBLY (See page PB-38)

15. REMOVE PARKING BRAKE SHOE ADJUSTING SCREW SET (See page PB-39)

16. REMOVE NO. 2 PARKING BRAKE SHOE ASSEMBLY (See page PB-39)

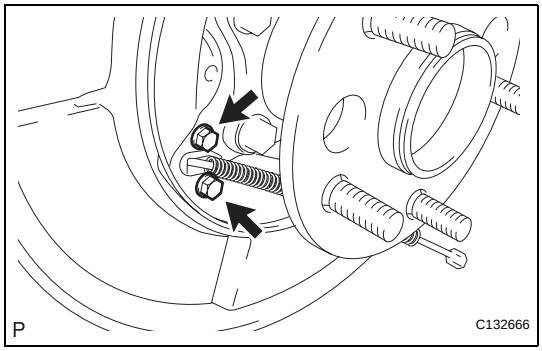

17. REMOVE NO. 3 PARKING BRAKE CABLE ASSEMBLY

(a) Remove the 2 bolts and separate the No. 3 parking brake cable assembly from the backing plate.

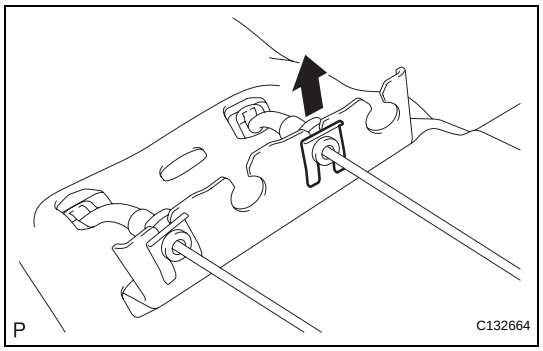

(b) Using needle-nose pliers, remove the clip from the No. 3 parking brake cable assembly.

(c) Remove 3 bolts (A), bolt (B) and nut (C), and disengage each claw.

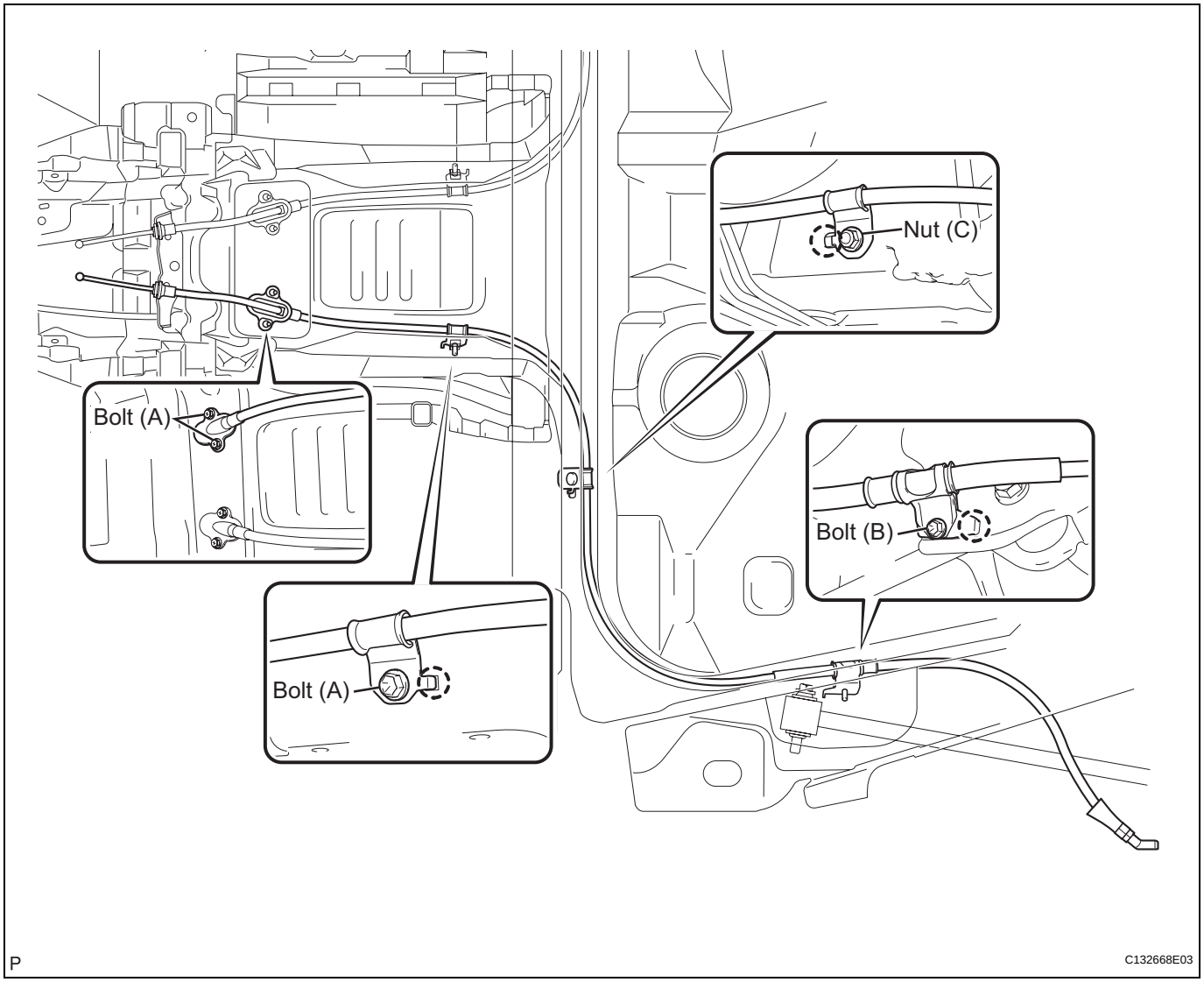

(d) Remove the No. 3 parking brake cable assembly from the body.

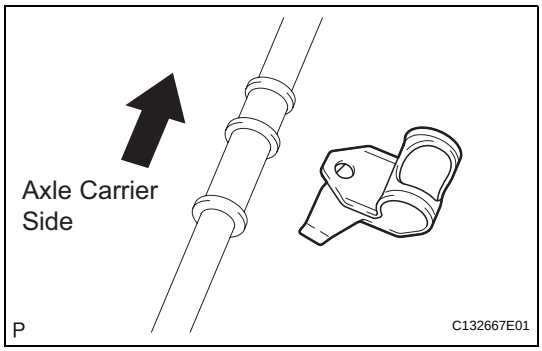

(e) Remove the parking brake cable clamp.

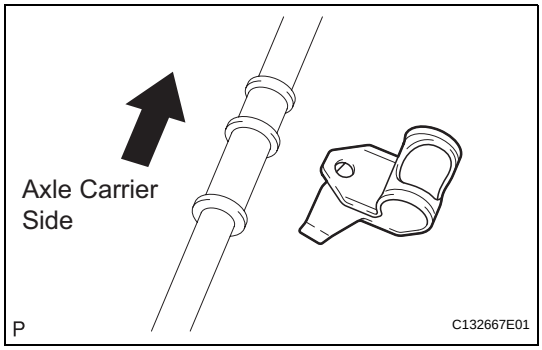

INSTALLATION

1. INSTALL NO. 3 PARKING BRAKE CABLE ASSEMBLY

(a) Install the parking brake cable clamp to the No. 3 parking brake cable assembly.

(b) Install the No. 3 parking brake cable assembly with 3 bolts (A), bolt (B) and nut (C), and engage each claw.

Torque: Bolt (A)
8.5 N*m (87 kgf*cm, 75 in.*lbf)
Bolt (B) and Nut (C)
6.0 N*m (61 kgf*cm, 53 in.*lbf)

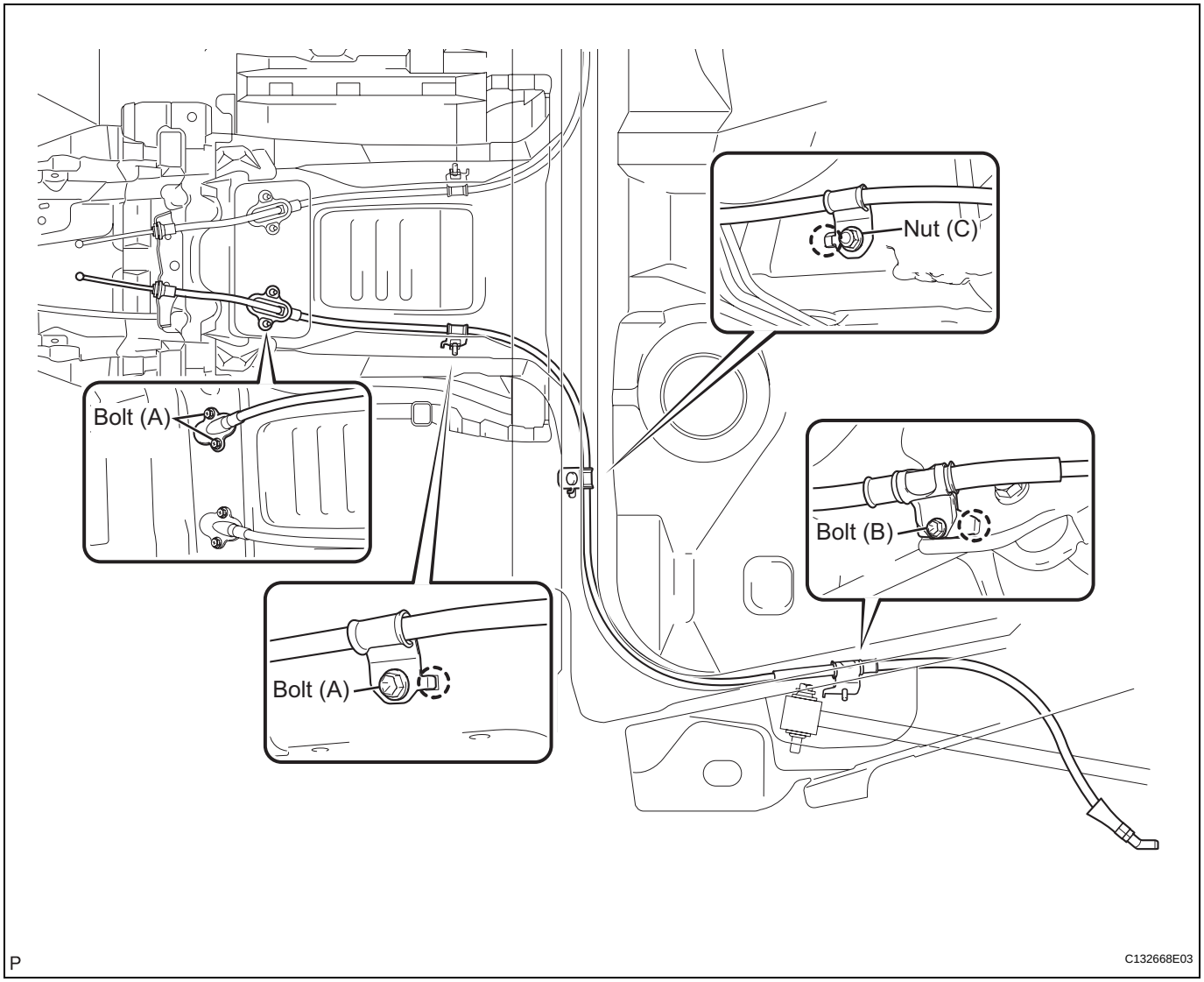

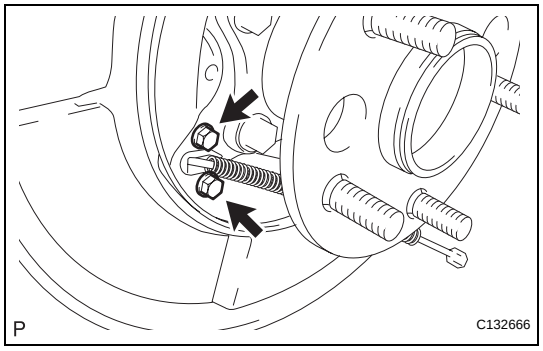

(c) Install the No. 3 parking brake cable assembly to the backing plate with the 2 bolts.
Torque: 8.0 N*m (82 kgf*cm, 71 in.*lbf)

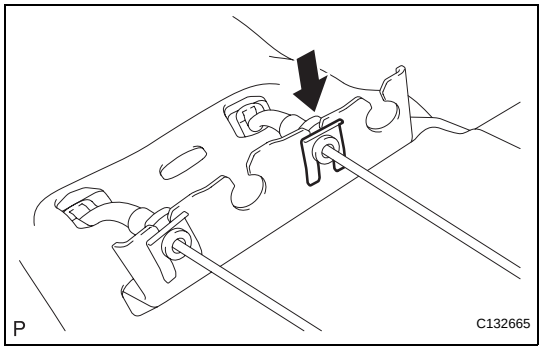

(d) Using a brass bar and a hammer, install the clip to the No. 3 parking brake cable assembly.

2. INSTALL NO. 2 PARKING BRAKE SHOE ASSEMBLY (See page PB-41)

3. INSTALL PARKING BRAKE SHOE ADJUSTING SCREW SET (See page PB-42)

4. INSTALL NO. 1 PARKING BRAKE SHOE ASSEMBLY (See page PB-42)

5. **INSTALL PARKING BRAKE SHOE STRUT (See page PB-42)**
6. **INSTALL PARKING BRAKE SHOE RETURN TENSION NO. 1 SPRING (See page PB-42)**
7. **CHECK PARKING BRAKE INSTALLATION (See page PB-43)**
8. **INSTALL REAR DISC (See page PB-43)**
9. **ADJUST PARKING BRAKE SHOE CLEARANCE (See page PB-1)**
10. **INSTALL REAR DISC BRAKE CALIPER ASSEMBLY (See page PB-43)**
11. **INSTALL REAR WHEEL**
12. **INSTALL EXHAUST CENTER PIPE ASSEMBLY (See page EX-4)**
13. **INSTALL EXHAUST TAIL PIPE ASSEMBLY (See page EX-5)**
14. **INSTALL NO. 4 PARKING BRAKE CABLE ASSEMBLY**
    (a) Install the No. 4 parking brake cable assembly to the parking brake equalizer.

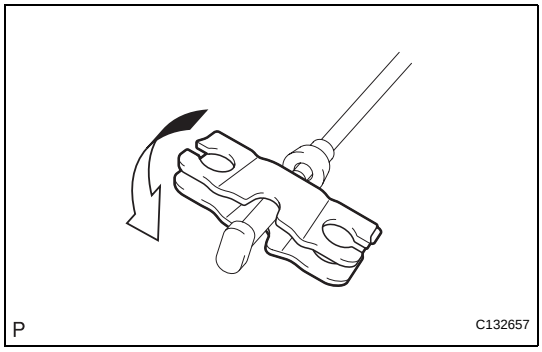

    (b) Slide the rubber boot back as shown in the illustration.

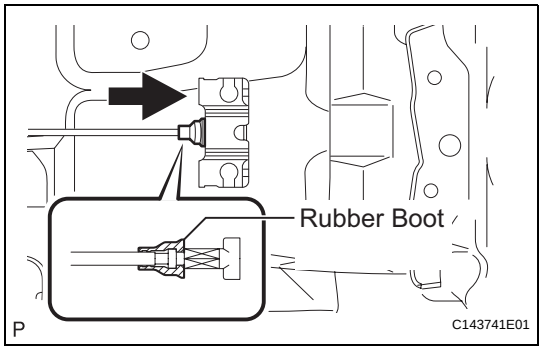

15. **CONNECT NO. 2 PARKING BRAKE CABLE ASSEMBLY**
    (a) Connect the No. 2 parking brake cable assembly to the parking brake equalizer.

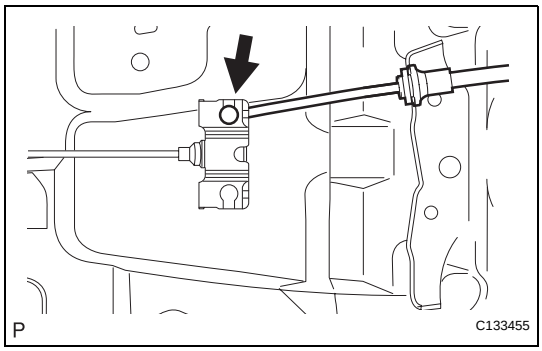

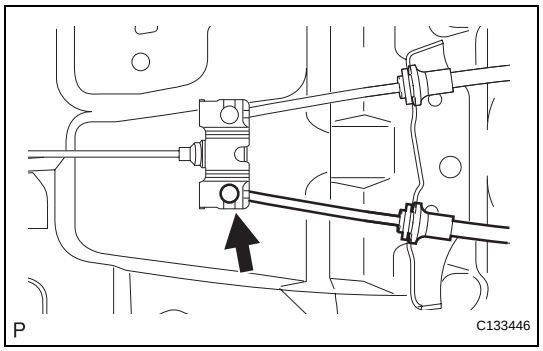

16. CONNECT NO. 3 PARKING BRAKE CABLE ASSEMBLY

(a) Connect the No. 3 parking brake cable assembly to the parking brake equalizer.

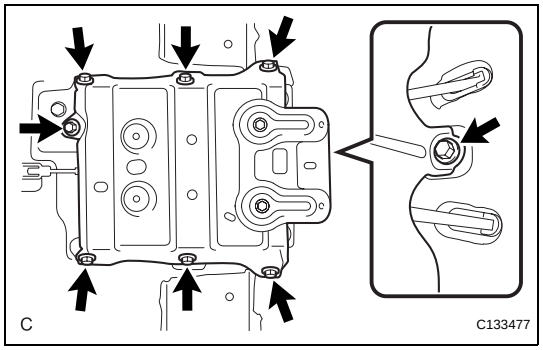

17. INSTALL CROSS MEMBER FLOOR NO. 4 REINFORCEMENT SUB-ASSEMBLY

(a) Install the cross member floor No. 4 reinforcement sub-assembly with the 8 bolts.
Torque: 19 N*m (194 kgf*cm, 14 ft.*lbf)

18. INSTALL NO. 1 PARKING BRAKE CABLE ASSEMBLY (See page PB-16)

19. INSTALL PARKING BRAKE PEDAL ASSEMBLY

HINT:
Refer to the procedures up to "INSTALL PARKING BRAKE PEDAL". (See page PB-17)

20. CHECK FOR EXHAUST GAS LEAKS (See page EX-5)

REASSEMBLY

1. APPLY HIGH TEMPERATURE GREASE

(a) Apply high temperature grease to the backing plate which makes contact with the shoe.

2. INSTALL PARKING BRAKE SHOE GUIDE PLATE

(a) Apply adhesive to the threads of the parking brake shoe guide plate set bolt.
Adhesive:
Toyota Genuine Adhesive 1344, Three Bond 1344 or equivalent

(b) Install the parking brake shoe guide plate with the parking brake shoe guide plate set bolt.
Torque: 18 N*m (184 kgf*cm, 13 ft.*lbf)

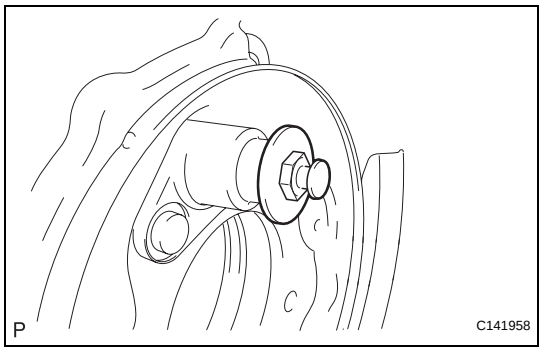

3. INSTALL PARKING BRAKE SHOE LEVER

(a) Install the parking brake shoe lever and shim to the No. 2 parking brake shoe assembly with a new C-washer.

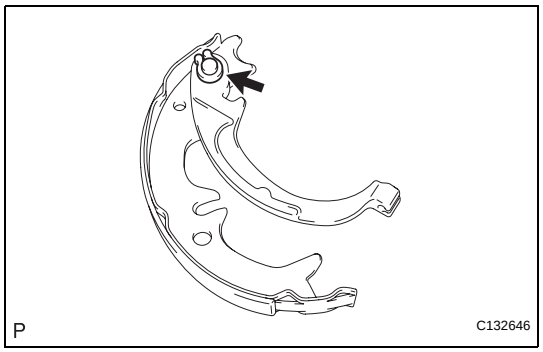

(b) Using a feeler gauge, measure the clearance between the No. 2 parking brake shoe assembly and parking brake shoe lever.
Standard clearance:
Less than 0.35 mm (0.014 in.)
If the clearance is not as specified, replace the shim with one of the correct size.

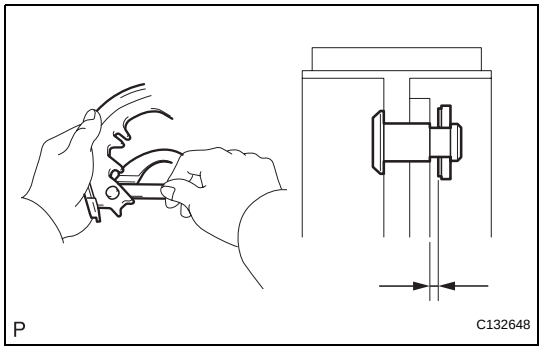

Shim Thickness	Shim Thickness
0.3 mm (0.012 in.)	0.9 mm (0.035 in.)
0.6 mm (0.024 in.)	-

4. INSTALL NO. 2 PARKING BRAKE SHOE ASSEMBLY

(a) Using needle-nose pliers, connect the No. 3 parking brake cable assembly to the parking brake shoe lever.

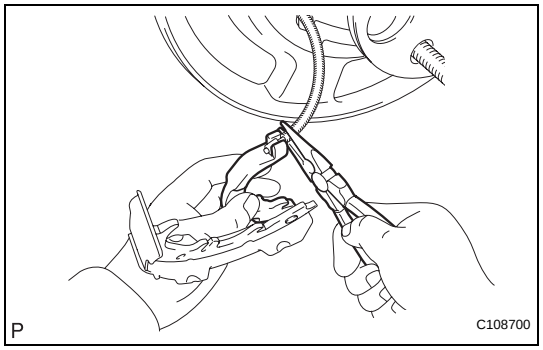

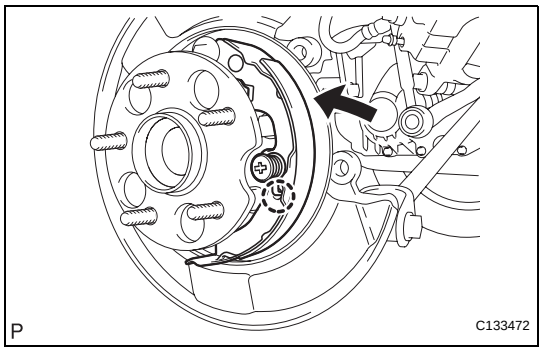

(b) Install the No. 2 parking brake shoe assembly with the parking brake shoe hold down spring No. 2 pin, the parking brake shoe hold down spring No. 2 cup, the parking brake shoe hold down spring and the parking brake shoe hold down spring No. 1 cup.
(c) Engage the claw of the parking brake shoe hold down spring No. 1 cup to the No. 2 parking brake shoe assembly.

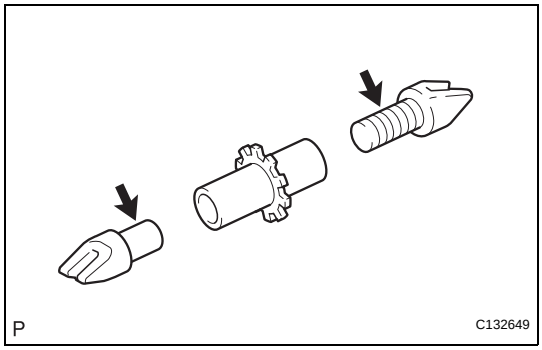

5. INSTALL PARKING BRAKE SHOE ADJUSTING SCREW SET

(a) Apply high temperature grease to the parking brake adjusting screw as shown in the illustration.

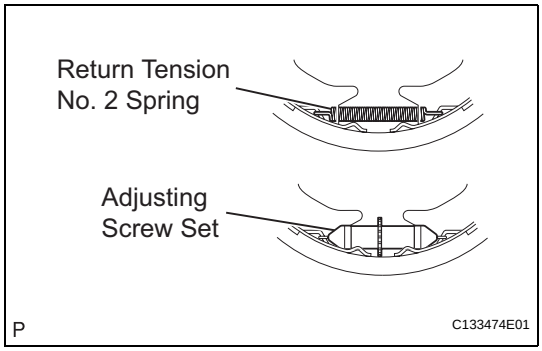

(b) Install the parking brake shoe return tension No. 2 spring to the No. 1 parking brake shoe assembly and the No. 2 parking brake shoe assembly.
(c) Install the parking brake shoe adjusting screw set to the No. 1 parking brake shoe assembly and the No. 2 parking brake shoe assembly.

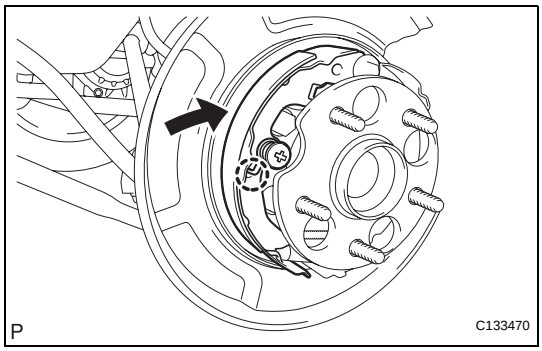

6. INSTALL NO. 1 PARKING BRAKE SHOE ASSEMBLY

(a) Install the No. 1 parking brake shoe assembly with the parking brake shoe hold down spring No. 1 pin, parking brake shoe hold down spring No. 2 cup, parking brake shoe hold down spring and parking brake shoe hold down spring No. 1 cup.
(b) Engage the claw of the parking brake shoe hold down spring No. 1 cup to the No. 1 parking brake shoe assembly.

7. INSTALL PARKING BRAKE SHOE STRUT

(a) Attach the parking brake shoe strut and the parking brake shoe strut compression spring to the No. 1 parking brake shoe assembly and No. 2 parking brake shoe assembly.

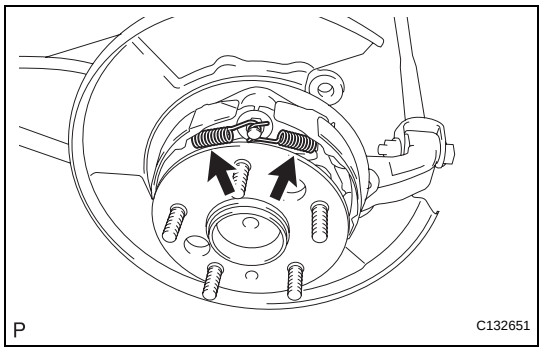

8. INSTALL PARKING BRAKE SHOE RETURN TENSION NO. 1 SPRING

(a) Using needle-nose pliers, install the 2 parking brake shoe return tension No. 1 springs.
HINT:
First install the front side spring and then the rear side spring.

9. CHECK PARKING BRAKE INSTALLATION

(a) Check that each part is installed properly.

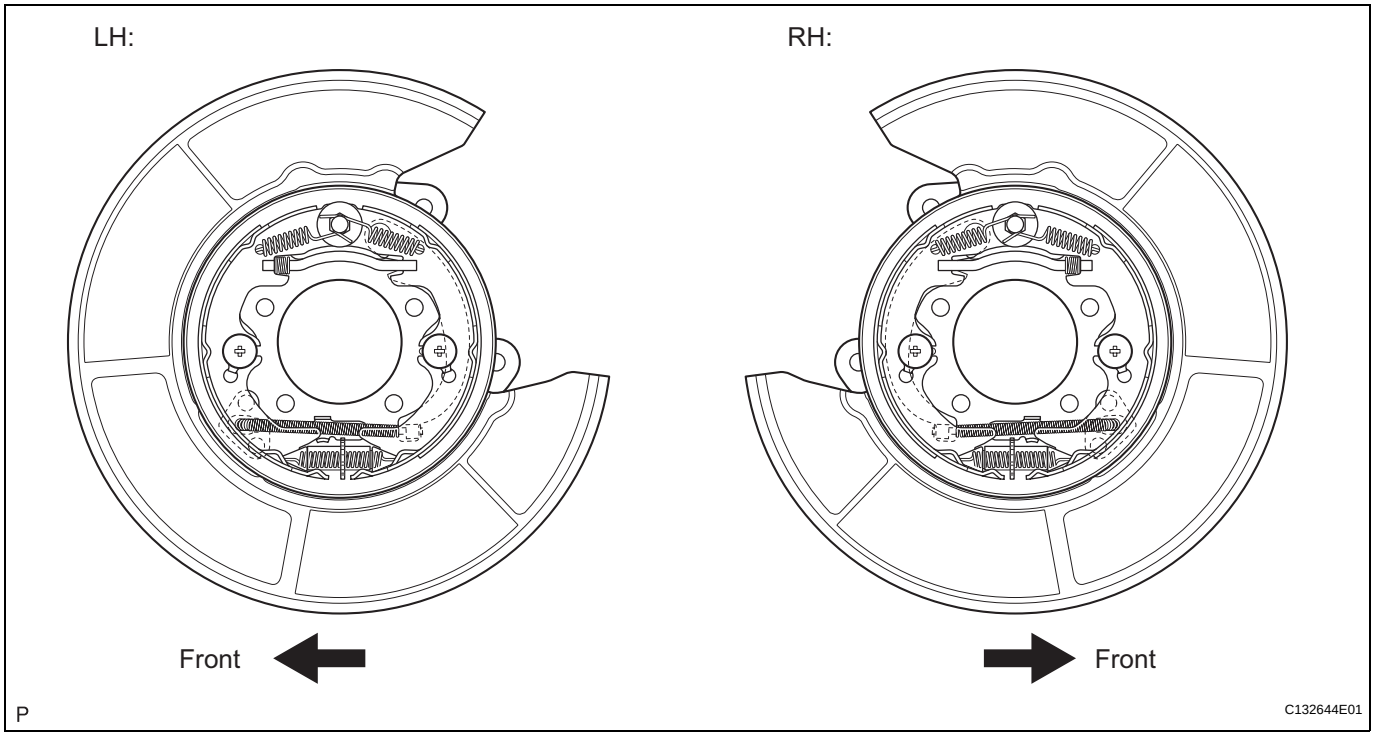

NOTICE:
There should be no oil or grease on the friction surface of the shoe lining and disc.

10. INSTALL REAR DISC

(a) Align the matchmarks and install the rear disc.

11. ADJUST PARKING BRAKE SHOE CLEARANCE (See page PB-1)

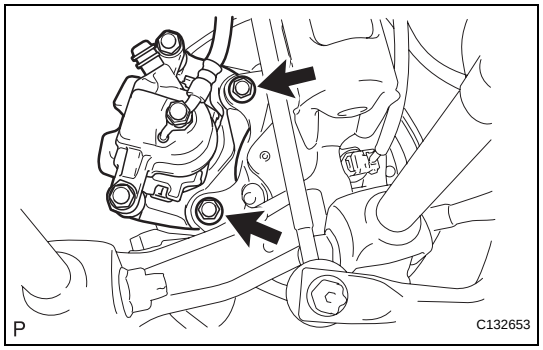

12. INSTALL REAR DISC BRAKE CALIPER ASSEMBLY

(a) Install the rear disc brake caliper assembly with the 2 bolts.
Torque: 62 N*m (632 kgf*cm, 46 ft.*lbf)

13. INSTALL REAR WHEEL
Torque: 103 N*m (1,050 kgf*cm, 76 ft.*lbf)

14. INSPECT PARKING BRAKE PEDAL TRAVEL (See page PB-1)

15. ADJUST PARKING BRAKE PEDAL TRAVEL (See page PB-2)

PARKING BRAKE SYSTEM

PROBLEM SYMPTOMS TABLE

Use the table below to help determine the cause of the problem. The numbers indicate the priority of the likely cause of the problem. Check each part in order. If necessary, replace these parts.

Symptom	Suspected Area	See page
Brake drag	1. Parking brake pedal travel (Out of adjustment)	PB-2
	2. Parking brake cable (Sticking) [No. 1 cable]	PB-30
	3. Parking brake cable (Sticking) [No. 2/No. 3 cable]	PB-30
	4. Parking brake shoe clearance (Out of adjustment)	PB-1
	5. Parking brake shoe lining (Cracked or distorted)	PB-38
	6. Tension or return spring (Damaged)	PB-38

ADJUSTMENT

1. REMOVE REAR WHEEL

2. ADJUST PARKING BRAKE SHOE CLEARANCE

(a) Temporarily install the hub nuts.
(b) Remove the shoe adjusting hole plug.

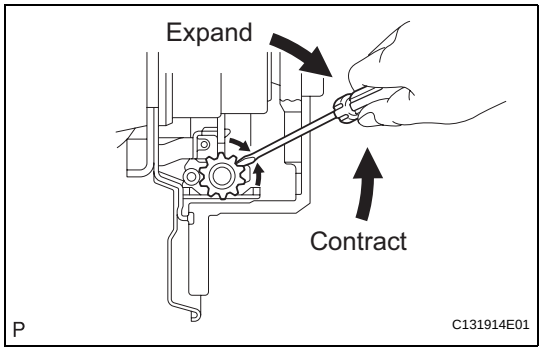

(c) Turn the shoe adjuster and expand the shoe until the disc locks.
(d) Turn and contract the shoe adjuster until the disc can rotate smoothly.
Standard:
Return 8 notches.
(e) Check that there is no brake drag against the shoe.
(f) Install the shoe adjusting hole plug.
(g) Remove the hub nuts.

3. INSTALL REAR WHEEL
Torque: 103 N*m (1,050 kgf*cm, 76 ft.*lbf)

4. INSPECT PARKING BRAKE PEDAL TRAVEL

(a) Fully depress the parking brake pedal and release it to engage the parking brake.
(b) Depress the pedal to the floor again, and release it to disengage the parking brake.

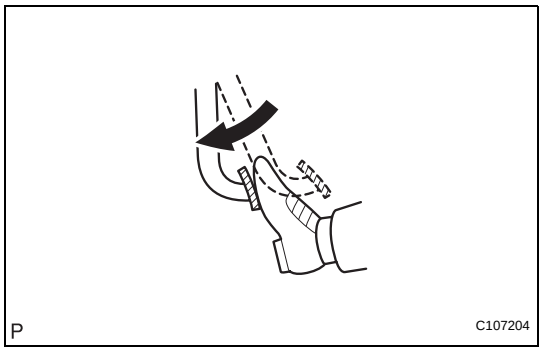

(c) Slowly depress the parking brake pedal to the floor, and count the number of clicks.
Parking brake pedal travel:
7 to 10 notches at 300 N (31 kgf, 67 lbf)

5. ADJUST PARKING BRAKE PEDAL TRAVEL

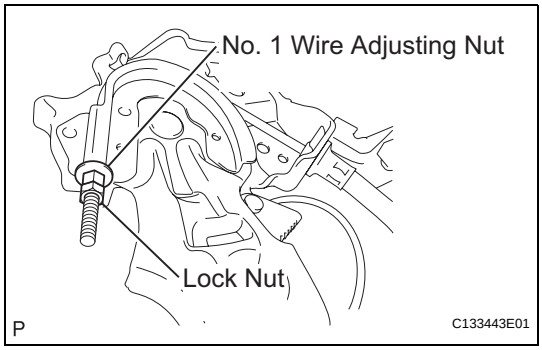

(a) Depress the parking brake pedal. Hold the No. 1 wire adjusting nut using a wrench and loosen the lock nut.
(b) Release the parking brake pedal.
(c) Turn the No. 1 wire adjusting nut until the parking brake pedal travel meets the above specification.
(d) Hold the No. 1 wire adjusting nut using a wrench or an equivalent tool and tighten the lock nut.
Torque: 5.4 N*m (55 kgf*cm, 48 in.*lbf)
(e) Count the number of clicks after depressing and releasing the parking brake pedal 3 or 4 times.
(f) Check whether the parking brake drags.
(g) When operating the parking brake pedal, check that the parking brake indicator light comes on.

REMOVAL

1. **REMOVE FRONT SEAT ASSEMBLY LH**
   HINT:
   Refer to the procedures up to "REMOVE FRONT SEAT ASSEMBLY". (See page SE-83)
2. **REMOVE FRONT SEAT ASSEMBLY RH**
   HINT:
   Use the same procedures for the RH side and the LH side.
3. **REMOVE FRONT DOOR SCUFF PLATE LH (See page IR-39)**
4. **REMOVE REAR DOOR SCUFF PLATE LH (See page IR-40)**
5. **REMOVE LOWER CENTER PILLAR GARNISH LH (See page IR-40)**
6. **REMOVE FRONT DOOR OPENING TRIM COVER LH (See page IR-39)**
7. **REMOVE SIDE INSTRUMENT PANEL LH (See page IP-12)**
8. **REMOVE INSTRUMENT PANEL FINISH PANEL END LH (See page IP-13)**
9. **REMOVE LOWER INSTRUMENT PANEL SUB-ASSEMBLY (See page IP-13)**
10. **REMOVE INSTRUMENT PANEL FINISH PANEL END RH (See page IP-15)**
11. **REMOVE FRONT DOOR SCUFF PLATE RH (See page IR-42)**
12. **REMOVE REAR DOOR SCUFF PLATE RH (See page IR-42)**
13. **REMOVE LOWER CENTER PILLAR GARNISH RH**
14. **REMOVE FRONT DOOR OPENING TRIM COVER RH (See page IR-42)**
15. **REMOVE NO. 2 INSTRUMENT PANEL UNDER COVER SUB-ASSEMBLY (See page IP-15)**
16. **REMOVE SIDE INSTRUMENT PANEL RH (See page IP-15)**
17. **REMOVE FRONT PASSENGER SIDE KNEE AIRBAG ASSEMBLY (See page RS-396)**
18. **REMOVE LOWER INSTRUMENT PANEL RH (See page IP-16)**
19. **REMOVE SHIFT LEVER KNOB SUB-ASSEMBLY (See page IP-16)**
20. **REMOVE UPPER CONSOLE PANEL ASSEMBLY WITH FRONT ASH RECEPTACLE (See page IP-16)**
21. **REMOVE CONSOLE BOX POCKET (See page IP-18)**

22. REMOVE CONSOLE BOX CARPET (See page IP-18)

23. REMOVE CONSOLE REAR END PANEL SUB-ASSEMBLY (See page IP-19)

24. REMOVE REAR CONSOLE BOX ASSEMBLY (See page IP-19)

25. REMOVE FRONT FLOOR FRONT CARPET ASSEMBLY

(a) Disengage the 11 clamps, 4 claws, 4 clips and 5 fasteners.

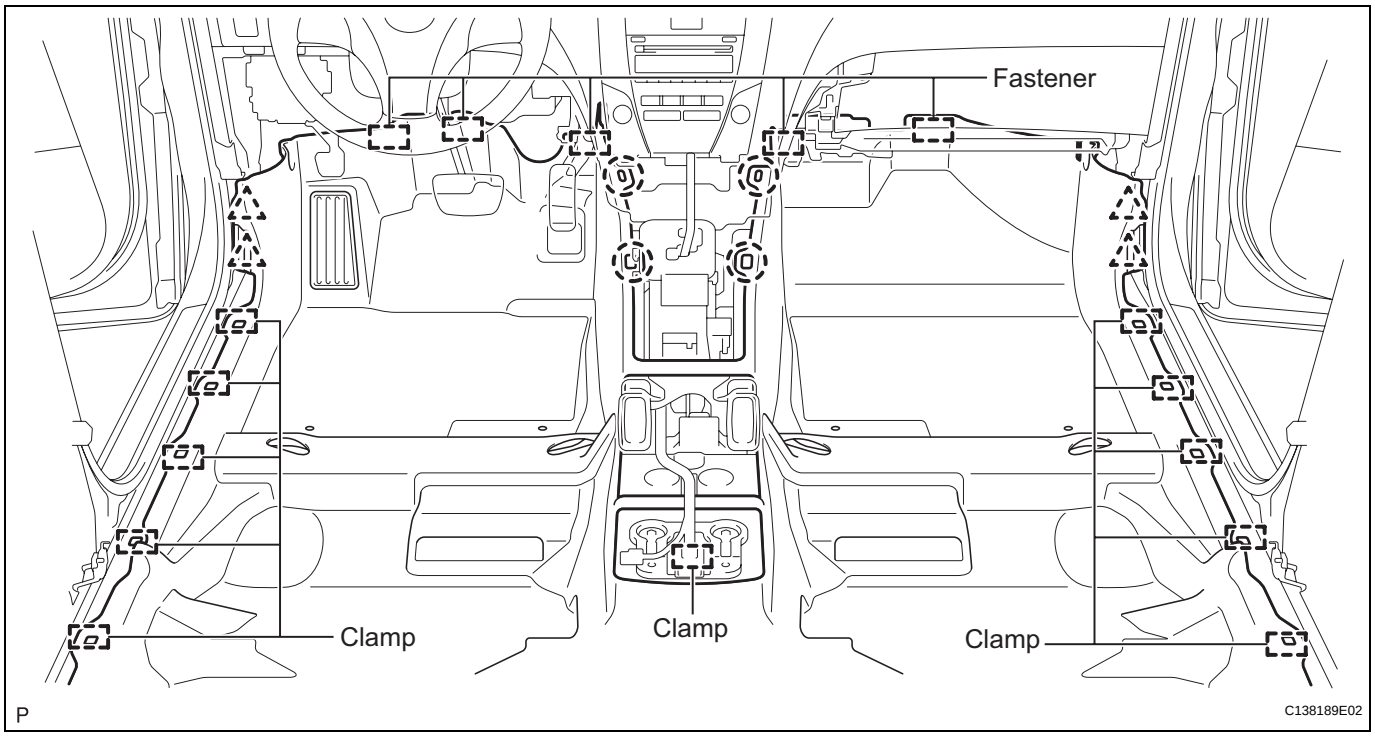

(b) Turn back the front floor front carpet assembly until the whole of the cross member floor No. 4 reinforcement sub-assembly can be seen.

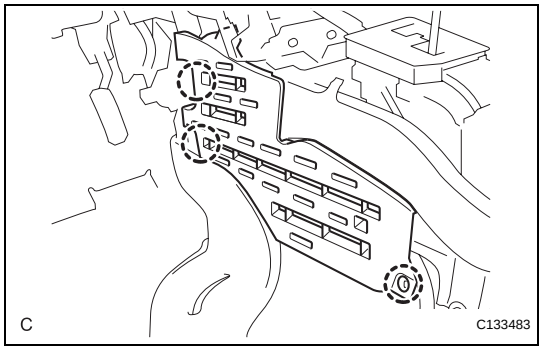

26. REMOVE FLOOR CARPET BRACKET LH

(a) Remove the 3 clips and the floor carpet bracket LH.

27. REMOVE FLOOR CARPET BRACKET RH

HINT:
Use the same procedures for the RH side and the LH side.

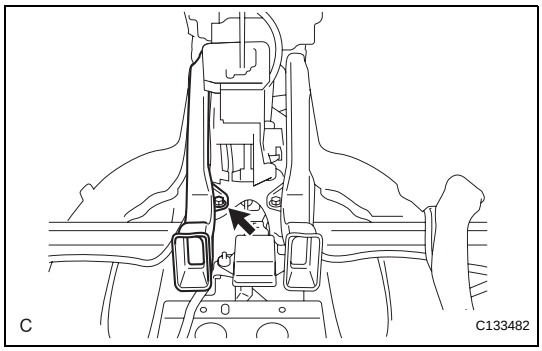

28. REMOVE NO. 2 CONSOLE BOX DUCT

(a) Remove the bolt and the No. 2 console box duct.

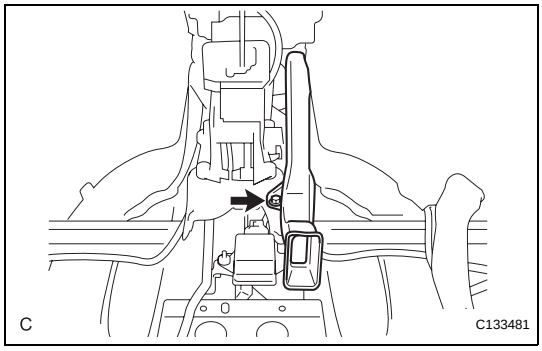

29. REMOVE NO. 3 CONSOLE BOX DUCT

(a) Remove the bolt and the No. 3 console box duct.

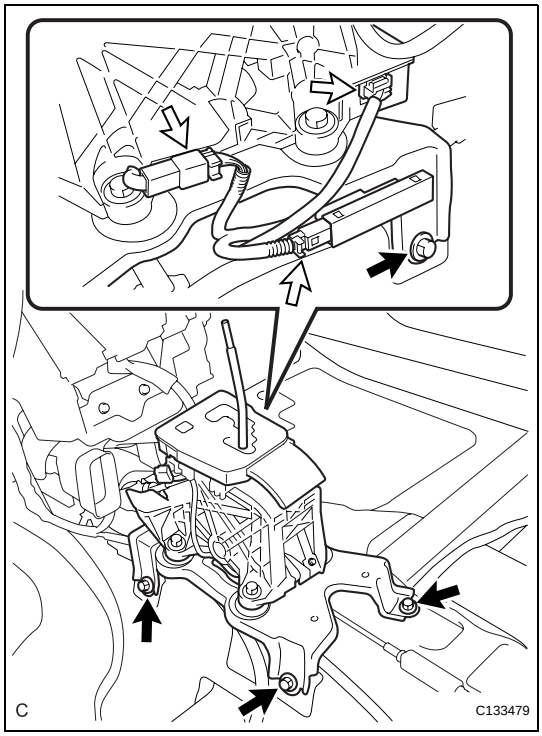

30. REMOVE FLOOR SHIFT LEVER ASSEMBLY

(a) Disconnect the 3 connectors.

(b) Remove the 4 bolts and the floor shift lever assembly.

HINT:

It is not necessary to disconnect the transmission control cable from the floor shift lever assembly.

PB

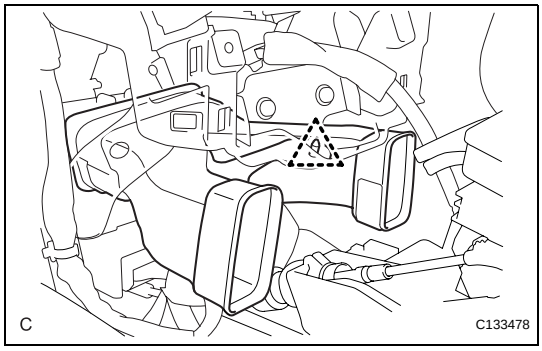

31. REMOVE NO. 1 CONSOLE BOX DUCT

(a) Remove the clip and the No. 1 console box duct.

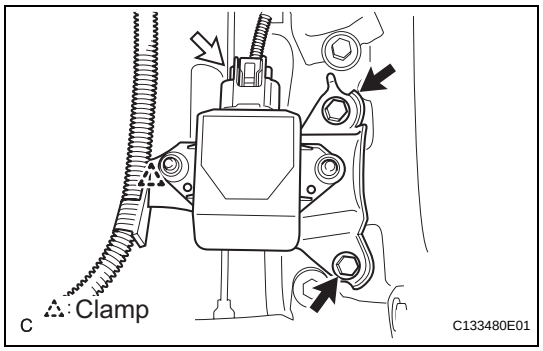

32. REMOVE YAW RATE AND ACCELERATION SENSOR

(a) Disengage the clamp and disconnect the connector.

(b) Remove the 2 bolts and the yaw rate and acceleration sensor.

33. REMOVE CENTER AIRBAG SENSOR ASSEMBLY (See page RS-469)

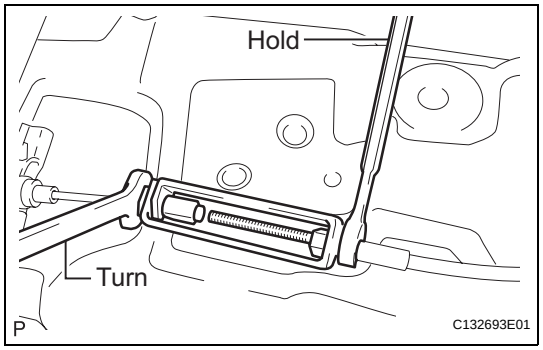

34. DISCONNECT NO. 4 PARKING BRAKE CABLE ASSEMBLY

(a) Using a wrench, hold the lock nut of the No. 1 parking brake cable and loosen the turnbuckle of the No. 4 parking brake cable.

(b) Disconnect the No. 4 parking brake cable assembly from the No. 1 parking brake cable assembly.

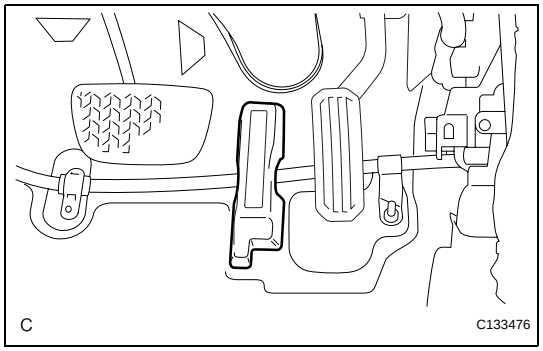

35. REMOVE NO. 2 DASH PANEL INSULATOR PAD

(a) Remove the No. 2 dash panel insulator pad.

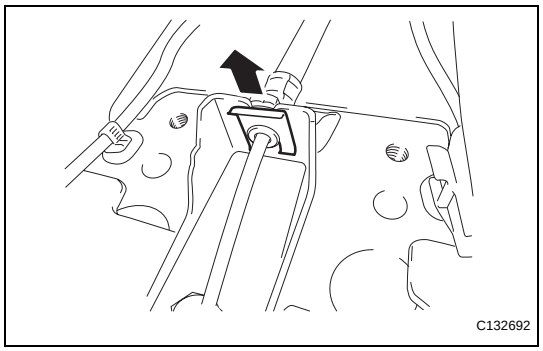

36. REMOVE PARKING BRAKE PEDAL ASSEMBLY

(a) Using needle-nose pliers, remove the clip from the No. 1 parking brake cable assembly.

(b) Remove the bolt, nut, and the No. 1 parking brake cable clamp.

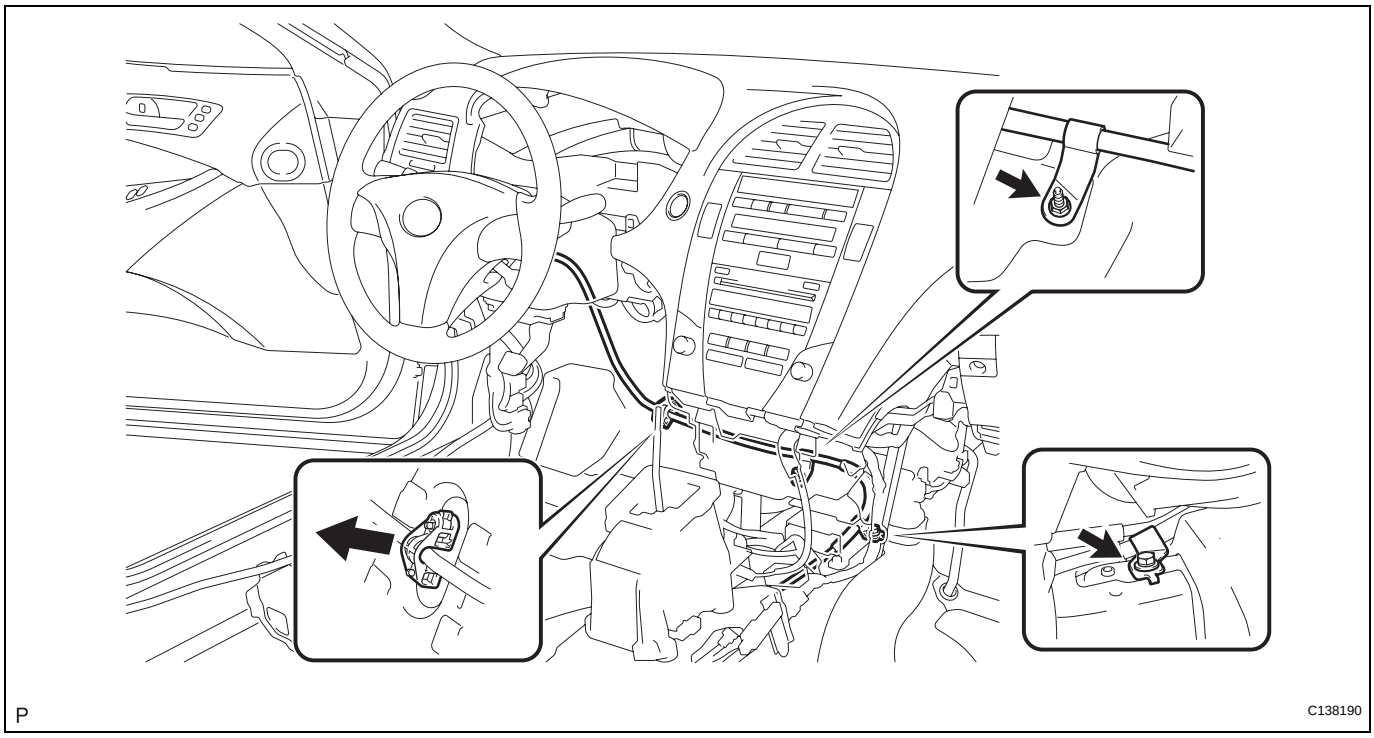

(c) Separate the No. 1 parking brake cable assembly from the body.

(d) Disconnect the parking brake switch connector.

(e) Remove the bolt, 2 nuts, and the parking brake pedal assembly with the No. 1 parking brake cable assembly from the body.

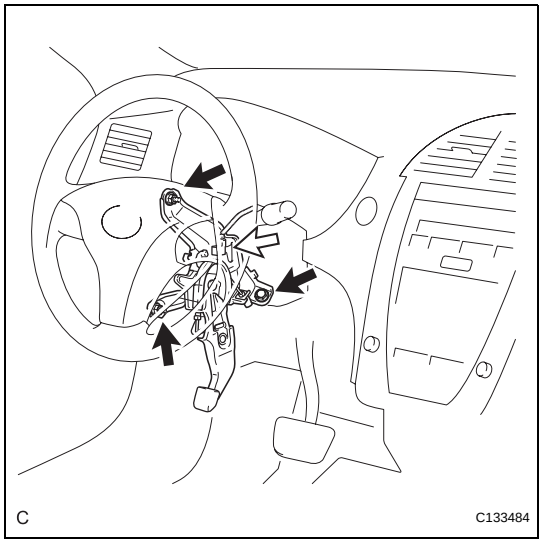

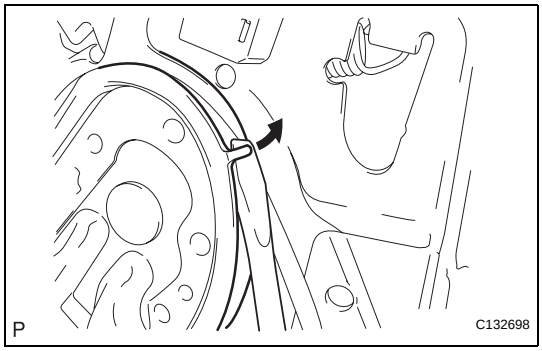

DISASSEMBLY

1. REMOVE NO. 1 PARKING BRAKE CABLE ASSEMBLY

(a) Using a screwdriver, pull up the parking brake pedal claw.

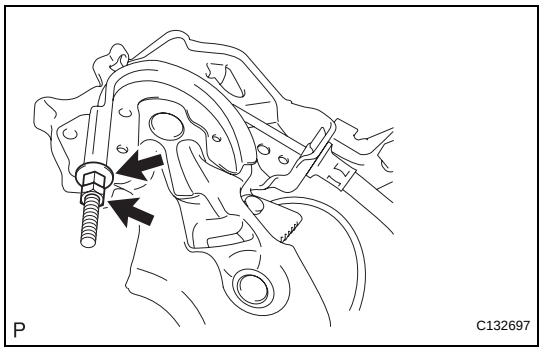

(b) Remove the lock nut and the No. 1 wire adjusting nut.

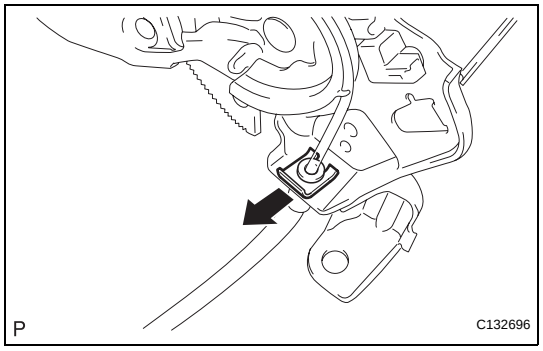

(c) Using needle-nose pliers, remove the clip and the No. 1 parking brake cable from the parking brake pedal assembly.

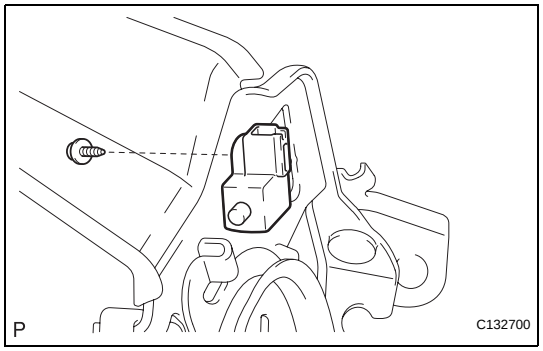

2. REMOVE PARKING BRAKE SWITCH ASSEMBLY

(a) Remove the screw and the parking brake switch assembly.

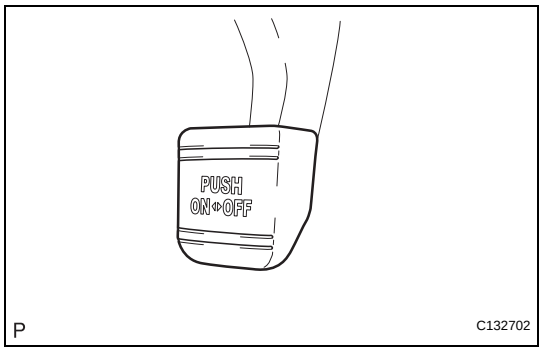

3. REMOVE PARKING PEDAL PAD

(a) Remove the parking pedal pad.

REASSEMBLY

1. INSTALL PARKING PEDAL PAD

(a) Install the parking pedal pad to the parking brake pedal assembly.

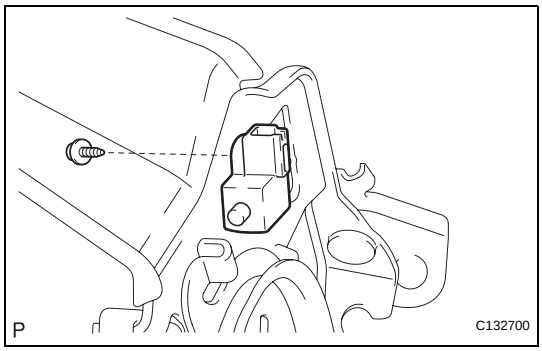

2. INSTALL PARKING BRAKE SWITCH ASSEMBLY

(a) Install the parking brake switch assembly with the screw.

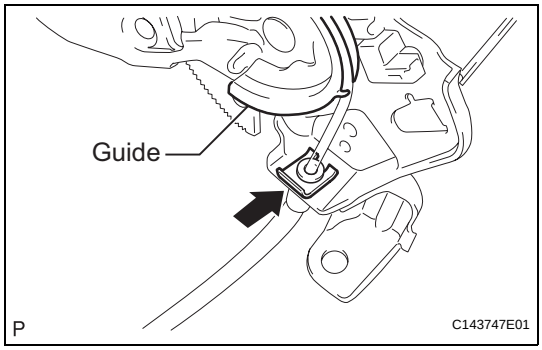

3. INSTALL NO. 1 PARKING BRAKE CABLE ASSEMBLY

(a) Pass the No. 1 parking brake cable assembly through the guide of the parking brake pedal.

(b) Using a brass bar and a hammer, install the clip to the No. 1 parking brake cable assembly.

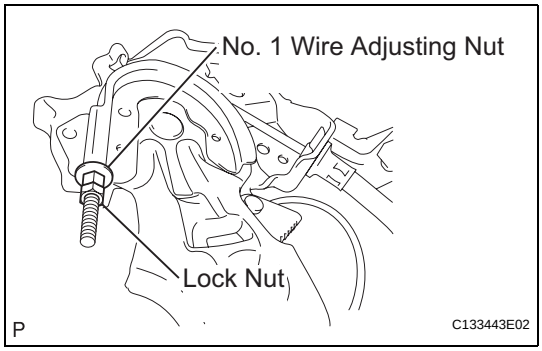

(c) Temporarily tighten the the lock nut and No. 1 wire adjusting nut.

NOTICE:

Fully tighten the lock nut and the No. 1 wire adjusting nut when adjusting the parking brake pedal travel.

Torque: 5.4 N*m (55 kgf*cm, 48 in.*lbf)

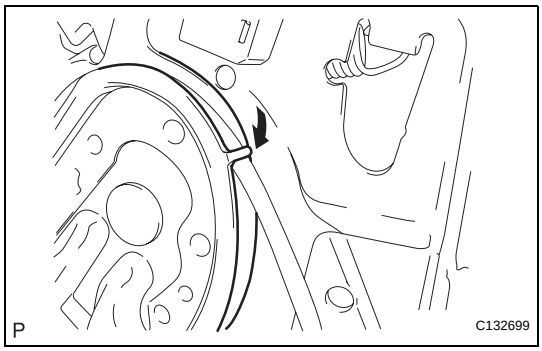

(d) Bend the parking brake pedal claw.

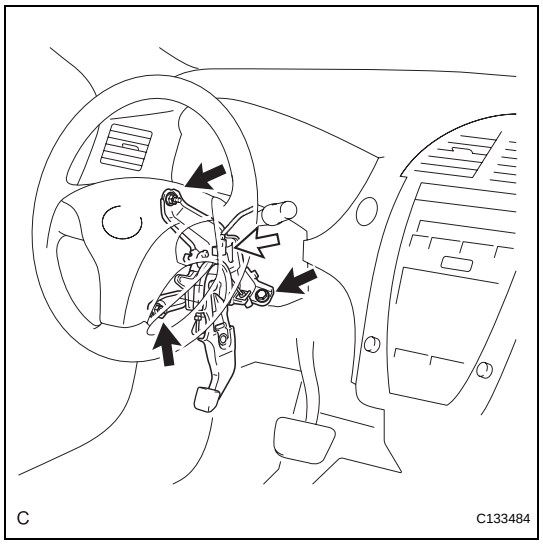

INSTALLATION

1. INSTALL PARKING BRAKE PEDAL ASSEMBLY

(a) Install the parking brake pedal assembly with the bolt and 2 nuts.
Torque: 39 N*m (398 kgf*cm, 29 ft.*lbf)

(b) Connect the parking brake switch connector.

(c) Install the No. 1 parking brake cable assembly to the body with the bolt, nut, and a new No. 1 parking brake cable clamp.

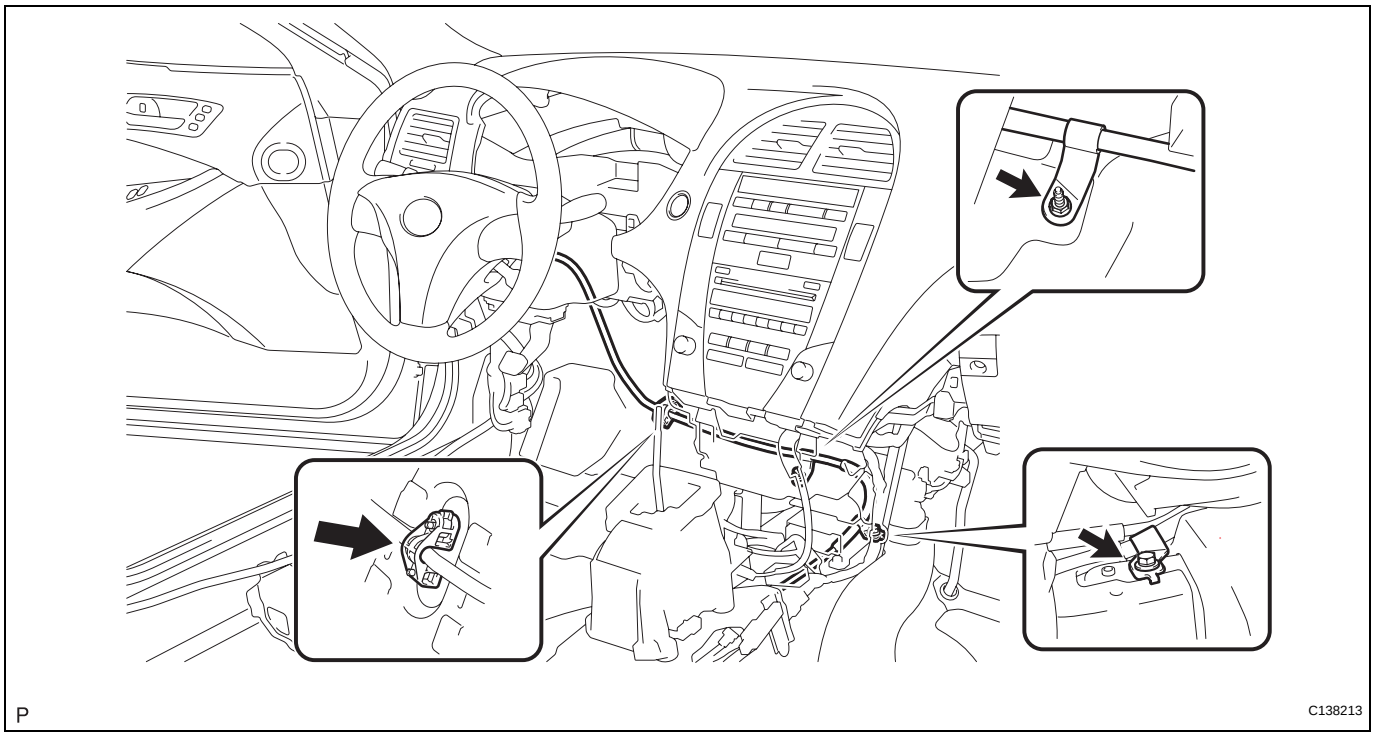

Torque: Bolt
15 N*m (153 kgf*cm, 11 ft.*lbf)
Nut
5.4 N*m (55 kgf*cm, 48 in.*lbf)

(d) Using a brass bar and a hammer, install the clip to the No. 1 parking brake cable assembly.

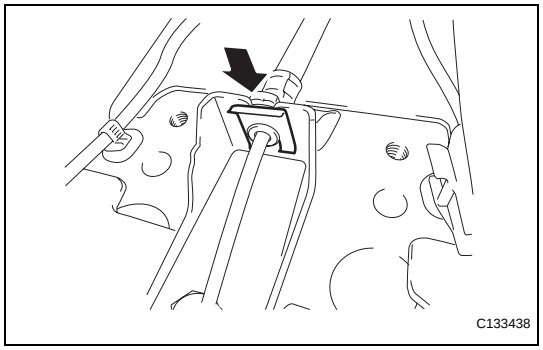

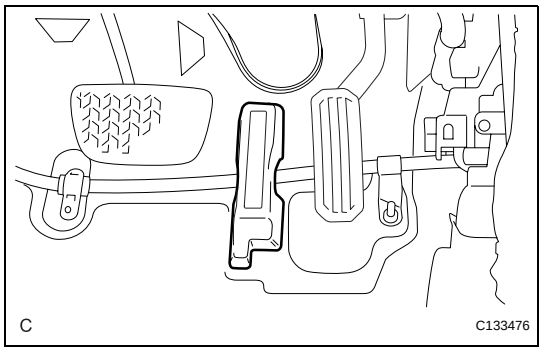

2. INSTALL NO. 2 DASH PANEL INSULATOR PAD

(a) Install the No. 2 dash panel insulator pad.

3. CONNECT NO. 4 PARKING BRAKE CABLE ASSEMBLY

(a) Connect the No. 4 parking brake cable assembly to the No. 1 parking brake cable assembly.

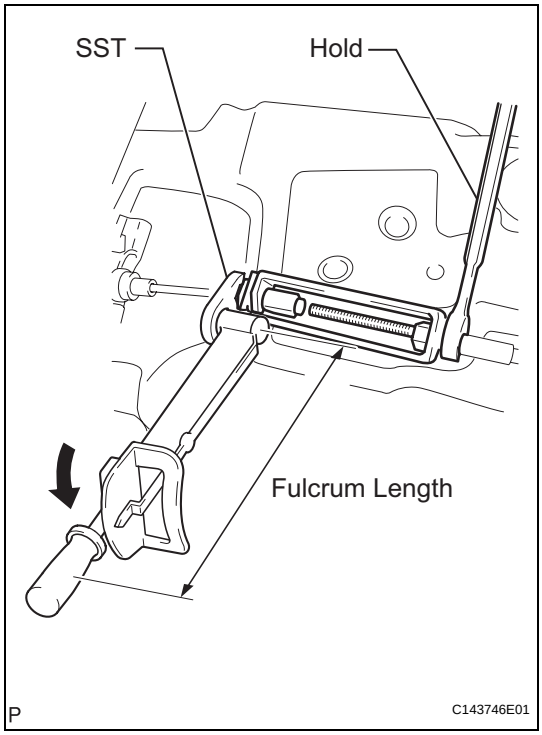

(b) Using SST and a wrench, hold the lock nut of the No. 1 parking brake cable and tighten the turnbuckle of the No. 4 parking brake cable.

SST 09023-00101

Torque: without SST
5.4 N*m (55 kgf*cm, 48 in.*lbf)
with SST
5.0 N*m (51 kgf*cm, 44 in.*lbf)

NOTICE:

- **Use a torque wrench with a fulcrum length of 250 mm (9.84 in.).**
- **This torque is effective when SST is parallel to a torque wrench.**

4. INSTALL CENTER AIRBAG SENSOR ASSEMBLY (See page RS-469)

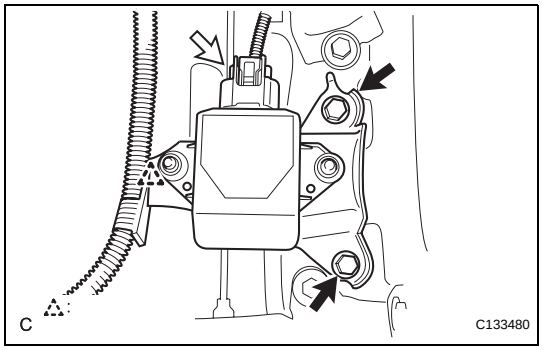

5. INSTALL YAW RATE AND ACCELERATION SENSOR

(a) Install the yaw rate and acceleration sensor assembly with the 2 bolts.
Torque: 13 N*m (133 kgf*cm, 10 ft.*lbf)

(b) Engage the clamp and connect the connector.

PB

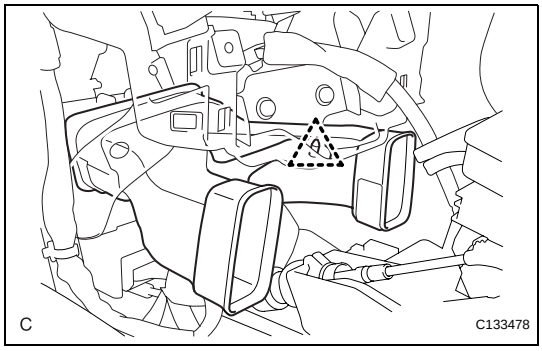

6. INSTALL NO. 1 CONSOLE BOX DUCT

(a) Install the No. 1 console box duct with the clip.

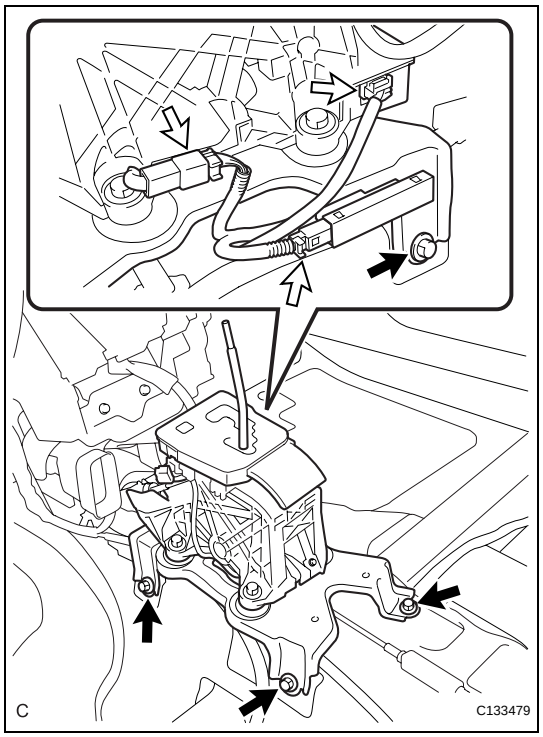

7. INSTALL FLOOR SHIFT LEVER ASSEMBLY

(a) Install the floor shift lever assembly with the 4 bolts.
Torque: 12 N*m (122 kgf*cm, 9 ft.*lbf)

(b) Connect the 3 connectors.

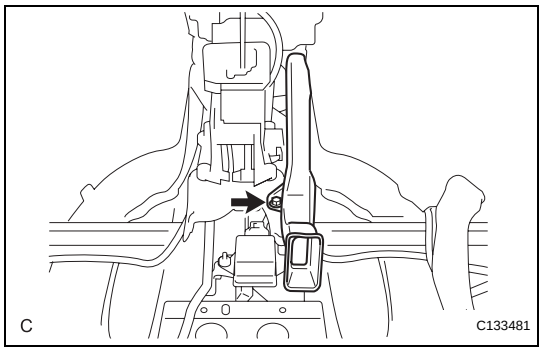

8. INSTALL NO. 3 CONSOLE BOX DUCT

(a) Install the No. 3 console box duct with the bolt.

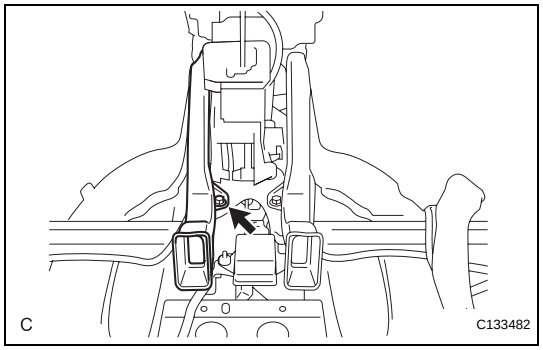

9. INSTALL NO. 2 CONSOLE BOX DUCT

(a) Install the No. 2 console box duct with the bolt.

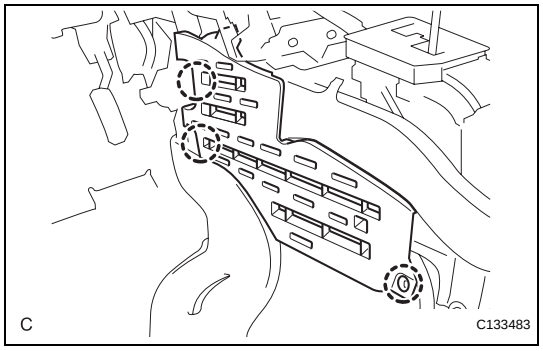

10. INSTALL FLOOR CARPET BRACKET LH

(a) Install the floor carpet bracket LH with the 3 clips.

11. INSTALL FLOOR CARPET BRACKET RH

HINT:
Use the same procedures for the RH side and the LH side.

12. INSTALL FRONT FLOOR FRONT CARPET ASSEMBLY

(a) Engage the 11 clamps, 4 claws, 4 clips and 5 fasteners, and install the front floor front carpet assembly.

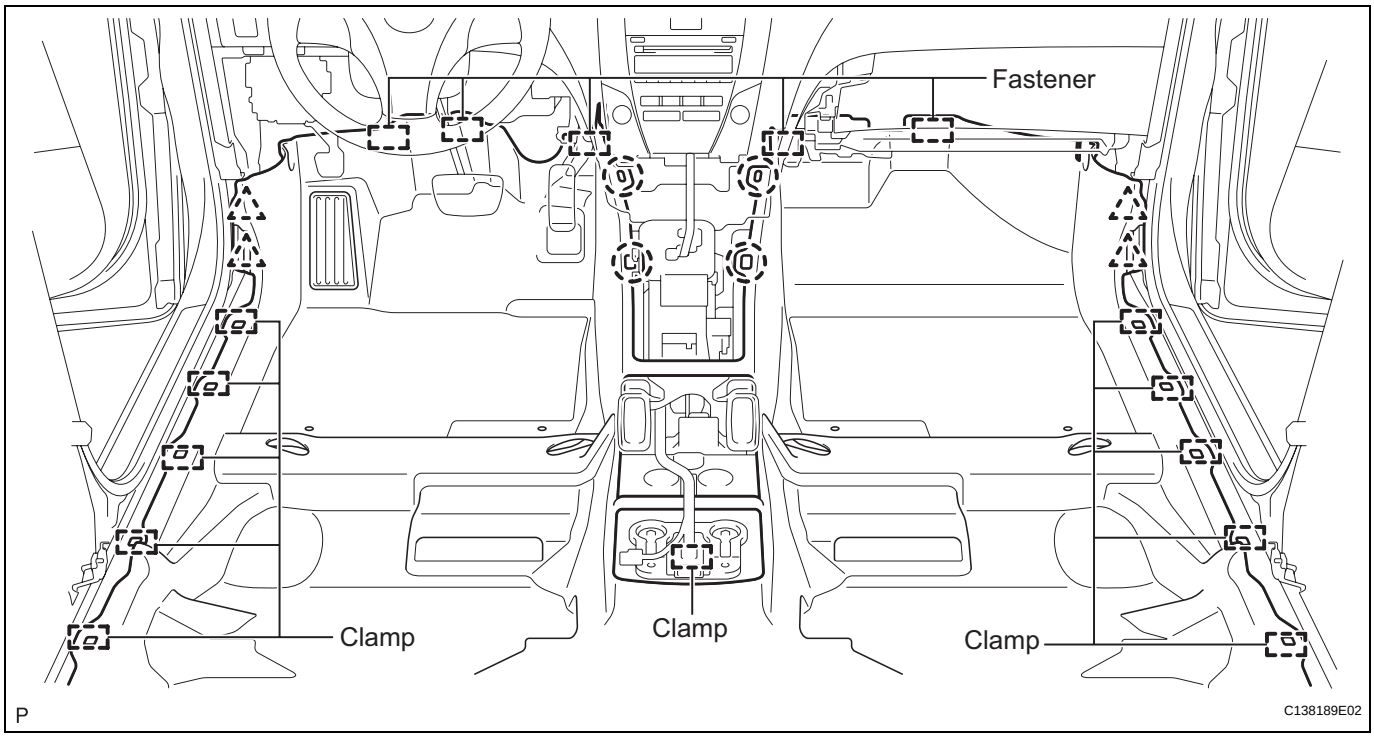

13. INSTALL REAR CONSOLE BOX ASSEMBLY (See page IP-39)

14. INSTALL CONSOLE REAR END PANEL SUB-ASSEMBLY (See page IP-40)

15. INSTALL CONSOLE BOX CARPET (See page IP-41)

16. INSTALL CONSOLE BOX POCKET (See page IP-41)

17. INSTALL UPPER CONSOLE PANEL ASSEMBLY WITH FRONT ASH RECEPTACLE (See page IP-42)

18. INSTALL SHIFT LEVER KNOB SUB-ASSEMBLY (See page IP-42)

19. INSTALL LOWER INSTRUMENT PANEL SUB-ASSEMBLY (See page IP-46)

20. INSTALL INSTRUMENT PANEL FINISH PANEL END LH (See page IP-46)

21. INSTALL SIDE INSTRUMENT PANEL LH (See page IP-47)

22. INSTALL FRONT DOOR OPENING TRIM COVER LH (See page IR-64)

23. INSTALL LOWER CENTER PILLAR GARNISH LH (See page IR-63)

24. INSTALL FRONT DOOR SCUFF PLATE LH (See page IR-65)

25. **INSTALL REAR DOOR SCUFF PLATE LH (See page IR-63)**
26. **INSTALL LOWER INSTRUMENT PANEL RH (See page IP-42)**
27. **INSTALL FRONT PASSENGER SIDE KNEE AIRBAG ASSEMBLY (See page RS-396)**
28. **INSTALL SIDE INSTRUMENT PANEL RH (See page IP-43)**
29. **INSTALL NO. 2 INSTRUMENT PANEL UNDER COVER SUB-ASSEMBLY (See page IP-44)**
30. **INSTALL FRONT DOOR OPENING TRIM COVER RH (See page IR-65)**
31. **INSTALL LOWER CENTER PILLAR GARNISH RH (See page IR-65)**
32. **INSTALL FRONT DOOR SCUFF PLATE RH (See page IR-65)**
33. **INSTALL REAR DOOR SCUFF PLATE RH (See page IR-65)**
34. **INSTALL INSTRUMENT PANEL FINISH PANEL END RH (See page IP-44)**
35. **INSTALL FRONT SEAT ASSEMBLY LH**
    HINT:
    Refer to the procedures up to "INSTALL FRONT SEAT ASSEMBLY". (See page SE-109)
36. **INSTALL FRONT SEAT ASSEMBLY RH**
    HINT:
    Use the same procedures for the RH side and the LH side.
37. **INSPECT PARKING BRAKE PEDAL TRAVEL (See page PB-1)**
38. **ADJUST PARKING BRAKE PEDAL TRAVEL (See page PB-2)**

REMOVAL

HINT:
- Use the same procedures for the No. 2 parking brake cable assembly and No. 3 parking brake cable assembly.
- The procedures listed below are for the No. 3 parking brake cable assembly.

1. REMOVE PARKING BRAKE PEDAL ASSEMBLY

HINT:
Refer to the procedures up to "REMOVE PARKING BRAKE PEDAL". (See page PB-10)

2. REMOVE NO. 1 PARKING BRAKE CABLE ASSEMBLY (See page PB-14)

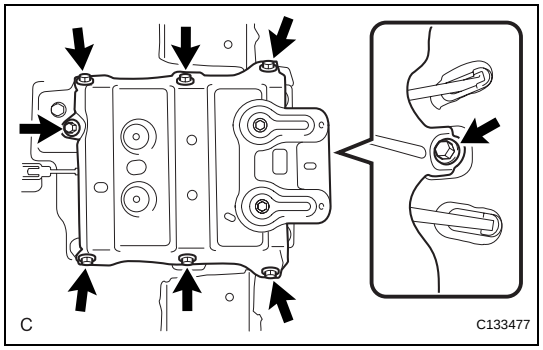

3. REMOVE CROSS MEMBER FLOOR NO. 4 REINFORCEMENT SUB-ASSEMBLY

(a) Remove the 8 bolts and the cross member floor No. 4 reinforcement sub-assembly.

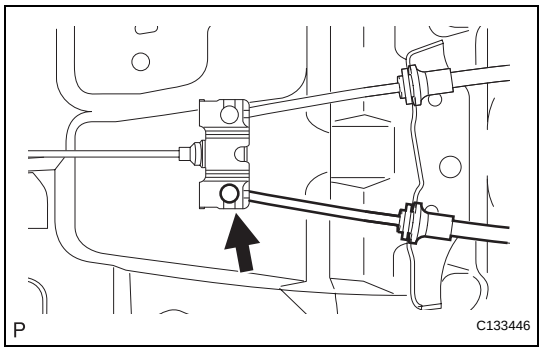

4. SEPARATE NO. 3 PARKING BRAKE CABLE ASSEMBLY

(a) Separate the No. 3 parking brake cable assembly from the parking brake equalizer.

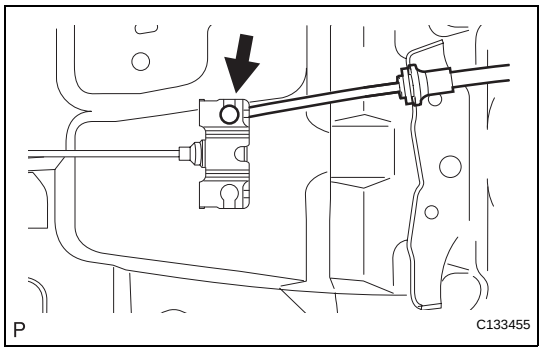

5. SEPARATE NO. 2 PARKING BRAKE CABLE ASSEMBLY

(a) Separate the No. 2 parking brake cable assembly from the parking brake equalizer.

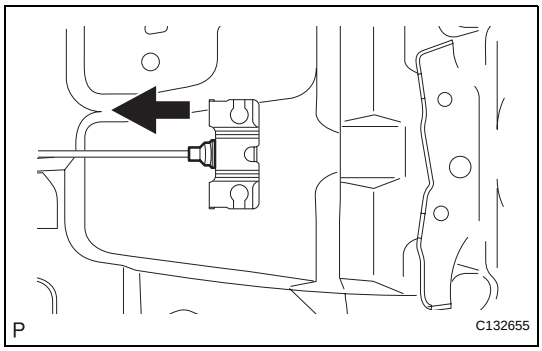

6. REMOVE NO. 4 PARKING BRAKE CABLE ASSEMBLY

(a) Slide the rubber boot as shown in the illustration.

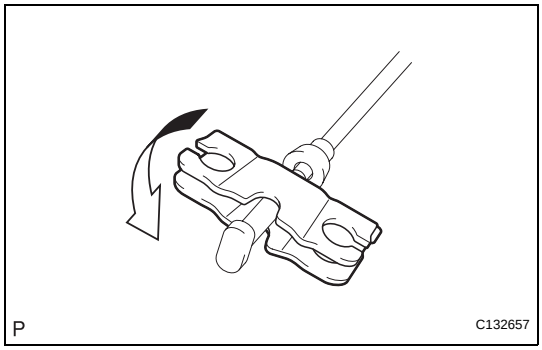

(b) Remove the No. 4 parking brake cable assembly from the parking brake equalizer as shown in the illustration.

7. REMOVE EXHAUST TAIL PIPE ASSEMBLY (See page EX-2)

8. REMOVE EXHAUST CENTER PIPE ASSEMBLY (See page EX-2)

9. REMOVE REAR WHEEL

10. SEPARATE REAR DISC BRAKE CALIPER ASSEMBLY (See page PB-38)

11. REMOVE REAR DISC (See page PB-38)

12. REMOVE PARKING BRAKE SHOE RETURN TENSION NO. 1 SPRING (See page PB-38)

13. REMOVE PARKING BRAKE SHOE STRUT (See page PB-38)

14. REMOVE NO. 1 PARKING BRAKE SHOE ASSEMBLY (See page PB-38)

15. REMOVE PARKING BRAKE SHOE ADJUSTING SCREW SET (See page PB-39)

16. REMOVE NO. 2 PARKING BRAKE SHOE ASSEMBLY (See page PB-39)

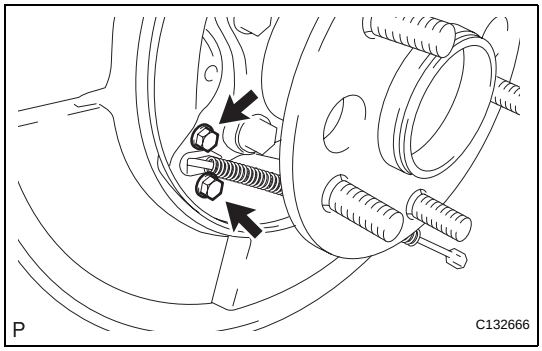

17. REMOVE NO. 3 PARKING BRAKE CABLE ASSEMBLY

(a) Remove the 2 bolts and separate the No. 3 parking brake cable assembly from the backing plate.

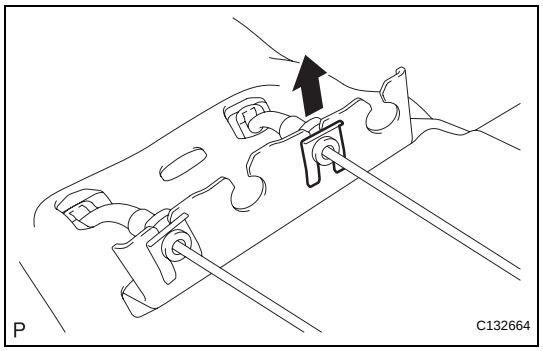

(b) Using needle-nose pliers, remove the clip from the No. 3 parking brake cable assembly.

(c) Remove 3 bolts (A), bolt (B) and nut (C), and disengage each claw.

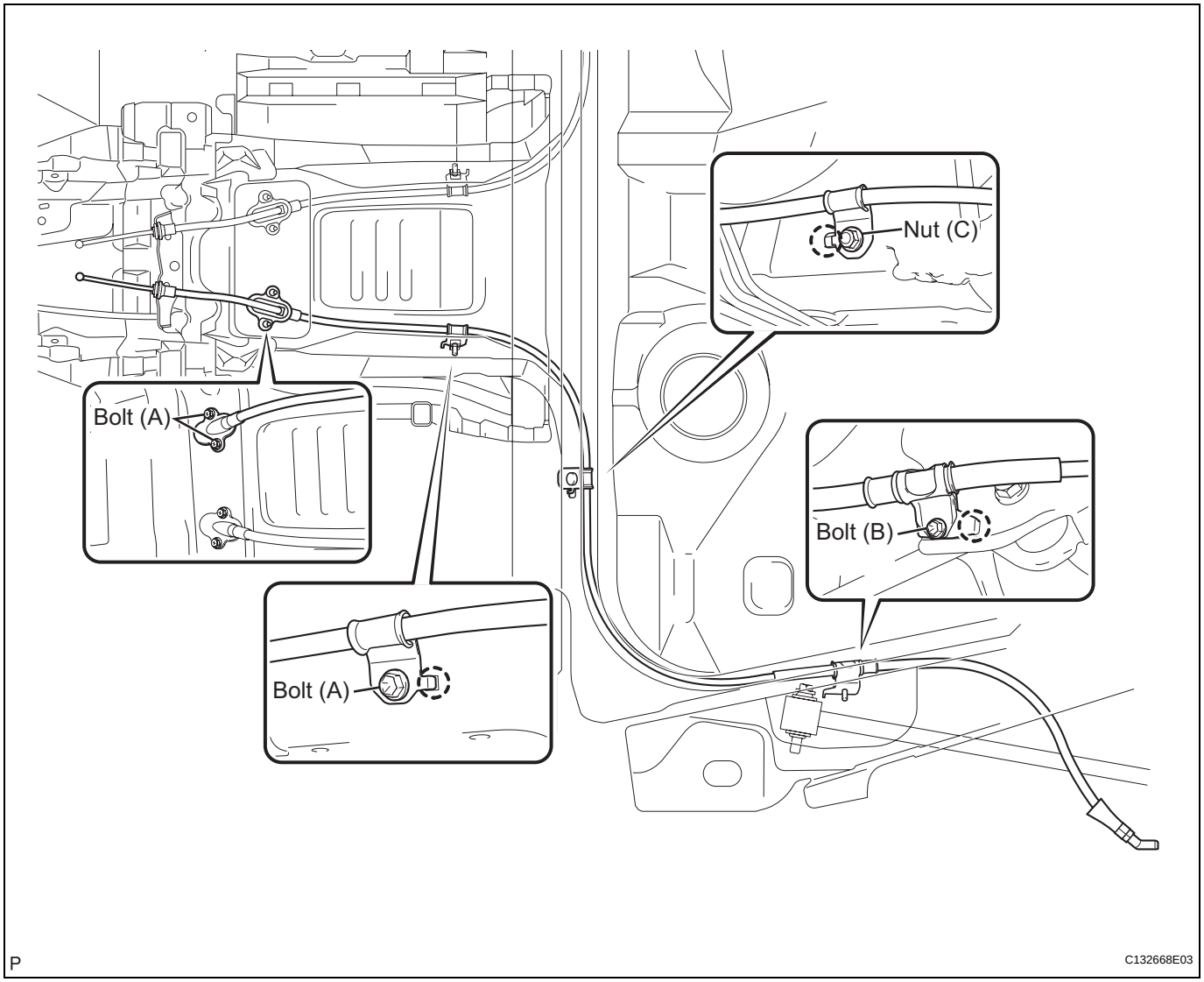

(d) Remove the No. 3 parking brake cable assembly from the body.

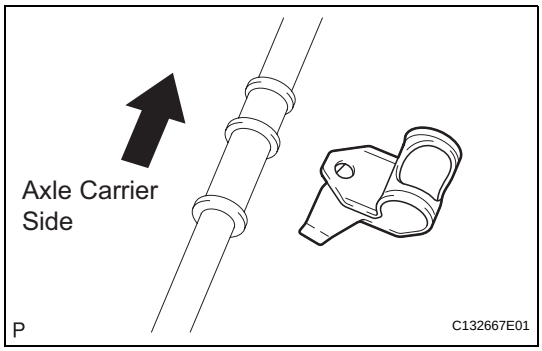

(e) Remove the parking brake cable clamp.

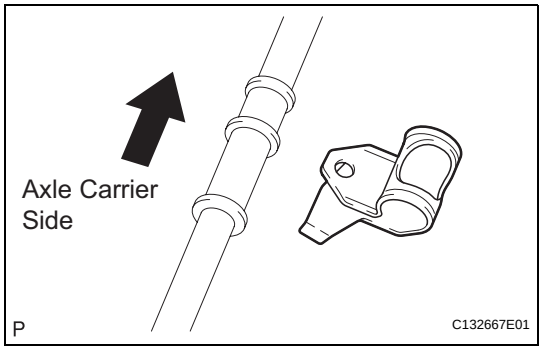

INSTALLATION

1. INSTALL NO. 3 PARKING BRAKE CABLE ASSEMBLY

(a) Install the parking brake cable clamp to the No. 3 parking brake cable assembly.

(b) Install the No. 3 parking brake cable assembly with 3 bolts (A), bolt (B) and nut (C), and engage each claw.

Torque: Bolt (A)
8.5 N*m (87 kgf*cm, 75 in.*lbf)
Bolt (B) and Nut (C)
6.0 N*m (61 kgf*cm, 53 in.*lbf)

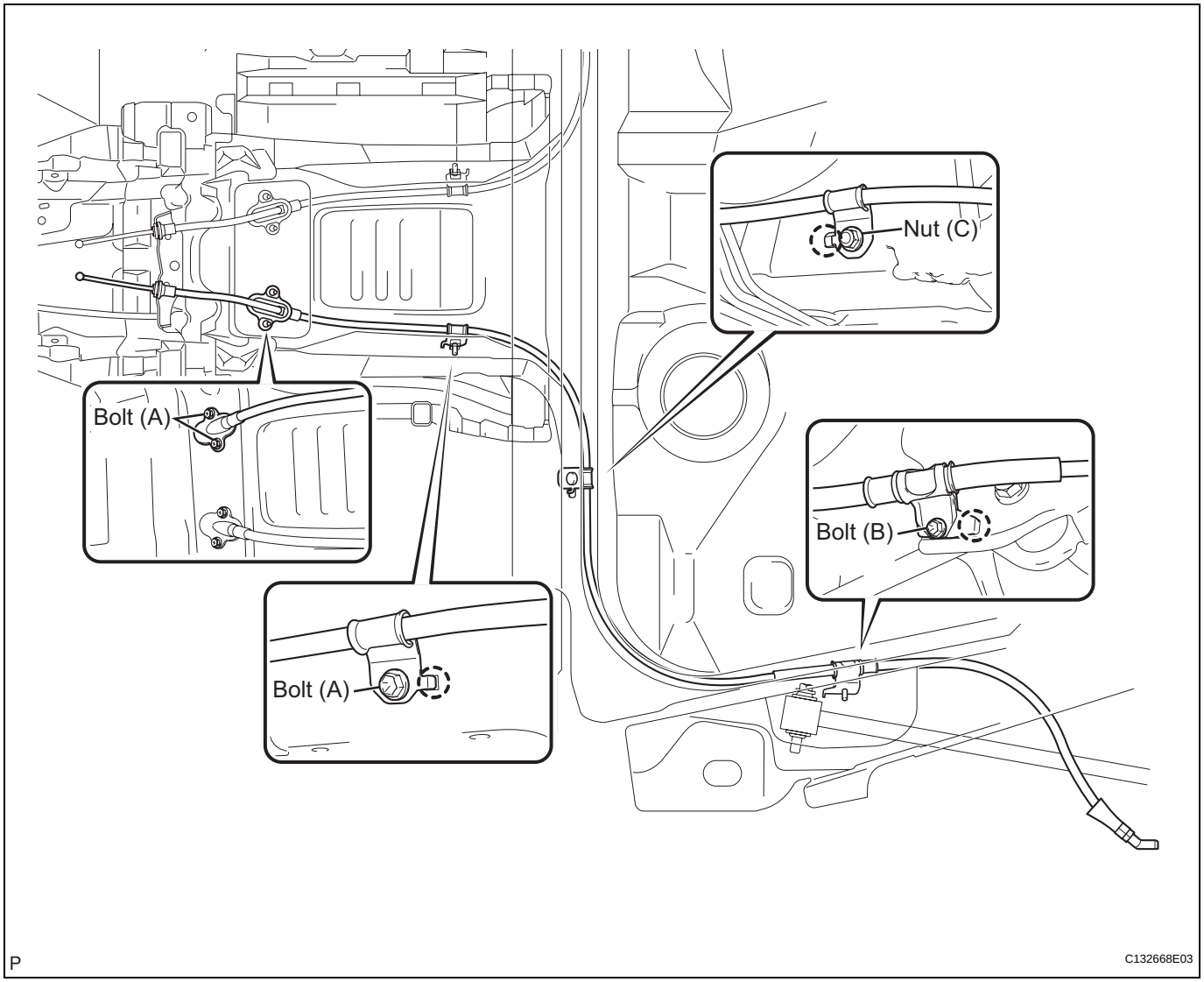

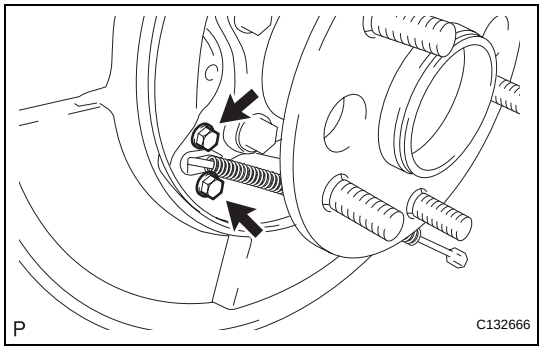

(c) Install the No. 3 parking brake cable assembly to the backing plate with the 2 bolts.
Torque: 8.0 N*m (82 kgf*cm, 71 in.*lbf)

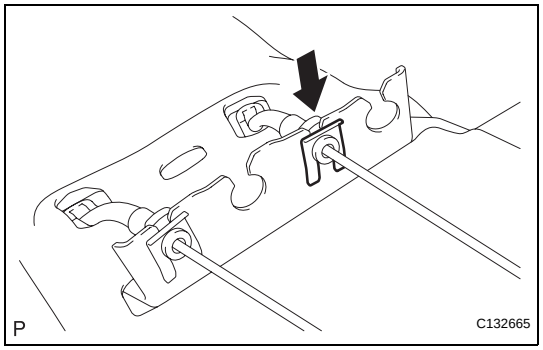

(d) Using a brass bar and a hammer, install the clip to the No. 3 parking brake cable assembly.

2. INSTALL NO. 2 PARKING BRAKE SHOE ASSEMBLY (See page PB-41)

3. INSTALL PARKING BRAKE SHOE ADJUSTING SCREW SET (See page PB-42)

4. INSTALL NO. 1 PARKING BRAKE SHOE ASSEMBLY (See page PB-42)

5. **INSTALL PARKING BRAKE SHOE STRUT (See page PB-42)**
6. **INSTALL PARKING BRAKE SHOE RETURN TENSION NO. 1 SPRING (See page PB-42)**
7. **CHECK PARKING BRAKE INSTALLATION (See page PB-43)**
8. **INSTALL REAR DISC (See page PB-43)**
9. **ADJUST PARKING BRAKE SHOE CLEARANCE (See page PB-1)**
10. **INSTALL REAR DISC BRAKE CALIPER ASSEMBLY (See page PB-43)**
11. **INSTALL REAR WHEEL**
12. **INSTALL EXHAUST CENTER PIPE ASSEMBLY (See page EX-4)**
13. **INSTALL EXHAUST TAIL PIPE ASSEMBLY (See page EX-5)**
14. **INSTALL NO. 4 PARKING BRAKE CABLE ASSEMBLY**
    (a) Install the No. 4 parking brake cable assembly to the parking brake equalizer.

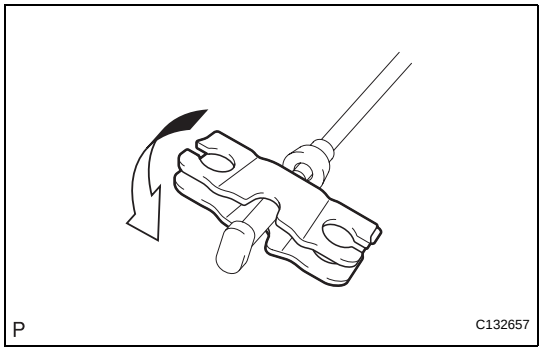

    (b) Slide the rubber boot back as shown in the illustration.

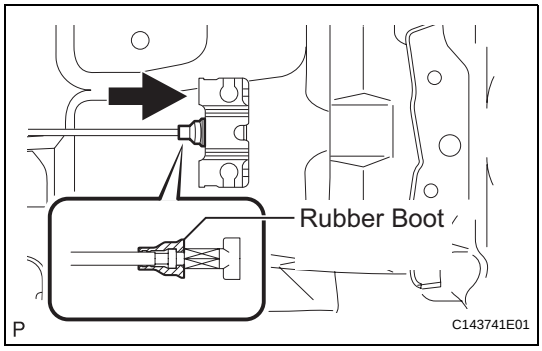

15. **CONNECT NO. 2 PARKING BRAKE CABLE ASSEMBLY**
    (a) Connect the No. 2 parking brake cable assembly to the parking brake equalizer.

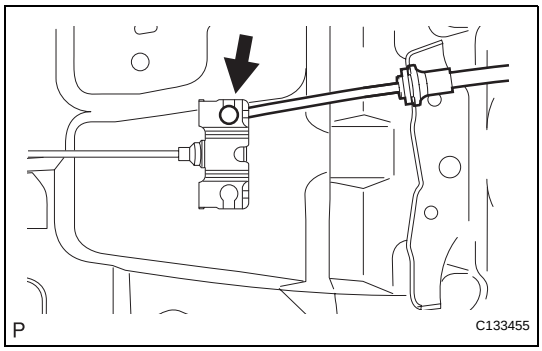

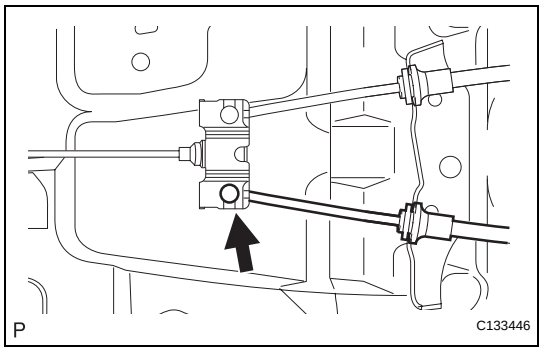

16. CONNECT NO. 3 PARKING BRAKE CABLE ASSEMBLY

(a) Connect the No. 3 parking brake cable assembly to the parking brake equalizer.

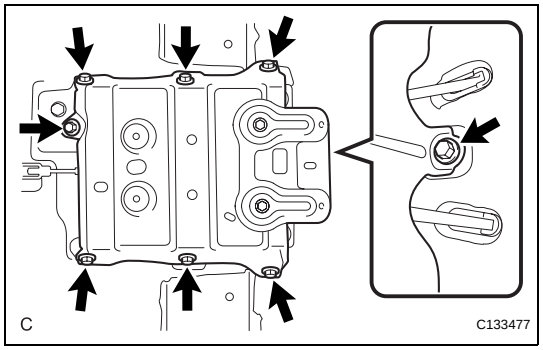

17. INSTALL CROSS MEMBER FLOOR NO. 4 REINFORCEMENT SUB-ASSEMBLY

(a) Install the cross member floor No. 4 reinforcement sub-assembly with the 8 bolts.
Torque: 19 N*m (194 kgf*cm, 14 ft.*lbf)

18. INSTALL NO. 1 PARKING BRAKE CABLE ASSEMBLY (See page PB-16)

19. INSTALL PARKING BRAKE PEDAL ASSEMBLY

HINT:
Refer to the procedures up to "INSTALL PARKING BRAKE PEDAL". (See page PB-17)

20. CHECK FOR EXHAUST GAS LEAKS (See page EX-5)

PARKING BRAKE ASSEMBLY

COMPONENTS

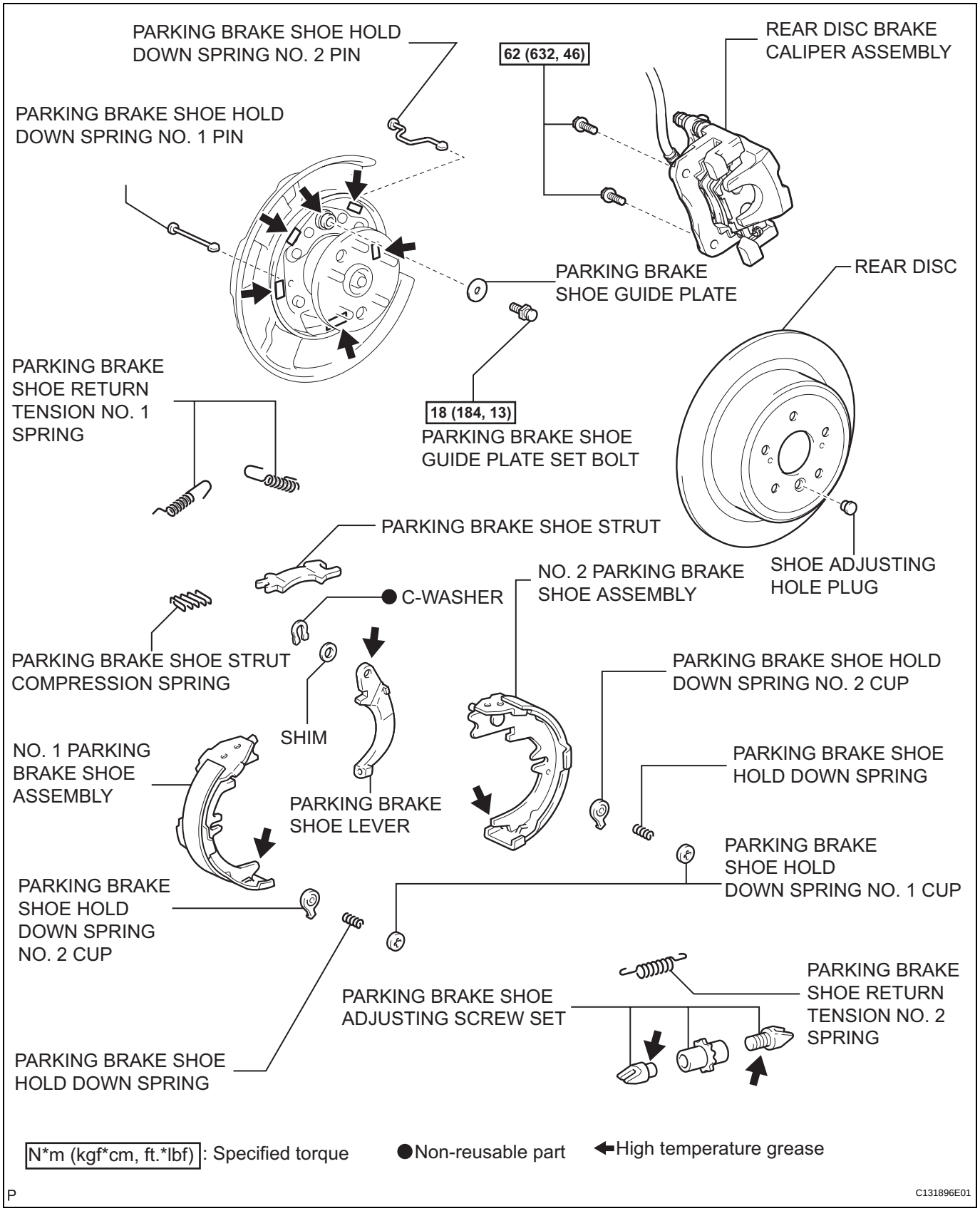

PB

DISASSEMBLY

HINT:
- Use the same procedures for the RH side and the LH side.
- The procedures listed below are for the LH side.

1. REMOVE REAR WHEEL

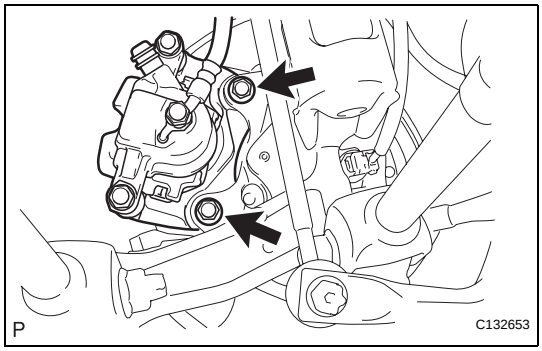

2. SEPARATE REAR DISC BRAKE CALIPER ASSEMBLY

(a) Remove the 2 bolts and separate the rear disc brake caliper assembly.
HINT:
Do not disconnect the flexible hose from the disc brake caliper assembly.

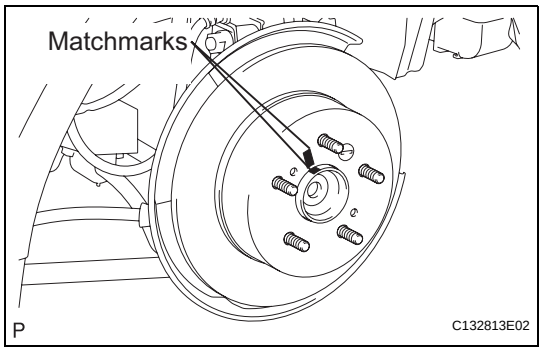

3. REMOVE REAR DISC

(a) Release the parking brake and place the matchmarks on the rear disc and the axle hub.
(b) Remove the rear disc.
HINT:
If the disc cannot be removed easily, turn the shoe adjuster until the wheel turns freely.

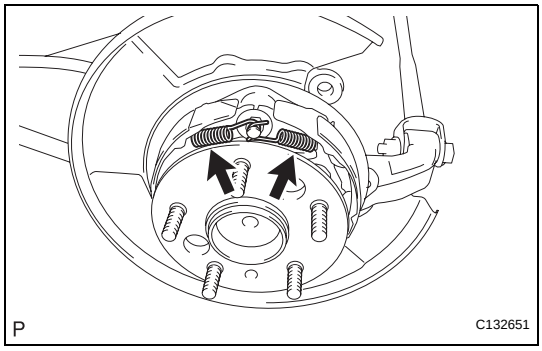

4. REMOVE PARKING BRAKE SHOE RETURN TENSION NO. 1 SPRING

(a) Using needle-nose pliers, remove the 2 parking brake shoe return tension No. 1 springs.

5. REMOVE PARKING BRAKE SHOE STRUT

(a) Remove the parking brake shoe strut and the parking brake shoe strut compression spring.

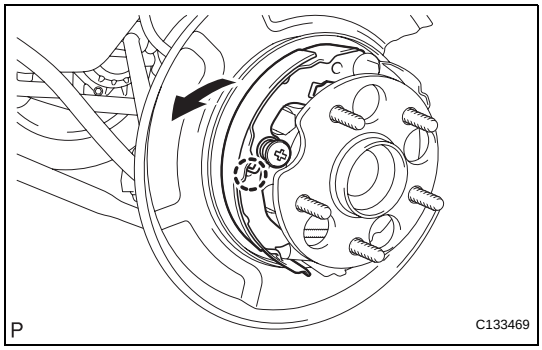

6. REMOVE NO. 1 PARKING BRAKE SHOE ASSEMBLY

(a) Release the claw of the parking brake shoe hold down spring No. 1 cup.
(b) Remove the No. 1 parking brake shoe assembly as shown in the illustration.
(c) Remove the parking brake shoe hold down spring No. 1 cup, the parking brake shoe hold down spring, the parking brake shoe hold down spring No. 2 cup, and the parking brake shoe hold down spring No. 1 pin.

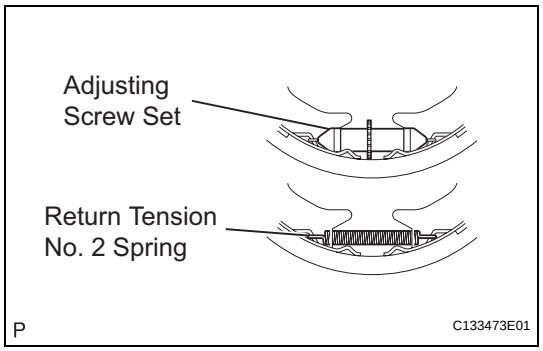

7. REMOVE PARKING BRAKE SHOE ADJUSTING SCREW SET

(a) Remove the parking brake shoe adjusting screw set.

(b) Remove the parking brake shoe return tension No. 2 spring.

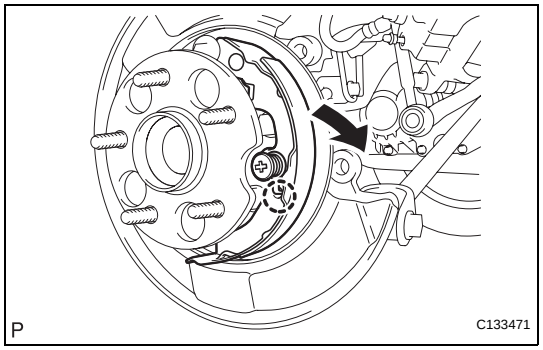

8. REMOVE NO. 2 PARKING BRAKE SHOE ASSEMBLY

(a) Release the claw of the parking brake shoe hold down spring No. 1 cup.

(b) Remove the No. 2 parking brake shoe assembly as shown in the illustration.

(c) Remove the parking brake shoe hold down spring No. 1 cup, the parking brake shoe hold down spring, the parking brake shoe hold down spring No. 2 cup, and the parking brake shoe hold down spring No. 2 pin.

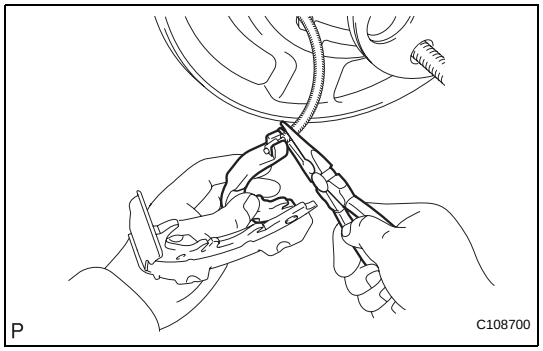

(d) Using needle-nose pliers, disconnect the No. 3 parking brake cable assembly from the parking brake shoe lever.

NOTICE:

Be careful not to damage the No. 3 parking brake cable assembly.

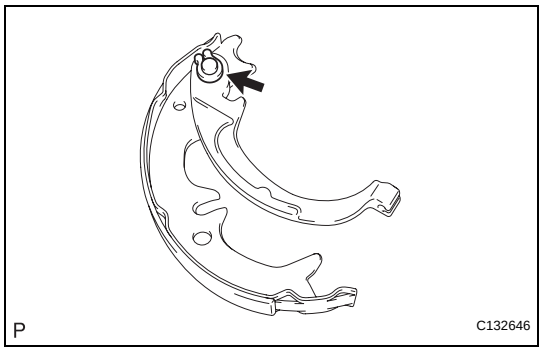

9. REMOVE PARKING BRAKE SHOE LEVER

(a) Using a screwdriver, remove the C-washer, shim and the parking brake shoe lever.

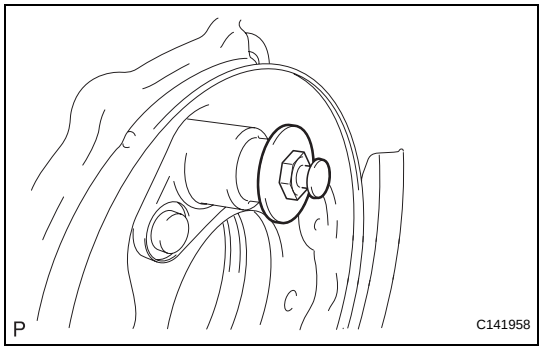

10. REMOVE PARKING BRAKE SHOE GUIDE PLATE

(a) Remove the parking brake shoe guide plate set bolt and the parking brake shoe guide plate.

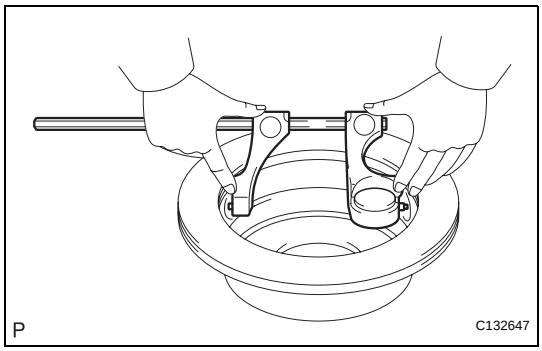

INSPECTION

1. INSPECT BRAKE DISC INSIDE DIAMETER

(a) Using a brake drum gauge or an equivalent tool, measure the inside diameter of the disc.

Standard inside diameter:
170 mm (6.69 in.)
Maximum inside diameter:
171 mm (6.73 in.)

If the inside diameter is more than the maximum, replace the rear disc.

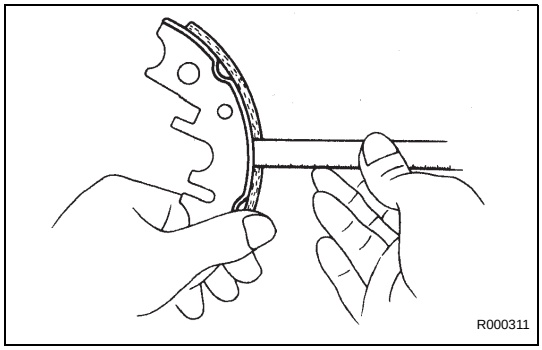

2. INSPECT PARKING BRAKE SHOE LINING THICKNESS

(a) Using a ruler, measure the thickness of the shoe lining.

Standard thickness:
2.0 mm (0.079 in.)
Minimum thickness:
1.0 mm (0.039 in.)

If the lining thickness is less than the minimum, or if there is severe or uneven wear, replace the brake shoe.

NOTICE:
Always replace both the right and left parking brake shoes together.

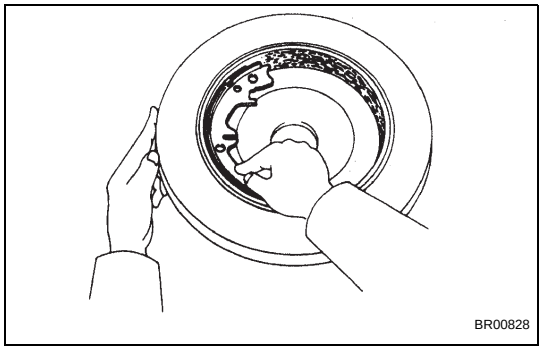

3. INSPECT BRAKE DISC AND PARKING BRAKE SHOE LINING FOR PROPER CONTACT

(a) Apply chalk to the inside surface of the disc, then grind down the brake shoe lining to fit the disc.
If the contact between the disc and the brake shoe lining is improper, repair it using a brake shoe grinder or replace the brake shoe.

REASSEMBLY

1. APPLY HIGH TEMPERATURE GREASE

(a) Apply high temperature grease to the backing plate which makes contact with the shoe.

2. INSTALL PARKING BRAKE SHOE GUIDE PLATE

(a) Apply adhesive to the threads of the parking brake shoe guide plate set bolt.
Adhesive:
Toyota Genuine Adhesive 1344, Three Bond 1344 or equivalent

(b) Install the parking brake shoe guide plate with the parking brake shoe guide plate set bolt.
Torque: 18 N*m (184 kgf*cm, 13 ft.*lbf)

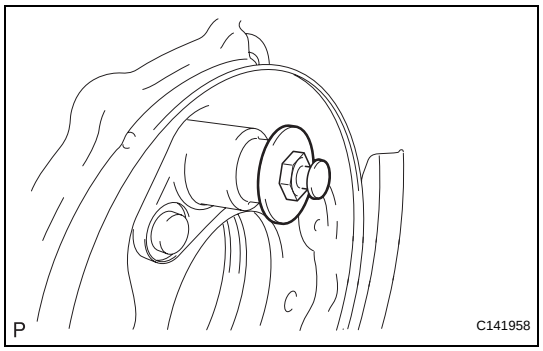

3. INSTALL PARKING BRAKE SHOE LEVER

(a) Install the parking brake shoe lever and shim to the No. 2 parking brake shoe assembly with a new C-washer.

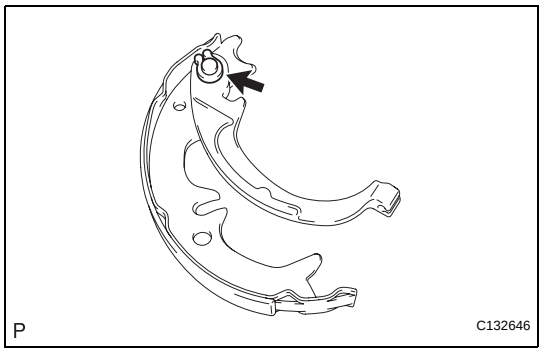

(b) Using a feeler gauge, measure the clearance between the No. 2 parking brake shoe assembly and parking brake shoe lever.
Standard clearance:
Less than 0.35 mm (0.014 in.)
If the clearance is not as specified, replace the shim with one of the correct size.

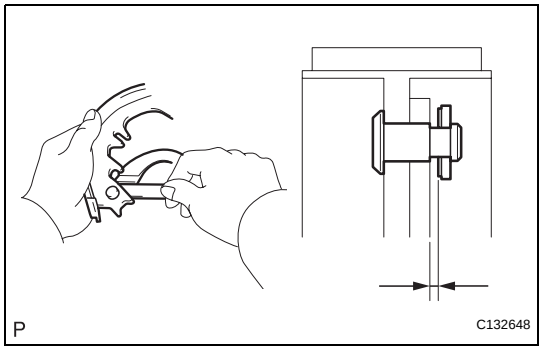

Shim Thickness	Shim Thickness
0.3 mm (0.012 in.)	0.9 mm (0.035 in.)
0.6 mm (0.024 in.)	-

4. INSTALL NO. 2 PARKING BRAKE SHOE ASSEMBLY

(a) Using needle-nose pliers, connect the No. 3 parking brake cable assembly to the parking brake shoe lever.

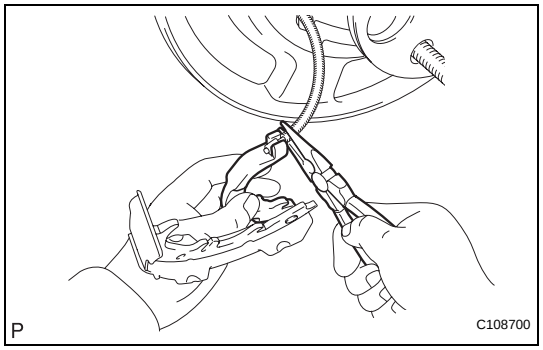

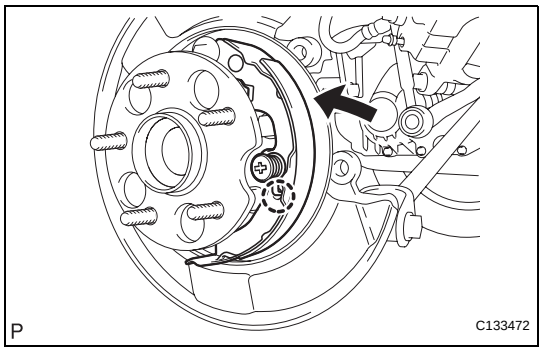

(b) Install the No. 2 parking brake shoe assembly with the parking brake shoe hold down spring No. 2 pin, the parking brake shoe hold down spring No. 2 cup, the parking brake shoe hold down spring and the parking brake shoe hold down spring No. 1 cup.
(c) Engage the claw of the parking brake shoe hold down spring No. 1 cup to the No. 2 parking brake shoe assembly.

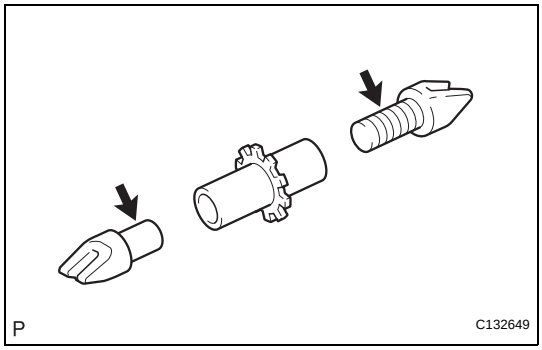

5. INSTALL PARKING BRAKE SHOE ADJUSTING SCREW SET

(a) Apply high temperature grease to the parking brake adjusting screw as shown in the illustration.

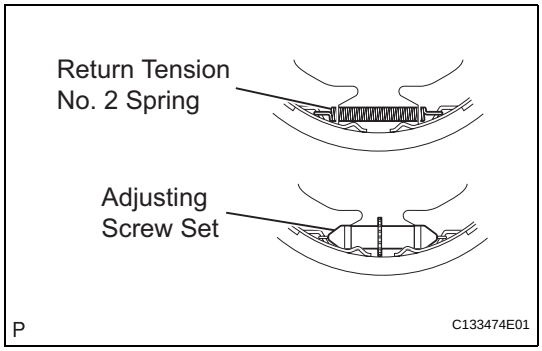

(b) Install the parking brake shoe return tension No. 2 spring to the No. 1 parking brake shoe assembly and the No. 2 parking brake shoe assembly.
(c) Install the parking brake shoe adjusting screw set to the No. 1 parking brake shoe assembly and the No. 2 parking brake shoe assembly.

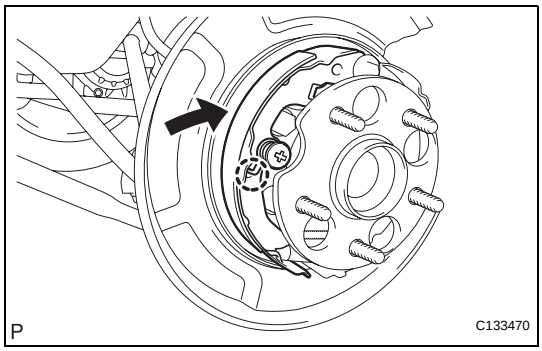

6. INSTALL NO. 1 PARKING BRAKE SHOE ASSEMBLY

(a) Install the No. 1 parking brake shoe assembly with the parking brake shoe hold down spring No. 1 pin, parking brake shoe hold down spring No. 2 cup, parking brake shoe hold down spring and parking brake shoe hold down spring No. 1 cup.
(b) Engage the claw of the parking brake shoe hold down spring No. 1 cup to the No. 1 parking brake shoe assembly.

7. INSTALL PARKING BRAKE SHOE STRUT

(a) Attach the parking brake shoe strut and the parking brake shoe strut compression spring to the No. 1 parking brake shoe assembly and No. 2 parking brake shoe assembly.

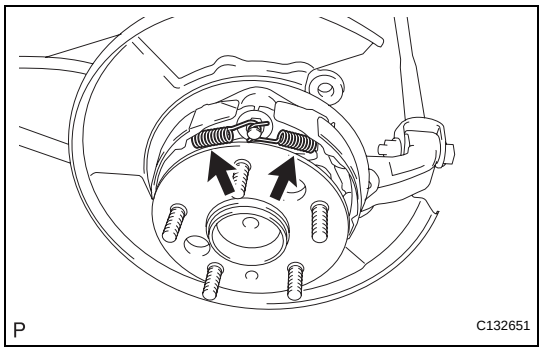

8. INSTALL PARKING BRAKE SHOE RETURN TENSION NO. 1 SPRING

(a) Using needle-nose pliers, install the 2 parking brake shoe return tension No. 1 springs.
HINT:
First install the front side spring and then the rear side spring.

9. CHECK PARKING BRAKE INSTALLATION

(a) Check that each part is installed properly.

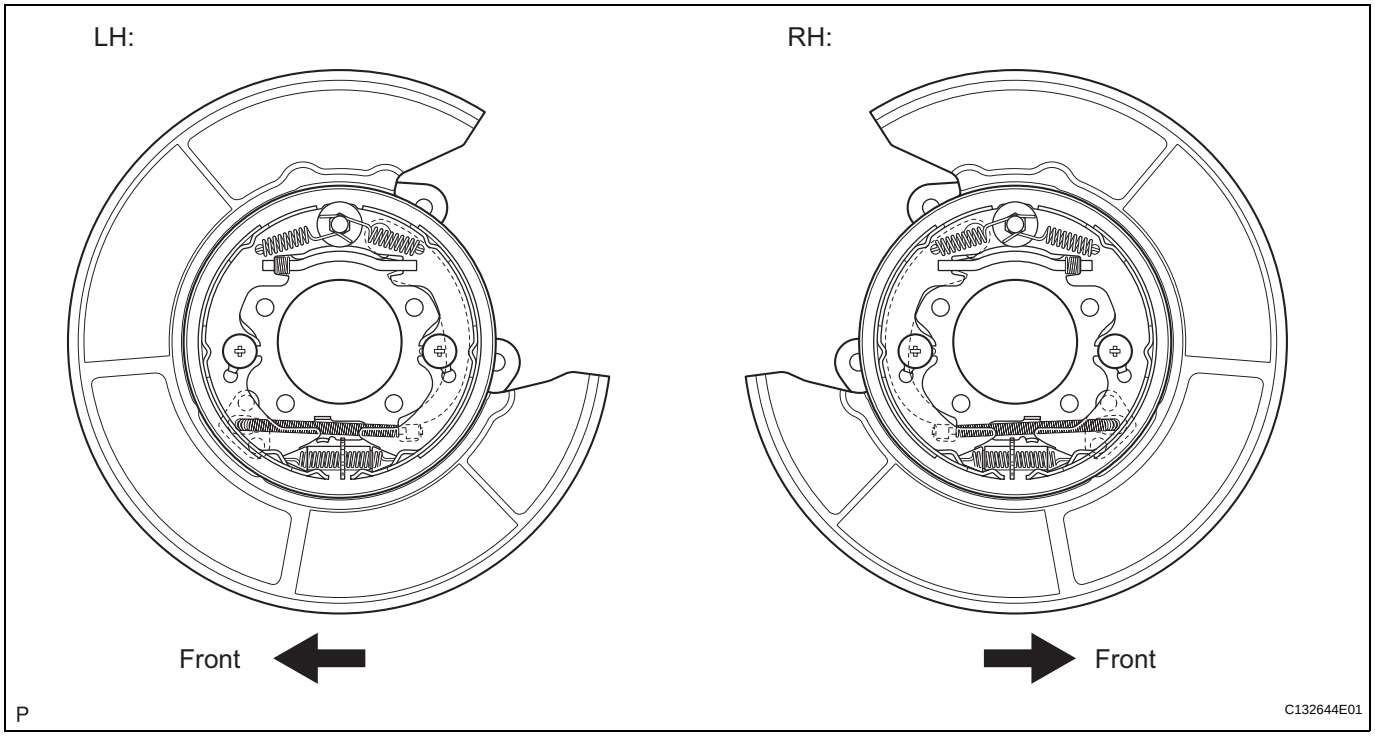

NOTICE:
There should be no oil or grease on the friction surface of the shoe lining and disc.

10. INSTALL REAR DISC

(a) Align the matchmarks and install the rear disc.

11. ADJUST PARKING BRAKE SHOE CLEARANCE (See page PB-1)

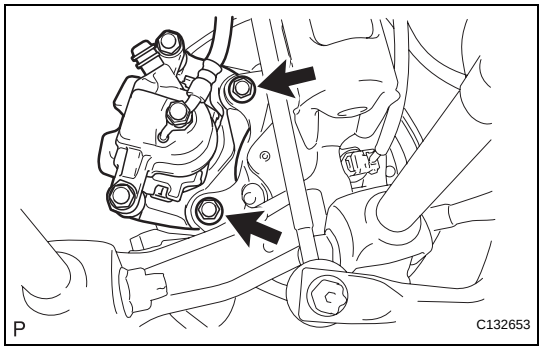

12. INSTALL REAR DISC BRAKE CALIPER ASSEMBLY

(a) Install the rear disc brake caliper assembly with the 2 bolts.
Torque: 62 N*m (632 kgf*cm, 46 ft.*lbf)

13. INSTALL REAR WHEEL
Torque: 103 N*m (1,050 kgf*cm, 76 ft.*lbf)

14. INSPECT PARKING BRAKE PEDAL TRAVEL (See page PB-1)

15. ADJUST PARKING BRAKE PEDAL TRAVEL (See page PB-2)

SYSTEM DIAGRAM

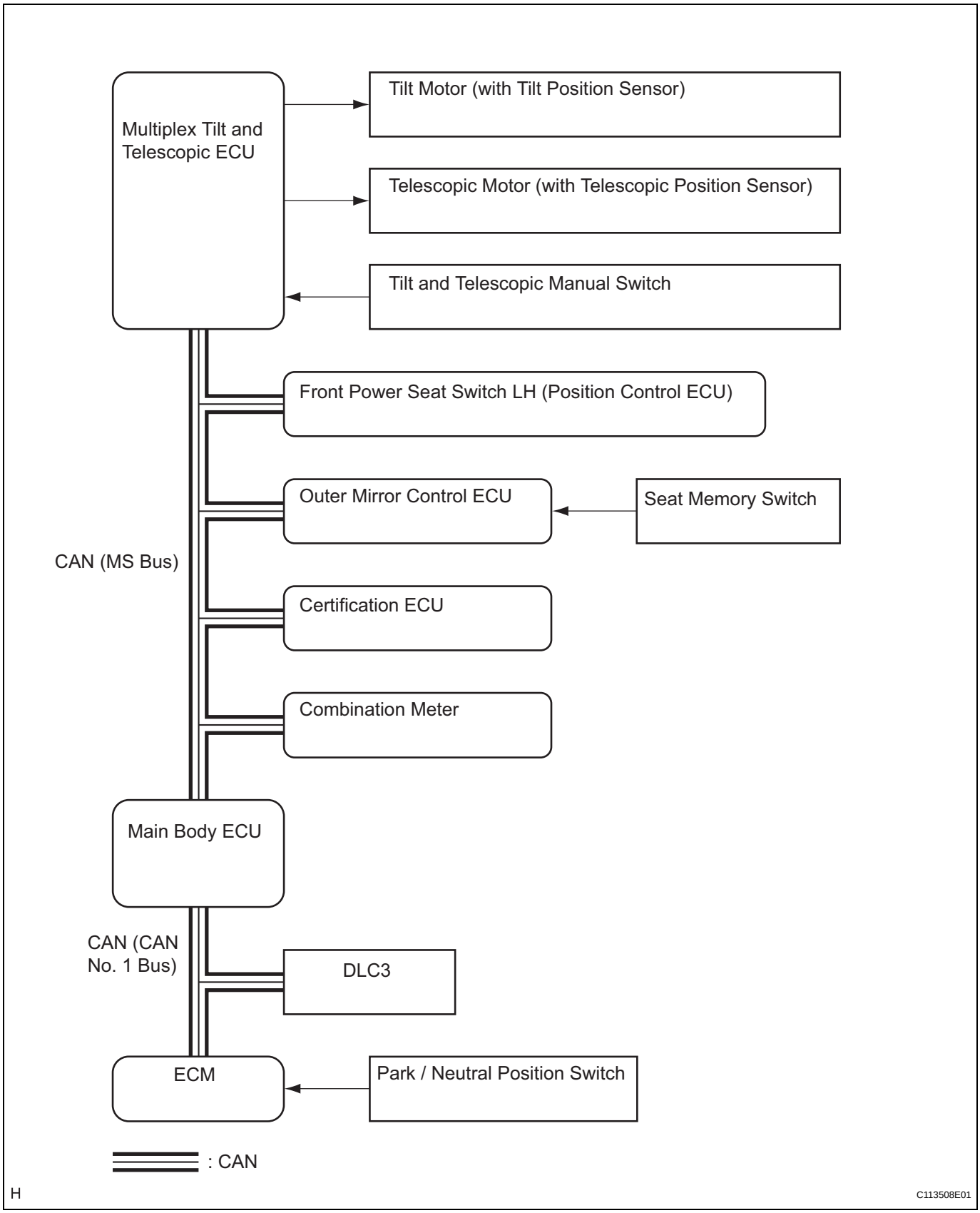

Communication Table:

Sender	Receiver	Signal	Line
Main Body ECU	Multiplex Tilt and Telescopic ECU	• Ignition switch signal • Key switch signal • Key signal for push start system use	CAN
Multiplex Tilt and Telescopic ECU	Front Power Seat Switch LH (Position Control ECU)	• Tilt and Telescopic execution signal • Tilt and Telescopic completion signal	CAN
Front Power Seat Switch LH (Position Control ECU)	Multiplex Tilt and Telescopic ECU	• Memory command of Memory 1 for driver's seat • Memory command of Memory 2 for driver's seat • Play command of Memory 1 for driver's seat • Play command of Memory 2 for driver's seat • Start signal to play Tilt and Telescopic steering • Stop signal to play Tilt and Telescopic steering	CAN
Combination meter ECU	Multiplex Tilt and Telescopic ECU	• Vehicle speed signal (meter to other)	CAN

SYSTEM DESCRIPTION

1. FUNCTION OF MAIN COMPONENTS

Components	Function
Multiplex tilt and telescopic ECU	This ECU sends a control signal to the power tilt motor and the power telescopic motor, based on signals from each switch, to adjust the steering position.
Power tilt motor (with tilt position sensor)	This motor is activated by a signal from the multiplex tilt and telescopic ECU and adjusts the tilt position. The tilt position sensor in the motor detects the tilt position by counting the number of pulses as the motor rotates.
Power telescopic motor (with telescopic position sensor)	This motor is activated by a signal from the multiplex tilt and telescopic ECU and adjusts the telescopic position. The telescopic position sensor in the motor detects the telescopic position by counting the number of pulses as the motor rotates.

2. MANUAL OPERATION

(a) The tilt and telescopic positions can be adjusted as desired by operating the tilt and telescopic switch.

3. AUTO AWAY/RETURN FUNCTION

(a) When the engine switch is turned off, the steering column moves forward, away from the driver, and also tilts up for easy ingress and egress.

(b) When the engine switch is turned on (IG), the steering column returns to the previously set position.

(c) The auto away/return function can be prohibited by using the intelligent tester.

4. DRIVING POSITION MEMORY FUNCTION (with Seat Position Memory System)

(a) The steering column moves to the previously set position by pressing the seat memory switches.

HOW TO PROCEED WITH TROUBLESHOOTING

HINT:
*: Use the intelligent tester.

1	**VEHICLE BROUGHT TO WORKSHOP**

NEXT

2	**CHECK CAN COMMUNICATION SYSTEM***

NEXT

3	**CHECK AND CLEAR DTCS***

NEXT

4	**PROBLEM SYMPTOM CONFIRMATION**

- **SYMPTOM DOES NOT OCCUR (GO TO STEP 5)**
- **SYMPTOM OCCURS (GO TO STEP 6)**

5	**SYMPTOM SIMULATION**

NEXT

6	**DTC CHECK***

- **NORMAL SYSTEM CODE (GO TO STEP 7)**
- **TROUBLE CODE (GO TO STEP 8)**

7	**PROBLEM SYMPTOMS TABLE**

- **GO TO STEP 9**

8	**DTC CHART**

NEXT

9	**CIRCUIT INSPECTION***

NEXT

10	**IDENTIFICATION OF PROBLEM**

NEXT

11	**REPAIR**

NEXT

12	**CONFIRMATION TEST**

NEXT

END

STEERING SYSTEM

PRECAUTION

NOTICE:
When disconnecting the cable from the negative (-) battery terminal, some systems require initialization after the cable is reconnected (See page IN-33).

1. **HANDLING PRECAUTIONS FOR STEERING SYSTEM**
   (a) Care must be taken when replacing parts. Incorrect replacement may affect the performance of the steering system and result in driving hazards.
2. **HANDLING PRECAUTIONS FOR SRS AIRBAG SYSTEM**
   (a) The vehicle is equipped with an SRS (Supplemental Restraint System) such as airbags. Failure to carry out service operations in the correct sequence could cause the SRS to unexpectedly deploy during servicing. This may cause a serious accident. Before servicing (including inspection, replacement, removal and installation of parts), be sure to read the precautionary notices for the Supplemental Restraint System (See page RS-1).

PROBLEM SYMPTOMS TABLE

HINT:
Use the table below to help determine the cause of the problem. The numbers indicate likely causes of the problem in descending order. Check each part in order. If necessary, repair or replace faulty parts.

STEERING SYSTEM

Symptom	Suspected Area	See page
Hard steering	1. Tires (Improperly inflated)	TW-3
	2. Front wheel alignment (Incorrect)	SP-4
	3. Steering system joints (Worn)	-
	4. Suspension arm ball joints (Worn)	SP-25
	5. Steering column (Binding)	SR-78
	6. Power steering gear	PS-28
Poor return	1. Tires (Improperly inflated)	TW-3
	2. Front wheel alignment (Incorrect)	SP-4
	3. Steering column (Binding)	SR-78
	4. Power steering gear	PS-28
Excessive free play	1. Steering system joints (Worn)	-
	2. Suspension arm ball joints (Worn)	SP-25
	3. Intermediate shaft, universal joint, sliding yoke (Worn)	-
	4. Front wheel bearing (Worn)	AH-5
	5. Power steering gear	PS-28
Abnormal noise	1. Steering system joints (Worn)	-
	2. Power steering gear	PS-28

ON-VEHICLE INSPECTION

1. INSPECT STEERING WHEEL FREE PLAY

(a) Stop the vehicle and align the tires facing straight ahead.

(b) Gently turn the steering wheel right and left by hand, and check the steering wheel free play.
Maximum free play:
30 mm (1.18 in.)
HINT:
If the free play exceeds the maximum, check the steering column, steering intermediate shaft, or steering gear.

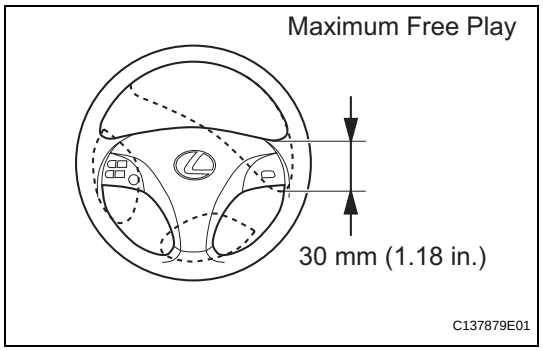

ADJUSTMENT

1. STEERING OFF CENTER ADJUSTMENT PROCEDURE

HINT:
This is the adjustment procedure for steering off center.

(a) Inspect steering wheel off center.

(1) Apply masking tape to the top center of the steering wheel and steering column upper cover.

(2) Drive the vehicle in a straight line for 100 meters at a constant speed of 35 mph (56 km/h), and hold the steering wheel to maintain the course.

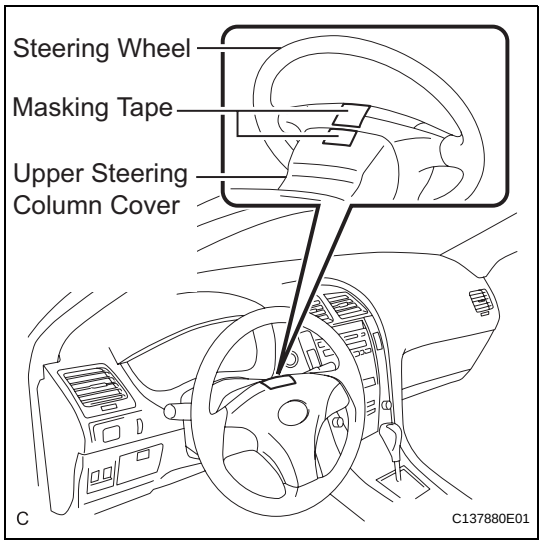

(3) Draw a line on the masking tape as shown in the illustration.

(4) Turn the steering wheel to the center position.
HINT:
Look at the upper surface of the steering wheel, steering spoke, and SRS airbag line to find the center position.

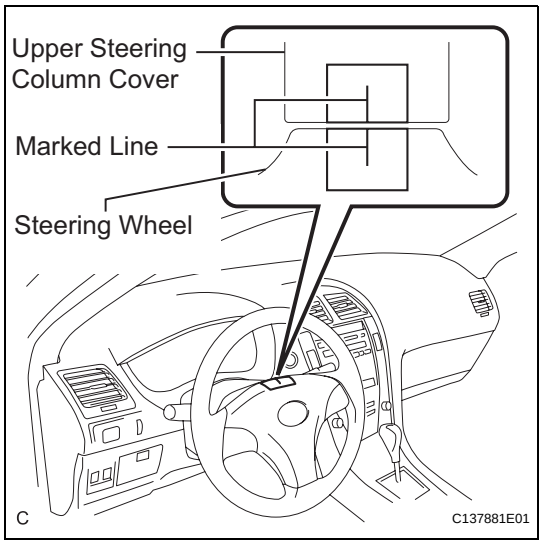

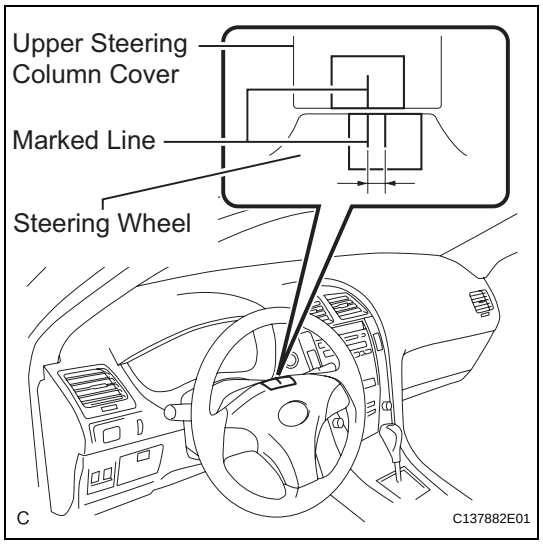

(5) Draw a new line on the masking tape on the steering wheel as shown in the illustration.
(6) Measure the distance between the 2 lines on the masking tape on the steering wheel.
(7) Convert the measured distance to steering angle.
HINT:
- Measured distance 1 mm (0.04 in.) = Steering angle of approximately 1 degree.
- Make a note of the steering angle.

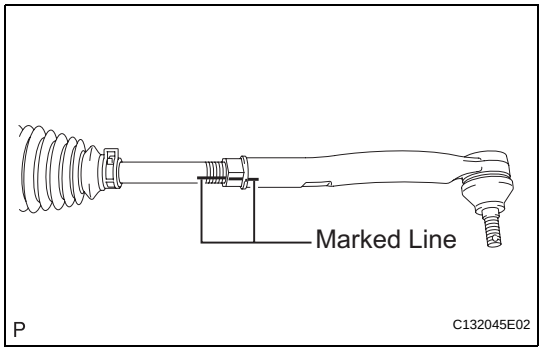

(b) Adjust steering angle.
(1) Draw a line on the RH and LH tie rod ends and rack ends respectively where it can be easily seen.
(2) Using a paper gauge, measure the distance from the RH and LH tie rod ends to the rack end screws.
HINT:
- Measure both the RH and LH sides.
- Make a note of the measured values.

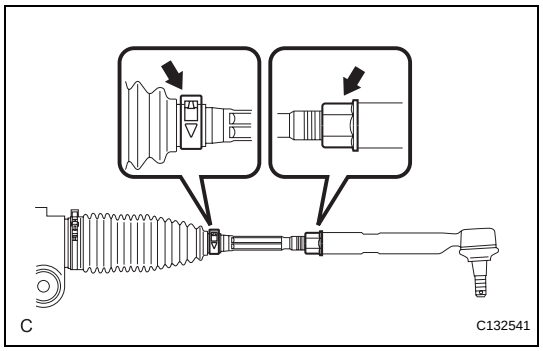

(3) Remove the RH and LH boot clips from the rack boots.
(4) Loosen the RH and LH lock nuts.
(5) Turn the RH and LH rack ends by the same amount (but in different directions) according to the steering angle.
HINT:
One 360 degree turn of the rack end (1.5 mm (0.059 in.) horizontal movement) equals to 12 degrees of steering angle.
(6) Tighten the RH and LH lock nuts to the specified torque.
Torque: 74 N*m (755 kgf*cm, 55 ft.*lbf)
NOTICE:
Make sure that the difference in length between the RH and LH tie rod ends and rack end screws is within 1.5 mm (0.059 in.).
(7) Install the RH and LH boot clips.

CUSTOMIZE PARAMETERS

HINT:
The following can be customized.

NOTICE:

- **Be sure to record the current value before customizing.**
- **When troubleshooting, be careful, as customizing could turn off the function. (Example: If the wireless operation does not function, check that it has not been turned off by customizing.)**

TILT & TELESCO:

DISPLAY	DEFAULT	CONTENTS	SETTING
AUTO TILT AWAY	ON	ON/OFF of the auto away / return function	ON/OFF

PROBLEM SYMPTOMS TABLE

The power tilt and power telescopic steering column system uses the multiplex communication system, so check its diagnostic system before proceeding to troubleshooting. The table below will be useful in troubleshooting these electrical systems. The numbered suspected areas indicate the likelihood of the cause in descending order. Inspect each part in the order shown, and replace if a fault is found.

- If the instruction "PROCEED TO NEXT CIRCUIT INSPECTION SHOWN IN PROBLEM SYMPTOMS TABLE" is given in the flow chart on the following pages, proceed to the circuit with the next highest number in the table below to continue the check.
- If the problem still occurs when there is no abnormality in the related circuits, check the multiplex tilt and telescopic ECU and replace it if necessary.

POWER TILT AND POWER TELESCOPIC STEERING COLUMN SYSTEM:

Symptom	Suspected Area	See page
Only manual switch does not operate	1. Tilt and telescopic manual switch circuit	SR-45
	2. Headlight dimmer switch assembly (Tilt and Telescopic manual switch)	SR-45
	3. Multiplex tilt and telescopic ECU	SR-90
Only auto away/return function does not operate	1. Check customization status of auto away function using intelligent tester	SR-9
	2. IG power source circuit	SR-46
	3. Multiplex tilt and telescopic ECU	SR-90
Only auto away function does not operate	1. Smart access system with push button start function	ST-17
	2. Multiplex tilt and telescopic ECU	SR-90
Only auto return function does not operate	1. Smart access system with push button start function	ST-17
	2. Multiplex tilt and telescopic ECU	SR-90
Only memory function does not operate	1. Driving position memory switch	SE-124
	2. Multiplex tilt and telescopic ECU	SR-90

CUSTOMIZE PARAMETERS

HINT:
The following can be customized.

NOTICE:

- **Be sure to record the current value before customizing.**
- **When troubleshooting, be careful, as customizing could turn off the function. (Example: If the wireless operation does not function, check that it has not been turned off by customizing.)**

TILT & TELESCO:

DISPLAY	DEFAULT	CONTENTS	SETTING
AUTO TILT AWAY	ON	ON/OFF of the auto away / return function	ON/OFF

PROBLEM SYMPTOMS TABLE

The power tilt and power telescopic steering column system uses the multiplex communication system, so check its diagnostic system before proceeding to troubleshooting. The table below will be useful in troubleshooting these electrical systems. The numbered suspected areas indicate the likelihood of the cause in descending order. Inspect each part in the order shown, and replace if a fault is found.

- If the instruction "PROCEED TO NEXT CIRCUIT INSPECTION SHOWN IN PROBLEM SYMPTOMS TABLE" is given in the flow chart on the following pages, proceed to the circuit with the next highest number in the table below to continue the check.
- If the problem still occurs when there is no abnormality in the related circuits, check the multiplex tilt and telescopic ECU and replace it if necessary.

POWER TILT AND POWER TELESCOPIC STEERING COLUMN SYSTEM:

Symptom	Suspected Area	See page
Only manual switch does not operate	1. Tilt and telescopic manual switch circuit	SR-45
	2. Headlight dimmer switch assembly (Tilt and Telescopic manual switch)	SR-45
	3. Multiplex tilt and telescopic ECU	SR-90
Only auto away/return function does not operate	1. Check customization status of auto away function using intelligent tester	SR-9
	2. IG power source circuit	SR-46
	3. Multiplex tilt and telescopic ECU	SR-90
Only auto away function does not operate	1. Smart access system with push button start function	ST-17
	2. Multiplex tilt and telescopic ECU	SR-90
Only auto return function does not operate	1. Smart access system with push button start function	ST-17
	2. Multiplex tilt and telescopic ECU	SR-90
Only memory function does not operate	1. Driving position memory switch	SE-124
	2. Multiplex tilt and telescopic ECU	SR-90

DIAGNOSTIC TROUBLE CODE CHART

If a DTC is displayed, check the circuit for that code listed in the table below.

POWER TILT AND POWER TELESCOPIC STEERING COLUMN:

DTC Code	Detection Item	Trouble Area	See page
B2602	Key Unlock Warning Switch Circuit Malfunction	1. CAN communication system 2. Smart access system with push-button start 3. Multiplex tilt and telescopic ECU	SR-21
B2603	Tilt and Telescopic Manual Switch Circuit Malfunction	1. Tilt and telescopic manual switch 2. Tilt and telescopic manual switch circuit 3. Multiplex tilt and telescopic ECU	SR-24
B2606	Key Code Confirm Signal Malfunction	1. CAN communication system 2. Smart access system with push-button start 3. Multiplex tilt and telescopic ECU	SR-21
B2610	Tilt Position Sensor or Tilt Motor Circuit Malfunction	1. Wire harness or connector 2. Tilt position sensor or tilt motor 3. Multiplex tilt and telescopic ECU	SR-28
B2611	Telescopic Position Sensor or Telescopic Motor Circuit Malfunction	1. Wire harness or connector 2. Telescopic position sensor or telescopic motor 3. Multiplex tilt and telescopic ECU	SR-33
B2620	ECU Power Source Circuit Malfunction	1. Battery 2. Wire harness or connector 3. Multiplex tilt and telescopic ECU	SR-37
B2621	Communication Interruption	1. CAN communication system 2. Main body ECU 3. Front power seat switch LH (Position control ECU) 4. Combination meter assembly 5. Multiplex tilt and telescopic ECU	SR-39
B2624	Vehicles Speed Malfunction	1. CAN communication system 2. Combination meter assembly 3. Multiplex tilt and telescopic ECU	SR-41

DTC	B2602	Key Unlock Warning Switch Circuit Malfunction

DTC	B2606	Key Code Confirm Signal Malfunction

DESCRIPTION

A key code confirmation signal (ON or OFF) is sent from the main body ECU to the multiplex tilt and telescopic ECU via the communication bus.
The multiplex tilt and telescopic ECU uses this signal to operate the auto away/return function.

DTC No.	Detection Item	Trouble Area
B2602	Both of the following conditions continue: • A key code confirmation signal is off • The engine switch is on (IG)	• CAN communication system • Smart access system with push-button start • Multiplex tilt and telescopic ECU
B2606	IG signals and/or key code confirmation signals are not received correctly.	• CAN communication system • Smart access system with push-button start • Multiplex tilt and telescopic ECU

WIRING DIAGRAM

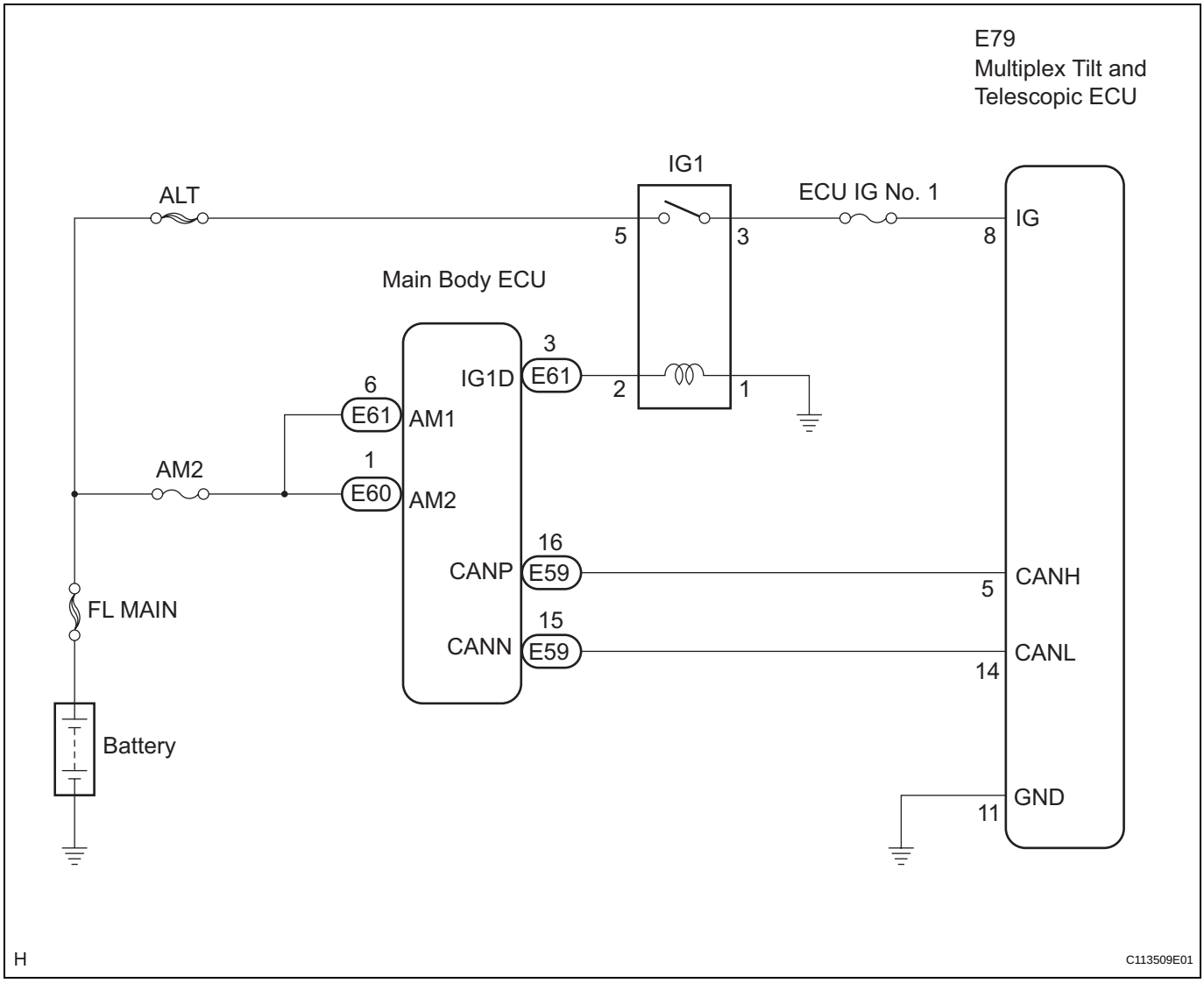

SR

INSPECTION PROCEDURE

1 CHECK OTHER DTC OUTPUT

HINT:
The power tilt and power telescopic steering column system uses the CAN communication system, so check its diagnostic system before proceeding to troubleshooting.
(a) Check if DTC B2621 is output.

Result

DTC Condition	Proceed to
No output	A
B2621 is output	B

HINT:
- If DTC B2621 besides B2602 and B2606 are output, perform troubleshooting for B2621 first.
- DTC B2621 indicates a communication interruption for the power tilt and power telescopic steering column system.

B → **REPAIR CIRCUIT INDICATED BY OUTPUT CODE**

A

2 READ VALUE OF INTELLIGENT TESTER

(a) Connect the intelligent tester to the DLC3.
(b) Turn the engine switch on (IG) and turn the intelligent tester on.
(c) Select "IG SW (CAN)", "KEYSW (CAN)" and "KEY CODE (CAN)" from the DATA LIST.
(d) Check the communication state of the tester screen.

TILT & TELESCO:

Tester Display	Measurement Item/Range	Normal Condition	Diagnostic Note
IG SW (CAN)	Communication state of engine switch / ON or OFF	ON: Communication is normal OFF: Communication is interrupted	-
KEYSW (CAN)	Communication state of key switch confirmation signal / ON or OFF	ON: Communication is normal OFF: Communication is interrupted	-
KEY CODE (CAN)	Communication state of key code confirmation signal / ON or OFF	ON: Communication is normal OFF: Communication is interrupted	-

OK:
"ON" is displayed.

NG → **CHECK SMART ACCESS SYSTEM WITH PUSH-BUTTON START**

OK

3	RECONFIRM DTC

(a) Clear the DTC.
(b) Check for DTCs.
OK:
DTC B2602 and/or B2606 is not output.

NG → **REPLACE MULTIPLEX TILT AND TELESCOPIC ECU**

OK

END

DTC	B2603	Tilt and Telescopic Manual Switch Circuit Malfunction

DESCRIPTION

Different voltage values are input to the multiplex tilt and telescopic ECU by operating the manual switch. The multiplex tilt and telescopic ECU then judges which motor and in which direction that the motor should rotate based on the voltage value.

DTC No.	Detection Item	Trouble Area
B2603	Abnormal voltage value, which is not within the specification, is input to the multiplex tilt and telescopic ECU when the manual switch is operated.	• Tilt and telescopic manual switch • Tilt and telescopic manual switch circuit • Multiplex tilt and telescopic ECU

WIRING DIAGRAM

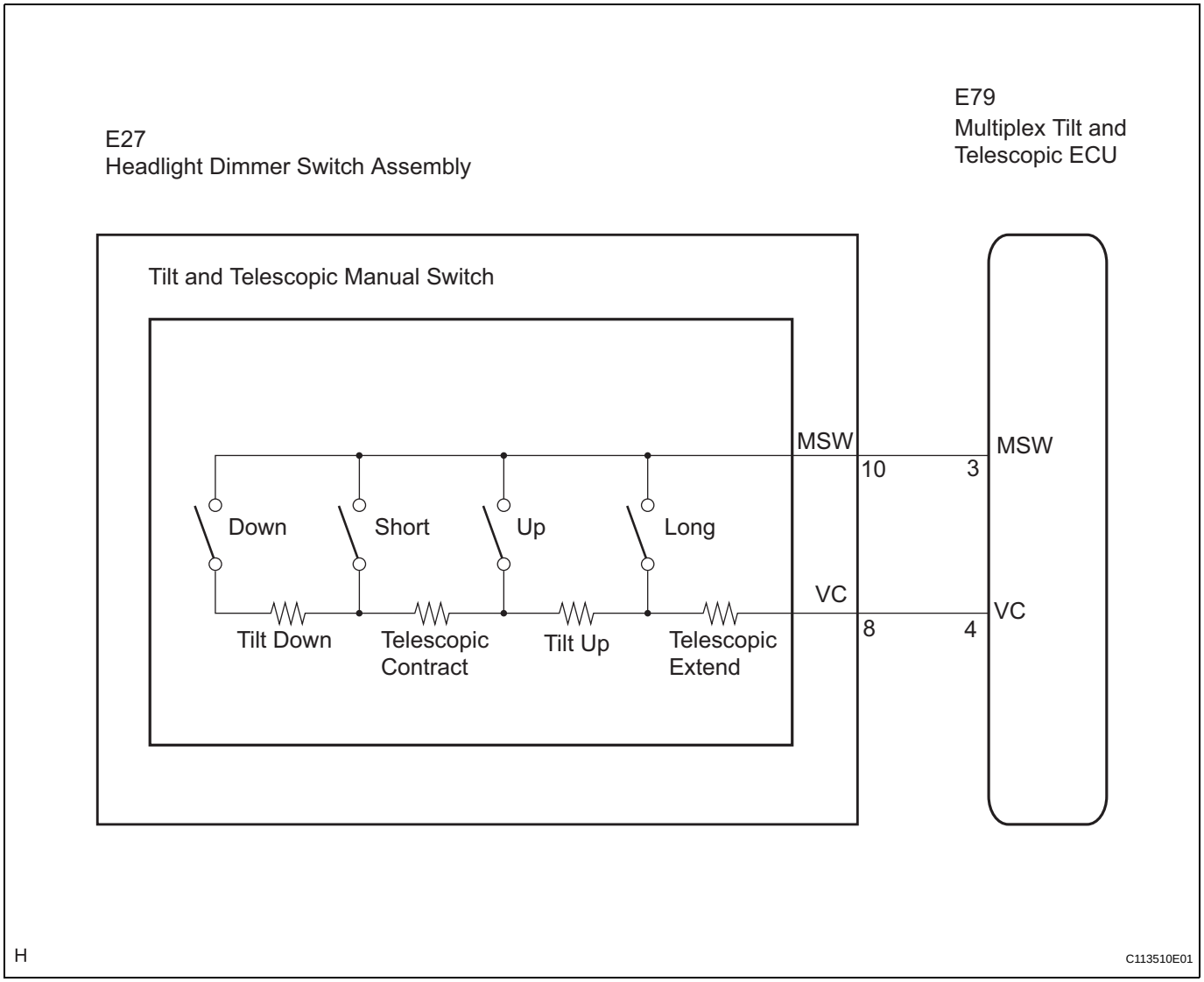

SR

INSPECTION PROCEDURE

1	READ VALUE OF INTELLIGENT TESTER

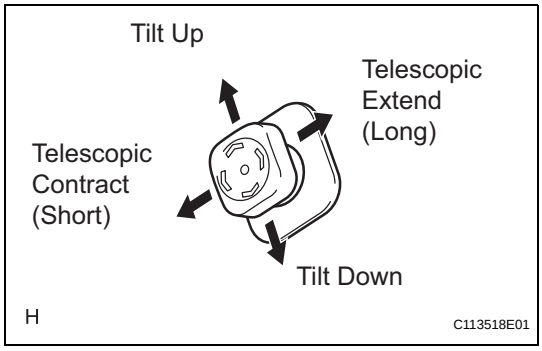

(a) Connect the intelligent tester to the DLC3.
(b) Turn the engine switch on (IG) and turn the intelligent tester on.
(c) Select "T&T MANUAL SW" from the DATA LIST.
(d) Read voltages on the tester screen when operating the manual switch.

Standard voltage

Manual Switch Position	Specified Condition
Neutral	Below 0.2 V
Tilt up	1.67 to 2.13 V
Tilt down	0.54 to 0.74 V
Telescopic contract (Short)	1.08 to 1.40 V
Telescopic extend (Long)	2.22 to 2.77 V

Result

Result	Proceed to
Switch voltages in all directions are within the standard.	A
Switch voltages in certain directions are outside the standard.	B
Switch voltages in all directions are outside the standard.	C

A → **REPLACE MULTIPLEX TILT AND TELESCOPIC ECU**

B → **REPLACE HEADLIGHT DIMMER SWITCH ASSEMBLY**

C

2 CHECK HARNESS AND CONNECTOR (MULTIPLEX TILT AND TELESCOPIC ECU - HEADLIGHT DIMMER SWITCH)

Multiplex Tilt and Telescopic ECU:

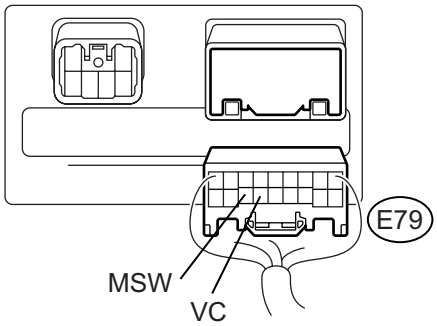

Headlight Dimmer Switch Assembly:

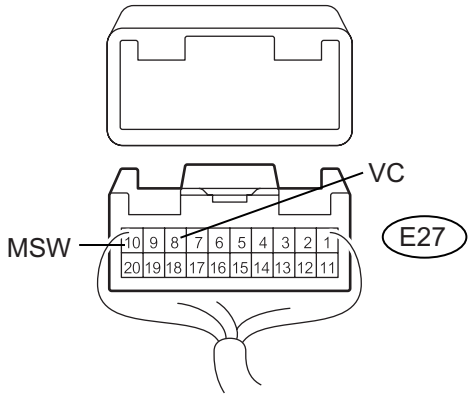

H C104131E04

(a) Disconnect the E79 connector from the multiplex tilt and telescopic ECU.
(b) Disconnect the E27 connector from the headlight dimmer switch assembly.
(c) Measure the resistance according to the value(s) in the table below.

Standard resistance

Tester Connection	Condition	Specified Condition
VC (E79-4) - VC (E27-8)	Always	Below 1 Ω
MSW (E79-3) - MSW (E27-10)	Always	Below 1 Ω
VC (E27-8) - Body ground	Always	10 kΩ or higher
MSW (E27-10) - Body ground	Always	10 kΩ or higher

NG → **REPAIR OR REPLACE HARNESS OR CONNECTOR**

OK

3 INSPECT MULTIPLEX TILT AND TELESCOPIC ECU (VC TERMINAL VOLTAGE)

Headlight Dimmer Switch Assembly:

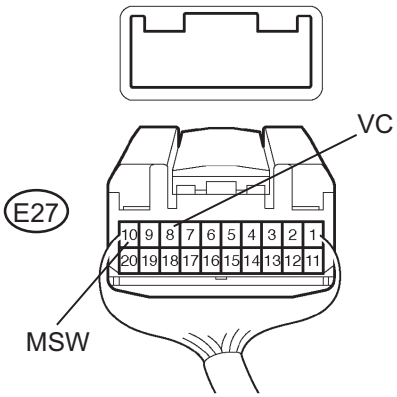

F044885E04

(a) Reconnect the E79 connector to the multiplex tilt and telescopic ECU.
(b) Measure the voltage according to the value(s) in the table below.

Standard voltage

Tester Connection	Condition	Specified Condition
VC (E27-8) - MSW (E27-10)	Engine switch on (IG)	4.9 to 5.1 V

NG → **REPLACE MULTIPLEX TILT AND TELESCOPIC ECU**

OK

4	INSPECT HEADLIGHT DIMMER SWITCH ASSEMBLY (TILT AND TELESCOPIC MANUAL SWITCH)

Headlight Dimmer Switch Assembly Connector:

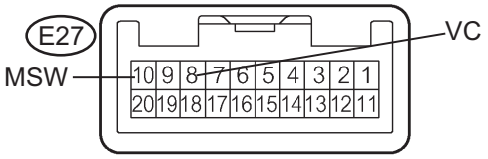

F045649E02

(a) Measure the resistance according to the value(s) in the table below.

Standard resistance

Tester Connection	Condition (Manual switch position)	Specified Condition
VC (E27-8) - MSW (E27-10)	Tilt up	360 Ω
	Tilt down	1,990 Ω
	Telescopic contract	790 Ω
	Telescopic extend	160 Ω

NG → **REPLACE HEADLIGHT DIMMER SWITCH ASSEMBLY**

OK

REPLACE MULTIPLEX TILT AND TELESCOPIC ECU

DTC	B2610	Tilt Position Sensor or Tilt Motor Circuit Malfunction

DESCRIPTION

The tilt motor is operated by the power source voltage supplied from the multiplex tilt and telescopic ECU and tilts the steering column up and down. The tilt position sensor (hall IC) in the tilt motor detects the tilt angle of the steering column and outputs a signal to the CPU based on that tilt.

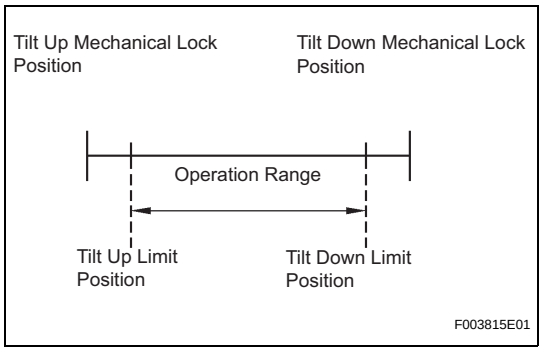

HINT:
Limit positions can be confirmed on the screen of the intelligent tester.

DTC No.	Detection Item	Trouble Area
B2610	Tilt operation stops within the operation range while operating.	• Wire harness or connector • Tilt position sensor or tilt motor • Multiplex tilt and telescopic ECU

WIRING DIAGRAM

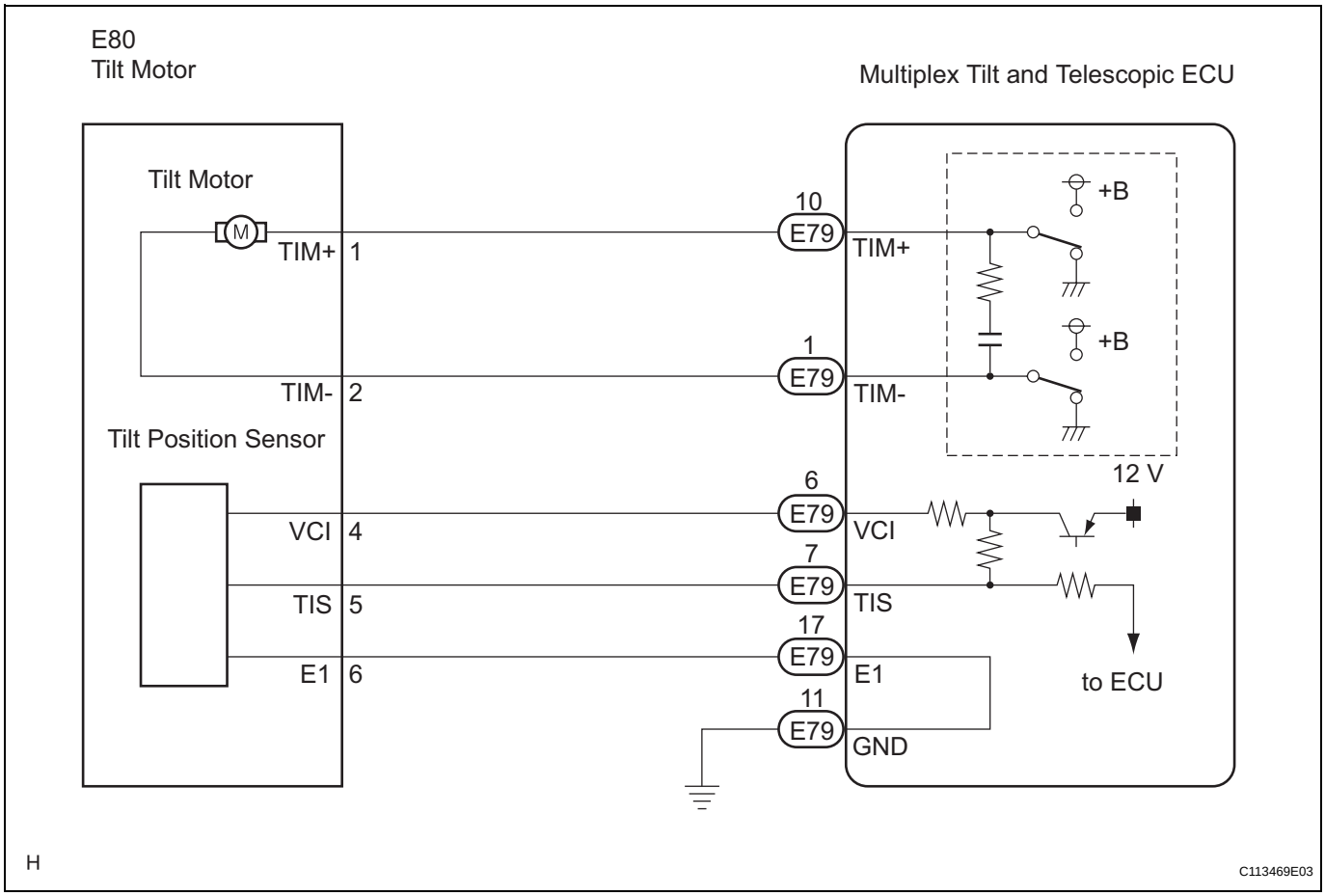

INSPECTION PROCEDURE

1	PERFORM ACTIVE TEST BY INTELLIGENT TESTER

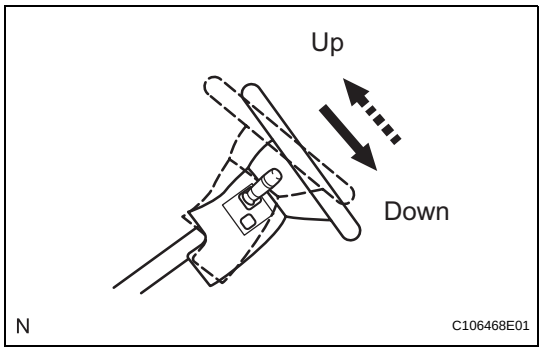

(a) Connect the intelligent tester to the DLC3.
(b) Turn the engine switch on (IG) and turn the intelligent tester on.
(c) Select "TILT & TELESCO".
(d) Select "TILT", and perform the ACTIVE TEST using the intelligent tester.
(e) Check that the steering wheel tilts up (down) when the ACTIVE TEST is carried out.
OK:
Steering wheel tilts up (down).

OK → **Go to step 4**

NG →

SR

2 CHECK HARNESS AND CONNECTOR (MULTIPLEX TILT AND TELESCOPIC ECU - TILT MOTOR)

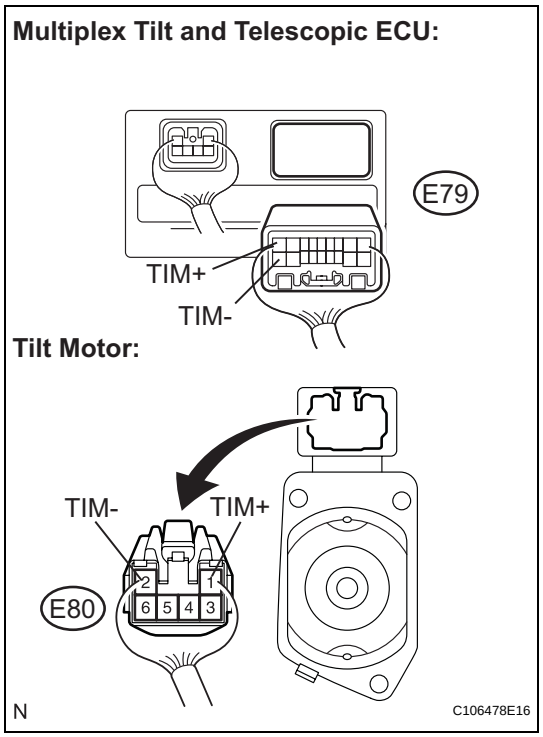

(a) Disconnect the E79 connector from the multiplex tilt and telescopic ECU.
(b) Disconnect the E80 connector from the tilt motor.
(c) Measure the resistance according to the value(s) in the table below.

Standard resistance

Tester Connection	Condition	Specified Condition
TIM+ (E79-10) - TIM+ (E80-1)	Always	Below 1 Ω
TIM- (E79-1) - TIM- (E80-2)	Always	Below 1 Ω
TIM+ (E79-10) - Body ground	Always	10 kΩ or higher
TIM- (E79-1) - Body ground	Always	10 kΩ or higher

NG → **REPAIR OR REPLACE HARNESS OR CONNECTOR**

OK

3 INSPECT TILT MOTOR

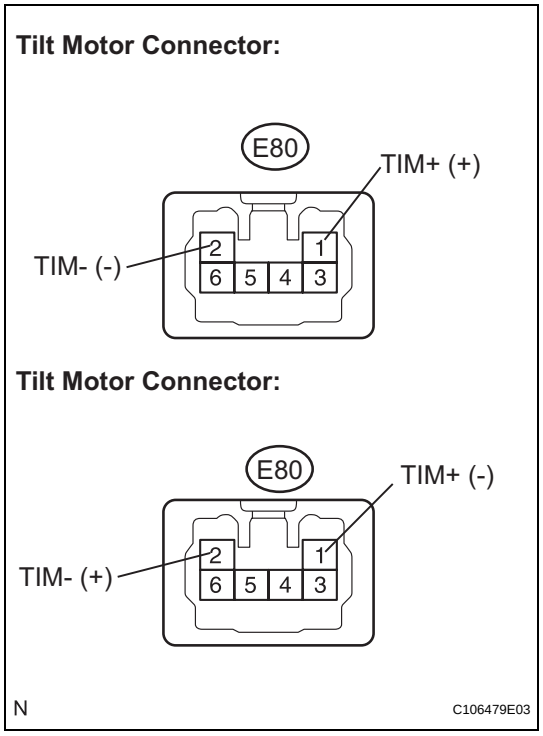

(a) Connect the positive battery terminal to terminal TIM+ (E80-1) and the negative battery terminal to terminal TIM- (E80-2) of the tilt motor connector. Then confirm that the steering wheel tilts up.

OK:

The steering wheel tilts up.

(b) Connect the negative battery terminal to terminal TIM+ (E80-1) and the positive battery terminal to terminal TIM- (E80-2) of the tilt motor connector. Then confirm that the steering wheel tilts down.

OK:

The steering wheel tilts down.

NG → **REPLACE STEERING COLUMN ASSEMBLY**

OK

REPLACE MULTIPLEX TILT AND TELESCOPIC ECU

4 CHECK HARNESS AND CONNECTOR (MULTIPLEX TILT AND TELESCOPIC ECU - TILT POSITION SENSOR)

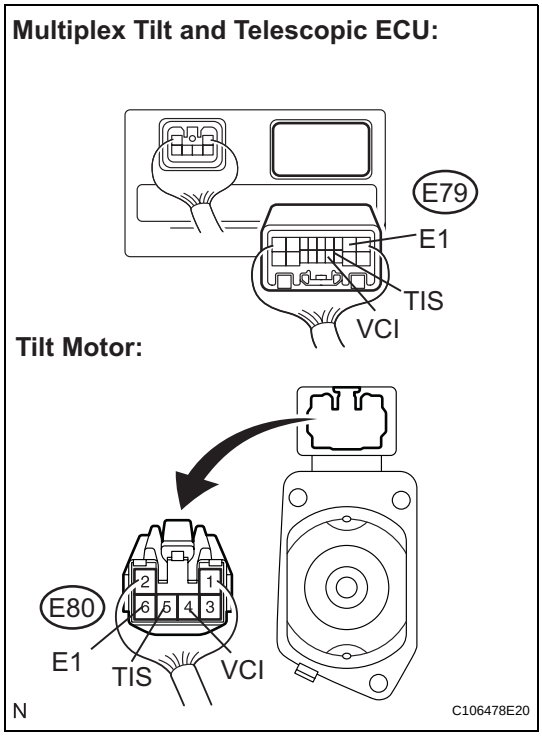

(a) Disconnect the E79 connector from the multiplex tilt and telescopic ECU.
(b) Disconnect the E80 connector from the tilt motor.
(c) Measure the resistance according to the value(s) in the table below.

Standard resistance

Tester Connection	Condition	Specified Condition
VCI (E79-6) - VCI (E80-4)	Always	Below 1 Ω
TIS (E79-7) - TIS (E80-5)	Always	Below 1 Ω
E1 (E79-17) - E1 (E80-6)	Always	Below 1 Ω
VCI (E79-6) - Body ground	Always	10 kΩ or higher
TIS (E79-7) - Body ground	Always	10 kΩ or higher
E1 (E79-17) - Body ground	Always	10 kΩ or higher

NG → **REPAIR OR REPLACE HARNESS OR CONNECTOR**

OK

5 CHECK HARNESS AND CONNECTOR (MULTIPLEX TILT AND TELESCOPIC ECU - BODY GROUND)

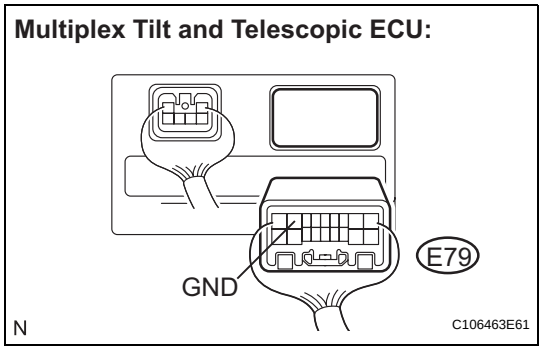

(a) Measure the resistance according to the value(s) in the table below.

Standard resistance

Tester Connection	Condition	Specified Condition
GND (E79-11) - Body ground	Always	Below 1 Ω

NG → **REPAIR OR REPLACE HARNESS OR CONNECTOR**

SR

OK

6 INSPECT MULTIPLEX TILT AND TELESCOPIC ECU (VCI, TIS TERMINAL VOLTAGE)

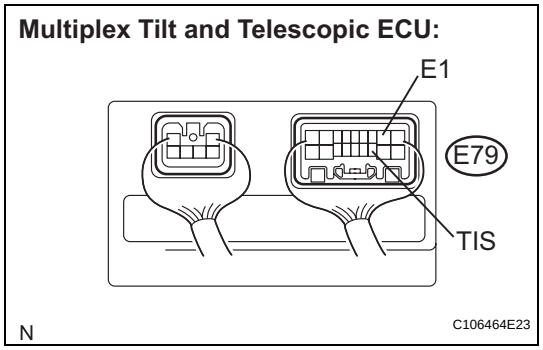

(a) Reconnect the E79 connector to the multiplex tilt and telescopic ECU.
(b) Measure the voltage according to the value(s) in the table below.

Standard voltage

Tester Connection	Condition	Specified Condition
TIS (E79-7) - E1 (E79-17)	Steering tilts up or tilts down	8 to 16 V (Pulse HI)
		Below 1 V (Pulse LOW)

NG → **REPLACE MULTIPLEX TILT AND TELESCOPIC ECU**

OK

7 INSPECT TILT POSITION SENSOR

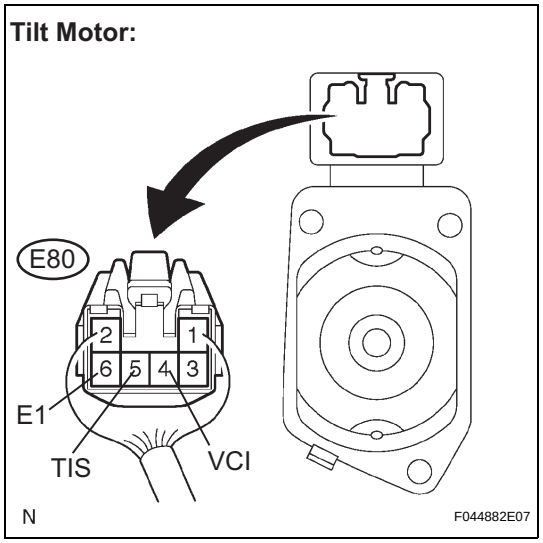

(a) Reconnect the E80 connector to the tilt motor.
(b) Measure the voltage according to the value(s) in the table below.

Standard voltage

Tester Connection	Condition	Specified Condition
VCI (E80-4) - E1 (E80-6)	Engine switch on (IG)	8 to 16 V
TIS (E80-5) - E1 (E80-6)	Engine switch on (IG)	8 to 16 V

NG → **REPLACE STEERING COLUMN ASSEMBLY**

OK

REPLACE MULTIPLEX TILT AND TELESCOPIC ECU

DTC	B2611	Telescopic Position Sensor or Telescopic Motor Circuit Malfunction

DESCRIPTION

The telescopic motor is operated by the power source voltage supplied from the multiplex tilt and telescopic ECU and slides the steering column forward and backward. The telescopic position sensor (hall IC) in the telescopic motor detects the sliding position in the forward and backward directions of the steering column and outputs a signal to the based on that sliding amount.

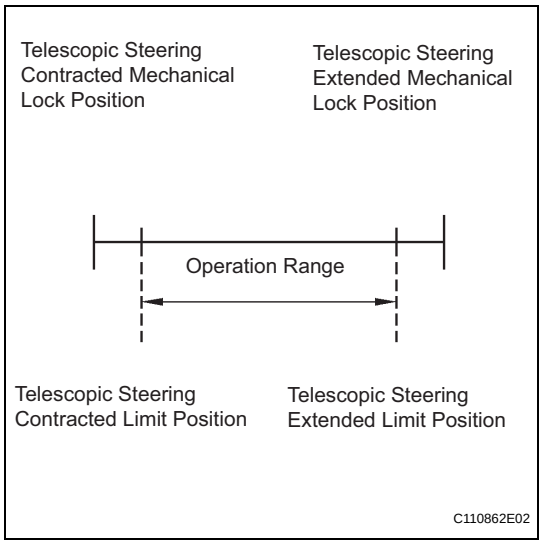

HINT:
Limit positions can be confirmed on the screen of the intelligent tester.

DTC No.	Detection Item	Trouble Area
B2611	Telescopic operation stops within the operation range while operating.	• Wire harness or connector • Telescopic position sensor or telescopic motor • Multiplex tilt and telescopic ECU

WIRING DIAGRAM

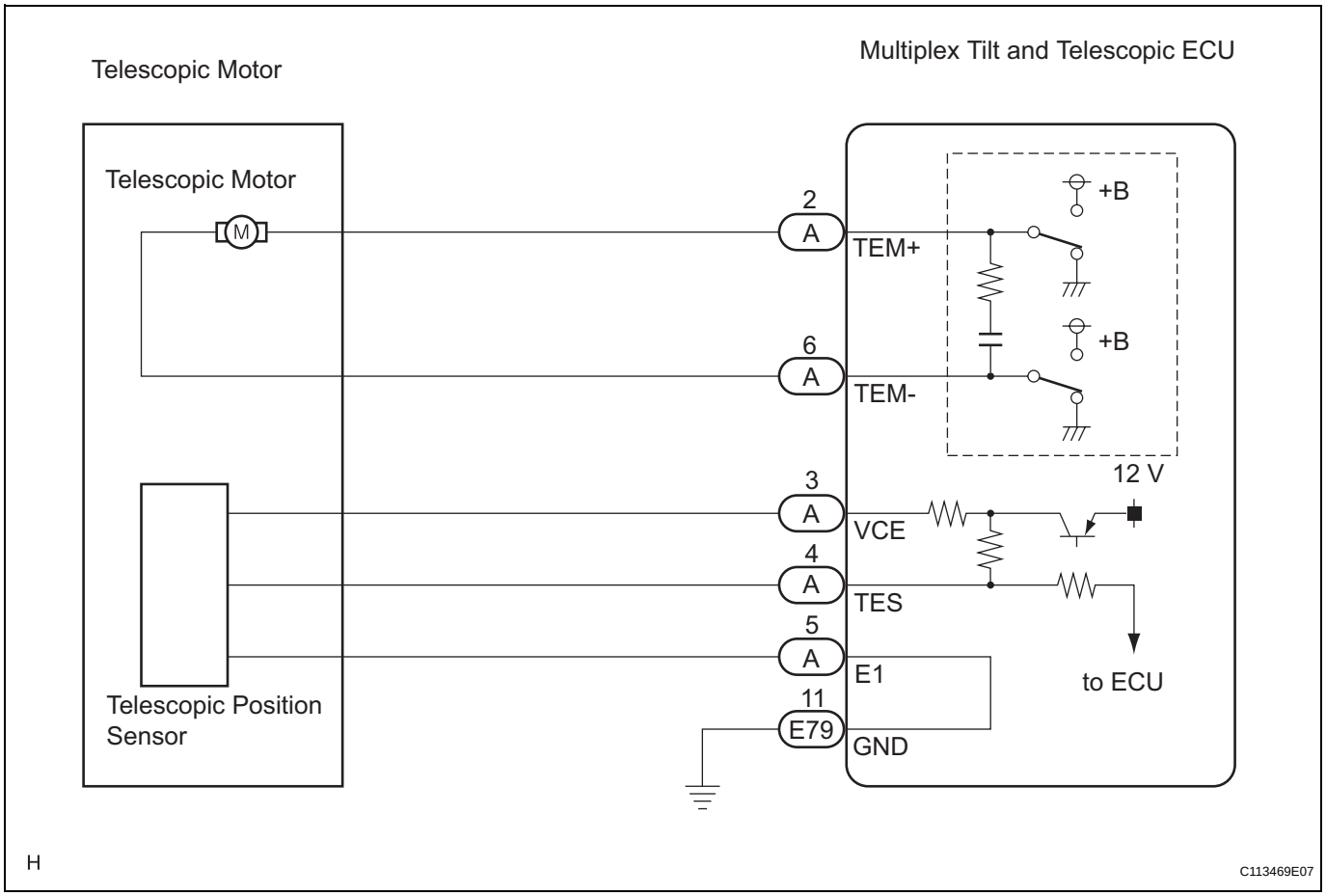

INSPECTION PROCEDURE

HINT:
The wire harness between the multiplex tilt and telescopic ECU and telescopic motor is provided with the steering column assembly.

1	PERFORM ACTIVE TEST BY INTELLIGENT TESTER

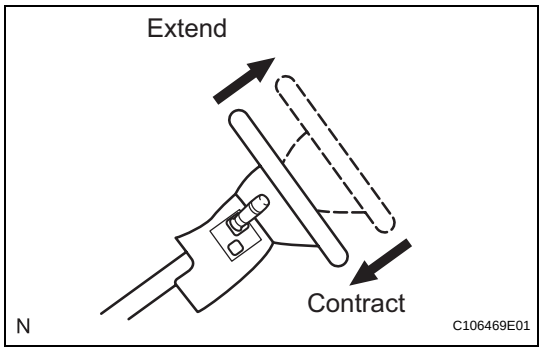

(a) Connect the intelligent tester to the DLC3.
(b) Turn the engine switch on (IG) and turn the intelligent tester on.
(c) Select "TILT & TELESCO".
(d) Select "TELESCO", and perform the ACTIVE TEST using the intelligent tester.
(e) Check that the steering column contracts (extends) when the ACTIVE TEST is carried out.
OK:
The steering column contracts (extends).

OK → **Go to step 3**

NG

SR

2 INSPECT TELESCOPIC MOTOR

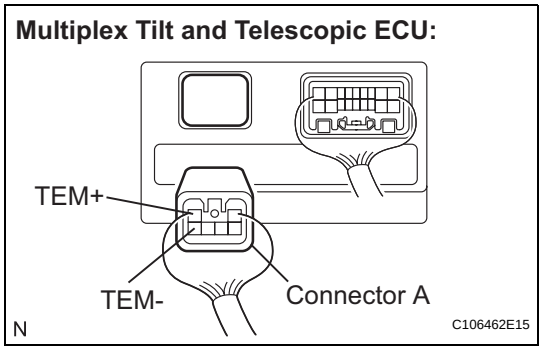

(a) Disconnect connector A from the multiplex tilt and telescopic ECU.

(b) Connect the positive battery terminal to terminal TEM+ (A-2) and the negative battery terminal to terminal TEM- (A-6) of the telescopic motor connector. Then confirm that the steering column contracts.

OK:

The steering column contracts.

(c) Connect the negative battery terminal to terminal TEM+ (A-2) and the positive battery terminal to terminal TEM- (A-6) of the telescopic motor connector. Then confirm that the steering column extends.

OK:

The steering column extends.

NG → **REPLACE STEERING COLUMN ASSEMBLY**

OK

REPLACE MULTIPLEX TILT AND TELESCOPIC ECU

3 INSPECT MULTIPLEX TILT AND TELESCOPIC ECU (VCE TERMINAL VOLTAGE)

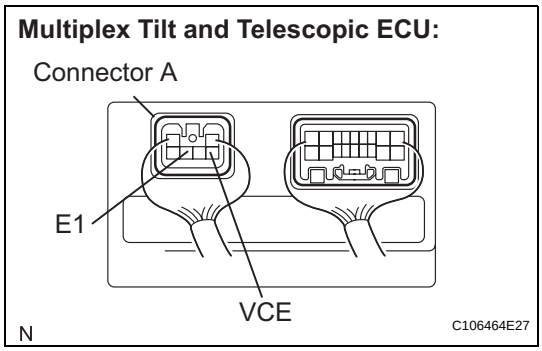

(a) Measure the voltage according to the value(s) in the table below.

Standard voltage

Tester Connection	Condition	Specified Condition
VCE (A-3) - E1 (A-5)	Engine switch on (IG)	8 to 16 V

NG → **Go to step 5**

OK

4 INSPECT TELESCOPIC POSITION SENSOR

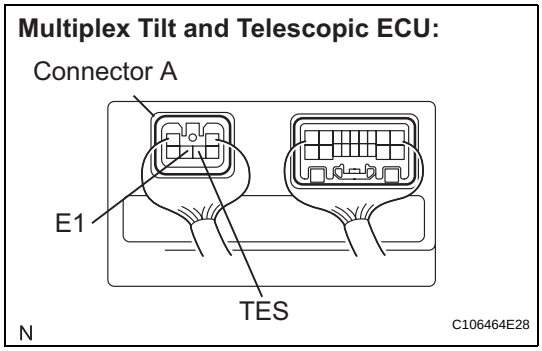

(a) Measure the voltage according to the value(s) in the table below.

Standard voltage

Tester Connection	Condition	Specified Condition
TES (A-4) - E1 (A-5)	Telescopic steering contracted or extended	8 to 16 V (Pulse HI)
		Below 1 V (Pulse LOW)

NG → **REPLACE STEERING COLUMN ASSEMBLY**

OK

REPLACE MULTIPLEX TILT AND TELESCOPIC ECU

5 CHECK HARNESS AND CONNECTOR (ECU - BODY GROUND (VCE CIRCUIT))

Multiplex Tilt and Telescopic ECU:

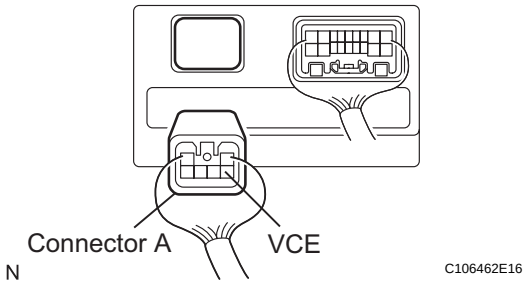

(a) Disconnect connector A from the multiplex tilt and telescopic ECU.

(b) Measure the resistance according to the value(s) in the table below.

Standard resistance

Tester Connection	Condition	Specified Condition
VCE (A-3) - Body ground	Always	10 kΩ or higher

NG → **REPAIR OR REPLACE HARNESS OR CONNECTOR**

OK

6 CHECK HARNESS AND CONNECTOR (ECU - BODY GROUND (GND CIRCUIT))

Multiplex Tilt and Telescopic ECU:

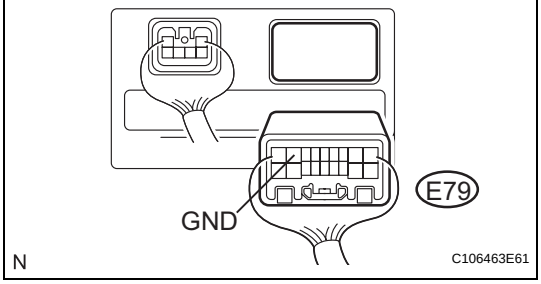

(a) Disconnect the E79 connector from the multiplex tilt and telescopic ECU.

(b) Measure the resistance according to the value(s) in the table below.

Standard resistance

Tester Connection	Condition	Specified Condition
GND (E79-11) - Body ground	Always	Below 1 Ω

NG → **REPAIR OR REPLACE HARNESS OR CONNECTOR**

OK

REPLACE MULTIPLEX TILT AND TELESCOPIC ECU

DTC	B2620	ECU Power Source Circuit Malfunction

DESCRIPTION

The ECU power source circuit supplies positive voltage to the multiplex tilt and telescopic ECU.

DTC No.	Detection Item	Trouble Area
B2620	The voltage of the ECU power source drops to 8 V or less and this condition continues for 10 secs. or more.	• Battery • Wire harness or connector • Multiplex tilt and telescopic ECU

WIRING DIAGRAM

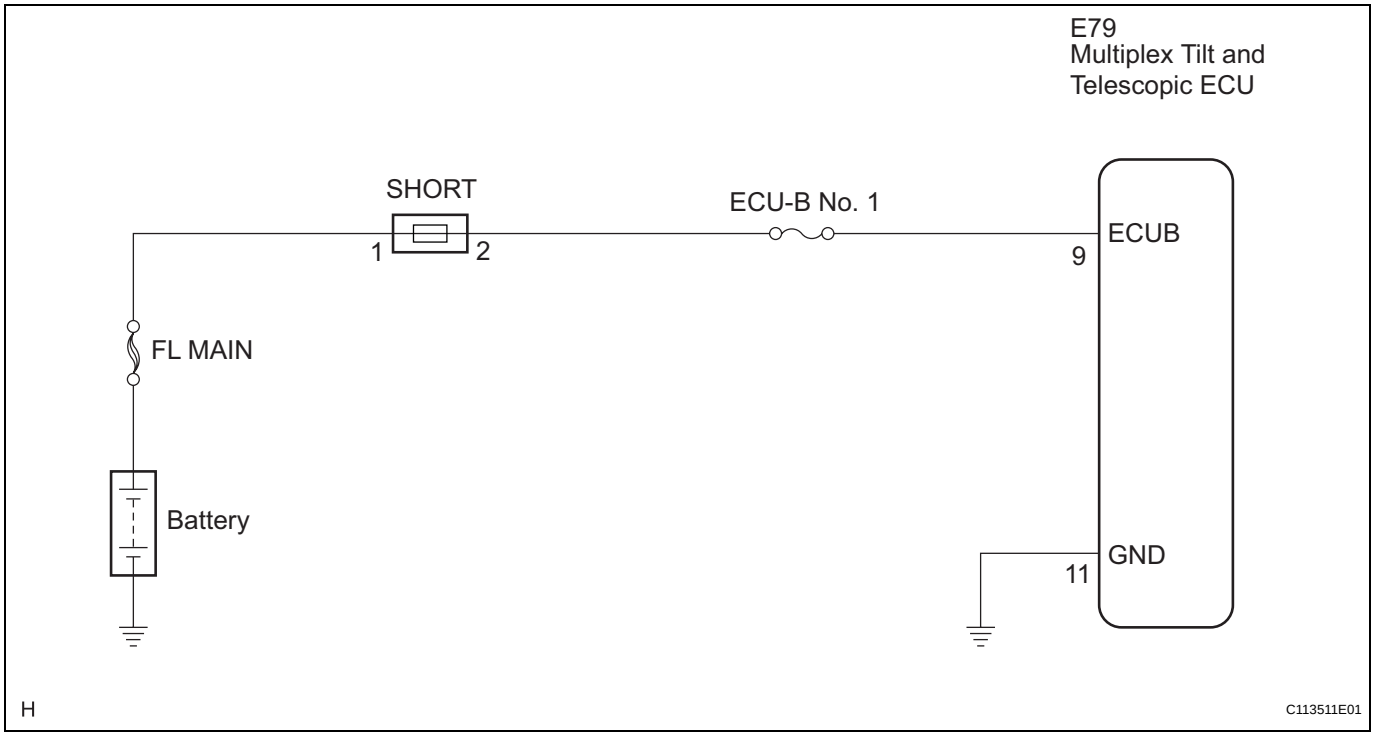

INSPECTION PROCEDURE

1	INSPECT FUSE

(a) Remove the ECU-B No. 1 fuse from the engine room J/B.

(b) Measure the resistance of the ECU-B No. 1 fuse.

Standard resistance:

Below 1 Ω

NG → **REPLACE FUSE**

OK

SR

2	**CHECK HARNESS AND CONNECTOR (MULTIPLEX TILT AND TELESCOPIC ECU - BATTERY)**

Multiplex Tilt and Telescopic ECU:

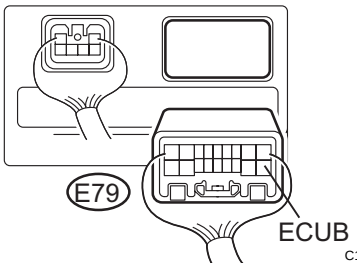

(a) Disconnect the E79 connector from the multiplex tilt and telescopic ECU.

(b) Measure the voltage according to the value(s) in the table below.

Standard voltage

Tester Connection	Condition	Specified Condition
ECUB (E79-9) - Body ground	Always	10 to 14 V

NG → **REPAIR OR REPLACE HARNESS OR CONNECTOR**

OK

3	**CHECK HARNESS AND CONNECTOR (MULTIPLEX TILT AND TELESCOPIC ECU - BODY GROUND)**

Multiplex Tilt and Telescopic ECU:

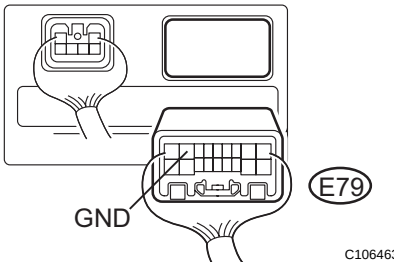

(a) Measure the resistance according to the value(s) in the table below.

Standard resistance

Tester Connection	Condition	Specified Condition
GND (E79-11) - Body ground	Always	Below 1 Ω

NG → **REPAIR OR REPLACE HARNESS OR CONNECTOR**

OK

REPLACE MULTIPLEX TILT AND TELESCOPIC ECU

DTC	B2621	Communication Interruption

DESCRIPTION

The multiplex tilt and telescopic ECU forms a network with the ECUs of other systems through the communication bus. Each ECU informs the other ECUs that they are connected to the network by outputting a specified signal (periodical signal) onto the communication bus on a regular schedule. The multiplex tilt and telescopic ECU detects the connection of each ECU based on the signal.

DTC No.	Detection Item	Trouble Area
B2621	Periodical signal from the specified ECU has stopped.	• CAN communication system • Main body ECU • Front power seat switch LH (Position control ECU) • Combination meter assembly • Multiplex tilt and telescopic ECU

INSPECTION PROCEDURE

1 CHECK DTC (CAN COMMUNICATION SYSTEM)

(a) Check the DTC of the CAN communication system (See page CA-49).

Result

Result	Proceed to
DTC is not output	A
DTC is output	B

B → **GO TO CAN COMMUNICATION SYSTEM**

A

2 READ VALUE OF INTELLIGENT TESTER (MAIN BODY ECU COMMUNICATION SIGNAL)

(a) Connect the intelligent tester to the DLC3.
(b) Turn the engine switch on (IG) and turn the intelligent tester on.
(c) Select "J/B" from DATA LIST.
(d) Check the signal communication state of the main body ECU on the tester screen.

TILT & TELESCO:

Tester Display	Measurement Item/Range	Normal Condition	Diagnostic Note
J/B	Communication state of body ECU signal / OK or Interruption	OK: Communication is normal Interruption: Communication is interrupted	-

OK:
"OK" is displayed.

NG → **REPLACE MAIN BODY ECU**

OK

SR

3	READ VALUE OF INTELLIGENT TESTER (DRIVER SEAT ECU COMMUNICATION SIGNAL)

(a) Select "SEAT ECU INFO" from DATA LIST.
(b) Check the signal communication state of the front power seat switch LH (position control ECU) on the tester screen.

TILT & TELESCO:

Tester Display	Measurement Item/Range	Normal Condition	Diagnostic Note
SEAT ECU INFO	Communication state of seat ECU signal / OK or Interruption	OK: Communication is normal Interruption: Communication is interrupted	-

OK:
"OK" is displayed.

NG → **REPLACE FRONT POWER SEAT SWITCH (DRIVER SEAT ECU)**

OK

4	READ VALUE OF INTELLIGENT TESTER (COMBINATION METER ECU COMMUNICATION SIGNAL)

(a) Select "METER ECU INFO" from DATA LIST.
(b) Check the signal communication state of the power source control ECU on the tester screen.

TILT & TELESCO:

Tester Display	Measurement Item/Range	Normal Condition	Diagnostic Note
METER ECU INFO	Communication state of power source control ECU signal / OK or Interruption	OK: Communication is normal Interruption: Communication is interrupted	-

OK:
"OK" is displayed.

NG → **REPLACE COMBINATION METER ASSEMBLY (COMBINATION METER ECU)**

OK

REPLACE MULTIPLEX TILT AND TELESCOPIC ECU

DTC	B2624	Vehicles Speed Malfunction

DESCRIPTION

The multiplex tilt and telescopic ECU forms a network with the ECUs of other systems through the communication bus. Each ECU informs the other ECUs that they are connected to the network by outputting a specified signal (periodic signal) onto the communication bus on a regular basis. The multiplex tilt and telescopic ECU receives vehicle speed signals from the combination meter via the communication bus to prevent improper operation of the auto away/return function during driving.

DTC No.	Detection Item	Trouble Area
B2624	• The auto away function is disabled with the last vehicle speed signal (*1) of 10 km/h (6 mph) or more. • Vehicle speed signal is lost for 5 seconds or more and the auto away/return function is disabled.	• CAN communication system • Combination meter assembly • Multiplex tilt and telescopic ECU

HINT:
*1: If the engine switch is turned off immediately after the vehicle comes to a sudden stop, the last vehicle speed signal may not be 0 km/h (0 mph).

INSPECTION PROCEDURE

1 CHECK CAN COMMUNICATION SYSTEM

(a) Check the "COMMUNICATION STOP MODE TABLE" of the CAN communication system (See page CA-15).

Result

Tester Display	Proceed to
"Meter" is displayed.	A
"Meter" is not displayed.	B

B → GO TO CAN COMMUNICATION SYSTEM

A

2 READ VALUE OF INTELLIGENT TESTER (SPEED SIGNAL)

(a) Connect the intelligent tester to the DLC3.
(b) Turn the engine switch on (IG) and turn the intelligent tester on.
(c) Select "FREEZ SPD INFO" from DATA LIST.
(d) Check the vehicle speed signal on the tester screen.

TILT & TELESCO:

Tester Display	Measurement Item/Range	Inspection Condition	Standard
FREEZ SPD INFO	Vehicle speed data / min.: 0 km/h (0 mph), max.: 255 km/h (158 mph)	Stop → Drive → Stop	0 km/h (0 mph) → Same speed as indicated on speedometer → 0 km/h (0 mph)

Result

Result	Proceed to
OK	A
NG (Tester indication is abnormal)	B
NG (Meter indication is abnormal)	C

HINT:
Vehicle speed of 3 km/h (2 mph) or more may be displayed on the tester screen immediately after the vehicle comes to a sudden stop. This is caused by a delay in vehicle signal input via the communication bus and not a malfunction.

B → **REPLACE MULTIPLEX TILT AND TELESCOPIC ECU**

C → **CHECK COMBINATION METER SYSTEM**

A

REPLACE MULTIPLEX TILT AND TELESCOPIC ECU

Tilt and Telescopic Manual Switch Circuit

DESCRIPTION

The signals generated by operating the manual switch are sent to the multiplex tilt and telescopic ECU through the communication bus.

INSPECTION PROCEDURE

1 READ VALUE OF INTELLIGENT TESTER (COMBINATION SWITCH)

(a) Connect the intelligent tester to the DLC3.
(b) Turn the engine switch on (IG) and turn the intelligent tester on.
(c) Select "COMBINATION SWITCH".
(d) Select the following items from the DATA LIST.
(e) Check the tilt and telescopic manual switch.

COMBINATION SWITCH:

Tester Display	Measurement Item/Range	Normal Condition	Normal Condition
TELESC SHORT SW	Telescopic SHORT switch status / OFF or ON	OFF: Telescopic short is not activated by manual switch ON: Telescopic short is activated by manual switch	-
TELESC LONG SW	Telescopic LONG switch status / OFF or ON	OFF: Telescopic long is not activated by manual switch ON: Telescopic long is activated by manual switch	-
TILT DOWN SW	Tilt DOWN switch status / OFF or ON	OFF: Tilt down is not activated by manual switch ON: Tilt down is activated by manual switch	-
TILT UP SW	Tilt UP switch status / OFF or ON	OFF: Tilt up is not activated by manual switch ON: Tilt up is activated by manual switch	-

OK:
"ON" is displayed on the tester screen when each switch is turned on.
"OFF" is displayed on the tester screen when each switch is turned off.

NG → **REPLACE HEADLIGHT DIMMER SWITCH ASSEMBLY**

OK

PROCEED TO NEXT CIRCUIT INSPECTION SHOWN IN PROBLEM SYMPTOMS TABLE

IG Power Source Circuit

DESCRIPTION

When the engine switch is turned on (IG), the IG power source circuit supplies positive voltage to the multiplex tilt and telescopic ECU.
The multiplex tilt and telescopic ECU also receives engine switch signals via this circuit.

WIRING DIAGRAM

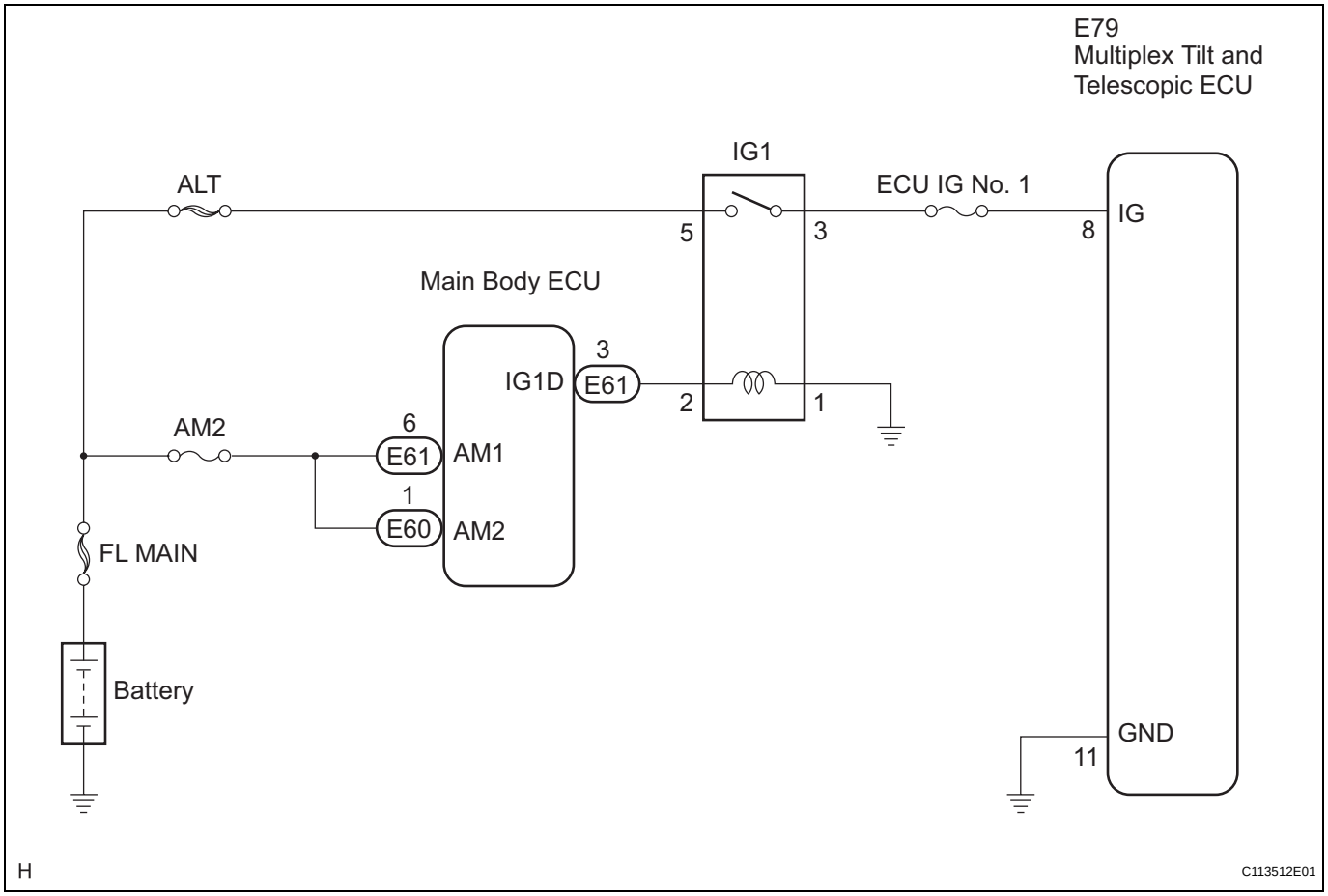

INSPECTION PROCEDURE

1	INSPECT FUSE (ECU IG NO. 1)

(a) Remove the ECU-IG No. 1 fuse from the instrument panel J/B.
(b) Measure the resistance of the ECU-IG No. 1 fuse.
Standard resistance:
Below 1 Ω

NG → **REPLACE FUSE**

OK

SR

2 INSPECT MULTIPLEX TILT AND TELESCOPIC ECU (IG TERMINAL VOLTAGE)

Multiplex Tilt and Telescopic ECU:

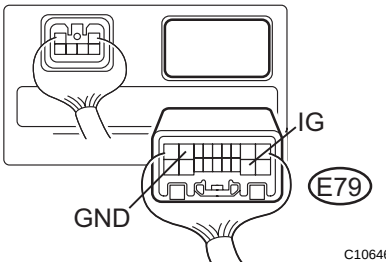

(a) Disconnect the E79 connector from the multiplex tilt and telescopic ECU.

(b) Measure the voltage according to the value(s) in the table below.

Standard voltage

Tester Connection	Condition	Specified Condition
IG (E79-8) - GND (E79-11)	Engine switch on (IG)	10 to 14 V

OK → **PROCEED TO NEXT CIRCUIT INSPECTION SHOWN IN PROBLEM SYMPTOMS TABLE**

NG

3 CHECK HARNESS AND CONNECTOR (MULTIPLEX TILT AND TELESCOPIC ECU - BODY GROUND)

Multiplex Tilt and Telescopic ECU:

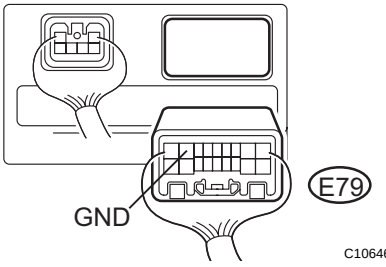

(a) Measure the resistance according to the value(s) in the table below.

Standard resistance

Tester Connection	Condition	Specified Condition
GND (E79-11) - Body ground	Always	Below 1 Ω

NG → **REPAIR OR REPLACE HARNESS OR CONNECTOR**

OK

REPLACE MULTIPLEX TILT AND TELESCOPIC ECU

TERMINALS OF ECU

1. MULTIPLEX TILT AND TELESCOPIC ECU

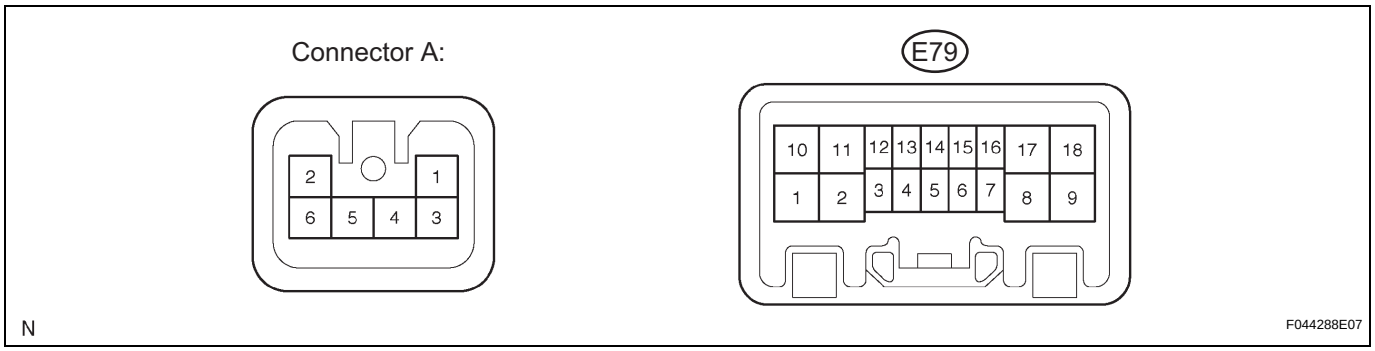

Symbols (Terminal No.)	Wiring Color	Terminal Description	Condition	Specified Condition
TEM+ (A-2) - GND (E79-11)	- (Not available) - W-B	Telescopic motor output	• Engine switch on (IG) • Telescopic steering contracts	10 to 14 V
			Telescopic motor is not operating	Below 1 V
VCE (A-3) - E1 (A-5)	- (Not available)	Telescopic sensor power source	Engine switch on (IG)	8 to 16 V
TES (A-4) - E1 (A-5)	- (Not available)	Telescopic sensor signal	Telescopic motor is operating	Pulse generation HI: 8 to 16 V LOW: 0 V
E1 (A-5) - Body ground	- (Not available) - Body ground	Telescopic sensor ground	Always	Below 1 V
TEM- (A-6) - GND (E79-11)	- (Not available) - W-B	Telescopic motor output	• Engine switch on (IG) • Telescopic steering extends	10 to 14 V
			Telescopic motor is not operating	Below 1 V
TIM- (E79-1) - GND (E79-11)	L - W-B	Tilt motor output	• Engine switch on (IG) • Steering tilts down	10 to 14 V
			Tilt motor is not operating	Below 1 V
+B (E79-2) - GND (E79-11)	W - W-B	Motor power source	Always	10 to 14 V
MSW (E79-3) - GND (E79-11)	GR - W-B	Manual switch signal	• Engine switch on (IG) • Tilt up by manual switch	1.67 to 2.13 V
			• Engine switch on (IG) • Tilt down by manual switch	0.54 to 0.74 V
			• Engine switch on (IG) • Telescopic contracted by manual switch	1.08 to 1.40 V
			• Engine switch on (IG) • Telescopic extended by manual switch	2.22 to 2.77 V
			Manual switch is not operated	Below 0.2 V
VC (E79-4) - GND (E79-11)	LG - W-B	Manual switch power source	Engine switch on (IG)	4.9 to 5.1 V
CANH (E79-5) - GND (E79-11)	BR - W-B	CAN communication	Engine switch on (IG)	Below 1 V
VCI (E79-6) - E1 (E79-17)	B - L	Tilt sensor power source	Engine switch on (IG)	8 to 16 V
TIS (E79-7) - E1 (E79-17)	Y - L	Tilt sensor signal	Tilt motor is operating	Pulse generation HI: 8 to 16 V LOW: 0 V

Symbols (Terminal No.)	Wiring Color	Terminal Description	Condition	Specified Condition
IG (E79-8) - GND (E79-11)	B - W-B	IG signal / IG power source	Engine switch on (IG)	10 to 14 V
			Engine switch off	Below 1 V
ECUB (E79-9) - GND (E79-11)	V - W-B	ECU power source	Always	10 to 14 V
TIM+ (E79-10) - GND (E79-11)	B - W-B	Tilt motor output	• Engine switch on (IG) • Steering tilts up	10 to 14 V
			Tilt motor is not operating	Below 1 V
GND (E79-11) - Body ground	W-B - Body ground	ECU ground	Always	Below 1 V
CANL (E79-14) - GND (E79-11)	GR - W-B	CAN communication	Engine switch on (IG)	Below 1 V
E1 (E79-17) - Body ground	L - Body ground	Tilt sensor ground	Always	Below 1 V

SYSTEM DESCRIPTION

1. DESCRIPTION

(a) The steering lock system locks or unlocks the steering lock by activating the steering lock bar with a motor. The steering lock ECU activates the motor based on signals from the certification ECU and main body ECU.

(b) A LIN (Local Interconnect Network) is used for communication between different ECUs in this system.

2. FUNCTIONS OF COMPONENTS

(a) The steering lock ECU controls the system based on information from the following components.

Item	Function
Steering lock actuator assembly	Consists of a motor, lock bar, lock and unlock position sensors, etc. Activated by the steering lock ECU.
Steering lock ECU	Included in the steering lock actuator assembly. This ECU activates the steering lock motor based on permission signals from the main body ECU and certification ECU. Detects steering lock or unlock state and transmits this information to other ECUs.
Main body ECU	Permits the steering lock ECU to supply power to activate the motor. The main body ECU and certification ECU permit engine start after receiving an unlock signal from the steering lock ECU.
Certification ECU	Orders the steering lock ECU to lock / unlock the steering. The main body ECU and certification ECU permit engine start after receiving an unlock signal from the steering lock ECU.
IG2 relay	Controlled by the main body ECU. This ECU sends IG signals to the steering lock ECU.

HOW TO PROCEED WITH TROUBLESHOOTING

*: Use the intelligent tester.

1	VEHICLE BROUGHT TO WORKSHOP

NEXT

2	CHECK AND CLEAR DTCS*

NEXT

3	PROBLEM SYMPTOM CONFIRMATION

→ SYMPTOM DOES NOT OCCUR (Go to step 4)

→ SYMPTOM OCCURS (Go to step 5)

4	SYMPTOM SIMULATION

NEXT

5	CHECK CAN COMMUNICATION SYSTEM*

HINT:
Check that there are no problems with the CAN communication system before troubleshooting the steering lock system.

NEXT

6	DTC CHECK*

→ DTC IS NOT OUTPUT (Go to step 7)

→ DTC IS OUTPUT (Go to step 8)

7	PROBLEM SYMPTOMS TABLE

→ Go to step 9

8	DTC CHART

NEXT

9	CIRCUIT INSPECTION*

NEXT

10	PROBLEM IDENTIFICATION

NEXT

11	REPAIR OR REPLACEMENT

NEXT

12	CONFIRMATION TEST

NEXT

END

INITIALIZATION

HINT:
In vehicles equipped with the smart access system with push-button start function, the starting function may not operate after recharging or while jump-starting a discharged battery. This condition is most common if the battery voltage drops below 9 V. The following procedure has been developed to address this condition.

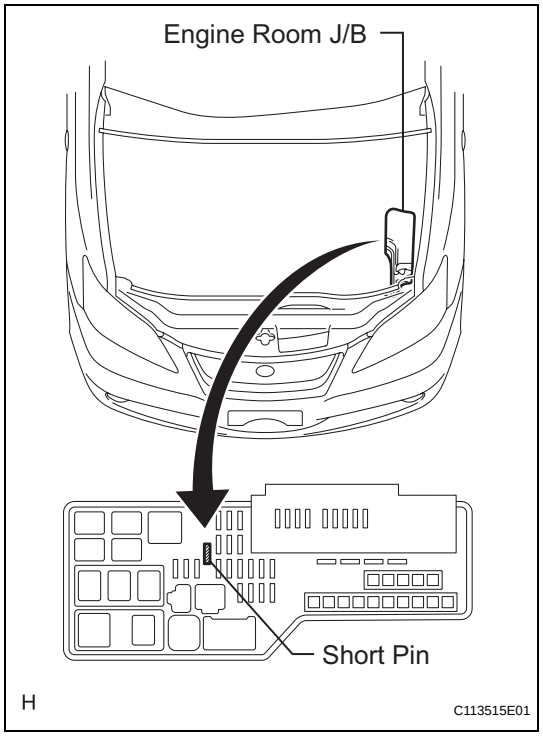

1. INITIALIZATION PROCEDURE

(a) Confirm that the short pin is installed.
HINT:
If the short pin fuse is not installed, install it at this time.

(b) Move the shift lever to the P position.

(c) Turn the engine switch off.

(d) Open the driver's door.
HINT:
Opening the driver's door will start an initialization process between the steering lock ECU and the engine room J/B.

(e) Depress the brake pedal.

(f) Press the "START STOP" switch.

PROBLEM SYMPTOMS TABLE

Inspect the suspected areas in numerical order by referring to the corresponding pages when any of the following symptoms occurs:

ELECTRIC STEERING LOCK FUNCTION:

Symptom	Suspected Area	See page
Steering wheel cannot be unlocked (the engine cannot be started).	1. Initialization	SR-53
	2. Check for DTCs in the smart access system with push-button start.	ST-28
	3. Check for DTCs in the engine immobiliser system.	EI-25
	4. Check that the LCK/UNLCK REC item in the DATA LIST of the certification ECU displays YES within 10 seconds after starting the engine. (If it displays NO, see "No steering unlock command" in this table.)	SR-58
	5. Check the input signal from the IGE terminal of the steering lock ECU.	SR-68
	6. Steering lock ECU power source circuit.	SR-74
	7. Replace the steering lock ECU.	SR-82
Steering wheel cannot be unlocked (no steering unlock command).	1. Check that the S CODE MACH item in the DATA LIST of the certification ECU displays OK. (If it displays NG, replace the ID code box.)	-
	2. Check that the L CODE MACH item in the DATA LIST of the certification ECU displays OK. (If it displays NG, replace the ID code box.)	-
	3. Replace the certification ECU.	-
Steering wheel cannot be locked.	1. Check for DTCs in the smart access system with push-button start.	ST-28
	2. Check for DTCs in the engine immobiliser system.	EI-25
	3. With the engine switch off and the shift lever in the P position, open and close the drivers door. After that, check that the LCK/UNLCK REC item in the DATA LIST of the certification ECU displays YES within 10 seconds. (If it displays NO, see "No steering lock command" in this table.)	SR-58
	4. Check the input signal from the IGE terminal of the steering lock ECU.	SR-68
	5. Steering lock ECU power source circuit.	SR-74
	6. Replace the steering lock ECU.	SR-82
Steering wheel cannot be locked (no steering lock command).	1. Courtesy light switch circuit	LI-94
	2. Check that the S CODE MACH item in the DATA LIST of the certification ECU displays OK. (If it displays NG, replace the ID code box.)	-
	3. Check that the L CODE MACH item in the DATA LIST of the certification ECU displays OK. (If it displays NG, replace the ID code box.)	-
	4. Replace the certification ECU.	-

SMART ACCESS SYSTEM WITH PUSH-BUTTON START FUNCTION:

Symptom	Suspected Area	See page
Engine does not start.	1. Initialization	SR-53
	2. Check for DTCs in the smart access system with push-button start.	ST-28
	3. Check for DTCs in the engine immobiliser system.	EI-25
	4. Check that the engine switch is turned on (IG).	-
	5. Check cranking operation. (If cranking operation is possible, see "Engine does not start due to the engine immobiliser" in this table.)	-
	6. Check SHIFT P SIG in the DATA LIST of the power source control ECU and confirm that the shift signal is normal.	-
	7. Check whether the steering wheel is locked or unlocked. (If it is locked, see "Steering wheel cannot be unlocked" in the steering lock function table.)	-
	8. Check the output from the SLP terminal of the steering lock ECU.	SR-72
	9. Check the output signal from the ST SW of the certification ECU (DTC B2275).	ST-48
	10. Replace the main body ECU.	-
Engine does not start due to the engine immobiliser.	1. Check that the L CODE MACH item in the DATA LIST of the certification ECU displays OK. (If it displays NG, replace the ID code box.)	-
	2. Check that the ENG START REQ item in the DATA LIST of the certification ECU displays YES. (If it displays NO, replace the certification ECU.)	-
	3. Check that the S CODE MACH item in the DATA LIST of the certification ECU displays OK. (If it displays NG, replace the ID code box.)	-
	4. Replace the ID code box.	-

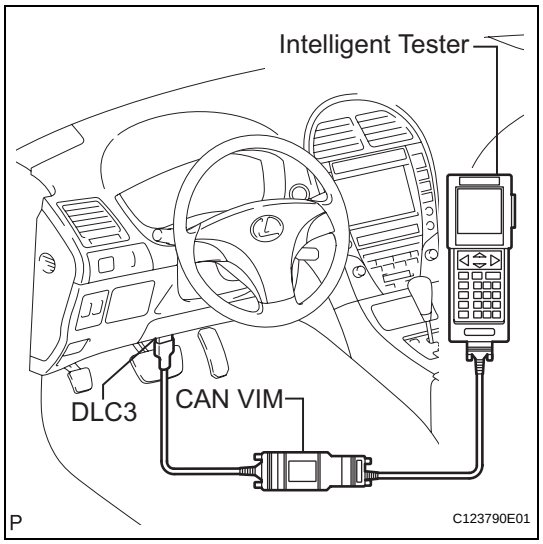

DTC CHECK / CLEAR

1. CHECK FOR DTCS

(a) Prepare the intelligent tester.

(b) Connect the intelligent tester to the DLC3 at the lower part of the instrument panel.

(c) Turn the engine switch on (IG) and turn the intelligent tester on.

(d) Use the intelligent tester to check for DTCs, and note or print the result (see the operator's manual for operating instructions).

(e) Confirm the details of the DTCs (See page SR-59).

2. CLEAR DTCS

(a) Operate the intelligent tester to clear the DTCs (see the operator's manual for operating instructions).

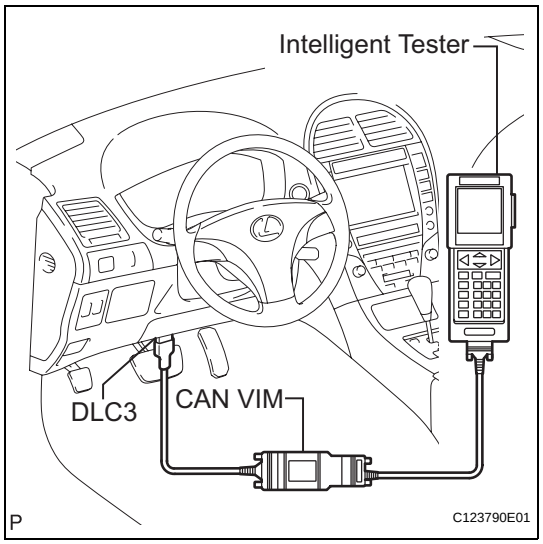

DATA LIST / ACTIVE TEST

1. DATA LIST

(a) Connect the intelligent tester to the DLC3.

HINT:

By accessing the DATA LIST displayed on the intelligent tester, it is possible to perform such functions as reading the values of switches and sensors without removing any parts. Reading the DATA LIST is the first step in troubleshooting and is one method to save diagnostic time.

(b) Turn the engine switch on (IG) and turn the intelligent tester on.

(c) Operate the intelligent tester according to the steps on the display and select DATA LIST.

SMART:

Tester Display	Measurement Item/Range	Normal Condition	Diagnostic Note
SLCK SLEEP COND	Steering lock ECU sleep condition / YES or NO	YES: Steering lock ECU sleep mode can be entered NO: Steering lock ECU sleep mode cannot be entered	-
SLCK START COND	Steering lock ECU start signal / YES or NO	YES: Steering lock ECU sent a start signal NO: Steering lock ECU did not send a start signal	-
ENG START COND	Engine start condition / OK or NG	OK: Engine is allowed to start NG: Engine is not allowed to start	-
SENSOR VALUE	Sensor malfunction / NG (PAST) or OK	NG (PAST): Sensor malfunction OK: No malfunction	-
PWR SUPPLY SHRT	Short in ECU / NG (PAST) or OK	NG (PAST): Short in ECU OK: No malfunction	-
PWR SUPPLY OPEN	Open in ECU / NG (PAST) or OK	NG (PAST): Open in ECU OK: No malfunction	-
MTR DRIVER SHRT	Short in driver ECU / NG (PAST) or OK	NG (PAST): Short in driver ECU OK: No malfunction	-
MTR DRIVER OPEN	Open in driver ECU / NG (PAST) or OK	NG (PAST): Open in driver ECU OK: No malfunction	-

Tester Display	Measurement Item/Range	Normal Condition	Diagnostic Note
LCK/UNLCK REC	Steering lock command reception record / YES or NO	YES: Steering lock / unlock signal received NO: Steering lock / unlock signal no received	-
LCK BAR STUCK	Lock bar stuck malfunction / NG (PAST) or OK	NG (PAST): Lock bar stuck malfunction OK: No malfunction	-
PUSH START ERR	Push button start function malfunction / NG (PAST) or OK	NG (PAST): Malfunction in push button start OK: No malfunction	-
IG2	IG2 voltage / ON or OFF	ON: 10 to 14 V OFF: Below 1 V	-
IG (LIN)	LIN bus IG status / ON or OFF	ON: LIN bus IG ON status OFF: LIN bus IG OFF status	-

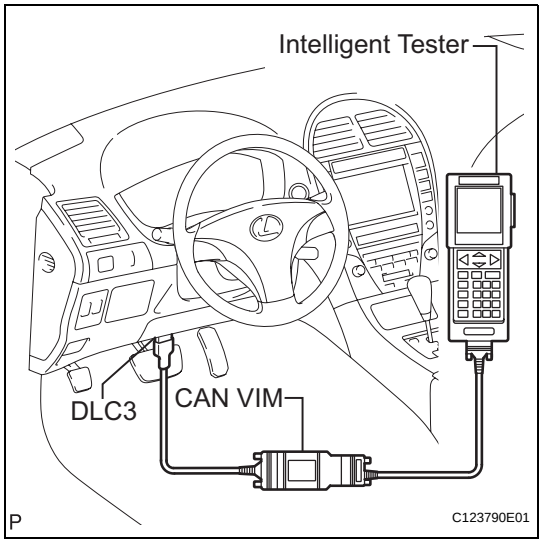

2. ACTIVE TEST

(a) Connect the intelligent tester to the DLC3.
HINT:
Performing the ACTIVE TEST is one of the methods to save diagnostic time. It is possible to display the DATA LIST during the ACTIVE TEST.

(b) Turn the engine switch on (IG) and turn the intelligent tester on.

(c) Following the display on the intelligent tester, perform the ACTIVE TEST.

MAIN BODY:

Tester Display	Test Part	Control Range	Diagnostic Note
STR LOCK PWR	Steering Lock Power Source	ON / OFF	-

DIAGNOSTIC TROUBLE CODE CHART

If a trouble code is displayed during the DTC check, check the parts listed for that code in the table below and proceed to the appropriate page.
HINT:
The steering lock ECU does not store DTCs regarding the past problems.

ELECTRIC STEERING LOCK:

DTC Code	Detection Item	Trouble Area	See page
B2781	Open / Short in Steering Lock ECU	Steering lock actuator assembly (Steering lock ECU)	SR-61
B2782	Power Source Control ECU Malfunction	1. Wire harness 2. Steering lock actuator assembly (Steering lock ECU) 3. Main body ECU	SR-62
B2788	IG2 Signal Malfunction	1. IG2 relay 2. Wire harness 3. Main body ECU 4. Steering lock actuator assembly (Steering lock ECU)	SR-65

DTC	B2781	Open / Short in Steering Lock ECU

DESCRIPTION

If the steering lock ECU determines that there is a malfunction inside the ECU, it outputs this DTC. The steering lock ECU diagnosis information cannot be read directly from the steering lock ECU by the tester. The diagnosis information from the steering lock ECU is transmitted to the tester via the certification ECU to the tester using the controller area network (CAN).

DTC No.	DTC Detecting Condition	Trouble Area
B2781	• Steering lock motor drive circuit is defective. • Both lock and unlock position sensors detect "ON".	Steering lock actuator assembly (Steering lock ECU)

INSPECTION PROCEDURE

1	REPLACE STEERING LOCK ACTUATOR ASSEMBLY (STEERING LOCK ECU)

HINT:
The steering lock ECU and steering lock actuator assembly are supplied as a unit.

(a) Replace the steering lock actuator assembly (See page SR-82).

NEXT

END

DTC	B2782	Power Source Control ECU Malfunction

DESCRIPTION

The main body ECU (*) controls the power supply to activate the steering lock motor. This prevents the steering from being locked while the vehicle is moving.
HINT:
*: The power source control ECU is not a physical part. This code refers to the power source control function performed by the main body ECU.

DTC No.	DTC Detecting Condition	Trouble Area
B2782	Steering lock motor drive control circuit is defective.	• Wire harness • Steering lock actuator assembly (Steering lock ECU) • Main body ECU

WIRING DIAGRAM

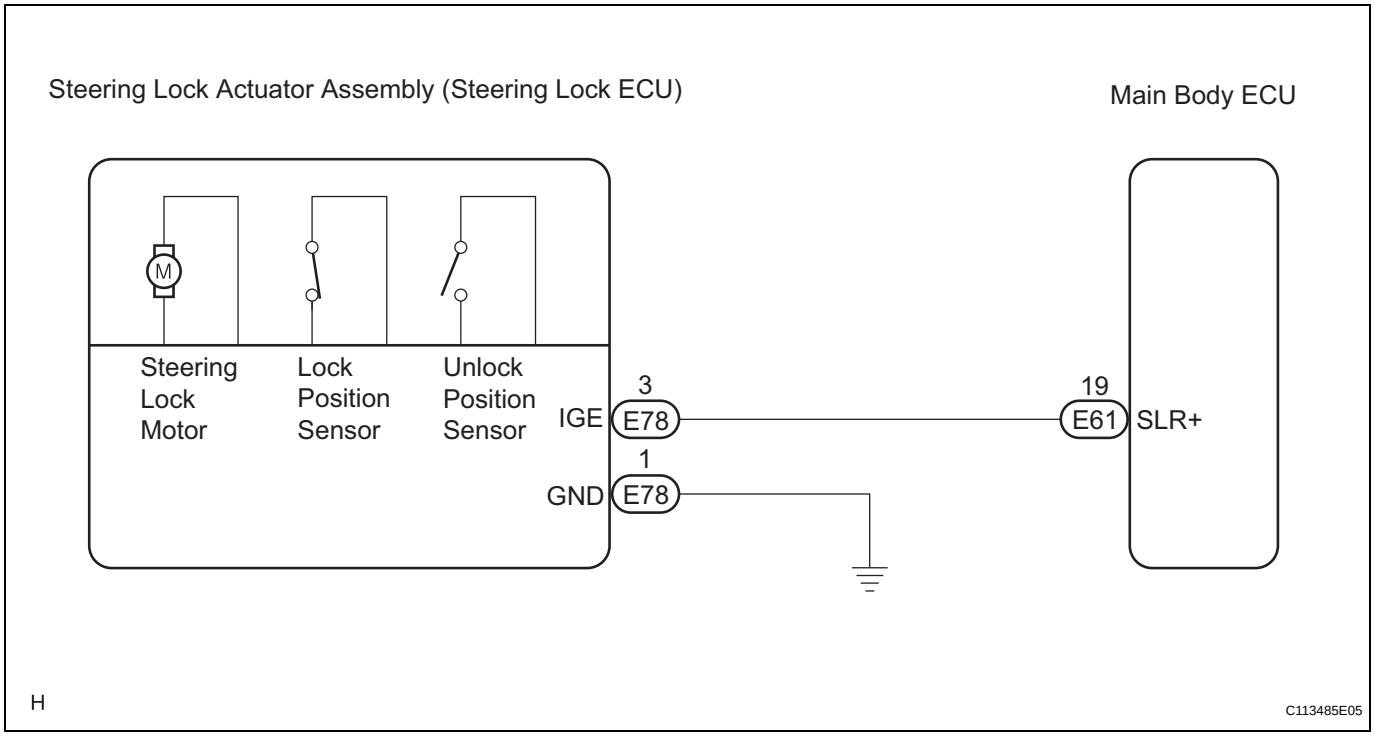

INSPECTION PROCEDURE

1	INSPECT STEERING LOCK ACTUATOR ASSEMBLY (STEERING LOCK ECU)

Steering Lock Actuator Assembly:

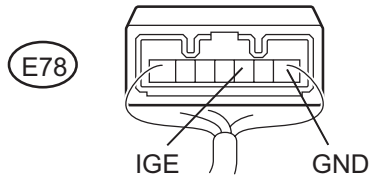

(a) Measure the voltage according to the value(s) in the table below.

Standard voltage

Tester Connection	Condition	Specified Condition
E78-3 (IGE) - E78-1 (GND)	**The specified condition should be checked after performing the following:** **1. Turn the engine switch off** **2. Turn the engine switch on (ACC or IG)**	• **Motor activated: Below 1 V** • **Motor not activated: 10 to 12 V**

SR

Tester Connection	Condition	Specified Condition
E78-3 (IGE) - E78-1 (GND)	The specified condition should be checked after performing the following: 1. Move the shift lever to the P position 2. Turn the engine switch off 3. Open the driver's door	• Motor activated: Below 1 V • Motor not activated: 10 to 12 V

HINT:
The steering lock ECU and steering lock actuator assembly are supplied as a unit.

OK → **REPLACE STEERING LOCK ACTUATOR ASSEMBLY (STEERING LOCK ECU)**

NG

2 CHECK HARNESS AND CONNECTOR (STEERING LOCK ACTUATOR ASSEMBLY - BODY GROUND)

Steering Lock Actuator Assembly:

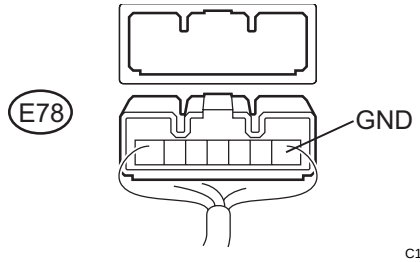

(a) Disconnect the E78 connector from the steering lock actuator assembly.
(b) Measure the resistance according to the value(s) in the table below.

Standard resistance

Tester Connection	Condition	Specified Condition
E78-1 (GND) - Body ground	Always	Below 1 Ω

NG → **REPAIR OR REPLACE HARNESS OR CONNECTOR**

OK

3	CHECK HARNESS AND CONNECTOR (STEERING LOCK ACTUATOR ASSEMBLY - MAIN BODY ECU)

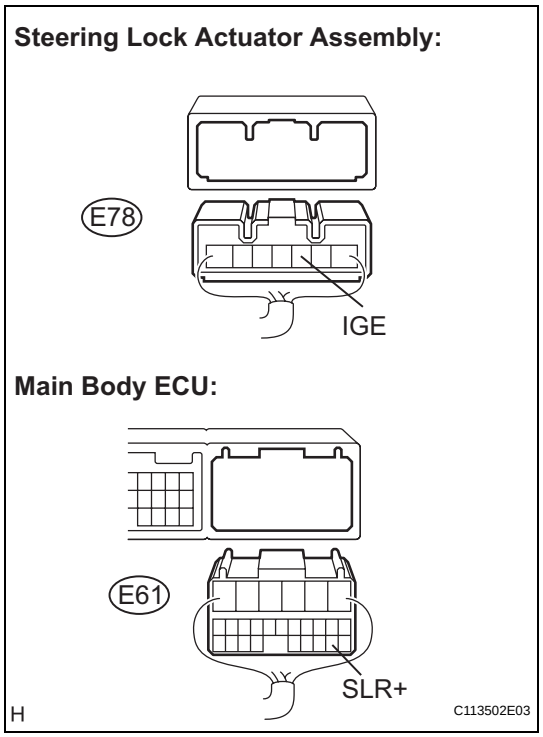

(a) Disconnect the E61 connector from the main body ECU.
(b) Measure the resistance according to the value(s) in the table below.

Standard resistance

Tester Connection	Condition	Specified Condition
E78-3 (IGE) - E61-19 (SLR+)	Always	Below 1 Ω
E78-3 (IGE) - Body ground	Always	10 kΩ or higher

NG → **REPAIR OR REPLACE HARNESS OR CONNECTOR**

OK

REPLACE MAIN BODY ECU

DTC	B2788	IG2 Signal Malfunction

DESCRIPTION

The steering lock ECU receives power from the IG2 relay. When the digital signal from the certification ECU and the voltage from the IG2 relay are received by the steering lock ECU, the steering will be unlocked. The steering lock ECU will not lock the steering when power from the IG2 relay is present (this prevents the steering from being locked while the vehicle is moving).

DTC No.	DTC Detecting Condition	Trouble Area
B2788	Different information is obtained from IG2 signals received directly from the IG2 circuit, and from IG2 signals sent via LIN communication for a period of 1 second.	• IG2 relay • Wire harness • Main body ECU • Steering lock actuator assembly (Steering lock ECU)

WIRING DIAGRAM

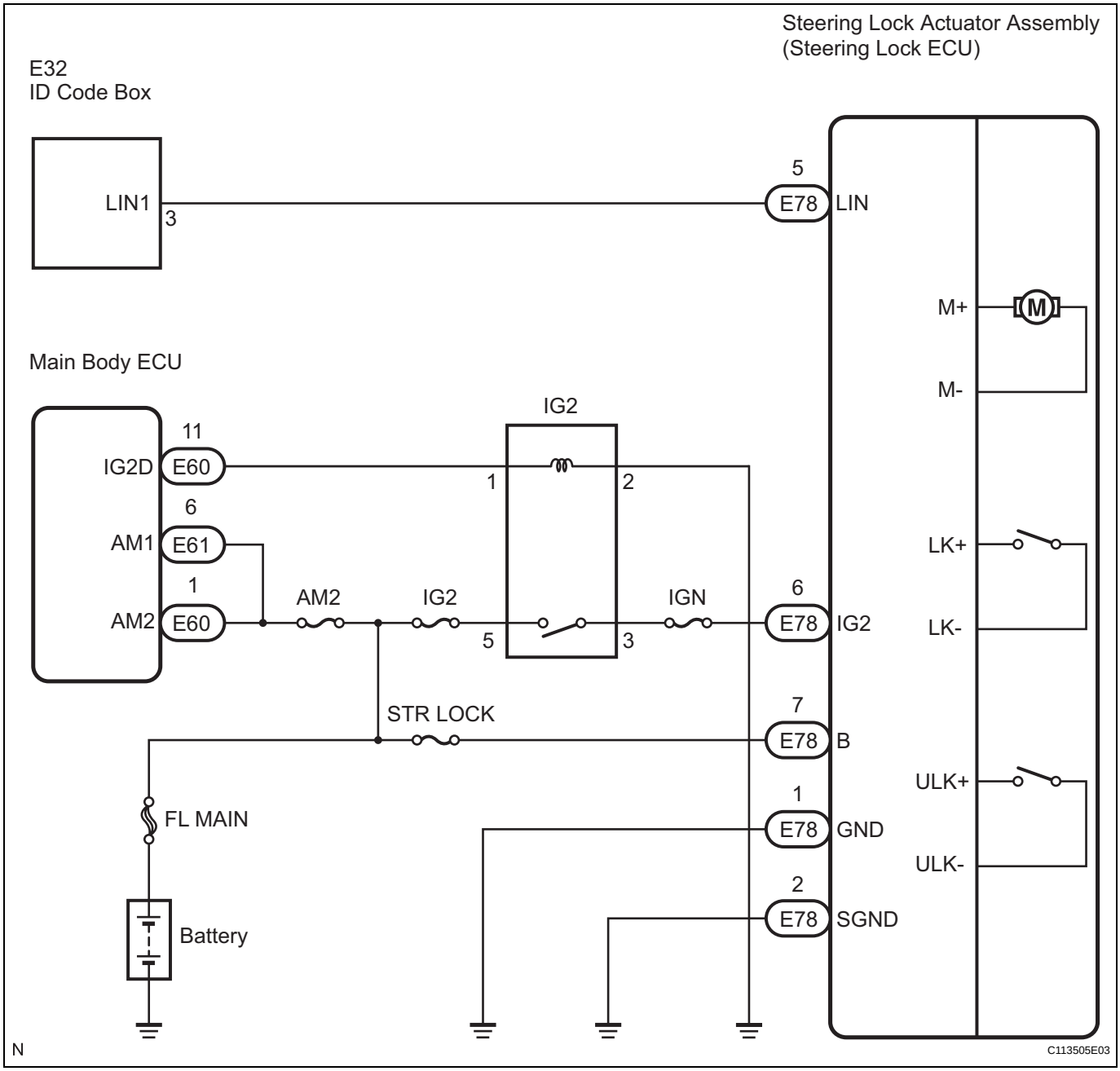

INSPECTION PROCEDURE

1 INSPECT IG2 RELAY

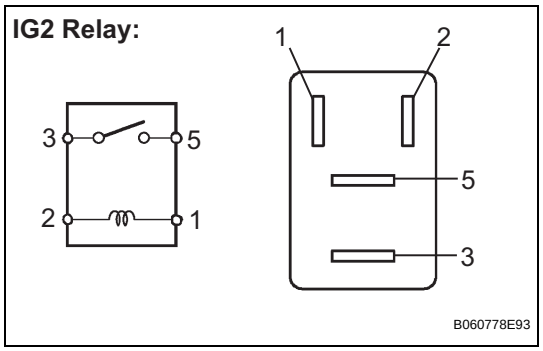

(a) Remove the IG2 relay from the engine room R/B.
(b) Measure the resistance according to the value(s) in the table below.

Standard resistance

Tester Connection	Condition	Specified Condition
3 - 5	Always	10 kΩ or higher
3 - 5	When battery voltage is applied to terminals 1 and 2	Below 1 Ω

NG → **REPLACE IG2 RELAY**

OK

2 CHECK HARNESS AND CONNECTOR (STEERING LOCK ACTUATOR ASSEMBLY - BODY GROUND)

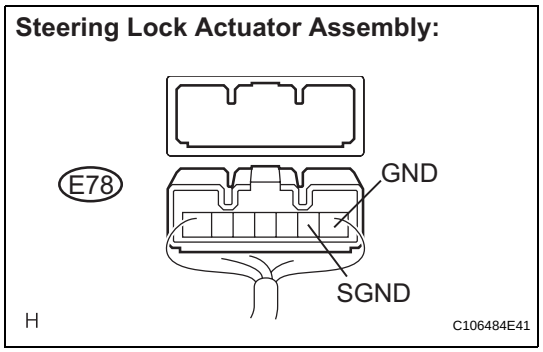

(a) Disconnect the E78 connector from the steering lock actuator assembly.
(b) Measure the resistance according to the value(s) in the table below.

Standard resistance

Tester Connection	Condition	Specified Condition
E78-1 (GND) - Body ground	Always	Below 1 Ω
E78-2 (SGND) - Body ground	Always	Below 1 Ω

NG → **REPAIR OR REPLACE HARNESS OR CONNECTOR**

OK

3 CHECK HARNESS AND CONNECTOR (STEERING LOCK ACTUATOR ASSEMBLY - BATTERY)

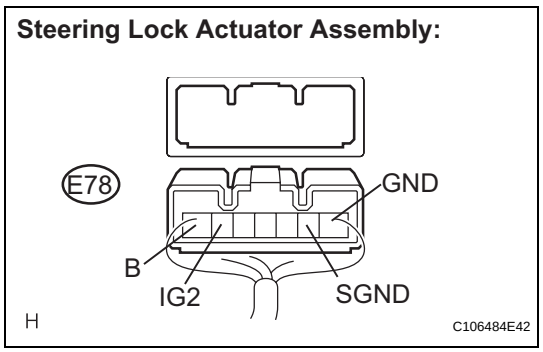

(a) Measure the voltage according to the value(s) in the table below.

Standard voltage

Tester Connection	Condition	Specified Condition
E78-6 (IG2) - E78-1 (GND)	Engine switch on (IG)	10 to 14 V
E78-6 (IG2) - E78-2 (SGND)	Engine switch on (IG)	10 to 14 V

(b) Measure the resistance according to the value(s) in the table below.

Standard resistance

Tester Connection	Condition	Specified Condition
*E78-6 (IG2) - E78-7 (B)	Engine switch off	10 kΩ or higher

*: This measurement is performed with the engine switch off to check for a short between IG2 and battery voltage.

OK → **REPLACE STEERING LOCK ACTUATOR ASSEMBLY (STEERING LOCK ECU)**

NG

REPAIR OR REPLACE HARNESS OR CONNECTOR (STEERING LOCK ACTUATOR ASSEMBLY - BATTERY)

Steering Lock Motor Drive Power Circuit

DESCRIPTION

The steering lock ECU is connected to the main body ECU and certification ECU. The steering lock ECU cannot activate the motor unless it receives permission signals from both ECUs. (The main body ECU permits the steering lock ECU to supply power to activate the motor.)

WIRING DIAGRAM

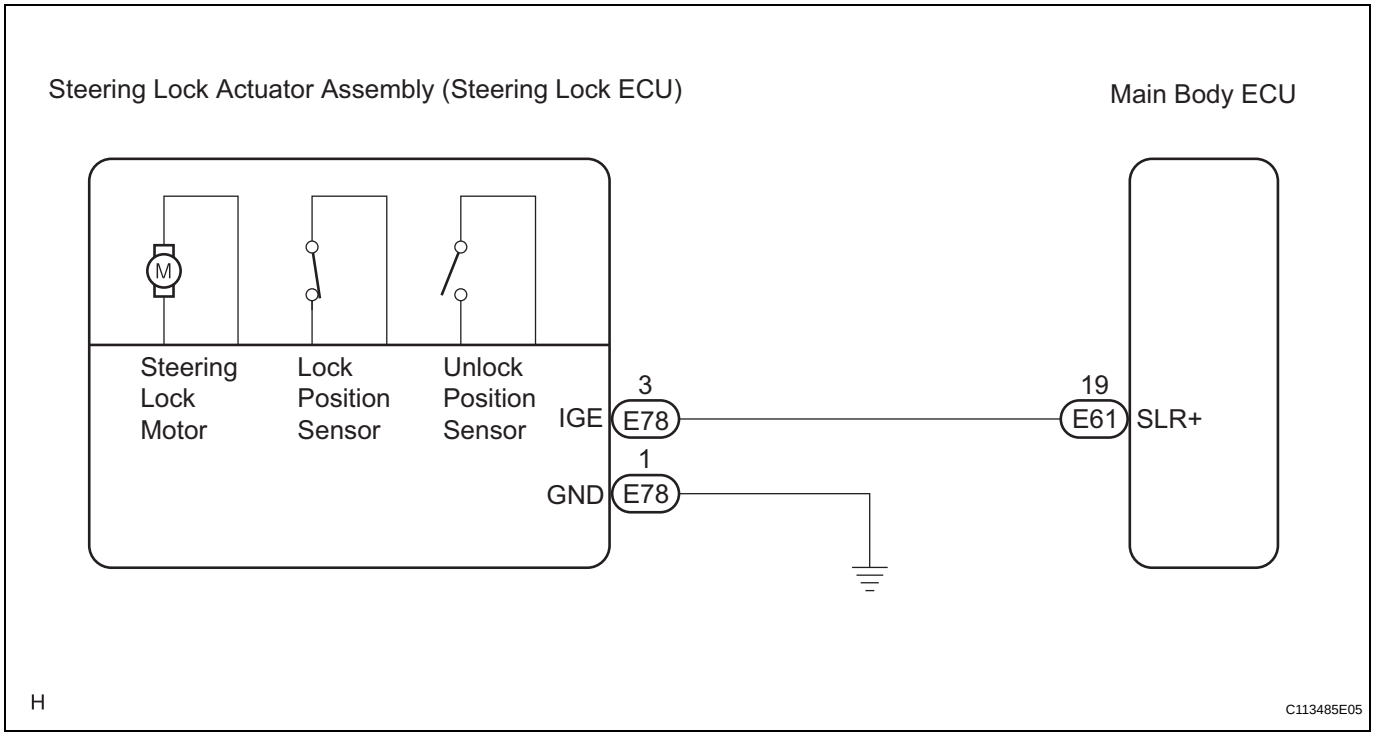

INSPECTION PROCEDURE

1	CHECK VEHICLE CONDITION

(a) Check the problem symptom of the steering lock system.
Result

Condition	Proceed to
Steering lock cannot be released	A
Steering cannot be locked	B

B → **Go to step 6**

A

2	READ VALUE OF INTELLIGENT TESTER

(a) Connect the intelligent tester to the DLC3.
(b) Turn the engine switch on (IG), and turn the intelligent tester on.

(c) Select the item below in the DATA LIST, and read its value displayed on the intelligent tester.

SMART:

Tester Display	Measurement Item/Range	Normal Condition	Diagnostic Note
LCK/UNLCK REC	Steering lock command reception record / YES or NO	YES: Steering lock / unlock signal received NO: Steering lock / unlock signal not received	-

(d) Check if a steering unlock command signal has been received.

OK:

"YES" is displayed on the tester display.

NG → **CHECK SMART ACCESS SYSTEM WITH PUSH-BUTTON START**

OK

3 INSPECT STEERING LOCK ACTUATOR ASSEMBLY (STEERING LOCK ECU)

Steering Lock Actuator Assembly:

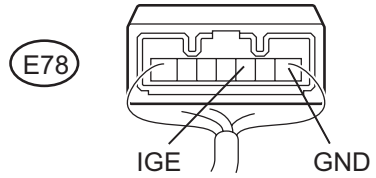

H C106483E28

(a) Measure the voltage according to the value(s) in the table below.

Standard voltage

Tester Connection	Condition	Specified Condition
E78-3 (IGE) - E78-1 (GND)	1. Engine switch off 2. Engine switch on (ACC or IG)	• Motor activated: Below 1 V • Motor not activated: 10 to 12 V

OK → **PROCEED TO NEXT CIRCUIT INSPECTION SHOWN IN PROBLEM SYMPTOMS TABLE**

NG

4 CHECK HARNESS AND CONNECTOR (STEERING LOCK ACTUATOR ASSEMBLY - BODY GROUND)

Steering Lock Actuator Assembly:

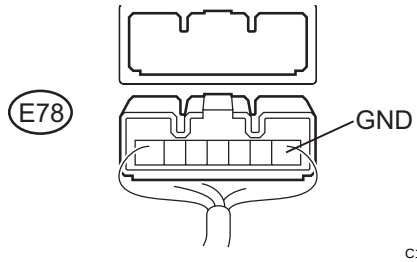

H C106484E40

(a) Disconnect the E78 connector from the steering lock actuator assembly.

(b) Measure the resistance according to the value(s) in the table below.

Standard resistance

Tester Connection	Condition	Specified Condition
E78-1 (GND) - Body ground	Always	Below 1 Ω

NG → **REPAIR OR REPLACE HARNESS OR CONNECTOR**

OK

SR

5 CHECK HARNESS AND CONNECTOR (STEERING LOCK ACTUATOR ASSEMBLY - MAIN BODY ECU)

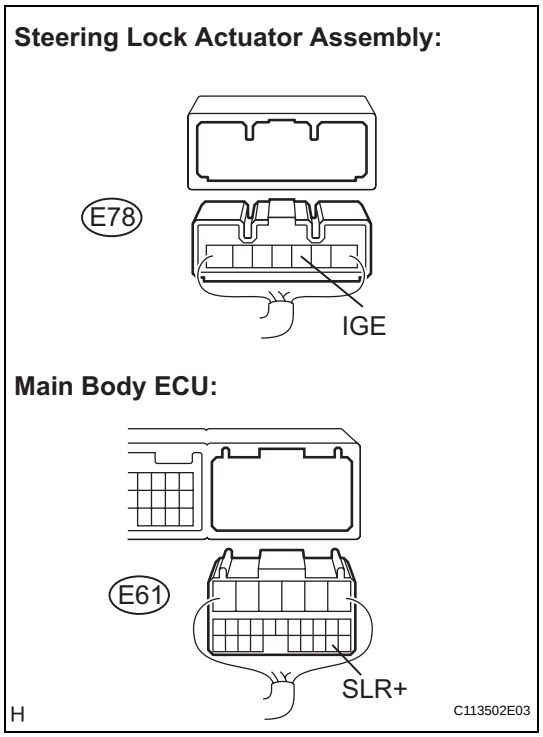

(a) Disconnect the E61 connector from the main body ECU.
(b) Measure the resistance according to the value(s) in the table below.

Standard resistance

Tester Connection	Condition	Specified Condition
E78-3 (IGE) - E61-19 (SLR+)	Always	Below 1 Ω
E78-3 (IGE) - Body ground	Always	10 kΩ or higher

NG → **REPAIR OR REPLACE HARNESS OR CONNECTOR**

OK

REPLACE MAIN BODY ECU

6 INSPECT STEERING LOCK ACTUATOR ASSEMBLY (STEERING LOCK ECU)

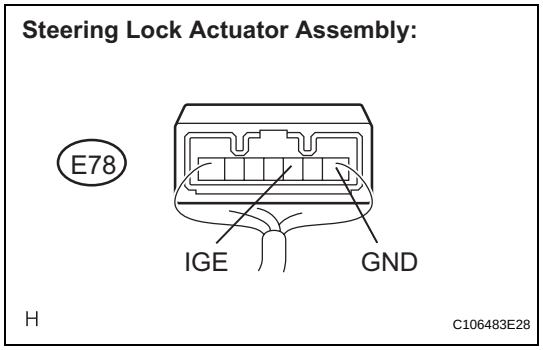

(a) Measure the voltage according to the value(s) in the table below.

Standard voltage

Tester Connection	Condition	Specified Condition
E78-3 (IGE) - E78-1 (GND)	The specified condition should be checked after performing the following: 1. Move the shift lever to the P position 2. Turn the engine switch off 3. Open the driver's door	• Motor activated: Below 1 V • Motor not activated: 10 to 12 V

OK → **PROCEED TO NEXT CIRCUIT INSPECTION SHOWN IN PROBLEM SYMPTOMS TABLE**

NG

SR

7	CHECK HARNESS AND CONNECTOR (STEERING LOCK ACTUATOR ASSEMBLY - MAIN BODY ECU)

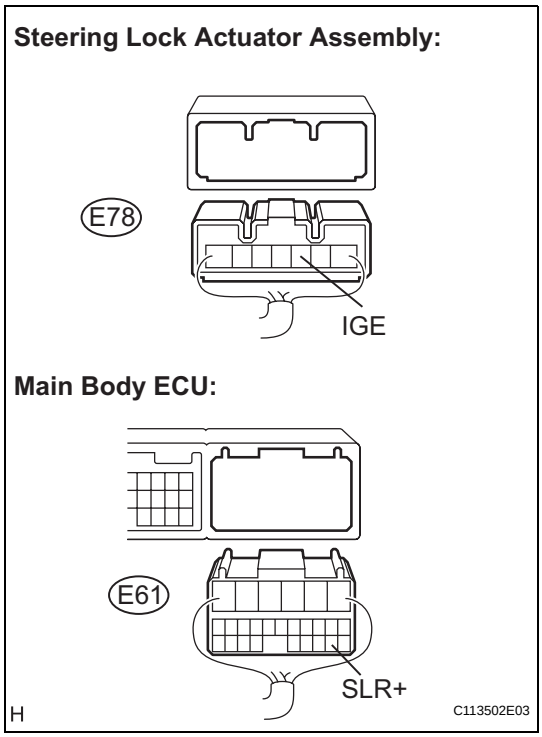

(a) Disconnect the E78 connector from the steering lock actuator assembly.
(b) Disconnect the E61 connector from the main body ECU.
(c) Measure the resistance according to the value(s) in the table below.

Standard resistance

Tester Connection	Condition	Specified Condition
E78-3 (IGE) - E61-19 (SLR+)	Always	Below 1 Ω
E78-3 (IGE) - Body ground	Always	10 kΩ or higher

NG → **REPAIR OR REPLACE HARNESS OR CONNECTOR**

OK

REPLACE MAIN BODY ECU

Unlock Position Sensor Signal Circuit

DESCRIPTION

The unlock position sensor is one of the components in the steering lock actuator. The sensor switch contact closes when the steering lock is released. The steering lock release signal is then sent to the main body ECU. Receiving the signal, the ECU permits engine start. (This prevents the engine from being started with the steering locked.)

WIRING DIAGRAM

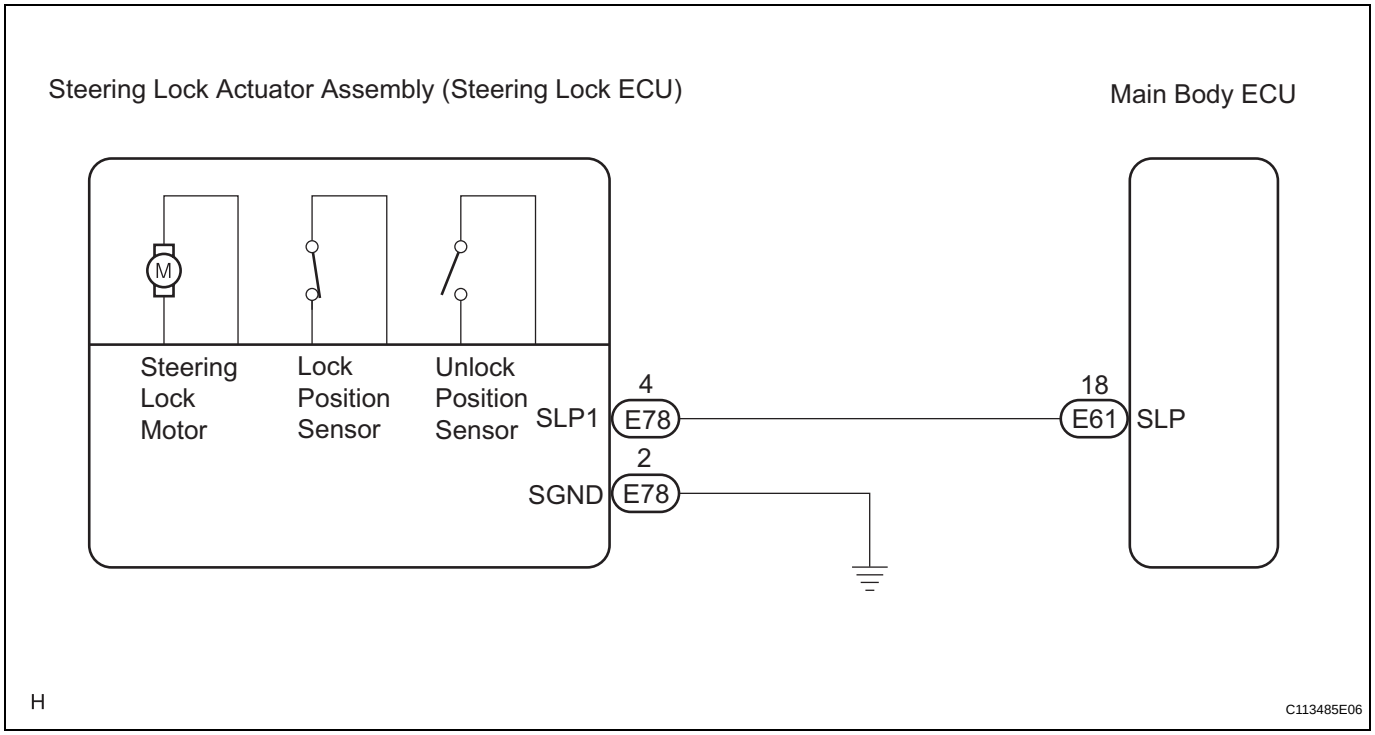

INSPECTION PROCEDURE

1	INSPECT STEERING LOCK ACTUATOR ASSEMBLY (STEERING LOCK ECU)

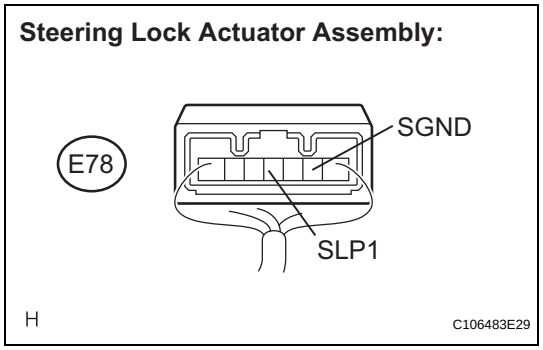

(a) Measure the voltage according to the value(s) in the table below.

Standard voltage

Tester Connection	Condition	Specified Condition
E78-4 (SLP1) - E78-2 (SGND)	1. Engine switch off 2. Engine switch on (ACC or IG)	Below 1 V

OK → **CHECK SMART ACCESS SYSTEM WITH PUSH-BUTTON START FUNCTION**

NG

SR

2	CHECK HARNESS AND CONNECTOR (STEERING LOCK ACTUATOR ASSEMBLY - MAIN BODY ECU)

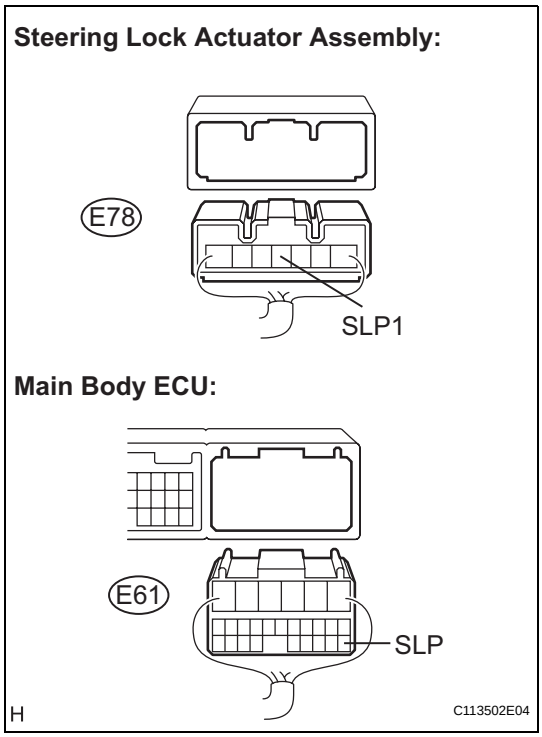

(a) Disconnect the E78 connector from the steering lock actuator assembly.
(b) Disconnect the E61 connector from the main body ECU.
(c) Measure the resistance according to the value(s) in the table below.

Standard resistance

Tester Connection	Condition	Specified Condition
E78-4 (SLP1) - E61-18 (SLP)	Always	Below 1 Ω
E78-4 (SLP1) - Body ground	Always	10 kΩ or higher

NG → **REPAIR OR REPLACE HARNESS OR CONNECTOR**

OK

PROCEED TO NEXT CIRCUIT INSPECTION SHOWN IN PROBLEM SYMPTOMS TABLE

Power Source Circuit

DESCRIPTION

This circuit supplies voltage from the battery to terminal B of the steering lock ECU. This circuit is used as power source for the steering lock CPU, motor, communication, and peripheral circuits.

WIRING DIAGRAM

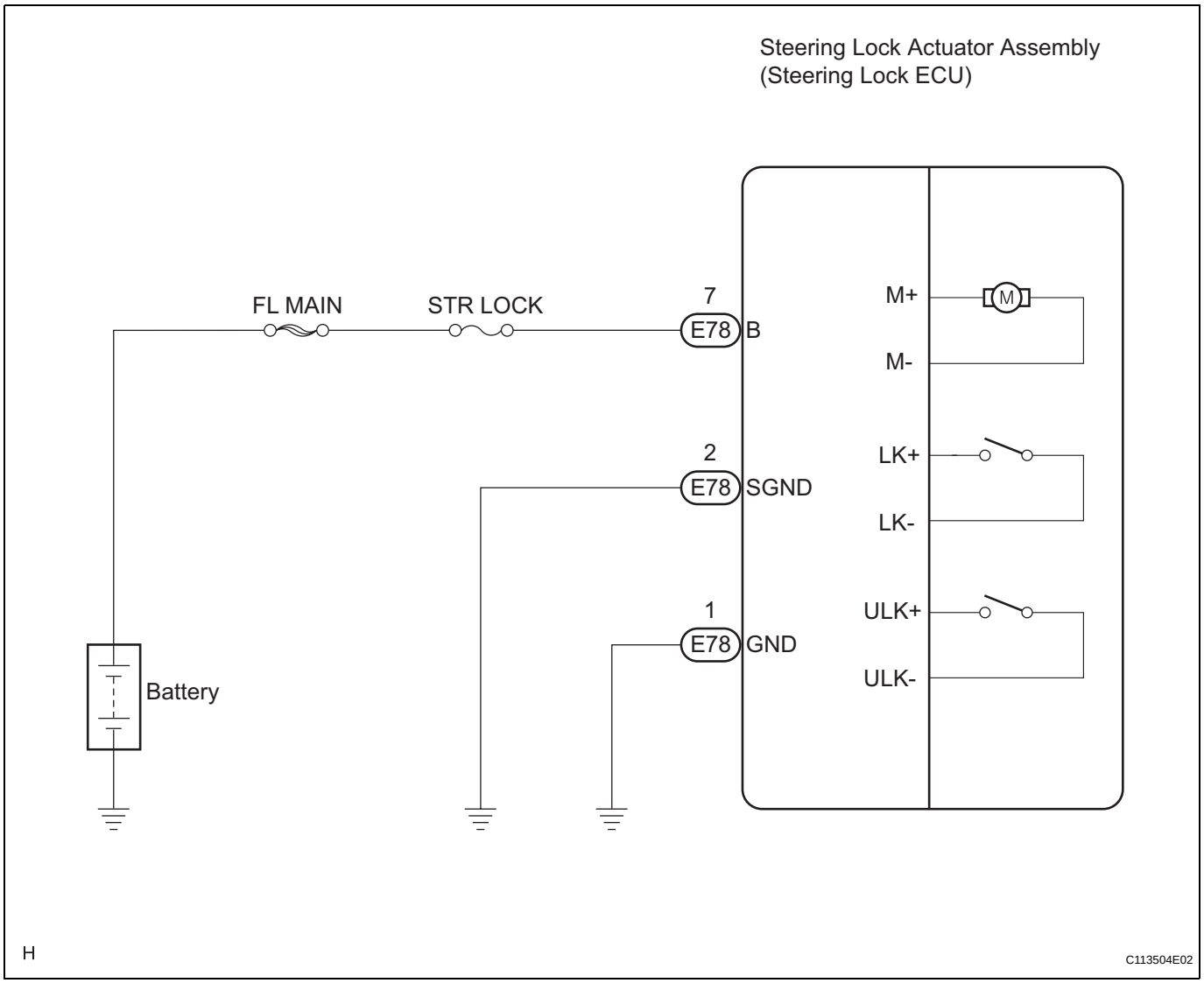

INSPECTION PROCEDURE

1 **CHECK HARNESS AND CONNECTOR (STEERING LOCK ACTUATOR ASSEMBLY - BODY GROUND)**

Steering Lock Actuator Assembly:

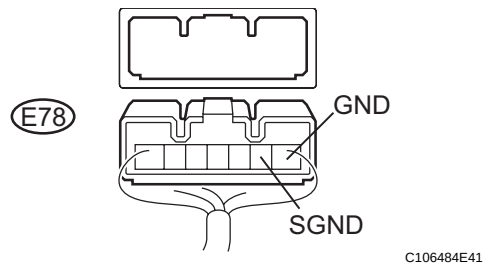

(a) Disconnect the E78 connector from the steering lock actuator assembly.

(b) Measure the resistance according to the value(s) in the table below.

Standard resistance

Tester Connection	Condition	Specified Condition
E78-1 (GND) - Body ground	Always	Below 1 Ω
E78-2 (SGND) - Body ground	Always	Below 1 Ω

NG → **REPAIR OR REPLACE HARNESS OR CONNECTOR**

OK

2 **CHECK HARNESS AND CONNECTOR (STEERING LOCK ACTUATOR ASSEMBLY - BATTERY)**

Steering Lock Actuator Assembly:

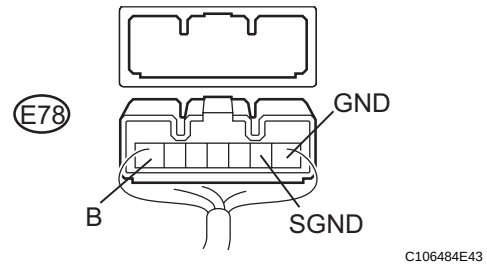

(a) Measure the voltage according to the value(s) in the table below.

Standard voltage

Tester Connection	Condition	Specified Condition
E78-7 (B) - E78-1 (GND)	Always	10 to 14 V
E78-7 (B) - E78-2 (SGND)	Always	10 to 14 V

OK → **PROCEED TO NEXT CIRCUIT INSPECTION SHOWN IN PROBLEM SYMPTOMS TABLE**

NG

REPAIR OR REPLACE HARNESS OR CONNECTOR (STEERING LOCK ACTUATOR ASSEMBLY - BATTERY)

DIAGNOSIS SYSTEM

1. DESCRIPTION

(a) When troubleshooting a vehicle with the diagnostic system, the only difference from the usual troubleshooting procedure is connecting the intelligent tester to the vehicle and reading various data output from the vehicle's multiplex tilt and telescopic ECU.
The multiplex tilt and telescopic ECU records DTCs when the ECU detects a malfunction in the computer itself or in its circuits.
To check the DTCs, connect the intelligent tester to the DLC3 on the vehicle. The intelligent tester enables you to erase the DTCs, activate several actuators, and check the freeze frame data and various forms of steering data.

2. DLC3 CHECK

(a) Check the DLC3.

(1) The multiplex tilt and telescopic ECU uses ISO 15765-4 for communication. The terminal arrangement of the DLC3 complies with SAE J1962 and matches the ISO 15765-4 format.

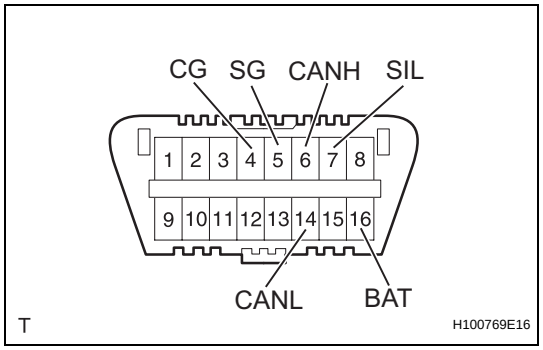

Symbols (Terminal No.)	Terminal Description	Condition	Specified Condition
SIL (7) - SG (5)	Bus "+" line	During communication	Pulse generation
CG (4) - Body ground	Chassis ground	Always	Below 1 Ω
SG (5) - Body ground	Signal ground	Always	Below 1 Ω
BAT (16) - Body ground	Battery positive	Always	11 to 14 V
CANH (6) - CANL (14)	CAN bus line	Engine switch off*	54 to 69 Ω
CANH (6) - CG (4)	HIGH-level CAN bus line	Engine switch off*	200 Ω or higher
CANL (14) - CG (4)	LOW-level CAN bus line	Engine switch off*	200 Ω or higher
CANH (6) - BAT (16)	HIGH-level CAN bus line	Engine switch off*	6 kΩ or higher
CANL (14) - BAT (16)	LOW-level CAN bus line	Engine switch off*	6 kΩ or higher

NOTICE:
Before measuring the resistance, leave the vehicle as is for at least 1 minute and do not operate the engine switch, any other switches or the doors.

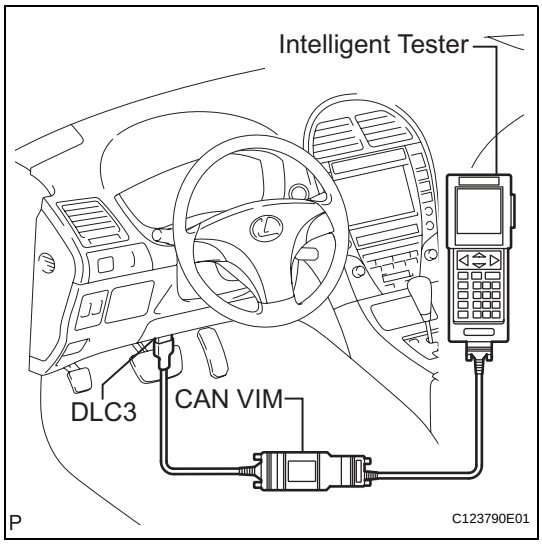

(b) Connect the cable of the intelligent tester to the DLC3, turn the engine switch on (IG) and attempt to use the tester. If the display indicates a communication error, there may be a problem either with the vehicle or with the tester.
- If communication is normal when the tester is connected to another vehicle, inspect the DLC3 on the original vehicle.
- If communication is still not possible when the tester is connected to another vehicle, the problem may be in the tester itself. Consult the Service Department listed in the tester's instruction manual.

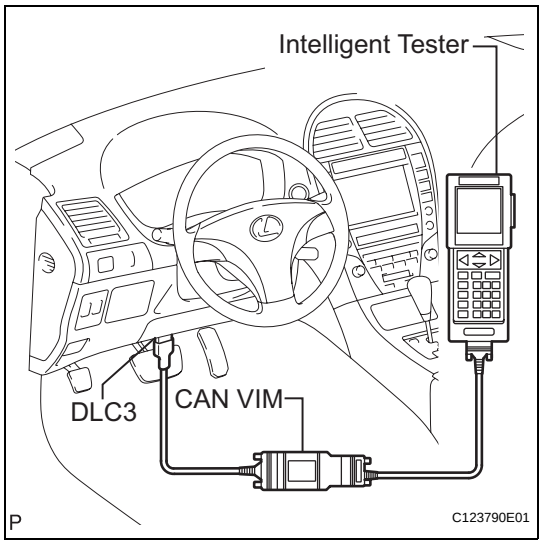

DTC CHECK / CLEAR

1. CHECK FOR DTCS

(a) Prepare the intelligent tester.

(b) Connect the intelligent tester to the DLC3 at the lower part of the instrument panel.

(c) Turn the engine switch on (IG) and turn the intelligent tester on.

(d) Use the intelligent tester to check for DTCs and the freeze frame data, and note or print the result (see the operator's manual for operating instructions).

(e) Confirm the details of the DTCs (See page SR-20).

2. CLEAR DTCS

(a) Operate the intelligent tester to clear the DTCs and freeze frame data (see the operator's manual for operating instructions).

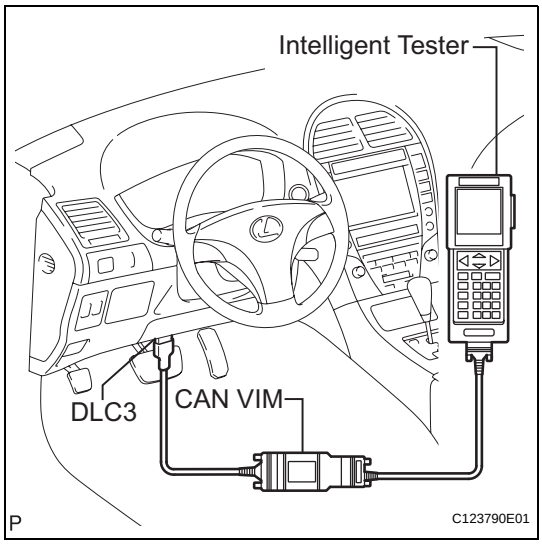

FREEZE FRAME DATA

1. FREEZE FRAME DATA

(a) Connect the intelligent tester to the DLC3.

(b) Turn the engine switch on (IG) and check the freeze frame data by following the prompts on the intelligent tester screen.

SR

TILT & TELESCO:

Tester Display	Measurement Item/Range	Normal Condition	Diagnostic Note
T&T AUTOAWAY	Auto away and return function / ON or OFF	ON: Auto away and return function is allowed OFF: Auto away and return function is restrained	-

Tester Display	Measurement Item/Range	Normal Condition	Diagnostic Note
TILT POS	Current tilt position data / min.: 0000 H (0 edge), max.: FFFF H (65535 edge)	7000 to 9000 H (28672 to 36864 edge)	-
TELSC POS	Current telescopic position data / min.: 0000 H (0 edge), max.: FFFF H (65535 edge)	7000 to 9000 H (28672 to 36864 edge)	-
TILT RETURN POS	Memorized tilt return position data / min.: 0000 H (0 edge), max.: FFFF H (65535 edge)	7000 to 9000 H (28672 to 36864 edge)	-
TELSC RETRN POS	Memorized telescopic return position data / min.: 0000 H (0 edge), max.: FFFF H (65535 edge)	7000 to 9000 H (28672 to 36864 edge)	-
T&T MEM 1	Tilt & telescopic memory position 1 / NOT MEM or MEM	NOT MEM: Position is not memorized MEM: Position is memorized	-
TILT MEM 1 POS	Tilt data of memory position 1 / min.: 0000 H (0 edge), max.: FFFF H (65535 edge)	7000 to 9000 H (28672 to 36864 edge)	-
TELSC MEM 1 POS	Telescopic data of memory position 1 / min.: 0000 H (0 edge), max.: FFFF H (65535 edge)	7000 to 9000 H (28672 to 36864 edge)	-
T&T MEM 2	Tilt & telescopic memory position 2 / NOT MEM or MEM	NOT MEM: Position is not memorized MEM: Position is memorized	-
TILT MEM 2 POS	Tilt data of memory position 2 / min.: 0000 H (0 edge), max.: FFFF H (65535 edge)	7000 to 9000 H (28672 to 36864 edge)	-
TELSC MEM 2 POS	Telescopic data of memory position 2 / min.: 0000 H (0 edge), max.: FFFF H (65535 edge)	7000 to 9000 H (28672 to 36864 edge)	-
UP LIMIT	Uppermost tilt position / NOT MEM or MEM	NOT MEM: Position is not memorized MEM: Position is memorized	-
UP LIMIT POS	Uppermost tilt position data / min.: 0000 H (0 edge), max.: FFFF H (65535 edge)	7000 to 9000 H (28672 to 36864 edge)	-
DOWN LIMIT	Lowermost tilt position / NOT MEM or MEM	NOT MEM: Position is not memorized MEM: Position is memorized	-
DOWN LIMIT POS	Lowermost tilt position data / min.: 0000 H (0 edge), max.: FFFF H (65535 edge)	7000 to 9000 H (28672 to 36864 edge)	-
SHORT LIMIT	Shortest telescopic position / NOT MEM or MEM	NOT MEM: Position is not memorized MEM: Position is memorized	-
SHORT LIMIT POS	Shortest telescopic position data / min.: 0000 H (0 edge), max.: FFFF H (65535 edge)	7000 to 9000 H (28672 to 36864 edge)	-
LONG LIMIT	Longest telescopic position / NOT MEM or MEM	NOT MEM: Position is not memorized MEM: Position is memorized	-
LONG LIMIT POS	Longest telescopic position data / min.: 0000 H (0 edge), max.: FFFF H (65535 edge)	7000 to 9000 H (28672 to 36864 edge)	-
UP SW	Input state of tilt up by manual switch / ON or OFF	ON: Tilt up is activated by manual switch OFF: Tilt up is not activated by manual switch	-

Tester Display	Measurement Item/Range	Normal Condition	Diagnostic Note
DOWN SW	Input state of tilt down by manual switch / ON or OFF	ON: Tilt down is activated by manual switch OFF: Tilt down is not activated by manual switch	-
SHORT SW	Input state of telescopic short by manual switch / ON or OFF	ON: Telescopic short is activated by manual switch OFF: Telescopic short is not activated by manual switch	-
LONG SW	Input state of telescopic long by manual switch / ON or OFF	ON: telescopic long is activated by manual switch OFF: Telescopic long is not activated by manual switch	-
POWER VOLTAGE	Voltage data of power supply / min.: 0 V, max.: 20 V	Actual power supply voltage 10 to 14 V	-
FREEZ SPD INFO	Vehicle speed data / 0 km/h (0 mph), max.: 255 km/h (158 mph)	Actual vehicle speed	-
IG SW	Input state of engine switch / ON or OFF	ON: Input signal is normal OFF: Input signal is interrupted	-
IG SW (CAN)	Communication state of engine switch / ON or OFF	ON: Communication is normal OFF: Communication is interrupted	-
T&T MANUAL SW	Voltage data of manual switch / min.: 0 V, max.: 5 V	Neutral position: Below 0.2 V Tilt up: 1.67 to 2.13 V Tilt down: 0.54 to 0.74 V Telescopic contract: 1.08 to 1.40 V Telescopic extend: 2.22 to 2.77 V	-
KEYSW (CAN)	Communication state of key switch confirmation signal / ON or OFF	ON: Communication is normal OFF: Communication is interrupted	-
KEYSW	Input state of key switch / ON or OFF	ON: Input signal is normal OFF: Input signal is interrupted	-
KEY CODE (CAN)	Communication state of key code confirmation signal / ON or OFF	ON: Communication is normal OFF: Communication is interrupted	-
J/B	Communication state of main body ECU signal / OK or Interruption	OK: Communication is normal Interruption: Communication is interrupted	-
SEAT ECU INFO	Communication state of seat ECU signal / OK or Interruption	OK: Communication is normal Interruption: Communication is interrupted	-
METER ECU INFO	Communication state of combination meter signal / OK or Interruption	OK: Communication is normal Interruption: Communication is interrupted	-

REMOVAL

1. **PRECAUTION**
   HINT:
   (See page SR-1)

2. **PLACE FRONT WHEELS FACING STRAIGHT AHEAD**

3. **REMOVE FRONT WHEEL LH**

4. **DISCONNECT CABLE FROM NEGATIVE BATTERY TERMINAL**
   (a) Disable the AUTO TILT AWAY function by changing the customize parameter (See page SR-9).
   NOTICE:
   Record the current customize parameter setting (whether the AUTO TILT AWAY function is enabled or disabled) in order to restore the current setting after finishing the operation.
   HINT:
   Performing the above operation causes the AUTO TILT AWAY function to be disabled when the engine switch is turned off.
   (b) Turn the engine switch on (IG). Operate the tilt and telescopic switch to fully extend and lower the steering column assembly.
   (c) Turn the engine switch off and disconnect the cable from the negative battery terminal.
   NOTICE:
   Wait at least 90 seconds after disconnecting the cable from the negative (-) battery terminal to prevent airbag and seat belt pretensioner activation.

5. **REMOVE FRONT DOOR SCUFF PLATE LH (See page IR-39)**

6. **REMOVE FRONT DOOR OPENING TRIM COVER LH (See page IR-39)**

7. **REMOVE SIDE INSTRUMENT PANEL LH (See page IP-12)**

8. **REMOVE INSTRUMENT PANEL FINISH PANEL END LH (See page IP-13)**

9. **REMOVE LOWER INSTRUMENT PANEL SUB-ASSEMBLY (See page IP-13)**

10. **REMOVE DRIVER SIDE KNEE AIRBAG ASSEMBLY (See page RS-386)**

11. **REMOVE NO. 2 LOWER STEERING WHEEL COVER (See page RS-367)**

12. **REMOVE NO. 3 LOWER STEERING WHEEL COVER (See page RS-367)**

13. **REMOVE STEERING PAD (See page RS-367)**

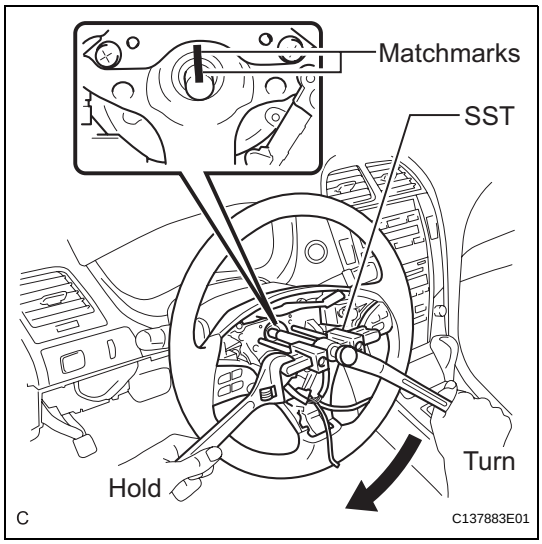

14. REMOVE STEERING WHEEL ASSEMBLY

(a) Remove the steering wheel assembly set nut.

(b) Put matchmarks on the steering wheel assembly and main shaft assembly.

(c) Using SST, remove the steering wheel assembly.

SST 09950-50013 (09951-05010, 09952-05010, 09953-05020, 09954-05011)

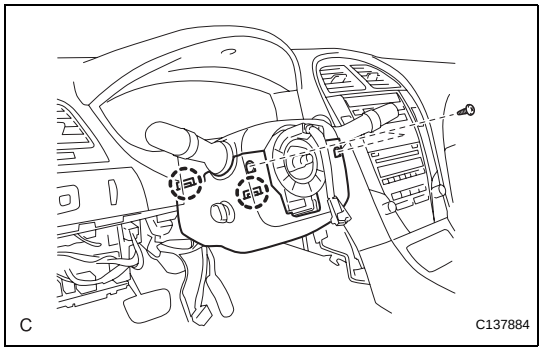

15. REMOVE STEERING COLUMN COVER

(a) Remove the 2 screws.

(b) Disengage the 2 claws to remove the lower steering column cover.

NOTICE:

Do not damage the tilt and telescopic switch.

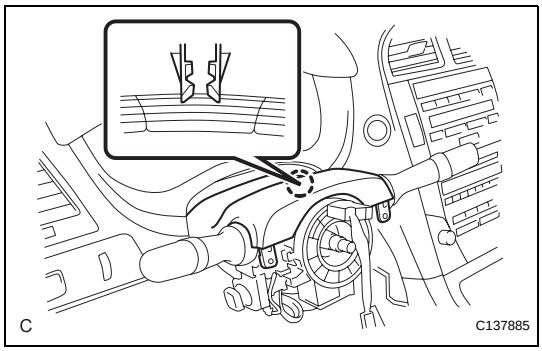

(c) Disengage the claw to remove the upper steering column cover.

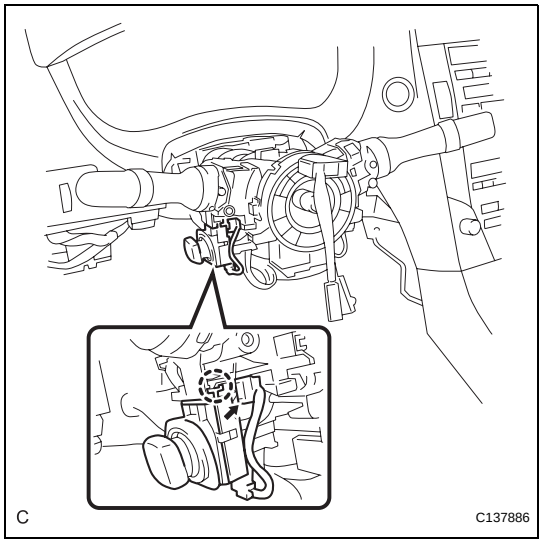

16. REMOVE TILT AND TELESCOPIC SWITCH

(a) Disconnect the connector.

(b) Using a screwdriver, disengage the claw and pull out the tilt and telescopic switch.

NOTICE:

Pushing on the claw too hard will break the claw.

HINT:

Tape the screwdriver tip before use.

17. REMOVE TURN SIGNAL SWITCH ASSEMBLY WITH SPIRAL CABLE SUB-ASSEMBLY

(a) Disconnect the connectors from the turn signal switch assembly with spiral cable sub-assembly.

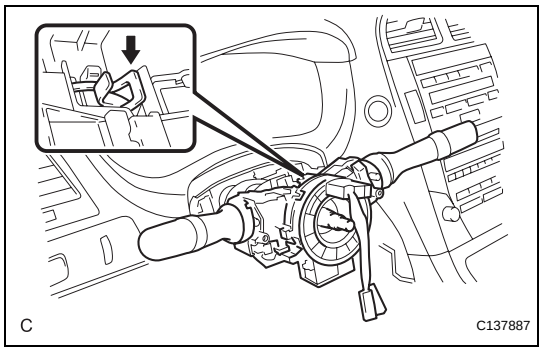

(b) Using pliers, grip the claws of the clip and remove the turn signal switch assembly with spiral cable sub-assembly from the steering column assembly.

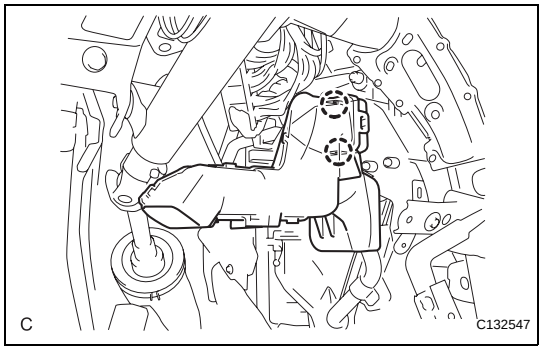

18. REMOVE NO. 1 AIR DUCT SUB-ASSEMBLY

(a) Disengage the 2 claws and remove the No. 1 air duct sub-assembly.

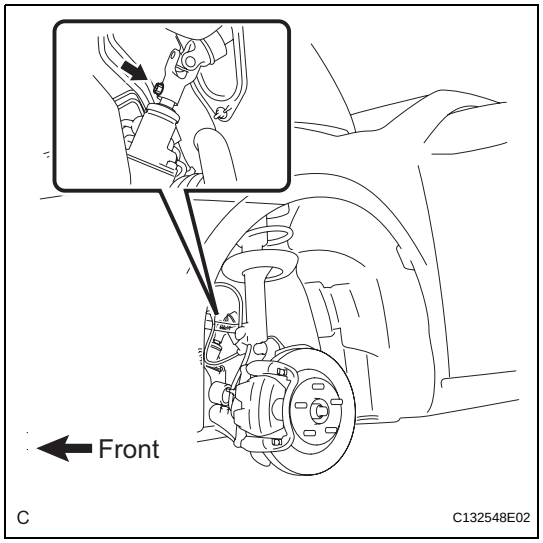

19. SEPARATE STEERING INTERMEDIATE SHAFT ASSEMBLY

(a) Remove the bolt and slide the steering intermediate shaft assembly.

NOTICE:

Do not separate the steering intermediate shaft assembly from the power steering link assembly.

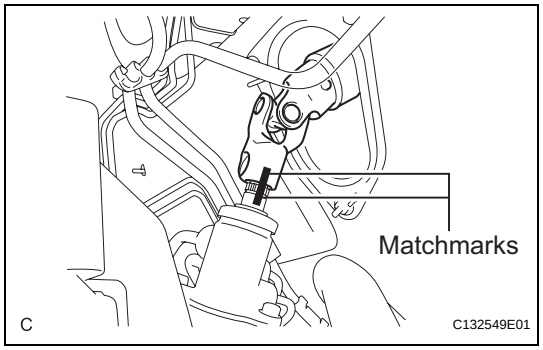

(b) Put matchmarks on the steering intermediate shaft assembly and the power steering link assembly.

(c) Separate the steering intermediate shaft assembly from the power steering link assembly.

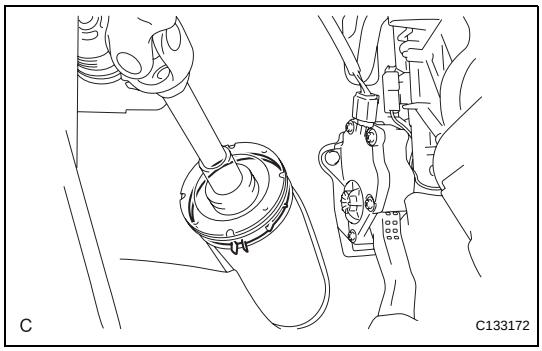

20. REMOVE STEERING COLUMN ASSEMBLY

(a) Remove the clamp from the steering column hole shield.

(b) Disconnect the connectors and wire harness clamps from the steering column assembly.

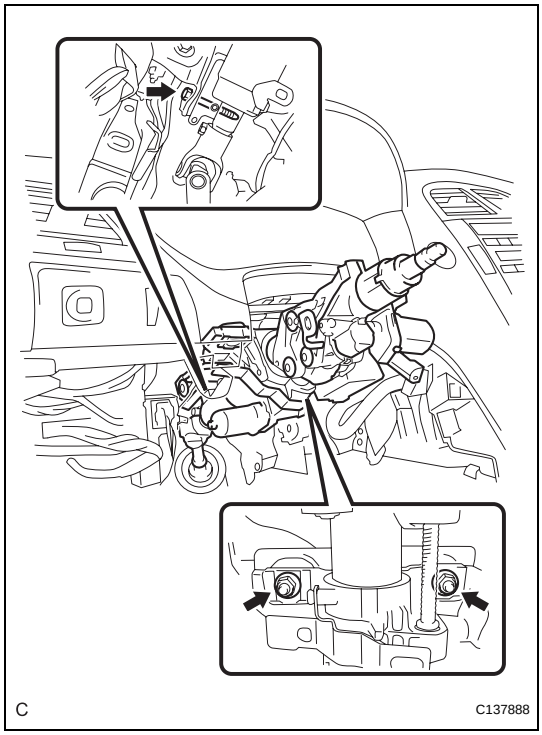

(c) Remove the bolt, 2 nuts, and steering column assembly.

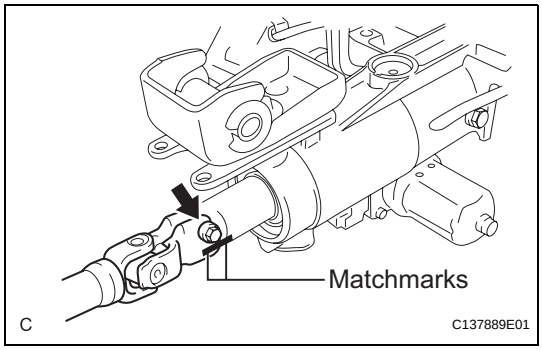

21. REMOVE STEERING INTERMEDIATE SHAFT ASSEMBLY

(a) Put matchmarks on the steering intermediate shaft assembly and the steering main shaft.

(b) Remove the bolt and the steering intermediate shaft assembly.

DISASSEMBLY

1. REMOVE STEERING LOCK ACTUATOR ASSEMBLY

(a) Using a center punch, mark the center of the 2 tapered-head bolts.

(b) Using a 3 to 4 mm (0.12 to 0.16 in.) drill, drill a hole in the 2 tapered-head bolts.

(c) Using a screw extractor, remove the 2 tapered-head bolts and steering lock actuator assembly from the steering column assembly.

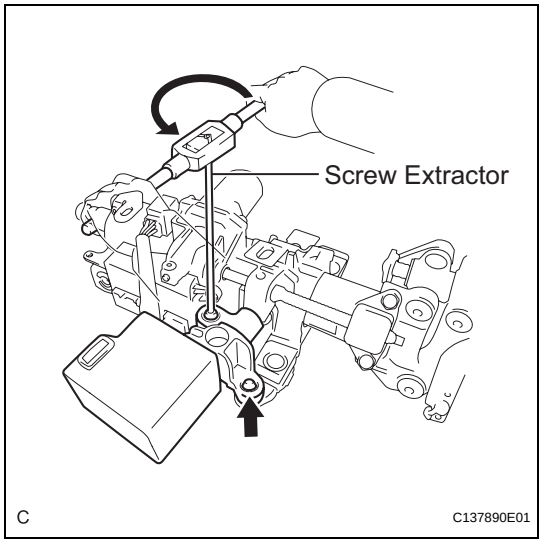

2. REMOVE MULTIPLEX TILT AND TELESCOPIC ECU (See page SR-90)

INSPECTION

1. INSPECT STEERING COLUMN ASSEMBLY (Tilt Motor)

(a) Connect the positive battery terminal to terminal TIM+ (E80-1) and the negative battery terminal to terminal TIM- (E80-2) of the tilt motor connector. Then confirm that the steering wheel tilts up.

OK:

The steering wheel tilts up.

(b) Connect the negative battery terminal to terminal TIM+ (E80-1) and the positive battery terminal to terminal TIM- (E80-2) of the tilt motor connector. Then confirm that the steering wheel tilts down.

OK:

The steering wheel tilts down.

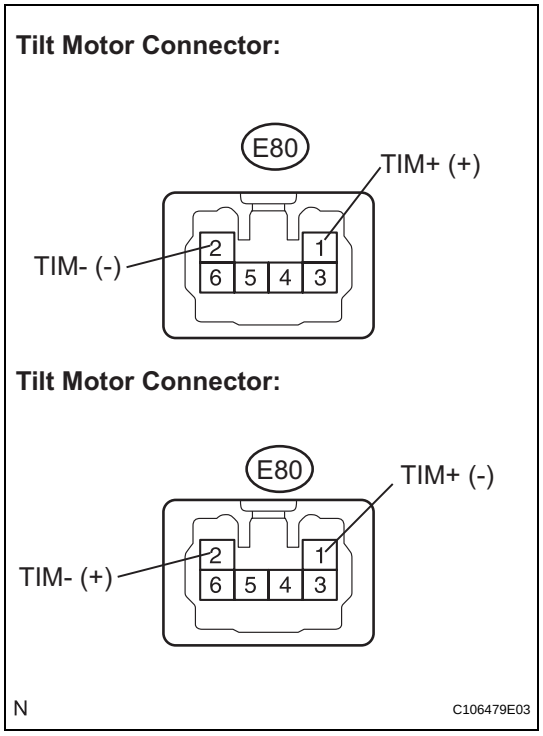

Multiplex Tilt and Telescopic ECU:

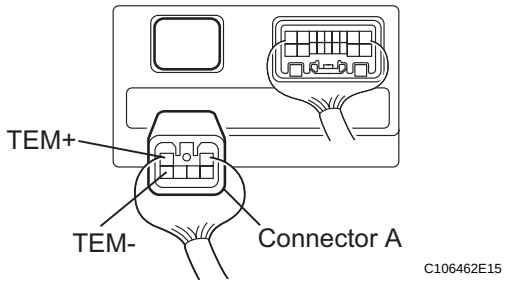

2. INSPECT STEERING COLUMN ASSEMBLY (Telescopic Motor)

(a) Disconnect connector A from the multiplex tilt and telescopic ECU.

(b) Connect the positive battery terminal to terminal TEM+ (A-2) and the negative battery terminal to terminal TEM- (A-6) of the telescopic motor connector. Then confirm that the steering column contracts.

OK:

The steering column contracts.

(c) Connect the negative battery terminal to terminal TEM+ (A-2) and the positive battery terminal to terminal TEM- (A-6) of the telescopic motor connector. Then confirm that the steering column extends.

OK:

The steering column extends.

REASSEMBLY

1. **INSTALL MULTIPLEX TILT AND TELESCOPIC ECU (See page SR-90)**

2. **INSTALL STEERING LOCK ACTUATOR ASSEMBLY**
   (a) Temporarily install the steering lock actuator assembly with 2 new tapered-head bolts.
   (b) Tighten the 2 tapered-head bolts until the bolt heads break off.

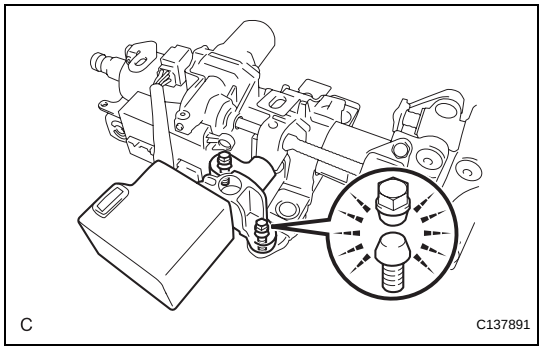

INSTALLATION

1. **INSTALL STEERING INTERMEDIATE SHAFT ASSEMBLY**
   (a) Align the matchmarks on the steering intermediate shaft assembly and the steering main shaft.
   (b) Install the bolt.
   Torque: 35 N*m (360 kgf*cm, 26 ft.*lbf)

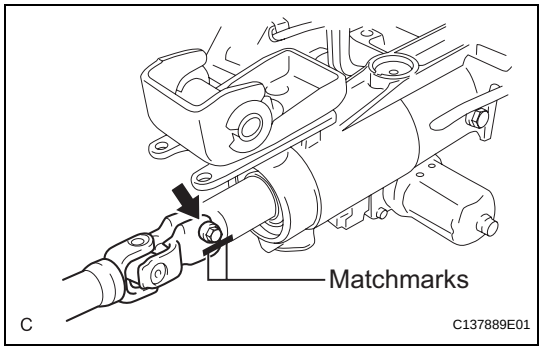

2. **INSTALL STEERING COLUMN ASSEMBLY**
   (a) Install the steering column assembly with the bolt and 2 nuts.
   Torque: 21 N*m (214 kgf*cm, 16 ft.*lbf)
   (b) Connect the connectors and wire harness clamps to the steering column assembly.

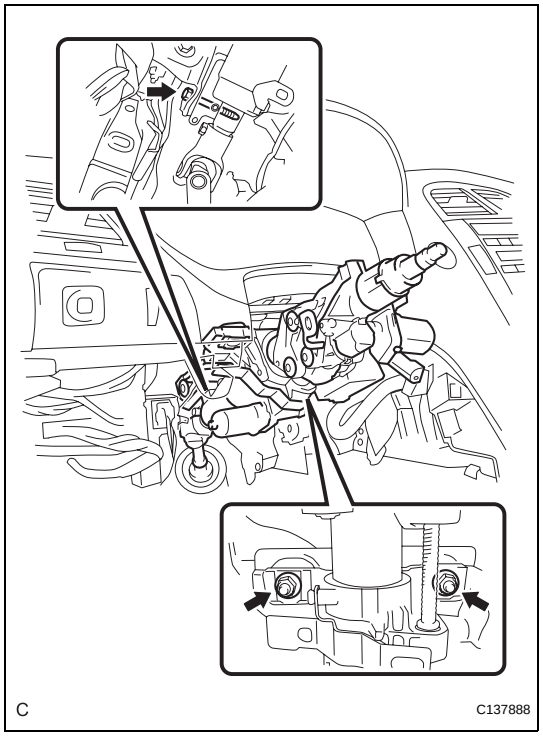

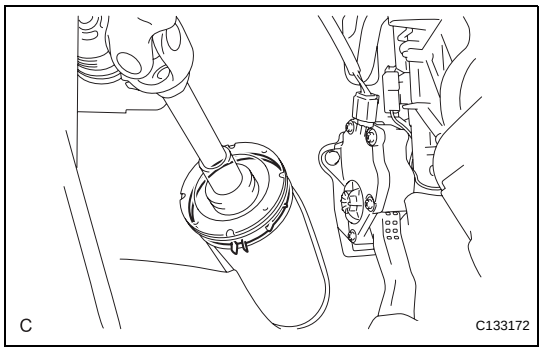

(c) Install the clamp to the steering column hole shield.

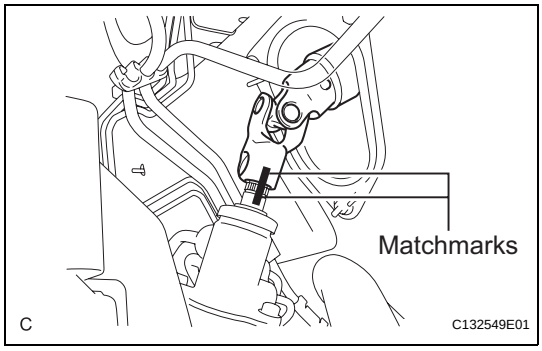

3. CONNECT STEERING INTERMEDIATE SHAFT ASSEMBLY

(a) Align the matchmarks on the steering intermediate shaft assembly and the power steering link assembly.

(b) Install the bolt.
Torque: 35 N*m (360 kgf*cm, 26 ft.*lbf)

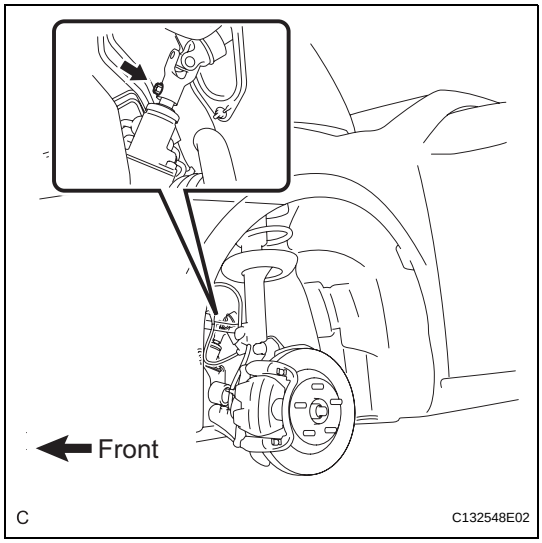

4. INSTALL FRONT WHEEL LH
Torque: 103 N*m (1,050 kgf*cm, 76 ft.*lbf)

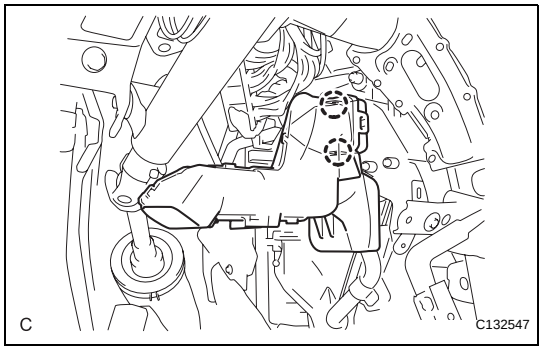

5. INSTALL NO. 1 AIR DUCT SUB-ASSEMBLY

(a) Engage the 2 claws to install the No. 1 air duct sub-assembly.

6. PLACE FRONT WHEELS FACING STRAIGHT AHEAD

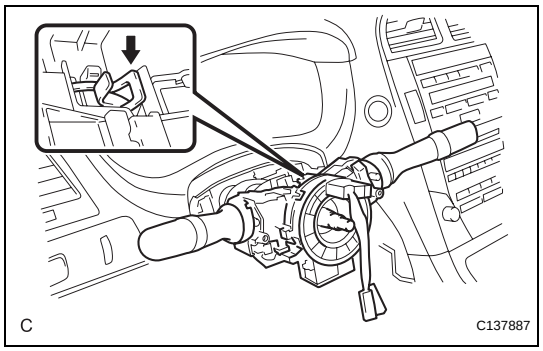

7. INSTALL TURN SIGNAL SWITCH ASSEMBLY WITH SPIRAL CABLE SUB-ASSEMBLY

(a) Install the turn signal switch assembly with spiral cable sub-assembly to the steering column assembly with the clamp.

(b) Connect the connectors to the turn signal switch assembly with spiral cable sub-assembly.

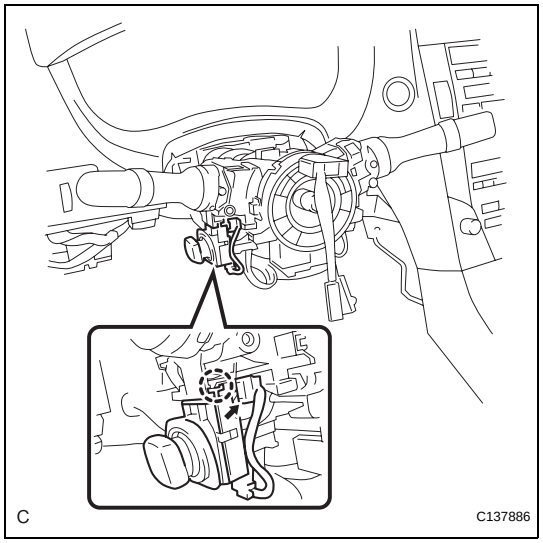

8. INSTALL TILT AND TELESCOPIC SWITCH

(a) Engage the claw to install the tilt and telescopic switch.

(b) Connect the connector.

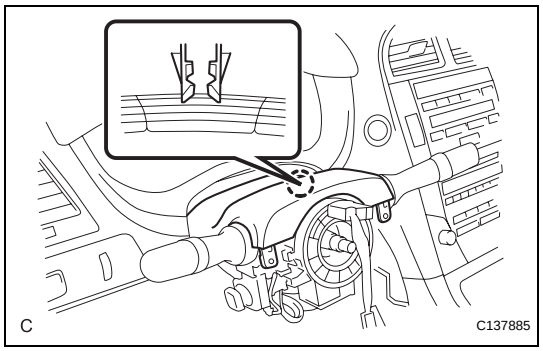

9. INSTALL STEERING COLUMN COVER

(a) Engage the claw to install the upper steering column cover.

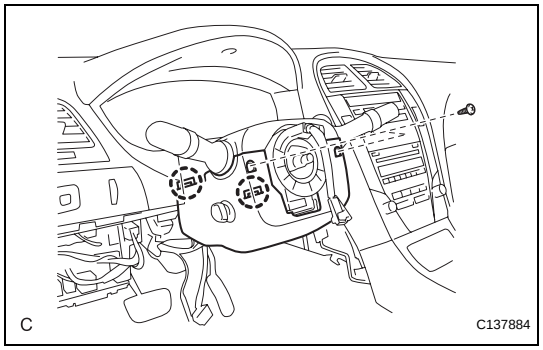

(b) Engage the 2 claws to install the lower steering column cover.

NOTICE:

Do not damage the tilt and telescopic switch.

(c) Install the 2 screws.

Torque: 2.0 N*m (20 kgf*cm, 18 in.*lbf)

10. ADJUST SPIRAL CABLE (See page RS-382)

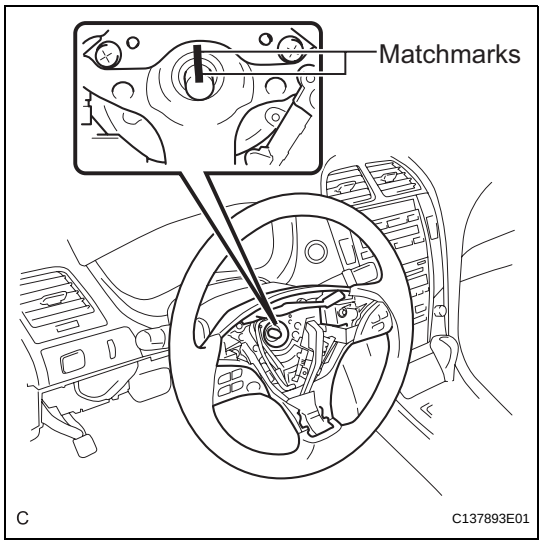

11. INSTALL STEERING WHEEL ASSEMBLY
(a) Align the matchmarks on the steering wheel assembly and steering main shaft assembly.
(b) Install the steering wheel assembly set nut.
Torque: 50 N*m (510 kgf*cm, 37 ft.*lbf)

12. INSPECT STEERING WHEEL CENTER POINT

13. INSTALL DRIVER SIDE KNEE AIRBAG ASSEMBLY (See page RS-387)

14. INSTALL LOWER INSTRUMENT PANEL SUB-ASSEMBLY (See page IP-46)

15. INSTALL INSTRUMENT PANEL FINISH PANEL END LH (See page IP-46)

16. INSTALL SIDE INSTRUMENT PANEL LH (See page IP-47)

17. INSTALL FRONT DOOR OPENING TRIM COVER LH (See page IR-64)

18. INSTALL FRONT DOOR SCUFF PLATE LH (See page IR-65)

19. INSTALL STEERING PAD (See page RS-368)

20. INSTALL NO. 3 LOWER STEERING WHEEL COVER (See page RS-369)

21. INSTALL NO. 2 LOWER STEERING WHEEL COVER (See page RS-369)

22. INSPECT STEERING PAD (See page RS-369)

23. CONNECT CABLE TO NEGATIVE BATTERY TERMINAL
NOTICE:
Reset the AUTO TILT AWAY function setting to the previous condition by changing the customize parameter (See page SR-9).

24. INSPECT SRS WARNING LIGHT
HINT:
(See page RS-37)

25. PERFORM INITIALIZATION
NOTICE:
Some systems need initialization after reconnecting the cable to the negative battery terminal (See page IN-33).

FAIL-SAFE CHART

HINT:
If the power voltage to the ECU returns to normal within 10 seconds during tilt or telescopic operation, the operation will be resumed. If it returns to normal after 10 seconds have elapsed, the operation restarts when a tilt or telescopic operation signal is again input to the ECU.

FAIL-SAFE OPERATION

DTC Code	Detection Item	Fail-safe
B2602	Key Unlock Warning Switch Circuit Malfunction	Auto away function stops. Auto return function: • Continues (when the engine switch is on (IG)) • Stops (when the engine switch is off)
B2603	Tilt and Telescopic Manual Switch Circuit Malfunction	Tilt and telescopic operation by manual switch is suspended.
B2606	Key Code Confirm Signal Malfunction	Auto away or auto return function stops.
B2610	Tilt Position Sensor or Tilt Motor Circuit Malfunction	Tilt operation is suspended.
B2611	Telescopic Position Sensor or Telescopic Motor Circuit Malfunction	Telescopic operation is suspended.
B2620	ECU Power Source Circuit Malfunction	Tilt and telescopic operation is suspended.
B2624	Speed Signal Malfunction	Auto away and/or auto return function stops.

1. FAIL-SAFE FUNCTION

(a) If a malfunction in the tilt position sensor signal or telescopic position sensor signal occurs while operating the power tilt or power telescopic function, the tilt and telescopic ECU stops the operation of the power tilt and power telescopic steering column system.

(b) If the power voltage to the ECU drops below approximately 8 V while operating the power tilt or power telescopic function, the ECU stops the operation of the power tilt and power telescopic steering column system.

(c) If the tilt and telescopic ECU detects that the motor has locked during the operation of the power tilt or power telescopic function, the ECU stops the operation of the power tilt and power telescopic steering column system.

(d) If the communication of an ECU that is related to the power tilt and power telescopic steering column system is interrupted, the tilt and telescopic ECU effects the controls listed below.

Function	Main Body ECU Communication Interruption	Mirror ECU Communication Interruption	Seat ECU Communication Interruption	All ECUs (*1) Communication Interruption
Manual	X (*2)	○	○	X (*2)
Automatic Away	X	X	○	X
Automatic Return	X (*3)	X (*3)	○	X (*3)
Memory	X	X	X	X

HINT:
- *1: All ECUs that are related to the power tilt and power telescopic steering column system.

- *2: The operation is permitted if the engine switch signal is ON while the signal from main body ECU is interrupted.
  The operation is prohibited if the engine switch signal is OFF while the signal from main body ECU is interrupted.
- *3: In case that the signal from main body ECU is interrupted after the operation was started, the operation will be continued if the engine switch signal is ON.
  The operation is prohibited if the engine switch signal is OFF while the signal from main body ECU is interrupted.

MULTIPLEX TILT AND TELESCOPIC ECU

COMPONENTS

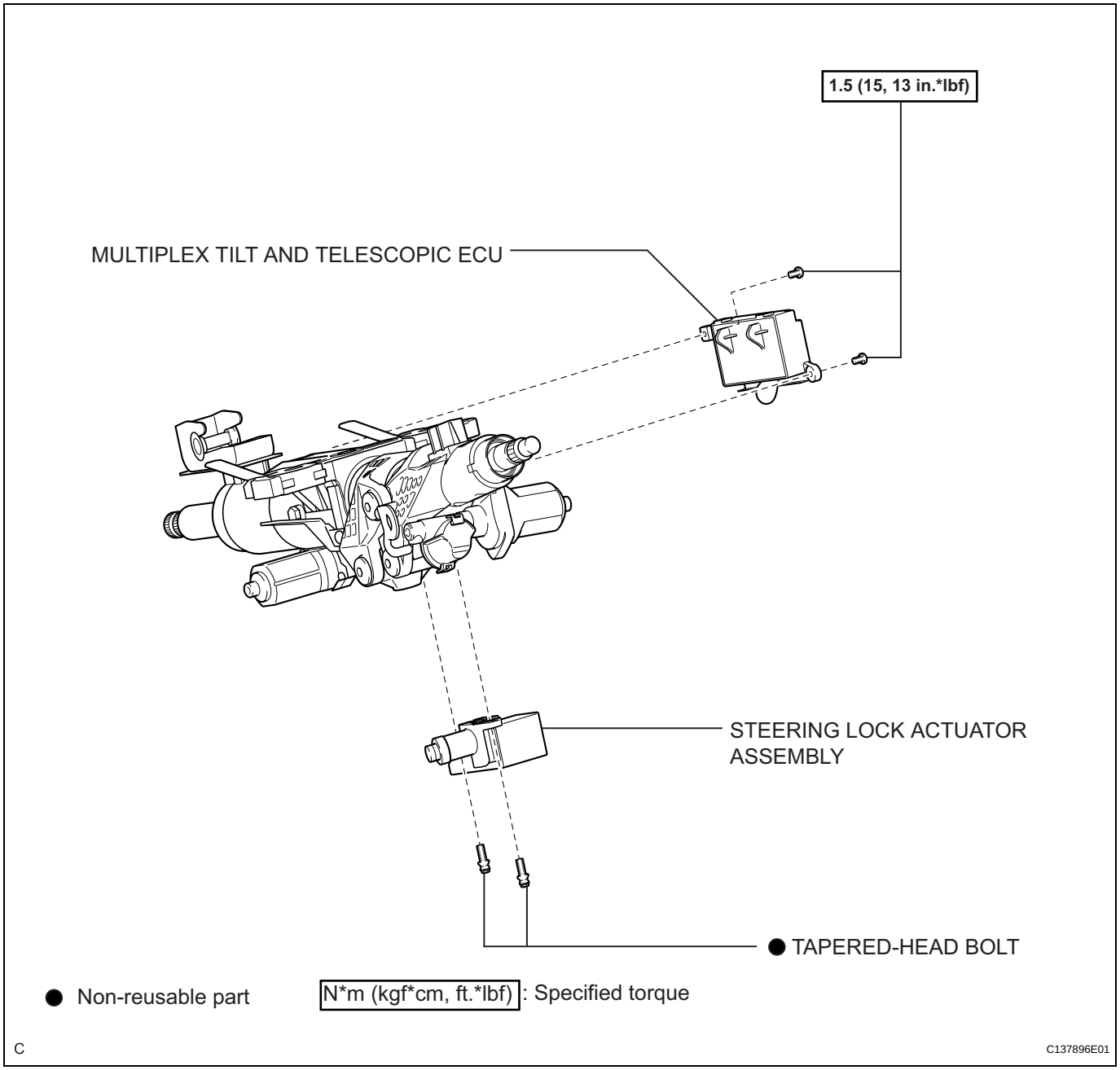

REMOVAL

1. REMOVE STEERING COLUMN ASSEMBLY

HINT:
Refer to the instructions for REMOVAL of the STEERING COLUMN ASSEMBLY (See page SR-78).

2. REMOVE STEERING LOCK ACTUATOR ASSEMBLY

(a) Using a center punch, mark the center of the 2 tapered-head bolts.

(b) Using a 3 to 4 mm (0.12 to 0.16 in.) drill, drill a hole in the 2 bolts.

(c) Using a screw extractor, remove the 2 bolts and steering lock actuator assembly from the steering column assembly.

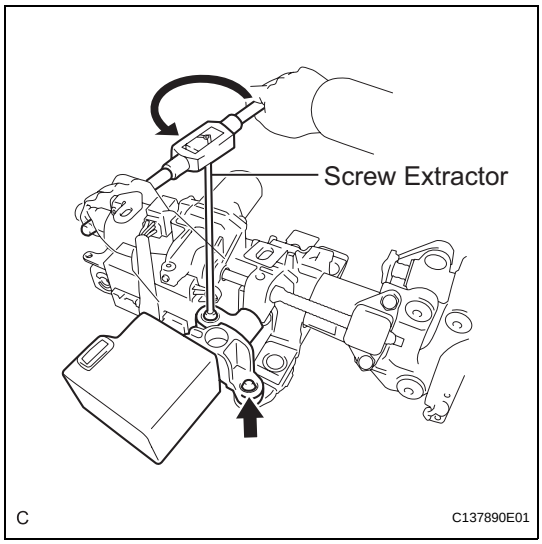

3. REMOVE MULTIPLEX TILT AND TELESCOPIC ECU

(a) Disconnect the connector from the multiplex tilt and telescopic ECU.

(b) Remove the 2 screws and multiplex tilt and telescopic ECU.

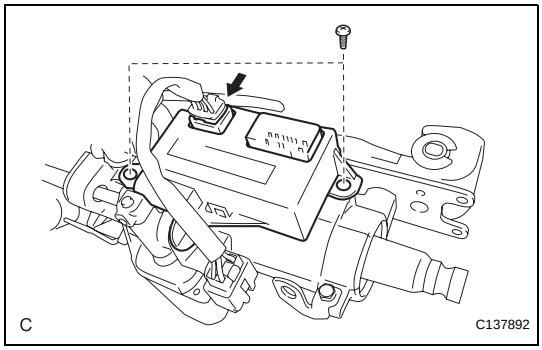

INSTALLATION

1. INSTALL MULTIPLEX TILT AND TELESCOPIC ECU

(a) Install the multiplex tilt and telescopic ECU with the 2 screws.
Torque: 1.5 N*m (15 kgf*cm, 13 in.*lbf)

(b) Connect the connector to the multiplex tilt and telescopic ECU.
NOTICE:
- **The connectors on both ends of the wire harness between the telescopic motor and ECU are the same shape.**
- **When installing them, connect the connectors of the same color.**

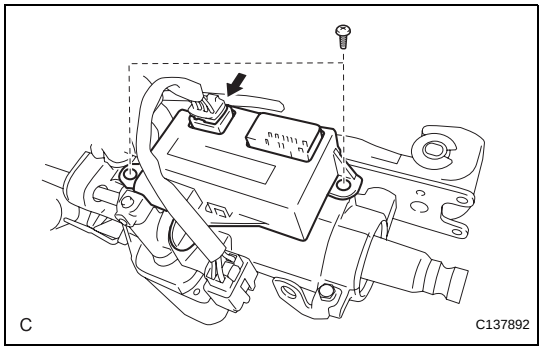

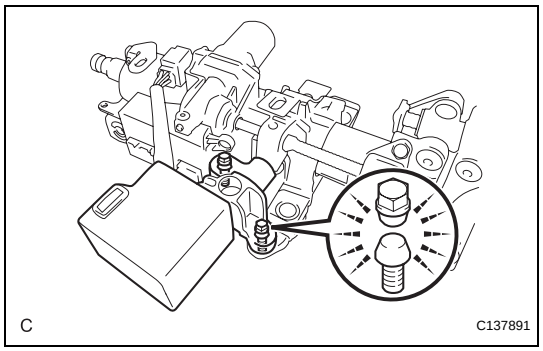

2. INSTALL STEERING LOCK ACTUATOR ASSEMBLY

(a) Temporarily install the steering lock actuator assembly with 2 new tapered-head bolts.

(b) Tighten the 2 tapered-head bolts until the bolt heads break off.

3. INSTALL STEERING COLUMN ASSEMBLY

HINT:

Refer to the instructions for INSTALLATION of the STEERING COLUMN ASSEMBLY (See page SR-84).

DATA LIST / ACTIVE TEST

1. DATA LIST

HINT:
By accessing the DATA LIST displayed on the intelligent tester, you can perform such functions as reading the values of switches and sensors without removing any parts. Reading the DATA LIST is first step in troubleshooting and is one method to save diagnostic time.

(a) Connect the intelligent tester to the DLC3.
(b) Turn the engine switch on (IG) and turn the intelligent tester on.
(c) Select the following items from the DATA LIST:

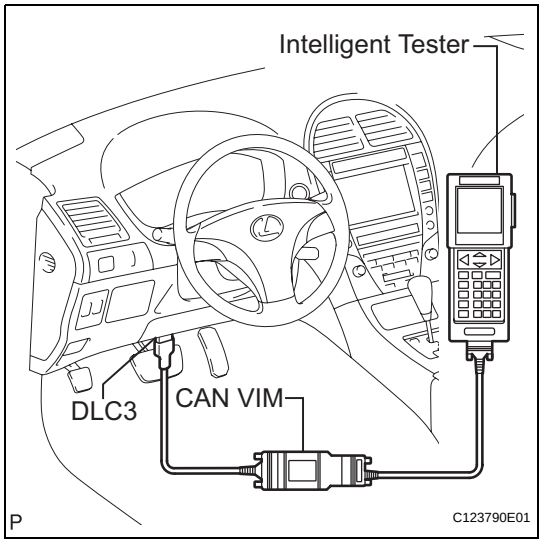

TILT & TELESCO:

Tester Display	Measurement Item/Range	Normal Condition	Diagnostic Note
T&T AUTOAWAY	Auto away and return function / ON or OFF	ON: Auto away and return function is allowed OFF: Auto away and return function is restrained	-
TILT POS	Current tilt position data / min.: 0000 H (0 edge), max.: FFFF H (65535 edge)	7000 to 9000 H (28672 to 36864 edge)	-
TELSC POS	Current telescopic position data / min.: 0000 H (0 edge), max.: FFFF H (65535 edge)	7000 to 9000 H (28672 to 36864 edge)	-
TILT RETURN POS	Memorized tilt return position data / min.: 0000 H (0 edge), max.: FFFF H (65535 edge)	7000 to 9000 H (28672 to 36864 edge)	-
TELSC RETRN POS	Memorized telescopic return position data / min.: 0000 H (0 edge), max.: FFFF H (65535 edge)	7000 to 9000 H (28672 to 36864 edge)	-
T&T MEM 1	Tilt & telescopic memory position 1 / NOT MEM or MEM	NOT MEM: Position is not memorized MEM: Position is memorized	-
TILT MEM 1 POS	Tilt data of memory position 1 / min.: 0000 H (0 edge), max.: FFFF H (65535 edge)	7000 to 9000 H (28672 to 36864 edge)	-
TELSC MEM 1 POS	Telescopic data of memory position 1 / min.: 0000 H (0 edge), max.: FFFF H (65535 edge)	7000 to 9000 H (28672 to 36864 edge)	-
T&T MEM 2	Tilt & telescopic memory position 2 / NOT MEM or MEM	NOT MEM: Position is not memorized MEM: Position is memorized	-

Tester Display	Measurement Item/Range	Normal Condition	Diagnostic Note
TILT MEM 2 POS	Tilt data of memory position 2 / min.: 0000 H (0 edge), max.: FFFF H (65535 edges)	7000 to 9000 H (28672 to 36864 edges)	-
TELSC MEM 2 POS	Telescopic data of memory position 2 / min.: 0000 H (0 edge), max.: FFFF H (65535 edges)	7000 to 9000 H (28672 to 36864 edges)	-
TILT MEM 3 POS	Tilt data of memory position 3 / Min.: 0000H (0 edge), max.: FFFF H (65535 edge)	7000 to 9000 H (28672 to 36864 edge)	-
TELSC MEM 3 POS	Telescopic data of memory position 3 /Min.: 0000H (0 edge), max.: FFFF H (65535 edge)	7000 to 9000 H (28672 to 36864 edge)	-
UP LIMIT	Uppermost tilt position / NOT MEM or MEM	NOT MEM: Position is not memorized MEM: Position is memorized	-
UP LIMIT POS	Uppermost tilt position data / min.: 0000 H (0 edge), max.: FFFF H (65535 edges)	7000 to 9000 H (28672 to 36864 edges)	-
DOWN LIMIT	Lowermost tilt position / NOT MEM or MEM	NOT MEM: Position is not memorized MEM: Position is memorized	-
DOWN LIMIT POS	Lowermost tilt position data / min.: 0000 H (0 edge), max.: FFFF H (65535 edges)	7000 to 9000 H (28672 to 36864 edges)	-
SHORT LIMIT	Shortest telescopic position / NOT MEM or MEM	NOT MEM: Position is not memorized MEM: Position is memorized	-
SHORT LIMIT POS	Shortest telescopic position data / min.: 0000 H (0 edge), max.: FFFF H (65535 edges)	7000 to 9000 H (28672 to 36864 edges)	-
LONG LIMIT	Longest telescopic position / NOT MEM or MEM	NOT MEM: Position is not memorized MEM: Position is memorized	-
LONG LIMIT POS	Longest telescopic position data / min.: 0000 H (0 edge), max.: FFFF H (65535 edges)	7000 to 9000 H (28672 to 36864 edges)	-
UP SW	Input state of tilt up by manual switch / ON or OFF	ON: Tilt up is activated by manual switch OFF: Tilt up is not activated by manual switch	-
UP SW (CAN)	Communication state of UP SW / ON or OFF	ON: Input signal is normal OFF: Input signal is interrupted	-
DOWN SW	Input state of tilt down by manual switch / ON or OFF	ON: Tilt down is activated by manual switch OFF: Tilt down is not activated by manual switch	-
DOWN SW (CAN)	Communication state of DOWN SW / ON or OFF	ON: Input signal is normal OFF: Input signal is interrupted	-
SHORT SW	Input state of telescopic short by manual switch / ON or OFF	ON: Telescopic short is activated by manual switch OFF: Telescopic short is not activated by manual switch	-
SHORT SW (CAN)	Communication state of SHORT SW / ON or OFF	ON: Input signal is normal OFF: Input signal is interrupted	-
LONG SW	Input state of telescopic long by manual switch / ON or OFF	ON: Telescopic long is activated by manual switch OFF: Telescopic long is not activated by manual switch	-
LONG SW (CAN)	Communication state of LONG SW / ON or OFF	ON: Input signal is normal OFF: Input signal is interrupted	-

Tester Display	Measurement Item/Range	Normal Condition	Diagnostic Note
POWER VOLTAGE	Voltage data of power supply / min.: 0 V, max.: 20 V	Actual power supply voltage 10 to 14 V	-
FREEZ SPD INFO	Vehicle speed data / 0 km/h (0 mph), max.: 255 km/h (158 mph)	Actual vehicle speed	-
IG SW	Input state of engine switch / ON or OFF	ON: Input signal is normal OFF: Input signal is interrupted	-
IG SW (CAN)	Communication state of engine switch / ON or OFF	ON: Communication is normal OFF: Communication is interrupted	-
T&T MANUAL SW	Voltage data of manual switch / min.: 0 V, max.: 5 V	Neutral position: Below 0.2 V Tilt up: 1.67 to 2.13 V Tilt down: 0.54 to 0.74 V Telescopic contract: 1.08 to 1.40 V Telescopic extend: 2.22 to 2.77 V	-
KEYSW (CAN)	Communication state of key switch confirmation signal / ON or OFF	ON: Communication is normal OFF: Communication is interrupted	-
KEY CODE (CAN)	Communication state of key code confirmation signal / ON or OFF	ON: Communication is normal OFF: Communication is interrupted	-
KEYSW	Input state of key switch / ON or OFF	ON: Input signal is normal OFF: Input signal is interrupted	-
JUNCTION BOX	Communication state of main body ECU signal / OK or Interruption	OK: Communication is normal Interruption: Communication is interrupted	-
COMBI ECU INFO	Communication state of Combination switch ECU information / OK or Interruption	OK: Communication is normal Interruption: Communication is interrupted	-
SEAT ECU INFO	Communication state of seat ECU signal / OK or Interruption	OK: Communication is normal Interruption: Communication is interrupted	-
METER ECU INFO	Communication state of combination meter signal / OK or Interruption	OK: Communication is normal Interruption: Communication is interrupted	-
B/B	Communication state of B/B information / OK or Interruption	OK: Communication is normal Interruption: Communication is interrupted	-
# CODES	Number of diagnosis code / min.: 0, max.: 255	Actual number of diagnosis codes	-

2. ACTIVE TEST

HINT:

Performing the ACTIVE TEST is one of the methods to save diagnostic time. It is possible to display the DATA LIST during the ACTIVE TEST.

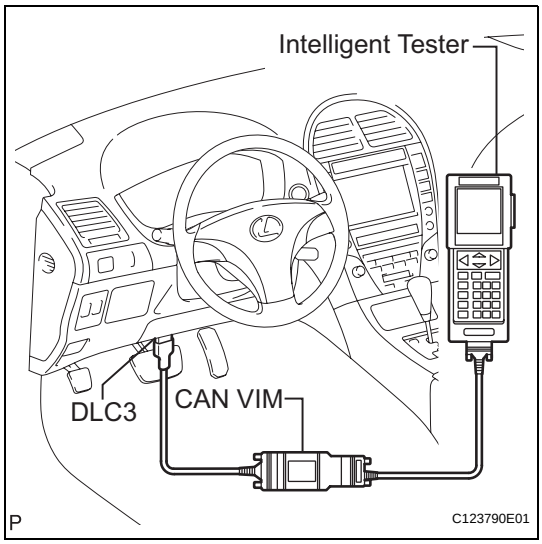

(a) Connect the intelligent tester to the DLC3.
(b) Turn the engine switch on (IG) and turn the intelligent tester on.
(c) Select the following items from the ACTIVE TEST:

TILT & TELESCO:

Tester Display	Test Part	Control Range	Diagnostic Note
TILT	Tilt operation	UP / DOWN	-
TELESCO	Telescopic operation	LONG / SHORT	-

DIAGNOSTIC TROUBLE CODE CHART

If a DTC is displayed, check the circuit for that code listed in the table below.

POWER TILT AND POWER TELESCOPIC STEERING COLUMN:

DTC Code	Detection Item	Trouble Area	See page
B2602	Key Unlock Warning Switch Circuit Malfunction	1. CAN communication system 2. Smart access system with push-button start 3. Multiplex tilt and telescopic ECU	SR-21
B2603	Tilt and Telescopic Manual Switch Circuit Malfunction	1. Tilt and telescopic manual switch 2. Tilt and telescopic manual switch circuit 3. Multiplex tilt and telescopic ECU	SR-24
B2606	Key Code Confirm Signal Malfunction	1. CAN communication system 2. Smart access system with push-button start 3. Multiplex tilt and telescopic ECU	SR-21
B2610	Tilt Position Sensor or Tilt Motor Circuit Malfunction	1. Wire harness or connector 2. Tilt position sensor or tilt motor 3. Multiplex tilt and telescopic ECU	SR-28
B2611	Telescopic Position Sensor or Telescopic Motor Circuit Malfunction	1. Wire harness or connector 2. Telescopic position sensor or telescopic motor 3. Multiplex tilt and telescopic ECU	SR-33
B2620	ECU Power Source Circuit Malfunction	1. Battery 2. Wire harness or connector 3. Multiplex tilt and telescopic ECU	SR-37
B2621	Communication Interruption	1. CAN communication system 2. Main body ECU 3. Front power seat switch LH (Position control ECU) 4. Combination meter assembly 5. Multiplex tilt and telescopic ECU	SR-39
B2624	Vehicles Speed Malfunction	1. CAN communication system 2. Combination meter assembly 3. Multiplex tilt and telescopic ECU	SR-41

DTC	B2602	Key Unlock Warning Switch Circuit Malfunction

DTC	B2606	Key Code Confirm Signal Malfunction

DESCRIPTION

A key code confirmation signal (ON or OFF) is sent from the main body ECU to the multiplex tilt and telescopic ECU via the communication bus.
The multiplex tilt and telescopic ECU uses this signal to operate the auto away/return function.

DTC No.	Detection Item	Trouble Area
B2602	Both of the following conditions continue: • A key code confirmation signal is off • The engine switch is on (IG)	• CAN communication system • Smart access system with push-button start • Multiplex tilt and telescopic ECU
B2606	IG signals and/or key code confirmation signals are not received correctly.	• CAN communication system • Smart access system with push-button start • Multiplex tilt and telescopic ECU

WIRING DIAGRAM

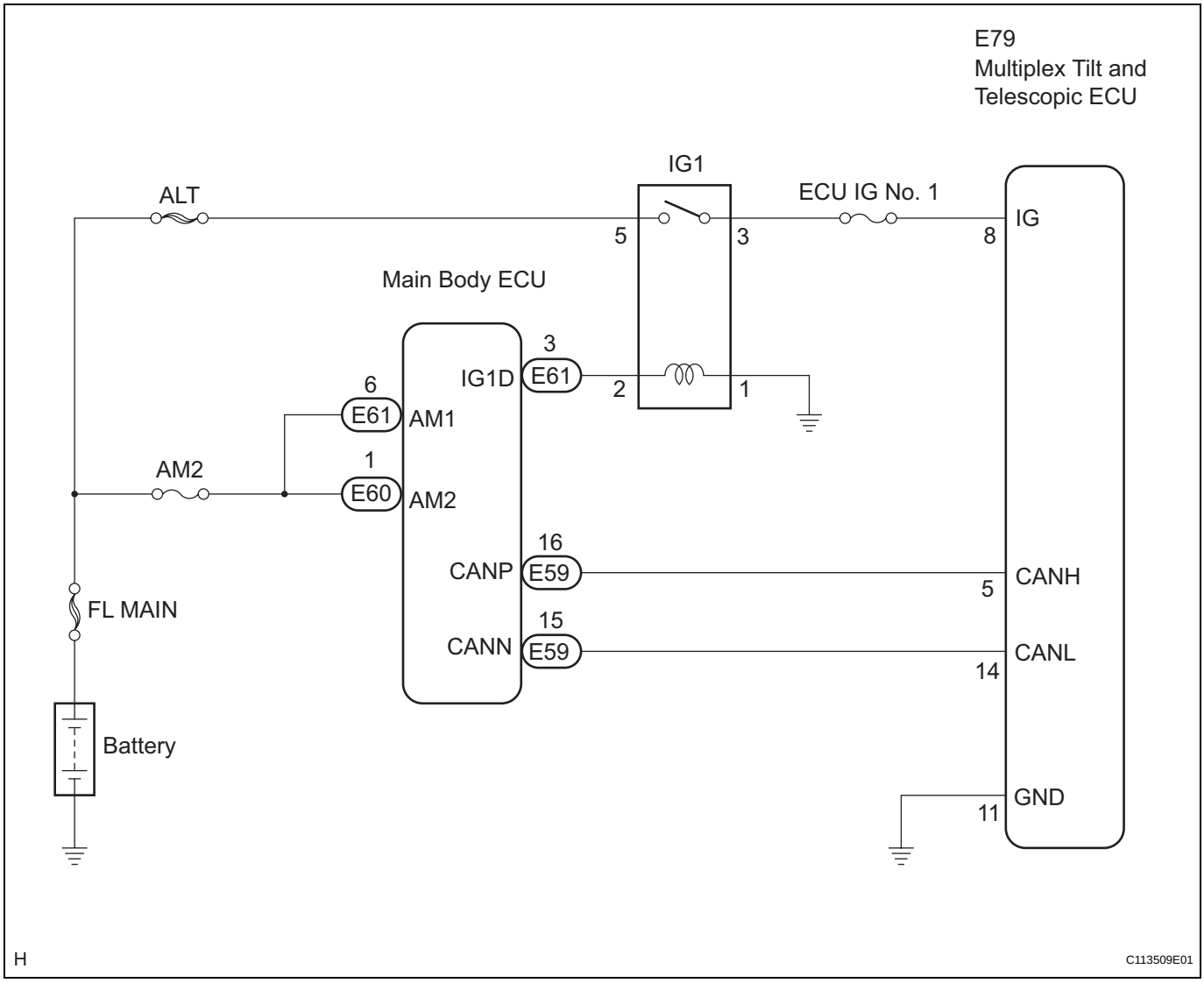

SR

INSPECTION PROCEDURE

1 CHECK OTHER DTC OUTPUT

HINT:
The power tilt and power telescopic steering column system uses the CAN communication system, so check its diagnostic system before proceeding to troubleshooting.
(a) Check if DTC B2621 is output.

Result

DTC Condition	Proceed to
No output	A
B2621 is output	B

HINT:
- If DTC B2621 besides B2602 and B2606 are output, perform troubleshooting for B2621 first.
- DTC B2621 indicates a communication interruption for the power tilt and power telescopic steering column system.

B → **REPAIR CIRCUIT INDICATED BY OUTPUT CODE**

A

2 READ VALUE OF INTELLIGENT TESTER

(a) Connect the intelligent tester to the DLC3.
(b) Turn the engine switch on (IG) and turn the intelligent tester on.
(c) Select "IG SW (CAN)", "KEYSW (CAN)" and "KEY CODE (CAN)" from the DATA LIST.
(d) Check the communication state of the tester screen.

TILT & TELESCO:

Tester Display	Measurement Item/Range	Normal Condition	Diagnostic Note
IG SW (CAN)	Communication state of engine switch / ON or OFF	ON: Communication is normal OFF: Communication is interrupted	-
KEYSW (CAN)	Communication state of key switch confirmation signal / ON or OFF	ON: Communication is normal OFF: Communication is interrupted	-
KEY CODE (CAN)	Communication state of key code confirmation signal / ON or OFF	ON: Communication is normal OFF: Communication is interrupted	-

OK:
"ON" is displayed.

NG → **CHECK SMART ACCESS SYSTEM WITH PUSH-BUTTON START**

OK

3	RECONFIRM DTC

(a) Clear the DTC.
(b) Check for DTCs.
OK:
DTC B2602 and/or B2606 is not output.

NG → **REPLACE MULTIPLEX TILT AND TELESCOPIC ECU**

OK

END

DTC	B2603	Tilt and Telescopic Manual Switch Circuit Malfunction

DESCRIPTION

Different voltage values are input to the multiplex tilt and telescopic ECU by operating the manual switch. The multiplex tilt and telescopic ECU then judges which motor and in which direction that the motor should rotate based on the voltage value.

DTC No.	Detection Item	Trouble Area
B2603	Abnormal voltage value, which is not within the specification, is input to the multiplex tilt and telescopic ECU when the manual switch is operated.	• Tilt and telescopic manual switch • Tilt and telescopic manual switch circuit • Multiplex tilt and telescopic ECU

WIRING DIAGRAM

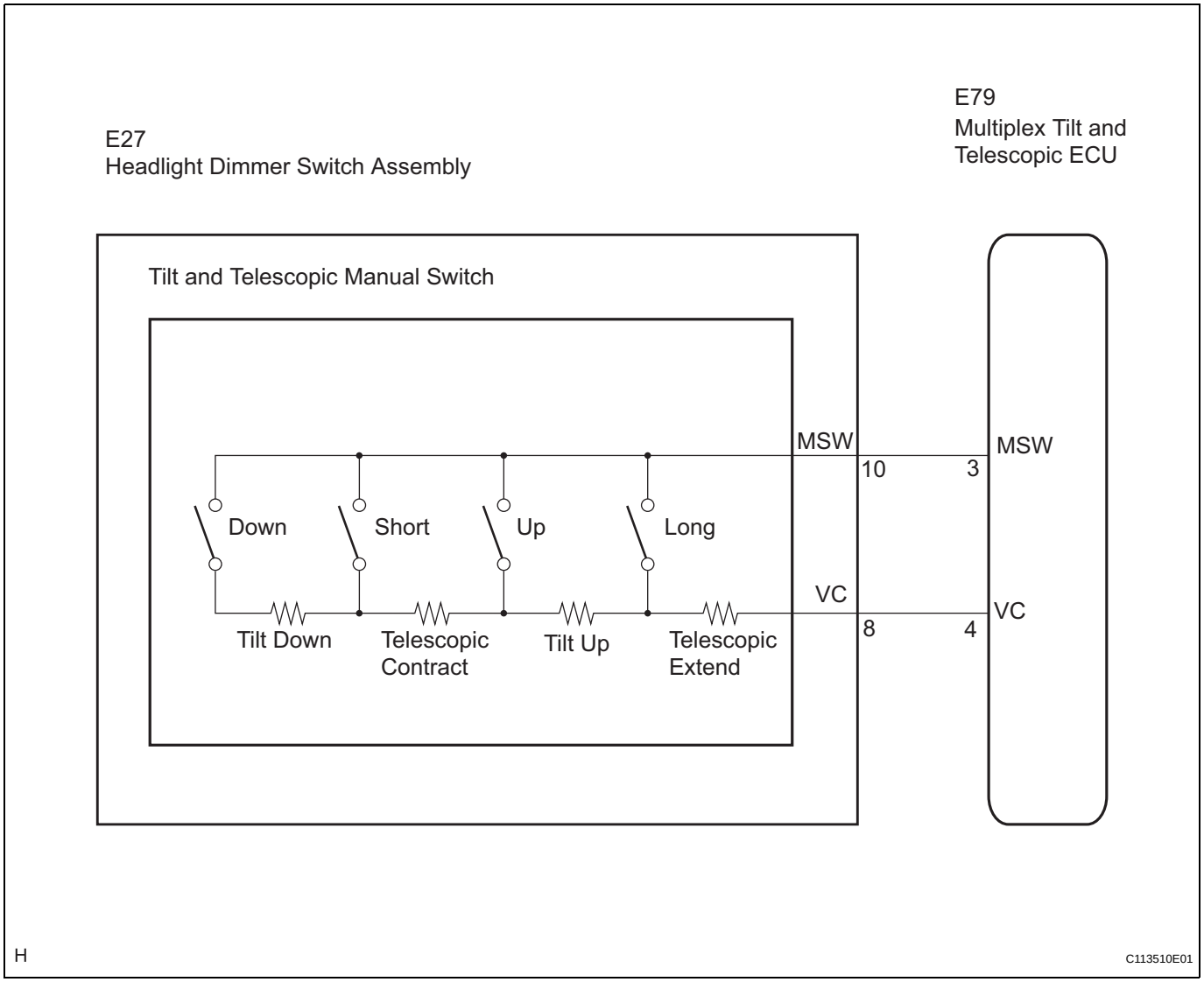

SR

INSPECTION PROCEDURE

1	READ VALUE OF INTELLIGENT TESTER

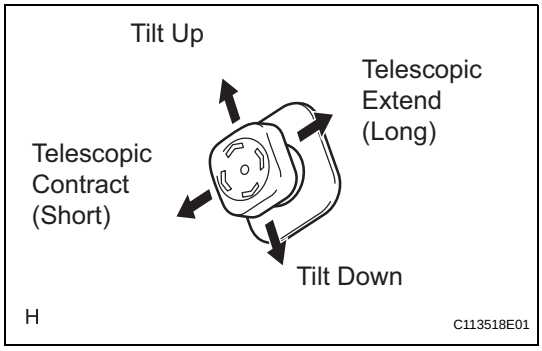

(a) Connect the intelligent tester to the DLC3.
(b) Turn the engine switch on (IG) and turn the intelligent tester on.
(c) Select "T&T MANUAL SW" from the DATA LIST.
(d) Read voltages on the tester screen when operating the manual switch.

Standard voltage

Manual Switch Position	Specified Condition
Neutral	Below 0.2 V
Tilt up	1.67 to 2.13 V
Tilt down	0.54 to 0.74 V
Telescopic contract (Short)	1.08 to 1.40 V
Telescopic extend (Long)	2.22 to 2.77 V

Result

Result	Proceed to
Switch voltages in all directions are within the standard.	A
Switch voltages in certain directions are outside the standard.	B
Switch voltages in all directions are outside the standard.	C

A → **REPLACE MULTIPLEX TILT AND TELESCOPIC ECU**

B → **REPLACE HEADLIGHT DIMMER SWITCH ASSEMBLY**

C

2 CHECK HARNESS AND CONNECTOR (MULTIPLEX TILT AND TELESCOPIC ECU - HEADLIGHT DIMMER SWITCH)

Multiplex Tilt and Telescopic ECU:

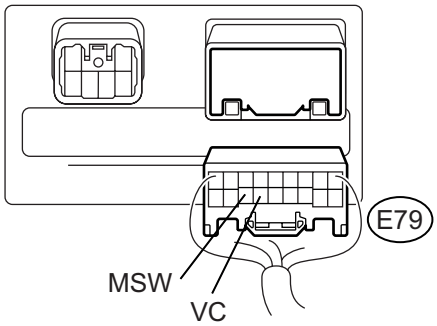

Headlight Dimmer Switch Assembly:

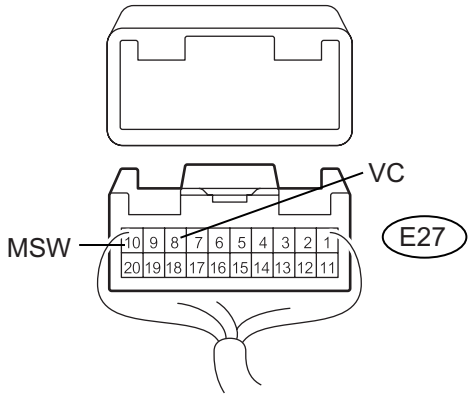

H C104131E04

(a) Disconnect the E79 connector from the multiplex tilt and telescopic ECU.
(b) Disconnect the E27 connector from the headlight dimmer switch assembly.
(c) Measure the resistance according to the value(s) in the table below.

Standard resistance

Tester Connection	Condition	Specified Condition
VC (E79-4) - VC (E27-8)	Always	Below 1 Ω
MSW (E79-3) - MSW (E27-10)	Always	Below 1 Ω
VC (E27-8) - Body ground	Always	10 kΩ or higher
MSW (E27-10) - Body ground	Always	10 kΩ or higher

NG → **REPAIR OR REPLACE HARNESS OR CONNECTOR**

OK

3 INSPECT MULTIPLEX TILT AND TELESCOPIC ECU (VC TERMINAL VOLTAGE)

Headlight Dimmer Switch Assembly:

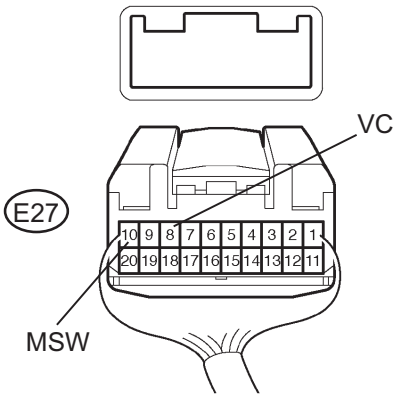

F044885E04

(a) Reconnect the E79 connector to the multiplex tilt and telescopic ECU.
(b) Measure the voltage according to the value(s) in the table below.

Standard voltage

Tester Connection	Condition	Specified Condition
VC (E27-8) - MSW (E27-10)	Engine switch on (IG)	4.9 to 5.1 V

NG → **REPLACE MULTIPLEX TILT AND TELESCOPIC ECU**

OK

4	INSPECT HEADLIGHT DIMMER SWITCH ASSEMBLY (TILT AND TELESCOPIC MANUAL SWITCH)

Headlight Dimmer Switch Assembly Connector:

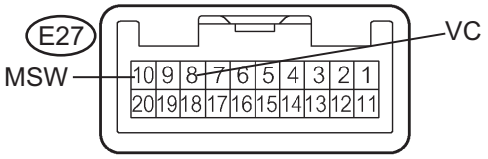

F045649E02

(a) Measure the resistance according to the value(s) in the table below.

Standard resistance

Tester Connection	Condition (Manual switch position)	Specified Condition
VC (E27-8) - MSW (E27-10)	Tilt up	360 Ω
	Tilt down	1,990 Ω
	Telescopic contract	790 Ω
	Telescopic extend	160 Ω

NG → **REPLACE HEADLIGHT DIMMER SWITCH ASSEMBLY**

OK

REPLACE MULTIPLEX TILT AND TELESCOPIC ECU

DTC	B2610	Tilt Position Sensor or Tilt Motor Circuit Malfunction

DESCRIPTION

The tilt motor is operated by the power source voltage supplied from the multiplex tilt and telescopic ECU and tilts the steering column up and down. The tilt position sensor (hall IC) in the tilt motor detects the tilt angle of the steering column and outputs a signal to the CPU based on that tilt.

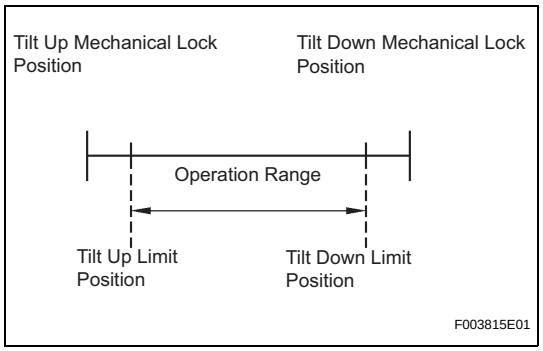

HINT:
Limit positions can be confirmed on the screen of the intelligent tester.

DTC No.	Detection Item	Trouble Area
B2610	Tilt operation stops within the operation range while operating.	• Wire harness or connector • Tilt position sensor or tilt motor • Multiplex tilt and telescopic ECU

WIRING DIAGRAM

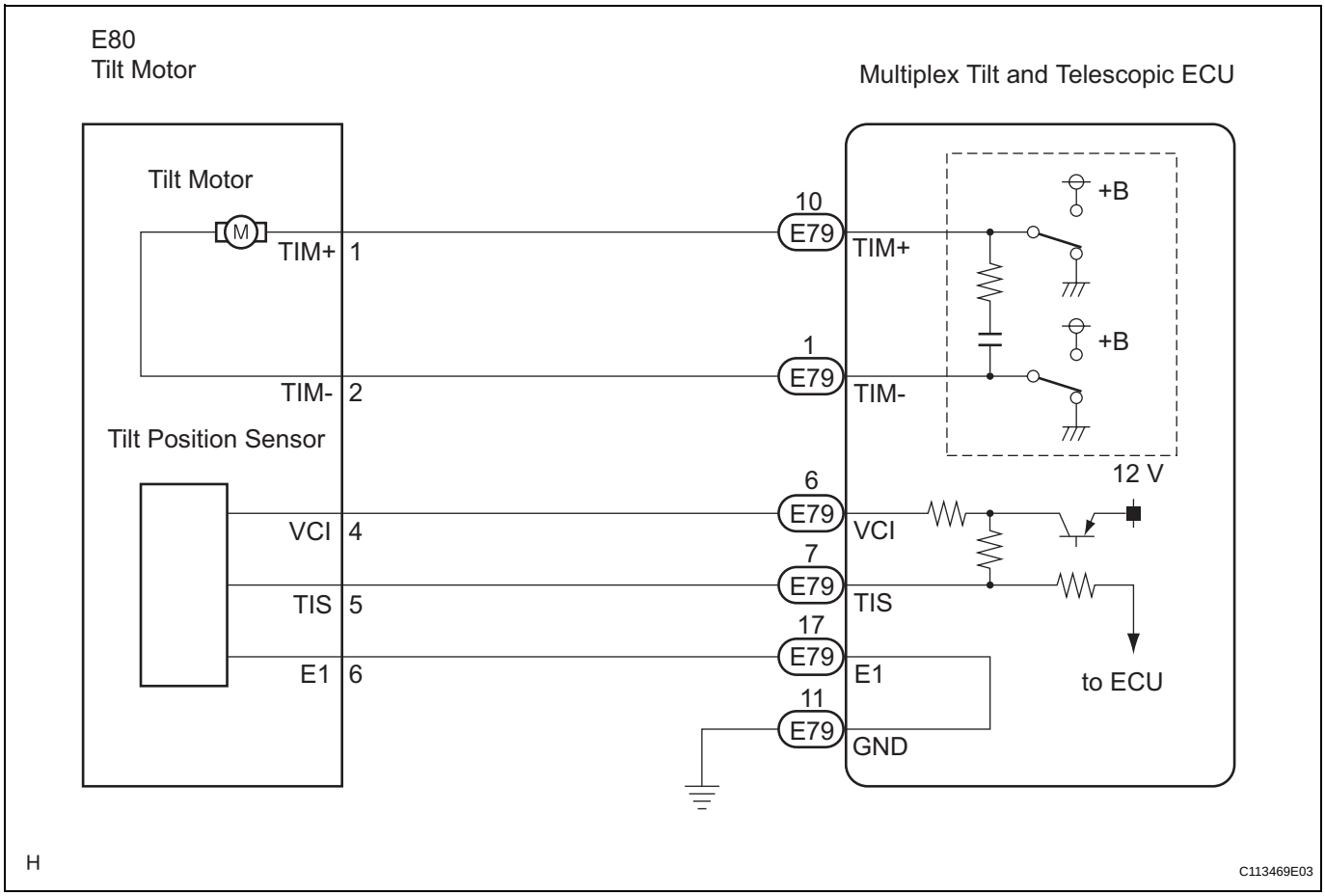

INSPECTION PROCEDURE

1	PERFORM ACTIVE TEST BY INTELLIGENT TESTER

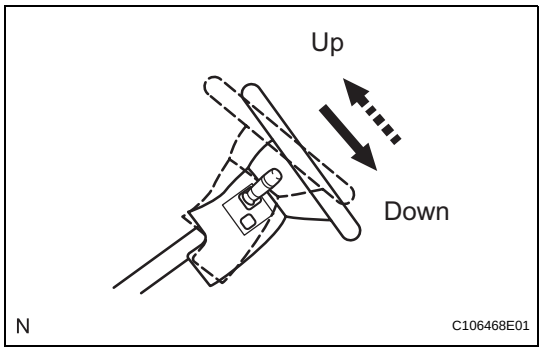

(a) Connect the intelligent tester to the DLC3.
(b) Turn the engine switch on (IG) and turn the intelligent tester on.
(c) Select "TILT & TELESCO".
(d) Select "TILT", and perform the ACTIVE TEST using the intelligent tester.
(e) Check that the steering wheel tilts up (down) when the ACTIVE TEST is carried out.
OK:
Steering wheel tilts up (down).

OK → **Go to step 4**

NG →

SR

2 CHECK HARNESS AND CONNECTOR (MULTIPLEX TILT AND TELESCOPIC ECU - TILT MOTOR)

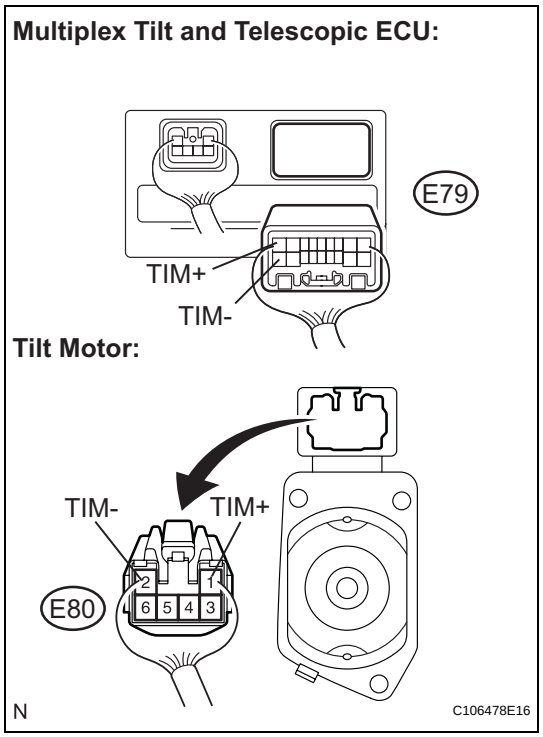

(a) Disconnect the E79 connector from the multiplex tilt and telescopic ECU.
(b) Disconnect the E80 connector from the tilt motor.
(c) Measure the resistance according to the value(s) in the table below.

Standard resistance

Tester Connection	Condition	Specified Condition
TIM+ (E79-10) - TIM+ (E80-1)	Always	Below 1 Ω
TIM- (E79-1) - TIM- (E80-2)	Always	Below 1 Ω
TIM+ (E79-10) - Body ground	Always	10 kΩ or higher
TIM- (E79-1) - Body ground	Always	10 kΩ or higher

NG → **REPAIR OR REPLACE HARNESS OR CONNECTOR**

OK

3 INSPECT TILT MOTOR

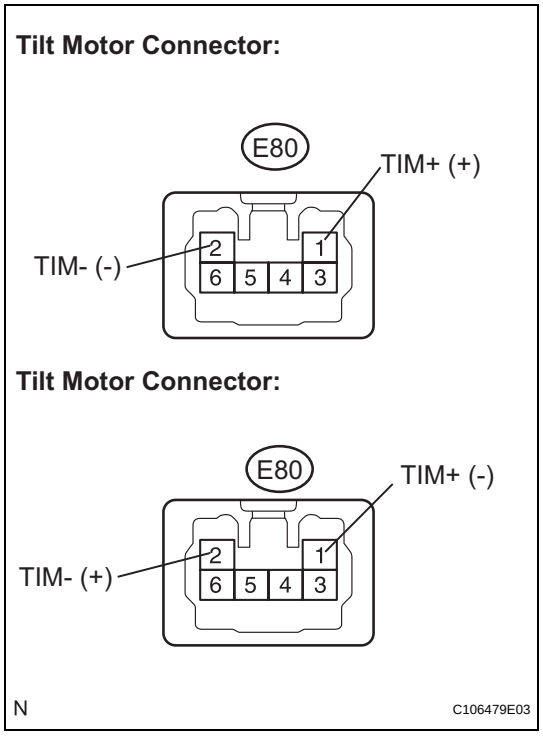

(a) Connect the positive battery terminal to terminal TIM+ (E80-1) and the negative battery terminal to terminal TIM- (E80-2) of the tilt motor connector. Then confirm that the steering wheel tilts up.

OK:

The steering wheel tilts up.

(b) Connect the negative battery terminal to terminal TIM+ (E80-1) and the positive battery terminal to terminal TIM- (E80-2) of the tilt motor connector. Then confirm that the steering wheel tilts down.

OK:

The steering wheel tilts down.

NG → **REPLACE STEERING COLUMN ASSEMBLY**

OK

REPLACE MULTIPLEX TILT AND TELESCOPIC ECU

4 CHECK HARNESS AND CONNECTOR (MULTIPLEX TILT AND TELESCOPIC ECU - TILT POSITION SENSOR)

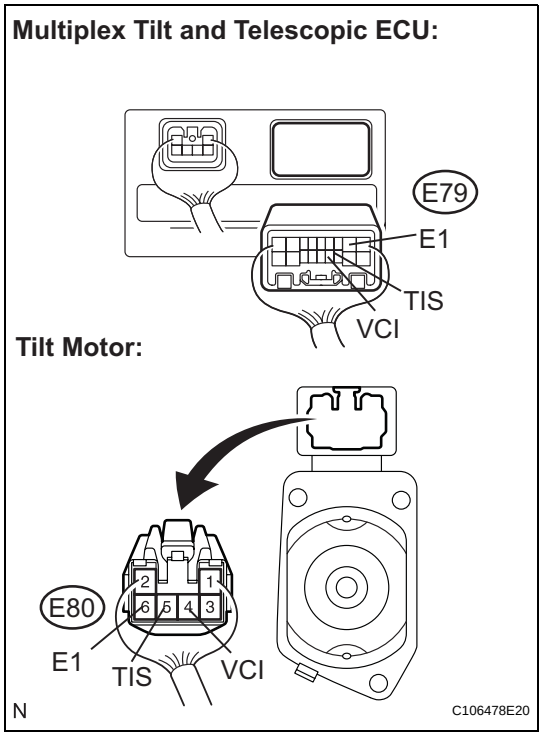

(a) Disconnect the E79 connector from the multiplex tilt and telescopic ECU.
(b) Disconnect the E80 connector from the tilt motor.
(c) Measure the resistance according to the value(s) in the table below.

Standard resistance

Tester Connection	Condition	Specified Condition
VCI (E79-6) - VCI (E80-4)	Always	Below 1 Ω
TIS (E79-7) - TIS (E80-5)	Always	Below 1 Ω
E1 (E79-17) - E1 (E80-6)	Always	Below 1 Ω
VCI (E79-6) - Body ground	Always	10 kΩ or higher
TIS (E79-7) - Body ground	Always	10 kΩ or higher
E1 (E79-17) - Body ground	Always	10 kΩ or higher

NG → **REPAIR OR REPLACE HARNESS OR CONNECTOR**

OK

5 CHECK HARNESS AND CONNECTOR (MULTIPLEX TILT AND TELESCOPIC ECU - BODY GROUND)

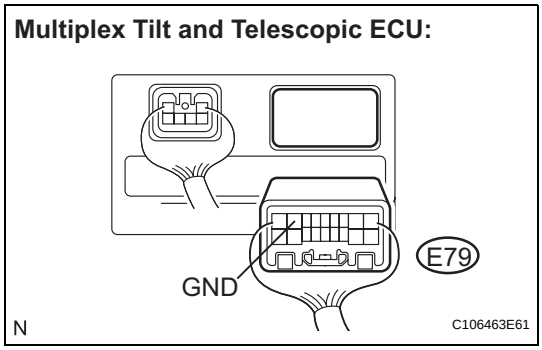

(a) Measure the resistance according to the value(s) in the table below.

Standard resistance

Tester Connection	Condition	Specified Condition
GND (E79-11) - Body ground	Always	Below 1 Ω

NG → **REPAIR OR REPLACE HARNESS OR CONNECTOR**

SR

OK

6 INSPECT MULTIPLEX TILT AND TELESCOPIC ECU (VCI, TIS TERMINAL VOLTAGE)

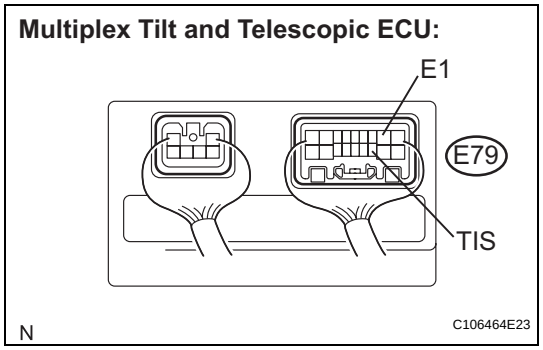

(a) Reconnect the E79 connector to the multiplex tilt and telescopic ECU.
(b) Measure the voltage according to the value(s) in the table below.

Standard voltage

Tester Connection	Condition	Specified Condition
TIS (E79-7) - E1 (E79-17)	Steering tilts up or tilts down	8 to 16 V (Pulse HI)
		Below 1 V (Pulse LOW)

NG → **REPLACE MULTIPLEX TILT AND TELESCOPIC ECU**

OK

7 INSPECT TILT POSITION SENSOR

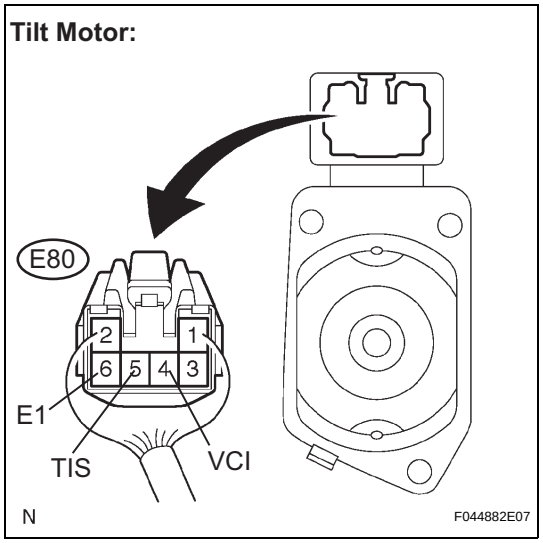

(a) Reconnect the E80 connector to the tilt motor.
(b) Measure the voltage according to the value(s) in the table below.

Standard voltage

Tester Connection	Condition	Specified Condition
VCI (E80-4) - E1 (E80-6)	Engine switch on (IG)	8 to 16 V
TIS (E80-5) - E1 (E80-6)	Engine switch on (IG)	8 to 16 V

NG → **REPLACE STEERING COLUMN ASSEMBLY**

OK

REPLACE MULTIPLEX TILT AND TELESCOPIC ECU

REMOVAL

1. **DRAIN POWER STEERING FLUID**
2. **REMOVE FRONT WHEEL RH**
3. **REMOVE FRONT FENDER APRON SEAL RH**
4. **REMOVE COOL AIR INTAKE DUCT SEAL (See page EM-22)**
5. **REMOVE ENGINE ROOM SIDE COVER LH (See page EM-22)**
6. **REMOVE ENGINE ROOM SIDE COVER RH (See page EM-22)**
7. **REMOVE V-BANK COVER SUB-ASSEMBLY (See page EM-23)**
8. **REMOVE FAN AND GENERATOR V BELT (See page EM-6)**
9. **DISCONNECT NO. 1 FLUID RESERVOIR TO PUMP HOSE**
   (a) Slide the clip and disconnect the No. 1 fluid reservoir to pump hose from the vane pump assembly.

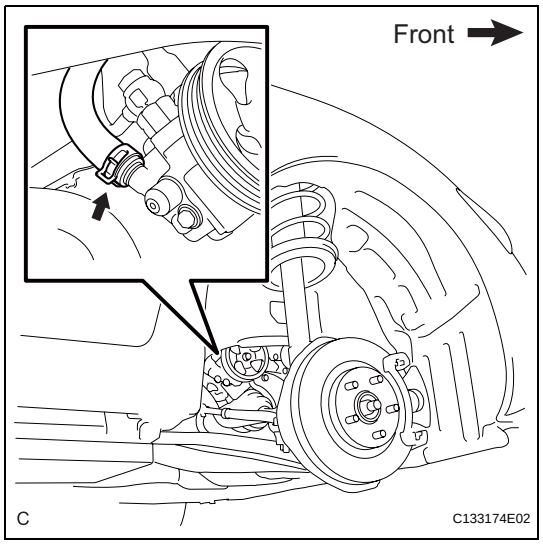

10. **DISCONNECT PRESSURE FEED TUBE ASSEMBLY**
    (a) Remove the union bolt and disconnect the pressure feed tube assembly from the vane pump assembly.
    (b) Remove the bolt and separate pressure feed tube clamp.
    (c) Remove the gasket from the pressure feed tube assembly.

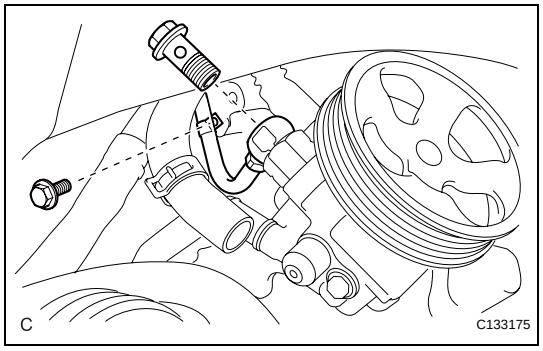

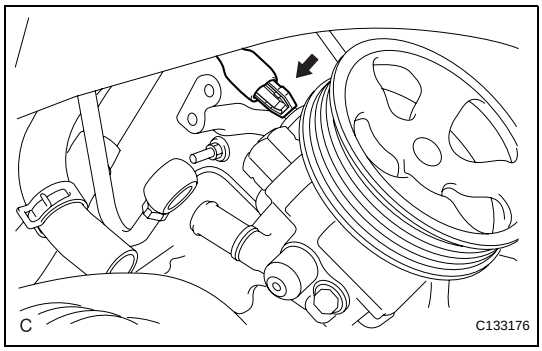

11. DISCONNECT POWER STEERING FLUID PRESSURE SWITCH CONNECTOR

(a) Disconnect the power steering fluid pressure switch connector.

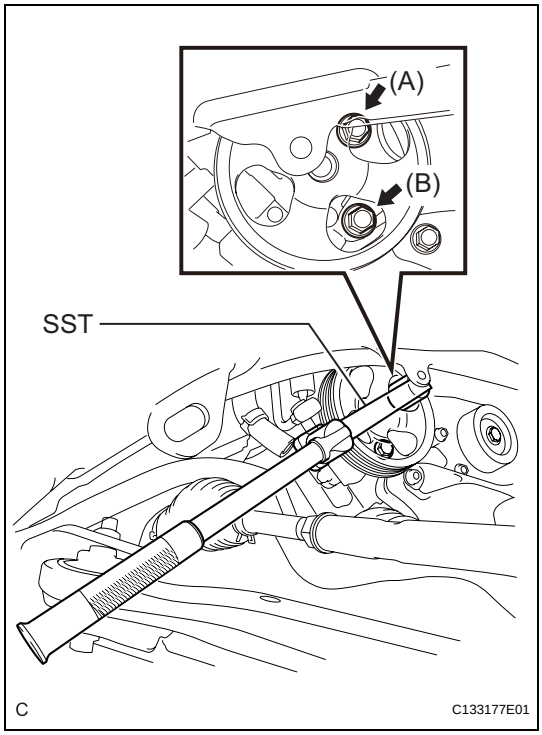

12. REMOVE VANE PUMP ASSEMBLY

(a) Using SST, loosen the bolt (A) and remove bolt (B), and then remove the vane pump assembly.
SST 09249-63010

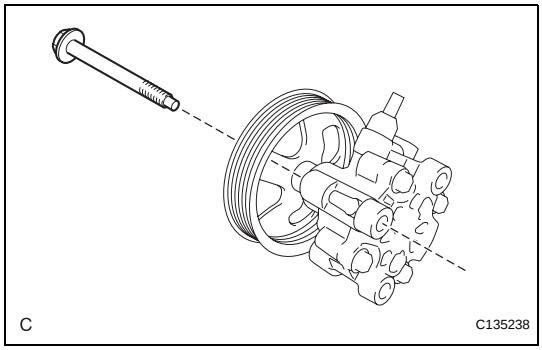

(b) Remove the bolt from the vane pump assembly.

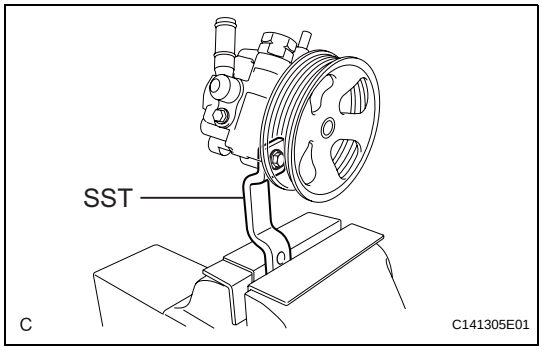

DISASSEMBLY

1. HOLD VANE PUMP ASSEMBLY

(a) Using SST, hold the vane pump assembly in a vise.
SST 09630-00014 (09631-00132)

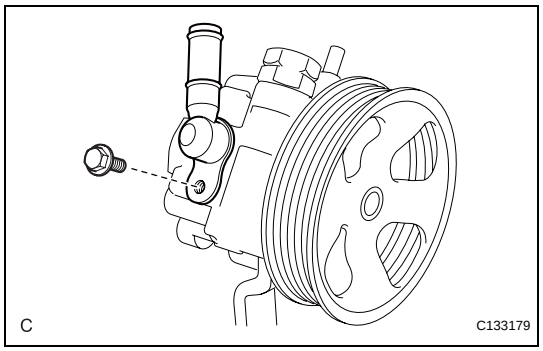

2. REMOVE POWER STEERING SUCTION PORT UNION

(a) Remove the bolt and the power steering suction port union from the vane pump assembly.

(b) Using a screw driver, remove the O-ring from the power steering suction port union.

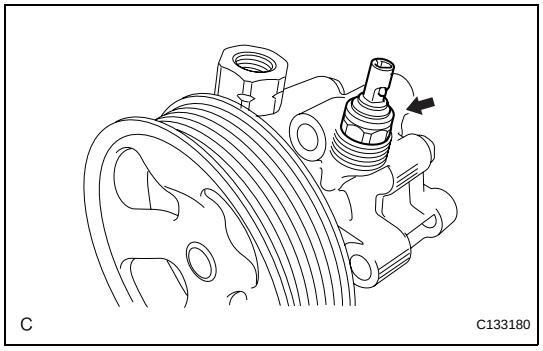

3. REMOVE POWER STEERING FLUID PRESSURE SWITCH

(a) Remove the power steering fluid pressure switch from the vane pump assembly.

NOTICE:

Perform this procedure only when the power steering fluid pressure switch is replaced.

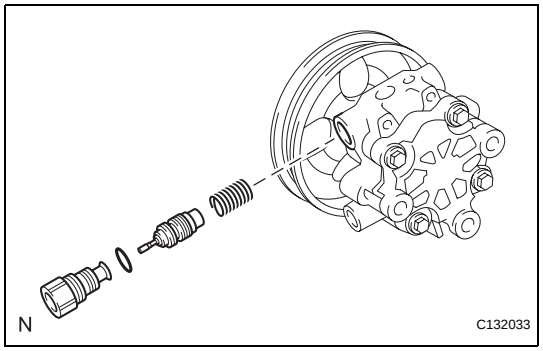

4. REMOVE FLOW CONTROL VALVE ASSEMBLY

(a) Remove the pressure port union.

(b) Remove the O-ring from the pressure port union.

(c) Remove the flow control valve assembly and the flow control valve compression spring.

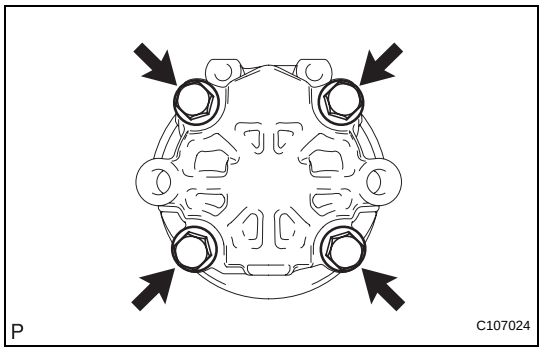

5. REMOVE VANE PUMP REAR HOUSING

(a) Remove the 4 bolts and vane pump rear housing from the vane pump front housing.

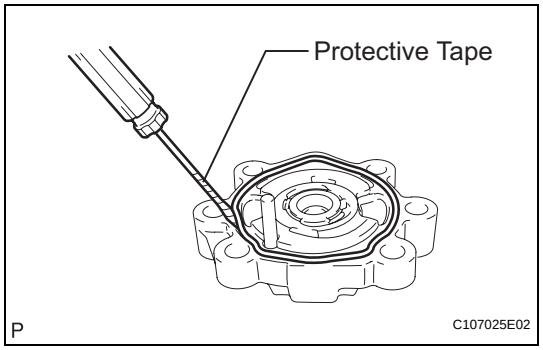

(b) Using a screwdriver, remove the O-ring from the vane pump rear housing.

HINT:

Tape the screwdriver tip before use.

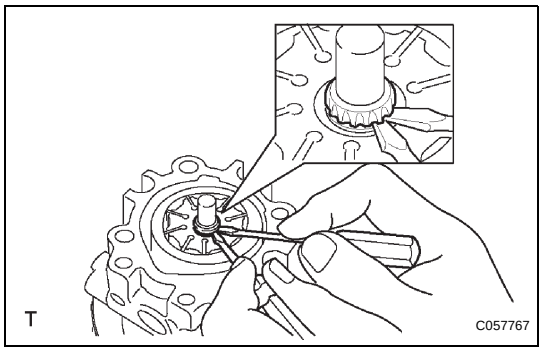

6. REMOVE VANE PUMP SHAFT WITH PULLEY

(a) Using 2 screwdrivers, remove the vane pump shaft snap ring from the vane pump shaft with pulley.

(b) Remove the vane pump shaft with pulley.

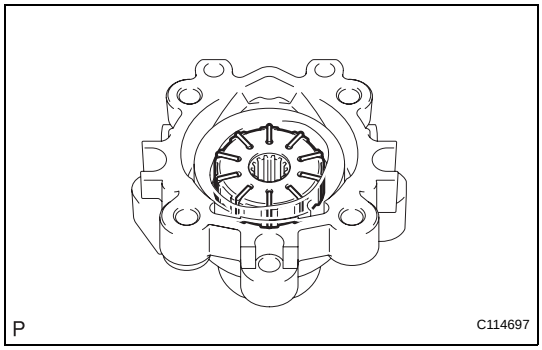

7. REMOVE VANE PUMP ROTOR

(a) Remove the 10 vane pump plates.

(b) Remove the vane pump rotor.

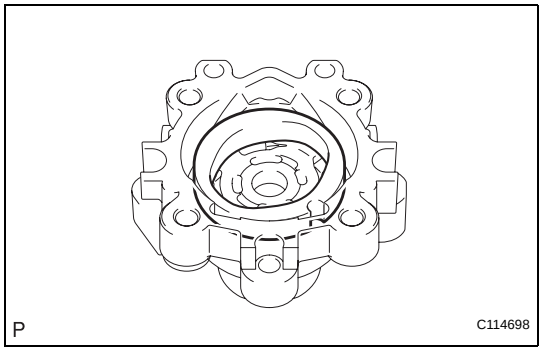

8. REMOVE VANE PUMP CAM RING

(a) Remove the vane pump cam ring from the vane pump front housing.

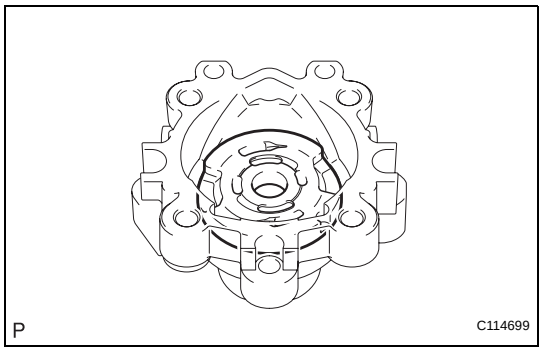

9. REMOVE VANE PUMP FRONT SIDE PLATE

(a) Remove the vane pump front side plate from the vane pump front housing.

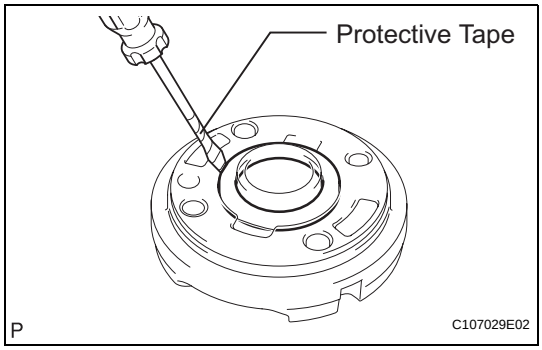

(b) Using a screwdriver, remove the O-ring from the vane pump front side plate.
HINT:
Tape the screwdriver tip before use.

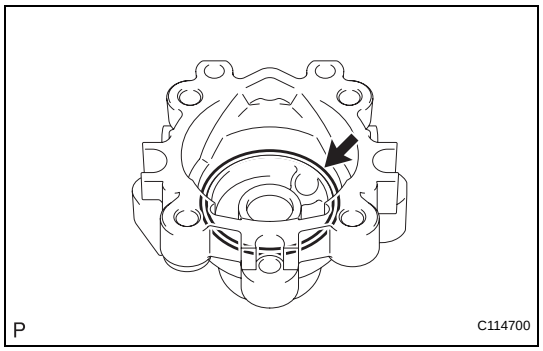

(c) Remove the O-ring from the vane pump front housing.

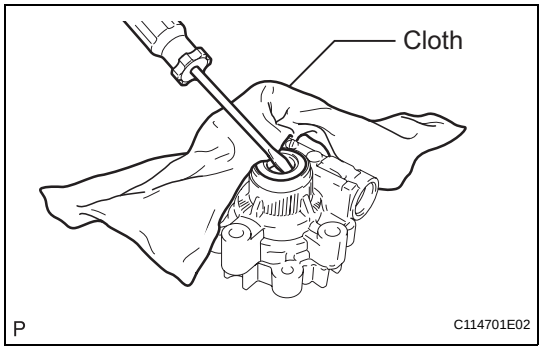

10. REMOVE VANE PUMP HOUSING OIL SEAL

(a) Using a screwdriver and a shop rag or a piece of cloth, remove the vane pump housing oil seal.
NOTICE:
Be careful not to damage the vane pump front housing.

INSPECTION

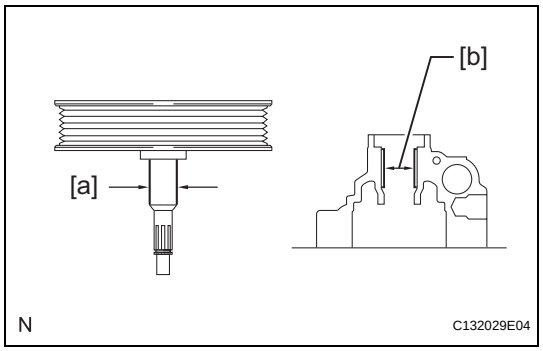

1. INSPECT VANE PUMP SHAFT AND BUSHING IN VANE PUMP FRONT HOUSING

(a) Using a micrometer, measure the outer diameter of the vane pump shaft with pulley [a].

(b) Using vernier calipers, measure the inner diameter of the vane pump front housing bushing [b].

(c) Calculate the oil clearance.
Oil clearance = Inner diameter of the bushing [b] - Outer diameter of the shaft [a].
Maximum oil clearance:
0.07 mm (0.0028 in.)
If the oil clearance exceeds the maximum, replace the vane pump assembly.

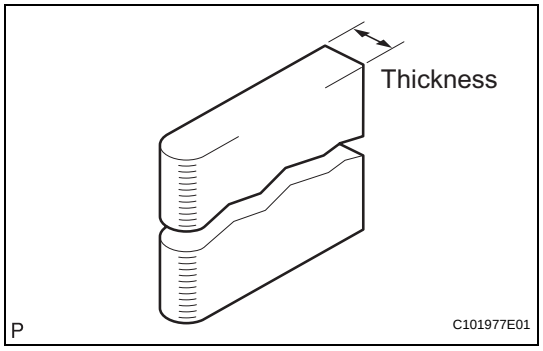

2. INSPECT VANE PUMP ROTOR AND VANE PUMP PLATE CLEARANCE

(a) Using a micrometer, measure the thickness of the vane pump plates.
Standard thickness:
1.405 to 1.411 mm (0.05531 to 0.05555 in.)
If the thickness is not within the specified range, replace the vane pump assembly.

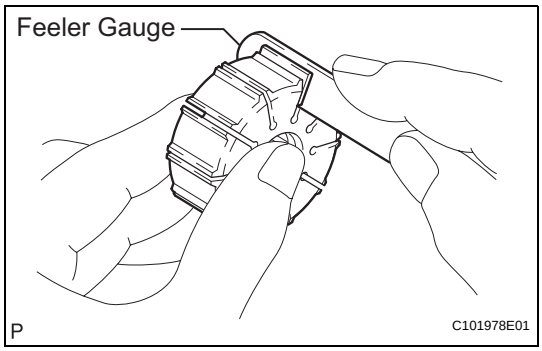

(b) Using a feeler gauge, measure the clearance between the side face of the vane pump rotor groove and the vane pump plates.
Maximum clearance:
0.03 mm (0.0012 in.)
If the clearance exceeds the maximum, replace the vane pump assembly.

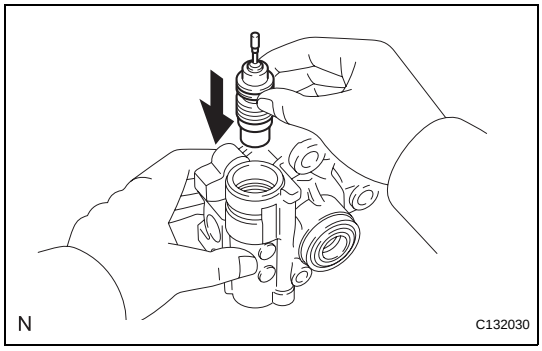

3. INSPECT FLOW CONTROL VALVE ASSEMBLY

(a) Coat the flow control valve assembly with power steering fluid and check that it falls smoothly into the flow control valve due to its own weight.
If the control valve does not fall into the hole smoothly, replace the vane pump assembly.

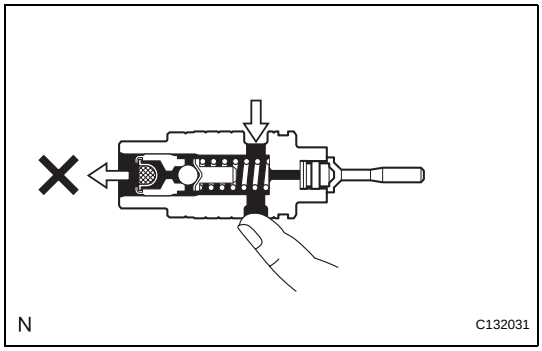

(b) Check the flow control valve assembly for leakage. Close one of the holes and apply compressed air, 392 to 490 kPa (4 to 5 kgf/cm^2, 57 to 71 psi), into the opposite side hole, and confirm that air does not come out from the end holes.
If air leaks, replace the vane pump assembly.

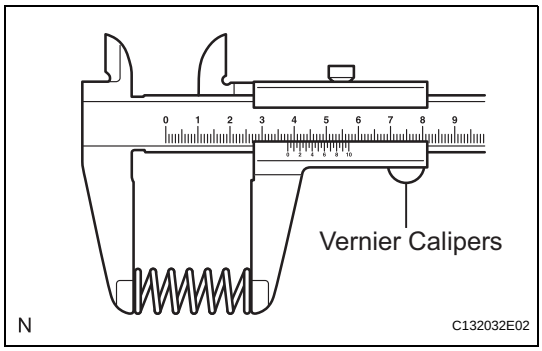

4. INSPECT FLOW CONTROL VALVE COMPRESSION SPRING

(a) Using vernier calipers, measure the free length of the flow control valve compression spring.
Minimum free length:
29.2 mm (1.150 in.)
If the length is less than the minimum, replace the vane pump assembly.

5. INSPECT PRESSURE PORT UNION

If the union seat in the pressure port union is damaged, it may cause fluid leakage. In this case, replace the vane pump assembly.

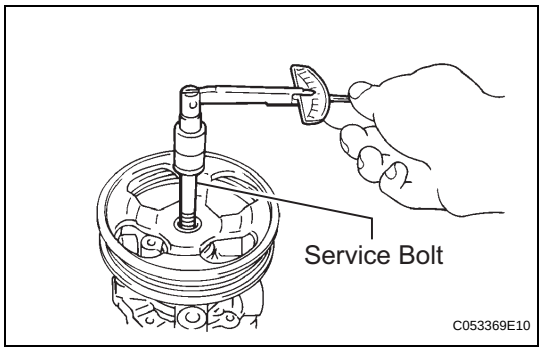

6. INSPECT TOTAL PRELOAD

(a) Check that the pump rotates smoothly without abnormal noise.

(b) Temporarily install the service bolt.
Recommended service bolt:
Thread diameter:
10 mm (0.39 in.)
Thread pitch:
1.25 mm (0.0492 in.)
Bolt length:
50 mm (1.97 in.)

(c) Using a torque wrench, check the pump rotating torque.
Rotating torque:
0.27 N*m (2.8 kgf*cm, 2.4 in.*lbf) or less
If the rotating torque is not as specified, check the vane pump housing oil seal.

REASSEMBLY

NOTICE:
When installing parts, coat the parts indicated by arrows with power steering fluid (See page PS-9).

1. INSTALL VANE PUMP HOUSING OIL SEAL

(a) Coat a new vane pump housing oil seal lip with power steering fluid.

(b) Using SST and a press, install the vane pump housing oil seal until it is flush with the vane pump front housing end surface.
SST 09950-60010 (09951-00280), 09950-70010 (09951-07100)
NOTICE:
Make sure that the oil seal is installed facing in the correct direction as shown in the illustration.

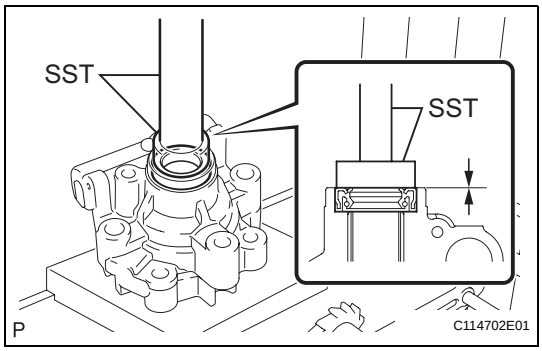

2. INSTALL VANE PUMP SHAFT WITH PULLEY

(a) Coat the inside surface of the bushing in the vane pump front housing with power steering fluid.

(b) Gradually insert the vane pump shaft with pulley.
NOTICE:
Do not damage the oil seal lip in the front housing.
HINT:
Wrap protective tape around the spline of the vane pump shaft with pulley in order to prevent damage to the oil seal.

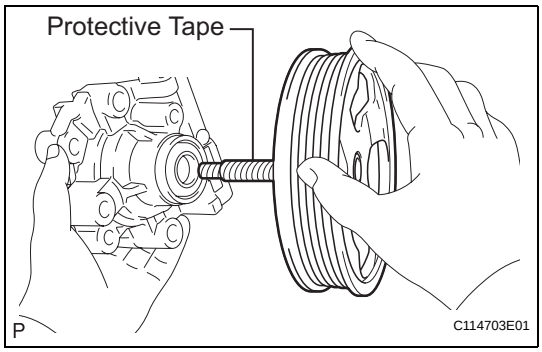

3. INSTALL VANE PUMP FRONT SIDE PLATE

(a) Coat a new O-ring with power steering fluid and install it into the vane pump front housing.

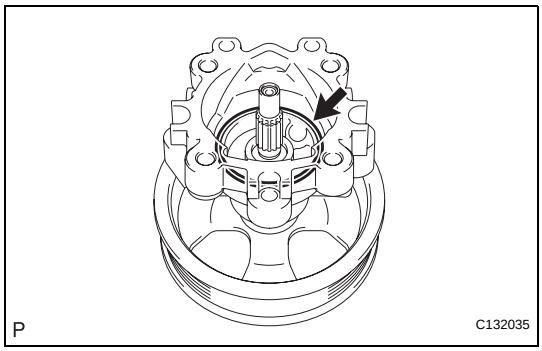

(b) Coat a new O-ring with power steering fluid and install it onto the vane pump front side plate.

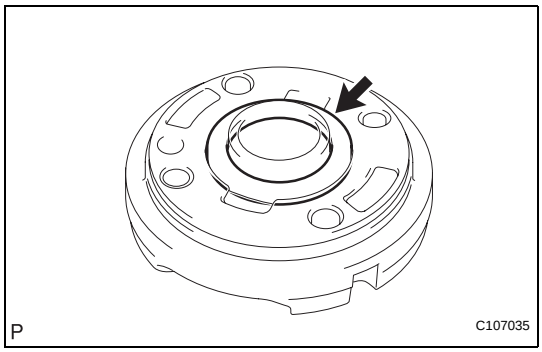

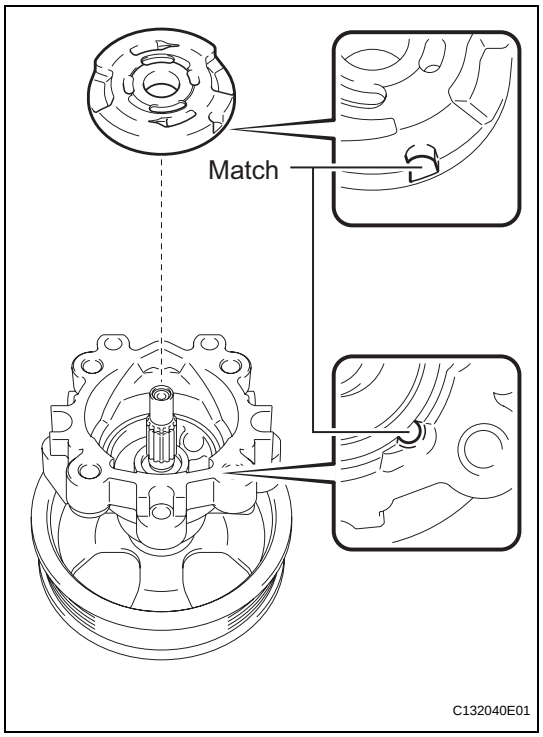

(c) Align the notch of the vane pump front side plate with that of the vane pump front housing, and install the vane pump front side plate.
NOTICE:
Make sure that the vane pump front side plate is installed facing in the correct direction.

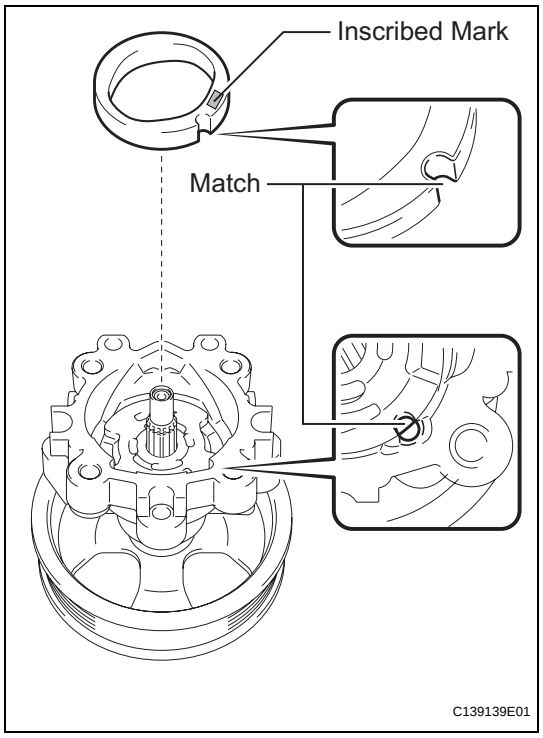

4. INSTALL VANE PUMP CAM RING

(a) Align the notch of the cam ring with that of the vane pump front side plate, and install the vane pump cam ring with the inscribed mark facing upward.
NOTICE:
Make sure that the vane pump cam ring is installed facing in the correct direction.

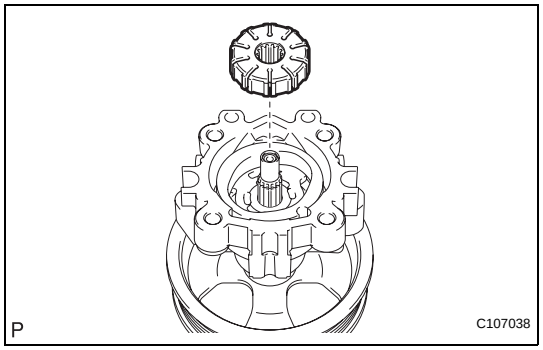

5. INSTALL VANE PUMP ROTOR

(a) Install the vane pump rotor.
HINT:
Vane pump rotor can be installed in both directions.

(b) Coat the 10 vane pump plates with power steering fluid.

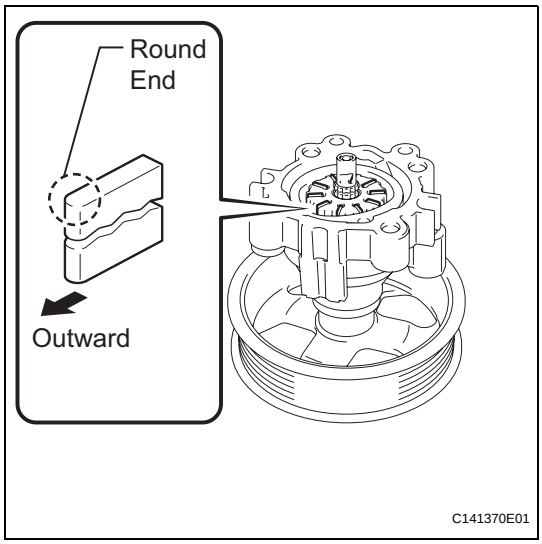

(c) Install the vane pump plates with the round end facing outward.
NOTICE:
Make sure that the vane pump plates are installed facing in the correct direction.

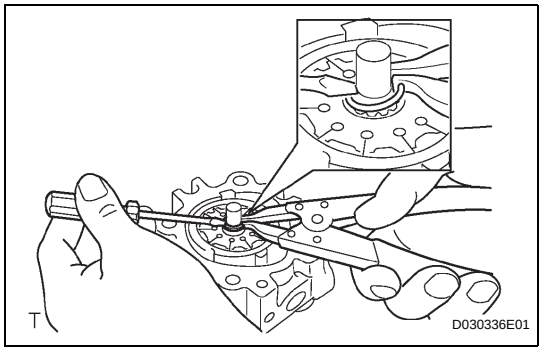

6. INSTALL VANE PUMP SHAFT SNAP RING

(a) Using a screwdriver and a snap ring expander, install a new vane pump shaft snap ring onto the vane pump shaft with pulley.
NOTICE:
Make sure that the vane pump shaft snap ring is securely installed in the vane pump shaft groove.

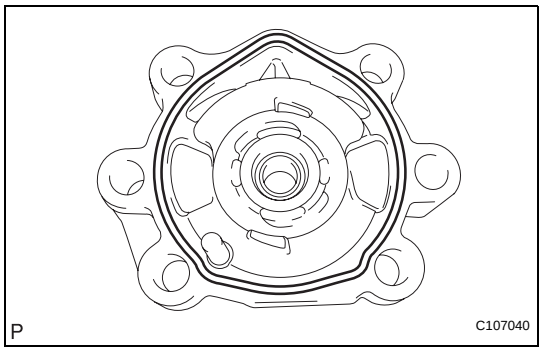

7. INSTALL VANE PUMP REAR HOUSING

(a) Coat a new O-ring with power steering fluid and install it onto the vane pump rear housing.

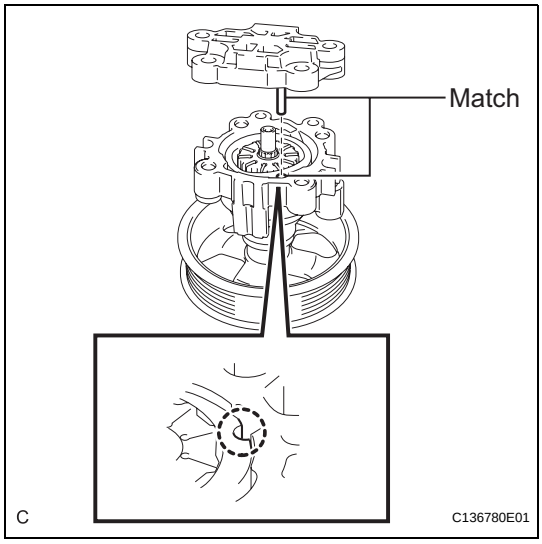

(b) Align the straight pin of the vane pump rear housing with the notches of the vane pump cam ring, vane pump front side plate, and vane pump front housing.

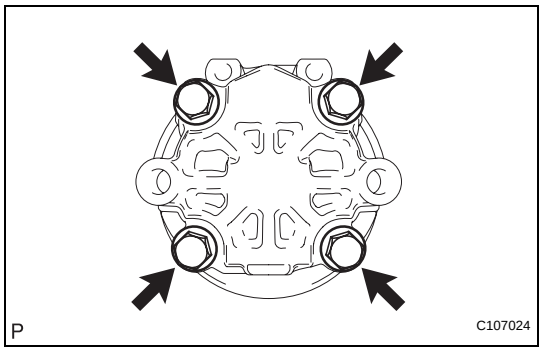

(c) Install the vane pump rear housing with the 4 bolts.
Torque: 22 N*m (224 kgf*cm, 16 ft.*lbf)

8. INSPECT TOTAL PRELOAD (See page PS-17)

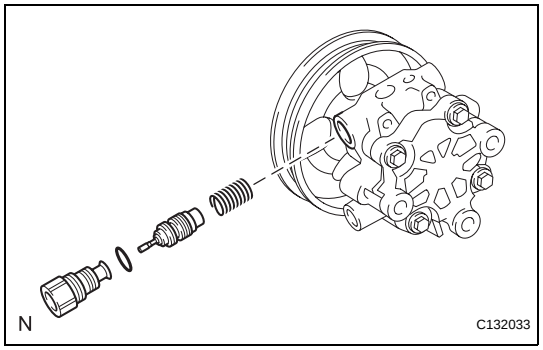

9. INSTALL FLOW CONTROL VALVE ASSEMBLY

(a) Coat the flow control valve assembly with power steering fluid.

(b) Install the flow control valve compression spring and the flow control valve assembly to the vane pump front housing.

(c) Coat a new O-ring with power steering fluid and install it onto the pressure port union.

(d) Install the pressure port union to the vane pump front housing.
Torque: 69 N*m (704 kgf*cm, 51 ft.*lbf)

10. INSTALL POWER STEERING FLUID PRESSURE SWITCH

(a) Coat the new O-ring attached to the new power steering fluid pressure switch with power steering fluid.

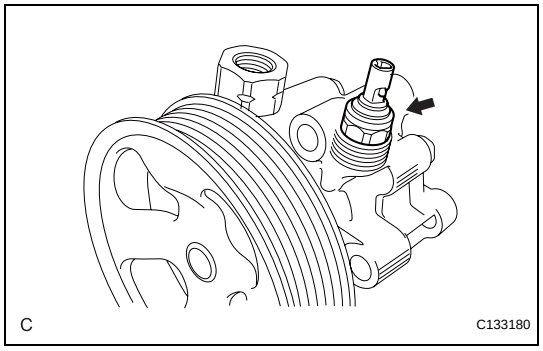

(b) Install the power steering fluid pressure switch to the vane pump assembly.
Torque: 21 N*m (214 kgf*cm, 16 ft.*lbf)
NOTICE:
Do not use a power steering fluid pressure switch that has been subjected an impact; for example, due to it having been dropped.

11. INSTALL POWER STEERING SUCTION PORT UNION

(a) Coat a new O-ring with power steering fluid and install it to the power steering suction port union.

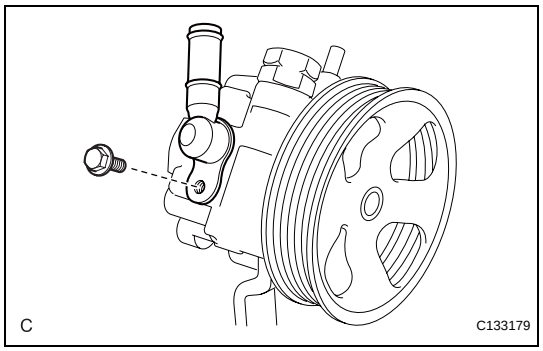

(b) Install the power steering suction port union to the vane pump assembly with the bolt.
Torque: 12 N*m (122 kgf*cm, 9 ft.*lbf)

INSTALLATION

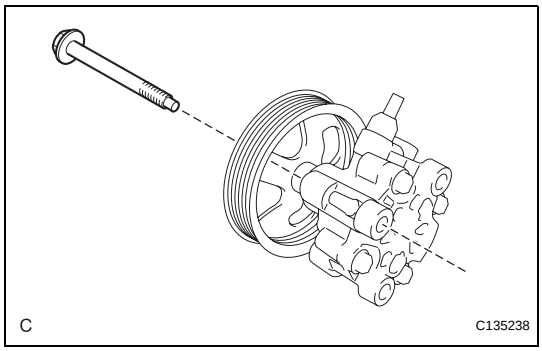

1. INSTALL VANE PUMP ASSEMBLY

(a) Temporarily install the bolt to the vane pump assembly.

(b) Install the vane pump assembly.

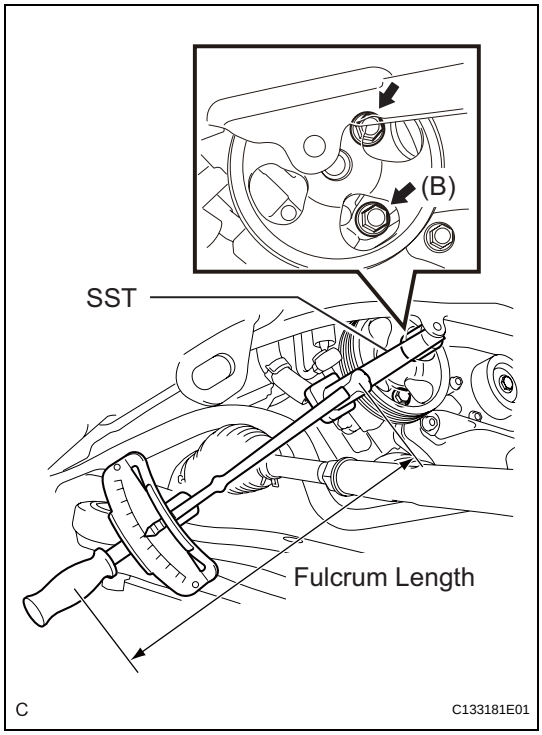

(c) Using SST, install bolt (B) and tighten the 2 bolts.

SST 09249-63010

Torque: Without SST
43 N*m (439 kgf*cm, 32 ft.*lbf)
With SST
29 N*m (294 kgf*cm, 21 ft.*lbf)

NOTICE:

- **Use a torque wrench with a fulcrum length of 300 mm (11.81 in.).**
- **This torque value is accurate when SST is parallel to the torque wrench.**

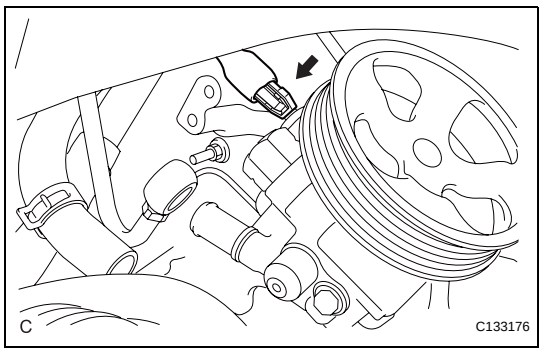

2. CONNECT POWER STEERING FLUID PRESSURE SWITCH CONNECTOR

(a) Connect the connector to the power steering fluid pressure switch.

3. CONNECT PRESSURE FEED TUBE ASSEMBLY

(a) Install a new gasket to the pressure feed tube assembly.

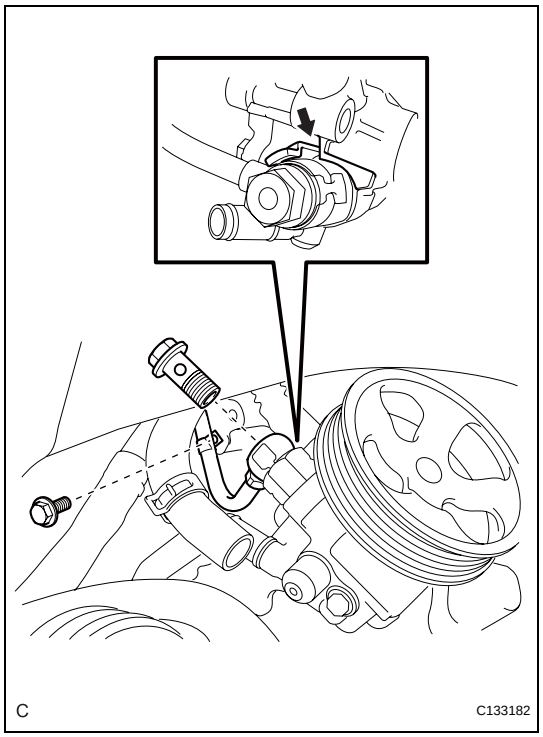

(b) Temporarily connect the pressure feed tube assembly to the vane pump assembly with the union bolt.

(c) Install the pressure feed tube assembly clamp with the bolt.
Torque: 9.8 N*m (100 kgf*cm, 87 in.*lbf)
NOTICE:
Install the pressure feed tube assembly clamp in the correct position.

(d) Fully tighten the union bolt.
Torque: 50 N*m (510 kgf*cm, 37 ft.*lbf)
NOTICE:
Make sure that the stopper of the pressure feed tube assembly contacts the vane pump assembly securely as shown in the illustration.

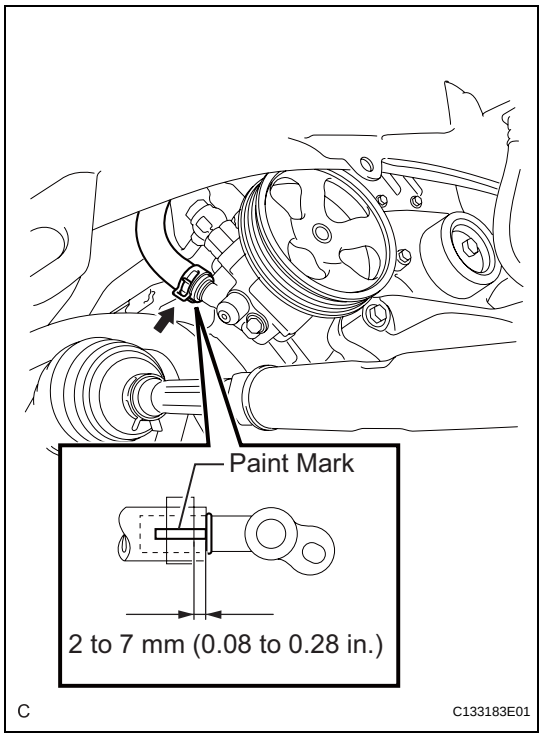

4. CONNECT NO. 1 FLUID RESERVOIR TO PUMP HOSE

(a) Connect the No. 1 fluid reservoir to pump hose to the vane pump assembly with the clip.
NOTICE:
- **Connect the No. 1 fluid reservoir to pump hose with the paint mark facing toward the rear of the vehicle.**
- **Install the No. 1 fluid reservoir to pump hose as far as it will go as shown in the illustration.**
- **Install the clip at the position specified in the illustration.**

5. INSTALL FAN AND GENERATOR V BELT (See page EM-7)

6. ADD POWER STEERING FLUID

7. BLEED POWER STEERING FLUID (See page PS-8)

8. CHECK POWER STEERING FLUID LEVEL (See page PS-3)

9. CHECK FOR POWER STEERING FLUID LEAKS

10. INSTALL V-BANK COVER SUB-ASSEMBLY (See page EM-49)

11. INSTALL ENGINE ROOM SIDE COVER RH (See page EM-50)

12. INSTALL ENGINE ROOM SIDE COVER LH (See page EM-50)

13. INSTALL COOL AIR INTAKE DUCT SEAL (See page EM-50)

14. INSTALL FRONT FENDER APRON SEAL RH

15. INSTALL FRONT WHEEL RH
Torque: 103 N*m (1,050 kgf*cm, 76 ft.*lbf)

PROBLEM SYMPTOMS TABLE

HINT:
Use the table below to help determine the cause of the problem. The numbers indicate likely causes of the problem in descending order. Check each part in order. If necessary, repair or replace faulty parts.

POWER STEERING SYSTEM

Symptom	Suspected Area	See page
Hard steering	1. Tire (Improperly inflated)	TW-3
	2. Power steering fluid level (Low)	PS-3
	3. Drive belt (Loose)	-
	4. Front wheel alignment (Incorrect)	SP-4
	5. Steering system joints (Worn)	-
	6. Suspension arm ball joints (Worn)	SP-25
	7. Steering column (Binding)	SR-78
	8. Power steering vane pump	PS-11
	9. Power steering gear	PS-28
Poor return	1. Tire (Improperly inflated)	TW-3
	2. Front wheel alignment (Incorrect)	SP-4
	3. Steering column (Binding)	SR-78
	4. Power steering gear	PS-28
Excessive free play	1. Steering system joints (Worn)	-
	2. Suspension arm ball joints (Worn)	SP-25
	3. Front wheel bearing (Worn)	AH-5
	4. Intermediate shaft, sliding yoke (Worn)	-
	5. Power steering gear	PS-28
Abnormal noise	1. Power steering fluid level (Low)	PS-3
	2. Steering system joints (Worn)	-
	3. Power steering vane pump	PS-11
	4. Power steering gear	PS-28

Example:

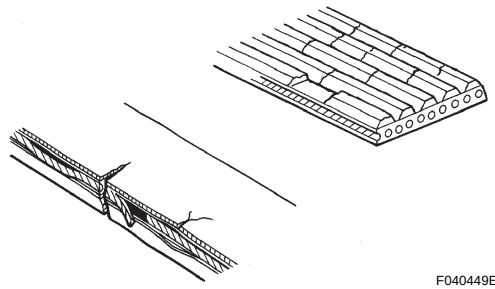

ON-VEHICLE INSPECTION

1. INSPECT DRIVE BELT

(a) Visually check the drive belt for excessive wear, frayed cords, etc.
If any defect is found, replace the drive belt.
HINT:
Cracks on the rib side of a belt are considered acceptable. Replace the belt if there are any missing ribs.

2. CHECK POWER STEERING FLUID LEVEL

(a) Keep the vehicle level.

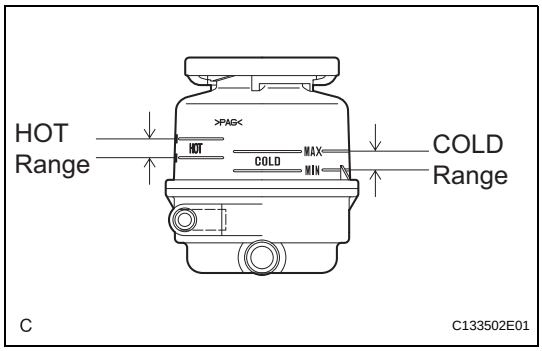

(b) With the engine stopped, check the fluid level in the fluid reservoir.
If necessary, add fluid.
Fluid:
ATF DEXRON II or III, or equivalent
HINT:
If the fluid is hot, check that the fluid level is within the HOT range on the fluid reservoir. If the fluid is cold, check that the fluid level is within the COLD range.

(c) Start the engine and run it at idle.

(d) Turn the steering wheel from lock to lock several times to raise fluid temperature.
Fluid temperature:
75 to 80°C (167 to 176°F)

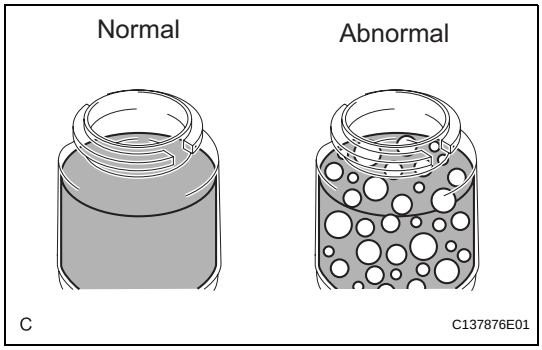

(e) Check for foaming or emulsification.
If foaming or emulsification is identified, bleed the power steering system (See page PS-8).

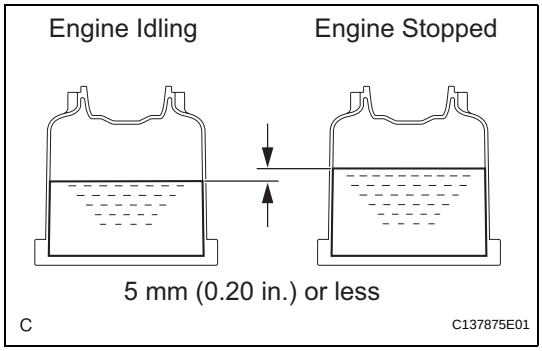

(f) With the engine idling, measure the fluid level in the fluid reservoir.

(g) Stop the engine.

(h) Wait a few minutes and remeasure the fluid level in the fluid reservoir.
Maximum fluid level rise:
5 mm (0.20 in.)
If a problem is found, bleed the power steering system (See page PS-8).

(i) Check the fluid level.

3. INSPECT STEERING FLUID PRESSURE

(a) Disconnect the No. 1 fluid reservoir to pump hose from the vane pump assembly (See page PS-11).

(b) Disconnect the pressure feed tube assembly from the vane pump assembly (See page PS-11).

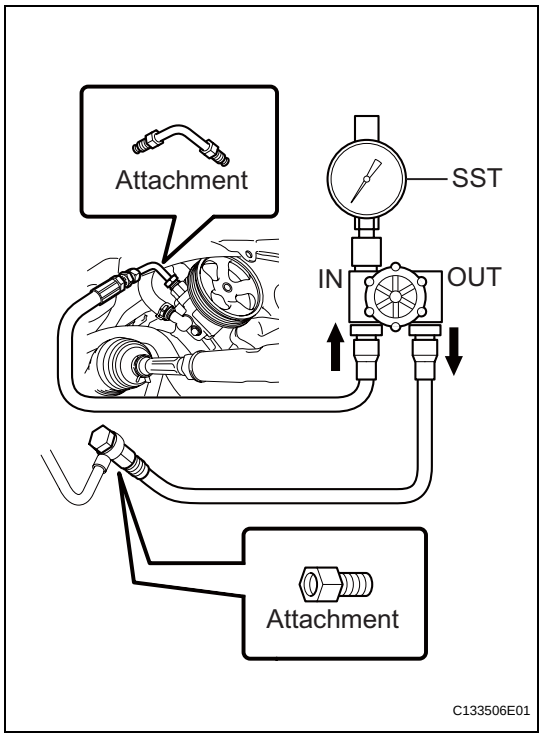

(c) Connect SST as shown in the illustration.
SST 09640-10010 (09641-01010, 09641-01060, 09641-01030)
NOTICE:
Check that the valve of the SST is in the open position.

(d) Connect the No. 1 fluid reservoir to pump hose to the vane pump assembly (See page PS-23).

(e) Bleed the power steering system (See page PS-8).

(f) Start the engine and run it at idle.

(g) Turn the steering wheel from lock to lock several times to raise fluid temperature.
Fluid temperature:
75 to 80°C (167 to 176°F)

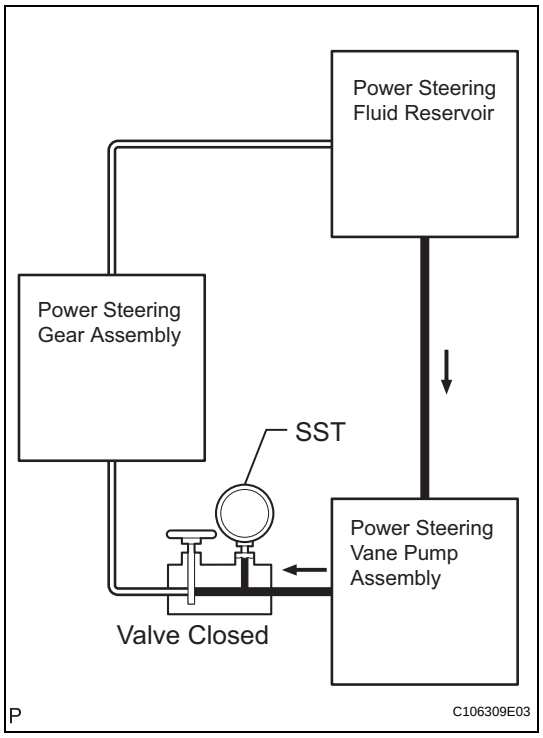

(h) With the engine idling, close the valve of the SST and observe the reading on the SST.
Standard fluid pressure:
7,800 to 8,300 kPa (79.5 to 84.6 kgf/cm^2, 1,131 to 1,204 psi)
NOTICE:
- **Do not keep the valve closed for more than 10 seconds.**
- **Do not allow the fluid temperature to become too high.**

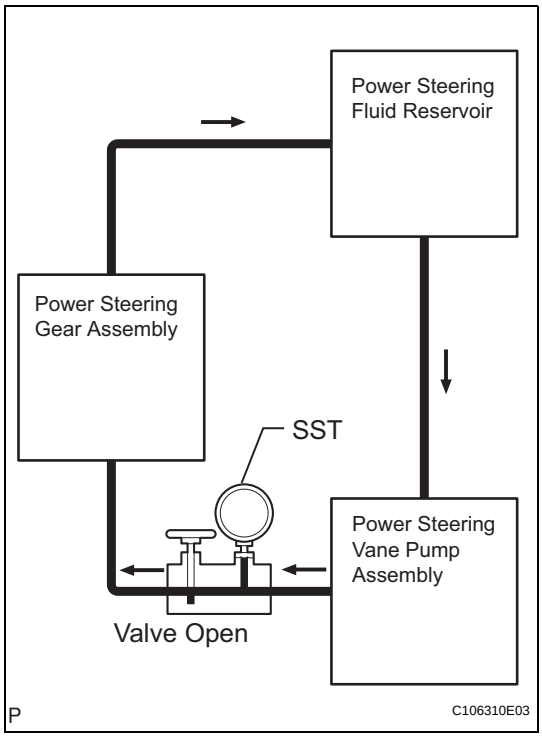

(i) With the engine idling, open the valve fully.
(j) Measure the fluid pressure at engine speeds of 1,000 rpm and 3,000 rpm.
Fluid pressure difference:
490 kPa (5 kgf/cm^2, 71 psi) or less
NOTICE:
Do not turn the steering wheel.

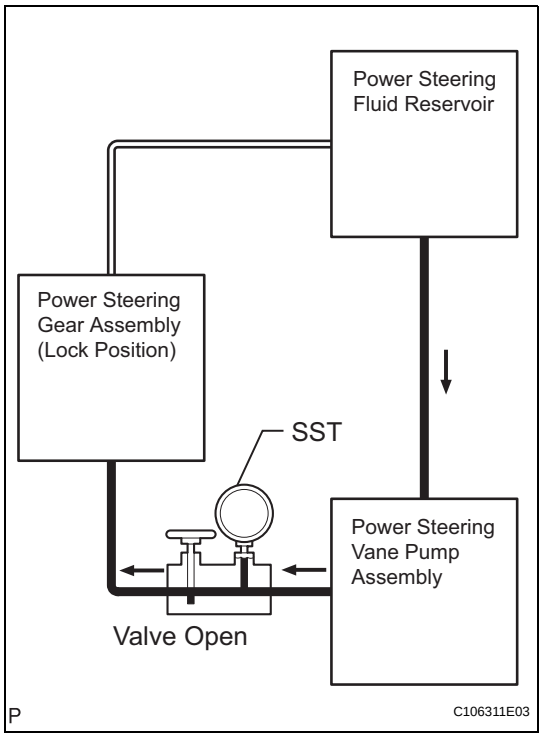

(k) With the engine idling and the valve fully opened, turn the steering wheel left or right to the full lock position. Observe the reading on the SST.
Standard fluid pressure:
7,800 to 8,300 kPa (79.5 to 84.6 kgf/cm^2, 1,131 to 1,204 psi)
NOTICE:
- **Do not keep the steering wheel in the full lock position for more than 10 seconds.**
- **Do not allow the fluid temperature to become too high.**

(l) Disconnect the No. 1 fluid reservoir to pump hose from the vane pump assembly (See page PS-11).
(m) Disconnect the SST.
(n) Connect the pressure feed tube assembly to the vane pump assembly (See page PS-22).
(o) Connect the No. 1 fluid reservoir to pump hose to the vane pump assembly (See page PS-23).
(p) Bleed the power steering system (See page PS-8).

4. CHECK STEERING EFFORT
(a) Stop the vehicle on a level, paved surface and turn the wheels straight ahead.
(b) Disconnect the cable from the negative (-) battery terminal.
NOTICE:
Wait at least 90 seconds after disconnecting the cable from the negative (-) battery terminal to prevent airbag and seat belt pretensioner activation.
(c) Remove the steering pad (See page RS-366).
(d) Connect the cable to the negative (-) battery terminal.

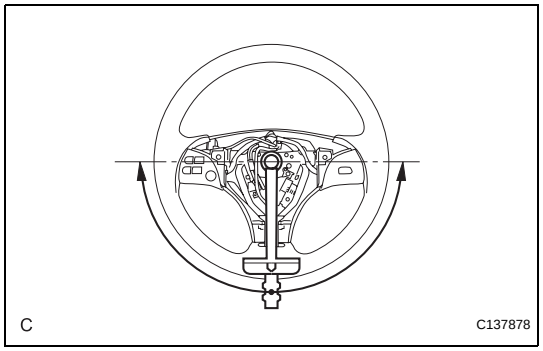

(e) Using a torque wrench, check if the steering wheel set nut is properly tightened.
Torque: 50 N*m (510 kgf*cm, 37 ft.*lbf)

(f) Start the engine and run it at idle.

(g) Turn the steering wheel 90 degrees to the right and check steering effort (torque) while turning the wheel. Check the opposite direction in the same manner.
Torque: Steering effort (Reference)
6.0 N*m (61 kgf*cm, 53 in.*lbf)
HINT:
Check tire type, pressure, and the road surface before making your diagnosis.

(h) Disconnect the cable from the negative (-) battery terminal.

(i) Torque the steering wheel set nut.
Torque: 50 N*m (510 kgf*cm, 37 ft.*lbf)

(j) Install the steering pad (See page RS-368).

(k) Connect the cable to the negative (-) battery terminal.

(l) Clear the DTCs (See page RS-49).

(m) Perform initialization.
NOTICE:
Some systems need initialization after reconnecting the cable to the negative battery terminal (See page IN-33).

(n) Inspect the airbag warning light (See page RS-37).

REMOVAL

1. PLACE FRONT WHEELS FACING STRAIGHT AHEAD

2. DISCONNECT CABLE FROM NEGATIVE BATTERY TERMINAL

3. REMOVE FRONT WHEELS

4. SEPARATE STEERING INTERMEDIATE SHAFT ASSEMBLY

(a) Secure the steering wheel with the seat belt in order to prevent rotation.
HINT:
This operation is useful to prevent damage to the spiral cable.

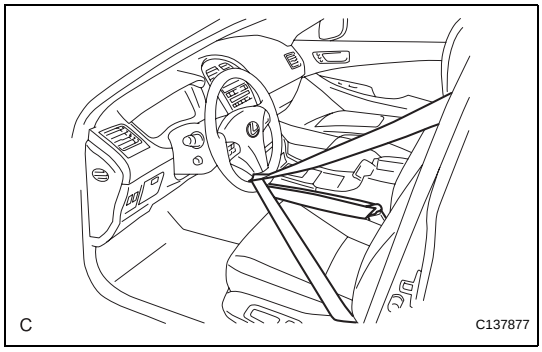

(b) Remove the bolt and slide the steering intermediate shaft assembly.
NOTICE:
Do not separate the steering intermediate shaft assembly from the power steering link assembly.

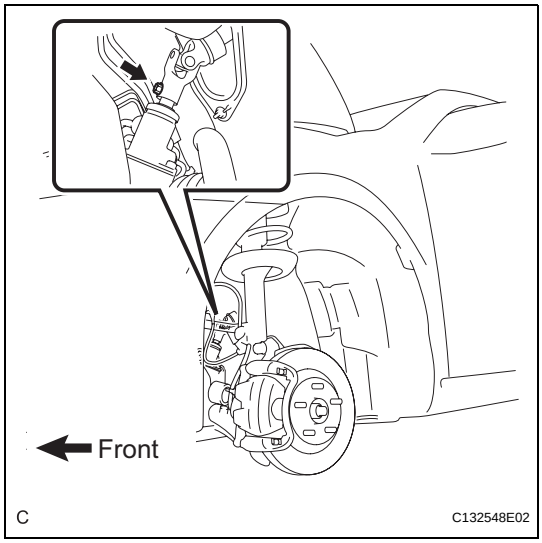

(c) Put matchmarks on the steering intermediate shaft assembly and the power steering link assembly.

(d) Separate the steering intermediate shaft assembly from the power steering link assembly.

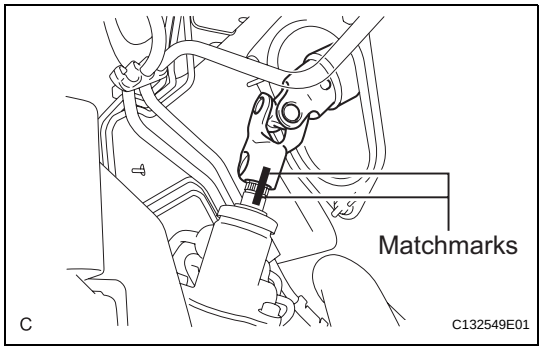

5. SEPARATE TIE ROD ASSEMBLY LH

(a) Remove the cotter pin and the nut.

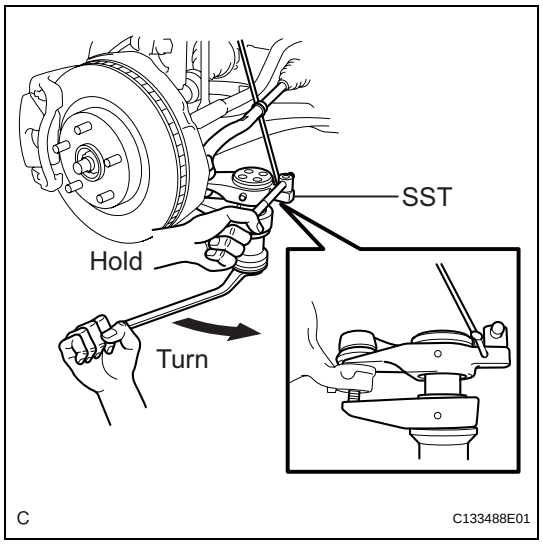

(b) Using SST, separate the tie rod assembly LH from the steering knuckle.
SST 09628-00011
NOTICE:
- **Hang SST with a string, etc. to prevent it from falling.**
- **Do not damage the front disc brake dust cover.**
- **Do not damage the ball joint dust cover.**
- **Do not damage the steering knuckle.**

6. SEPARATE TIE ROD ASSEMBLY RH
HINT:
Perform the same procedure as for the LH side.

7. REMOVE ENGINE ASSEMBLY WITH TRANSAXLE
HINT:
Refer to the instructions for REMOVAL of the ENGINE ASSEMBLY (See page EM-22).

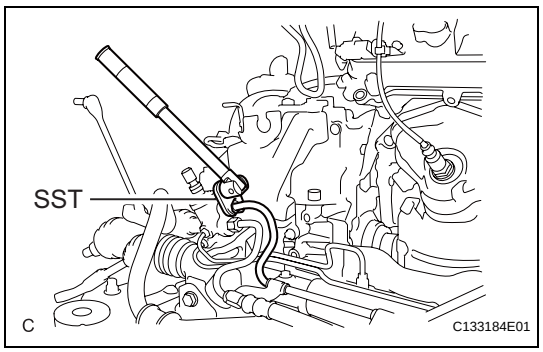

8. DISCONNECT PRESSURE FEED TUBE ASSEMBLY
(a) Using SST, disconnect the pressure feed tube assembly (return tube side) from the power steering link assembly.
SST 09023-12701

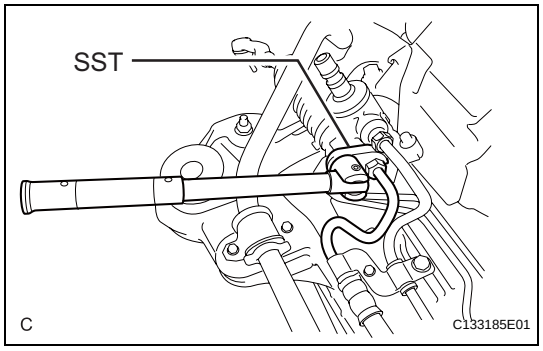

(b) Using SST, disconnect the pressure feed tube assembly (pressure feed tube side) from the power steering link assembly.
SST 09023-12701

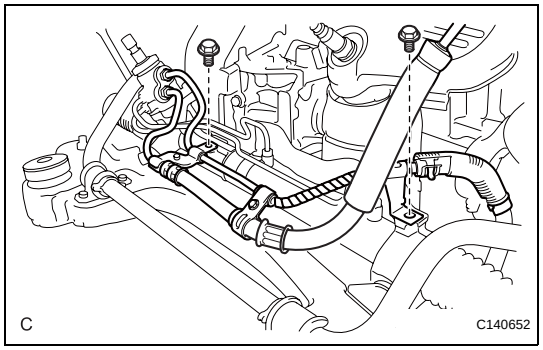

(c) Remove the 2 bolts and separate the pressure feed tube clamp.

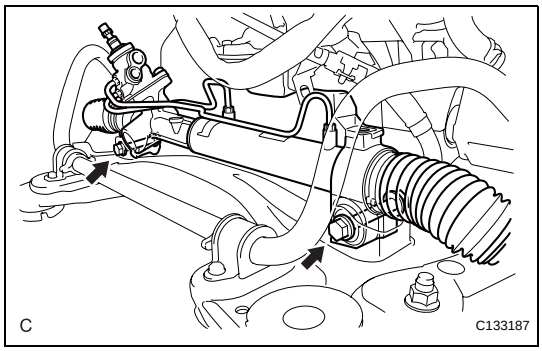

9. REMOVE POWER STEERING LINK ASSEMBLY

(a) Remove the 2 bolts, 2 nuts, and the power steering link assembly.

NOTICE:

Because the nut has its own stopper, do not turn the nut. Loosen the bolt with the nut fixed.

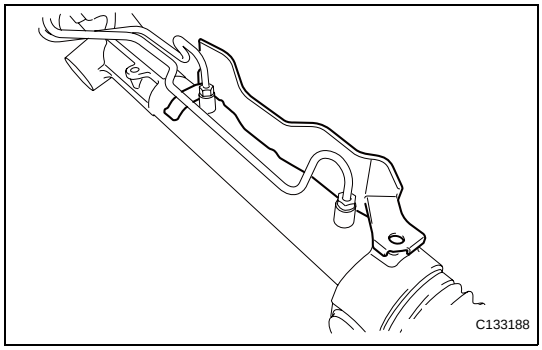

10. REMOVE POWER STEERING RACK HOUSING HEAT INSULATOR

(a) Remove the power steering rack housing heat insulator from the power steering link assembly.

DISASSEMBLY

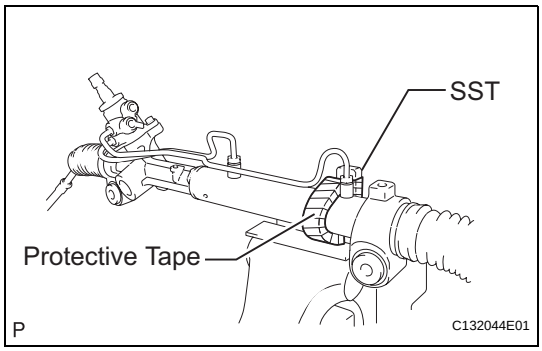

1. SECURE POWER STEERING LINK ASSEMBLY

(a) Using SST, secure the power steering link assembly.

SST 09612-00012

HINT:

Tape the SST before use.

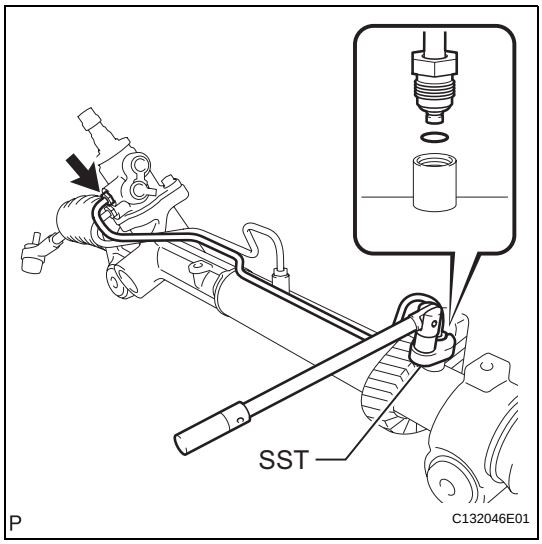

2. REMOVE STEERING LEFT TURN PRESSURE TUBE

(a) Using SST, remove the steering left turn pressure tube.

SST 09023-38201

(b) Remove the 2 O-rings from the steering left turn pressure tube.

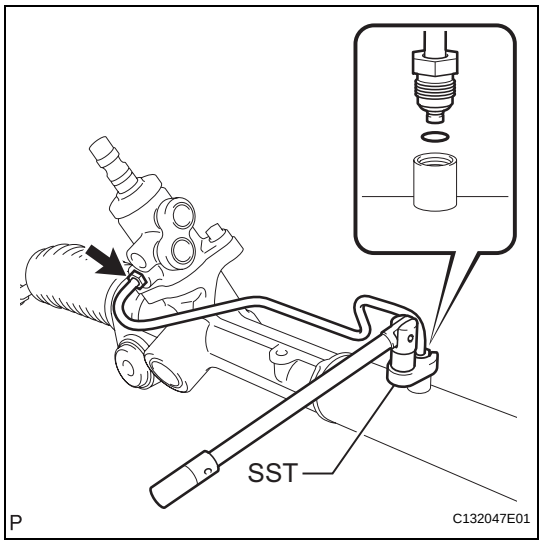

3. REMOVE STEERING RIGHT TURN PRESSURE TUBE

(a) Using SST, remove the steering right turn pressure tube.
SST 09023-38201

(b) Remove the 2 O-rings from the steering right turn pressure tube.

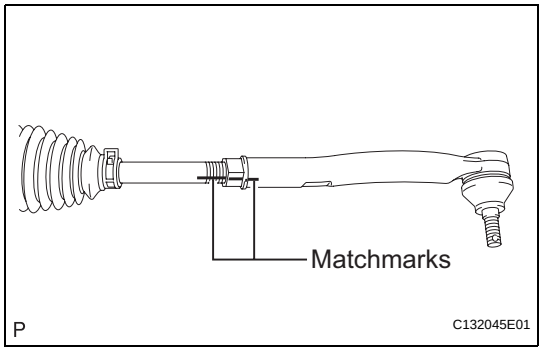

4. REMOVE TIE ROD ASSEMBLY LH

(a) Put matchmarks on the tie rod assembly LH and the steering rack end sub-assembly.

(b) Loosen the lock nut, and remove the tie rod assembly LH and the lock nut.

5. REMOVE TIE ROD ASSEMBLY RH

HINT:
Perform the same procedure as for the LH side.

6. REMOVE STEERING RACK BOOT CLIP

(a) Using pliers, remove the 2 steering rack boot clips.

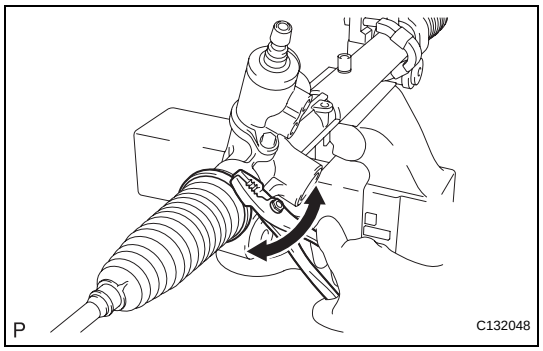

7. REMOVE NO. 2 STEERING RACK BOOT CLAMP

(a) Using pliers, remove the 2 No. 2 steering rack boot clamps as shown in the illustration.
NOTICE:
Be careful not to damage the steering rack boot No. 2.

8. REMOVE NO. 2 STEERING RACK BOOT

(a) Remove the No. 2 steering rack boot.

9. REMOVE NO. 1 STEERING RACK BOOT

(a) Remove the No. 1 steering rack boot.

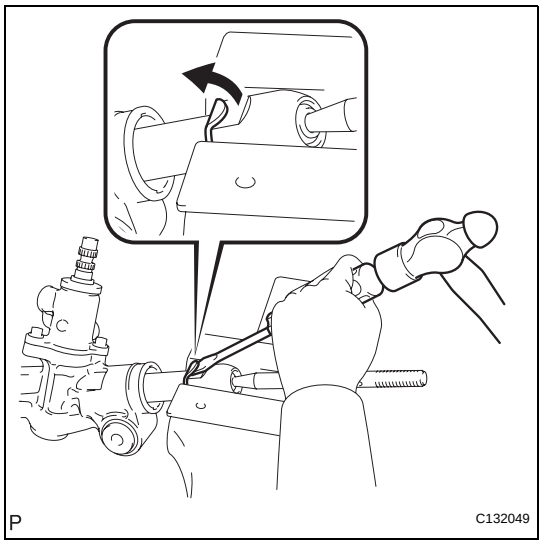

10. REMOVE STEERING RACK END SUB-ASSEMBLY

(a) Using a screwdriver and a hammer, unstake the RH and LH claw washers.
NOTICE:
Avoid any impact to the steering rack.

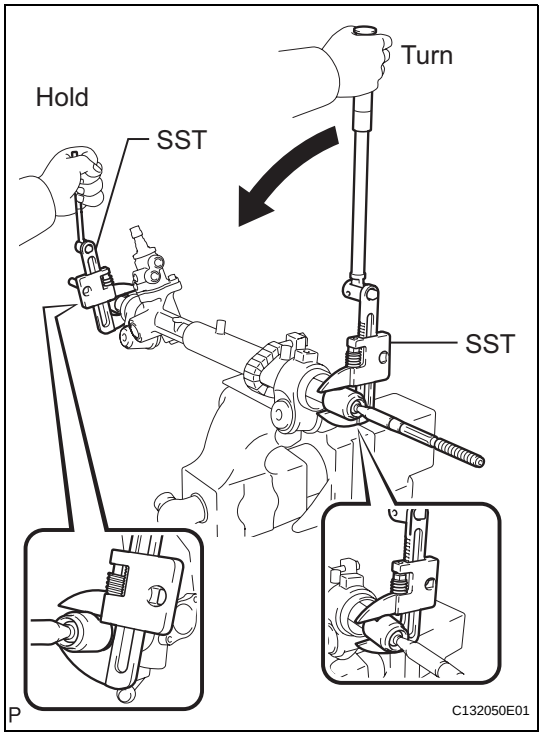

(b) Using SST, remove the steering rack end sub-assembly (RH side) and the claw washer.
SST 09922-10010
NOTICE:
Use SST 09922-10010 as shown in the illustration.

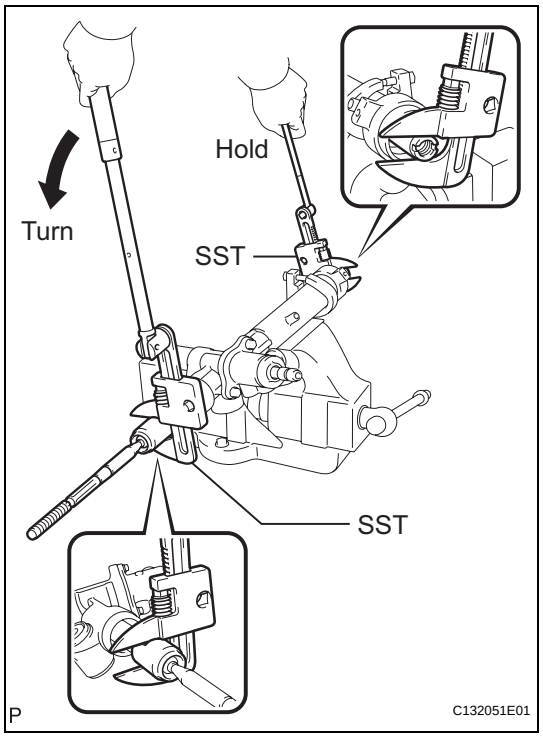

(c) Using SST, remove the steering rack end sub-assembly (LH side) and the claw washer.
SST 09922-10010
NOTICE:
Use SST 09922-10010 as shown in the illustration.
HINT:
Using SST, hold the rack and remove the steering rack end sub-assembly.

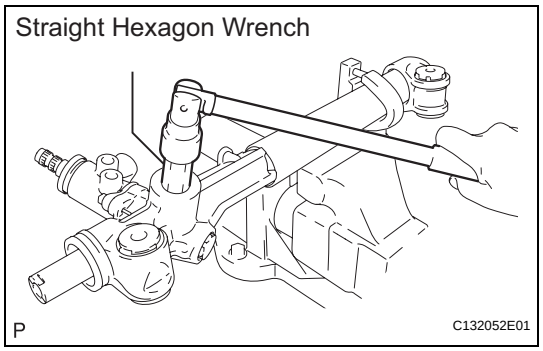

11. REMOVE RACK GUIDE

(a) Using a straight hexagon wrench (24 mm (0.94 in.)), remove the rack guide spring cap.

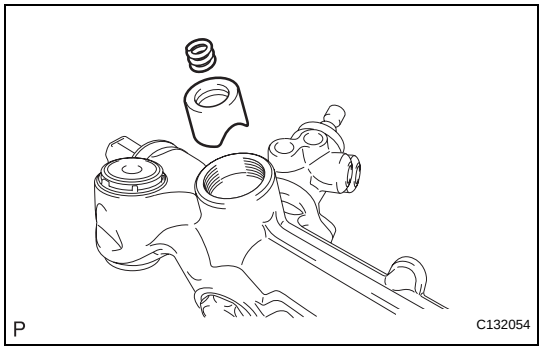

(b) Remove the compression spring and the rack guide sub-assembly.

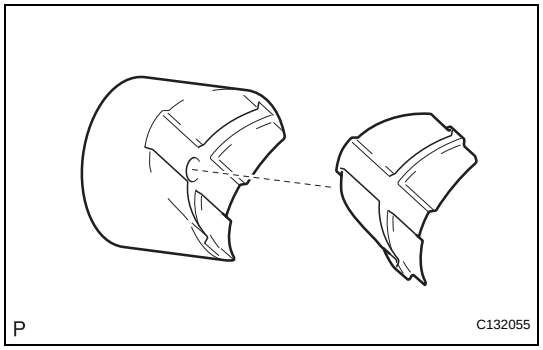

(c) Remove the rack guide base from the rack guide.

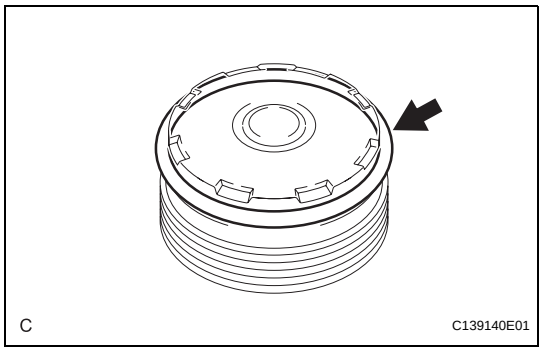

(d) Remove the O-ring from the rack guide spring cap.

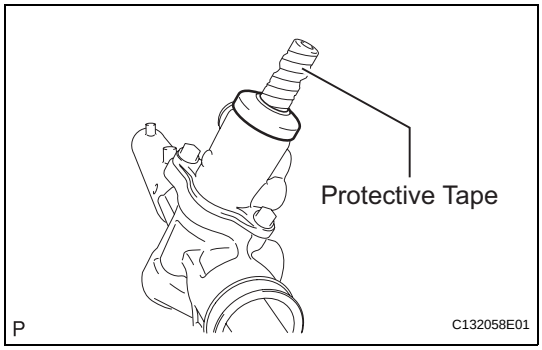

12. REMOVE DUST COVER

(a) Wrap protective tape around the spline of the control valve in order to prevent damaging the dust cover.

(b) Remove the dust cover.

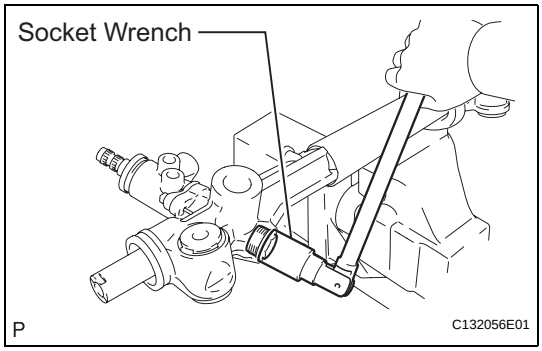

13. REMOVE POWER STEERING CONTROL VALVE ASSEMBLY

(a) Using a socket wrench (27 mm (1.06 in.)), remove the rack housing cap.

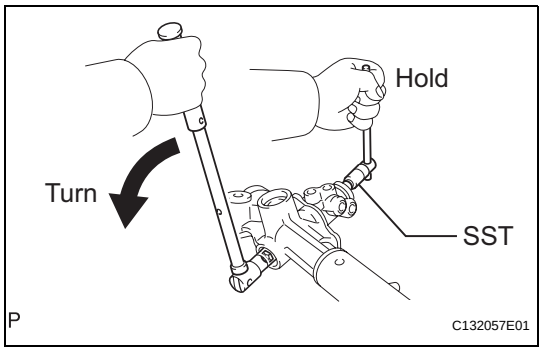

(b) Using SST, hold the control valve shaft and remove the nut.
SST 09616-00011

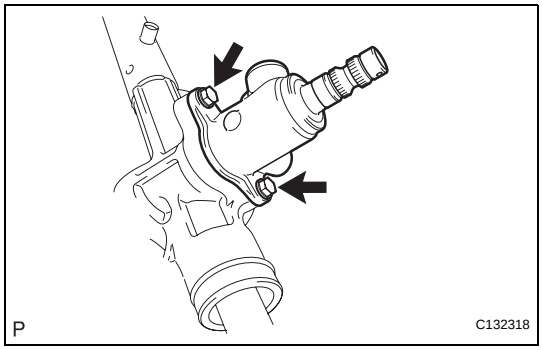

(c) Remove the 2 bolts and the power steering control valve assembly.

(d) Remove the gasket.

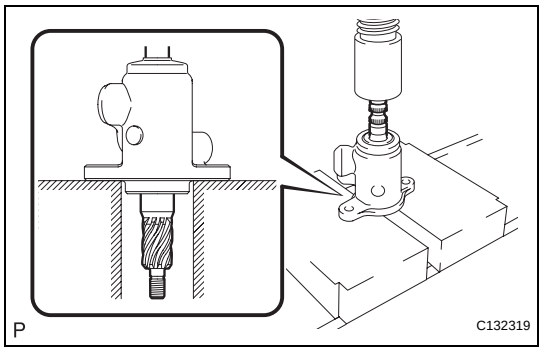

14. REMOVE POWER STEERING CONTROL VALVE SUB-ASSEMBLY

(a) Using a press, remove the power steering control valve sub-assembly.

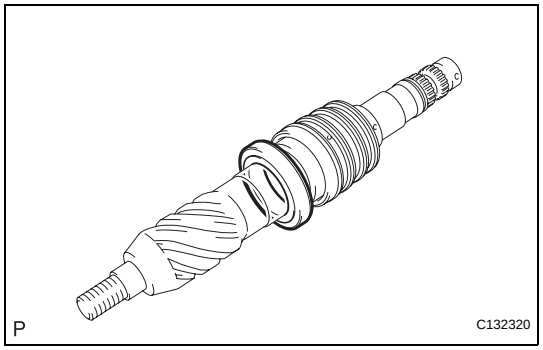

15. REMOVE POWER STEERING CONTROL VALVE LOWER OIL SEAL

(a) Remove the power steering control valve lower oil seal from the power steering control valve sub-assembly.

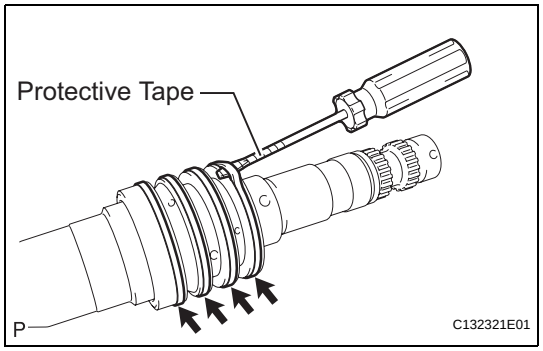

16. REMOVE POWER STEERING CONTROL VALVE SPACER

(a) Using a screwdriver, remove the 4 power steering control valve spacers from the power steering control valve sub-assembly.

NOTICE:

Be careful not to damage the spacer grooves on the control valve.

HINT:

Tape the screwdriver tip before use.

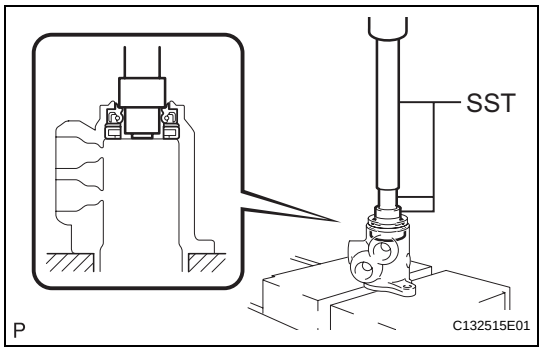

17. REMOVE POWER STEERING CONTROL VALVE UPPER OIL SEAL

(a) Using SST and a press, press out the power steering control valve upper oil seal and the power steering control valve upper bearing from the control valve housing sub-assembly.

SST 09950-70010 (09951-07150), 09950-60010 (09951-00250, 09951-00180, 09952-06010)

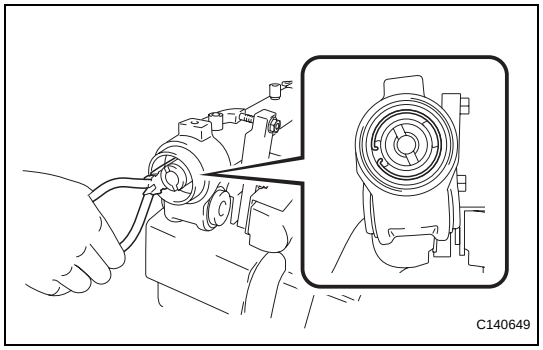

18. REMOVE CYLINDER END STOPPER HOLE SNAP RING

(a) Using needle-nose pliers, remove the cylinder end stopper hole snap ring from the power steering rack housing.

19. REMOVE POWER STEERING RACK SUB-ASSEMBLY

(a) Remove the power steering rack sub-assembly with the cylinder end stopper and power steering rack bushing.

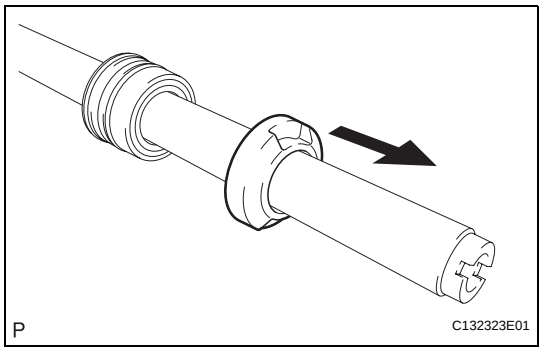

20. REMOVE CYLINDER END STOPPER

(a) Remove the cylinder end stopper from the power steering rack sub-assembly.

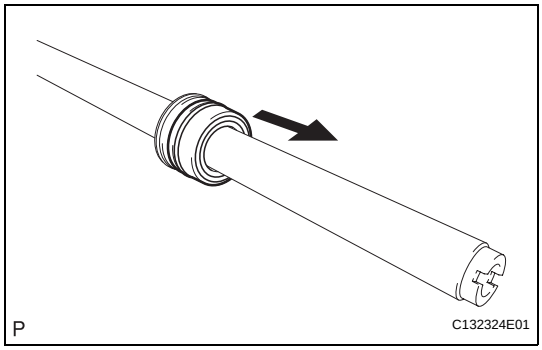

21. REMOVE POWER STEERING RACK BUSHING

(a) Remove the power steering rack bushing from the power steering rack sub-assembly.

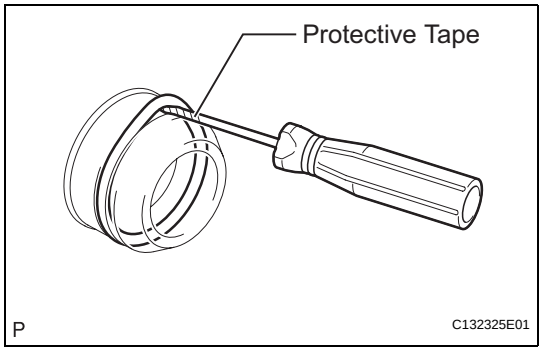

(b) Using a screwdriver, remove the O-ring from the power steering rack bushing.
HINT:
Tape the screwdriver tip before use.

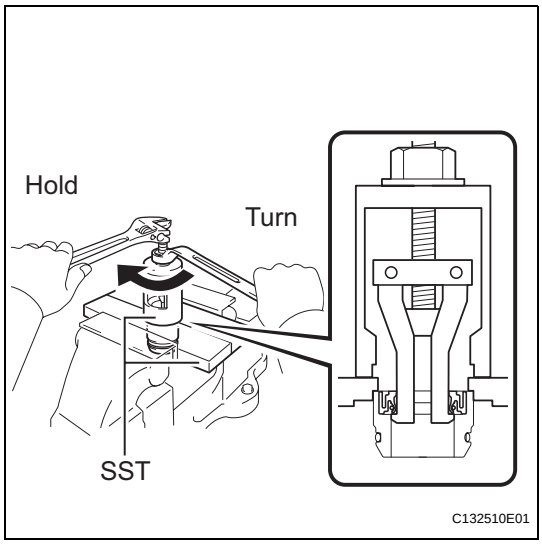

(c) Using SST, remove the rack bushing oil seal from the power steering rack bushing.
SST 09527-21011, 09612-24014 (09613-22011)
NOTICE:
Be careful not to drop the power steering rack bushing.

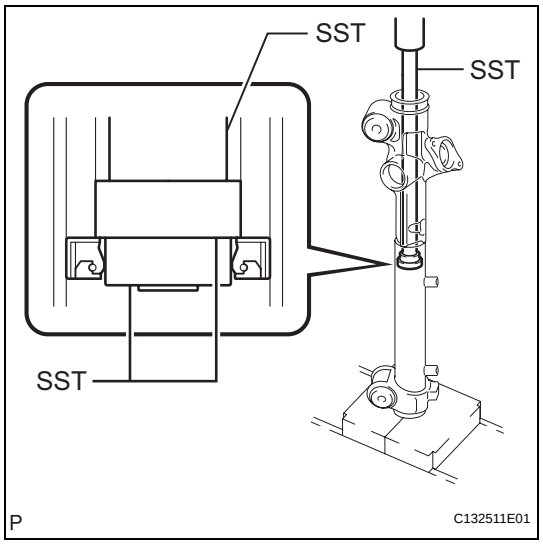

22. REMOVE POWER STEERING CYLINDER TUBE OIL SEAL

(a) Using SST and a press, remove the power steering cylinder tube oil seal.

SST 09950-70010 (09951-07360), 09950-60010 (09951-00290, 09951-00250)

NOTICE:

Be careful not to damage the inside surface of the power steering rack housing.

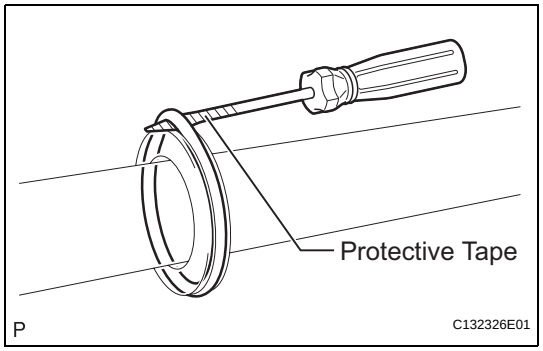

23. REMOVE POWER PISTON OIL SEAL

(a) Using a screwdriver, remove the power piston oil seal and the O-ring from the power steering rack.

NOTICE:

Be careful not to damage the power piston oil seal groove on the power steering rack.

HINT:

Tape the screwdriver tip before use.

INSPECTION

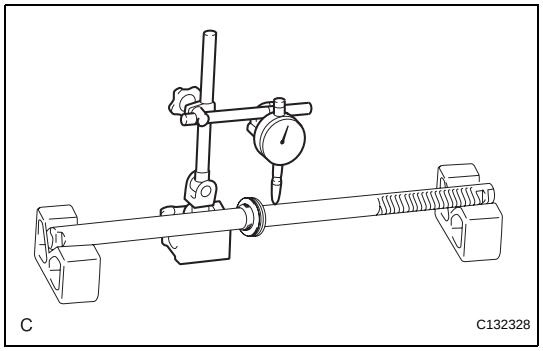

1. INSPECT POWER STEERING RACK

(a) Using a dial indicator, check for teeth wear and runout of the steering rack.

Maximum runout:

0.3 mm (0.0118 in.)

NOTICE:

Make sure that the steering rack is placed horizontally.

If runout exceeds the maximum, replace the power steering link assembly.

(b) Check the rack surface for wear and damage.

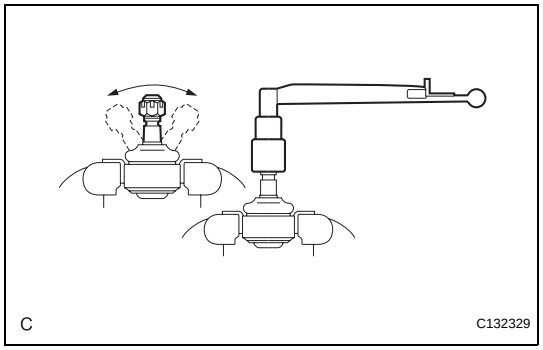

2. INSPECT TIE ROD ASSEMBLY LH

(a) Secure the tie rod end assembly LH in a vise.

(b) Install the nut to the stud bolt.

(c) Flip the ball joint back and forth 5 times or more.

(d) Using a torque wrench, turn the nut continuously at a rate of 3 to 5 seconds per turn and take the torque reading on the 5th turn.

Torque: Turning torque

0.98 to 3.92 N*m (10 to 40 kgf*cm, 8.7 to 34.7 in.*lbf)

If turning torque is not within the specified range, replace the tie rod assembly LH.

3. INSPECT TIE ROD ASSEMBLY RH

HINT:

Perform the same procedure as for the LH side.

4. INSPECT TOTAL PRELOAD

(a) Temporarily install the 2 steering rack ends to the power steering rack.

NOTICE:

Do not fully turn the power steering rack without the steering rack ends as it may damage the oil seal in the rack housing.

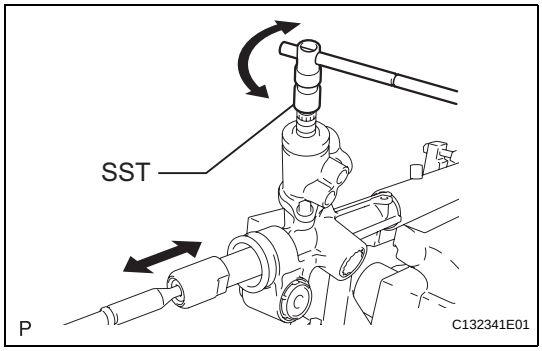

(b) Using SST, fully turn the power steering rack right and left 10 times to settle it.

SST 09616-00011

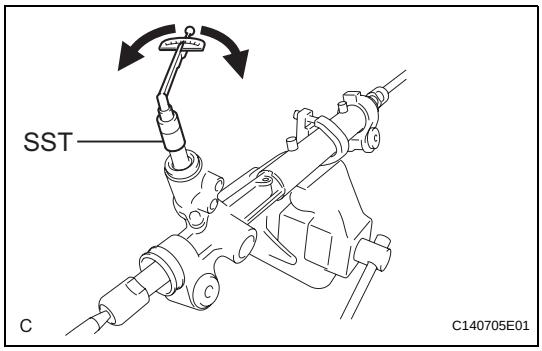

(c) Using SST, turn the control valve and measure the preload.

SST 09616-00011

Torque: Standard preload (turning)
1.5 N*m (15.3 kgf*cm, 13.3 in.*lbf) or less

If the preload exceeds the specified value, go back to INSTALL RACK GUIDE (See page PS-44).

(d) Remove the 2 steering rack ends from the power steering rack.

POWER STEERING FLUID

BLEEDING

1. BLEED POWER STEERING SYSTEM

(a) Check the fluid level (See page PS-3).

(b) Jack up the front of the vehicle and support it with stands.

(c) Turn the steering wheel.

(1) With the engine stopped, turn the steering wheel slowly from lock to lock several times.

(d) Lower the vehicle.

(e) Start the engine.

(1) Run the engine at idle for a few minutes.

(f) Turn the steering wheel.

(1) With the engine idling, turn the steering wheel left or right to the full lock position and keep it in that position for 2 to 3 seconds, then turn the steering wheel to the opposite full lock position and keep it there for 2 to 3 seconds.

(2) Repeat this procedure several times.

(g) Stop the engine.

(h) Check for foaming or emulsification.
Be sure to check for fluid leaks in the system especially if the system has to be bled twice because of forming or emulsification.

(i) Check the fluid level (See page PS-3).

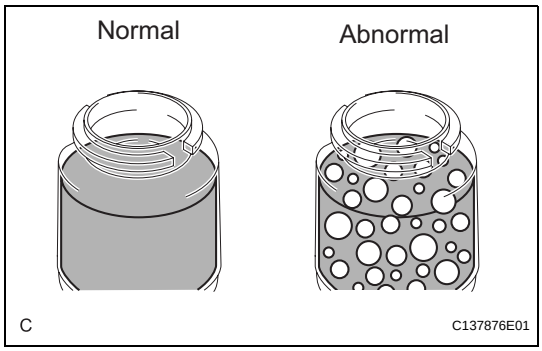

REASSEMBLY

NOTICE:
When installing parts, coat the parts indicated by arrows with power steering fluid, molybdenum disulfide lithium base grease, MP grease or silicon grease (See page PS-24).

1. INSTALL POWER PISTON OIL SEAL

(a) Coat a new O-ring with power steering fluid and install it to the steering rack.

(b) Expand the new power piston oil seal with your fingers.
NOTICE:
Be careful not to expand the oil seal excessively.

(c) Coat the power piston oil seal with power steering fluid.

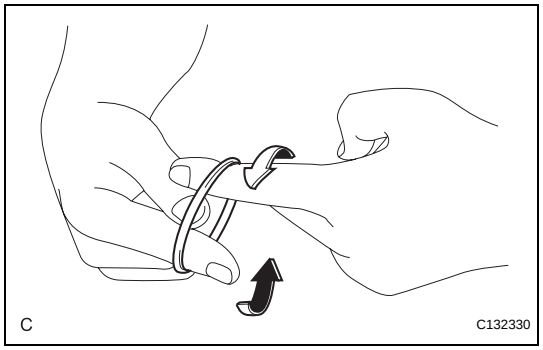

(d) Install the power piston oil seal to the steering rack, and adjust it with your fingers.

2. INSTALL POWER STEERING CYLINDER TUBE OIL SEAL

(a) Apply power steering fluid to the lip of a new power steering cylinder tube oil seal.

(b) Install the power steering cylinder tube oil seal to the rack housing at a slant.

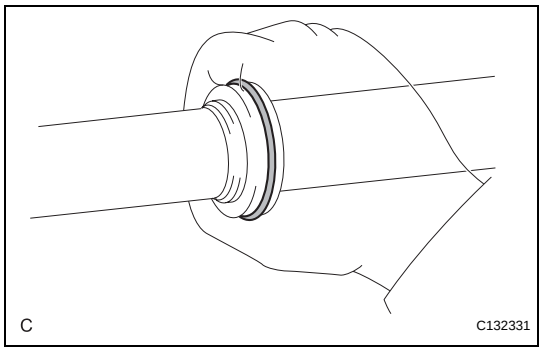

(c) Using SST, insert the power steering cylinder tube oil seal by pushing the SST in by hand until the oil seal passes the 2 ports.
SST 09950-70010 (09951-07360), 09631-00200
NOTICE:
- **Ensure that the power steering cylinder tube oil seal is installed in the correct direction as shown in the illustration.**
- **Install the power steering cylinder tube oil seal at an angle of approximately 15° so that the lowermost part comes to the point, indicated by the arrow in the illustration, to prevent damage to the side of the oil seal when it passes the 2 ports.**
- **Do not turn the SST when inserting the oil seal.**

(d) Install SST (09631-00200) to SST (09951-07360) upside down.

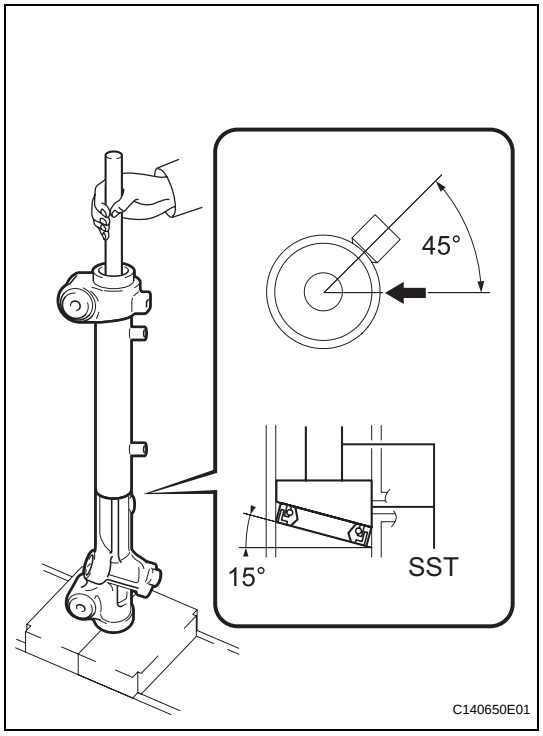

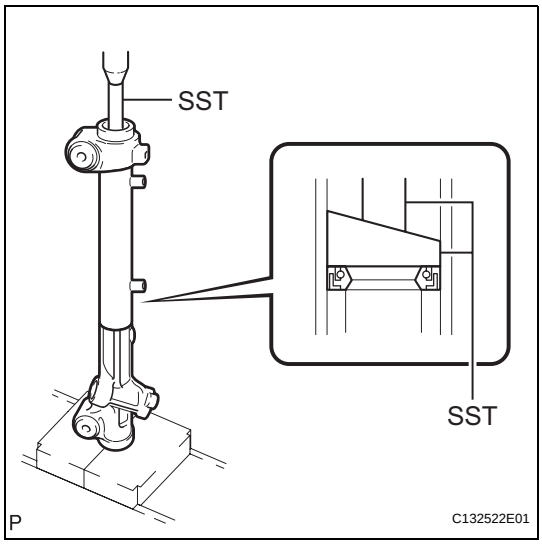

(e) Using SST, level the power steering cylinder tube oil seal by pushing the SST in by hand. Using SST and a press, install the oil seal.
SST 09950-70010 (09951-07360), 09631-00200

3. INSTALL POWER STEERING RACK SUB-ASSEMBLY

(a) Apply molybdenum disulfide lithium base grease to the rack teeth ends.

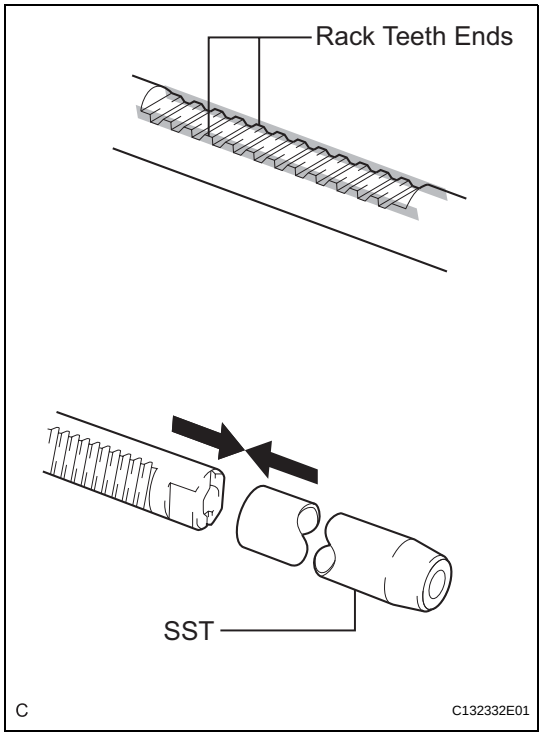

(b) Connect SST to the power steering rack sub-assembly.
SST 09631-33010
(c) Coat SST with power steering fluid.
(d) Install the power steering rack sub-assembly to the power steering rack housing.
(e) Remove SST.

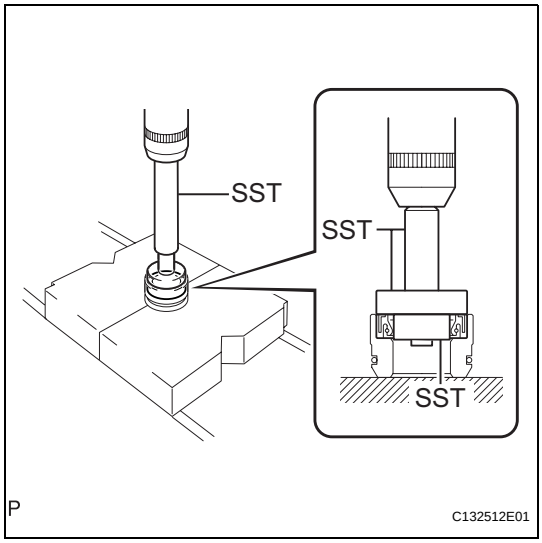

4. INSTALL POWER STEERING RACK BUSHING

(a) Using SST and a press, install the rack bushing oil seal to the power steering rack bushing.
SST 09950-70010 (09951-07100), 09950-60010 (09951-00400, 09951-00250, 09952-06010)
NOTICE:
Ensure that the rack bushing oil seal is installed in the correct direction as shown in the illustration.
(b) Coat a new O-ring with power steering fluid and install it to the rack bushing.
(c) Coat the rack bushing oil seal lip with power steering fluid.

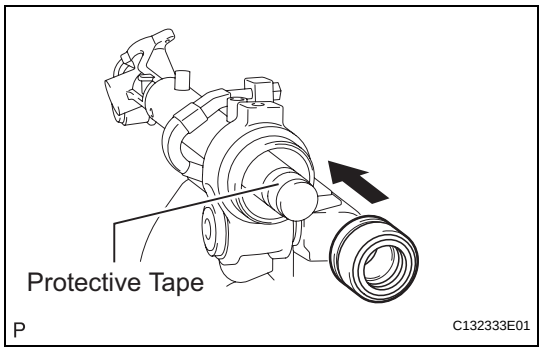

(d) Install the power steering rack bushing to the power steering rack housing.
NOTICE:
Do not damage the rack bushing oil seal.
HINT:
Wrap protective tape around the end of the steering rack in order to prevent damage to the rack bushing oil seal.

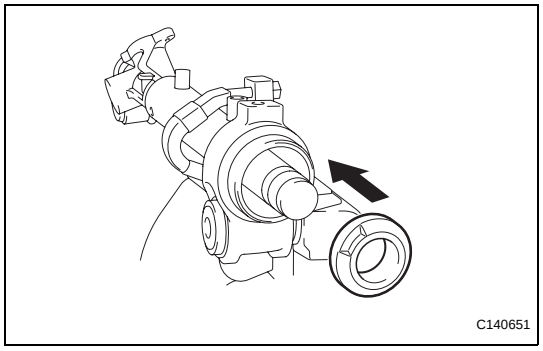

5. INSTALL CYLINDER END STOPPER

(a) Install the cylinder end stopper to the power steering rack housing.

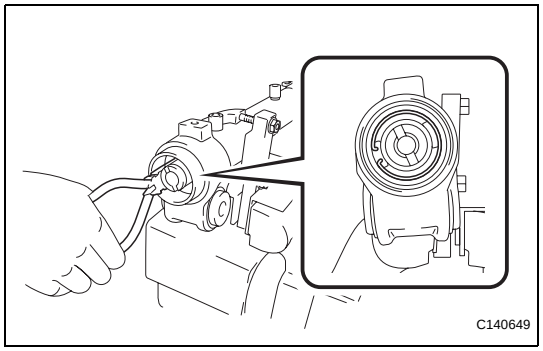

6. INSTALL CYLINDER END STOPPER HOLE SNAP RING

(a) Using needle nose pliers, install the cylinder end stopper hole snap ring to the power steering rack housing.
NOTICE:
- **Make sure that the cylinder end stopper hole snap ring is securely installed in the power steering rack housing groove.**
- **Make sure that the cylinder end stopper hole snap ring claws are aligned with the cylinder end stopper notch.**

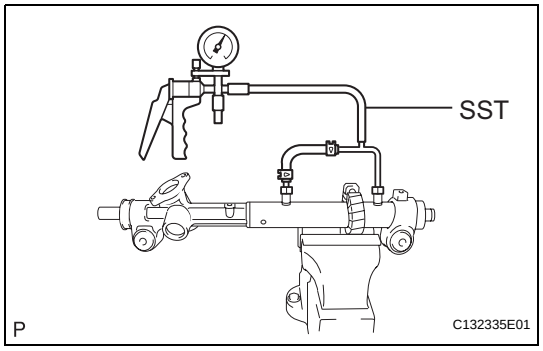

7. AIR TIGHTNESS TEST

(a) Install SST to the power steering rack housing.
SST 09631-12071 (09633-00010)

(b) Apply a vacuum of 53 kPa (398 mmHg, 15.65 in.Hg) for approximately 30 seconds.

(c) Check that there is no change in the vacuum pressure.
If there is a change in the vacuum pressure, check the installation of the oil seals.

8. INSTALL POWER STEERING CONTROL VALVE UPPER OIL SEAL

(a) Coat a new power steering control valve upper oil seal lip with power steering fluid.

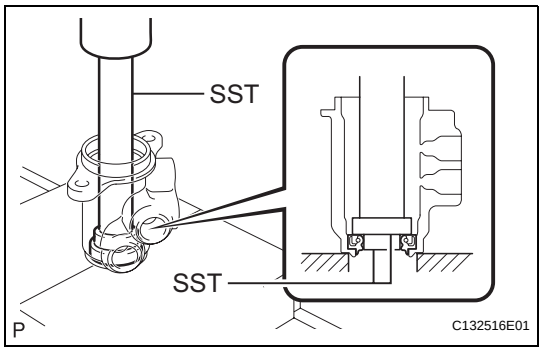

(b) Using SST and a press, press in the power steering control valve upper oil seal.
SST 09950-70010 (09951-07150), 09950-60010 (09951-00180, 09952-06010, 09951-00320)
NOTICE:
Make sure that the power steering control valve upper oil seal is installed in the correct direction as shown in the illustration.

9. INSTALL POWER STEERING CONTROL VALVE UPPER BEARING

(a) Coat the power steering control valve upper bearing with molybdenum disulfide lithium base grease.

(b) Using SST and a press, press in the power steering control valve upper bearing.
SST 09950-70010 (09951-07150), 09950-60010 (09951-00180, 09951-00340)
NOTICE:
Make sure that the power steering control valve upper bearing is installed in the correct direction as shown in the illustration.

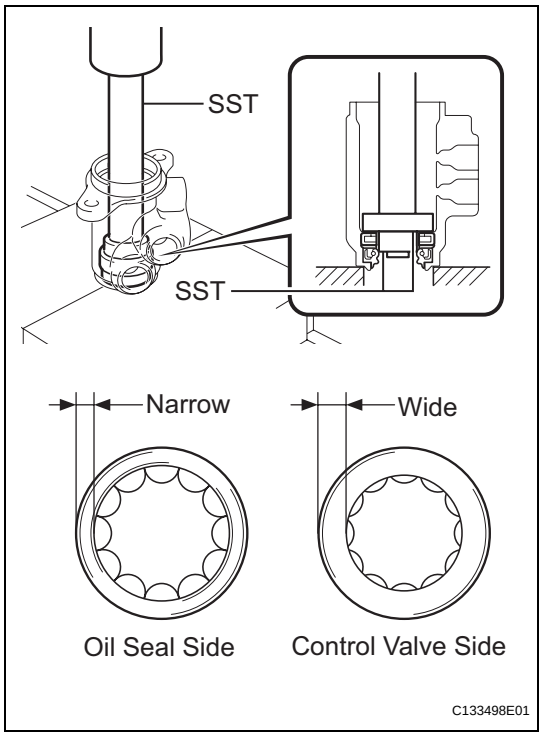

10. INSTALL POWER STEERING CONTROL VALVE SPACER

(a) Expand 4 new power steering control valve spacers with your fingers.
NOTICE:
Be careful not to expand the power steering control valve spacers excessively.

(b) Coat the 4 power steering control valve spacers with power steering fluid.

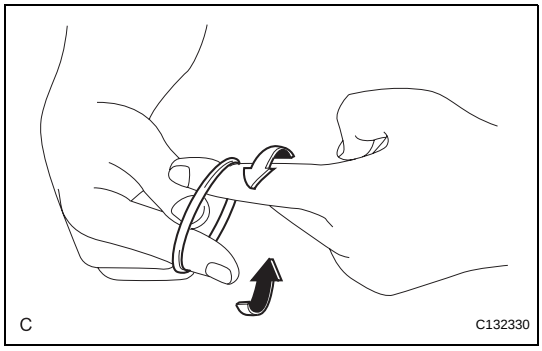

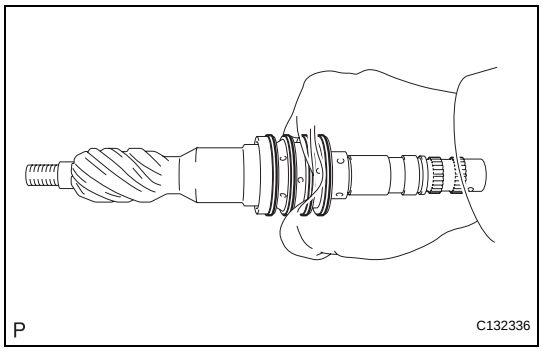

(c) Install the 4 power steering control valve spacers to the control valve, and adjust them with your fingers.

11. INSTALL POWER STEERING CONTROL VALVE SUB-ASSEMBLY

(a) Coat the power steering control valve sub-assembly with power steering fluid.

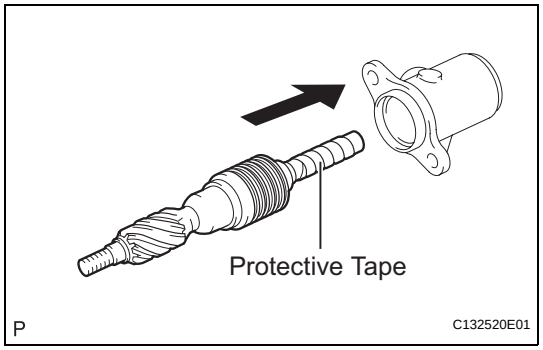

(b) Install the power steering control valve sub-assembly into the control valve housing sub-assembly.

NOTICE:

Be careful not to damage the power steering control valve spacers and power steering control valve upper oil seal lip.

HINT:

Wrap protective tape around the spline of the power steering control valve sub-assembly in order to prevent damage to the oil seal.

12. INSTALL POWER STEERING CONTROL VALVE LOWER OIL SEAL

(a) Coat a new power steering control valve lower oil seal lip with power steering fluid.

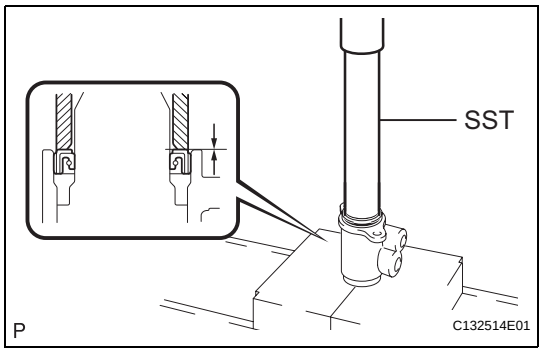

(b) Using SST and a press, install the power steering control valve lower oil seal to the control valve assembly.

SST 09612-22011

NOTICE:

- **Make sure that the power steering control valve lower oil seal is installed in the correct direction as shown in the illustration.**
- **Do not damage the power steering control valve lower oil seal.**

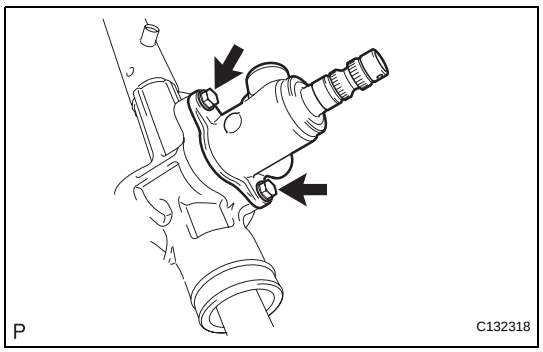

13. INSTALL POWER STEERING CONTROL VALVE ASSEMBLY

(a) Install the power steering control valve assembly and a new gasket to the power steering rack housing with the 2 bolts.

Torque: 21 N*m (214 kgf*cm, 16 ft.*lbf)

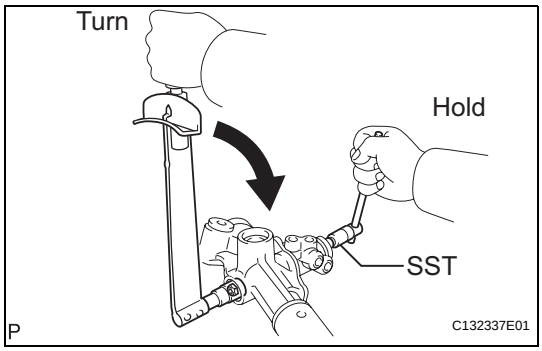

(b) Using SST, hold the control valve shaft and install a new nut.
SST 09616-00011
Torque: 25 N*m (250 kgf*cm, 18 ft.*lbf)

(c) Apply sealant to 2 or 3 threads of the rack housing cap.
Sealant:
TOYOTA genuine adhesive 1344, THREE BOND 1344 or equivalent

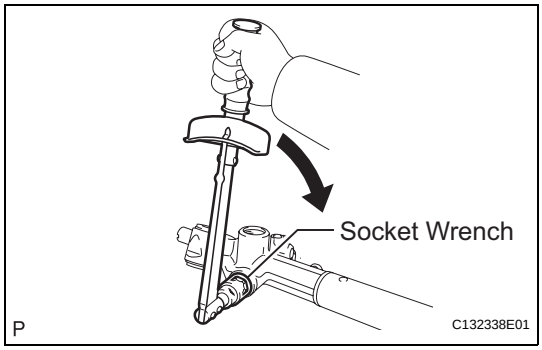

(d) Using a socket wrench (27 mm (1.06 in.)), install the rack housing cap.
Torque: 54 N*m (546 kgf*cm, 40 ft.*lbf)

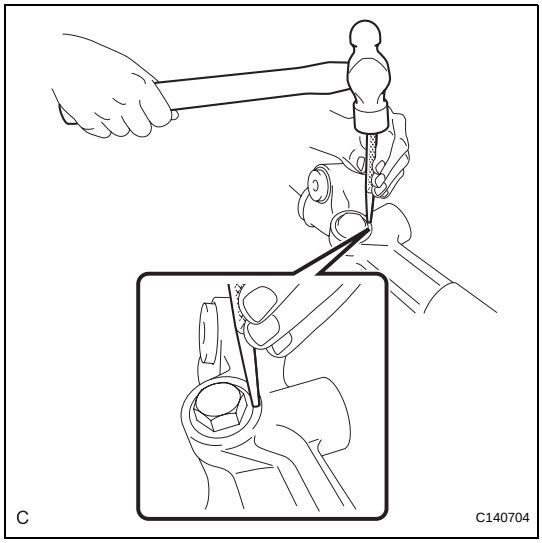

(e) Using a punch and a hammer, stake the rack housing cap and the power steering rack housing.

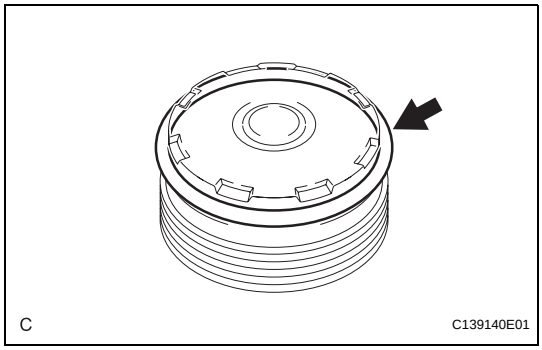

14. INSTALL RACK GUIDE

(a) Coat a new O-ring with molybdenum disulfide lithium base grease and install it to the rack guide spring cap.

(b) Apply molybdenum disulfide lithium base grease to the rack guide base and rack guide.

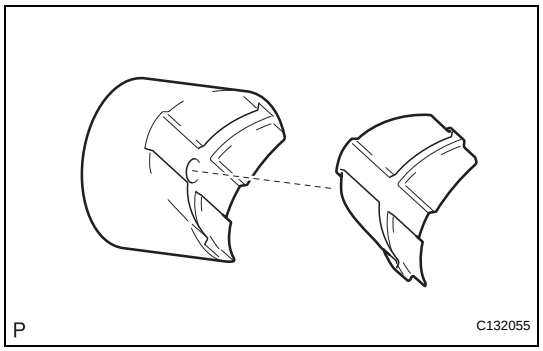

(c) Install the rack guide base to the rack guide.
(d) Apply molybdenum disulfide lithium base grease to the compression spring and the contact surface of the rack guide sub-assembly and the power steering rack.

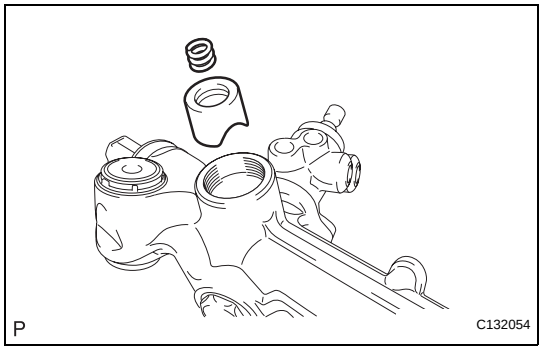

(e) Install the compression spring and rack guide sub-assembly to the power steering rack housing.

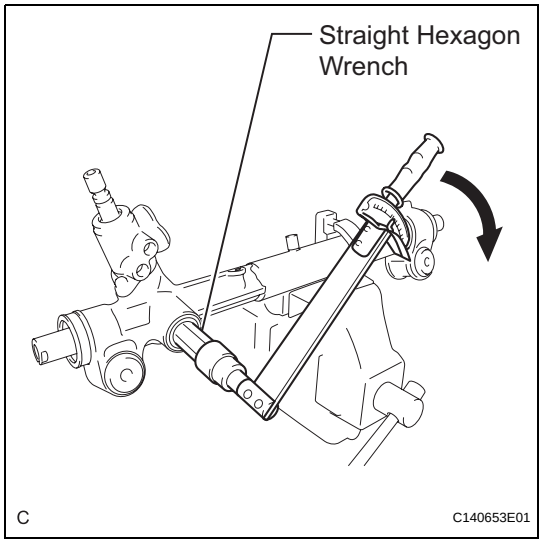

(f) Using a straight hexagon wrench (24 mm (0.94 in.)), install the rack guide spring cap to the power steering rack housing.
Torque: 50 to 70 N*m (514 to 714 kgf*cm, 37 to 52 ft.*lbf)

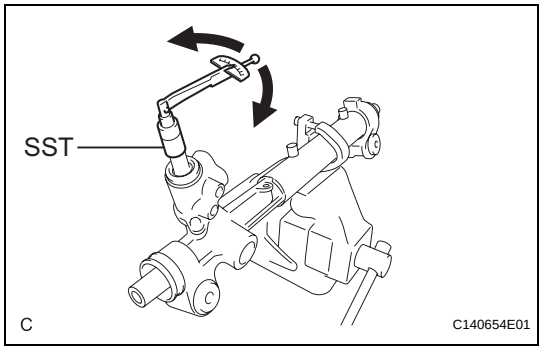

(g) Using SST, turn the control valve and measure the turning torque.
Torque: 6.0 N*m (61 kgf*cm, 54 in.*lbf) or more

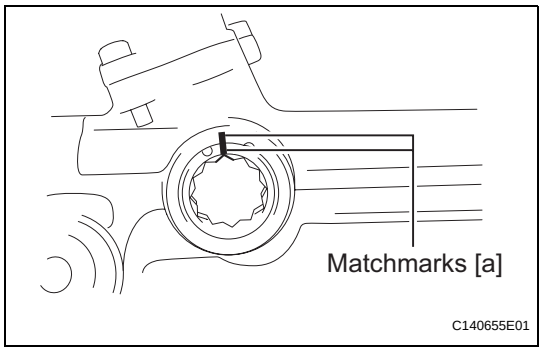

(h) Put matchmarks [a] on the power steering rack housing and the rack guide spring cap.

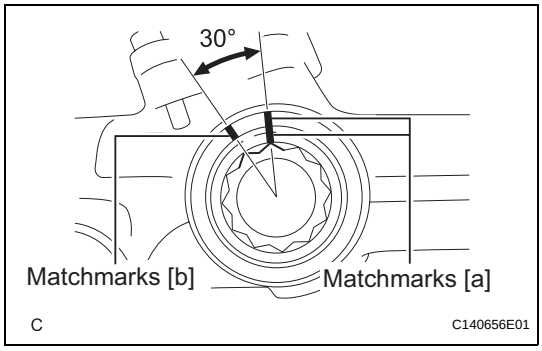

(i) Put matchmarks [b] 30° counterclockwise from matchmarks [a] on the power steering rack housing.

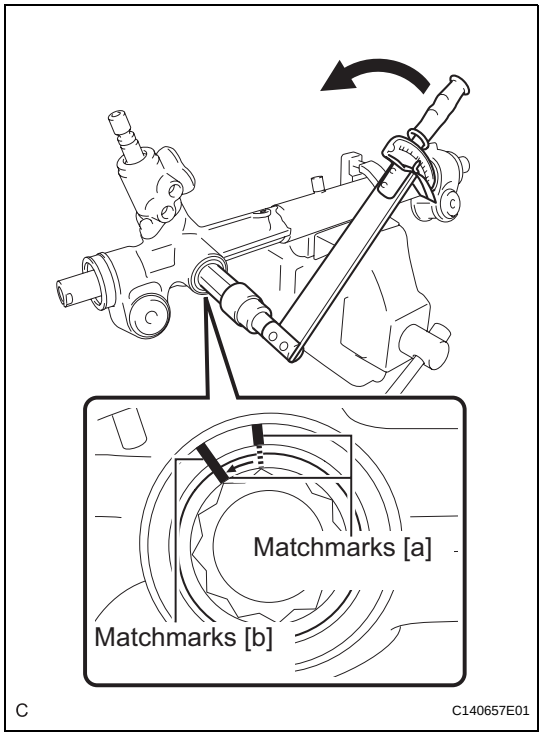

(j) Using a straight hexagon wrench (24 mm (0.94 in.)), loosen the rack guide spring cap until matchmarks [b] and matchmarks [a] on the rack guide spring cap are aligned. Measure the rotating torque required when loosening the rack guide spring cap.
Torque: 10 N*m (102 kgf*cm, 7.4 ft.*lbf) or more

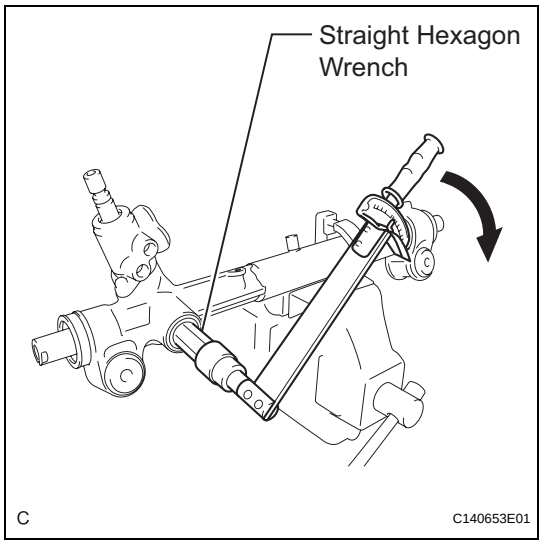

(k) If the rotating torque required when loosening is below the specified value, perform the following procedure to achieve the specified value.

(1) Using a straight hexagon wrench (24 mm (0.94 in.)), re-tighten the rack guide spring cap.
Torque: 50 to 70 N*m (510 to 714 kgf*cm, 37 to 52 ft.*lbf)

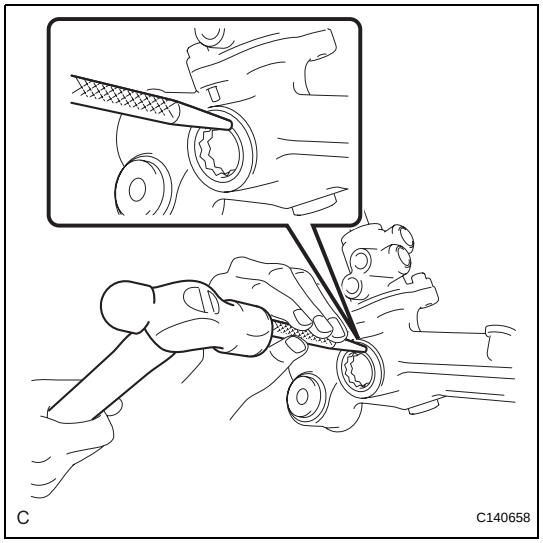

(2) Using a punch and hammer, stake the power steering rack housing and rack guide spring cap at 3 equally spaced positions.
HINT:
Tap the power steering rack housing and rack guide spring cap strongly and repeatedly to stake them securely.

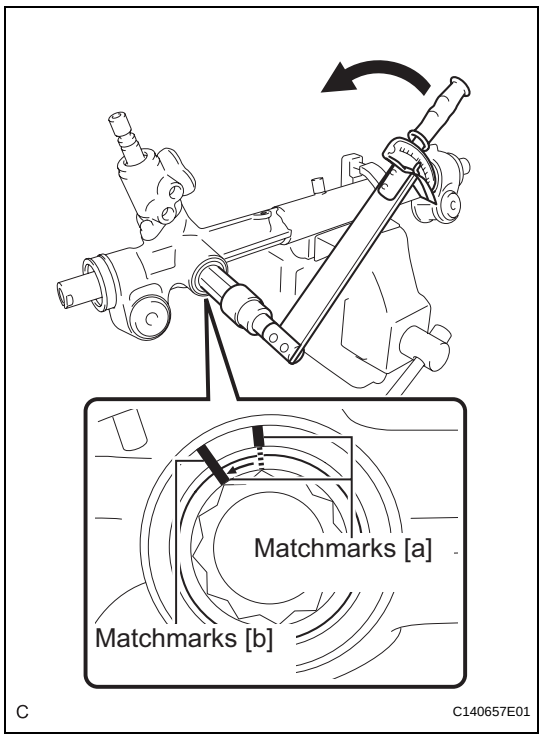

(3) Using a straight hexagon wrench (24 mm (0.94 in.)), loosen the rack guide spring cap until matchmarks [b] and matchmarks [a] on the rack guide spring cap are aligned. Measure the rotating torque required when loosening the rack guide spring cap.
Torque: 10 N*m (102 kgf*cm, 7.4 ft.*lbf) or more

15. INSPECT TOTAL PRELOAD (See page PS-38)

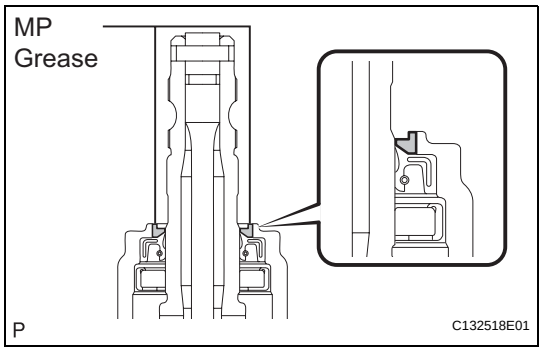

16. INSTALL DUST COVER

(a) Apply MP grease around the control valve shaft as shown in the illustration.

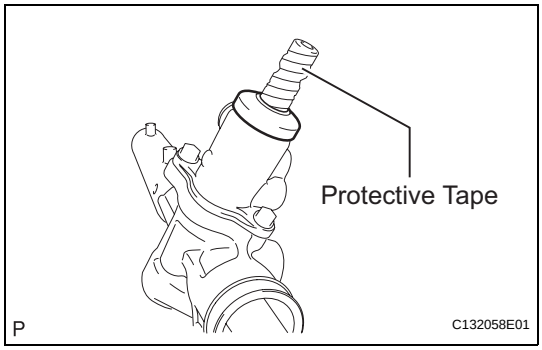

(b) Wrap electrical tape around the spline of the control valve.

(c) Install the dust cover to the control valve assembly.

17. INSTALL STEERING RACK END SUB-ASSEMBLY

(a) Install 2 new claw washers.
HINT:
Align the claws of the claw washer with the steering rack grooves.

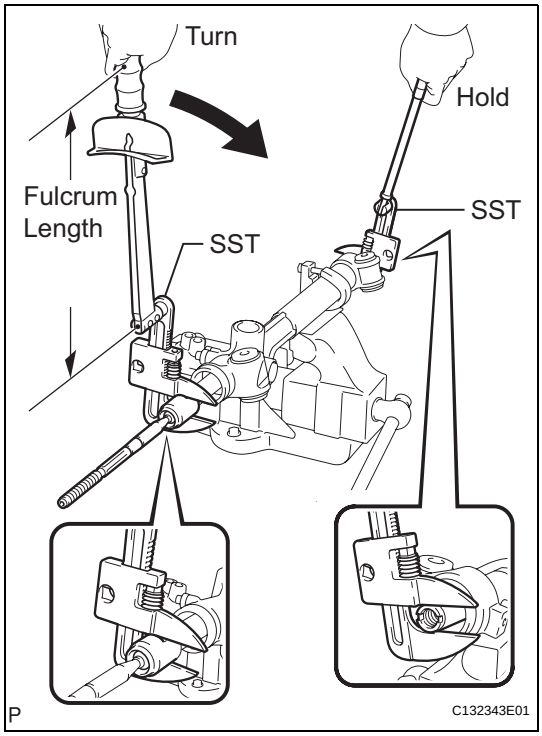

(b) Using SST, install the steering rack end sub-assembly (LH side).
SST 09922-10010
Torque: Without SST
84 N*m (852 kgf*cm, 62 ft.*lbf)
With SST
60 N*m (613 kgf*cm, 44 ft.*lbf)
NOTICE:
- **Use SST 09922-10010 as shown in the illustration.**
- **Use a torque wrench with a fulcrum length of 345 mm (13.58 in.).**
- **This torque value is effective when SST is parallel to the torque wrench.**

HINT:
Using SST, hold the steering rack and install the steering rack end sub-assembly (LH side).

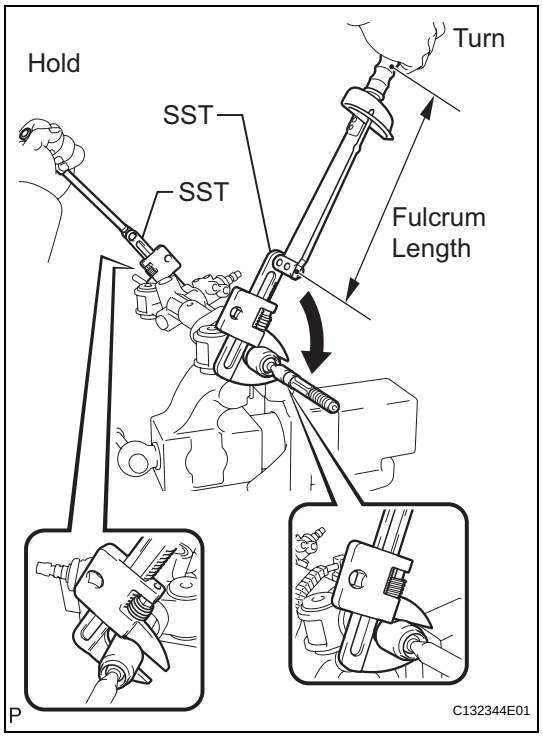

(c) Using SST, install the steering rack end sub-assembly (RH side).
SST 09922-10010
Torque: Without SST
84 N*m (852 kgf*cm, 62 ft.*lbf)
With SST
60 N*m (613 kgf*cm, 44 ft.*lbf)
NOTICE:
- **Use SST 09922-10010 as shown in the illustration.**
- **Use a torque wrench with a fulcrum length of 345 mm (13.58 in.).**
- **This torque value is effective when SST is parallel to the torque wrench.**

HINT:
Using SST, hold the steering rack end sub-assembly (LH side) and install the steering rack end sub-assembly (RH side).

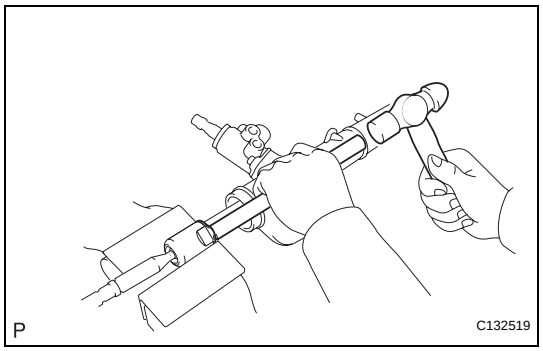

(d) Using a brass bar and a hammer, stake the 2 claw washers.
NOTICE:
Avoid any impact to the steering rack.

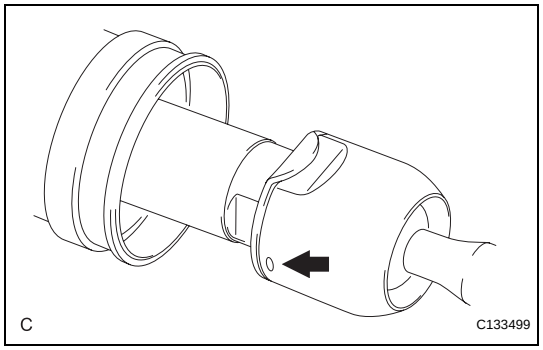

(e) Ensure that the holes of rack ends are not clogged with grease.
HINT:
If the holes are clogged, the pressure inside the boot will change after it is assembled and the steering wheel is turned.

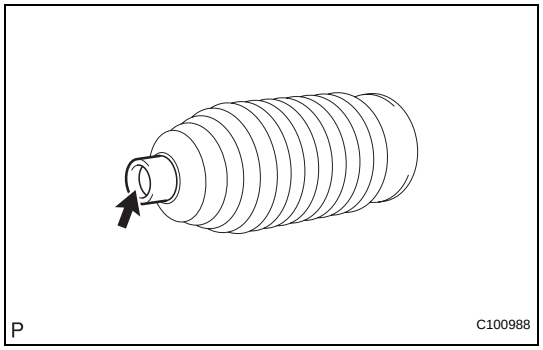

18. INSTALL NO. 2 STEERING RACK BOOT

(a) Apply silicon grease to the inside of the small opening of the No. 2 steering rack boot.

(b) Install the No. 2 steering rack boot to the groove on the rack housing.
NOTICE:
- **Be careful not to damage or twist the No. 2 steering rack boot.**
- **Do not damage the No. 2 steering rack boot.**

19. INSTALL NO. 1 STEERING RACK BOOT

HINT:
Perform the same procedure as for the No. 2 steering rack boot.

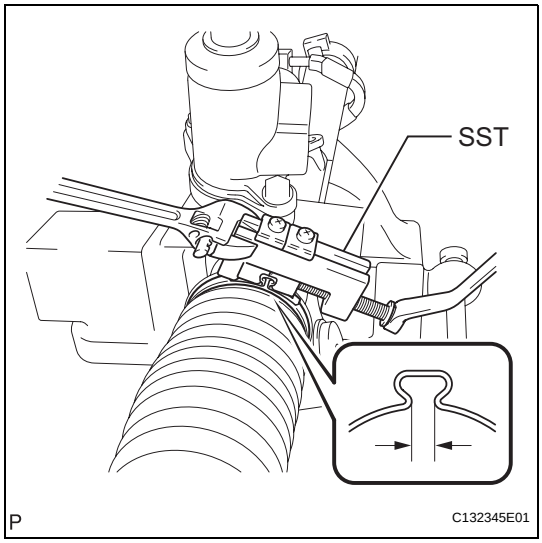

20. INSTALL NO. 2 STEERING RACK BOOT CLAMP

(a) Using SST, tighten the 2 No. 2 steering rack boot clamps as shown in the illustration.
SST 09521-24010
Clearance:
2.0 mm (0.079 in.) or less
NOTICE:
Be careful not to damage the No. 2 steering rack boot.

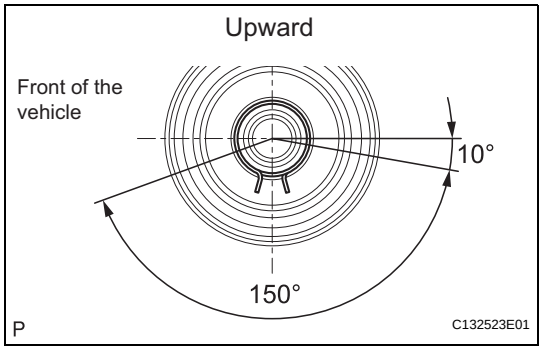

21. INSTALL STEERING RACK BOOT CLIP

(a) Using pliers, install the 2 steering rack boot clips.
NOTICE:
Make sure that the each clip claw is positioned within the area shown in the illustration.

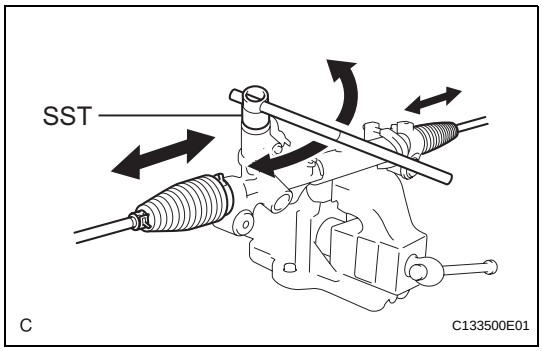

(b) Using SST, turn the pinion and check that the rack boots expand and contract smoothly.
SST 09616-00011

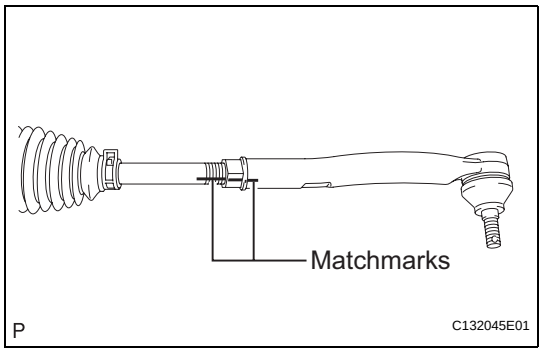

22. INSTALL TIE ROD ASSEMBLY LH

(a) Install the lock nut and the tie rod assembly LH to the steering rack end sub-assembly until the matchmarks are aligned.
HINT:
After adjusting toe-in, torque the lock nut.

23. INSTALL TIE ROD ASSEMBLY RH

HINT:
Perform the same procedure as for the LH side.

24. INSTALL STEERING RIGHT TURN PRESSURE TUBE

(a) Coat 2 new O-rings with power steering fluid and install them to the steering right turn pressure tube.

(b) Using SST, install the right turn pressure tube to the power steering link assembly.

SST 09023-38201

Torque: Without SST

13 N*m (128 kgf*cm, 9 ft.*lbf)

With SST

11 N*m (114 kgf*cm, 8 ft.*lbf)

NOTICE:

- **Use a torque wrench with a fulcrum length of 250 mm (9.84 in.).**
- **This torque value is effective when SST is parallel to the torque wrench.**

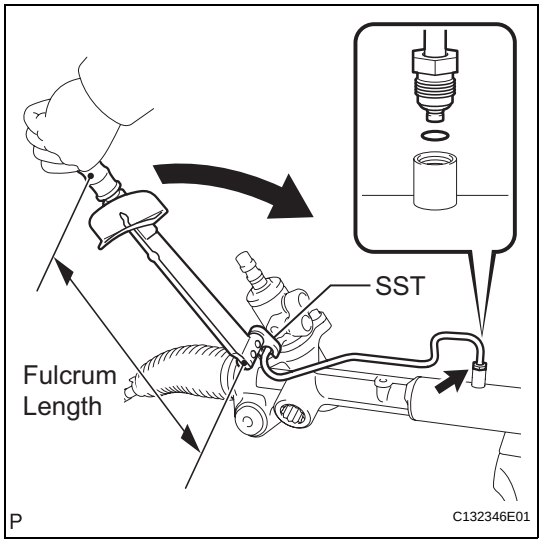

25. INSTALL STEERING LEFT TURN PRESSURE TUBE

(a) Coat 2 new O-rings with power steering fluid and install them to the steering left turn pressure tube.

(b) Using SST, install the left turn pressure tube to the power steering link assembly.

SST 09023-38201

Torque: Without SST

13 N*m (128 kgf*cm, 9 ft.*lbf)

With SST

11 N*m (114 kgf*cm, 8 ft.*lbf)

NOTICE:

- **Use a torque wrench with a fulcrum length of 250 mm (9.84 in.).**
- **This torque value is effective when SST is parallel to the torque wrench.**

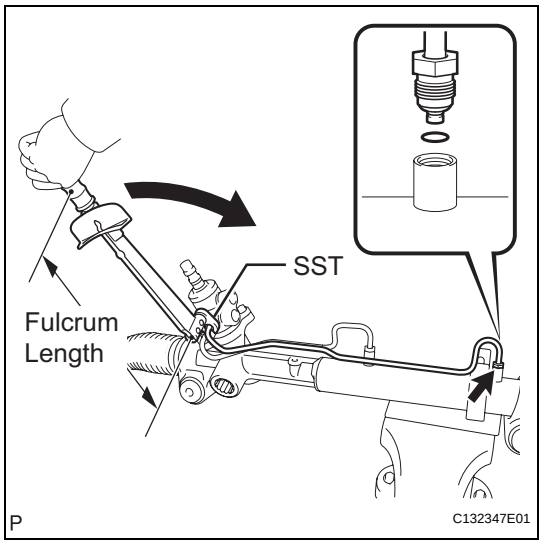

INSTALLATION

1. INSTALL POWER STEERING RACK HOUSING HEAT INSULATOR

(a) Install the power steering rack housing heat insulator to the power steering link assembly.

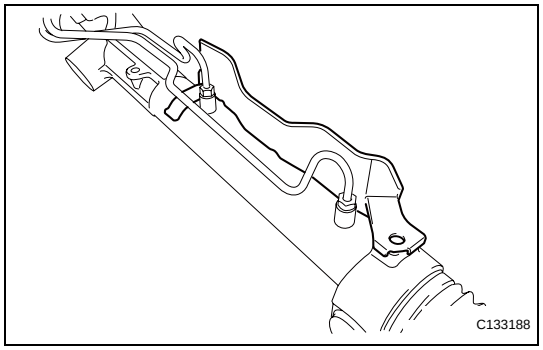

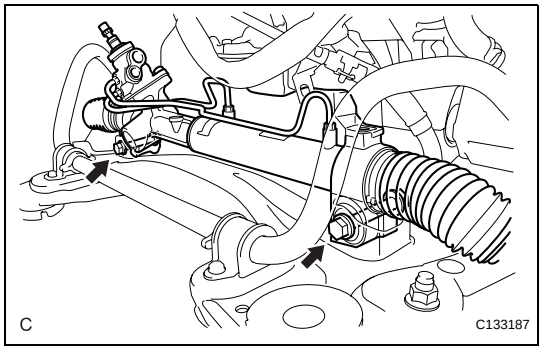

2. INSTALL POWER STEERING LINK ASSEMBLY

(a) Install the power steering link assembly with the 2 bolts and 2 nuts.
Torque: 70 N*m (714 kgf*cm, 52 ft.*lbf)

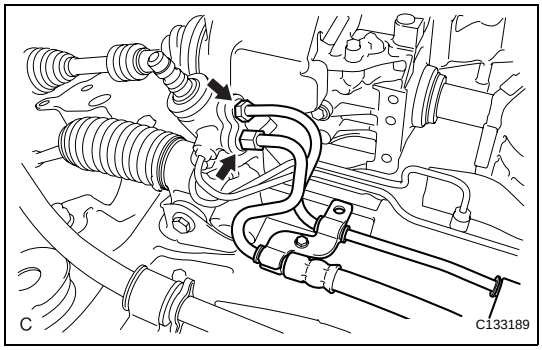

3. CONNECT PRESSURE FEED TUBE ASSEMBLY

(a) Temporarily connect the pressure feed tube assembly to the power steering link assembly.

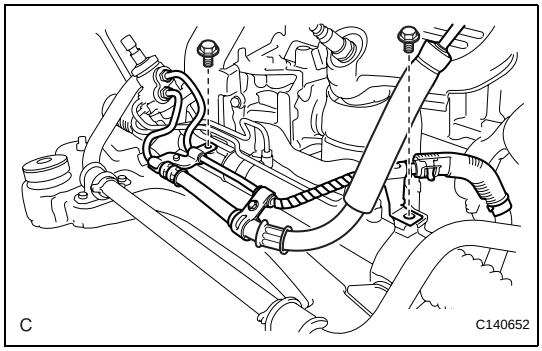

(b) Install the pressure feed tube assembly clamp with the 2 bolts.
Torque: 9.8 N*m (100 kgf*cm, 87 in.*lbf)

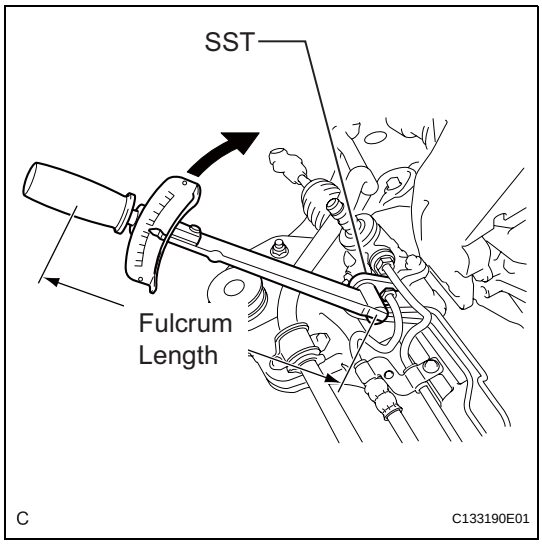

(c) Using SST, tighten the pressure feed tube assembly (pressure feed tube side).
SST 09023-12701
Torque: Without SST
25 N*m (250 kgf*cm, 18 ft.*lbf)
With SST
22 N*m (227 kgf*cm, 16 ft.*lbf)
NOTICE:
- **Use a torque wrench with a fulcrum length of 300 mm (11.81 in.).**
- **This torque value is effective when SST is parallel to the torque wrench.**

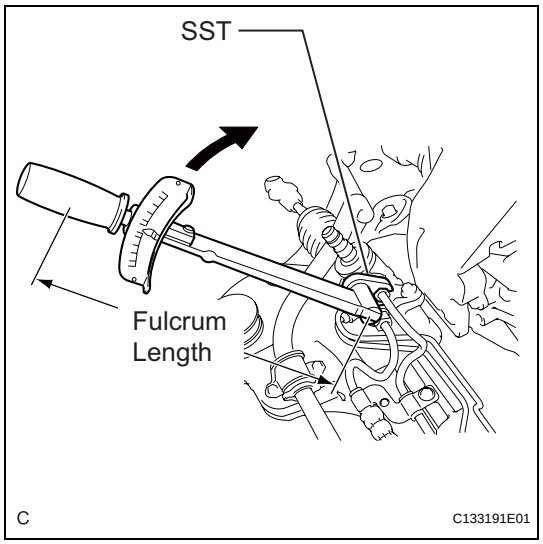

(d) Using SST, tighten the pressure feed tube assembly (return tube side).
SST 09023-12701
Torque: Without SST
25 N*m (250 kgf*cm, 18 ft.*lbf)
With SST
22 N*m (227 kgf*cm, 16 ft.*lbf)
NOTICE:
- **Use a torque wrench with a fulcrum length of 300 mm (11.81 in.).**
- **This torque value is effective when SST is parallel to the torque wrench.**

4. INSTALL ENGINE ASSEMBLY WITH TRANSAXLE
HINT:
Refer to the instructions for INSTALLATION of the ENGINE ASSEMBLY (See page EM-36).

5. CONNECT TIE ROD ASSEMBLY LH
(a) Connect the tie rod assembly LH to the steering knuckle with the nut.
Torque: 49 N*m (500 kgf*cm, 36 ft.*lbf)
(b) Install a new cotter pin.
NOTICE:
Tighten the nut further up to 60° if the holes for the cotter pin are not aligned.

6. CONNECT TIE ROD ASSEMBLY RH
HINT:
Perform the same procedure as for the LH side.

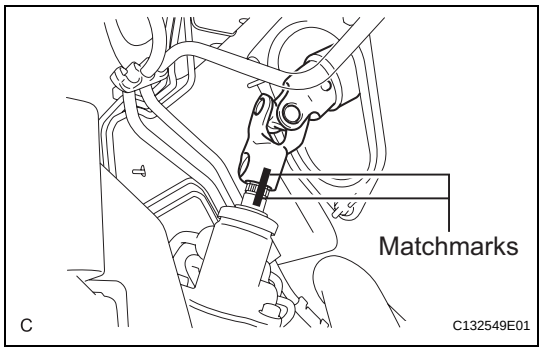

7. CONNECT STEERING INTERMEDIATE SHAFT ASSEMBLY
(a) Align the matchmarks on the steering intermediate shaft assembly and the steering link assembly.

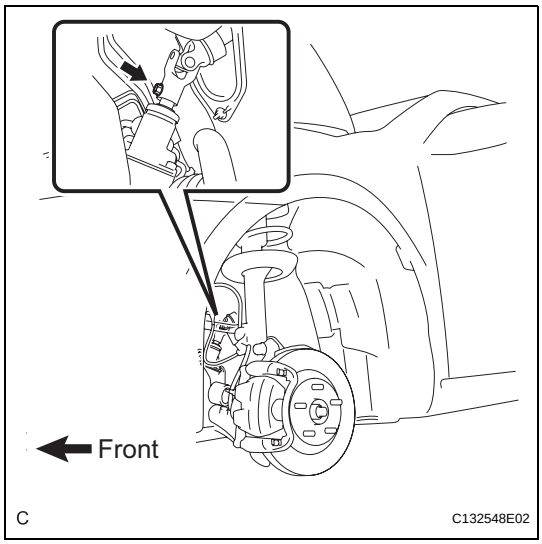

(b) Install the bolt.
Torque: 35 N*m (360 kgf*cm, 26 ft.*lbf)

8. **INSTALL FRONT WHEELS**
Torque: 103 N*m (1,050 kgf*cm, 76 ft.*lbf)

9. **CONNECT CABLE TO NEGATIVE BATTERY TERMINAL**

10. **BLEED POWER STEERING FLUID (See page PS-8)**

11. **CHECK POWER STEERING FLUID LEVEL (See page PS-3)**

12. **CHECK POWER STEERING FLUID LEAKAGE**

13. **CHECK FOR EXHAUST GAS LEAKS**

14. **PLACE FRONT WHEELS FACING STRAIGHT AHEAD**

15. **INSPECT AND ADJUST FRONT WHEEL ALIGNMENT**
HINT:
(See page SP-4)

16. **PERFORM INITIALIZATION**
NOTICE:
Some systems need initialization after reconnecting the cable to the negative battery terminal (See page IN-33).

VANE PUMP

COMPONENTS

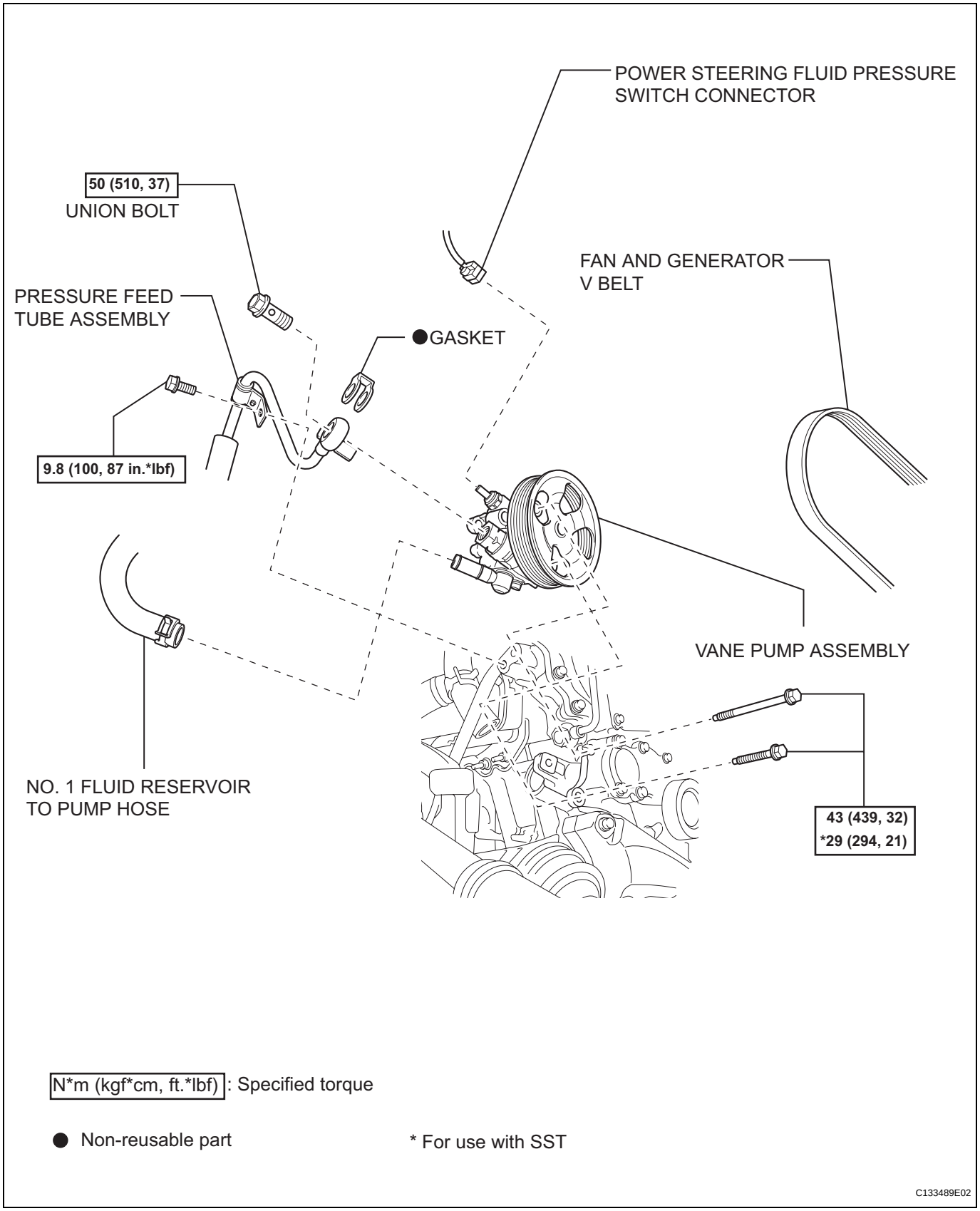

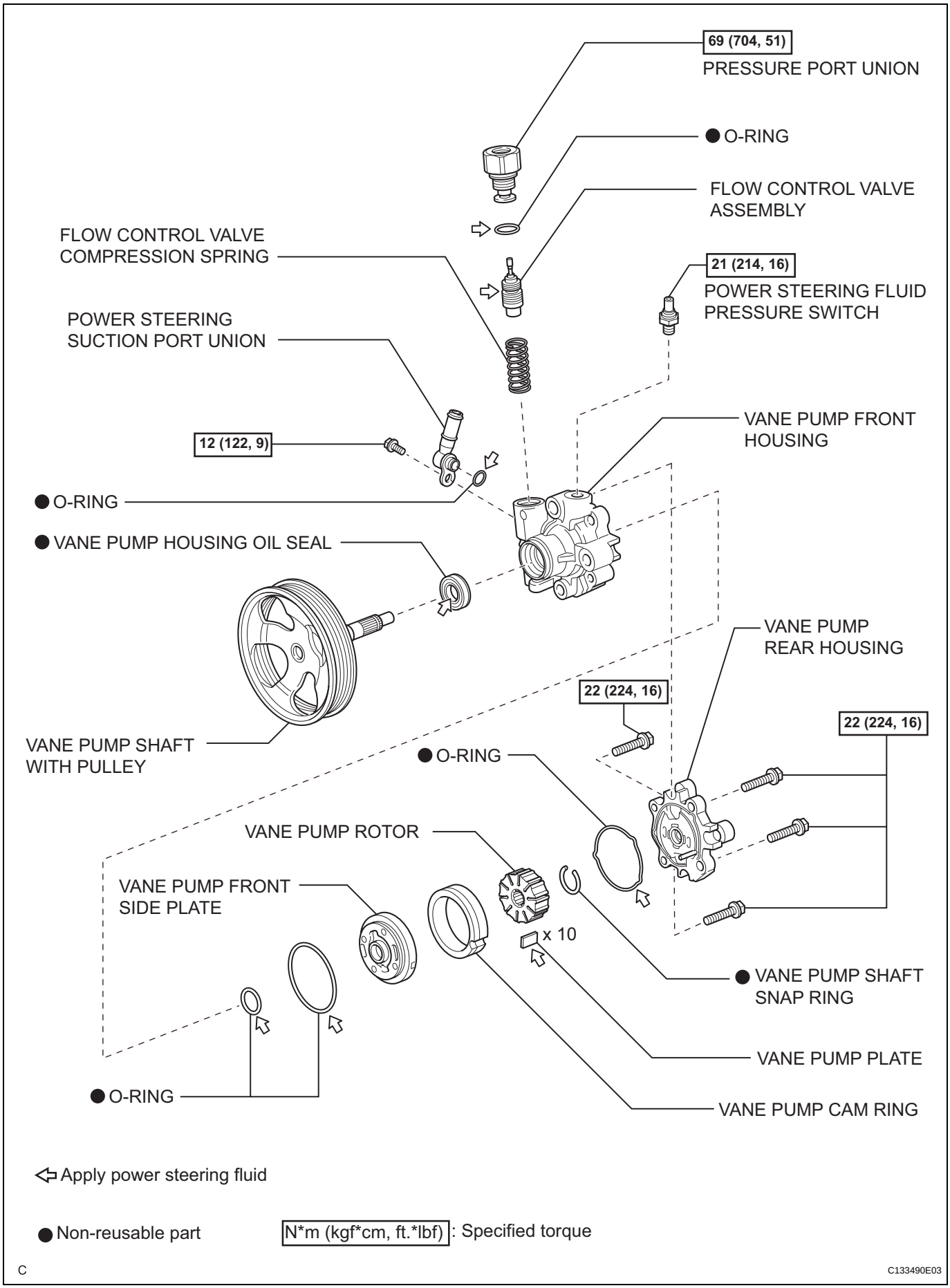
69 (704, 51)
PRESSURE PORT UNION
● O-RING
FLOW CONTROL VALVE ASSEMBLY
FLOW CONTROL VALVE COMPRESSION SPRING
21 (214, 16)
POWER STEERING FLUID PRESSURE SWITCH
POWER STEERING SUCTION PORT UNION
VANE PUMP FRONT HOUSING
12 (122, 9)
● O-RING
● VANE PUMP HOUSING OIL SEAL
VANE PUMP REAR HOUSING
22 (224, 16)
22 (224, 16)
VANE PUMP SHAFT WITH PULLEY
● O-RING
VANE PUMP ROTOR
VANE PUMP FRONT SIDE PLATE
x 10
● VANE PUMP SHAFT SNAP RING
VANE PUMP PLATE
● O-RING
VANE PUMP CAM RING
PS
Apply power steering fluid
● Non-reusable part
N*m (kgf*cm, ft.*lbf): Specified torque
C
C133490E03

REMOVAL

1. **DRAIN POWER STEERING FLUID**
2. **REMOVE FRONT WHEEL RH**
3. **REMOVE FRONT FENDER APRON SEAL RH**
4. **REMOVE COOL AIR INTAKE DUCT SEAL (See page EM-22)**
5. **REMOVE ENGINE ROOM SIDE COVER LH (See page EM-22)**
6. **REMOVE ENGINE ROOM SIDE COVER RH (See page EM-22)**
7. **REMOVE V-BANK COVER SUB-ASSEMBLY (See page EM-23)**
8. **REMOVE FAN AND GENERATOR V BELT (See page EM-6)**
9. **DISCONNECT NO. 1 FLUID RESERVOIR TO PUMP HOSE**
   (a) Slide the clip and disconnect the No. 1 fluid reservoir to pump hose from the vane pump assembly.

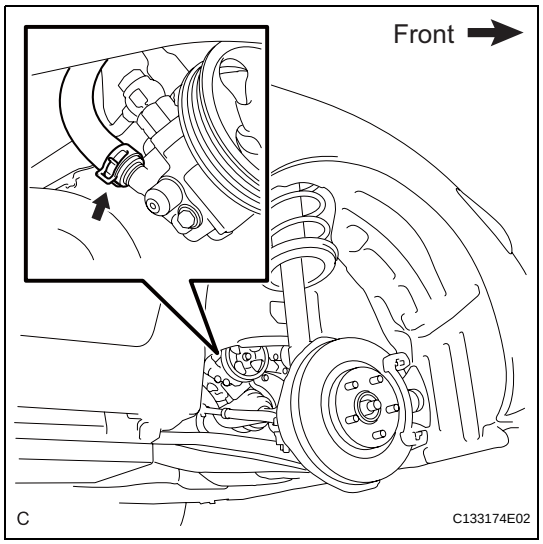

10. **DISCONNECT PRESSURE FEED TUBE ASSEMBLY**
    (a) Remove the union bolt and disconnect the pressure feed tube assembly from the vane pump assembly.
    (b) Remove the bolt and separate pressure feed tube clamp.
    (c) Remove the gasket from the pressure feed tube assembly.

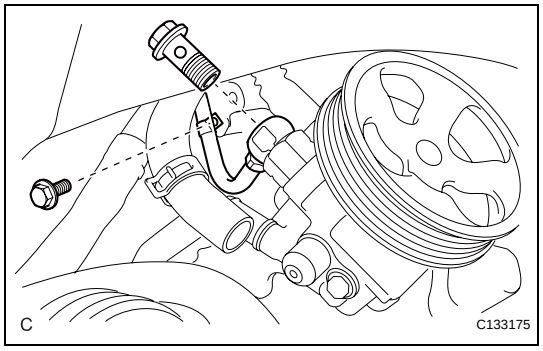

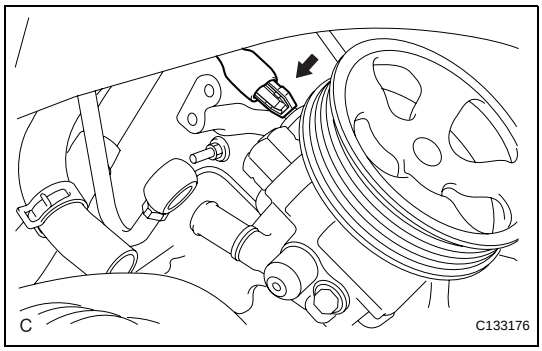

11. DISCONNECT POWER STEERING FLUID PRESSURE SWITCH CONNECTOR

(a) Disconnect the power steering fluid pressure switch connector.

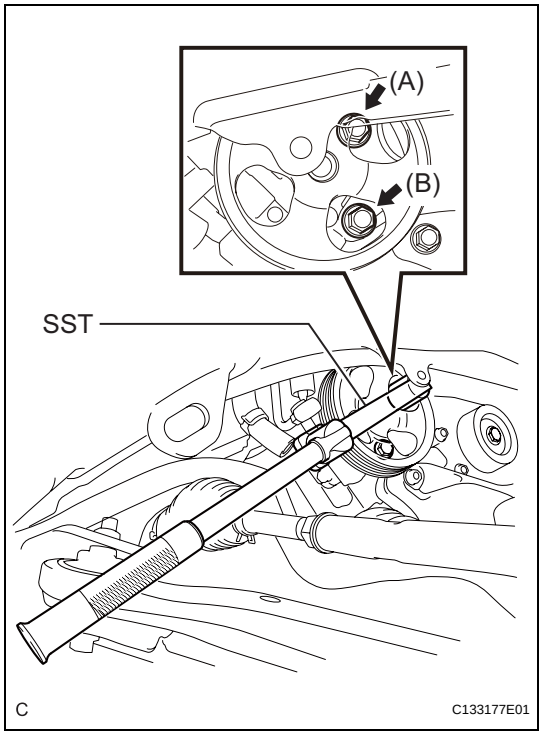

12. REMOVE VANE PUMP ASSEMBLY

(a) Using SST, loosen the bolt (A) and remove bolt (B), and then remove the vane pump assembly.
SST 09249-63010

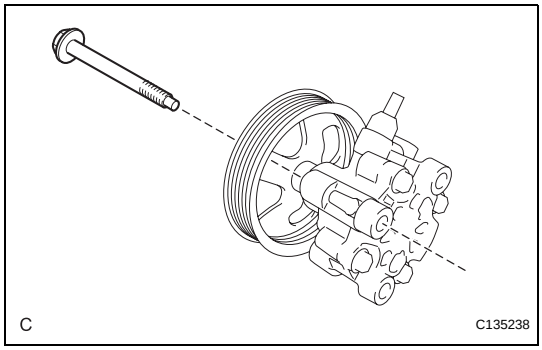

(b) Remove the bolt from the vane pump assembly.

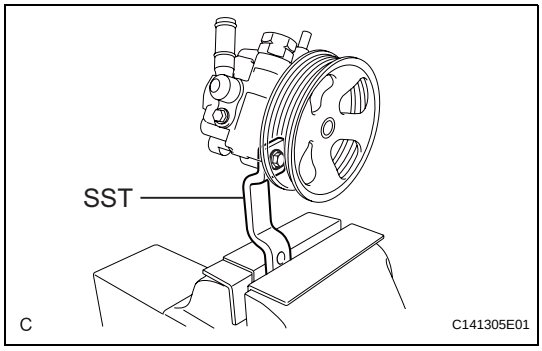

DISASSEMBLY

1. HOLD VANE PUMP ASSEMBLY

(a) Using SST, hold the vane pump assembly in a vise.
SST 09630-00014 (09631-00132)

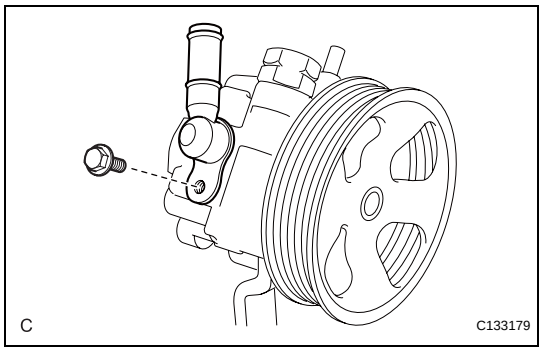

2. REMOVE POWER STEERING SUCTION PORT UNION

(a) Remove the bolt and the power steering suction port union from the vane pump assembly.

(b) Using a screw driver, remove the O-ring from the power steering suction port union.

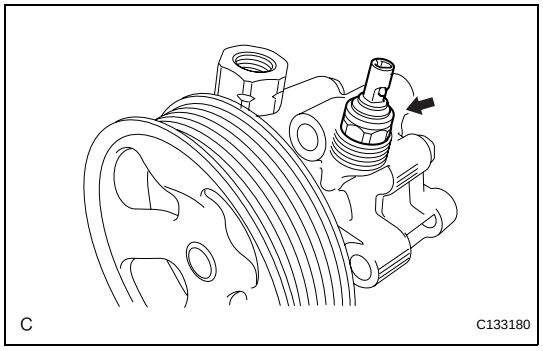

3. REMOVE POWER STEERING FLUID PRESSURE SWITCH

(a) Remove the power steering fluid pressure switch from the vane pump assembly.

NOTICE:

Perform this procedure only when the power steering fluid pressure switch is replaced.

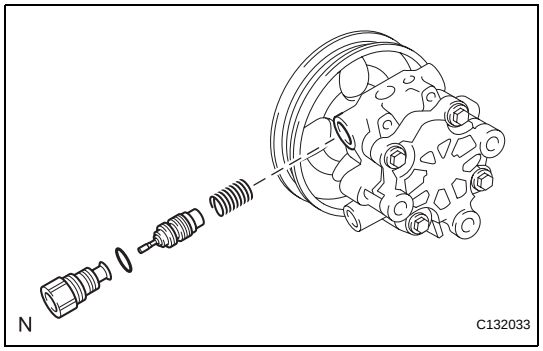

4. REMOVE FLOW CONTROL VALVE ASSEMBLY

(a) Remove the pressure port union.

(b) Remove the O-ring from the pressure port union.

(c) Remove the flow control valve assembly and the flow control valve compression spring.

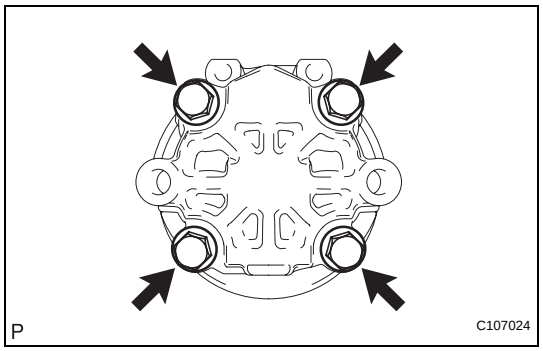

5. REMOVE VANE PUMP REAR HOUSING

(a) Remove the 4 bolts and vane pump rear housing from the vane pump front housing.

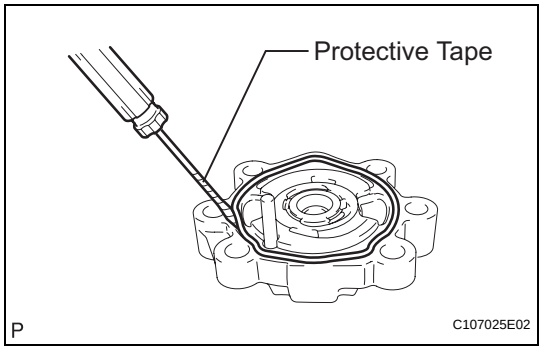

(b) Using a screwdriver, remove the O-ring from the vane pump rear housing.

HINT:

Tape the screwdriver tip before use.

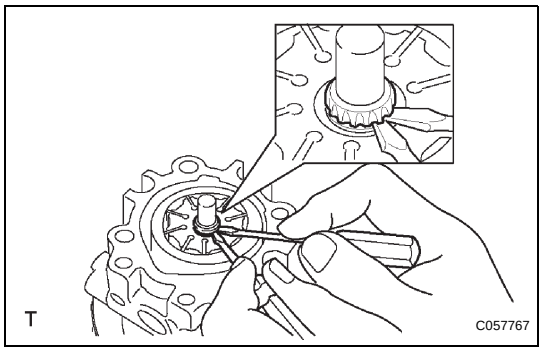

6. REMOVE VANE PUMP SHAFT WITH PULLEY

(a) Using 2 screwdrivers, remove the vane pump shaft snap ring from the vane pump shaft with pulley.

(b) Remove the vane pump shaft with pulley.

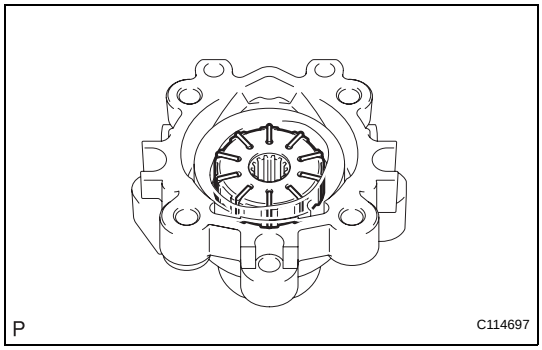

7. REMOVE VANE PUMP ROTOR

(a) Remove the 10 vane pump plates.

(b) Remove the vane pump rotor.

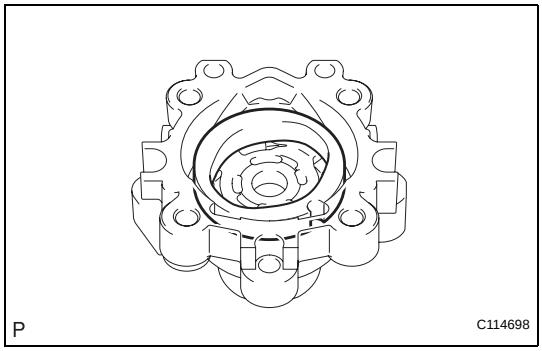

8. REMOVE VANE PUMP CAM RING

(a) Remove the vane pump cam ring from the vane pump front housing.

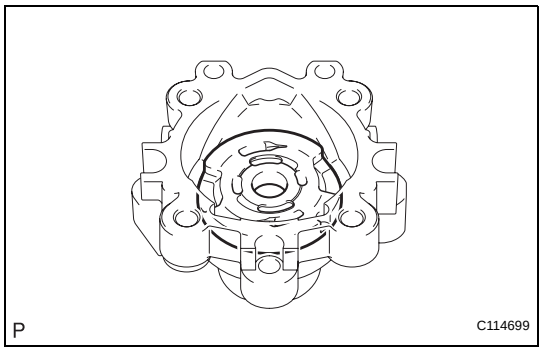

9. REMOVE VANE PUMP FRONT SIDE PLATE

(a) Remove the vane pump front side plate from the vane pump front housing.

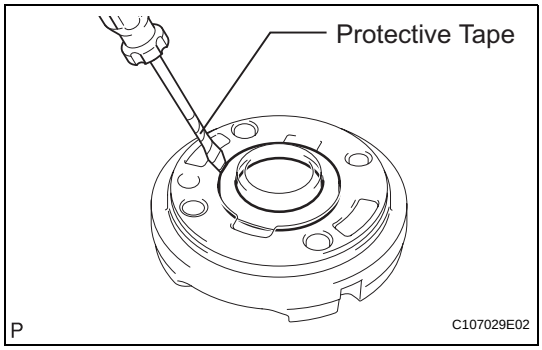

(b) Using a screwdriver, remove the O-ring from the vane pump front side plate.
HINT:
Tape the screwdriver tip before use.

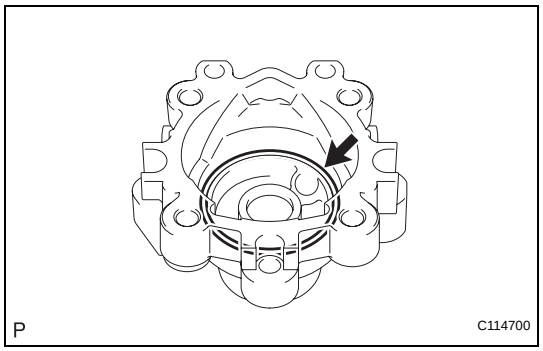

(c) Remove the O-ring from the vane pump front housing.

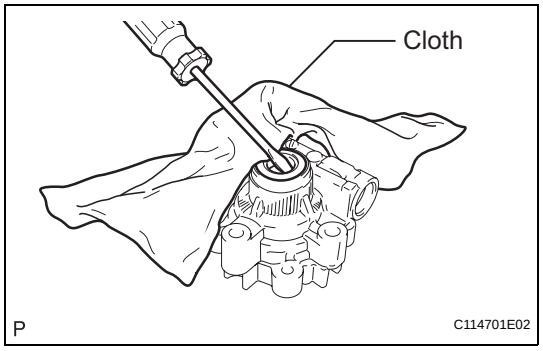

10. REMOVE VANE PUMP HOUSING OIL SEAL

(a) Using a screwdriver and a shop rag or a piece of cloth, remove the vane pump housing oil seal.
NOTICE:
Be careful not to damage the vane pump front housing.

INSPECTION

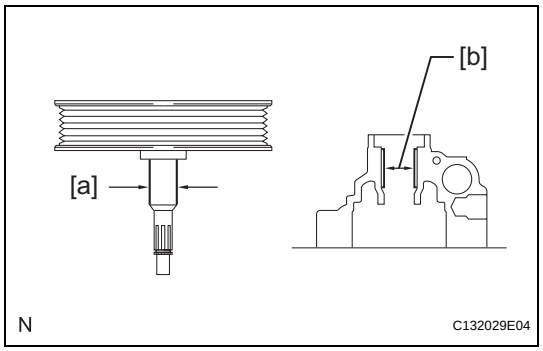

1. INSPECT VANE PUMP SHAFT AND BUSHING IN VANE PUMP FRONT HOUSING

(a) Using a micrometer, measure the outer diameter of the vane pump shaft with pulley [a].

(b) Using vernier calipers, measure the inner diameter of the vane pump front housing bushing [b].

(c) Calculate the oil clearance.
Oil clearance = Inner diameter of the bushing [b] - Outer diameter of the shaft [a].
Maximum oil clearance:
0.07 mm (0.0028 in.)
If the oil clearance exceeds the maximum, replace the vane pump assembly.

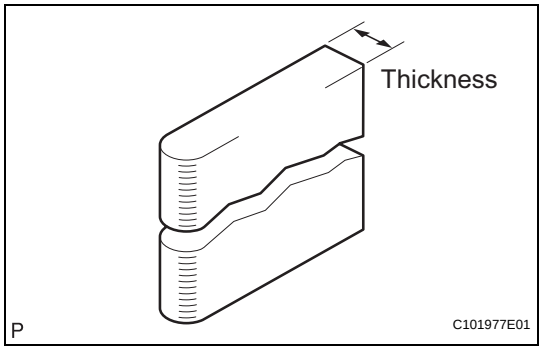

2. INSPECT VANE PUMP ROTOR AND VANE PUMP PLATE CLEARANCE

(a) Using a micrometer, measure the thickness of the vane pump plates.
Standard thickness:
1.405 to 1.411 mm (0.05531 to 0.05555 in.)
If the thickness is not within the specified range, replace the vane pump assembly.

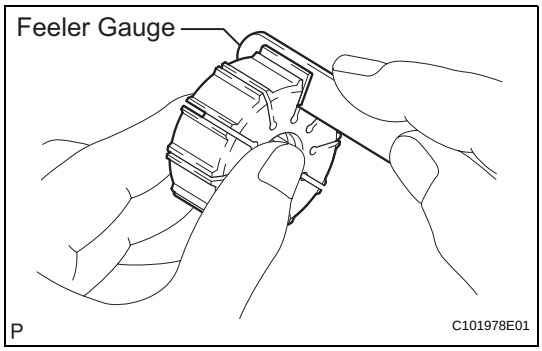

(b) Using a feeler gauge, measure the clearance between the side face of the vane pump rotor groove and the vane pump plates.
Maximum clearance:
0.03 mm (0.0012 in.)
If the clearance exceeds the maximum, replace the vane pump assembly.

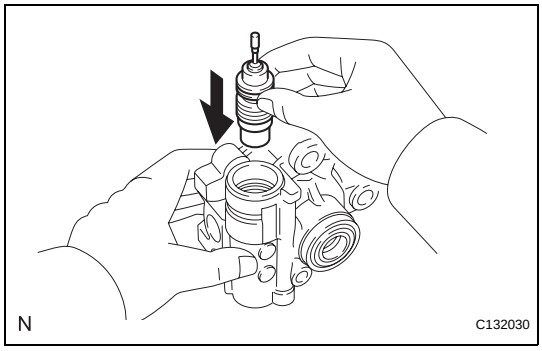

3. INSPECT FLOW CONTROL VALVE ASSEMBLY

(a) Coat the flow control valve assembly with power steering fluid and check that it falls smoothly into the flow control valve due to its own weight.
If the control valve does not fall into the hole smoothly, replace the vane pump assembly.

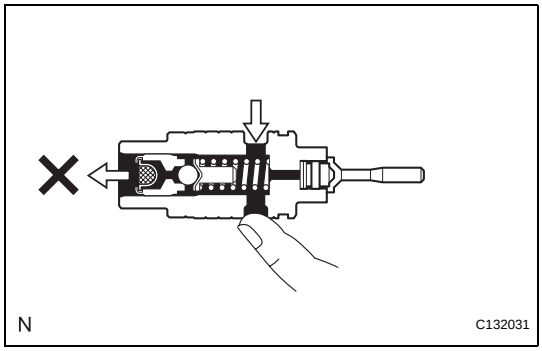

(b) Check the flow control valve assembly for leakage. Close one of the holes and apply compressed air, 392 to 490 kPa (4 to 5 kgf/cm^2, 57 to 71 psi), into the opposite side hole, and confirm that air does not come out from the end holes.
If air leaks, replace the vane pump assembly.

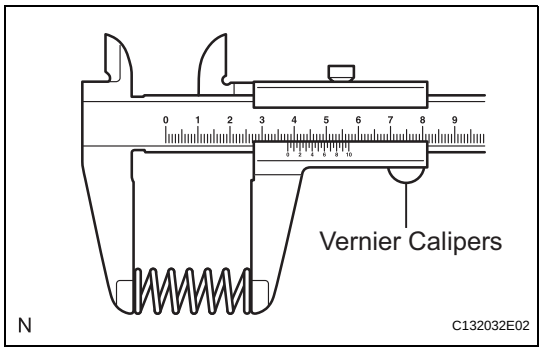

4. INSPECT FLOW CONTROL VALVE COMPRESSION SPRING

(a) Using vernier calipers, measure the free length of the flow control valve compression spring.
Minimum free length:
29.2 mm (1.150 in.)
If the length is less than the minimum, replace the vane pump assembly.

5. INSPECT PRESSURE PORT UNION

If the union seat in the pressure port union is damaged, it may cause fluid leakage. In this case, replace the vane pump assembly.

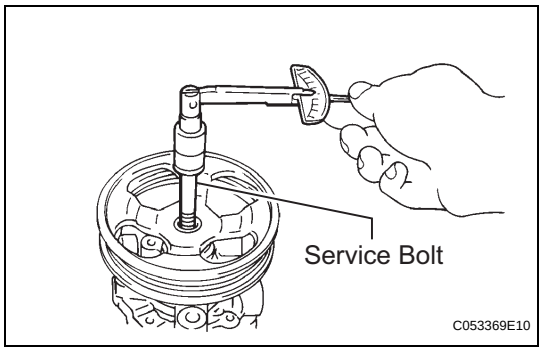

6. INSPECT TOTAL PRELOAD

(a) Check that the pump rotates smoothly without abnormal noise.

(b) Temporarily install the service bolt.
Recommended service bolt:
Thread diameter:
10 mm (0.39 in.)
Thread pitch:
1.25 mm (0.0492 in.)
Bolt length:
50 mm (1.97 in.)

(c) Using a torque wrench, check the pump rotating torque.
Rotating torque:
0.27 N*m (2.8 kgf*cm, 2.4 in.*lbf) or less
If the rotating torque is not as specified, check the vane pump housing oil seal.

REASSEMBLY

NOTICE:
When installing parts, coat the parts indicated by arrows with power steering fluid (See page PS-9).

1. INSTALL VANE PUMP HOUSING OIL SEAL

(a) Coat a new vane pump housing oil seal lip with power steering fluid.

(b) Using SST and a press, install the vane pump housing oil seal until it is flush with the vane pump front housing end surface.
SST 09950-60010 (09951-00280), 09950-70010 (09951-07100)
NOTICE:
Make sure that the oil seal is installed facing in the correct direction as shown in the illustration.

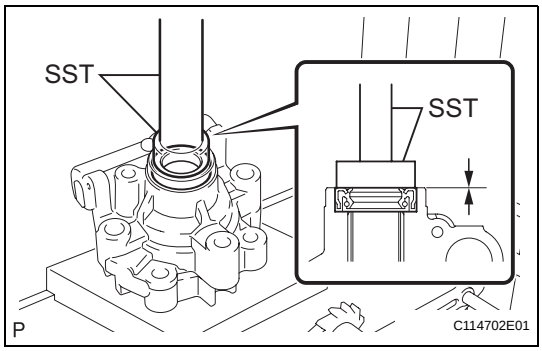

2. INSTALL VANE PUMP SHAFT WITH PULLEY

(a) Coat the inside surface of the bushing in the vane pump front housing with power steering fluid.

(b) Gradually insert the vane pump shaft with pulley.
NOTICE:
Do not damage the oil seal lip in the front housing.
HINT:
Wrap protective tape around the spline of the vane pump shaft with pulley in order to prevent damage to the oil seal.

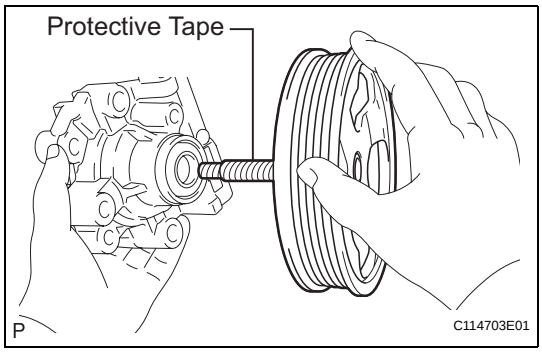

3. INSTALL VANE PUMP FRONT SIDE PLATE

(a) Coat a new O-ring with power steering fluid and install it into the vane pump front housing.

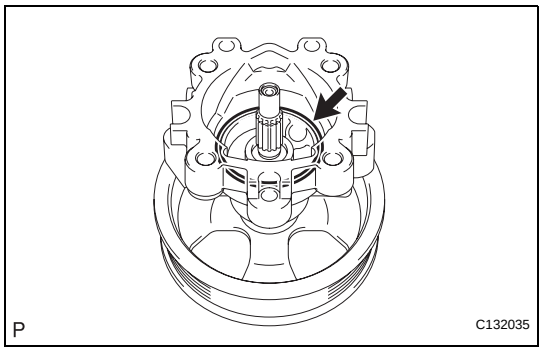

(b) Coat a new O-ring with power steering fluid and install it onto the vane pump front side plate.

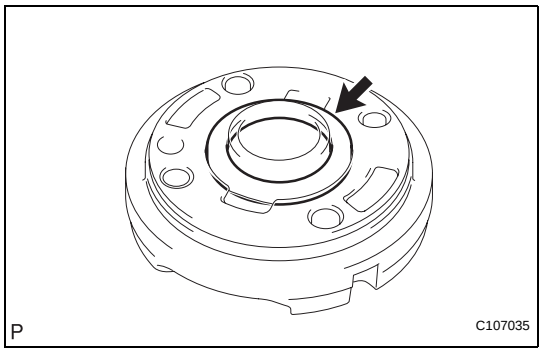

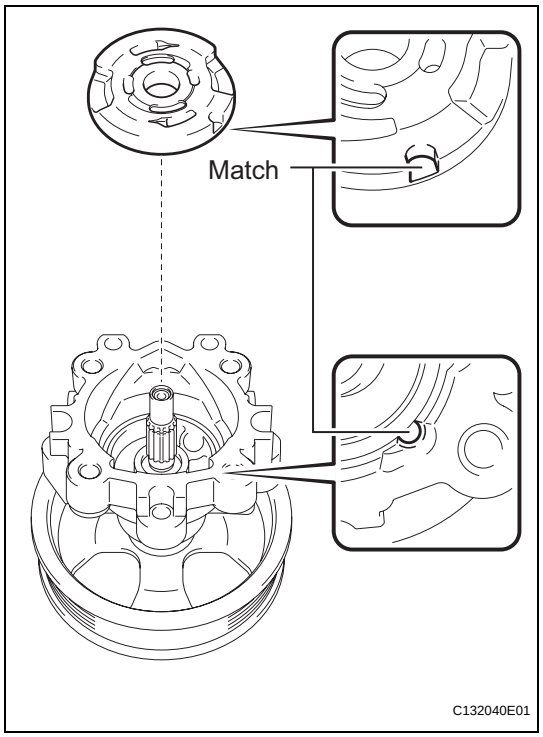

(c) Align the notch of the vane pump front side plate with that of the vane pump front housing, and install the vane pump front side plate.
NOTICE:
Make sure that the vane pump front side plate is installed facing in the correct direction.

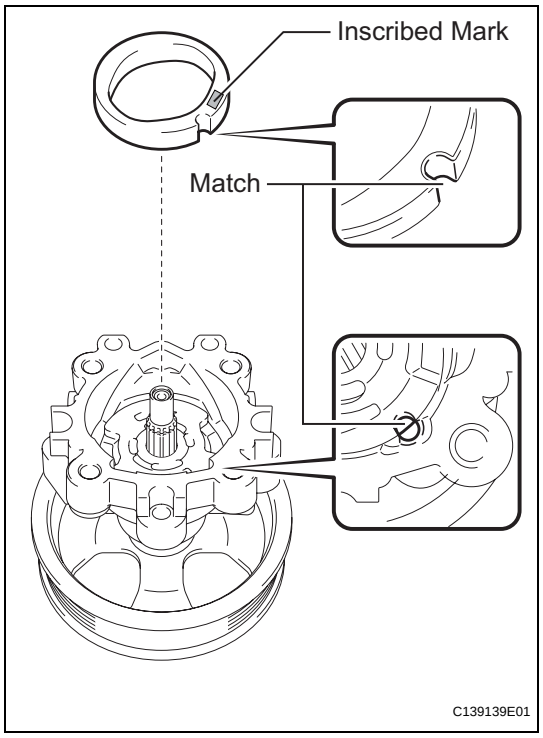

4. INSTALL VANE PUMP CAM RING

(a) Align the notch of the cam ring with that of the vane pump front side plate, and install the vane pump cam ring with the inscribed mark facing upward.
NOTICE:
Make sure that the vane pump cam ring is installed facing in the correct direction.

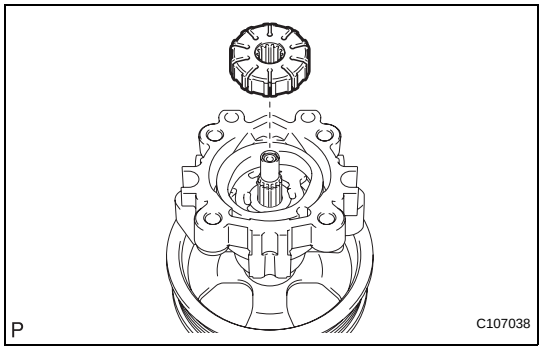

5. INSTALL VANE PUMP ROTOR

(a) Install the vane pump rotor.
HINT:
Vane pump rotor can be installed in both directions.

(b) Coat the 10 vane pump plates with power steering fluid.

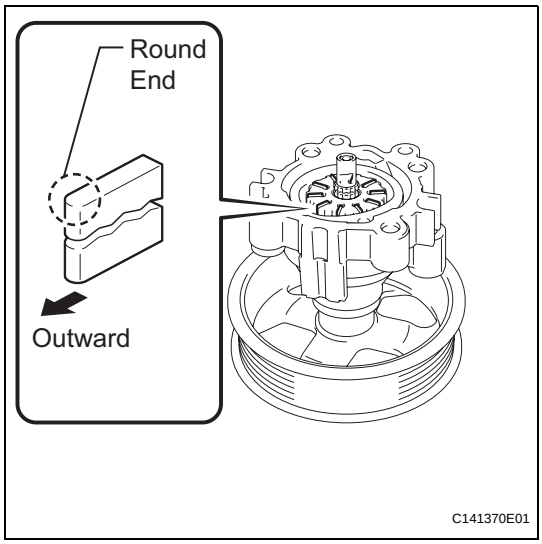

(c) Install the vane pump plates with the round end facing outward.
NOTICE:
Make sure that the vane pump plates are installed facing in the correct direction.

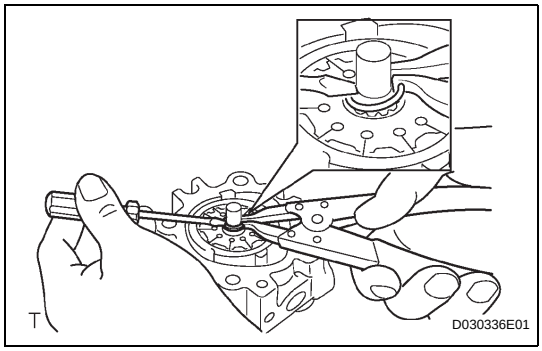

6. INSTALL VANE PUMP SHAFT SNAP RING

(a) Using a screwdriver and a snap ring expander, install a new vane pump shaft snap ring onto the vane pump shaft with pulley.
NOTICE:
Make sure that the vane pump shaft snap ring is securely installed in the vane pump shaft groove.

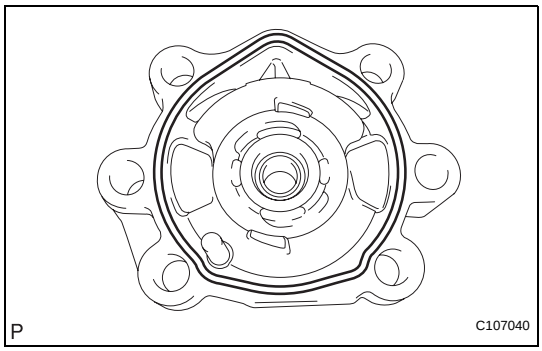

7. INSTALL VANE PUMP REAR HOUSING

(a) Coat a new O-ring with power steering fluid and install it onto the vane pump rear housing.

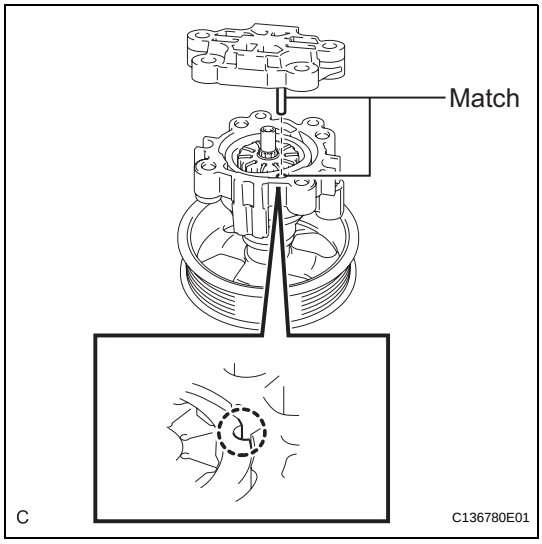

(b) Align the straight pin of the vane pump rear housing with the notches of the vane pump cam ring, vane pump front side plate, and vane pump front housing.

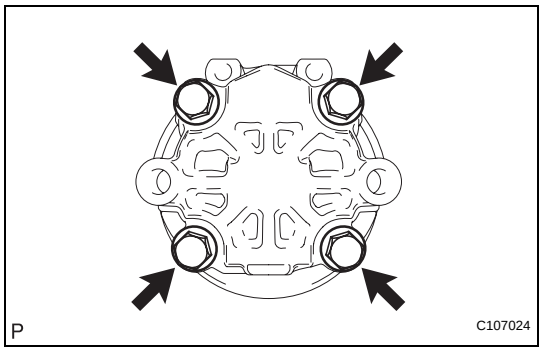

(c) Install the vane pump rear housing with the 4 bolts.
Torque: 22 N*m (224 kgf*cm, 16 ft.*lbf)

8. INSPECT TOTAL PRELOAD (See page PS-17)

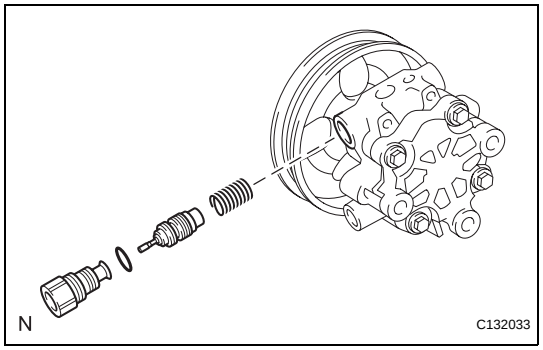

9. INSTALL FLOW CONTROL VALVE ASSEMBLY

(a) Coat the flow control valve assembly with power steering fluid.

(b) Install the flow control valve compression spring and the flow control valve assembly to the vane pump front housing.

(c) Coat a new O-ring with power steering fluid and install it onto the pressure port union.

(d) Install the pressure port union to the vane pump front housing.
Torque: 69 N*m (704 kgf*cm, 51 ft.*lbf)

10. INSTALL POWER STEERING FLUID PRESSURE SWITCH

(a) Coat the new O-ring attached to the new power steering fluid pressure switch with power steering fluid.

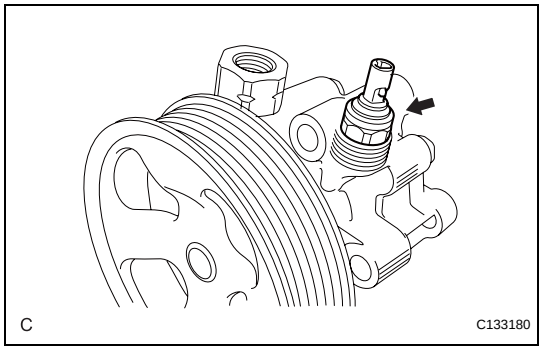

(b) Install the power steering fluid pressure switch to the vane pump assembly.
Torque: 21 N*m (214 kgf*cm, 16 ft.*lbf)
NOTICE:
Do not use a power steering fluid pressure switch that has been subjected an impact; for example, due to it having been dropped.

11. INSTALL POWER STEERING SUCTION PORT UNION

(a) Coat a new O-ring with power steering fluid and install it to the power steering suction port union.

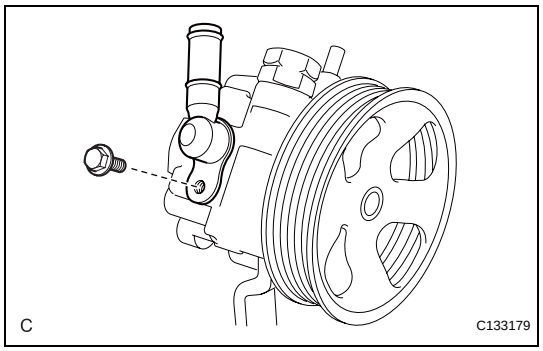

(b) Install the power steering suction port union to the vane pump assembly with the bolt.
Torque: 12 N*m (122 kgf*cm, 9 ft.*lbf)

INSTALLATION

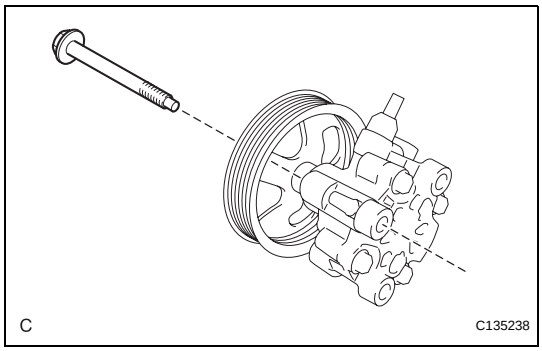

1. INSTALL VANE PUMP ASSEMBLY

(a) Temporarily install the bolt to the vane pump assembly.

(b) Install the vane pump assembly.

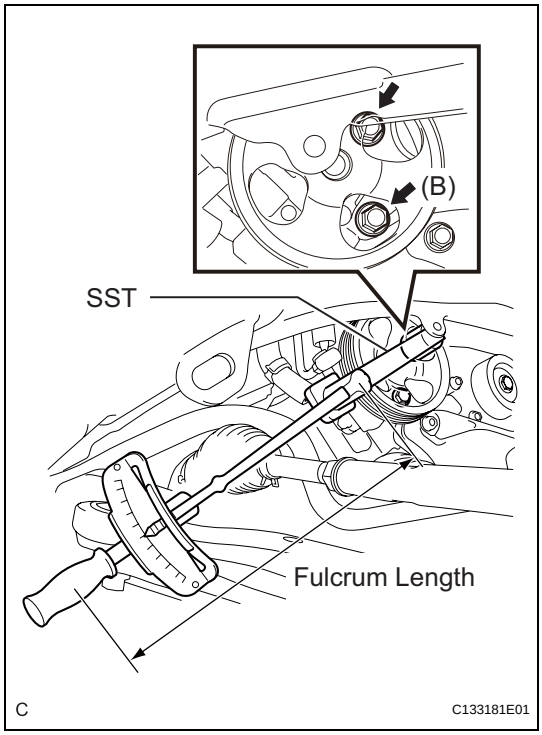

(c) Using SST, install bolt (B) and tighten the 2 bolts.

SST 09249-63010

Torque: Without SST
43 N*m (439 kgf*cm, 32 ft.*lbf)
With SST
29 N*m (294 kgf*cm, 21 ft.*lbf)

NOTICE:

- **Use a torque wrench with a fulcrum length of 300 mm (11.81 in.).**
- **This torque value is accurate when SST is parallel to the torque wrench.**

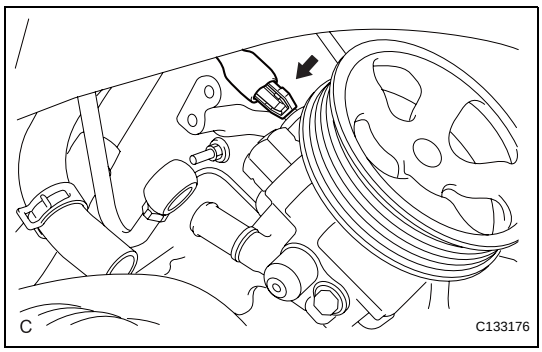

2. CONNECT POWER STEERING FLUID PRESSURE SWITCH CONNECTOR

(a) Connect the connector to the power steering fluid pressure switch.

3. CONNECT PRESSURE FEED TUBE ASSEMBLY

(a) Install a new gasket to the pressure feed tube assembly.

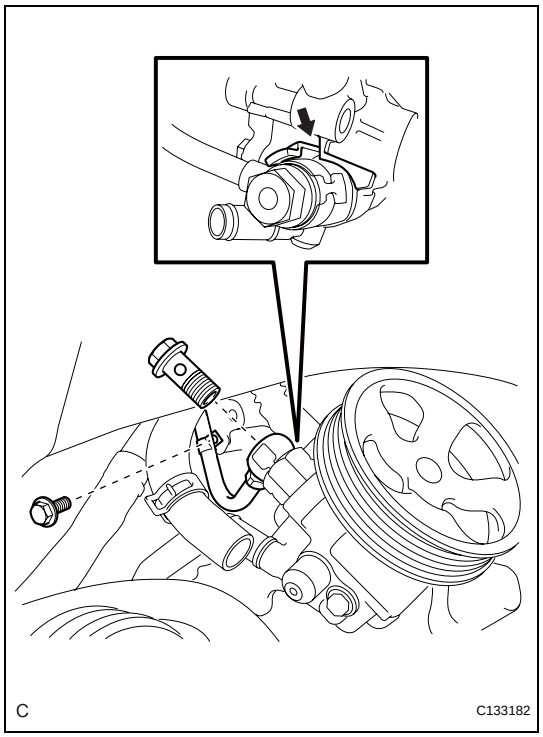

(b) Temporarily connect the pressure feed tube assembly to the vane pump assembly with the union bolt.

(c) Install the pressure feed tube assembly clamp with the bolt.
Torque: 9.8 N*m (100 kgf*cm, 87 in.*lbf)
NOTICE:
Install the pressure feed tube assembly clamp in the correct position.

(d) Fully tighten the union bolt.
Torque: 50 N*m (510 kgf*cm, 37 ft.*lbf)
NOTICE:
Make sure that the stopper of the pressure feed tube assembly contacts the vane pump assembly securely as shown in the illustration.

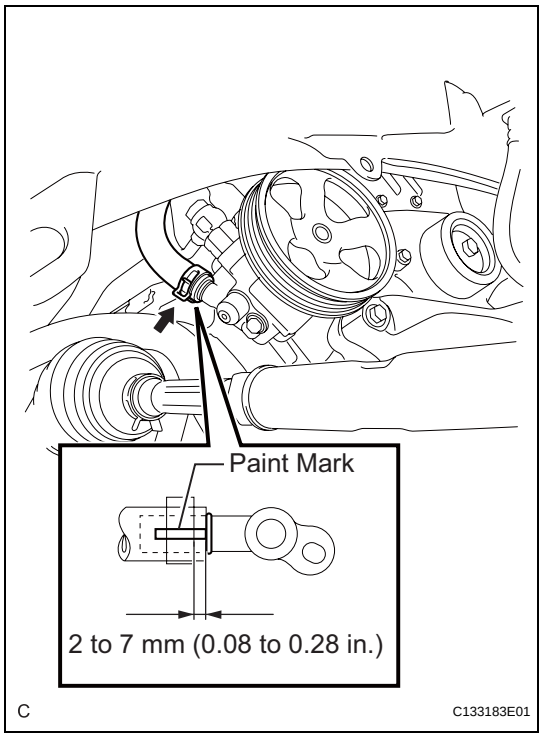

4. CONNECT NO. 1 FLUID RESERVOIR TO PUMP HOSE

(a) Connect the No. 1 fluid reservoir to pump hose to the vane pump assembly with the clip.
NOTICE:
- **Connect the No. 1 fluid reservoir to pump hose with the paint mark facing toward the rear of the vehicle.**
- **Install the No. 1 fluid reservoir to pump hose as far as it will go as shown in the illustration.**
- **Install the clip at the position specified in the illustration.**

5. INSTALL FAN AND GENERATOR V BELT (See page EM-7)

6. ADD POWER STEERING FLUID

7. BLEED POWER STEERING FLUID (See page PS-8)

8. CHECK POWER STEERING FLUID LEVEL (See page PS-3)

9. CHECK FOR POWER STEERING FLUID LEAKS

10. INSTALL V-BANK COVER SUB-ASSEMBLY (See page EM-49)

11. INSTALL ENGINE ROOM SIDE COVER RH (See page EM-50)

12. INSTALL ENGINE ROOM SIDE COVER LH (See page EM-50)

13. INSTALL COOL AIR INTAKE DUCT SEAL (See page EM-50)

14. INSTALL FRONT FENDER APRON SEAL RH

15. INSTALL FRONT WHEEL RH
Torque: 103 N*m (1,050 kgf*cm, 76 ft.*lbf)

POWER STEERING LINK

COMPONENTS

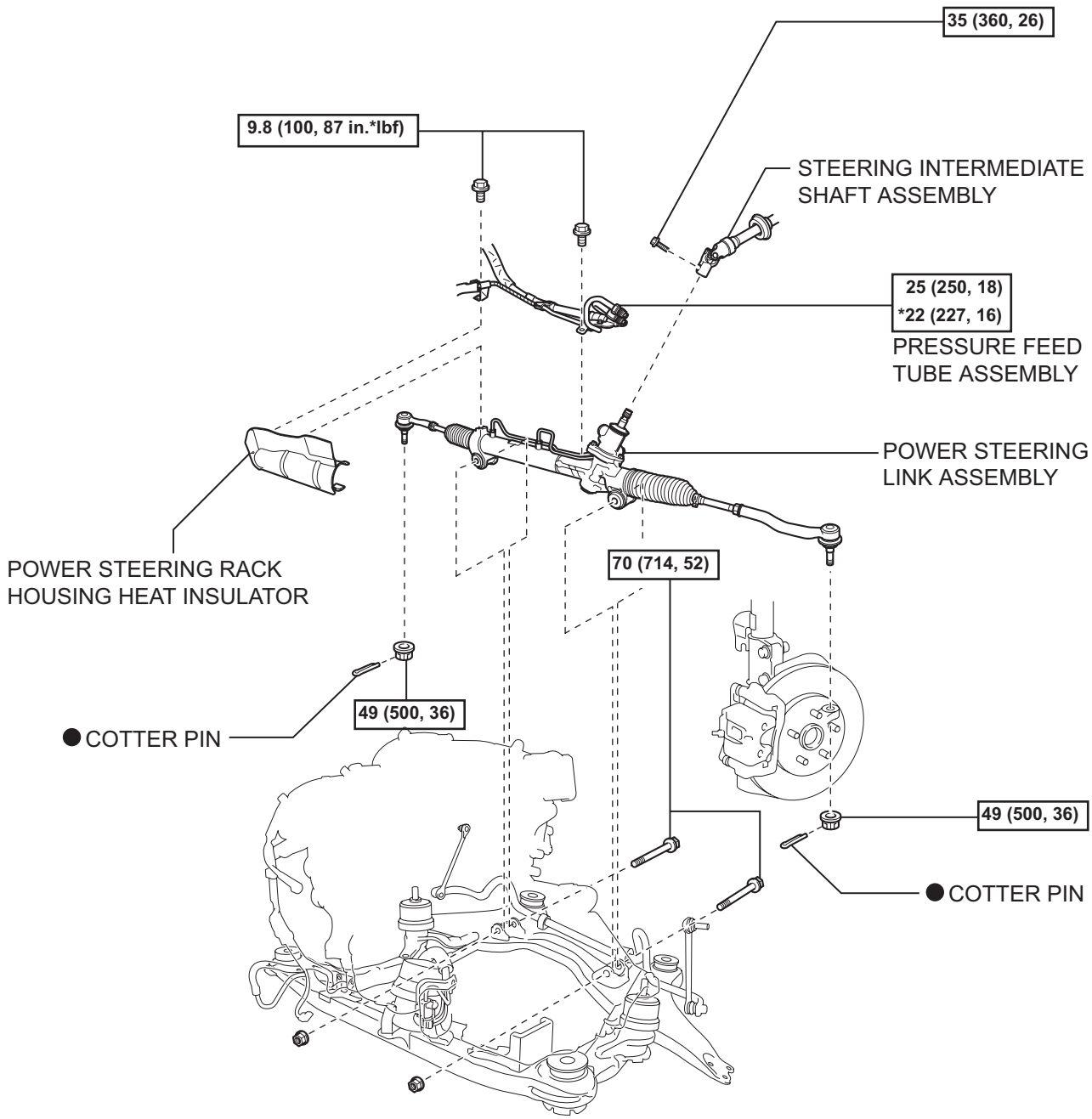

PS

N*m (kgf*cm, ft.*lbf) : Specified torque

● Non-reusable part

* For use with SST

C137899E01

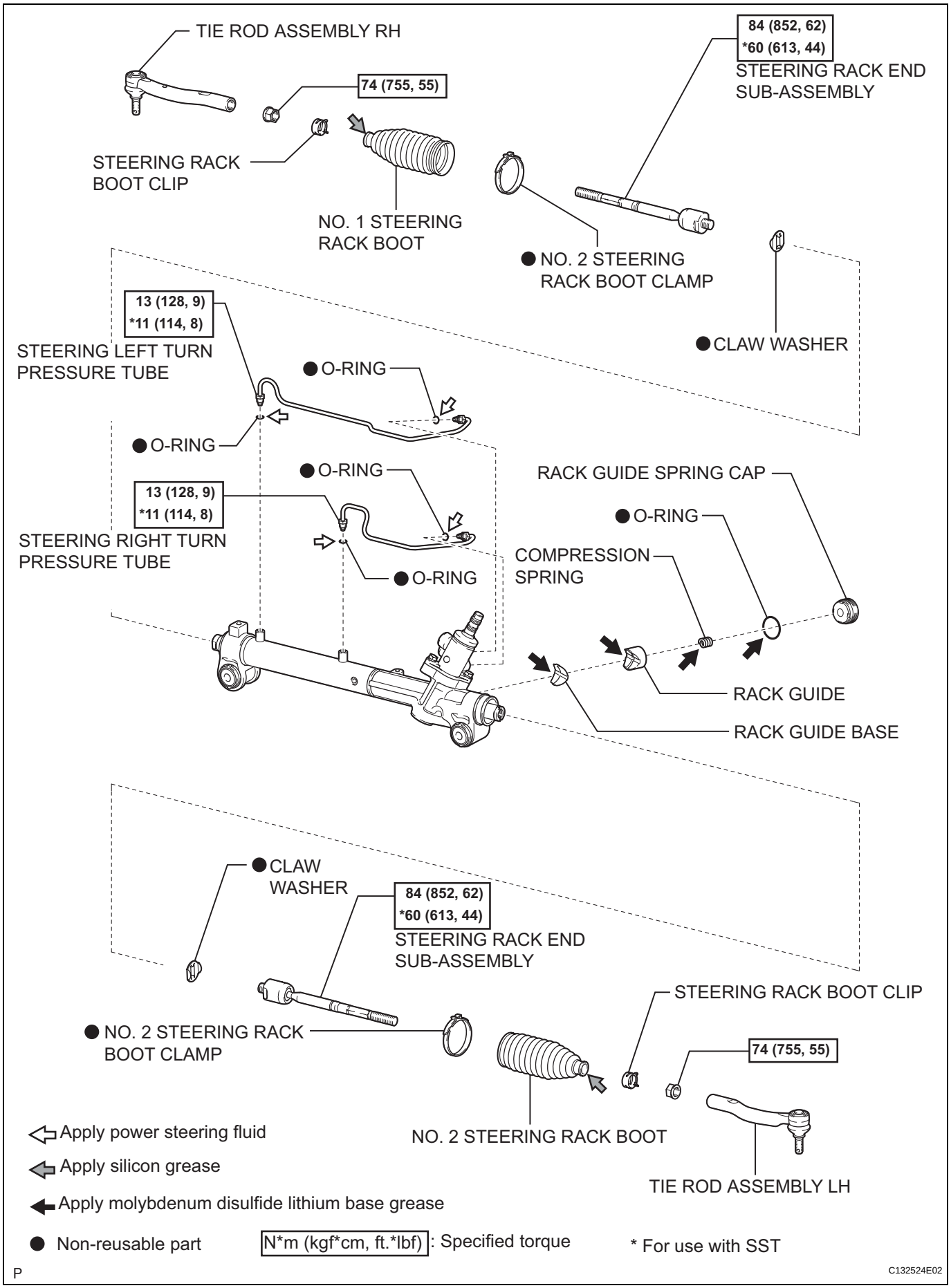
TIE ROD ASSEMBLY RH
74 (755, 55)
84 (852, 62)
*60 (613, 44)
STEERING RACK END SUB-ASSEMBLY
STEERING RACK BOOT CLIP
NO. 1 STEERING RACK BOOT
● NO. 2 STEERING RACK BOOT CLAMP
● CLAW WASHER
13 (128, 9)
*11 (114, 8)
STEERING LEFT TURN PRESSURE TUBE
● O-RING
● O-RING
● O-RING
13 (128, 9)
*11 (114, 8)
STEERING RIGHT TURN PRESSURE TUBE
● O-RING
RACK GUIDE SPRING CAP
● O-RING
COMPRESSION SPRING
RACK GUIDE
RACK GUIDE BASE
● CLAW WASHER
84 (852, 62)
*60 (613, 44)
STEERING RACK END SUB-ASSEMBLY
STEERING RACK BOOT CLIP
● NO. 2 STEERING RACK BOOT CLAMP
74 (755, 55)
NO. 2 STEERING RACK BOOT
TIE ROD ASSEMBLY LH
Apply power steering fluid
Apply silicon grease
Apply molybdenum disulfide lithium base grease
● Non-reusable part
N*m (kgf*cm, ft.*lbf): Specified torque
* For use with SST
P
C132524E02

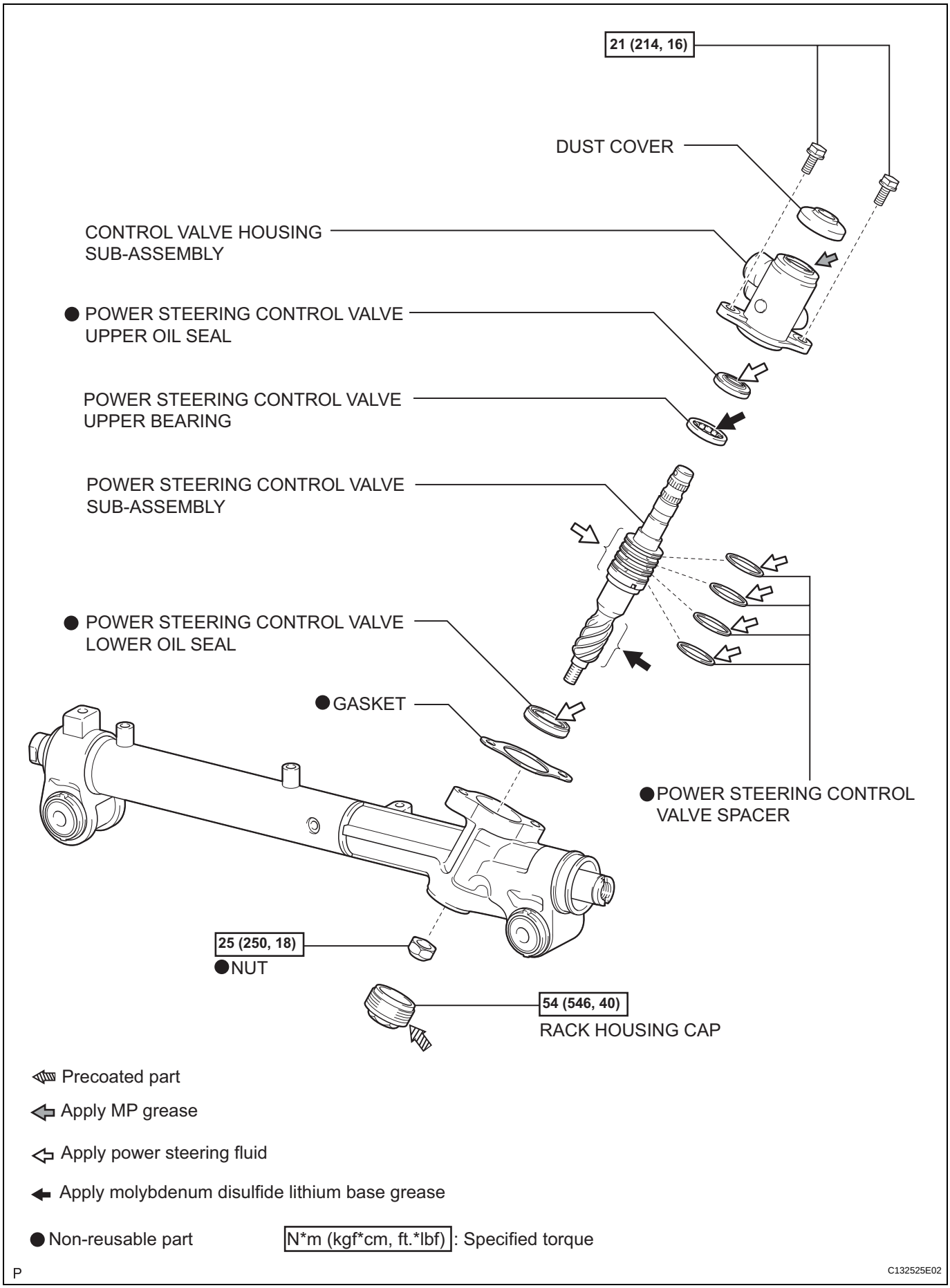
21 (214, 16)
DUST COVER
CONTROL VALVE HOUSING SUB-ASSEMBLY
● POWER STEERING CONTROL VALVE UPPER OIL SEAL
POWER STEERING CONTROL VALVE UPPER BEARING
POWER STEERING CONTROL VALVE SUB-ASSEMBLY
● POWER STEERING CONTROL VALVE LOWER OIL SEAL
●GASKET
●POWER STEERING CONTROL VALVE SPACER
25 (250, 18)
●NUT
54 (546, 40)
RACK HOUSING CAP
Precoated part
Apply MP grease
Apply power steering fluid
Apply molybdenum disulfide lithium base grease
● Non-reusable part
N*m (kgf*cm, ft.*lbf): Specified torque
P
C132525E02

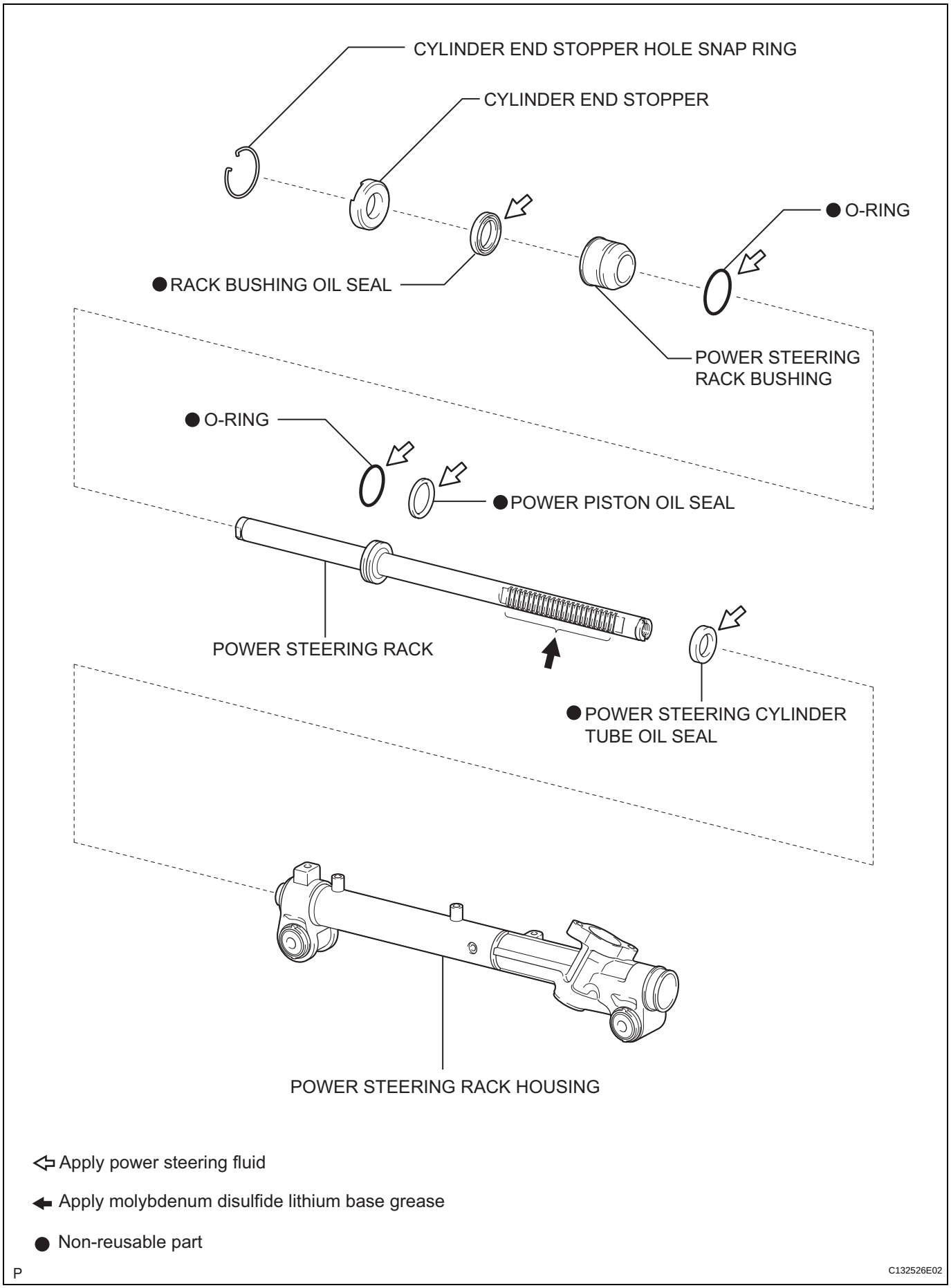
CYLINDER END STOPPER HOLE SNAP RING
CYLINDER END STOPPER
● O-RING
● RACK BUSHING OIL SEAL
POWER STEERING RACK BUSHING
● O-RING
● POWER PISTON OIL SEAL
POWER STEERING RACK
● POWER STEERING CYLINDER TUBE OIL SEAL
POWER STEERING RACK HOUSING
⇦ Apply power steering fluid
🡄 Apply molybdenum disulfide lithium base grease
● Non-reusable part
P
C132526E02

REMOVAL

1. PLACE FRONT WHEELS FACING STRAIGHT AHEAD

2. DISCONNECT CABLE FROM NEGATIVE BATTERY TERMINAL

3. REMOVE FRONT WHEELS

4. SEPARATE STEERING INTERMEDIATE SHAFT ASSEMBLY

(a) Secure the steering wheel with the seat belt in order to prevent rotation.
HINT:
This operation is useful to prevent damage to the spiral cable.

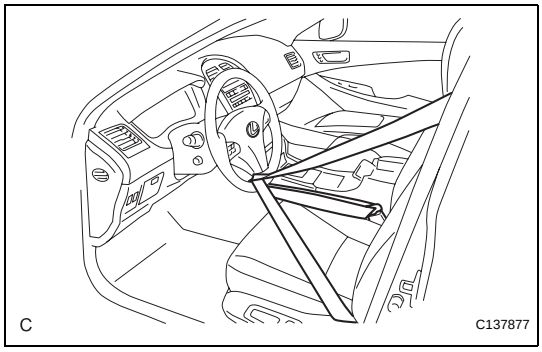

(b) Remove the bolt and slide the steering intermediate shaft assembly.
NOTICE:
Do not separate the steering intermediate shaft assembly from the power steering link assembly.

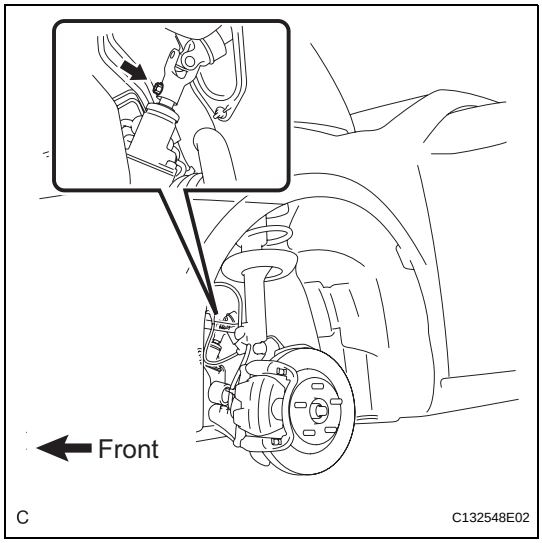

(c) Put matchmarks on the steering intermediate shaft assembly and the power steering link assembly.

(d) Separate the steering intermediate shaft assembly from the power steering link assembly.

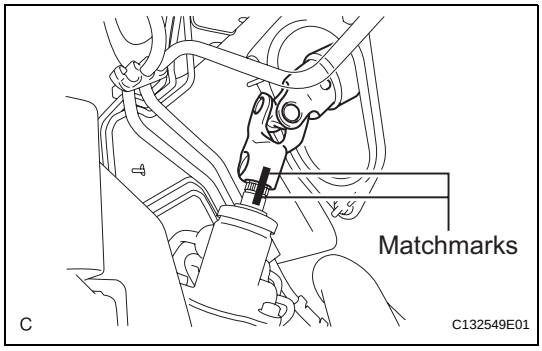

5. SEPARATE TIE ROD ASSEMBLY LH

(a) Remove the cotter pin and the nut.

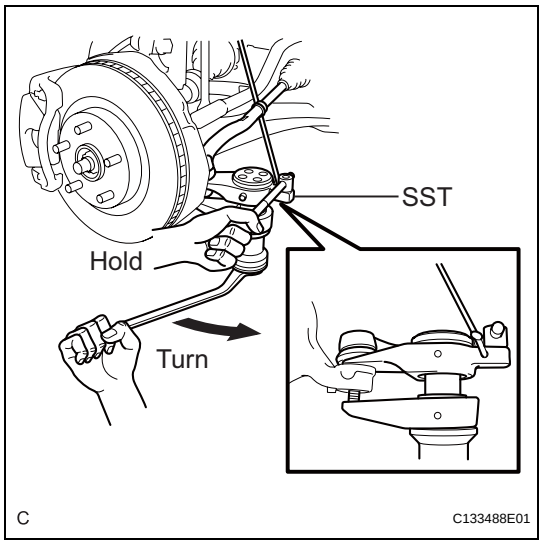

(b) Using SST, separate the tie rod assembly LH from the steering knuckle.
SST 09628-00011
NOTICE:
- **Hang SST with a string, etc. to prevent it from falling.**
- **Do not damage the front disc brake dust cover.**
- **Do not damage the ball joint dust cover.**
- **Do not damage the steering knuckle.**

6. SEPARATE TIE ROD ASSEMBLY RH
HINT:
Perform the same procedure as for the LH side.

7. REMOVE ENGINE ASSEMBLY WITH TRANSAXLE
HINT:
Refer to the instructions for REMOVAL of the ENGINE ASSEMBLY (See page EM-22).

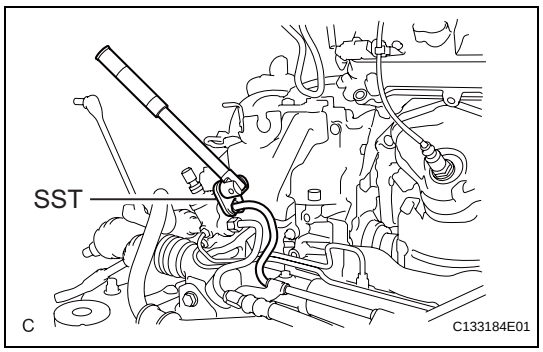

8. DISCONNECT PRESSURE FEED TUBE ASSEMBLY
(a) Using SST, disconnect the pressure feed tube assembly (return tube side) from the power steering link assembly.
SST 09023-12701

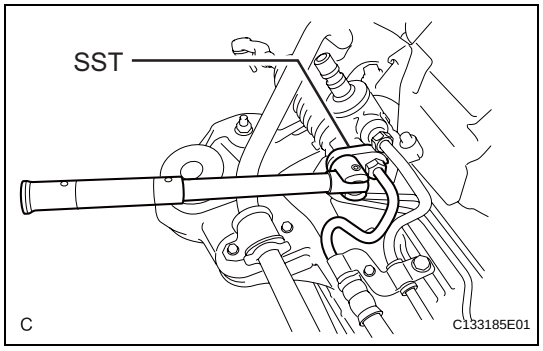

(b) Using SST, disconnect the pressure feed tube assembly (pressure feed tube side) from the power steering link assembly.
SST 09023-12701

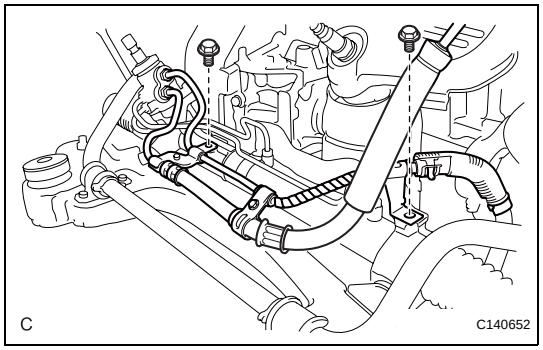

(c) Remove the 2 bolts and separate the pressure feed tube clamp.

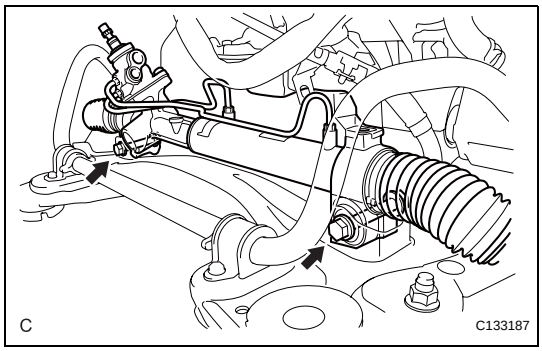

9. REMOVE POWER STEERING LINK ASSEMBLY

(a) Remove the 2 bolts, 2 nuts, and the power steering link assembly.

NOTICE:

Because the nut has its own stopper, do not turn the nut. Loosen the bolt with the nut fixed.

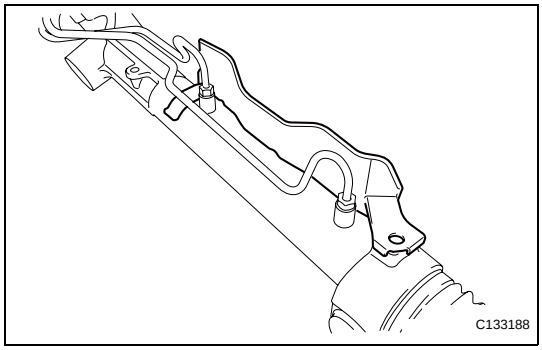

10. REMOVE POWER STEERING RACK HOUSING HEAT INSULATOR

(a) Remove the power steering rack housing heat insulator from the power steering link assembly.

DISASSEMBLY

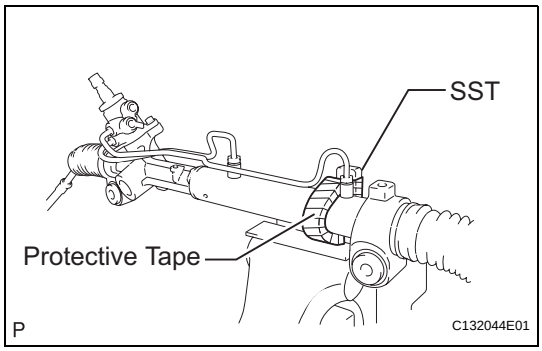

1. SECURE POWER STEERING LINK ASSEMBLY

(a) Using SST, secure the power steering link assembly.

SST 09612-00012

HINT:

Tape the SST before use.

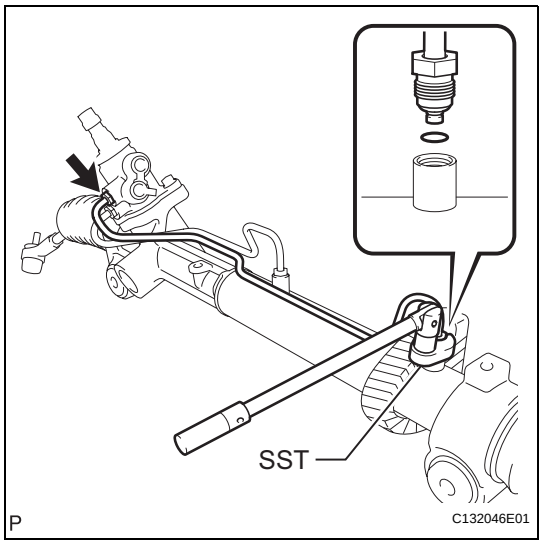

2. REMOVE STEERING LEFT TURN PRESSURE TUBE

(a) Using SST, remove the steering left turn pressure tube.

SST 09023-38201

(b) Remove the 2 O-rings from the steering left turn pressure tube.

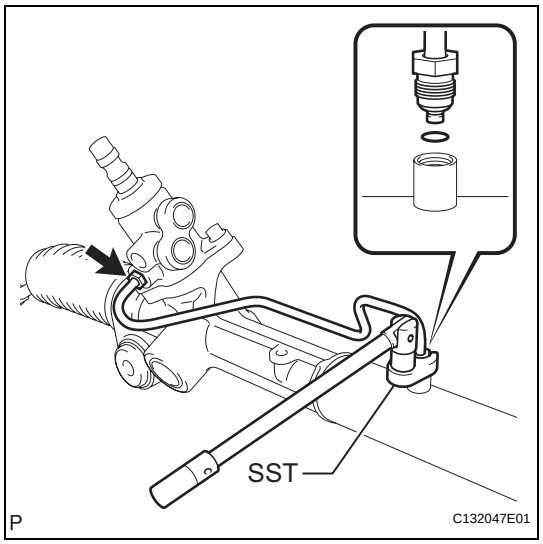

3. REMOVE STEERING RIGHT TURN PRESSURE TUBE

(a) Using SST, remove the steering right turn pressure tube.
SST 09023-38201

(b) Remove the 2 O-rings from the steering right turn pressure tube.

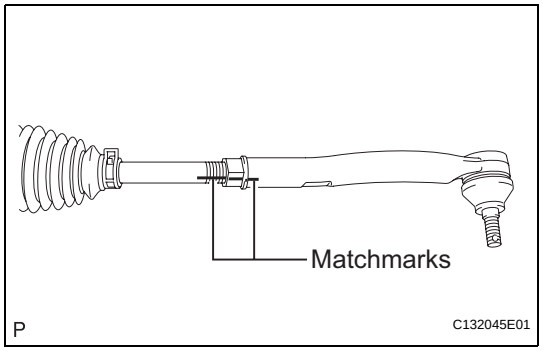

4. REMOVE TIE ROD ASSEMBLY LH

(a) Put matchmarks on the tie rod assembly LH and the steering rack end sub-assembly.

(b) Loosen the lock nut, and remove the tie rod assembly LH and the lock nut.

5. REMOVE TIE ROD ASSEMBLY RH

HINT:
Perform the same procedure as for the LH side.

6. REMOVE STEERING RACK BOOT CLIP

(a) Using pliers, remove the 2 steering rack boot clips.

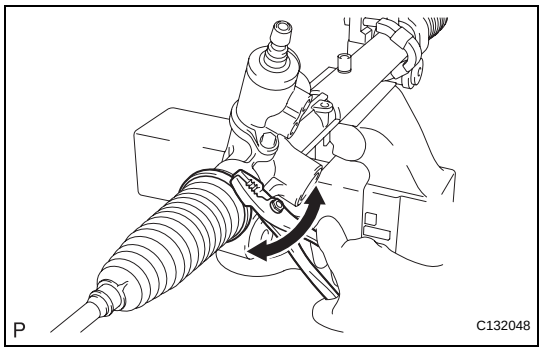

7. REMOVE NO. 2 STEERING RACK BOOT CLAMP

(a) Using pliers, remove the 2 No. 2 steering rack boot clamps as shown in the illustration.
NOTICE:
Be careful not to damage the steering rack boot No. 2.

8. REMOVE NO. 2 STEERING RACK BOOT

(a) Remove the No. 2 steering rack boot.

9. REMOVE NO. 1 STEERING RACK BOOT

(a) Remove the No. 1 steering rack boot.

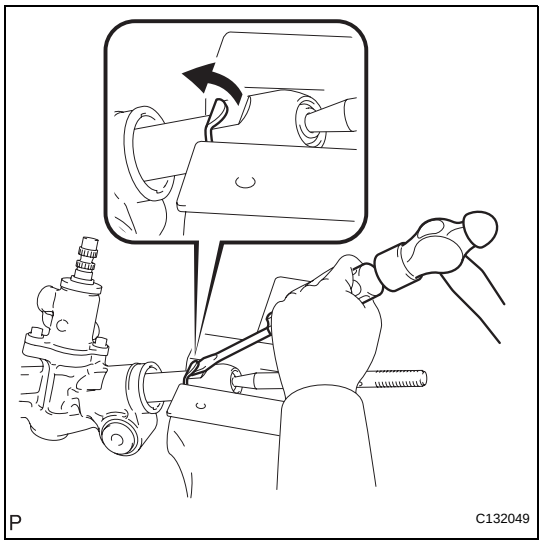

10. REMOVE STEERING RACK END SUB-ASSEMBLY

(a) Using a screwdriver and a hammer, unstake the RH and LH claw washers.
NOTICE:
Avoid any impact to the steering rack.

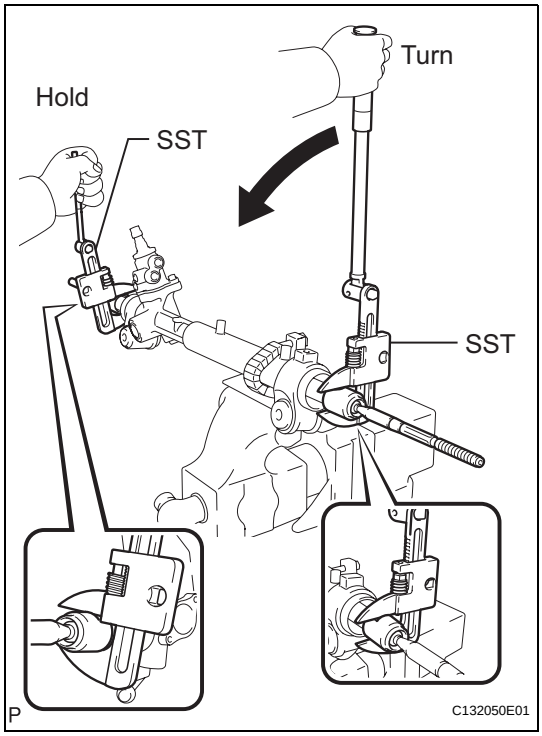

(b) Using SST, remove the steering rack end sub-assembly (RH side) and the claw washer.
SST 09922-10010
NOTICE:
Use SST 09922-10010 as shown in the illustration.

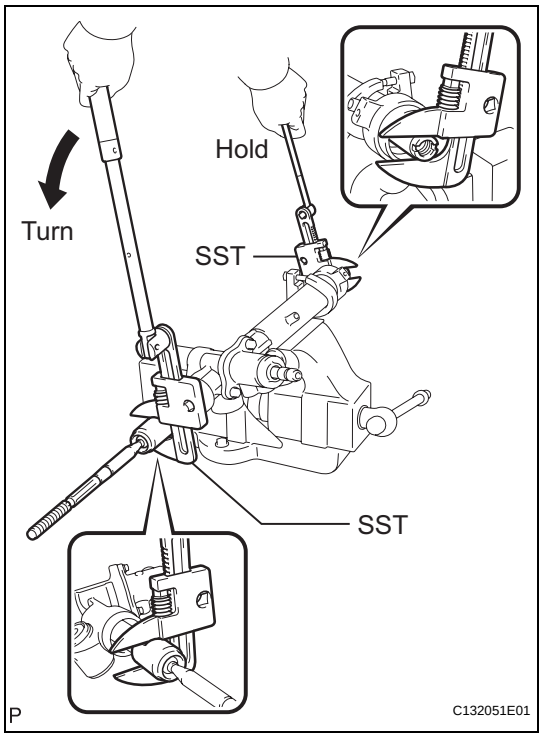

(c) Using SST, remove the steering rack end sub-assembly (LH side) and the claw washer.
SST 09922-10010
NOTICE:
Use SST 09922-10010 as shown in the illustration.
HINT:
Using SST, hold the rack and remove the steering rack end sub-assembly.

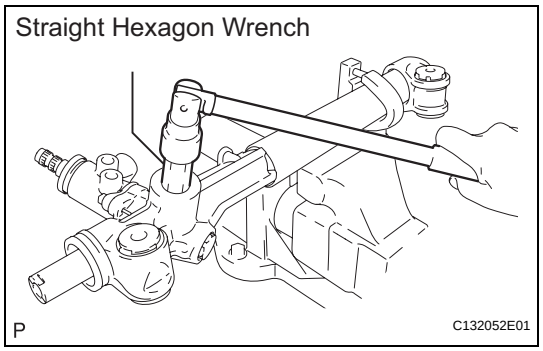

11. REMOVE RACK GUIDE

(a) Using a straight hexagon wrench (24 mm (0.94 in.)), remove the rack guide spring cap.

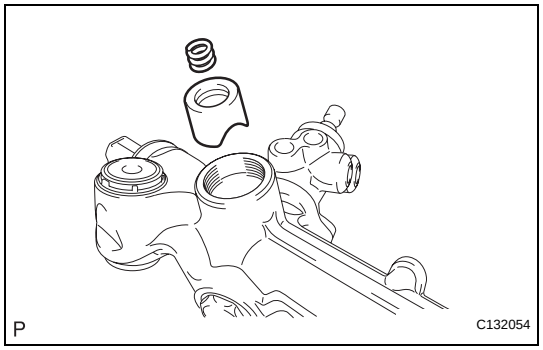

(b) Remove the compression spring and the rack guide sub-assembly.

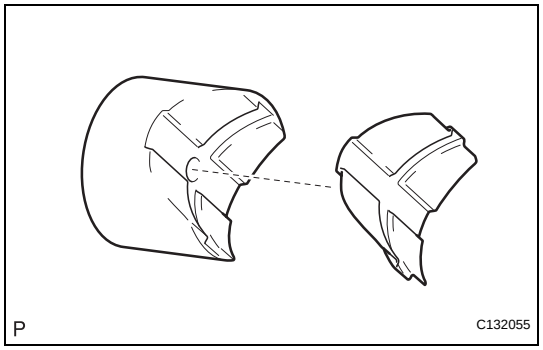

(c) Remove the rack guide base from the rack guide.

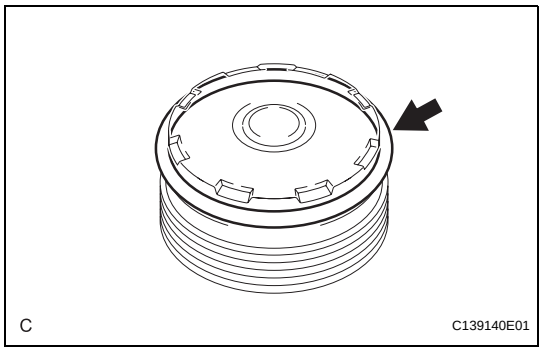

(d) Remove the O-ring from the rack guide spring cap.

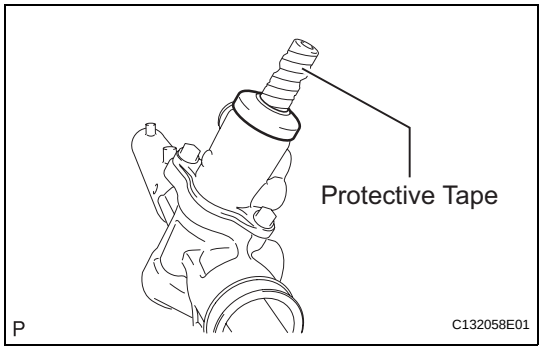

12. REMOVE DUST COVER

(a) Wrap protective tape around the spline of the control valve in order to prevent damaging the dust cover.

(b) Remove the dust cover.

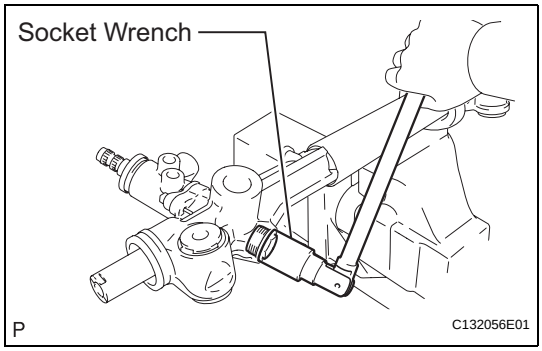

13. REMOVE POWER STEERING CONTROL VALVE ASSEMBLY

(a) Using a socket wrench (27 mm (1.06 in.)), remove the rack housing cap.

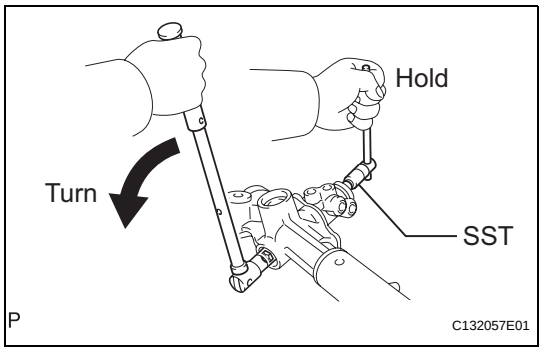

(b) Using SST, hold the control valve shaft and remove the nut.
SST 09616-00011

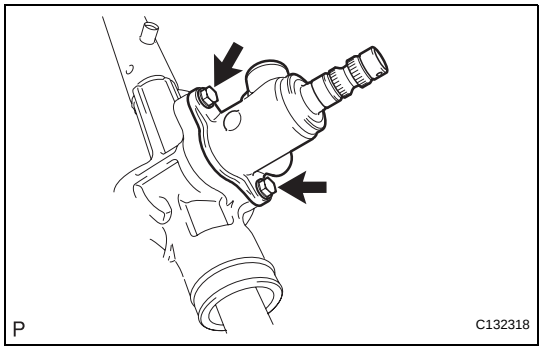

(c) Remove the 2 bolts and the power steering control valve assembly.

(d) Remove the gasket.

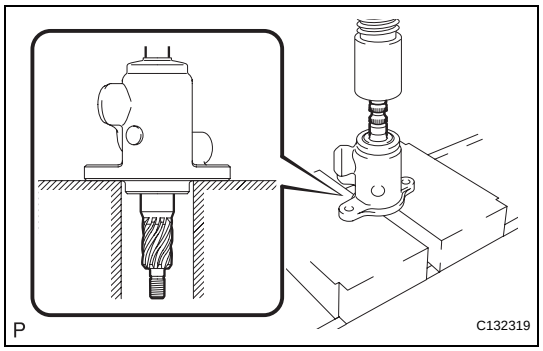

14. REMOVE POWER STEERING CONTROL VALVE SUB-ASSEMBLY

(a) Using a press, remove the power steering control valve sub-assembly.

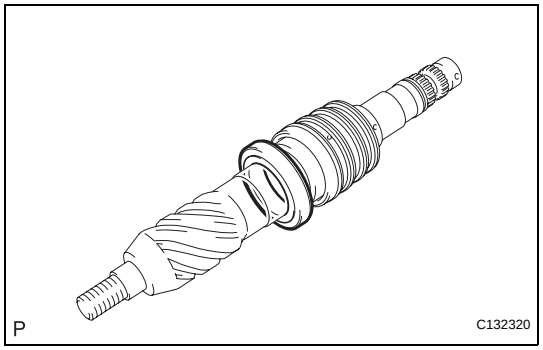

15. REMOVE POWER STEERING CONTROL VALVE LOWER OIL SEAL

(a) Remove the power steering control valve lower oil seal from the power steering control valve sub-assembly.

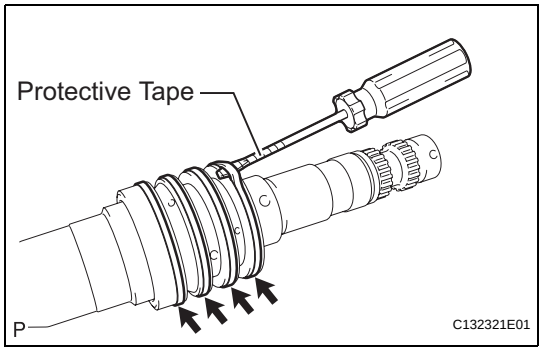

16. REMOVE POWER STEERING CONTROL VALVE SPACER

(a) Using a screwdriver, remove the 4 power steering control valve spacers from the power steering control valve sub-assembly.

NOTICE:

Be careful not to damage the spacer grooves on the control valve.

HINT:

Tape the screwdriver tip before use.

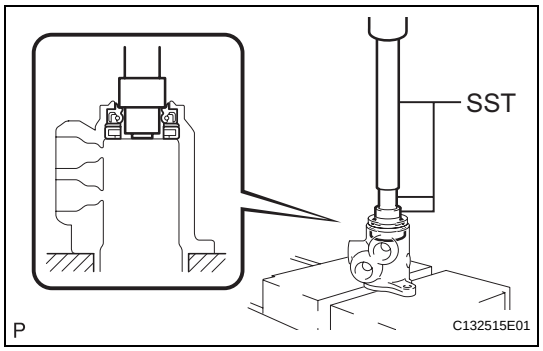

17. REMOVE POWER STEERING CONTROL VALVE UPPER OIL SEAL

(a) Using SST and a press, press out the power steering control valve upper oil seal and the power steering control valve upper bearing from the control valve housing sub-assembly.

SST 09950-70010 (09951-07150), 09950-60010 (09951-00250, 09951-00180, 09952-06010)

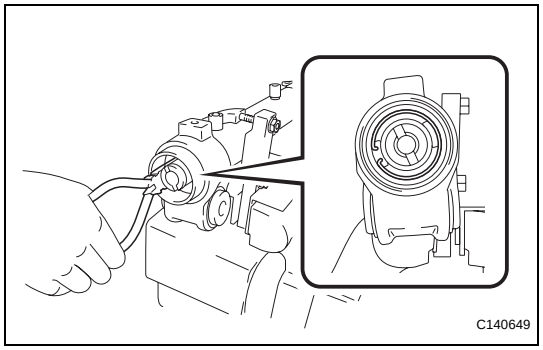

18. REMOVE CYLINDER END STOPPER HOLE SNAP RING

(a) Using needle-nose pliers, remove the cylinder end stopper hole snap ring from the power steering rack housing.

19. REMOVE POWER STEERING RACK SUB-ASSEMBLY

(a) Remove the power steering rack sub-assembly with the cylinder end stopper and power steering rack bushing.

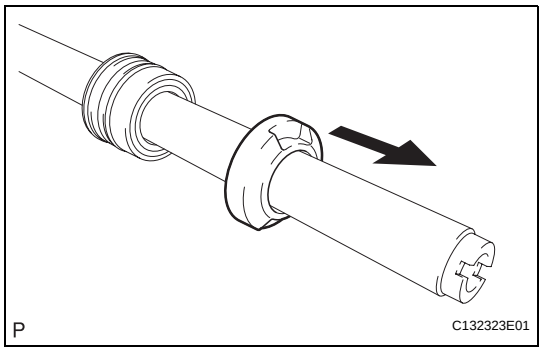

20. REMOVE CYLINDER END STOPPER

(a) Remove the cylinder end stopper from the power steering rack sub-assembly.

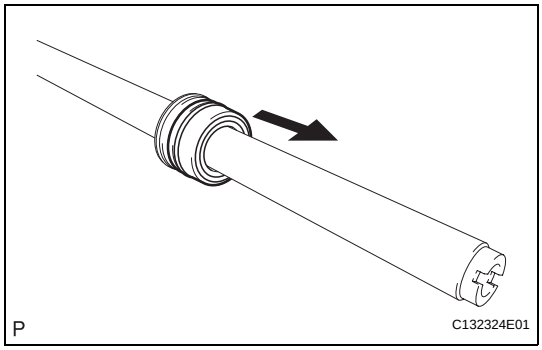

21. REMOVE POWER STEERING RACK BUSHING

(a) Remove the power steering rack bushing from the power steering rack sub-assembly.

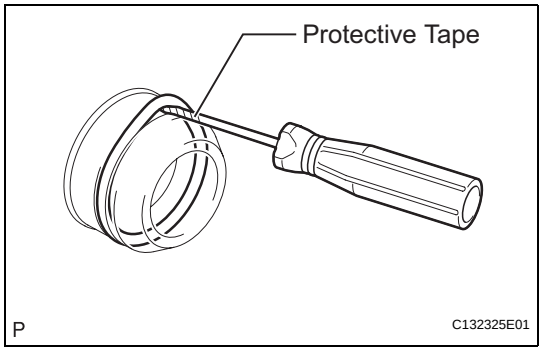

(b) Using a screwdriver, remove the O-ring from the power steering rack bushing.
HINT:
Tape the screwdriver tip before use.

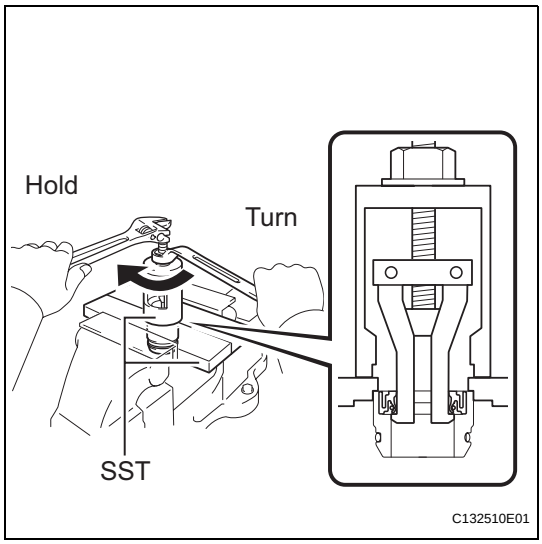

(c) Using SST, remove the rack bushing oil seal from the power steering rack bushing.
SST 09527-21011, 09612-24014 (09613-22011)
NOTICE:
Be careful not to drop the power steering rack bushing.

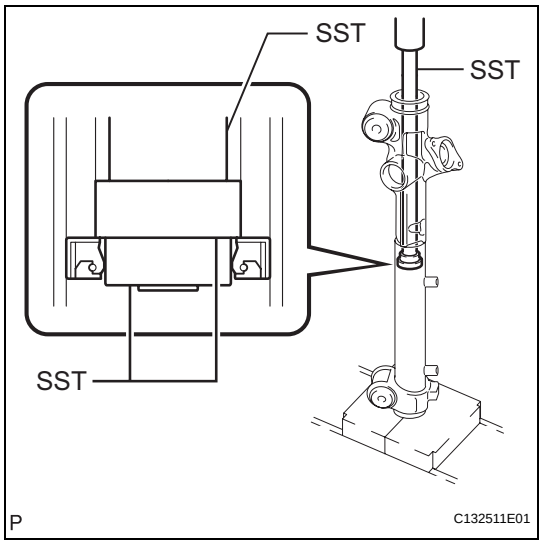

22. REMOVE POWER STEERING CYLINDER TUBE OIL SEAL

(a) Using SST and a press, remove the power steering cylinder tube oil seal.

SST 09950-70010 (09951-07360), 09950-60010 (09951-00290, 09951-00250)

NOTICE:

Be careful not to damage the inside surface of the power steering rack housing.

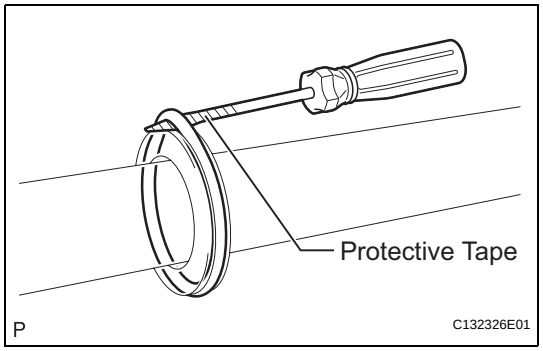

23. REMOVE POWER PISTON OIL SEAL

(a) Using a screwdriver, remove the power piston oil seal and the O-ring from the power steering rack.

NOTICE:

Be careful not to damage the power piston oil seal groove on the power steering rack.

HINT:

Tape the screwdriver tip before use.

INSPECTION

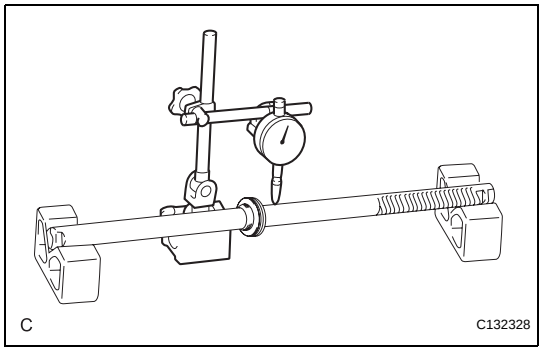

1. INSPECT POWER STEERING RACK

(a) Using a dial indicator, check for teeth wear and runout of the steering rack.

Maximum runout:

0.3 mm (0.0118 in.)

NOTICE:

Make sure that the steering rack is placed horizontally.

If runout exceeds the maximum, replace the power steering link assembly.

(b) Check the rack surface for wear and damage.

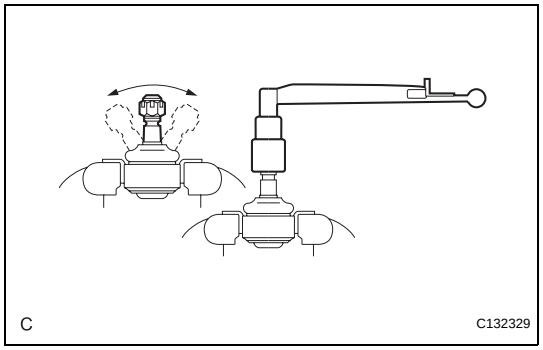

2. INSPECT TIE ROD ASSEMBLY LH

(a) Secure the tie rod end assembly LH in a vise.

(b) Install the nut to the stud bolt.

(c) Flip the ball joint back and forth 5 times or more.

(d) Using a torque wrench, turn the nut continuously at a rate of 3 to 5 seconds per turn and take the torque reading on the 5th turn.

Torque: Turning torque

0.98 to 3.92 N*m (10 to 40 kgf*cm, 8.7 to 34.7 in.*lbf)

If turning torque is not within the specified range, replace the tie rod assembly LH.

3. INSPECT TIE ROD ASSEMBLY RH

HINT:

Perform the same procedure as for the LH side.

4. INSPECT TOTAL PRELOAD

(a) Temporarily install the 2 steering rack ends to the power steering rack.

NOTICE:

Do not fully turn the power steering rack without the steering rack ends as it may damage the oil seal in the rack housing.

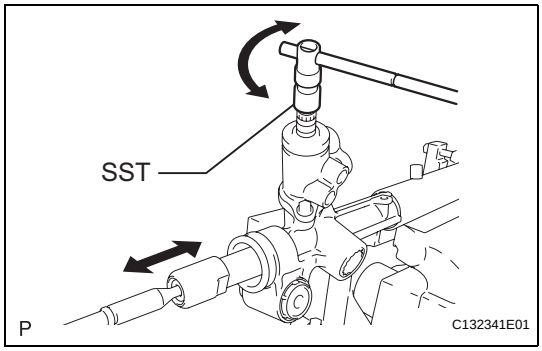

(b) Using SST, fully turn the power steering rack right and left 10 times to settle it.

SST 09616-00011

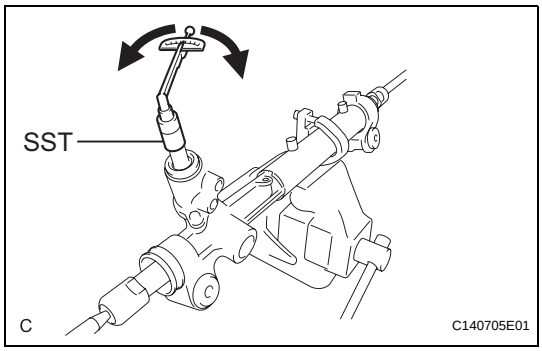

(c) Using SST, turn the control valve and measure the preload.

SST 09616-00011

Torque: Standard preload (turning)
1.5 N*m (15.3 kgf*cm, 13.3 in.*lbf) or less

If the preload exceeds the specified value, go back to INSTALL RACK GUIDE (See page PS-44).

(d) Remove the 2 steering rack ends from the power steering rack.

REASSEMBLY

NOTICE:
When installing parts, coat the parts indicated by arrows with power steering fluid, molybdenum disulfide lithium base grease, MP grease or silicon grease (See page PS-24).

1. INSTALL POWER PISTON OIL SEAL

(a) Coat a new O-ring with power steering fluid and install it to the steering rack.

(b) Expand the new power piston oil seal with your fingers.
NOTICE:
Be careful not to expand the oil seal excessively.

(c) Coat the power piston oil seal with power steering fluid.

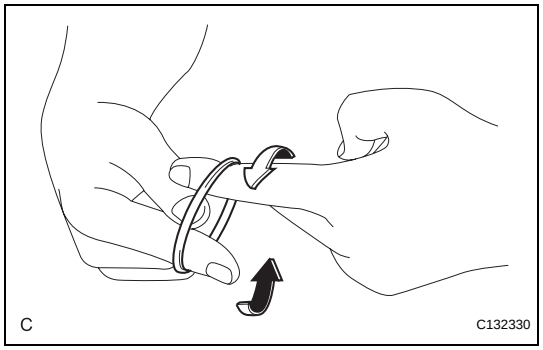

(d) Install the power piston oil seal to the steering rack, and adjust it with your fingers.

2. INSTALL POWER STEERING CYLINDER TUBE OIL SEAL

(a) Apply power steering fluid to the lip of a new power steering cylinder tube oil seal.

(b) Install the power steering cylinder tube oil seal to the rack housing at a slant.

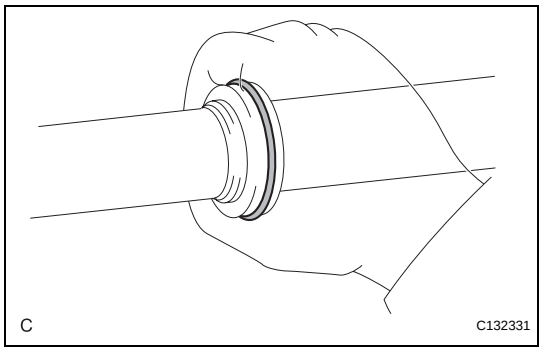

(c) Using SST, insert the power steering cylinder tube oil seal by pushing the SST in by hand until the oil seal passes the 2 ports.
SST 09950-70010 (09951-07360), 09631-00200
NOTICE:
- **Ensure that the power steering cylinder tube oil seal is installed in the correct direction as shown in the illustration.**
- **Install the power steering cylinder tube oil seal at an angle of approximately 15° so that the lowermost part comes to the point, indicated by the arrow in the illustration, to prevent damage to the side of the oil seal when it passes the 2 ports.**
- **Do not turn the SST when inserting the oil seal.**

(d) Install SST (09631-00200) to SST (09951-07360) upside down.

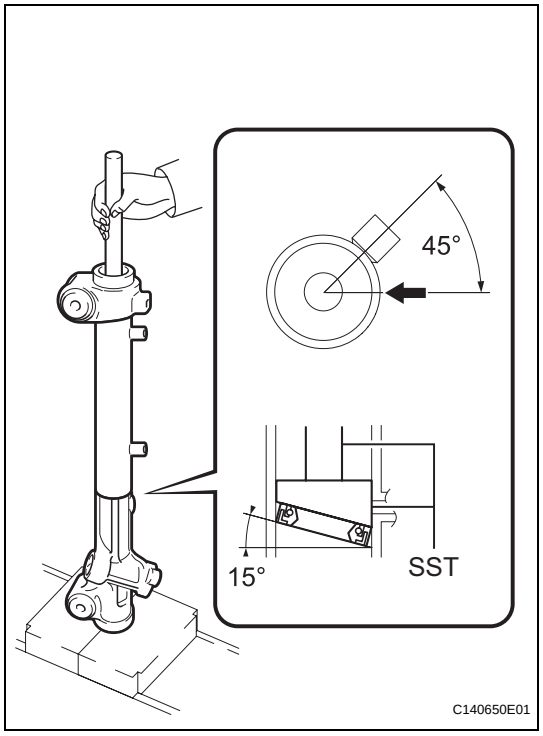

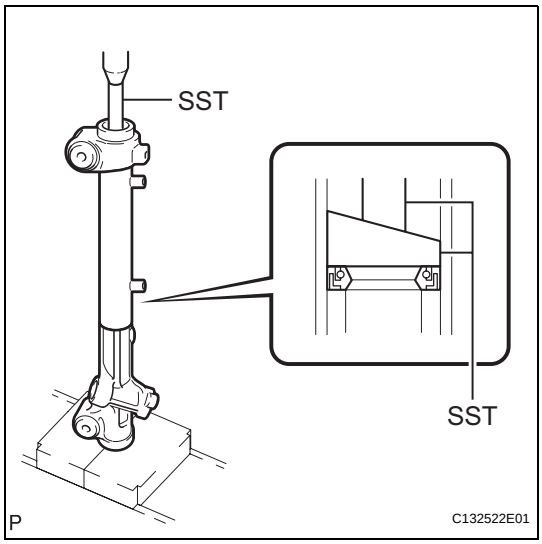

(e) Using SST, level the power steering cylinder tube oil seal by pushing the SST in by hand. Using SST and a press, install the oil seal.
SST 09950-70010 (09951-07360), 09631-00200

3. INSTALL POWER STEERING RACK SUB-ASSEMBLY

(a) Apply molybdenum disulfide lithium base grease to the rack teeth ends.

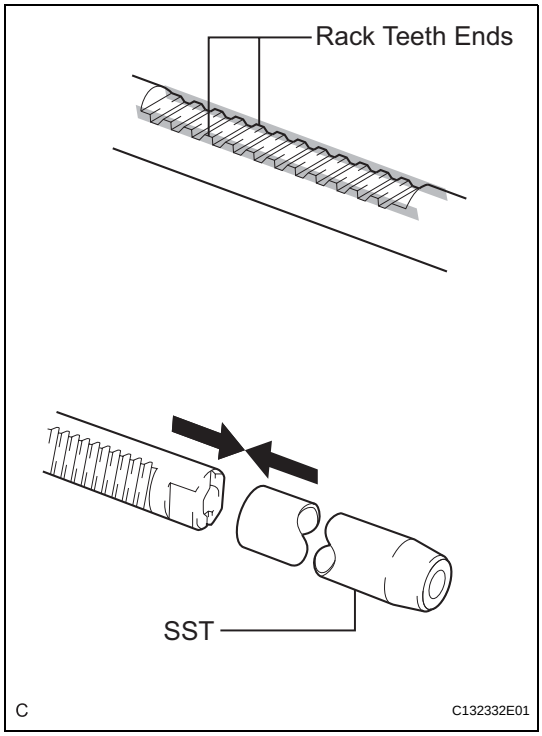

(b) Connect SST to the power steering rack sub-assembly.
SST 09631-33010
(c) Coat SST with power steering fluid.
(d) Install the power steering rack sub-assembly to the power steering rack housing.
(e) Remove SST.

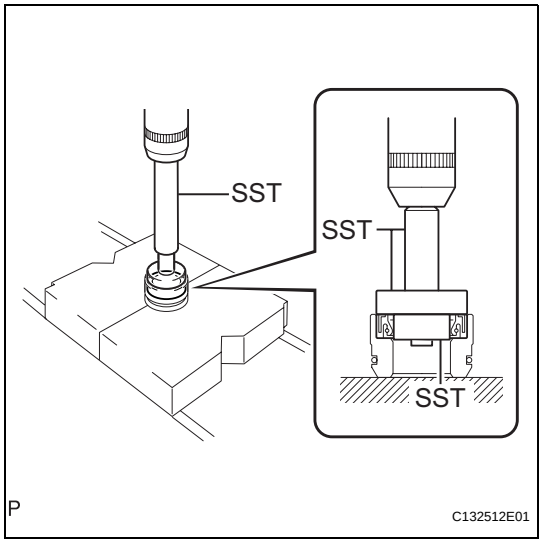

4. INSTALL POWER STEERING RACK BUSHING

(a) Using SST and a press, install the rack bushing oil seal to the power steering rack bushing.
SST 09950-70010 (09951-07100), 09950-60010 (09951-00400, 09951-00250, 09952-06010)
NOTICE:
Ensure that the rack bushing oil seal is installed in the correct direction as shown in the illustration.
(b) Coat a new O-ring with power steering fluid and install it to the rack bushing.
(c) Coat the rack bushing oil seal lip with power steering fluid.

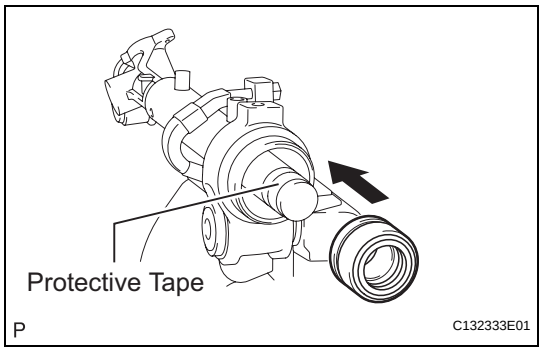

(d) Install the power steering rack bushing to the power steering rack housing.
NOTICE:
Do not damage the rack bushing oil seal.
HINT:
Wrap protective tape around the end of the steering rack in order to prevent damage to the rack bushing oil seal.

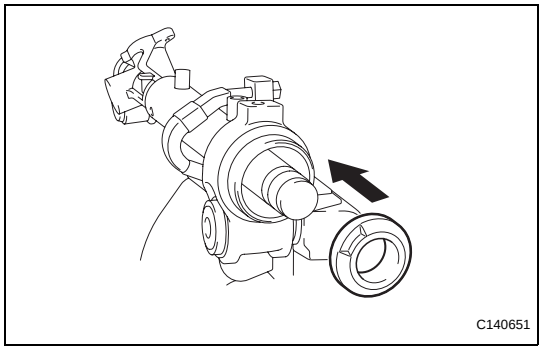

5. INSTALL CYLINDER END STOPPER

(a) Install the cylinder end stopper to the power steering rack housing.

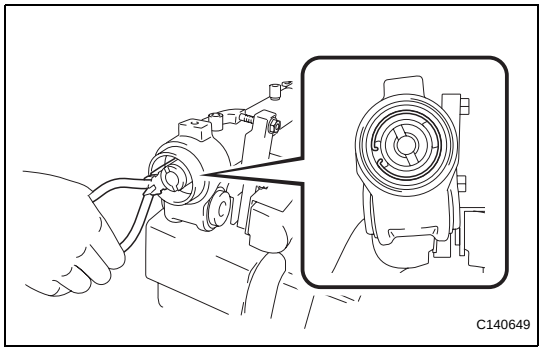

6. INSTALL CYLINDER END STOPPER HOLE SNAP RING

(a) Using needle nose pliers, install the cylinder end stopper hole snap ring to the power steering rack housing.
NOTICE:
- **Make sure that the cylinder end stopper hole snap ring is securely installed in the power steering rack housing groove.**
- **Make sure that the cylinder end stopper hole snap ring claws are aligned with the cylinder end stopper notch.**

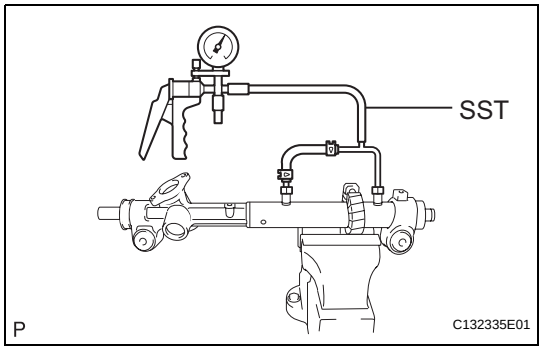

7. AIR TIGHTNESS TEST

(a) Install SST to the power steering rack housing.
SST 09631-12071 (09633-00010)

(b) Apply a vacuum of 53 kPa (398 mmHg, 15.65 in.Hg) for approximately 30 seconds.

(c) Check that there is no change in the vacuum pressure.
If there is a change in the vacuum pressure, check the installation of the oil seals.

8. INSTALL POWER STEERING CONTROL VALVE UPPER OIL SEAL

(a) Coat a new power steering control valve upper oil seal lip with power steering fluid.

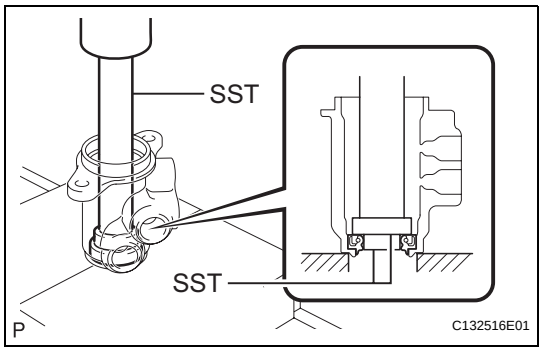

(b) Using SST and a press, press in the power steering control valve upper oil seal.
SST 09950-70010 (09951-07150), 09950-60010 (09951-00180, 09952-06010, 09951-00320)
NOTICE:
Make sure that the power steering control valve upper oil seal is installed in the correct direction as shown in the illustration.

9. INSTALL POWER STEERING CONTROL VALVE UPPER BEARING

(a) Coat the power steering control valve upper bearing with molybdenum disulfide lithium base grease.

(b) Using SST and a press, press in the power steering control valve upper bearing.
SST 09950-70010 (09951-07150), 09950-60010 (09951-00180, 09951-00340)
NOTICE:
Make sure that the power steering control valve upper bearing is installed in the correct direction as shown in the illustration.

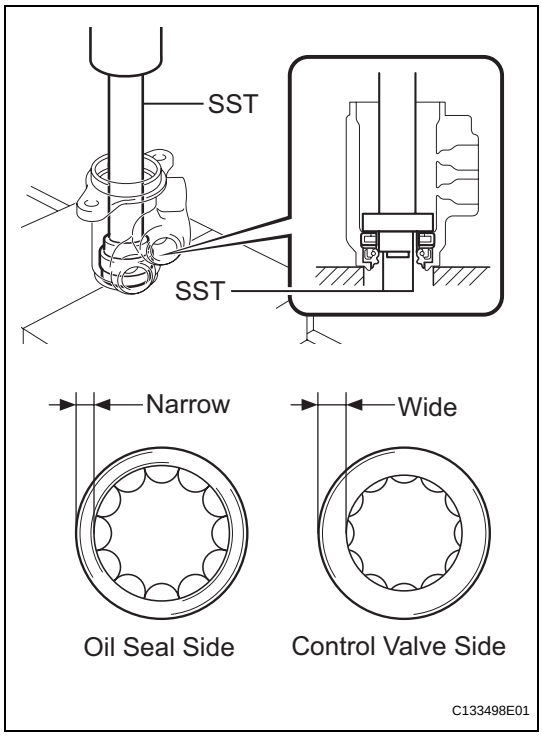

10. INSTALL POWER STEERING CONTROL VALVE SPACER

(a) Expand 4 new power steering control valve spacers with your fingers.
NOTICE:
Be careful not to expand the power steering control valve spacers excessively.

(b) Coat the 4 power steering control valve spacers with power steering fluid.

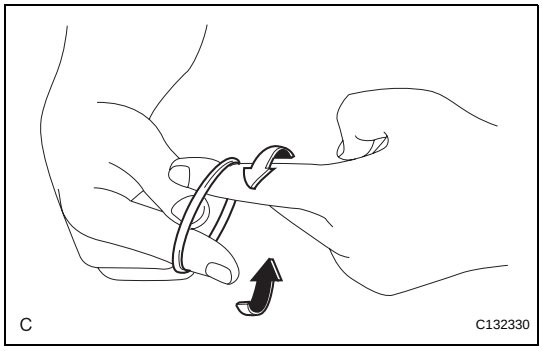

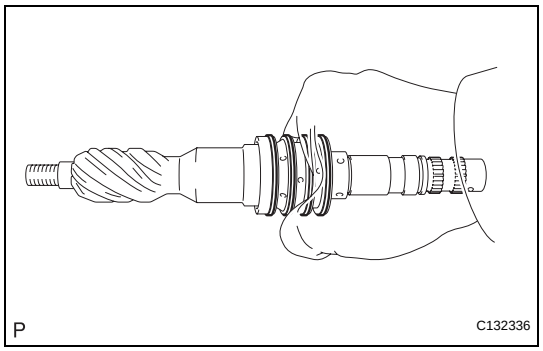

(c) Install the 4 power steering control valve spacers to the control valve, and adjust them with your fingers.

11. INSTALL POWER STEERING CONTROL VALVE SUB-ASSEMBLY

(a) Coat the power steering control valve sub-assembly with power steering fluid.

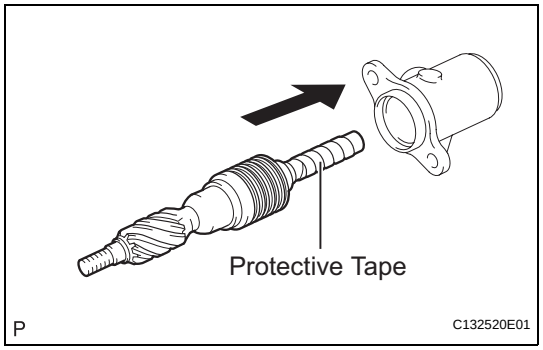

(b) Install the power steering control valve sub-assembly into the control valve housing sub-assembly.

NOTICE:

Be careful not to damage the power steering control valve spacers and power steering control valve upper oil seal lip.

HINT:

Wrap protective tape around the spline of the power steering control valve sub-assembly in order to prevent damage to the oil seal.

12. INSTALL POWER STEERING CONTROL VALVE LOWER OIL SEAL

(a) Coat a new power steering control valve lower oil seal lip with power steering fluid.

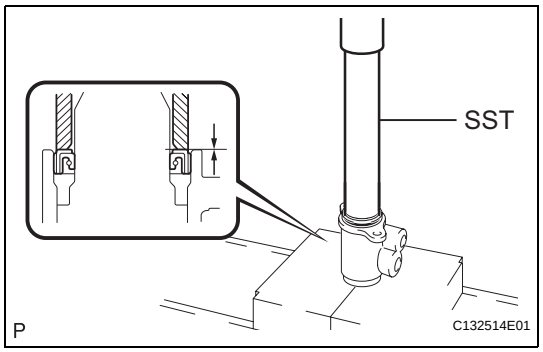

(b) Using SST and a press, install the power steering control valve lower oil seal to the control valve assembly.

SST 09612-22011

NOTICE:

- **Make sure that the power steering control valve lower oil seal is installed in the correct direction as shown in the illustration.**
- **Do not damage the power steering control valve lower oil seal.**

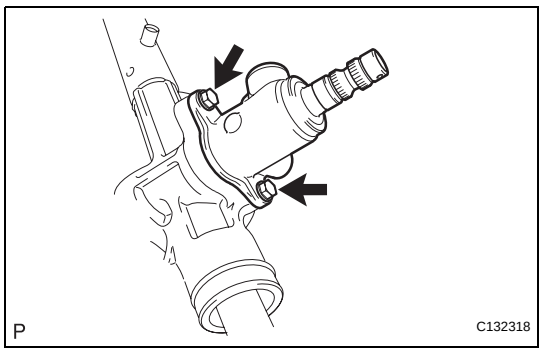

13. INSTALL POWER STEERING CONTROL VALVE ASSEMBLY

(a) Install the power steering control valve assembly and a new gasket to the power steering rack housing with the 2 bolts.

Torque: 21 N*m (214 kgf*cm, 16 ft.*lbf)

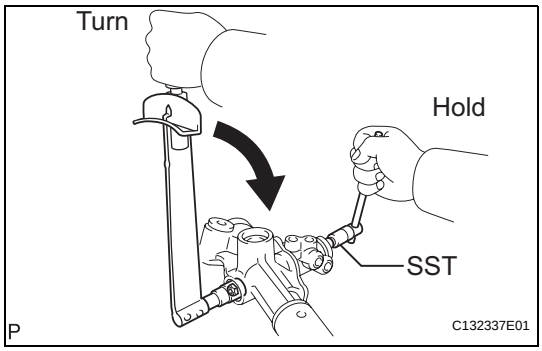

(b) Using SST, hold the control valve shaft and install a new nut.
SST 09616-00011
Torque: 25 N*m (250 kgf*cm, 18 ft.*lbf)

(c) Apply sealant to 2 or 3 threads of the rack housing cap.
Sealant:
TOYOTA genuine adhesive 1344, THREE BOND 1344 or equivalent

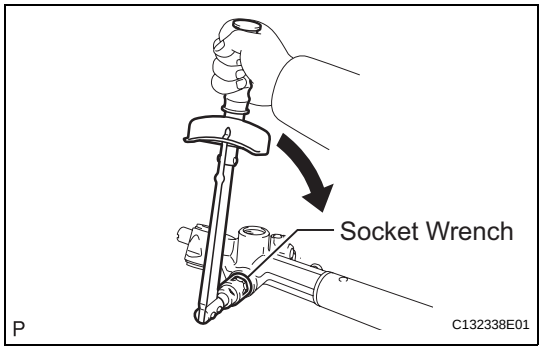

(d) Using a socket wrench (27 mm (1.06 in.)), install the rack housing cap.
Torque: 54 N*m (546 kgf*cm, 40 ft.*lbf)

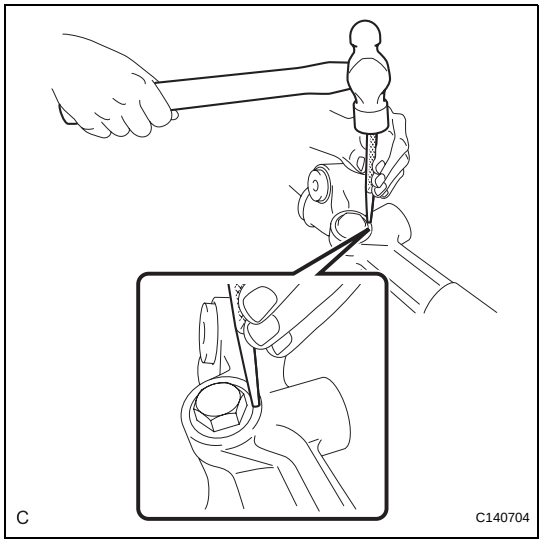

(e) Using a punch and a hammer, stake the rack housing cap and the power steering rack housing.

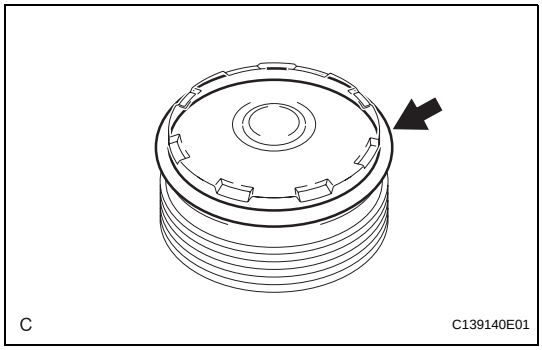

14. INSTALL RACK GUIDE

(a) Coat a new O-ring with molybdenum disulfide lithium base grease and install it to the rack guide spring cap.

(b) Apply molybdenum disulfide lithium base grease to the rack guide base and rack guide.

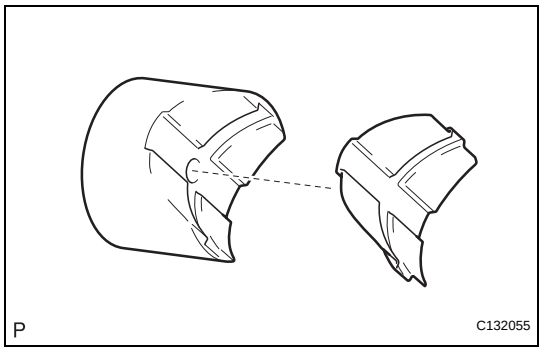

(c) Install the rack guide base to the rack guide.
(d) Apply molybdenum disulfide lithium base grease to the compression spring and the contact surface of the rack guide sub-assembly and the power steering rack.

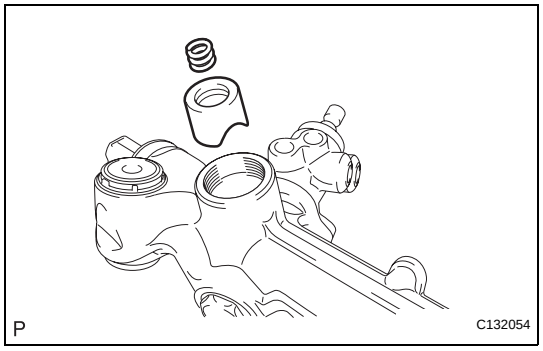

(e) Install the compression spring and rack guide sub-assembly to the power steering rack housing.

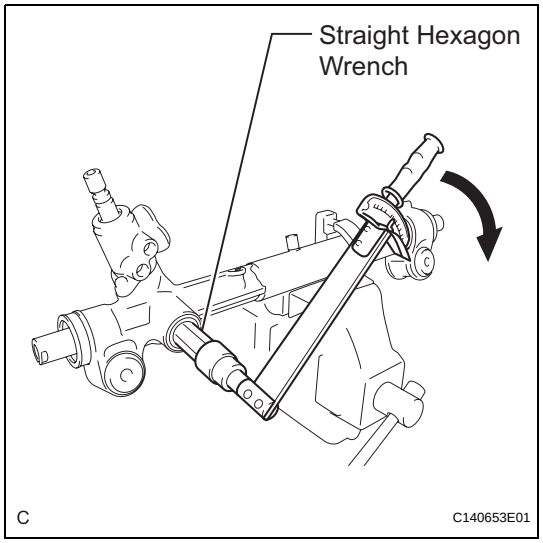

(f) Using a straight hexagon wrench (24 mm (0.94 in.)), install the rack guide spring cap to the power steering rack housing.
Torque: 50 to 70 N*m (514 to 714 kgf*cm, 37 to 52 ft.*lbf)

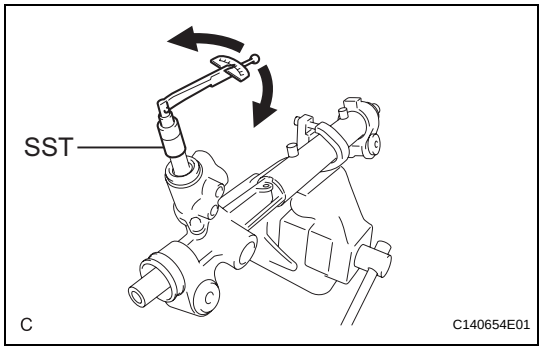

(g) Using SST, turn the control valve and measure the turning torque.
Torque: 6.0 N*m (61 kgf*cm, 54 in.*lbf) or more

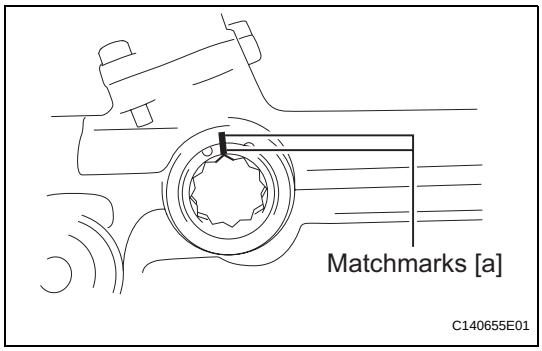

(h) Put matchmarks [a] on the power steering rack housing and the rack guide spring cap.

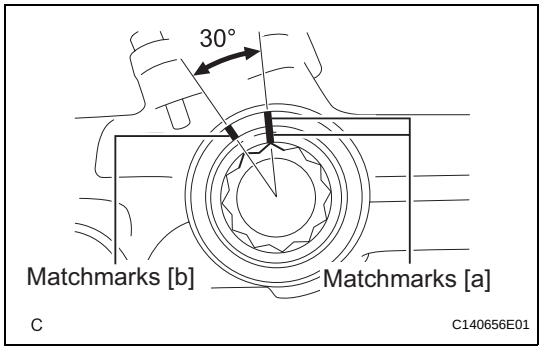

(i) Put matchmarks [b] 30° counterclockwise from matchmarks [a] on the power steering rack housing.

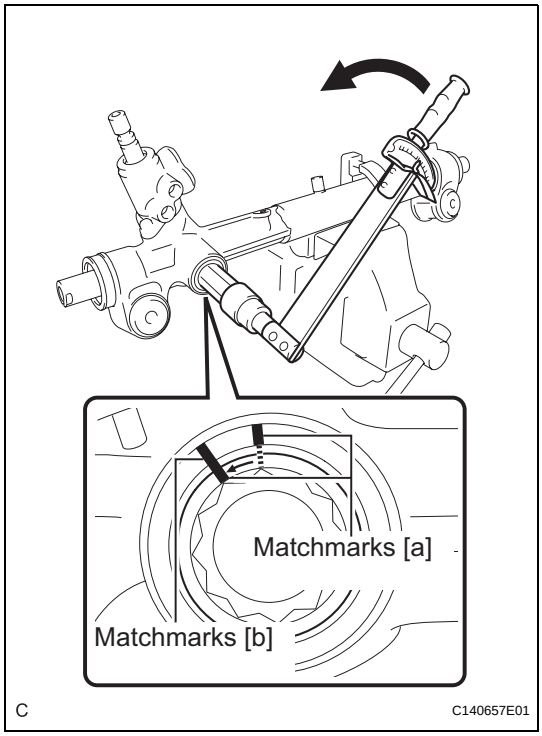

(j) Using a straight hexagon wrench (24 mm (0.94 in.)), loosen the rack guide spring cap until matchmarks [b] and matchmarks [a] on the rack guide spring cap are aligned. Measure the rotating torque required when loosening the rack guide spring cap.
Torque: 10 N*m (102 kgf*cm, 7.4 ft.*lbf) or more

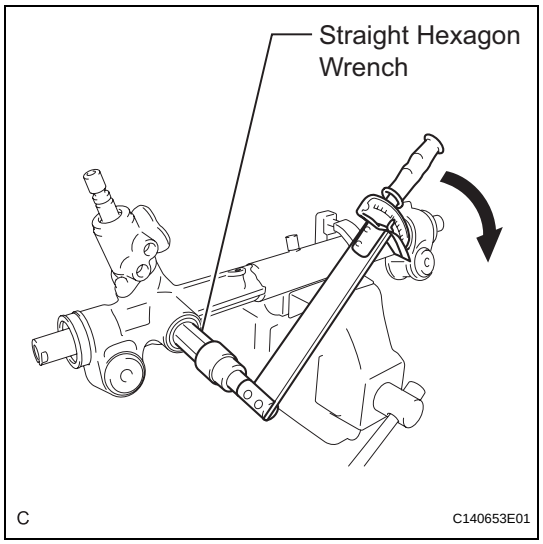

(k) If the rotating torque required when loosening is below the specified value, perform the following procedure to achieve the specified value.

(1) Using a straight hexagon wrench (24 mm (0.94 in.)), re-tighten the rack guide spring cap.
Torque: 50 to 70 N*m (510 to 714 kgf*cm, 37 to 52 ft.*lbf)

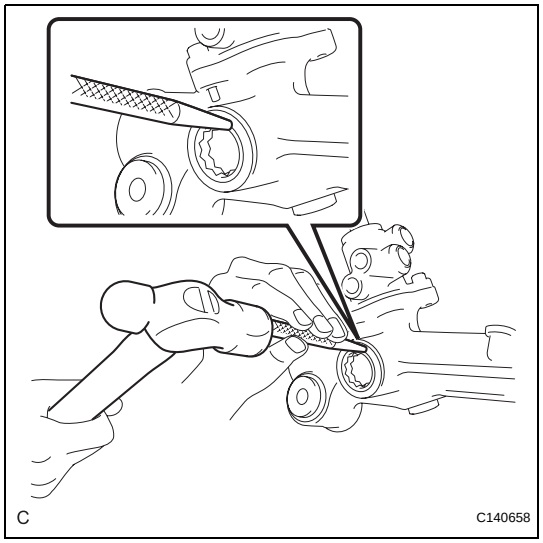

(2) Using a punch and hammer, stake the power steering rack housing and rack guide spring cap at 3 equally spaced positions.
HINT:
Tap the power steering rack housing and rack guide spring cap strongly and repeatedly to stake them securely.

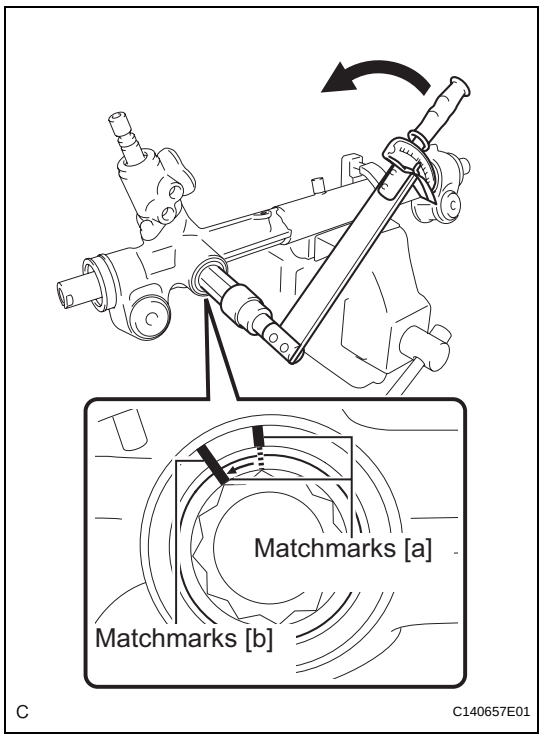

(3) Using a straight hexagon wrench (24 mm (0.94 in.)), loosen the rack guide spring cap until matchmarks [b] and matchmarks [a] on the rack guide spring cap are aligned. Measure the rotating torque required when loosening the rack guide spring cap.
Torque: 10 N*m (102 kgf*cm, 7.4 ft.*lbf) or more

15. INSPECT TOTAL PRELOAD (See page PS-38)

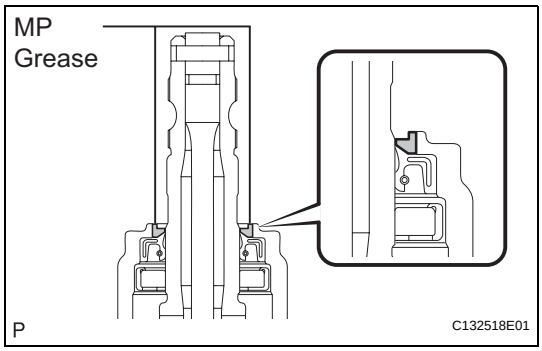

16. INSTALL DUST COVER

(a) Apply MP grease around the control valve shaft as shown in the illustration.

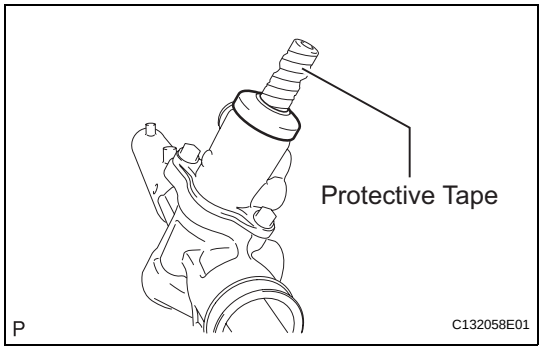

(b) Wrap electrical tape around the spline of the control valve.

(c) Install the dust cover to the control valve assembly.

17. INSTALL STEERING RACK END SUB-ASSEMBLY

(a) Install 2 new claw washers.
HINT:
Align the claws of the claw washer with the steering rack grooves.

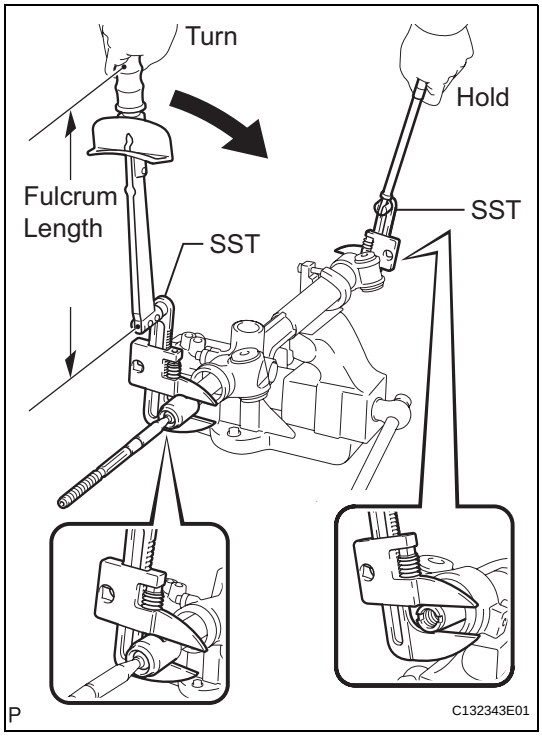

(b) Using SST, install the steering rack end sub-assembly (LH side).
SST 09922-10010
Torque: Without SST
84 N*m (852 kgf*cm, 62 ft.*lbf)
With SST
60 N*m (613 kgf*cm, 44 ft.*lbf)
NOTICE:
- **Use SST 09922-10010 as shown in the illustration.**
- **Use a torque wrench with a fulcrum length of 345 mm (13.58 in.).**
- **This torque value is effective when SST is parallel to the torque wrench.**

HINT:
Using SST, hold the steering rack and install the steering rack end sub-assembly (LH side).

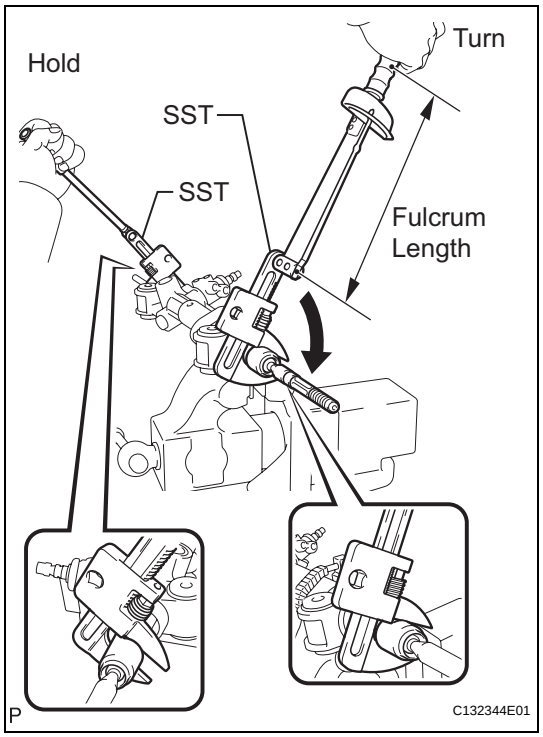

(c) Using SST, install the steering rack end sub-assembly (RH side).
SST 09922-10010
Torque: Without SST
84 N*m (852 kgf*cm, 62 ft.*lbf)
With SST
60 N*m (613 kgf*cm, 44 ft.*lbf)
NOTICE:
- **Use SST 09922-10010 as shown in the illustration.**
- **Use a torque wrench with a fulcrum length of 345 mm (13.58 in.).**
- **This torque value is effective when SST is parallel to the torque wrench.**

HINT:
Using SST, hold the steering rack end sub-assembly (LH side) and install the steering rack end sub-assembly (RH side).

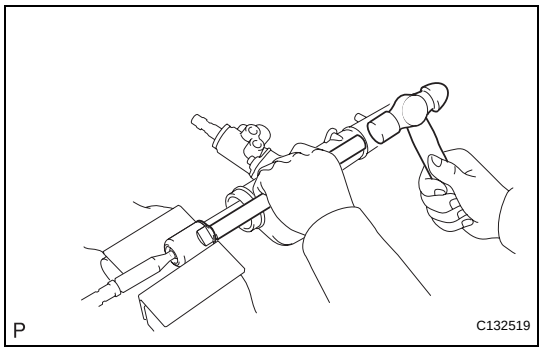

(d) Using a brass bar and a hammer, stake the 2 claw washers.
NOTICE:
Avoid any impact to the steering rack.

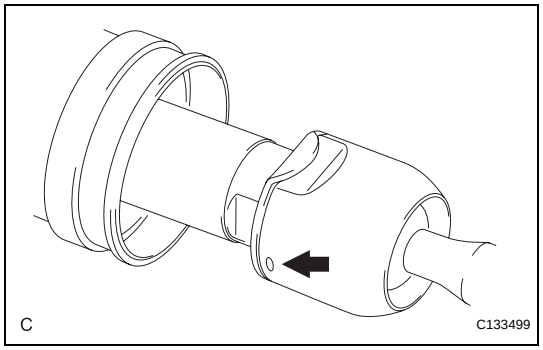

(e) Ensure that the holes of rack ends are not clogged with grease.
HINT:
If the holes are clogged, the pressure inside the boot will change after it is assembled and the steering wheel is turned.

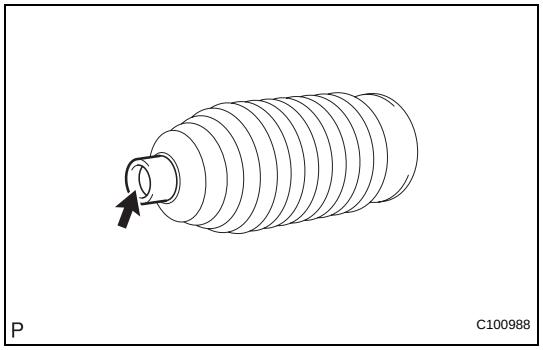

18. INSTALL NO. 2 STEERING RACK BOOT

(a) Apply silicon grease to the inside of the small opening of the No. 2 steering rack boot.

(b) Install the No. 2 steering rack boot to the groove on the rack housing.
NOTICE:
- **Be careful not to damage or twist the No. 2 steering rack boot.**
- **Do not damage the No. 2 steering rack boot.**

19. INSTALL NO. 1 STEERING RACK BOOT

HINT:
Perform the same procedure as for the No. 2 steering rack boot.

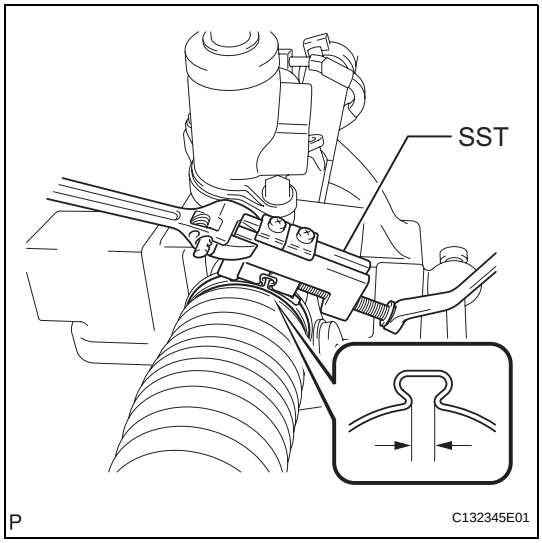

20. INSTALL NO. 2 STEERING RACK BOOT CLAMP

(a) Using SST, tighten the 2 No. 2 steering rack boot clamps as shown in the illustration.
SST 09521-24010
Clearance:
2.0 mm (0.079 in.) or less
NOTICE:
Be careful not to damage the No. 2 steering rack boot.

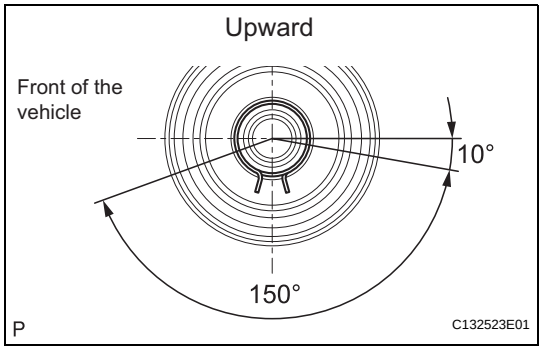

21. INSTALL STEERING RACK BOOT CLIP

(a) Using pliers, install the 2 steering rack boot clips.
NOTICE:
Make sure that the each clip claw is positioned within the area shown in the illustration.

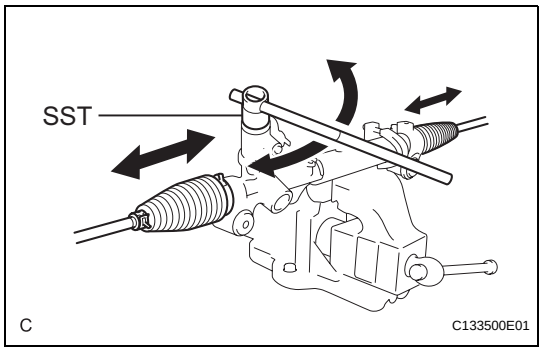

(b) Using SST, turn the pinion and check that the rack boots expand and contract smoothly.
SST 09616-00011

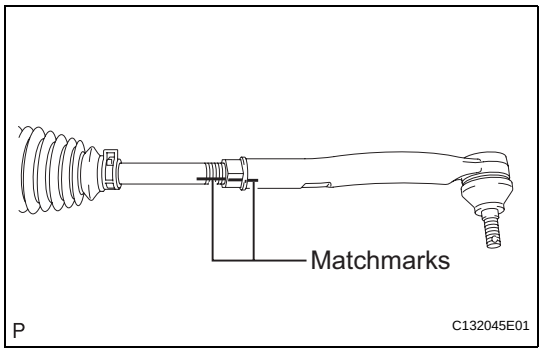

22. INSTALL TIE ROD ASSEMBLY LH

(a) Install the lock nut and the tie rod assembly LH to the steering rack end sub-assembly until the matchmarks are aligned.
HINT:
After adjusting toe-in, torque the lock nut.

23. INSTALL TIE ROD ASSEMBLY RH

HINT:
Perform the same procedure as for the LH side.

24. INSTALL STEERING RIGHT TURN PRESSURE TUBE

(a) Coat 2 new O-rings with power steering fluid and install them to the steering right turn pressure tube.

(b) Using SST, install the right turn pressure tube to the power steering link assembly.

SST 09023-38201

Torque: Without SST

13 N*m (128 kgf*cm, 9 ft.*lbf)

With SST

11 N*m (114 kgf*cm, 8 ft.*lbf)

NOTICE:

- **Use a torque wrench with a fulcrum length of 250 mm (9.84 in.).**
- **This torque value is effective when SST is parallel to the torque wrench.**

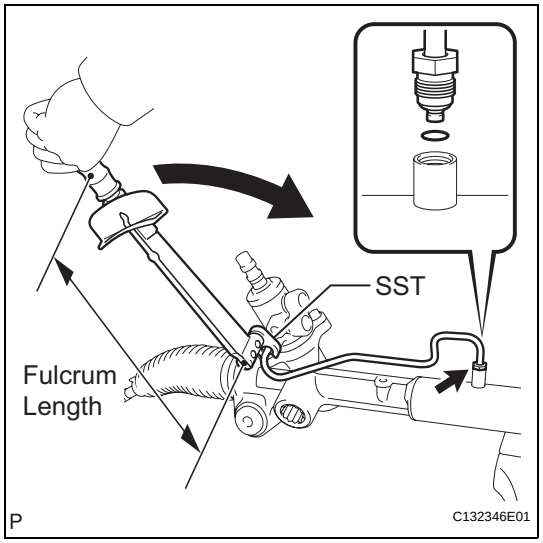

25. INSTALL STEERING LEFT TURN PRESSURE TUBE

(a) Coat 2 new O-rings with power steering fluid and install them to the steering left turn pressure tube.

(b) Using SST, install the left turn pressure tube to the power steering link assembly.

SST 09023-38201

Torque: Without SST

13 N*m (128 kgf*cm, 9 ft.*lbf)

With SST

11 N*m (114 kgf*cm, 8 ft.*lbf)

NOTICE:

- **Use a torque wrench with a fulcrum length of 250 mm (9.84 in.).**
- **This torque value is effective when SST is parallel to the torque wrench.**

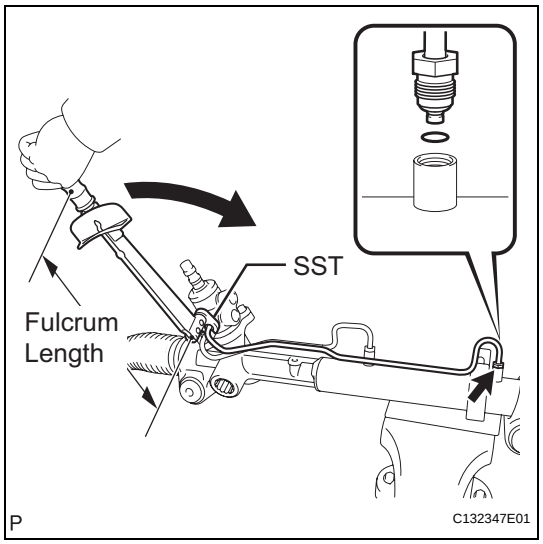

INSTALLATION

1. INSTALL POWER STEERING RACK HOUSING HEAT INSULATOR

(a) Install the power steering rack housing heat insulator to the power steering link assembly.

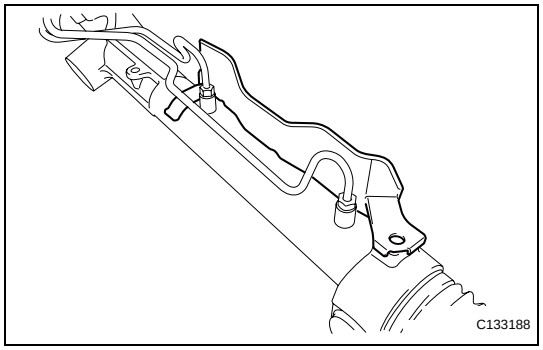

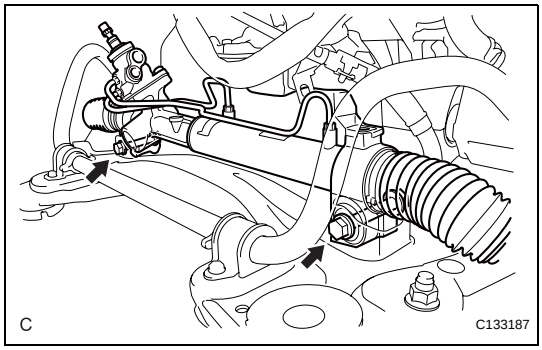

2. INSTALL POWER STEERING LINK ASSEMBLY

(a) Install the power steering link assembly with the 2 bolts and 2 nuts.
Torque: 70 N*m (714 kgf*cm, 52 ft.*lbf)

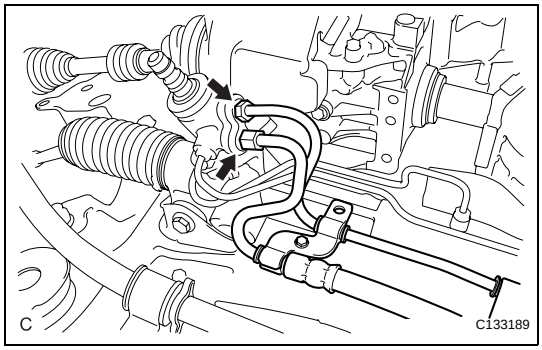

3. CONNECT PRESSURE FEED TUBE ASSEMBLY

(a) Temporarily connect the pressure feed tube assembly to the power steering link assembly.

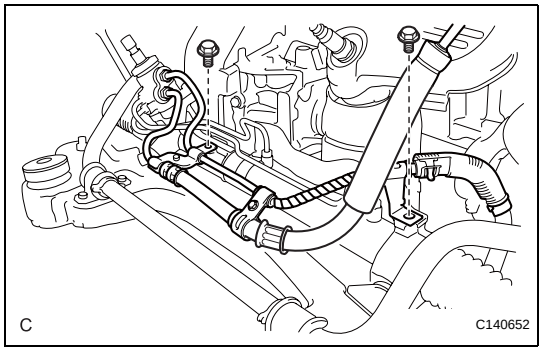

(b) Install the pressure feed tube assembly clamp with the 2 bolts.
Torque: 9.8 N*m (100 kgf*cm, 87 in.*lbf)

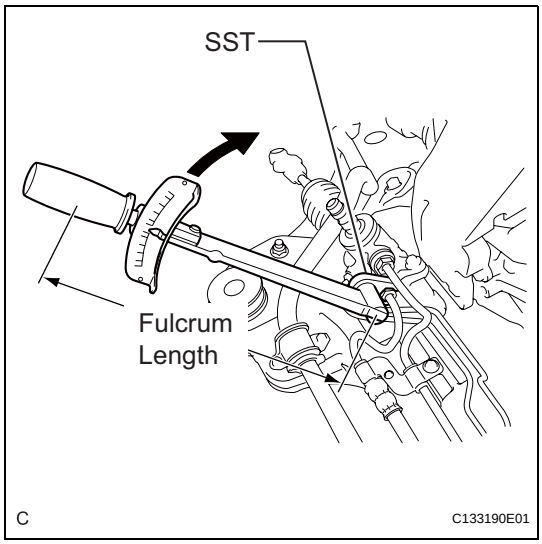

(c) Using SST, tighten the pressure feed tube assembly (pressure feed tube side).
SST 09023-12701
Torque: Without SST
25 N*m (250 kgf*cm, 18 ft.*lbf)
With SST
22 N*m (227 kgf*cm, 16 ft.*lbf)
NOTICE:
- **Use a torque wrench with a fulcrum length of 300 mm (11.81 in.).**
- **This torque value is effective when SST is parallel to the torque wrench.**

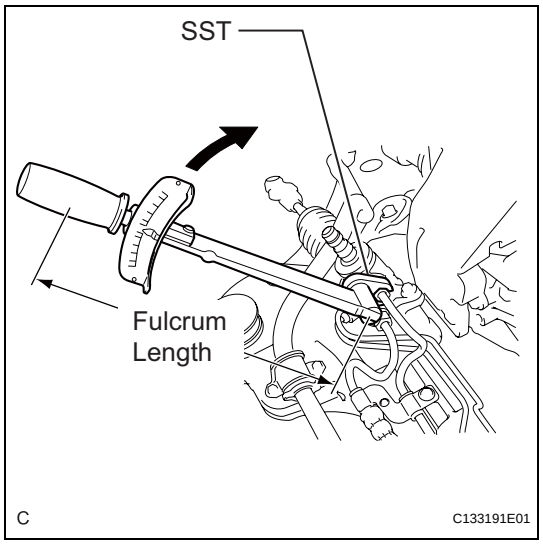

(d) Using SST, tighten the pressure feed tube assembly (return tube side).
SST 09023-12701
Torque: Without SST
25 N*m (250 kgf*cm, 18 ft.*lbf)
With SST
22 N*m (227 kgf*cm, 16 ft.*lbf)
NOTICE:
- **Use a torque wrench with a fulcrum length of 300 mm (11.81 in.).**
- **This torque value is effective when SST is parallel to the torque wrench.**

4. INSTALL ENGINE ASSEMBLY WITH TRANSAXLE
HINT:
Refer to the instructions for INSTALLATION of the ENGINE ASSEMBLY (See page EM-36).

5. CONNECT TIE ROD ASSEMBLY LH
(a) Connect the tie rod assembly LH to the steering knuckle with the nut.
Torque: 49 N*m (500 kgf*cm, 36 ft.*lbf)
(b) Install a new cotter pin.
NOTICE:
Tighten the nut further up to 60° if the holes for the cotter pin are not aligned.

6. CONNECT TIE ROD ASSEMBLY RH
HINT:
Perform the same procedure as for the LH side.

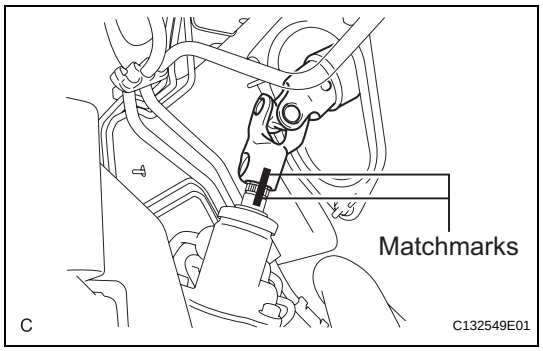

7. CONNECT STEERING INTERMEDIATE SHAFT ASSEMBLY
(a) Align the matchmarks on the steering intermediate shaft assembly and the steering link assembly.

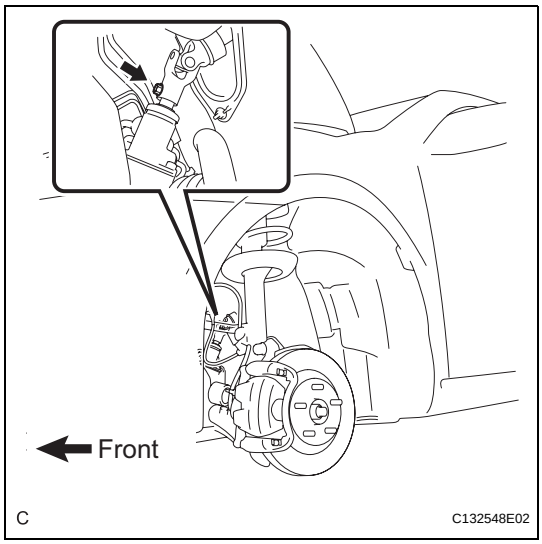

(b) Install the bolt.
Torque: 35 N*m (360 kgf*cm, 26 ft.*lbf)

8. **INSTALL FRONT WHEELS**
Torque: 103 N*m (1,050 kgf*cm, 76 ft.*lbf)

9. **CONNECT CABLE TO NEGATIVE BATTERY TERMINAL**

10. **BLEED POWER STEERING FLUID (See page PS-8)**

11. **CHECK POWER STEERING FLUID LEVEL (See page PS-3)**

12. **CHECK POWER STEERING FLUID LEAKAGE**

13. **CHECK FOR EXHAUST GAS LEAKS**

14. **PLACE FRONT WHEELS FACING STRAIGHT AHEAD**

15. **INSPECT AND ADJUST FRONT WHEEL ALIGNMENT**
HINT:
(See page SP-4)

16. **PERFORM INITIALIZATION**
NOTICE:
Some systems need initialization after reconnecting the cable to the negative battery terminal (See page IN-33).

SYSTEM DIAGRAM

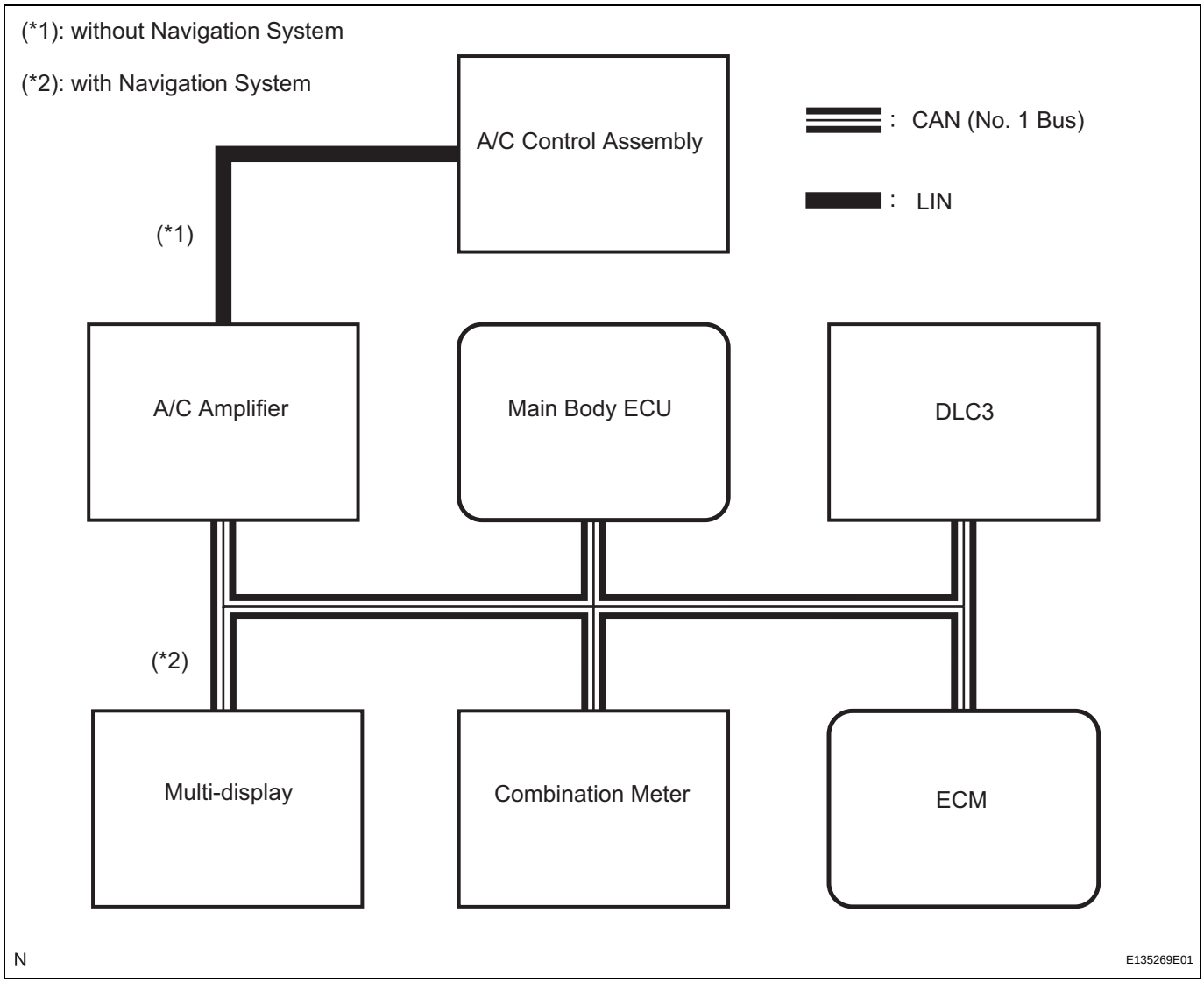

Transmitter	Receiver	Line	Signal
A/C Amplifier	ECM	CAN	Magnetic Clutch Request Signal
			Heater Idle Up Request Signal
			A/C Idle Up Request Signal
			Outside Temperature Data
			External Variable Control Solenoid Current Signal
			Prior A/C Control Request Signal
			Refrigerant Gas Pressure Sensor Signal
A/C Amplifier	Combination Meter	CAN	Outside Temperature Data
A/C Amplifier	DLC3	CAN	Diagnostic Tool Response
A/C Amplifier	A/C Control Assembly	LIN	A/C Operating State Signal
A/C Amplifier	Multi-display	CAN	A/C Operating State Signal
Main Body ECU	A/C Amplifier	CAN	Auto Dimmer Signal
			Destination Package
			Vehicle Configuration (LHD/RHD) Information
Combination Meter	A/C Amplifier	CAN	Vehicle Speed Signal

Transmitter	Receiver	Line	Signal
ECM	A/C Amplifier	CAN	Engine Coolant Temperature Signal
			Engine rpm Data
			A/C Control Cut-off Signal
			A/C-E/G Cooperation Control
A/C Control Assembly	A/C Amplifier	LIN	A/C Operation Signal
Multi-display	A/C Amplifier	CAN	A/C Operation Signal

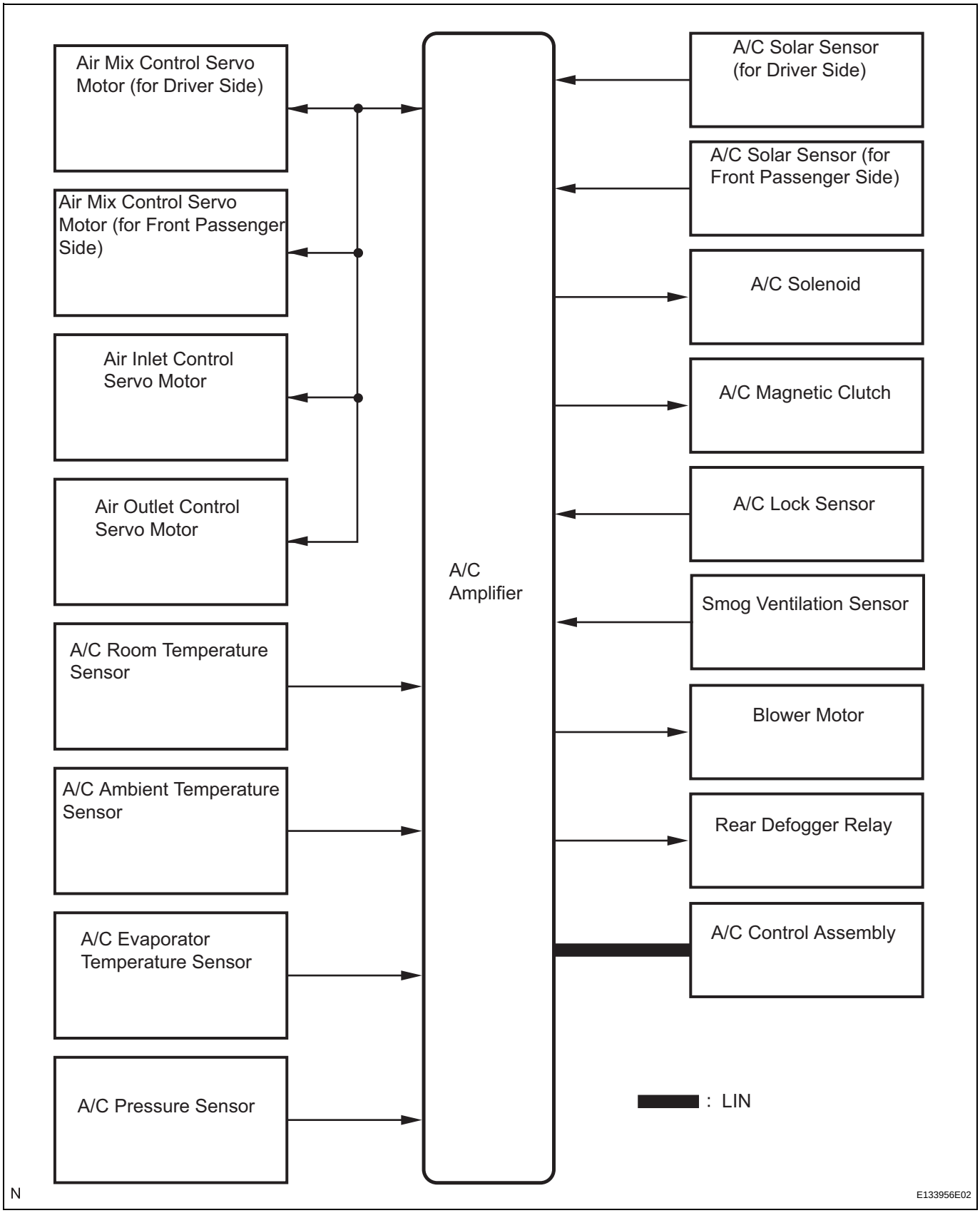
Air Mix Control Servo Motor (for Driver Side)
Air Mix Control Servo Motor (for Front Passenger Side)
Air Inlet Control Servo Motor
Air Outlet Control Servo Motor
A/C Room Temperature Sensor
A/C Ambient Temperature Sensor
A/C Evaporator Temperature Sensor
A/C Pressure Sensor
A/C Amplifier
A/C Solar Sensor (for Driver Side)
A/C Solar Sensor (for Front Passenger Side)
A/C Solenoid
A/C Magnetic Clutch
A/C Lock Sensor
Smog Ventilation Sensor
Blower Motor
Rear Defogger Relay
A/C Control Assembly
: LIN
N
E133956E02

SYSTEM DESCRIPTION

1. GENERAL

The air conditioning system has the following controls:

Control	Outline
Neural Network Control	This control is capable of effecting complex control by artificially simulating the information processing method of the nervous system of living organisms in order to establish a complex input / output relationship that is similar to a human brain.
Automatic Recirculation Control	Automatically changes the air inlet mode to fresh air or recirculation air mode in accordance with the level of harmful elements in the outside air, the cabin temperature, and the ambient temperature.
Outlet Air Temp. Control	Based on the temperature set at the temperature control switch, the neural network control calculates the outlet air temperature based on the input signals from various sensors.
	The temperature setting for the driver and front passenger are controlled independently in order to provide a separate vehicle interior temperatures for the right and left side of the cabin. Thus, air conditioning that accommodates the occupants' preferences has been realized.
Blower Control	Controls the blower motor in accordance with the airflow volume that has been calculated by the neural network control based on the input signals from various sensors.
Air Outlet Control	Automatically switches the air outlets in accordance with the outlet mode that has been calculated by the neural network control based on the input signals from various sensors.
	In accordance with the engine coolant temperature, outside air temperature, amount of sunlight, required blower, outlet temperature, and vehicle speed conditions, this control automatically switches the blower outlet to the FOOT / DEF mode to prevent the windows from becoming fogged when the outside air temperature is low.
Air Inlet Control	Automatically controls the air inlet control damper to achieve the calculated required outlet air temperature.
	Drives the servo motor (for air inlet) according to the operation of the air inlet control switch and moves the dampers to the FRESH or RECIRC position.
Compressor Control	Through the calculation of the target evaporator temperature based on various sensor signals, the A/C amplifier optimally controls the discharge capacity by regulating the opening extent of the A/C compressor solenoid valve.
	The A/C amplifier compares the A/C pulley speed signals, which are transmitted by the lock sensor located on the A/C compressor, with the engine speed signals, which are transmitted by the ECM (crankshaft position sensor). When the A/C amplifier determines that the A/C pulley is locked, it turns off the magnetic clutch.
MAX A/C Control	When the temperature control switch is in the MAX A/C position, the A/C amplifier turns the compressor on and activates the servomotor (air inlet) to set the air inlet control damper to the RECIRC position, improving the cooling efficiency.
Rear Window Defogger Control	Switches the rear defogger and outside rear view mirror heaters on for 15 minutes when the rear defogger button is pressed. Switches them off if the button is pressed while they are operating.
Outside Temperature Indication Control	Calculates the outside temperature using signals transmitted by the outside temperature sensor. Calculated values are corrected by the A/C amplifier and then indicated on the multi-information display.
Self-Diagnosis	A DTC (Diagnostic Trouble Code) is stored in the memory when the A/C amplifier detects a problem with the air conditioning system.

2. NEURAL NETWORK CONTROL

- In previous automatic air conditioning systems, the A/C amplifier determined the required outlet air temperature and blower air volume in accordance with the calculation formula that has been obtained based on information received from the sensors. However, because the senses of a person are rather complex, a given temperature is sensed differently, depending on the environment in which the person is situated. For example, a given amount of solar radiation can feel comfortably warm in a cold climate, or extremely uncomfortable in a hot climate. Therefore, as a technique for effecting a higher level of control, a neural network has been adopted in the automatic air conditioning system. With this technique, the data that has been collected under varying environmental conditions is stored in the A/C amplifier. The A/C amplifier can then effect control to provide enhanced air conditioning comfort.
- The neural network control consists of neurons in the input layer, intermediate layer, and output layer. The input layer neurons process the input data of the outside temperature, the amount of sunlight, and the room temperature based on the outputs of the switches and sensors, and output them to the intermediate layer neurons. Based on this data, the intermediate layer neurons adjust the strength of the links among the neurons. The sum of these is then calculated by the output layer neurons in the form of the required outlet temperature, solar correction, target airflow volume, and outlet mode control volume. Accordingly, the A/C amplifier controls the servo motors and blower motor in accordance with the control volumes that have been calculated by the neural network control.

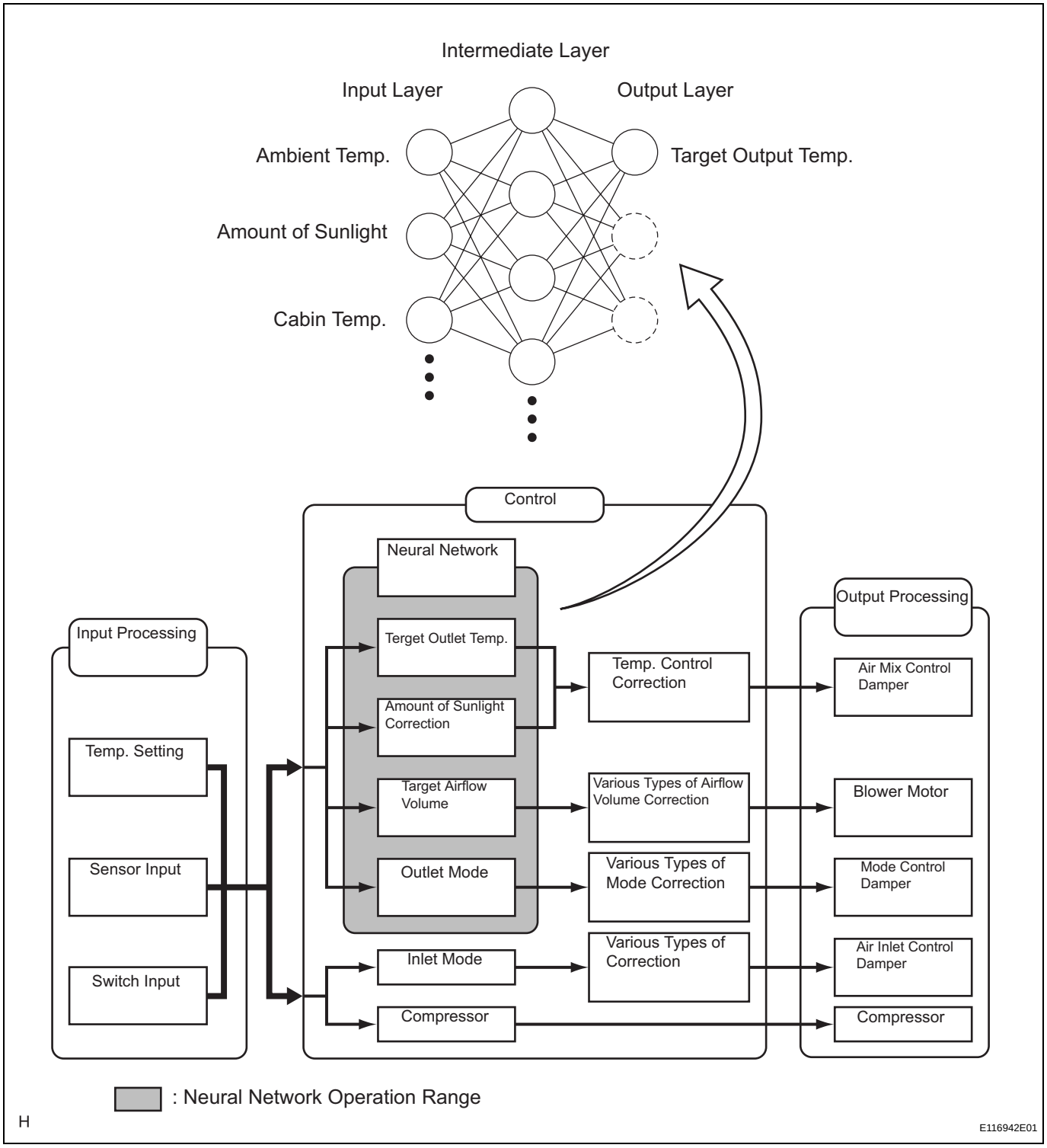
Intermediate Layer
Input Layer
Output Layer
Ambient Temp.
Amount of Sunlight
Cabin Temp.
Target Output Temp.
Control
Neural Network
Input Processing
Output Processing
Terget Outlet Temp.
Amount of Sunlight Correction
Target Airflow Volume
Outlet Mode
Inlet Mode
Compressor
Temp. Setting
Sensor Input
Switch Input
Temp. Control Correction
Various Types of Airflow Volume Correction
Various Types of Mode Correction
Various Types of Correction
Air Mix Control Damper
Blower Motor
Mode Control Damper
Air Inlet Control Damper
Compressor
: Neural Network Operation Range
H
E116942E01

3. MODE POSITION AND DAMPER OPERATION

(a) Mode Position and Damper Operation

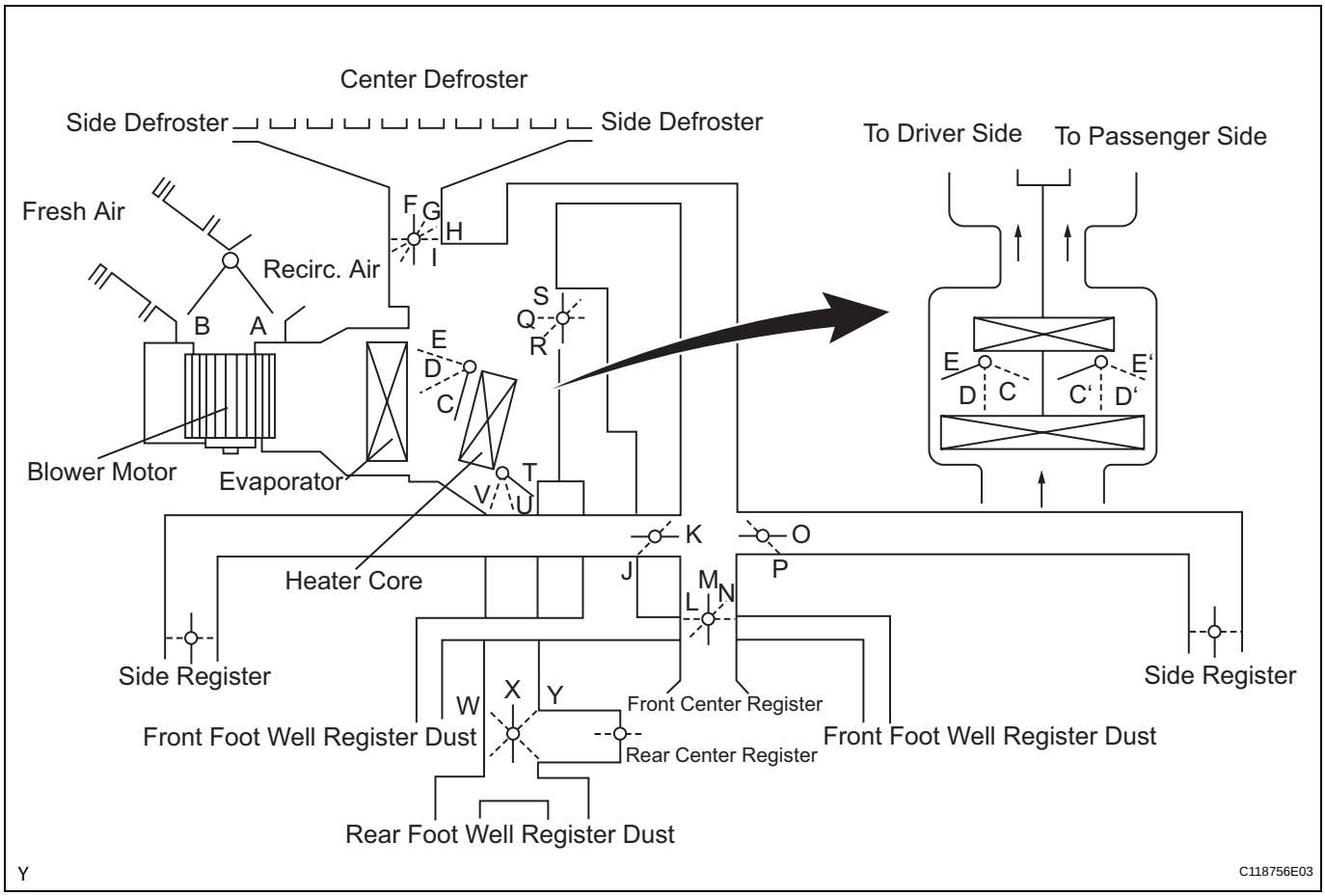

Functions of Main Dampers:

Control Damper	Operation Position	Damper Position	Operation
Air Inlet Control Damper	FRESH	A	Brings in fresh air.
	RECIRC	B	Recirculates internal air.
Air Mix Control Damper	MAX COLD to MAX HOT Temperature Setting	C - D - E (C' - D' - E') T - U - V	Varies the mixture ratio of the fresh air and the recirculation air in order to regulate the temperature continuously from HOT to COLD.

Control Damper	Operation Position	Damper Position	Operation
Air Outlet Control Damper	DEF	F, J, L, P, S, Y	Defrosts the windshield through the center defroster, side defroster, and side register.
	FOOT / DEF	G, J, L, P, Q, X	Defrosts the windshield through the center defroster, side defroster, side register, and rear center register, while air is also blown out from the front and rear foot well register ducts.
	FOOT	H, J, L, P, Q, X	Air blows out of the foot well register dust, and side register. In addition, air blows out slightly from the center defroster and side defroster.
	BI-LEVEL	I, K, N, O, R, X	Air blows out of the front and rear center registers, side register and front and rear foot well register ducts.
	FACE	I, K, M, O, S, W	Air blows out of the front and rear center registers, and side register.

4. AIR OUTLETS AND AIRFLOW VOLUME

(a) Air Outlets and Airflow Volume

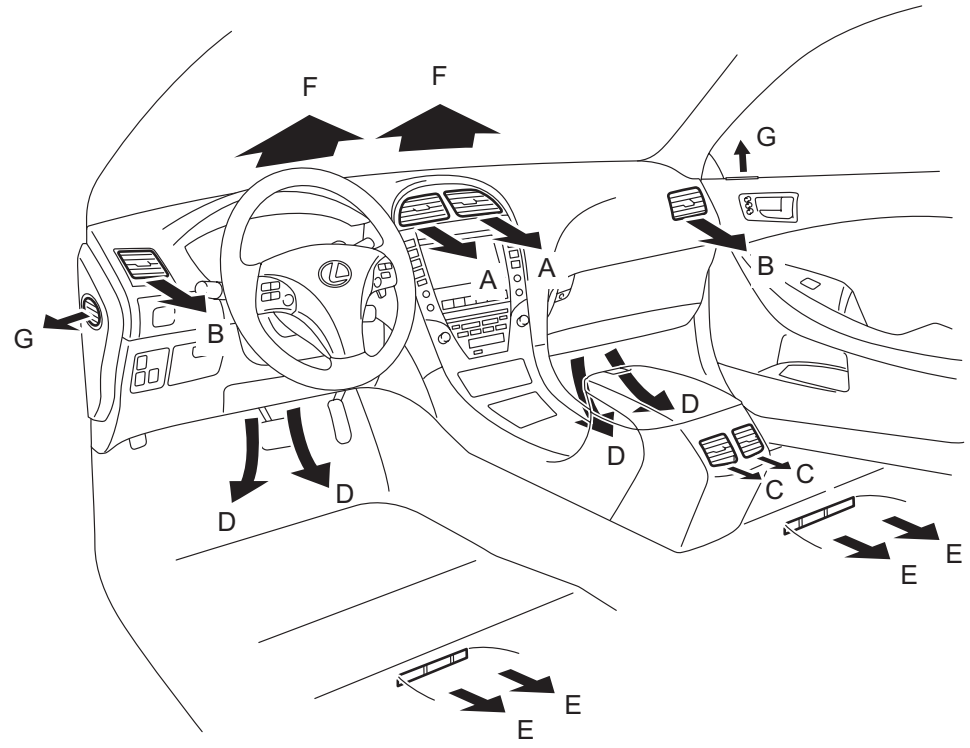

N

E135299E01

INDICATION (MODE)	SELECTION (Auto / Manual)	FACE			FOOT		DEF	
		CTR	SIDE	RR	FR	RR	CTR	SIDE
		A	B	C	D	E	F	G
FACE	○ / ○	○	○	○	—	—	—	—
B/L-U*1	○ / ○	○	○	○	○	○	—	—
B/L-L*2	○ / -	○	○	○	○	○	—	—
FOOT-F*3	○ / -	—	○	○	○	○	○	○
FOOT-R*4	○ / ○	—	○	○	○	○	○	○

FOOT-D*5	○ / -	—	○	○	○	○	○	○
F/D	○ / ○	—	○	○	◯	◯	○	○
DEF	○ / ○	—	○	—	—	—	◯	◯

The size of the circle ○ indicates the proportion of airflow volume.
*1: Greater airflow volume at the upper area
*2: Greater airflow volume at the lower area
*3: Greater airflow volume at the front
*4: Greater airflow volume at the rear
*5: Greater airflow volume at the defroster

5. AUTOMATIC RECIRCULATION CONTROL

(a) When the automatic recirculation control is operating, the A/C amplifier automatically changes the air inlet mode to the fresh air or recirculation air mode based on signals from the smog ventilation sensor, ambient temperature, and room temperature sensors when the AUTO air inlet mode is selected.

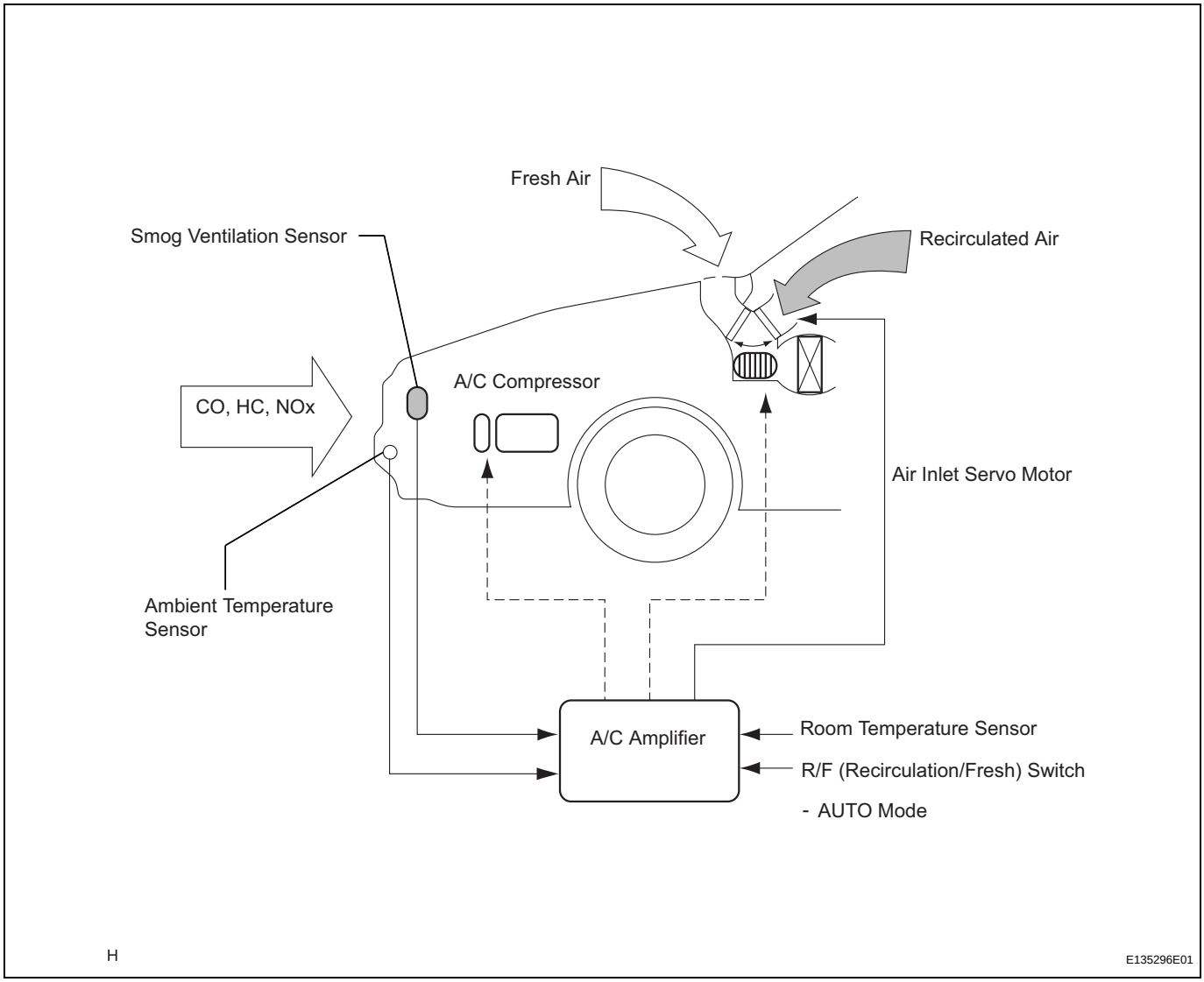

(1) The A/C amplifier detects harmful elements (CO, HC, and NOx) based on smog ventilation sensor signals and automatically switches the air inlet mode to the recirculate air mode to prevent such harmful elements from entering the cabin.

(2) The A/C amplifier detects cabin temperature based on a room temperature sensor signal and automatically switches the air inlet mode to the recirculate air mode to prevent the cabin temperature from becoming too high.

(3) The A/C amplifier detects the outside temperature based on an ambient temperature sensor signal and automatically switches the air inlet mode to the fresh air mode to prevent the windshield from fogging up.
NOTICE:
The smog ventilation sensor cannot detect elements such as the smoke from a bonfire or factory exhaust, foul or animal odors, and dirt or dust particles. Therefore, the air inlet modes are not switched in accordance with those elements.

6. BLOWER MOTOR
The blower motor has a built-in blower controller, and is controlled with duty control from the A/C amplifier.

7. BUS CONNECTOR
(a) A BUS connector is used in the wire harness connection that connects the servo motor from the A/C amplifier.

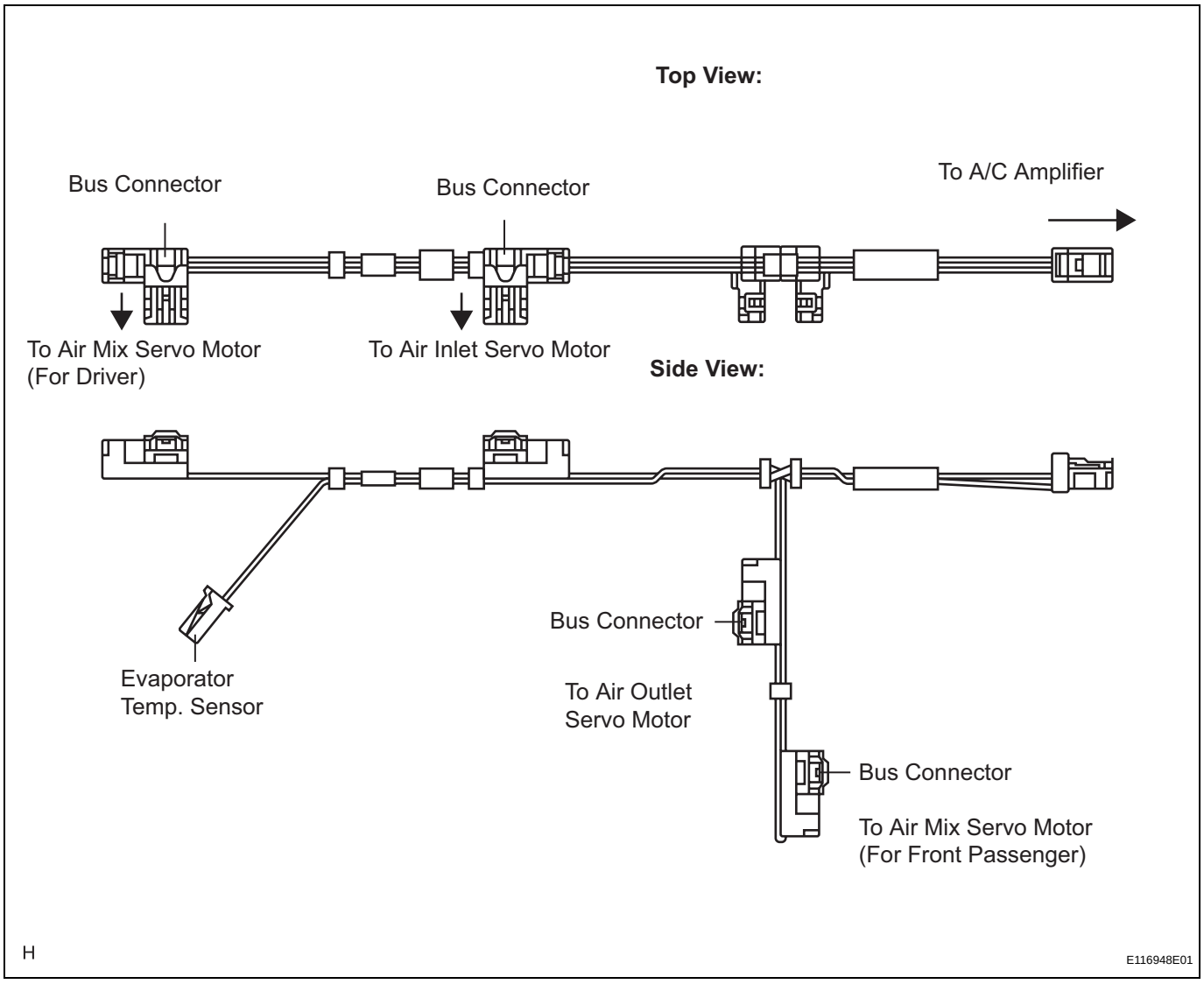

(b) The BUS connector has a built-in communication/driver IC which communicates with each servo motor connector, actuates the servo motor, and has a position detection function. This enables bus communication for the servo motor wire harness, for a more lightweight construction and a reduced number of wires.

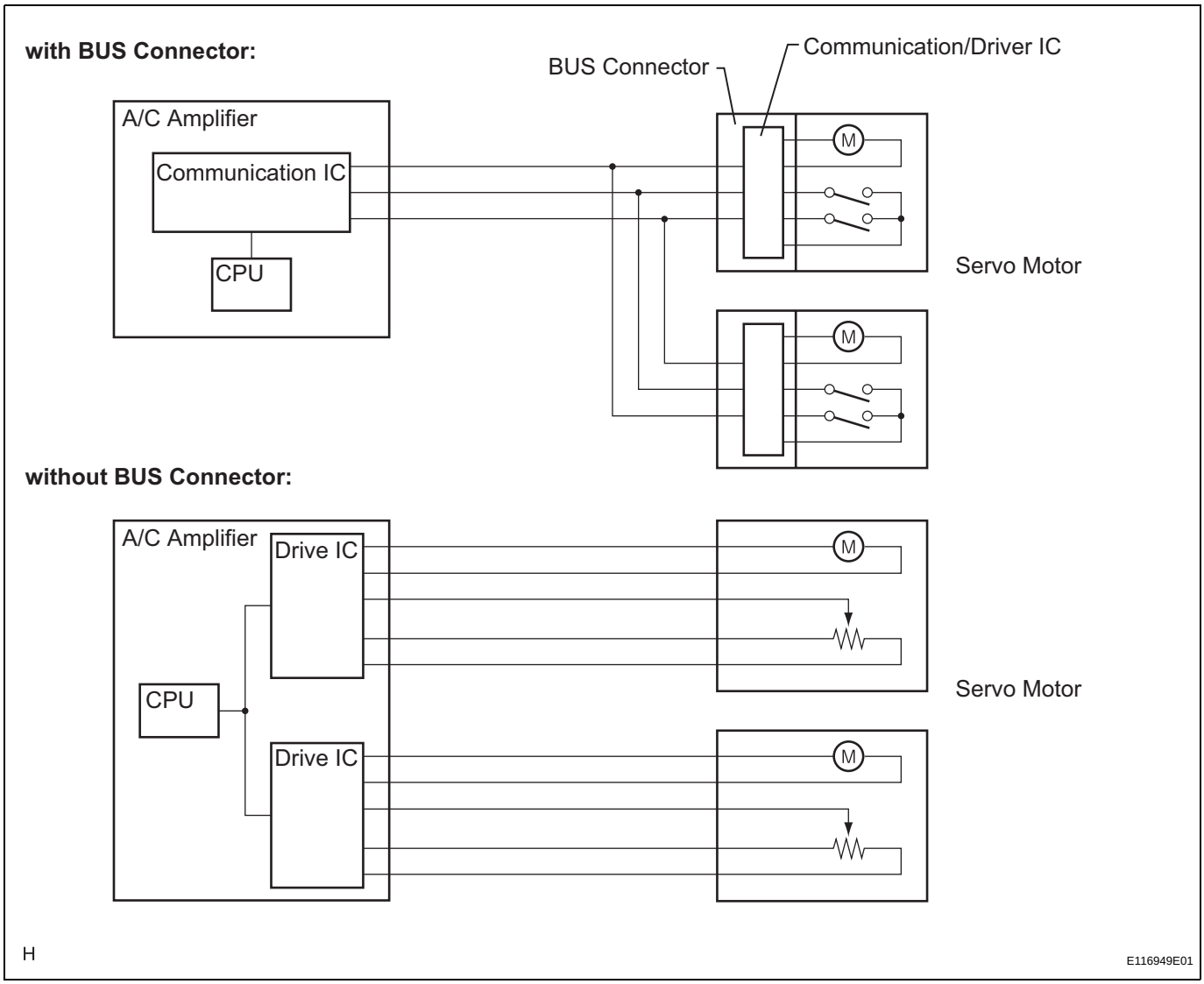

8. SERVO MOTOR

(a) The pulse pattern type servo motor consists of a printed circuit board and servo motor. The printed circuit board has three contact points, and transmits to the A/C amplifier two ON-OFF signals for the difference of the pulse phase. The BUS connector detects the damper position and movement direction with this signal.

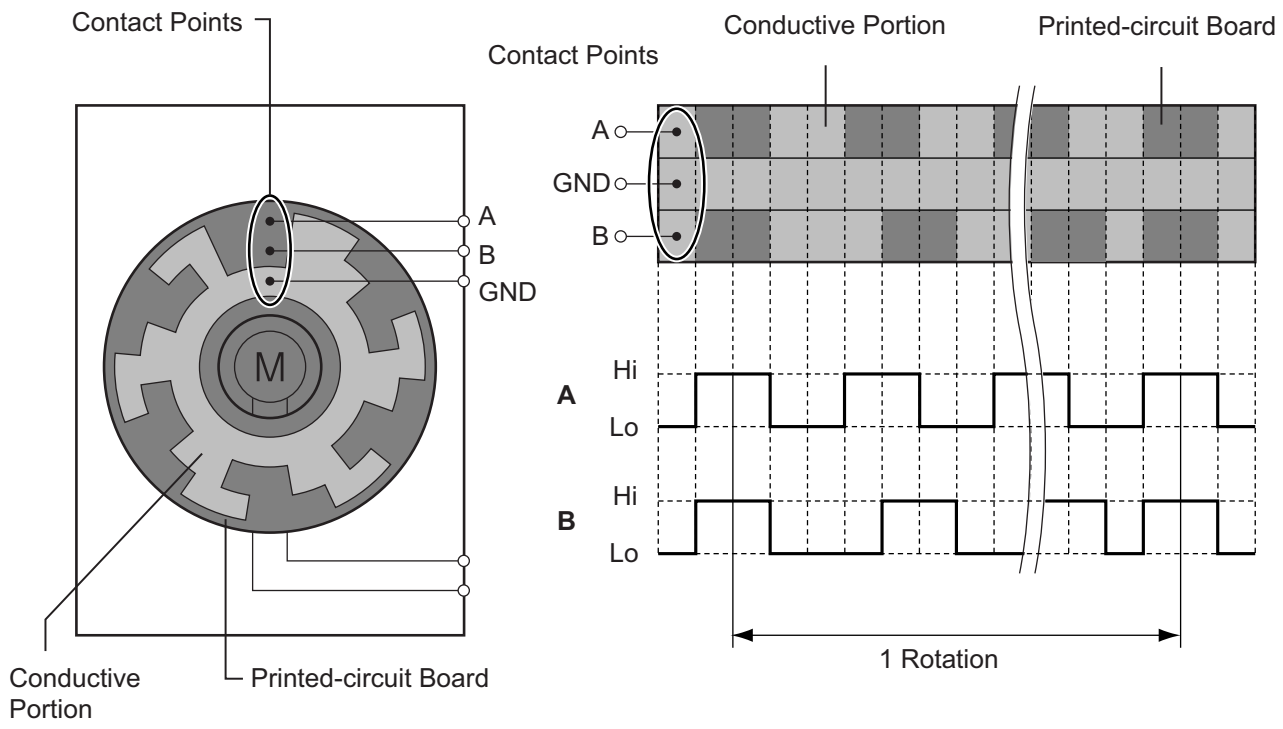

H

E116950E01

9. A/C COMPRESSOR

(a) General

(1) The A/C compressor is a continuously variable capacity type in which its capacity can be varied in accordance with the cooling load of the air conditioning.

(2) This compressor consists of the A/C pulley, shaft, lug plate, swash plate, piston, shoe, crank chamber, cylinder, and solenoid valve.

(3) A solenoid valve that adjusts the suction pressure so that the compressor capacity can be controlled as desired is provided.

(b) Solenoid Valve Operation

(1) The crank chamber is connected to the discharge passage. A solenoid valve is provided between the discharge passage (LO pressure) and the discharge passage (HI pressure).

(2) The solenoid valve operates under duty cycle control in accordance with the signals from A/C amplifier.

(3) When the solenoid valve closes (solenoid coil is energized), a difference in pressure is created and the pressure in the crank chamber decreases. Then, the pressure that is applied to the right side of the piston becomes greater than the pressure that is applied to the left side of the piston. This compresses the spring and tilts the swash plate. As a result, the piston stroke increases and the discharge capacity increases.

(4) When the solenoid valve opens (solenoid coil is not energized), the difference in pressure disappears. Then, the pressure that is applied to the left side of the piston becomes the same as the pressure that is applied to the right side of the piston. Thus, the spring elongates and eliminates the tilt of the swash plate. As a result, there is no piston stroke and the discharge capacity is reduced.

10. LOCK SENSOR

The lock sensor sends A/C pulley speed signals to the A/C amplifier. The A/C amplifier determines whether the magnetic clutch is locked or not by using those signals and engine speed signals.

11. ROOM TEMPERATURE SENSOR

The room temperature sensor detects the cabin temperature based on changes in the resistance of its built-in thermistor and sends a signal to the A/C amplifier.

12. AMBIENT TEMPERATURE SENSOR

The ambient temperature sensor detects the outside temperature based on changes in the resistance of its built-in thermistor and sends a signal to the A/C amplifier.

13. SOLAR SENSOR

(a) The solar sensor consists of a photo diode, two amplifier circuits for the solar sensor, and frequency converter circuit for the light control sensor.

(b) A solar sensor detects (in the form of changes in the current that flows through the built-in photo diode) the changes in the amount of sunlight from the LH and RH sides (2 directions) and outputs these sunlight strength signals to the A/C amplifier.

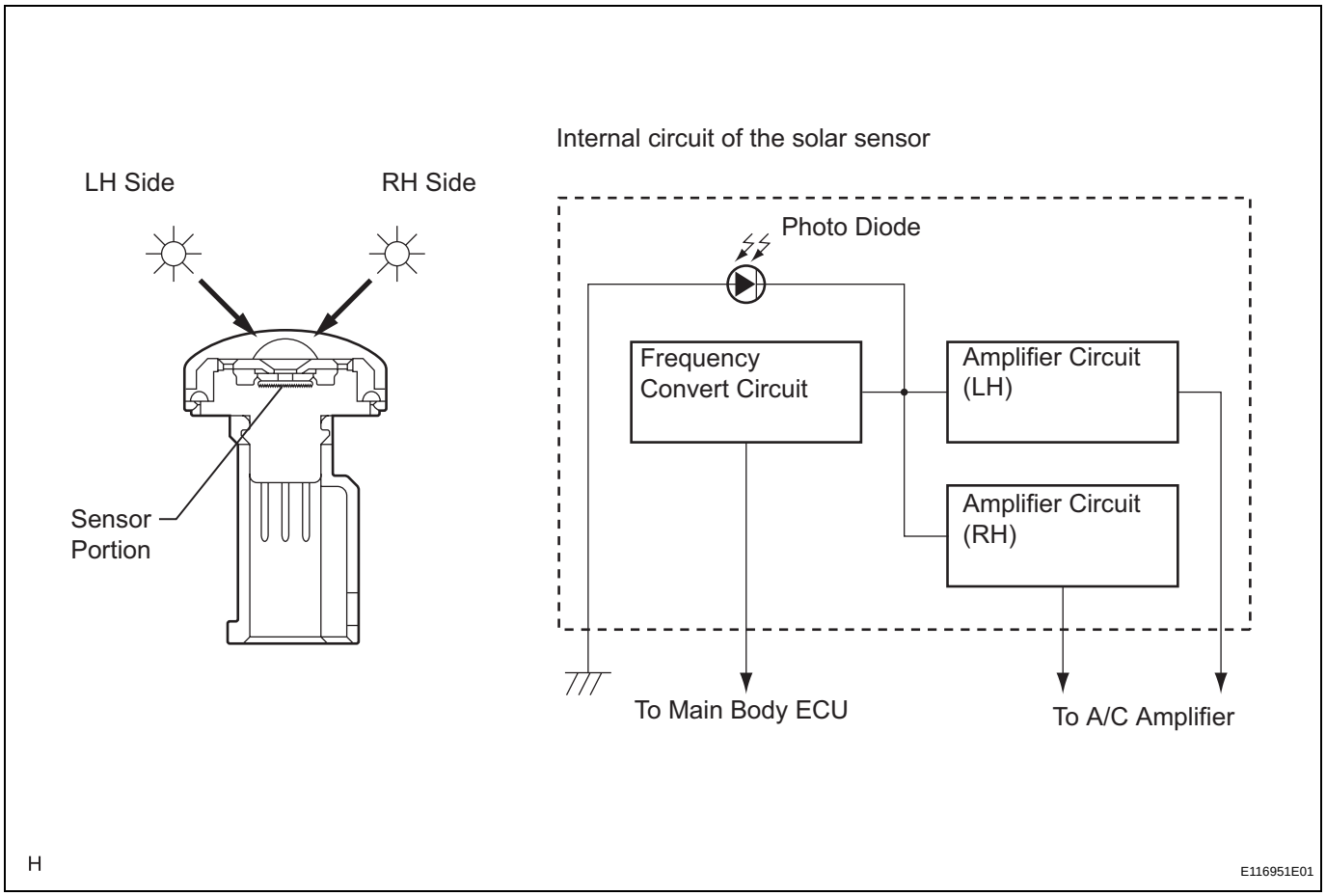

14. EVAPORATOR TEMPERATURE SENSOR

The evaporator temperature sensor detects the temperature of the cool air immediately past the evaporator in the form of resistance changes, and outputs it to the A/C amplifier.

15. A/C PRESSURE SENSOR

The A/C pressure sensor detects the refrigerant pressure and outputs it to the A/C amplifier in the form of voltage changes.

16. SMOG VENTILATION SENSOR

(a) The smog ventilation sensor detects harmful elements such as CO, HC, and NOx, which are present in the air outside of the vehicle. The sensor outputs it to the A/C amplifier.

(b) The sensitivity of the smog ventilation sensor can be adjusted. Adjustment can be done using the heater control panel or multi-display.

CUSTOMIZE PARAMETERS

HINT:
The following items can be customized.

NOTICE:

- **When the customer requests a change in a function, first make sure that the function can be customized.**
- **Be sure to make a note of the current settings before customizing.**
- **When troubleshooting a function, first make sure that the function is set to the default setting.**

AIR CONDITIONER:

DISPLAY (ITEM)	DEFAULT	CONTENTS	SETTING
SET TEMP SHIFT (Set Temperature Shift)	NORMAL	To shift the temperature against the displayed temperature	+2 C / +1 C / NORMAL / -1 C / -2 C
AIR INLET MODE (Air Inlet Mode)	AUTO	In case of turning the A/C ON when you desire to make the compartment cool down quickly, this is the function to change the mode automatically to RECIRCULATION mode	MANUAL / AUTO
COMPRESSOR MODE (Compressor Mode)	AUTO	Function to turn the A/C ON automatically by pressing the AUTO button when the blower is ON and the A/C is OFF	MANUAL / AUTO
COMPRS / DEF OPER (Compressor / Air Inlet DEF Operation)	LINK	Function to turn the A/C ON automatically linked with the FRONT DEF button when the A/C is OFF	NORMAL / LINK
EVAP CTRL (Evaporator Control)	AUTO	Function to set the evaporator control to the AUTOMATIC position (AUTO) to save power, or to the coldest position (MANUAL) to dehumidify the air and to prevent the windows from fogging up	MANUAL / AUTO
GAS SENS SHIF (Emission Gas Sensor Shift)	NORMAL	Function to change the sensitivity of the exhaust gas sensor	MU MORE / MORE / LI MORE / NORMAL / LI LESS / LESS / MU LESS
BUTTON PRS BUZ	ON	Function to sound a buzzer when a button is pressed	OFF / ON
FOOT / DEF MODE (Foot / DEF Auto Mode)	ON	Function to turn the airflow from FOOT/DEF ON automatically when AUTO MODE is ON	OFF / ON
AUTO BLOW UP (Foot / DEF Automatic Blower Up Function)	ON	Function to change the blower level automatically when the defroster is ON	OFF / ON
AMBIENT TMP SFT (Ambient Temperature Shift)	NORMAL	Function to shift the ambient temperature against the displayed ambient temperature	+3 C / +2 C / +1 C / NORMAL / -1 C / -2 C / -3 C

PROBLEM SYMPTOMS TABLE

AIR CONDITIONER:

Symptom	Suspected Area	See page
All functions of the A/C system do not operate	1. IG power source circuit	AC-115
	2. Back-up power source circuit	AC-118
	3. Heater control panel power source circuit	AC-107
	4. LIN communication circuit	AC-120
	5. A/C control assembly	AC-226
	6. A/C amplifier	AC-232
Air Flow Control: No blower operation	1. Blower motor circuit	AC-101
	2. Heater control panel power source circuit	AC-107
	3. LIN communication circuit	AC-120
	4. A/C control assembly	AC-226
	5. A/C amplifier	AC-232
Air Flow Control: No blower control	1. Blower motor circuit	AC-101
	2. Heater control panel power source circuit	AC-107
	3. LIN communication circuit	AC-120
	4. A/C control assembly	AC-226
	5. A/C amplifier	AC-232
Air Flow Control: Insufficient air flow	1. Blower motor circuit	AC-101
	2. A/C amplifier	AC-232
Temperature Control: No cool air comes out	1. Refrigerant volume	AC-122
	2. Refrigerant pressure	AC-122
	3. Pressure sensor circuit	AC-71
	4. Air conditioning compressor magnetic clutch circuit	AC-109
	5. Compressor lock sensor circuit	AC-67
	6. Compressor solenoid circuit	AC-89
	7. Air mix control servo motor circuit (Driver side)	AC-87
	8. Air mix control servo motor circuit (Passenger side)	AC-80
	9. Evaporator temperature sensor circuit	AC-54
	10. Room temperature sensor circuit	AC-46
	11. Ambient temperature sensor circuit	AC-50
	12. Heater control panel power source circuit	AC-107
	13. LIN communication circuit	AC-120
	14. Expansion valve	AC-155
	15. A/C control assembly	AC-226
	16. A/C amplifier	AC-232
	17. ECM	ES-543
Temperature Control: No warm air comes out	1. Air mix control servo motor circuit (Driver side)	AC-87
	2. Air mix control servo motor circuit (Passenger side)	AC-80
	3. Evaporator temperature sensor circuit	AC-54
	4. Room temperature sensor circuit	AC-46
	5. Ambient temperature sensor circuit	AC-50
	6. A/C amplifier	AC-232

Symptom	Suspected Area	See page
Temperature Control: Output air is warmer or cooler than the set temperature or response is slow	1. Refrigerant volume	AC-122
	2. Refrigerant pressure	AC-122
	3. Solar sensor circuit (Driver side)	AC-75
	4. Solar sensor circuit (Passenger side)	AC-62
	5. Room temperature sensor circuit	AC-46
	6. Ambient temperature sensor circuit	AC-50
	7. Air mix control servo motor circuit (Driver side)	AC-87
	8. Air mix control servo motor circuit (Passenger side)	AC-80
	9. Radiator unit sub-assembly	AC-154
	10. Expansion valve	AC-155
	11. A/C amplifier	AC-232
Temperature Control: No temperature control (only Max. cool or Max. warm)	1. Air mix control servo motor circuit (Driver side)	AC-87
	2. Air mix control servo motor circuit (Passenger side)	AC-80
	3. Room temperature sensor circuit	AC-46
	4. Ambient temperature sensor circuit	AC-50
	5. Evaporator temperature sensor circuit	AC-54
	6. Solar sensor circuit (Driver side)	AC-75
	7. Solar sensor circuit (Passenger side)	AC-62
	8. A/C control assembly	AC-226
	9. A/C amplifier	AC-232
No air inlet control	1. Air inlet control servo motor circuit	AC-82
	2. A/C amplifier	AC-232
No air flow mode control	1. Air outlet control servo motor circuit	AC-84
	2. A/C amplifier	AC-232
Engine idle up does not occur, or is continuous	1. Air conditioning compressor magnetic clutch circuit	AC-109
	2. Compressor lock sensor circuit	AC-67
	3. Compressor solenoid circuit	AC-89
	4. Heater control panel power source circuit	AC-107
	5. LIN communication circuit	AC-120
	6. A/C control assembly	AC-226
	7. A/C amplifier	AC-232
	8. ECM	ES-543
Blinking of A/C indicator	1. Compressor solenoid circuit	AC-89
	2. A/C amplifier	AC-232
Diagnostic trouble codes are not recorded. Set mode is cleared when engine switch is turned off.	1. Back-up power source circuit	AC-118
	2. A/C amplifier	AC-232

TERMINALS OF ECU

1. A/C AMPLIFIER

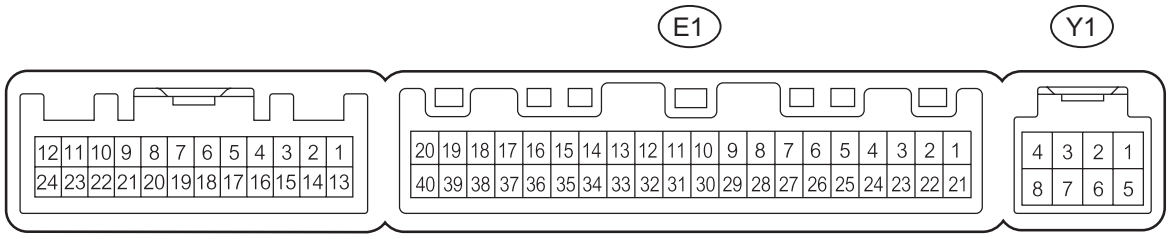

H

E124486E02

HINT:
Check from the rear of the connector while it is connected to the A/C amplifier.

Terminal No. (Symbols)	Wiring Color	Terminal Description	Condition	Specified Condition
E1-1 (IG+) - E1-14 (GND)	V - W-B	Power source (IG)	Engine switch on (IG)	10 to 14 V
E1-1 (IG+) - E1-14 (GND)	V - W-B	Power source (IG)	Engine switch off	Below 1 V
E1-2 (SOL+) - E1-14 (GND)	W - W-B	A/C compressor operation signal	Engine is running A/C switch: ON Blower switch: LO	Pulse generation (See waveform 1)
E1-5 (TAM) - E1-14 (GND)	G - W-B	A/C ambient temperature sensor signal	Engine switch on (IG) at 25°C (77°F)	1.35 to 1.75 V
E1-5 (TAM) - E1-14 (GND)	G - W-B	A/C ambient temperature sensor signal	Engine switch on (IG) at 40°C (104°F)	0.9 to 1.2 V
E1-6 (DGS) - E1-14 (GND)	LG - W-B	Exhaust gas sensor signal (HC, CO)	After 30 seconds from engine switch on (IG) and sensor is exposed to exhaust gas.	1.0 to 4.5 V
E1-7 (DGS1) - E1-14 (GND)	P - W-B	Exhaust gas sensor signal (NOx)	After 30 seconds from engine switch on (IG) and sensor is exposed to exhaust gas.	1.0 to 4.5 V
E1-8 (LOCK) - E1-14 (GND)	G - W-B	A/C compressor lock sensor signal	Engine is running Blower switch: LO A/C switch: ON	Pulse generation (See waveform 2)
E1-9 (PRE) - E1-13 (SG-2)	R - L	A/C pressure sensor signal	Start engine, Operate A/C system, Refrigerant pressure: Abnormal pressure (more than 3,140 kPa (32.0 kgf/cm^2, 455 psi))	4.74 V or higher
E1-9 (PRE) - E1-13 (SG-2)	R - L	A/C pressure sensor signal	Start engine, Operate A/C system, Refrigerant pressure: Abnormal pressure (less than 196 kPa (2.0 kgf/cm^2, 28 psi))	Below 0.76 V
E1-9 (PRE) - E1-13 (SG-2)	R - L	A/C pressure sensor signal	Start engine, Operate A/C system, Refrigerant pressure: Abnormal pressure (more than 3,140 kPa (32.0 kgf/cm^2, 455 psi) or less than 196 kPa (2.0 kgf/cm^2, 28 psi))	0.76 to 4.74 V
E1-10 (S5-3) - E1-13 (SG-2)	G - L	Power supply for A/C pressure sensor	Engine switch on (IG)	4.5 to 5.5 V
E1-11 (CANH) - E1-12 (CANL)	GR - BR	CAN communication system	CAN communication circuit	Pulse generation

Terminal No. (Symbols)	Wiring Color	Terminal Description	Condition	Specified Condition
E1-13 (SG-2) - Body ground	L - Body ground	Ground for A/C pressure sensor, A/C ambient temperature sensor, A/C lock sensor	Always	Below 1 V
E1-14 (GND) - Body ground	W-B - Body ground	Ground for main power supply	Always	Below 1 V
E1-20 (MGC) - E1-14 (GND)	B - W-B	A/C compressor magnetic clutch operation signal	Engine switch on (IG) Blower switch: LO A/C switch: OFF	10 to 14 V
E1-20 (MGC) - E1-14 (GND)	B - W-B	A/C compressor magnetic clutch operation signal	Engine switch on (IG) Blower switch: LO A/C switch: ON	Below 1 V
E1-21 (B) - E1-14 (GND)	GR - W-B	Power source (Back-up)	Always	10 to 14 V
E1-23 (BLW) - E1-14 (GND)	R - W-B	Blower motor speed control signal	Engine switch on (IG) Blower switch: ON	Pulse generation (See waveform 3)
E1-29 (TR) - E1-34 (SG-1)	BR - LG	A/C room temperature sensor signal	Engine switch on (IG) Cabin temperature at 25°C (77°F)	1.8 to 2.2 V
E1-29 (TR) - E1-34 (SG-1)	BR - LG	A/C room temperature sensor signal	Engine switch on (IG) Cabin temperature at 40°C (104°F)	1.2 to 1.6 V
E1-32 (TSP) - E1-14 (GND)	Y - W-B	A/C solar sensor signal (for Front passenger side)	Engine switch on (IG) Solar sensor is subjected to electric light.	0.8 to 4.3 V
E1-32 (TSP) - E1-14 (GND)	Y - W-B	A/C solar sensor signal (for Front passenger side)	Engine switch on (IG) Solar sensor is covered with a cloth.	Below 0.8 V
E1-33 (TSD) - E1-14 (GND)	O - W-B	A/C solar sensor signal (for Driver side)	Engine switch on (IG) Solar sensor is subjected to electric light.	0.8 to 4.3 V
E1-33 (TSD) - E1-14 (GND)	O - W-B	A/C solar sensor signal (for Driver side)	Engine switch on (IG) Solar sensor is covered with a cloth.	Below 0.8 V
E1-34 (SG-1) - Body ground	LG - Body ground	Ground for A/C room temperature sensor	Always	Below 1 V
E1-37 (LIN1) - E1-14 (GND)	GR - W-B	LIN communication signal	Engine switch on (IG)	Pulse generation
E1-38 (RDFG) - E1-14 (GND)	G - W-B	DEF relay signal	Engine switch on (IG) REAR DEF switch: ON	Below 1 V
E1-38 (RDFG) - E1-14 (GND)	G - W-B	DEF relay signal	Engine switch on (IG) REAR DEF switch: OFF	10 to 14 V
Y1-2 (BUS G) - Body ground	-	Ground for BUS IC	Always	Below 1 V
Y1-3 (BUS) - Y1-2 (BUS G)	-	BUS IC control signal	Engine switch off → on (IG)	Pulse generation
Y1-4 (B BUS) - Y1-2 (BUS G)	-	Power supply for BUS IC	Engine switch off	Below 1 V
Y1-4 (B BUS) - Y1-2 (BUS G)	-	Power supply for BUS IC	Engine switch on (IG)	10 to 14 V
Y1-5 (SG-3) - Body ground	-	Ground for evaporator temperature sensor	Always	Below 1 V
Y1-6 (TEA) - Y1-5 (SG-3)	-	A/C evaporator temperature sensor signal	Engine switch on (IG) Evaporator temperature at 0°C (32°F)	1.7 to 2.1 V
Y1-6 (TEA) - Y1-5 (SG-3)	-	A/C evaporator temperature sensor signal	Engine switch on (IG) Evaporator temperature at 15°C (59°F)	0.7 to 1.3 V

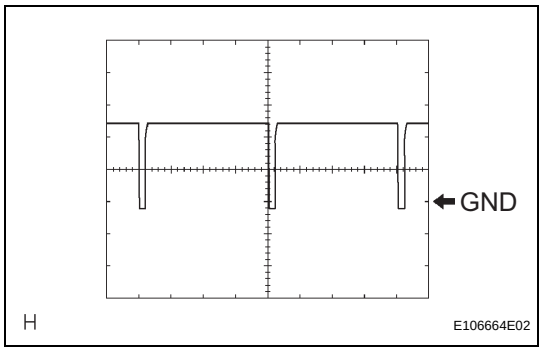

(a) Waveform 1:

Item	Contents
Terminal No. (Symbols)	E1-2 (SOL+) - E1-14 (GND)
Tool Setting	5 V/DIV., 500 μs./DIV.
Vehicle Condition	Engine is running A/C switch: ON

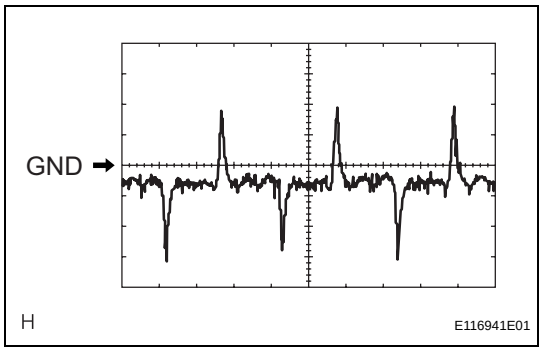

(b) Waveform 2:

Item	Contents
Terminal No. (Symbols)	E1-8 (LOCK) - E1-14 (GND)
Tool Setting	200 mV/DIV., 10 ms./DIV.
Vehicle Condition	Engine is running Blower switch: LO A/C switch: ON

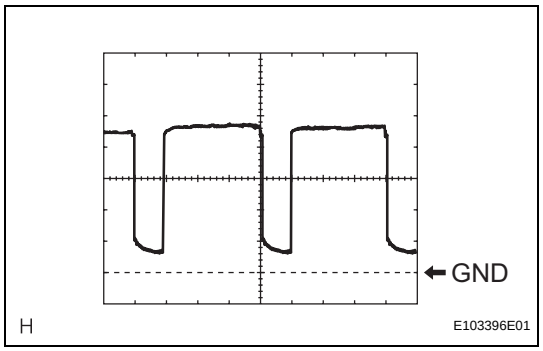

(c) Waveform 3:

Item	Contents
Terminal No. (Symbols)	E1-23 (BLW) - E1-14 (GND)
Tool Setting	1 V/DIV., 500 μs./DIV.
Vehicle Condition	Engine switch on (IG) Blower switch: ON

2. A/C CONTROL ASSEMBLY

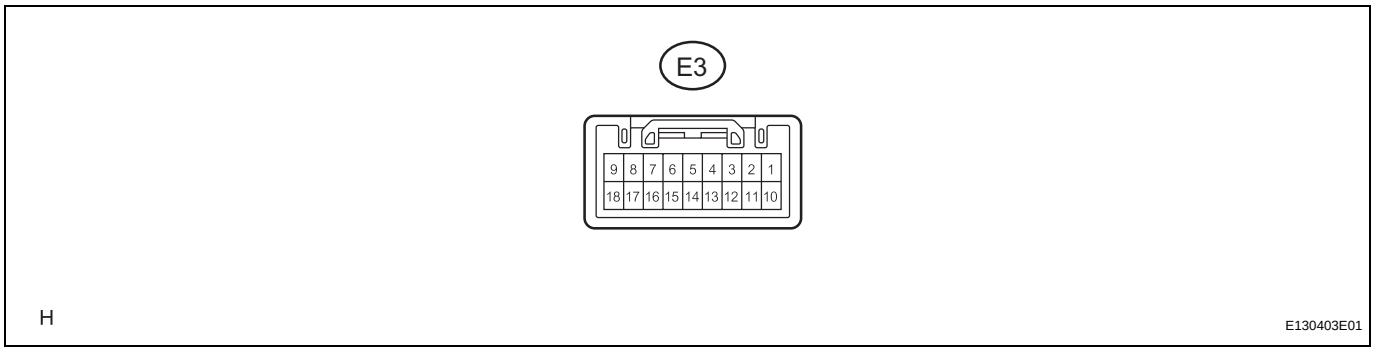

HINT:
Check from the rear of the connector while it is connected to the A/C control assembly.

Terminal No. (Symbols)	Wiring Color	Terminal Description	Condition	Specified Condition
E3-1 (+B) - E3-18 (GND)	GR - W-B	Power source (Back-up)	Always	10 to 14 V
E3-2 (IG+) - E3-18 (GND)	V - W-B	Power source (IG)	Engine switch off	Below 1 V
E3-2 (IG+) - E3-18 (GND)	V - W-B	Power source (IG)	Engine switch on (IG)	10 to 14 V
E3-10 (ACC) - E3-18 (GND)	L - W-B	Power source (ACC)	Engine switch off	Below 1 V
E3-10 (ACC) - E3-18 (GND)	L - W-B	Power source (ACC)	Engine switch on (ACC)	10 to 14 V
E3-15 (TX+) - E3-18 (GND)	GR - W-B	LIN communication circuit	Engine switch on (IG)	Pulse generation

CHECK MODE PROCEDURE

1. LIST OF OPERATION METHODS

(a) By operating each of the A/C control switches as shown in the diagram below, it is possible to enter the diagnostic check mode.

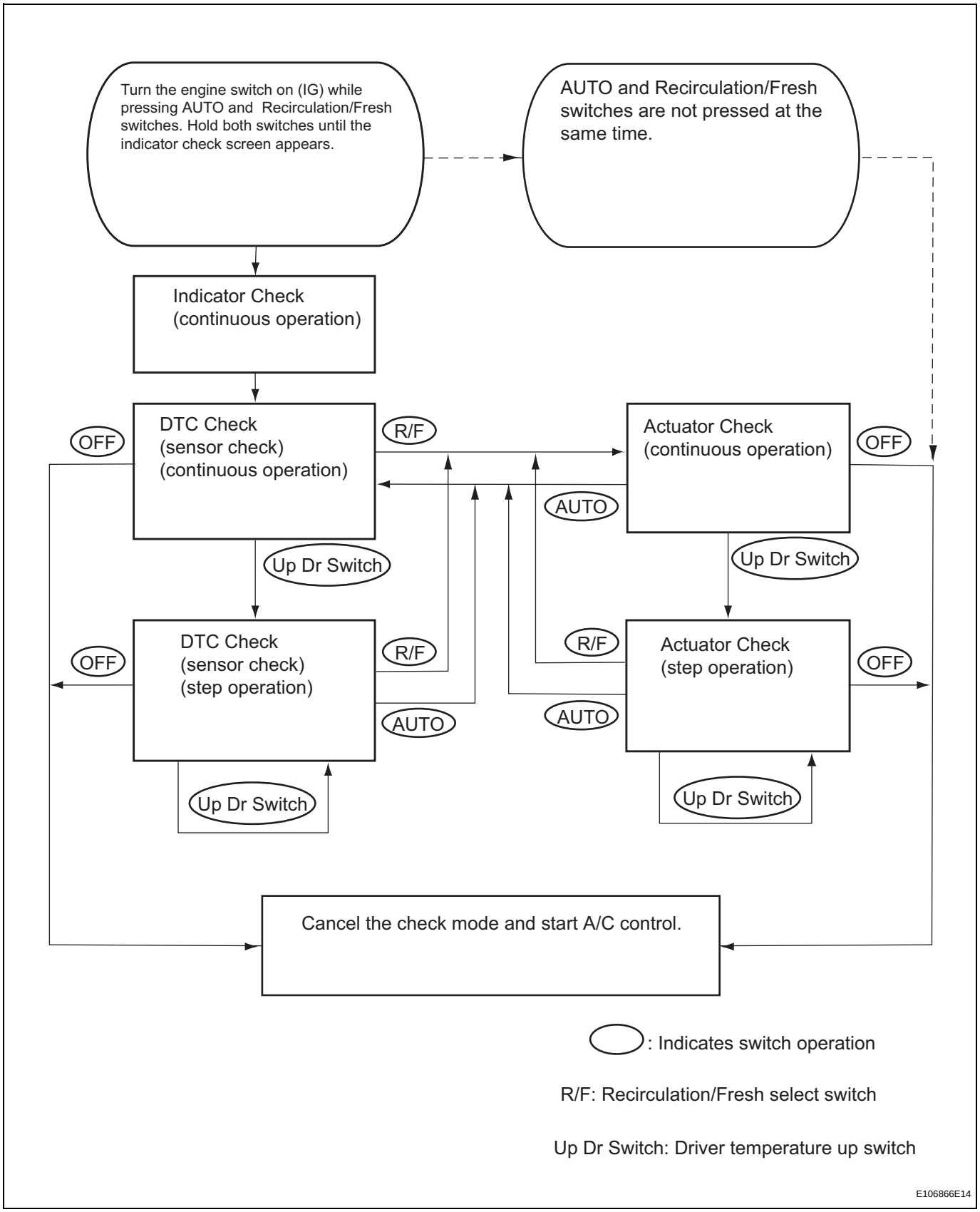

2. INDICATOR CHECK

(a) Turn the engine switch off.

without Navigation System:

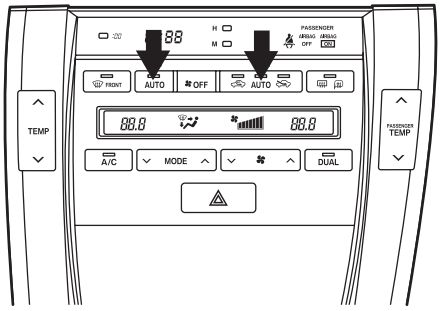

with Navigation System:

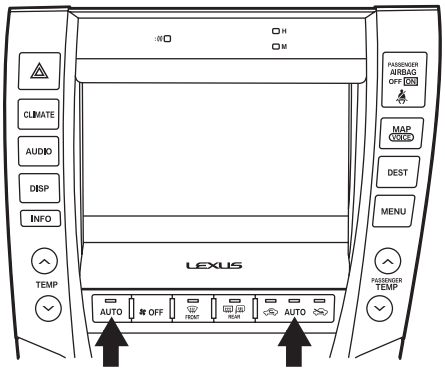

H

E130406E04

(b) Turn the engine switch on (IG) while pressing the A/C control "AUTO" switch and "R/F" switch simultaneously. Hold both switches until the indicator check screen appears.

without Navigation System:

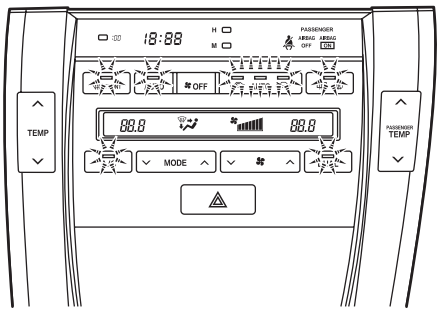

with Navigation System:

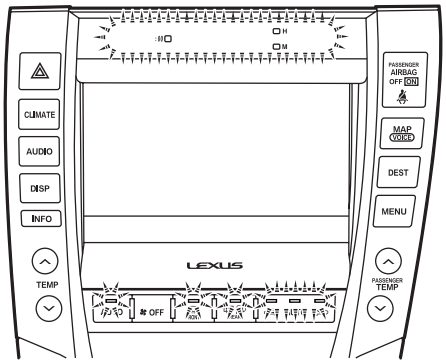

Indicator Blinking Pattern:

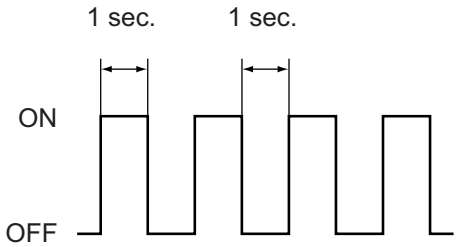

H

E130408E01

(c) The indicator check is automatically performed when panel diagnosis is activated. Check that the indicators light up and go off at 1 second intervals 4 times in succession.
HINT:
- The sensor check automatically starts when the indicator check is completed.
- Press the "OFF" switch to cancel the check mode.
- If a navigation system is installed, the indicator will blink and the buzzer will sound.

3. DTC CHECK (SENSOR CHECK)

(a) Start the engine and warm it up.

(b) Perform the indicator check.
HINT:
After the indicator check is completed, the system enters the DTC check mode automatically.

without Navigation System:

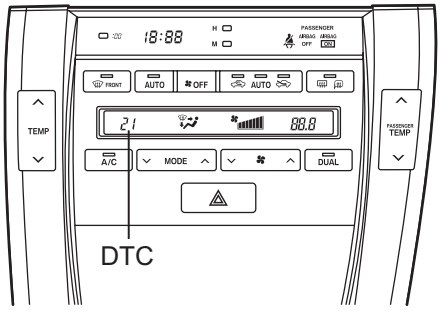

with Navigation System:

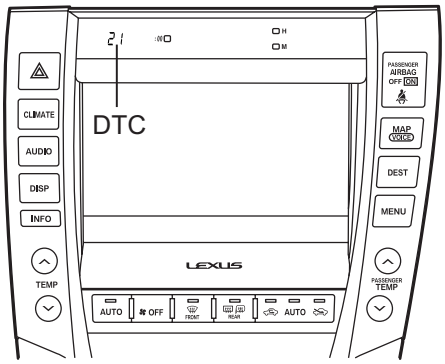

H

E130410E01

(c) Read the DTC on the panel.

NOTICE:

- **In the sensor check mode, which is automatically transferred from the indicator check mode, troubleshooting may be partially performed. Be sure to perform the actuator check, and then the sensor check again.**
- **If the check is performed in a dark place, DTC 21 or 24 may be displayed even though the system is normal.**

HINT:

Refer to the DTC chart (Diagnostic Trouble Code chart) for details of the codes (See page AC-41).

- When there are no problems, DTC 00 is output.
- As an example, the illustration shows that DTC 21 is output.

without Navigation System:

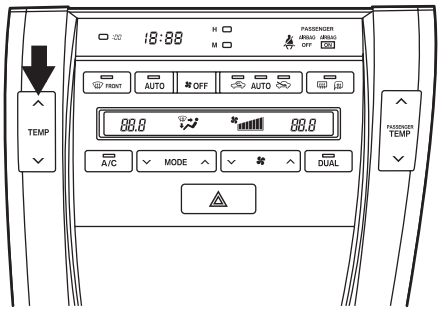

with Navigation System:

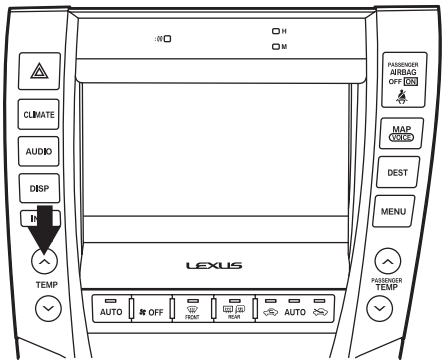

H

E130406E02

(d) If the steps are difficult to read because they change automatically, push the "UPDr" switch to display the steps one at a time so that they can be read easily. The items are displayed step by step each time the "UPDr" switch is pushed.

HINT:

- Push the "OFF" switch to finish panel diagnosis.
- Push the "R/F" switch to enter the actuator check mode.

4. ACTUATOR CHECK

(a) Start the engine and warm it up.

(b) Perform the indicator check.

without Navigation System:

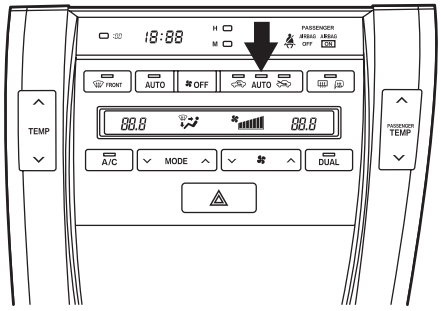

with Navigation System:

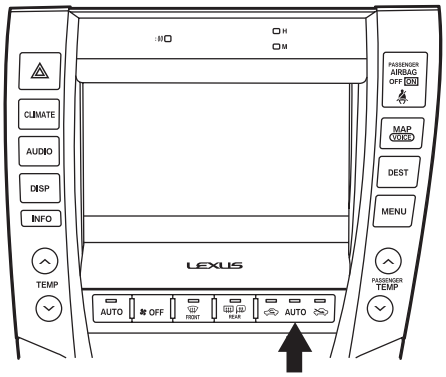

H

E130406E01

(c) Push the "R/F" switch to perform the actuator check.
HINT:
Be sure to perform the actuator check after starting the engine.

without Navigation System:

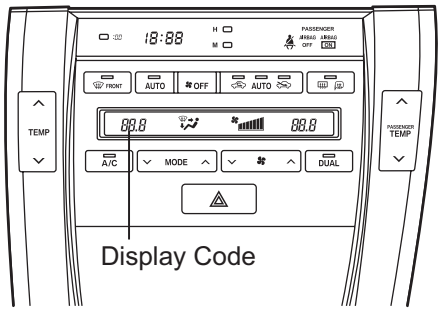

with Navigation System:

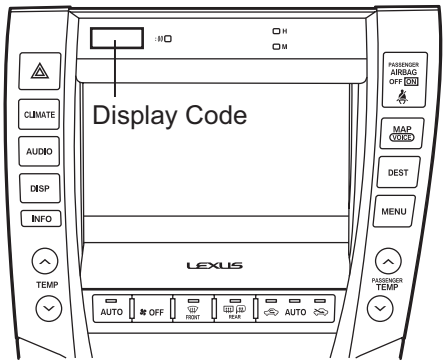

H

E130406E05

(d) As the actuator check is repeated from steps 1 to 10 at 1-second intervals, check the temperature and air flow visually and by hand.
HINT:
- The display blinks at 1-second intervals in the step operation.
- Push the "OFF" switch to finish panel diagnosis.
- Push the "AUTO" switch to enter the sensor check mode.

Step No.	Display Code	Conditions				
		Blower Level	Air Mix Damper	Airflow Vent	Air Inlet Damper	Compressor
1	0	0	0% open	FACE	FRESH	OFF
2	1	1	0% open	FACE	FRESH	OFF
3	2	17	0% open	FACE	RECIRCULATION / FRESH	ON
4	3	17	0% open	FACE	RECIRCULATION	ON
5	4	17	50% open	B/L	RECIRCULATION	ON
6	5	17	50% open	B/L	RECIRCULATION	ON
7	6	17	50% open	FOOT	FRESH	ON
8	7	17	100% open	FOOT-0	FRESH	ON
9	8	17	100% open	F/D	FRESH	ON
10	9	31	100% open	DEF	FRESH	ON

without Navigation System:

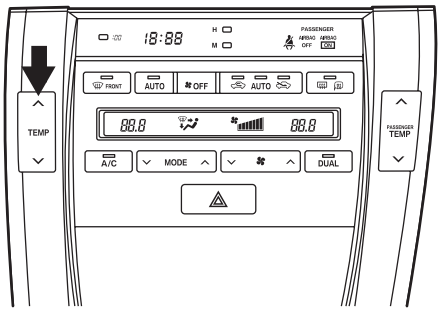

with Navigation System:

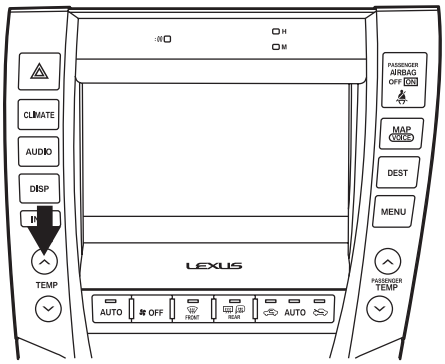

H

E130406E02

(e) If the steps are difficult to read because they change automatically, push the "UPDr" switch to display the steps one at a time so that they can be read easily. The items are displayed step by step each time the "UPDr" switch is pushed.
HINT:
- Push the "OFF" switch to finish panel diagnosis.
- Push the "R/F" switch to enter the sensor check mode.

DATA LIST / ACTIVE TEST

1. DATA LIST

HINT:
Using the intelligent tester's DATA LIST allows switch, sensor, actuator, and other item values to be read without removing any parts. Reading the DATA LIST early in troubleshooting is one way to save time.

(a) Connect the intelligent tester to the DLC3.
(b) Turn the engine switch on (IG).
(c) Turn the tester on.
(d) Enter the following menus: DIAGNOSIS / OBD/ MOBD / AIR CONDITIONER / DATA LIST.
(e) Check the value(s) by referring to the table below.

AIR CONDITIONER:

Tester Display	Measurement Item/Range	Normal Condition	Diagnostic Note
ROOM TEMP (Room temperature sensor)	Room temperature sensor / Min.: -6.5°C (20.3°F), Max.: 57.25°C (135.05°F)	Actual cabin temperature is displayed	-
AMBI TEMP SENS (Ambient temperature sensor)	Ambient temperature sensor / Min.: -23.3°C (-9.94°F), Max.: 65.95°C (150.71°F)	Actual ambient temperature is displayed	-
AMBI TEMP (Adjusted ambient temperature)	Adjusted ambient temperature / Min.: -30.8°C (-23.44°F), Max.: 50.8°C (123.44°F)	-	-
EVAP FIN TEMP (Evaporator fin thermistor)	Evaporator fin thermistor / Min.: -29.7°C (-21.46°F), Max.: 59.55°C (139.19°F)	Actual evaporator temperature is displayed	-
SOLAR SENS-D (Solar sensor (D side))	Driver side solar sensor / Min.: 0, Max.: 255	Driver side solar sensor value increases as brightness increases	-
SOLAR SENS-P (Solar sensor (P side))	Passenger side solar sensor / Min.: 0, Max.: 255	Passenger side solar sensor value increases as brightness increases	-
COOLANT TEMP (Engine coolant temperature)	Engine coolant temperature / Min.: 1.3°C (34.34°F), Max.: 90.55°C (194.99°F)	Actual engine coolant temperature is displayed while engine is warmed up	-
SET TEMP-D (Set temperature (D - side))	Driver side set temperature / Min.: 0°C (32°F), Max.: 31°C (54°F)	Driver side set temperature is displayed	-
SET TEMP-P (Set temperature (P - side))	Passenger side set temperature / Min.: 0°C (32°F), Max.: 31°C (54°F)	Passenger side set temperature is displayed	-
BLOWER LEVEL (Blower motor speed level)	Blower motor speed level / Min.: 0 level, Max.: 31 level	Increases in the range between 0 and 31 as the blower motor speed increases	-
NOX GAS SENS (Emission gas NOx sensor)	Emission gas / Min.: 0, Max.: 255	Smog ventilation sensor value increases as gas amount increases	-
EMISS GAS SENS (Emission gas sensor)	Emission gas / Min.: 0, Max.: 255	Smog ventilation sensor value increases as gas amount increases	-
REG PRESS SENS (Regulator pressure sensor)	Regulator pressure sensor / Min.: -0.5 kgf/cm^{2}G, Max.: 37.75 kgf/cm^{2}G	Actual refrigerant pressure is displayed	-
REG CTRL CURRNT (Regulator control current)	Compressor variable output current / Min.: 0 A, Max.: 0.996 A	-	-
AIR MIX PULSE-D (Air mix servomotor target pulse (D side))	Driver side air mix servo motor target pulse / Min.: 0, Max.: 255	MAX. COLD: 5 (pulse) MAX. HOT: 103 (pulse)	-

Tester Display	Measurement Item/Range	Normal Condition	Diagnostic Note
AIR MIX PULSE-P (Air mix servomotor target pulse (P side))	Passenger side air mix servo motor target pulse / Min.: 0, Max.: 255	MAX. COLD: 105 (pulse) MAX. HOT: 7 (pulse)	-
AIR OUT PULSE-D (Air out pulse-D)	Driver side air outlet servo motor target pulse / Min.: 0, Max.: 255	FACE: 8 (pulse) B/L: 30 to 38 (pulse) FOOT: 50 to 74 (pulse) FOOT/DEF: 80 (pulse) DEF: 97 (pulse)	-
A/I DAMP PLS (Air inlet damper target pulse)	Air inlet damper target pulse / Min.: 0, Max.: 255	RECIRCULATION: 7 (pulse) FRESH: 28 (pulse)	-
#CODES (Number of trouble codes)	Number of trouble codes / Min.: 0, Max.: 255	Number of DTCs will be displayed	-

ENGINE:

Tester Display	Measurement Item/Range	Normal Condition	Diagnostic Note
A/C SIGNAL (A/C signal)	A/C signal / ON or OFF	ON: A/C ON OFF: A/C OFF	-

2. ACTIVE TEST

HINT:

Performing the intelligent tester's ACTIVE TEST allows relays, VSVs, actuators and other items to be operated without removing any parts. Performing the ACTIVE TEST early in troubleshooting is one way to save time. The DATA LIST can be displayed during the ACTIVE TEST.

(a) Connect the intelligent tester to the DLC3.
(b) Turn the engine switch on (IG).
(c) Turn the tester on.
(d) Enter the following menus: DIAGNOSIS / OBD/ MOBD / AIR CONDITIONER / ACTIVE TEST.
(e) Perform the ACTIVE TEST by referring to the table below.

AIR CONDITIONER:

Tester Display	Test Part	Control Range
BLOWER MOTOR (Blower motor)	Blower motor / Min.: Level 0, Max.: Level 31	-
A/C MAG CLUTCH (Magnetic clutch relay)	Magnetic clutch relay / OFF, ON	-
DEFOGER RLY-R (Defogger relay (Rear))	Defogger relay (Rear) / OFF, ON	-
AIR MIX PULSE-D (Air mix servomotor pulse (D side))	Driver side air mix servo motor pulse / Min.: 0, Max.: 255	-
AIR MIX PULSE-P (Air mix servomotor pulse (P side))	Passenger side air mix servo motor pulse / Min.: 0, Max.: 255	-
AIR OUT PULSE-D (Air outlet servomotor pulse (D side))	Driver side air outlet servo motor pulse / Min.: 0, Max.: 255	-
A/I DAMP PLS (Air inlet damper target pulse)	Air inlet damper target pulse / Min.: 0, Max.: 255	-

DIAGNOSTIC TROUBLE CODE CHART

AIR CONDITIONING SYSTEM:

DTC Code	Detection Item	Trouble Area	Memory *4	See page
B1411/11 *1	Room Temperature Sensor Circuit	1. A/C room temperature sensor 2. Harness or connector between A/C room temperature sensor and A/C amplifier 3. A/C amplifier	Memorized (8.5 min. or more)	AC-46
B1412/12 *2	Ambient Temperature Sensor Circuit	1. Ambient temperature sensor 2. Harness or connector between ambient temperature sensor and A/C amplifier 3. A/C amplifier	Memorized (8.5 min. or more)	AC-50
B1413/13	Evaporator Temperature Sensor Circuit	1. Air conditioning harness (evaporator temperature sensor) 2. A/C amplifier	Memorized (8.5 min. or more)	AC-54
B1418/18	Exhaust Gas Sensor Circuit	1. Smog ventilation sensor (emission gas sensor) 2. Harness or connector between smog ventilation sensor (emission gas sensor) and A/C amplifier 3. A/C amplifier	-	AC-57
B1421/21 *3	Solar Sensor Circuit (Passenger Side)	1. Solar sensor 2. Harness or connector between solar sensor and A/C amplifier 3. Harness or connector between solar sensor and main body ECU 4. A/C amplifier 5. Main body ECU	Memorized (8.5 min. or more) (only when circuit is shorted)	AC-62
B1422/22	Compressor Lock Sensor Circuit	1. A/C compressor (A/C lock sensor) 2. Compressor drive belt 3. Harness or connector between compressor and magnetic clutch (A/C lock sensor) 4. A/C amplifier 5. CAN communication system	-	AC-67
B1423/23	Pressure Sensor Circuit	1. A/C pressure sensor 2. Harness or connector between A/C pressure sensor and A/C amplifier 3. Refrigerant pipe line 4. A/C amplifier	-	AC-71
B1424/24 *3	Solar Sensor Circuit (Driver Side)	1. Solar sensor 2. Harness or connector between solar sensor and A/C amplifier 3. Harness or connector between solar sensor and main body ECU 4. A/C amplifier 5. Main body ECU	Memorized (8.5 min. or more) (only when circuit is shorted)	AC-75

DTC Code	Detection Item	Trouble Area	Memory *4	See page
B1441/41	Air Mix Damper Control Servo Motor Circuit (Passenger Side)	1. A/C amplifier 2. Air conditioning harness 3. Air mix control servo motor	Memorized (30 sec.)	AC-80
B1442/42	Air Inlet Damper Control Servo Motor Circuit	1. A/C amplifier 2. Air conditioning harness 3. Air inlet control servo motor	Memorized (30 sec.)	AC-82
B1443/43	Air Outlet Damper Control Servo Motor Circuit	1. A/C amplifier 2. Air conditioning harness 3. Air outlet control servo motor	Memorized (30 sec.)	AC-84
B1446/46	Air Mix Damper Control Servo Motor Circuit (Driver Side)	1. A/C amplifier 2. Air conditioning harness 3. Air mix control servo motor	Memorized (30 sec.)	AC-87
B1451/51	Compressor Solenoid Circuit	1. A/C compressor 2. Harness or connector between A/C amplifier and solenoid of externally changeable compressor 3. A/C amplifier	-	AC-89
B1461/61	Emission Gas NOx Sensor Circuit	1. Smog ventilation sensor (emission gas NOx sensor) 2. Harness or connector between smog ventilation sensor (emission gas NOx sensor) and A/C amplifier 3. A/C amplifier	-	AC-92
B1497/97	BUS IC Communication Malfunction	1. Air conditioning harness 2. A/C amplifier	Memorized (10 sec. or more)	AC-97
B1499/99	Multiplex Communication Circuit	CAN communication system	Memorized	AC-100

*1: If the room temperature is approx. -18.6°C (-1.48°F) or lower, DTC B1411/11 may be output even though the system is normal.

*2: If the ambient temperature is approx. -52.9°C (-63.22°F) or lower, DTC B1412/12 may be output even though the system is normal.

*3: If the check is performed in a dark place, DTC B1421/21 or B1424/24 (solar sensor circuit abnormal) may be output even though the system is normal.

*4: The A/C amplifier memorizes the DTC of the respective malfunction if it has occurred for the period of time indicated in the brackets.

ACTUATOR CHECK

1. ACTUATOR CHECK

(a) Start the engine and warm it up.

(b) Perform the indicator check (See page AC-33).

(c) Push the "R/F" switch to perform the actuator check.
HINT:
Be sure to perform the actuator check after starting the engine.

without Navigation System:

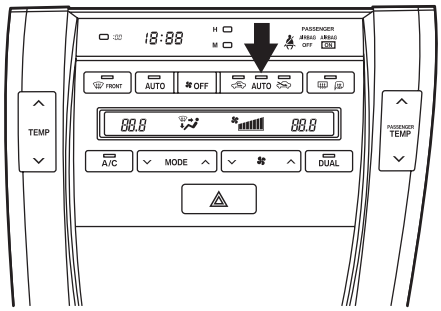

with Navigation System:

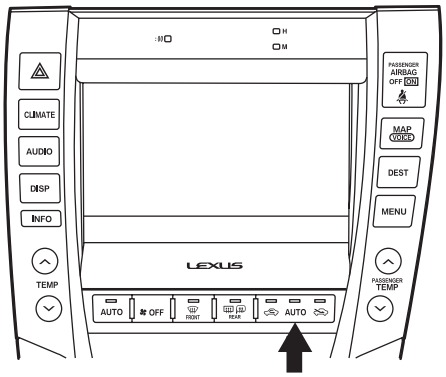

H

E130406E01

without Navigation System:

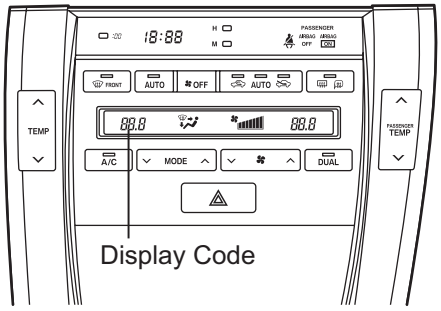

with Navigation System:

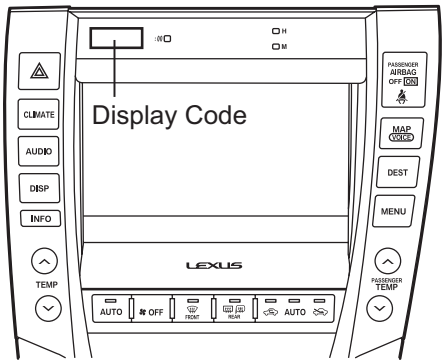

H

E130406E05

(d) As the actuator check is repeated from steps 1 to 10 at 1-second intervals, check the temperature and air flow visually and by hand.
HINT:
- The display blinks at 1-second intervals in the step operation.
- Push the "OFF" switch to finish panel diagnosis.
- Push the "AUTO" switch to enter the sensor check mode.

Step No.	Display Code	Conditions				
		Blower Level	Air Mix Damper	Airflow Vent	Air Inlet Damper	Compressor
1	0	0	0% open	FACE	FRESH	OFF
2	1	1	0% open	FACE	FRESH	OFF
3	2	17	0% open	FACE	RECIRCULATION / FRESH	ON
4	3	17	0% open	FACE	RECIRCULATION	ON
5	4	17	50% open	B/L	RECIRCULATION	ON
6	5	17	50% open	B/L	RECIRCULATION	ON
7	6	17	50% open	FOOT	FRESH	ON
8	7	17	100% open	FOOT-0	FRESH	ON
9	8	17	100% open	F/D	FRESH	ON
10	9	31	100% open	DEF	FRESH	ON

without Navigation System:

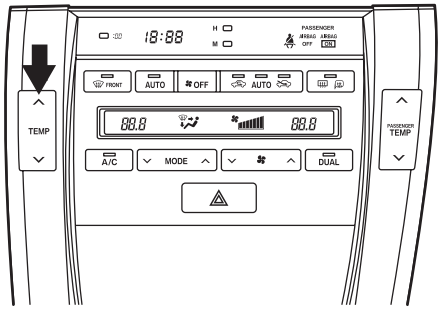

with Navigation System:

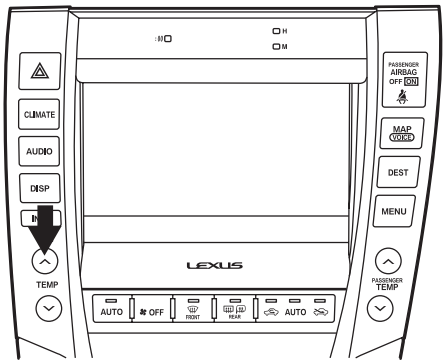

H

E130406E02

(e) If the steps are difficult to read because they change automatically, push the "UPDr" switch to display the steps one at a time so that they can be read easily. The items are displayed step by step each time the "UPDr" switch is pushed.

HINT:

- Push the "OFF" switch to finish panel diagnosis.
- Push the "R/F" switch to enter the sensor check mode.

DTC	B1411/11	Room Temperature Sensor Circuit

DESCRIPTION

This sensor detects the cabin temperature that is used as the basis for temperature control and sends a signal to the A/C amplifier.

DTC No.	DTC Detection Condition	Trouble Area
B1411/11	Open or short in room temperature sensor circuit	• A/C room temperature sensor • Harness or connector between A/C room temperature sensor and A/C amplifier • A/C amplifier

WIRING DIAGRAM

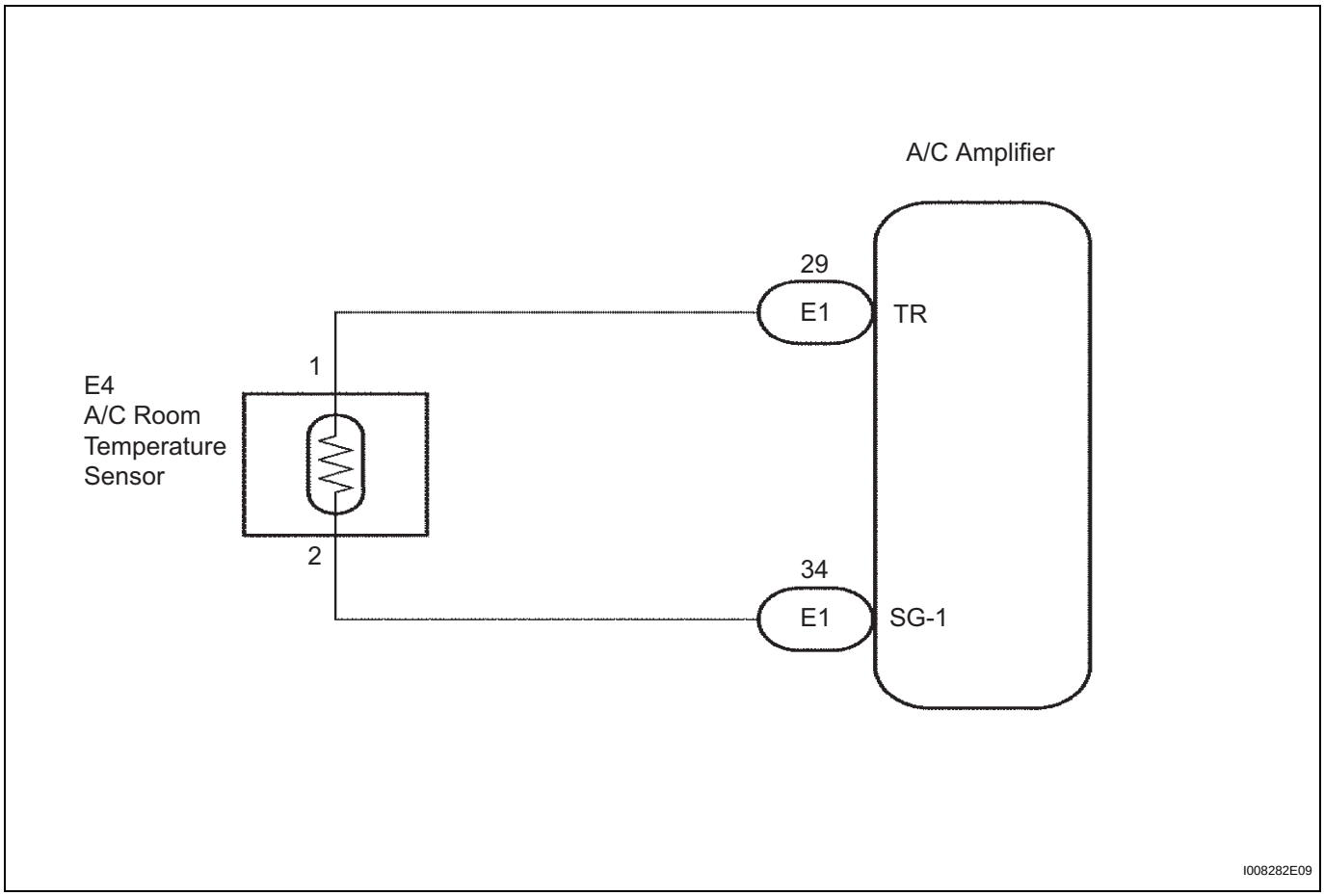

INSPECTION PROCEDURE

1	READ VALUE OF INTELLIGENT TESTER

(a) Connect the intelligent tester to the DLC3.
(b) Turn the engine switch on (IG) and turn the intelligent tester main switch on.

(c) Select the item below in the DATA LIST, and read the display on the intelligent tester.

DATA LIST / AIR CONDITIONER:

Tester Display	Measurement Item/Range	Normal Condition	Diagnostic Note
ROOM TEMP	Room temperature sensor / Min.: -6.5°C (20.3°F), Max.: 57.25°C (135.05°F)	Actual cabin temperature is displayed	-

OK:

The display is as specified in the normal condition column.

Result

Result	Proceed to
NG	**A**
OK (When troubleshooting according to the PROBLEM SYMPTOMS TABLE)	**B**
OK (When troubleshooting according to the DTC)	**C**

B → **PROCEED TO NEXT CIRCUIT INSPECTION SHOWN IN PROBLEM SYMPTOMS TABLE**

C → **REPLACE AIR CONDITIONING AMPLIFIER**

A

2 INSPECT AIR CONDITIONING AMPLIFIER

Air Conditioning Amplifier Connector Wire Harness View:

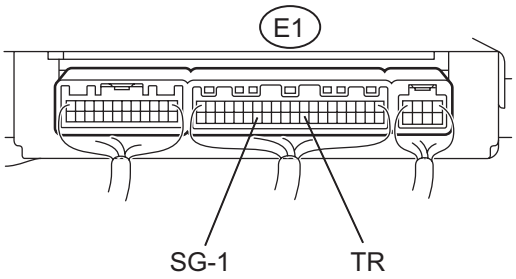

H E124471E17

(a) Remove the A/C amplifier with the connectors still connected.

(b) Turn the engine switch on (IG).

(c) Measure the voltage according to the value(s) in the table below.

Standard voltage

Tester Connection	Condition	Specified Condition
E1-29 (TR) - E1-34 (SG-1)	**Engine switch on (IG) at 25°C (77°F)**	**1.35 to 1.75 V**
E1-29 (TR) - E1-34 (SG-1)	**Engine switch on (IG) at 40°C (104°F)**	**0.9 to 1.2 V**

HINT:

As the temperature increases, the voltage decreases.

Result

Result	Proceed to
NG	**A**
OK (When troubleshooting according to the PROBLEM SYMPTOMS TABLE)	**B**
OK (When troubleshooting according to the DTC)	**C**

B → **PROCEED TO NEXT CIRCUIT INSPECTION SHOWN IN PROBLEM SYMPTOMS TABLE**

C → **REPLACE AIR CONDITIONING AMPLIFIER**

A

3 INSPECT A/C ROOM TEMPERATURE SENSOR

A/C Room Temperature Sensor Connector Front View:

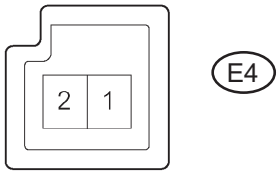

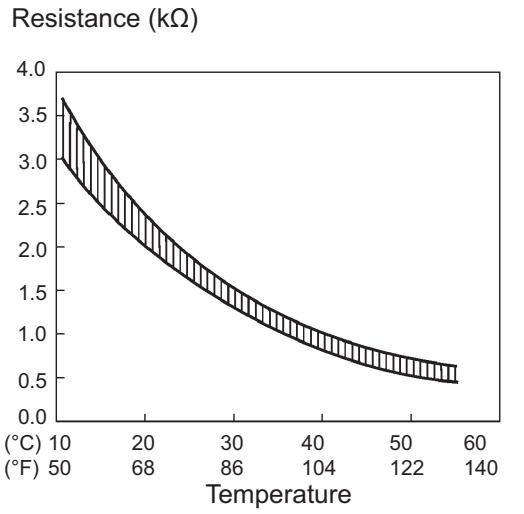

(a) Remove the A/C room temperature sensor.
(b) Measure the resistance according to the value(s) in the table below.

Standard resistance

Tester Connection	Condition	Specified Condition
E4-1 - E4-2	10°C (50°F)	3.00 to 3.73 kΩ
E4-1 - E4-2	15°C (59°F)	2.45 to 2.88 kΩ
E4-1 - E4-2	20°C (68°F)	1.95 to 2.30 kΩ
E4-1 - E4-2	25°C (77°F)	1.60 to 1.80 kΩ
E4-1 - E4-2	30°C (86°F)	1.28 to 1.47 kΩ
E4-1 - E4-2	35°C (95°F)	1.00 to 1.22 kΩ
E4-1 - E4-2	40°C (104°F)	0.80 to 1.00 kΩ
E4-1 - E4-2	45°C (113°F)	0.65 to 0.85 kΩ
E4-1 - E4-2	50°C (122°F)	0.50 to 0.70 kΩ
E4-1 - E4-2	55°C (131°F)	0.44 to 0.60 kΩ
E4-1 - E4-2	60°C (140°F)	0.36 to 0.50 kΩ

NOTICE:
- **Hold the sensor only by its connector. Touching the sensor may change the resistance value.**
- **When measuring, the sensor temperature must be the same as the ambient temperature.**

HINT:
As the temperature increases, the resistance decreases (see the graph).

NG → **REPLACE A/C ROOM TEMPERATURE SENSOR**

OK

4	CHECK HARNESS AND CONNECTOR (A/C ROOM TEMPERATURE SENSOR - AIR CONDITIONING AMPLIFIER)

A/C Conditioning Amplifier Connector Wire Harness View:

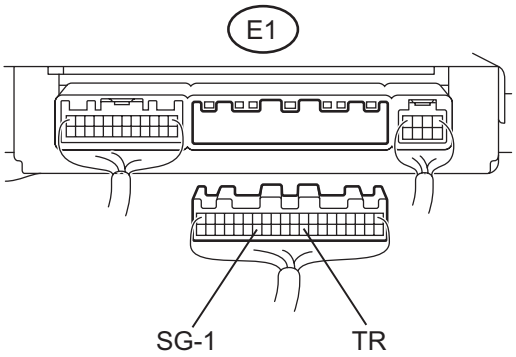

H E124470E31

(a) Disconnect the connector from the A/C amplifier.

A/C Room Temperature Sensor Connector Front View:

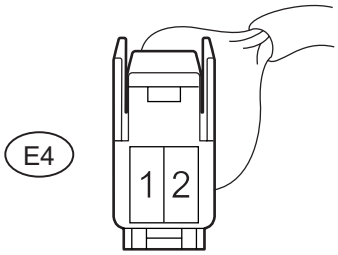

H E124472E03

(b) Disconnect the connector from the A/C room temperature sensor.

(c) Measure the resistance according to the value(s) in the table below.

Standard resistance

Tester Connection	Condition	Specified Condition
E1-29 (TR) - E4-1	Always	Below 1 Ω
E1-34 (SG-1) - E4-2	Always	Below 1 Ω
E1-29 (TR) - Body ground	Always	10 kΩ or higher
E1-34 (SG-1) - Body ground	Always	10 kΩ or higher

NG → **REPAIR OR REPLACE HARNESS OR CONNECTOR**

OK

REPLACE AIR CONDITIONING AMPLIFIER

DTC	B1412/12	Ambient Temperature Sensor Circuit

DESCRIPTION

The ambient temperature sensor is installed in front of the condenser to detect the ambient temperature which is used to control the air conditioner "AUTO" mode. This sensor is connected to the A/C amplifier and detects fluctuations in the ambient temperature. This data is used for controlling the cabin temperature. The sensor sends a signal to the A/C amplifier. The resistance of the ambient temperature sensor changes in accordance with the ambient temperature. As the temperature decreases, the resistance increases. As the temperature increases, the resistance decreases.
The A/C amplifier applies voltage (5 V) to the ambient temperature sensor and reads voltage changes as the resistance of the ambient temperature sensor changes.

DTC No.	DTC Detection Condition	Trouble Area
B1412/12	Open or short in ambient temperature sensor circuit	• Ambient temperature sensor • Harness or connector between ambient temperature sensor and A/C amplifier • A/C amplifier

WIRING DIAGRAM

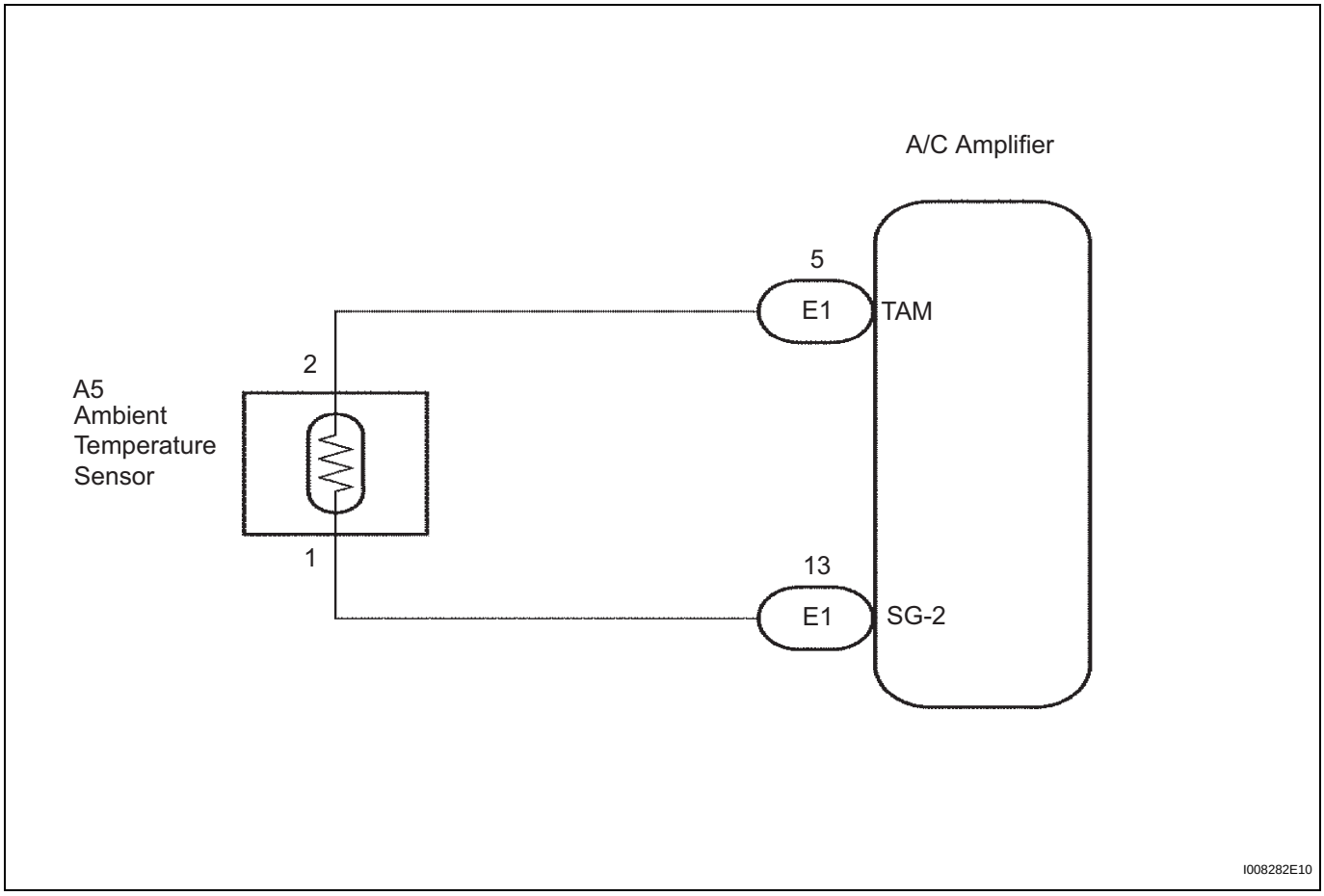

INSPECTION PROCEDURE

AC

1	READ VALUE OF INTELLIGENT TESTER

(a) Connect the intelligent tester to the DLC3.

(b) Turn the engine switch on (IG) and turn the intelligent tester main switch on.
(c) Select the item below in the DATA LIST, and read the display on the intelligent tester.

DATA LIST / AIR CONDITIONER:

Tester Display	Measurement Item/Range	Normal Condition	Diagnostic Note
AMBI TEMP SENS (Ambient temperature sensor)	Ambient temperature sensor / Min: -23.3°C (-9.94°F), Max: 65.95°C (150.71°F)	Actual ambient temperature is displayed	Open in circuit: -23.3°C (-9.94°F) Short in circuit: 65.95°C (150.71°F)

OK:
The display is as specified in the normal condition column.

Result

Result	Proceed to
NG	A
OK (When troubleshooting according to the PROBLEM SYMPTOMS TABLE)	B
OK (When troubleshooting according to the DTC)	C

B → **PROCEED TO NEXT CIRCUIT INSPECTION SHOWN IN PROBLEM SYMPTOMS TABLE**

C → **REPLACE AIR CONDITIONING AMPLIFIER**

A

2 INSPECT AIR CONDITIONING AMPLIFIER

Air Conditioning Amplifier Connector Wire Harness View:

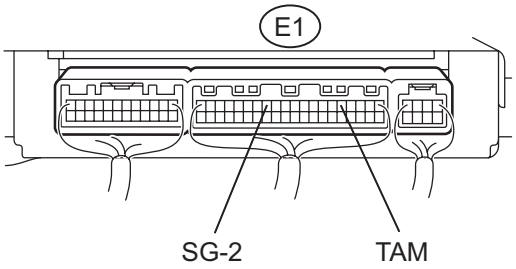

H E124471E24

(a) Remove the A/C amplifier with the connector still connected.
(b) Turn the engine switch on (IG).
(c) Measure the voltage according to the value(s) in the table below.

Standard voltage

Tester Connection	Condition	Specified Condition
E1-5 (TAM) - E1-13 (SG-2)	Engine switch on (IG) at 25°C (77°F)	1.35 to 1.75 V
E1-5 (TAM) - E1-13 (SG-2)	Engine switch on (IG) at 40°C (104°F)	0.9 to 1.2 V

HINT:
As the temperature increases, the voltage decreases.

Result

Result	Proceed to
NG	A
OK (When troubleshooting according to the PROBLEM SYMPTOMS TABLE)	B
OK (When troubleshooting according to the DTC)	C

B → **PROCEED TO NEXT CIRCUIT INSPECTION SHOWN IN PROBLEM SYMPTOMS TABLE**

C → **REPLACE AIR CONDITIONING AMPLIFIER**

A

3 INSPECT AMBIENT TEMPERATURE SENSOR

Ambient Temperature Sensor Connector Front View:

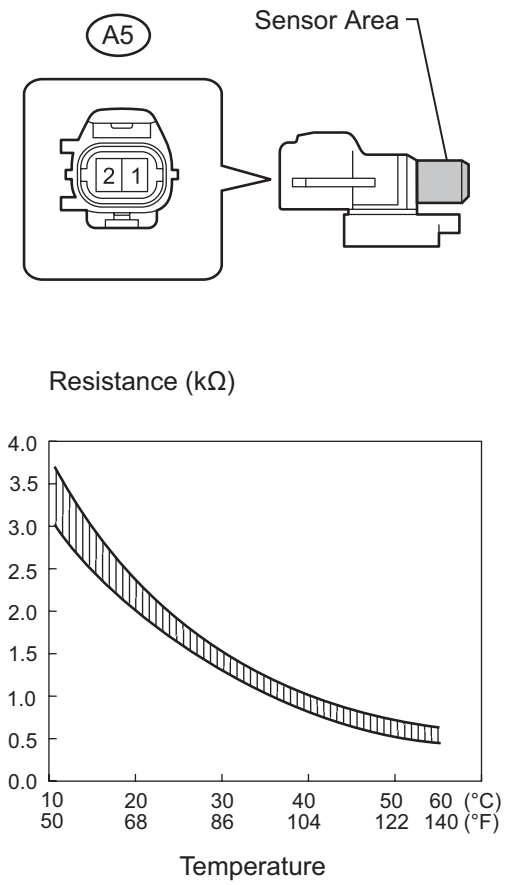

(a) Remove the ambient temperature sensor.

(b) Measure the resistance according to the value(s) in the table below.

Standard resistance

Tester Connection	Condition	Specified Condition
A5-1 - A5-2	10°C (50°F)	3.00 to 3.73 kΩ
A5-1 - A5-2	15°C (59°F)	2.45 to 2.88 kΩ
A5-1 - A5-2	20°C (68°F)	1.95 to 2.30 kΩ
A5-1 - A5-2	25°C (77°F)	1.60 to 1.80 kΩ
A5-1 - A5-2	30°C (86°F)	1.28 to 1.47 kΩ
A5-1 - A5-2	35°C (95°F)	1.00 to 1.22 kΩ
A5-1 - A5-2	40°C (104°F)	0.80 to 1.00 kΩ
A5-1 - A5-2	45°C (113°F)	0.65 to 0.85 kΩ
A5-1 - A5-2	50°C (122°F)	0.50 to 0.70 kΩ
A5-1 - A5-2	55°C (131°F)	0.44 to 0.60 kΩ
A5-1 - A5-2	60°C (140°F)	0.36 to 0.50 kΩ

NOTICE:

- **Even slightly touching the sensor may change the resistance value. Be sure to hold the connector of the sensor.**
- **When measuring, the sensor temperature must be the same as the ambient temperature.**

HINT:

As the temperature increases, the resistance decreases (see the graph).

NG → **REPLACE AMBIENT TEMPERATURE SENSOR**

OK

4	CHECK HARNESS AND CONNECTOR (AMBIENT TEMPERATURE SENSOR - A/C AMPLIFIER)

Ambient Temperature Sensor Connector Front View:

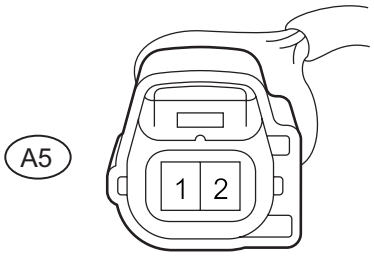

H E124473E04

(a) Disconnect the ambient temperature sensor connector.

Air Conditioning Amplifier Connector Wire Harness View:

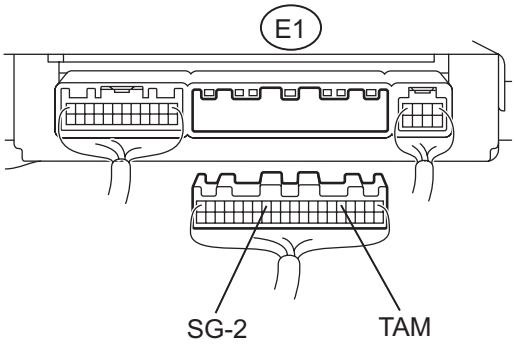

H E124470E32

(b) Disconnect the A/C amplifier connector.

(c) Measure the resistance according to the value(s) in the table below.

Standard resistance

Tester Connection	Condition	Specified Condition
A5-2 - E1-5 (TAM)	Always	Below 1 Ω
A5-1 - E1-13 (SG-2)	Always	Below 1 Ω
E1-5 (TAM) - Body ground	Always	10 kΩ or higher
E1-13 (SG-2) - Body ground	Always	10 kΩ or higher

NG → **REPAIR OR REPLACE HARNESS OR CONNECTOR**

OK

REPLACE AIR CONDITIONING AMPLIFIER

DTC	B1413/13	Evaporator Temperature Sensor Circuit

DESCRIPTION

The evaporator temperature sensor (A/C thermistor) is installed on the evaporator in the air conditioner unit. It detects the temperature of the cooled air that has passed through the evaporator and its signal is used to control the air conditioning. It sends a signal to the A/C amplifier. The resistance of the evaporator temperature sensor (A/C thermistor) changes in accordance with the temperature of the cooled air that has passed through the evaporator. As the temperature decreases, the resistance increases. As the temperature increases, the resistance decreases.
The A/C amplifier applies voltage (5 V) to the evaporator temperature sensor (A/C thermistor) and reads voltage changes as the resistance of the evaporator temperature sensor (A/C thermistor) changes. This sensor is used to prevent the evaporator from freezing.

DTC No.	DTC Detection Condition	Trouble Area
B1413/13	Open or short in evaporator temperature sensor circuit	• Air conditioning harness (evaporator temperature sensor) • A/C amplifier

WIRING DIAGRAM

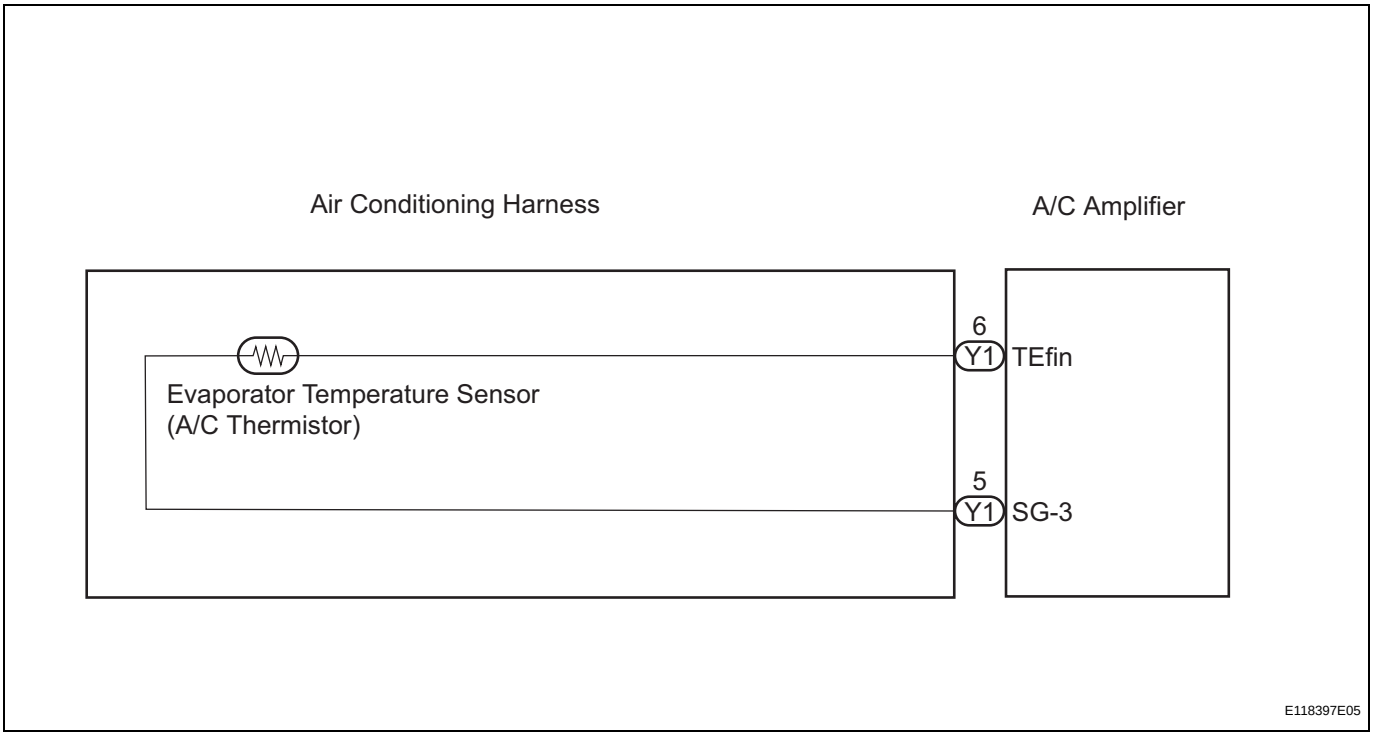

INSPECTION PROCEDURE

1	READ VALUE OF INTELLIGENT TESTER

(a) Connect the intelligent tester to the DLC3.
(b) Turn the engine switch on (IG) and turn the intelligent tester main switch on.

(c) Select the item below in the DATA LIST, and read the display on the intelligent tester.

DATA LIST / AIR CONDITIONER:

Tester Display	Measurement Item/Range	Normal Condition	Diagnostic Note
EVAP FIN TEMP (Evaporator fin thermistor)	Evaporator fin thermistor / Min.: -29.7°C (-21.46°F), Max.: 59.55°C (139.19°F)	Actual evaporator temperature is displayed	Open in circuit: -29.7°C (-21.46°F) Short in circuit: 59.55°C (139.19°F)

OK:

The display is as specified in the normal condition column.

Result

Result	Proceed to
NG	**A**
OK (When troubleshooting according to the PROBLEM SYMPTOMS TABLE)	**B**
OK (When troubleshooting according to the DTC)	**C**

B → **PROCEED TO NEXT CIRCUIT INSPECTION SHOWN IN PROBLEM SYMPTOMS TABLE**

C → **REPLACE AIR CONDITIONING AMPLIFIER**

A

2 INSPECT AIR CONDITIONING HARNESS

Air Conditioning Harness:
(A/C Evaporator Temperature Sensor)

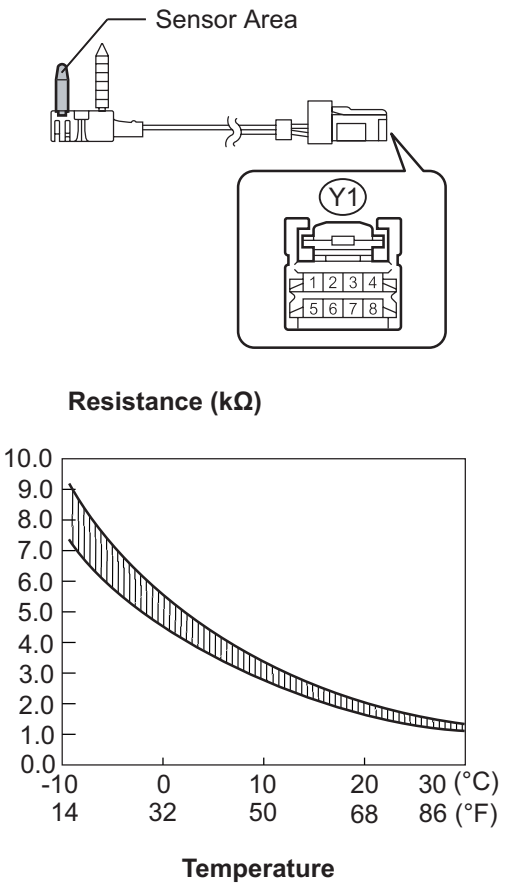

(a) Remove the air conditioning harness (evaporator temperature sensor).

(b) Measure the resistance according to the value(s) in the table below.

Standard resistance

Tester Connection	Condition	Specified Condition
Y1-5 - Y1-6	-10°C (14°F)	7.30 to 9.10 kΩ
Y1-5 - Y1-6	-5°C (23°F)	5.65 to 6.95 kΩ
Y1-5 - Y1-6	0°C (32°F)	4.40 to 5.35 kΩ
Y1-5 - Y1-6	5°C (41°F)	3.40 to 4.15 kΩ
Y1-5 - Y1-6	10°C (50°F)	2.70 to 3.25 kΩ
Y1-5 - Y1-6	15°C (59°F)	2.14 to 2.58 kΩ
Y1-5 - Y1-6	20°C (68°F)	1.71 to 2.05 kΩ
Y1-5 - Y1-6	25°C (77°F)	1.38 to 1.64 kΩ
Y1-5 - Y1-6	30°C (86°F)	1.11 to 1.32 kΩ

NOTICE:

- **Even slightly touching the sensor may change the resistance value. Be sure to hold the connector of the sensor.**
- **When measuring, the sensor temperature must be the same as the ambient temperature.**

HINT:
As the temperature increases, the resistance decreases (see the graph).

NG → **REPLACE AIR CONDITIONING HARNESS**

OK

REPLACE AIR CONDITIONING AMPLIFIER

DTC	B1418/18	Exhaust Gas Sensor Circuit

DESCRIPTION

The smog ventilation sensor, which is installed on the front of the condenser, is used for automatic air inlet control. This sensor detects CO and HC in the emission gas and transmits signals to the A/C amplifier.

DTC No.	DTC Detection Condition	Trouble Area
B1418/18	Open or short in smog ventilation sensor circuit (HC, CO)	• Smog ventilation sensor (emission gas sensor) • Harness or connector between smog ventilation sensor (emission gas sensor) and A/C amplifier • A/C amplifier

WIRING DIAGRAM

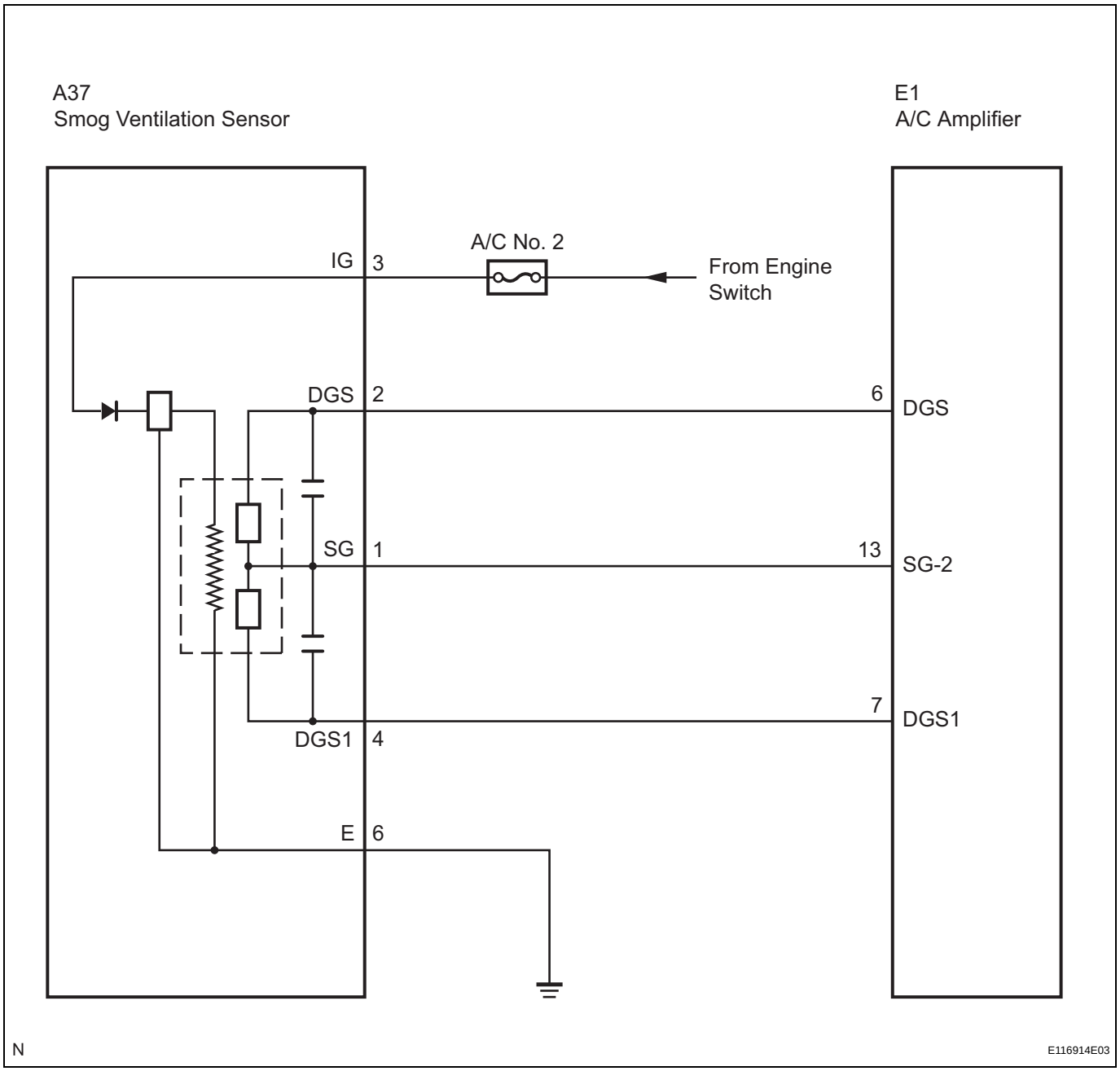

AC

INSPECTION PROCEDURE

1 INSPECT FUSE (LH-IG)

(a) Remove the LH-IG fuse from the cowl side junction block LH.
(b) Measure the resistance according to the value(s) in the table below.

Standard resistance

Tester Item	Condition	Specified Condition
LH-IG fuse	Always	Below 1 Ω

NG → **REPLACE FUSE (LH-IG)**

OK

2 READ VALUE OF INTELLIGENT TESTER

(a) Connect the intelligent tester to the DLC3.
(b) Turn the engine switch on (IG) and turn the intelligent tester main switch on.
(c) Allow exhaust gas (HC, CO) to travel to the sensing portion of the smog ventilation sensor.
(d) Select the item below in the DATA LIST, and read the display on the intelligent tester.

DATA LIST / AIR CONDITIONER:

Tester Display	Measurement Item/Range	Normal Condition	Diagnostic Note
EMISS GAS SENS (Emission gas sensor)	Emission gas / Min.: 0 V, Max.: 255 V	Smog ventilation sensor value increases as gas amount increases	-

OK:
The display is as specified in the normal condition column.

Result

Result	Proceed to
NG	A
OK (When troubleshooting according to the PROBLEM SYMPTOMS TABLE)	B
OK (When troubleshooting according to the DTC)	C

B → **PROCEED TO NEXT CIRCUIT INSPECTION SHOWN IN PROBLEM SYMPTOMS TABLE**

C → **REPLACE AIR CONDITIONING AMPLIFIER**

A

3 CHECK HARNESS AND CONNECTOR (SMOG VENTILATION SENSOR - BODY GROUND)

Wire Harness Side Connector Front View:

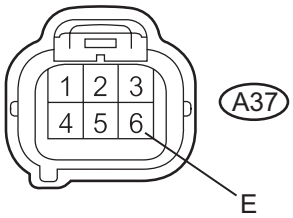

H E107005E13

(a) Disconnect the smog ventilation sensor connector.
(b) Measure the resistance according to the value(s) in the table below.

Standard resistance

Tester Connection	Condition	Specified Condition
A37-6 (E) - Body ground	Always	Below 1 Ω

NG → **REPAIR OR REPLACE HARNESS OR CONNECTOR**

OK

4 CHECK HARNESS AND CONNECTOR (SMOG VENTILATION SENSOR - BATTERY)

Wire Harness Side Connector Front View:

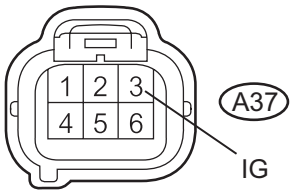

H E107005E14

(a) Disconnect the smog ventilation sensor connector.
(b) Measure the voltage according to the value(s) in the table below.

Standard voltage

Tester Connection	Condition	Specified Condition
A37-3 (IG) - Body ground	Engine switch on (IG)	10 to 14 V
	Engine switch off	Below 1 V

NG → **REPAIR OR REPLACE HARNESS OR CONNECTOR**

OK

5 INSPECT SMOG VENTILATION SENSOR

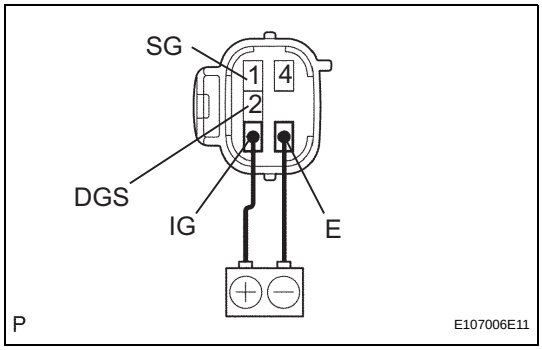

(a) Remove the smog ventilation sensor.
(b) Apply battery voltage between terminals 3 (IG) and 6 (E).
(c) Allow exhaust gas (HC, CO) to travel to the sensing portion of the smog ventilation sensor, and measure the resistance between terminals 1 (SG) and 2 (DGS).
OK:
When the sensor is exposed to the exhaust gas, the resistance increases.
HINT:
The resistance before blowing exhaust gas is 10 kΩ to 40 kΩ.

NG → **REPLACE SMOG VENTILATION SENSOR**

OK

6 CHECK HARNESS AND CONNECTOR (SMOG VENTILATION SENSOR - A/C AMPLIFIER)

Wire Harness Side Connector Front View:

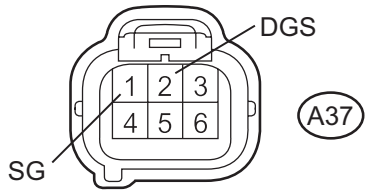

(a) Disconnect the smog ventilation sensor.

Air Conditioning Amplifier Connector Wire Harness View:

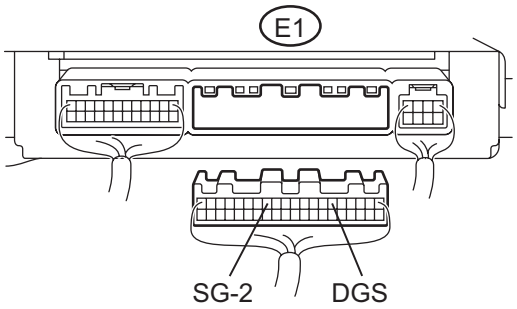

(b) Disconnect the A/C amplifier connector.
(c) Measure the resistance according to the value(s) in the table below.
Standard resistance

Tester Connection	Condition	Specified Condition
A37-1 (SG) - E1-13 (SG-2)	Always	Below 1 Ω
A37-2 (DGS) - E1-6 (DGS)	Always	Below 1 Ω
E1-13 (SG-2) - Body ground	Always	10 kΩ or higher
E1-6 (DGS) - Body ground	Always	10 kΩ or higher

NG → **REPAIR OR REPLACE HARNESS OR CONNECTOR**

OK

REPLACE AIR CONDITIONING AMPLIFIER

DTC	B1421/21	Solar Sensor Circuit (Passenger Side)

DESCRIPTION

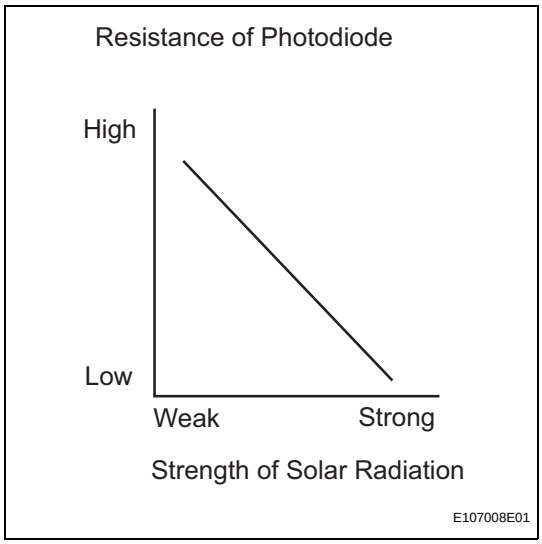

The solar sensor, which is installed on the upper side of the instrument panel, detects sunlight and controls the air conditioning in AUTO mode. The output voltage from the solar sensor varies according to the amount of sunlight. When the sunlight increases, the output voltage increases. As the sunlight decreases, the output voltage decreases. The A/C amplifier detects voltage output from the solar sensor.

DTC No.	DTC Detection Condition	Trouble Area
B1421/21	Open or short in passenger side solar sensor circuit	• Solar sensor • Harness or connector between solar sensor and A/C amplifier • Harness or connector between solar sensor and main body ECU • A/C amplifier • Main body ECU

WIRING DIAGRAM

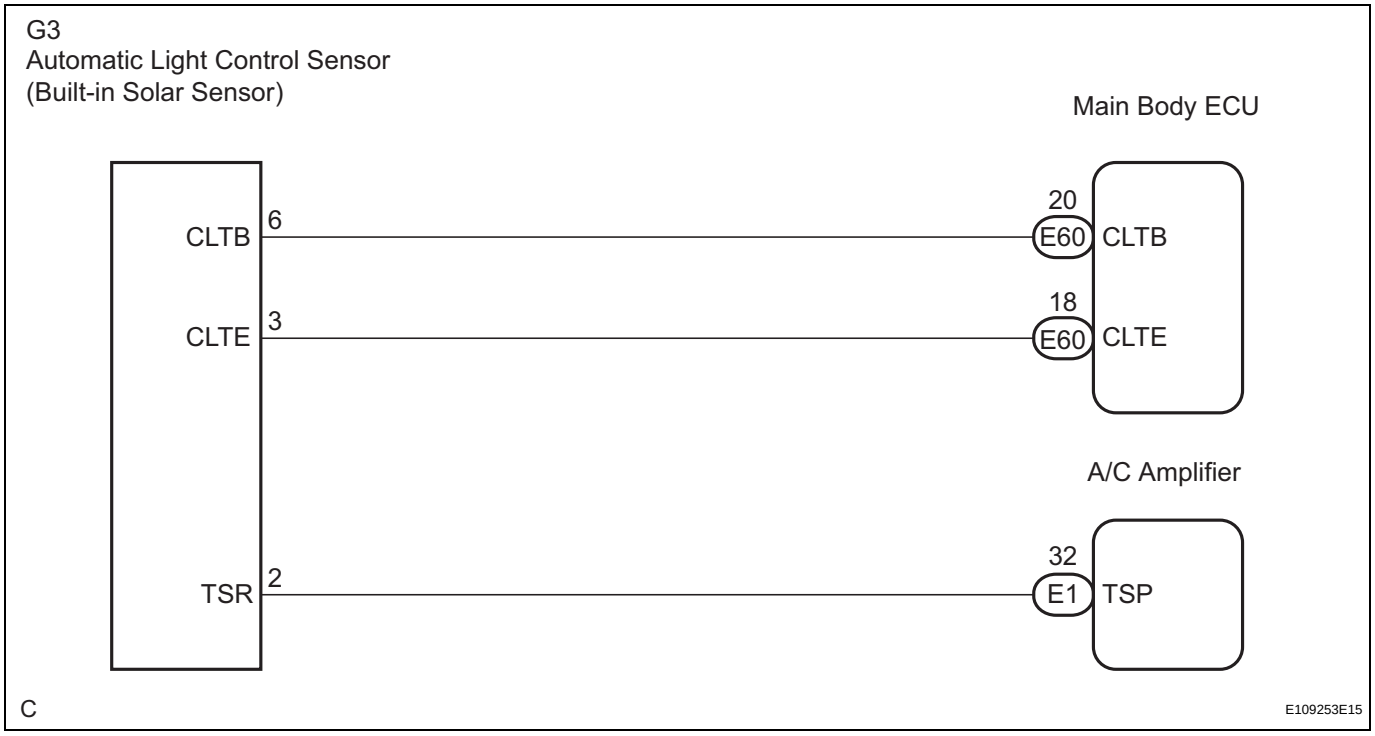

INSPECTION PROCEDURE

HINT:

- If DTC B1244 is output at the same time, troubleshoot DTC B1244 first (See page LI-49).
- If the check is performed in a dark place, DTC B1421/21 or B1424/24 (solar sensor circuit abnormal) may be output even though the system is normal.

1	READ VALUE OF INTELLIGENT TESTER

(a) Connect the intelligent tester to the DLC3.
(b) Turn the engine switch on (IG) and turn the intelligent tester main switch on.
(c) Expose the sensing portion of the solar sensor to light.
HINT:
Use an incandescent light for inspection.
(d) Select the item below in the DATA LIST, and read the display on the intelligent tester.

DATA LIST / AIR CONDITIONER:

Tester Display	Measurement Item/Range	Normal Condition	Diagnostic Note
SOLAR SENS-P (Solar sensor (P side))	Passenger side solar sensor / Min.: 0, Max.: 255	Passenger side solar sensor value increases as brightness increases	-

OK:

The display is as specified in the normal condition column.

Result

Result	Proceed to
NG	A
OK (When troubleshooting according to the PROBLEM SYMPTOMS TABLE)	B
OK (When troubleshooting according to the DTC)	C

B → **PROCEED TO NEXT CIRCUIT INSPECTION SHOWN IN PROBLEM SYMPTOMS TABLE**

C → **REPLACE AIR CONDITIONING AMPLIFIER**

A

2 CHECK HARNESS AND CONNECTOR (SOLAR SENSOR)

A/C Solar Sensor Connector Wire Harness View:

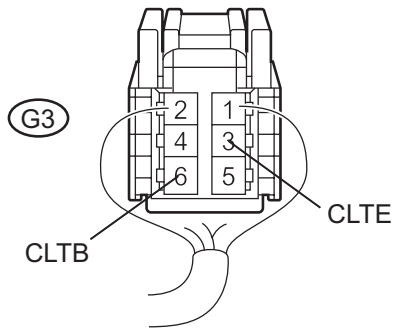

(a) Disconnect the solar sensor connector.
(b) Measure the voltage according to the value(s) in the table below.

Standard voltage

Tester Connection	Condition	Specified Condition
G3-6 (CLTB) - G3-3 (CLTE)	Engine switch off	Below 1 V
G3-6 (CLTB) - G3-3 (CLTE)	Engine switch on (IG)	10 to 14 V

OK → **Go to step 4**

NG

3 CHECK HARNESS AND CONNECTOR (MAIN BODY ECU - SOLAR SENSOR)

Main Body ECU Connector Front View:

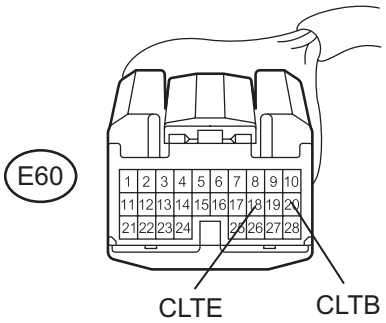

(a) Disconnect the main body ECU connector.

A/C Solar Sensor Connector Wire Harness View:

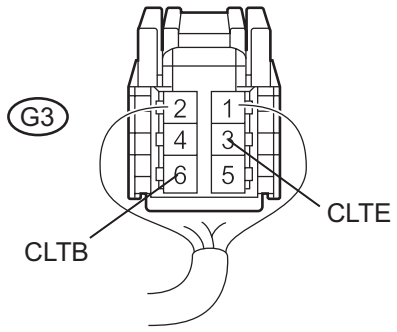

H E124476E11

(b) Measure the resistance according to the value(s) in the table below.

Standard resistance

Tester Connection	Condition	Specified Condition
E60-20 (CLTB) - G3-6 (CLTB)	Always	Below 1 Ω
E60-18 (CLTE) - G3-3 (CLTE)	Always	Below 1 Ω
E60-20 (CLTB) - Body ground	Always	10 kΩ or higher
E60-18 (CLTE) - Body ground	Always	10 kΩ or higher

NG → **REPAIR OR REPLACE HARNESS OR CONNECTOR**

OK

REPLACE MAIN BODY ECU

4 CHECK SOLAR SENSOR

Solar Sensor Connector Front View:

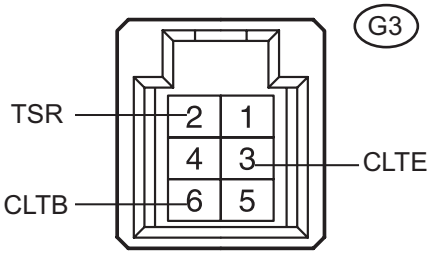

P E109215E18

(a) Remove the solar sensor with its connector still connected.

(b) Connect the positive (+) lead from the battery to terminal 6 (CLTB), and the negative (-) lead to terminal 3 (CLTE) of the solar sensor.

(c) Measure the voltage according to the value(s) in the table below.

Standard voltage

Tester Connection	Condition	Specified Condition
G3-2 (TSR) - G3-3 (CLTE)	Sensor is subjected to electric light	0.8 to 4.3 V
G3-2 (TSR) - G3-3 (CLTE)	Sensor is covered with a cloth	Below 0.8 V

NOTICE:

- **The connection procedure for using a digital tester such as a TOYOTA electrical tester is shown above. When using an analog tester, connect the negative (-) lead to terminal 6, and the positive (+) lead to terminal 3 of the solar sensor.**
- **While using the battery during inspection, do not bring the positive and negative tester probes too close to each other as a short circuit may occur.**

HINT:

- Use an incandescent light for inspection. Bring it within about 30 cm (11.8 in.) of the solar sensor.
- As the inspection light is moved away from the sensor, the voltage increases.

NG → **REPLACE SOLAR SENSOR**

OK

5	CHECK HARNESS AND CONNECTOR (SOLAR SENSOR - A/C AMPLIFIER)

A/C Solar Sensor Connector Wire Harness View:

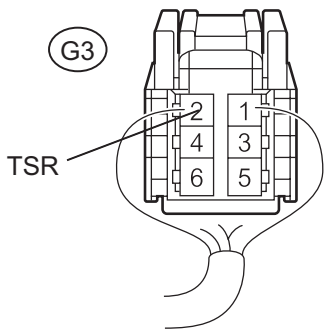

H E124476E12

(a) Disconnect the solar sensor connector.

Air Conditioning Amplifier Connector Wire Harness View:

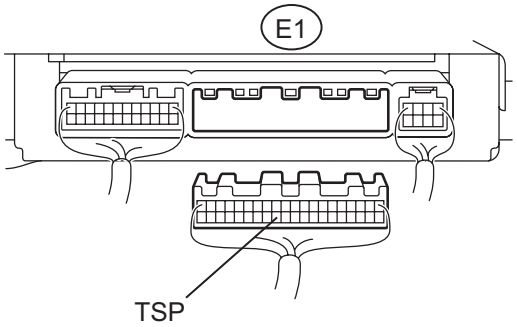

H E124470E34

(b) Disconnect the A/C amplifier connector.

(c) Measure the resistance according to the value(s) in the table below.

Standard resistance

Tester Connection (Symbols)	Condition	Specified Condition
E1-32 (TSP) - G3-2 (TSR)	Always	Below 1 Ω
E1-32 (TSP) - Body ground	Always	10 kΩ or higher

NG → **REPAIR OR REPLACE HARNESS OR CONNECTOR**

OK

REPLACE AIR CONDITIONING AMPLIFIER

DTC	B1422/22	Compressor Lock Sensor Circuit

SYSTEM DESCRIPTION

The ECM sends an engine speed signal to the A/C amplifier via CAN communication.
The A/C amplifier reads the difference between compressor speed and engine speed. When the difference becomes too large, the A/C amplifier determines that the compressor locks, and turns the magnetic clutch off.

DTC No.	DTC Detection Condition	Trouble Area
B1422/22	Open or short in compressor lock sensor circuit	• A/C compressor (A/C lock sensor) • Compressor drive belt • Harness or connector between compressor and magnetic clutch (A/C lock sensor) • A/C amplifier • CAN communication system

WIRING DIAGRAM

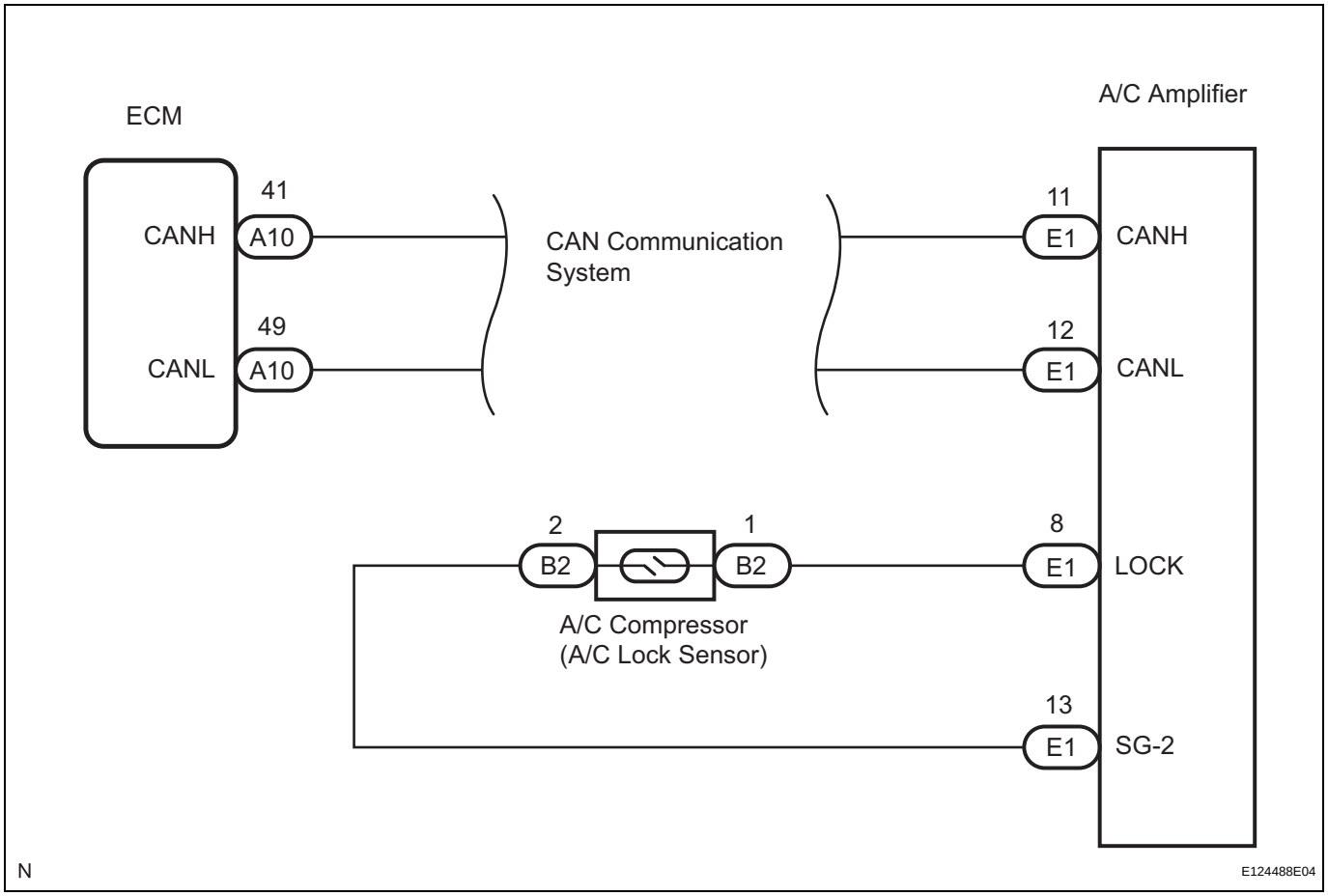

INSPECTION PROCEDURE

1	CHECK CAN COMMUNICATION SYSTEM

(a) Use the intelligent tester to check if the CAN Communication System is functioning normally.

AC

Result

Result	Proceed to
CAN DTC is not output	A
CAN DTC is output	B

B → **GO TO CAN COMMUNICATION SYSTEM (See page CA-11)**

A

2 INSPECT AIR CONDITIONING AMPLIFIER

Air Conditioning Amplifier Connector Wire Harness View:

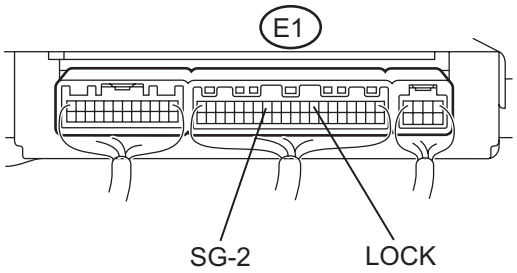

H E124471E18

(a) Remove the A/C amplifier with the connectors still connected.

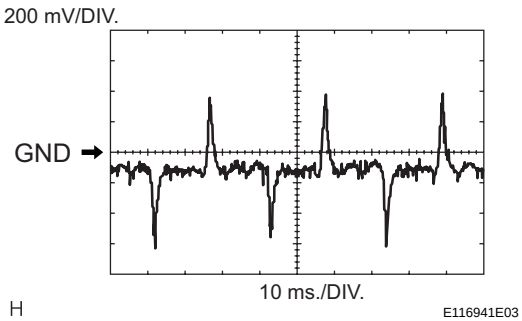

H E116941E03

(b) Measure the waveform of the connector.

Item	Contents
Tool setting	200 mV/DIV., 10 ms./DIV.
Vehicle condition	Engine is running A/C switch: ON Blower switch: LO

Standard

Tester Connection (Symbols)	Condition	Specified Condition
E1-8 (LOCK) - E1-13 (SG-2)	Engine is running A/C switch: ON Blower switch: LO	Pulse generation

Result

Result	Proceed to
NG	A
OK (When troubleshooting according to the PROBLEM SYMPTOMS TABLE)	B
OK (When troubleshooting according to the DTC)	C

B → **PROCEED TO NEXT CIRCUIT INSPECTION SHOWN IN PROBLEM SYMPTOMS TABLE**

C → **REPLACE AIR CONDITIONING AMPLIFIER**

A

3 INSPECT COMPRESSOR AND MAGNETIC CLUTCH (A/C LOCK SENSOR)

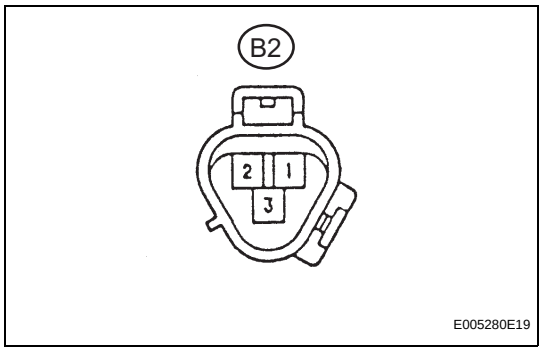

(a) Disconnect the connector from the A/C compressor.
(b) Measure the resistance according to the value(s) in the table below.

Standard resistance

Tester Connection	Condition	Specified Condition
B2-1 (SSR+) - B2-2 (SSR-)	Always (at 20°C (68°F))	165 to 205 Ω

NG → **REPLACE COMPRESSOR AND MAGNETIC CLUTCH (A/C LOCK SENSOR)**

OK

4 CHECK HARNESS AND CONNECTOR (A/C AMPLIFIER - A/C LOCK SENSOR)

Air Conditioning Amplifier Connector Wire Harness View:

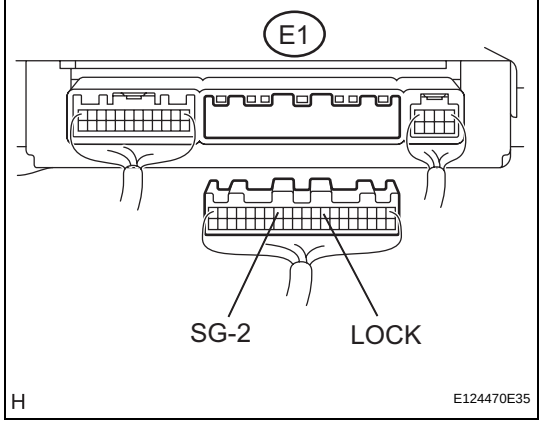

(a) Disconnect the connector from the A/C amplifier.

Compressor and Magnetic Clutch Connector Front View:

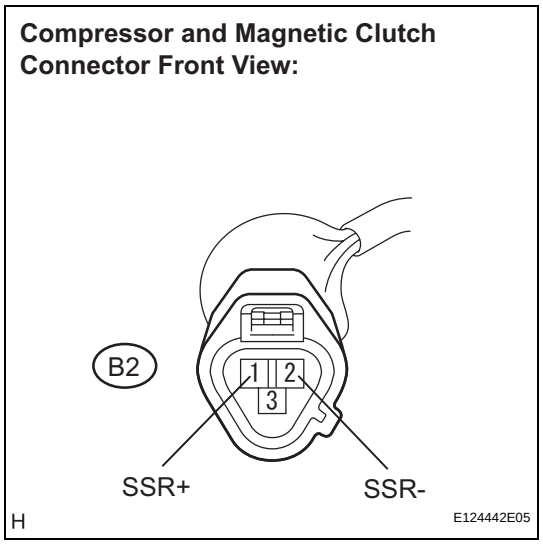

(b) Measure the resistance according to the value(s) in the table below.

Standard resistance

Tester Connection (Symbols)	Condition	Specified Condition
E1-8 (LOCK) - B2-1 (SSR+)	Always	Below 1 Ω
E1-13 (SG-2) - B2-2 (SSR-)	Always	Below 1 Ω
E1-8 (LOCK) - Body ground	Always	10 kΩ or higher
E1-13 (SG-2) - Body ground	Always	10 kΩ or higher

NG → **REPAIR OR REPLACE HARNESS OR CONNECTOR**

OK

REPLACE AIR CONDITIONING AMPLIFIER

DTC	B1423/23	Pressure Sensor Circuit

DESCRIPTION

This DTC is output when refrigerant pressure is extremely low (0.19 MPa (2.0 kgf/cm^2, 28 psi) or less) or extremely high (3.14 MPa (32.0 kgf/cm^2, 455 psi) or more). The A/C pressure sensor, which is installed on the pipe of the high pressure side to detect refrigerant pressure, outputs a refrigerant pressure signal to the A/C amplifier. The A/C amplifier converts this signal to pressure according to the sensor characteristics to control the compressor.
HINT:
Be sure to check the refrigerant volume first when this DTC is output because this DTC can also be output if there is no refrigerant in the system.

DTC No.	DTC Detection Condition	Trouble Area
B1423/23	Open or short in pressure switch circuit	• A/C pressure sensor • Harness or connector between pressure sensor and A/C amplifier • Refrigerant pipe line • A/C amplifier

WIRING DIAGRAM

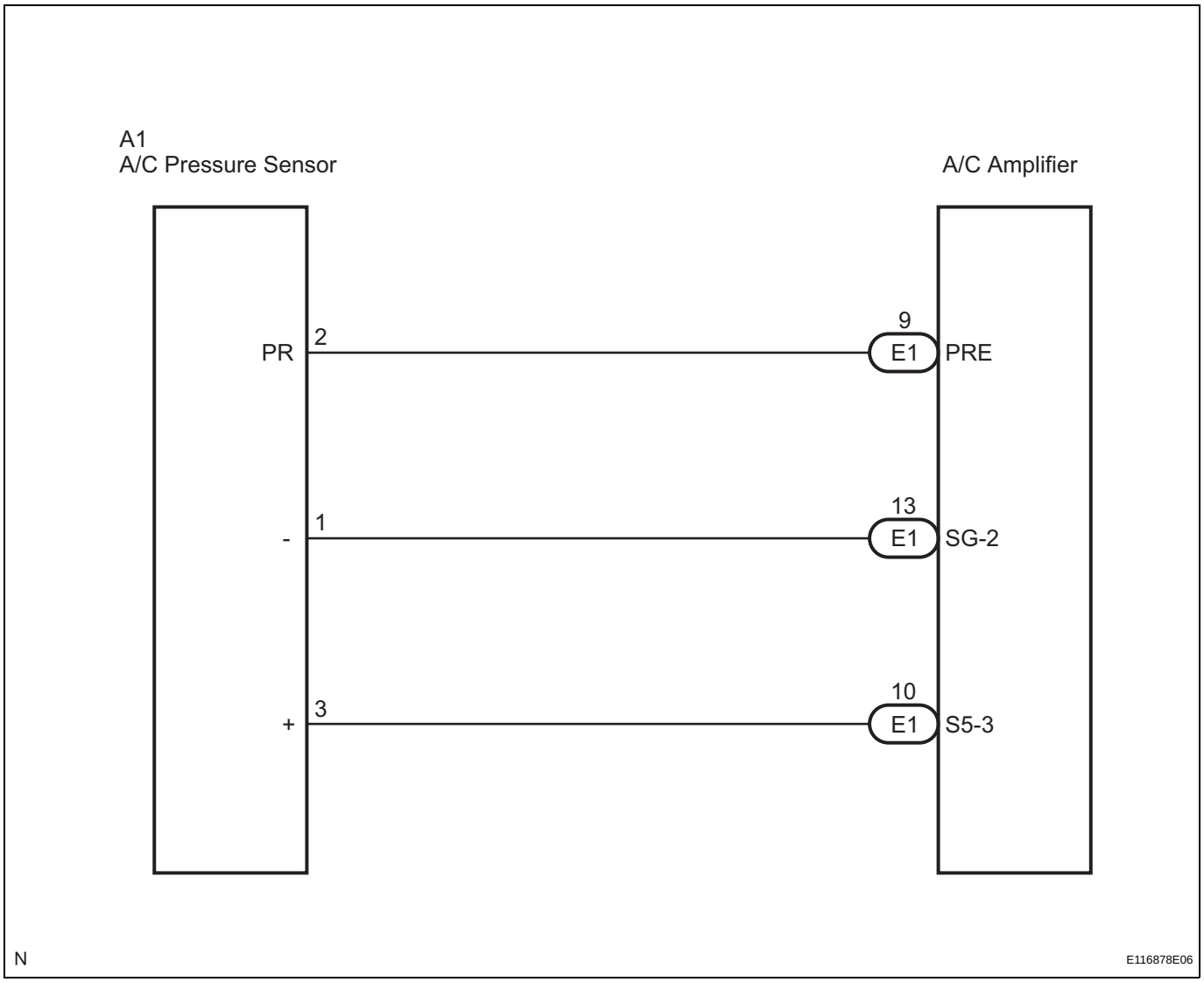

AC

INSPECTION PROCEDURE

1 CHECK REFRIGERANT

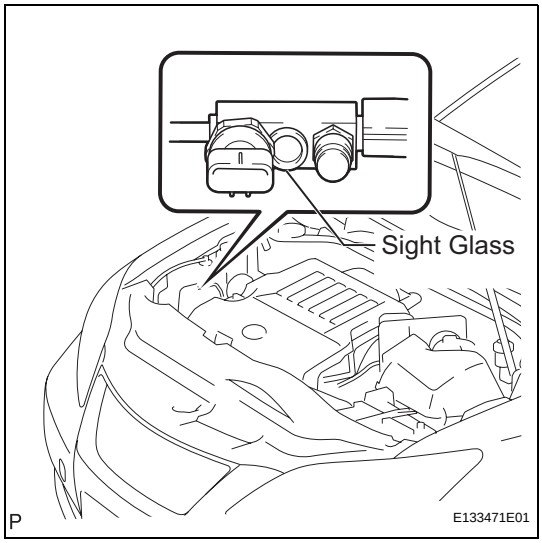

(a) Check the sight glass of the cooler unit refrigerant liquid pipe.

(1) Prepare the vehicle according to the chart below.

Item	Condition
Vehicle Doors	Fully open
Temperature Setting	MAX COLD
Blower Speed	HI
A/C	ON

(2) Compare the sight glass to the following chart.

Item	Symptom	Amount of Refrigerant	Corrective Actions
1	Bubbles visible	Insufficient*	1. Check for gas leakage and repair if necessary 2. Recharge with proper amount of refrigerant (See page AC-127)
2	No bubbles visible	Empty, insufficient, or excessive	Refer to 3 and 4
3	No temperature difference between compressor inlet and outlet	Empty or nearly empty	1. Check for gas leakage with gas leak detector and repair if necessary 2. Evacuate A/C system and recharge with proper amount of refrigerant (See page AC-127)
4	Considerable temperature difference between compressor inlet and outlet	Proper or excessive	Refer to 5 and 6
5	Immediately after air conditioning is turned OFF, refrigerant clears	Excessive	1. Recover refrigerant 2. Evacuate A/C system and recharge with proper amount of refrigerant (See page AC-127)
6	Immediately after air conditioning is turned OFF, refrigerant foams and then becomes clear	Proper	-

*: Bubbles in the sight glass with the vehicle interior temperature above 35°C (95°F) can be considered normal if cooling is sufficient.

NG → **CHARGE REFRIGERANT**

OK

2 CHECK HARNESS AND CONNECTOR (PRESSURE SENSOR - A/C AMPLIFIER)

A/C Pressure Sensor Connector Front View:

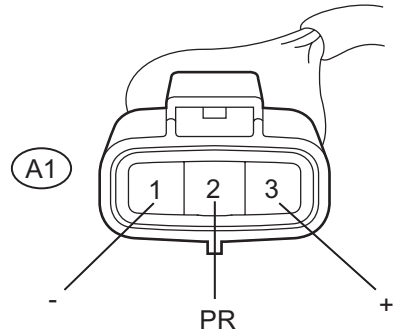

H E124477E04

(a) Disconnect the pressure sensor connector.

Air Conditioning Amplifier Connector Wire Harness View:

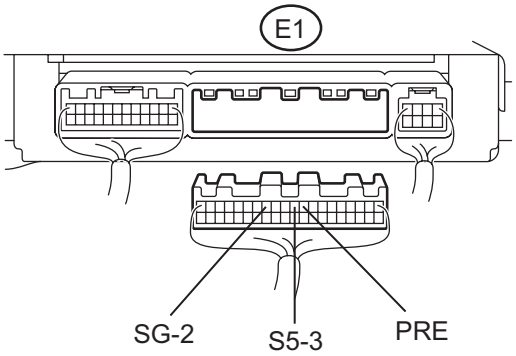

H E124470E36

(b) Disconnect the A/C amplifier connector.

(c) Measure the resistance according to the value(s) in the table below.

Standard resistance

Tester Connection	Condition	Specified Condition
A1-2 (PR) - E1-9 (PRE)	Always	Below 1 Ω
A1-3 (+) - E1-10 (S5-3)	Always	Below 1 Ω
A1-1 (-) - E1-13 (SG-2)	Always	Below 1 Ω
E1-9 (PRE) - Body ground	Always	10 kΩ or higher
E1-10 (S5-3) - Body ground	Always	10 kΩ or higher
E1-13 (SG-2) - Body ground	Always	10 kΩ or higher

NG → **REPAIR OR REPLACE HARNESS OR CONNECTOR**

OK

3 INSPECT PRESSURE SENSOR

(a) Install the manifold gauge set (See page AC-122).

A/C Pressure Sensor Connector Front View:

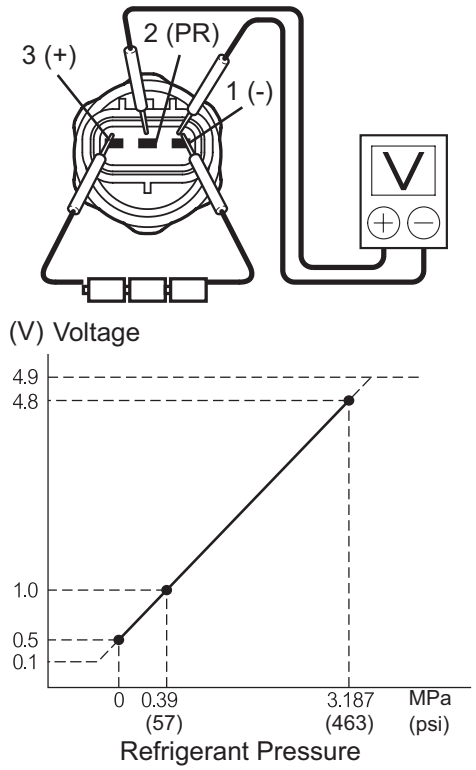

(b) Connect the three 1.5 V dry cell batteries' positive (+) lead to terminal 3, and the negative (-) lead to terminal 1. Then connect the voltmeter's positive (+) lead to terminal 2, and the negative (-) lead to terminal 1. Measure the voltage.

OK:

The voltage changes according to refrigerant pressure, as shown in the graph.

Result

Result	Proceed to
NG	A
OK (When troubleshooting according to the DTC)	B
OK (When troubleshooting according to the PROBLEM SYMPTOMS TABLE)	C

B → **REPLACE AIR CONDITIONING AMPLIFIER**

C → **PROCEED TO NEXT CIRCUIT INSPECTION SHOWN IN PROBLEM SYMPTOMS TABLE**

A

REPLACE PRESSURE SENSOR

DTC	B1424/24	Solar Sensor Circuit (Driver Side)

DESCRIPTION

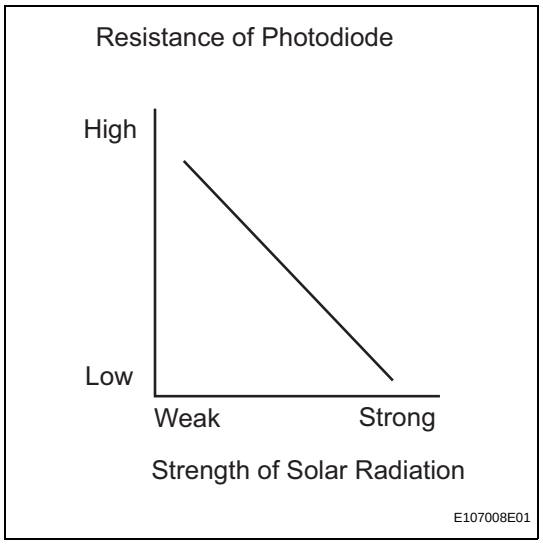

The solar sensor, which is installed on the upper side of the instrument panel, detects sunlight and controls the air conditioning in AUTO mode. The output voltage from the solar sensor varies according to the amount of sunlight. When the sunlight increases, the output voltage increases. As the sunlight decreases, the output voltage decreases. The A/C amplifier detects output voltage from the solar sensor.

DTC No.	DTC Detection Condition	Trouble Area
B1424/24	Open or short in driver side solar sensor circuit	• Solar sensor • Harness or connector between solar sensor and A/C amplifier • Harness or connector between solar sensor and main body ECU • A/C amplifier • Main body ECU

WIRING DIAGRAM

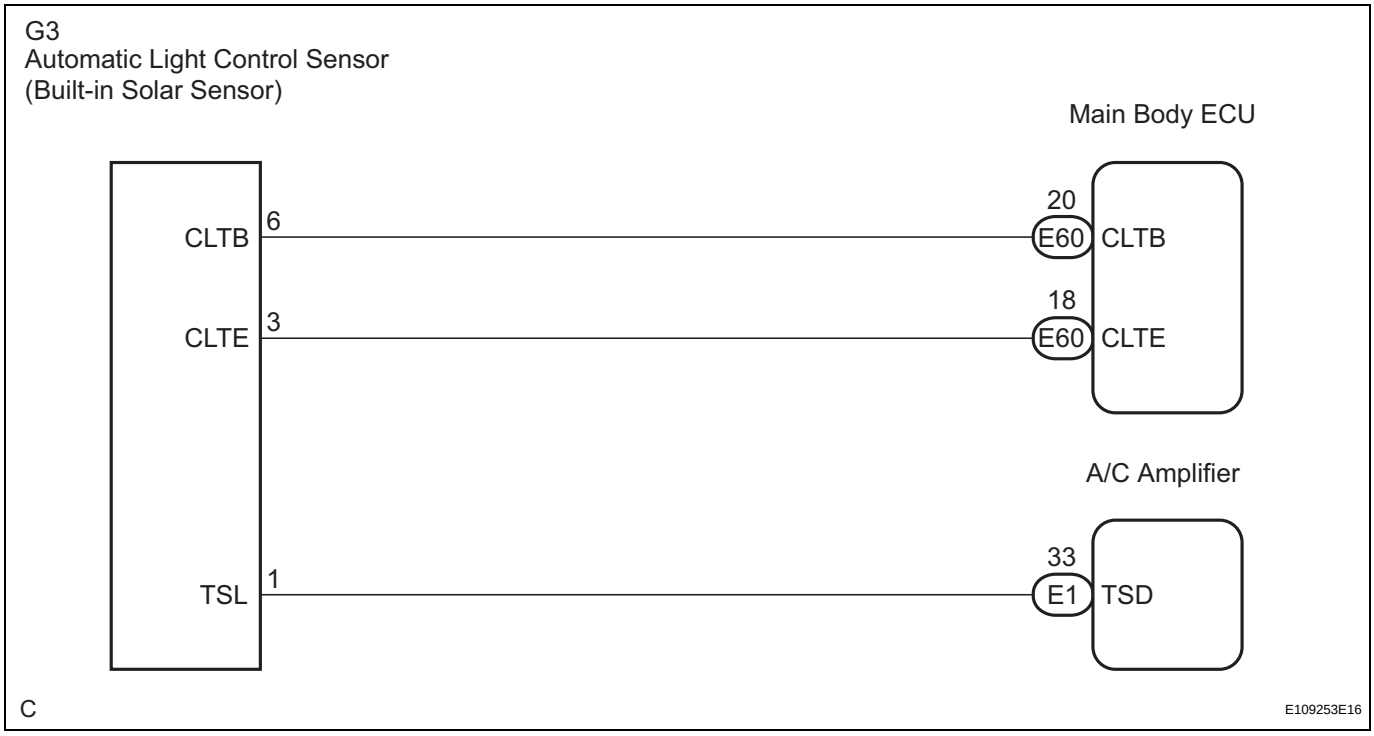

INSPECTION PROCEDURE

HINT:

- If DTC B1244 is output at the same time, troubleshoot DTC B1244 first (See page LI-49).
- If the check is performed in a dark place, DTC B1421/21 or B1424/24 (solar sensor circuit abnormal) may be output even though the system is normal.

1	READ VALUE OF INTELLIGENT TESTER

(a) Connect the intelligent tester to the DLC3.
(b) Turn the engine switch on (IG) and turn the intelligent tester main switch on.
(c) Expose the sensing portion of the solar sensor to light.
HINT:
Use an incandescent light for inspection.
(d) Select the item below in the DATA LIST, and read the display on the intelligent tester.

DATA LIST / AIR CONDITIONER:

Tester Display	Measurement Item/Range	Normal Condition	Diagnostic Note
SOLAR SENS-D (Solar sensor (D side))	Driver side solar sensor / Min.: 0, Max.: 255	Driver side solar sensor value increases as brightness increases	-

OK:
The display is as specified in the normal condition column.

AC

Result

Result	Proceed to
NG	A
OK (When troubleshooting according to the PROBLEM SYMPTOMS TABLE)	B
OK (When troubleshooting according to the DTC)	C

B → **PROCEED TO NEXT CIRCUIT INSPECTION SHOWN IN PROBLEM SYMPTOMS TABLE**

C → **REPLACE AIR CONDITIONING AMPLIFIER**

A

2 CHECK HARNESS AND CONNECTOR (SOLAR SENSOR)

A/C Solar Sensor Connector Wire Harness View:

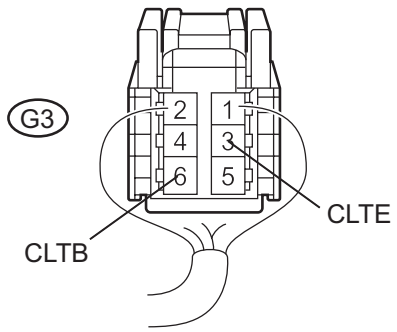

H E124476E13

(a) Disconnect the solar sensor connector.
(b) Measure the voltage according to the value(s) in the table below.

Standard voltage

Tester Connection	Condition	Specified Condition
G3-6 (CLTB) - G3-3 (CLTE)	Engine switch on (IG)	10 to 14 V
G3-6 (CLTB) - G3-3 (CLTE)	Engine switch off	Below 1 V

OK → **Go to step 4**

NG

3 CHECK HARNESS AND CONNECTOR (SOLAR SENSOR - MAIN BODY ECU)

Main Body ECU Connector Front View:

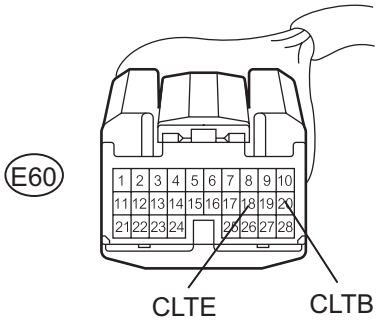

H E124475E05

(a) Disconnect the main body ECU connector.

A/C Solar Sensor Connector Wire Harness View:

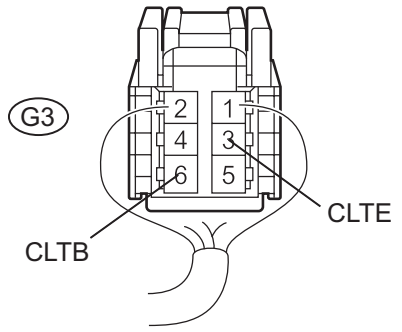

H E124476E14

(b) Measure the resistance according to the value(s) in the table below.

Standard resistance

Tester Connection	Condition	Specified Condition
E60-20 (CLTB) - G3-6 (CLTB)	Always	Below 1 Ω
E60-18 (CLTE) - G3-3 (CLTE)	Always	Below 1 Ω
E60-20 (CLTB) - Body ground	Always	10 kΩ or higher
E60-18 (CLTE) - Body ground	Always	10 kΩ or higher

NG → **REPAIR OR REPLACE HARNESS OR CONNECTOR**

OK

REPLACE MAIN BODY ECU

4 CHECK SOLAR SENSOR

Solar Sensor Connector Front View:

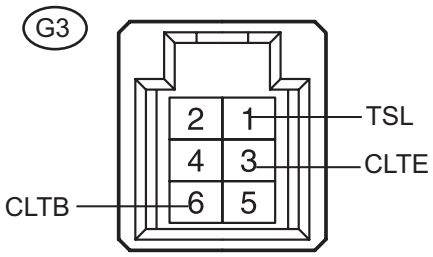

P E109215E19

(a) Remove the solar sensor with its connector still connected.

(b) Connect the positive (+) lead from the battery to terminal 6 (CLTB), and the negative (-) lead to terminal 3 (CLTE) of the solar sensor.

(c) Measure the voltage according to the value(s) in the table below.

Standard voltage

Tester Connection	Condition	Specified Condition
G3-1 (TSL) - G3-3 (CLTE)	Sensor is subjected to electric light	0.8 to 4.3 V
G3-1 (TSL) - G3-3 (CLTE)	Sensor is covered with a cloth	Below 0.8 V

NOTICE:

- **The connection procedure for using a digital tester such as a TOYOTA electrical tester is shown above. When using an analog tester, connect the negative (-) lead to terminal 6, and the positive (+) lead to terminal 3 of the solar sensor.**
- **While using the battery during inspection, do not bring the positive and negative tester probes too close to each other as a short circuit may occur.**

HINT:

- Use an incandescent light for inspection. Bring it within about 30 cm (11.8 in.) of the solar sensor.
- As the inspection light is moved away from the sensor, the voltage increases.

NG → **REPLACE SOLAR SENSOR**

OK

5	CHECK HARNESS AND CONNECTOR (SOLAR SENSOR - A/C AMPLIFIER)

A/C Solar Sensor Connector Wire Harness View:

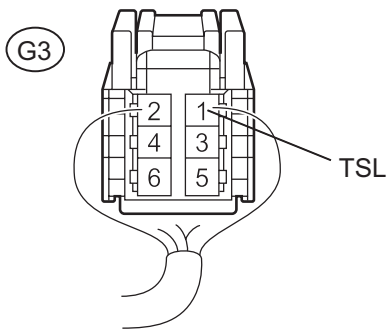

H E124476E15

(a) Disconnect the solar sensor connector.

Air Conditioning Amplifier Connector Wire Harness View:

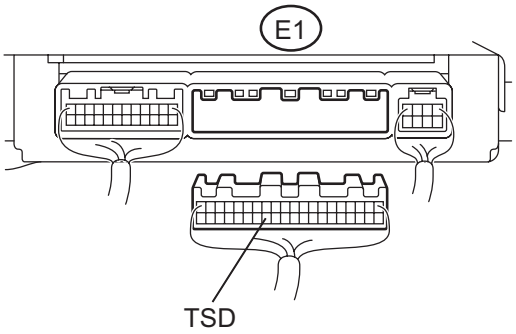

H E124470E37

(b) Disconnect the A/C amplifier connector.

(c) Measure the resistance according to the value(s) in the table below.

Standard resistance

Tester Connection	Condition	Specified Condition
E1-33 (TSD) - G3-1 (TSL)	Always	Below 1 Ω
E1-33 (TSD) - Body ground	Always	10 kΩ or higher

NG → **REPAIR OR REPLACE HARNESS OR CONNECTOR**

OK

REPLACE AIR CONDITIONING AMPLIFIER

DTC	B1441/41	Air Mix Damper Control Servo Motor Circuit (Passenger Side)

DESCRIPTION

The air mix damper servo sends pulse signals to inform the air conditioning amplifier of the damper position. The air conditioning amplifier activates the motor (normal, reverse) based on the signals to move the air mix damper (passenger seat) to any position, which adjusts the amount of air passing the heater core after passing the evaporator to control the blowing temperature.
HINT:
Confirm that no mechanical problem is present because this diagnostic code can be output when either a damper link or damper is mechanically locked.

DTC No.	DTC Detection Condition	Trouble Area
B1441/41	Air mix damper position sensor value does not change even if air conditioning amplifier operates air mix control servo motor	• Air mix control servo motor • Air conditioning harness • A/C amplifier

WIRING DIAGRAM

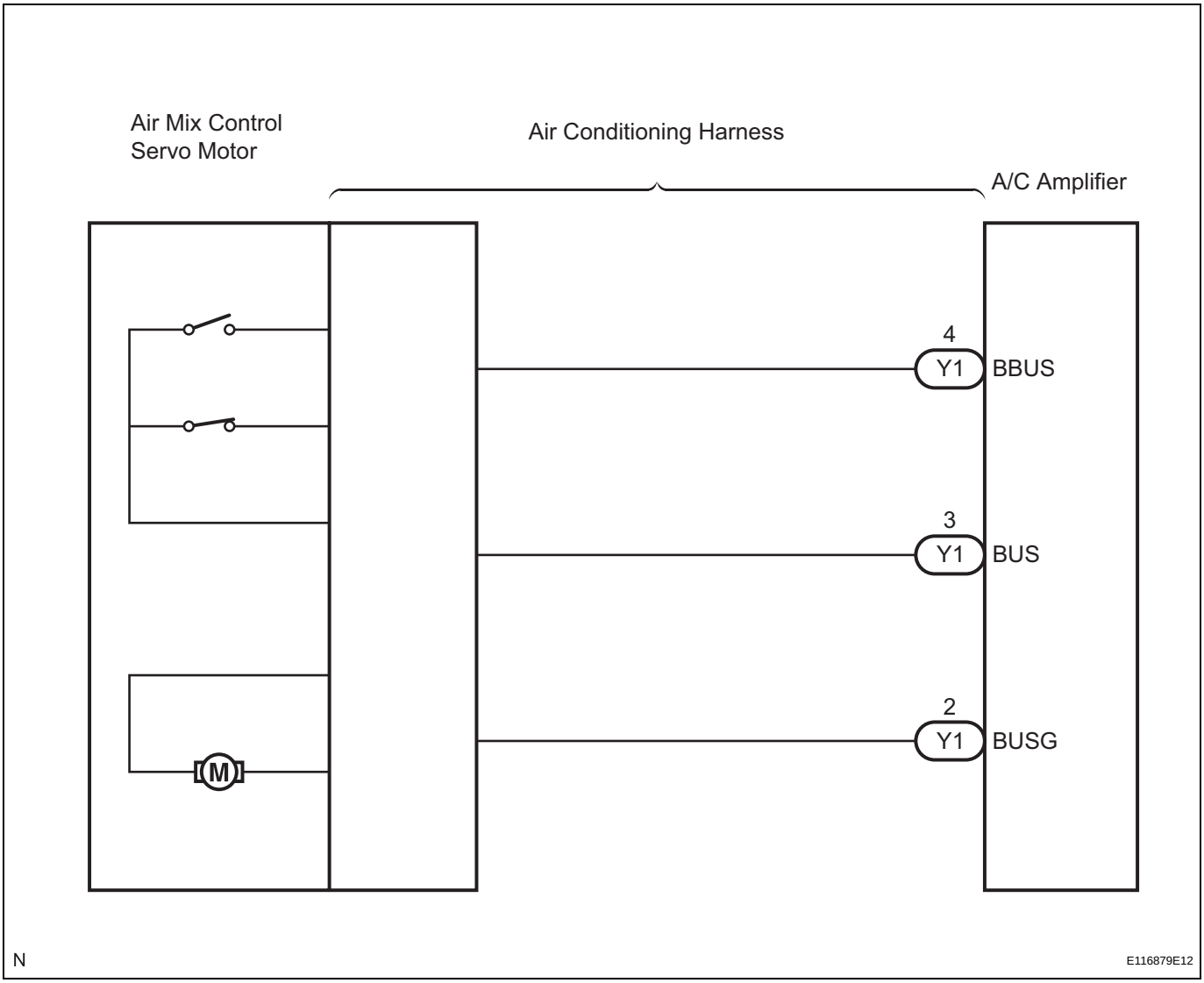

INSPECTION PROCEDURE

1 READ VALUE OF INTELLIGENT TESTER

(a) Connect the intelligent tester to the DLC3.
(b) Turn the engine switch on (IG) and turn the intelligent tester main switch on.
(c) Operate the front passenger side temperature adjustment switch.
(d) Select the item below in the DATA LIST, and read the display on the intelligent tester.

DATA LIST / AIR CONDITIONER:

Tester Display	Measurement Item/Range	Normal Condition	Diagnostic Note
AIR MIX PULSE-P (Air mix servomotor target pulse (P side))	Passenger side air mix servo motor target pulse / Min.: 0, Max.: 255	MAX. COLD: 105 (pulse) MAX. HOT: 7 (pulse)	-

OK:
The display is as specified in the normal condition column.

Result

Result	Proceed to
NG	**A**
OK (When troubleshooting according to the PROBLEM SYMPTOMS TABLE)	**B**
OK (When troubleshooting according to the DTC)	**C**

B → **PROCEED TO NEXT CIRCUIT INSPECTION SHOWN IN PROBLEM SYMPTOMS TABLE**

C → **REPLACE AIR CONDITIONING AMPLIFIER**

A

2 REPLACE AIR MIX CONTROL SERVO MOTOR

(a) Replace the air mix control servo motor.
HINT:
Since the servo motor cannot be inspected while it is removed from the vehicle, replace the servo motor with a normal one and check that the condition returns to normal.
(b) Check for DTCs.
Result

Result	Proceed to
DTC B1441/41 is output	**A**
DTC B1441/41 is not output	**B**

B → **END**

A

REPLACE AIR CONDITIONING HARNESS

DTC	B1442/42	Air Inlet Damper Control Servo Motor Circuit

DESCRIPTION

The damper servo (air inlet control) sends pulse signals to inform the air conditioning amplifier of the damper position. The air conditioning amplifier activates the motor (normal, reverse) based on the signals to move the air inlet damper to any position, which controls the intake air settings (FRESH, FRESH/RECIRCULATION, and RECIRCULATION).

HINT:

Confirm that no mechanical problem is present because this diagnostic code can be output when either a damper link or damper is mechanically locked.

DTC No.	DTC Detection Condition	Trouble Area
B1442/42	Air inlet damper position sensor value does not change even if air conditioning amplifier operates air inlet control servo motor	• Air inlet control servo motor • Air conditioning harness • A/C amplifier

WIRING DIAGRAM

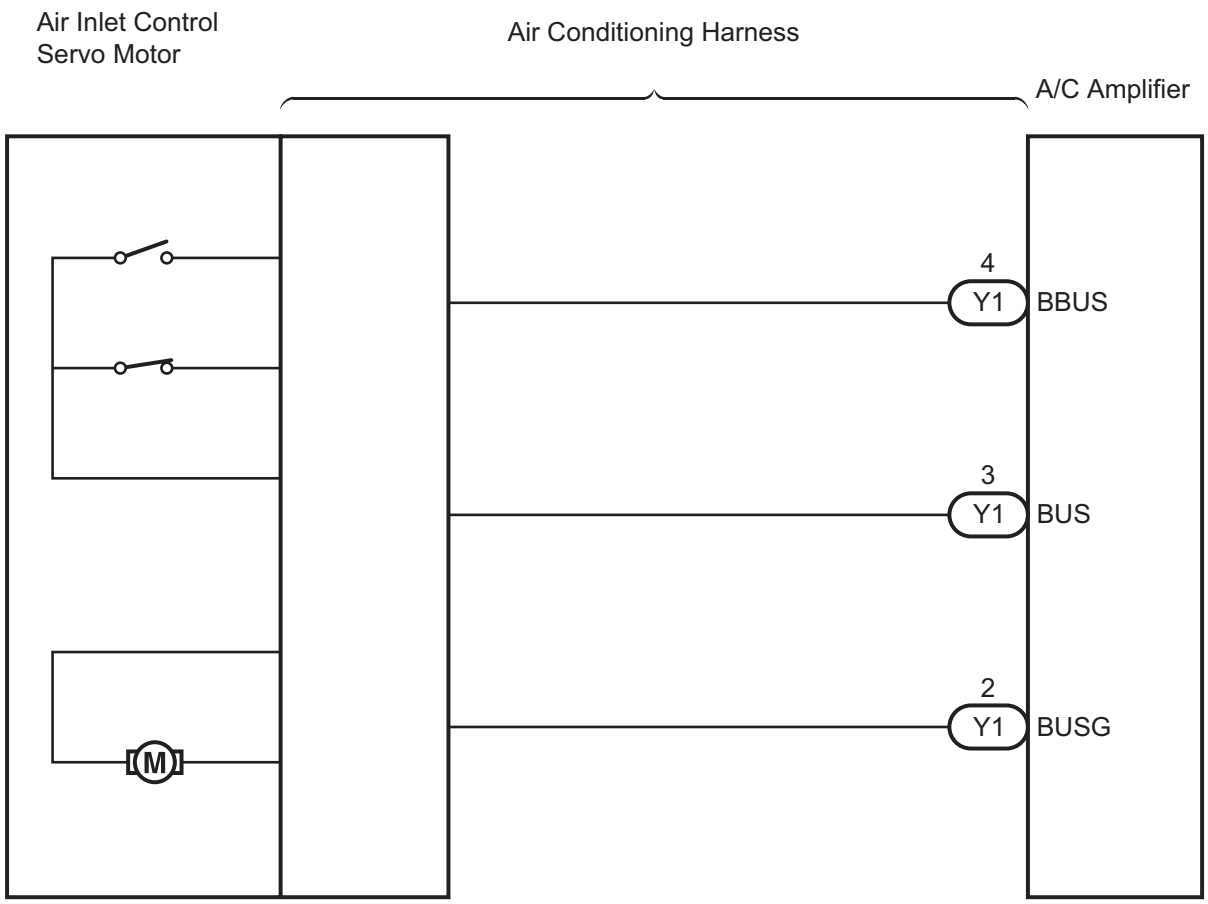

N

E116879E13

INSPECTION PROCEDURE

1 READ VALUE OF INTELLIGENT TESTER

(a) Connect the intelligent tester to the DLC3.
(b) Turn the engine switch on (IG) and turn the intelligent tester main switch on.
(c) Operate the R/F (Recirculation/Fresh) switch.
(d) Select the item below in the DATA LIST, and read the display on the intelligent tester.

DATA LIST / AIR CONDITIONER:

Tester Display	Measurement Item/Range	Normal Condition	Diagnostic Note
A/I DAMP PLS (Air inlet damper target pulse)	Air inlet damper target pulse / Min.: 0, Max.: 255	RECIRCULATION: 7 (pulse) FRESH: 28 (pulse)	-

OK:
The display is as specified in the normal condition column.

Result

Result	Proceed to
NG	A
OK (When troubleshooting according to the PROBLEM SYMPTOMS TABLE)	B
OK (When troubleshooting according to the DTC)	C

B → **PROCEED TO NEXT CIRCUIT INSPECTION SHOWN IN PROBLEM SYMPTOMS TABLE**

C → **REPLACE AIR CONDITIONING AMPLIFIER**

A

2 REPLACE AIR INLET CONTROL SERVO MOTOR

(a) Replace the air inlet control servo motor.
HINT:
Since the servo motor cannot be inspected while it is removed from the vehicle, replace the servo motor with a normal one and check that the condition returns to normal.
(b) Check for DTCs.
Result

Result	Proceed to
DTC B1442/42 is output	A
DTC B1442/42 is not output	B

B → **END**

A

REPLACE AIR CONDITIONING HARNESS

DTC	B1443/43	Air Outlet Damper Control Servo Motor Circuit

DESCRIPTION

The mode damper servo sends pulse signals to inform the air conditioning amplifier of the damper position. The air conditioning amplifier activates the motor (normal, reverse) based on the signals to move the air outlet damper to any position, which controls the air outlet switching.
HINT:
Confirm that no mechanical problem is present because this diagnostic code can be output when either a damper link or damper is mechanically locked.

DTC No.	DTC Detection Condition	Trouble Area
B1443/43	Air outlet damper position sensor value does not change even if air conditioning amplifier operates air outlet control servo motor	• Air outlet control servo motor • Air conditioning harness • A/C amplifier

WIRING DIAGRAM

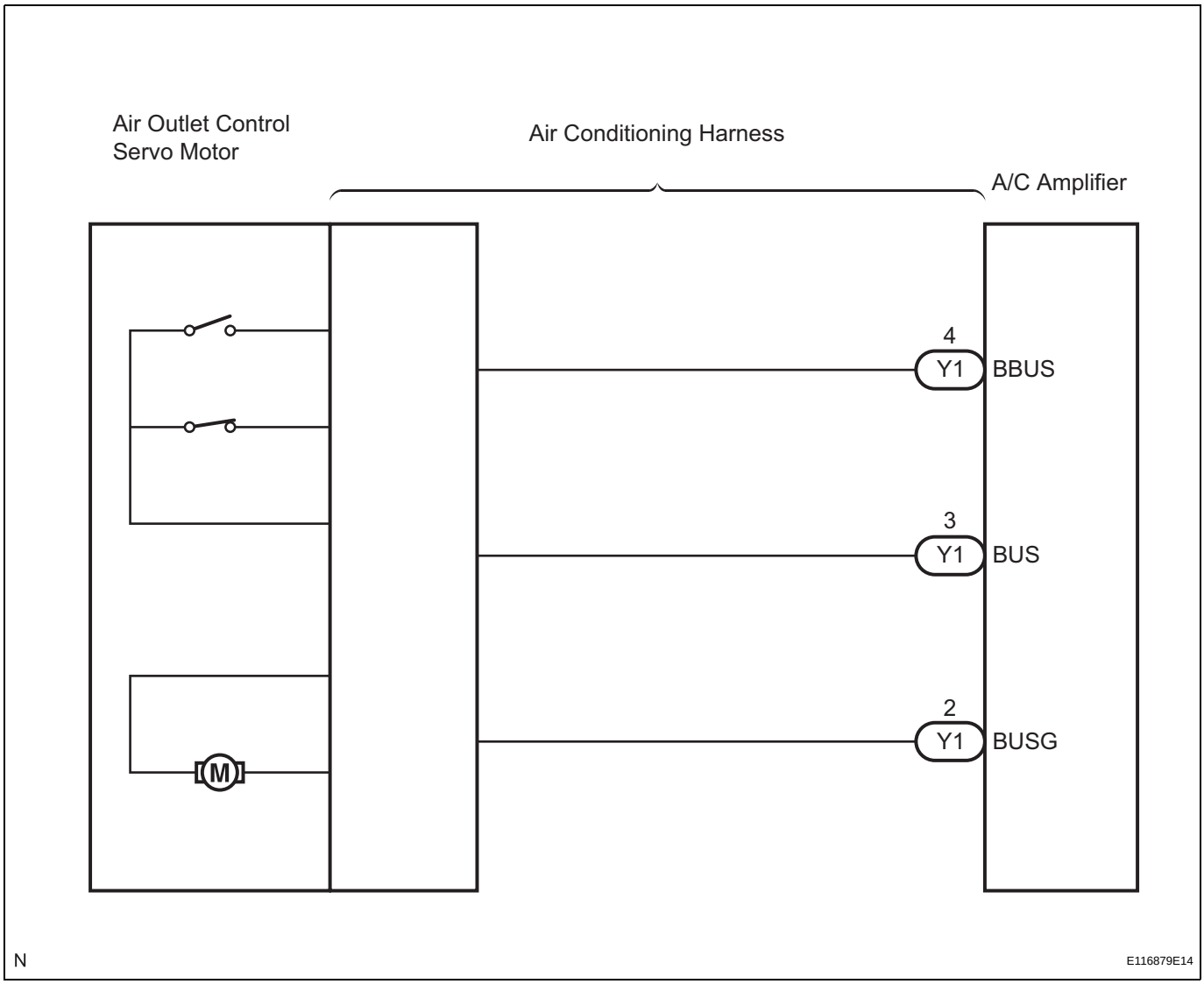

INSPECTION PROCEDURE

1	READ VALUE OF INTELLIGENT TESTER

(a) Connect the intelligent tester to the DLC3.
(b) Turn the engine switch on (IG) and turn the intelligent tester main switch on.
(c) Operate the MODE switch.
(d) Select the item below in the DATA LIST, and read the display on the intelligent tester.

DATA LIST / AIR CONDITIONER:

Tester Display	Measurement Item/Range	Normal Condition	Diagnostic Note
AIR OUT PULSE-D (Air outlet servomotor target pulse (D side))	Driver side air outlet servo motor target pulse / Min.: 0, Max.: 255	FACE: 8 (pulse) B/L: 30 to 38 (pulse) FOOT: 50 to 74 (pulse) FOOT/DEF: 80 (pulse) DEF: 97 (pulse)	-

OK:
The display is as specified in the normal condition column.

Result

Result	Proceed to
NG	A
OK (When troubleshooting according to the PROBLEM SYMPTOMS TABLE)	B
OK (When troubleshooting according to the DTC)	C

B → **PROCEED TO NEXT CIRCUIT INSPECTION SHOWN IN PROBLEM SYMPTOMS TABLE**

C → **REPLACE AIR CONDITIONING AMPLIFIER**

A

2	REPLACE AIR OUTLET CONTROL SERVO MOTOR

(a) Replace the air outlet control servo motor.
HINT:
Since the servo motor cannot be inspected while it is removed from the vehicle, replace the servo motor with a normal one and check that the condition returns to normal.
(b) Check for DTCs.
Result

Result	Proceed to
DTC B1443/43 is output	A
DTC B1443/43 is not output	B

B → **END**

A

REPLACE AIR CONDITIONING HARNESS

DTC	B1446/46	Air Mix Damper Control Servo Motor Circuit (Driver Side)

DESCRIPTION

The air mix damper servo sends pulse signals to inform the air conditioning amplifier of the damper position. The air conditioning amplifier activates the motor (normal, reverse) based on the signals to move the air mix damper (driver seat) to any position. As a result, the amount of air passing through the heater core after passing through the evaporator is adjusted, and the temperature of the air blowing toward the driver seat side is controlled.

HINT:

Confirm that no mechanical problem is present because this diagnostic code can be output when either a damper link or damper is mechanically locked.

DTC No.	DTC Detection Condition	Trouble Area
B1446/46	Air mix damper position sensor value does not change even if air conditioning amplifier operates air mix control servo motor	• Air mix control servo motor • Air conditioning harness • A/C amplifier

WIRING DIAGRAM

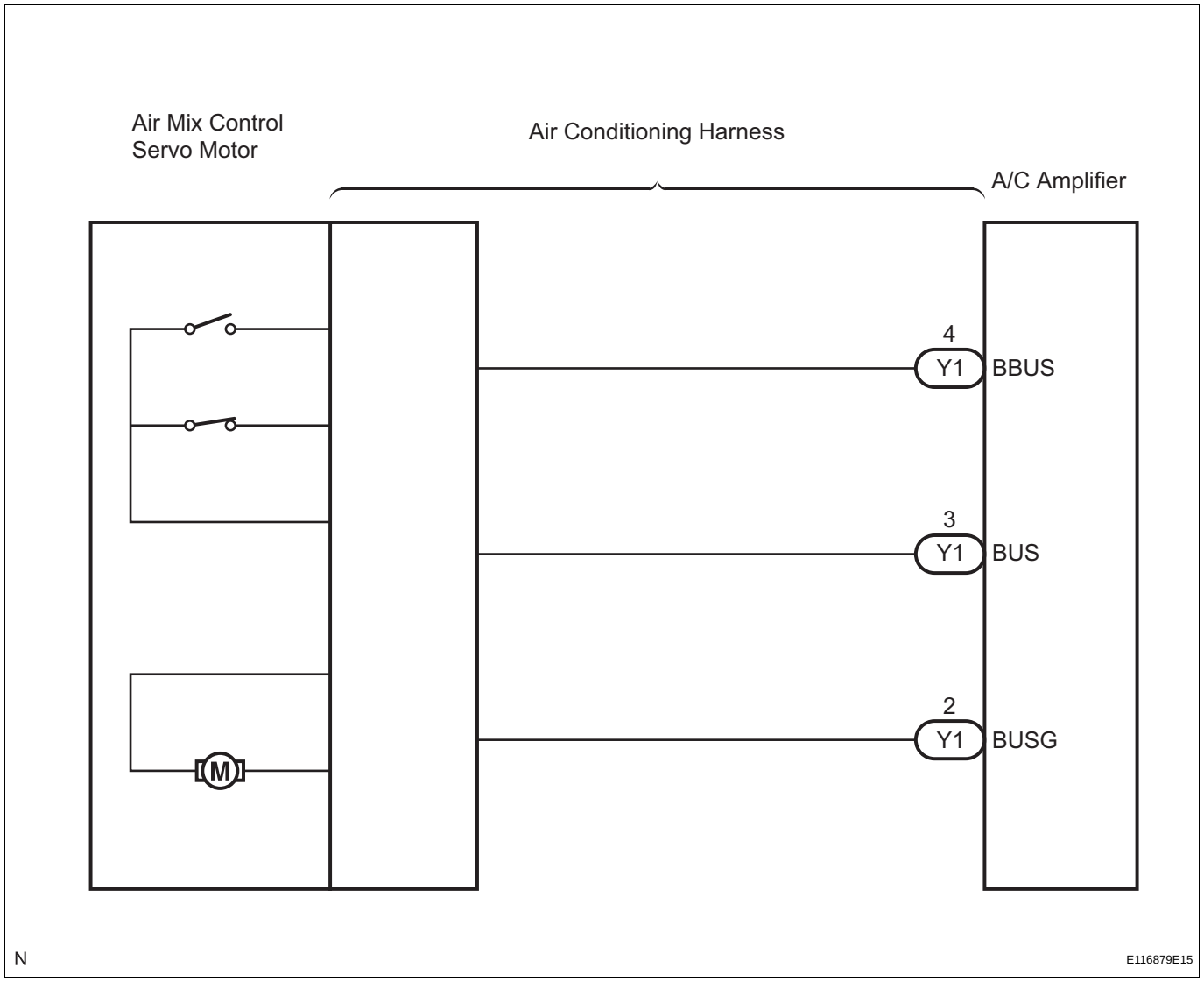

AC

INSPECTION PROCEDURE

1 READ VALUE OF INTELLIGENT TESTER

(a) Connect the intelligent tester to the DLC3.
(b) Turn the engine switch on (IG) and turn the intelligent tester main switch on.
(c) Operate the driver side temperature adjustment switch.
(d) Select the item below in the DATA LIST, and read the display on the intelligent tester.

DATA LIST / AIR CONDITIONER:

Tester Display	Measurement Item/Range	Normal Condition	Diagnostic Note
AIR MIX PULSE-D (Air mix servomotor target pulse (D side))	Driver side air mix servo motor target pulse / Min.: 0, Max.: 255	MAX COLD: 5 (pulse) MAX HOT: 103 (pulse)	-

OK:
The display is as specified in the normal condition column.

Result

Result	Proceed to
NG	A
OK (When troubleshooting according to the PROBLEM SYMPTOMS TABLE)	B
OK (When troubleshooting according to the DTC)	C

B → **PROCEED TO NEXT CIRCUIT INSPECTION SHOWN IN PROBLEM SYMPTOMS TABLE**

C → **REPLACE AIR CONDITIONING AMPLIFIER**

A

2 REPLACE AIR MIX CONTROL SERVO MOTOR

(a) Replace the air mix control servo motor.
HINT:
Since the servo motor cannot be inspected while it is removed from the vehicle, replace the servo motor with a normal one and check that the condition returns to normal.
(b) Check for DTCs.
Result

Result	Proceed to
DTC B1446/46 is output	A
DTC B1446/46 is not output	B

B → **END**

AC

A

REPLACE AIR CONDITIONING HARNESS

DTC	B1451/51	Compressor Solenoid Circuit

DESCRIPTION

In this circuit, the compressor receives a refrigerant compression demand signal from the air conditioning amplifier.
Based on this signal, the compressor changes the amount of compressor output.

DTC No.	DTC Detection Condition	Trouble Area
B1451/51	Open or short in externally changeable compressor solenoid circuit	• A/C compressor • Harness or connector between A/C amplifier and solenoid of externally changeable compressor • A/C amplifier

WIRING DIAGRAM

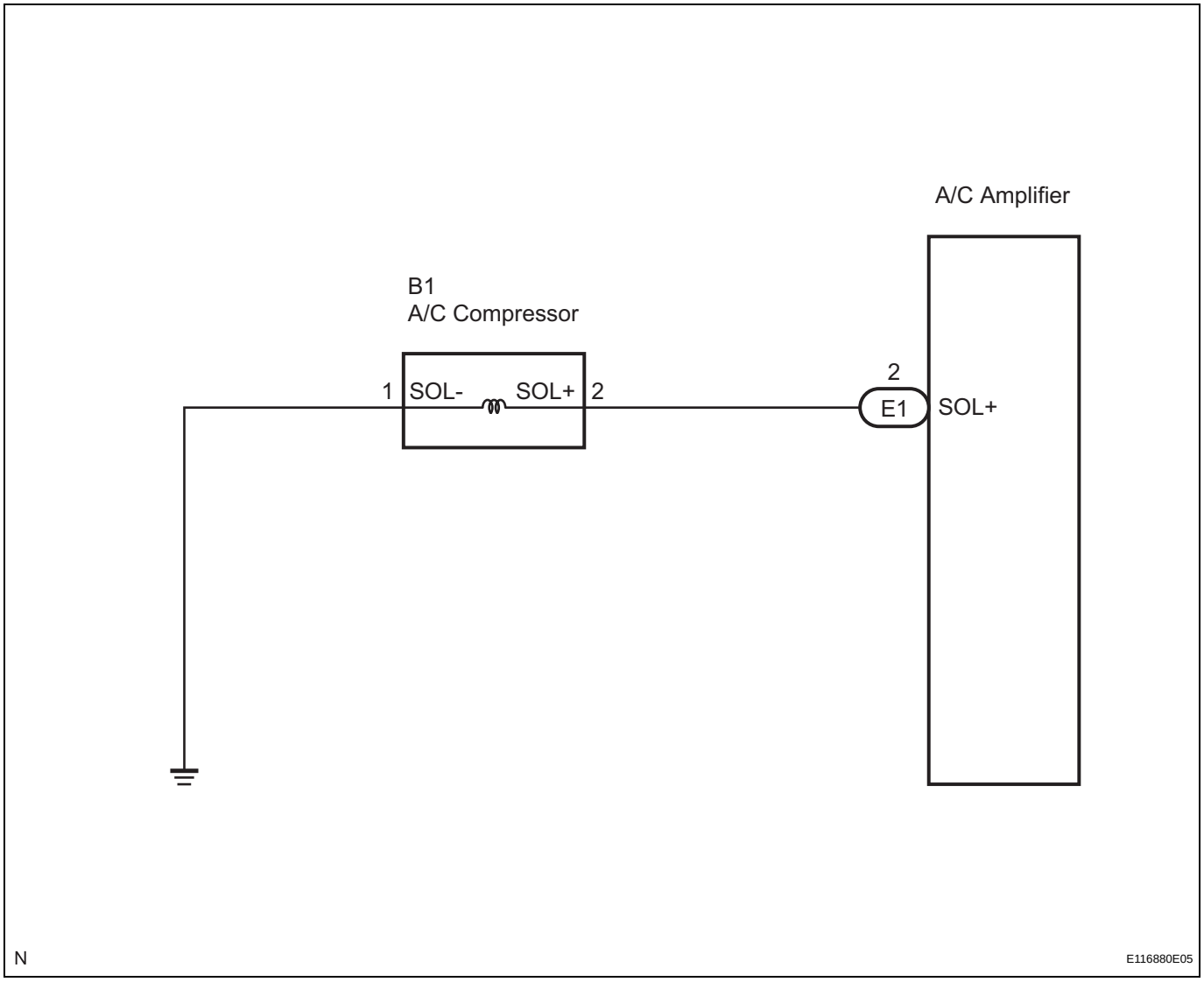

INSPECTION PROCEDURE

1 INSPECT A/C COMPRESSOR

A/C Compressor Connector Front View:

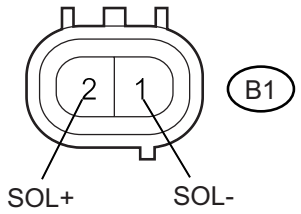

H E116970E05

(a) Disconnect the A/C compressor connector.
(b) Measure the resistance according to the value(s) in the table below.

Standard resistance

Tester Connection	Condition	Specified Condition
B1-2 (SOL+) - B1-1 (SOL-)	20°C (68°F)	10 to 11 Ω

NG → **REPLACE A/C COMPRESSOR**

OK

2 CHECK HARNESS AND CONNECTOR (A/C COMPRESSOR - BODY GROUND)

A/C Compressor Connector Front View:

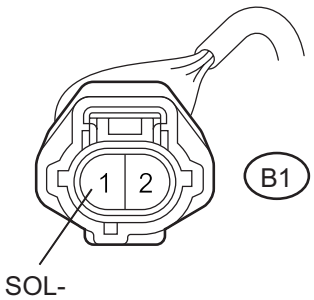

H E116971E04

(a) Disconnect the A/C compressor connector.
(b) Measure the resistance according to the value(s) in the table below.

Standard resistance

Tester Connection	Condition	Specified Condition
B1-1 (SOL-) - Body ground	Always	Below 1 Ω

NG → **REPAIR OR REPLACE HARNESS OR CONNECTOR**

OK

3	CHECK HARNESS AND CONNECTOR (A/C COMPRESSOR - A/C AMPLIFIER)

A/C Compressor Connector Front View:

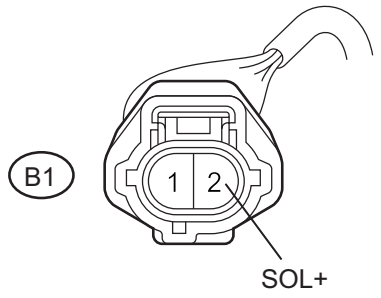

H E116971E05

(a) Disconnect the A/C compressor connector.

Air Conditioning Amplifier Connector Wire Harness View:

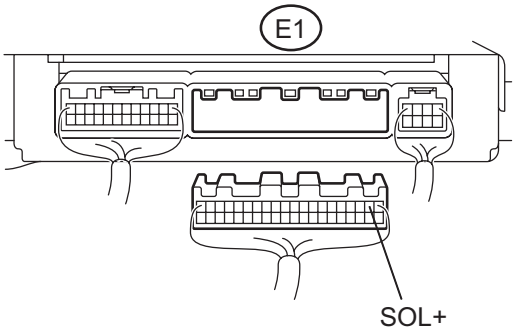

H E124470E38

(b) Disconnect the A/C amplifier connector.

(c) Measure the resistance according to the value(s) in the table below.

Standard resistance

Tester Connection	Condition	Specified Condition
E1-2 (SOL+) - B1-2 (SOL+)	Always	Below 1 Ω
E1-2 (SOL+) - Body ground	Always	10 kΩ or higher

Result

Result	Proceed to
NG	A
OK (When troubleshooting according to the PROBLEM SYMPTOMS TABLE)	B
OK (When troubleshooting according to the DTC)	C

B → **PROCEED TO NEXT CIRCUIT INSPECTION SHOWN IN PROBLEM SYMPTOMS TABLE**

C → **REPLACE AIR CONDITIONING AMPLIFIER**

A

REPAIR OR REPLACE HARNESS OR CONNECTOR

DTC	B1461/61	Emission Gas NOx Sensor Circuit

DESCRIPTION

The smog ventilation sensor detects NOx in the emission gas and transmits signals to the A/C amplifier. Based on the signals, the A/C amplifier performs automatic air inlet control (FRESH, FRESH/ RECIRCULATION, or RECIRCULATION mode).

DTC No.	DTC Detection Condition	Trouble Area
B1461/61	Open or short in emission gas NOx sensor circuit	• Smog ventilation sensor (emission gas NOx sensor) • Harness or connector between smog ventilation sensor (emission gas NOx sensor) and A/C amplifier • A/C amplifier

WIRING DIAGRAM

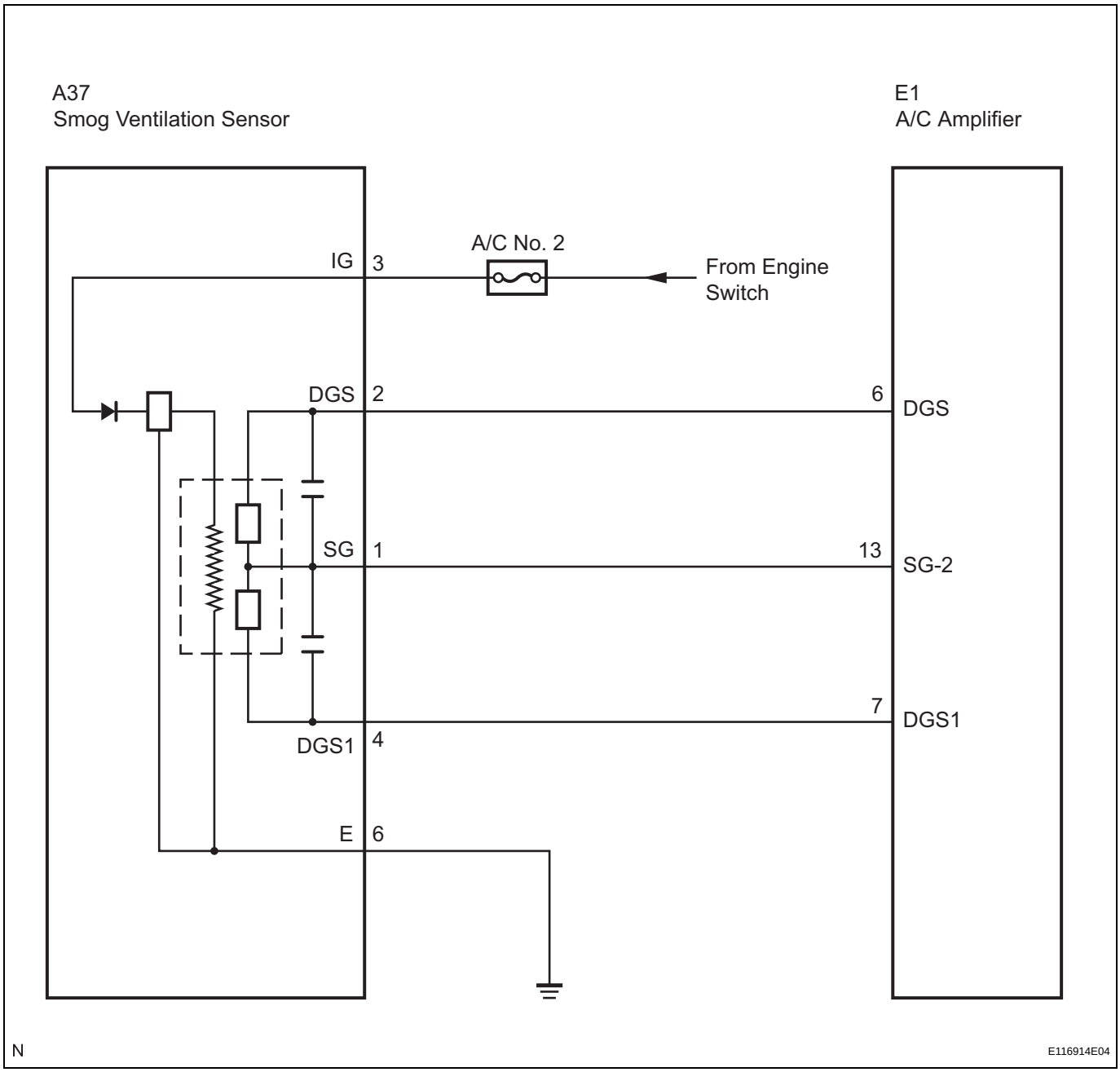

INSPECTION PROCEDURE

1 INSPECT FUSE (LH-IG)

(a) Remove the LH-IG fuse from the cowl side junction block LH.
(b) Measure the resistance according to the value(s) in the table below.

Standard resistance

Tester Item	Condition	Specified Condition
LH-IG fuse	Always	Below 1 Ω

NG → **REPLACE FUSE (LH-IG)**

OK

2 READ VALUE OF INTELLIGENT TESTER

(a) Connect the intelligent tester to the DLC3.
(b) Turn the engine switch on (IG) and turn the intelligent tester main switch on.
(c) Allow exhaust gas (NOx) to travel to the sensing portion of the smog ventilation sensor.
(d) Select the item below in the DATA LIST, and read the display on the intelligent tester.

DATA LIST / AIR CONDITIONER:

Tester Display	Measurement Item/Range	Normal Condition	Diagnostic Note
NOX GAS SENS (Emission gas NOx sensor)	Emission gas NOx sensor / Min.: 0, Max.: 255	Smog ventilation sensor value increases as gas amount increases	-

OK:
The display is as specified in the normal condition column.

Result

Result	Proceed to
NG	A
OK (When troubleshooting according to the PROBLEM SYMPTOMS TABLE)	B
OK (When troubleshooting according to the DTC)	C

B → **PROCEED TO NEXT CIRCUIT INSPECTION SHOWN IN PROBLEM SYMPTOMS TABLE**

C → **REPLACE AIR CONDITIONING AMPLIFIER**

A

3 CHECK HARNESS AND CONNECTOR (SMOG VENTILATION SENSOR - BODY GROUND)

Wire Harness Side Connector Front View:

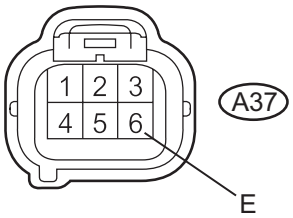

H E107005E13

(a) Disconnect the smog ventilation sensor connector.
(b) Measure the resistance according to the value(s) in the table below.

Standard resistance

Tester Connection	Condition	Specified Condition
A37-6 (E) - Body ground	Always	Below 1 Ω

NG → **REPAIR OR REPLACE HARNESS OR CONNECTOR**

OK

4 CHECK HARNESS AND CONNECTOR (SMOG VENTILATION SENSOR - BATTERY)

Wire Harness Side Connector Front View:

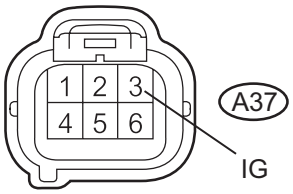

H E107005E17

(a) Disconnect the smog ventilation sensor connector.
(b) Measure the voltage according to the value(s) in the table below.

Standard voltage

Tester Connection	Condition	Specified Condition
A37-3 (IG) - Body ground	Engine switch on (IG)	10 to 14 V
	Engine switch off	Below 1 V

NG → **REPAIR OR REPLACE HARNESS OR CONNECTOR**

OK

5 INSPECT SMOG VENTILATION SENSOR

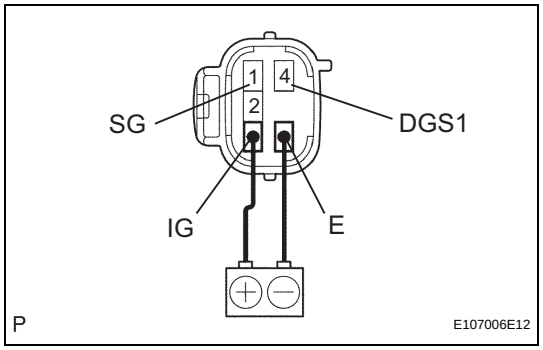

(a) Remove the smog ventilation sensor.
(b) Apply battery voltage between terminals 3 (IG) and 6 (E).
(c) Allow exhaust gas (NOx) to travel to the sensing portion of the smog ventilation sensor, and measure the resistance between terminals 1 (SG) and 4 (DGS1).
OK:
When the sensor is exposed to the exhaust gas, the resistance increases.
HINT:
The resistance before blowing exhaust gas is 10 kΩ to 40 kΩ.

NG → **REPLACE SMOG VENTILATION SENSOR**

OK

6 CHECK HARNESS AND CONNECTOR (SMOG VENTILATION SENSOR - A/C AMPLIFIER)

Wire Harness Side Connector Front View:

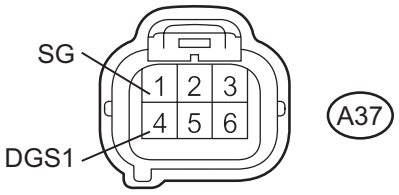

(a) Disconnect the exhaust gas sensor connector.

Air Conditioning Amplifier Connector Wire Harness View:

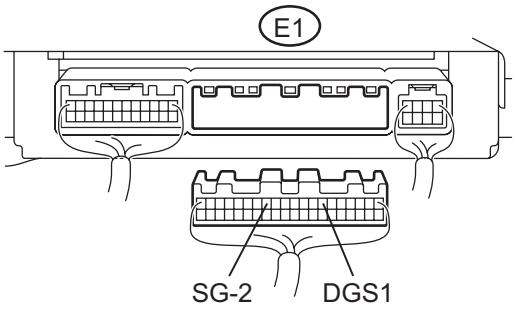

(b) Disconnect the A/C amplifier connector.
(c) Measure the resistance according to the value(s) in the table below.
Standard resistance

Tester Connection	Condition	Specified Condition
A37-1 (SG) - E1-13 (SG-2)	Always	Below 1 Ω
A37-4 (DGS1) - E1-7 (DGS1)	Always	Below 1 Ω
E1-13 (SG-2) - Body ground	Always	10 kΩ or higher
E1-7 (DGS1) - Body ground	Always	10 kΩ or higher

NG → **REPAIR OR REPLACE HARNESS OR CONNECTOR**

OK

REPLACE AIR CONDITIONING AMPLIFIER

DTC	B1497/97	BUS IC Communication Malfunction

DESCRIPTION

The air conditioning harness connects the air conditioning amplifier and each servo motor. The air conditioning amplifier supplies power and sends operation instructions to each servo motor through the air conditioning harness. Each servo motor sends the damper position information to the air conditioning amplifier.

DTC No.	DTC Detection Condition	Trouble Area
B1497/97	Communication line error or open	• Air conditioning harness • A/C amplifier

WIRING DIAGRAM

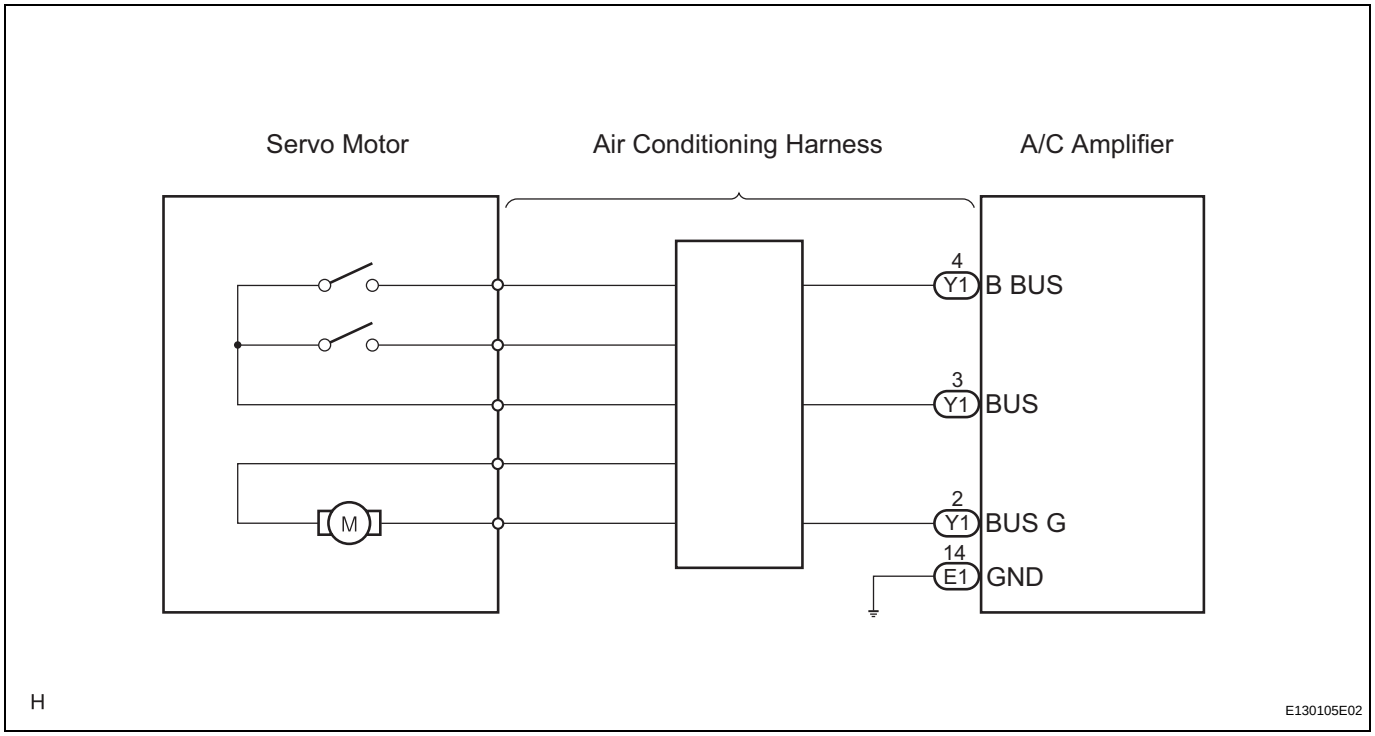

INSPECTION PROCEDURE

1	CHECK HARNESS AND CONNECTOR

(a) Remove the A/C amplifier.

Air Conditioning Amplifier Connector Wire Harness View:

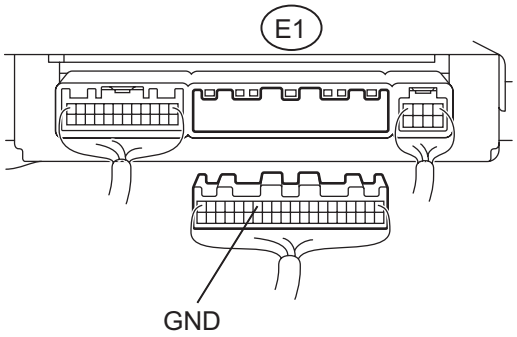

H E124470E40

(b) Disconnect the connector from the A/C amplifier.
(c) Measure the resistance according to the value(s) in the table below.

Standard resistance

Tester Connection	Condition	Specified Condition
E1-14 (GND) - Body ground	Always	Below 1 Ω

NG → **REPAIR OR REPLACE HARNESS OR CONNECTOR**

OK

2 INSPECT AIR CONDITIONING AMPLIFIER

Air Conditioning Amplifier Connector Wire Harness View:

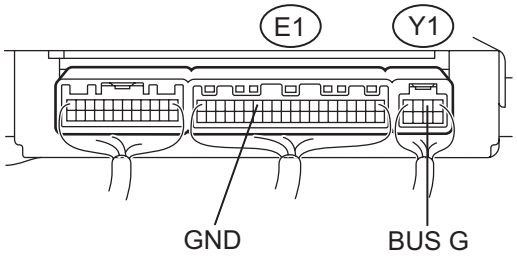

H E124471E19

(a) Reconnect the connector to the A/C amplifier.
(b) Measure the resistance according to the value(s) in the table below.

Standard resistance

Tester Connection	Condition	Specified Condition
Y1-2 (BUS G) - E1-14 (GND)	Always	Below 1 Ω

NG → **REPLACE AIR CONDITIONING AMPLIFIER**

OK

3 INSPECT AIR CONDITIONING AMPLIFIER

Air Conditioning Amplifier Connector Wire Harness View:

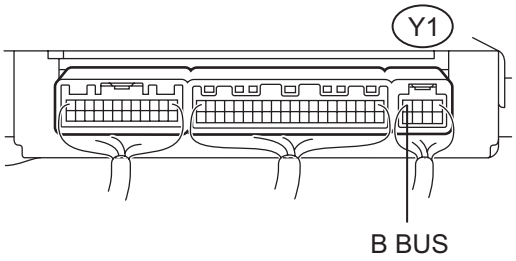

H E124471E20

(a) Disconnect the connector (Y1) from the A/C amplifier.
(b) Measure the voltage according to the value(s) in the table below.

Standard voltage

Tester Connection	Condition	Specified Condition
Y1-4 (B BUS) - Body ground	Engine switch off	Below 1 V
Y1-4 (B BUS) - Body ground	Engine switch on (IG)	10 to 14 V

NG → **REPLACE AIR CONDITIONING AMPLIFIER**

OK

4 REPLACE AIR CONDITIONING HARNESS

(a) Replace the air conditioning harness.
HINT:
Since the air conditioning harness cannot be inspected while it is removed from the vehicle, replace the air conditioning harness with a normal one and check that the condition returns to normal.
(b) Check for DTCs.

Result

Result	Proceed to
DTC B1497/97 is output.	A
DTC B1497/97 is not output.	B

B → **END**

A

REPLACE AIR CONDITIONING AMPLIFIER

DTC	B1499/99	Multiplex Communication Circuit

DESCRIPTION

DTC No.	DTC Detection Condition	Trouble Area
B1499/99	Open in CAN communication circuit	CAN communication system

INSPECTION PROCEDURE

HINT:
Refer to the CAN communication system (See page CA-11).

Blower Motor Circuit

DESCRIPTION

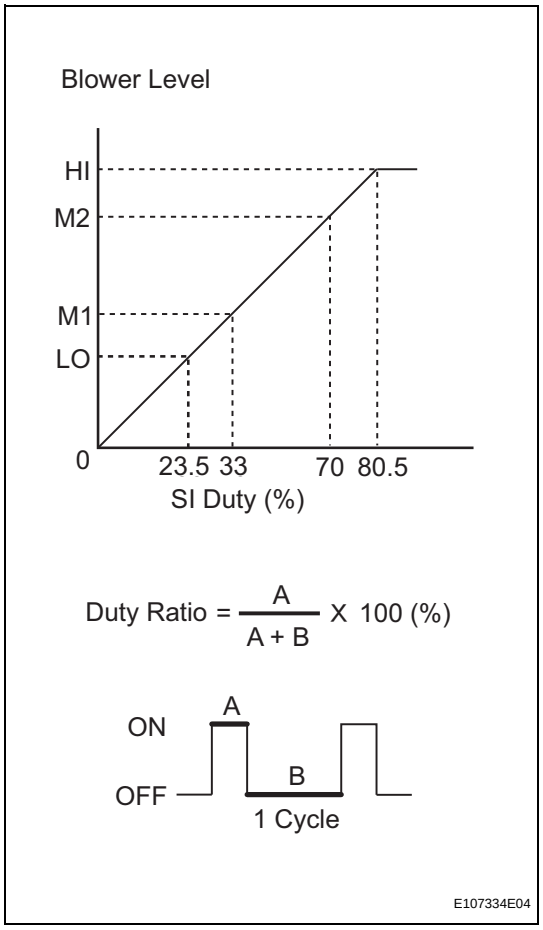

The blower motor is operated by signals from the A/C amplifier. The blower motor speed is controlled using various duty ratios.

Duty Ratio:

The duty ratio is the ratio of the blower motor ON time (A) to the total of the blower motor ON and OFF time (A + B).

The blower motor controller controls the blower motor speed.

WIRING DIAGRAM

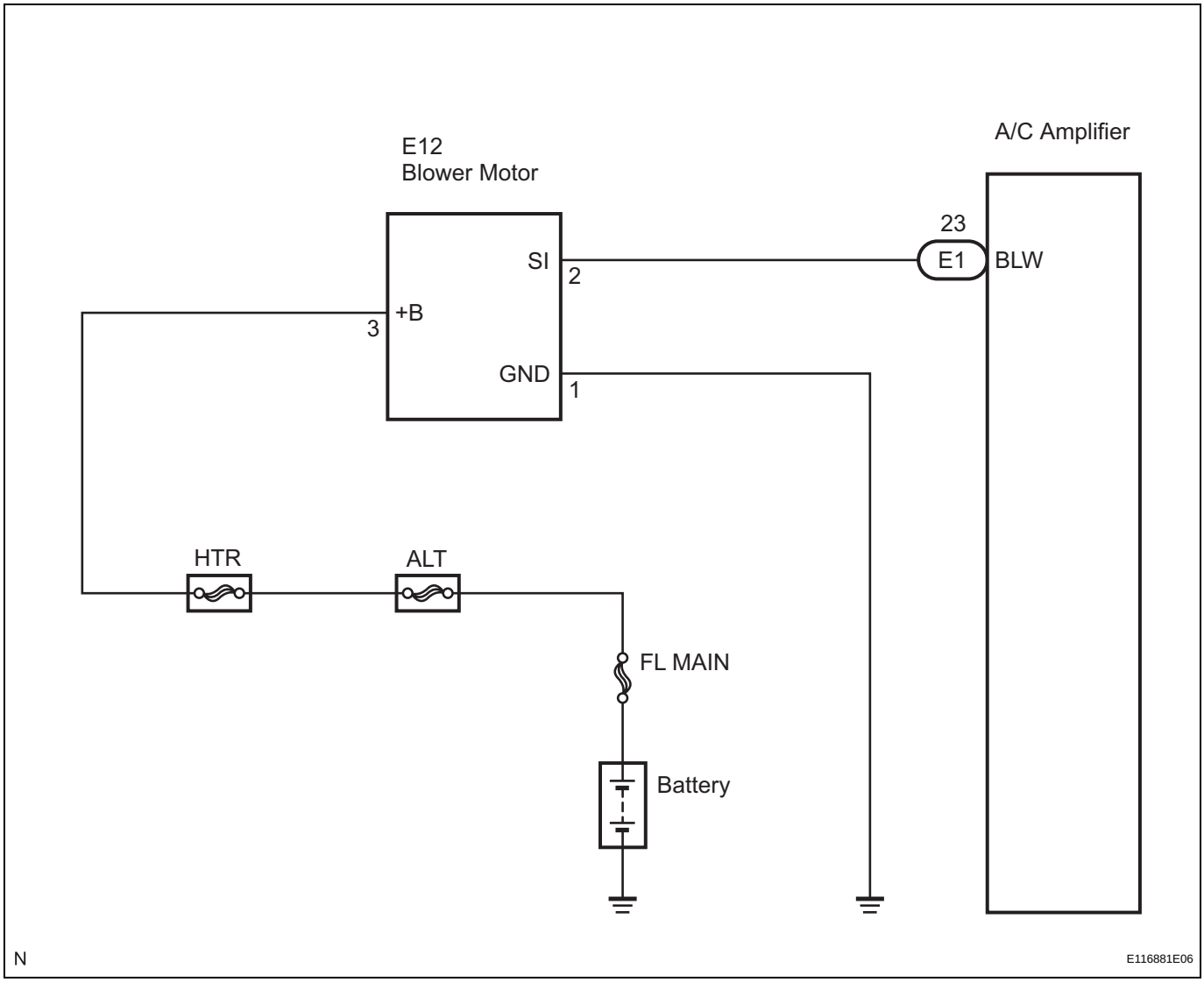

INSPECTION PROCEDURE

1	PERFORM ACTIVE TEST BY INTELLIGENT TESTER

(a) Connect the intelligent tester to the DLC3.
(b) Turn the engine switch on (IG) and turn the intelligent tester main switch on.
(c) Select the item below in the ACTIVE TEST and then check that the blower motor operates.

ACTIVE TEST / AIR CONDITIONER:

Tester Display	Test Part	Control Range
BLOWER MOTOR (Blower motor)	Blower motor / Min.: Level 01, Max.: Level 31	-

AC

Result

Result	Proceed to
OK	**A**
NG (blower motor does not operate)	**B**

Result	Proceed to
NG (blower motor operates but does not change speed)	C

B → Go to step 2

C → Go to step 6

A

PROCEED TO NEXT CIRCUIT INSPECTION SHOWN IN PROBLEM SYMPTOMS TABLE

2 INSPECT FUSIBLE LINK (HTR)

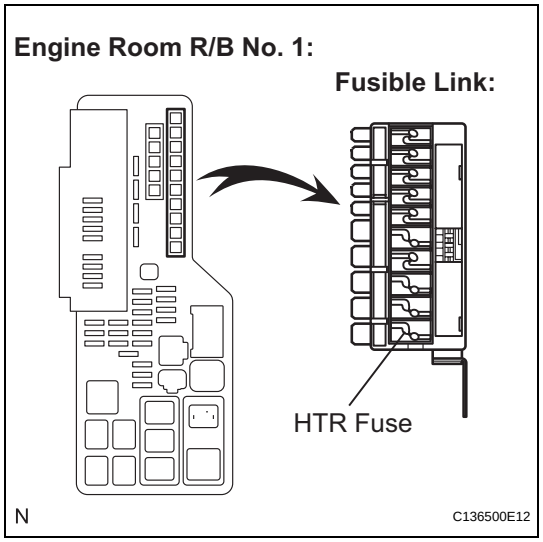

(a) Remove the fusible link from the engine room R/B No. 1.

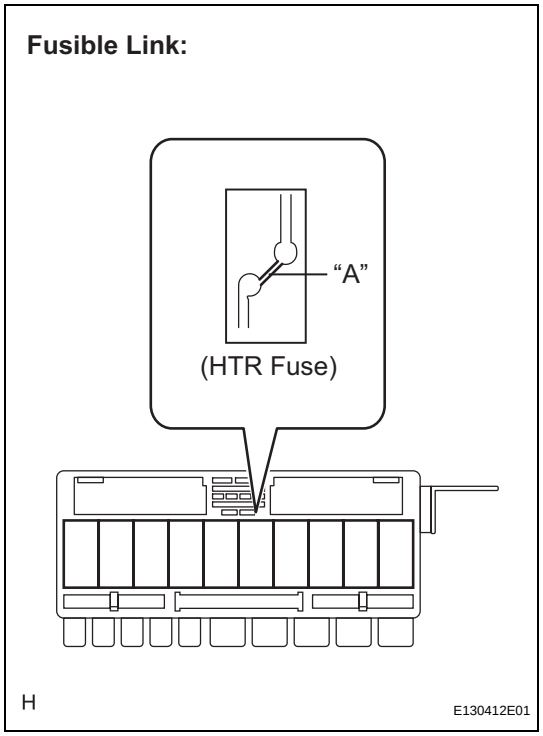

(b) Check if the fusible link is melted.
OK:
The point indicated by "A" is not melted.

Fusible Link:

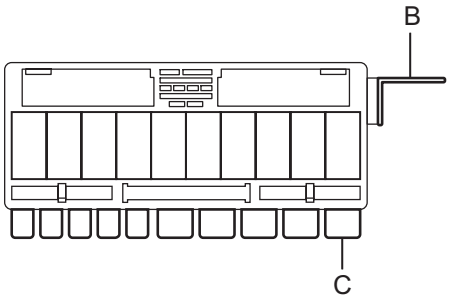

E133955E01

(c) Measure the resistance according to the value(s) in the table below.

Standard resistance

Tester Item	Condition	Specified Condition
HTR fuse (B - C)	Always	Below 1 Ω

(d) Install the fusible link to the engine room R/B with the nut.

NG → **REPLACE FUSIBLE LINK (HTR)**

OK

3 CHECK HARNESS AND CONNECTOR (BLOWER MOTOR - BODY GROUND)

Blower Motor Connector Front View:

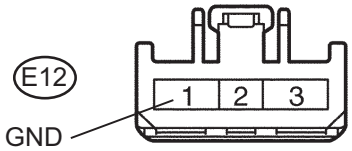

I041124E18

(a) Disconnect the blower motor connector.
(b) Measure the resistance according to the value(s) in the table below.

Standard resistance

Tester Connection	Condition	Specified Condition
E12-1 (GND) - Body ground	Always	Below 1 Ω

NG → **REPAIR OR REPLACE HARNESS OR CONNECTOR**

OK

4 CHECK HARNESS AND CONNECTOR (BLOWER MOTOR - BATTERY)

Blower Motor Connector Front View:

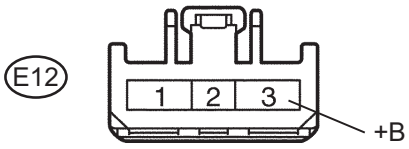

I041124E19

(a) Disconnect the blower motor connector.
(b) Measure the voltage according to the value(s) in the table below.

Standard voltage

Tester Connection	Condition	Specified Condition
E12-3 (+B) - Body ground	Always	10 to 14 V

NG → **REPAIR OR REPLACE HARNESS OR CONNECTOR**

OK

5 CHECK HARNESS AND CONNECTOR (A/C AMPLIFIER - BLOWER MOTOR)

Air Conditioning Amplifier Connector Wire Harness View:

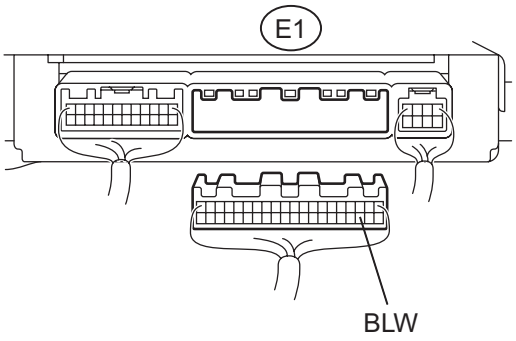

(a) Disconnect the A/C amplifier connector.

Blower Motor Connector Front View:

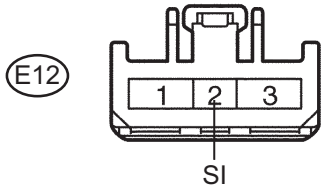

(b) Measure the resistance according to the value(s) in the table below.

Standard resistance

Tester Connection (Symbols)	Condition	Specified Condition
E12-2 (SI) - E1-23 (BLW)	Always	Below 1 Ω
E12-2 (SI) - Body ground	Always	10 kΩ or higher

NG → **REPAIR OR REPLACE HARNESS OR CONNECTOR**

OK

6 INSPECT BLOWER MOTOR

Air Conditioning Amplifier Connector Wire Harness View:

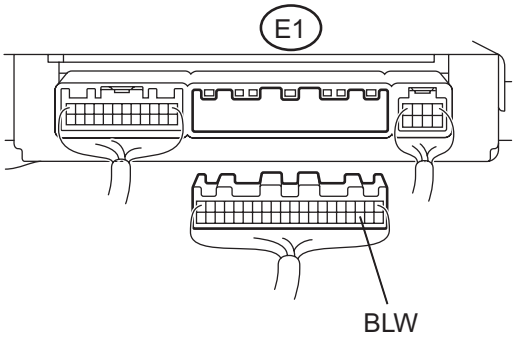

(a) Reconnect the connector to the blower motor.

(b) Measure the voltage on the A/C amplifier connector side according to the value(s) in the table below.

Standard voltage

Tester Connection	Condition	Specified Condition
E1-23 (BLW) - Body ground	Engine switch on (IG)	4.5 to 5.5 V

NG → **REPLACE BLOWER MOTOR**

OK

7	INSPECT AIR CONDITIONING AMPLIFIER

Air Conditioning Amplifier Connector Wire Harness View:

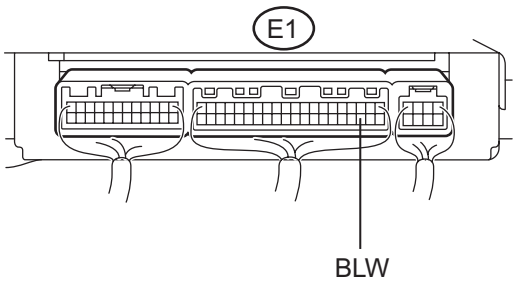

H E124471E21

(a) Remove the A/C amplifier.
(b) Reconnect the connector to the A/C amplifier.

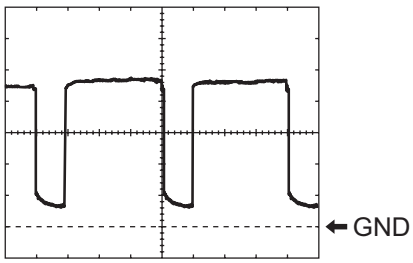

H E103396E01

(c) Turn the engine switch on (IG) .
(d) Turn the blower switch ON.
(e) Measure the waveform between terminal E1-23 (BLW) of the A/C amplifier and body ground.
OK:
Waveform is as shown in the illustration.
HINT:
Waveform varies with the blower level.

Item	Contents
Tool setting	1 V/DIV., 500 μs/DIV.
Vehicle condition	Engine switch on (IG) Blower switch ON

NG → **REPLACE AIR CONDITIONING AMPLIFIER**

OK

REPLACE BLOWER MOTOR

Heater Control Panel Power Source Circuit

DESCRIPTION

Battery voltage is supplied to the A/C control assembly through the A/C fuse and A/C No. 2 fuse.

WIRING DIAGRAM

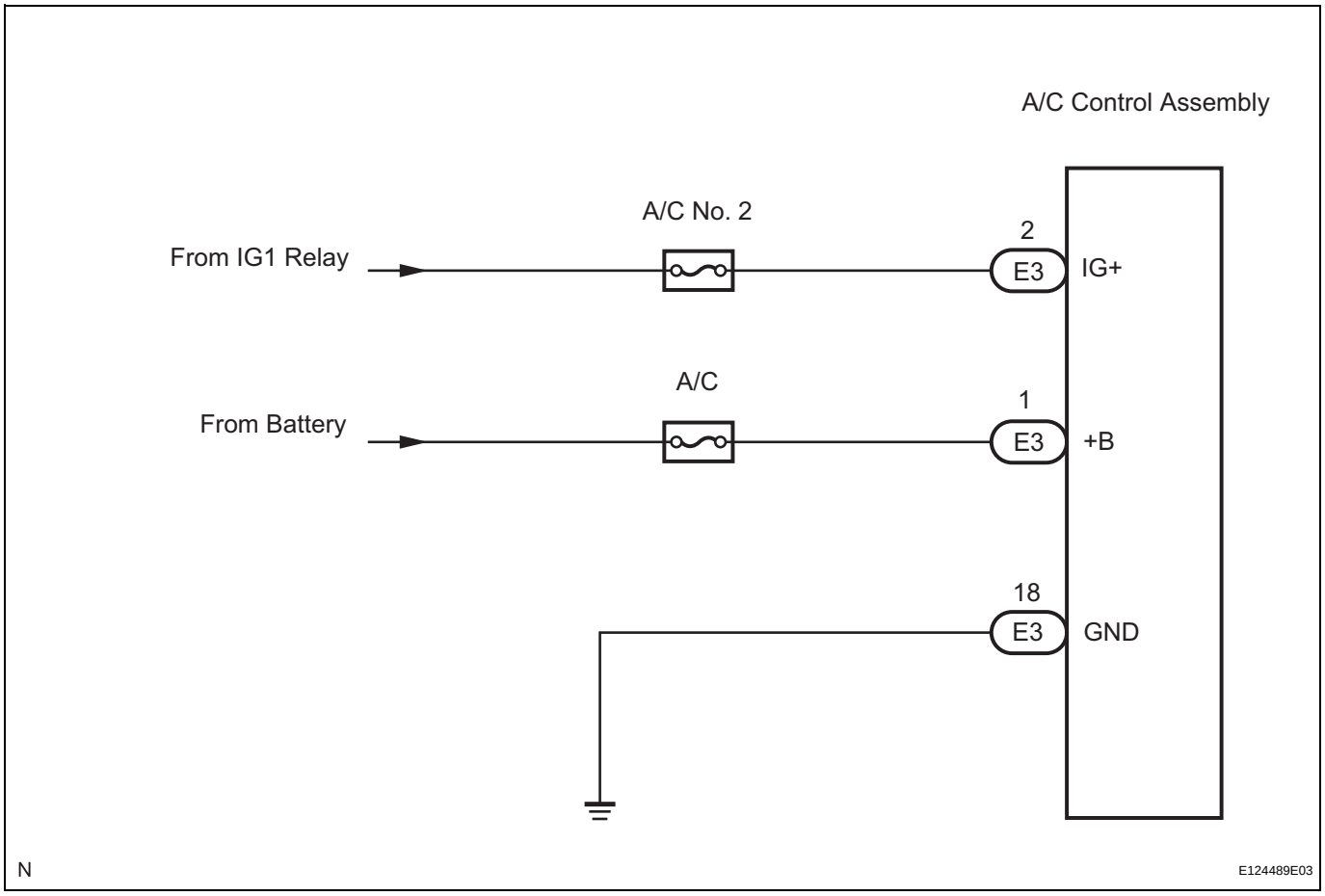

INSPECTION PROCEDURE

1 CHECK HARNESS AND CONNECTOR (IG+, B - BODY GROUND)

A/C Control Assembly Connector Wire Harness View:

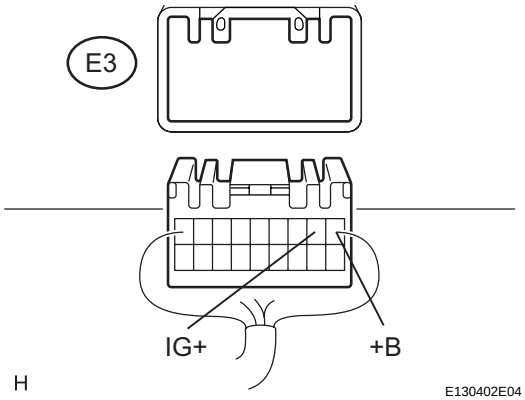

(a) Disconnect the connector from the A/C control assembly.
(b) Measure the voltage according to the value(s) in the table below.

Standard voltage

Tester Connection (Symbols)	Condition	Specified Condition
E3-2 (IG+) - Body ground	Engine switch on (IG)	10 to 14 V
E3-2 (IG+) - Body ground	Engine switch off	Below 1 V
E3-1 (+B) - Body ground	Always	10 to 14 V

NG → **GO TO SMART ACCESS SYSTEM WITH PUSH-BUTTON START (See page ST-15)**

OK

2 CHECK HARNESS AND CONNECTOR (GND - BODY GROUND)

A/C Control Assembly Connector Wire Harness View:

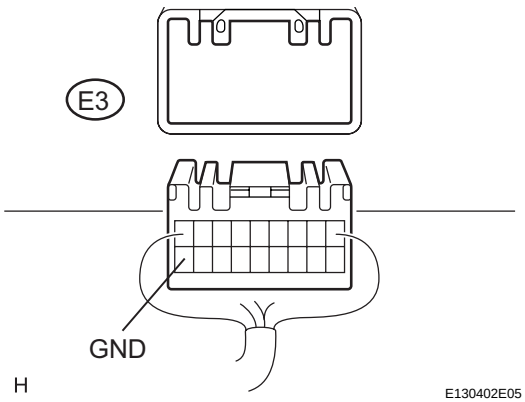

(a) Measure the resistance according to the value(s) in the table below.

Standard resistance

Tester Connection (Symbols)	Condition	Specified Condition
E3-18 (GND) - Body ground	Always	Below 1 Ω

NG → **REPAIR OR REPLACE HARNESS OR CONNECTOR**

OK

PROCEED TO NEXT CIRCUIT INSPECTION SHOWN IN PROBLEM SYMPTOMS TABLE

Air Conditioning Compressor Magnetic Clutch Circuit

DESCRIPTION

When the A/C amplifier is turned on, a magnetic clutch ON signal is sent from the MGC terminal of the A/C amplifier. Then, the MGC relay turns on to operate the magnetic clutch.

WIRING DIAGRAM

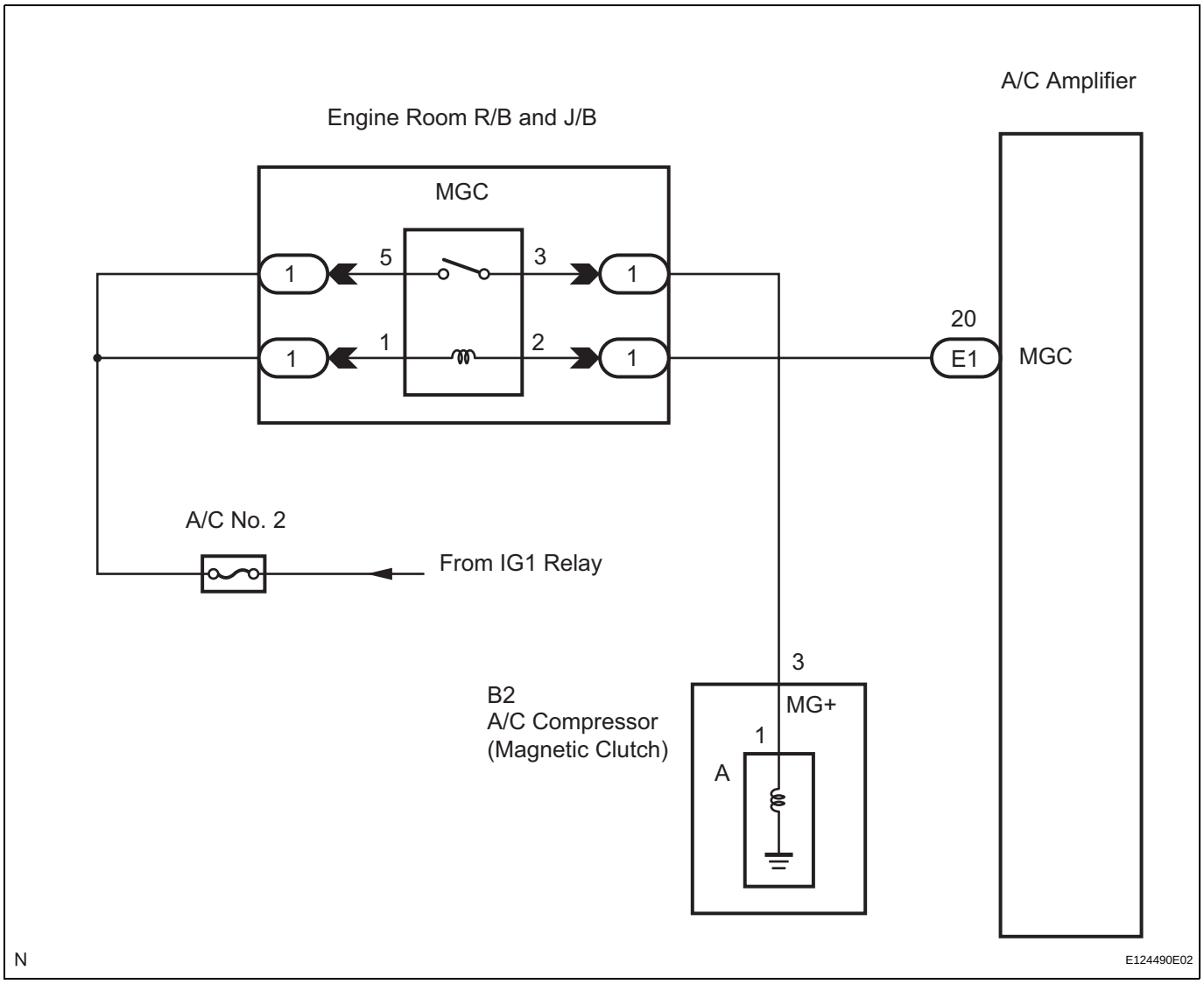

INSPECTION PROCEDURE

1	CHECK CAN COMMUNICATION SYSTEM

(a) Use the intelligent tester to check if the CAN Communication System is functioning normally.

Result

Result	Proceed to
CAN DTC is not output	A
CAN DTC is output	B

AC

B → **GO TO CAN COMMUNICATION SYSTEM (See page CA-11)**

A

2 READ VALUE OF INTELLIGENT TESTER

(a) Connect the intelligent tester to the DLC3.
(b) Turn the engine switch on (IG) and turn the intelligent tester main switch on.
(c) Turn the A/C switch on and off.
(d) Select the item below in the DATA LIST, and read the display on the intelligent tester.

DATA LIST / ENGINE:

Tester Display	Measurement Item/Range	Normal Condition	Diagnostic Note
A/C SIGNAL (A/C Signal)	A/C signal / ON or OFF	ON: A/C ON OFF: A/C OFF	-

OK:
The display is as specified in the normal condition column.

NG → **PROCEED TO NEXT CIRCUIT INSPECTION SHOWN IN PROBLEM SYMPTOMS TABLE**

OK

3 PERFORM ACTIVE TEST BY INTELLIGENT TESTER

(a) Connect the intelligent tester to the DLC3.
(b) Turn the engine switch on (IG) and turn the intelligent tester main switch on.
(c) Select the item below in the ACTIVE TEST and check that the magnetic clutch relay operates.

ACTIVE TEST / AIR CONDITIONER:

Tester Display	Test Part	Control Range
A/C MAG CLUTCH (Magnetic clutch relay)	Magnetic clutch relay / OFF, ON	-

OK:
The magnetic clutch relay operates normally.

OK → **PROCEED TO NEXT CIRCUIT INSPECTION SHOWN IN PROBLEM SYMPTOMS TABLE**

NG

4 INSPECT FUSE (A/C NO. 2)

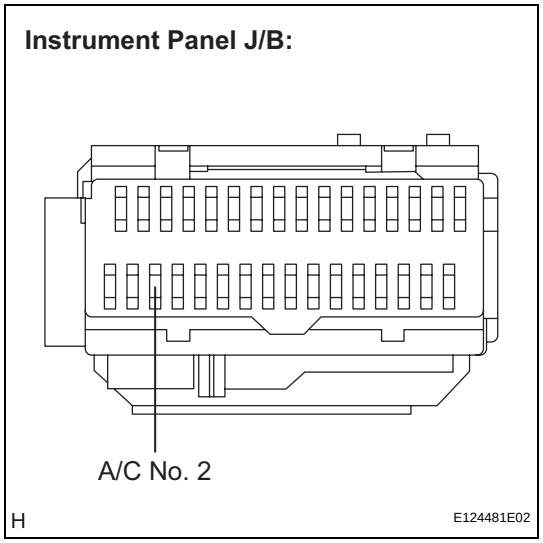

(a) Remove the A/C No. 2 fuse from the instrument panel J/B.

(b) Measure the resistance of the fuse.

Standard resistance

Tester Item	Condition	Specified Condition
A/C No. 2 fuse	Always	Below 1 Ω

(c) Reconnect the A/C No. 2 fuse to the instrument panel J/B.

NG → **REPLACE FUSE (A/C NO. 2)**

OK

5 INSPECT RELAY (MGC)

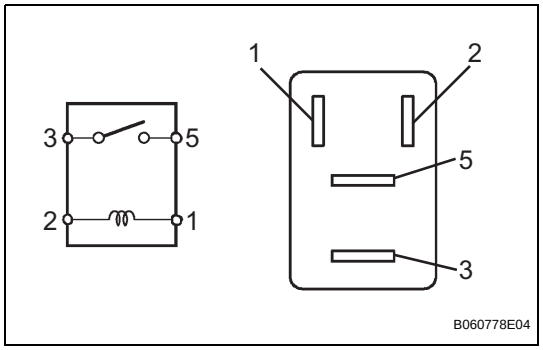

(a) Remove the MGC relay from the engine room R/B and J/B.

(b) Measure the resistance according to the value(s) in the table below.

Standard resistance

Tester Connection	Specified Condition
3 - 5	10 kΩ or higher
3 - 5	Below 1 Ω (when battery voltage is applied to terminals 1 and 2)

(c) Install the MGC relay to the engine room R/B and J/B.

NG → **REPLACE RELAY (MGC)**

OK

6 CHECK HARNESS AND CONNECTOR (A/C AMPLIFIER - BATTERY)

Air Conditioning Amplifier Connector Wire Harness View:

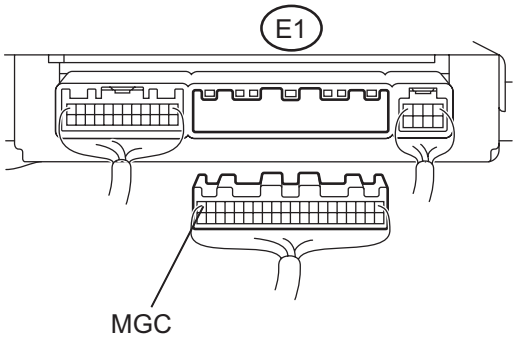

H E124470E43

(a) Disconnect the connector from the A/C amplifier.
(b) Measure the voltage according to the value(s) in the table below.

Standard voltage

Tester Connection (Symbols)	Condition	Specified Condition
E1-20 (MGC) - Body ground	Engine switch off	Below 1 V
E1-20 (MGC) - Body ground	Engine switch on (IG)	10 to 14 V

NG → **REPAIR OR REPLACE HARNESS OR CONNECTOR**

OK

7 INSPECT AIR CONDITIONING AMPLIFIER

Air Conditioning Amplifier Connector Wire Harness View:

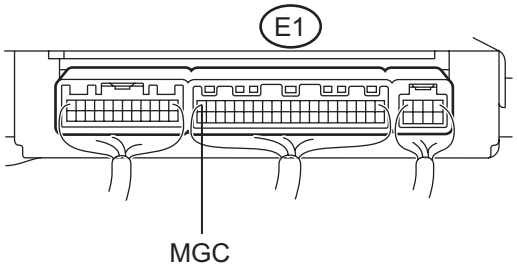

H E124471E22

(a) Reconnect the connector to the A/C amplifier.
(b) Measure the voltage according to the value(s) in the table below.

Standard voltage

Tester Connection (Symbols)	Condition	Specified Condition
E1-20 (MGC) - Body ground	Engine switch on (IG) A/C switch: OFF	10 to 14 V
E1-20 (MGC) - Body ground	Engine switch on (IG) A/C switch: ON	Below 1 V

NG → **REPLACE AIR CONDITIONING AMPLIFIER**

OK

8 INSPECT A/C COMPRESSOR

A/C Compressor Connector Front View:

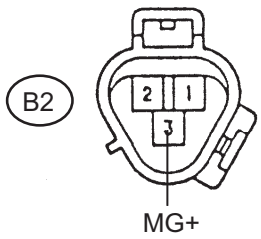

E005280E20

(a) Disconnect the connector from the A/C compressor.

Magnetic Clutch Connector Front View:

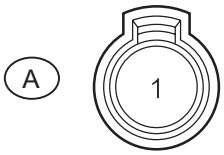

H

E124482E01

(b) Disconnect the connector from the magnetic clutch.

(c) Measure the resistance according to the value(s) in the table below.

Standard resistance

Tester Connection (Symbols)	Condition	Specified Condition
B2-3 (MG+) - A-1	Always	Below 1 Ω
B2-3 (MG+) - Body ground	Always	10 kΩ or higher

NG → **REPLACE A/C COMPRESSOR**

OK

9 INSPECT MAGNETIC CLUTCH

Magnetic Clutch Connector Front View:

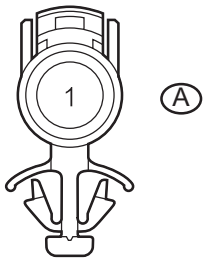

H

E113611E01

(a) Measure the resistance according to the value(s) in the table below.

Standard resistance

Tester Connection	Condition	Specified Condition
A-1 - Body ground	Always	3.4 to 3.8 Ω

(b) When connector terminal A-1 is connected to the positive (+) battery terminal, check that the following occurs: 1) the magnetic clutch's operating sound can be heard, and 2) the magnetic clutch's hub and rotor lock.

NG → **REPLACE MAGNETIC CLUTCH**

OK

10	CHECK HARNESS AND CONNECTOR (ENGINE ROOM R/B AND J/B - BATTERY)

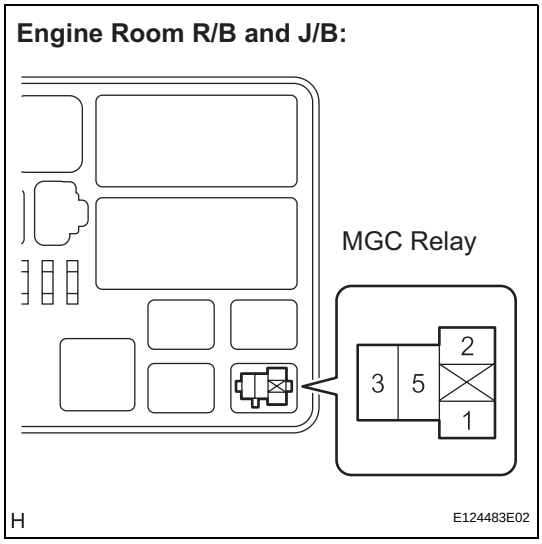

(a) Remove the MGC relay from the engine room R/B and J/B.
(b) Turn the engine switch on (IG).
(c) Measure the voltage according to the value(s) in the table below.

Standard voltage

Tester Connection	Specified Condition
Relay block MGC relay terminal 5 - Body ground	10 to 14 V
Relay block MGC relay terminal 1 - Body ground	10 to 14 V

NG → **REPAIR OR REPLACE HARNESS OR CONNECTOR**

OK

REPAIR OR REPLACE HARNESS OR CONNECTOR (ENGINE ROOM R/B AND J/B - A/C COMPRESSOR)

IG Power Source Circuit

DESCRIPTION

The main power source is supplied to the A/C amplifier when the engine switch is turned on (IG).
The power source is used for operating the A/C amplifier and servo motor, etc.

WIRING DIAGRAM

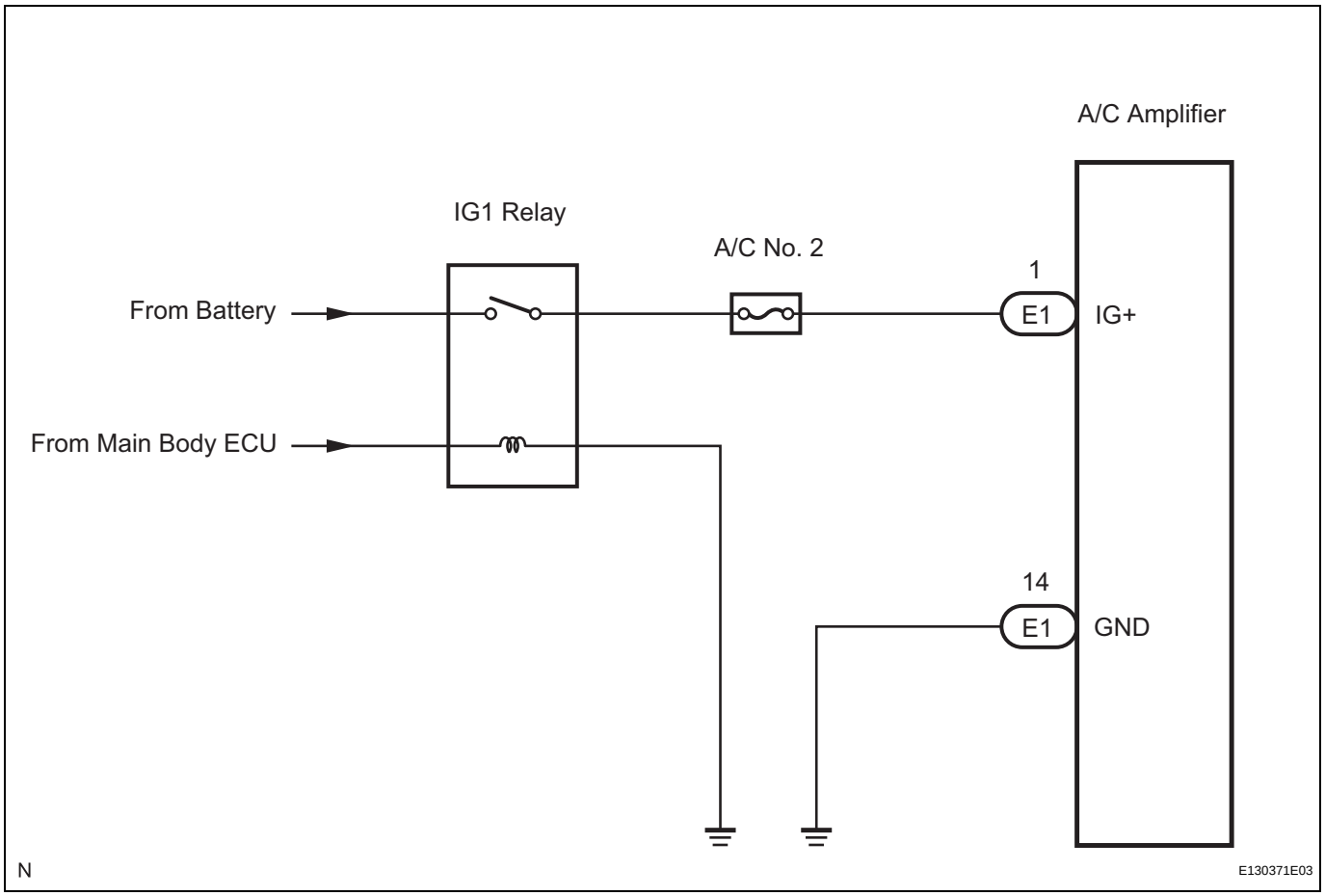

INSPECTION PROCEDURE

HINT:
Start the engine before inspection. Check the IG1 relay or battery if the engine does not start.

1 INSPECT FUSE (A/C NO. 2)

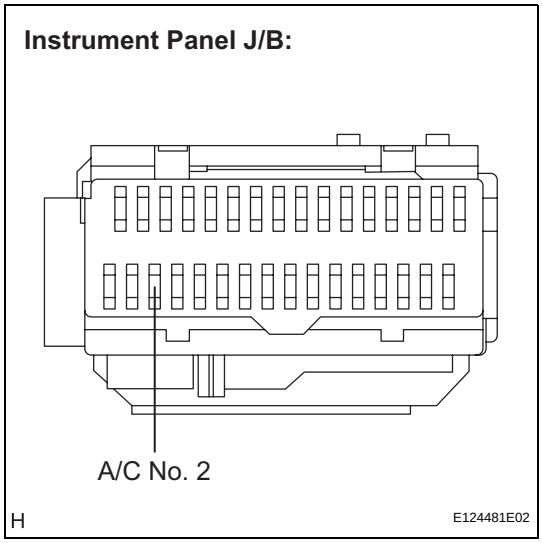

(a) Remove the A/C No. 2 fuse from the instrument panel J/B.
(b) Measure the resistance according to the value(s) in the table below.

Standard resistance

Tester Item	Condition	Specified Condition
A/C No. 2 fuse	Always	Below 1 Ω

NG → **REPLACE FUSE (A/C NO. 2)**

OK

2 INSPECT AIR CONDITIONING AMPLIFIER (IG+ - GND)

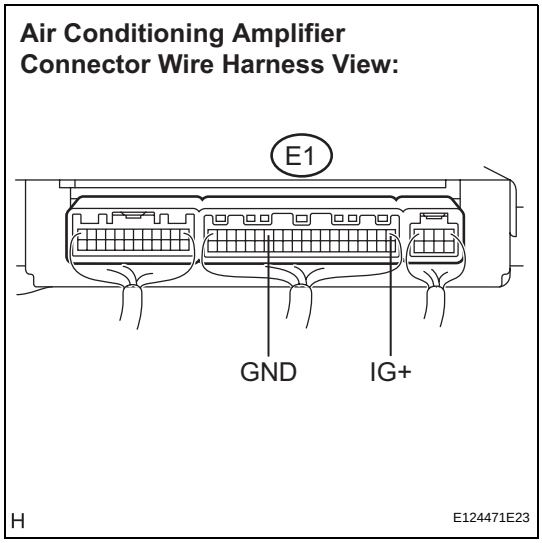

(a) Remove the A/C amplifier with its connectors still connected.
(b) Turn the engine switch on (IG).
(c) Measure the voltage according to the value(s) in the table below.

Standard voltage

Tester Connection	Condition	Specified Condition
E1-1 (IG+) - E1-14 (GND)	Engine switch on (IG)	10 to 14 V

NG → **Go to step 3**

OK

PROCEED TO NEXT CIRCUIT INSPECTION SHOWN IN PROBLEM SYMPTOMS TABLE

3 CHECK WIRE HARNESS (AIR CONDITIONING AMPLIFIER - BATTERY)

Air Conditioning Amplifier Connector Wire Harness View:

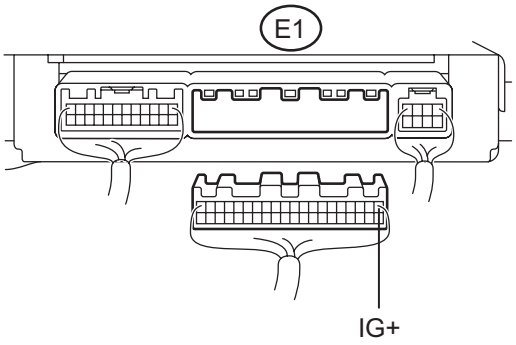

H E124470E44

(a) Disconnect the A/C amplifier connector.
(b) Measure the voltage according to the value(s) in the table below.

Standard voltage

Tester Connection	Condition	Specified Condition
E1-1 (IG+) - Body ground	Engine switch off	Below 1 V
	Engine switch on (IG)	10 to 14 V

NG → **REPAIR OR REPLACE HARNESS OR CONNECTOR**

OK

4 CHECK WIRE HARNESS (AIR CONDITIONING AMPLIFIER - BODY GROUND)

Air Conditioning Amplifier Connector Wire Harness View:

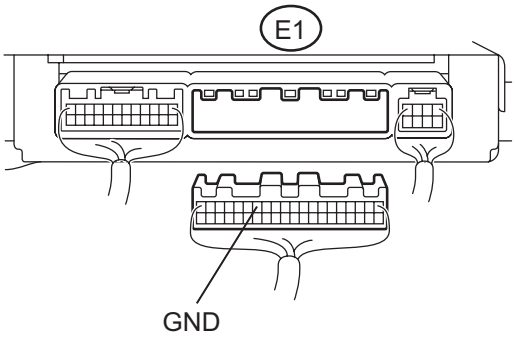

H E124470E45

(a) Disconnect the A/C amplifier connector.
(b) Measure the resistance according to the value(s) in the table below.

Standard resistance

Tester Connection	Condition	Specified Condition
E1-14 (GND) - Body ground	Always	Below 1 Ω

NG → **REPAIR OR REPLACE HARNESS OR CONNECTOR**

OK

REPLACE AIR CONDITIONING AMPLIFIER

Back-up Power Source Circuit

DESCRIPTION

The back-up power source circuit for the A/C amplifier is shown below. Power is supplied even when turning the engine switch off and is used for diagnostic trouble code memory, etc.

WIRING DIAGRAM

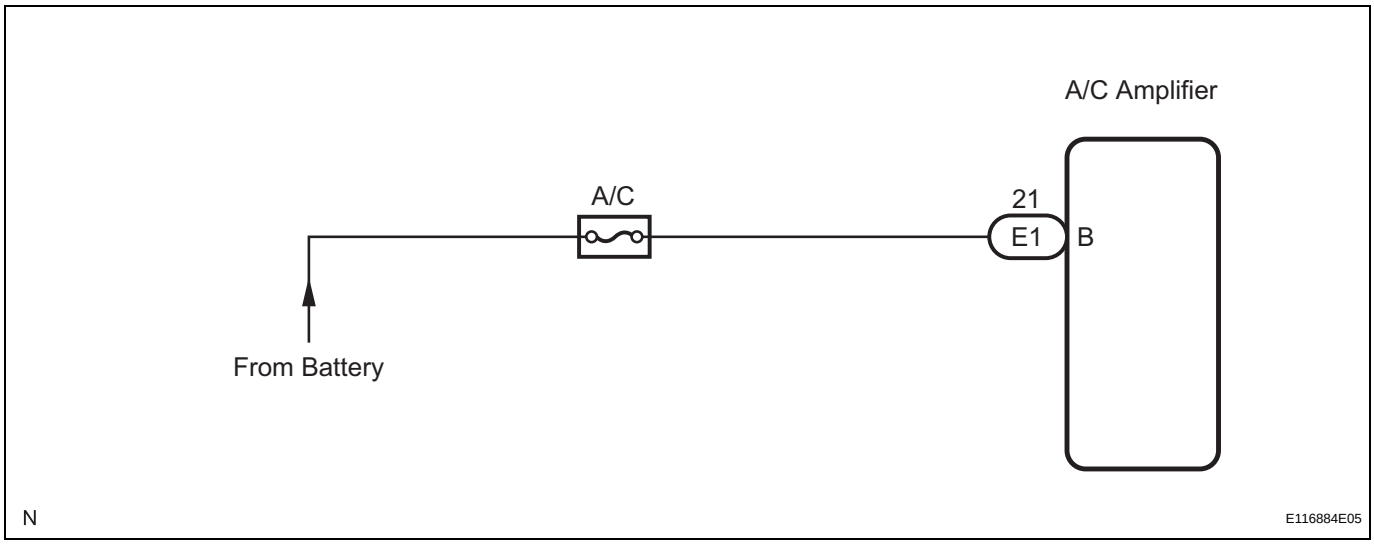

INSPECTION PROCEDURE

1	INSPECT FUSE (A/C)

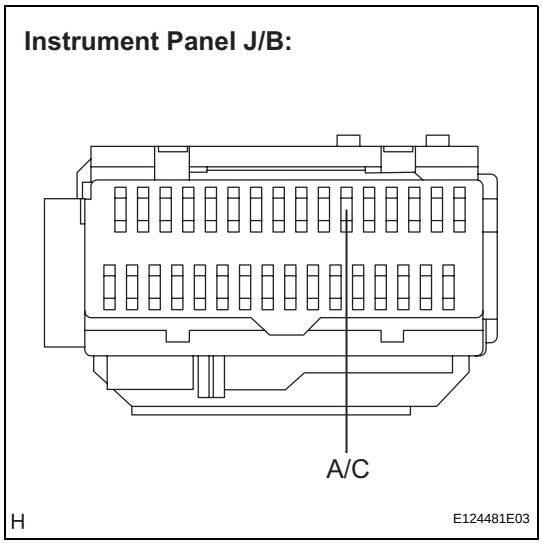

(a) Remove the A/C fuse from the instrument panel J/B.
(b) Measure the resistance according to the value(s) in the table below.

Standard resistance

Tester Item	Condition	Specified Condition
A/C fuse	Always	Below 1 Ω

NG → **REPLACE FUSE (A/C)**

OK

2	**INSPECT AIR CONDITIONING AMPLIFIER (AIR CONDITIONING AMPLIFIER - BODY GROUND)**

Air Conditioning Amplifier Connector Wire Harness View:

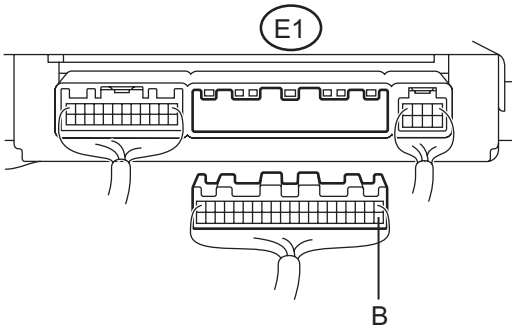

H E124470E46

(a) Disconnect the A/C amplifier connector.
(b) Measure the voltage according to the value(s) in the table below.

Standard voltage

Tester Connection	Condition	Specified Condition
E1-21 (B) - Body ground	Always	10 to 14 V

NG → **REPAIR OR REPLACE HARNESS OR CONNECTOR**

OK

PROCEED TO NEXT CIRCUIT INSPECTION SHOWN IN PROBLEM SYMPTOMS TABLE

LIN Communication Circuit

DESCRIPTION

The operation signal of a switch etc. is exchanged between terminal TX+ of the A/C control assembly and terminal LIN1 of the A/C amplifier.

WIRING DIAGRAM

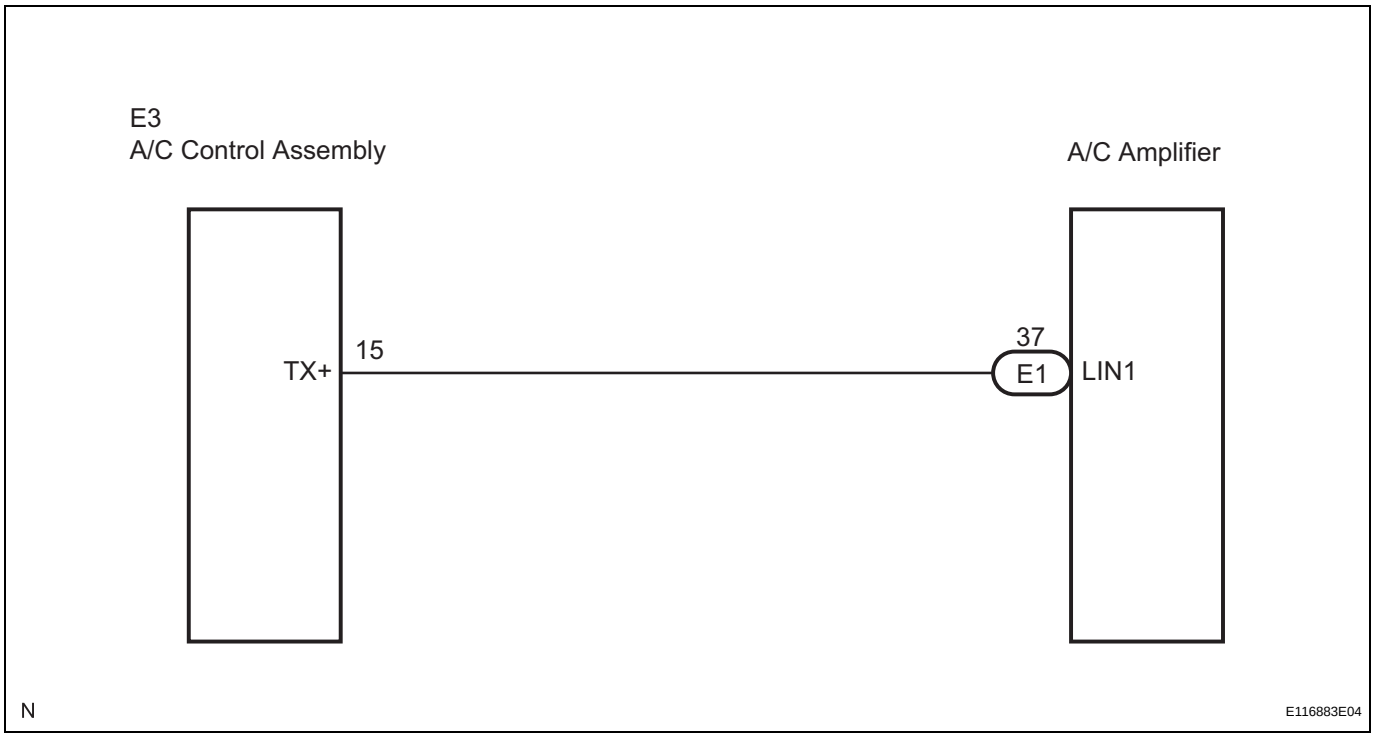

INSPECTION PROCEDURE

1	CHECK HARNESS AND CONNECTOR (A/C CONTROL ASSEMBLY - AIR CONDITIONING AMPLIFIER)

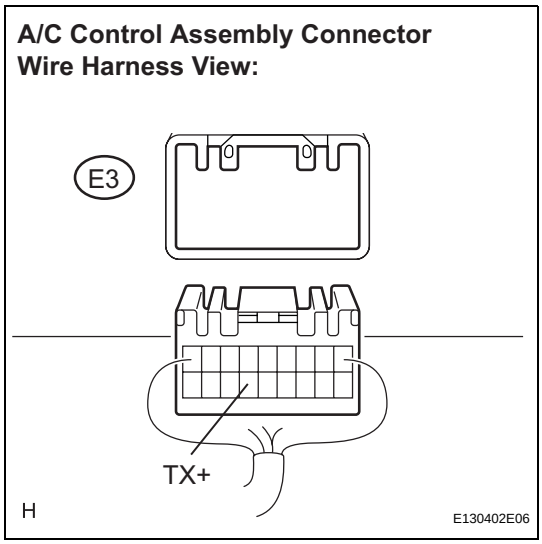

(a) Disconnect the connector from the A/C control assembly.

Air Conditioning Amplifier Connector Wire Harness View:

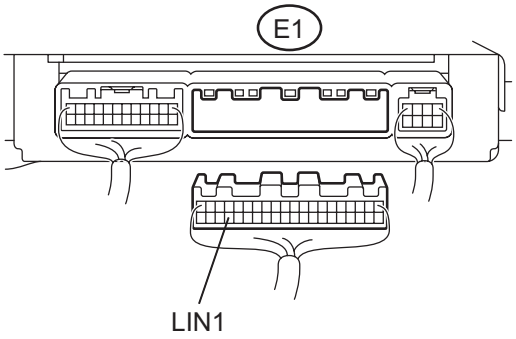

H E124470E47

(b) Disconnect the connector from the A/C amplifier.

(c) Measure the resistance according to the value(s) in the table below.

Standard resistance

Tester Connection (Symbols)	Condition	Specified Condition
E1-37 (LIN1) - E3-15 (TX1)	Always	Below 1 Ω
E1-37 (LIN1) - Body ground	Always	10 kΩ or higher

NG → **REPAIR OR REPLACE HARNESS OR CONNECTOR**

OK

PROCEED TO NEXT CIRCUIT INSPECTION SHOWN IN PROBLEM SYMPTOMS TABLE

HOW TO PROCEED WITH TROUBLESHOOTING

HINT:
- Use the following procedures to troubleshoot the air conditioning system.
- *: Use the intelligent tester.

1 VEHICLE BROUGHT TO WORKSHOP

NEXT

2 INSPECT BATTERY VOLTAGE

(a) Inspect the battery voltage.
Standard voltage:
11 to 14 V
If the voltage is below 11 V, recharge or replace the battery before proceeding.

NEXT

3 CHECK COMMUNICATION FUNCTION OF CAN COMMUNICATION SYSTEM*

(a) Use the intelligent tester to check if the CAN Communication System is functioning normally.
Result

Result	Proceed to
CAN DTC is not output	A
CAN DTC is output	B

B → **Go to CAN COMMUNICATION SYSTEM**

A

4 CHECK FOR DTC*

(a) Check for DTCs and note any codes that are output.
(b) Delete the DTCs.
(c) Recheck for DTCs. Based on the DTCs output above, try to force output of the A/C system DTC by simulating the operation indicated by the DTC.
Result

Result	Proceed to
DTC is not output	A
DTC is output	B

B → **Go to step 7**

A

5	PROBLEM SYMPTOMS TABLE

(a) Refer to the problem symptoms table (See page AC-24).

Result

Result	Proceed to
Fault is not listed in problem symptoms table	A
Fault is listed in problem symptoms table	B

B → **Go to step 7**

A

6	OVERALL ANALYSIS AND TROUBLESHOOTING*

(a) ACTUATOR CHECK (See page AC-43)
(b) DATA LIST / ACTIVE TEST (See page AC-39)
(c) TERMINALS OF ECU (See page AC-26)
(d) On-vehicle Inspection
(e) Inspection

NEXT

7	ADJUST, REPAIR OR REPLACE

NEXT

END

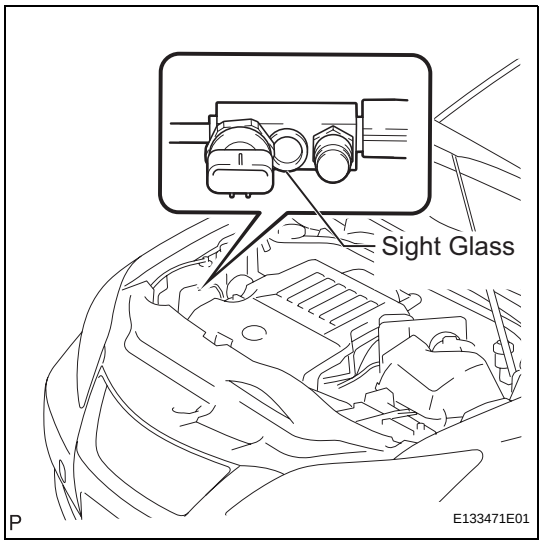

REFRIGERANT

ON-VEHICLE INSPECTION

1. INSPECT REFRIGERANT VOLUME

(a) Check the sight glass on the air conditioning tube & accessory assembly.

(1) Prepare the vehicle according to the chart below.

Item	Condition
Vehicle door	Fully open
Temperature setting	MAX COLD
Blower speed	HI
A/C	ON

(2) Compare the sight glass to the following chart.

Item	Symptom	Amount of refrigerant	Corrective Actions
1	Bubbles exist	Insufficient*	1. Check for gas leakage and repair if necessary 2. Recharge with proper amount of refrigerant
2	No bubbles exist	Empty, insufficient, or excessive	Refer to 3 and 4
3	No temperature difference between compressor inlet and outlet	Empty or nearly empty	1. Check for gas leakage and repair if necessary 2. Evacuate the AC system and recharge with the proper amount of refrigerant
4	Considerable temperature difference between compressor inlet and outlet	Proper or excessive	Refer to 5 and 6
5	Immediately after air conditioning is turned off, refrigerant remains clear	Excessive	1. Recover refrigerant 2. Evacuate the AC system and recharge with the proper amount of refrigerant
6	Immediately after air conditioning is turned off, refrigerant foams and then becomes clear	Proper	-

*: Bubbles in the sight glass with the vehicle's interior temperature above 35°C (95°F) can be considered normal if cooling is sufficient.

2. INSPECT REFRIGERANT PRESSURE WITH MANIFOLD GAUGE SET

HINT:
This is a method where a manifold gauge set is used to help locate the problem.

(a) Read the manifold gauge pressure when the following conditions are established.
Test conditions:
- Temperature at the air inlet with the switch set at RECIRC is 30 to 35°C (86 to 95°F).
- Engine is running at 1,500 rpm.
- Blower speed control switch is at "HI".
- Temperature control dial is at "COOL".
- A/C switch is ON.
- Doors are fully open.
- Ignition switch is in a position that enables the AC compressor to run.

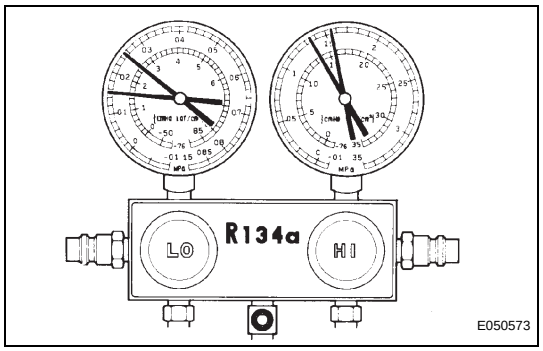

(1) Normally functioning refrigeration system
Gauge reading

Pressure side	Refrigerant volume
Low	0.15 to 0.25 MPa (1.5 to 2.5 kgf/cm^2, 21.3 to 35.5 psi)
High	1.37 to 1.57 MPa (14 to 16 kgf/cm^2, 199.1 to 227.5 psi)

(2) Moisture is present in refrigeration system.

Condition:
Periodically cools and then fails to cool

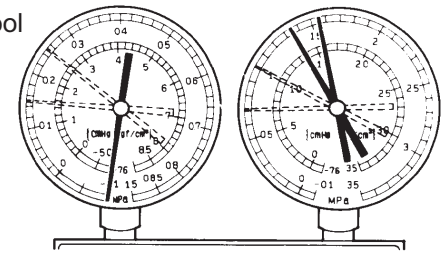

I022117E21

Symptom	Probable Cause	Diagnosis	Corrective Actions
During operation, pressure on low pressure side cycles between normal and vacuum	Moisture in AC system will freeze at the expansion valve orifice, causing the refrigeration cycle to temporarily stop After the system stops, and warms up again, the ice will melt and normal operation will be temporarily restored	• Cooler dryer integrated into condenser tank in oversaturated state • Moisture in refrigeration system freezes at expansion valve orifice and blocks circulation of refrigerant	1. Replace cooler dryer 2. Remove moisture in system by repeatedly evacuating air 3. Supply a proper amount of new refrigerant

(3) Insufficient cooling

Condition: Cooling system does not function effectively.

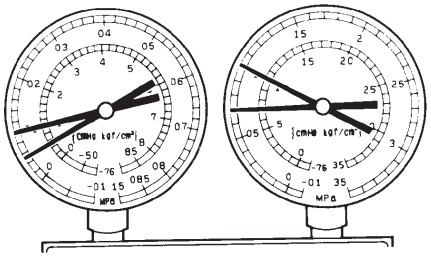

I022118E13

Symptom	Probable Cause	Diagnosis	Corrective Actions
• Pressure is low on both low and high pressure sides • Bubbles are seen through sight glass continuously • Insufficient cooling performance	Gas leakage from the refrigeration system	• Insufficient refrigerant • Refrigerant leaking	1. Check for gas leakage and repair if necessary 2. Supply a proper amount of new refrigerant 3. If the gauge indicates a pressure of close to 0, then it will be necessary to evacuate the system after repairing the leak

(4) Poor circulation of refrigerant

Condition: Cooling system does not function effectively.

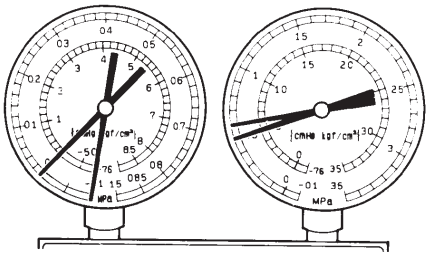

I022119E14

Symptom	Probable Cause	Diagnosis	Corrective Actions
• Pressure is low on both low and high pressure sides • Frost exists on pipe from condenser to unit	Refrigerant flow is obstructed by dirt inside the pipes of the condenser core	Receiver is clogged	Replace condenser

(5) Refrigerant does not circulate.

Condition: Cooling system does not function. (Sometimes it may function.)

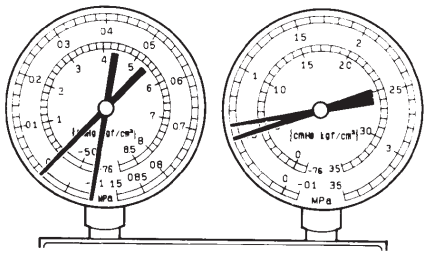

I022120E14

Symptom	Probable Cause	Diagnosis	Corrective Actions
• Vacuum is indicated on low pressure side and very low pressure is indicated on high pressure side • Frost or condensation is seen on piping on both sides of receiver/drier or expansion valve	• Refrigerant flow is obstructed by moisture or dirt in refrigeration system • Refrigerant flow is disrupted by gas leaking internally through the expansion valve	Refrigerant does not circulate	1. Check the expansion valve 2. Replace expansion valve 3. Replace condenser 4. Evacuate air and supply a proper amount of new refrigerant 5. For internal gas leak at expansion valve, replace expansion valve

(6) Refrigerant is overcharged or cooling effectiveness of condenser is insufficient.

Condition: Cooling system does not function.

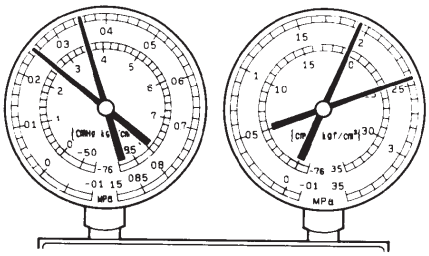

I022121E14

Symptom	Probable Cause	Diagnosis	Corrective Actions
• Pressure is too high on both low and high pressure sides • No air bubbles are seen through sight glass even when engine rpm lowers	• Unable to develop sufficient performance due to excessive use of refrigeration system • Cooling effectiveness of condenser is insufficient	• Excessive refrigerant in cycle → excessive refrigerant was added during recharging • Condenser cooling effectiveness is insufficient → condenser fins are clogged at cooling fan	1. Clean condenser 2. Check the operation of the condenser cooling fan 3. If 1 and 2 are normal state, check the amount of refrigerant and supply proper amount of refrigerant

(7) Air is present in refrigeration system.

Condition: Cooling system does not function.

NOTE: These gauge indications occur when the refrigeration system opens and the refrigerant is charged without vacuum purging.

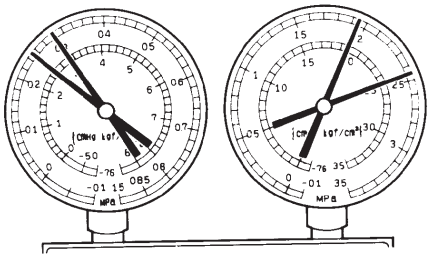

I022122E06

Symptom	Probable Cause	Diagnosis	Corrective Actions
• Pressure is too high on both low and high pressure sides • The low pressure piping is too hot to touch • Bubbles can be seen through sight glass	Air in system	• Air present in refrigeration system • Insufficient vacuum purging	1. Check compressor oil to see if it is dirty or insufficient 2. Evacuate the system and recharge it with new or purified refrigerant

(8) Expansion valve malfunction

Condition: Insufficient cooling

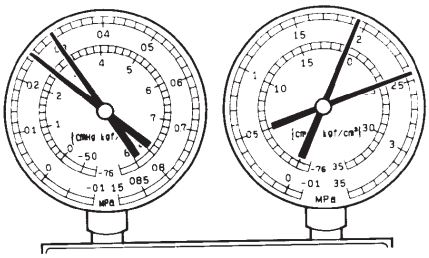

I022123E05

Symptom	Probable Cause	Diagnosis	Corrective Actions
• Pressure is too high on both low and high pressure sides • Frost or a large amount of condensation on piping on low pressure side	Expansion valve may be sticking	• Excessive refrigerant in low pressure piping • Expansion valve opened too wide	Check expansion valve

(9) Insufficient compressor compression

Condition: Insufficient cooling

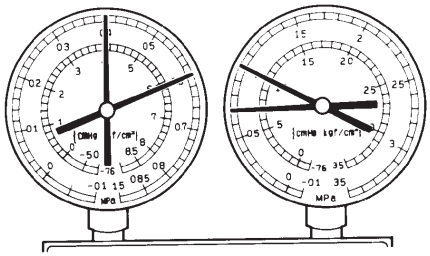

I022124E05

Symptom	Probable Cause	Diagnosis	Corrective Actions
• Pressure is too high both on low and high pressure sides • Pressure is too low on high pressure side	Internal leak in compressor	• Low compression • Leak from a damaged valve, or parts may be broken	Replace compressor

Gauge readings (Reference)

Pressure on low pressure side

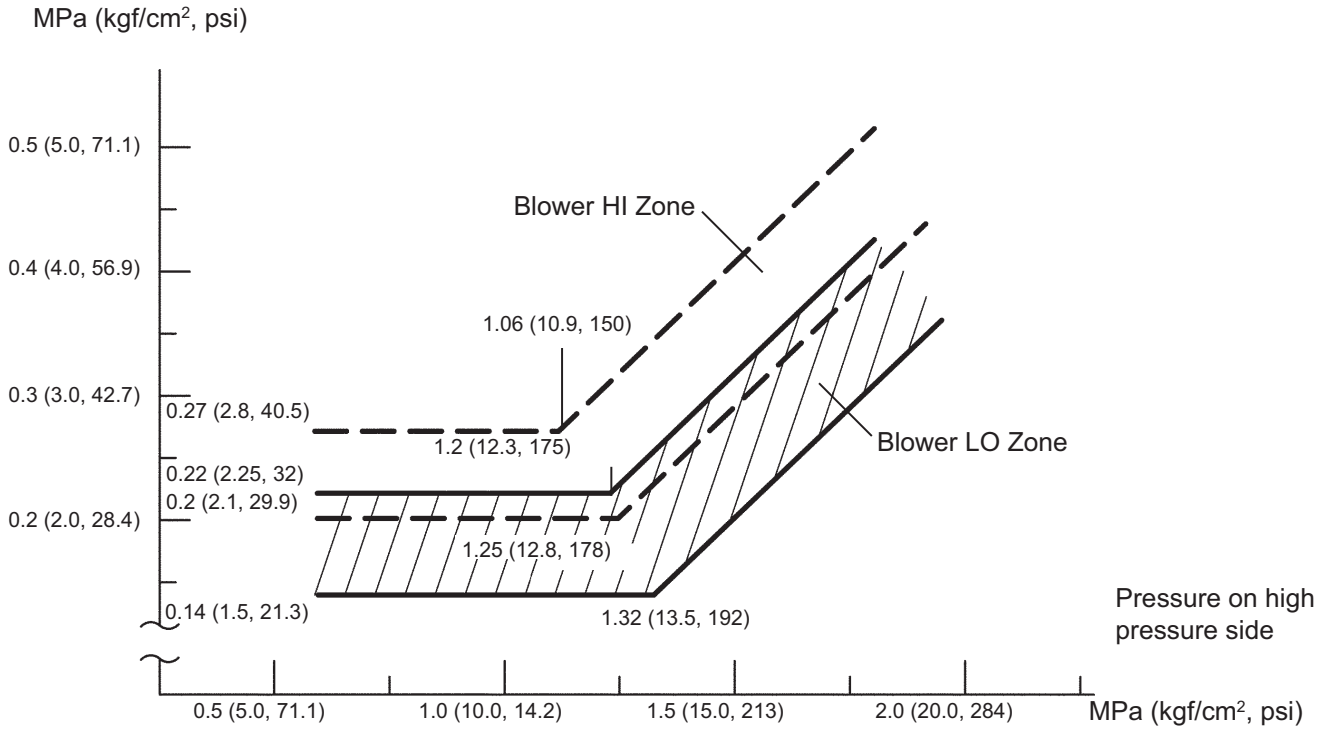

I030081E07

REPLACEMENT

1. RECOVER REFRIGERANT FROM REFRIGERATION SYSTEM

(a) Start up the engine.
(b) Turn the A/C switch on.
(c) Operate the cooler compressor at an engine speed of approximately 1,000 rpm for 5 to 6 minutes to circulate the refrigerant. This causes most of the compressor oil from the various components of the A/C system to collect in the A/C compressor.
(d) Stop the engine.
(e) Recover the refrigerant from the A/C system using a refrigerant recovery unit.

2. CHARGE WITH REFRIGERANT

(a) Perform vacuum purging using a vacuum pump.
(b) Using SST charge with refrigerant HFC-134a (R134a).

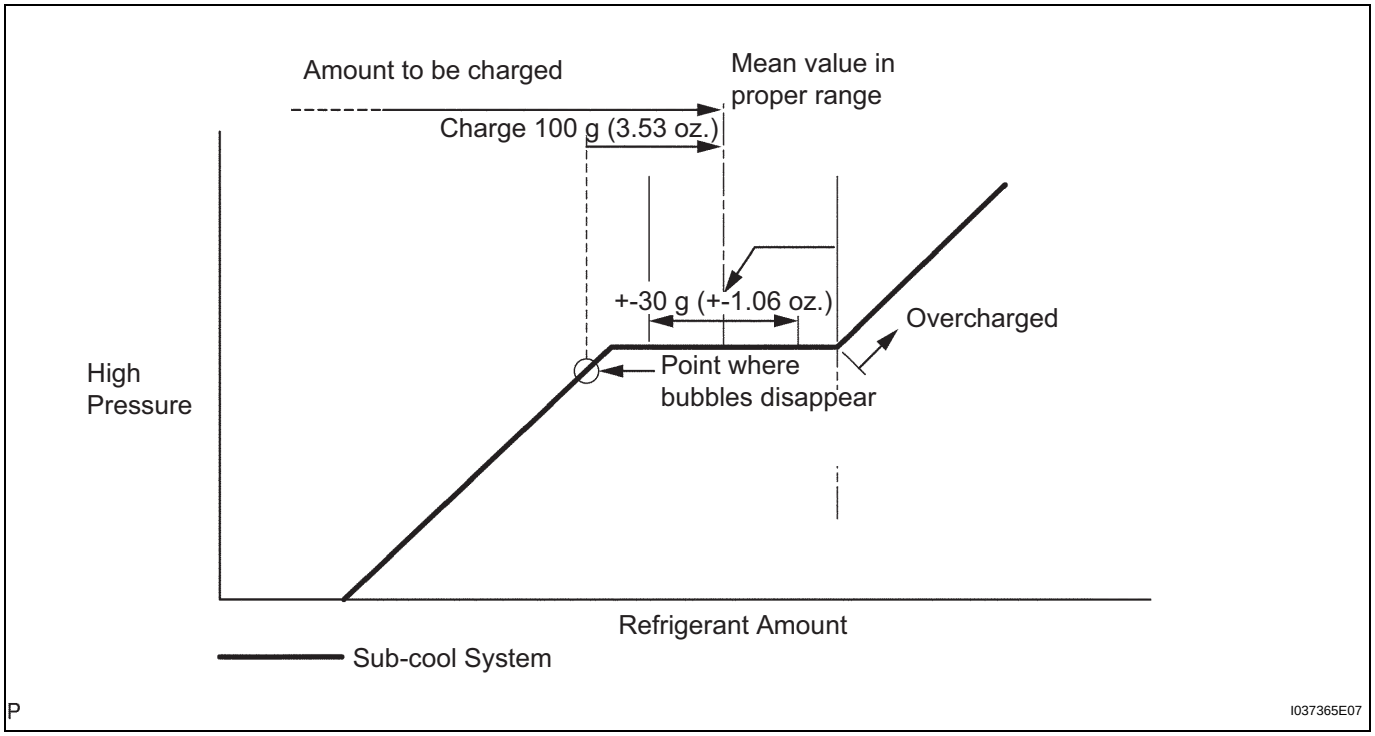

Standard:
470 to 530 g (16.6 to 18.7 oz.)

SST 07110-58060 (07117-58060, 07117-58070, 07117-58080, 07117-58090, 07117-78050, 07117-88060, 07117-88070, 07117-88080)

NOTICE:

- **Do not turn the A/C on before charging with refrigerant. Doing so will cause the cooler compressor to work without refrigerant, resulting in overheating of the cooler compressor.**

- **Approximately 100 g (3.53 oz.) of refrigerant may need to be charged after bubbles disappear.**
  The refrigerant amount should be checked by quantity, not with the sight glass.

HINT:
Ensure that sufficient refrigerant is available to recharge the system when using a refrigerant recovery unit. Refrigerant recovery units are not always able to recover 100 % of the refrigerant from the A/C system.

3. WARM UP COMPRESSOR

(a) Keep the A/C switch on for at least 2 minutes to warm up the compressor.
NOTICE:
Be sure to warm up the compressor when turning the A/C on after removing and installing the cooler refrigerant lines (including the compressor), to prevent damage to the compressor.

4. CHECK FOR LEAKAGE OF REFRIGERANT

(a) After recharging with refrigerant gas, check for leakage of refrigerant gas using a halogen leak detector.

(b) Carry out the test as follows:
- Turn the engine switch off.
- Secure good ventilation (the gas leak detector may react to volatile gases which are not refrigerant, such as evaporated gasoline and exhaust gas).
- Repeat the test 2 or 3 times.
- Make sure that there is some refrigerant remaining in the refrigeration system.
  When the compressor is off: approx. 392 to 588 kPa (4 to 6 kgf/cm^2, 57 to 85 psi)

(c) Using a gas leak detector, check for leakage from the refrigerant lines.

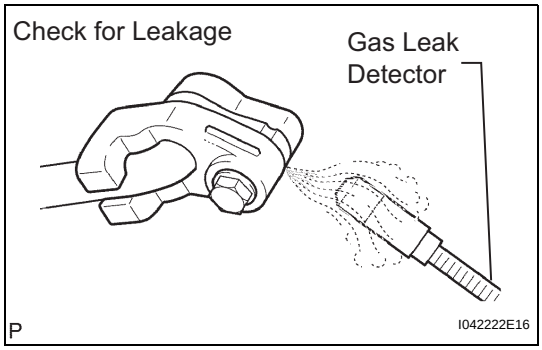

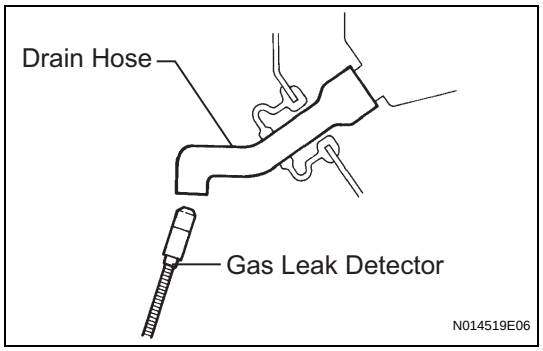

(d) Bring the gas leak detector close to the drain hose with the detector's power off, and then turn the detector on.
HINT:
- After the blower motor has stopped, let the cooling unit stand for more than 15 minutes.
- Bring the gas leak detector sensor under the drain hose.
- When bringing the gas leak detector close to the drain hose, make sure that the gas leak detector does not react to volatile gases.
  If it is not possible to avoid interference from volatile gases, the vehicle should be lifted up to allow testing.

(e) If a gas leak is not detected from the drain hose, remove the blower motor control from the cooling unit. Insert the gas leak detector sensor into the unit and perform the test.

(f) Disconnect the pressure switch connector and leave it for approximately 20 minutes. Bring the gas leak detector close to the pressure switch and perform the test.

CUSTOMIZE PARAMETERS

HINT:
The following items can be customized.

NOTICE:

- **When the customer requests a change in a function, first make sure that the function can be customized.**
- **Be sure to make a note of the current settings before customizing.**
- **When troubleshooting a function, first make sure that the function is set to the default setting.**

AIR CONDITIONER:

DISPLAY (ITEM)	DEFAULT	CONTENTS	SETTING
SET TEMP SHIFT (Set Temperature Shift)	NORMAL	To shift the temperature against the displayed temperature	+2 C / +1 C / NORMAL / -1 C / -2 C
AIR INLET MODE (Air Inlet Mode)	AUTO	In case of turning the A/C ON when you desire to make the compartment cool down quickly, this is the function to change the mode automatically to RECIRCULATION mode	MANUAL / AUTO
COMPRESSOR MODE (Compressor Mode)	AUTO	Function to turn the A/C ON automatically by pressing the AUTO button when the blower is ON and the A/C is OFF	MANUAL / AUTO
COMPRS / DEF OPER (Compressor / Air Inlet DEF Operation)	LINK	Function to turn the A/C ON automatically linked with the FRONT DEF button when the A/C is OFF	NORMAL / LINK
EVAP CTRL (Evaporator Control)	AUTO	Function to set the evaporator control to the AUTOMATIC position (AUTO) to save power, or to the coldest position (MANUAL) to dehumidify the air and to prevent the windows from fogging up	MANUAL / AUTO
GAS SENS SHIF (Emission Gas Sensor Shift)	NORMAL	Function to change the sensitivity of the exhaust gas sensor	MU MORE / MORE / LI MORE / NORMAL / LI LESS / LESS / MU LESS
BUTTON PRS BUZ	ON	Function to sound a buzzer when a button is pressed	OFF / ON
FOOT / DEF MODE (Foot / DEF Auto Mode)	ON	Function to turn the airflow from FOOT/DEF ON automatically when AUTO MODE is ON	OFF / ON
AUTO BLOW UP (Foot / DEF Automatic Blower Up Function)	ON	Function to change the blower level automatically when the defroster is ON	OFF / ON
AMBIENT TMP SFT (Ambient Temperature Shift)	NORMAL	Function to shift the ambient temperature against the displayed ambient temperature	+3 C / +2 C / +1 C / NORMAL / -1 C / -2 C / -3 C

PROBLEM SYMPTOMS TABLE

AIR CONDITIONER:

Symptom	Suspected Area	See page
All functions of the A/C system do not operate	1. IG power source circuit	AC-115
	2. Back-up power source circuit	AC-118
	3. Heater control panel power source circuit	AC-107
	4. LIN communication circuit	AC-120
	5. A/C control assembly	AC-226
	6. A/C amplifier	AC-232
Air Flow Control: No blower operation	1. Blower motor circuit	AC-101
	2. Heater control panel power source circuit	AC-107
	3. LIN communication circuit	AC-120
	4. A/C control assembly	AC-226
	5. A/C amplifier	AC-232
Air Flow Control: No blower control	1. Blower motor circuit	AC-101
	2. Heater control panel power source circuit	AC-107
	3. LIN communication circuit	AC-120
	4. A/C control assembly	AC-226
	5. A/C amplifier	AC-232
Air Flow Control: Insufficient air flow	1. Blower motor circuit	AC-101
	2. A/C amplifier	AC-232
Temperature Control: No cool air comes out	1. Refrigerant volume	AC-122
	2. Refrigerant pressure	AC-122
	3. Pressure sensor circuit	AC-71
	4. Air conditioning compressor magnetic clutch circuit	AC-109
	5. Compressor lock sensor circuit	AC-67
	6. Compressor solenoid circuit	AC-89
	7. Air mix control servo motor circuit (Driver side)	AC-87
	8. Air mix control servo motor circuit (Passenger side)	AC-80
	9. Evaporator temperature sensor circuit	AC-54
	10. Room temperature sensor circuit	AC-46
	11. Ambient temperature sensor circuit	AC-50
	12. Heater control panel power source circuit	AC-107
	13. LIN communication circuit	AC-120
	14. Expansion valve	AC-155
	15. A/C control assembly	AC-226
	16. A/C amplifier	AC-232
	17. ECM	ES-543
Temperature Control: No warm air comes out	1. Air mix control servo motor circuit (Driver side)	AC-87
	2. Air mix control servo motor circuit (Passenger side)	AC-80
	3. Evaporator temperature sensor circuit	AC-54
	4. Room temperature sensor circuit	AC-46
	5. Ambient temperature sensor circuit	AC-50
	6. A/C amplifier	AC-232

Symptom	Suspected Area	See page
Temperature Control: Output air is warmer or cooler than the set temperature or response is slow	1. Refrigerant volume	AC-122
	2. Refrigerant pressure	AC-122
	3. Solar sensor circuit (Driver side)	AC-75
	4. Solar sensor circuit (Passenger side)	AC-62
	5. Room temperature sensor circuit	AC-46
	6. Ambient temperature sensor circuit	AC-50
	7. Air mix control servo motor circuit (Driver side)	AC-87
	8. Air mix control servo motor circuit (Passenger side)	AC-80
	9. Radiator unit sub-assembly	AC-154
	10. Expansion valve	AC-155
	11. A/C amplifier	AC-232
Temperature Control: No temperature control (only Max. cool or Max. warm)	1. Air mix control servo motor circuit (Driver side)	AC-87
	2. Air mix control servo motor circuit (Passenger side)	AC-80
	3. Room temperature sensor circuit	AC-46
	4. Ambient temperature sensor circuit	AC-50
	5. Evaporator temperature sensor circuit	AC-54
	6. Solar sensor circuit (Driver side)	AC-75
	7. Solar sensor circuit (Passenger side)	AC-62
	8. A/C control assembly	AC-226
	9. A/C amplifier	AC-232
No air inlet control	1. Air inlet control servo motor circuit	AC-82
	2. A/C amplifier	AC-232
No air flow mode control	1. Air outlet control servo motor circuit	AC-84
	2. A/C amplifier	AC-232
Engine idle up does not occur, or is continuous	1. Air conditioning compressor magnetic clutch circuit	AC-109
	2. Compressor lock sensor circuit	AC-67
	3. Compressor solenoid circuit	AC-89
	4. Heater control panel power source circuit	AC-107
	5. LIN communication circuit	AC-120
	6. A/C control assembly	AC-226
	7. A/C amplifier	AC-232
	8. ECM	ES-543
Blinking of A/C indicator	1. Compressor solenoid circuit	AC-89
	2. A/C amplifier	AC-232
Diagnostic trouble codes are not recorded. Set mode is cleared when engine switch is turned off.	1. Back-up power source circuit	AC-118
	2. A/C amplifier	AC-232

TERMINALS OF ECU

1. A/C AMPLIFIER

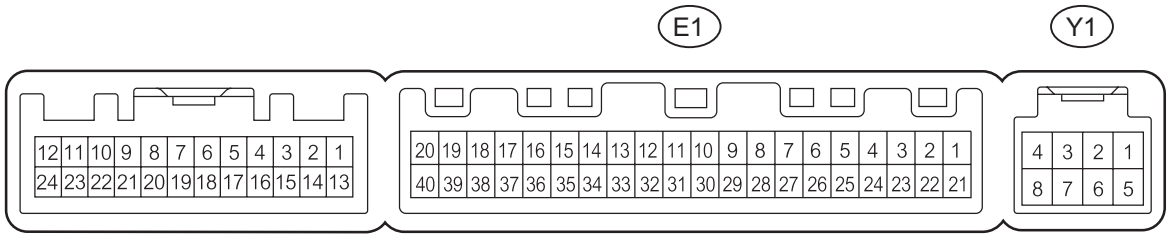

H

E124486E02

HINT:
Check from the rear of the connector while it is connected to the A/C amplifier.

Terminal No. (Symbols)	Wiring Color	Terminal Description	Condition	Specified Condition
E1-1 (IG+) - E1-14 (GND)	V - W-B	Power source (IG)	Engine switch on (IG)	10 to 14 V
E1-1 (IG+) - E1-14 (GND)	V - W-B	Power source (IG)	Engine switch off	Below 1 V
E1-2 (SOL+) - E1-14 (GND)	W - W-B	A/C compressor operation signal	Engine is running A/C switch: ON Blower switch: LO	Pulse generation (See waveform 1)
E1-5 (TAM) - E1-14 (GND)	G - W-B	A/C ambient temperature sensor signal	Engine switch on (IG) at 25°C (77°F)	1.35 to 1.75 V
E1-5 (TAM) - E1-14 (GND)	G - W-B	A/C ambient temperature sensor signal	Engine switch on (IG) at 40°C (104°F)	0.9 to 1.2 V
E1-6 (DGS) - E1-14 (GND)	LG - W-B	Exhaust gas sensor signal (HC, CO)	After 30 seconds from engine switch on (IG) and sensor is exposed to exhaust gas.	1.0 to 4.5 V
E1-7 (DGS1) - E1-14 (GND)	P - W-B	Exhaust gas sensor signal (NOx)	After 30 seconds from engine switch on (IG) and sensor is exposed to exhaust gas.	1.0 to 4.5 V
E1-8 (LOCK) - E1-14 (GND)	G - W-B	A/C compressor lock sensor signal	Engine is running Blower switch: LO A/C switch: ON	Pulse generation (See waveform 2)
E1-9 (PRE) - E1-13 (SG-2)	R - L	A/C pressure sensor signal	Start engine, Operate A/C system, Refrigerant pressure: Abnormal pressure (more than 3,140 kPa (32.0 kgf/cm^2, 455 psi))	4.74 V or higher
E1-9 (PRE) - E1-13 (SG-2)	R - L	A/C pressure sensor signal	Start engine, Operate A/C system, Refrigerant pressure: Abnormal pressure (less than 196 kPa (2.0 kgf/cm^2, 28 psi))	Below 0.76 V
E1-9 (PRE) - E1-13 (SG-2)	R - L	A/C pressure sensor signal	Start engine, Operate A/C system, Refrigerant pressure: Abnormal pressure (more than 3,140 kPa (32.0 kgf/cm^2, 455 psi) or less than 196 kPa (2.0 kgf/cm^2, 28 psi))	0.76 to 4.74 V
E1-10 (S5-3) - E1-13 (SG-2)	G - L	Power supply for A/C pressure sensor	Engine switch on (IG)	4.5 to 5.5 V
E1-11 (CANH) - E1-12 (CANL)	GR - BR	CAN communication system	CAN communication circuit	Pulse generation

Terminal No. (Symbols)	Wiring Color	Terminal Description	Condition	Specified Condition
E1-13 (SG-2) - Body ground	L - Body ground	Ground for A/C pressure sensor, A/C ambient temperature sensor, A/C lock sensor	Always	Below 1 V
E1-14 (GND) - Body ground	W-B - Body ground	Ground for main power supply	Always	Below 1 V
E1-20 (MGC) - E1-14 (GND)	B - W-B	A/C compressor magnetic clutch operation signal	Engine switch on (IG) Blower switch: LO A/C switch: OFF	10 to 14 V
E1-20 (MGC) - E1-14 (GND)	B - W-B	A/C compressor magnetic clutch operation signal	Engine switch on (IG) Blower switch: LO A/C switch: ON	Below 1 V
E1-21 (B) - E1-14 (GND)	GR - W-B	Power source (Back-up)	Always	10 to 14 V
E1-23 (BLW) - E1-14 (GND)	R - W-B	Blower motor speed control signal	Engine switch on (IG) Blower switch: ON	Pulse generation (See waveform 3)
E1-29 (TR) - E1-34 (SG-1)	BR - LG	A/C room temperature sensor signal	Engine switch on (IG) Cabin temperature at 25°C (77°F)	1.8 to 2.2 V
E1-29 (TR) - E1-34 (SG-1)	BR - LG	A/C room temperature sensor signal	Engine switch on (IG) Cabin temperature at 40°C (104°F)	1.2 to 1.6 V
E1-32 (TSP) - E1-14 (GND)	Y - W-B	A/C solar sensor signal (for Front passenger side)	Engine switch on (IG) Solar sensor is subjected to electric light.	0.8 to 4.3 V
E1-32 (TSP) - E1-14 (GND)	Y - W-B	A/C solar sensor signal (for Front passenger side)	Engine switch on (IG) Solar sensor is covered with a cloth.	Below 0.8 V
E1-33 (TSD) - E1-14 (GND)	O - W-B	A/C solar sensor signal (for Driver side)	Engine switch on (IG) Solar sensor is subjected to electric light.	0.8 to 4.3 V
E1-33 (TSD) - E1-14 (GND)	O - W-B	A/C solar sensor signal (for Driver side)	Engine switch on (IG) Solar sensor is covered with a cloth.	Below 0.8 V
E1-34 (SG-1) - Body ground	LG - Body ground	Ground for A/C room temperature sensor	Always	Below 1 V
E1-37 (LIN1) - E1-14 (GND)	GR - W-B	LIN communication signal	Engine switch on (IG)	Pulse generation
E1-38 (RDFG) - E1-14 (GND)	G - W-B	DEF relay signal	Engine switch on (IG) REAR DEF switch: ON	Below 1 V
E1-38 (RDFG) - E1-14 (GND)	G - W-B	DEF relay signal	Engine switch on (IG) REAR DEF switch: OFF	10 to 14 V
Y1-2 (BUS G) - Body ground	-	Ground for BUS IC	Always	Below 1 V
Y1-3 (BUS) - Y1-2 (BUS G)	-	BUS IC control signal	Engine switch off → on (IG)	Pulse generation
Y1-4 (B BUS) - Y1-2 (BUS G)	-	Power supply for BUS IC	Engine switch off	Below 1 V
Y1-4 (B BUS) - Y1-2 (BUS G)	-	Power supply for BUS IC	Engine switch on (IG)	10 to 14 V
Y1-5 (SG-3) - Body ground	-	Ground for evaporator temperature sensor	Always	Below 1 V
Y1-6 (TEA) - Y1-5 (SG-3)	-	A/C evaporator temperature sensor signal	Engine switch on (IG) Evaporator temperature at 0°C (32°F)	1.7 to 2.1 V
Y1-6 (TEA) - Y1-5 (SG-3)	-	A/C evaporator temperature sensor signal	Engine switch on (IG) Evaporator temperature at 15°C (59°F)	0.7 to 1.3 V

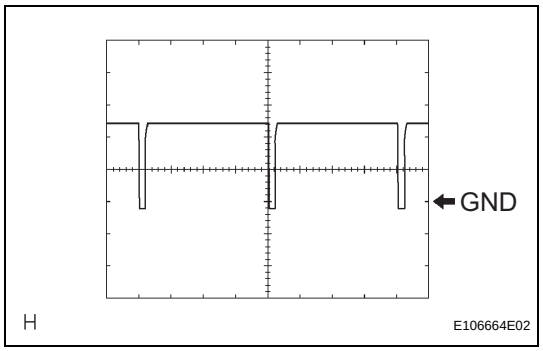

(a) Waveform 1:

Item	Contents
Terminal No. (Symbols)	E1-2 (SOL+) - E1-14 (GND)
Tool Setting	5 V/DIV., 500 μs./DIV.
Vehicle Condition	Engine is running A/C switch: ON

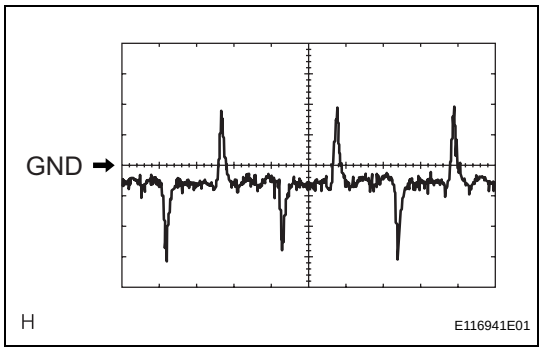

(b) Waveform 2:

Item	Contents
Terminal No. (Symbols)	E1-8 (LOCK) - E1-14 (GND)
Tool Setting	200 mV/DIV., 10 ms./DIV.
Vehicle Condition	Engine is running Blower switch: LO A/C switch: ON

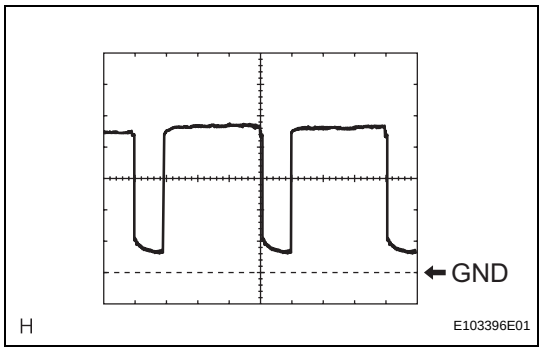

(c) Waveform 3:

Item	Contents
Terminal No. (Symbols)	E1-23 (BLW) - E1-14 (GND)
Tool Setting	1 V/DIV., 500 μs./DIV.
Vehicle Condition	Engine switch on (IG) Blower switch: ON

2. A/C CONTROL ASSEMBLY

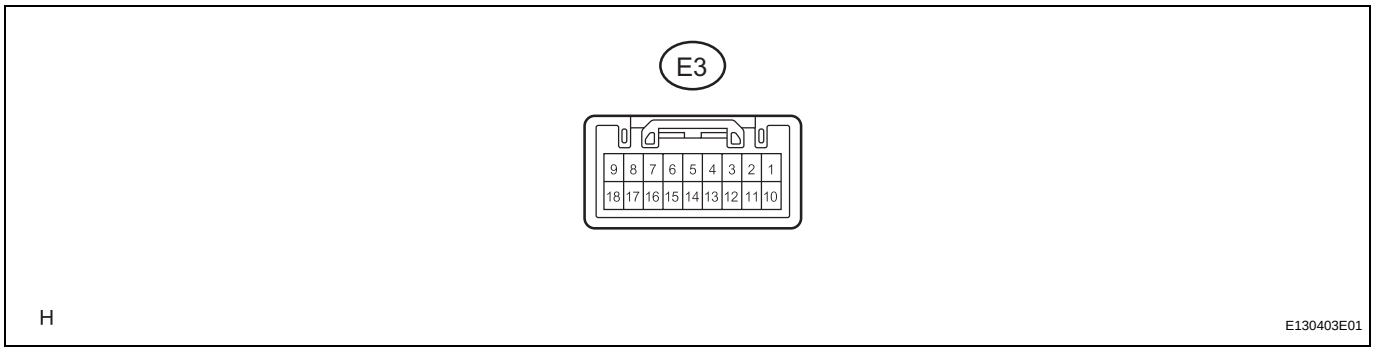

HINT:
Check from the rear of the connector while it is connected to the A/C control assembly.

Terminal No. (Symbols)	Wiring Color	Terminal Description	Condition	Specified Condition
E3-1 (+B) - E3-18 (GND)	GR - W-B	Power source (Back-up)	Always	10 to 14 V
E3-2 (IG+) - E3-18 (GND)	V - W-B	Power source (IG)	Engine switch off	Below 1 V
E3-2 (IG+) - E3-18 (GND)	V - W-B	Power source (IG)	Engine switch on (IG)	10 to 14 V
E3-10 (ACC) - E3-18 (GND)	L - W-B	Power source (ACC)	Engine switch off	Below 1 V
E3-10 (ACC) - E3-18 (GND)	L - W-B	Power source (ACC)	Engine switch on (ACC)	10 to 14 V
E3-15 (TX+) - E3-18 (GND)	GR - W-B	LIN communication circuit	Engine switch on (IG)	Pulse generation

REMOVAL

1. **RECOVER REFRIGERANT FROM REFRIGERATION SYSTEM**
   (a) Start up the engine.
   (b) Turn the A/C switch on.
   (c) Operate the cooler compressor at an engine speed of approximately 1,000 rpm for 5 to 6 minutes to circulate the refrigerant. This causes most of the compressor oil from the various components of the A/C system to collect in the A/C compressor.
   (d) Stop the engine.
   (e) Recover the refrigerant from the A/C system using a refrigerant recovery unit.
2. **ALIGN FRONT WHEELS FACING STRAIGHT AHEAD**
3. **DISCONNECT BATTERY NEGATIVE TERMINAL**
   NOTICE:
   Wait for 90 seconds after disconnecting the terminal to prevent the airbag from deploying (See page RS-1).
4. **REMOVE COOL AIR INTAKE DUCT SEAL (See page EM-22)**
5. **REMOVE HOOD HINGE COVER (for LH Side) (See page WW-38)**
6. **REMOVE HOOD HINGE COVER (for RH Side) (See page WW-39)**
7. **REMOVE ENGINE ROOM SIDE COVER LH (See page WW-39)**
8. **REMOVE ENGINE ROOM SIDE COVER RH (See page WW-39)**
9. **REMOVE AIR CLEANER CAP SUB-ASSEMBLY (See page ES-519)**
10. **REMOVE AIR CLEANER FILTER ELEMENT SUB-ASSEMBLY**
11. **REMOVE FRONT SUSPENSION UPPER CENTER BRACE (See page BR-22)**
12. **REMOVE FRONT WIPER ARM AND BLADE ASSEMBLY LH (See page WW-39)**
13. **REMOVE FRONT WIPER ARM AND BLADE ASSEMBLY RH (See page WW-39)**
14. **REMOVE COWL TOP VENTILATOR LOUVER SUB-ASSEMBLY (See page WW-40)**
15. **REMOVE WINDSHIELD WIPER MOTOR AND LINK ASSEMBLY (See page WW-40)**

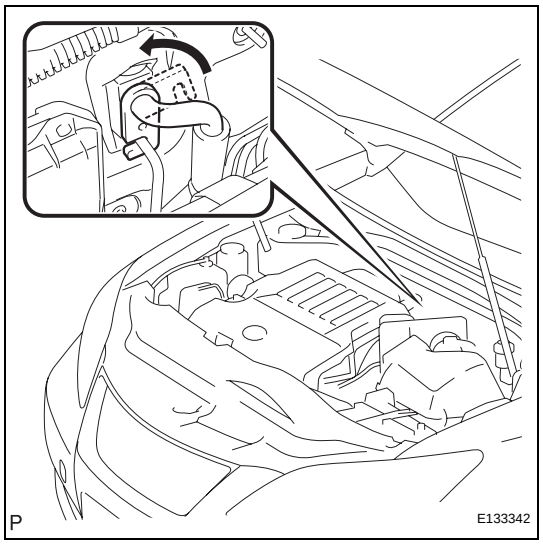

16. DISCONNECT SUCTION PIPE SUB-ASSEMBLY

(a) Remove the bolt, and slide the hook connector.

(b) Disconnect the suction pipe sub-assembly.

(c) Remove the O-ring from the suction hose sub-assembly.

NOTICE:

Seal the openings of the disconnected parts using vinyl tape to prevent entry of moisture and foreign matter.

17. DISCONNECT AIR CONDITIONER TUBE AND ACCESSORY

(a) Disconnect the air conditioner tube and accessory.

(b) Remove the O-ring from the air conditioner tube and accessory.

NOTICE:

Seal the openings of the disconnected parts using vinyl tape to prevent entry of moisture and foreign matter.

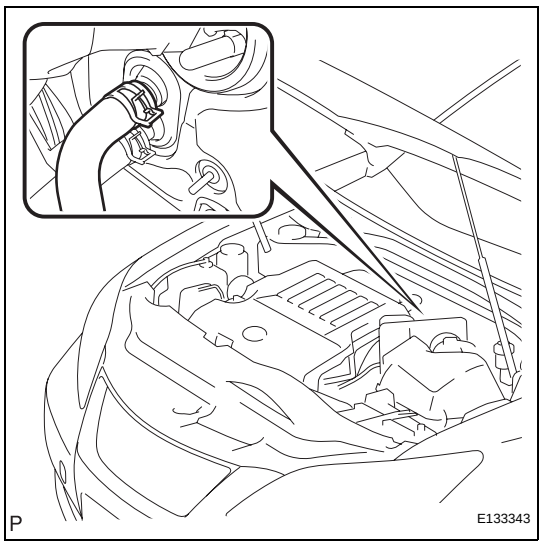

18. DISCONNECT HEATER OUTLET WATER HOSE

(a) Using pliers, grip the claws of the clip and slide the clip to disconnect the heater outlet water hose.

NOTICE:

- **Do not apply excessive force to the heater outlet water hose.**
- **Prepare a drain pan or cloth in case the coolant leaks.**

19. DISCONNECT HEATER INLET WATER HOSE

HINT:

Disconnection procedure for the heater inlet water hose is the same as that for the heater outlet water hose.

20. REMOVE LOWER NO. 3 STEERING WHEEL COVER (See page RS-367)

21. REMOVE LOWER NO. 2 STEERING WHEEL COVER (See page RS-367)

22. REMOVE STEERING PAD (See page RS-367)

23. REMOVE STEERING WHEEL ASSEMBLY (See page SR-80)

24. REMOVE FRONT DOOR SCUFF PLATE LH (See page IR-39)

25. REMOVE FRONT DOOR OPENING TRIM COVER LH (See page IR-39)

26. REMOVE SIDE INSTRUMENT PANEL LH (See page IP-12)

27. REMOVE INSTRUMENT PANEL FINISH PANEL END LH (See page IP-13)

28. REMOVE LOWER INSTRUMENT PANEL SUB-ASSEMBLY (See page IP-13)

29. REMOVE STEERING COLUMN COVER (See page IP-13)

30. **REMOVE TURN SIGNAL SWITCH ASSEMBLY WITH SPIRAL CABLE SUB-ASSEMBLY (See page SR-80)**
31. **REMOVE TILT & TELESCOPIC SWITCH (See page SR-80)**
32. **REMOVE INSTRUMENT CLUSTER FINISH PANEL SUB-ASSEMBLY (See page IP-14)**
33. **REMOVE COMBINATION METER ASSEMBLY (See page IP-14)**
34. **REMOVE NO. 1 SWITCH HOLE BASE (See page IP-14)**
35. **REMOVE INSTRUMENT PANEL FINISH PANEL END RH (See page IP-15)**
36. **REMOVE FRONT DOOR SCUFF PLATE RH (See page IR-42)**
37. **REMOVE FRONT DOOR OPENING TRIM COVER RH (See page IR-42)**
38. **REMOVE NO. 2 INSTRUMENT PANEL UNDER COVER SUB-ASSEMBLY (See page IP-15)**
39. **REMOVE SIDE INSTRUMENT PANEL RH (See page IP-15)**
40. **REMOVE FRONT PASSENGER SIDE KNEE AIRBAG ASSEMBLY (See page RS-396)**
41. **REMOVE LOWER INSTRUMENT PANEL RH (See page IP-16)**
42. **REMOVE SHIFT LEVER KNOB SUB-ASSEMBLY (See page IP-16)**
43. **REMOVE UPPER CONSOLE PANEL ASSEMBLY WITH FRONT ASH RECEPTACLE (See page IP-16)**
44. **REMOVE NO. 2 INSTRUMENT PANEL REGISTER ASSEMBLY (See page IP-17)**
45. **REMOVE INTEGRATION CONTROL PANEL WITH RADIO RECEIVER ASSEMBLY (w/o Navigation System) (See page AV-168)**
46. **REMOVE MULTI-DISPLAY WITH RADIO RECEIVER ASSEMBLY (w/ Navigation System) (See page AV-170)**
47. **REMOVE HEATER SEAT SWITCH CONSOLE BASE (w/o Seat Heater System) (See page IP-17)**
48. **REMOVE HEATER SEAT SWITCH CONSOLE BASE (w/ Seat Heater System) (See page IP-18)**
49. **REMOVE CONSOLE BOX POCKET (See page IP-18)**
50. **REMOVE CONSOLE BOX CARPET (See page IP-18)**
51. **REMOVE CONSOLE REAR END PANEL SUB-ASSEMBLY (See page IP-19)**

52. **REMOVE REAR CONSOLE BOX ASSEMBLY (See page IP-19)**
53. **REMOVE FRONT PILLAR GARNISH LH (See page IR-39)**
54. **REMOVE NO. 1 INSTRUMENT PANEL SPEAKER PANEL SUB-ASSEMBLY (See page IP-20)**
55. **REMOVE FRONT NO. 2 SPEAKER ASSEMBLY (for LH Side) (See page AV-184)**
56. **REMOVE NO. 1 INSTRUMENT PANEL REGISTER ASSEMBLY (See page IP-20)**
57. **REMOVE FRONT PILLAR GARNISH RH (See page IR-42)**
58. **REMOVE NO. 2 INSTRUMENT PANEL SPEAKER PANEL SUB-ASSEMBLY (See page IP-21)**
59. **REMOVE FRONT NO. 2 SPEAKER ASSEMBLY (for RH Side) (See page IP-21)**
60. **REMOVE NO. 3 INSTRUMENT PANEL REGISTER ASSEMBLY (See page IP-21)**
61. **REMOVE NO. 1 SPEAKER HOLE COVER (See page IP-21)**
62. **REMOVE FRONT STEREO COMPONENT SPEAKER ASSEMBLY (See page AV-188)**
63. **REMOVE NO. 1 INSTRUMENT PANEL MOUNTING BRACKET (See page IP-22)**
64. **REMOVE PUSH START SWITCH (See page IP-22)**
65. **DISCONNECT INSTRUMENT PANEL WIRE ASSEMBLY (See page RS-414)**
66. **REMOVE ROOM TEMPERATURE SENSOR (See page AC-214)**
67. **REMOVE INSTRUMENT PANEL SAFETY PAD ASSEMBLY (w/o DVD Player) (See page IP-22)**
68. **REMOVE INSTRUMENT PANEL SAFETY PAD ASSEMBLY (w/ DVD Player) (See page IP-24)**

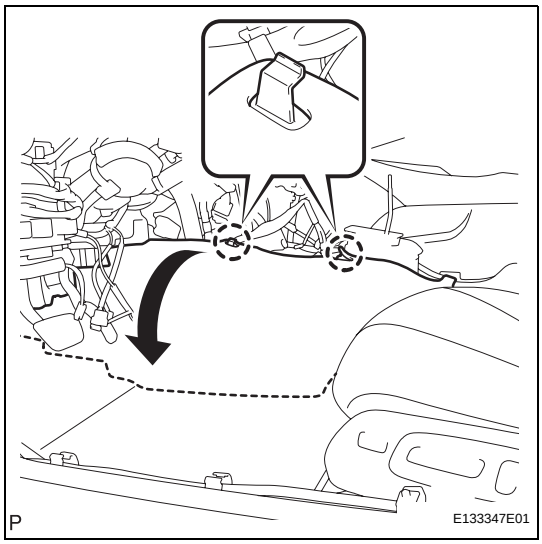

69. REMOVE FLOOR CARPET BRACKET LH

(a) Release the 2 claws.
(b) Turn back the floor carpet.

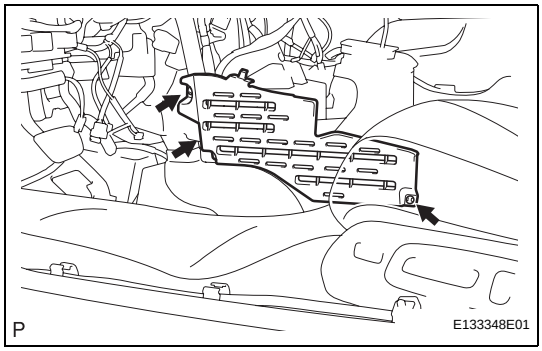

(c) Remove the 3 clips.
(d) Remove the floor carpet bracket LH.

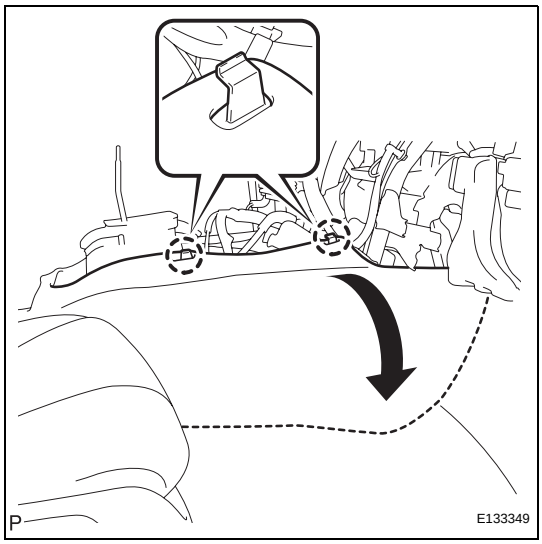

70. REMOVE FLOOR CARPET BRACKET RH

(a) Release the 2 claws.
(b) Turn back the floor carpet.

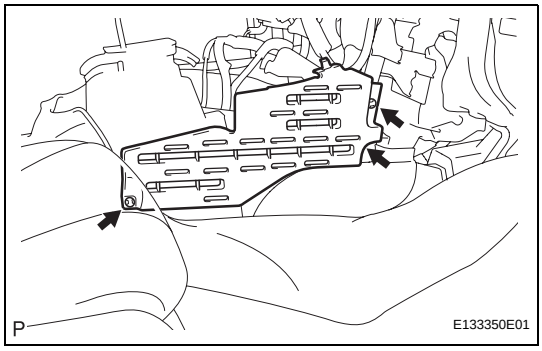

(c) Remove the 3 clips.
(d) Remove the floor carpet bracket RH.

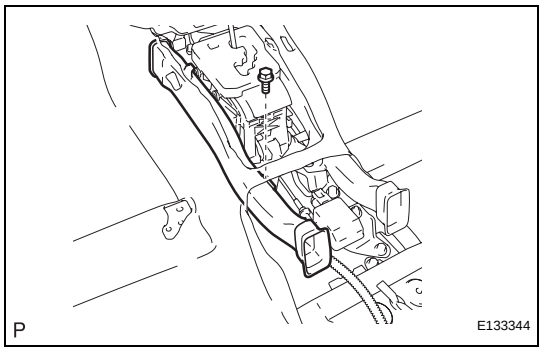

71. REMOVE NO. 2 CONSOLE BOX DUCT

(a) Remove the bolt and No. 2 console box duct.

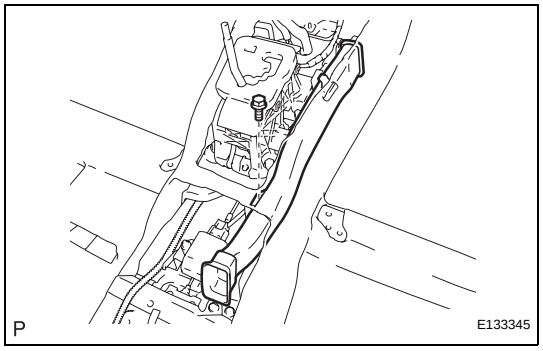

72. REMOVE NO. 3 CONSOLE BOX DUCT

(a) Remove the bolt and No. 3 console box duct.

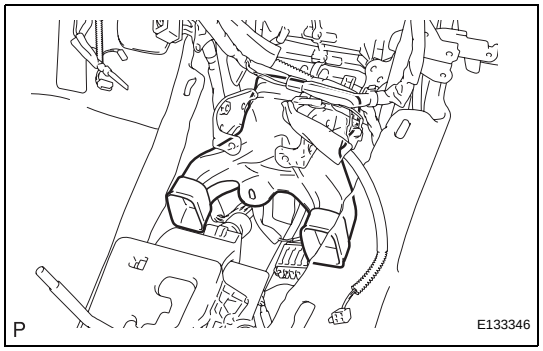

73. REMOVE NO. 1 CONSOLE BOX DUCT

(a) Remove the No. 1 console box duct.

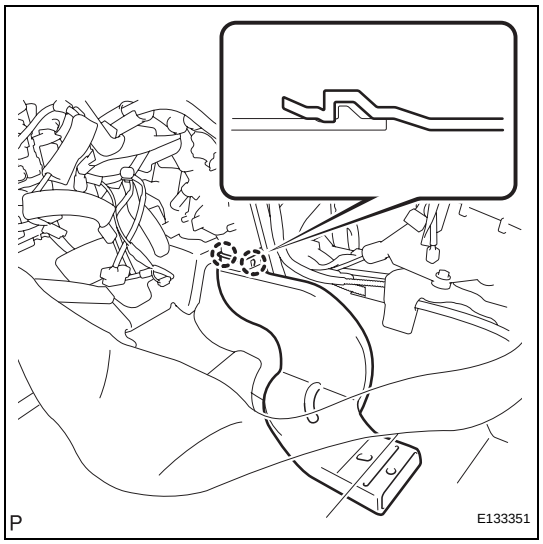

74. REMOVE REAR NO. 2 AIR DUCT

(a) Release the 2 claws and remove the rear No. 2 air duct.

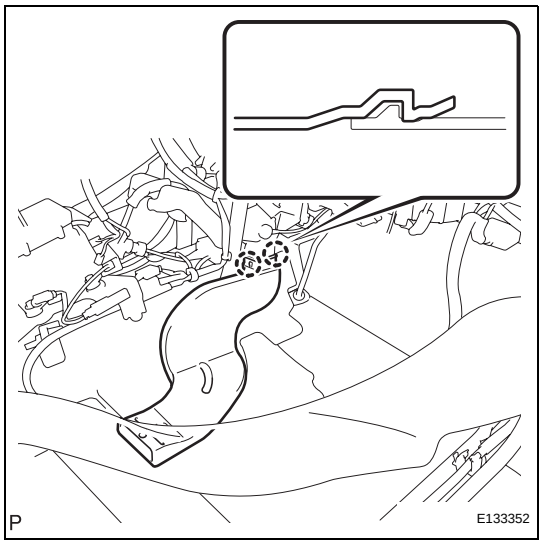

75. REMOVE REAR NO. 1 AIR DUCT

(a) Release the 2 claws and remove the rear No. 1 air duct.

76. REMOVE NO. 1 AIR DUCT SUB-ASSEMBLY (See page SR-81)

77. SEPARATE STEERING INTERMEDIATE SHAFT ASSEMBLY (See page SR-81)

78. REMOVE STEERING COLUMN ASSEMBLY (See page SR-82)

79. REMOVE AIR CONDITIONING AMPLIFIER ASSEMBLY (See page AC-232)

80. REMOVE INSTRUMENT PANEL REINFORCEMENT ASSEMBLY

(a) Remove the 24 clamps, disconnect the 11 connectors, and then disconnect the wire harness.

(b) Remove the 8 nuts, 7 bolts, and junction block.

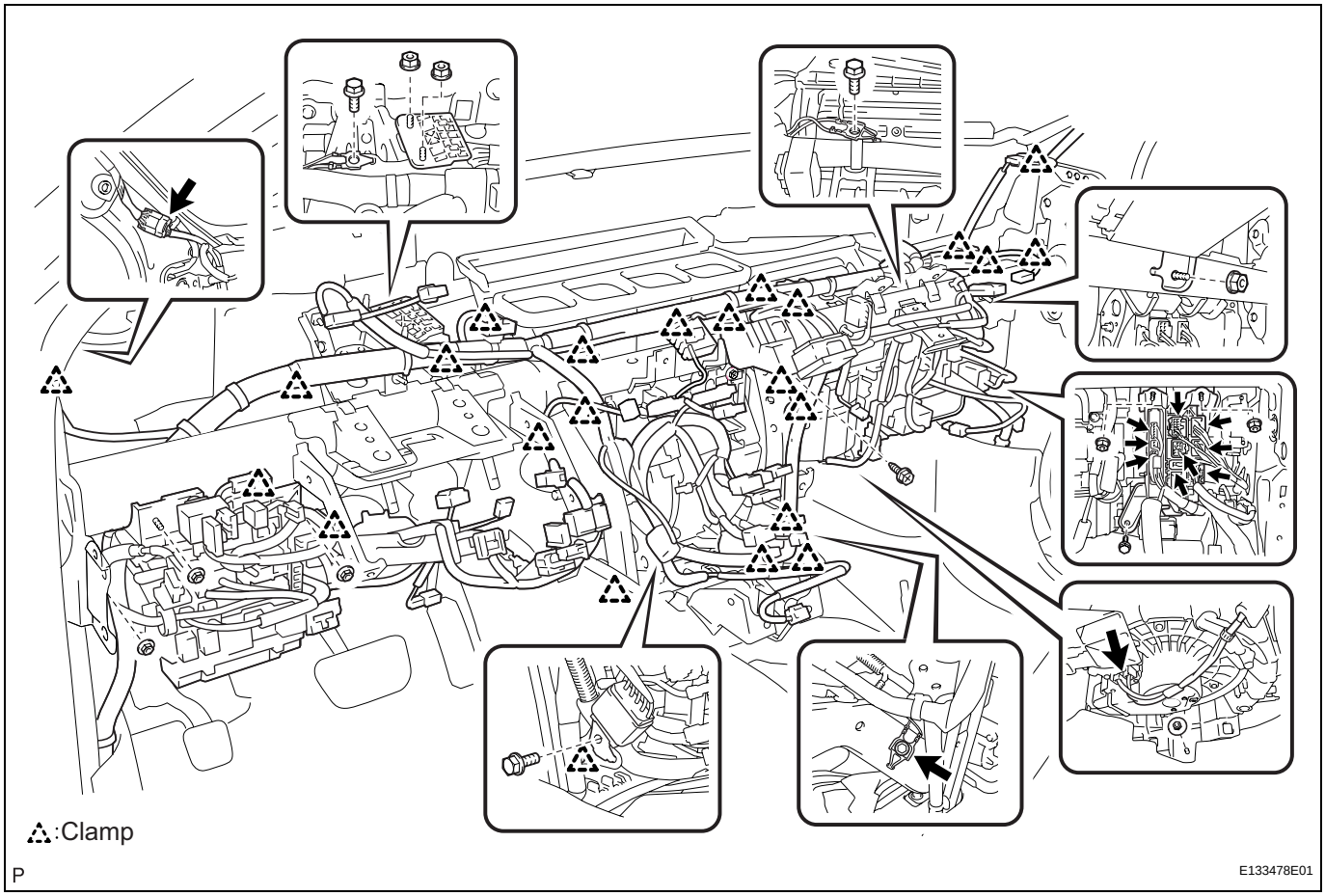

(c) Remove the cap and bolt from the engine compartment side.

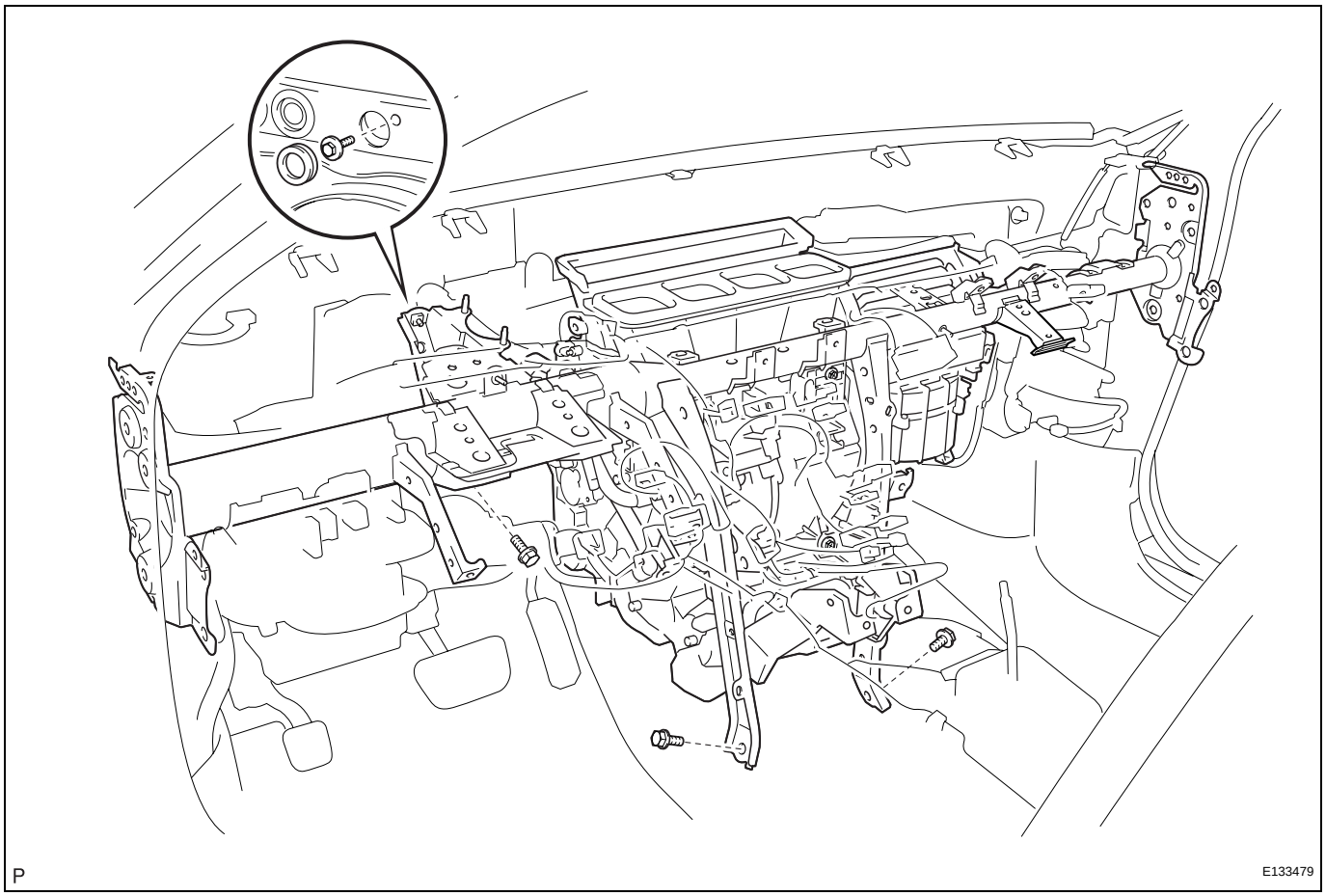

(d) Remove the 3 bolts and nut.

(e) Using a "TORX" socket wrench (T40), remove the 5 "TORX" bolts.

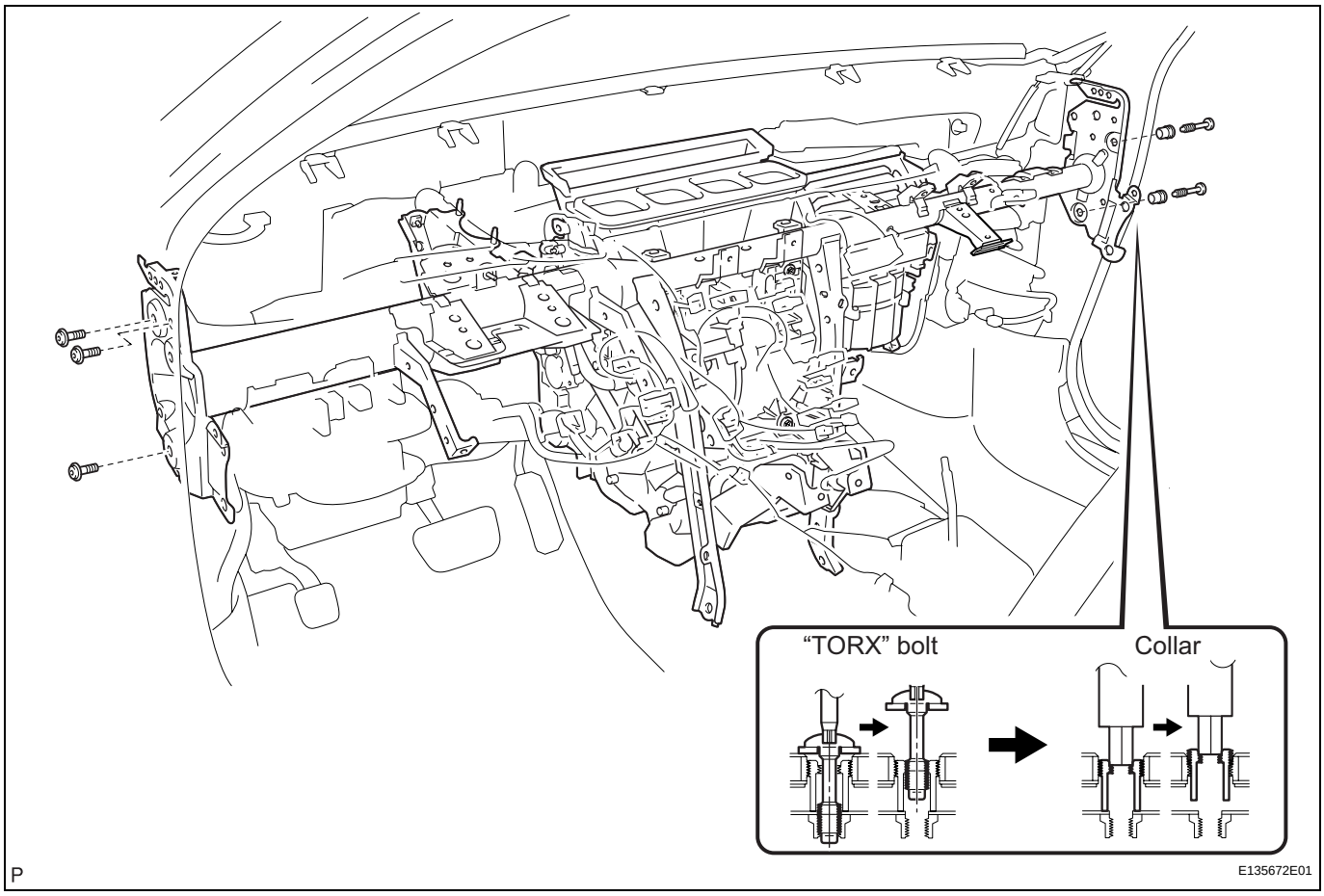

HINT:
The "TORX" bolts on the passenger side can be removed with the collars for adjustment.

(f) Using a hexagon wrench 12 mm, remove the 2 collars and instrument panel reinforcement assembly with the air conditioner unit assembly.

(g) Remove the 3 bolts, 2 screws, and instrument panel reinforcement assembly.

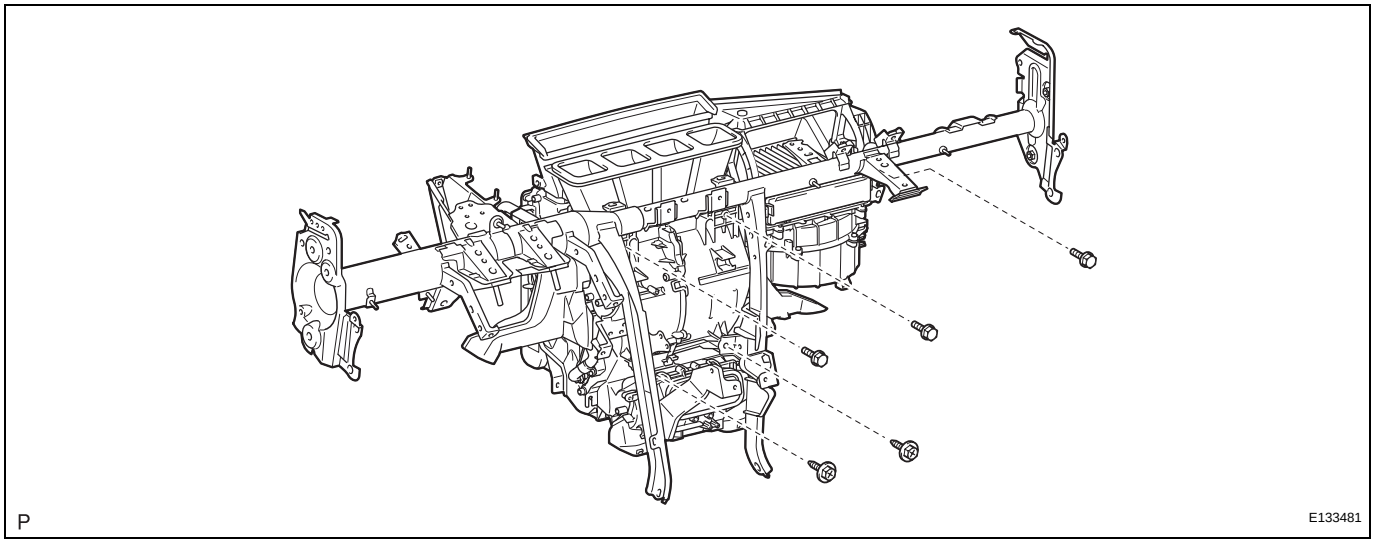

DISASSEMBLY

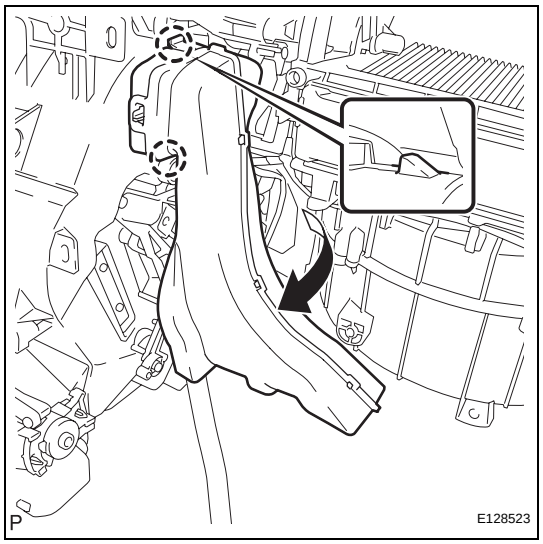

1. REMOVE NO. 2 AIR DUCT SUB-ASSEMBLY

(a) Release the 2 claws and remove the No. 2 air duct sub-assembly as shown in the illustration.

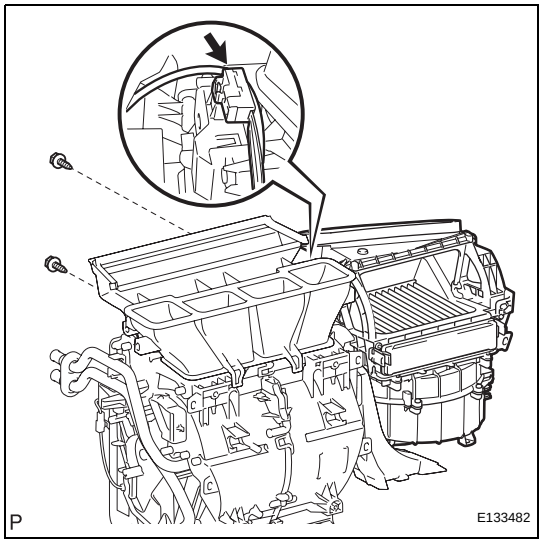

2. REMOVE BLOWER ASSEMBLY

(a) Disconnect the connector.

(b) Remove the 2 screws and blower assembly.

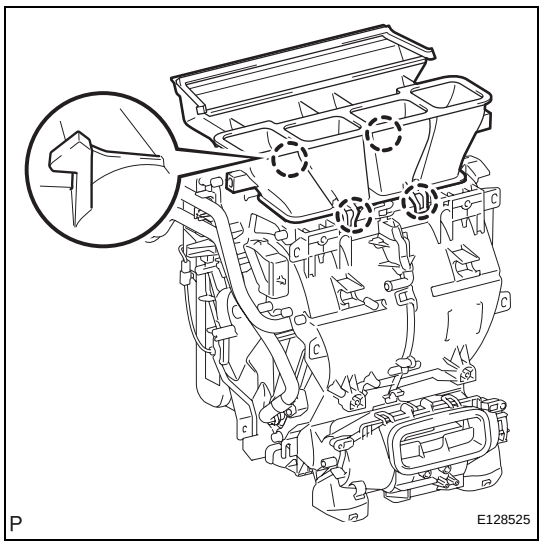

3. REMOVE NO. 6 HEATER TO REGISTER DUCT ASSEMBLY

(a) Release the 4 claws and remove the No. 6 heater to register duct assembly.

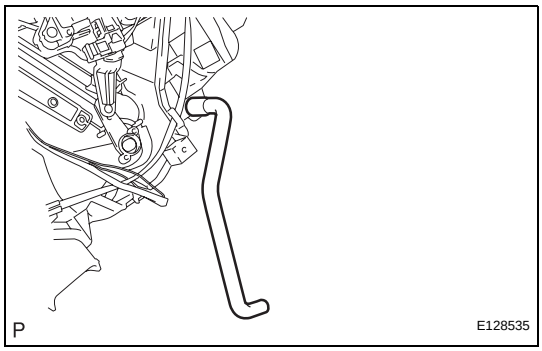

4. REMOVE DRAIN COOLER HOSE

(a) Remove the drain cooler hose from the air conditioning radiator assembly.

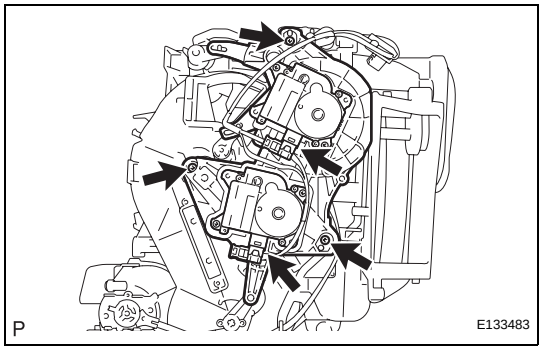

5. REMOVE AIR OUTLET CONTROL SERVO MOTOR

(a) Disconnect the 2 connectors and remove the air conditioner harness.

(b) Remove the 3 screws and then remove the air outlet control servo motor.

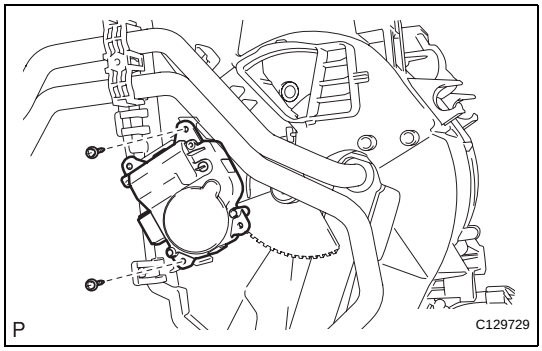

6. REMOVE AIR MIX CONTROL SERVO MOTOR

(a) Remove the 2 screws and air mix control servo motor.

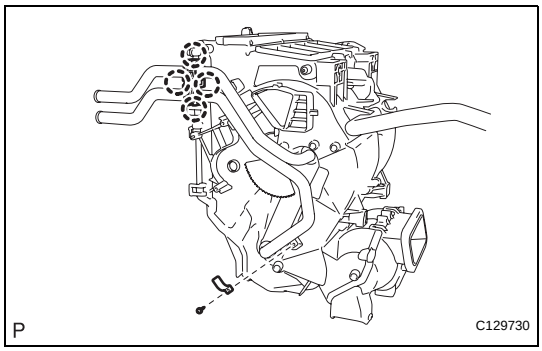

7. REMOVE HEATER RADIATOR UNIT SUB-ASSEMBLY

(a) Remove the screw and clamp.

(b) Release the 4 claws and remove the clamp.

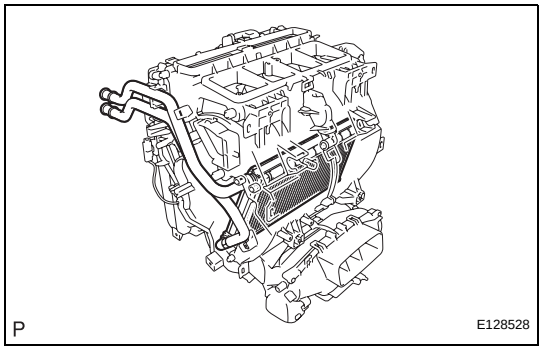

(c) Remove the heater radiator unit sub-assembly from the air conditioning radiator assembly.

NOTICE:

Prepare a drain pan or cloth in case the cooling water leaks.

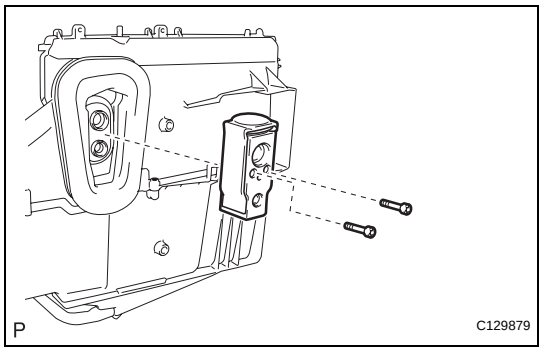

8. REMOVE COOLER EXPANSION VALVE

(a) Using a 4 mm hexagon wrench, remove the 2 hexagon bolts and cooler expansion valve.

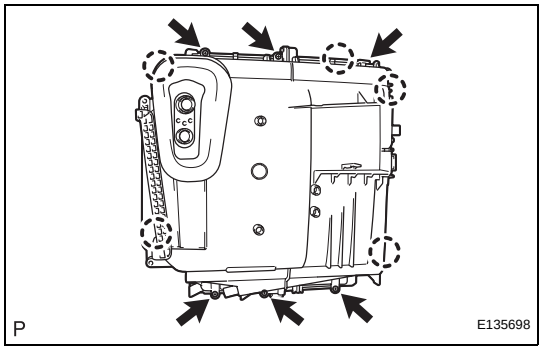

9. REMOVE NO. 1 COOLER EVAPORATOR SUB-ASSEMBLY

(a) Remove the 6 screws, release the 5 claws, and remove the plate cover.

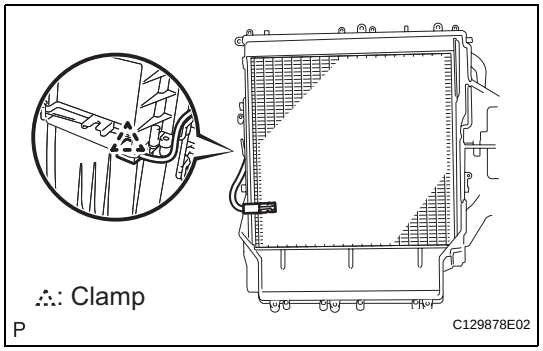

(b) Remove the clamp and No. 1 cooler thermistor.

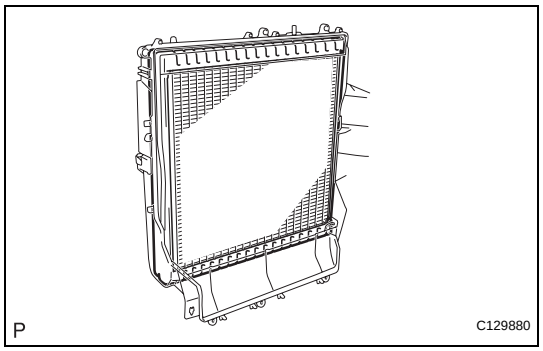

(c) Remove the No. 1 cooler evaporator sub-assembly.

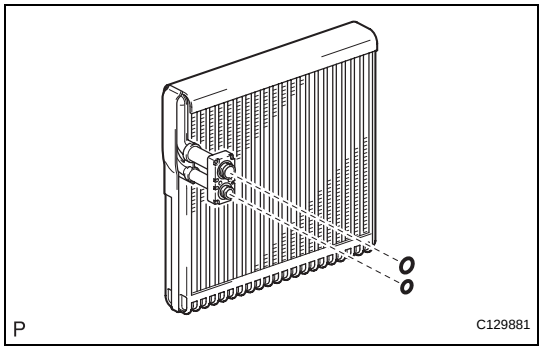

(d) Remove the 2 O-rings from the No. 1 cooler evaporator sub-assembly.

REASSEMBLY

1. INSTALL NO. 1 COOLER THERMISTOR

(a) If using a new evaporator:

(1) Install the No. 1 cooler thermistor to the evaporator as shown in the illustration.

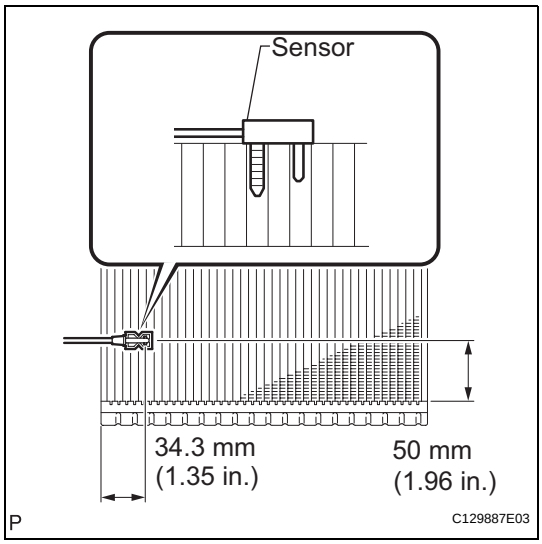

(b) If reusing the evaporator:

(1) Install the No. 1 cooler thermistor to the evaporator as shown in the illustration.

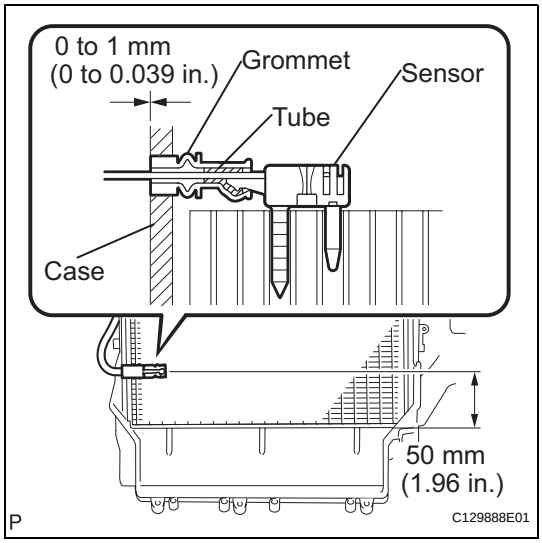

2. INSTALL NO. 1 COOLER EVAPORATOR SUB-ASSEMBLY

(a) Sufficiently apply compressor oil to 2 new O-rings and the fitting surfaces.

(b) Install the 2 O-rings to the No. 1 cooler evaporator sub-assembly.

Compressor oil:
ND-OIL 8 or equivalent

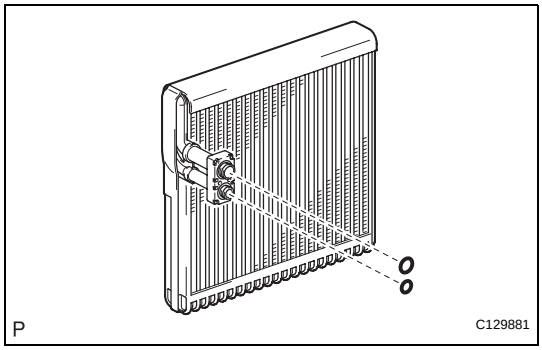

(c) Install the No. 1 cooler evaporator sub-assembly.

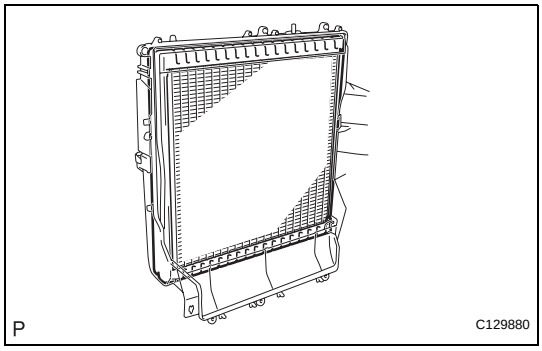

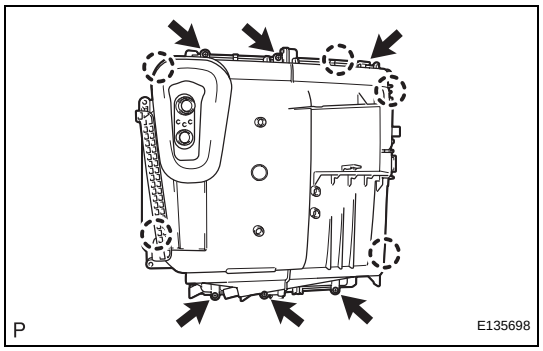

(d) Engage the 5 claws and install the plate cover with the 6 screws.

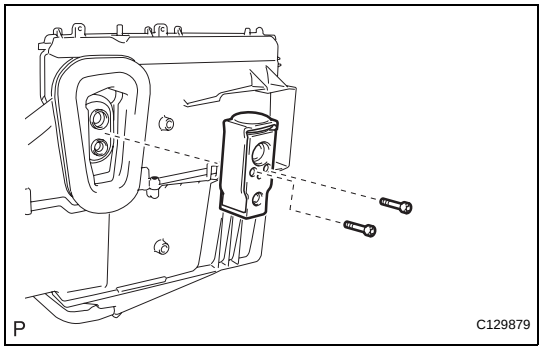

3. INSTALL COOLER EXPANSION VALVE

(a) Using a 4 mm hexagon wrench, install the cooler expansion valve with the 2 hexagon bolts.
Torque: 3.5 N*m (35 kgf*cm, 30 in.*lbf)

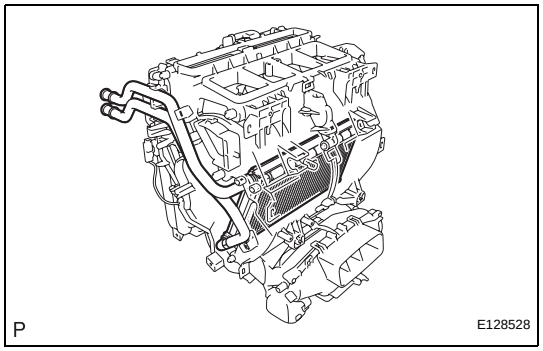

4. INSTALL HEATER RADIATOR UNIT SUB-ASSEMBLY

(a) Install the heater radiator unit sub-assembly to the air conditioner radiator assembly.

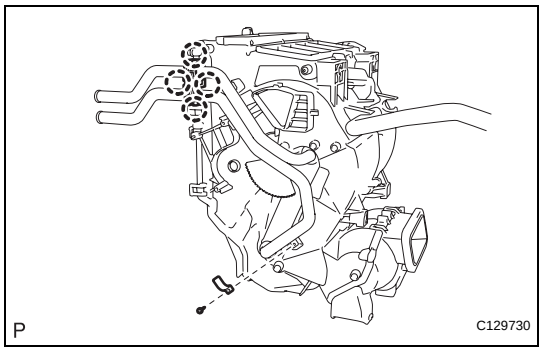

(b) Install the clamp with the screw.
(c) Engage the 4 claws and install the heater clamp.

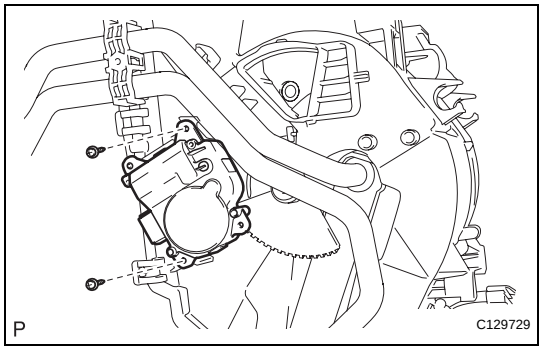

5. INSTALL AIR MIX CONTROL SERVO MOTOR

(a) Install the air mix control servo motor with the 2 screws.

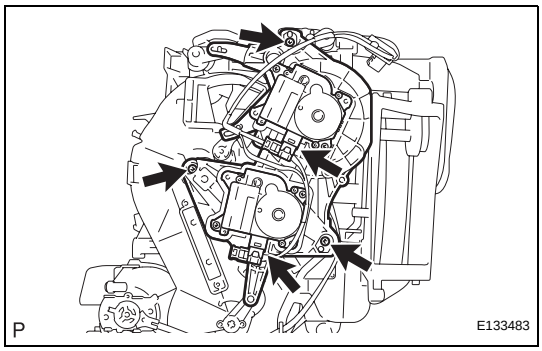

6. INSTALL AIR OUTLET CONTROL SERVO MOTOR

(a) Install the air outlet control servo motor with the 3 screws.

(b) Connect the 2 connectors and install the air conditioner harness.

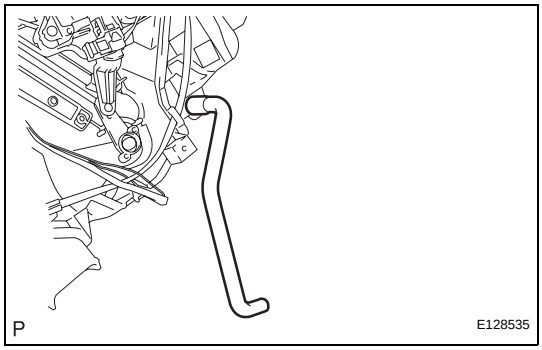

7. INSTALL DRAIN COOLER HOSE

(a) Install the drain cooler hose to the air conditioner radiator assembly.

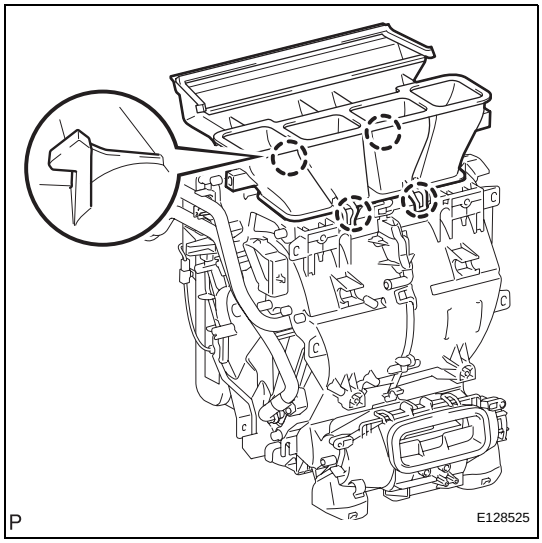

8. INSTALL NO. 6 HEATER TO REGISTER DUCT ASSEMBLY

(a) Engage the 4 claws to install the No. 6 heater to register duct assembly.

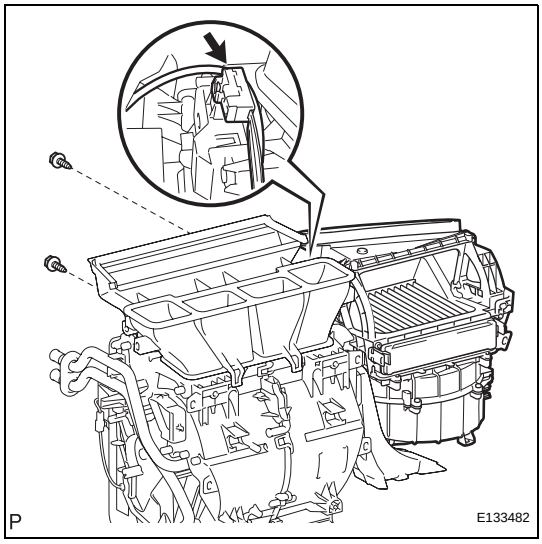

9. INSTALL BLOWER ASSEMBLY

(a) Install the blower assembly with the 2 screws.

(b) Connect the connector.

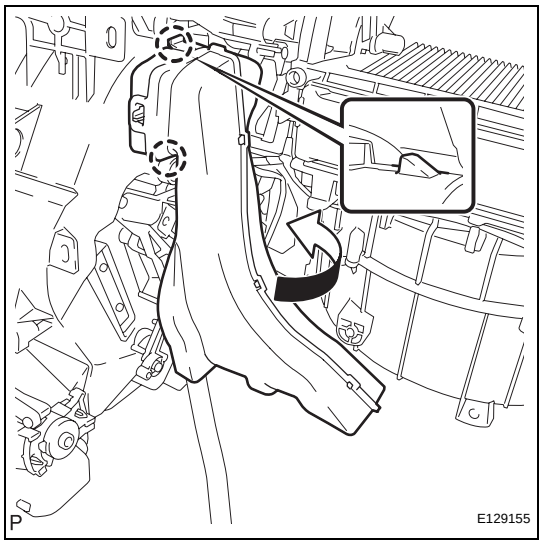

10. INSTALL NO. 2 AIR DUCT SUB-ASSEMBLY

(a) Engage the 2 claws to install the No. 2 air duct sub-assembly.

INSTALLATION

1. INSTALL INSTRUMENT PANEL REINFORCEMENT ASSEMBLY

(a) Install the conditioner unit assembly to the instrument panel reinforcement assembly with the 2 screws and 3 bolts.

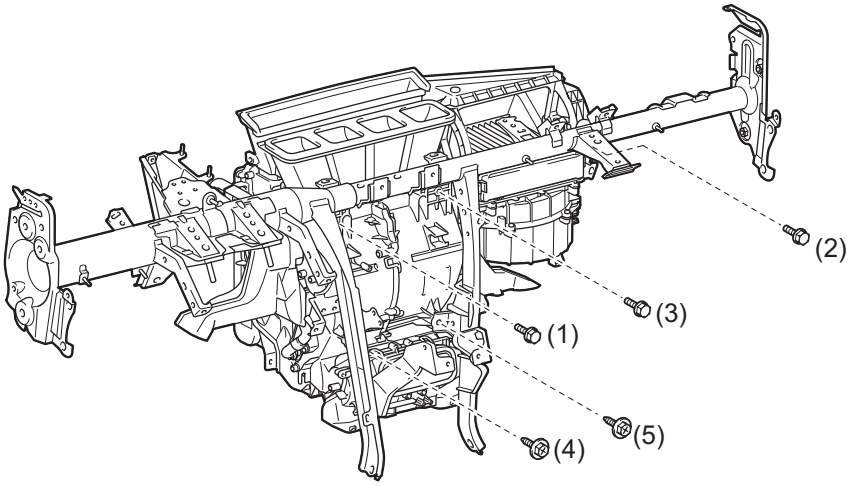

Torque: 9.8 N*m (100 kgf*cm, 87 in.*lbf)
NOTICE:
Tighten the bolts and screws in the order shown in the illustration to install the air conditioner unit assembly.

(b) Driver seat:

(1) Using a "TORX" socket wrench (T40), install the instrument panel reinforcement assembly with the 3 "TORX" bolts.

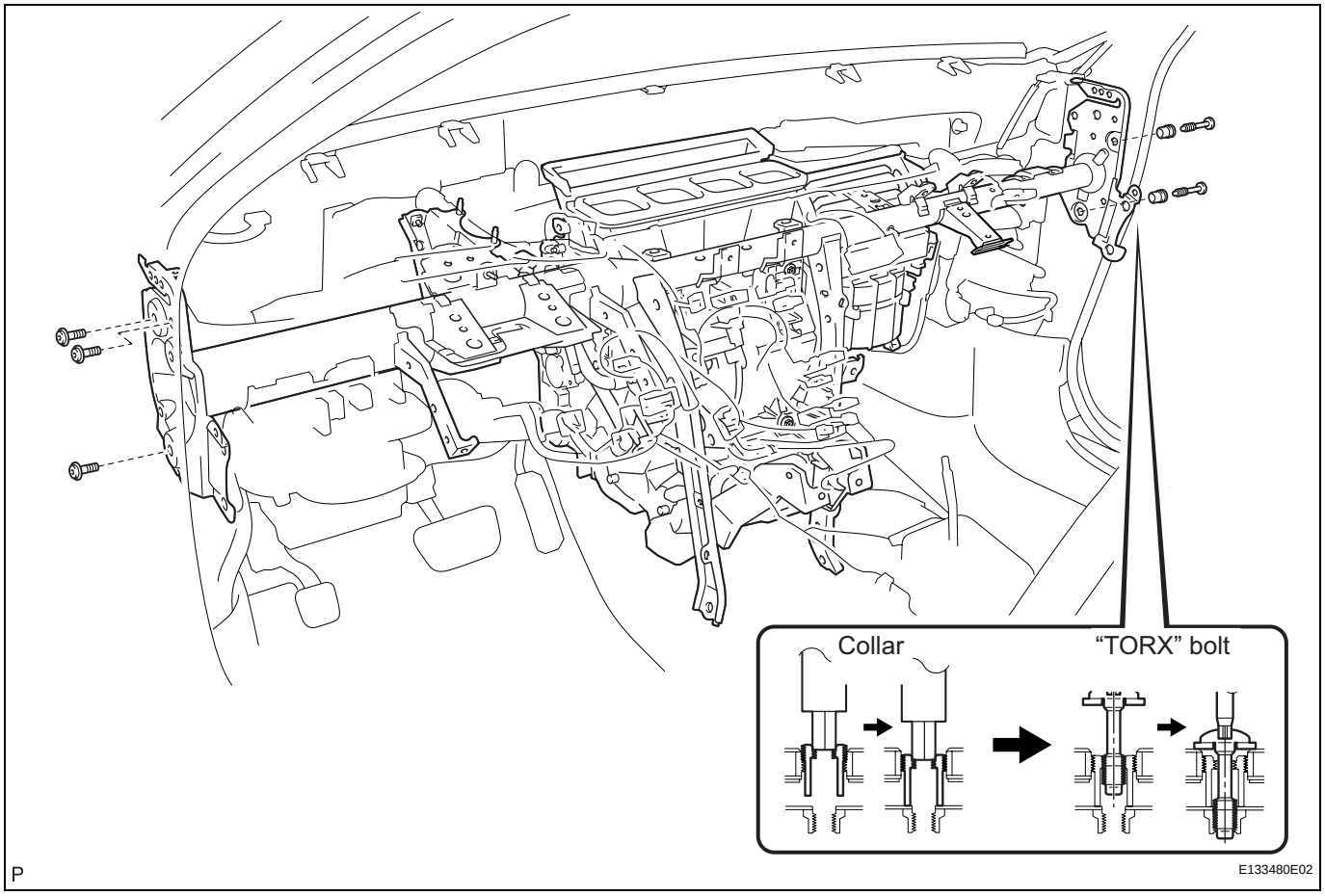

Torque: 17 N*m (173 kgf*cm, 13 ft.*lbf)

(c) Passenger seat:

(1) Using a 12 mm hexagon wrench, adjust the position of the 2 collars.
Torque: 6.0 N*m (61 kgf*cm, 53 in.*lbf)

(2) Using a "TORX" socket wrench (T40), install the instrument panel reinforcement assembly with the 2 "TORX" bolts.
Torque: 20 N*m (204 kgf*cm, 15 ft.*lbf)

(d) Install the instrument panel reinforcement assembly with the 3 bolts and nut.

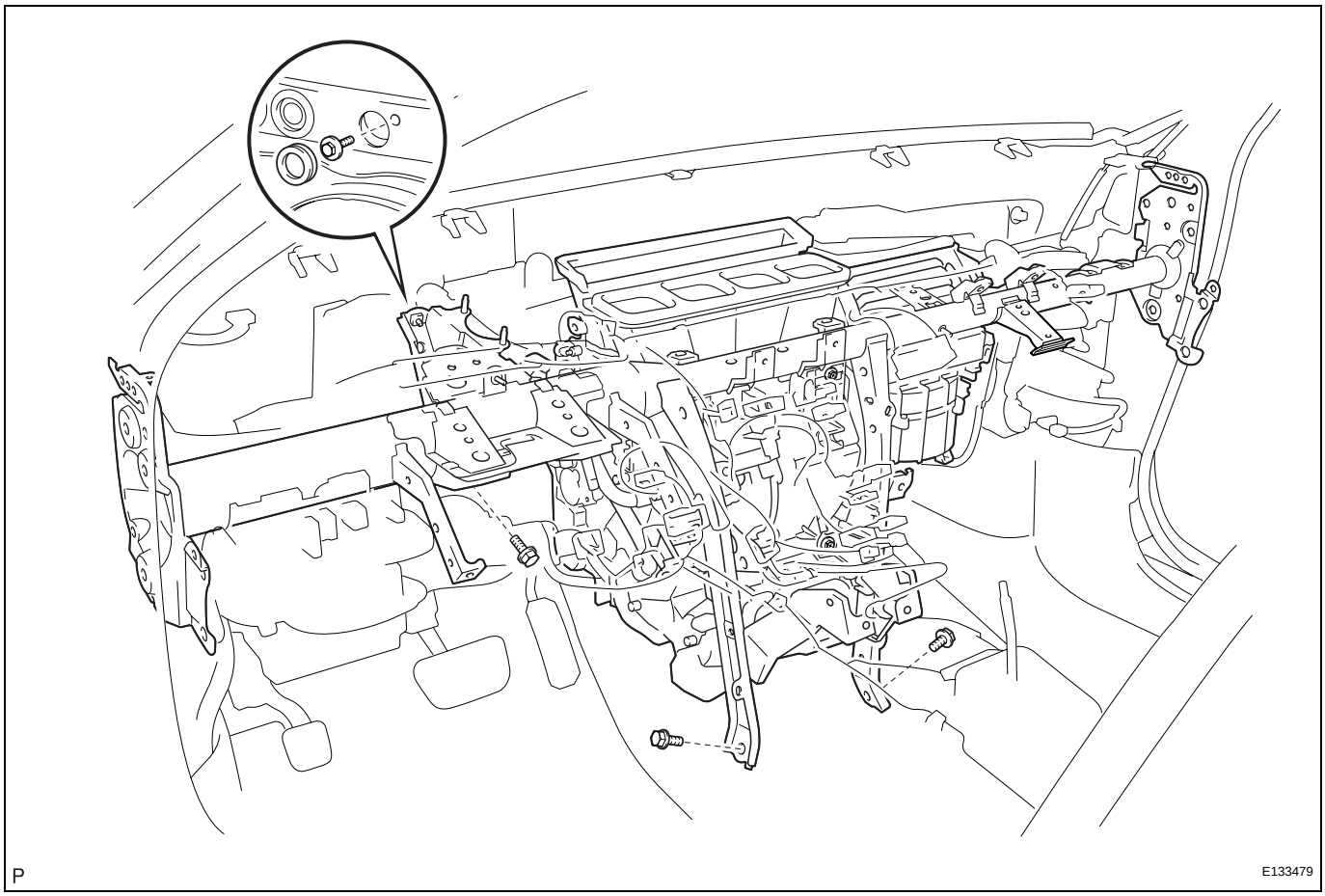

Torque: 9.8 N*m (100 kgf*cm, 87 in.*lbf) (NUT)

(e) Install the bolt and cap.

(f) Connect the connectors and clamps.

(g) Install the 8 nuts and 7 bolts.

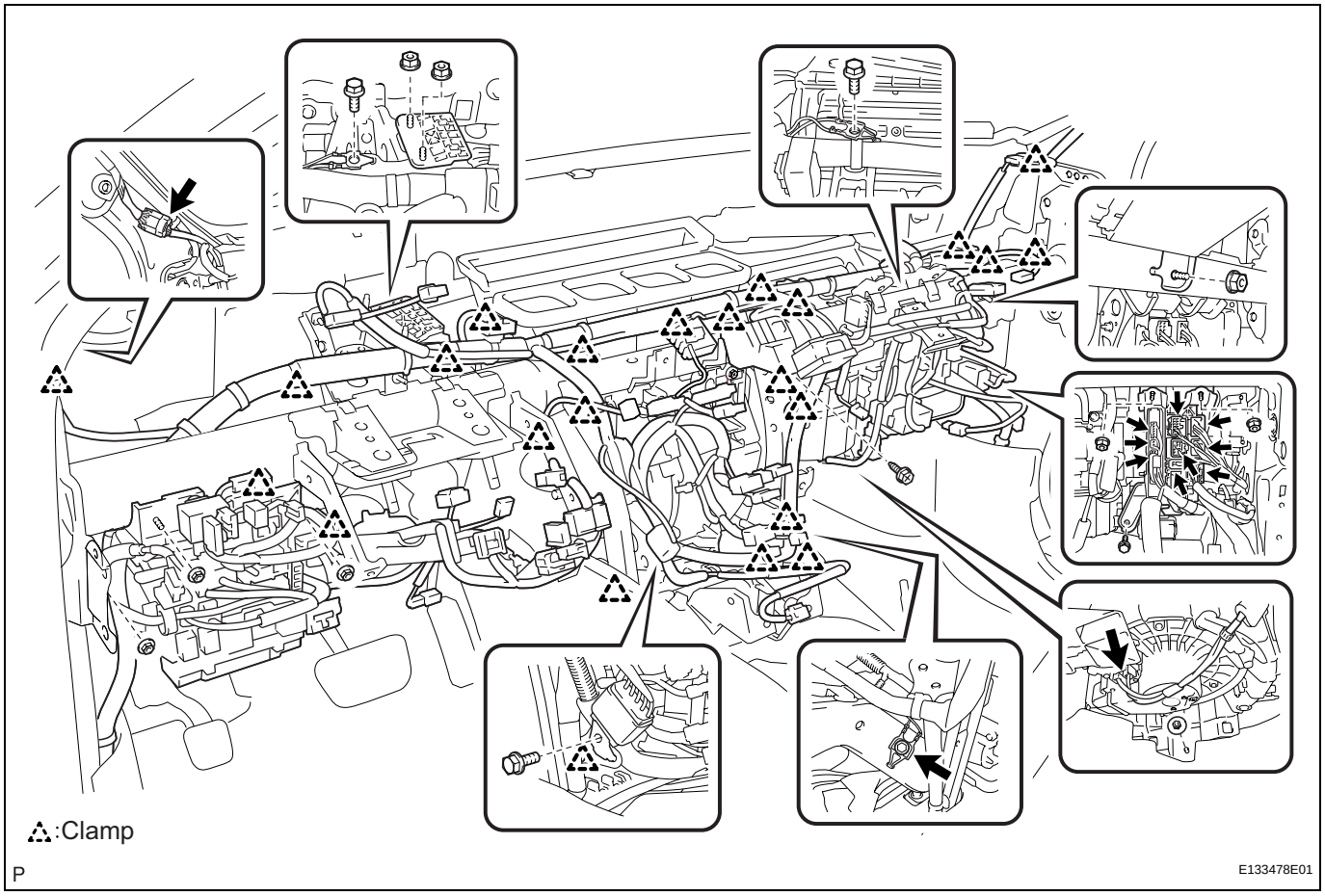

2. **INSTALL AIR CONDITIONING AMPLIFIER ASSEMBLY (See page AC-232)**

3. **INSTALL STEERING COLUMN ASSEMBLY (See page SR-85)**

4. **CONNECT STEERING INTERMEDIATE SHAFT ASSEMBLY (See page SR-85)**

5. **INSTALL NO. 1 AIR DUCT SUB-ASSEMBLY (See page SR-86)**

6. **INSTALL REAR NO. 1 AIR DUCT**
   (a) Engage the 2 claws to install the rear No. 1 air duct.

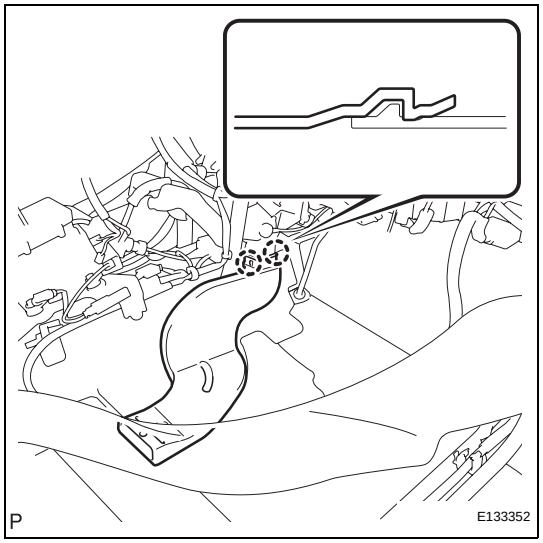

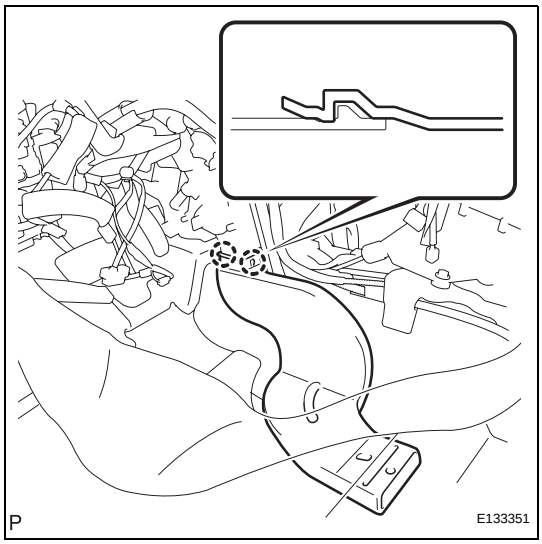

7. INSTALL REAR NO. 2 AIR DUCT

(a) Engage the 2 claws to install the rear No. 2 air duct.

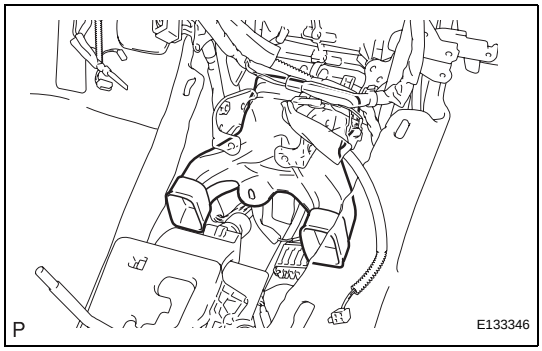

8. INSTALL NO. 1 CONSOLE BOX DUCT

(a) Install the No. 1 console box duct.

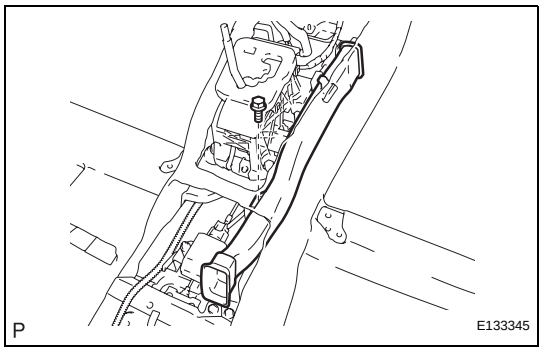

9. INSTALL NO. 3 CONSOLE BOX DUCT

(a) Install the bolt and No. 3 console box duct.

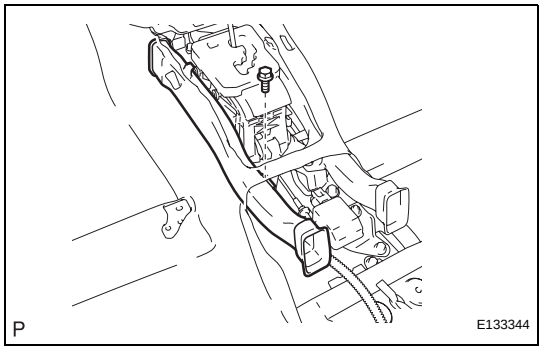

10. INSTALL NO. 2 CONSOLE BOX DUCT

(a) Install the bolt and No. 2 console box duct.

11. INSTALL FLOOR CARPET BRACKET RH

12. INSTALL FLOOR CARPET BRACKET LH

13. INSTALL INSTRUMENT PANEL SAFETY PAD ASSEMBLY (w/o DVD Player) (See page IP-33)

14. INSTALL INSTRUMENT PANEL SAFETY PAD ASSEMBLY (w/ DVD Player) (See page IP-35)

15. INSTALL ROOM TEMPERATURE SENSOR (See page AC-215)

16. CONNECT INSTRUMENT PANEL WIRE ASSEMBLY (See page RS-416)

17. INSTALL PUSH START SWITCH (See page IP-37)

18. **INSTALL NO. 1 INSTRUMENT PANEL MOUNTING BRACKET (See page IP-38)**
19. **INSTALL FRONT STEREO COMPONENT SPEAKER ASSEMBLY (See page AV-188)**
20. **INSTALL NO. 1 SPEAKER HOLE COVER (See page IP-38)**
21. **INSTALL NO. 1 INSTRUMENT PANEL REGISTER ASSEMBLY (See page IP-38)**
22. **INSTALL FRONT NO. 2 SPEAKER ASSEMBLY (for LH Side) (See page AV-185)**
23. **INSTALL NO. 1 INSTRUMENT PANEL SPEAKER PANEL SUB-ASSEMBLY (See page IP-39)**
24. **INSTALL FRONT PILLAR GARNISH LH (See page IR-64)**
25. **INSTALL NO. 3 INSTRUMENT PANEL REGISTER ASSEMBLY (See page IP-39)**
26. **INSTALL FRONT NO. 2 SPEAKER ASSEMBLY (for RH Side) (See page IP-39)**
27. **INSTALL NO. 2 INSTRUMENT PANEL SPEAKER PANEL SUB-ASSEMBLY (See page IP-39)**
28. **INSTALL FRONT PILLAR GARNISH RH (See page IR-65)**
29. **INSTALL REAR CONSOLE BOX ASSEMBLY (See page IP-39)**
30. **INSTALL CONSOLE REAR END PANEL SUB-ASSEMBLY (See page IP-40)**
31. **INSTALL CONSOLE BOX CARPET (See page IP-41)**
32. **INSTALL CONSOLE BOX POCKET (See page IP-41)**
33. **INSTALL HEATER SEAT SWITCH CONSOLE BASE (w/o Seat Heater System) (See page IP-41)**
34. **INSTALL HEATER SEAT SWITCH CONSOLE BASE (w/ Seat Heater System) (See page IP-41)**
35. **INSTALL INTEGRATION CONTROL PANEL WITH RADIO RECEIVER ASSEMBLY (w/o Navigation System) (See page AV-172)**
36. **INSTALL MULTI-DISPLAY WITH RADIO RECEIVER ASSEMBLY (w/ Navigation System) (See page AV-173)**
37. **INSTALL NO. 2 INSTRUMENT PANEL REGISTER ASSEMBLY (See page IP-41)**
38. **INSTALL UPPER CONSOLE PANEL ASSEMBLY WITH FRONT ASH RECEPTACLE (See page IP-42)**
39. **INSTALL SHIFT LEVER KNOB SUB-ASSEMBLY (See page IP-42)**

40. **INSTALL LOWER INSTRUMENT PANEL RH (See page IP-42)**
41. **INSTALL FRONT PASSENGER SIDE KNEE AIRBAG ASSEMBLY (See page RS-396)**
42. **INSTALL SIDE INSTRUMENT PANEL RH (See page IP-43)**
43. **INSTALL NO. 2 INSTRUMENT PANEL UNDER COVER SUB-ASSEMBLY (See page IP-44)**
44. **INSTALL FRONT DOOR OPENING TRIM COVER RH (See page IR-65)**
45. **INSTALL FRONT DOOR SCUFF PLATE RH (See page IR-65)**
46. **INSTALL INSTRUMENT PANEL FINISH PANEL END RH (See page IP-44)**
47. **INSTALL NO. 1 SWITCH HOLE BASE (See page IP-44)**
48. **INSTALL COMBINATION METER ASSEMBLY (See page IP-45)**
49. **INSTALL INSTRUMENT CLUSTER FINISH PANEL SUB-ASSEMBLY (See page IP-45)**
50. **INSTALL TURN SIGNAL SWITCH ASSEMBLY WITH SPIRAL CABLE (See page SR-86)**
51. **INSTALL TILT & TELESCOPIC SWITCH (See page SR-86)**
52. **INSTALL STEERING COLUMN COVER (See page IP-46)**
53. **ADJUST SPIRAL CABLE SUB-ASSEMBLY (See page RS-382)**
54. **INSTALL LOWER INSTRUMENT PANEL SUB-ASSEMBLY (See page IP-46)**
55. **INSTALL INSTRUMENT PANEL FINISH PANEL END LH (See page IP-46)**
56. **INSTALL SIDE INSTRUMENT PANEL LH (See page IP-47)**
57. **INSTALL FRONT DOOR OPENING TRIM COVER LH (See page IR-64)**
58. **INSTALL FRONT DOOR SCUFF PLATE LH (See page IR-65)**
59. **INSTALL STEERING WHEEL ASSEMBLY (See page SR-87)**
60. **INSTALL STEERING PAD (See page RS-368)**
61. **INSTALL LOWER NO. 3 STEERING WHEEL COVER (See page RS-369)**

62. INSTALL LOWER NO. 2 STEERING WHEEL COVER (See page RS-369)

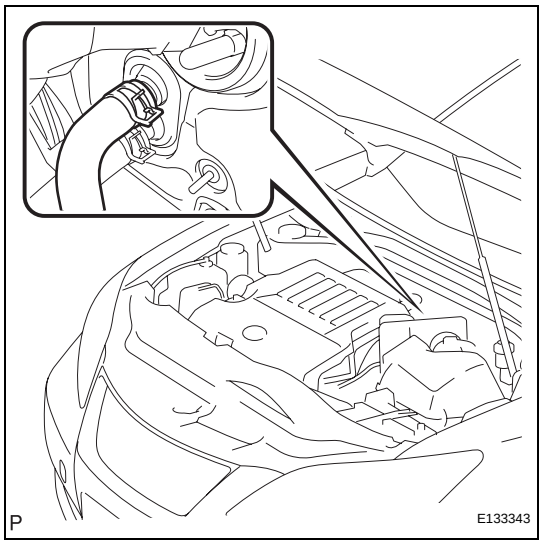

63. INSTALL HEATER INLET WATER HOSE
(a) Install the water hose and attach the clip.

64. INSTALL HEATER OUTLET WATER HOSE
(a) Use the same procedure described for the heater inlet water hose.

65. INSTALL AIR CONDITIONER TUBE AND ACCESSORY
(a) Remove the attached vinyl tape from the tube.
(b) Sufficiently apply compressor oil to a new O-ring and fitting surface of the air conditioning tube assembly.
Compressor oil:
ND-OIL 8 or equivalent
(c) Install the O-ring on the air conditioner tube and accessory.
(d) Install the air conditioner tube and accessory.

66. INSTALL SUCTION HOSE SUB-ASSEMBLY
(a) Remove the attached vinyl tape from the hose.
(b) Sufficiently apply compressor oil to a new O-ring and the fitting surface of the suction hose sub-assembly.
Compressor oil:
ND-OIL 8 or equivalent
(c) Install the O-ring on the suction hose sub-assembly.

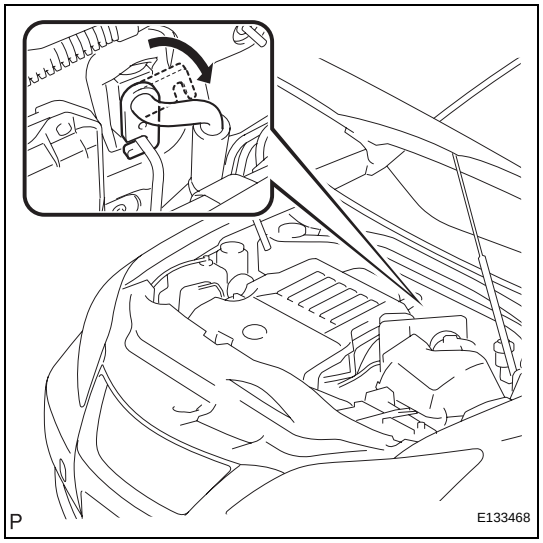

(d) Move the hook connector in the direction indicated by the arrow in the illustration.
(e) Insert the pipe joint into the fitting hole securely and tighten the bolt.
Torque: 9.8 N*m (100 kgf*cm, 87 in.*lbf)

67. INSTALL WINDSHIELD WIPER MOTOR AND LINK ASSEMBLY (See page WW-43)

68. INSTALL FRONT FENDER TO COWL SIDE SEAL RH (See page WW-43)

69. INSTALL FRONT FENDER TO COWL SIDE SEAL LH (See page WW-43)

70. INSTALL COWL TOP VENTILATOR LOUVER SUB-ASSEMBLY (See page WW-44)

71. INSTALL FRONT WIPER ARM AND BLADE ASSEMBLY LH (See page WW-44)

72. INSTALL FRONT WIPER ARM AND BLADE ASSEMBLY RH (See page WW-45)

73. CONNECT CABLE TO NEGATIVE BATTERY TERMINAL

74. INSPECT STEERING PAD (See page RS-369)

75. INSPECT FRONT PASSENGER SIDE KNEE AIRBAG ASSEMBLY (See page RS-395)

76. INSPECT SRS WARNING LIGHT

(a) Inspect the SRS warning light (See page RS-37).

77. PERFORM INITIALIZATION

NOTICE:

Some systems need initialization after reconnecting the negative battery terminal (See page IN-33).

78. ADD ENGINE COOLANT (See page CO-6)

79. CHECK FOR ENGINE COOLANT LEAKS

80. CHARGE WITH REFRIGERANT (See page AC-127)

81. WARM UP COMPRESSOR (See page AC-128)

82. CHECK FOR REFRIGERANT LEAKS (See page AC-128)

83. INSTALL ENGINE ROOM SIDE COVER RH (See page WW-47)

84. INSTALL ENGINE ROOM SIDE COVER LH (See page WW-47)

85. INSTALL HOOD HINGE COVER (for RH Side) (See page WW-47)

86. INSTALL HOOD HINGE COVER (for LH Side) (See page WW-47)

87. INSTALL COOL AIR INTAKE DUCT SEAL (See page ET-14)

Terminal No. (Symbols)	Wiring Color	Terminal Description	Condition	Specified Condition
E3-18 (GND) - Body ground	W-B - Body ground	Ground for A/C control assembly	Always	Below 1 V

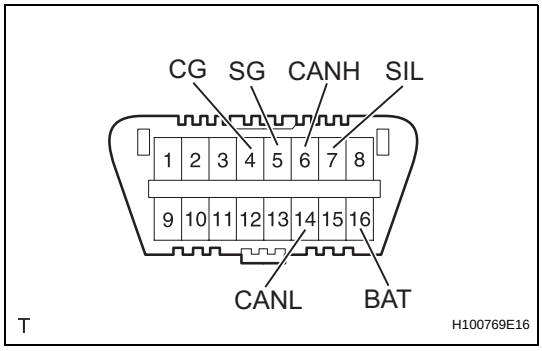

DIAGNOSIS SYSTEM

1. CHECK DLC3

(a) The vehicle's ECU uses the ISO 15765-4 communication protocol. The terminal arrangement of the DLC3 complies with SAE J1962 and matches the ISO 15765-4 format.

Symbol (Terminal No.)	Terminal Description	Condition	Specified Condition
SIL (7) - SG (5)	Bus "+" line	During transmission	Pulse generation
CG (4) - Body ground	Chassis ground	Always	Below 1 Ω
SG (5) - Body ground	Signal ground	Always	Below 1 Ω
BAT (16) - Body ground	Battery positive	Always	10 to 14 V
CANH (6) - CANL (14)	CAN bus line	Engine switch off*	54 to 69 Ω
CANH (6) - BAT (16)	HIGH-level CAN bus line	Engine switch off*	1 MΩ or higher
CANH (6) - CG (4)	HIGH-level CAN bus line	Engine switch off*	1 kΩ or higher
CANL (14) - BAT (16)	LOW-level CAN bus line	Engine switch off*	1 MΩ or higher
CANL (14) - CG (4)	LOW-level CAN bus line	Engine switch off*	1 kΩ or higher

NOTICE:
***: Before measuring the resistance, leave the vehicle as is for at least 1 minute and do not operate the engine switch, any other switches, or the doors.**

HINT:
Connect the cable of the intelligent tester to the DLC3, turn the engine switch on (IG) and attempt to use the tester. If the display indicates that a communication error has occurred, there is a problem either with the vehicle or with the tester.

- If communication is normal when the tester is connected to another vehicle, inspect the DLC3 of the original vehicle.
- If communication is still not possible when the tester is connected to another vehicle, the problem may be in the tester itself. Consult the Service Department listed in the tester's instruction manual.

DTC CHECK / CLEAR

1. DTC CHECK (SENSOR CHECK)

(a) Start the engine and warm it up.

(b) Perform the indicator check (See page AC-33).

HINT:

After the indicator check is completed, the system enters the DTC check mode automatically.

(c) Read the DTC on the panel.

NOTICE:

- **In the sensor check mode, which is automatically transferred from the indicator check mode, troubleshooting may be partially performed. Be sure to perform the actuator check, and then the sensor check again.**
- **If the check is performed in a dark place, DTC 21 or 24 may be displayed even though the system is normal.**

HINT:

Refer to the DTC chart (Diagnostic Trouble Code chart) for details of the codes (See page AC-41).

- When there are no problems, DTC 00 is output.
- As an example, the illustration shows that DTC 21 is output.

without Navigation System:

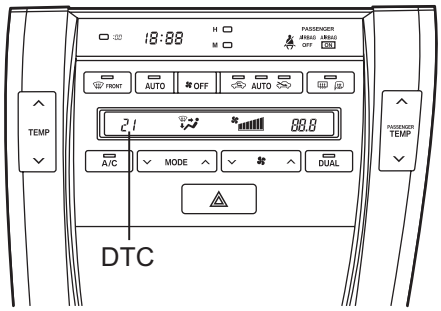

with Navigation System:

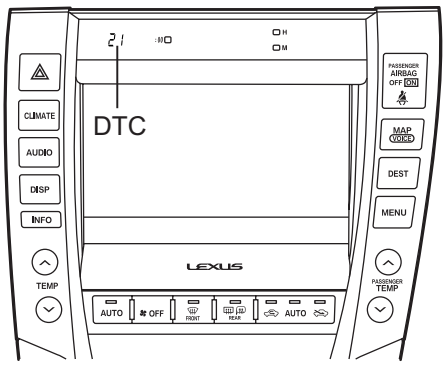

H

E130410E01

without Navigation System:

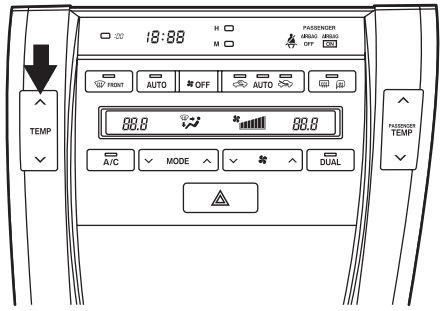

with Navigation System:

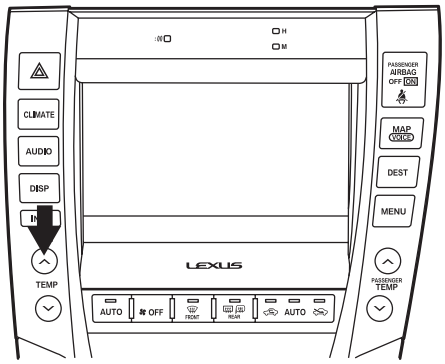

H

E130406E02

(d) If the steps are difficult to read because they change automatically, push the "UPDr" switch to display the steps one at a time so that they can be read easily. The items are displayed step by step each time the "UPDr" switch is pushed.
HINT:
- Push the "OFF" switch to finish panel diagnosis.
- Push the "R/F" switch to enter the actuator check mode.

without Navigation System:

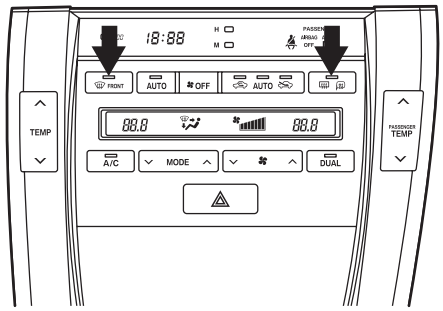

with Navigation System:

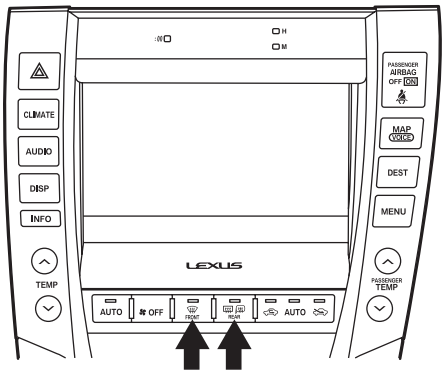

H

E130406E03

2. CLEARING DTC

(a) During the sensor check, press the "FRONT DEF" switch and "REAR DEF" switch at the same time.

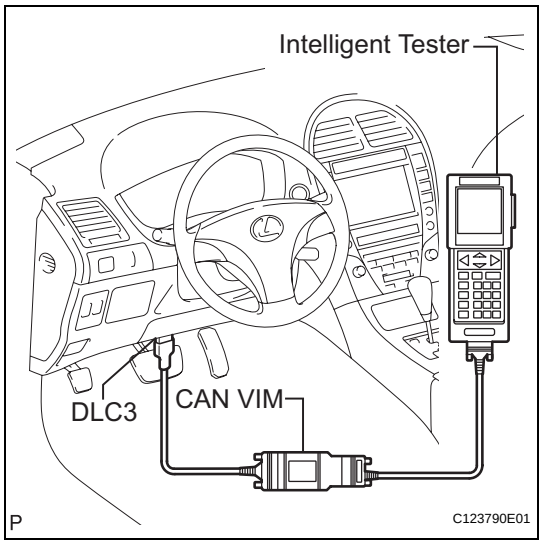

3. DTC CHECK USING INTELLIGENT TESTER

(a) Connect the intelligent tester to the DLC3.

(b) Turn the engine switch on (IG).

(c) Turn the tester ON.

(d) Enter the following menu items: DIAGNOSIS / OBD/ MOBD / DTC INFO / CURRENT CODES.
HINT:
Refer to the intelligent tester operator's manual for further details.

(e) Check the details of the DTCs.

(f) Clear the DTCs.
HINT:
After repairing the malfunctions, clear the DTCs.
(1) Connect the intelligent tester to the DLC3.
(2) Turn the engine switch on (IG).
(3) Enter the following menu items: DIAGNOSIS / OBD/MOBD / DTC INFO / CLEAR CODES.
HINT:
Refer to the intelligent tester operator's manual for further details.
(4) Press the YES button.

CHECK MODE PROCEDURE

1. LIST OF OPERATION METHODS

(a) By operating each of the A/C control switches as shown in the diagram below, it is possible to enter the diagnostic check mode.

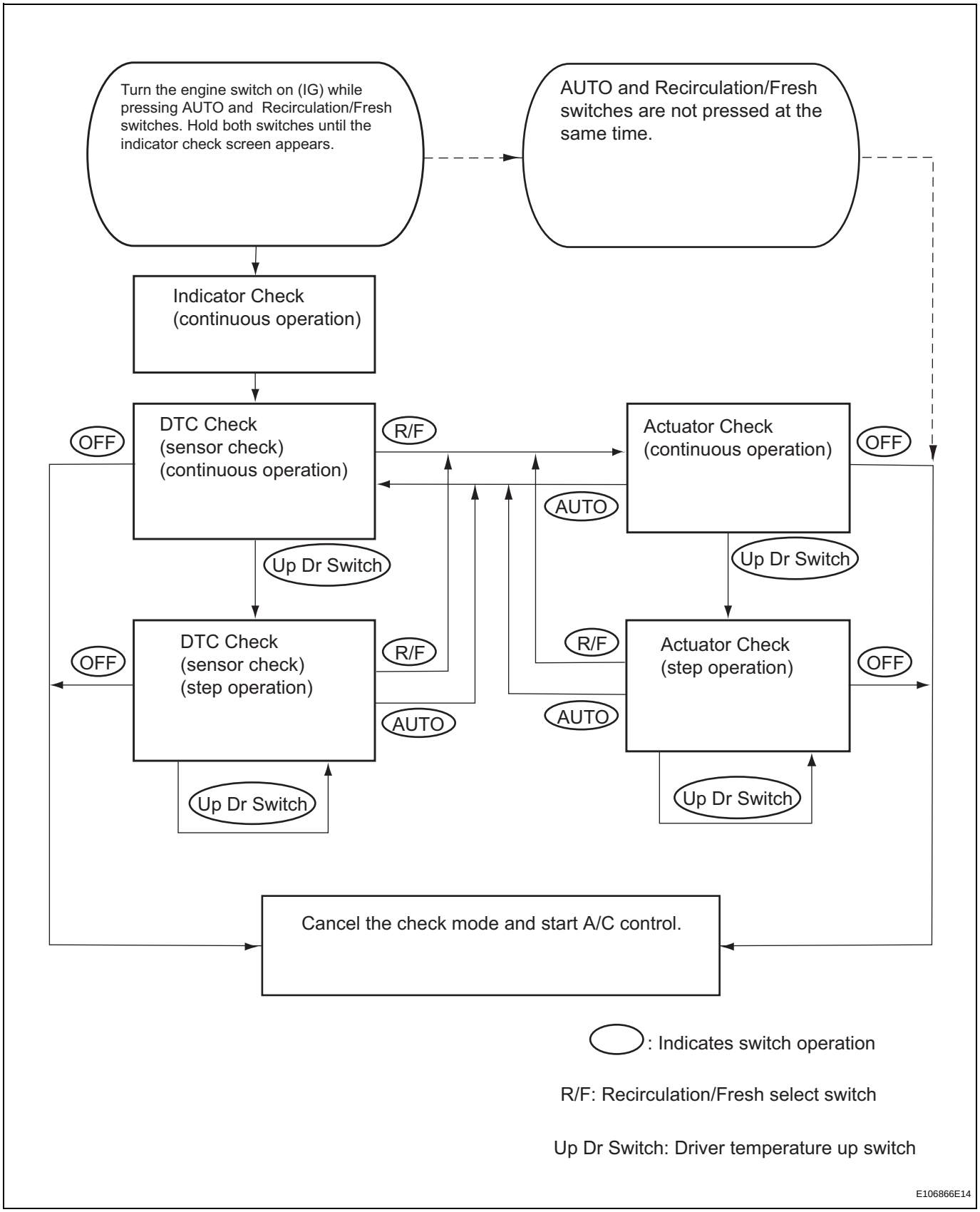

2. INDICATOR CHECK

(a) Turn the engine switch off.

without Navigation System:

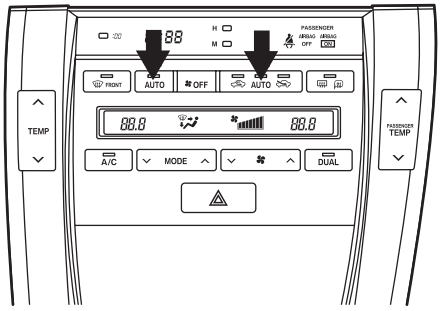

with Navigation System:

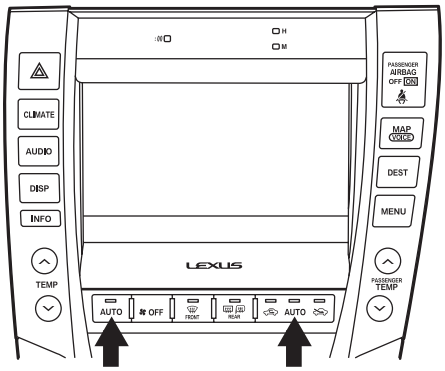

H

E130406E04

(b) Turn the engine switch on (IG) while pressing the A/C control "AUTO" switch and "R/F" switch simultaneously. Hold both switches until the indicator check screen appears.

without Navigation System:

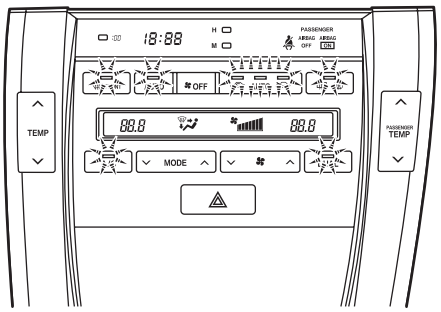

with Navigation System:

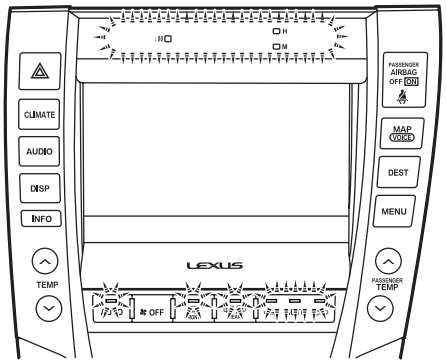

Indicator Blinking Pattern:

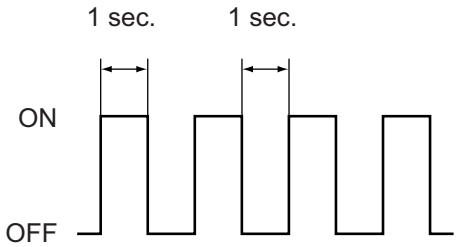

H

E130408E01

(c) The indicator check is automatically performed when panel diagnosis is activated. Check that the indicators light up and go off at 1 second intervals 4 times in succession.
HINT:
- The sensor check automatically starts when the indicator check is completed.
- Press the "OFF" switch to cancel the check mode.
- If a navigation system is installed, the indicator will blink and the buzzer will sound.

3. DTC CHECK (SENSOR CHECK)

(a) Start the engine and warm it up.

(b) Perform the indicator check.
HINT:
After the indicator check is completed, the system enters the DTC check mode automatically.

without Navigation System:

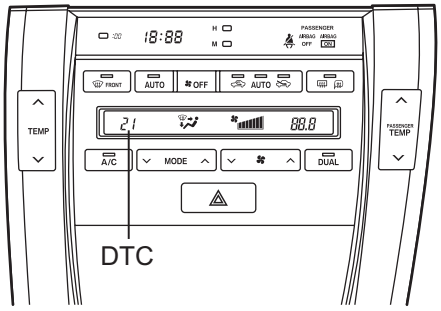

with Navigation System:

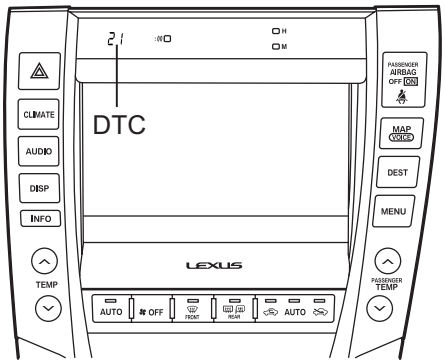

H

E130410E01

(c) Read the DTC on the panel.

NOTICE:

- **In the sensor check mode, which is automatically transferred from the indicator check mode, troubleshooting may be partially performed. Be sure to perform the actuator check, and then the sensor check again.**
- **If the check is performed in a dark place, DTC 21 or 24 may be displayed even though the system is normal.**

HINT:

Refer to the DTC chart (Diagnostic Trouble Code chart) for details of the codes (See page AC-41).

- When there are no problems, DTC 00 is output.
- As an example, the illustration shows that DTC 21 is output.

without Navigation System:

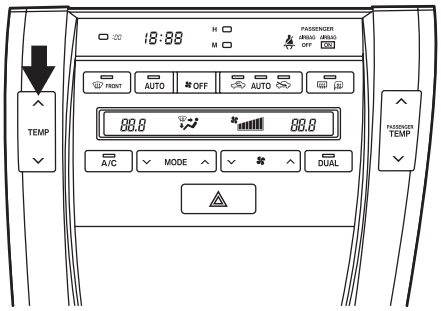

with Navigation System:

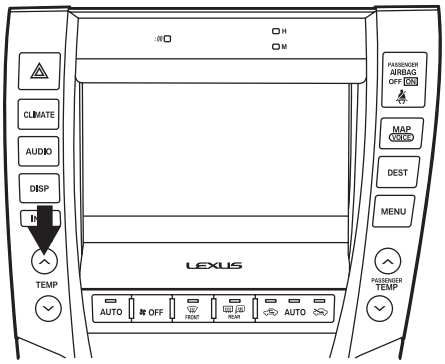

H

E130406E02

(d) If the steps are difficult to read because they change automatically, push the "UPDr" switch to display the steps one at a time so that they can be read easily. The items are displayed step by step each time the "UPDr" switch is pushed.

HINT:

- Push the "OFF" switch to finish panel diagnosis.
- Push the "R/F" switch to enter the actuator check mode.

4. ACTUATOR CHECK

(a) Start the engine and warm it up.

(b) Perform the indicator check.

without Navigation System:

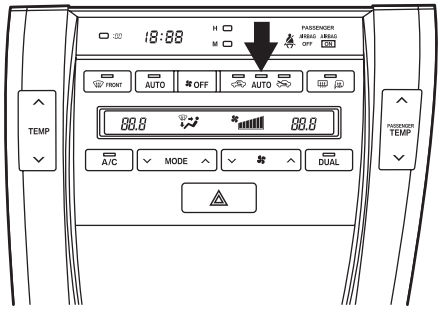

with Navigation System:

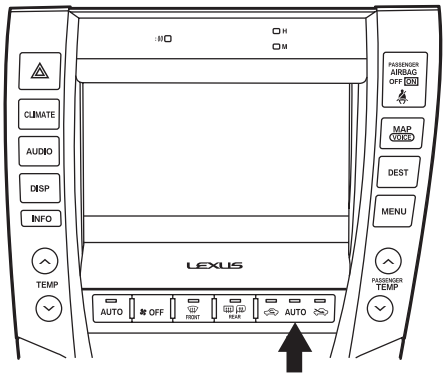

H

E130406E01

(c) Push the "R/F" switch to perform the actuator check.
HINT:
Be sure to perform the actuator check after starting the engine.

without Navigation System:

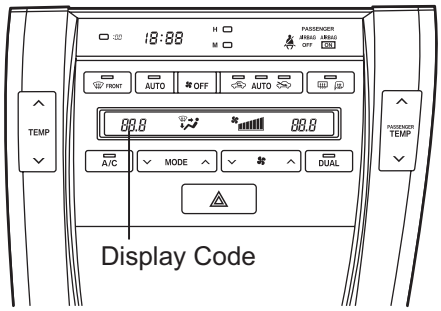

with Navigation System:

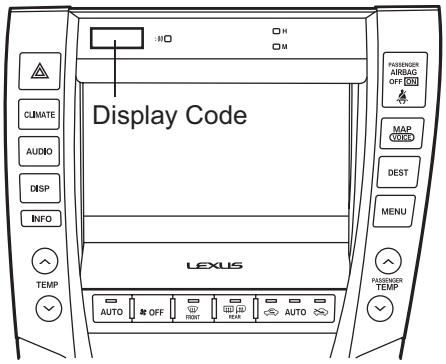

H

E130406E05

(d) As the actuator check is repeated from steps 1 to 10 at 1-second intervals, check the temperature and air flow visually and by hand.
HINT:
- The display blinks at 1-second intervals in the step operation.
- Push the "OFF" switch to finish panel diagnosis.
- Push the "AUTO" switch to enter the sensor check mode.

Step No.	Display Code	Conditions				
		Blower Level	Air Mix Damper	Airflow Vent	Air Inlet Damper	Compressor
1	0	0	0% open	FACE	FRESH	OFF
2	1	1	0% open	FACE	FRESH	OFF
3	2	17	0% open	FACE	RECIRCULATION / FRESH	ON
4	3	17	0% open	FACE	RECIRCULATION	ON
5	4	17	50% open	B/L	RECIRCULATION	ON
6	5	17	50% open	B/L	RECIRCULATION	ON
7	6	17	50% open	FOOT	FRESH	ON
8	7	17	100% open	FOOT-0	FRESH	ON
9	8	17	100% open	F/D	FRESH	ON
10	9	31	100% open	DEF	FRESH	ON

without Navigation System:

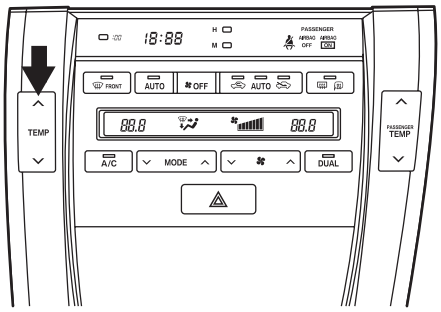

with Navigation System:

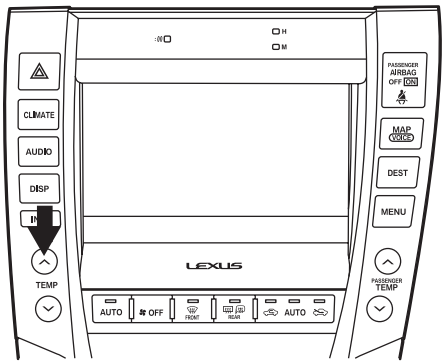

H

E130406E02

(e) If the steps are difficult to read because they change automatically, push the "UPDr" switch to display the steps one at a time so that they can be read easily. The items are displayed step by step each time the "UPDr" switch is pushed.
HINT:
- Push the "OFF" switch to finish panel diagnosis.
- Push the "R/F" switch to enter the sensor check mode.

REMOVAL

1. RECOVER REFRIGERANT FROM REFRIGERATION SYSTEM (See page AC-126)
2. DISCONNECT CABLE FROM NEGATIVE BATTERY TERMINAL
3. REMOVE FRONT WHEEL RH
4. REMOVE FRONT FENDER APRON SEAL RH
5. REMOVE COOL AIR INTAKE DUCT SEAL (See page EM-22)
6. REMOVE ENGINE ROOM SIDE COVER LH (See page EM-22)
7. REMOVE ENGINE ROOM SIDE COVER RH (See page EM-22)
8. REMOVE V-BANK COVER SUB-ASSEMBLY (See page EM-23)
9. REMOVE FRONT WHEEL OPENING EXTENSION PAD LH
10. REMOVE FRONT WHEEL OPENING EXTENSION PAD RH
11. REMOVE ENGINE UNDER COVER LH
12. REMOVE ENGINE UNDER COVER RH
13. DRAIN ENGINE COOLANT (See page CO-5)
14. REMOVE AIR CLEANER CAP SUB-ASSEMBLY (See page ES-519)
15. REMOVE NO. 2 AIR CLEANER INLET
16. REMOVE NO. 1 AIR CLEANER INLET
17. REMOVE FRONT BUMPER ASSEMBLY (See page ET-5)
18. REMOVE FRONT BUMPER ENERGY ABSORBER
19. REMOVE MILLIMETER WAVE RADAR SENSOR ASSEMBLY (w/ Dynamic Radar Cruise Control System) (See page CC-122)
20. SEPARATE RADIATOR RESERVE TANK HOSE (See page CO-25)
21. DISCONNECT RADIATOR HOSE INLET (See page CO-25)
22. DISCONNECT RADIATOR HOSE OUTLET (See page CO-25)
23. DISCONNECT NO. 1 OIL COOLER INLET HOSE (See page CO-26)
24. DISCONNECT NO. 1 OIL COOLER OUTLET HOSE (See page CO-26)

25. REMOVE RADIATOR SUPPORT UPPER (See page CO-26)

26. REMOVE FAN SHROUD (See page CO-27)

27. REMOVE RADIATOR ASSEMBLY (See page CO-27)

28. REMOVE V-RIBBED BELT (See page EM-6)

29. REMOVE GENERATOR ASSEMBLY (See page CH-14)

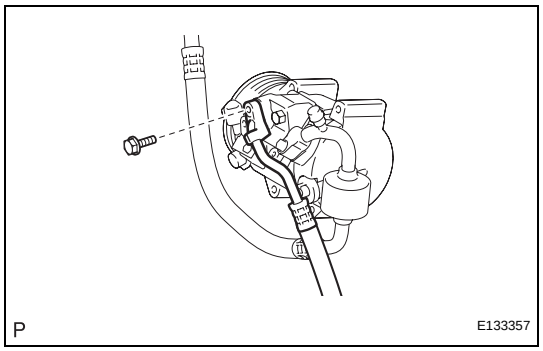

30. DISCONNECT NO. 1 COOLER REFRIGERANT DISCHARGE HOSE

(a) Remove the bolt and disconnect the No. 1 cooler refrigerant discharge hose from the compressor and pulley.

(b) Remove the O-ring from the No. 1 cooler refrigerant discharge hose.

NOTICE:

Seal the openings of the disconnected parts using vinyl tape to prevent entry of moisture and foreign matter.

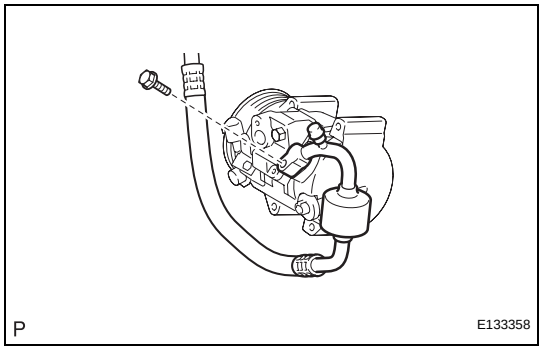

31. DISCONNECT NO. 1 COOLER REFRIGERANT SUCTION HOSE

(a) Remove the bolt and disconnect the No. 1 cooler refrigerant suction hose from the compressor and pulley.

(b) Remove the O-ring from the No. 1 cooler refrigerant suction hose.

NOTICE:

Seal the openings of the disconnected parts using vinyl tape to prevent entry of moisture and foreign matter.

32. REMOVE COMPRESSOR AND MAGNETIC CLUTCH

(a) Disconnect the magnetic clutch connector.

(b) Remove the 4 bolts.

(c) Remove the compressor and magnetic clutch.

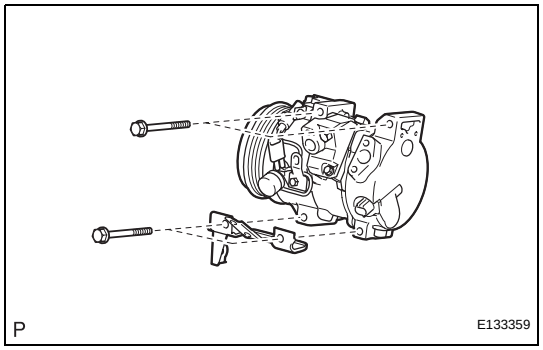

DISASSEMBLY

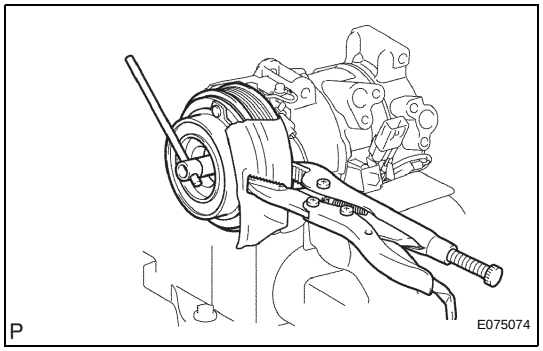

1. REMOVE MAGNETIC CLUTCH ASSEMBLY

(a) Place the compressor and magnetic clutch in a vise.

(b) Using locking pliers, hold the magnetic clutch hub.

(c) Remove the bolt, magnetic clutch hub, and magnetic clutch washers.

HINT:

There is no set number of magnetic clutch washers because they are used for adjustment.

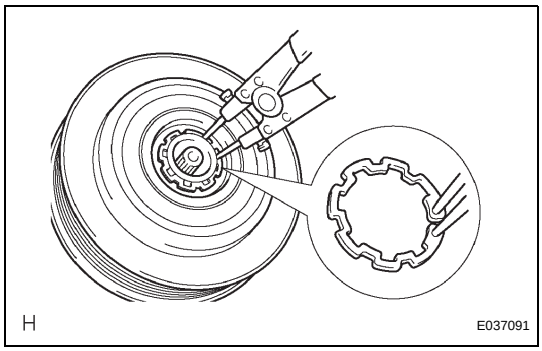

(d) Using a snap ring expander, remove the snap ring and then remove the magnetic clutch rotor.
NOTICE:
Take care not to damage the seal cover of the bearing when removing the snap ring.

(e) Disconnect the connector.

(f) Remove the screw.

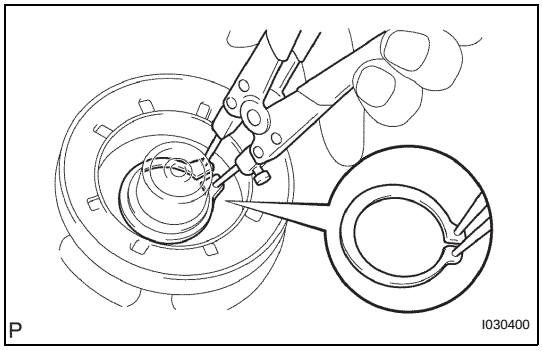

(g) Using a snap ring expander, remove the snap ring and magnetic clutch stator.

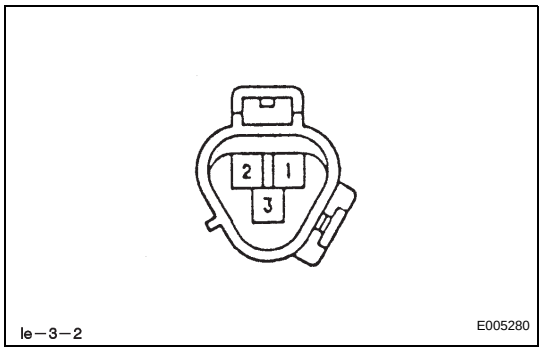

INSPECTION

1. INSPECT COMPRESSOR AND MAGNETIC CLUTCH (A/C LOCK SENSOR)

(a) Measure the resistance according to the value(s) in the table below.
Standard resistance

Tester Connection	Condition	Specified Condition
1 - 2	Always (at 20°C (68°F))	165 to 205 Ω

If the resistance is not as specified, replace the compressor and magnetic clutch.

Compressor and Magnetic Clutch Connector Front View:

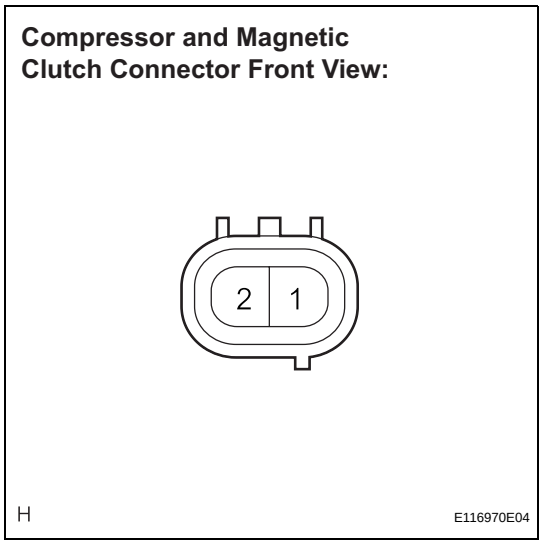

2. INSPECT COMPRESSOR AND MAGNETIC CLUTCH (A/C COMPRESSOR SOLENOID)

(a) Measure the resistance according to the value(s) in the table below.
Standard resistance

Tester Connection	Condition	Specified Condition
2 - 1	20°C (68°F)	10 to 11 Ω

If the resistance is not as specified, replace the compressor and magnetic clutch.

A/C Compressor Connector Front View:

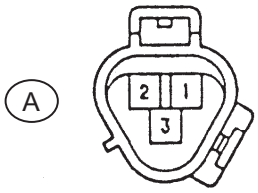

Ie–3–2 E005280E18

3. INSPECT COMPRESSOR AND MAGNETIC CLUTCH

(a) Disconnect the connector from the compressor and magnetic clutch.

Magnetic Clutch Connector Front View:

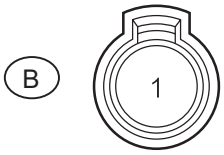

H E124482E03

(b) Disconnect the connector from the magnetic clutch.

(c) Measure the resistance according to the value(s) in the table below.

Standard resistance

Tester Connection	Condition	Specified Condition
A-3 - B-1	Always	Below 1 Ω
A-3 - Body ground	Always	10 kΩ or higher

If the resistance is not as specified, replace the compressor and magnetic clutch.

Magnetic Clutch Connector Front View:

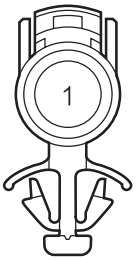

H E113611E02

4. INSPECT MAGNETIC CLUTCH

(a) Measure the resistance according to the value(s) in the table below.

Standard resistance

Tester Connection	Condition	Specified Condition
1 - Body ground	Always	3.4 to 3.8 Ω

If the resistance is not as specified, replace the magnetic clutch.

(b) When connector terminal 1 is connected to the positive (+) battery terminal, check that the following occurs: 1) the magnetic clutch's operating sound can be heard, and 2) the magnetic clutch's hub and rotor lock.

OK:

1):

The magnetic clutch's operating sound can be heard.

2):

The magnetic clutch's hub and rotor lock.

If the result is not as specified, replace the magnetic clutch.

REASSEMBLY

1. INSTALL MAGNETIC CLUTCH ASSEMBLY

(a) Install the magnetic clutch stator while aligning the protrusion on the stator with the notch on the air compressor assembly as shown in the illustration.

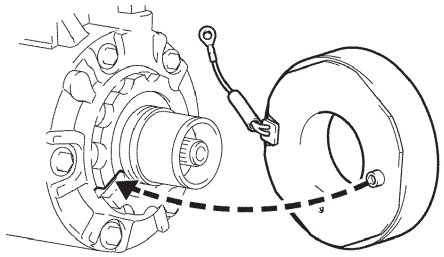

P E075075

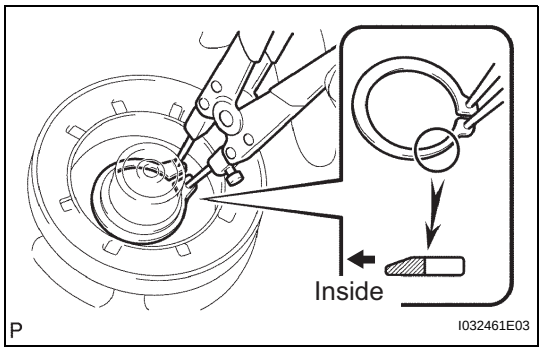

(b) Using a snap ring expander, install a new snap ring with the chamfered side facing up.
NOTICE:
Take care not to damage the seal cover of the bearing when installing the snap ring.

(c) Connect the connector.

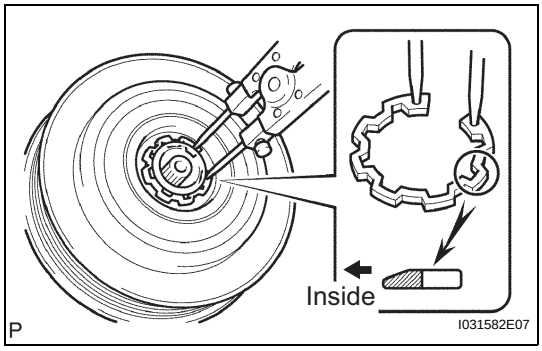

(d) Using a snap ring expander, install the magnetic clutch rotor and a new snap ring with the chamfered side facing up.
NOTICE:
- **Do not expand the snap ring by more than 35.5 mm (1.39 in.) when installing it.**
- **Do not damage the seal cover of the bearing when installing the snap ring.**

(e) Install the magnetic clutch washer and magnetic clutch hub.
NOTICE:
Do not change the combination of the magnetic clutch washers used before disassembly.

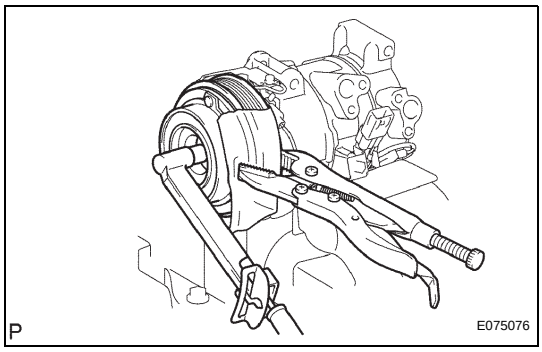

(f) Using locking pliers, hold the magnetic clutch hub and install the bolt.
Torque: 18 N*m (184 kgf*cm, 13 ft.*lbf)
NOTICE:
Make sure that there is no foreign matter or oil on the compressor shaft, bolt, and clutch hub.

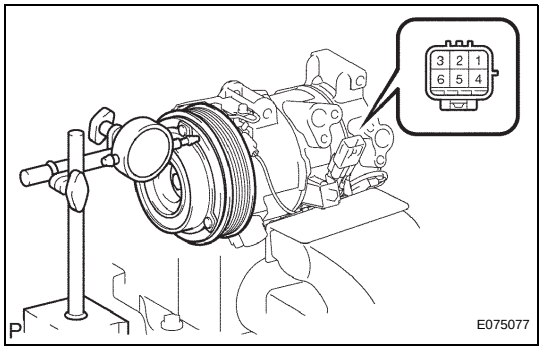

2. INSPECT MAGNETIC CLUTCH CLEARANCE

(a) Set the dial indicator to the magnetic clutch hub.

(b) Connect the battery positive lead to terminal 1 of the magnetic clutch connector, and the negative lead to the ground wire. Turn the magnetic clutch on and off and measure the clearance.
Standard clearance:
0.26 to 0.60 mm (0.010 to 0.024 in.)
If the measured value is not within the standard range, remove the magnetic clutch hub and adjust it with magnetic clutch washers.
NOTICE:
Adjustment should be performed with 3 or less magnetic clutch washers.

(c) Remove the compressor and magnetic clutch from the vise.

3. ADJUST COMPRESSOR OIL LEVEL

(a) When replacing the compressor and magnetic clutch with a new one, gradually discharge the refrigerant gas from the service valve, and drain the following amount of oil from the new compressor and magnetic clutch before installation.

Standard:

(Oil capacity inside the new compressor and magnetic clutch: 130 + 15 cc (4.6 + 0.51 fl.oz.)) - (Remaining oil amount in the removed compressor and magnetic clutch) = (Oil amount to be removed from the new compressor when replacing)

NOTICE:

- **When checking the compressor oil level, observe the precautions on the cooler removal/installation.**
- **If a new compressor and magnetic clutch are installed without removing some oil, due to the oil remaining in the pipes of the vehicle, the oil amount will be too large. This prevents heat exchange in the refrigerant cycle and causes refrigerant failure.**
- **If the volume of oil remaining in the removed compressor and magnetic clutch is too small, check for oil leakage.**
- **Be sure to use ND-OIL 8 or equivalent for compressor oil.**

INSTALLATION

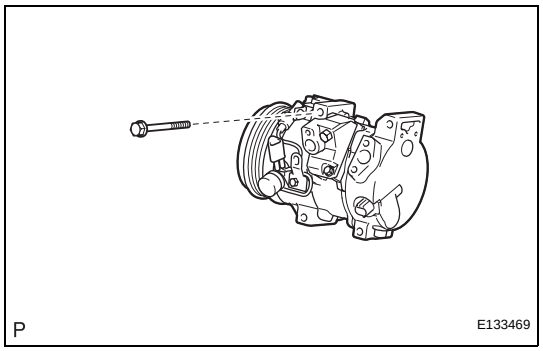

1. TEMPORARILY TIGHTEN COMPRESSOR AND MAGNETIC CLUTCH

(a) Temporarily install the compressor and magnetic clutch onto the bolt.

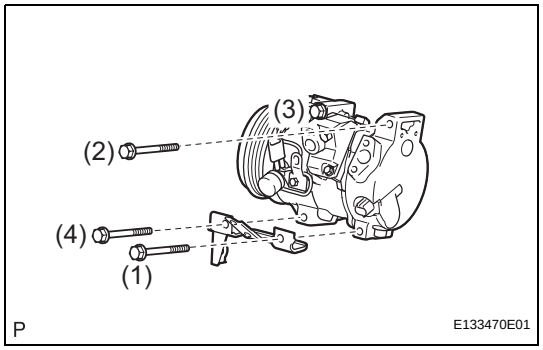

2. FULLY TIGHTEN COMPRESSOR AND MAGNETIC CLUTCH

(a) Install the compressor and magnetic clutch with the 4 bolts.

Torque: 25 N*m (255 kgf*cm, 18 ft.*lbf)

NOTICE:

Tighten the bolts in the order shown in the illustration to install the compressor and magnetic clutch.

3. INSTALL NO. 1 COOLER REFRIGERANT SUCTION HOSE

(a) Remove the attached vinyl tape from the hose.

(b) Apply sufficient compressor oil to a new O-ring and the fitting surface of the compressor and magnetic clutch.
Compressor oil:
ND-OIL 8 or equivalent

(c) Install the O-ring onto the No. 1 cooler refrigerant suction hose.

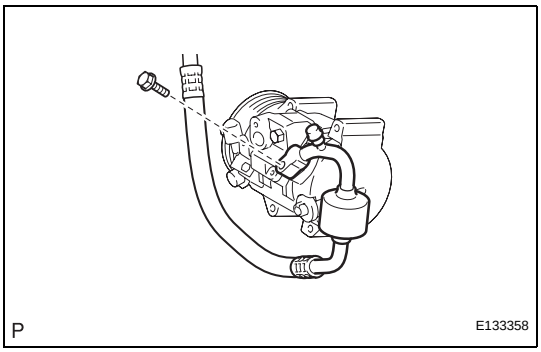

(d) Install the No. 1 cooler refrigerant suction hose onto the compressor and magnetic clutch with the bolt.
Torque: 9.8 N*m (100 kgf*cm, 87 in.*lbf)

4. INSTALL NO. 1 COOLER REFRIGERANT DISCHARGE HOSE

(a) Remove the attached vinyl tape from the hose.

(b) Apply sufficient compressor oil to a new O-ring and the fitting surface of the compressor and magnetic clutch.
Compressor oil:
ND-OIL 8 or equivalent

(c) Install the O-ring onto the No. 1 cooler refrigerant discharge hose sub-assembly.

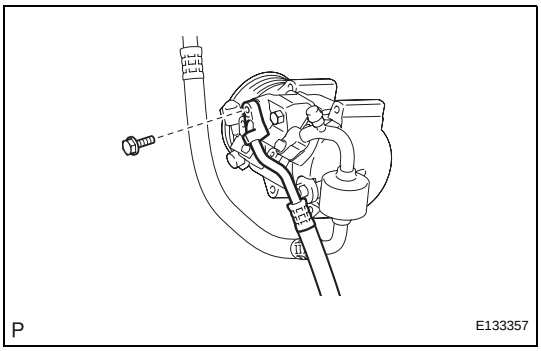

(d) Install the No. 1 cooler refrigerant discharge hose onto the compressor and magnetic clutch with the bolt.
Torque: 9.8 N*m (100 kgf*cm, 87 in.*lbf)

5. INSTALL GENERATOR ASSEMBLY (See page CH-22)

6. INSTALL V-RIBBED BELT (See page EM-7)

7. INSTALL RADIATOR ASSEMBLY (See page CO-33)

8. INSTALL FAN SHROUD (See page CO-33)

9. INSTALL RADIATOR SUPPORT UPPER (See page CO-33)

10. CONNECT NO. 1 OIL COOLER OUTLET TUBE (See page CO-34)

11. CONNECT NO. 1 OIL COOLER INLET TUBE (See page CO-34)

12. CONNECT RADIATOR HOSE OUTLET (See page CO-35)

13. CONNECT RADIATOR HOSE INLET (See page CO-35)

14. CONNECT RADIATOR RESERVOIR TANK HOSE (See page CO-35)

15. INSTALL MILLIMETER WAVE RADAR SENSOR ASSEMBLY (w/ Dynamic Radar Cruise Control System) (See page CC-128)

16. INSTALL FRONT BUMPER ENERGY ABSORBER

17. INSTALL FRONT BUMPER ASSEMBLY (See page ET-14)

18. **INSTALL NO. 1 AIR CLEANER INLET (See page EM-48)**
19. **INSTALL NO. 2 AIR CLEANER INLET (See page EM-48)**
20. **INSTALL AIR CLEANER CAP SUB-ASSEMBLY (See page ES-522)**
21. **CONNECT CABLE TO NEGATIVE BATTERY TERMINAL**
22. **ADD ENGINE COOLANT (See page CO-6)**
23. **CHECK FOR ENGINE COOLANT LEAKS (See page CO-1)**
24. **CHARGE WITH REFRIGERANT (See page AC-127)**
25. **WARM UP COMPRESSOR (See page AC-128)**
26. **CHECK FOR REFRIGERANT LEAKS (See page AC-128)**
27. **PERFORM INITIALIZATION**
    NOTICE:
    Some systems need initialization after reconnecting the negative battery terminal (See page IN-33).
28. **INSTALL COOL AIR INTAKE DUCT SEAL (See page ET-14)**
29. **INSTALL ENGINE ROOM SIDE COVER LH (See page WW-47)**
30. **INSTALL ENGINE ROOM SIDE COVER RH (See page WW-47)**
31. **INSTALL V-BANK COVER SUB-ASSEMBLY (See page EM-49)**
32. **INSTALL ENGINE UNDER COVER LH**
33. **INSTALL ENGINE UNDER COVER RH**
34. **INSTALL FRONT WHEEL OPENING EXTENSION PAD LH**
35. **INSTALL FRONT WHEEL OPENING EXTENSION PAD RH**
36. **ADJUST MILLIMETER WAVE RADAR SENSOR (See page CC-122)**
37. **VEHICLE PREPARATION FOR FOG LIGHT AIM ADJUSTMENT (See page LI-141)**
38. **PREPARATION FOR FOG LIGHT AIMING (See page LI-142)**
39. **FOG LIGHT AIMING INSPECTION (See page LI-143)**
40. **FOG LIGHT AIMING ADJUSTMENT (See page LI-144)**

DATA LIST / ACTIVE TEST

1. DATA LIST

HINT:
Using the intelligent tester's DATA LIST allows switch, sensor, actuator, and other item values to be read without removing any parts. Reading the DATA LIST early in troubleshooting is one way to save time.

(a) Connect the intelligent tester to the DLC3.
(b) Turn the engine switch on (IG).
(c) Turn the tester on.
(d) Enter the following menus: DIAGNOSIS / OBD/ MOBD / AIR CONDITIONER / DATA LIST.
(e) Check the value(s) by referring to the table below.

AIR CONDITIONER:

Tester Display	Measurement Item/Range	Normal Condition	Diagnostic Note
ROOM TEMP (Room temperature sensor)	Room temperature sensor / Min.: -6.5°C (20.3°F), Max.: 57.25°C (135.05°F)	Actual cabin temperature is displayed	-
AMBI TEMP SENS (Ambient temperature sensor)	Ambient temperature sensor / Min.: -23.3°C (-9.94°F), Max.: 65.95°C (150.71°F)	Actual ambient temperature is displayed	-
AMBI TEMP (Adjusted ambient temperature)	Adjusted ambient temperature / Min.: -30.8°C (-23.44°F), Max.: 50.8°C (123.44°F)	-	-
EVAP FIN TEMP (Evaporator fin thermistor)	Evaporator fin thermistor / Min.: -29.7°C (-21.46°F), Max.: 59.55°C (139.19°F)	Actual evaporator temperature is displayed	-
SOLAR SENS-D (Solar sensor (D side))	Driver side solar sensor / Min.: 0, Max.: 255	Driver side solar sensor value increases as brightness increases	-
SOLAR SENS-P (Solar sensor (P side))	Passenger side solar sensor / Min.: 0, Max.: 255	Passenger side solar sensor value increases as brightness increases	-
COOLANT TEMP (Engine coolant temperature)	Engine coolant temperature / Min.: 1.3°C (34.34°F), Max.: 90.55°C (194.99°F)	Actual engine coolant temperature is displayed while engine is warmed up	-
SET TEMP-D (Set temperature (D - side))	Driver side set temperature / Min.: 0°C (32°F), Max.: 31°C (54°F)	Driver side set temperature is displayed	-
SET TEMP-P (Set temperature (P - side))	Passenger side set temperature / Min.: 0°C (32°F), Max.: 31°C (54°F)	Passenger side set temperature is displayed	-
BLOWER LEVEL (Blower motor speed level)	Blower motor speed level / Min.: 0 level, Max.: 31 level	Increases in the range between 0 and 31 as the blower motor speed increases	-
NOX GAS SENS (Emission gas NOx sensor)	Emission gas / Min.: 0, Max.: 255	Smog ventilation sensor value increases as gas amount increases	-
EMISS GAS SENS (Emission gas sensor)	Emission gas / Min.: 0, Max.: 255	Smog ventilation sensor value increases as gas amount increases	-
REG PRESS SENS (Regulator pressure sensor)	Regulator pressure sensor / Min.: -0.5 kgf/cm^{2}G, Max.: 37.75 kgf/cm^{2}G	Actual refrigerant pressure is displayed	-
REG CTRL CURRNT (Regulator control current)	Compressor variable output current / Min.: 0 A, Max.: 0.996 A	-	-
AIR MIX PULSE-D (Air mix servomotor target pulse (D side))	Driver side air mix servo motor target pulse / Min.: 0, Max.: 255	MAX. COLD: 5 (pulse) MAX. HOT: 103 (pulse)	-

Tester Display	Measurement Item/Range	Normal Condition	Diagnostic Note
AIR MIX PULSE-P (Air mix servomotor target pulse (P side))	Passenger side air mix servo motor target pulse / Min.: 0, Max.: 255	MAX. COLD: 105 (pulse) MAX. HOT: 7 (pulse)	-
AIR OUT PULSE-D (Air out pulse-D)	Driver side air outlet servo motor target pulse / Min.: 0, Max.: 255	FACE: 8 (pulse) B/L: 30 to 38 (pulse) FOOT: 50 to 74 (pulse) FOOT/DEF: 80 (pulse) DEF: 97 (pulse)	-
A/I DAMP PLS (Air inlet damper target pulse)	Air inlet damper target pulse / Min.: 0, Max.: 255	RECIRCULATION: 7 (pulse) FRESH: 28 (pulse)	-
#CODES (Number of trouble codes)	Number of trouble codes / Min.: 0, Max.: 255	Number of DTCs will be displayed	-

ENGINE:

Tester Display	Measurement Item/Range	Normal Condition	Diagnostic Note
A/C SIGNAL (A/C signal)	A/C signal / ON or OFF	ON: A/C ON OFF: A/C OFF	-

2. ACTIVE TEST

HINT:

Performing the intelligent tester's ACTIVE TEST allows relays, VSVs, actuators and other items to be operated without removing any parts. Performing the ACTIVE TEST early in troubleshooting is one way to save time. The DATA LIST can be displayed during the ACTIVE TEST.

(a) Connect the intelligent tester to the DLC3.
(b) Turn the engine switch on (IG).
(c) Turn the tester on.
(d) Enter the following menus: DIAGNOSIS / OBD/ MOBD / AIR CONDITIONER / ACTIVE TEST.
(e) Perform the ACTIVE TEST by referring to the table below.

AIR CONDITIONER:

Tester Display	Test Part	Control Range
BLOWER MOTOR (Blower motor)	Blower motor / Min.: Level 0, Max.: Level 31	-
A/C MAG CLUTCH (Magnetic clutch relay)	Magnetic clutch relay / OFF, ON	-
DEFOGER RLY-R (Defogger relay (Rear))	Defogger relay (Rear) / OFF, ON	-
AIR MIX PULSE-D (Air mix servomotor pulse (D side))	Driver side air mix servo motor pulse / Min.: 0, Max.: 255	-
AIR MIX PULSE-P (Air mix servomotor pulse (P side))	Passenger side air mix servo motor pulse / Min.: 0, Max.: 255	-
AIR OUT PULSE-D (Air outlet servomotor pulse (D side))	Driver side air outlet servo motor pulse / Min.: 0, Max.: 255	-
A/I DAMP PLS (Air inlet damper target pulse)	Air inlet damper target pulse / Min.: 0, Max.: 255	-

DIAGNOSTIC TROUBLE CODE CHART

AIR CONDITIONING SYSTEM:

DTC Code	Detection Item	Trouble Area	Memory *4	See page
B1411/11 *1	Room Temperature Sensor Circuit	1. A/C room temperature sensor 2. Harness or connector between A/C room temperature sensor and A/C amplifier 3. A/C amplifier	Memorized (8.5 min. or more)	AC-46
B1412/12 *2	Ambient Temperature Sensor Circuit	1. Ambient temperature sensor 2. Harness or connector between ambient temperature sensor and A/C amplifier 3. A/C amplifier	Memorized (8.5 min. or more)	AC-50
B1413/13	Evaporator Temperature Sensor Circuit	1. Air conditioning harness (evaporator temperature sensor) 2. A/C amplifier	Memorized (8.5 min. or more)	AC-54
B1418/18	Exhaust Gas Sensor Circuit	1. Smog ventilation sensor (emission gas sensor) 2. Harness or connector between smog ventilation sensor (emission gas sensor) and A/C amplifier 3. A/C amplifier	-	AC-57
B1421/21 *3	Solar Sensor Circuit (Passenger Side)	1. Solar sensor 2. Harness or connector between solar sensor and A/C amplifier 3. Harness or connector between solar sensor and main body ECU 4. A/C amplifier 5. Main body ECU	Memorized (8.5 min. or more) (only when circuit is shorted)	AC-62
B1422/22	Compressor Lock Sensor Circuit	1. A/C compressor (A/C lock sensor) 2. Compressor drive belt 3. Harness or connector between compressor and magnetic clutch (A/C lock sensor) 4. A/C amplifier 5. CAN communication system	-	AC-67
B1423/23	Pressure Sensor Circuit	1. A/C pressure sensor 2. Harness or connector between A/C pressure sensor and A/C amplifier 3. Refrigerant pipe line 4. A/C amplifier	-	AC-71
B1424/24 *3	Solar Sensor Circuit (Driver Side)	1. Solar sensor 2. Harness or connector between solar sensor and A/C amplifier 3. Harness or connector between solar sensor and main body ECU 4. A/C amplifier 5. Main body ECU	Memorized (8.5 min. or more) (only when circuit is shorted)	AC-75

DTC Code	Detection Item	Trouble Area	Memory *4	See page
B1441/41	Air Mix Damper Control Servo Motor Circuit (Passenger Side)	1. A/C amplifier 2. Air conditioning harness 3. Air mix control servo motor	Memorized (30 sec.)	AC-80
B1442/42	Air Inlet Damper Control Servo Motor Circuit	1. A/C amplifier 2. Air conditioning harness 3. Air inlet control servo motor	Memorized (30 sec.)	AC-82
B1443/43	Air Outlet Damper Control Servo Motor Circuit	1. A/C amplifier 2. Air conditioning harness 3. Air outlet control servo motor	Memorized (30 sec.)	AC-84
B1446/46	Air Mix Damper Control Servo Motor Circuit (Driver Side)	1. A/C amplifier 2. Air conditioning harness 3. Air mix control servo motor	Memorized (30 sec.)	AC-87
B1451/51	Compressor Solenoid Circuit	1. A/C compressor 2. Harness or connector between A/C amplifier and solenoid of externally changeable compressor 3. A/C amplifier	-	AC-89
B1461/61	Emission Gas NOx Sensor Circuit	1. Smog ventilation sensor (emission gas NOx sensor) 2. Harness or connector between smog ventilation sensor (emission gas NOx sensor) and A/C amplifier 3. A/C amplifier	-	AC-92
B1497/97	BUS IC Communication Malfunction	1. Air conditioning harness 2. A/C amplifier	Memorized (10 sec. or more)	AC-97
B1499/99	Multiplex Communication Circuit	CAN communication system	Memorized	AC-100

*1: If the room temperature is approx. -18.6°C (-1.48°F) or lower, DTC B1411/11 may be output even though the system is normal.

*2: If the ambient temperature is approx. -52.9°C (-63.22°F) or lower, DTC B1412/12 may be output even though the system is normal.

*3: If the check is performed in a dark place, DTC B1421/21 or B1424/24 (solar sensor circuit abnormal) may be output even though the system is normal.

*4: The A/C amplifier memorizes the DTC of the respective malfunction if it has occurred for the period of time indicated in the brackets.

ROOM TEMPERATURE SENSOR

COMPONENTS

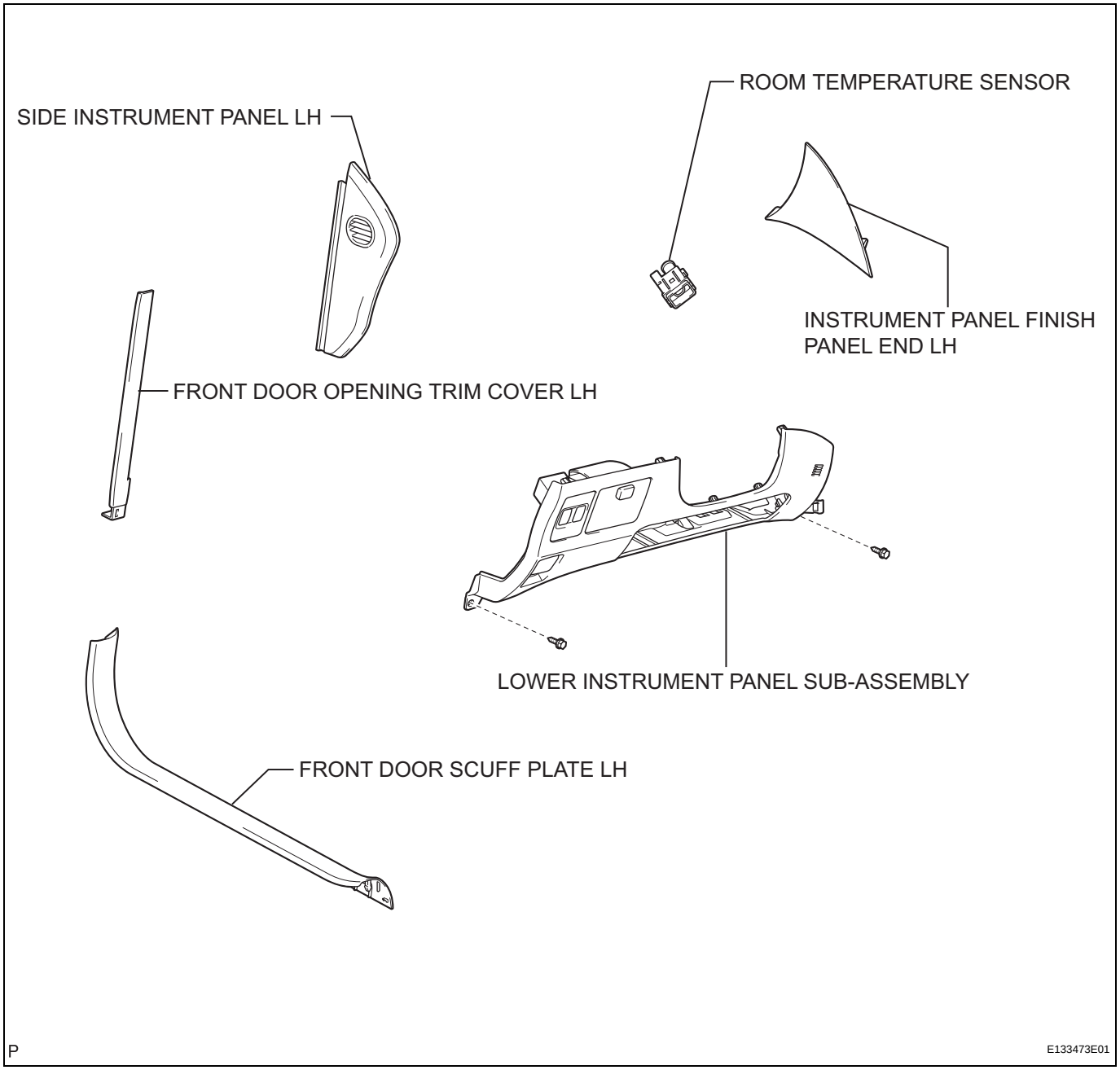

REMOVAL

1. **REMOVE FRONT DOOR SCUFF PLATE LH (See page IR-39)**
2. **REMOVE FRONT DOOR OPENING TRIM COVER LH (See page IR-39)**
3. **REMOVE SIDE INSTRUMENT PANEL LH (See page IP-12)**
4. **REMOVE INSTRUMENT PANEL FINISH PANEL END LH (See page IP-13)**
5. **REMOVE LOWER INSTRUMENT PANEL SUB-ASSEMBLY (See page IP-13)**
6. **REMOVE ROOM TEMPERATURE SENSOR**
   (a) Disconnect the connector and air hose.
   (b) Release the claw and remove the sensor.

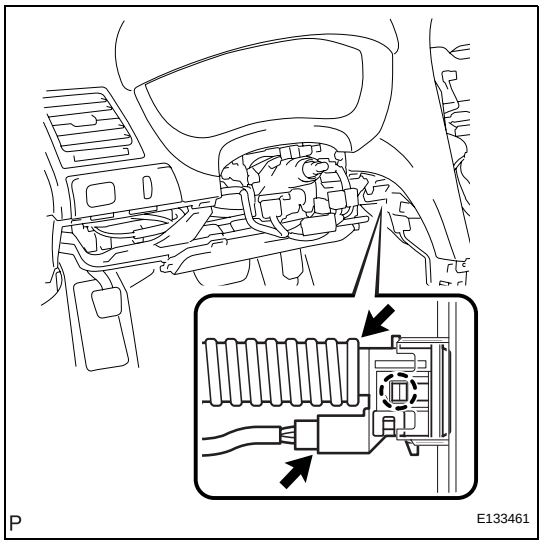

A/C Room Temperature Sensor Connector Front View:

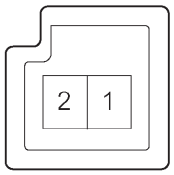

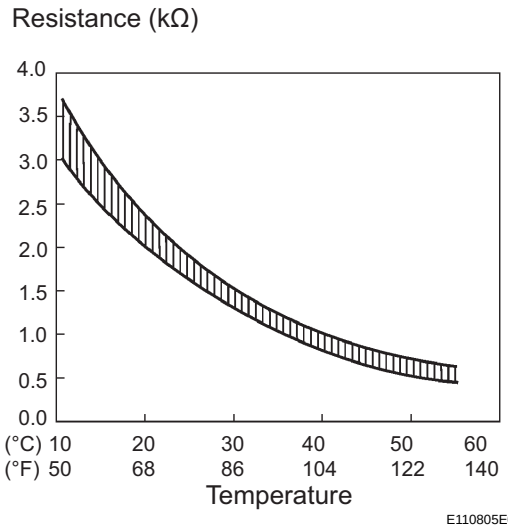

INSPECTION

1. INSPECT ROOM TEMPERATURE SENSOR

(a) Measure the resistance according to the value(s) in the table below.

Standard resistance

Tester Connection	Condition	Specified Condition
1 - 2	10°C (50°F)	3.00 to 3.73 kΩ
1 - 2	15°C (59°F)	2.45 to 2.88 kΩ
1 - 2	20°C (68°F)	1.95 to 2.30 kΩ
1 - 2	15°C (77°F)	1.60 to 1.80 kΩ
1 - 2	30°C (86°F)	1.28 to 1.47 kΩ
1 - 2	35°C (95°F)	1.00 to 1.22 kΩ
1 - 2	40°C (104°F)	0.80 to 1.00 kΩ
1 - 2	45°C (113°F)	0.65 to 0.85 kΩ
1 - 2	50°C (122°F)	0.50 to 0.70 kΩ
1 - 2	55°C (131°F)	0.44 to 0.60 kΩ
1 - 2	60°C (140°F)	0.36 to 0.50 kΩ

NOTICE:

- **Hold the sensor only by its connector. Touching the sensor may change the resistance value.**
- **When measuring, the sensor temperature must be the same as the ambient temperature.**

HINT:

As the temperature increases, the resistance decreases (see the graph).

If the resistance is not as specified, replace the room temperature sensor.

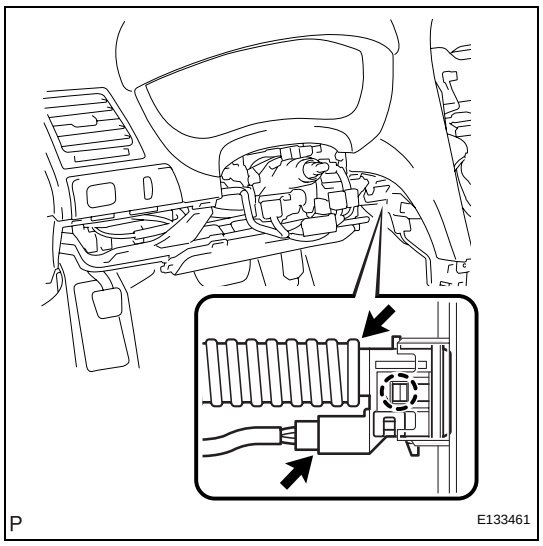

INSTALLATION

1. INSTALL ROOM TEMPERATURE SENSOR

(a) Engage the claw to install the sensor.

(b) Connect the connector and attach the air hose.

2. INSTALL LOWER INSTRUMENT PANEL SUB-ASSEMBLY (See page IP-46)

3. INSTALL INSTRUMENT PANEL FINISH PANEL END LH (See page IP-46)

4. INSTALL SIDE INSTRUMENT PANEL LH (See page IP-47)

5. INSTALL FRONT DOOR OPENING TRIM COVER LH (See page IR-64)

6. INSTALL FRONT DOOR SCUFF PLATE LH (See page IR-65)

ACTUATOR CHECK

1. ACTUATOR CHECK

(a) Start the engine and warm it up.

(b) Perform the indicator check (See page AC-33).

(c) Push the "R/F" switch to perform the actuator check.
HINT:
Be sure to perform the actuator check after starting the engine.

without Navigation System:

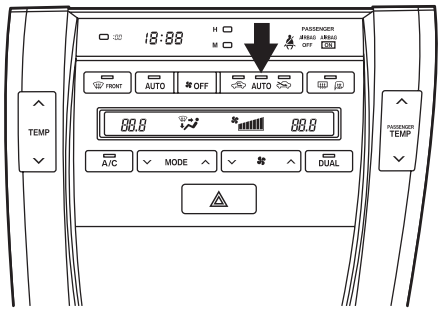

with Navigation System:

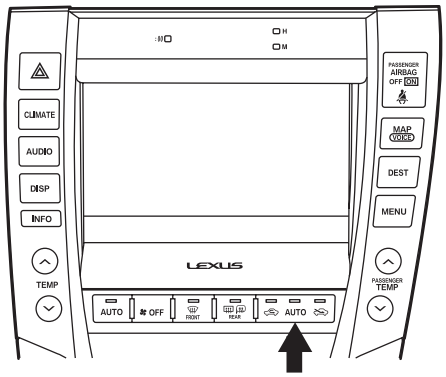

H

E130406E01

without Navigation System:

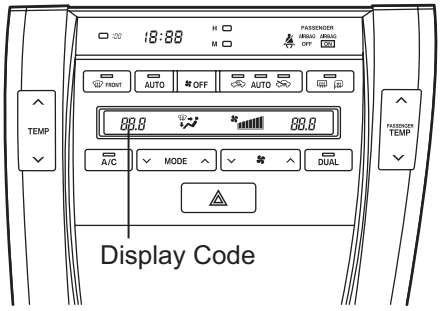

with Navigation System:

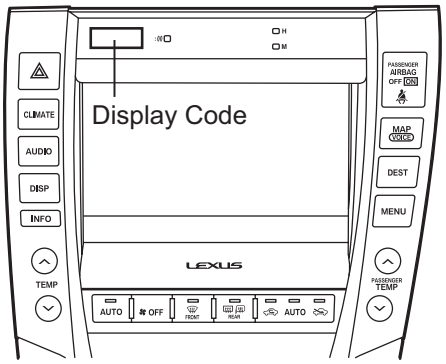

H

E130406E05

(d) As the actuator check is repeated from steps 1 to 10 at 1-second intervals, check the temperature and air flow visually and by hand.
HINT:
- The display blinks at 1-second intervals in the step operation.
- Push the "OFF" switch to finish panel diagnosis.
- Push the "AUTO" switch to enter the sensor check mode.

Step No.	Display Code	Conditions				
		Blower Level	Air Mix Damper	Airflow Vent	Air Inlet Damper	Compressor
1	0	0	0% open	FACE	FRESH	OFF
2	1	1	0% open	FACE	FRESH	OFF
3	2	17	0% open	FACE	RECIRCULATION / FRESH	ON
4	3	17	0% open	FACE	RECIRCULATION	ON
5	4	17	50% open	B/L	RECIRCULATION	ON
6	5	17	50% open	B/L	RECIRCULATION	ON
7	6	17	50% open	FOOT	FRESH	ON
8	7	17	100% open	FOOT-0	FRESH	ON
9	8	17	100% open	F/D	FRESH	ON
10	9	31	100% open	DEF	FRESH	ON

without Navigation System:

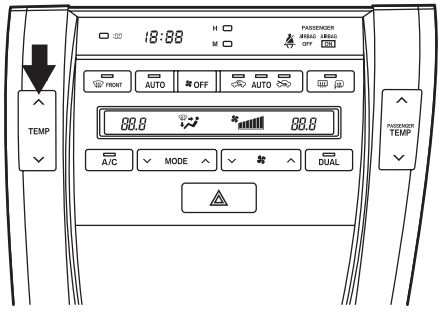

with Navigation System:

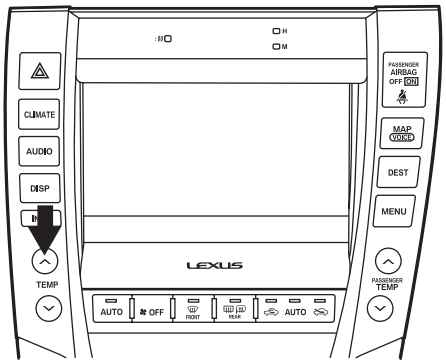

H

E130406E02

(e) If the steps are difficult to read because they change automatically, push the "UPDr" switch to display the steps one at a time so that they can be read easily. The items are displayed step by step each time the "UPDr" switch is pushed.

HINT:

- Push the "OFF" switch to finish panel diagnosis.
- Push the "R/F" switch to enter the sensor check mode.

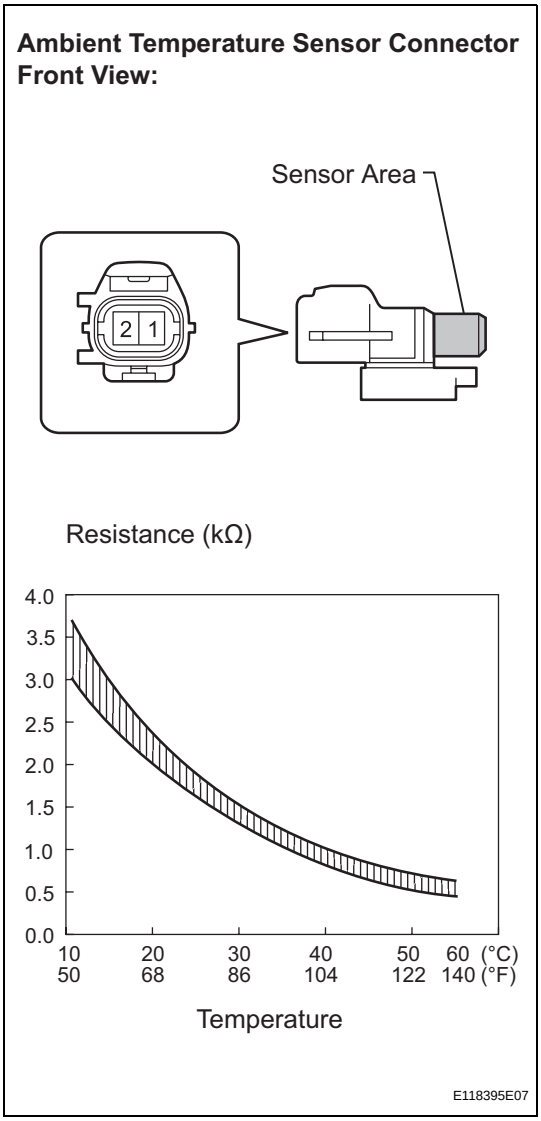

INSPECTION

1. INSPECT AMBIENT TEMPERATURE SENSOR

(a) Measure the resistance according to the value(s) in the table below.

Standard resistance

Tester Connection	Condition	Specified Condition
1 - 2	10°C (50°F)	3.00 to 3.73 kΩ
1 - 2	15°C (59°F)	2.45 to 2.88 kΩ
1 - 2	20°C (68°F)	1.95 to 2.30 kΩ
1 - 2	25°C (77°F)	1.60 to 1.80 kΩ
1 - 2	30°C (86°F)	1.28 to 1.47 kΩ
1 - 2	35°C (95°F)	1.00 to 1.22 kΩ
1 - 2	40°C (104°F)	0.80 to 1.00 kΩ
1 - 2	45°C (113°F)	0.65 to 0.85 kΩ
1 - 2	50°C (122°F)	0.50 to 0.70 kΩ
1 - 2	55°C (131°F)	0.44 to 0.60 kΩ
1 - 2	60°C (140°F)	0.36 to 0.50 kΩ

NOTICE:

- **Even slightly touching the sensor may change the resistance value. Be sure to hold the connector of the sensor.**
- **When measuring, the sensor temperature must be the same as the ambient temperature.**

HINT:

As the temperature increases, the resistance decreases (see the graph).

If the resistance is not as specified, replace the ambient temperature sensor.

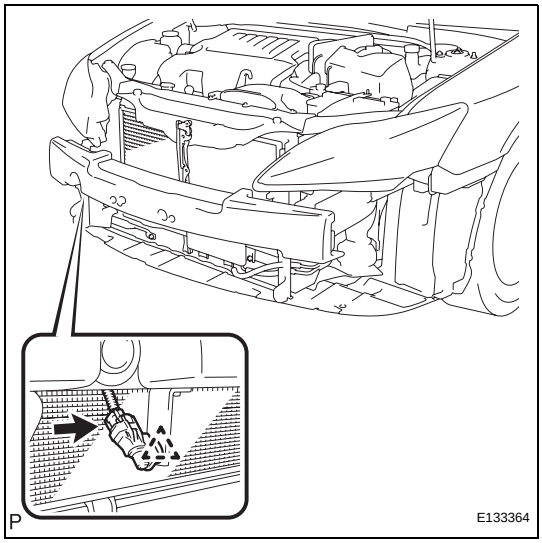

INSTALLATION

1. INSTALL AMBIENT TEMPERATURE SENSOR

(a) Install the ambient temperature sensor with the clamp.

(b) Connect the connector.

2. INSTALL FRONT BUMPER ASSEMBLY (See page ET-14)

3. INSTALL COOL AIR INTAKE DUCT SEAL (See page ET-14)

REMOVAL

1. **REMOVE SHIFT LEVER KNOB SUB-ASSEMBLY (See page IP-16)**
2. **REMOVE UPPER CONSOLE PANEL SUB-ASSEMBLY WITH FRONT ASH RECEPTACLE (See page IP-16)**
3. **REMOVE INSTRUMENT PANEL FINISH PANEL END LH (See page IP-13)**
4. **REMOVE INSTRUMENT PANEL FINISH PANEL END RH (See page IP-15)**
5. **REMOVE NO. 2 INSTRUMENT PANEL REGISTER ASSEMBLY (See page IP-17)**
6. **REMOVE INTEGRATION CONTROL PANEL WITH RADIO RECEIVER ASSEMBLY (See page AV-168)**
7. **REMOVE NO. 1 RADIO BRACKET (See page AV-168)**
8. **REMOVE NO. 2 RADIO BRACKET (See page AV-169)**
9. **REMOVE RADIO RECEIVER ASSEMBLY (See page AV-169)**

DISASSEMBLY

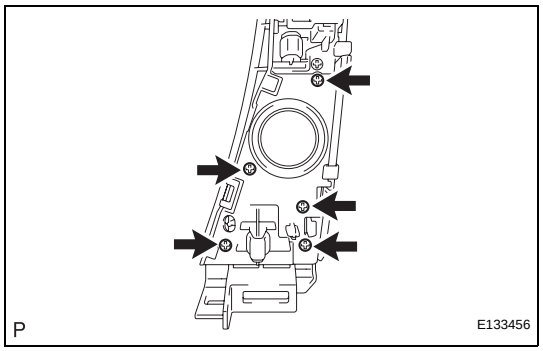

1. **REMOVE HEATER CONTROL ORNAMENT LH**
   (a) Remove the 5 screws and heater control ornament LH.

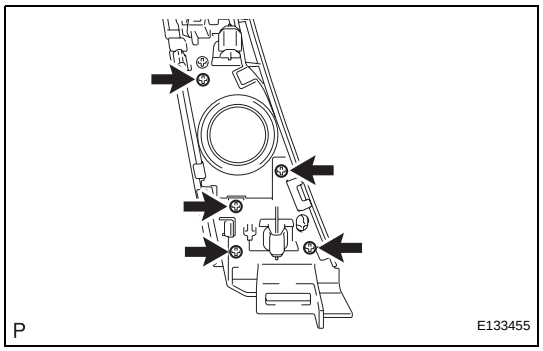

2. **REMOVE HEATER CONTROL ORNAMENT RH**
   (a) Remove the 5 screws and heater control ornament RH.

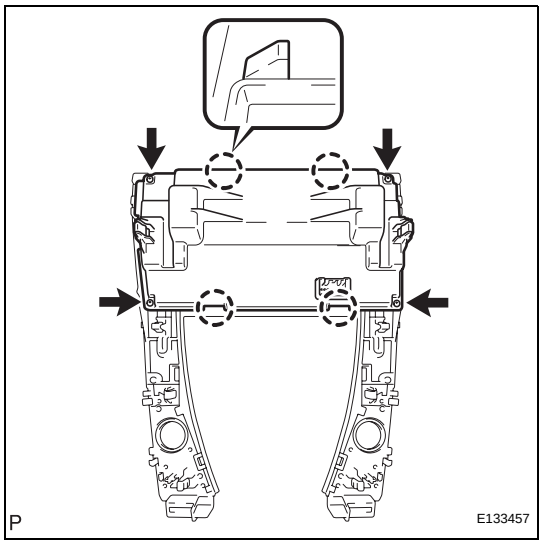

3. REMOVE HEATER CONTROL HOUSING SUB-ASSEMBLY

(a) Remove the 4 screws and disengage the 4 claws. Remove the heater control housing sub-assembly.

4. REMOVE CENTER CLUSTER MODULE CONTROL ASSEMBLY

NOTICE:
When disassembling the center cluster module control assembly, eliminate static electricity by touching the vehicle body to prevent the components from being damaged.

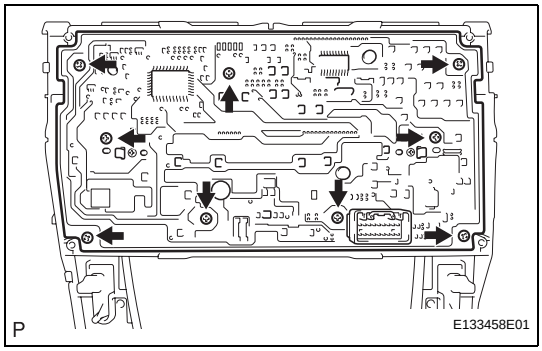

(a) Remove the 9 screws and center cluster module control assembly.
NOTICE:
Do not drop the switches or buttons.

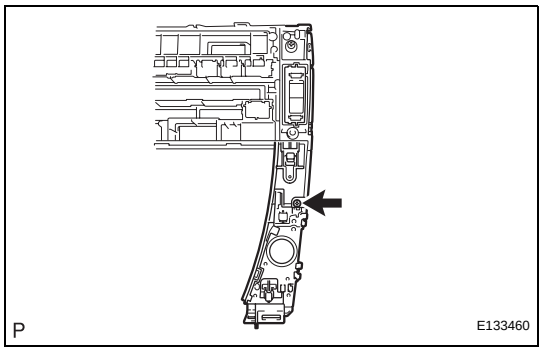

5. REMOVE AIR CONDITIONING PANEL SUB-ASSEMBLY LH

(a) Remove the screw and air conditioning panel sub-assembly LH.

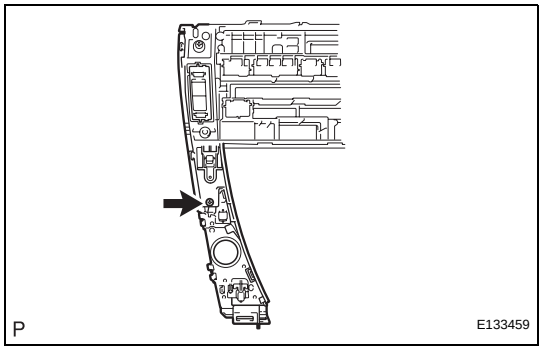

6. REMOVE AIR CONDITIONING PANEL SUB-ASSEMBLY RH

(a) Remove the screw and air conditioning panel sub-assembly RH.

REASSEMBLY

1. INSTALL CENTER CLUSTER MODULE CONTROL ASSEMBLY

NOTICE:

When reassembling the center cluster module control assembly, eliminate static electricity by touching the vehicle body to prevent the components from being damaged.

(a) Install the center cluster module control assembly with the 5 screws.

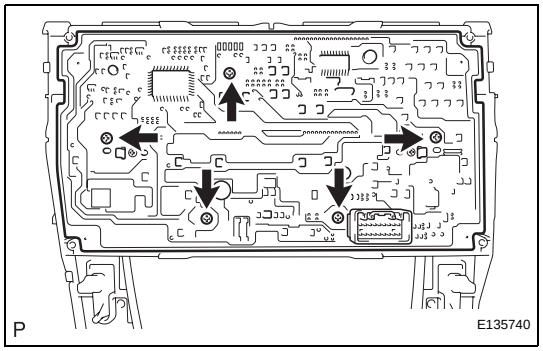

2. INSTALL AIR CONDITIONING PANEL SUB-ASSEMBLY RH

(a) Install the air conditioning panel sub-assembly RH with the 3 screws.

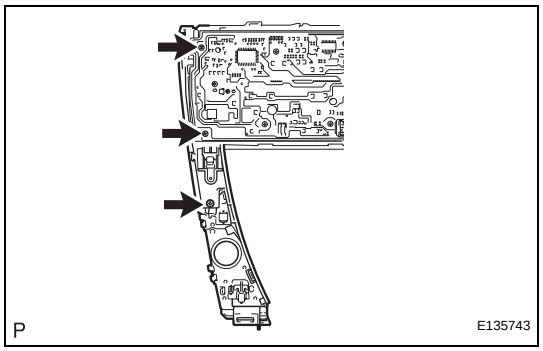

3. INSTALL AIR CONDITIONING PANEL SUB-ASSEMBLY LH

(a) Install the air conditioning panel sub-assembly LH with the 3 screws.

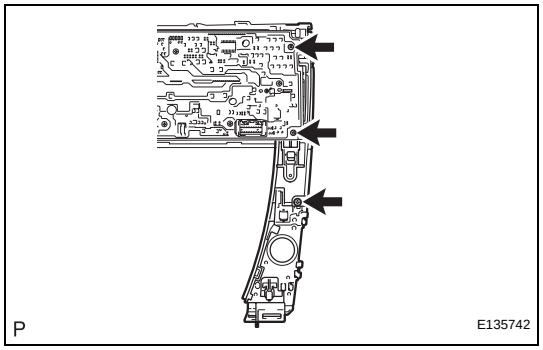

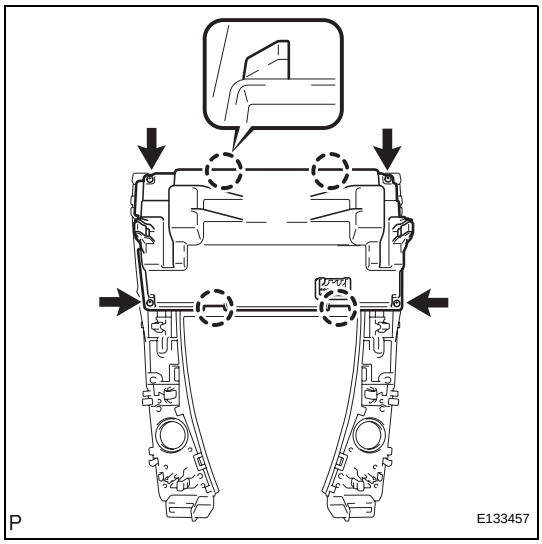

4. INSTALL HEATER CONTROL HOUSING SUB-ASSEMBLY

(a) Engage the 4 claws and install the heater control housing sub-assembly with the 4 screws.

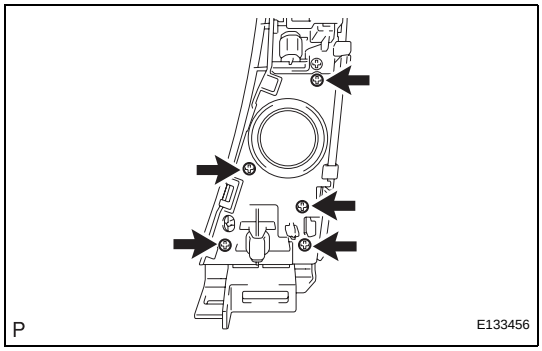

5. INSTALL HEATER CONTROL ORNAMENT LH

(a) Install the heater control ornament LH with the 5 screws.

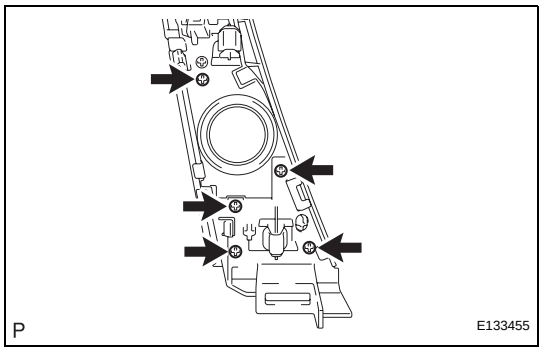

6. INSTALL HEATER CONTROL ORNAMENT RH

(a) Install the heater control ornament RH with the 5 screws.

INSTALLATION

1. **INSTALL RADIO RECEIVER ASSEMBLY (See page AV-171)**
2. **INSTALL NO. 2 RADIO BRACKET (See page AV-172)**
3. **INSTALL NO. 1 RADIO BRACKET (See page AV-172)**
4. **INSTALL INTEGRATION CONTROL PANEL WITH RADIO RECEIVER ASSEMBLY (See page AV-172)**
5. **INSTALL INSTRUMENT PANEL FINISH PANEL END LH (See page IP-46)**
6. **INSTALL INSTRUMENT PANEL FINISH PANEL END RH (See page IP-44)**
7. **INSTALL UPPER CONSOLE PANEL SUB-ASSEMBLY WITH FRONT ASH RECEPTACLE (See page IP-42)**
8. **INSTALL NO. 2 INSTRUMENT PANEL REGISTER ASSEMBLY (See page IP-41)**
9. **INSTALL SHIFT LEVER KNOB SUB-ASSEMBLY (See page IP-42)**
10. **ADJUST CLOCK**

REMOVAL

1. **REMOVE SHIFT LEVER KNOB SUB-ASSEMBLY (See page IP-16)**
2. **REMOVE UPPER CONSOLE PANEL SUB-ASSEMBLY WITH FRONT ASH RECEPTACLE (See page IP-16)**
3. **REMOVE INSTRUMENT PANEL FINISH PANEL END LH (See page IP-13)**
4. **REMOVE INSTRUMENT PANEL FINISH PANEL END RH (See page IP-15)**
5. **REMOVE NO. 2 INSTRUMENT PANEL REGISTER ASSEMBLY (See page IP-17)**
6. **REMOVE INTEGRATION CONTROL PANEL WITH RADIO RECEIVER ASSEMBLY (See page AV-168)**
7. **REMOVE NO. 1 RADIO BRACKET (See page AV-168)**
8. **REMOVE NO. 2 RADIO BRACKET (See page AV-169)**
9. **REMOVE RADIO RECEIVER ASSEMBLY (See page AV-169)**

DISASSEMBLY

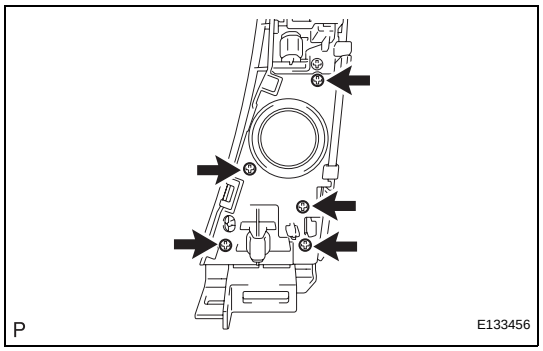

1. **REMOVE HEATER CONTROL ORNAMENT LH**
   (a) Remove the 5 screws and heater control ornament LH.

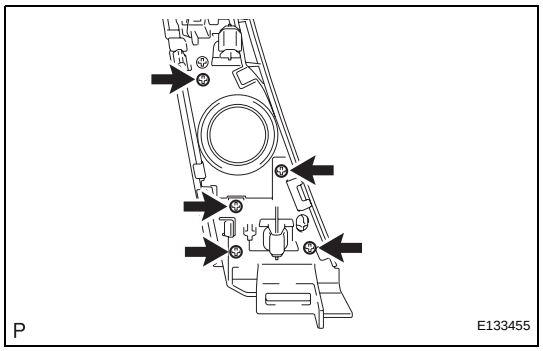

2. **REMOVE HEATER CONTROL ORNAMENT RH**
   (a) Remove the 5 screws and heater control ornament RH.

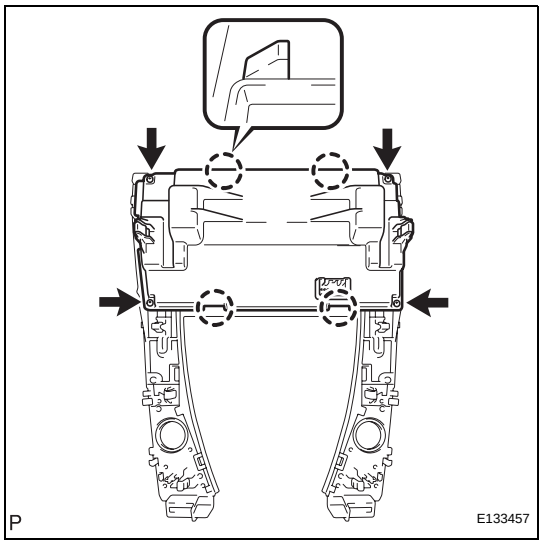

3. REMOVE HEATER CONTROL HOUSING SUB-ASSEMBLY

(a) Remove the 4 screws and disengage the 4 claws. Remove the heater control housing sub-assembly.

4. REMOVE CENTER CLUSTER MODULE CONTROL ASSEMBLY

NOTICE:
When disassembling the center cluster module control assembly, eliminate static electricity by touching the vehicle body to prevent the components from being damaged.

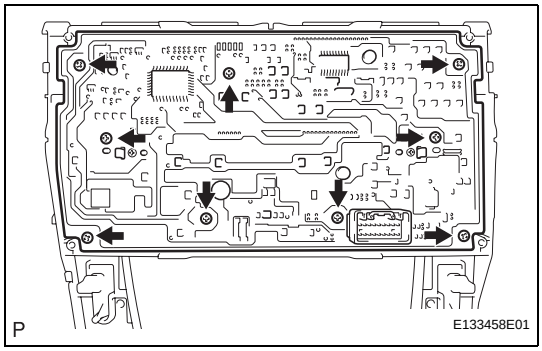

(a) Remove the 9 screws and center cluster module control assembly.
NOTICE:
Do not drop the switches or buttons.

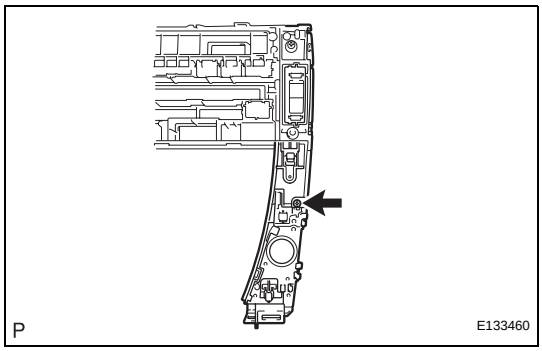

5. REMOVE AIR CONDITIONING PANEL SUB-ASSEMBLY LH

(a) Remove the screw and air conditioning panel sub-assembly LH.

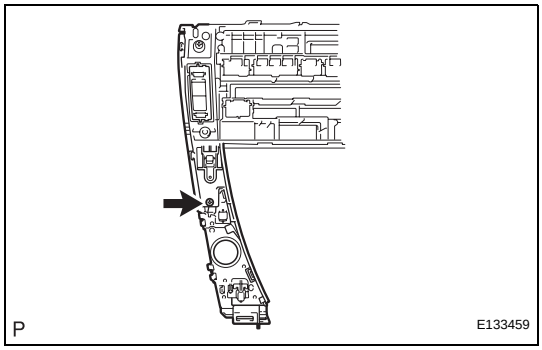

6. REMOVE AIR CONDITIONING PANEL SUB-ASSEMBLY RH

(a) Remove the screw and air conditioning panel sub-assembly RH.

REASSEMBLY

1. INSTALL CENTER CLUSTER MODULE CONTROL ASSEMBLY

NOTICE:

When reassembling the center cluster module control assembly, eliminate static electricity by touching the vehicle body to prevent the components from being damaged.

(a) Install the center cluster module control assembly with the 5 screws.

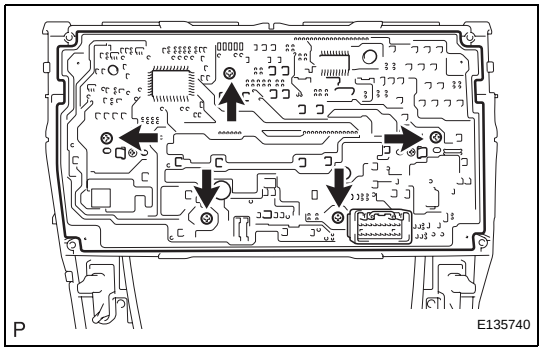

2. INSTALL AIR CONDITIONING PANEL SUB-ASSEMBLY RH

(a) Install the air conditioning panel sub-assembly RH with the 3 screws.

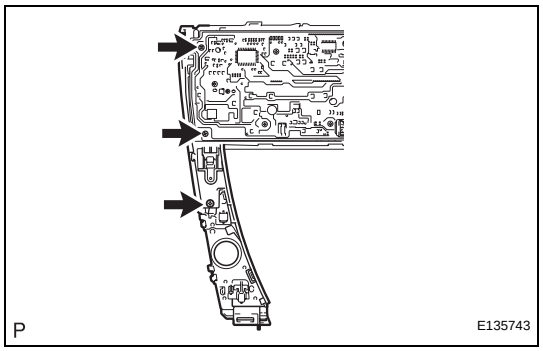

3. INSTALL AIR CONDITIONING PANEL SUB-ASSEMBLY LH

(a) Install the air conditioning panel sub-assembly LH with the 3 screws.

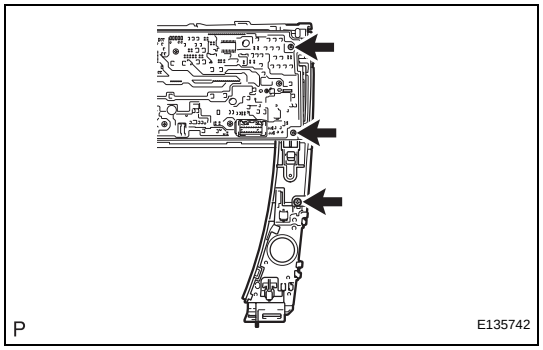

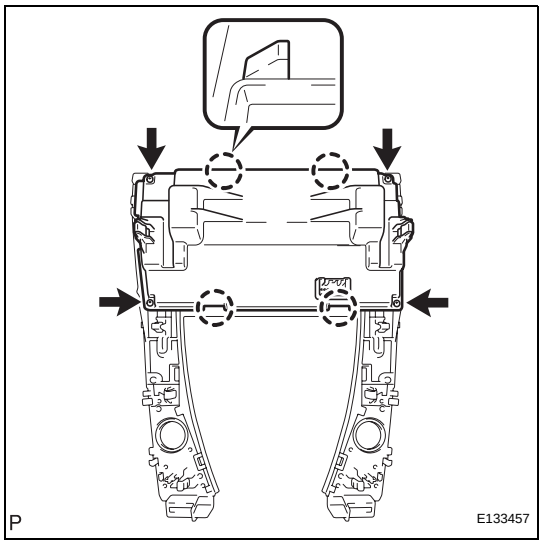

4. INSTALL HEATER CONTROL HOUSING SUB-ASSEMBLY

(a) Engage the 4 claws and install the heater control housing sub-assembly with the 4 screws.

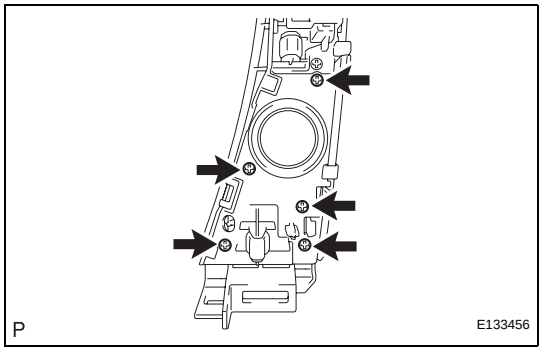

5. INSTALL HEATER CONTROL ORNAMENT LH

(a) Install the heater control ornament LH with the 5 screws.

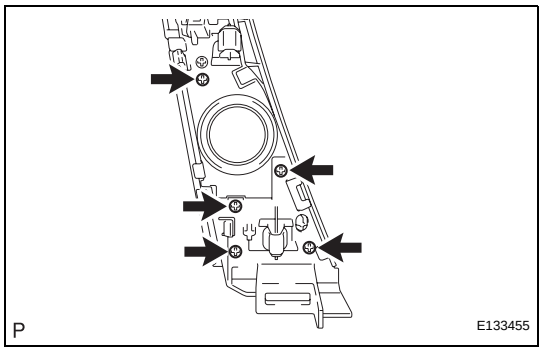

6. INSTALL HEATER CONTROL ORNAMENT RH

(a) Install the heater control ornament RH with the 5 screws.

AIR CONDITIONING AMPLIFIER

COMPONENTS

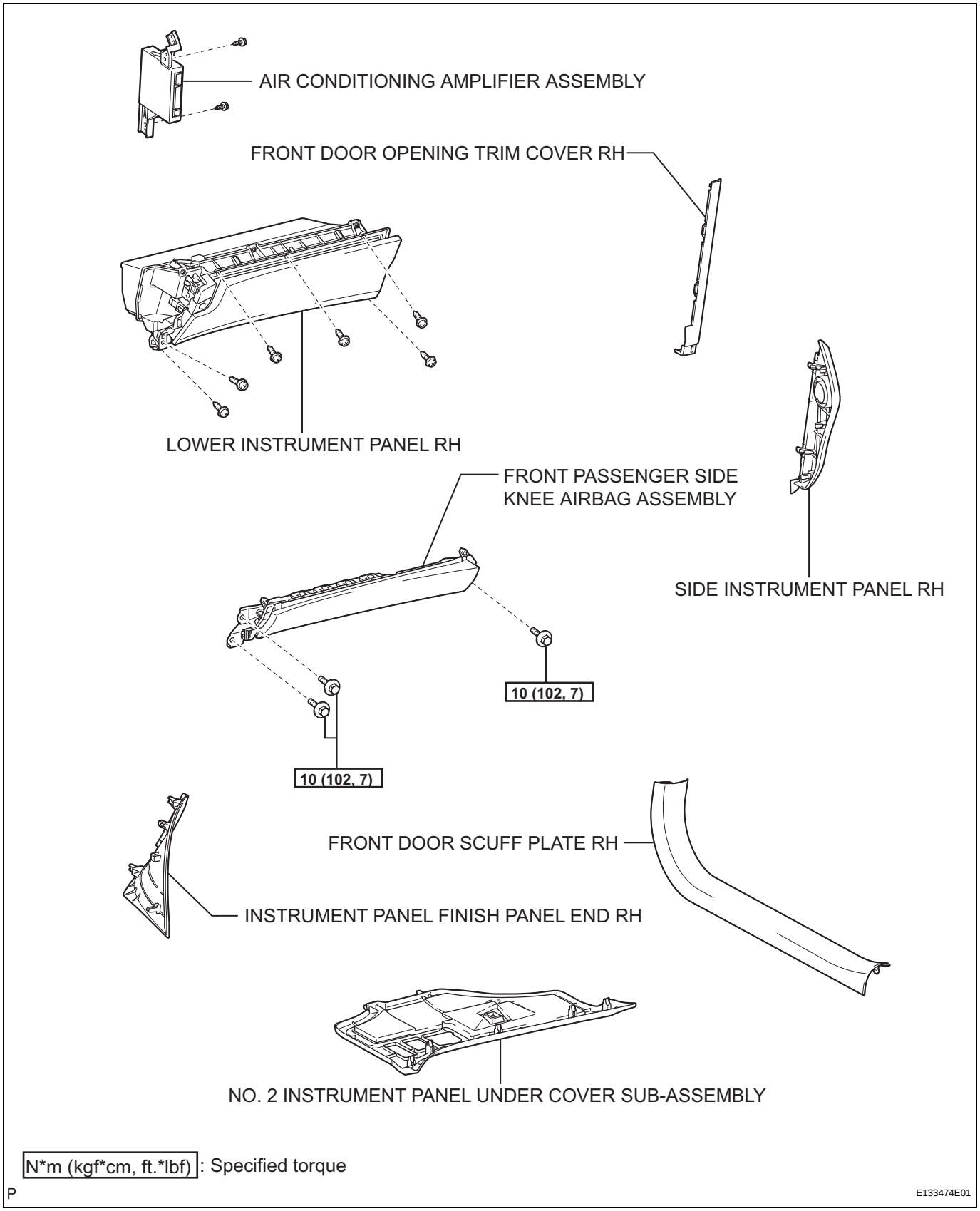

AC

REMOVAL

1. **DISCONNECT CABLE FROM NEGATIVE BATTERY TERMINAL**
   NOTICE:
   Wait for 90 seconds after disconnecting the cable to prevent airbag deployment (See page RS-1).
2. **REMOVE FRONT DOOR SCUFF PLATE RH (See page IR-42)**
3. **REMOVE FRONT DOOR OPENING TRIM COVER RH (See page IR-42)**
4. **REMOVE NO. 2 INSTRUMENT PANEL UNDER COVER SUB-ASSEMBLY (See page IP-15)**
5. **REMOVE SIDE INSTRUMENT PANEL RH (See page IP-15)**
6. **REMOVE FRONT PASSENGER SIDE KNEE AIR BAG ASSEMBLY (See page RS-396)**
7. **REMOVE LOWER INSTRUMENT PANEL RH (See page IP-16)**
8. **REMOVE AIR CONDITIONING AMPLIFIER ASSEMBLY**
   (a) Disconnect the 3 connectors.
   (b) Remove the 2 bolts and air conditioning amplifier assembly.

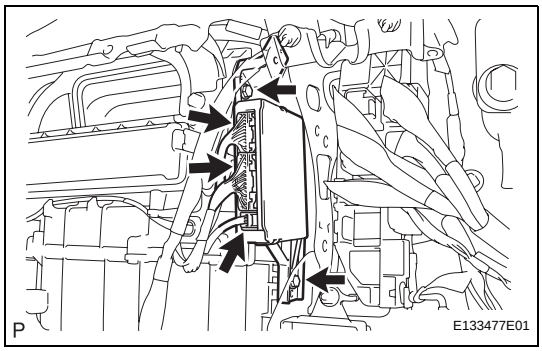

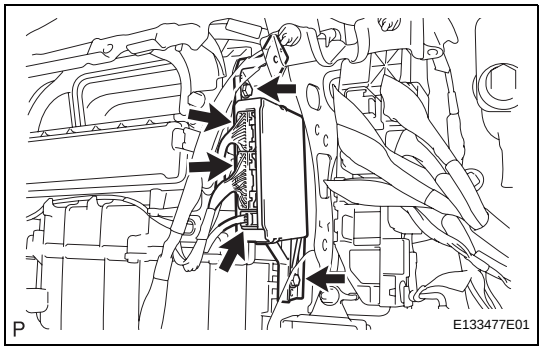

INSTALLATION

1. **INSTALL AIR CONDITIONING AMPLIFIER ASSEMBLY**
   (a) Install the air conditioning amplifier assembly with the 2 bolts.
   (b) Connect the 3 connectors.
2. **INSTALL LOWER INSTRUMENT PANEL RH (See page IP-42)**
3. **INSTALL FRONT PASSENGER SIDE KNEE AIRBAG ASSEMBLY (See page RS-396)**
4. **INSTALL SIDE INSTRUMENT PANEL RH (See page IP-43)**
5. **INSTALL NO. 2 INSTRUMENT PANEL UNDER COVER SUB-ASSEMBLY (See page IP-44)**
6. **INSTALL FRONT DOOR OPENING TRIM COVER RH (See page IR-65)**
7. **INSTALL FRONT DOOR SCUFF PLATE RH (See page IR-65)**

8. **INSTALL INSTRUMENT PANEL FINISH PANEL END RH (See page IP-44)**

9. **CONNECT CABLE TO NEGATIVE BATTERY TERMINAL**

10. **INSPECT FRONT PASSENGER SIDE KNEE AIRBAG ASSEMBLY (See page RS-395)**

11. **INSPECT SRS WARNING LIGHT**
    (a) Inspect the SRS warning light (See page RS-37).

12. **PERFORM INITIALIZATION**
    NOTICE:
    Some systems need initialization after reconnecting the negative battery terminal (See page IN-33).

SYSTEM DESCRIPTION

1. PRE-COLLISION SYSTEM

(a) The pre-collision system optimizes and activates occupant protection equipment (see below) to attempt to reduce damage due to a collision.

2. OUTLINE OF PRE-COLLISION SYSTEM

Operating Condition	Control	Transmitting ECU	Receiving ECU	Part operated
Operates according to sensor detection	Pre-collision seat belts	Distance control ECU	Seat belt control ECU	Front seat outer belts
Operates according to sensor detection	Pre-collision brake assist	Distance control ECU	Skid control ECU	Brake assist system
Operates when sudden braking occurs	Pre-collision seat belts	Skid control ECU	Seat belt control ECU	Front seat outer belts

(a) When operating according to sensor detection:
The millimeter wave radar sensor detects vehicles and other objects on the road in front of the user's vehicle. The distance control ECU determines if a collision is unavoidable based on object position, speed and track information. If the distance control ECU determines that a collision is unavoidable, it transmits this information to the following areas using CAN communication:
- Seat belt control ECU (initiates control of pre-collision seat belts)
- Skid control ECU (activates pre-collision brake assist system)

(b) When operating as a result of sudden braking:
The skid control ECU uses brake pressure information and other data to determine if the driver has suddenly applied the brakes. If so, the skid control ECU sends a signal to the seat belt control ECU through CAN communication and the pre-collision seat belt activates.

3. OUTLINE OF PRE-COLLISION SEAT BELT CONTROL

(a) The pre-collision seat belt operates depending on what the sensor detects, or whether sudden braking has occurred. The pre-collision seat belt motor tightens the seat belt to optimize occupant restraint performance.

(b) Operative condition

(1) Refer to the sensor and sudden braking descriptions under "outline of pre-collision system" (see above).

4. OUTLINE OF PRE-COLLISION BRAKE ASSIST SYSTEM

(a) The pre-collision brake assist system operates depending on what the sensor detects. The system then enters standby mode before a collision. When the driver depresses the brake pedal, brake fluid pressure is increased to improve fluid pressure response and improve vehicle speed reduction rate.

(b) Operative condition
(1) Refer to the sensor description under "outline of pre-collision system" (see above).
(2) When the driver depresses the brake pedal after the distance control ECU determines that a collision is unavoidable:
Brake fluid pressure is increased at the same time the driver depresses the brake pedal.
(3) When the driver depresses the brake pedal before the distance control ECU determines that a collision is unavoidable:
Brake fluid pressure is increased at the same time that the distance control ECU receives a pre-collision sensor signal (indicating that other vehicles or objects are in front of the vehicle).

5. OPERATIVE CONDITION AND INOPERATIVE CONDITION OF EACH CONTROL (REVIEW)

	Pre-collision seat belts (*1)	Pre-collision seat belts (*2)	Pre-collision brake assist (*2)
Engine switch off or on (ACC)	-	-	-
When a warning message is displayed on the multi-information display	*3	*3	*3
When seat belt(s) is/are fastened	*4	*4	-
Operates when the vehicle speed is 30 km/h (18.6 mph) or more, regardless of relative speed	○	-	-
Operates when the vehicle speed is 5 km/h (3.1 mph) or more and relative speed is 30 km/h (18.6 mph) or more	-	○	-
When the vehicle collides with an object outside the detection range of the millimeter wave radar sensor (side collision, rear collision, etc.)	○	-	-
When the millimeter wave radar sensor cannot detect a possible collision object	○	-	-
Operates when the vehicle speed is 30 km/h (18.6 mph) or more, regardless of relative speed 30 km/h (18.6 mph) or more	-	-	○

*1: Operates when brakes are suddenly applied.
*2: Operates according to sensor detection.
*3: Inoperative parts are different depending on malfunction areas.
*4: Only operates when seat belt is fastened.

6. PRECAUTION FOR PRE-COLLISION SYSTEM OPERATION

(a) When the millimeter wave radar sensor detects an object in front of the vehicle under the conditions described below, the distance control ECU may determine that a collision is unavoidable, and activate the pre-collision system. This activation of the system is normal.

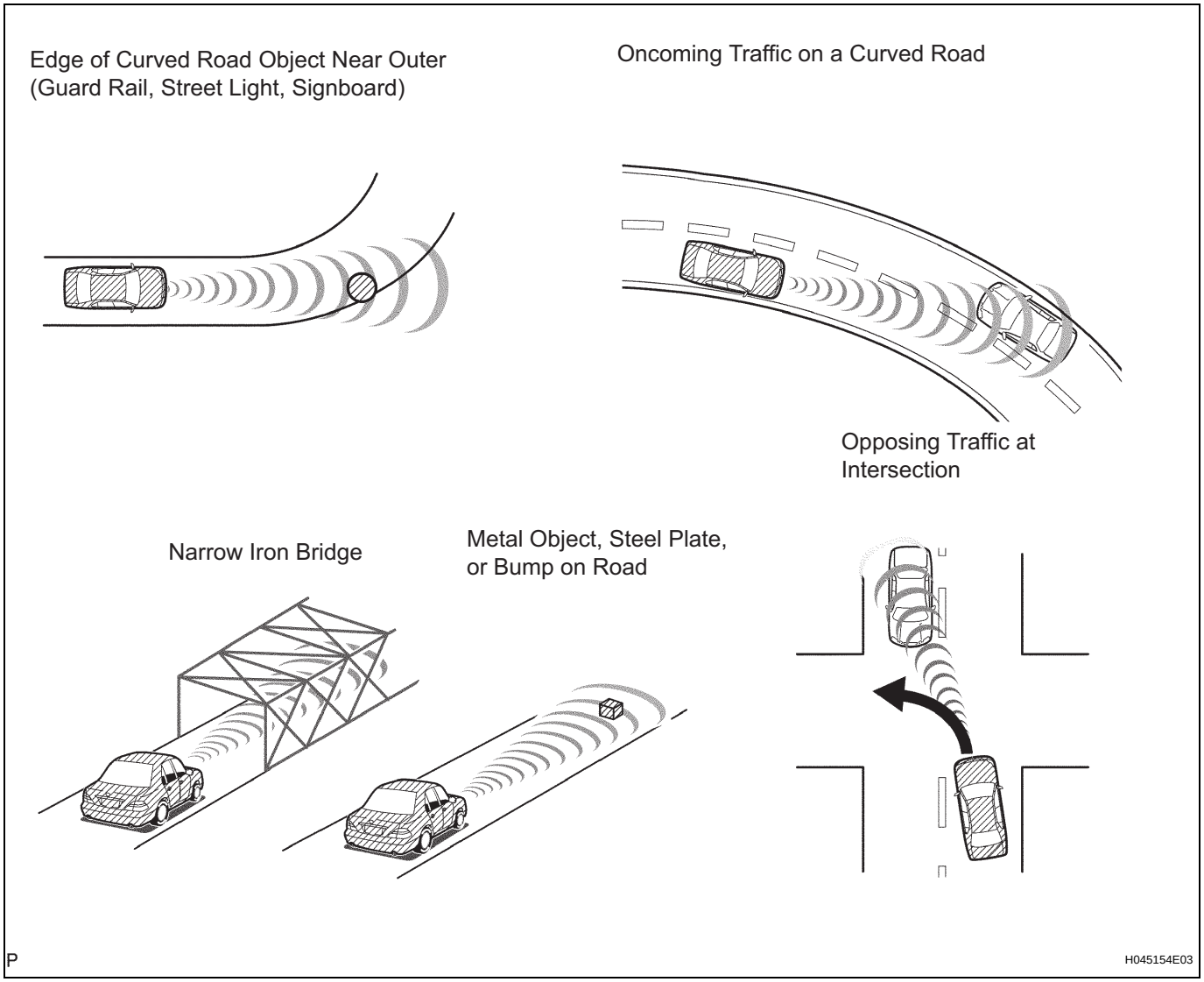

HINT:

- The pre-collision system will not activate when the pre-collision sensor detects safety cones and other plastic objects.
- The pre-collision system may or may not activate when the pre-collision sensor detects the following objects: people, bicycles, motorcycles, trees, animals and snow fences.

Object Type	Example
Objects that cannot be detected	Plastic items (safety cones)
Objects that cannot be detected in a stable manner	People, bicycles, motorcycles, trees, animals, snow fence, etc

HOW TO PROCEED WITH TROUBLESHOOTING

HINT:
- Use the following procedures to troubleshoot the pre-collision system.
- The intelligent tester should be used in steps 2, 3 and 5.

1 VEHICLE BROUGHT TO WORKSHOP

NEXT

2 CHECK CAN COMMUNICATION SYSTEM

(a) Use the intelligent tester to check if the CAN communication system is functioning normally.
  (1) Perform bus check (Communication malfunctioning DTC).
  (2) Perform bus check (Communication Bus check).
  Result

DTC Condition	Proceed to
DTC is not output	A
DTC is output	B (See page CA-49)

B → GO TO CAN COMMUNICATION SYSTEM

A

3 CHECK FOR DTC

(a) Check for DTCs.
  (1) Record the DTCs.
(b) Clear the DTCs.
(c) Recheck for DTCs.
  (1) Attempt to duplicate the malfunction and check if the DTCs are output again (See page PC-14).
  Result

DTC Condition	Proceed to
DTC is not output	A
DTC is output	B (See page PC-17)
No DTC is output, and malfunction cannot be duplicated or checked	C (See page IN-39)

B → GO TO DTC CHART

C → SYMPTOM SIMULATION

A

4	**PROBLEM SYMPTOMS TABLE**

(a) If the result is not listed on the problem symptoms table, proceed to A.
(b) If the result is listed on the problem symptoms table, proceed to B.

B → **GO TO STEP 7**

A

5	**OVERALL ANALYSIS AND TROUBLESHOOTING**

(a) DATA LIST/ACTIVE TEST (See page PC-15).
(b) Terminals of ECU (See page PC-12).

NEXT

6	**ADJUST, REPAIR OR REPLACE**

NEXT

7	**CONFIRMATION TEST**

NEXT

END

INITIALIZATION

1. Precautions for Seat Belt Control ECU Replacement

The seat belt control ECU operates the pre-collision system based on the stored data that informs that the vehicle is LHD or RHD model. LHD or RHD refers to the seating position of the driver, not which side of the road the vehicle is driven on.

Therefore, when replacing the seat belt control ECU, it is necessary to store the information about whether the vehicle is a LHD or RHD model. This can be performed by following the steps below:

(a) Turn the engine switch on (IG).

(b) The PCS warning light comes on for at least 3 seconds after turning the engine switch on (IG). Make sure that the warning light does not remain on.

(c) At this time, the seat belt control ECU receives vehicle configuration (LHD/RHD) information from the gateway ECU and stores it in memory.

(1) Connect the intelligent tester (with CAN VIM) to the DLC3.

(2) Turn the engine switch on (IG).

(3) Following the display on the tester, select the "Active Test".

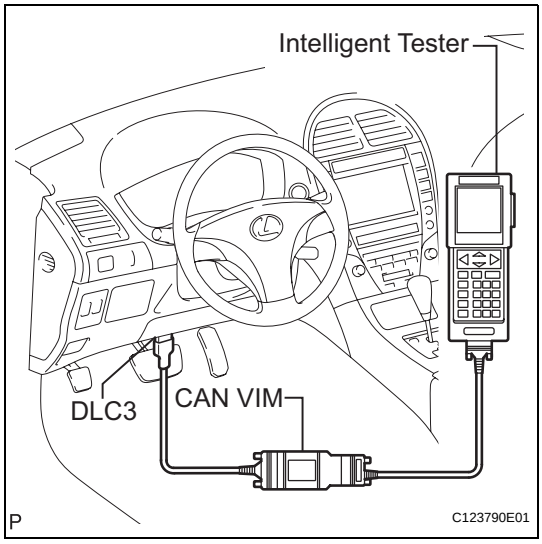

Seat Belt Control ECU:

Tester Display	Test Part	Control Range	Diagnostic Note
D BELT MOTOR	Driver's seat belt motor	ON: Seat belt motor operate OFF: Seat belt motor does not operate	Seat belt (driver side) is fastened
P BELT MOTOR	Passenger's seat belt motor	ON: Seat belt motor operate OFF: Seat belt motor does not operate	Seat belt (passenger side) is fastened

PROBLEM SYMPTOMS TABLE

PRE-COLLISION SYSTEM

Symptom	Suspected Area	See page
System operates when the possibility of collision does not exist	1. Check if inoperative conditions of the system are met	PC-17
	2. Millimeter wave radar sensor	CC-122
	3. Distance control ECU	CC-118
System does not operate when the possibility of collision exists	1. Check if inoperative conditions of the system are met	PC-17
	2. Millimeter wave radar sensor	CC-122
	3. Distance control ECU	CC-118
Neither normal system code nor DTC is output	1. Power source circuit	PC-54
System does not operate normally even when normal system code is output and DTCs are not output	1. Power source circuit	PC-54

TERMINALS OF ECU

1. SEAT BELT CONTROL ECU

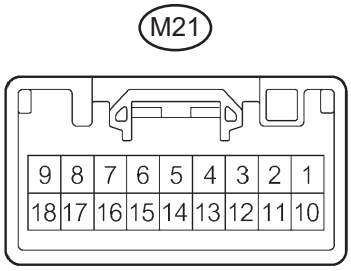

H G025193E06

Terminal No. (Symbols)	Wiring Color	Terminal Description	Condition	Specified Value
M21-1 (MOR+) - M21-18 (PGND)	Y - W-B	Seat belt motor RH power source line	Engine switch on (IG)	4.0 to 8.5 V
M21-2 (MOL+) - M21-18 (PGND)	L - W-B	Seat belt motor LH power source line	Engine switch on (IG)	4.0 to 8.5 V
M21-3 (IG1) - Body ground	R - Body ground	Seat belt control ECU power source line	Engine switch on (IG)	10 to 14 V
M21-9 (+B) - Body ground	BR - W-B	Seat belt control ECU power source line	Always	10 to 14 V
M21-10 (MOR-) - Body ground	B - Body ground	Seat belt motor RH ground line	Engine switch on (IG)	4.0 to 8.5 V
M21-11 (MOL-) - Body ground	W - Body ground	Seat belt motor LH ground line	Engine switch on (IG)	4.0 to 8.5 V
M21-18 (PGND) - Body ground	W-B - Body ground	Seat belt control ECU ground line	Always	Below 1 Ω

DIAGNOSIS SYSTEM

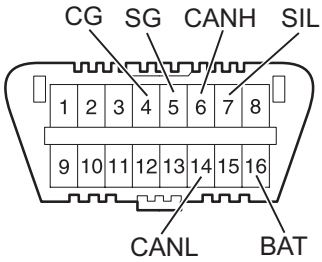

T H100769E16

1. CHECK DLC3

(a) The vehicle's ECU uses ISO 15765-4 for communication protocol. The terminal arrangement of the DLC3 complies with SAE J1962 and matches the ISO 15765-4 format.

Symbols (Terminal No.)	Terminal Description	Condition	Specified Condition
SIL (7) - SG (5)	Bus "+" line	During transmission	Pulse generation
CG (4) - Body ground	Chassis ground	Always	Below 1 Ω
SG (5) - Body ground	Signal ground	Always	Below 1 Ω
BAT (16) - Body ground	Battery positive	Always	10 to 14 V
CANH (6) - CANL (14)	CAN bus line	Engine switch off*	54 to 69 Ω
CANH (6) - CG (4)	HIGH-level CAN bus line	Engine switch off*	200 Ω or higher
CANL (14) - CG (4)	LOW-level CAN bus line	Engine switch off*	200 Ω or higher
CANH (6) - BAT (16)	HIGH-level CAN bus line	Engine switch off*	6 kΩ or higher
CANL (14) - BAT (16)	LOW-level CAN bus line	Engine switch off*	6 kΩ or higher

NOTICE:
***: Before measuring the resistance, leave the vehicle as is for at least 1 minute and do not operate the engine switch, any other switches or the doors.**
If the result is not as specified, the DLC3 may have a malfunction. Repair or replace the harness and connector.

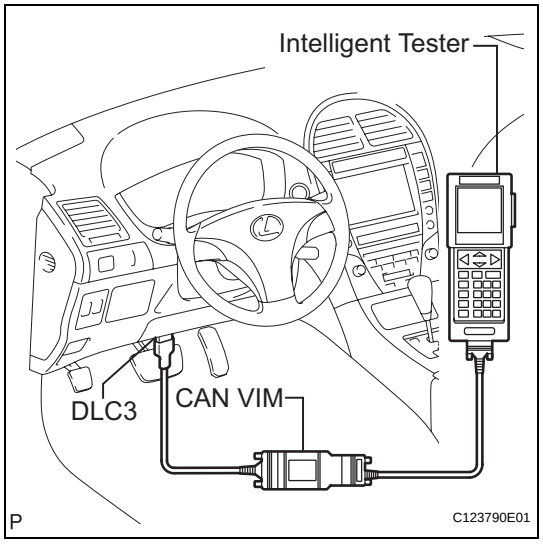

(b) Connect the cable of the intelligent tester (with CAN VIM) to the DLC3, turn the engine switch on (IG) and attempt to use the intelligent tester. If the screen displays a communication error message, a problem exists in the vehicle side or tester side.
HINT:
- If communication is normal when the tool is connected to another vehicle, inspect the DLC3 on the original vehicle.
- If communication is still impossible when the tool is connected to another vehicle, the problem is probably in the tool itself. Consult the Service Department listed in the tool's instruction manual.

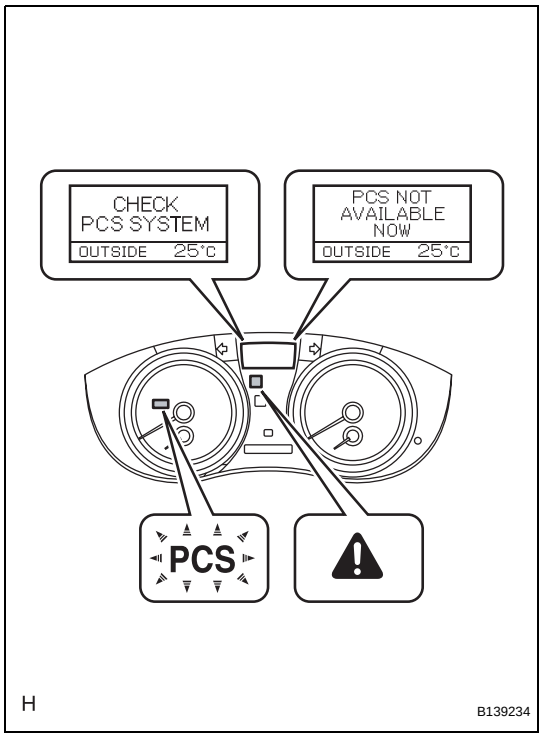

2. FUNCTION OF WARNING INDICATOR AND MESSAGE

(a) If the pre-collision system is not functioning properly, the driver is warned by the master warning indicator and multi-information display warning message on the combination meter.

Master Warning Indicator	Warning Message	Detail	DTC	PCS Warning indicator
ON	CHECK PCS SYSTEM	This message appears when the seat belt control ECU detects a system malfunction	○	ON

Master Warning Indicator	Warning Message	Detail	DTC	PCS Warning indicator
ON	PCS NOT AVAILABLE NOW	This message appears when the seat belt control ECU is in the fail-safe mode (See page PC-11)	-	Blinking

○: DTC is output
-: DTC is not output

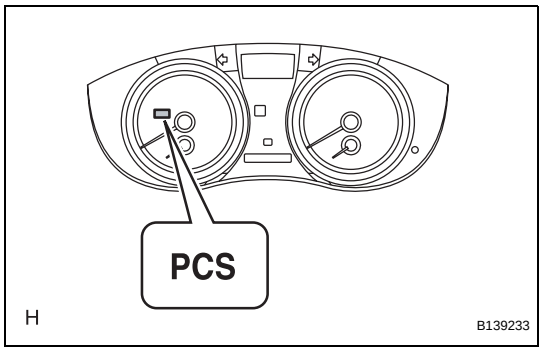

(b) Initial check.
(1) The initial check occurs when the engine switch is off for more than 2 seconds, and then turned on (IG). The initial check consists of a pre-collision system diagnostic check with a duration of approximately 3 seconds.
(2) If a malfunction is detected during the initial check, the multi-information display will output "CHECK PCS SYSTEM " or "PCS NOT AVAILABLE NOW".

(c) Constant check.
(1) The seat belt control ECU and distance control ECU constantly monitor the pre-collision system for malfunctions after the initial check approximately 3 seconds after turning the engine switch on (IG).
(2) "CHECK PCS SYSTEM" or "PCS NOT AVAILABLE NOW" is displayed on the multi-information display in the combination meter assembly when the constant check detects malfunctions in the pre-collision system.

DTC CHECK / CLEAR

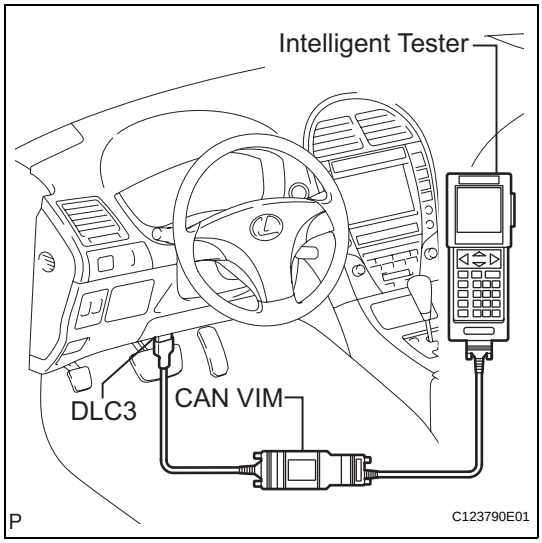

1. CHECK DTC

(a) Check the DTCs.
(1) Connect the intelligent tester (with CAN VIM) to the DLC3.
(2) Turn the engine switch on (IG).
(3) Check the DTCs by following the prompts on the tester screen.
HINT:
Refer to the intelligent tester operator's manual for further details.

(b) Clear the DTCs.
(1) Connect the intelligent tester (with CAN VIM) to the DLC3.
(2) Turn the engine switch on (IG).
(3) Clear the DTCs by following the prompts on the tester screen.
HINT:
Refer to the intelligent tester operator's manual for further details.

FAIL-SAFE CHART

HINT:
The pre-collision system fail-safe function and details are indicated in the table below.

Cause	Warning message	Fail-safe Operation	Conditions to return to normal condition
A malfunction exists in part of pre-collision system	"CHECK PCS SYSTEM " to "PCS NOT AVAILABLE NOW"	Depending on malfunction part, pre-collision seat belt or brake assist system may stop operating*2	Repair malfunctioning part
Radiator grille or millimeter wave radar sensor is dirty	"PCS NOT AVAILABLE NOW"	Depending on dirty part, pre-collision seat belt or brake assist system may stop operating*2	Clean radiator grille or millimeter wave radar sensor
Pre-collision sensor cannot detect possible crash object because of bad weather, such as snow	"PCS NOT AVAILABLE NOW"	Depending on dirty part, pre-collision seat belt or brake assist system may stop operating*2	Sensor can detect an object
Overheating prevention function of seat belt control ECU operates*1	"PCS NOT AVAILABLE NOW"	Pre-collision seat belts	Temperature of seat belt drops, and seat belt control ECU becomes operative

*1: The overheating prevention function operates when the seat belt control ECU detects a rise in seat belt temperature because of excessive seat belt operation.
*2: The pre-collision seat belts operate only with sudden braking.

DATA LIST / ACTIVE TEST

1. DATA LIST

HINT:
Using the intelligent tester to read the Data List allows the values or states of switches, sensors, actuators and other items to be read without removing any parts. This non-intrusive inspection can be very useful as intermittent conditions or signals may be discovered before parts or wiring are disturbed. Reading the Data List information early in troubleshooting is one way to save diagnostic time.

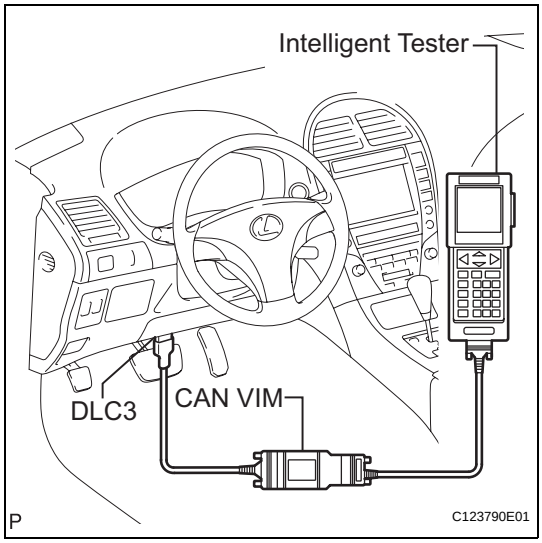

(a) Connect the intelligent tester (with CAN VIM) to the DLC3.
(b) Turn the engine switch on (IG).
(c) By following the display on the tester, select the "Data List".

PRE-COLLISION:

Tester Display	Measurement Item/Range	Normal Condition	Diagnostic Note
D BUCKLE SW	Buckle switch status of driver's seat / UNSET: Unfasten driver side seat belt SET: Fasten driver side seat belt NG: Indeterminate data	UNSET / SET	-
P BUCKLE SW	Buckle switch status of passenger's seat / UNSET: Unfasten passenger side seat belt SET: Fasten passenger side seat belt NG: Indeterminate data	UNSET / SET	-
D BELT CTRL	Seat belt control status of driver's seat / STOP: Control stopped ON: Controlled ERROR: Indeterminate data	STOP / ON	Seat belt (driver side) is fastened
P BELT CTRL	Seat belt control status of passenger's seat / STOP: Control stopped ON: Controlled ERROR: Indeterminate data	STOP / ON	Seat belt (passenger side) is fastened
#PRESENT CODES	Number of present trouble codes / min: 0, max: 255	Number of DTCs will be displayed	-
#PAST CODES	Number of past trouble codes / min: 0, max: 255	Number of DTCs will be displayed	-

2. ACTIVE TEST

HINT:

Using the intelligent tester to perform Active Test allows the operation or effects of relays, VSVs, actuators and other items to be tested without removing any parts. This non-intrusive inspection can be very useful as intermittent conditions or operation may be discovered before parts or wiring are disturbed. Using the Active Test early in troubleshooting is one way to save diagnostic time. It is possible to view Data List information on the intelligent tester while performing Active Tests.

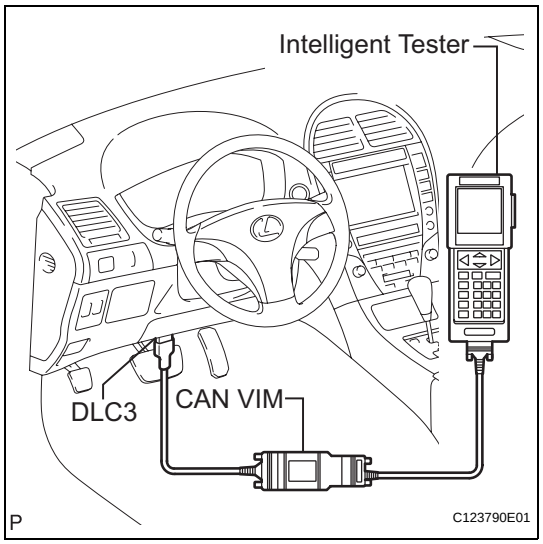

(a) Connect the intelligent tester (with CAN VIM) to the DLC3.

(b) Turn the engine switch on (IG).

(c) Following the display on the tester, select the "Active Test".

PRE-COLLISION:

Tester Display	Test Part	Control Range	Diagnostic Note
D BELT MOTOR	Driver's seat belt motor	ON: Seat belt motor operates OFF: Seat belt motor does not operate	Seat belt (driver side) is fastened
P BELT MOTOR	Passenger's seat belt motor	ON: Seat belt motor operates OFF: Seat belt motor does not operate	Seat belt (passenger side) is fastened
D-P BELT MOTOR	Driver's and passenger's seat belt motor	ON: Seat belt motors operate OFF: Seat belt motors do not operate	Seat belts (driver and passenger) are fastened

NOTICE:

- **The belt motor does not operate when the buckle switch is off .**
- **Do not operate the motor continuously to prevent overheating of the motor. Allow a 30 second interval between each test.**

DIAGNOSTIC TROUBLE CODE CHART

PRE-COLLISION SYSTEM DIAGNOSTIC TROUBLE CODE CHART

DTC Code	Detection Item	Trouble Area	See page
B2000	Short to B+ in Seat Belt Motor RH Circuit	1. Front seat outer belt assembly RH 2. Wire harness 3. Seat belt control ECU	PC-20
B2001	Short to GND in Seat Belt Motor RH Circuit	1. Front seat outer belt assembly RH 2. Wire harness 3. Seat belt control ECU	PC-22
B2002	Open in Seat Belt Motor RH Circuit	1. Front seat outer belt assembly RH 2. Wire harness 3. Seat belt control ECU	PC-24
B2005	Short to B+ in Seat Belt Motor LH Circuit	1. Front seat outer belt assembly LH 2. Wire harness 3. Seat belt control ECU	PC-26
B2006	Short to GND in Seat Belt Motor LH Circuit	1. Front seat outer belt assembly LH 2. Wire harness 3. Seat belt control ECU	PC-28
B2007	Open in Seat Belt Motor LH Circuit	1. Front seat outer belt assembly LH 2. Wire harness 3. Seat belt control ECU	PC-30
B2015	Open in Right Side Upper MOS	Seat belt control ECU	PC-32
B2016	Open in Right Side Lower MOS	Seat belt control ECU	PC-32
B2020	Open in Left Side Upper MOS	Seat belt control ECU	PC-32
B2021	Open in Left Side Lower MOS	Seat belt control ECU	PC-32
B2025	Right Side Current Detection Circuit Malfunction Hi	Seat belt control ECU	PC-32
B2026	Right Side Current Detection Circuit Malfunction Lo	Seat belt control ECU	PC-32
B2027	Right Side Over-Current Malfunction	Seat belt control ECU	PC-32
B2030	Left Side Current Detection Circuit Malfunction Hi	Seat belt control ECU	PC-32
B2031	Left Side Current Detection Circuit Malfunction Lo	Seat belt control ECU	PC-32
B2032	Left Side Over-Current Malfunction	Seat belt control ECU	PC-32
B2035	Power Supply Relay Adherence Malfunction	1. Front seat outer belt assembly RH 2. Front seat outer belt assembly LH 3. Wire harness 4. Seat belt control ECU	PC-34
B2036	Power Supply Relay Malfunction Open	Seat belt control ECU	PC-32
B2040	EEPROM Malfunction	Seat belt control ECU	PC-32
B2041	Fall of Raised Voltage	Seat belt control ECU	PC-32
B2043	Fall of B+ Voltage	Seat belt control ECU	PC-32
B2047	Seat Belt Control ECU Inner Circuit Malfunction	Seat belt control ECU	PC-32
B2055	Radar Sensor Malfunction	1. Millimeter wave radar sensor 2. Seat belt control ECU	PC-38
B2056	Axial Gap of Radar Sensor	1. Millimeter wave radar sensor 2. Seat belt control ECU	PC-39

DTC Code	Detection Item	Trouble Area	See page
B2057	Yaw Rate Sensor	1. Yaw rate sensor 2. Seat belt control ECU	PC-40
B2058	Steering Angle Sensor	1. Steering angle sensor 2. Seat belt control ECU	PC-42
B2059	Vehicle Speed Malfunction	1. Combination meter assembly 2. ECM 3. Skid control ECU 4. Distance control ECU 5. Seat belt control ECU	PC-44
B2060	ABS Malfunction	1. Skid control ECU 2. Seat belt control ECU	PC-46
B2065	Distance Control ECU Malfunction	1. Distance control ECU 2. Seat belt control ECU	PC-48
B2074	Driver Side Seat Belt Buckle Switch Circuit Malfunction	1. Wire harness 2. Front seat inner belt LH assembly 3. Center airbag sensor assembly 4. Seat belt control ECU	PC-49
B2075	Passenger Side Seat Belt Buckle Switch Circuit Malfunction	1. Wire harness 2. Front seat inner belt RH assembly 3. Occupant classification ECU 4. Center airbag sensor assembly 5. Seat belt control ECU	PC-49
U0100	Lost Communication with ECM/ PCM "A"	1. CAN communication system 2. ECM 3. Distance control ECU	PC-52
U0122	Lost Communication with Vehicle Dynamics Control Module	1. CAN communication system 2. Skid control ECU 3. Seat belt control ECU	PC-52
U0151	Lost Communication with Airbag ECU	1. CAN communication system 2. Center airbag sensor assembly 3. Seat belt control ECU	PC-52
U0235	Lost Communication with Cruise Control Front Distance Range Sensor	1. CAN communication system 2. Millimeter wave radar sensor 3. Distance control ECU	PC-53
U1101	Lost Communication with Distance Control ECU	1. CAN Communication system 2. Distance control ECU 3. Seat Belt Control ECU	PC-52
U1102	Lost Communication with Radar Sensor	1. CAN communication system 2. Millimeter wave radar sensor 3. Distance control ECU	PC-53

DTC	B2000	Short to B+ in Seat Belt Motor RH Circuit

DESCRIPTION

The seat belt control ECU receives information from the distance control ECU through CAN communication and tightens the seat belt by operating the motor in the front seat outer belt assembly RH.

CAUTION:

The pretensioner is built into the front seat outer belt assembly RH. Be sure to follow the correct inspection procedure, as failure to follow the correct procedure (such as inspection of incorrect connectors) may deploy the pretensioner.

DTC No.	DTC Detection Condition	Trouble Area
B2000	• Short to B+ in the seat belt motor RH circuit continues for 1 second or more • Short in the seat belt motor RH circuit	• Front seat outer belt assembly RH • Wire harness (seat belt control ECU - front seat outer belt assembly RH) • Seat belt control ECU

WIRING DIAGRAM

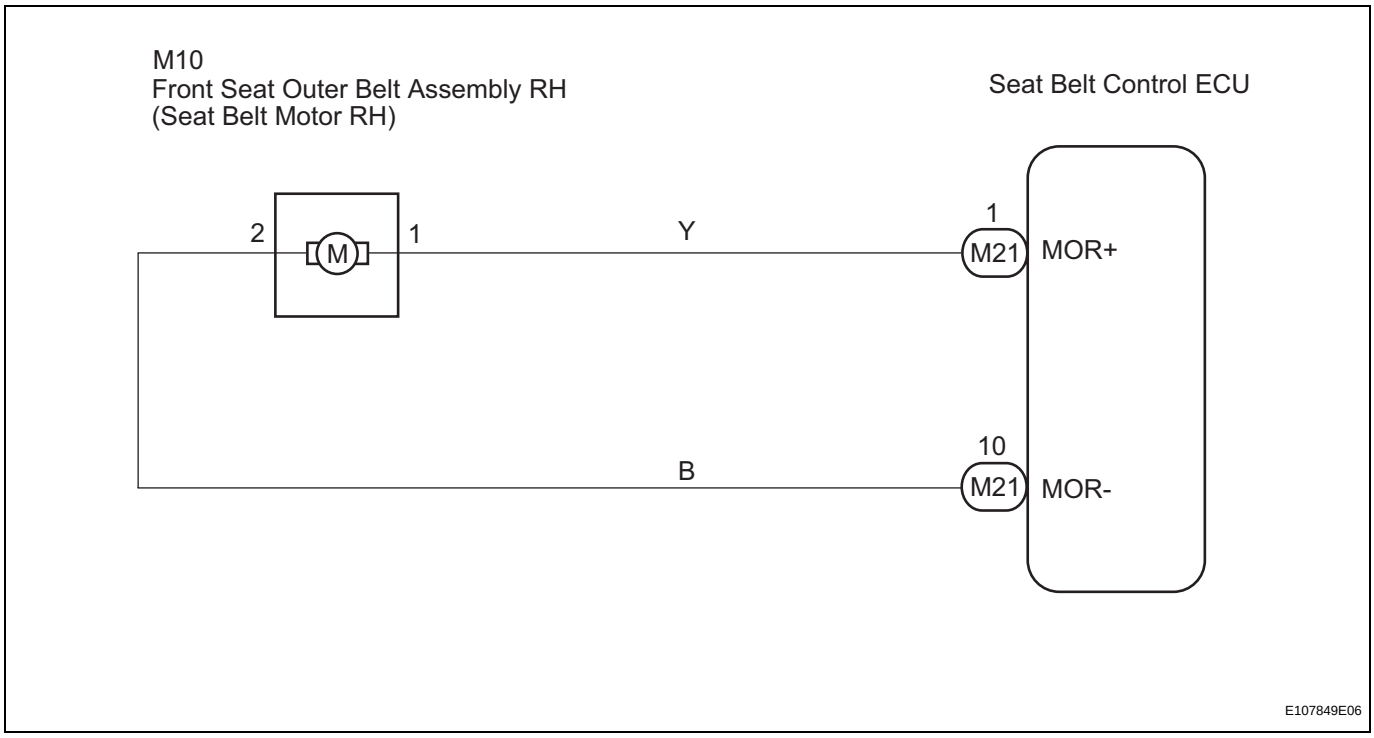

INSPECTION PROCEDURE

NOTICE:

When the seat belt control ECU is replaced with a new one, INITIALIZATION must be performed. (See page PC-11)

1 INSPECT FRONT SEAT OUTER BELT ASSEMBLY RH

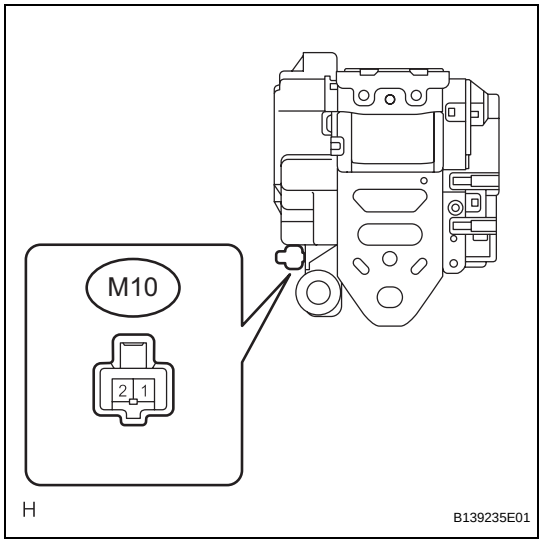

(a) Disconnect the M10 connector of the front seat outer belt assembly RH.
(b) Measure the voltage according to the value(s) in the table below.

Standard voltage

Tester Connection	Condition	Specified Condition
M10-1 - Body ground	Engine switch on (IG)	Below 1 V
M10-2 - Body ground	Engine switch on (IG)	Below 1 V

NG → **REPLACE FRONT SEAT OUTER BELT ASSEMBLY RH (See page SB-27)**

OK

2 CHECK HARNESS AND CONNECTOR (FRONT SEAT OUTER BELT ASSEMBLY RH - SEAT BELT CONTROL ECU)

Wire Harness Side Connector Front View:

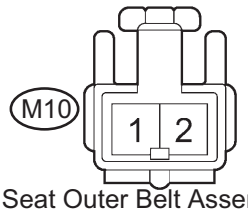

Front Seat Outer Belt Assembly RH

H045168E20

(a) Disconnect the negative (-) battery terminal.
(b) Disconnect the M21 connector of the seat belt control ECU.
(c) Connect the negative (-) terminal to the battery.
(d) Measure the voltage according to the value(s) in the table below.

Standard voltage

Tester Connection	Condition	Specified Condition
M10-1 - Body ground	Engine switch on (IG)	Below 1 V
M10-2 - Body ground	Engine switch on (IG)	Below 1 V

NG → **REPAIR OR REPLACE HARNESS OR CONNECTOR**

OK

REPLACE SEAT BELT CONTROL ECU (See page SB-64)

DTC	B2001	Short to GND in Seat Belt Motor RH Circuit

DESCRIPTION

The seat belt control ECU receives information from the distance control ECU using CAN communication and tightens the seat belt by operating the motor in the front seat outer belt assembly RH.

CAUTION:

The pretensioner is built into the front seat outer belt assembly RH. Be sure to follow the correct inspection procedure, as failure to follow the correct procedure (such as inspection of incorrect connectors) may deploy the pretensioner.

DTC No.	DTC Detection Condition	Trouble Area
B2001	• Short to ground in seat belt motor RH circuit continues for 1 second or more • Short in seat belt motor RH circuit	• Front seat outer belt assembly RH • Wire harness (seat belt control ECU - front seat outer belt assembly RH) • Seat belt control ECU

WIRING DIAGRAM

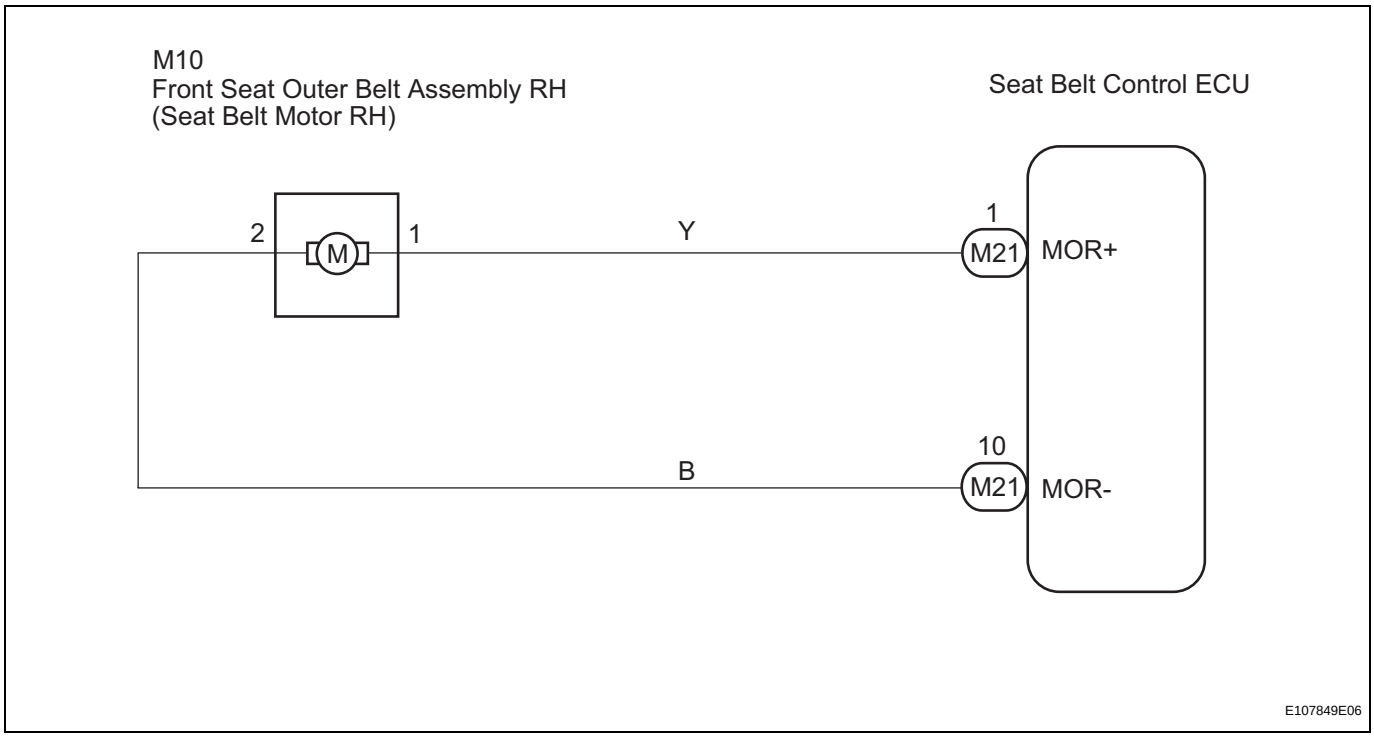

INSPECTION PROCEDURE

NOTICE:

When the seat belt control ECU is replaced with a new one, INITIALIZATION must be performed. (See page PC-11)

1 INSPECT FRONT SEAT OUTER BELT ASSEMBLY RH

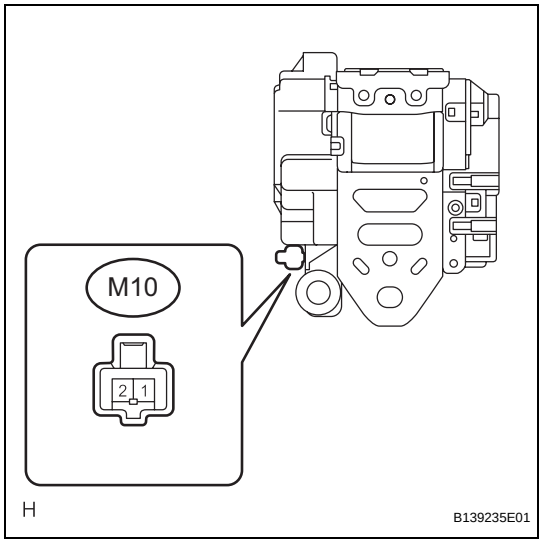

(a) Disconnect the M10 connector of the front seat outer belt assembly RH.
(b) Measure the resistance according to the value(s) in the table below.

Standard resistance

Tester Connection	Condition	Specified Condition
M10-1 - Body ground	Always	1 MΩ or higher
M10-2 - Body ground	Always	1 MΩ or higher

NG → **REPLACE FRONT SEAT OUTER BELT ASSEMBLY RH (See page SB-27)**

OK

2 CHECK HARNESS AND CONNECTOR (FRONT SEAT OUTER BELT ASSEMBLY RH - SEAT BELT CONTROL ECU)

Wire Harness Side Connector Front View:

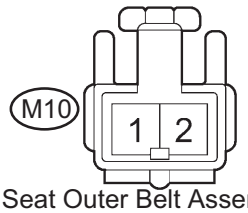

Front Seat Outer Belt Assembly RH

H045168E20

(a) Disconnect the negative (-) battery terminal.
(b) Disconnect the M21 connector of the seat belt control ECU.
(c) Measure the resistance according to the value(s) in the table below.

Standard resistance

Tester Connection	Condition	Specified Condition
M10-1 - Body ground	Always	1 MΩ or higher
M10-2 - Body ground	Always	1 MΩ or higher
M10-1 - M10-2	Always	1 MΩ or higher

NG → **REPAIR OR REPLACE HARNESS OR CONNECTOR**

OK

REPLACE SEAT BELT CONTROL ECU (See page SB-64)

DTC	B2002	Open in Seat Belt Motor RH Circuit

DESCRIPTION

The seat belt control ECU receives information from the distance control ECU using CAN communication and tightens the seat belt by operating the motor in the front seat outer belt assembly RH.

CAUTION:

The pretensioner is built into the front seat outer belt assembly RH. Be sure to follow the correct inspection procedure, as failure to follow the correct procedure (such as inspection of incorrect connectors) may deploy the pretensioner.

DTC No.	DTC Detecting Condition	Trouble Area
B2002	Open in the seat belt motor RH circuit continues for 1 second or more	• Front seat outer belt assembly RH • Wire harness (seat belt control ECU - front seat outer belt assembly RH) • Seat belt control ECU

WIRING DIAGRAM

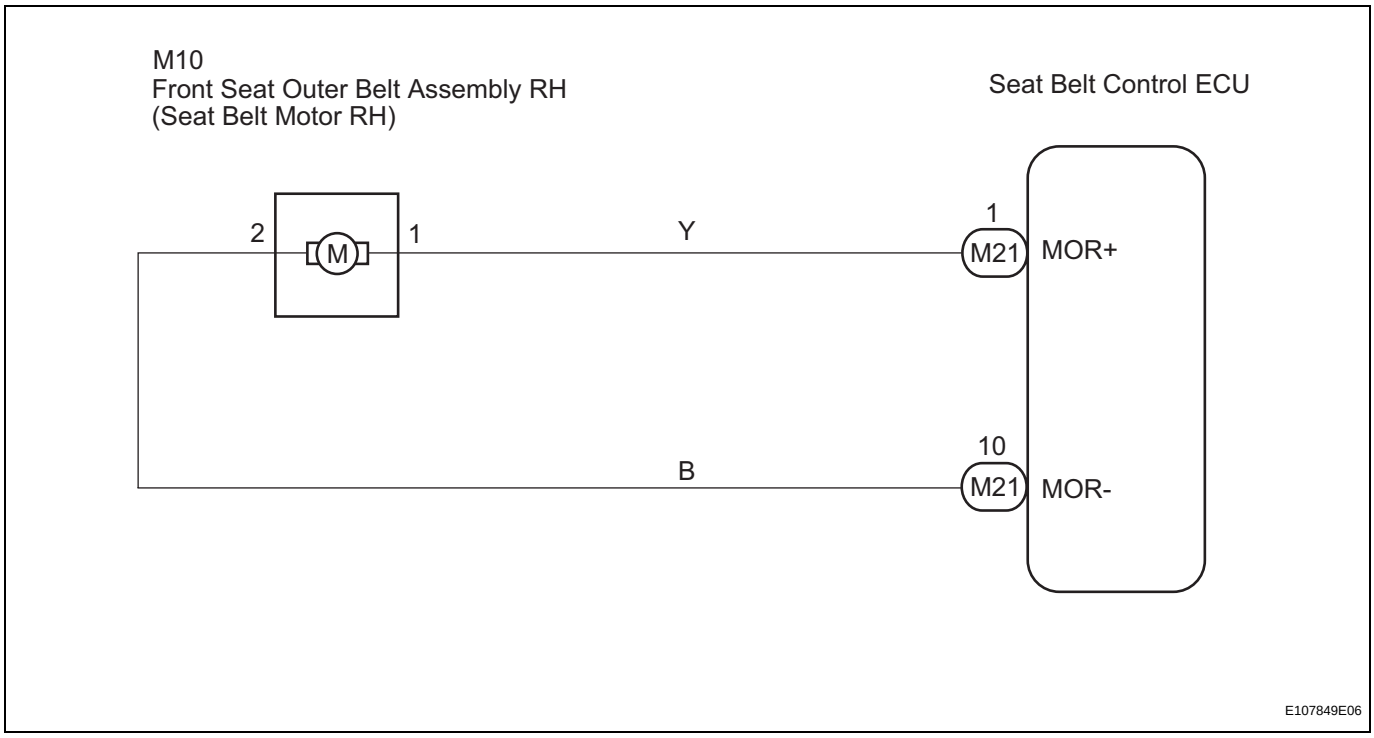

INSPECTION PROCEDURE

NOTICE:

When the seat belt control ECU is replaced with a new one, INITIALIZATION must be performed. (See page PC-11)

1 INSPECT FRONT SEAT OUTER BELT ASSEMBLY RH

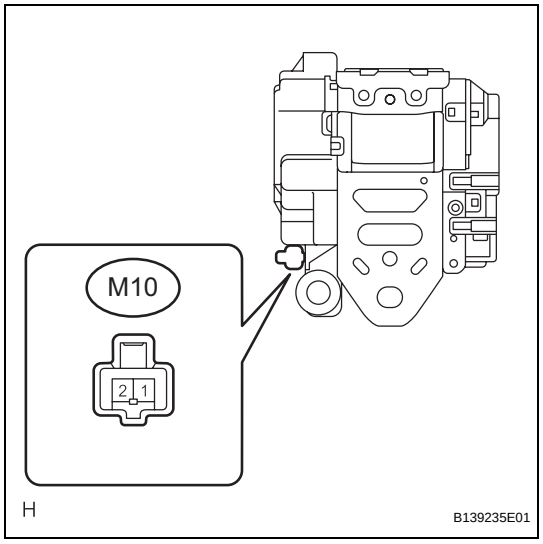

(a) Disconnect the M10 connector of the front seat outer belt assembly RH.
(b) Measure the resistance according to the value(s) in the table below.
Standard resistance

Tester Connection	Condition	Specified Condition
M10-1 - M10-2	Always	Below 1 MΩ

NG → **REPLACE FRONT SEAT OUTER BELT ASSEMBLY RH (See page SB-27)**

OK

2 CHECK HARNESS AND CONNECTOR (FRONT SEAT OUTER BELT ASSEMBLY RH - SEAT BELT CONTROL ECU)

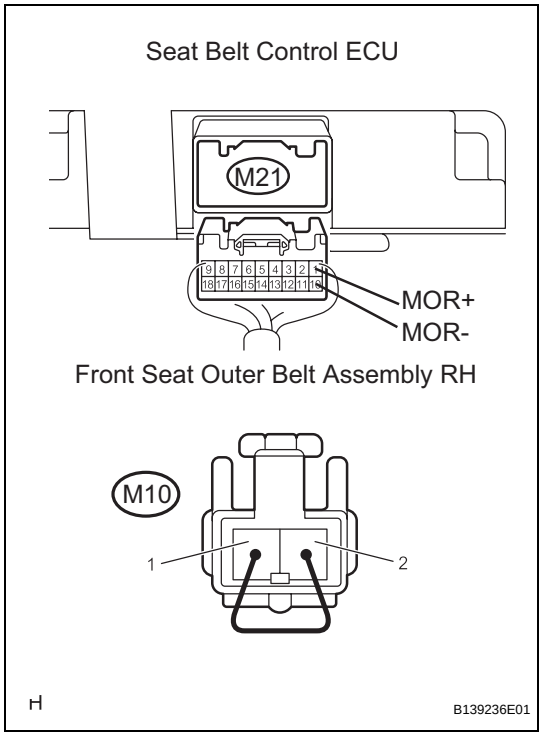

(a) Disconnect the negative (-) battery terminal.
(b) Disconnect the M21 connector of the seat belt control ECU.
(c) Using a service wire, connect M10-1 and M10-2 of the connector on the front seat outer belt assembly RH side.
NOTICE:
Do not forcibly insert the service wire into the terminals of the connector.
(d) Measure the resistance according to the value(s) in the table below.
Standard resistance

Tester Connection	Condition	Specified Condition
M21-1 (MOR+) - M21-10 (MOR-)	Always	Below 1 Ω

NG → **REPAIR OR REPLACE HARNESS OR CONNECTOR**

OK

REPLACE SEAT BELT CONTROL ECU (See page SB-64)

DTC	B2005	Short to B+ in Seat Belt Motor LH Circuit

DESCRIPTION

The seat belt control ECU receives information from the distance control ECU using CAN communication and tightens the seat belt by operating the motor in the front seat outer belt assembly LH.

CAUTION:

The pretensioner is built into the front seat outer belt assembly LH. Be sure to follow the correct inspection procedure, as failure to follow the correct procedure (such as inspection of incorrect connectors) may deploy the pretensioner.

DTC No.	DTC Detection Condition	Trouble Area
B2005	• Short to B+ in seat belt motor LH circuit continues for 1 second or more • Short in seat belt motor LH circuit	• Front seat outer belt assembly LH • Wire harness (Seat belt control ECU - front seat outer belt assembly LH) • Seat belt control ECU

WIRING DIAGRAM

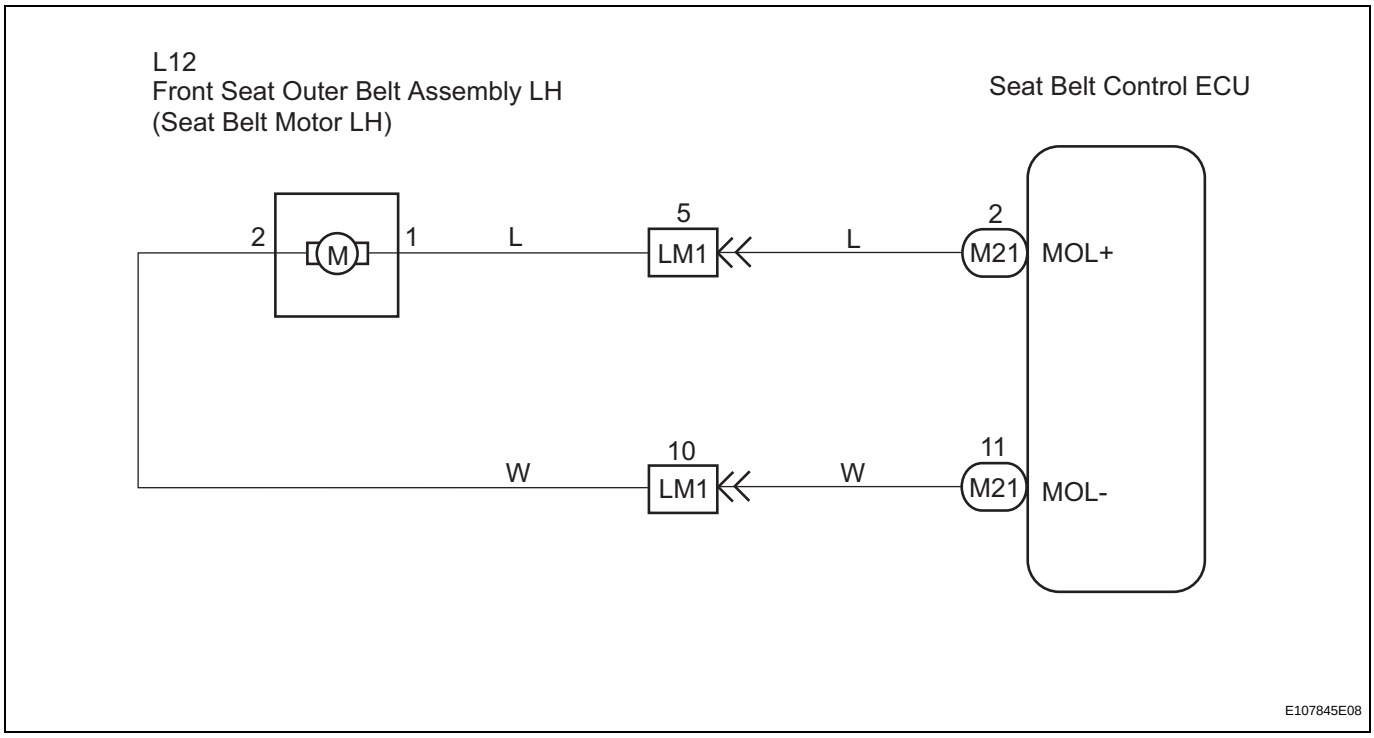

INSPECTION PROCEDURE

NOTICE:

When the seat belt control ECU is replaced with a new one, INITIALIZATION must be performed. (See page PC-11)

1 INSPECT FRONT SEAT OUTER BELT ASSEMBLY LH

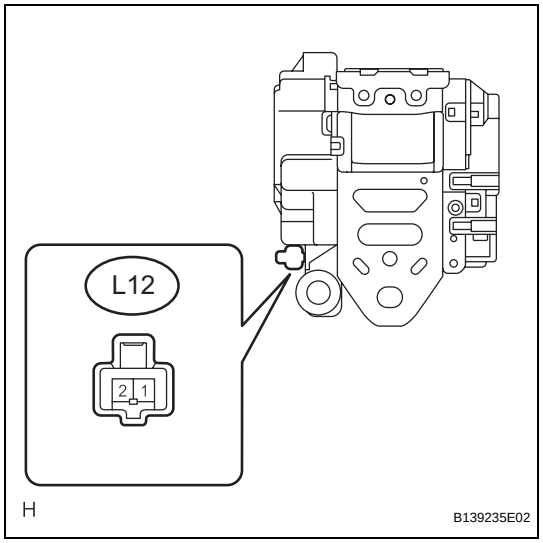

(a) Disconnect the L12 connector of the front seat outer belt assembly LH.
(b) Measure the voltage according to the value(s) in the table below.

Standard voltage

Tester Connection	Condition	Specified Condition
L12-1 - Body ground	Engine switch on (IG)	Below 1 V
L12-2 - Body ground	Engine switch on (IG)	Below 1 V

NG → **REPLACE FRONT SEAT OUTER BELT ASSEMBLY LH (See page SB-27)**

OK

2 CHECK HARNESS AND CONNECTOR (FRONT SEAT OUTER BELT ASSEMBLY LH - SEAT BELT CONTROL ECU)

Wire Harness Side Connector Front View:

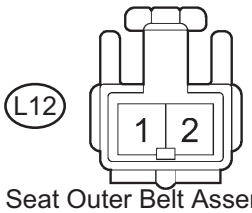

Front Seat Outer Belt Assembly LH

H045168E21

(a) Disconnect the negative (-) battery terminal.
(b) Disconnect the M21 connector of the seat belt control ECU.
(c) Connect the negative (-) terminal to the battery.
(d) Measure the voltage according to the value(s) in the table below.

Standard voltage

Tester Connection	Condition	Specified Condition
L12-1 - Body ground	Engine switch on (IG)	Below 1 V
L12-2 - Body ground	Engine switch on (IG)	Below 1 V

NG → **REPAIR OR REPLACE HARNESS OR CONNECTOR**

OK

REPLACE SEAT BELT CONTROL ECU (See page SB-64)

DTC	B2006	Short to GND in Seat Belt Motor LH Circuit

DESCRIPTION

The seat belt control ECU receives information from the distance control ECU using CAN communication and tightens the seat belt by operating the motor in the front seat outer belt assembly LH.

CAUTION:

The pretensioner is built into the front seat outer belt assembly LH. Be sure to follow the correct inspection procedure, as failure to follow the correct procedure (such as inspection of incorrect connectors) may deploy the pretensioner.

DTC No.	DTC Detection Condition	Trouble Area
B2006	• Short to ground in seat belt motor LH circuit continues for 1 second or more • Short in seat belt motor LH circuit	• Front seat outer belt assembly LH • Wire harness (Seat belt control ECU - front seat outer belt assembly LH) • Seat belt control ECU

WIRING DIAGRAM

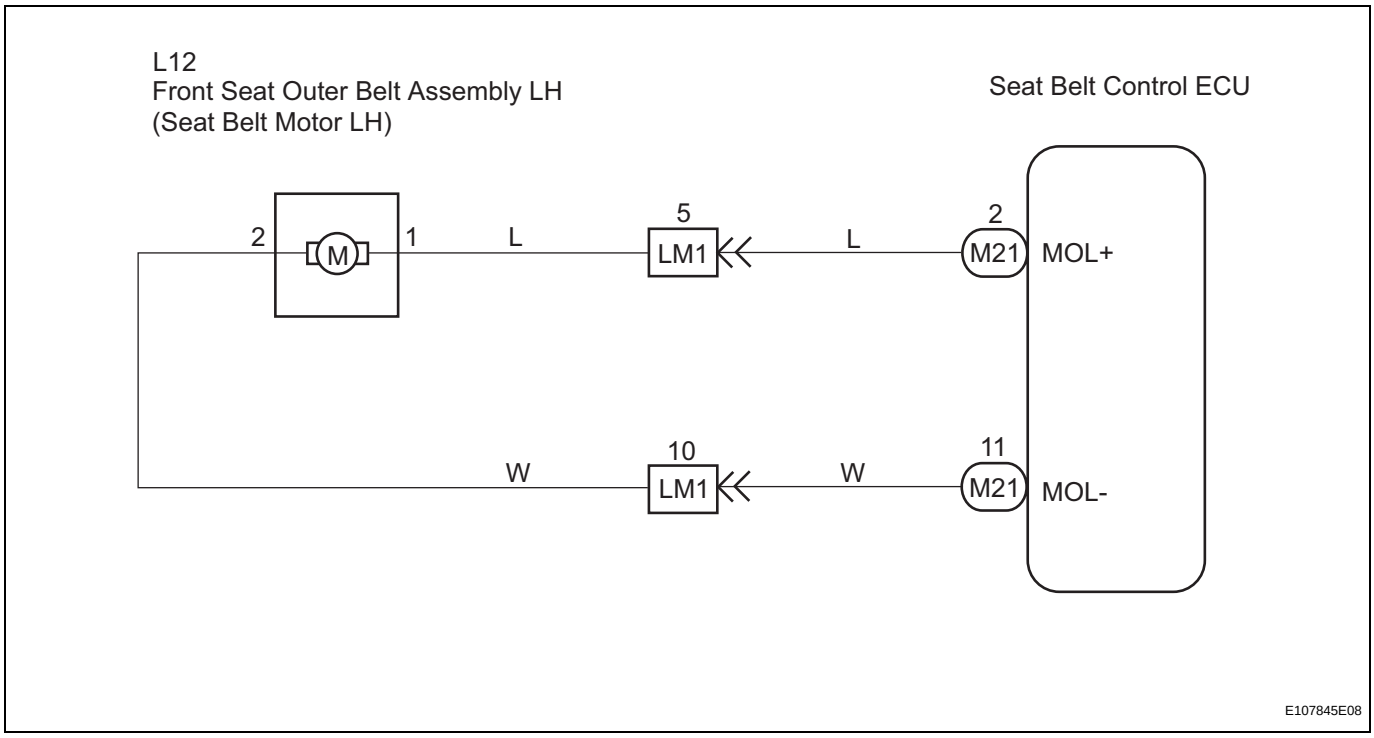

INSPECTION PROCEDURE

NOTICE:

When the seat belt control ECU is replaced with a new one, INITIALIZATION must be performed. (See page PC-11)

1 INSPECT FRONT SEAT OUTER BELT ASSEMBLY LH

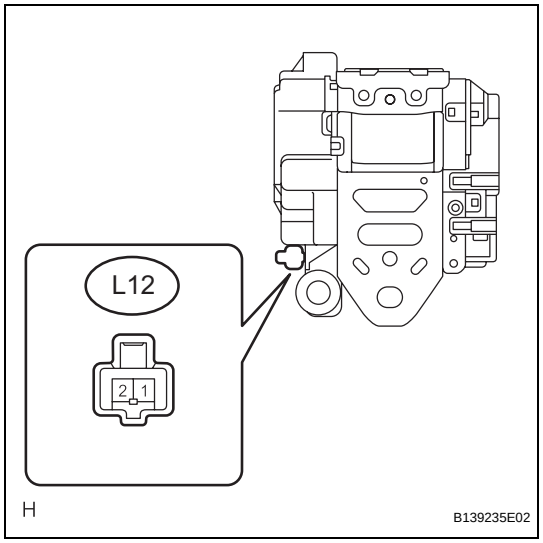

(a) Disconnect the L12 connector of the front seat outer belt assembly LH.
(b) Measure the resistance according to the value(s) in the table below.

Standard resistance

Tester Connection	Condition	Specified Condition
L12-1 - Body ground	Always	1 MΩ or higher
L12-2 - Body ground	Always	1 MΩ or higher

NG → **REPLACE FRONT SEAT OUTER BELT ASSEMBLY LH (See page SB-27)**

OK

2 CHECK HARNESS AND CONNECTOR (FRONT SEAT OUTER BELT ASSEMBLY - SEAT BELT CONTROL ECU)

Wire Harness Side Connector Front View:

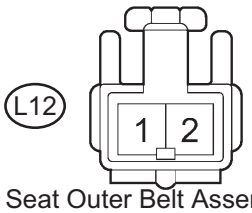

Front Seat Outer Belt Assembly LH

H045168E21

(a) Disconnect the negative (-) battery terminal.
(b) Disconnect the M21 connector of the seat belt control ECU.
(c) Measure the resistance according to the value(s) in the table below.

Standard resistance

Tester Connection	Condition	Specified Condition
L12-1 - Body ground	Always	1 MΩ or higher
L12-2 - Body ground	Always	1 MΩ or higher
L12-1 - L12-2	Always	1 MΩ or higher

NG → **REPAIR OR REPLACE HARNESS OR CONNECTOR**

OK

REPLACE SEAT BELT CONTROL ECU (See page SB-64)

DTC	B2007	Open in Seat Belt Motor LH Circuit

DESCRIPTION

The seat belt control ECU receives information from the distance control ECU using CAN communication and tightens the seat belt by operating the motor in the front seat outer belt assembly LH.

CAUTION:

The pretensioner is built into the front seat outer belt assembly LH. Be sure to follow the correct inspection procedure, as failure to follow the correct procedure (such as inspection of incorrect connectors) may deploy the pretensioner.

DTC No.	DTC Detection Condition	Trouble Area
B2007	Open in seat belt motor LH circuit continues for 1 second or more	• Front seat outer belt assembly LH • Wire harness (seat belt control ECU - front seat outer belt assembly LH) • Seat belt control ECU

WIRING DIAGRAM

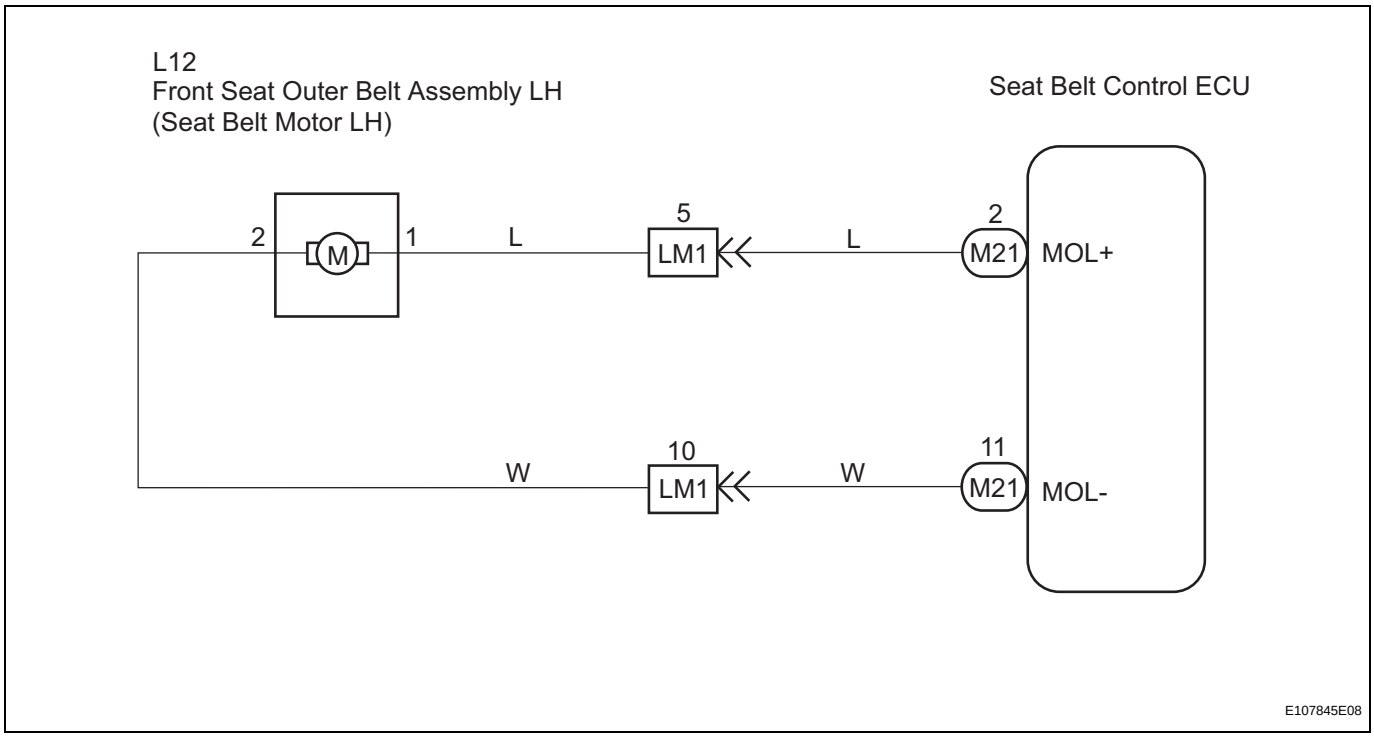

INSPECTION PROCEDURE

NOTICE:

When the seat belt control ECU is replaced with a new one, INITIALIZATION must be performed. (See page PC-11)

1 INSPECT FRONT SEAT OUTER BELT ASSEMBLY LH

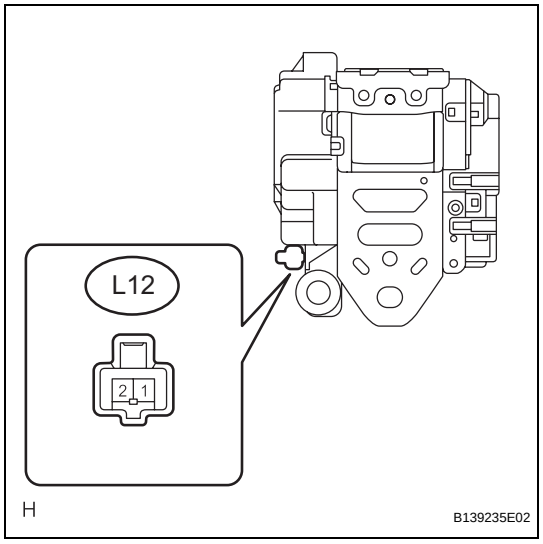

(a) Disconnect the L12 connector of the front seat outer belt assembly LH.
(b) Measure the resistance according to the value(s) in the table below.
Standard resistance

Tester Connection	Condition	Specified Condition
L12-1 - L12-2	Always	Below 1 MΩ

NG → **REPLACE FRONT SEAT OUTER BELT ASSEMBLY LH (See page SB-27)**

OK

2 CHECK HARNESS AND CONNECTOR (FRONT SEAT OUTER BELT ASSEMBLY LH - SEAT BELT CONTROL ECU)

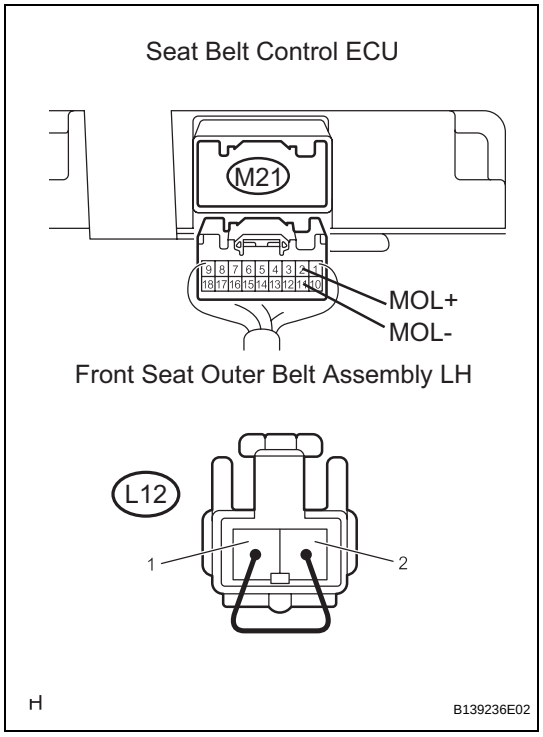

(a) Disconnect the negative (-) battery terminal.
(b) Disconnect the M21 connector of the seat belt control ECU.
(c) Using a service wire, connect L12-1 and L12-2 of the connector on the front seat outer belt assembly LH side.
NOTICE:
Do not forcibly insert the service wire into the terminals of the connector.
(d) Measure the resistance according to the value(s) in the table below.
Standard resistance

Tester Connection	Condition	Specified Condition
M21-2 (MOL+) - M21-11 (MOL-)	Always	Below 1 Ω

NG → **REPAIR OR REPLACE HARNESS OR CONNECTOR**

OK

REPLACE SEAT BELT CONTROL ECU (See page SB-64)

DTC	B2015	Open in Right Side Upper MOS
DTC	B2016	Open in Right Side Lower MOS
DTC	B2020	Open in Left Side Upper MOS
DTC	B2021	Open in Left Side Lower MOS
DTC	B2025	Right Side Current Detection Circuit Malfunction Hi
DTC	B2026	Right Side Current Detection Circuit Malfunction Lo
DTC	B2027	Right Side Over-Current Malfunction
DTC	B2030	Left Side Current Detection Circuit Malfunction Hi
DTC	B2031	Left Side Current Detection Circuit Malfunction Lo
DTC	B2032	Left Side Over-Current Malfunction
DTC	B2036	Power Supply Relay Malfunction Open
DTC	B2040	EEPROM Malfunction
DTC	B2041	Fall of Raised Voltage
DTC	B2043	Fall of B+ Voltage
DTC	B2047	Seat Belt Control ECU Inner Circuit Malfunction

DESCRIPTION

The DTCs above are output during the seat belt control ECU's self diagnosis.

DTC No.	DTC Detection Condition	Trouble Area
B2015	Open in right side upper MOS	Seat belt control ECU
B2016	Open in right side lower MOS	Seat belt control ECU
B2020	Open in left side upper MOS	Seat belt control ECU
B2021	Open in left side lower MOS	Seat belt control ECU
B2025	Malfunction in right side current detection HI circuit	Seat belt control ECU

DTC No.	DTC Detection Condition	Trouble Area
B2026	Malfunction in right side current detection LO circuit	Seat belt control ECU
B2027	Over-current in right side circuit	Seat belt control ECU
B2030	Malfunction in left side current detection HI circuit	Seat belt control ECU
B2031	Malfunction in left side current detection LO circuit	Seat belt control ECU
B2032	Over-current in left side circuit	Seat belt control ECU
B2036	Open in power supply relay	Seat belt control ECU
B2040	EEPROM malfunction	Seat belt control ECU
B2041	Decline in raised voltage	Seat belt control ECU
B2043	Fall of B+ voltage	Seat belt control ECU
B2047	Malfunction in the inner circuit of the seat belt control ECU	Seat belt control ECU

INSPECTION PROCEDURE

NOTICE:

When the seat belt control ECU is replaced with a new one, INITIALIZATION must be performed. (See page PC-11)

1 CHECK DTC OUTPUT

(a) Turn the engine switch on (IG).
(b) Clear the DTCs stored in memory (See page PC-14).
(c) Turn the engine switch off.
(d) Turn the engine switch on (IG).
(e) Check for the DTCs (See page PC-14).
OK:
No DTC is output.

NG → **REPLACE SEAT BELT CONTROL ECU (See page SB-64)**

OK

USE SIMULATION METHOD TO CHECK

DTC	B2035	Power Supply Relay Adherence Malfunction

DESCRIPTION

The DTC is output during the power supply relay adherence malfunction in the seat belt control ECU.

DTC No.	DTC Detection Condition	Trouble Area
B2035	Adherence in power supply relay	• Front seat outer belt assembly RH • Front seat outer belt assembly LH • Wire harness (seat belt control ECU - front seat outer belt assembly RH) • Wire harness (seat belt control ECU - front seat outer belt assembly LH) • Seat belt control ECU

WIRING DIAGRAM

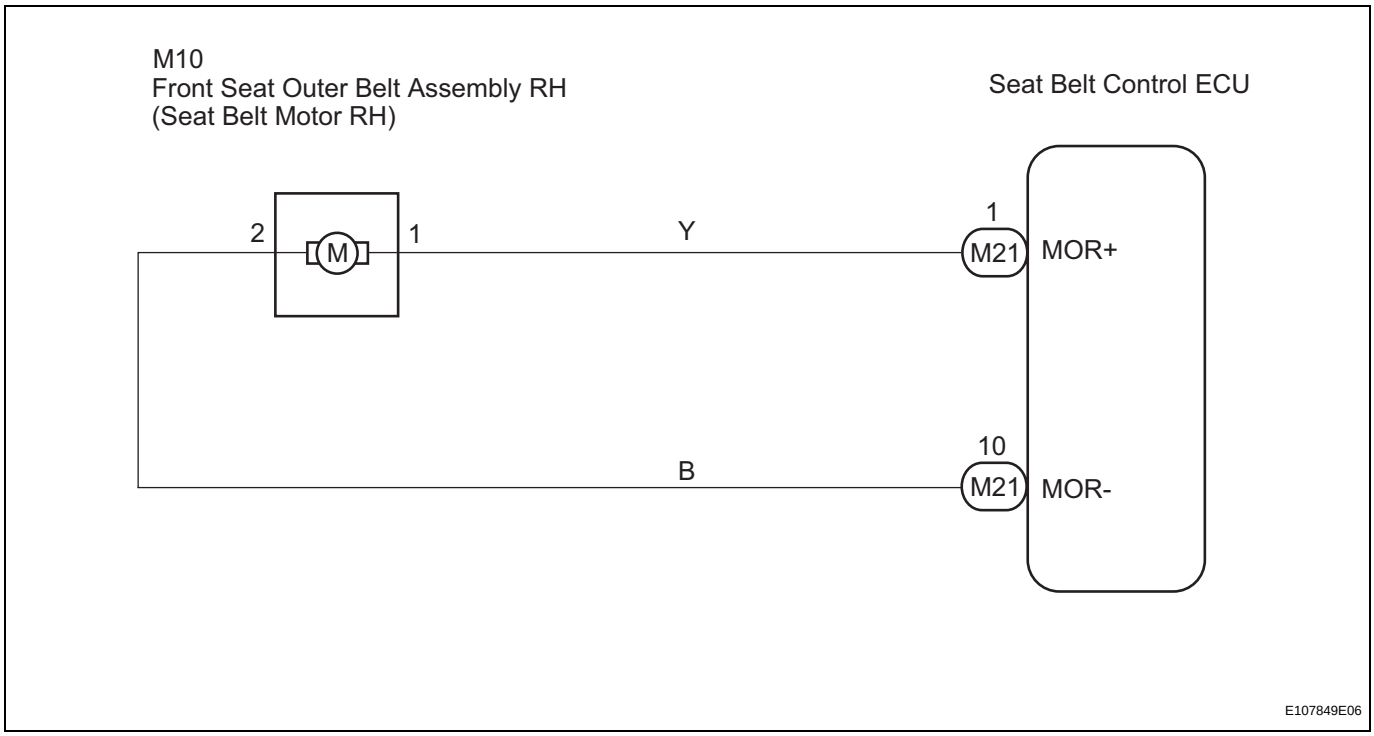

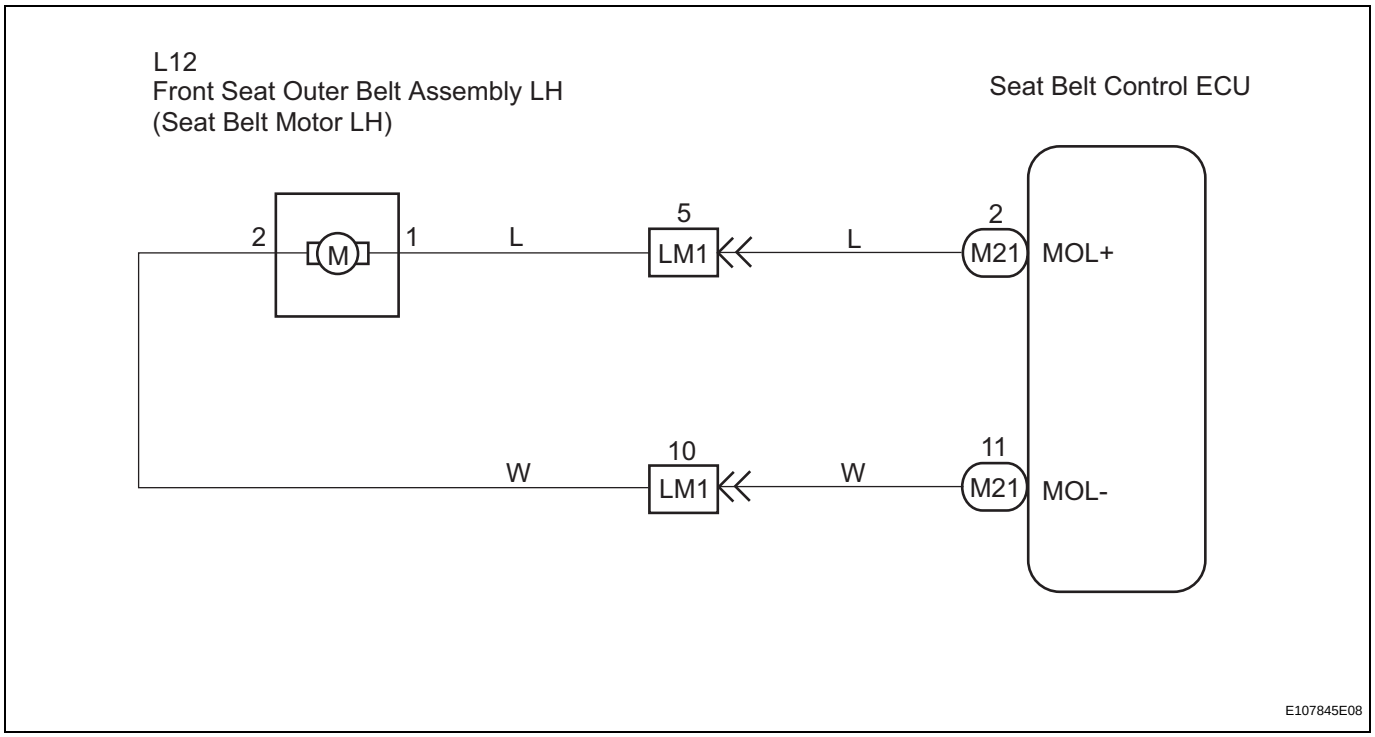

INSPECTION PROCEDURE

NOTICE:

When the seat belt control ECU is replaced with a new one, INITIALIZATION must be performed. (See page PC-11)

1	INSPECT FRONT SEAT OUTER BELT ASSEMBLY RH

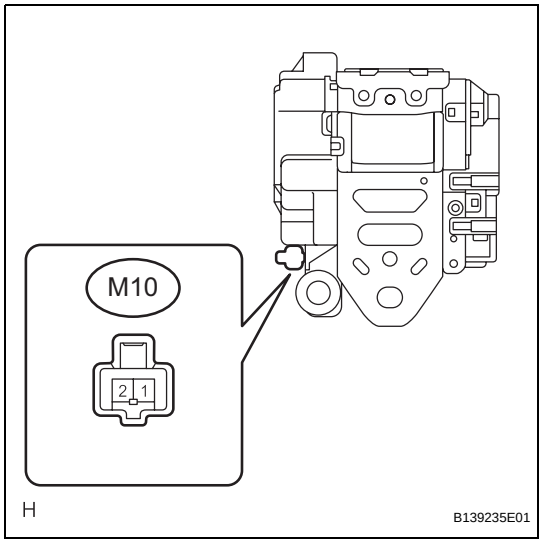

(a) Disconnect the M10 connector of the front seat outer belt assembly RH.

(b) Measure the voltage according to the value(s) in the table below.

Standard voltage

Tester Connection	Condition	Specified Condition
M10-1 - Body ground	Engine switch on (IG)	Below 1 V
M10-2 - Body ground	Engine switch on (IG)	Below 1 V

NG → **REPLACE FRONT SEAT OUTER BELT ASSEMBLY RH (See page SB-27)**

OK

2 INSPECT FRONT SEAT OUTER BELT ASSEMBLY LH

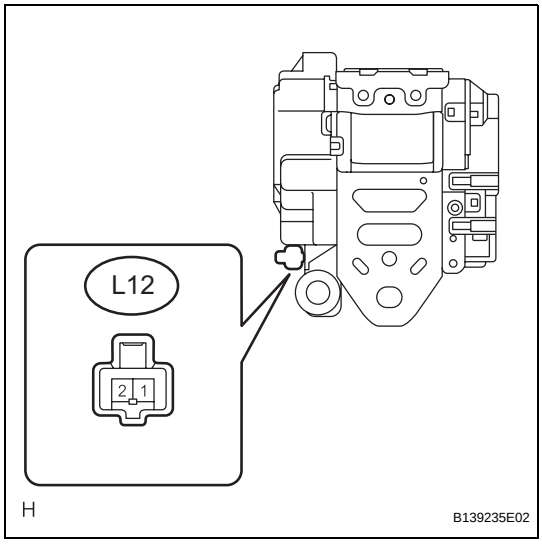

(a) Disconnect the L12 connector of the front seat outer belt assembly LH.
(b) Measure the voltage according to the value(s) in the table below.

Standard voltage

Tester Connection	Condition	Specified Condition
L12-1 - Body ground	Engine switch on (IG)	Below 1 V
L12-2 - Body ground	Engine switch on (IG)	Below 1 V

NG → **REPLACE FRONT SEAT OUTER BELT ASSEMBLY LH (See page SB-27)**

OK

3 CHECK HARNESS AND CONNECTOR (FRONT SEAT BELT ASSEMBLY RH - SEAT BELT CONTROL ECU)

Wire Harness Side Connector Front View:

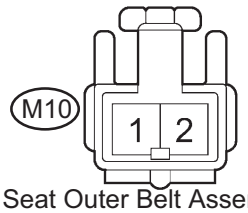

Front Seat Outer Belt Assembly RH

H045168E20

(a) Disconnect the negative (-) battery terminal.
(b) Disconnect the M21 connector of the seat belt control ECU.
(c) Connect the negative (-) terminal to the battery.
(d) Measure the voltage according to the value(s) in the table below.

Standard voltage

Tester Connection	Condition	Specified Condition
M10-1 - Body ground	Engine switch on (IG)	Below 1 V
M10-2 - Body ground	Engine switch on (IG)	Below 1 V

NG → **REPAIR OR REPLACE HARNESS OR CONNECTOR**

OK

4	CHECK HARNESS AND CONNECTOR (FRONT SEAT BELT ASSEMBLY LH - SEAT BELT CONTROL ECU)

Wire Harness Side Connector Front View:

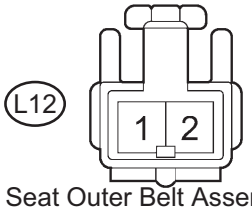

Front Seat Outer Belt Assembly LH

H045168E21

(a) Disconnect the negative (-) battery terminal.
(b) Disconnect the M21 connector of the seat belt control ECU.
(c) Connect the negative (-) terminal to the battery.
(d) Measure the voltage according to the value(s) in the table below.

Standard voltage

Tester Connection	Condition	Specified Condition
L12-1 - Body ground	Engine switch on (IG)	Below 1 V
L12-2 - Body ground	Engine switch on (IG)	Below 1 V

NG → **REPAIR OR REPLACE HARNESS OR CONNECTOR**

OK

5	CHECK DTC OUTPUT

(a) Turn the engine switch on (IG).
(b) Clear the DTCs stored in memory (See page PC-14).
(c) Turn the engine switch off.
(d) Turn the engine switch on (IG).
(e) Check for DTCs (See page PC-14).

OK:

No DTC is output.

NG → **REPLACE SEAT BELT CONTROL ECU (See page SB-64)**

OK

USE SIMULATION METHOD TO CHECK

DTC	B2055	Radar Sensor Malfunction

DESCRIPTION

This DTC is output when one of the following occurs: 1) an error in communication with the millimeter wave radar sensor assembly is detected, or 2) vehicle information sent from the radar sensor assembly is abnormal. If output, perform initialization of the radar sensor assembly to register the vehicle information to the radar sensor assembly.

DTC No.	DTC Detection Condition	Trouble Area
B2055	Radar sensor assembly malfunction is detected or initialization settings are faulty	• Millimeter wave radar sensor • Seat belt control ECU

INSPECTION PROCEDURE

NOTICE:

When the seat belt control ECU is replaced with a new one, INITIALIZATION must be performed. (See page PC-11)

1	CHECK DTC OUTPUT (DYNAMIC RADAR CRUISE CONTROL SYSTEM)

(a) Delete the DTC (See page PC-14).
(b) Recheck for DTCs.
OK:
DTC P1570 is not output.

NG → **GO TO DYNAMIC RADAR CRUISE CONTROL SYSTEM (See page CC-65)**

OK

2	CHECK DTC OUTPUT (PRE-COLLISION SYSTEM)

(a) Delete the DTC (See page PC-14).
(b) Recheck for DTCs.
OK:
DTC B2055 is not output.

NG → **REPLACE SEAT BELT CONTROL ECU (See page SB-64)**

OK

USE SIMULATION METHOD TO CHECK

DTC	B2056	Axial Gap of Radar Sensor

DESCRIPTION

DTC No.	DTC Detection Condition	Trouble Area
B2056	Radar sensor assembly malfunction is detected or initialization settings are faulty	• Millimeter wave radar sensor (axial adjustment) • Seat belt control ECU

INSPECTION PROCEDURE

NOTICE:

When the seat belt control ECU is replaced with a new one, INITIALIZATION must be performed. (See page PC-11)

1 CHECK DTC OUTPUT (DYNAMIC RADAR CRUISE CONTROL SYSTEM)

(a) Delete the DTC (See page PC-14).
(b) Recheck for DTCs.
OK:
DTC P1572 is not output.

NG → **GO TO DYNAMIC RADAR CRUISE CONTROL SYSTEM (See page CC-65)**

OK

2 CHECK DTC OUTPUT (PRE-COLLISION SYSTEM)

(a) Delete the DTC (See page PC-14).
(b) Recheck for DTCs.
OK:
DTC B2056 is not output.

NG → **REPLACE SEAT BELT CONTROL ECU (See page SB-64)**

OK

USE SIMULATION METHOD TO CHECK

DTC	B2057	Yaw Rate Sensor

DESCRIPTION

This DTC is output when a malfunction in the yaw rate sensor is detected. This circuit consists of the yaw rate sensor and seat belt control ECU. Signals are sent from the yaw rate sensor using CAN communication.

DTC No.	DTC Detection Condition	Trouble Area
B2057	Malfunction in yaw rate sensor	• Yaw rate sensor • Seat belt control ECU

INSPECTION PROCEDURE

NOTICE:

When the seat belt control ECU is replaced with a new one, INITIALIZATION must be performed. (See page PC-11)

1	CHECK DTC OUTPUT (CAN COMMUNICATION SYSTEM)

(a) Delete the DTC (See page PC-14).
(b) Recheck for DTCs.
OK:
DTC U0123 is not output.

NG → **GO TO CAN COMMUNICATION SYSTEM (See page CA-49)**

OK

2	CHECK DTC OUTPUT (BRAKE CONTROL SYSTEM)

(a) Delete the DTC (See page PC-14).
(b) Recheck for DTCs.
OK:
DTC C1234 is not output.

NG → **GO TO BRAKE CONTROL SYSTEM (See page BC-52)**

OK

3	CHECK DTC OUTPUT (PRE-COLLISION SYSTEM)

(a) Delete the DTC (See page PC-14).
(b) Recheck for DTCs.
OK:
DTC B2057 is not output.

NG → **REPLACE SEAT BELT CONTROL ECU (See page SB-64)**

OK

USE SIMULATION METHOD TO CHECK

DTC	B2058	Steering Angle Sensor

DESCRIPTION

This DTC is output when a malfunction in the steering angle sensor is detected. This circuit consists of the steering angle sensor and seat belt control ECU. Signals are sent from the steering sensor using CAN communication.

DTC No.	DTC Detection Condition	Trouble Area
B2058	Malfunction in steering angle sensor is detected	• Steering angle sensor • Seat belt control ECU

INSPECTION PROCEDURE

NOTICE:

When the seat belt control ECU is replaced with a new one, INITIALIZATION must be performed. (See page PC-11)

1 CHECK DTC OUTPUT (CAN COMMUNICATION SYSTEM)

(a) Delete the DTC (See page PC-14).
(b) Recheck for DTCs.
OK:
DTC U0126 is not output.

NG → **GO TO CAN COMMUNICATION SYSTEM (See page CA-49)**

OK

2 CHECK DTC OUTPUT (BRAKE CONTROL SYSTEM)

(a) Delete the DTC (See page PC-14).
(b) Recheck for DTCs.
OK:
DTC C1231 is not output.

NG → **GO TO BRAKE CONTROL SYSTEM (See page BC-52)**

OK

3 CHECK DTC OUTPUT (PRE-COLLISION SYSTEM)

(a) Delete the DTC (See page PC-14).
(b) Recheck for DTCs.
OK:
DTC B2058 is not output.

NG → **REPLACE SEAT BELT CONTROL ECU (See page SB-64)**

OK

USE SIMULATION METHOD TO CHECK

DTC	B2059	Vehicle Speed Malfunction

DESCRIPTION

The distance control ECU uses the combination meter to send vehicle speed information to the ECM. The ECM and the skid control ECU use CAN communication to send vehicle speed information to the distance control ECU. This DTC is output when the difference between the vehicle speed information from the ECM and the skid control ECU is more than the specified value.

DTC No.	DTC Detection Condition	Trouble Area
B2059	Difference between vehicle speed information from ECM and ABS & traction actuator assembly is more than specified value	• Combination meter assembly • ECM • Skid control ECU • Distance control ECU • Seat belt control ECU

INSPECTION PROCEDURE

NOTICE:

When the distance control ECU is replaced with a new one, INITIALIZATION must be performed. (See page PC-11)

1	CHECK DTC OUTPUT (CAN COMMUNICATION SYSTEM)

(a) Delete the DTC (See page PC-14).
(b) Recheck for DTCs.
OK:
DTC U0100, U0122 or U1101 is not output.

NG → **GO TO CAN COMMUNICATION SYSTEM (See page CA-49)**

OK

2	CHECK DTC OUTPUT (ENGINE CONTROL SYSTEM)

(a) Delete the DTC (See page PC-14).
(b) Recheck for DTCs.
OK:
DTC P0500 is not output.

NG → **GO TO ENGINE CONTROL SYSTEM (See page ES-59)**

OK

3	CHECK DTC OUTPUT (BRAKE CONTROL SYSTEM)

(a) Delete the DTC (See page PC-14).
(b) Recheck for DTCs.
OK:
DTC C0200, C0205, C0210, C0215, C1235, C1236, C1238 or C1239 is not output.

NG → **GO TO BRAKE CONTROL SYSTEM (See page BC-52)**

OK

4 READ VALUE OF INTELLIGENT TESTER

(a) Operate the intelligent tester according to the steps on the display and select the "DATA LIST".

COMBINATION METER

Tester Display	Measurement item /Range	Normal Condition	Diagnostic Note
SPEED METER	Vehicle speed/Min: 0 km/h (0 mph), Max: 255 km/h (158 mph)	Almost same as actual vehicle speed (When driving)	-

OK:
Vehicle speed displayed on the tester is almost the same as the actual vehicle speed.

NG → **GO TO COMBINATION METER SYSTEM (See page ME-14)**

OK

5 REPLACE DISTANCE CONTROL ECU ASSEMBLY

(a) Replace the distance control ECU assembly (See page CC-118).

NEXT

6 CHECK DTC OUTPUT (PRE-COLLISION SYSTEM)

(a) Delete the DTC (See page PC-14).
(b) Recheck for DTCs.
OK:
DTC B2059 is not output.

NG → **REPLACE SEAT BELT CONTROL ECU (See page SB-64)**

OK

END

DTC	B2060	ABS Malfunction

DESCRIPTION

This DTC is output when a malfunction in the brake system is detected. This circuit consists of the skid control ECU and seat belt control ECU. Signals are sent from the skid control ECU using the CAN communication.

DTC No.	DTC Detection Condition	Trouble Area
B2060	Malfunction in brake system is detected	• Skid control ECU • Seat belt control ECU

INSPECTION PROCEDURE

NOTICE:

When the seat belt control ECU is replaced with a new one, INITIALIZATION must be performed. (See page PC-11)

1 CHECK DTC OUTPUT (CAN COMMUNICATION SYSTEM)

(a) Delete the DTC (See page PC-14).
(b) Recheck for DTCs.
OK:
DTC U0122 is not output.

NG → **GO TO CAN COMMUNICATION SYSTEM (See page CA-49)**

OK

2 CHECK DTC OUTPUT (BRAKE CONTROL SYSTEM)

(a) Delete the DTC (See page PC-14).
(b) Recheck for DTCs.
OK:
DTC is not output.

NG → **GO TO BRAKE CONTROL SYSTEM (See page BC-52)**

OK

3 CHECK DTC OUTPUT (PRE-COLLISION SYSTEM)

(a) Delete the DTC (See page PC-14).
(b) Recheck for DTCs.
OK:
DTC B2060 is not output.

NG → **REPLACE SEAT BELT CONTROL ECU (See page SB-64)**

OK

USE SIMULATION METHOD TO CHECK

DTC	B2065	Distance Control ECU Malfunction

DESCRIPTION

DTC No.	DTC Detection Condition	Trouble Area
B2065	Distance control ECU assembly setting is faulty	• Distance control ECU • Seat belt control ECU

INSPECTION PROCEDURE

NOTICE:

When the seat belt control ECU is replaced with a new one, Active Test must be performed. (See page PC-11)

1	CHECK DTC OUTPUT (DYNAMIC RADAR CRUISE CONTROL SYSTEM)

(a) Delete the DTC (See page PC-14).
(b) Check for DTCs.
OK:
DTC P1617 is not output.

NG → **GO TO DYNAMIC RADAR CRUISE CONTROL SYSTEM (See page CC-65)**

OK

2	CHECK DTC OUTPUT (PRE-COLLISION SYSTEM)

(a) Delete the DTC (See page PC-14).
(b) Recheck for DTCs.
OK:
DTC B2065 is not output.

NG → **REPLACE SEAT BELT CONTROL ECU (See page SB-64)**

OK

USE SIMULATION METHOD TO CHECK

DTC	B2074	Driver Side Seat Belt Buckle Switch Circuit Malfunction

DTC	B2075	Passenger Side Seat Belt Buckle Switch Circuit Malfunction

DESCRIPTION

This DTC is output when a malfunction is detected in the driver's side buckle switch circuit or passenger's side buckle switch circuit.

DTC No.	DTC Detection Condition	Trouble Area
B2074	Malfunction in front seat belt inner LH	• Wire harness • Front seat inner belt LH assembly • Center airbag sensor assembly • Seat belt control ECU
B2075	Malfunction in front seat belt inner RH	• Wire harness • Front seat inner belt RH assembly • Occupant classification ECU • Center airbag sensor assembly • Seat belt control ECU

WIRING DIAGRAM

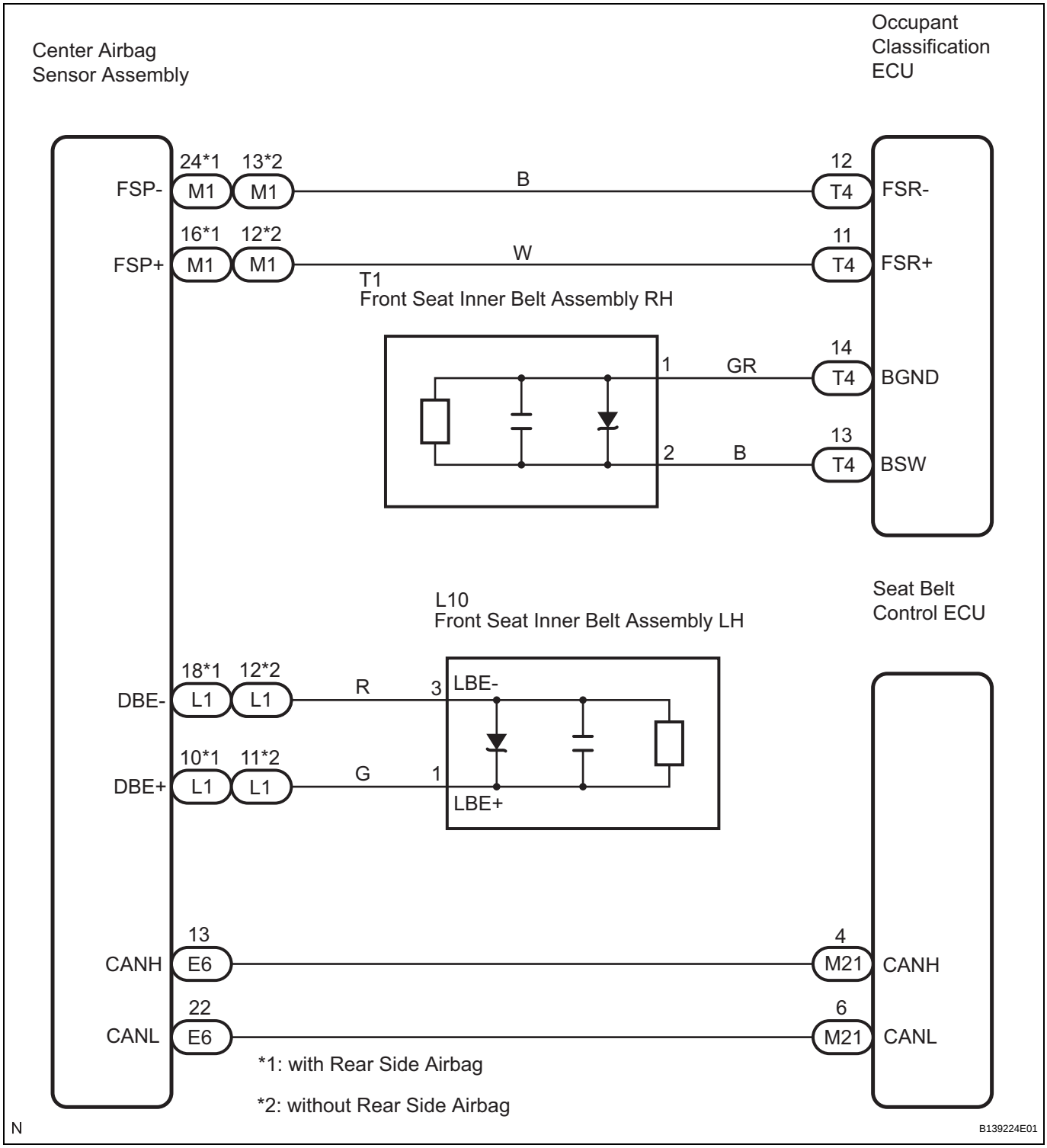

INSPECTION PROCEDURE

NOTICE:

When the seat belt control ECU is replaced with a new one, INITIALIZATION must be performed. (See page PC-11)

PC

1	CHECK DTC OUTPUT (CAN COMMUNICATION SYSTEM)

(a) Delete the DTC (See page PC-14).

(b) Recheck for DTCs.
OK:
DTC U0151 is not output.

NG → **GO TO CAN COMMUNICATION SYSTEM (See page CA-49)**

OK

2	CHECK DTC OUTPUT (SUPPLEMENTAL RESTRAINT SYSTEM)

(a) Delete the DTC (See page RS-49).
(b) Recheck for DTCs.
OK:
DTC B1655 is not output.

NG → **GO TO SUPPLEMENTAL RESTRAINT SYSTEM (See page RS-53)**

OK

3	CHECK DTC OUTPUT (OCCUPANT CLASSIFICATION SYSTEM)

(a) Delete the DTC (See page RS-318).
(b) Recheck for DTCs.
OK:
DTC B1771 is not output.

NG → **GO TO OCCUPANT CLASSIFICATION SYSTEM (See page RS-320)**

OK

4	CHECK DTC OUTPUT (PRE-COLLISION SYSTEM)

(a) Delete the DTC (See page PC-14).
(b) Recheck for DTCs.
OK:
DTC B2074 or B2075 is not output.

NG → **REPLACE SEAT BELT CONTROL ECU (See page SB-64)**

OK

USE SIMULATION METHOD TO CHECK

DTC	U0100	Lost Communication with ECM/PCM "A"

DTC	U0122	Lost Communication with Vehicle Dynamics Control Module

DTC	U0151	Lost Communication with Airbag ECU

DTC	U1101	Lost Communication with Distance Control ECU

DESCRIPTION

The seat belt control ECU receives signals from the skid control ECU, center airbag sensor assembly, and distance control ECU via CAN communication system.
The distance control ECU receives signals from the ECM via CAN communication system.

DTC No.	DTC Detection Item	Inspection Area
U0100	ECM communication error	• CAN communication system • ECM • Distance control ECU
U0122	Skid control ECU communication error	• CAN communication system • Skid control ECU • Seat belt control ECU
U0151	Center airbag sensor communication error	• CAN communication system • Center airbag sensor assembly • Seat belt control ECU
U1101	Distance control ECU communication error	• CAN communication system • Distance control ECU • Seat belt control ECU

HINT:
When two or more DTCs starting with "U" are output simultaneously, inspect the connectors and wire harness of each ECU.

INSPECTION PROCEDURE

Refer to the U0100 (CAN communication system) (See page CA-137).
Refer to the U0122 (CAN communication system) (See page CA-126).
Refer to the U0151 (CAN communication system) (See page CA-144).
Refer to the U1101 (CAN communication system) (See page CC-82).

DTC	U0235	Lost Communication with Cruise Control Front Distance Range Sensor

DTC	U1102	Lost Communication with Radar Sensor

DESCRIPTION

The millimeter wave radar sensor and distance control ECU transmit the data for general vehicle control and diagnosis function along the communication line.

DTC No.	DTC Detection Condition	Trouble Area
U0235	ECM detects communication error signal from millimeter wave radar sensor to distance control ECU for 0.15 sec. or more while dynamic radar cruise control is in operation.	• CAN communication system • Millimeter wave radar sensor • Distance control ECU
U1102	ECM detects communication error signal (from distance control ECU to millimeter wave radar sensor to distance control ECU) for 0.15 sec. or more while dynamic radar cruise control is in operation.	• CAN communication system • Millimeter wave radar sensor • Distance control ECU

INSPECTION PROCEDURE

Refer to the U0235 (Dynamic radar cruise control system) (See page CC-85).
Refer to the U1102 (Dynamic radar cruise control system) (See page CC-88).

Power Source Circuit

DESCRIPTION

This circuit supplies power to the seat belt control ECU.

WIRING DIAGRAM

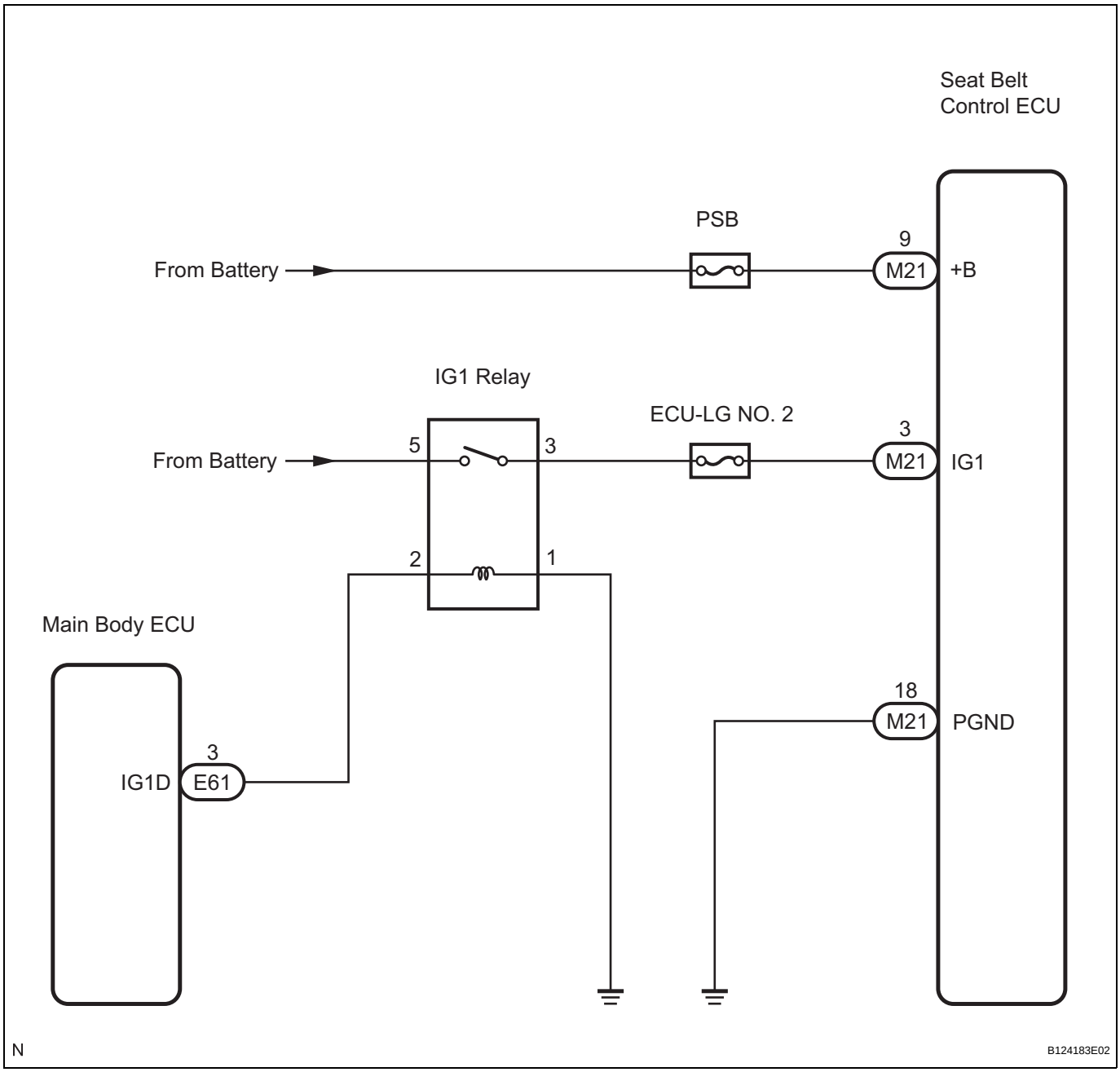

INSPECTION PROCEDURE

NOTICE:

When the seat belt control ECU is replaced with a new one, INITIALIZATION must be performed. (See page PC-11)

1 CHECK HARNESS AND CONNECTOR (POWER SOURCE CIRCUIT)

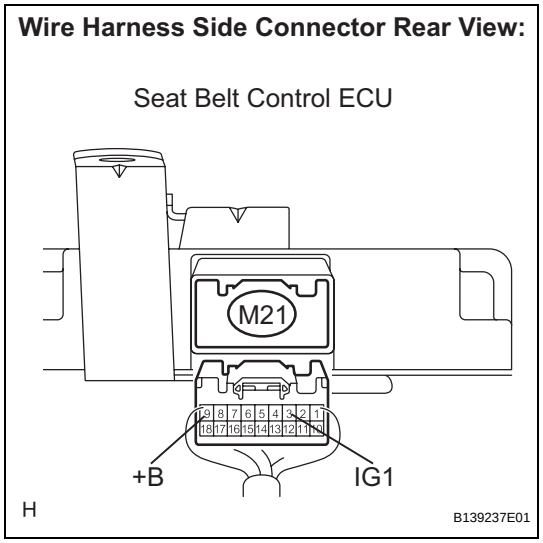

(a) Disconnect the negative (-) terminal cable from the battery.
(b) Disconnect the M21 seat belt control ECU connector.
(c) Connect the negative (-) terminal cable to the battery.
(d) Measure the voltage according to the value(s) in the table below.

Standard voltage

Tester Connection	Condition	Specified Condition
M21-3 (IG1) - Body ground	Engine switch off	Below 1 V
	Engine switch on (IG)	10 to 14 V
M21-9 (+B) - Body ground	Always	10 to 14 V

NG → **REPAIR OR REPLACE HARNESS OR CONNECTOR**

OK

2 CHECK HARNESS AND CONNECTOR (GROUND CIRCUIT)

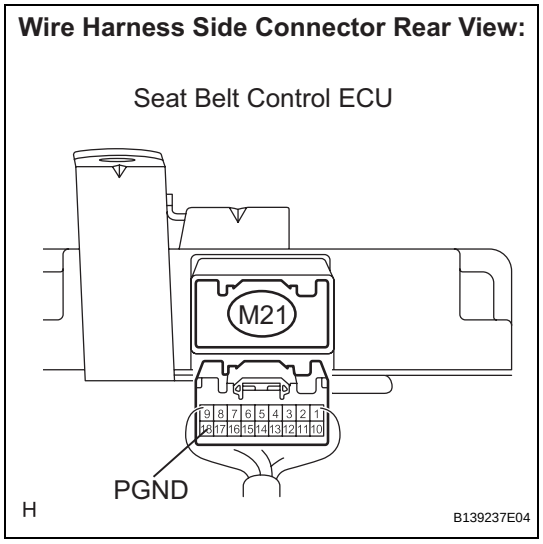

(a) Disconnect the negative (-) terminal cable from the battery.
(b) Measure the resistance according to the value(s) in the table below.

Standard resistance

Tester Connection	Condition	Specified Condition
M21-18 (PGND) - Body ground	Always	Below 1 Ω

NG → **REPAIR OR REPLACE HARNESS OR CONNECTOR**

OK

REPLACE SEAT BELT CONTROL ECU (See page SB-64)

INITIALIZATION

1. Precautions for Seat Belt Control ECU Replacement

The seat belt control ECU operates the pre-collision system based on the stored data that informs that the vehicle is LHD or RHD model. LHD or RHD refers to the seating position of the driver, not which side of the road the vehicle is driven on.

Therefore, when replacing the seat belt control ECU, it is necessary to store the information about whether the vehicle is a LHD or RHD model. This can be performed by following the steps below:

(a) Turn the engine switch on (IG).

(b) The PCS warning light comes on for at least 3 seconds after turning the engine switch on (IG). Make sure that the warning light does not remain on.

(c) At this time, the seat belt control ECU receives vehicle configuration (LHD/RHD) information from the gateway ECU and stores it in memory.

(1) Connect the intelligent tester (with CAN VIM) to the DLC3.

(2) Turn the engine switch on (IG).

(3) Following the display on the tester, select the "Active Test".

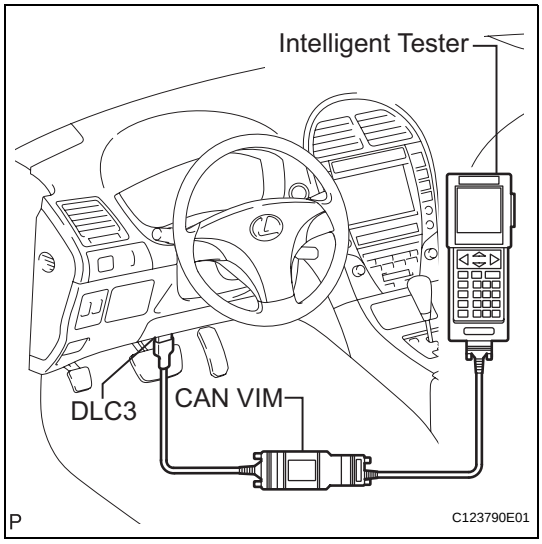

Seat Belt Control ECU:

Tester Display	Test Part	Control Range	Diagnostic Note
D BELT MOTOR	Driver's seat belt motor	ON: Seat belt motor operate OFF: Seat belt motor does not operate	Seat belt (driver side) is fastened
P BELT MOTOR	Passenger's seat belt motor	ON: Seat belt motor operate OFF: Seat belt motor does not operate	Seat belt (passenger side) is fastened

PROBLEM SYMPTOMS TABLE

PRE-COLLISION SYSTEM

Symptom	Suspected Area	See page
System operates when the possibility of collision does not exist	1. Check if inoperative conditions of the system are met	PC-17
	2. Millimeter wave radar sensor	CC-122
	3. Distance control ECU	CC-118
System does not operate when the possibility of collision exists	1. Check if inoperative conditions of the system are met	PC-17
	2. Millimeter wave radar sensor	CC-122
	3. Distance control ECU	CC-118
Neither normal system code nor DTC is output	1. Power source circuit	PC-54
System does not operate normally even when normal system code is output and DTCs are not output	1. Power source circuit	PC-54

TERMINALS OF ECU

1. SEAT BELT CONTROL ECU

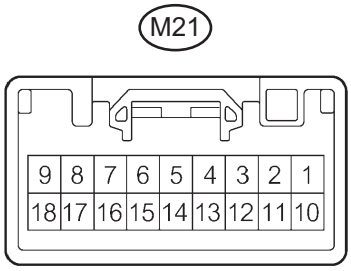

H G025193E06

Terminal No. (Symbols)	Wiring Color	Terminal Description	Condition	Specified Value
M21-1 (MOR+) - M21-18 (PGND)	Y - W-B	Seat belt motor RH power source line	Engine switch on (IG)	4.0 to 8.5 V
M21-2 (MOL+) - M21-18 (PGND)	L - W-B	Seat belt motor LH power source line	Engine switch on (IG)	4.0 to 8.5 V
M21-3 (IG1) - Body ground	R - Body ground	Seat belt control ECU power source line	Engine switch on (IG)	10 to 14 V
M21-9 (+B) - Body ground	BR - W-B	Seat belt control ECU power source line	Always	10 to 14 V
M21-10 (MOR-) - Body ground	B - Body ground	Seat belt motor RH ground line	Engine switch on (IG)	4.0 to 8.5 V
M21-11 (MOL-) - Body ground	W - Body ground	Seat belt motor LH ground line	Engine switch on (IG)	4.0 to 8.5 V
M21-18 (PGND) - Body ground	W-B - Body ground	Seat belt control ECU ground line	Always	Below 1 Ω

DIAGNOSIS SYSTEM

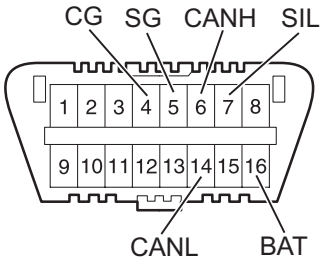

T H100769E16

1. CHECK DLC3

(a) The vehicle's ECU uses ISO 15765-4 for communication protocol. The terminal arrangement of the DLC3 complies with SAE J1962 and matches the ISO 15765-4 format.

Symbols (Terminal No.)	Terminal Description	Condition	Specified Condition
SIL (7) - SG (5)	Bus "+" line	During transmission	Pulse generation
CG (4) - Body ground	Chassis ground	Always	Below 1 Ω
SG (5) - Body ground	Signal ground	Always	Below 1 Ω
BAT (16) - Body ground	Battery positive	Always	10 to 14 V
CANH (6) - CANL (14)	CAN bus line	Engine switch off*	54 to 69 Ω
CANH (6) - CG (4)	HIGH-level CAN bus line	Engine switch off*	200 Ω or higher
CANL (14) - CG (4)	LOW-level CAN bus line	Engine switch off*	200 Ω or higher
CANH (6) - BAT (16)	HIGH-level CAN bus line	Engine switch off*	6 kΩ or higher
CANL (14) - BAT (16)	LOW-level CAN bus line	Engine switch off*	6 kΩ or higher

NOTICE:
***: Before measuring the resistance, leave the vehicle as is for at least 1 minute and do not operate the engine switch, any other switches or the doors.**
If the result is not as specified, the DLC3 may have a malfunction. Repair or replace the harness and connector.

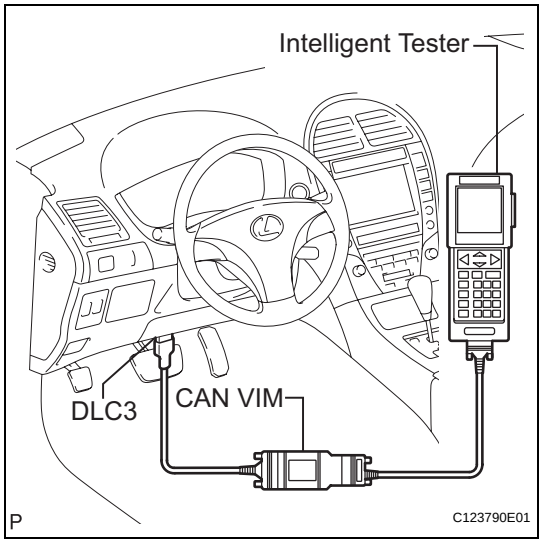

(b) Connect the cable of the intelligent tester (with CAN VIM) to the DLC3, turn the engine switch on (IG) and attempt to use the intelligent tester. If the screen displays a communication error message, a problem exists in the vehicle side or tester side.
HINT:
- If communication is normal when the tool is connected to another vehicle, inspect the DLC3 on the original vehicle.
- If communication is still impossible when the tool is connected to another vehicle, the problem is probably in the tool itself. Consult the Service Department listed in the tool's instruction manual.

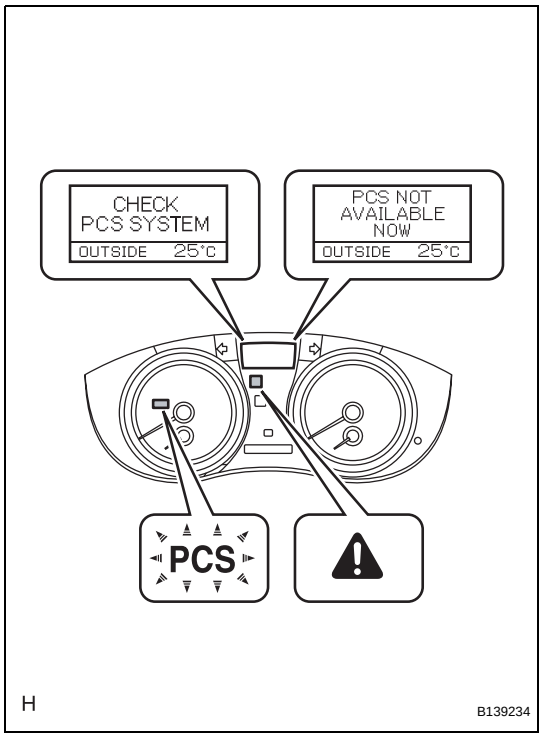

2. FUNCTION OF WARNING INDICATOR AND MESSAGE

(a) If the pre-collision system is not functioning properly, the driver is warned by the master warning indicator and multi-information display warning message on the combination meter.

Master Warning Indicator	Warning Message	Detail	DTC	PCS Warning indicator
ON	CHECK PCS SYSTEM	This message appears when the seat belt control ECU detects a system malfunction	○	ON

Master Warning Indicator	Warning Message	Detail	DTC	PCS Warning indicator
ON	PCS NOT AVAILABLE NOW	This message appears when the seat belt control ECU is in the fail-safe mode (See page PC-11)	-	Blinking

○: DTC is output
-: DTC is not output

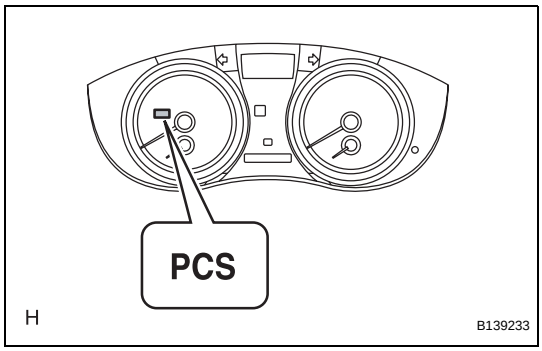

(b) Initial check.
(1) The initial check occurs when the engine switch is off for more than 2 seconds, and then turned on (IG). The initial check consists of a pre-collision system diagnostic check with a duration of approximately 3 seconds.
(2) If a malfunction is detected during the initial check, the multi-information display will output "CHECK PCS SYSTEM " or "PCS NOT AVAILABLE NOW".

(c) Constant check.
(1) The seat belt control ECU and distance control ECU constantly monitor the pre-collision system for malfunctions after the initial check approximately 3 seconds after turning the engine switch on (IG).
(2) "CHECK PCS SYSTEM" or "PCS NOT AVAILABLE NOW" is displayed on the multi-information display in the combination meter assembly when the constant check detects malfunctions in the pre-collision system.

DTC CHECK / CLEAR

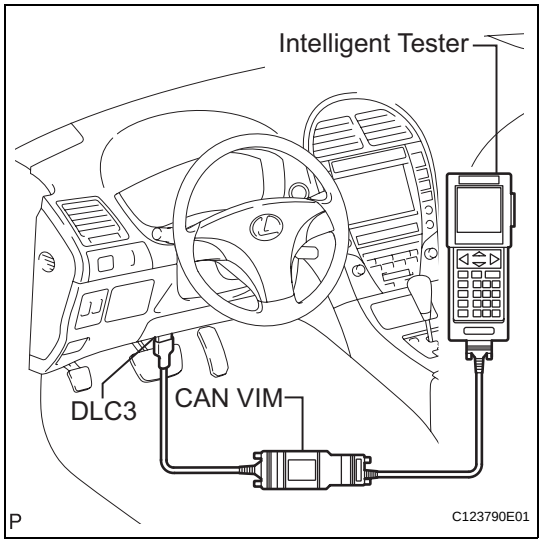

1. CHECK DTC

(a) Check the DTCs.
(1) Connect the intelligent tester (with CAN VIM) to the DLC3.
(2) Turn the engine switch on (IG).
(3) Check the DTCs by following the prompts on the tester screen.
HINT:
Refer to the intelligent tester operator's manual for further details.

(b) Clear the DTCs.
(1) Connect the intelligent tester (with CAN VIM) to the DLC3.
(2) Turn the engine switch on (IG).
(3) Clear the DTCs by following the prompts on the tester screen.
HINT:
Refer to the intelligent tester operator's manual for further details.

FAIL-SAFE CHART

HINT:
The pre-collision system fail-safe function and details are indicated in the table below.

Cause	Warning message	Fail-safe Operation	Conditions to return to normal condition
A malfunction exists in part of pre-collision system	"CHECK PCS SYSTEM " to "PCS NOT AVAILABLE NOW"	Depending on malfunction part, pre-collision seat belt or brake assist system may stop operating*2	Repair malfunctioning part
Radiator grille or millimeter wave radar sensor is dirty	"PCS NOT AVAILABLE NOW"	Depending on dirty part, pre-collision seat belt or brake assist system may stop operating*2	Clean radiator grille or millimeter wave radar sensor
Pre-collision sensor cannot detect possible crash object because of bad weather, such as snow	"PCS NOT AVAILABLE NOW"	Depending on dirty part, pre-collision seat belt or brake assist system may stop operating*2	Sensor can detect an object
Overheating prevention function of seat belt control ECU operates*1	"PCS NOT AVAILABLE NOW"	Pre-collision seat belts	Temperature of seat belt drops, and seat belt control ECU becomes operative

*1: The overheating prevention function operates when the seat belt control ECU detects a rise in seat belt temperature because of excessive seat belt operation.
*2: The pre-collision seat belts operate only with sudden braking.

DATA LIST / ACTIVE TEST

1. DATA LIST

HINT:
Using the intelligent tester to read the Data List allows the values or states of switches, sensors, actuators and other items to be read without removing any parts. This non-intrusive inspection can be very useful as intermittent conditions or signals may be discovered before parts or wiring are disturbed. Reading the Data List information early in troubleshooting is one way to save diagnostic time.

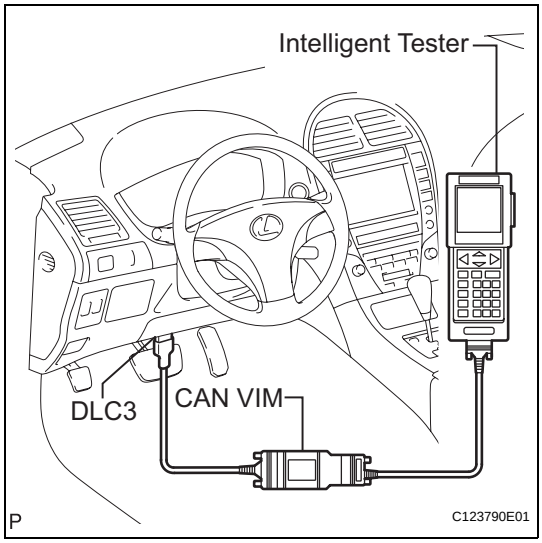

(a) Connect the intelligent tester (with CAN VIM) to the DLC3.
(b) Turn the engine switch on (IG).
(c) By following the display on the tester, select the "Data List".

PRE-COLLISION:

Tester Display	Measurement Item/Range	Normal Condition	Diagnostic Note
D BUCKLE SW	Buckle switch status of driver's seat / UNSET: Unfasten driver side seat belt SET: Fasten driver side seat belt NG: Indeterminate data	UNSET / SET	-
P BUCKLE SW	Buckle switch status of passenger's seat / UNSET: Unfasten passenger side seat belt SET: Fasten passenger side seat belt NG: Indeterminate data	UNSET / SET	-
D BELT CTRL	Seat belt control status of driver's seat / STOP: Control stopped ON: Controlled ERROR: Indeterminate data	STOP / ON	Seat belt (driver side) is fastened
P BELT CTRL	Seat belt control status of passenger's seat / STOP: Control stopped ON: Controlled ERROR: Indeterminate data	STOP / ON	Seat belt (passenger side) is fastened
#PRESENT CODES	Number of present trouble codes / min: 0, max: 255	Number of DTCs will be displayed	-
#PAST CODES	Number of past trouble codes / min: 0, max: 255	Number of DTCs will be displayed	-

2. ACTIVE TEST

HINT:

Using the intelligent tester to perform Active Test allows the operation or effects of relays, VSVs, actuators and other items to be tested without removing any parts. This non-intrusive inspection can be very useful as intermittent conditions or operation may be discovered before parts or wiring are disturbed. Using the Active Test early in troubleshooting is one way to save diagnostic time. It is possible to view Data List information on the intelligent tester while performing Active Tests.

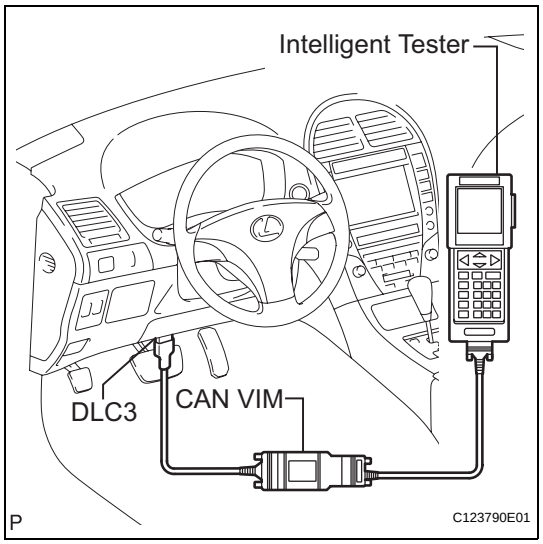

(a) Connect the intelligent tester (with CAN VIM) to the DLC3.

(b) Turn the engine switch on (IG).

(c) Following the display on the tester, select the "Active Test".

PRE-COLLISION:

Tester Display	Test Part	Control Range	Diagnostic Note
D BELT MOTOR	Driver's seat belt motor	ON: Seat belt motor operates OFF: Seat belt motor does not operate	Seat belt (driver side) is fastened
P BELT MOTOR	Passenger's seat belt motor	ON: Seat belt motor operates OFF: Seat belt motor does not operate	Seat belt (passenger side) is fastened
D-P BELT MOTOR	Driver's and passenger's seat belt motor	ON: Seat belt motors operate OFF: Seat belt motors do not operate	Seat belts (driver and passenger) are fastened

NOTICE:

- **The belt motor does not operate when the buckle switch is off .**
- **Do not operate the motor continuously to prevent overheating of the motor. Allow a 30 second interval between each test.**

DIAGNOSTIC TROUBLE CODE CHART

PRE-COLLISION SYSTEM DIAGNOSTIC TROUBLE CODE CHART

DTC Code	Detection Item	Trouble Area	See page
B2000	Short to B+ in Seat Belt Motor RH Circuit	1. Front seat outer belt assembly RH 2. Wire harness 3. Seat belt control ECU	PC-20
B2001	Short to GND in Seat Belt Motor RH Circuit	1. Front seat outer belt assembly RH 2. Wire harness 3. Seat belt control ECU	PC-22
B2002	Open in Seat Belt Motor RH Circuit	1. Front seat outer belt assembly RH 2. Wire harness 3. Seat belt control ECU	PC-24
B2005	Short to B+ in Seat Belt Motor LH Circuit	1. Front seat outer belt assembly LH 2. Wire harness 3. Seat belt control ECU	PC-26
B2006	Short to GND in Seat Belt Motor LH Circuit	1. Front seat outer belt assembly LH 2. Wire harness 3. Seat belt control ECU	PC-28
B2007	Open in Seat Belt Motor LH Circuit	1. Front seat outer belt assembly LH 2. Wire harness 3. Seat belt control ECU	PC-30
B2015	Open in Right Side Upper MOS	Seat belt control ECU	PC-32
B2016	Open in Right Side Lower MOS	Seat belt control ECU	PC-32
B2020	Open in Left Side Upper MOS	Seat belt control ECU	PC-32
B2021	Open in Left Side Lower MOS	Seat belt control ECU	PC-32
B2025	Right Side Current Detection Circuit Malfunction Hi	Seat belt control ECU	PC-32
B2026	Right Side Current Detection Circuit Malfunction Lo	Seat belt control ECU	PC-32
B2027	Right Side Over-Current Malfunction	Seat belt control ECU	PC-32
B2030	Left Side Current Detection Circuit Malfunction Hi	Seat belt control ECU	PC-32
B2031	Left Side Current Detection Circuit Malfunction Lo	Seat belt control ECU	PC-32
B2032	Left Side Over-Current Malfunction	Seat belt control ECU	PC-32
B2035	Power Supply Relay Adherence Malfunction	1. Front seat outer belt assembly RH 2. Front seat outer belt assembly LH 3. Wire harness 4. Seat belt control ECU	PC-34
B2036	Power Supply Relay Malfunction Open	Seat belt control ECU	PC-32
B2040	EEPROM Malfunction	Seat belt control ECU	PC-32
B2041	Fall of Raised Voltage	Seat belt control ECU	PC-32
B2043	Fall of B+ Voltage	Seat belt control ECU	PC-32
B2047	Seat Belt Control ECU Inner Circuit Malfunction	Seat belt control ECU	PC-32
B2055	Radar Sensor Malfunction	1. Millimeter wave radar sensor 2. Seat belt control ECU	PC-38
B2056	Axial Gap of Radar Sensor	1. Millimeter wave radar sensor 2. Seat belt control ECU	PC-39

DTC Code	Detection Item	Trouble Area	See page
B2057	Yaw Rate Sensor	1. Yaw rate sensor 2. Seat belt control ECU	PC-40
B2058	Steering Angle Sensor	1. Steering angle sensor 2. Seat belt control ECU	PC-42
B2059	Vehicle Speed Malfunction	1. Combination meter assembly 2. ECM 3. Skid control ECU 4. Distance control ECU 5. Seat belt control ECU	PC-44
B2060	ABS Malfunction	1. Skid control ECU 2. Seat belt control ECU	PC-46
B2065	Distance Control ECU Malfunction	1. Distance control ECU 2. Seat belt control ECU	PC-48
B2074	Driver Side Seat Belt Buckle Switch Circuit Malfunction	1. Wire harness 2. Front seat inner belt LH assembly 3. Center airbag sensor assembly 4. Seat belt control ECU	PC-49
B2075	Passenger Side Seat Belt Buckle Switch Circuit Malfunction	1. Wire harness 2. Front seat inner belt RH assembly 3. Occupant classification ECU 4. Center airbag sensor assembly 5. Seat belt control ECU	PC-49
U0100	Lost Communication with ECM/ PCM "A"	1. CAN communication system 2. ECM 3. Distance control ECU	PC-52
U0122	Lost Communication with Vehicle Dynamics Control Module	1. CAN communication system 2. Skid control ECU 3. Seat belt control ECU	PC-52
U0151	Lost Communication with Airbag ECU	1. CAN communication system 2. Center airbag sensor assembly 3. Seat belt control ECU	PC-52
U0235	Lost Communication with Cruise Control Front Distance Range Sensor	1. CAN communication system 2. Millimeter wave radar sensor 3. Distance control ECU	PC-53
U1101	Lost Communication with Distance Control ECU	1. CAN Communication system 2. Distance control ECU 3. Seat Belt Control ECU	PC-52
U1102	Lost Communication with Radar Sensor	1. CAN communication system 2. Millimeter wave radar sensor 3. Distance control ECU	PC-53

DTC	B2000	Short to B+ in Seat Belt Motor RH Circuit

DESCRIPTION

The seat belt control ECU receives information from the distance control ECU through CAN communication and tightens the seat belt by operating the motor in the front seat outer belt assembly RH.

CAUTION:

The pretensioner is built into the front seat outer belt assembly RH. Be sure to follow the correct inspection procedure, as failure to follow the correct procedure (such as inspection of incorrect connectors) may deploy the pretensioner.

DTC No.	DTC Detection Condition	Trouble Area
B2000	• Short to B+ in the seat belt motor RH circuit continues for 1 second or more • Short in the seat belt motor RH circuit	• Front seat outer belt assembly RH • Wire harness (seat belt control ECU - front seat outer belt assembly RH) • Seat belt control ECU

WIRING DIAGRAM

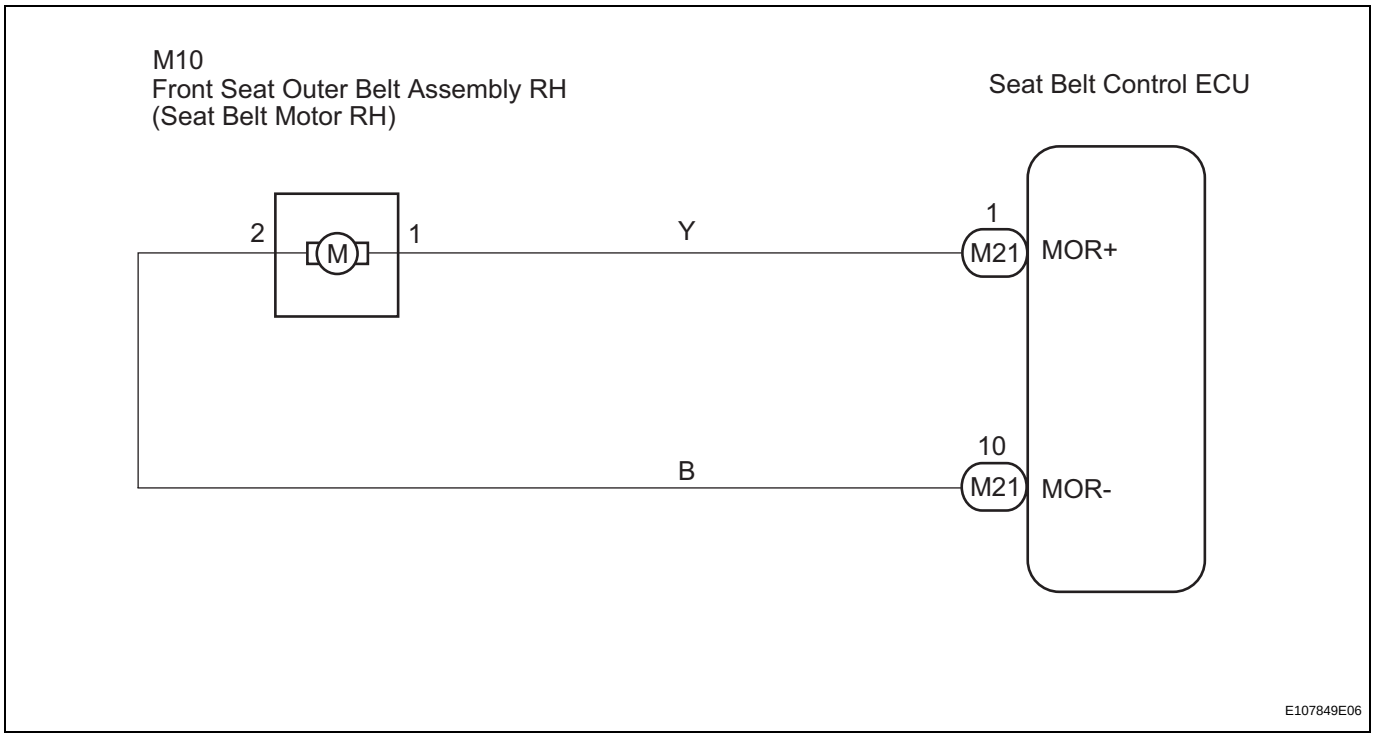

INSPECTION PROCEDURE

NOTICE:

When the seat belt control ECU is replaced with a new one, INITIALIZATION must be performed. (See page PC-11)

1 INSPECT FRONT SEAT OUTER BELT ASSEMBLY RH

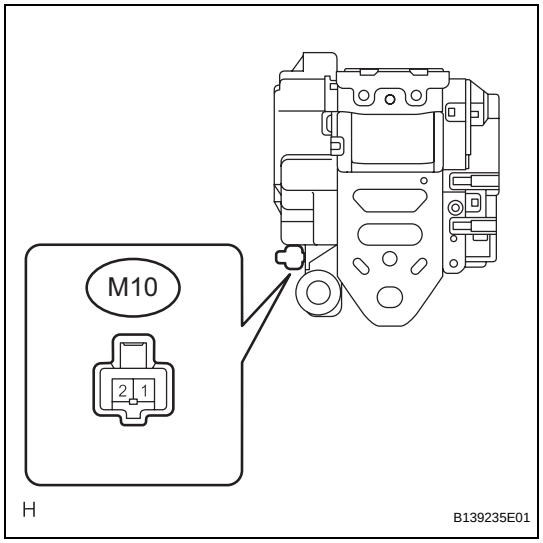

(a) Disconnect the M10 connector of the front seat outer belt assembly RH.
(b) Measure the voltage according to the value(s) in the table below.

Standard voltage

Tester Connection	Condition	Specified Condition
M10-1 - Body ground	Engine switch on (IG)	Below 1 V
M10-2 - Body ground	Engine switch on (IG)	Below 1 V

NG → **REPLACE FRONT SEAT OUTER BELT ASSEMBLY RH (See page SB-27)**

OK

2 CHECK HARNESS AND CONNECTOR (FRONT SEAT OUTER BELT ASSEMBLY RH - SEAT BELT CONTROL ECU)

Wire Harness Side Connector Front View:

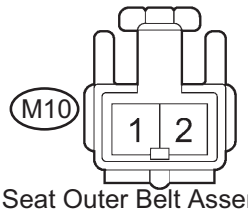

Front Seat Outer Belt Assembly RH

H045168E20

(a) Disconnect the negative (-) battery terminal.
(b) Disconnect the M21 connector of the seat belt control ECU.
(c) Connect the negative (-) terminal to the battery.
(d) Measure the voltage according to the value(s) in the table below.

Standard voltage

Tester Connection	Condition	Specified Condition
M10-1 - Body ground	Engine switch on (IG)	Below 1 V
M10-2 - Body ground	Engine switch on (IG)	Below 1 V

NG → **REPAIR OR REPLACE HARNESS OR CONNECTOR**

OK

REPLACE SEAT BELT CONTROL ECU (See page SB-64)

DTC	B2001	Short to GND in Seat Belt Motor RH Circuit

DESCRIPTION

The seat belt control ECU receives information from the distance control ECU using CAN communication and tightens the seat belt by operating the motor in the front seat outer belt assembly RH.

CAUTION:

The pretensioner is built into the front seat outer belt assembly RH. Be sure to follow the correct inspection procedure, as failure to follow the correct procedure (such as inspection of incorrect connectors) may deploy the pretensioner.

DTC No.	DTC Detection Condition	Trouble Area
B2001	• Short to ground in seat belt motor RH circuit continues for 1 second or more • Short in seat belt motor RH circuit	• Front seat outer belt assembly RH • Wire harness (seat belt control ECU - front seat outer belt assembly RH) • Seat belt control ECU

WIRING DIAGRAM

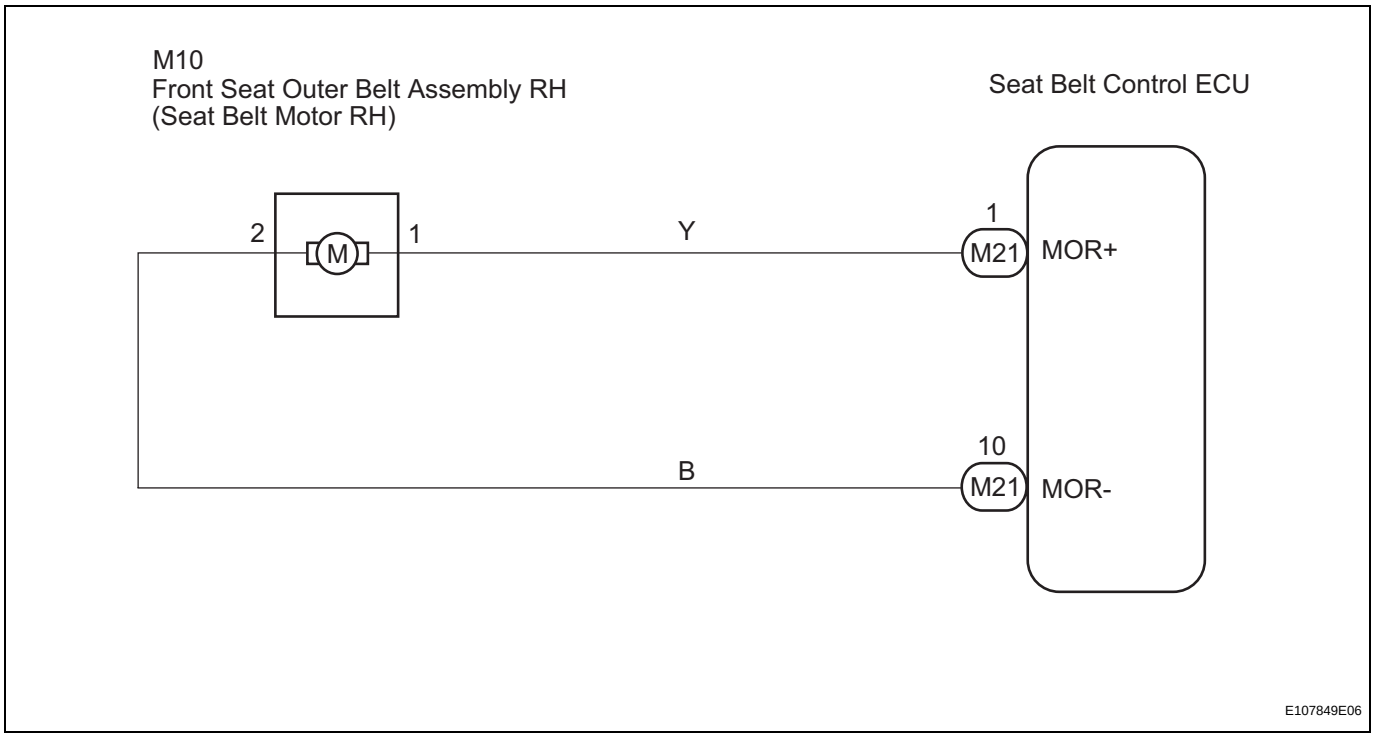

INSPECTION PROCEDURE

NOTICE:

When the seat belt control ECU is replaced with a new one, INITIALIZATION must be performed. (See page PC-11)

1 INSPECT FRONT SEAT OUTER BELT ASSEMBLY RH

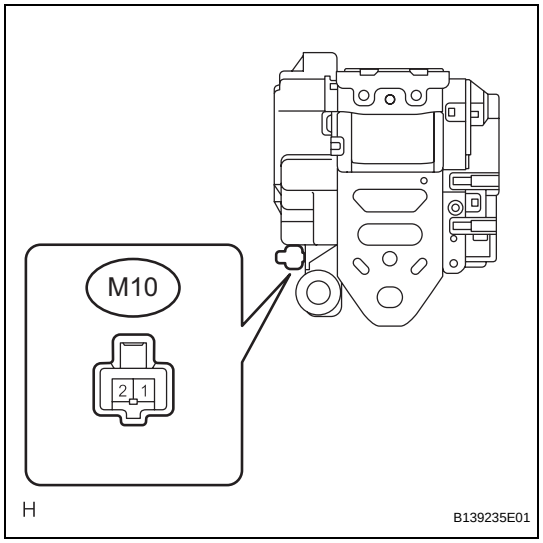

(a) Disconnect the M10 connector of the front seat outer belt assembly RH.
(b) Measure the resistance according to the value(s) in the table below.

Standard resistance

Tester Connection	Condition	Specified Condition
M10-1 - Body ground	Always	1 MΩ or higher
M10-2 - Body ground	Always	1 MΩ or higher

NG → **REPLACE FRONT SEAT OUTER BELT ASSEMBLY RH (See page SB-27)**

OK

2 CHECK HARNESS AND CONNECTOR (FRONT SEAT OUTER BELT ASSEMBLY RH - SEAT BELT CONTROL ECU)

Wire Harness Side Connector Front View:

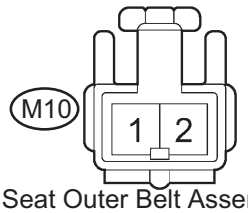

Front Seat Outer Belt Assembly RH

H045168E20

(a) Disconnect the negative (-) battery terminal.
(b) Disconnect the M21 connector of the seat belt control ECU.
(c) Measure the resistance according to the value(s) in the table below.

Standard resistance

Tester Connection	Condition	Specified Condition
M10-1 - Body ground	Always	1 MΩ or higher
M10-2 - Body ground	Always	1 MΩ or higher
M10-1 - M10-2	Always	1 MΩ or higher

NG → **REPAIR OR REPLACE HARNESS OR CONNECTOR**

OK

REPLACE SEAT BELT CONTROL ECU (See page SB-64)

DTC	B2002	Open in Seat Belt Motor RH Circuit

DESCRIPTION

The seat belt control ECU receives information from the distance control ECU using CAN communication and tightens the seat belt by operating the motor in the front seat outer belt assembly RH.

CAUTION:

The pretensioner is built into the front seat outer belt assembly RH. Be sure to follow the correct inspection procedure, as failure to follow the correct procedure (such as inspection of incorrect connectors) may deploy the pretensioner.

DTC No.	DTC Detecting Condition	Trouble Area
B2002	Open in the seat belt motor RH circuit continues for 1 second or more	• Front seat outer belt assembly RH • Wire harness (seat belt control ECU - front seat outer belt assembly RH) • Seat belt control ECU

WIRING DIAGRAM

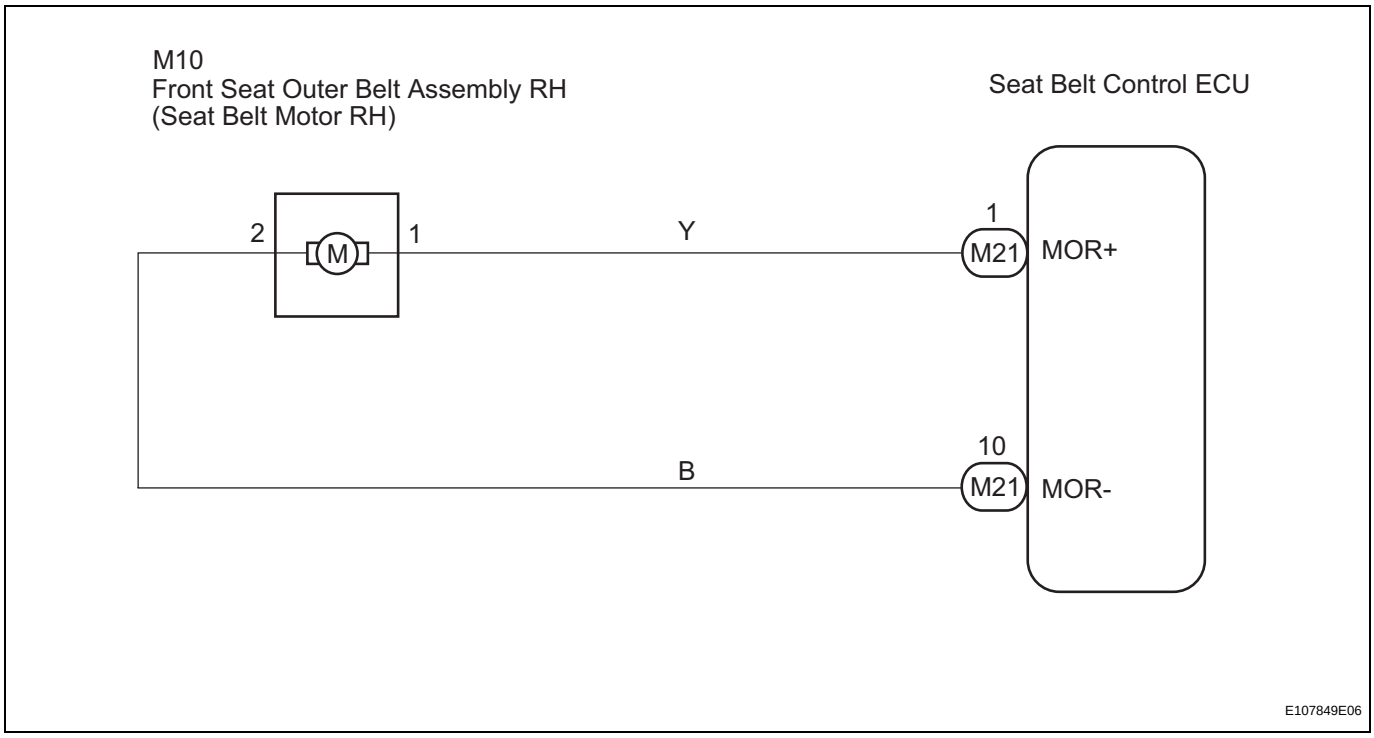

INSPECTION PROCEDURE

NOTICE:

When the seat belt control ECU is replaced with a new one, INITIALIZATION must be performed. (See page PC-11)

1 INSPECT FRONT SEAT OUTER BELT ASSEMBLY RH

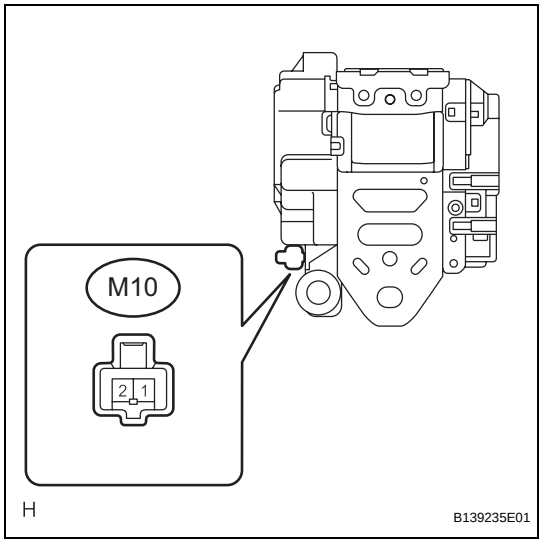

(a) Disconnect the M10 connector of the front seat outer belt assembly RH.
(b) Measure the resistance according to the value(s) in the table below.
Standard resistance

Tester Connection	Condition	Specified Condition
M10-1 - M10-2	Always	Below 1 MΩ

NG → **REPLACE FRONT SEAT OUTER BELT ASSEMBLY RH (See page SB-27)**

OK

2 CHECK HARNESS AND CONNECTOR (FRONT SEAT OUTER BELT ASSEMBLY RH - SEAT BELT CONTROL ECU)

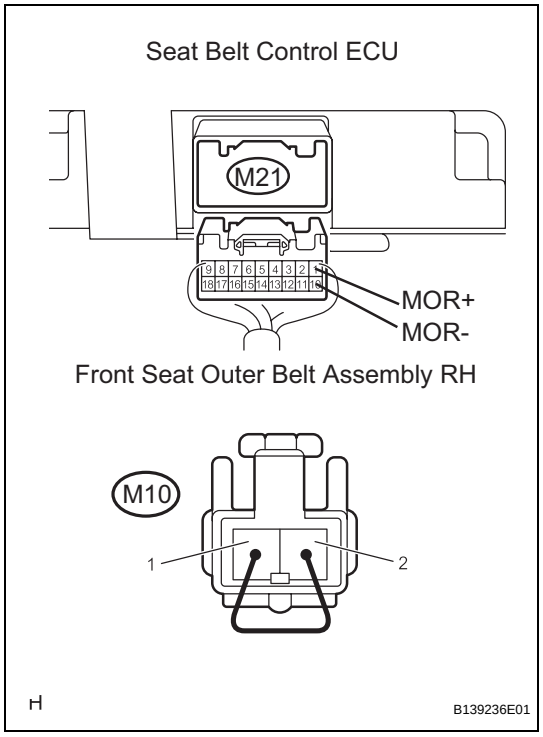

(a) Disconnect the negative (-) battery terminal.
(b) Disconnect the M21 connector of the seat belt control ECU.
(c) Using a service wire, connect M10-1 and M10-2 of the connector on the front seat outer belt assembly RH side.
NOTICE:
Do not forcibly insert the service wire into the terminals of the connector.
(d) Measure the resistance according to the value(s) in the table below.
Standard resistance

Tester Connection	Condition	Specified Condition
M21-1 (MOR+) - M21-10 (MOR-)	Always	Below 1 Ω

NG → **REPAIR OR REPLACE HARNESS OR CONNECTOR**

OK

REPLACE SEAT BELT CONTROL ECU (See page SB-64)

DTC	B2005	Short to B+ in Seat Belt Motor LH Circuit

DESCRIPTION

The seat belt control ECU receives information from the distance control ECU using CAN communication and tightens the seat belt by operating the motor in the front seat outer belt assembly LH.

CAUTION:

The pretensioner is built into the front seat outer belt assembly LH. Be sure to follow the correct inspection procedure, as failure to follow the correct procedure (such as inspection of incorrect connectors) may deploy the pretensioner.

DTC No.	DTC Detection Condition	Trouble Area
B2005	• Short to B+ in seat belt motor LH circuit continues for 1 second or more • Short in seat belt motor LH circuit	• Front seat outer belt assembly LH • Wire harness (Seat belt control ECU - front seat outer belt assembly LH) • Seat belt control ECU

WIRING DIAGRAM

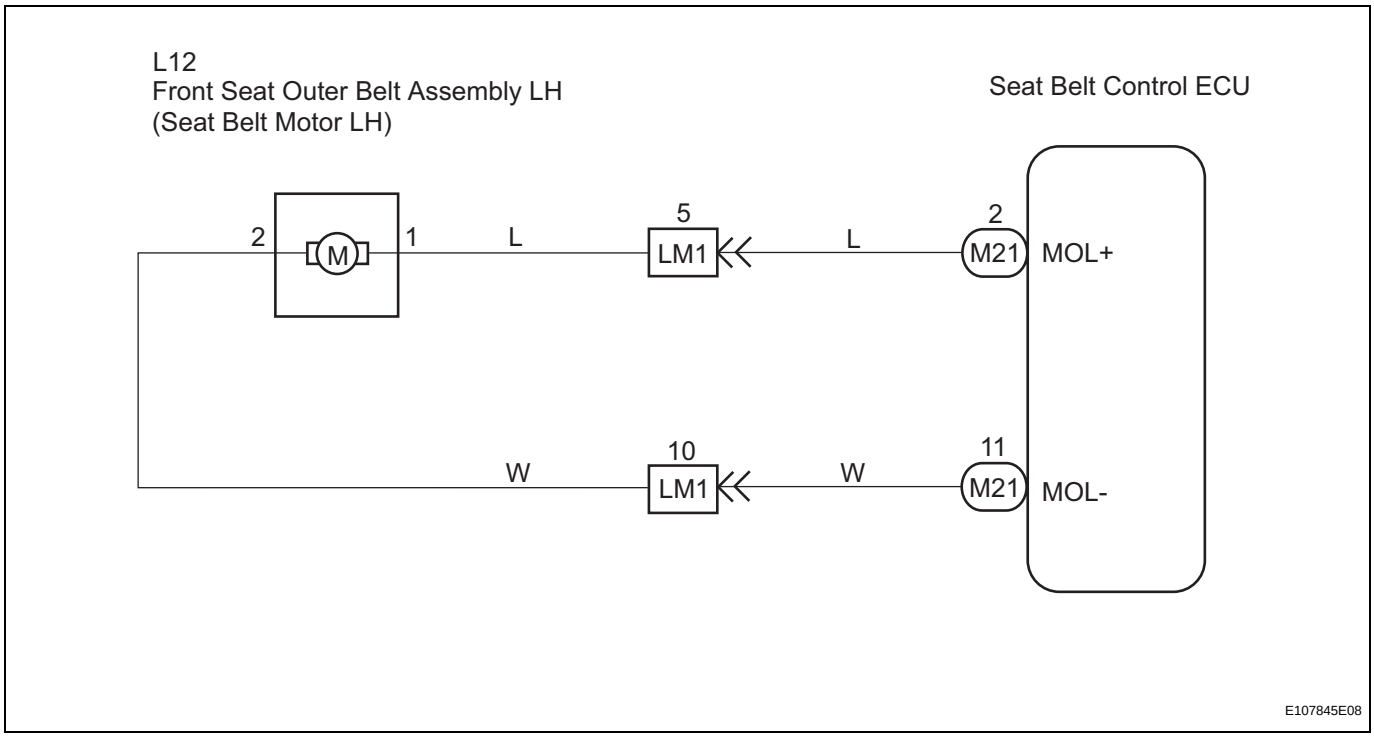

INSPECTION PROCEDURE

NOTICE:

When the seat belt control ECU is replaced with a new one, INITIALIZATION must be performed. (See page PC-11)

1 INSPECT FRONT SEAT OUTER BELT ASSEMBLY LH

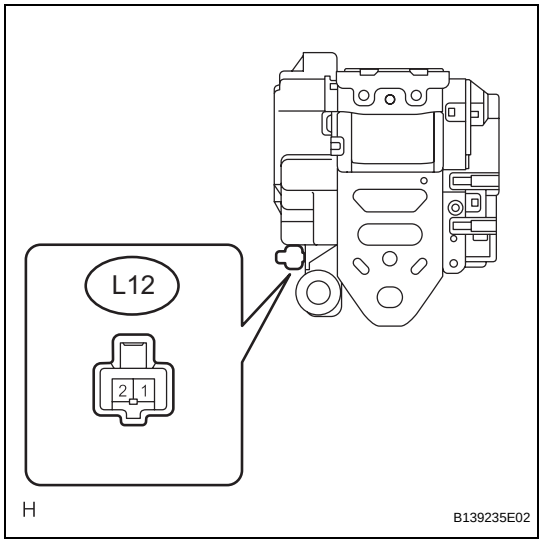

(a) Disconnect the L12 connector of the front seat outer belt assembly LH.
(b) Measure the voltage according to the value(s) in the table below.

Standard voltage

Tester Connection	Condition	Specified Condition
L12-1 - Body ground	Engine switch on (IG)	Below 1 V
L12-2 - Body ground	Engine switch on (IG)	Below 1 V

NG → **REPLACE FRONT SEAT OUTER BELT ASSEMBLY LH (See page SB-27)**

OK

2 CHECK HARNESS AND CONNECTOR (FRONT SEAT OUTER BELT ASSEMBLY LH - SEAT BELT CONTROL ECU)

Wire Harness Side Connector Front View:

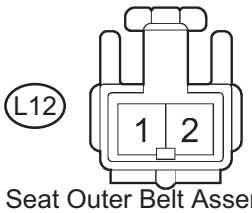

Front Seat Outer Belt Assembly LH

H045168E21

(a) Disconnect the negative (-) battery terminal.
(b) Disconnect the M21 connector of the seat belt control ECU.
(c) Connect the negative (-) terminal to the battery.
(d) Measure the voltage according to the value(s) in the table below.

Standard voltage

Tester Connection	Condition	Specified Condition
L12-1 - Body ground	Engine switch on (IG)	Below 1 V
L12-2 - Body ground	Engine switch on (IG)	Below 1 V

NG → **REPAIR OR REPLACE HARNESS OR CONNECTOR**

OK

REPLACE SEAT BELT CONTROL ECU (See page SB-64)

RS

SYSTEM DIAGRAM

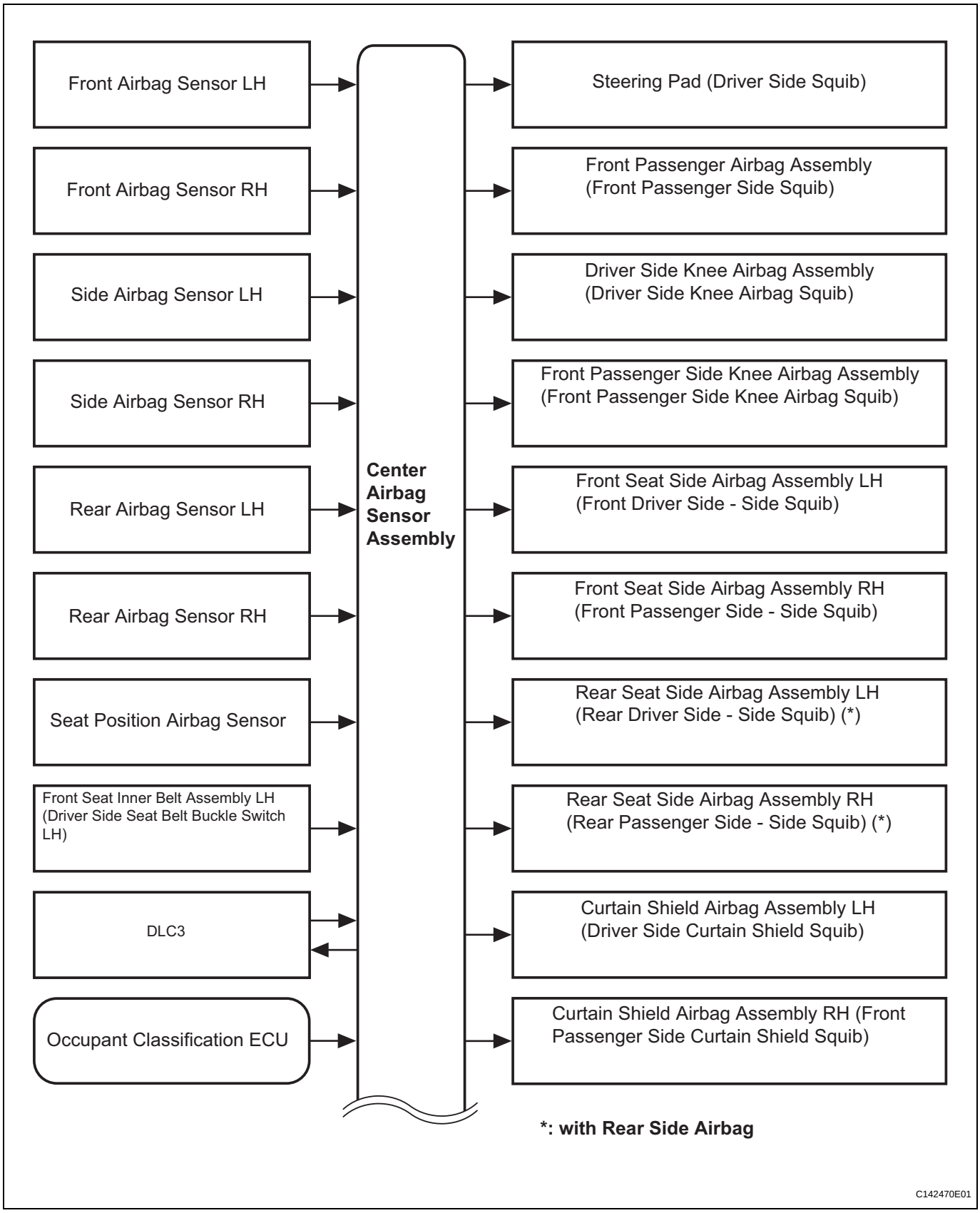

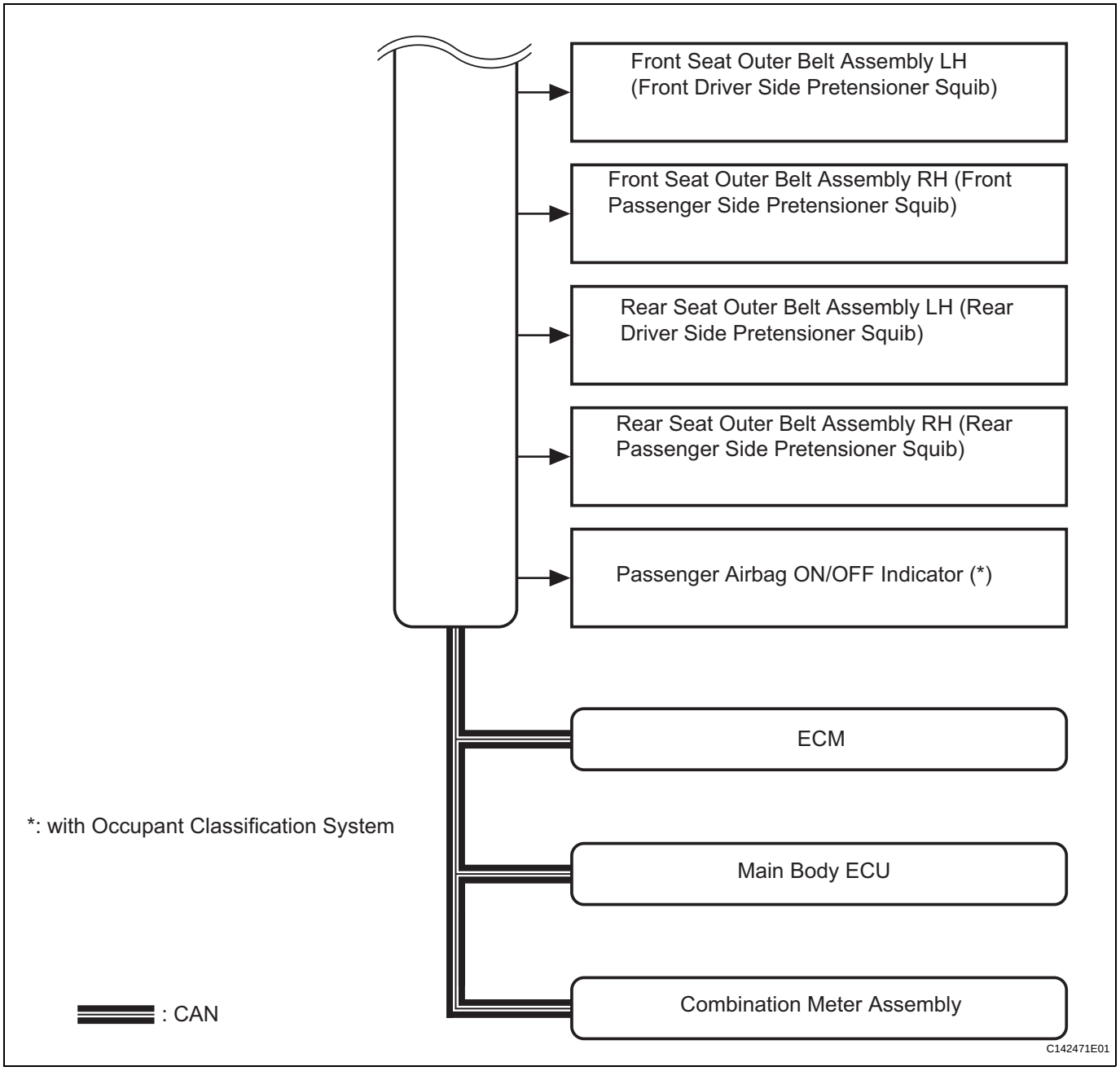
Front Seat Outer Belt Assembly LH (Front Driver Side Pretensioner Squib)
Front Seat Outer Belt Assembly RH (Front Passenger Side Pretensioner Squib)
Rear Seat Outer Belt Assembly LH (Rear Driver Side Pretensioner Squib)
Rear Seat Outer Belt Assembly RH (Rear Passenger Side Pretensioner Squib)
Passenger Airbag ON/OFF Indicator (*)
ECM
Main Body ECU
Combination Meter Assembly
*: with Occupant Classification System
: CAN
C142471E01

Transmitting ECU (Transmitter)	Receiving ECU	Signals	Communication method
Center Airbag Sensor Assembly	ECM	Crash detection signal	CAN
Center Airbag Sensor Assembly	Main Body ECU	Driver seat buckle switch signal	
Center Airbag Sensor Assembly	Combination Meter Assembly	• SRS warning light ON demand signal • SRS warning light blink demand signal • Passenger seat occupant detection signal • Passenger seat buckle switch signal • Diagnosis signal (DTC)	
Combination Meter Assembly	Center Airbag Sensor Assembly	• Vehicle speed signal • Meter diagnosis polling signal	
ECM	Center Airbag Sensor Assembly	• Engine speed signal • Accelerator opening angle information • Accelerator opening angle signal • Shift position signal • Test mode signal • Stop signal	

SYSTEM DESCRIPTION

1. GENERAL

(a) In conjunction with the impact absorbing structure for a front collision, the SRS (Supplemental Restraint System) driver airbag, front passenger airbag, driver side knee airbag, and front passenger side knee airbag were designed to supplement seat belts in the event of a front collision in order to help reduce shock to the head, chest, and knees of the driver and front passenger. This system is a 3-sensor type airbag system which detects the impact during a front collision using the center airbag sensor assembly and front airbag sensors. It also operates the airbag system and seat belt pretensioner.

(b) In order to detect the extent of the collision during the initial stages of the collision in further details, the front airbag sensors have been changed from mechanical type to electrical type deceleration sensors. Accordingly, the deployment of the driver airbag and front passenger airbag is controlled in two stages according to the severity of the impact.

(c) In conjunction with the impact absorbing structure for a side collision, the side airbag and curtain shield airbag were designed to help reduce shock to the driver, front passenger, and rear outer passengers in the event of a side collision.

(d) A curtain shield airbag that helps reduce shock to the front and rear seat occupants with a single curtain shield airbag has been adopted. In conjunction with this system, the side airbag sensors have been installed at the bottom of the center pillars and the rear airbag sensors have been installed at the bottom of the rear pillars.

(e) In this system, a front side collision is detected by the side airbag sensor in order to simultaneously deploy the front side, rear side, and curtain shield airbags. A rear side collision is detected by the rear airbag sensor and the center airbag sensor assembly in order to deploy the rear side airbags and curtain shield airbag.

(f) The center airbag sensor assembly sends the airbag deployment signal to the ECM through CAN (Controller Area Network) to operate the fuel pump control.

(g) The center airbag sensor assembly sends the airbag deployment signal to the main body ECU via the discrete line to operate collision door lock release control.

2. CONSTRUCTION AND OPERATION

(a) FRONT AIRBAG SENSOR

(1) The front airbag sensors are installed on the right and left radiator supports respectively.

(2) The front airbag sensor consists of a deceleration sensor.
(3) The deceleration sensor is built into the front airbag sensor, and the distortion that is created in the sensor is converted into an electric signal based on the vehicle deceleration rate during a frontal collision. Accordingly, the extent of the initial collision can be detected in detail.

(b) SIDE AIRBAG SENSOR
(1) The side airbag sensors are installed on the bottom of the right and left center pillars respectively.
(2) The side airbag sensor consists of a deceleration sensor and an ignition control circuit.
(3) The deceleration sensor is built into the side airbag sensor, and the distortion that is created in the sensor is converted into an electric signal based on the vehicle deceleration rate during a front side collision. Accordingly, the extent of the initial collision can be detected in detail.

(c) REAR AIRBAG SENSOR
(1) The rear airbag sensors are installed on the right and left rear pillars respectively.
(2) The rear airbag sensor consists of a deceleration sensor and an ignition control circuit.
(3) The deceleration sensor is built into the rear airbag sensor, and the distortion that is created in the sensor is converted into an electric signal based on the vehicle deceleration rate during a rear side collision. Accordingly, the extent of the initial collision can be detected in detail.

(d) CENTER AIRBAG SENSOR ASSEMBLY
(1) General
- The center airbag sensor assembly is installed on the center floor under the instrument panel.
- The center airbag sensor assembly consists of a deceleration sensor, safing sensor, electronic safing sensor, ignition control circuit, and diagnostic circuit.
- The center airbag sensor assembly receives signals from the deceleration sensor and safing sensor built into the center airbag sensor assembly and front airbag sensor. Then the center airbag sensor assembly determines whether the driver airbag, front passenger airbag, driver side knee airbag, front passenger side knee airbag, front seat belt pretensioners and rear seat belt pretensioners should be activated, and diagnoses system malfunctions.

- The center airbag sensor assembly causes the front side, rear side, and curtain shield airbags to deploy when receiving signals from the side airbag sensors.
- The center airbag sensor assembly receives signals from the deceleration sensor and the electronic safing sensor built into the center airbag sensor assembly and the rear airbag sensor, and determines whether the rear side and curtain shield airbag should be activated, and diagnoses system malfunctions.
- The center airbag sensor assembly sends the airbag deployment signal to the ECM through CAN to operate the fuel pump control.
- The center airbag sensor assembly sends the airbag deployment signal to the main body ECU through the discrete line to operate collision door lock release control.

(2) Deceleration sensor and ignition control circuit
- The deceleration sensor is built into the center airbag sensor assembly.
- The ignition control circuit performs calculations based on the signal output from the deceleration sensors of the center airbag sensor assembly and front airbag sensor. If the calculated values are greater than the specified values, it activates an ignition operation.

(3) Safing sensor
- The safing sensor is built into the center airbag sensor assembly. During a front collision, the sensor turns on and outputs an ON signal to the center airbag sensor assembly if a deceleration rate sent to the safing sensor is greater than the specified value.

(4) Electronic safing sensor
- The electronic safing sensor is built into the center airbag sensor assembly. During a side collision, the sensor turns on and outputs an ON signal to the center airbag sensor assembly if a deceleration rate sent to the electronic safing sensor is greater than the specified value.

(5) Backup power source
- The backup power source consists of a power supply capacitor and a DC-DC converter. When the power system does not function during a collision, the power supply capacitor discharges and supplies electric power to the system. The DC-DC converter operates as a boosting transformer when the battery voltage falls below a predetermined level.

(6) Diagnostic circuit
- This circuit constantly diagnoses system malfunctions. When a malfunction is detected, it turns on the SRS warning light on the combination meter assembly to inform the driver.

(7) Memory circuit
- When a malfunction is detected in the diagnostic circuit, it is coded and stored in the memory circuit.

(e) SRS WARNING LIGHT

(1) The SRS warning light is located on the combination meter assembly. It comes on to inform the driver of system trouble when a malfunction is detected in self-diagnosis of the center airbag sensor assembly. Under normal operating conditions when the engine switch is turned on (IG), it comes on for approximately 6 seconds and then goes off.

3. DEPLOYMENT CONDITION

If the vehicle collides and the shock is greater than the specified value, the SRS is activated automatically. The center airbag sensor assembly includes the safing sensor and deceleration sensor. The safing sensor is designed to turn on at a lower deceleration rate than the deceleration sensor.

(a) The center airbag sensor assembly determines whether ignition is necessary based on signals from the deceleration sensor and the front airbag sensor (*1). If the safing sensor turns on simultaneously, current flows to the squibs to deploy the SRS as shown in the illustration below.

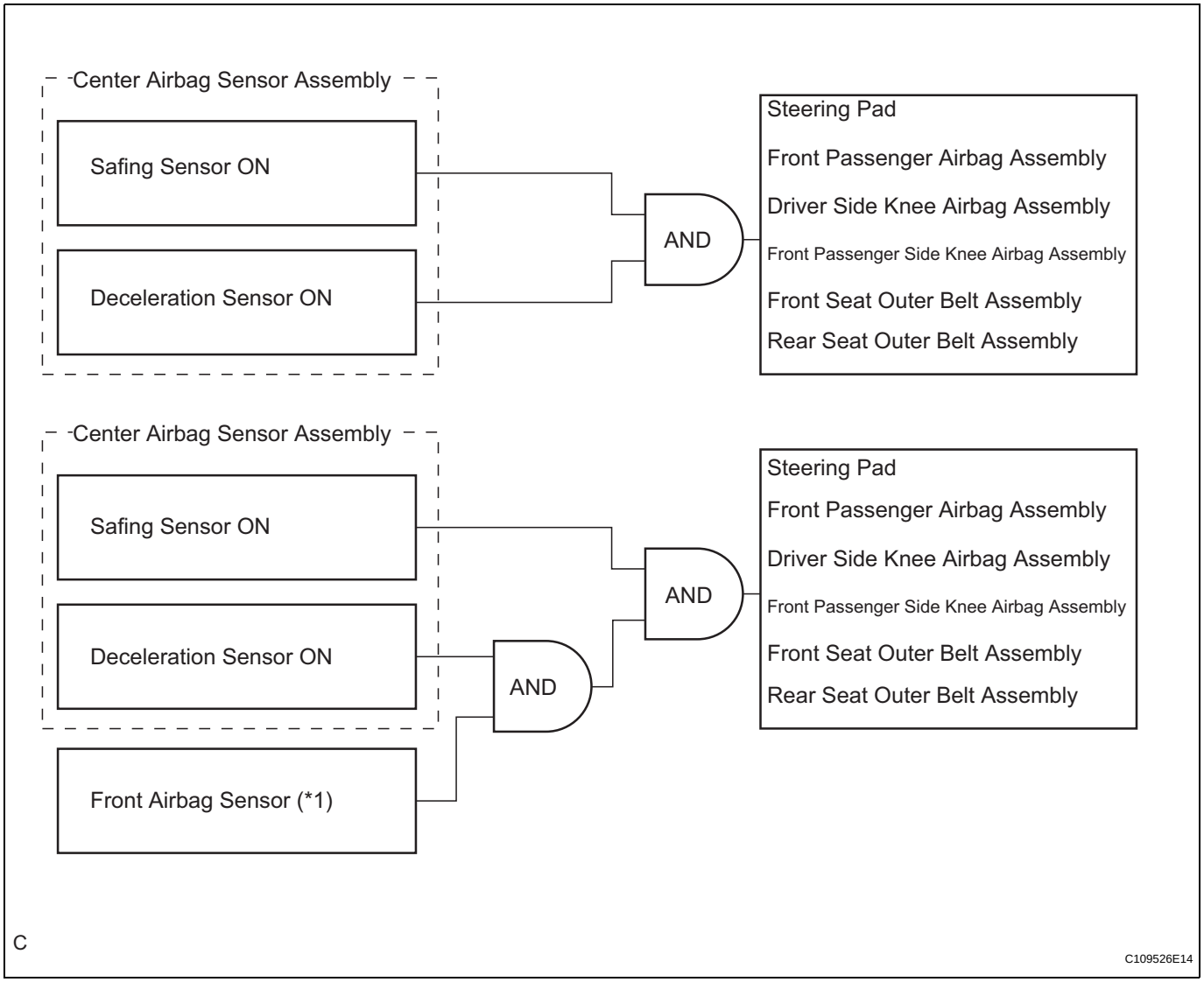

HINT:

*1: In case of front collision, the ignition signal could be output with the deceleration sensor ON signal even without a signal from the front airbag sensor.

(b) The center airbag sensor assembly determines whether ignition is necessary based on signals from the side airbag sensor. If the safing sensor turns on simultaneously, current flows to the squib to deploy the SRS as shown in the illustration below.

RS

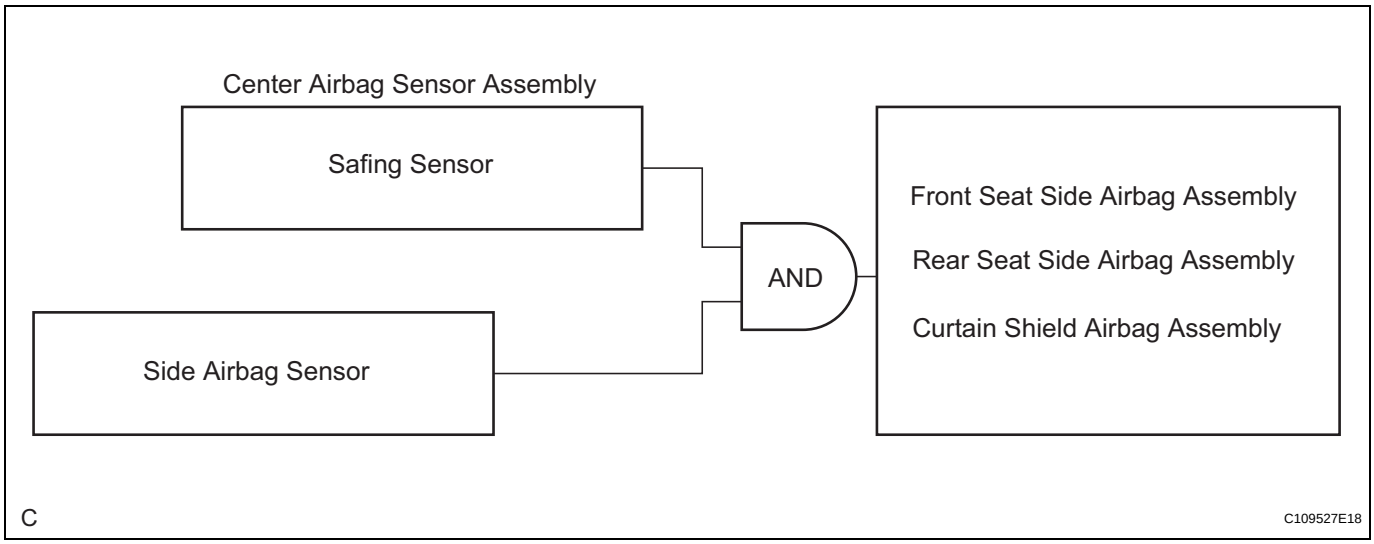

(c) The center airbag sensor assembly determines whether ignition is necessary based on signals from the rear airbag sensor. If the safing sensor turns on simultaneously, current flows to the squib to deploy the SRS as shown in the illustration below (*1).

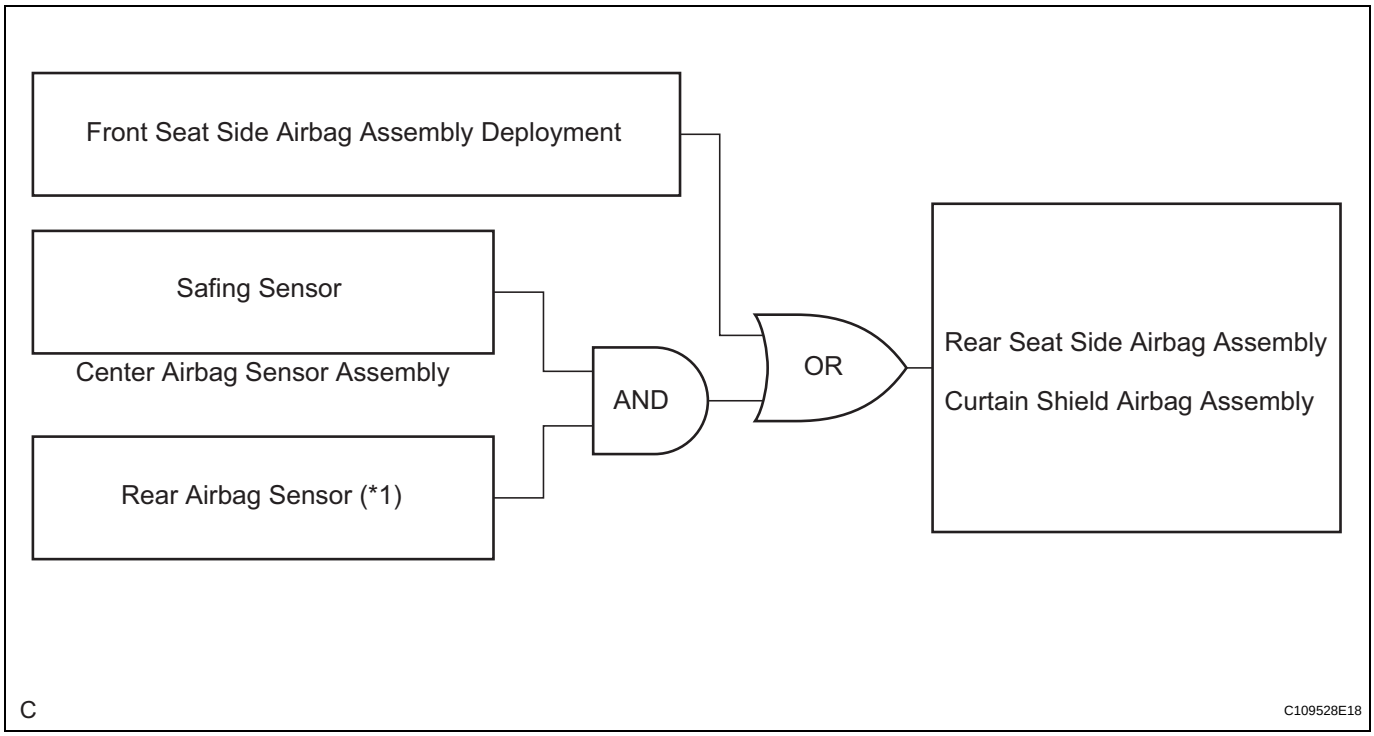

HINT:
*1: If the front seat side airbag assembly deploys, the rear side airbag assembly and the curtain shield airbag assembly will also deploy, regardless of whether the signal is output from the rear airbag sensor.

AIRBAG SYSTEM

PRECAUTION

CAUTION:

- **The vehicle is equipped with a Supplemental Restraint System (SRS). It consists of a driver airbag, front passenger airbag, driver side knee airbag, front passenger side knee airbag, front side airbag, rear side airbag, curtain shield airbag, front seat belt pretensioner, and rear seat belt pretensioner. Failure to carry out service operations in the correct sequence could cause the SRS to unexpectedly deploy during servicing, possibly leading to a serious accident. Further, if a mistake is made when servicing the SRS, it is possible that the SRS may fail to operate when required. Before performing servicing (including removal or installation of parts, inspection or replacement), be sure to read the following items carefully, then follow the procedures exactly as indicated in the repair manual.**
- **Wait at least 90 seconds after the engine switch is turned off and the negative (-) terminal cable is disconnected from the battery before starting the operation.**
  (The SRS is equipped with a backup power source, so if work is started within 90 seconds after disconnecting the negative (-) terminal cable from the battery, the SRS may be deployed.)
- **Do not expose any of these components of the SRS directly to hot air or flames: the steering pad, front passenger airbag assembly, driver side knee airbag assembly, front passenger side knee airbag assembly, center airbag sensor assembly, front airbag sensor, front seat inner belt assembly, seat position airbag sensor, occupant classification ECU, front seat side airbag assembly, rear seat side airbag assembly, side airbag sensor, curtain shield airbag assembly, rear airbag sensor, front seat outer belt assembly, and rear seat outer belt assembly.**

NOTICE:

- **Malfunction symptoms of the SRS are difficult to confirm, so DTCs are the most important source of information when troubleshooting. When troubleshooting the SRS, always inspect DTCs before disconnecting the battery.**

- **Even in the case of a minor collision that does not cause the SRS to deploy, the following components of the SRS should be inspected: the steering pad, front passenger airbag assembly, driver side knee airbag assembly, front passenger side knee airbag assembly, center airbag sensor assembly, front airbag sensor, front seat inner belt assembly, seat position airbag sensor, occupant classification ECU, front seat side airbag assembly, rear seat side airbag assembly, side airbag sensor, curtain shield airbag assembly, rear airbag sensor, front seat outer belt assembly, and rear seat outer belt assembly.**
- **Before beginning repairs, remove the airbag sensor if any kind of shock is likely to occur to the airbag sensor during the operation.**
- **Never use SRS parts from another vehicle. When replacing parts, replace them with new ones.**
- **Never disassemble or repair any of the following parts in order to reuse them. If any of these parts have been dropped, or any defect is found (e.g. cracks, dents or any other defects) in any of the housings, brackets or connectors, replace the part with a new one.**
  (a) Steering Pad
  (b) Front Passenger Airbag Assembly
  (c) Driver Side Knee Airbag Assembly
  (d) Front Passenger Side Knee Airbag Assembly
  (e) Front Seat Side Airbag Assembly
  (f) Rear Seat Side Airbag Assembly
  (g) Curtain Shield Airbag Assembly
  (h) Center Airbag Sensor Assembly
  (i) Front Airbag Sensor
  (j) Front Seat Inner Belt Assembly
  (k) Seat Position Airbag Sensor
  (l) Occupant Classification ECU
  (m) Side Airbag Sensor
  (n) Rear Airbag Sensor
  (o) Front Seat Outer Belt Assembly
  (p) Rear Seat Outer Belt Assembly
- **Use a volt/ohmmeter with high impedance (10 kΩ/V minimum) for troubleshooting the electrical circuits.**
- **Information labels are attached near the SRS components. Follow the instructions noted in the caution.**
- **After work on the SRS is completed, perform on SRS warning light (See page RS-37).**
- **When the negative (-) terminal cable is disconnected from the battery, the memory will be cleared. Because of this, be sure to make a record of the contents memorized in each system before starting work. When work is finished, adjust each system to its previous state. Never use a backup power supply for the purpose of retaining the memory of vehicle electronic systems.**

- **If the vehicle is equipped with a mobile communication system, refer to the precaution in the INTRODUCTION section.**
- **Some systems need to be initialized after reconnecting the negative (-) battery terminal (See page IN-33).**

HINT:
In the airbag system, the center airbag sensor assembly, front airbag sensor LH and RH, side airbag sensor LH and RH, and rear airbag sensor LH and RH are collectively referred to as the airbag sensors.

1. HANDLING PRECAUTIONS FOR AIRBAG SENSORS

(a) Before starting the following operations, wait for at least 90 seconds after disconnecting the negative (-) terminal cable from the battery:
(1) Replacement of the airbag sensors.
(2) Adjustment of the front/rear doors of the vehicle equipped with side airbags and curtain shield airbags (fitting adjustment).

(b) When connecting or disconnecting the airbag sensor connectors, ensure that each sensor is installed in the vehicle.

(c) Do not use airbag sensors which have been dropped during the operation or transportation.

(d) Do not disassemble the airbag sensors.

2. INSPECTION PROCEDURE FOR VEHICLE INVOLVED IN ACCIDENT

(a) When the airbag has not deployed, confirm the DTCs by checking the SRS warning light. If there is any malfunction in the SRS airbag system, perform troubleshooting.

(b) When any of the airbags have deployed, replace the airbag sensors and check the installation condition.

3. SRS CONNECTORS

(a) SRS connectors are located as shown in the following illustration.

RS

Driver Side (with Rear Side Airbag):

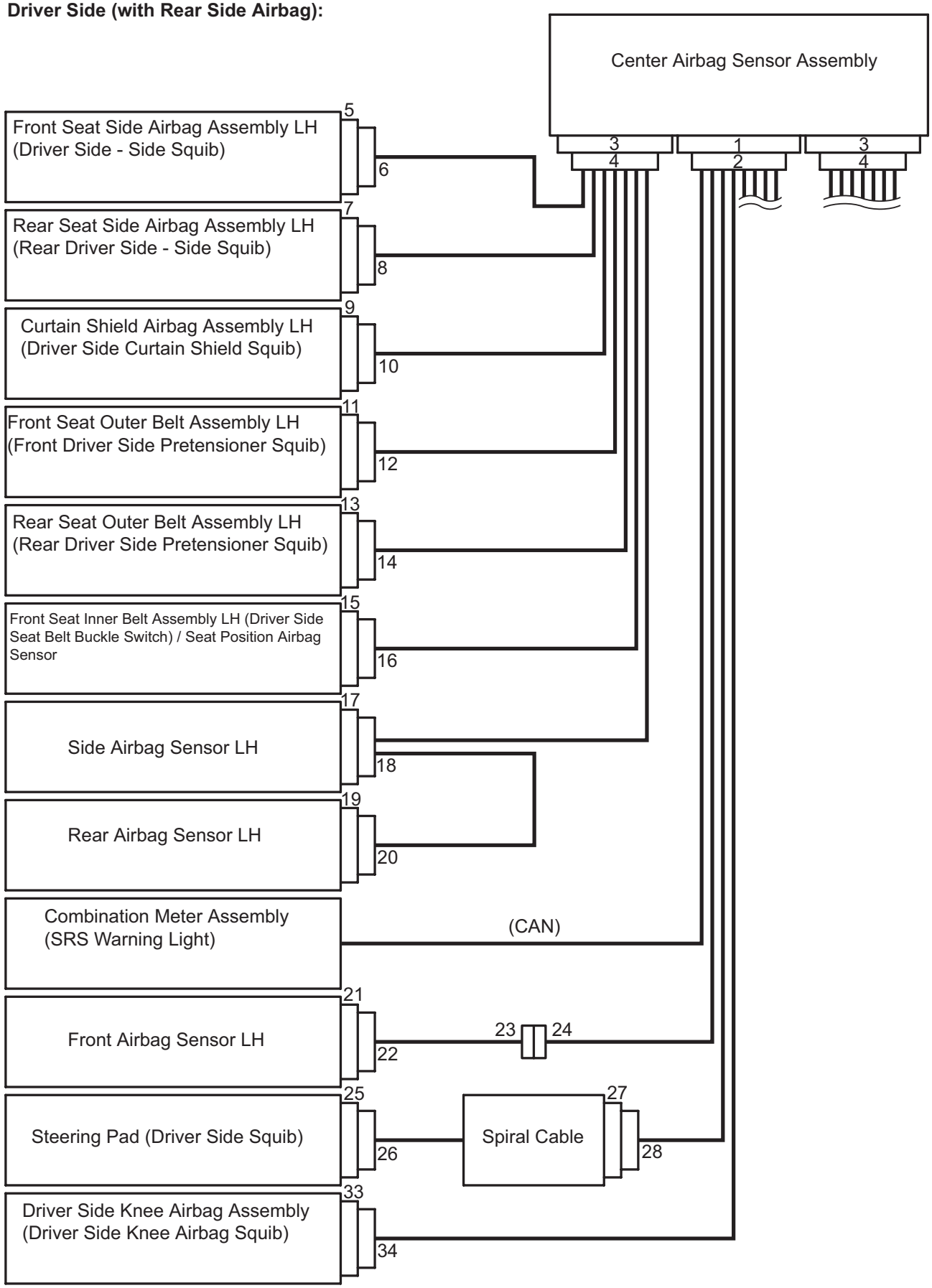

RS

Passenger Side (with Rear Side Airbag):

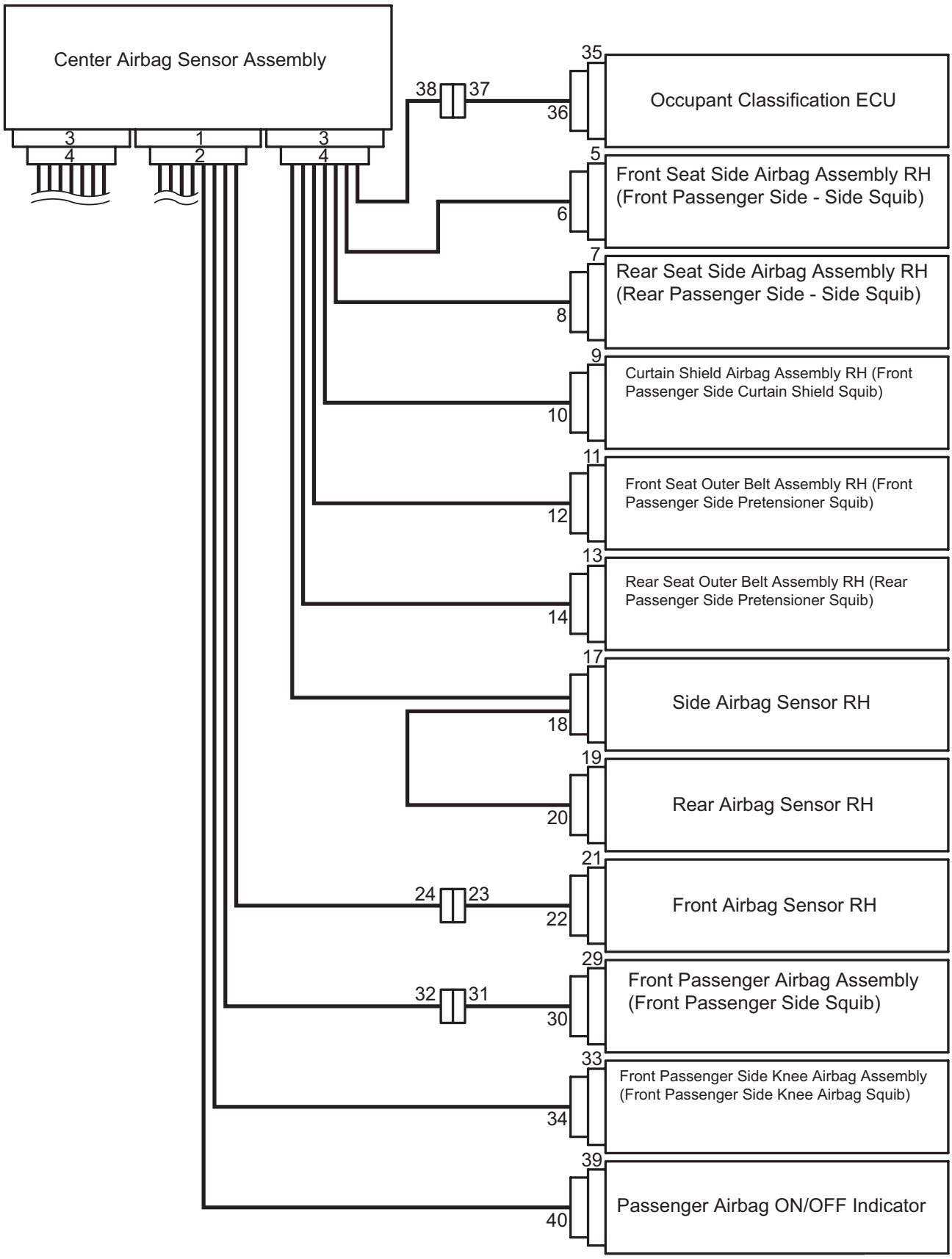

RS

Driver Side (without Rear Side Airbag):

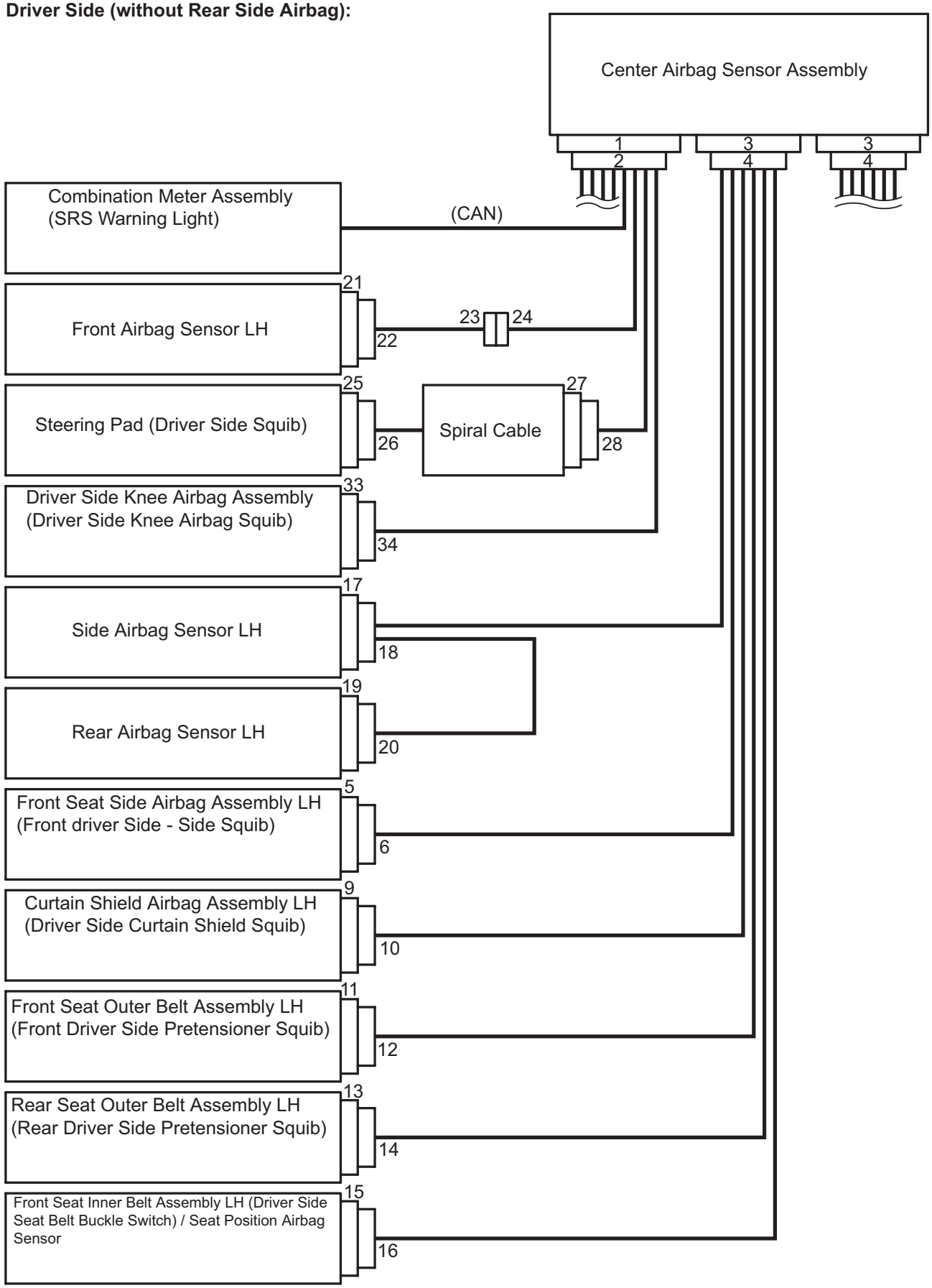

RS

Passenger Side (without Rear Side Airbag):

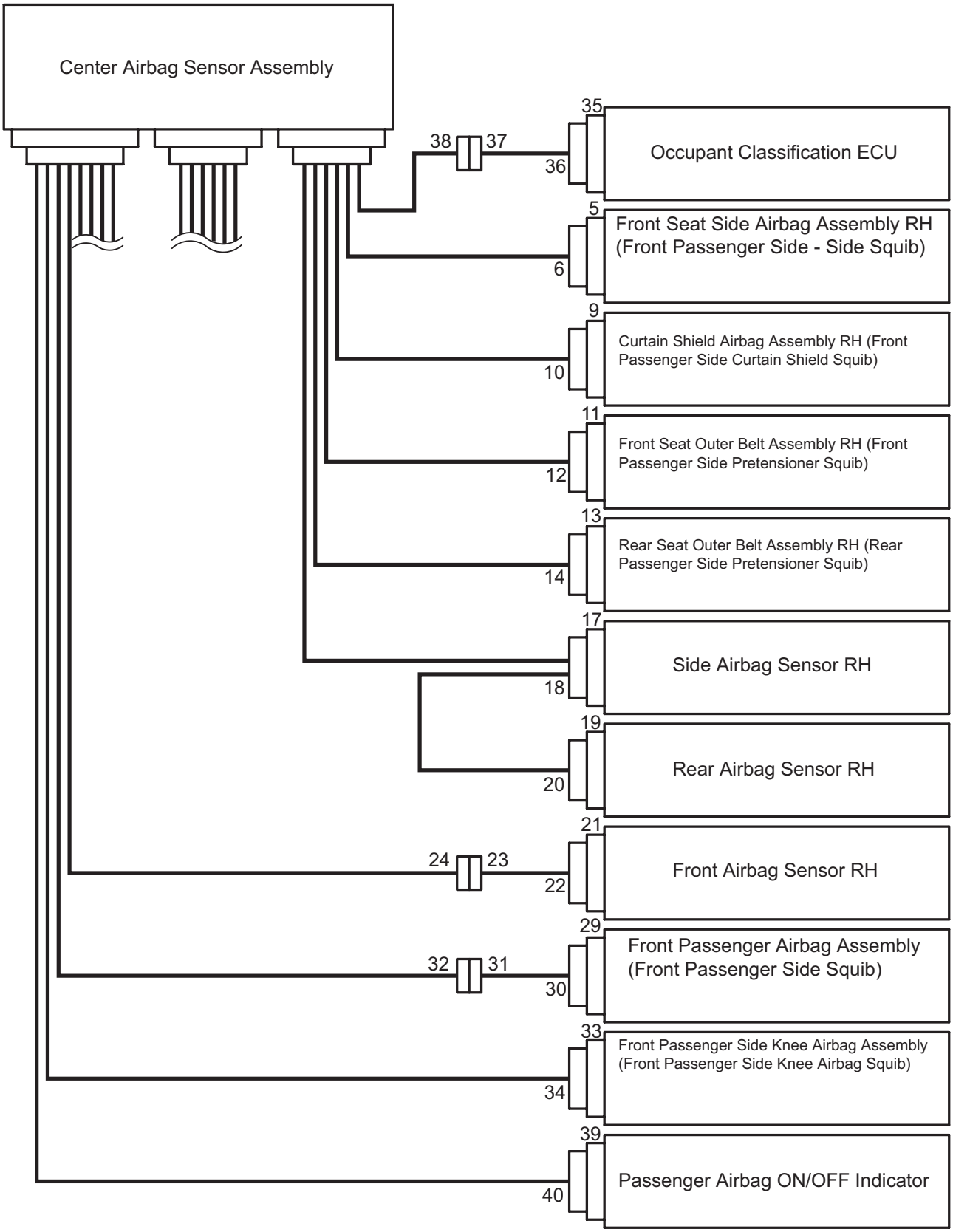

P

C123795E01

No.	Item	Application
(1)	Terminal Twin-Lock Mechanism	Connectors 5, 6, 7, 8, 18, 20, 23, 24, 27, 28, 31, 32, 38
(2)	Activation Prevention Mechanism	Connectors 5, 7, 27, 31
(3)	Half Connection Prevention Mechanism	Connectors 6, 8, 18, 20, 23, 28, 32
(4)	Connector Position Assurance Mechanism	Connector 22
(5)	Connector Lock Mechanism (1)	Connectors 10, 12, 14, 26, 30, 34
(6)	Connector Lock Mechanism (2)	Connectors 2, 4
(7)	Improper Connection Prevention Lock Mechanism	Connectors 1, 3

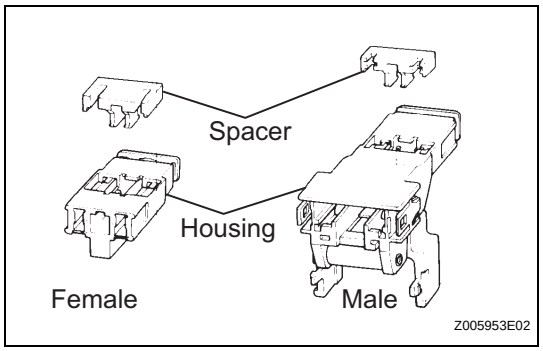

(b) All connectors in the SRS, except the seat position airbag sensor connector, are colored yellow to distinguish them from other connectors. These connectors have special functions, and are specially designed for the SRS. All SRS connectors use durable gold-plated terminals, and are placed in the locations shown on the previous page to ensure high reliability.

(1) Terminal twin-lock mechanism:
All connectors with a terminal twin-lock mechanism have a two-piece component consisting of a housing and a spacer. This design enables the terminal to be locked securely by two locking devices (the retainer and the lance) to prevent terminals from coming out.

RS

(2) Activation prevention mechanism:
All connectors with an activation prevention mechanism contain a short spring plate. When these connectors are disconnected, the short spring plate creates a short circuit by automatically connecting the positive (+) and negative (-) terminals of the squib.

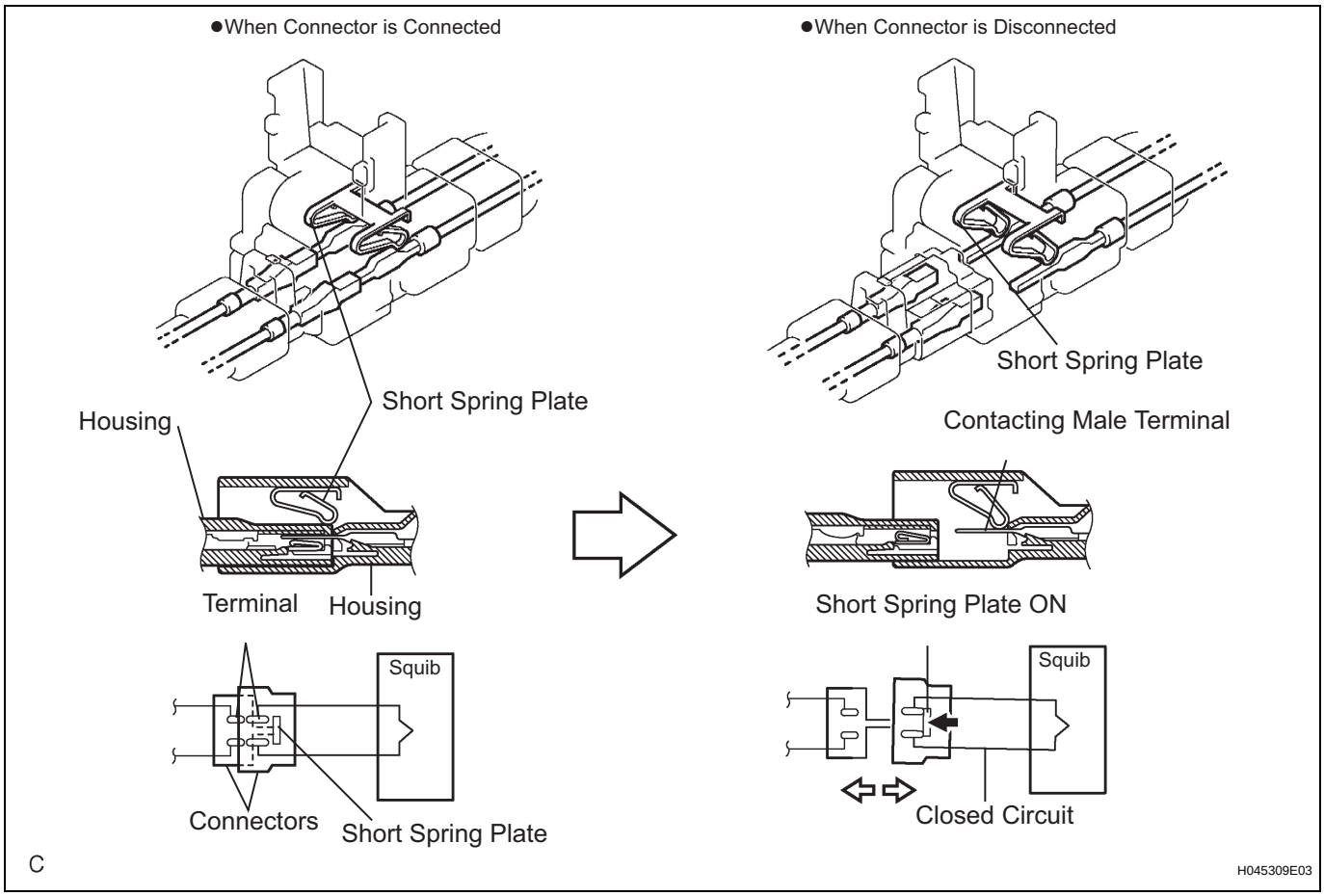

(3) Half connection prevention mechanism:
If the connector is not completely connected, the connector is disconnected due to the spring force so that no continuity exists.

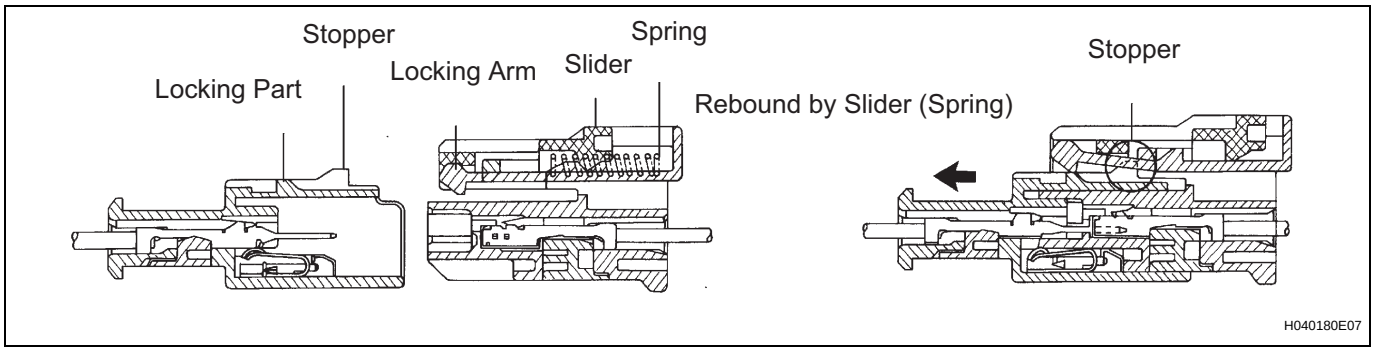

(4) Connector position assurance mechanism:
Only when the housing lock (white part) is completely engaged, the CPA (yellow part) slides, which completes the connector engagement.

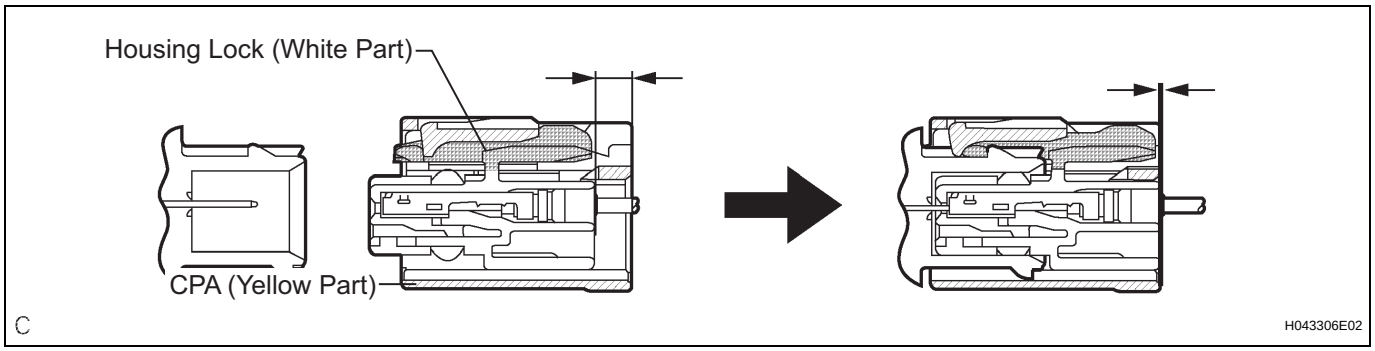

(5) Connector lock mechanism (1):
Locking the connector lock button connects the connector securely.

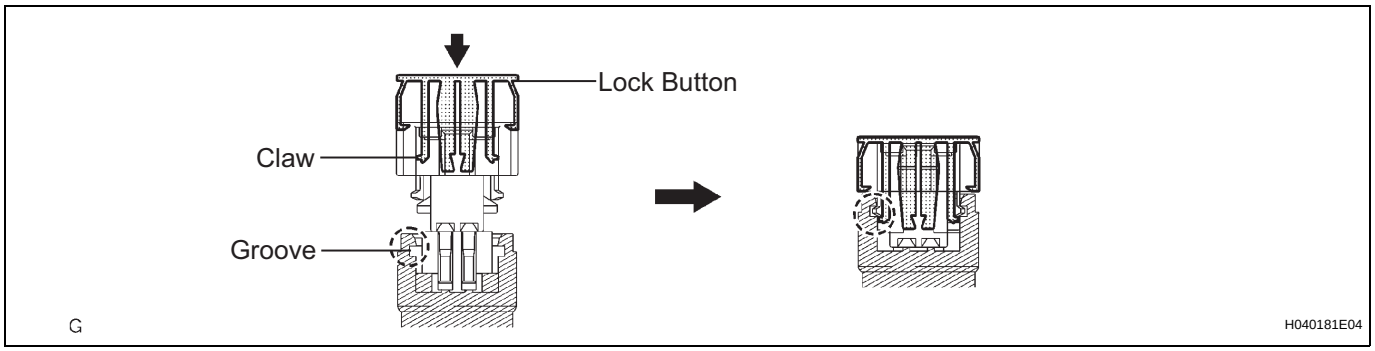

(6) Connector lock mechanism (2):
Both the primary lock with holder lances and the secondary lock with retainer prevent the connectors from becoming disconnected.

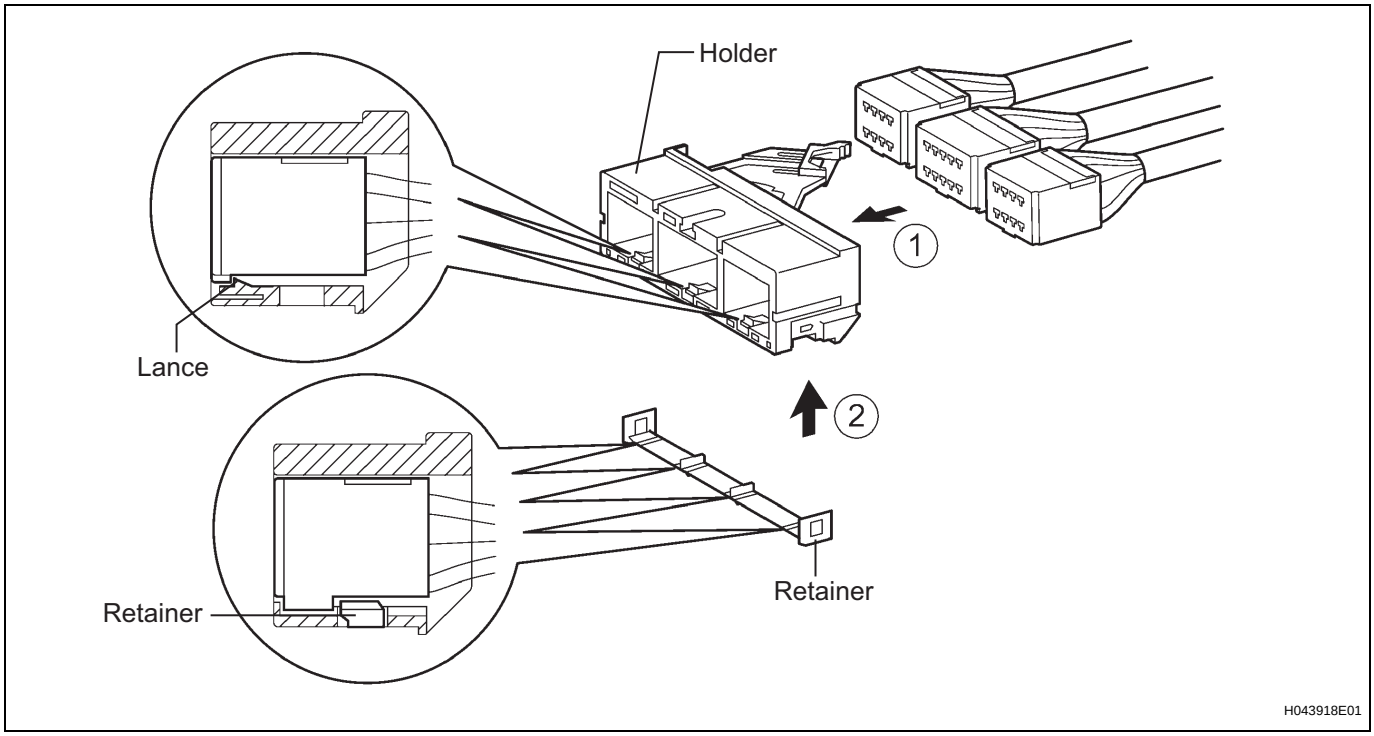

(7) Improper connection prevention lock mechanism:
When connecting the holder, the lever is pushed into the end by rotating around the A axis to lock the holder securely.

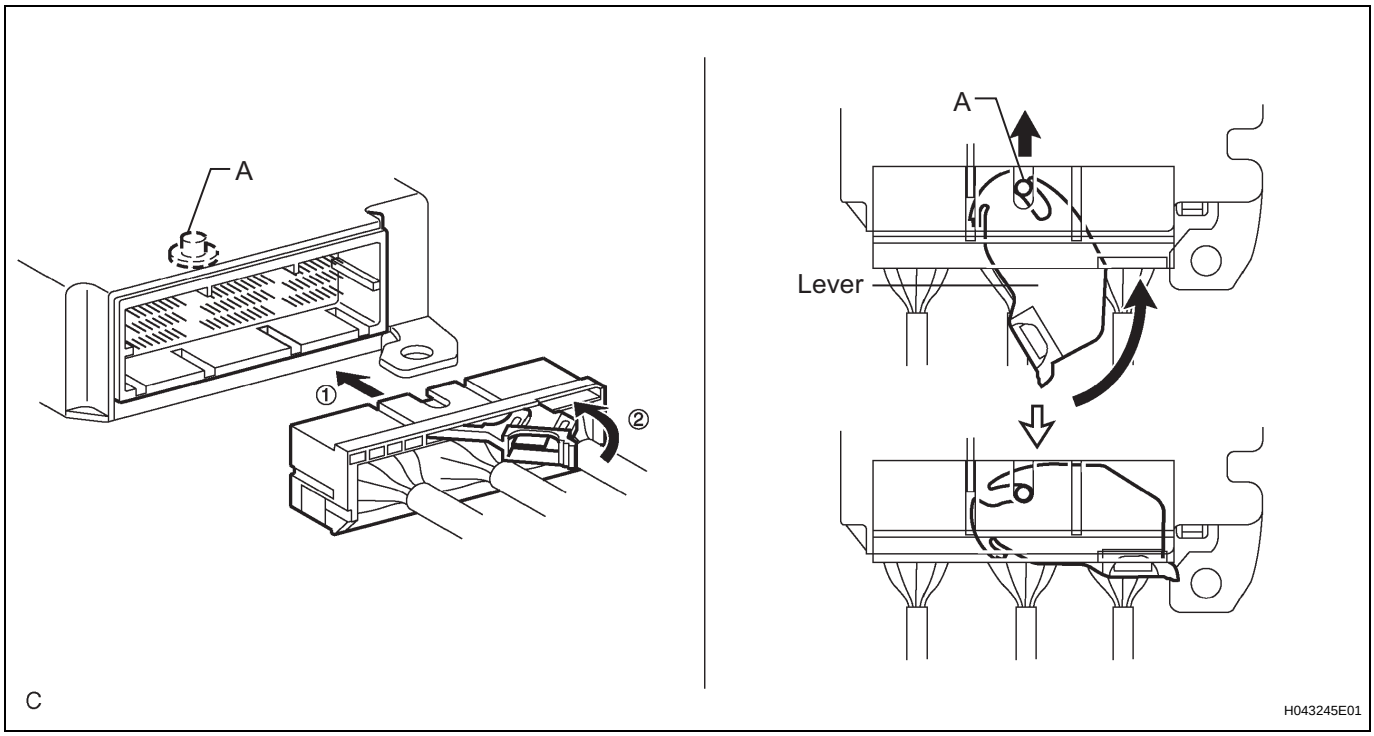

4. DISCONNECTION OF CONNECTORS FOR STEERING PAD, FRONT PASSENGER AIRBAG ASSEMBLY (SQUIB SIDE), DRIVER SIDE KNEE AIRBAG ASSEMBLY, FRONT PASSENGER SIDE KNEE AIRBAG ASSEMBLY, CURTAIN SHIELD AIRBAG ASSEMBLY, FRONT SEAT OUTER BELT ASSEMBLY, AND REAR SEAT OUTER BELT ASSEMBLY

HINT:

Tape up the screwdriver tip before use.

(a) Release the lock button (yellow part) of the connector using a screwdriver.

(b) Insert the screwdriver tip between the connector and the base, and then raise the connector.

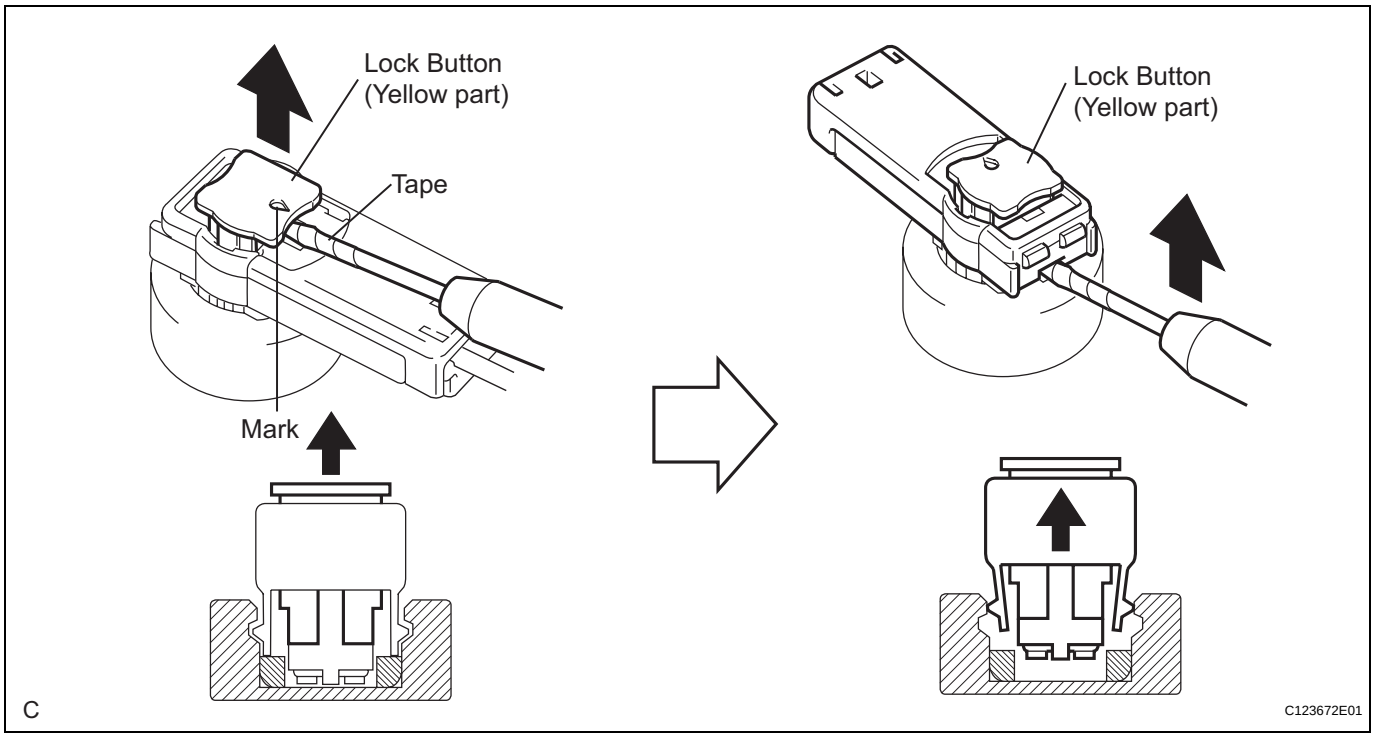

5. CONNECTION OF CONNECTORS FOR STEERING PAD, FRONT PASSENGER AIRBAG ASSEMBLY (SQUIB SIDE), DRIVER SIDE KNEE AIRBAG ASSEMBLY, FRONT PASSENGER SIDE KNEE AIRBAG ASSEMBLY CURTAIN SHIELD AIRBAG ASSEMBLY, FRONT SEAT OUTER BELT ASSEMBLY, AND REAR SEAT OUTER BELT ASSEMBLY

(a) Connect the connector.

(b) Push down securely on the lock button (yellow part) of the connector. (When locked, a click sound can be heard.)

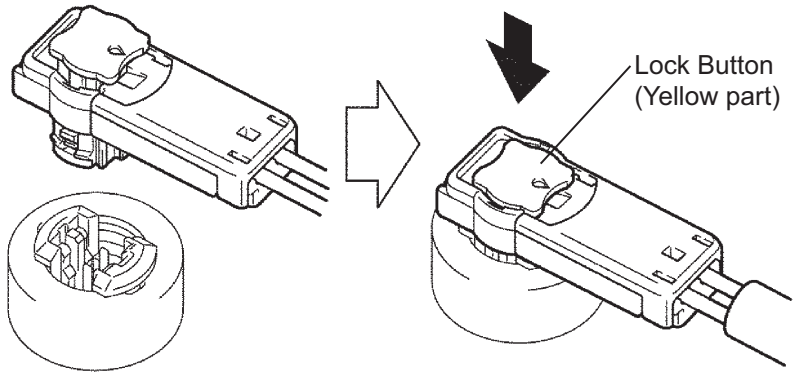

H043151E04

6. DISCONNECTION OF CONNECTOR FOR SPIRAL CABLE (INSTRUMENT PANEL WIRE SIDE) AND FRONT PASSENGER AIRBAG ASSEMBLY (INSTRUMENT PANEL WIRE SIDE)

(a) Place a finger on the slider, slide the slider to release the lock, and then disconnect the connector.

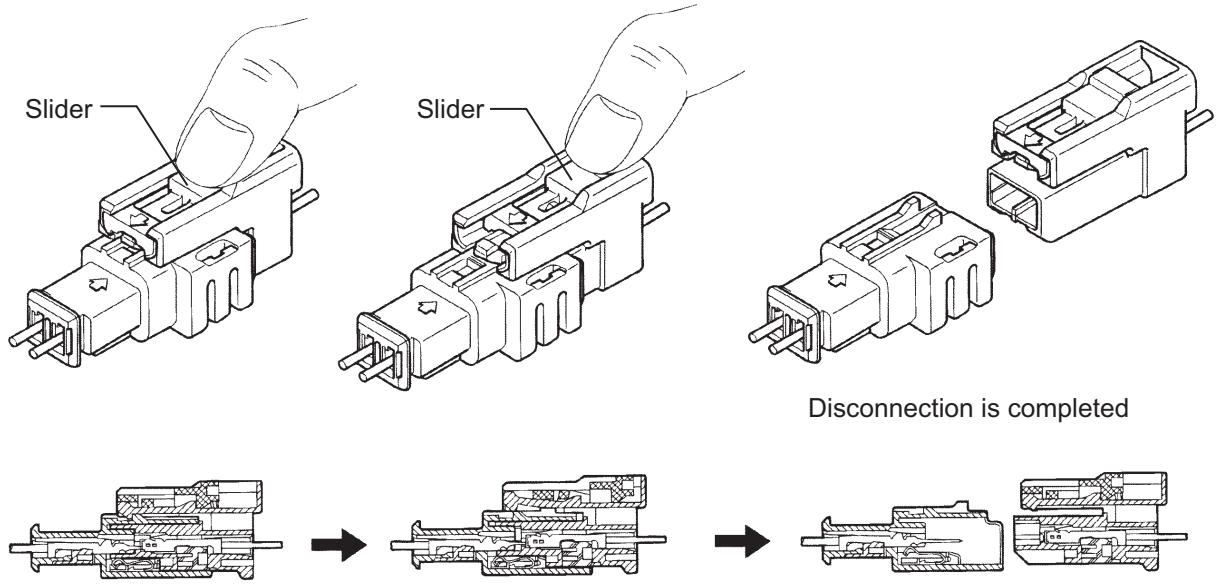

H001586E02

7. CONNECTION OF CONNECTOR FOR SPIRAL CABLE (INSTRUMENT PANEL WIRE SIDE) AND FRONT PASSENGER AIRBAG ASSEMBLY (INSTRUMENT PANEL WIRE SIDE)

(a) Connect the connector as shown in the illustration. (When locking, make sure that the slider returns to its original position and a click sound can be heard.)
HINT:
When connecting, the slider will slide. Be sure not to touch the slider while connecting, as it may result in an insecure fit.

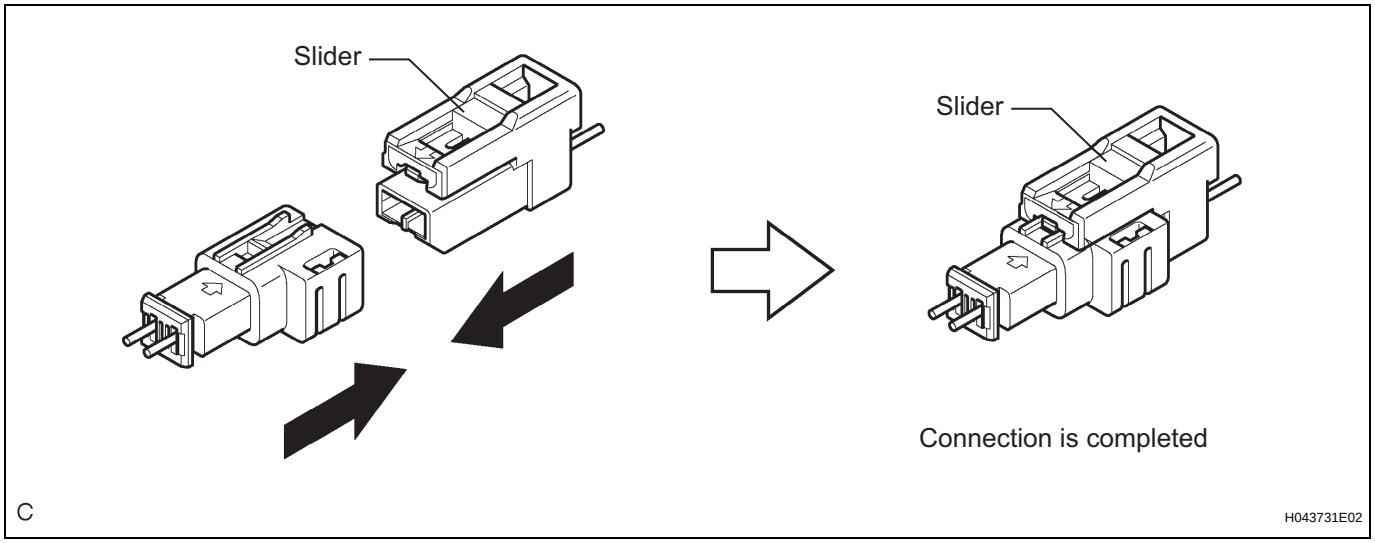

8. DISCONNECTION OF CONNECTORS FOR FRONT SEAT SIDE AIRBAG ASSEMBLY AND REAR SEAT SIDE AIRBAG ASSEMBLY

(a) Place a finger on the slider, slide the slider to release the lock, and then disconnect the connector.

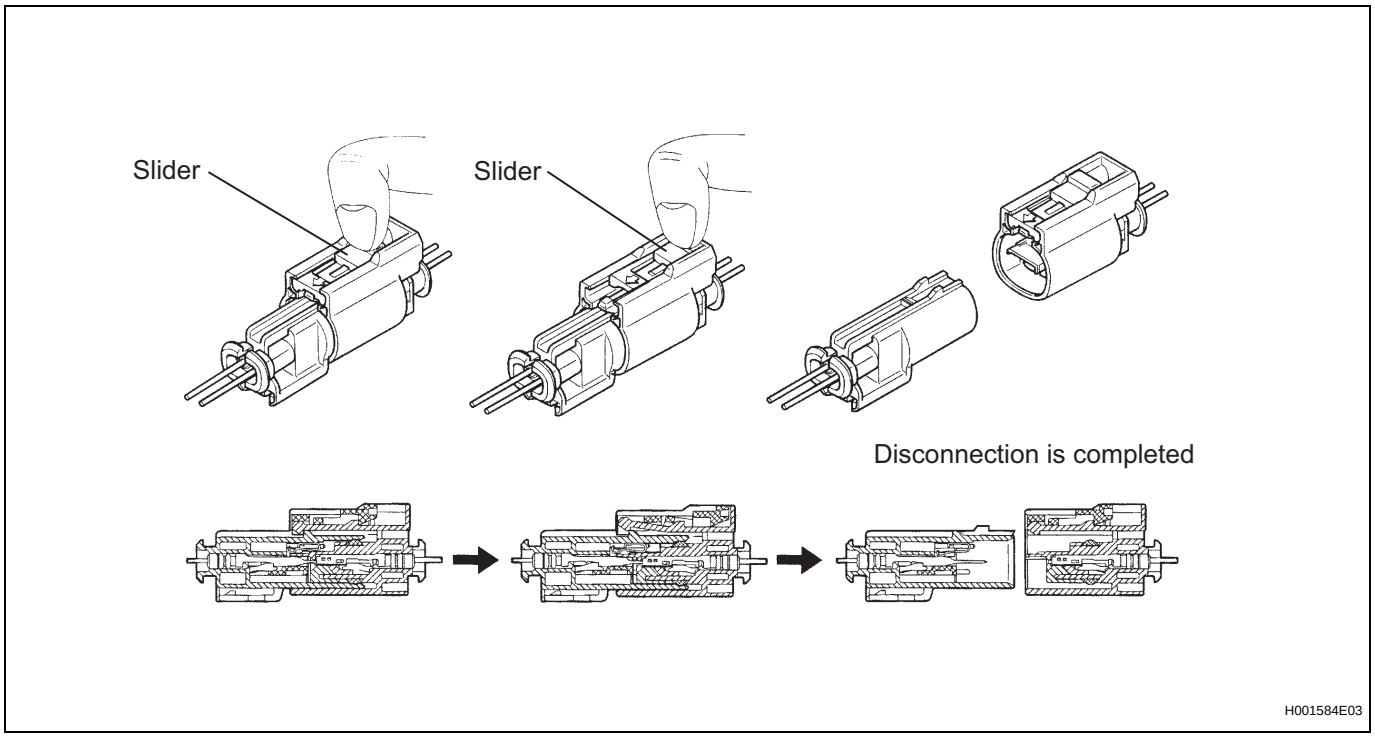

RS

9. CONNECTION OF CONNECTORS FOR FRONT SEAT SIDE AIRBAG ASSEMBLY AND REAR SEAT SIDE AIRBAG ASSEMBLY

(a) Connect the connector as shown in the illustration. (When locking, make sure that the slider returns to its original position and a click sound can be heard.)
HINT:
When connecting, the slider will slide. Be sure not to touch the slider while connecting, as it may result in an insecure fit.

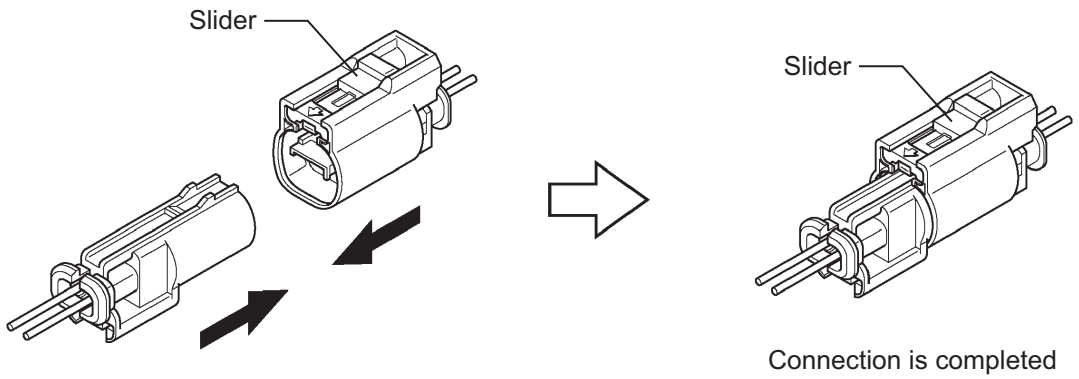

10. DISCONNECTION OF CONNECTOR FOR CENTER AIRBAG SENSOR ASSEMBLY

(a) Pull the lever by pushing part A as shown in the illustration and disconnect the holder (with connectors).

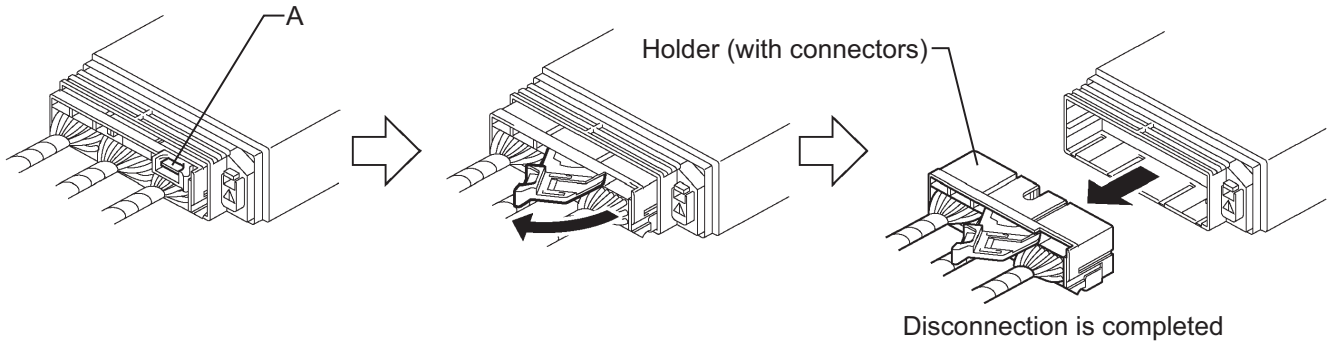

HINT:
Perform the following procedures when replacing the holder.

(b) Remove the holder.
(1) Using a screwdriver, unlock the retainer.

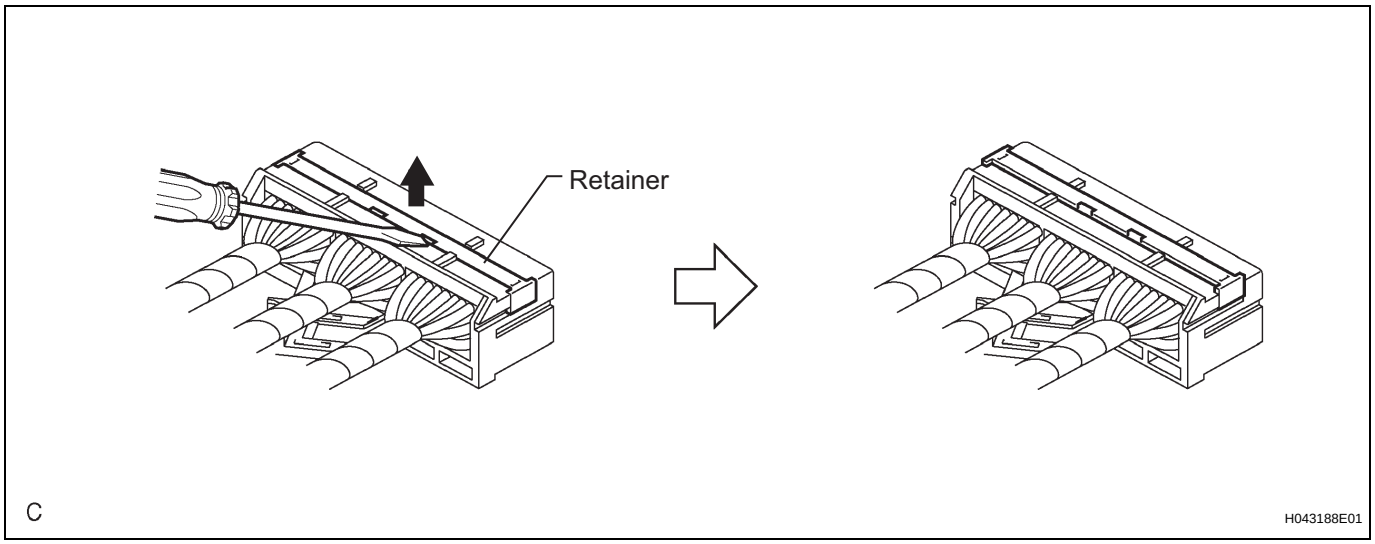

(2) Release the fitting lance and remove the holder.

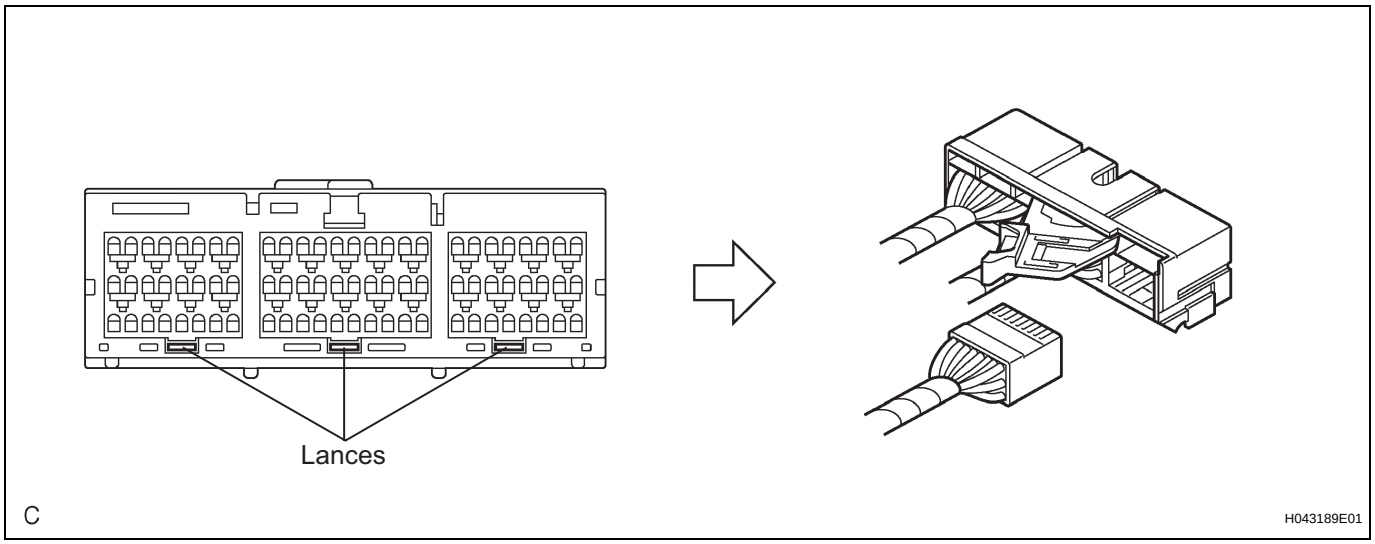

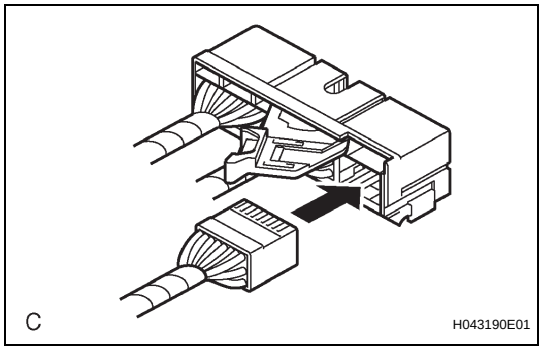

(c) Install the holder.
(1) Install the connectors to the holder. (When locked, a click sound can be heard.)
HINT:
The retainer is locked when the holder is connected.

11. CONNECTION OF CONNECTOR FOR CENTER AIRBAG SENSOR ASSEMBLY

(a) Firmly insert the holder (with connectors) into the center airbag sensor assembly until it cannot be pushed any further.

(b) Push the lever to connect the holder (with connectors). (When locked, a click sound can be heard.)
HINT:
The holder slides into the center airbag sensor assembly when it is being connected. Be sure not to hold the holder while connecting, as it may result in an insecure fit.

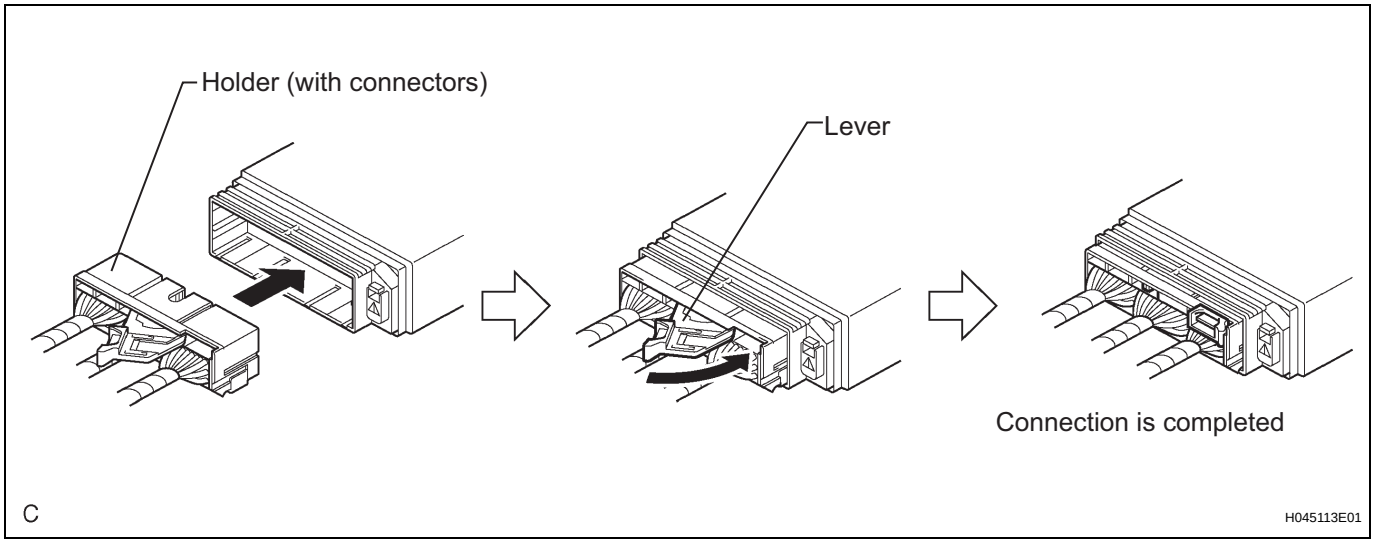

12. DISCONNECTION OF CONNECTOR FOR FRONT AIRBAG SENSOR

(a) Push down the housing lock (white part) and slide the CPA (yellow part). (At this time, the connector cannot be disconnected yet.)

(b) Push down the housing lock (white part) again and disconnect the connector.
HINT:
Do not push down the A part shown in the illustration when disconnecting.

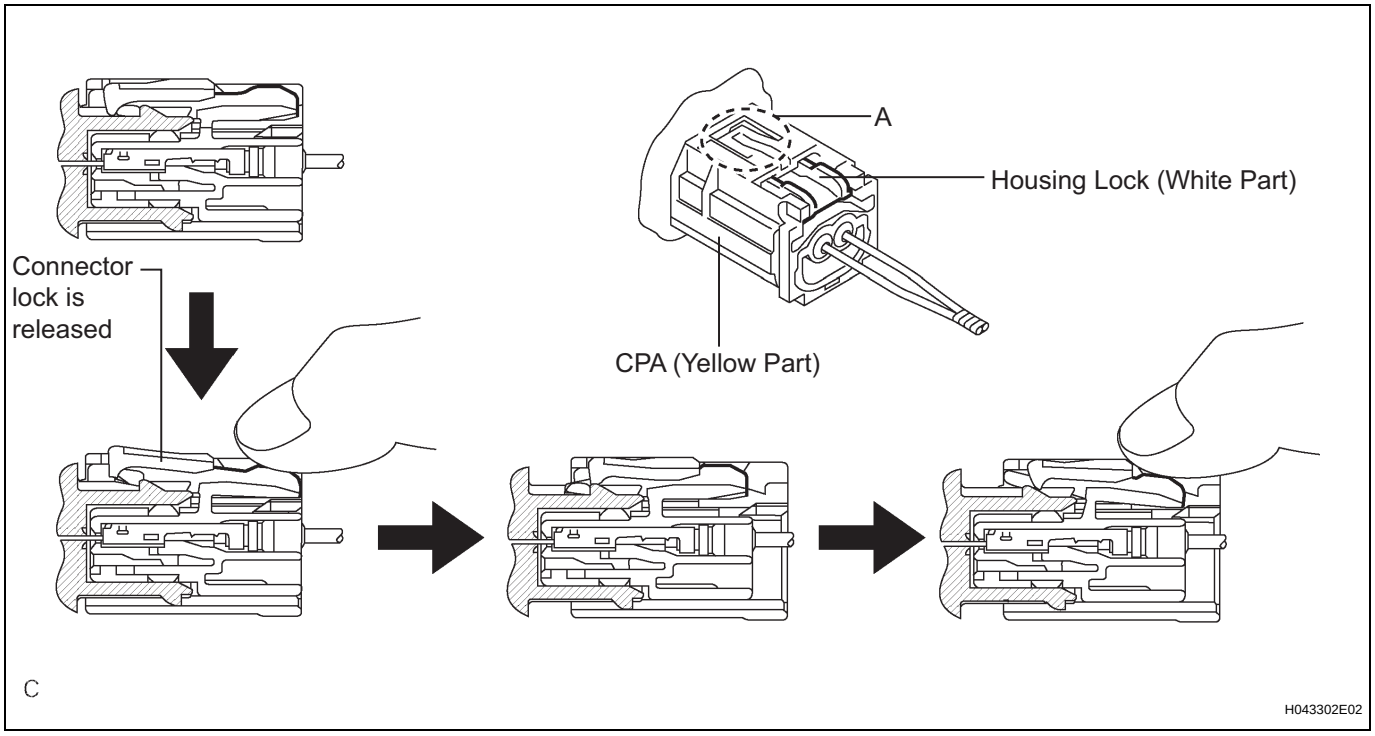

(c) After disconnecting the connector, check that the position of the housing lock (white part) is as shown in the illustration.

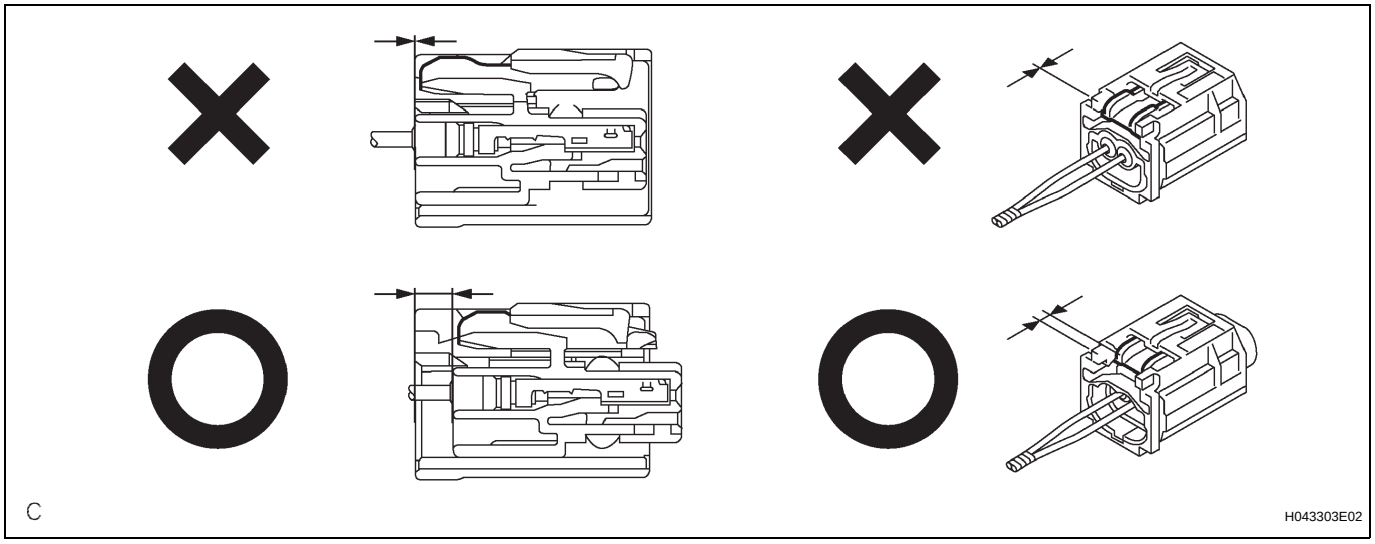

RS

13. CONNECTION OF CONNECTOR FOR FRONT AIRBAG SENSOR

(a) Before connecting the connectors, check that the position of the housing lock (white part) is as shown in the illustration.

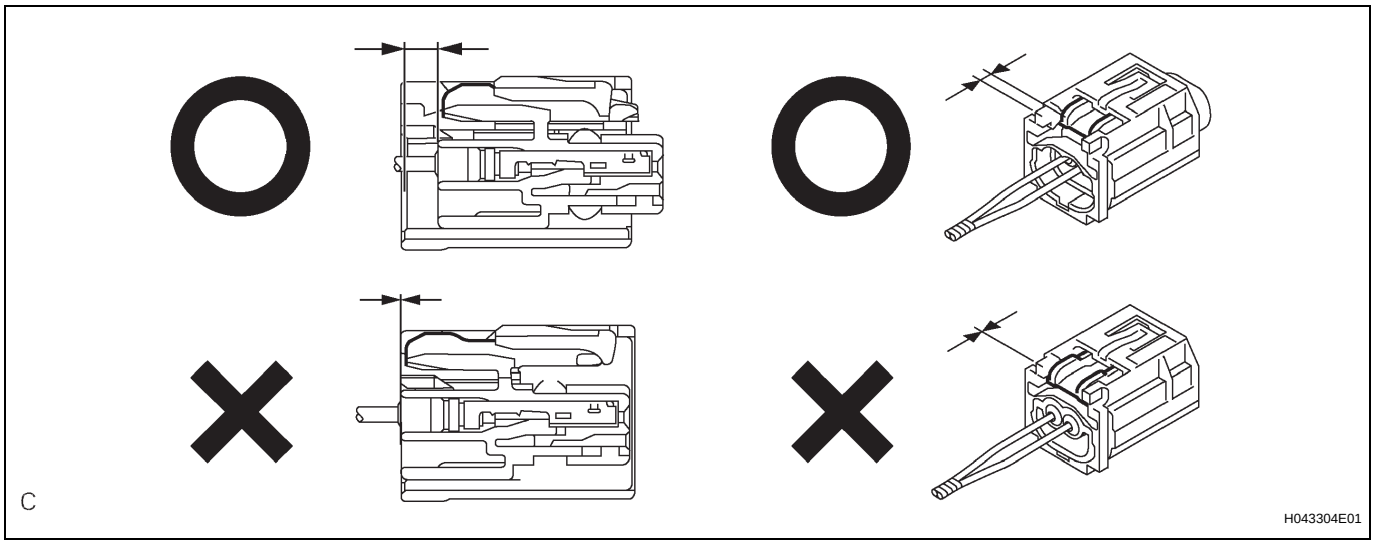

(b) Be sure to engage the connectors until they are locked. (When locking, make sure that a click sound can be heard.)
HINT:
When connecting them, the housing lock (white part) slides. Be sure not to hold the housing lock (white part) and A part, as it may result in an insecure fit.

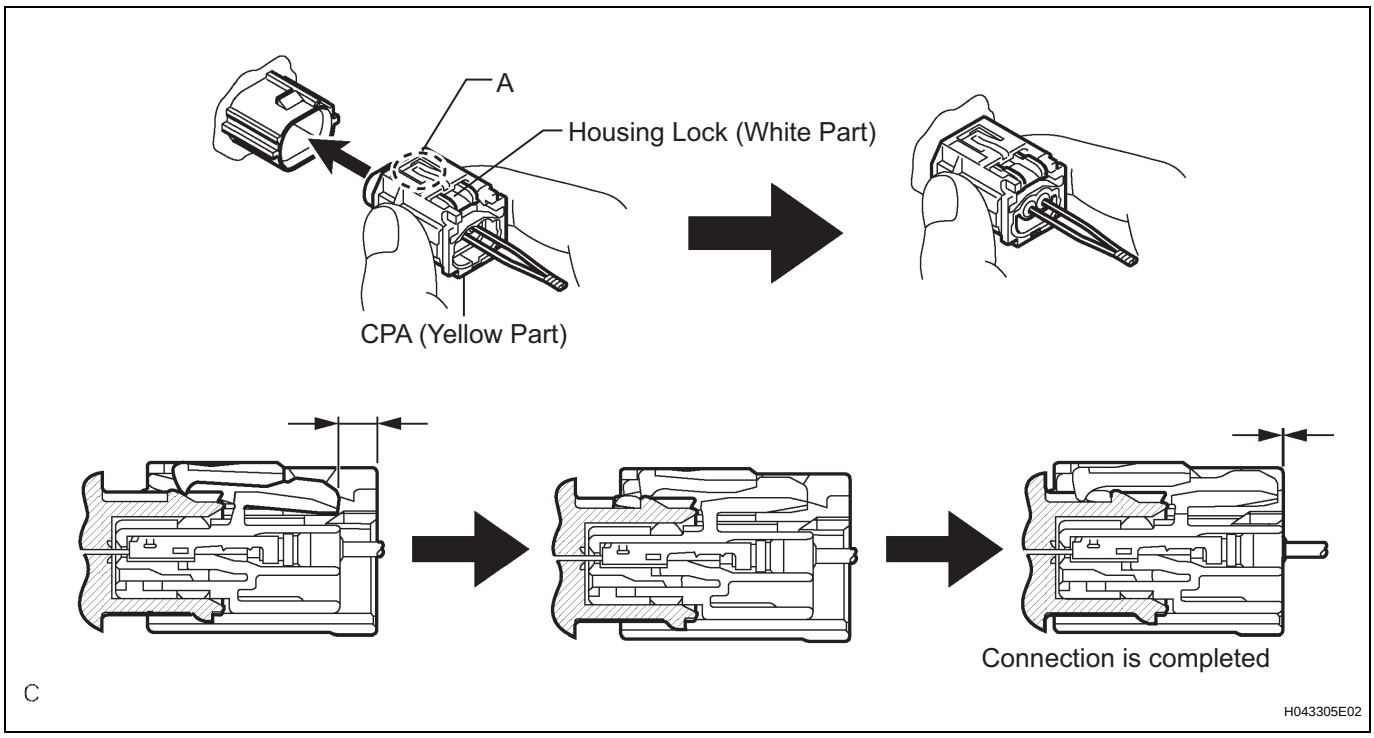

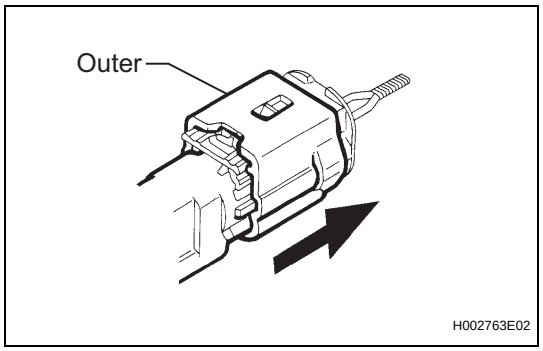

14. DISCONNECTION OF CONNECTORS FOR SIDE AIRBAG SENSOR AND REAR AIRBAG SENSOR

(a) While holding the sides of the outer connector locking sleeve, slide the outer in the direction shown by the arrow.

(b) When the connector lock is released, the connectors are disconnected.
HINT:
Be sure to hold both outer flank sides. Holding the top and bottom will make disconnection difficult.

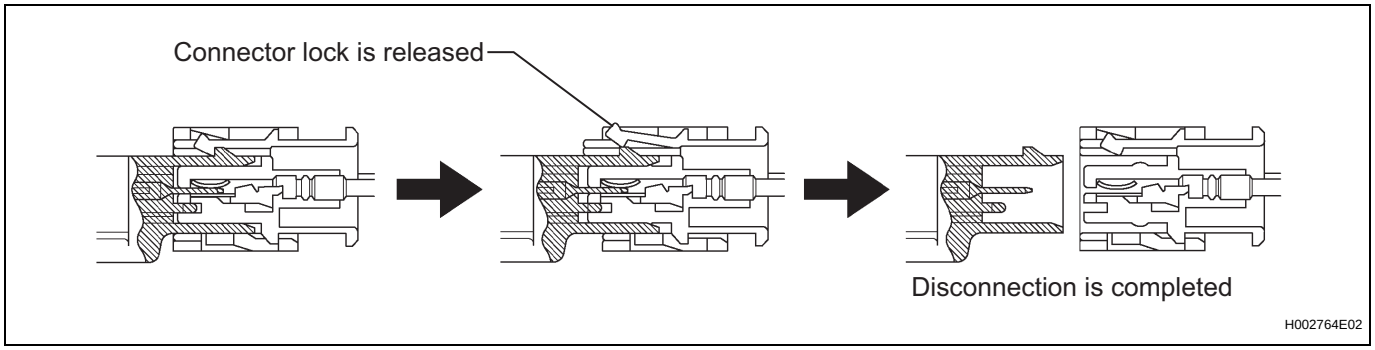

15. CONNECTION OF CONNECTORS FOR SIDE AIRBAG SENSOR AND REAR AIRBAG SENSOR

(a) Connect the connector as shown in the illustration (When locking, make sure that the outer returns to its original position and a click sound can be heard).
HINT:
When connecting, the outer will slide. Be sure not to hold the outer while connecting, as it may result in an insecure fit.

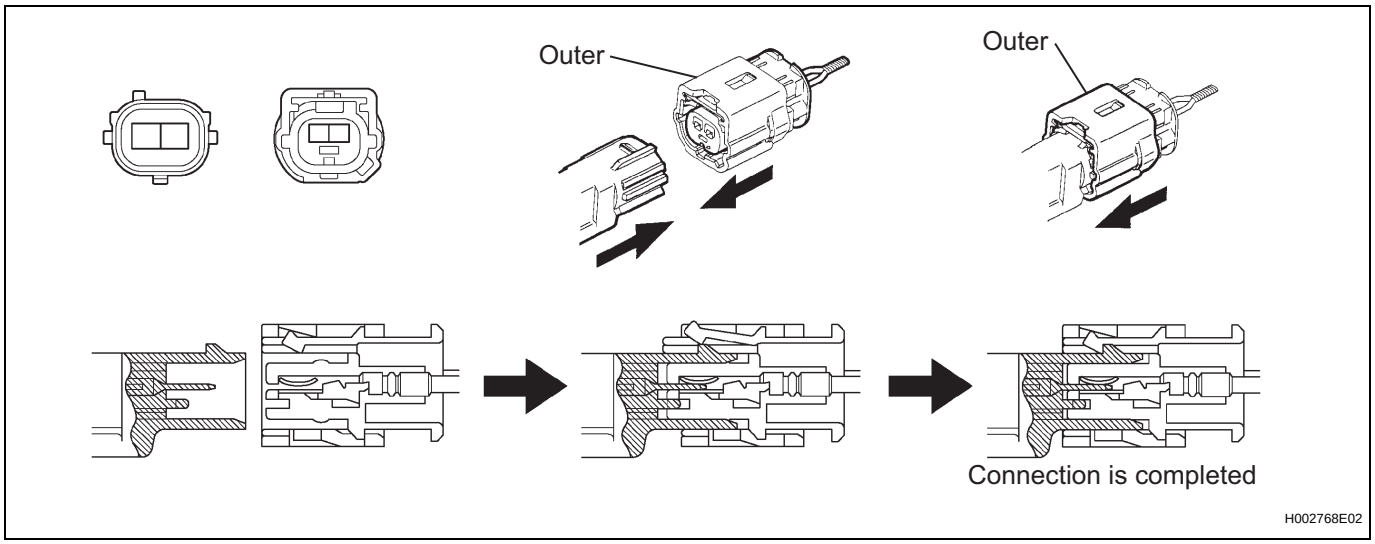

PROBLEM SYMPTOMS TABLE

HINT:
Proceed to the troubleshooting for each circuit in the table below.

AIRBAG SYSTEM:

Symptom	Suspected Area	See page
The SRS warning light goes off after the primary check, but then comes on.	SRS Warning Light Remains ON	RS-294
With the engine switch on (IG), the SRS warning light sometimes comes on after approximately 6 seconds.	SRS Warning Light Remains ON	RS-294
The SRS warning light always comes on even when DTC is not output.	SRS Warning Light Remains ON	RS-294
With the engine switch on (IG), the SRS warning light does not come on.	SRS Warning Light does not Come ON	RS-298
Although an SRS warning light operates normally, DTC or a normal system code is not displayed.	Diagnosis Circuit	RS-300
Although terminals TC and CG of DLC3 are not connected, DTC or a normal system code is displayed.	Diagnosis Circuit	RS-300

TERMINALS OF ECU

1. CENTER AIRBAG SENSOR ASSEMBLY (with Rear Airbag Sensor)

RS

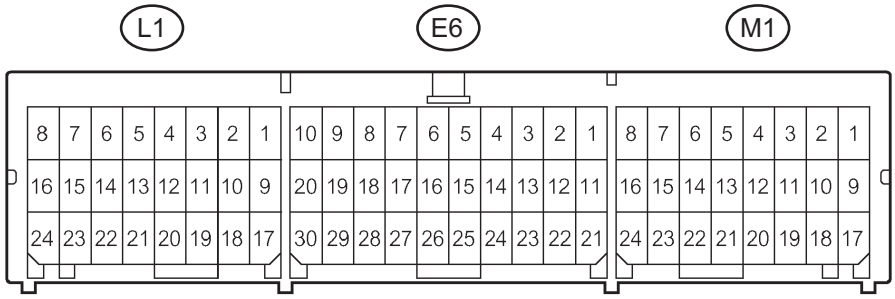

H

C109532E09

Terminal No.	Terminal Symbol	Destination
E6-1	P2+	Front passenger airbag assembly (Front passenger side squib 2nd step)
E6-2	P2-	Front passenger airbag assembly (Front passenger side squib 2nd step)
E6-3	P-	Front passenger airbag assembly (Front passenger side squib)
E6-4	P+	Front passenger airbag assembly (Front passenger side squib)
E6-5	D+	Steering pad (Driver side squib)
E6-6	D-	Steering pad (Driver side squib)
E6-7	D2-	Steering pad (Driver side squib 2nd step)
E6-8	D2+	Steering pad (Driver side squib 2nd step)
E6-9	DK+	Driver side knee airbag assembly (Driver side knee airbag squib)
E6-10	DK-	Driver side knee airbag assembly (Driver side knee airbag squib)
E6-13	CANH	CAN Communication line
E6-16	SIL	DLC3
E6-17	P-AB	Passenger airbag ON/OFF indicator
E6-18	GSW	Main body ECU
E6-19	PK+	Front passenger side knee airbag assembly (Front passenger side knee airbag squib)
E6-20	PK-	Front passenger side knee airbag assembly (Front passenger side knee airbag squib)
E6-21	IG2	IGN fuse
E6-22	CANL	CAN Communication line
E6-23	PAON	Passenger airbag ON/OFF indicator
E6-25	E1	Ground
E6-26	E2	Ground
E6-27	-SR	Front airbag sensor RH
E6-28	-SL	Front airbag sensor LH
E6-29	+SR	Front airbag sensor RH

Terminal No.	Terminal Symbol	Destination
E6-30	+SL	Front airbag sensor LH
L1-1	SFD+	Front seat side airbag assembly LH (Front driver side - side squib)
L1-2	SFD-	Front seat side airbag assembly LH (Front driver side - side squib)
L1-3	ICD-	Curtain shield airbag assembly LH (Driver side curtain shield squib)
L1-4	ICD+	Curtain shield airbag assembly LH (Driver side curtain shield squib)
L1-5	PD+	Front seat outer belt assembly LH (Front driver side pretensioner squib)
L1-6	PD-	Front seat outer belt assembly LH (Front driver side pretensioner squib)
L1-7	PDR-	Rear seat outer belt assembly LH (Rear driver side pretensioner squib)
L1-8	PDR+	Rear seat outer belt assembly LH (Rear driver side pretensioner squib)
L1-9	DSP+	Seat position airbag sensor
L1-10	DBE+	Front seat inner belt assembly LH (Driver side seat belt buckle switch)
L1-15	RD-	Rear seat side airbag assembly LH (Rear driver side - side squib)
L1-16	RD+	Rear seat side airbag assembly LH (Rear driver side - side squib)
L1-17	DSP-	Seat position airbag sensor
L1-18	DBE-	Front seat inner belt assembly LH (Driver side seat belt buckle switch)
L1-23	BBD-	Side airbag sensor LH
L1-24	BBD+	Side airbag sensor LH
M1-1	PPR+	Rear seat outer belt assembly RH (Rear passenger side pretensioner squib)
M1-2	PPR-	Rear seat outer belt assembly RH (Rear passenger side pretensioner squib)
M1-3	PP-	Front seat outer belt assembly RH (Front passenger side pretensioner squib)
M1-4	PP+	Front seat outer belt assembly RH (Front passenger side pretensioner squib)
M1-5	ICP+	Curtain shield airbag assembly RH (Front passenger side curtain shield squib)
M1-6	ICP-	Curtain shield airbag assembly RH (Front passenger side curtain shield squib)
M1-7	SFP-	Front seat side airbag assembly RH (Front passenger side - side squib)
M1-8	SFP+	Front seat side airbag assembly RH (Front passenger side - side squib)
M1-9	RP+	Rear seat side airbag assembly RH (Rear passenger side - side squib)
M1-10	RP-	Rear seat side airbag assembly RH (Rear passenger side - side squib)
M1-16	FSP+	Occupant classification ECU
M1-17	BBP+	Side airbag sensor RH
M1-18	BBP-	Side airbag sensor RH
M1-24	FSP-	Occupant classification ECU

2. CENTER AIRBAG SENSOR ASSEMBLY (without Rear Airbag Sensor)

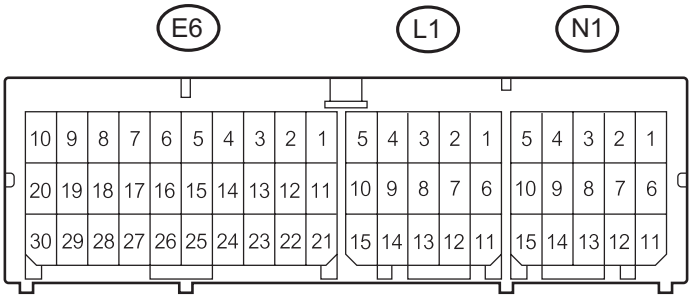

C123353E05

Terminal No.	Terminal Symbol	Destination
E6-1	P2+	Front passenger airbag assembly (Front passenger side squib 2nd step)
E6-2	P2-	Front passenger airbag assembly (Front passenger side squib 2nd step)
E6-3	P-	Front passenger airbag assembly (Front passenger side squib)
E6-4	P+	Front passenger airbag assembly (Front passenger side squib)
E6-5	D+	Steering pad (Driver side squib)
E6-6	D-	Steering pad (Driver side squib)
E6-7	D2-	Steering pad (Driver side squib 2nd step)
E6-8	D2+	Steering pad (Driver side squib 2nd step)
E6-9	DK+	Driver side knee airbag assembly (Driver side knee airbag squib)
E6-10	DK-	Driver side knee airbag assembly (Driver side knee airbag squib)
E6-13	CANH	CAN Communication line
E6-16	SIL	DLC3
E6-17	P-AB	Passenger airbag ON/OFF indicator
E6-18	GSW	Main body ECU
E6-19	PK+	Front passenger side knee airbag assembly (Front passenger side knee airbag squib)
E6-20	PK-	Front passenger side knee airbag assembly (Front passenger side knee airbag squib)
E6-21	IG2	IGN fuse
E6-22	CANL	CAN Communication line
E6-23	PAON	Passenger airbag ON/OFF indicator
E6-25	E1	Ground
E6-26	E2	Ground
E6-27	-SR	Front airbag sensor RH
E6-28	-SL	Front airbag sensor LH
E6-29	+SR	Front airbag sensor RH
E6-30	+SL	Front airbag sensor LH
L1-1	PD+	Front seat outer belt assembly LH (Front drive side pretensioner squib)
L1-2	PD-	Front seat outer belt assembly LH (Front driver side pretensioner squib)
L1-4	PDR+	Rear seat outer belt assembly LH (Rear driver side pretensioner squib)
L1-5	PDR-	Rear seat outer belt assembly LH (Rear driver side pretensioner squib)
L1-6	ICD-	Curtain shield airbag assembly LH (Driver side curtain shield squib)
L1-7	ICD+	Curtain shield airbag assembly LH (Driver side curtain shield squib)
L1-8	BBD+	Side airbag sensor LH
L1-9	SFD+	Front seat side airbag assembly LH (Front driver side - side squib)
L1-10	SFD-	Front seat side airbag assembly LH (Front driver side - side squib)
L1-11	DBE+	Front seat inner belt assembly LH (Driver side seat belt buckle switch)
L1-12	DBE-	Front seat inner belt assembly LH (Driver side seat belt buckle switch)
L1-13	DSP-	Seat position airbag sensor
L1-14	DSP+	Seat position airbag sensor
L1-15	BBD-	Side airbag sensor LH
M1-1	PPR-	Rear seat outer belt assembly RH (Rear passenger side pretensioner squib)
M1-2	PPR+	Rear seat outer belt assembly RH (Rear passenger side pretensioner squib)
M1-4	PP+	Front seat outer belt assembly RH (Front passenger side pretensioner squib)
M1-5	PP-	Front seat outer belt assembly RH (Front passenger side pretensioner squib)
M1-6	SFP-	Front seat side airbag assembly RH (Front passenger side - side squib)
M1-7	SFP+	Front seat side airbag assembly RH (Front passenger side - side squib)
M1-8	BBP+	Side airbag sensor RH
M1-9	ICP+	Curtain shield airbag assembly RH (Front passenger side curtain shield squib)
M1-10	ICP-	Curtain shield airbag assembly RH (Front passenger side curtain shield squib)

Terminal No.	Terminal Symbol	Destination
M1-11	BBP-	Side airbag sensor RH
M1-12	FSP+	Occupant classification ECU
M1-13	FSP-	Occupant classification ECU

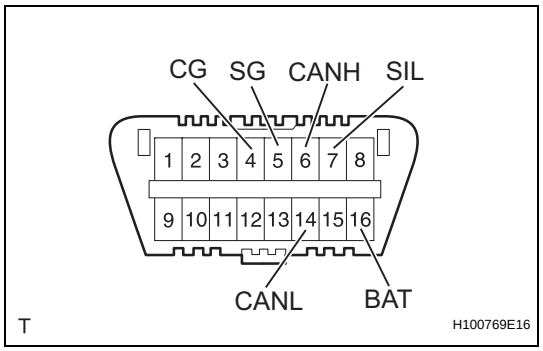

DIAGNOSIS SYSTEM

1. CHECK DLC3

(a) The ECU uses ISO 15765-4 for communication. The terminal arrangement of the DLC3 complies with SAE J1962 and matches the ISO 15765-4 format.

Symbols (Terminal No.)	Terminal Description	Condition	Specified condition
SIL (7) - SG (5)	Bus "+" line	During transmission	Pulse generation
CG (4) - Body ground	Chassis ground	Always	Below 1 Ω
SG (5) - Body ground	Signal ground	Always	Below 1 Ω
BAT (16) - Body ground	Battery positive	Always	10 to 14 V
CANH (6) - CANL (14)	CAN bus line	Engine switch off (*)	54 to 69 Ω
CANH (6) - BAT (16)	HIGH-level CAN bus line	Engine switch off (*)	6 kΩ or higher
CANH (6) - CG (4)	HIGH-level CAN bus line	Engine switch off (*)	200 Ω or higher
CANL (14) - BAT (16)	LOW-level CAN bus line	Engine switch off (*)	6 kΩ or higher
CANL (14) - CG (4)	LOW-level CAN bus line	Engine switch off (*)	200 Ω or higher

NOTICE:

***: Before measuring the resistance, leave the vehicle as is for at least 1 minute and do not operate the engine switch, any other switches, or the doors.**

If the result is not as specified, the DLC3 may have a malfunction. Repair or replace the harness and connector.

HINT:

If the display shows a communication error message when connecting the cable of the intelligent tester to the DLC3, turning the engine switch on (IG) and operating the intelligent tester, there is a problem on the vehicle side or tester side.

- If communication is normal when the tester is connected to another vehicle, inspect the DLC3 on the original vehicle.
- If communication is still not possible when the tester is connected to another vehicle, the problem is probably in the tester itself. Consult the Service Department listed in the tester's instruction manual.

RS

2. SYMPTOM SIMULATION

HINT:
The most difficult case in troubleshooting is when no symptoms occur. In such cases, a thorough customer problem analysis must be carried out. Then the same or similar conditions and the environment in which the problem occurred in the customer's vehicle should be reproduced. No matter how experienced or skilled a technician may be, if he proceeds to troubleshooting without confirming the problem symptoms, he will likely overlook something important and make a wrong guess at some points in the repair operation.
This leads to a standstill in troubleshooting.

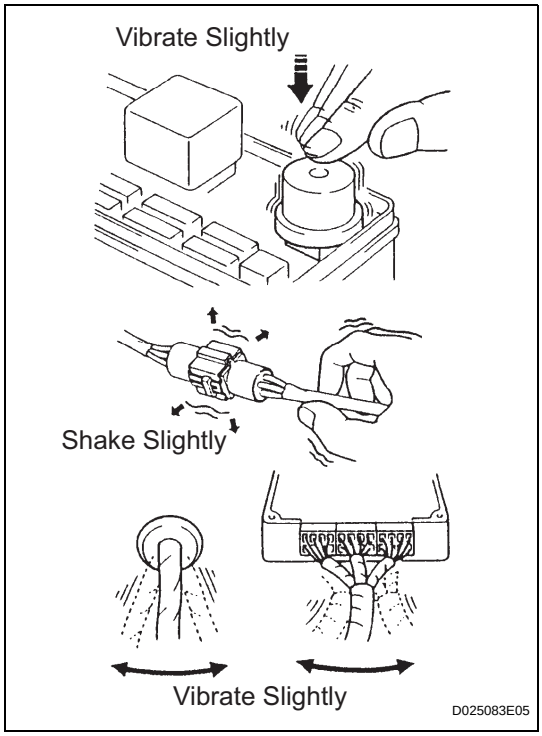

(a) Vibration method: When vibration seems to be the major cause.
HINT:
Perform the simulation method only during the primary check period (for approximately 6 seconds after the engine switch is turned on (IG)).
(1) Slightly vibrate the part of the sensor considered to be the problem cause with your fingers and check whether the malfunction occurs.
HINT:
Shaking the relays too strongly may result in open relays.
(2) Slightly shake the connector vertically and horizontally.
(3) Slightly shake the wire harness vertically and horizontally.
The connector joint and fulcrum of the vibration are the major areas to be checked thoroughly.

3. FUNCTION OF SRS WARNING LIGHT

(a) Primary check.
(1) Turn the engine switch off. Wait for at least 2 seconds, then turn the engine switch on (IG).
The SRS warning light comes on for approximately 6 seconds and the diagnosis of the airbag system (including the seat belt pretensioners) is performed.
HINT:
If trouble is detected during the primary check, the SRS warning light remains on even after the primary check period (of approximately 6 seconds) has elapsed.

(b) Constant check.
(1) After the primary check, the center airbag sensor assembly constantly monitors the airbag system for trouble.
HINT:
If trouble is detected during the constant check, the center airbag sensor assembly functions as follows:
- The SRS warning light comes on.

- The SRS warning light goes off, and then comes on. This blinking pattern indicates a source voltage drop. The SRS warning light goes off 10 seconds after the source voltage returns to normal.

(c) Review.

(1) When the airbag system is normal:
The SRS warning light comes on only during the primary check period (for approximately 6 seconds after the engine switch is turned on (IG)).

(2) When the airbag system has trouble:
- The SRS warning light remains on even after the primary check period has elapsed.
- The SRS warning light goes off after the primary check, but comes on again during the constant check.
- The SRS warning light does not come on when turning the engine switch from off to on (IG).

HINT:
The center airbag sensor assembly functions to keep the SRS warning light on if the airbag has been deployed.

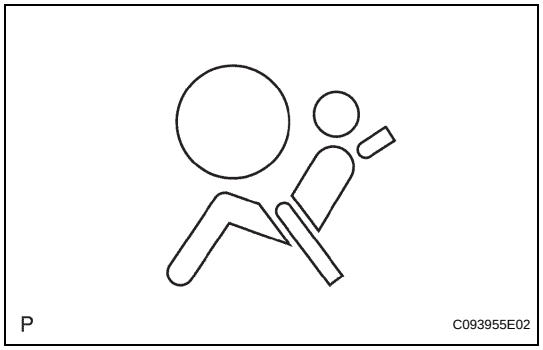

4. SRS WARNING LIGHT CHECK

(a) Turn the engine switch on (IG), and check that the SRS warning light comes on for approximately 6 seconds (primary check).

(b) Check that the SRS warning light goes off approximately 6 seconds after the engine switch is turned on (IG) (constant check).
HINT:
When any of the following symptoms occur, refer to "Problem Symptoms Table" (See page RS-33).
- The SRS warning light comes on occasionally, after the primary check period has elapsed.
- The SRS warning light comes on, but a DTC is not output.
- The engine switch is turned from off to on (IG), but the SRS warning light does not come on.

5. FUNCTION OF PASSENGER AIRBAG ON/OFF INDICATOR

(a) Initial check

(1) Turn the engine switch on (IG).

(2) The passenger airbag ON/OFF indicator comes on for approximately 4 seconds, then goes off for approximately 2 seconds.

(3) Approximately 6 seconds after the engine switch is turned on (IG), the passenger airbag ON/OFF indicator will be ON or OFF depending on the conditions listed below.

Condition	"ON" indicator	"OFF" indicator
Vacant	OFF	OFF

Condition	"ON" indicator	"OFF" indicator
Adult is seated.	ON	OFF
Child is seated.	OFF	ON
Child restraint system is set.	OFF	ON
Front passenger occupant classification failure	OFF	ON

HINT:

- The passenger airbag ON/OFF indicator is based on the timing chart below in order to check the indicator light circuit.
- When the occupant classification system has trouble, both the SRS warning light and the passenger airbag ON/OFF indicator ("OFF") come on. In this case, check the DTCs in "AIRBAG SYSTEM" first. Then troubleshoot the occupant classification system if DTC B1650/32 is detected, and troubleshoot the passenger airbag ON/OFF indicator if DTC B1660/43 is detected.

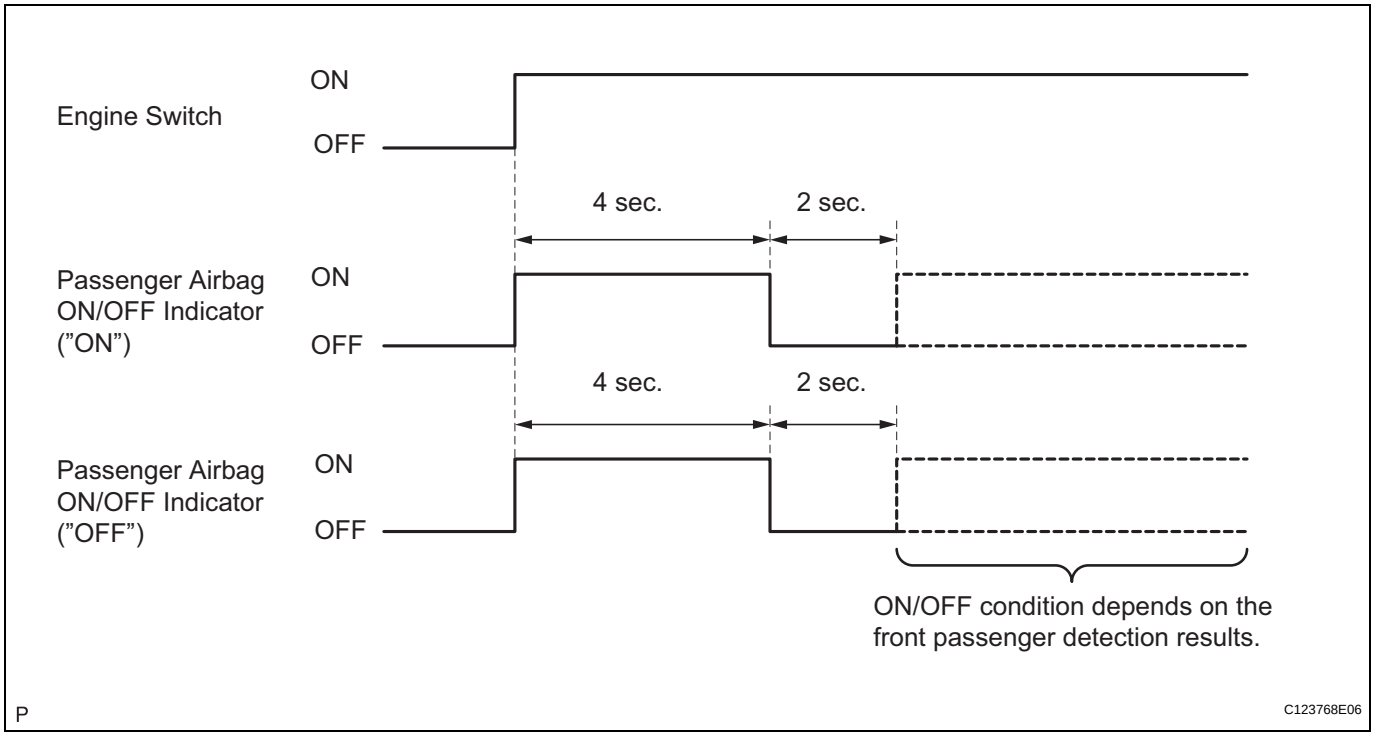

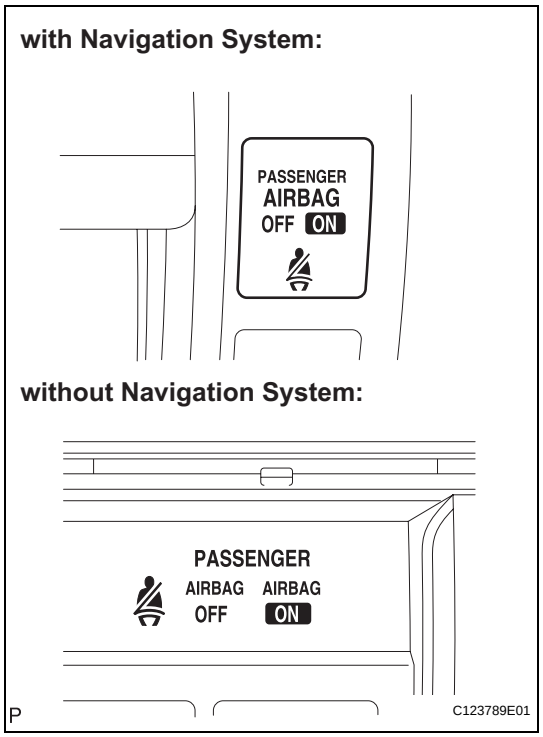

6. PASSENGER AIRBAG ON/OFF INDICATOR CHECK

(a) Turn the engine switch on (IG).

(b) Check that the passenger airbag ON/OFF indicator ("ON" and "OFF") comes on for approximately 4 seconds, then goes off for approximately 2 seconds.
HINT:
Refer to the table in the previous step regarding the passenger airbag ON/OFF indicator when the engine switch is turned on (IG) and approximately 6 seconds have passed.

7. ACTIVATION PREVENTION MECHANISM

(a) FUNCTION OF ACTIVATION PREVENTION MECHANISM

(1) An activation prevention mechanism is built into the connector (on the center airbag sensor assembly side) of the airbag system squib circuit to prevent accidental airbag activation.

(2) This mechanism closes the circuit when the connector is disconnected by bringing the short spring into contact with the terminals and shutting off external electricity to prevent accidental airbag activation.

(b) RELEASING OF ACTIVATION PREVENTION MECHANISM

(1) To release the activation prevention mechanism, insert a piece of paper with the same thickness as the male terminal (approximately 0.5 mm (0.020 in.)) between the terminals and the short spring to break the connection.

(2) Refer to the following illustrations concerning connectors utilizing the activation prevention mechanism and its release method.
CAUTION:
Never release the activation prevention mechanism on the squib connector even when inspecting with the squib disconnected.
NOTICE:
- **Do not release the activation prevention mechanism unless specially directed by the troubleshooting procedure.**
- **To prevent the terminal and the short spring from being damaged, always use a piece of paper with the same thickness as the male terminal.**

RS

RS

Driver Side (with Rear Side Airbag):

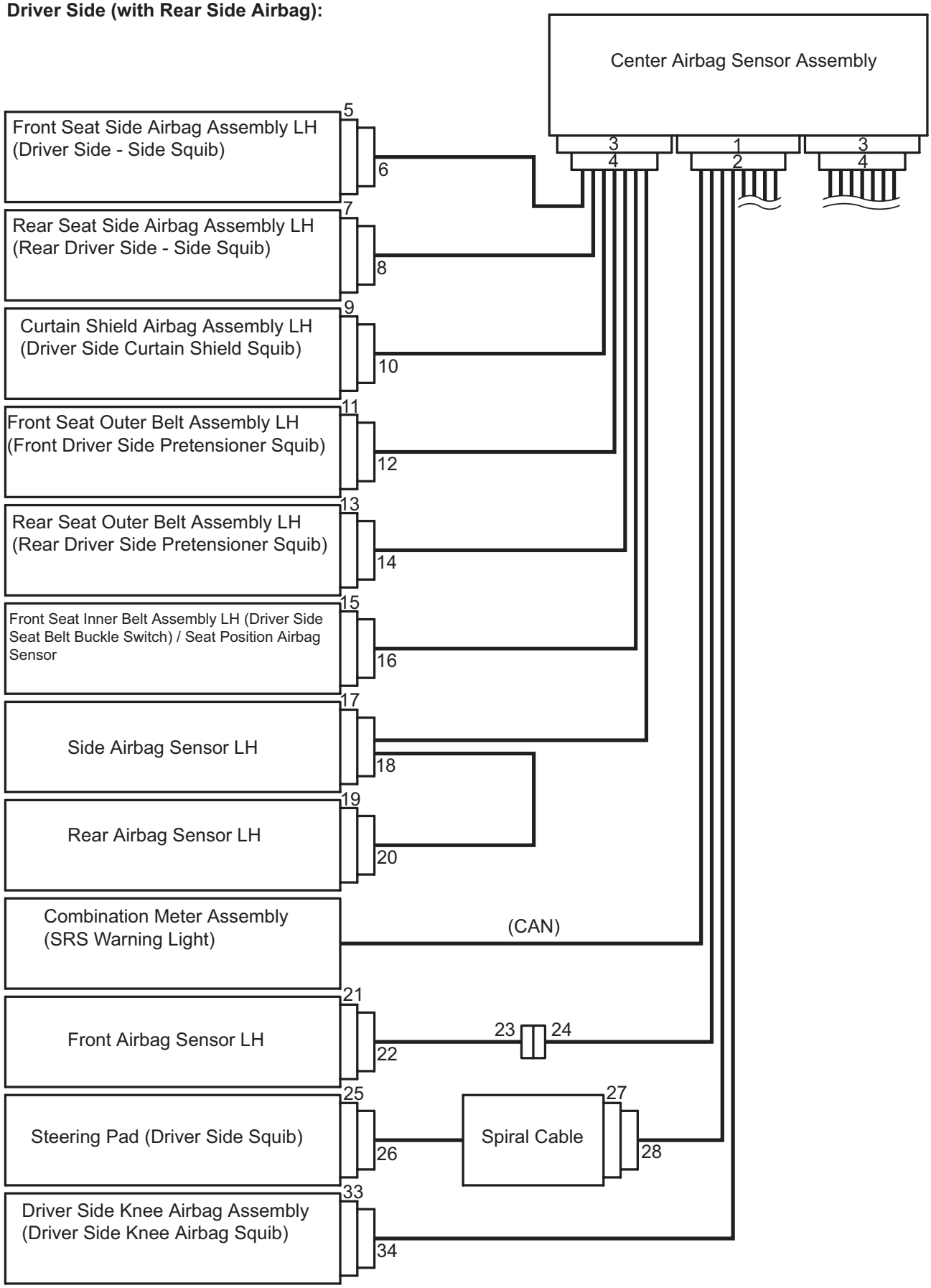

RS

Passenger Side (with Rear Side Airbag):

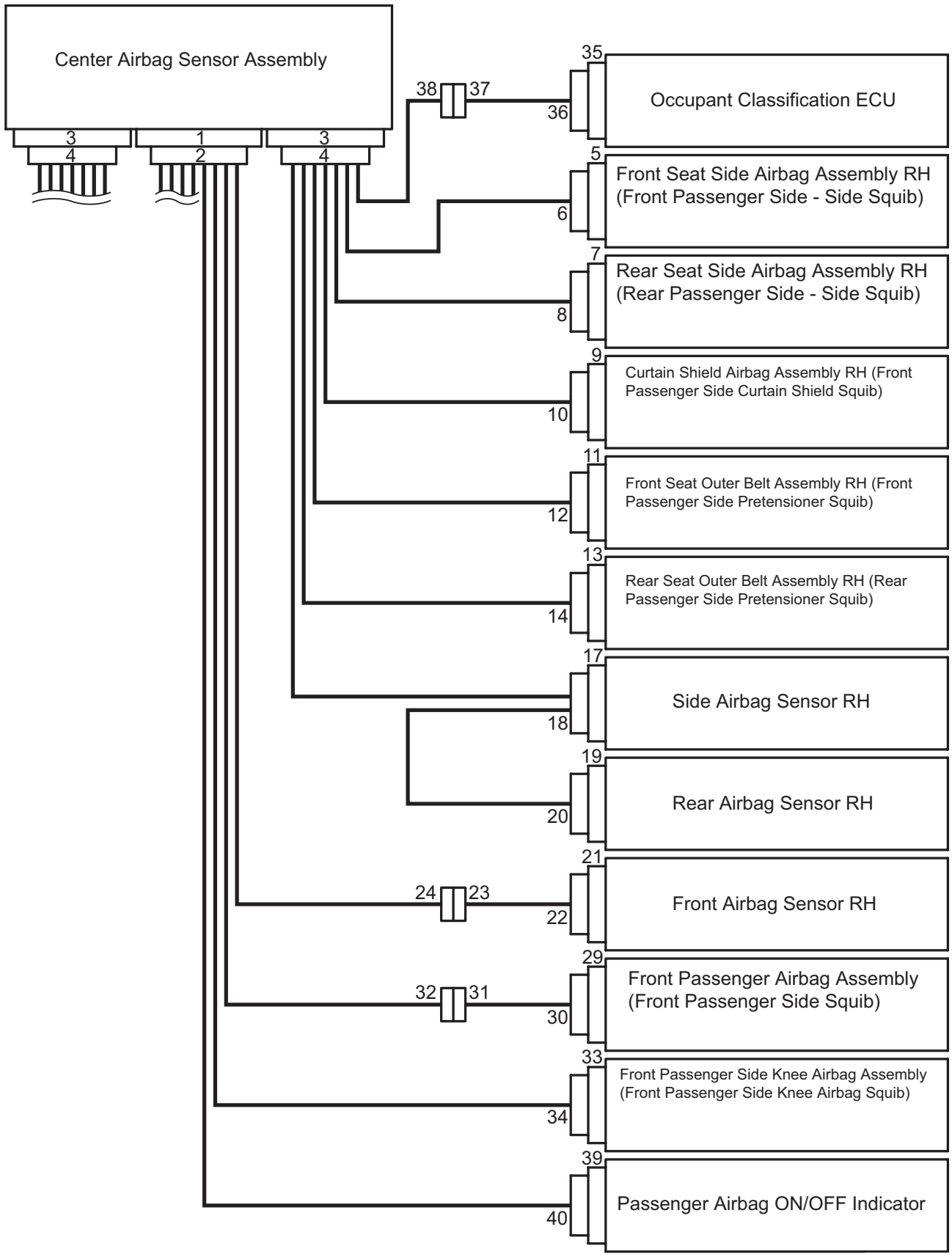

RS

with Rear Side Airbag:

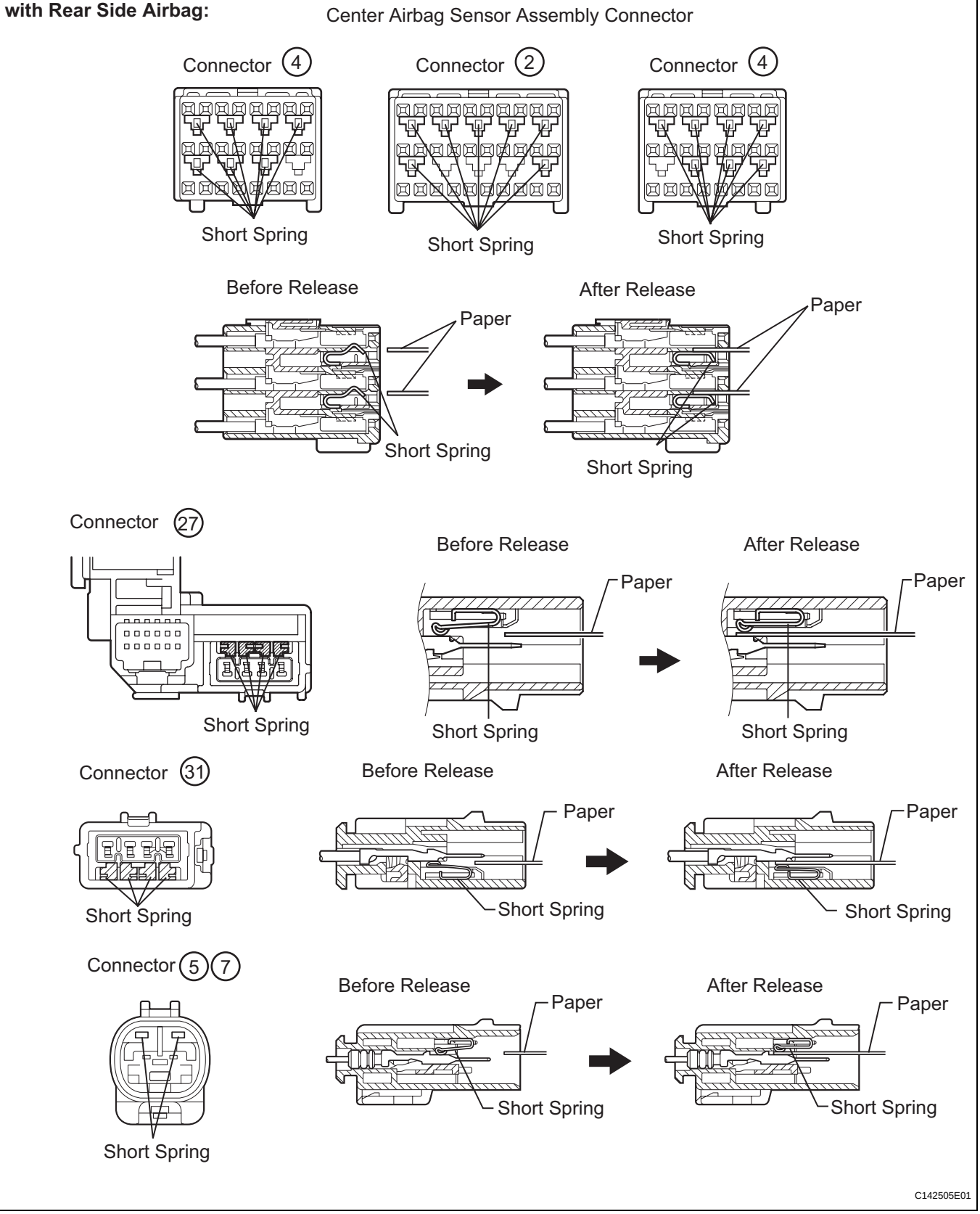

RS

Driver Side (without Rear Side Airbag):

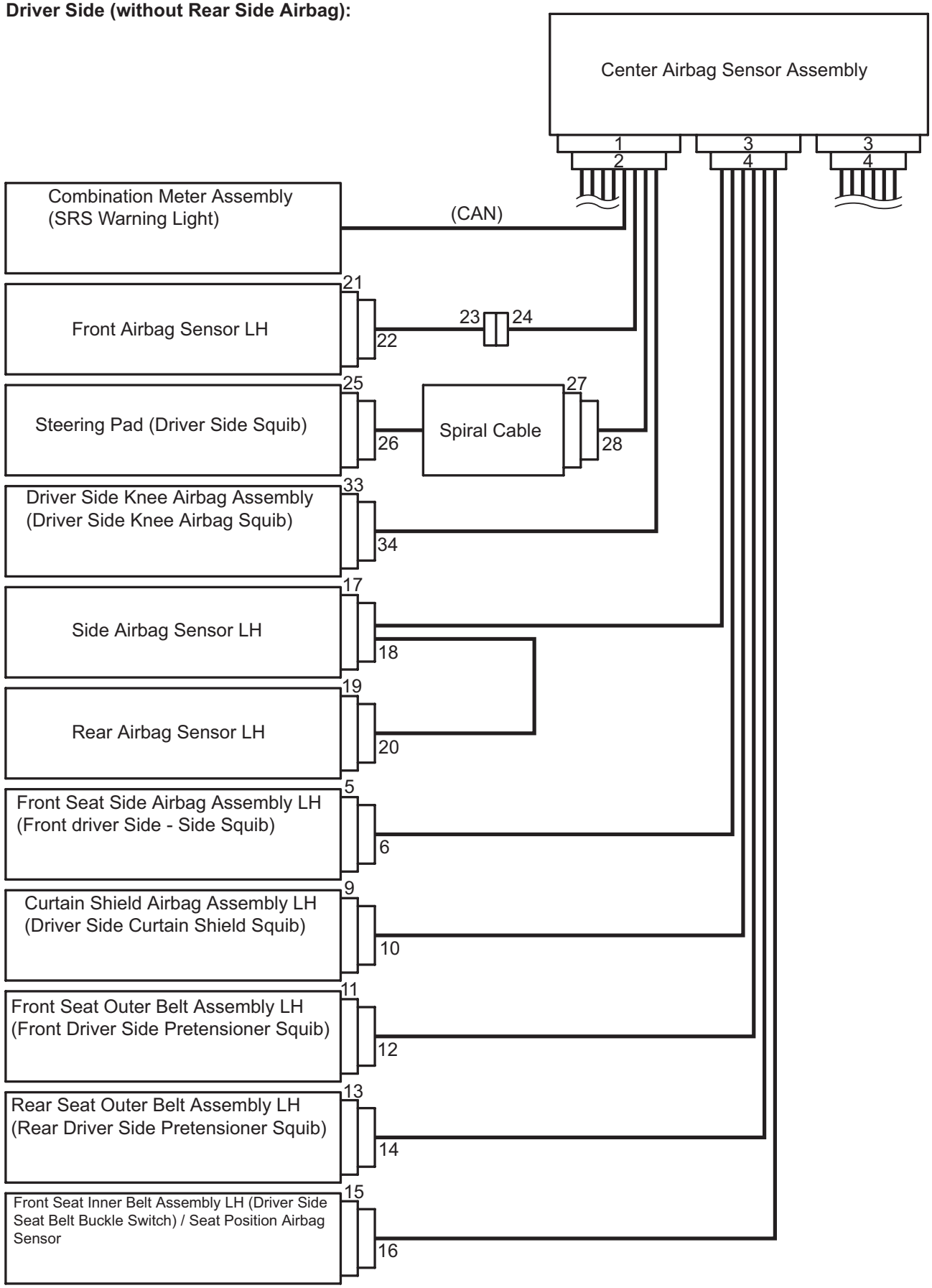

RS

Passenger Side (without Rear Side Airbag):

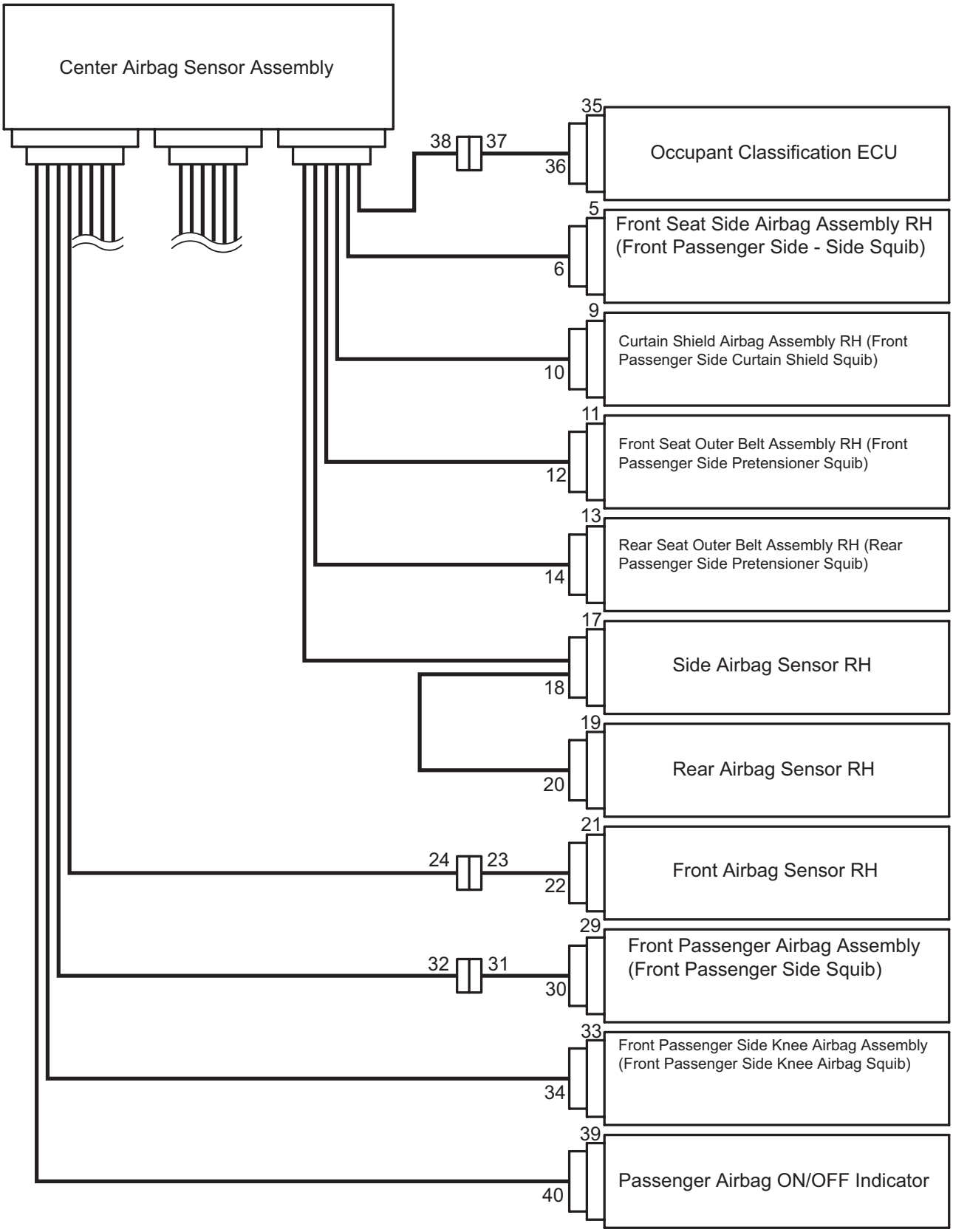

P

C123795E01

without Rear Side Airbag: Center Airbag Sensor Assembly Connector

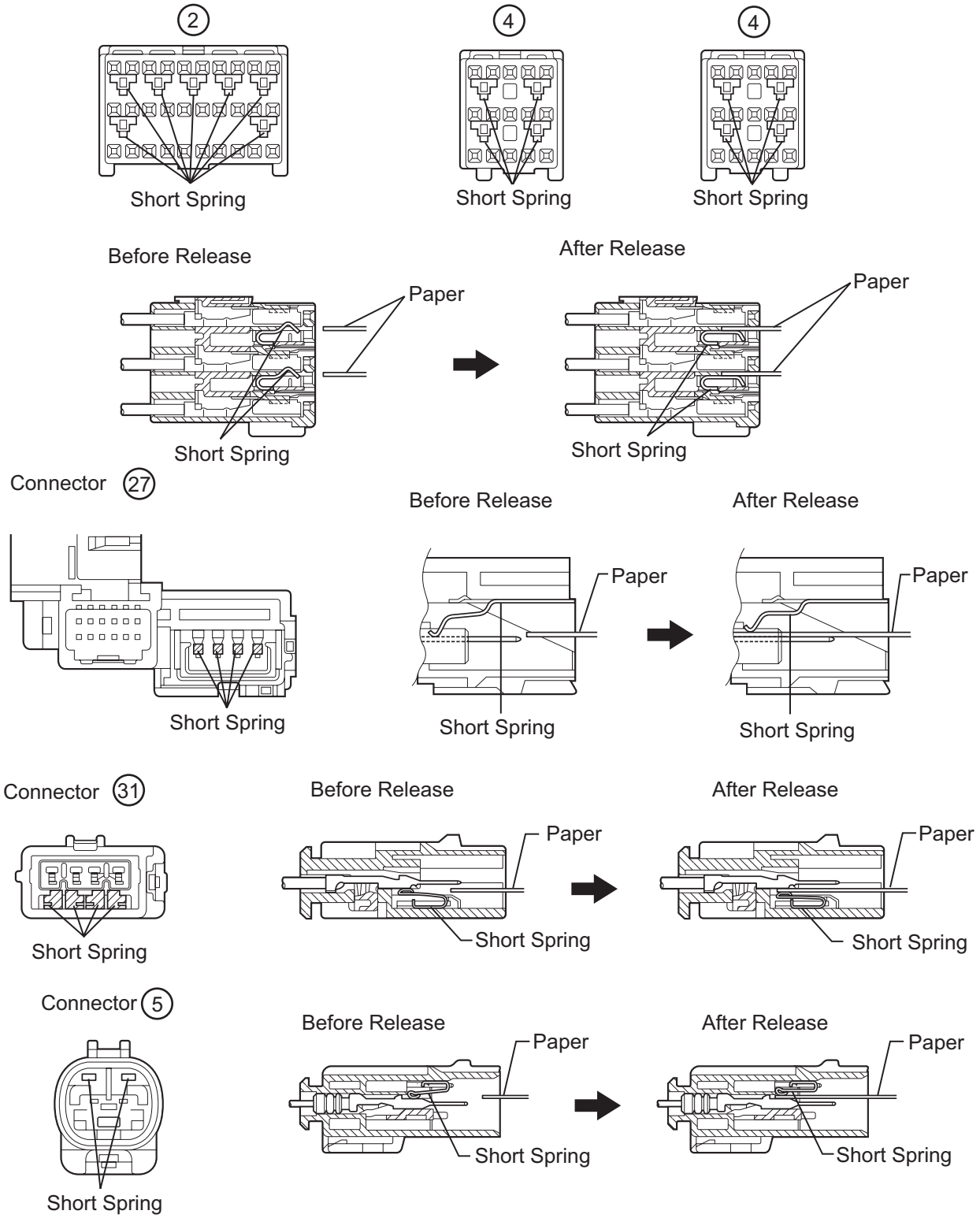

C

C114854E06

RS

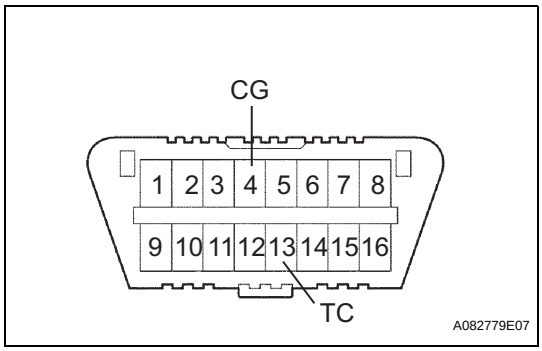

DTC CHECK / CLEAR

1. DTC CHECK (USING SST CHECK WIRE)

(a) Check the DTCs (Present trouble code).

(1) Turn the engine switch on (IG), and wait for approximately 60 seconds.

(2) Using SST, connect terminals TC and CG of the DLC3.

SST 09843-18040

NOTICE:

Connect the terminals to the correct positions to avoid a malfunction.

(b) Check the DTCs (Past trouble code).

(1) Using SST, connect terminals TC and CG of the DLC3.

SST 09843-18040

NOTICE:

Connect the terminals to the correct positions to avoid a malfunction.

(2) Turn the engine switch on (IG), and wait for approximately 60 seconds.

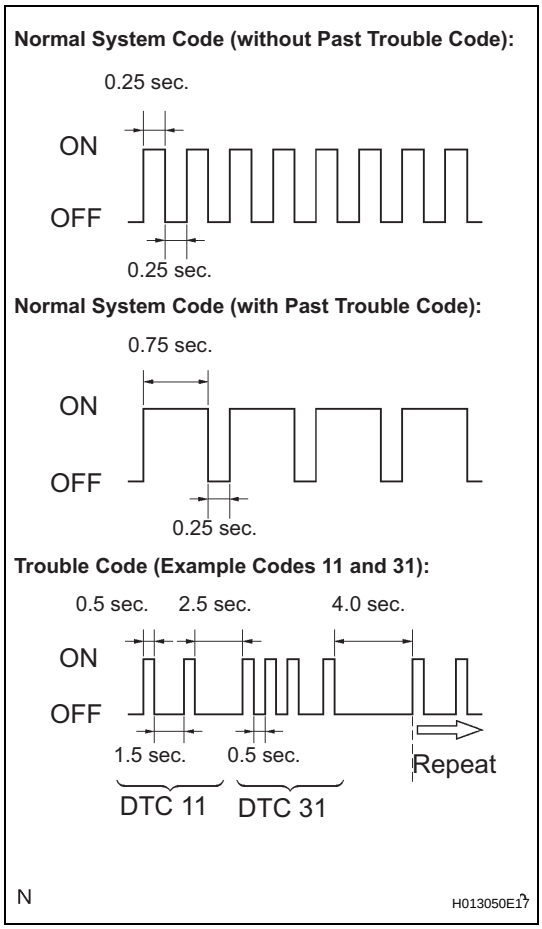

(c) Read the DTCs.

(1) Read the blinking patterns of the DTCs. As examples, the blinking patterns for the normal system code and trouble codes 11 and 31 are shown in the illustration.

- Normal system code indication (without past trouble code)
  The light blinks twice per second.
- Normal system code indication (with past trouble code)
  When the past trouble code is stored in the center airbag sensor assembly, the light blinks only once per second.
- Trouble code indication
  The first blinks indicates the first DTC. The second blinks occurs after a 1.5-second pause.

If there is more than 1 code, there will be a 2.5-second pause between each code. After all codes are shown, there will be a 4.0-second pause, and then all codes will be repeated.

HINT:

- If 2 or more malfunctions are found, the indication begins with the smaller-numbered code.
- If DTCs are indicated without connecting the terminals, proceed to "Diagnosis Circuit" (See page RS-300).

2. DTC CLEAR (USING SST CHECK WIRE)

(a) Clear the DTCs.

(1) When the engine switch is turned off, the DTCs are cleared.
HINT:
Depending on the DTC, the code may not be cleared by turning off the engine switch. In this case, proceed to the next procedure.

(2) Using SST, connect terminals TC and CG of the DLC3, and then turn the engine switch on (IG).
SST 09843-18040

(3) Disconnect terminal TC of the DLC3 within 3 to 10 seconds after the DTCs are output, and check if the SRS warning light comes on after 3 seconds.

(4) Within 2 to 4 seconds after the SRS warning light comes on, connect terminals TC and CG of the DLC3.

(5) The SRS warning light should go off within 2 to 4 seconds after connecting terminals TC and CG of the DLC3. Then, disconnect terminal TC within 2 to 4 seconds after the SRS warning light goes off.

(6) The SRS warning light comes on again within 2 to 4 seconds after disconnecting terminal TC. Then, reconnect terminals TC and CG within 2 to 4 seconds after the SRS warning light comes on.

RS

(7) Check if the SRS warning light goes off within 2 to 4 seconds after connecting terminals TC and CG of the DLC3. Also check if the normal system code is output within 1 second after the SRS warning light goes off.
If DTCs are not cleared, repeat this procedure until the codes are cleared.

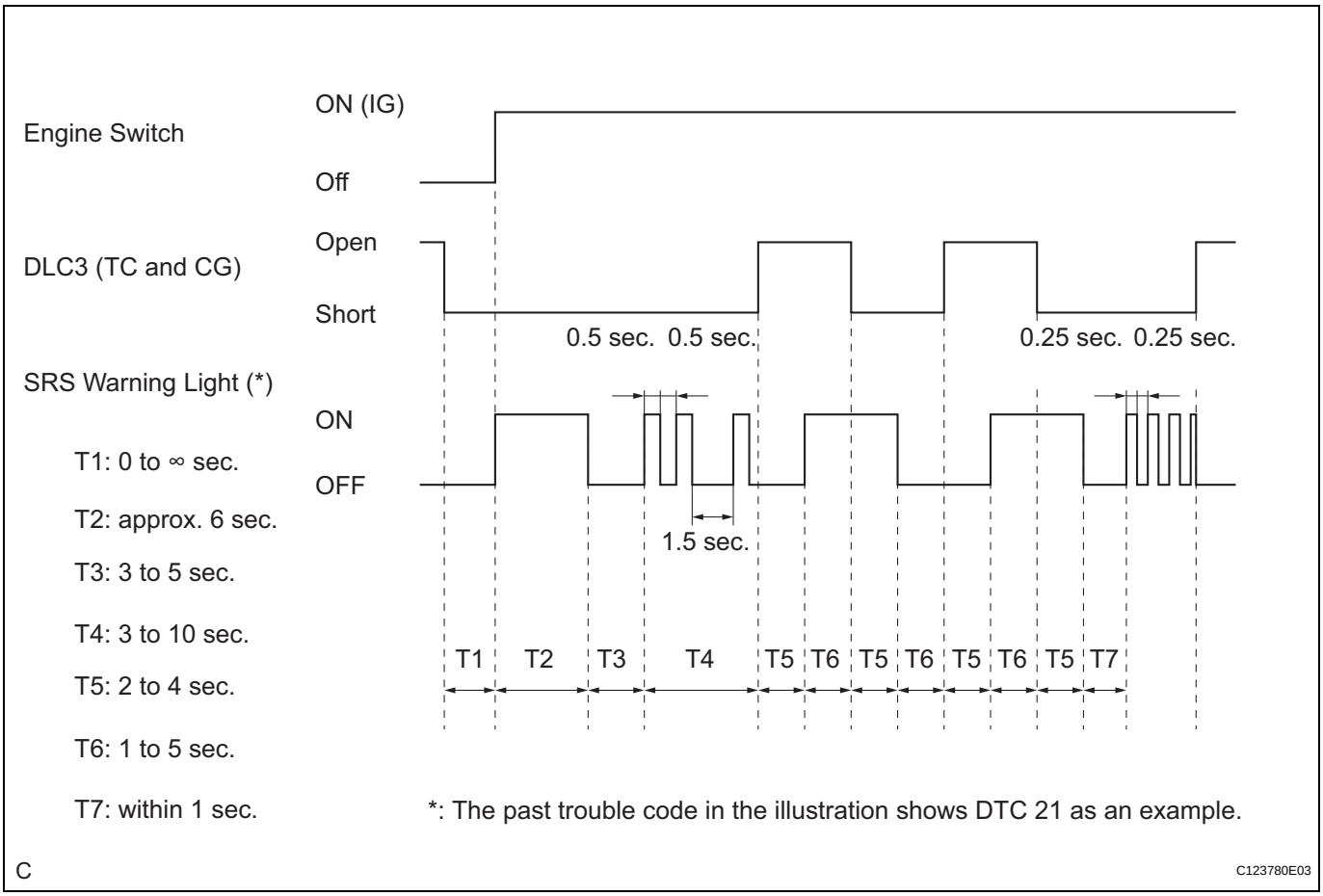

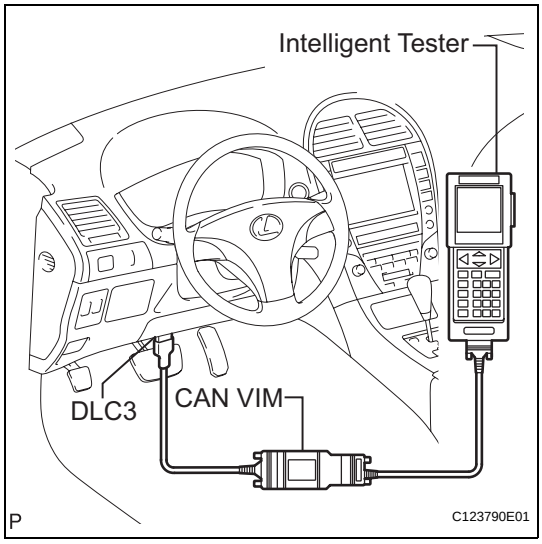

3. DTC CHECK

(a) Check the DTCs.
(1) Connect the intelligent tester to the DLC3.
(2) Turn the engine switch on (IG).
(3) Check the DTCs by following the prompts on the tester screen.
HINT:
Refer to the intelligent tester operator's manual for further details.

(b) Clear the DTCs.
(1) Connect the intelligent tester to the DLC3.
(2) Turn the engine switch on (IG).
(3) Clear the DTCs by following the prompts on the tester screen.
HINT:
Refer to the intelligent tester operator's manual for further details.

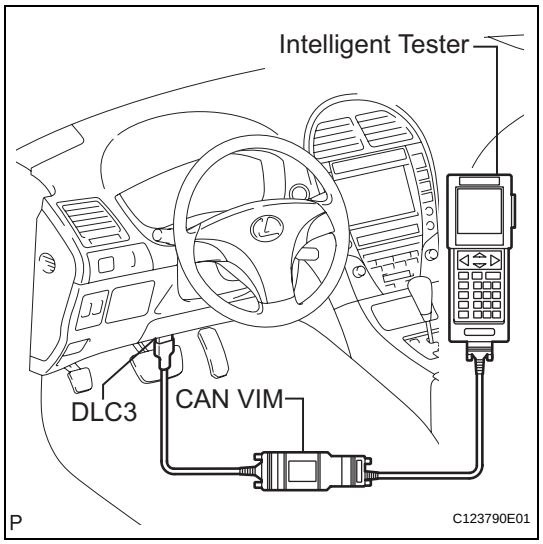

CHECK MODE PROCEDURE

1. CHECK MODE (SIGNAL CHECK): DTC CHECK

(a) Connect the intelligent tester to the DLC3.

(b) Turn the engine switch on (IG).

(c) Select "SIGNAL CHECK", and proceed with checking using the intelligent tester.

NOTICE:

Select "SIGNAL CHECK" from the "DTC CHECK" screen displayed on the intelligent tester to clear the output DTCs (both present and past).

HINT:

- DTCs can be detected more sensitively in check mode than in normal diagnosis mode.
- Perform check mode inspection when a malfunction in each squib circuit is suspected even after the normal system code is output through normal diagnosis mode inspection.

RS

DIAGNOSTIC TROUBLE CODE CHART

HINT:

- When the SRS warning light remains on and the DTC output is the normal system code, a voltage source drop is likely to occur. This malfunction is not stored in the memory by the center airbag sensor assembly. If the power source voltage returns to normal, the SRS warning light will automatically go off.
- When 2 or more codes are indicated, the code with the lower number appears first.
- If a code is not listed on the display chart, the center airbag sensor assembly may have failed.
- In the case of any malfunction concerning an open circuit, short to ground, or short to B+ due to a squib, other trouble codes may not be detected. In this case, repair the malfunction currently indicated and then perform malfunction diagnosis again.
- Mark in the check mode column:
  *1: DTC is not corresponding to the check mode.
  *2: DTC is corresponding to the check mode.
- DTC which has the mark of the *3 is output only the equipped car of rear side airbag.

AIRBAG SYSTEM:

DTC Code	Detection Item	Trouble Area	Check Mode	See page
B1000/31	Center Airbag Sensor Assembly Malfunction	Center airbag sensor assembly	*1	RS-60
B1603/83	Front Satellite Sensor Bus RH Initialization Incomplete	1. Instrument panel wire 2. Engine room main wire 3. Front airbag sensor RH 4. Center airbag sensor assembly	*1	RS-61
B1608/84	Front Satellite Sensor Bus LH Initialization Incomplete	1. Instrument panel wire 2. Engine room main wire 3. Front airbag sensor LH 4. Center airbag sensor assembly	*1	RS-78
B1610/13	Front Airbag Sensor RH Malfunction	1. Front airbag sensor RH 2. Center airbag sensor assembly	*1	RS-95
B1612/83	Lost Communication with Front Airbag Sensor RH	1. Instrument panel wire 2. Engine room main wire 3. Front airbag sensor RH 4. Center airbag sensor assembly	*1	RS-61
B1613/83	Front Airbag Sensor RH Initialization Incomplete	1. Instrument panel wire 2. Engine room main wire 3. Front airbag sensor RH 4. Center airbag sensor assembly	*1	RS-61
B1615/14	Front Airbag Sensor LH Malfunction	1. Front airbag sensor LH 2. Center airbag sensor assembly	*1	RS-97
B1617/84	Lost Communication with Front Airbag Sensor LH	1. Instrument panel wire 2. Engine room main wire 3. Front airbag sensor LH 4. Center airbag sensor assembly	*1	RS-78

DTC Code	Detection Item	Trouble Area	Check Mode	See page
B1618/84	Front Airbag Sensor LH Initialization Incomplete	1. Instrument panel wire 2. Engine room main wire 3. Front airbag sensor LH 4. Center airbag sensor assembly	*1	RS-78
B1620/21	Driver Side - Side Airbag Sensor Malfunction	1. Side airbag sensor LH 2. Center airbag sensor assembly	*1	RS-99
B1622/81	Lost Communication with Driver Side - Side Airbag Sensor Assembly	1. Floor wire 2. Side airbag sensor LH 3. Rear airbag sensor LH 4. Center airbag sensor assembly	*1	RS-103
B1623/81	Driver Side - Side Airbag Sensor Assembly Initialization Incomplete	1. Floor wire 2. Side airbag sensor LH 3. Rear airbag sensor LH 4. Center airbag sensor assembly	*1	RS-103
B1625/22	Front Passenger Side - Side Airbag Sensor Malfunction	1. Side airbag sensor RH 2. Center airbag sensor assembly	*1	RS-126
B1627/82	Lost Communication with Front Passenger Side - Side Airbag Sensor Assembly	1. Floor wire No. 2 2. Side airbag sensor RH 3. Rear airbag sensor RH 4. Center airbag sensor assembly	*1	RS-130
B1628/82	Front Passenger Side - Side Airbag Sensor Assembly Initialization Incomplete	1. Floor wire No. 2 2. Side airbag sensor RH 3. Rear airbag sensor RH 4. Center airbag sensor assembly	*1	RS-130
B1630/23	Driver Side Rear Airbag Sensor Malfunction	1. Rear airbag sensor LH 2. Center airbag sensor assembly	*1	RS-147
B1632/81	Lost Communication with Driver Side Rear Airbag Sensor	1. Floor wire 2. Side airbag sensor LH 3. Rear airbag sensor LH 4. Center airbag sensor assembly	*1	RS-103
B1633/81	Driver Side Rear Airbag Sensor Initialization Incomplete	1. Floor wire 2. Side airbag sensor LH 3. Rear airbag sensor LH 4. Center airbag sensor assembly	*1	RS-103
B1635/24	Front Passenger Side Rear Airbag Sensor Malfunction	1. Rear airbag sensor RH 2. Center airbag sensor assembly	*1	RS-151
B1637/82	Lost Communication with Passenger Side Rear Airbag Sensor	1. Floor wire No. 2 2. Side airbag sensor RH 3. Rear airbag sensor RH 4. Center airbag sensor assembly	*1	RS-130
B1638/82	Passenger Side Rear Airbag Sensor Initialization Incomplete	1. Floor wire No. 2 2. Side airbag sensor RH 3. Rear airbag sensor RH 4. Center airbag sensor assembly	*1	RS-130
B1642/81	Lost Communication with Driver Side Satellite Sensor Bus	1. Floor wire 2. Side airbag sensor LH 3. Rear airbag sensor LH 4. Center airbag sensor assembly	*1	RS-103

DTC Code	Detection Item	Trouble Area	Check Mode	See page
B1643/81	Driver Side Satellite Sensor Bus Initialization Incomplete	1. Floor wire 2. Side airbag sensor LH 3. Rear airbag sensor LH 4. Center airbag sensor assembly	*1	RS-103
B1647/82	Lost Communication with Front Passenger Side Satellite Sensor Bus	1. Floor wire No. 2 2. Side airbag sensor RH 3. Rear airbag sensor RH 4. Center airbag sensor assembly	*1	RS-130
B1648/82	Front Passenger Side Satellite Sensor Bus Initialization Incomplete	1. Floor wire No. 2 2. Side airbag sensor RH 3. Rear airbag sensor RH 4. Center airbag sensor assembly	*1	RS-130
B1650/32	Occupant Classification System Malfunction	1. Floor wire No. 2 2. Front seat wire RH 3. Occupant classification system 4. Center airbag sensor assembly	*1	RS-155
B1653/35	Seat Position Airbag Sensor Circuit Malfunction	1. Floor wire 2. Seat position airbag sensor 3. Center airbag sensor assembly	*1	RS-164
B1655/37	Driver Side Seat Belt Buckle Switch Circuit Malfunction	1. Floor wire 2. Front seat inner belt assembly LH (Driver side seat belt buckle switch) 3. Center airbag sensor assembly	*1	RS-174
B1660/43	Passenger Airbag ON / OFF Indicator Circuit Malfunction	1. Instrument panel wire 2. Multi-display assembly (with Navigation system) 3. Air conditioner panel sub-assembly (without Navigation system) 4. Center airbag sensor assembly	*1	RS-184
B1800/51	Short in Driver Side Squib Circuit	1. Instrument panel wire 2. Spiral cable 3. Steering pad (Driver side squib) 4. Center airbag sensor assembly	*2	RS-206
B1801/51	Open in Driver Side Squib Circuit	Same as DTC B1800/51	*2	RS-206
B1802/51	Short to GND in Driver Side Squib Circuit	Same as DTC B1800/51	*2	RS-206
B1803/51	Short to B+ in Driver Side Squib Circuit	Same as DTC B1800/51	*2	RS-206
B1805/52	Short in Front Passenger Side Squib Circuit	1. Instrument panel wire 2. Instrument panel wire assembly 3. Front passenger airbag assembly (Front passenger side squib) 4. Center airbag sensor assembly	*2	RS-213
B1806/52	Open in Front Passenger Side Squib Circuit	Same as DTC B1805/52	*2	RS-213

DTC Code	Detection Item	Trouble Area	Check Mode	See page
B1807/52	Short to GND in Front Passenger Side Squib Circuit	Same as DTC B1805/52	*2	RS-213
B1808/52	Short to B+ in Front Passenger Side Squib Circuit	Same as DTC B1805/52	*2	RS-213
B1810/53	Short in Driver Side Squib 2nd Step Circuit	1. Instrument panel wire 2. Spiral cable 3. Steering pad (Driver side squib 2nd step) 4. Center airbag sensor assembly	*2	RS-220
B1811/53	Open in Driver Side Squib 2nd Step Circuit	Same as DTC B1810/53	*2	RS-220
B1812/53	Short to GND in Driver Side Squib 2nd Step Circuit	Same as DTC B1810/53	*2	RS-220
B1813/53	Short to B+ in Driver Side Squib 2nd Step Circuit	Same as DTC B1810/53	*2	RS-220
B1815/54	Short in Front Passenger Side Squib 2nd Step Circuit	1. Instrument panel wire 2. Instrument panel wire assembly 3. Front passenger airbag assembly (Front passenger side squib 2nd step) 4. Center airbag sensor assembly	*2	RS-227
B1816/54	Open in Front Passenger Side Squib 2nd Step Circuit	Same as DTC B1815/54	*2	RS-227
B1817/54	Short to GND in Front Passenger Side Squib 2nd Step Circuit	Same as DTC B1815/54	*2	RS-227
B1818/54	Short to B+ in Front Passenger Side Squib 2nd Step Circuit	Same as DTC B1815/54	*2	RS-227
B1820/55	Short in Front Driver Side - Side Squib Circuit	1. Floor wire 2. Front seat side airbag assembly LH (Front driver side - side squib) 3. Center airbag sensor assembly	*2	RS-234
B1821/55	Open in Front Driver Side - Side Squib Circuit	Same as DTC B1820/55	*2	RS-234
B1822/55	Short to GND in Front Driver Side - Side Squib Circuit	Same as DTC B1820/55	*2	RS-234
B1823/55	Short to B+ in Front Driver Side - Side Squib Circuit	Same as DTC B1820/55	*2	RS-234
B1825/56	Short in Front Passenger Side - Side Squib Circuit	1. Floor wire No. 2 2. Front seat side airbag assembly RH (Front passenger side - side squib) 3. Center airbag sensor assembly	*2	RS-239
B1826/56	Open in Front Passenger Side - Side Squib Circuit	Same as DTC B1825/56	*2	RS-239
B1827/56	Short to GND in Front Passenger Side - Side Squib Circuit	Same as DTC B1825/56	*2	RS-239

DTC Code	Detection Item	Trouble Area	Check Mode	See page
B1828/56	Short to B+ in Front Passenger Side - Side Squib Circuit	Same as DTC B1825/56	*2	RS-239
B1830/57	Short in Driver Side Curtain Shield Squib Circuit	1. Floor wire 2. Curtain shield airbag assembly LH (Driver side curtain shield squib) 3. Center airbag sensor assembly	*2	RS-244
B1831/57	Open in Driver Side Curtain Shield Squib Circuit	Same as DTC B1830/57	*2	RS-244
B1832/57	Short to GND in Driver Side Curtain Shield Squib Circuit	Same as DTC B1830/57	*2	RS-244
B1833/57	Short to B+ in Driver Side Curtain Shield Squib Circuit	Same as DTC B1830/57	*2	RS-244
B1835/58	Short in Front Passenger Side Curtain Shield Squib Circuit	1. Floor wire No. 2 2. Curtain shield airbag assembly RH (Front passenger side curtain shield squib) 3. Center airbag sensor assembly	*2	RS-249
B1836/58	Open in Front Passenger Side Curtain Shield Squib Circuit	Same as DTC B1835/58	*2	RS-249
B1837/58	Short to GND in Front Passenger Side Curtain Shield Squib Circuit	Same as DTC B1835/58	*2	RS-249
B1838/58	Short to B+ in Front Passenger Side Curtain Shield Squib Circuit	Same as DTC B1835/58	*2	RS-249
B1850/62 (*3)	Short in Rear Driver Side - Side Squib Circuit	1. Floor wire 2. Rear seat side airbag assembly LH (Rear driver side - side squib) 3. Center airbag sensor assembly	*2	RS-254
B1851/62 (*3)	Open in Rear Driver Side - Side Squib Circuit	Same as DTC B1850/62	*2	RS-254
B1852/62 (*3)	Short to GND in Rear Driver Side - Side Squib Circuit	Same as DTC B1850/62	*2	RS-254
B1853/62 (*3)	Short to B+ in Rear Driver Side - Side Squib Circuit	Same as DTC B1850/62	*2	RS-254
B1855/63 (*3)	Short in Rear Passenger Side - Side Squib Circuit	1. Floor wire No. 2 2. Rear seat side airbag assembly RH (Rear passenger side - side squib) 3. Center airbag sensor assembly	*2	RS-259
B1856/63 (*3)	Open in Rear Passenger Side - Side Squib Circuit	Same as DTC B1855/63	*2	RS-259
B1857/63 (*3)	Short to GND in Rear Passenger Side - Side Squib Circuit	Same as DTC B1855/63	*2	RS-259
B1858/63 (*3)	Short to B+ in Rear Passenger Side - Side Squib Circuit	Same as DTC B1855/63	*2	RS-259

DTC Code	Detection Item	Trouble Area	Check Mode	See page
B1860/64	Short in Driver Side Knee Airbag Squib Circuit	1. Instrument panel wire 2. Driver side knee airbag assembly (Driver side knee airbag squib) 3. Center airbag sensor assembly	*2	RS-264
B1861/64	Open in Driver Side Knee Airbag Squib Circuit	Same as DTC B1860/64	*2	RS-264
B1862/64	Short to GND in Driver Side Knee Airbag Squib Circuit	Same as DTC B1860/64	*2	RS-264
B1863/64	Short to B+ in Driver Side Knee Airbag Squib Circuit	Same as DTC B1860/64	*2	RS-264
B1865/65	Short in Front Passenger Side Knee Airbag Squib Circuit	1. Instrument panel wire 2. Front passenger side knee airbag assembly (Front passenger side knee airbag squib) 3. Center airbag sensor assembly	*2	RS-269
B1866/65	Open in Front Passenger Side Knee Airbag Squib Circuit	Same as DTC B1865/65	*2	RS-269
B1867/65	Short to GND in Front Passenger Side Knee Airbag Squib Circuit	Same as DTC B1865/65	*2	RS-269
B1868/65	Short to B+ in Front Passenger Side Knee Airbag Squib Circuit	Same as DTC B1865/65	*2	RS-269
B1900/73	Short in Front Driver Side Pretensioner Squib Circuit	1. Floor wire 2. Front seat outer belt assembly LH (Front driver side pretensioner squib) 3. Center airbag sensor assembly	*2	RS-274
B1901/73	Open in Front Driver Side Pretensioner Squib Circuit	Same as DTC B1900/73	*2	RS-274
B1902/73	Short to GND in Front Driver Side Pretensioner Squib Circuit	Same as DTC B1900/73	*2	RS-274
B1903/73	Short to B+ in Front Driver Side Pretensioner Squib Circuit	Same as DTC B1900/73	*2	RS-274
B1905/74	Short in Front Passenger Side Pretensioner Squib Circuit	1. Floor wire No. 2 2. Front seat outer belt assembly RH (Front passenger side pretensioner squib) 3. Center airbag sensor assembly	*2	RS-279
B1906/74	Open in Front Passenger Side Pretensioner Squib Circuit	Same as DTC B1905/74	*2	RS-279
B1907/74	Short to GND in Front Passenger Side Pretensioner Squib Circuit	Same as DTC B1905/74	*2	RS-279
B1908/74	Short to B+ in Front Passenger Side Front Pretensioner Squib Circuit	Same as DTC B1905/74	*2	RS-279

DTC Code	Detection Item	Trouble Area	Check Mode	See page
B1920/77	Short in Rear Driver Side Pretensioner Squib Circuit	1. Floor wire 2. Rear seat outer belt assembly LH (Rear driver side pretensioner squib) 3. Center airbag sensor assembly	*2	RS-284
B1921/77	Open in Rear Pretensioner Squib RH Circuit	Same as DTC B1920/77	*2	RS-284
B1922/77	Short to GND in Rear Pretensioner Squib RH Circuit	Same as DTC B1920/77	*2	RS-284
B1923/77	Short to B+ in Rear Pretensioner Squib RH Circuit	Same as DTC B1920/77	*2	RS-284
B1925/78	Short in Rear Passenger Side Pretensioner Squib Circuit	1. Floor wire No. 2 2. Rear seat outer belt assembly RH (Rear passenger side pretensioner squib) 3. Center airbag sensor assembly	*2	RS-289
B1926/78	Open in Rear Passenger Side Pretensioner Squib Circuit	Same as DTC B1925/78	*2	RS-289
B1927/78	Short to GND in Rear Passenger Side Pretensioner Squib Circuit	Same as DTC B1925/78	*2	RS-289
B1928/78	Short to B+ in Rear Passenger Side Pretensioner Squib Circuit	Same as DTC B1925/78	*2	RS-289

DTC	B1000/31	Center Airbag Sensor Assembly Malfunction

DESCRIPTION

The center airbag sensor assembly consists of the airbag sensor, the safing sensor, the drive circuit, the diagnosis circuit, the ignition control, etc.
If the center airbag sensor assembly receives signals from the airbag sensor, it determines whether the SRS should be activated.
DTC B1000/31 is recorded when a malfunction is detected in the center airbag sensor assembly.

DTC No.	DTC Detecting Condition	Trouble Area
B1000/31	Center airbag sensor assembly malfunction	Center airbag sensor assembly

HINT:
When a trouble code is displayed simultaneously with B1000/31, repair the malfunction indicated by this code (except B1000/31) first.

INSPECTION PROCEDURE

1	CHECK CENTER AIRBAG SENSOR ASSEMBLY

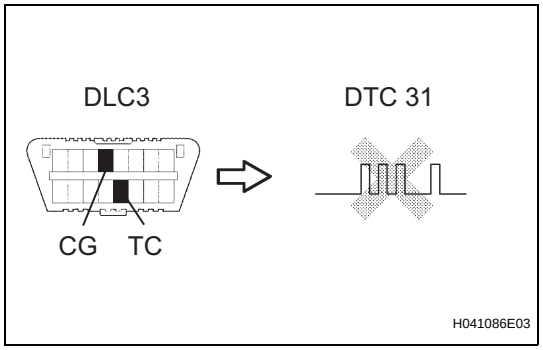

(a) Turn the ignition switch off.
(b) Disconnect the negative (-) terminal cable from the battery, and wait for at least 90 seconds.
(c) Connect the negative (-) terminal cable to the battery, and wait for at least 2 seconds.
(d) Turn the engine switch on (IG), and wait for at least 60 seconds.
(e) Clear the DTCs stored in the memory (See page RS-49).
(f) Turn the engine switch off.
(g) Turn the engine switch on (IG), and wait for at least 60 seconds.
(h) Check the DTCs (See page RS-49).
OK:
DTC B1000/31 is not output.

NG → **REPLACE CENTER AIRBAG SENSOR ASSEMBLY (See page RS-468)**

OK

USE SIMULATION METHOD TO CHECK (See page RS-37)

DTC	**B1603/83**	**Front Satellite Sensor Bus RH Initialization Incomplete**

DTC	**B1612/83**	**Lost Communication with Front Airbag Sensor RH**

DTC	**B1613/83**	**Front Airbag Sensor RH Initialization Incomplete**

DESCRIPTION

The front airbag sensor RH circuit consists of the center airbag sensor assembly and front airbag sensor RH.

The front airbag sensor RH detects impacts to the vehicle and sends signals to the center airbag sensor assembly to determine if the airbag should be deployed.

DTC B1603/83, B1612/83, or B1613/83 is recorded when a malfunction is detected in the front airbag sensor RH circuit.

DTC No.	DTC Detecting Condition	Trouble Area
B1603/83 B1612/83 B1613/83	• The airbag sensor assembly center receives a line short circuit signal, an open circuit signal, a short circuit to ground signal or a short circuit to B+ signal in the front airbag sensor RH circuit for 2 seconds. • Front airbag sensor RH malfunction • Center airbag sensor assembly malfunction	• Instrument panel wire • Engine room main wire • Front airbag sensor RH • Center airbag sensor assembly

RS

WIRING DIAGRAM

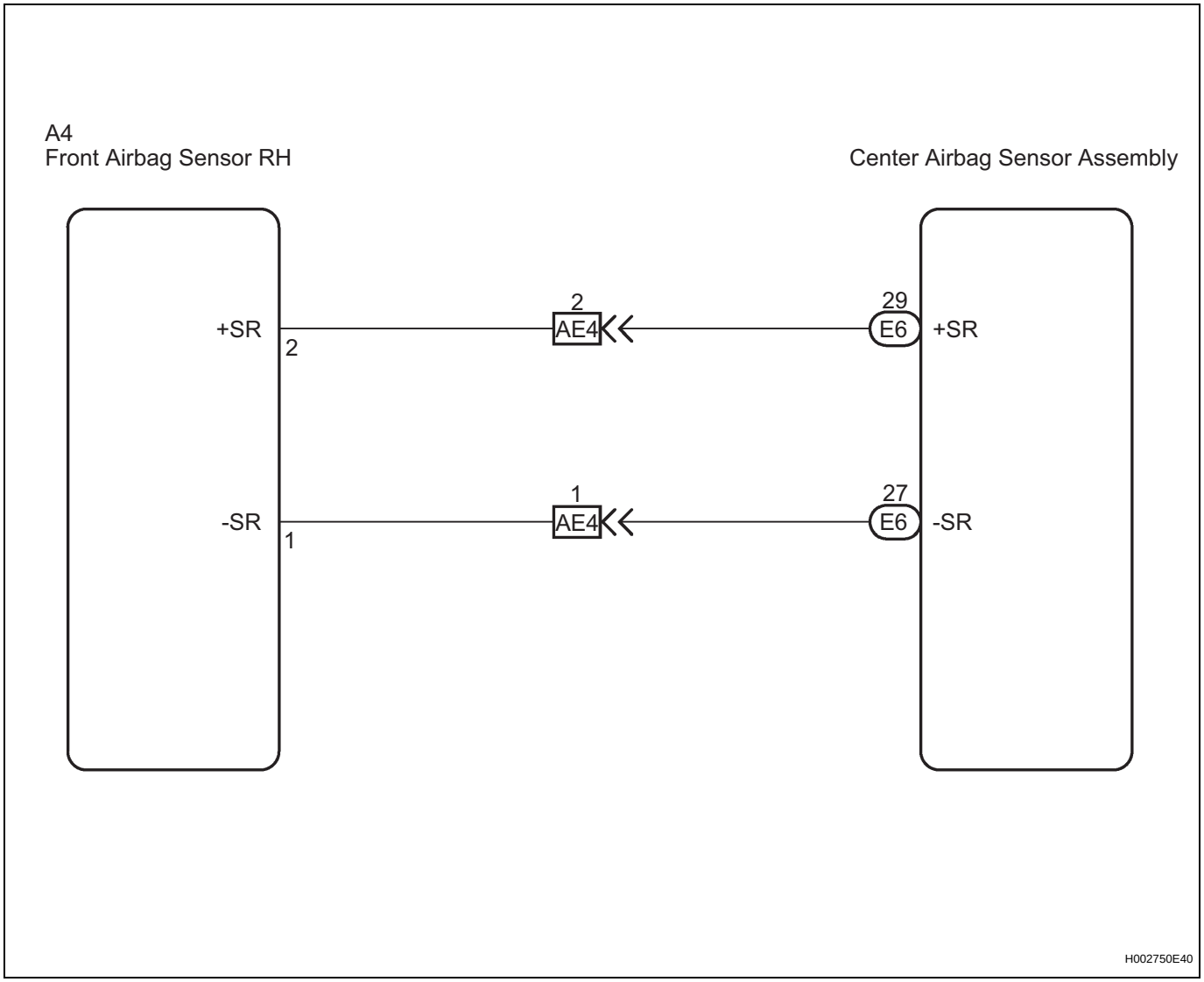

INSPECTION PROCEDURE

1	CHECK DTC

(a) Turn the engine switch on (IG), and wait for at least 60 seconds.

(b) Turn the engine switch off.
HINT:
If a communication error occurs, DTCs for both the LH and RH sides will be stored simultaneously. To identify the malfunctioning area, turn the engine switch off and then on (IG) again.

(c) Turn the engine switch on (IG), and wait for at least 60 seconds.

(d) Check the DTCs (See page RS-49).
Result

Result	Proceed to
DTC B1603, B1613, or 83 is output.	A

RS

Result	Proceed to
DTC B1618/84 is output.	B
DTC B1603, B1613, or 83 and B1618/84 are not output.	C

HINT:
- DTCs indicating communication errors will be changed to DTCs indicating errors in initialization by turning the engine switch off and then on (IG) again.
- Codes other than DTC B1603, B1613, or 83 and B1618/84 may be output at this time, but they are not related to this check.

B → **GO TO DTC B1618/84 (See page RS-78)**

C → **USE SIMULATION METHOD TO CHECK (See page RS-37)**

A

2 CHECK CONNECTION OF CONNECTORS

(a) Turn the engine switch off.
(b) Disconnect the negative (-) terminal cable from the battery, and wait for at least 90 seconds.
(c) Check that the connectors are properly connected to the center airbag sensor assembly and the front airbag sensor RH.
OK:
The connectors are properly connected.

NG → **CONNECT CONNECTORS PROPERLY**

OK

3 CHECK CONNECTORS

(a) Disconnect the connectors from the center airbag sensor assembly and front airbag sensor RH.
(b) Check that the connectors (on the center airbag sensor assembly side and front airbag sensor RH side) are not damaged.
OK:
The connectors are not deformed or damaged.

NG → **REPAIR OR REPLACE WIRE HARNESS**

OK

4 CHECK VEHICLE CONDITION

(a) Check whether or not the vehicle is equipped with the rear side airbag.

Result:
A:
with the rear side airbag
B:
without the rear side airbag

B → **Go to step 14**

RS

A

5 CHECK FRONT AIRBAG SENSOR RH CIRCUIT (OPEN)

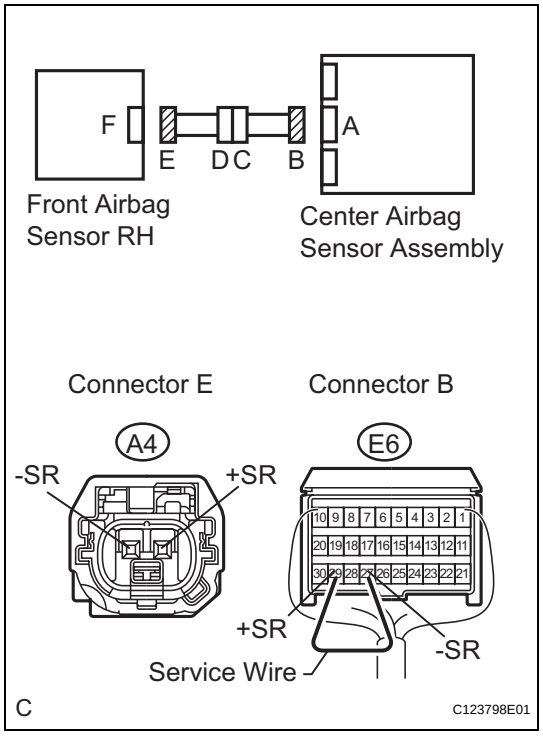

(a) Using a service wire, connect terminals 29 (+SR) and 27 (-SR) of connector B.
NOTICE:
Do not forcibly insert a service wire into the terminals of the connector when connecting the wire.

(b) Measure the resistance according to the value(s) in the table below.
Standard resistance

Tester Connection	Condition	Specified Condition
A4-2 (+SR) - A4-1 (-SR)	Always	Below 1 Ω

NG → **Go to step 10**

OK

RS

6 CHECK FRONT AIRBAG SENSOR RH CIRCUIT (SHORT)

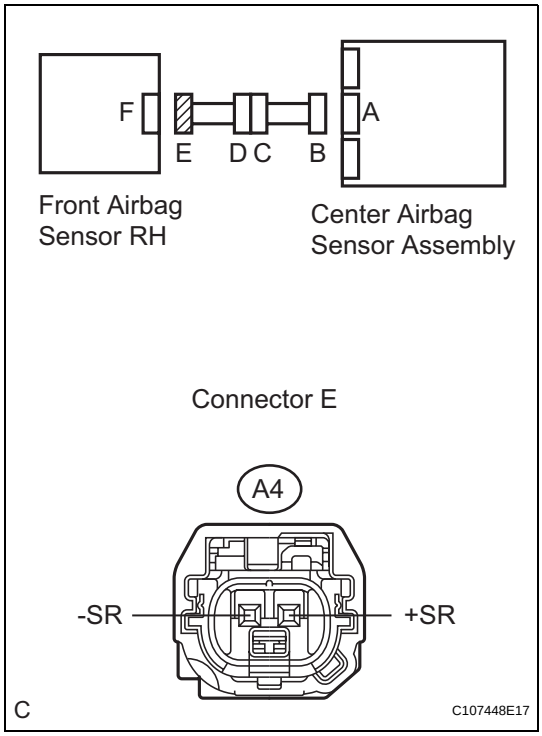

(a) Disconnect the service wire from connector B.
(b) Measure the resistance according to the value(s) in the table below.

Standard resistance

Tester Connection	Condition	Specified Condition
A4-2 (+SR) - A4-1 (-SR)	Always	1 MΩ or higher

NG → **Go to step 11**

OK

7 CHECK FRONT AIRBAG SENSOR RH CIRCUIT (SHORT TO B+)

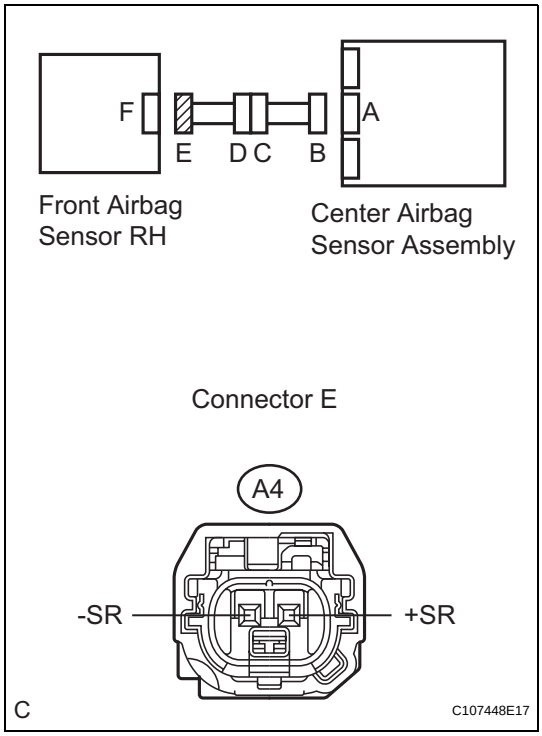

(a) Connect the negative (-) terminal cable to the battery, and wait for at least 2 seconds.
(b) Turn the engine switch on (IG).
(c) Measure the voltage according to the value(s) in the table below.

Standard voltage

Tester Connection	Condition	Specified Condition
A4-2 (+SR) - Body ground	Engine switch on (IG)	Below 1 V
A4-1 (-SR) - Body ground	Engine switch on (IG)	Below 1 V

NG → **Go to step 12**

OK

RS

8 CHECK FRONT AIRBAG SENSOR RH CIRCUIT (SHORT TO GROUND)

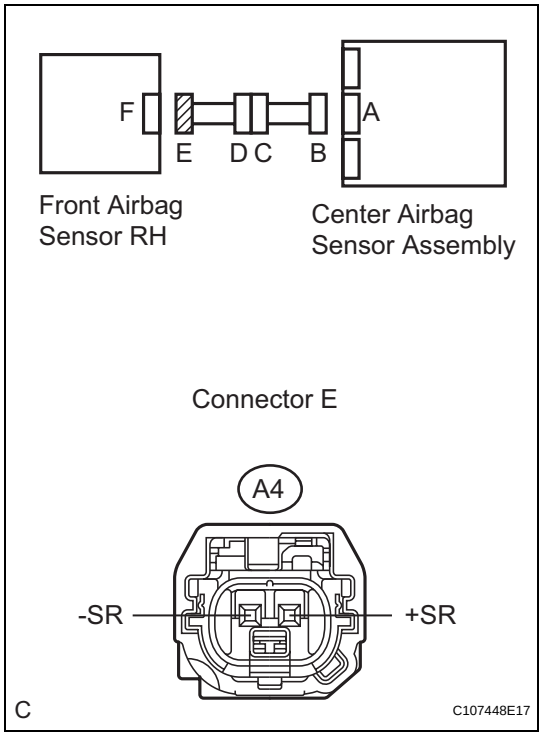

(a) Turn the engine switch off.
(b) Disconnect the negative (-) terminal cable from the battery, and wait for at least 90 seconds.
(c) Measure the resistance according to the value(s) in the table below.

Standard resistance

Tester Connection	Condition	Specified Condition
A4-2 (+SR) - Body ground	Always	1 MΩ or higher
A4-1 (-SR) - Body ground	Always	1 MΩ or higher

NG → **Go to step 13**

OK

9 CHECK FRONT AIRBAG SENSOR RH

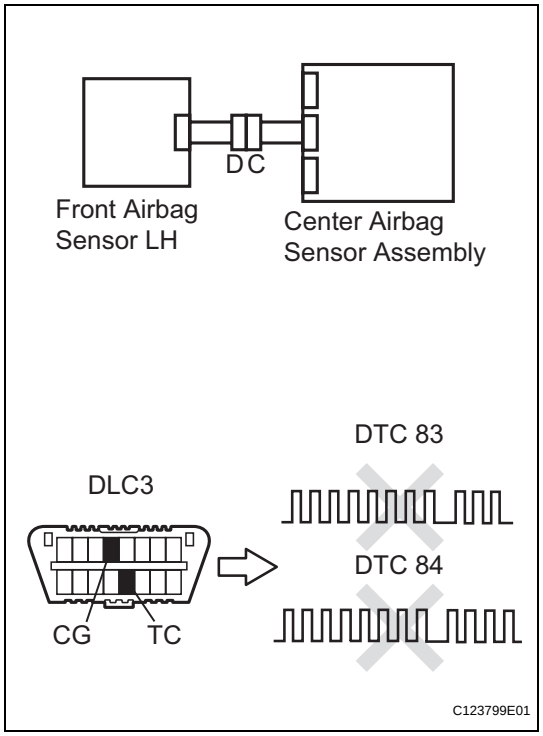

(a) Connect the connectors to the center airbag sensor assembly.
(b) Interchange the front airbag sensor LH with RH and connect the connectors to them.
(c) Connect the negative (-) terminal cable to the battery, and wait for at least 2 seconds.
(d) Turn the engine switch on (IG), and wait for at least 60 seconds.
(e) Clear the DTCs stored in the memory (See page RS-49).
(f) Turn the engine switch off.
(g) Turn the engine switch on (IG), and wait for at least 60 seconds.
(h) Check the DTCs (See page RS-49).

Result

Result	Proceed to
DTC B1603, B1612, B1613, or 83 is output.	A
DTC B1608, B1617, B1618, or 84 is output.	B
DTC B1603, B1612, B1613, or 83 and B1608, B1617, B1618, or 84 are not output.	C

HINT:
Codes other than DTC B1603, B1612, B1613, or 83 and B1608, B1617, B1618, or 84 may be output at this time, but they are not related to this check.

A → **REPLACE CENTER AIRBAG SENSOR ASSEMBLY (See page RS-468)**

B → **REPLACE FRONT AIRBAG SENSOR RH (See page RS-473)**

RS

C

USE SIMULATION METHOD TO CHECK (See page RS-37)

10 CHECK INSTRUMENT PANEL WIRE (OPEN)

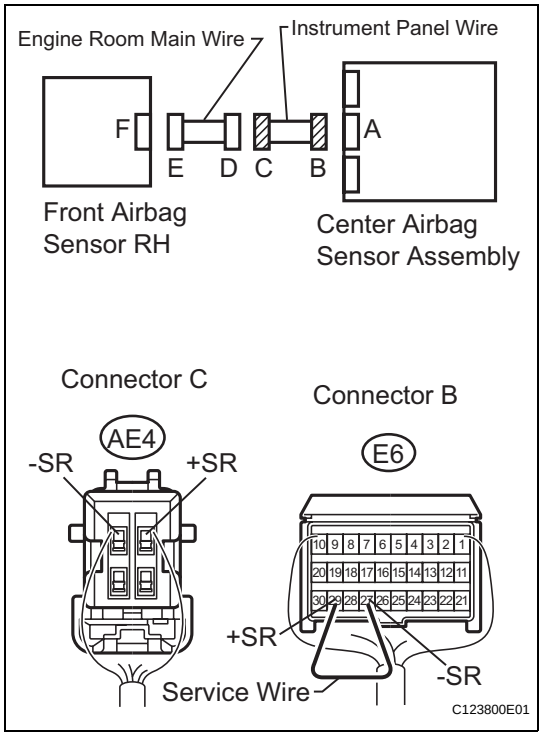

(a) Disconnect the instrument panel wire connector from the engine room main wire.
HINT:
The service wire has already been inserted into connector B.

(b) Measure the resistance according to the value(s) in the table below.
Standard resistance

Tester Connection	Condition	Specified Condition
AE4-2 (+SR) - AE4-1 (-SR)	Always	Below 1 Ω

NG → **REPAIR OR REPLACE INSTRUMENT PANEL WIRE**

OK

REPAIR OR REPLACE ENGINE ROOM MAIN WIRE

RS

11 CHECK INSTRUMENT PANEL WIRE (SHORT)

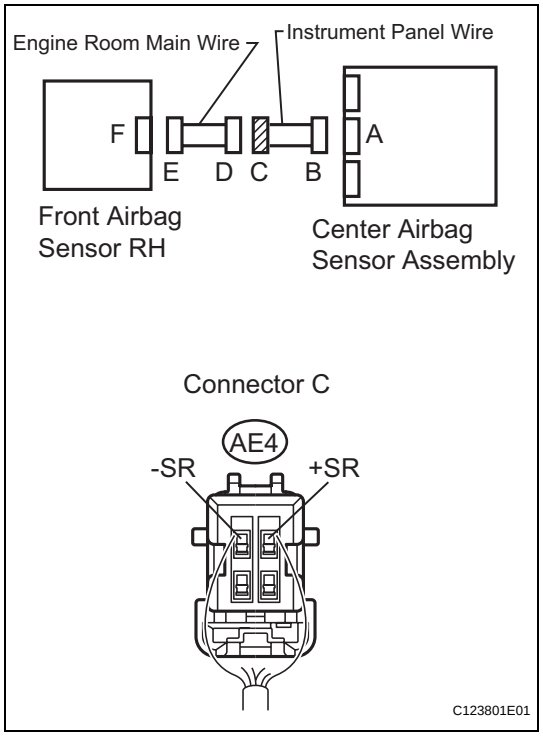

(a) Disconnect the instrument panel wire connector from the engine room main wire.

(b) Measure the resistance according to the value(s) in the table below.

Standard resistance

Tester Connection	Condition	Specified Condition
AE4-2 (+SR) - AE4-1 (-SR)	Always	1 MΩ or higher

NG → **REPAIR OR REPLACE INSTRUMENT PANEL WIRE**

OK

REPAIR OR REPLACE ENGINE ROOM MAIN WIRE

RS

12 CHECK INSTRUMENT PANEL WIRE (SHORT TO B+)

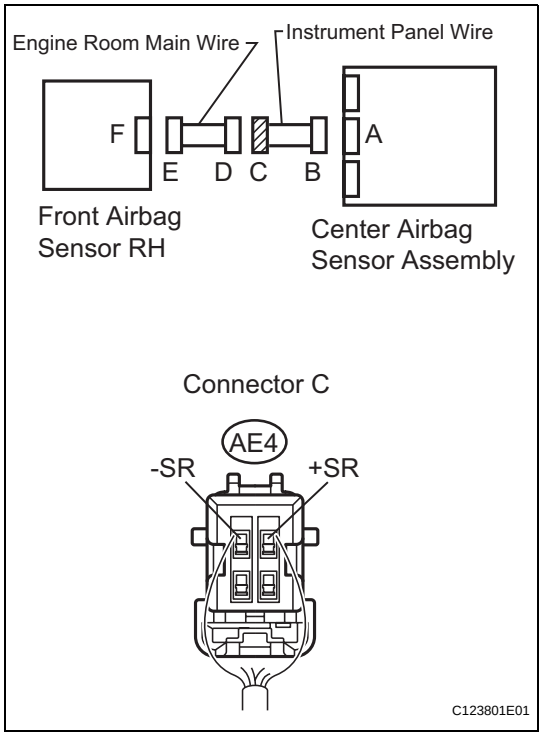

(a) Turn the engine switch off.
(b) Disconnect the negative (-) terminal cable from the battery, and wait for at least 90 seconds.
(c) Disconnect the instrument panel wire connector from the engine room main wire.
(d) Connect the negative (-) terminal cable to battery, and wait for at least 2 seconds.
(e) Turn the engine switch on (IG).
(f) Measure the voltage according to the value(s) in the table below.

Standard voltage

Tester Connection	Condition	Specified Condition
AE4-2 (+SR) - Body ground	Engine switch on (IG)	Below 1 V
AE4-1 (-SR) - Body ground	Engine switch on (IG)	Below 1 V

NG → **REPAIR OR REPLACE INSTRUMENT PANEL WIRE**

OK

REPAIR OR REPLACE ENGINE ROOM MAIN WIRE

RS

13 CHECK INSTRUMENT PANEL WIRE (SHORT TO GROUND)

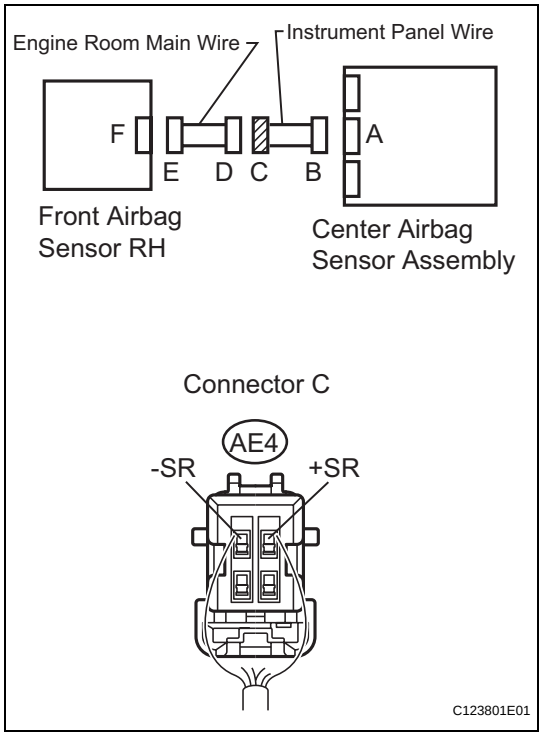

(a) Disconnect the instrument panel wire connector from the engine room main wire.

(b) Measure the resistance according to the value(s) in the table below.

Standard resistance

Tester Connection	Condition	Specified Condition
AE4-2 (+SR) - Body ground	Always	1 MΩ or higher
AE4-1 (-SR) - Body ground	Always	1 MΩ or higher

NG → **REPAIR OR REPLACE INSTRUMENT PANEL WIRE**

OK

REPAIR OR REPLACE ENGINE ROOM MAIN WIRE

RS

14 CHECK FRONT AIRBAG SENSOR RH (OPEN)

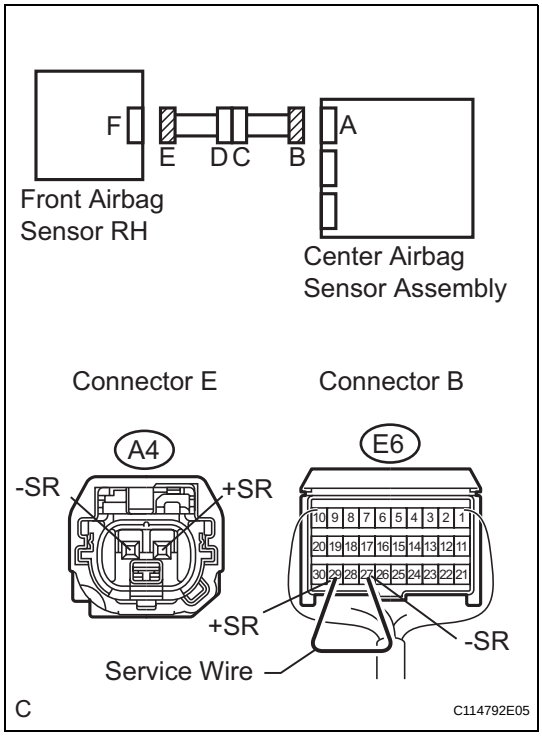

(a) Using a service wire, connect terminals 29 (+SR) and 27 (-SR) of connector B.
NOTICE:
Do not forcibly insert a service wire into the terminals of the connector when connecting the wire.

(b) Measure the resistance according to the value(s) in the table below.
Standard resistance

Tester Connection	Condition	Specified Condition
A4-2 (+SR) - A4-1 (-SR)	Always	Below 1 Ω

NG → **Go to step 19**

OK

15 CHECK FRONT AIRBAG SENSOR RH (SHORT)

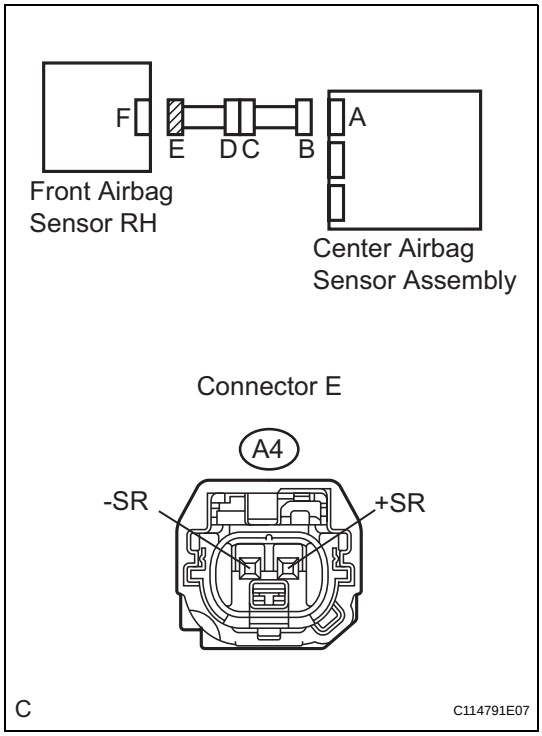

(a) Disconnect the service wire from connector B.

(b) Measure the resistance according to the value(s) in the table below.
Standard resistance

Tester Connection	Condition	Specified Condition
A4-2 (+SR) - A4-1 (-SR)	Always	1 MΩ or higher

NG → **Go to step 20**

OK

RS

16 CHECK FRONT AIRBAG SENSOR RH (SHORT TO B+)

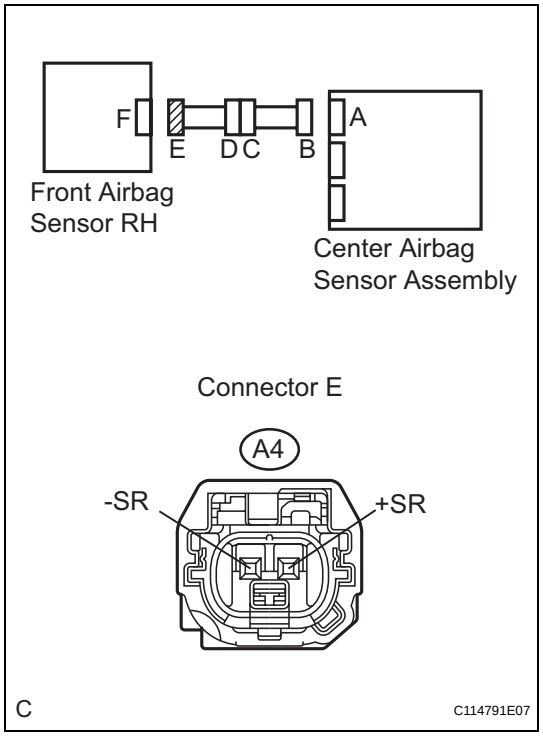

(a) Connect the negative (-) terminal cable to the battery, and wait for at least 2 seconds.
(b) Turn the engine switch on (IG).
(c) Measure the voltage according to the value(s) in the table below.

Standard voltage

Tester Connection	Condition	Specified Condition
A4-2 (+SR) - Body ground	Engine switch on (IG)	Below 1 V
A4-1 (-SR) - Body ground	Engine switch on (IG)	Below 1 V

NG → **Go to step 21**

OK

17 CHECK FRONT AIRBAG SENSOR RH (SHORT TO GROUND)

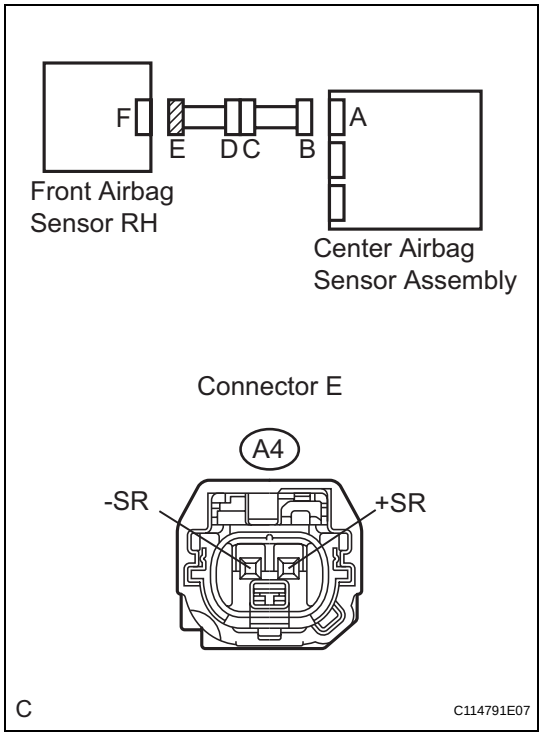

(a) Turn the engine switch off.
(b) Disconnect the negative (-) terminal cable from the battery, and wait for at least 90 seconds.
(c) Measure the resistance according to the value(s) in the table below.

Standard resistance

Tester Connection	Condition	Specified Condition
A4-2 (+SR) - Body ground	Always	1 MΩ or higher
A4-1 (-SR) - Body ground	Always	1 MΩ or higher

NG → **Go to step 22**

OK

RS

18	CHECK FRONT AIRBAG SENSOR RH

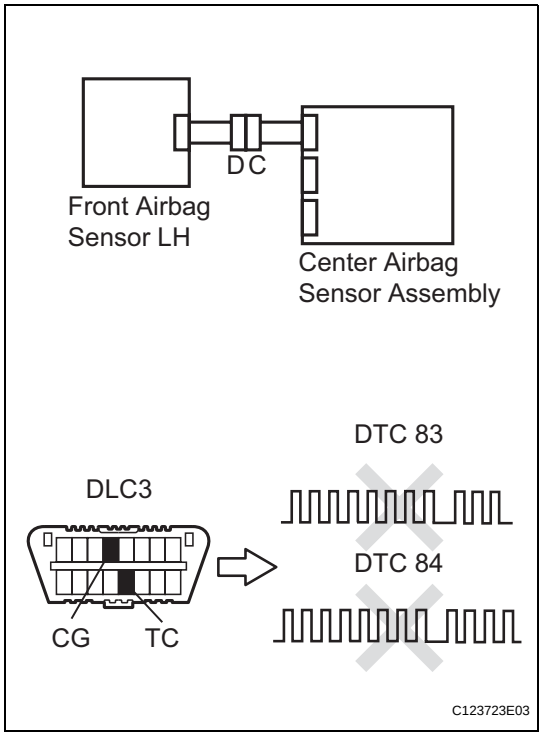

(a) Connect the connectors to the center airbag sensor assembly.
(b) Interchange the front airbag sensor LH with RH and connect the connectors to them.
(c) Connect the negative (-) terminal cable to the battery, and wait for at least 2 seconds.
(d) Turn the engine switch on (IG), and wait for at least 60 seconds.
(e) Clear the DTCs stored in the memory (See page RS-49).
(f) Turn the engine switch off.
(g) Turn the engine switch on (IG), and wait for at least 60 seconds.
(h) Check the DTCs (See page RS-49).

Result

Result	Proceed to
DTC B1603, B1612, B1613, or 83 is output.	A
DTC B1608, B1617, B1618, or 84 is output.	B
DTC B1603, B1612, B1613, or 83 and B1608, B1617, B1618, or 84 are not output.	C

HINT:
Codes other than DTC B1603, B1612, B1613, or 83 and B1608, B1617, B1618, or 84 may be output at this time, but they are not related to this check.

A → **REPLACE CENTER AIRBAG SENSOR ASSEMBLY (See page RS-468)**

B → **REPLACE FRONT AIRBAG SENSOR RH (See page RS-473)**

C

USE SIMULATION METHOD TO CHECK (See page RS-37)

RS

19 CHECK INSTRUMENT PANEL WIRE (OPEN)

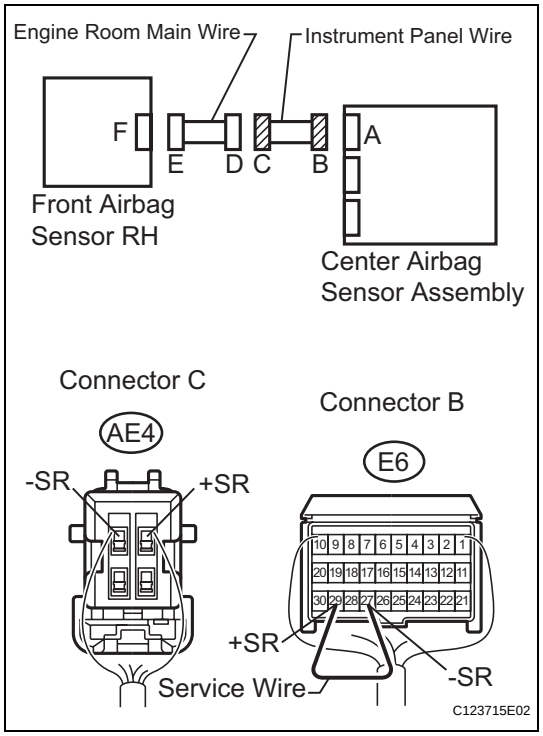

(a) Disconnect the instrument panel wire connector from the engine room main wire.
HINT:
The service wire has already been inserted into connector B.

(b) Measure the resistance according to the value(s) in the table below.
Standard resistance

Tester Connection	Condition	Specified Condition
AE4-2 (+SR) - AE4-1 (-SR)	Always	Below 1 Ω

NG → **REPAIR OR REPLACE INSTRUMENT PANEL WIRE**

OK

REPAIR OR REPLACE ENGINE ROOM MAIN WIRE

RS

20 CHECK INSTRUMENT PANEL WIRE (SHORT)

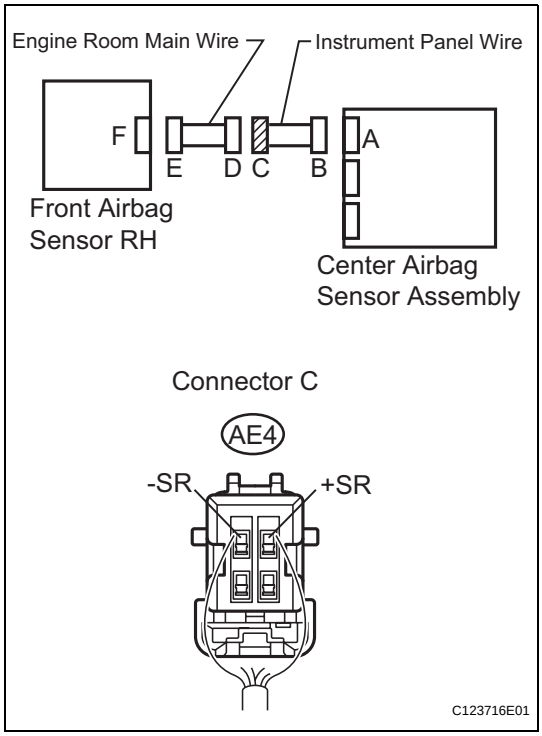

(a) Disconnect the instrument panel wire connector from the engine room main wire.

(b) Measure the resistance according to the value(s) in the table below.

Standard resistance

Tester Connection	Condition	Specified Condition
AE4-2 (+SR) - AE4-1 (-SR)	Always	1 MΩ or higher

NG → **REPAIR OR REPLACE INSTRUMENT PANEL WIRE**

OK

REPAIR OR REPLACE ENGINE ROOM MAIN WIRE

RS

21 CHECK INSTRUMENT PANEL WIRE (SHORT TO B+)

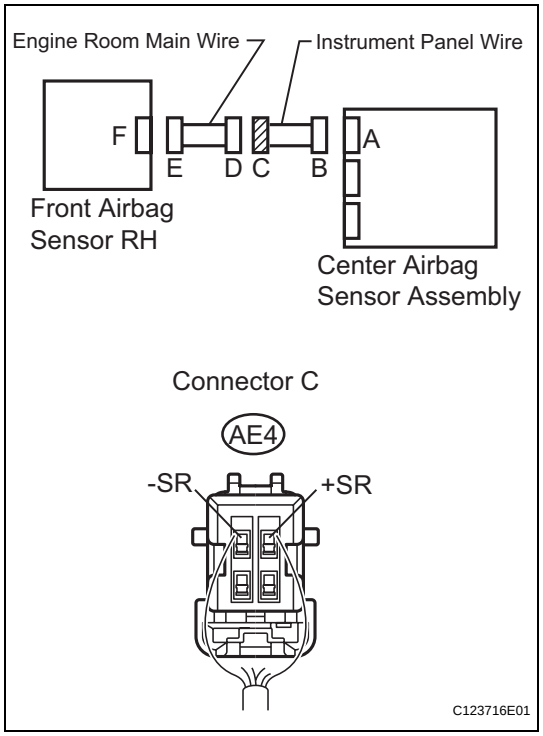

(a) Turn the engine switch off.
(b) Disconnect the negative (-) terminal cable from the battery, and wait for at least 90 seconds.
(c) Disconnect the instrument panel wire connector from the engine room main wire.
(d) Connect the negative (-) terminal cable to battery, and wait for at least 2 seconds.
(e) Turn the engine switch on (IG).
(f) Measure the voltage according to the value(s) in the table below.

Standard voltage

Tester Connection	Condition	Specified Condition
AE4-2 (+SR) - Body ground	Engine switch on (IG)	Below 1 V
AE4-1 (-SR) - Body ground	Engine switch on (IG)	Below 1 V

NG → **REPAIR OR REPLACE INSTRUMENT PANEL WIRE**

OK

REPAIR OR REPLACE ENGINE ROOM MAIN WIRE

RS

22 CHECK INSTRUMENT PANEL WIRE (SHORT TO GROUND)

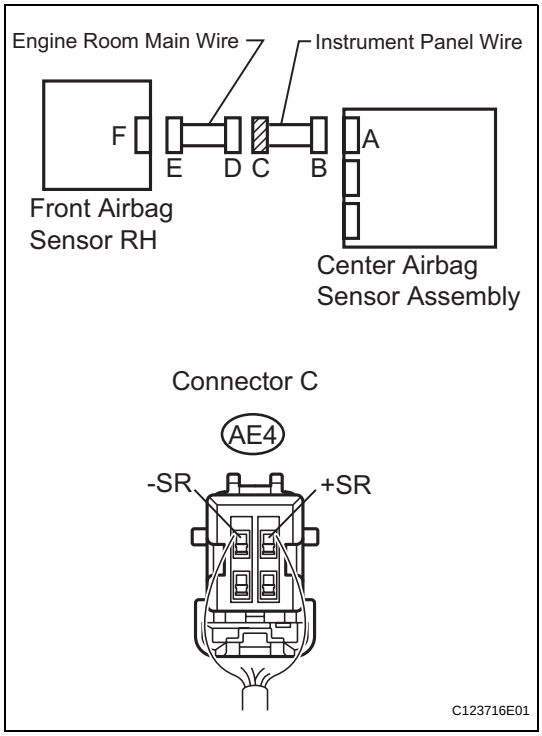

(a) Disconnect the instrument panel wire connector from the engine room main wire.

(b) Measure the resistance according to the value(s) in the table below.

Standard resistance

Tester Connection	Condition	Specified Condition
AE4-2 (+SR) - Body ground	Always	1 MΩ or higher
AE4-1 (-SR) - Body ground	Always	1 MΩ or higher

NG → **REPAIR OR REPLACE INSTRUMENT PANEL WIRE**

OK

REPAIR OR REPLACE ENGINE ROOM MAIN WIRE

DTC	**B1608/84**	**Front Satellite Sensor Bus LH Initialization Incomplete**

DTC	**B1617/84**	**Lost Communication with Front Airbag Sensor LH**

DTC	**B1618/84**	**Front Airbag Sensor LH Initialization Incomplete**

DESCRIPTION

The front airbag sensor LH circuit consists of the center airbag sensor assembly and front airbag sensor LH.

The front airbag sensor LH detects impacts to the vehicle and sends signals to the center airbag sensor assembly to determine if the airbag should be deployed.

DTC B1608/84, B1617/84, or B1618/84 is recorded when a malfunction is detected in the front airbag sensor RH circuit.

DTC No.	DTC Detecting Condition	Trouble Area
B1608/84 B1617/84 B1618/84	• The center airbag sensor assembly receives a line short circuit signal, an open circuit signal, a short circuit to ground signal or a short circuit to B+ signal in the front airbag sensor LH circuit for 2 seconds. • Front airbag sensor LH malfunction • Center airbag sensor assembly malfunction	• Instrument panel wire • Engine room main wire • Front airbag sensor LH • Center airbag sensor assembly

RS

WIRING DIAGRAM

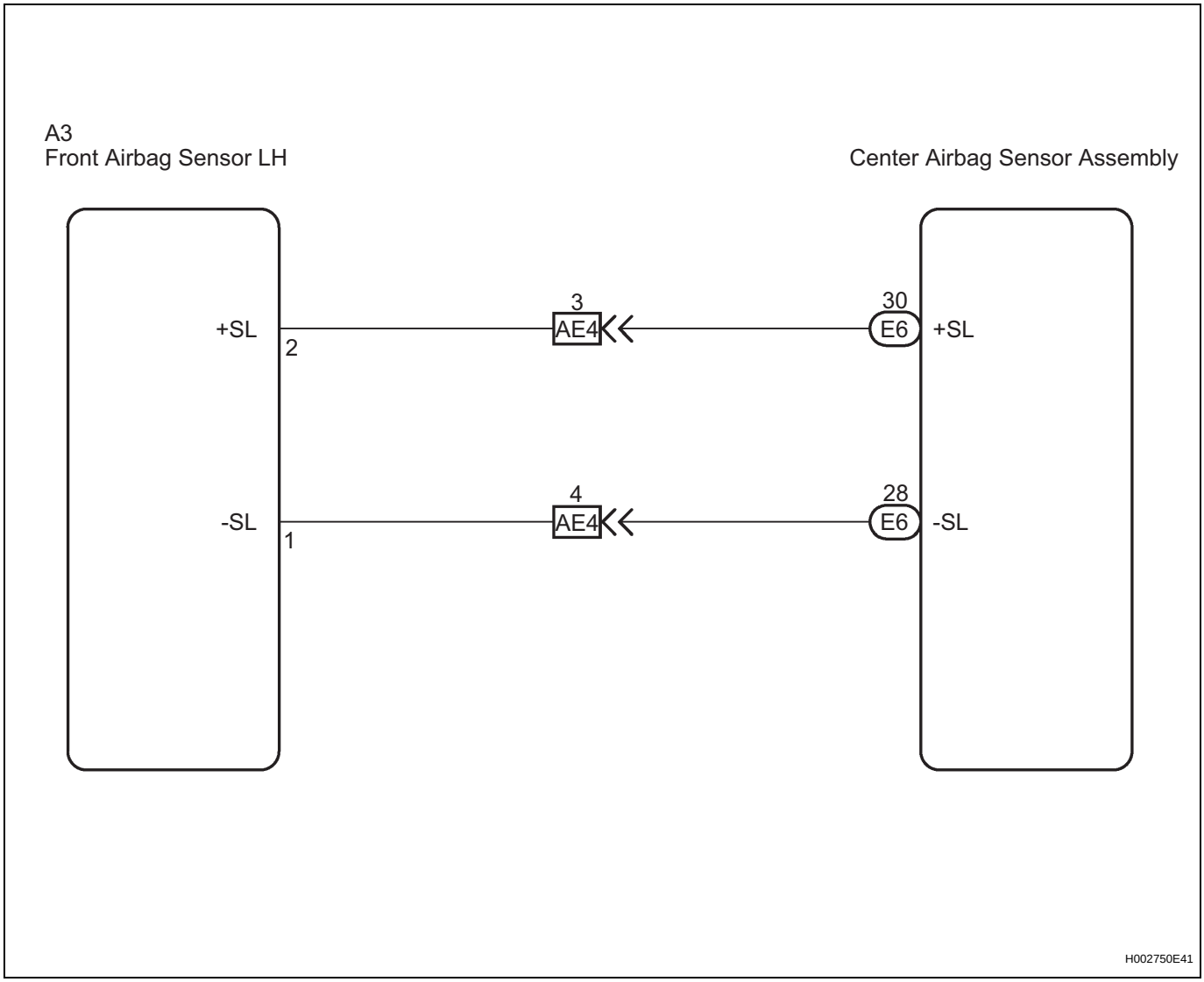

INSPECTION PROCEDURE

1	CHECK DTC

(a) Turn the engine switch on (IG), and wait for at least 60 seconds.

(b) Turn the engine switch off.
HINT:
If a communication error occurs, DTCs for both the LH and RH sides will be stored simultaneously. To identify the malfunctioning area, turn the engine switch off and then on (IG) again.

(c) Turn the engine switch on (IG), and wait for at least 60 seconds.

(d) Check the DTCs (See page RS-49).
Result

Result	Proceed to
DTC B1608, B1618, or 84 is output.	A

Result	Proceed to
DTC B1613/83 is output.	B
DTC B1608, B1618, or 84 and B1613/83 are not output.	C

HINT:
- DTCs indicating communication errors will be changed to DTCs indicating errors in initialization by turning the engine switch off and then on (IG) again.
- Codes other than DTC B1608, B1618, or 84 and B1613/83 may be output at this time, but they are not related to this check.

B → **GO TO DTC B1613/83 (See page RS-61)**

C → **USE SIMULATION METHOD TO CHECK (See page RS-37)**

A

2 CHECK CONNECTION OF CONNECTORS

(a) Turn the engine switch off.
(b) Disconnect the negative (-) terminal cable from the battery, and wait for at least 90 seconds.
(c) Check that the connectors are properly connected to the center airbag sensor assembly and the front airbag sensor LH.
OK:
The connectors are properly connected.

NG → **CONNECT CONNECTORS PROPERLY**

OK

3 CHECK CONNECTORS

(a) Disconnect the connectors from the center airbag sensor assembly and front airbag sensor LH.
(b) Check that the connectors (on the center airbag sensor assembly side and front airbag sensor LH side) are not damaged.
OK:
The connectors are not deformed or damaged.

NG → **REPAIR OR REPLACE WIRE HARNESS**

OK

4 CHECK VEHICLE CONDITION

(a) Check whether or not the vehicle is equipped with the rear side airbag.

Result:
A:
with the rear side airbag
B:
without the rear side airbag

RS

B → **Go to step 14**

A

5 CHECK FRONT AIRBAG SENSOR LH (OPEN)

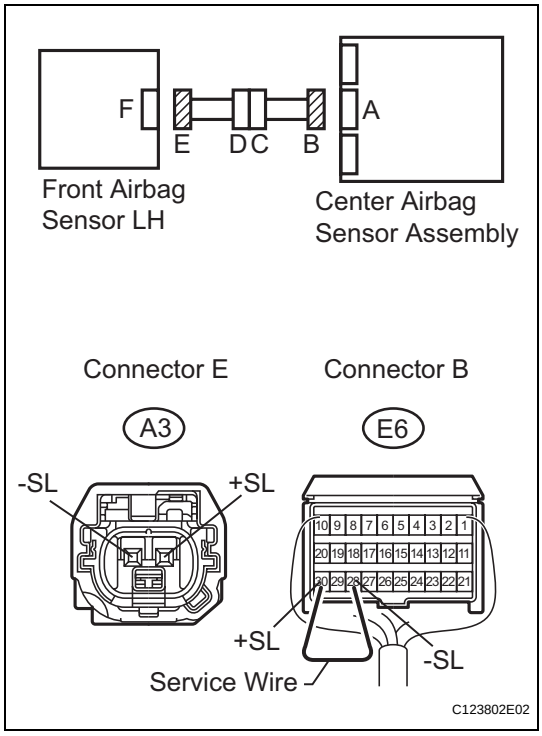

(a) Using a service wire, connect terminals 30 (+SL) and 28 (-SL) of connector B.
NOTICE:
Do not forcibly insert a service wire into the terminals of the connector when connecting the wire.

(b) Measure the resistance according to the value(s) in the table below.
Standard resistance

Tester Connection	Condition	Specified Condition
A3-2 (+SL) - A3-1 (-SL)	Always	Below 1 Ω

NG → **Go to step 10**

OK

RS

6 CHECK FRONT AIRBAG SENSOR LH (SHORT)

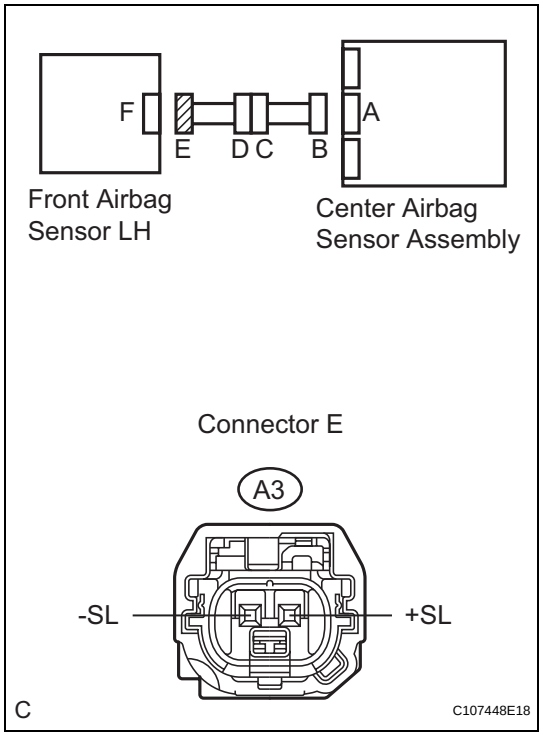

(a) Disconnect the service wire from connector B.
(b) Measure the resistance according to the value(s) in the table below.

Standard resistance

Tester Connection	Condition	Specified Condition
A3-2 (+SL) - A3-1 (-SL)	Always	1 MΩ or higher

NG → **Go to step 11**

OK

7 CHECK FRONT AIRBAG SENSOR LH (SHORT TO B+)

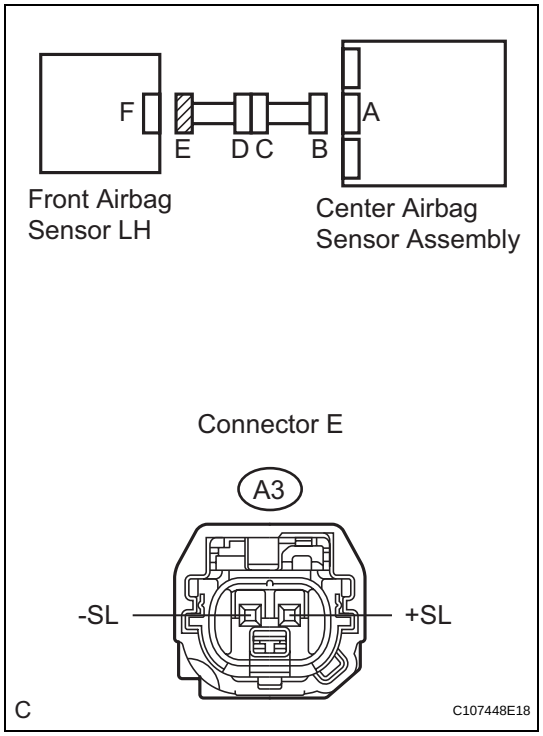

(a) Connect the negative (-) terminal cable to the battery, and wait for at least 2 seconds.
(b) Turn the engine switch on (IG).
(c) Measure the voltage according to the value(s) in the table below.

Standard voltage

Tester Connection	Condition	Specified Condition
A3-2 (+SL) - Body ground	Engine switch on (IG)	Below 1 V
A3-1 (-SL) - Body ground	Engine switch on (IG)	Below 1 V

NG → **Go to step 12**

OK

RS

8 CHECK FRONT AIRBAG SENSOR LH (SHORT TO GROUND)

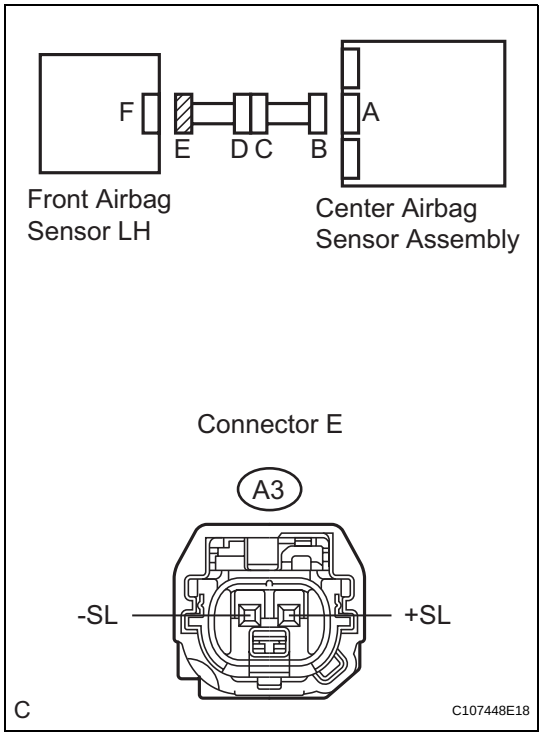

(a) Turn the engine switch off.
(b) Disconnect the negative (-) terminal cable from the battery, and wait for at least 90 seconds.
(c) Measure the resistance according to the value(s) in the table below.

Standard resistance

Tester Connection	Condition	Specified Condition
A3-2 (+SL) - Body ground	Always	1 MΩ or higher
A3-1 (-SL) - Body ground	Always	1 MΩ or higher

NG → **Go to step 13**

OK

9 CHECK FRONT AIRBAG SENSOR LH

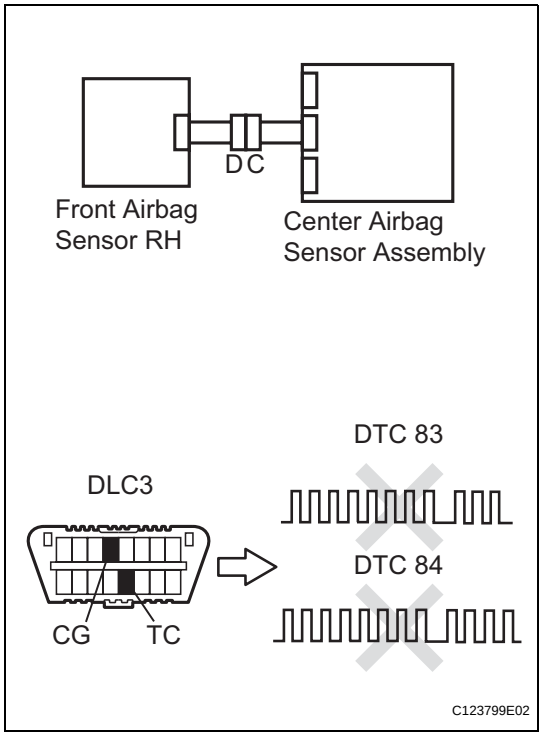

(a) Connect the connectors to the center airbag sensor assembly.
(b) Interchange the front airbag sensor RH with LH and connect the connectors to them.
(c) Connect the negative (-) terminal cable to the battery, and wait for at least 2 seconds.
(d) Turn the engine switch on (IG), and wait for at least 60 seconds.
(e) Clear the DTCs stored in the memory (See page RS-49).
(f) Turn the engine switch off.
(g) Turn the engine switch on (IG), and wait for at least 60 seconds.
(h) Check the DTCs (See page RS-49).

Result

Result	Proceed to
DTC B1608, B1617, B1618, or 84 is output.	A
DTC B1603, B1612, B1613, or 83 is output.	B
DTC B1603, B1612, B1613, or 83 and B1608, B1617, B1618, or 84 are not output.	C

HINT:
Codes other than DTC B1608, B1617, B1618, or 84 and B1603, B1612, B1613, or 83 may be output at this time, but they are not related to this check.

A → **REPLACE CENTER AIRBAG SENSOR ASSEMBLY (See page RS-468)**

B → **REPLACE FRONT AIRBAG SENSOR LH (See page RS-473)**

RS

C

USE SIMULATION METHOD TO CHECK (See page RS-37)

10 CHECK INSTRUMENT PANEL WIRE (OPEN)

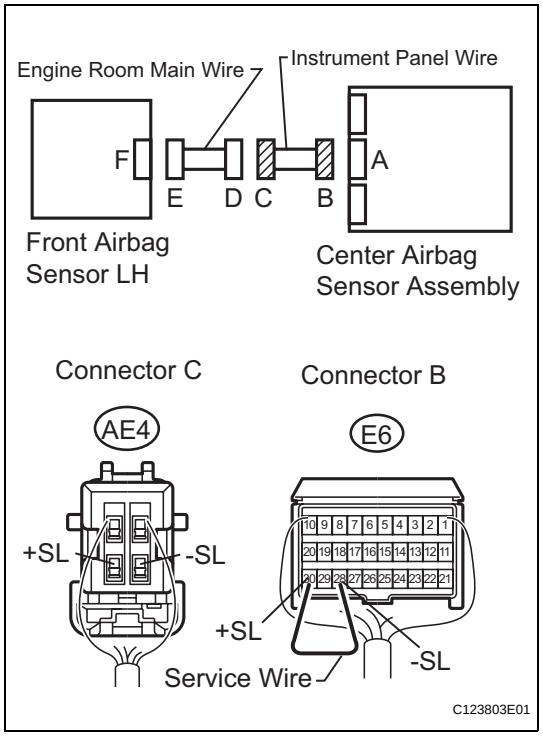

(a) Disconnect the instrument panel wire connector from the engine room main wire.
HINT:
The service wire has already been inserted into connector B.

(b) Measure the resistance according to the value(s) in the table below.
Standard resistance

Tester Connection	Condition	Specified Condition
AE4-3 (+SL) - AE4-4 (-SL)	Always	Below 1 Ω

NG → **REPAIR OR REPLACE INSTRUMENT PANEL WIRE**

OK

REPAIR OR REPLACE ENGINE ROOM MAIN WIRE

RS

11 CHECK INSTRUMENT PANEL WIRE (SHORT)

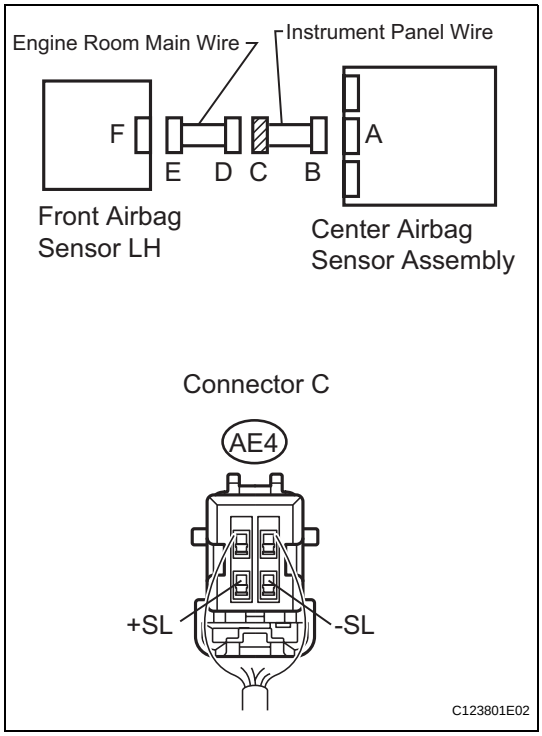

(a) Disconnect the instrument panel wire connector from the engine room main wire.

(b) Measure the resistance according to the value(s) in the table below.

Standard resistance

Tester Connection	Condition	Specified Condition
AE4-3 (+SL) - AE4-4 (-SL)	Always	1 MΩ or higher

NG → **REPAIR OR REPLACE INSTRUMENT PANEL WIRE**

OK

REPAIR OR REPLACE ENGINE ROOM MAIN WIRE

RS

12 CHECK INSTRUMENT PANEL WIRE (SHORT TO B+)

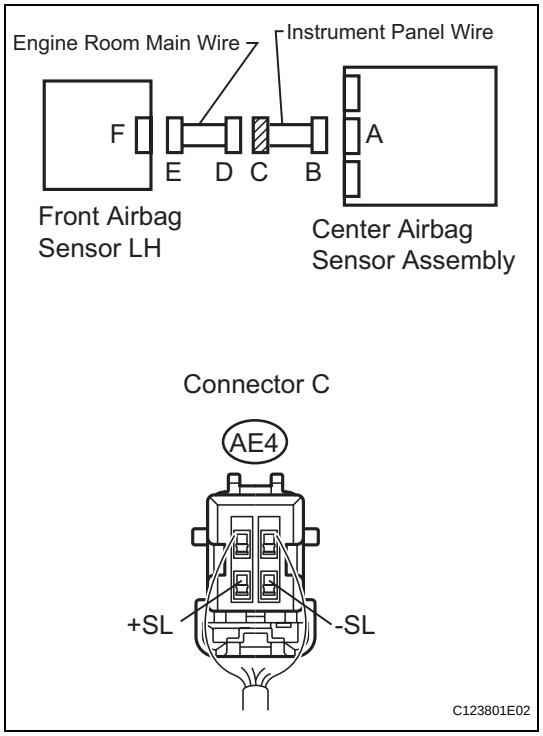

(a) Turn the engine switch off.
(b) Disconnect the negative (-) terminal cable from the battery, and wait for at least 90 seconds.
(c) Disconnect the instrument panel wire connector from the engine room main wire.
(d) Connect the negative (-) terminal cable to battery, and wait for at least 2 seconds.
(e) Turn the engine switch on (IG).
(f) Measure the voltage according to the value(s) in the table below.

Standard voltage

Tester Connection	Condition	Specified Condition
AE4-3 (+SL) - Body ground	Engine switch on (IG)	Below 1 V
AE4-4 (-SL) - Body ground	Engine switch on (IG)	Below 1 V

NG → **REPAIR OR REPLACE INSTRUMENT PANEL WIRE**

OK

REPAIR OR REPLACE ENGINE ROOM MAIN WIRE

RS

13 CHECK INSTRUMENT PANEL WIRE (SHORT TO GROUND)

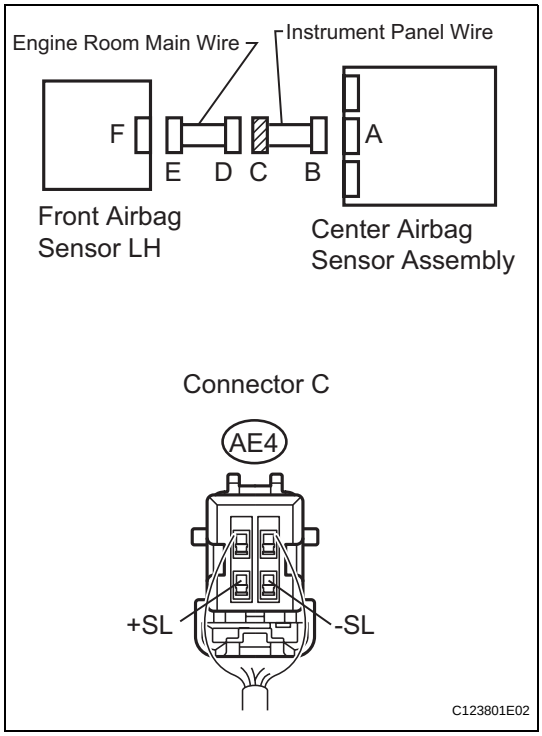

(a) Disconnect the instrument panel wire connector from the engine room main wire.

(b) Measure the resistance according to the value(s) in the table below.

Standard resistance

Tester Connection	Condition	Specified Condition
AE4-3 (+SL) - Body ground	Always	1 MΩ or higher
AE4-4 (-SL) - Body ground	Always	1 MΩ or higher

NG → **REPAIR OR REPLACE INSTRUMENT PANEL WIRE**

OK

REPAIR OR REPLACE ENGINE ROOM MAIN WIRE

RS

14 CHECK FRONT AIRBAG SENSOR LH (OPEN)

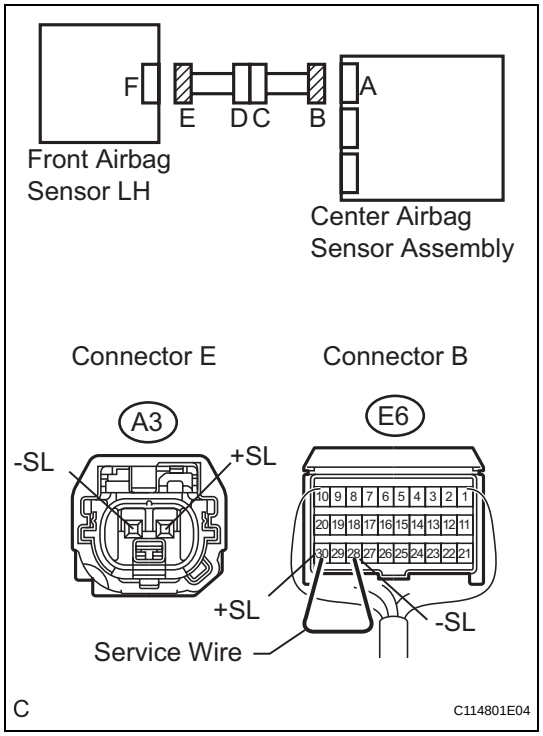

(a) Using a service wire, connect terminals 30 (+SL) and 28 (-SL) of connector B.
NOTICE:
Do not forcibly insert a service wire into the terminals of the connector when connecting the wire.

(b) Measure the resistance according to the value(s) in the table below.
Standard resistance

Tester Connection	Condition	Specified Condition
A3-2 (+SL) - A3-1 (-SL)	Always	Below 1 Ω

NG → **Go to step 19**

OK

15 CHECK FRONT AIRBAG SENSOR LH (SHORT)

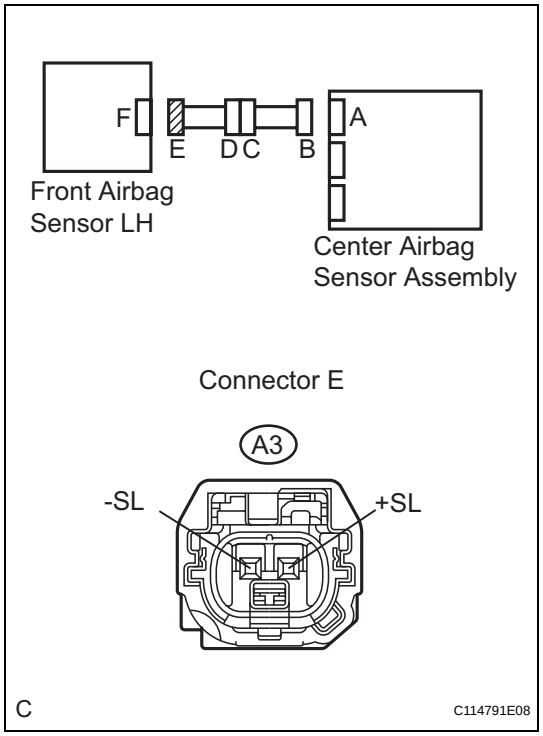

(a) Disconnect the service wire from connector B.

(b) Measure the resistance according to the value(s) in the table below.
Standard resistance

Tester Connection	Condition	Specified Condition
A3-2 (+SL) - A3-1 (-SL)	Always	1 MΩ or higher

NG → **Go to step 20**

OK

RS

16 CHECK FRONT AIRBAG SENSOR LH (SHORT TO B+)

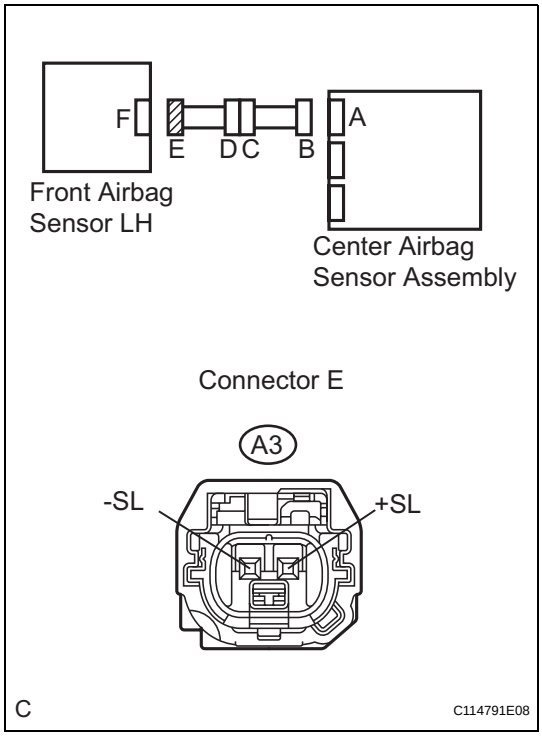

(a) Connect the negative (-) terminal cable to the battery, and wait for at least 2 seconds.
(b) Turn the engine switch on (IG).
(c) Measure the voltage according to the value(s) in the table below.

Standard voltage

Tester Connection	Condition	Specified Condition
A3-2 (+SL) - Body ground	Engine switch on (IG)	Below 1 V
A3-1 (-SL) - Body ground	Engine switch on (IG)	Below 1 V

NG → **Go to step 21**

OK

17 CHECK FRONT AIRBAG SENSOR LH (SHORT TO GROUND)

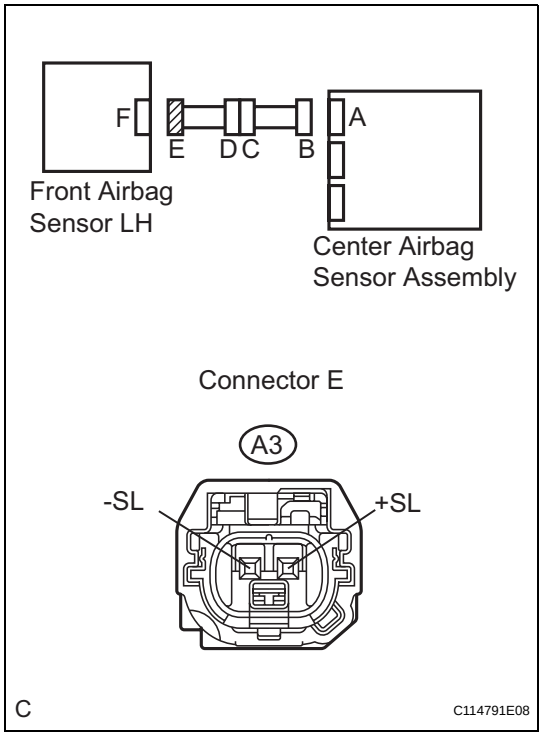

(a) Turn the engine switch off.
(b) Disconnect the negative (-) terminal cable from the battery, and wait for at least 90 seconds.
(c) Measure the resistance according to the value(s) in the table below.

Standard resistance

Tester Connection	Condition	Specified Condition
A3-2 (+SL) - Body ground	Always	1 MΩ or higher
A3-1 (-SL) - Body ground	Always	1 MΩ or higher

NG → **Go to step 22**

OK

RS

18 CHECK FRONT AIRBAG SENSOR LH

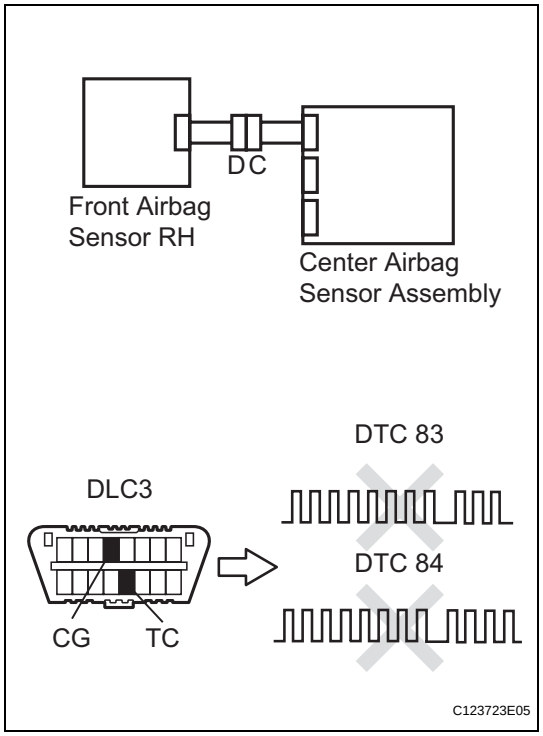

(a) Connect the connectors to the center airbag sensor assembly.
(b) Interchange the front airbag sensor RH with LH and connect the connectors to them.
(c) Connect the negative (-) terminal cable to the battery, and wait for at least 2 seconds.
(d) Turn the engine switch on (IG), and wait for at least 60 seconds.
(e) Clear the DTCs stored in the memory (See page RS-49).
(f) Turn the engine switch off.
(g) Turn the engine switch on (IG), and wait for at least 60 seconds.
(h) Check the DTCs (See page RS-49).

Result

Result	Proceed to
DTC B1608, B1617, B1618, or 84 is output.	A
DTC B1603, B1612, B1613, or 83 is output.	B
DTC B1603, B1612, B1613, or 83 and B1608, B1617, B1618, or 84 are not output.	C

HINT:
Codes other than DTC B1608, B1617, B1618, or 84 and B1603, B1612, B1613, or 83 may be output at this time, but they are not related to this check.

A → **REPLACE CENTER AIRBAG SENSOR ASSEMBLY (See page RS-468)**

B → **REPLACE FRONT AIRBAG SENSOR LH (See page RS-473)**

C

USE SIMULATION METHOD TO CHECK (See page RS-37)

RS

19	CHECK INSTRUMENT PANEL WIRE (OPEN)

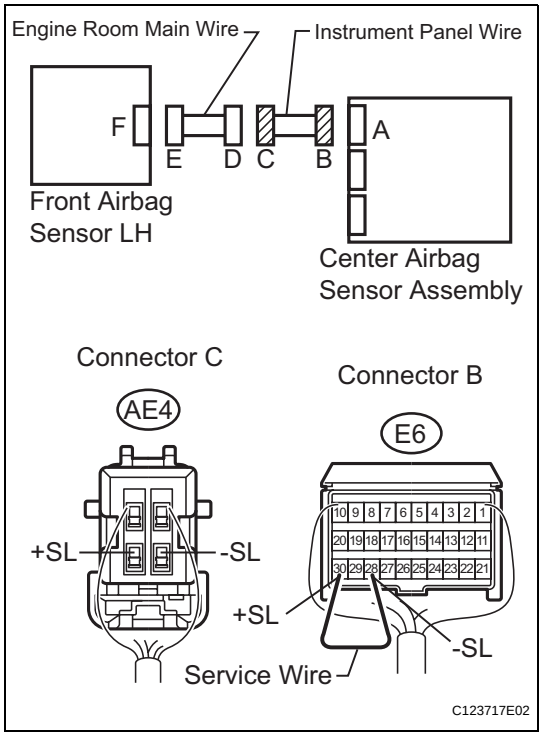

(a) Disconnect the instrument panel wire connector from the engine room main wire.
HINT:
The service wire has already been inserted into connector B.

(b) Measure the resistance according to the value(s) in the table below.
Standard resistance

Tester Connection	Condition	Specified Condition
AE4-3 (+SL) - AE4-4 (-SL)	Always	Below 1 Ω

NG → **REPAIR OR REPLACE INSTRUMENT PANEL WIRE**

OK

REPAIR OR REPLACE ENGINE ROOM MAIN WIRE

RS

20 CHECK INSTRUMENT PANEL WIRE (SHORT)

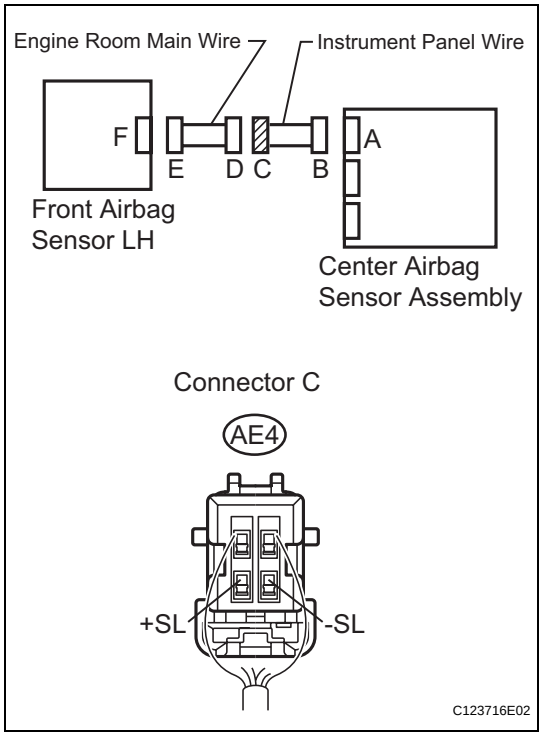

(a) Disconnect the instrument panel wire connector from the engine room main wire.

(b) Measure the resistance according to the value(s) in the table below.

Standard resistance

Tester Connection	Condition	Specified Condition
AE4-3 (+SL) - AE4-4 (-SL)	Always	1 MΩ or higher

NG → **REPAIR OR REPLACE INSTRUMENT PANEL WIRE**

OK

REPAIR OR REPLACE ENGINE ROOM MAIN WIRE

RS

21 CHECK INSTRUMENT PANEL WIRE (SHORT TO B+)

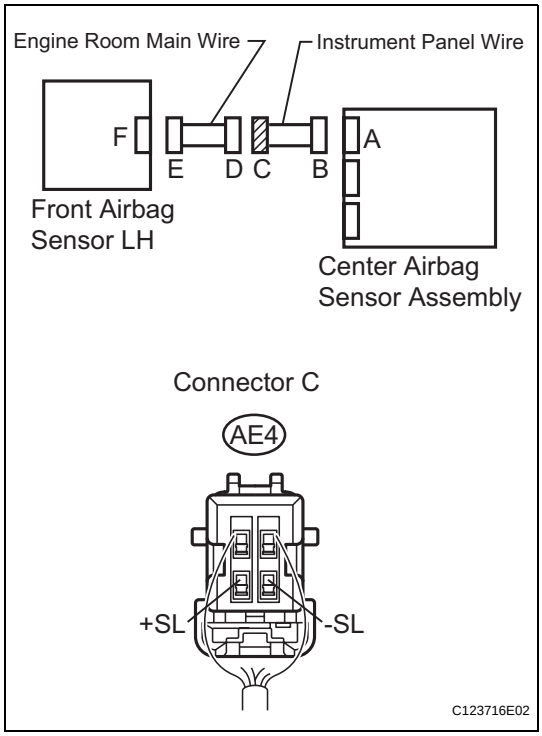

(a) Turn the engine switch off.
(b) Disconnect the negative (-) terminal cable from the battery, and wait for at least 90 seconds.
(c) Disconnect the instrument panel wire connector from the engine room main wire.
(d) Connect the negative (-) terminal cable to battery, and wait for at least 2 seconds.
(e) Turn the engine switch on (IG).
(f) Measure the voltage according to the value(s) in the table below.

Standard voltage

Tester Connection	Condition	Specified Condition
AE4-3 (+SL) - Body ground	Engine switch on (IG)	Below 1 V
AE4-4 (-SL) - Body ground	Engine switch on (IG)	Below 1 V

NG → **REPAIR OR REPLACE INSTRUMENT PANEL WIRE**

OK

REPAIR OR REPLACE ENGINE ROOM MAIN WIRE

22 CHECK INSTRUMENT PANEL WIRE (SHORT TO GROUND)

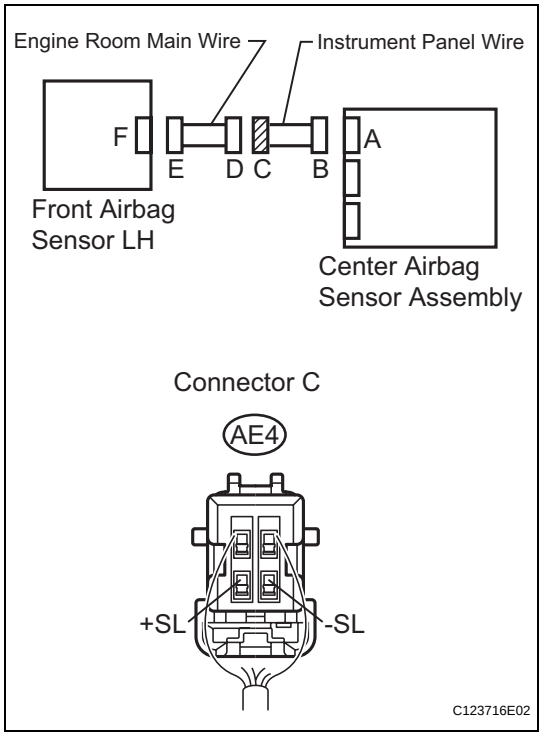

(a) Disconnect the instrument panel wire connector from the engine room main wire.

(b) Measure the resistance according to the value(s) in the table below.

Standard resistance

Tester Connection	Condition	Specified Condition
AE4-3 (+SL) - Body ground	Always	1 MΩ or higher
AE4-4 (-SL) - Body ground	Always	1 MΩ or higher

NG → **REPAIR OR REPLACE INSTRUMENT PANEL WIRE**

OK

REPAIR OR REPLACE ENGINE ROOM MAIN WIRE

RS

DTC	B1610/13	Front Airbag Sensor RH Malfunction

DESCRIPTION

The front airbag sensor RH consists of the diagnostic circuit, the frontal deceleration sensor, etc.
If the center airbag sensor assembly receives signals from the frontal deceleration sensor, it determines whether the SRS should be activated.
DTC B1610/13 is recorded when a malfunction is detected in the front airbag sensor RH circuit.

RS

DTC No.	DTC Detection Condition	Trouble Area
B1610/13	• Front airbag sensor RH malfunction • Center airbag sensor assembly malfunction	• Front airbag sensor RH • Center airbag sensor assembly

WIRING DIAGRAM

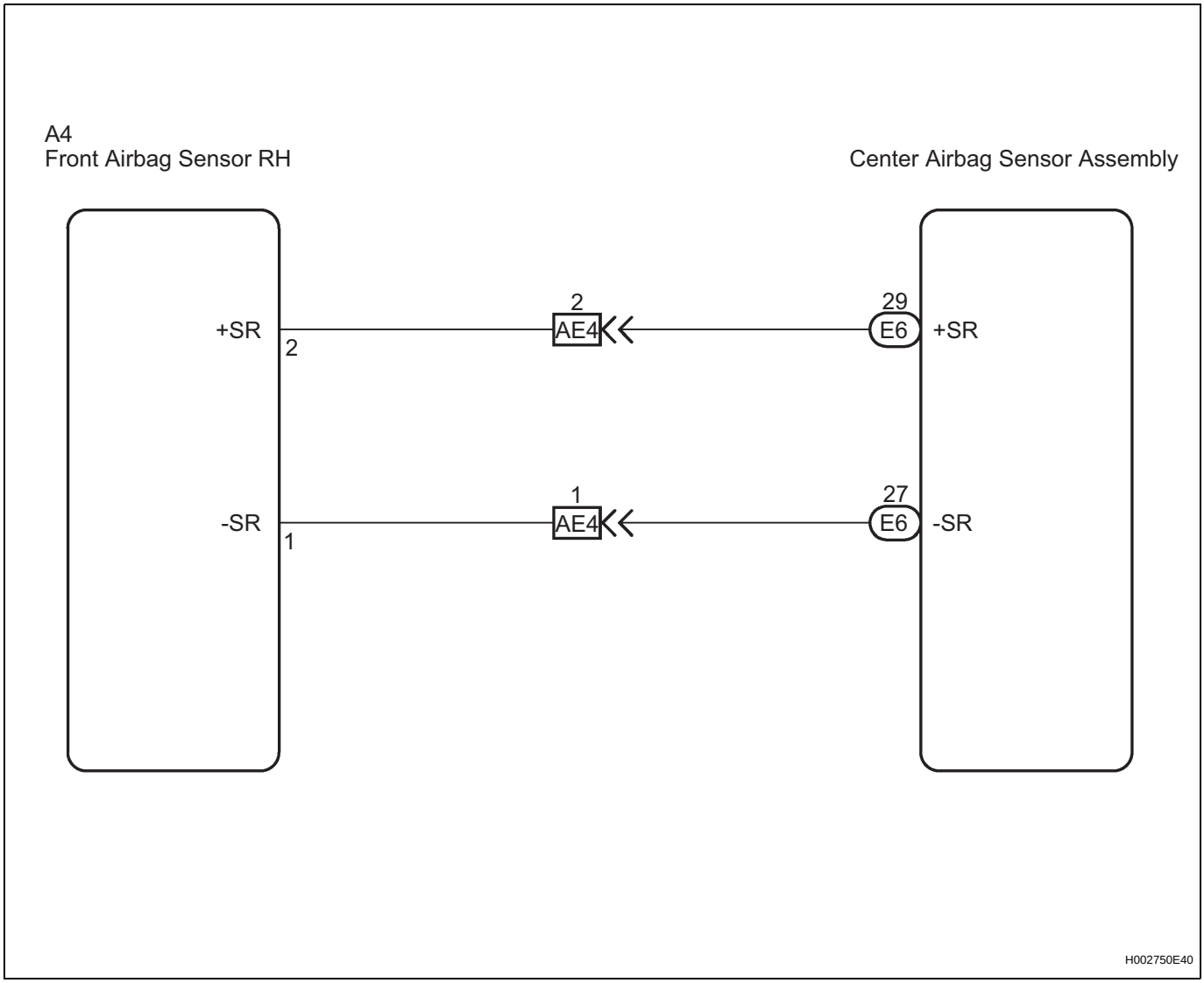

INSPECTION PROCEDURE

1	CHECK FRONT AIRBAG SENSOR RH

(a) Turn the engine switch off.

(b) Disconnect the negative (-) terminal cable from the battery, and wait for at least 90 seconds.
(c) Interchange the front airbag sensor LH with RH and connect the connectors to them.
(d) Connect the negative (-) terminal cable to the battery, and wait for at least 2 seconds.
(e) Turn the engine switch on (IG), and wait for at least 60 seconds.
(f) Clear the DTCs stored in the memory (See page RS-49).
(g) Turn the engine switch off.
(h) Turn the engine switch on (IG), and wait for at least 60 seconds.
(i) Check the DTCs (See page RS-49).

Result

Result	Proceed to
DTC B1610/13 is output.	A
DTC B1615/14 is output.	B
DTC B1610/13 and B1615/14 are not output.	C

HINT:
Codes other than DTC B1610/13 and B1615/14 may be output at this time, but they are not related to this check.

A → **REPLACE CENTER AIRBAG SENSOR ASSEMBLY (See page RS-468)**

B → **REPLACE FRONT AIRBAG SENSOR RH (See page RS-473)**

C

USE SIMULATION METHOD TO CHECK (See page RS-37)

DTC	B1615/14	Front Airbag Sensor LH Malfunction

DESCRIPTION

The front airbag sensor LH consists of the diagnostic circuit and the frontal deceleration sensor, etc.
If the center airbag sensor assembly receives signals from the frontal deceleration sensor, it determines whether the SRS should be activated.
DTC B1615/14 is recorded when a malfunction is detected in the front airbag sensor LH circuit.

RS

DTC No.	DTC Detection Condition	Trouble Area
B1615/14	• Front airbag sensor LH malfunction • Center airbag sensor assembly malfunction	• Front airbag sensor LH • Center airbag sensor assembly

WIRING DIAGRAM

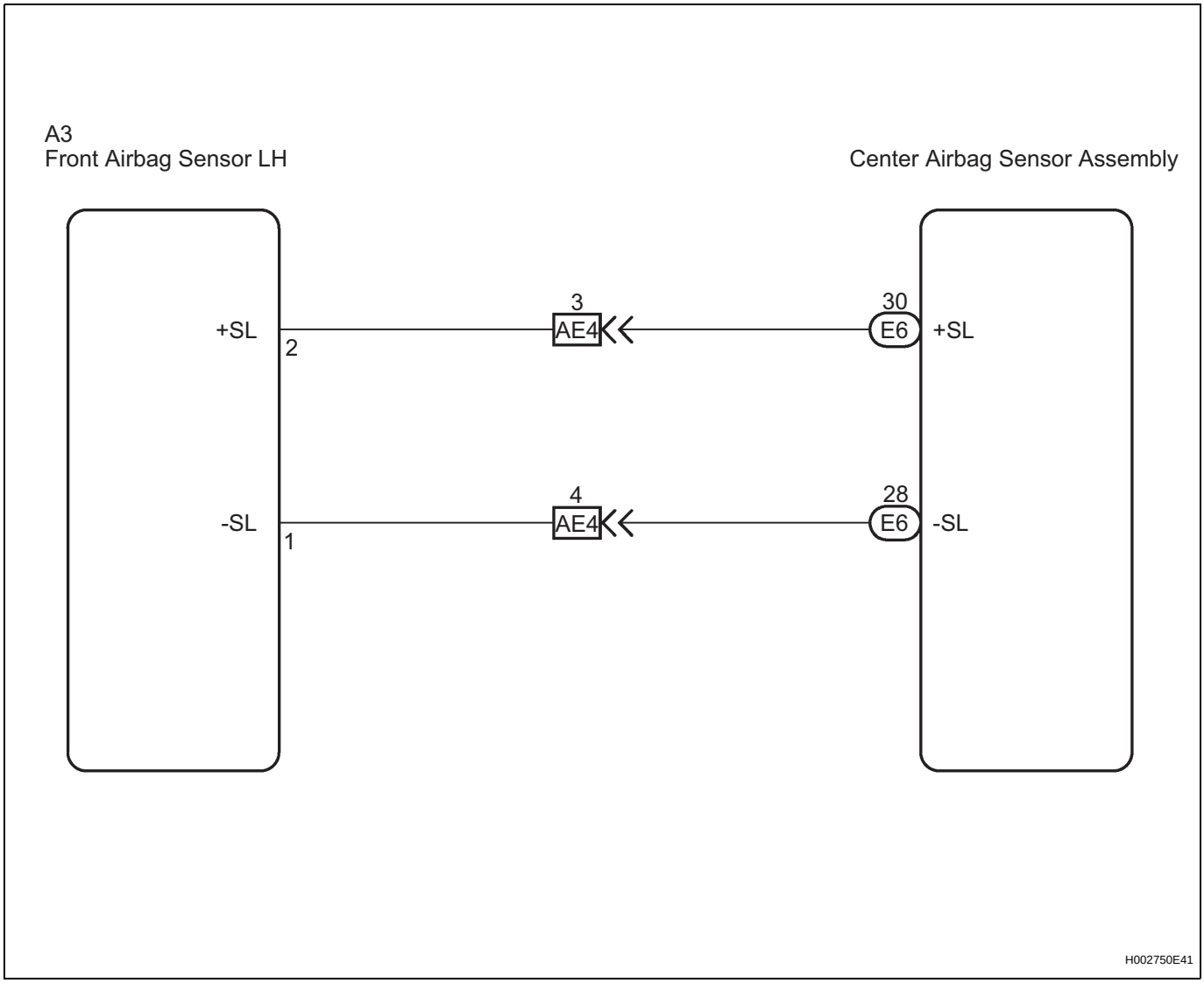

INSPECTION PROCEDURE

1	CHECK FRONT AIRBAG SENSOR LH

(a) Turn the engine switch off.

(b) Disconnect the negative (-) terminal cable from the battery, and wait for at least 90 seconds.
(c) Interchange the front airbag sensor RH with LH and connect the connectors to them.
(d) Connect the negative (-) terminal cable to the battery, and wait for at least 2 seconds.
(e) Turn the engine switch on (IG), and wait for at least 60 seconds.
(f) Clear the DTCs stored in the memory (See page RS-49).
(g) Turn the engine switch off.
(h) Turn the engine switch on (IG), and wait for at least 60 seconds.
(i) Check the DTCs (See page RS-49).

Result

Result	Proceed to
DTC B1615/14 is output.	A
DTC B1610/13 is output.	B
DTC B1610/13 and B1615/14 are not output.	C

HINT:
Codes other than DTC B1610/13 and B1615/14 may be output at this time, but they are not related to this check.

A → **REPLACE CENTER AIRBAG SENSOR ASSEMBLY (See page RS-468)**

B → **REPLACE FRONT AIRBAG SENSOR LH (See page RS-473)**

C

USE SIMULATION METHOD TO CHECK (See page RS-37)

DTC	B1620/21	Driver Side - Side Airbag Sensor Malfunction

DESCRIPTION

The side airbag sensor LH consists of the safing sensor, the diagnostic circuit, the lateral deceleration sensor, etc.

RS

If the center airbag sensor assembly receives signals from the lateral deceleration sensor, it determines whether the SRS should be activated.

DTC B1620/21 is recorded when a malfunction is detected in the driver side - side airbag sensor circuit.

DTC No.	DTC Detection Condition	Trouble Area
B1620/21	• Side airbag sensor LH malfunction • Center airbag sensor assembly malfunction	• Side airbag sensor LH • Center airbag sensor assembly

WIRING DIAGRAM

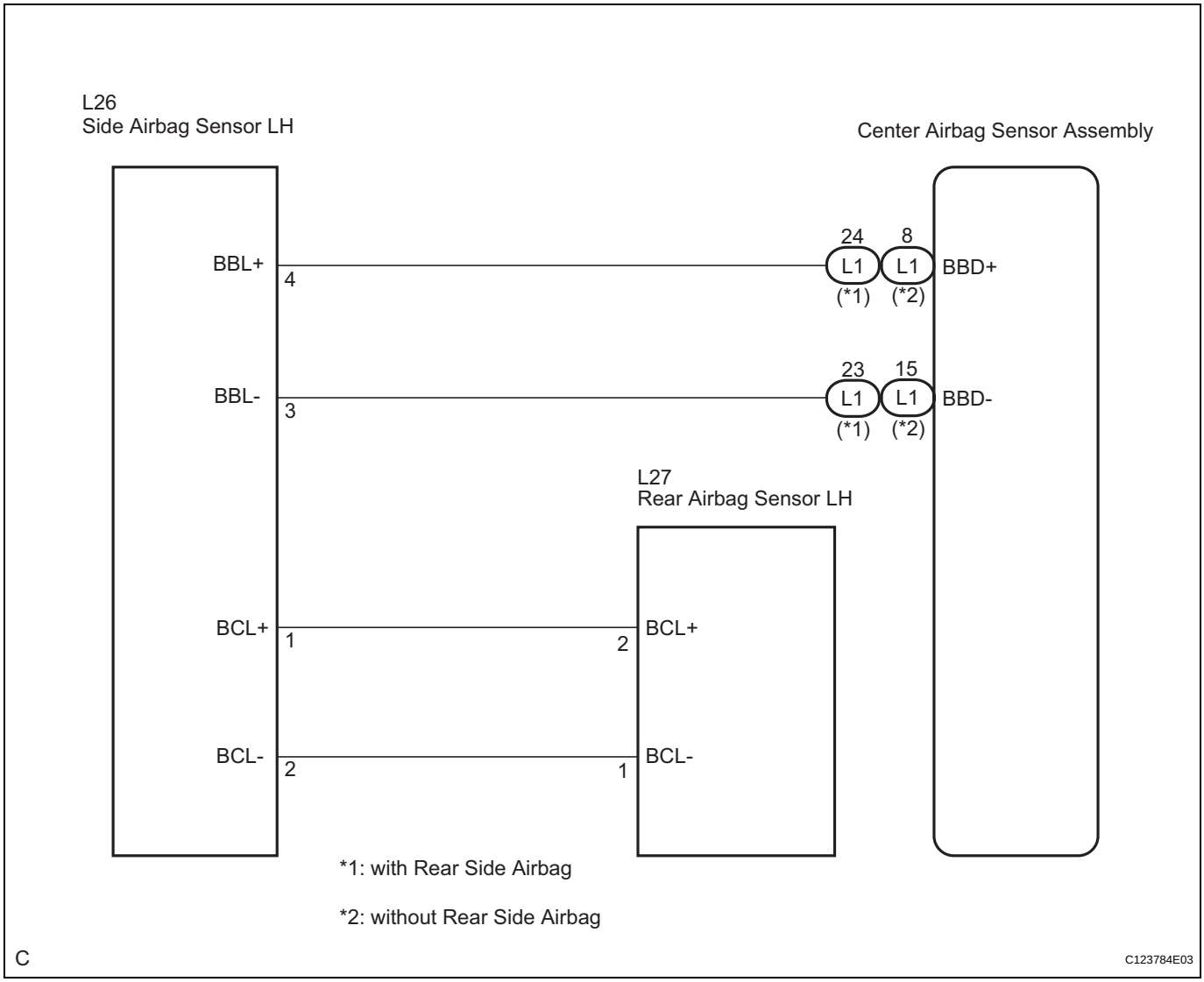

INSPECTION PROCEDURE

1	CHECK DTC

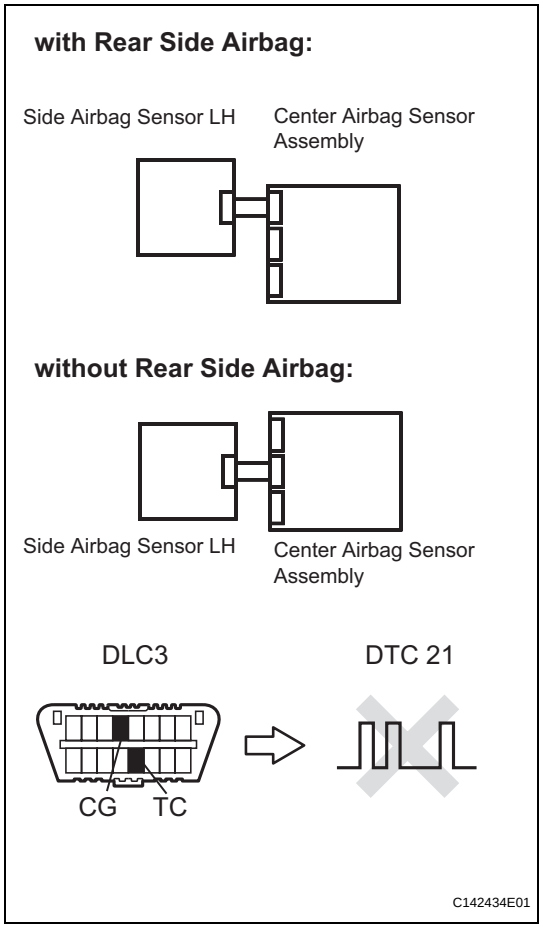

(a) Turn the engine switch on (IG), and wait for at least 60 seconds.
(b) Clear the DTCs stored in the memory (See page RS-49).
(c) Turn the engine switch off.
(d) Turn the engine switch on (IG), and wait for at least 60 seconds.
(e) Check the DTCs (See page RS-49).
OK:
DTC B1620/21 is not output.
HINT:
Codes other than DTC B1620/21 may be output at this time, but they are not related to this check.

OK → **USE SIMULATION METHOD TO CHECK (See page RS-37)**

NG

2	CONFIRM PART NUMBER OF SIDE AIRBAG SENSOR

(a) Turn the engine switch off.
(b) Disconnect the negative (-) terminal cable from the battery, and wait for at least 90 seconds.
(c) Check that the part number of the side airbag sensor LH is equal to the number of the other side.
OK:
Those numbers are the same.

NG → **Go to step 4**

OK

RS

3 CHECK SIDE AIRBAG SENSOR LH

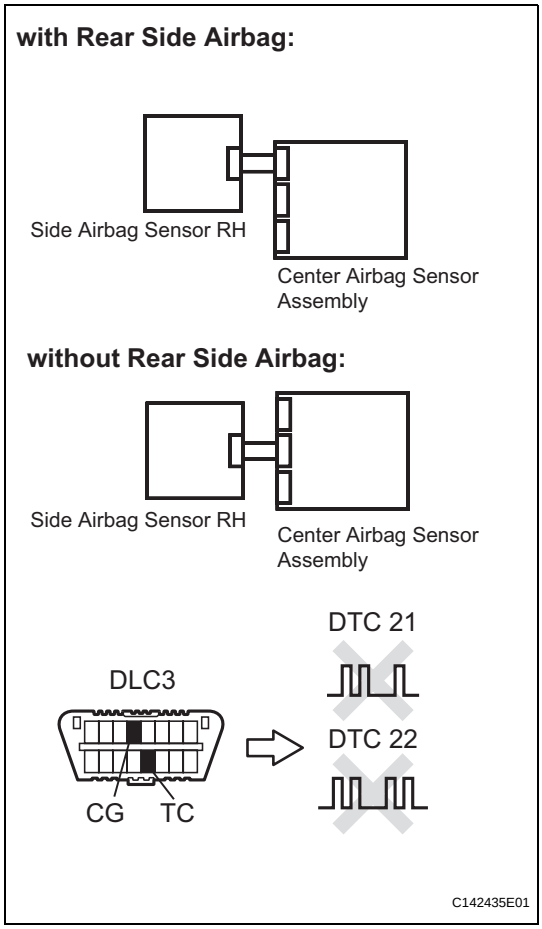

(a) Interchange the side airbag sensor RH with LH and connect the connectors to them.
(b) Connect the negative (-) terminal cable to the battery, and wait for at least 2 seconds.
(c) Turn the engine switch on (IG), and wait for at least 60 seconds.
(d) Clear the DTCs stored in the memory (See page RS-49).
(e) Turn the engine switch off.
(f) Turn the engine switch on (IG), and wait for at least 60 seconds.
(g) Check the DTCs (See page RS-49).

Result

Result	Proceed to
DTC B1620/21 is output.	A
DTC B1625/22 is output.	B
DTC B1620/21 and B1625/22 are not output.	C

HINT:
Codes other than DTC B1620/21 and B1625/22 may be output at this time, but they are not related to this check.

(h) Turn the engine switch off.
(i) Disconnect the negative (-) terminal cable from the battery, and wait for at least 90 seconds.
(j) Return the side airbag sensor RH and LH to their original positions and connect the connectors to them.

A → **Go to step 5**

B → **REPLACE SIDE AIRBAG SENSOR LH (See page RS-477)**

C

USE SIMULATION METHOD TO CHECK (See page RS-37)

4 REPLACE SIDE AIRBAG SENSOR LH

(a) Replace the side airbag sensor LH (See page RS-477).
HINT:
Perform inspection using parts from a normal vehicle if possible.

NEXT

5	CHECK CENTER AIRBAG SENSOR ASSEMBLY

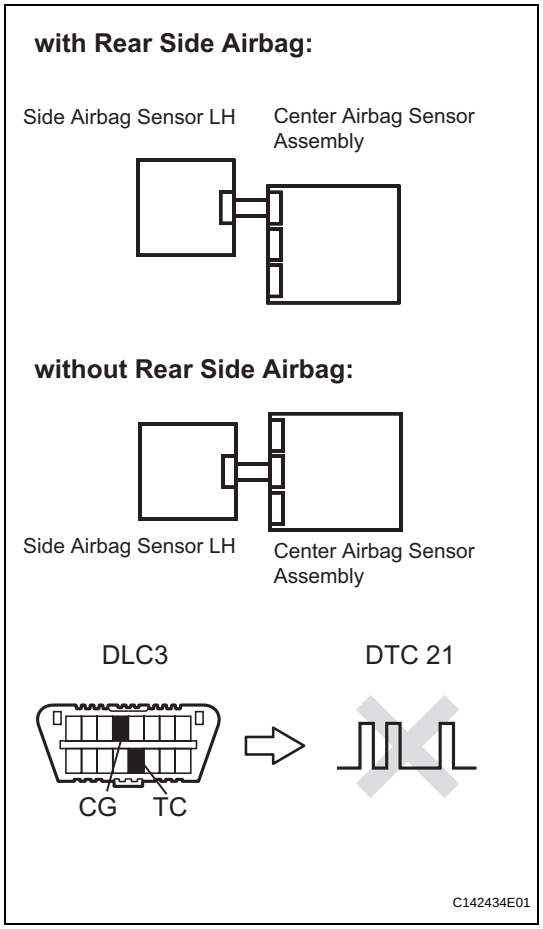

(a) Connect the negative (-) terminal cable to the battery, and wait for at least 2 seconds.
(b) Turn the engine switch on (IG), and wait for at least 60 seconds.
(c) Clear the DTCs stored in the memory (See page RS-49).
(d) Turn the engine switch off.
(e) Turn the engine switch on (IG), and wait for at least 60 seconds.
(f) Check the DTCs (See page RS-49).
OK:
DTC B1620/21 is not output.
HINT:
Codes other than DTC B1620/21 may be output at this time, but they are not related to this check.

NG → **REPLACE CENTER AIRBAG SENOR ASSEMBLY (See page RS-468)**

OK

USE SIMULATION METHOD TO CHECK (See page RS-37)

RS

DTC	**B1622/81**	**Lost Communication with Driver Side - Side Airbag Sensor Assembly**

DTC	**B1623/81**	**Driver Side - Side Airbag Sensor Assembly Initialization Incomplete**

DTC	**B1632/81**	**Lost Communication with Driver Side Rear Airbag Sensor**

DTC	**B1633/81**	**Driver Side Rear Airbag Sensor Initialization Incomplete**

DTC	**B1642/81**	**Lost Communication with Driver Side Satellite Sensor Bus**

DTC	**B1643/81**	**Driver Side Satellite Sensor Bus Initialization Incomplete**

DESCRIPTION

The circuit for the side collision sensor LH (to determine deployment of the front seat side airbag assembly LH and curtain shield airbag assembly LH) is composed of the center airbag sensor assembly, side airbag sensor LH, and rear airbag sensor LH.
The side airbag sensor LH and rear airbag sensor LH detect impacts to the vehicle and send signals to the center airbag sensor assembly to determine if the airbag should be deployed.
DTC B1622/81, B1623/81, B1632/81, B1633/81, B1642/81, or B1643/81 is recorded when a malfunction is detected in the circuit for the side collision sensor LH (to determine deployment of the front seat side airbag assembly LH and curtain shield airbag assembly LH).

DTC No.	DTC Detecting Condition	Trouble Area
1622/81 1623/81 1632/81 1633/81 1642/81 1643/81	• The center airbag sensor assembly receives a line short circuit signal, an open circuit signal, a short circuit to ground signal or a short circuit to B+ signal in the circuit for the side collision sensor LH (to determine deployment of the front seat side airbag assembly LH and curtain shield airbag assembly LH) for 2 seconds. • Side airbag sensor LH malfunction • Rear airbag sensor LH malfunction • Center airbag sensor assembly malfunction	• Floor wire • Side airbag sensor LH • Rear airbag sensor LH • Center airbag sensor assembly

WIRING DIAGRAM

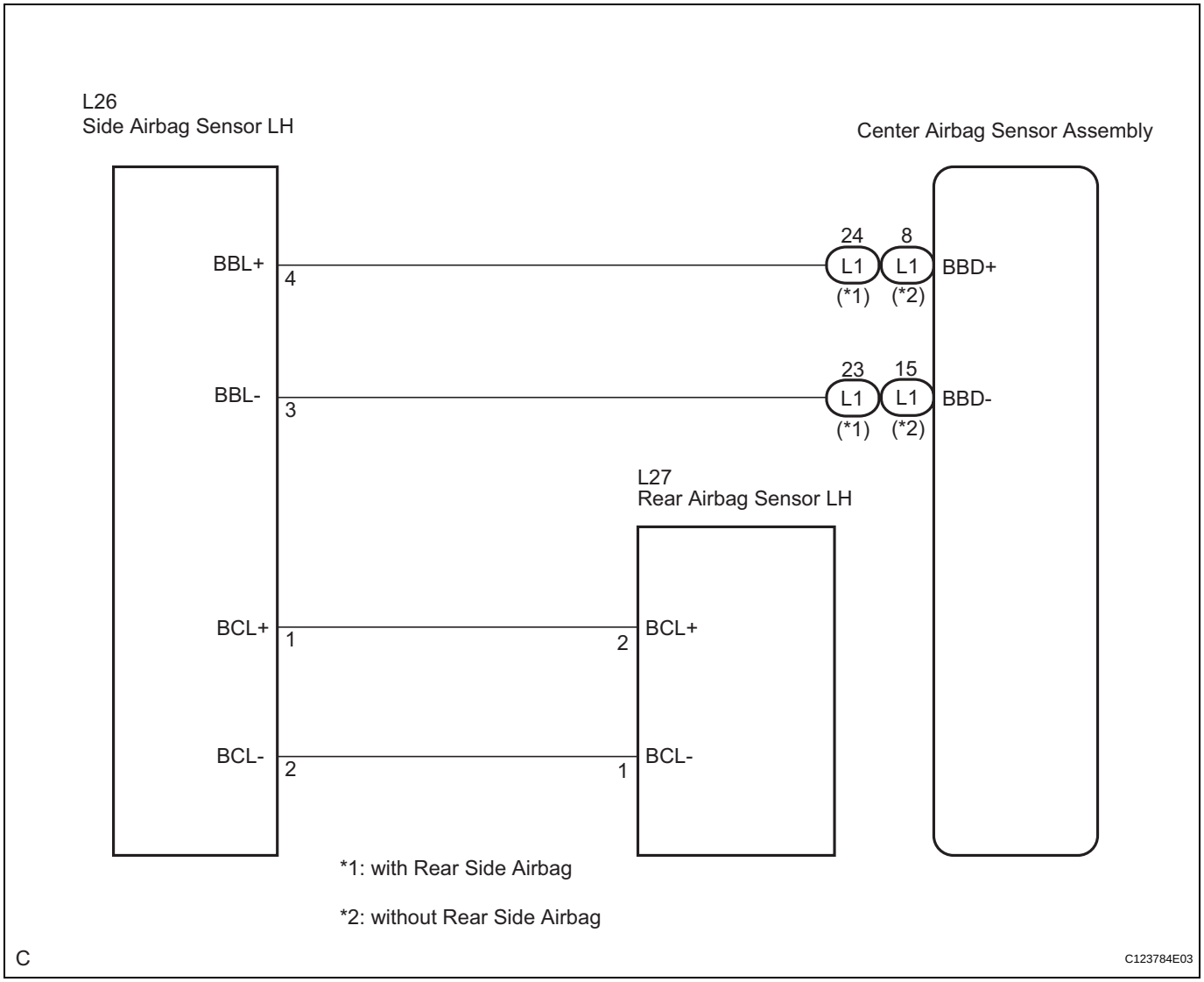

INSPECTION PROCEDURE

1	CHECK PRESENT DTC

(a) Turn the engine switch on (IG), and wait for at least 60 seconds.

(b) Turn the engine switch off.
HINT:
If a communication error occurs, DTCs for both the LH and RH sides will be stored simultaneously. To identify the malfunctioning area, turn the engine switch off and then on (IG) again.

(c) Turn the engine switch on (IG), and wait for at least 60 seconds.

(d) Check the present DTCs (See page RS-49).
Result

Result	Proceed to
Present DTC B1623, B1633, B1643, or 81 is output.	**A**

Result	Proceed to
Present DTC B1628, B1638, B1648, or 82 is output.	B
Present DTC B1623, B1633, B1643, or 81 and B1628, B1638, B1648, or 82 are not output.	C

HINT:
- DTCs indicating communication errors will be changed to DTCs indicating errors in initialization by turning the engine switch off and then on (IG) again.
- Codes other than present DTC B1623, B1633, B1643, or 81 and B1628, B1638, B1648, or 82 may be output at this time, but they are not related to this check.

B → **REPAIR CIRCUITS INDICATED BY OUTPUT DTCS**

C → **USE SIMULATION METHOD TO CHECK (See page RS-37)**

A

2 CHECK PAST DTC

(a) Check the past DTCs (See page RS-49).
Result

Result	Proceed to
• Past DTC B1632, B1642, or 81 is output. • Past DTC B1622, B1632, B1642, or 81 is not output.	A
Past DTC B1622 is output.	B

HINT:
Codes other than past DTC B1622, B1632, B1642, or 81 may be output at this time, but they are not related to this check.

B → **Go to step 27**

A

3 CHECK CONNECTION OF CONNECTORS

(a) Turn the engine switch off.
(b) Disconnect the negative (-) terminal cable from the battery, and wait for at least 90 seconds.
(c) Check that the connectors are properly connected to the center airbag sensor assembly and the side airbag sensor LH.
OK:
The connectors are properly connected.

NG → **CONNECT CONNECTORS PROPERLY**

OK

4	CHECK CONNECTORS

(a) Disconnect the connectors from the center airbag sensor assembly and side airbag sensor LH.

(b) Check that the connectors (on the center airbag sensor assembly side and side airbag sensor LH side) are not damaged.

OK:

The connectors are not deformed or damaged.

NG → **REPAIR OR REPLACE FLOOR WIRE**

OK

5	CHECK VEHICLE CONDITION

(a) Check whether or not the vehicle is equipped with the rear side airbag.

Result:

A:

with the rear side airbag

B:

without the rear side airbag

B → **Go to step 12**

A

RS

6 CHECK FLOOR WIRE (OPEN)

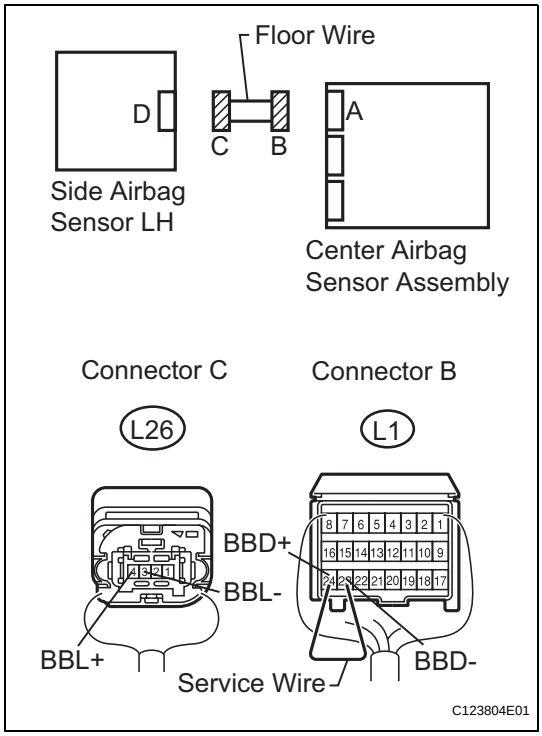

(a) Using a service wire, connect terminals 24 (BBD+) and 23 (BBD-) of connector B.
NOTICE:
Do not forcibly insert a service wire into the terminals of the connector when connecting the wire.

(b) Measure the resistance according to the value(s) in the table below.
Standard resistance

Tester Connection	Condition	Specified Condition
L26-4 (BBL+) - L26-3 (BBL-)	Always	Below 1 Ω

NG → **REPAIR OR REPLACE FLOOR WIRE**

OK

7 CHECK FLOOR WIRE (SHORT)

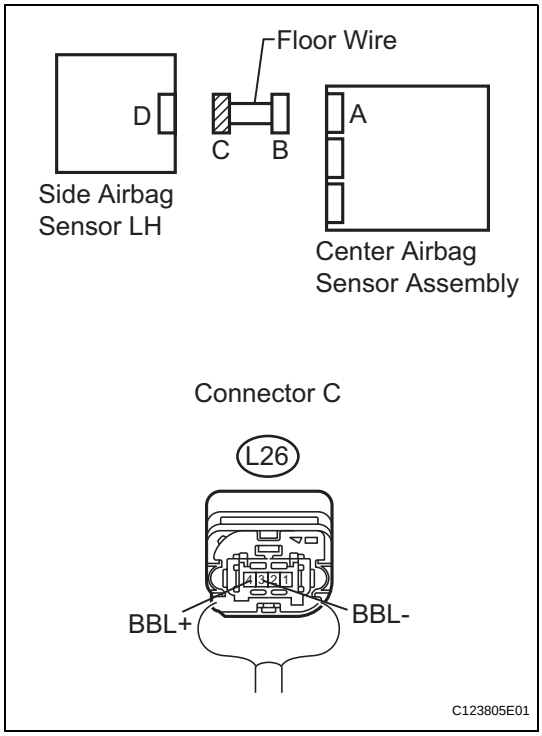

(a) Disconnect the service wire from connector B.

(b) Measure the resistance according to the value(s) in the table below.
Standard resistance

Tester Connection	Condition	Specified Condition
L26-4 (BBL+) - L26-3 (BBL-)	Always	1 MΩ or higher

NG → **REPAIR OR REPLACE FLOOR WIRE**

OK

RS

8 CHECK FLOOR WIRE (SHORT TO B+)

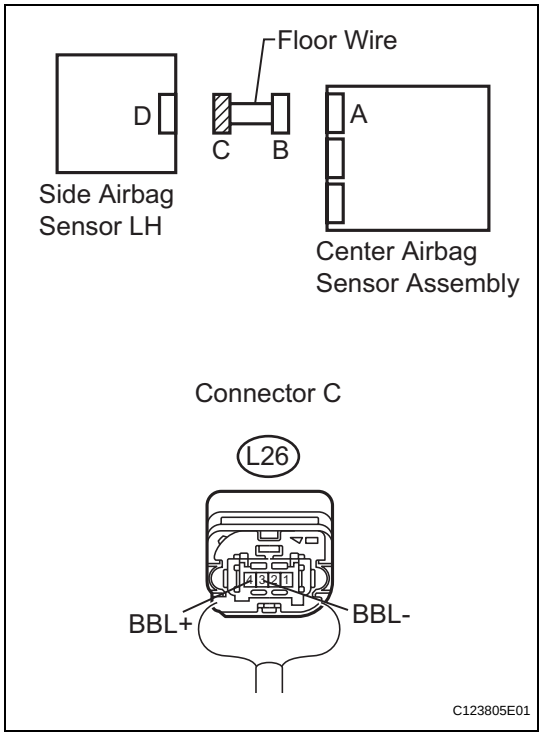

(a) Connect the negative (-) terminal cable to the battery, and wait for at least 2 seconds.
(b) Turn the engine switch on (IG).
(c) Measure the voltage according to the value(s) in the table below.

Standard voltage

Tester Connection	Condition	Specified Condition
L26-4 (BBL+) - Body ground	Engine switch on (IG)	Below 1 V
L26-3 (BBL-) - Body ground	Engine switch on (IG)	Below 1 V

NG → **REPAIR OR REPLACE FLOOR WIRE**

OK

9 CHECK FLOOR WIRE (SHORT TO GROUND)

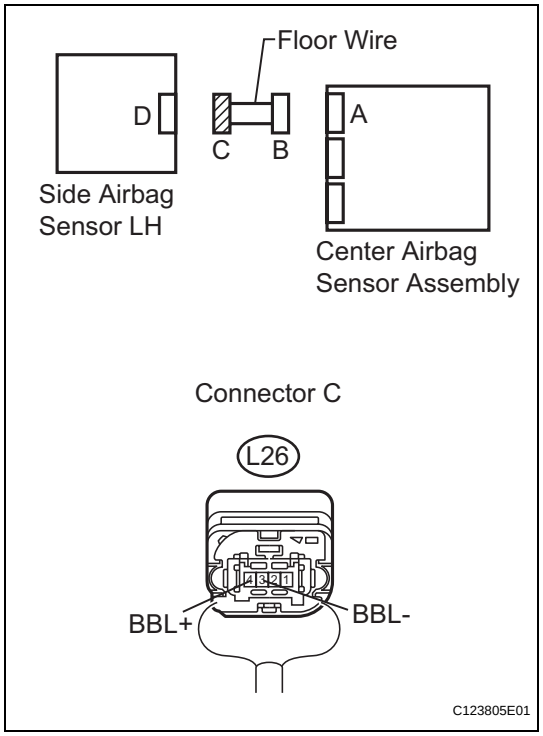

(a) Turn the engine switch off.
(b) Disconnect the negative (-) terminal cable from the battery, and wait for at least 90 seconds.
(c) Measure the resistance according to the value(s) in the table below.

Standard resistance

Tester Connection	Condition	Specified Condition
L26-4 (BBL+) - Body ground	Always	1 MΩ or higher
L26-3 (BBL-) - Body ground	Always	1 MΩ or higher

NG → **REPAIR OR REPLACE FLOOR WIRE**

OK

RS

10	CONFIRM PART NUMBER OF SIDE AIRBAG SENSOR

(a) Check that the part number of the side airbag sensor LH is equal to the number of the other side.
OK:
Those numbers are the same.

(b) Connect the connectors to the center airbag sensor assembly and the side airbag sensor LH.

NG → **Go to step 18**

OK

11	CHECK SIDE AIRBAG SENSOR LH

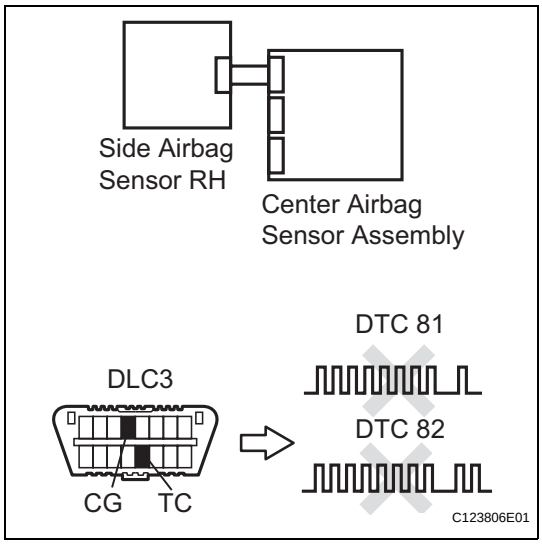

(a) Interchange the side airbag sensor RH with LH and connect the connectors to them.
(b) Connect the negative (-) terminal cable to the battery, and wait for at least 2 seconds.
(c) Turn the engine switch on (IG), and wait for at least 60 seconds.
(d) Clear the DTCs stored in the the memory (See page RS-49).
(e) Turn the engine switch off.
(f) Turn the engine switch on (IG), and wait for at least 60 seconds.
(g) Check the DTCs (See page RS-49).
Result

Result	Proceed to
DTC B1623, B1633, B1643, or 81 and B1628, B1638, B1648, or 82 are not output.	A
DTC B1628, B1638, B1648, or 82 is output.	B
DTC B1623, B1633, B1643, or 81 is output.	C

(h) Turn the engine switch off.
(i) Disconnect the negative (-) terminal cable from the battery, and wait for at least 90 seconds.
(j) Return the side airbag sensor RH and LH to their original positions and connect the connectors to them.

B → **REPLACE SIDE AIRBAG SENSOR LH (See page RS-477)**

C → **Go to step 18**

A

USE SIMULATION METHOD TO CHECK (See page RS-37)

RS

12 CHECK FLOOR WIRE (OPEN)

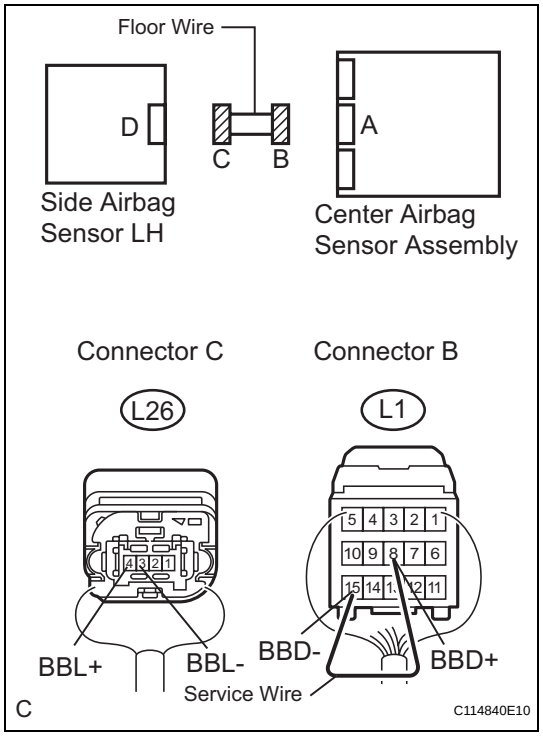

(a) Using a service wire, connect terminals 8 (BBD+) and 15 (BBD-) of connector B.
NOTICE:
Do not forcibly insert a service wire into the terminals of the connector when connecting the wire.

(b) Measure the resistance according to the value(s) in the table below.
Standard resistance

Tester Connection	Condition	Specified Condition
L26-4 (BBL+) - L26-3 (BBL-)	Always	Below 1 Ω

NG → **REPAIR OR REPLACE FLOOR WIRE**

OK

13 CHECK FLOOR WIRE (SHORT)

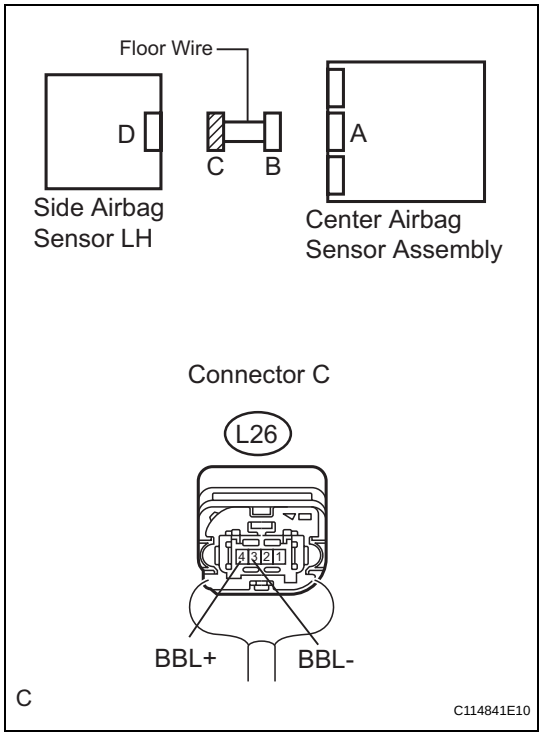

(a) Disconnect the service wire from connector B.

(b) Measure the resistance according to the value(s) in the table below.
Standard resistance

Tester Connection	Condition	Specified Condition
L26-4 (BBL+) - L26-3 (BBL-)	Always	1 MΩ or higher

NG → **REPAIR OR REPLACE FLOOR WIRE**

OK

RS

14 CHECK FLOOR WIRE (SHORT TO B+)

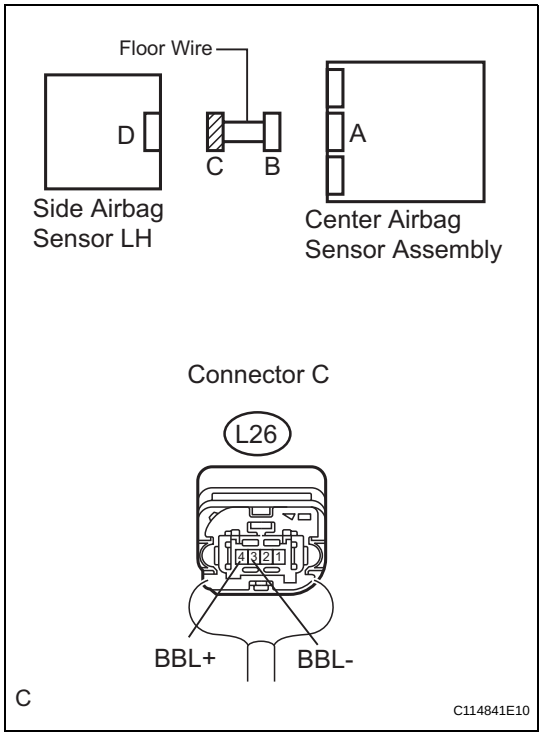

(a) Connect the negative (-) terminal cable to the battery, and wait for at least 2 seconds.
(b) Turn the engine switch on (IG).
(c) Measure the voltage according to the value(s) in the table below.

Standard voltage

Tester Connection	Condition	Specified Condition
L26-4 (BBL+) - Body ground	Engine switch on (IG)	Below 1 V
L26-3 (BBL-) - Body ground	Engine switch on (IG)	Below 1 V

NG → **REPAIR OR REPLACE FLOOR WIRE**

OK

15 CHECK FLOOR WIRE (SHORT TO GROUND)

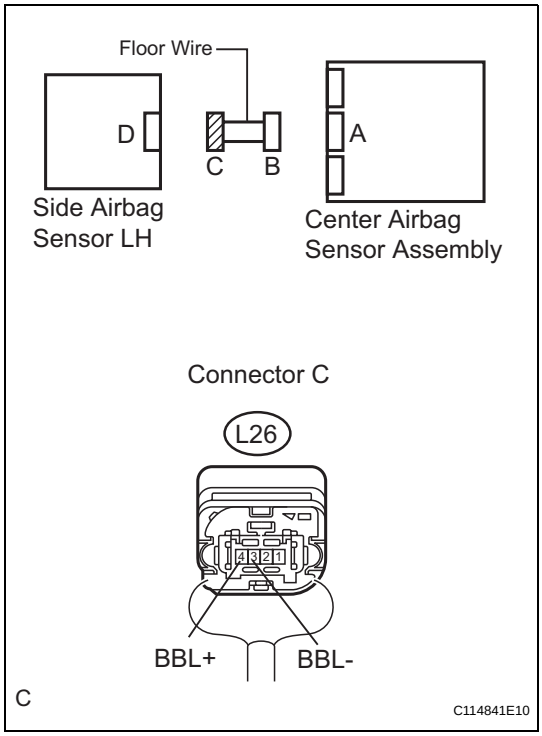

(a) Turn the engine switch off.
(b) Disconnect the negative (-) terminal cable from the battery, and wait for at least 90 seconds.
(c) Measure the resistance according to the value(s) in the table below.

Standard resistance

Tester Connection	Condition	Specified Condition
L26-4 (BBL+) - Body ground	Always	1 MΩ or higher
L26-3 (BBL-) - Body ground	Always	1 MΩ or higher

NG → **REPAIR OR REPLACE FLOOR WIRE**

OK

RS

16 CONFIRM PART NUMBER OF SIDE AIRBAG SENSOR

(a) Check that the part number of the side airbag sensor LH is equal to the number of the other side.
OK:
Those numbers are the same.

(b) Connect the connectors to the center airbag sensor assembly and the side airbag sensor LH.

NG → **Go to step 18**

OK

17 CHECK SIDE AIRBAG SENSOR LH

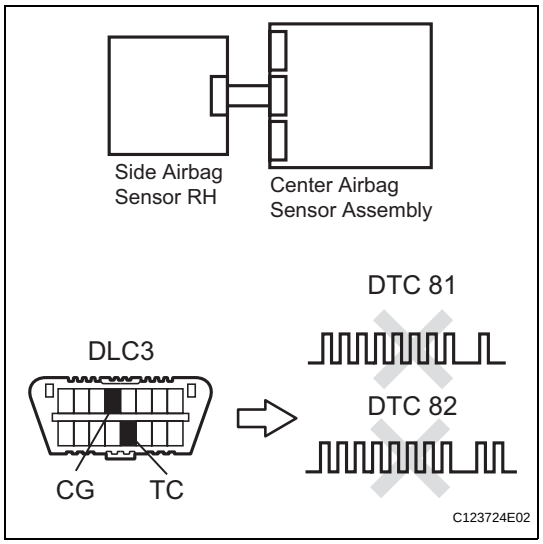

(a) Interchange the side airbag sensor RH with LH and connect the connectors to them.
(b) Connect the negative (-) terminal cable to the battery, and wait for at least 2 seconds.
(c) Turn the engine switch on (IG), and wait for at least 60 seconds.
(d) Clear the DTCs stored in the the memory (See page RS-49).
(e) Turn the engine switch off.
(f) Turn the engine switch on (IG), and wait for at least 60 seconds.
(g) Check the DTCs (See page RS-49).
Result

Result	Proceed to
DTC B1623, B1633, B1643, or 81 is output.	A
DTC B1628, B1638, B1648, or 82 is output.	B
DTC B1623, B1633, B1643, or 81 and B1628, B1638, B1648, or 82 are not output.	C

(h) Turn the engine switch off.
(i) Disconnect the negative (-) terminal cable from the battery, and wait for at least 90 seconds.
(j) Return the side airbag sensor RH and LH to their original positions and connect the connectors to them.

B → **REPLACE SIDE AIRBAG SENSOR LH (See page RS-477)**

C → **USE SIMULATION METHOD TO CHECK (See page RS-37)**

A

18 CHECK CONNECTION OF CONNECTOR

(a) Check that the connector is properly connected to the rear airbag sensor LH.

OK:
The connector is properly connected.

NG → **CONNECT CONNECTOR PROPERLY**

OK

RS

19 CHECK CONNECTOR

(a) Disconnect the connectors from the side airbag sensor LH and rear airbag sensor LH.
(b) Check that the connector (on the rear airbag sensor LH side) is not damaged.
OK:
The connector is not deformed or damaged.

NG → **REPAIR OR REPLACE FLOOR WIRE**

OK

20 CHECK FLOOR WIRE (OPEN)

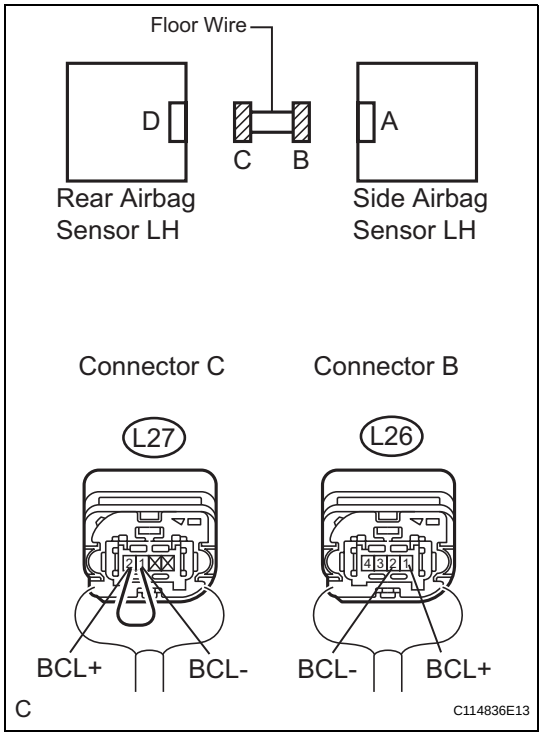

(a) Using a service wire, connect terminals 2 (BCL+) and 1 (BCL-) of connector C.
NOTICE:
Do not forcibly insert a service wire into the terminals of the connector when connecting the wire.
(b) Measure the resistance according to the value(s) in the table below.
Standard resistance

Tester Connection	Condition	Specified Condition
L26-1 (BCL+) - L26-2 (BCL-)	Always	Below 1 Ω

NG → **REPAIR OR REPLACE FLOOR WIRE**

OK

RS

21 CHECK FLOOR WIRE (SHORT)

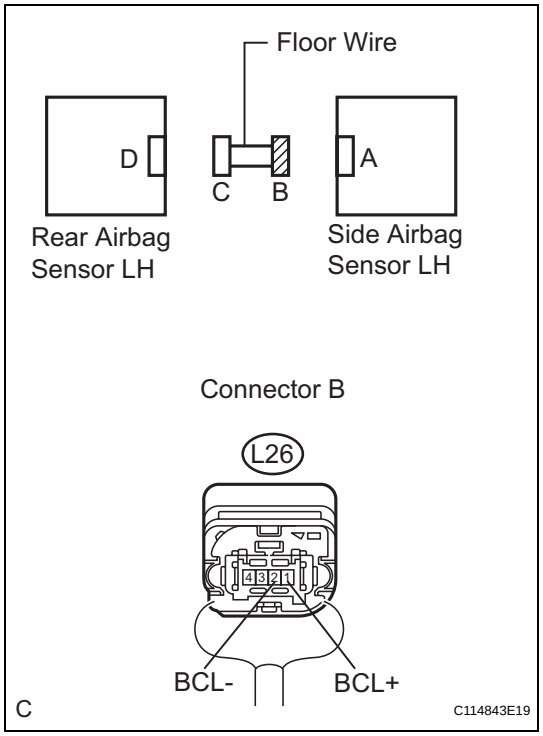

(a) Disconnect the service wire from connector C.
(b) Measure the resistance according to the value(s) in the table below.

Standard resistance

Tester Connection	Condition	Specified Condition
L26-1 (BCL+) - L26-2 (BCL-)	Always	1 MΩ or higher

NG → **REPAIR OR REPLACE FLOOR WIRE**

OK

22 CHECK FLOOR WIRE (SHORT TO B+)

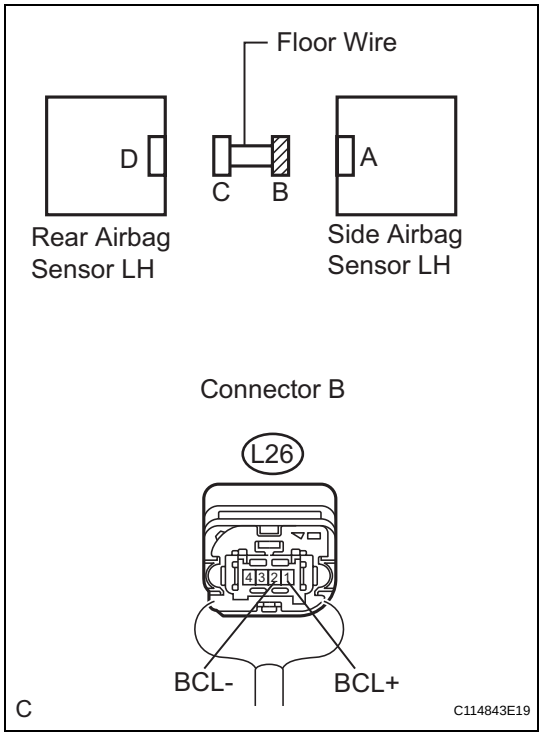

(a) Connect the negative (-) terminal cable to the battery, and wait for at least 2 seconds.
(b) Turn the engine switch on (IG).
(c) Measure the voltage according to the value(s) in the table below.

Standard voltage

Tester Connection	Condition	Specified Condition
L26-1 (BCL+) - Body ground	Engine switch on (IG)	Below 1 V
L26-2 (BCL-) - Body ground	Engine switch on (IG)	Below 1 V

NG → **REPAIR OR REPLACE FLOOR WIRE**

OK

RS

23 CHECK FLOOR WIRE (SHORT TO GROUND)

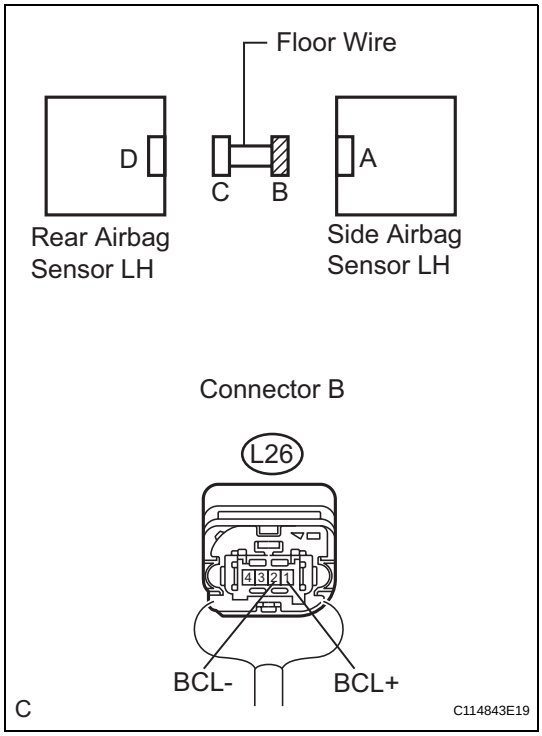

(a) Turn the engine switch off.
(b) Disconnect the negative (-) terminal cable from the battery, and wait for at least 90 seconds.
(c) Measure the resistance according to the value(s) in the table below.
Standard resistance

Tester Connection	Condition	Specified Condition
L26-1 (BCL+) - Body ground	Always	1 MΩ or higher
L26-2 (BCL-) - Body ground	Always	1 MΩ or higher

NG → **REPAIR OR REPLACE FLOOR WIRE**

OK

24 CONFIRM PART NUMBER OF REAR AIRBAG SENSOR

(a) Check that the part number of the rear airbag sensor LH is equal to the number of the other side.
OK:
Those numbers are the same.
(b) Connect the connectors to the side airbag sensor LH and the rear airbag sensor LH.

NG → **Go to step 26**

OK

RS

25 CHECK REAR AIRBAG SENSOR LH

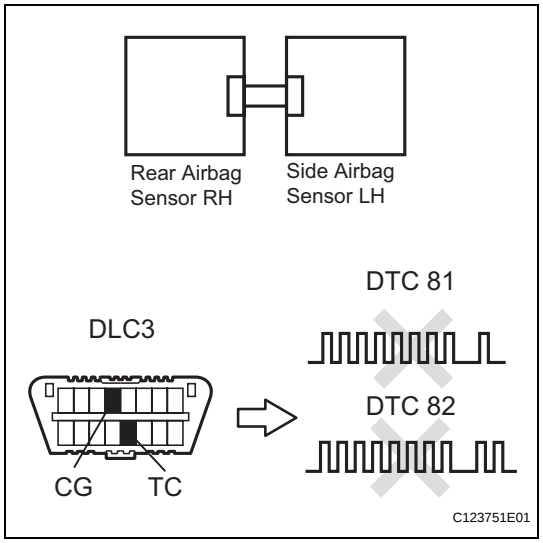

(a) Interchange the rear airbag sensor RH with LH and connect the connectors to them.
(b) Connect the negative (-) terminal cable to the battery, and wait for at least 2 seconds.
(c) Turn the engine switch on (IG), and wait for at least 60 seconds.
(d) Clear the DTCs stored in the memory (See page RS-49).
(e) Turn the engine switch off.
(f) Turn the engine switch on (IG), and wait for at least 60 seconds.
(g) Check the DTCs (See page RS-49).
Result

Result	Proceed to
DTC B1623, B1633, B1643, or 81 is output.	**A**
DTC B1628, B1638, B1648, or 82 is output.	**B**
DTC B1623, B1633, B1643, or 81 and B1628, B1638, B1648, or 82 are not output.	**C**

HINT:
Codes other than DTC B1623, B1633, B1643, or 81 and B1628, B1638, B1648, or 82 may be output at this time, but they are not related to this check.
(h) Turn the engine switch off.
(i) Disconnect the negative (-) terminal cable from the battery, and wait for at least 90 seconds.
(j) Return the rear airbag sensor RH and LH to their original positions and connect the connectors to them.

B → **REPLACE REAR AIRBAG SENSOR LH (See page RS-480)**

C → **USE SIMULATION METHOD TO CHECK (See page RS-37)**

A

26 CHECK CENTER AIRBAG SENSOR ASSEMBLY

(a) Connect the negative (-) terminal cable to the battery, and wait for at least 2 seconds.
(b) Turn the engine switch on (IG), and wait for at least 60 seconds.
(c) Clear the DTCs stored in the memory (See page RS-49).
(d) Turn the engine switch off.
(e) Turn the engine switch on (IG), and wait for at least 60 seconds.
(f) Check the DTCs (See page RS-49).
OK:
DTC B1623, B1633, B1643, or 81 is not output.

HINT:
Codes other than DTC B1623, B1633, B1643, or 81 may be output at this time, but they are not related to this check.

NG → **REPLACE CENTER AIRBAG SENSOR ASSEMBLY (See page RS-468)**

RS

OK

USE SIMULATION METHOD TO CHECK (See page RS-37)

27 CHECK CONNECTION OF CONNECTORS

(a) Turn the engine switch off.
(b) Disconnect the negative (-) terminal cable from the battery, and wait for at least 90 seconds.
(c) Check that the connectors are properly connected to the center airbag sensor assembly and the side airbag sensor LH.
OK:
The connectors are properly connected.

NG → **CONNECT CONNECTORS PROPERLY**

OK

28 CHECK CONNECTORS

(a) Disconnect the connectors from the center airbag sensor assembly and side airbag sensor LH.
(b) Check that the connectors (on the center airbag sensor assembly side and side airbag sensor LH side) are not damaged.
OK:
The connectors are not deformed or damaged.

NG → **REPAIR OR REPLACE FLOOR WIRE**

OK

29 CHECK VEHICLE CONDITION

(a) Check whether or not the vehicle is equipped with the rear side airbag.
Result:
A:
with the rear side airbag
B:
without the rear side airbag

B → **Go to step 37**

A

30 CHECK FLOOR WIRE (OPEN)

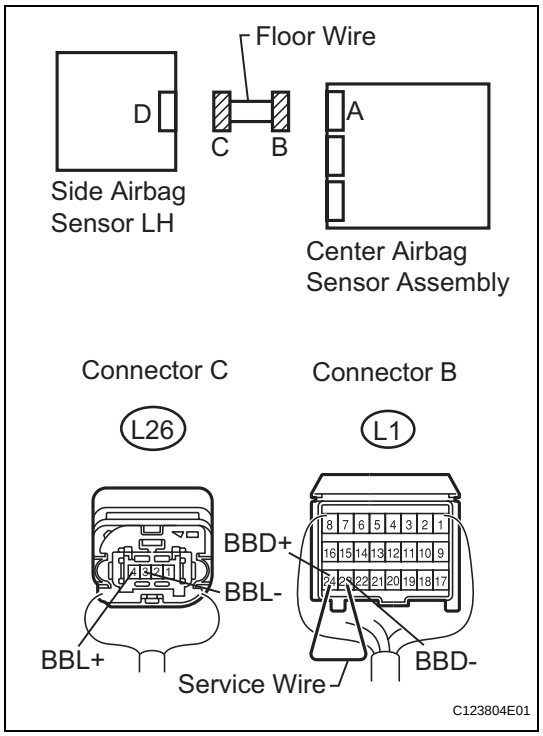

(a) Using a service wire, connect terminals 24 (BBD+) and 23 (BBD-) of connector B.
NOTICE:
Do not forcibly insert a service wire into the terminals of the connector when connecting the wire.

(b) Measure the resistance according to the value(s) in the table below.
Standard resistance

Tester Connection	Condition	Specified Condition
L26-4 (BBL+) - L26-3 (BBL-)	Always	Below 1 Ω

NG → **REPAIR OR REPLACE FLOOR WIRE**

OK

31 CHECK FLOOR WIRE (SHORT)

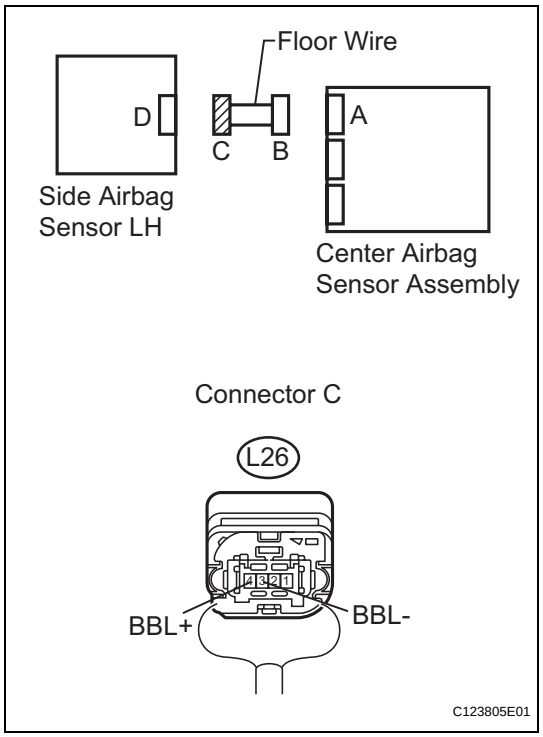

(a) Disconnect the service wire from connector B.

(b) Measure the resistance according to the value(s) in the table below.
Standard resistance

Tester Connection	Condition	Specified Condition
L26-4 (BBL+) - L26-3 (BBL-)	Always	1 MΩ or higher

NG → **REPAIR OR REPLACE FLOOR WIRE**

OK

32 CHECK FLOOR WIRE (SHORT TO B+)

RS

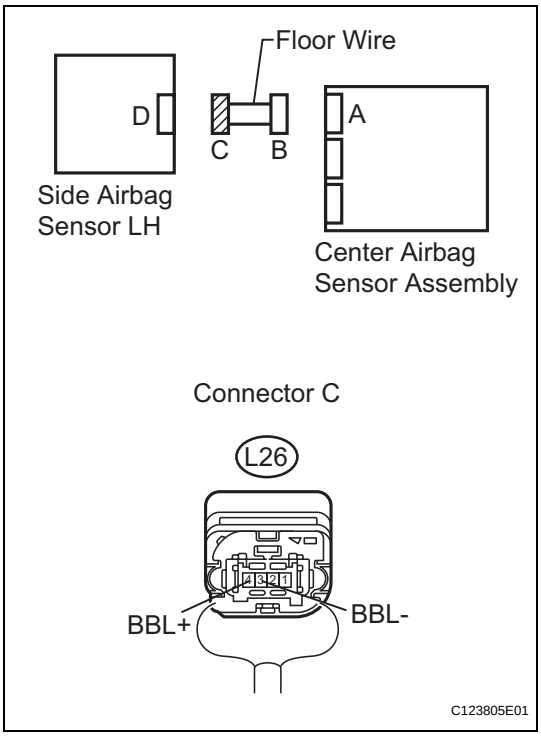

(a) Connect the negative (-) terminal cable to the battery, and wait for at least 2 seconds.
(b) Turn the engine switch on (IG).
(c) Measure the voltage according to the value(s) in the table below.

Standard voltage

Tester Connection	Condition	Specified Condition
L26-4 (BBL+) - Body ground	Engine switch on (IG)	Below 1 V
L26-3 (BBL-) - Body ground	Engine switch on (IG)	Below 1 V

NG → **REPAIR OR REPLACE FLOOR WIRE**

OK

33 CHECK FLOOR WIRE (SHORT TO GROUND)

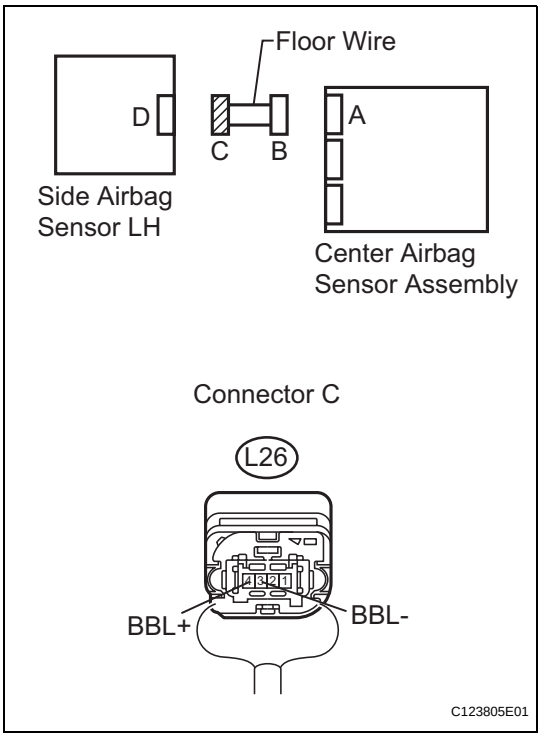

(a) Turn the engine switch off.
(b) Disconnect the negative (-) terminal cable from the battery, and wait for at least 90 seconds.
(c) Measure the resistance according to the value(s) in the table below.

Standard resistance

Tester Connection	Condition	Specified Condition
L26-4 (BBL+) - Body ground	Always	1 MΩ or higher
L26-3 (BBL-) - Body ground	Always	1 MΩ or higher

NG → **REPAIR OR REPLACE FLOOR WIRE**

OK

34 CONFIRM PART NUMBER OF SIDE AIRBAG SENSOR

(a) Check that the part number of the side airbag sensor LH is equal to the number of the other side.
OK:
Those numbers are the same.

(b) Connect the connectors to the center airbag sensor assembly and the side airbag sensor LH.

NG → **Go to step 36**

OK

35 CHECK SIDE AIRBAG SENSOR LH

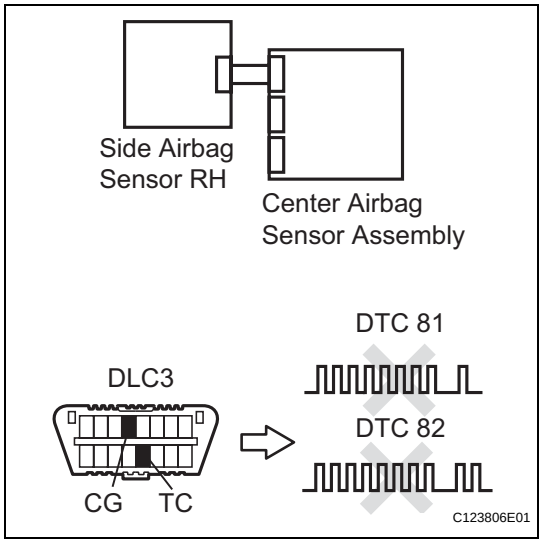

(a) Interchange the side airbag sensor RH with LH and connect the connectors to them.
(b) Connect the negative (-) terminal cable to the battery, and wait for at least 2 seconds.
(c) Turn the engine switch on (IG), and wait for at least 60 seconds.
(d) Clear the DTCs stored in the memory (See page RS-49).
(e) Turn the engine switch off.
(f) Turn the engine switch on (IG), and wait for at least 60 seconds.
(g) Check the DTCs (See page RS-49).
Result

Result	Proceed to
DTC B1623, B1633, B1643, or 81 is output.	A
DTC B1628, B1638, B1648, or 82 is output.	B
DTC B1623, B1633, B1643, or 81 and B1628, B1638, B1648, or 82 are not output.	C

(h) Turn the engine switch off.
(i) Disconnect the negative (-) terminal cable from the battery, and wait for at least 90 seconds.
(j) Return the side airbag sensor RH and LH to their original positions and connect the connectors to them.

B → **REPLACE SIDE AIRBAG SENSOR LH (See page RS-477)**

C → **USE SIMULATION METHOD TO CHECK (See page RS-37)**

A

36 CHECK CENTER AIRBAG SENSOR ASSEMBLY

(a) Connect the negative (-) terminal cable to the battery, and wait for at least 2 seconds.

RS

(b) Turn the engine switch on (IG), and wait for at least 60 seconds.
(c) Clear the DTCs stored in the memory (See page RS-49).
(d) Turn the engine switch off.
(e) Turn the engine switch on (IG), and wait for at least 60 seconds.
(f) Check the DTCs (See page RS-49).
OK:
DTC B1623, B1633, B1643, or 81 is not output.
HINT:
Codes other than DTC B1623, B1633, B1643, or 81 may be output at this time, but they are not related to this check.

NG → **REPLACE CENTER AIRBAG SENSOR ASSEMBLY (See page RS-468)**

OK

USE SIMULATION METHOD TO CHECK (See page RS-37)

37 CHECK FLOOR WIRE (OPEN)

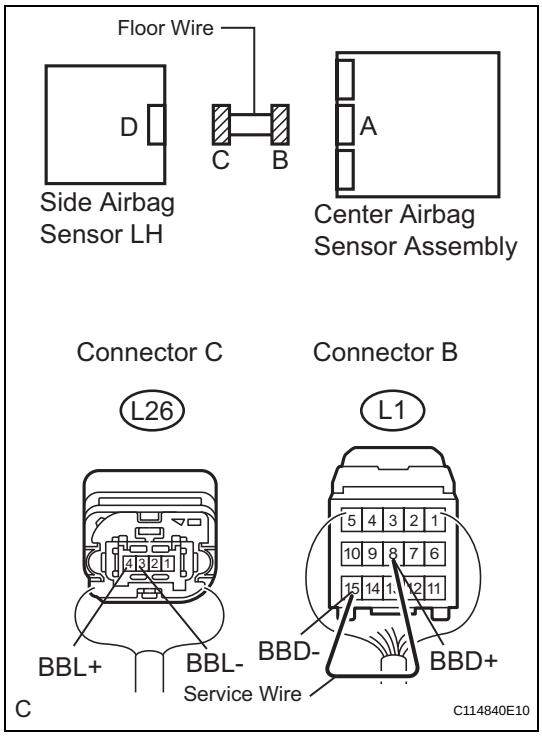

(a) Using a service wire, connect terminals 8 (BBD+) and 15 (BBD-) of connector B.
NOTICE:
Do not forcibly insert a service wire into the terminals of the connector when connecting the wire.
(b) Measure the resistance according to the value(s) in the table below.
Standard resistance

Tester Connection	Condition	Specified Condition
L26-4 (BBL+) - L26-3 (BBL-)	Always	Below 1 Ω

NG → **REPAIR OR REPLACE FLOOR WIRE**

OK

RS

38 CHECK FLOOR WIRE (SHORT)

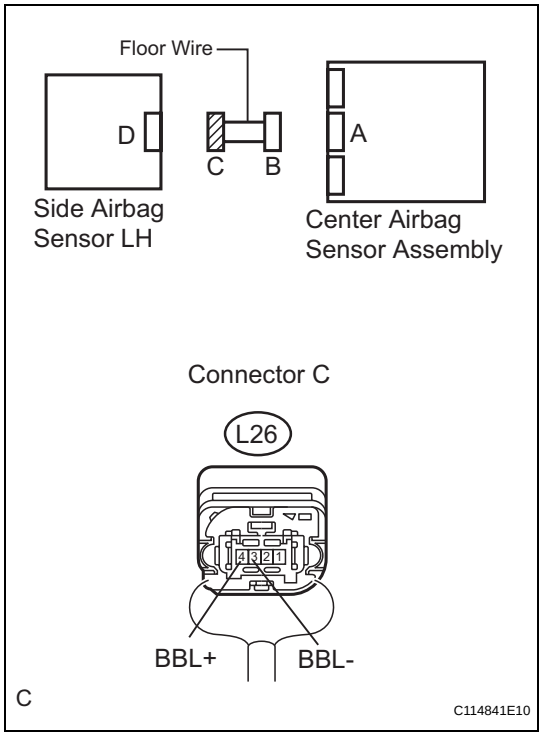

(a) Disconnect the service wire from connector B.
(b) Measure the resistance according to the value(s) in the table below.

Standard resistance

Tester Connection	Condition	Specified Condition
L26-4 (BBL+) - L26-3 (BBL-)	Always	1 MΩ or higher

NG → **REPAIR OR REPLACE FLOOR WIRE**

OK

39 CHECK FLOOR WIRE (SHORT TO B+)

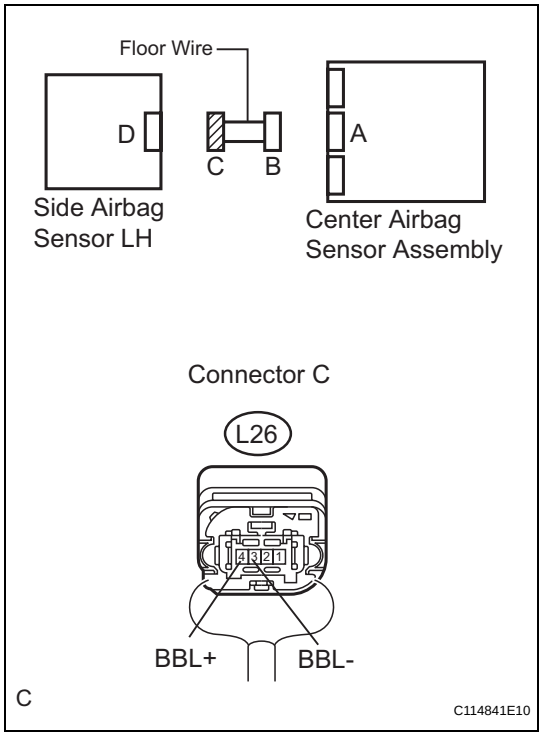

(a) Connect the negative (-) terminal cable to the battery, and wait for at least 2 seconds.
(b) Turn the engine switch on (IG).
(c) Measure the voltage according to the value(s) in the table below.

Standard voltage

Tester Connection	Condition	Specified Condition
L26-4 (BBL+) - Body ground	Engine switch on (IG)	Below 1 V
L26-3 (BBL-) - Body ground	Engine switch on (IG)	Below 1 V

NG → **REPAIR OR REPLACE FLOOR WIRE**

OK

RS

40 CHECK FLOOR WIRE (SHORT TO GROUND)

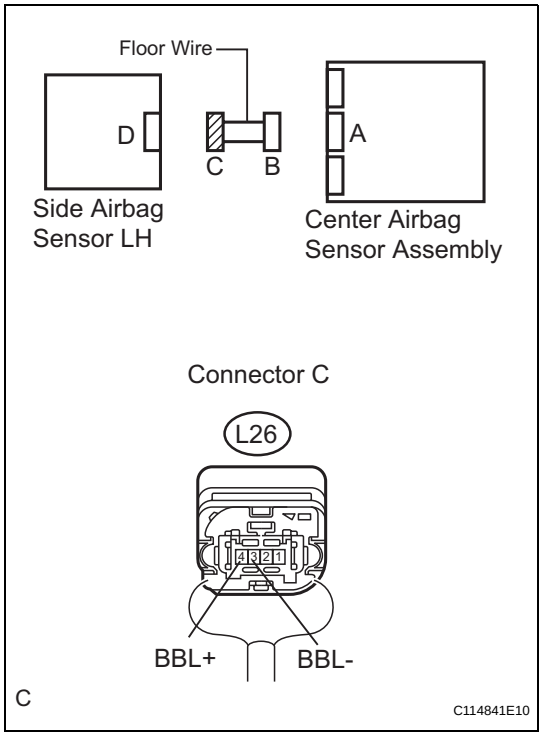

(a) Turn the engine switch off.
(b) Disconnect the negative (-) terminal cable from the battery, and wait for at least 90 seconds.
(c) Measure the resistance according to the value(s) in the table below.
Standard resistance

Tester Connection	Condition	Specified Condition
L26-4 (BBL+) - Body ground	Always	1 MΩ or higher
L26-3 (BBL-) - Body ground	Always	1 MΩ or higher

NG → **REPAIR OR REPLACE FLOOR WIRE**

OK

41 CONFIRM PART NUMBER OF SIDE AIRBAG SENSOR

(a) Check that the part number of the side airbag sensor LH is equal to the number of the other side.
OK:
Those numbers are the same.
(b) Connect the connectors to the center airbag sensor assembly and the side airbag sensor LH.

NG → **Go to step 43**

OK

RS

42 CHECK SIDE AIRBAG SENSOR LH

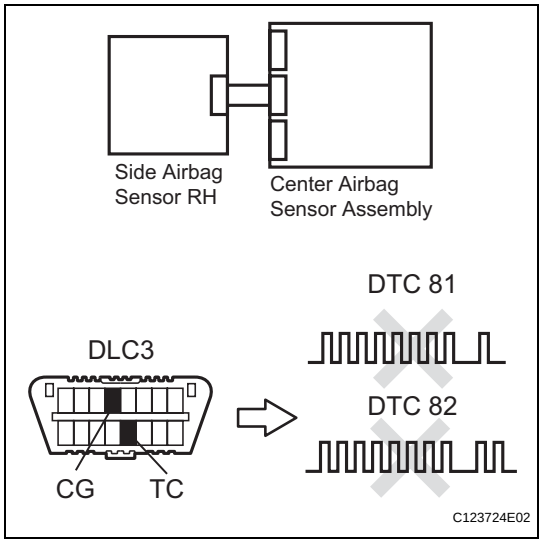

(a) Interchange the side airbag sensor RH with LH and connect the connectors to them.
(b) Connect the negative (-) terminal cable to the battery, and wait for at least 2 seconds.
(c) Turn the engine switch on (IG), and wait for at least 60 seconds.
(d) Clear the DTCs stored in the the memory (See page RS-49).
(e) Turn the engine switch off.
(f) Turn the engine switch on (IG), and wait for at least 60 seconds.
(g) Check the DTCs (See page RS-49).

Result

Result	Proceed to
DTC B1623, B1633, B1643, or 81 is output.	A
DTC B1628, B1638, B1648, or 82 is output.	B
DTC B1623, B1633, B1643, or 81 and B1628, B1638, B1648, or 82 are not output.	C

(h) Turn the engine switch off.
(i) Disconnect the negative (-) terminal cable from the battery, and wait for at least 90 seconds.
(j) Return the side airbag sensor RH and LH to their original positions and connect the connectors to them.

B → **REPLACE SIDE AIRBAG SENSOR LH (See page RS-477)**

C → **USE SIMULATION METHOD TO CHECK (See page RS-37)**

A

43 CHECK CENTER AIRBAG SENSOR ASSEMBLY

(a) Connect the negative (-) terminal cable to the battery, and wait for at least 2 seconds.
(b) Turn the engine switch on (IG), and wait for at least 60 seconds.
(c) Clear the DTCs stored in the memory (See page RS-49).
(d) Turn the engine switch off.
(e) Turn the engine switch on (IG), and wait for at least 60 seconds.
(f) Check the DTCs (See page RS-49).

OK:

DTC B1623, B1633, B1643, or 81 is not output.

HINT:
Codes other than DTC B1623, B1633, B1643, or 81 may be output at this time, but they are not related to this check.

NG → **REPLACE CENTER AIRBAG SENSOR ASSEMBLY (See page RS-468)**

OK

RS

USE SIMULATION METHOD TO CHECK (See page RS-37)

DTC	B1625/22	Front Passenger Side - Side Airbag Sensor Malfunction

DESCRIPTION

The side airbag sensor RH consists of the safing sensor, the diagnostic circuit, the lateral deceleration sensor, etc.
If the center airbag sensor assembly receives signals from the lateral deceleration sensor, it determines whether the SRS should be activated.
DTC B1625/22 is recorded when a malfunction is detected in the front passenger side - side airbag sensor circuit.

DTC No.	DTC Detection Condition	Trouble Area
B1625/22	• Side airbag sensor RH malfunction • Center airbag sensor assembly malfunction	• Side airbag sensor RH • Center airbag sensor assembly

WIRING DIAGRAM

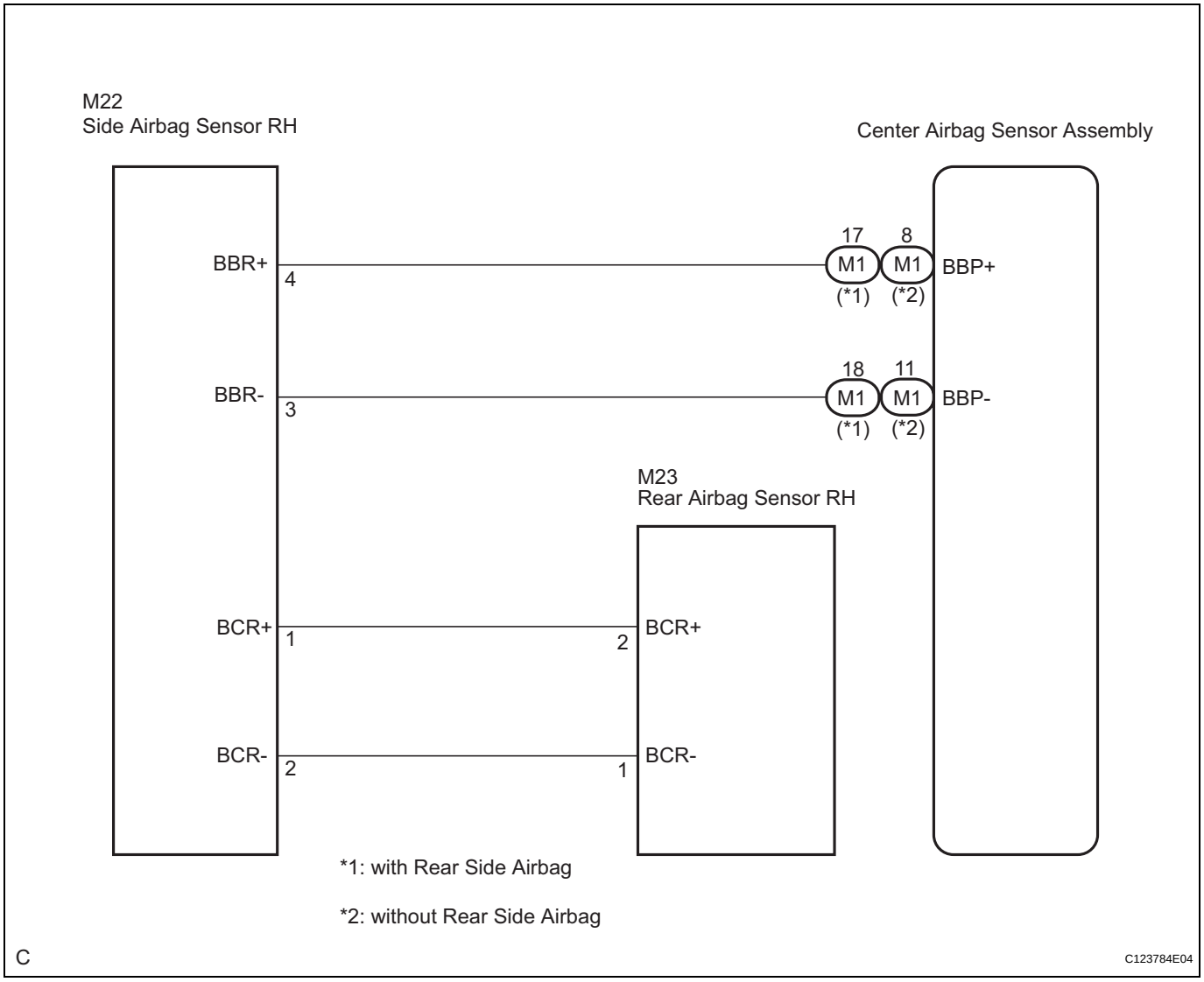

INSPECTION PROCEDURE

RS

1	CHECK DTC

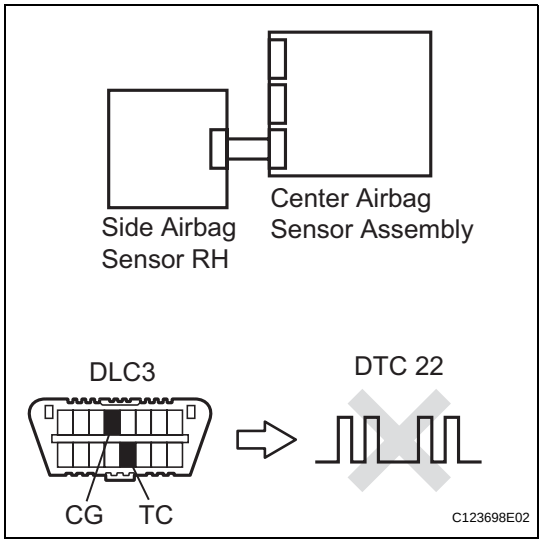

(a) Turn the engine switch on (IG), and wait for at least 60 seconds.
(b) Clear the DTCs stored in the memory (See page RS-49).
(c) Turn the engine switch off.
(d) Turn the engine switch on (IG), and wait for at least 60 seconds.
(e) Check the DTCs (See page RS-49).
OK:
DTC B1625/22 is not output.
HINT:
Codes other than DTC B1625/22 may be output at this time, but they are not related to this check.

OK → **USE SIMULATION METHOD TO CHECK (See page RS-37)**

NG

2	CONFIRM PART NUMBER OF SIDE AIRBAG SENSOR

(a) Turn the engine switch off.
(b) Disconnect the negative (-) terminal cable from the battery, and wait for at least 90 seconds.
(c) Check that the part number of the side airbag sensor RH is equal to the number of the other side.
OK:
Those numbers are the same.

NG → **Go to step 4**

OK

RS

3 CHECK SIDE AIRBAG SENSOR RH

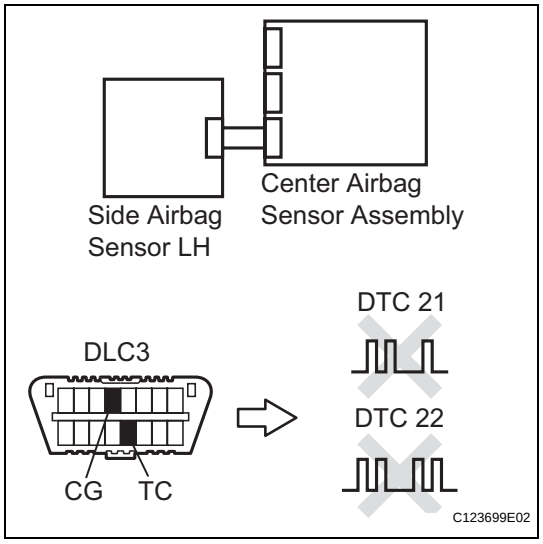

(a) Connect the connectors to the center airbag sensor assembly.
(b) Interchange the side airbag sensor LH with RH and connect the connectors to them.
(c) Connect the negative (-) terminal cable to the battery, and wait for at least 2 seconds.
(d) Turn the engine switch on (IG), and wait for at least 60 seconds.
(e) Clear the DTCs stored in the memory (See page RS-49).
(f) Turn the engine switch off.
(g) Turn the engine switch on (IG), and wait for at least 60 seconds.
(h) Check the DTCs (See page RS-49).

Result

Result	Proceed to
DTC B1625/22 is output.	A
DTC B1620/21 is output.	B
DTC B1620/21 and B1625/22 are not output.	C

HINT:
Codes other than DTC B1620/21 and B1625/22 may be output at this time, but they are not related to this check.

(i) Turn the engine switch off.
(j) Disconnect the negative (-) terminal cable from the battery, and wait for at least 90 seconds.
(k) Return the side airbag sensor LH and RH to their original positions and connect the connectors to them.

A → **Go to step 5**

B → **REPLACE SIDE AIRBAG SENSOR RH (See page RS-477)**

C

USE SIMULATION METHOD TO CHECK (See page RS-37)

4 REPLACE SIDE AIRBAG SENSOR RH

(a) Replace the side airbag sensor RH (See page RS-477).
HINT:
Perform inspection using parts from a normal vehicle if possible.

NEXT

RS

5	CHECK CENTER AIRBAG SENSOR ASSEMBLY

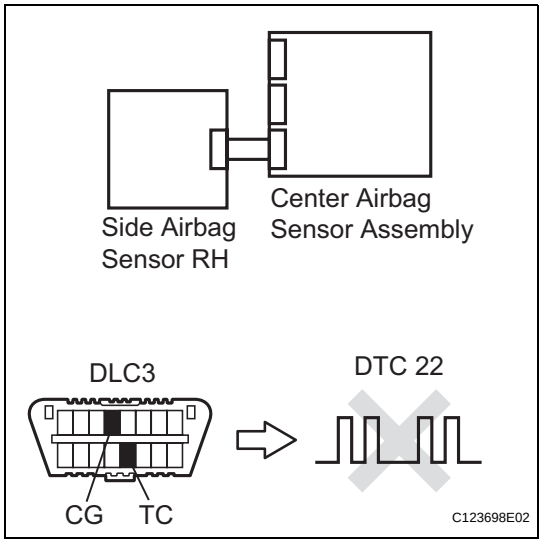

(a) Connect the negative (-) terminal cable to the battery, and wait for at least 2 seconds.
(b) Turn the engine switch on (IG), and wait for at least 60 seconds.
(c) Clear the DTCs stored in the memory (See page RS-49).
(d) Turn the engine switch off.
(e) Turn the engine switch on (IG), and wait for at least 60 seconds.
(f) Check the DTCs (See page RS-49).
OK:
DTC B1625/22 is not output.
HINT:
Codes other than DTC B1625/22 may be output at this time, but they are not related to this check.

NG → **REPLACE CENTER AIRBAG SENSOR ASSEMBLY (See page RS-468)**

OK

USE SIMULATION METHOD TO CHECK (See page RS-37)

DTC	**B1627/82**	**Lost Communication with Front Passenger Side - Side Airbag Sensor Assembly**

DTC	**B1628/82**	**Front Passenger Side - Side Airbag Sensor Assembly Initialization Incomplete**

DTC	**B1637/82**	**Lost Communication with Passenger Side Rear Airbag Sensor**

DTC	**B1638/82**	**Passenger Side Rear Airbag Sensor Initialization Incomplete**

DTC	**B1647/82**	**Lost Communication with Front Passenger Side Satellite Sensor Bus**

DTC	**B1648/82**	**Front Passenger Side Satellite Sensor Bus Initialization Incomplete**

DESCRIPTION

The circuit for the side collision sensor RH (to determine deployment of the front seat side airbag assembly RH and curtain shield airbag assembly RH) is composed of the center airbag sensor assembly, side airbag sensor RH, and rear airbag sensor RH.
The side airbag sensor RH and rear airbag sensor RH detect impacts to the vehicle and send signals to the center airbag sensor assembly to determine if the airbag should be deployed.
DTC B1627/82, B1628/82, B1637/82, B1638/82, B1647/82, or B1648/82 is recorded when a malfunction is detected in the circuit for the side collision sensor RH.

DTC No.	DTC Detecting Condition	Trouble Area
B1627/82 B1628/82 B1637/82 B1638/82 B1647/82 B1648/82	• The center airbag sensor assembly receives a line short circuit signal, an open circuit signal, a short circuit to ground signal or a short circuit to B+ signal in the circuit for the side collision sensor RH (to determine deployment of the front seat side airbag assembly RH and curtain shield airbag assembly RH) for 2 seconds. • Side airbag sensor RH malfunction • Rear airbag sensor RH malfunction • Center airbag sensor assembly malfunction	• Floor wire No. 2 • Side airbag sensor RH • Rear airbag sensor RH • Center airbag sensor assembly

RS

WIRING DIAGRAM

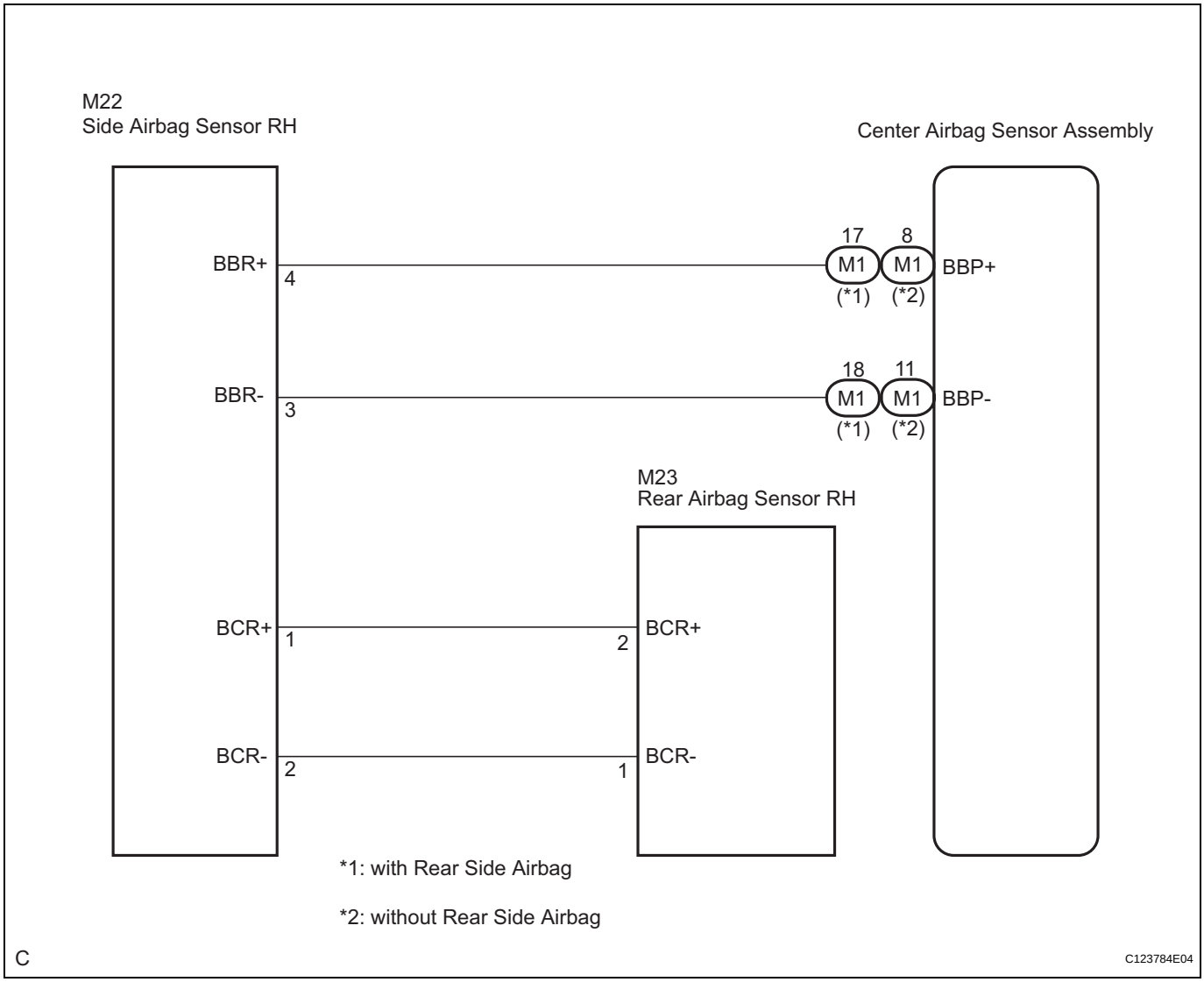

INSPECTION PROCEDURE

1	CHECK DTC

(a) Turn the engine switch on (IG), and wait for at least 60 seconds.

(b) Turn the engine switch off.
HINT:
If a communication error occurs, DTCs for both the LH and RH sides will be stored simultaneously. To identify the malfunctioning area, turn the engine switch off and then on (IG) again.

(c) Turn the engine switch on (IG), and wait for at least 60 seconds.

(d) Check the present DTCs (See page RS-49).
Result

Result	Proceed to
Present DTC B1628, B1638, B1648, or 82 is output.	**A**

Result	Proceed to
Present DTC B1623, B1633 B1643, or 81 is output.	B
Present DTC B1623, B1633, B1643, or 81 and B1628, B1638, B1648, or 82 are not output.	C

HINT:
- DTCs indicating communication errors will be changed to DTCs indicating errors in initialization by turning the engine switch off and then on (IG) again.
- Codes other than present DTC B1623, B1633, B1643, or 81 and B1628, B1638, B1648, or 82 may be output at this time, but they are not related to this check.

B → **REPAIR CIRCUITS INDICATED BY OUTPUT DTCS**

C → **USE SIMULATION METHOD TO CHECK (See page RS-37)**

A

2 CHECK PAST DTC

(a) Check the past DTCs (See page RS-49).
Result

Result	Proceed to
• Past DTC B1637, B1647, or 82 is output. • Past DTC B1627, B1637, B1647, or 82 is not output.	A
Past DTC B1627 is output.	B

HINT:
Codes other than past DTC B1627, B1637, B1647, or 82 may be output at this time, but they are not related to this check.

B → **Go to step 20**

A

3 CHECK CONNECTION OF CONNECTORS

(a) Turn the engine switch off.
(b) Disconnect the negative (-) terminal cable from the battery, and wait for at least 90 seconds.
(c) Check that the connectors are properly connected to the center airbag sensor assembly and the side airbag sensor RH.
OK:
The connectors are properly connected.

NG → **CONNECT CONNECTORS PROPERLY**

OK

4	CHECK CONNECTORS

RS

(a) Disconnect the connectors from the center airbag sensor assembly and side airbag sensor RH.
(b) Check that the connectors (on the center airbag sensor assembly side and side airbag sensor RH side) are not damaged.
OK:
The connectors are not deformed or damaged.

NG → **REPAIR OR REPLACE FLOOR WIRE NO. 2**

OK

5	CHECK FLOOR WIRE NO. 2 (OPEN)

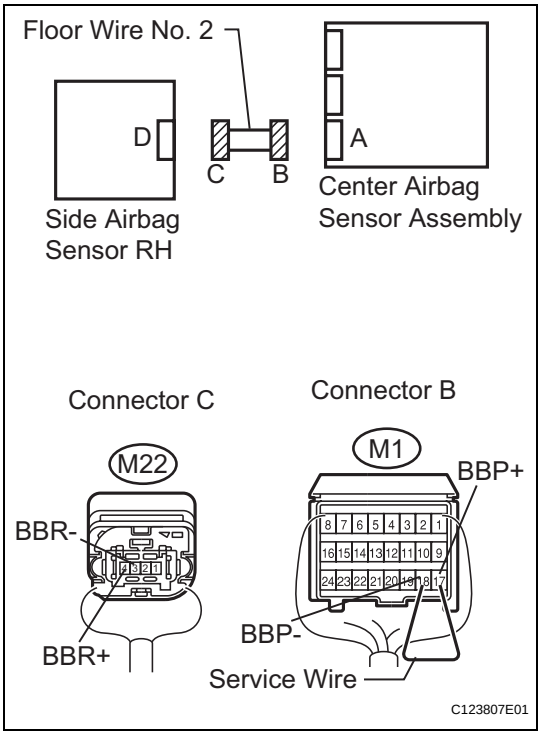

(a) with Rear side airbag:
Using a service wire, connect terminals 17 (BBP+) and 18 (BBP-) of connector B.
NOTICE:
Do not forcibly insert a service wire into the terminals of the connector when connecting the wire.

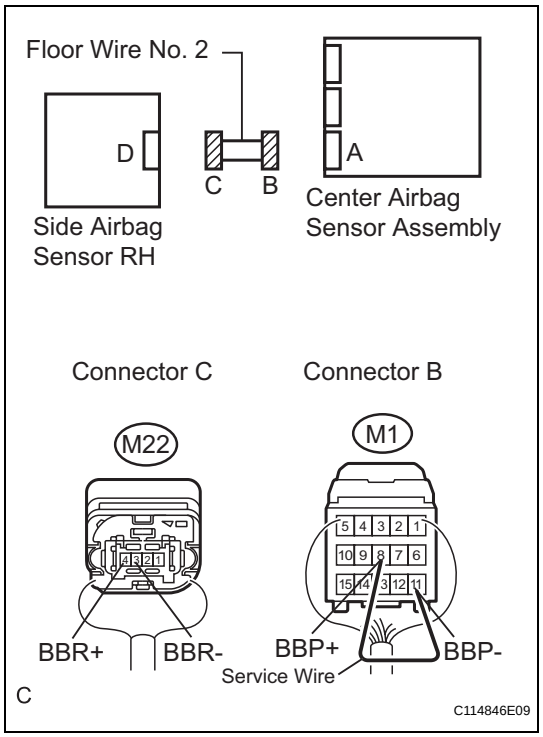

(b) without Rear side airbag:
Using a service wire, connect terminals 8 (BBP+) and 11 (BBP-) of connector B.
NOTICE:
Do not forcibly insert a service wire into the terminals of the connector when connecting the wire.

(c) Measure the resistance according to the value(s) in the table below.
Standard resistance

Tester Connection	Condition	Specified Condition
M22-4 (BBR+) - M22-3 (BBR-)	Always	Below 1 Ω

NG → **REPAIR OR REPLACE FLOOR WIRE NO. 2**

OK

6 CHECK FLOOR WIRE NO. 2 (SHORT)

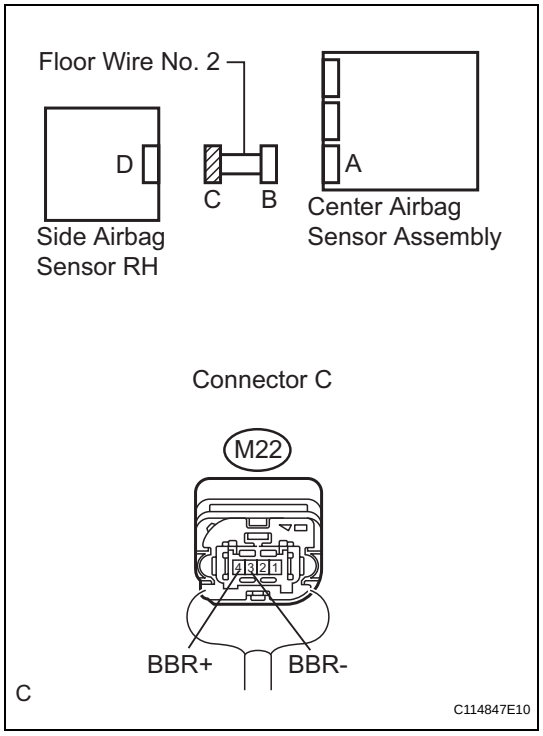

(a) Disconnect the service wire from connector B.

(b) Measure the resistance according to the value(s) in the table below.
Standard resistance

Tester Connection	Condition	Specified Condition
M22-4 (BBR+) - M22-3 (BBR-)	Always	1 MΩ or higher

NG → **REPAIR OR REPLACE FLOOR WIRE NO. 2**

OK

RS

7 CHECK FLOOR WIRE NO. 2 (SHORT TO B+)

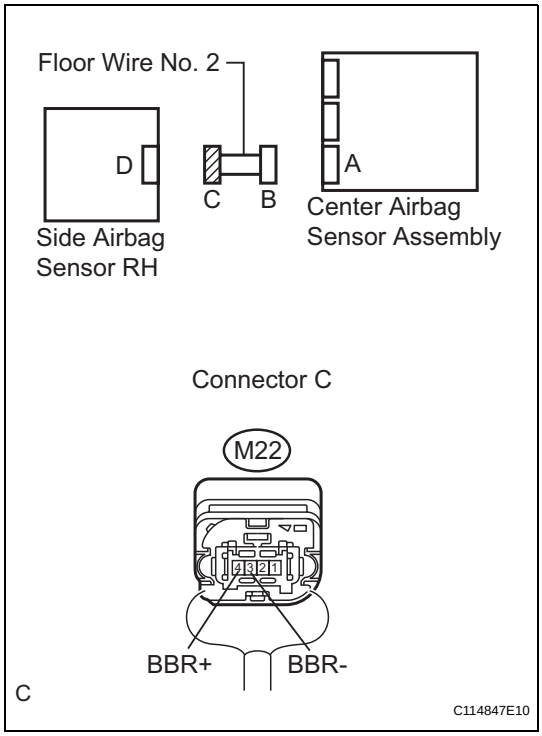

(a) Connect the negative (-) terminal cable to the battery, and wait for at least 2 seconds.
(b) Turn the engine switch on (IG).
(c) Measure the voltage according to the value(s) in the table below.

Standard voltage

Tester Connection	Condition	Specified Condition
M22-4 (BBR+) - Body ground	Engine switch on (IG)	Below 1 V
M22-3 (BBR-) - Body ground	Engine switch on (IG)	Below 1 V

NG → **REPAIR OR REPLACE FLOOR WIRE NO. 2**

OK

8 CHECK FLOOR WIRE NO. 2 (SHORT TO GROUND)

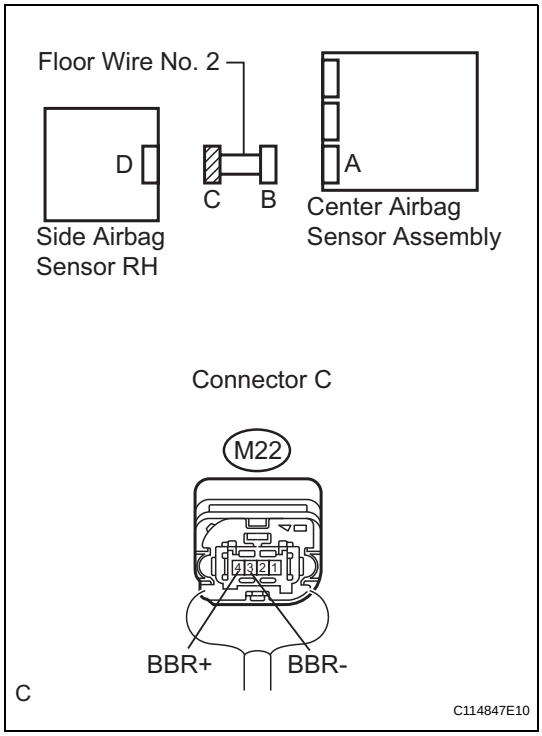

(a) Turn the engine switch off.
(b) Disconnect the negative (-) terminal cable from the battery, and wait for at least 90 seconds.
(c) Measure the resistance according to the value(s) in the table below.

Standard resistance

Tester Connection	Condition	Specified Condition
M22-4 (BBR+) - Body ground	Always	1 MΩ or higher
M22-3 (BBR-) - Body ground	Always	1 MΩ or higher

NG → **REPAIR OR REPLACE FLOOR WIRE NO. 2**

OK

RS

9	CONFIRM PART NUMBER OF SIDE AIRBAG SENSOR

(a) Check that the part number of the side airbag sensor RH is equal to the number of the other side.
OK:
Those numbers are the same.

(b) Connect the connectors to the center airbag sensor assembly and the side airbag sensor RH.

NG → **Go to step 11**

OK

10	CHECK SIDE AIRBAG SENSOR RH

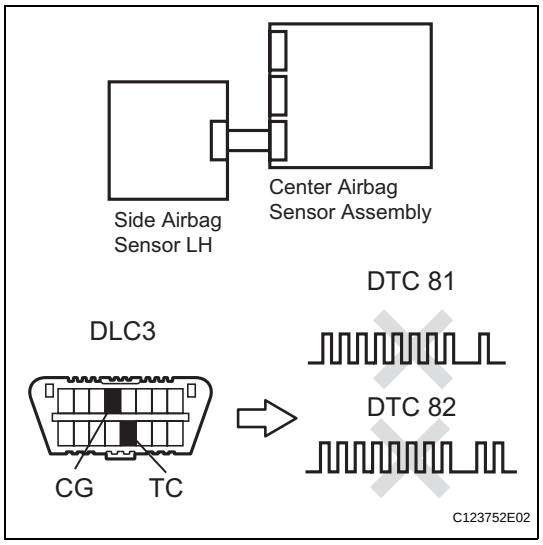

(a) Interchange the side airbag sensor LH with RH and connect the connectors to them.
(b) Connect the negative (-) terminal cable to the battery, and wait for at least 2 seconds.
(c) Turn the engine switch on (IG), and wait for at least 60 seconds.
(d) Clear the DTCs stored in the memory (See page RS-49).
(e) Turn the engine switch off.
(f) Turn the engine switch on (IG), and wait for at least 60 seconds.
(g) Check the DTCs (See page RS-49).
Result

Result	Proceed to
DTC B1628, B1638, B1648, or 82 is output.	A
DTC B1623, B1633, B1643, or 81 is output.	B
DTC B1623, B1633, B1643, or 81 and B1628, B1638, B1648, or 82 are not output.	C

(h) Turn the engine switch off.
(i) Disconnect the negative (-) terminal cable from the battery, and wait for at least 90 seconds.
(j) Return the side airbag sensor LH and RH to their original positions and connect the connectors to them.

B → **REPLACE SIDE AIRBAG SENSOR RH (See page RS-477)**

C → **USE SIMULATION METHOD TO CHECK (See page RS-37)**

A

11	CHECK CONNECTION OF CONNECTOR

(a) Check that the connector is properly connected to the rear airbag sensor RH.
OK:
The connector is properly connected.

NG → **CONNECT CONNECTOR PROPERLY**

OK

RS

12 CHECK CONNECTOR

(a) Disconnect the connectors from the side airbag sensor RH and rear airbag sensor RH.
(b) Check that the connector (on the rear airbag sensor RH side) is not damaged.
OK:
The connector is not deformed or damaged.

NG → **REPAIR OR REPLACE FLOOR WIRE NO. 2**

OK

13 CHECK FLOOR WIRE NO. 2 (OPEN)

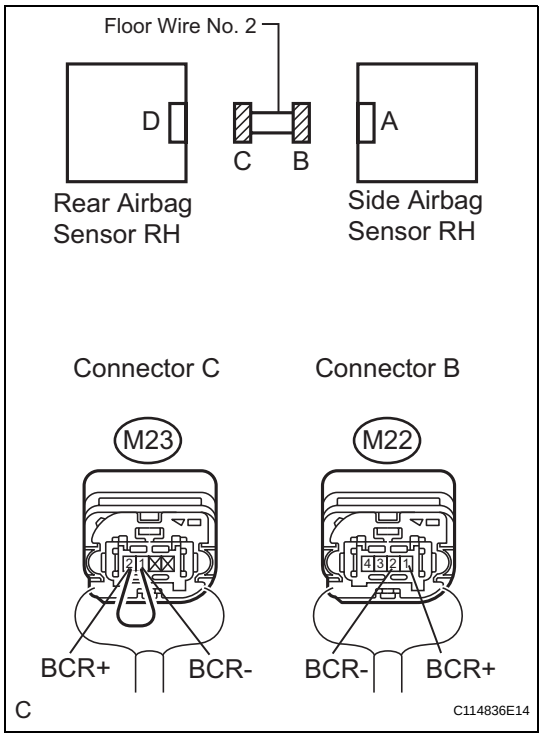

(a) Using a service wire, connect terminals 2 (BCR+) and 1 (BCR-) of connector C.
NOTICE:
Do not forcibly insert a service wire into the terminals of the connector when connecting the wire.
(b) Measure the resistance according to the value(s) in the table below.
Standard resistance

Tester Connection	Condition	Specified Condition
M22-2 (BCR-) - M22-1 (BCR+)	Always	Below 1 Ω

NG → **REPAIR OR REPLACE FLOOR WIRE NO. 2**

OK

RS

14 CHECK FLOOR WIRE NO. 2 (SHORT)

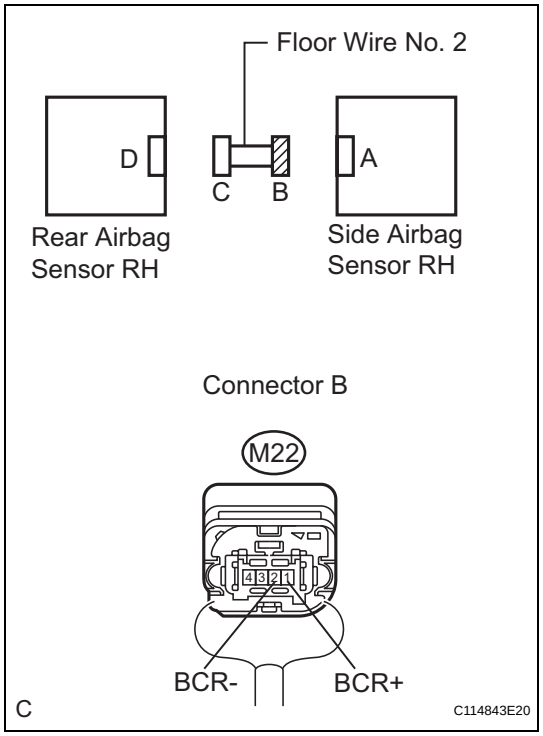

(a) Disconnect the service wire from connector C.
(b) Measure the resistance according to the value(s) in the table below.

Standard resistance

Tester Connection	Condition	Specified Condition
M22-1 (BCR+) - M22-2 (BCR-)	Always	1 MΩ or higher

NG → **REPAIR OR REPLACE FLOOR WIRE NO. 2**

OK

15 CHECK FLOOR WIRE NO. 2 (SHORT TO B+)

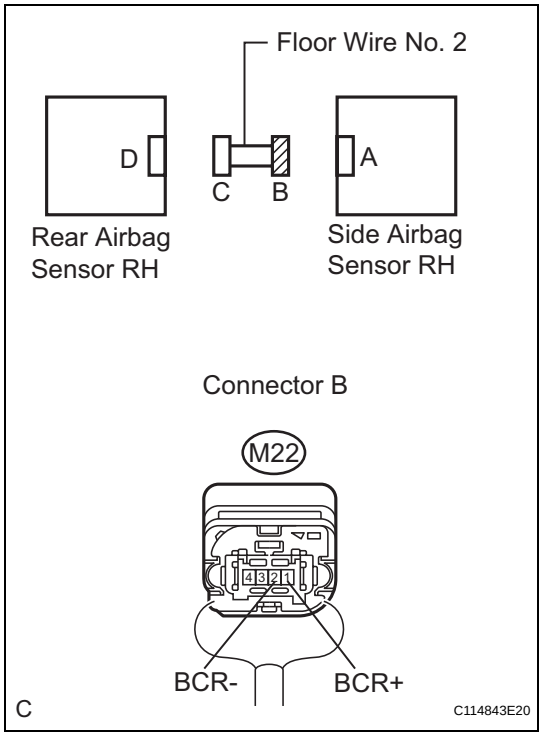

(a) Connect the negative (-) terminal cable to the battery, and wait for at least 2 seconds.
(b) Turn the engine switch on (IG).
(c) Measure the voltage according to the value(s) in the table below.

Standard voltage

Tester Connection	Condition	Specified Condition
M22-1 (BCR+) - Body ground	Engine switch on (IG)	Below 1 V
M22-2 (BCR-) - Body ground	Engine switch on (IG)	Below 1 V

NG → **REPAIR OR REPLACE FLOOR WIRE NO. 2**

OK

RS

16 CHECK FLOOR WIRE NO. 2 (SHORT TO GROUND)

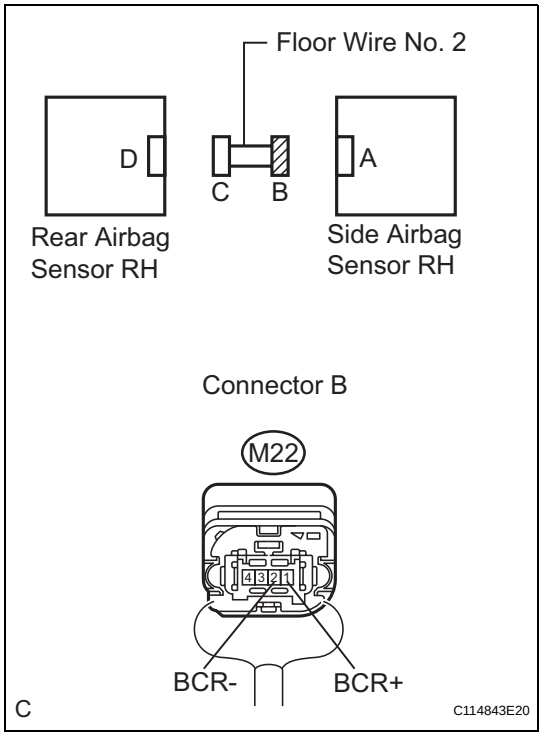

(a) Turn the engine switch off.
(b) Disconnect the negative (-) terminal cable from the battery, and wait for at least 90 seconds.
(c) Measure the resistance according to the value(s) in the table below.
Standard resistance

Tester Connection	Condition	Specified Condition
M22-1 (BCR+) - Body ground	Always	1 MΩ or higher
M22-2 (BCR-) - Body ground	Always	1 MΩ or higher

NG → **REPAIR OR REPLACE FLOOR WIRE NO. 2**

OK

17 CONFIRM PART NUMBER OF REAR AIRBAG SENSOR

(a) Check that the part number of the rear airbag sensor RH is equal to the number of the other side.
OK:
Those numbers are the same.
(b) Connect the connectors to the side airbag sensor RH and the rear airbag sensor RH.

NG → **Go to step 19**

OK

RS

18 CHECK REAR AIRBAG SENSOR RH

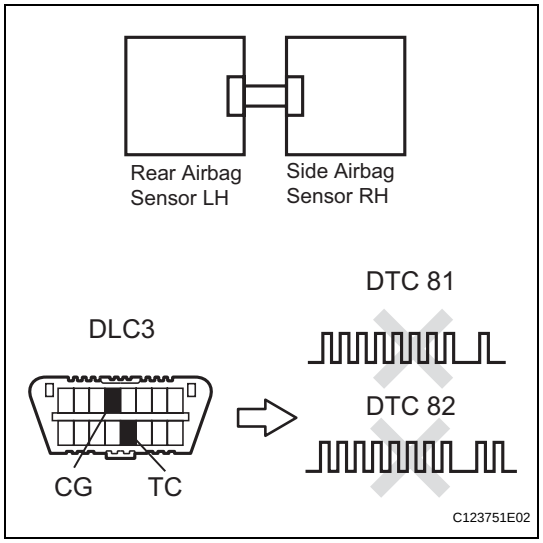

(a) Interchange the side airbag sensor LH with RH and connect the connectors to them.
(b) Connect the negative (-) terminal cable to the battery, and wait for at least 2 seconds.
(c) Turn the engine switch on (IG), and wait for at least 60 seconds.
(d) Clear the DTCs stored in the memory (See page RS-49).
(e) Turn the engine switch off.
(f) Turn the engine switch on (IG), and wait for at least 60 seconds.
(g) Check the DTCs (See page RS-49).
Result

Result	Proceed to
DTC B1628, B1638, B1648, or 82 is output.	**A**
DTC B1623, B1633, B1643, or 81 is output.	**B**
DTC B1623, B1633, B1643, or 81 and B1628, B1638, B1648, or 82 are not output.	**C**

HINT:
Codes other than DTC B1623, B1633, B1643, or 81 and B1628, B1638, B1648, or 82 may be output at this time, but they are not related to this check.
(h) Turn the engine switch off.
(i) Disconnect the negative (-) terminal cable from the battery, and wait for at least 90 seconds.
(j) Return the rear airbag sensor LH and RH to their original positions and connect the connectors to them.

B → **REPLACE REAR AIRBAG SENSOR RH (See page RS-480)**

C → **USE SIMULATION METHOD TO CHECK (See page RS-37)**

A

19 CHECK CENTER AIRBAG SENSOR ASSEMBLY

(a) Connect the negative (-) terminal cable to the battery, and wait for at least 2 seconds.
(b) Turn the engine switch on (IG), and wait for at least 60 seconds.
(c) Clear the DTCs stored in the memory (See page RS-49).
(d) Turn the engine switch off.
(e) Turn the engine switch on (IG), and wait for at least 60 seconds.
(f) Check the DTCs (See page RS-49).
OK:
DTC B1628, B1638, B1648, or 82 is not output.

HINT:
Codes other than DTC B1628, B1638, B1648, or 82 may be output at this time, but they are not related to this check.

NG → **REPLACE CENTER AIRBAG SENSOR ASSEMBLY (See page RS-468)**

RS

OK

USE SIMULATION METHOD TO CHECK (See page RS-37)

20 CHECK CONNECTION OF CONNECTORS

(a) Turn the engine switch off.
(b) Disconnect the negative (-) terminal cable from the battery, and wait for at least 90 seconds.
(c) Check that the connectors are properly connected to the center airbag sensor assembly and the side airbag sensor RH.
OK:
The connectors are properly connected.

NG → **CONNECT CONNECTORS PROPERLY**

OK

21 CHECK CONNECTORS

(a) Disconnect the connectors from the center airbag sensor assembly and side airbag sensor RH.
(b) Check that the connectors (on the center airbag sensor assembly side and side airbag sensor RH side) are not damaged.
OK:
The connectors are not deformed or damaged.

NG → **REPAIR OR REPLACE FLOOR WIRE NO. 2**

OK

RS

22 CHECK FLOOR WIRE NO. 2 (OPEN)

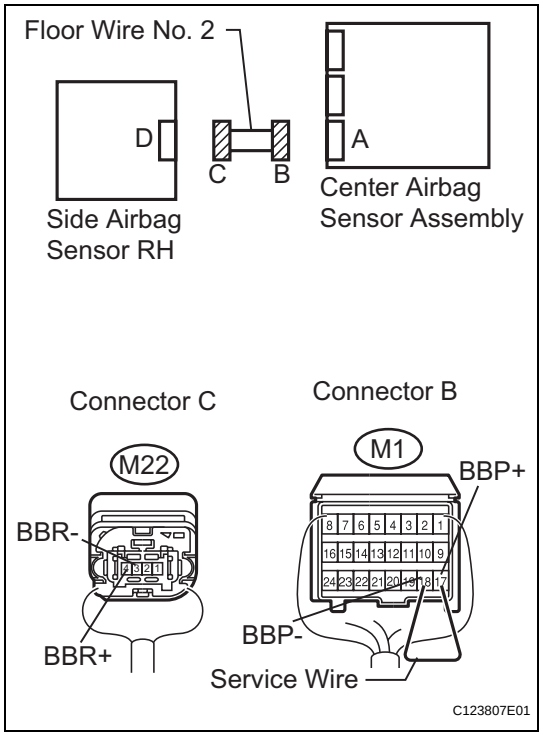

(a) with Rear side airbag:
Using a service wire, connect terminals 17 (BBP+) and 18 (BBP-) of connector B.
NOTICE:
Do not forcibly insert a service wire into the terminals of the connector when connecting the wire.

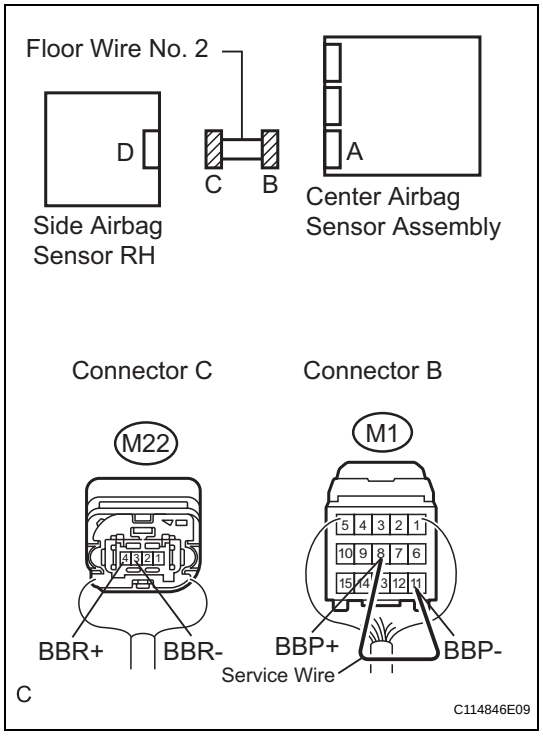

(b) without Rear side airbag:
Using a service wire, connect terminals 8 (BBP+) and 11 (BBP-) of connector B.
NOTICE:
Do not forcibly insert a service wire into the terminals of the connector when connecting the wire.

(c) Measure the resistance according to the value(s) in the table below.
Standard resistance

Tester Connection	Condition	Specified Condition
M22-4 (BBR+) - M22-3 (BBR-)	Always	Below 1 Ω

NG → **REPAIR OR REPLACE FLOOR WIRE NO. 2**

OK

RS

23 CHECK FLOOR WIRE NO. 2 (SHORT)

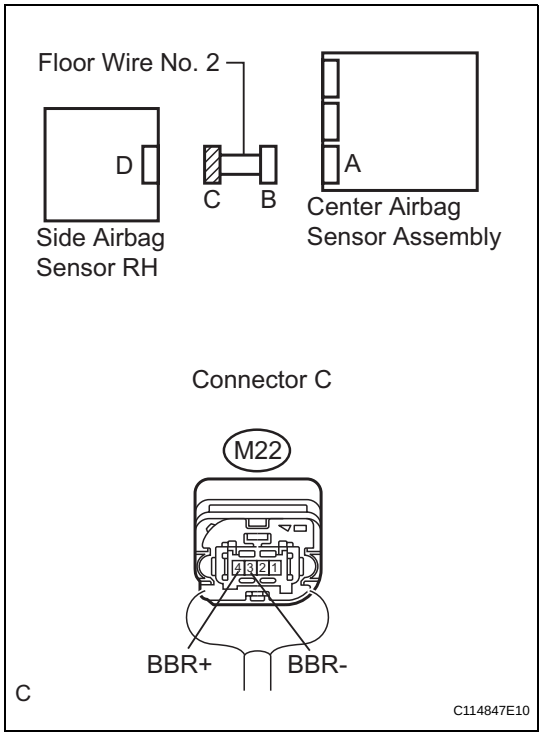

(a) Disconnect the service wire from connector B.
(b) Measure the resistance according to the value(s) in the table below.

Standard resistance

Tester Connection	Condition	Specified Condition
M22-4 (BBR+) - M22-3 (BBR-)	Always	1 MΩ or higher

NG → **REPAIR OR REPLACE FLOOR WIRE NO. 2**

OK

24 CHECK FLOOR WIRE NO. 2 (SHORT TO B+)

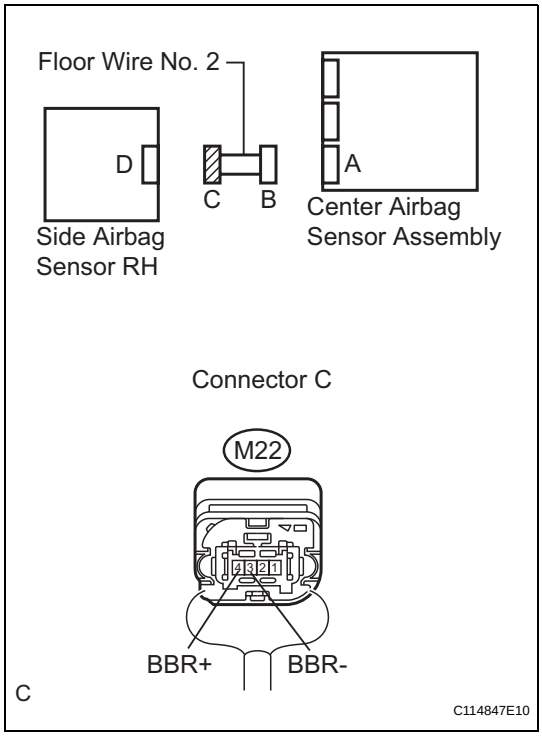

(a) Connect the negative (-) terminal cable to the battery, and wait for at least 2 seconds.
(b) Turn the engine switch on (IG).
(c) Measure the voltage according to the value(s) in the table below.

Standard voltage

Tester Connection	Condition	Specified Condition
M22-4 (BBR+) - Body ground	Engine switch on (IG)	Below 1 V
M22-3 (BBR-) - Body ground	Engine switch on (IG)	Below 1 V

NG → **REPAIR OR REPLACE FLOOR WIRE NO. 2**

OK

RS

25 CHECK FLOOR WIRE NO. 2 (SHORT TO GROUND)

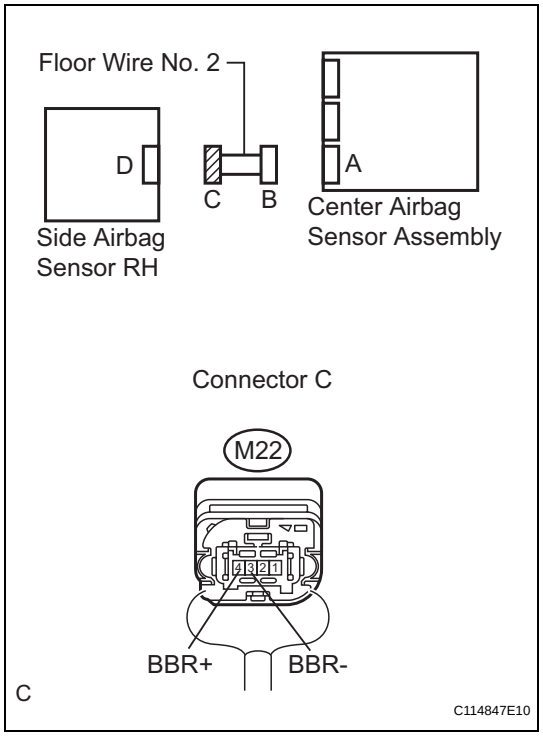

(a) Turn the engine switch off.
(b) Disconnect the negative (-) terminal cable from the battery, and wait for at least 90 seconds.
(c) Measure the resistance according to the value(s) in the table below.
Standard resistance

Tester Connection	Condition	Specified Condition
M22-4 (BBR+) - Body ground	Always	1 MΩ or higher
M22-3 (BBR-) - Body ground	Always	1 MΩ or higher

NG → **REPAIR OR REPLACE FLOOR WIRE NO. 2**

OK

26 CONFIRM PART NUMBER OF SIDE AIRBAG SENSOR

(a) Check that the part number of the side airbag sensor RH is equal to the number of the other side.
OK:
Those numbers are the same.
(b) Connect the connectors to the center airbag sensor assembly and the side airbag sensor RH.

NG → **Go to step 28**

OK

RS

27 CHECK SIDE AIRBAG SENSOR RH

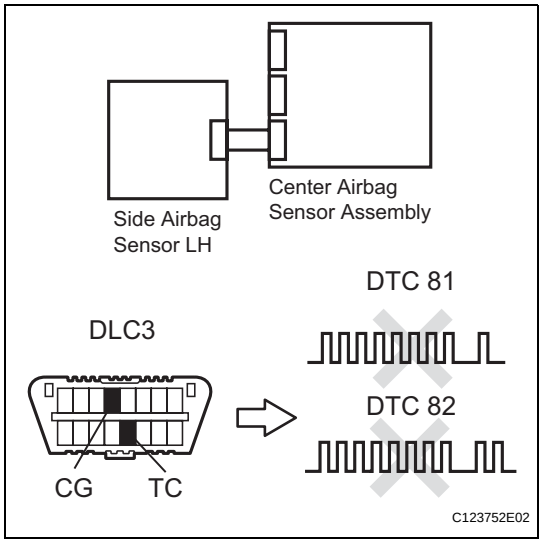

(a) Interchange the side airbag sensor LH with RH and connect the connectors to them.
(b) Connect the negative (-) terminal cable to the battery, and wait for at least 2 seconds.
(c) Turn the engine switch on (IG), and wait for at least 60 seconds.
(d) Clear the DTCs stored in the memory (See page RS-49).
(e) Turn the engine switch off.
(f) Turn the engine switch on (IG), and wait for at least 60 seconds.
(g) Check the DTCs (See page RS-49).
Result

Result	Proceed to
DTC B1628, B1638, B1648, or 82 is output.	**A**
DTC B1623, B1633, B1643, or 81 is output.	**B**
DTC B1623, B1633, B1643, or 81 and B1628, B1638, B1648, or 82 are not output.	**C**

(h) Turn the engine switch off.
(i) Disconnect the negative (-) terminal cable from the battery, and wait for at least 90 seconds.
(j) Return the side airbag sensor LH and RH to their original positions and connect the connectors to them.

B → **REPLACE SIDE AIRBAG SENSOR RH (See page RS-477)**

C → **USE SIMULATION METHOD TO CHECK (See page RS-37)**

A

28 CHECK CENTER AIRBAG SENSOR ASSEMBLY

(a) Connect the negative (-) terminal cable to the battery, and wait for at least 2 seconds.
(b) Turn the engine switch on (IG), and wait for at least 60 seconds.
(c) Clear the DTCs stored in the memory (See page RS-49).
(d) Turn the engine switch off.
(e) Turn the engine switch on (IG), and wait for at least 60 seconds.
(f) Check the DTCs (See page RS-49).
OK:
DTC B1628, B1638, B1648, or 82 is not output.
HINT:
Codes other than DTC B1628, B1638, B1648, or 82 may be output at this time, but they are not related to this check.

NG → **REPLACE CENTER AIRBAG SENSOR ASSEMBLY (See page RS-468)**

OK

USE SIMULATION METHOD TO CHECK (See page RS-37)

DTC	B1630/23	Driver Side Rear Airbag Sensor Malfunction

DESCRIPTION

The rear airbag sensor LH consists of the safing sensor, the diagnostic circuit, the lateral deceleration sensor, etc.

RS

If the center airbag sensor assembly receives signals from the lateral deceleration sensor, it determines whether the SRS should be activated.

DTC B1630/23 is recorded when a malfunction is detected in the driver side rear airbag sensor circuit.

DTC No.	DTC Detection Condition	Trouble Area
B1630/23	• Rear airbag sensor LH malfunction • Center airbag sensor assembly malfunction	• Rear airbag sensor LH • Center airbag sensor assembly

WIRING DIAGRAM

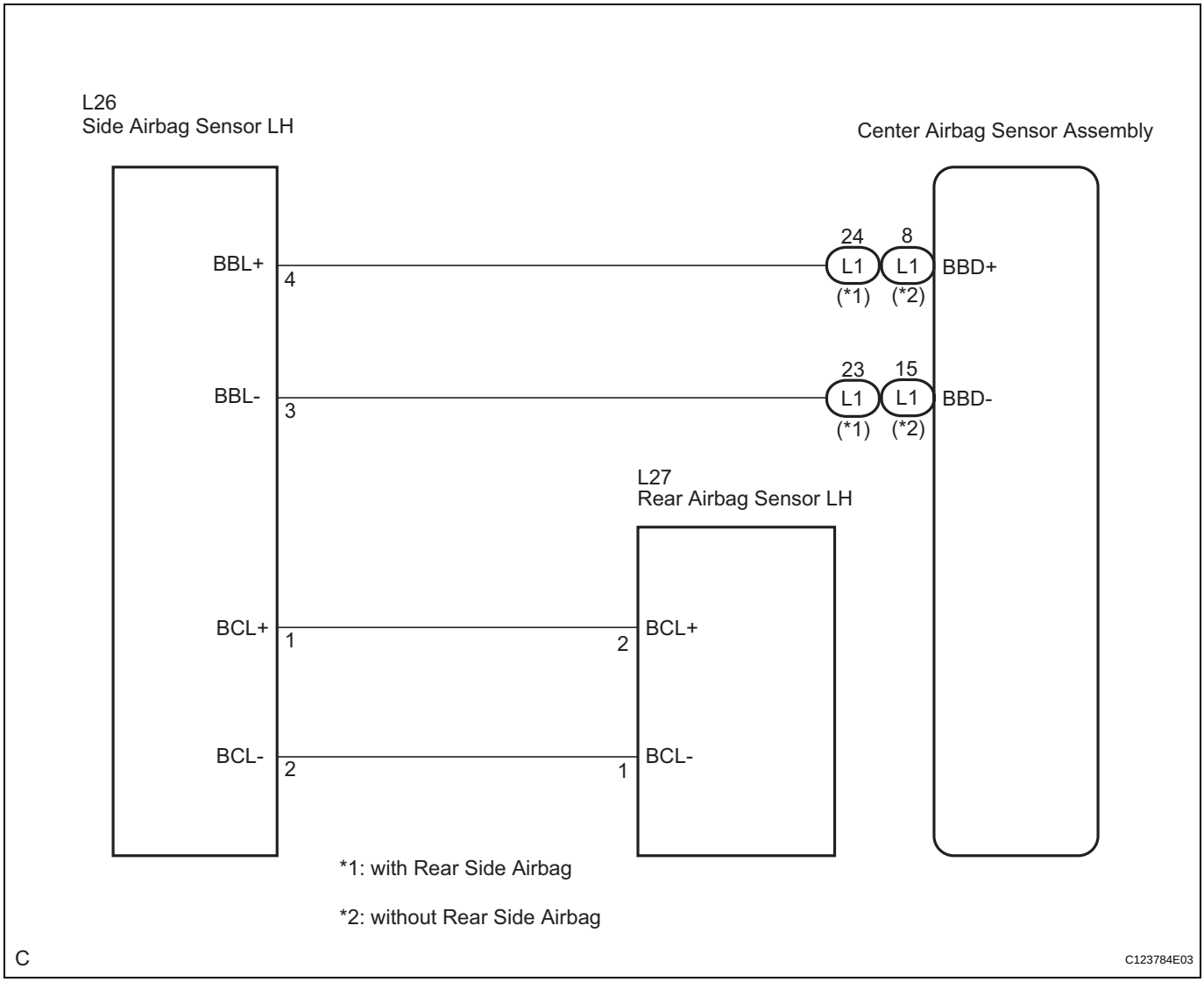

INSPECTION PROCEDURE

1	CHECK DTC

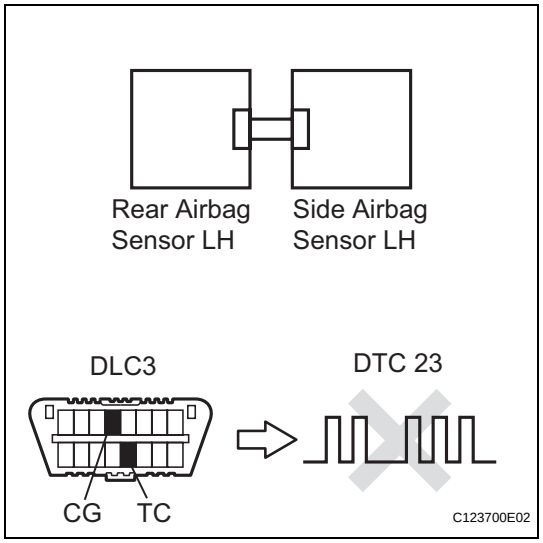

(a) Turn the engine switch on (IG), and wait for at least 60 seconds.
(b) Clear the DTCs stored in the memory (See page RS-49).
(c) Turn the engine switch off.
(d) Turn the engine switch on (IG), and wait for at least 60 seconds.
(e) Check the DTCs (See page RS-49).
OK:
DTC B1630/23 is not output.

OK → **USE SIMULATION METHOD TO CHECK (See page RS-37)**

NG

2	CONFIRM PART NUMBER OF REAR AIRBAG SENSOR

(a) Turn the engine switch off.
(b) Disconnect the negative (-) terminal cable from the battery, and wait for at least 90 seconds.
(c) Check that the part number of the rear airbag sensor LH is equal to the number of the other side.
OK:
Those numbers are the same.

NG → **Go to step 4**

OK

RS

3 CHECK REAR AIRBAG SENSOR LH

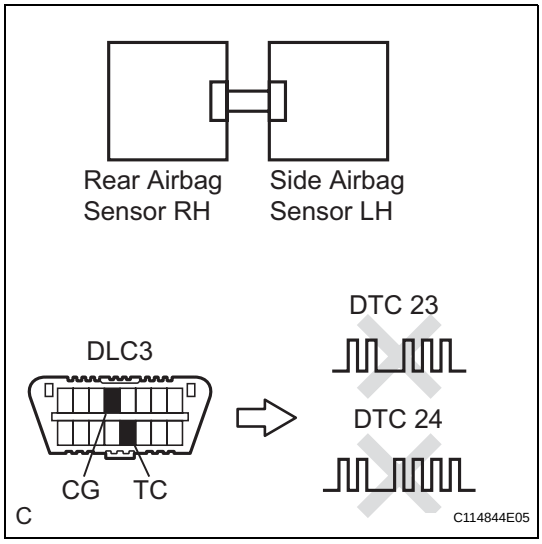

(a) Interchange the rear airbag sensor RH with LH and connect the connectors to them.
(b) Connect the negative (-) terminal cable to the battery, and wait for at least 2 seconds.
(c) Turn the engine switch on (IG), and wait for at least 60 seconds.
(d) Clear the DTCs stored in the memory (See page RS-49).
(e) Turn the engine switch off.
(f) Turn the engine switch on (IG), and wait for at least 60 seconds.
(g) Check the DTCs (See page RS-49).
Result

Result	Proceed to
DTC B1630/23 is output.	**A**
DTC B1635/24 is output.	**B**
DTC B1630/23 and B1635/24 are not output.	**C**

HINT:
Codes other than DTC B1630/23 and B1635/24 may be output at this time, but they are not related to this check.
(h) Turn the engine switch off.
(i) Disconnect the negative (-) terminal cable from the battery, and wait for at least 90 seconds.
(j) Return the rear airbag sensor RH and LH to their original positions and connect the connectors to them.

A → **Go to step 5**

B → **REPLACE REAR AIRBAG SENSOR LH (See page RS-480)**

C

USE SIMULATION METHOD TO CHECK (See page RS-37)

4 REPLACE REAR AIRBAG SENSOR LH

(a) Replace the rear airbag sensor LH (See page RS-480).
HINT:
Perform inspection using parts from a normal vehicle if possible.

NEXT

5	CHECK CENTER AIRBAG SENSOR ASSEMBLY

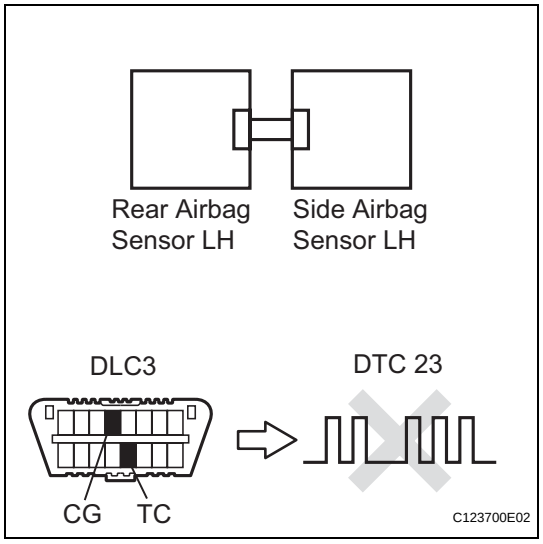

(a) Connect the negative (-) terminal cable to the battery, and wait for at least 2 seconds.
(b) Turn the engine switch on (IG), and wait for at least 60 seconds.
(c) Clear the DTCs stored in the memory (See page RS-49).
(d) Turn the engine switch off.
(e) Turn the engine switch on (IG), and wait for at least 60 seconds.
(f) Check the DTCs (See page RS-49).
OK:
DTC B1630/23 is not output.
HINT:
Codes other than DTC B1630/23 and B1635/24 may be output at this time, but they are not related to this check.

NG → **REPLACE CENTER AIRBAG SENSOR ASSEMBLY (See page RS-468)**

OK

USE SIMULATION METHOD TO CHECK (See page RS-37)

RS

DTC	B1635/24	Front Passenger Side Rear Airbag Sensor Malfunction

DESCRIPTION

RS

The rear airbag sensor RH consists of the safing sensor, the diagnostic circuit, the lateral deceleration sensor, etc.
If the center airbag sensor assembly receives signals from the lateral deceleration sensor, it determines whether the SRS should be activated.
DTC B1635/24 is recorded when a malfunction is detected in the front passenger side rear airbag sensor circuit.

DTC No.	DTC Detection Condition	Trouble Area
B1635/24	• Rear airbag sensor RH malfunction • Center airbag sensor assembly malfunction	• Rear airbag sensor RH • Center airbag sensor assembly

WIRING DIAGRAM

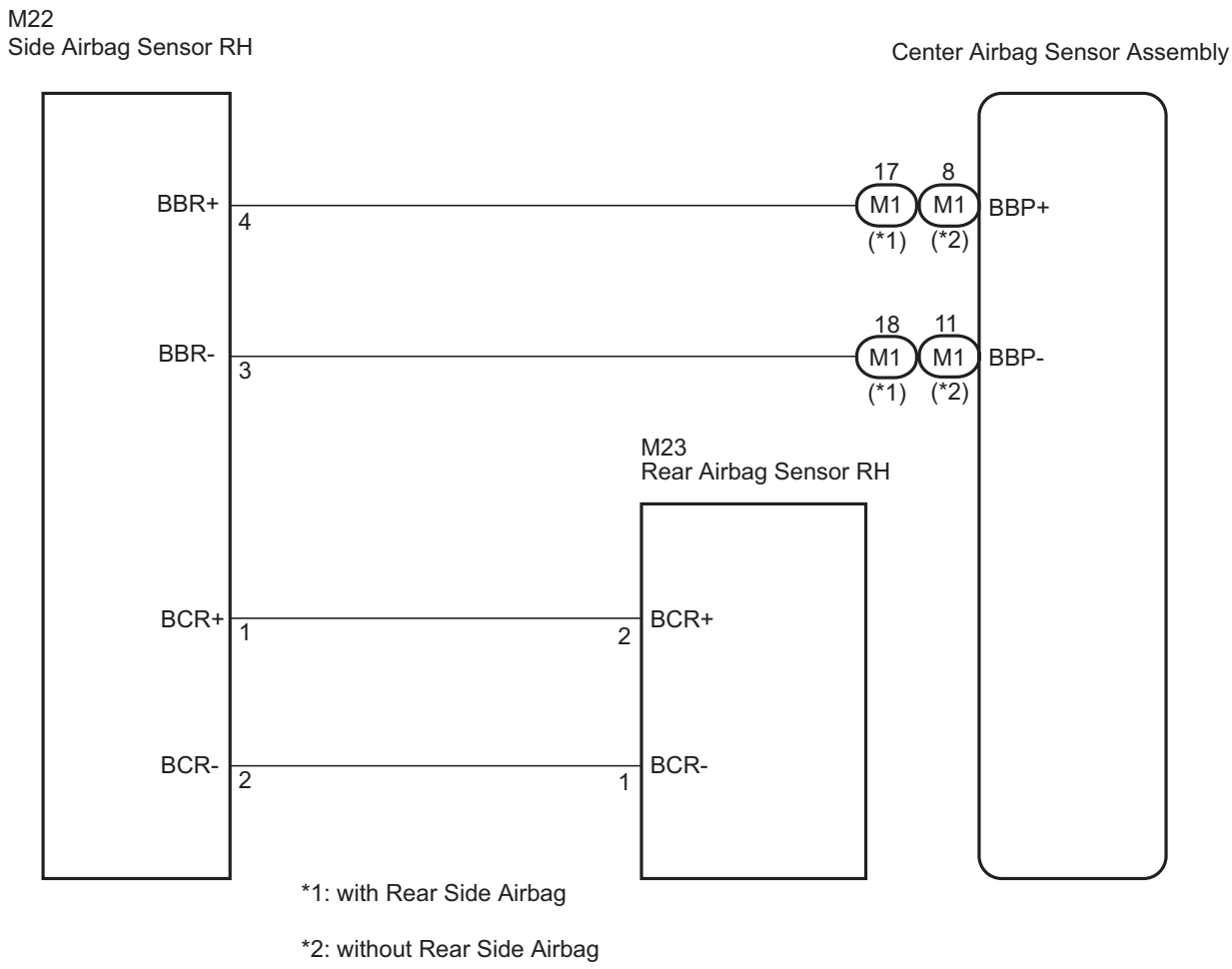

INSPECTION PROCEDURE

1	CHECK DTC

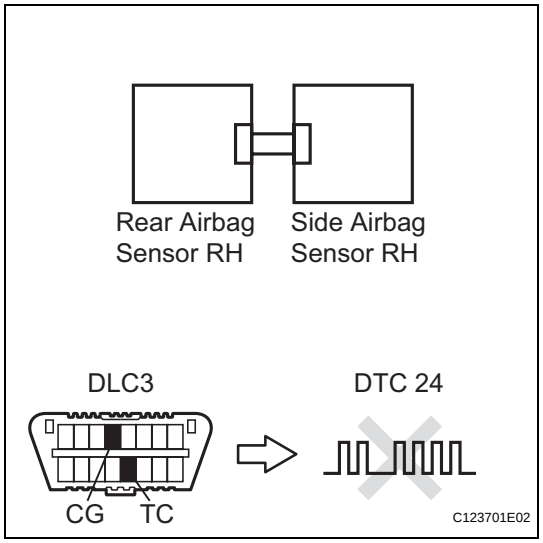

(a) Turn the engine switch on (IG), and wait for at least 60 seconds.
(b) Clear the DTCs stored in the memory (See page RS-49).
(c) Turn the engine switch off.
(d) Turn the engine switch on (IG), and wait for at least 60 seconds.
(e) Check the DTCs (See page RS-49).
OK:
DTC B1635/24 is not output.
HINT:
Codes other than DTC B1635/24 may be output at this time, but they are not related to this check.

OK → **USE SIMULATION METHOD TO CHECK (See page RS-37)**

NG

2	CONFIRM PART NUMBER OF REAR AIRBAG SENSOR

(a) Turn the engine switch off.
(b) Disconnect the negative (-) terminal cable from the battery, and wait for at least 90 seconds.
(c) Check that the part number of the rear airbag sensor RH is equal to the number of the other side.
OK:
Those numbers are the same.

NG → **Go to step 4**

OK

RS

3 CHECK REAR AIRBAG SENSOR RH

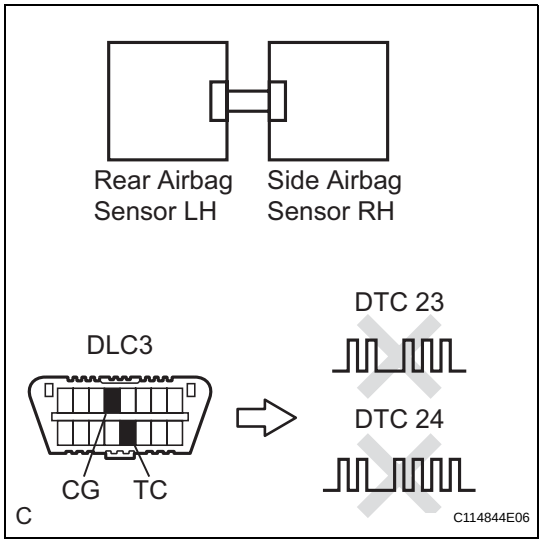

(a) Interchange the rear airbag sensor LH with RH and connect the connectors to them.
(b) Connect the negative (-) terminal cable to the battery, and wait for at least 2 seconds.
(c) Turn the engine switch on (IG), and wait for at least 60 seconds.
(d) Clear the DTCs stored in the memory (See page RS-49).
(e) Turn the engine switch off.
(f) Turn the engine switch on (IG), and wait for at least 60 seconds.
(g) Check the DTCs (See page RS-49).

Result

Result	Proceed to
DTC B1635/24 is output.	**A**
DTC B1630/23 is output.	**B**
DTC B1630/23 and B1635/24 are not output.	**C**

HINT:
Codes other than DTC B1630/23 and B1635/24 may be output at this time, but they are not related to this check.

(h) Turn the engine switch off.
(i) Disconnect the negative (-) terminal cable from the battery, and wait for at least 90 seconds.
(j) Return the rear airbag sensor LH and RH to their original positions and connect the connectors to them.

A → **Go to step 5**

B → **REPLACE REAR AIRBAG SENSOR RH (See page RS-480)**

C

USE SIMULATION METHOD TO CHECK (See page RS-37)

4 REPLACE REAR AIRBAG SENSOR RH

(a) Replace the rear airbag sensor RH (See page RS-480).
HINT:
Perform inspection using parts from a normal vehicle if possible.

NEXT

5	CHECK CENTER AIRBAG SENSOR ASSEMBLY

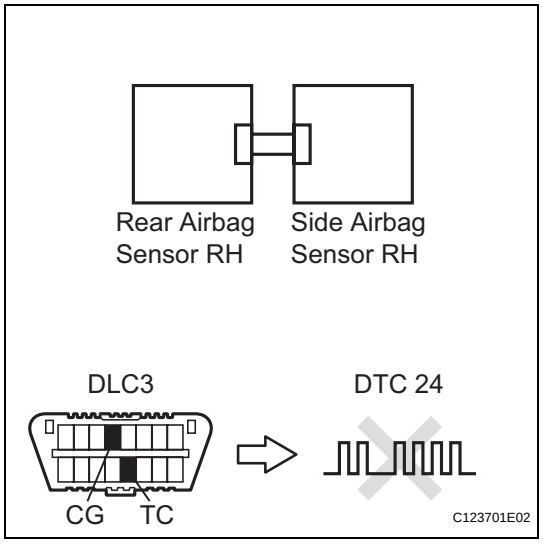

(a) Connect the negative (-) terminal cable to the battery, and wait for at least 2 seconds.
(b) Turn the engine switch on (IG), and wait for at least 60 seconds.
(c) Clear the DTCs stored in the memory (See page RS-49).
(d) Turn the engine switch off.
(e) Turn the engine switch on (IG), and wait for at least 60 seconds.
(f) Check the DTCs (See page RS-49).
OK:
DTC B1635/24 is not output.
HINT:
Codes other than DTC B1635/24 may be output at this time, but they are not related to this check.

NG → **REPLACE CENTER AIRBAG SENSOR ASSEMBLY (See page RS-468)**

OK

USE SIMULATION METHOD TO CHECK (See page RS-37)

RS

DTC	B1650/32	Occupant Classification System Malfunction

DESCRIPTION

The occupant classification system circuit consists of the center airbag sensor assembly and the occupant classification system.

RS

If the center airbag sensor assembly receives signals from the occupant classification ECU, it determines whether the front passenger airbag assembly, the front seat side airbag assembly RH and front seat outer belt assembly should be operated.

DTC B1650/32 is recorded when a malfunction is detected in the occupant classification system circuit.

DTC No.	DTC Detecting Condition	Trouble Area
B1650/32	• Occupant classification system malfunction • The center airbag sensor assembly receives a line short circuit signal, an open circuit signal, a short circuit to ground signal or a short circuit to B+ signal in the occupant classification system circuit for 2 seconds. • Center airbag sensor assembly malfunction	• Floor wire No. 2 • Front seat wire RH • Occupant classification system • Center airbag sensor assembly

WIRING DIAGRAM

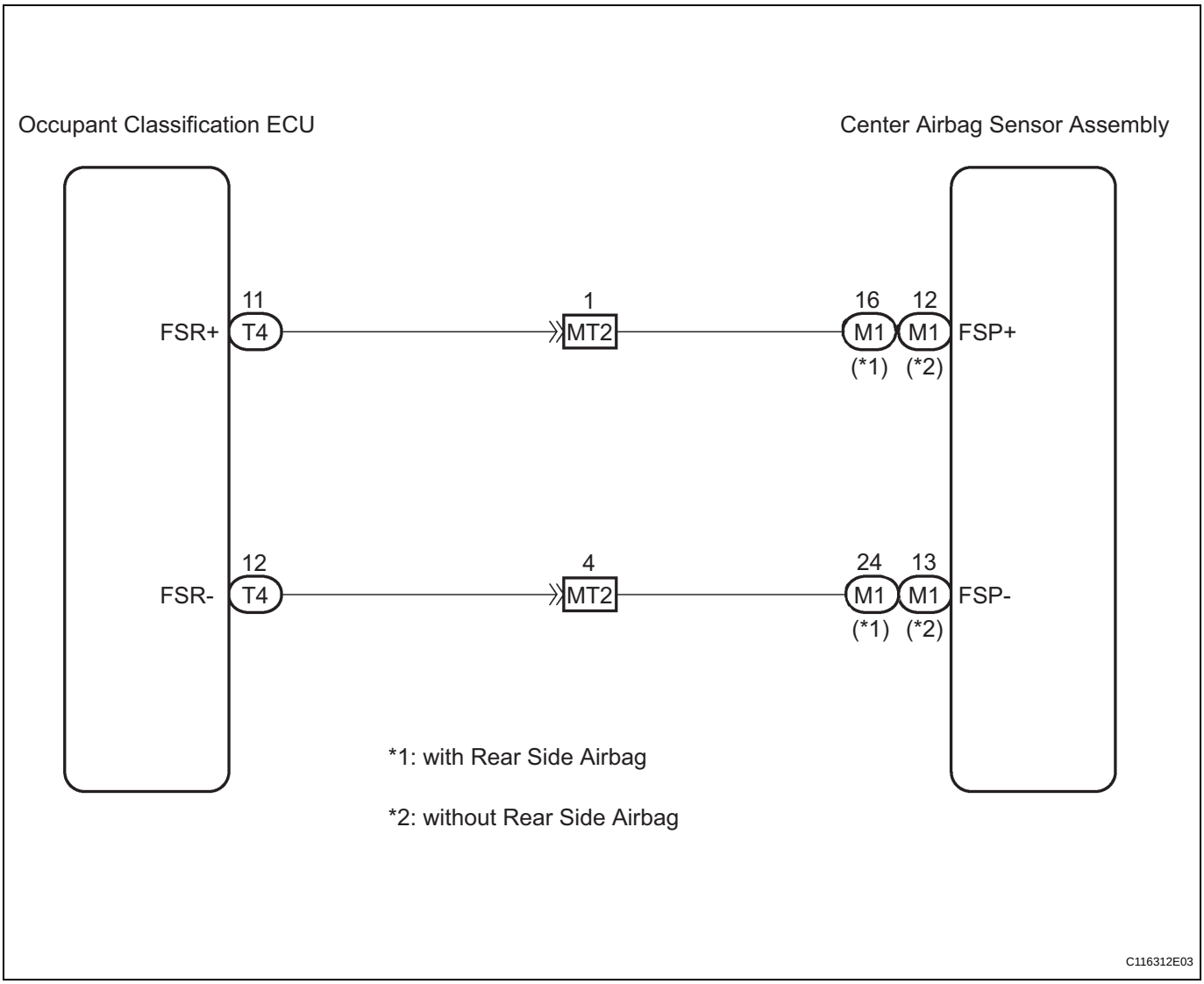

INSPECTION PROCEDURE

1 CHECK DTC (OCCUPANT CLASSIFICATION ECU)

(a) Turn the engine switch on (IG), and wait for at least 10 seconds.
(b) Using the intelligent tester, check the DTCs of the occupant classification ECU (See page RS-318).
OK:
DTC is not output.

NG → **REPAIR CIRCUITS INDICATED BY OUTPUT DTCS**

OK

2 CHECK DTC (CENTER AIRBAG SENSOR ASSEMBLY)

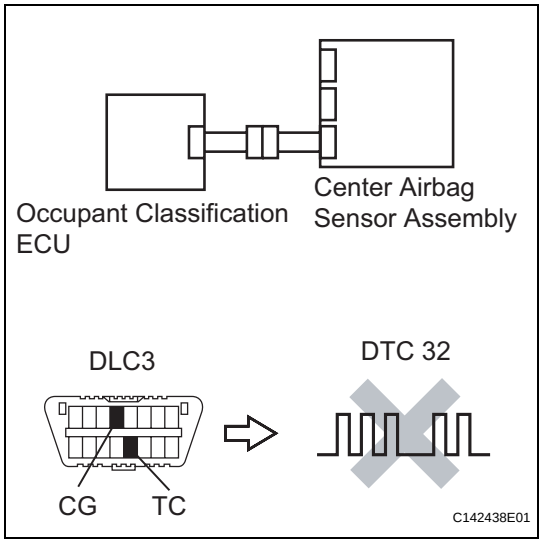

(a) Turn the engine switch on (IG), and wait for at least 60 seconds.
(b) Clear the DTCs stored in the memory (See page RS-49).
(c) Turn the engine switch off.
(d) Turn the engine switch on (IG), and wait for at least 60 seconds.
(e) Check the DTCs (See page RS-49).
OK:
DTC B1650/32 is not output.
HINT:
Codes other than DTC B1650/32 may be output at this time, but they are not related to this check.

OK → **USE SIMULATION METHOD TO CHECK (See page RS-37)**

NG

3 CHECK CONNECTION OF CONNECTORS

(a) Turn the engine switch off.
(b) Disconnect the negative (-) terminal cable from the battery, and wait for at least 90 seconds.
(c) Check that the connectors are properly connected to the center airbag sensor assembly and the occupant classification ECU.
OK:
The connectors are properly connected.

NG → **CONNECT CONNECTORS PROPERLY**

OK

RS

4	CHECK CONNECTORS

(a) Disconnect the connectors from the center airbag sensor assembly and the occupant classification ECU.
(b) Check that the connectors (on the center airbag sensor assembly side and occupant classification ECU side) are not damaged.
OK:
The connectors are not deformed or damaged.

NG → **REPAIR OR REPLACE WIRE HARNESS**

OK

5	CHECK OCCUPANT CLASSIFICATION SYSTEM CIRCUIT (OPEN)

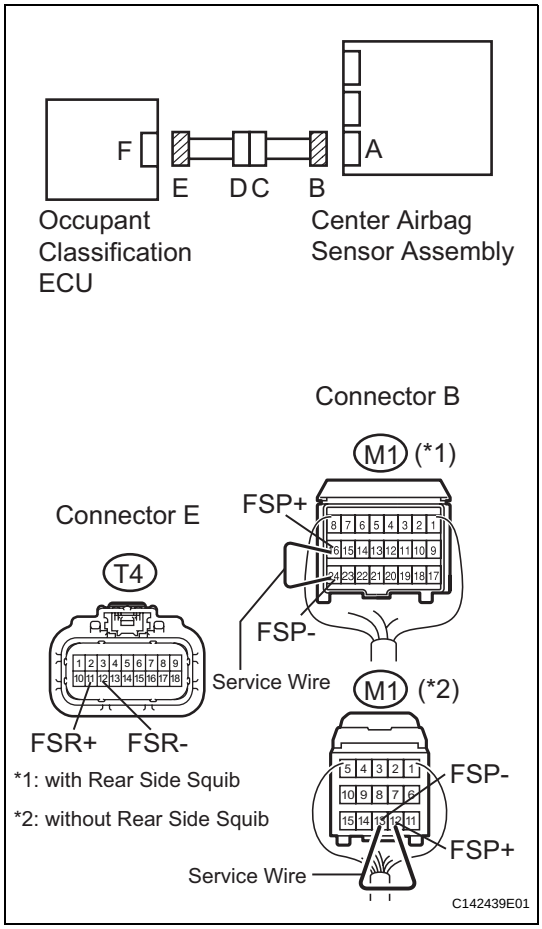

(a) with Rear side airbag:
Using a service wire, connect terminals 16 (FSP+) and 24 (FSP-) of connector B.
NOTICE:
Do not forcibly insert a service wire into the terminals of the connector when connecting the wire.
(b) without Rear side airbag:
Using a service wire, connect terminals 12 (FSP+) and 13 (FSP-) of connector B.
NOTICE:
Do not forcibly insert a service wire into the terminal of the connector when connecting the wire.
(c) Measure the resistance according to the value(s) in the table below.
Standard resistance

Tester Connection	Condition	Specified Condition
T4-11 (FSR+) - T4-12 (FSR-)	Always	Below 1 Ω

NG → **Go to step 9**

OK

RS

6 CHECK OCCUPANT CLASSIFICATION SYSTEM CIRCUIT (SHORT)

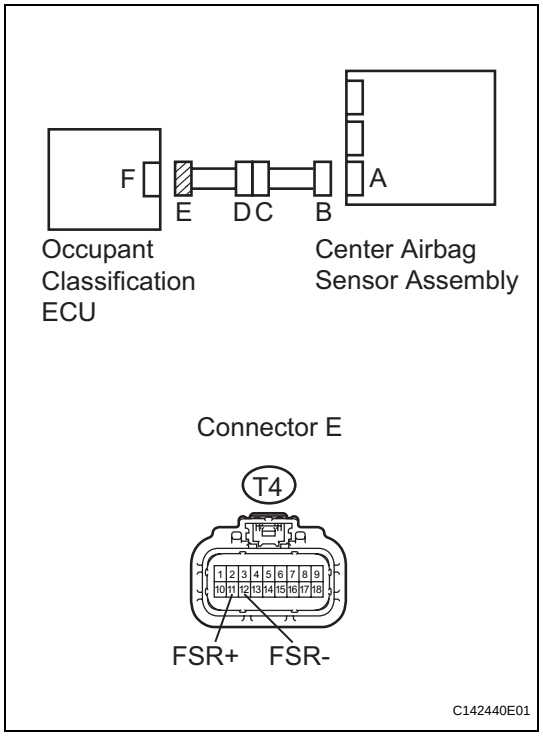

(a) Disconnect the service wire from connector B.
(b) Measure the resistance according to the value(s) in the table below.

Standard resistance

Tester Connection	Condition	Specified Condition
T4-11 (FSR+) - T4-12 (FSR-)	Always	1 MΩ or higher

NG → **Go to step 10**

OK

7 CHECK OCCUPANT CLASSIFICATION SYSTEM CIRCUIT (SHORT TO B+)

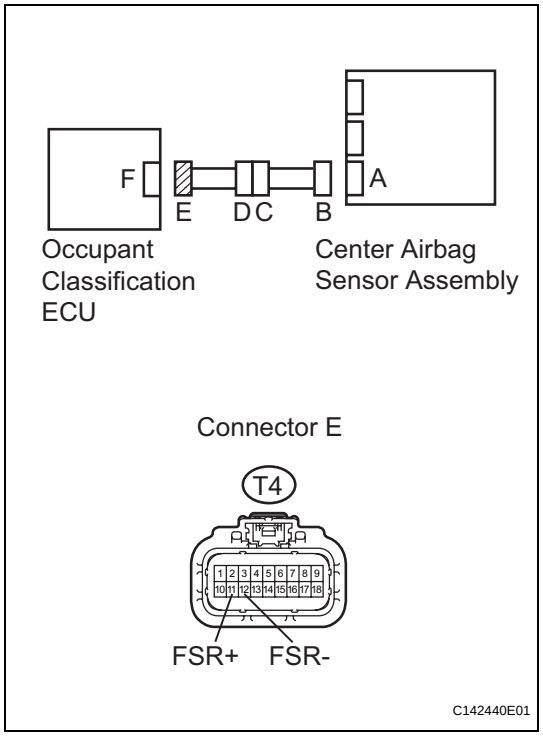

(a) Connect the negative (-) terminal cable to the battery, and wait for at least 2 seconds.
(b) Turn the engine switch on (IG).
(c) Measure the voltage according to the value(s) in the table below.

Standard voltage

Tester Connection	Condition	Specified Condition
T4-11 (FSR+) - Body ground	Engine switch on (IG)	Below 1 V
T4-12 (FSR-) - Body ground	Engine switch on (IG)	Below 1 V

NG → **Go to step 11**

OK

RS

8	CHECK OCCUPANT CLASSIFICATION SYSTEM CIRCUIT (SHORT TO GROUND)

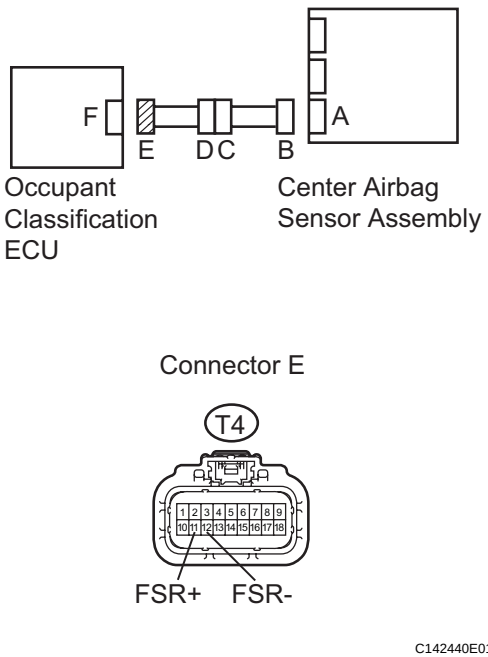

(a) Turn the engine switch off.
(b) Disconnect the negative (-) terminal cable from the battery, and wait for at least 90 seconds.
(c) Measure the resistance according to the value(s) in the table below.

Standard resistance

Tester Connection	Condition	Specified Condition
T4-11 (FSR+) - Body ground	Always	1 MΩ or higher
T4-12 (FSR-) - Body ground	Always	1 MΩ or higher

HINT:
After replacing the center airbag sensor assembly, check for DTCs of the center airbag sensor assembly. If the DTC B1650/32 is detected, replace the occupant classification ECU (See page RS-501) and perform "zero point calibration" and "sensitivity check" of the occupant classification system (See page RS-312).

NG → **Go to step 12**

OK

REPLACE CENTER AIRBAG SENSOR ASSEMBLY (See page RS-468)

RS

9	CHECK FLOOR WIRE NO. 2 (OPEN)

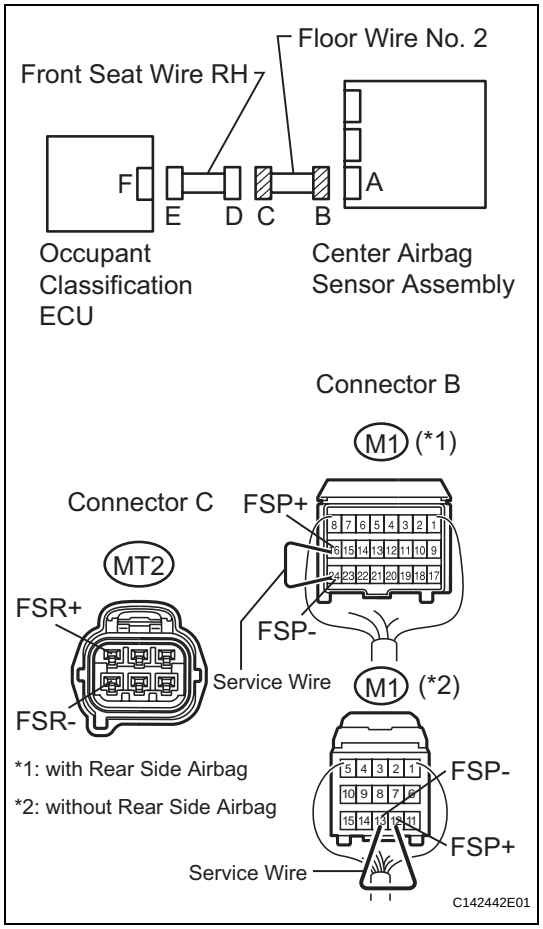

(a) Disconnect the front seat wire RH connector from the floor wire No. 2.
HINT:
The service wire has already been inserted into connector B.

(b) Measure the resistance according to the value(s) in the table below.
Standard resistance

Tester Connection	Condition	Specified Condition
MT2-1 (FSR+) - MT2-4 (FSR-)	Always	Below 1 Ω

NG → **REPAIR OR REPLACE FLOOR WIRE NO. 2**

OK

REPAIR OR REPLACE FRONT SEAT WIRE RH

RS

10	CHECK FLOOR WIRE NO. 2 (SHORT)

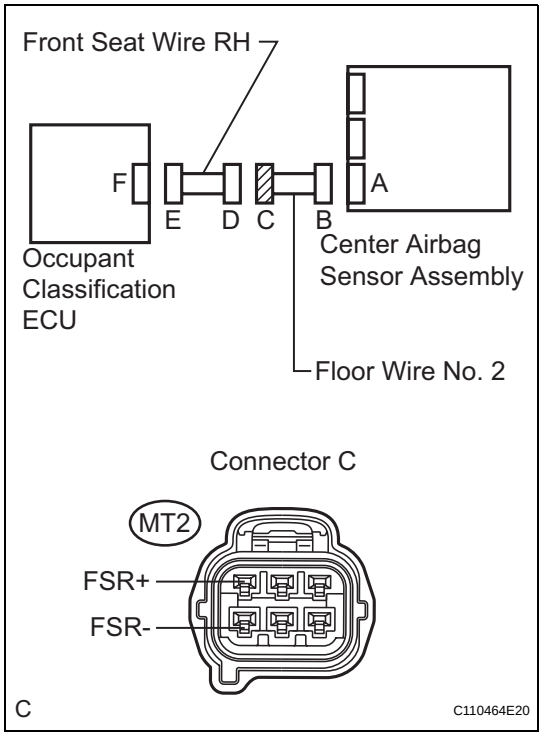

(a) Disconnect the front seat wire RH connector from the floor wire No. 2.

(b) Measure the resistance according to the value(s) in the table below.

Standard resistance

Tester Connection	Condition	Specified Condition
MT2-1 (FSR+) - MT2-4 (FSR-)	Always	1 MΩ or higher

NG → **REPAIR OR REPLACE FLOOR WIRE NO. 2**

OK

REPAIR OR REPLACE FRONT SEAT WIRE RH

RS

11 CHECK FLOOR WIRE NO. 2 (SHORT TO B+)

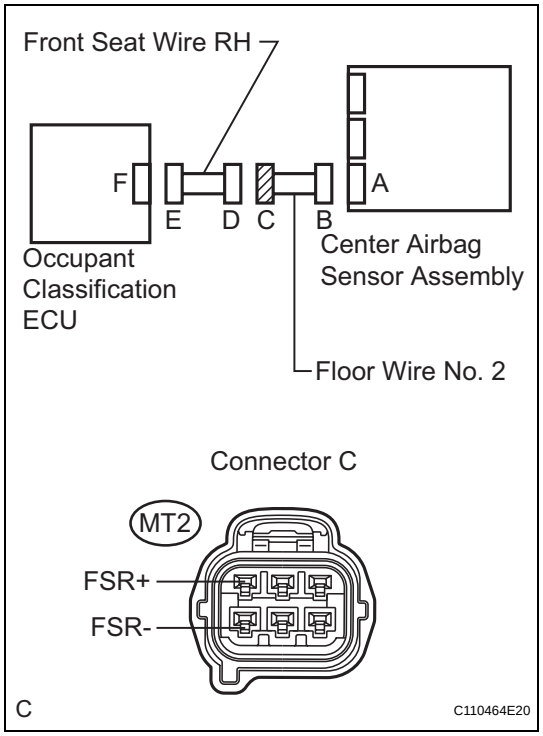

(a) Turn the engine switch off.
(b) Disconnect the negative (-) terminal cable from the battery, and wait for at least 90 seconds.
(c) Disconnect the front seat wire RH connector from the floor wire No. 2.
(d) Connect the negative (-) terminal cable to the battery, and wait for at least 2 seconds.
(e) Turn the engine switch on (IG).
(f) Measure the voltage according to the value(s) in the table below.

Standard voltage

Tester Connection	Condition	Specified Condition
MT2-1 (FSR+) - Body ground	Engine switch on (IG)	Below 1 V
MT2-4 (FSR-) - Body ground	Engine switch on (IG)	Below 1 V

NG → **REPAIR OR REPLACE FLOOR WIRE NO. 2**

OK

REPAIR OR REPLACE FRONT SEAT WIRE RH

RS

12 CHECK FLOOR WIRE NO. 2 (SHORT TO GROUND)

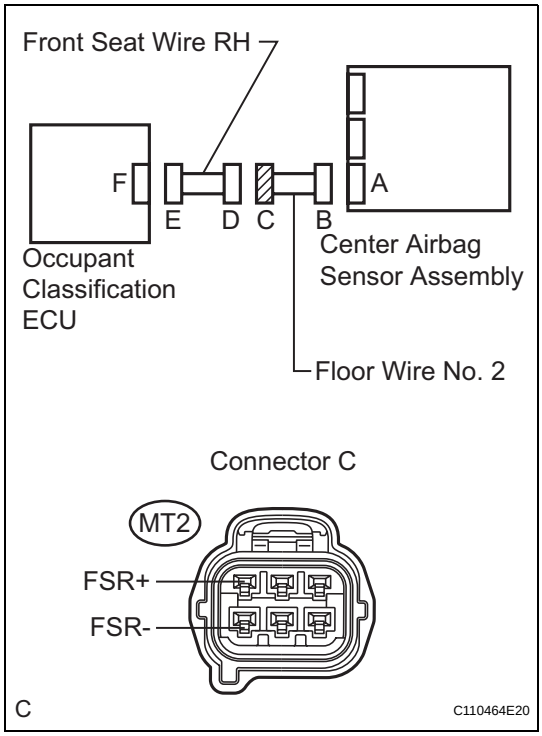

(a) Disconnect the front seat wire RH connector from the floor wire No. 2.

(b) Measure the resistance according to the value(s) in the table below.

Standard resistance

Tester Connection	Condition	Specified Condition
MT2-1 (FSR+) - Body ground	Always	1 MΩ or higher
MT2-4 (FSR-) - Body ground	Always	1 MΩ or higher

NG → **REPAIR OR REPLACE FLOOR WIRE NO. 2**

OK

REPAIR OR REPLACE FRONT SEAT WIRE RH

DTC	B1653/35	Seat Position Airbag Sensor Circuit Malfunction

DESCRIPTION

The seat position airbag sensor circuit consists of the center airbag sensor assembly and the seat position airbag sensor.
DTC B1653/35 is recorded when a malfunction is detected in the seat position airbag sensor circuit.

DTC No.	DTC Detecting Condition	Trouble Area
B1653/35	• The center airbag sensor assembly receives a line short circuit signal, an open circuit signal, a short circuit to ground signal or a short circuit to B+ signal in the seat position airbag sensor circuit for 2 seconds. • Seat position airbag sensor malfunction • Center airbag sensor assembly malfunction	• Floor wire • Seat position airbag sensor • Center airbag sensor assembly

WIRING DIAGRAM

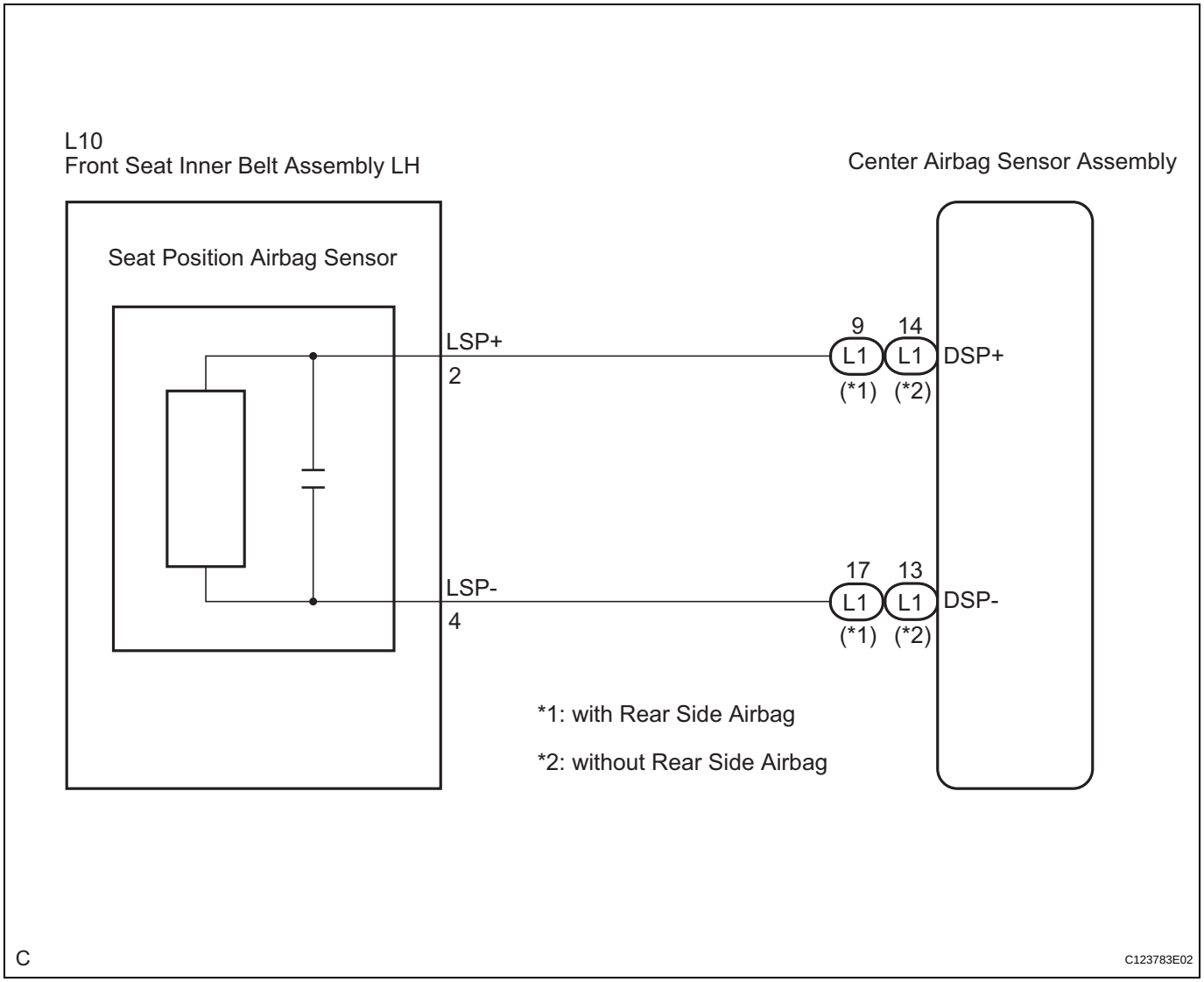

INSPECTION PROCEDURE

1	CHECK DTC

RS

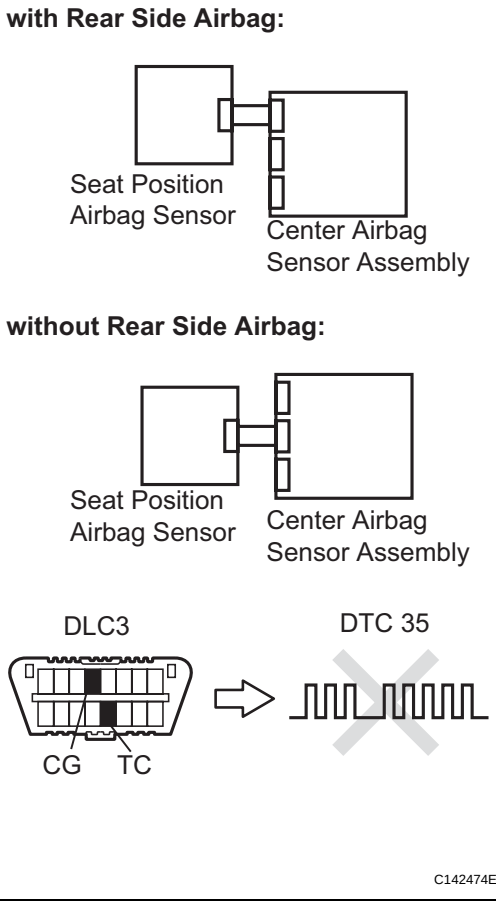

(a) Turn the engine switch on (IG), and wait for at least 60 seconds.
(b) Clear the DTCs stored in the memory (See page RS-49).
(c) Turn the engine switch off.
(d) Turn the engine switch on (IG), and wait for at least 60 seconds.
(e) Check the DTCs (See page RS-49).
OK:
DTC B1653/35 is not output.
HINT:
Codes other than DTC B1653/35 may be output at this time, but they are not related to this check.

OK → **USE SIMULATION METHOD TO CHECK (See page RS-37)**

NG

2	CHECK CONNECTION OF CONNECTORS

(a) Turn the engine switch off.
(b) Disconnect the negative (-) terminal cable from the battery, and wait for at least 90 seconds.
(c) Check that the connectors are properly connected to the center airbag sensor assembly and the seat position airbag sensor.
OK:
The connectors are properly connected.

NG → **CONNECT CONNECTORS PROPERLY, THEN GO TO STEP 1**

OK

RS

3 CHECK CONNECTORS

(a) Disconnect the connectors from the center airbag sensor assembly and the seat position airbag sensor.

(b) Check that the connectors (on the center airbag sensor assembly side and seat position airbag sensor side) are not damaged.

OK:

The connectors are not deformed or damaged.

NG → **REPAIR OR REPLACE FLOOR WIRE**

OK

4 CHECK VEHICLE CONDITION

(a) Check whether or not the vehicle is equipped with the rear side airbag.

Result:

A:

with the rear side airbag

B:

without the rear side airbag

B → **Go to step 12**

A

5 CHECK FLOOR WIRE (OPEN)

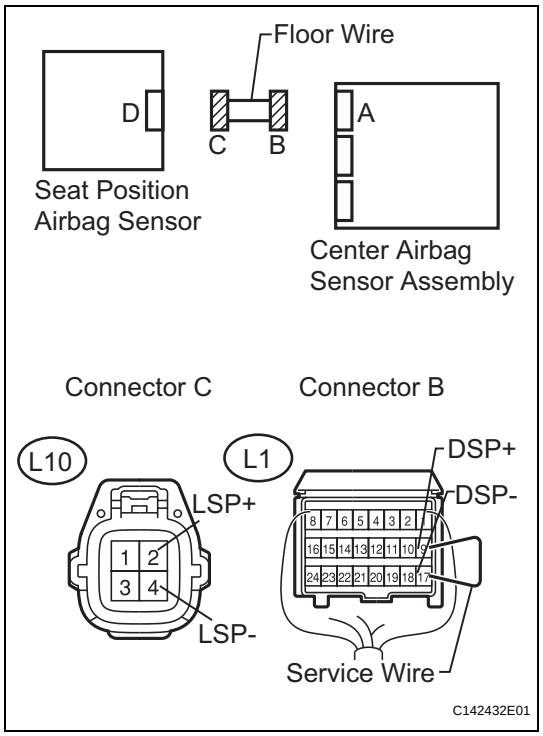

(a) Using a service wire, connect terminals 9 (DSP+) and 17 (DSP-) of connector B.

NOTICE:

Do not forcibly insert a service wire into the terminals of the connector when connecting the wire.

(b) Measure the resistance according to the value(s) in the table below.

Standard resistance

Tester Connection	Condition	Specified Condition
L10-2 (LSP+) - L10-4 (LSP-)	Always	Below 1 Ω

NG → **REPAIR OR REPLACE FLOOR WIRE**

OK

6 CHECK FLOOR WIRE (SHORT)

RS

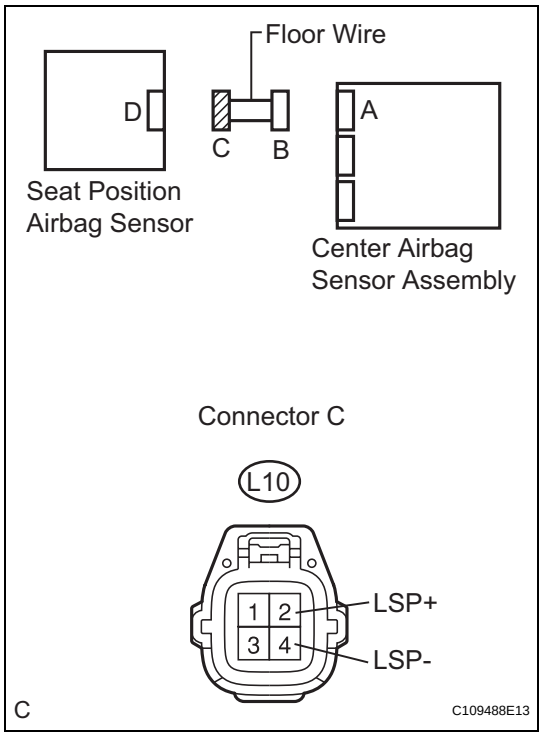

(a) Disconnect the service wire from connector B.
(b) Measure the resistance according to the value(s) in the table below.

Standard resistance

Tester Connection	Condition	Specified Condition
L10-2 (LSP+) - L10-4 (LSP-)	Always	1 MΩ or higher

NG → **REPAIR OR REPLACE FLOOR WIRE**

OK

7 CHECK FLOOR WIRE (SHORT TO B+)

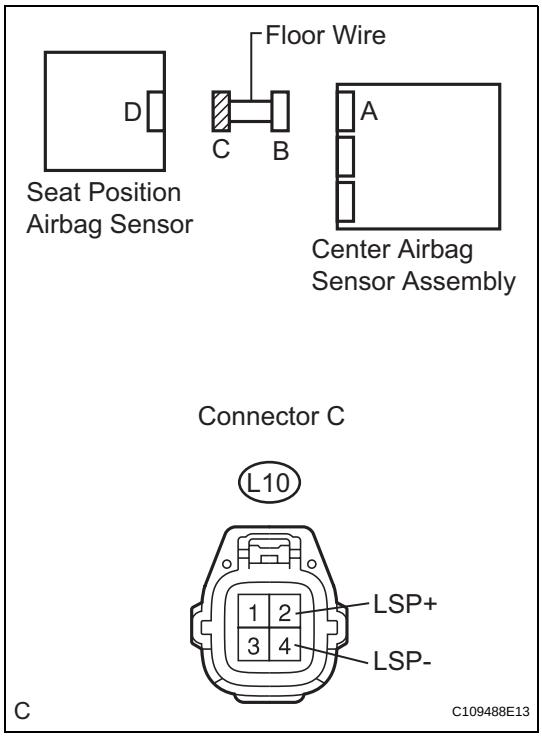

(a) Connect the negative (-) terminal cable to the battery, and wait for at least 2 seconds.
(b) Turn the engine switch on (IG).
(c) Measure the voltage according to the value(s) in the table below.

Standard voltage

Tester Connection	Condition	Specified Condition
L10-2 (LSP+) - Body ground	Engine switch on (IG)	Below 1 V
L10-4 (LSP-) - Body ground	Engine switch on (IG)	Below 1 V

NG → **REPAIR OR REPLACE FLOOR WIRE**

OK

8 CHECK FLOOR WIRE (SHORT TO GROUND)

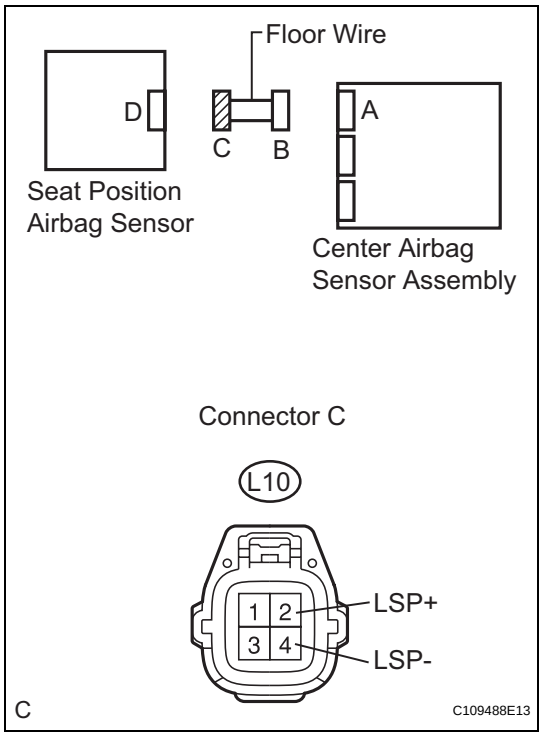

(a) Turn the engine switch off.
(b) Disconnect the negative (-) terminal cable from the battery, and wait for at least 90 seconds.
(c) Measure the resistance according to the value(s) in the table below.

Standard resistance

Tester Connection	Condition	Specified Condition
L10-2 (LSP+) - Body ground	Always	1 MΩ or higher
L10-4 (LSP-) - Body ground	Always	1 MΩ or higher

NG → **REPAIR OR REPLACE FLOOR WIRE**

OK

9 CHECK SEAT POSITION AIRBAG SENSOR

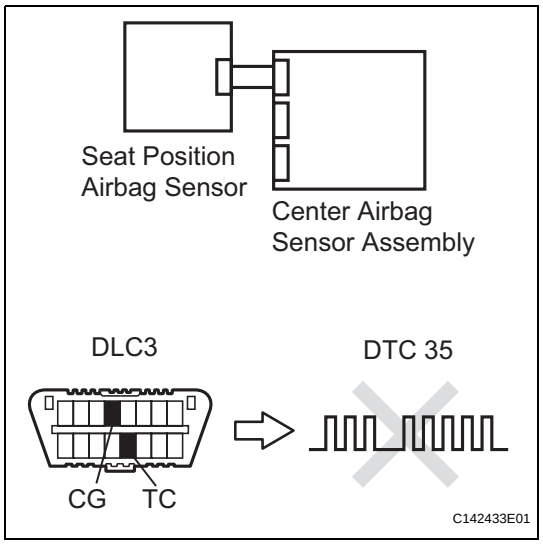

(a) Connect the connectors to the center airbag sensor assembly and the seat position airbag sensor.
(b) Connect the negative (-) terminal cable to the battery, and wait for at least 2 seconds.
(c) Turn the engine switch on (IG), and wait for at least 60 seconds.
(d) Clear the DTCs stored in the memory (See page RS-49).
(e) Turn the engine switch off.
(f) Turn the engine switch on (IG), and wait for at least 60 seconds.
(g) Check the DTCs (See page RS-49).

OK:

DTC B1653/35 is not output.

HINT:

Codes other than DTC B1653/35 may be output at this time, but they are not related to this check.

OK → **USE SIMULATION METHOD TO CHECK (See page RS-37)**

NG

RS

10	REPLACE SEAT POSITION AIRBAG SENSOR

(a) Turn the engine switch off.
(b) Disconnect the negative (-) terminal cable from the battery, and wait for at least 90 seconds.
(c) Replace the seat position airbag sensor (See page RS-484).
HINT:
Perform inspection using parts from a normal vehicle if possible.

NEXT

11	CHECK CENTER AIRBAG SENSOR ASSEMBLY

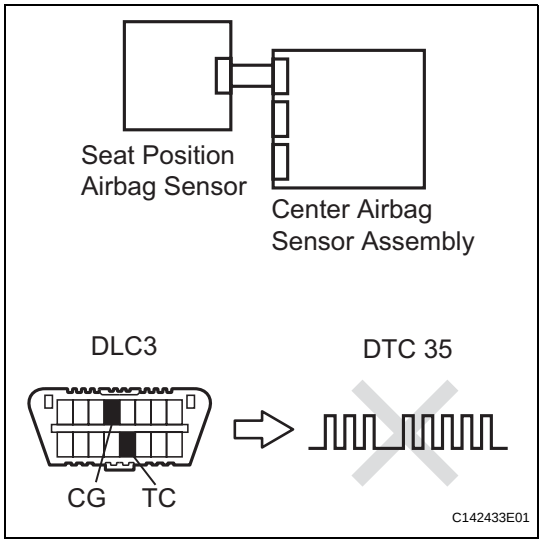

(a) Connect the negative (-) terminal cable to the battery, and wait for at least 2 seconds.
(b) Turn the engine switch on (IG), and wait for at least 60 seconds.
(c) Clear the DTCs stored in the memory (See page RS-49).
(d) Turn the engine switch off.
(e) Turn the engine switch on (IG), and wait for at least 60 seconds.
(f) Check the DTCs (See page RS-49).
OK:
DTC B1653/35 is not output.
HINT:
Codes other than DTC B1653/35 may be output at this time, but they are not related to this check.

NG → **REPLACE CENTER AIRBAG SENSOR ASSEMBLY (See page RS-468)**

OK

END

RS

12 CHECK FLOOR WIRE (OPEN)

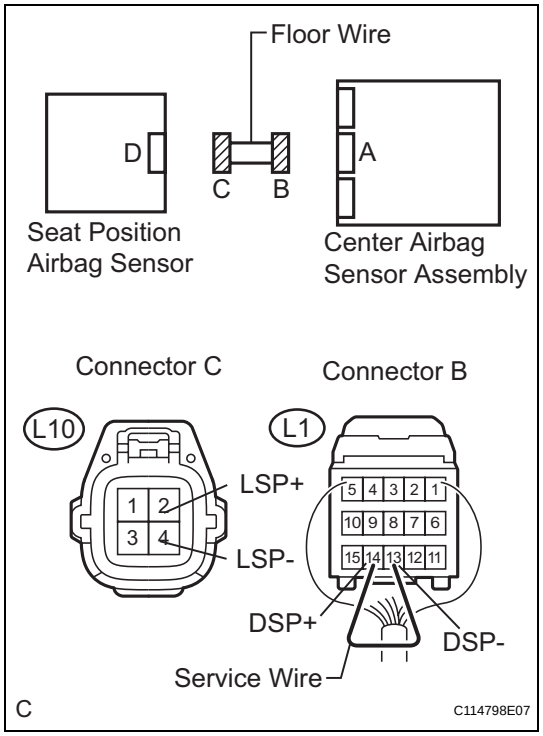

(a) Using a service wire, connect terminals 9 (DSP+) and 17 (DSP-) of connector B.
NOTICE:
Do not forcibly insert a service wire into the terminals of the connector when connecting the wire.

(b) Measure the resistance according to the value(s) in the table below.
Standard resistance

Tester Connection	Condition	Specified Condition
L10-2 (LSP+) - L10-4 (LSP-)	Always	Below 1 Ω

NG → **REPAIR OR REPLACE FLOOR WIRE**

OK

13 CHECK FLOOR WIRE (SHORT)

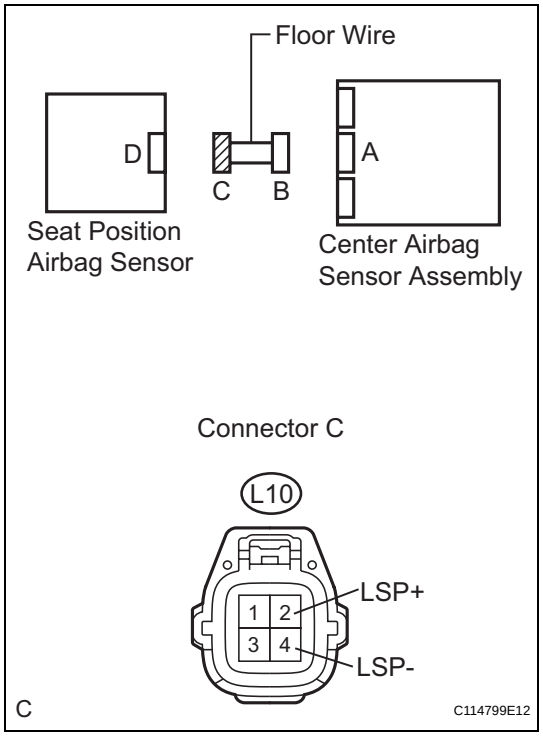

(a) Disconnect the service wire from connector B.

(b) Measure the resistance according to the value(s) in the table below.
Standard resistance

Tester Connection	Condition	Specified Condition
L10-2 (LSP+) - L10-4 (LSP-)	Always	1 MΩ or higher

NG → **REPAIR OR REPLACE FLOOR WIRE**

OK

RS

14 CHECK FLOOR WIRE (SHORT TO B+)

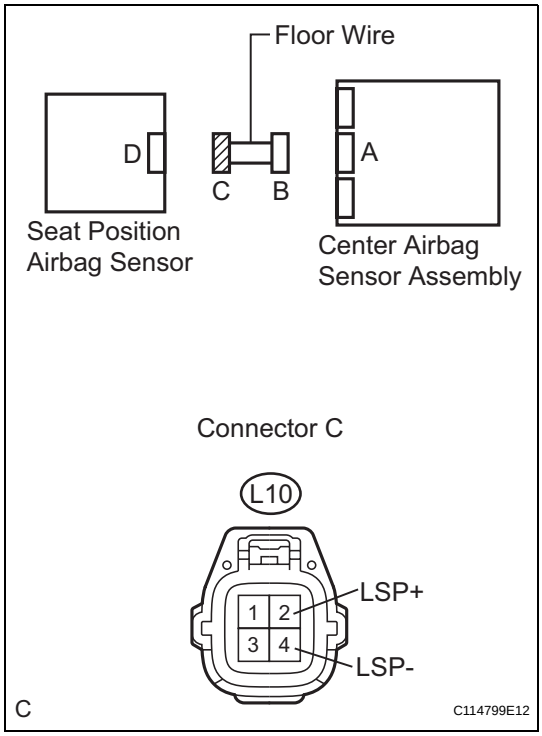

(a) Connect the negative (-) terminal cable to the battery, and wait for at least 2 seconds.
(b) Turn the engine switch on (IG).
(c) Measure the voltage according to the value(s) in the table below.

Standard voltage

Tester Connection	Condition	Specified Condition
L10-2 (LSP+) - Body ground	Engine switch on (IG)	Below 1 V
L10-4 (LSP-) - Body ground	Engine switch on (IG)	Below 1 V

NG → **REPAIR OR REPLACE FLOOR WIRE**

OK

15 CHECK FLOOR WIRE (SHORT TO GROUND)

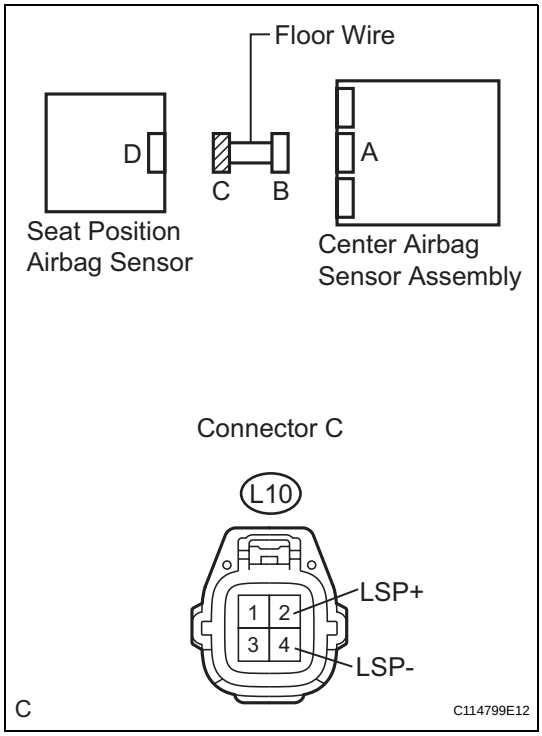

(a) Turn the engine switch off.
(b) Disconnect the negative (-) terminal cable from the battery, and wait for at least 90 seconds.
(c) Measure the resistance according to the value(s) in the table below.

Standard resistance

Tester Connection	Condition	Specified Condition
L10-2 (LSP+) - Body ground	Always	1 MΩ or higher
L10-4 (LSP-) - Body ground	Always	1 MΩ or higher

NG → **REPAIR OR REPLACE FLOOR WIRE**

OK

RS

16 CHECK SEAT POSITION AIRBAG SENSOR

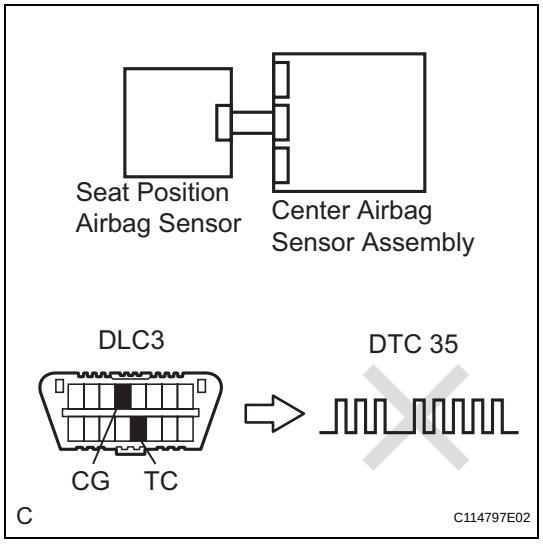

(a) Connect the connectors to the center airbag sensor assembly and the seat position airbag sensor.
(b) Connect the negative (-) terminal cable to the battery, and wait for at least 2 seconds.
(c) Turn the engine switch on (IG), and wait for at least 60 seconds.
(d) Clear the DTCs stored in the memory (See page RS-49).
(e) Turn the engine switch off.
(f) Turn the engine switch on (IG), and wait for at least 60 seconds.
(g) Check the DTCs (See page RS-49).
OK:
DTC B1653/35 is not output.
HINT:
Codes other than DTC B1653/35 may be output at this time, but they are not related to this check.

OK → **USE SIMULATION METHOD TO CHECK (See page RS-37)**

NG

17 REPLACE SEAT POSITION AIRBAG SENSOR

(a) Turn the engine switch off.
(b) Disconnect the negative (-) terminal cable from the battery, and wait for at least 90 seconds.
(c) Replace the seat position airbag sensor (See page RS-484).
HINT:
Perform inspection using parts from a normal vehicle if possible.

NEXT

RS

18	CHECK CENTER AIRBAG SENSOR ASSEMBLY

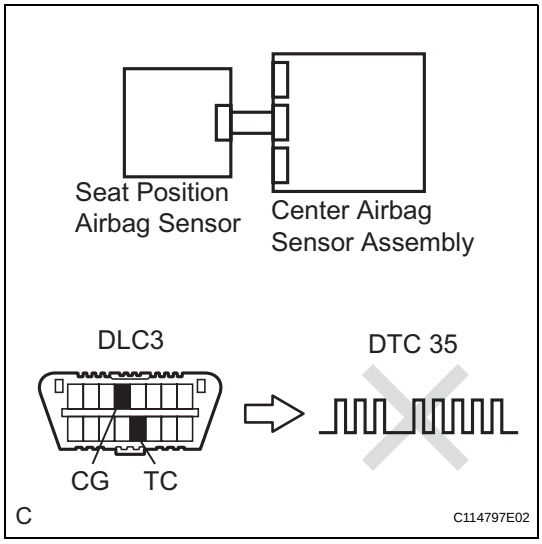

(a) Connect the negative (-) terminal cable to the battery, and wait for at least 2 seconds.
(b) Turn the engine switch on (IG), and wait for at least 60 seconds.
(c) Clear the DTCs stored in the memory (See page RS-49).
(d) Turn the engine switch off.
(e) Turn the engine switch on (IG), and wait for at least 60 seconds.
(f) Check the DTCs (See page RS-49).
OK:
DTC B1653/35 is not output.
HINT:
Codes other than DTC B1653/35 may be output at this time, but they are not related to this check.

NG → **REPLACE CENTER AIRBAG SENSOR ASSEMBLY (See page RS-468)**

OK

END

DTC	B1655/37	Driver Side Seat Belt Buckle Switch Circuit Malfunction

DESCRIPTION

The driver side seat belt buckle switch circuit consists of the center airbag sensor assembly and the front seat inner belt assembly LH.

DTC B1655/37 is recorded when a malfunction is detected in the driver side seat belt buckle switch circuit.

DTC No.	DTC Detection Condition	Trouble Area
B1655/37	• The center airbag sensor assembly receives a line short circuit signal, an open circuit signal, a short circuit to ground signal or a short circuit to B+ signal in the driver side seat belt buckle switch circuit for 2 seconds. • Front seat inner belt assembly LH malfunction • Center airbag sensor assembly malfunction	• Floor wire • Front seat inner belt assembly LH (Driver side seat belt buckle switch) • Center airbag sensor assembly

WIRING DIAGRAM

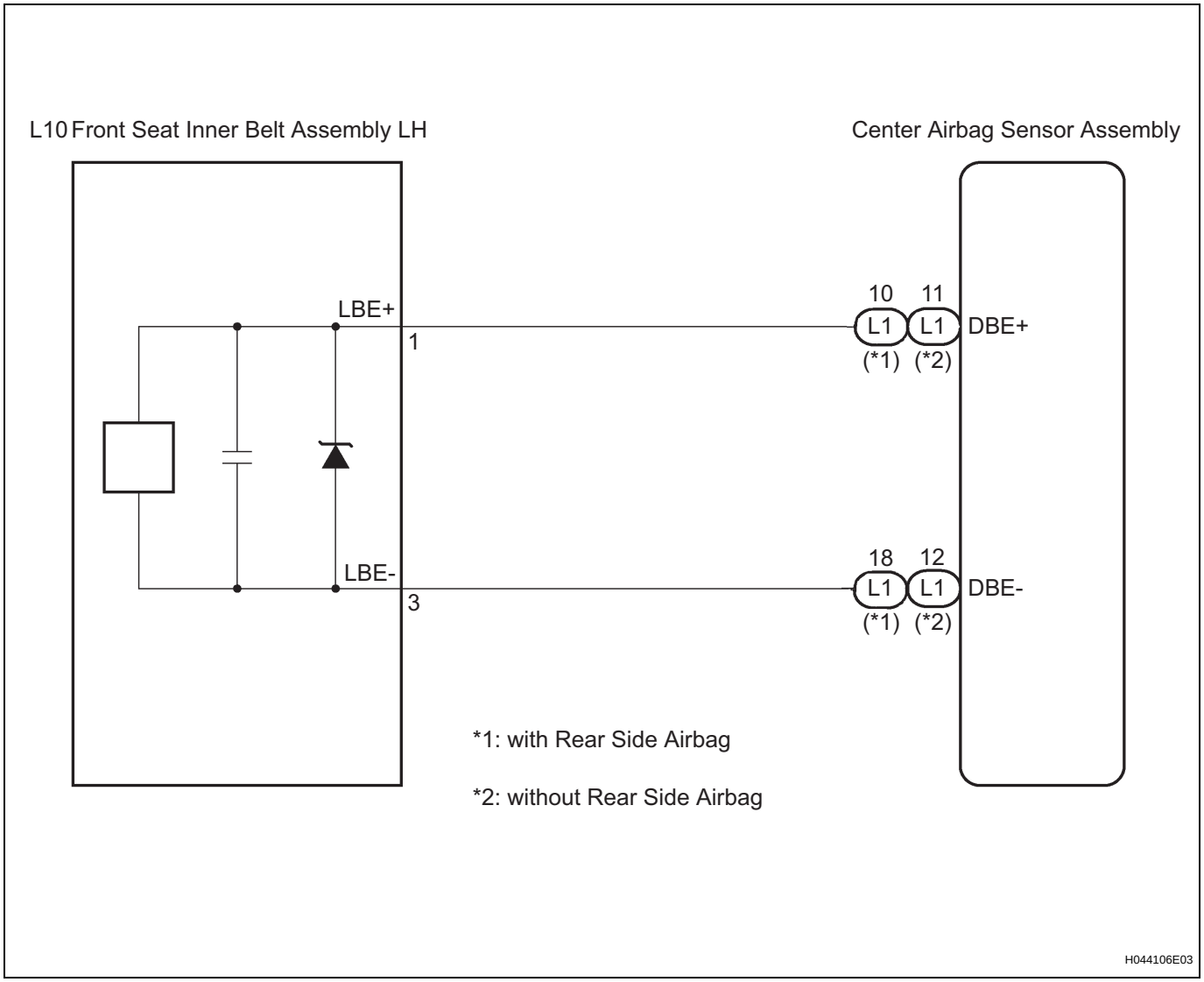

INSPECTION PROCEDURE

1	CHECK DTC

RS

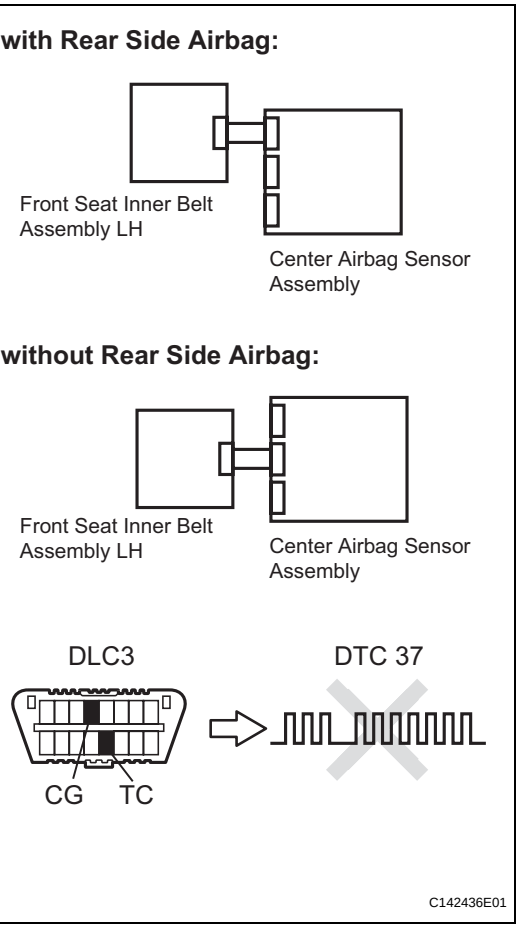

(a) Turn the engine switch on (IG), and wait for at least 60 seconds.
(b) Clear the DTCs stored in the memory (See page RS-49).
(c) Turn the engine switch off.
(d) Turn the engine switch on (IG), and wait for at least 60 seconds.
(e) Check the DTCs (See page RS-52).
OK:
DTC B1655/37 is not output.
HINT:
Codes other than DTC B1655/37 may be output at this time, but they are not related to this check.

OK → **USE SIMULATION METHOD TO CHECK (See page RS-37)**

NG

2	CHECK CONNECTION OF CONNECTORS

(a) Turn the engine switch off.
(b) Disconnect the negative (-) terminal cable from the battery, and wait for at least 90 seconds.
(c) Check that the connectors are properly connected to the center airbag sensor assembly and front seat inner belt assembly LH.
OK:
The connectors are properly connected.

NG → **CONNECT CONNECTORS PROPERLY, THEN GO TO STEP 1**

OK

RS

3 CHECK CONNECTORS

(a) Disconnect the connectors from the center airbag sensor assembly and the front seat inner belt assembly LH.

(b) Check that the connectors (on the center airbag sensor assembly side and front seat inner belt assembly LH side) are not damaged.

OK:

The connectors are not deformed or damaged.

NG → **REPAIR OR REPLACE FLOOR WIRE**

OK

4 CHECK VEHICLE CONDITION

(a) Check whether or not the vehicle is equipped with the rear side airbag.

Result:

A:

with the rear side airbag

B:

without the rear side airbag

B → **Go to step 12**

A

5 CHECK FLOOR WIRE (OPEN)

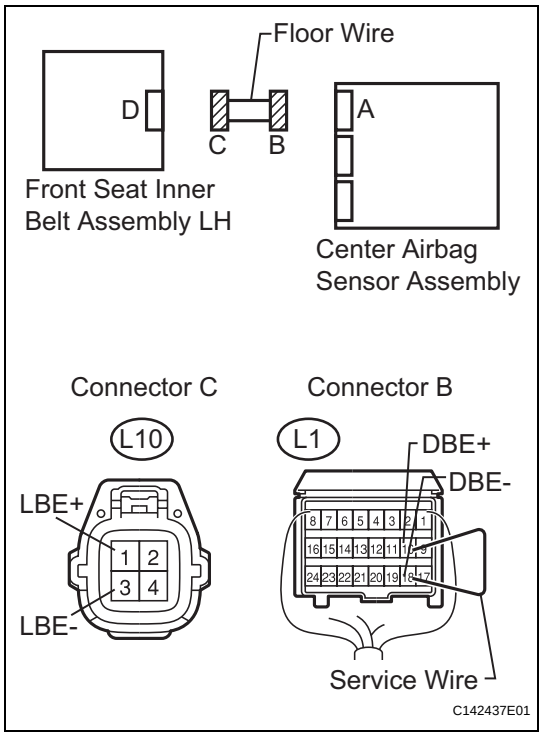

(a) Using a service wire, connect terminals 10 (DBE+) and 18 (DBE-) of connector B.

NOTICE:

Do not forcibly insert a service wire into the terminals of the connector when connecting the wire.

(b) Measure the resistance according to the value(s) in the table below.

Standard resistance

Tester Connection	Condition	Specified Condition
L10-1 (LBE+) - L10-3 (LBE-)	Always	Below 1 Ω

NG → **REPAIR OR REPLACE FLOOR WIRE**

OK

6 CHECK FLOOR WIRE (SHORT)

RS

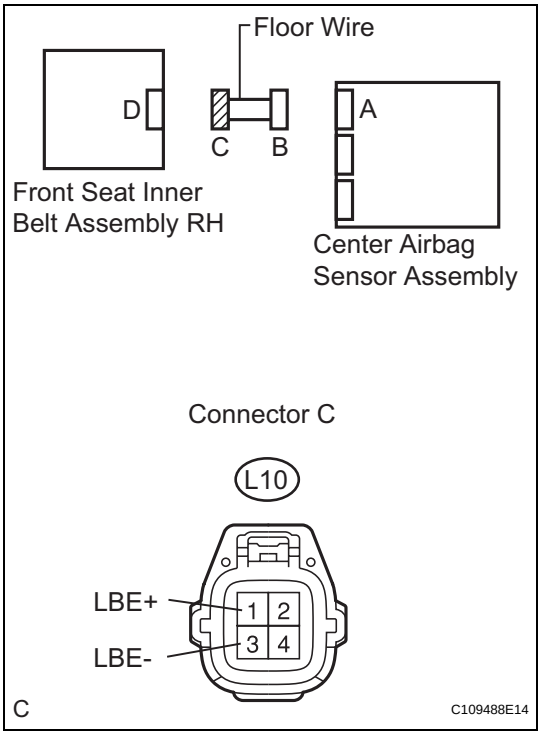

(a) Disconnect the service wire from connector B.
(b) Measure the resistance according to the value(s) in the table below.

Standard resistance

Tester Connection	Condition	Specified Condition
L10-1 (LBE+) - L10-3 (LBE-)	Always	1 MΩ or higher

NG → **REPAIR OR REPLACE FLOOR WIRE**

OK

7 CHECK FLOOR WIRE (SHORT TO B+)

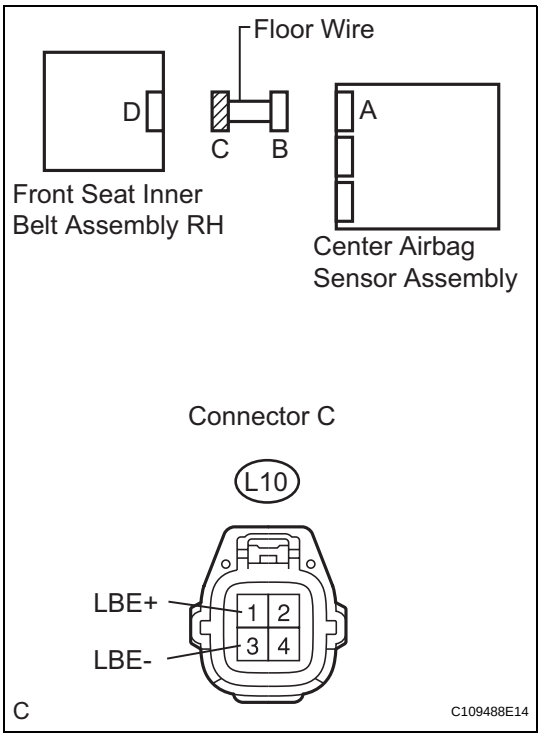

(a) Connect the negative (-) terminal cable to the battery, and wait for at least 2 seconds.
(b) Turn the engine switch on (IG).
(c) Measure the voltage according to the value(s) in the table below.

Standard voltage

Tester Connection	Condition	Specified Condition
L10-1 (LBE+) - Body ground	Engine switch on (IG)	Below 1 V
L10-3 (LBE-) - Body ground	Engine switch on (IG)	Below 1 V

NG → **REPAIR OR REPLACE FLOOR WIRE**

OK

8 CHECK FLOOR WIRE (SHORT TO GROUND)

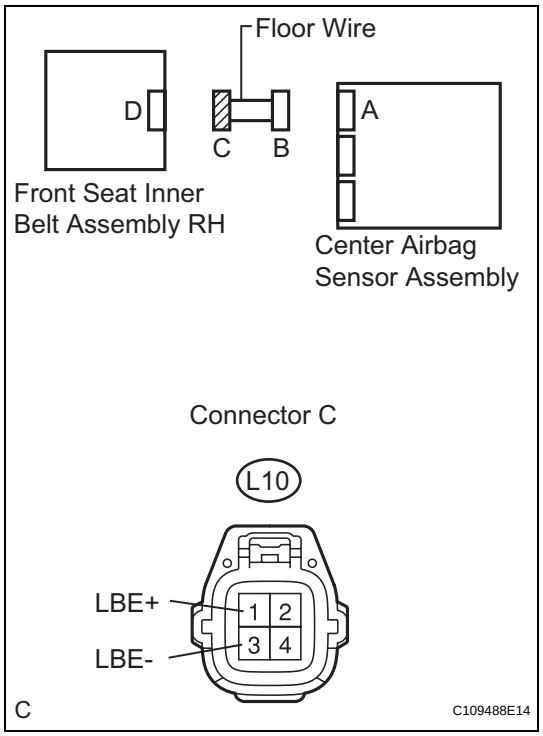

(a) Turn the engine switch off.
(b) Disconnect the negative (-) terminal cable from the battery, and wait for at least 90 seconds.
(c) Measure the resistance according to the value(s) in the table below.

Standard resistance

Tester Connection	Condition	Specified Condition
L10-1 (LBE+) - Body ground	Always	1 MΩ or higher
L10-3 (LBE-) - Body ground	Always	1 MΩ or higher

NG → **REPAIR OR REPLACE FLOOR WIRE**

OK

9 CHECK FRONT SEAT INNER BELT ASSEMBLY LH

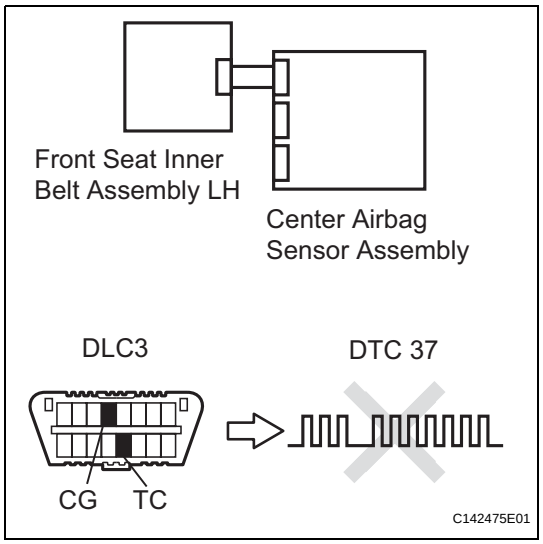

(a) Connect the connector to the center airbag sensor assembly and the front seat inner belt assembly LH.
(b) Connect the negative (-) terminal cable to the battery, and wait for at least 2 seconds.
(c) Turn the engine switch on (IG), and wait for at least 60 seconds.
(d) Clear the DTCs stored in the memory (See page RS-49).
(e) Turn the engine switch off.
(f) Turn the engine switch on (IG), and wait for at least 60 seconds.
(g) Check the DTCs (See page RS-49).

OK:

DTC B1655/37 is not output.

HINT:

Codes other than DTC B1655/37 may be output at this time, but they are not related to this check.

OK → **USE SIMULATION METHOD TO CHECK (See page RS-37)**

NG

RS

10	REPLACE FRONT SEAT INNER BELT ASSEMBLY LH

(a) Turn the engine switch off.
(b) Disconnect the negative (-) terminal cable from the battery, and wait for at least 90 seconds.
(c) Replace the front seat inner belt assembly LH (See page SB-22).
HINT:
Perform inspection using parts from a normal vehicle if possible.

NEXT

11	CHECK CENTER AIRBAG SENSOR ASSEMBLY

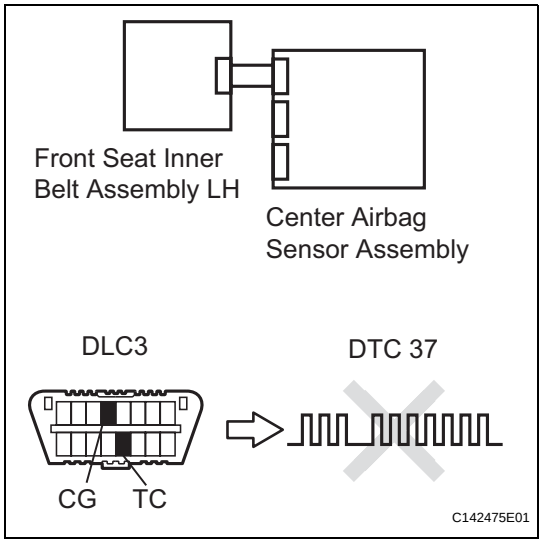

(a) Connect the negative (-) terminal cable to the battery, and wait for at least 2 seconds.
(b) Turn the engine switch on (IG), and wait for at least 60 seconds.
(c) Clear the DTCs stored in the memory (See page RS-49).
(d) Turn the engine switch off.
(e) Turn the engine switch on (IG), and wait for at least 60 seconds.
(f) Check the DTCs (See page RS-49).
OK:
DTC B1655/37 is not output.
HINT:
Codes other than DTC B1655/37 may be output at this time, but they are not related to this check.

NG → **REPLACE CENTER AIRBAG SENSOR ASSEMBLY (See page RS-468)**

OK

END

RS

12 CHECK FLOOR WIRE (OPEN)

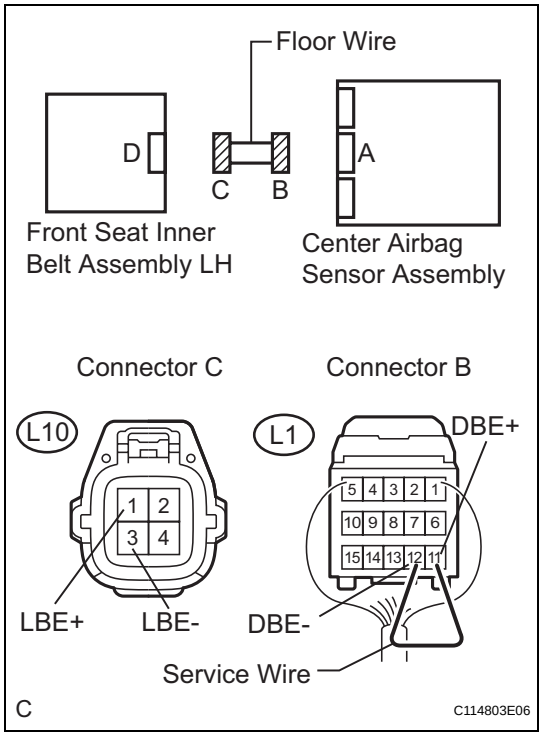

(a) Using a service wire, connect terminals 10 (DBE+) and 18 (DBE-) of connector B.
NOTICE:
Do not forcibly insert a service wire into the terminals of the connector when connecting the wire.

(b) Measure the resistance according to the value(s) in the table below.
Standard resistance

Tester Connection	Condition	Specified Condition
L10-1 (LBE+) - L10-3 (LBE-)	Always	Below 1 Ω

NG → **REPAIR OR REPLACE FLOOR WIRE**

OK

13 CHECK FLOOR WIRE (SHORT)

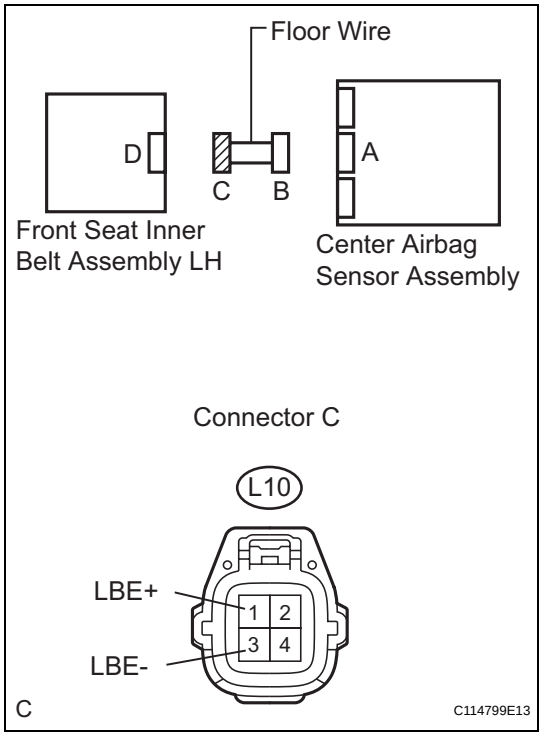

(a) Disconnect the service wire from connector B.

(b) Measure the resistance according to the value(s) in the table below.
Standard resistance

Tester Connection	Condition	Specified Condition
L10-1 (LBE+) - L10-3 (LBE-)	Always	1 MΩ or higher

NG → **REPAIR OR REPLACE FLOOR WIRE**

OK

RS

14 CHECK FLOOR WIRE (SHORT TO B+)

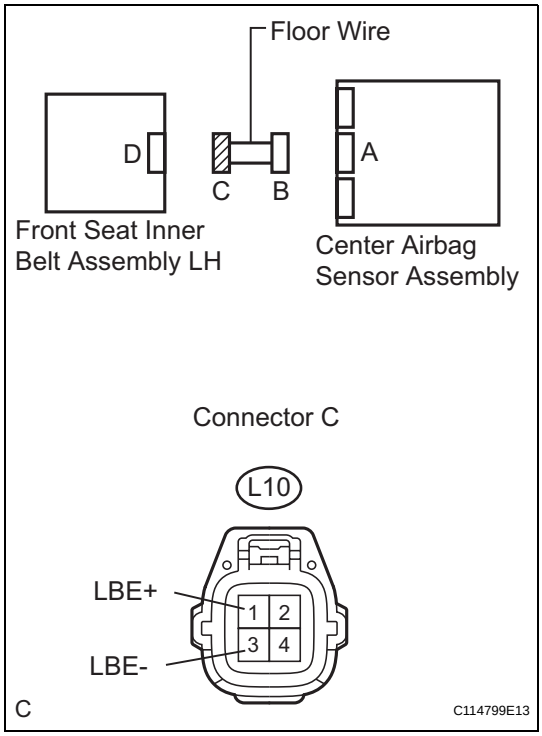

(a) Connect the negative (-) terminal cable to the battery, and wait for at least 2 seconds.
(b) Turn the engine switch on (IG).
(c) Measure the voltage according to the value(s) in the table below.

Standard voltage

Tester Connection	Condition	Specified Condition
L10-1 (LBE+) - Body ground	Engine switch on (IG)	Below 1 V
L10-3 (LBE-) - Body ground	Engine switch on (IG)	Below 1 V

NG → **REPAIR OR REPLACE FLOOR WIRE**

OK

15 CHECK FLOOR WIRE (SHORT TO GROUND)

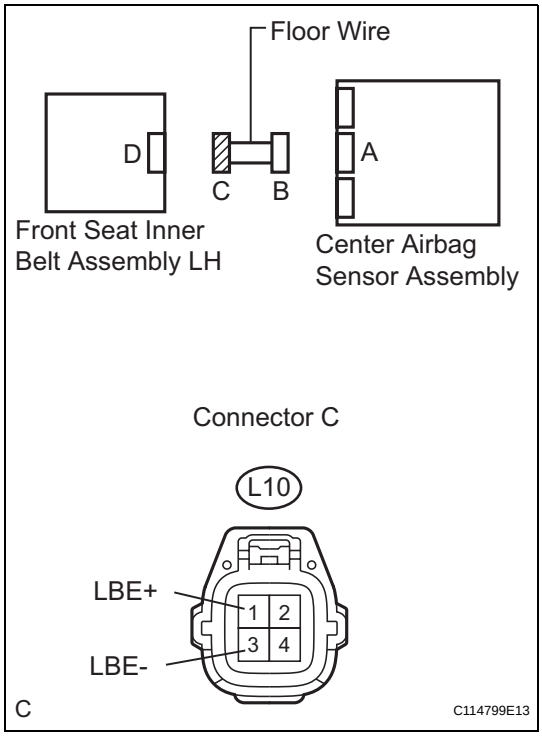

(a) Turn the engine switch off.
(b) Disconnect the negative (-) terminal cable from the battery, and wait for at least 90 seconds.
(c) Measure the resistance according to the value(s) in the table below.

Standard resistance

Tester Connection	Condition	Specified Condition
L10-1 (LBE+) - Body ground	Always	1 MΩ or higher
L10-3 (LBE-) - Body ground	Always	1 MΩ or higher

NG → **REPAIR OR REPLACE FLOOR WIRE**

OK

RS

16 CHECK FRONT SEAT INNER BELT ASSEMBLY LH

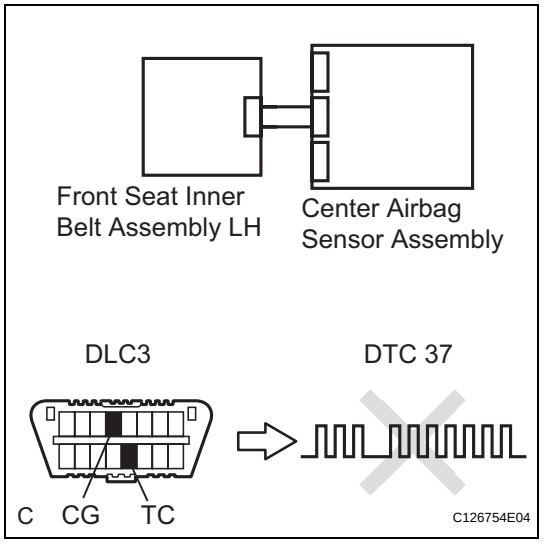

(a) Connect the connector to the center airbag sensor assembly and the front seat inner belt assembly LH.
(b) Connect the negative (-) terminal cable to the battery, and wait for at least 2 seconds.
(c) Turn the engine switch on (IG), and wait for at least 60 seconds.
(d) Clear the DTCs stored in the memory (See page RS-49).
(e) Turn the engine switch off.
(f) Turn the engine switch on (IG), and wait for at least 60 seconds.
(g) Check the DTCs (See page RS-49).
OK:
DTC B1655/37 is not output.
HINT:
Codes other than DTC B1655/37 may be output at this time, but they are not related to this check.

OK → **USE SIMULATION METHOD TO CHECK (See page RS-37)**

NG

17 REPLACE FRONT SEAT INNER BELT ASSEMBLY LH

(a) Turn the engine switch off.
(b) Disconnect the negative (-) terminal cable from the battery, and wait for at least 90 seconds.
(c) Replace the front seat inner belt assembly LH (See page SB-22).
HINT:
Perform inspection using parts from a normal vehicle if possible.

NEXT

RS

18	CHECK CENTER AIRBAG SENSOR ASSEMBLY

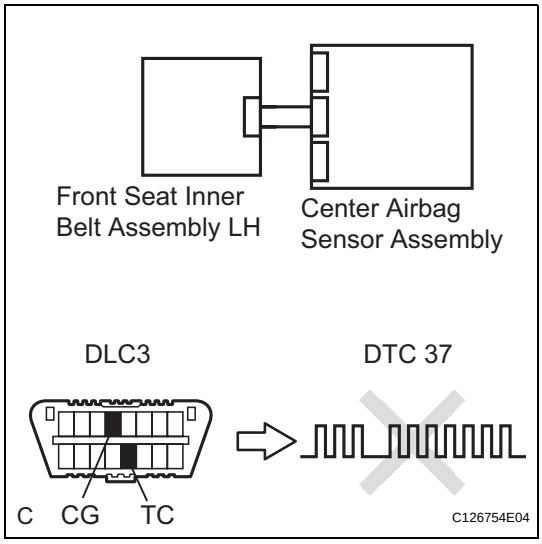

(a) Connect the negative (-) terminal cable to the battery, and wait for at least 2 seconds.
(b) Turn the engine switch on (IG), and wait for at least 60 seconds.
(c) Clear the DTCs stored in the memory (See page RS-49).
(d) Turn the engine switch off.
(e) Turn the engine switch on (IG), and wait for at least 60 seconds.
(f) Check the DTCs (See page RS-49).
OK:
DTC B1655/37 is not output.
HINT:
Codes other than DTC B1655/37 may be output at this time, but they are not related to this check.

NG → **REPLACE CENTER AIRBAG SENSOR ASSEMBLY (See page RS-468)**

OK

END

DTC	B1660/43	Passenger Airbag ON / OFF Indicator Circuit Malfunction

DESCRIPTION

The passenger airbag ON/OFF indicator circuit consists of the center airbag sensor assembly and the passenger airbag ON/OFF indicator.
The passenger airbag ON/OFF indicator indicates the operation condition of the front passenger airbag assembly, front passenger side knee airbag assembly, front seat side airbag assembly RH and front seat outer belt assembly RH.
DTC B1660/43 is recorded when a malfunction is detected in the passenger airbag ON/OFF indicator circuit.

DTC No.	DTC Detecting Condition	Trouble Area
B1660/43	• The center airbag sensor assembly receives an open circuit signal, a short circuit to ground signal or a short circuit to B+ signal in the passenger airbag ON/OFF indicator circuit for 2 seconds. • Passenger airbag ON/OFF indicator malfunction • Center airbag sensor assembly malfunction	• Instrument panel wire • Multi-display assembly (with Navigation system) • Air conditioner panel sub-assembly (without Navigation system) • Center airbag sensor assembly

WIRING DIAGRAM

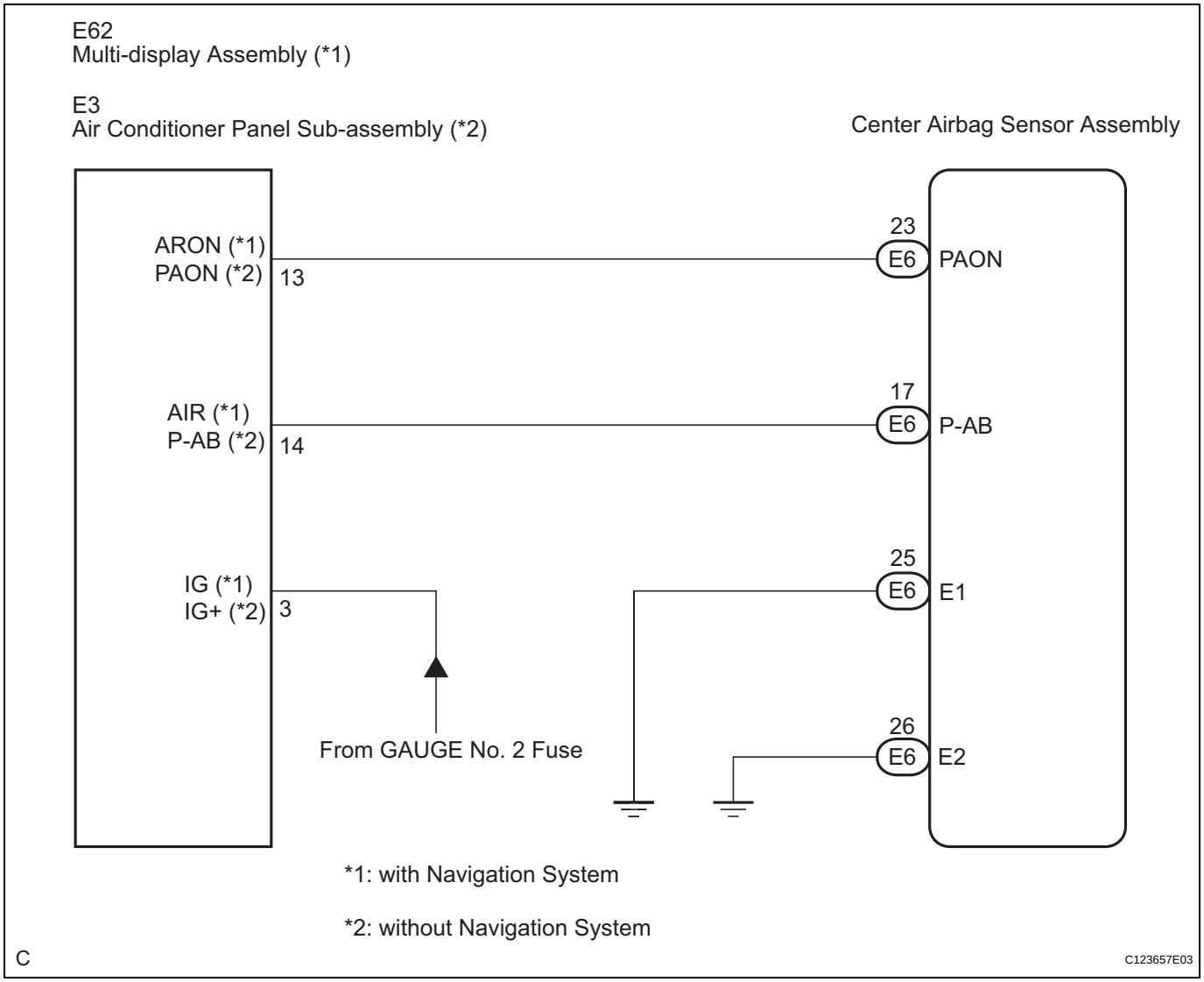

RS

INSPECTION PROCEDURE

1	CHECK PASSENGER AIRBAG ON/OFF INDICATOR CONDITION

(a) Turn the engine switch on (IG).
(b) Check the passenger airbag ON/OFF indicator operation.
HINT:
Refer to the normal condition of the passenger airbag ON/OFF indicator (See page RS-37).

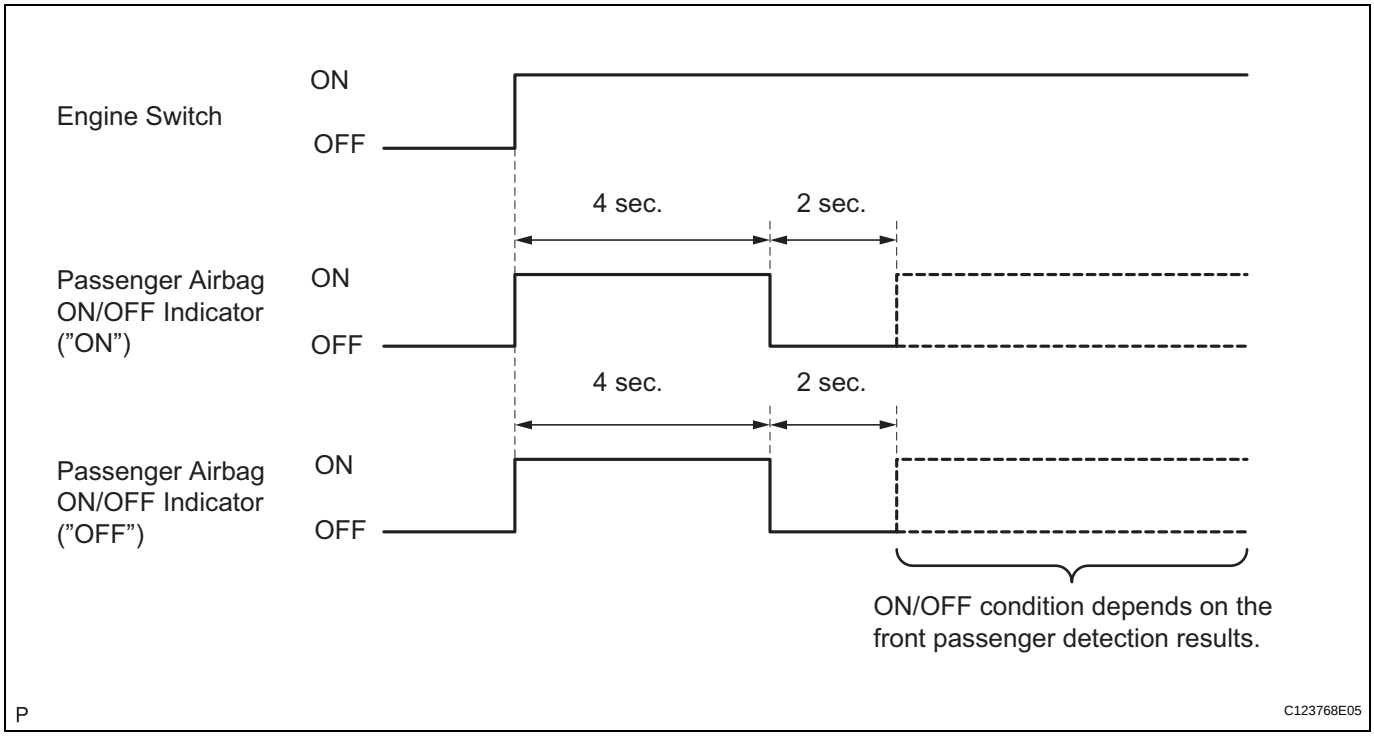

Result

ON/OFF Indicator Illumination	Proceed to
Always ON	A
OFF	B

B → **Go to step 17**

A

2	CHECK CONNECTION OF CONNECTORS

(a) Turn the engine switch off.
(b) Disconnect the negative (-) terminal cable from the battery, and wait for at least 90 seconds.
(c) with Navigation system:
Check that the connectors are properly connected to the center airbag sensor assembly and the multi-display assembly.
OK:
The connectors are properly connected.

(d) without Navigation system:
Check that the connectors are properly connected to the center airbag sensor assembly and the air conditioner panel sub-assembly.
OK:
The connectors are properly connected.

NG → **CONNECT CONNECTORS PROPERLY**

RS

OK

3 CHECK CONNECTORS

(a) with Navigation system:
(1) Disconnect the connectors from the center airbag sensor assembly and the multi-display assembly.
(2) Check that the connectors (on the center airbag sensor assembly side and multi-display assembly side) are not damaged.
OK:
The connectors are not deformed or damaged.

(b) without Navigation system:
(1) Disconnect the connectors from the center airbag sensor assembly and the air conditioner panel sub-assembly.
(2) Check that the connectors (on the center airbag sensor assembly side and air conditioner panel sub-assembly side) are not damaged.
OK:
The connectors are not deformed or damaged.

NG → **REPAIR OR REPLACE INSTRUMENT PANEL WIRE**

OK

4 CHECK VEHICLE CONDITION

(a) Check whether or not the vehicle is equipped with the rear side airbag.
Result:
A:
with the rear side airbag
B:
without the rear side airbag

B → **Go to step 11**

A

RS

5 CHECK PASSENGER AIRBAG ON/OFF INDICATOR

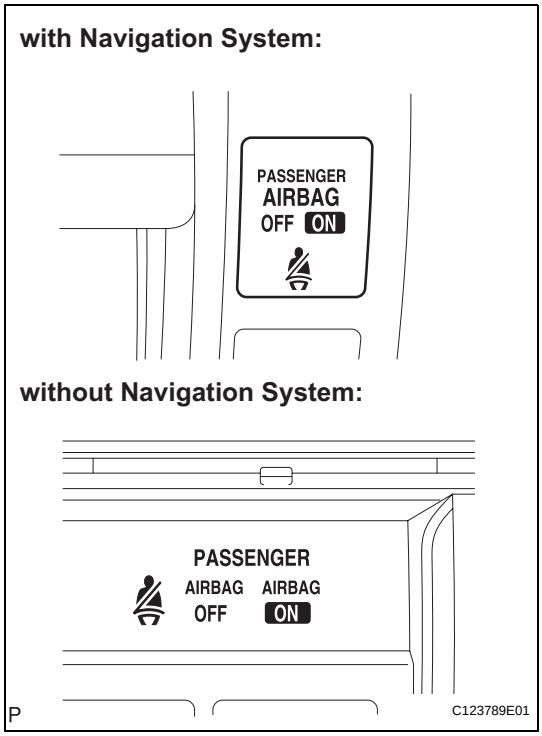

(a) with Navigation system:
Connect the connector to the multi-display assembly.
(b) without Navigation system:
Connect the connector to the air conditioner panel sub-assembly.
(c) Connect the negative (-) terminal cable to the battery, and wait for at least 2 seconds.
(d) Turn the engine switch on (IG).
(e) Check the passenger airbag ON/OFF indicator operation.
OK:
The passenger airbag ON/OFF indicator does not come on.

NG → **Go to step 7**

OK

6 CHECK CENTER AIRBAG SENSOR ASSEMBLY

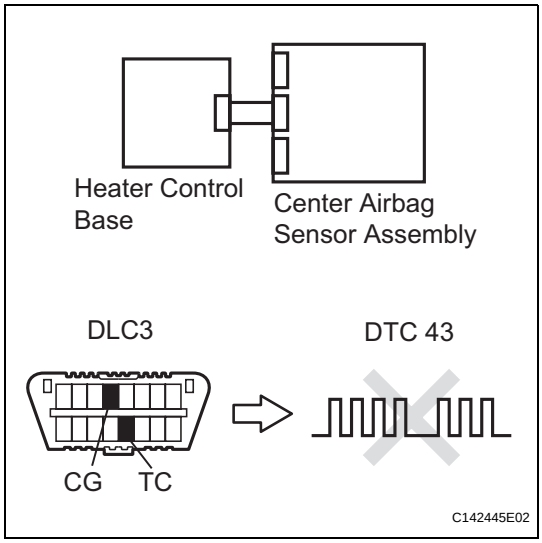

(a) Connect the connector to the center airbag sensor assembly.
(b) Connect the negative (-) terminal cable to the battery, and wait for at least 2 seconds.
(c) Turn the engine switch on (IG), and wait for at least 60 seconds.
(d) Clear the DTCs stored in the memory (See page RS-49).
(e) Turn the engine switch off.
(f) Turn the engine switch on (IG), and wait for at least 60 seconds.
(g) Check for DTCs (See page RS-49).
OK:
DTC B1660/43 is not output.
HINT:
Codes other than DTC B1660/43 may be output at this time, but they are not related to this check.

NG → **REPLACE CENTER AIRBAG SENSOR ASSEMBLY (See page RS-468)**

OK

USE SIMULATION METHOD TO CHECK (See page RS-37)

RS

7 CHECK INSTRUMENT PANEL WIRE (OPEN)

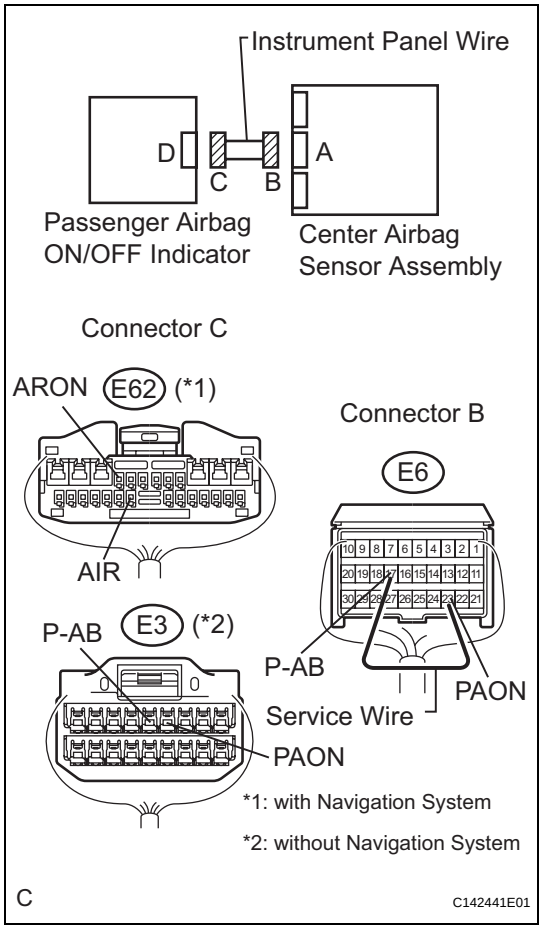

(a) Turn the engine switch off.

(b) Disconnect the negative (-) terminal cable from the battery, and wait for at least 90 seconds.

(c) with Navigation system:
Disconnect the connector from the multi-display assembly.

(d) without Navigation system:
Disconnect the connector from the air conditioner panel sub-assembly.

(e) Using a service wire, connect terminals 23 (PAON) and 17 (P-AB) of connector B.
NOTICE:
Do not forcibly insert a service wire into the terminals of the connector when connecting the wire.

(f) Measure the resistance according to the value(s) in the table below.
Standard resistance:
with Navigation system

Tester Connection	Condition	Specified Condition
E62-9 (ARON) - E62-20 (AIR)	Always	Below 1 Ω

without Navigation system

Tester Connection	Condition	Specified Condition
E3-4 (PAON) - E3-5 (P-AB)	Always	Below 1 Ω

NG → **REPAIR OR REPLACE INSTRUMENT PANEL WIRE**

OK

RS

8 CHECK INSTRUMENT PANEL WIRE (SHORT)

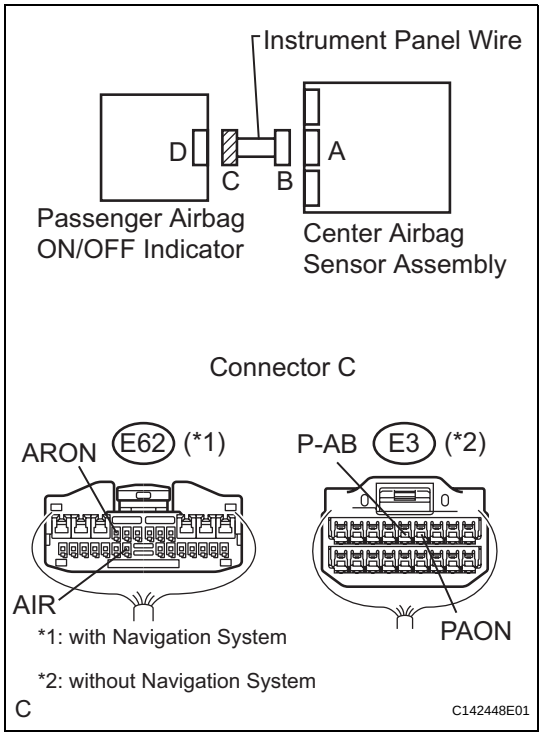

(a) Disconnect the service wire from connector B.
(b) Measure the resistance according to the value(s) in the table below.

Standard resistance:
with Navigation system

Tester Connection	Condition	Specified Condition
E62-9 (ARON) - E62-20 (AIR)	Always	1 MΩ or higher

without Navigation system

Tester Connection	Condition	Specified Condition
E3-4 (PAON) - E3-5 (P-AB)	Always	1 MΩ or higher

NG → **REPAIR OR REPLACE INSTRUMENT PANEL WIRE**

OK

9 CHECK INSTRUMENT PANEL WIRE (SHORT TO GROUND)

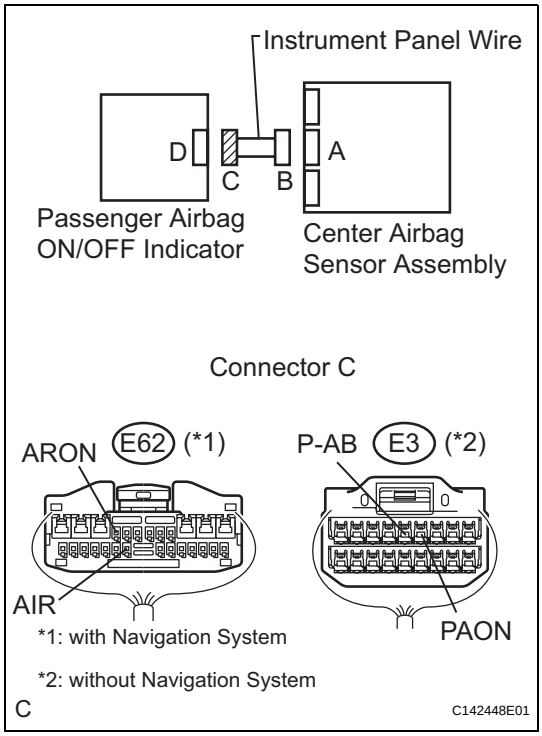

(a) Measure the resistance according to the value(s) in the table below.

Standard resistance:
with Navigation system

Tester Connection	Condition	Specified Condition
E62-9 (ARON) - Body ground	Always	1 MΩ or higher
E62-20 (AIR) - Body ground	Always	1 MΩ or higher

without Navigation system

Tester Connection	Condition	Specified Condition
E3-4 (PAON) - Body ground	Always	1 MΩ or higher
E3-5 (P-AB) - Body ground	Always	1 MΩ or higher

NG → **REPAIR OR REPLACE INSTRUMENT PANEL WIRE**

OK

RS

10 CHECK INSTRUMENT PANEL WIRE (SHORT TO B+)

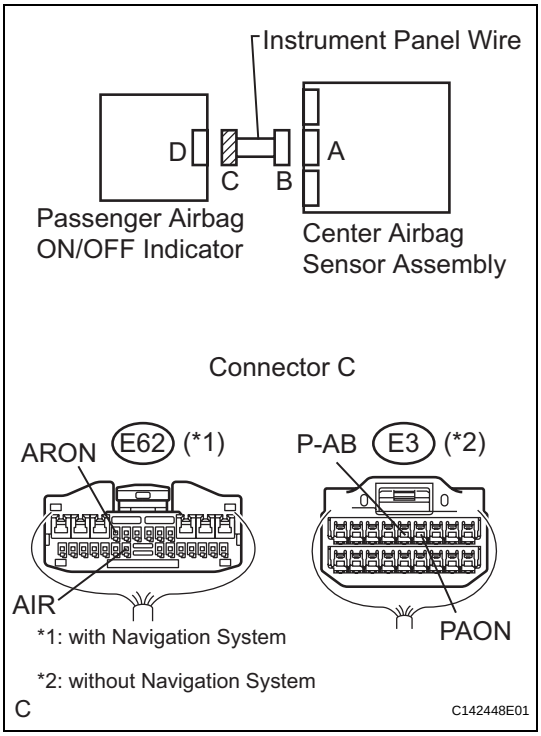

(a) Connect the negative (-) terminal cable to the battery, and wait for at least 2 seconds.
(b) Turn the engine switch on (IG).
(c) Measure the voltage according to the value(s) in the table below.

Standard voltage:
with Navigation system

Tester Connection	Condition	Specified Condition
E62-9 (ARON) - Body ground	Engine switch on (IG)	Below 1 V
E62-20 (AIR) - Body ground	Engine switch on (IG)	Below 1 V

without Navigation system

Tester Connection	Condition	Specified Condition
E3-4 (PAON) - Body ground	Engine switch on (IG)	Below 1 V
E3-5 (P-AB) - Body ground	Engine switch on (IG)	Below 1 V

Result

Result	Proceed to
OK (with Navigation system)	A
OK (without Navigation system)	B
NG	C

A → **REPLACE MULTI-DISPLAY ASSEMBLY (See page NS-233)**

B → **REPLACE AIR CONDITIONER PANEL SUB-ASSEMBLY (See page AC-227)**

C

REPAIR OR REPLACE INSTRUMENT PANEL WIRE

RS

11 CHECK PASSENGER AIRBAG ON/OFF INDICATOR

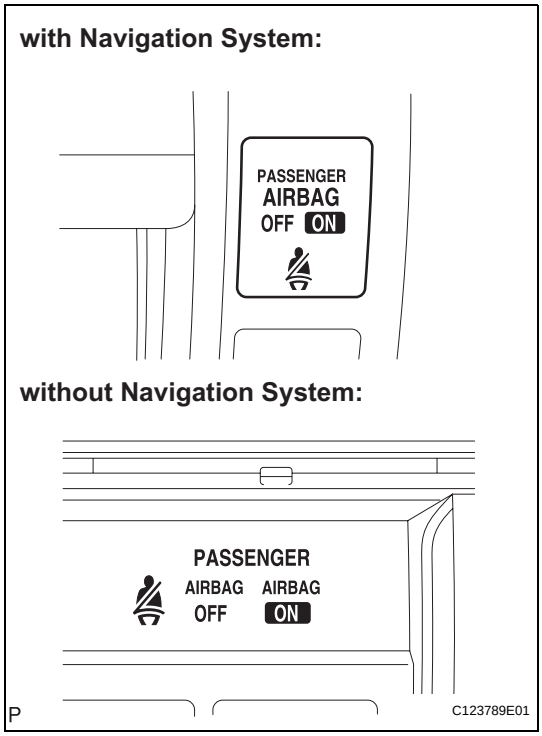

(a) with Navigation system:
Connect the connector to the multi-display assembly.
(b) without Navigation system:
Connect the connector to the air conditioner panel sub-assembly.
(c) Connect the negative (-) terminal cable to the battery, and wait for at least 2 seconds.
(d) Turn the engine switch on (IG).
(e) Check the passenger airbag ON/OFF indicator operation.
OK:
The passenger airbag ON/OFF indicator does not come on.

NG → **Go to step 13**

OK

12 CHECK CENTER AIRBAG SENSOR ASSEMBLY

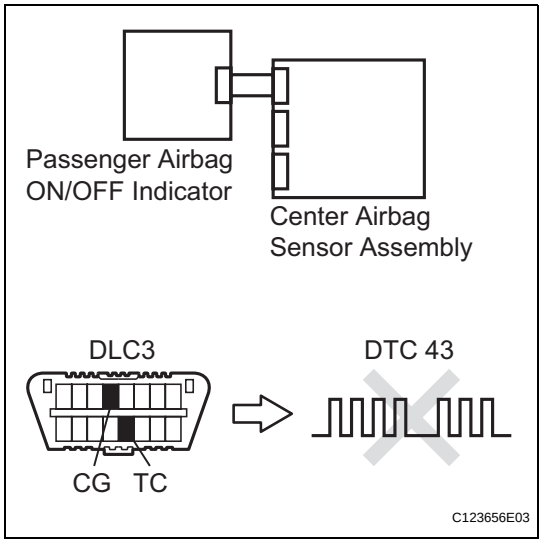

(a) Connect the connector to the center airbag sensor assembly.
(b) Connect the negative (-) terminal cable to the battery, and wait for at least 2 seconds.
(c) Turn the engine switch on (IG), and wait for at least 60 seconds.
(d) Clear the DTCs stored in the memory (See page RS-49).
(e) Turn the engine switch off.
(f) Turn the engine switch on (IG), and wait for at least 60 seconds.
(g) Check for DTCs (See page RS-49).
OK:
DTC B1660/43 is not output.
HINT:
Codes other than DTC B1660/43 may be output at this time, but they are not related to this check.

NG → **REPLACE CENTER AIRBAG SENSOR ASSEMBLY (See page RS-468)**

OK

USE SIMULATION METHOD TO CHECK (See page RS-37)

RS

13 CHECK INSTRUMENT PANEL WIRE (OPEN)

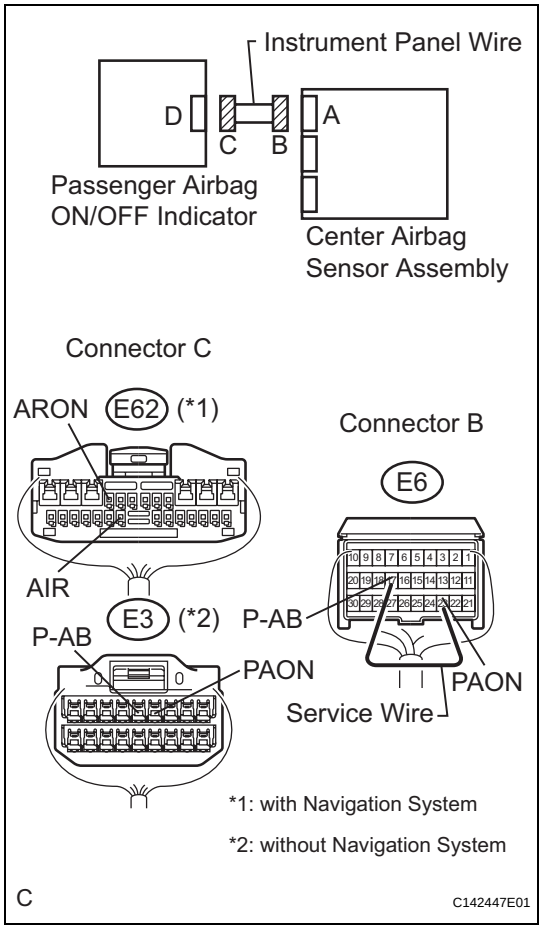

(a) Turn the engine switch off.

(b) Disconnect the negative (-) terminal cable from the battery, and wait for at least 90 seconds.

(c) with Navigation system:
Disconnect the connector from the multi-display assembly.

(d) without Navigation system:
Disconnect the connector from the air conditioner panel sub-assembly.

(e) Using a service wire, connect terminals 23 (PAON) and 17 (P-AB) of connector B.
NOTICE:
Do not forcibly insert a service wire into the terminals of the connector when connecting the wire.

(f) Measure the resistance according to the value(s) in the table below.
Standard resistance:
with Navigation system

Tester Connection	Condition	Specified Condition
E62-9 (ARON) - E62-20 (AIR)	Always	Below 1 Ω

without Navigation system

Tester Connection	Condition	Specified Condition
E3-4 (PAON) - E3-5 (P-AB)	Always	Below 1 Ω

NG → **REPAIR OR REPLACE INSTRUMENT PANEL WIRE**

OK

RS

14 CHECK INSTRUMENT PANEL WIRE (SHORT)

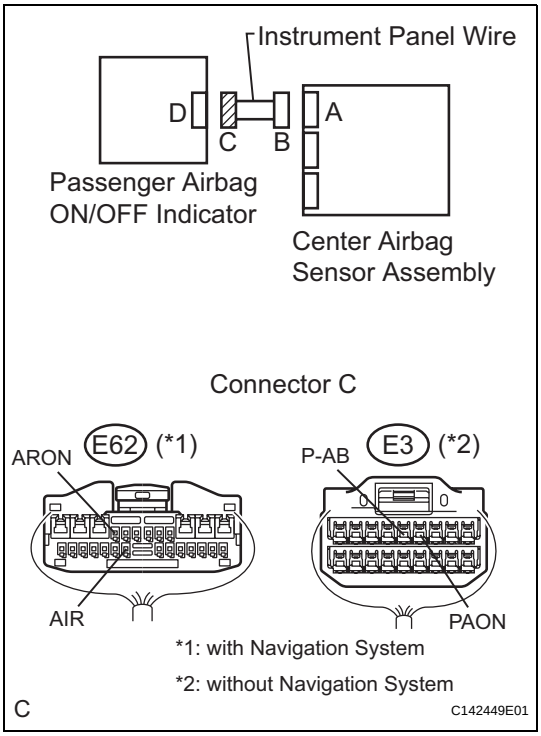

(a) Disconnect the service wire from connector B.
(b) Measure the resistance according to the value(s) in the table below.

Standard resistance:
with Navigation system

Tester Connection	Condition	Specified Condition
E62-9 (ARON) - E62-20 (AIR)	Always	1 MΩ or higher

without Navigation system

Tester Connection	Condition	Specified Condition
E3-4 (PAON) - E3-5 (P-AB)	Always	1 MΩ or higher

NG → **REPAIR OR REPLACE INSTRUMENT PANEL WIRE**

OK

15 CHECK INSTRUMENT PANEL WIRE (SHORT TO GROUND)

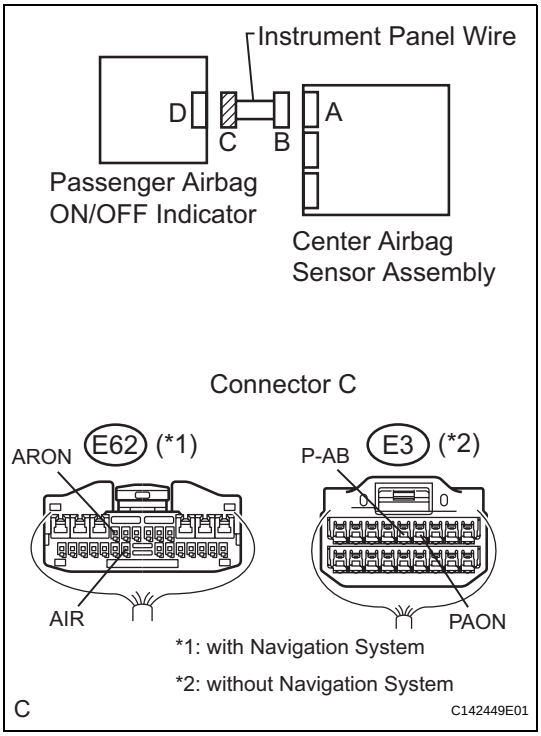

(a) Measure the resistance according to the value(s) in the table below.

Standard resistance:
with Navigation system

Tester Connection	Condition	Specified Condition
E62-9 (ARON) - Body ground	Always	1 MΩ or higher
E62-20 (AIR) - Body ground	Always	1 MΩ or higher

without Navigation system

Tester Connection	Condition	Specified Condition
E3-4 (PAON) - Body ground	Always	1 MΩ or higher
E3-5 (P-AB) - Body ground	Always	1 MΩ or higher

NG → **REPAIR OR REPLACE INSTRUMENT PANEL WIRE**

OK

RS

16 CHECK INSTRUMENT PANEL WIRE (SHORT TO B+)

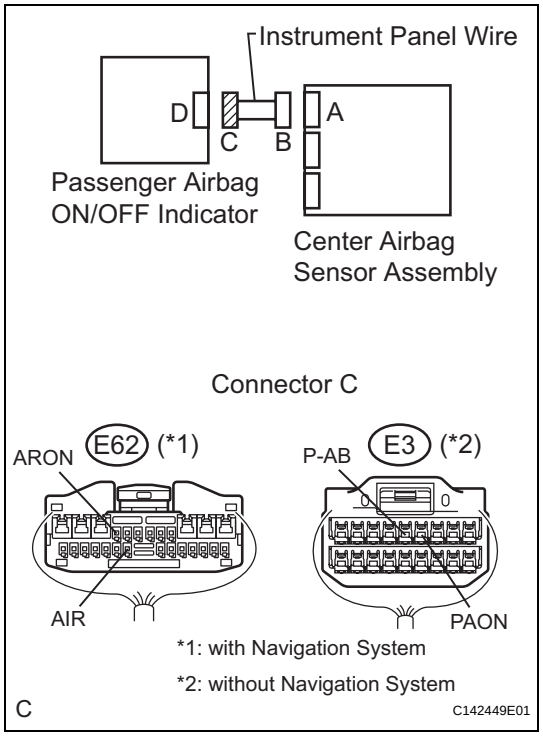

(a) Connect the negative (-) terminal cable to the battery, and wait for at least 2 seconds.
(b) Turn the engine switch on (IG).
(c) Measure the voltage according to the value(s) in the table below.

Standard voltage:
with Navigation system

Tester Connection	Condition	Specified Condition
E62-9 (ARON) - Body ground	Engine switch on (IG)	Below 1 V
E62-20 (AIR) - Body ground	Engine switch on (IG)	Below 1 V

without Navigation system

Tester Connection	Condition	Specified Condition
E3-4 (PAON) - Body ground	Engine switch on (IG)	Below 1 V
E3-5 (P-AB) - Body ground	Engine switch on (IG)	Below 1 V

Result

Result	Proceed to
OK (with Navigation system)	A
OK (without Navigation system)	B
NG	C

A → **REPLACE MULTI-DISPLAY ASSEMBLY (See page NS-233)**

B → **REPLACE AIR CONDITIONER PANEL SUB-ASSEMBLY (See page AC-227)**

C

REPAIR OR REPLACE INSTRUMENT PANEL WIRE

17 CHECK CONNECTION OF CONNECTORS

(a) Turn the engine switch off.
(b) Disconnect the negative (-) terminal cable from the battery, and wait for at least 90 seconds.
(c) with Navigation system:
Check that the connectors are properly connected to the center airbag sensor assembly and the multi-display assembly.
OK:
The connectors are properly connected.
(d) without Navigation system:

RS

Check that the connectors are properly connected to the center airbag sensor assembly and the air conditioner panel sub-assembly.

OK:

The connectors are properly connected.

NG → **CONNECT CONNECTORS PROPERLY**

OK

18	CHECK CONNECTORS

(a) with Navigation system:

(1) Disconnect the connectors from the center airbag sensor assembly and the multi-display assembly.

(2) Check that the connectors (on the center airbag sensor assembly side and multi-display assembly side) are not damaged.

OK:

The connectors are not deformed or damaged.

(b) without Navigation system:

(1) Disconnect the connectors from the center airbag sensor assembly and the air conditioner panel sub-assembly.

(2) Check that the connectors (on the center airbag sensor assembly side and air conditioner panel sub-assembly side) are not damaged.

OK:

The connectors are not deformed or damaged.

NG → **REPAIR OR REPLACE INSTRUMENT PANEL WIRE**

OK

19	CHECK VEHICLE CONDITION

(a) Check whether or not the vehicle is equipped with the rear side airbag.

Result:

A:

with the rear side airbag

B:

without the rear side airbag

B → **Go to step 27**

A

RS

20 CHECK INSTRUMENT PANEL WIRE (OPEN)

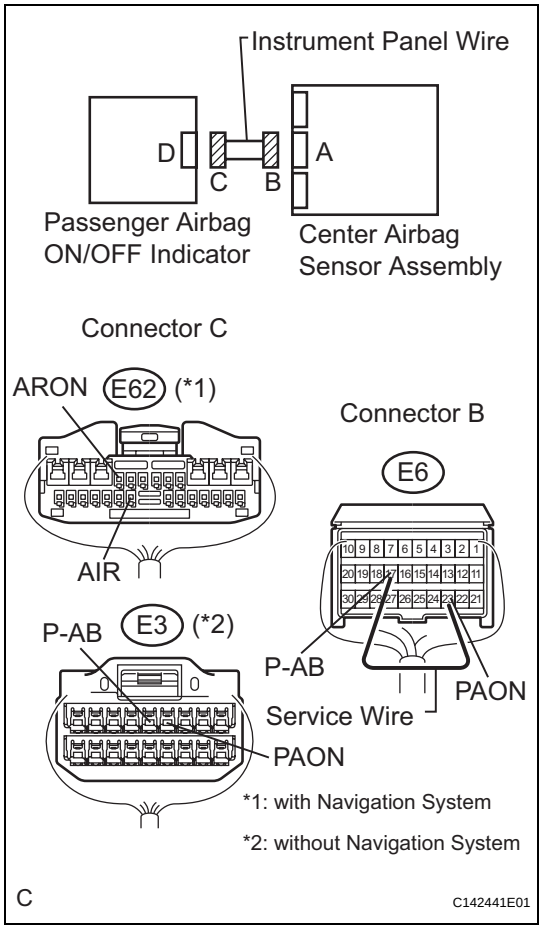

(a) Turn the engine switch off.

(b) Disconnect the negative (-) terminal cable from the battery, and wait for at least 90 seconds.

(c) with Navigation system:
Disconnect the connector from the multi-display assembly.

(d) without Navigation system:
Disconnect the connector from the air conditioner panel sub-assembly.

(e) Using a service wire, connect terminals 23 (PAON) and 17 (P-AB) of connector B.
NOTICE:
Do not forcibly insert a service wire into the terminals of the connector when connecting the wire.

(f) Measure the resistance according to the value(s) in the table below.
Standard resistance:
with Navigation system

Tester Connection	Condition	Specified Condition
E62-9 (ARON) - E62-20 (AIR)	Always	Below 1 Ω

without Navigation system

Tester Connection	Condition	Specified Condition
E3-4 (PAON) - E3-5 (P-AB)	Always	Below 1 Ω

NG → **REPAIR OR REPLACE INSTRUMENT PANEL WIRE**

OK

RS

21 CHECK INSTRUMENT PANEL WIRE (SHORT)

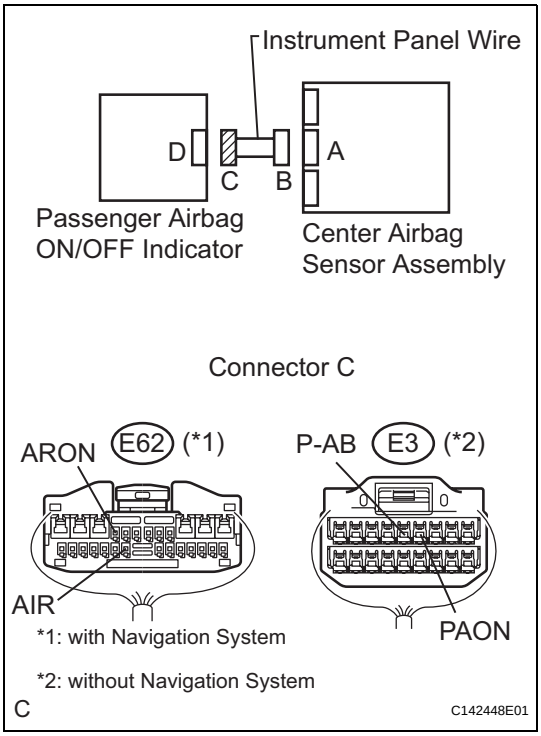

(a) Disconnect the service wire from connector B.
(b) Measure the resistance according to the value(s) in the table below.

Standard resistance:
with Navigation system

Tester Connection	Condition	Specified Condition
E62-9 (ARON) - E62-20 (AIR)	Always	1 MΩ or higher

without Navigation system

Tester Connection	Condition	Specified Condition
E3-4 (PAON) - E3-5 (P-AB)	Always	1 MΩ or higher

NG → **REPAIR OR REPLACE INSTRUMENT PANEL WIRE**

OK

22 CHECK INSTRUMENT PANEL WIRE (SHORT TO GROUND)

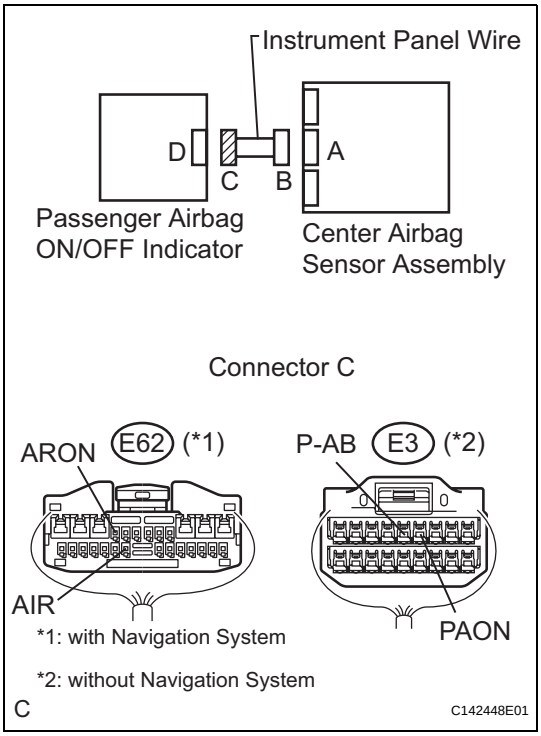

(a) Measure the resistance according to the value(s) in the table below.

Standard resistance:
with Navigation system

Tester Connection	Condition	Specified Condition
E62-9 (ARON) - Body ground	Always	1 MΩ or higher
E62-20 (AIR) - Body ground	Always	1 MΩ or higher

without Navigation system

Tester Connection	Condition	Specified Condition
E3-4 (PAON) - Body ground	Always	1 MΩ or higher
E3-5 (P-AB) - Body ground	Always	1 MΩ or higher

NG → **REPAIR OR REPLACE INSTRUMENT PANEL WIRE**

OK

RS

23 CHECK INSTRUMENT PANEL WIRE (SHORT TO B+)

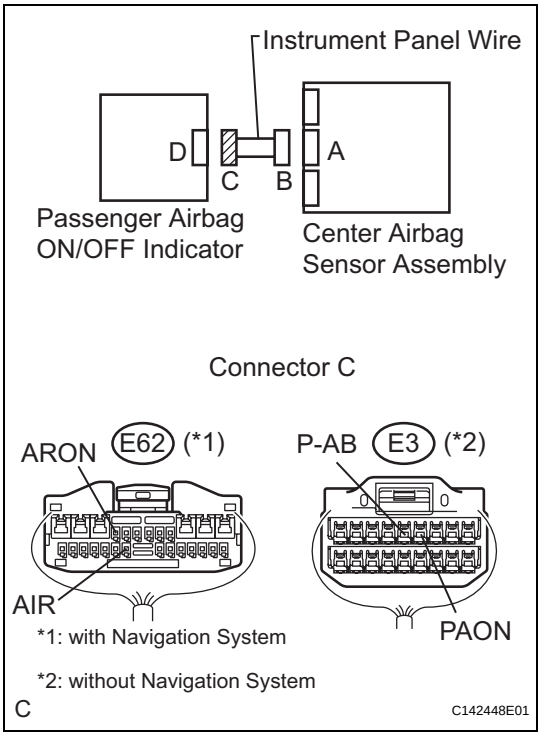

(a) Connect the negative (-) terminal cable to the battery, and wait for at least 2 seconds.
(b) Turn the engine switch on (IG).
(c) Measure the voltage according to the value(s) in the table below.

Standard voltage:
with Navigation system

Tester Connection	Condition	Specified Condition
E62-9 (ARON) - Body ground	Engine switch on (IG)	Below 1 V
E62-20 (AIR) - Body ground	Engine switch on (IG)	Below 1 V

without Navigation system

Tester Connection	Condition	Specified Condition
E3-4 (PAON) - Body ground	Engine switch on (IG)	Below 1 V
E3-5 (P-AB) - Body ground	Engine switch on (IG)	Below 1 V

NG → **REPAIR OR REPLACE INSTRUMENT PANEL WIRE**

OK

24 CHECK PASSENGER AIRBAG ON/OFF INDICATOR (SOURCE VOLTAGE)

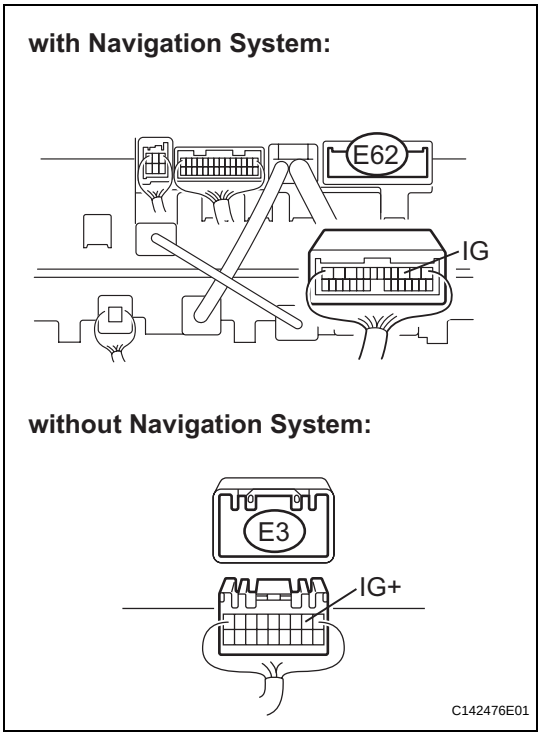

(a) Connect the connectors to the center airbag sensor assembly.
(b) Connect the negative (-) terminal cable to the battery, and wait for at least 2 seconds.
(c) Turn the engine switch on (IG).
(d) Measure the voltage according to the value(s) in the table below.

Standard voltage:
with Navigation system

Tester Connection	Condition	Specified Condition
E62-3 (IG) - Body ground	Engine switch on (IG)	10 to 14 V

without Navigation system

Tester Connection	Condition	Specified Condition
E3-2 (IG+) - Body ground	Engine switch on (IG)	10 to 14 V

NG → **REPAIR OR REPLACE WIRE HARNESS (PASSENGER AIRBAG ON/OFF INDICATOR - BATTERY) OR BATTERY**

OK

25 CHECK PASSENGER AIRBAG ON/OFF INDICATOR

RS

Center Airbag Sensor Assembly Side:

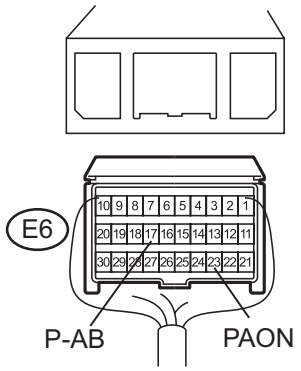

C142450E01

(a) Turn the engine switch off.
(b) Disconnect the negative (-) terminal cable from the battery, and wait for at least 90 seconds.
(c) with Navigation system
Connect the connector to the multi-display assembly.
(d) without Navigation system
Connect the connector to the clock assembly.
(e) Disconnect the connectors from the center airbag sensor assembly.
(f) Connect the negative (-) terminal cable to the battery, and wait for at least 2 seconds.
(g) Turn the engine switch on (IG).
(h) Check the indicator according to the conditions in the table below.

Result

Tester Connection	Condition	Passenger airbag ON/ OFF indicator
E6-23 (PAON) - Body ground	Engine switch on (IG)	"ON" comes on
E6-17 (P-AB) - Body ground	Engine switch on (IG)	"OFF" comes on

Result

Result	Proceed to
NG (with Navigation system)	A
NG (without Navigation system)	B
OK	C

A → **REPLACE MULTI-DISPLAY ASSEMBLY (See page NS-233)**

B → **REPLACE AIR CONDITIONER PANEL SUB-ASSEMBLY (See page AC-227)**

C

26	CHECK CENTER AIRBAG SENSOR ASSEMBLY

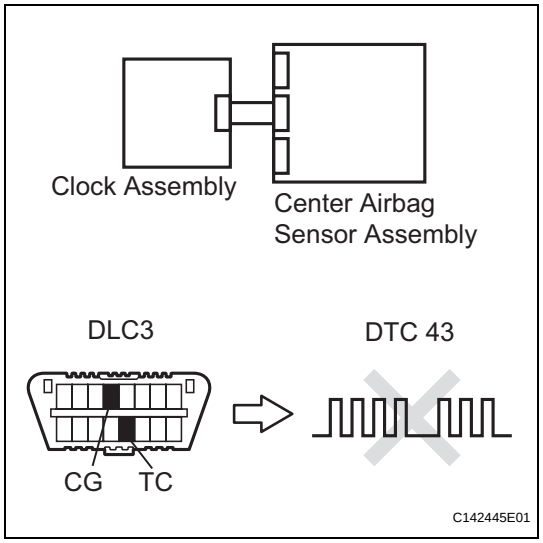

(a) Turn the engine switch off.
(b) Disconnect the negative (-) terminal cable from the battery, and wait for at least 90 seconds.
(c) Connect the connectors to the center airbag sensor assembly.
(d) Connect the negative (-) terminal cable to the battery and wait for at least 2 seconds.
(e) Turn the engine switch on (IG), and wait for at least 60 seconds.
(f) Clear the DTCs stored in the memory (See page RS-49).
(g) Turn the engine switch off.
(h) Turn the engine switch on (IG), and wait for at least 60 seconds.
(i) Check for DTCs (See page RS-49).
OK:
DTC B1660/43 is not output.
HINT:
Codes other than DTC B1660/43 may be output at this time, but they are not related to this check.

NG → **REPLACE CENTER AIRBAG SENSOR ASSEMBLY (See page RS-468)**

OK

USE SIMULATION METHOD TO CHECK (See page RS-37)

RS

RS

27	CHECK INSTRUMENT PANEL WIRE (OPEN)

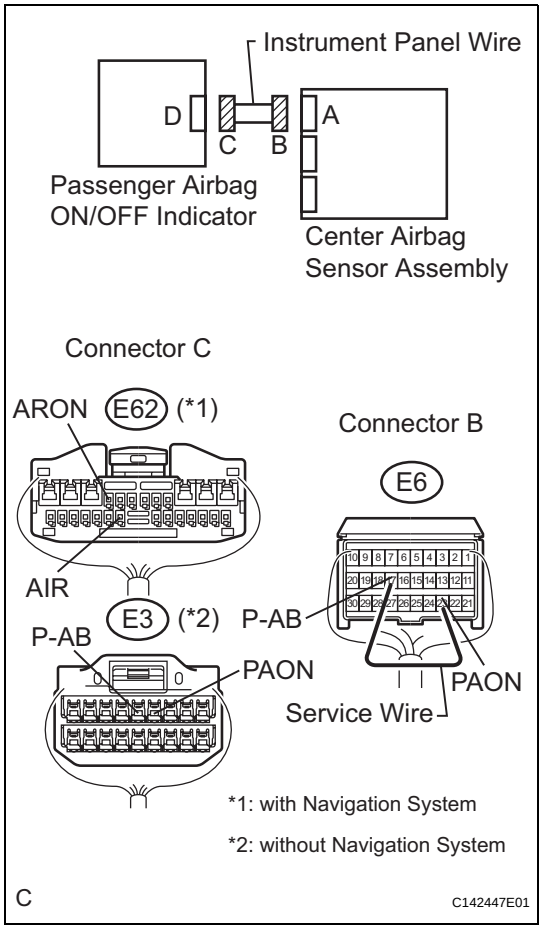

(a) Turn the engine switch off.
(b) Disconnect the negative (-) terminal cable from the battery, and wait for at least 90 seconds.
(c) with Navigation system:
Disconnect the connector from the multi-display assembly.
(d) without Navigation system:
Disconnect the connector from the air conditioner panel sub-assembly.
(e) Using a service wire, connect terminals 23 (PAON) and 17 (P-AB) of connector B.
NOTICE:
Do not forcibly insert a service wire into the terminals of the connector when connecting the wire.
(f) Measure the resistance according to the value(s) in the table below.
Standard resistance:
with Navigation system

Tester Connection	Condition	Specified Condition
E62-9 (ARON) - E62-20 (AIR)	Always	Below 1 Ω

without Navigation system

Tester Connection	Condition	Specified Condition
E3-4 (PAON) - E3-5 (P-AB)	Always	Below 1 Ω

NG → **REPAIR OR REPLACE INSTRUMENT PANEL WIRE**

OK

RS

28 CHECK INSTRUMENT PANEL WIRE (SHORT)

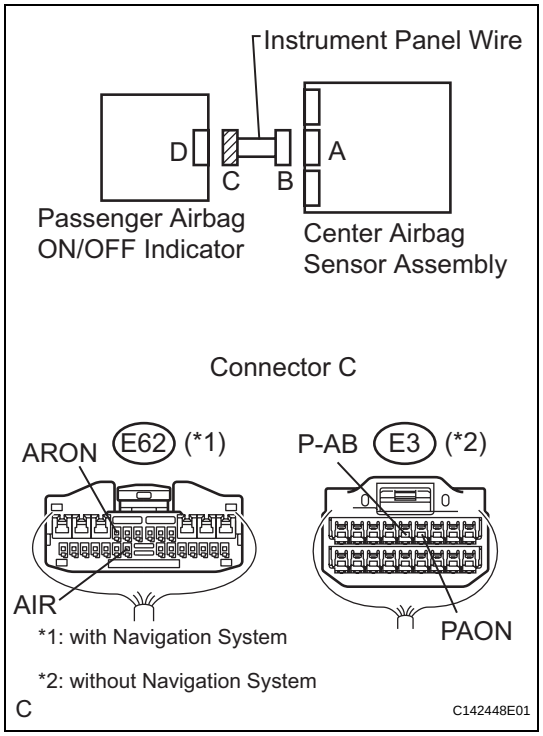

(a) Disconnect the service wire from connector B.
(b) Measure the resistance according to the value(s) in the table below.

Standard resistance:
with Navigation system

Tester Connection	Condition	Specified Condition
E62-9 (ARON) - E62-20 (AIR)	Always	1 MΩ or higher

without Navigation system

Tester Connection	Condition	Specified Condition
E3-4 (PAON) - E3-5 (P-AB)	Always	1 MΩ or higher

NG → **REPAIR OR REPLACE INSTRUMENT PANEL WIRE**

OK

29 CHECK INSTRUMENT PANEL WIRE (SHORT TO GROUND)

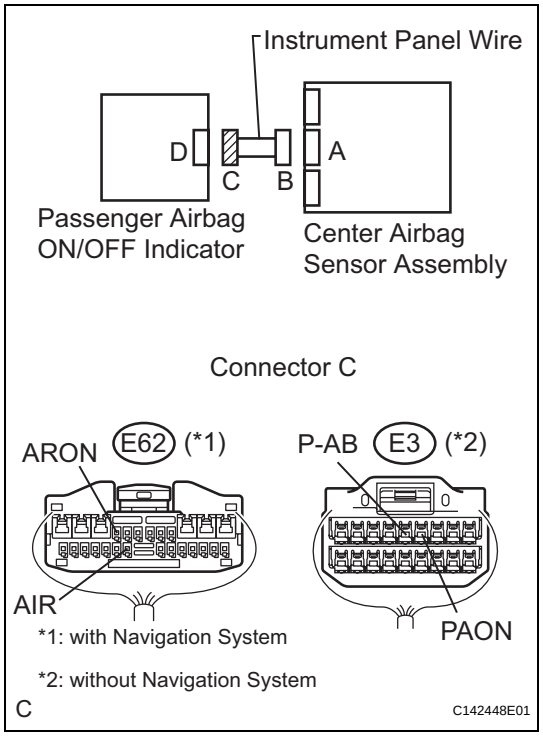

(a) Measure the resistance according to the value(s) in the table below.

Standard resistance:
with Navigation system

Tester Connection	Condition	Specified Condition
E62-9 (ARON) - Body ground	Always	1 MΩ or higher
E62-20 (AIR) - Body ground	Always	1 MΩ or higher

without Navigation system

Tester Connection	Condition	Specified Condition
E3-4 (PAON) - Body ground	Always	1 MΩ or higher
E3-5 (P-AB) - Body ground	Always	1 MΩ or higher

NG → **REPAIR OR REPLACE INSTRUMENT PANEL WIRE**

OK

RS

30 CHECK INSTRUMENT PANEL WIRE (SHORT TO B+)

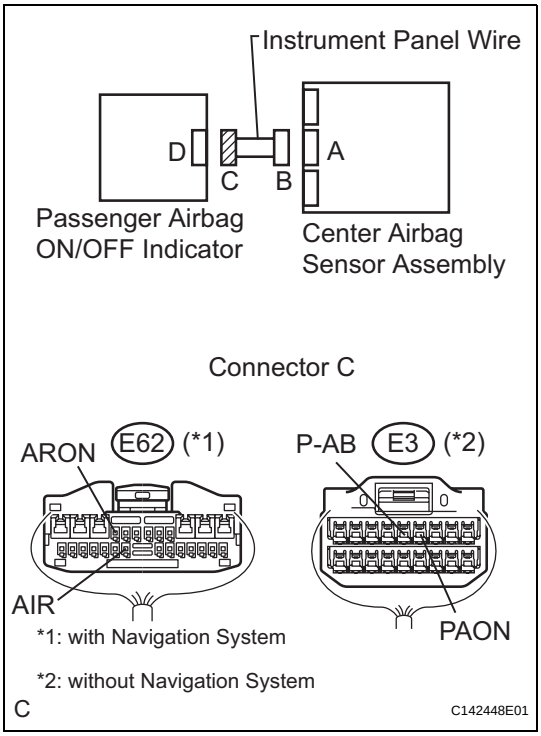

(a) Connect the negative (-) terminal cable to the battery, and wait for at least 2 seconds.
(b) Turn the engine switch on (IG).
(c) Measure the voltage according to the value(s) in the table below.

Standard voltage:
with Navigation system

Tester Connection	Condition	Specified Condition
E62-9 (ARON) - Body ground	Engine switch on (IG)	Below 1 V
E62-20 (AIR) - Body ground	Engine switch on (IG)	Below 1 V

without Navigation system

Tester Connection	Condition	Specified Condition
E3-4 (PAON) - Body ground	Engine switch on (IG)	Below 1 V
E3-5 (P-AB) - Body ground	Engine switch on (IG)	Below 1 V

NG → **REPAIR OR REPLACE INSTRUMENT PANEL WIRE**

OK

31 CHECK PASSENGER AIRBAG ON/OFF INDICATOR (SOURCE VOLTAGE)

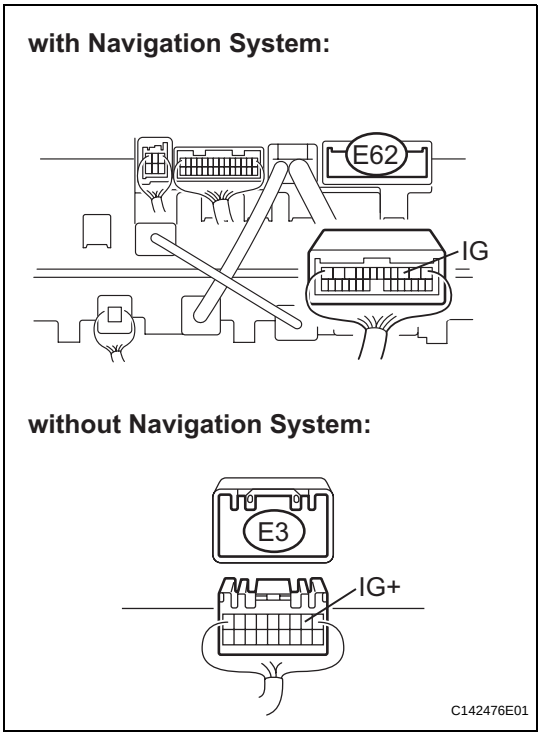

(a) Connect the connectors to the center airbag sensor assembly.
(b) Connect the negative (-) terminal cable to the battery, and wait for at least 2 seconds.
(c) Turn the engine switch on (IG).
(d) Measure the voltage according to the value(s) in the table below.

Standard voltage:
with Navigation system

Tester Connection	Condition	Specified Condition
E62-3 (IG) - Body ground	Engine switch on (IG)	10 to 14 V

without Navigation system

Tester Connection	Condition	Specified Condition
E3-2 (IG+) - Body ground	Engine switch on (IG)	10 to 14 V

NG → **REPAIR OR REPLACE WIRE HARNESS (PASSENGER AIRBAG ON/OFF INDICATOR - BATTERY) OR BATTERY**

OK

32 CHECK PASSENGER AIRBAG ON/OFF INDICATOR

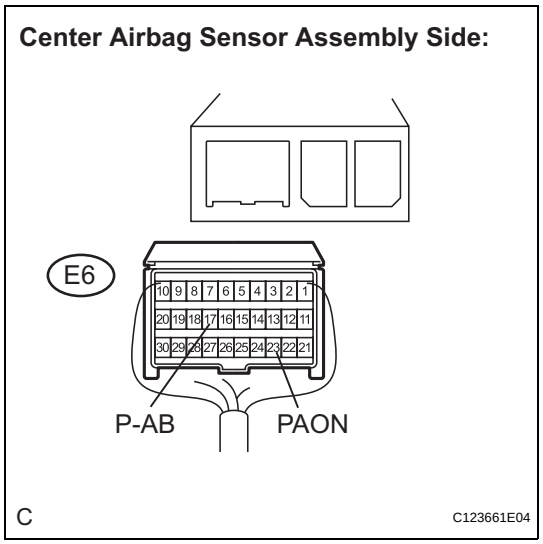

(a) Turn the engine switch off.
(b) Disconnect the negative (-) terminal cable from the battery, and wait for at least 90 seconds.
(c) with Navigation system
Connect the connector to the multi-display assembly.
(d) without Navigation system
Connect the connector to the clock assembly.
(e) Disconnect the connectors from the center airbag sensor assembly.
(f) Connect the negative (-) terminal cable to the battery, and wait for at least 2 seconds.
(g) Turn the engine switch on (IG).
(h) Check the indicator according to the conditions in the table below.

Result

Tester Connection	Condition	Passenger airbag ON/ OFF indicator
E6-23 (PAON) - Body ground	Engine switch on (IG)	"ON" comes on
E6-17 (P-AB) - Body ground	Engine switch on (IG)	"OFF" comes on

Result

Result	Proceed to
NG (with Navigation system)	A
NG (without Navigation system)	B
OK	C

A → **REPLACE MULTI-DISPLAY ASSEMBLY (See page NS-233)**

B → **REPLACE AIR CONDITIONER PANEL SUB-ASSEMBLY (See page AC-227)**

C

RS

33	CHECK CENTER AIRBAG SENSOR ASSEMBLY

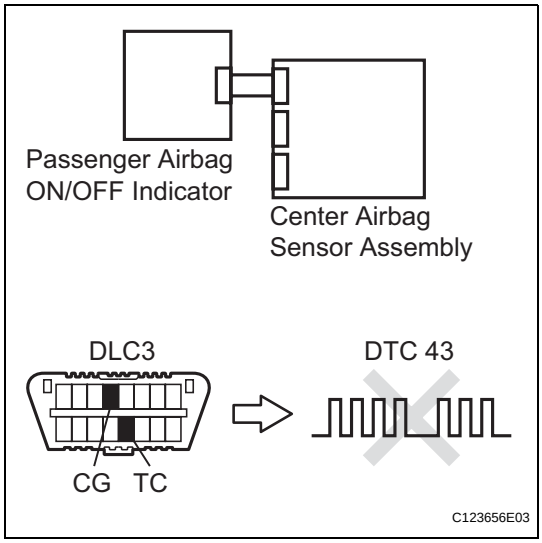

(a) Turn the engine switch off.
(b) Disconnect the negative (-) terminal cable from the battery, and wait for at least 90 seconds.
(c) Connect the connector to the center airbag sensor assembly.
(d) Connect the negative (-) terminal cable to the battery and wait for at least 2 seconds.
(e) Turn the engine switch on (IG), and wait for at least 60 seconds.
(f) Clear the DTCs stored in the memory (See page RS-49).
(g) Turn the engine switch off.
(h) Turn the engine switch on (IG), and wait for at least 60 seconds.
(i) Check for DTCs (See page RS-49).
OK:
DTC B1660/43 is not output.
HINT:
Codes other than DTC B1660/43 may be output at this time, but they are not related to this check.

NG → **REPLACE CENTER AIRBAG SENSOR ASSEMBLY (See page RS-468)**

OK

USE SIMULATION METHOD TO CHECK (See page RS-37)

DTC	B1800/51	Short in Driver Side Squib Circuit

DTC	B1801/51	Open in Driver Side Squib Circuit

DTC	B1802/51	Short to GND in Driver Side Squib Circuit

DTC	B1803/51	Short to B+ in Driver Side Squib Circuit

DESCRIPTION

The driver side squib circuit consists of the center airbag sensor assembly, the spiral cable, and the steering pad.
The circuit instructs the SRS to deploy when deployment conditions are met.
These DTCs are recorded when a malfunction is detected in the driver side squib circuit.

DTC No.	DTC Detecting Condition	Trouble Area
B1800/51	• The center airbag sensor assembly receives a line short circuit signal 5 times in the driver side squib circuit during primary check. • Driver side squib malfunction • Spiral cable malfunction • Center airbag sensor assembly malfunction	• Instrument panel wire • Spiral cable • Steering pad (Driver side squib) • Center airbag sensor assembly
B1801/51	• The center airbag sensor assembly receives an open circuit signal in the driver side squib circuit for 2 seconds. • Driver side squib malfunction • Spiral cable malfunction • Center airbag sensor assembly malfunction	• Instrument panel wire • Spiral cable • Steering pad (Driver side squib) • Center airbag sensor assembly
B1802/51	• The center airbag sensor assembly receives a short circuit to ground signal in the driver side squib circuit for 0.5 seconds. • Driver side squib malfunction • Spiral cable malfunction • Center airbag sensor assembly malfunction	• Instrument panel wire • Spiral cable • Steering pad (Driver side squib) • Center airbag sensor assembly
B1803/51	• The center airbag sensor assembly receives a short circuit to B+ signal in the driver side squib circuit for 0.5 seconds. • Driver side squib malfunction • Spiral cable malfunction • Center airbag sensor assembly malfunction	• Instrument panel wire • Spiral cable • Steering pad (Driver side squib) • Center airbag sensor assembly

RS

WIRING DIAGRAM

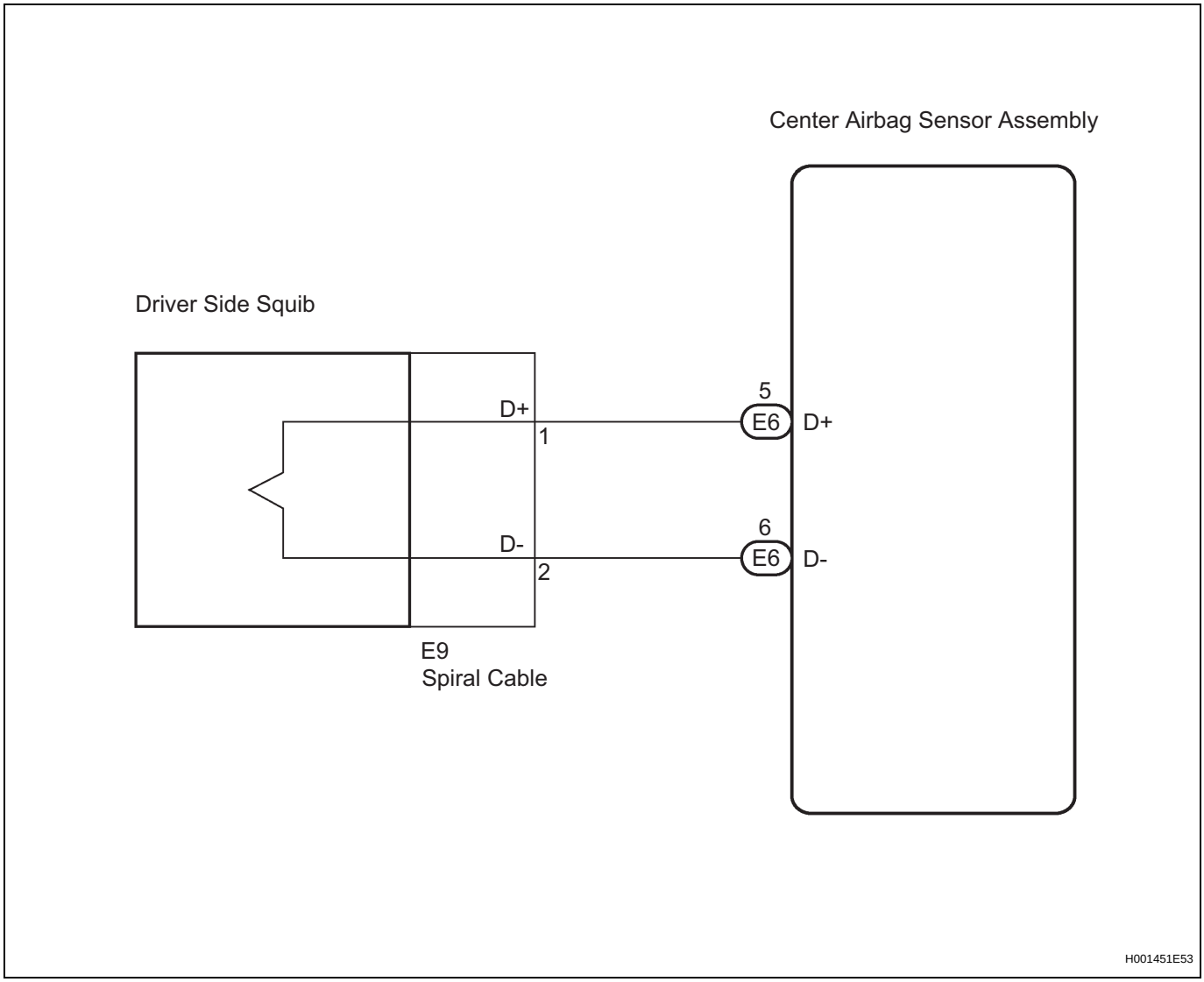

INSPECTION PROCEDURE

HINT:

- Perform the simulation method by selecting the "check mode" (signal check) with the intelligent tester (See page RS-52).
- After selecting the "check mode" (signal check), perform the simulation method by wiggling each connector of the airbag system or driving the vehicle on a city or rough road (See page RS-52).

RS

1 CHECK STEERING PAD (DRIVER SIDE SQUIB)

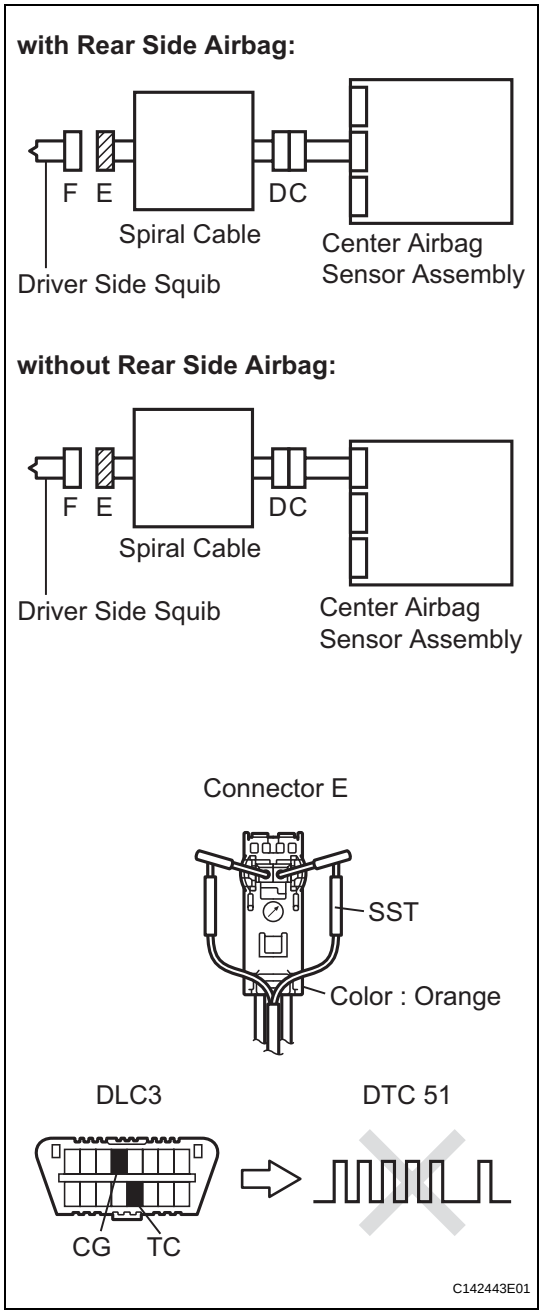

(a) Turn the engine switch off.
(b) Disconnect the negative (-) terminal cable from the battery, and wait for at least 90 seconds.
(c) Disconnect the connectors from the steering pad.
(d) Connect the white wire side of SST (resistance 2.1 Ω) to connector E (orange connector).
CAUTION:
Never connect the tester to the steering pad (driver side squib) for measurement, as this may lead to a serious injury due to airbag deployment.
NOTICE:
- **Do not forcibly insert the SST into the terminals of the connector when connecting the SST.**
- **Insert straight the SST into the terminals of the connector.**

SST 09843-18060

(e) Connect the negative (-) terminal cable to the battery, and wait for at least 2 seconds.
(f) Turn the engine switch on (IG), and wait for at least 60 seconds.
(g) Clear the DTCs stored in the memory (See page RS-49).
(h) Turn the engine switch off.
(i) Turn the engine switch on (IG), and wait for at least 60 seconds.
(j) Check the DTCs (See page RS-49).
OK:
DTC B1800, B1801, B1802, B1803, or 51 is not output.
HINT:
Codes other than DTC B1800, B1801, B1802, B1803, and 51 may be output at this time, but they are not related to this check.

OK → **REPLACE STEERING PAD (See page RS-366)**

NG

2 CHECK CONNECTOR

(a) Turn the engine switch off.
(b) Disconnect the negative (-) terminal cable from the battery, and wait for at least 90 seconds.
(c) Disconnect the SST from connector E.
(d) Check that the spiral cable connectors (on the steering pad side) are not damaged.

OK:
The lock button is not disengaged, or the claw of the lock is not deformed or damaged.

NG → **REPLACE SPIRAL CABLE (See page RS-379)**

RS

OK

3 CHECK DRIVER SIDE SQUIB CIRCUIT

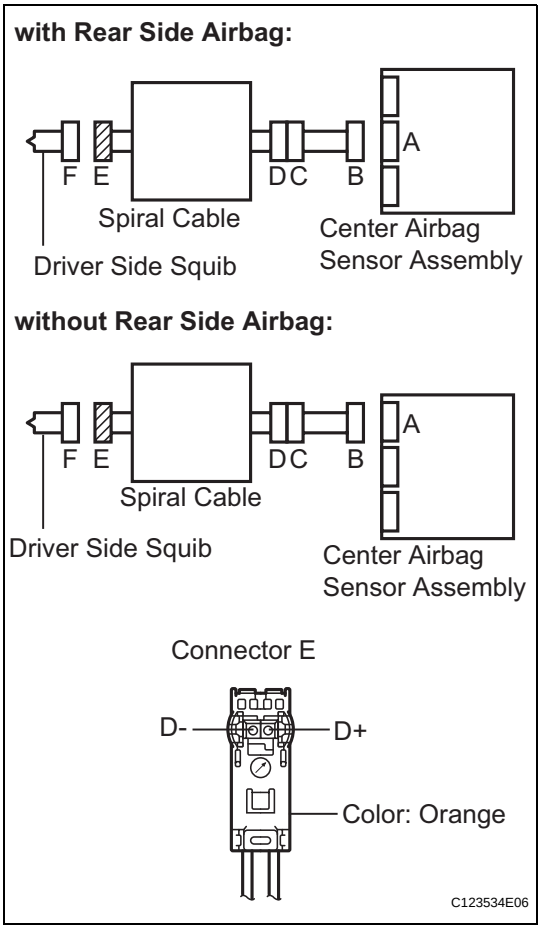

(a) Disconnect the connectors from the center airbag sensor assembly.

(b) Check for a short to B+ in the circuit.
  (1) Connect the negative (-) terminal cable to the battery, and wait for at least 2 seconds.
  (2) Turn the engine switch on (IG).
  (3) Measure the voltage according to the value(s) in the table below.
  Standard voltage

Tester Connection	Condition	Specified Condition
D+ - Body ground	Engine switch on (IG)	Below 1 V
D- - Body ground	Engine switch on (IG)	Below 1 V

(c) Check for an open in the circuit.
  (1) Turn the engine switch off.
  (2) Disconnect the negative (-) terminal cable from the battery, and wait for at least 90 seconds.
  (3) Measure the resistance according to the value(s) in the table below.
  Standard resistance

Tester Connection	Condition	Specified Condition
D+ - D-	Always	Below 1 Ω

(d) Check for a short to ground in the circuit.
  (1) Measure the resistance according to the value(s) in the table below.
  Standard resistance

Tester Connection	Condition	Specified Condition
D+ - Body ground	Always	1 MΩ or higher
D- - Body ground	Always	1 MΩ or higher

(e) Check for a short in the circuit.
  (1) Release the activation prevention mechanism built into connector B (See page RS-37).
  (2) Measure the resistance according to the value(s) in the table below.
  Standard resistance

Tester Connection	Condition	Specified Condition
D+ - D-	Always	1 MΩ or higher

NG → **Go to step 5**

OK

4	CHECK CENTER AIRBAG SENSOR ASSEMBLY

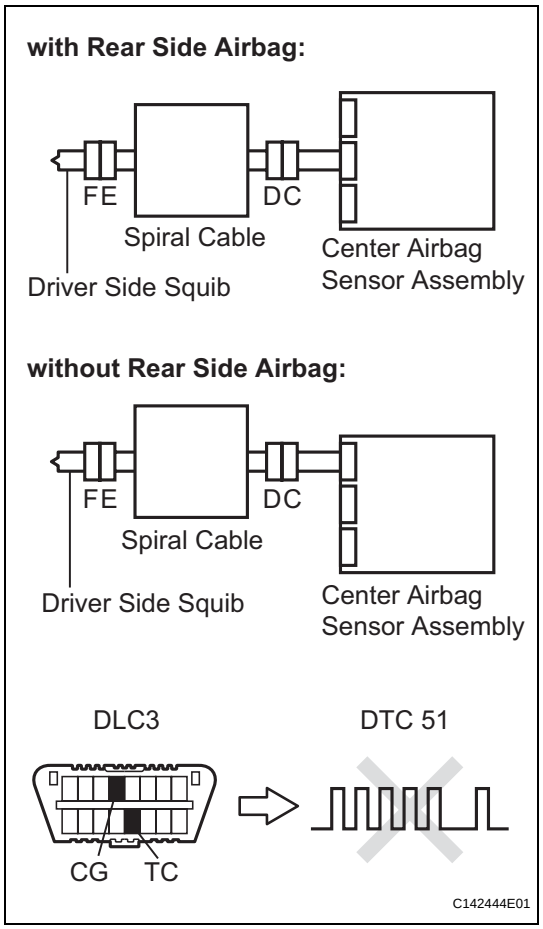

(a) Connect the connectors to the steering pad and the center airbag sensor assembly.
(b) Connect the negative (-) terminal cable to the battery, and wait for at least 2 seconds.
(c) Turn the engine switch on (IG), and wait for at least 60 seconds.
(d) Clear the DTCs stored in the memory (See page RS-49).
(e) Turn the engine switch off.
(f) Turn the engine switch on (IG), and wait for at least 60 seconds.
(g) Check the DTCs (See page RS-49).
OK:
DTC B1800, B1801, B1802, B1803, or 51 is not output.
HINT:
Codes other than DTC B1800, B1801, B1802, B1803, and 51 may be output at this time, but they are not related to this check.

NG → **REPLACE CENTER AIRBAG SENSOR ASSEMBLY (See page RS-468)**

OK

USE SIMULATION METHOD TO CHECK (See page RS-37)

RS

RS

5	CHECK INSTRUMENT PANEL WIRE

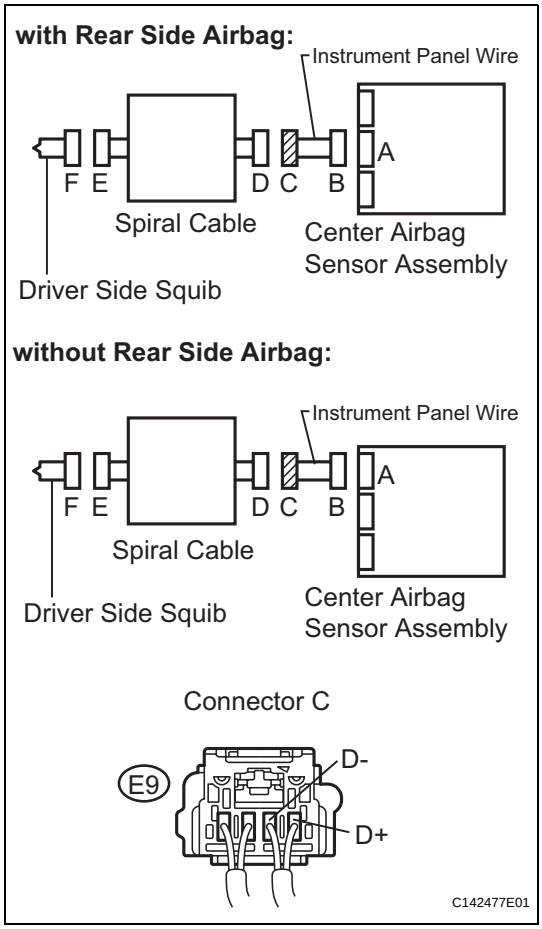

(a) Restore the released activation prevention mechanism of connector B to the original condition.

(b) Disconnect the instrument panel wire connector from the spiral cable.

(c) Check for a short to B+ in the circuit.
  (1) Connect the negative (-) terminal cable to the battery, and wait for at least 2 seconds.
  (2) Turn the engine switch on (IG).
  (3) Measure the voltage according to the value(s) in the table below.

Standard voltage

Tester Connection	Condition	Specified Condition
E9-1 (D+) - Body ground	Engine switch on (IG)	Below 1 V
E9-2 (D-) - Body ground	Engine switch on (IG)	Below 1 V

(d) Check for an open in the circuit.
  (1) Turn the engine switch off.
  (2) Disconnect the negative (-) terminal cable from the battery, and wait for at least 90 seconds.
  (3) Measure the resistance according to the value(s) in the table below.

Standard resistance

Tester Connection	Condition	Specified Condition
E9-1 (D+) - E9-2 (D-)	Always	Below 1 Ω

(e) Check for a short to ground in the circuit.
  (1) Measure the resistance according to the value(s) in the table below.

Standard resistance

Tester Connection	Condition	Specified Condition
E9-1 (D+) - Body ground	Always	1 MΩ or higher
E9-2 (D-) - Body ground	Always	1 MΩ or higher

(f) Check for a short in the circuit.
  (1) Release the activation prevention mechanism built into connector B (See page RS-37).
  (2) Measure the resistance according to the value(s) in the table below.

Standard resistance

Tester Connection	Condition	Specified Condition
E9-1 (D+) - E9-2 (D-)	Always	1 MΩ or higher

NG → **REPAIR OR REPLACE INSTRUMENT PANEL WIRE**

OK

RS

6 CHECK SPIRAL CABLE

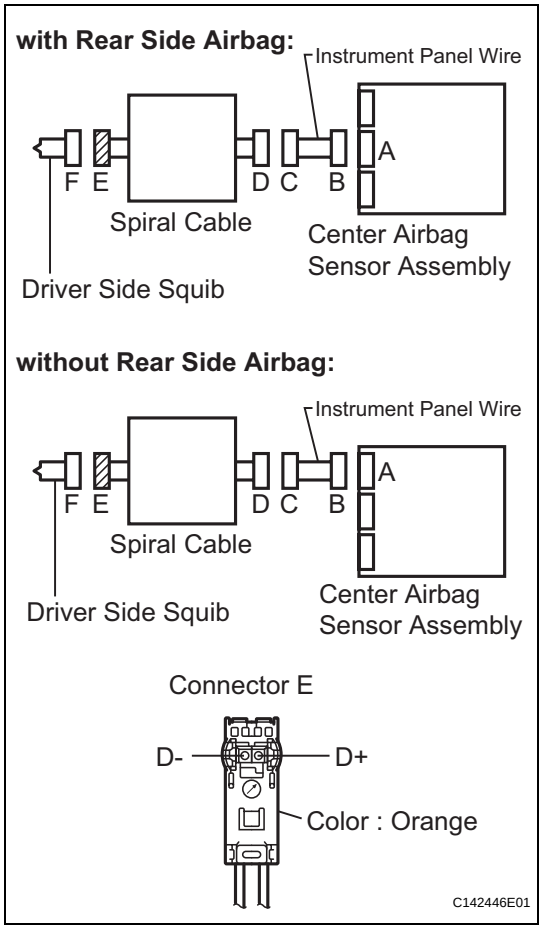

(a) Check for a short to B+ in the circuit.
(1) Connect the negative (-) terminal cable to the battery, and wait for at least 2 seconds.
(2) Turn the engine switch on (IG).
(3) Measure the voltage according to the value(s) in the table below.

Standard voltage

Tester Connection	Condition	Specified Condition
D+ - Body ground	Engine switch on (IG)	Below 1 V
D- - Body ground	Engine switch on (IG)	Below 1 V

(b) Check for an open in the circuit.
(1) Turn the engine switch off.
(2) Disconnect the negative (-) terminal cable from the battery, and wait for at least 90 seconds.
(3) Measure the resistance according to the value(s) in the table below.

Standard resistance

Tester Connection	Condition	Specified Condition
D+ - D-	Always	Below 1 Ω

(c) Check for a short to ground in the circuit.
(1) Measure the resistance according to the value(s) in the table below.

Standard resistance

Tester Connection	Condition	Specified Condition
D+ - Body ground	Always	1 MΩ or higher
D- - Body ground	Always	1 MΩ or higher

(d) Check for a short in the circuit.
(1) Release the activation prevention mechanism built into connector D (See page RS-37).
(2) Measure the resistance according to the value(s) in the table below.

Standard resistance

Tester Connection	Condition	Specified Condition
D+ - D-	Always	1 MΩ or higher

NG → **REPLACE SPIRAL CABLE (See page RS-379)**

OK

USE SIMULATION METHOD TO CHECK (See page RS-37)

DTC	B1805/52	Short in Front Passenger Side Squib Circuit

DTC	B1806/52	Open in Front Passenger Side Squib Circuit

RS

DTC	B1807/52	Short to GND in Front Passenger Side Squib Circuit

DTC	B1808/52	Short to B+ in Front Passenger Side Squib Circuit

DESCRIPTION

The front passenger side squib circuit consists of the center airbag sensor assembly and the front passenger airbag assembly.
The circuit instructs the SRS to deploy when deployment conditions are met.
These DTCs are recorded when a malfunction is detected in the front passenger side squib circuit.

DTC No.	DTC Detection Condition	Trouble Area
B1805/52	• The center airbag sensor assembly receives a line short circuit signal 5 times in the front passenger side squib circuit during primary check. • Front passenger side squib malfunction • Center airbag sensor assembly malfunction	• Instrument panel wire • Instrument panel wire assembly • Front passenger airbag assembly (Front passenger side squib) • Center airbag sensor assembly
B1806/52	• The center airbag sensor assembly receives an open circuit signal in the front passenger side squib circuit for 2 seconds. • Front passenger side squib malfunction • Center airbag sensor assembly malfunction	• Instrument panel wire • Instrument panel wire assembly • Front passenger airbag assembly (Front passenger side squib) • Center airbag sensor assembly
B1807/52	• The center airbag sensor assembly receives a short circuit to ground signal in the front passenger side squib circuit for 0.5 seconds. • Front passenger side squib malfunction • Center airbag sensor assembly malfunction	• Instrument panel wire • Instrument panel wire assembly • Front passenger airbag assembly (Front passenger side squib) • Center airbag sensor assembly
B1808/52	• The center airbag sensor assembly receives a short circuit to B+ signal in the front passenger side squib circuit for 0.5 seconds. • Front passenger side squib malfunction • Center airbag sensor assembly malfunction	• Instrument panel wire • Instrument panel wire assembly • Front passenger airbag assembly (Front passenger side squib) • Center airbag sensor assembly

RS

WIRING DIAGRAM

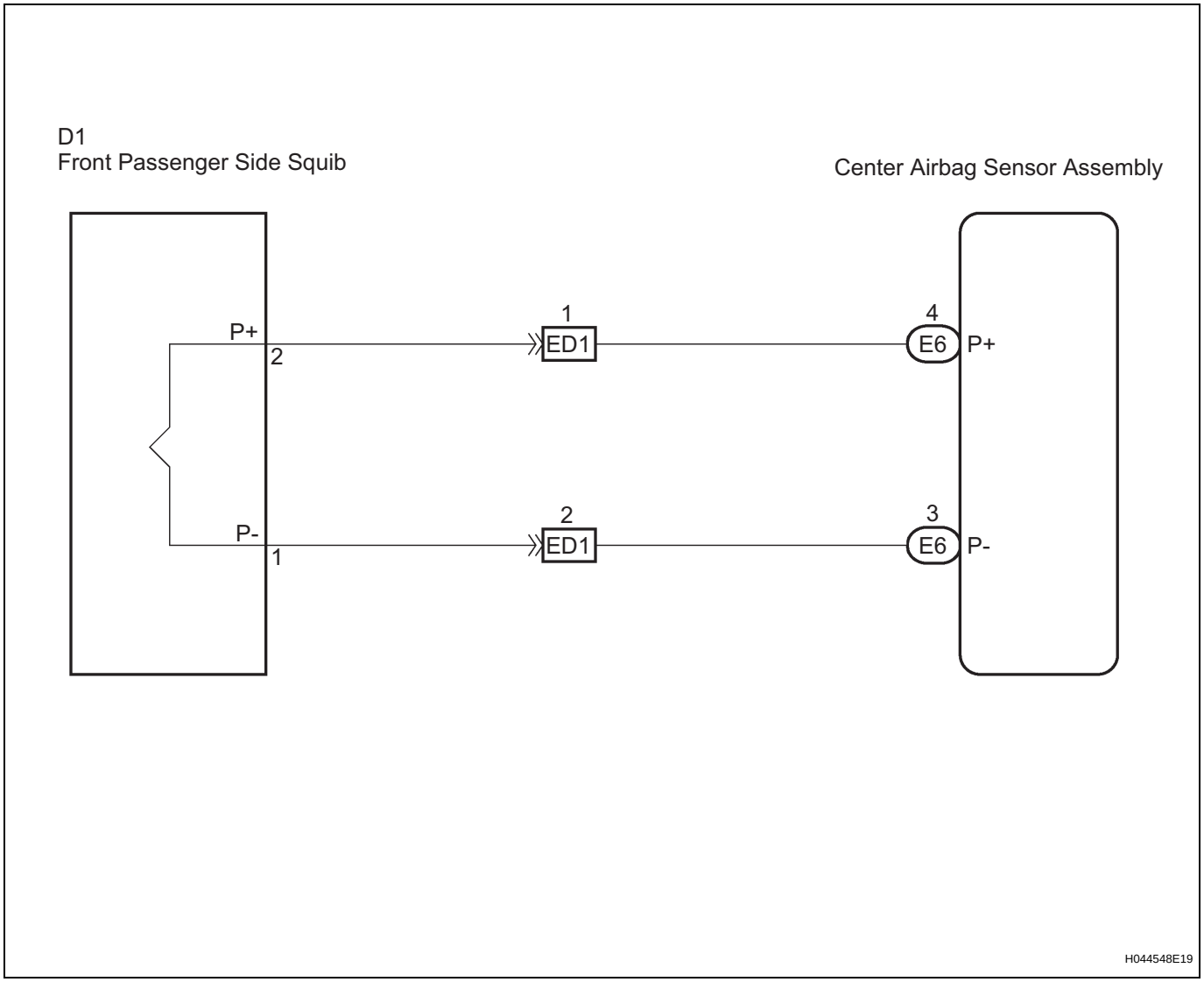

INSPECTION PROCEDURE

HINT:

- Perform the simulation method by selecting "check mode" (signal check) with the intelligent tester (See page RS-52).
- After selecting "check mode" (signal check), perform the simulation method by wiggling each connector of the airbag system or driving the vehicle on a city or rough road (See page RS-52).

RS

1	CHECK FRONT PASSENGER AIRBAG ASSEMBLY (FRONT PASSENGER SIDE SQUIB)

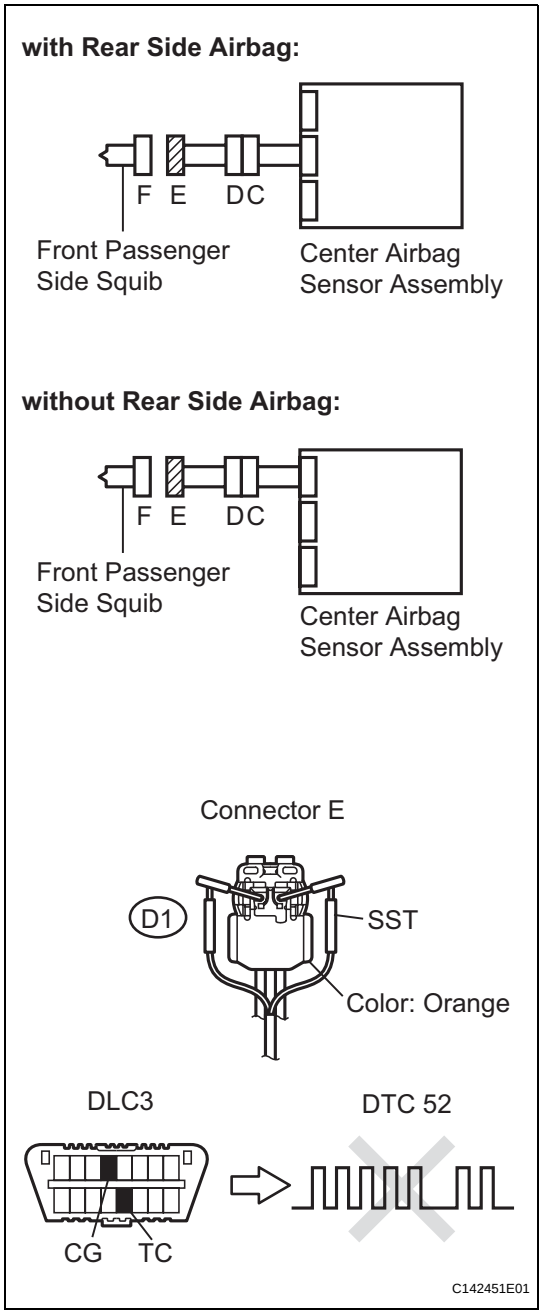

(a) Turn the engine switch off.
(b) Disconnect the negative (-) terminal cable from the battery, and wait for at least 90 seconds.
(c) Disconnect the connectors from the front passenger airbag assembly.
(d) Connect the white wire side of SST (resistance 2.1 Ω) to connector E (orange connector).
CAUTION:
Never connect the tester to the front passenger airbag assembly (front passenger side squib) for measurement, as this may lead to a serious injury due to airbag deployment.
NOTICE:
- **Do not forcibly insert the SST into the terminals of the connector when connecting the SST.**
- **Insert straight the SST into the terminals of the connector.**

SST 09843-18060

(e) Connect the negative (-) terminal cable to the battery, and wait for at least 2 seconds.
(f) Turn the engine switch on (IG), and wait for at least 60 seconds.
(g) Clear the DTCs stored in the memory (See page RS-49).
(h) Turn the engine switch off.
(i) Turn the engine switch on (IG), and wait for at least 60 seconds.
(j) Check the DTCs (See page RS-49).
OK:
DTC B1805, B1806, B1807, B1808, or 52 is not output.
HINT:
Codes other than DTC B1805, B1806, B1807, B1808, and 52 may be output at this time, but they are not related to this check.

OK → **REPLACE FRONT PASSENGER AIRBAG ASSEMBLY (See page RS-412)**

NG

2	CHECK CONNECTOR

(a) Turn the engine switch off.
(b) Disconnect the negative (-) terminal cable from the battery, and wait for at least 90 seconds.
(c) Disconnect the SST from connector E.
(d) Check that the instrument panel wire assembly connectors (on the front passenger airbag assembly side) are not damaged.

OK:
The lock button is not disengaged, or the claw of the lock is not deformed or damaged.

NG → **REPAIR OR REPLACE INSTRUMENT PANEL WIRE ASSEMBLY**

RS

OK

3 CHECK FRONT PASSENGER SIDE SQUIB CIRCUIT

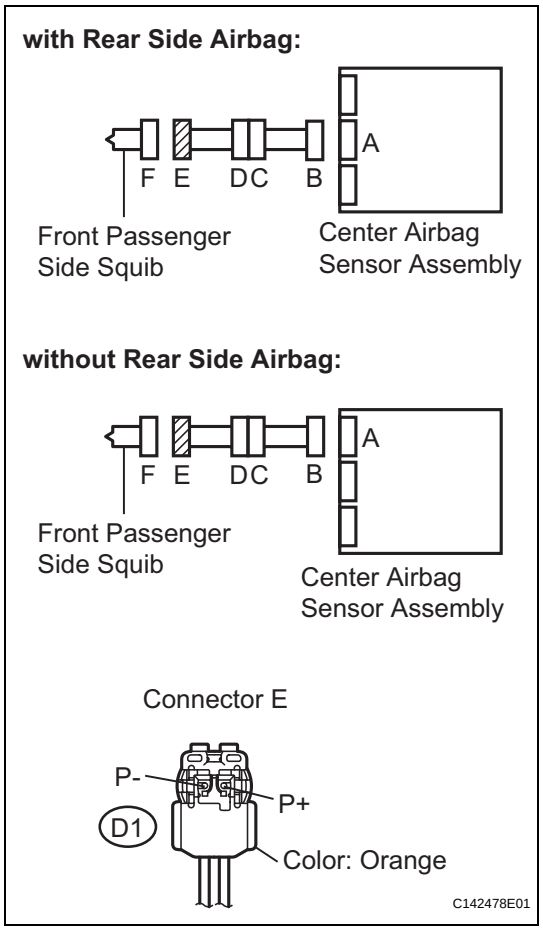

(a) Disconnect the connectors from the center airbag sensor assembly.

(b) Check for a short to B+ in the circuit.
  (1) Connect the negative (-) terminal cable to the battery, and wait for at least 2 seconds.
  (2) Turn the engine switch on (IG).
  (3) Measure the voltage according to the value(s) in the table below.
  Standard voltage

Tester Connection	Condition	Specified Condition
D1-2 (P+) - Body ground	Engine switch on (IG)	Below 1 V
D1-1 (P-) - Body ground	Engine switch on (IG)	Below 1 V

(c) Check for an open in the circuit.
  (1) Turn the engine switch off.
  (2) Disconnect the negative (-) terminal cable from the battery, and wait for at least 90 seconds.
  (3) Measure the resistance according to the value(s) in the table below.
  Standard resistance

Tester Connection	Condition	Specified Condition
D1-2 (P+) - D1-1 (P-)	Always	Below 1 Ω

(d) Check for a short to ground in the circuit.
  (1) Measure the resistance according to the value(s) in the table below.
  Standard resistance

Tester Connection	Condition	Specified Condition
D1-2 (P+) - Body ground	Always	1 MΩ or higher
D1-1 (P-) - Body ground	Always	1 MΩ or higher

(e) Check for a short in the circuit.
  (1) Release the activation prevention mechanism built into connector B (See page RS-37).
  (2) Measure the resistance according to the value(s) in the table below.
  Standard resistance

Tester Connection	Condition	Specified Condition
D1-2 (P+) - D1-1 (P-)	Always	1 MΩ or higher

NG → **Go to step 5**

OK

4	CHECK CENTER AIRBAG SENSOR ASSEMBLY

RS

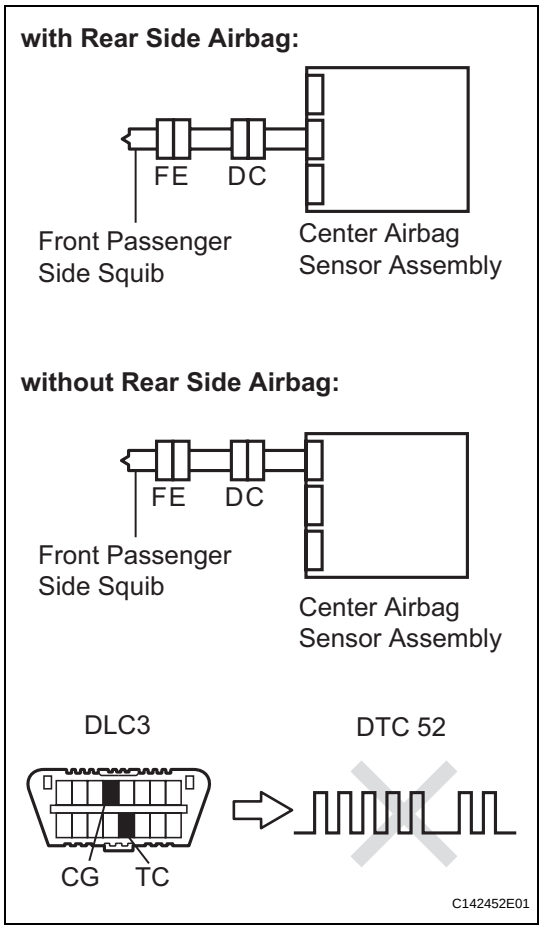

(a) Connect the connectors to the front passenger airbag assembly and the center airbag sensor assembly.
(b) Connect the negative (-) terminal cable to the battery, and wait for at least 2 seconds.
(c) Turn the engine switch on (IG), and wait for at least 60 seconds.
(d) Clear the DTCs stored in the memory (See page RS-49).
(e) Turn the engine switch off.
(f) Turn the engine switch on (IG), and wait for at least 60 seconds.
(g) Check the DTCs (See page RS-49).
OK:
DTC B1805, B1806, B1807, B1808, or 52 is not output.
HINT:
Codes other than DTC B1805, B1806, B1807, B1808, and 52 may be output at this time, but they are not related to this check.

NG → **REPLACE CENTER AIRBAG SENSOR ASSEMBLY (See page RS-468)**

OK

USE SIMULATION METHOD TO CHECK (See page RS-37)

RS

5 CHECK INSTRUMENT PANEL WIRE

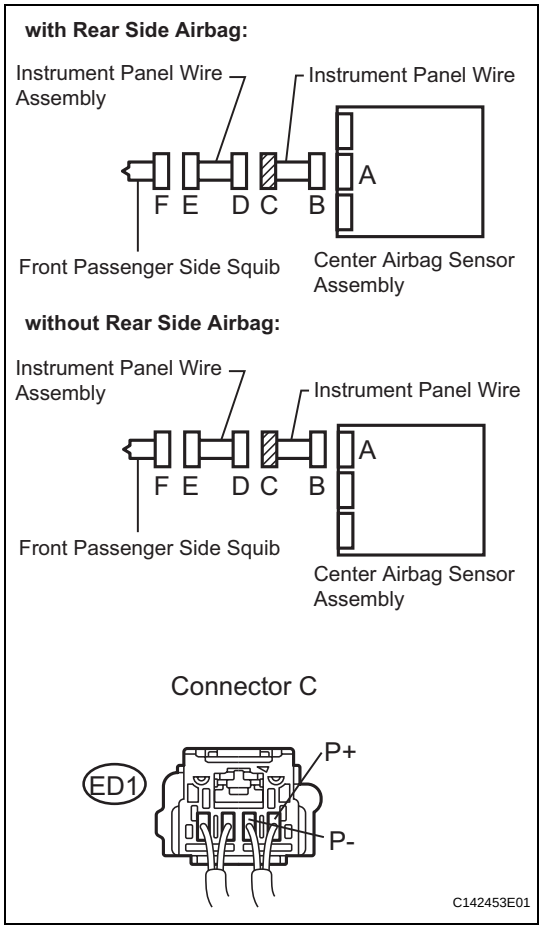

(a) Restore the released activation prevention mechanism of connector B to the original condition.

(b) Disconnect the instrument panel wire connector from the instrument panel wire assembly.

(c) Check for a short to B+ in the circuit.
   (1) Connect the negative (-) terminal cable to the battery, and wait for at least 2 seconds.
   (2) Turn the engine switch on (IG).
   (3) Measure the voltage according to the value(s) in the table below.
   Standard voltage

Tester Connection	Condition	Specified Condition
ED1-1 (P+) - Body ground	Engine switch on (IG)	Below 1 V
ED1-2 (P-) - Body ground	Engine switch on (IG)	Below 1 V

(d) Check for an open in the circuit.
   (1) Turn the engine switch off.
   (2) Disconnect the negative (-) terminal cable from the battery, and wait for at least 90 seconds.
   (3) Measure the resistance according to the value(s) in the table below.
   Standard resistance

Tester Connection	Condition	Specified Condition
ED1-1 (P+) - ED1-2 (P-)	Always	Below 1 Ω

(e) Check for a short to ground in the circuit.
   (1) Measure the resistance according to the value(s) in the table below.
   Standard resistance

Tester Connection	Condition	Specified Condition
ED1-1 (P+) - Body ground	Always	1 MΩ or higher
ED1-2 (P-) - Body ground	Always	1 MΩ or higher

(f) Check for a short in the circuit.
   (1) Release the activation prevention mechanism built into connector B (See page RS-37).
   (2) Measure the resistance according to the value(s) in the table below.
   Standard resistance

Tester Connection	Condition	Specified Condition
ED1-1 (P+) - ED1-2 (P-)	Always	1 MΩ or higher

NG → **REPAIR OR REPLACE INSTRUMENT PANEL WIRE**

OK

RS

6 CHECK INSTRUMENT PANEL WIRE ASSEMBLY

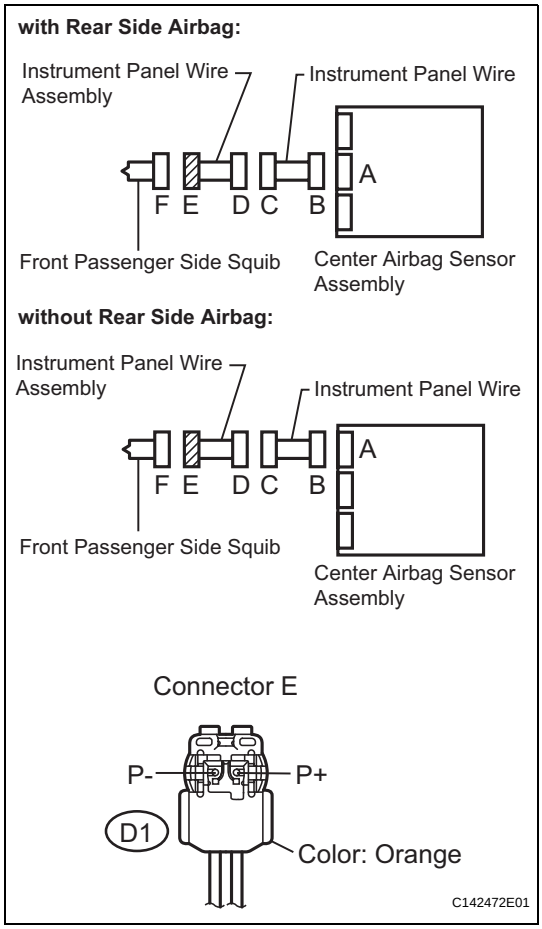

(a) Check for a short to B+ in the circuit.
  (1) Connect the negative (-) terminal cable to the battery, and wait for at least 2 seconds.
  (2) Turn the engine switch on (IG).
  (3) Measure the voltage according to the value(s) in the table below.
  Standard voltage

Tester Connection	Condition	Specified Condition
D1-2 (P+) - Body ground	Engine switch on (IG)	Below 1 V
D1-1 (P-) - Body ground	Engine switch on (IG)	Below 1 V

(b) Check for a open in the circuit.
  (1) Turn the engine switch off.
  (2) Disconnect the negative (-) terminal cable from the battery, and wait for at least 90 seconds.
  (3) Measure the resistance according to the value(s) in the table below.
  Standard resistance

Tester Connection	Condition	Specified Condition
D1-2 (P+) - D1-1 (P-)	Always	Below 1 Ω

(c) Check for a short to ground in the circuit.
  (1) Measure the resistance according to the value(s) in the table below.
  Standard resistance

Tester Connection	Condition	Specified Condition
D1-2 (P+) - Body ground	Always	1 MΩ or higher
D1-1 (P-) - Body ground	Always	1 MΩ or higher

(d) Check for a short in the circuit.
  (1) Release the activation prevention mechanism built into connector D (See page RS-37).
  (2) Measure the resistance according to the value(s) in the table below.
  Standard resistance

Tester Connection	Condition	Specified Condition
D1-2 (P+) - D1-1 (P-)	Always	1 MΩ or higher

NG → **REPAIR OR REPLACE INSTRUMENT PANEL WIRE ASSEMBLY**

OK

USE SIMULATION METHOD TO CHECK (See page RS-37)

DTC	B1810/53	Short in Driver Side Squib 2nd Step Circuit

DTC	B1811/53	Open in Driver Side Squib 2nd Step Circuit

DTC	B1812/53	Short to GND in Driver Side Squib 2nd Step Circuit

DTC	B1813/53	Short to B+ in Driver Side Squib 2nd Step Circuit

DESCRIPTION

The driver side squib 2nd step circuit consists of the center airbag sensor assembly, the spiral cable, and the steering pad.
The circuit instructs the SRS to deploy when deployment conditions are met.
These DTCs are recorded when a malfunction is detected in the driver side squib 2nd step circuit.

DTC No.	DTC Detecting Condition	Trouble Area
B1810/53	• The center airbag sensor assembly receives a line short circuit signal 5 times in the driver side squib 2nd step circuit during primary check. • Driver side squib 2nd step malfunction • Spiral cable malfunction • Center airbag sensor assembly malfunction	• Instrument panel wire • Spiral cable • Steering pad (Driver side squib 2nd step) • Center airbag sensor assembly
B1811/53	• The center airbag sensor assembly receives an open circuit signal in the driver side squib 2nd step circuit for 2 seconds. • Driver side squib 2nd step malfunction • Spiral cable malfunction • Center airbag sensor assembly malfunction	• Instrument panel wire • Spiral cable • Steering pad (Driver side squib 2nd step) • Center airbag sensor assembly
B1812/53	• The center airbag sensor assembly receives a short circuit to ground signal in the driver side 2nd step circuit for 0.5 seconds. • Driver side squib 2nd step malfunction • Spiral cable malfunction • Center airbag sensor assembly malfunction	• Instrument panel wire • Spiral cable • Steering pad (Driver side squib 2nd step) • Center airbag sensor assembly
B1813/53	• The center airbag sensor assembly receives a short circuit to B+ signal in the driver side squib 2nd step circuit for 0.5 seconds. • Driver side squib 2nd step malfunction • Spiral cable malfunction • Center airbag sensor assembly malfunction	• Instrument panel wire • Spiral cable • Steering pad (Driver side squib 2nd step) • Center airbag sensor assembly

RS

WIRING DIAGRAM

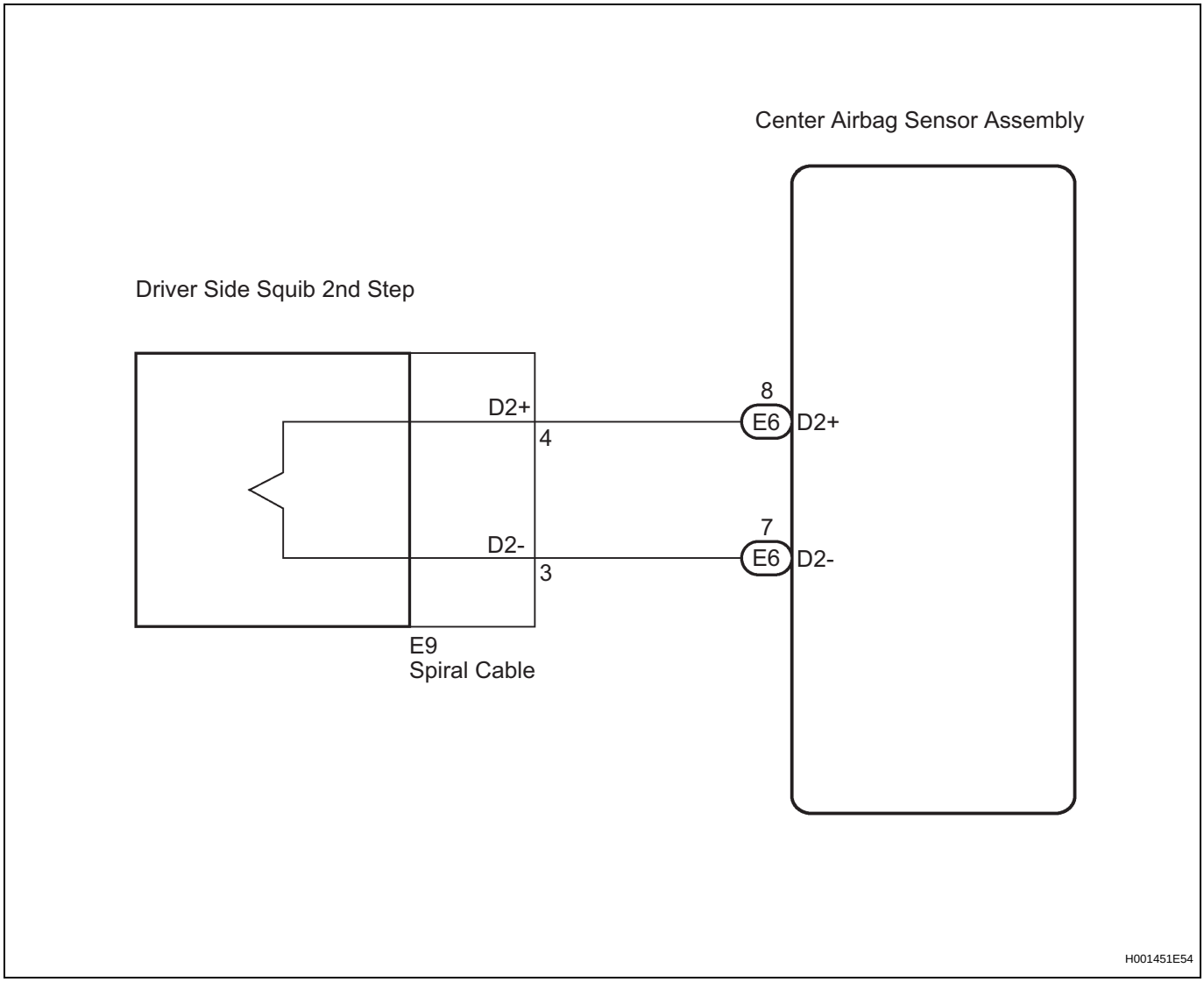

INSPECTION PROCEDURE

HINT:

- Perform the simulation method by selecting "check mode" (signal check) with the intelligent tester (See page RS-52).
- After selecting "check mode" (signal check), perform the simulation method by wiggling each connector of the airbag system or driving the vehicle on a city or rough road (See page RS-52).

RS

1 CHECK STEERING PAD (DRIVER SIDE SQUIB 2ND STEP)

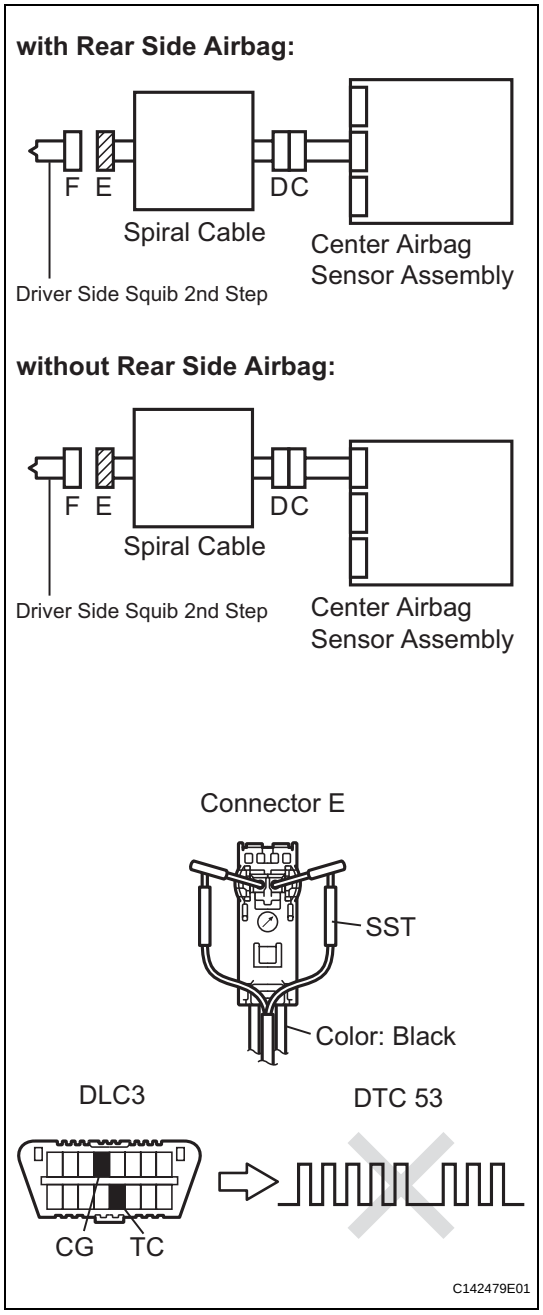

(a) Turn the engine switch off.
(b) Disconnect the negative (-) terminal cable from the battery, and wait for at least 90 seconds.
(c) Disconnect the connectors from the steering pad.
(d) Connect the white wire side of SST (resistance 2.1 Ω) to connector E (black connector).

CAUTION:
Never connect the tester to the steering pad (driver side squib 2nd step) for measurement, as this may lead to a serious injury due to airbag deployment.

NOTICE:
- **Do not forcibly insert the SST into the terminals of the connector when connecting the SST.**
- **Insert straight the SST into the terminals of the connector.**

SST 09843-18060

(e) Connect the negative (-) terminal cable to the battery, and wait for at least 2 seconds.
(f) Turn the engine switch on (IG), and wait for at least 60 seconds.
(g) Clear the DTCs stored in the memory (See page RS-49).
(h) Turn the engine switch off.
(i) Turn the engine switch on (IG), and wait for at least 60 seconds.
(j) Check the DTCs (See page RS-49).

OK:
DTC B1810, B1811, B1812, B1813, or 53 is not output.

HINT:
Codes other than DTC B1810, B1811, B1812, B1813, and 53 may be output at this time, but they are not related to this check.

OK → **REPLACE STEERING PAD (See page RS-366)**

NG

2 CHECK CONNECTOR

(a) Turn the engine switch off.
(b) Disconnect the negative (-) terminal cable from the battery, and wait for at least 90 seconds.
(c) Disconnect the SST from connector E.
(d) Check that the spiral cable connectors (on the steering pad side) are not damaged.

OK:
The lock button is not disengaged, or the claw of the lock is not deformed or damaged.

NG → **REPLACE SPIRAL CABLE (See page RS-379)**

RS

OK

3 CHECK DRIVER SIDE SQUIB 2ND STEP CIRCUIT

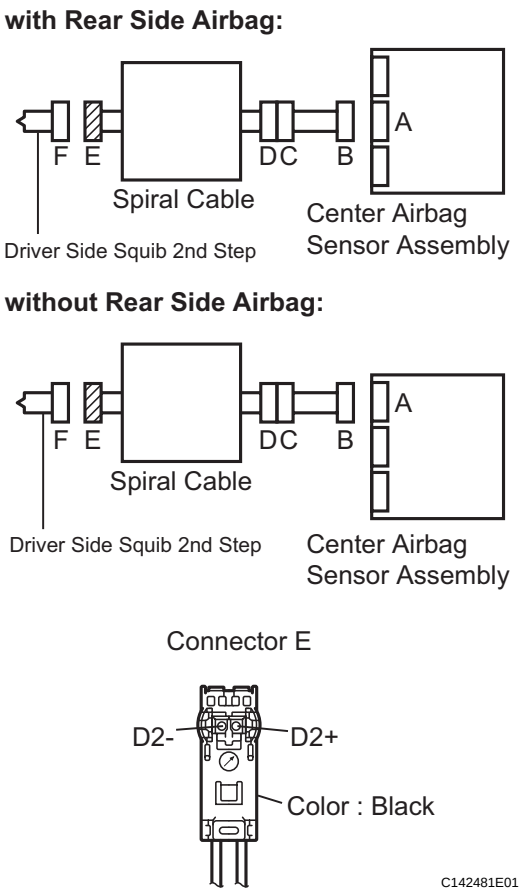

(a) Disconnect the connectors from the center airbag sensor assembly.

(b) Check for a short to B+ in the circuit.
  (1) Connect the negative (-) terminal cable to the battery, and wait for at least 2 seconds.
  (2) Turn the engine switch on (IG).
  (3) Measure the voltage according to the value(s) in the table below.
  Standard voltage

Tester Connection	Condition	Specified Condition
D2+ - Body ground	Engine switch on (IG)	Below 1 V
D2- - Body ground	Engine switch on (IG)	Below 1 V

(c) Check for an open in the circuit.
  (1) Turn the engine switch off.
  (2) Disconnect the negative (-) terminal cable from the battery, and wait for at least 90 seconds.
  (3) Measure the resistance according to the value(s) in the table below.
  Standard resistance

Tester Connection	Condition	Specified Condition
D2+ - D2-	Always	Below 1 Ω

(d) Check for a short to ground in the circuit.
  (1) Measure the resistance according to the value(s) in the table below.
  Standard resistance

Tester Connection	Condition	Specified Condition
D2+ - Body ground	Always	1 MΩ or higher
D2- - Body ground	Always	1 MΩ or higher

(e) Check for a short in the circuit.
  (1) Release the activation prevention mechanism built into connector B (See page RS-37).
  (2) Measure the resistance according to the value(s) in the table below.
  Standard resistance

Tester Connection	Condition	Specified Condition
D2+ - D2-	Always	1 MΩ or higher

NG → **Go to step 5**

OK

4	CHECK CENTER AIRBAG SENSOR ASSEMBLY

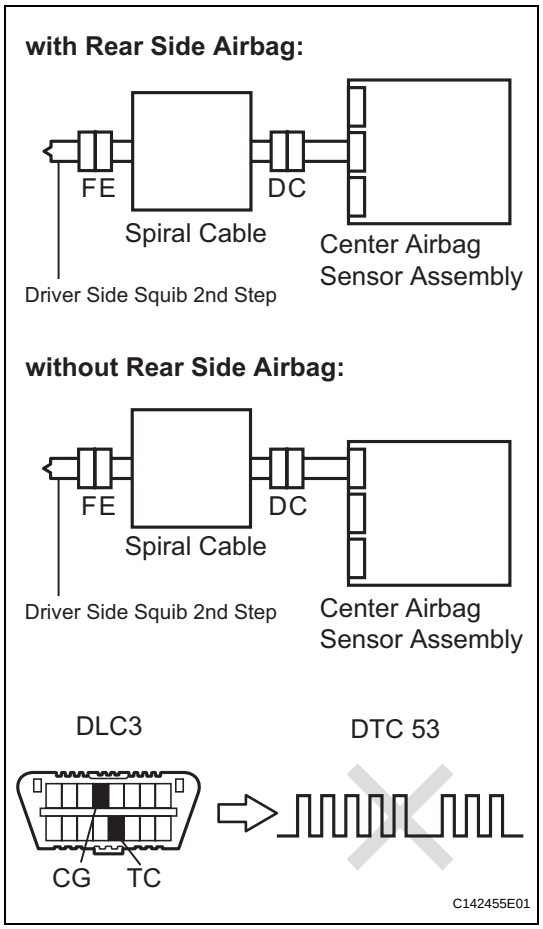

(a) Connect the connectors to the steering pad and the center airbag sensor assembly.
(b) Connect the negative (-) terminal cable to the battery, and wait for at least 2 seconds.
(c) Turn the engine switch on (IG), and wait for at least 60 seconds.
(d) Clear the DTCs stored in the memory (See page RS-49).
(e) Turn the engine switch off.
(f) Turn the engine switch on (IG), and wait for at least 60 seconds.
(g) Check the DTCs (See page RS-49).
OK:
DTC B1810, B1811, B1812, B1813, or 53 is not output.
HINT:
Codes other than DTC B1810, B1811, B1812, B1813, and 53 may be output at this time, but they are not related to this check.

NG → **REPLACE CENTER AIRBAG SENSOR ASSEMBLY (See page RS-468)**

OK

USE SIMULATION METHOD TO CHECK (See page RS-37)

RS

RS

5 CHECK INSTRUMENT PANEL WIRE

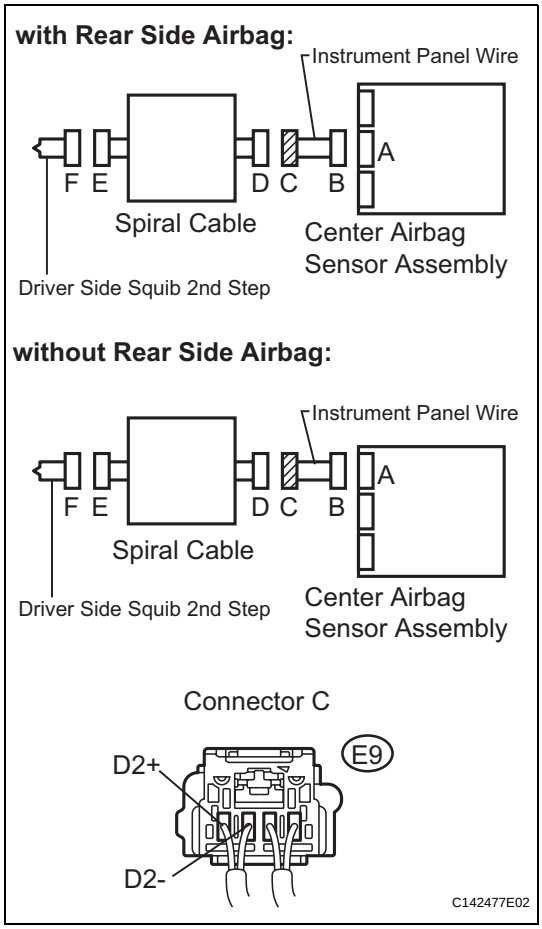

(a) Check for a short to B+ in the circuit.
  (1) Restore the released activation prevention mechanism of connector B to the original condition.
  (2) Disconnect the instrument panel wire connector from the spiral cable.
  (3) Connect the negative (-) terminal cable to the battery, and wait for at least 2 seconds.
  (4) Turn the engine switch on (IG).
  (5) Measure the voltage according to the value(s) in the table below.

Standard voltage

Tester Connection	Condition	Specified Condition
E9-4 (D2+) - Body ground	Engine switch on (IG)	Below 1 V
E9-3 (D2-) - Body ground	Engine switch on (IG)	Below 1 V

(b) Check for an open in the circuit.
  (1) Turn the engine switch off.
  (2) Disconnect the negative (-) terminal cable from the battery, and wait for at least 90 seconds.
  (3) Measure the resistance according to the value(s) in the table below.

Standard resistance

Tester Connection	Condition	Specified Condition
E9-4 (D2+) - E9-3 (D2-)	Always	Below 1 Ω

(c) Check for a short to ground in the circuit.
  (1) Measure the resistance according to the value(s) in the table below.

Standard resistance

Tester Connection	Condition	Specified Condition
E9-4 (D2+) - Body ground	Always	1 MΩ or higher
E9-3 (D2-) - Body ground	Always	1 MΩ or higher

(d) Check for a short in the circuit.
  (1) Release the activation prevention mechanism built into connector B (See page RS-37).
  (2) Measure the resistance according to the value(s) in the table below.

Standard resistance

Tester Connection	Condition	Specified Condition
E9-4 (D2+) - E9-3 (D2-)	Always	1 MΩ or higher

NG → **REPAIR OR REPLACE INSTRUMENT PANEL WIRE ASSEMBLY**

OK

RS

6 CHECK SPIRAL CABLE

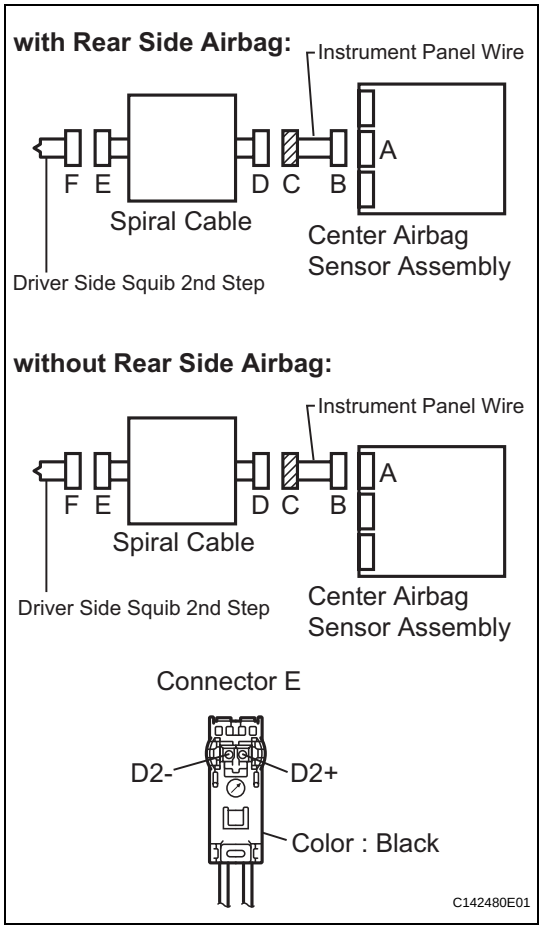

(a) Check for a short to B+ in the circuit.
(1) Connect the negative (-) terminal cable to the battery, and wait for at least 2 seconds.
(2) Turn the engine switch on (IG).
(3) Measure the voltage according to the value(s) in the table below.

Standard voltage

Tester Connection	Condition	Specified Condition
D2+ - Body ground	Engine switch on (IG)	Below 1 V
D2- - Body ground	Engine switch on (IG)	Below 1 V

(b) Check for an open in the circuit.
(1) Turn the engine switch off.
(2) Disconnect the negative (-) terminal cable from the battery, and wait for at least 90 seconds.
(3) Measure the resistance according to the value(s) in the table below.

Standard resistance

Tester Connection	Condition	Specified Condition
D2+ - D2-	Always	Below 1 Ω

(c) Check for a short to ground in the circuit.
(1) Measure the resistance according to the value(s) in the table below.

Standard resistance

Tester Connection	Condition	Specified Condition
D2+ - Body ground	Always	1 MΩ or higher
D2- - Body ground	Always	1 MΩ or higher

(d) Check for a short in the circuit.
(1) Release the activation prevention mechanism built into connector D (See page RS-37).
(2) Measure the resistance according to the value(s) in the table below.

Standard resistance

Tester Connection	Condition	Specified Condition
D2+ - D2-	Always	1 MΩ or higher

NG → **REPLACE SPIRAL CABLE (See page RS-379)**

OK

USE SIMULATION METHOD TO CHECK (See page RS-37)

DTC	**B1815/54**	**Short in Front Passenger Side Squib 2nd Step Circuit**

DTC	**B1816/54**	**Open in Front Passenger Side Squib 2nd Step Circuit**

DTC	**B1817/54**	**Short to GND in Front Passenger Side Squib 2nd Step Circuit**

DTC	**B1818/54**	**Short to B+ in Front Passenger Side Squib 2nd Step Circuit**

DESCRIPTION

The front passenger side squib 2nd step circuit consists of the center airbag sensor assembly and the front passenger airbag assembly.
The circuit instructs the SRS to deploy when deployment conditions are met.
These DTCs are recorded when a malfunction is detected in the front passenger side squib 2nd step circuit.

DTC No.	DTC Detecting Condition	Trouble Area
B1815/54	• The center airbag sensor assembly receives a line short circuit signal 5 times in the front passenger side squib 2nd step circuit during primary check. • Front passenger side squib 2nd step malfunction • Center airbag sensor assembly malfunction	• Instrument panel wire • Instrument panel wire assembly • Front passenger airbag assembly (Front passenger side squib 2nd step) • Center airbag sensor assembly
B1816/54	• The center airbag sensor assembly receives an open circuit signal in the front passenger side squib 2nd step circuit for 2 seconds. • Front passenger side squib 2nd step malfunction • Center airbag sensor assembly malfunction	• Instrument panel wire • Instrument panel wire assembly • Front passenger airbag assembly (Front passenger side squib 2nd step) • Center airbag sensor assembly
B1817/54	• The center airbag sensor assembly receives a short circuit to ground signal in the front passenger side squib 2nd step circuit for 0.5 seconds. • Front passenger side squib 2nd step malfunction • Center airbag sensor assembly malfunction	• Instrument panel wire • Instrument panel wire assembly • Front passenger airbag assembly (Front passenger side squib 2nd step) • Center airbag sensor assembly
B1818/54	• The center airbag sensor assembly receives a short circuit to B+ signal in the front passenger side squib 2nd step circuit for 0.5 seconds. • Front passenger side squib 2nd step malfunction • Center airbag sensor assembly malfunction	• Instrument panel wire • Instrument panel wire assembly • Front passenger airbag assembly (Front passenger side squib 2nd step) • Center airbag sensor assembly

RS

WIRING DIAGRAM

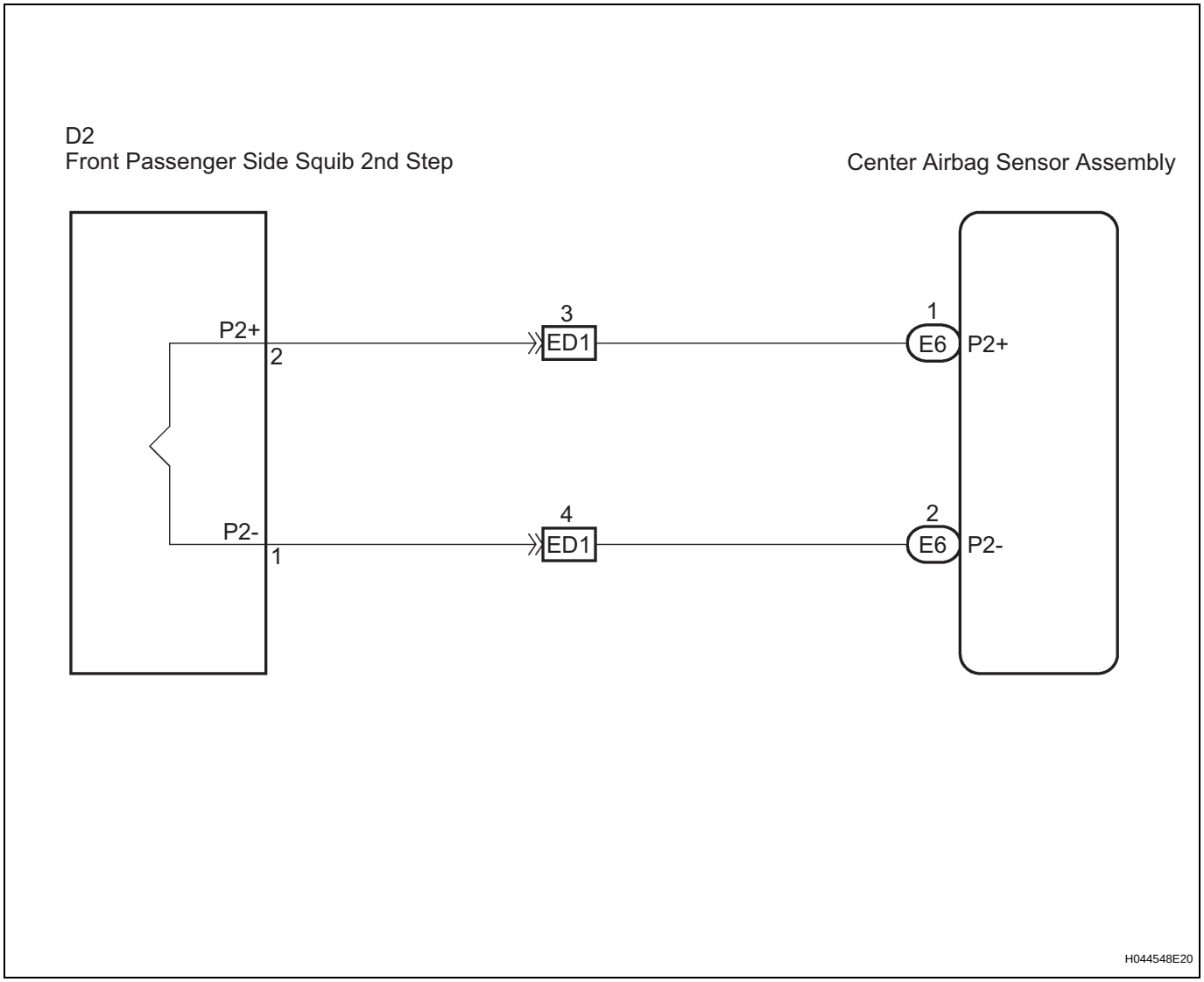

INSPECTION PROCEDURE

HINT:

- Perform the simulation method by selecting "check mode" (signal check) with the intelligent tester (See page RS-52).
- After selecting "check mode" (signal check), perform the simulation method by wiggling each connector of the airbag system or driving the vehicle on a city or rough road (See page RS-52).

RS

1	CHECK FRONT PASSENGER AIRBAG ASSEMBLY (FRONT PASSENGER SIDE SQUIB 2ND STEP)

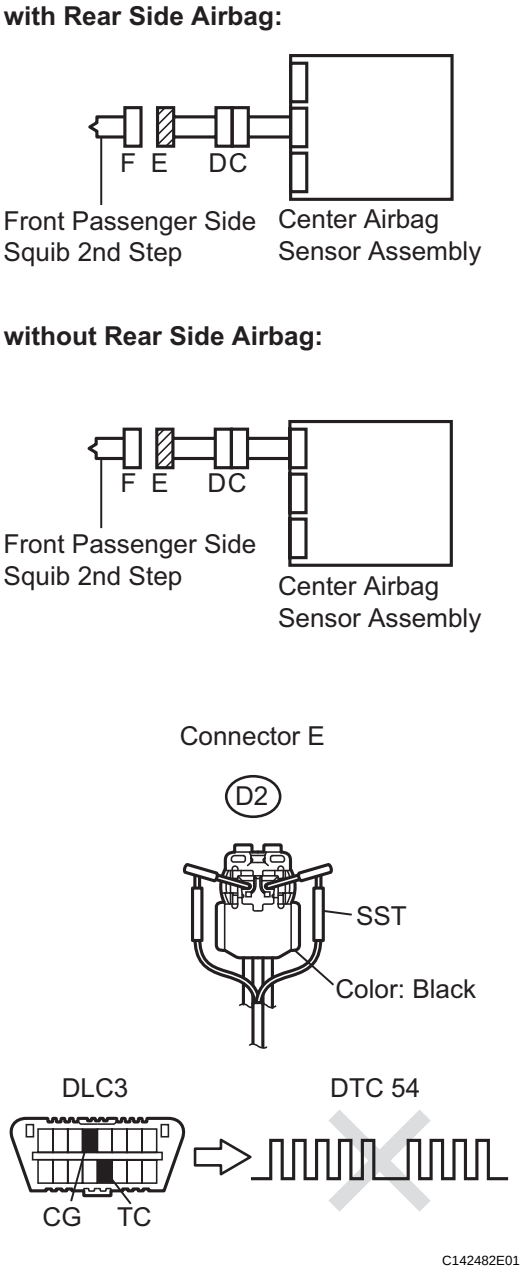

(a) Turn the engine switch off.
(b) Disconnect the negative (-) terminal cable from the battery, and wait for at least 90 seconds.
(c) Disconnect the connectors from the front passenger airbag assembly.
(d) Connect the white wire side of SST (resistance 2.1 Ω) to connector E (black connector).
CAUTION:
Never connect the tester to the front passenger airbag assembly (front passenger side squib 2nd step) for measurement, as this may lead to a serious injury due to airbag deployment.
NOTICE:
- **Do not forcibly insert the SST into the terminals of the connector when connecting the SST.**
- **Insert straight the SST into the terminals of the connector.**

SST 09843-18060

(e) Connect the negative (-) terminal cable to the battery, and wait for at least 2 seconds.
(f) Turn the engine switch on (IG), and wait for at least 60 seconds.
(g) Clear the DTCs stored in the memory (See page RS-49).
(h) Turn the engine switch off.
(i) Turn the engine switch on (IG), and wait for at least 60 seconds.
(j) Check the DTCs (See page RS-49).
OK:
DTC B1815, B1816, B1817, B1818, or 54 is not output.
HINT:
Codes other than DTC B1815, B1816, B1817, B1818, and 54 may be output at this time, but they are not related to this check.

OK → **REPLACE FRONT PASSENGER AIRBAG ASSEMBLY (See page RS-412)**

NG

2	CHECK CONNECTOR

(a) Turn the engine switch off.
(b) Disconnect the negative (-) terminal cable from the battery, and wait for at least 90 seconds.
(c) Disconnect the SST from connector E.
(d) Check that the instrument panel wire assembly connectors (on the front passenger airbag assembly side) are not damaged.

OK:
The lock button is not disengaged, or the claw of the lock is not damaged or deformed.

NG → **REPAIR OR REPLACE INSTRUMENT PANEL WIRE ASSEMBLY**

RS

OK

3 CHECK FRONT PASSENGER SIDE SQUIB 2ND STEP CIRCUIT

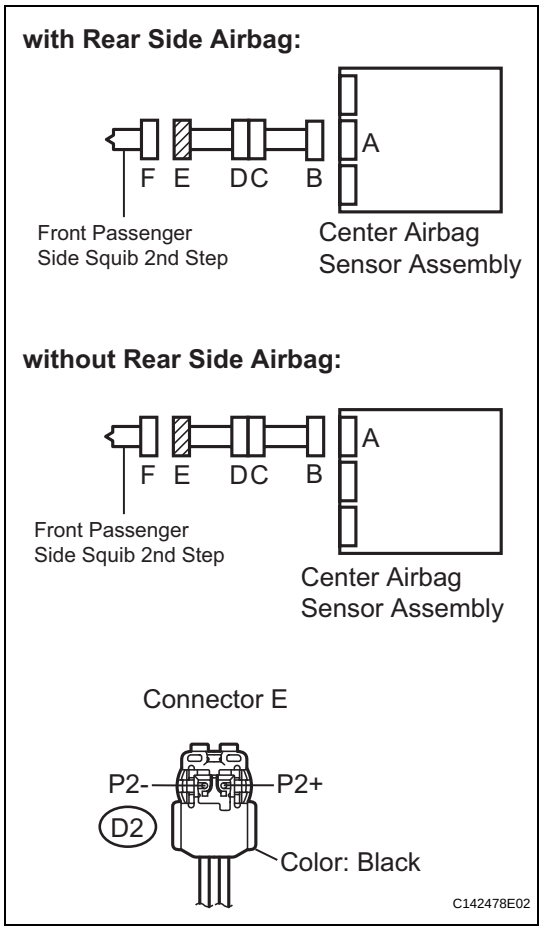

(a) Disconnect the connectors from the center airbag sensor assembly.

(b) Check for a short to B+ in the circuit.
  (1) Connect the negative (-) terminal cable to the battery, and wait for at least 2 seconds.
  (2) Turn the engine switch on (IG).
  (3) Measure the voltage according to the value(s) in the table below.
  Standard voltage

Tester Connection	Condition	Specified Condition
D2-2 (P2+) - Body ground	Engine switch on (IG)	Below 1 V
D2-1 (P2-) - Body ground	Engine switch on (IG)	Below 1 V

(c) Check for an open in the circuit.
  (1) Turn the engine switch off.
  (2) Disconnect the negative (-) terminal cable from the battery, and wait for at least 90 seconds.
  (3) Measure the resistance according to the value(s) in the table below.
  Standard resistance

Tester Connection	Condition	Specified Condition
D2-2 (P2+) - D2-1 (P2-)	Always	Below 1 Ω

(d) Check for a short to ground in the circuit.
  (1) Measure the resistance according to the value(s) in the table below.
  Standard resistance

Tester Connection	Condition	Specified Condition
D2-2 (P2+) - Body ground	Always	1 MΩ or higher
D2-1 (P2-) - Body ground	Always	1 MΩ or higher

(e) Check for a short in the circuit.
  (1) Release the activation prevention mechanism built into connector B (See page RS-37).
  (2) Measure the resistance according to the value(s) in the table below.
  Standard resistance

Tester Connection	Condition	Specified Condition
D2-2 (P2+) - D2-1 (P2-)	Always	1 MΩ or higher

NG → **Go to step 5**

OK

RS

4 CHECK CENTER AIRBAG SENSOR ASSEMBLY

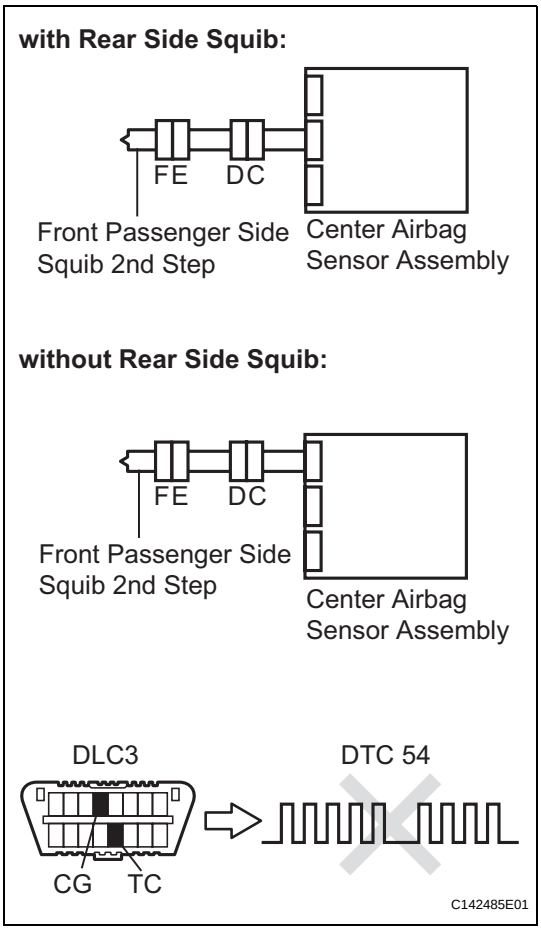

(a) Connect the connectors to the front passenger airbag assembly and the center airbag sensor assembly.
(b) Connect the negative (-) terminal cable to the battery, and wait for at least 2 seconds.
(c) Turn the engine switch on (IG), and wait for at least 60 seconds.
(d) Clear the DTCs stored in the memory (See page RS-49).
(e) Turn the engine switch off.
(f) Turn the engine switch on (IG), and wait for at least 60 seconds.
(g) Check the DTCs (See page RS-49).
OK:
DTC B1815, B1816, B1817, B1818, or 54 is not output.
HINT:
Codes other than DTC B1815, B1816, B1817, B1818, and 54 may be output at this time, but they are not related to this check.

NG → **REPLACE CENTER AIRBAG SENSOR ASSEMBLY (See page RS-468)**

OK

USE SIMULATION METHOD TO CHECK (See page RS-37)

RS

5 CHECK INSTRUMENT PANEL WIRE

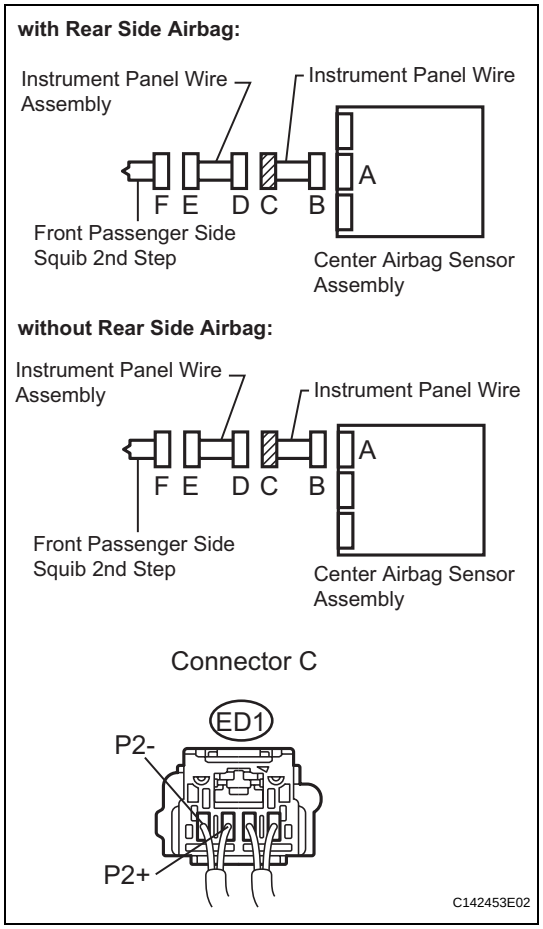

(a) Check for a short to B+ in the circuit.
  (1) Restore the released activation prevention mechanism of connector B to the original condition.
  (2) Disconnect the instrument panel wire connector from the instrument panel wire assembly.
  (3) Connect the negative (-) terminal cable to the battery, and wait for at least 2 seconds.
  (4) Turn the engine switch on (IG).
  (5) Measure the voltage according to the value(s) in the table below.

Standard voltage

Tester Connection	Condition	Specified Condition
ED1-3 (P2+) - Body ground	Engine switch on (IG)	Below 1 V
ED1-4 (P2-) - Body ground	Engine switch on (IG)	Below 1 V

(b) Check for an open in the circuit.
  (1) Turn the engine switch off.
  (2) Disconnect the negative (-) terminal cable from the battery, and wait for at least 90 seconds.
  (3) Measure the resistance according to the value(s) in the table below.

Standard resistance

Tester Connection	Condition	Specified Condition
ED1-3 (P2+) - ED1-4 (P2-)	Always	Below 1 Ω

(c) Check for a short to ground in the circuit.
  (1) Measure the resistance according to the value(s) in the table below.

Standard resistance

Tester Connection	Condition	Specified Condition
ED1-3 (P2+) - Body ground	Always	1 MΩ or higher
ED1-4 (P2-) - Body ground	Always	1 MΩ or higher

(d) Check for a short in the circuit.
  (1) Release the activation prevention mechanism built into connector B (See page RS-37).
  (2) Measure the resistance according to the value(s) in the table below.

Standard resistance

Tester Connection	Condition	Specified Condition
ED1-3 (P2+) - ED1-4 (P2-)	Always	1 MΩ or higher

NG → **REPAIR OR REPLACE INSTRUMENT PANEL WIRE**

OK

RS

6 CHECK INSTRUMENT PANEL WIRE ASSEMBLY

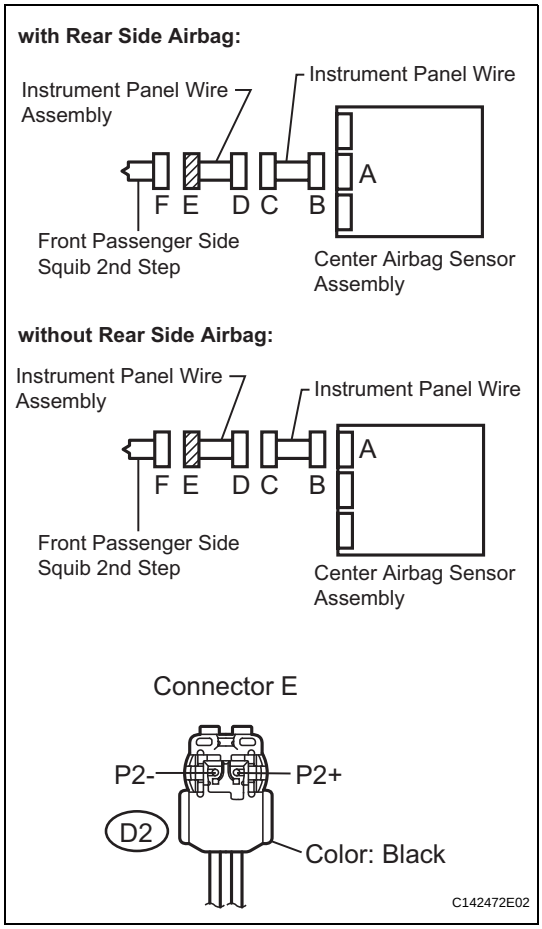

(a) Check for a short to B+ in the circuit.
  (1) Connect the negative (-) terminal cable to the battery, and wait for at least 2 seconds.
  (2) Turn the engine switch on (IG).
  (3) Measure the voltage according to the value(s) in the table below.
  Standard voltage

Tester Connection	Condition	Specified Condition
D2-2 (P2+) - Body ground	Engine switch on (IG)	Below 1 V
D2-1 (P2-) - Body ground	Engine switch on (IG)	Below 1 V

(b) Check for an open in the circuit.
  (1) Turn the engine switch off.
  (2) Disconnect the negative (-) terminal cable from the battery, and wait for at least 90 seconds.
  (3) Measure the resistance according to the value(s) in the table below.
  Standard resistance

Tester Connection	Condition	Specified Condition
D2-2 (P2+) - D2-1 (P2-)	Always	Below 1 Ω

(c) Check for a short to ground in the circuit.
  (1) Measure the resistance according to the value(s) in the table below.
  Standard resistance

Tester Connection	Condition	Specified Condition
D2-2 (P2+) - Body ground	Always	1 MΩ or higher
D2-1 (P2-) - Body ground	Always	1 MΩ or higher

(d) Check for a short in the circuit.
  (1) Release the activation prevention mechanism built into connector D (See page RS-37).
  (2) Measure the resistance according to the value(s) in the table below.
  Standard resistance

Tester Connection	Condition	Specified Condition
D2-2 (P2+) - D2-1 (P2-)	Always	1 MΩ or higher

NG → **REPAIR OR REPLACE INSTRUMENT PANEL WIRE ASSEMBLY**

OK

USE SIMULATION METHOD TO CHECK (See page RS-37)

DTC	B1820/55	Short in Front Driver Side - Side Squib Circuit

DTC	B1821/55	Open in Front Driver Side - Side Squib Circuit

DTC	B1822/55	Short to GND in Front Driver Side - Side Squib Circuit

DTC	B1823/55	Short to B+ in Front Driver Side - Side Squib Circuit

DESCRIPTION

The front driver side - side squib circuit consists of the center airbag sensor assembly and the front seat side airbag assembly LH.
This circuit instructs the SRS to deploy when deployment conditions are met.
These DTCs are recorded when a malfunction is detected in the front driver side - side squib circuit.

DTC No.	DTC Detection Condition	Trouble Area
B1820/55	• The center airbag sensor assembly receives a line short circuit signal 5 times in the front driver side - side squib circuit during primary check. • Front driver side - side squib malfunction • Center airbag sensor assembly malfunction	• Floor wire • Front seat side airbag assembly LH (Front driver side - side squib) • Center airbag sensor assembly
B1821/55	• The center airbag sensor assembly receives an open circuit signal in the front driver side - side squib circuit for 2 seconds. • Front driver side - side squib malfunction • Center airbag sensor assembly malfunction	• Floor wire • Front seat side airbag assembly LH (Front driver side - side squib) • Center airbag sensor assembly
B1822/55	• The center airbag sensor assembly receives a short circuit to ground signal in the front driver side - side squib circuit for 0.5 seconds. • Front driver side - side squib malfunction • Center airbag sensor assembly malfunction	• Floor wire • Front seat side airbag assembly LH (Front driver side - side squib) • Center airbag sensor assembly
B1823/55	• The center airbag sensor assembly receives a short circuit to B+ signal in the front driver side - side squib circuit for 0.5 seconds. • Front driver side - side squib malfunction • Center airbag sensor assembly malfunction	• Floor wire • Front seat side airbag assembly LH (Front driver side - side squib) • Center airbag sensor assembly

RS

WIRING DIAGRAM

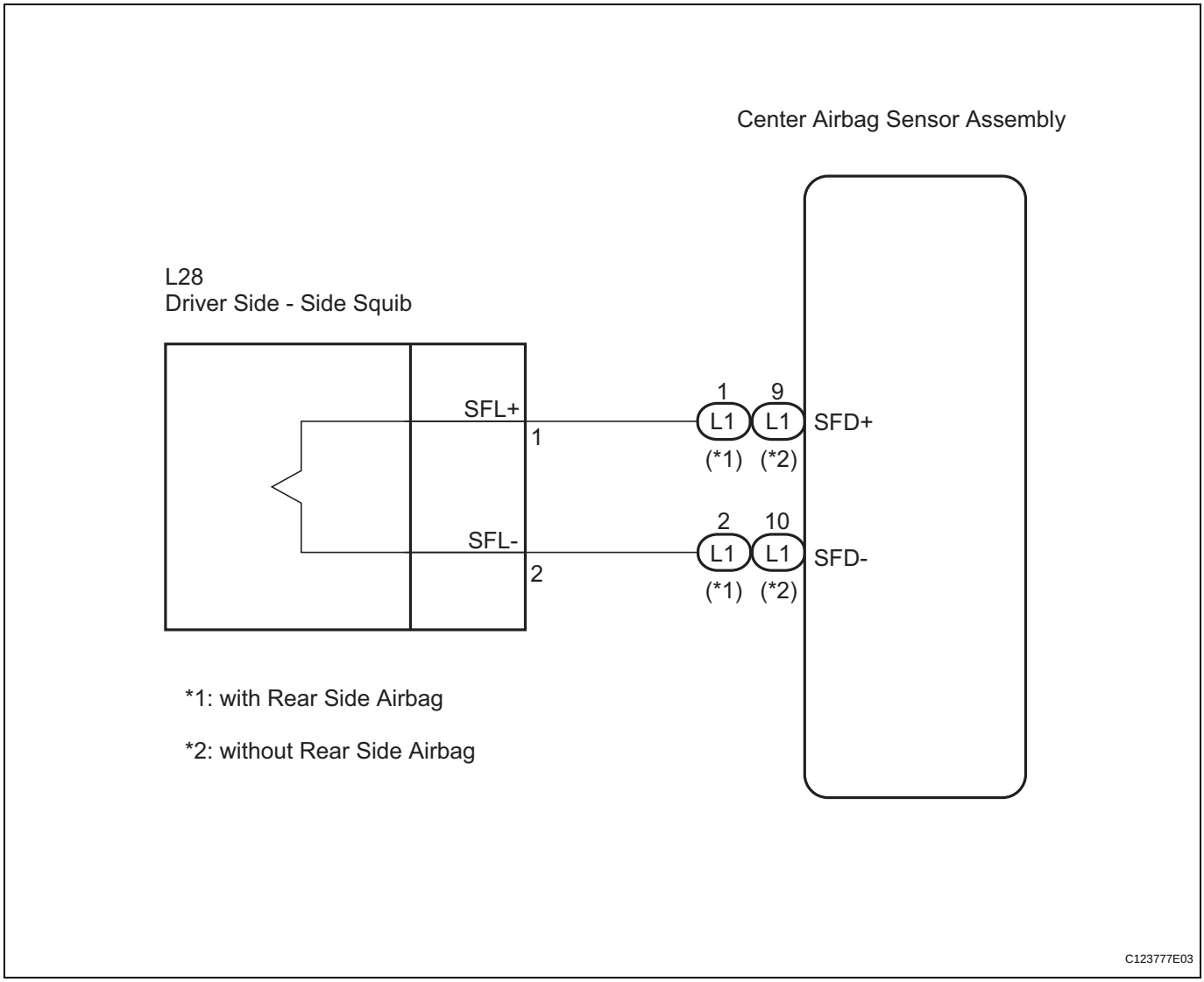

INSPECTION PROCEDURE

HINT:

- Perform the simulation method by selecting "check mode" (signal check) with the intelligent tester (See page RS-52).
- After selecting "check mode" (signal check), perform the simulation method by wiggling each connector of the airbag system or driving the vehicle on a city or rough road (See page RS-52).

RS

1	CHECK FRONT SEAT SIDE AIRBAG ASSEMBLY LH (FRONT DRIVER SIDE - SIDE SQUIB)

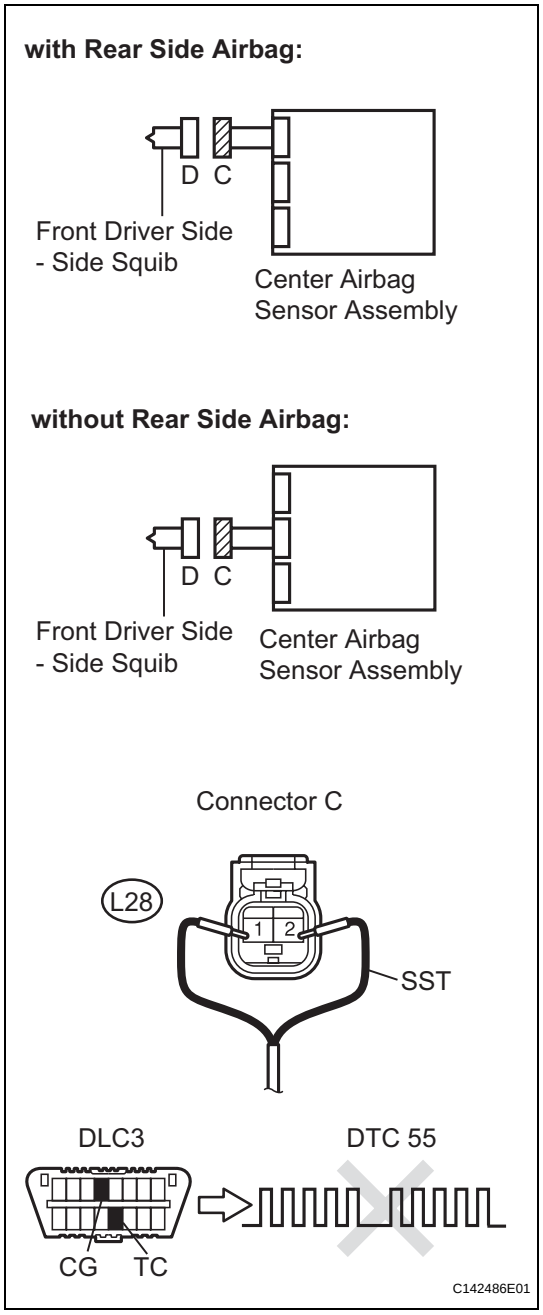

(a) Turn the engine switch off.

(b) Disconnect the negative (-) terminal cable from the battery, and wait for at least 90 seconds.

(c) Disconnect the connector from the front seat side airbag assembly LH.

(d) Connect the black wire side of SST (resistance 2.1 Ω) to connector C.

CAUTION:

Never connect the tester to the front seat side airbag assembly LH (front driver side - side squib) for measurement, as this may lead to a serious injury due to airbag deployment.

NOTICE:

- **Do not forcibly insert the SST into the terminals of the connector when connecting the SST.**
- **Insert straight the SST into the terminals of the connector.**

SST 09843-18060

(e) Connect the negative (-) terminal cable to the battery, and wait for at least 2 seconds.

(f) Turn the engine switch on (IG), and wait for at least 60 seconds.

(g) Clear the DTCs stored in the memory (See page RS-49).

(h) Turn the engine switch off.

(i) Turn the engine switch on (IG), and wait for at least 60 seconds.

(j) Check the DTCs (See page RS-49).

OK:

DTC B1820, B1821, B1822, B1823, or 55 is not output.

HINT:

Codes other than DTC B1820, B1821, B1822, B1823, and 55 may be output at this time, but they are not related to this check.

OK → **REPLACE FRONT SEAT ASSEMBLY LH (See page SE-83)**

NG

RS

2	CHECK FLOOR WIRE (FRONT DRIVER SIDE - SIDE SQUIB CIRCUIT)

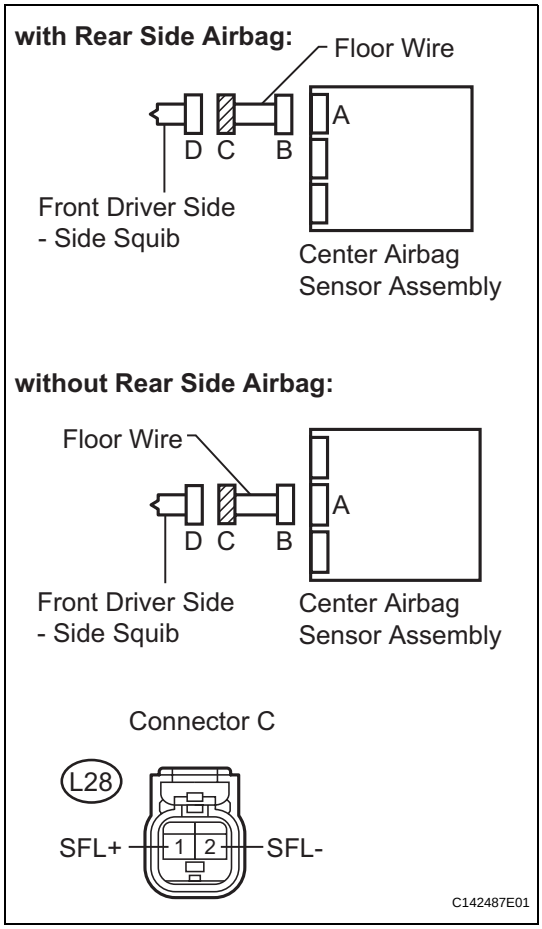

(a) Turn the engine switch off.
(b) Disconnect the negative (-) terminal cable from the battery, and wait for at least 90 seconds.
(c) Disconnect the SST from connector C.
(d) Disconnect the connectors from the center airbag sensor assembly.
(e) Check for a short to B+ in the circuit.
  (1) Connect the negative (-) terminal cable to the battery, and wait for at least 2 seconds.
  (2) Turn the engine switch on (IG).
  (3) Measure the voltage according to the value(s) in the table below.
  Standard voltage

Tester Connection	Condition	Specified Condition
L28-1 (SFL+) - Body ground	Engine switch on (IG)	Below 1 V
L28-2 (SFL-) - Body ground	Engine switch on (IG)	Below 1 V

(f) Check for an open in the circuit.
  (1) Turn the engine switch off.
  (2) Disconnect the negative (-) terminal cable from the battery, and wait for at least 90 seconds.
  (3) Measure the resistance according to the value(s) in the table below.
  Standard resistance

Tester Connection	Condition	Specified Condition
L28-1 (SFL+) - L28-2 (SFL-)	Always	Below 1 Ω

(g) Check for a short to ground in the circuit.
  (1) Measure the resistance according to the value(s) in the table below.
  Standard resistance

Tester Connection	Condition	Specified Condition
L28-1 (SFL+) - Body ground	Always	1 MΩ or higher
L28-2 (SFL-) - Body ground	Always	1 MΩ or higher

(h) Check for a short in the circuit.
  (1) Release the activation prevention mechanism built into connector B (See page RS-37).
  (2) Measure the resistance according to the value(s) in the table below.
  Standard resistance

Tester Connection	Condition	Specified Condition
L28-1 (SFL+) - L28-2 (SFL-)	Always	1 MΩ or higher

NG → **REPAIR OR REPLACE FLOOR WIRE**

OK

3	CHECK CENTER AIRBAG SENSOR ASSEMBLY

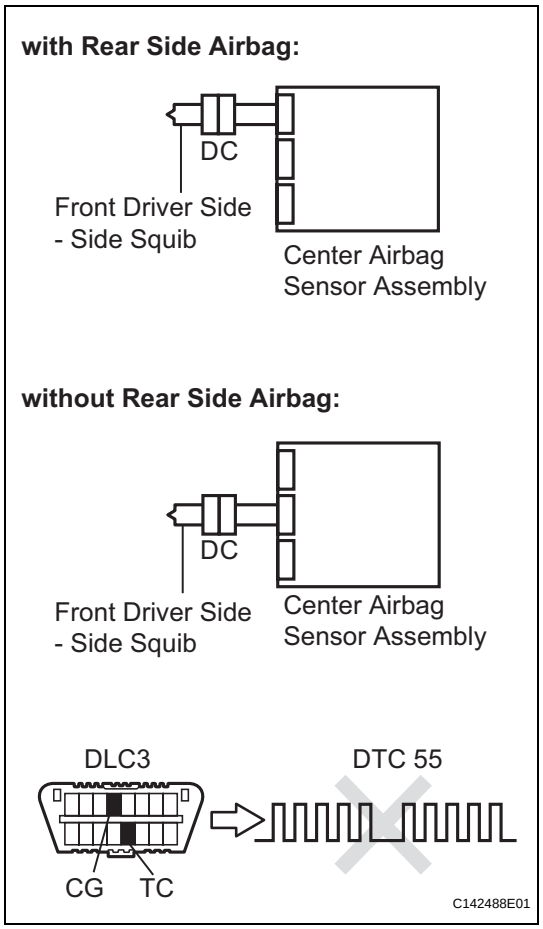

(a) Connect the connectors to the front seat side airbag assembly LH and the center airbag sensor assembly.
(b) Connect the negative (-) terminal cable to the battery, and wait for at least 2 seconds.
(c) Turn the engine switch on (IG), and wait for at least 60 seconds.
(d) Clear the DTCs stored in the memory (See page RS-49).
(e) Turn the engine switch off.
(f) Turn the engine switch on (IG), and wait for at least 60 seconds.
(g) Check the DTCs (See page RS-49).
OK:
DTC B1820, B1821, B1822, B1823, or 55 is not output.
HINT:
Codes other than DTC B1820, B1821, B1822, B1823, and 55 may be output at this time, but they are not related to this check.

NG → **REPLACE CENTER AIRBAG SENSOR ASSEMBLY (See page RS-468)**

OK

USE SIMULATION METHOD TO CHECK (See page RS-37)

RS

RS

DTC	**B1825/56**	**Short in Front Passenger Side - Side Squib Circuit**

DTC	**B1826/56**	**Open in Front Passenger Side - Side Squib Circuit**

DTC	**B1827/56**	**Short to GND in Front Passenger Side - Side Squib Circuit**

DTC	**B1828/56**	**Short to B+ in Front Passenger Side - Side Squib Circuit**

DESCRIPTION

The front passenger side - side squib circuit consists of the center airbag sensor assembly and the front seat side airbag assembly RH.
The circuit instructs the SRS to deploy when deployment conditions are met.
These DTCs are recorded when a malfunction is detected in the front passenger side - side squib circuit.

DTC No.	DTC Detection Condition	Trouble Area
B1825/56	• The center airbag sensor assembly receives a line short circuit signal 5 times in the front passenger side - side squib circuit during primary check. • Front passenger side - side squib malfunction • Center airbag sensor assembly malfunction	• Floor wire No. 2 • Front seat side airbag assembly RH (Front passenger side - side squib) • Center airbag sensor assembly
B1826/56	• The center airbag sensor assembly receives an open circuit signal in the front passenger side - side squib circuit for 2 seconds. • Front passenger side - side squib malfunction • Center airbag sensor assembly malfunction	• Floor wire No. 2 • Front seat side airbag assembly RH (Front passenger side - side squib) • Center airbag sensor assembly
B1827/56	• The center airbag sensor assembly receives a short circuit to ground signal in the front passenger side - side squib circuit for 0.5 seconds. • Front passenger side - side squib malfunction • Center airbag sensor assembly malfunction	• Floor wire No. 2 • Front seat side airbag assembly RH (Front passenger side - side squib) • Center airbag sensor assembly
B1828/56	• The center airbag sensor assembly receives a short circuit to B+ signal in the front passenger side - side squib circuit for 0.5 seconds. • Front passenger side - side squib malfunction • Center airbag sensor assembly malfunction	• Floor wire No. 2 • Front seat side airbag assembly RH (Front passenger side - side squib) • Center airbag sensor assembly

WIRING DIAGRAM

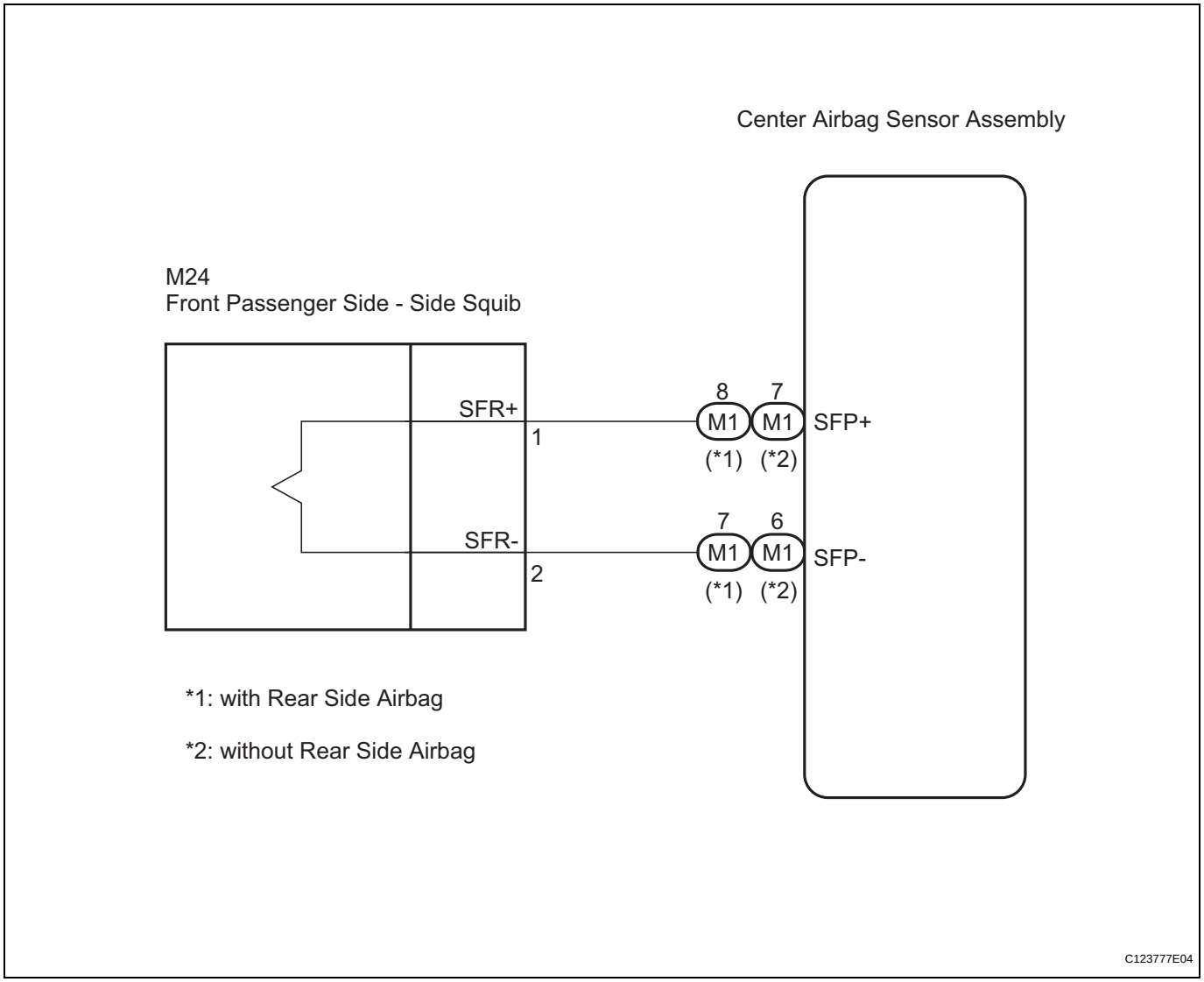

INSPECTION PROCEDURE

HINT:

- Perform the simulation method by selecting "check mode" (signal check) with the intelligent tester (See page RS-52).
- After selecting "check mode" (signal check), perform the simulation method by wiggling each connector of the airbag system or driving the vehicle on a city or rough road (See page RS-52).

RS

1	CHECK FRONT SEAT SIDE AIRBAG ASSEMBLY RH (FRONT PASSENGER SIDE - SIDE SQUIB)

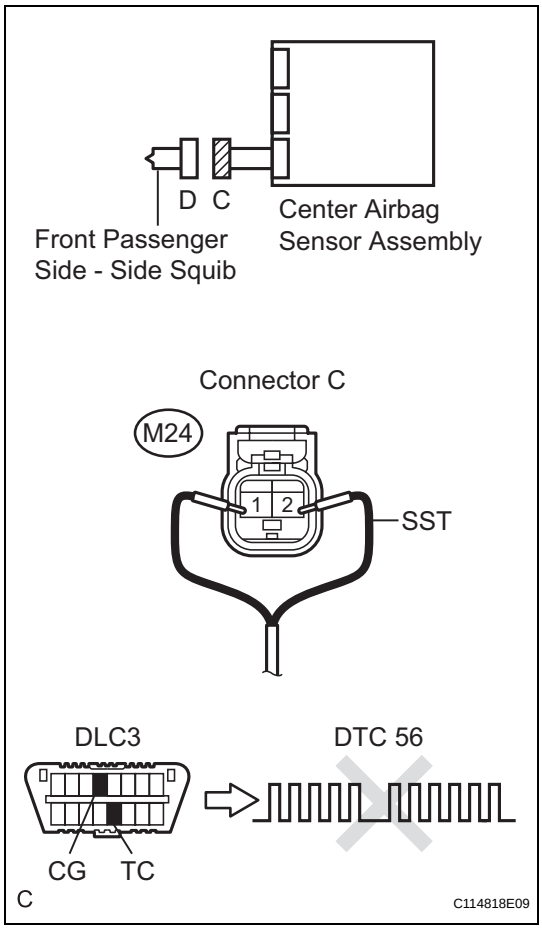

(a) Turn the engine switch off.
(b) Disconnect the negative (-) terminal cable from the battery, and wait for at least 90 seconds.
(c) Disconnect the connector from the front seat side airbag assembly RH.
(d) Connect the black wire side of SST (resistance 2.1 Ω) to connector C.
CAUTION:
Never connect the tester to the front seat side airbag assembly RH (front passenger side - side squib) for measurement, as this may lead to a serious injury due to airbag deployment.
NOTICE:
- **Do not forcibly insert the SST into the terminals of the connector when connecting the SST.**
- **Insert straight the SST into the terminals of the connector.**

SST 09843-18060
(e) Connect the negative (-) terminal cable to the battery, and wait for at least 2 seconds.
(f) Turn the engine switch on (IG), and wait for at least 60 seconds.
(g) Clear the DTCs stored in the memory (See page RS-49).
(h) Turn the engine switch off.
(i) Turn the engine switch on (IG), and wait for at least 60 seconds.
(j) Check the DTCs (See page RS-49).
OK:
DTC B1825, B1826, B1827, B1828, or 56 is not output.
HINT:
Codes other than DTC B1825, B1826, B1827, B1828, and 56 may be output at this time, but they are not related to this check.

OK → **REPLACE FRONT SEAT ASSEMBLY RH (See page SE-83)**

NG

RS

2 CHECK FLOOR WIRE NO. 2 (FRONT PASSENGER SIDE - SIDE SQUIB CIRCUIT)

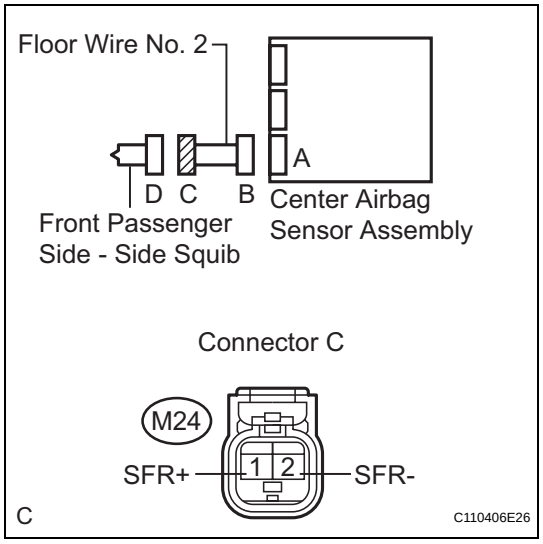

(a) Turn the engine switch off.
(b) Disconnect the negative (-) terminal cable from the battery, and wait for at least 90 seconds.
(c) Disconnect the SST from connector C.
(d) Disconnect the connectors from the center airbag sensor assembly.
(e) Check for a short to B+ in the circuit.
  (1) Connect the negative (-) terminal cable to the battery, and wait for at least 2 seconds.
  (2) Turn the engine switch on (IG).
  (3) Measure the voltage according to the value(s) in the table below.
  Standard voltage

Tester Connection	Condition	Specified Condition
M24-1 (SFR+) - Body ground	Engine switch on (IG)	Below 1 V
M24-2 (SFR-) - Body ground	Engine switch on (IG)	Below 1 V

(f) Check for an open in the circuit.
  (1) Turn the engine switch off.
  (2) Disconnect the negative (-) terminal cable from the battery, and wait for at least 90 seconds.
  (3) Measure the resistance according to the value(s) in the table below.
  Standard resistance

Tester Connection	Condition	Specified Condition
M24-1 (SFR+) - M24-2 (SFR-)	Always	Below 1 Ω

(g) Check for a short to ground in the circuit.
  (1) Measure the resistance according to the value(s) in the table below.
  Standard resistance

Tester Connection	Condition	Specified Condition
M24-1 (SFR+) - Body ground	Always	1 MΩ or higher
M24-2 (SFR-) - Body ground	Always	1 MΩ or higher

(h) Check for a short in the circuit.
  (1) Release the activation prevention mechanism built into connector B (See page RS-37).
  (2) Measure the resistance according to the value(s) in the table below.
  Standard resistance

Tester Connection	Condition	Specified Condition
M24-1 (SFR+) - M24-2 (SFR-)	Always	1 MΩ or higher

NG → **REPAIR OR REPLACE FLOOR WIRE NO. 2**

OK

3	CHECK CENTER AIRBAG SENSOR ASSEMBLY

RS

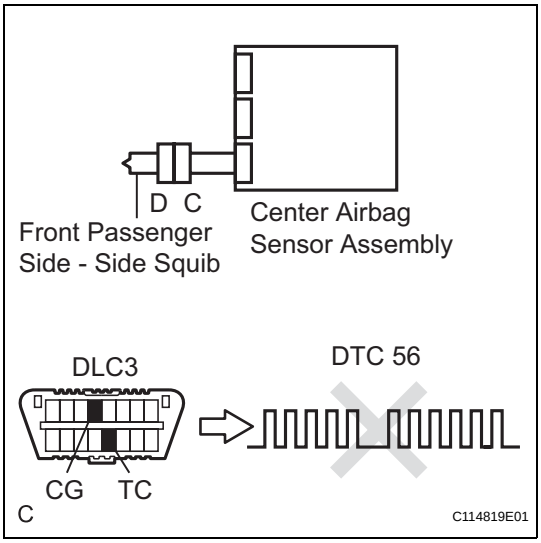

(a) Connect the connectors to the front seat side airbag assembly RH and the center airbag sensor assembly.
(b) Connect the negative (-) terminal cable to the battery, and wait for at least 2 seconds.
(c) Turn the engine switch on (IG), and wait for at least 60 seconds.
(d) Clear the DTCs stored in the memory (See page RS-49).
(e) Turn the engine switch off.
(f) Turn the engine switch on (IG), and wait for at least 60 seconds.
(g) Check the DTCs (See page RS-49).
OK:
DTC B1825, B1826, B1827, B1828, or 56 is not output.
HINT:
Codes other than DTC B1825, B1826, B1827, B1828, and 56 may be output at this time, but they are not related to this check.

NG → **REPLACE CENTER AIRBAG SENSOR ASSEMBLY (See page RS-468)**

OK

USE SIMULATION METHOD TO CHECK (See page RS-37)

DTC	**B1830/57**	**Short in Driver Side Curtain Shield Squib Circuit**

DTC	**B1831/57**	**Open in Driver Side Curtain Shield Squib Circuit**

DTC	**B1832/57**	**Short to GND in Driver Side Curtain Shield Squib Circuit**

DTC	**B1833/57**	**Short to B+ in Driver Side Curtain Shield Squib Circuit**

DESCRIPTION

The driver side curtain shield squib circuit consists of the center airbag sensor assembly and the curtain shield airbag assembly LH.
The circuit instructs the SRS to deploy when deployment conditions are met.
These DTCs are recorded when a malfunction is detected in the driver side curtain shield squib circuit.

DTC No.	DTC Detection Condition	Trouble Area
B1830/57	• The center airbag sensor assembly receives a line short circuit signal 5 times in the driver side curtain shield squib circuit during primary check. • Driver side curtain shield squib malfunction • Center airbag sensor assembly malfunction	• Floor wire • Curtain shield airbag assembly LH (Driver side curtain shield squib) • Center airbag sensor assembly
B1831/57	• The center airbag sensor assembly receives an open circuit signal in the driver side curtain shield squib circuit for 2 seconds. • Driver side curtain shield squib malfunction • Center airbag sensor assembly malfunction	• Floor wire • Curtain shield airbag assembly LH (Driver side curtain shield squib) • Center airbag sensor assembly
B1832/57	• The center airbag sensor assembly receives a short circuit to ground signal in the driver side curtain shield squib circuit for 0.5 seconds. • Driver side curtain shield squib malfunction • Center airbag sensor assembly malfunction	• Floor wire • Curtain shield airbag assembly LH (Driver side curtain shield squib) • Center airbag sensor assembly
B1833/57	• The center airbag sensor assembly receives a short circuit to B+ signal in the driver side curtain shield squib circuit for 0.5 seconds. • Driver side curtain shield squib malfunction • Center airbag sensor assembly malfunction	• Floor wire • Curtain shield airbag assembly LH (Driver side curtain shield squib) • Center airbag sensor assembly

RS

WIRING DIAGRAM

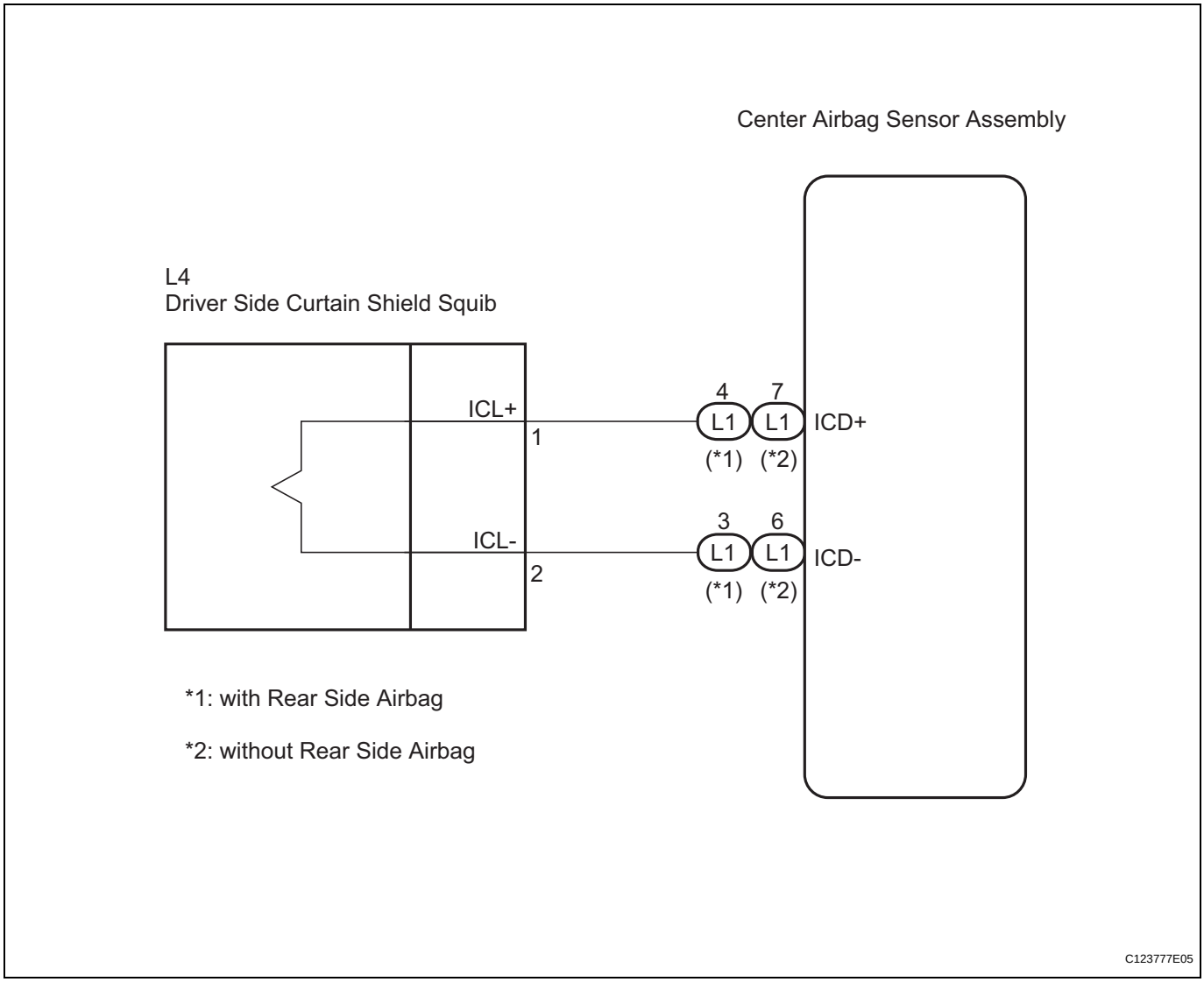

INSPECTION PROCEDURE

HINT:

- Perform the simulation method by selecting "check mode" (signal check) with the intelligent tester (See page RS-52).
- After selecting "check mode" (signal check), perform the simulation method by wiggling each connector of the airbag system or driving the vehicle on a city or rough road (See page RS-52).

RS

1	CHECK CURTAIN SHIELD AIRBAG ASSEMBLY LH (DRIVER SIDE CURTAIN SHIELD SQUIB)

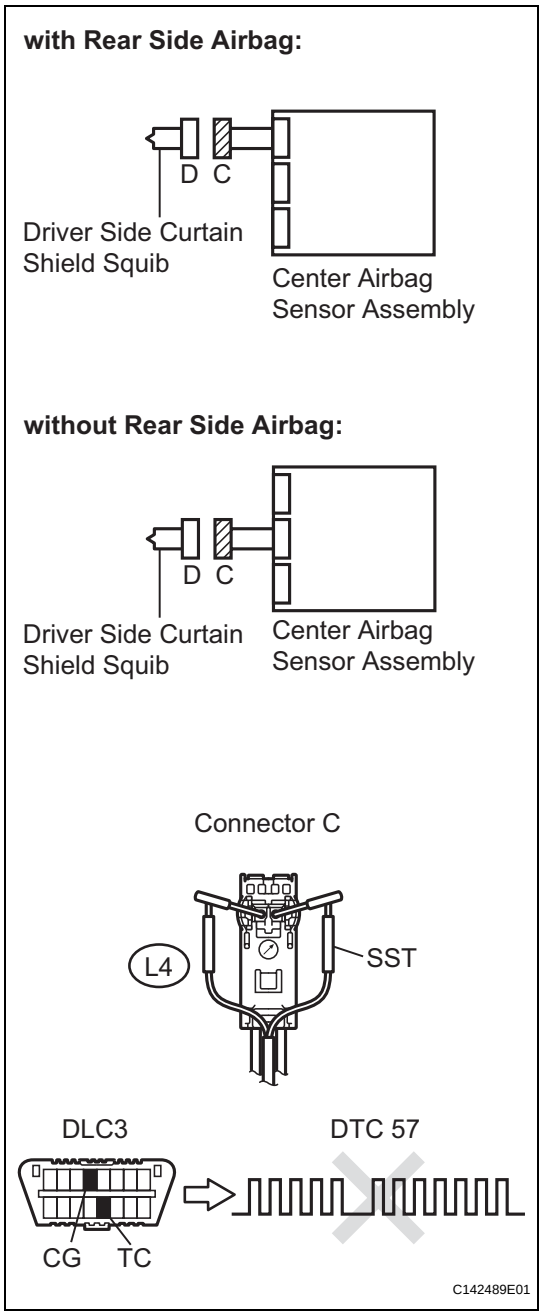

(a) Turn the engine switch off.
(b) Disconnect the negative (-) terminal cable from the battery, and wait for at least 90 seconds.
(c) Disconnect the connector from the curtain shield airbag assembly LH.
(d) Connect the white wire side of SST (resistance 2.1 Ω) to connector C.
CAUTION:
Never connect the tester to the curtain shield airbag assembly LH (driver side curtain shield squib) for measurement, as this may lead to a serious injury due to airbag deployment.
NOTICE:
- **Do not forcibly insert the SST into the terminals of the connector when connecting the SST.**
- **Insert straight the SST into the terminals of the connector.**

SST 09843-18060

(e) Connect the negative (-) terminal cable to the battery, and wait for at least 2 seconds.
(f) Turn the engine switch on (IG), and wait for at least 60 seconds.
(g) Clear the DTCs stored in the memory (See page RS-49).
(h) Turn the engine switch off.
(i) Turn the engine switch on (IG), and wait for at least 60 seconds.
(j) Check the DTCs (See page RS-49).
OK:
DTC B1830, B1831, B1832, B1833, or 57 is not output.
HINT:
Codes other than DTC B1830, B1831, B1832, B1833, and 57 may be output at this time, but they are not related to this check.

OK → **REPLACE CURTAIN SHIELD AIRBAG ASSEMBLY LH (See page RS-435)**

NG

2	CHECK CONNECTOR

(a) Turn the engine switch off.
(b) Disconnect the negative (-) terminal cable from the battery, and wait for at least 90 seconds.
(c) Disconnect the SST from connector C.
(d) Check that the floor wire connector (on the curtain shield airbag assembly LH side) is not damaged.

OK:
The lock button is not disengaged, or the claw of the lock is not deformed or damaged.

NG → **REPAIR OR REPLACE FLOOR WIRE**

RS

OK

3 CHECK FLOOR WIRE (DRIVER SIDE CURTAIN SHIELD SQUIB CIRCUIT)

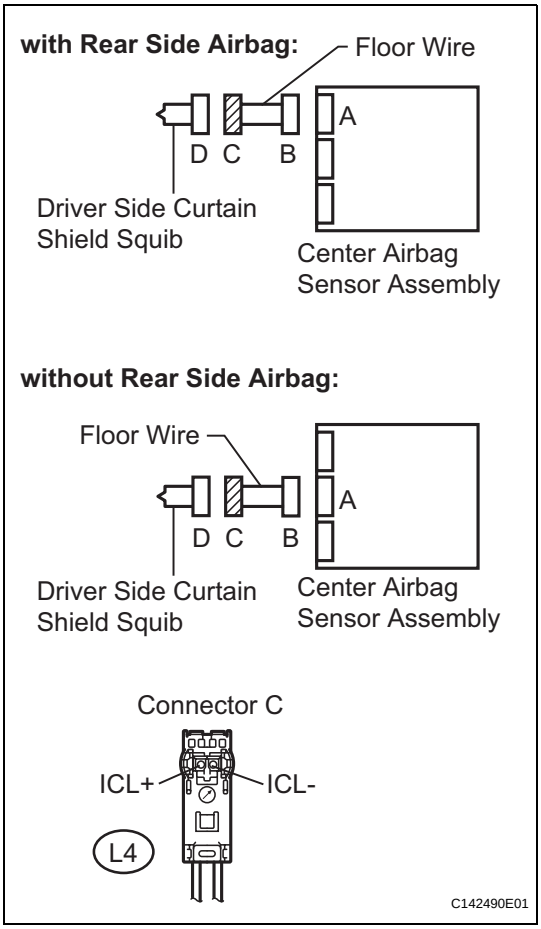

(a) Disconnect the connectors from the center airbag sensor assembly.

(b) Check for a short to B+ in the circuit.
  (1) Connect the negative (-) terminal cable to the battery, and wait for at least 2 seconds.
  (2) Turn the engine switch on (IG).
  (3) Measure the voltage according to the value(s) in the table below.
  Standard voltage

Tester Connection	Condition	Specified Condition
L4-1 (ICL+) - Body ground	Engine switch on (IG)	Below 1 V
L4-2 (ICL-) - Body ground	Engine switch on (IG)	Below 1 V

(c) Check for an open in the circuit.
  (1) Turn the engine switch off.
  (2) Disconnect the negative (-) terminal cable from the battery, and wait for at least 90 seconds.
  (3) Measure the resistance according to the value(s) in the table below.
  Standard resistance

Tester Connection	Condition	Specified Condition
L4-1 (ICL+) - L4-2 (ICL-)	Always	Below 1 Ω

(d) Check for a short to ground in the circuit.
  (1) Measure the resistance according to the value(s) in the table below.
  Standard resistance

Tester Connection	Condition	Specified Condition
L4-1 (ICL+) - Body ground	Always	1 MΩ or higher
L4-2 (ICL-) - Body ground	Always	1 MΩ or higher

(e) Check for a short in the circuit.
  (1) Release the activation prevention mechanism built into connector B (See page RS-37).
  (2) Measure the resistance according to the value(s) in the table below.
  Standard resistance

Tester Connection	Condition	Specified Condition
L4-1 (ICL+) - L4-2 (ICL-)	Always	1 MΩ or higher

NG → **REPAIR OR REPLACE FLOOR WIRE**

OK

4 CHECK CENTER AIRBAG SENSOR ASSEMBLY

RS

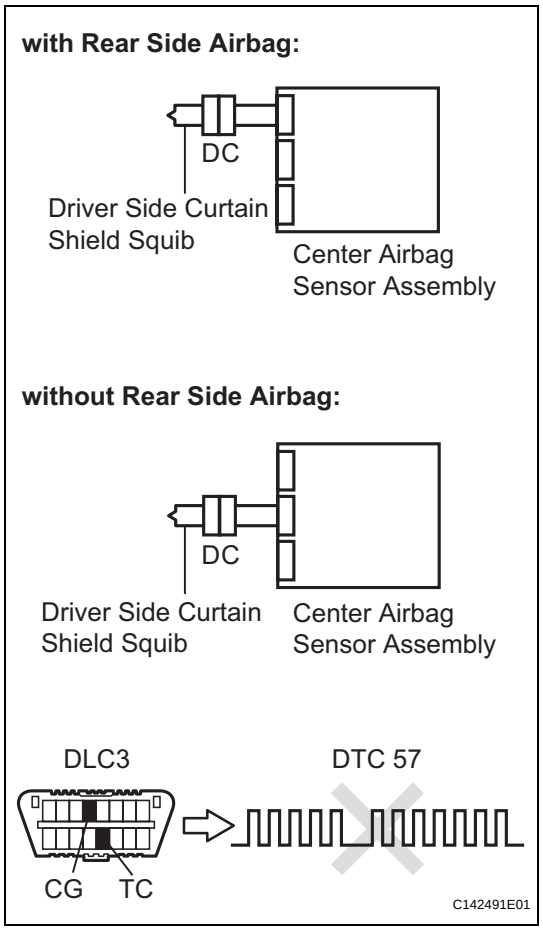

(a) Connect the connectors to the curtain shield airbag assembly LH and the center airbag sensor assembly.
(b) Connect the negative (-) terminal cable to the battery, and wait for at least 2 seconds.
(c) Turn the engine switch on (IG), and wait for at least 60 seconds.
(d) Clear the DTCs stored in the memory (See page RS-49).
(e) Turn the engine switch off.
(f) Turn the engine switch on (IG), and wait for at least 60 seconds.
(g) Check the DTCs (See page RS-49).
OK:
DTC B1830, B1831, B1832, B1833, or 57 is not output.
HINT:
Codes other than DTC B1830, B1831, B1832, B1833, and 57 may be output at this time, but they are not related to this check.

NG → **REPLACE CENTER AIRBAG SENSOR ASSEMBLY (See page RS-468)**

OK

USE SIMULATION METHOD TO CHECK (See page RS-37)

RS

DTC	**B1835/58**	**Short in Front Passenger Side Curtain Shield Squib Circuit**

DTC	**B1836/58**	**Open in Front Passenger Side Curtain Shield Squib Circuit**

DTC	**B1837/58**	**Short to GND in Front Passenger Side Curtain Shield Squib Circuit**

DTC	**B1838/58**	**Short to B+ in Front Passenger Side Curtain Shield Squib Circuit**

DESCRIPTION

The front passenger side curtain shield squib circuit consists of the center airbag sensor assembly and the curtain shield airbag assembly RH.
The circuit instructs the SRS to deploy when deployment conditions are met.
These DTCs are recorded when a malfunction is detected in the front passenger side curtain shield squib circuit.

DTC No.	DTC Detection Condition	Trouble Area
B1835/58	• The center airbag sensor assembly receives a line short circuit signal 5 times in the front passenger side curtain shield squib circuit during primary check. • Front passenger side curtain shield squib malfunction • Center airbag sensor assembly malfunction	• Floor wire No. 2 • Curtain shield airbag assembly RH (Front passenger side curtain shield squib) • Center airbag sensor assembly
B1836/58	• The center airbag sensor assembly receives an open circuit signal in the front passenger side curtain shield squib circuit for 2 seconds. • Front passenger side curtain shield squib malfunction • Center airbag sensor assembly malfunction	• Floor wire No. 2 • Curtain shield airbag assembly RH (Front passenger side curtain shield squib) • Center airbag sensor assembly
B1837/58	• The center airbag sensor assembly receives a short circuit to ground signal in the front passenger side curtain shield squib circuit for 0.5 seconds. • Front passenger side curtain shield squib malfunction • Center airbag sensor assembly malfunction	• Floor wire No. 2 • Curtain shield airbag assembly RH (Front passenger side curtain shield squib) • Center airbag sensor assembly
B1838/58	• The center airbag sensor assembly receives a short circuit to B+ signal in the front passenger side curtain shield squib circuit for 0.5 seconds. • Front passenger side curtain shield squib malfunction • Center airbag sensor assembly malfunction	• Floor wire No. 2 • Curtain shield airbag assembly RH (Front passenger side curtain shield squib) • Center airbag sensor assembly

WIRING DIAGRAM

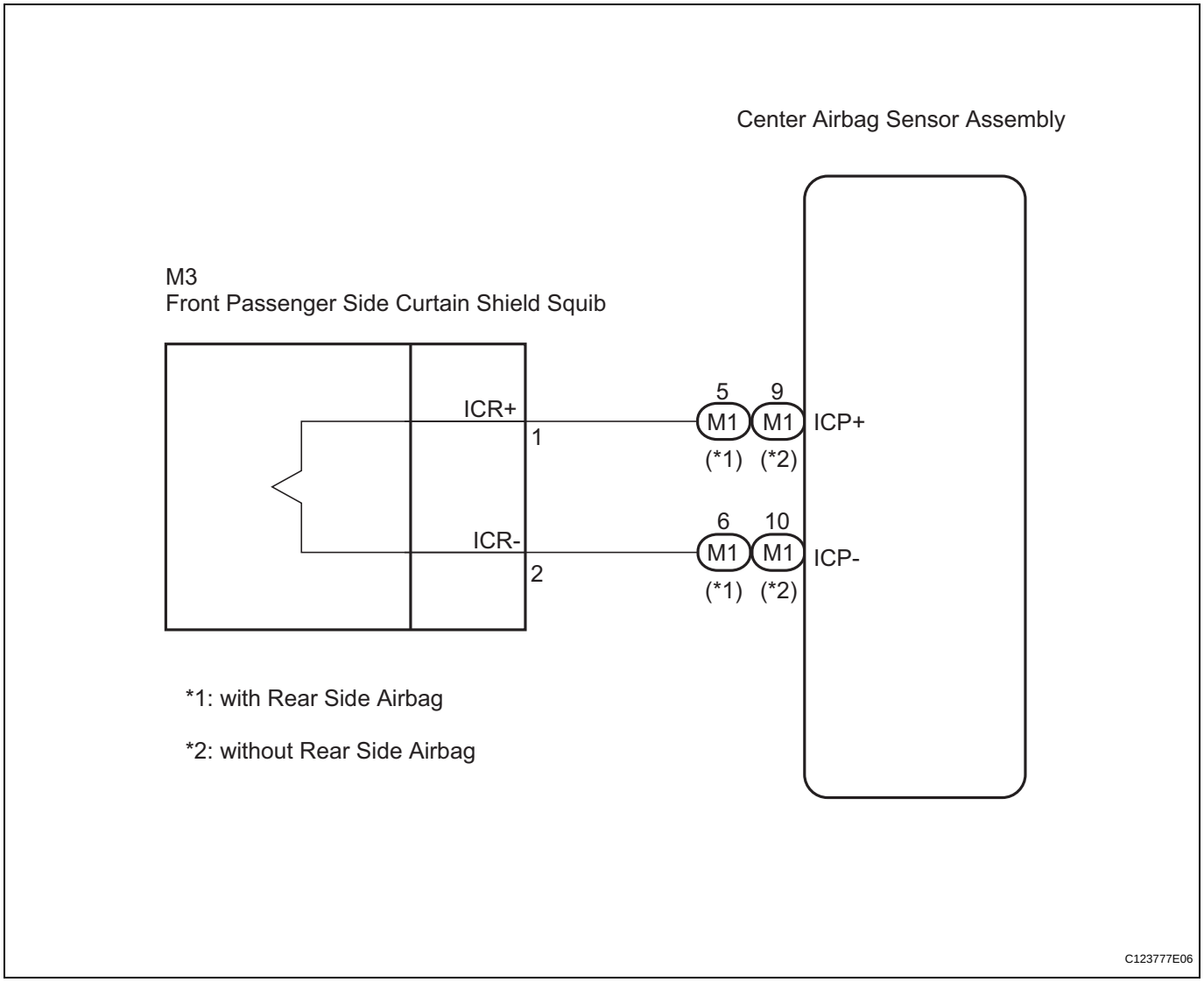

INSPECTION PROCEDURE

HINT:

- Perform the simulation method by selecting "check mode" (signal check) with the intelligent tester (See page RS-52).
- After selecting "check mode" (signal check), perform the simulation method by wiggling each connector of the airbag system or driving the vehicle on a city or rough road (See page RS-52).

RS

1	CHECK CURTAIN SHIELD AIRBAG ASSEMBLY RH (FRONT PASSENGER SIDE CURTAIN SHIELD SQUIB)

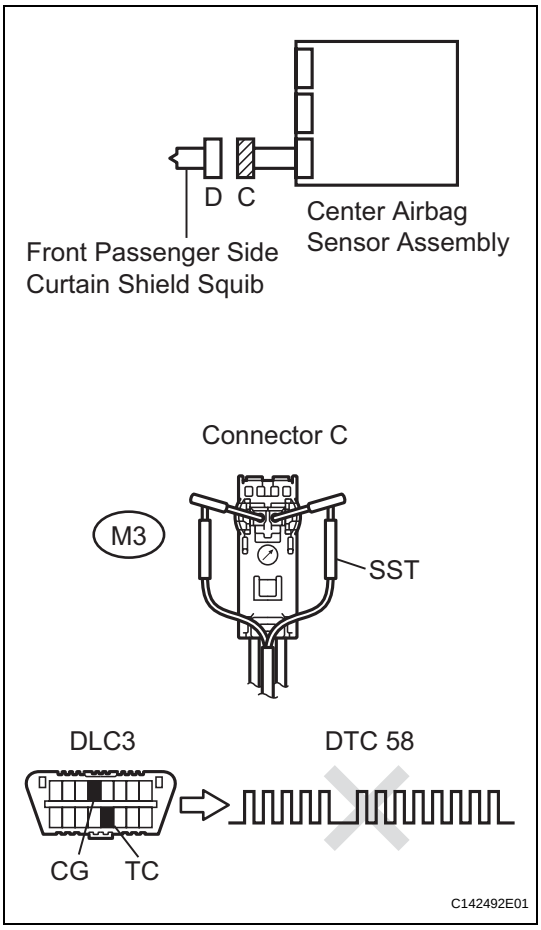

(a) Turn the engine switch off.
(b) Disconnect the negative (-) terminal cable from the battery, and wait for at least 90 seconds.
(c) Disconnect the connectors from the curtain shield airbag assembly RH.
(d) Connect the white wire side of SST (resistance 2.1 Ω) to connector C.
CAUTION:
Never connect the tester to the curtain shield airbag assembly RH (front passenger side curtain shield squib) for measurement, as this may lead to a serious injury due to airbag deployment.
NOTICE:
- **Do not forcibly insert the SST into the terminals of the connector when connecting the SST.**
- **Insert straight the SST into the terminals of the connector.**

SST 09843-18060

(e) Connect the negative (-) terminal cable to the battery, and wait for at least 2 seconds.
(f) Turn the engine switch on (IG), and wait for at least 60 seconds.
(g) Clear the DTCs stored in the memory (See page RS-49).
(h) Turn the engine switch off.
(i) Turn the engine switch on (IG), and wait for at least 60 seconds.
(j) Check the DTCs (See page RS-49).
OK:
DTC B1835, B1836, B1837, B1838, or 58 is not output.
HINT:
Codes other than DTC B1835, B1836, B1837, B1838, and 58 may be output at this time, but they are not related to this check.

OK → **REPLACE CURTAIN SHIELD AIRBAG ASSEMBLY RH (See page RS-435)**

NG

2	CHECK CONNECTOR

(a) Turn the engine switch off.
(b) Disconnect the negative (-) terminal cable from the battery, and wait for at least 90 seconds.
(c) Disconnect the SST from connector C.
(d) Check that the floor wire No. 2 connectors (on the curtain shield airbag assembly RH side) are not damaged.

OK:
The lock button is not disengaged, or the claw of the lock is not deformed or damaged.

NG → **REPAIR OR REPLACE FLOOR WIRE NO. 2**

OK

3 CHECK FLOOR WIRE NO. 2 (FRONT PASSENGER SIDE CURTAIN SHIELD SQUIB CIRCUIT)

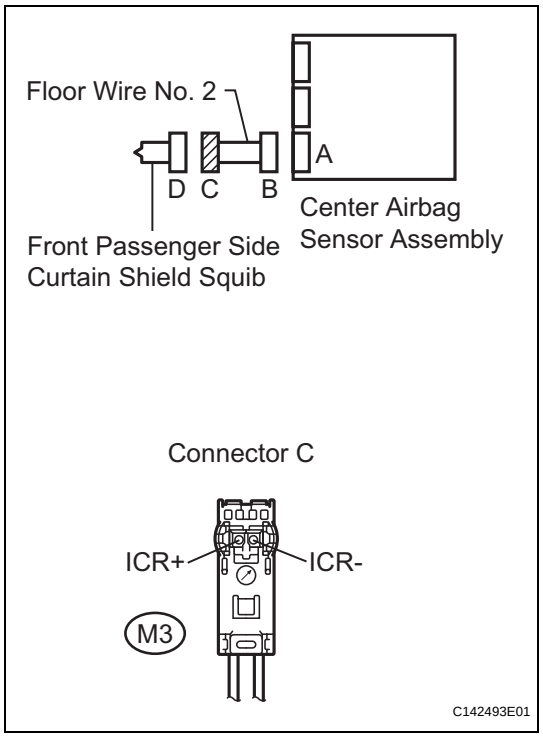

(a) Disconnect the connectors from the center airbag sensor assembly.

(b) Check for a short to B+ in the circuit.
  (1) Connect the negative (-) terminal cable to the battery, and wait for at least 2 seconds.
  (2) Turn the engine switch on (IG).
  (3) Measure the voltage according to the value(s) in the table below.
  Standard voltage

Tester Connection	Condition	Specified Condition
M3-1 (ICR+) - Body ground	Engine switch on (IG)	Below 1 V
M3-2 (ICR-) - Body ground	Engine switch on (IG)	Below 1 V

(c) Check for an open in the circuit.
  (1) Turn the engine switch off.
  (2) Disconnect the negative (-) terminal cable from the battery, and wait for at least 90 seconds.
  (3) Measure the resistance according to the value(s) in the table below.
  Standard resistance

Tester Connection	Condition	Specified Condition
M3-1 (ICR+) - M3-2 (ICR-)	Always	Below 1 Ω

(d) Check for a short to ground in the circuit.
  (1) Measure the resistance according to the value(s) in the table below.
  Standard resistance

Tester Connection	Condition	Specified Condition
M3-1 (ICR+) - Body ground	Always	1 MΩ or higher
M3-2 (ICR-) - Body ground	Always	1 MΩ or higher

(e) Check for a short in the circuit.
  (1) Release the activation prevention mechanism built into connector B (See page RS-37).
  (2) Measure the resistance according to the value(s) in the table below.
  Standard resistance

Tester Connection	Condition	Specified Condition
M3-1 (ICR+) - M3-2 (ICR-)	Always	1 MΩ or higher

NG → **REPAIR OR REPLACE FLOOR WIRE NO. 2**

OK

4	CHECK CENTER AIRBAG SENSOR ASSEMBLY

RS

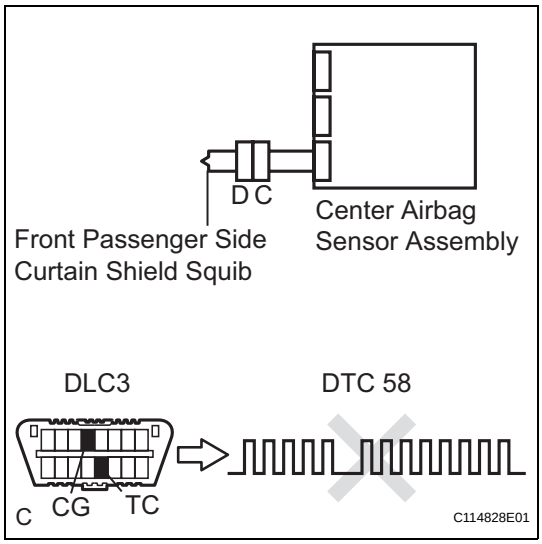

(a) Connect the connectors to the curtain shield airbag assembly RH and the center airbag sensor assembly.
(b) Connect the negative (-) terminal cable to the battery, and wait for at least 2 seconds.
(c) Turn the engine switch on (IG), and wait for at least 60 seconds.
(d) Clear the DTCs stored in the memory (See page RS-49).
(e) Turn the engine switch off.
(f) Turn the engine switch on (IG), and wait for at least 60 seconds.
(g) Check the DTCs (See page RS-49).
OK:
DTC B1835, B1836, B1837, B1838, or 58 is not output.
HINT:
Codes other than DTC B1835, B1836, B1837, B1838, and 58 may be output at this time, but they are not related to this check.

NG → **REPLACE CENTER AIRBAG SENSOR ASSEMBLY (See page RS-468)**

OK

USE SIMULATION METHOD TO CHECK (See page RS-37)

DTC	B1850/62	Short in Rear Driver Side - Side Squib Circuit

DTC	B1851/62	Open in Rear Driver Side - Side Squib Circuit

DTC	B1852/62	Short to GND in Rear Driver Side - Side Squib Circuit

DTC	B1853/62	Short to B+ in Rear Driver Side - Side Squib Circuit

DESCRIPTION

The rear driver side - side squib circuit consists of the center airbag sensor assembly and the rear seat side airbag assembly LH.
This circuit instructs the SRS to deploy when deployment conditions are met.
These DTCs are recorded when a malfunction is detected in the rear driver side - side squib circuit.

DTC No.	DTC Detecting Condition	Trouble Area
B1850/62	• The center airbag sensor assembly receives a line short circuit signal 5 times in the rear driver side - side squib circuit during primary check. • Rear driver side - side squib malfunction • Center airbag sensor assembly malfunction	• Floor wire • Rear seat side airbag assembly LH (Rear driver side - side squib) • Center airbag sensor assembly
B1851/62	• The center airbag sensor assembly receives an open circuit signal in the rear driver side - side squib circuit for 2 seconds. • Rear driver side - side squib malfunction • Center airbag sensor assembly malfunction	• Floor wire • Rear seat side airbag assembly LH (Rear driver side - side squib) • Center airbag sensor assembly
B1852/62	• The center airbag sensor assembly receives a short circuit to ground signal in the rear driver side - side squib circuit for 0.5 seconds. • Rear driver side - side squib malfunction • Center airbag sensor assembly malfunction	• Floor wire • Rear seat side airbag assembly LH (Rear driver side - side squib) • Center airbag sensor assembly
B1853/62	• The center airbag sensor assembly receives a short circuit to B+ signal in the rear driver side - side squib circuit for 0.5 seconds. • Rear driver side - side squib malfunction • Center airbag sensor assembly malfunction	• Floor wire • Rear seat side airbag assembly LH (Rear driver side - side squib) • Center airbag sensor assembly

RS

WIRING DIAGRAM

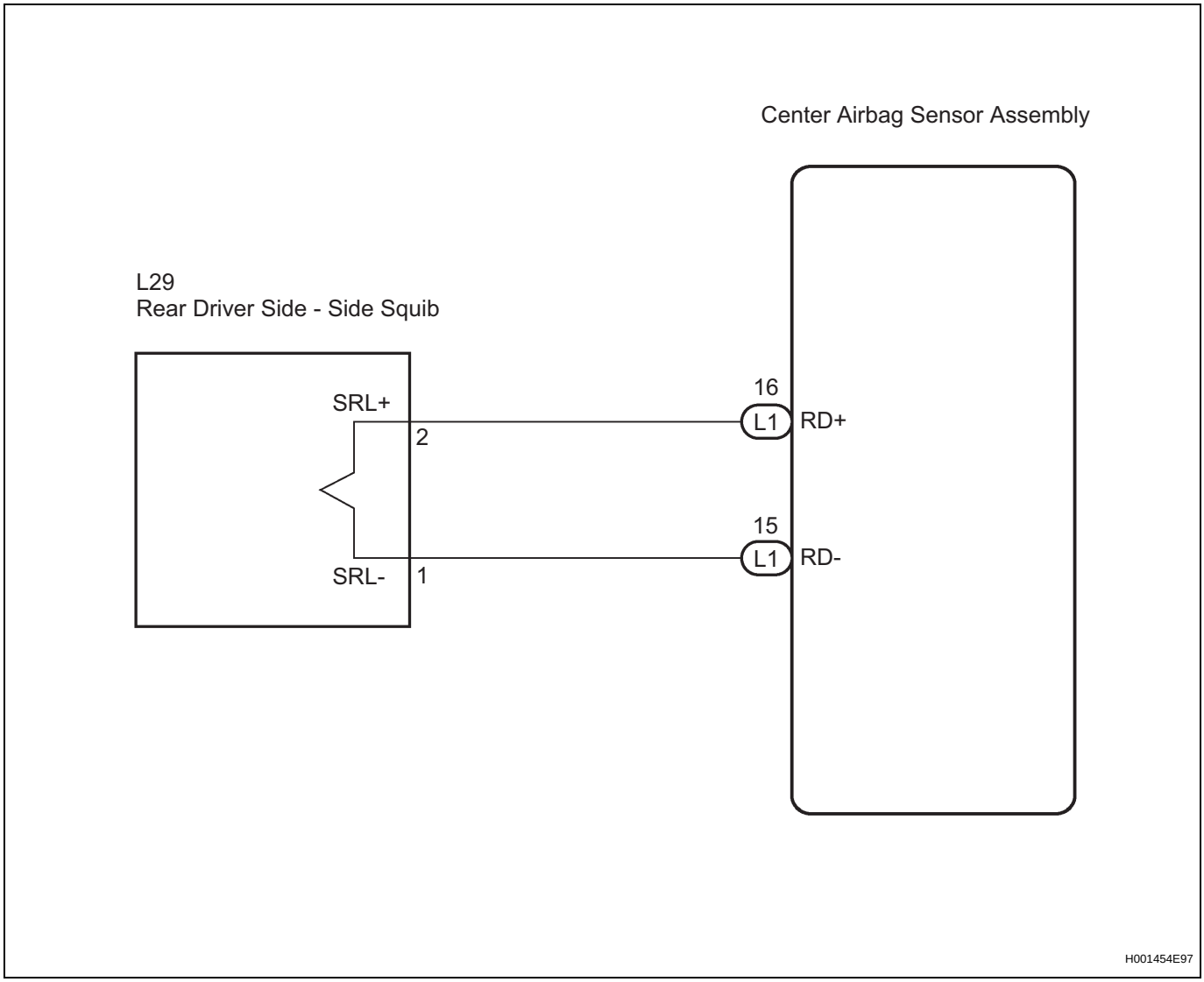

INSPECTION PROCEDURE

HINT:

- Perform the simulation method by selecting "check mode" (signal check) with the intelligent tester (See page RS-52).
- After selecting "check mode" (signal check), perform the simulation method by wiggling each connector of the airbag system or driving the vehicle on a city or rough road (See page RS-52).

RS

1	CHECK REAR SEAT SIDE AIRBAG ASSEMBLY LH (REAR DRIVER SIDE - SIDE SQUIB)

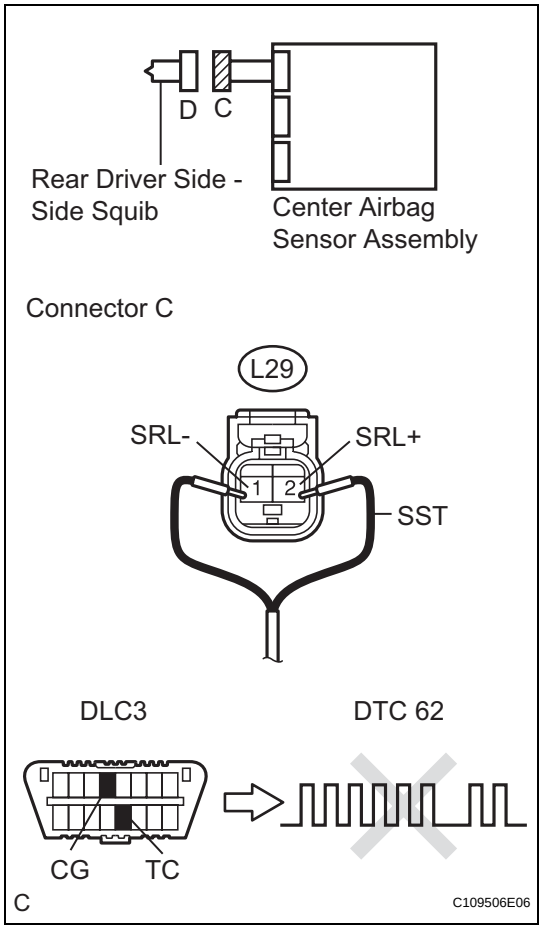

(a) Turn the engine switch off.
(b) Disconnect the negative (-) terminal cable from the battery, and wait for at least 90 seconds.
(c) Disconnect the connector from the rear seat side airbag assembly LH.
(d) Connect the black wire side of SST (resistance 2.1 Ω) to connector C.
CAUTION:
Never connect a tester to the rear seat side airbag assembly RH (rear driver side - side squib) for measurement, as this may lead to a serious injury due to airbag deployment.
NOTICE:
- **Do not forcibly insert the SST into the terminals of the connector when connecting the SST.**
- **Insert straight the SST into the terminals of the connector.**

SST 09843-18060

(e) Connect the negative (-) terminal cable to the battery, and wait for at least 2 seconds.
(f) Turn the engine switch on (IG), and wait for at least 60 seconds.
(g) Clear the DTCs stored in the memory (See page RS-49).
(h) Turn the engine switch off.
(i) Turn the engine switch on (IG), and wait for at least 60 seconds.
(j) Check the DTCs (See page RS-49).
OK:
DTC B1850, B1851, B1852, B1853, or 62 is not output.
HINT:
Codes other than DTC B1850, B1851, B1852, B1853, and 62 may be output at this time, but they are not related to this check.

OK → **REPLACE REAR SEAT SIDE AIRBAG ASSEMBLY LH (See page SE-113)**

NG

RS

2	CHECK FLOOR WIRE (REAR DRIVER SIDE - SIDE SQUIB CIRCUIT)

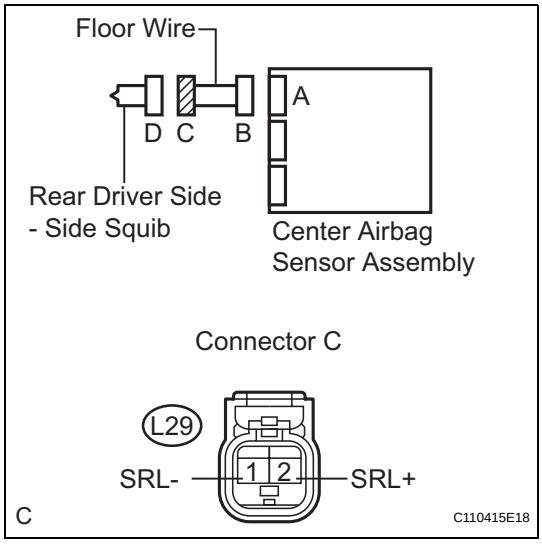

(a) Turn the engine switch off.
(b) Disconnect the negative (-) terminal cable from the battery, and wait for at least 90 seconds.
(c) Disconnect the SST from connector C.
(d) Disconnect the connectors from the center airbag sensor assembly.
(e) Check the short to B+ in the circuit.
  (1) Connect the negative (-) terminal cable to the battery, and wait for at least 2 seconds.
  (2) Turn the engine switch on (IG).
  (3) Measure the voltage according to the value(s) in the table below.
  Standard voltage

Tester Connection	Condition	Specified Condition
L29-2 (SRL+) - Body ground	Engine switch on (IG)	Below 1 V
L29-1 (SRL-) - Body ground	Engine switch on (IG)	Below 1 V

(f) Check the open in the circuit.
  (1) Turn the engine switch off.
  (2) Disconnect the negative (-) terminal cable from the battery, and wait for at least 90 seconds.
  (3) Measure the resistance according to the value(s) in the table below.
  Standard resistance

Tester Connection	Condition	Specified Condition
L29-2 (SRL+) - L29-1 (SRL-)	Always	Below 1 Ω

(g) Check the short to ground in the circuit.
  (1) Measure the resistance according to the value(s) in the table below.
  Standard resistance

Tester Connection	Condition	Specified Condition
L29-2 (SRL+) - Body ground	Always	1 MΩ or higher
L29-1 (SRL-) - Body ground	Always	1 MΩ or higher

(h) Check the short in the circuit.
  (1) Release the activation prevention mechanism built into connector B (See page RS-37).
  (2) Measure the resistance according to the value(s) in the table below.
  Standard resistance

Tester Connection	Condition	Specified Condition
L29-2 (SRL+) - L29-1 (SRL-)	Always	1 MΩ or higher

NG → **REPAIR OR REPLACE FLOOR WIRE**

OK

3	CHECK CENTER AIRBAG SENSOR ASSEMBLY

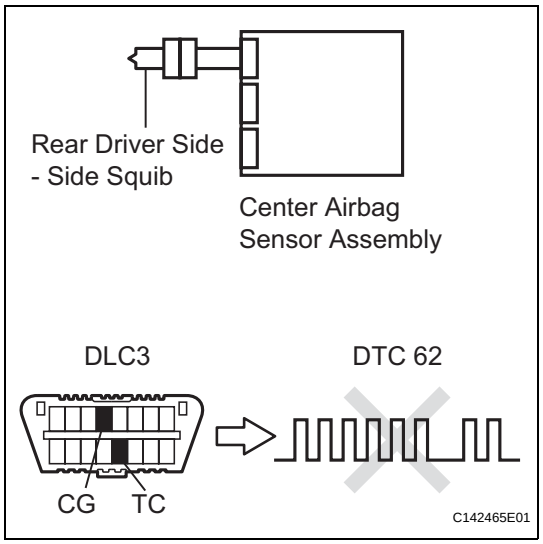

(a) Connect the connectors to the rear seat side airbag assembly LH and the center airbag sensor assembly.
(b) Connect the negative (-) terminal cable to the battery, and wait for at least 2 seconds.
(c) Turn the engine switch on (IG), and wait for at least 60 seconds.
(d) Clear the DTCs stored in the memory (See page RS-49).
(e) Turn the engine switch off.
(f) Turn the engine switch on (IG), and wait for at least 60 seconds.
(g) Check the DTCs (See page RS-49).
OK:
DTC B1850, B1851, B1852, B1853, or 62 is not output.
HINT:
Codes other than DTC B1850, B1851, B1852, B1853, and 62 may be output at this time, but they are not related to this check.

NG → **REPLACE CENTER AIRBAG SENSOR ASSEMBLY (See page RS-468)**

OK

USE SIMULATION METHOD TO CHECK (See page RS-37)

RS

RS

DTC	**B1855/63**	**Short in Rear Passenger Side - Side Squib Circuit**

DTC	**B1856/63**	**Open in Rear Passenger Side - Side Squib Circuit**

DTC	**B1857/63**	**Short to GND in Rear Passenger Side - Side Squib Circuit**

DTC	**B1858/63**	**Short to B+ in Rear Passenger Side - Side Squib Circuit**

DESCRIPTION

The rear passenger side - side squib circuit consists of the center airbag sensor assembly and the rear seat side airbag assembly RH.
The circuit instructs the SRS to deploy when deployment conditions are met.
These DTCs are recorded when a malfunction is detected in the rear passenger side - side squib circuit.

DTC No.	DTC Detecting Condition	Trouble Area
B1855/63	• The center airbag sensor assembly receives a line short circuit signal 5 times in the rear passenger side - side squib circuit during primary check. • Rear passenger side - side squib malfunction • Center airbag sensor assembly malfunction	• Floor wire No. 2 • Rear seat side airbag assembly RH (Rear passenger side - side squib) • Center airbag sensor assembly
B1856/63	• The center airbag sensor assembly receives an open circuit signal in the rear passenger side - side squib circuit for 2 seconds. • Rear passenger side - side squib malfunction • Center airbag sensor assembly malfunction	• Floor wire No. 2 • Rear seat side airbag assembly RH (Rear passenger side - side squib) • Center airbag sensor assembly
B1857/63	• The center airbag sensor assembly receives a short circuit to ground signal in the rear passenger side - side squib circuit for 0.5 seconds. • Rear passenger side - side squib malfunction • Center airbag sensor assembly malfunction	• Floor wire No. 2 • Rear seat side airbag assembly RH (Rear passenger side - side squib) • Center airbag sensor assembly
B1858/63	• The center airbag sensor assembly receives a short circuit to B+ signal in the rear passenger side - side squib circuit for 0.5 seconds. • Rear passenger side - side squib malfunction • Center airbag sensor assembly malfunction	• Floor wire No. 2 • Rear seat side airbag assembly RH (Rear passenger side - side squib) • Center airbag sensor assembly

RS

WIRING DIAGRAM

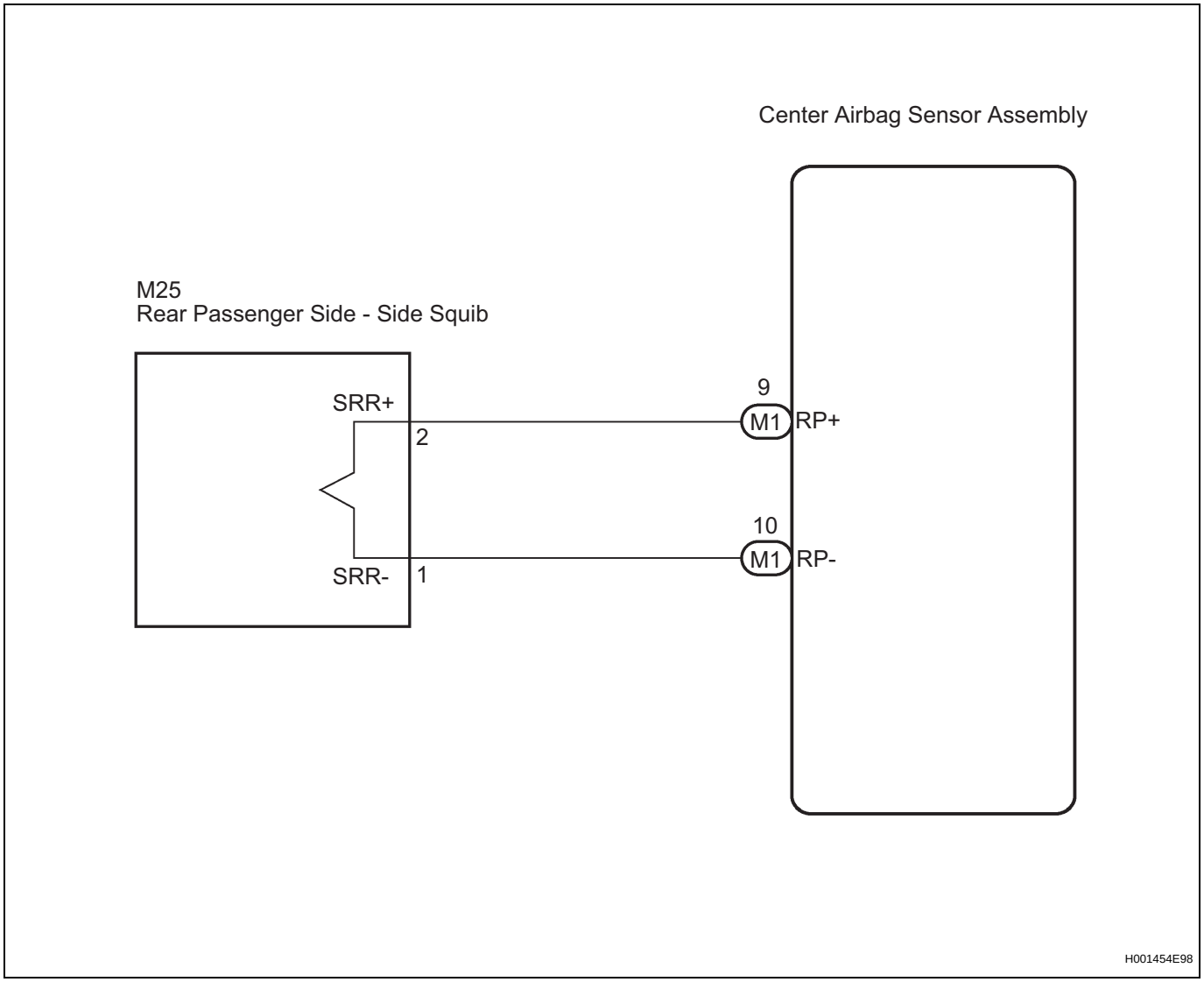

INSPECTION PROCEDURE

HINT:

- Change the intelligent tester to the "check mode" (signal check) with the intelligent tester (See page RS-52).
- After selecting the "check mode" (signal check), perform the simulation method by wiggling each connector of the airbag system or driving the vehicle on various types of roads (See page RS-52).

RS

1	CHECK REAR SEAT SIDE AIRBAG ASSEMBLY RH (REAR PASSENGER SIDE - SIDE SQUIB)

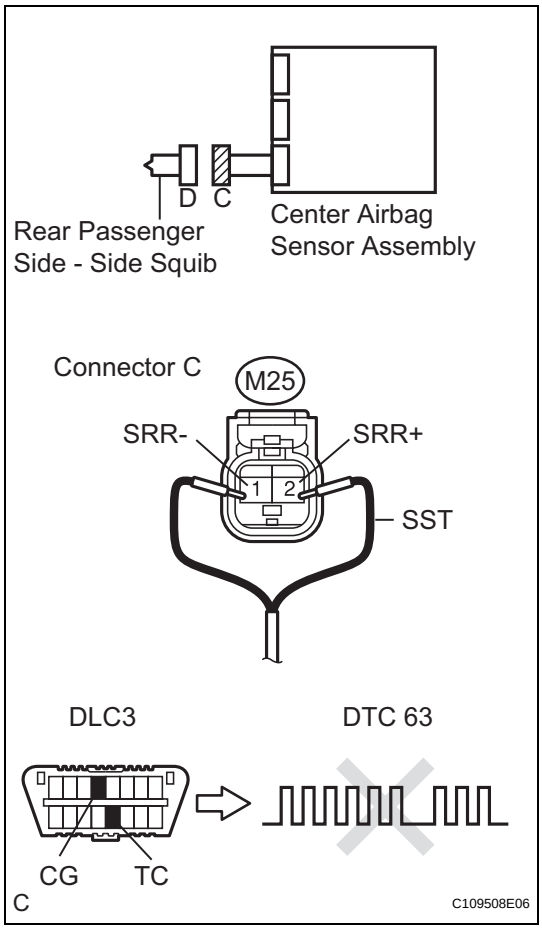

(a) Turn the engine switch off.
(b) Disconnect the negative (-) terminal cable from the battery, and wait for at least 90 seconds.
(c) Disconnect the connector from the rear seat side airbag RH.
(d) Connect the black wire side of SST (resistance 2.1 Ω) to connector C.
CAUTION:
Never connect a tester to the rear seat side airbag RH (rear passenger side - side squib) for measurement, as this may lead to a serious injury due to airbag deployment.
NOTICE:
- **Do not forcibly insert the SST into the terminals of the connector when connecting the SST.**
- **Insert straight the SST into the terminals of the connector.**

SST 09843-18060

(e) Connect the negative (-) terminal cable to the battery, and wait for at least 2 seconds.
(f) Turn the engine switch on (IG), and wait for at least 60 seconds.
(g) Clear the DTCs stored in the memory (See page RS-49).
(h) Turn the engine switch off.
(i) Turn the engine switch on (IG), and wait for at least 60 seconds.
(j) Check the DTCs (See page RS-49).
OK:
DTC B1855, B1856, B1857, B1858, or 63 is not output.
HINT:
Codes other than DTC B1855, B1856, B1857, B1858, and 63 may be output at this time, but they are not related to this check.

OK → **REPLACE REAR SEAT SIDE AIRBAG ASSEMBLY RH (See page SE-113)**

NG

RS

2 CHECK FLOOR WIRE NO. 2 (REAR PASSENGER SIDE - SIDE SQUIB CIRCUIT)

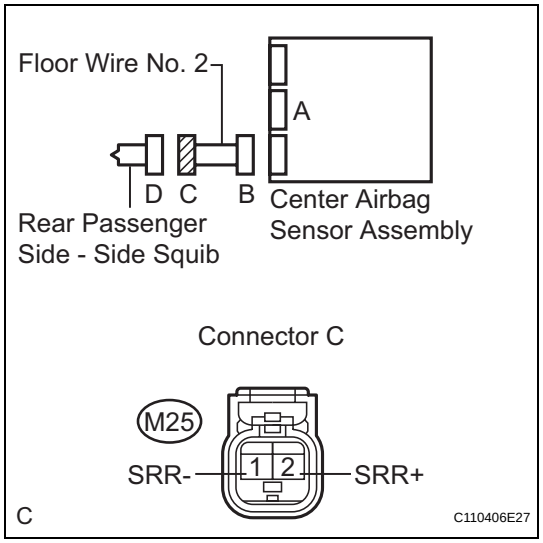

(a) Turn the engine switch off.
(b) Disconnect the negative (-) terminal cable from the battery, and wait for at least 90 seconds.
(c) Disconnect the SST (resistance 2.1 Ω) from the floor wire No. 2.
(d) Disconnect the connectors from the center airbag sensor assembly.
(e) Check the short to B+ in the circuit.
  (1) Connect the negative (-) terminal cable to the battery, and wait for at least 2 seconds.
  (2) Turn the engine switch on (IG).
  (3) Measure the voltage according to the value(s) in the table below.

Standard voltage

Tester Connection	Condition	Specified Condition
M25-2 (SRR+) - Body ground	Engine switch on (IG)	Below 1 V
M25-1 (SRR-) - Body ground	Engine switch on (IG)	Below 1 V

(f) Check the open in the circuit.
  (1) Turn the engine switch off.
  (2) Disconnect the negative (-) terminal cable from the battery, and wait for at least 90 seconds.
  (3) Measure the resistance according to the value(s) in the table below.

Standard resistance

Tester Connection	Condition	Specified Condition
M25-2 (SRR+) - M25-1 (SRR-)	Always	Below 1 Ω

(g) Check the short to ground in the circuit.
  (1) Measure the resistance according to the value(s) in the table below.

Standard resistance

Tester Connection	Condition	Specified Condition
M25-2 (SRR+) - Body ground	Always	1 MΩ or higher
M25-1 (SRR-) - Body ground	Always	1 MΩ or higher

(h) Check the short in the circuit.
  (1) Release the activation prevention mechanism built into connector B (See page RS-37).
  (2) Measure the resistance according to the value(s) in the table below.

Standard resistance

Tester Connection	Condition	Specified Condition
M25-2 (SRR+) - M25-1 (SRR-)	Always	1 MΩ or higher

NG → **REPAIR OR REPLACE FLOOR WIRE NO. 2**

OK

RS

3 CHECK CENTER AIRBAG SENSOR ASSEMBLY

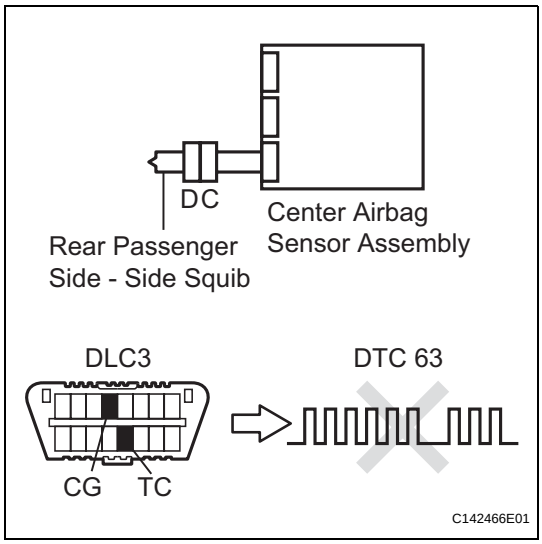

(a) Connect the connectors to the rear seat side airbag assembly RH and the center airbag sensor assembly.
(b) Connect the negative (-) terminal cable to the battery, and wait for at least 2 seconds.
(c) Turn the engine switch on (IG), and wait for at least 60 seconds.
(d) Clear the DTCs stored in the memory (See page RS-49).
(e) Turn the engine switch off.
(f) Turn the engine switch on (IG), and wait for at least 60 seconds.
(g) Check the DTCs (See page RS-49).
OK:
DTC B1855, B1856, B1857, B1858, or 63 is not output.
HINT:
Codes other than DTC B1855, B1856, B1857, B1858, and 63 may be output at this time, but they are not related to this check.

NG → **REPLACE CENTER AIRBAG SENSOR ASSEMBLY (See page RS-468)**

OK

USE SIMULATION METHOD TO CHECK (See page RS-37)

DTC	B1860/64	Short in Driver Side Knee Airbag Squib Circuit

DTC	B1861/64	Open in Driver Side Knee Airbag Squib Circuit

DTC	B1862/64	Short to GND in Driver Side Knee Airbag Squib Circuit

DTC	B1863/64	Short to B+ in Driver Side Knee Airbag Squib Circuit

DESCRIPTION

The driver side knee airbag squib circuit consists of the center airbag sensor assembly and the driver side knee airbag assembly.
This circuit instructs the SRS to deploy when deployment conditions are met.
These DTCs are recorded when a malfunction is detected in the driver side knee airbag squib circuit.

DTC No.	DTC Detecting Condition	Trouble Area
B1860/64	• The center airbag sensor assembly receives a line short circuit signal 5 times in the driver side knee airbag squib circuit during primary check. • Driver side knee airbag squib malfunction • Center airbag sensor assembly malfunction	• Instrument panel wire • Driver side knee airbag assembly (Driver side knee airbag squib) • Center airbag sensor assembly
B1861/64	• The center airbag sensor assembly receives an open circuit signal in the driver side knee airbag squib circuit for 2 seconds. • Driver side knee airbag squib malfunction • Center airbag sensor assembly malfunction	• Instrument panel wire • Driver side knee airbag assembly (Driver side knee airbag squib) • Center airbag sensor assembly
B1862/64	• The airbag sensor assembly center receives a short circuit to ground signal in the knee airbag (D side) squib circuit for 0.5 seconds. • Driver side knee airbag squib malfunction • Center airbag sensor assembly malfunction	• Instrument panel wire • Driver side knee airbag assembly (Driver side knee airbag squib) • Center airbag sensor assembly
B1863/64	• The airbag sensor assembly center receives a short circuit to B+ signal in the knee airbag (D side) squib circuit for 0.5 seconds. • Driver side knee airbag squib malfunction • Center airbag sensor assembly malfunction	• Instrument panel wire • Driver side knee airbag assembly (Driver side knee airbag squib) • Center airbag sensor assembly

RS

WIRING DIAGRAM

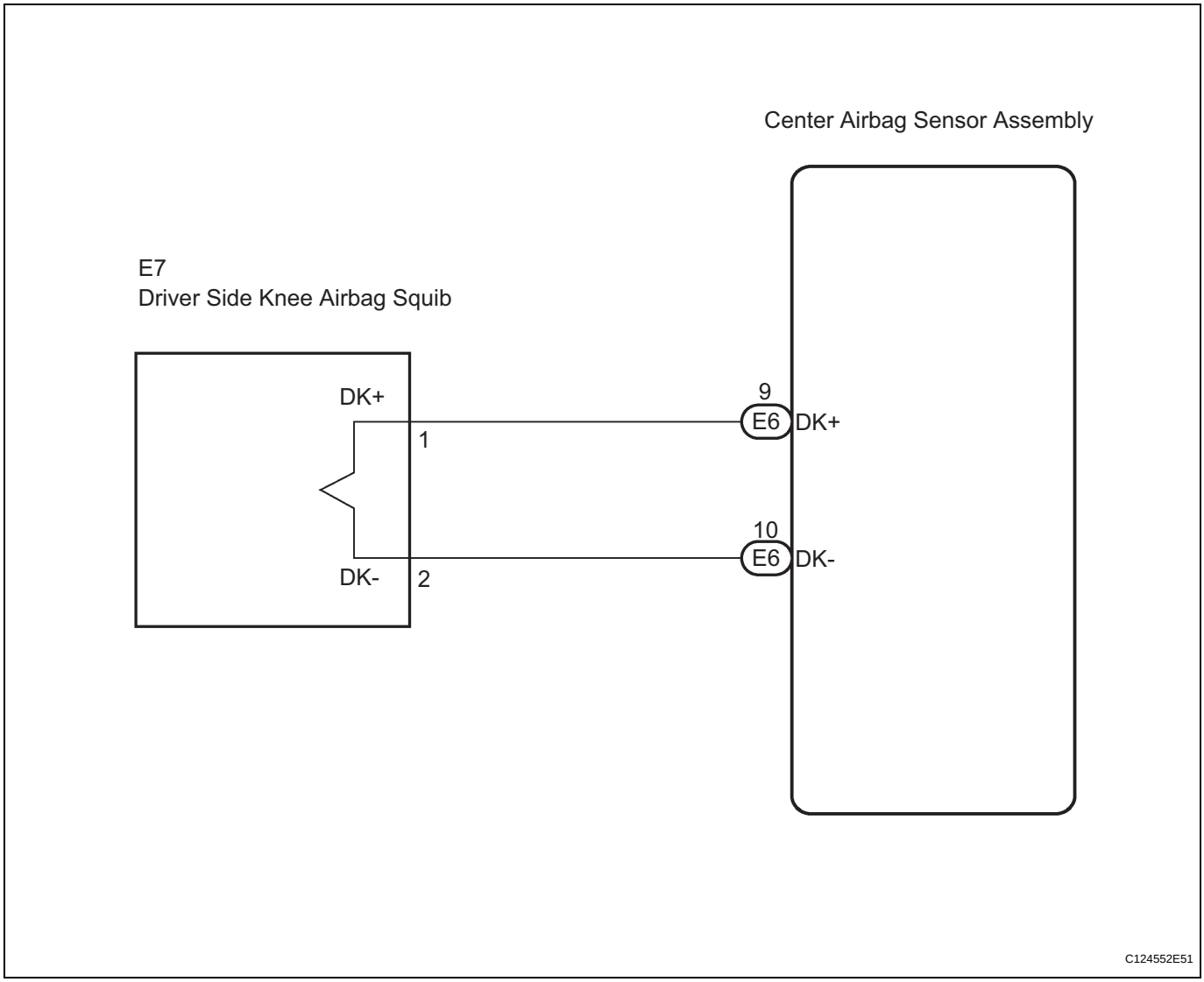

INSPECTION PROCEDURE

HINT:

- Perform the simulation method by selecting "check mode" (signal check) with the intelligent tester (See page RS-52).
- After selecting "check mode" (signal check), perform the simulation method by wiggling each connector of the airbag system or driving the vehicle on a city or rough road (See page RS-52).

RS

1	CHECK DRIVER SIDE KNEE AIRBAG ASSEMBLY (DRIVER SIDE KNEE AIRBAG SQUIB)

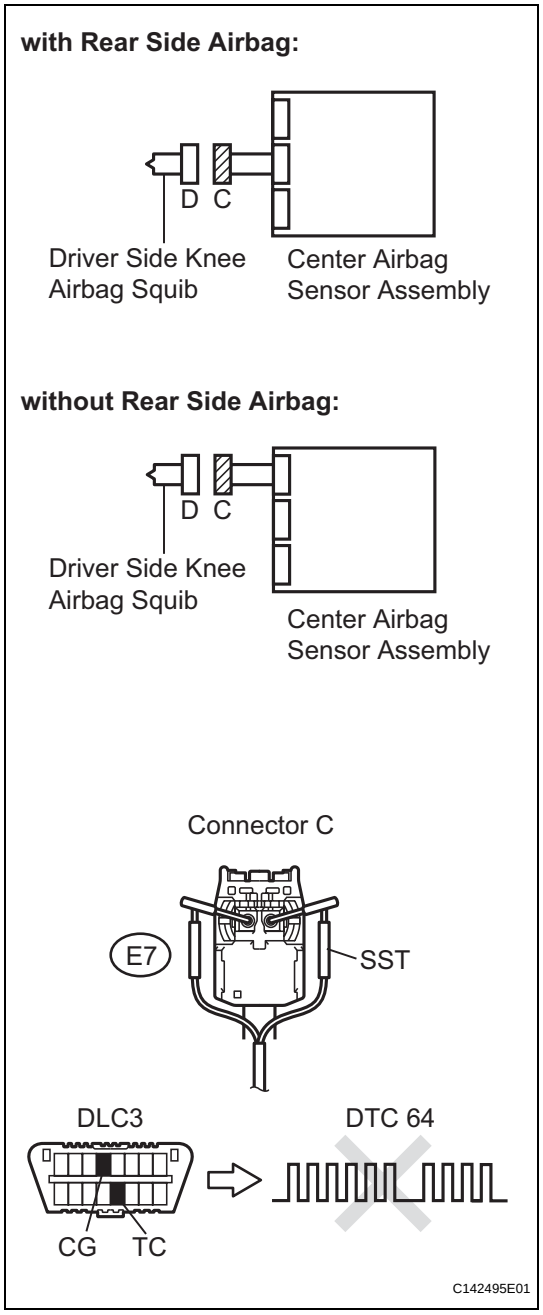

(a) Turn the engine switch off.
(b) Disconnect the negative (-) terminal cable from the battery, and wait for at least 90 seconds.
(c) Disconnect the connector from the driver side knee airbag assembly.
(d) Connect the white wire side of SST (resistance 2.1 Ω) to connector C.
CAUTION:
Never connect the tester to the driver side knee airbag assembly (driver side knee airbag squib) for measurement, as this may lead to a serious injury due to airbag deployment.
NOTICE:
- **Do not forcibly insert the SST into the terminals of the connector when connecting the SST.**
- **Insert straight the SST into the terminals of the connector.**

SST 09843-18060

(e) Connect the negative (-) terminal cable to the battery, and wait for at least 2 seconds.
(f) Turn the engine switch on (IG), and wait for at least 60 seconds.
(g) Clear the DTCs stored in the memory (See page RS-49).
(h) Turn the engine switch off.
(i) Turn the engine switch on (IG), and wait for at least 60 seconds.
(j) Check the DTCs (See page RS-49).
OK:
DTC B1860, B1861, B1862, B1863, or 64 is not output.
HINT:
Codes other than DTC B1860, B1861, B1862, B1863, and 64 may be output at this time, but they are not related to this check.

OK → **REPLACE DRIVER SIDE KNEE AIRBAG ASSEMBLY (See page RS-385)**

NG

2	CHECK CONNECTOR

(a) Turn the engine switch off.
(b) Disconnect the negative (-) terminal cable from the battery, and wait for at least 90 seconds.
(c) Disconnect the SST from connector C.
(d) Check that the instrument panel wire connector (on the driver side knee airbag assembly side) is not damaged.

OK:
The lock button is not disengaged, or the claw of the lock is not deformed or damaged.

NG → **REPAIR OR REPLACE INSTRUMENT PANEL WIRE**

RS

OK

3 CHECK INSTRUMENT PANEL WIRE (DRIVER SIDE KNEE AIRBAG SQUIB CIRCUIT)

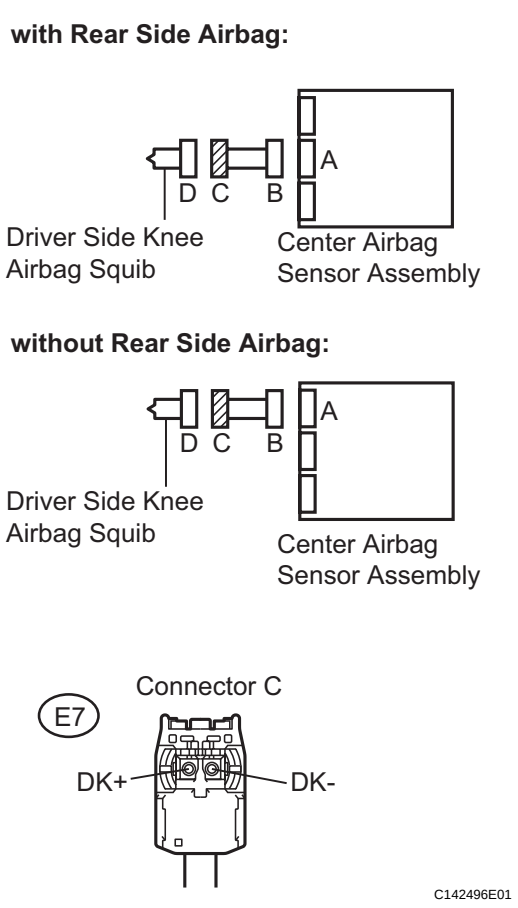

(a) Disconnect the connectors from the center airbag sensor assembly.

(b) Check for a short to B+ in the circuit.
  (1) Connect the negative (-) terminal cable to the battery, and wait for at least 2 seconds.
  (2) Turn the engine switch on (IG).
  (3) Measure the voltage according to the value(s) in the table below.
  Standard voltage

Tester Connection	Condition	Specified Condition
E7-1 (DK+) - Body ground	Engine switch on (IG)	Below 1 V
E7-2 (DK-) - Body ground	Engine switch on (IG)	Below 1 V

(c) Check for an open in the circuit.
  (1) Turn the engine switch off.
  (2) Disconnect the negative (-) terminal cable from the battery, and wait for at least 90 seconds.
  (3) Measure the resistance according to the value(s) in the table below.
  Standard resistance

Tester Connection	Condition	Specified Condition
E7-1 (DK+) - E7-2 (DK-)	Always	Below 1 Ω

(d) Check for a short to ground in the circuit.
  (1) Measure the resistance according to the value(s) in the table below.
  Standard resistance

Tester Connection	Condition	Specified Condition
E7-1 (DK+) - Body ground	Always	1 MΩ or higher
E7-2 (DK-) - Body ground	Always	1 MΩ or higher

(e) Check for a short in the circuit.
  (1) Release the activation prevention mechanism built into connector B (See page RS-37).
  (2) Measure the resistance according to the value(s) in the table below.
  Standard resistance

Tester Connection	Condition	Specified Condition
E7-1 (DK+) - E7-2 (DK-)	Always	1 MΩ or higher

NG → **REPAIR OR REPLACE INSTRUMENT PANEL WIRE**

OK

RS

4 CHECK CENTER AIRBAG SENSOR ASSEMBLY

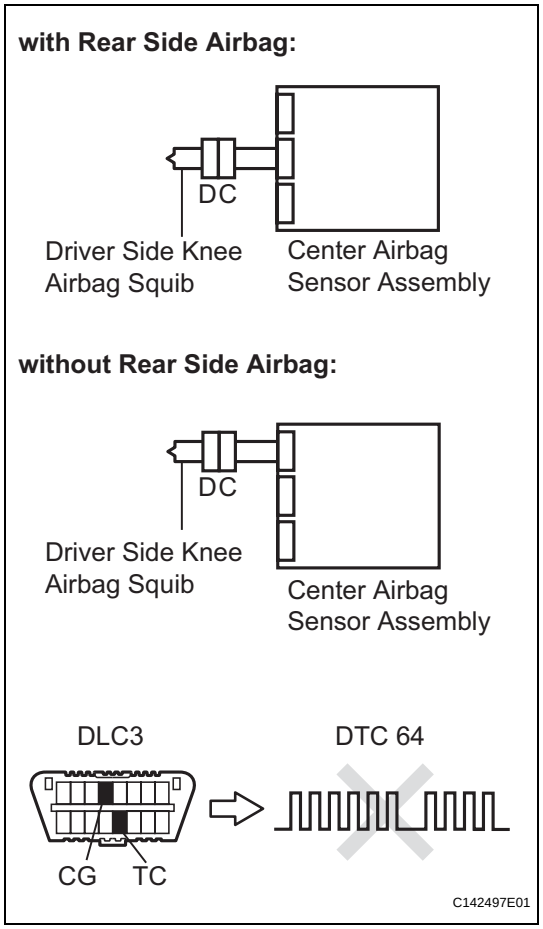

(a) Connect the connectors to the driver side knee airbag assembly and the center airbag sensor assembly.
(b) Connect the negative (-) terminal cable to the battery, and wait for at least 2 seconds.
(c) Turn the engine switch on (IG), and wait for at least 60 seconds.
(d) Clear the stored DTCs in the memory (See page RS-49).
(e) Turn the engine switch off.
(f) Turn the engine switch on (IG), and wait for at least 60 seconds.
(g) Check the DTCs (See page RS-49).
OK:
DTC B1860, B1861, B1862, B1863, or 64 is not output.
HINT:
Codes other than DTC B1860, B1861, B1862, B1863, and 64 may be output at this time, but they are not related to this check.

NG → **REPLACE CENTER AIRBAG SENSOR ASSEMBLY (See page RS-468)**

OK

USE SIMULATION METHOD TO CHECK (See page RS-37)

DTC	**B1865/65**	**Short in Front Passenger Side Knee Airbag Squib Circuit**

DTC	**B1866/65**	**Open in Front Passenger Side Knee Airbag Squib Circuit**

DTC	**B1867/65**	**Short to GND in Front Passenger Side Knee Airbag Squib Circuit**

DTC	**B1868/65**	**Short to B+ in Front Passenger Side Knee Airbag Squib Circuit**

DESCRIPTION

The front passenger side knee airbag squib circuit consists of the center airbag sensor assembly and the front passenger side knee airbag assembly.
The circuit instructs the SRS to deploy when deployment conditions are met.
These DTCs are recorded when a malfunction is detected in the front passenger side knee airbag squib circuit.

DTC No.	DTC Detecting Condition	Trouble Area
B1865/65	• The center airbag sensor assembly receives a line short circuit signal 5 times in the front passenger side knee airbag squib circuit during primary check. • Front passenger side knee airbag squib malfunction • Center airbag sensor assembly malfunction	• Instrument panel wire • Front passenger side knee airbag assembly (Front passenger side knee airbag squib) • Center airbag sensor assembly
B1866/65	• The center airbag sensor assembly receives an open circuit signal in the front passenger side knee airbag squib circuit for 2 seconds. • Front passenger side knee airbag squib malfunction • Center airbag sensor assembly malfunction	• Instrument panel wire • Front passenger side knee airbag assembly (Front passenger side knee airbag squib) • Center airbag sensor assembly
B1867/65	• The center airbag sensor assembly receives a short circuit to ground signal in the front passenger side knee airbag squib circuit for 0.5 seconds. • Front passenger side knee airbag squib malfunction • Center airbag sensor assembly malfunction	• Instrument panel wire • Front passenger side knee airbag assembly (Front passenger side knee airbag squib) • Center airbag sensor assembly
B1868/65	• The center airbag sensor assembly receives a short circuit to B+ signal in the front passenger side knee airbag squib circuit for 0.5 seconds. • Front passenger side knee airbag squib malfunction • Center airbag sensor assembly malfunction	• Instrument panel wire • Front passenger side knee airbag assembly (Front passenger side knee airbag squib) • Center airbag sensor assembly

RS

WIRING DIAGRAM

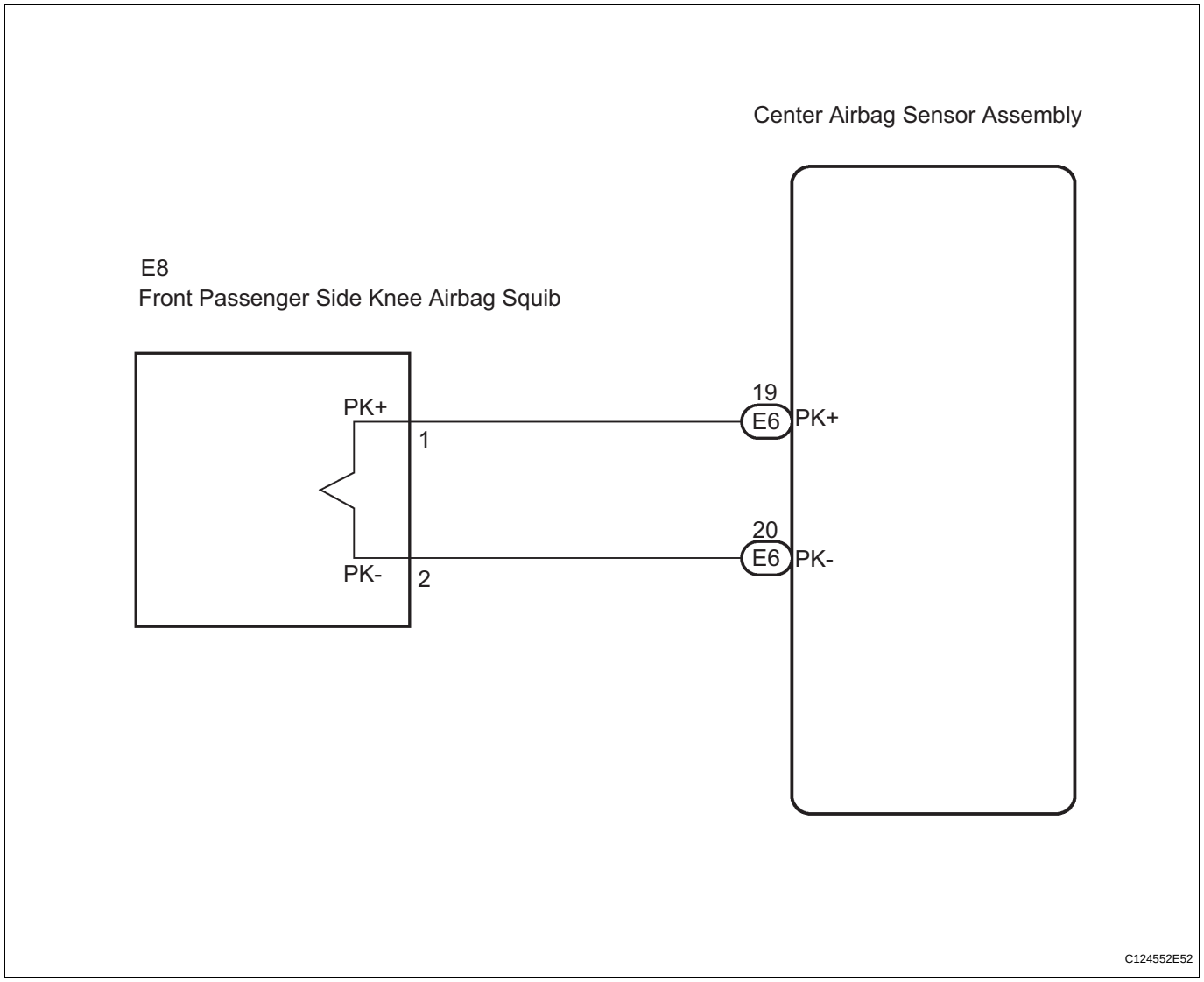

INSPECTION PROCEDURE

HINT:

- Perform the simulation method by selecting the "check mode" (signal check) with the intelligent tester (See page RS-52).
- After selecting the "check mode" (signal check), perform the simulation method by wiggling each connector of the airbag system or driving the vehicle on a city or rough road (See page RS-52).

RS

1	CHECK FRONT PASSENGER SIDE KNEE AIRBAG ASSEMBLY (FRONT PASSENGER SIDE KNEE AIRBAG SQUIB)

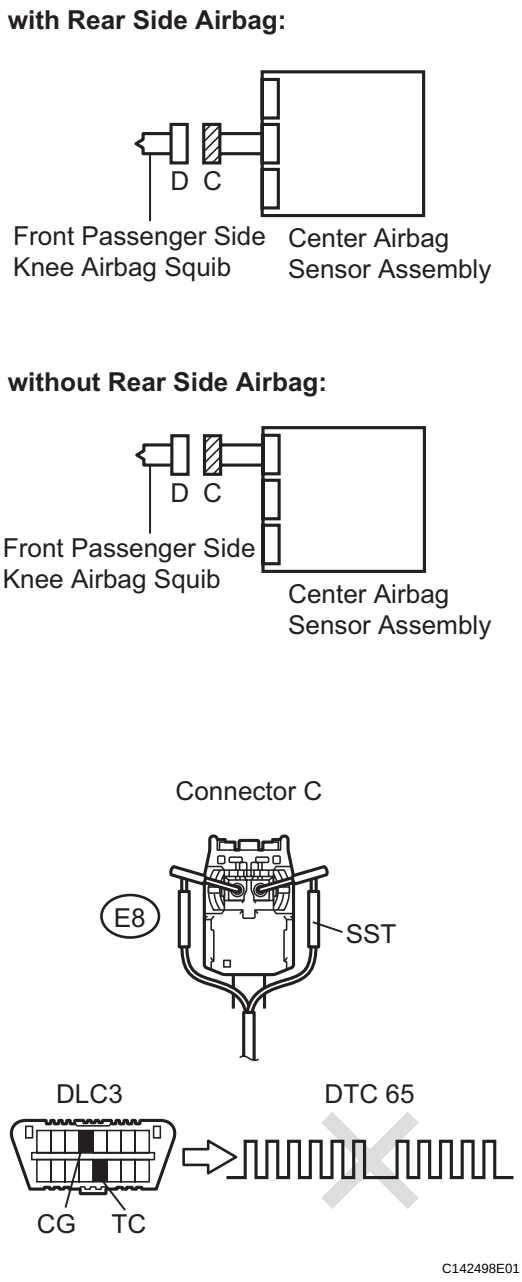

(a) Turn the engine switch off.
(b) Disconnect the negative (-) terminal cable from the battery, and wait for at least 90 seconds.
(c) Disconnect the connector from the front passenger side knee airbag assembly.
(d) Connect the white wire side of SST (resistance 2.1 Ω) to connector C.
CAUTION:
Never connect a tester to the front passenger side knee airbag assembly (front passenger side knee airbag squib) for measurement, as this may lead to a serious injury due to airbag deployment.
NOTICE:
- **Do not forcibly insert the SST into the terminals of the connector when connecting the SST.**
- **Insert straight the SST into the terminals of the connector.**

SST 09843-18060
(e) Connect the negative (-) terminal cable to the battery, and wait for at least 2 seconds.
(f) Turn the engine switch on (IG), and wait for at least 60 seconds.
(g) Clear the DTCs stored in the memory (See page RS-49).
(h) Turn the engine switch off.
(i) Turn the engine switch on (IG), and wait for at least 60 seconds.
(j) Check the DTCs (See page RS-49).
OK:
DTC B1865, B1866, B1867, B1868, or 65 is not output.
HINT:
Codes other than DTC B1865, B1866, B1867, B1868, and 65 may be output at this time, but they are not related to this check.

OK → **REPLACE FRONT PASSENGER SIDE KNEE AIRBAG ASSEMBLY (See page RS-412)**

NG

2	CHECK CONNECTOR

(a) Turn the engine switch off.
(b) Disconnect the negative (-) terminal cable from the battery, and wait for at least 90 seconds.
(c) Disconnect the SST from connector C.
(d) Check that the instrument panel wire connector (on the front passenger side knee airbag assembly side) is not damaged.

OK:
The lock button is not disengaged, or the claw of the lock is not deformed or damaged.

NG → **REPAIR OR REPLACE INSTRUMENT PANEL WIRE**

OK

3	CHECK INSTRUMENT PANEL WIRE (FRONT PASSENGER KNEE AIRBAG SQUIB CIRCUIT)

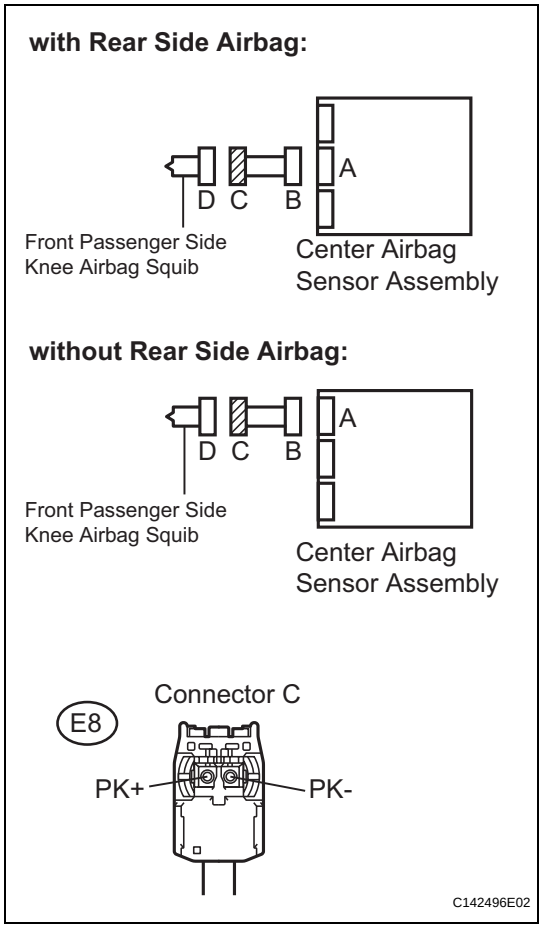

(a) Disconnect the connectors from the center airbag sensor assembly.

(b) Check for a short to B+ in the circuit.
  (1) Connect the negative (-) terminal cable to the battery, and wait for at least 2 seconds.
  (2) Turn the engine switch on (IG).
  (3) Measure the voltage according to the value(s) in the table below.
  Standard voltage

Tester Connection	Condition	Specified Condition
E8-1 (PK+) - Body ground	Engine switch on (IG)	Below 1 V
E8-2 (PK-) - Body ground	Engine switch on (IG)	Below 1 V

(c) Check for an open in the circuit.
  (1) Turn the engine switch off.
  (2) Disconnect the negative (-) terminal cable from the battery, and wait for at least 90 seconds.
  (3) Measure the resistance according to the value(s) in the table below.
  Standard resistance

Tester Connection	Condition	Specified Condition
E8-1 (PK+) - E8-2 (PK-)	Always	Below 1 Ω

(d) Check for a short to ground in the circuit.
  (1) Measure the resistance according to the value(s) in the table below.
  Standard resistance

Tester Connection	Condition	Specified Condition
E8-1 (PK+) - Body ground	Always	1 MΩ or higher
E8-2 (PK-) - Body ground	Always	1 MΩ or higher

(e) Check for a short in the circuit.
  (1) Release the activation prevention mechanism built into connector B (See page RS-37).
  (2) Measure the resistance according to the value(s) in the table below.
  Standard resistance

Tester Connection	Condition	Specified Condition
E8-1 (PK+) - E8-2 (PK-)	Always	1 MΩ or higher

NG → **REPAIR OR REPLACE INSTRUMENT PANEL WIRE**

OK

RS

4 CHECK CENTER AIRBAG SENSOR ASSEMBLY

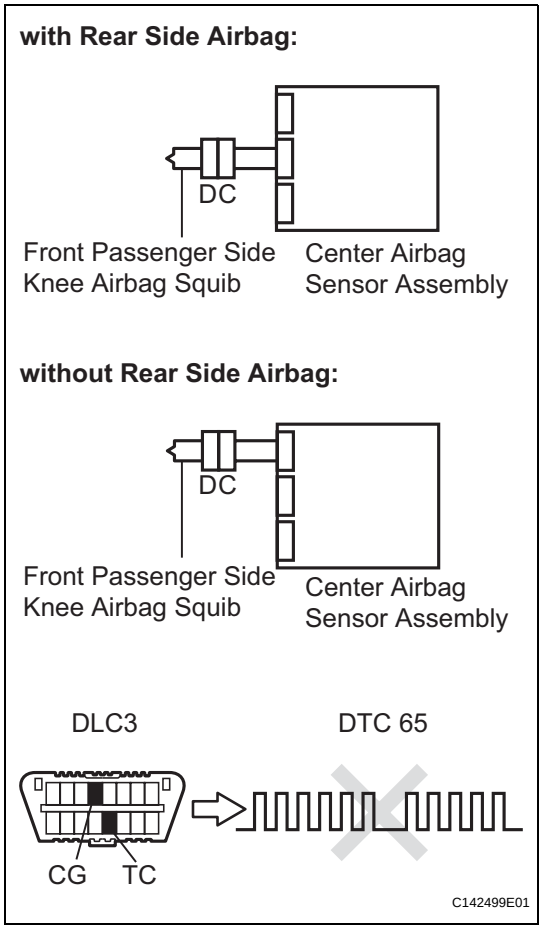

(a) Connect the connectors to the front passenger side knee airbag assembly and the center airbag sensor assembly.
(b) Connect the negative (-) terminal cable to the battery, and wait for at least 2 seconds.
(c) Turn the engine switch on (IG), and wait for at least 60 seconds.
(d) Clear the DTCs stored in the memory (See page RS-49).
(e) Turn the engine switch off.
(f) Turn the engine switch on (IG), and wait for at least 60 seconds.
(g) Check the DTCs (See page RS-49).
OK:
DTC B1865, B1866, B1867, B1868 or 65 is not output.
HINT:
Codes other than DTC B1865, B1866, B1867, B1868 and 65 may be output at this time, but they are not related to this check.

NG → **REPLACE CENTER AIRBAG SENSOR ASSEMBLY (See page RS-468)**

OK

USE SIMULATION METHOD TO CHECK (See page RS-37)

DTC	B1900/73	Short in Front Driver Side Pretensioner Squib Circuit

DTC	B1901/73	Open in Front Driver Side Pretensioner Squib Circuit

DTC	B1902/73	Short to GND in Front Driver Side Pretensioner Squib Circuit

DTC	B1903/73	Short to B+ in Front Driver Side Pretensioner Squib Circuit

DESCRIPTION

The front driver side pretensioner squib circuit consists of the center airbag sensor assembly and the front seat outer belt assembly LH.
This circuit instructs the SRS to deploy when deployment conditions are met.
These DTCs are recorded when a malfunction is detected in the front driver side pretensioner squib circuit.

DTC No.	DTC Detection Condition	Trouble Area
B1900/73	• The center airbag sensor assembly receives a line short circuit signal 5 times in the front driver side pretensioner squib circuit during primary check. • Front driver side pretensioner squib malfunction • Center airbag sensor assembly malfunction	• Floor wire • Front seat outer belt assembly LH (Front driver side pretensioner squib) • Center airbag sensor assembly
B1901/73	• The center airbag sensor assembly receives an open circuit signal in the front driver side pretensioner squib circuit for 2 seconds. • Front driver side pretensioner squib malfunction • Center airbag sensor assembly malfunction	• Floor wire • Front seat outer belt assembly LH (Front driver side pretensioner squib) • Center airbag sensor assembly
B1902/73	• The center airbag sensor assembly receives a short circuit to ground signal in the front driver side pretensioner squib circuit for 0.5 seconds. • Front driver side pretensioner squib malfunction • Center airbag sensor assembly malfunction	• Floor wire • Front seat outer belt assembly LH (Front driver side pretensioner squib) • Center airbag sensor assembly
B1903/73	• The center airbag sensor assembly receives a short circuit to B+ signal in the front driver side pretensioner squib circuit for 0.5 seconds. • Front driver side pretensioner squib malfunction • Center airbag sensor assembly malfunction	• Floor wire • Front seat outer belt assembly LH (Front driver side pretensioner squib) • Center airbag sensor assembly

RS

WIRING DIAGRAM

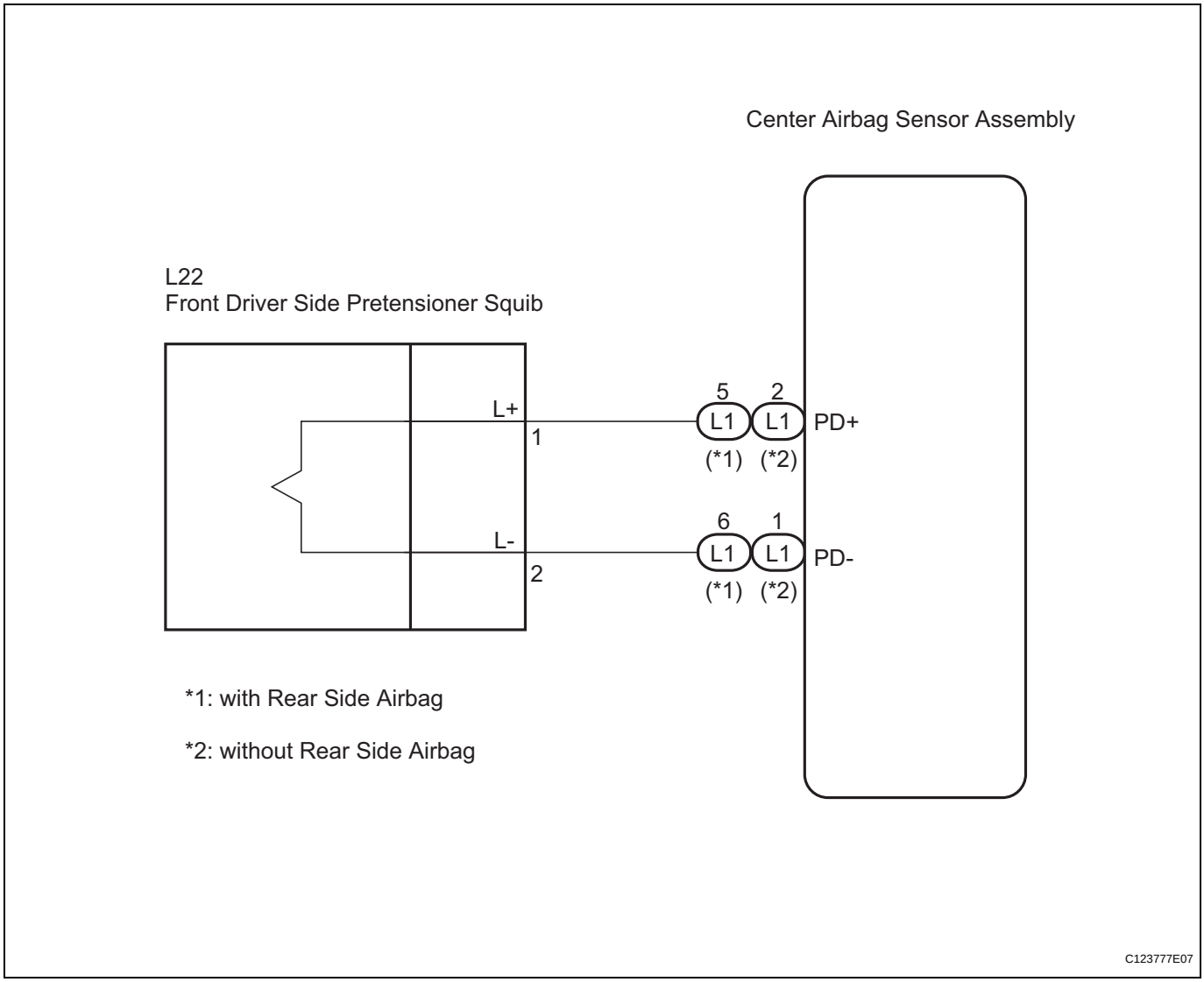

INSPECTION PROCEDURE

HINT:

- Perform the simulation method by selecting "check mode" (signal check) with the intelligent tester (See page RS-52).
- After selecting "check mode" (signal check), perform the simulation method by wiggling each connector of the airbag system or driving the vehicle on a city or rough road (See page RS-52).

RS

1	CHECK FRONT SEAT OUTER BELT ASSEMBLY LH (FRONT DRIVER SIDE PRETENSIONER SQUIB)

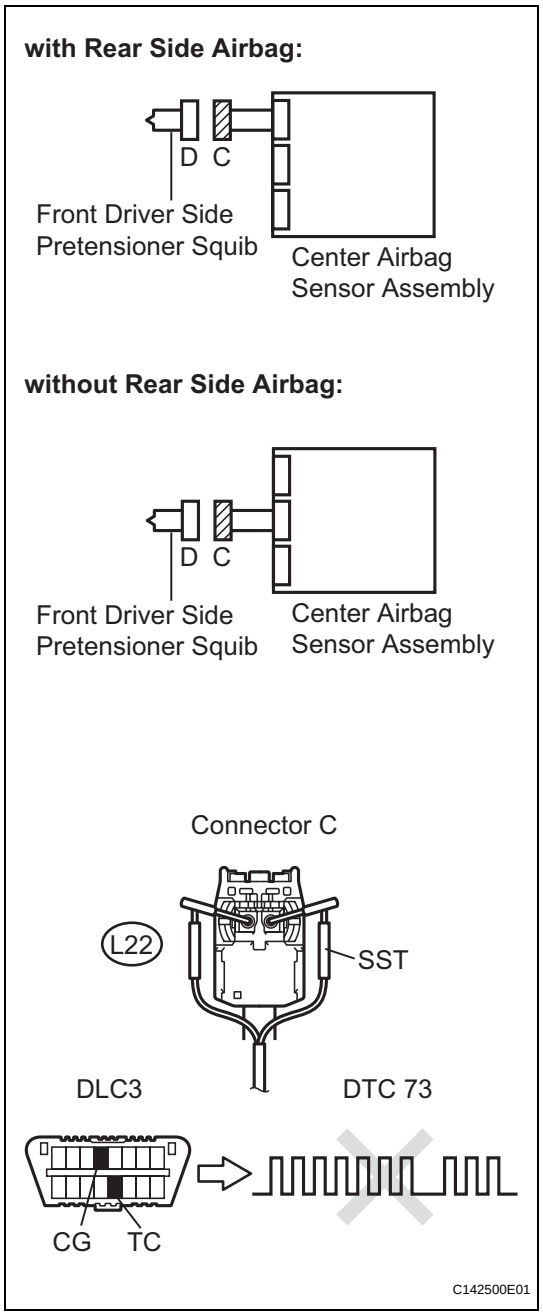

(a) Turn the engine switch off.
(b) Disconnect the negative (-) terminal cable from the battery, and wait for at least 90 seconds.
(c) Disconnect the connectors from the front seat outer belt assembly LH.
(d) Connect the white wire side of SST (resistance 2.1 Ω) to connector C.
CAUTION:
Never connect the tester to the front seat outer belt assembly LH (front driver side pretensioner squib) for measurement, as this may lead to a serious injury due to airbag deployment.
NOTICE:
- **Do not forcibly insert the SST into the terminals of the connector when connecting.**
- **Insert straight the SST into the terminals of the connector.**

SST 09843-18060

(e) Connect the negative (-) terminal cable to the battery, and wait for at least 2 seconds.
(f) Turn the engine switch on (IG), and wait for at least 60 seconds.
(g) Clear the DTCs stored in the memory (See page RS-49).
(h) Turn the engine switch off.
(i) Turn the engine switch on (IG), and wait for at least 60 seconds.
(j) Check the DTCs (See page RS-49).
OK:
DTC B1900, B1901, B1902, B1903, or 73 is not output.
HINT:
Codes other than DTC B1900, B1901, B1902, B1903, and 73 may be output at this time, but they are not related to this check.

OK → **REPLACE FRONT SEAT OUTER BELT ASSEMBLY LH (See page SB-27)**

NG

2	CHECK CONNECTOR

(a) Turn the engine switch off.
(b) Disconnect the negative (-) terminal cable from the battery, and wait for at least 90 seconds.
(c) Disconnect the SST from connector C.
(d) Check that the floor wire connector (on the front seat outer belt assembly LH side) is not damaged.

OK:
The lock button is not disengaged, or the claw of the lock is not deformed or damaged.

NG → **REPAIR OR REPLACE FLOOR WIRE**

RS

OK

3 CHECK FLOOR WIRE (FRONT DRIVER SIDE PRETENSIONER SQUIB CIRCUIT)

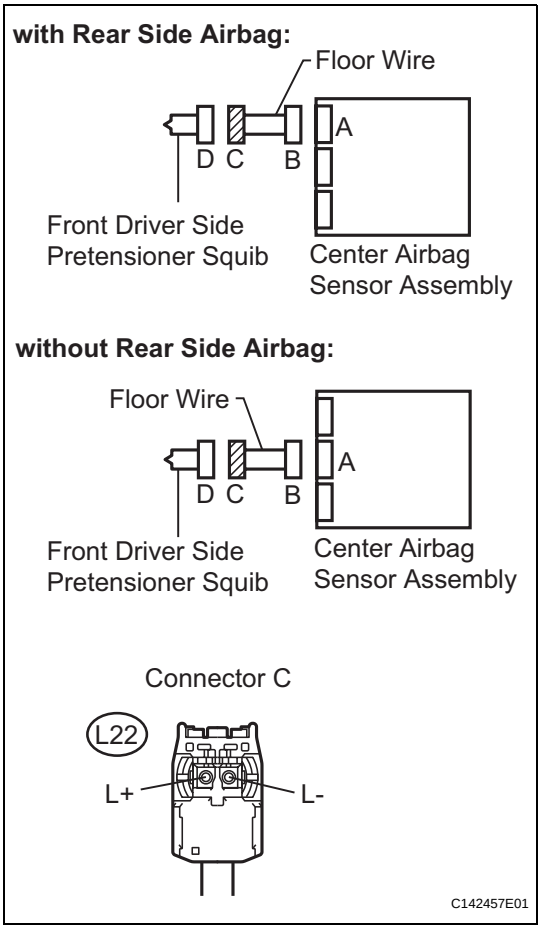

(a) Disconnect the connectors from the center airbag sensor assembly.

(b) Check for a short to B+ in the circuit.
  (1) Connect the negative (-) terminal cable to the battery, and wait for at least 2 seconds.
  (2) Turn the engine switch on (IG).
  (3) Measure the voltage according to the value(s) in the table below.
  Standard voltage

Tester Connection	Condition	Specified Condition
L22-1 (L+) - Body ground	Engine switch on (IG)	Below 1 V
L22-2 (L-) - Body ground	Engine switch on (IG)	Below 1 V

(c) Check for an open in the circuit.
  (1) Turn the engine switch off.
  (2) Disconnect the negative (-) terminal cable from the battery, and wait for at least 90 seconds.
  (3) Measure the resistance according to the value(s) in the table below.
  Standard resistance

Tester Connection	Condition	Specified Condition
L22-1 (L+) - L22-2 (L-)	Always	Below 1 Ω

(d) Check for a short to ground in the circuit.
  (1) Measure the resistance according to the value(s) in the table below.
  Standard resistance

Tester Connection	Condition	Specified Condition
L22-1 (L+) - Body ground	Always	1 MΩ or higher
L22-2 (L-) - Body ground	Always	1 MΩ or higher

(e) Check for a short in the circuit.
  (1) Release the activation prevention mechanism built into connector B (See page RS-37).
  (2) Measure the resistance according to the value(s) in the table below.
  Standard resistance

Tester Connection	Condition	Specified Condition
L22-1 (L+) - L22-2 (L-)	Always	1 MΩ or higher

NG → **REPAIR OR REPLACE FLOOR WIRE**

OK

4	CHECK CENTER AIRBAG SENSOR ASSEMBLY

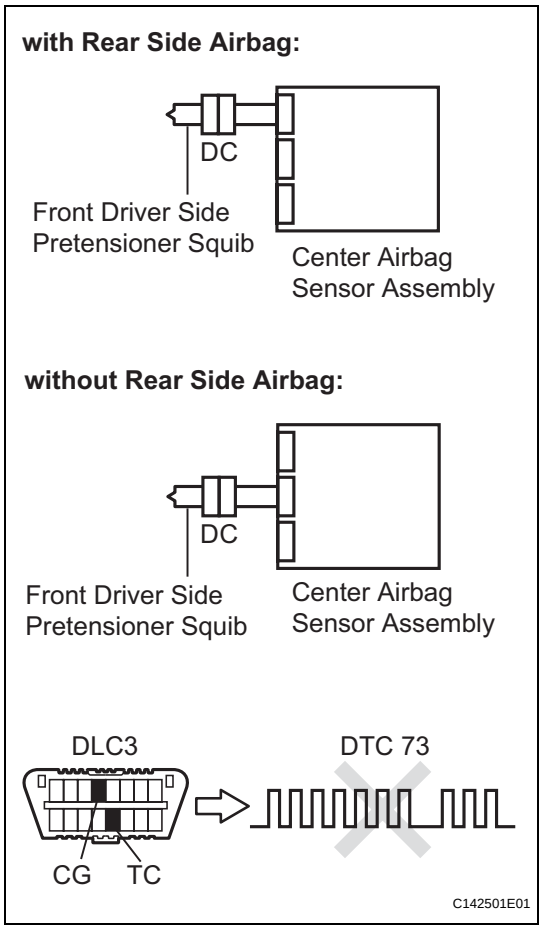

(a) Connect the connectors to the front seat outer belt assembly LH and the center airbag sensor assembly.
(b) Connect the negative (-) terminal cable to the battery, and wait for at least 2 seconds.
(c) Turn the engine switch on (IG), and wait for at least 60 seconds.
(d) Clear the DTCs stored in the memory (See page RS-49).
(e) Turn the engine switch off.
(f) Turn the engine switch on (IG), and wait for at least 60 seconds.
(g) Check the DTCs (See page RS-49).
OK:
DTC B1900, B1901, B1902, B1903, or 73 is not output.
HINT:
Codes other than DTC B1900, B1901, B1902, B1903, or 73 may be output at this time, but they are not related to this check.

NG → **REPLACE CENTER AIRBAG SENSOR ASSEMBLY (See page RS-468)**

OK

USE SIMULATION METHOD TO CHECK (See page RS-37)

RS

RS

DTC	**B1905/74**	**Short in Front Passenger Side Pretensioner Squib Circuit**

DTC	**B1906/74**	**Open in Front Passenger Side Pretensioner Squib Circuit**

DTC	**B1907/74**	**Short to GND in Front Passenger Side Pretensioner Squib Circuit**

DTC	**B1908/74**	**Short to B+ in Front Passenger Side Front Pretensioner Squib Circuit**

DESCRIPTION

The front passenger side pretensioner squib circuit consists of the center airbag sensor assembly and the front seat outer belt assembly RH.
This circuit instructs the SRS to deploy when deployment conditions are met.
These DTCs are recorded when a malfunction is detected in the front passenger side pretensioner squib circuit.

DTC No.	DTC Detection Condition	Trouble Area
B1905/74	• The center airbag sensor assembly receives a line short circuit signal 5 times in the front passenger side pretensioner squib circuit during primary check. • Front passenger side pretensioner squib malfunction • Center airbag sensor assembly malfunction	• Floor wire No. 2 • Front seat outer belt assembly RH (Front passenger side pretensioner squib) • Center airbag sensor assembly
B1906/74	• The center airbag sensor assembly receives an open circuit signal in the front passenger side pretensioner squib circuit for 2 seconds. • Front passenger side pretensioner squib malfunction • Center airbag sensor assembly malfunction	• Floor wire No. 2 • Front seat outer belt assembly RH (Front passenger side pretensioner squib) • Center airbag sensor assembly
B1907/74	• The center airbag sensor assembly receives a short circuit to ground signal in the front passenger side pretensioner squib circuit for 0.5 seconds. • Front passenger side pretensioner squib malfunction • Center airbag sensor assembly malfunction	• Floor wire No. 2 • Front seat outer belt assembly RH (Front passenger side pretensioner squib) • Center airbag sensor assembly
B1908/74	• The center airbag sensor assembly receives a short circuit to B+ signal in the front passenger side pretensioner squib circuit for 0.5 seconds. • Front passenger side pretensioner squib malfunction • Center airbag sensor assembly malfunction	• Floor wire No. 2 • Front seat outer belt assembly RH (Front passenger side pretensioner squib) • Center airbag sensor assembly

WIRING DIAGRAM

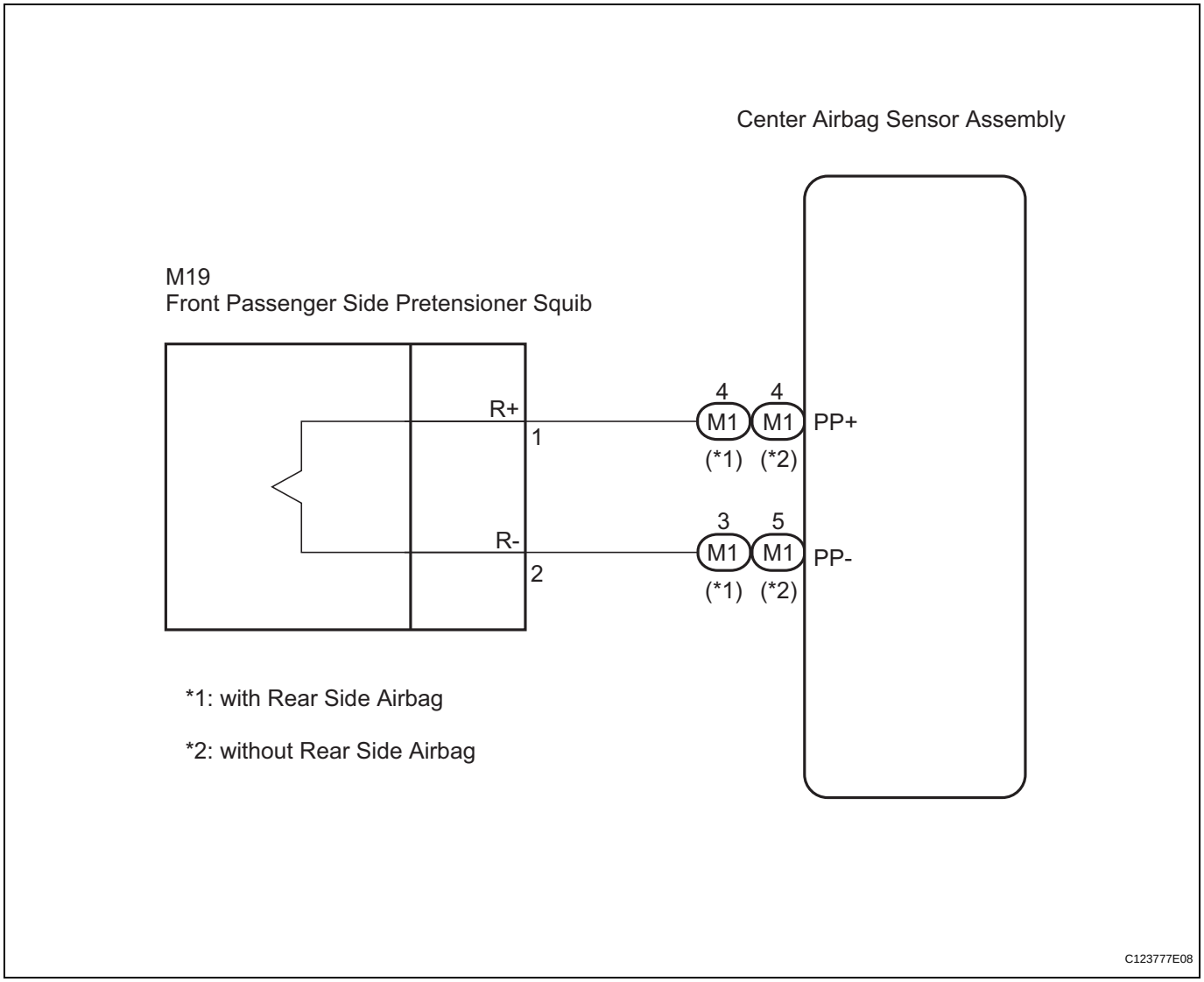

INSPECTION PROCEDURE

HINT:

- Perform the simulation method by selecting "check mode" (signal check) with the intelligent tester (See page RS-52).
- After selecting "check mode" (signal check), perform the simulation method by wiggling each connector of the airbag system or driving the vehicle on a city or rough road (See page RS-52).

RS

1	CHECK FRONT SEAT OUTER BELT ASSEMBLY RH (FRONT PASSENGER SIDE PRETENSIONER SQUIB)

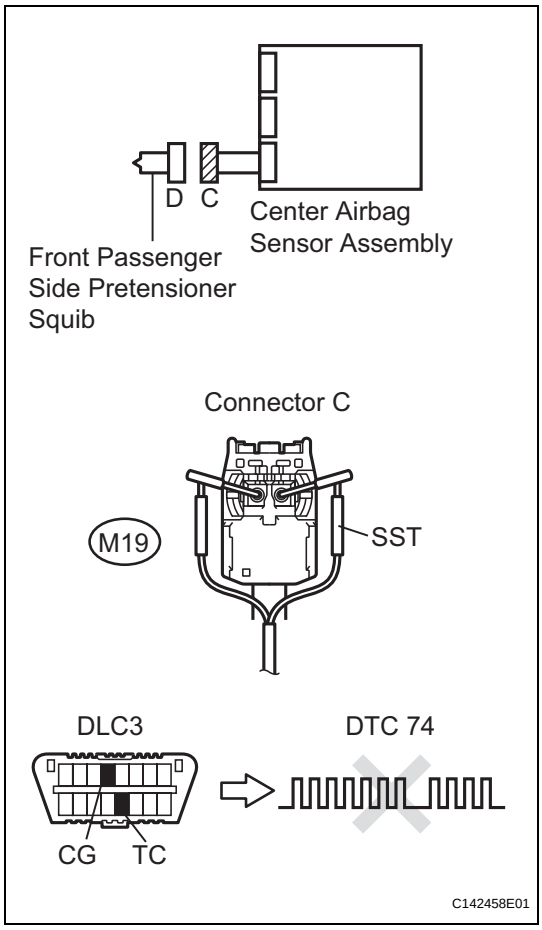

(a) Turn the engine switch off.
(b) Disconnect the negative (-) terminal cable from the battery, and wait for at least 90 seconds.
(c) Disconnect the connectors from the front seat outer belt assembly RH.
(d) Connect the white wire side of SST (resistance 2.1 Ω) to connector C.
CAUTION:
Never connect the tester to the front seat outer belt assembly RH (front passenger side pretensioner squib) for measurement, as this may lead to a serious injury due to airbag deployment.
NOTICE:
- **Do not forcibly insert the SST into the terminals of the connector when connecting the SST.**
- **Insert straight the SST into the terminals of the connector.**

SST 09843-18060

(e) Connect the negative (-) terminal cable to the battery, and wait for at least 2 seconds.
(f) Turn the engine switch on (IG), and wait for at least 60 seconds.
(g) Clear the DTCs stored in the memory (See page RS-49).
(h) Turn the engine switch off.
(i) Turn the engine switch on (IG), and wait for at least 60 seconds.
(j) Check the DTCs (See page RS-49).
OK:
DTC B1905, B1906, B1907, B1908, or 74 is not output.
HINT:
Codes other than DTC B1905, B1906, B1907, B1908, and 74 may be output at this time, but they are not related to this check.

OK → **REPLACE FRONT SEAT OUTER BELT ASSEMBLY RH (See page SB-27)**

NG

2	CHECK CONNECTOR

(a) Turn the engine switch off.
(b) Disconnect the negative (-) terminal cable from the battery, and wait for at least 90 seconds.
(c) Disconnect the SST from connector C.
(d) Check that the floor wire No. 2 connector (on the front seat outer belt assembly RH side) is not damaged.

OK:
The lock button is not disengaged, or the claw of the lock is not deformed or damaged.

NG → **REPAIR OR REPLACE FLOOR WIRE NO. 2**

OK

3	CHECK FLOOR WIRE NO. 2 (FRONT PASSENGER SIDE PRETENSIONER SQUIB CIRCUIT)

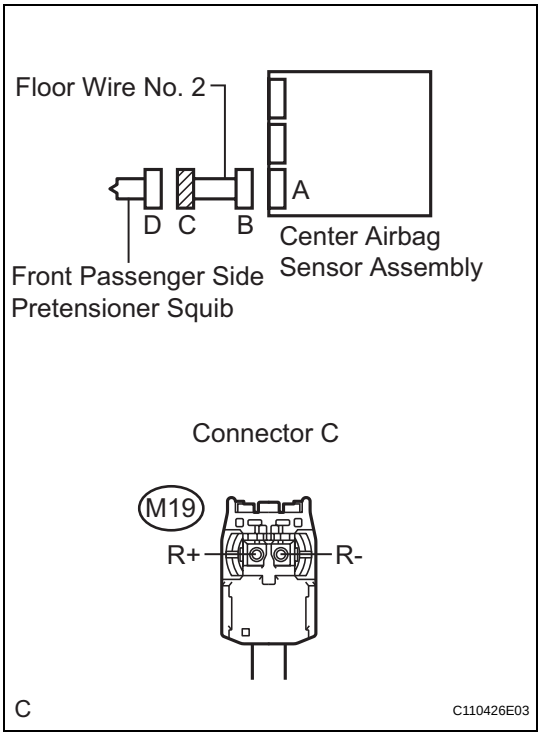

(a) Disconnect the connectors from the center airbag sensor assembly.

(b) Check for a short to B+ in the circuit.
  (1) Connect the negative (-) terminal cable to the battery, and wait for at least 2 seconds.
  (2) Turn the engine switch on (IG).
  (3) Measure the voltage according to the value(s) in the table below.
  Standard voltage

Tester Connection	Condition	Specified Condition
M19-1 (R+) - Body ground	Engine switch on (IG)	Below 1 V
M19-2 (R-) - Body ground	Engine switch on (IG)	Below 1 V

(c) Check for an open in the circuit.
  (1) Turn the engine switch off.
  (2) Disconnect the negative (-) terminal cable from the battery, and wait for at least 90 seconds.
  (3) Measure the resistance according to the value(s) in the table below.
  Standard resistance

Tester Connection	Condition	Specified Condition
M19-1 (R+) - M19-2 (R-)	Always	Below 1 Ω

(d) Check for a short to ground in the circuit.
  (1) Measure the resistance according to the value(s) in the table below.
  Standard resistance

Tester Connection	Condition	Specified Condition
M19-1 (R+) - Body ground	Always	1 MΩ or higher
M19-2 (R-) - Body ground	Always	1 MΩ or higher

(e) Check for a short in the circuit.
  (1) Release the activation prevention mechanism built into connector B (See page RS-37).
  (2) Measure the resistance according to the value(s) in the table below.
  Standard resistance

Tester Connection	Condition	Specified Condition
M19-1 (R+) - M19-2 (R-)	Always	1 MΩ or higher

NG → **REPAIR OR REPLACE FLOOR WIRE NO. 2**

OK

RS

4 CHECK CENTER AIRBAG SENSOR ASSEMBLY

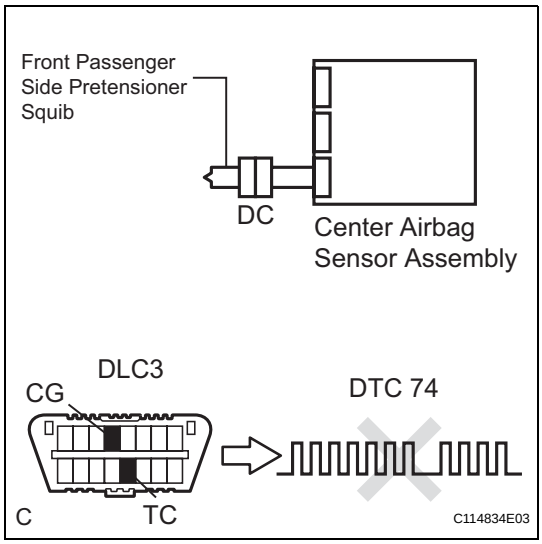

(a) Connect the connectors to the front seat outer belt assembly RH and the center airbag sensor assembly.
(b) Connect the negative (-) terminal cable to the battery, and wait for at least 2 seconds.
(c) Turn the engine switch on (IG), and wait for at least 60 seconds.
(d) Clear the DTCs stored in the memory (See page RS-49).
(e) Turn the engine switch off.
(f) Turn the engine switch on (IG), and wait for at least 60 seconds.
(g) Check the DTCs (See page RS-49).
OK:
DTC B1905, B1906, B1907, B1908, or 74 is not output.
HINT:
Codes other than DTC B1905, B1906, B1907, B1908, and 74 may be output at this time, but they are not related to this check.

NG → **REPLACE CENTER AIRBAG SENSOR ASSEMBLY (See page RS-468)**

OK

USE SIMULATION METHOD TO CHECK (See page RS-37)

DTC	B1920/77	Short in Rear Driver Side Pretensioner Squib Circuit

DTC	B1921/77	Open in Rear Pretensioner Squib RH Circuit

DTC	B1922/77	Short to GND in Rear Pretensioner Squib RH Circuit

DTC	B1923/77	Short to B+ in Rear Pretensioner Squib RH Circuit

DESCRIPTION

The rear driver side pretensioner squib circuit consists of the center airbag sensor assembly and the rear seat outer belt assembly LH.
This circuit instructs the SRS to deploy when deployment conditions are met.
These DTCs are recorded when a malfunction is detected in the rear driver side pretensioner squib circuit.

DTC No.	DTC Detection Condition	Trouble Area
B1920/77	• The center airbag sensor assembly receives a line short circuit signal 5 times in the rear driver side pretensioner squib circuit during primary check. • Rear driver side pretensioner squib malfunction • Center airbag sensor assembly malfunction	• Floor wire • Rear seat outer belt assembly LH (Rear driver side pretensioner squib) • Center airbag sensor assembly
B1921/77	• The center airbag sensor assembly receives an open circuit signal in the rear driver side pretensioner squib circuit for 2 seconds. • Rear driver side pretensioner squib malfunction • Center airbag sensor assembly malfunction	• Floor wire • Rear seat outer belt assembly LH (Rear driver side pretensioner squib) • Center airbag sensor assembly
B1922/77	• The center airbag sensor assembly receives a short circuit to ground signal in the rear driver side pretensioner squib circuit for 0.5 seconds. • Rear driver side pretensioner squib malfunction • Center airbag sensor assembly malfunction	• Floor wire • Rear seat outer belt assembly LH (Rear driver side pretensioner squib) • Center airbag sensor assembly
B1923/77	• The center airbag sensor assembly receives a short circuit to B+ signal in the rear driver side pretensioner squib circuit for 0.5 seconds. • Rear driver side pretensioner squib malfunction • Center airbag sensor assembly malfunction	• Floor wire • Rear seat outer belt assembly LH (Rear driver side pretensioner squib) • Center airbag sensor assembly

RS

WIRING DIAGRAM

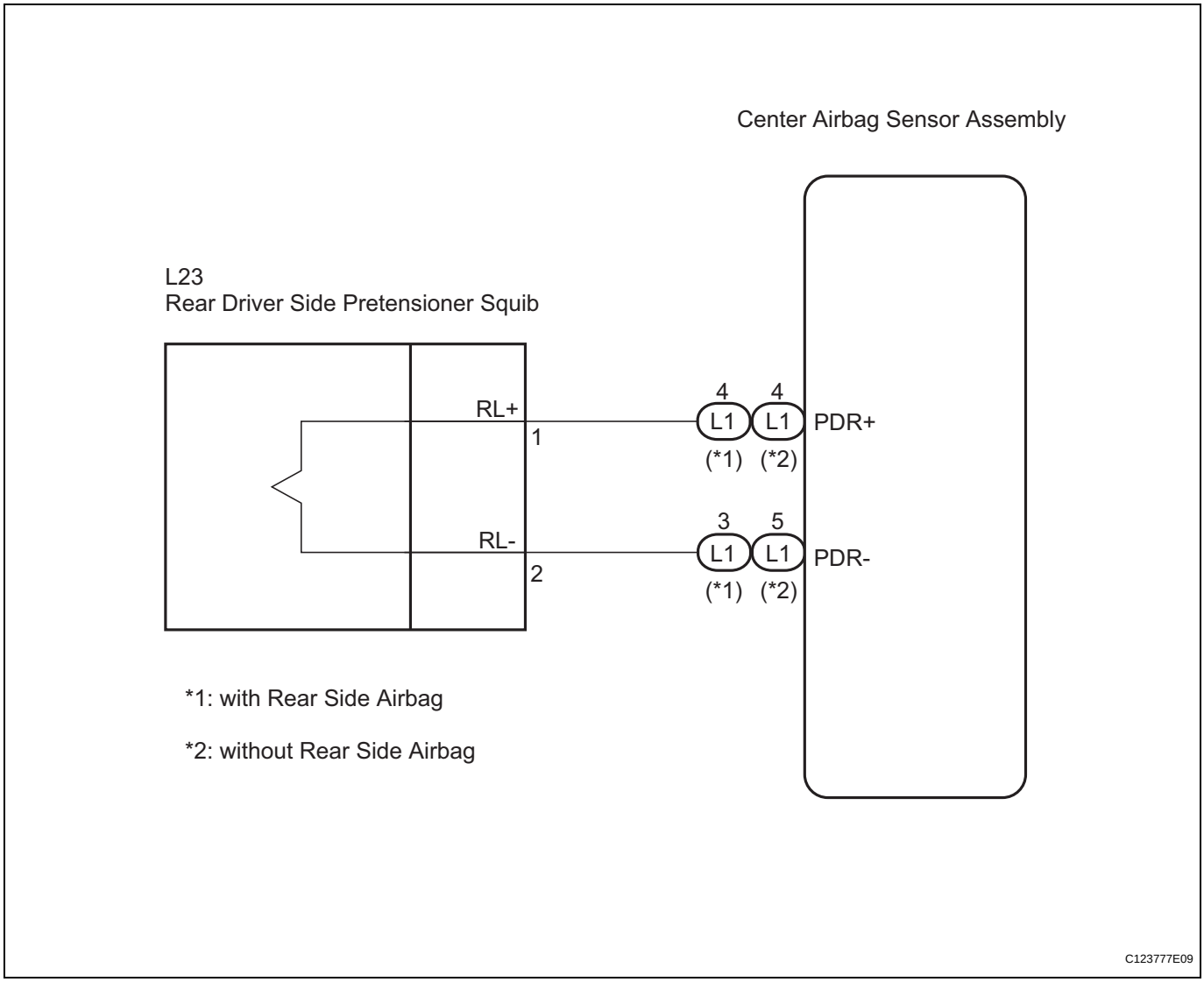

INSPECTION PROCEDURE

HINT:

- Perform the simulation method by selecting the "check mode" (signal check) with the intelligent tester (See page RS-52).
- After selecting the "check mode" (signal check), perform the simulation method by wiggling each connector of the airbag system or driving the vehicle on a city or rough road (See page RS-52).

RS

1	CHECK REAR SEAT OUTER BELT ASSEMBLY LH (REAR DRIVER SIDE PRETENSIONER SQUIB)

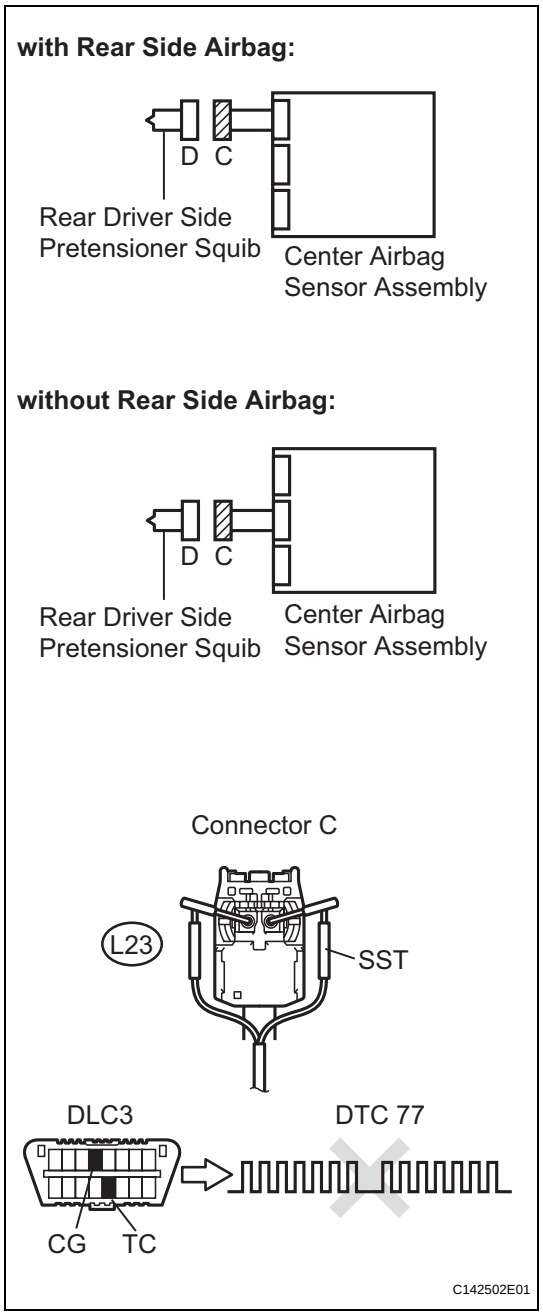

(a) Turn the engine switch off.
(b) Disconnect the negative (-) terminal cable from the battery, and wait for at least 90 seconds.
(c) Disconnect the connectors from the rear seat outer belt assembly LH.
(d) Connect the white wire side of SST (resistance 2.1 Ω) to connector C.
CAUTION:
Never connect a tester to the rear seat outer belt assembly LH (rear driver side pretensioner squib) for measurement, as this may lead to a serious injury due to airbag deployment.
NOTICE:
- **Do not forcibly insert the SST into the terminals of the connector when connecting the SST.**
- **Insert straight the SST into the terminals of the connector.**

SST 09843-18060

(e) Connect the negative (-) terminal cable to the battery, and wait for at least 2 seconds.
(f) Turn the engine switch on (IG), and wait for at least 60 seconds.
(g) Clear the DTCs stored in the memory (See page RS-49).
(h) Turn the engine switch off.
(i) Turn the engine switch on (IG), and wait for at least 60 seconds.
(j) Check the DTCs (See page RS-49).
OK:
DTC B1920, B1921, B1922, B1923, or 77 is not output.
HINT:
Codes other than DTC B1920, B1921, B1922, B1923, and 77 may be output at this time, but they are not related to this check.

NG → **REPLACE REAR SEAT OUTER BELT ASSEMBLY LH (See page SB-47)**

OK

2	CHECK CONNECTOR

(a) Turn the engine switch off.
(b) Disconnect the negative (-) terminal cable from the battery, and wait for at least 90 seconds.
(c) Disconnect the SST from connector C.
(d) Check that the floor wire connector (on the rear seat outer belt assembly LH side) is not damaged.

OK:
The lock button is not disengaged, or the claw of the lock is not deformed or damaged.

NG → **REPAIR OR REPLACE FLOOR WIRE**

RS

OK

3 CHECK FLOOR WIRE (REAR DRIVER SIDE PRETENSIONER SQUIB CIRCUIT)

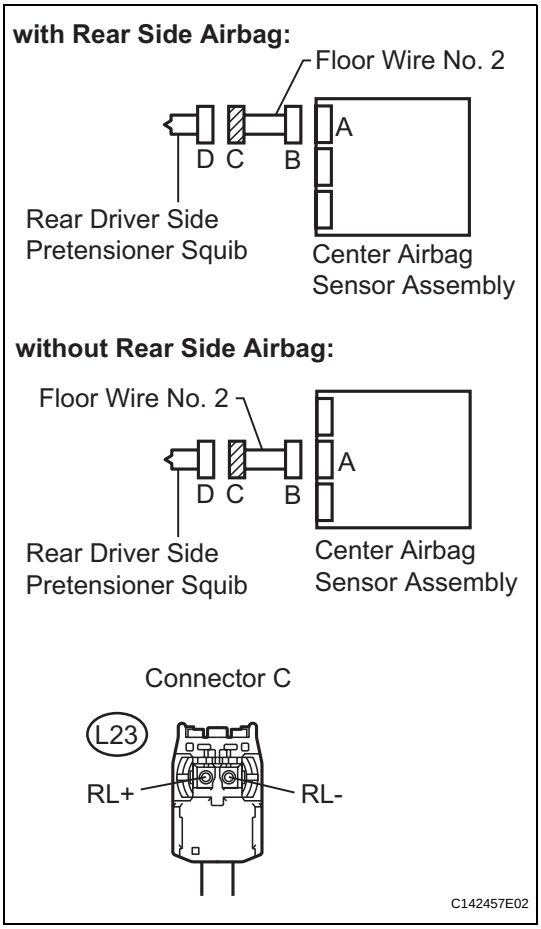

(a) Disconnect the connectors from the center airbag sensor assembly.

(b) Check for a short to B+ in the circuit.
  (1) Connect the negative (-) terminal cable to the battery, and wait for at least 2 seconds.
  (2) Turn the engine switch on (IG).
  (3) Measure the voltage according to the value(s) in the table below.
  Standard voltage

Tester Connection	Condition	Specified Condition
L23-1 (RL+) - Body ground	Engine switch on (IG)	Below 1 V
L23-2 (RL-) - Body ground	Engine switch on (IG)	Below 1 V

(c) Check for an open in the circuit.
  (1) Turn the engine switch off.
  (2) Disconnect the negative (-) terminal cable from the battery, and wait for at least 90 seconds.
  (3) Measure the resistance according to the value(s) in the table below.
  Standard resistance

Tester Connection	Condition	Specified Condition
L23-1 (RL+) - L23-2 (RL-)	Always	Below 1 Ω

(d) Check for a short to ground in the circuit.
  (1) Measure the resistance according to the value(s) in the table below.
  Standard resistance

Tester Connection	Condition	Specified Condition
L23-1 (RL+) - Body ground	Always	1 MΩ or higher
L23-2 (RL-) - Body ground	Always	1 MΩ or higher

(e) Check for a short in the circuit.
  (1) Release the activation prevention mechanism built into connector B (See page RS-37).
  (2) Measure the resistance according to the value(s) in the table below.
  Standard resistance

Tester Connection	Condition	Specified Condition
L23-1 (RL+) - L23-2 (RL-)	Always	1 MΩ or higher

NG → **REPAIR OR REPLACE FLOOR WIRE**

OK

4 CHECK CENTER AIRBAG SENSOR ASSEMBLY

RS

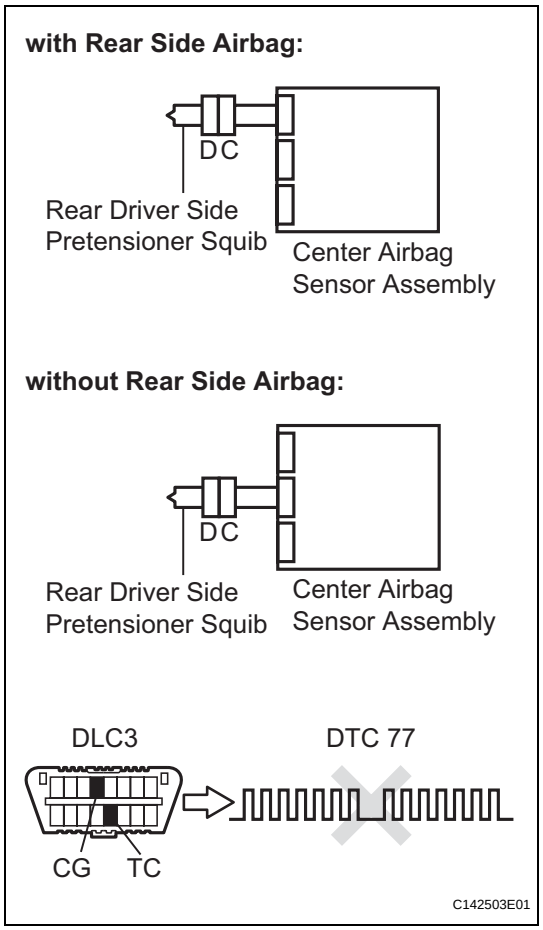

(a) Connect the connectors to the rear seat outer belt assembly LH and the center airbag sensor assembly.
(b) Connect the negative (-) terminal cable to the battery, and wait for at least 2 seconds.
(c) Turn the engine switch on (IG), and wait for at least 60 seconds.
(d) Clear the DTCs stored in the memory (See page RS-49).
(e) Turn the engine switch off.
(f) Turn the engine switch on (IG), and wait for at least 60 seconds.
(g) Check the DTCs (See page RS-49).
OK:
DTC B1920, B1921, B1922, B1923, or 77 is not output.
HINT:
Codes other than B1920, B1921, B1922, B1923, and 77 may be output at this time, but they are not related to this check.

NG → **REPLACE CENTER AIRBAG SENSOR ASSEMBLY (See page RS-468)**

OK

USE SIMULATION METHOD TO CHECK (See page RS-37)

DTC	**B1925/78**	**Short in Rear Passenger Side Pretensioner Squib Circuit**

DTC	**B1926/78**	**Open in Rear Passenger Side Pretensioner Squib Circuit**

DTC	**B1927/78**	**Short to GND in Rear Passenger Side Pretensioner Squib Circuit**

DTC	**B1928/78**	**Short to B+ in Rear Passenger Side Pretensioner Squib Circuit**

DESCRIPTION

The rear passenger side pretensioner squib circuit consists of the center airbag sensor assembly and the rear seat outer belt assembly RH.
This circuit instructs the SRS to deploy when deployment conditions are met.
These DTCs are recorded when a malfunction is detected in the rear passenger side pretensioner squib circuit.

DTC No.	DTC Detection Condition	Trouble Area
B1925/78	• The center airbag sensor assembly receives a line short circuit signal 5 times in the rear passenger side pretensioner squib circuit during primary check. • Rear passenger side pretensioner squib malfunction • Center airbag sensor assembly malfunction	• Floor wire No. 2 • Rear seat outer belt assembly RH (Rear passenger side pretensioner squib) • Center airbag sensor assembly
B1926/78	• The center airbag sensor assembly receives an open circuit signal in the rear passenger side pretensioner squib circuit for 2 seconds. • Rear passenger side pretensioner squib malfunction • Center airbag sensor assembly malfunction	• Floor wire No. 2 • Rear seat outer belt assembly RH (Rear passenger side pretensioner squib) • Center airbag sensor assembly
B1927/78	• The center airbag sensor assembly receives a short circuit to ground signal in the rear passenger side pretensioner squib circuit for 0.5 seconds. • Rear passenger side pretensioner squib malfunction • Center airbag sensor assembly malfunction	• Floor wire No. 2 • Rear seat outer belt assembly RH (Rear passenger side pretensioner squib) • Center airbag sensor assembly
B1928/78	• The center airbag sensor assembly receives a short circuit to B+ signal in the rear passenger side pretensioner squib circuit for 0.5 seconds. • Rear passenger side pretensioner squib malfunction • Center airbag sensor assembly malfunction	• Floor wire No. 2 • Rear seat outer belt assembly RH (rear passenger side pretensioner squib) • Center airbag sensor assembly

RS

WIRING DIAGRAM

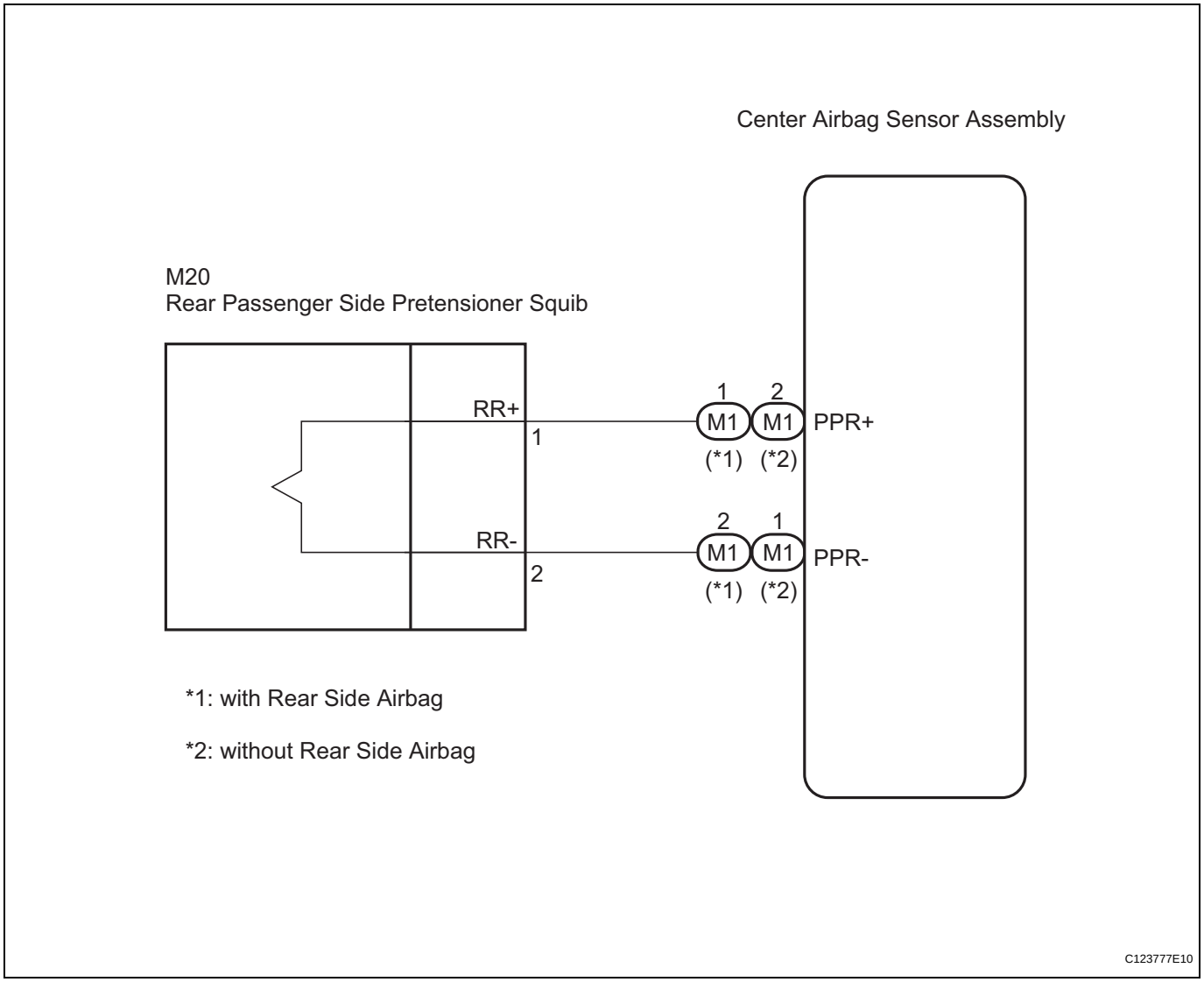

INSPECTION PROCEDURE

HINT:

- Perform the simulation method by selecting the "check mode" (signal check) with the intelligent tester (See page RS-52).
- After selecting the "check mode" (signal check), perform the simulation method by wiggling each connector of the airbag system or driving the vehicle on a city or rough road (See page RS-52).

RS

1	CHECK REAR SEAT OUTER BELT ASSEMBLY RH (REAR PASSENGER SIDE PRETENSIONER SQUIB)

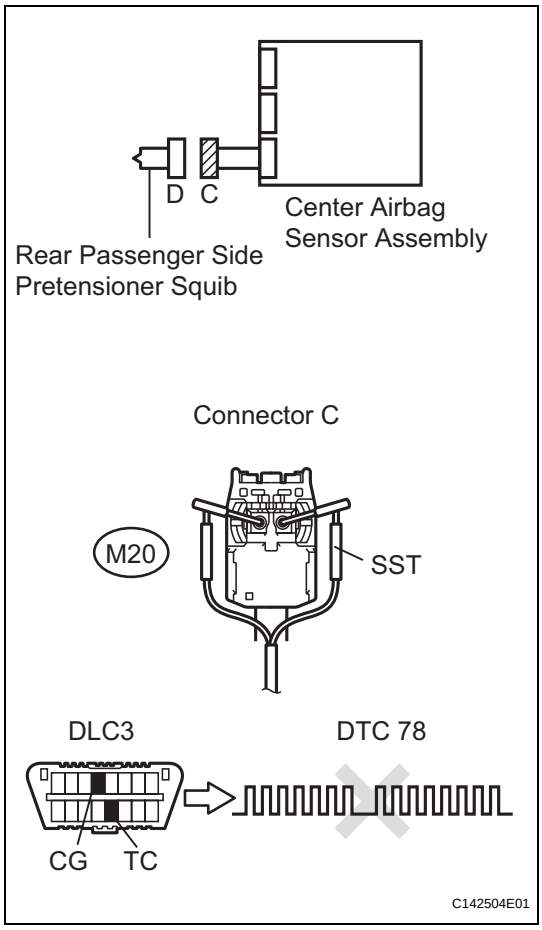

(a) Turn the engine switch off.
(b) Disconnect the negative (-) terminal cable from the battery, and wait for at least 90 seconds.
(c) Disconnect the connectors from the rear seat outer belt assembly RH.
(d) Connect the white wire side of SST (resistance 2.1 Ω) to connector C.
CAUTION:
Never connect a tester to the rear seat outer belt assembly RH (rear passenger side pretensioner squib) for measurement, as this may lead to a serious injury due to airbag deployment.
NOTICE:
- **Do not forcibly insert the SST into the terminals of the connector when connecting the SST.**
- **Insert straight the SST into the terminals of the connector.**

SST 09843-18060

(e) Connect the negative (-) terminal cable to the battery, and wait for at least 2 seconds.
(f) Turn the engine switch on (IG), and wait for at least 60 seconds.
(g) Clear the DTCs stored in the memory (See page RS-49).
(h) Turn the engine switch off.
(i) Turn the engine switch on (IG), and wait for at least 60 seconds.
(j) Check the DTCs (See page RS-49).
OK:
DTC B1925, B1926, B1927, B1928 or 78 is not output.
HINT:
Codes other than DTC B1925, B1926, B1927, B1928 and 78 may be output at this time, but they are not related to this check.

NG → **REPLACE REAR SEAT OUTER BELT ASSEMBLY RH (See page SB-47)**

OK

2	CHECK CONNECTOR

(a) Turn the engine switch off.
(b) Disconnect the negative (-) terminal cable from the battery, and wait for at least 90 seconds.
(c) Disconnect the SST from connector C.
(d) Check that the floor wire No. 2 connector (on the rear seat outer belt assembly RH side) is not damaged.

NG → **REPAIR OR REPLACE FLOOR WIRE NO. 2**

OK

3	CHECK FLOOR WIRE NO. 2 (REAR PASSENGER SIDE PRETENSIONER SQUIB CIRCUIT)

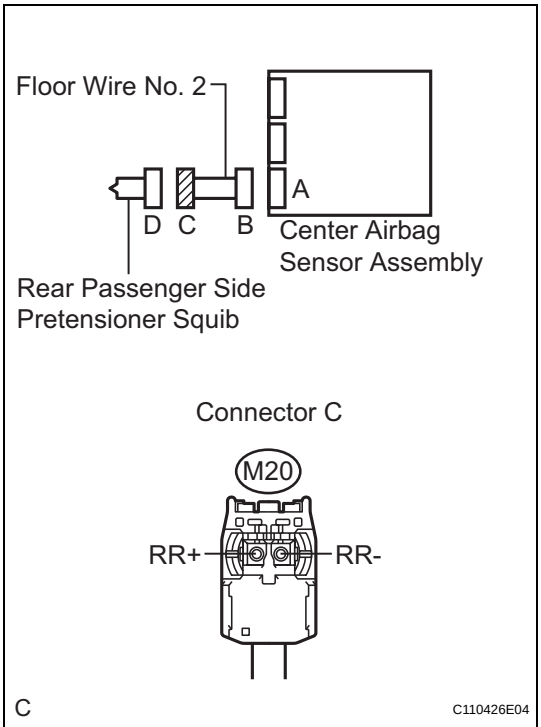

(a) Disconnect the connectors from the center airbag sensor assembly.

(b) Check for a short to B+ in the circuit.
  (1) Connect the negative (-) terminal cable to the battery, and wait for at least 2 seconds.
  (2) Turn the engine switch on (IG).
  (3) Measure the voltage according to the value(s) in the table below.
  Standard voltage

Tester Connection	Condition	Specified Condition
M20-1 (RR+) - Body ground	Engine switch on (IG)	Below 1 V
M20-2 (RR-) - Body ground	Engine switch on (IG)	Below 1 V

(c) Check for an open in the circuit.
  (1) Turn the engine switch off.
  (2) Disconnect the negative (-) terminal cable from the battery, and wait for at least 90 seconds.
  (3) Measure the resistance according to the value(s) in the table below.
  Standard resistance

Tester Connection	Condition	Specified Condition
M20-1 (RR+) - M20-2 (RR-)	Always	Below 1 Ω

(d) Check for a short to ground in the circuit.
  (1) Measure the resistance according to the value(s) in the table below.
  Standard resistance

Tester Connection	Condition	Specified Condition
M20-1 (RR+) - Body ground	Always	1 MΩ or higher
M20-2 (RR-) - Body ground	Always	1 MΩ or higher

(e) Check for a short in the circuit.
  (1) Release the activation prevention mechanism built into connector B (See page RS-49).
  (2) Measure the resistance according to the value(s) in the table below.
  Standard resistance

Tester Connection	Condition	Specified Condition
M20-1 (RR+) - M20-2 (RR-)	Always	1 MΩ or higher

NG → **REPAIR OR REPLACE FLOOR WIRE NO. 2**

OK

RS

4	CHECK CENTER AIRBAG SENSOR ASSEMBLY

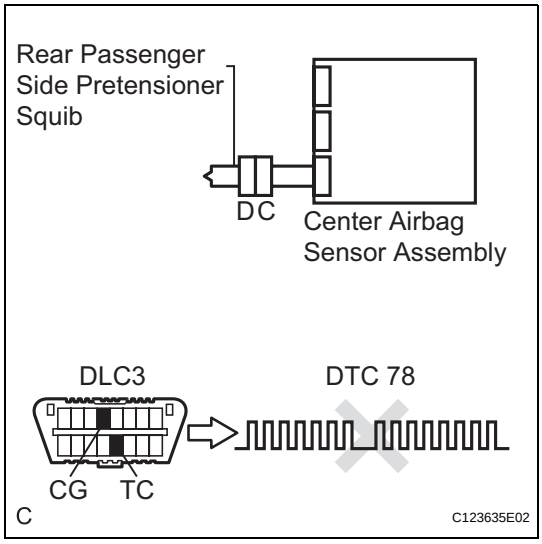

(a) Connect the connectors to the rear seat outer belt assembly RH and the center airbag sensor assembly.
(b) Connect the negative (-) terminal cable to the battery, and wait for at least 2 seconds.
(c) Turn the engine switch on (IG), and wait for at least 60 seconds.
(d) Clear the DTCs stored in the memory (See page RS-49).
(e) Turn the engine switch off.
(f) Turn the engine switch on (IG), and wait for at least 60 seconds.
(g) Check the DTCs (See page RS-49).
OK:
DTC B1925, B1926, B1927, B1928 or 78 is not output.
HINT:
Codes other than DTC B1925, B1926, B1927, B1928 and 78 may be output at this time, but they are not related to this check.

NG → **REPLACE CENTER AIRBAG SENSOR ASSEMBLY (See page RS-468)**

OK

USE SIMULATION METHOD TO CHECK (See page RS-37)

SRS Warning Light Remains ON

DESCRIPTION

The SRS warning light is located on the combination meter assembly.
When the SRS is normal, the SRS warning light comes on for approximately 6 seconds after the engine switch is turned from off to on (IG), and then goes off automatically.
If there is a malfunction in the SRS, the SRS warning light comes on to inform the driver of a problem.
When terminals TC and CG of the DLC3 are connected, the DTC is displayed by blinking of the SRS warning light.
The SRS is equipped with a voltage-increase circuit (DC-DC converter) in the center airbag sensor assembly in case the source voltage drops.
When the battery voltage drops, the voltage-increase circuit (DC-DC converter) functions to increase the voltage of the SRS to normal voltage.
A malfunction in this circuit is not recorded in the center airbag sensor assembly. The SRS warning light automatically goes off when the source voltage returns to normal.
The signal to illuminate the SRS warning light is transmitted from the center airbag sensor assembly to the combination meter assembly through the CAN communication system.

RS

WIRING DIAGRAM

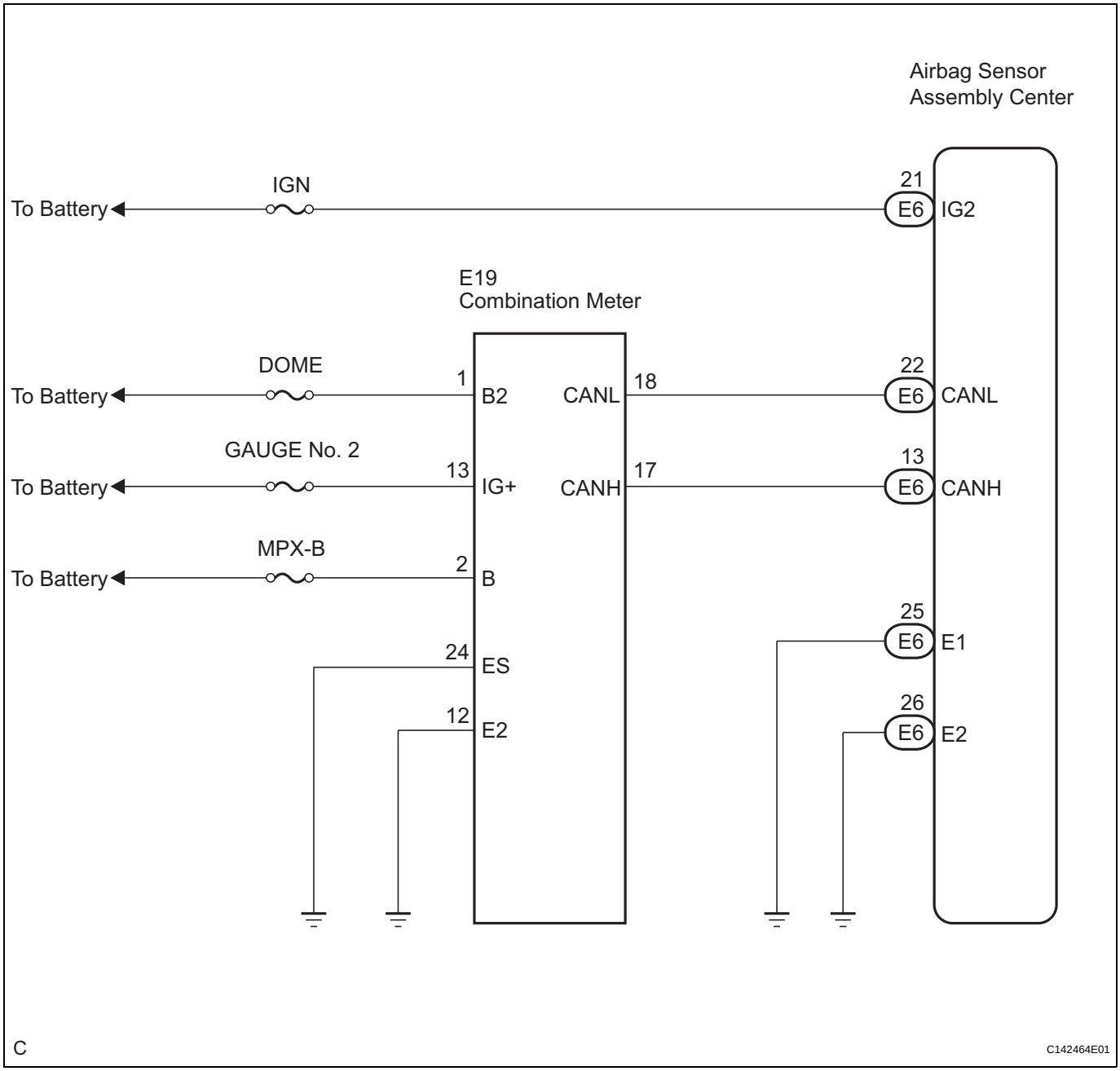

INSPECTION PROCEDURE

1	CHECK CAN COMMUNICATION SYSTEM

(a) Check if a CAN communication DTC is output (See page CA-41).

Result

Condition	Proceed to
DTC is not output	A
DTC is output	B

B → **REPAIR CIRCUITS INDICATED BY OUTPUT DTCS**

A

RS

2 CHECK BATTERY

(a) Measure the voltage of the battery.
Standard voltage:
11 to 14 V

NG → **CHECK AND REPLACE BATTERY OR CHARGING SYSTEM**

OK

3 CHECK CONNECTORS

(a) Turn the engine switch off.
(b) Disconnect the negative (-) terminal cable from the battery, and wait for at least 90 seconds.
(c) Check that the connectors are properly connected to the center airbag sensor assembly and combination meter assembly.
OK:
The connectors are properly connected.

NG → **CONNECT CONNECTORS PROPERLY**

OK

4 CHECK WIRE HARNESS (SOURCE VOLTAGE OF CENTER AIRBAG SENSOR ASSEMBLY)

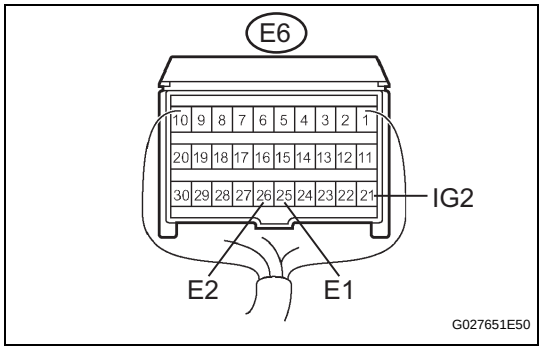

(a) Disconnect the connectors from the center airbag sensor assembly.
(b) Connect the negative (-) terminal cable to the battery, and wait for at least 2 seconds.
(c) Turn the engine switch on (IG).
(d) Operate all components of the electrical system (defogger, wipers, headlights, heater blower, etc.).
(e) Measure the voltage according to the value(s) in the table below.
Standard voltage

Tester Connection	Condition	Specified Condition
E6-21 (IG2) - E6-25 (E1)	Engine switch on (IG)	10 to 14 V
E6-21 (IG2) - E6-26 (E2)	Engine switch on (IG)	10 to 14 V

NG → **REPAIR OR REPLACE WIRE HARNESS**

OK

RS

5	CHECK WIRE HARNESS (SOURCE VOLTAGE OF COMBINATION METER ASSEMBLY)

Combination Meter Assembly Wire Harness View:

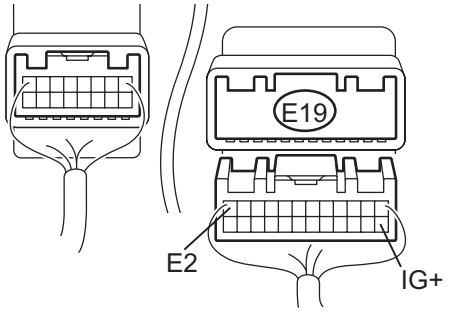

(a) Disconnect the negative (-) terminal cable from the battery, and wait for at least 90 seconds.
(b) Disconnect the E19 connector from the combination meter assembly.
(c) Connect the negative (-) terminal cable to the battery, and wait for at least 2 seconds.
(d) Turn the engine switch on (IG).
(e) Measure the voltage according to the value(s) in the table below.

Standard voltage

Tester Connection	Condition	Specified Condition
E19-13 (IG+) - E19-12 (E2)	Engine switch on (IG)	10 to 14 V

NG → **REPAIR OR REPLACE WIRE HARNESS**

OK

6	CHECK SRS WARNING LIGHT

(a) Turn the engine switch off.
(b) Disconnect the negative (-) terminal cable from the battery, and wait for at least 90 seconds.
(c) Connect the connector to the combination meter assembly.
(d) Connect the negative (-) terminal cable to the battery, and wait for at least 2 seconds.
(e) Turn the engine switch on (IG).
(f) Check the SRS warning light condition.

OK:

After the primary check period, SRS warning light goes off for approximately 10 seconds and remains on.

HINT:
The primary check period shows approximately 6 seconds after the engine switch is turned on (IG).

NG → **GO TO METER / GAUGE SYSTEM (See page ME-14)**

OK

REPLACE CENTER AIRBAG SENSOR ASSEMBLY (See page RS-468)

SRS Warning Light does not Come ON

DESCRIPTION

See page RS-294.

WIRING DIAGRAM

See page RS-295.

RS

INSPECTION PROCEDURE

1	CHECK BATTERY

(a) Measure the voltage of the battery.
Standard voltage:
11 to 14 V

NG → **CHECK AND REPLACE BATTERY OR CHARGING SYSTEM**

OK ↓

2	CHECK CONNECTOR

(a) Turn the engine switch off.
(b) Disconnect the negative (-) terminal cable from the battery, and wait for at least 90 seconds.
(c) Check that the connectors are properly connected to the combination meter assembly.
OK:
The connectors are properly connected.

NG → **CONNECT CONNECTOR PROPERLY**

OK ↓

RS

3 CHECK WIRE HARNESS (SOURCE VOLTAGE OF COMBINATION METER)

Combination Meter Assembly Wire Harness View:

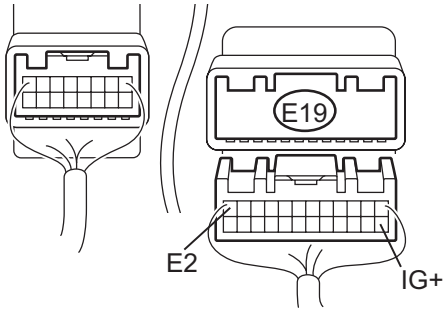

(a) Turn the engine switch off.
(b) Disconnect the negative (-) terminal cable from the battery, and wait for at least 90 seconds.
(c) Disconnect the E19 connector from the combination meter assembly.
(d) Connect the negative (-) terminal cable to the battery, and wait for at least 2 seconds.
(e) Turn the engine switch on (IG).
(f) Measure the voltage according to the value(s) in the table below.

Standard voltage

Tester Connection	Condition	Specified Condition
E19-13 (IG+) - E12-12 (E2)	Engine switch on (IG)	10 to 14 V

NG → **REPAIR OR REPLACE WIRE HARNESS**

OK

4 CHECK SRS WARNING LIGHT

(a) Turn the engine switch off.
(b) Disconnect the negative (-) terminal cable from the battery, and wait for at least 90 seconds.
(c) Connect the connector to the combination meter assembly.
(d) Connect the negative (-) terminal cable to the battery, and wait for at least 2 seconds.
(e) Turn the engine switch on (IG).
(f) Check the SRS warning light condition.

OK:

After the primary check period, SRS warning light goes off for approximately 10 seconds and remains on.

HINT:
The primary check period is approximately 6 seconds after the engine switch is turned on (IG).

NG → **GO TO METER / GAUGE SYSTEM (See page ME-14)**

OK

REPLACE CENTER AIRBAG SENSOR ASSEMBLY (See page RS-468)

Diagnosis Circuit

DESCRIPTION

DTC output mode is set by connecting terminals TC and CG of the DLC3.
DTCs are displayed by blinking of the SRS warning light.
HINT:

- When each warning light stays blinking, a ground short in the wiring of terminal TC of the DLC3 or an internal ground short in each ECU is suspected.
- A DTC output mode signal is transmitted through CAN communication system to each ECU including the center airbag sensor assembly. Thus when all systems do not enter DTC output mode, there may be an ECM malfunction.

WIRING DIAGRAM

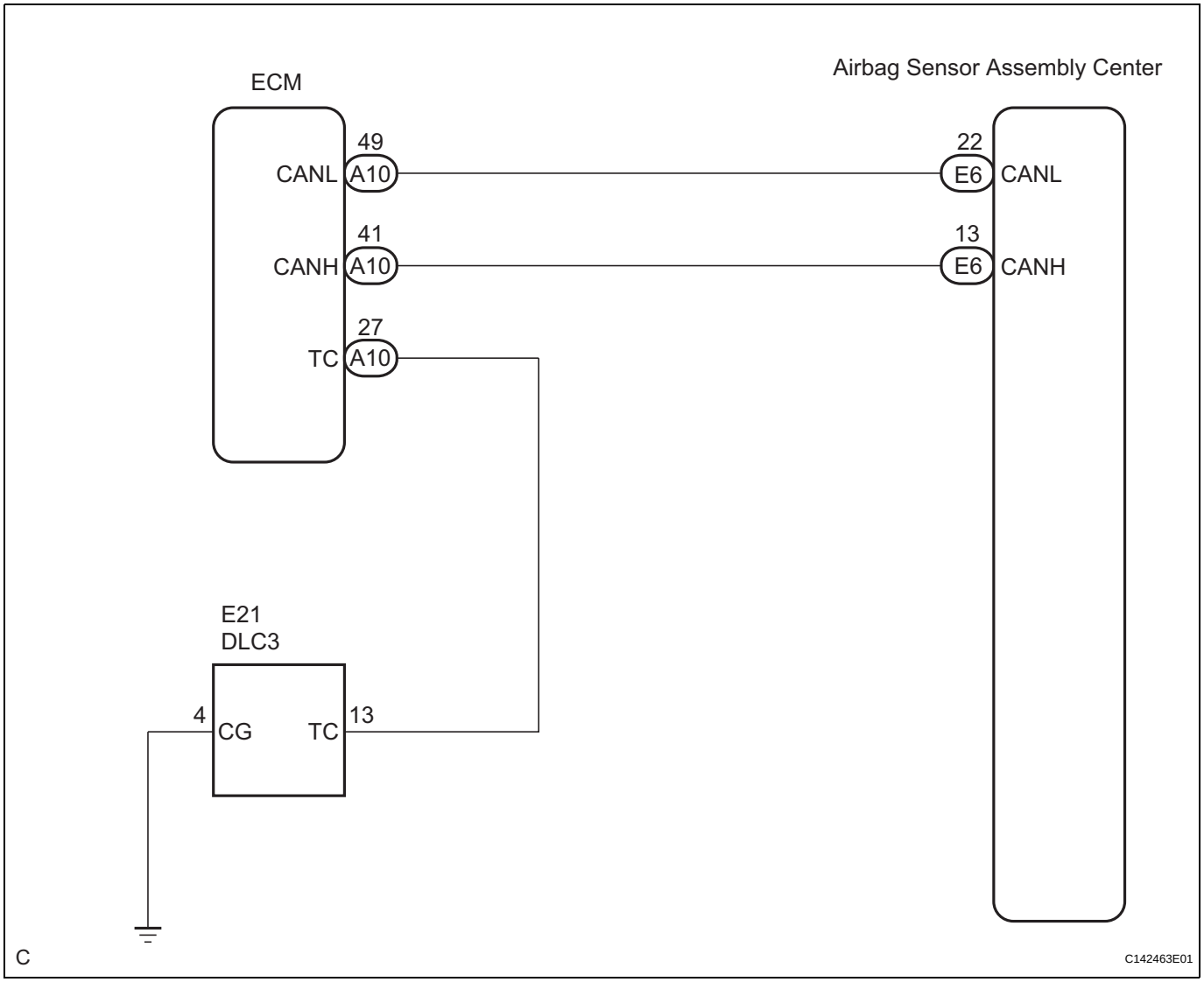

INSPECTION PROCEDURE

RS

1	CHECK CAN COMMUNICATION SYSTEM

(a) Check if a CAN communication system DTC is output (See page CA-41).

Result

Condition	Proceed to
DTC is not output	A
DTC is output	B

B → **REPAIR CIRCUITS INDICATED BY OUTPUT DTCS**

A

2	CHECK WIRE HARNESS (DLC3 - ECM)

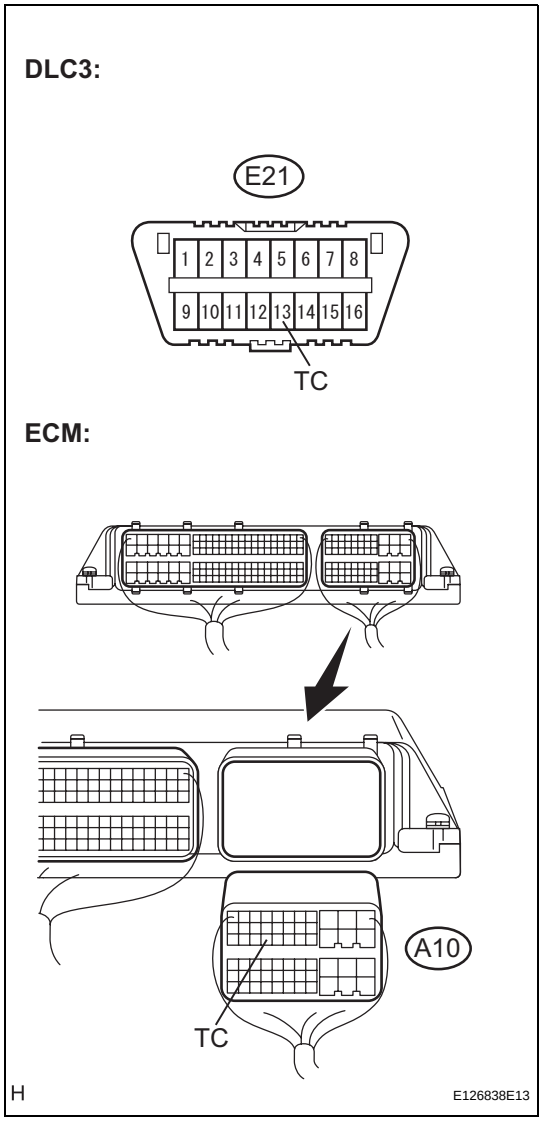

(a) Turn the engine switch off.
(b) Disconnect the A10 connector from the ECM.
(c) Measure the resistance according to the value(s) in the table below.

Standard resistance

Tester Connection	Condition	Specified Condition
E21-13 (TC) - A10-27 (TC)	Always	Below 1 Ω

NG → **REPAIR OR REPLACE WIRE HARNESS (TC OF DLC3 - TC OF ECM)**

OK

3 CHECK WIRE HARNESS (CG OF DLC3 - BODY GROUND)

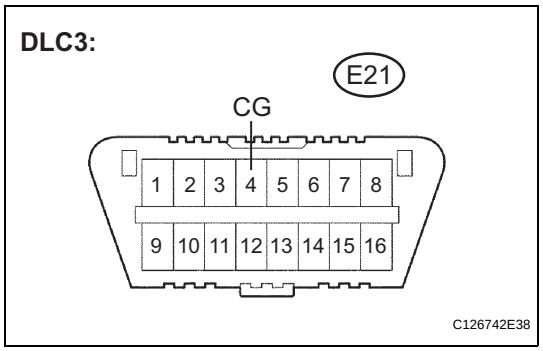

(a) Measure the resistance according to the value(s) in the table below.

Standard resistance

Tester Connection	Condition	Specified Condition
E21-4 (CG) - Body ground	Always	Below 1 Ω

NG → **REPAIR OR REPLACE WIRE HARNESS (CG OF DLC3 - BODY GROUND)**

OK

4 CHECK WIRE HARNESS (TC OF ECM - BODY GROUND)

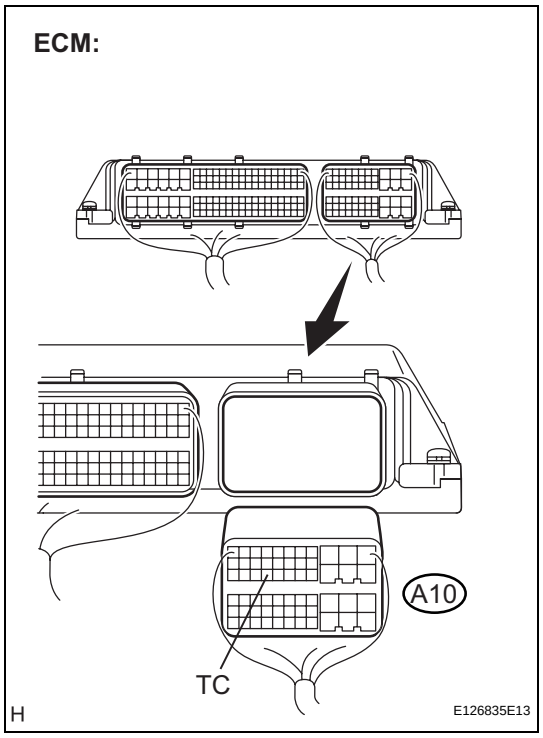

(a) Measure the resistance according to the value(s) in the table below.

Standard resistance

Tester Connection	Condition	Specified Condition
A10-27 (TC) - Body ground	Always	1 MΩ or higher

NG → **REPAIR OR REPLACE WIRE HARNESS OR EACH ECU**

OK

REPLACE CENTER AIRBAG SENSOR ASSEMBLY (See page RS-468)

HOW TO PROCEED WITH TROUBLESHOOTING

HINT:
*: Use the intelligent tester.

RS

1 VEHICLE BROUGHT TO WORKSHOP

NEXT

2 CUSTOMER PROBLEM ANALYSIS

(a) Confirm problem symptoms (See page IN-39).

NEXT

3 CHECK CAN COMMUNICATION SYSTEM*

(a) Check for DTC outputs (See page CA-41).
HINT:
The center airbag sensor assembly is connected to the CAN communication system. Therefore, before starting troubleshooting, make sure to check that there is no trouble in the CAN communication system.

Result

Result	Proceed to
CAN communication DTC is not output.	A
CAN communication DTC is output.	B

B → **INSPECT CAN COMMUNICATION CIRCUIT**

A

4 SRS WARNING LIGHT CHECK

NEXT

5 CHECK DTC (Present and Past DTCs)*

(a) Check for DTC outputs.

Result

Result	Proceed to
DTC is output.	A
DTC is not output.	B

B → **PROBLEM SYMPTOMS TABLE**

A

RS

6	DTC CHART

NEXT

7	CIRCUIT INSPECTION*

NEXT

8	REPAIR

NEXT

9	CLEAR DTC (Present and Past DTCs)*

NEXT

10	CHECK DTC (Present and Past DTCs)*

(a) Check for DTC outputs.

Result

Result	Proceed to
DTC is not output.	A
DTC is output.	B

B → **Go to step 6**

A

11	CONFIRMATION TEST

NEXT

END

REGISTRATION

1. REGISTRATION

NOTICE:

- **If any DTCs related to the occupant classification ECU are output, troubleshoot those DTCs by referring to the DIAGNOSTIC TROUBLE CODE CHART.**
- **When ECU data saving or loading operations cannot be performed, replace the front seat cushion assembly (with occupant classification ECU and occupant classification sensor).**

HINT:

- When the occupant classification ECU is replaced, the previous ECU data must be saved in the intelligent tester and loaded into the new ECU by following the flowchart below.
- Until the data from the previous ECU are loaded into the new occupant classification ECU, these data are not erased even when the tester is turned off.
- ECU EXCHANGE PROCEDURE (Before Exchange) describes the procedure to save the data in the intelligent tester from the occupant classification ECU which has been installed on the vehicle. ECU EXCHANGE PROCEDURE (After Exchange) describes the procedure to load the data from the previous ECU, stored in the intelligent tester, into the new ECU.

(a) Connect the intelligent tester to the DLC3.

(b) Turn the engine switch on (IG).

(c) Store the occupant classification ECU data in the intelligent tester by following the prompts on the tester screen.

HINT:

If the ECU data cannot be stored in the intelligent tester, replace the front seat cushion assembly (with occupant classification ECU and occupant classification sensor).

(d) Turn the engine switch on (IG).

(e) Disconnect the negative (-) terminal cable from the battery, and wait for at least 90 seconds.

(f) Replace the occupant classification ECU (See page RS-501).

(g) Connect the negative (-) terminal cable to the battery.

(h) Turn the engine switch on (IG).

(i) Load the data from the previous ECU stored in the tester, into the newly installed ECU by following the prompts on the tester screen.

(j) Turn the engine switch off.

(k) Turn the engine switch on (IG).

(l) Clear the DTCs stored in the memory (See page RS-318).
HINT:
If DTCs are not cleared at this time, past DTCs will remain.

RS

ECU EXCHANGE PROCEDURE (Before Exchange):

1: DIAGNOSIS - 1: OBD/MOBD - MODEL YEAR - MODEL SELECTION - 9: OCCUPANT DETECT
Refer to the following screen flow.

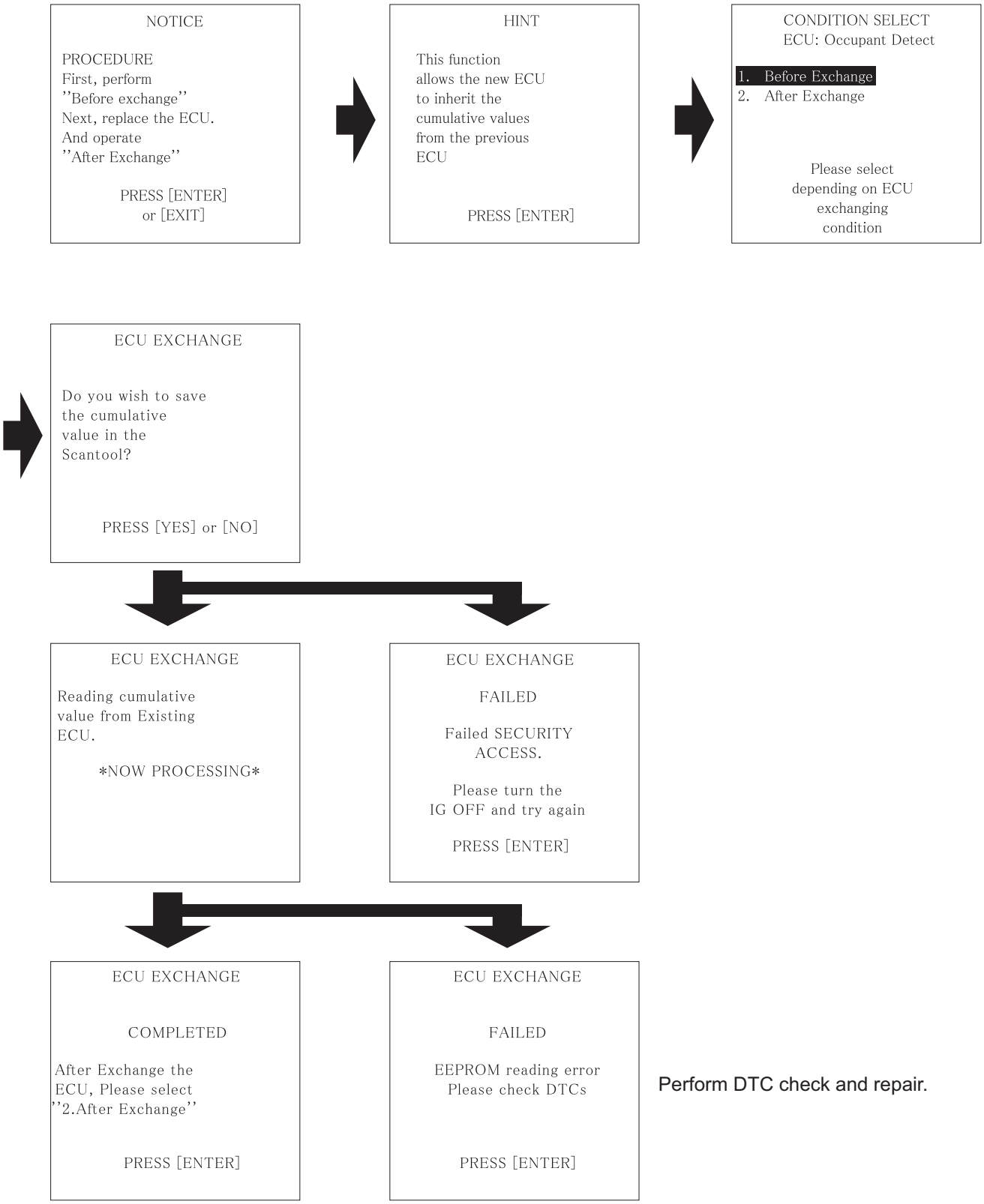

Perform DTC check and repair.

T

H101940E03

RS

ECU EXCHANGE PROCEDURE (After Exchange):

1: DIAGNOSIS - 1: OBD/MOBD - MODEL YEAR - MODEL SELECTION - 9: OCCUPANT DETECT
Refer to the following screen flow.

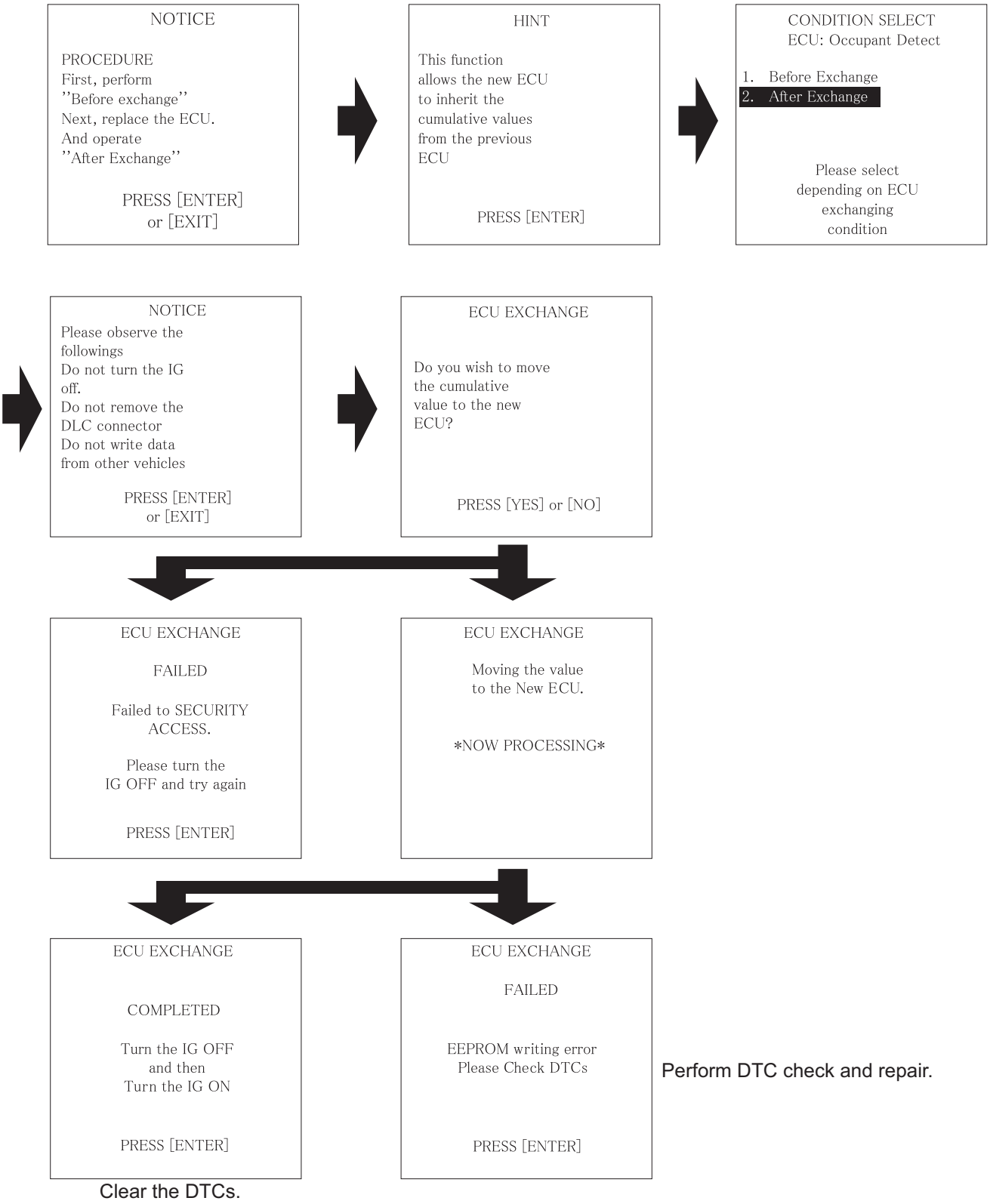

T

H101939E03

RS

INITIALIZATION

NOTICE:
Make sure that the front passenger seat is not occupied before performing the operation.
HINT:
Perform the zero point calibration if any of the following conditions is met:
- The occupant classification ECU is replaced.
- The passenger airbag ON/OFF indicator indicates OFF when the front passenger seat is not occupied.
- The vehicle is brought to the workshop for repair due to an accident or a collision.

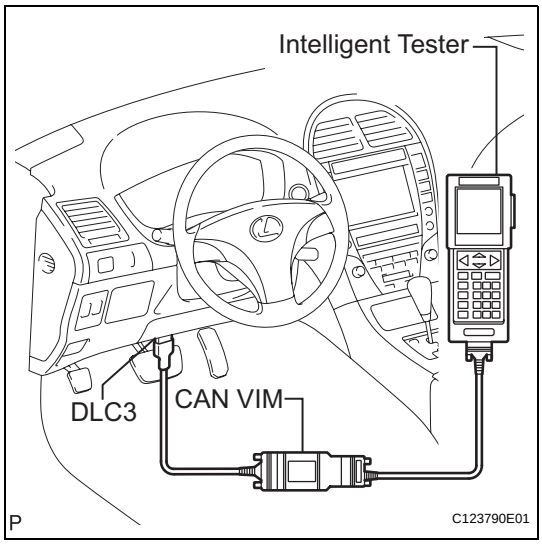

1. ZERO POINT CALIBRATION

(a) Zero point calibration procedures

(1) Check that all of the following conditions are met:
- The vehicle is parked on a flat surface.
- No objects are placed on the front passenger seat.
- The front passenger seat belt buckle switch is OFF.

(2) Adjust the seat position according to the table below.

Adjustment Item	Position
Slide Direction	Rearmost position
Reclining Angle	Upright position
Headrest Height	Lowest position
Lifter Height	Lowest position

(3) Connect the intelligent tester to the DLC3.

(4) Turn the engine switch on (IG).

(5) Perform the zero point calibration by following the prompts on the tester screen.
HINT:
- Refer to the intelligent tester operator's manual for further details.
- If the zero point calibration is performed when the calibration conditions are not satisfied, DTC B1797 is output.
- If the zero point calibration has failed, DTC B1797 is output.

RS

ZERO POINT CALIBRATION PROCEDURE:

1: DIAGNOSIS - 1: OBD/MOBD - MODEL YEAR - MODEL SELECTION - 9: OCCUPANT DETECT
Refer to the following screen flow.

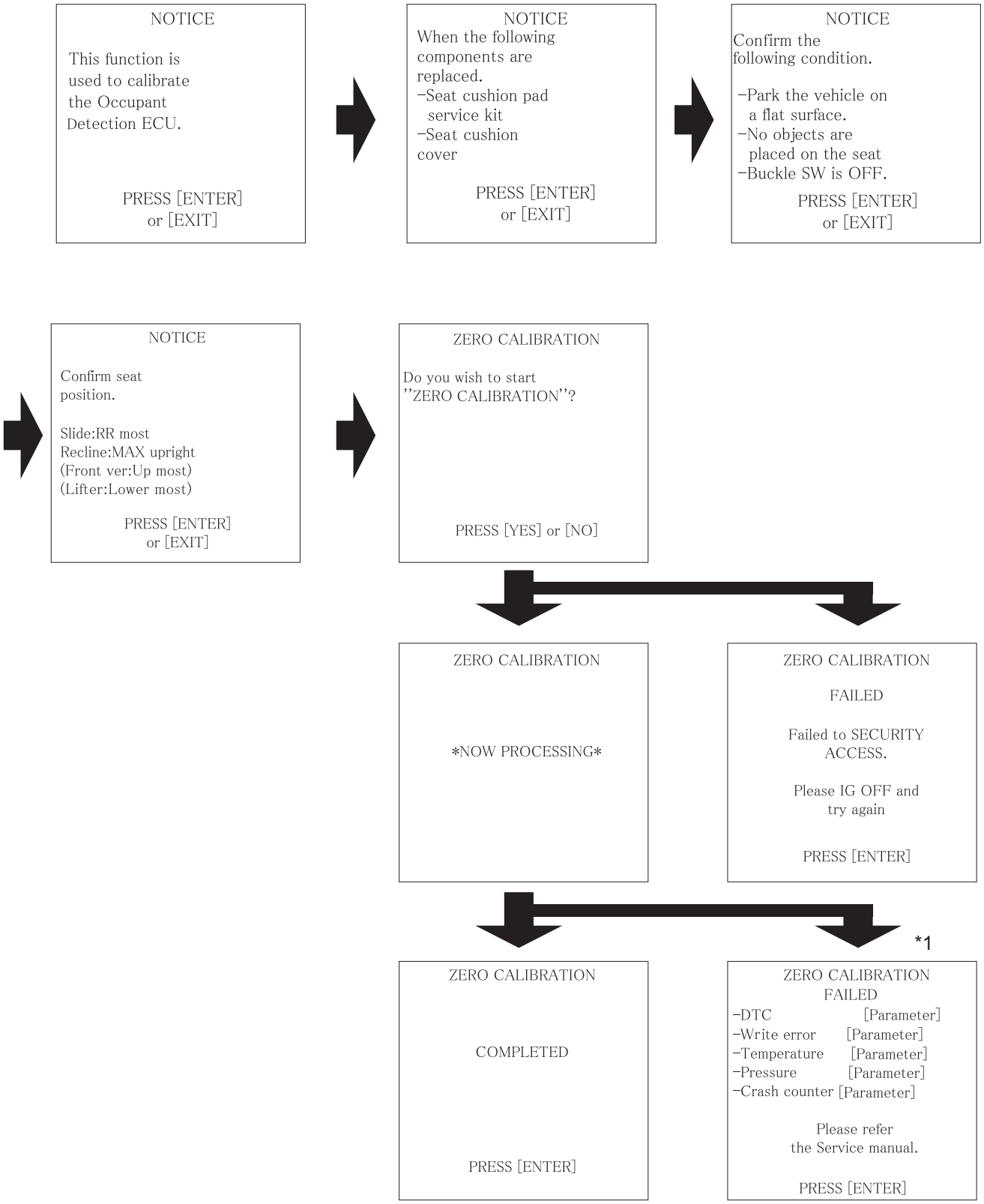

T

H101942E06

HINT:
*1: If After Exchange is selected before the previous ECU data are stored in the intelligent tester, the display screen returns to CONDITION SELECT ECU: Occupant Detect.

RS

Item	Procedure
DTC	Perform DTC check and repair
Write error	Replace front seat cushion assembly (with occupant classification ECU and occupant classification sensor)
Temperature	Check value of THERMISTOR TEMP in ECU DATA LIST
Pressure	Check value of FILTERED PRESS in ECU DATA LIST
Crash counter	-

2. SENSITIVITY CHECK

(a) Sensitivity check procedures

(1) Turn the engine switch off.

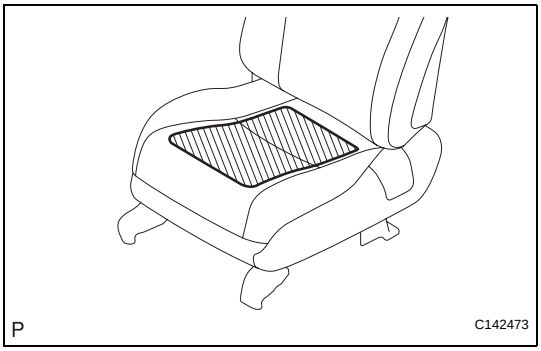

(2) Place a weight of 20 kg (44.0 lb) on the front passenger seat.
NOTICE:
- **Do not allow the weight to come into contact with the seatback when placing it on the seat cushion.**
- **Place the weight in the area shown in the illustration.**

(3) Turn the engine switch on (IG), and wait for at least 6 seconds.

(4) Check that the passenger airbag ON/OFF indicator indicates OFF.
OK:
The passenger airbag ON/OFF indicator indicates OFF.

(5) Add a weight of 30 kg (66.1 lb) to the front passenger seat (total 50 kg (110.2 lb)).
NOTICE:
- **Do not allow the weight to come into contact with the seatback when placing it on the seat cushion.**
- **Place the weight in the area shown in the illustration.**

(6) Check that the passenger airbag ON/OFF indicator indicates ON.
OK:
The passenger airbag ON/OFF indicator indicates ON.

PROBLEM SYMPTOMS TABLE

HINT:
Proceed to the troubleshooting for each circuit in the table below.

OCCUPANT CLASSIFICATION SYSTEM

Symptom	Suspected Area	See page
The front passenger seat condition differs from the indication by the passenger airbag ON/OFF indicator (DTC is not output).	Trouble in Passenger Airbag ON/OFF Indicator	RS-361

RS

TERMINALS OF ECU

1. OCCUPANT CLASSIFICATION ECU

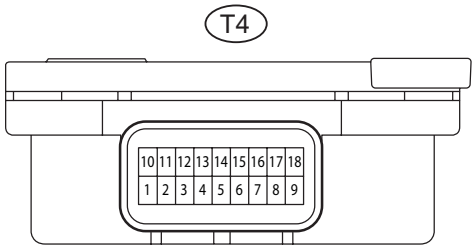

Y H101800E04

Terminal No. (Symbols)	Wiring Color	Terminal Description	Condition	Specified Condition
T4-5 (GND) - Body ground	W-B - Body ground	Occupant classification ECU ground line	Always	Below 1 V
T4-6 (PS) - T4-15 (GPS)	LG - W	Pressure sensor signal line	Engine switch on (IG)	0 to 5 V
T4-7 (VPS) - T4-5 (GND)	Y - W-B	Pressure sensor +B line	Engine switch on (IG)	4.75 to 5.25 V
T4-8 (GBT) - T4-5 (GND)	G - W-B	Belt tension sensor ground line	Always	Below 1 V
T4-9 (IG) - T4-5 (GND)	B - W-B	Occupant classification ECU +B line	Engine switch on (IG)	10 to 14 V
T4-10 (DIA) - T4-5 (GND)	W - W-B	Diagnosis (DLC3)	Engine switch on (IG)	Pulse generation
T4-11 (FSR+) - T4-12 (FSR-)	W - B	Center airbag sensor assembly communication line	Engine switch on (IG)	Pulse generation
T4-12 (FSR-) - T4-5 (GND)	B - W-B	Center airbag sensor assembly communication line (-)	Always	Below 1 V
T4-13 (BSW) - T4-14 (BGND)	B - GR	Passenger side buckle switch line	Engine switch on (IG)	Low: 4 to 7 mA Hi: 12 to 18 mA
T4-14 (BGND) - T4-5 (GND)	GR - W-B	Passenger side buckle switch ground line	Always	Below 1 V
T4-15 (GPS) - T4-5 (GND)	W - W-B	Pressure sensor ground line	Always	Below 1 V
T4-16 (BT) - T4-5 (GND)	R - W-B	Belt tension sensor signal line	Engine switch on (IG)	0 to 5 V
T4-17 (VBT) - T4-5 (GND)	P - W-B	Belt tension sensor +B line	Engine switch on (IG)	4.75 to 5.25 V

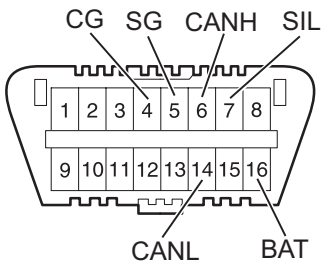

T H100769E16

DIAGNOSIS SYSTEM

1. CHECK DLC3

(a) The ECU uses ISO 15765-4 for communication. The terminal arrangement of the DLC3 complies with SAE J1962 and matches the ISO 15765-4 format.

Symbols (Terminal No.)	Terminal Description	Condition	Pulse condition
SIL (7) - SG (5)	Bus "+" Line	During transmission	Pulse generation
CG (4) - Body ground	Chassis Ground	Always	Below 1 Ω
SG (5) - Body ground	Signal ground	Always	Below 1 Ω

Symbols (Terminal No.)	Terminal Description	Condition	Pulse condition
BAT (16) - Body ground	Battery positive	Always	10 to 14 V
CANH (6) - CANL (14)	CAN bus line	Engine switch off (*)	54 to 69 Ω
CANH (6) - BAT (16)	HIGH-level CAN bus line	Engine switch off (*)	6 kΩ or higher
CANH (6) - CG (4)	HIGH-level CAN bus line	Engine switch off (*)	200 Ω or higher
CANL (14) - BAT (16)	LOW-level CAN bus line	Engine switch off (*)	6 kΩ or higher
CANL (14) - CG (4)	LOW-level CAN bus line	Engine switch off (*)	200 Ω or higher

NOTICE:
***: Before measuring the resistance, leave the vehicle as is for at least 1 minute and do not operate the engine switch, any other switches, or the door.**

If the result is not as specified, the DLC3 may have a malfunction. Repair or replace the harness and connector.

HINT:

If the display shows a communication error message when connecting the cable of the intelligent tester to the DLC3, turning the engine switch on (IG) and operating the intelligent tester, there is a problem on the vehicle side or tester side.

- If communication is normal when the tester is connected to another vehicle, inspect the DLC3 on the original vehicle.
- If communication is still not possible when the tester is connected to another vehicle, the problem is probably in the tester itself. Consult the Service Department listed in the tester's instruction manual.

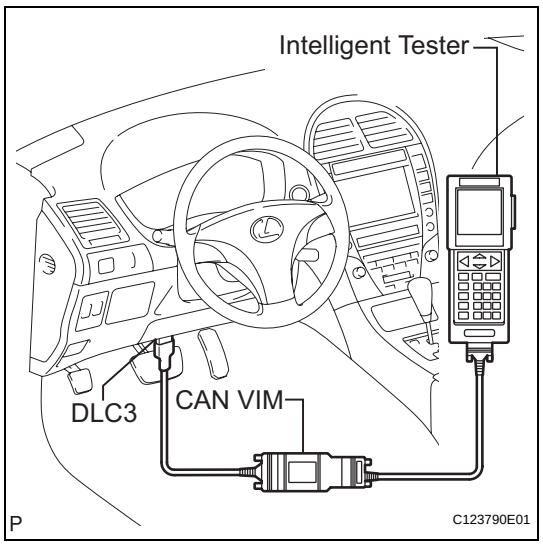

2. SYMPTOM SIMULATION

HINT:

The most difficult case in troubleshooting is when no symptoms occur. In such cases, a thorough customer problem analysis must be carried out. Then the same or similar conditions and the environment in which the problem occurred in the customer's vehicle should be simulated. No matter how experienced or skilled a technician may be, if he proceeds to troubleshooting without confirming the problem symptoms, he will likely overlook something important and make a wrong guess at some points in the repair operation.

This leads to a standstill in troubleshooting.

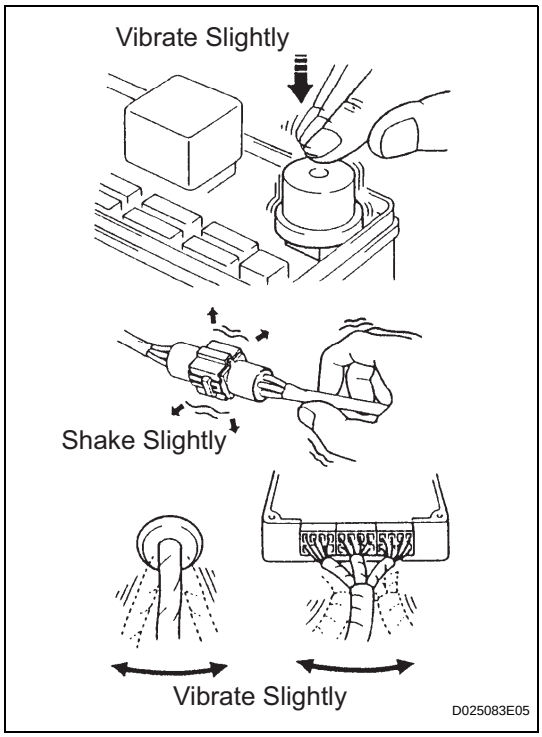

(a) Vibration method: When vibration seems to be the major cause.
HINT:
Perform the simulation method only during the primary check period (for approximately 6 seconds after the engine switch is turned on (IG)).
(1) Slightly vibrate the part of the sensor considered to be the problem cause with your fingers and check whether the malfunction occurs.
HINT:
Shaking the relays too strongly may result in open relays.
(2) Slightly shake the connector vertically and horizontally.
(3) Slightly shake the wire harness vertically and horizontally.
The connector joint and fulcrum of the vibration are the major areas to be checked thoroughly.

3. FUNCTION OF PASSENGER AIRBAG ON/OFF INDICATOR

(a) Initial check.
(1) Turn the engine switch on (IG).
(2) The passenger airbag ON/OFF indicator ("ON" and "OFF") comes on for approximately 4 seconds, then goes off for approximately 2 seconds.
(3) Approximately 6 seconds after the engine switch is turned on (IG), the passenger airbag ON/OFF indicator will show ON or OFF depending on the conditions listed below.

Condition	ON Indicator	OFF Indicator
Vacant	OFF	OFF
Adult is seated.	ON	OFF
Child is seated.	OFF	ON
Child restraint system is set.	OFF	ON
Occupant classification system failure	OFF	ON

HINT:
- The passenger airbag ON/OFF indicator is based on the timing chart below in order to check the indicator light circuit.
- When the occupant classification system has trouble, both the SRS warning light and the passenger airbag ON/OFF indicator ("OFF") come on. In this case, check the DTCs in "AIRBAG SYSTEM" first.

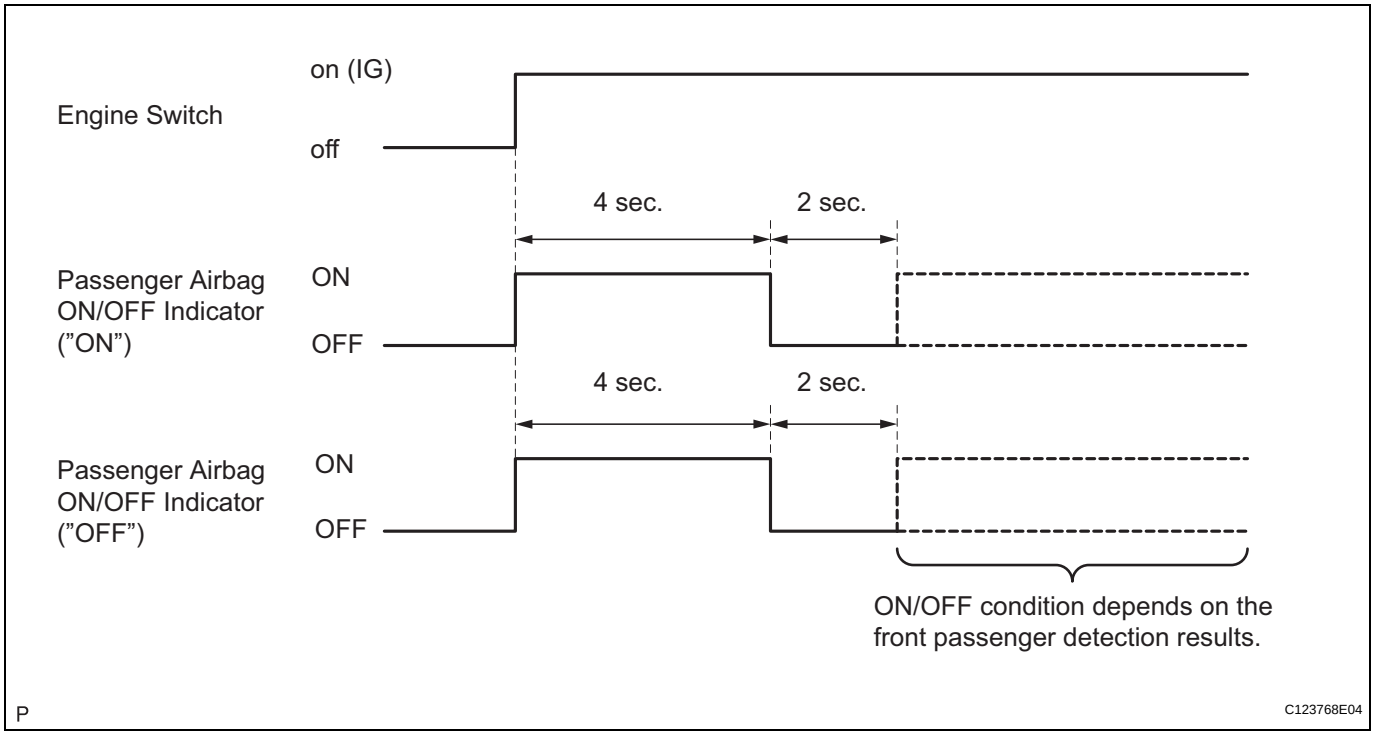

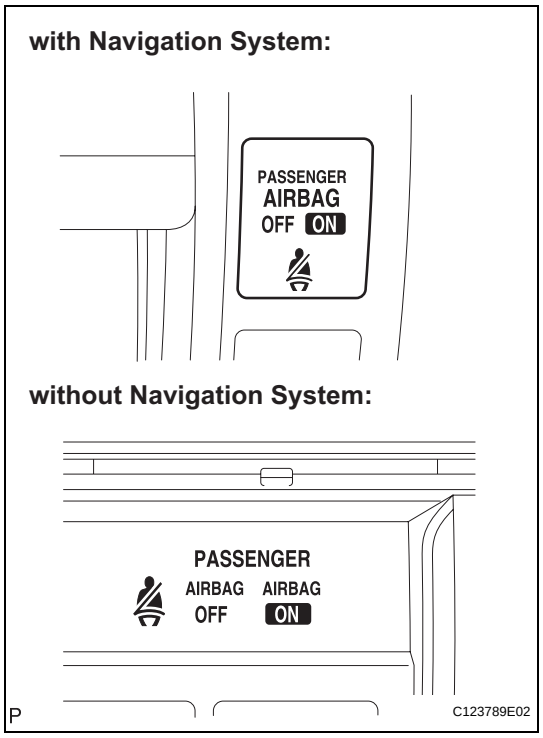

4. CHECK PASSENGER AIRBAG ON/OFF INDICATOR

(a) Turn the engine switch on (IG).

(b) Check that the passenger airbag ON/OFF indicator ("ON" and "OFF") comes on for approximately 4 seconds, then goes off for approximately 2 seconds.

HINT:

Refer to the table in the previous step regarding the passenger airbag ON/OFF indicator when the engine switch is turned on (IG) and approximately 6 seconds pass.

RS

DTC CHECK / CLEAR

1. DTC CHECK

HINT:

- When DTC B1650/32 is detected as a result of troubleshooting for AIRBAG SYSTEM, perform troubleshooting for the OCCUPANT CLASSIFICATION SYSTEM.
- Using the intelligent tester to read and clear DTCs, otherwise the DTCs cannot be read and cleared.

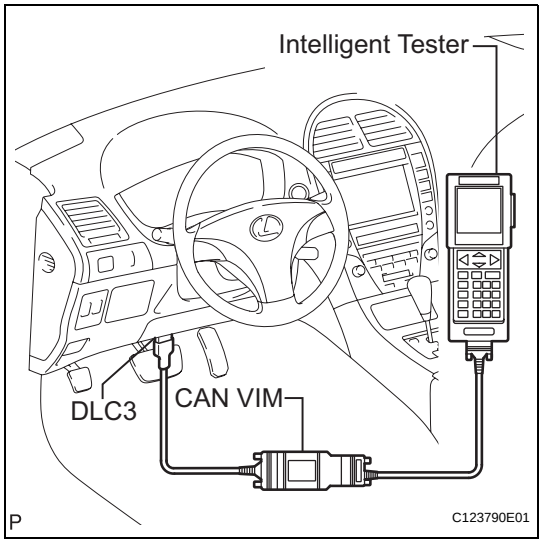

(a) Check for DTCs.
  (1) Connect the intelligent tester to the DLC3.
  (2) Turn the engine switch on (IG).
  (3) Check the DTCs by following the prompts on the tester screen.
  HINT:
  Refer to the intelligent tester operator's manual for further details.

(b) Clear DTCs.
  (1) Connect the intelligent tester to the DLC3.
  (2) Turn the engine switch on (IG).
  (3) Clear the DTCs by following the prompts on the tester screen.
  HINT:
  Refer to the intelligent tester operator's manual for further details.

DATA LIST / ACTIVE TEST

HINT:
By accessing the DATA LIST displayed on the intelligent tester, values of switches and sensors can be checked without removing any parts. Reading the DATA LIST as the first step of troubleshooting is one method to save diagnostic time.

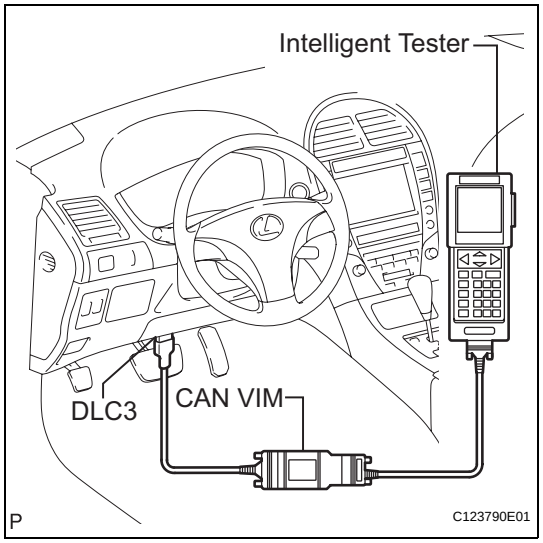

1. DATA LIST FOR OCCUPANT CLASSIFICATION ECU

(a) Connect the intelligent tester to the DLC3.
(b) Turn the engine switch on (IG).
(c) Turn the tester on.
(d) Enter the following menus: DIAGNOSIS / OBD/ MOBD / OCCUPANT DETECT / DATA LIST.
(e) Check the values by referring to the table below.
HINT:
The Specified Condition for Zero Point Calibration in the table below must be satisfied when the zero point calibration is performed.

DATA LIST:

Tester Display	Measurement Item/ Range	Normal Condition	Specified Condition for Zero Point Calibration	Diagnostic Note
PASSENGER CLASS	Passenger classification/ NG: Data is not determined AM50: Adult is seated and seat is in rear position AF05: Adult is seated and seat is in front position CHILD: Child is seated OFF: Vacant	AM50/AF05/CHILD/OFF	OFF	-
P BUCKLE SW	Buckle switch (Passenger side)/ SET: Passenger side seat belt is fastened UNSET: Passenger side seat belt is unfastened NG: Data is not determined	UNSET/SET	UNSET	-
RELATIVE PRESS	Pressure sensor output/ Min.: 0 Max.: 255	0 to 210	0 to 2	-
FILTERED PRESS	Filtered pressure sensor output/ Min.: 0 Max.: 255	38 to 240	38 to 75	If value is outside range of Specified Condition for Zero Point Calibration, check whether any objects placed on seat cushion and that seat cushion fitted correctly.
THERMISTOR TEMP	Thermistor temperature output/ Min.: -40°C (-40°F) Max.: 90°C (194°F)	-40° to 85°C (-40° to185°F)	3° to 40°C (36° to 104°F)	If value is outside range of Specified Condition for Zero Point Calibration, adjust temperature to proper range by using air conditioner, etc.
WEIGHT THRESH	Weight threshold/ Min.: 0 Max.: 255	36 to 67 (reference value)	36 to 67 (reference value)	-

Tester Display	Measurement Item/ Range	Normal Condition	Specified Condition for Zero Point Calibration	Diagnostic Note
FILTERED TENSION	Filtered belt tension output/ Min.: 0 Max.: 255	39 to 229	39 to 64 (no load)	-
EMPTY THRESH	Empty threshold value from seat factory/ Min.: 0 Max.: 255	38 to 75	38 to 75	-
ALLOW THRESH	Threshold value for adult passenger or not from seat factory/ Min.: 0 Max.: 255	43 to 64 (reference value)	43 to 64 (reference value)	-
#PRESENT CODES	Number of present trouble codes/ Min.: 0 Max.: 255	0	0	-
#PAST CODES	Number of past trouble codes/ Min.: 0 Max.: 255	0	0	-

DIAGNOSTIC TROUBLE CODE CHART

HINT:

- When DTC B1650/32 is detected as a result of troubleshooting for the AIRBAG SYSTEM, perform troubleshooting for the OCCUPANT CLASSIFICATION SYSTEM as shown in the chart below.
- Use the intelligent tester to read and clear the DTC of the occupant classification ECU, otherwise the DTCs cannot be read and cleared.

OCCUPANT CLASSIFICATION SYSTEM

DTC Code	Detection Item	Trouble Area	Passenger Airbag ON/ OFF Indicator (OFF Indicator)	See page
B1771	Passenger Side Buckle Switch Circuit Malfunction	1. Front seat wire RH 2. Front seat inner belt assembly RH (Passenger side buckle switch) 3. Occupant classification ECU	ON	RS-322
B1773	Belt Tension Sensor Circuit Malfunction	1. Front seat wire RH 2. Front seat outer belt assembly RH (Seat belt tension sensor) 3. Occupant classification ECU	ON	RS-329
B1774	Pressure Sensor Circuit Malfunction	1. Front seat wire RH 2. Occupant classification sensor 3. Occupant classification ECU	ON	RS-336
B1775	Pressure Sensor Power Source Circuit Malfunction	1. Front seat wire RH 2. Occupant classification sensor 3. Occupant classification ECU	ON	RS-336
B1776	Seat Belt Tension Sensor Power Source Circuit Malfunction	1. Front seat wire RH 2. Front seat outer belt assembly RH (Seat belt tension sensor) 3. Occupant classification ECU	ON	RS-329
B1790	Center Airbag Sensor Assembly Communication Circuit Malfunction	1. Floor wire No. 2 2. Front seat wire RH 3. Occupant classification ECU 4. Center airbag sensor assembly	ON	RS-343
B1795	Occupant Classification ECU Malfunction	Occupant classification ECU	ON	RS-355
B1797	Calibration Malfunction	There is no malfunction if this DTC is not output again after performing occupant classification system zero point calibration.	ON	RS-357

DTC	B1771	Passenger Side Buckle Switch Circuit Malfunction

DESCRIPTION

The passenger side buckle switch circuit consists of the occupant classification ECU and the front seat inner belt assembly RH.
DTC B1771 is recorded when a malfunction is detected in the passenger side buckle switch circuit.

DTC No.	DTC Detecting Condition	Trouble Area
B1771	• The occupant classification ECU receives a line short circuit signal, and open circuit signal, a short circuit to ground signal or a short circuit to B+ signal in passenger side buckle switch circuit for 2 seconds • Passenger side buckle switch malfunction • Occupant classification ECU malfunction	• Front seat wire RH • Front seat inner belt assembly RH (Passenger side buckle switch) • Occupant classification ECU

HINT:
When DTC B1650/32 is detected as a result of troubleshooting for the AIRBAG SYSTEM, check the DTCs stored in the occupant classification ECU. When DTC B1771 is output, perform troubleshooting for the DTC.

WIRING DIAGRAM

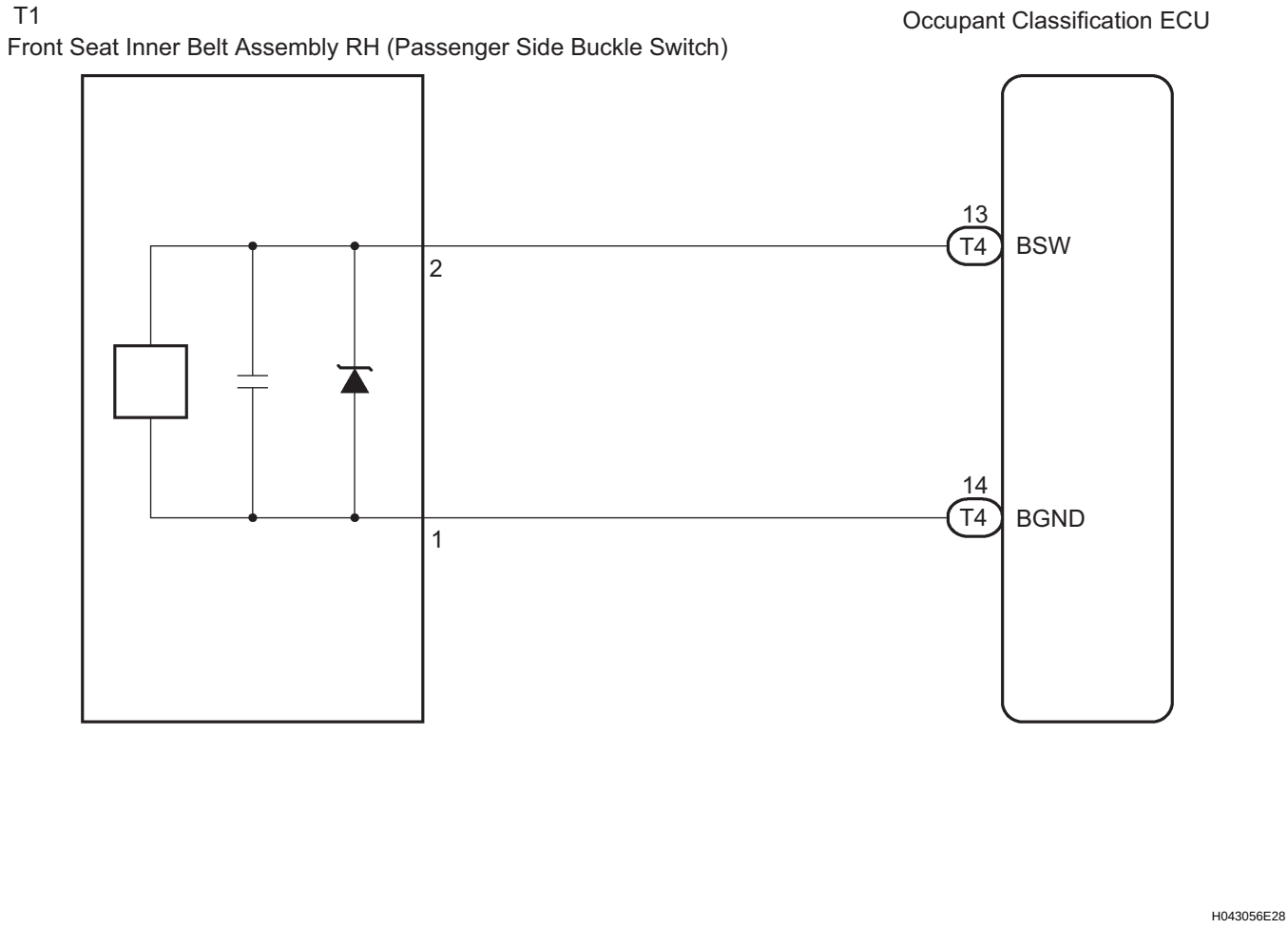

INSPECTION PROCEDURE

HINT:

- If troubleshooting (wire harness inspection) is difficult to perform, remove the front passenger seat installation bolts to see the undersurface of the seat cushion.
- In the above case, hold the seat so that it does not fall down. Holding the seat for a long period of time may cause a problem, such as seat rail deformation. Hold the seat only as necessary.

1	CHECK DTC

(a) Turn the engine switch on (IG).
(b) Clear the DTCs stored in the occupant classification ECU (See page RS-318).
(c) Clear the DTCs stored in the center airbag sensor assembly (See page RS-49).
(d) Turn the engine switch off.
(e) Turn the engine switch on (IG).
(f) Check the DTCs (See page RS-318).

RS

OK:

DTC B1771 is not output.

HINT:

Codes other than B1771 may be output at this time, but they are not related to this check.

OK → **USE SIMULATION METHOD TO CHECK (See page RS-37)**

NG

2 CHECK CONNECTION OF CONNECTORS

(a) Turn the engine switch off.

(b) Disconnect the negative (-) terminal cable from the battery, and wait for at least 90 seconds.

(c) Check that the connectors are properly connected to the occupant classification ECU and the front seat inner belt assembly RH.

OK:

The connectors are properly connected.

NG → **CONNECT CONNECTORS PROPERLY, THEN GO TO STEP 1**

OK

3 CHECK CONNECTORS

(a) Disconnect the connectors from the occupant classification ECU and front seat inner belt assembly RH.

(b) Check that the connectors (on the center airbag sensor assembly side and front seat inner belt assembly RH) are not damaged.

OK:

The connectors are not deformed or damaged.

HINT:

If the connectors are not connected securely, reconnect the connectors and proceed to the next inspection.

NG → **REPAIR OR REPLACE FRONT SEAT WIRE RH**

OK

RS

4 CHECK FRONT SEAT WIRE RH (SHORT TO B+)

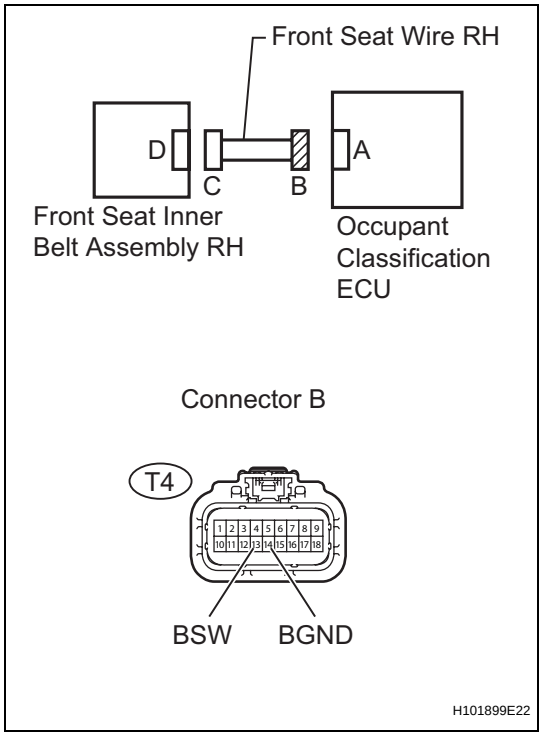

(a) Connect the negative (-) terminal cable to the battery.
(b) Turn the engine switch on (IG).
(c) Measure the voltage according to the value(s) in the table below.

Standard voltage

Tester connection	Condition	Specified condition
T4-13 (BSW) - Body ground	Engine switch on (IG)	Below 1 V
T4-14 (BGND) - Body ground	Engine switch on (IG)	Below 1 V

NG → **REPAIR OR REPLACE FRONT SEAT WIRE RH**

OK

5 CHECK FRONT SEAT WIRE RH (OPEN)

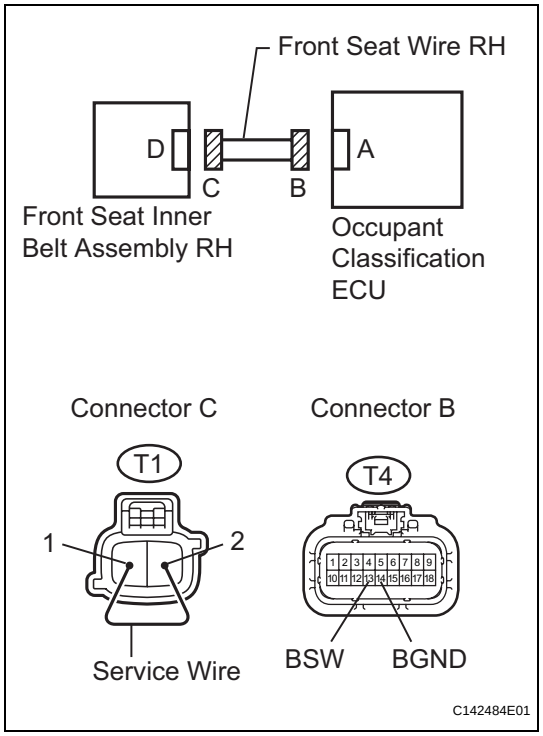

(a) Turn the engine switch off.
(b) Disconnect the negative (-) terminal cable from the battery, and wait for at least 90 seconds.
(c) Using a service wire, connect terminals 1 and 2 of connector C.

NOTICE:
Do not forcibly insert the service wire into the terminals of the connector when connecting the wire.

(d) Measure the resistance according to the value(s) in the table below.

Standard resistance

Tester connection	Condition	Specified condition
T4-13 (BSW) - T4-14 (BGND)	Always	Below 1 Ω

NG → **REPAIR OR REPLACE FRONT SEAT WIRE RH**

OK

RS

6 CHECK FRONT SEAT WIRE RH (SHORT TO GROUND)

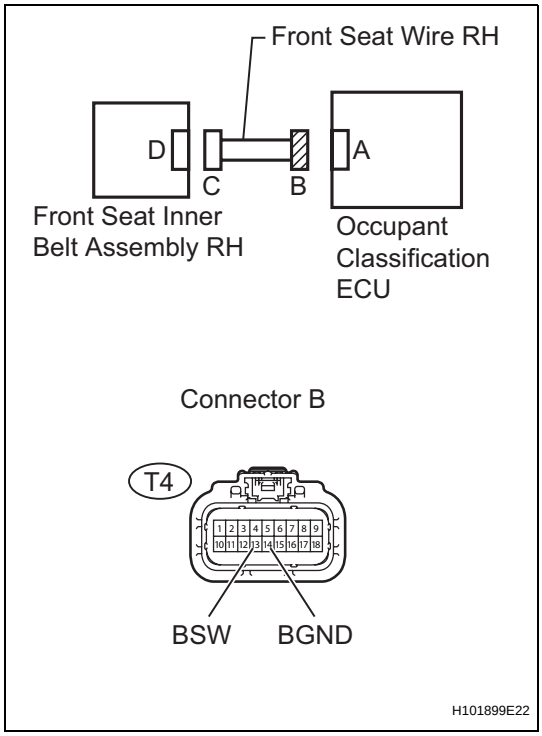

(a) Disconnect the service wire from connector C.
(b) Measure the resistance according to the value(s) in the table below.

Standard resistance

Tester connection	Condition	Specified condition
T4-13 (BSW) - Body ground	Always	1 MΩ or higher
T4-14 (BGND) - Body ground	Always	1 MΩ or higher

NG → **REPAIR OR REPLACE FRONT SEAT WIRE RH**

OK

7 CHECK FRONT SEAT WIRE RH (SHORT)

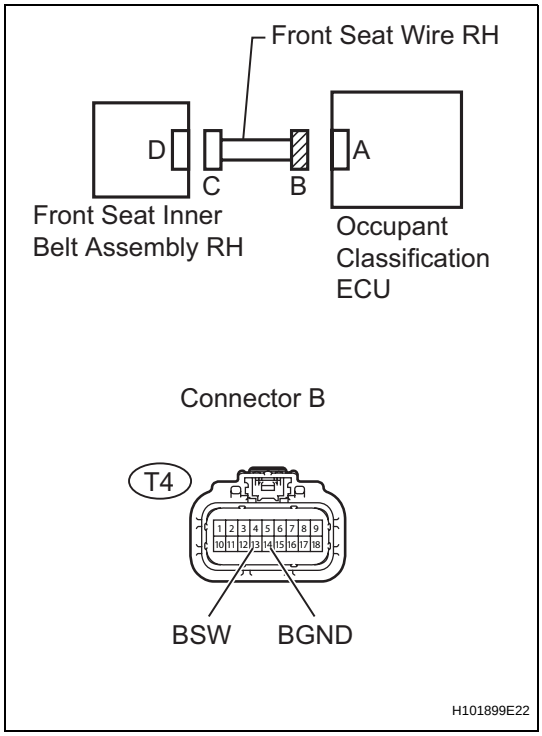

(a) Measure the resistance according to the value(s) in the table below.

Standard resistance

Tester connection	Condition	Specified condition
T4-13 (BSW) - T4-14 (BGND)	Always	1 MΩ or higher

NG → **REPAIR OR REPLACE FRONT SEAT WIRE RH**

OK

8	CHECK DTC

(a) Connect the connectors to the occupant classification ECU and the front seat inner belt assembly RH.
(b) Connect the negative (-) terminal cable to the battery.
(c) Turn the engine switch on (IG).
(d) Clear the DTCs stored in the occupant classification ECU (See page RS-318).
(e) Clear the DTCs stored in the center airbag sensor assembly (See page RS-49)
(f) Turn the engine switch off.
(g) Turn the engine switch on (IG).
(h) Check the DTCs (See page RS-318).
OK:
DTC B1771 is not output.
HINT:
Codes other than B1771 may be output at this time, but they are not related to this check.

OK → **USE SIMULATION METHOD TO CHECK (See page RS-37)**

NG ↓

9	REPLACE FRONT SEAT INNER BELT ASSEMBLY RH

(a) Turn the engine switch off.
(b) Disconnect the negative (-) terminal cable from the battery, and wait for at least 90 seconds.
(c) Replace the front seat inner belt assembly RH (See page SB-22).
HINT:
Perform the inspection using parts from a normal vehicle if possible.
(d) Connect the negative (-) terminal cable to the battery.
(e) Turn the engine switch on (IG).
(f) Clear the DTCs stored in the occupant classification ECU (See page RS-318).
(g) Clear the DTCs stored in the center airbag sensor assembly (See page RS-49)
(h) Turn the engine switch off.
(i) Turn the engine switch on (IG).
(j) Check the DTCs (See page RS-318).
OK:
DTC B1771 is not output.
HINT:
Codes other than B1771 may be output at this time, but they are not related to this check.

OK → **END**

NG ↓

RS

10	REPLACE OCCUPANT CLASSIFICATION ECU

(a) Connect the intelligent tester to the DLC3.
(b) Turn the engine switch on (IG).
(c) Using the intelligent tester, save the ECU data from the ECU which has been installed on the vehicle (See page RS-308).
(d) Turn the engine switch off.
(e) Disconnect the negative (-) terminal cable from the battery, and wait for at least 90 seconds.
(f) Replace the occupant classification ECU (See page RS-501).
(g) Connect the negative (-) terminal cable to the battery.
(h) Turn the engine switch on (IG).
(i) Using the intelligent tester, load the previous ECU data stored into the new ECU (See page RS-308).
(j) Turn the engine switch off.
(k) Turn the engine switch on (IG).
(l) Clear the DTCs stored in the memory (See page RS-318).
HINT:
If DTC is not cleared at this time, past DTC will remain.

NEXT

11	PERFORM SENSITIVITY CHECK

(a) Perform the sensitivity check (See page RS-312).

NEXT

END

DTC	B1773	Belt Tension Sensor Circuit Malfunction

DTC	B1776	Seat Belt Tension Sensor Power Source Circuit Malfunction

DESCRIPTION

The seat belt tension sensor circuit consists of the occupant classification ECU and the seat belt tension sensor.
The seat belt tension sensor sends the seat belt tension signal to the occupant classification ECU.
DTC B1773 and B1776 are recorded when a malfunction is detected in the seat belt tension sensor circuit.

DTC No.	DTC Detecting Condition	Trouble Area
B1773 B1776	• The occupant classification ECU receives line short circuit signal, and open circuit signal, a short circuit to ground signal or a short circuit to B+ signal in the seat belt tension sensor circuit for 2 seconds. • Seat belt tension sensor malfunction • Occupant classification ECU malfunction	• Front seat wire RH • Front seat outer belt assembly RH (Seat belt tension sensor) • Occupant classification ECU

HINT:
When DTC B1650/32 is detected as a result of troubleshooting for the AIRBAG SYSTEM, check the DTCs stored in the occupant classification ECU. When DTC B1773 and B1776 are output, perform troubleshooting for the DTC.

RS

WIRING DIAGRAM

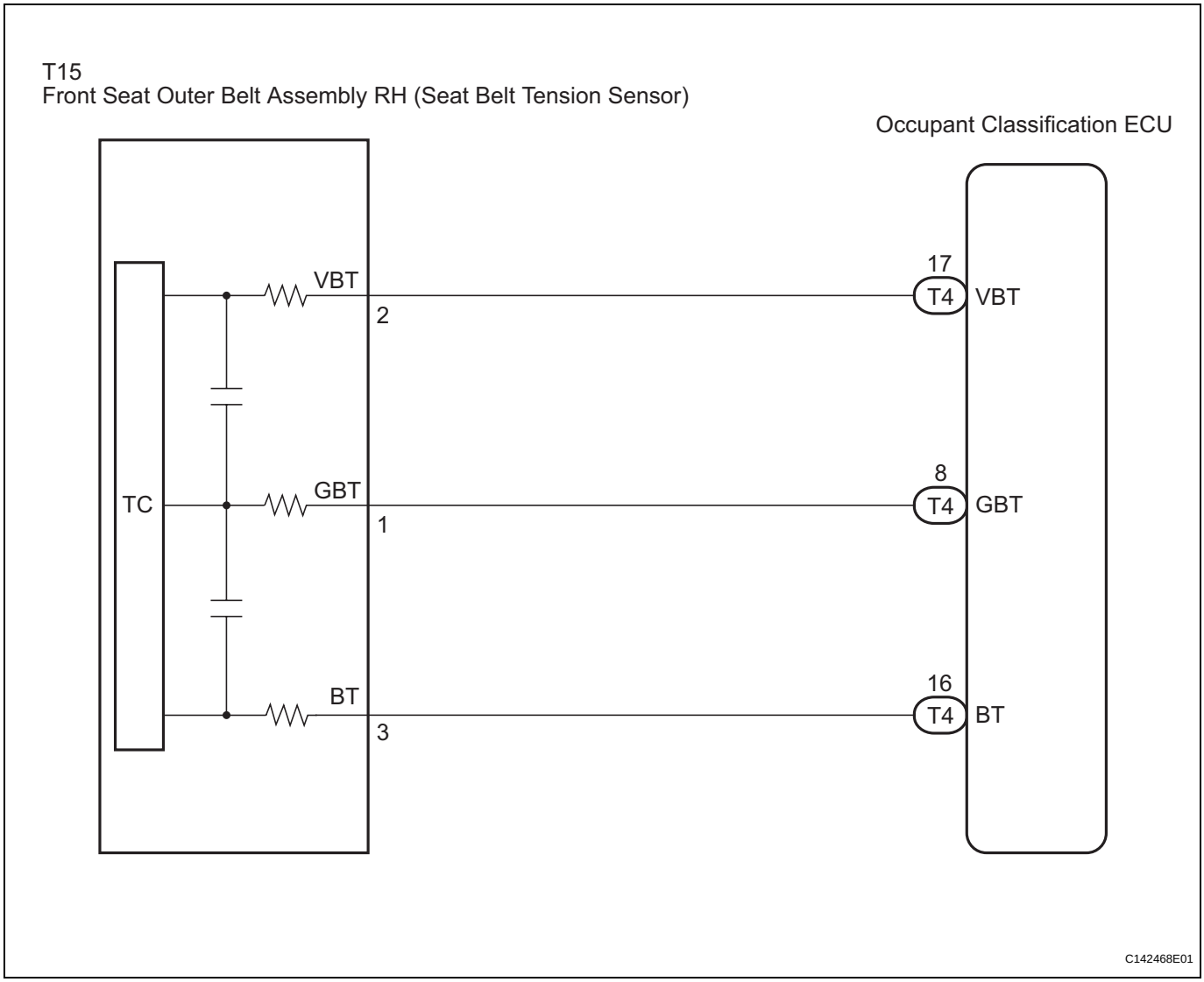

INSPECTION PROCEDURE

HINT:

- If troubleshooting (wire harness inspection) is difficult to perform, remove the passenger seat installation bolts to see the undersurface of the seat cushion.
- In the above case, hold the seat so that it does not fall down. Holding the seat for a long period of time may cause a problem, such as seat rail deformation. Hold the seat only as necessary.

1	CHECK DTC

(a) Turn the engine switch on (IG).
(b) Clear the DTCs stored in the occupant classification ECU (See page RS-318).
(c) Clear the DTCs stored in the center airbag sensor assembly (See page RS-49).
(d) Turn the engine switch off.
(e) Turn the engine switch on (IG).
(f) Check the DTCs (See page RS-318).

OK:

DTC B1773 and B1776 are not output.

HINT:

Codes other than B1773 and B1776 may be output at this time, but they are not related to this check.

OK → **USE SIMULATION METHOD TO CHECK (See page RS-37)**

NG

2 CHECK CONNECTION OF CONNECTORS

(a) Turn the engine switch off.

(b) Disconnect the negative (-) terminal cable from the battery, and wait for at least 90 seconds.

(c) Check that the connectors are properly connected to the occupant classification ECU and the seat belt tension sensor.

OK:

The connectors are properly connected.

NG → **CONNECT CONNECTORS PROPERLY, THEN GO TO STEP 1**

OK

3 CHECK CONNECTORS

(a) Disconnect the connectors from the occupant classification ECU and the belt tension sensor.

(b) Check that the connectors (on the center airbag sensor assembly side and seat belt tension sensor side) are not damaged.

OK:

The connectors are not deformed or damaged.

HINT:

If the connectors are not connected securely, reconnect the connectors and proceed to the next inspection.

NG → **REPAIR OR REPLACE FRONT SEAT WIRE RH**

OK

RS

4 CHECK FRONT SEAT WIRE RH (SHORT TO B+)

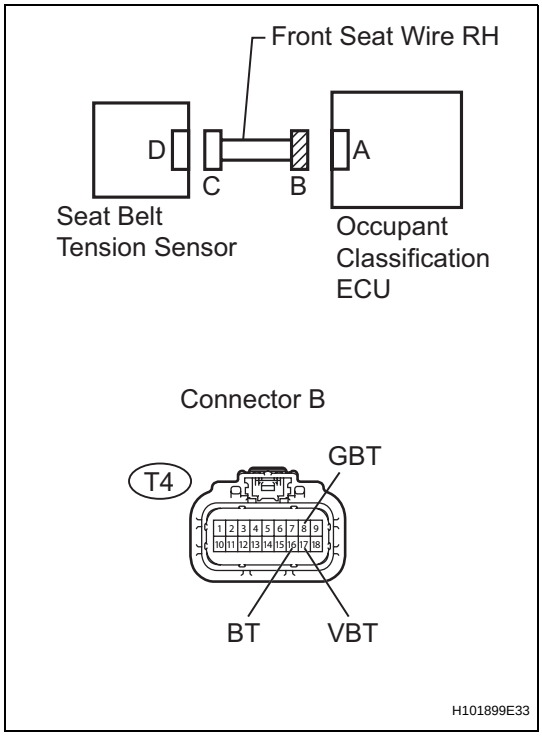

(a) Connect the negative (-) terminal cable to the battery.
(b) Turn the engine switch on (IG).
(c) Measure the voltage according to the value(s) in the table below.

Standard voltage

Tester Connection	Condition	Specified Condition
T4-8 (GBT) - Body ground	Engine switch on (IG)	Below 1 V
T4-16 (BT) - Body ground	Engine switch on (IG)	Below 1 V
T4-17 (VBT) - Body ground	Engine switch on (IG)	Below 1 V

NG → **REPAIR OR REPLACE FRONT SEAT WIRE RH**

OK

5 CHECK FRONT SEAT WIRE RH (OPEN)

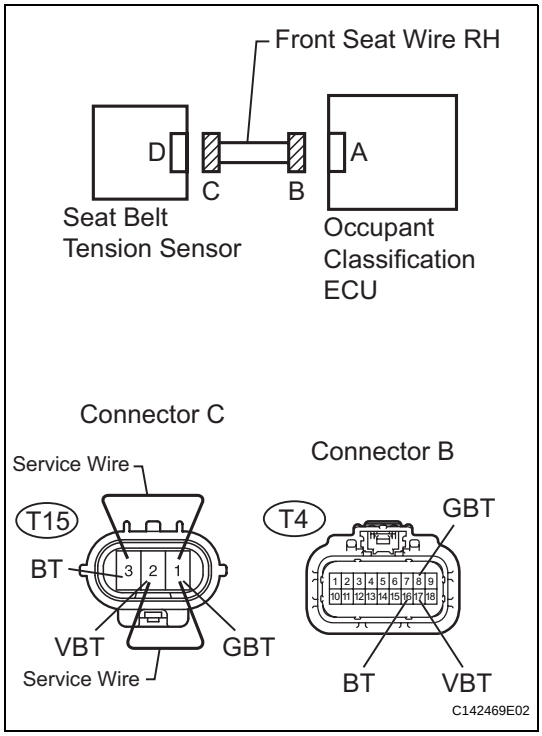

(a) Turn the engine switch off.
(b) Disconnect the negative (-) terminal cable from the battery, and wait for at least 90 seconds.
(c) Using a service wire, connect terminals 1 (GBT) and 3 (BT), and connect terminals 1 (GBT) and 2 (VBT) of connector C.

NOTICE:
Do not forcibly insert the service wire into the terminals of the connector when connecting the wire.

(d) Measure the resistance according to the value(s) in the table below.

Standard resistance

Tester Connection	Condition	Specified Condition
T4-16 (BT) - T4-8 (GBT)	Always	Below 1 Ω
T4-17 (VBT) - T4-8 (GBT)	Always	Below 1 Ω

NG → **REPAIR OR REPLACE FRONT SEAT WIRE RH**

OK

RS

6 CHECK FRONT SEAT WIRE RH (SHORT TO GROUND)

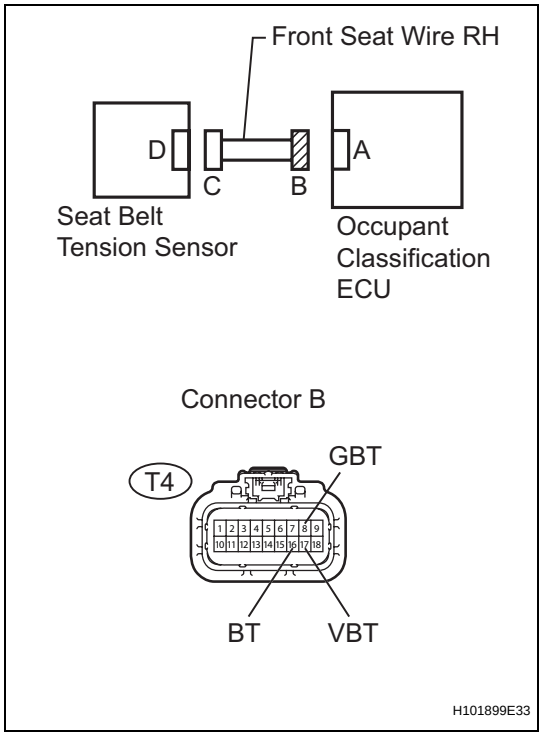

(a) Disconnect the service wire from connector C.
(b) Measure the resistance according to the value(s) in the table below.

Standard resistance

Tester Connection	Condition	Specified Condition
T4-8 (GBT) - Body ground	Always	1 MΩ or higher
T4-16 (BT) - Body ground	Always	1 MΩ or higher
T4-17 (VBT) - Body ground	Always	1 MΩ or higher

NG → **REPAIR OR REPLACE FRONT SEAT WIRE RH**

OK

7 CHECK FRONT SEAT WIRE RH (SHORT)

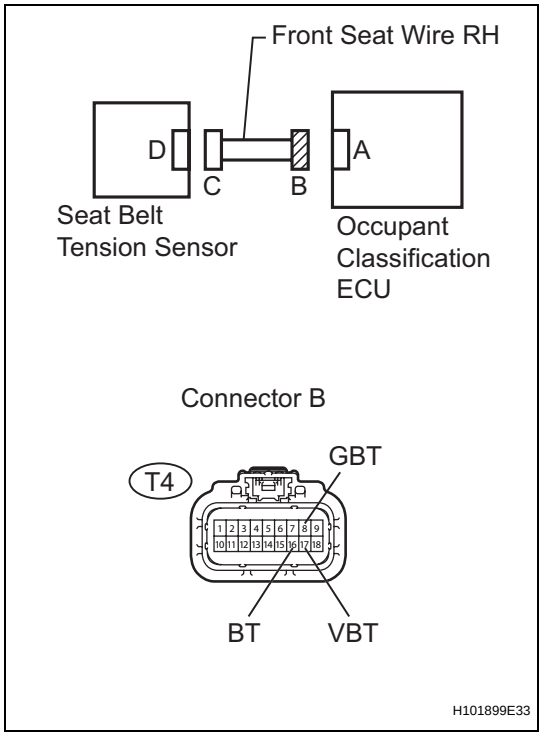

(a) Measure the resistance according to the value(s) in the table below.

Standard resistance

Tester Connection	Condition	Specified Condition
T4-16 (BT) - T4-8 (GBT)	Always	1 MΩ or higher
T4-17 (VBT) - T4-8 (GBT)	Always	1 MΩ or higher

NG → **REPAIR OR REPLACE FRONT SEAT WIRE RH**

OK

RS

8	CHECK DTC

(a) Connect the connectors to the occupant classification ECU and the seat belt tension sensor.
(b) Connect the negative (-) terminal cable to the battery.
(c) Turn the engine switch on (IG).
(d) Clear the DTCs stored in the occupant classification ECU (See page RS-318).
(e) Clear the DTCs stored in the center airbag sensor assembly (See page RS-49).
(f) Turn the engine switch off.
(g) Turn the engine switch on (IG).
(h) Check the DTCs (See page RS-318).
OK:
DTC B1773 and B1776 are not output.
HINT:
Codes other than B1773 and B1776 may be output at this time, but they are not related to this check.

OK → **USE SIMULATION METHOD TO CHECK (See page RS-37)**

NG

9	REPLACE FRONT SEAT OUTER BELT ASSEMBLY RH

(a) Turn the engine switch off.
(b) Disconnect the negative (-) terminal cable from the battery, and wait for at least 90 seconds.
(c) Replace the front seat outer belt assembly (See page SB-27).
HINT:
Perform the inspection using parts from a normal vehicle if possible.
(d) Connect the negative (-) terminal cable to the battery.
(e) Turn the engine switch on (IG).
(f) Clear the DTCs stored in the occupant classification ECU (See page RS-318).
(g) Clear the DTCs stored in the center airbag sensor assembly (See page RS-49).
(h) Turn the engine switch off.
(i) Turn the engine switch on (IG).
(j) Check the DTCs (See page RS-318).
OK:
DTC B1773 and B1776 are not output.
HINT:
Codes other than B1773 and B1776 may be output at this time, but they are not related to this check.

OK → **END**

NG

10	REPLACE OCCUPANT CLASSIFICATION ECU

(a) Connect the intelligent tester to the DLC3.
(b) Turn the engine switch on (IG).
(c) Using the intelligent tester, save the ECU data from the ECU which has been installed on the vehicle (See page RS-308).
(d) Turn the engine switch off.
(e) Disconnect the negative (-) terminal cable from the battery, and wait for at least 90 seconds.
(f) Replace the occupant classification ECU (See page RS-501).
(g) Connect the negative (-) terminal cable to the battery.
(h) Turn the engine switch on (IG).
(i) Using the intelligent tester, load the previous ECU data stored into the new ECU (See page RS-308).
(j) Turn the engine switch off.
(k) Turn the engine switch on (IG).
(l) Clear the DTCs stored in the memory (See page RS-318).
HINT:
If DTC is not cleared at this time, past DTC will remain.

NEXT

11	PERFORM SENSITIVITY CHECK

(a) Perform the sensitivity check (See page RS-312).

NEXT

END

DTC	B1774	Pressure Sensor Circuit Malfunction

DTC	B1775	Pressure Sensor Power Source Circuit Malfunction

DESCRIPTION

The pressure sensor circuit consists of the occupant classification ECU and the occupant classification sensor.
The occupant classification sensor sends the pressure signal to the occupant classification ECU.
DTC B1774 and B1775 are recorded when a malfunction is detected in the pressure sensor circuit.

DTC No.	DTC Detecting Condition	Trouble Area
B1774 B1775	• The occupant classification ECU receives a line short circuit signal, and open circuit signal, a short circuit to ground signal or a short circuit to B+ signal in the pressure sensor circuit for 2 seconds. • Occupant classification sensor malfunction • Occupant classification ECU malfunction	• Front seat wire RH • Occupant classification sensor • Occupant classification ECU

HINT:
When DTC B1650/32 is detected as a result of troubleshooting for the AIRBAG SYSTEM, check the DTCs stored in the occupant classification ECU. When DTC B1774 and B1775 are output, perform troubleshooting for the DTC.

RS

WIRING DIAGRAM

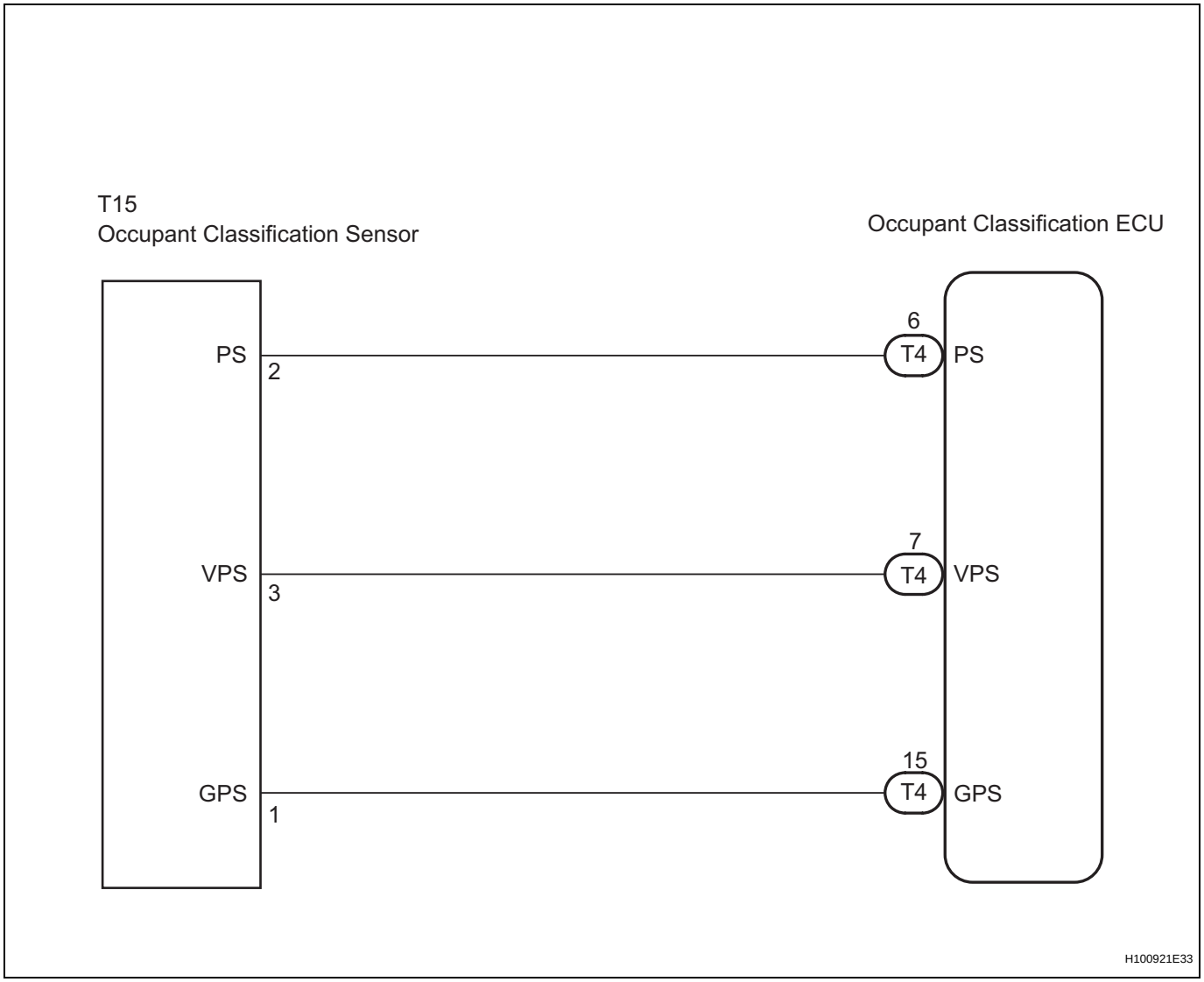

INSPECTION PROCEDURE

HINT:

- If troubleshooting (wire harness inspection) is difficult to perform, remove the passenger seat installation bolts to see the undersurface of the seat cushion.
- In the above case, hold the seat so that it does not fall down. Holding the seat for a long period of time may cause a problem, such as seat rail deformation. Hold the seat only as necessary.
- After performing the zero point calibration, check for DTCs to confirm that the calibration is completed normally. (If it fails, DTC B1797 will be output.)

1	CHECK DTC

(a) Turn the engine switch on (IG).
(b) Clear the DTCs stored in the occupant classification ECU (See page RS-318).
(c) Clear the DTCs stored in the center airbag sensor assembly (See page RS-49).
(d) Turn the engine switch off.
(e) Turn the engine switch on (IG).

RS

(f) Check the DTCs (See page RS-318).
OK:
DTC B1774 and B1775 are not output.
HINT:
Codes other than B1774 and B1775 may be output at this time, but they are not related to this check.

OK → **USE SIMULATION METHOD TO CHECK (See page RS-315)**

NG

2 CHECK CONNECTION OF CONNECTORS

(a) Turn the engine switch off.
(b) Disconnect the negative (-) terminal cable from the battery, and wait for at least 90 seconds.
(c) Check that the connectors are properly connected to the occupant classification ECU and the occupant classification sensor.
OK:
The connectors are properly connected.

NG → **CONNECT CONNECTORS PROPERLY, THEN GO TO STEP 1**

OK

3 CHECK CONNECTORS

(a) Disconnect the connectors from the occupant classification ECU and the occupant classification sensor.
(b) Check that the connectors (on the center airbag sensor assembly and occupant classification sensor side) are not damaged.
OK:
The connectors are not deformed or damaged.

NG → **REPAIR OR REPLACE FRONT SEAT WIRE RH**

OK

RS

4 CHECK FRONT SEAT WIRE RH (SHORT TO B+)

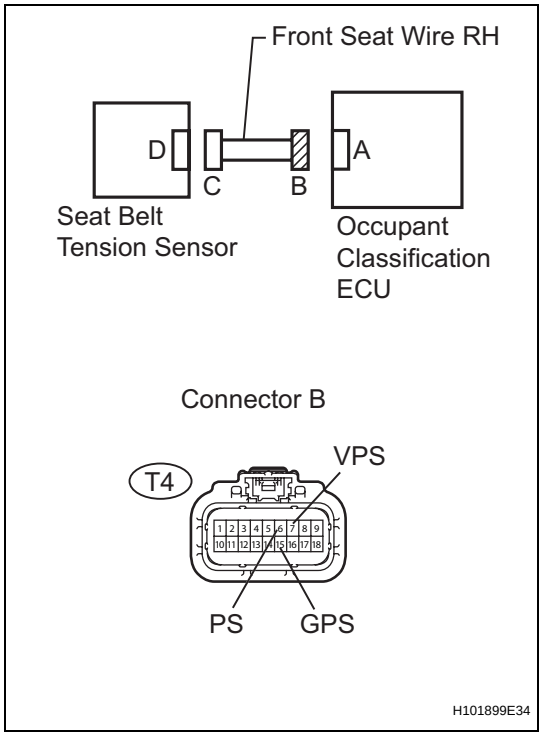

(a) Connect the negative (-) terminal cable to the battery.
(b) Turn the engine switch on (IG).
(c) Measure the voltage according to the value(s) in the table below.

Standard voltage

Tester Connection	Condition	Specified Condition
T4-6 (PS) - Body ground	Engine switch on (IG)	Below 1 V
T4-7 (VPS) - Body ground	Engine switch on (IG)	Below 1 V
T4-15 (GPS) - Body ground	Engine switch on (IG)	Below 1 V

NG → **REPAIR OR REPLACE FRONT SEAT WIRE RH**

OK

5 CHECK FRONT SEAT WIRE RH (OPEN)

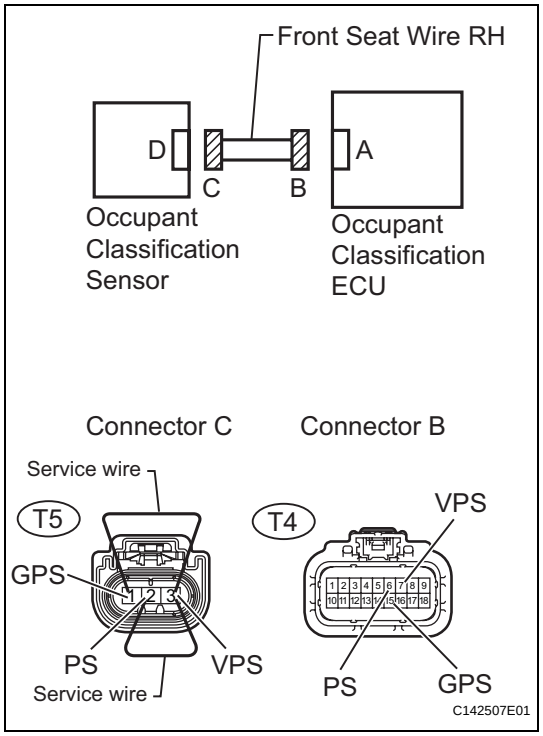

(a) Turn the engine switch off.
(b) Disconnect the negative (-) terminal cable from the battery, and wait for at least 90 seconds.
(c) Using a service wire, connect terminals 1 (GPS) and 3 (VPS), and connect terminals 2 (PS) and 3 (VPS) of connector C.

NOTICE:
Do not forcibly insert the service wire into the terminals of the connector when connecting the wire.

(d) Measure the resistance according to the value(s) in the table below.

Standard resistance

Tester Connection	Condition	Specified Condition
T4-6 (PS) - T4-7 (VPS)	Always	Below 1 Ω
T4-7 (VPS) - T4-15 (GPS)	Always	Below 1 Ω

NG → **REPAIR OR REPLACE FRONT SEAT WIRE RH**

OK

RS

6 CHECK FRONT SEAT WIRE RH (SHORT TO GROUND)

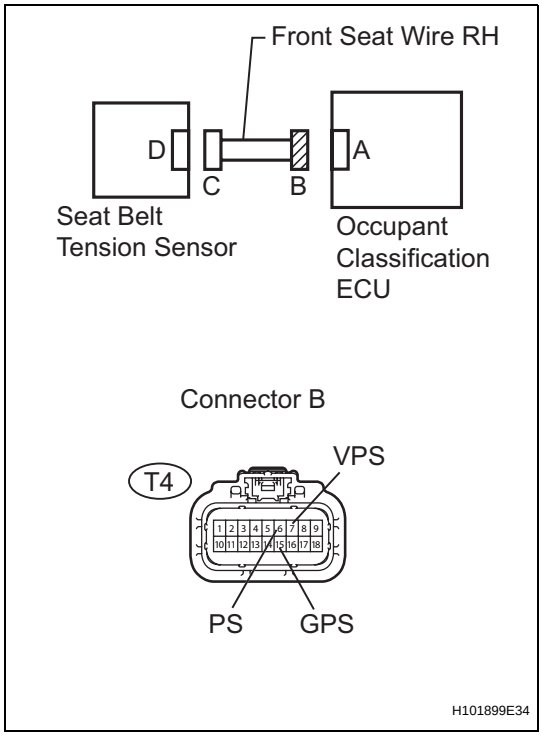

(a) Disconnect the service wire from connector C.
(b) Measure the resistance according to the value(s) in the table below.

Standard resistance

Tester Connection	Condition	Specified Condition
T4-6 (PS) - Body ground	Always	1 MΩ or higher
T4-7 (VPS) - Body ground	Always	1 MΩ or higher
T4-15 (GPS) - Body ground	Always	1 MΩ or higher

NG → **REPAIR OR REPLACE FRONT SEAT WIRE RH**

OK

7 CHECK FRONT SEAT WIRE RH (SHORT)

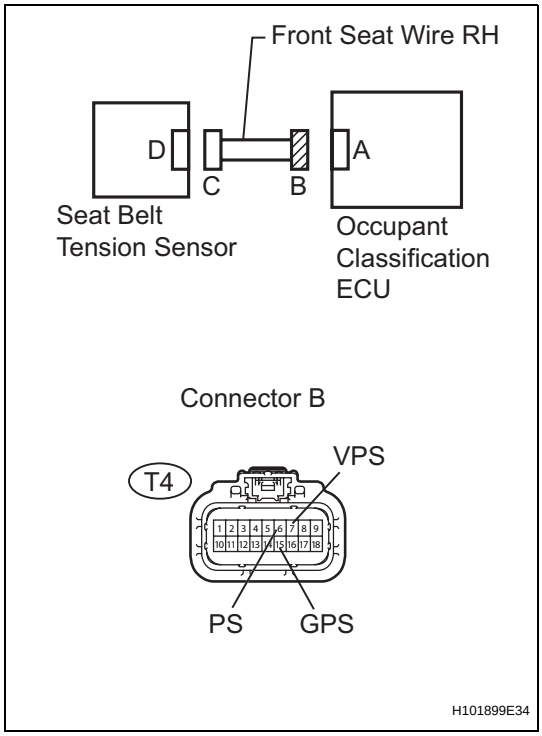

(a) Measure the resistance according to the value(s) in the table below.

Standard resistance

Tester Connection	Condition	Specified Condition
T4-6 (PS) - T4-15 (GPS)	Always	1 MΩ or higher
T4-7 (VPS) - T4-15 (GPS)	Always	1 MΩ or higher

NG → **REPAIR OR REPLACE FRONT SEAT WIRE RH**

OK

8	CHECK DTC

(a) Connect the connectors to the occupant classification ECU and the occupant classification sensor.
(b) Connect the negative (-) terminal cable to the battery.
(c) Turn the engine switch on (IG).
(d) Clear the DTCs stored in the occupant classification ECU (See page RS-318).
(e) Clear the DTCs stored in the center airbag sensor assembly (See page RS-49).
(f) Turn the engine switch off.
(g) Turn the engine switch on (IG).
(h) Check the DTCs (See page RS-318).
OK:
DTCs B1774 and B1775 are not output.
HINT:
Codes other than B1774 and B1775 may be output at this time, but they are not related to this check.

OK → **USE SIMULATION METHOD TO CHECK (See page RS-315)**

NG

9	REPLACE OCCUPANT CLASSIFICATION SENSOR (FRONT SEAT CUSHION ASSEMBLY)

(a) Turn the engine switch off.
(b) Disconnect the negative (-) terminal cable from the battery, and wait for at least 90 seconds.
(c) Replace the front seat cushion assembly (with occupant classification ECU and occupant classification sensor) (See page RS-501).
HINT:
Perform the inspection using parts from a normal vehicle if possible.
(d) Connect the negative (-) terminal cable to the battery.
(e) Turn the engine switch on (IG).
(f) Clear the DTCs stored in the occupant classification ECU (See page RS-318).
(g) Clear the DTCs stored in the center airbag sensor assembly (See page RS-49)
(h) Turn the engine switch off.
(i) Turn the engine switch on (IG).
(j) Check the DTCs (See page RS-318).
OK:
DTC B1774 and B1775 are not output.
HINT:
Codes other than B1774 and B1775 may be output at this time, but they are not related to this check.

NEXT

RS

10	PERFORM ZERO POINT CALIBRATION

(a) Connect the intelligent tester to the DLC3.
(b) Turn the engine switch on (IG).
(c) Using the intelligent tester, perform the zero point calibration (See page RS-312).
(d) Turn the engine switch off.
(e) Turn the engine switch on (IG).
(f) Clear the DTCs stored in the memory (See page RS-318).
HINT:
If DTC is not cleared at this time, past DTC will remain.

NEXT

11	CHECK DTC

HINT:
Check that the zero point calibration is completed normally. If any of the following conditions is met, DTC B1797 will be output (Refer to INITIALIZATION: See page RS-312):
- Zero point calibration is performed when the conditions for the calibration are not satisfied.
- Zero point calibration has failed.

(a) Turn the engine switch on (IG).
(b) Clear the DTCs stored in the occupant classification ECU (See page RS-318).
(c) Clear the DTCs stored in the center airbag sensor assembly (See page RS-49).
(d) Turn the engine switch off.
(e) Turn the engine switch on (IG).
(f) Check the DTCs (See page RS-49).
OK:
DTC B1797 is not output.

NG → **GO TO DTC B1797 (See page RS-357)**

OK

12	PERFORM SENSITIVITY CHECK

(a) Perform the sensitivity check (See page RS-312).

NEXT

END

DTC	B1790	Center Airbag Sensor Assembly Communication Circuit Malfunction

DESCRIPTION

The center airbag sensor assembly communication circuit consists of the occupant classification ECU and the center airbag sensor assembly.
DTC B1790 is recorded when a malfunction is detected in the center airbag sensor assembly communication circuit.

DTC No.	DTC Detecting Condition	Trouble Area
B1790	• The occupant classification ECU receives a line short circuit signal, an open circuit signal, a short circuit to ground signal or a short circuit to B+ signal in the center airbag sensor assembly communication circuit for 2 seconds. • Center airbag sensor assembly malfunction • Occupant classification ECU malfunction	• Floor wire No. 2 • Front seat wire RH (for Power seat) • Occupant classification ECU • Center airbag sensor assembly

HINT:
When DTC B1650/32 is detected as a result of troubleshooting for the AIRBAG SYSTEM, check the DTCs stored in the occupant classification ECU. When DTC B1790 is output, perform troubleshooting for the DTC.

RS

WIRING DIAGRAM

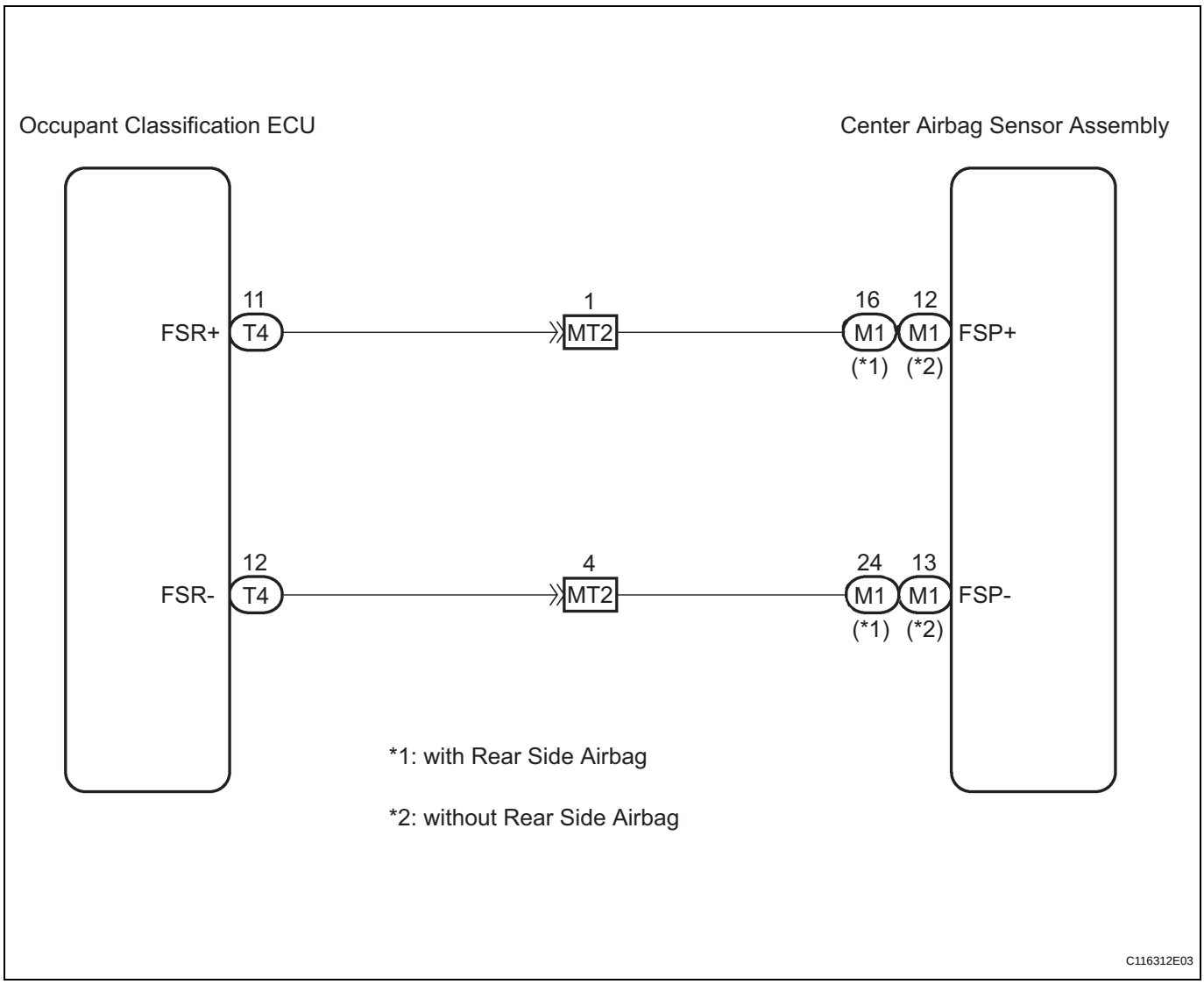

INSPECTION PROCEDURE

HINT:

- If troubleshooting (wire harness inspection) is difficult to perform, remove the front passenger seat installation bolts to see the undersurface of the seat cushion.
- In the above case, hold the seat so that it does not fall down. Holding the seat for a long period of time may cause a problem, such as seat rail deformation. Hold the seat only as necessary.

1	CHECK DTC

(a) Turn the engine switch on (IG).
(b) Clear the DTCs stored in the occupant classification ECU (See page RS-318).
(c) Clear the DTCs stored in the center airbag sensor assembly (See page RS-49).
(d) Turn the engine switch off.
(e) Turn the engine switch on (IG).
(f) Check the DTCs (See page RS-318).

OK:
DTC B1790 is not output.
HINT:
Codes other than DTC B1790 may be output at this time, but they are not related to this check.

OK → **USE SIMULATION METHOD TO CHECK (See page RS-37)**

NG

2 CHECK CONNECTION OF CONNECTORS

(a) Turn the engine switch off.
(b) Disconnect the negative (-) terminal cable from the battery.
(c) Check that the connectors are properly connected to the occupant classification ECU and the center airbag sensor assembly.
OK:
The connectors are properly connected.

NG → **CONNECT CONNECTORS PROPERLY, THEN GO TO STEP 1**

OK

3 CHECK CONNECTORS

(a) Disconnect the connectors from the center airbag sensor assembly and the occupant classification ECU.
(b) Check that the connectors (on the center airbag sensor assembly side and occupant classification ECU side) are not damaged.
OK:
The connectors are not deformed or damaged.

NG → **REPAIR OR REPLACE WIRE HARNESS**

OK

RS

4 CHECK OCCUPANT CLASSIFICATION SYSTEM CIRCUIT (SHORT TO B+)

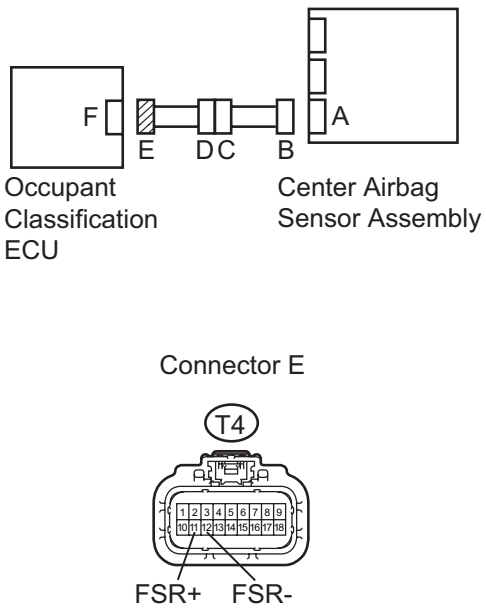

(a) Connect the negative (-) terminal cable to the battery.
(b) Turn the engine switch on (IG).
(c) Measure the voltage according to the value(s) in the table below.

Standard voltage

Tester connection	Condition	Specified condition
T4-11 (FSR+) - Body ground	Engine switch on (IG)	Below 1 V
T4-12 (FSR-) - Body ground	Engine switch on (IG)	Below 1 V

NG → **Go to step 13**

OK

RS

5 CHECK OCCUPANT CLASSIFICATION SYSTEM CIRCUIT (OPEN)

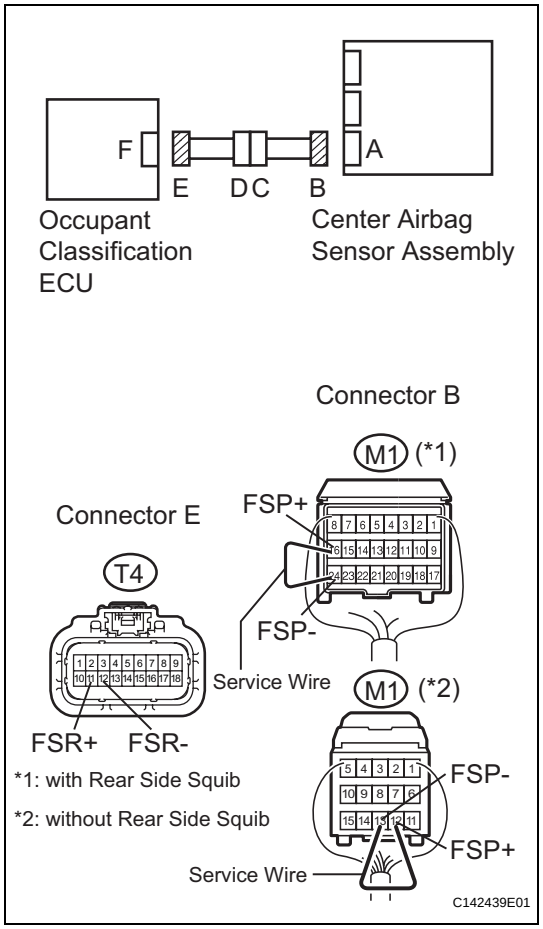

OK

(a) Turn the engine switch off.

(b) Disconnect the negative (-) terminal cable from the battery.

(c) with Rear side airbag:
Using a service wire, connect terminals 16 (FSP+) and 24 (FSP-) of connector B.
NOTICE:
Do not forcibly insert a service wire into the terminals of the connector when connecting the wire.

(d) without Rear side airbag:
Using a service wire, connect terminals 12 (FSP+) and 13 (FSP-) of connector B.
NOTICE:
Do not forcibly insert a service wire into the terminals of the connector when connecting the wire.

(e) Measure the resistance according to the value(s) in the table below.
Standard resistance

Tester connection	Condition	Specified condition
T4-11 (FSR+) - T4-12 (FSR-)	Always	Below 1 Ω

NG → **Go to step 14**

RS

6 CHECK OCCUPANT CLASSIFICATION SYSTEM CIRCUIT (SHORT)

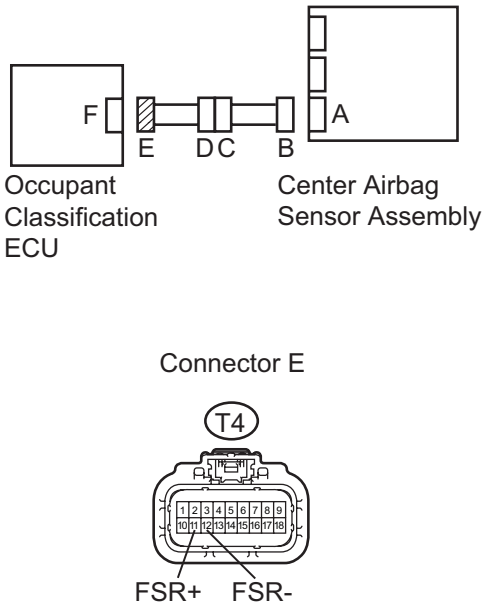

(a) Disconnect the service wire from connector B.
(b) Measure the resistance according to the value(s) in the table below.

Standard resistance

Tester connection	Condition	Specified condition
T4-11 (FSR+) - T4-12 (FSR-)	Always	1 MΩ or higher

NG → **Go to step 15**

OK

7 CHECK OCCUPANT CLASSIFICATION SYSTEM CIRCUIT (SHORT TO GROUND)

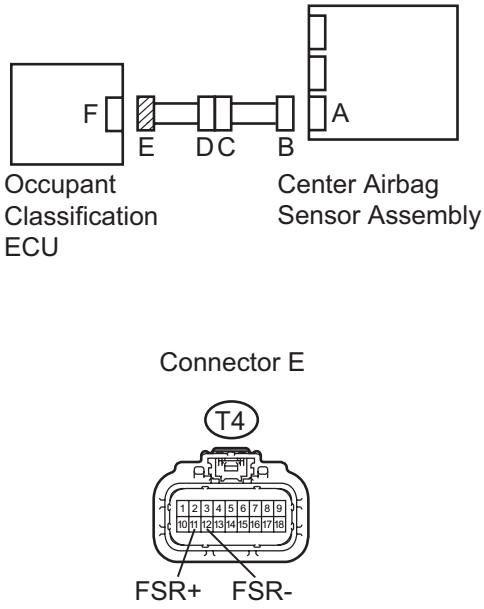

(a) Measure the resistance according to the value(s) in the table below.

Standard resistance

Tester connection	Condition	Specified condition
T4-11 (FSR+) - Body ground	Always	1 MΩ or higher
T4-12 (FSR-) - Body ground	Always	1 MΩ or higher

NG → **Go to step 16**

OK

8	RECHECK DTC

(a) Connect the connectors to the occupant classification ECU and the center airbag sensor assembly.
(b) Connect the intelligent tester to the DLC3.
(c) Connect the negative (-) terminal cable to the battery.
(d) Turn the engine switch on (IG).
(e) Clear the DTCs stored in the occupant classification ECU (See page RS-318).
(f) Clear the DTCs stored in the center airbag sensor assembly (See page RS-49).
(g) Turn the engine switch off.
(h) Turn the engine switch on (IG).
(i) Using the intelligent tester, check the DTCs of the occupant classification ECU (See page RS-318).
OK:
DTC B1790 is not output.
HINT:
Codes other than DTC B1790 may be output at this time, but they are not related to this check.

OK → **USE SIMULATION METHOD TO CHECK (See page RS-37)**

NG

9	REPLACE OCCUPANT CLASSIFICATION ECU

(a) Connect the intelligent tester to the DLC3.
(b) Turn the engine switch on (IG).
(c) Using the intelligent tester, save the ECU data from the ECU which has been installed on the vehicle (See page RS-308).
(d) Turn the engine switch off.
(e) Disconnect the negative (-) terminal cable from the battery, and wait for at least 90 seconds.
(f) Replace the occupant classification ECU (See page RS-501).
(g) Connect the negative (-) terminal cable to the battery.
(h) Turn the engine switch on (IG).
(i) Using the intelligent tester, load the previous ECU data stored into the new ECU (See page RS-308).
(j) Turn the engine switch off.
(k) Turn the engine switch on (IG).
(l) Clear the DTCs stored in the memory (See page RS-318).
HINT:
If the DTCs are not cleared at this time, past DTCs will remain.

NEXT

RS

10	RECHECK DTC

(a) Turn the engine switch on (IG).
(b) Clear the DTCs stored in the occupant classification ECU (See page RS-318).
(c) Clear the DTCs stored in the center airbag sensor assembly (See page RS-49).
(d) Turn the engine switch off.
(e) Turn the engine switch on (IG).
(f) Using the intelligent tester, check the DTCs of the occupant classification ECU (See page RS-318).
OK:
DTC B1790 is not output.
HINT:
Codes other than DTC B1790 may be output at this time, but they are not related to this check.

OK → **Go to step 12**

NG

11	REPLACE CENTER AIRBAG SENSOR ASSEMBLY

(a) Turn the engine switch off.
(b) Disconnect the negative (-) terminal cable from the battery, and wait for at least 90 seconds.
(c) Replace the center airbag sensor assembly (See page RS-468).

NEXT

12	PERFORM SENSITIVITY CHECK

(a) Perform the sensitivity check (See page RS-312).

NEXT

END

RS

13	CHECK FLOOR WIRE NO. 2 (SHORT TO B+)

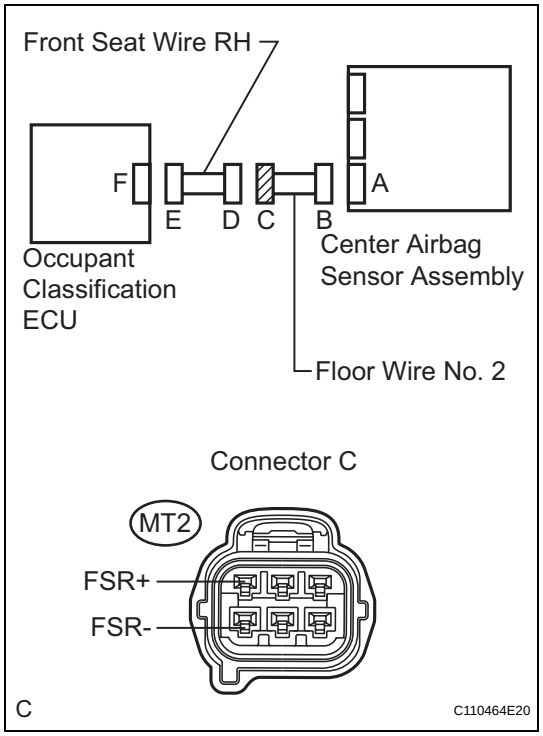

(a) Turn the engine switch off.
(b) Disconnect the negative (-) terminal cable from the battery, and wait for at least 90 seconds.
(c) Disconnect the front seat wire RH connector from the floor wire No. 2.
(d) Connect the negative (-) terminal cable to the battery, and wait for at least 2 seconds.
(e) Turn the engine switch on (IG).
(f) Measure the voltage according to the value(s) in the table below.

Standard voltage

Tester connection	Condition	Specified condition
MT2-1 (FSR+) - Body ground	Engine switch on (IG)	Below 1 V
MT2-4 (FSR-) - Body ground	Engine switch on (IG)	Below 1 V

NG → **REPAIR OR REPLACE FLOOR WIRE NO. 2**

OK

REPAIR OR REPLACE FRONT SEAT WIRE RH

RS

14	CHECK FLOOR WIRE NO. 2 (OPEN)

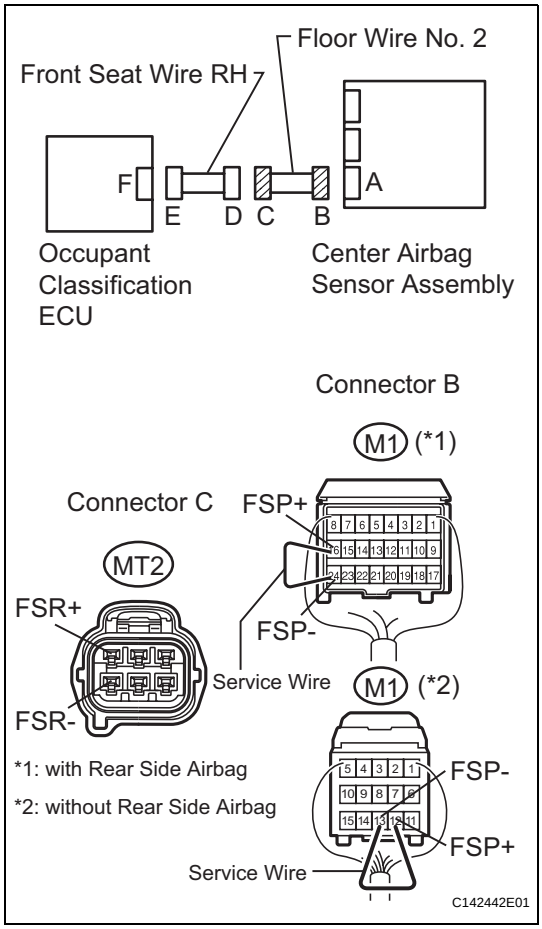

(a) Disconnect the front seat wire RH connector from the floor wire No. 2.
HINT:
The service wire has already been inserted into connector B.

(b) Measure the resistance according to the value(s) in the table below.
Standard resistance

Tester connection	Condition	Specified condition
MT2-1 (FSR+) - MT2-4 (FSR-)	Always	Below 1 Ω

NG → **REPAIR OR REPLACE FLOOR WIRE NO. 2**

OK

REPAIR OR REPLACE FRONT SEAT WIRE RH

15	CHECK FLOOR WIRE NO. 2 (SHORT)

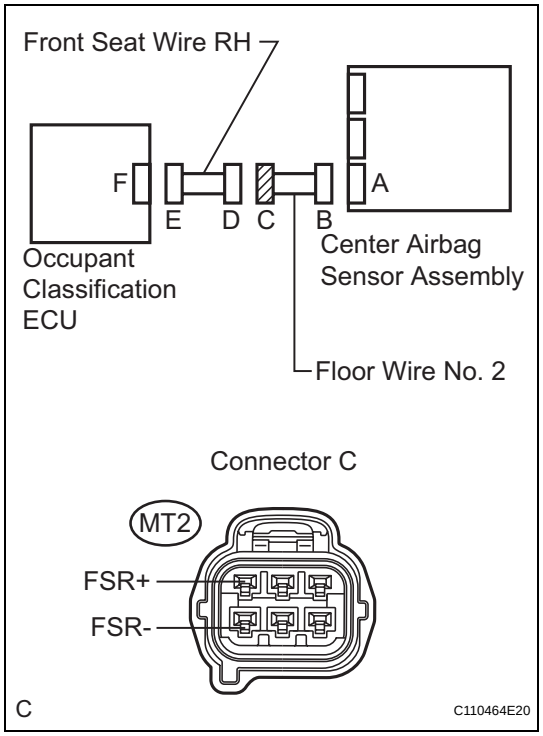

(a) Disconnect the front seat wire RH connector from the floor wire No. 2.

(b) Measure the resistance according to the value(s) in the table below.

Standard resistance

Tester connection	Condition	Specified condition
MT2-1 (FSR+) - MT2-4 (FSR-)	Always	1 MΩ or higher

NG → **REPAIR OR REPLACE FLOOR WIRE NO. 2**

OK

REPAIR OR REPLACE FRONT SEAT WIRE RH

RS

RS

16 CHECK FLOOR WIRE NO. 2 (SHORT TO GROUND)

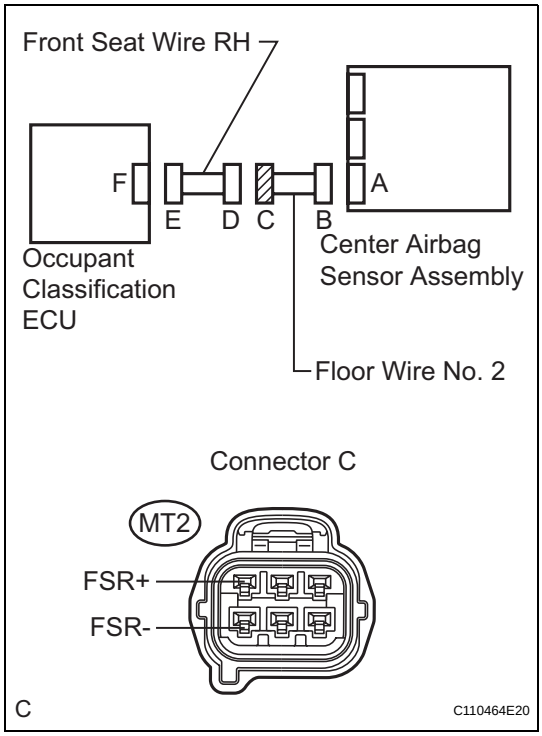

(a) Disconnect the front seat wire RH connector from the floor wire No. 2.

(b) Measure the resistance according to the value(s) in the table below.

Standard resistance

Tester connection	Condition	Specified condition
MT2-1 (FSR+) - Body ground	Always	1 MΩ or higher
MT2-4 (FSR-) - Body ground	Always	1 MΩ or higher

NG → **REPAIR OR REPLACE FLOOR WIRE NO. 2**

OK

REPAIR OR REPLACE FRONT SEAT WIRE RH

DTC	B1795	Occupant Classification ECU Malfunction

DESCRIPTION

DTC B1795 is recorded when a malfunction is detected in the occupant classification ECU.

DTC No.	DTC Detecting Condition	Trouble Area
B1795	Occupant classification ECU malfunction	Occupant classification ECU

HINT:
When DTC B1650/32 is detected as a result of troubleshooting for the AIRBAG SYSTEM, check the DTCs stored in the occupant classification ECU. When DTC B1795 is output, perform troubleshooting for the DTC.

INSPECTION PROCEDURE

HINT:
- If troubleshooting (wire harness inspection) is difficult to perform, remove the front passenger seat installation bolts to see the undersurface of the seat cushion.
- In the above case, hold the seat so that it does not fall down. Holding the seat for a long period of time may cause a problem, such as seat rail deformation. Hold the seat only as necessary.

1 CHECK DTC

(a) Turn the engine switch on (IG).
(b) Clear the DTCs stored in the occupant classification ECU (See page RS-318).
(c) Clear the DTCs stored in the center airbag sensor assembly (See page RS-49).
(d) Turn the engine switch off.
(e) Turn the engine switch on (IG), and wait for at least 10 seconds.
(f) Check the DTCs (See page RS-318).
OK:
DTC B1795 is not output.

HINT:
Codes other than B1795 may be output at this time, but they are not related to this check.

OK → **USE SIMULATION METHOD TO CHECK (See page RS-37)**

NG

2 REPLACE OCCUPANT CLASSIFICATION ECU

(a) Connect the intelligent tester to the DLC3.
(b) Turn the engine switch on (IG).
(c) Using the intelligent tester, save the ECU data from the ECU which has been installed on the vehicle (See page RS-308).
(d) Turn the engine switch off.
(e) Disconnect the negative (-) terminal cable from the battery, and wait for at least 90 seconds.

(f) Replace the occupant classification ECU (See page RS-501).
(g) Connect the negative (-) terminal cable to the battery.
(h) Turn the engine switch on (IG).
(i) Using the intelligent tester, load the previous ECU data stored into the new ECU (See page RS-308).
(j) Turn the engine switch off.
(k) Turn the engine switch on (IG).
(l) Clear the DTCs stored in the memory (See page RS-318).
HINT:
If DTC is not cleared at this time, past DTC will remain.

NEXT

3	PERFORM SENSITIVITY CHECK

(a) Perform the sensitivity check (See page RS-312).

NEXT

END

DTC B1797 Calibration Malfunction

DESCRIPTION

DTC B1797 is output when the following condition is met:

- Zero point calibration is performed when the conditions for the calibration are not satisfied.
- Zero point calibration has failed.

Condition for the zero point calibration:

Item	Condition
DTC	Not recorded
Front passenger seat occupant	Vacant
Front passenger side buckle switch	OFF (The seat belt is not fastened)
ECU temperature	0 to 46°C (32 to 114.8°F)
Filtered pressure	38 to 75 count

DTC No.	DTC Detecting Condition	Trouble Area
B1797	• Zero point calibration is performed when the conditions for the calibration are not satisfied. • Zero point calibration has failed.	• There is no malfunction if this DTC is not output again after performing occupant classification system zero point calibration. • Occupant classification sensor

HINT:
When DTC B1650/32 is detected as a result of troubleshooting for the AIRBAG SYSTEM, check the DTCs stored in the occupant classification ECU. When DTC B1797 is output, perform troubleshooting for the DTC.

INSPECTION PROCEDURE

1 CHECK DTC

(a) Turn the engine switch on (IG).
(b) Clear the DTCs stored in the occupant classification ECU (See page RS-318).
(c) Clear the DTCs stored in the center airbag sensor assembly (See page RS-49).
(d) Turn the engine switch off.
(e) Turn the engine switch on (IG), and wait for at least 10 seconds.
(f) Check the DTCs (See page RS-318).
OK:
DTC B1797 is not output.
HINT:
Codes other than B1797 may be output at this time, but they are not related to this check.

OK → **PERFORM ZERO POINT CALIBRATION**

NG

2 READ VALUE OF DATA LIST (SPECIFIED CONDITION FOR ZERO POINT CALIBRATION)

(a) Connect the intelligent tester to the DLC3.
(b) Turn the engine switch on (IG).

RS

(c) Using the intelligent tester, read the DATA LIST (See page RS-319).

Item	Measurement Item/ Range (Display)	Normal Condition	Specified Condition for Zero Point Calibration
RELATIVE PRESS	Pressure sensor output/ Min.: 0 Max.: 255	0 to 210 (reference value)	0 to 2
THERMISTOR TEMP	Thermistor temperature output/ Min.: -40°C (-40°F) Max.: 90°C (194°F)	-40 to 85°C (-40 to185°F)	3 to 40°C (36 to 104°F)
#PRESENT CODES	Number of present trouble codes/ Min.: 0 Max.: 255	0	0
#PAST CODES	Number of past trouble codes/ Min.: 0 Max.: 255	0	0

Result

Result	Proceed to
All items correspond to the range of specified condition for zero point calibration.	**A**
THERMISTOR TEMP does not correspond to the range of specified condition for zero point calibration.	**B**

B → **Go to step 6**

A

3 CHECK DTC

HINT:
Check that the zero point calibration is completed normally. If any of the following condition is met, DTC B1797 will be output (Refer to INITIALIZATION: See page RS-312).

- Zero point calibration is performed when the the calibration conditions are not satisfied.
- Zero point calibration has failed.

(a) Turn the engine switch on (IG).
(b) Clear the DTCs stored in the occupant classification ECU (See page RS-318).
(c) Clear the DTCs stored in the center airbag sensor assembly (See page RS-49).
(d) Turn the engine switch off.
(e) Turn the engine switch on (IG).
(f) Check the DTCs (See page RS-318).
OK:
DTC B1797 is not output.

NEXT

4 PERFORM ZERO POINT CALIBRATION

(a) Connect the intelligent tester to the DLC3.
(b) Turn the engine switch on (IG).
(c) Using the intelligent tester, perform the zero point calibration (See page RS-312).
(d) Turn the engine switch off.

(e) Turn the engine switch on (IG).
(f) Clear the DTCs stored in the memory (See page RS-318).
HINT:
If the DTCs are not cleared at this time, past DTCs will remain.

NEXT

5	CHECK DTC

(a) Turn the engine switch on (IG).
(b) Clear the DTCs stored in the occupant classification ECU (See page RS-318).
(c) Clear the DTCs stored in the center airbag sensor assembly (See page RS-49).
(d) Turn the engine switch off.
(e) Turn the engine switch on (IG).
(f) Check the DTCs (See page RS-318).
OK:
DTC B1797 is not output.
HINT:
Codes other than B1797 may be output at this time, but they are not related to this check.

NEXT

END

6	REPLACE OCCUPANT CLASSIFICATION SENSOR (FRONT SEAT CUSHION ASSEMBLY)

(a) Turn the engine switch off.
(b) Disconnect the negative (-) terminal cable from the battery, and wait for at least 90 seconds.
(c) Replace the front seat cushion assembly (with occupant classification ECU and occupant classification sensor) (See page RS-490).
(d) Connect the negative (-) terminal cable to the battery.
(e) Turn the engine switch on (IG).
(f) Clear the DTCs stored in the occupant classification ECU (See page RS-318).
(g) Clear the DTCs stored in the center airbag sensor assembly (See page RS-49).
(h) Turn the engine switch off.
(i) Turn the engine switch on (IG).
(j) Using the intelligent tester, check the DTCs of the occupant classification ECU (See page RS-318).
OK:
DTC is not output.

NEXT

RS

7	PERFORM ZERO POINT CALIBRATION

(a) Connect the intelligent tester to the DLC3.
(b) Turn the engine switch on (IG).
(c) Using the intelligent tester, perform the zero point calibration (See page RS-312).
(d) Turn the engine switch off.
(e) Turn the engine switch on (IG).
(f) Clear the DTCs stored in the occupant classification ECU (See page RS-318).
HINT:
If the DTCs are not cleared at this time, past DTCs will remain.

NEXT

8	CHECK DTC

(a) Turn the engine switch on (IG).
(b) Clear the DTCs stored in the occupant classification ECU (See page RS-318).
(c) Clear the DTCs stored in the center airbag sensor assembly (See page RS-49).
(d) Turn the engine switch off.
(e) Turn the engine switch on (IG).
(f) Check the DTCs (See page RS-318).
OK:
DTC B1797 is not output.

NEXT

9	PERFORM SENSITIVITY CHECK

(a) Perform the sensitivity check (See page RS-312).

NEXT

END

Trouble in Passenger Airbag ON / OFF Indicator

DESCRIPTION

The occupant classification system detects the front passenger seat condition. It then informs a passenger of the front passenger airbag assembly and front seat side airbag assembly condition (activated/not activated) by the passenger airbag ON/OFF indicator.

HINT:

Approximately 6 seconds after the engine switch is turned on (IG), the passenger airbag ON/OFF indicator will be ON/OFF depending on the conditions listed below.

Front passenger seat condition	Passenger Airbag ON/OFF Indicator		SRS Warning Light
	ON Indicator	OFF Indicator	
Adult is seated	ON	OFF	OFF
Child is seated	OFF	ON	OFF
Vacant	OFF	OFF	OFF
Occupant classification system failure	OFF	ON	ON

INSPECTION PROCEDURE

HINT:

If this trouble occurs, the SRS warning light is off. If it is on, a DTC is output. Troubleshoot for the output DTC.

1 CHECK DTC

(a) Turn the engine switch on (IG).
(b) Clear the DTCs stored in the occupant classification ECU (See page RS-318).
(c) Clear the DTCs stored in the center airbag sensor assembly (See page RS-49).
(d) Turn the engine switch off.
(e) Turn the engine switch on (IG).
(f) Check the DTCs of the occupant classification ECU (See page RS-318).

OK:

DTC is not output.

OK → **REPAIR CIRCUITS INDICATED BY OUTPUT DTCS**

NG

2 READ VALUE OF DATA LIST (PASSENGER SIDE BUCKLE SWITCH)

(a) Turn the engine switch on (IG).
(b) Using the intelligent tester, read the DATA LIST (See page RS-319).

(1) Read the the display when the passenger side buckle switch is operated.

Item	Measurement Item / Range (Display)	Normal Condition	Diagnostic Note
P BUCKLE SW	Buckle switch (Passenger side)/ UNSET: The seat belt is not fastened SET: The seat belt is fastened NG: Data is not determined	UNSET/SET	-

OK:
The tester display changes correctly in accordance with the operation of the buckle switch.

NG → **REPLACE FRONT SEAT INNER BELT ASSEMBLY RH (See page SB-22)**

OK

3 READ VALUE OF DATA LIST (SEAT BELT TENSION SENSOR)

(a) Fasten the passenger side seat belt.
(b) Turn the engine switch on (IG).
(c) Using the intelligent tester, read the value of the DATA LIST (See page RS-319).

Item	Measurement Item / Range (Display)	Normal Condition	Diagnostic Note
FILTERED TENSION	Filtered belt tension output/ Min.: 0 N Max.: 255 N	39 to 64 (no load)	-

OK:
When there is no tension on the belt, 39 to 64 is displayed on the tester.

NG → **REPLACE FRONT SEAT OUTER BELT ASSEMBLY RH (See page SB-27)**

OK

4 CHECK PASSENGER AIRBAG ON/OFF INDICATOR (PERFORM SENSITIVITY CHECK)

(a) Perform the sensitivity check (See page RS-312).

NG → **Go to step 7**

OK

5 PERFORM ZERO POINT CALIBRATION

(a) Connect the intelligent tester to the DLC3.
(b) Turn the engine switch on (IG).
(c) Using the intelligent tester, perform the zero point calibration (See page RS-312).

NEXT

6	CHECK DTC

(a) Turn the engine switch on (IG).
(b) Clear the DTCs stored in the occupant classification ECU (See page RS-318).
(c) Clear the DTCs stored in the center airbag sensor assembly (See page RS-49).
(d) Turn the engine switch off.
(e) Turn the engine switch on (IG).
(f) Check the DTCs of the occupant classification ECU (See page RS-318).
OK:
DTC B1797 is not output.

NG → **GO TO DTC B1797 (See page RS-357)**

OK

7	REPLACE FRONT SEAT CUSHION ASSEMBLY

(a) Turn the engine switch off.
(b) Disconnect the negative (-) terminal cable from the battery, and wait for at least 90 seconds.
(c) Replace the front seat cushion assembly (with occupant classification ECU and occupant classification sensor) (See page RS-490).
(d) Connect the negative (-) terminal cable to the battery.
(e) Turn the engine switch on (IG).
(f) Clear the DTCs stored in the occupant classification ECU (See page RS-318).
(g) Clear the DTCs stored in the center airbag sensor assembly (See page RS-49).
(h) Turn the engine switch off.
(i) Turn the engine switch on (IG).
(j) Check the DTCs (See page RS-318).
OK:
DTC is not output.

NG → **REPLACE CENTER AIRBAG SENSOR ASSEMBLY (See page RS-468)**

OK

8	PERFORM ZERO POINT CALIBRATION

(a) Connect the intelligent tester to the DLC3.
(b) Turn the engine switch on (IG).
(c) Using the intelligent tester, perform the zero point calibration (See page RS-312).
(d) Turn the engine switch off.
(e) Turn the engine switch on (IG).

(f) Clear the DTCs stored in the occupant classification ECU (See page RS-318).
HINT:
If the DTCs are not cleared at this time, past DTCs will remain.

RS

NEXT

9	CHECK DTC

(a) Turn the engine switch on (IG).
(b) Clear the DTCs stored in the occupant classification ECU (See page RS-318).
(c) Clear the DTCs stored in the center airbag sensor assembly (See page RS-49).
(d) Turn the engine switch off.
(e) Turn the engine switch on (IG).
(f) Check the DTCs of the occupant classification ECU (See page RS-318).
OK:
DTC B1797 is not output.

NEXT

10	PERFORM SENSITIVITY CHECK

(a) Perform the sensitivity check (See page RS-312).

NEXT

END

PROBLEM SYMPTOMS TABLE

HINT:
Proceed to the troubleshooting for each circuit in the table below.

AIRBAG SYSTEM:

Symptom	Suspected Area	See page
The SRS warning light goes off after the primary check, but then comes on.	SRS Warning Light Remains ON	RS-294
With the engine switch on (IG), the SRS warning light sometimes comes on after approximately 6 seconds.	SRS Warning Light Remains ON	RS-294
The SRS warning light always comes on even when DTC is not output.	SRS Warning Light Remains ON	RS-294
With the engine switch on (IG), the SRS warning light does not come on.	SRS Warning Light does not Come ON	RS-298
Although an SRS warning light operates normally, DTC or a normal system code is not displayed.	Diagnosis Circuit	RS-300
Although terminals TC and CG of DLC3 are not connected, DTC or a normal system code is displayed.	Diagnosis Circuit	RS-300

TERMINALS OF ECU

1. CENTER AIRBAG SENSOR ASSEMBLY (with Rear Airbag Sensor)

RS

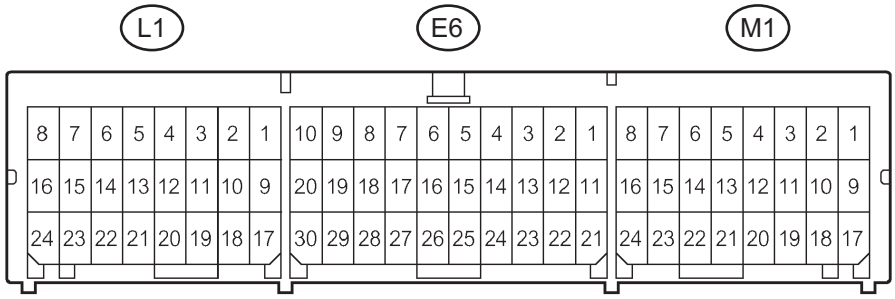

H

C109532E09

Terminal No.	Terminal Symbol	Destination
E6-1	P2+	Front passenger airbag assembly (Front passenger side squib 2nd step)
E6-2	P2-	Front passenger airbag assembly (Front passenger side squib 2nd step)
E6-3	P-	Front passenger airbag assembly (Front passenger side squib)
E6-4	P+	Front passenger airbag assembly (Front passenger side squib)
E6-5	D+	Steering pad (Driver side squib)
E6-6	D-	Steering pad (Driver side squib)
E6-7	D2-	Steering pad (Driver side squib 2nd step)
E6-8	D2+	Steering pad (Driver side squib 2nd step)
E6-9	DK+	Driver side knee airbag assembly (Driver side knee airbag squib)
E6-10	DK-	Driver side knee airbag assembly (Driver side knee airbag squib)
E6-13	CANH	CAN Communication line
E6-16	SIL	DLC3
E6-17	P-AB	Passenger airbag ON/OFF indicator
E6-18	GSW	Main body ECU
E6-19	PK+	Front passenger side knee airbag assembly (Front passenger side knee airbag squib)
E6-20	PK-	Front passenger side knee airbag assembly (Front passenger side knee airbag squib)
E6-21	IG2	IGN fuse
E6-22	CANL	CAN Communication line
E6-23	PAON	Passenger airbag ON/OFF indicator
E6-25	E1	Ground
E6-26	E2	Ground
E6-27	-SR	Front airbag sensor RH
E6-28	-SL	Front airbag sensor LH
E6-29	+SR	Front airbag sensor RH

Terminal No.	Terminal Symbol	Destination
E6-30	+SL	Front airbag sensor LH
L1-1	SFD+	Front seat side airbag assembly LH (Front driver side - side squib)
L1-2	SFD-	Front seat side airbag assembly LH (Front driver side - side squib)
L1-3	ICD-	Curtain shield airbag assembly LH (Driver side curtain shield squib)
L1-4	ICD+	Curtain shield airbag assembly LH (Driver side curtain shield squib)
L1-5	PD+	Front seat outer belt assembly LH (Front driver side pretensioner squib)
L1-6	PD-	Front seat outer belt assembly LH (Front driver side pretensioner squib)
L1-7	PDR-	Rear seat outer belt assembly LH (Rear driver side pretensioner squib)
L1-8	PDR+	Rear seat outer belt assembly LH (Rear driver side pretensioner squib)
L1-9	DSP+	Seat position airbag sensor
L1-10	DBE+	Front seat inner belt assembly LH (Driver side seat belt buckle switch)
L1-15	RD-	Rear seat side airbag assembly LH (Rear driver side - side squib)
L1-16	RD+	Rear seat side airbag assembly LH (Rear driver side - side squib)
L1-17	DSP-	Seat position airbag sensor
L1-18	DBE-	Front seat inner belt assembly LH (Driver side seat belt buckle switch)
L1-23	BBD-	Side airbag sensor LH
L1-24	BBD+	Side airbag sensor LH
M1-1	PPR+	Rear seat outer belt assembly RH (Rear passenger side pretensioner squib)
M1-2	PPR-	Rear seat outer belt assembly RH (Rear passenger side pretensioner squib)
M1-3	PP-	Front seat outer belt assembly RH (Front passenger side pretensioner squib)
M1-4	PP+	Front seat outer belt assembly RH (Front passenger side pretensioner squib)
M1-5	ICP+	Curtain shield airbag assembly RH (Front passenger side curtain shield squib)
M1-6	ICP-	Curtain shield airbag assembly RH (Front passenger side curtain shield squib)
M1-7	SFP-	Front seat side airbag assembly RH (Front passenger side - side squib)
M1-8	SFP+	Front seat side airbag assembly RH (Front passenger side - side squib)
M1-9	RP+	Rear seat side airbag assembly RH (Rear passenger side - side squib)
M1-10	RP-	Rear seat side airbag assembly RH (Rear passenger side - side squib)
M1-16	FSP+	Occupant classification ECU
M1-17	BBP+	Side airbag sensor RH
M1-18	BBP-	Side airbag sensor RH
M1-24	FSP-	Occupant classification ECU

2. CENTER AIRBAG SENSOR ASSEMBLY (without Rear Airbag Sensor)

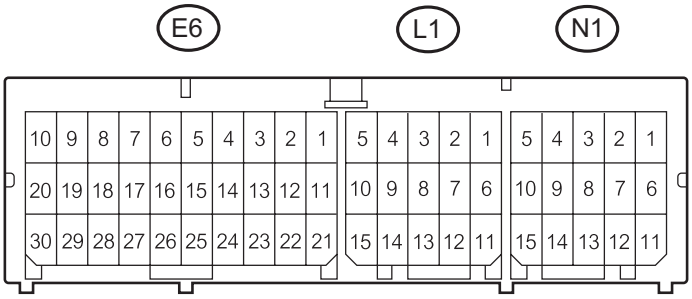

C123353E05

Terminal No.	Terminal Symbol	Destination
E6-1	P2+	Front passenger airbag assembly (Front passenger side squib 2nd step)
E6-2	P2-	Front passenger airbag assembly (Front passenger side squib 2nd step)
E6-3	P-	Front passenger airbag assembly (Front passenger side squib)
E6-4	P+	Front passenger airbag assembly (Front passenger side squib)
E6-5	D+	Steering pad (Driver side squib)
E6-6	D-	Steering pad (Driver side squib)
E6-7	D2-	Steering pad (Driver side squib 2nd step)
E6-8	D2+	Steering pad (Driver side squib 2nd step)
E6-9	DK+	Driver side knee airbag assembly (Driver side knee airbag squib)
E6-10	DK-	Driver side knee airbag assembly (Driver side knee airbag squib)
E6-13	CANH	CAN Communication line
E6-16	SIL	DLC3
E6-17	P-AB	Passenger airbag ON/OFF indicator
E6-18	GSW	Main body ECU
E6-19	PK+	Front passenger side knee airbag assembly (Front passenger side knee airbag squib)
E6-20	PK-	Front passenger side knee airbag assembly (Front passenger side knee airbag squib)
E6-21	IG2	IGN fuse
E6-22	CANL	CAN Communication line
E6-23	PAON	Passenger airbag ON/OFF indicator
E6-25	E1	Ground
E6-26	E2	Ground
E6-27	-SR	Front airbag sensor RH
E6-28	-SL	Front airbag sensor LH
E6-29	+SR	Front airbag sensor RH
E6-30	+SL	Front airbag sensor LH
L1-1	PD+	Front seat outer belt assembly LH (Front drive side pretensioner squib)
L1-2	PD-	Front seat outer belt assembly LH (Front driver side pretensioner squib)
L1-4	PDR+	Rear seat outer belt assembly LH (Rear driver side pretensioner squib)
L1-5	PDR-	Rear seat outer belt assembly LH (Rear driver side pretensioner squib)
L1-6	ICD-	Curtain shield airbag assembly LH (Driver side curtain shield squib)
L1-7	ICD+	Curtain shield airbag assembly LH (Driver side curtain shield squib)
L1-8	BBD+	Side airbag sensor LH
L1-9	SFD+	Front seat side airbag assembly LH (Front driver side - side squib)
L1-10	SFD-	Front seat side airbag assembly LH (Front driver side - side squib)
L1-11	DBE+	Front seat inner belt assembly LH (Driver side seat belt buckle switch)
L1-12	DBE-	Front seat inner belt assembly LH (Driver side seat belt buckle switch)
L1-13	DSP-	Seat position airbag sensor
L1-14	DSP+	Seat position airbag sensor
L1-15	BBD-	Side airbag sensor LH
M1-1	PPR-	Rear seat outer belt assembly RH (Rear passenger side pretensioner squib)
M1-2	PPR+	Rear seat outer belt assembly RH (Rear passenger side pretensioner squib)
M1-4	PP+	Front seat outer belt assembly RH (Front passenger side pretensioner squib)
M1-5	PP-	Front seat outer belt assembly RH (Front passenger side pretensioner squib)
M1-6	SFP-	Front seat side airbag assembly RH (Front passenger side - side squib)
M1-7	SFP+	Front seat side airbag assembly RH (Front passenger side - side squib)
M1-8	BBP+	Side airbag sensor RH
M1-9	ICP+	Curtain shield airbag assembly RH (Front passenger side curtain shield squib)
M1-10	ICP-	Curtain shield airbag assembly RH (Front passenger side curtain shield squib)

STEERING PAD

COMPONENTS

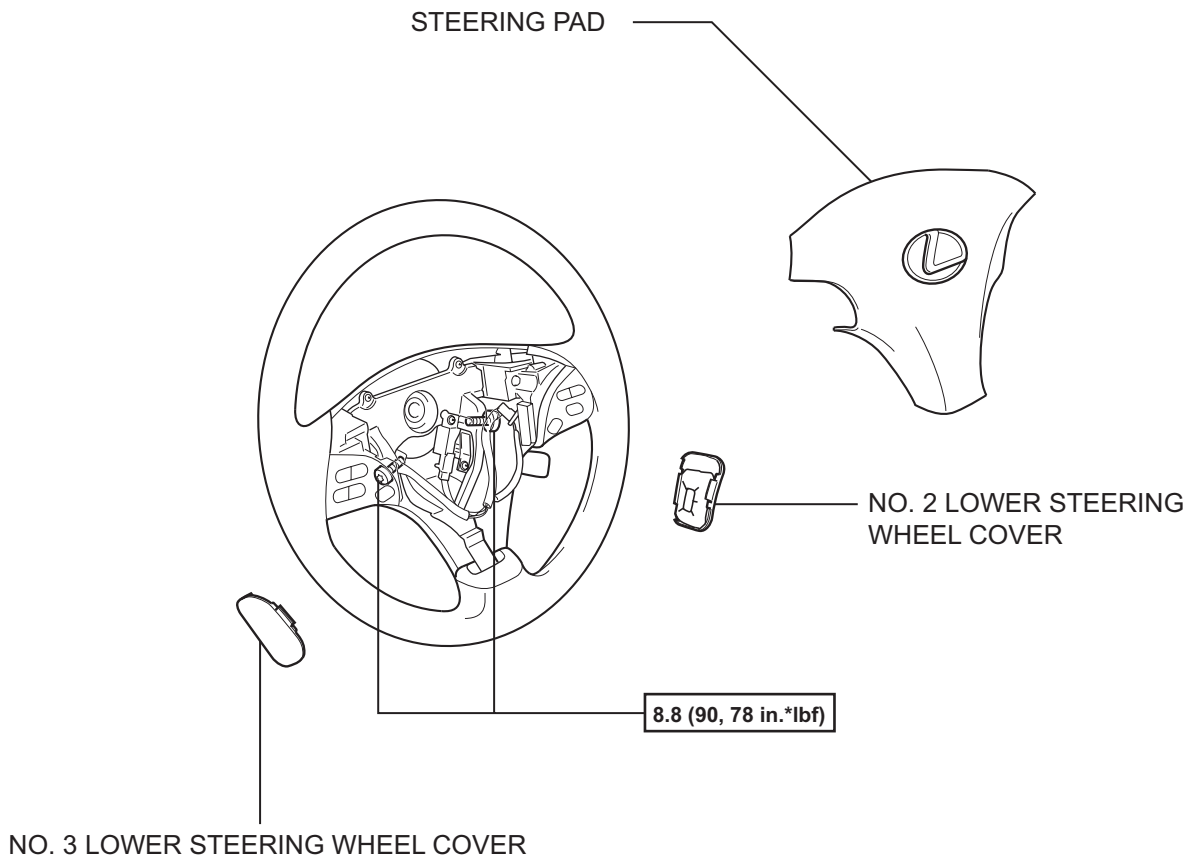

N*m (kgf*cm, ft.*lbf) : Specified torque

C

C133914E01

RS

ON-VEHICLE INSPECTION

1. INSPECT STEERING PAD (VEHICLE NOT INVOLVED IN COLLISION)

(a) Perform a diagnostic system check (See page RS-37).

(b) With the steering pad installed on the vehicle, perform a visual check. If there are any defects as mentioned below, replace the steering pad with a new one:
Cuts, minute cracks or marked discoloration on the steering pad top surface or in the grooved portion.

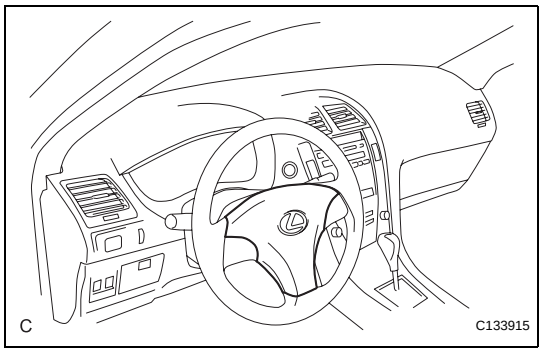

2. INSPECT STEERING PAD (VEHICLE INVOLVED IN COLLISION AND AIRBAG HAS NOT DEPLOYED)

(a) Perform a diagnostic system check (See page RS-37).

(b) With the steering pad removed from the vehicle, perform a visual check. If there are any defects as mentioned below, replace the steering pad or steering wheel assembly with a new one:
- Cuts, minute cracks or marked discoloration on the steering pad top surface or in the grooved portion.
- Cracks or other damage to the connectors.
- Deformation of the steering wheel assembly.
- Deformation of the horn button contact plate of the steering pad.
- There should be no interference between the steering pad and steering wheel assembly, and the clearance should be uniform all the way around when the new steering pad is installed on the steering wheel assembly.

CAUTION:
Be sure to follow the correct removal and installation procedures.

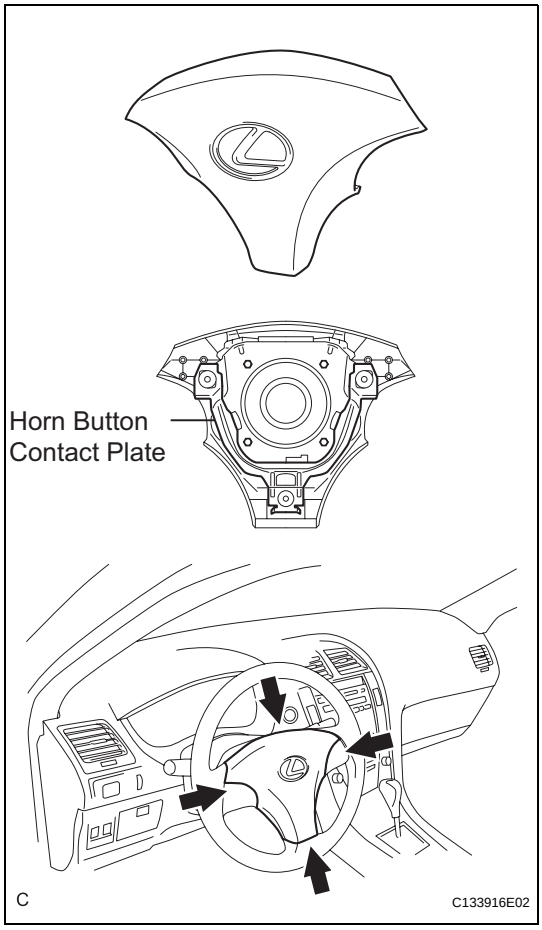

REMOVAL

1. **PRECAUTION**
   CAUTION:
   Be sure to read "PRECAUTION" thoroughly before servicing (See page RS-1).

2. **DISCONNECT CABLE FROM NEGATIVE BATTERY TERMINAL**
   CAUTION:
   Wait for 90 seconds after disconnecting the cable to prevent airbag deployment.

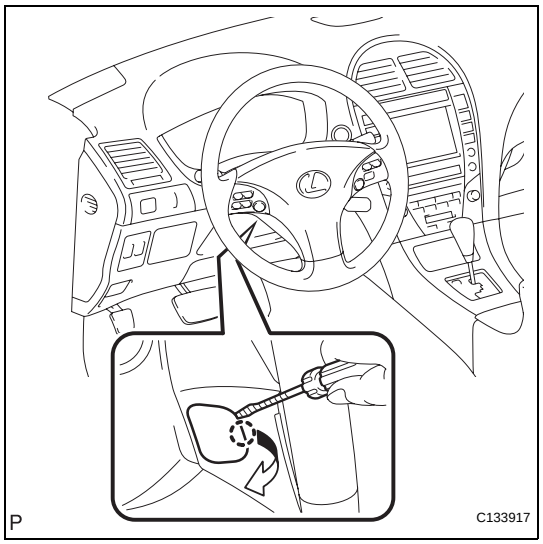

3. **REMOVE NO. 3 LOWER STEERING WHEEL COVER**
   (a) Using a screwdriver, remove the No. 3 lower steering wheel cover as shown in the illustration.
   HINT:
   Tape up the screwdriver tip before use.

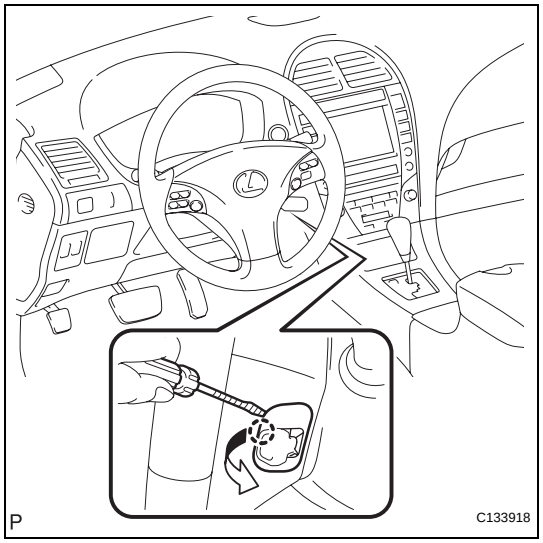

4. **REMOVE NO. 2 LOWER STEERING WHEEL COVER**
   (a) Using a screwdriver, remove the No. 2 lower steering wheel cover as shown in the illustration.
   HINT:
   Tape up the screwdriver tip before use.

RS

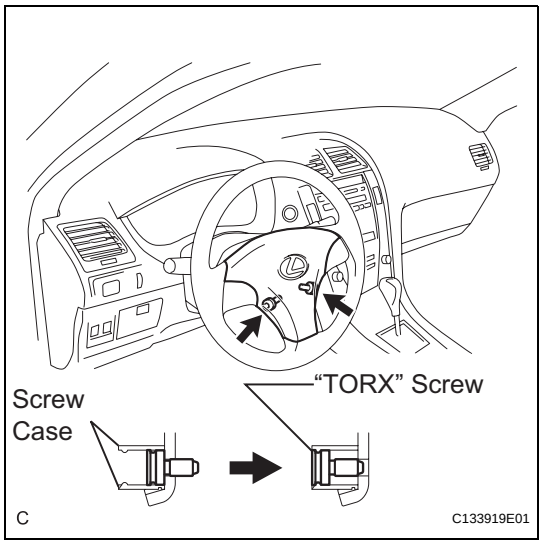

5. REMOVE STEERING PAD

(a) Using a "TORX" socket (T30), loosen the 2 "TORX" screws until the groove along the screw circumference catches on the screw case.

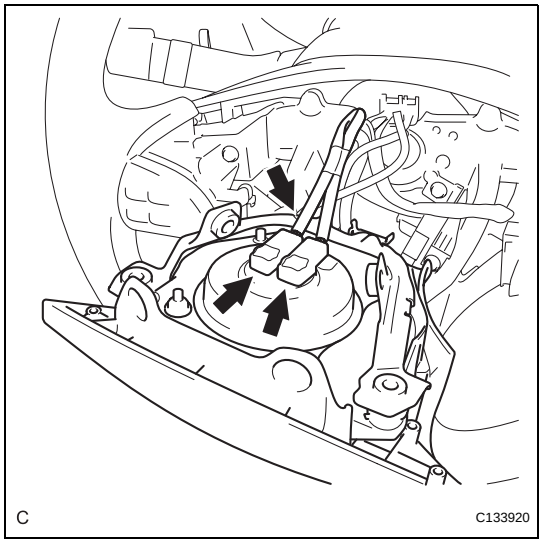

(b) Pull out the steering pad from the steering wheel assembly and support the steering pad with one hand.
NOTICE:
When removing the steering pad, do not pull the airbag wire harness.

(c) Disconnect the horn connector from the steering pad.

(d) Disconnect the 2 airbag connectors and remove the steering pad.
NOTICE:
When handling the airbag connector, take care not to damage the airbag wire harness.

(e) Remove the steering pad.

INSTALLATION

1. INSTALL STEERING PAD

(a) Check that the engine switch is off.

(b) Check that the battery negative (-) cable is disconnected.

CAUTION:
Wait for 90 seconds after disconnecting the cable to prevent airbag deployment.

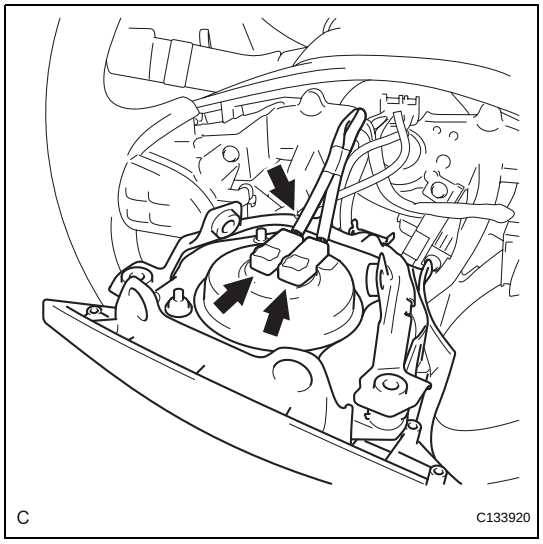

(c) Support the steering pad with one hand.

(d) Connect the 2 airbag connectors to the steering pad.

NOTICE:
When handling the airbag connector, take care not to damage the airbag wire harness.

(e) Connect the horn connector to the steering pad.

(f) Confirm that the circumference groove of the "TORX" screw fits in the screw case, and place the steering pad onto the steering wheel assembly.

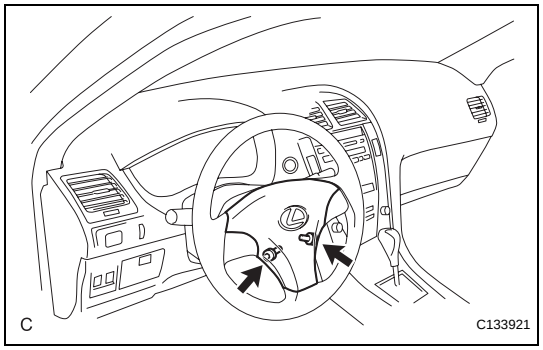

(g) Using a "TORX" socket (T30), tighten the 2 "TORX" screws.

Torque: 8.8 N*m (90 kgf*cm, 78 in.*lbf)

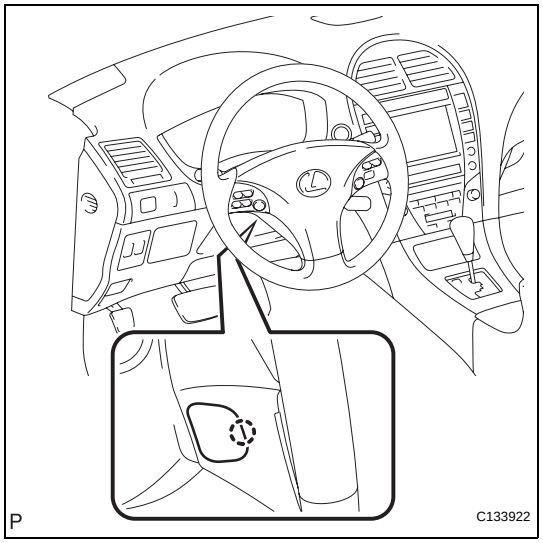

2. INSTALL NO. 3 LOWER STEERING WHEEL COVER

(a) Engage the claw and install the No. 3 lower steering wheel cover.

RS

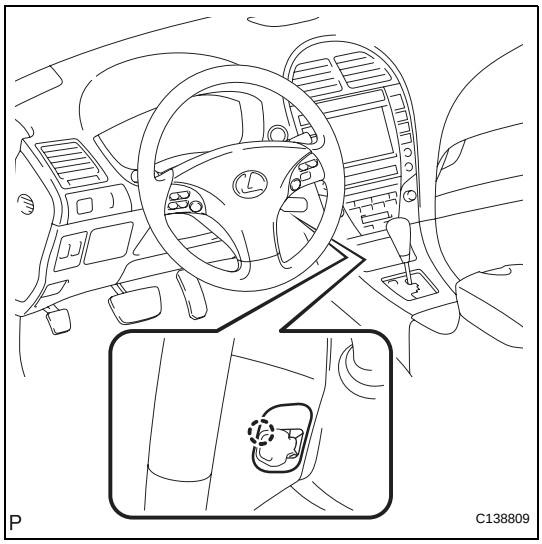

3. INSTALL NO. 2 LOWER STEERING WHEEL COVER

(a) Engage the claw and install the No. 2 lower steering wheel cover.

4. CONNECT CABLE TO NEGATIVE BATTERY TERMINAL

5. PERFORM INITIALIZATION

(a) Perform initialization (See page IN-33).
HINT:
Some systems need initialization after reconnecting the cable to the negative battery terminal.

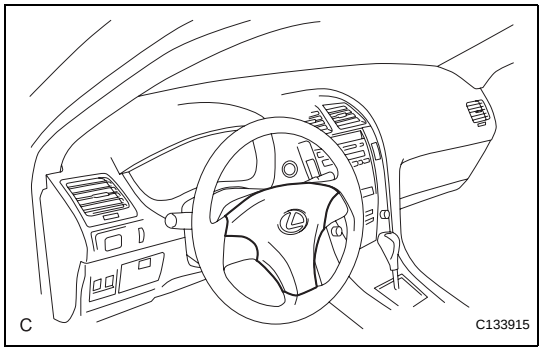

6. INSPECT STEERING PAD

(a) With the steering pad installed on the vehicle, perform a visual check. If there are any defects as mentioned below, replace the steering pad with a new one:
Cuts, minute cracks or marked discoloration on the steering pad top surface or in the grooved portion.

(b) Make sure that the horn sounds.
HINT:
If the horn does not sound, inspect the horn system (See page HO-3).

7. INSPECT SRS WARNING LIGHT

(a) Inspect the SRS warning light (See page RS-37).

DISPOSAL

HINT:
When scrapping a vehicle equipped with the SRS or disposing of the steering pad, be sure to deploy the airbag first in accordance with the procedure described below. If any abnormality occurs with the airbag deployment, contact the SERVICE DEPT. of TOYOTA MOTOR SALES, U.S.A., INC.

CAUTION:

- **Never dispose of a steering pad that has an undeployed airbag.**
- **The airbag produces an exploding sound when it is deployed, so perform the operation outdoors and where it will not create a nuisance to nearby residents.**
- **When deploying the airbag, always use the specified SST (SRS Airbag Deployment Tool). Perform the operation in a place away from electrical noise.**
- **When deploying the airbag, perform the operation at least 10 m (33 ft) away from the steering pad.**
- **The steering pad becomes extremely hot when the airbag is deployed, so do not touch it for at least 30 minutes after deployment.**
- **Use gloves and safety glasses when handling a steering pad with a deployed airbag.**
- **Do not apply water, etc. to a steering pad with a deployed airbag.**
- **Always wash your hands with water after completing the operation.**

1. DISPOSE OF STEERING PAD (WHEN INSTALLED IN VEHICLE)

HINT:
Prepare a battery as the power source to deploy the airbag.

(a) Check the function of the SST.
SST 09082-00700
CAUTION:
When deploying the airbag, always use the specified SST:
SRS Airbag Deployment Tool

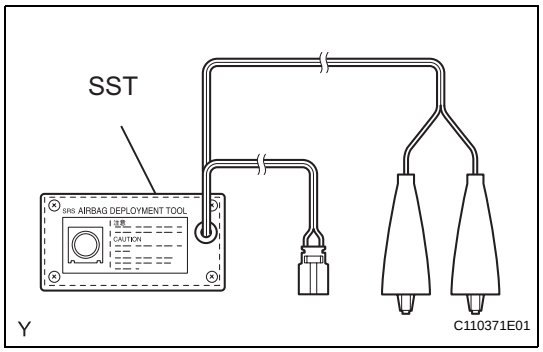

(1) Connect the SST to the battery.
Connect the red clip of the SST to the battery positive (+) terminal and the black clip of the SST to the negative (-) terminal.

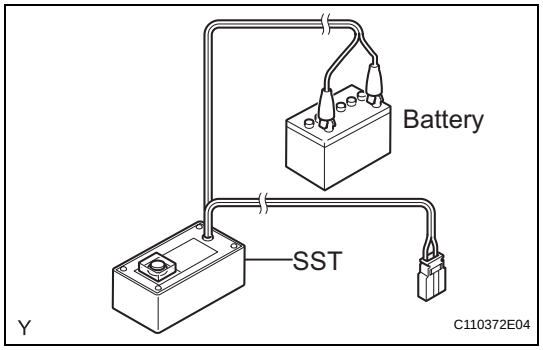

RS

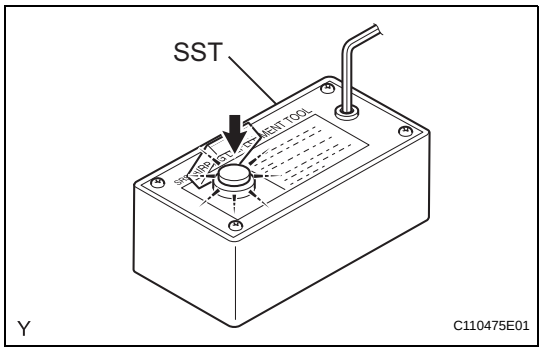

(2) Check the function of the SST.
Press the SST activation switch, and check that the LED of the SST activation switch comes on.
CAUTION:
- **Do not connect the SST connector (yellow colored one) to the airbag.**
- **If the LED comes on when the activation switch is not being pressed, SST malfunction is possible, so replace the SST with a new one.**

(3) Disconnect the SST from the battery.

(b) Refer to PRECAUTION (See page RS-1).

(c) Disconnect the cable from the negative battery terminal.
CAUTION:
Wait for 90 seconds after disconnecting the cable to prevent airbag deployment.

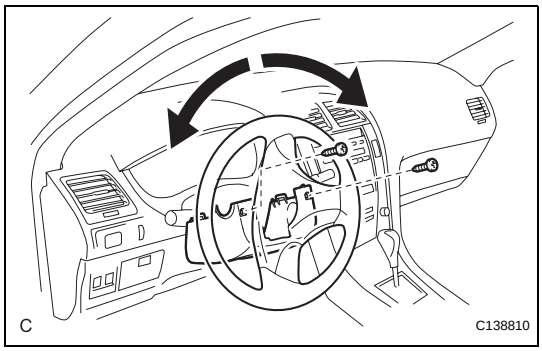

(d) Remove the steering column cover (lower).
(1) While turning the steering wheel assembly to the right and left, remove the 2 screws and steering column cover (lower).

(e) Install the SST.
CAUTION:
Check that there is no looseness in the steering wheel assembly and steering pad.
(1) Disconnect the airbag connector (yellow colored one) from the spiral cable.
NOTICE:
When handling the airbag connector, take care not to damage the airbag wire harness.

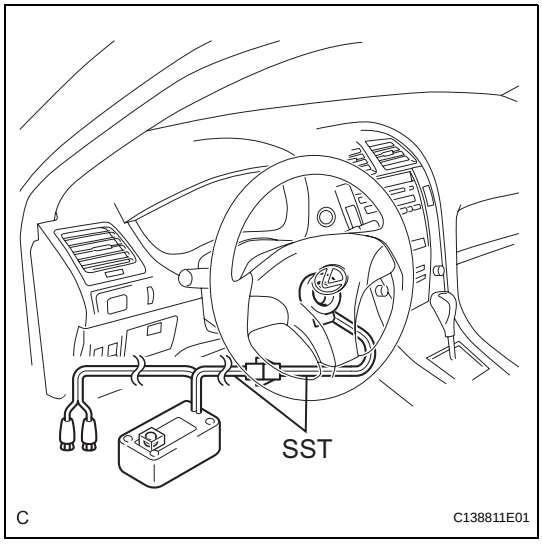

(2) Connect the SST connector to the airbag connector of the spiral cable.
SST 09082-00700, 09082-00780
NOTICE:
To avoid damaging the SST connector and wire harness, do not lock the secondary lock of the twin lock.

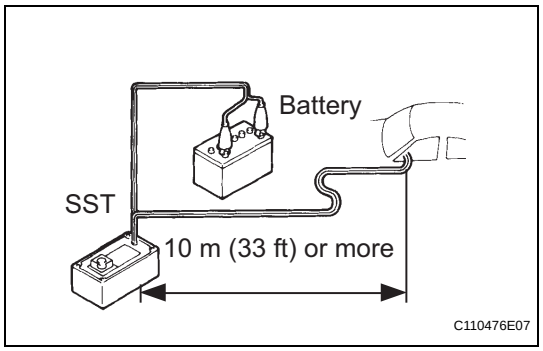

(3) Move the SST at least 10 m (33 ft) away from the vehicle front side window.

(4) Maintaining enough clearance for the SST wire harness in the front side window, close all doors and windows of the vehicle.
NOTICE:
Take care not to damage the SST wire harness.

(5) Connect the red clip of the SST to the battery positive (+) terminal and the black clip of the SST to the negative (-) terminal.

(f) Deploy the airbag.

(1) Check that no one is inside the vehicle or within a 10 m (33 ft) radius of the vehicle.

(2) Press the SST activation switch and deploy the airbag.
CAUTION:
- **When deploying the airbag, make sure that no one is near the vehicle.**
- **The steering pad becomes extremely hot when the airbag is deployed, so do not touch it for at least 30 minutes after deployment.**
- **Use gloves and safety glasses when handling a steering pad with a deployed airbag.**
- **Do not apply water, etc. to a steering pad with a deployed airbag.**
- **Always wash your hands with water after completing the operation.**

HINT:
The airbag is deployed as the LED of the SST activation switch comes on.

2. DISPOSE OF STEERING PAD (WHEN NOT INSTALLED IN VEHICLE)
NOTICE:
- **When disposing of the steering pad, never use the customer's vehicle to deploy the airbag.**
- **Be sure to follow the procedure detailed below when deploying the airbag.**

HINT:
Prepare a battery as the power source to deploy the airbag.

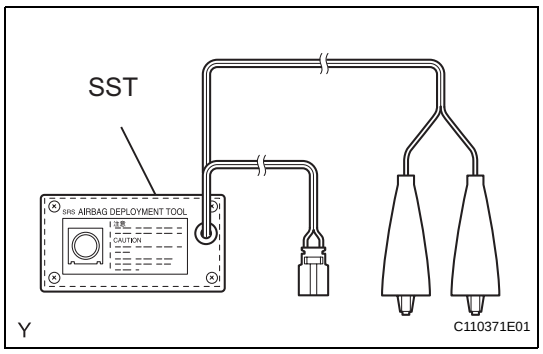

(a) Check the function of the SST.
SST 09082-00700
CAUTION:
When deploying the airbag, always use the specified SST:
SRS Airbag Deployment Tool

RS

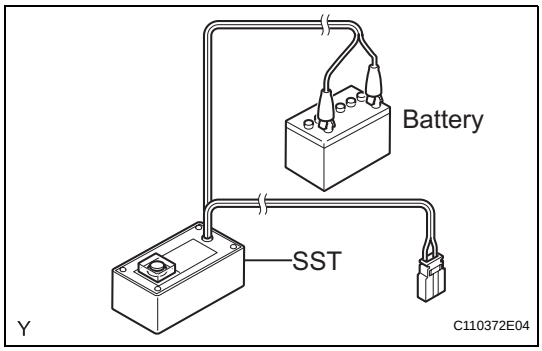

(1) Connect the SST to the battery.
Connect the red clip of the SST to the battery positive (+) terminal and the black clip of the SST to the negative (-) terminal.

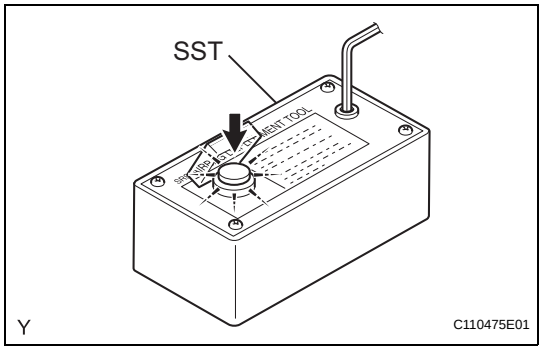

(2) Check the function of the SST.
Press the SST activation switch, and check that the LED of the SST activation switch comes on.
CAUTION:
- **Do not connect the SST connector (yellow colored one) to the airbag.**
- **If the LED comes on when the activation switch is not being pressed, SST malfunction is possible, so replace the SST with a new one.**

(3) Disconnect the SST from the battery.

(b) Remove the steering pad (See page RS-366).
CAUTION:
- **When removing the steering pad, work must be started 90 seconds after the engine switch is turned off and the negative (-) terminal cable is disconnected from the battery.**
- **When storing the steering pad, keep the airbag deployment side facing upward.**

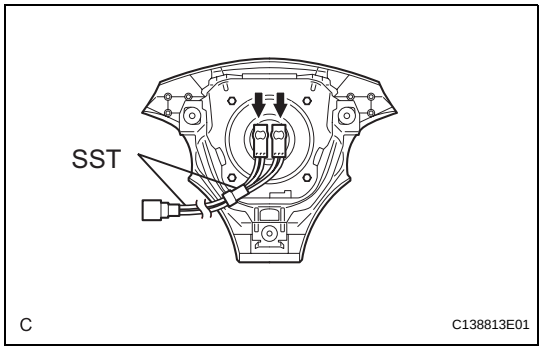

(c) After connecting the SST below to each other, connect them to the steering pad.
SST 09082-00802 (09082-10801, 09082-30801)

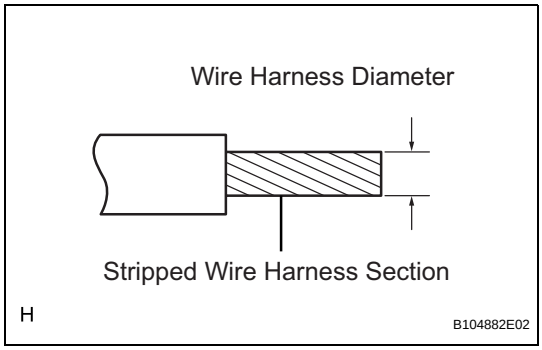

(d) Using a service-purpose wire harness for the vehicle, tie down the steering pad to the disc wheel.
Wire harness:
Stripped wire harness section
1.25 mm^2 or more (0.0019 in.^{2} or more)
CAUTION:
If the wire harness is too thin or an alternative object is used to tie down the steering pad, it may be snapped by the shock when the airbag is deployed. Always use a wire harness for vehicle use with an area of at least 1.25 mm^2 (0.0019 in.^{2}).

HINT:
To calculate the area of the stripped wire harness section:

Area = 3.14 x (Diameter)^2 divided by 4

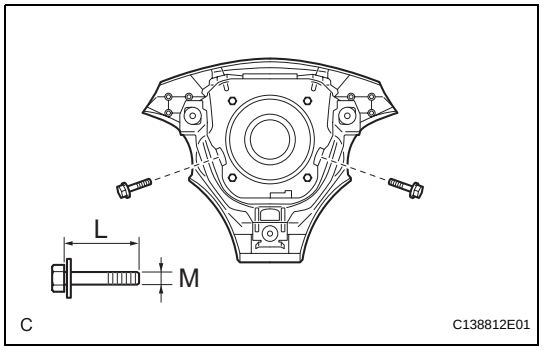

(1) Install the 2 bolts with washers into the 2 bolt holes on the steering pad.
Bolt:
L:
35.0 mm (1.378 in.)
M:
6.0 mm (0.236 in.)
Pitch:
1.0 mm (0.039 in.)
NOTICE:
- **Tighten the bolts by hand until they become difficult to turn.**
- **Do not tighten the bolts excessively.**

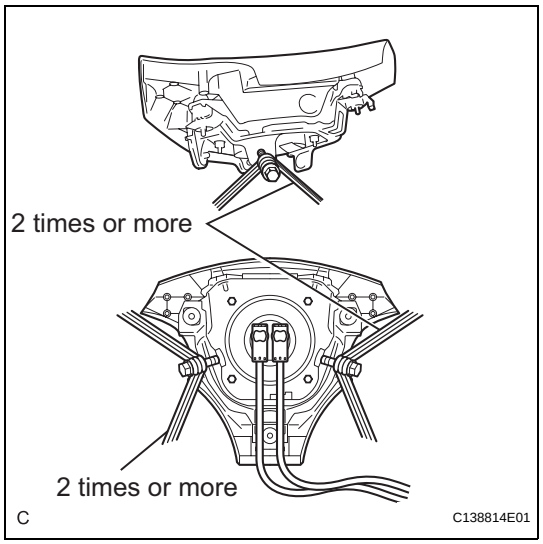

(2) Using 3 wire harnesses, wind wire harness at least 2 times each around each of the bolts installed on the left and right sides of the steering pad.
CAUTION:
- **Tightly wind the wire harness around the bolts so that there is no slack.**
- **Make sure that the wire harness is tight. If there is slack in the wire harness, the steering pad may become loose due to the shock when the airbag is deployed.**

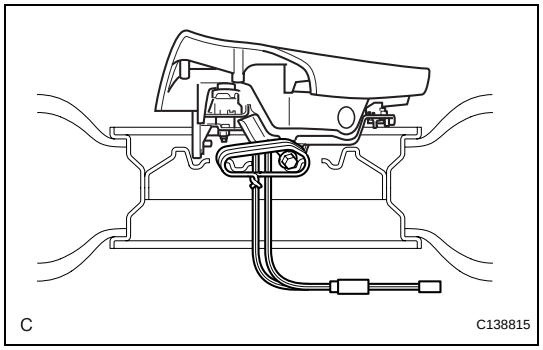

(3) Face the airbag deployment side of the steering pad upward on top of a tire and wheel set. Separately tie the left and right sides of the steering pad to the disc wheel through the hub nut holes. Position the SST connector so that it hangs downward through the hub hole of the disc wheel.
CAUTION:
- **Make sure that the wire harness is tight. If there is slack in the wire harness, the steering pad may become loose due to the shock when the airbag is deployed.**
- **Always tie down the steering pad with the airbag deployment side facing upward.**

NOTICE:
The disc wheel will be damaged by the airbag deployment, so use an extra disc wheel.

RS

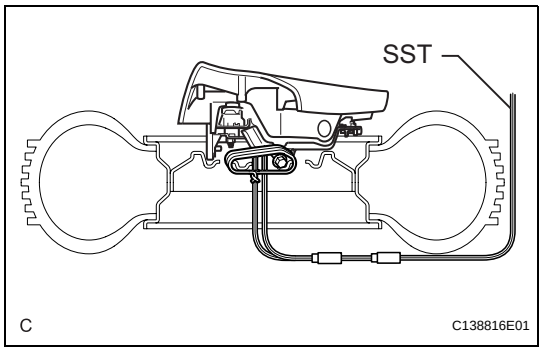

(e) Install the SST.
CAUTION:
Place the disc wheel on level ground.
(1) Connect the SST connector.
SST 09082-00700
NOTICE:
To avoid damaging the SST connector and wire harness, do not lock the secondary lock of the twin lock. Also, secure some slack for the SST wire harness inside the disc wheel.

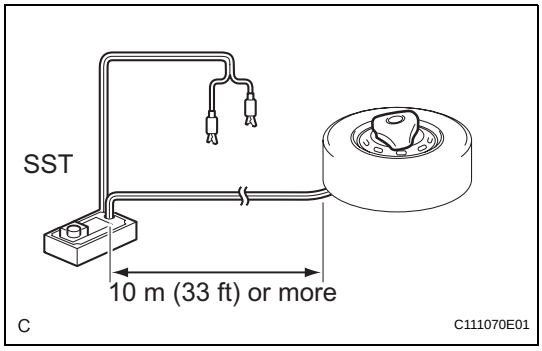

(2) Move the SST at least 10 m (33 ft) away from the airbag tied down to the disc wheel.

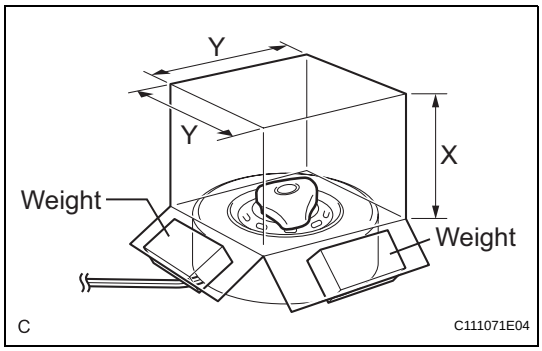

(f) Cover the steering pad (Using a cardboard box).
(1) Cover the steering pad with the cardboard box.
(2) Place weights on the cardboard box in 4 places totalling at least 190 N (19 kg, 43 lb).
Cardboard box size:
Must exceed the following dimensions
X:
460 mm (18.11 in.)
Y:
650 mm (25.59 in.)
NOTICE:
- **When dimension Y of the cardboard box exceeds the diameter of the disc wheel with tire which the steering pad is tied to, X should be the following size.**
  X = 460 mm (18.11 in.) + width of tire
- **If a cardboard box which is smaller than the specified size is used, the cardboard box will be broken by the shock from the airbag deployment.**

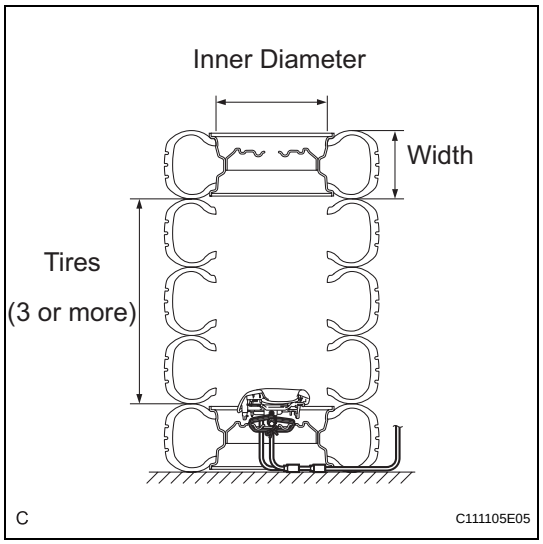

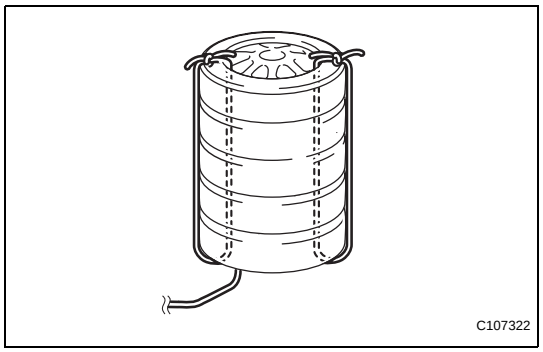

(g) Cover the steering pad (Using tires).

(1) Place at least 3 tires without disc wheels on the tire with disc wheel which the steering pad is tied to.

(2) Place the tire with a disc wheel on top of them.

Tire size:

Must exceed the following dimensions

Width:

185 mm (7.28 in.)

Inner diameter:

360 mm (14.17 in.)

CAUTION:

Do not use tires with disc wheels except for on the top and bottom.

NOTICE:

- **The tires may be damaged by the airbag deployment, so use an extra tire.**
- **Do not place the SST connector under the tire because it could be damaged.**

(3) Tie the tires together with 2 wire harnesses.

CAUTION:

Make sure that the wire harness is tight. Looseness in the wire harness results in the tires coming free due to the shock when the airbag is deployed.

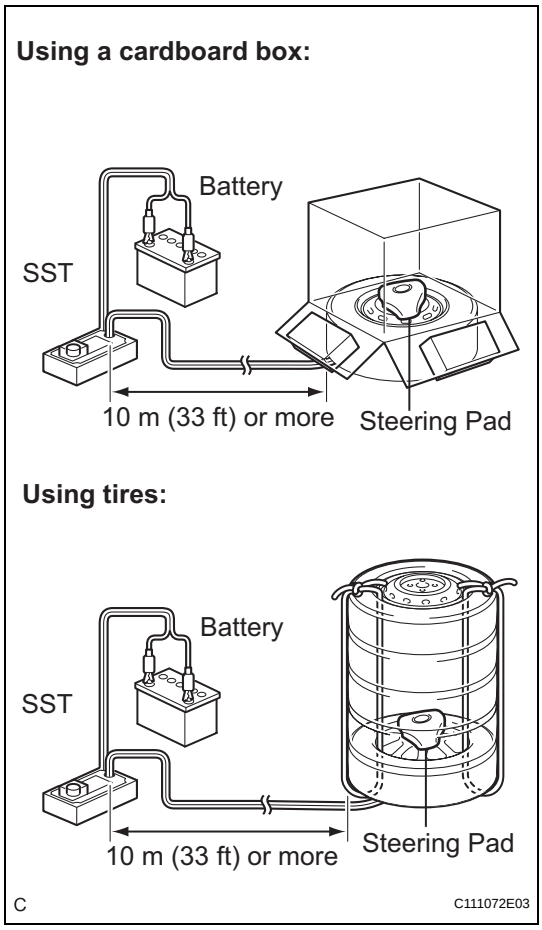

(h) Deploy the airbag.
  (1) Connect the red clip of the SST to the battery positive (+) terminal and the black clip of the SST to the negative (-) terminal.
  (2) Check that no one is within a 10 m (33 ft) radius of the disc wheel which the steering pad is tied to.
  (3) Press the SST activation switch and deploy the airbag.
  CAUTION:
  When deploying the airbag, make sure that no one is near the tire.
  HINT:
  The airbag is deployed as the LED of the SST activation switch comes on.

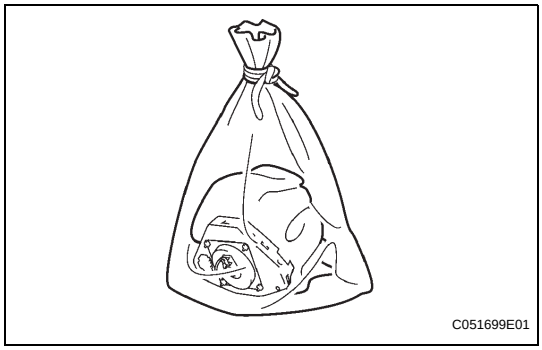

(i) Dispose of the steering pad.
  CAUTION:
  - **The steering pad becomes extremely hot when the airbag is deployed, so do not touch it for at least 30 minutes after deployment.**
  - **Use gloves and safety glasses when handling a steering pad with a deployed airbag.**
  - **Do not apply water, etc. to a steering pad with a deployed airbag.**
  - **Always wash your hands with water after completing the operation.**
  (1) Remove the steering pad from the disc wheel.
  (2) Place the steering pad in a plastic bag, tie it tightly and dispose of it as other general part disposal.

Terminal No.	Terminal Symbol	Destination
M1-11	BBP-	Side airbag sensor RH
M1-12	FSP+	Occupant classification ECU
M1-13	FSP-	Occupant classification ECU

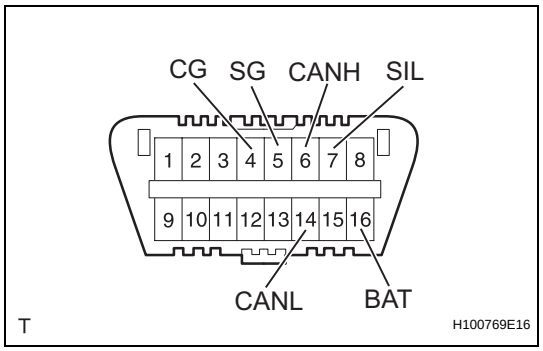

DIAGNOSIS SYSTEM

1. CHECK DLC3

(a) The ECU uses ISO 15765-4 for communication. The terminal arrangement of the DLC3 complies with SAE J1962 and matches the ISO 15765-4 format.

Symbols (Terminal No.)	Terminal Description	Condition	Specified condition
SIL (7) - SG (5)	Bus "+" line	During transmission	Pulse generation
CG (4) - Body ground	Chassis ground	Always	Below 1 Ω
SG (5) - Body ground	Signal ground	Always	Below 1 Ω
BAT (16) - Body ground	Battery positive	Always	10 to 14 V
CANH (6) - CANL (14)	CAN bus line	Engine switch off (*)	54 to 69 Ω
CANH (6) - BAT (16)	HIGH-level CAN bus line	Engine switch off (*)	6 kΩ or higher
CANH (6) - CG (4)	HIGH-level CAN bus line	Engine switch off (*)	200 Ω or higher
CANL (14) - BAT (16)	LOW-level CAN bus line	Engine switch off (*)	6 kΩ or higher
CANL (14) - CG (4)	LOW-level CAN bus line	Engine switch off (*)	200 Ω or higher

NOTICE:

***: Before measuring the resistance, leave the vehicle as is for at least 1 minute and do not operate the engine switch, any other switches, or the doors.**

If the result is not as specified, the DLC3 may have a malfunction. Repair or replace the harness and connector.

HINT:

If the display shows a communication error message when connecting the cable of the intelligent tester to the DLC3, turning the engine switch on (IG) and operating the intelligent tester, there is a problem on the vehicle side or tester side.

- If communication is normal when the tester is connected to another vehicle, inspect the DLC3 on the original vehicle.
- If communication is still not possible when the tester is connected to another vehicle, the problem is probably in the tester itself. Consult the Service Department listed in the tester's instruction manual.

RS

2. SYMPTOM SIMULATION

HINT:
The most difficult case in troubleshooting is when no symptoms occur. In such cases, a thorough customer problem analysis must be carried out. Then the same or similar conditions and the environment in which the problem occurred in the customer's vehicle should be reproduced. No matter how experienced or skilled a technician may be, if he proceeds to troubleshooting without confirming the problem symptoms, he will likely overlook something important and make a wrong guess at some points in the repair operation.
This leads to a standstill in troubleshooting.

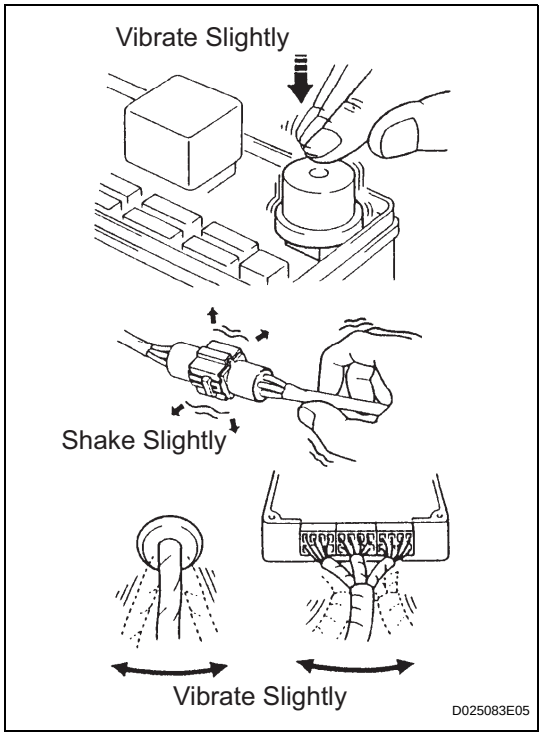

(a) Vibration method: When vibration seems to be the major cause.
HINT:
Perform the simulation method only during the primary check period (for approximately 6 seconds after the engine switch is turned on (IG)).
(1) Slightly vibrate the part of the sensor considered to be the problem cause with your fingers and check whether the malfunction occurs.
HINT:
Shaking the relays too strongly may result in open relays.
(2) Slightly shake the connector vertically and horizontally.
(3) Slightly shake the wire harness vertically and horizontally.
The connector joint and fulcrum of the vibration are the major areas to be checked thoroughly.

3. FUNCTION OF SRS WARNING LIGHT

(a) Primary check.
(1) Turn the engine switch off. Wait for at least 2 seconds, then turn the engine switch on (IG).
The SRS warning light comes on for approximately 6 seconds and the diagnosis of the airbag system (including the seat belt pretensioners) is performed.
HINT:
If trouble is detected during the primary check, the SRS warning light remains on even after the primary check period (of approximately 6 seconds) has elapsed.

(b) Constant check.
(1) After the primary check, the center airbag sensor assembly constantly monitors the airbag system for trouble.
HINT:
If trouble is detected during the constant check, the center airbag sensor assembly functions as follows:
- The SRS warning light comes on.

- The SRS warning light goes off, and then comes on. This blinking pattern indicates a source voltage drop. The SRS warning light goes off 10 seconds after the source voltage returns to normal.

(c) Review.

(1) When the airbag system is normal:
The SRS warning light comes on only during the primary check period (for approximately 6 seconds after the engine switch is turned on (IG)).

(2) When the airbag system has trouble:
- The SRS warning light remains on even after the primary check period has elapsed.
- The SRS warning light goes off after the primary check, but comes on again during the constant check.
- The SRS warning light does not come on when turning the engine switch from off to on (IG).

HINT:
The center airbag sensor assembly functions to keep the SRS warning light on if the airbag has been deployed.

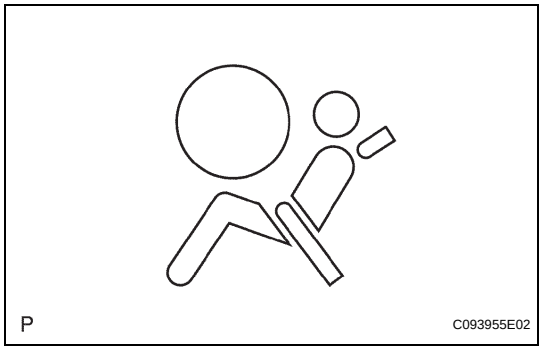

4. SRS WARNING LIGHT CHECK

(a) Turn the engine switch on (IG), and check that the SRS warning light comes on for approximately 6 seconds (primary check).

(b) Check that the SRS warning light goes off approximately 6 seconds after the engine switch is turned on (IG) (constant check).
HINT:
When any of the following symptoms occur, refer to "Problem Symptoms Table" (See page RS-33).
- The SRS warning light comes on occasionally, after the primary check period has elapsed.
- The SRS warning light comes on, but a DTC is not output.
- The engine switch is turned from off to on (IG), but the SRS warning light does not come on.

5. FUNCTION OF PASSENGER AIRBAG ON/OFF INDICATOR

(a) Initial check

(1) Turn the engine switch on (IG).

(2) The passenger airbag ON/OFF indicator comes on for approximately 4 seconds, then goes off for approximately 2 seconds.

(3) Approximately 6 seconds after the engine switch is turned on (IG), the passenger airbag ON/OFF indicator will be ON or OFF depending on the conditions listed below.

Condition	"ON" indicator	"OFF" indicator
Vacant	OFF	OFF

Condition	"ON" indicator	"OFF" indicator
Adult is seated.	ON	OFF
Child is seated.	OFF	ON
Child restraint system is set.	OFF	ON
Front passenger occupant classification failure	OFF	ON

HINT:

- The passenger airbag ON/OFF indicator is based on the timing chart below in order to check the indicator light circuit.
- When the occupant classification system has trouble, both the SRS warning light and the passenger airbag ON/OFF indicator ("OFF") come on. In this case, check the DTCs in "AIRBAG SYSTEM" first. Then troubleshoot the occupant classification system if DTC B1650/32 is detected, and troubleshoot the passenger airbag ON/OFF indicator if DTC B1660/43 is detected.

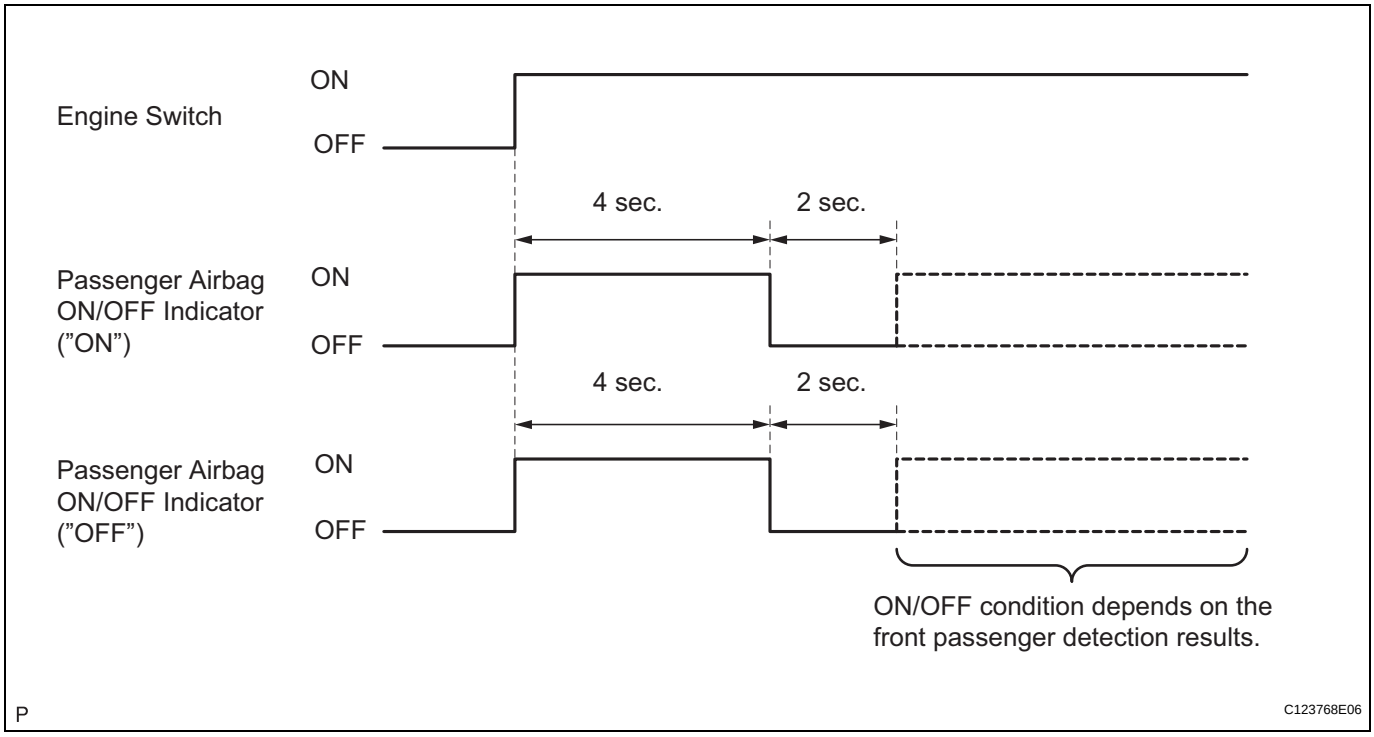

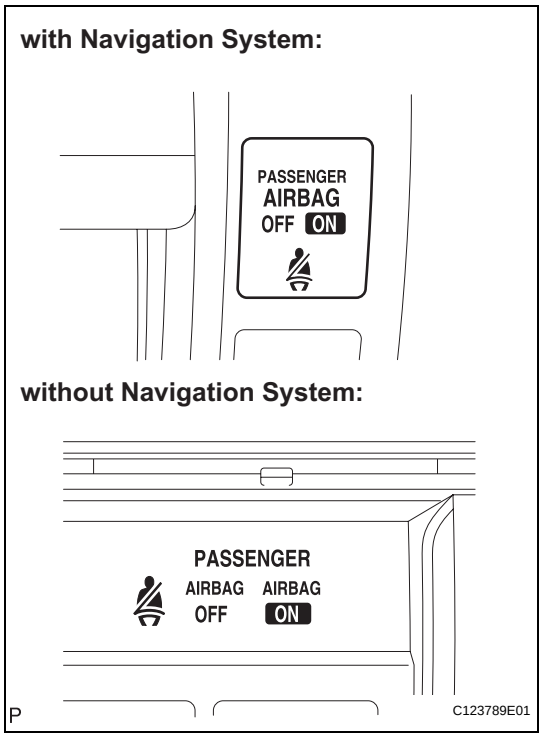

6. PASSENGER AIRBAG ON/OFF INDICATOR CHECK

(a) Turn the engine switch on (IG).

(b) Check that the passenger airbag ON/OFF indicator ("ON" and "OFF") comes on for approximately 4 seconds, then goes off for approximately 2 seconds.
HINT:
Refer to the table in the previous step regarding the passenger airbag ON/OFF indicator when the engine switch is turned on (IG) and approximately 6 seconds have passed.

7. ACTIVATION PREVENTION MECHANISM

(a) FUNCTION OF ACTIVATION PREVENTION MECHANISM

(1) An activation prevention mechanism is built into the connector (on the center airbag sensor assembly side) of the airbag system squib circuit to prevent accidental airbag activation.

(2) This mechanism closes the circuit when the connector is disconnected by bringing the short spring into contact with the terminals and shutting off external electricity to prevent accidental airbag activation.

(b) RELEASING OF ACTIVATION PREVENTION MECHANISM

(1) To release the activation prevention mechanism, insert a piece of paper with the same thickness as the male terminal (approximately 0.5 mm (0.020 in.)) between the terminals and the short spring to break the connection.

(2) Refer to the following illustrations concerning connectors utilizing the activation prevention mechanism and its release method.
CAUTION:
Never release the activation prevention mechanism on the squib connector even when inspecting with the squib disconnected.
NOTICE:
- **Do not release the activation prevention mechanism unless specially directed by the troubleshooting procedure.**
- **To prevent the terminal and the short spring from being damaged, always use a piece of paper with the same thickness as the male terminal.**

RS

RS

Driver Side (with Rear Side Airbag):

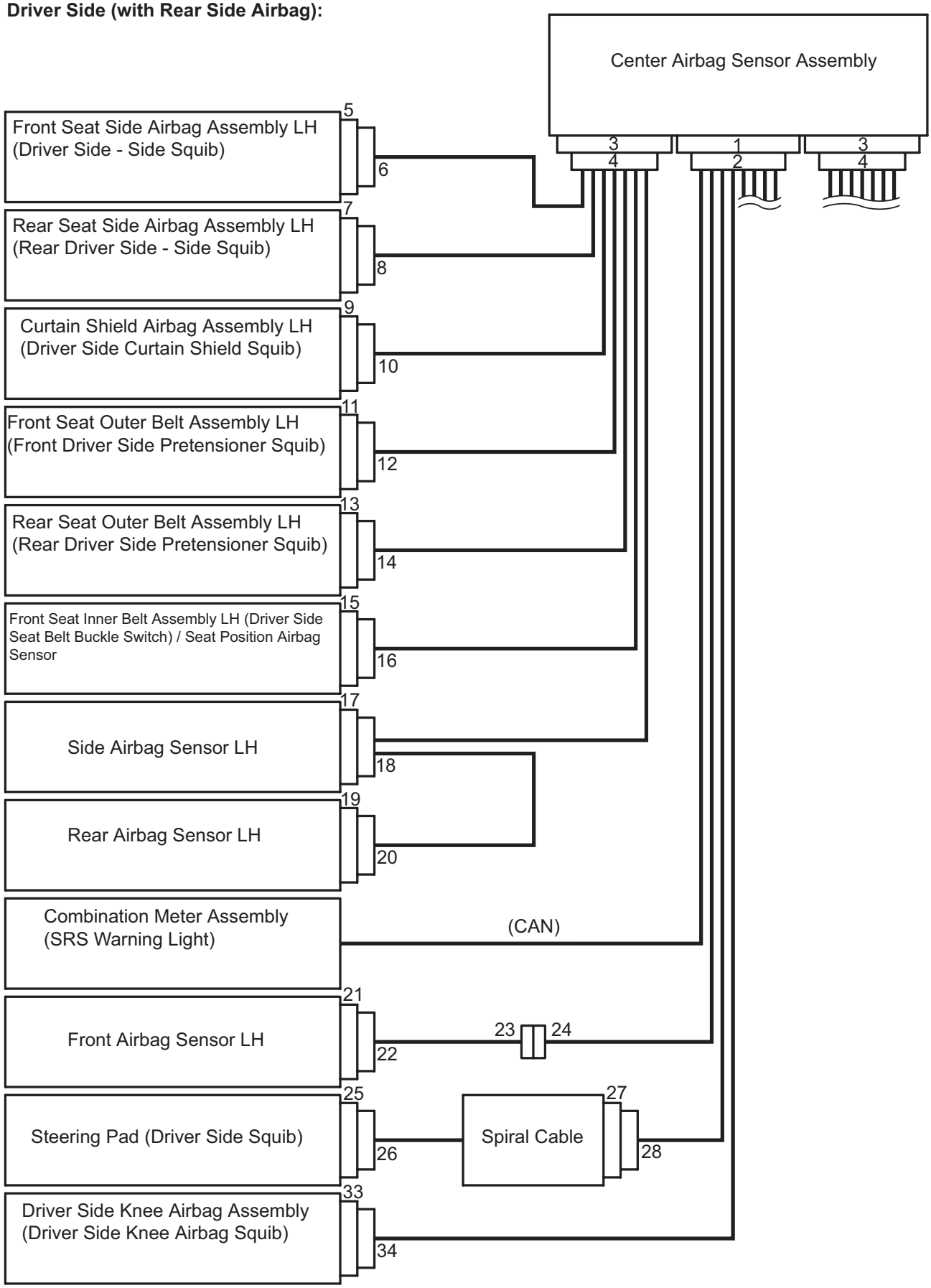

RS

Passenger Side (with Rear Side Airbag):

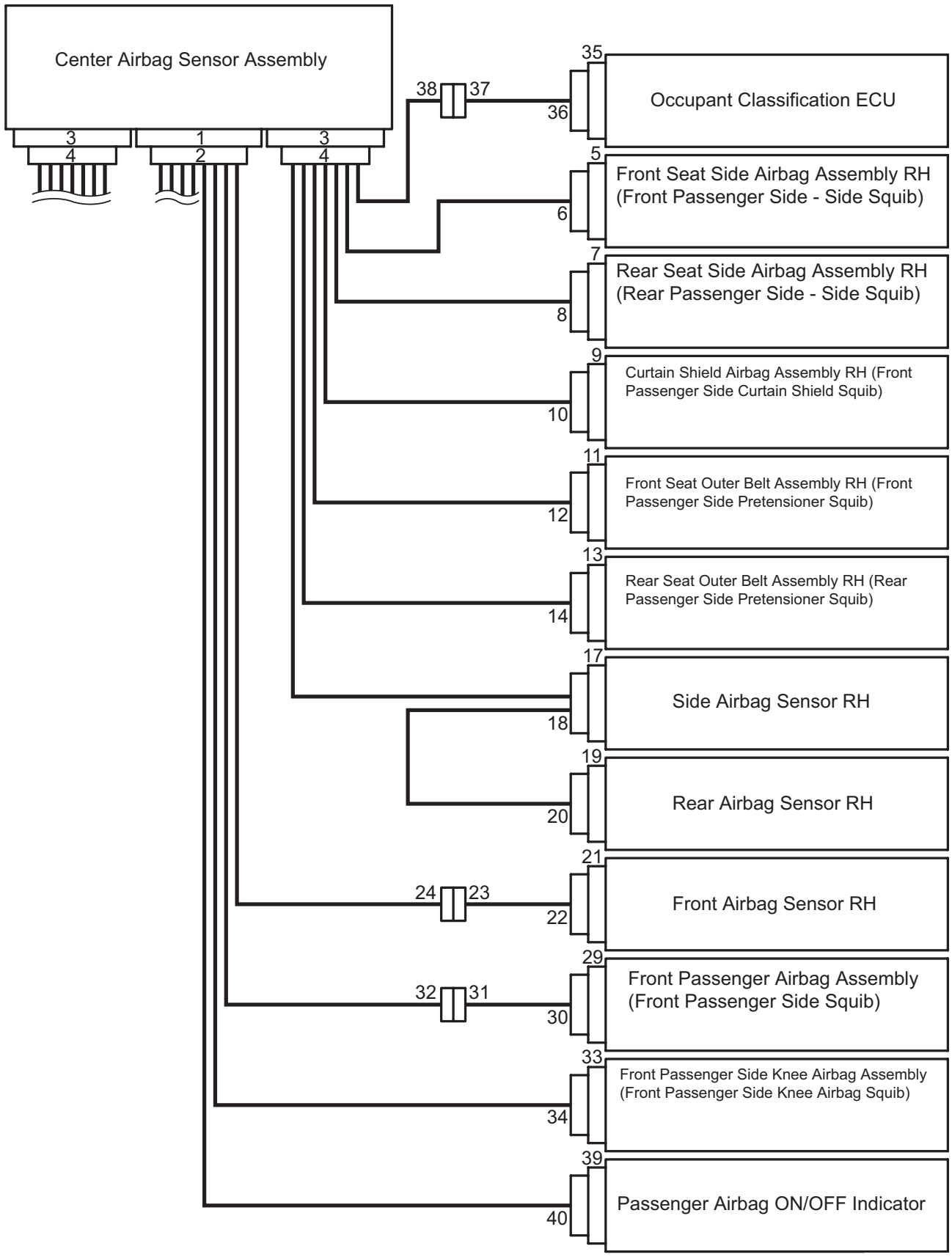

RS

with Rear Side Airbag:

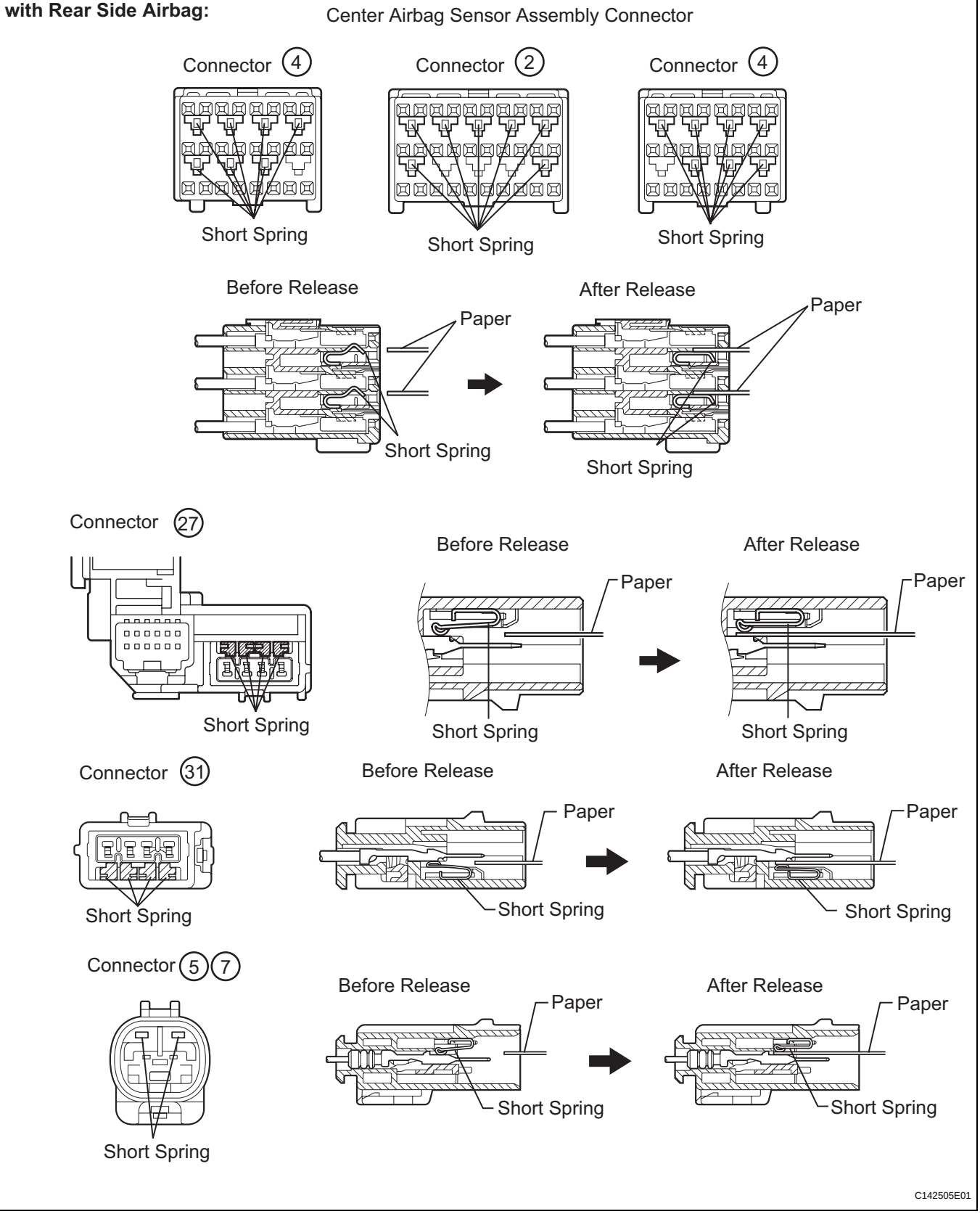

RS

Driver Side (without Rear Side Airbag):

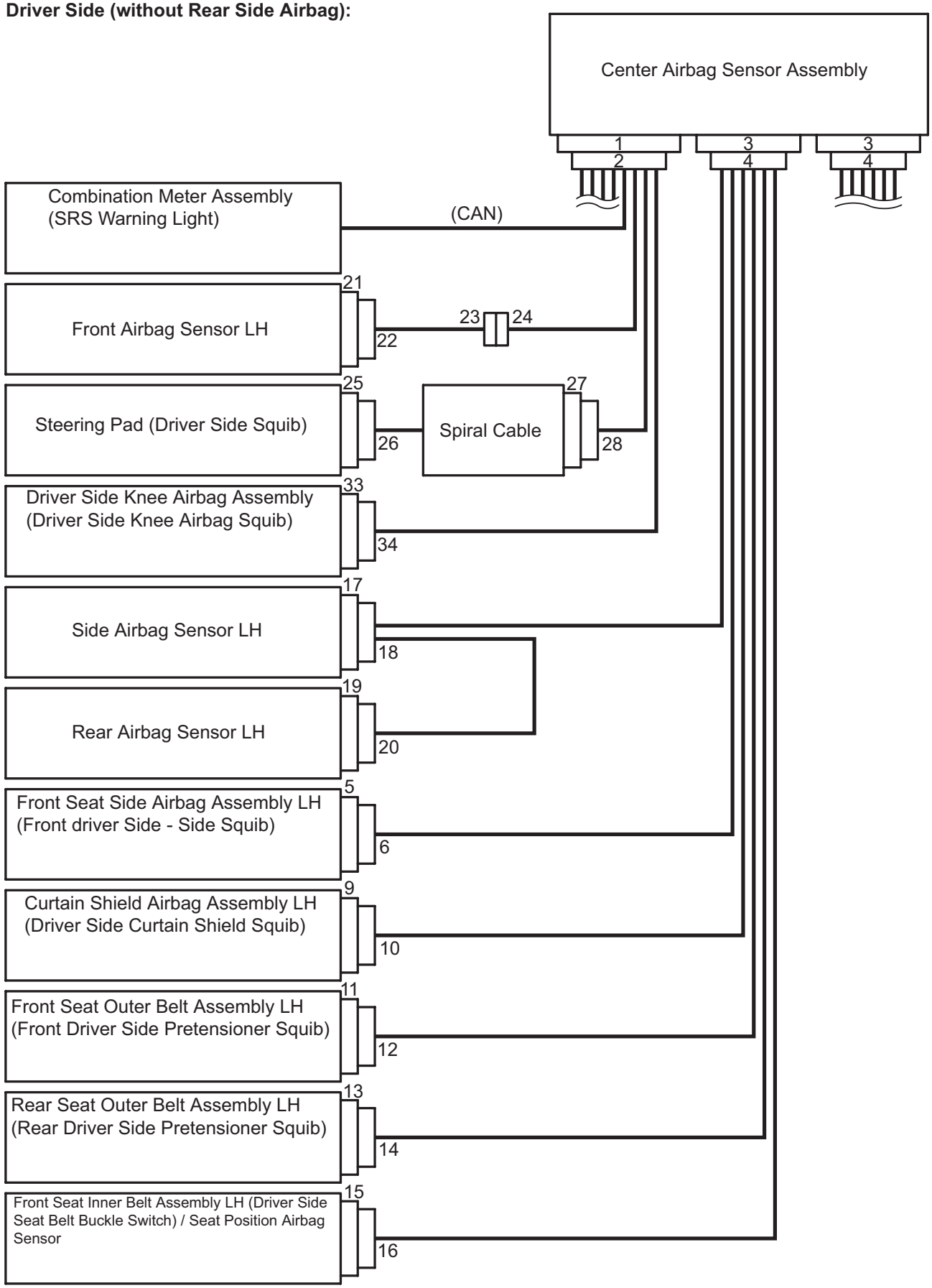

RS

Passenger Side (without Rear Side Airbag):

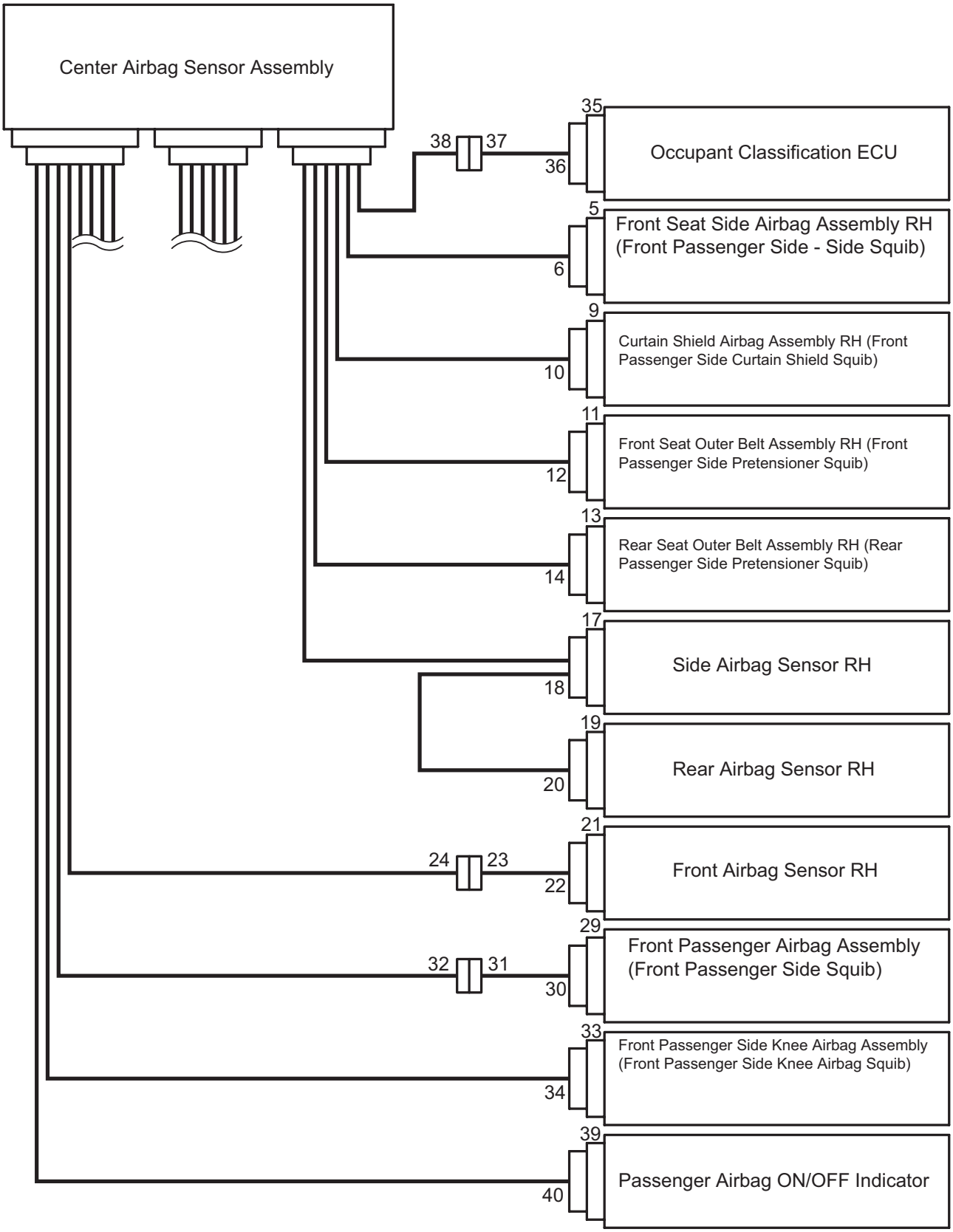

P

C123795E01

without Rear Side Airbag: Center Airbag Sensor Assembly Connector

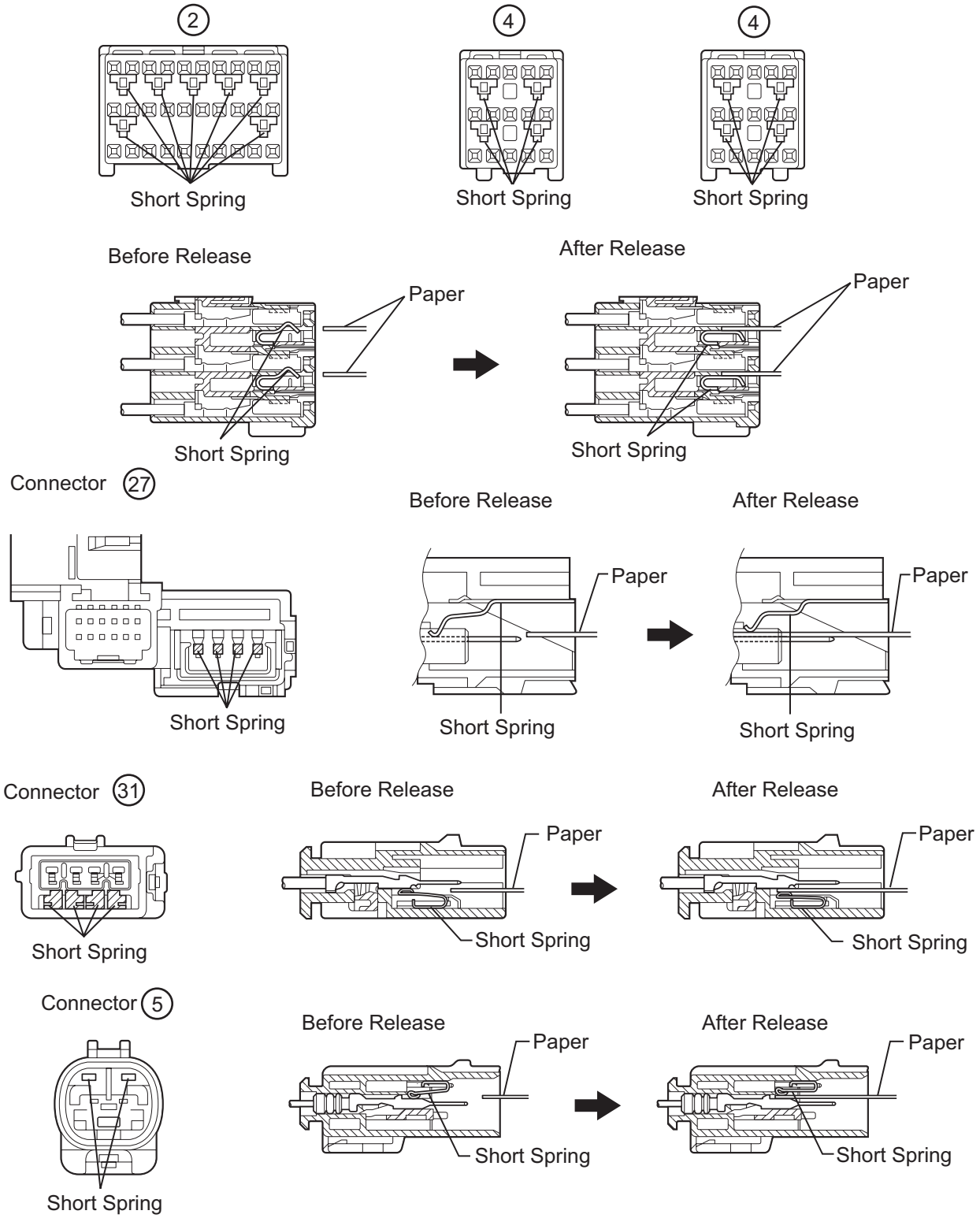

C

C114854E06

SPIRAL CABLE

COMPONENTS

RS

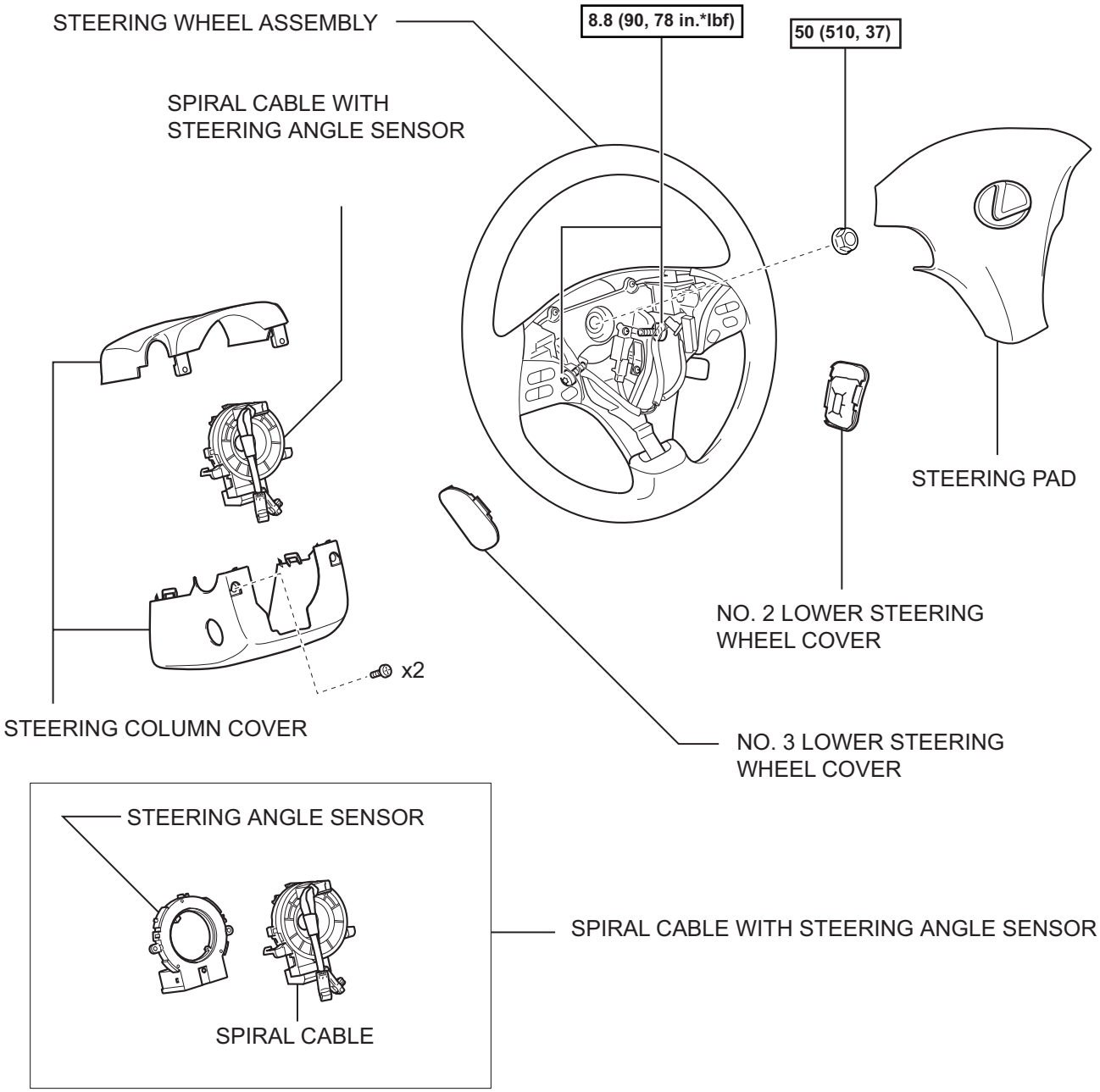

N*m (kgf*cm, ft.*lbf) : Specified torque

C

C138817E02

REMOVAL

1. **PRECAUTION**
   CAUTION:
   Be sure to read "PRECAUTION" thoroughly before servicing (See page RS-1).
2. **DISCONNECT CABLE FROM NEGATIVE BATTERY TERMINAL**
   NOTICE:
   Wait for 90 seconds after disconnecting the cable to prevent airbag deployment.
3. **ALIGN FRONT WHEELS FACING STRAIGHT AHEAD**
4. **REMOVE NO. 3 LOWER STEERING WHEEL COVER (See page RS-367)**
5. **REMOVE NO. 2 LOWER STEERING WHEEL COVER (See page RS-367)**
6. **REMOVE STEERING PAD (See page RS-367)**
7. **REMOVE STEERING WHEEL ASSEMBLY (See page SR-80)**
8. **REMOVE STEERING COLUMN COVER (See page SR-80)**
9. **REMOVE SPIRAL CABLE WITH STEERING ANGLE SENSOR**
   (a) Disconnect the connectors from the spiral cable with steering angle sensor.
   NOTICE:
   When handling the airbag connector, take care not to damage the airbag wire harness.
   (b) Disengage the 3 claws and remove the spiral cable with steering angle sensor.

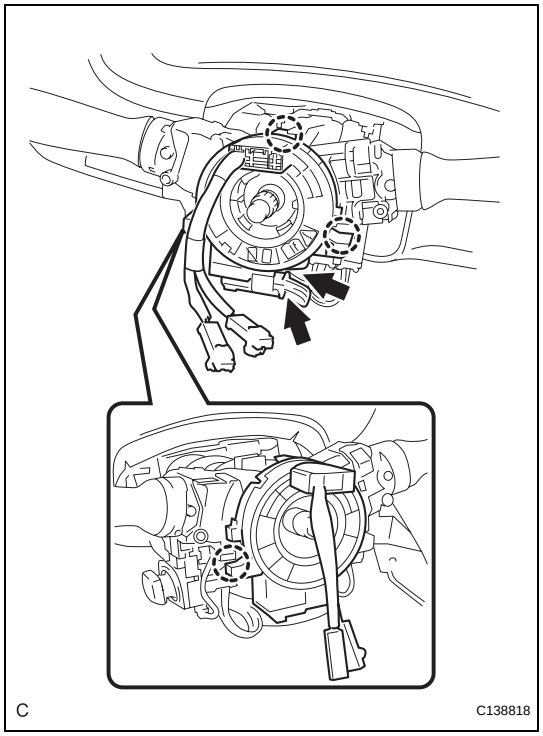

RS

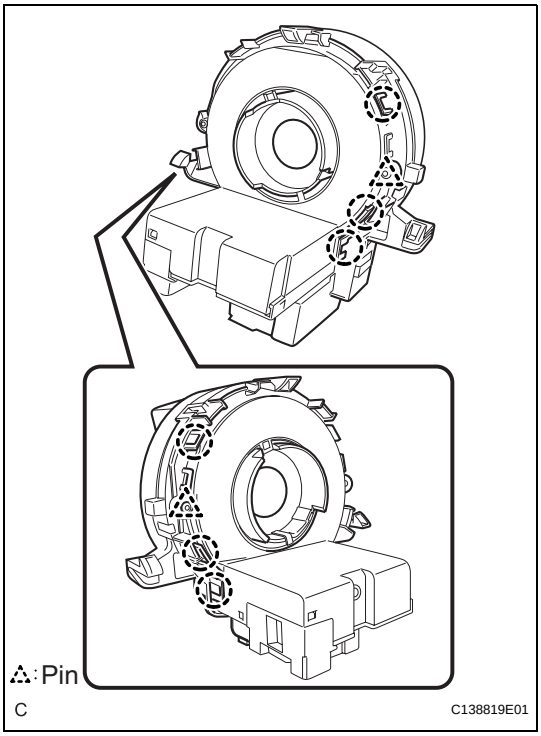

10. REMOVE SPIRAL CABLE

(a) Disengage the 6 claws and 2 pins, and remove the spiral cable from the steering angle sensor.

INSPECTION

1. INSPECT SPIRAL CABLE

(a) If there are any defects as mentioned below, replace the spiral cable with a new one:
Scratches, cracks, dents or chips on the connector or the spiral cable.

(b) Inspect the spiral cable.

(1) Measure the resistance according to the value(s) in the table below.

NOTICE:
To avoid breakage of the spiral cable, do not turn the spiral cable more than necessary.

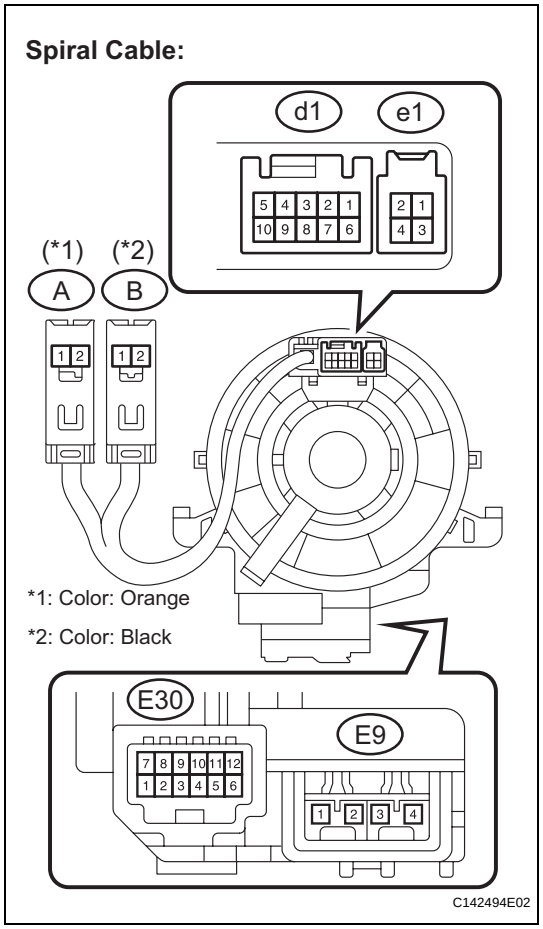

Standard resistance

Tester connection	Condition	Specified condition
d1-1 - e1-2	Center	Below 1 Ω
	2.5 rotations to the left	
	2.5 rotations to the right	
d1-1 - E30-8 (HO)	Center	Below 1 Ω
	2.5 rotations to the left	
	2.5 rotations to the right	
d1-4 - E30-11 (DIST)	Center	Below 1 Ω
	2.5 rotations to the left	
	2.5 rotations to the right	
d1-5 - E30-12 (IL+2)	Center	Below 1 Ω
	2.5 rotations to the left	
	2.5 rotations to the right	
d1-6 - e1-4	Center	Below 1 Ω
	2.5 rotations to the left	
	2.5 rotations to the right	
d1-6 - E30-2 (ECC)	Center	Below 1 Ω
	2.5 rotations to the left	
	2.5 rotations to the right	
d1-7 - E30-3 (DISP)	Center	Below 1 Ω
	2.5 rotations to the left	
	2.5 rotations to the right	
d1-8 - E30-4 (EAU)	Center	Below 1 Ω
	2.5 rotations to the left	
	2.5 rotations to the right	
d1-9 - E30-5 (AU2)	Center	Below 1 Ω
	2.5 rotations to the left	
	2.5 rotations to the right	
d1-10 - E30-6 (AU1)	Center	Below 1 Ω
	2.5 rotations to the left	
	2.5 rotations to the right	
e1-1 - E30-7 (R/N)	Center	Below 1 Ω
	2.5 rotations to the left	
	2.5 rotations to the right	
e1-2 - E30-8 (HO)	Center	Below 1 Ω
	2.5 rotations to the left	
	2.5 rotations to the right	

RS

Tester connection	Condition	Specified condition
e1-3 - E30-1 (CCS)	Center	Below 1 Ω
	2.5 rotations to the left	
	2.5 rotations to the right	
e1-4 - E30-2 (ECC)	Center	Below 1 Ω
	2.5 rotations to the left	
	2.5 rotations to the right	
A-1 (D-) - E9-2 (D-)	Center	Below 1 Ω
	2.5 rotations to the left	
	2.5 rotations to the right	
A-2 (D+) - E9-1 (D+)	Center	Below 1 Ω
	2.5 rotations to the left	
	2.5 rotations to the right	
B-1 (D2-) - E9-3 (D2-)	Center	Below 1 Ω
	2.5 rotations to the left	
	2.5 rotations to the right	
B-2 (D2+) - E9-4 (D2+)	Center	Below 1 Ω
	2.5 rotations to the left	
	2.5 rotations to the right	

If the value is not within the specified range, replace the spiral cable.

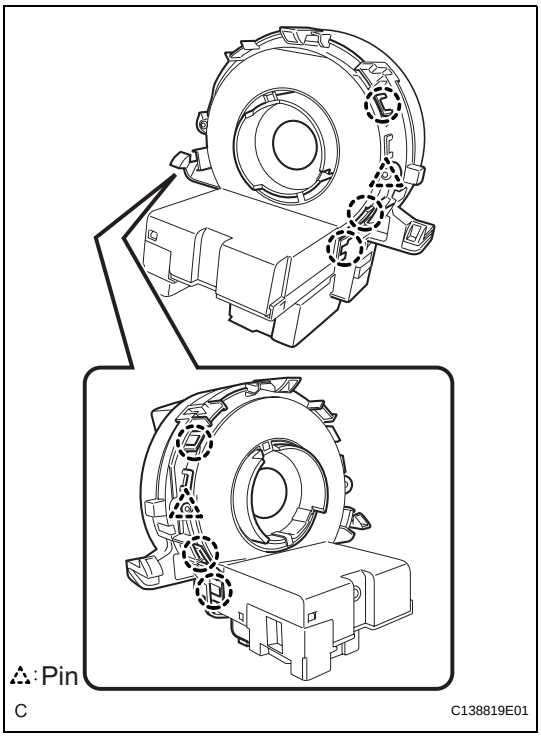

INSTALLATION

1. INSTALL SPIRAL CABLE

(a) Engage the 6 claws and 2 pins, and install the spiral cable to the steering angle sensor.

2. INSTALL SPIRAL CABLE WITH STEERING ANGLE SENSOR

(a) Check that the front wheels are facing straight ahead.

(b) Set the turn signal switch to the neutral position.

NOTICE:

If it is not in the neutral position, the pin of the turn signal switch may be snapped.

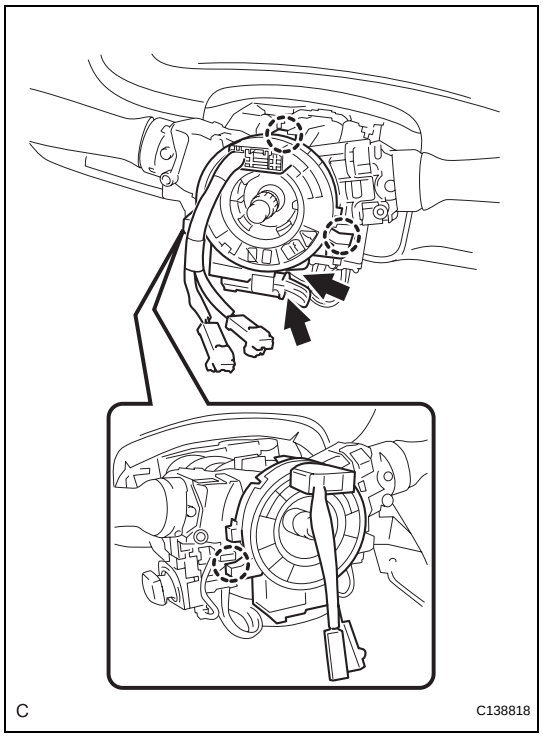

(c) Engage the 3 claws and install the spiral cable with steering angle sensor.
NOTICE:
When replacing the spiral cable with a new one, remove the lock pin before installing the steering wheel assembly.

(d) Connect the connectors to the spiral cable with steering angle sensor.
NOTICE:
When handling the airbag connector, take care not to damage the airbag wire harness.

3. INSTALL STEERING COLUMN COVER (See page SR-87)

4. ADJUST SPIRAL CABLE

(a) Check that the engine switch is off.

(b) Check that the battery negative (-) cable is disconnected.
CAUTION:
Wait for 90 seconds after disconnecting the cable to prevent airbag deployment.

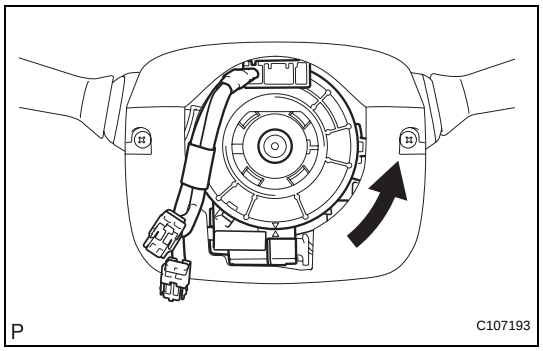

(c) Rotate the spiral cable counterclockwise slowly by hand until it feels firm.
NOTICE:
Do not turn the spiral cable by the airbag wire harness.

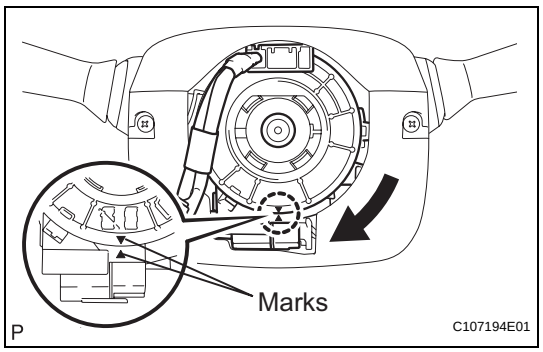

(d) Rotate the spiral cable clockwise approximately 2.5 turns to align the marks.
NOTICE:
Do not turn the spiral cable by the airbag wire harness.
HINT:
The spiral cable will rotate approximately 2.5 turns to both the left and right from the center.

5. INSTALL STEERING WHEEL ASSEMBLY (See page SR-87)

6. INSPECT STEERING WHEEL CENTER POINT

7. INSTALL STEERING PAD (See page RS-368)

8. INSTALL NO. 3 LOWER STEERING WHEEL COVER (See page RS-369)

9. INSTALL NO. 2 LOWER STEERING WHEEL COVER (See page RS-369)

10. CONNECT CABLE TO NEGATIVE BATTERY TERMINAL

11. PERFORM INITIALIZATION

(a) Perform initialization (See page IN-33).

HINT:

Some systems need initialization after reconnecting the cable to the negative battery terminal.

12. INSPECT STEERING PAD (See page RS-369)

13. INSPECT SRS WARNING LIGHT

(a) Inspect the SRS warning light (See page RS-37).

RS

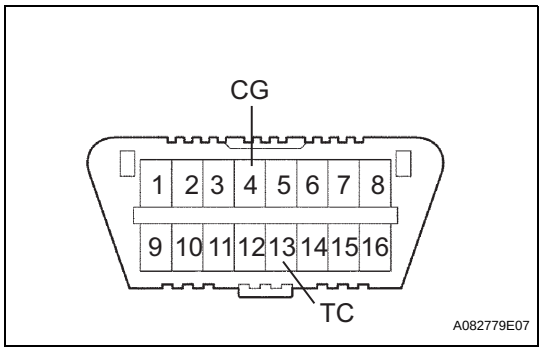

DTC CHECK / CLEAR

1. DTC CHECK (USING SST CHECK WIRE)

(a) Check the DTCs (Present trouble code).

(1) Turn the engine switch on (IG), and wait for approximately 60 seconds.

(2) Using SST, connect terminals TC and CG of the DLC3.

SST 09843-18040

NOTICE:

Connect the terminals to the correct positions to avoid a malfunction.

(b) Check the DTCs (Past trouble code).

(1) Using SST, connect terminals TC and CG of the DLC3.

SST 09843-18040

NOTICE:

Connect the terminals to the correct positions to avoid a malfunction.

(2) Turn the engine switch on (IG), and wait for approximately 60 seconds.

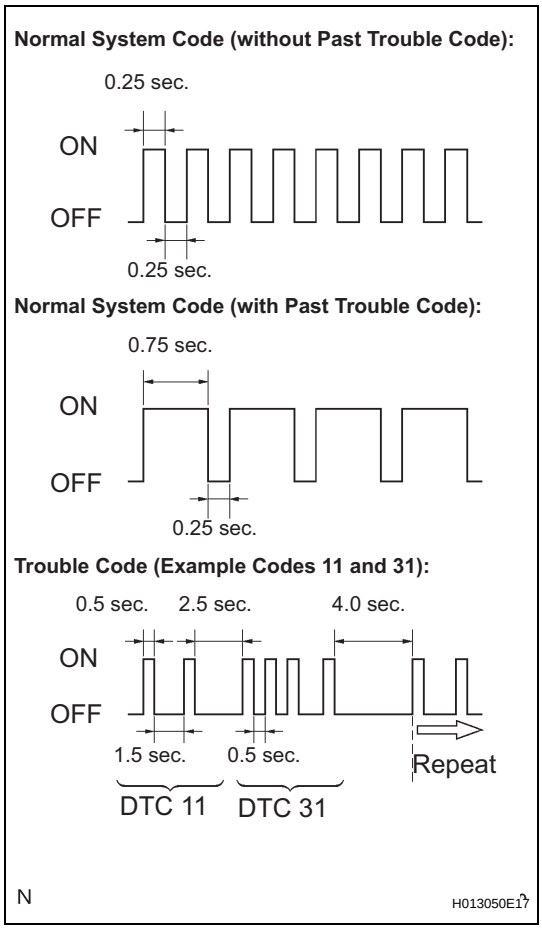

(c) Read the DTCs.

(1) Read the blinking patterns of the DTCs. As examples, the blinking patterns for the normal system code and trouble codes 11 and 31 are shown in the illustration.

- Normal system code indication (without past trouble code)
  The light blinks twice per second.
- Normal system code indication (with past trouble code)
  When the past trouble code is stored in the center airbag sensor assembly, the light blinks only once per second.
- Trouble code indication
  The first blinks indicates the first DTC. The second blinks occurs after a 1.5-second pause.

If there is more than 1 code, there will be a 2.5-second pause between each code. After all codes are shown, there will be a 4.0-second pause, and then all codes will be repeated.

HINT:

- If 2 or more malfunctions are found, the indication begins with the smaller-numbered code.
- If DTCs are indicated without connecting the terminals, proceed to "Diagnosis Circuit" (See page RS-300).

2. DTC CLEAR (USING SST CHECK WIRE)

(a) Clear the DTCs.

(1) When the engine switch is turned off, the DTCs are cleared.
HINT:
Depending on the DTC, the code may not be cleared by turning off the engine switch. In this case, proceed to the next procedure.

(2) Using SST, connect terminals TC and CG of the DLC3, and then turn the engine switch on (IG).
SST 09843-18040

(3) Disconnect terminal TC of the DLC3 within 3 to 10 seconds after the DTCs are output, and check if the SRS warning light comes on after 3 seconds.

(4) Within 2 to 4 seconds after the SRS warning light comes on, connect terminals TC and CG of the DLC3.

(5) The SRS warning light should go off within 2 to 4 seconds after connecting terminals TC and CG of the DLC3. Then, disconnect terminal TC within 2 to 4 seconds after the SRS warning light goes off.

(6) The SRS warning light comes on again within 2 to 4 seconds after disconnecting terminal TC. Then, reconnect terminals TC and CG within 2 to 4 seconds after the SRS warning light comes on.

RS

(7) Check if the SRS warning light goes off within 2 to 4 seconds after connecting terminals TC and CG of the DLC3. Also check if the normal system code is output within 1 second after the SRS warning light goes off.
If DTCs are not cleared, repeat this procedure until the codes are cleared.

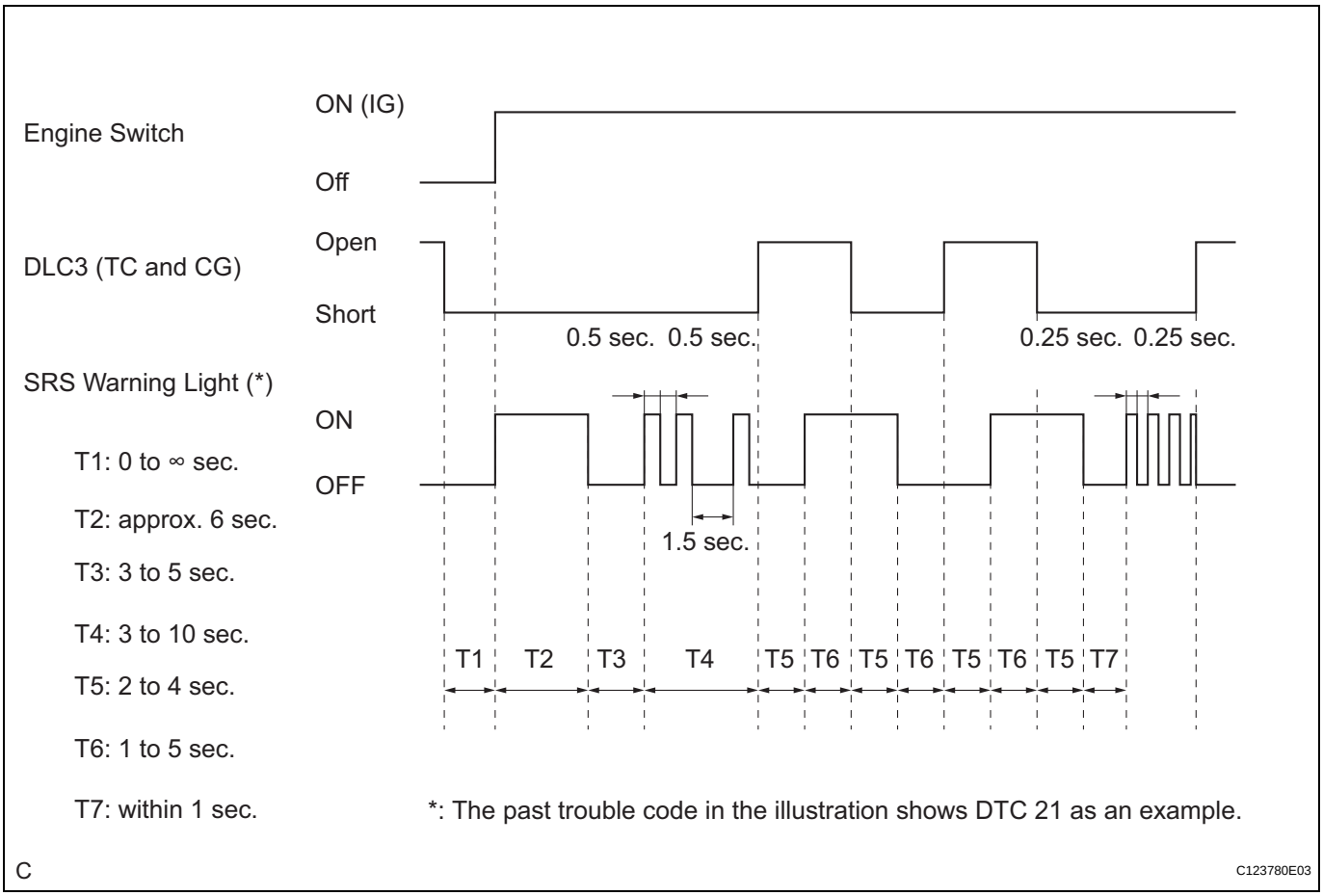

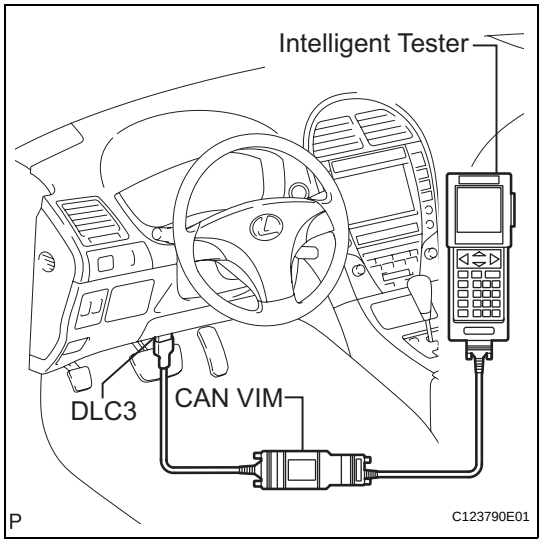

3. DTC CHECK

(a) Check the DTCs.
(1) Connect the intelligent tester to the DLC3.
(2) Turn the engine switch on (IG).
(3) Check the DTCs by following the prompts on the tester screen.
HINT:
Refer to the intelligent tester operator's manual for further details.

(b) Clear the DTCs.
(1) Connect the intelligent tester to the DLC3.
(2) Turn the engine switch on (IG).
(3) Clear the DTCs by following the prompts on the tester screen.
HINT:
Refer to the intelligent tester operator's manual for further details.

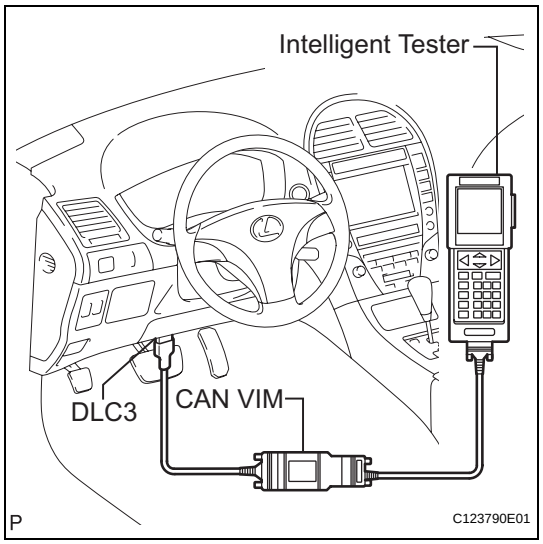

CHECK MODE PROCEDURE

1. CHECK MODE (SIGNAL CHECK): DTC CHECK

(a) Connect the intelligent tester to the DLC3.

(b) Turn the engine switch on (IG).

(c) Select "SIGNAL CHECK", and proceed with checking using the intelligent tester.

NOTICE:

Select "SIGNAL CHECK" from the "DTC CHECK" screen displayed on the intelligent tester to clear the output DTCs (both present and past).

HINT:

- DTCs can be detected more sensitively in check mode than in normal diagnosis mode.
- Perform check mode inspection when a malfunction in each squib circuit is suspected even after the normal system code is output through normal diagnosis mode inspection.

DRIVER SIDE KNEE AIRBAG ASSEMBLY

COMPONENTS

RS

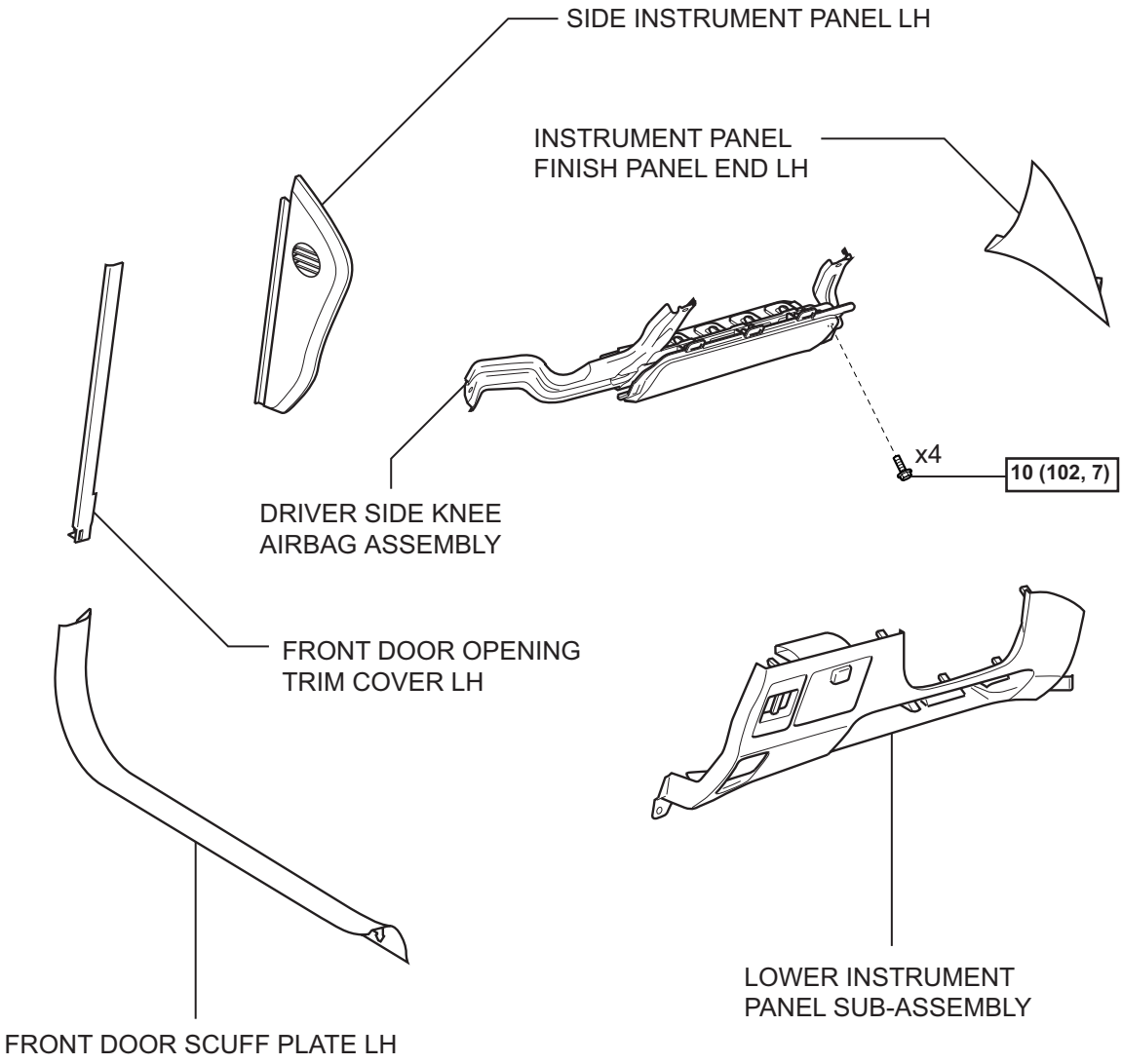

N*m (kgf*cm, ft.*lbf) : Specified torque

C

C138822E01

ON-VEHICLE INSPECTION

1. INSPECT DRIVER SIDE KNEE AIRBAG ASSEMBLY (VEHICLE NOT INVOLVED IN COLLISION)

(a) Perform a diagnostic system check (See page RS-37).

(b) With the driver side knee airbag assembly installed on the vehicle, perform a visual check. If there are any defects as mentioned below, replace the driver side knee airbag assembly with a new one:
Cuts, minute cracks or marked discoloration on the driver side knee airbag assembly.

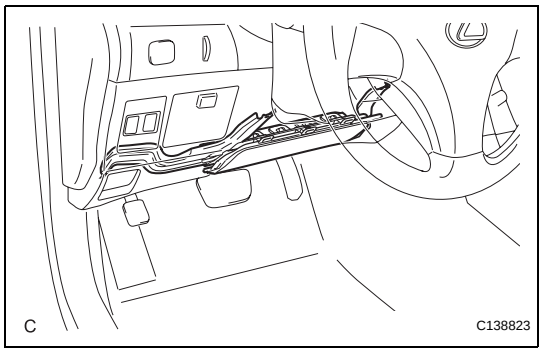

2. INSPECT DRIVER SIDE KNEE AIRBAG ASSEMBLY (VEHICLE INVOLVED IN COLLISION AND AIRBAG HAS NOT DEPLOYED)

(a) Perform a diagnostic system check (See page RS-37).

(b) With the driver side knee airbag assembly removed from the vehicle, perform a visual check. If there are any defects as mentioned below, replace the driver side knee airbag assembly with a new one:
- Cuts, minute cracks or marked discoloration on the driver side knee airbag assembly.
- Cracks or other damage to the connector.
- Deformation or cracks on the instrument panel reinforcement.

CAUTION:
Be sure to follow the correct removal and installation procedures.

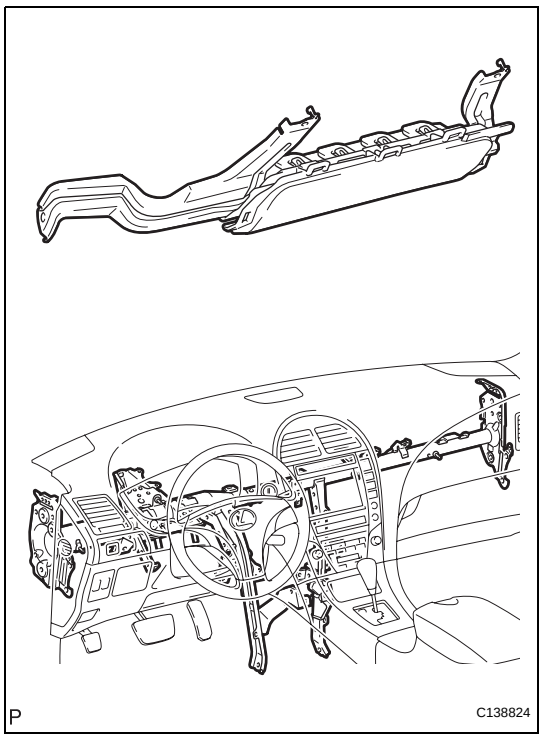

RS

REMOVAL

1. **PRECAUTION**
   CAUTION:
   Be sure to read "PRECAUTION" thoroughly before servicing (See page RS-1).

2. **DISCONNECT CABLE FROM NEGATIVE BATTERY TERMINAL**
   NOTICE:
   Wait for 90 seconds after disconnecting the cable to prevent airbag deployment.

3. **REMOVE FRONT DOOR SCUFF PLATE LH (See page IR-39)**

4. **REMOVE FRONT DOOR OPENING TRIM COVER LH (See page IR-39)**

5. **REMOVE SIDE INSTRUMENT PANEL LH (See page IP-12)**

6. **REMOVE INSTRUMENT PANEL FINISH PANEL END LH (See page IP-13)**

7. **REMOVE LOWER INSTRUMENT PANEL SUB-ASSEMBLY (See page IP-13)**

8. **REMOVE DRIVER SIDE KNEE AIRBAG ASSEMBLY**
   (a) Remove the 4 bolts.
   (b) Disconnect the driver side knee airbag connector.
   NOTICE:
   When handling the airbag connector, take care not to damage the airbag wire harness.

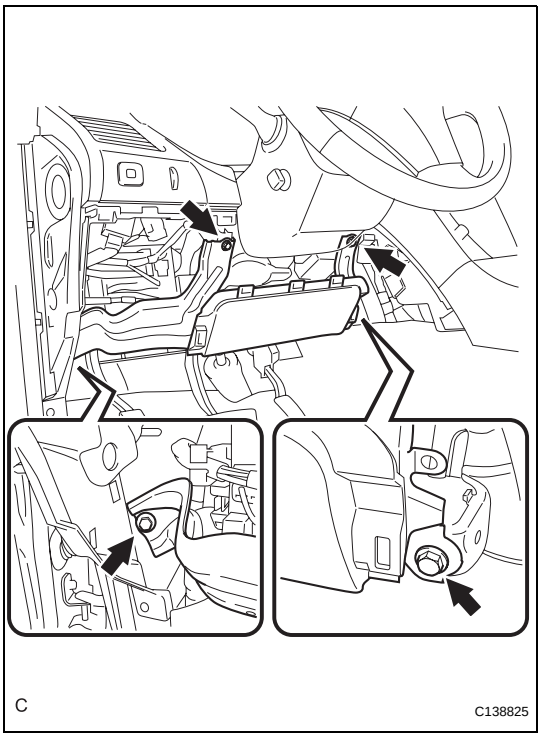

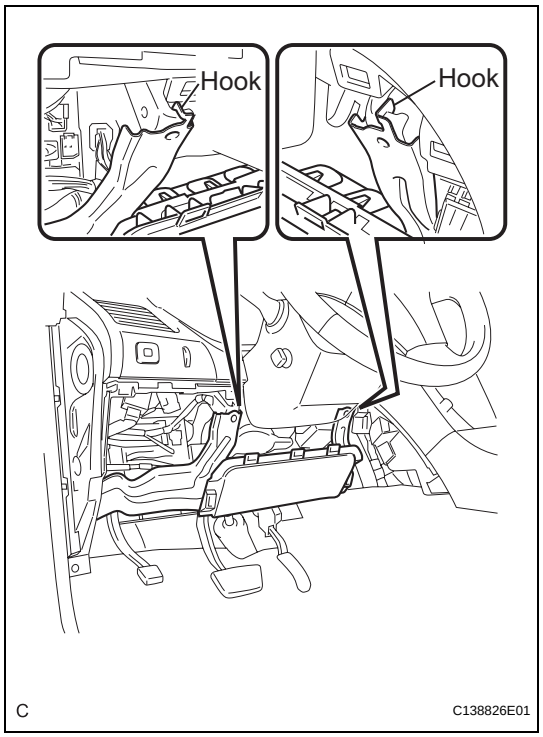

(c) Disengage the 2 hooks and separate the driver side knee airbag assembly.

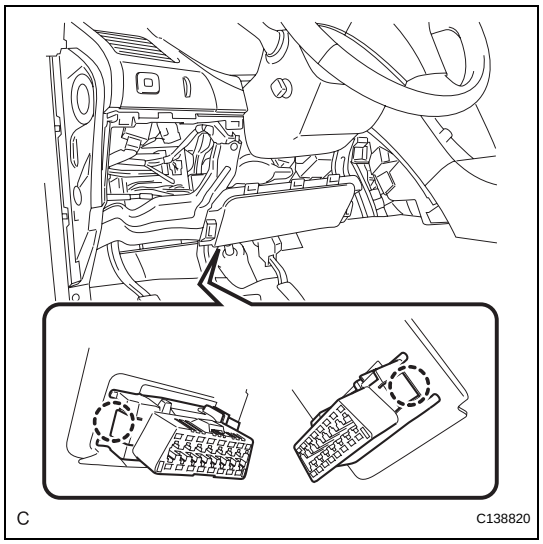

(d) Disengage the 2 claws and remove the DLC3, and remove the driver side knee airbag assembly.

RS

INSTALLATION

1. INSTALL DRIVER SIDE KNEE AIRBAG ASSEMBLY

(a) Check that the engine switch is off.

(b) Check that the battery negative (-) cable is disconnected.

CAUTION:
Wait for 90 seconds after disconnecting the cable to prevent airbag deployment.

(c) Temporarily install the driver side knee airbag assembly with the 2 hooks.

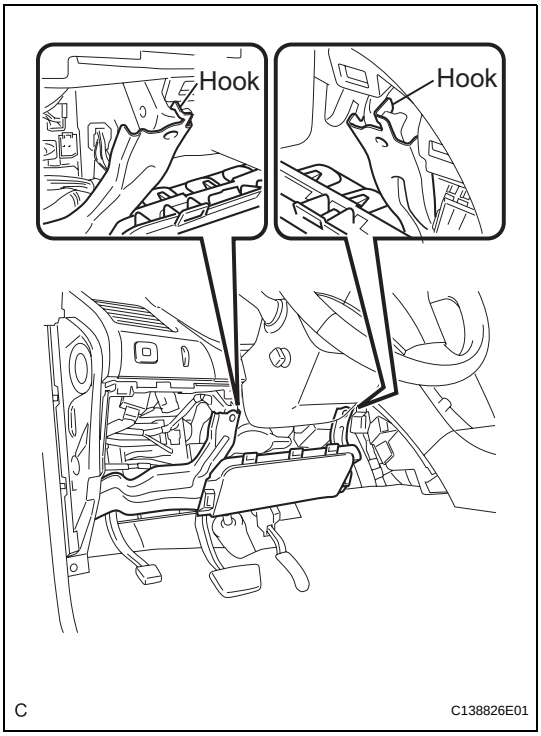

(d) Engage the 2 claws and install the DLC3.

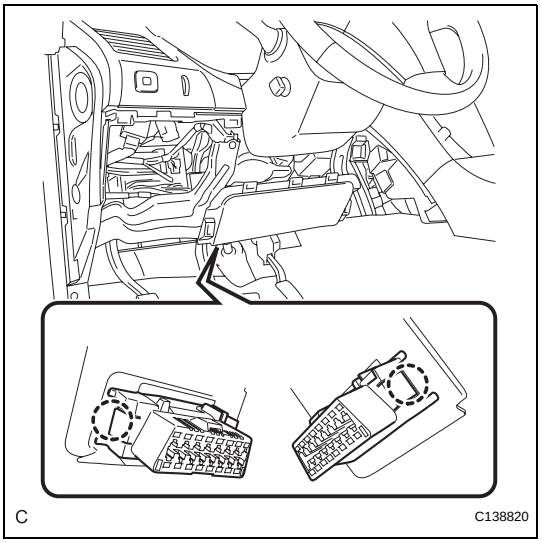

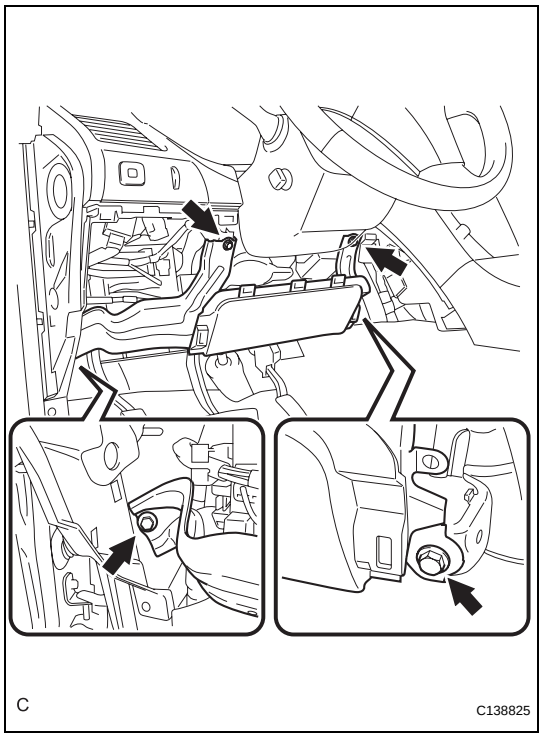

(e) Install the driver side knee airbag assembly with the 4 bolts.
Torque: 10 N*m (102 kgf*cm, 7 ft.*lbf)

(f) Connect the driver side knee airbag connector.
NOTICE:
When handling the airbag connector, take care not to damage the airbag wire harness.

RS

2. INSTALL LOWER INSTRUMENT PANEL SUB-ASSEMBLY (See page IP-46)

3. INSTALL INSTRUMENT PANEL FINISH PANEL END LH (See page IP-46)

4. INSTALL SIDE INSTRUMENT PANEL LH (See page IP-47)

5. INSTALL FRONT DOOR OPENING TRIM COVER LH (See page IR-64)

6. INSTALL FRONT DOOR SCUFF PLATE LH (See page IR-65)

7. CONNECT CABLE TO NEGATIVE BATTERY TERMINAL

8. PERFORM INITIALIZATION

(a) Perform initialization (See page IN-33).
HINT:
Some systems need initialization after reconnecting the cable to the negative battery terminal.

9. INSPECT DRIVER SIDE KNEE AIRBAG ASSEMBLY (See page RS-385)

10. INSPECT SRS WARNING LIGHT

(a) Inspect the SRS warning light (See page RS-37).

RS

DISPOSAL

HINT:
When scrapping a vehicle equipped with the SRS or disposing of the driver side knee airbag assembly, be sure to deploy the airbag first in accordance with the procedure described below. If any abnormality occurs with the airbag deployment, contact the SERVICE DEPT. of TOYOTA MOTOR SALES, U.S.A., INC.

CAUTION:

- **Never dispose of a driver side knee airbag assembly that has an undeployed airbag.**
- **The airbag produces an exploding sound when it is deployed, so perform the operation outdoors and where it will not create a nuisance to nearby residents.**
- **When deploying the airbag, always use the specified SST (SRS Airbag Deployment Tool). Perform the operation in a place away from electrical noise.**
- **When deploying the airbag, perform the operation at least 10 m (33 ft) away from the driver side knee airbag assembly.**
- **The driver side knee airbag assembly becomes extremely hot when the airbag is deployed, so do not touch it for at least 30 minutes after deployment.**
- **Use gloves and safety glasses when handling a driver side knee airbag assembly with a deployed airbag.**
- **Do not apply water, etc. to a driver side knee airbag assembly with a deployed airbag.**
- **Always wash your hands with water after completing the operation.**

1. DISPOSE OF DRIVER SIDE KNEE AIRBAG ASSEMBLY (WHEN INSTALLED IN VEHICLE)

HINT:
Prepare a battery as the power source to deploy the airbag.

(a) Check the function of the SST (See page RS-370).
(b) Refer to PRECAUTION (See page RS-1).
(c) Disconnect the cable from the negative battery terminal.
CAUTION:
Wait for 90 seconds after disconnecting the cable to prevent airbag deployment.
(d) Remove the driver side knee airbag assembly (See page RS-385).

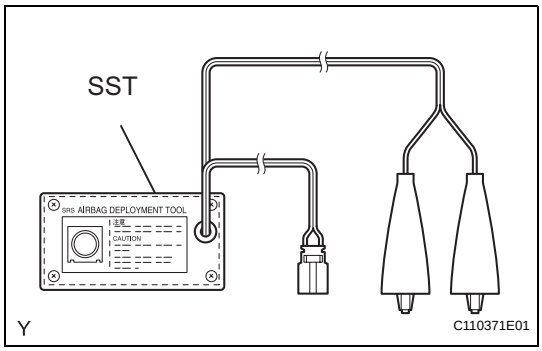

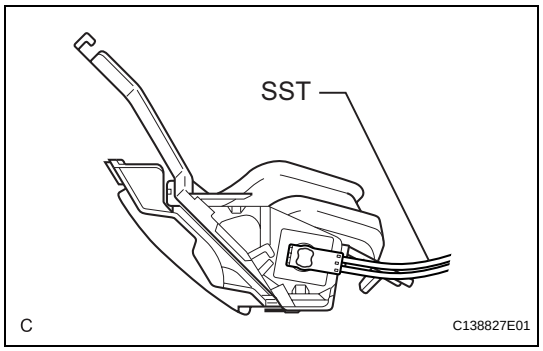

(e) Install the SST.

(1) Connect the SST connector to the driver side knee airbag assembly.
SST 09082-00700, 09082-00770
NOTICE:
To avoid damaging the SST connector and wire harness, do not lock the secondary lock of the twin lock.

(2) Install the driver side knee airbag assembly (See page RS-387).
NOTICE:
Take care not to damage the SST wire harness.

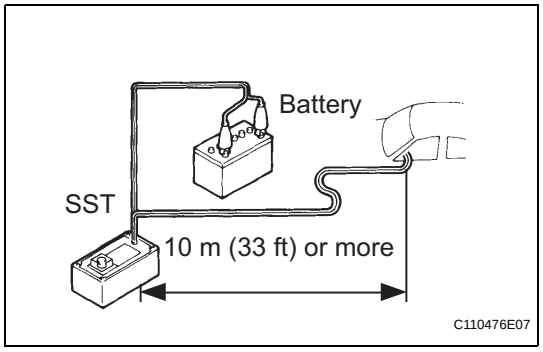

(3) Move the SST at least 10 m (33 ft) away from the vehicle front side window.

(4) Maintaining enough clearance for the SST wire harness in the front side window, close all doors and windows of the vehicle.
NOTICE:
Take care not to damage the SST wire harness.

(5) Connect the red clip of the SST to the battery positive (+) terminal and the black clip of the SST to the battery negative (-) terminal.

(f) Deploy the airbag.

(1) Check that no one is inside the vehicle or within a 10 m (33 ft) radius of the vehicle.

(2) Press the SST activation switch and deploy the airbag.
CAUTION:
- **When deploying the airbag, make sure that no one is near the vehicle.**
- **The driver side knee airbag assembly becomes extremely hot when the airbag is deployed, so do not touch it for at least 30 minutes after deployment.**
- **Use gloves and safety glasses when handling a driver side knee airbag assembly with a deployed airbag.**
- **Do not apply water, etc. to a driver side knee airbag assembly with a deployed airbag.**
- **Always wash your hands with water after completing the operation.**

HINT:
The airbag is deployed as the LED of the SST activation switch comes on.

2. DISPOSE OF DRIVER SIDE KNEE AIRBAG ASSEMBLY (WHEN NOT INSTALLED IN VEHICLE)
NOTICE:
- **When disposing of the driver side knee airbag assembly, never use the customer's vehicle to deploy the airbag.**

RS

- **Be sure to follow the procedure detailed below when deploying the airbag.**

HINT:
Prepare a battery as the power source to deploy the airbag.

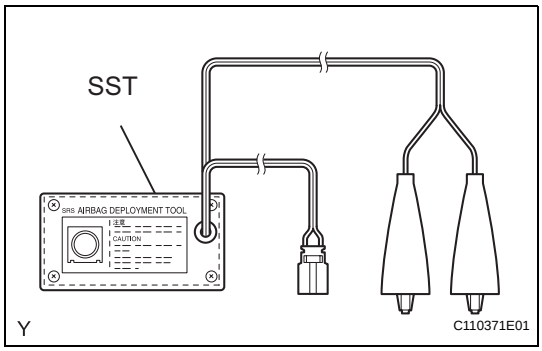

(a) Check the function of the SST (See page RS-372).
(b) Remove the driver side knee airbag assembly (See page RS-385).
CAUTION:
- **When removing the driver side knee airbag assembly, work must be started 90 seconds after the engine switch is turned off and the negative (-) terminal cable is disconnected from the battery.**
- **When storing the driver side knee airbag assembly, keep the airbag deployment side facing upward.**

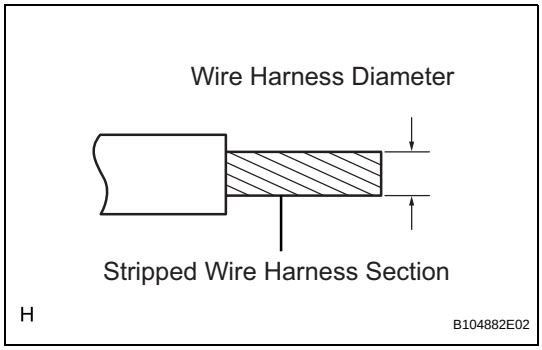

(c) Using a service-purpose wire harness for the vehicle, tie down the driver side knee airbag assembly to the tire.
Wire harness:
Stripped wire harness section
1.25 mm^2 or more (0.0019 in.^{2} or more)
CAUTION:
If the wire harness is too thin or an alternative object is used to tie down the driver side knee airbag assembly, it may be snapped by the shock when the airbag is deployed. Always use a wire harness for vehicle use with an area of at least 1.25 mm^2 (0.0019 in.^{2}).
HINT:
To calculate the area of the stripped wire harness section:
Area = 3.14 x (Diameter)^2 divided by 4
(1) Position the driver side knee airbag assembly inside the tire with the airbag deployment side facing inside.
Tire size:
Must exceed the following dimensions
Width:
185 mm (7.28 in.)
Inner diameter:
360 mm (14.17 in.)

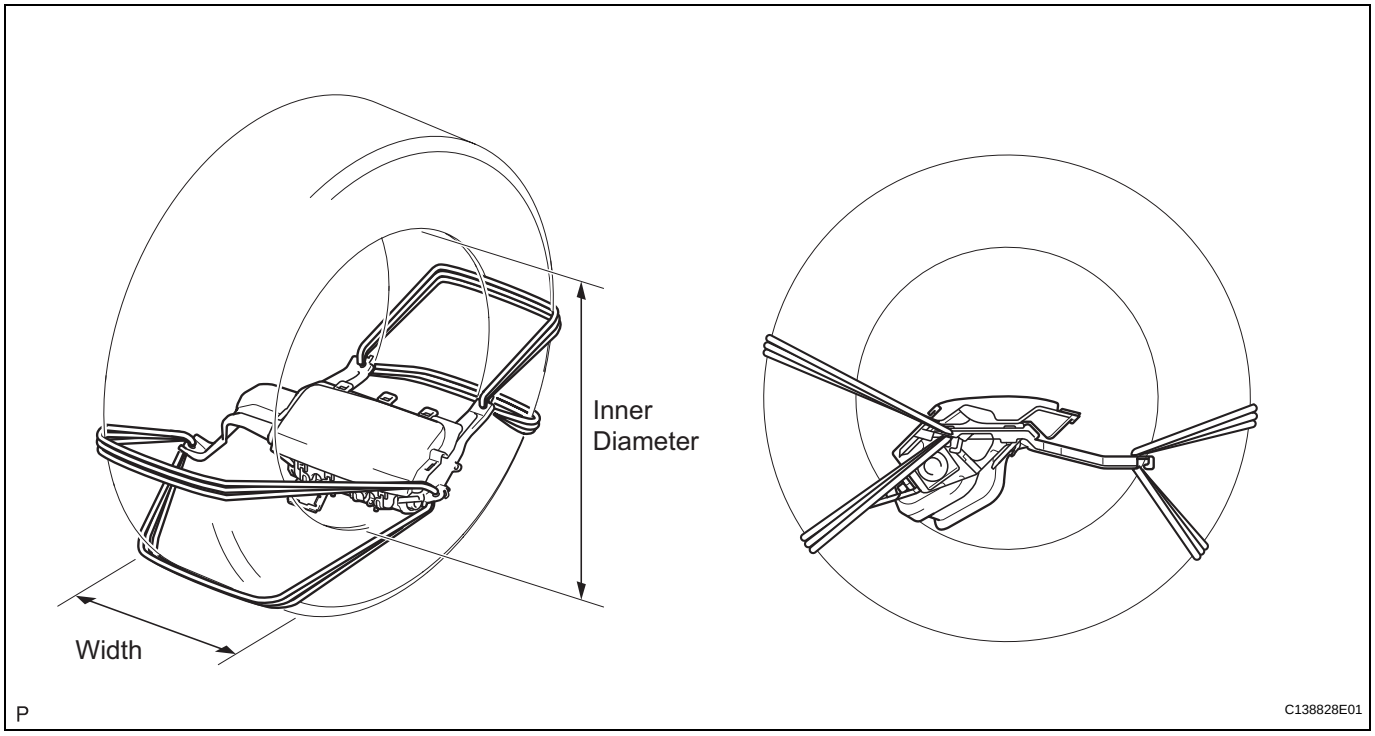

CAUTION:

- **Make sure that the wire harness is tight. If there is slack in the wire harness, the driver side knee airbag assembly may become loose due to the shock when the airbag is deployed.**
- **Always tie down the driver side knee airbag assembly with the airbag deployment side facing inside the tire.**

NOTICE:

The tire may be damaged by the airbag deployment, so use an extra tire.

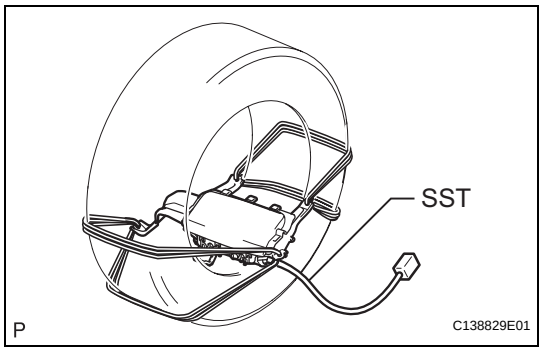

(d) Install the SST.

(1) Connect the SST connector to the driver side knee airbag assembly.

SST 09082-00770

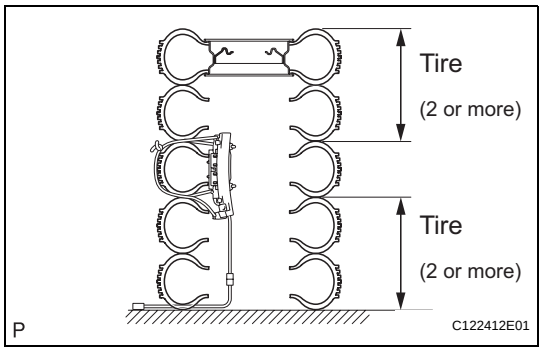

(e) Place the tires.
(1) Place at least 2 tires under the tire which the driver side knee airbag assembly is tied to.
(2) Place at least 2 tires over the tire which the driver side knee airbag assembly is tied to. The top tire should have the disc wheel installed.
NOTICE:
- **The tire may be damaged by the airbag deployment, so use an extra tire.**
- **Do not place the SST connector under the tire because it could be damaged.**

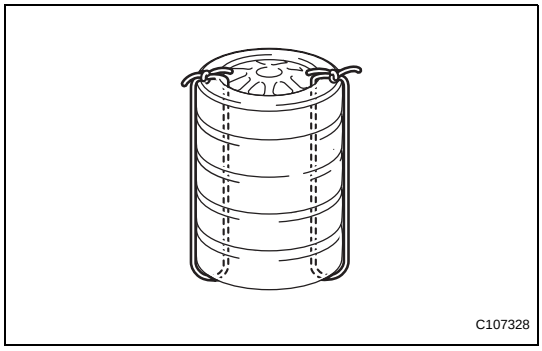

(3) Tie the tires together with 2 wire harnesses.
CAUTION:
Make sure that the wire harness is tight. Looseness in the wire harness results in the tires coming free due to the shock when the airbag is deployed.

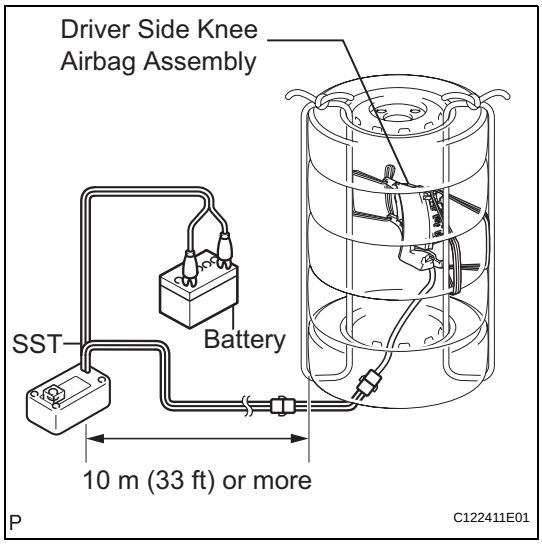

(f) Install the SST.
(1) Connect the SST connector.
SST 09082-00700
NOTICE:
To avoid damaging the SST connector and wire harness, do not lock the secondary lock of the twin lock. Also, secure some slack for the SST wire harness inside the tire.
(2) Move the SST at least 10 m (33 ft) away from the airbag tied down to the tire.

(g) Deploy the airbag.
(1) Connect the red clip of the SST to the battery positive (+) terminal and the black clip of the SST to the battery negative (-) terminal.
(2) Check that no one is within a 10 m (33 ft) radius of the tire which the driver side knee airbag assembly is tied to.
(3) Press the SST activation switch and deploy the airbag.
CAUTION:
When deploying the airbag, make sure that no one is near the tire.
HINT:
The airbag is deployed as the LED of the SST activation switch comes on.

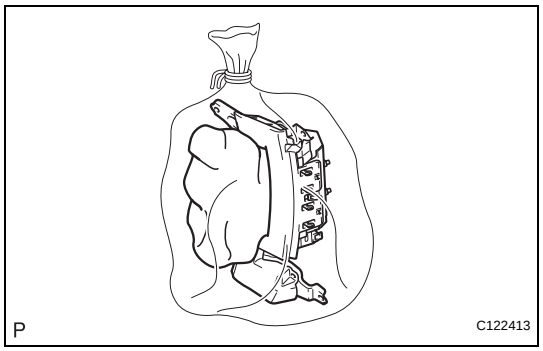

(h) Dispose of the driver side knee airbag assembly.

CAUTION:

- **The driver side knee airbag assembly becomes extremely hot when the airbag is deployed, so do not touch it for at least 30 minutes after deployment.**
- **Use gloves and safety glasses when handling a driver side knee airbag assembly with a deployed airbag.**
- **Do not apply water, etc. to a driver side knee airbag assembly with a deployed airbag.**
- **Always wash your hands with water after completing the operation.**

(1) Remove the driver side knee airbag assembly from the tire.

(2) Place the driver side knee airbag assembly in a plastic bag, tie it tightly and dispose of it as other general part disposal.

RS

DATA LIST / ACTIVE TEST

HINT:
By accessing the DATA LIST displayed on the intelligent tester, you can perform such functions as reading the values of switches and sensors without removing any parts. Reading the DATA LIST as the first step in troubleshooting is one method to save diagnostic time.

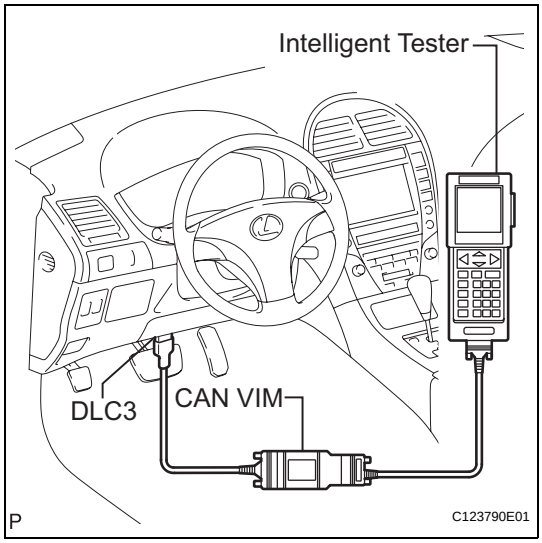

1. DATA LIST FOR CENTER AIRBAG SENSOR ASSEMBLY

(a) Connect the intelligent tester to the DLC3.
(b) Turn the engine switch on (IG).
(c) Turn the tester on.
(d) Enter the following menus: DIAGNOSIS / OBD/ MOBD / SRS AIRBAG / DATA LIST.
(e) Check the values by referring to the table below.

DATA LIST:

Tester Display	Measurement Item/Range	Normal Condition	Diagnostic Note
D SEAT POSITION	Driver Seat Position/ FORWARD: Seat position is forward BKWARD: Seat position is backward FAIL: Failure detected	FORWARD/BKWARD	-
PASSENGER CLASS	Passenger Classification/ NG: Data is not determined OFF: Vacant CHILD: Child (less than 36 kg (79.37 lb)) is seated AF05: Adult (36 to 54 kg (79.37 to 119.05 lb) is seated AM50: Adult (more than 54 kg (119.05 lb)) is seated FAIL: A failure is detected	OFF/CHILD/AF05/AM50	-
D BUCKLE SW	Driver Buckle SW/ UNSET: The seat belt is not fastened SET: The seat belt is fastened NG: Data is not determined	UNSET/SET	-
P BUCKLE SW	Passenger Buckle SW/ UNSET: The seat belt is not fastened SET: The seat belt is fastened NG: Data is not determined	UNSET/SET	-
PAST CODES	Number of Past DTC/ Min.: 0, Max.: 255	0	-

TYPE INFO:

Tester Display	Measurement Item/Range	Normal Condition	Diagnostic Note
DISPLAY TYPE	Display Type Information/ LR: The display is indicated by LH/RH DP: The display is indicated by Driver/Passenger	DP	-

FRONT PASSENGER SIDE KNEE AIRBAG ASSEMBLY

COMPONENTS

RS

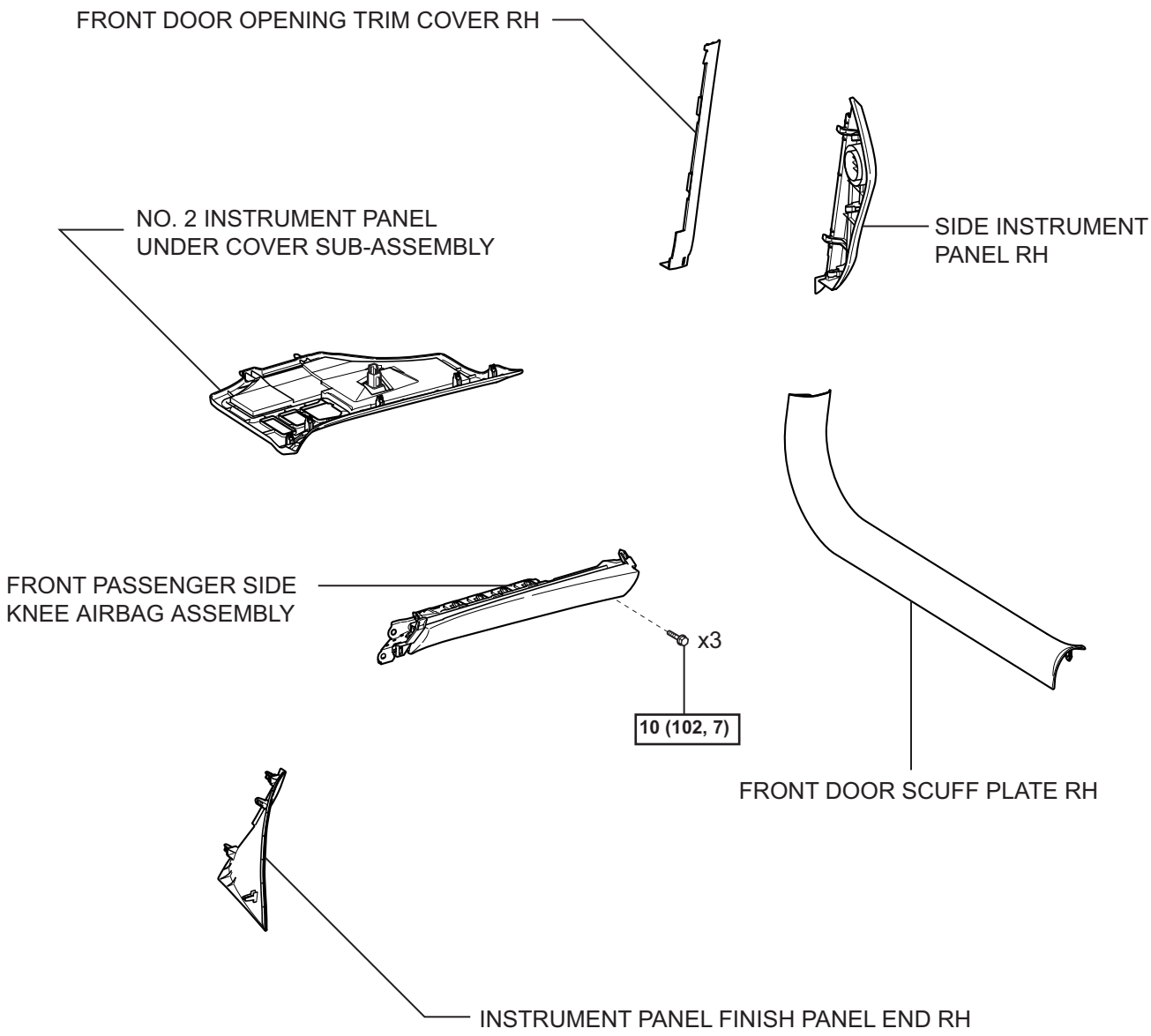

N*m (kgf*cm, ft.*lbf) : Specified torque

C

C138846E01

ON-VEHICLE INSPECTION

1. INSPECT FRONT PASSENGER SIDE KNEE AIRBAG ASSEMBLY (VEHICLE NOT INVOLVED IN COLLISION)

(a) Perform a diagnostic system check (see page RS-37).

(b) With the front passenger side knee airbag assembly installed on the vehicle, perform a visual check. If there are any defects as mentioned below, replace the front passenger side knee airbag assembly with a new one:
Cuts, minute cracks or marked discoloration on the front passenger side knee airbag assembly.

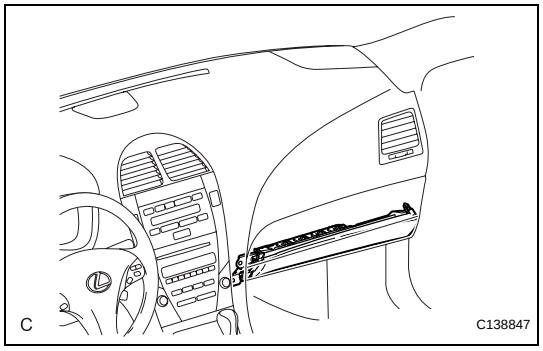

2. INSPECT FRONT PASSENGER SIDE KNEE AIRBAG ASSEMBLY (VEHICLE INVOLVED IN COLLISION AND AIRBAG HAS NOT DEPLOYED)

(a) Perform a diagnostic system check (see page RS-37).

(b) With the front passenger side knee airbag assembly removed from the vehicle, perform a visual check. If there are any defects as mentioned below, replace the front passenger side knee airbag assembly with a new one:
- Cuts, minute cracks or marked discoloration on the front passenger side knee airbag assembly.
- Cracks or other damage to the connector.
- Deformation or cracks on the instrument panel reinforcement.

CAUTION:
Be sure to follow the correct removal and installation procedure.

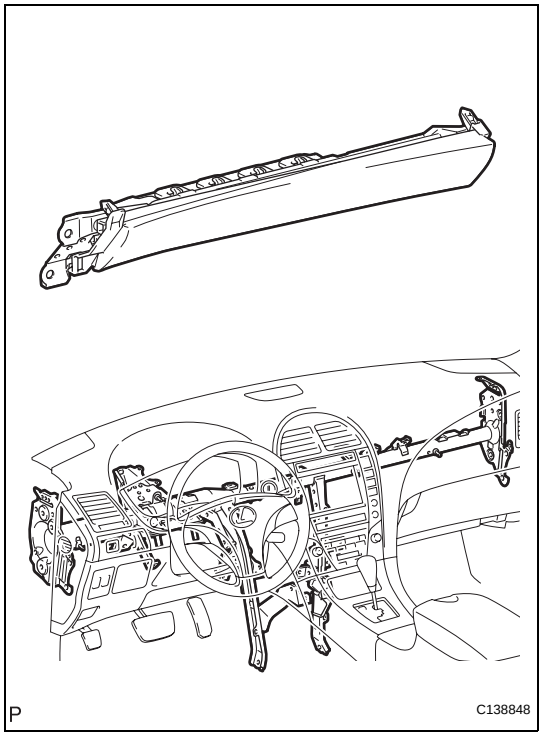

REMOVAL

1. **PRECAUTION**
   CAUTION:
   Be sure to read "PRECAUTION" thoroughly before servicing (See page RS-1).

2. **DISCONNECT CABLE FROM NEGATIVE BATTERY TERMINAL**
   NOTICE:
   Wait for 90 seconds after disconnecting the cable to prevent the airbag deployment.

3. **REMOVE FRONT DOOR SCUFF PLATE RH (See page IR-42)**

4. **REMOVE FRONT DOOR OPENING TRIM COVER RH (See page IR-42)**

5. **REMOVE SIDE INSTRUMENT PANEL RH (See page IP-15)**

6. **REMOVE INSTRUMENT PANEL FINISH PANEL END RH (See page IP-15)**

7. **REMOVE NO. 2 INSTRUMENT PANEL UNDER COVER SUB-ASSEMBLY (See page IP-15)**

8. **REMOVE FRONT PASSENGER SIDE KNEE AIRBAG ASSEMBLY**
   (a) Remove the 3 bolts.
   (b) Disconnect the front passenger side knee airbag connector.

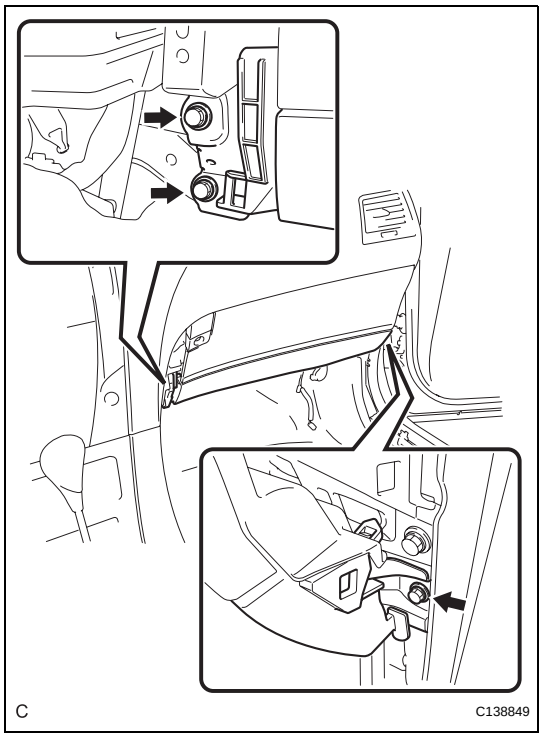

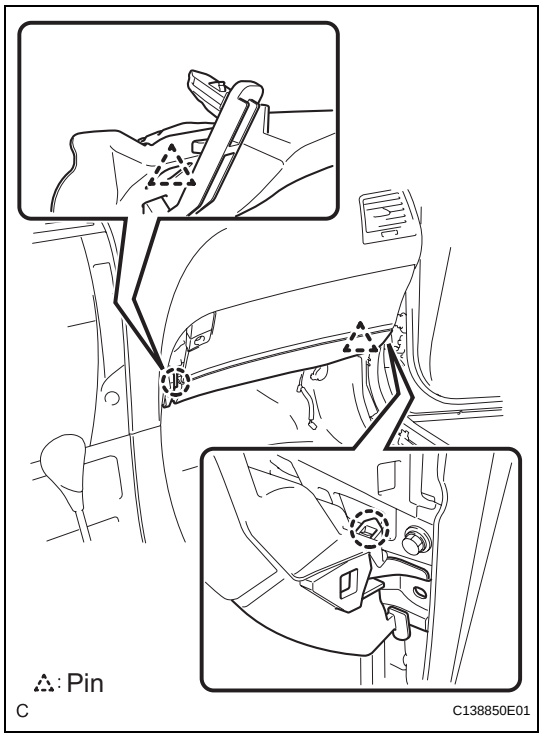

(c) Disengage the 2 claws and 2 pins, and remove the front passenger side knee airbag assembly.
NOTICE:
When handling the airbag connector, take care not to damage the airbag wire harness.

RS

INSTALLATION

1. INSTALL FRONT PASSENGER SIDE KNEE AIRBAG ASSEMBLY

(a) Check that the engine switch is off.

(b) Check that the battery negative (-) cable is disconnected.

CAUTION:
Wait for 90 seconds after disconnecting the cable to prevent airbag deployment.

(c) Connect the front passenger side knee airbag connector.

NOTICE:
When handling the airbag connector, take care not to damage the airbag wire harness.

(d) Engage the 2 claws and 2 pins.

HINT:
Make sure that the pins are securely installed in the front passenger side knee airbag assembly.

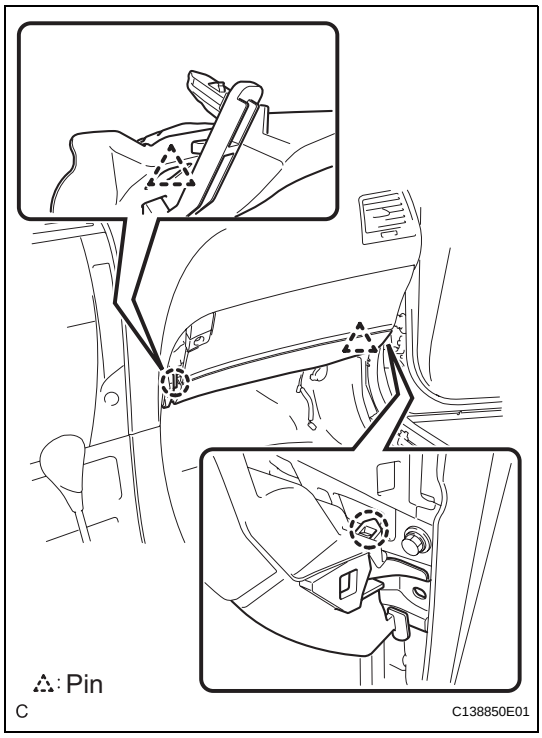

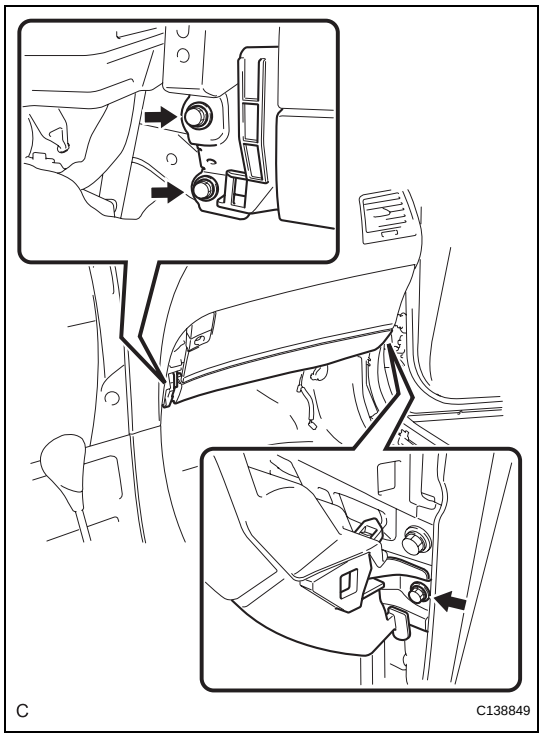

(e) Install the front passenger side knee airbag assembly with the 3 bolts.
Torque: 10 N*m (102 kgf*cm, 7 ft.*lbf)

2. **INSTALL NO. 2 INSTRUMENT PANEL UNDER COVER SUB-ASSEMBLY (See page IP-44)**

3. **INSTALL INSTRUMENT PANEL FINISH PANEL END RH (See page IP-44)**

4. **INSTALL SIDE INSTRUMENT PANEL RH (See page IP-43)**

5. **INSTALL FRONT DOOR OPENING TRIM COVER RH (See page IR-65)**

6. **INSTALL FRONT DOOR SCUFF PLATE RH (See page IR-65)**

7. **CONNECT CABLE TO NEGATIVE BATTERY TERMINAL**

8. **PERFORM INITIALIZATION**
   (a) Perform initialization (See page IN-33).
   HINT:
   Some systems need initialization after reconnecting the cable to the negative battery terminal.

9. **INSPECT FRONT PASSENGER SIDE KNEE AIRBAG ASSEMBLY (See page RS-395)**

10. **INSPECT SRS WARNING LIGHT**
    (a) Inspect the SRS warning light (See page RS-37).

RS

RS

DISPOSAL

HINT:
When scrapping a vehicle equipped with the SRS or disposing of the front passenger side knee airbag assembly, be sure to deploy the airbag first in accordance with the procedure described below. If any abnormality occurs with the airbag deployment, contact the SERVICE DEPT. of TOYOTA MOTOR SALES, U.S.A., INC.

CAUTION:

- **Never dispose of a front passenger side knee airbag assembly that has an undeployed airbag.**
- **The airbag produces an exploding sound when it is deployed, so perform the operation outdoors and where it will not create a nuisance to nearby residents.**
- **When deploying the airbag, always use the specified SST (SRS Airbag Deployment Tool). Perform the operation in a place away from electrical noise.**
- **When deploying the airbag, perform the operation at least 10 m (33 ft) away from the front passenger side knee airbag assembly.**
- **The front passenger side knee airbag assembly becomes extremely hot when the airbag is deployed, so do not touch it for at least 30 minutes after deployment.**
- **Use gloves and safety glasses when handling a front passenger side knee airbag assembly with a deployed airbag.**
- **Do not apply water, etc. to a front passenger side knee airbag assembly with a deployed airbag.**
- **Always wash your hands with water after completing the operation.**

1. DISPOSE OF FRONT PASSENGER SIDE KNEE AIRBAG ASSEMBLY (WHEN INSTALLED IN VEHICLE)

HINT:
Prepare a battery as the power source to deploy the airbag.

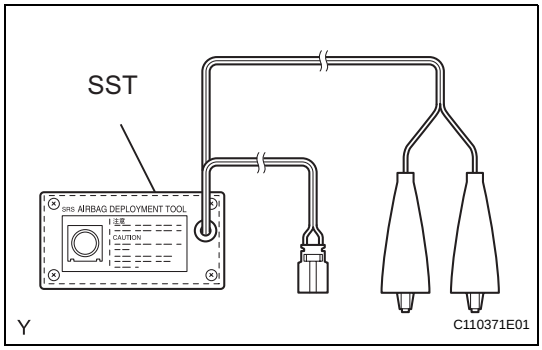

(a) Check the function of the SST (see page RS-370).
(b) Refer to PRECAUTION (see page RS-1).
(c) Disconnect the cable from the negative battery terminal.
CAUTION:
Wait for 90 seconds after disconnecting the cable to prevent airbag deployment.
(d) Remove the front passenger side knee airbag assembly (see page RS-395).

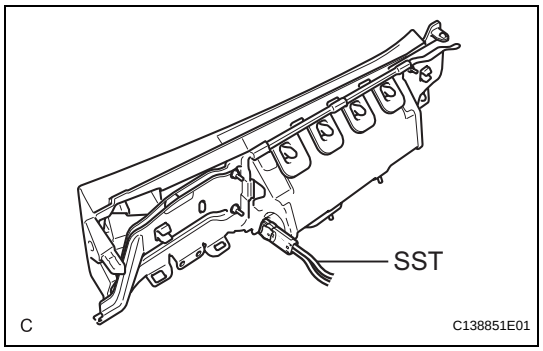

(e) Install the SST.

(1) Connect the SST connector to the front passenger side knee airbag assembly.
SST 09082-00700, 09082-00770
NOTICE:
To avoid damaging the SST connector and wire harness, do not lock the secondary lock of the twin lock.

(2) Install the front passenger side knee airbag assembly (see page RS-396).
NOTICE:
Take care not to damage the SST wire harness.

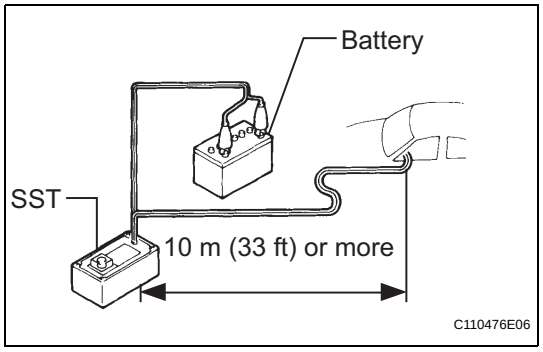

(3) Move the SST at least 10 m (33 ft) away from the vehicle front side window.

(4) Maintaining enough clearance for the SST wire harness in the front side window, close all doors and windows of the vehicle.
NOTICE:
Take care not to damage the SST wire harness.

(5) Connect the red clip of the SST to the battery positive (+) terminal and the black clip of the SST to the battery negative (-) terminal.

(f) Deploy the airbag.

(1) Check that no one is inside the vehicle or within a 10 m (33 ft) radius of the vehicle.

(2) Press the SST activation switch and deploy the airbag.
CAUTION:
- **When deploying the airbag, make sure that no one is near the vehicle.**
- **The front passenger side knee airbag assembly becomes extremely hot when the airbag is deployed, so do not touch it for at least 30 minutes after deployment.**
- **Use gloves and safety glasses when handling a front passenger side knee airbag assembly with a deployed airbag.**
- **Do not apply water, etc. to a front passenger side knee airbag assembly with a deployed airbag.**
- **Always wash your hands with water after completing the operation.**

HINT:
The airbag is deployed as the LED of the SST activation switch comes on.

2. DISPOSE OF FRONT PASSENGER SIDE KNEE AIRBAG ASSEMBLY (WHEN NOT INSTALLED IN VEHICLE)
NOTICE:
- **When disposing of the front passenger side knee airbag assembly, never use the customer's vehicle to deploy the airbag.**

RS

- **Be sure to follow the procedure detailed below when deploying the airbag.**

HINT:
Prepare a battery as the power source to deploy the airbag.

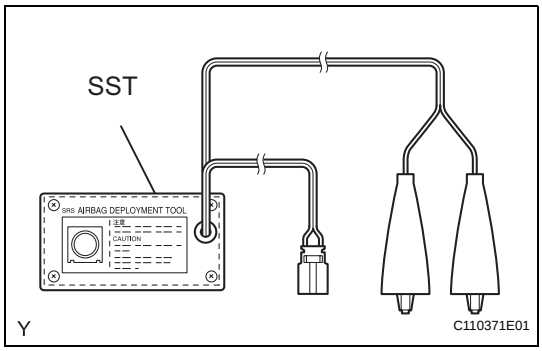

(a) Check the function of the SST (see page RS-372).
(b) Remove the front passenger side knee airbag assembly (see page RS-395).
CAUTION:
- **When removing the front passenger side knee airbag assembly, work must be started 90 seconds after the engine switch is turned off and the negative (-) terminal cable is disconnected from the battery.**
- **When storing the front passenger side knee airbag assembly, keep the airbag deployment side facing upward.**

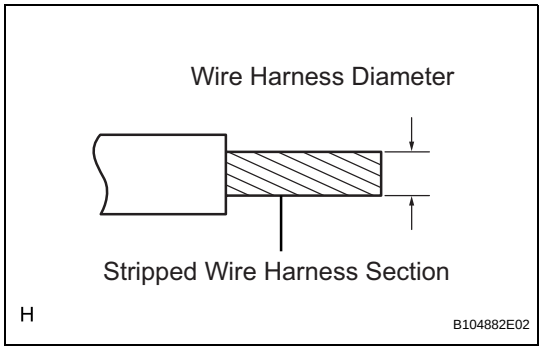

(c) Using a service-purpose wire harness for the vehicle, tie down the front passenger side knee airbag assembly to the tire.
Wire harness:
Stripped wire harness section
1.25 mm^2 or more (0.0019 in.^{2} or more)
CAUTION:
If the wire harness is too thin or an alternative object is used to tie down the front passenger side knee airbag assembly, it may be snapped by the shock when the airbag is deployed. Always use a wire harness for vehicle use with an area of at least 1.25 mm^2 (0.0019 in.^{2}).
HINT:
To calculate the area of the stripped wire harness section:
Area = 3.14 x (Diameter)^2 divided by 4
(1) Position the front passenger side knee airbag assembly inside the tire with the airbag deployment side facing inside.
Tire size:
Must exceed the following dimensions
Width:
185 mm (7.28 in.)
Inner diameter:
360 mm (14.17 in.)

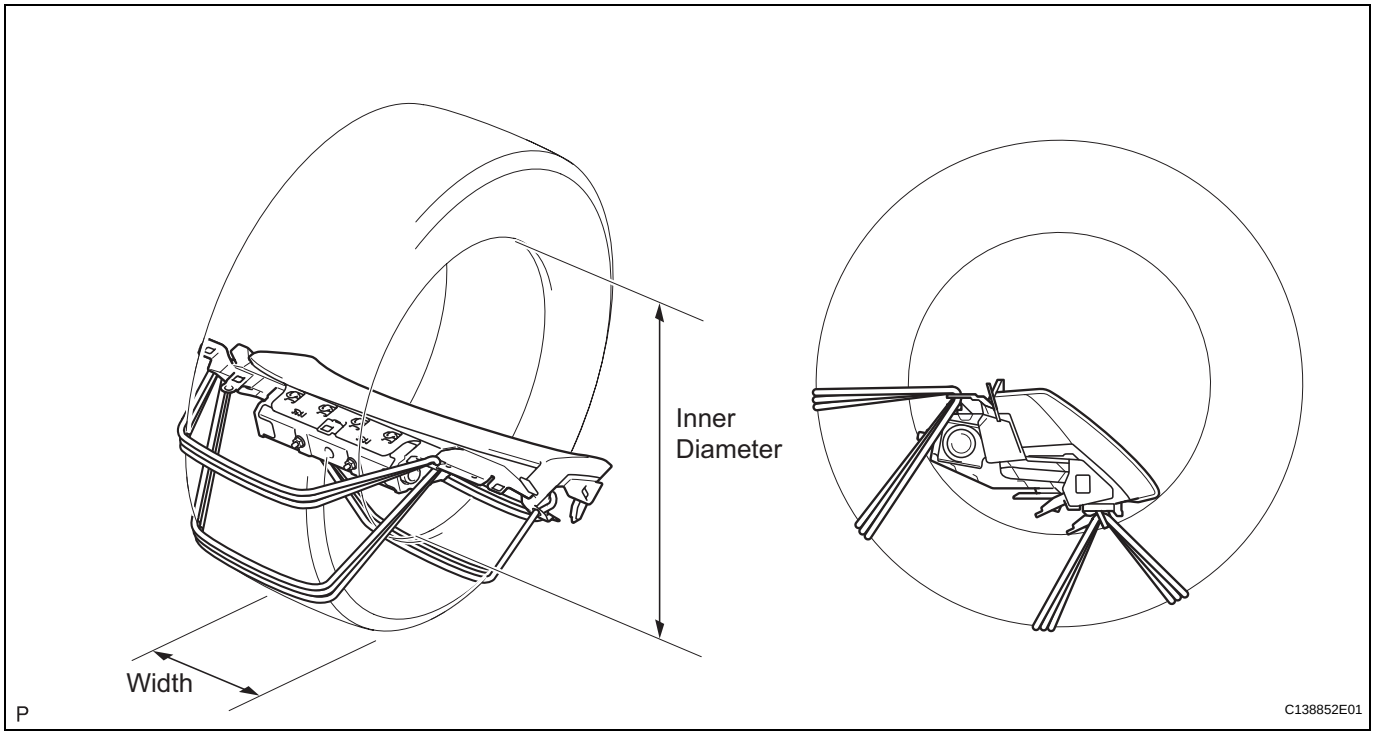

CAUTION:

- **Make sure that the wire harness is tight. If there is slack in wire harness, the front passenger side knee airbag assembly may become loose due to the shock when the airbag is deployed.**
- **Always tie down the front passenger side knee airbag assembly with the airbag deployment side facing inside the tire.**

NOTICE:

The tire may be damaged by the airbag deployment, so use an extra tire.

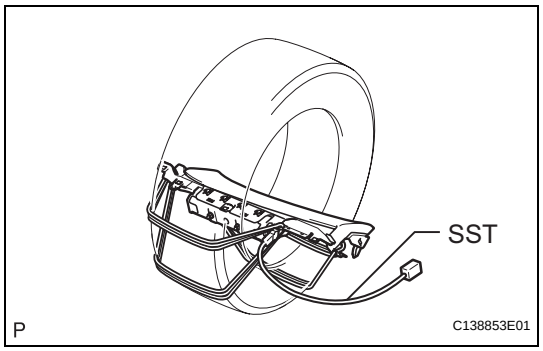

(d) Install the SST.

(1) Connect the SST connector to the front passenger side knee airbag assembly.
SST 09082-00770

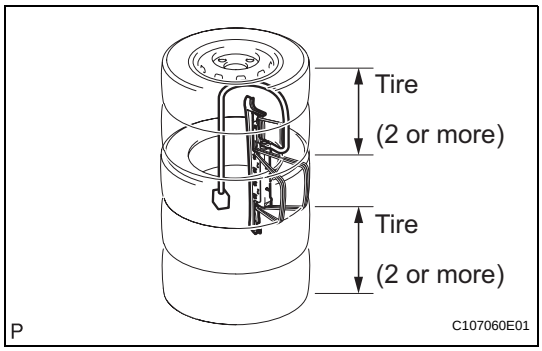

(e) Place the tires.
  (1) Place at least 2 tires under the tire which the front passenger side knee airbag assembly is tied to.
  (2) Place at least 2 tires over the tire which the front passenger side knee airbag assembly is tied to. The top tire should have the disc wheel installed.
  NOTICE:
  - **The tire may be damaged by the airbag deployment, so use an extra tire.**
  - **Do not place the SST connector under the tire because it could be damaged.**
  (3) Tie the tires together with 2 wire harnesses.
  CAUTION:
  Make sure that the wire harness is tight. Looseness in the wire harness results in the tires coming free due to the shock when the airbag is deployed.

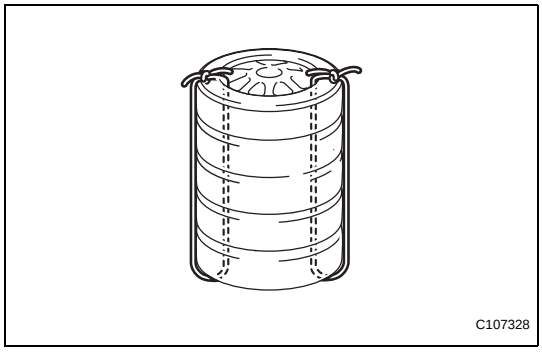

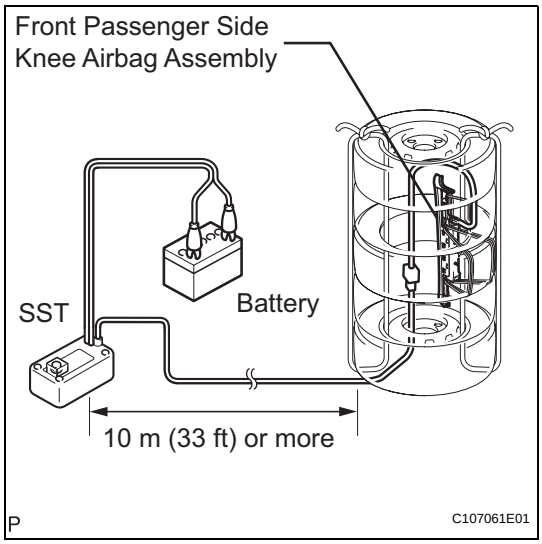

(f) Install the SST.
  (1) Connect the SST connector.
  SST 09082-00700
  NOTICE:
  To avoid damaging the SST connector and wire harness, do not lock the secondary lock of the twin lock. Also, secure some slack for the SST wire harness inside the tire.
  (2) Move the SST at least 10 m (33 ft) away from the airbag tied down to the tire.

(g) Deploy the airbag.
  (1) Connect the red clip of the SST to the battery positive (+) terminal and the black clip of the SST to the battery negative (-) terminal.
  (2) Check that no one is within a 10 m (33 ft) radius of the tire which the front passenger side knee airbag assembly is tied to.
  (3) Press the SST activation switch and deploy the airbag.
  CAUTION:
  When deploying the airbag, make sure that no one is near the tire.
  HINT:
  The airbag is deployed as the LED of the SST activation switch comes on.

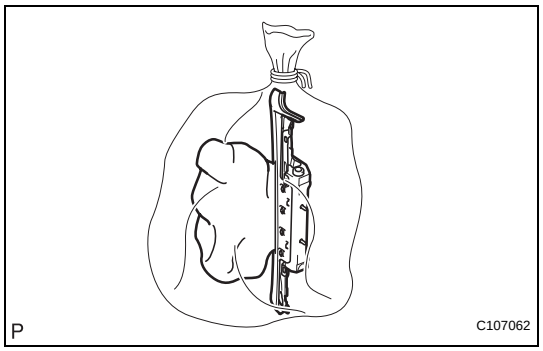

(h) Dispose of the front passenger side knee airbag assembly.

CAUTION:

- **The front passenger side knee airbag assembly becomes extremely hot when the airbag is deployed, so do not touch it for at least 30 minutes after deployment.**
- **Use gloves and safety glasses when handling a front passenger side knee airbag assembly with a deployed airbag.**
- **Do not apply water, etc. to a front passenger side knee airbag assembly with a deployed airbag.**
- **Always wash your hands with water after completing the operation.**

(1) Remove the front passenger side knee airbag assembly from the tire.

(2) Place the front passenger side knee airbag assembly in a plastic bag, tie it tightly and dispose of it as other general part disposal.

RS

DIAGNOSTIC TROUBLE CODE CHART

HINT:

- When the SRS warning light remains on and the DTC output is the normal system code, a voltage source drop is likely to occur. This malfunction is not stored in the memory by the center airbag sensor assembly. If the power source voltage returns to normal, the SRS warning light will automatically go off.
- When 2 or more codes are indicated, the code with the lower number appears first.
- If a code is not listed on the display chart, the center airbag sensor assembly may have failed.
- In the case of any malfunction concerning an open circuit, short to ground, or short to B+ due to a squib, other trouble codes may not be detected. In this case, repair the malfunction currently indicated and then perform malfunction diagnosis again.
- Mark in the check mode column:
  *1: DTC is not corresponding to the check mode.
  *2: DTC is corresponding to the check mode.
- DTC which has the mark of the *3 is output only the equipped car of rear side airbag.

AIRBAG SYSTEM:

DTC Code	Detection Item	Trouble Area	Check Mode	See page
B1000/31	Center Airbag Sensor Assembly Malfunction	Center airbag sensor assembly	*1	RS-60
B1603/83	Front Satellite Sensor Bus RH Initialization Incomplete	1. Instrument panel wire 2. Engine room main wire 3. Front airbag sensor RH 4. Center airbag sensor assembly	*1	RS-61
B1608/84	Front Satellite Sensor Bus LH Initialization Incomplete	1. Instrument panel wire 2. Engine room main wire 3. Front airbag sensor LH 4. Center airbag sensor assembly	*1	RS-78
B1610/13	Front Airbag Sensor RH Malfunction	1. Front airbag sensor RH 2. Center airbag sensor assembly	*1	RS-95
B1612/83	Lost Communication with Front Airbag Sensor RH	1. Instrument panel wire 2. Engine room main wire 3. Front airbag sensor RH 4. Center airbag sensor assembly	*1	RS-61
B1613/83	Front Airbag Sensor RH Initialization Incomplete	1. Instrument panel wire 2. Engine room main wire 3. Front airbag sensor RH 4. Center airbag sensor assembly	*1	RS-61
B1615/14	Front Airbag Sensor LH Malfunction	1. Front airbag sensor LH 2. Center airbag sensor assembly	*1	RS-97
B1617/84	Lost Communication with Front Airbag Sensor LH	1. Instrument panel wire 2. Engine room main wire 3. Front airbag sensor LH 4. Center airbag sensor assembly	*1	RS-78

DTC Code	Detection Item	Trouble Area	Check Mode	See page
B1618/84	Front Airbag Sensor LH Initialization Incomplete	1. Instrument panel wire 2. Engine room main wire 3. Front airbag sensor LH 4. Center airbag sensor assembly	*1	RS-78
B1620/21	Driver Side - Side Airbag Sensor Malfunction	1. Side airbag sensor LH 2. Center airbag sensor assembly	*1	RS-99
B1622/81	Lost Communication with Driver Side - Side Airbag Sensor Assembly	1. Floor wire 2. Side airbag sensor LH 3. Rear airbag sensor LH 4. Center airbag sensor assembly	*1	RS-103
B1623/81	Driver Side - Side Airbag Sensor Assembly Initialization Incomplete	1. Floor wire 2. Side airbag sensor LH 3. Rear airbag sensor LH 4. Center airbag sensor assembly	*1	RS-103
B1625/22	Front Passenger Side - Side Airbag Sensor Malfunction	1. Side airbag sensor RH 2. Center airbag sensor assembly	*1	RS-126
B1627/82	Lost Communication with Front Passenger Side - Side Airbag Sensor Assembly	1. Floor wire No. 2 2. Side airbag sensor RH 3. Rear airbag sensor RH 4. Center airbag sensor assembly	*1	RS-130
B1628/82	Front Passenger Side - Side Airbag Sensor Assembly Initialization Incomplete	1. Floor wire No. 2 2. Side airbag sensor RH 3. Rear airbag sensor RH 4. Center airbag sensor assembly	*1	RS-130
B1630/23	Driver Side Rear Airbag Sensor Malfunction	1. Rear airbag sensor LH 2. Center airbag sensor assembly	*1	RS-147
B1632/81	Lost Communication with Driver Side Rear Airbag Sensor	1. Floor wire 2. Side airbag sensor LH 3. Rear airbag sensor LH 4. Center airbag sensor assembly	*1	RS-103
B1633/81	Driver Side Rear Airbag Sensor Initialization Incomplete	1. Floor wire 2. Side airbag sensor LH 3. Rear airbag sensor LH 4. Center airbag sensor assembly	*1	RS-103
B1635/24	Front Passenger Side Rear Airbag Sensor Malfunction	1. Rear airbag sensor RH 2. Center airbag sensor assembly	*1	RS-151
B1637/82	Lost Communication with Passenger Side Rear Airbag Sensor	1. Floor wire No. 2 2. Side airbag sensor RH 3. Rear airbag sensor RH 4. Center airbag sensor assembly	*1	RS-130
B1638/82	Passenger Side Rear Airbag Sensor Initialization Incomplete	1. Floor wire No. 2 2. Side airbag sensor RH 3. Rear airbag sensor RH 4. Center airbag sensor assembly	*1	RS-130
B1642/81	Lost Communication with Driver Side Satellite Sensor Bus	1. Floor wire 2. Side airbag sensor LH 3. Rear airbag sensor LH 4. Center airbag sensor assembly	*1	RS-103

DTC Code	Detection Item	Trouble Area	Check Mode	See page
B1643/81	Driver Side Satellite Sensor Bus Initialization Incomplete	1. Floor wire 2. Side airbag sensor LH 3. Rear airbag sensor LH 4. Center airbag sensor assembly	*1	RS-103
B1647/82	Lost Communication with Front Passenger Side Satellite Sensor Bus	1. Floor wire No. 2 2. Side airbag sensor RH 3. Rear airbag sensor RH 4. Center airbag sensor assembly	*1	RS-130
B1648/82	Front Passenger Side Satellite Sensor Bus Initialization Incomplete	1. Floor wire No. 2 2. Side airbag sensor RH 3. Rear airbag sensor RH 4. Center airbag sensor assembly	*1	RS-130
B1650/32	Occupant Classification System Malfunction	1. Floor wire No. 2 2. Front seat wire RH 3. Occupant classification system 4. Center airbag sensor assembly	*1	RS-155
B1653/35	Seat Position Airbag Sensor Circuit Malfunction	1. Floor wire 2. Seat position airbag sensor 3. Center airbag sensor assembly	*1	RS-164
B1655/37	Driver Side Seat Belt Buckle Switch Circuit Malfunction	1. Floor wire 2. Front seat inner belt assembly LH (Driver side seat belt buckle switch) 3. Center airbag sensor assembly	*1	RS-174
B1660/43	Passenger Airbag ON / OFF Indicator Circuit Malfunction	1. Instrument panel wire 2. Multi-display assembly (with Navigation system) 3. Air conditioner panel sub-assembly (without Navigation system) 4. Center airbag sensor assembly	*1	RS-184
B1800/51	Short in Driver Side Squib Circuit	1. Instrument panel wire 2. Spiral cable 3. Steering pad (Driver side squib) 4. Center airbag sensor assembly	*2	RS-206
B1801/51	Open in Driver Side Squib Circuit	Same as DTC B1800/51	*2	RS-206
B1802/51	Short to GND in Driver Side Squib Circuit	Same as DTC B1800/51	*2	RS-206
B1803/51	Short to B+ in Driver Side Squib Circuit	Same as DTC B1800/51	*2	RS-206
B1805/52	Short in Front Passenger Side Squib Circuit	1. Instrument panel wire 2. Instrument panel wire assembly 3. Front passenger airbag assembly (Front passenger side squib) 4. Center airbag sensor assembly	*2	RS-213
B1806/52	Open in Front Passenger Side Squib Circuit	Same as DTC B1805/52	*2	RS-213

DTC Code	Detection Item	Trouble Area	Check Mode	See page
B1807/52	Short to GND in Front Passenger Side Squib Circuit	Same as DTC B1805/52	*2	RS-213
B1808/52	Short to B+ in Front Passenger Side Squib Circuit	Same as DTC B1805/52	*2	RS-213
B1810/53	Short in Driver Side Squib 2nd Step Circuit	1. Instrument panel wire 2. Spiral cable 3. Steering pad (Driver side squib 2nd step) 4. Center airbag sensor assembly	*2	RS-220
B1811/53	Open in Driver Side Squib 2nd Step Circuit	Same as DTC B1810/53	*2	RS-220
B1812/53	Short to GND in Driver Side Squib 2nd Step Circuit	Same as DTC B1810/53	*2	RS-220
B1813/53	Short to B+ in Driver Side Squib 2nd Step Circuit	Same as DTC B1810/53	*2	RS-220
B1815/54	Short in Front Passenger Side Squib 2nd Step Circuit	1. Instrument panel wire 2. Instrument panel wire assembly 3. Front passenger airbag assembly (Front passenger side squib 2nd step) 4. Center airbag sensor assembly	*2	RS-227
B1816/54	Open in Front Passenger Side Squib 2nd Step Circuit	Same as DTC B1815/54	*2	RS-227
B1817/54	Short to GND in Front Passenger Side Squib 2nd Step Circuit	Same as DTC B1815/54	*2	RS-227
B1818/54	Short to B+ in Front Passenger Side Squib 2nd Step Circuit	Same as DTC B1815/54	*2	RS-227
B1820/55	Short in Front Driver Side - Side Squib Circuit	1. Floor wire 2. Front seat side airbag assembly LH (Front driver side - side squib) 3. Center airbag sensor assembly	*2	RS-234
B1821/55	Open in Front Driver Side - Side Squib Circuit	Same as DTC B1820/55	*2	RS-234
B1822/55	Short to GND in Front Driver Side - Side Squib Circuit	Same as DTC B1820/55	*2	RS-234
B1823/55	Short to B+ in Front Driver Side - Side Squib Circuit	Same as DTC B1820/55	*2	RS-234
B1825/56	Short in Front Passenger Side - Side Squib Circuit	1. Floor wire No. 2 2. Front seat side airbag assembly RH (Front passenger side - side squib) 3. Center airbag sensor assembly	*2	RS-239
B1826/56	Open in Front Passenger Side - Side Squib Circuit	Same as DTC B1825/56	*2	RS-239
B1827/56	Short to GND in Front Passenger Side - Side Squib Circuit	Same as DTC B1825/56	*2	RS-239

DTC Code	Detection Item	Trouble Area	Check Mode	See page
B1828/56	Short to B+ in Front Passenger Side - Side Squib Circuit	Same as DTC B1825/56	*2	RS-239
B1830/57	Short in Driver Side Curtain Shield Squib Circuit	1. Floor wire 2. Curtain shield airbag assembly LH (Driver side curtain shield squib) 3. Center airbag sensor assembly	*2	RS-244
B1831/57	Open in Driver Side Curtain Shield Squib Circuit	Same as DTC B1830/57	*2	RS-244
B1832/57	Short to GND in Driver Side Curtain Shield Squib Circuit	Same as DTC B1830/57	*2	RS-244
B1833/57	Short to B+ in Driver Side Curtain Shield Squib Circuit	Same as DTC B1830/57	*2	RS-244
B1835/58	Short in Front Passenger Side Curtain Shield Squib Circuit	1. Floor wire No. 2 2. Curtain shield airbag assembly RH (Front passenger side curtain shield squib) 3. Center airbag sensor assembly	*2	RS-249
B1836/58	Open in Front Passenger Side Curtain Shield Squib Circuit	Same as DTC B1835/58	*2	RS-249
B1837/58	Short to GND in Front Passenger Side Curtain Shield Squib Circuit	Same as DTC B1835/58	*2	RS-249
B1838/58	Short to B+ in Front Passenger Side Curtain Shield Squib Circuit	Same as DTC B1835/58	*2	RS-249
B1850/62 (*3)	Short in Rear Driver Side - Side Squib Circuit	1. Floor wire 2. Rear seat side airbag assembly LH (Rear driver side - side squib) 3. Center airbag sensor assembly	*2	RS-254
B1851/62 (*3)	Open in Rear Driver Side - Side Squib Circuit	Same as DTC B1850/62	*2	RS-254
B1852/62 (*3)	Short to GND in Rear Driver Side - Side Squib Circuit	Same as DTC B1850/62	*2	RS-254
B1853/62 (*3)	Short to B+ in Rear Driver Side - Side Squib Circuit	Same as DTC B1850/62	*2	RS-254
B1855/63 (*3)	Short in Rear Passenger Side - Side Squib Circuit	1. Floor wire No. 2 2. Rear seat side airbag assembly RH (Rear passenger side - side squib) 3. Center airbag sensor assembly	*2	RS-259
B1856/63 (*3)	Open in Rear Passenger Side - Side Squib Circuit	Same as DTC B1855/63	*2	RS-259
B1857/63 (*3)	Short to GND in Rear Passenger Side - Side Squib Circuit	Same as DTC B1855/63	*2	RS-259
B1858/63 (*3)	Short to B+ in Rear Passenger Side - Side Squib Circuit	Same as DTC B1855/63	*2	RS-259

DTC Code	Detection Item	Trouble Area	Check Mode	See page
B1860/64	Short in Driver Side Knee Airbag Squib Circuit	1. Instrument panel wire 2. Driver side knee airbag assembly (Driver side knee airbag squib) 3. Center airbag sensor assembly	*2	RS-264
B1861/64	Open in Driver Side Knee Airbag Squib Circuit	Same as DTC B1860/64	*2	RS-264
B1862/64	Short to GND in Driver Side Knee Airbag Squib Circuit	Same as DTC B1860/64	*2	RS-264
B1863/64	Short to B+ in Driver Side Knee Airbag Squib Circuit	Same as DTC B1860/64	*2	RS-264
B1865/65	Short in Front Passenger Side Knee Airbag Squib Circuit	1. Instrument panel wire 2. Front passenger side knee airbag assembly (Front passenger side knee airbag squib) 3. Center airbag sensor assembly	*2	RS-269
B1866/65	Open in Front Passenger Side Knee Airbag Squib Circuit	Same as DTC B1865/65	*2	RS-269
B1867/65	Short to GND in Front Passenger Side Knee Airbag Squib Circuit	Same as DTC B1865/65	*2	RS-269
B1868/65	Short to B+ in Front Passenger Side Knee Airbag Squib Circuit	Same as DTC B1865/65	*2	RS-269
B1900/73	Short in Front Driver Side Pretensioner Squib Circuit	1. Floor wire 2. Front seat outer belt assembly LH (Front driver side pretensioner squib) 3. Center airbag sensor assembly	*2	RS-274
B1901/73	Open in Front Driver Side Pretensioner Squib Circuit	Same as DTC B1900/73	*2	RS-274
B1902/73	Short to GND in Front Driver Side Pretensioner Squib Circuit	Same as DTC B1900/73	*2	RS-274
B1903/73	Short to B+ in Front Driver Side Pretensioner Squib Circuit	Same as DTC B1900/73	*2	RS-274
B1905/74	Short in Front Passenger Side Pretensioner Squib Circuit	1. Floor wire No. 2 2. Front seat outer belt assembly RH (Front passenger side pretensioner squib) 3. Center airbag sensor assembly	*2	RS-279
B1906/74	Open in Front Passenger Side Pretensioner Squib Circuit	Same as DTC B1905/74	*2	RS-279
B1907/74	Short to GND in Front Passenger Side Pretensioner Squib Circuit	Same as DTC B1905/74	*2	RS-279
B1908/74	Short to B+ in Front Passenger Side Front Pretensioner Squib Circuit	Same as DTC B1905/74	*2	RS-279

DTC Code	Detection Item	Trouble Area	Check Mode	See page
B1920/77	Short in Rear Driver Side Pretensioner Squib Circuit	1. Floor wire 2. Rear seat outer belt assembly LH (Rear driver side pretensioner squib) 3. Center airbag sensor assembly	*2	RS-284
B1921/77	Open in Rear Pretensioner Squib RH Circuit	Same as DTC B1920/77	*2	RS-284
B1922/77	Short to GND in Rear Pretensioner Squib RH Circuit	Same as DTC B1920/77	*2	RS-284
B1923/77	Short to B+ in Rear Pretensioner Squib RH Circuit	Same as DTC B1920/77	*2	RS-284
B1925/78	Short in Rear Passenger Side Pretensioner Squib Circuit	1. Floor wire No. 2 2. Rear seat outer belt assembly RH (Rear passenger side pretensioner squib) 3. Center airbag sensor assembly	*2	RS-289
B1926/78	Open in Rear Passenger Side Pretensioner Squib Circuit	Same as DTC B1925/78	*2	RS-289
B1927/78	Short to GND in Rear Passenger Side Pretensioner Squib Circuit	Same as DTC B1925/78	*2	RS-289
B1928/78	Short to B+ in Rear Passenger Side Pretensioner Squib Circuit	Same as DTC B1925/78	*2	RS-289

RS

ON-VEHICLE INSPECTION

1. INSPECT FRONT PASSENGER AIRBAG ASSEMBLY (VEHICLE NOT INVOLVED IN COLLISION)

(a) Perform a diagnostic system check (See page RS-37).

(b) With the front passenger airbag assembly installed on the vehicle, perform a visual check. If there are any defects as mentioned below, replace the instrument panel with a new one:
Cuts, minute cracks or marked discoloration on the instrument panel around the front passenger airbag assembly.

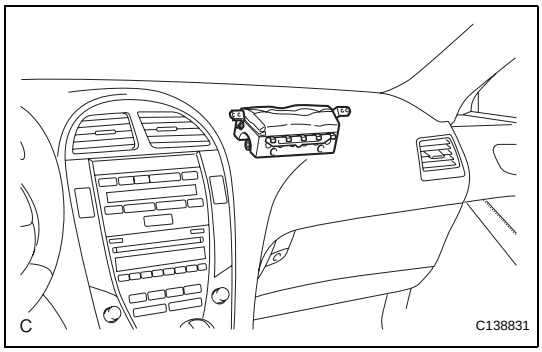

2. INSPECT FRONT PASSENGER AIRBAG ASSEMBLY (VEHICLE INVOLVED IN COLLISION AND AIRBAG HAS NOT DEPLOYED)

(a) Perform a diagnostic system check (See page RS-37).

(b) With the front passenger airbag assembly removed from the vehicle, perform a visual check. If there are any defects as mentioned below, replace the front passenger airbag assembly, instrument panel or instrument panel reinforcement with a new one:
- Cuts, minute cracks or marked discoloration on the front passenger airbag assembly.
- Cracks or other damage to the connectors.
- Deformation or cracks on the instrument panel or instrument panel reinforcement.

CAUTION:
Be sure to follow the correct removal and installation procedures.

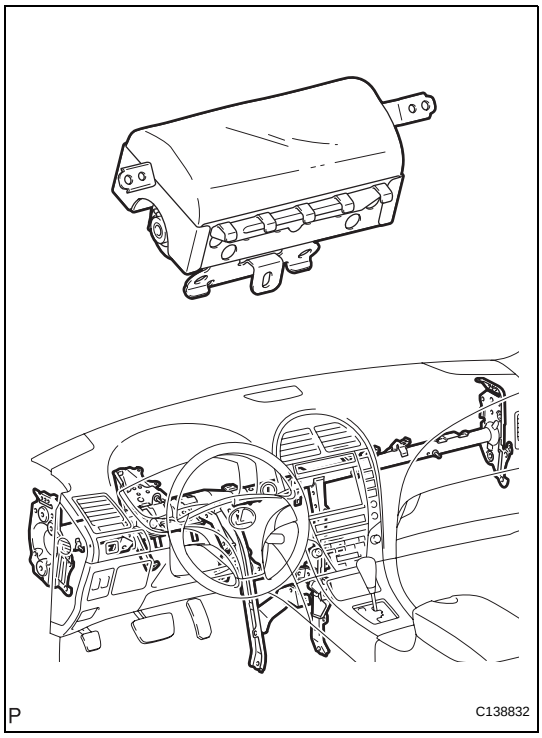

REMOVAL

1. **PRECAUTION**
   CAUTION:
   Be sure to read "PRECAUTION" thoroughly before servicing (See page RS-1).
2. **ALIGN FRONT WHEELS FACING STRAIGHT AHEAD**
3. **DISCONNECT CABLE FROM NEGATIVE BATTERY TERMINAL**
   CAUTION:
   Wait for 90 seconds after disconnecting the cable to prevent airbag deployment.
4. **REMOVE LOWER NO. 3 STEERING WHEEL COVER (See page RS-367)**
5. **REMOVE LOWER NO. 2 STEERING WHEEL COVER (See page RS-367)**
6. **REMOVE STEERING PAD (See page RS-367)**
7. **REMOVE STEERING WHEEL ASSEMBLY (See page SR-80)**
8. **REMOVE FRONT DOOR SCUFF PLATE LH (See page IR-39)**
9. **REMOVE FRONT DOOR OPENING TRIM COVER LH (See page IR-39)**
10. **REMOVE SIDE INSTRUMENT PANEL LH (See page IP-12)**
11. **REMOVE INSTRUMENT PANEL FINISH PANEL END LH (See page IP-13)**
12. **REMOVE LOWER INSTRUMENT PANEL SUB-ASSEMBLY (See page IP-13)**
13. **REMOVE STEERING COLUMN COVER (See page SR-80)**
14. **REMOVE TILT & TELESCOPIC SWITCH (See page SR-80)**
15. **REMOVE TURN SIGNAL SWITCH ASSEMBLY WITH SPIRAL CABLE SUB-ASSEMBLY (See page SR-80)**
16. **REMOVE INSTRUMENT CLUSTER FINISH PANEL SUB-ASSEMBLY (See page IP-14)**
17. **REMOVE COMBINATION METER ASSEMBLY (See page IP-14)**
18. **REMOVE NO. 1 SWITCH HOLE BASE (See page IP-14)**
19. **REMOVE INSTRUMENT PANEL FINISH PANEL END RH (See page IP-15)**
20. **REMOVE FRONT DOOR SCUFF PLATE RH (See page IR-42)**

21. **REMOVE FRONT DOOR OPENING TRIM COVER RH (See page IR-42)**
22. **REMOVE NO. 2 INSTRUMENT PANEL UNDER COVER SUB-ASSEMBLY (See page IP-15)**
23. **REMOVE SIDE INSTRUMENT PANEL RH (See page IP-15)**
24. **REMOVE FRONT PASSENGER SIDE KNEE AIRBAG ASSEMBLY (See page RS-396)**
25. **REMOVE LOWER INSTRUMENT PANEL RH (See page IP-16)**
26. **REMOVE SHIFT LEVER KNOB SUB-ASSEMBLY (See page IP-16)**
27. **REMOVE UPPER CONSOLE PANEL ASSEMBLY WITH FRONT ASH RECEPTACLE (See page IP-16)**
28. **REMOVE NO. 2 INSTRUMENT PANEL REGISTER ASSEMBLY (See page IP-17)**
29. **REMOVE INTEGRATION CONTROL PANEL WITH RADIO RECEIVER ASSEMBLY (w/o Navigation System) (See page AV-168)**
30. **REMOVE MULTI-DISPLAY WITH RADIO RECEIVER ASSEMBLY (w/ Navigation System) (See page AV-170)**
31. **REMOVE HEATER SEAT SWITCH CONSOLE BASE (w/o Seat Heater System) (See page IP-17)**
32. **REMOVE HEATER SEAT SWITCH CONSOLE BASE (w/ Seat Heater System) (See page IP-18)**
33. **REMOVE CONSOLE BOX POCKET (See page IP-18)**
34. **REMOVE CONSOLE BOX CARPET (See page IP-18)**
35. **REMOVE CONSOLE REAR END PANEL SUB-ASSEMBLY (See page IP-19)**
36. **REMOVE REAR CONSOLE BOX ASSEMBLY (See page IP-19)**
37. **REMOVE FRONT PILLAR GARNISH LH (See page IR-39)**
38. **REMOVE NO. 1 INSTRUMENT PANEL SPEAKER PANEL SUB-ASSEMBLY (See page IP-20)**
39. **REMOVE FRONT NO. 2 SPEAKER ASSEMBLY (for LH Side) (See page AV-184)**
40. **REMOVE NO. 1 INSTRUMENT PANEL REGISTER ASSEMBLY (See page IP-20)**
41. **REMOVE FRONT PILLAR GARNISH RH (See page IR-42)**
42. **REMOVE NO. 2 INSTRUMENT PANEL SPEAKER PANEL SUB-ASSEMBLY (See page IP-21)**

43. REMOVE FRONT NO. 2 SPEAKER ASSEMBLY (for RH Side) (See page IP-21)

44. REMOVE NO. 3 INSTRUMENT PANEL REGISTER ASSEMBLY (See page IP-21)

45. REMOVE NO. 1 SPEAKER HOLE COVER (See page IP-21)

46. REMOVE FRONT STEREO COMPONENT SPEAKER ASSEMBLY (See page AV-188)

47. REMOVE NO. 1 INSTRUMENT PANEL MOUNTING BRACKET (See page IP-22)

48. REMOVE PUSH START SWITCH (See page IP-22)

49. DISCONNECT INSTRUMENT PANEL WIRE ASSEMBLY

(a) Disconnect the instrument panel wire connector.

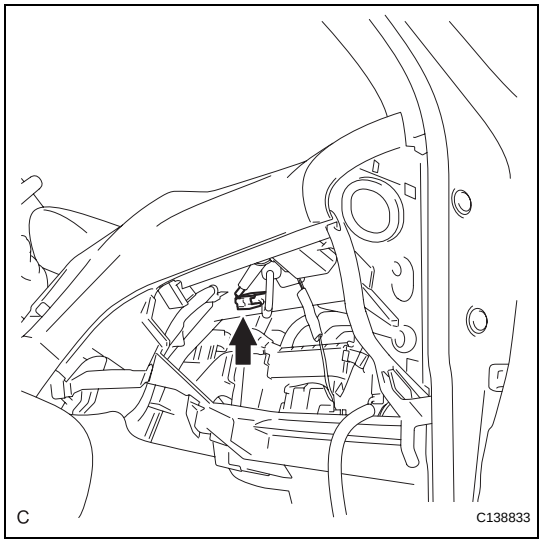

50. REMOVE ROOM TEMPERATURE SENSOR (See page AC-214)

51. REMOVE INSTRUMENT PANEL SAFETY PAD ASSEMBLY (w/o DVD Player) (See page IP-22)

52. REMOVE INSTRUMENT PANEL SAFETY PAD ASSEMBLY (w/ DVD Player) (See page IP-24)

53. REMOVE FRONT PASSENGER AIRBAG ASSEMBLY

(a) Remove the 2 screws.

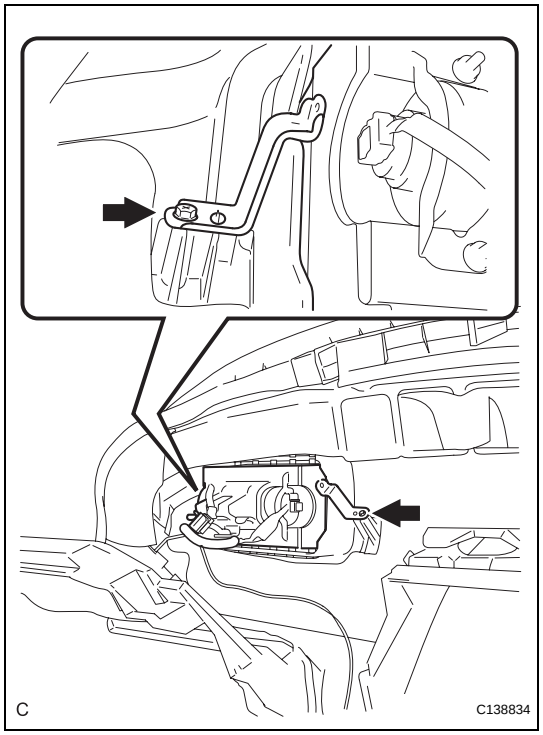

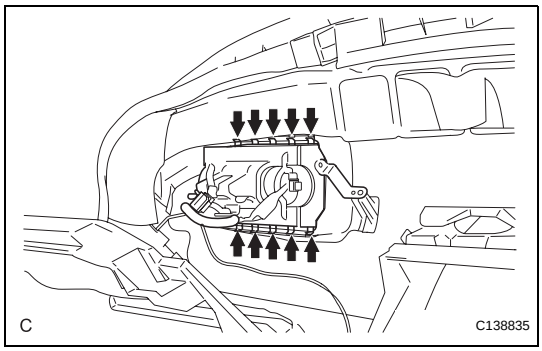

(b) Disengage the 10 hooks and remove the front passenger airbag assembly from the instrument panel.

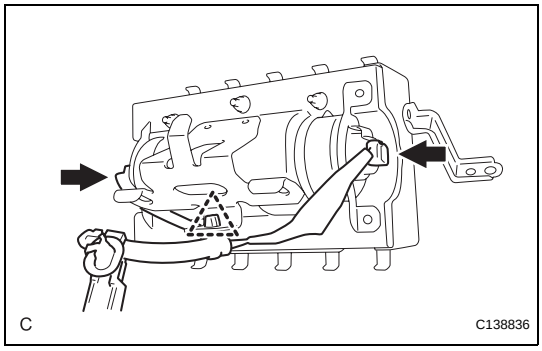

54. REMOVE INSTRUMENT PANEL WIRE ASSEMBLY

(a) Disconnect the 2 connectors.

(b) Remove the clamp and the instrument panel wire assembly from the front passenger airbag assembly.

NOTICE:

When handling the airbag connector, take care not to damage the airbag wire harness.

INSTALLATION

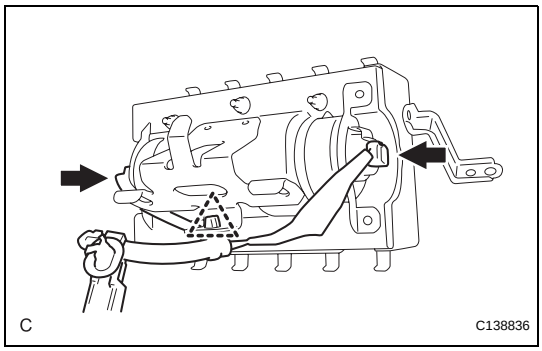

1. INSTALL INSTRUMENT PANEL WIRE ASSEMBLY

(a) Connect the 2 connectors.

(b) Install the clamp and the instrument panel wire assembly on the front passenger airbag assembly.

NOTICE:

When handling the airbag connector, take care not to damage the airbag wire harness.

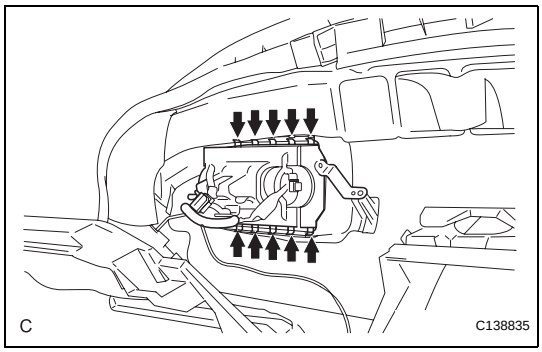

2. INSTALL FRONT PASSENGER AIRBAG ASSEMBLY

(a) Engage the 10 hooks and install the front passenger airbag assembly on the instrument panel.

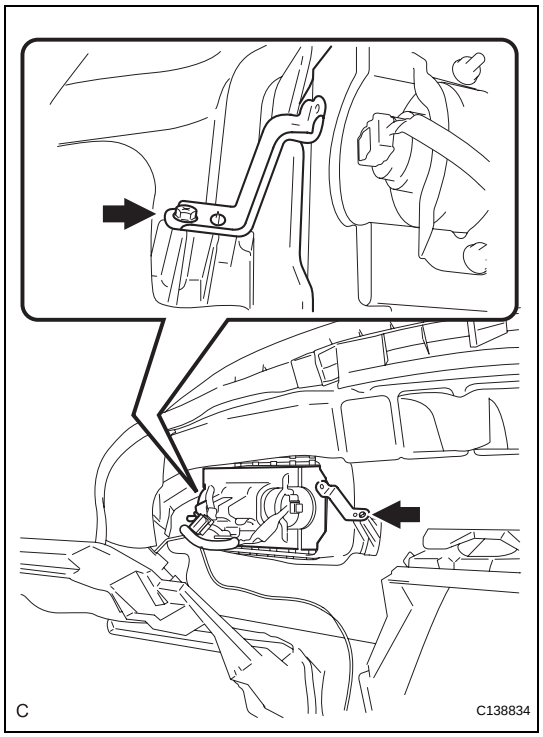

(b) Install the 2 screws.

3. **INSTALL INSTRUMENT PANEL SAFETY PAD ASSEMBLY (w/o DVD Player) (See page IP-33)**

4. **INSTALL INSTRUMENT PANEL SAFETY PAD ASSEMBLY (w/ DVD Player) (See page IP-35)**

5. **INSTALL ROOM TEMPERATURE SENSOR (See page AC-215)**

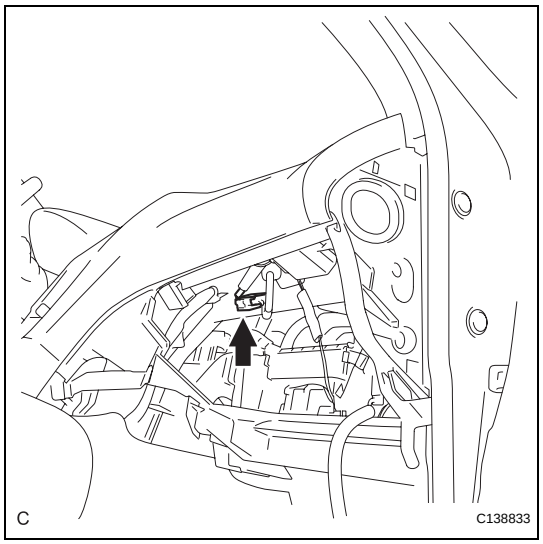

6. **CONNECT INSTRUMENT PANEL WIRE ASSEMBLY**
   (a) Connect the instrument panel wire connector.

7. **INSTALL PUSH START SWITCH (See page IP-37)**

8. **INSTALL NO. 1 INSTRUMENT PANEL MOUNTING BRACKET (See page IP-38)**

9. **INSTALL FRONT STEREO COMPONENT SPEAKER ASSEMBLY (See page AV-188)**

10. **INSTALL NO. 1 SPEAKER HOLE COVER (See page IP-38)**

11. **INSTALL NO. 1 INSTRUMENT PANEL REGISTER ASSEMBLY (See page IP-38)**

12. **INSTALL FRONT NO. 2 SPEAKER ASSEMBLY (for LH Side) (See page AV-185)**

13. **INSTALL NO. 1 INSTRUMENT PANEL SPEAKER PANEL SUB-ASSEMBLY (See page IP-39)**

14. **INSTALL FRONT PILLAR GARNISH LH (See page IR-64)**

15. **INSTALL NO. 3 INSTRUMENT PANEL REGISTER ASSEMBLY (See page IP-39)**

16. **INSTALL FRONT NO. 2 SPEAKER ASSEMBLY (for RH Side) (See page IP-39)**

17. **INSTALL NO. 2 INSTRUMENT PANEL SPEAKER PANEL SUB-ASSEMBLY (See page IP-39)**

18. **INSTALL FRONT PILLAR GARNISH RH (See page IR-65)**

19. **INSTALL REAR CONSOLE BOX ASSEMBLY (See page IP-39)**
20. **INSTALL CONSOLE REAR END PANEL SUB-ASSEMBLY (See page IP-40)**
21. **INSTALL CONSOLE BOX CARPET (See page IP-41)**
22. **INSTALL CONSOLE BOX POCKET (See page IP-41)**
23. **INSTALL HEATER SEAT SWITCH CONSOLE BASE (w/o Seat Heater System) (See page IP-41)**
24. **INSTALL HEATER SEAT SWITCH CONSOLE BASE (w/ Seat Heater System) (See page IP-41)**
25. **INSTALL INTEGRATION CONTROL PANEL WITH RADIO RECEIVER ASSEMBLY (w/o Navigation System) (See page AV-172)**
26. **INSTALL MULTI-DISPLAY WITH RADIO RECEIVER ASSEMBLY (w/ Navigation System) (See page AV-173)**
27. **INSTALL NO. 2 INSTRUMENT PANEL REGISTER ASSEMBLY (See page IP-41)**
28. **INSTALL UPPER CONSOLE PANEL ASSEMBLY WITH FRONT ASH RECEPTACLE (See page IP-42)**
29. **INSTALL SHIFT LEVER KNOB SUB-ASSEMBLY (See page IP-42)**
30. **INSTALL LOWER INSTRUMENT PANEL RH (See page IP-42)**
31. **INSTALL FRONT PASSENGER SIDE KNEE AIRBAG ASSEMBLY (See page RS-396)**
32. **INSTALL SIDE INSTRUMENT PANEL RH (See page IP-43)**
33. **INSTALL NO. 2 INSTRUMENT PANEL UNDER COVER SUB-ASSEMBLY (See page IP-44)**
34. **INSTALL FRONT DOOR OPENING TRIM COVER RH (See page IR-65)**
35. **INSTALL FRONT DOOR SCUFF PLATE RH (See page IR-65)**
36. **INSTALL INSTRUMENT PANEL FINISH PANEL END RH (See page IP-44)**
37. **INSTALL NO. 1 SWITCH HOLE BASE (See page IP-44)**
38. **INSTALL COMBINATION METER ASSEMBLY (See page IP-45)**
39. **INSTALL INSTRUMENT CLUSTER FINISH PANEL SUB-ASSEMBLY (See page IP-45)**
40. **INSTALL TURN SIGNAL SWITCH ASSEMBLY WITH SPIRAL CABLE SUB-ASSEMBLY (See page SR-86)**

41. INSTALL TILT & TELESCOPIC SWITCH (See page SR-86)

42. INSTALL STEERING COLUMN COVER (See page SR-87)

43. ADJUST SPIRAL CABLE (See page RS-382)

44. INSTALL LOWER INSTRUMENT PANEL SUB-ASSEMBLY (See page IP-46)

45. INSTALL INSTRUMENT PANEL FINISH PANEL END LH (See page IP-46)

46. INSTALL SIDE INSTRUMENT PANEL LH (See page IP-47)

47. INSTALL FRONT DOOR OPENING TRIM COVER LH (See page IR-64)

48. INSTALL FRONT DOOR SCUFF PLATE LH (See page IR-65)

49. INSTALL STEERING WHEEL ASSEMBLY (See page SR-87)

50. INSTALL STEERING PAD (See page RS-368)

51. INSTALL LOWER NO. 3 STEERING WHEEL COVER (See page RS-369)

52. INSTALL LOWER NO. 2 STEERING WHEEL COVER (See page RS-369)

53. CONNECT CABLE TO NEGATIVE BATTERY TERMINAL

54. PERFORM INITIALIZATION

(a) Perform initialization (See page IN-33).
HINT:
Some systems need initialization after reconnecting the cable to the negative battery terminal.

55. INSPECT STEERING PAD (See page RS-369)

56. INSPECT FRONT PASSENGER SIDE KNEE AIRBAG ASSEMBLY (See page RS-395)

57. INSPECT FRONT PASSENGER AIRBAG ASSEMBLY (See page RS-411)

58. INSPECT SRS WARNING LIGHT

(a) Inspect the SRS warning light (See page RS-37).

RS

DISPOSAL

HINT:
When scrapping a vehicle equipped with the SRS or disposing of the front passenger airbag assembly, be sure to deploy the airbag first in accordance with the procedure described below. If any abnormality occurs with the airbag deployment, contact the SERVICE DEPT. of the TOYOTA MOTOR SALES, U.S.A., INC.

CAUTION:

- **Never dispose of a front passenger airbag assembly that has an undeployed airbag.**
- **The airbag produces an exploding sound when it is deployed, so perform the operation outdoors and where it will not create a nuisance to nearby residents.**
- **When deploying the airbag, always use the specified SST (SRS Airbag Deployment Tool). Perform the operation in a place away from electrical noise.**
- **When deploying the airbag, perform the operation at least 10 m (33 ft) away from the front passenger airbag assembly.**
- **The front passenger airbag assembly becomes extremely hot when the airbag is deployed, so do not touch it for at least 30 minutes after deployment.**
- **Use gloves and safety glasses when handling a front passenger airbag assembly with a deployed airbag.**
- **Do not apply water, etc. to a front passenger airbag assembly with a deployed airbag.**
- **Always wash your hands with water after completing the operation.**

1. DISPOSE OF FRONT PASSENGER AIRBAG ASSEMBLY (WHEN INSTALLED IN VEHICLE)

HINT:
Prepare a battery as the power source to deploy the airbag.

(a) Check the function of the SST (See page RS-370).
(b) Refer to PRECAUTION (See page RS-1).
(c) Disconnect the cable from the negative battery terminal.
CAUTION:
Wait for 90 seconds after disconnecting the cable to prevent airbag deployment.
(d) Install the SST.
(1) Remove the lower instrument panel sub-assembly (See page IP-13).

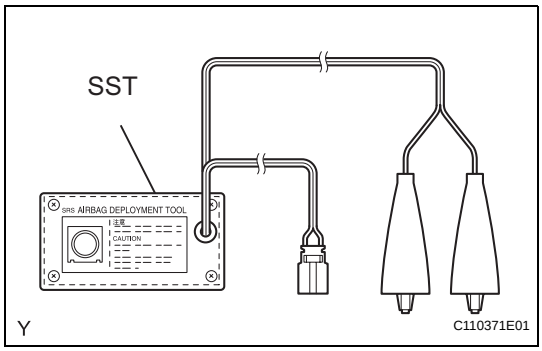

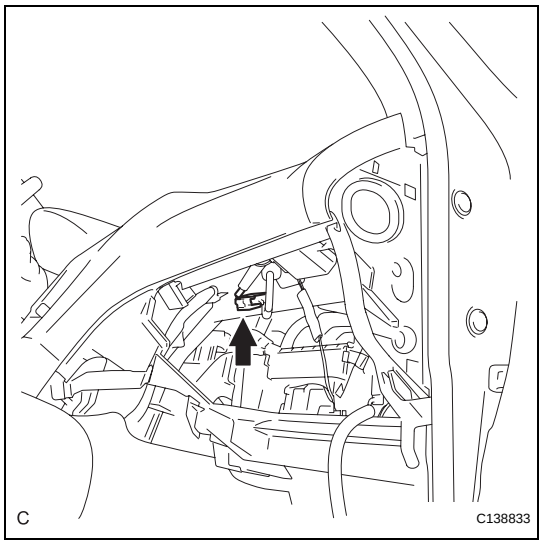

(2) Disconnect the connector.
NOTICE:
When handling the airbag connector, take care not to damage the airbag wire harness.

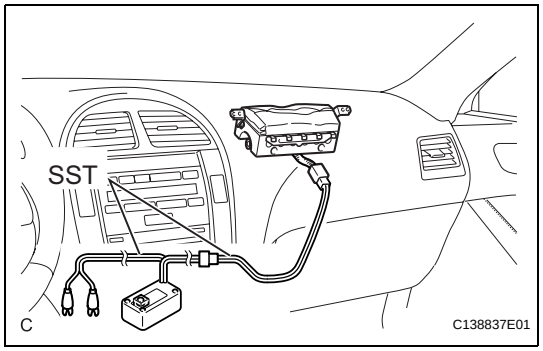

(3) Connect the SST connector to the instrument panel wire assembly.
SST 09082-00700, 09082-00780
NOTICE:
To avoid damaging the SST connector and wire harness, do not lock the secondary lock of the twin lock.

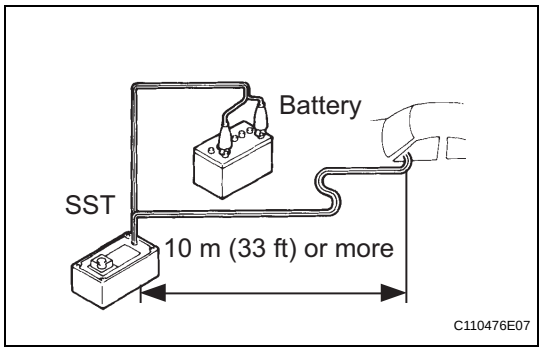

(4) Move the SST at least 10 m (33 ft) away from the vehicle front side window.
(5) Maintaining enough clearance for the SST wire harness in the front side window, close all doors and windows of the vehicle.
NOTICE:
Take care not to damage the SST wire harness.
(6) Connect the red clip of the SST to the battery positive (+) terminal and the black clip of the SST to the negative (-) terminal.

(e) Deploy the airbag.
(1) Check that no one is inside the vehicle or within a 10 m (33 ft) radius of the vehicle.
(2) Press the SST activation switch and deploy the airbag.
CAUTION:
- **When deploying the airbag, make sure that no one is near the vehicle.**
- **The front passenger airbag assembly becomes extremely hot when the airbag is deployed, so do not touch it for at least 30 minutes after deployment.**
- **Use gloves and safety glasses when handling a front passenger airbag assembly with a deployed airbag.**

RS

- **Do not apply water, etc. to a front passenger airbag assembly with a deployed airbag.**
- **Always wash your hands with water after completing the operation.**

HINT:
The airbag is deployed as the LED of the SST activation switch comes on.

2. DISPOSE OF FRONT PASSENGER AIRBAG ASSEMBLY (WHEN NOT INSTALLED IN VEHICLE)

NOTICE:

- **When disposing of the front passenger airbag assembly, never use the customer's vehicle to deploy the airbag.**
- **Be sure to follow the procedure detailed below when deploying the airbag.**

HINT:
Prepare a battery as the power source to deploy the airbag.

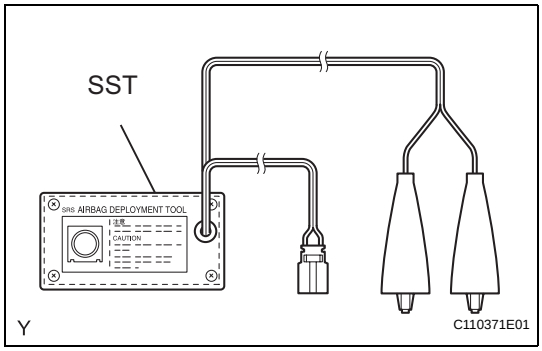

(a) Check the function of the SST (See page RS-372).

(b) Remove the front passenger airbag assembly (See page RS-412).

CAUTION:

- **When removing the front passenger airbag assembly, work must be started 90 seconds after the engine switch is turned off and the negative (-) terminal cable is disconnected from the battery.**
- **When storing the front passenger airbag assembly, keep the airbag deployment side facing upward.**

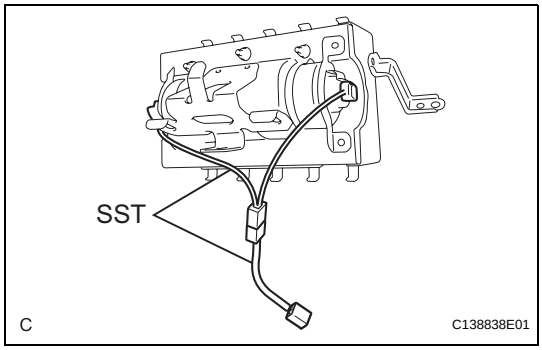

(c) Install the SST.

(1) After connecting the SST below to each other, connect them to the front passenger airbag assembly.

SST 09082-00802 (09082-10801, 09082-30801)

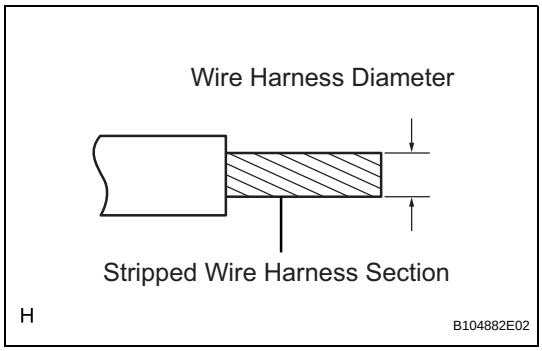

(d) Using a service-purpose wire harness for the vehicle, tie down the front passenger airbag assembly to the tire.

Wire harness:

Stripped wire harness section

1.25 mm^2 or more (0.0019 in.^{2} or more)

CAUTION:
If the wire harness is too thin or an alternative object is used to tie down the front passenger airbag assembly, it may be snapped by the shock when the airbag is deployed. Always use a wire harness for vehicle use with an area of at least 1.25 mm^2 (0.0019 in.^{2}).

HINT:
To calculate the area of the stripped wire harness section:

Area = 3.14 x (Diameter)^2 divided by 4

(1) Position the front passenger airbag assembly inside the tire with the airbag deployment side facing inside.
Tire size:
Must exceed the following dimensions
Width:
185 mm (7.28 in.)
Inner diameter:
360 mm (14.17 in.)

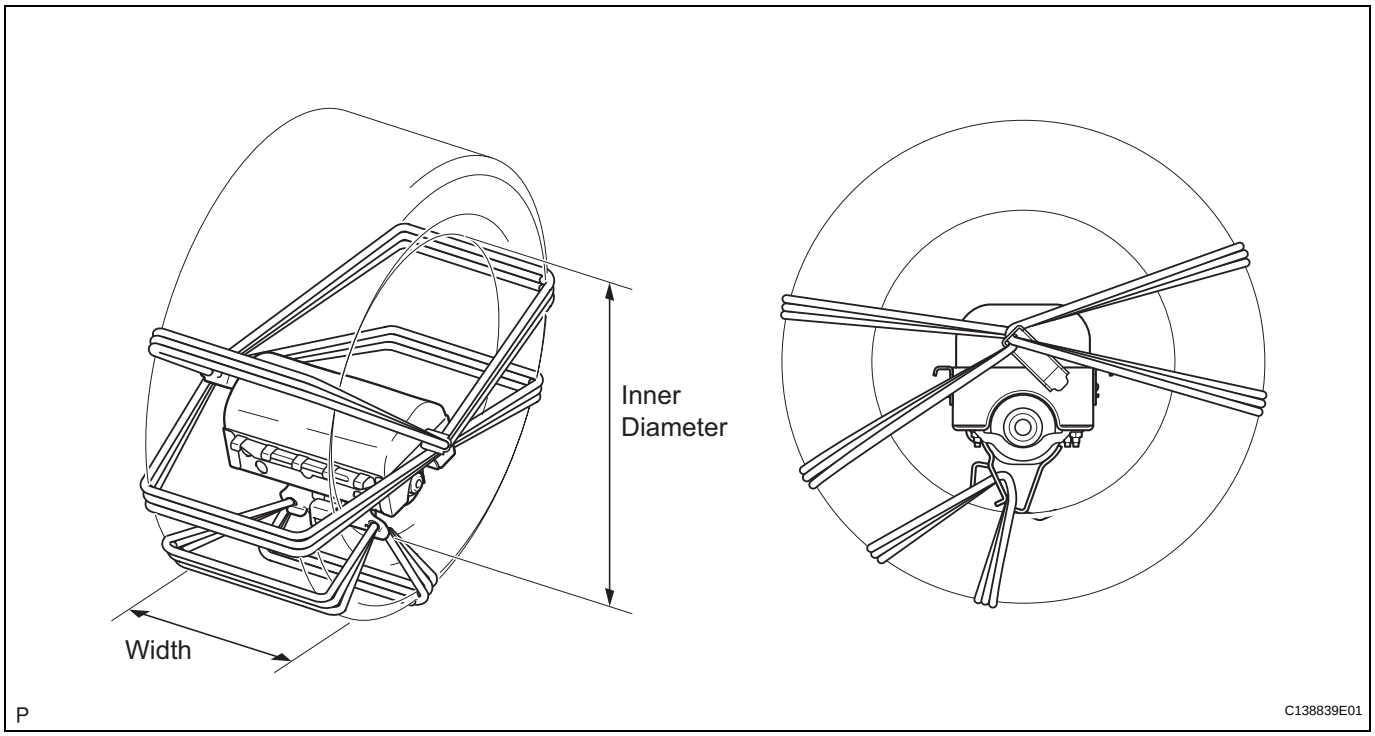

CAUTION:
- **Make sure that the wire harness is tight. If there is slack in the wire harness, the front passenger airbag assembly may become loose due to the shock when the airbag is deployed.**
- **Always tie down the front passenger airbag assembly with the airbag deployment side facing inside the tire.**

NOTICE:
The tire will be marked by the airbag deployment, so use an extra tire.

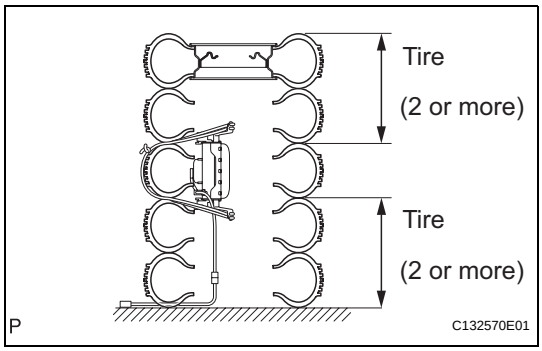

(e) Place the tires.
(1) Place at least 2 tires under the tire which the front passenger airbag assembly is tied to.
(2) Place at least 2 tires over the tire which the front passenger airbag assembly is tied to. The top tire should have a disc wheel installed.
NOTICE:
Do not place the SST connector under the tire because it could be damaged.

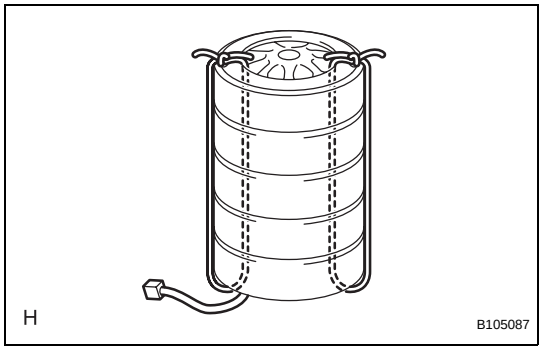

(3) Tie the tires together with 2 wire harnesses.
CAUTION:
Make sure that the wire harness is tight. Looseness in the wire harness results in the tires coming free due to the shock when the airbag is deployed.

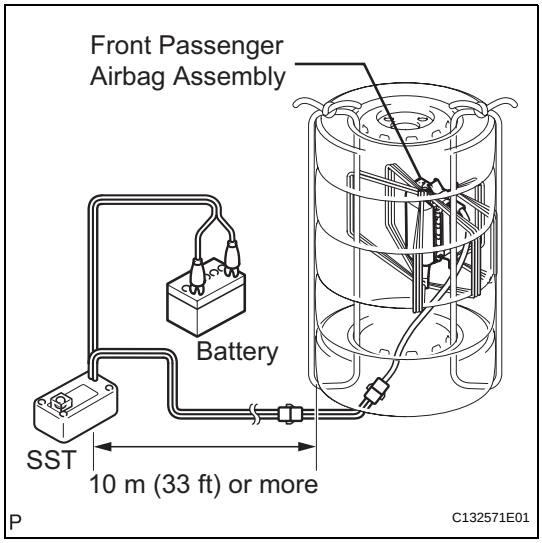

(f) Install the SST.
(1) Connect the SST connector.
SST 09082-00700
NOTICE:
To avoid damaging the SST connector and wire harness, do not lock the secondary lock of the twin lock. Also, secure some slack for the SST wire harness inside the tire.
(2) Move the SST at least 10 m (33 ft) away from the airbag tied down to the tire.

(g) Deploy the airbag.
(1) Connect the red clip of the SST to the battery positive (+) terminal and the black clip of the SST to the battery negative (-) terminal.
(2) Check that no one is within a 10 m (33 ft) radius of the tire which the front passenger airbag assembly is tied to.
(3) Press the SST activation switch and deploy the airbag.
CAUTION:
When deploying the airbag, make sure that no one is near the tire.
HINT:
The airbag is deployed as the LED of the SST activation switch comes on.

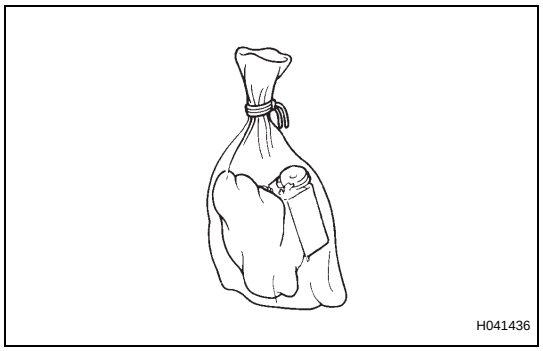

(h) Dispose of the front passenger airbag assembly.

CAUTION:

- **The front passenger airbag assembly becomes extremely hot when the airbag is deployed, so do not touch it for at least 30 minutes after deployment.**
- **Use gloves and safety glasses when handling a front passenger airbag assembly with a deployed airbag.**
- **Do not apply water, etc. to a front passenger airbag assembly with a deployed airbag.**
- **Always wash your hands with water after completing the operation.**

(1) Remove the front passenger airbag assembly from the tire.

(2) Place the front passenger airbag assembly in a plastic bag, tie it tightly and dispose of it as other general part disposal.

DTC	B1000/31	Center Airbag Sensor Assembly Malfunction

DESCRIPTION

The center airbag sensor assembly consists of the airbag sensor, the safing sensor, the drive circuit, the diagnosis circuit, the ignition control, etc.
If the center airbag sensor assembly receives signals from the airbag sensor, it determines whether the SRS should be activated.
DTC B1000/31 is recorded when a malfunction is detected in the center airbag sensor assembly.

DTC No.	DTC Detecting Condition	Trouble Area
B1000/31	Center airbag sensor assembly malfunction	Center airbag sensor assembly

HINT:
When a trouble code is displayed simultaneously with B1000/31, repair the malfunction indicated by this code (except B1000/31) first.

INSPECTION PROCEDURE

1	CHECK CENTER AIRBAG SENSOR ASSEMBLY

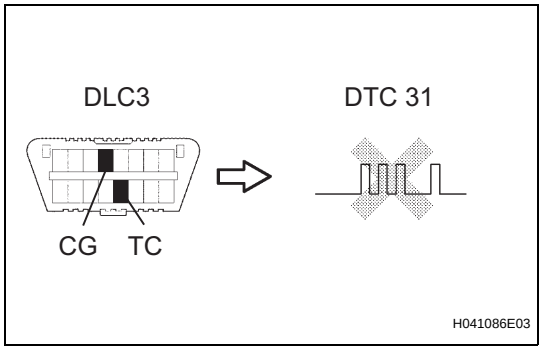

(a) Turn the ignition switch off.
(b) Disconnect the negative (-) terminal cable from the battery, and wait for at least 90 seconds.
(c) Connect the negative (-) terminal cable to the battery, and wait for at least 2 seconds.
(d) Turn the engine switch on (IG), and wait for at least 60 seconds.
(e) Clear the DTCs stored in the memory (See page RS-49).
(f) Turn the engine switch off.
(g) Turn the engine switch on (IG), and wait for at least 60 seconds.
(h) Check the DTCs (See page RS-49).
OK:
DTC B1000/31 is not output.

NG → **REPLACE CENTER AIRBAG SENSOR ASSEMBLY (See page RS-468)**

OK

USE SIMULATION METHOD TO CHECK (See page RS-37)

DTC	**B1603/83**	**Front Satellite Sensor Bus RH Initialization Incomplete**

DTC	**B1612/83**	**Lost Communication with Front Airbag Sensor RH**

DTC	**B1613/83**	**Front Airbag Sensor RH Initialization Incomplete**

DESCRIPTION

The front airbag sensor RH circuit consists of the center airbag sensor assembly and front airbag sensor RH.

The front airbag sensor RH detects impacts to the vehicle and sends signals to the center airbag sensor assembly to determine if the airbag should be deployed.

DTC B1603/83, B1612/83, or B1613/83 is recorded when a malfunction is detected in the front airbag sensor RH circuit.

DTC No.	DTC Detecting Condition	Trouble Area
B1603/83 B1612/83 B1613/83	• The airbag sensor assembly center receives a line short circuit signal, an open circuit signal, a short circuit to ground signal or a short circuit to B+ signal in the front airbag sensor RH circuit for 2 seconds. • Front airbag sensor RH malfunction • Center airbag sensor assembly malfunction	• Instrument panel wire • Engine room main wire • Front airbag sensor RH • Center airbag sensor assembly

RS

WIRING DIAGRAM

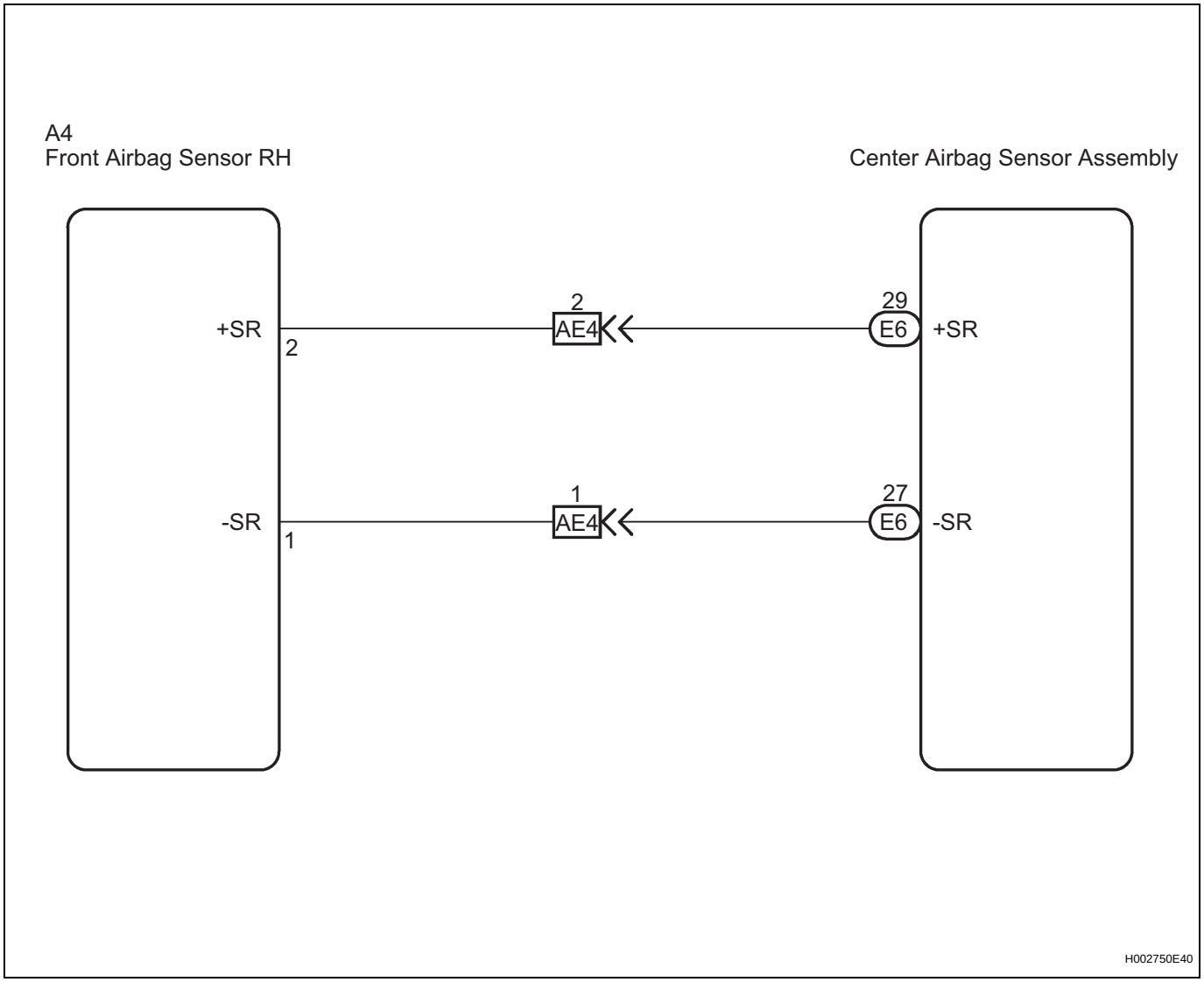

INSPECTION PROCEDURE

1	CHECK DTC

(a) Turn the engine switch on (IG), and wait for at least 60 seconds.

(b) Turn the engine switch off.
HINT:
If a communication error occurs, DTCs for both the LH and RH sides will be stored simultaneously. To identify the malfunctioning area, turn the engine switch off and then on (IG) again.

(c) Turn the engine switch on (IG), and wait for at least 60 seconds.

(d) Check the DTCs (See page RS-49).
Result

Result	Proceed to
DTC B1603, B1613, or 83 is output.	A

RS

Result	Proceed to
DTC B1618/84 is output.	B
DTC B1603, B1613, or 83 and B1618/84 are not output.	C

HINT:
- DTCs indicating communication errors will be changed to DTCs indicating errors in initialization by turning the engine switch off and then on (IG) again.
- Codes other than DTC B1603, B1613, or 83 and B1618/84 may be output at this time, but they are not related to this check.

B → **GO TO DTC B1618/84 (See page RS-78)**

C → **USE SIMULATION METHOD TO CHECK (See page RS-37)**

A

2 CHECK CONNECTION OF CONNECTORS

(a) Turn the engine switch off.
(b) Disconnect the negative (-) terminal cable from the battery, and wait for at least 90 seconds.
(c) Check that the connectors are properly connected to the center airbag sensor assembly and the front airbag sensor RH.
OK:
The connectors are properly connected.

NG → **CONNECT CONNECTORS PROPERLY**

OK

3 CHECK CONNECTORS

(a) Disconnect the connectors from the center airbag sensor assembly and front airbag sensor RH.
(b) Check that the connectors (on the center airbag sensor assembly side and front airbag sensor RH side) are not damaged.
OK:
The connectors are not deformed or damaged.

NG → **REPAIR OR REPLACE WIRE HARNESS**

OK

4 CHECK VEHICLE CONDITION

(a) Check whether or not the vehicle is equipped with the rear side airbag.

Result:
A:
with the rear side airbag
B:
without the rear side airbag

B → **Go to step 14**

RS

A

5 CHECK FRONT AIRBAG SENSOR RH CIRCUIT (OPEN)

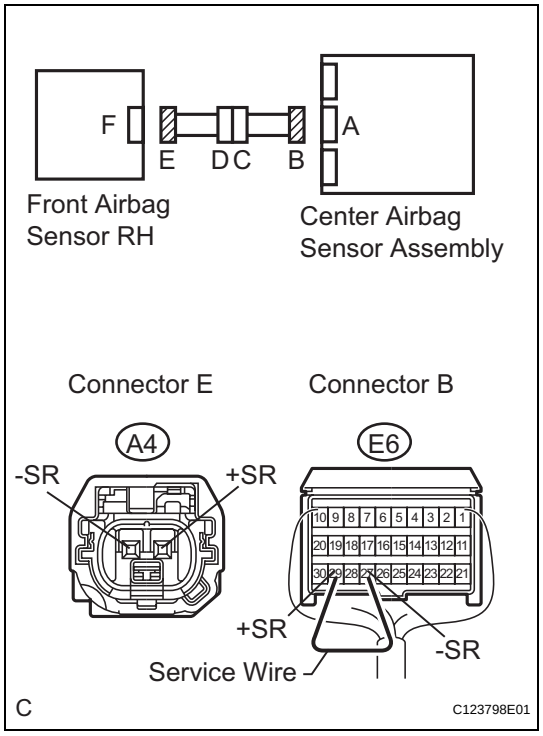

(a) Using a service wire, connect terminals 29 (+SR) and 27 (-SR) of connector B.
NOTICE:
Do not forcibly insert a service wire into the terminals of the connector when connecting the wire.

(b) Measure the resistance according to the value(s) in the table below.
Standard resistance

Tester Connection	Condition	Specified Condition
A4-2 (+SR) - A4-1 (-SR)	Always	Below 1 Ω

NG → **Go to step 10**

OK

RS

6 CHECK FRONT AIRBAG SENSOR RH CIRCUIT (SHORT)

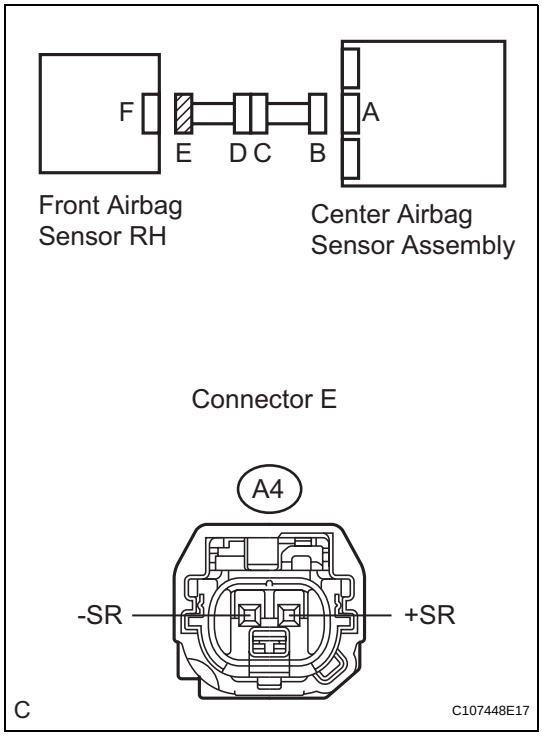

(a) Disconnect the service wire from connector B.
(b) Measure the resistance according to the value(s) in the table below.

Standard resistance

Tester Connection	Condition	Specified Condition
A4-2 (+SR) - A4-1 (-SR)	Always	1 MΩ or higher

NG → **Go to step 11**

OK

7 CHECK FRONT AIRBAG SENSOR RH CIRCUIT (SHORT TO B+)

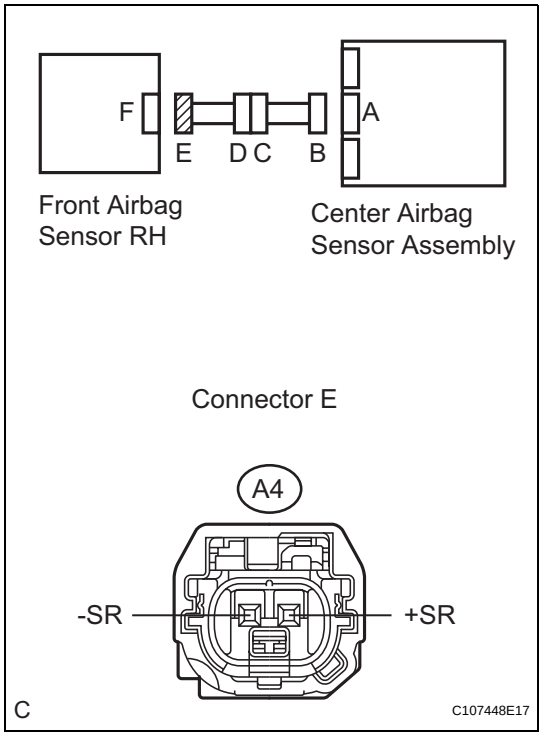

(a) Connect the negative (-) terminal cable to the battery, and wait for at least 2 seconds.
(b) Turn the engine switch on (IG).
(c) Measure the voltage according to the value(s) in the table below.

Standard voltage

Tester Connection	Condition	Specified Condition
A4-2 (+SR) - Body ground	Engine switch on (IG)	Below 1 V
A4-1 (-SR) - Body ground	Engine switch on (IG)	Below 1 V

NG → **Go to step 12**

OK

RS

8 CHECK FRONT AIRBAG SENSOR RH CIRCUIT (SHORT TO GROUND)

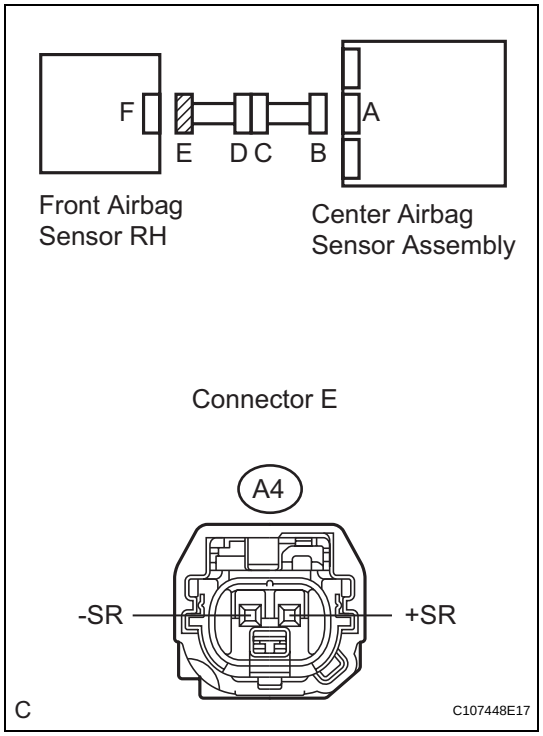

(a) Turn the engine switch off.
(b) Disconnect the negative (-) terminal cable from the battery, and wait for at least 90 seconds.
(c) Measure the resistance according to the value(s) in the table below.

Standard resistance

Tester Connection	Condition	Specified Condition
A4-2 (+SR) - Body ground	Always	1 MΩ or higher
A4-1 (-SR) - Body ground	Always	1 MΩ or higher

NG → **Go to step 13**

OK

9 CHECK FRONT AIRBAG SENSOR RH

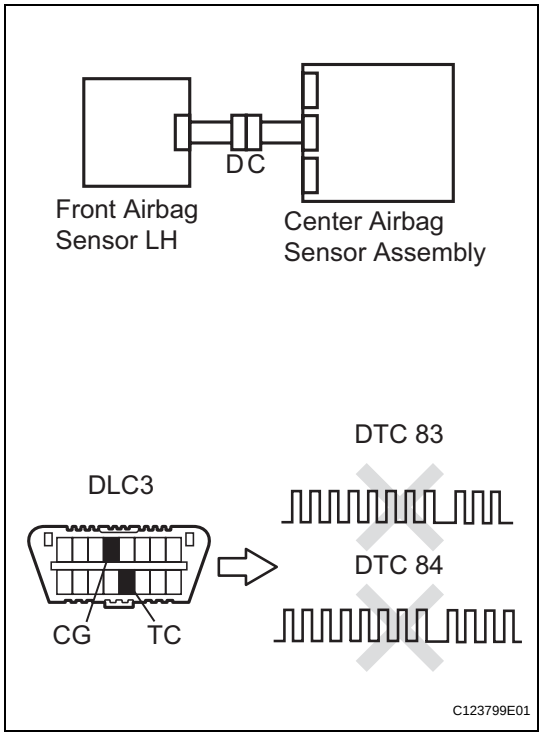

(a) Connect the connectors to the center airbag sensor assembly.
(b) Interchange the front airbag sensor LH with RH and connect the connectors to them.
(c) Connect the negative (-) terminal cable to the battery, and wait for at least 2 seconds.
(d) Turn the engine switch on (IG), and wait for at least 60 seconds.
(e) Clear the DTCs stored in the memory (See page RS-49).
(f) Turn the engine switch off.
(g) Turn the engine switch on (IG), and wait for at least 60 seconds.
(h) Check the DTCs (See page RS-49).

Result

Result	Proceed to
DTC B1603, B1612, B1613, or 83 is output.	A
DTC B1608, B1617, B1618, or 84 is output.	B
DTC B1603, B1612, B1613, or 83 and B1608, B1617, B1618, or 84 are not output.	C

HINT:
Codes other than DTC B1603, B1612, B1613, or 83 and B1608, B1617, B1618, or 84 may be output at this time, but they are not related to this check.

A → **REPLACE CENTER AIRBAG SENSOR ASSEMBLY (See page RS-468)**

B → **REPLACE FRONT AIRBAG SENSOR RH (See page RS-473)**

RS

C

USE SIMULATION METHOD TO CHECK (See page RS-37)

10 CHECK INSTRUMENT PANEL WIRE (OPEN)

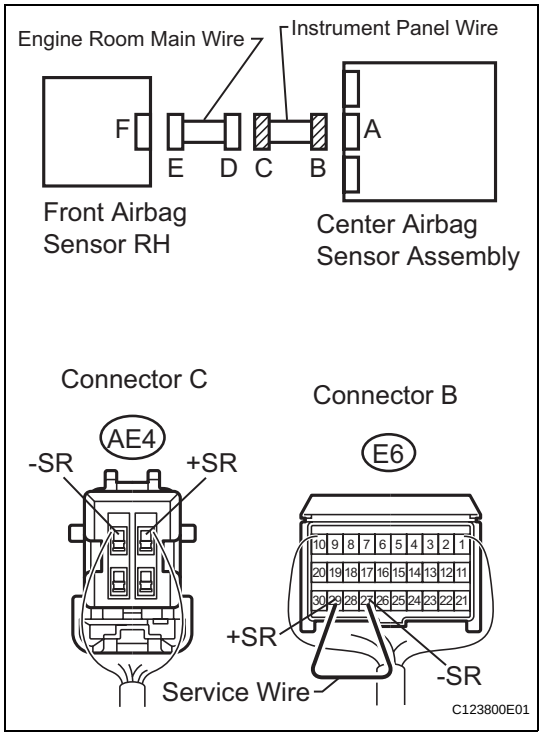

(a) Disconnect the instrument panel wire connector from the engine room main wire.
HINT:
The service wire has already been inserted into connector B.

(b) Measure the resistance according to the value(s) in the table below.
Standard resistance

Tester Connection	Condition	Specified Condition
AE4-2 (+SR) - AE4-1 (-SR)	Always	Below 1 Ω

NG → **REPAIR OR REPLACE INSTRUMENT PANEL WIRE**

OK

REPAIR OR REPLACE ENGINE ROOM MAIN WIRE

RS

11 CHECK INSTRUMENT PANEL WIRE (SHORT)

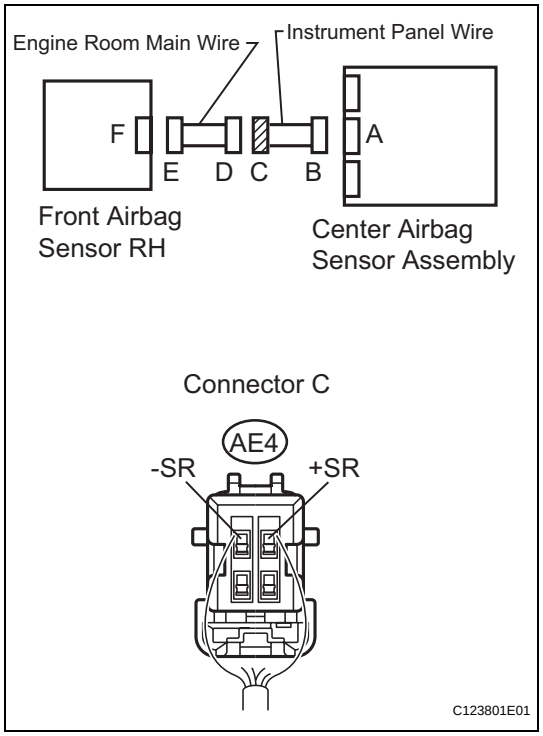

(a) Disconnect the instrument panel wire connector from the engine room main wire.

(b) Measure the resistance according to the value(s) in the table below.

Standard resistance

Tester Connection	Condition	Specified Condition
AE4-2 (+SR) - AE4-1 (-SR)	Always	1 MΩ or higher

NG → **REPAIR OR REPLACE INSTRUMENT PANEL WIRE**

OK

REPAIR OR REPLACE ENGINE ROOM MAIN WIRE

RS

12 CHECK INSTRUMENT PANEL WIRE (SHORT TO B+)

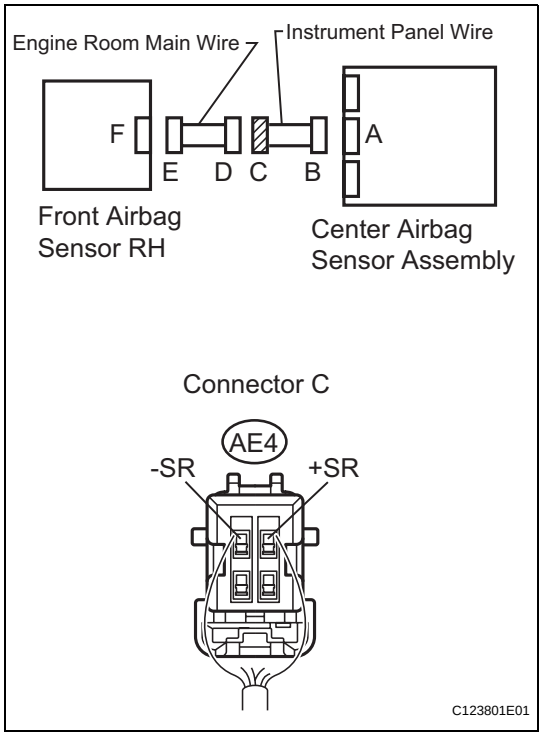

(a) Turn the engine switch off.
(b) Disconnect the negative (-) terminal cable from the battery, and wait for at least 90 seconds.
(c) Disconnect the instrument panel wire connector from the engine room main wire.
(d) Connect the negative (-) terminal cable to battery, and wait for at least 2 seconds.
(e) Turn the engine switch on (IG).
(f) Measure the voltage according to the value(s) in the table below.

Standard voltage

Tester Connection	Condition	Specified Condition
AE4-2 (+SR) - Body ground	Engine switch on (IG)	Below 1 V
AE4-1 (-SR) - Body ground	Engine switch on (IG)	Below 1 V

NG → **REPAIR OR REPLACE INSTRUMENT PANEL WIRE**

OK

REPAIR OR REPLACE ENGINE ROOM MAIN WIRE

RS

13 CHECK INSTRUMENT PANEL WIRE (SHORT TO GROUND)

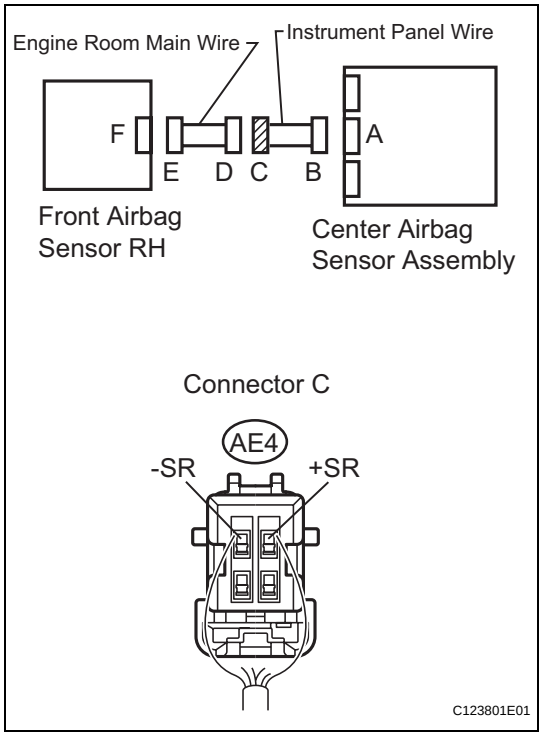

(a) Disconnect the instrument panel wire connector from the engine room main wire.

(b) Measure the resistance according to the value(s) in the table below.

Standard resistance

Tester Connection	Condition	Specified Condition
AE4-2 (+SR) - Body ground	Always	1 MΩ or higher
AE4-1 (-SR) - Body ground	Always	1 MΩ or higher

NG → **REPAIR OR REPLACE INSTRUMENT PANEL WIRE**

OK

REPAIR OR REPLACE ENGINE ROOM MAIN WIRE

RS

14 CHECK FRONT AIRBAG SENSOR RH (OPEN)

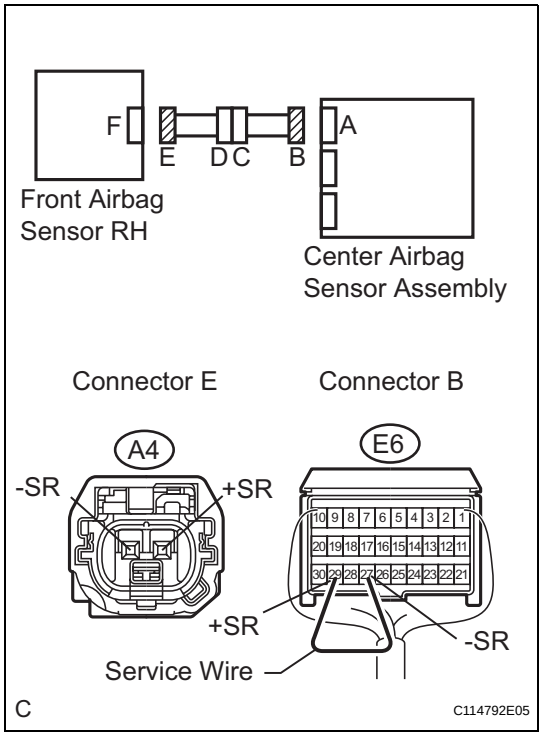

(a) Using a service wire, connect terminals 29 (+SR) and 27 (-SR) of connector B.
NOTICE:
Do not forcibly insert a service wire into the terminals of the connector when connecting the wire.

(b) Measure the resistance according to the value(s) in the table below.
Standard resistance

Tester Connection	Condition	Specified Condition
A4-2 (+SR) - A4-1 (-SR)	Always	Below 1 Ω

NG → **Go to step 19**

OK

15 CHECK FRONT AIRBAG SENSOR RH (SHORT)

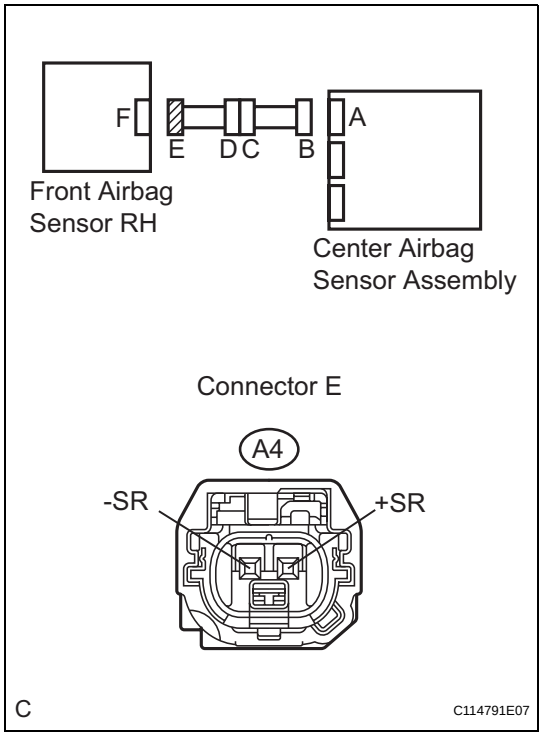

(a) Disconnect the service wire from connector B.

(b) Measure the resistance according to the value(s) in the table below.
Standard resistance

Tester Connection	Condition	Specified Condition
A4-2 (+SR) - A4-1 (-SR)	Always	1 MΩ or higher

NG → **Go to step 20**

OK

RS

16 CHECK FRONT AIRBAG SENSOR RH (SHORT TO B+)

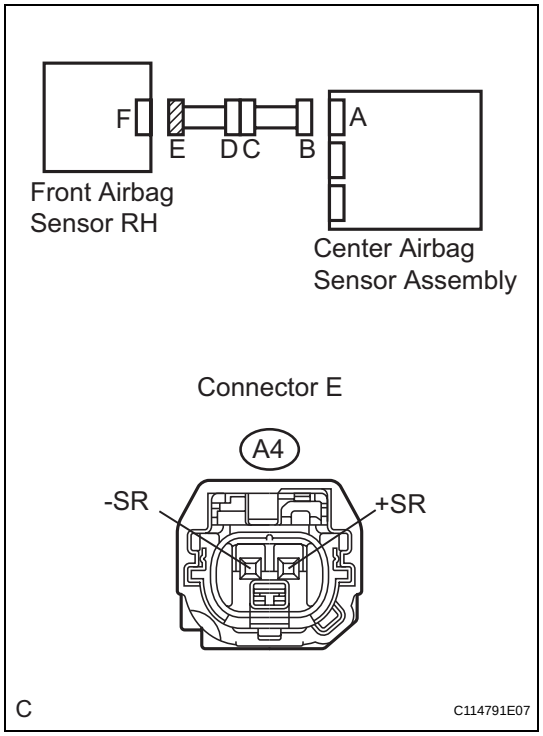

(a) Connect the negative (-) terminal cable to the battery, and wait for at least 2 seconds.
(b) Turn the engine switch on (IG).
(c) Measure the voltage according to the value(s) in the table below.

Standard voltage

Tester Connection	Condition	Specified Condition
A4-2 (+SR) - Body ground	Engine switch on (IG)	Below 1 V
A4-1 (-SR) - Body ground	Engine switch on (IG)	Below 1 V

NG → **Go to step 21**

OK

17 CHECK FRONT AIRBAG SENSOR RH (SHORT TO GROUND)

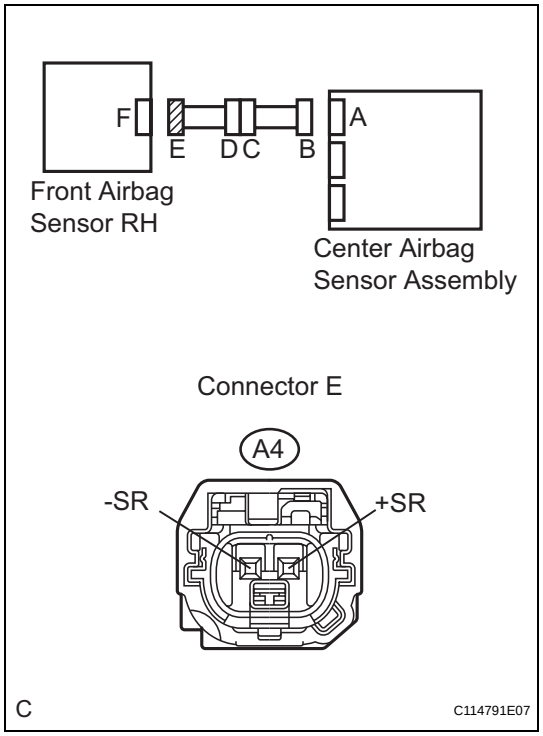

(a) Turn the engine switch off.
(b) Disconnect the negative (-) terminal cable from the battery, and wait for at least 90 seconds.
(c) Measure the resistance according to the value(s) in the table below.

Standard resistance

Tester Connection	Condition	Specified Condition
A4-2 (+SR) - Body ground	Always	1 MΩ or higher
A4-1 (-SR) - Body ground	Always	1 MΩ or higher

NG → **Go to step 22**

OK

RS

18	CHECK FRONT AIRBAG SENSOR RH

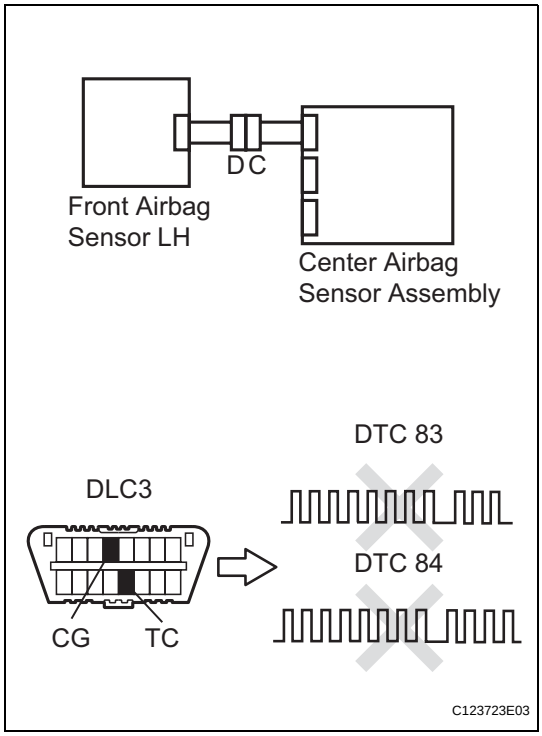

(a) Connect the connectors to the center airbag sensor assembly.
(b) Interchange the front airbag sensor LH with RH and connect the connectors to them.
(c) Connect the negative (-) terminal cable to the battery, and wait for at least 2 seconds.
(d) Turn the engine switch on (IG), and wait for at least 60 seconds.
(e) Clear the DTCs stored in the memory (See page RS-49).
(f) Turn the engine switch off.
(g) Turn the engine switch on (IG), and wait for at least 60 seconds.
(h) Check the DTCs (See page RS-49).

Result

Result	Proceed to
DTC B1603, B1612, B1613, or 83 is output.	A
DTC B1608, B1617, B1618, or 84 is output.	B
DTC B1603, B1612, B1613, or 83 and B1608, B1617, B1618, or 84 are not output.	C

HINT:
Codes other than DTC B1603, B1612, B1613, or 83 and B1608, B1617, B1618, or 84 may be output at this time, but they are not related to this check.

A → **REPLACE CENTER AIRBAG SENSOR ASSEMBLY (See page RS-468)**

B → **REPLACE FRONT AIRBAG SENSOR RH (See page RS-473)**

C

USE SIMULATION METHOD TO CHECK (See page RS-37)

RS

19 CHECK INSTRUMENT PANEL WIRE (OPEN)

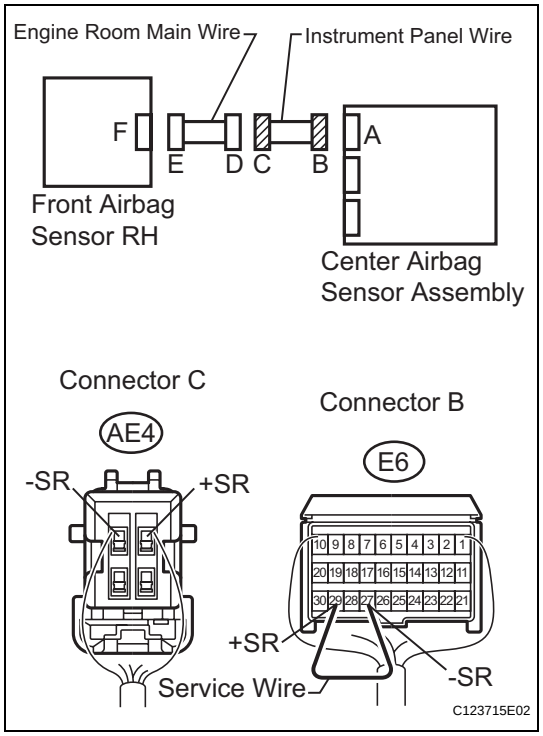

(a) Disconnect the instrument panel wire connector from the engine room main wire.
HINT:
The service wire has already been inserted into connector B.

(b) Measure the resistance according to the value(s) in the table below.
Standard resistance

Tester Connection	Condition	Specified Condition
AE4-2 (+SR) - AE4-1 (-SR)	Always	Below 1 Ω

NG → **REPAIR OR REPLACE INSTRUMENT PANEL WIRE**

OK

REPAIR OR REPLACE ENGINE ROOM MAIN WIRE

RS

20 CHECK INSTRUMENT PANEL WIRE (SHORT)

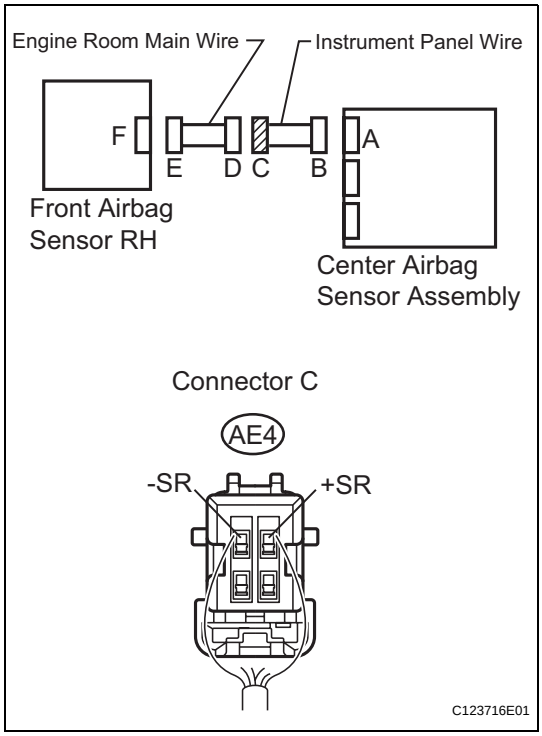

(a) Disconnect the instrument panel wire connector from the engine room main wire.

(b) Measure the resistance according to the value(s) in the table below.

Standard resistance

Tester Connection	Condition	Specified Condition
AE4-2 (+SR) - AE4-1 (-SR)	Always	1 MΩ or higher

NG → **REPAIR OR REPLACE INSTRUMENT PANEL WIRE**

OK

REPAIR OR REPLACE ENGINE ROOM MAIN WIRE

RS

21 CHECK INSTRUMENT PANEL WIRE (SHORT TO B+)

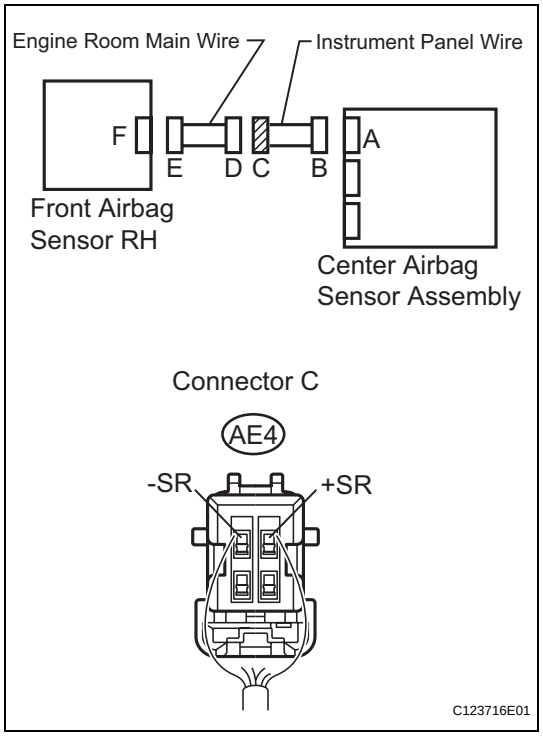

(a) Turn the engine switch off.
(b) Disconnect the negative (-) terminal cable from the battery, and wait for at least 90 seconds.
(c) Disconnect the instrument panel wire connector from the engine room main wire.
(d) Connect the negative (-) terminal cable to battery, and wait for at least 2 seconds.
(e) Turn the engine switch on (IG).
(f) Measure the voltage according to the value(s) in the table below.

Standard voltage

Tester Connection	Condition	Specified Condition
AE4-2 (+SR) - Body ground	Engine switch on (IG)	Below 1 V
AE4-1 (-SR) - Body ground	Engine switch on (IG)	Below 1 V

NG → **REPAIR OR REPLACE INSTRUMENT PANEL WIRE**

OK

REPAIR OR REPLACE ENGINE ROOM MAIN WIRE

RS

22 CHECK INSTRUMENT PANEL WIRE (SHORT TO GROUND)

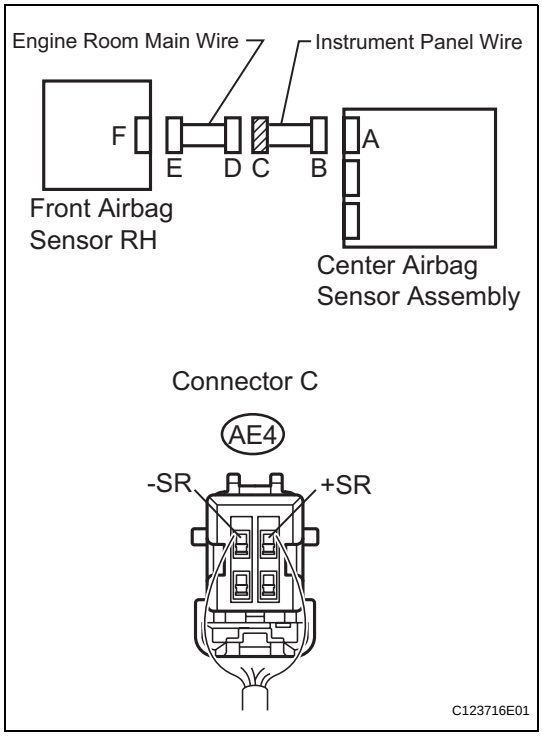

(a) Disconnect the instrument panel wire connector from the engine room main wire.

(b) Measure the resistance according to the value(s) in the table below.

Standard resistance

Tester Connection	Condition	Specified Condition
AE4-2 (+SR) - Body ground	Always	1 MΩ or higher
AE4-1 (-SR) - Body ground	Always	1 MΩ or higher

NG → **REPAIR OR REPLACE INSTRUMENT PANEL WIRE**

OK

REPAIR OR REPLACE ENGINE ROOM MAIN WIRE

ON-VEHICLE INSPECTION

1. INSPECT CURTAIN SHIELD AIRBAG ASSEMBLY (VEHICLE NOT INVOLVED IN COLLISION)

(a) Perform a diagnostic system check (See page RS-37).

(b) With the curtain shield airbag assembly installed on the vehicle, perform a visual check. If there are any defects as mentioned below, replace the front pillar garnish or roof headlining assembly with a new one:

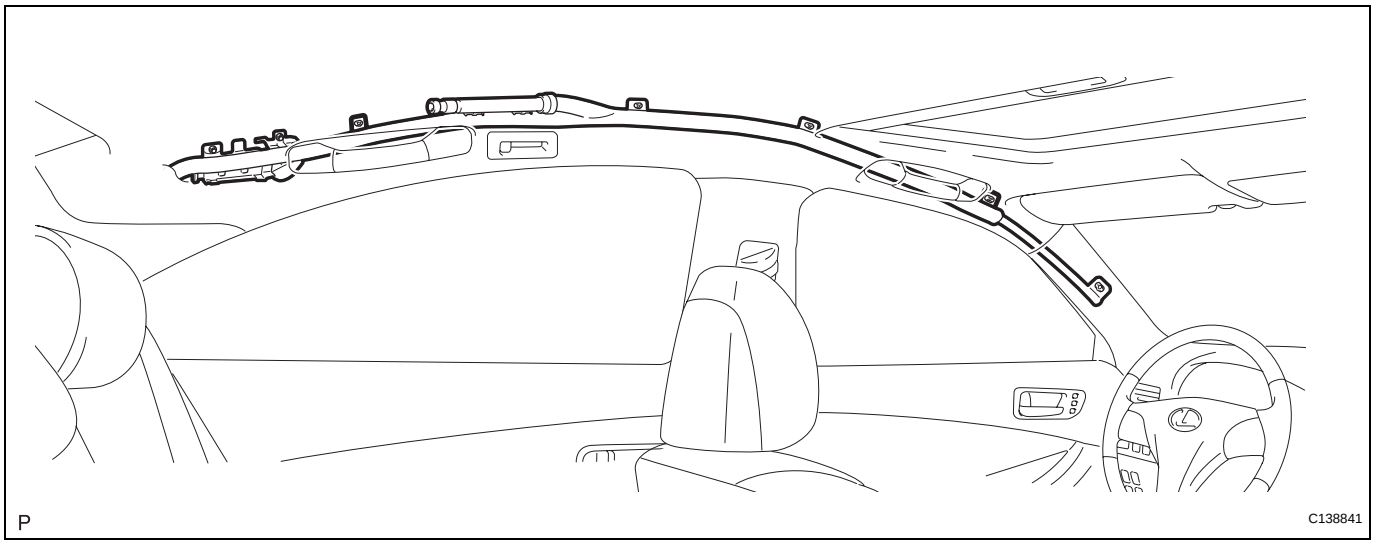

Cuts, minute cracks or marked discoloration on the front pillar garnish or roof headlining assembly around the curtain shield airbag assembly.

2. INSPECT CURTAIN SHIELD AIRBAG ASSEMBLY (VEHICLE INVOLVED IN COLLISION AND AIRBAG HAS NOT DEPLOYED)

(a) Perform a diagnostic system check (See page RS-37).

(b) With the curtain shield airbag assembly removed from the vehicle, perform a visual check. If there are any defects as mentioned below, replace the curtain shield airbag assembly with a new one:

- Cuts, minute cracks or marked discoloration on the curtain shield airbag assembly.
- Cracks or other damage to the connectors.

CAUTION:

Be sure to follow the correct removal and installation procedures.

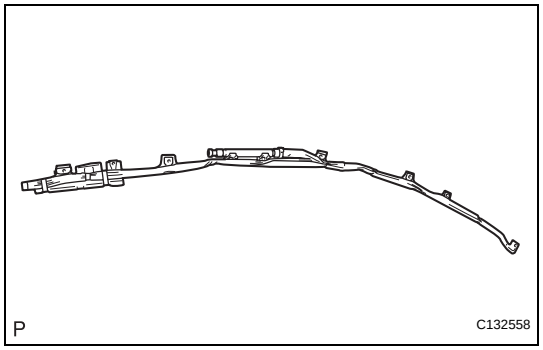

REMOVAL

HINT:
- Use the same procedure for the RH side and LH side.
- The procedure listed below are for the LH side.

1. **PRECAUTION**
   CAUTION:
   Be sure to read "PRECAUTION" thoroughly before servicing (See page RS-1).
2. **REMOVE REAR SEAT CUSHION ASSEMBLY (See page SE-113)**
3. **REMOVE REAR SEAT HEADREST ASSEMBLY**
4. **REMOVE REAR CENTER SEAT HEADREST ASSEMBLY**
5. **REMOVE REAR SEATBACK ASSEMBLY (See page SE-113)**
6. **REMOVE SEAT BELT ANCHOR COVER CAP LH (See page SB-27)**
7. **DISCONNECT FRONT SEAT OUTER BELT ASSEMBLY LH (See page SB-27)**
8. **REMOVE FRONT SEAT HEADREST ASSEMBLY (for Driver Seat)**
9. **REMOVE FRONT SEAT OUTER TRACK BRACKET COVER LH (See page SE-83)**
10. **REMOVE FRONT SEAT INNER TRACK BRACKET COVER LH (See page SE-83)**
11. **REMOVE FRONT SEAT REAR OUTER TRACK BRACKET COVER LH (See page SE-83)**
12. **REMOVE FRONT SEAT REAR INNER TRACK BRACKET COVER LH (See page SE-83)**
13. **REMOVE FRONT SEAT ASSEMBLY LH (See page SE-83)**
14. **REMOVE SEAT BELT ANCHOR COVER CAP RH (See page RS-490)**
15. **DISCONNECT FRONT SEAT OUTER BELT ASSEMBLY RH (See page RS-490)**
16. **REMOVE FRONT SEAT HEADREST ASSEMBLY (for Front Passenger Seat)**
17. **REMOVE FRONT SEAT OUTER TRACK BRACKET COVER RH (See page RS-490)**
18. **REMOVE FRONT SEAT INNER TRACK BRACKET COVER RH (See page RS-490)**
19. **REMOVE FRONT SEAT REAR OUTER TRACK BRACKET COVER RH (See page RS-490)**
20. **REMOVE FRONT SEAT REAR INNER TRACK BRACKET COVER RH (See page RS-490)**

21. **REMOVE FRONT SEAT ASSEMBLY RH (See page RS-491)**
22. **REMOVE FRONT DOOR SCUFF PLATE LH (See page IR-39)**
23. **REMOVE FRONT DOOR OPENING TRIM COVER LH (See page IR-39)**
24. **REMOVE SIDE INSTRUMENT PANEL LH (See page IP-12)**
25. **REMOVE FRONT PILLAR GARNISH LH (See page IR-39)**
26. **REMOVE REAR DOOR SCUFF PLATE LH (See page IR-40)**
27. **REMOVE LOWER CENTER PILLAR GARNISH LH (See page IR-40)**
28. **REMOVE UPPER CENTER PILLAR GARNISH LH (See page IR-41)**
29. **REMOVE REAR SEAT SIDE GARNISH LH (w/o Rear Seat Side Airbag) (See page IR-41)**
30. **REMOVE REAR SEAT SIDE AIRBAG ASSEMBLY LH (w/ Rear Seat Side Airbag) (See page RS-460)**
31. **REMOVE ROOF SIDE INNER GARNISH ASSEMBLY LH (See page IR-42)**
32. **REMOVE FRONT DOOR SCUFF PLATE RH (See page IR-42)**
33. **REMOVE FRONT DOOR OPENING TRIM COVER RH (See page IR-42)**
34. **REMOVE SIDE INSTRUMENT PANEL RH (See page IP-15)**
35. **REMOVE FRONT PILLAR GARNISH RH (See page IR-42)**
36. **REMOVE REAR DOOR SCUFF PLATE RH (See page IR-42)**
37. **REMOVE LOWER CENTER PILLAR GARNISH RH (See page IR-42)**
38. **REMOVE UPPER CENTER PILLAR GARNISH RH (See page IR-42)**
39. **REMOVE REAR SEAT SIDE GARNISH RH (w/o Rear Seat Side Airbag) (See page IR-43)**
40. **REMOVE REAR SEAT SIDE AIRBAG ASSEMBLY RH (w/ Rear Seat Side Airbag)**
    HINT:
    Use the same procedure for the RH side and the LH side.
41. **REMOVE ROOF SIDE INNER GARNISH ASSEMBLY RH (See page IR-43)**

42. **REMOVE INSTRUMENT PANEL FINISH PANEL END LH (See page IP-13)**
43. **REMOVE INSTRUMENT PANEL FINISH PANEL END RH (See page IP-15)**
44. **REMOVE SHIFT LEVER KNOB SUB-ASSEMBLY (See page IP-16)**
45. **REMOVE UPPER CONSOLE PANEL ASSEMBLY WITH FRONT ASH RECEPTACLE (See page IP-16)**
46. **REMOVE HEATER SEAT SWITCH CONSOLE BASE (w/o Seat Heater System) (See page IP-17)**
47. **REMOVE HEATER SEAT SWITCH CONSOLE BASE (w/ Seat Heater System) (See page IP-18)**
48. **REMOVE CONSOLE BOX POCKET (See page IP-18)**
49. **REMOVE CONSOLE BOX CARPET (See page IP-18)**
50. **REMOVE CONSOLE REAR END PANEL SUB-ASSEMBLY (See page IP-19)**
51. **REMOVE REAR CONSOLE BOX ASSEMBLY (See page IP-19)**
52. **REMOVE NO. 2 CONSOLE BOX DUCT (See page AC-149)**
53. **REMOVE NO. 3 CONSOLE BOX DUCT (See page AC-149)**
54. **DISCONNECT TRANSMISSION CONTROL CABLE ASSEMBLY (See page AX-232)**
55. **REMOVE SHIFT LEVER ASSEMBLY (See page AX-233)**
56. **REMOVE FLOOR CARPET BRACKET LH (See page PB-11)**
57. **REMOVE FLOOR CARPET BRACKET RH (See page PB-11)**
58. **REMOVE LUGGAGE COMPARTMENT FLOOR MAT (w/ DVD Player)**
59. **REMOVE SPARE WHEEL COVER TRAY (w/ DVD Player)**
60. **REMOVE LUGGAGE HOLD BELT STRIKER ASSEMBLY (w/ DVD Player) (See page ED-82)**
61. **REMOVE NO. 1 LUGGAGE COMPARTMENT TRIM HOOK (w/ DVD Player) (See page ED-83)**
62. **REMOVE REAR FLOOR FINISH PLATE (w/ DVD Player) (See page ED-83)**
63. **REMOVE LUGGAGE COMPARTMENT INNER TRIM COVER RH (w/ DVD Player) (See page ED-83)**

64. DISCONNECT STEREO COMPONENT AMPLIFIER ASSEMBLY CONNECTOR (w/ DVD Player) (See page IR-44)

65. REMOVE INNER REAR VIEW MIRROR STAY HOLDER COVER (See page MI-42)

66. REMOVE RAIN SENSOR COVER (w/ Rain Sensor) (See page WW-63)

67. REMOVE ROOF CONSOLE BOX ASSEMBLY (See page IR-44)

68. REMOVE VISOR BRACKET COVER (See page IR-45)

69. REMOVE VISOR ASSEMBLY LH (See page IR-45)

70. REMOVE VISOR ASSEMBLY RH (See page IR-45)

71. REMOVE VISOR HOLDER (See page IR-45)

72. REMOVE COAT HOOK (See page IR-45)

73. REMOVE SPOT LIGHT ASSEMBLY (for Standard) (See page IR-46)

74. REMOVE SPOT LIGHT ASSEMBLY (for Glass Roof) (See page IR-46)

75. REMOVE ASSIST GRIP SUB-ASSEMBLY (See page IR-47)

76. REMOVE ROOF HEADLINING ASSEMBLY (for Standard) (See page IR-47)

77. REMOVE ROOF HEADLINING ASSEMBLY (for Glass Roof) (See page IR-48)

78. REMOVE CURTAIN SHIELD AIRBAG ASSEMBLY

(a) Disconnect the curtain shield airbag connector.

NOTICE:
When handling the airbag connector, take care not to damage the airbag wire harness.

(b) Remove the 4 clips.
(1) Using a clip remover, remove the pin.

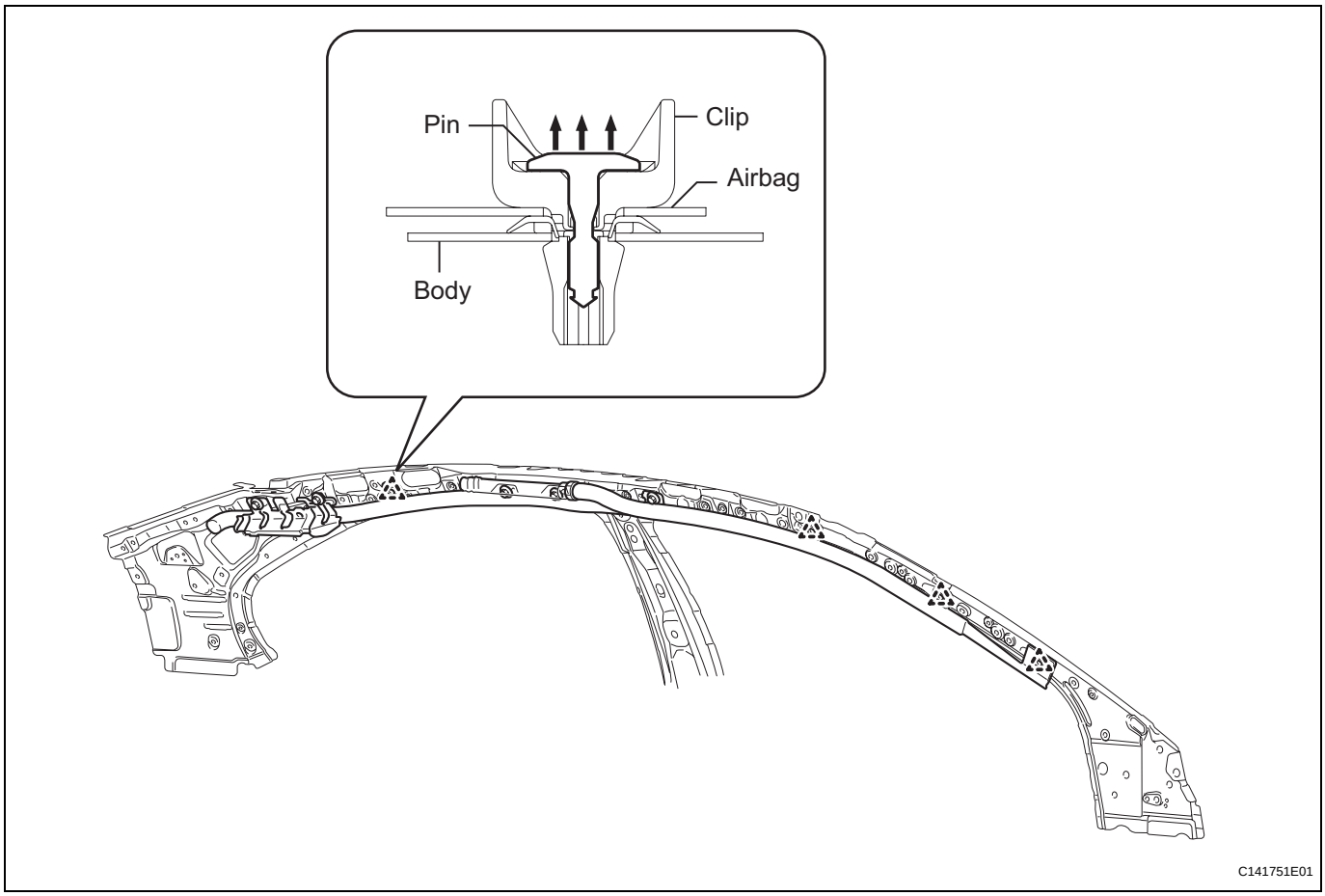

(2) Using needle-nose pliers, remove the clip and curtain shield airbag from the body as shown in the illustration.

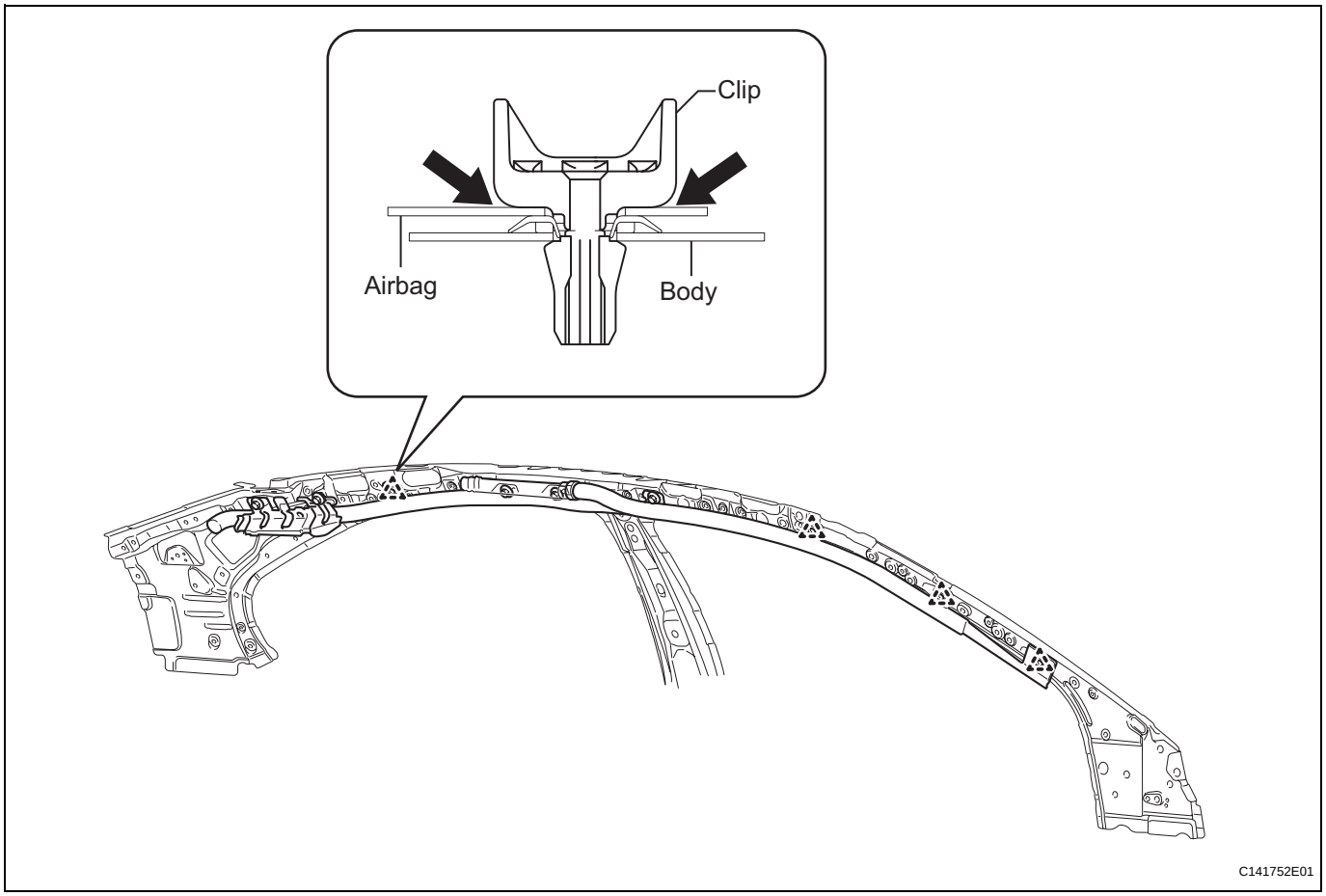

(c) Remove the 5 bolts and curtain shield airbag assembly.

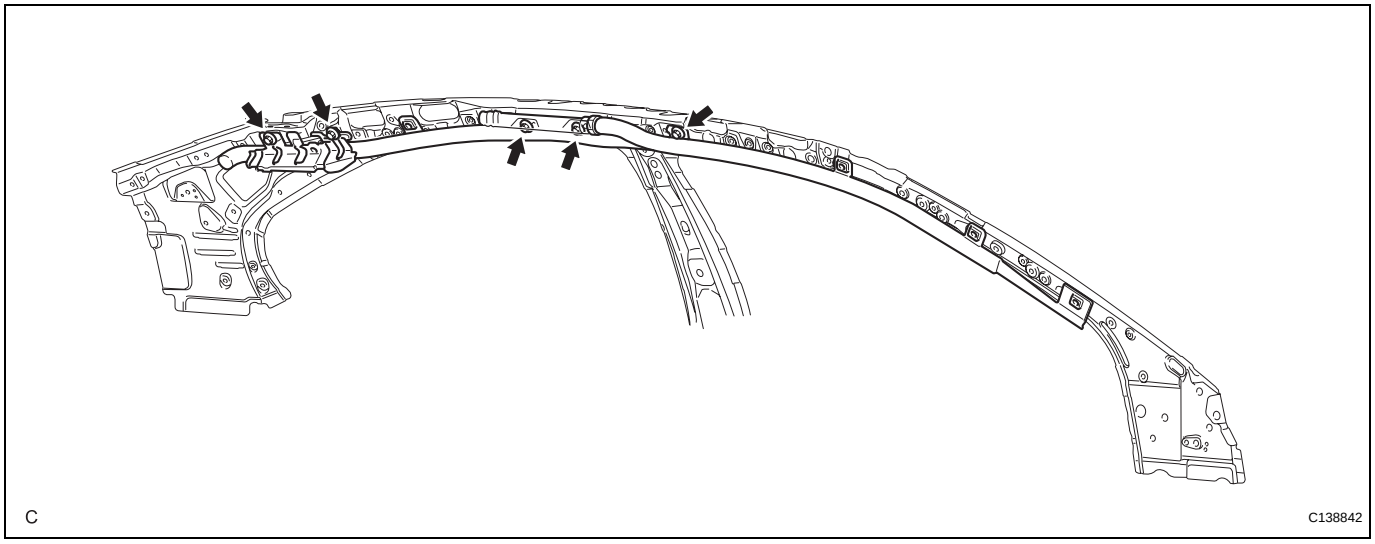

(d) Remove the 4 clips and 4 spacers from curtain shield airbag assembly.

NOTICE:

If clips and spacers are removed, always replace them with new ones even though they may not appear to be damaged.

RS

INSTALLATION

1. INSTALL CURTAIN SHIELD AIRBAG ASSEMBLY

(a) Check that the engine switch is off.

(b) Check that the battery negative (-) cable is disconnected.

CAUTION:
Wait for 90 seconds after disconnecting the cable to prevent airbag deployment.

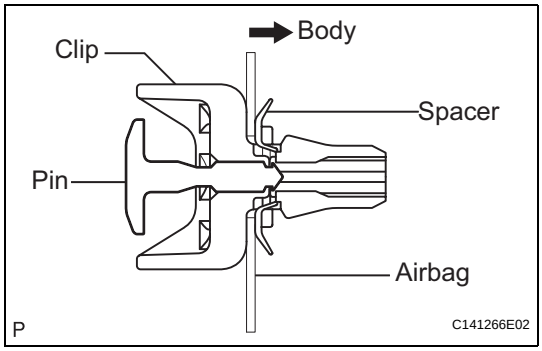

(c) Install 4 new clips and 4 new spacers to the curtain shield air bag assembly as shown in the illustration.

NOTICE:
- **Do not push in the pin.**
- **Make sure that the clips are installed in the correct direction.**
- **Make sure that the spacers are installed properly, in the correct direction, and that they are not damaged.**

(d) Install the curtain shield airbag assembly with 5 new bolts.

Torque: 11 N*m (112 kgf*cm, 8 ft.*lbf)

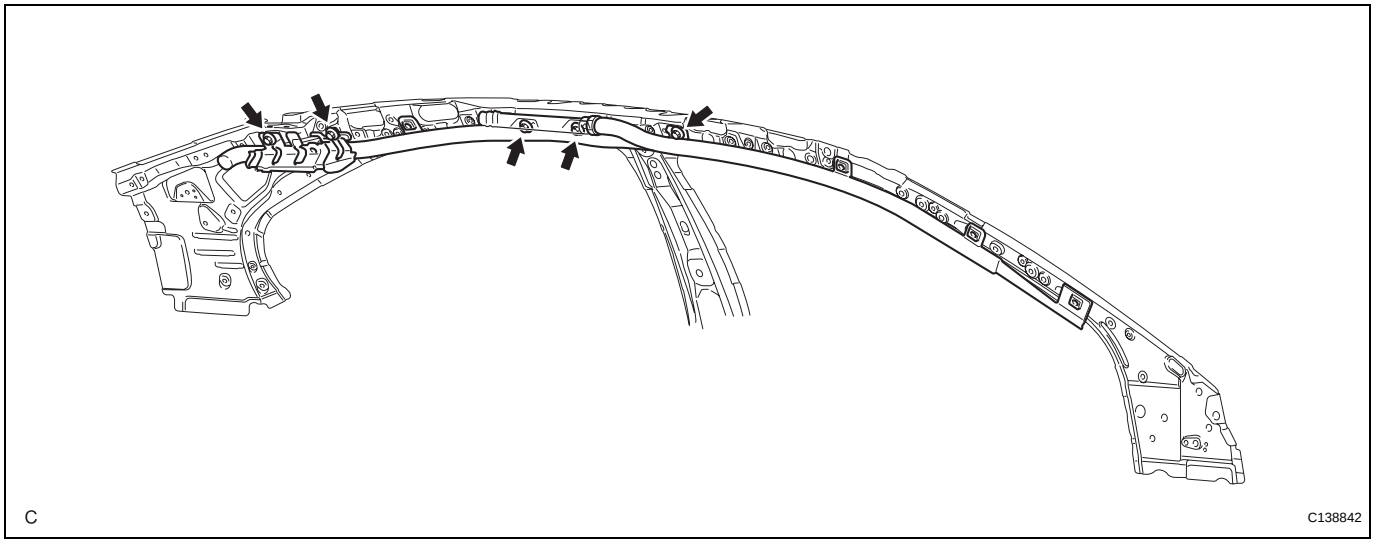

NOTICE:
Do not twist the curtain shield airbag assembly when installing it.

(e) Install the 4 clips with the curtain shield airbag assembly to the body panel as shown in the illustration.

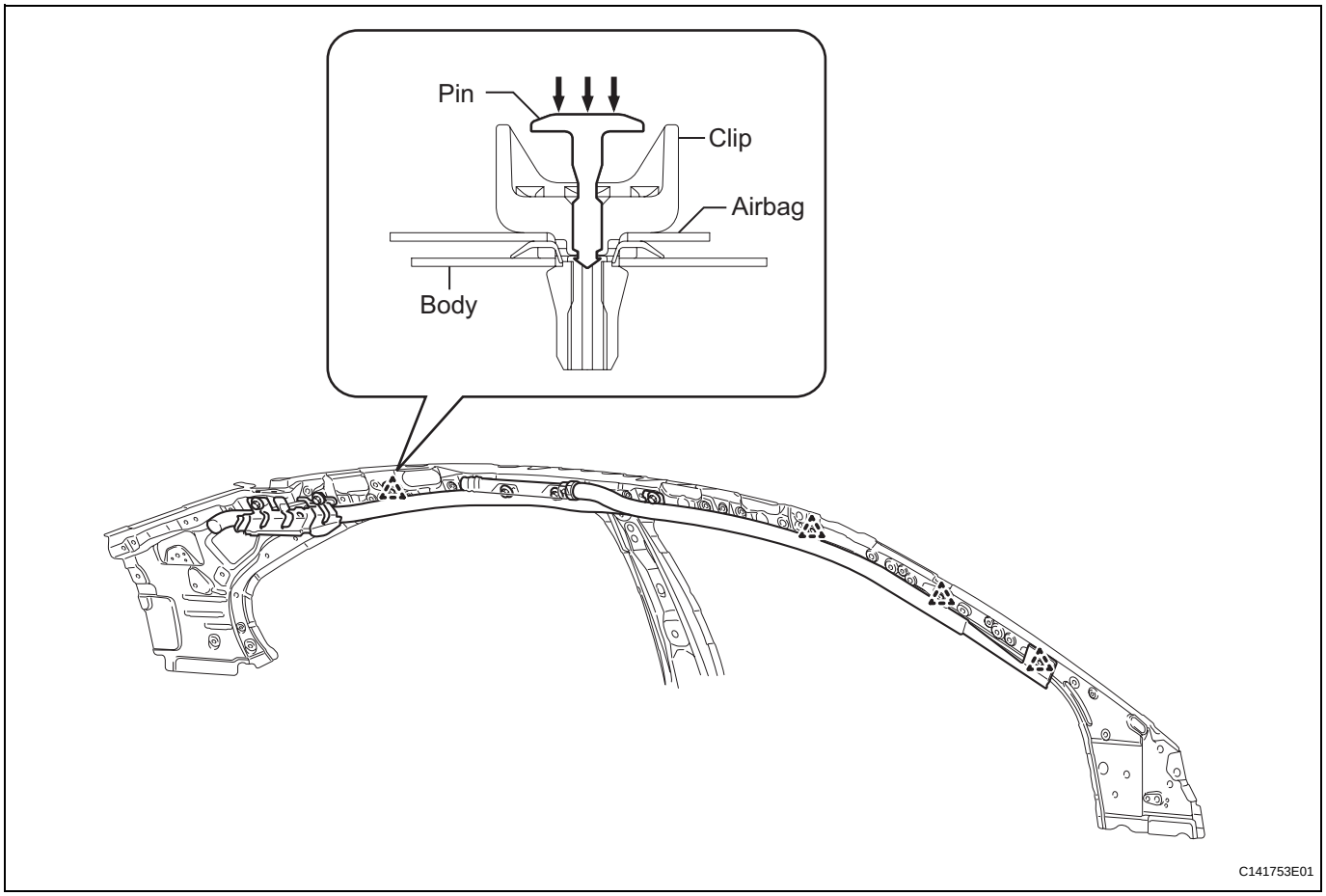

NOTICE:
Make sure that the pins of the clips are pushed in firmly.

(f) Mark the clips.
HINT:
Mark the clips to make sure that they are not reused.

(g) Connect the curtain shield airbag connector.
NOTICE:
When handling the airbag connector, take care not to damage the airbag wire harness.

2. **INSTALL ROOF HEADLINING ASSEMBLY (for Standard) (See page IR-56)**

3. **INSTALL ROOF HEADLINING ASSEMBLY (for Glass Roof) (See page IR-57)**

4. **INSTALL ASSIST GRIP SUB-ASSEMBLY (See page IR-58)**

5. **INSTALL SPOT LIGHT ASSEMBLY (for Standard) (See page IR-59)**

6. **INSTALL SPOT LIGHT ASSEMBLY (for Glass Roof) (See page IR-59)**

7. **INSTALL COAT HOOK (See page IR-60)**
8. **INSTALL VISOR HOLDER (See page IR-60)**
9. **INSTALL VISOR ASSEMBLY LH (See page IR-60)**
10. **INSTALL VISOR ASSEMBLY RH (See page IR-60)**
11. **INSTALL VISOR BRACKET COVER (See page IR-60)**
12. **INSTALL ROOF CONSOLE BOX ASSEMBLY (See page IR-60)**
13. **INSTALL RAIN SENSOR COVER (See page WW-65)**
14. **INSTALL INNER REAR VIEW MIRROR STAY HOLDER COVER (See page MI-44)**
15. **CONNECT STEREO COMPONENT AMPLIFIER ASSEMBLY CONNECTOR (w/ DVD Player) (See page IR-61)**
16. **INSTALL LUGGAGE COMPARTMENT INNER TRIM COVER RH (w/ DVD Player) (See page ED-88)**
17. **INSTALL REAR FLOOR FINISH PLATE (w/ DVD Player) (See page ED-88)**
18. **INSTALL NO. 1 LUGGAGE COMPARTMENT TRIM HOOK (w/ DVD Player) (See page ED-89)**
19. **INSTALL LUGGAGE HOLD BELT STRIKER ASSEMBLY (w/ DVD Player) (See page ED-89)**
20. **INSTALL SPARE WHEEL COVER TRAY (w/ DVD Player)**
21. **INSTALL LUGGAGE COMPARTMENT FLOOR MAT (w/ DVD Player)**
22. **INSTALL FLOOR CARPET BRACKET LH (See page PB-19)**
23. **INSTALL FLOOR CARPET BRACKET RH (See page PB-19)**
24. **INSTALL SHIFT LEVER ASSEMBLY (See page AX-240)**
25. **CONNECT TRANSMISSION CONTROL CABLE ASSEMBLY (See page AX-241)**
26. **INSTALL NO. 2 CONSOLE BOX DUCT (See page AC-163)**
27. **INSTALL NO. 3 CONSOLE BOX DUCT (See page AC-163)**
28. **INSTALL REAR CONSOLE BOX ASSEMBLY (See page IP-39)**
29. **INSTALL CONSOLE REAR END PANEL SUB-ASSEMBLY (See page IP-40)**
30. **INSTALL CONSOLE BOX CARPET (See page IP-41)**
31. **INSTALL CONSOLE BOX POCKET (See page IP-41)**

32. **INSTALL HEATER SEAT SWITCH CONSOLE BASE (w/o Seat Heater System) (See page IP-41)**
33. **INSTALL HEATER SEAT SWITCH CONSOLE BASE (w/ Seat Heater System) (See page IP-41)**
34. **INSTALL UPPER CONSOLE PANEL ASSEMBLY WITH FRONT ASH RECEPTACLE (See page IP-42)**
35. **INSTALL SHIFT LEVER KNOB SUB-ASSEMBLY (See page IP-42)**
36. **INSTALL INSTRUMENT PANEL FINISH PANEL END LH (See page IP-46)**
37. **INSTALL INSTRUMENT PANEL FINISH PANEL END RH (See page IP-44)**
38. **INSTALL ROOF SIDE INNER GARNISH ASSEMBLY LH (See page IR-62)**
39. **INSTALL REAR SEAT SIDE GARNISH LH (w/o Rear Seat Side Airbag) (See page IR-62)**
40. **INSTALL REAR SEAT SIDE AIRBAG ASSEMBLY LH (w/ Rear Seat Side Airbag) (See page RS-460)**
41. **INSTALL UPPER CENTER PILLAR GARNISH LH (See page IR-63)**
42. **INSTALL LOWER CENTER PILLAR GARNISH LH (See page IR-63)**
43. **INSTALL REAR DOOR SCUFF PLATE LH (See page IR-63)**
44. **INSTALL FRONT PILLAR GARNISH LH (See page IR-64)**
45. **INSTALL SIDE INSTRUMENT PANEL LH (See page IP-47)**
46. **INSTALL FRONT DOOR OPENING TRIM COVER LH (See page IR-64)**
47. **INSTALL FRONT DOOR SCUFF PLATE LH (See page IR-65)**
48. **INSTALL ROOF SIDE INNER GARNISH ASSEMBLY RH (See page IR-65)**
49. **INSTALL REAR SEAT SIDE GARNISH RH (w/o Rear Seat Side Airbag) (See page IR-65)**
50. **INSTALL REAR SEAT SIDE AIRBAG ASSEMBLY RH (w/ Rear Seat Side Airbag)**
    HINT:
    Use the same procedure for the RH side and the LH side.
51. **INSTALL UPPER CENTER PILLAR GARNISH RH (See page IR-65)**
52. **INSTALL LOWER CENTER PILLAR GARNISH RH (See page IR-65)**

53. **INSTALL REAR DOOR SCUFF PLATE RH (See page IR-65)**
54. **INSTALL FRONT PILLAR GARNISH RH (See page IR-65)**
55. **INSTALL SIDE INSTRUMENT PANEL RH (See page IP-43)**
56. **INSTALL FRONT DOOR OPENING TRIM COVER RH (See page IR-65)**
57. **INSTALL FRONT DOOR SCUFF PLATE RH (See page IR-65)**
58. **INSTALL FRONT SEAT ASSEMBLY LH (See page SE-109)**
59. **INSTALL FRONT SEAT REAR OUTER TRACK BRACKET COVER LH (See page SE-110)**
60. **INSTALL FRONT SEAT REAR INNER TRACK BRACKET COVER LH (See page SE-110)**
61. **INSTALL FRONT SEAT OUTER TRACK BRACKET COVER LH (See page SE-110)**
62. **INSTALL FRONT SEAT INNER TRACK BRACKET COVER LH (See page SE-110)**
63. **INSTALL FRONT SEAT HEADREST ASSEMBLY (for Driver Seat)**
64. **CONNECT FRONT SEAT OUTER BELT ASSEMBLY LH (See page SB-31)**
65. **INSTALL SEAT BELT ANCHOR COVER CAP LH (See page SB-31)**
66. **DISCONNECT CABLE FROM NEGATIVE BATTERY TERMINAL**
    CAUTION:
    Wait for 90 seconds after disconnecting the cable to prevent airbag deployment.
67. **INSTALL FRONT SEAT ASSEMBLY RH (See page RS-497)**
68. **INSTALL FRONT SEAT REAR OUTER TRACK BRACKET COVER RH (See page RS-498)**
69. **INSTALL FRONT SEAT REAR INNER TRACK BRACKET COVER RH (See page RS-498)**
70. **INSTALL FRONT SEAT OUTER TRACK BRACKET COVER RH (See page RS-498)**
71. **INSTALL FRONT SEAT INNER TRACK BRACKET COVER RH (See page RS-498)**
72. **INSTALL FRONT SEAT HEADREST ASSEMBLY (for Front Passenger Seat)**
73. **CONNECT FRONT SEAT OUTER BELT ASSEMBLY RH (See page RS-499)**

74. INSTALL SEAT BELT ANCHOR COVER CAP RH (See page RS-499)

75. INSTALL REAR SEATBACK ASSEMBLY (See page SE-121)

76. INSTALL REAR CENTER SEAT HEADREST ASSEMBLY

77. INSTALL REAR SEAT HEADREST ASSEMBLY

78. INSTALL REAR SEAT CUSHION ASSEMBLY (See page SE-121)

79. PERFORM INITIALIZATION

(a) Perform initialization (See page IN-33).
HINT:
Some systems need initialization after reconnecting the cable to the negative battery terminal.

80. INSPECT SHIFT LEVER POSITION (See page AX-200)

81. ADJUST SHIFT LEVER POSITION (See page AX-200)

82. INSPECT CURTAIN SHIELD AIRBAG ASSEMBLY (See page RS-434)

83. INSPECT FRONT SEAT ASSEMBLY (See page SE-110)

84. INSPECT SRS WARNING LIGHT

(a) Inspect the SRS warning light (See page RS-37).

RS

DISPOSAL

HINT:
When scrapping a vehicle equipped with the SRS or disposing of the curtain shield airbag assembly, be sure to deploy the airbag first in accordance with the procedure described below. If any abnormality occurs with the airbag deployment, contact the SERVICE DEPT. of TOYOTA MOTOR SALES, U.S.A., INC.

CAUTION:

- **Never dispose of a curtain shield airbag assembly that has an undeployed airbag.**
- **The airbag produces an exploding sound when it is deployed, so perform the operation outdoors and where it will not create a nuisance to nearby residents.**
- **When deploying the airbag, always use the specified SST (SRS Airbag Deployment Tool). Perform the operation in a place away from electrical noise.**
- **When deploying the airbag, perform the operation at least 10 m (33 ft) away from the curtain shield airbag assembly.**
- **The curtain shield airbag assembly becomes extremely hot when the airbag is deployed, so do not touch it for at least 30 minutes after deployment.**
- **Use gloves and safety glasses when handling a curtain shield airbag assembly with a deployed airbag.**
- **Do not apply water, etc. to a curtain shield airbag assembly with a deployed airbag.**
- **Always wash your hands with water after completing the operation.**

1. DISPOSE OF CURTAIN SHIELD AIRBAG ASSEMBLY (WHEN INSTALLED IN VEHICLE)

HINT:
Prepare a battery as the power source to deploy the airbag.

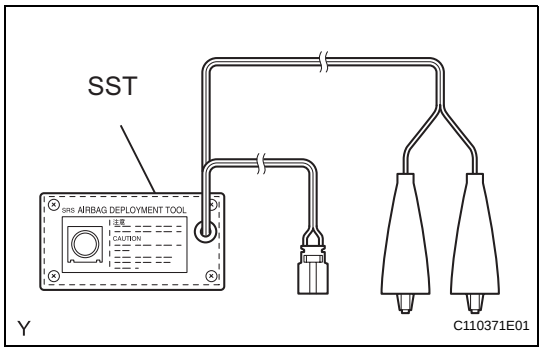

(a) Check the function of the SST (See page RS-370).
(b) Refer to PRECAUTION (See page RS-1).
(c) Disconnect the cable from the negative battery terminal.
CAUTION:
Wait for 90 seconds after disconnecting the cable to prevent airbag deployment.
(d) Remove the roof headlining assembly (See page IR-38).
(e) Install the SST.
(1) Disconnect the connector from the curtain shield airbag assembly.
NOTICE:
When handling the airbag connector, take care not to damage the airbag wire harness.

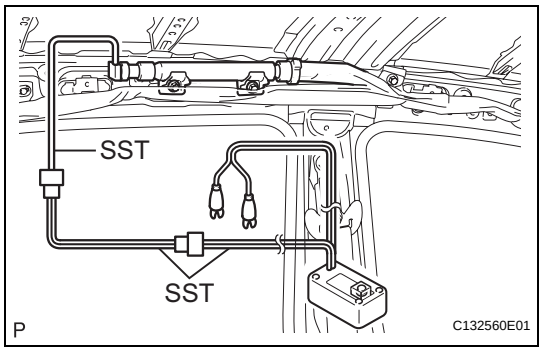

(2) After connecting the SST below to each other, connect them to the curtain shield airbag assembly.
SST 09082-00700, 09082-00802 (09082-10801, 09082-20801)
NOTICE:
To avoid damaging the SST connector and wire harness, do not lock the secondary lock of the twin lock.

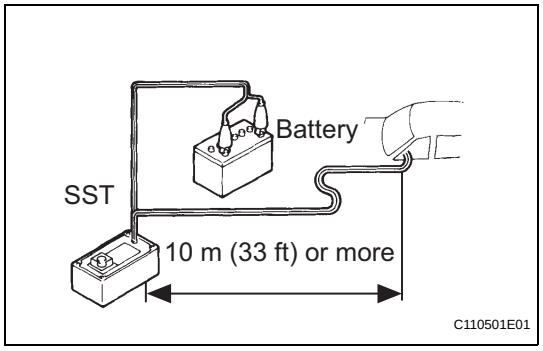

(3) Move the SST at least 10 m (33 ft) away from the vehicle rear side window.
(4) Maintaining enough clearance for the SST wire harness in the rear side window, close all doors and windows of the vehicle.
NOTICE:
Take care not to damage the SST wire harness.
(5) Connect the red clip of the SST to the battery positive (+) terminal and the black clip of the SST to the battery negative (-) terminal.

(f) Deploy the airbag.
(1) Check that no one is inside the vehicle or within a 10 m (33 ft) radius of the vehicle.
(2) Press the SST activation switch and deploy the airbag.
CAUTION:
- **When deploying the airbag, make sure that no one is near the vehicle.**
- **The curtain shield airbag assembly becomes extremely hot when the airbag is deployed, so do not touch it for at least 30 minutes after deployment.**
- **Use gloves and safety glasses when handling a curtain shield airbag assembly with a deployed airbag.**
- **Do not apply water, etc. to a curtain shield airbag assembly with a deployed airbag.**
- **Always wash your hands with water after completing the operation.**

HINT:
The airbag is deployed as the LED of the SST activation switch comes on.

2. DISPOSE OF CURTAIN SHIELD AIRBAG ASSEMBLY (WHEN NOT INSTALLED IN VEHICLE)
NOTICE:
- **When disposing of the curtain shield airbag assembly, never use the customer's vehicle to deploy the airbag.**
- **Be sure to follow the procedure detailed below when deploying the airbag.**

RS

RS

HINT:
Prepare a battery as the power source to deploy the airbag.

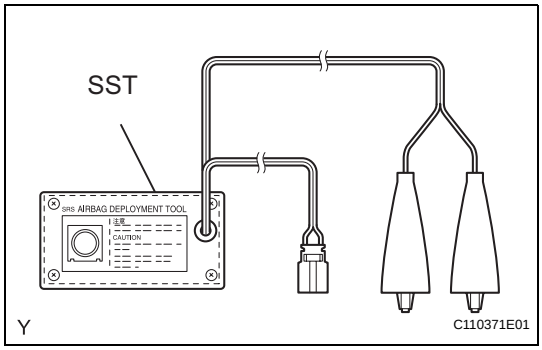

(a) Check the function of the SST (See page RS-372).
(b) Remove the curtain shield airbag assembly (See page RS-435).
CAUTION:
When removing the curtain shield airbag assembly, work must be started 90 seconds after the engine switch is turned off and the negative (-) terminal cable is disconnected from the battery.

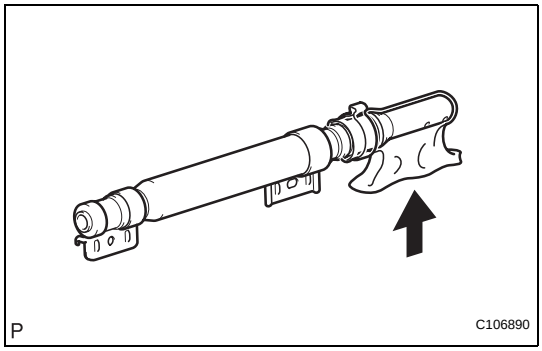

(c) Cut off the deployment section of the curtain shield airbag assembly.

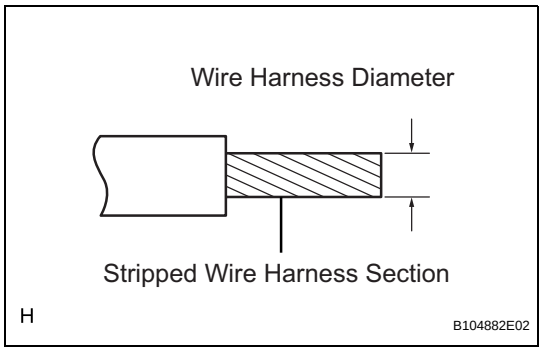

(d) Using a service-purpose wire harness for the vehicle, tie down the curtain shield airbag assembly to the tire.
Wire harness:
Stripped wire harness section
1.25 mm^2 or more (0.0019 in.^{2} or more)
CAUTION:
If the wire harness is too thin or an alternative object is used to tie down the curtain shield airbag assembly, it may be snapped by the shock when the airbag is deployed. Always use a wire harness for vehicle use with an area of at least 1.25 mm^2 (0.0019 in.^{2}).
HINT:
To calculate the area of the stripped wire harness section:
Area = 3.14 x (Diameter)^2 divided by 4

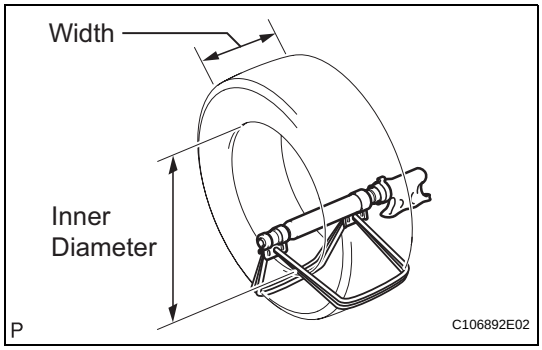

(1) Position the curtain shield airbag assembly inside the tire as shown in the illustration.
Tire size:
Must exceed the following dimensions
Width:
185 mm (7.28 in.)
Inner diameter:
360 mm (14.17 in.)

CAUTION:
Make sure that the wire harness is tight. If there is slack in the wire harness, the curtain shield airbag assembly may become loose due to the shock when the airbag is deployed.
NOTICE:
The tire may be damaged by the airbag deployment, so use an extra tire.

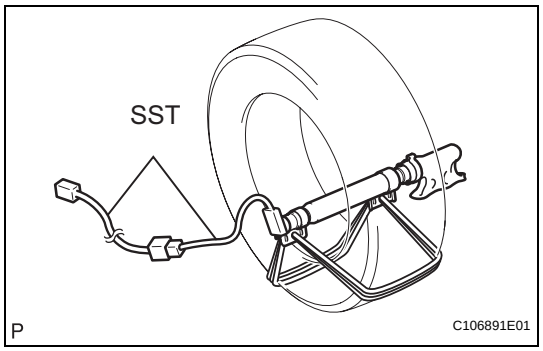

(e) Install the SST.
(1) After connecting the SST below to each other, connect them to the curtain shield airbag assembly.
SST 09082-00802 (09082-10801, 09082-20801)

(f) Place the tires.
CAUTION:
Do not place the deployment direction of the curtain shield airbag assembly facing toward the ground.

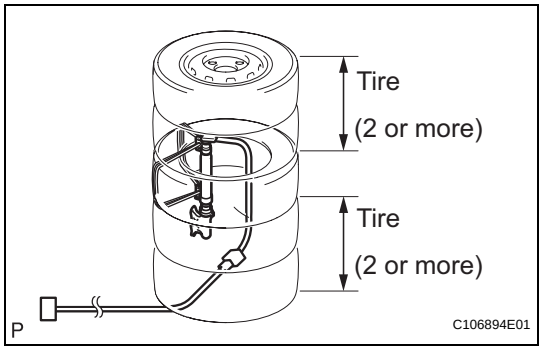

(1) Place at least 2 tires under the tire which the curtain shield airbag assembly is tied to.
(2) Place at least 2 tires over the tire which the curtain shield airbag assembly is tied to. The top tire should have the disc wheel installed.
NOTICE:
Do not place the SST connector under the tire because it could be damaged.

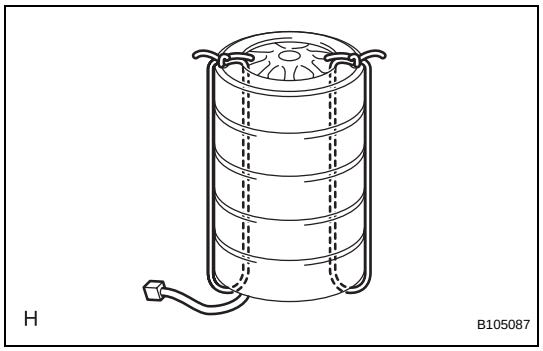

(3) Tie the tires together with 2 wire harnesses.
CAUTION:
Make sure that the wire harness is tight. Looseness in the wire harness results in the tires coming free due to the shock when the airbag is deployed.

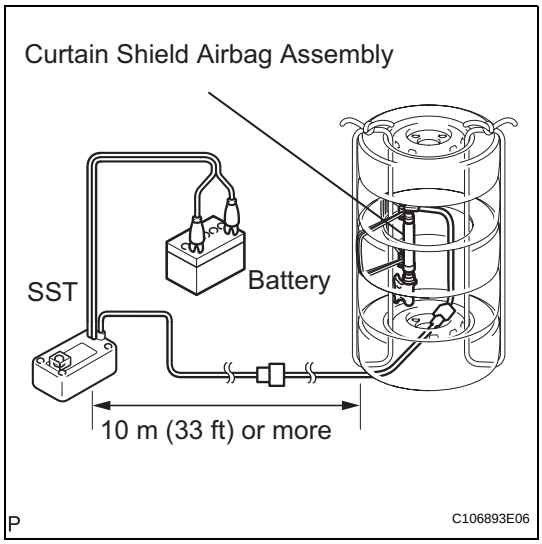

(g) Install the SST.
  (1) Connect the SST connector.
  SST 09082-00700
  NOTICE:
  To avoid damaging the SST connector and wire harness, do not lock the secondary lock of the twin lock. Also, secure some slack for the SST wire harness inside the tire.
  (2) Move the SST at least 10 m (33 ft) away from the airbag tied down to the tire.

(h) Deploy the airbag.
  (1) Connect the red clip of the SST to the battery positive (+) terminal and the black clip of the SST to the battery negative (-) terminal.
  (2) Check that no one is within a 10 m (33 ft) radius of the tire which the curtain shield airbag assembly is tied to.
  (3) Press the SST activation switch and deploy the airbag.
  CAUTION:
  When deploying the airbag, make sure that no one is near the tire.
  HINT:
  The airbag is deployed as the LED of the SST activation switch comes on.

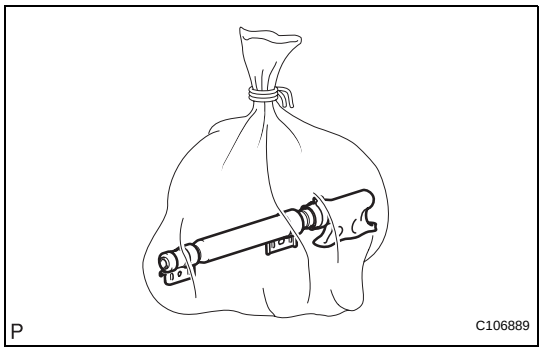

(i) Dispose of the curtain shield airbag assembly.
  CAUTION:
  - **The curtain shield airbag assembly becomes extremely hot when the airbag is deployed, so do not touch it for at least 30 minutes after deployment.**
  - **Use gloves and safety glasses when handling a curtain shield airbag assembly with a deployed airbag.**
  - **Do not apply water, etc. to a curtain shield airbag assembly with a deployed airbag.**
  - **Always wash your hands with water after completing the operation.**
  (1) Remove the curtain shield airbag assembly from the tire.
  (2) Place the curtain shield airbag assembly in a plastic bag, tie it tightly and dispose of it as other general part disposal.

DTC	**B1608/84**	**Front Satellite Sensor Bus LH Initialization Incomplete**

DTC	**B1617/84**	**Lost Communication with Front Airbag Sensor LH**

DTC	**B1618/84**	**Front Airbag Sensor LH Initialization Incomplete**

DESCRIPTION

The front airbag sensor LH circuit consists of the center airbag sensor assembly and front airbag sensor LH.

The front airbag sensor LH detects impacts to the vehicle and sends signals to the center airbag sensor assembly to determine if the airbag should be deployed.

DTC B1608/84, B1617/84, or B1618/84 is recorded when a malfunction is detected in the front airbag sensor RH circuit.

DTC No.	DTC Detecting Condition	Trouble Area
B1608/84 B1617/84 B1618/84	• The center airbag sensor assembly receives a line short circuit signal, an open circuit signal, a short circuit to ground signal or a short circuit to B+ signal in the front airbag sensor LH circuit for 2 seconds. • Front airbag sensor LH malfunction • Center airbag sensor assembly malfunction	• Instrument panel wire • Engine room main wire • Front airbag sensor LH • Center airbag sensor assembly

RS

WIRING DIAGRAM

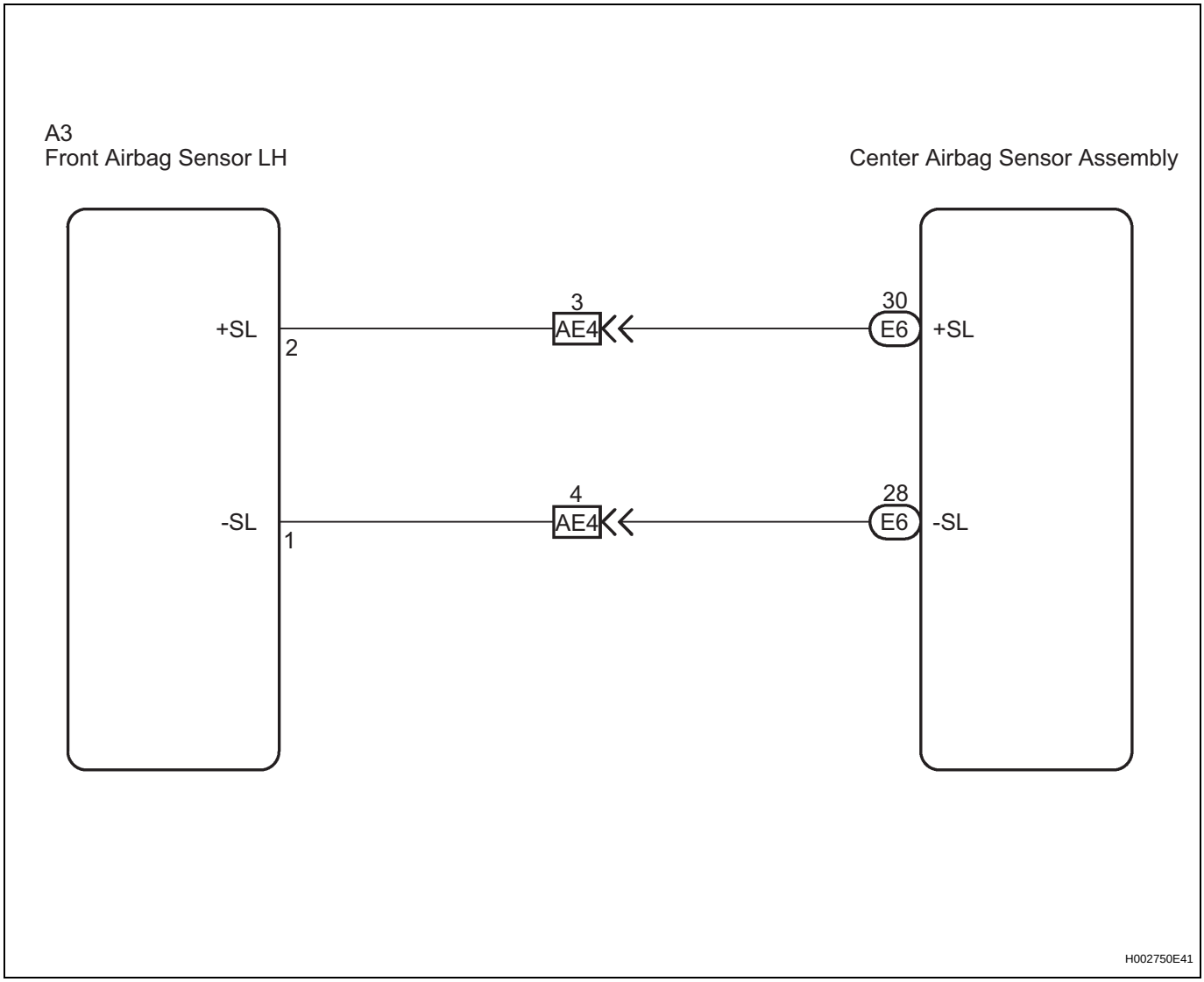

INSPECTION PROCEDURE

1	CHECK DTC

(a) Turn the engine switch on (IG), and wait for at least 60 seconds.

(b) Turn the engine switch off.
HINT:
If a communication error occurs, DTCs for both the LH and RH sides will be stored simultaneously. To identify the malfunctioning area, turn the engine switch off and then on (IG) again.

(c) Turn the engine switch on (IG), and wait for at least 60 seconds.

(d) Check the DTCs (See page RS-49).
Result

Result	Proceed to
DTC B1608, B1618, or 84 is output.	A

Result	Proceed to
DTC B1613/83 is output.	B
DTC B1608, B1618, or 84 and B1613/83 are not output.	C

HINT:
- DTCs indicating communication errors will be changed to DTCs indicating errors in initialization by turning the engine switch off and then on (IG) again.
- Codes other than DTC B1608, B1618, or 84 and B1613/83 may be output at this time, but they are not related to this check.

B → **GO TO DTC B1613/83 (See page RS-61)**

C → **USE SIMULATION METHOD TO CHECK (See page RS-37)**

A

2 CHECK CONNECTION OF CONNECTORS

(a) Turn the engine switch off.
(b) Disconnect the negative (-) terminal cable from the battery, and wait for at least 90 seconds.
(c) Check that the connectors are properly connected to the center airbag sensor assembly and the front airbag sensor LH.
OK:
The connectors are properly connected.

NG → **CONNECT CONNECTORS PROPERLY**

OK

3 CHECK CONNECTORS

(a) Disconnect the connectors from the center airbag sensor assembly and front airbag sensor LH.
(b) Check that the connectors (on the center airbag sensor assembly side and front airbag sensor LH side) are not damaged.
OK:
The connectors are not deformed or damaged.

NG → **REPAIR OR REPLACE WIRE HARNESS**

OK

4 CHECK VEHICLE CONDITION

(a) Check whether or not the vehicle is equipped with the rear side airbag.

Result:
A:
with the rear side airbag
B:
without the rear side airbag

RS

B → **Go to step 14**

A

5 CHECK FRONT AIRBAG SENSOR LH (OPEN)

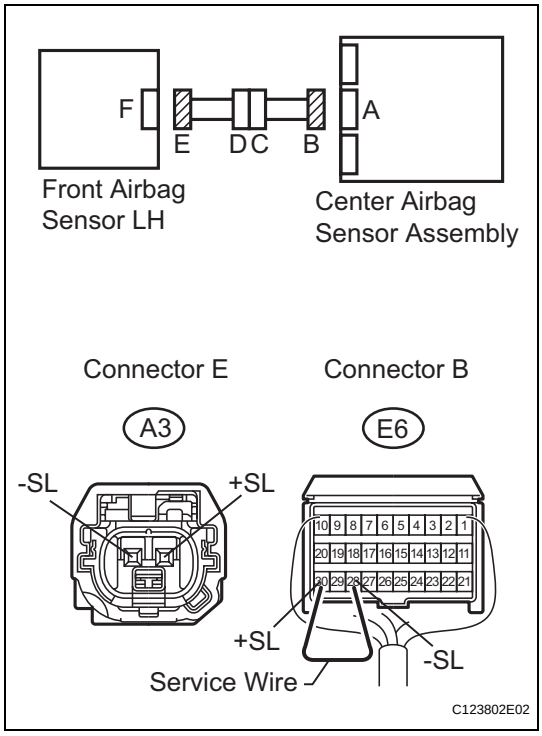

(a) Using a service wire, connect terminals 30 (+SL) and 28 (-SL) of connector B.
NOTICE:
Do not forcibly insert a service wire into the terminals of the connector when connecting the wire.

(b) Measure the resistance according to the value(s) in the table below.
Standard resistance

Tester Connection	Condition	Specified Condition
A3-2 (+SL) - A3-1 (-SL)	Always	Below 1 Ω

NG → **Go to step 10**

OK

RS

6 CHECK FRONT AIRBAG SENSOR LH (SHORT)

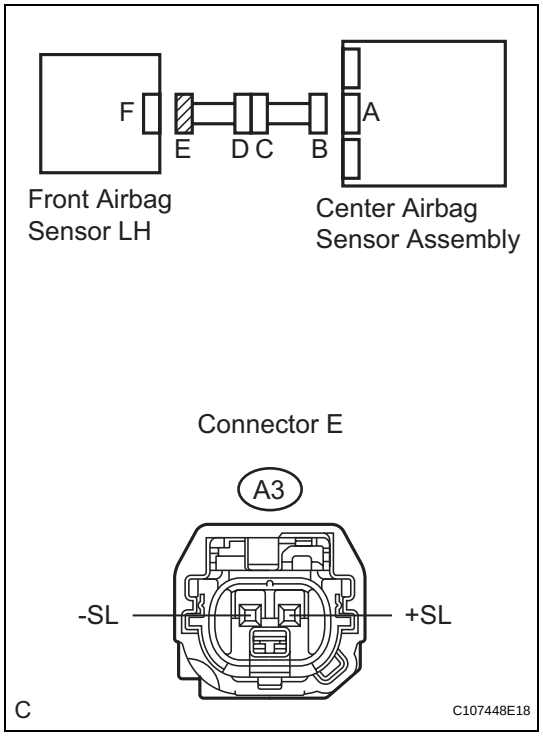

(a) Disconnect the service wire from connector B.
(b) Measure the resistance according to the value(s) in the table below.

Standard resistance

Tester Connection	Condition	Specified Condition
A3-2 (+SL) - A3-1 (-SL)	Always	1 MΩ or higher

NG → **Go to step 11**

OK

7 CHECK FRONT AIRBAG SENSOR LH (SHORT TO B+)

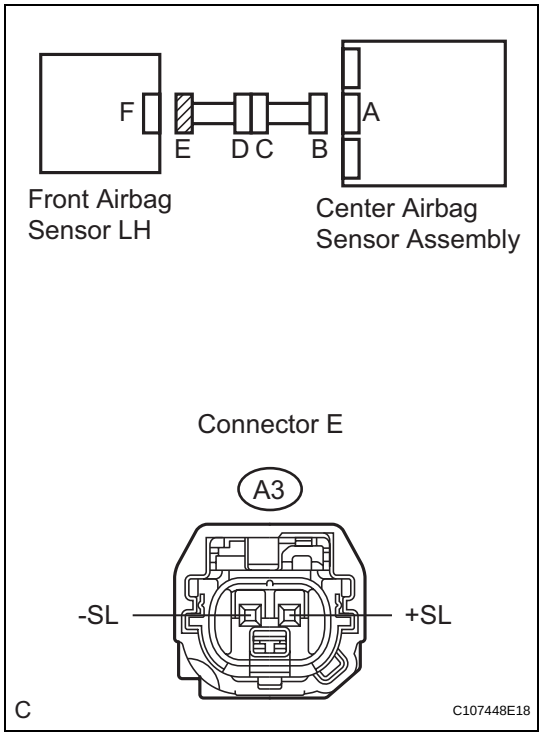

(a) Connect the negative (-) terminal cable to the battery, and wait for at least 2 seconds.
(b) Turn the engine switch on (IG).
(c) Measure the voltage according to the value(s) in the table below.

Standard voltage

Tester Connection	Condition	Specified Condition
A3-2 (+SL) - Body ground	Engine switch on (IG)	Below 1 V
A3-1 (-SL) - Body ground	Engine switch on (IG)	Below 1 V

NG → **Go to step 12**

OK

RS

8 CHECK FRONT AIRBAG SENSOR LH (SHORT TO GROUND)

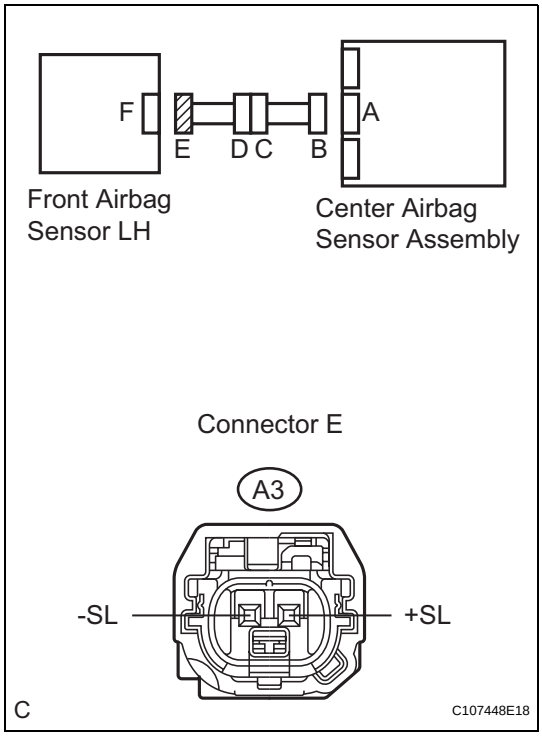

(a) Turn the engine switch off.
(b) Disconnect the negative (-) terminal cable from the battery, and wait for at least 90 seconds.
(c) Measure the resistance according to the value(s) in the table below.

Standard resistance

Tester Connection	Condition	Specified Condition
A3-2 (+SL) - Body ground	Always	1 MΩ or higher
A3-1 (-SL) - Body ground	Always	1 MΩ or higher

NG → **Go to step 13**

OK

9 CHECK FRONT AIRBAG SENSOR LH

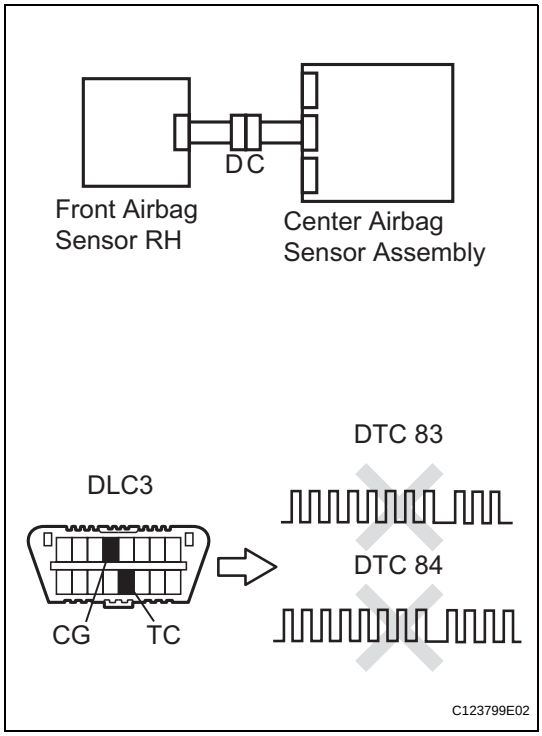

(a) Connect the connectors to the center airbag sensor assembly.
(b) Interchange the front airbag sensor RH with LH and connect the connectors to them.
(c) Connect the negative (-) terminal cable to the battery, and wait for at least 2 seconds.
(d) Turn the engine switch on (IG), and wait for at least 60 seconds.
(e) Clear the DTCs stored in the memory (See page RS-49).
(f) Turn the engine switch off.
(g) Turn the engine switch on (IG), and wait for at least 60 seconds.
(h) Check the DTCs (See page RS-49).

Result

Result	Proceed to
DTC B1608, B1617, B1618, or 84 is output.	A
DTC B1603, B1612, B1613, or 83 is output.	B
DTC B1603, B1612, B1613, or 83 and B1608, B1617, B1618, or 84 are not output.	C

HINT:
Codes other than DTC B1608, B1617, B1618, or 84 and B1603, B1612, B1613, or 83 may be output at this time, but they are not related to this check.

A → **REPLACE CENTER AIRBAG SENSOR ASSEMBLY (See page RS-468)**

B → **REPLACE FRONT AIRBAG SENSOR LH (See page RS-473)**

RS

C

USE SIMULATION METHOD TO CHECK (See page RS-37)

10 CHECK INSTRUMENT PANEL WIRE (OPEN)

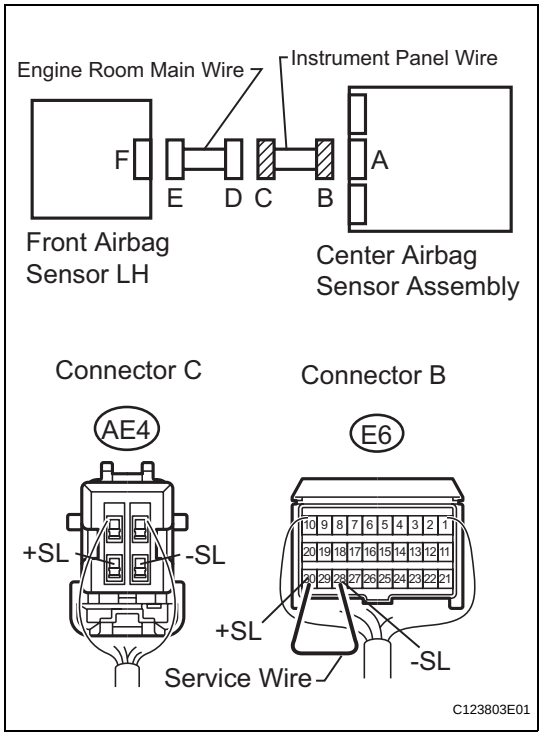

(a) Disconnect the instrument panel wire connector from the engine room main wire.
HINT:
The service wire has already been inserted into connector B.

(b) Measure the resistance according to the value(s) in the table below.
Standard resistance

Tester Connection	Condition	Specified Condition
AE4-3 (+SL) - AE4-4 (-SL)	Always	Below 1 Ω

NG → **REPAIR OR REPLACE INSTRUMENT PANEL WIRE**

OK

REPAIR OR REPLACE ENGINE ROOM MAIN WIRE

RS

11 CHECK INSTRUMENT PANEL WIRE (SHORT)

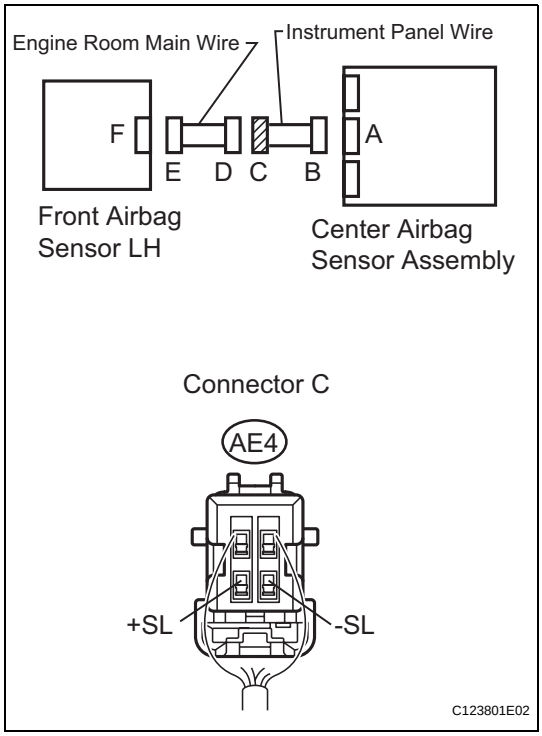

(a) Disconnect the instrument panel wire connector from the engine room main wire.

(b) Measure the resistance according to the value(s) in the table below.

Standard resistance

Tester Connection	Condition	Specified Condition
AE4-3 (+SL) - AE4-4 (-SL)	Always	1 MΩ or higher

NG → **REPAIR OR REPLACE INSTRUMENT PANEL WIRE**

OK

REPAIR OR REPLACE ENGINE ROOM MAIN WIRE

RS

12 CHECK INSTRUMENT PANEL WIRE (SHORT TO B+)

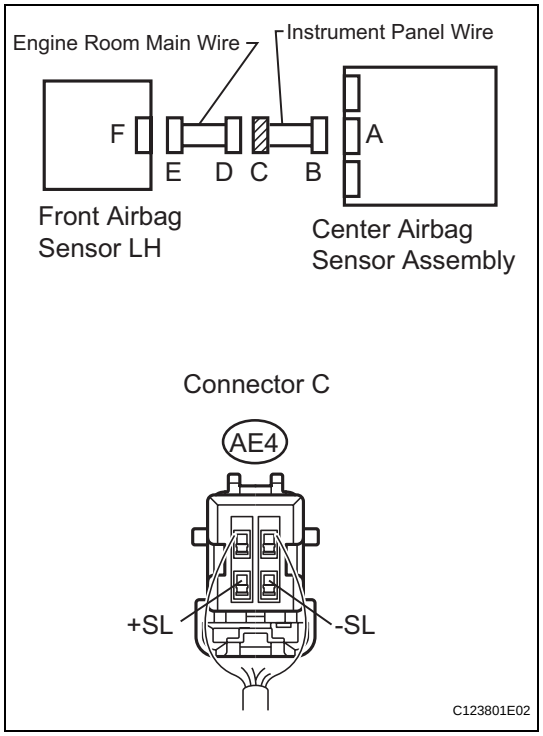

(a) Turn the engine switch off.
(b) Disconnect the negative (-) terminal cable from the battery, and wait for at least 90 seconds.
(c) Disconnect the instrument panel wire connector from the engine room main wire.
(d) Connect the negative (-) terminal cable to battery, and wait for at least 2 seconds.
(e) Turn the engine switch on (IG).
(f) Measure the voltage according to the value(s) in the table below.

Standard voltage

Tester Connection	Condition	Specified Condition
AE4-3 (+SL) - Body ground	Engine switch on (IG)	Below 1 V
AE4-4 (-SL) - Body ground	Engine switch on (IG)	Below 1 V

NG → **REPAIR OR REPLACE INSTRUMENT PANEL WIRE**

OK

REPAIR OR REPLACE ENGINE ROOM MAIN WIRE

RS

13 CHECK INSTRUMENT PANEL WIRE (SHORT TO GROUND)

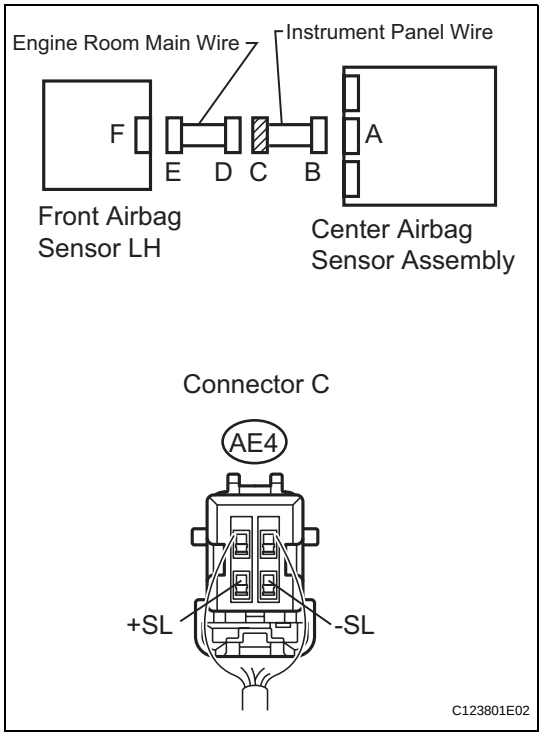

(a) Disconnect the instrument panel wire connector from the engine room main wire.

(b) Measure the resistance according to the value(s) in the table below.

Standard resistance

Tester Connection	Condition	Specified Condition
AE4-3 (+SL) - Body ground	Always	1 MΩ or higher
AE4-4 (-SL) - Body ground	Always	1 MΩ or higher

NG → **REPAIR OR REPLACE INSTRUMENT PANEL WIRE**

OK

REPAIR OR REPLACE ENGINE ROOM MAIN WIRE

RS

14 CHECK FRONT AIRBAG SENSOR LH (OPEN)

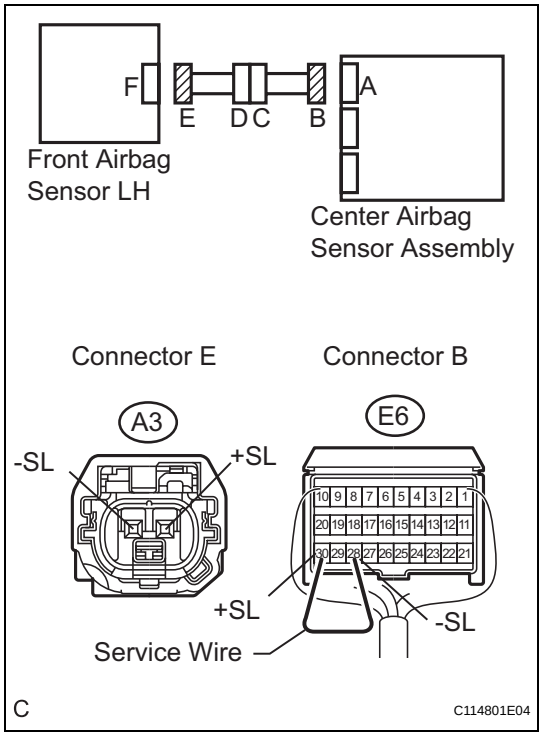

(a) Using a service wire, connect terminals 30 (+SL) and 28 (-SL) of connector B.
NOTICE:
Do not forcibly insert a service wire into the terminals of the connector when connecting the wire.

(b) Measure the resistance according to the value(s) in the table below.
Standard resistance

Tester Connection	Condition	Specified Condition
A3-2 (+SL) - A3-1 (-SL)	Always	Below 1 Ω

NG → **Go to step 19**

OK

15 CHECK FRONT AIRBAG SENSOR LH (SHORT)

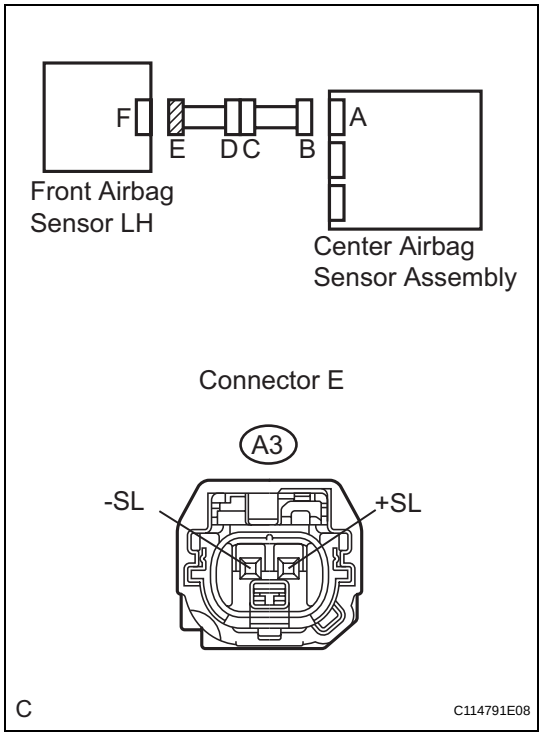

(a) Disconnect the service wire from connector B.

(b) Measure the resistance according to the value(s) in the table below.
Standard resistance

Tester Connection	Condition	Specified Condition
A3-2 (+SL) - A3-1 (-SL)	Always	1 MΩ or higher

NG → **Go to step 20**

OK

RS

16 CHECK FRONT AIRBAG SENSOR LH (SHORT TO B+)

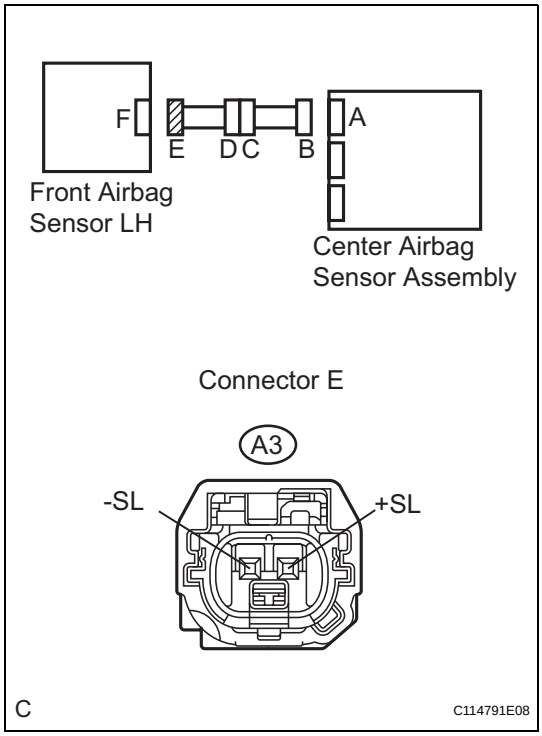

(a) Connect the negative (-) terminal cable to the battery, and wait for at least 2 seconds.
(b) Turn the engine switch on (IG).
(c) Measure the voltage according to the value(s) in the table below.

Standard voltage

Tester Connection	Condition	Specified Condition
A3-2 (+SL) - Body ground	Engine switch on (IG)	Below 1 V
A3-1 (-SL) - Body ground	Engine switch on (IG)	Below 1 V

NG → **Go to step 21**

OK

17 CHECK FRONT AIRBAG SENSOR LH (SHORT TO GROUND)

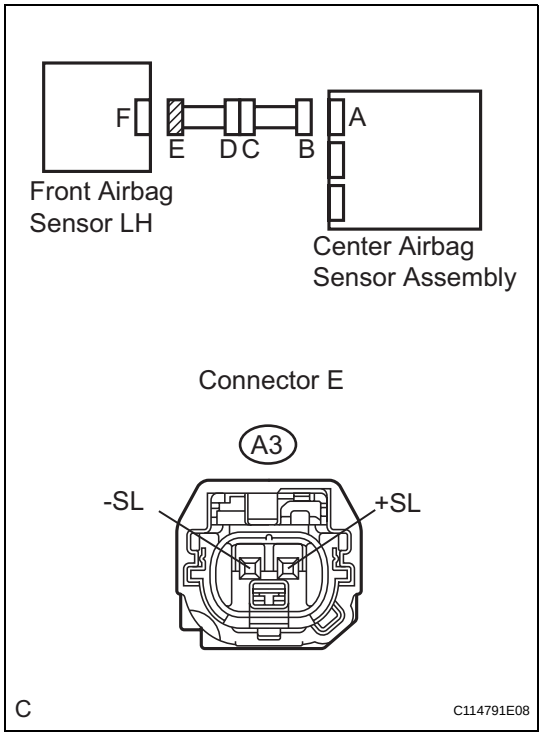

(a) Turn the engine switch off.
(b) Disconnect the negative (-) terminal cable from the battery, and wait for at least 90 seconds.
(c) Measure the resistance according to the value(s) in the table below.

Standard resistance

Tester Connection	Condition	Specified Condition
A3-2 (+SL) - Body ground	Always	1 MΩ or higher
A3-1 (-SL) - Body ground	Always	1 MΩ or higher

NG → **Go to step 22**

OK

RS

18 CHECK FRONT AIRBAG SENSOR LH

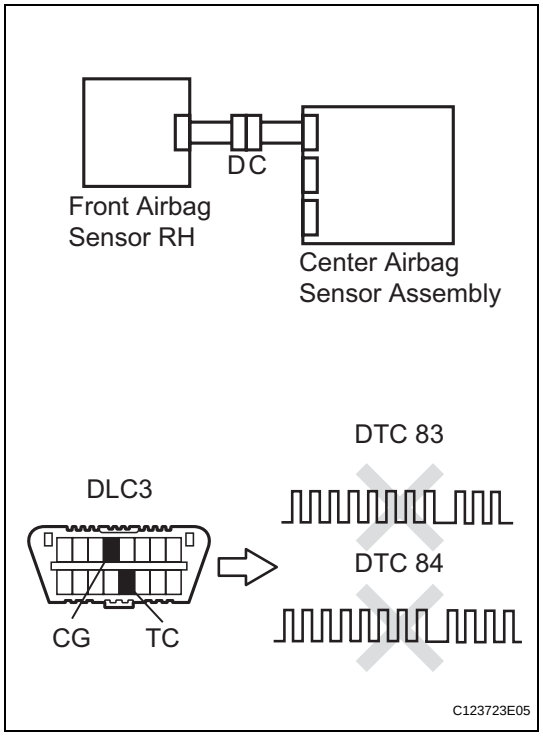

(a) Connect the connectors to the center airbag sensor assembly.
(b) Interchange the front airbag sensor RH with LH and connect the connectors to them.
(c) Connect the negative (-) terminal cable to the battery, and wait for at least 2 seconds.
(d) Turn the engine switch on (IG), and wait for at least 60 seconds.
(e) Clear the DTCs stored in the memory (See page RS-49).
(f) Turn the engine switch off.
(g) Turn the engine switch on (IG), and wait for at least 60 seconds.
(h) Check the DTCs (See page RS-49).

Result

Result	Proceed to
DTC B1608, B1617, B1618, or 84 is output.	A
DTC B1603, B1612, B1613, or 83 is output.	B
DTC B1603, B1612, B1613, or 83 and B1608, B1617, B1618, or 84 are not output.	C

HINT:
Codes other than DTC B1608, B1617, B1618, or 84 and B1603, B1612, B1613, or 83 may be output at this time, but they are not related to this check.

A → **REPLACE CENTER AIRBAG SENSOR ASSEMBLY (See page RS-468)**

B → **REPLACE FRONT AIRBAG SENSOR LH (See page RS-473)**

C

USE SIMULATION METHOD TO CHECK (See page RS-37)

RS

19	CHECK INSTRUMENT PANEL WIRE (OPEN)

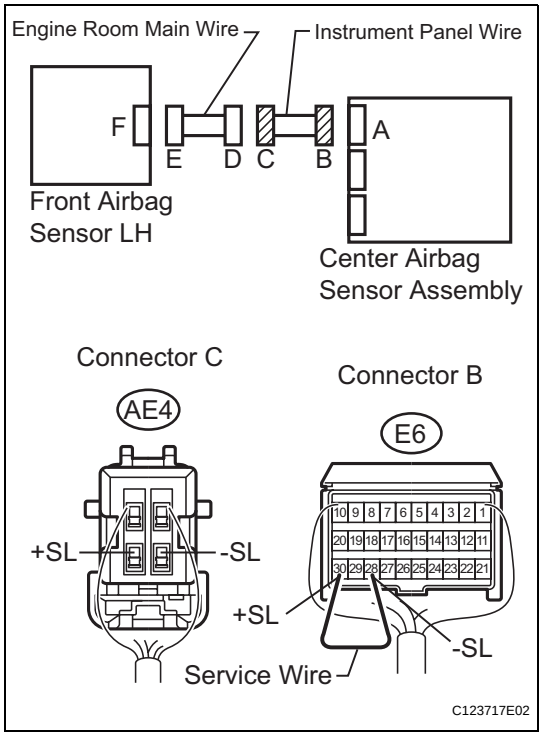

(a) Disconnect the instrument panel wire connector from the engine room main wire.
HINT:
The service wire has already been inserted into connector B.

(b) Measure the resistance according to the value(s) in the table below.
Standard resistance

Tester Connection	Condition	Specified Condition
AE4-3 (+SL) - AE4-4 (-SL)	Always	Below 1 Ω

NG → **REPAIR OR REPLACE INSTRUMENT PANEL WIRE**

OK

REPAIR OR REPLACE ENGINE ROOM MAIN WIRE

RS

20 CHECK INSTRUMENT PANEL WIRE (SHORT)

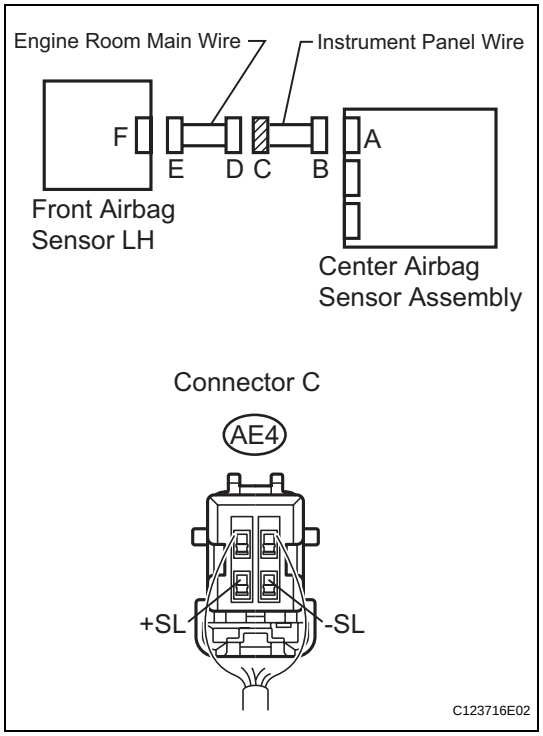

(a) Disconnect the instrument panel wire connector from the engine room main wire.

(b) Measure the resistance according to the value(s) in the table below.

Standard resistance

Tester Connection	Condition	Specified Condition
AE4-3 (+SL) - AE4-4 (-SL)	Always	1 MΩ or higher

NG → **REPAIR OR REPLACE INSTRUMENT PANEL WIRE**

OK

REPAIR OR REPLACE ENGINE ROOM MAIN WIRE

RS

21 CHECK INSTRUMENT PANEL WIRE (SHORT TO B+)

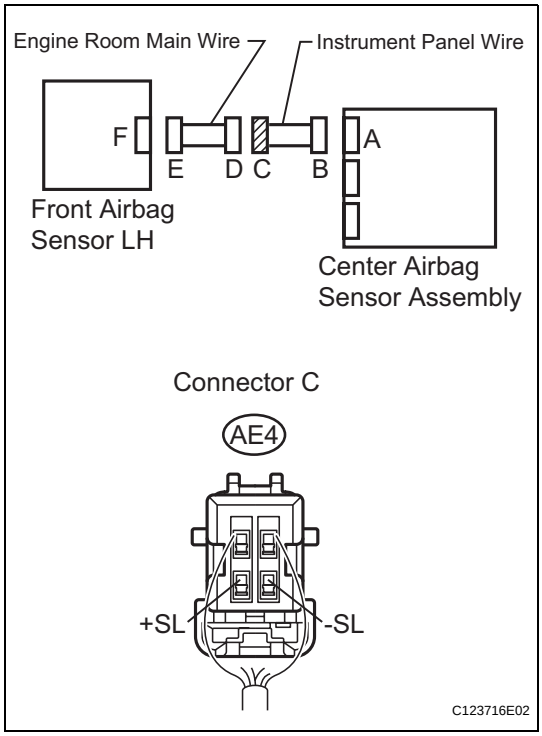

(a) Turn the engine switch off.
(b) Disconnect the negative (-) terminal cable from the battery, and wait for at least 90 seconds.
(c) Disconnect the instrument panel wire connector from the engine room main wire.
(d) Connect the negative (-) terminal cable to battery, and wait for at least 2 seconds.
(e) Turn the engine switch on (IG).
(f) Measure the voltage according to the value(s) in the table below.

Standard voltage

Tester Connection	Condition	Specified Condition
AE4-3 (+SL) - Body ground	Engine switch on (IG)	Below 1 V
AE4-4 (-SL) - Body ground	Engine switch on (IG)	Below 1 V

NG → **REPAIR OR REPLACE INSTRUMENT PANEL WIRE**

OK

REPAIR OR REPLACE ENGINE ROOM MAIN WIRE

22 CHECK INSTRUMENT PANEL WIRE (SHORT TO GROUND)

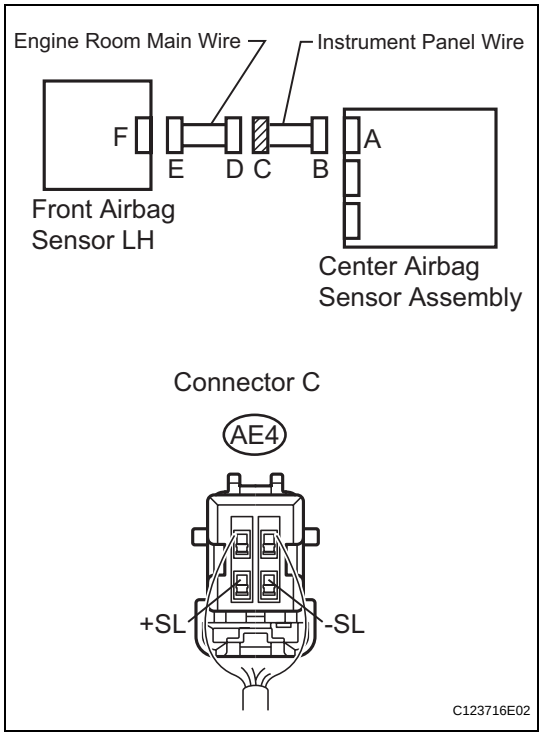

(a) Disconnect the instrument panel wire connector from the engine room main wire.

(b) Measure the resistance according to the value(s) in the table below.

Standard resistance

Tester Connection	Condition	Specified Condition
AE4-3 (+SL) - Body ground	Always	1 MΩ or higher
AE4-4 (-SL) - Body ground	Always	1 MΩ or higher

NG → **REPAIR OR REPLACE INSTRUMENT PANEL WIRE**

OK

REPAIR OR REPLACE ENGINE ROOM MAIN WIRE

RS

RS

FRONT SEAT SIDE AIRBAG ASSEMBLY

ON-VEHICLE INSPECTION

1. FRONT SEAT SIDE AIRBAG ASSEMBLY (VEHICLE NOT INVOLVED IN COLLISION)

(a) Perform a diagnostic system check (See page RS-37).

(b) With the front seat side airbag assembly installed on the vehicle, perform a visual check. If there are any defects as mentioned below, replace the front seat assembly with a new one:
Cuts, minute cracks or marked discoloration on the front seatback assembly around the front seat side airbag assembly.

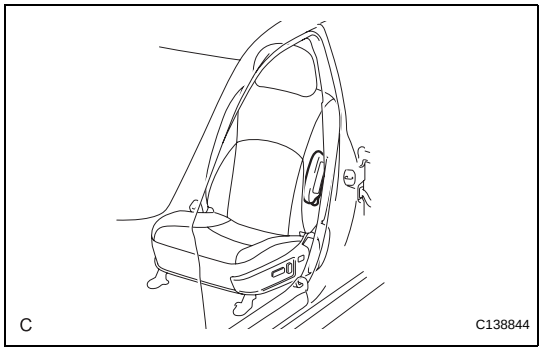

2. FRONT SEAT SIDE AIRBAG ASSEMBLY (VEHICLE INVOLVED IN COLLISION AND AIRBAG HAS NOT DEPLOYED)

(a) Perform a diagnostic system check (See page RS-37).

(b) With the front seat side airbag assembly removed from the vehicle, perform a visual check. If there are any defects as mentioned below, replace the front seat assembly with a new one:
- Cuts, minute cracks or marked discoloration on the front seat side airbag assembly.
- Cracks or other damage to the wire harness or connector.
- Deformation or cracks on the front seat assembly.

CAUTION:
Be sure to follow the correct removal and installation procedures.

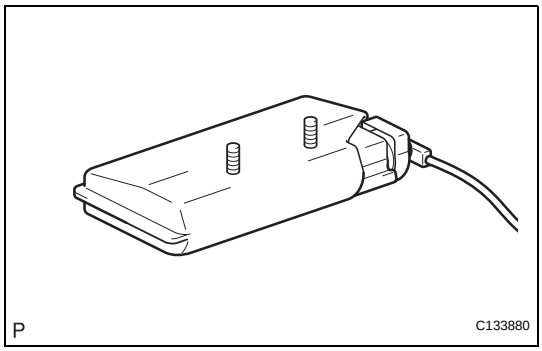

DISPOSAL

HINT:
When scrapping a vehicle equipped with the SRS or disposing of the front seat side airbag assembly, be sure to deploy the airbag first in accordance with the procedure described below. If any abnormality occurs with the airbag deployment, contact the SERVICE DEPT. of TOYOTA MOTOR SALES, U.S.A., INC.

CAUTION:

- **Never dispose of a front seat side airbag assembly that has an undeployed airbag.**
- **The airbag produces an exploding sound when it is deployed, so perform the operation outdoors and where it will not create a nuisance to nearby residents.**
- **When deploying the airbag, always use the specified SST (SRS Airbag Deployment Tool). Perform the operation in a place away from electrical noise.**
- **When deploying the airbag, perform the operation at least 10 m (33 ft) away from the front seat side airbag assembly.**
- **The front seat side airbag assembly becomes extremely hot when the airbag is deployed, so do not touch it for at least 30 minutes after deployment.**
- **Use gloves and safety glasses when handling a front seat side airbag assembly with a deployed airbag.**
- **Do not apply water, etc. to a front seat side airbag assembly with a deployed airbag.**
- **Always wash your hands with water after completing the operation.**

1. DISPOSE OF FRONT SEAT SIDE AIRBAG ASSEMBLY (WHEN INSTALLED IN VEHICLE)

HINT:
Prepare a battery as the power source to deploy the airbag.

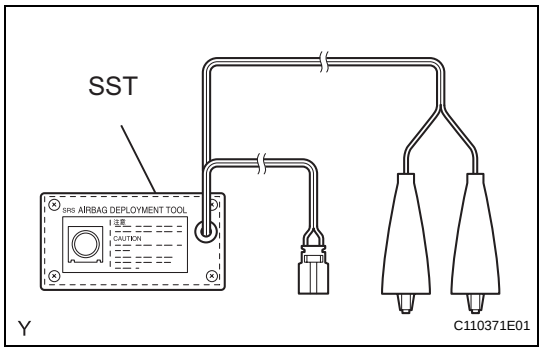

(a) Check the function of the SST (See page RS-370).
(b) Refer to PRECAUTION (See page RS-1).
(c) Disconnect the cable from the negative battery terminal.
CAUTION:
Wait for 90 seconds after disconnecting the cable to prevent airbag deployment.
(d) Remove the front seat assembly (See page SE-83).
(e) Install the SST.
(1) Disconnect the connector (yellow colored one) from the front seat side airbag assembly.
NOTICE:
When handling the airbag connector, take care not to damage the airbag wire harness.

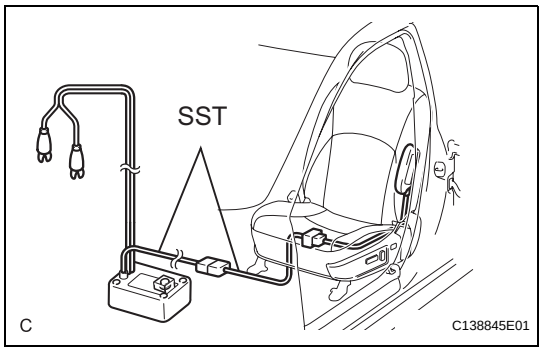

(2) Connect the SST connector to the front seat side airbag assembly connector.
SST 09082-00700, 09082-00750
NOTICE:
To avoid damaging the SST connector and wire harness, do not lock the secondary lock of the twin lock.

(3) Install the front seat assembly (See page SE-109).

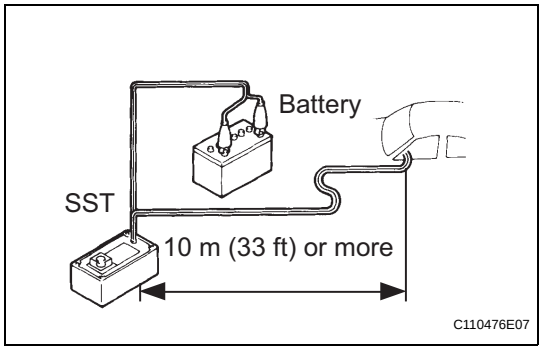

(4) Move the SST at least 10 m (33 ft) away from the vehicle front side window.

(5) Maintaining enough clearance for the SST wire harness in the front side window, close all doors and windows of the vehicle.
NOTICE:
Take care not to damage the SST wire harness.

(6) Connect the red clip of the SST to the battery positive (+) terminal and the black clip of the SST to the battery negative (-) terminal.

(f) Deploy the airbag.

(1) Check that no one is inside the vehicle or within a 10 m (33 ft) radius of the vehicle.

(2) Press the SST activation switch and deploy the airbag.
CAUTION:
- **When deploying the airbag, make sure that no one is near the vehicle.**
- **The front seat side airbag assembly becomes extremely hot when the airbag is deployed, so do not touch it for at least 30 minutes after deployment.**
- **Use gloves and safety glasses when handling a front seat side airbag assembly with a deployed airbag.**
- **Do not apply water, etc. to a front seat side airbag assembly with a deployed airbag.**
- **Always wash your hands with water after completing the operation.**

HINT:
The airbag is deployed as the LED of the SST activation switch comes on.

2. DISPOSE OF FRONT SEAT SIDE AIRBAG ASSEMBLY (WHEN NOT INSTALLED IN VEHICLE)
NOTICE:
- **When disposing of the front seat side airbag assembly, never use the customer's vehicle to deploy the airbag.**
- **Be sure to follow the procedure detailed below when deploying the airbag.**

HINT:
Prepare a battery as the power source to deploy the airbag.

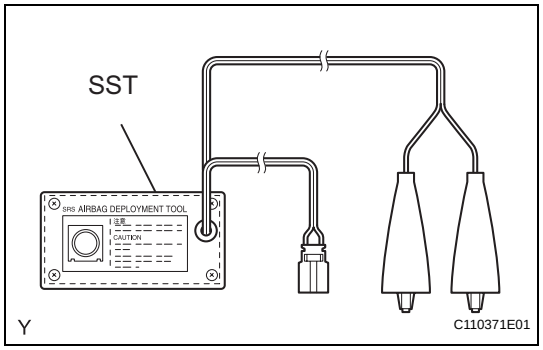

(a) Check the function of the SST (See page RS-372).
(b) Remove the front seat side airbag assembly.
  (1) Remove the front seat assembly (See page SE-83).
  (2) Remove the 2 nuts and the front seat side airbag assembly from the seatback assembly. (See page SE-84)
  CAUTION:
  - **When removing the front seat side airbag assembly, work must be started 90 seconds after the engine switch is turned off and the negative (-) terminal cable is disconnected from the battery.**
  - **When storing the front seat side airbag assembly, keep the airbag deployment side facing upward.**

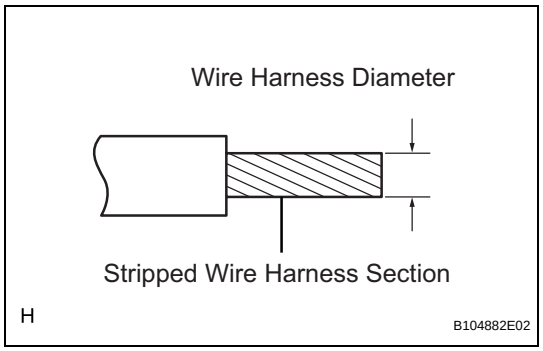

(c) Using a service-purpose wire harness for the vehicle, tie down the front seat side airbag assembly to the tire.
Wire harness:
Stripped wire harness section
1.25 mm^2 or more (0.0019 in.^{2} or more)
CAUTION:
If the wire harness is too thin or an alternative object is used to tie down the front seat side airbag assembly, it may be snapped by the shock when the airbag is deployed. Always use a wire harness for vehicle use with an area of at least 1.25 mm^2 (0.0019 in.^{2}).
HINT:
To calculate the area of the stripped wire harness section:
Area = 3.14 x (Diameter)^2 divided by 4

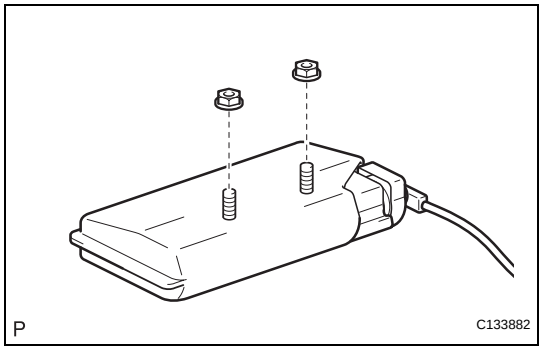

  (1) Install the 2 nuts to the front seat side airbag assembly.

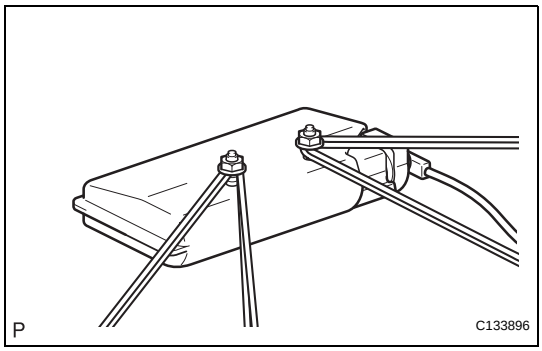

(2) Wind the wire harness around the stud bolts of the front seat side airbag assembly as shown in the illustration.

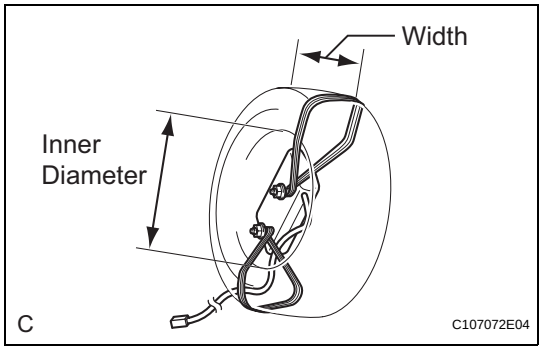

(3) Position the front seat side airbag assembly inside the tire.
Tire size:
Must exceed the following dimensions
Width:
185 mm (7.28 in.)
Inner diameter:
360 mm (14.17 in.)
CAUTION:
- **Make sure that the wire harness is tight. If there is slack in wire harness, the front seat side airbag assembly may become loose due to the shock when the airbag is deployed.**
- **Always tie down the front seat side airbag assembly with the airbag deployment direction facing inside the tire.**

NOTICE:
The tire will be marked by the airbag deployment, so use an extra tire.

(d) Install the SST.
(1) Connect the SST connector to the front seat side airbag assembly connector.
SST 09082-00750

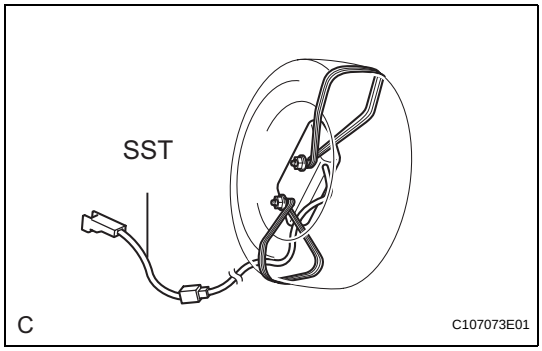

(e) Place the tires.
(1) Place at least 2 tires under the tire which the front seat side airbag assembly is tied to.
(2) Place at least 2 tires over the tire which the front seat side airbag assembly is tied to. The top tire should have the disc wheel installed.
NOTICE:
Do not place the SST connector under the tire because it could be damaged.

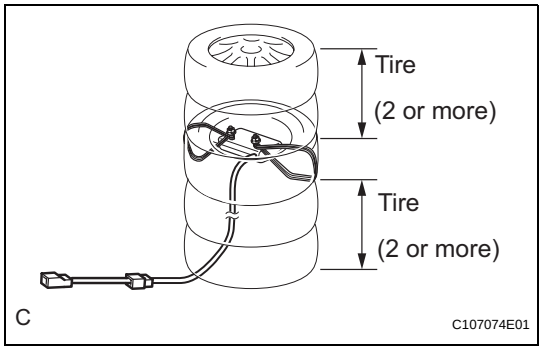

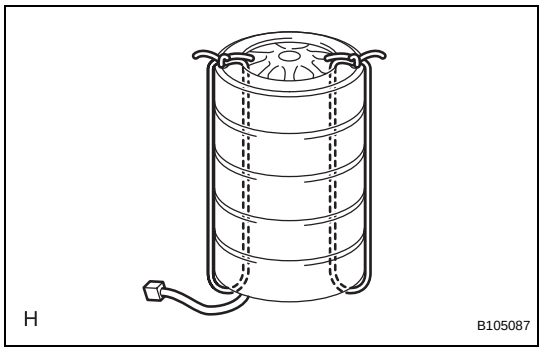

(3) Tie the tires together with 2 wire harnesses.
CAUTION:
Make sure that the wire harness is tight. Looseness in the wire harness results in the tires coming free due to the shock when the airbag is deployed.

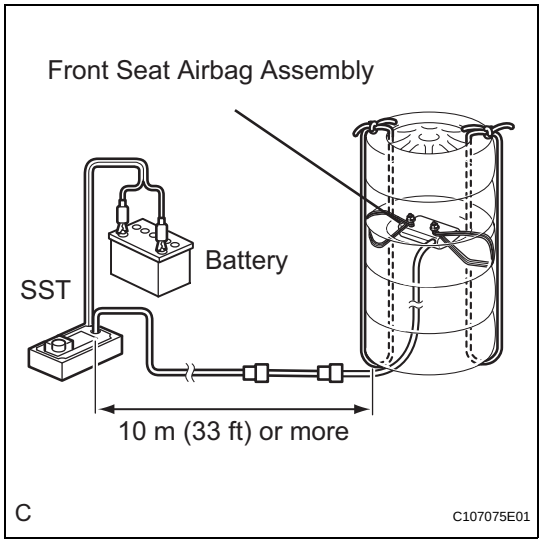

(f) Install the SST.
(1) Connect the SST connector.
SST 09082-00700
NOTICE:
To avoid damaging the SST connector and wire harness, do not lock the secondary lock of the twin lock. Also, secure some slack for the SST wire harness inside the tire.
(2) Move the SST at least 10 m (33 ft) away from the airbag tied down to the tire.

(g) Deploy the airbag.
(1) Connect the red clip of the SST to the battery positive (+) terminal and the black clip of the SST to the battery negative (-) terminal.
(2) Check that no one is within a 10 m (33 ft) radius of the tire which the front seat side airbag assembly is tied to.
(3) Press the SST activation switch and deploy the airbag.
CAUTION:
When deploying the airbag, make sure that no one is near the tire.
HINT:
The airbag is deployed as the LED of the SST activation switch comes on.

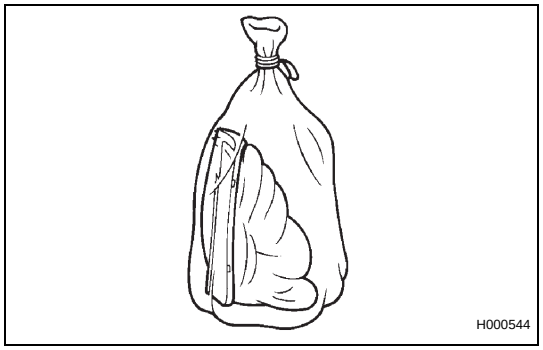

(h) Dispose of the front seat side airbag assembly.
CAUTION:
- **The front seat side airbag assembly becomes extremely hot when the airbag is deployed, so do not touch it for at least 30 minutes after deployment.**
- **Use gloves and safety glasses when handling a front seat side airbag assembly with a deployed airbag.**
- **Do not apply water, etc. to a front seat side airbag assembly with a deployed airbag.**
- **Always wash your hands with water after completing the operation.**

(1) Remove the front seat side airbag assembly from the tire.

(2) Place the front seat side airbag assembly in a plastic bag, tie it tightly and dispose of it as other general part disposal.

RS

DISPOSAL

HINT:
When scrapping a vehicle equipped with the SRS or disposing of the rear seat side airbag assembly, be sure to deploy the airbag first in accordance with the procedure described below. If any abnormality occurs with the airbag deployment, contact the SERVICE DEPT. of TOYOTA MOTOR SALES, U.S.A., INC.

CAUTION:

- **Never dispose of a rear seat side airbag assembly that has an undeployed airbag.**
- **The airbag produces an exploding sound when it is deployed, so perform the operation outdoors and where it will not create a nuisance to nearby residents.**
- **When deploying the airbag, always use the specified SST (SRS Airbag Deployment Tool). Perform the operation in a place away from electrical noise.**
- **When deploying the airbag, perform the operation at least 10 m (33 ft) away from the rear seat side airbag assembly.**
- **The rear seat side airbag assembly becomes extremely hot when the airbag is deployed, so do not touch it for at least 30 minutes after deployment.**
- **Use gloves and safety glasses when handling a rear seat side airbag assembly with a deployed airbag.**
- **Do not apply water, etc. to a rear seat side airbag assembly with a deployed airbag.**
- **Always wash your hands with water after completing the operation.**

1. DISPOSE OF REAR SEAT SIDE AIRBAG ASSEMBLY (WHEN INSTALLED IN VEHICLE)

HINT:
Prepare a battery as the power source to deploy the airbag.

(a) Check the function of the SST (see page RS-370).
(b) Refer to PRECAUTION (see page RS-1).
(c) Disconnect the cable from the negative battery terminal.
CAUTION:
Wait for 90 seconds after disconnecting the cable to prevent airbag deployment.
(d) Remove the rear seat side airbag assembly (see page RS-459).

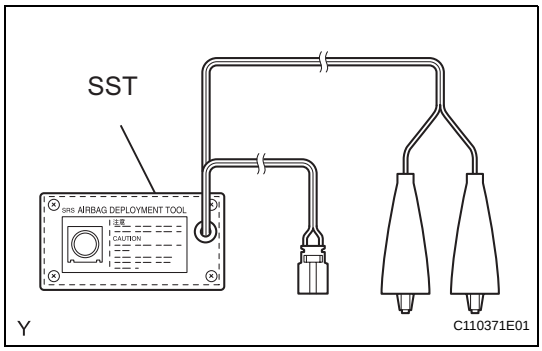

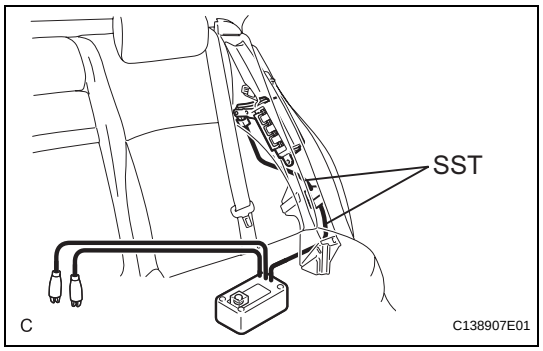

(e) Install the SST.

(1) Connect the SST connector to the rear seat side airbag assembly.
SST 09082-00700, 09082-00750
NOTICE:
To avoid damaging the SST connector and wire harness, do not lock the secondary lock of the twin lock.

(2) Install the rear seat side airbag assembly (see page RS-460).
NOTICE:
Take care not to damage the SST wire harness.

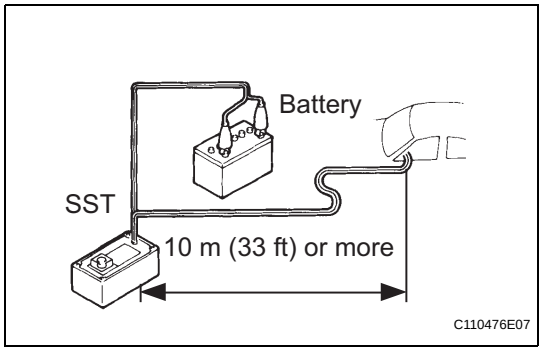

(3) Move the SST at least 10 m (33 ft) away from the vehicle rear side window.

(4) Maintaining enough clearance for the SST wire harness in the rear side window, close all doors and windows of the vehicle.
NOTICE:
Take care not to damage the SST wire harness.

(5) Connect the red clip of the SST to the battery positive (+) terminal and the black clip of the SST to the battery negative (-) terminal.

(f) Deploy the airbag.

(1) Check that no one is inside the vehicle or within a 10 m (33 ft) radius of the vehicle.

(2) Press the SST activation switch and deploy the airbag.
CAUTION:
- **When deploying the airbag, make sure that no one is near the vehicle.**
- **The rear seat side airbag assembly becomes extremely hot when the airbag is deployed, so do not touch it for at least 30 minutes after deployment.**
- **Use gloves and safety glasses when handling a rear seat side airbag assembly with a deployed airbag.**
- **Do not apply water, etc. to a rear seat side airbag assembly with a deployed airbag.**
- **Always wash your hands with water after completing the operation.**

HINT:
The airbag is deployed as the LED of the SST activation switch comes on.

2. DISPOSE OF REAR SEAT SIDE AIRBAG ASSEMBLY (WHEN NOT INSTALLED IN VEHICLE)
NOTICE:
- **When disposing of the rear seat side airbag assembly, never use the customer's vehicle to deploy the airbag.**

RS

- **Be sure to follow the procedure detailed below when deploying the airbag.**

HINT:
Prepare a battery as the power source to deploy the airbag.

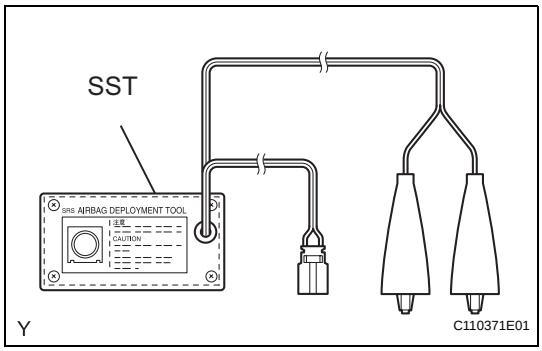

(a) Check the function of the SST (see page RS-372).

(b) Remove the rear seat side airbag assembly (see page RS-459).

CAUTION:
- **When removing the rear seat side airbag assembly, work must be started 90 seconds after the engine switch is turned off and the negative (-) terminal cable is disconnected from the battery.**
- **When storing the rear seat side airbag assembly, keep the airbag deployment side facing upward.**

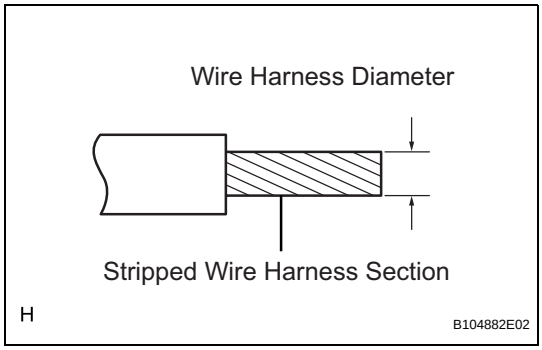

(c) Using a service-purpose wire harness for the vehicle, tie down the rear seat side airbag assembly to the tire.

Wire harness:
Stripped wire harness section
1.25 mm^2 or more (0.0019 in.^{2} or more)

CAUTION:
If the wire harness is too thin or an alternative object is used to tie down the rear seat side airbag assembly, it may be snapped by the shock when the airbag is deployed. Always use a wire harness for vehicle use with an area of at least 1.25 mm^2 (0.0019 in.^{2}).

HINT:
To calculate the area of the stripped wire harness section:

Area = 3.14 x (Diameter)^2 divided by 4

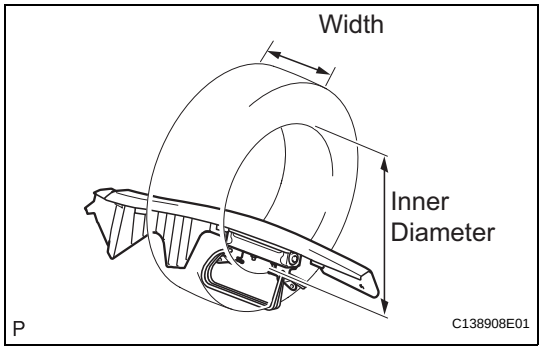

(1) Position the rear seat side airbag assembly inside the tire with the airbag deployment side facing inside.

Tire size:
Must exceed the following dimensions
Width:
185 mm (7.28 in.)
Inner diameter:
360 mm (14.17 in.)

CAUTION:
- **Make sure that the wire harness is tight. If there is slack in wire harness, the rear seat side airbag assembly may become loose due to the shock when the airbag is deployed.**
- **Always tie down the rear seat side airbag assembly with the airbag deployment side facing inside the tire.**

NOTICE:
The tire may be damaged by the airbag deployment, so use an extra tire.

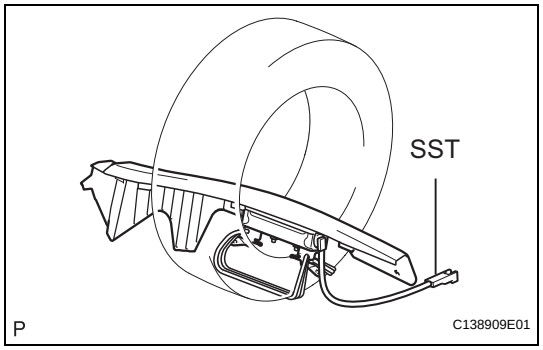

(d) Install the SST.
(1) Connect the SST connector to the rear seat side airbag assembly.
SST 09082-00770

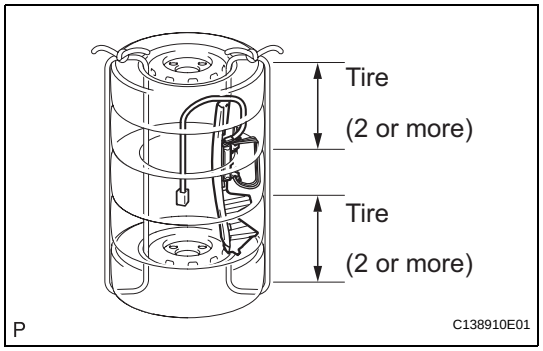

(e) Place the tires.
(1) Place at least 2 tires under the tire which the rear seat side airbag assembly is tied to.
(2) Place at least 2 tires over the tire which the rear seat side airbag assembly is tied to. The top tire should have the disc wheel installed.
NOTICE:
- **The tire may be damaged by the airbag deployment, so use an extra tire.**
- **Do not place the SST connector under the tire because it could be damaged.**

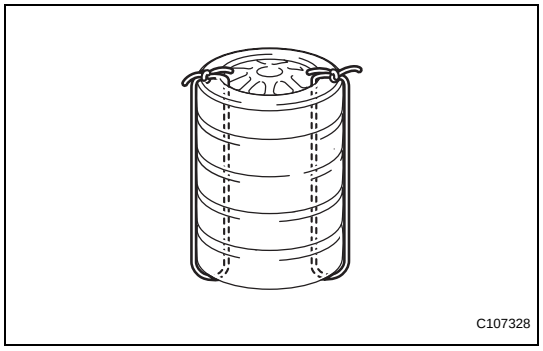

(3) Tie the tires together with 2 wire harnesses.
CAUTION:
Make sure that the wire harness is tight. Looseness in the wire harness results in the tires coming free due to the shock when the airbag is deployed.

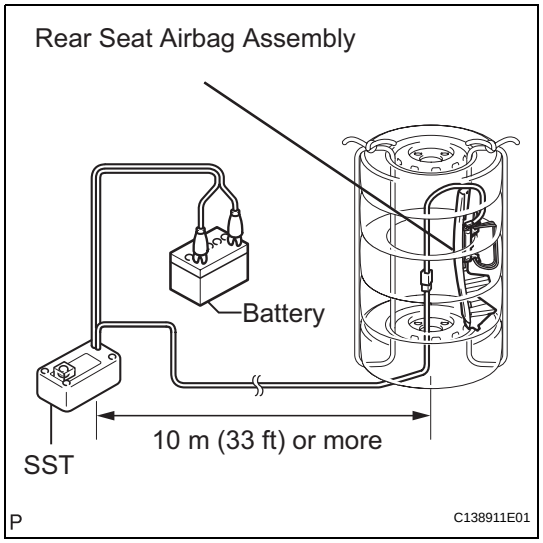

(f) Install the SST.
(1) Connect the SST connector.
SST 09082-00700
NOTICE:
To avoid damaging the SST connector and wire harness, do not lock the secondary lock of the twin lock. Also, secure some slack for the SST wire harness inside the tire.
(2) Move the SST at least 10 m (33 ft) away from the airbag tied down to the tire.

(g) Deploy the airbag.
(1) Connect the red clip of the SST to the battery positive (+) terminal and the black clip of the SST to the battery negative (-) terminal.
(2) Check that no one is within a 10 m (33 ft) radius of the tire which the rear seat side airbag assembly is tied to.

(3) Press the SST activation switch and deploy the airbag.
CAUTION:
When deploying the airbag, make sure that no one is near the tire.
HINT:
The airbag is deployed as the LED of the SST activation switch comes on.

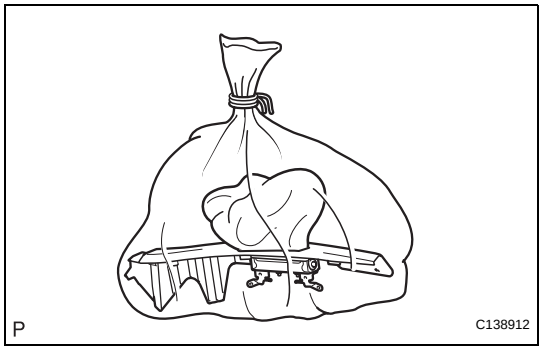

(h) Dispose of the rear seat side airbag assembly.
CAUTION:
- **The rear seat side airbag assembly becomes extremely hot when the airbag is deployed, so do not touch it for at least 30 minutes after deployment.**
- **Use gloves and safety glasses when handling a rear seat side airbag assembly with a deployed airbag.**
- **Do not apply water, etc. to a rear seat side airbag assembly with a deployed airbag.**
- **Always wash your hands with water after completing the operation.**

(1) Remove the rear seat side airbag assembly from the tire.
(2) Place the rear seat side airbag assembly in a plastic bag, tie it tightly and dispose of it as other general part disposal.

REAR SEAT SIDE AIRBAG ASSEMBLY

COMPONENTS

RS

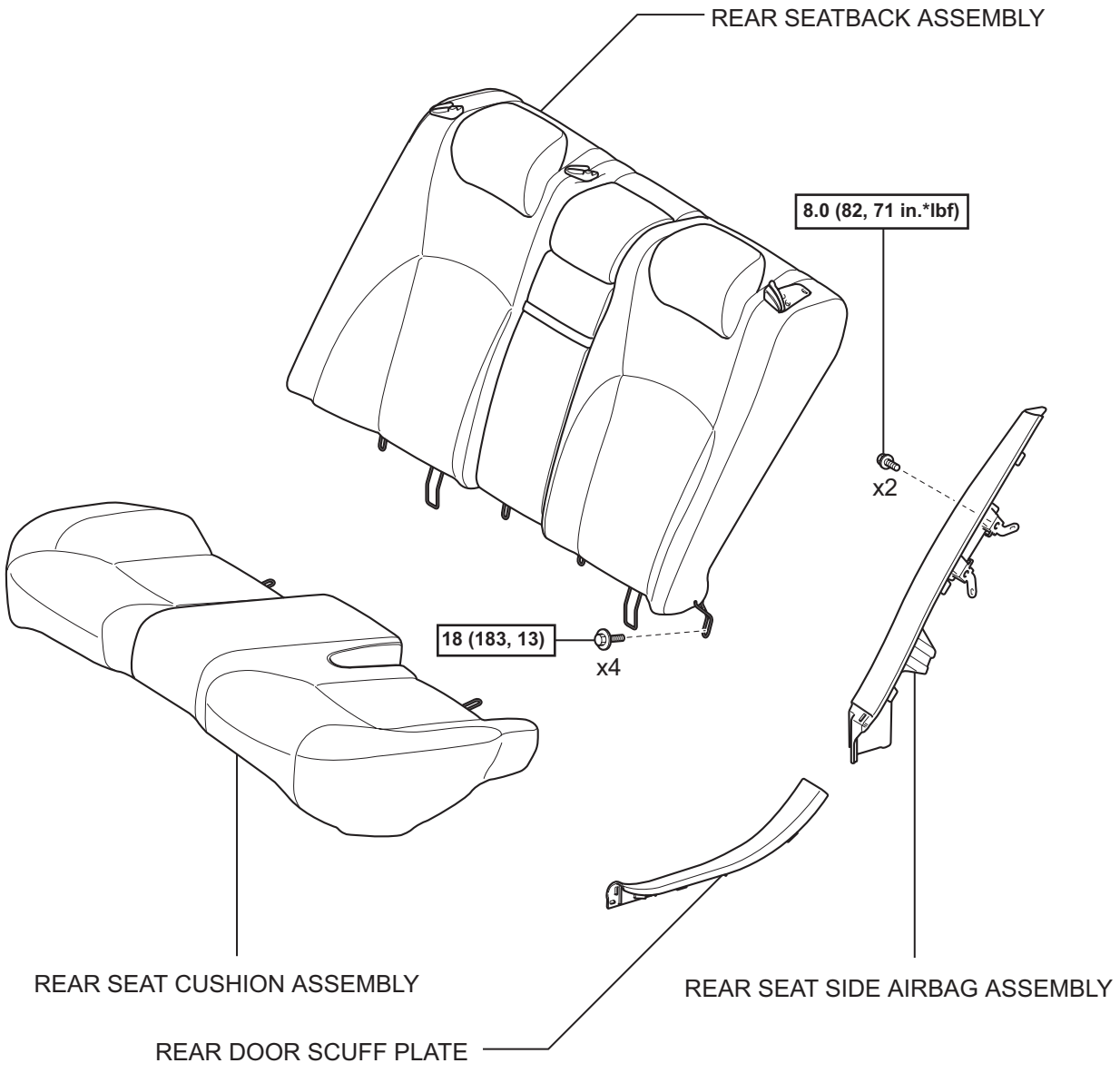

N*m (kgf*cm, ft.*lbf) : Specified torque

C

C138902E01

ON-VEHICLE INSPECTION

1. INSPECT REAR SEAT SIDE AIRBAG ASSEMBLY (VEHICLE NOT INVOLVED IN COLLISION)

(a) Perform a diagnostic system check (see page RS-37).

(b) With the rear seat side airbag assembly installed on the vehicle, perform a visual check. If there are any defects as mentioned below, replace the rear seat side airbag assembly with a new one:
Cuts, minute cracks or marked discoloration on the rear seat side airbag assembly.

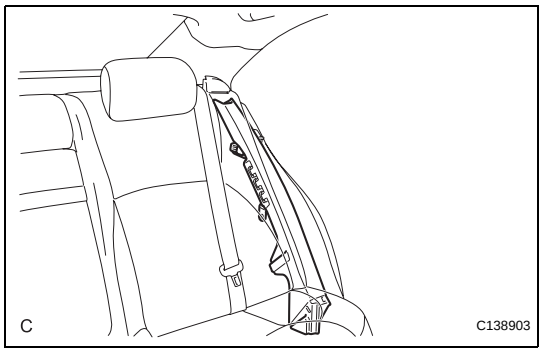

2. INSPECT REAR SEAT SIDE AIRBAG ASSEMBLY (VEHICLE INVOLVED IN COLLISION AND AIRBAG HAS NOT DEPLOYED)

(a) Perform a diagnostic system check (see page RS-37).

(b) With the rear seat side airbag assembly removed from the vehicle, perform a visual check. If there are any defects as mentioned below, replace the rear seat side airbag assembly with a new one:
- Cuts, minute cracks or marked discoloration on the rear seat side airbag assembly.
- Cracks or other damage to the connector.

CAUTION:
Be sure to follow the correct removal and installation procedure.

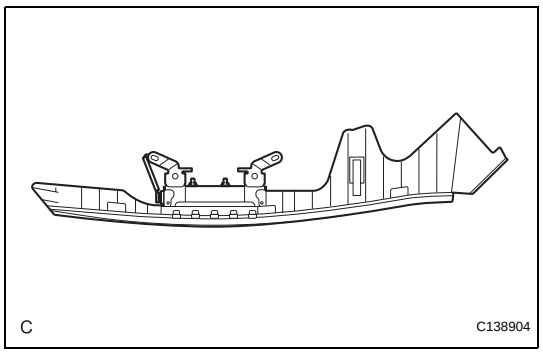

RS

REMOVAL

1. **PRECAUTION**
   CAUTION:
   Be sure to read "PRECAUTION" thoroughly before servicing (See page RS-1).

2. **DISCONNECT CABLE FROM NEGATIVE BATTERY TERMINAL**
   CAUTION:
   Wait for 90 seconds after disconnecting the cable to prevent airbag deployment.

3. **REMOVE REAR SEAT CUSHION ASSEMBLY (See page SE-113)**

4. **REMOVE REAR SEATBACK ASSEMBLY (See page SE-113)**

5. **REMOVE REAR DOOR SCUFF PLATE (See page IR-40)**

6. **REMOVE REAR SEAT SIDE AIRBAG ASSEMBLY**
   (a) Disconnect the rear seat side airbag connector.
   NOTICE:
   When handling the airbag connector, take care not to damage the airbag wire harness.
   (b) Remove the 2 bolts.
   (c) Disengage the 4 claws and remove the rear seat side airbag assembly.

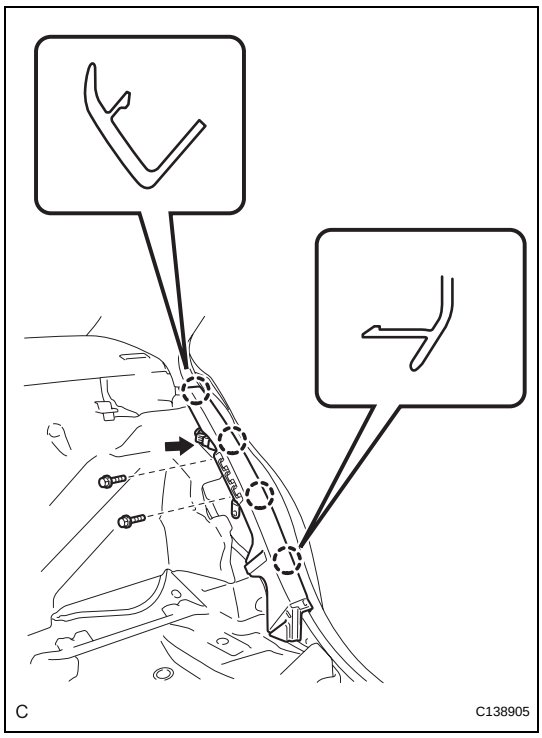

INSTALLATION

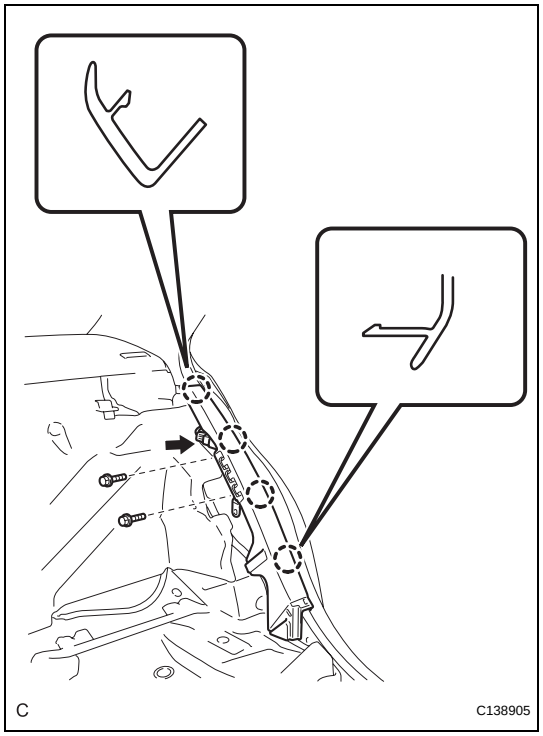

1. INSTALL REAR SEAT SIDE AIRBAG ASSEMBLY

(a) Check that the engine switch is off.

(b) Check that the battery negative (-) cable is disconnected.

CAUTION:
Wait for 90 seconds after disconnecting the cable to prevent airbag deployment.

(c) Engage the 4 claws.

(d) Install the rear seat side airbag assembly with the 2 bolts.

Torque: 8.0 N*m (82 kgf*cm, 71 in.*lbf)

(e) Connect the rear seat side airbag connector.

NOTICE:
When handling the airbag connector, take care not to damage the airbag wire harness.

2. INSTALL REAR DOOR SCUFF PLATE (See page IR-63)

3. INSTALL REAR SEATBACK ASSEMBLY (See page SE-121)

4. INSTALL REAR SEAT CUSHION ASSEMBLY (See page SE-121)

5. CONNECT CABLE TO NEGATIVE BATTERY TERMINAL

6. PERFORM INITIALIZATION

(a) Perform initialization (See page IN-5).

HINT:
Some systems need initialization after reconnecting the cable to the negative battery terminal.

7. INSPECT REAR SEAT SIDE AIRBAG ASSEMBLY (See page RS-459)

8. INSPECT SRS WARNING LIGHT

(a) Inspect the SRS warning light (See page RS-37).

RS

DISPOSAL

HINT:
When scrapping a vehicle equipped with the SRS or disposing of the rear seat side airbag assembly, be sure to deploy the airbag first in accordance with the procedure described below. If any abnormality occurs with the airbag deployment, contact the SERVICE DEPT. of TOYOTA MOTOR SALES, U.S.A., INC.

CAUTION:

- **Never dispose of a rear seat side airbag assembly that has an undeployed airbag.**
- **The airbag produces an exploding sound when it is deployed, so perform the operation outdoors and where it will not create a nuisance to nearby residents.**
- **When deploying the airbag, always use the specified SST (SRS Airbag Deployment Tool). Perform the operation in a place away from electrical noise.**
- **When deploying the airbag, perform the operation at least 10 m (33 ft) away from the rear seat side airbag assembly.**
- **The rear seat side airbag assembly becomes extremely hot when the airbag is deployed, so do not touch it for at least 30 minutes after deployment.**
- **Use gloves and safety glasses when handling a rear seat side airbag assembly with a deployed airbag.**
- **Do not apply water, etc. to a rear seat side airbag assembly with a deployed airbag.**
- **Always wash your hands with water after completing the operation.**

1. DISPOSE OF REAR SEAT SIDE AIRBAG ASSEMBLY (WHEN INSTALLED IN VEHICLE)

HINT:
Prepare a battery as the power source to deploy the airbag.

(a) Check the function of the SST (see page RS-370).
(b) Refer to PRECAUTION (see page RS-1).
(c) Disconnect the cable from the negative battery terminal.
CAUTION:
Wait for 90 seconds after disconnecting the cable to prevent airbag deployment.
(d) Remove the rear seat side airbag assembly (see page RS-459).

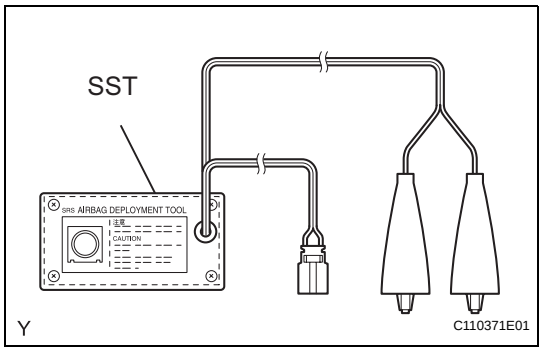

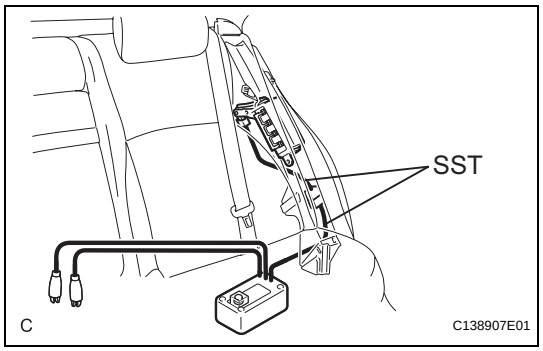

(e) Install the SST.

(1) Connect the SST connector to the rear seat side airbag assembly.
SST 09082-00700, 09082-00750
NOTICE:
To avoid damaging the SST connector and wire harness, do not lock the secondary lock of the twin lock.

(2) Install the rear seat side airbag assembly (see page RS-460).
NOTICE:
Take care not to damage the SST wire harness.

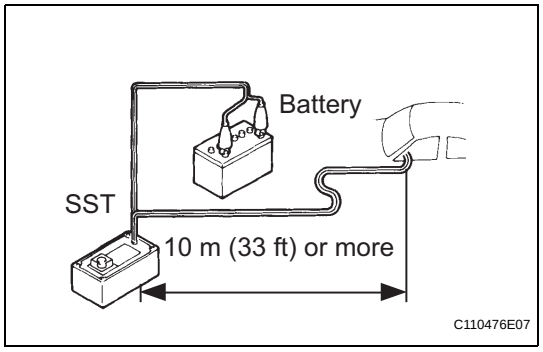

(3) Move the SST at least 10 m (33 ft) away from the vehicle rear side window.

(4) Maintaining enough clearance for the SST wire harness in the rear side window, close all doors and windows of the vehicle.
NOTICE:
Take care not to damage the SST wire harness.

(5) Connect the red clip of the SST to the battery positive (+) terminal and the black clip of the SST to the battery negative (-) terminal.

(f) Deploy the airbag.

(1) Check that no one is inside the vehicle or within a 10 m (33 ft) radius of the vehicle.

(2) Press the SST activation switch and deploy the airbag.
CAUTION:
- **When deploying the airbag, make sure that no one is near the vehicle.**
- **The rear seat side airbag assembly becomes extremely hot when the airbag is deployed, so do not touch it for at least 30 minutes after deployment.**
- **Use gloves and safety glasses when handling a rear seat side airbag assembly with a deployed airbag.**
- **Do not apply water, etc. to a rear seat side airbag assembly with a deployed airbag.**
- **Always wash your hands with water after completing the operation.**

HINT:
The airbag is deployed as the LED of the SST activation switch comes on.

2. DISPOSE OF REAR SEAT SIDE AIRBAG ASSEMBLY (WHEN NOT INSTALLED IN VEHICLE)
NOTICE:
- **When disposing of the rear seat side airbag assembly, never use the customer's vehicle to deploy the airbag.**

RS

- **Be sure to follow the procedure detailed below when deploying the airbag.**

HINT:
Prepare a battery as the power source to deploy the airbag.

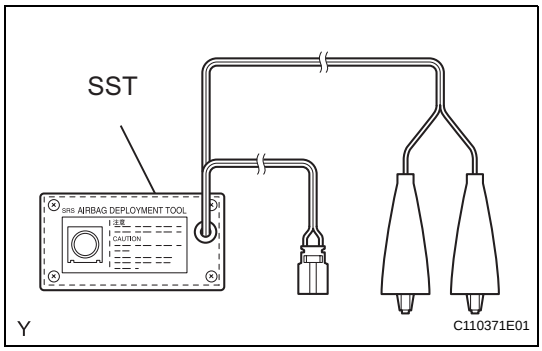

(a) Check the function of the SST (see page RS-372).

(b) Remove the rear seat side airbag assembly (see page RS-459).

CAUTION:
- **When removing the rear seat side airbag assembly, work must be started 90 seconds after the engine switch is turned off and the negative (-) terminal cable is disconnected from the battery.**
- **When storing the rear seat side airbag assembly, keep the airbag deployment side facing upward.**

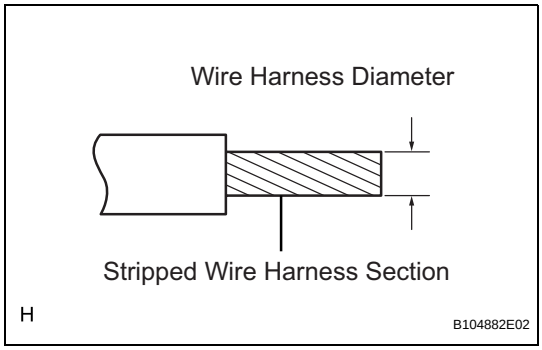

(c) Using a service-purpose wire harness for the vehicle, tie down the rear seat side airbag assembly to the tire.

Wire harness:
Stripped wire harness section
1.25 mm^2 or more (0.0019 in.^{2} or more)

CAUTION:
If the wire harness is too thin or an alternative object is used to tie down the rear seat side airbag assembly, it may be snapped by the shock when the airbag is deployed. Always use a wire harness for vehicle use with an area of at least 1.25 mm^2 (0.0019 in.^{2}).

HINT:
To calculate the area of the stripped wire harness section:

Area = 3.14 x (Diameter)^2 divided by 4

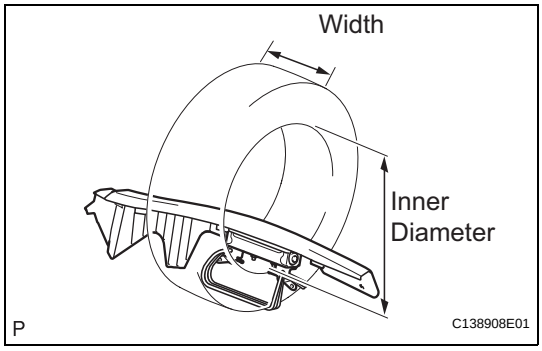

(1) Position the rear seat side airbag assembly inside the tire with the airbag deployment side facing inside.

Tire size:
Must exceed the following dimensions
Width:
185 mm (7.28 in.)
Inner diameter:
360 mm (14.17 in.)

CAUTION:
- **Make sure that the wire harness is tight. If there is slack in wire harness, the rear seat side airbag assembly may become loose due to the shock when the airbag is deployed.**
- **Always tie down the rear seat side airbag assembly with the airbag deployment side facing inside the tire.**

NOTICE:
The tire may be damaged by the airbag deployment, so use an extra tire.

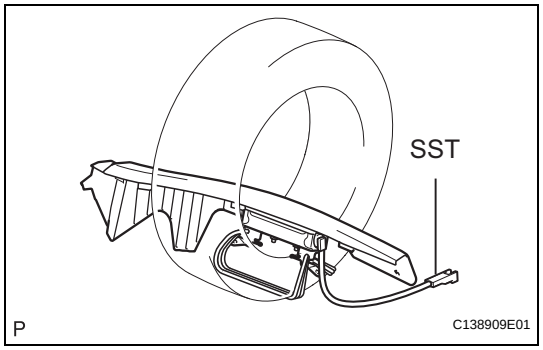

(d) Install the SST.
(1) Connect the SST connector to the rear seat side airbag assembly.
SST 09082-00770

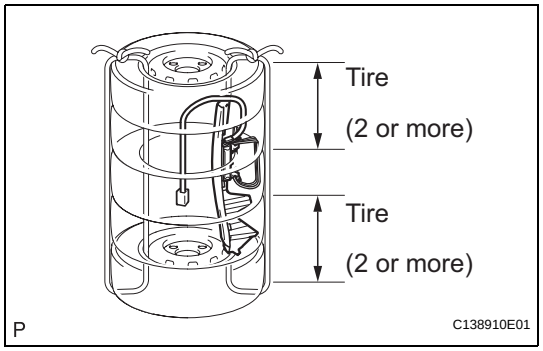

(e) Place the tires.
(1) Place at least 2 tires under the tire which the rear seat side airbag assembly is tied to.
(2) Place at least 2 tires over the tire which the rear seat side airbag assembly is tied to. The top tire should have the disc wheel installed.
NOTICE:
- **The tire may be damaged by the airbag deployment, so use an extra tire.**
- **Do not place the SST connector under the tire because it could be damaged.**

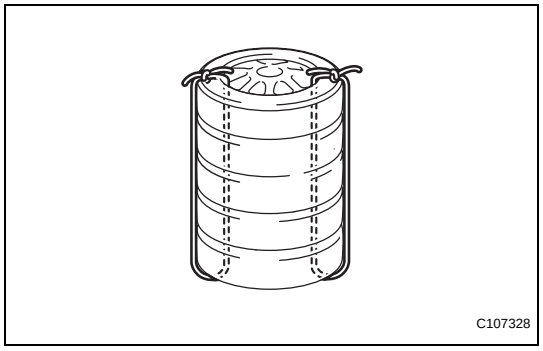

(3) Tie the tires together with 2 wire harnesses.
CAUTION:
Make sure that the wire harness is tight. Looseness in the wire harness results in the tires coming free due to the shock when the airbag is deployed.

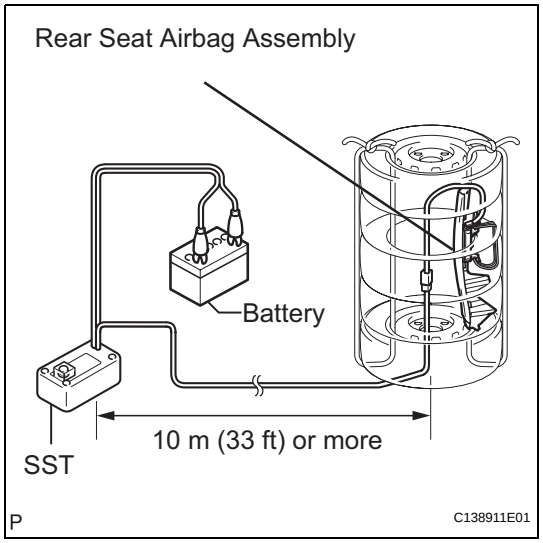

(f) Install the SST.
(1) Connect the SST connector.
SST 09082-00700
NOTICE:
To avoid damaging the SST connector and wire harness, do not lock the secondary lock of the twin lock. Also, secure some slack for the SST wire harness inside the tire.
(2) Move the SST at least 10 m (33 ft) away from the airbag tied down to the tire.

(g) Deploy the airbag.
(1) Connect the red clip of the SST to the battery positive (+) terminal and the black clip of the SST to the battery negative (-) terminal.
(2) Check that no one is within a 10 m (33 ft) radius of the tire which the rear seat side airbag assembly is tied to.

(3) Press the SST activation switch and deploy the airbag.
CAUTION:
When deploying the airbag, make sure that no one is near the tire.
HINT:
The airbag is deployed as the LED of the SST activation switch comes on.

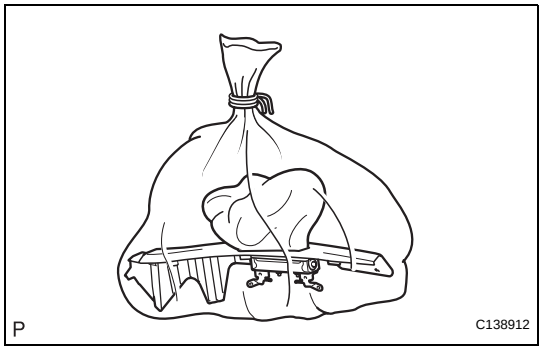

(h) Dispose of the rear seat side airbag assembly.
CAUTION:
- **The rear seat side airbag assembly becomes extremely hot when the airbag is deployed, so do not touch it for at least 30 minutes after deployment.**
- **Use gloves and safety glasses when handling a rear seat side airbag assembly with a deployed airbag.**
- **Do not apply water, etc. to a rear seat side airbag assembly with a deployed airbag.**
- **Always wash your hands with water after completing the operation.**

(1) Remove the rear seat side airbag assembly from the tire.
(2) Place the rear seat side airbag assembly in a plastic bag, tie it tightly and dispose of it as other general part disposal.

ON-VEHICLE INSPECTION

1. INSPECT CENTER AIRBAG SENSOR ASSEMBLY (VEHICLE NOT INVOLVED IN COLLISION)

(a) Perform a diagnostic system check (See page RS-37).

2. INSPECT CENTER AIRBAG SENSOR ASSEMBLY (VEHICLE INVOLVED IN COLLISION AND AIRBAG HAS NOT DEPLOYED)

(a) Perform a diagnostic system check (See page RS-37).

3. INSPECT CENTER AIRBAG SENSOR ASSEMBLY (VEHICLE INVOLVED IN COLLISION AND AIRBAG IS DEPLOYED)

(a) Replace the center airbag sensor assembly.

CAUTION:

Be sure to follow the correct removal and installation procedures.

HINT:

The center airbag sensor assembly should be replaced after any of the airbags has deployed, as it has been subjected to the impact.

REMOVAL

1. **PRECAUTION**
   CAUTION:
   Be sure to read "PRECAUTION" thoroughly before servicing (See page RS-1).
2. **DISCONNECT CABLE FROM NEGATIVE BATTERY TERMINAL**
   CAUTION:
   Wait for 90 seconds after disconnecting the cable to prevent airbag deployment.
3. **REMOVE FRONT DOOR SCUFF PLATE LH (See page IR-40)**
4. **REMOVE FRONT DOOR OPENING TRIM COVER LH (See page IR-39)**
5. **REMOVE SIDE INSTRUMENT PANEL LH (See page IP-12)**
6. **REMOVE INSTRUMENT PANEL FINISH PANEL END LH (See page IP-13)**
7. **REMOVE LOWER INSTRUMENT PANEL SUB-ASSEMBLY (See page IP-13)**
8. **REMOVE INSTRUMENT PANEL FINISH PANEL END RH (See page IP-15)**
9. **REMOVE FRONT DOOR SCUFF PLATE RH (See page IR-42)**
10. **REMOVE FRONT DOOR OPENING TRIM COVER RH (See page IR-42)**
11. **REMOVE NO. 2 INSTRUMENT PANEL UNDER COVER SUB-ASSEMBLY (See page IP-15)**
12. **REMOVE SIDE INSTRUMENT PANEL RH (See page IP-15)**
13. **REMOVE FRONT PASSENGER SIDE KNEE AIRBAG ASSEMBLY (See page RS-396)**
14. **REMOVE LOWER INSTRUMENT PANEL RH (See page IP-16)**
15. **REMOVE SHIFT LEVER KNOB SUB-ASSEMBLY (See page IP-16)**
16. **REMOVE UPPER CONSOLE PANEL ASSEMBLY WITH FRONT ASH RECEPTACLE (See page IP-16)**
17. **REMOVE CONSOLE BOX POCKET (See page IP-18)**
18. **REMOVE CONSOLE BOX CARPET (See page IP-18)**
19. **REMOVE CONSOLE REAR END PANEL SUB-ASSEMBLY (See page IP-19)**
20. **REMOVE REAR CONSOLE BOX ASSEMBLY (See page IP-19)**

21. REMOVE FLOOR CARPET BRACKET LH (See page PB-11)

22. REMOVE FLOOR CARPET BRACKET RH (See page PB-11)

23. REMOVE NO. 2 CONSOLE BOX DUCT (See page AC-149)

24. REMOVE NO. 3 CONSOLE BOX DUCT (See page AC-149)

25. REMOVE NO. 1 CONSOLE BOX DUCT (See page AC-149)

26. REMOVE CENTER AIRBAG SENSOR ASSEMBLY

(a) Turn back the carpet.

(b) Disconnect the holder (with connectors).

(c) Remove the 3 bolts and center airbag sensor assembly.

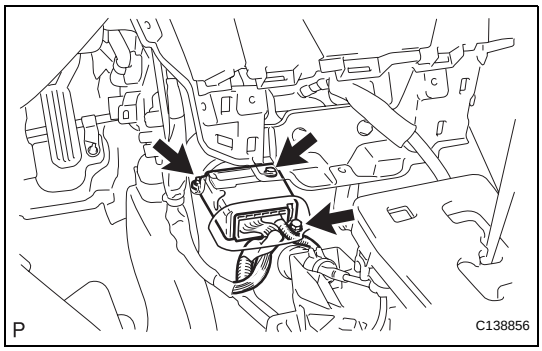

ON-VEHICLE INSPECTION

1. INSPECT CENTER AIRBAG SENSOR ASSEMBLY (VEHICLE NOT INVOLVED IN COLLISION)

(a) Perform a diagnostic system check (See page RS-37).

2. INSPECT CENTER AIRBAG SENSOR ASSEMBLY (VEHICLE INVOLVED IN COLLISION AND AIRBAG HAS NOT DEPLOYED)

(a) Perform a diagnostic system check (See page RS-37).

3. INSPECT CENTER AIRBAG SENSOR ASSEMBLY (VEHICLE INVOLVED IN COLLISION AND AIRBAG IS DEPLOYED)

(a) Replace the center airbag sensor assembly.

CAUTION:

Be sure to follow the correct removal and installation procedures.

HINT:

The center airbag sensor assembly should be replaced after any of the airbags has deployed, as it has been subjected to the impact.

REMOVAL

1. **PRECAUTION**
   CAUTION:
   Be sure to read "PRECAUTION" thoroughly before servicing (See page RS-1).
2. **DISCONNECT CABLE FROM NEGATIVE BATTERY TERMINAL**
   CAUTION:
   Wait for 90 seconds after disconnecting the cable to prevent airbag deployment.
3. **REMOVE FRONT DOOR SCUFF PLATE LH (See page IR-40)**
4. **REMOVE FRONT DOOR OPENING TRIM COVER LH (See page IR-39)**
5. **REMOVE SIDE INSTRUMENT PANEL LH (See page IP-12)**
6. **REMOVE INSTRUMENT PANEL FINISH PANEL END LH (See page IP-13)**
7. **REMOVE LOWER INSTRUMENT PANEL SUB-ASSEMBLY (See page IP-13)**
8. **REMOVE INSTRUMENT PANEL FINISH PANEL END RH (See page IP-15)**
9. **REMOVE FRONT DOOR SCUFF PLATE RH (See page IR-42)**
10. **REMOVE FRONT DOOR OPENING TRIM COVER RH (See page IR-42)**
11. **REMOVE NO. 2 INSTRUMENT PANEL UNDER COVER SUB-ASSEMBLY (See page IP-15)**
12. **REMOVE SIDE INSTRUMENT PANEL RH (See page IP-15)**
13. **REMOVE FRONT PASSENGER SIDE KNEE AIRBAG ASSEMBLY (See page RS-396)**
14. **REMOVE LOWER INSTRUMENT PANEL RH (See page IP-16)**
15. **REMOVE SHIFT LEVER KNOB SUB-ASSEMBLY (See page IP-16)**
16. **REMOVE UPPER CONSOLE PANEL ASSEMBLY WITH FRONT ASH RECEPTACLE (See page IP-16)**
17. **REMOVE CONSOLE BOX POCKET (See page IP-18)**
18. **REMOVE CONSOLE BOX CARPET (See page IP-18)**
19. **REMOVE CONSOLE REAR END PANEL SUB-ASSEMBLY (See page IP-19)**
20. **REMOVE REAR CONSOLE BOX ASSEMBLY (See page IP-19)**

21. REMOVE FLOOR CARPET BRACKET LH (See page PB-11)

22. REMOVE FLOOR CARPET BRACKET RH (See page PB-11)

23. REMOVE NO. 2 CONSOLE BOX DUCT (See page AC-149)

24. REMOVE NO. 3 CONSOLE BOX DUCT (See page AC-149)

25. REMOVE NO. 1 CONSOLE BOX DUCT (See page AC-149)

26. REMOVE CENTER AIRBAG SENSOR ASSEMBLY

(a) Turn back the carpet.

(b) Disconnect the holder (with connectors).

(c) Remove the 3 bolts and center airbag sensor assembly.

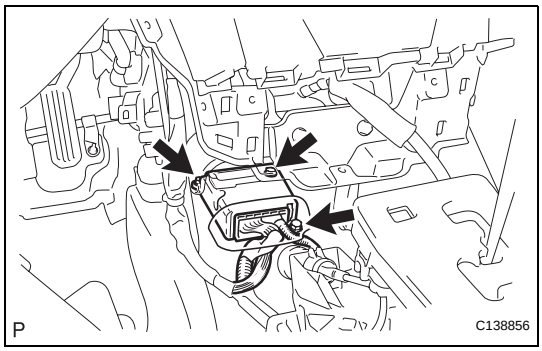

INSTALLATION

1. **INSTALL CENTER AIRBAG SENSOR ASSEMBLY**
   (a) Check that the engine switch is off.
   (b) Check that the battery negative (-) cable is disconnected.
   CAUTION:
   Wait for 90 seconds after disconnecting the cable to prevent airbag deployment.
   (c) Install the center airbag sensor assembly with the 3 bolts.
   Torque: 18 N*m (184 kgf*cm, 13 ft.*lbf)
   NOTICE:
   - **If the center airbag sensor assembly has been dropped, or there are any cracks, dents or other defects in the case, bracket or connector, replace it with a new one.**
   - **When installing the center airbag sensor assembly, be careful that the SRS wiring does not interfere with other parts and that it is not pinched between other parts.**

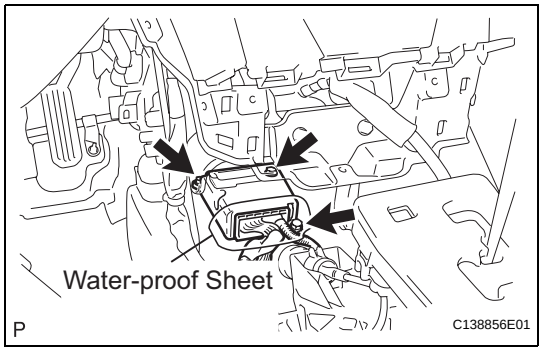

   (d) Check that there is no looseness in the installation parts of the center airbag sensor assembly.
   (e) Connect the holder (with connectors).
   (f) Check that the water-proof sheet is properly set.
2. **INSTALL NO. 1 CONSOLE BOX DUCT (See page AC-163)**
3. **INSTALL NO. 3 CONSOLE BOX DUCT (See page AC-163)**
4. **INSTALL NO. 2 CONSOLE BOX DUCT (See page AC-163)**
5. **INSTALL FLOOR CARPET BRACKET RH (See page PB-19)**
6. **INSTALL FLOOR CARPET BRACKET LH (See page PB-19)**
7. **INSTALL REAR CONSOLE BOX ASSEMBLY (See page IP-39)**
8. **INSTALL CONSOLE REAR END PANEL SUB-ASSEMBLY (See page IP-40)**
9. **INSTALL CONSOLE BOX CARPET (See page IP-41)**
10. **INSTALL CONSOLE BOX POCKET (See page IP-41)**
11. **INSTALL UPPER CONSOLE PANEL ASSEMBLY WITH FRONT ASH RECEPTACLE (See page IP-42)**
12. **INSTALL SHIFT LEVER KNOB SUB-ASSEMBLY (See page IP-42)**
13. **INSTALL LOWER INSTRUMENT PANEL RH (See page IP-42)**

14. INSTALL FRONT PASSENGER SIDE KNEE AIRBAG ASSEMBLY (See page RS-396)

15. INSTALL SIDE INSTRUMENT PANEL RH (See page IP-43)

16. INSTALL NO. 2 INSTRUMENT PANEL UNDER COVER SUB-ASSEMBLY (See page IP-44)

17. INSTALL FRONT DOOR OPENING TRIM COVER RH (See page IR-65)

18. INSTALL FRONT DOOR SCUFF PLATE RH (See page IR-65)

19. INSTALL INSTRUMENT PANEL FINISH PANEL END RH (See page IP-44)

20. INSTALL LOWER INSTRUMENT PANEL SUB-ASSEMBLY (See page IP-46)

21. INSTALL INSTRUMENT PANEL FINISH PANEL END LH (See page IP-46)

22. INSTALL SIDE INSTRUMENT PANEL LH (See page IP-47)

23. INSTALL FRONT DOOR OPENING TRIM COVER LH (See page IR-64)

24. INSTALL FRONT DOOR SCUFF PLATE LH (See page IR-65)

25. CONNECT CABLE TO NEGATIVE BATTERY TERMINAL

26. PERFORM INITIALIZATION

(a) Perform initialization (See page IN-33).
HINT:
Some systems need initialization after reconnecting the cable to the negative battery terminal.

27. INSPECT SRS WARNING LIGHT

(a) Inspect the SRS warning light (See page RS-37).

INSTALLATION

1. **INSTALL CENTER AIRBAG SENSOR ASSEMBLY**
   (a) Check that the engine switch is off.
   (b) Check that the battery negative (-) cable is disconnected.
   CAUTION:
   Wait for 90 seconds after disconnecting the cable to prevent airbag deployment.
   (c) Install the center airbag sensor assembly with the 3 bolts.
   Torque: 18 N*m (184 kgf*cm, 13 ft.*lbf)
   NOTICE:
   - **If the center airbag sensor assembly has been dropped, or there are any cracks, dents or other defects in the case, bracket or connector, replace it with a new one.**
   - **When installing the center airbag sensor assembly, be careful that the SRS wiring does not interfere with other parts and that it is not pinched between other parts.**

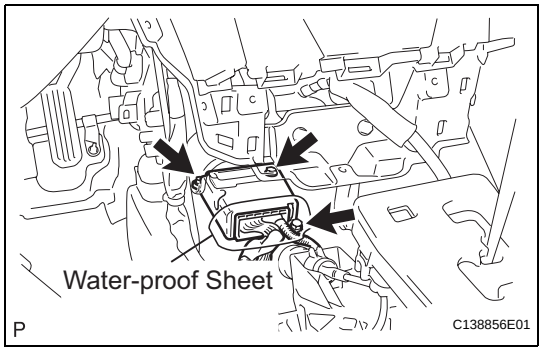

   (d) Check that there is no looseness in the installation parts of the center airbag sensor assembly.
   (e) Connect the holder (with connectors).
   (f) Check that the water-proof sheet is properly set.
2. **INSTALL NO. 1 CONSOLE BOX DUCT (See page AC-163)**
3. **INSTALL NO. 3 CONSOLE BOX DUCT (See page AC-163)**
4. **INSTALL NO. 2 CONSOLE BOX DUCT (See page AC-163)**
5. **INSTALL FLOOR CARPET BRACKET RH (See page PB-19)**
6. **INSTALL FLOOR CARPET BRACKET LH (See page PB-19)**
7. **INSTALL REAR CONSOLE BOX ASSEMBLY (See page IP-39)**
8. **INSTALL CONSOLE REAR END PANEL SUB-ASSEMBLY (See page IP-40)**
9. **INSTALL CONSOLE BOX CARPET (See page IP-41)**
10. **INSTALL CONSOLE BOX POCKET (See page IP-41)**
11. **INSTALL UPPER CONSOLE PANEL ASSEMBLY WITH FRONT ASH RECEPTACLE (See page IP-42)**
12. **INSTALL SHIFT LEVER KNOB SUB-ASSEMBLY (See page IP-42)**
13. **INSTALL LOWER INSTRUMENT PANEL RH (See page IP-42)**

14. INSTALL FRONT PASSENGER SIDE KNEE AIRBAG ASSEMBLY (See page RS-396)

15. INSTALL SIDE INSTRUMENT PANEL RH (See page IP-43)

16. INSTALL NO. 2 INSTRUMENT PANEL UNDER COVER SUB-ASSEMBLY (See page IP-44)

17. INSTALL FRONT DOOR OPENING TRIM COVER RH (See page IR-65)

18. INSTALL FRONT DOOR SCUFF PLATE RH (See page IR-65)

19. INSTALL INSTRUMENT PANEL FINISH PANEL END RH (See page IP-44)

20. INSTALL LOWER INSTRUMENT PANEL SUB-ASSEMBLY (See page IP-46)

21. INSTALL INSTRUMENT PANEL FINISH PANEL END LH (See page IP-46)

22. INSTALL SIDE INSTRUMENT PANEL LH (See page IP-47)

23. INSTALL FRONT DOOR OPENING TRIM COVER LH (See page IR-64)

24. INSTALL FRONT DOOR SCUFF PLATE LH (See page IR-65)

25. CONNECT CABLE TO NEGATIVE BATTERY TERMINAL

26. PERFORM INITIALIZATION

(a) Perform initialization (See page IN-33).
HINT:
Some systems need initialization after reconnecting the cable to the negative battery terminal.

27. INSPECT SRS WARNING LIGHT

(a) Inspect the SRS warning light (See page RS-37).

RS

REMOVAL

HINT:
- Use the same procedures for the RH side and LH side.
- The procedures listed below are for the LH side.

1. **PRECAUTION**
   CAUTION:
   Be sure to read "PRECAUTION" thoroughly before servicing (See page RS-1).
2. **DISCONNECT CABLE FROM NEGATIVE BATTERY TERMINAL**
   CAUTION:
   Wait for 90 seconds after disconnecting the cable to prevent airbag deployment.
3. **REMOVE FRONT WHEEL OPENING EXTENSION PAD LH**
4. **REMOVE FRONT WHEEL OPENING EXTENSION PAD RH**
5. **REMOVE ENGINE UNDER COVER RH**
6. **REMOVE ENGINE UNDER COVER LH**
7. **REMOVE FRONT AIRBAG SENSOR**
   (a) Remove the bolt and front airbag sensor from the body.
   (b) Disconnect the connector from the front airbag sensor.

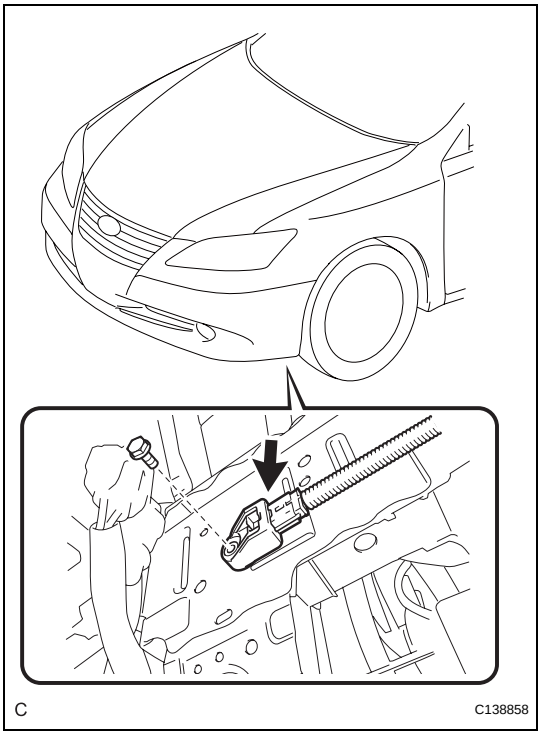

INSTALLATION

1. INSTALL FRONT AIRBAG SENSOR

(a) Check that the engine switch is off.

(b) Check that the battery negative (-) cable is disconnected.

CAUTION:
Wait for 90 seconds after disconnecting the cable to prevent airbag deployment.

(c) Connect the connector.

(d) Install the front airbag sensor with the bolt.
Torque: 18 N*m (184 kgf*cm, 13 ft.*lbf)
NOTICE:
- **If the front airbag sensor has been dropped, or there are any cracks, dents or other defects in the case, bracket or connector, replace it with a new one.**
- **When installing the front airbag sensor, be careful that the SRS wiring does not interfere with other parts and that it is not pinched between other parts.**

(e) Check that there is no looseness in the installation parts of the front airbag sensor.

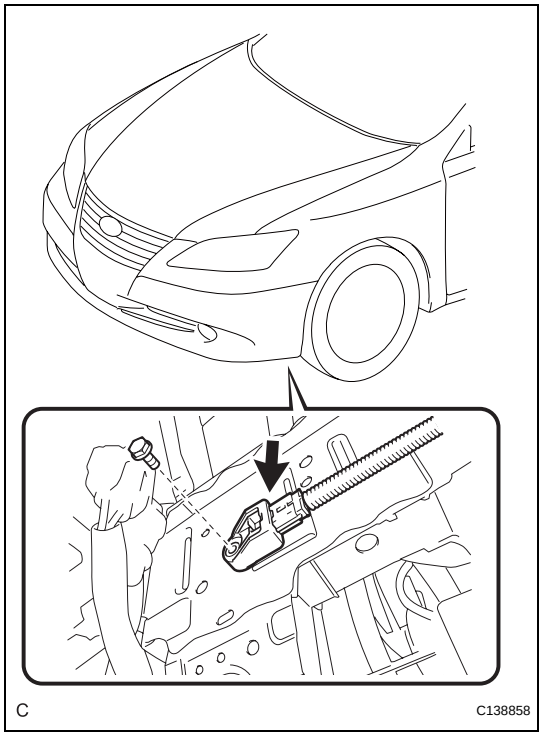

2. INSTALL ENGINE UNDER COVER LH

3. INSTALL ENGINE UNDER COVER RH

4. INSTALL FRONT WHEEL OPENING EXTENSION PAD RH

5. INSTALL FRONT WHEEL OPENING EXTENSION PAD LH

6. CONNECT CABLE TO NEGATIVE BATTERY TERMINAL

7. PERFORM INITIALIZATION

(a) Perform initialization (See page IN-33).
HINT:
Some systems need initialization after reconnecting the cable to the negative battery terminal.

8. INSPECT SRS WARNING LIGHT

(a) Inspect the SRS warning light (See page RS-37).

RS

REMOVAL

HINT:
- Use the same procedures for the RH side and LH side.
- The procedures listed below are for the LH side.

1. **PRECAUTION**
   CAUTION:
   Be sure to read "PRECAUTION" thoroughly before servicing (See page RS-1).
2. **DISCONNECT CABLE FROM NEGATIVE BATTERY TERMINAL**
   CAUTION:
   Wait for 90 seconds after disconnecting the cable to prevent airbag deployment.
3. **REMOVE FRONT WHEEL OPENING EXTENSION PAD LH**
4. **REMOVE FRONT WHEEL OPENING EXTENSION PAD RH**
5. **REMOVE ENGINE UNDER COVER RH**
6. **REMOVE ENGINE UNDER COVER LH**
7. **REMOVE FRONT AIRBAG SENSOR**
   (a) Remove the bolt and front airbag sensor from the body.
   (b) Disconnect the connector from the front airbag sensor.

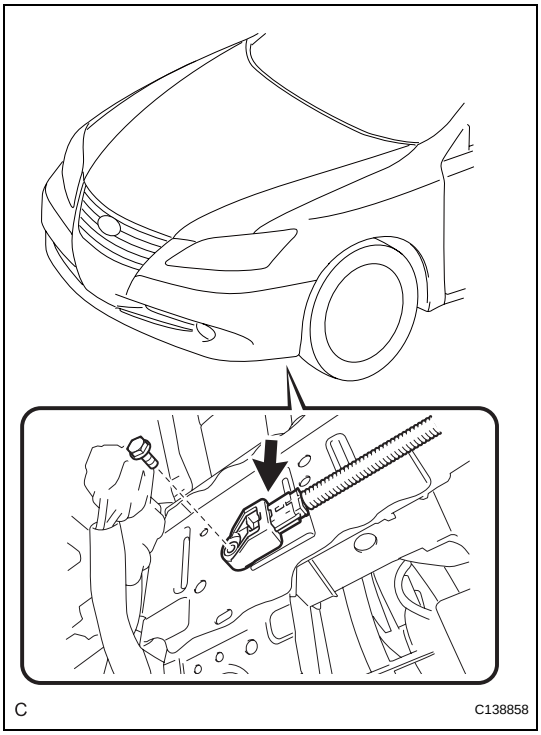

INSTALLATION

1. INSTALL FRONT AIRBAG SENSOR

(a) Check that the engine switch is off.

(b) Check that the battery negative (-) cable is disconnected.

CAUTION:
Wait for 90 seconds after disconnecting the cable to prevent airbag deployment.

(c) Connect the connector.

(d) Install the front airbag sensor with the bolt.
Torque: 18 N*m (184 kgf*cm, 13 ft.*lbf)
NOTICE:
- **If the front airbag sensor has been dropped, or there are any cracks, dents or other defects in the case, bracket or connector, replace it with a new one.**
- **When installing the front airbag sensor, be careful that the SRS wiring does not interfere with other parts and that it is not pinched between other parts.**

(e) Check that there is no looseness in the installation parts of the front airbag sensor.

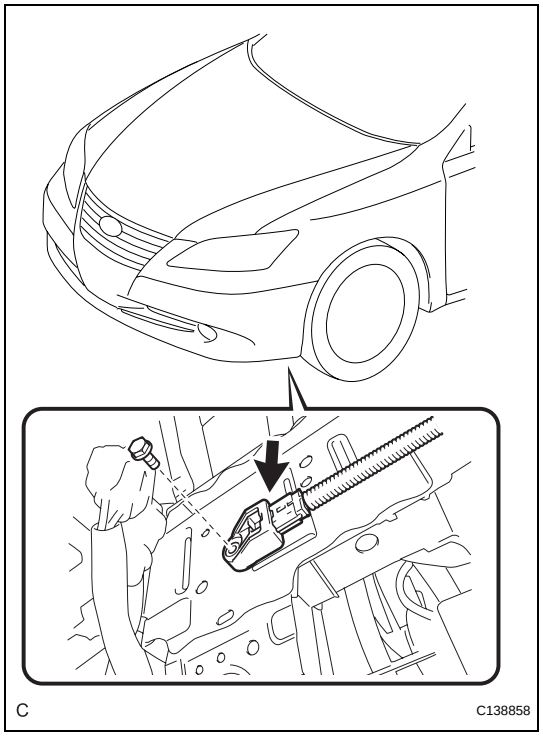

2. INSTALL ENGINE UNDER COVER LH

3. INSTALL ENGINE UNDER COVER RH

4. INSTALL FRONT WHEEL OPENING EXTENSION PAD RH

5. INSTALL FRONT WHEEL OPENING EXTENSION PAD LH

6. CONNECT CABLE TO NEGATIVE BATTERY TERMINAL

7. PERFORM INITIALIZATION

(a) Perform initialization (See page IN-33).
HINT:
Some systems need initialization after reconnecting the cable to the negative battery terminal.

8. INSPECT SRS WARNING LIGHT

(a) Inspect the SRS warning light (See page RS-37).

RS

REMOVAL

HINT:
- Use the same procedures for the RH side and LH side.
- The procedures listed below are for the LH side.

1. **PRECAUTION**
   CAUTION:
   Be sure to read "PRECAUTION" thoroughly before servicing (See page RS-1).
2. **DISCONNECT CABLE FROM NEGATIVE BATTERY TERMINAL**
   CAUTION:
   Wait for 90 seconds after disconnecting the cable to prevent airbag deployment.
3. **REMOVE FRONT DOOR SCUFF PLATE (See page IR-39)**
4. **REMOVE REAR DOOR SCUFF PLATE (See page IR-40)**
5. **REMOVE LOWER CENTER PILLAR GARNISH (See page IR-40)**
6. **REMOVE SIDE AIRBAG SENSOR**
   (a) Remove the nut and separate the side airbag sensor from the body.
   (b) Disconnect the side airbag sensor connector and remove it.
   NOTICE:
   When handling the sensor connector, take care not to damage the wire harness.

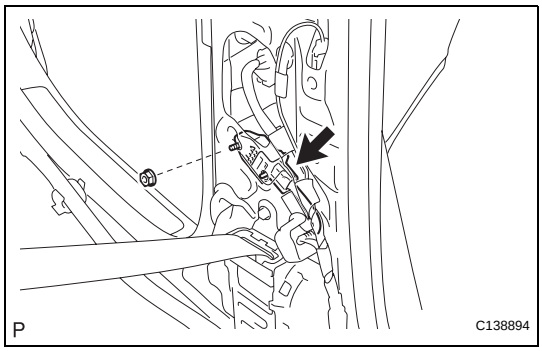

INSTALLATION

1. INSTALL SIDE AIRBAG SENSOR

(a) Check that the engine switch is off.

(b) Check that the battery negative (-) cable is disconnected.

CAUTION:
Wait for 90 seconds after disconnecting the cable to prevent airbag deployment.

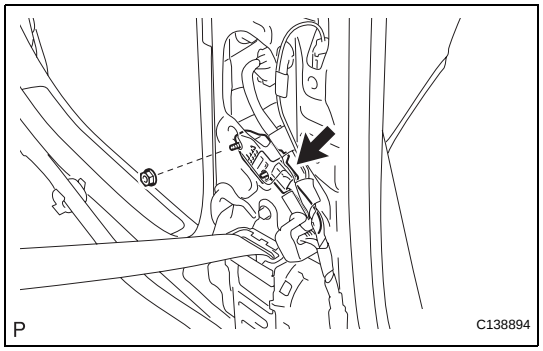

(c) Connect the side airbag sensor connector.

NOTICE:
When handling the sensor connector, take care not to damage the wire harness.

(d) Install the side airbag sensor with the nut.

Torque: 9.0 N*m (92 kgf*cm, 80 in.*lbf)

NOTICE:

- **Do not damage the stopper of the sensor when installing the nut.**
- **If the side airbag sensor has been dropped, or there are any cracks, dents or other defects in the case, bracket or connector, replace it with a new one.**
- **When installing the side airbag sensor, be careful that the SRS wiring does not interfere with other parts and that it is not pinched between other parts.**

(e) Check that there is no looseness in the installation parts of the side airbag sensor.

2. INSTALL LOWER CENTER PILLAR GARNISH (See page IR-63)

3. INSTALL REAR DOOR SCUFF PLATE (See page IR-63)

4. INSTALL FRONT DOOR SCUFF PLATE (See page IR-65)

5. CONNECT CABLE TO NEGATIVE BATTERY TERMINAL

6. PERFORM INITIALIZATION

(a) Perform initialization (See page IN-33).

HINT:
Some systems need initialization after reconnecting the cable to the negative battery terminal.

7. INSPECT SRS WARNING LIGHT

(a) Inspect the SRS warning light (See page RS-37).

RS

REMOVAL

HINT:
- Use the same procedures for the RH side and LH side.
- The procedures listed below are for the LH side.

1. **PRECAUTION**
   CAUTION:
   Be sure to read "PRECAUTION" thoroughly before servicing (See page RS-1).
2. **DISCONNECT CABLE FROM NEGATIVE BATTERY TERMINAL**
   CAUTION:
   Wait for 90 seconds after disconnecting the cable to prevent airbag deployment.
3. **REMOVE FRONT DOOR SCUFF PLATE (See page IR-39)**
4. **REMOVE REAR DOOR SCUFF PLATE (See page IR-40)**
5. **REMOVE LOWER CENTER PILLAR GARNISH (See page IR-40)**
6. **REMOVE SIDE AIRBAG SENSOR**
   (a) Remove the nut and separate the side airbag sensor from the body.
   (b) Disconnect the side airbag sensor connector and remove it.
   NOTICE:
   When handling the sensor connector, take care not to damage the wire harness.

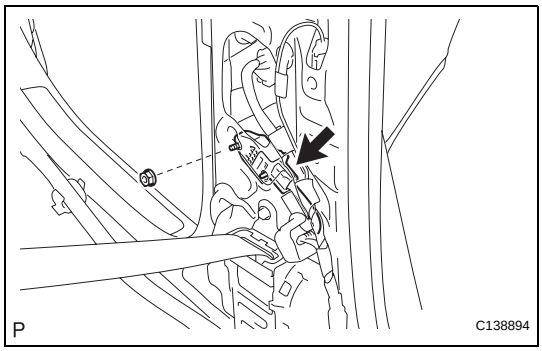

INSTALLATION

1. INSTALL SIDE AIRBAG SENSOR

(a) Check that the engine switch is off.

(b) Check that the battery negative (-) cable is disconnected.

CAUTION:
Wait for 90 seconds after disconnecting the cable to prevent airbag deployment.

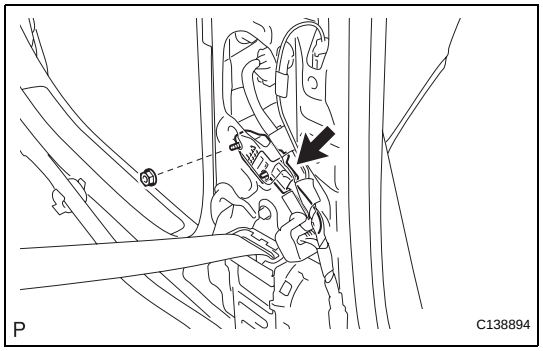

(c) Connect the side airbag sensor connector.

NOTICE:
When handling the sensor connector, take care not to damage the wire harness.

(d) Install the side airbag sensor with the nut.

Torque: 9.0 N*m (92 kgf*cm, 80 in.*lbf)

NOTICE:

- **Do not damage the stopper of the sensor when installing the nut.**
- **If the side airbag sensor has been dropped, or there are any cracks, dents or other defects in the case, bracket or connector, replace it with a new one.**
- **When installing the side airbag sensor, be careful that the SRS wiring does not interfere with other parts and that it is not pinched between other parts.**

(e) Check that there is no looseness in the installation parts of the side airbag sensor.

2. INSTALL LOWER CENTER PILLAR GARNISH (See page IR-63)

3. INSTALL REAR DOOR SCUFF PLATE (See page IR-63)

4. INSTALL FRONT DOOR SCUFF PLATE (See page IR-65)

5. CONNECT CABLE TO NEGATIVE BATTERY TERMINAL

6. PERFORM INITIALIZATION

(a) Perform initialization (See page IN-33).

HINT:
Some systems need initialization after reconnecting the cable to the negative battery terminal.

7. INSPECT SRS WARNING LIGHT

(a) Inspect the SRS warning light (See page RS-37).

REMOVAL

HINT:
- Use the same procedures for the RH side and LH side.
- The procedures listed below are for the LH side.

1. **PRECAUTION**
   CAUTION:
   Be sure to read "PRECAUTION" thoroughly before servicing (See page RS-1).
2. **DISCONNECT CABLE FROM NEGATIVE BATTERY TERMINAL**
   CAUTION:
   Wait for 90 seconds after disconnecting the cable to prevent airbag deployment.
3. **REMOVE REAR SEAT CUSHION ASSEMBLY (w/ Rear Seat Side Airbag) (See page SE-113)**
4. **REMOVE REAR SEATBACK ASSEMBLY (w/ Rear Seat Side Airbag) (See page SE-113)**
5. **REMOVE REAR DOOR SCUFF PLATE (w/o Rear Seat Side Airbag) (See page IR-40)**
6. **REMOVE REAR DOOR SCUFF PLATE (w/ Rear Seat Side Airbag) (See page IR-40)**
7. **REMOVE REAR SEAT SIDE GARNISH (w/o Rear Seat Side Airbag) (See page IR-41)**
8. **REMOVE REAR SEAT SIDE AIRBAG ASSEMBLY (w/ Rear Seat Side Airbag) (See page RS-460)**
9. **REMOVE REAR AIRBAG SENSOR**
   (a) Disconnect the connector.
   (b) Remove the bolt and rear airbag sensor.

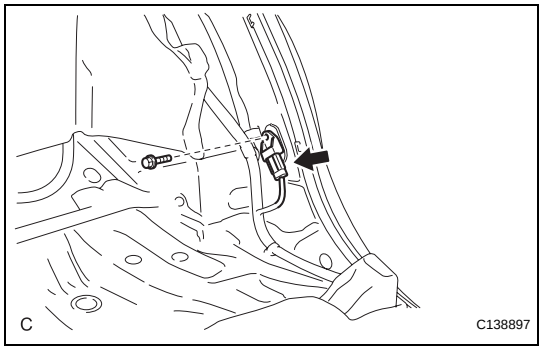

RS

INSTALLATION

1. INSTALL REAR AIRBAG SENSOR

(a) Check that the engine switch is off.

(b) Check that the battery negative (-) cable is disconnected.

CAUTION:
Wait for 90 seconds after disconnecting the cable to prevent airbag deployment.

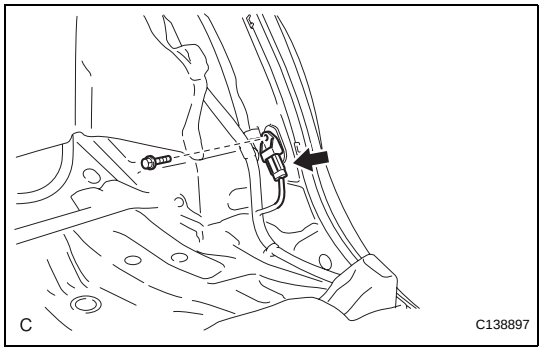

(c) Install the rear airbag sensor with the bolt.

Torque: 9.0 N*m (92 kgf*cm, 80 in.*lbf)

NOTICE:

- **If the rear airbag sensor has been dropped, or there are any cracks, dents or other defects in the case, bracket or connector, replace it with a new one.**
- **When installing the rear airbag sensor, be careful that the SRS wiring does not interfere with other parts and that it is not pinched between other parts.**

(d) Check that there is no looseness in the installation parts of the rear airbag sensor.

(e) Connect the connector.

2. INSTALL REAR SEAT SIDE AIRBAG ASSEMBLY (w/ Rear Seat Side Airbag) (See page RS-460)

3. INSTALL REAR SEAT SIDE GARNISH (w/o Rear Seat Side Airbag) (See page IR-62)

4. INSTALL REAR DOOR SCUFF PLATE (w/ Rear Seat Side Airbag) (See page IR-65)

5. INSTALL REAR DOOR SCUFF PLATE (w/o Rear Seat Side Airbag) (See page IR-63)

6. INSTALL REAR SEATBACK ASSEMBLY (w/ Rear Seat Side Airbag) (See page SE-121)

7. INSTALL REAR SEAT CUSHION ASSEMBLY (w/ Rear Seat Side Airbag) (See page SE-121)

8. CONNECT CABLE TO NEGATIVE BATTERY TERMINAL

9. PERFORM INITIALIZATION

(a) Perform initialization (See page IN-33).

HINT:
Some systems need initialization after reconnecting the cable to the negative battery terminal.

10. INSPECT SRS WARNING LIGHT

(a) Inspect the SRS warning light (See page RS-37).

REMOVAL

HINT:
- Use the same procedures for the RH side and LH side.
- The procedures listed below are for the LH side.

1. **PRECAUTION**
   CAUTION:
   Be sure to read "PRECAUTION" thoroughly before servicing (See page RS-1).
2. **DISCONNECT CABLE FROM NEGATIVE BATTERY TERMINAL**
   CAUTION:
   Wait for 90 seconds after disconnecting the cable to prevent airbag deployment.
3. **REMOVE REAR SEAT CUSHION ASSEMBLY (w/ Rear Seat Side Airbag) (See page SE-113)**
4. **REMOVE REAR SEATBACK ASSEMBLY (w/ Rear Seat Side Airbag) (See page SE-113)**
5. **REMOVE REAR DOOR SCUFF PLATE (w/o Rear Seat Side Airbag) (See page IR-40)**
6. **REMOVE REAR DOOR SCUFF PLATE (w/ Rear Seat Side Airbag) (See page IR-40)**
7. **REMOVE REAR SEAT SIDE GARNISH (w/o Rear Seat Side Airbag) (See page IR-41)**
8. **REMOVE REAR SEAT SIDE AIRBAG ASSEMBLY (w/ Rear Seat Side Airbag) (See page RS-460)**
9. **REMOVE REAR AIRBAG SENSOR**
   (a) Disconnect the connector.
   (b) Remove the bolt and rear airbag sensor.

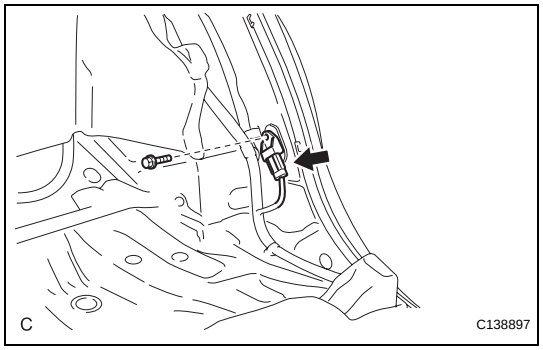

RS

INSTALLATION

1. INSTALL REAR AIRBAG SENSOR

(a) Check that the engine switch is off.

(b) Check that the battery negative (-) cable is disconnected.

CAUTION:
Wait for 90 seconds after disconnecting the cable to prevent airbag deployment.

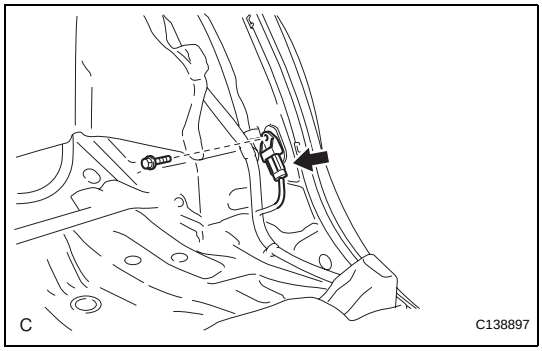

(c) Install the rear airbag sensor with the bolt.

Torque: 9.0 N*m (92 kgf*cm, 80 in.*lbf)

NOTICE:

- **If the rear airbag sensor has been dropped, or there are any cracks, dents or other defects in the case, bracket or connector, replace it with a new one.**
- **When installing the rear airbag sensor, be careful that the SRS wiring does not interfere with other parts and that it is not pinched between other parts.**

(d) Check that there is no looseness in the installation parts of the rear airbag sensor.

(e) Connect the connector.

2. INSTALL REAR SEAT SIDE AIRBAG ASSEMBLY (w/ Rear Seat Side Airbag) (See page RS-460)

3. INSTALL REAR SEAT SIDE GARNISH (w/o Rear Seat Side Airbag) (See page IR-62)

4. INSTALL REAR DOOR SCUFF PLATE (w/ Rear Seat Side Airbag) (See page IR-65)

5. INSTALL REAR DOOR SCUFF PLATE (w/o Rear Seat Side Airbag) (See page IR-63)

6. INSTALL REAR SEATBACK ASSEMBLY (w/ Rear Seat Side Airbag) (See page SE-121)

7. INSTALL REAR SEAT CUSHION ASSEMBLY (w/ Rear Seat Side Airbag) (See page SE-121)

8. CONNECT CABLE TO NEGATIVE BATTERY TERMINAL

9. PERFORM INITIALIZATION

(a) Perform initialization (See page IN-33).

HINT:
Some systems need initialization after reconnecting the cable to the negative battery terminal.

10. INSPECT SRS WARNING LIGHT

(a) Inspect the SRS warning light (See page RS-37).

REMOVAL

1. **PRECAUTION**
   CAUTION:
   Be sure to read "PRECAUTION" thoroughly before servicing (See page RS-1).
2. **REMOVE FRONT SEAT HEADREST ASSEMBLY**
3. **REMOVE SEAT BELT ANCHOR COVER CAP LH (See page SB-27)**
4. **DISCONNECT FRONT SEAT OUTER BELT ASSEMBLY LH (See page SB-27)**
5. **REMOVE FRONT SEAT OUTER TRACK BRACKET COVER LH (See page SE-83)**
6. **REMOVE FRONT SEAT INNER TRACK BRACKET COVER LH (See page SE-83)**
7. **REMOVE FRONT SEAT REAR OUTER TRACK BRACKET COVER LH (See page SE-83)**
8. **REMOVE FRONT SEAT REAR INNER TRACK BRACKET COVER LH (See page SE-83)**
9. **REMOVE FRONT SEAT ASSEMBLY LH (See page SE-83)**
10. **REMOVE SEAT POSITION SENSOR**
    (a) Disconnect the connector.
    (b) Using a "TORX" socket (T30), remove the "TORX" screw and seat position sensor with the seat slide position sensor protector.

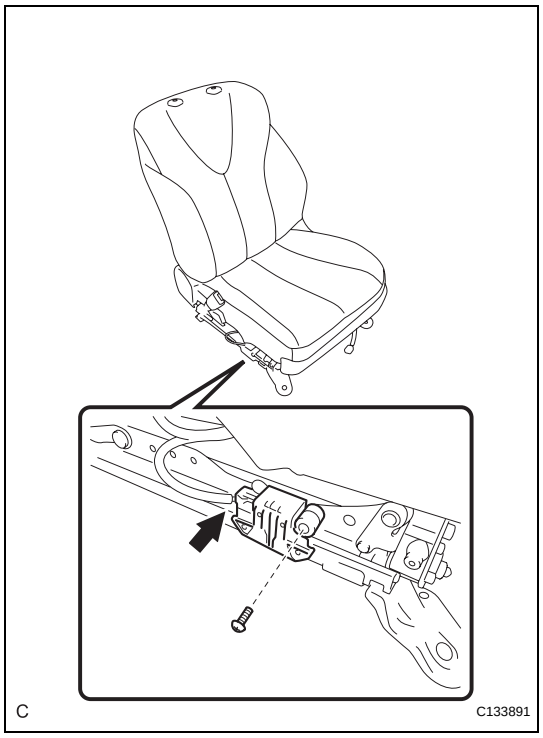

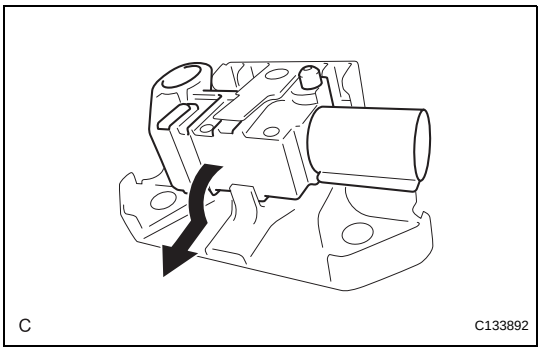

(c) Remove the seat position sensor from the seat slide position sensor protector as shown in the illustration.

INSTALLATION

1. INSTALL SEAT POSITION SENSOR

(a) Check that the engine switch is off.

(b) Check that the negative battery (-) cable is disconnected.

CAUTION:
Wait for 90 seconds after disconnecting the cable to prevent airbag deployment.

(c) Engage the pin and install the seat position sensor to the seat slide position sensor protector as shown in the illustration.

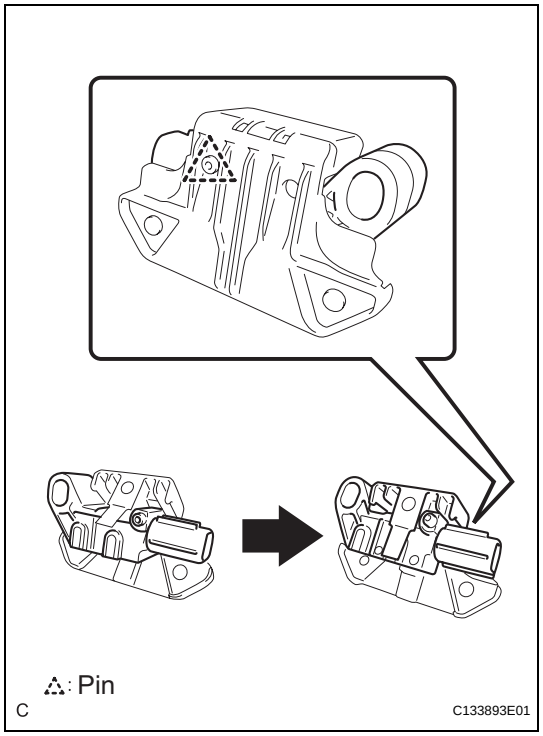

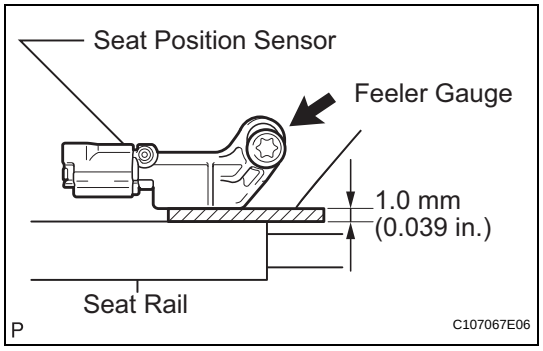

(d) Using a feeler gauge 1.0 mm (0.039 in.), temporarily install the seat position sensor.

NOTICE:

- **If the seat position sensor has been dropped, or there are any cracks, dents or other defects in the case or connector, replace the seat position sensor with a new one.**
- **When installing the seat position sensor, be careful that the SRS wiring does not interfere with other parts and that it is not pinched between other parts.**

HINT:
Be sure that a clearance between the seat position sensor and the seat rail is within 0.6 mm (0.024 in.) to 2.0 mm (0.079 in.).

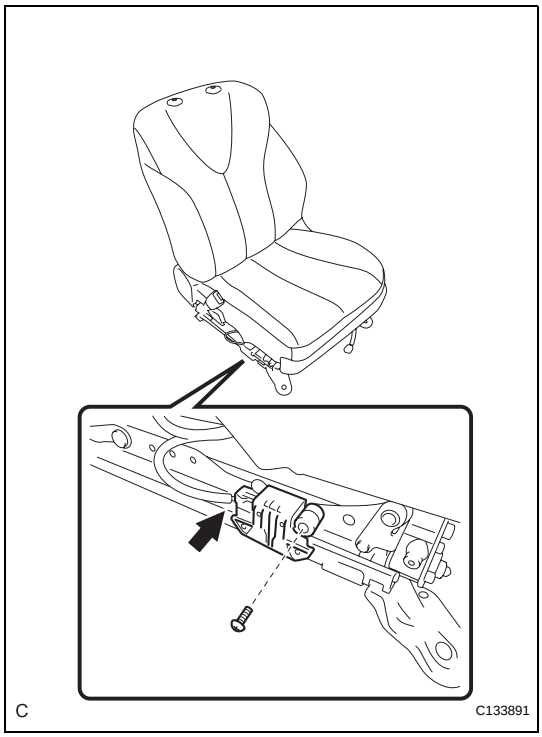

(e) Using a "TORX" socket (T30), tighten the "TORX" screw to install the seat position sensor.
Torque: 8.0 N*m (82 kgf*cm, 71 in.*lbf)

(f) Make sure that a clearance between the seat position sensor and the seat rail is within 0.6 mm (0.024 in.) to 2.0 mm (0.079 in.).

(g) Check that there is no looseness in the installation parts of the seat position sensor.

(h) Connect the connector.

2. INSTALL FRONT SEAT ASSEMBLY LH (See page SE-109)

3. INSTALL FRONT SEAT REAR INNER TRACK BRACKET COVER LH (See page SE-110)

4. INSTALL FRONT SEAT REAR OUTER TRACK BRACKET COVER LH (See page SE-110)

5. INSTALL FRONT SEAT INNER TRACK BRACKET COVER LH (See page SE-110)

6. INSTALL FRONT SEAT OUTER TRACK BRACKET COVER LH (See page SE-110)

7. CONNECT FRONT SEAT OUTER BELT ASSEMBLY LH (See page SB-31)

8. INSTALL SEAT BELT ANCHOR COVER CAP LH (See page SB-31)

9. INSTALL FRONT SEAT HEADREST ASSEMBLY

10. PERFORM INITIALIZATION

(a) Perform initialization (See page IN-33).
HINT:
Some systems need initialization after reconnecting the cable to the negative battery terminal.

11. INSPECT FRONT SEAT ASSEMBLY (See page SE-110)

12. INSPECT SRS WARNING LIGHT

(a) Inspect the SRS warning light (See page RS-37).

REMOVAL

1. **PRECAUTION**
   CAUTION:
   Be sure to read "PRECAUTION" thoroughly before servicing (See page RS-1).
2. **REMOVE FRONT SEAT HEADREST ASSEMBLY**
3. **REMOVE SEAT BELT ANCHOR COVER CAP LH (See page SB-27)**
4. **DISCONNECT FRONT SEAT OUTER BELT ASSEMBLY LH (See page SB-27)**
5. **REMOVE FRONT SEAT OUTER TRACK BRACKET COVER LH (See page SE-83)**
6. **REMOVE FRONT SEAT INNER TRACK BRACKET COVER LH (See page SE-83)**
7. **REMOVE FRONT SEAT REAR OUTER TRACK BRACKET COVER LH (See page SE-83)**
8. **REMOVE FRONT SEAT REAR INNER TRACK BRACKET COVER LH (See page SE-83)**
9. **REMOVE FRONT SEAT ASSEMBLY LH (See page SE-83)**
10. **REMOVE SEAT POSITION SENSOR**
    (a) Disconnect the connector.
    (b) Using a "TORX" socket (T30), remove the "TORX" screw and seat position sensor with the seat slide position sensor protector.

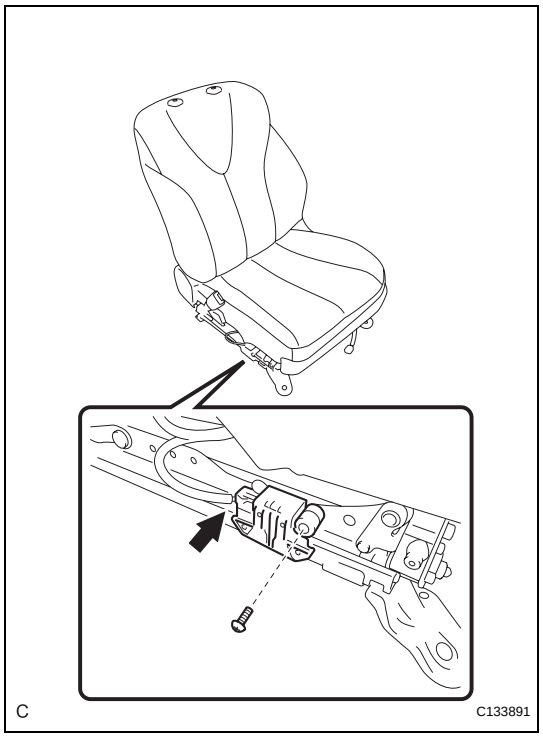

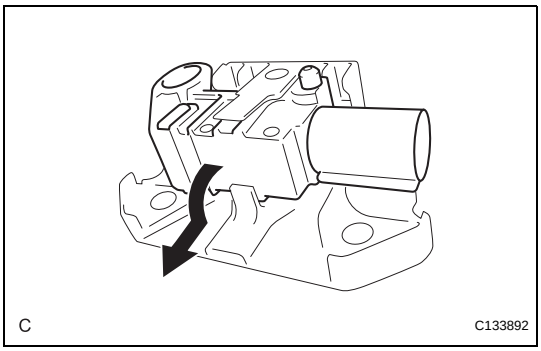

(c) Remove the seat position sensor from the seat slide position sensor protector as shown in the illustration.

FRONT SEAT CUSHION ASSEMBLY (w/ Occupant Classification ECU, Occupant Classification Sensor)

COMPONENTS

RS

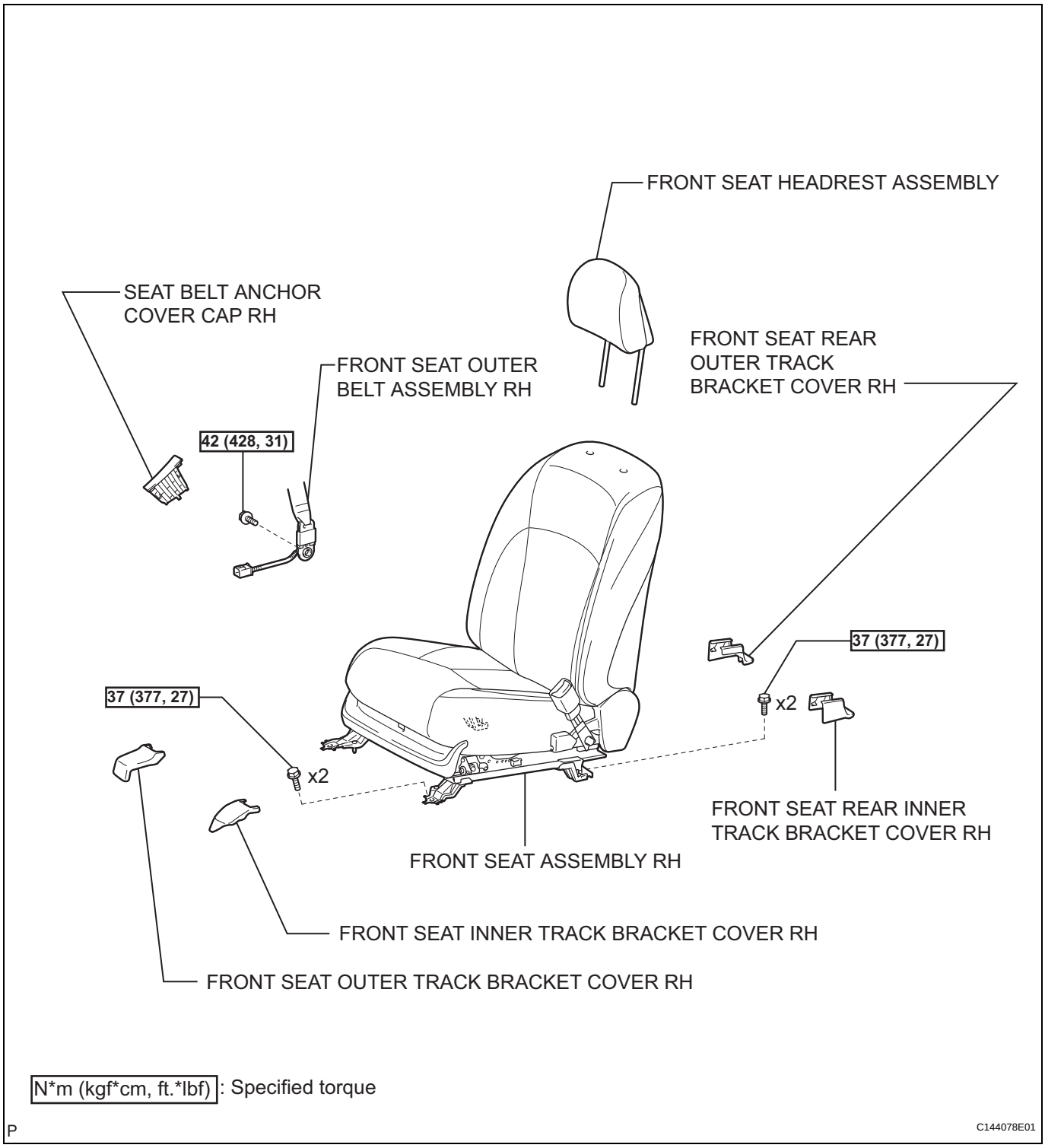

RS

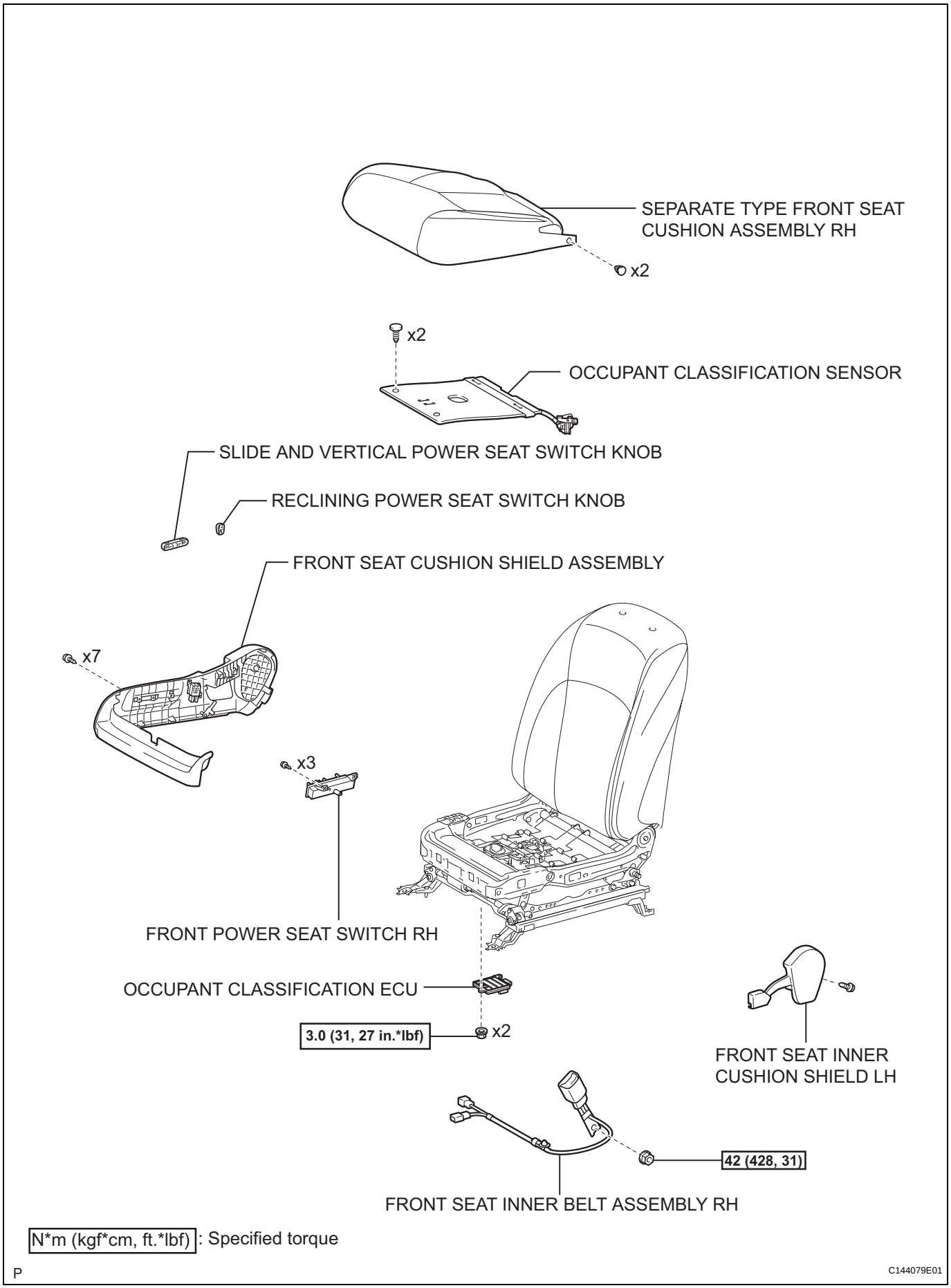
SEPARATE TYPE FRONT SEAT CUSHION ASSEMBLY RH
x2
x2
OCCUPANT CLASSIFICATION SENSOR
SLIDE AND VERTICAL POWER SEAT SWITCH KNOB
RECLINING POWER SEAT SWITCH KNOB
FRONT SEAT CUSHION SHIELD ASSEMBLY
x7
x3
FRONT POWER SEAT SWITCH RH
OCCUPANT CLASSIFICATION ECU
3.0 (31, 27 in.*lbf)
x2
FRONT SEAT INNER CUSHION SHIELD LH
42 (428, 31)
FRONT SEAT INNER BELT ASSEMBLY RH
N*m (kgf*cm, ft.*lbf) : Specified torque
P
C144079E01

REMOVAL

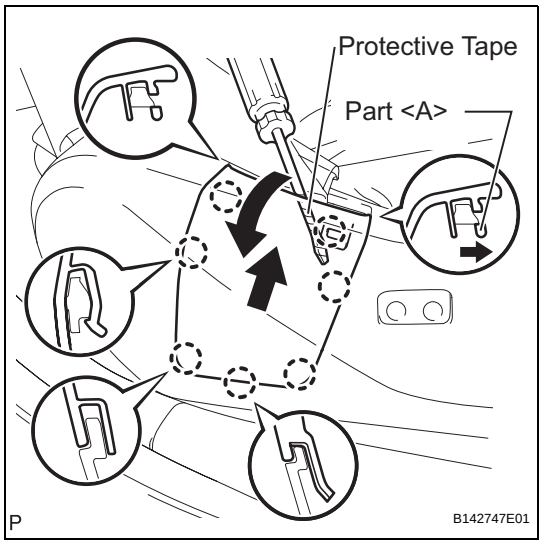

1. REMOVE SEAT BELT ANCHOR COVER CAP RH

(a) Hook a screwdriver to part A to bend it toward the inside of the cabin and release the claws. Pull the seat belt anchor cover cap RH upward and remove it.

NOTICE:
Do not damage the seat belt.

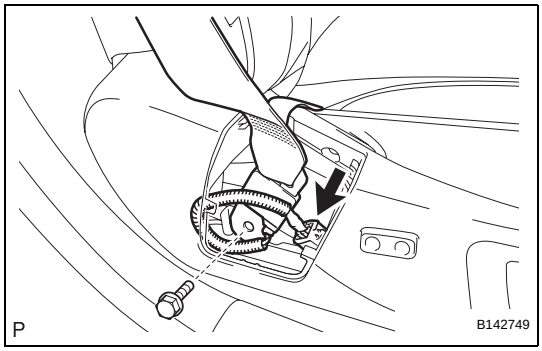

2. DISCONNECT FRONT SEAT OUTER BELT ASSEMBLY RH

(a) Disconnect the connector.

(b) Remove the bolt and disconnect the floor end of the front seat outer belt assembly RH.

3. REMOVE FRONT SEAT HEADREST ASSEMBLY

4. REMOVE FRONT SEAT OUTER TRACK BRACKET COVER RH

(a) Move the front seat assembly to the rearmost position by operating the slide and vertical power seat switch knob.

(b) Using a screwdriver, disengage the 2 claws and remove the front seat outer track bracket cover RH.
HINT:
Tape the screwdriver tip before use.

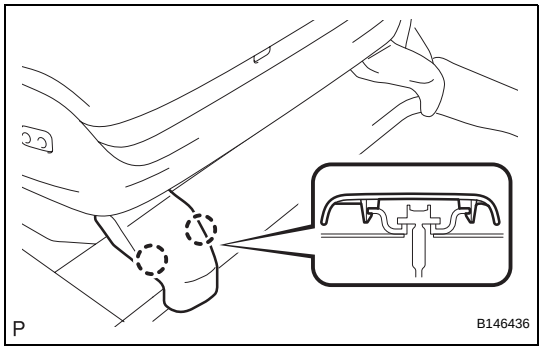

5. REMOVE FRONT SEAT INNER TRACK BRACKET COVER RH

HINT:
Use the same procedure for the inner side and outer side.

6. REMOVE FRONT SEAT REAR OUTER TRACK BRACKET COVER RH

(a) Move the front seat assembly fully forward by operating the slide and vertical power seat switch knob.

(b) Using a screwdriver, disengage the 4 claws and remove the front seat rear outer track bracket cover RH.
HINT:
Tape the screwdriver tip before use.

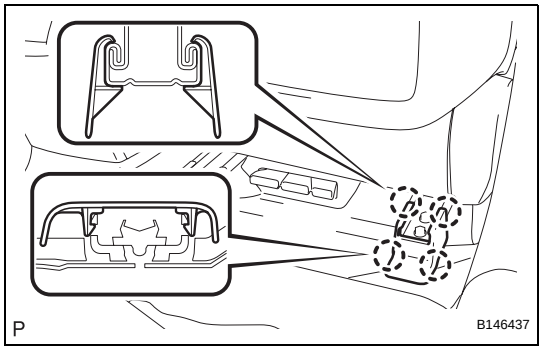

7. REMOVE FRONT SEAT REAR INNER TRACK BRACKET COVER RH

HINT:
Use the same procedure for the inner side and outer side.

8. REMOVE FRONT SEAT ASSEMBLY RH

(a) Move the front seat assembly to the rearmost position by operating the slide and vertical power seat switch knob.

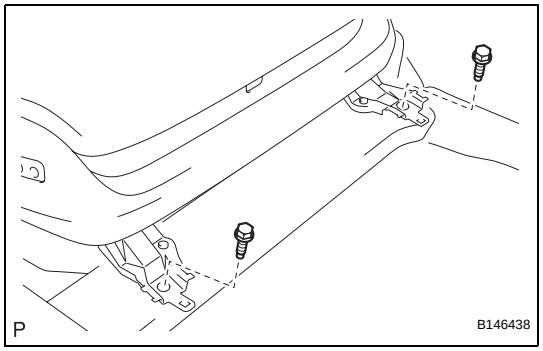

(b) Remove the 2 bolts on the front side.

(c) Move the front seat assembly fully forward by operating the slide and vertical power seat switch knob.

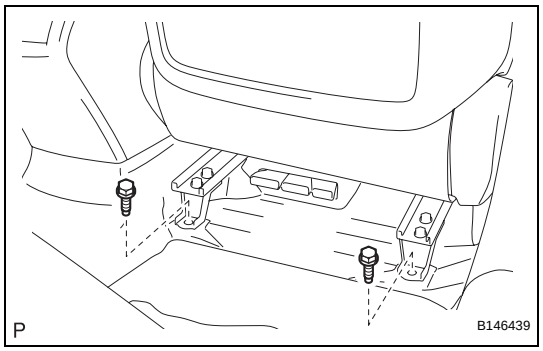

(d) Remove the 2 bolts on the rear side.

(e) Move the front seat assembly to the center position and adjust the seatback to the vertical position by operating the slide and vertical power seat switch knob and the reclining power seat switch knob.

(f) Turn the engine switch off.

(g) Disconnect the negative battery cable from the battery, and wait 90 seconds or more.

CAUTION:

Wait 90 seconds or more after disconnecting the negative terminal cable to prevent airbag deployment (See page RS-1).

(h) Disconnect the connectors and clamp.

(i) Remove the front seat assembly RH.

NOTICE:

When removing the front seat assembly RH, be careful not to step on the yaw rate sensor mounted on the floor under the seat.

9. REMOVE FRONT SEAT INNER BELT ASSEMBLY RH (See page SB-23)

10. REMOVE SLIDE AND VERTICAL POWER SEAT SWITCH KNOB

(a) Using a screwdriver, remove the slide and vertical power seat switch knob.

HINT:

Tape the screwdriver tip before use.

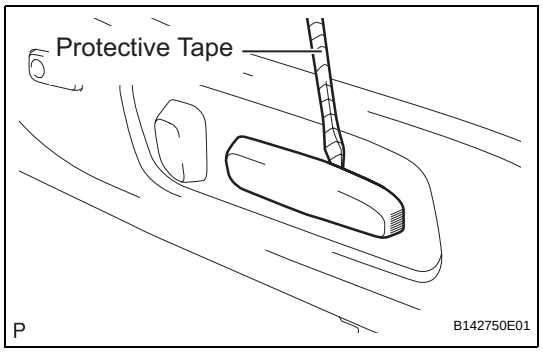

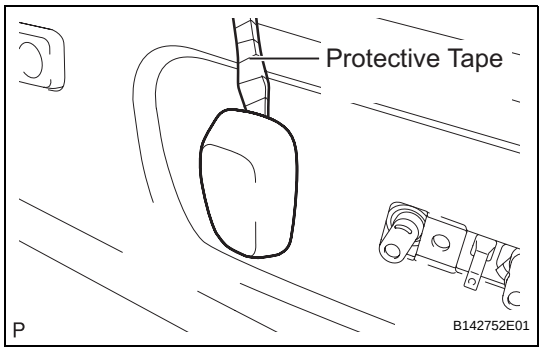

11. REMOVE RECLINING POWER SEAT SWITCH KNOB

(a) Using a screwdriver, remove the reclining power seat switch knob.
HINT:
Tape the screwdriver tip before use.

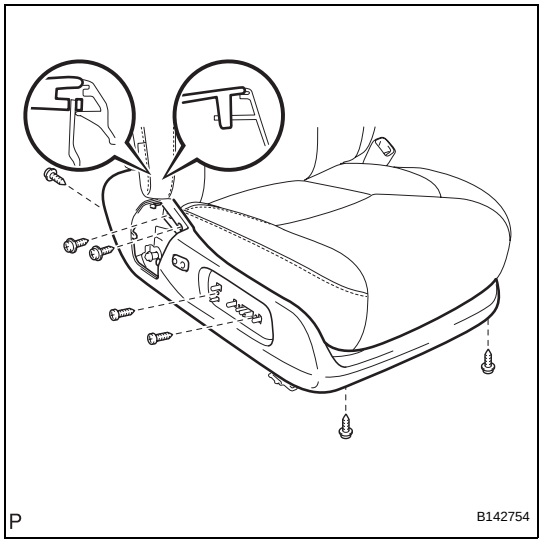

12. REMOVE FRONT SEAT CUSHION SHIELD ASSEMBLY

(a) Remove the 7 screws.
(b) Disengage the 2 claws and separate the front seat cushion shield assembly.
(c) Disconnect the connector and then remove the front seat cushion shield assembly.

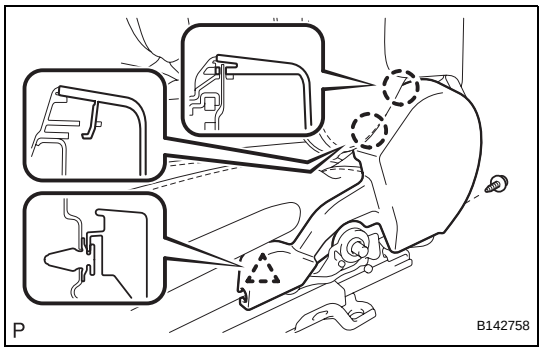

13. REMOVE FRONT SEAT INNER CUSHION SHIELD LH

(a) Remove the screw.
(b) Disengage the 2 claws and clip, and then remove the front seat inner cushion shield LH.

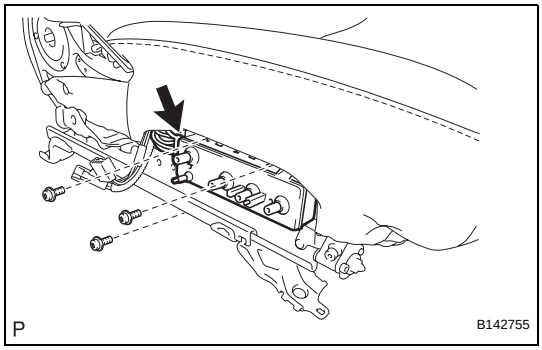

14. REMOVE FRONT POWER SEAT SWITCH RH

(a) Remove the 3 screws.
(b) Disconnect the connector and remove the front power seat switch RH.

15. REMOVE OCCUPANT CLASSIFICATION ECU (See page RS-502)

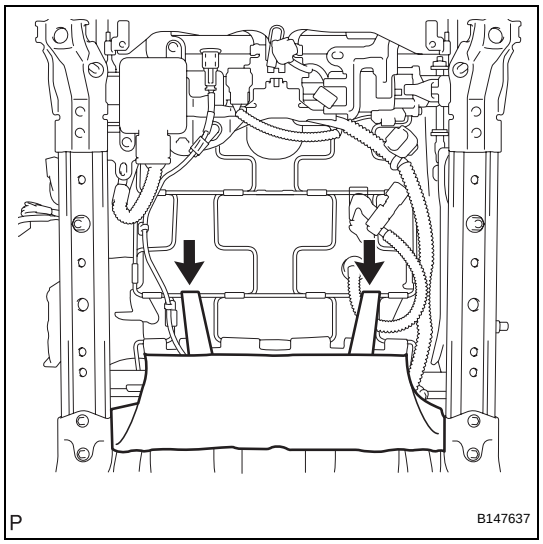

16. REMOVE SEPARATE TYPE FRONT SEAT CUSHION ASSEMBLY RH

(a) Disengage the 2 hooks.

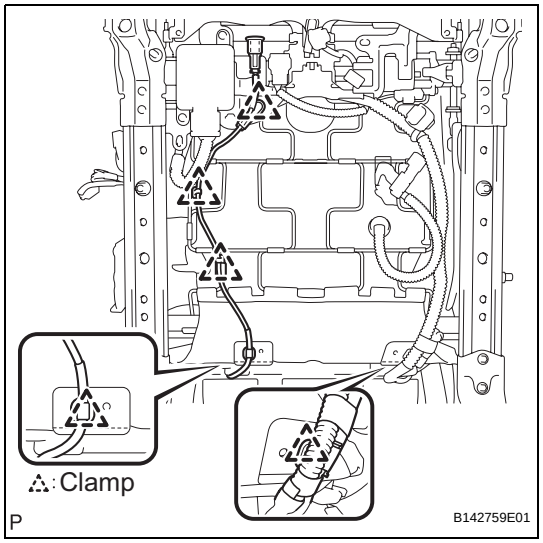

(b) Disengage the clamps.

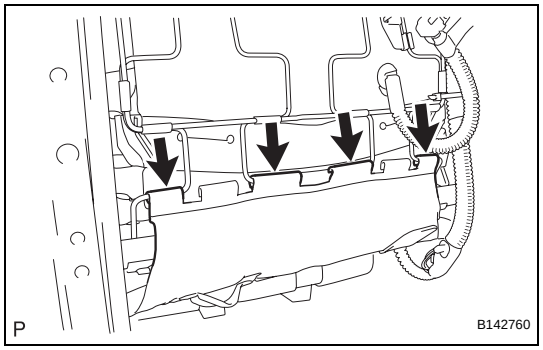

(c) Disengage the 4 hooks.

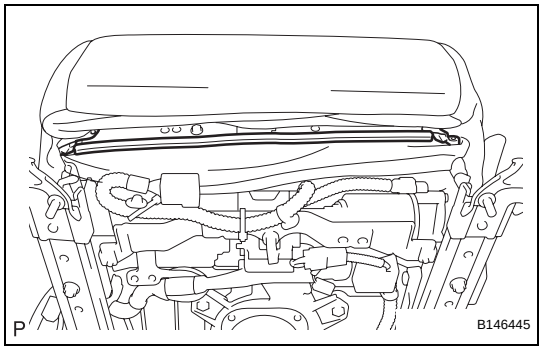

(d) Using a screwdriver, disengage the hooks.

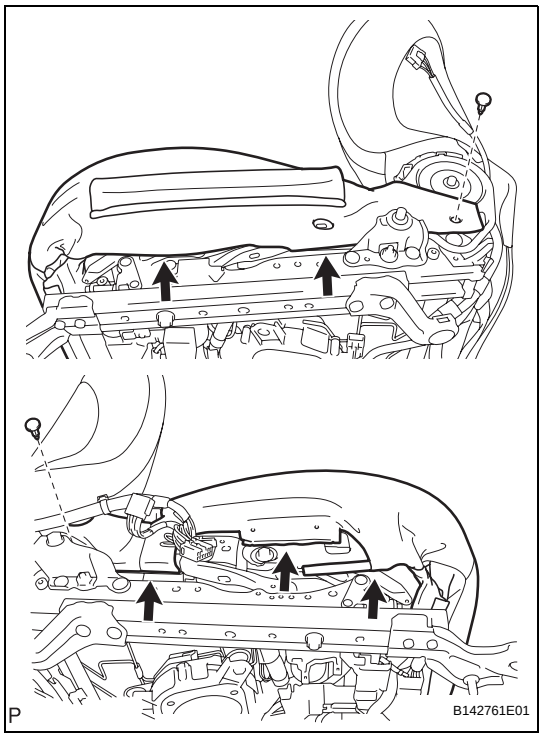

(e) Remove the 2 clips.
(f) Disengage the hooks and remove the separate type front seat cushion assembly RH.

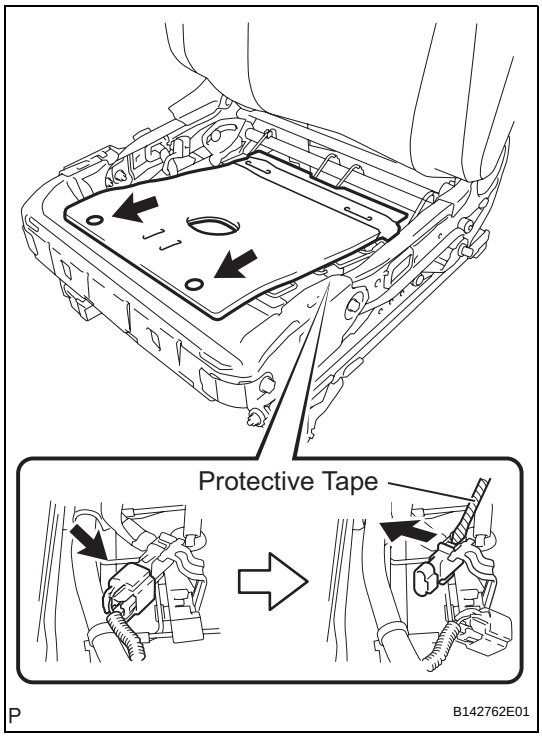

17. REMOVE OCCUPANT CLASSIFICATION SENSOR

(a) Disconnect the connector.
(b) Using a screwdriver, raise the claws on the bracket and pull out the connector in the direction indicated by the arrow in the illustration.
HINT:
Tape the screwdriver tip before use.
(c) Using a clip remover, disengage the 2 clips and remove the occupant classification sensor.
NOTICE:
When the occupant classification sensor is replaced, be sure to replace the occupant classification ECU as a set.

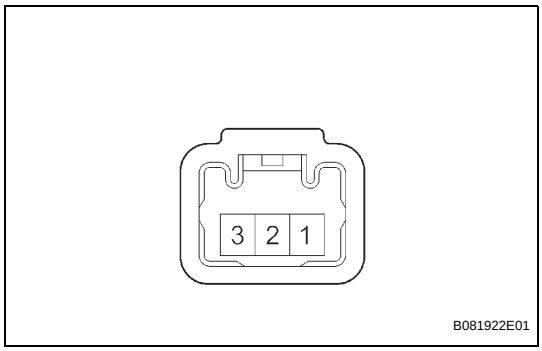

INSPECTION

1. INSPECT OCCUPANT DETECTION SENSOR

(a) Measure the resistance according to the value(s) in the table below.
Resistance

Tester Connection	Condition	Specified Condition
1 - 3	The passenger seat is occupied	Below 100 Ω
1 - 3	The passenger seat is not occupied	Below 1 MΩ

INSTALLATION

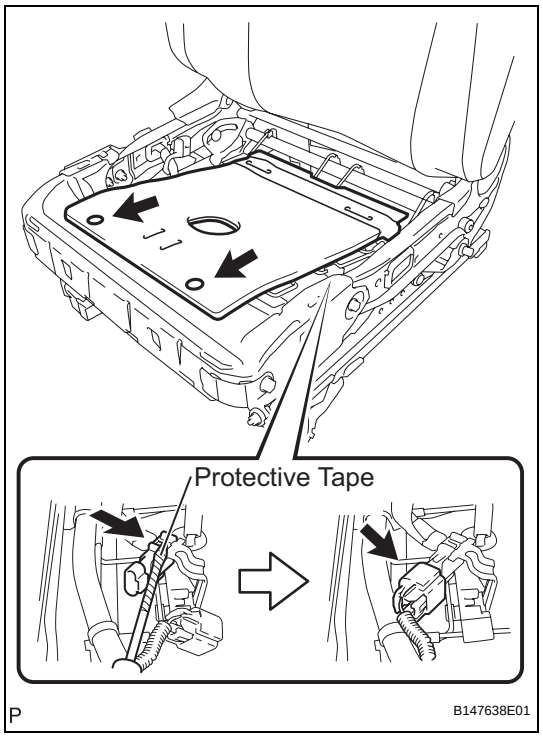

1. INSTALL OCCUPANT CLASSIFICATION SENSOR

(a) Install the occupant classification sensor with the 2 clips.

(b) Connect the connector to the connection in the bracket.
HINT:
If the connector cannot be connected securely, push the claws down on the bracket using a screwdriver.

(c) Connect the connector.

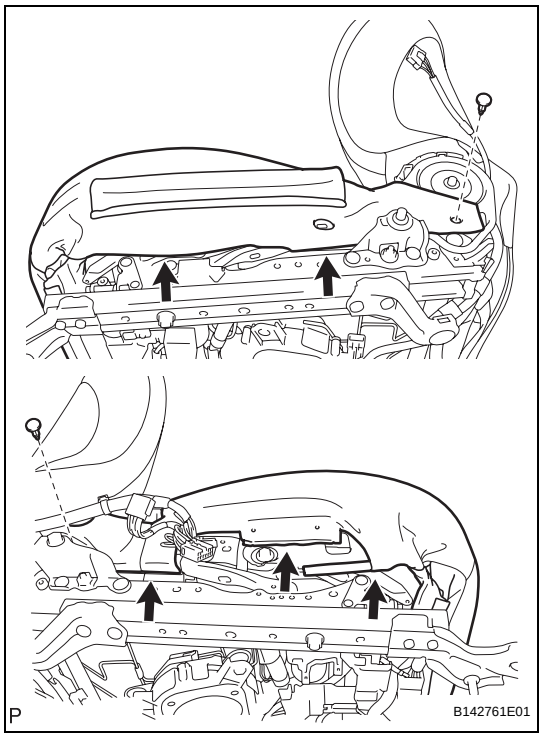

2. INSTALL SEPARATE TYPE FRONT SEAT CUSHION ASSEMBLY RH

(a) Engage the hooks.

(b) Install the separate type front seat cushion assembly RH with the 2 clips.

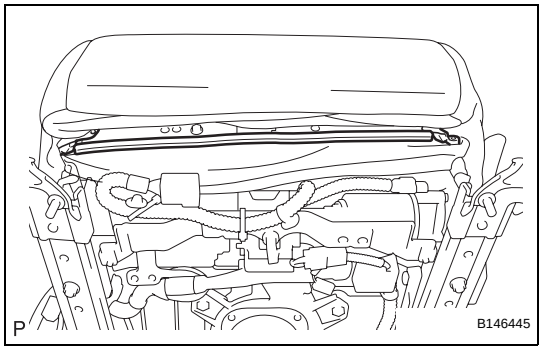

(c) Engage the hooks.

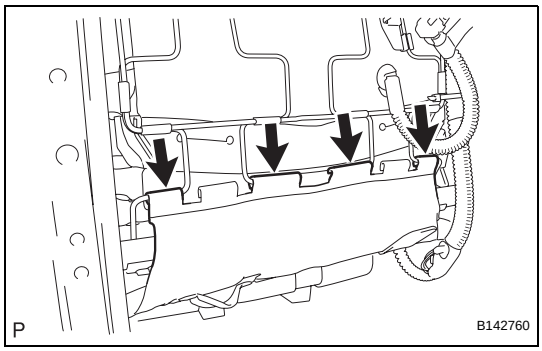

(d) Engage the 4 hooks.

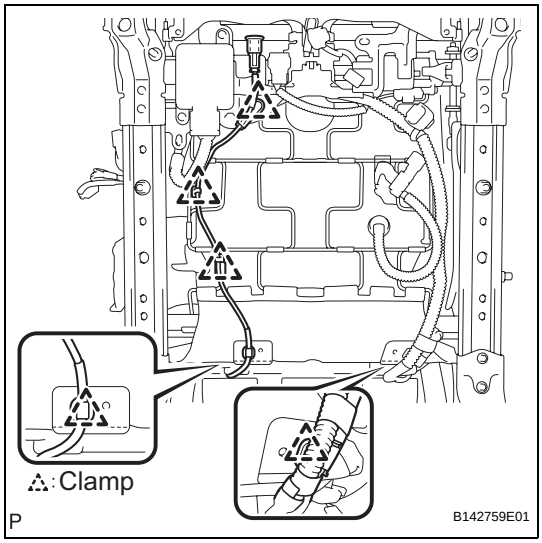

(e) Engage the clamps.

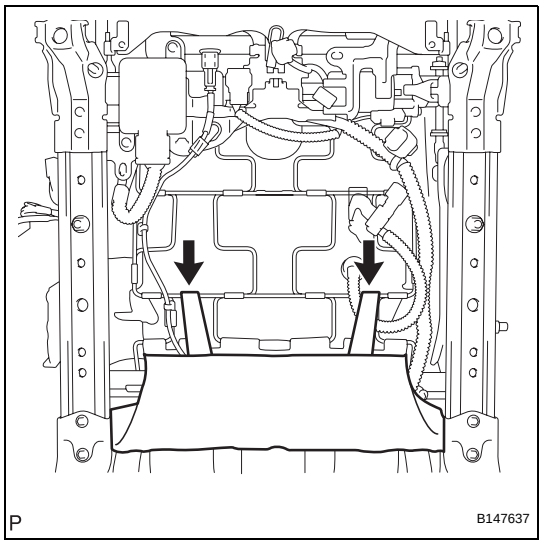

(f) Engage the 2 hooks.

3. INSTALL OCCUPANT CLASSIFICATION ECU (See page RS-502)

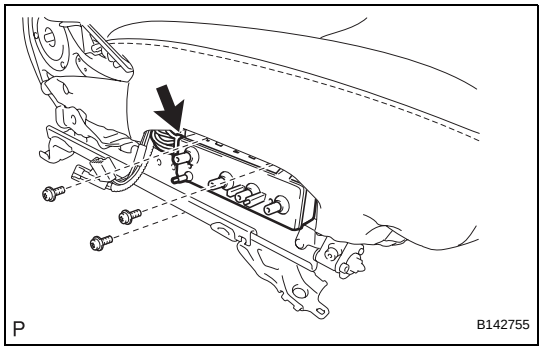

4. REMOVE FRONT POWER SEAT SWITCH RH

(a) Connect the connector.

(b) Install the front power seat switch RH with the 3 screws.

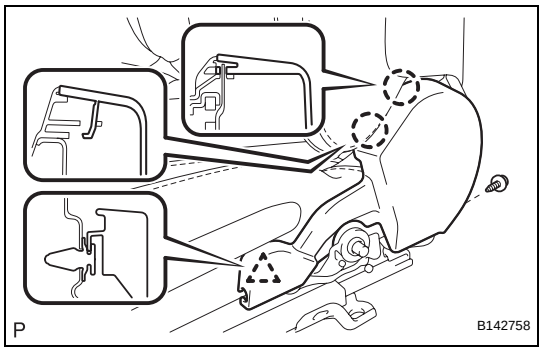

5. INSTALL FRONT SEAT INNER CUSHION SHIELD LH

(a) Engage the 2 claws and clip.

(b) Install the front seat inner cushion shield LH with the screw.

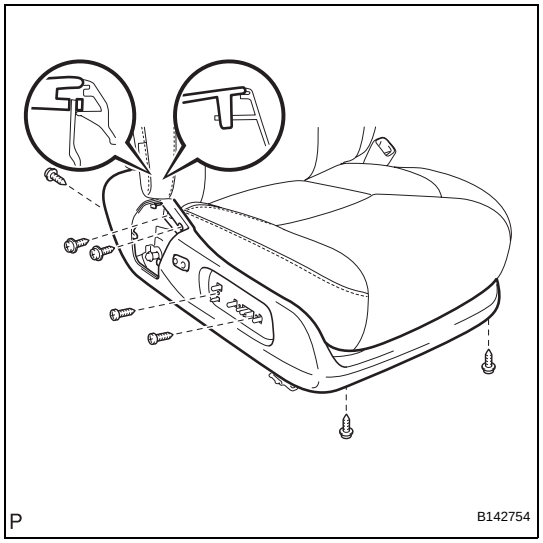

6. INSTALL FRONT SEAT CUSHION SHIELD ASSEMBLY

(a) Connect the connector.

(b) Engage the 2 claws.

(c) Install the front seat cushion shield assembly with the 7 screws.

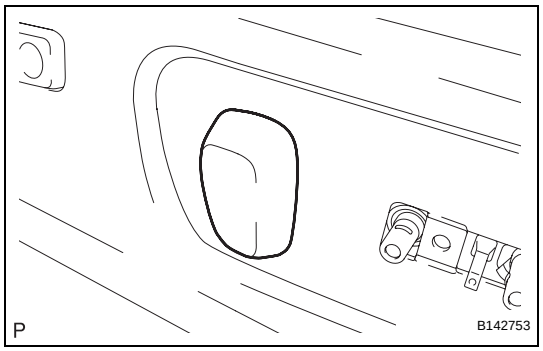

7. INSTALL RECLINING POWER SEAT SWITCH KNOB

(a) Install the reclining power seat switch knob.

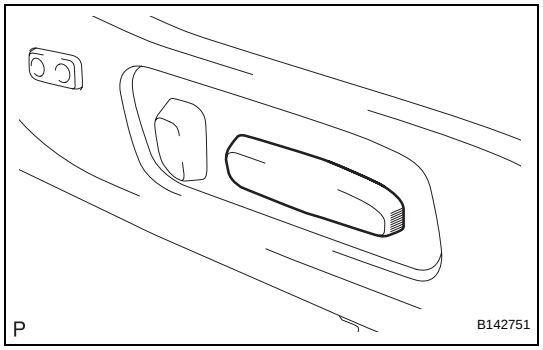

8. INSTALL SLIDE AND VERTICAL POWER SEAT SWITCH KNOB

(a) Install the slide and vertical power seat switch knob.

9. INSTALL FRONT SEAT INNER BELT ASSEMBLY RH (See page SB-24)

10. INSTALL FRONT SEAT ASSEMBLY RH

(a) Place the seat in the cabin.

(b) Connect the connectors under the seat.

(c) Connect the cable to the negative battery terminal.

(d) Move the front seat assembly RH fully forward by operating the slide and vertical power seat switch knob.

NOTICE:

Check that the seat is locked.

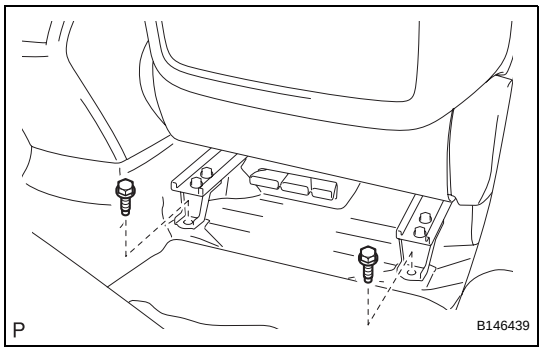

(e) Temporarily install the front side of the front seat assembly RH with the 2 bolts.

(f) Move the front seat assembly RH fully forward by operating the slide and vertical power seat switch knob.
NOTICE:
Check that the seat is locked.

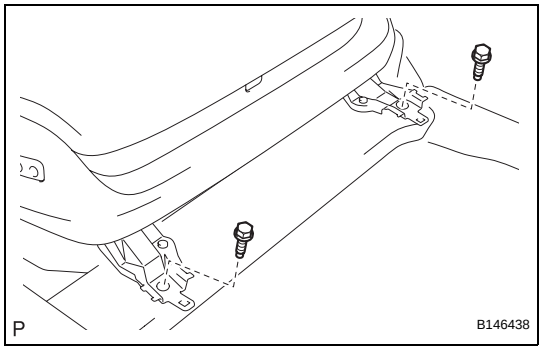

(g) Temporarily install the rear side of the front seat assembly RH with the 2 bolts.

(h) Move the front seat assembly RH to the rearmost position by operating the slide and vertical power seat switch knob.
NOTICE:
Check that the seat is locked.

(i) Fully tighten the 2 bolts on the front side of the front seat assembly RH in the order of the inner side bolt and then the outer side bolt.
Torque: 37 N*m (377 kgf*cm, 27 ft.*lbf)

(j) Move the front seat assembly RH fully forward by operating the slide and vertical power seat switch knob.
NOTICE:
Check that the seat is locked.

(k) Fully tighten the 2 bolts on the rear side of the front seat assembly RH in the order of the inner side bolt and then the outer side bolt.
Torque: 37 N*m (377 kgf*cm, 27 ft.*lbf)

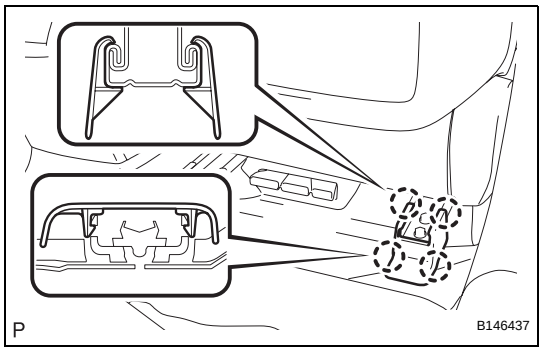

11. INSTALL FRONT SEAT REAR OUTER TRACK BRACKET COVER RH

(a) Engage the 4 claws and install the front seat rear outer track bracket cover RH.

12. INSTALL FRONT SEAT REAR INNER TRACK BRACKET COVER RH

HINT:
Use the same procedure for the inner side and outer side.

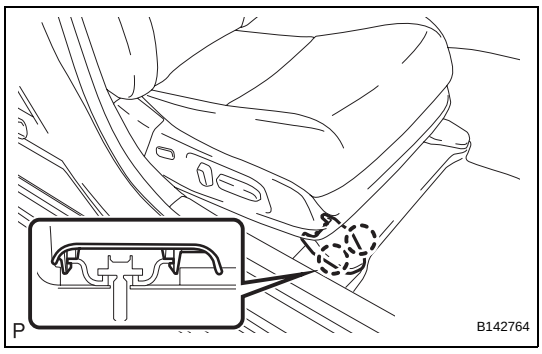

13. INSTALL FRONT SEAT OUTER TRACK BRACKET COVER RH

(a) Engage the 2 claws and install the front seat outer track bracket cover RH.

14. INSTALL FRONT SEAT INNER TRACK BRACKET COVER RH

HINT:
Use the same procedure for the inner side and outer side.

15. INSTALL FRONT SEAT HEADREST ASSEMBLY

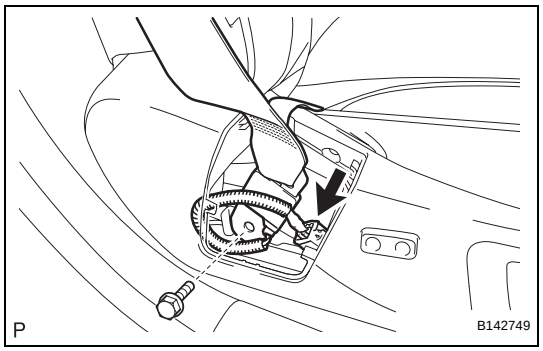

16. CONNECT FRONT SEAT OUTER BELT ASSEMBLY RH

(a) Connect the front seat outer belt assembly RH with the bolt.
Torque: 42 N*m (428 kgf*cm, 31 ft.*lbf)

(b) Connect the connector.

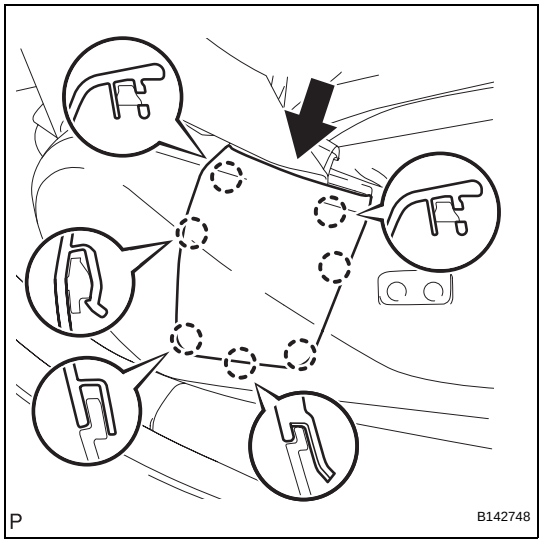

17. INSTALL SEAT BELT ANCHOR COVER CAP RH

(a) Engage the 7 claws and install the seat belt anchor cover cap RH.

18. PERFORM INITIALIZATION

(a) Perform initialization (See page IN-33).
HINT:
Some systems need initialization after reconnecting the cable to the negative battery terminal.

19. PERFORM ZERO POINT CALIBRATION AND SENSITIVITY CHECK

(a) Perform zero point calibration and sensitivity check (See page RS-312).

20. INSPECT FRONT SEAT ASSEMBLY (See page SE-110)

21. INSPECT SRS WARNING LIGHT

(a) Inspect SRS warning light (See page RS-37).

INSTALLATION

1. INSTALL SEAT POSITION SENSOR

(a) Check that the engine switch is off.

(b) Check that the negative battery (-) cable is disconnected.

CAUTION:
Wait for 90 seconds after disconnecting the cable to prevent airbag deployment.

(c) Engage the pin and install the seat position sensor to the seat slide position sensor protector as shown in the illustration.

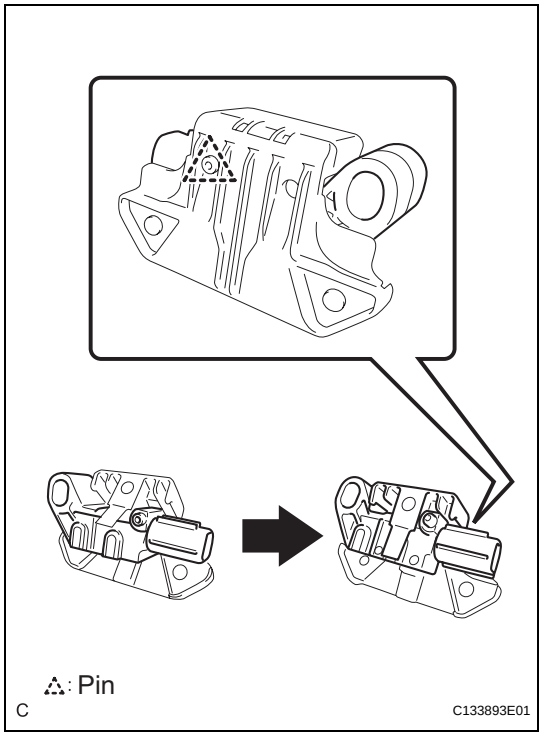

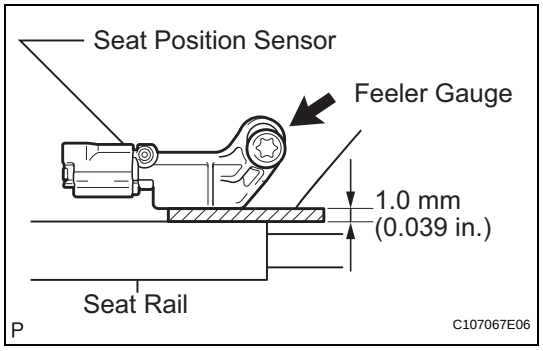

(d) Using a feeler gauge 1.0 mm (0.039 in.), temporarily install the seat position sensor.

NOTICE:

- **If the seat position sensor has been dropped, or there are any cracks, dents or other defects in the case or connector, replace the seat position sensor with a new one.**
- **When installing the seat position sensor, be careful that the SRS wiring does not interfere with other parts and that it is not pinched between other parts.**

HINT:
Be sure that a clearance between the seat position sensor and the seat rail is within 0.6 mm (0.024 in.) to 2.0 mm (0.079 in.).

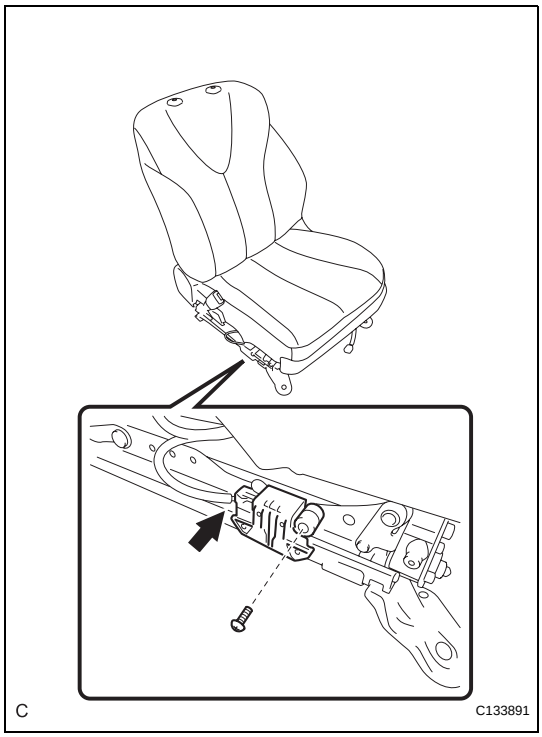

(e) Using a "TORX" socket (T30), tighten the "TORX" screw to install the seat position sensor.
Torque: 8.0 N*m (82 kgf*cm, 71 in.*lbf)

(f) Make sure that a clearance between the seat position sensor and the seat rail is within 0.6 mm (0.024 in.) to 2.0 mm (0.079 in.).

(g) Check that there is no looseness in the installation parts of the seat position sensor.

(h) Connect the connector.

2. INSTALL FRONT SEAT ASSEMBLY LH (See page SE-109)

3. INSTALL FRONT SEAT REAR INNER TRACK BRACKET COVER LH (See page SE-110)

4. INSTALL FRONT SEAT REAR OUTER TRACK BRACKET COVER LH (See page SE-110)

5. INSTALL FRONT SEAT INNER TRACK BRACKET COVER LH (See page SE-110)

6. INSTALL FRONT SEAT OUTER TRACK BRACKET COVER LH (See page SE-110)

7. CONNECT FRONT SEAT OUTER BELT ASSEMBLY LH (See page SB-31)

8. INSTALL SEAT BELT ANCHOR COVER CAP LH (See page SB-31)

9. INSTALL FRONT SEAT HEADREST ASSEMBLY

10. PERFORM INITIALIZATION

(a) Perform initialization (See page IN-33).
HINT:
Some systems need initialization after reconnecting the cable to the negative battery terminal.

11. INSPECT FRONT SEAT ASSEMBLY (See page SE-110)

12. INSPECT SRS WARNING LIGHT

(a) Inspect the SRS warning light (See page RS-37).

RS

REMOVAL

1. **PRECAUTION**
   CAUTION:
   Be sure to read "PRECAUTION" thoroughly before servicing (See page RS-1).
2. **REMOVE SEAT BELT ANCHOR COVER CAP RH (See page SB-27)**
3. **DISCONNECT FRONT SEAT OUTER BELT ASSEMBLY RH (See page SB-27)**
4. **REMOVE FRONT SEAT HEADREST ASSEMBLY**
5. **REMOVE FRONT SEAT OUTER TRACK BRACKET COVER RH (See page RS-490)**
6. **REMOVE FRONT SEAT INNER TRACK BRACKET COVER RH (See page RS-490)**
7. **REMOVE FRONT SEAT REAR OUTER TRACK BRACKET COVER RH (See page RS-490)**
8. **REMOVE FRONT SEAT REAR INNER TRACK BRACKET COVER RH (See page RS-490)**
9. **REMOVE FRONT SEAT ASSEMBLY RH (See page SE-83)**
10. **REMOVE OCCUPANT CLASSIFICATION ECU**
    (a) Disconnect the connector from the occupant classification ECU.
    (b) Remove the 2 nuts and occupant classification ECU.

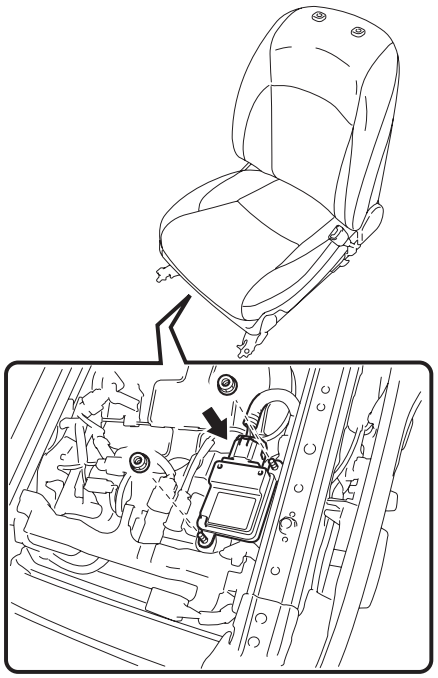

C C138901

INSTALLATION

1. INSTALL OCCUPANT CLASSIFICATION ECU

(a) Check that the engine switch is off.

(b) Check that the negative battery (-) cable is disconnected.

CAUTION:
Wait for 90 seconds after disconnecting the cable to prevent airbag deployment.

(c) Install the occupant classification ECU with the 2 nuts.

Torque: 3.0 N*m (31 kgf*cm, 27 in.*lbf)

(d) Connect the connector.

NOTICE:

- **If the occupant classification ECU has been dropped, or there are any cracks, dents or other defects in the case or connector, replace the occupant classification ECU with a new one.**
- **When installing the occupant classification ECU, be careful that the SRS wiring does not interfere with other parts and that it is not pinched between other parts.**

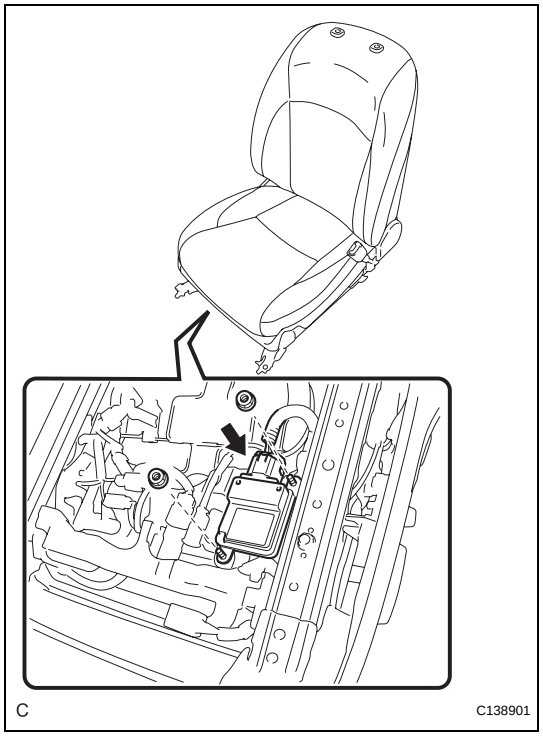

2. INSTALL FRONT SEAT ASSEMBLY RH (See page SE-109)

3. INSTALL FRONT SEAT REAR INNER TRACK BRACKET COVER RH (See page RS-498)

4. INSTALL FRONT SEAT REAR OUTER TRACK BRACKET COVER RH (See page RS-498)

5. INSTALL FRONT SEAT INNER TRACK BRACKET COVER RH (See page RS-498)

6. INSTALL FRONT SEAT OUTER TRACK BRACKET COVER RH (See page SE-110)

7. INSTALL FRONT SEAT HEADREST ASSEMBLY

8. CONNECT FRONT SEAT OUTER BELT ASSEMBLY RH (See page SB-31)

9. INSTALL SEAT BELT ANCHOR COVER CAP RH (See page SB-31)

10. PERFORM INITIALIZATION

(a) Perform initialization (See page IN-33).

HINT:
Some systems need initialization after reconnecting the cable to the negative battery terminal.

11. PERFORM ZERO POINT CALIBRATION AND SENSITIVITY CHECK

(a) Perform zero point calibration and sensitivity check (See page RS-312).

12. INSPECT FRONT SEAT ASSEMBLY (See page SE-110)

13. INSPECT SRS WARNING LIGHT

(a) Inspect the SRS warning light (See page RS-37).

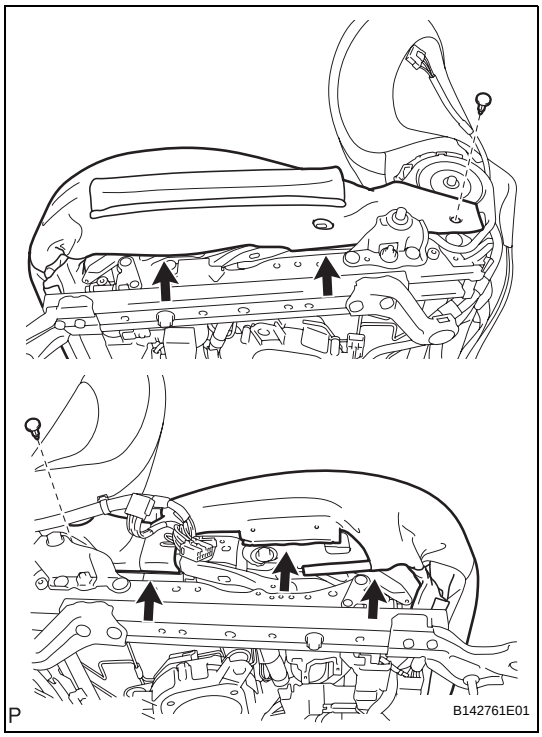

(e) Remove the 2 clips.
(f) Disengage the hooks and remove the separate type front seat cushion assembly RH.

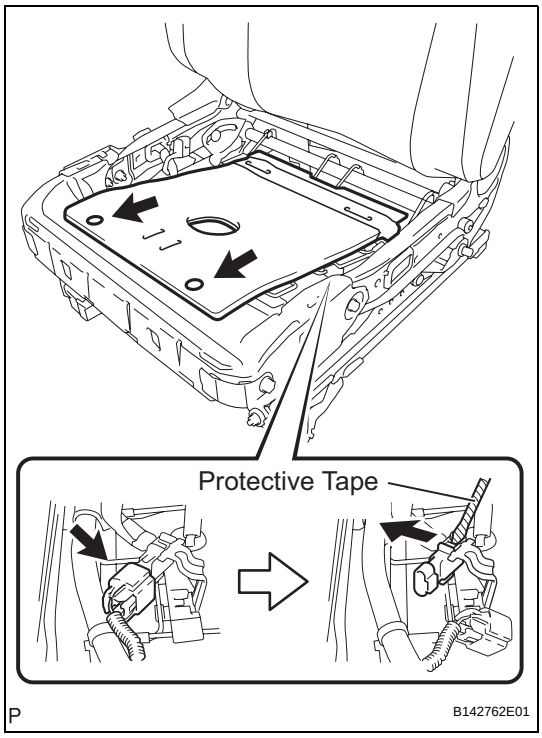

17. REMOVE OCCUPANT CLASSIFICATION SENSOR

(a) Disconnect the connector.
(b) Using a screwdriver, raise the claws on the bracket and pull out the connector in the direction indicated by the arrow in the illustration.
HINT:
Tape the screwdriver tip before use.
(c) Using a clip remover, disengage the 2 clips and remove the occupant classification sensor.
NOTICE:
When the occupant classification sensor is replaced, be sure to replace the occupant classification ECU as a set.

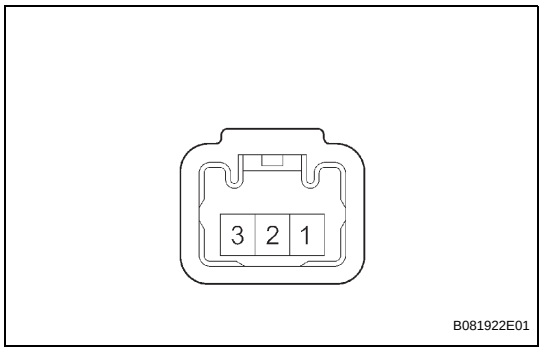

INSPECTION

1. INSPECT OCCUPANT DETECTION SENSOR

(a) Measure the resistance according to the value(s) in the table below.
Resistance

Tester Connection	Condition	Specified Condition
1 - 3	The passenger seat is occupied	Below 100 Ω
1 - 3	The passenger seat is not occupied	Below 1 MΩ

INSTALLATION

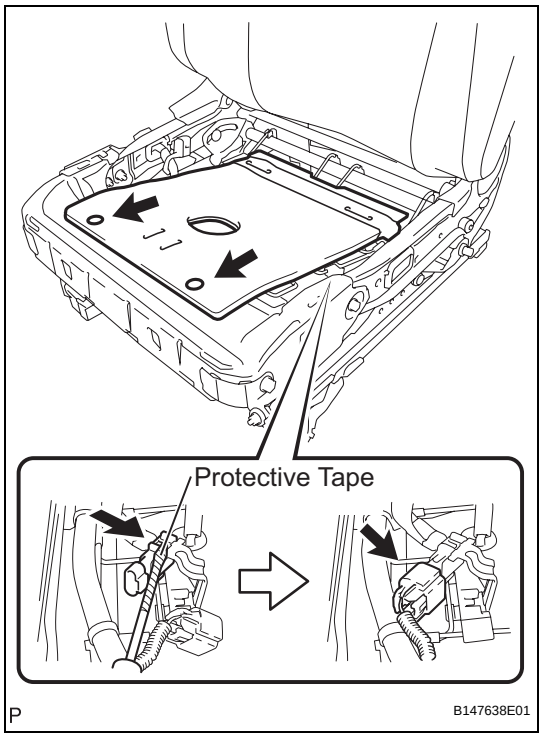

1. INSTALL OCCUPANT CLASSIFICATION SENSOR

(a) Install the occupant classification sensor with the 2 clips.

(b) Connect the connector to the connection in the bracket.
HINT:
If the connector cannot be connected securely, push the claws down on the bracket using a screwdriver.

(c) Connect the connector.

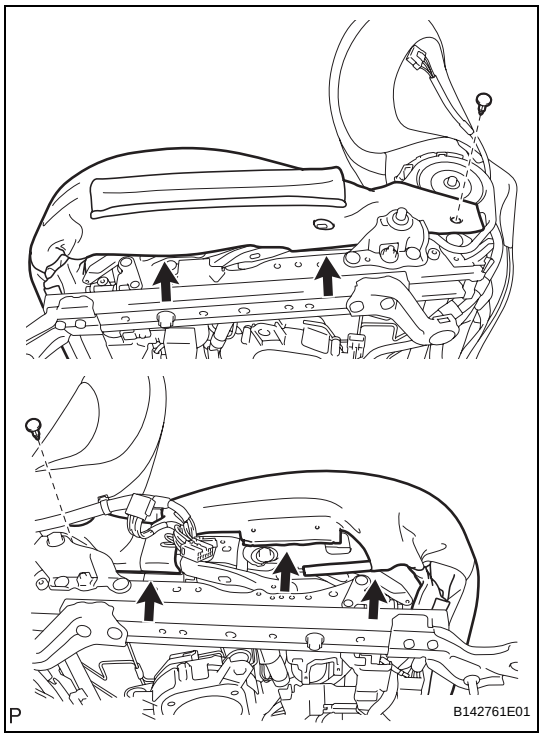

2. INSTALL SEPARATE TYPE FRONT SEAT CUSHION ASSEMBLY RH

(a) Engage the hooks.

(b) Install the separate type front seat cushion assembly RH with the 2 clips.

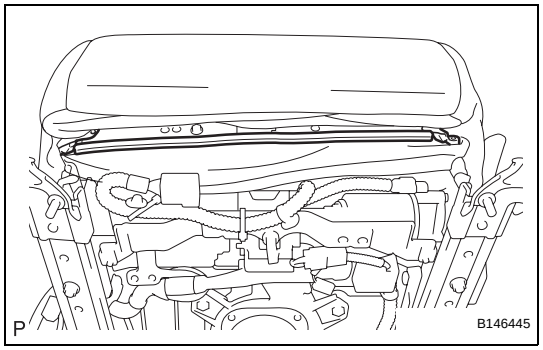

(c) Engage the hooks.

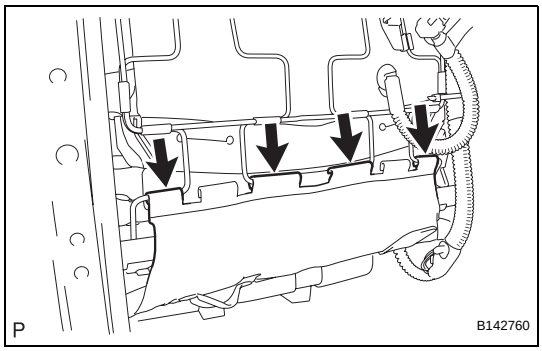

(d) Engage the 4 hooks.

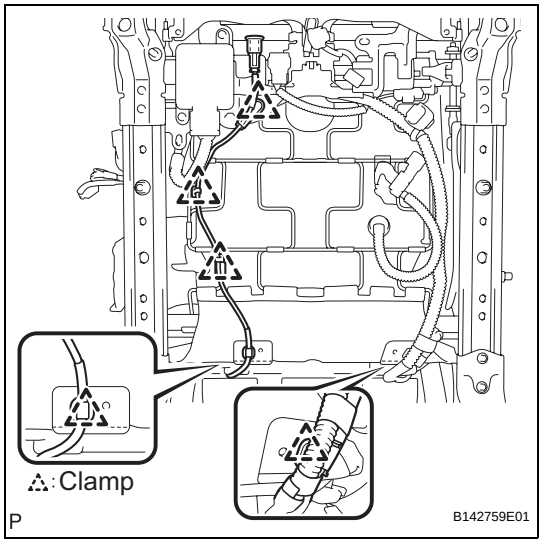

(e) Engage the clamps.

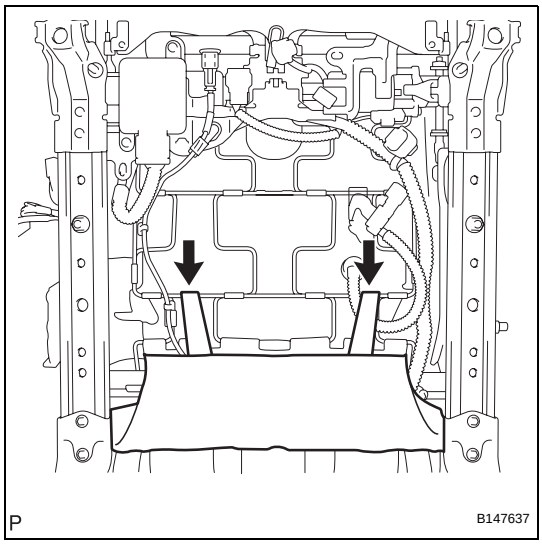

(f) Engage the 2 hooks.

3. INSTALL OCCUPANT CLASSIFICATION ECU (See page RS-502)

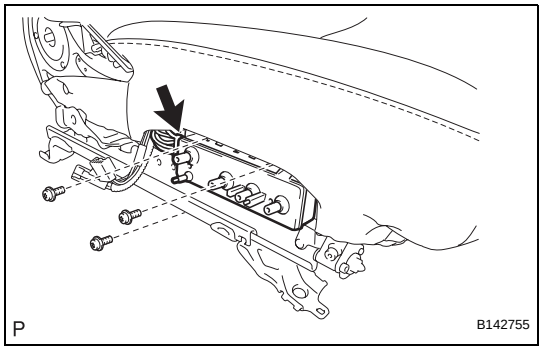

4. REMOVE FRONT POWER SEAT SWITCH RH

(a) Connect the connector.

(b) Install the front power seat switch RH with the 3 screws.

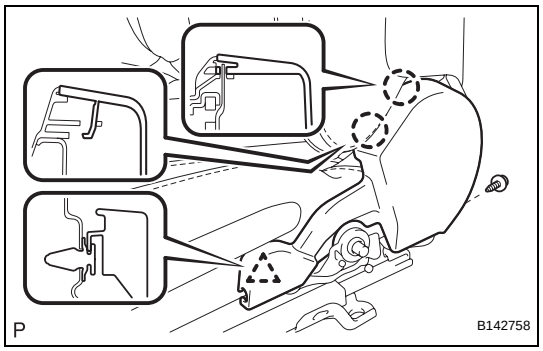

5. INSTALL FRONT SEAT INNER CUSHION SHIELD LH

(a) Engage the 2 claws and clip.

(b) Install the front seat inner cushion shield LH with the screw.

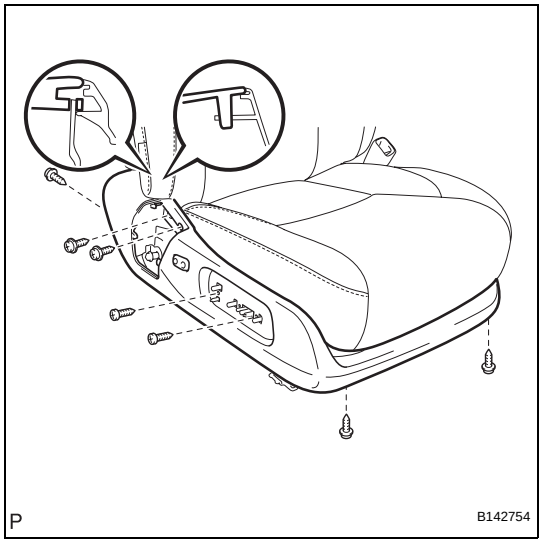

6. INSTALL FRONT SEAT CUSHION SHIELD ASSEMBLY

(a) Connect the connector.

(b) Engage the 2 claws.

(c) Install the front seat cushion shield assembly with the 7 screws.

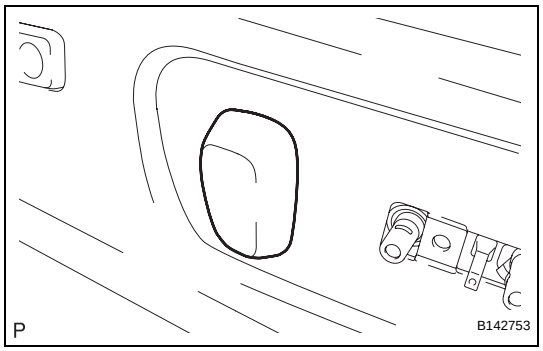

7. INSTALL RECLINING POWER SEAT SWITCH KNOB

(a) Install the reclining power seat switch knob.

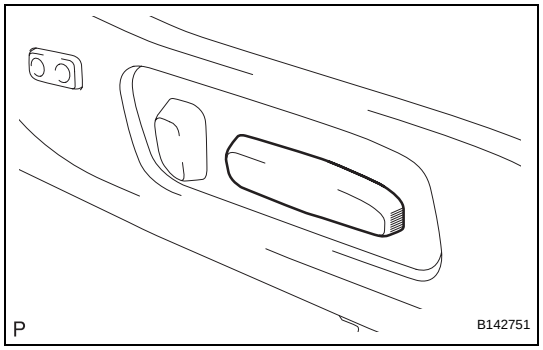

8. INSTALL SLIDE AND VERTICAL POWER SEAT SWITCH KNOB

(a) Install the slide and vertical power seat switch knob.

9. INSTALL FRONT SEAT INNER BELT ASSEMBLY RH (See page SB-24)

10. INSTALL FRONT SEAT ASSEMBLY RH

(a) Place the seat in the cabin.

(b) Connect the connectors under the seat.

(c) Connect the cable to the negative battery terminal.

(d) Move the front seat assembly RH fully forward by operating the slide and vertical power seat switch knob.

NOTICE:

Check that the seat is locked.

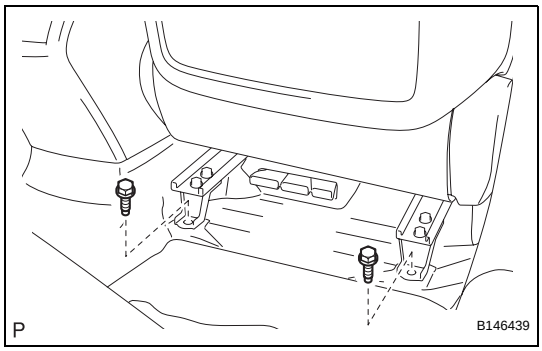

(e) Temporarily install the front side of the front seat assembly RH with the 2 bolts.

(f) Move the front seat assembly RH fully forward by operating the slide and vertical power seat switch knob.
NOTICE:
Check that the seat is locked.

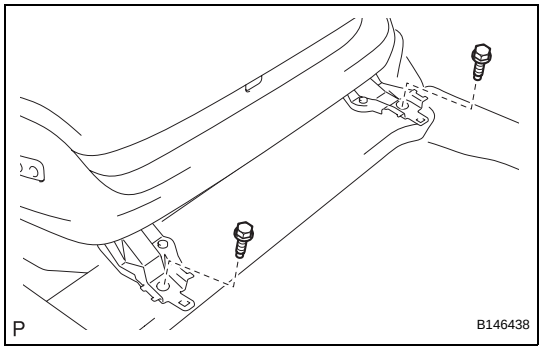

(g) Temporarily install the rear side of the front seat assembly RH with the 2 bolts.

(h) Move the front seat assembly RH to the rearmost position by operating the slide and vertical power seat switch knob.
NOTICE:
Check that the seat is locked.

(i) Fully tighten the 2 bolts on the front side of the front seat assembly RH in the order of the inner side bolt and then the outer side bolt.
Torque: 37 N*m (377 kgf*cm, 27 ft.*lbf)

(j) Move the front seat assembly RH fully forward by operating the slide and vertical power seat switch knob.
NOTICE:
Check that the seat is locked.

(k) Fully tighten the 2 bolts on the rear side of the front seat assembly RH in the order of the inner side bolt and then the outer side bolt.
Torque: 37 N*m (377 kgf*cm, 27 ft.*lbf)

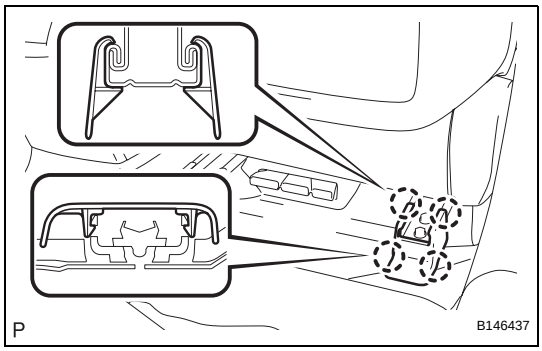

11. INSTALL FRONT SEAT REAR OUTER TRACK BRACKET COVER RH

(a) Engage the 4 claws and install the front seat rear outer track bracket cover RH.

12. INSTALL FRONT SEAT REAR INNER TRACK BRACKET COVER RH

HINT:
Use the same procedure for the inner side and outer side.

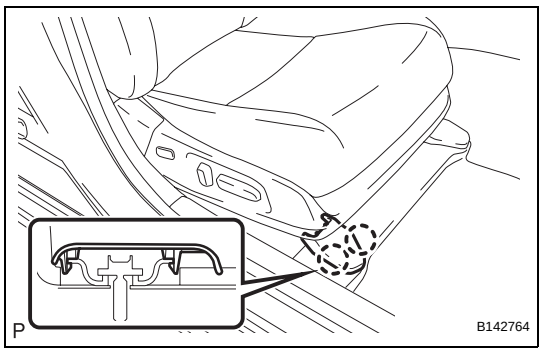

13. INSTALL FRONT SEAT OUTER TRACK BRACKET COVER RH

(a) Engage the 2 claws and install the front seat outer track bracket cover RH.

14. INSTALL FRONT SEAT INNER TRACK BRACKET COVER RH

HINT:
Use the same procedure for the inner side and outer side.

15. INSTALL FRONT SEAT HEADREST ASSEMBLY

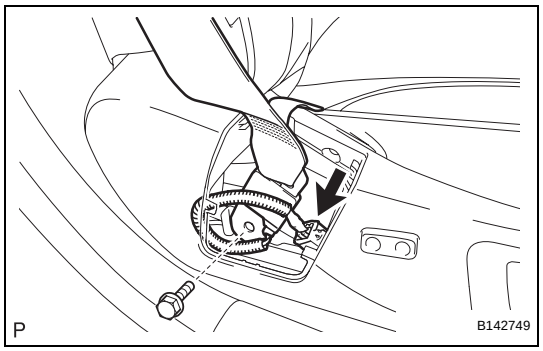

16. CONNECT FRONT SEAT OUTER BELT ASSEMBLY RH

(a) Connect the front seat outer belt assembly RH with the bolt.
Torque: 42 N*m (428 kgf*cm, 31 ft.*lbf)

(b) Connect the connector.

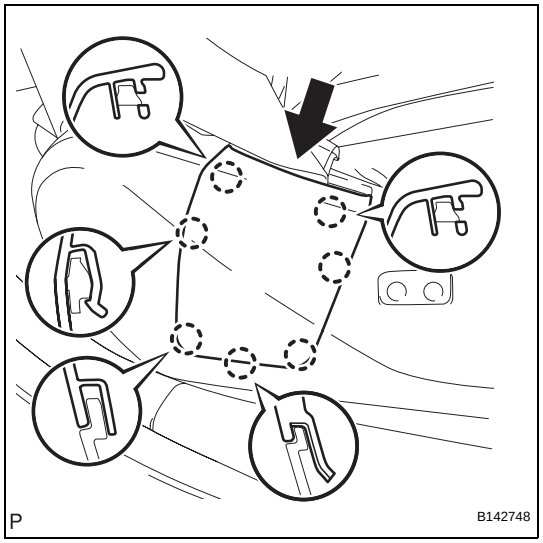

17. INSTALL SEAT BELT ANCHOR COVER CAP RH

(a) Engage the 7 claws and install the seat belt anchor cover cap RH.

18. PERFORM INITIALIZATION

(a) Perform initialization (See page IN-33).
HINT:
Some systems need initialization after reconnecting the cable to the negative battery terminal.

19. PERFORM ZERO POINT CALIBRATION AND SENSITIVITY CHECK

(a) Perform zero point calibration and sensitivity check (See page RS-312).

20. INSPECT FRONT SEAT ASSEMBLY (See page SE-110)

21. INSPECT SRS WARNING LIGHT

(a) Inspect SRS warning light (See page RS-37).

RS

REMOVAL

1. **PRECAUTION**
   CAUTION:
   Be sure to read "PRECAUTION" thoroughly before servicing (See page RS-1).
2. **REMOVE SEAT BELT ANCHOR COVER CAP RH (See page SB-27)**
3. **DISCONNECT FRONT SEAT OUTER BELT ASSEMBLY RH (See page SB-27)**
4. **REMOVE FRONT SEAT HEADREST ASSEMBLY**
5. **REMOVE FRONT SEAT OUTER TRACK BRACKET COVER RH (See page RS-490)**
6. **REMOVE FRONT SEAT INNER TRACK BRACKET COVER RH (See page RS-490)**
7. **REMOVE FRONT SEAT REAR OUTER TRACK BRACKET COVER RH (See page RS-490)**
8. **REMOVE FRONT SEAT REAR INNER TRACK BRACKET COVER RH (See page RS-490)**
9. **REMOVE FRONT SEAT ASSEMBLY RH (See page SE-83)**
10. **REMOVE OCCUPANT CLASSIFICATION ECU**
    (a) Disconnect the connector from the occupant classification ECU.
    (b) Remove the 2 nuts and occupant classification ECU.

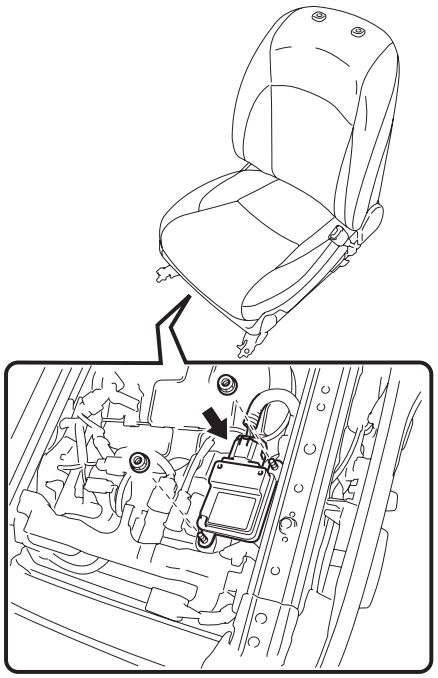

C C138901

INSTALLATION

1. INSTALL OCCUPANT CLASSIFICATION ECU

(a) Check that the engine switch is off.

(b) Check that the negative battery (-) cable is disconnected.

CAUTION:
Wait for 90 seconds after disconnecting the cable to prevent airbag deployment.

(c) Install the occupant classification ECU with the 2 nuts.

Torque: 3.0 N*m (31 kgf*cm, 27 in.*lbf)

(d) Connect the connector.

NOTICE:

- **If the occupant classification ECU has been dropped, or there are any cracks, dents or other defects in the case or connector, replace the occupant classification ECU with a new one.**
- **When installing the occupant classification ECU, be careful that the SRS wiring does not interfere with other parts and that it is not pinched between other parts.**

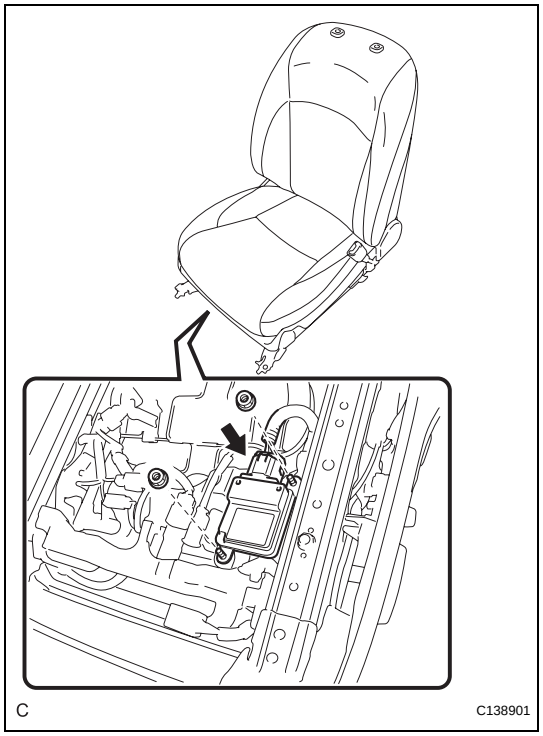

2. INSTALL FRONT SEAT ASSEMBLY RH (See page SE-109)

3. INSTALL FRONT SEAT REAR INNER TRACK BRACKET COVER RH (See page RS-498)

4. INSTALL FRONT SEAT REAR OUTER TRACK BRACKET COVER RH (See page RS-498)

5. INSTALL FRONT SEAT INNER TRACK BRACKET COVER RH (See page RS-498)

6. INSTALL FRONT SEAT OUTER TRACK BRACKET COVER RH (See page SE-110)

7. INSTALL FRONT SEAT HEADREST ASSEMBLY

8. CONNECT FRONT SEAT OUTER BELT ASSEMBLY RH (See page SB-31)

9. INSTALL SEAT BELT ANCHOR COVER CAP RH (See page SB-31)

10. PERFORM INITIALIZATION

(a) Perform initialization (See page IN-33).

HINT:
Some systems need initialization after reconnecting the cable to the negative battery terminal.

11. PERFORM ZERO POINT CALIBRATION AND SENSITIVITY CHECK

(a) Perform zero point calibration and sensitivity check (See page RS-312).

12. INSPECT FRONT SEAT ASSEMBLY (See page SE-110)

13. INSPECT SRS WARNING LIGHT

(a) Inspect the SRS warning light (See page RS-37).

SB

SYSTEM DIAGRAM

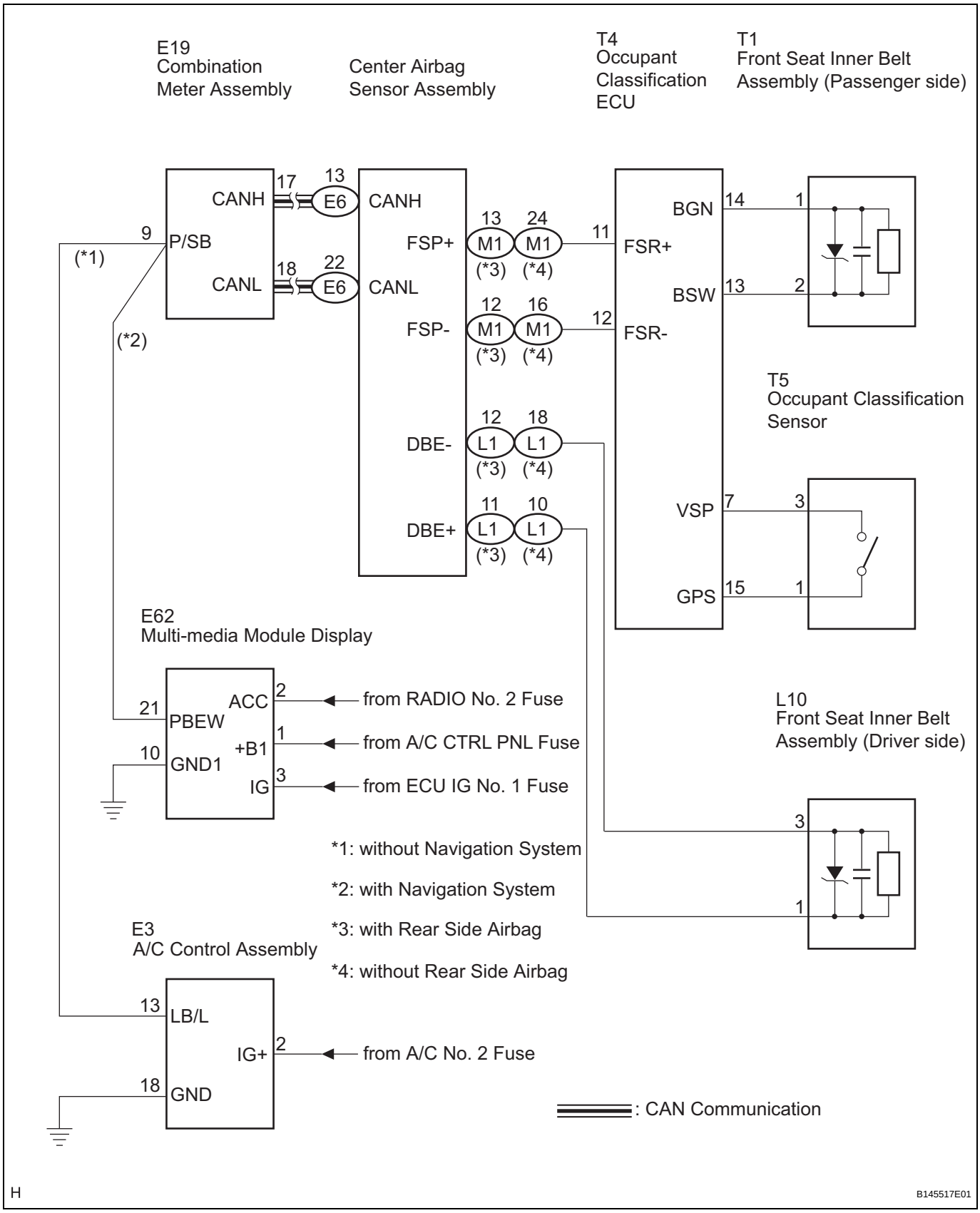

SYSTEM DESCRIPTION

1. Driver seat belt warning light

(a) When the driver seat belt is not fastened with the engine switch on (IG), the driver seat belt warning light on the combination meter assembly comes on to inform the driver. The center airbag assembly detects the driver seat belt status and sends signals to the combination meter assembly using CAN.

2. Passenger seat belt warning light

(a) When the passenger seat belt is not fastened with the engine switch on (IG) and the passenger seat occupied, check that the passenger seat belt warning light on the A/C control assembly (* Multi-media module display) blinks. The combination meter assembly displays the passenger seat belt status and whether the passenger seat is occupied.
*: with navigation system

SB

HOW TO PROCEED WITH TROUBLESHOOTING

HINT:
- Use the following procedures to troubleshoot the seat belt warning system.
- *: Use the intelligent tester.

1 VEHICLE BROUGHT TO WORKSHOP

NEXT

2 INSPECT BATTERY VOLTAGE

Standard voltage:
11 to 14 V
If the voltage is below 11 V, recharge or replace the battery before proceeding to the next step.

NEXT

3 CHECK COMMUNICATION FUNCTION OF CAN COMMUNICATION SYSTEM (CAN)*

(a) Use the intelligent tester to check if the CAN Communication System (CAN) is functioning normally.
Result

Result	Proceed to
CAN DTC is not output	A
CAN DTC is output	B

B → **GO TO CAN COMMUNICATION SYSTEM**

A

4 PROBLEM SYMPTOMS TABLE

HINT:
See page SB-8.

NEXT

5 OVERALL ANALYSIS AND TROUBLESHOOTING*

(a) DATA LIST / ACTIVE TEST (See page SB-11)
(b) Terminals of ECU (See page SB-9)
(c) On-vehicle inspection (See page SB-11)

NEXT

6	**REPAIR OR REPLACE**

NEXT

7	**CONFIRMATION TEST**

NEXT

END

PROBLEM SYMPTOMS TABLE

SEAT BELT WARNING SYSTEM

Symptom	Suspected Area	See page
Driver seat belt warning light does not operate	1. Front seat inner belt LH	SB-13
	2. Center airbag sensor assembly	SB-13
	3. Combination meter assembly	SB-13
	4. Wire harness	SB-13
Front passenger seat belt warning light does not operate	1. Front seat inner belt RH	SB-15
	2. Occupant detection ECU	SB-15
	3. Road sensor	SB-15
	4. Center airbag sensor assembly	SB-15
	5. Combination meter assembly	SB-15
	6. Clock assembly	SB-15
	7. Wire harness	SB-15

TERMINALS OF ECU

1. COMBINATION METER ASSEMBLY

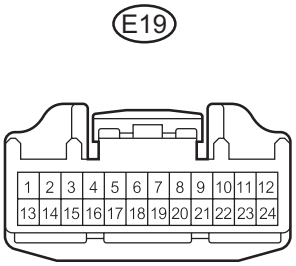

B148546E02

Standard resistance

Terminal No. (Symbols)	Terminal Description	Condition	Specified Condition
E19-9 (P/SB) - Body ground	Passenger seat belt signal	The passenger seat is occupied, seat belt is fastened → unfastened	Below 1 Ω → 10 kΩ or higher

2. MULTI-MEDIA MODULE DISPLAY (WITH NAVIGATION SYSTEM)

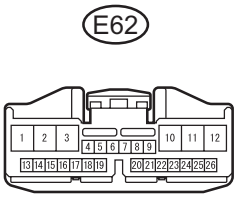

B126321E02

Standard resistance

Terminal No. (Symbols)	Terminal Description	Condition	Specified Condition
E62-21 (PBEW) - Body ground	Passenger seat belt signal	The passenger seat is occupied, seat belt is fastened → unfastened	Below 1 Ω → 10 kΩ or higher

3. A/C CONTROL ASSEMBLY (WITHOUT NAVIGATION SYSTEM)

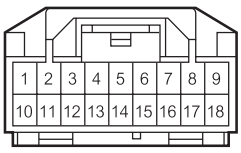

H

B148266E01

Standard resistance

Terminal No. (Symbols)	Terminal Description	Condition	Specified Condition
E3-13 (PBEW) - Body ground	Passenger seat belt signal	The passenger seat is occupied, seat belt is fastened → unfastened	Below 1 Ω → 10 kΩ or higher

SB

PROBLEM SYMPTOMS TABLE

SEAT BELT WARNING SYSTEM

Symptom	Suspected Area	See page
Driver seat belt warning light does not operate	1. Front seat inner belt LH	SB-13
	2. Center airbag sensor assembly	SB-13
	3. Combination meter assembly	SB-13
	4. Wire harness	SB-13
Front passenger seat belt warning light does not operate	1. Front seat inner belt RH	SB-15
	2. Occupant detection ECU	SB-15
	3. Road sensor	SB-15
	4. Center airbag sensor assembly	SB-15
	5. Combination meter assembly	SB-15
	6. Clock assembly	SB-15
	7. Wire harness	SB-15

TERMINALS OF ECU

1. COMBINATION METER ASSEMBLY

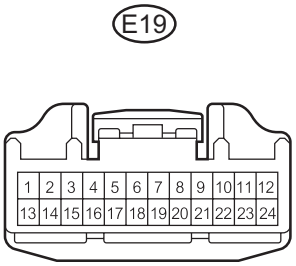

B148546E02

Standard resistance

Terminal No. (Symbols)	Terminal Description	Condition	Specified Condition
E19-9 (P/SB) - Body ground	Passenger seat belt signal	The passenger seat is occupied, seat belt is fastened → unfastened	Below 1 Ω → 10 kΩ or higher

2. MULTI-MEDIA MODULE DISPLAY (WITH NAVIGATION SYSTEM)

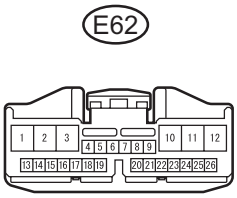

B126321E02

Standard resistance

Terminal No. (Symbols)	Terminal Description	Condition	Specified Condition
E62-21 (PBEW) - Body ground	Passenger seat belt signal	The passenger seat is occupied, seat belt is fastened → unfastened	Below 1 Ω → 10 kΩ or higher

3. A/C CONTROL ASSEMBLY (WITHOUT NAVIGATION SYSTEM)

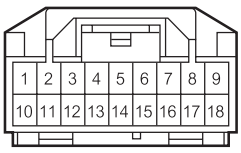

H

B148266E01

Standard resistance

Terminal No. (Symbols)	Terminal Description	Condition	Specified Condition
E3-13 (PBEW) - Body ground	Passenger seat belt signal	The passenger seat is occupied, seat belt is fastened → unfastened	Below 1 Ω → 10 kΩ or higher

SB

SB

DIAGNOSIS SYSTEM

1. DESCRIPTION

(a) The seat belt warning system data can be read from the Data Link Connector 3 (DLC3) of the vehicle. When the system seems to be malfunctioning, use the intelligent tester to check for malfunctions and perform repairs.

2. CHECK DLC3

(a) The ECU uses ISO 15765-4 communication protocol. The terminal arrangement of the DLC3 complies with ISO 15031-3 and matches the ISO 15765-4 format.

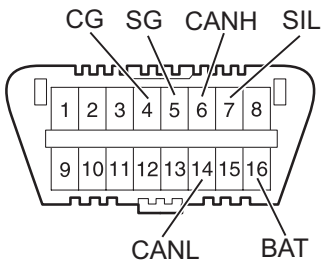

T H100769E16

Symbols (Terminal No.)	Terminal Description	Condition	Specified Condition
SIL (7) - SG (5)	Bus "+" line	During transmission	Pulse generation
CG (4) - Body ground	Chassis ground	Always	Below 1 Ω
SG (5) - Body ground	Signal ground	Always	Below 1 Ω
BAT (16) - Body ground	Battery positive	Always	10 to 14 V
CANH (6) - CANL (14)	CAN bus line	Engine switch OFF*	54 to 69 Ω
CANH (6) - CG (4)	HIGH-level CAN bus line	Engine switch OFF*	200 Ω or more
CANL (14) - CG (4)	LOW-level CAN bus line	Engine switch OFF*	200 Ω or more
CANH (6) - BAT (16)	HIGH-level CAN bus line	Engine switch OFF*	6 kΩ or more
CANL (14) - BAT (16)	LOW-level CAN bus line	Engine switch OFF*	6 kΩ or more

NOTICE:
***: Before measuring the resistance, leave the vehicle as is for at least 1 minute and do not operate the engine switch, any other switches or the door.**
If the result is not as specified, the DLC3 may have a malfunction. Repair or replace the harness and connector.
HINT:
Connect the cable of the intelligent tester to the DLC3, turn the engine switch on (IG) and attempt to use the tester. If the display indicates that a communication error has occurred, there is a problem either with the vehicle or with the tester.

- If communication is normal when the tester is connected to another vehicle, inspect the DLC3 of the original vehicle.
- If communication is still not possible when the tester is connected to another vehicle, the problem may be in the tester itself. Consult the Service Department listed in the tester's instruction manual.

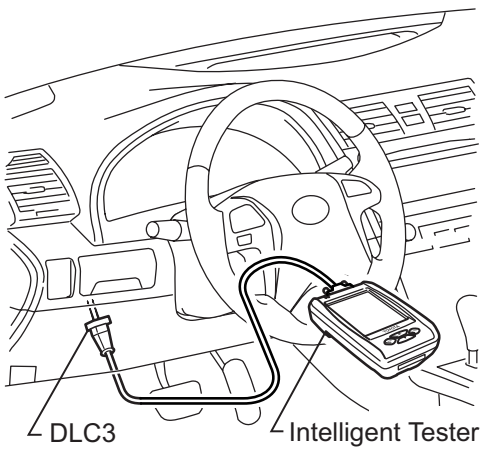

H C131975E01

DATA LIST / ACTIVE TEST

1. ACTIVE TEST

Performing the ACTIVE TEST using the intelligent tester allows the meters, indicators and so on to operate without removing any parts. Performing the ACTIVE TEST as the first step in troubleshooting is one way to shorten labor time.

(a) Connect the intelligent tester to the DLC3.
(b) Turn the engine switch on (IG).
(c) From the display on the tester, select the "ACTIVE TEST".

METER:

Tester Display	Measurement Item/Range	Normal Condition
D-BELT REMIND	D-SEAT BELT indicator light (OFF/ON)	Confirm that the vehicle is stopped with the engine idling
P-BELT REMIND	P-SEAT BELT indicator light (OFF/ON)	Confirm that the vehicle is stopped with the engine idling

SB

ON-VEHICLE INSPECTION

1. INSPECT DRIVER SIDE SEAT BELT WARNING

(a) Turn the engine switch on (IG).

(b) When the driver seat belt is not fastened, check that the driver seat belt warning light on the combination meter blinks.

(c) When the driver seat belt is fastened, check that the driver seat belt warning light on the combination meter is off.

2. INSPECT PASSENGER SIDE SEAT BELT WARNING

(a) Turn the engine switch on (IG).

(b) When the front passenger seat belt is not fastened with the passenger seat occupied, check that the front passenger seat belt warning light on the A/C control assembly (* Multi-media module display) blinks.
*: with navigation system

(c) When the front passenger seat belt is fastened with the passenger seat occupied, check that the front passenger seat belt warning light on the A/C control assembly (* Multi-media module display) is off.
*: with navigation system

3. INSPECT SEAT BELT WARNING BUZZER

HINT:
If the buzzer does not sound, the buzzer cancel setting may be set to ON.

(a) Turn the engine switch on (IG).

(b) When the vehicle is driven at approximately 25 km/h (16 mph) or more while the driver or front passenger seat belt is not being fastened, check that the buzzer in the combination meter assembly sounds at an interval of 1.2 seconds for 30 seconds.

(c) Check that the buzzer sounds at an interval of 0.4 seconds for 90 seconds.

(d) Check that the buzzer stops 2 minutes after the buzzer starts sounding.

(e) After the buzzer has stopped, turn the engine switch off and then start the engine again. Drive the vehicle at approximately 25 km/h (16 mph) or more while the driver or front passenger seat belt is not being fastened, and then check that the buzzer sounds again.

(f) After the buzzer has stopped, fasten the driver and front passenger seat belts. Drive the vehicle at approximately 25 km/h (16 mph) or more and unfasten the driver or front passenger seat belt, and then check that the buzzer sounds again.

(g) After the buzzer has stopped, move the shift lever to the R position, and then move it to the D position. Drive the vehicle at approximately 25 km/h (16 mph) or more, and then check that the buzzer sounds again.

Driver Side Seat Belt Warning Light does not Operate

DESCRIPTION

When the engine switch is on (IG), the center airbag sensor assembly transmits front seat inner belt state signals to the combination meter assembly through CAN. If the driver seat belt is not fastened, the combination meter assembly blinks the driver seat belt warning light. If the seat belt is fastened, the warning light goes off.

NOTICE:

The seat belt warning system uses CAN. Before troubleshooting the seat belt warning system, perform "COMMUNICATION FUNCTION CHECK" by following "HOW TO PROCEED WITH TROUBLESHOOTING" to confirm that the communication systems are normal.

SB

WIRING DIAGRAM

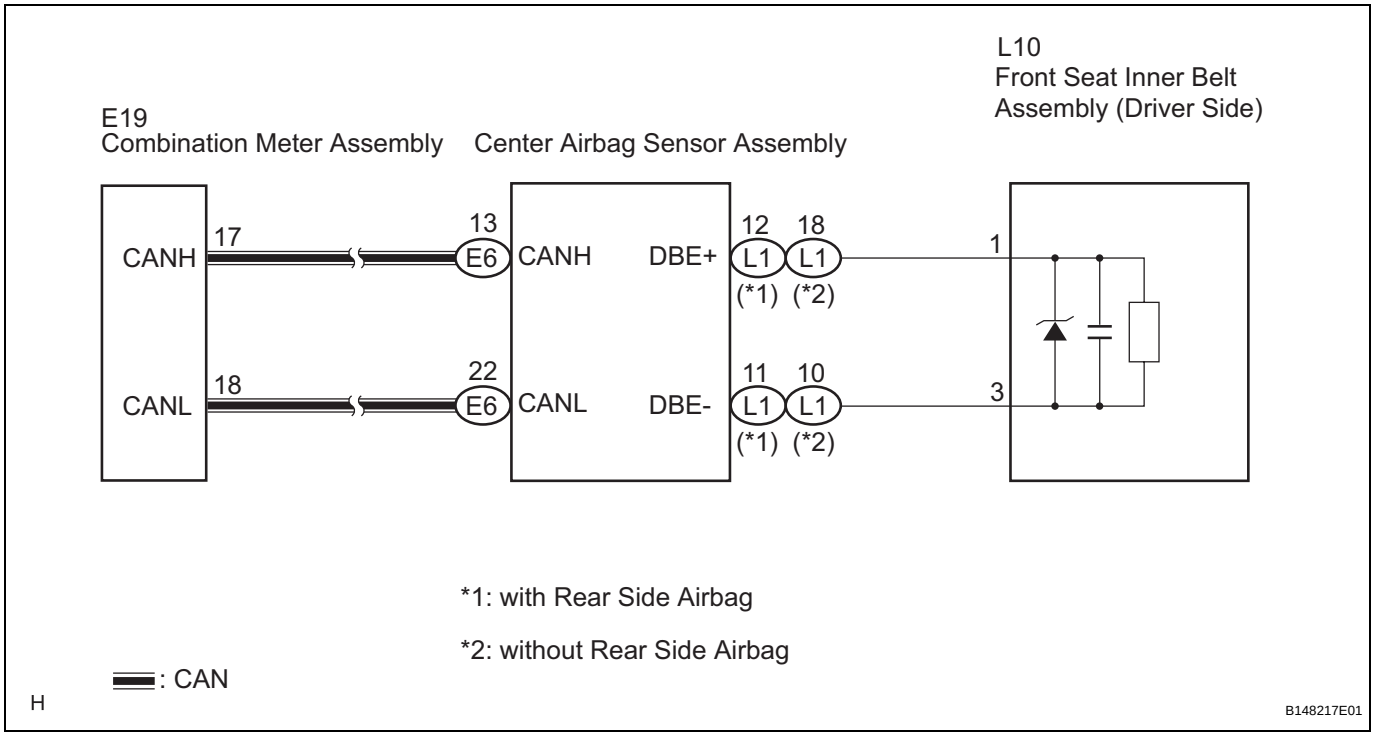

INSPECTION PROCEDURE

1	CHECK FOR DTCs

(a) Check for DTCs.

Result

Result	Proceed to
Output DTC (CAN communication system)	A
Output DTC (Airbag system)	B
No output DTC	C

A	GO TO CAN COMMUNICATION SYSTEM
B	GO TO AIRBAG SYSTEM

C

2	PERFORM ACTIVE TEST BY INTELLIGENT TESTER

(a) Operate the intelligent tester according to the steps on the display and select "ACTIVE TEST".

SB

METER

Item	Test Details	Diagnostic Note
D-BELT REMIND	D-SEAT BELT indicator light (OFF/ON)	Confirm that the vehicle is stopped with the engine idling

OK:
Switch condition (ON/OFF) can be switched by "ACTIVE TEST".

NG → **REPLACE COMBINATION METER ASSEMBLY**

OK

END

Front Passenger Side Seat Belt Warning Light Malfunction

DESCRIPTION

with Navigation System:

The combination meter assembly detects the state of the front passenger seat inner belt assembly when the front passenger seat is occupied with the engine switch on (IG). If the front passenger seat belt is not fastened, the front seat belt warning light on the multi-media module display blinks. If the seat belt is fastened, the warning light goes off.

without Navigation System:

The combination meter assembly detects the state of the front passenger seat inner belt assembly when the front passenger seat is occupied with the engine switch on (IG). If the front passenger seat belt is not fastened, the front seat belt warning light on the A/C control assembly blinks. If the seat belt is fastened, the warning light goes off.

SB

WIRING DIAGRAM

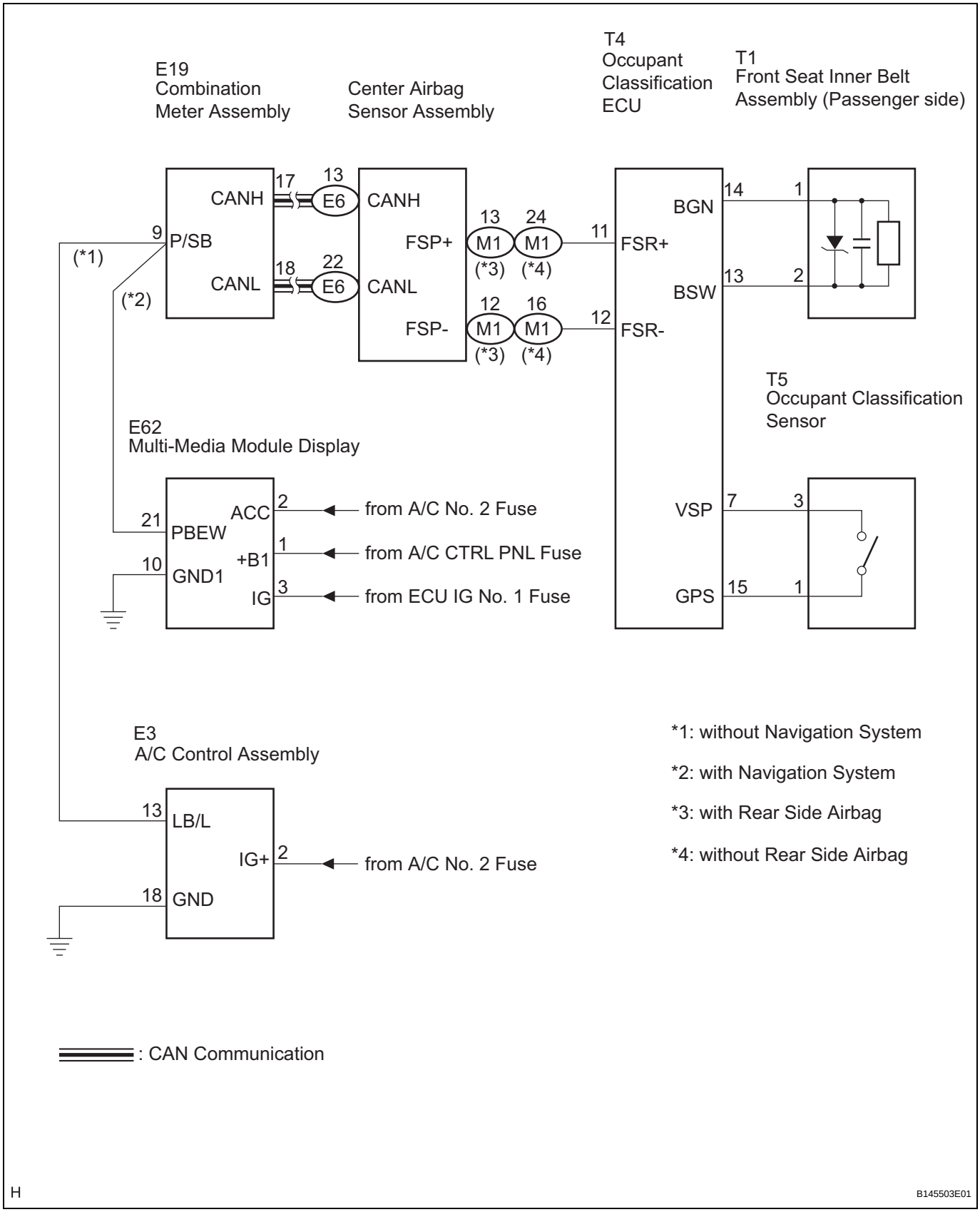

INSPECTION PROCEDURE

1	CHECK FOR DTCs

(a) Check for DTCs.

Result

Result	Proceed to
No output DTC	A
Output DTC (CAN communication)	B

B → **GO TO CAN COMMUNICATION SYSTEM**

A

2	PERFORM ACTIVE TEST BY INTELLIGENT TESTER

(a) Operate the intelligent tester according to the steps on the display and select "ACTIVE TEST".

METER

Item	Test Details	Diagnostic Note
P-BELT REMIND	P-SEAT BELT indicator light (OFF/ON)	Confirm that the vehicle is stopped with the engine idling

Result

Result	Proceed to
OK (without navigation system)	A
OK (with navigation system)	B
NG	C

B → **Go to step 6**

C → **GO TO COMBINATION METER SYSTEM**

A

3	CHECK WIRE HARNESS (A/C CONTROL ASSEMBLY +B)

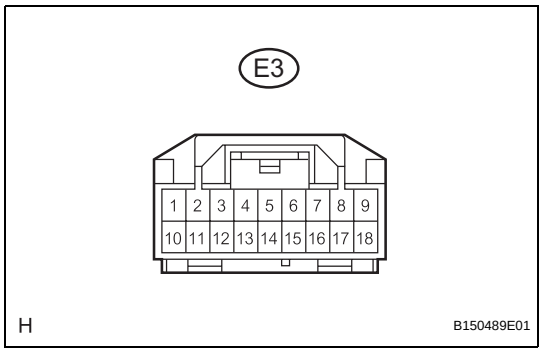

(a) Disconnect the A/C control assembly connector.
(b) Measure the voltage according to the value(s) in the table below.

Standard voltage

Tester Connection	Condition	Specified Condition
E3-2 (IG+) - Body ground	Engine switch on (IG)	10 to 14 V

NG → **REPAIR OR REPLACE HARNESS OR CONNECTOR**

OK

SB

4 CHECK A/C CONTROL ASSEMBLY

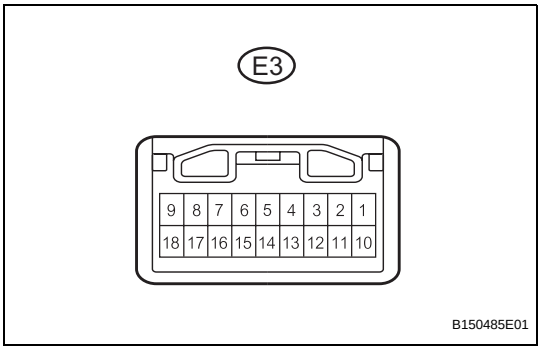

(a) Disconnect the A/C control assembly connector.
(b) Connect the positive (+) lead to terminal 2 (IG+), and the negative (-) battery lead to terminals 13 (LB/L) and 18 (GND).
(c) Check that the seat belt warning light comes on.
OK:
Seat belt warning light comes on.

NG → **REPLACE AIR CONDITIONING CONTROL ASSEMBLY**

OK

5 CHECK WIRE HARNESS (A/C CONTROL ASSEMBLY - COMBINATION METER ASSEMBLY)

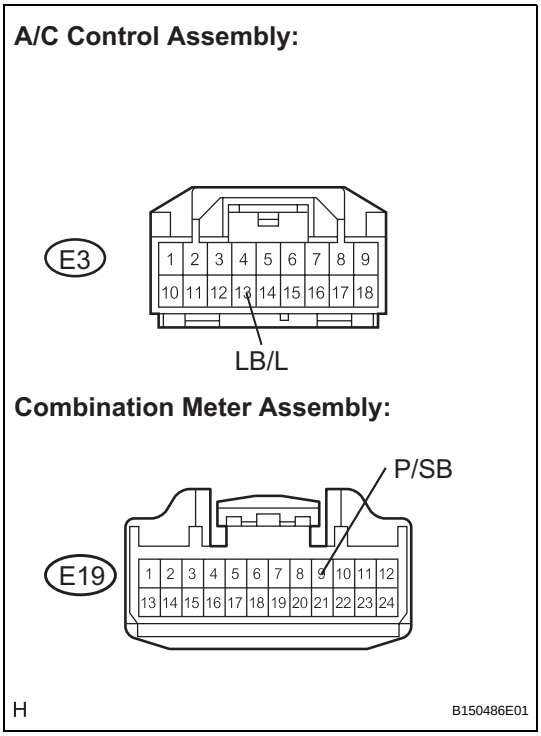

(a) Disconnect the combination meter assembly and A/C control assembly connectors.
(b) Measure the resistance according to the value(s) in the table below.
Standard resistance

Tester Connection	Condition	Specified Condition
E19-9 (P/SB) - E3-13 (LB/L)	Always	Below 1 Ω
E19-9 (P/SB) - Body ground	Always	10 kΩ or higher

NG → **REPAIR OR REPLACE HARNESS OR CONNECTOR**

OK

GO TO OCCUPANT CLASSIFICATION SYSTEM

6 CHECK WIRE HARNESS (MULTI-MEDIA MODULE DISPLAY +B)

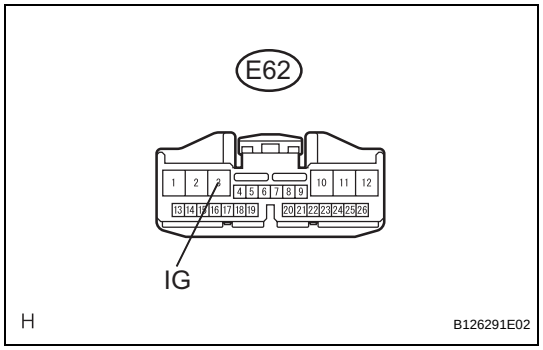

(a) Disconnect the multi-media module display connector.
(b) Measure the voltage according to the value(s) in the table below.
Standard voltage

Tester Connection	Condition	Specified Condition
E62-3 (IG) - Body ground	Engine switch on (IG)	10 to 14 V

NG → **REPLACE AIR CONDITIONING CONTROL ASSEMBLY**

OK

7 CHECK MULTI-MEDIA MODULE DISPLAY

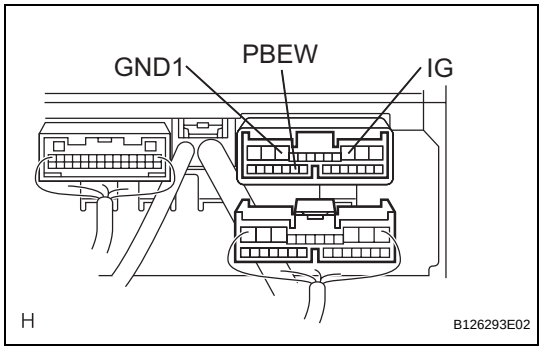

(a) Disconnect the multi-media module display connector.
(b) Connect the positive (+) lead to terminal 3 (IG), and the negative (-) battery lead to terminals 21 (PBEW) and 10 (GND1).
(c) Check that the seat belt warning light comes on.
OK:
Seat belt warning light comes on.

NG → **REPLACE MULTI-MEDIA MODULE DISPLAY**

OK

SB

SB

8	**CHECK WIRE HARNESS (MULTI-MEDIA MODULE DISPLAY - COMBINATION METER ASSEMBLY)**

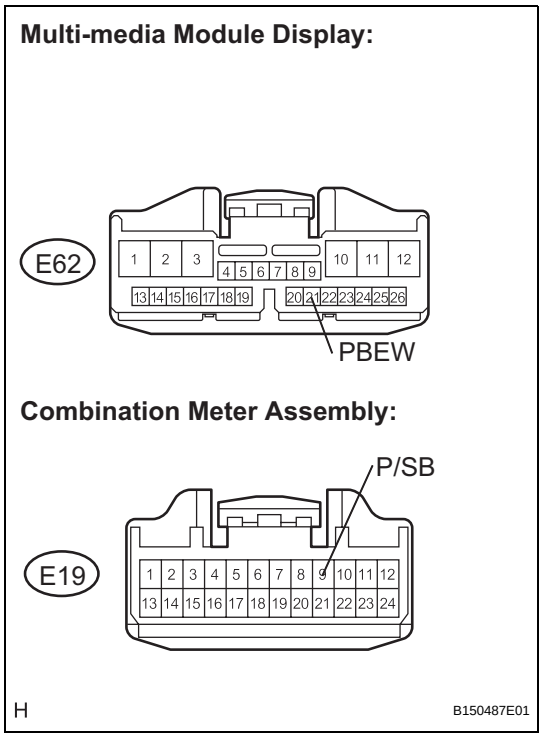

(a) Disconnect the combination meter assembly and multi-media module display connectors.

(b) Measure the resistance according to the value(s) in the table below.

Standard resistance

Tester Connection	Condition	Specified Condition
E19-9 (P/SB) - E62-21 (PBEW)	Always	Below 1 Ω
E19-9 (P/SB) - Body ground	Always	10 kΩ or higher

NG → **REPAIR OR REPLACE HARNESS OR CONNECTOR**

OK

GO TO OCCUPANT CLASSIFICATION SYSTEM

SB

DIAGNOSIS SYSTEM

1. DESCRIPTION

(a) The seat belt warning system data can be read from the Data Link Connector 3 (DLC3) of the vehicle. When the system seems to be malfunctioning, use the intelligent tester to check for malfunctions and perform repairs.

2. CHECK DLC3

(a) The ECU uses ISO 15765-4 communication protocol. The terminal arrangement of the DLC3 complies with ISO 15031-3 and matches the ISO 15765-4 format.

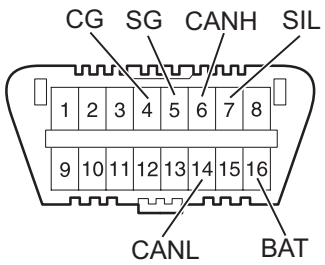

T H100769E16

Symbols (Terminal No.)	Terminal Description	Condition	Specified Condition
SIL (7) - SG (5)	Bus "+" line	During transmission	Pulse generation
CG (4) - Body ground	Chassis ground	Always	Below 1 Ω
SG (5) - Body ground	Signal ground	Always	Below 1 Ω
BAT (16) - Body ground	Battery positive	Always	10 to 14 V
CANH (6) - CANL (14)	CAN bus line	Engine switch OFF*	54 to 69 Ω
CANH (6) - CG (4)	HIGH-level CAN bus line	Engine switch OFF*	200 Ω or more
CANL (14) - CG (4)	LOW-level CAN bus line	Engine switch OFF*	200 Ω or more
CANH (6) - BAT (16)	HIGH-level CAN bus line	Engine switch OFF*	6 kΩ or more
CANL (14) - BAT (16)	LOW-level CAN bus line	Engine switch OFF*	6 kΩ or more

NOTICE:
***: Before measuring the resistance, leave the vehicle as is for at least 1 minute and do not operate the engine switch, any other switches or the door.**
If the result is not as specified, the DLC3 may have a malfunction. Repair or replace the harness and connector.
HINT:
Connect the cable of the intelligent tester to the DLC3, turn the engine switch on (IG) and attempt to use the tester. If the display indicates that a communication error has occurred, there is a problem either with the vehicle or with the tester.

- If communication is normal when the tester is connected to another vehicle, inspect the DLC3 of the original vehicle.
- If communication is still not possible when the tester is connected to another vehicle, the problem may be in the tester itself. Consult the Service Department listed in the tester's instruction manual.

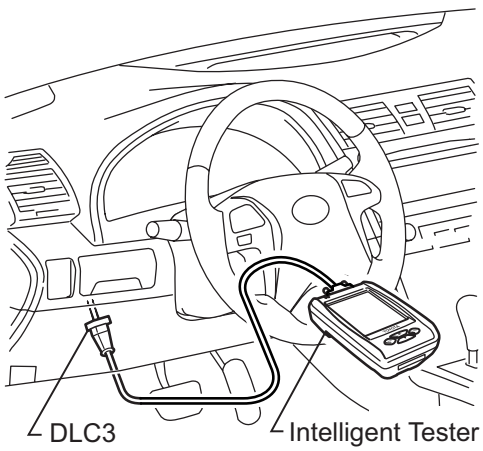

H C131975E01

DATA LIST / ACTIVE TEST

1. ACTIVE TEST

Performing the ACTIVE TEST using the intelligent tester allows the meters, indicators and so on to operate without removing any parts. Performing the ACTIVE TEST as the first step in troubleshooting is one way to shorten labor time.

(a) Connect the intelligent tester to the DLC3.
(b) Turn the engine switch on (IG).
(c) From the display on the tester, select the "ACTIVE TEST".

METER:

Tester Display	Measurement Item/Range	Normal Condition
D-BELT REMIND	D-SEAT BELT indicator light (OFF/ON)	Confirm that the vehicle is stopped with the engine idling
P-BELT REMIND	P-SEAT BELT indicator light (OFF/ON)	Confirm that the vehicle is stopped with the engine idling

FRONT SEAT INNER BELT ASSEMBLY

COMPONENTS

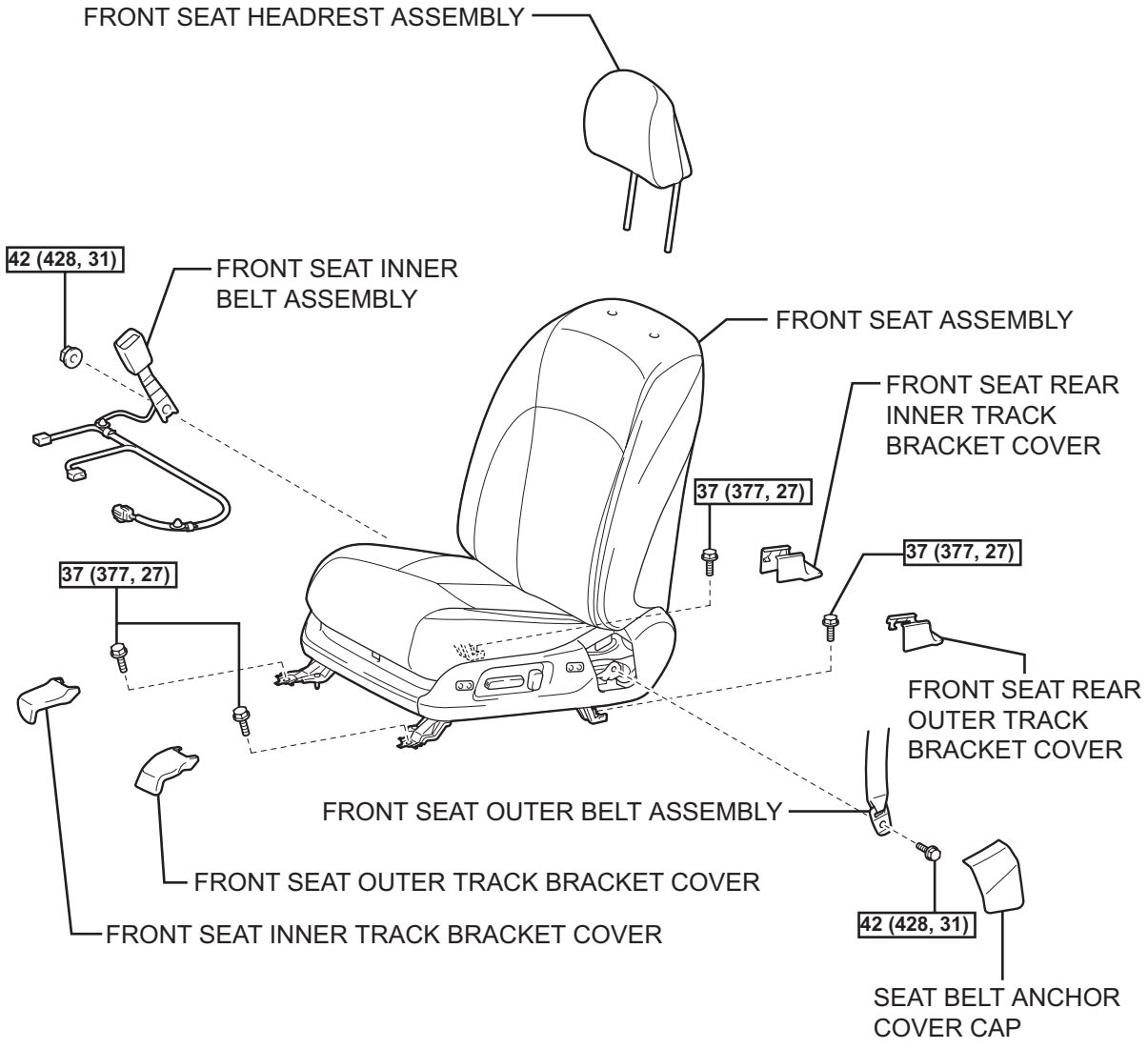

N*m (kgf*cm, ft.*lbf) : Specified torque

P

B142763E01

SB

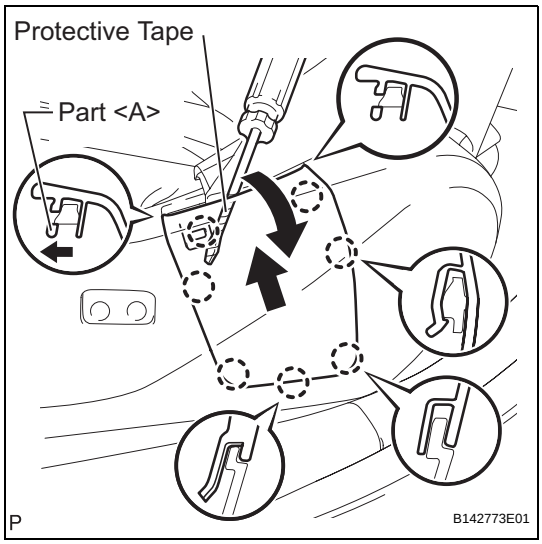

REMOVAL

1. REMOVE SEAT BELT ANCHOR COVER CAP

(a) Hook a screwdriver to part A to bend it toward the inside of the cabin and release the claws. Pull the seat belt anchor cover cap upward and remove it.
NOTICE:
Do not damage the seat belt.

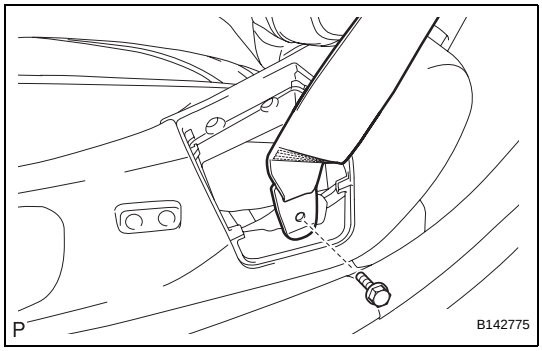

2. DISCONNECT FRONT SEAT OUTER BELT ASSEMBLY

(a) for Driver seat:
(1) Remove the bolt and disconnect the front seat outer belt assembly.

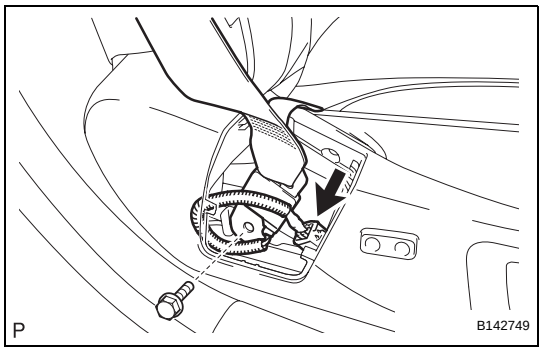

(b) for Passenger seat:
(1) Disconnect the connector.
(2) Remove the bolt and disconnect the front seat outer belt assembly.

3. REMOVE FRONT SEAT HEADREST ASSEMBLY

4. REMOVE FRONT SEAT OUTER TRACK BRACKET COVER (See page SE-83)

5. REMOVE FRONT SEAT INNER TRACK BRACKET COVER (See page SE-83)

6. REMOVE FRONT SEAT REAR OUTER TRACK BRACKET COVER (See page SE-83)

7. REMOVE FRONT SEAT REAR INNER TRACK BRACKET COVER (See page SE-83)

8. REMOVE FRONT SEAT ASSEMBLY (See page SE-83)

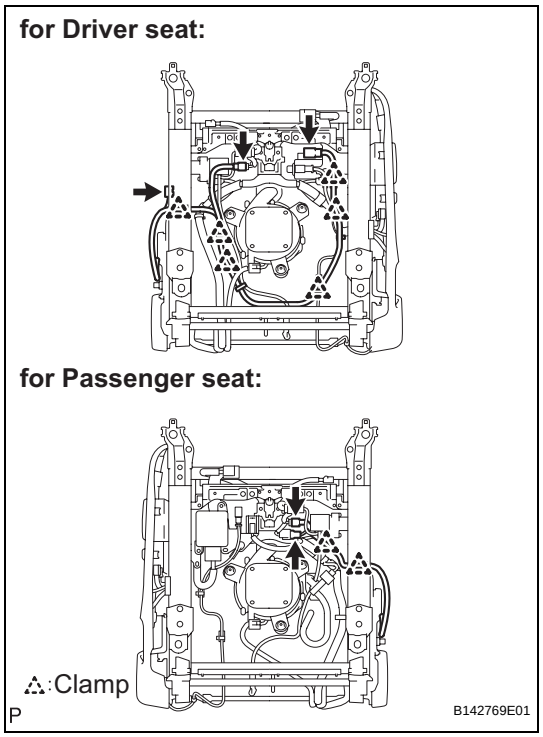

9. REMOVE FRONT SEAT INNER BELT ASSEMBLY

(a) for Driver seat:

(1) Disconnect the connectors and disengage the 6 clamps.

(b) for Passenger seat:

(1) Disconnect the connectors and disengage the 2 clamps.

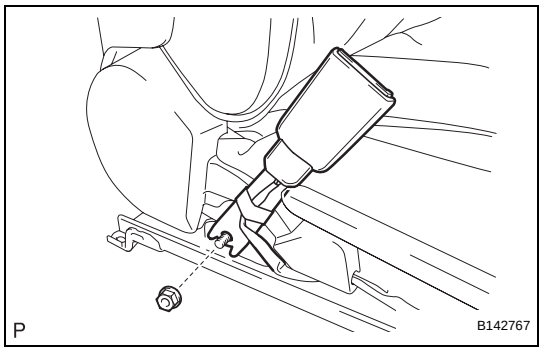

(c) Remove the nut and front seat inner belt assembly.

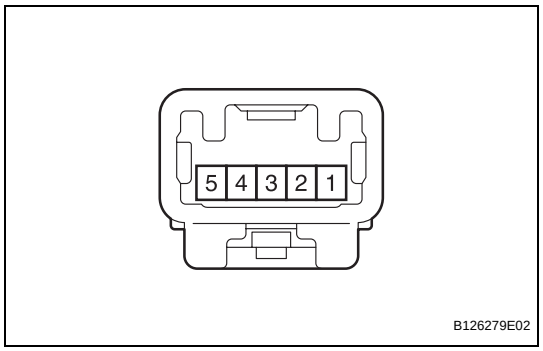

INSPECTION

1. INSPECT FRONT SEAT INNER BELT ASSEMBLY RH

(a) Measure the resistance between terminals of the switch when the switch is operated.

HINT:

This is the inspection procedure of the inner belt switch for the tension reducer.

Standard resistance

Tester Connection	Condition	Specified Condition
2 - 3	Seat belt is fastened	Below 1 Ω
2 - 3	Seat belt is unfastened	10 kΩ or higher

SB

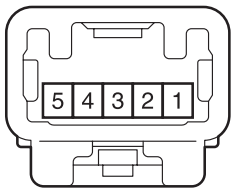

B126279E02

2. INSPECT FRONT SEAT INNER BELT ASSEMBLY LH

(a) Measure the resistance between terminals of the switch when the switch is operated.
HINT:
This is the inspection procedure of the inner belt switch for the tension reducer.
Standard resistance

Tester Connection	Condition	Specified Condition
2 - 3	Seat belt is fastened	Below 1 Ω
2 - 3	Seat belt is unfastened	10 kΩ or higher

INSTALLATION

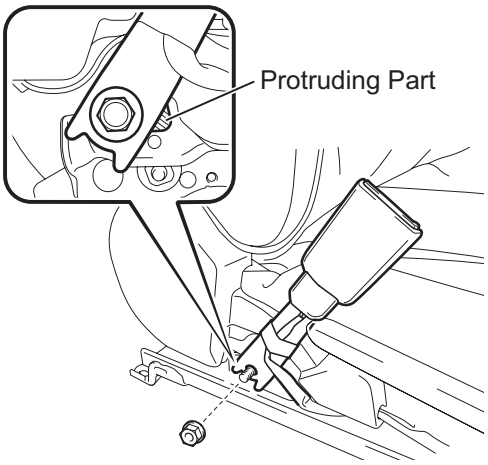

P
B142768E01

1. INSTALL FRONT SEAT INNER BELT ASSEMBLY

(a) Install the front seat inner belt assembly with the nut.
Torque: 42 N*m (428 kgf*cm, 31 ft.*lbf)
NOTICE:
Do not allow the anchor part of the front seat inner belt assembly to overlap the protruding part of the front seat adjuster.

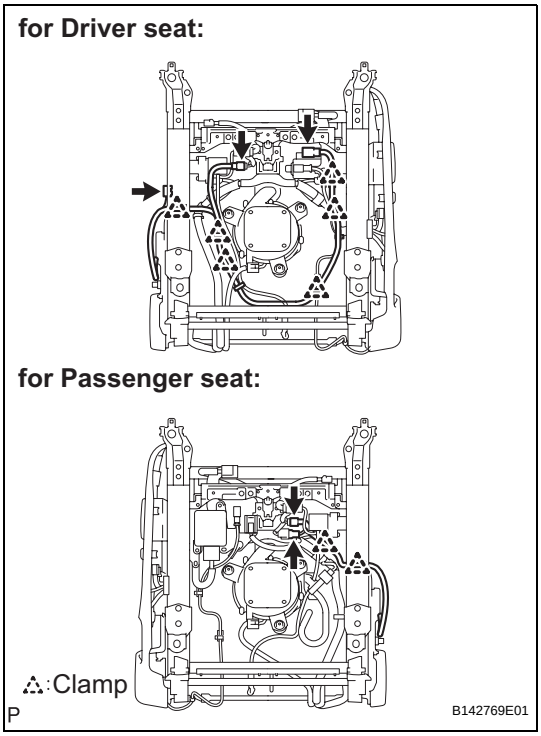

P
B142769E01

(b) for Driver seat:
(1) Connect the connectors and engage the 6 clamps.

(c) for Passenger seat:
(1) Connect the connectors and engage the 2 clamps.

2. INSTALL FRONT SEAT ASSEMBLY (See page SE-109)

3. INSTALL FRONT SEAT REAR OUTER TRACK BRACKET COVER (See page SE-110)

4. INSTALL FRONT SEAT REAR INNER TRACK BRACKET COVER (See page SE-110)

5. INSTALL FRONT SEAT OUTER TRACK BRACKET COVER (See page SE-110)

6. INSTALL FRONT SEAT INNER TRACK BRACKET COVER (See page SE-110)

7. INSTALL FRONT SEAT HEADREST ASSEMBLY

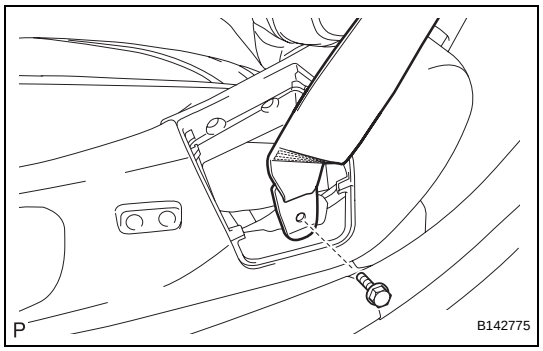

8. CONNECT FRONT SEAT OUTER BELT ASSEMBLY

(a) for Driver seat:

(1) Connect the front seat outer belt assembly with the bolt.
Torque: 42 N*m (428 kgf*cm, 31 ft.*lbf)

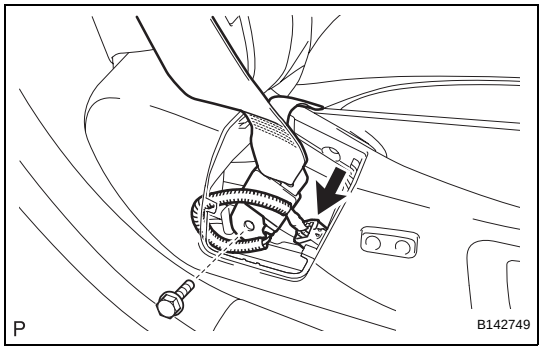

(b) for Passenger seat:

(1) Connect the front seat outer belt assembly with the bolt.
Torque: 42 N*m (428 kgf*cm, 31 ft.*lbf)

(2) Connect the connector.

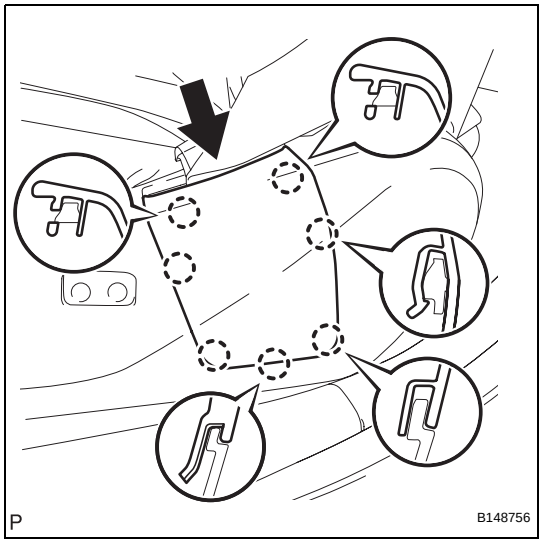

9. INSTALL SEAT BELT ANCHOR COVER CAP

(a) Engage the 7 claws and install the seat belt anchor cover cap.

10. PERFORM INITIALIZATION

NOTICE:
Some systems need initialization after reconnecting the cable to the negative battery terminal (See page IN-33).

11. INSPECT FRONT SEAT ASSEMBLY (See page SE-110)

12. INSPECT SRS WARNING LIGHT
(See page RS-37)

SB

ON-VEHICLE INSPECTION

1. INSPECT DRIVER SIDE SEAT BELT WARNING

(a) Turn the engine switch on (IG).

(b) When the driver seat belt is not fastened, check that the driver seat belt warning light on the combination meter blinks.

(c) When the driver seat belt is fastened, check that the driver seat belt warning light on the combination meter is off.

2. INSPECT PASSENGER SIDE SEAT BELT WARNING

(a) Turn the engine switch on (IG).

(b) When the front passenger seat belt is not fastened with the passenger seat occupied, check that the front passenger seat belt warning light on the A/C control assembly (* Multi-media module display) blinks.
*: with navigation system

(c) When the front passenger seat belt is fastened with the passenger seat occupied, check that the front passenger seat belt warning light on the A/C control assembly (* Multi-media module display) is off.
*: with navigation system

3. INSPECT SEAT BELT WARNING BUZZER

HINT:
If the buzzer does not sound, the buzzer cancel setting may be set to ON.

(a) Turn the engine switch on (IG).

(b) When the vehicle is driven at approximately 25 km/h (16 mph) or more while the driver or front passenger seat belt is not being fastened, check that the buzzer in the combination meter assembly sounds at an interval of 1.2 seconds for 30 seconds.

(c) Check that the buzzer sounds at an interval of 0.4 seconds for 90 seconds.

(d) Check that the buzzer stops 2 minutes after the buzzer starts sounding.

(e) After the buzzer has stopped, turn the engine switch off and then start the engine again. Drive the vehicle at approximately 25 km/h (16 mph) or more while the driver or front passenger seat belt is not being fastened, and then check that the buzzer sounds again.

(f) After the buzzer has stopped, fasten the driver and front passenger seat belts. Drive the vehicle at approximately 25 km/h (16 mph) or more and unfasten the driver or front passenger seat belt, and then check that the buzzer sounds again.

(g) After the buzzer has stopped, move the shift lever to the R position, and then move it to the D position. Drive the vehicle at approximately 25 km/h (16 mph) or more, and then check that the buzzer sounds again.

Driver Side Seat Belt Warning Light does not Operate

DESCRIPTION

When the engine switch is on (IG), the center airbag sensor assembly transmits front seat inner belt state signals to the combination meter assembly through CAN. If the driver seat belt is not fastened, the combination meter assembly blinks the driver seat belt warning light. If the seat belt is fastened, the warning light goes off.

NOTICE:

The seat belt warning system uses CAN. Before troubleshooting the seat belt warning system, perform "COMMUNICATION FUNCTION CHECK" by following "HOW TO PROCEED WITH TROUBLESHOOTING" to confirm that the communication systems are normal.

SB

WIRING DIAGRAM

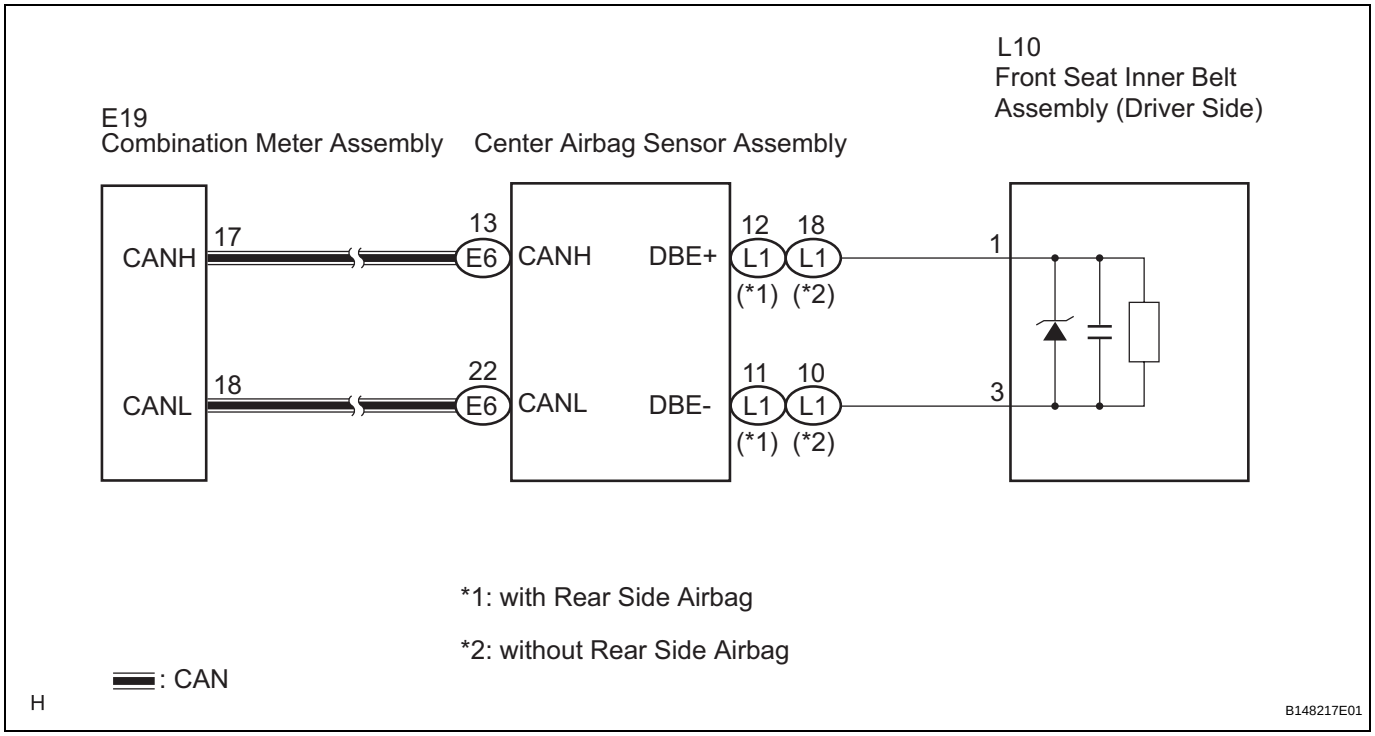

INSPECTION PROCEDURE

1	CHECK FOR DTCs

(a) Check for DTCs.

Result

Result	Proceed to
Output DTC (CAN communication system)	A
Output DTC (Airbag system)	B
No output DTC	C

A	GO TO CAN COMMUNICATION SYSTEM
B	GO TO AIRBAG SYSTEM

C

2	PERFORM ACTIVE TEST BY INTELLIGENT TESTER

(a) Operate the intelligent tester according to the steps on the display and select "ACTIVE TEST".

SB

METER

Item	Test Details	Diagnostic Note
D-BELT REMIND	D-SEAT BELT indicator light (OFF/ON)	Confirm that the vehicle is stopped with the engine idling

OK:
Switch condition (ON/OFF) can be switched by "ACTIVE TEST".

NG → **REPLACE COMBINATION METER ASSEMBLY**

OK

END

FRONT SEAT OUTER BELT ASSEMBLY

COMPONENTS

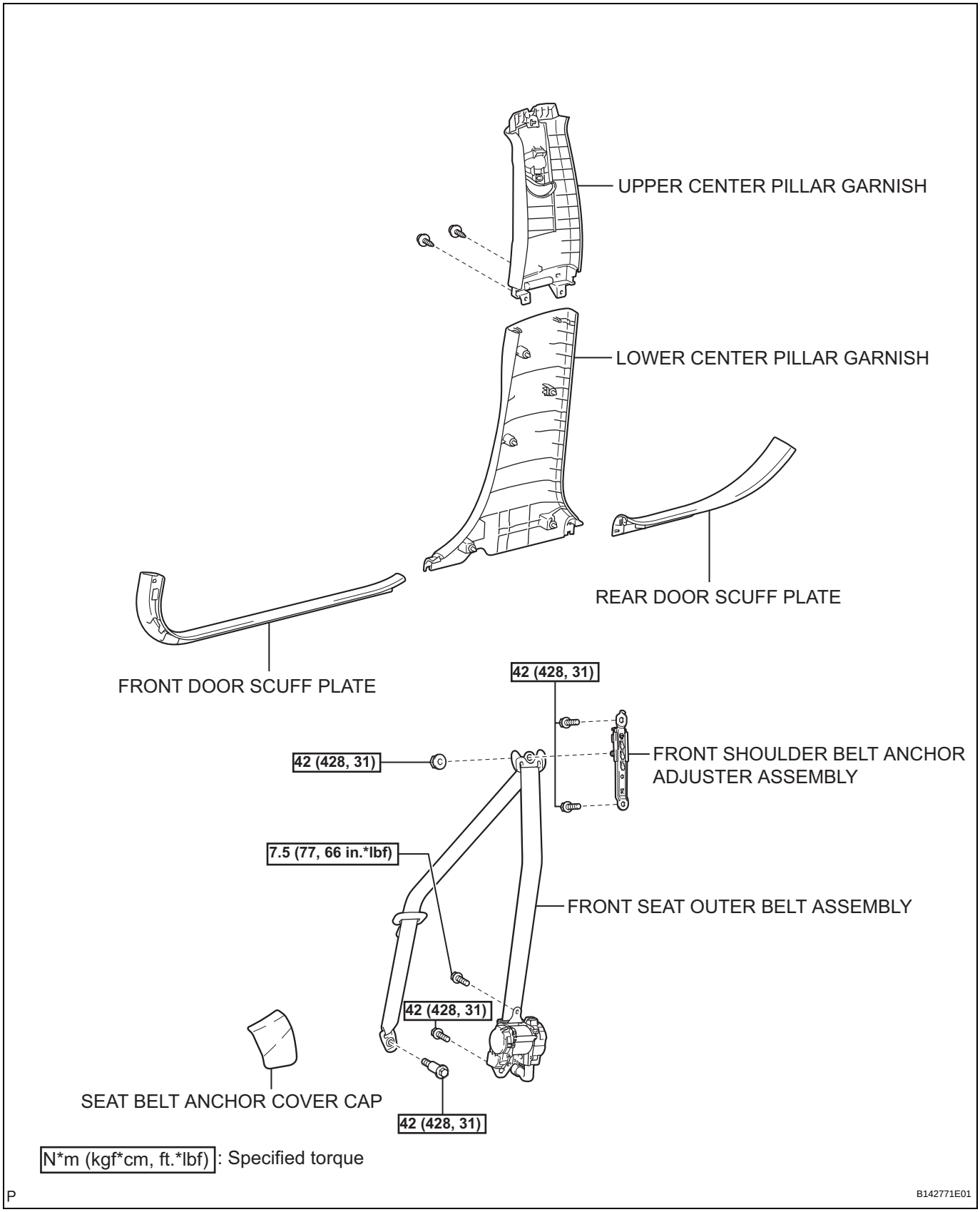

REMOVAL

1. **DISCONNECT CABLE FROM NEGATIVE BATTERY TERMINAL**
   CAUTION:
   Wait for 90 seconds after disconnecting the cable to prevent airbag deployment (See page RS-1).

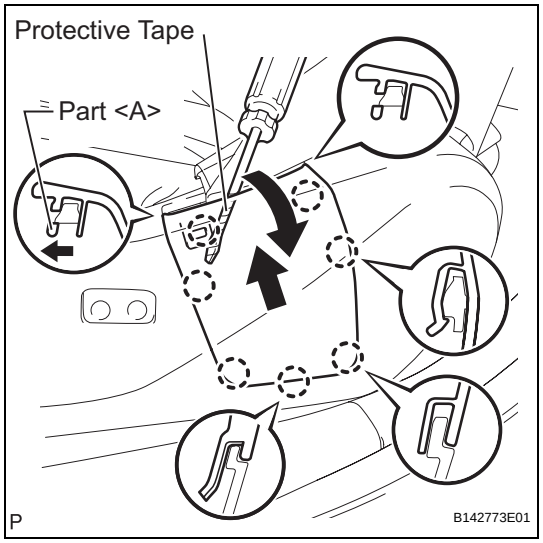

2. **REMOVE SEAT BELT ANCHOR COVER CAP**
   (a) Hook a screwdriver to part A to bend it toward the inside of the cabin and release the claws. Pull the seat belt anchor cover cap RH upward and remove it.
   NOTICE:
   Do not damage the seat belt.

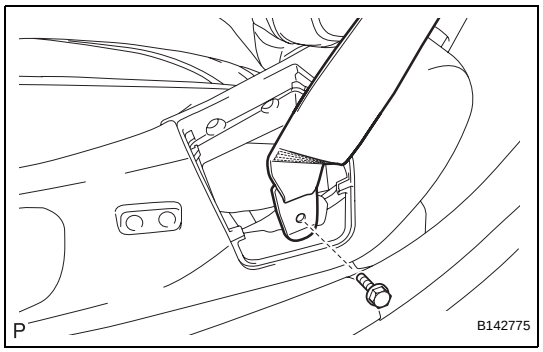

3. **DISCONNECT FRONT SEAT OUTER BELT ASSEMBLY**
   (a) for Driver seat:
      (1) Remove the bolt and disconnect the floor end of the front seat outer belt assembly.

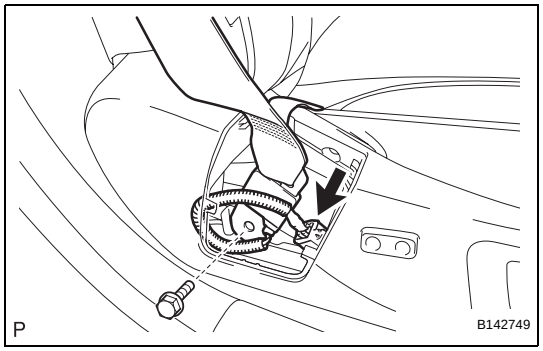

   (b) for Passenger seat:
      (1) Remove the bolt and disconnect the floor end of the front seat outer belt assembly.

4. **REMOVE FRONT DOOR SCUFF PLATE (See page IR-39)**
5. **REMOVE REAR DOOR SCUFF PLATE (See page IR-40)**
6. **REMOVE LOWER CENTER PILLAR GARNISH (See page IR-40)**
7. **REMOVE UPPER CENTER PILLAR GARNISH (See page IR-41)**

SB

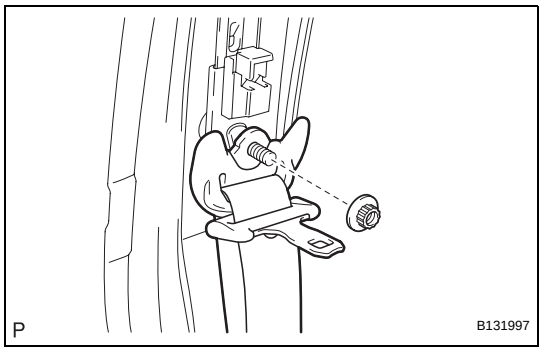

8. DISCONNECT FRONT SEAT OUTER BELT ASSEMBLY

(a) Remove the nut and disconnect the shoulder anchor of the front seat outer belt assembly.

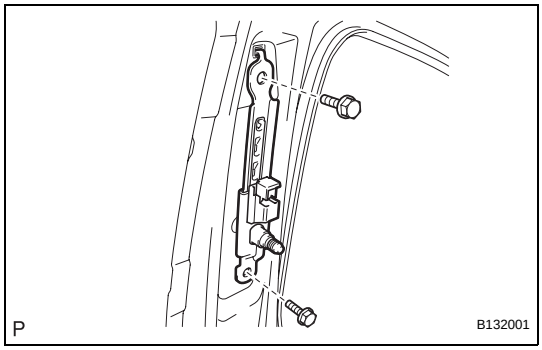

9. REMOVE FRONT SHOULDER BELT ANCHOR ADJUSTER ASSEMBLY

(a) Remove the 2 bolts and the front shoulder belt anchor adjuster assembly.

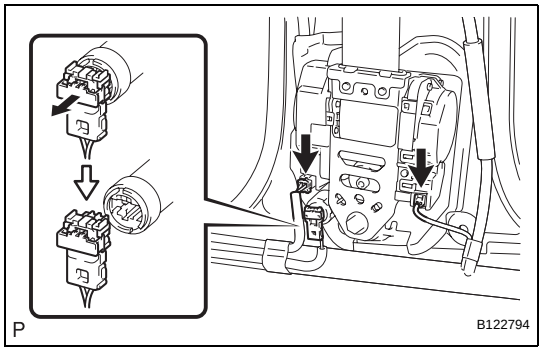

10. REMOVE FRONT SEAT OUTER BELT ASSEMBLY

(a) Using a screwdriver, pull out the locking button in the direction shown by the arrow to release the lock, and disconnect the pretensioner connector as shown in the illustration.
HINT:
Tape the screwdriver tip before use.

(b) Disconnect the connectors.

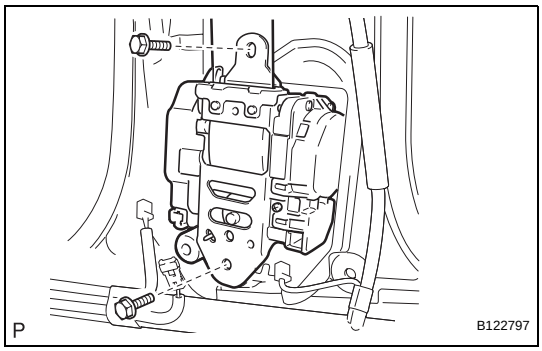

(c) Remove the 2 bolts and the front seat outer belt assembly.

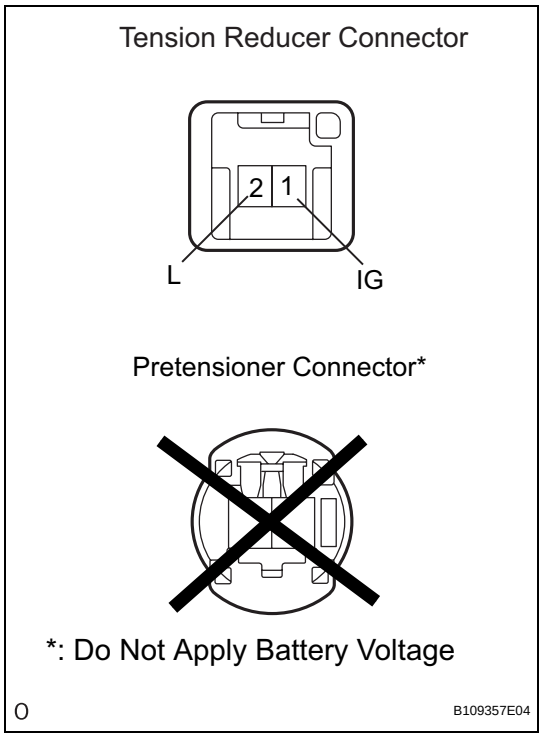

INSPECTION

1. INSPECT FRONT SEAT OUTER BELT ASSEMBLY RH

(a) Check the tension reducer operation.

NOTICE:

Do not apply battery voltage to the pretensioner connector.

(1) Connect the battery's positive (+) lead to terminal 1 of the tension reducer connector and the negative (-) lead to terminal 2.

(2) Check that an operating sound is heard when the magnetized solenoid is attracting the plunger.

(3) Pull out the seat belt and allow it to retract. Listen to the operating sound.

(4) Pull out the seat belt again, disconnect the battery's negative (-) lead and allow the seat belt to retract. Listen to the operating sound again and check that the operating sound volume has increased.

If the result is not as specified, replace the outer belt assembly.

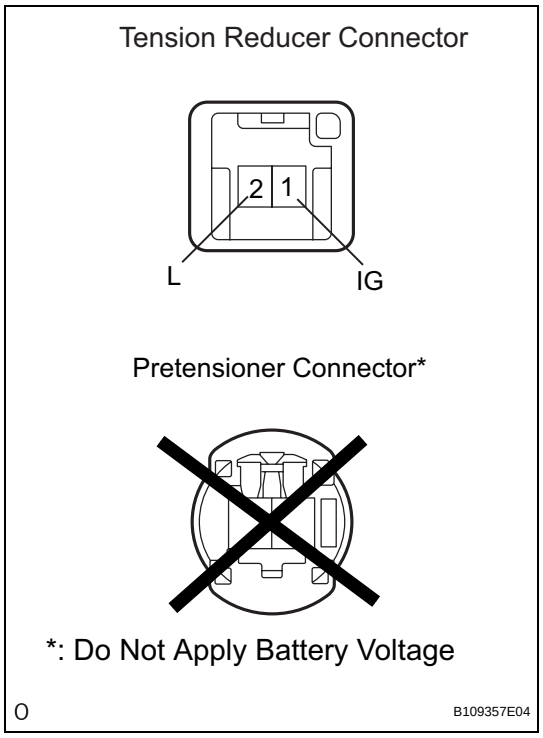

2. REMOVE FRONT SEAT OUTER BELT ASSEMBLY LH

(a) Check the tension reducer operation.

NOTICE:

Do not apply battery voltage to the pretensioner connector.

(1) Connect the battery's positive (+) lead to terminal 1 of the tension reducer connector and the negative (-) lead to terminal 2.

(2) Check that an operating sound is heard when the magnetized solenoid is attracting the plunger.

(3) Pull out the seat belt and allow it to retract. Listen to the operating sound.

(4) Pull out the seat belt again, disconnect the battery's negative (-) lead and allow the seat belt to retract. Listen to the operating sound again and check that the operating sound volume has increased.

If the result is not as specified, replace the outer belt assembly.

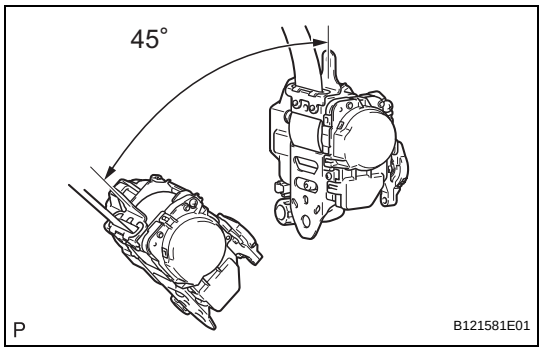

INSTALLATION

1. INSTALL FRONT SEAT OUTER BELT ASSEMBLY

(a) Check the degree of tilt when the ELR begins to lock.

(1) Check that the belt does not lock at less than 15 degrees of tilt in any direction but locks at over 45 degrees of tilt while gently pulling the belt.

NOTICE:

Do not disassemble the retractor.

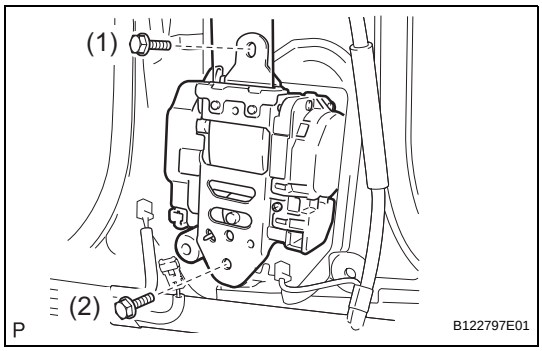

(b) Temporarily install the front seat outer belt assembly with the 2 bolts.

(c) Fully tighten the upper side bolt first, then the lower side bolt to install the front seat outer belt assembly.
Torque: for Upper bolt
7.5 N*m (77 kgf*cm, 66 in.*lbf)
for Lower bolt
42 N*m (428 kgf*cm, 31 ft.*lbf)

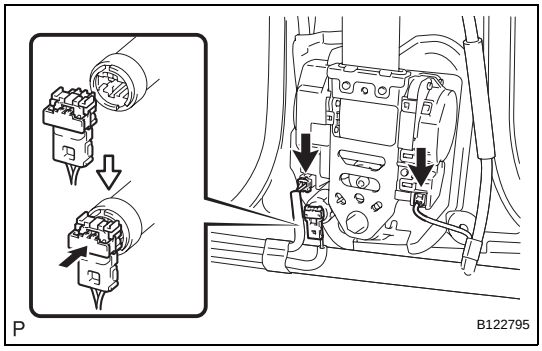

(d) Connect the pretensioner connector and lock the locking button as shown in the illustration.
NOTICE:
Securely lock the locking button.

(e) Connect the connectors.

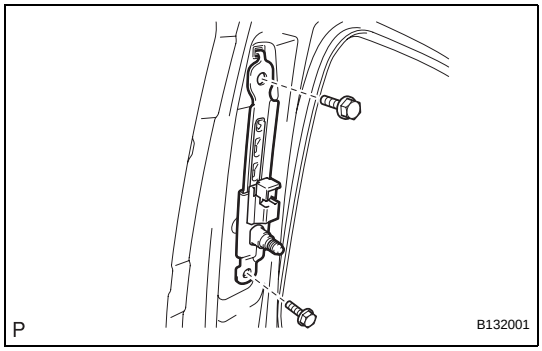

2. INSTALL FRONT SHOULDER BELT ANCHOR ADJUSTER ASSEMBLY

(a) Install the front shoulder belt anchor adjuster assembly with the 2 bolts.
Torque: 42 N*m (428 kgf*cm, 31 ft.*lbf)

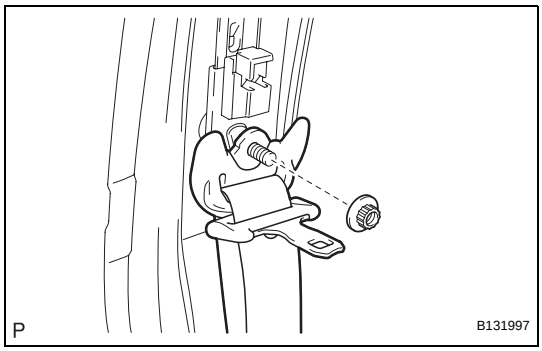

3. CONNECT FRONT SEAT OUTER BELT ASSEMBLY

(a) Install the shoulder anchor of the front seat outer belt assembly with the nut.
Torque: 42 N*m (428 kgf*cm, 31 ft.*lbf)

4. INSTALL UPPER CENTER PILLAR GARNISH (See page IR-63)

5. INSTALL LOWER CENTER PILLAR GARNISH (See page IR-63)

6. INSTALL REAR DOOR SCUFF PLATE (See page IR-63)

7. INSTALL FRONT DOOR SCUFF PLATE (See page IR-65)

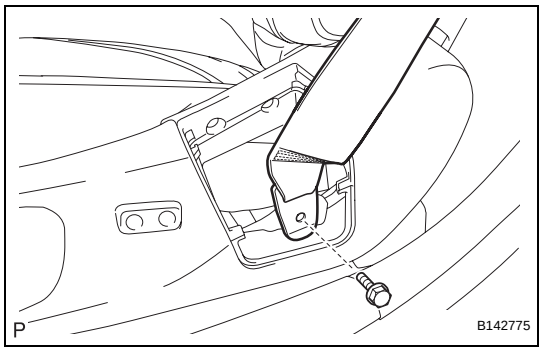

8. CONNECT FRONT SEAT OUTER BELT ASSEMBLY

(a) for Driver seat:

(1) Install the floor end of the front seat outer belt assembly with the bolt.
Torque: 42 N*m (428 kgf*cm, 31 ft.*lbf)

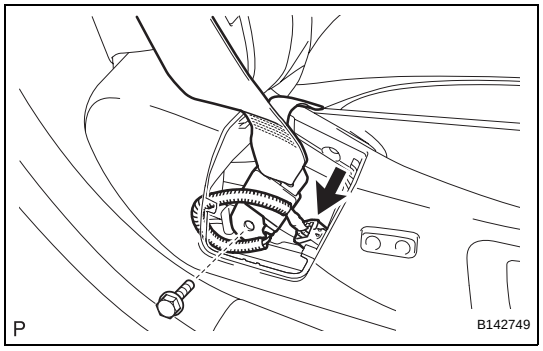

(b) for Passenger seat:

(1) Install the floor end of the front seat outer belt assembly with the bolt.
Torque: 42 N*m (428 kgf*cm, 31 ft.*lbf)

(c) Check if the ELR locks.
NOTICE:
The check should be performed with the outer belt assembly installed.

(1) With the belt assembly installed, check that the belt locks when it is pulled out quickly.

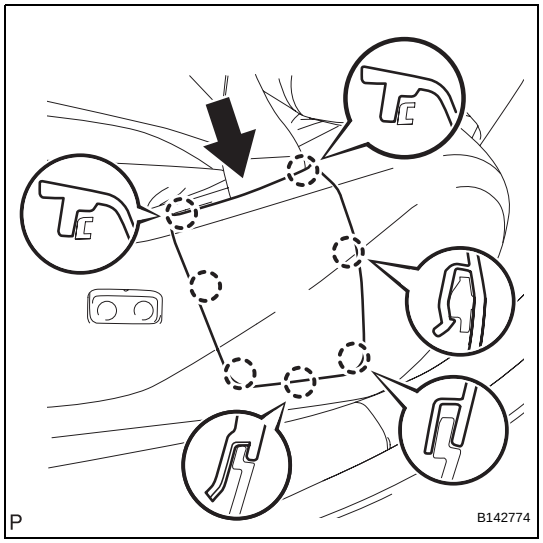

9. INSTALL SEAT BELT ANCHOR COVER CAP

(a) Engage the 7 claws to install the seat belt anchor cover cap.

10. CONNECT CABLE TO NEGATIVE BATTERY TERMINAL

11. PERFORM INITIALIZATION
NOTICE:
Some systems need initialization after reconnecting the cable to the negative battery terminal (See page IN-33).

12. INSPECT SRS WARNING LIGHT
(See page RS-37)

SB

DISPOSAL

HINT:
When scrapping vehicles equipped with a seat belt pretensioner or disposing of a front seat outer belt (with a seat belt pretensioner), always deploy the seat belt pretensioner first in accordance with the procedures described below. If any abnormality occurs during deployment of the seat belt pretensioner, contact the SERVICE DEPT. of the TOYOTA MOTOR SALES, U.S.A., INC.

1. DISPOSE OF FRONT SEAT OUTER BELT ASSEMBLY (WHEN INSTALLED IN VEHICLE)

NOTICE:

- **Never dispose of a front seat outer belt assembly with a pretensioner that has not been deployed.**
- **The seat belt pretensioner produces an exploding sound when it deploys, so perform the operation outdoors where it will not disturb local residents.**
- **When deploying a front seat outer belt (with a seat belt pretensioner), perform the operation at least 10 m (33 ft) away from the front seat outer belt.**
- **Use gloves and safety glasses when handling a front seat belt with a deployed pretensioner.**
- **Always wash your hands with water after completing the operation.**
- **Do not apply water, etc. to a front seat outer belt with a deployed pretensioner.**
- **When deploying the seat belt pretensioner, always use the specified SST (SRS airbag deployment tool). Perform the operation in a place away from electrical interference.**
- **Be sure to follow the procedures listed below when deploying the seat belt pretensioner.**

(a) Check the function of SST.
SST 09082-00700, 09082-00770
CAUTION:
When deploying the seat belt pretensioner, always use the specified SST.

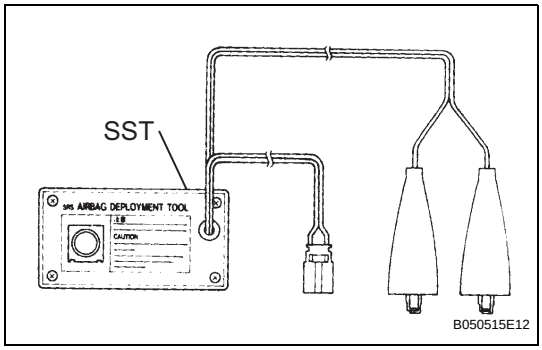

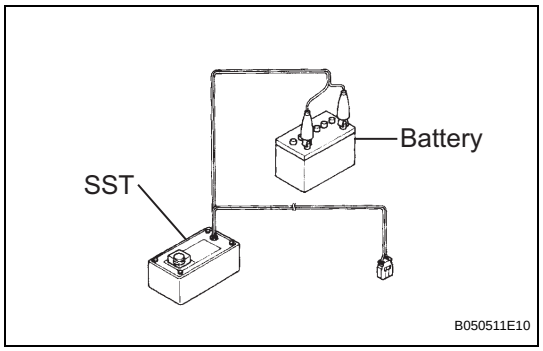

(1) Connect the red clip of the SST to the battery positive (+) terminal and the black clip to the battery negative (-) terminal.
HINT:
At this time, do not connect the yellow connector that will later be connected to the seat belt pretensioner.

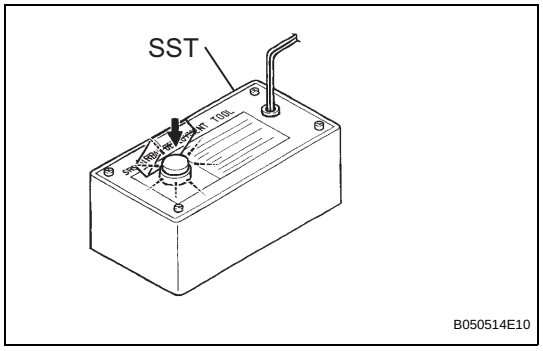

(2) Press the SST deployment switch, and check that the LED of the SST deployment switch lights up.
CAUTION:
If the LED is lit when the deployment switch is not pressed, the SST may be malfunctioning. Therefore, do not use the SST.

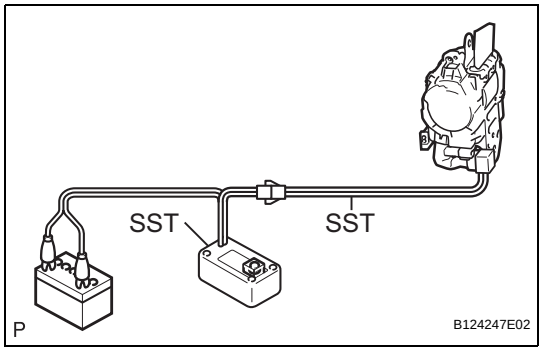

(b) Connect SST.
(1) Connect 2 SST, and then connect them to the front seat outer belt pretensioner.
SST 09082-00700, 09082-00770
NOTICE:
To avoid damaging the SST connector and wire harness, do not lock the secondary lock of the pretensioner connector.

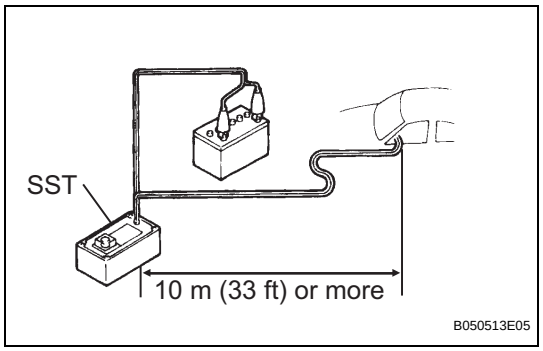

(2) Move the SST at least 10 m (33 ft) away from the front of the vehicle.
(3) Close all the doors and windows of the vehicle.
NOTICE:
Do not damage the SST wire harness.

(c) Deploy the front seat outer belt pretensioner.
(1) Confirm that no one is inside the vehicle or within a 10 m (33 ft) radius of the vehicle.
(2) Connect the red clip of the SST to the battery positive (+) terminal and the black clip to the negative (-) terminal.
(3) Press the SST deployment switch and deploy the front seat outer belt pretensioner.
HINT:
The seat belt pretensioner will deploy at the same time as the LED of the SST illuminates.

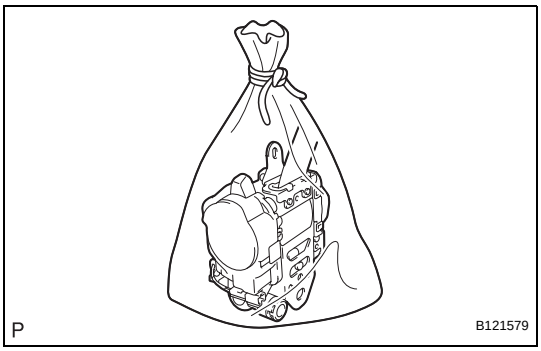

(d) Dispose of the front seat outer belt assembly.
  (1) Remove the front seat outer belt assembly and SST.
  (2) Place the outer belt in a plastic bag, tie the end tightly, and dispose of it in the same way as other general part disposal.
  CAUTION:
  - **The outer belt becomes very hot when the front seat outer belt pretensioner is deployed, so leave it untouched for at least 30 minutes after it has been deployed.**
  - **Use gloves and safety glasses when handling an outer belt with a pretensioner that has been deployed.**
  - **Always wash your hands with water after completing the operation.**
  - **Do not apply water, etc. to a front seat outer belt assembly with a pretensioner that has been deployed.**

  HINT:
  When scrapping a vehicle, deploy the front seat outer belt pretensioners, and then scrap the vehicle with the deployed outer belt installed.

2. DISPOSE OF FRONT SEAT OUTER BELT ASSEMBLY (WHEN NOT INSTALLED IN VEHICLE)

NOTICE:
- **Never dispose of a front seat outer belt assembly with a pretensioner that has not been deployed.**
- **The seat belt pretensioner produces an exploding sound when it deploys, so perform the operation outdoors where it will not disturb local residents.**
- **When deploying a front seat outer belt (with a seat belt pretensioner), perform the operation at least 10 m (33 ft) away from the front seat outer belt.**
- **Use gloves and safety glasses when handling a front seat belt with a deployed pretensioner.**
- **Always wash your hands with water after completing the operation.**
- **Do not apply water, etc. to a front seat outer belt with a deployed pretensioner.**
- **When disposing of a pretensioner equipped front seat outer belt, never deploy the belt in the customer's vehicle.**
- **Be sure to follow the procedures listed below when deploying the seat belt pretensioner.**

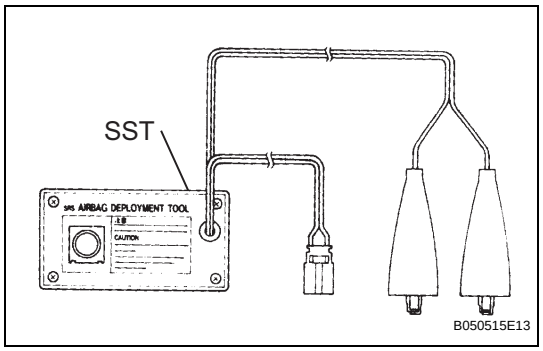

(a) Check the function of SST.
SST 09082-00700, 09082-00770
CAUTION:
When deploying the seat belt pretensioner, always use the specified SST.

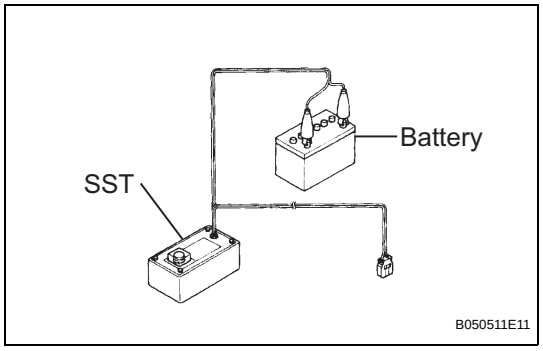

(1) Connect the red clip of the SST to the battery positive (+) terminal and the black clip to the battery negative (-) terminal.
HINT:
At this time, do not connect the yellow connector that will later be connected to the seat belt pretensioner.

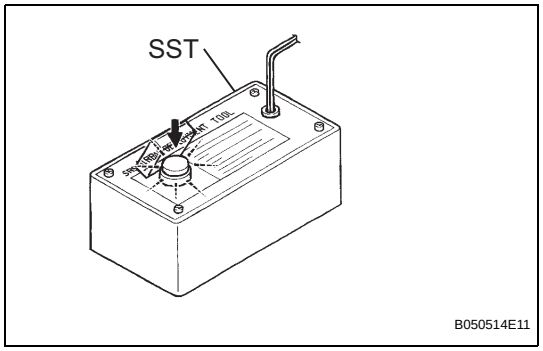

(2) Press the SST deployment switch, and check that the LED of the SST deployment switch lights up.
CAUTION:
If the LED is lit when the deployment switch is not pressed, the SST may be malfunctioning. Therefore, do not use the SST.

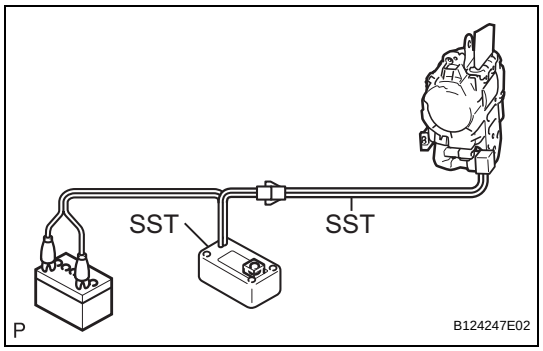

(b) Connect SST.
(1) Connect 2 SST, and then connect them to the front seat outer belt pretensioner.
SST 09082-00700, 09082-00770
NOTICE:
To avoid damaging the SST connector and wire harness, do not lock the secondary lock of the pretensioner connector.

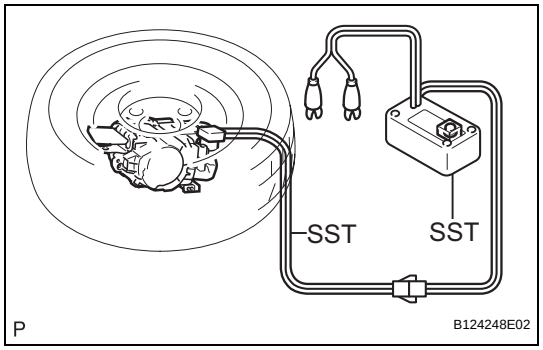

(2) Place the outer belt on the ground and cover it with a tire and wheel assembly.
NOTICE:
Position the front seat outer belt assembly as shown in the illustration.
(3) Position and hold the SST at least 10 m (33 ft) away from the wheel.
NOTICE:
Do not damage the SST wire harness.

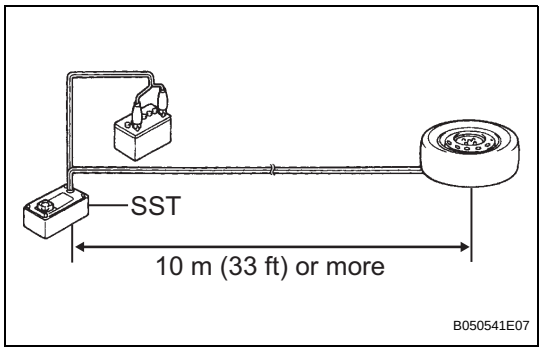

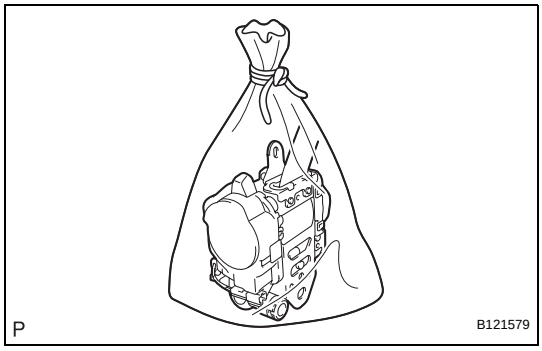

(c) Deploy the front seat outer belt pretensioner.
  (1) Check that no one is within a 10 m (33 ft) radius of the wheel.
  (2) Connect the red clip of the SST to the battery positive (+) terminal and the black clip to the battery negative (-) terminal.
  (3) Press the SST deployment switch and deploy the front seat outer belt pretensioner.
  HINT:
  The seat belt pretensioner will deploy at the same time as the LED of the SST illuminates.

(d) Dispose of the front seat outer belt assembly.
  (1) Remove the wheel and SST.
  (2) Place the outer belt in a plastic bag, tie the end tightly, and dispose of it in the same way as other general part disposal.
  CAUTION:
  - **The outer belt becomes very hot when the front seat outer belt pretensioner is deployed, so leave it untouched for at least 30 minutes after it has been deployed.**
  - **Use gloves and safety glasses when handling an outer belt with a pretensioner that has been deployed.**
  - **Always wash your hands with water after completing the operation.**
  - **Do not apply water, etc. to a front seat outer belt assembly with a pretensioner that has been deployed.**

  HINT:
  When scrapping a vehicle, deploy the front seat outer belt pretensioners, and then scrap the vehicle with the deployed outer belt installed.

Front Passenger Side Seat Belt Warning Light Malfunction

DESCRIPTION

with Navigation System:

The combination meter assembly detects the state of the front passenger seat inner belt assembly when the front passenger seat is occupied with the engine switch on (IG). If the front passenger seat belt is not fastened, the front seat belt warning light on the multi-media module display blinks. If the seat belt is fastened, the warning light goes off.

without Navigation System:

The combination meter assembly detects the state of the front passenger seat inner belt assembly when the front passenger seat is occupied with the engine switch on (IG). If the front passenger seat belt is not fastened, the front seat belt warning light on the A/C control assembly blinks. If the seat belt is fastened, the warning light goes off.

SB

WIRING DIAGRAM

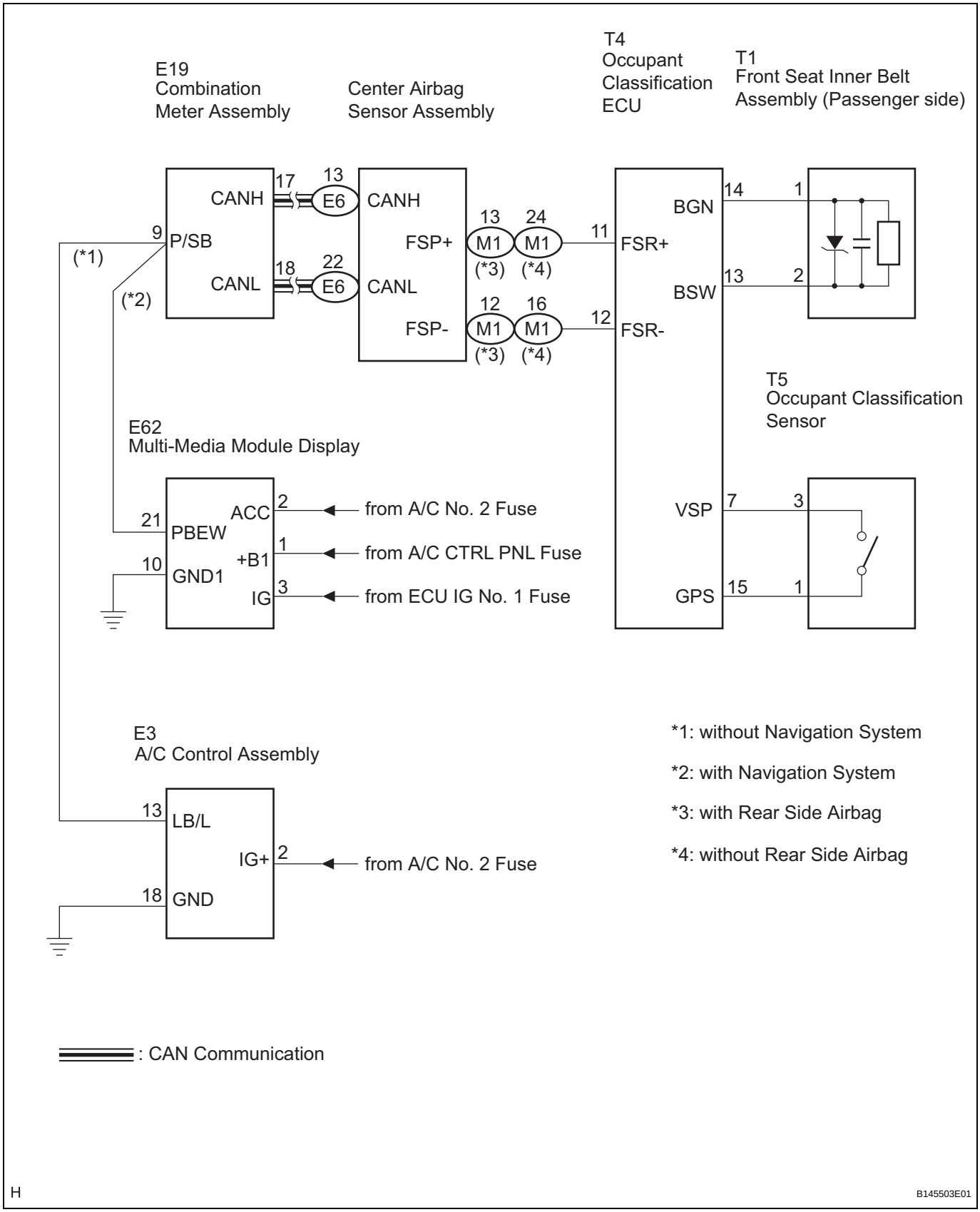

INSPECTION PROCEDURE

1	CHECK FOR DTCs

(a) Check for DTCs.

Result

Result	Proceed to
No output DTC	A
Output DTC (CAN communication)	B

B → **GO TO CAN COMMUNICATION SYSTEM**

A

2	PERFORM ACTIVE TEST BY INTELLIGENT TESTER

(a) Operate the intelligent tester according to the steps on the display and select "ACTIVE TEST".

METER

Item	Test Details	Diagnostic Note
P-BELT REMIND	P-SEAT BELT indicator light (OFF/ON)	Confirm that the vehicle is stopped with the engine idling

Result

Result	Proceed to
OK (without navigation system)	A
OK (with navigation system)	B
NG	C

B → **Go to step 6**

C → **GO TO COMBINATION METER SYSTEM**

A

3	CHECK WIRE HARNESS (A/C CONTROL ASSEMBLY +B)

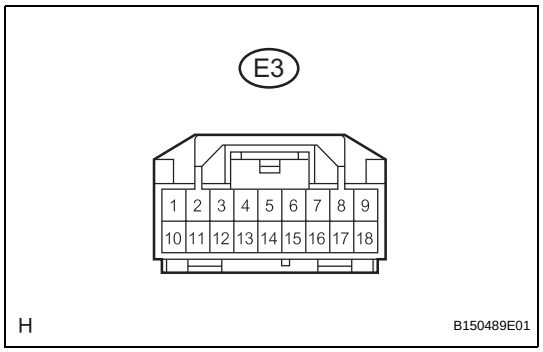

(a) Disconnect the A/C control assembly connector.
(b) Measure the voltage according to the value(s) in the table below.

Standard voltage

Tester Connection	Condition	Specified Condition
E3-2 (IG+) - Body ground	Engine switch on (IG)	10 to 14 V

NG → **REPAIR OR REPLACE HARNESS OR CONNECTOR**

OK

SB

4 CHECK A/C CONTROL ASSEMBLY

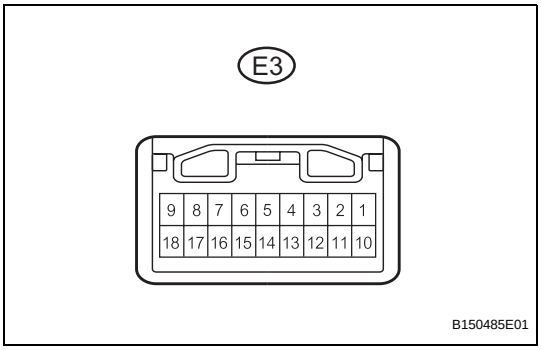

(a) Disconnect the A/C control assembly connector.
(b) Connect the positive (+) lead to terminal 2 (IG+), and the negative (-) battery lead to terminals 13 (LB/L) and 18 (GND).
(c) Check that the seat belt warning light comes on.
OK:
Seat belt warning light comes on.

NG → **REPLACE AIR CONDITIONING CONTROL ASSEMBLY**

OK

5 CHECK WIRE HARNESS (A/C CONTROL ASSEMBLY - COMBINATION METER ASSEMBLY)

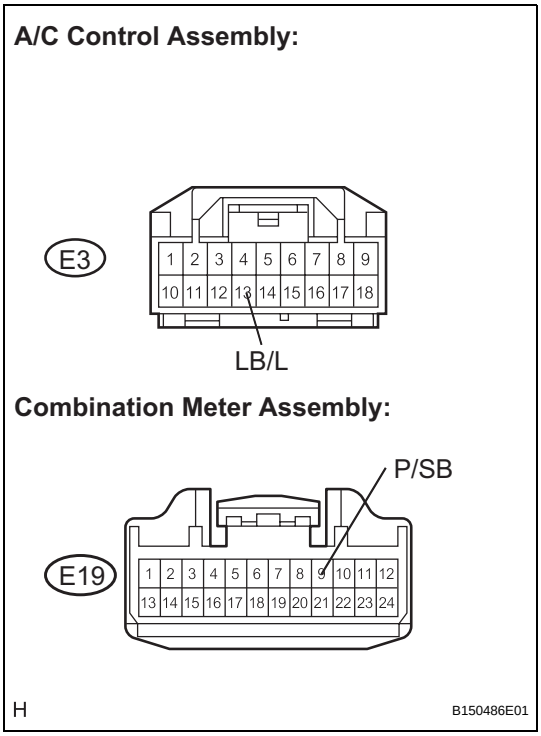

(a) Disconnect the combination meter assembly and A/C control assembly connectors.
(b) Measure the resistance according to the value(s) in the table below.
Standard resistance

Tester Connection	Condition	Specified Condition
E19-9 (P/SB) - E3-13 (LB/L)	Always	Below 1 Ω
E19-9 (P/SB) - Body ground	Always	10 kΩ or higher

NG → **REPAIR OR REPLACE HARNESS OR CONNECTOR**

OK

GO TO OCCUPANT CLASSIFICATION SYSTEM

6 CHECK WIRE HARNESS (MULTI-MEDIA MODULE DISPLAY +B)

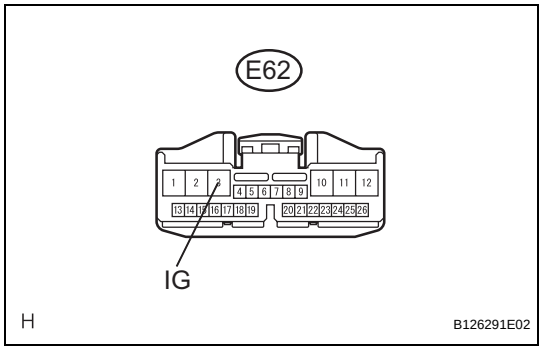

(a) Disconnect the multi-media module display connector.
(b) Measure the voltage according to the value(s) in the table below.
Standard voltage

Tester Connection	Condition	Specified Condition
E62-3 (IG) - Body ground	Engine switch on (IG)	10 to 14 V

NG → **REPLACE AIR CONDITIONING CONTROL ASSEMBLY**

OK

7 CHECK MULTI-MEDIA MODULE DISPLAY

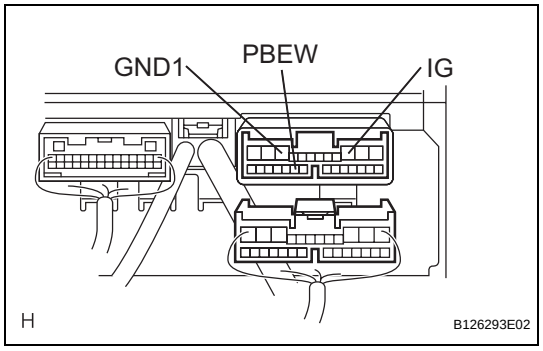

(a) Disconnect the multi-media module display connector.
(b) Connect the positive (+) lead to terminal 3 (IG), and the negative (-) battery lead to terminals 21 (PBEW) and 10 (GND1).
(c) Check that the seat belt warning light comes on.
OK:
Seat belt warning light comes on.

NG → **REPLACE MULTI-MEDIA MODULE DISPLAY**

OK

SB

SB

8	**CHECK WIRE HARNESS (MULTI-MEDIA MODULE DISPLAY - COMBINATION METER ASSEMBLY)**

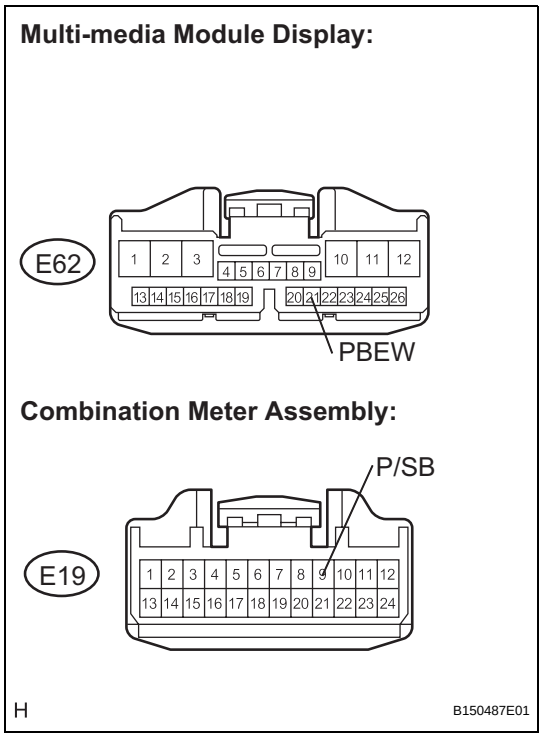

(a) Disconnect the combination meter assembly and multi-media module display connectors.

(b) Measure the resistance according to the value(s) in the table below.

Standard resistance

Tester Connection	Condition	Specified Condition
E19-9 (P/SB) - E62-21 (PBEW)	Always	Below 1 Ω
E19-9 (P/SB) - Body ground	Always	10 kΩ or higher

NG → **REPAIR OR REPLACE HARNESS OR CONNECTOR**

OK

GO TO OCCUPANT CLASSIFICATION SYSTEM

SB

REMOVAL

1. **DISCONNECT CABLE FROM NEGATIVE BATTERY TERMINAL (w/ Rear Seat Side Airbag)**
   CAUTION:
   Wait for 90 seconds after disconnecting the cable to prevent airbag deployment (See page RS-1).

2. **REMOVE REAR SEAT CUSHION ASSEMBLY (See page SE-113)**

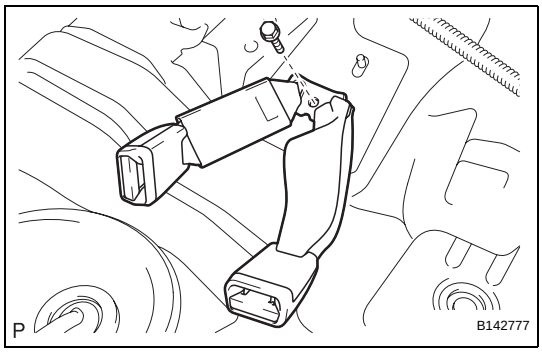

3. **REMOVE REAR SEAT INNER WITH CENTER BELT ASSEMBLY LH**
   (a) Remove the bolt and the rear seat inner with center belt assembly LH.

4. **REMOVE REAR SEAT HEADREST ASSEMBLY**

5. **REMOVE REAR CENTER SEAT HEADREST ASSEMBLY**

6. **REMOVE REAR SEATBACK ASSEMBLY (See page SE-113)**

7. **REMOVE REAR DOOR SCUFF PLATE LH (See page IR-40)**

8. **REMOVE REAR DOOR SCUFF PLATE RH (See page IR-42)**

9. **REMOVE REAR SEAT SIDE GARNISH LH (w/o Rear Seat Side Airbag) (See page IR-41)**

10. **REMOVE REAR SEAT SIDE GARNISH RH (w/o Rear Seat Side Airbag) (See page IR-43)**

11. **REMOVE REAR SEAT SIDE AIRBAG ASSEMBLY LH (w/ Rear Seat Side Airbag) (See page RS-460)**

12. **REMOVE REAR SEAT SIDE AIRBAG ASSEMBLY RH (w/ Rear Seat Side Airbag)**
    HINT:
    Use the same procedure for the RH side and the LH side.

13. **REMOVE ROOF SIDE INNER GARNISH ASSEMBLY LH (See page IR-42)**

14. **REMOVE ROOF SIDE INNER GARNISH ASSEMBLY RH (See page IR-43)**

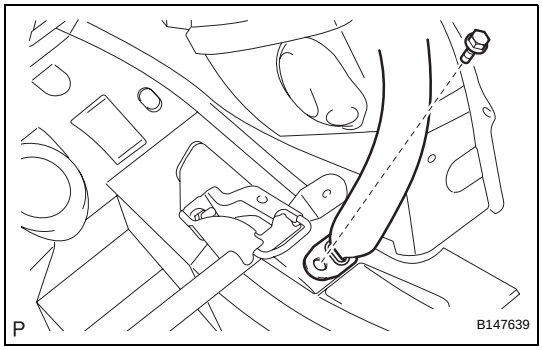

15. **DISCONNECT REAR SEAT 3 POINT TYPE BELT ASSEMBLY LH**
    (a) Remove the bolt and disconnect the floor end of the rear seat 3 point type belt assembly LH.

16. **DISCONNECT REAR SEAT 3 POINT TYPE BELT ASSEMBLY RH**
    HINT:
    Use the same procedure for the RH side and the LH side.

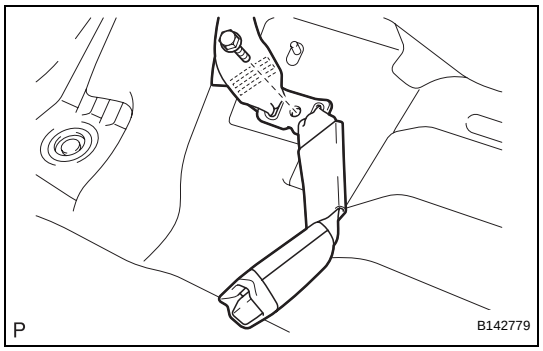

17. DISCONNECT REAR SEAT INNER WITH CENTER BELT ASSEMBLY RH

(a) Remove the bolt and disconnect the floor end of the rear seat inner with center belt assembly RH.

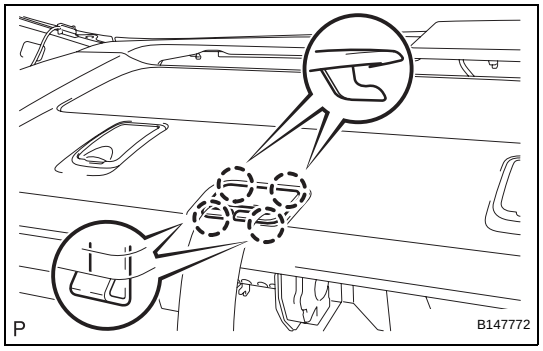

18. REMOVE REAR SEAT SHOULDER BELT HOLE COVER

(a) Disengage the 4 claws and remove the rear seat shoulder belt hole cover.
HINT:
Use the same procedure for the other 2 rear seat shoulder belt hole covers.

19. REMOVE CENTER STOP LIGHT SET (w/o Rear Sunshade) (See page LI-159)

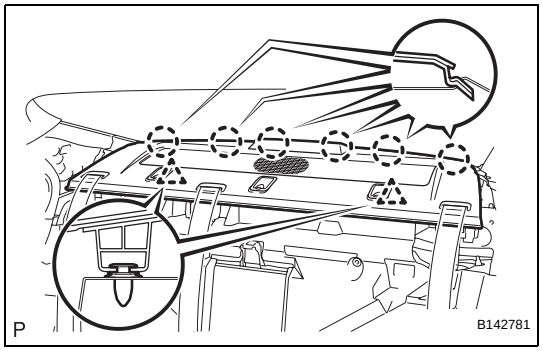

20. REMOVE PACKAGE TRAY TRIM PANEL ASSEMBLY (w/o Rear Sunshade)

(a) Disengage the 2 clips.
(b) Pass the 3 rear seat belt floor anchors through the package tray trim panel assembly.
(c) Disengage the 6 claws and remove the package tray trim panel assembly.

21. REMOVE PACKAGE TRAY TRIM PANEL ASSEMBLY (w/ Rear Sunshade) (See page IR-20)

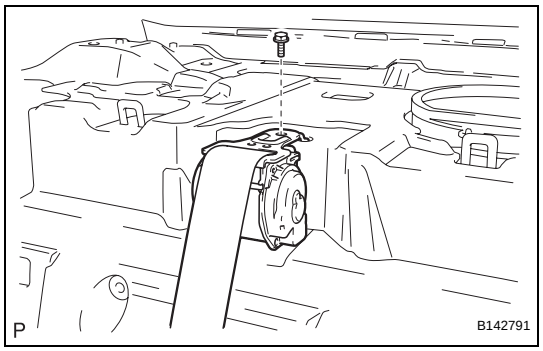

22. REMOVE REAR SEAT INNER WITH CENTER BELT ASSEMBLY RH

(a) Remove the bolt and the rear seat inner with center belt assembly RH.

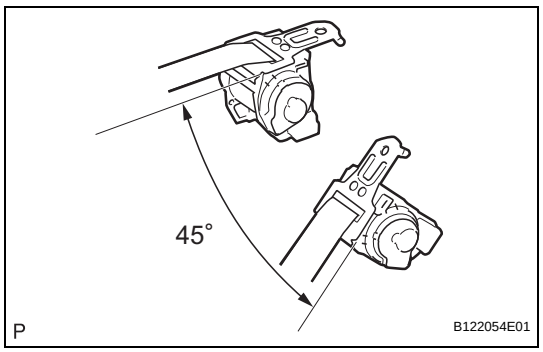

INSTALLATION

1. INSTALL REAR SEAT INNER WITH CENTER BELT ASSEMBLY RH

(a) Check the degree of tilt when the ELR begins to lock.
(1) Check that the belt does not lock at less than 15 degrees of tilt in any direction but locks at over 45 degrees of tilt while gently pulling the belt.
NOTICE:
Do not disassemble the retractor.

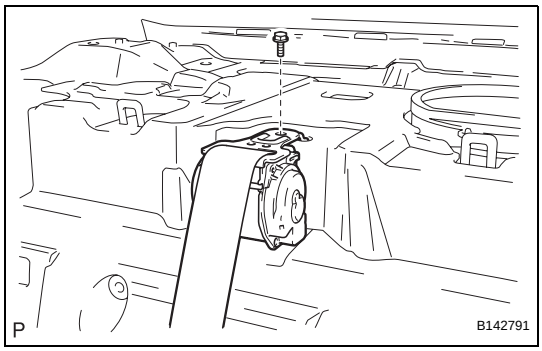

(b) Install the rear seat inner with center belt assembly RH with the bolt.
Torque: 42 N*m (428 kgf*cm, 31 ft.*lbf)

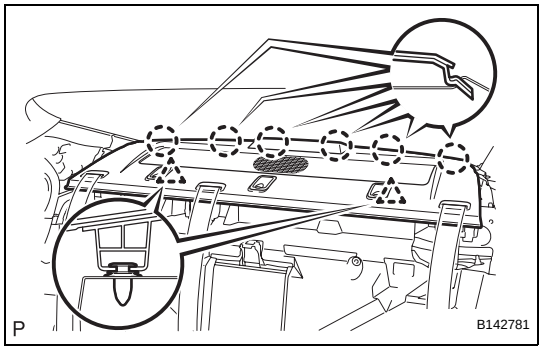

2. INSTALL PACKAGE TRAY TRIM PANEL ASSEMBLY (w/o Rear Sunshade)

(a) Pass the 3 rear seat belt floor anchors through the package tray trim panel assembly.

(b) Engage the 2 clips and 6 claws to install the package tray trim panel assembly.

3. INSTALL PACKAGE TRAY TRIM PANEL ASSEMBLY (w/ Rear Sunshade) (See page IR-23)

4. INSTALL CENTER STOP LIGHT SET (w/o Rear Sunshade) (See page LI-159)

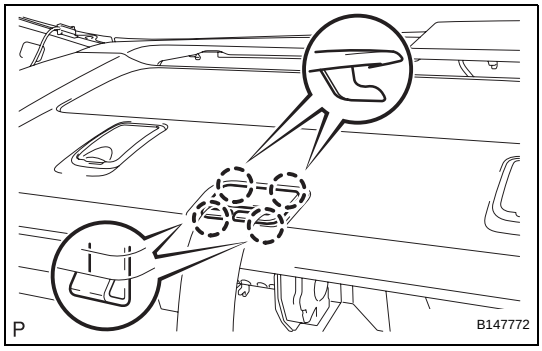

5. INSTALL REAR SEAT SHOULDER BELT HOLE COVER

(a) Engage the 4 claws to install the rear seat shoulder belt hole cover.
HINT:
Use the same procedure for the other 2 rear seat shoulder belt hole covers.

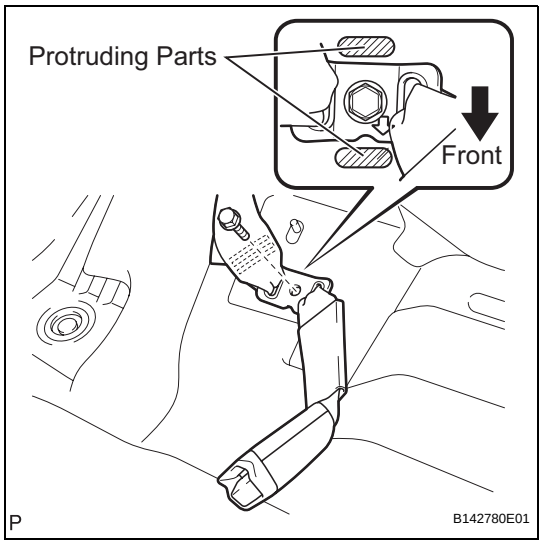

6. CONNECT REAR SEAT INNER WITH CENTER BELT ASSEMBLY RH

(a) Install the floor end of the rear seat inner with center belt assembly RH with the bolt.
Torque: 42 N*m (428 kgf*cm, 31 ft.*lbf)
NOTICE:
Do not allow the anchor part of the rear seat inner with center belt assembly RH to overlap the protruding parts of the floor panel.

(b) Check if the ELR locks.
NOTICE:
The check should be performed with the rear seat inner with center belt assembly RH installed.

(1) With the belt assembly installed, check that the belt locks when it is pulled out quickly.

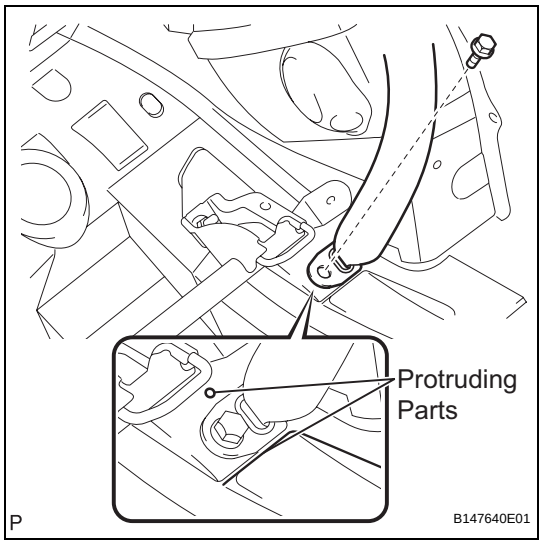

7. INSTALL REAR SEAT 3 POINT TYPE BELT ASSEMBLY LH

(a) Install the floor end of the rear seat 3 point type belt assembly LH with the bolt.
Torque: 42 N*m (428 kgf*cm, 31 ft.*lbf)
NOTICE:
Do not allow the anchor part of the rear seat 3 point type belt assembly LH to overlap the protruding parts of the floor panel.

(b) Check if the ELR locks.
NOTICE:
The check should be performed with the outer belt assembly installed.
(1) With the belt assembly installed, check that the belt locks when it is pulled out quickly.

8. INSTALL REAR SEAT 3 POINT TYPE BELT ASSEMBLY RH
HINT:
Use the same procedure for the RH side and the LH side.

9. INSTALL ROOF SIDE INNER GARNISH ASSEMBLY LH (See page IR-62)

10. INSTALL ROOF SIDE INNER GARNISH ASSEMBLY RH (See page IR-65)

11. INSTALL REAR SEAT SIDE AIRBAG ASSEMBLY LH (w/ Rear Seat Side Airbag) (See page RS-460)

12. INSTALL REAR SEAT SIDE AIRBAG ASSEMBLY RH (w/ Rear Seat Side Airbag)
HINT:
Use the same procedure for the RH side and the LH side.

13. INSTALL REAR SEAT SIDE GARNISH LH (w/o Rear Seat Side Airbag) (See page IR-62)

14. INSTALL REAR SEAT SIDE GARNISH RH (w/o Rear Seat Side Airbag) (See page IR-65)

15. INSTALL REAR DOOR SCUFF PLATE LH (See page IR-63)

16. INSTALL REAR DOOR SCUFF PLATE RH (See page IR-65)

17. INSTALL REAR SEATBACK ASSEMBLY (See page SE-121)

18. INSTALL REAR CENTER SEAT HEADREST ASSEMBLY

19. INSTALL REAR SEAT HEADREST ASSEMBLY

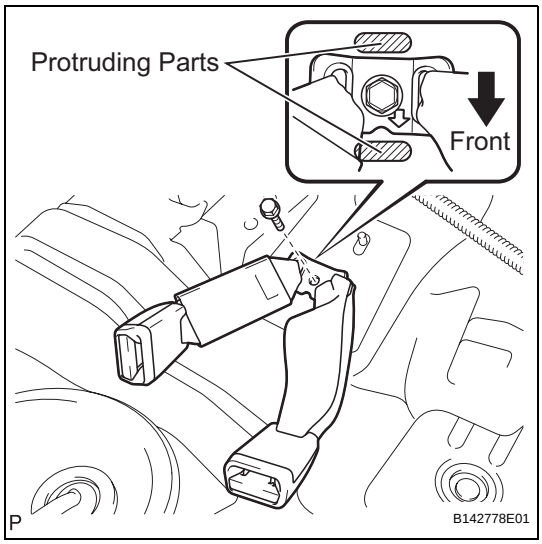

20. INSTALL REAR SEAT INNER WITH CENTER BELT ASSEMBLY LH

(a) Install the rear seat inner with center belt assembly LH with the bolt.
Torque: 42 N*m (428 kgf*cm, 31 ft.*lbf)
NOTICE:
Do not allow the anchor part of the rear seat inner with center belt assembly LH to overlap the protruding parts of the floor panel.

21. INSTALL REAR SEAT CUSHION ASSEMBLY (See page SE-121)

22. CONNECT CABLE TO NEGATIVE BATTERY TERMINAL (w/ Rear Seat Side Airbag)

23. PERFORM INITIALIZATION (w/ Rear Seat Side Airbag)
NOTICE:
Some systems need initialization after reconnecting the cable to the negative battery terminal (See page IN-33).

24. INSPECT SRS WARNING LIGHT (w/ Rear Seat Side Airbag)
(See page RS-37)

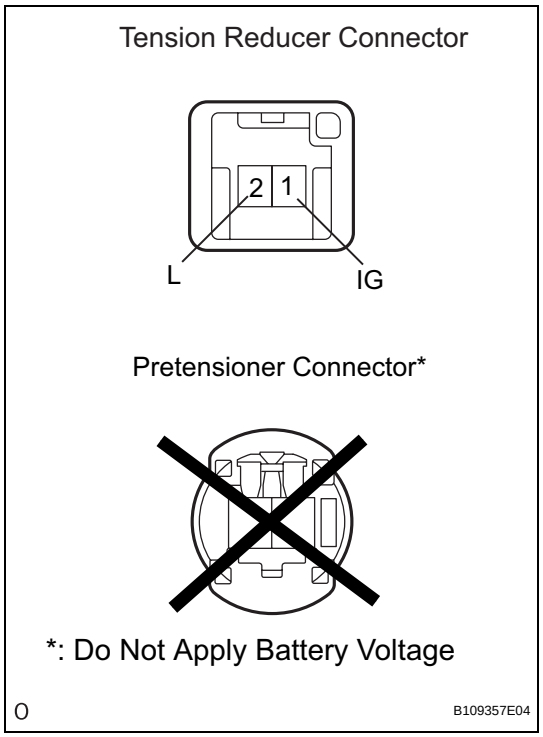

INSPECTION

1. INSPECT FRONT SEAT OUTER BELT ASSEMBLY RH

(a) Check the tension reducer operation.

NOTICE:

Do not apply battery voltage to the pretensioner connector.

(1) Connect the battery's positive (+) lead to terminal 1 of the tension reducer connector and the negative (-) lead to terminal 2.

(2) Check that an operating sound is heard when the magnetized solenoid is attracting the plunger.

(3) Pull out the seat belt and allow it to retract. Listen to the operating sound.

(4) Pull out the seat belt again, disconnect the battery's negative (-) lead and allow the seat belt to retract. Listen to the operating sound again and check that the operating sound volume has increased.

If the result is not as specified, replace the outer belt assembly.

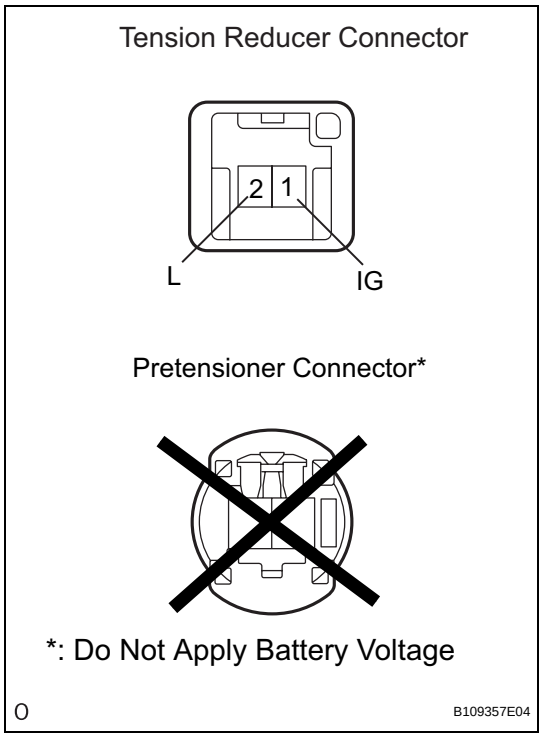

2. REMOVE FRONT SEAT OUTER BELT ASSEMBLY LH

(a) Check the tension reducer operation.

NOTICE:

Do not apply battery voltage to the pretensioner connector.

(1) Connect the battery's positive (+) lead to terminal 1 of the tension reducer connector and the negative (-) lead to terminal 2.

(2) Check that an operating sound is heard when the magnetized solenoid is attracting the plunger.

(3) Pull out the seat belt and allow it to retract. Listen to the operating sound.

(4) Pull out the seat belt again, disconnect the battery's negative (-) lead and allow the seat belt to retract. Listen to the operating sound again and check that the operating sound volume has increased.

If the result is not as specified, replace the outer belt assembly.

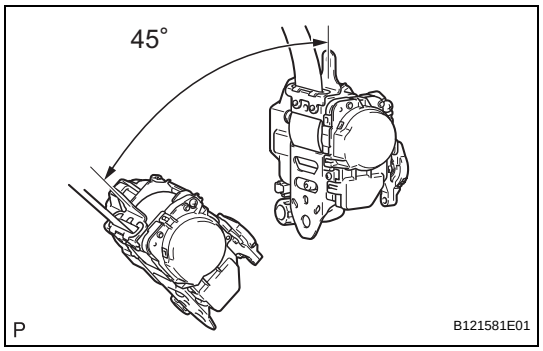

INSTALLATION

1. INSTALL FRONT SEAT OUTER BELT ASSEMBLY

(a) Check the degree of tilt when the ELR begins to lock.

(1) Check that the belt does not lock at less than 15 degrees of tilt in any direction but locks at over 45 degrees of tilt while gently pulling the belt.

NOTICE:

Do not disassemble the retractor.

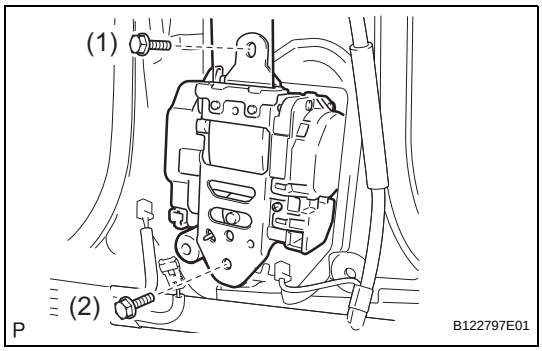

(b) Temporarily install the front seat outer belt assembly with the 2 bolts.

(c) Fully tighten the upper side bolt first, then the lower side bolt to install the front seat outer belt assembly.
Torque: for Upper bolt
7.5 N*m (77 kgf*cm, 66 in.*lbf)
for Lower bolt
42 N*m (428 kgf*cm, 31 ft.*lbf)

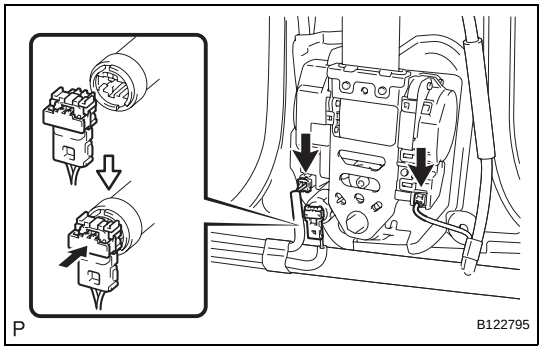

(d) Connect the pretensioner connector and lock the locking button as shown in the illustration.
NOTICE:
Securely lock the locking button.

(e) Connect the connectors.

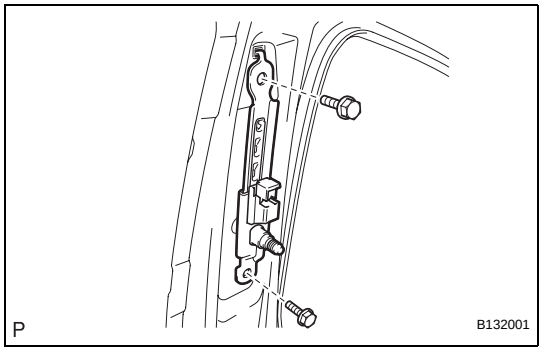

2. INSTALL FRONT SHOULDER BELT ANCHOR ADJUSTER ASSEMBLY

(a) Install the front shoulder belt anchor adjuster assembly with the 2 bolts.
Torque: 42 N*m (428 kgf*cm, 31 ft.*lbf)

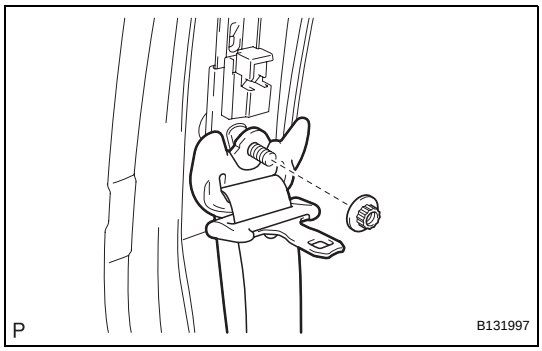

3. CONNECT FRONT SEAT OUTER BELT ASSEMBLY

(a) Install the shoulder anchor of the front seat outer belt assembly with the nut.
Torque: 42 N*m (428 kgf*cm, 31 ft.*lbf)

4. INSTALL UPPER CENTER PILLAR GARNISH (See page IR-63)

5. INSTALL LOWER CENTER PILLAR GARNISH (See page IR-63)

6. INSTALL REAR DOOR SCUFF PLATE (See page IR-63)

7. INSTALL FRONT DOOR SCUFF PLATE (See page IR-65)

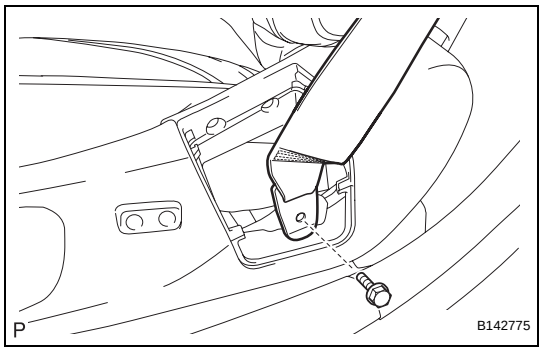

8. CONNECT FRONT SEAT OUTER BELT ASSEMBLY

(a) for Driver seat:

(1) Install the floor end of the front seat outer belt assembly with the bolt.
Torque: 42 N*m (428 kgf*cm, 31 ft.*lbf)

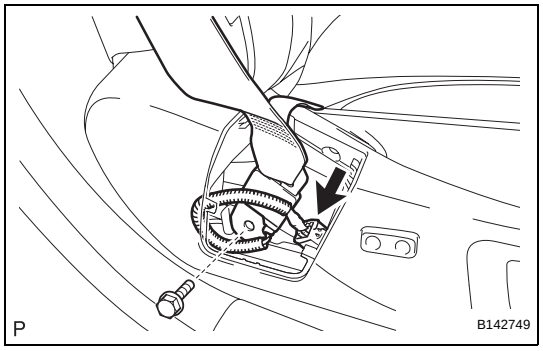

(b) for Passenger seat:

(1) Install the floor end of the front seat outer belt assembly with the bolt.
Torque: 42 N*m (428 kgf*cm, 31 ft.*lbf)

(c) Check if the ELR locks.
NOTICE:
The check should be performed with the outer belt assembly installed.

(1) With the belt assembly installed, check that the belt locks when it is pulled out quickly.

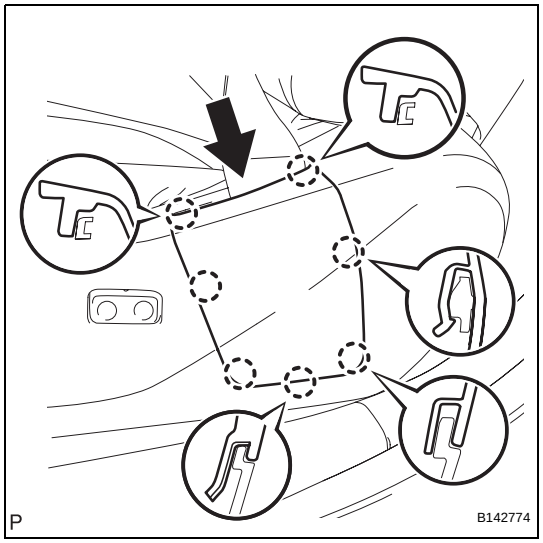

9. INSTALL SEAT BELT ANCHOR COVER CAP

(a) Engage the 7 claws to install the seat belt anchor cover cap.

10. CONNECT CABLE TO NEGATIVE BATTERY TERMINAL

11. PERFORM INITIALIZATION
NOTICE:
Some systems need initialization after reconnecting the cable to the negative battery terminal (See page IN-33).

12. INSPECT SRS WARNING LIGHT
(See page RS-37)

SB

DISPOSAL

HINT:
When scrapping vehicles equipped with a seat belt pretensioner or disposing of a front seat outer belt (with a seat belt pretensioner), always deploy the seat belt pretensioner first in accordance with the procedures described below. If any abnormality occurs during deployment of the seat belt pretensioner, contact the SERVICE DEPT. of the TOYOTA MOTOR SALES, U.S.A., INC.

1. DISPOSE OF FRONT SEAT OUTER BELT ASSEMBLY (WHEN INSTALLED IN VEHICLE)

NOTICE:

- **Never dispose of a front seat outer belt assembly with a pretensioner that has not been deployed.**
- **The seat belt pretensioner produces an exploding sound when it deploys, so perform the operation outdoors where it will not disturb local residents.**
- **When deploying a front seat outer belt (with a seat belt pretensioner), perform the operation at least 10 m (33 ft) away from the front seat outer belt.**
- **Use gloves and safety glasses when handling a front seat belt with a deployed pretensioner.**
- **Always wash your hands with water after completing the operation.**
- **Do not apply water, etc. to a front seat outer belt with a deployed pretensioner.**
- **When deploying the seat belt pretensioner, always use the specified SST (SRS airbag deployment tool). Perform the operation in a place away from electrical interference.**
- **Be sure to follow the procedures listed below when deploying the seat belt pretensioner.**

(a) Check the function of SST.
SST 09082-00700, 09082-00770
CAUTION:
When deploying the seat belt pretensioner, always use the specified SST.

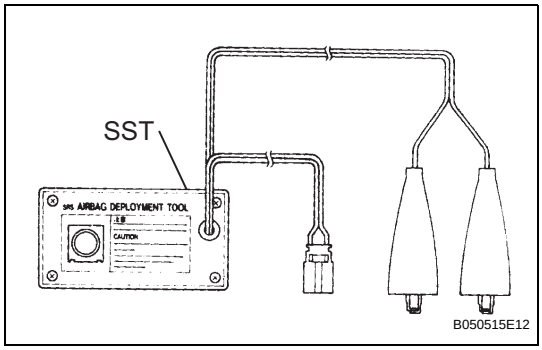

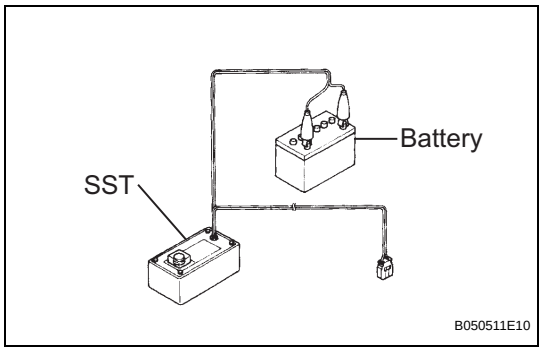

(1) Connect the red clip of the SST to the battery positive (+) terminal and the black clip to the battery negative (-) terminal.
HINT:
At this time, do not connect the yellow connector that will later be connected to the seat belt pretensioner.

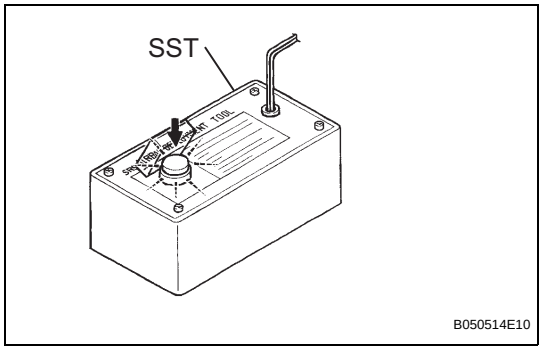

(2) Press the SST deployment switch, and check that the LED of the SST deployment switch lights up.
CAUTION:
If the LED is lit when the deployment switch is not pressed, the SST may be malfunctioning. Therefore, do not use the SST.

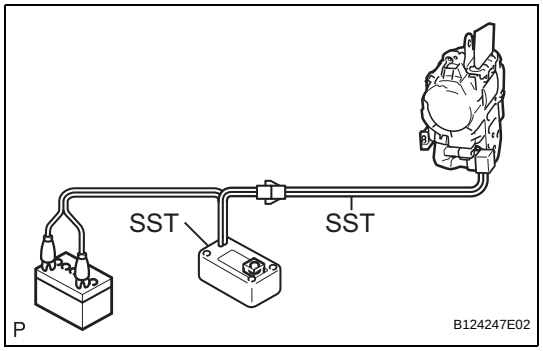

(b) Connect SST.
(1) Connect 2 SST, and then connect them to the front seat outer belt pretensioner.
SST 09082-00700, 09082-00770
NOTICE:
To avoid damaging the SST connector and wire harness, do not lock the secondary lock of the pretensioner connector.

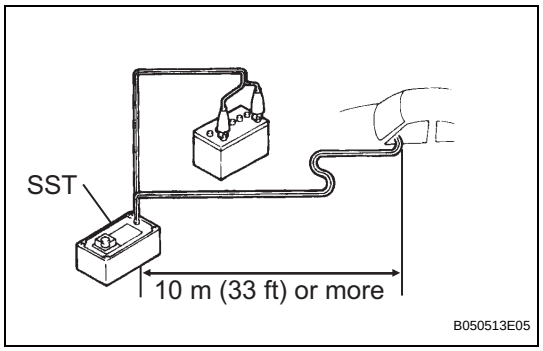

(2) Move the SST at least 10 m (33 ft) away from the front of the vehicle.
(3) Close all the doors and windows of the vehicle.
NOTICE:
Do not damage the SST wire harness.

(c) Deploy the front seat outer belt pretensioner.
(1) Confirm that no one is inside the vehicle or within a 10 m (33 ft) radius of the vehicle.
(2) Connect the red clip of the SST to the battery positive (+) terminal and the black clip to the negative (-) terminal.
(3) Press the SST deployment switch and deploy the front seat outer belt pretensioner.
HINT:
The seat belt pretensioner will deploy at the same time as the LED of the SST illuminates.

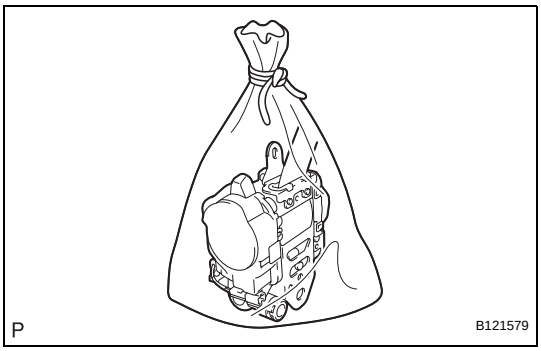

(d) Dispose of the front seat outer belt assembly.
  (1) Remove the front seat outer belt assembly and SST.
  (2) Place the outer belt in a plastic bag, tie the end tightly, and dispose of it in the same way as other general part disposal.
  CAUTION:
  - **The outer belt becomes very hot when the front seat outer belt pretensioner is deployed, so leave it untouched for at least 30 minutes after it has been deployed.**
  - **Use gloves and safety glasses when handling an outer belt with a pretensioner that has been deployed.**
  - **Always wash your hands with water after completing the operation.**
  - **Do not apply water, etc. to a front seat outer belt assembly with a pretensioner that has been deployed.**

  HINT:
  When scrapping a vehicle, deploy the front seat outer belt pretensioners, and then scrap the vehicle with the deployed outer belt installed.

2. DISPOSE OF FRONT SEAT OUTER BELT ASSEMBLY (WHEN NOT INSTALLED IN VEHICLE)

NOTICE:
- **Never dispose of a front seat outer belt assembly with a pretensioner that has not been deployed.**
- **The seat belt pretensioner produces an exploding sound when it deploys, so perform the operation outdoors where it will not disturb local residents.**
- **When deploying a front seat outer belt (with a seat belt pretensioner), perform the operation at least 10 m (33 ft) away from the front seat outer belt.**
- **Use gloves and safety glasses when handling a front seat belt with a deployed pretensioner.**
- **Always wash your hands with water after completing the operation.**
- **Do not apply water, etc. to a front seat outer belt with a deployed pretensioner.**
- **When disposing of a pretensioner equipped front seat outer belt, never deploy the belt in the customer's vehicle.**
- **Be sure to follow the procedures listed below when deploying the seat belt pretensioner.**

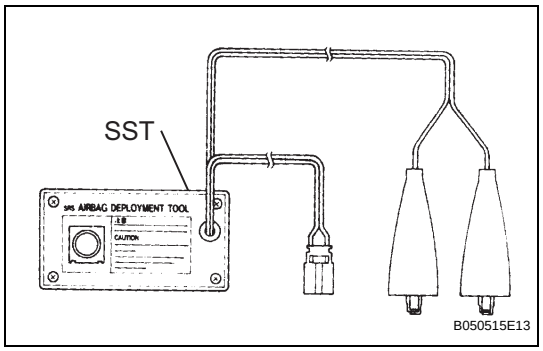

(a) Check the function of SST.
SST 09082-00700, 09082-00770
CAUTION:
When deploying the seat belt pretensioner, always use the specified SST.

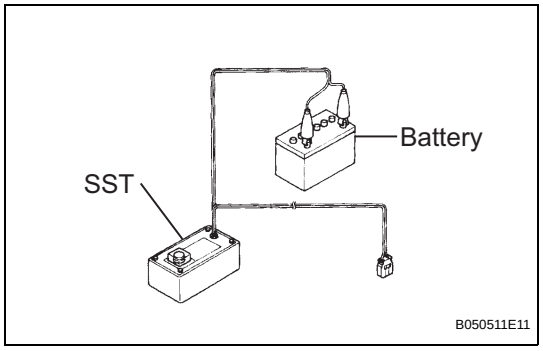

(1) Connect the red clip of the SST to the battery positive (+) terminal and the black clip to the battery negative (-) terminal.
HINT:
At this time, do not connect the yellow connector that will later be connected to the seat belt pretensioner.

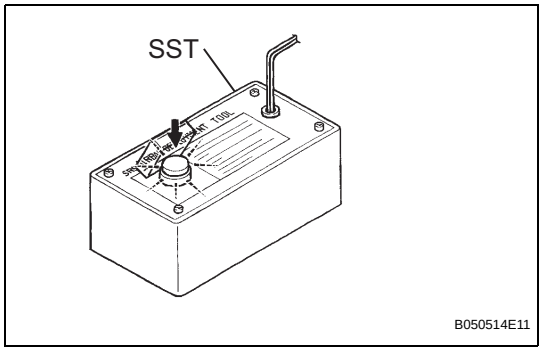

(2) Press the SST deployment switch, and check that the LED of the SST deployment switch lights up.
CAUTION:
If the LED is lit when the deployment switch is not pressed, the SST may be malfunctioning. Therefore, do not use the SST.

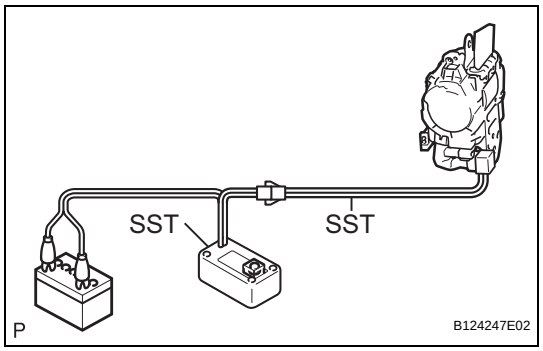

(b) Connect SST.
(1) Connect 2 SST, and then connect them to the front seat outer belt pretensioner.
SST 09082-00700, 09082-00770
NOTICE:
To avoid damaging the SST connector and wire harness, do not lock the secondary lock of the pretensioner connector.

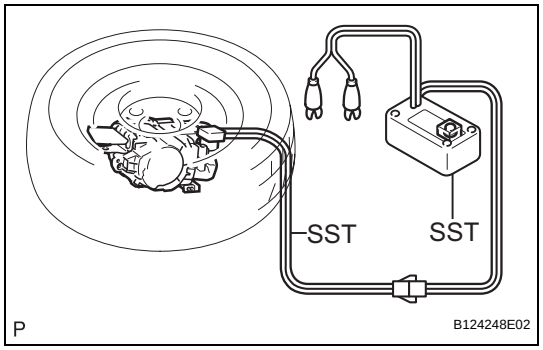

(2) Place the outer belt on the ground and cover it with a tire and wheel assembly.
NOTICE:
Position the front seat outer belt assembly as shown in the illustration.
(3) Position and hold the SST at least 10 m (33 ft) away from the wheel.
NOTICE:
Do not damage the SST wire harness.

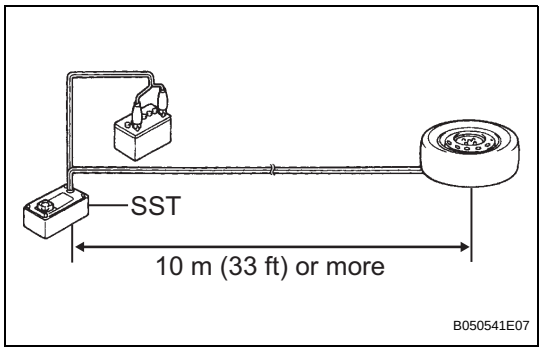

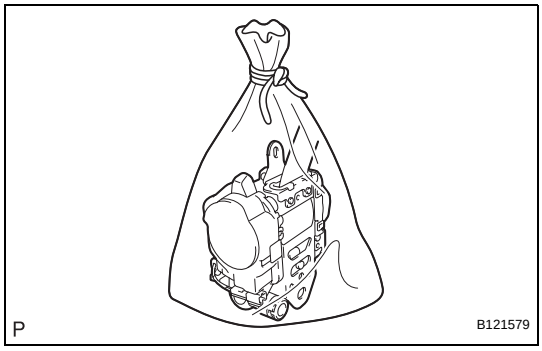

(c) Deploy the front seat outer belt pretensioner.
  (1) Check that no one is within a 10 m (33 ft) radius of the wheel.
  (2) Connect the red clip of the SST to the battery positive (+) terminal and the black clip to the battery negative (-) terminal.
  (3) Press the SST deployment switch and deploy the front seat outer belt pretensioner.
  HINT:
  The seat belt pretensioner will deploy at the same time as the LED of the SST illuminates.

(d) Dispose of the front seat outer belt assembly.
  (1) Remove the wheel and SST.
  (2) Place the outer belt in a plastic bag, tie the end tightly, and dispose of it in the same way as other general part disposal.
  CAUTION:
  - **The outer belt becomes very hot when the front seat outer belt pretensioner is deployed, so leave it untouched for at least 30 minutes after it has been deployed.**
  - **Use gloves and safety glasses when handling an outer belt with a pretensioner that has been deployed.**
  - **Always wash your hands with water after completing the operation.**
  - **Do not apply water, etc. to a front seat outer belt assembly with a pretensioner that has been deployed.**

  HINT:
  When scrapping a vehicle, deploy the front seat outer belt pretensioners, and then scrap the vehicle with the deployed outer belt installed.

REMOVAL

1. **DISCONNECT CABLE FROM NEGATIVE BATTERY TERMINAL**
   CAUTION:
   Wait for 90 seconds after disconnecting the cable to prevent airbag deployment (See page RS-1).
2. **REMOVE REAR SEAT CUSHION ASSEMBLY (See page SE-113)**
3. **REMOVE REAR SEAT HEADREST ASSEMBLY**
4. **REMOVE REAR CENTER SEAT HEADREST ASSEMBLY**
5. **REMOVE REAR SEATBACK ASSEMBLY (See page SE-113)**
6. **REMOVE REAR DOOR SCUFF PLATE LH (See page IR-40)**
7. **REMOVE REAR DOOR SCUFF PLATE RH (See page IR-42)**
8. **REMOVE REAR SEAT SIDE GARNISH LH (w/o Rear Seat Side Airbag) (See page IR-41)**
9. **REMOVE REAR SEAT SIDE GARNISH RH (w/o Rear Seat Side Airbag) (See page IR-43)**
10. **REMOVE REAR SEAT SIDE AIRBAG ASSEMBLY LH (w/ Rear Seat Side Airbag) (See page RS-460)**
11. **REMOVE REAR SEAT SIDE AIRBAG ASSEMBLY RH (w/ Rear Seat Side Airbag)**
    HINT:
    Use the same procedure for the RH side and LH side.
12. **REMOVE ROOF SIDE INNER GARNISH ASSEMBLY LH (See page IR-42)**
13. **REMOVE ROOF SIDE INNER GARNISH ASSEMBLY RH (See page IR-43)**
14. **DISCONNECT REAR SEAT 3 POINT TYPE BELT ASSEMBLY LH (See page SB-40)**
15. **DISCONNECT REAR SEAT 3 POINT TYPE BELT ASSEMBLY RH (See page SB-40)**
16. **DISCONNECT REAR SEAT INNER WITH CENTER BELT ASSEMBLY RH (See page SB-40)**
17. **REMOVE REAR SEAT SHOULDER BELT HOLE COVER (See page SB-41)**
18. **REMOVE CENTER STOP LIGHT SET (w/o Rear Sunshade) (See page LI-159)**
19. **REMOVE PACKAGE TRAY TRIM PANEL ASSEMBLY (w/o Rear Sunshade) (See page SB-41)**
20. **REMOVE PACKAGE TRAY TRIM PANEL ASSEMBLY (w/ Rear Sunshade) (See page IR-20)**

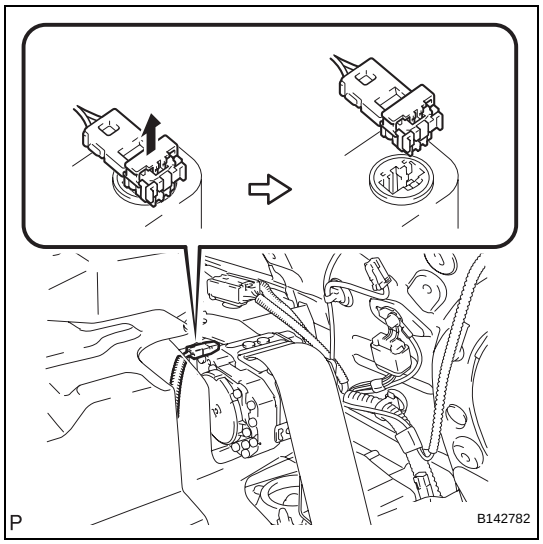

21. REMOVE REAR SEAT 3 POINT TYPE BELT ASSEMBLY

(a) Using a screwdriver, pull out the locking button in the direction shown by the arrow to release the lock, and disconnect the pretensioner connector as shown in the illustration.

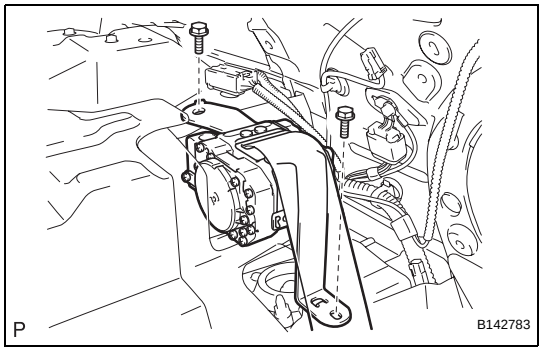

(b) Remove the 2 bolts and the rear seat 3 point type belt assembly.

INSTALLATION

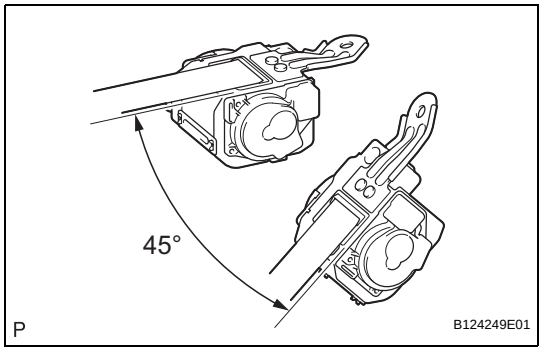

1. INSTALL REAR SEAT 3 POINT TYPE BELT ASSEMBLY

(a) Check the degree of tilt when the ELR begins to lock.

(1) Check that the belt does not lock at less than 15 degrees of tilt in any direction but locks at over 45 degrees of tilt while gently pulling the belt.

NOTICE:

Do not disassemble the retractor.

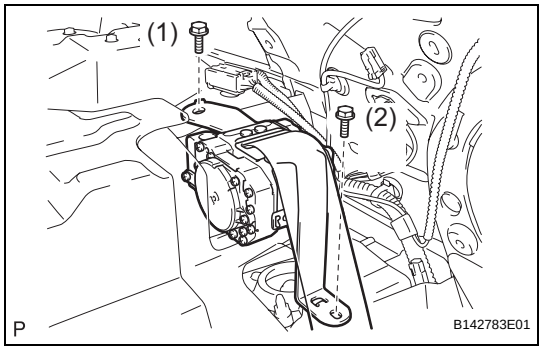

(b) Temporarily install the rear seat 3 point type belt assembly with the 2 bolts.

(c) Fully tighten the rear side bolt first, then the front side bolt to install the rear seat 3 point type belt assembly.

Torque: for Front bolt
7.5 N*m (77 kgf*cm, 66 in.*lbf)
for Rear bolt
42 N*m (428 kgf*cm, 31 ft.*lbf)

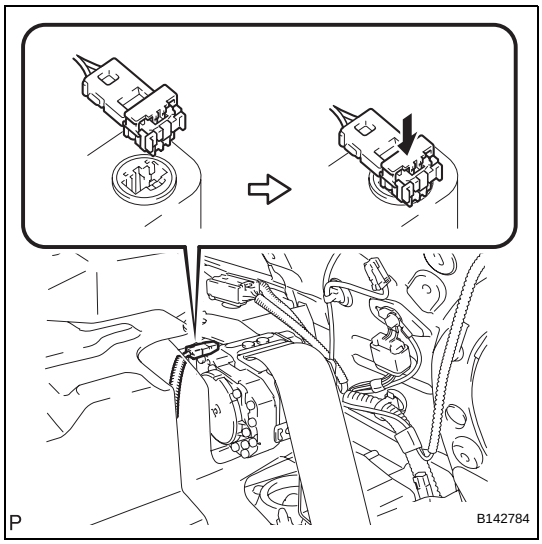

(d) Connect the pretensioner connector and lock the locking button as shown in the illustration.

2. **INSTALL PACKAGE TRAY TRIM PANEL ASSEMBLY (w/o Rear Sunshade) (See page SB-42)**
3. **INSTALL PACKAGE TRAY TRIM PANEL ASSEMBLY (w/ Rear Sunshade) (See page IR-23)**
4. **INSTALL CENTER STOP LIGHT SET (w/o Rear Sunshade) (See page LI-159)**
5. **INSTALL REAR SEAT SHOULDER BELT HOLE COVER (See page SB-42)**
6. **CONNECT REAR SEAT INNER WITH CENTER BELT ASSEMBLY RH (See page SB-42)**
7. **INSTALL REAR SEAT 3 POINT TYPE BELT ASSEMBLY LH (See page SB-42)**
8. **INSTALL REAR SEAT 3 POINT TYPE BELT ASSEMBLY RH (See page SB-43)**
9. **INSTALL ROOF SIDE INNER GARNISH ASSEMBLY LH (See page IR-62)**
10. **INSTALL ROOF SIDE INNER GARNISH ASSEMBLY RH (See page IR-65)**
11. **INSTALL REAR SEAT SIDE AIRBAG ASSEMBLY LH (w/ Rear Seat Side Airbag) (See page RS-460)**
12. **INSTALL REAR SEAT SIDE AIRBAG ASSEMBLY RH (w/ Rear Seat Side Airbag)**
    HINT:
    Use the same procedure for the RH side and LH side.
13. **INSTALL REAR SEAT SIDE GARNISH LH (w/o Rear Seat Side Airbag) (See page IR-62)**
14. **INSTALL REAR SEAT SIDE GARNISH RH (w/o Rear Seat Side Airbag) (See page IR-65)**
15. **INSTALL REAR DOOR SCUFF PLATE LH (See page IR-63)**
16. **INSTALL REAR DOOR SCUFF PLATE RH (See page IR-65)**
17. **INSTALL REAR SEATBACK ASSEMBLY (See page SE-121)**
18. **INSTALL REAR CENTER SEAT HEADREST ASSEMBLY**
19. **INSTALL REAR SEAT HEADREST ASSEMBLY**
20. **INSTALL REAR SEAT CUSHION ASSEMBLY (See page SE-121)**
21. **CONNECT CABLE TO NEGATIVE BATTERY TERMINAL**

22. PERFORM INITIALIZATION

NOTICE:

Some systems need initialization after reconnecting the cable to the negative battery terminal (See page IN-33).

23. INSPECT SRS WARNING LIGHT

(See page RS-37)

SB

REMOVAL

1. **DISCONNECT CABLE FROM NEGATIVE BATTERY TERMINAL (w/ Rear Seat Side Airbag)**
   CAUTION:
   Wait for 90 seconds after disconnecting the cable to prevent airbag deployment (See page RS-1).

2. **REMOVE REAR SEAT CUSHION ASSEMBLY (See page SE-113)**

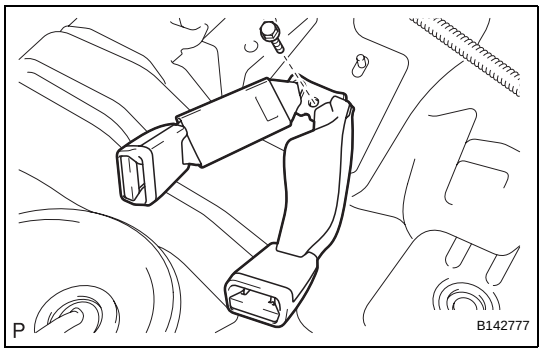

3. **REMOVE REAR SEAT INNER WITH CENTER BELT ASSEMBLY LH**
   (a) Remove the bolt and the rear seat inner with center belt assembly LH.

4. **REMOVE REAR SEAT HEADREST ASSEMBLY**

5. **REMOVE REAR CENTER SEAT HEADREST ASSEMBLY**

6. **REMOVE REAR SEATBACK ASSEMBLY (See page SE-113)**

7. **REMOVE REAR DOOR SCUFF PLATE LH (See page IR-40)**

8. **REMOVE REAR DOOR SCUFF PLATE RH (See page IR-42)**

9. **REMOVE REAR SEAT SIDE GARNISH LH (w/o Rear Seat Side Airbag) (See page IR-41)**

10. **REMOVE REAR SEAT SIDE GARNISH RH (w/o Rear Seat Side Airbag) (See page IR-43)**

11. **REMOVE REAR SEAT SIDE AIRBAG ASSEMBLY LH (w/ Rear Seat Side Airbag) (See page RS-460)**

12. **REMOVE REAR SEAT SIDE AIRBAG ASSEMBLY RH (w/ Rear Seat Side Airbag)**
    HINT:
    Use the same procedure for the RH side and the LH side.

13. **REMOVE ROOF SIDE INNER GARNISH ASSEMBLY LH (See page IR-42)**

14. **REMOVE ROOF SIDE INNER GARNISH ASSEMBLY RH (See page IR-43)**

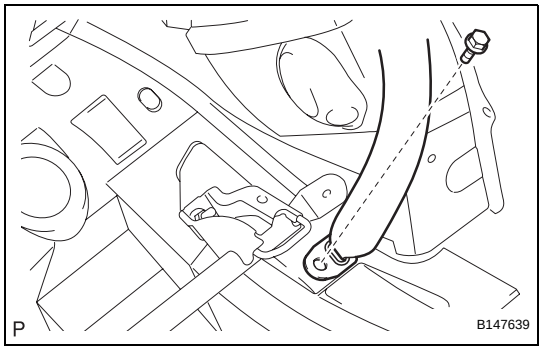

15. **DISCONNECT REAR SEAT 3 POINT TYPE BELT ASSEMBLY LH**
    (a) Remove the bolt and disconnect the floor end of the rear seat 3 point type belt assembly LH.

16. **DISCONNECT REAR SEAT 3 POINT TYPE BELT ASSEMBLY RH**
    HINT:
    Use the same procedure for the RH side and the LH side.

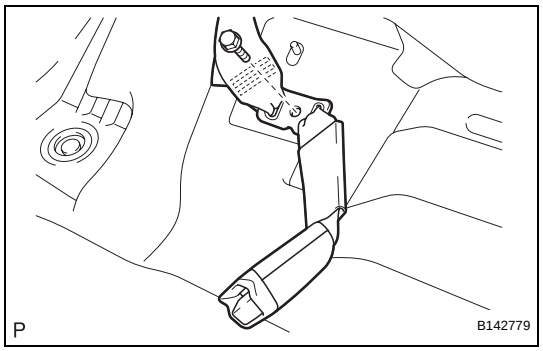

17. DISCONNECT REAR SEAT INNER WITH CENTER BELT ASSEMBLY RH

(a) Remove the bolt and disconnect the floor end of the rear seat inner with center belt assembly RH.

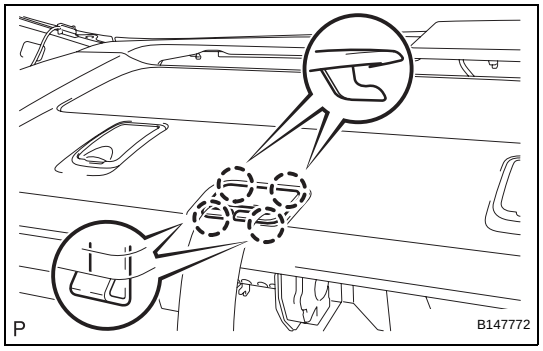

18. REMOVE REAR SEAT SHOULDER BELT HOLE COVER

(a) Disengage the 4 claws and remove the rear seat shoulder belt hole cover.
HINT:
Use the same procedure for the other 2 rear seat shoulder belt hole covers.

19. REMOVE CENTER STOP LIGHT SET (w/o Rear Sunshade) (See page LI-159)

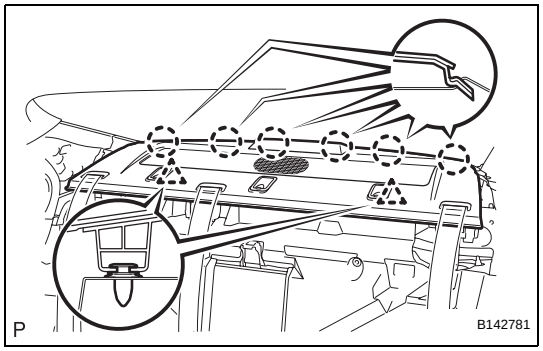

20. REMOVE PACKAGE TRAY TRIM PANEL ASSEMBLY (w/o Rear Sunshade)

(a) Disengage the 2 clips.
(b) Pass the 3 rear seat belt floor anchors through the package tray trim panel assembly.
(c) Disengage the 6 claws and remove the package tray trim panel assembly.

21. REMOVE PACKAGE TRAY TRIM PANEL ASSEMBLY (w/ Rear Sunshade) (See page IR-20)

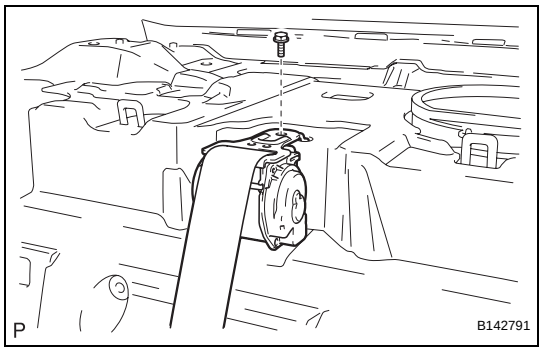

22. REMOVE REAR SEAT INNER WITH CENTER BELT ASSEMBLY RH

(a) Remove the bolt and the rear seat inner with center belt assembly RH.

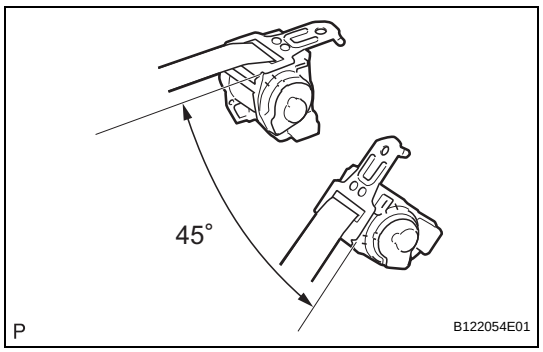

INSTALLATION

1. INSTALL REAR SEAT INNER WITH CENTER BELT ASSEMBLY RH

(a) Check the degree of tilt when the ELR begins to lock.
(1) Check that the belt does not lock at less than 15 degrees of tilt in any direction but locks at over 45 degrees of tilt while gently pulling the belt.
NOTICE:
Do not disassemble the retractor.

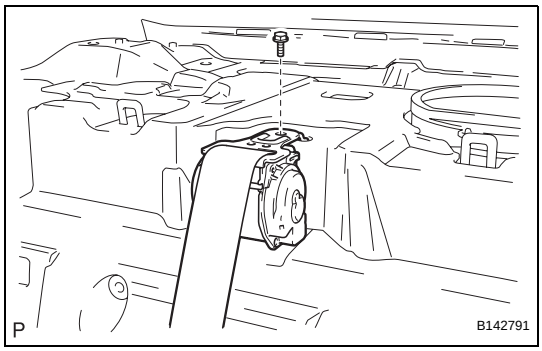

(b) Install the rear seat inner with center belt assembly RH with the bolt.
Torque: 42 N*m (428 kgf*cm, 31 ft.*lbf)

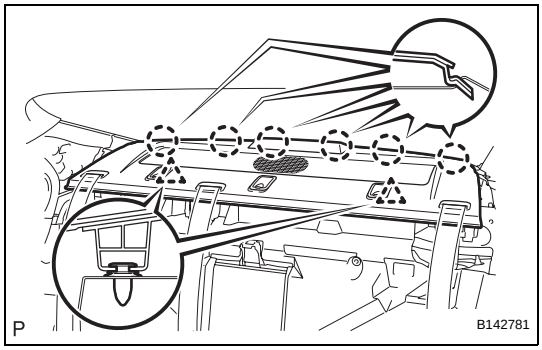

2. INSTALL PACKAGE TRAY TRIM PANEL ASSEMBLY (w/o Rear Sunshade)

(a) Pass the 3 rear seat belt floor anchors through the package tray trim panel assembly.

(b) Engage the 2 clips and 6 claws to install the package tray trim panel assembly.

3. INSTALL PACKAGE TRAY TRIM PANEL ASSEMBLY (w/ Rear Sunshade) (See page IR-23)

4. INSTALL CENTER STOP LIGHT SET (w/o Rear Sunshade) (See page LI-159)

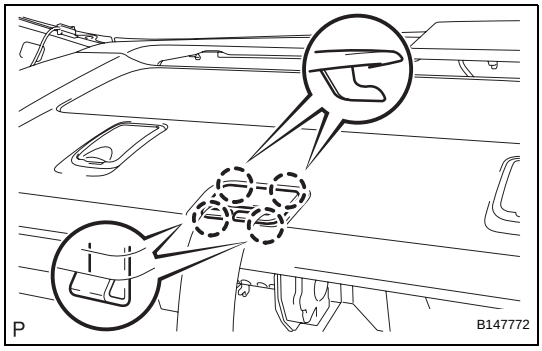

5. INSTALL REAR SEAT SHOULDER BELT HOLE COVER

(a) Engage the 4 claws to install the rear seat shoulder belt hole cover.
HINT:
Use the same procedure for the other 2 rear seat shoulder belt hole covers.

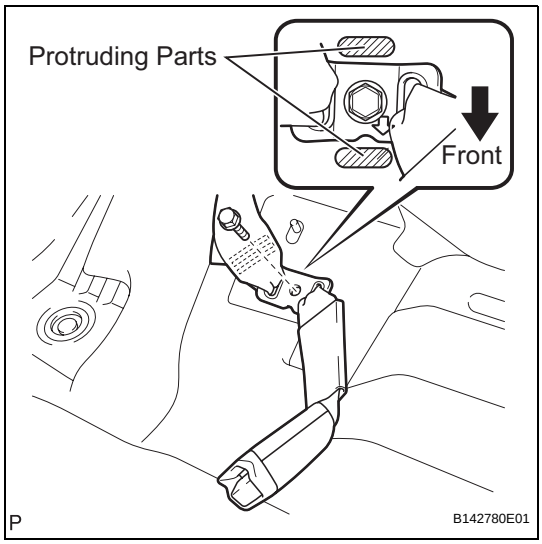

6. CONNECT REAR SEAT INNER WITH CENTER BELT ASSEMBLY RH

(a) Install the floor end of the rear seat inner with center belt assembly RH with the bolt.
Torque: 42 N*m (428 kgf*cm, 31 ft.*lbf)
NOTICE:
Do not allow the anchor part of the rear seat inner with center belt assembly RH to overlap the protruding parts of the floor panel.

(b) Check if the ELR locks.
NOTICE:
The check should be performed with the rear seat inner with center belt assembly RH installed.

(1) With the belt assembly installed, check that the belt locks when it is pulled out quickly.

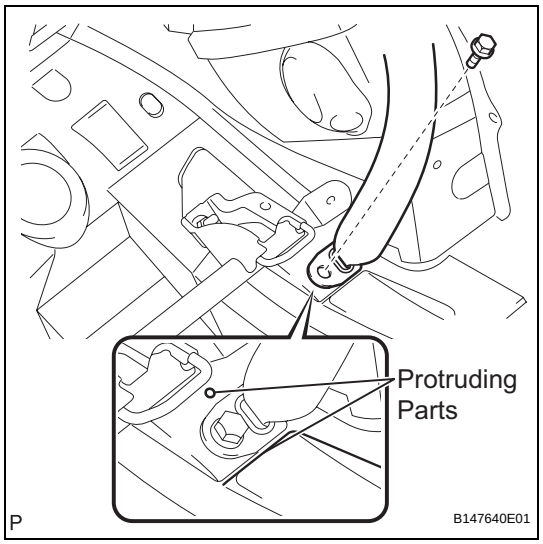

7. INSTALL REAR SEAT 3 POINT TYPE BELT ASSEMBLY LH

(a) Install the floor end of the rear seat 3 point type belt assembly LH with the bolt.
Torque: 42 N*m (428 kgf*cm, 31 ft.*lbf)
NOTICE:
Do not allow the anchor part of the rear seat 3 point type belt assembly LH to overlap the protruding parts of the floor panel.

(b) Check if the ELR locks.
NOTICE:
The check should be performed with the outer belt assembly installed.
(1) With the belt assembly installed, check that the belt locks when it is pulled out quickly.

8. INSTALL REAR SEAT 3 POINT TYPE BELT ASSEMBLY RH
HINT:
Use the same procedure for the RH side and the LH side.

9. INSTALL ROOF SIDE INNER GARNISH ASSEMBLY LH (See page IR-62)

10. INSTALL ROOF SIDE INNER GARNISH ASSEMBLY RH (See page IR-65)

11. INSTALL REAR SEAT SIDE AIRBAG ASSEMBLY LH (w/ Rear Seat Side Airbag) (See page RS-460)

12. INSTALL REAR SEAT SIDE AIRBAG ASSEMBLY RH (w/ Rear Seat Side Airbag)
HINT:
Use the same procedure for the RH side and the LH side.

13. INSTALL REAR SEAT SIDE GARNISH LH (w/o Rear Seat Side Airbag) (See page IR-62)

14. INSTALL REAR SEAT SIDE GARNISH RH (w/o Rear Seat Side Airbag) (See page IR-65)

15. INSTALL REAR DOOR SCUFF PLATE LH (See page IR-63)

16. INSTALL REAR DOOR SCUFF PLATE RH (See page IR-65)

17. INSTALL REAR SEATBACK ASSEMBLY (See page SE-121)

18. INSTALL REAR CENTER SEAT HEADREST ASSEMBLY

19. INSTALL REAR SEAT HEADREST ASSEMBLY

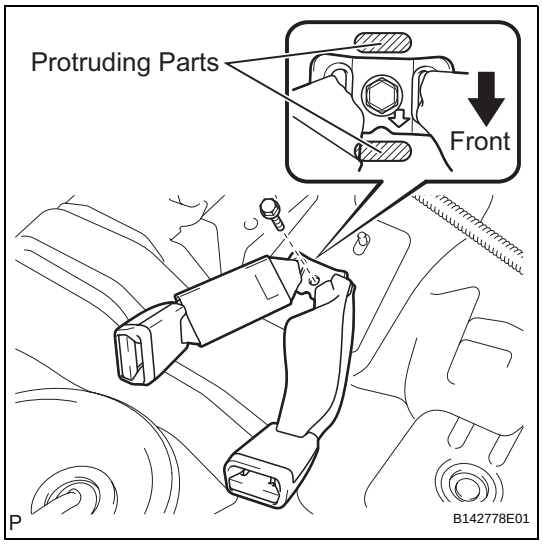

20. INSTALL REAR SEAT INNER WITH CENTER BELT ASSEMBLY LH

(a) Install the rear seat inner with center belt assembly LH with the bolt.
Torque: 42 N*m (428 kgf*cm, 31 ft.*lbf)
NOTICE:
Do not allow the anchor part of the rear seat inner with center belt assembly LH to overlap the protruding parts of the floor panel.

21. INSTALL REAR SEAT CUSHION ASSEMBLY (See page SE-121)

22. CONNECT CABLE TO NEGATIVE BATTERY TERMINAL (w/ Rear Seat Side Airbag)

23. PERFORM INITIALIZATION (w/ Rear Seat Side Airbag)
NOTICE:
Some systems need initialization after reconnecting the cable to the negative battery terminal (See page IN-33).

24. INSPECT SRS WARNING LIGHT (w/ Rear Seat Side Airbag)
(See page RS-37)

REMOVAL

1. **DISCONNECT CABLE FROM NEGATIVE BATTERY TERMINAL**
   CAUTION:
   Wait for 90 seconds after disconnecting the cable to prevent airbag deployment (See page RS-1).
2. **REMOVE REAR SEAT CUSHION ASSEMBLY (See page SE-113)**
3. **REMOVE REAR SEAT HEADREST ASSEMBLY**
4. **REMOVE REAR CENTER SEAT HEADREST ASSEMBLY**
5. **REMOVE REAR SEATBACK ASSEMBLY (See page SE-113)**
6. **REMOVE REAR DOOR SCUFF PLATE LH (See page IR-40)**
7. **REMOVE REAR DOOR SCUFF PLATE RH (See page IR-42)**
8. **REMOVE REAR SEAT SIDE GARNISH LH (w/o Rear Seat Side Airbag) (See page IR-41)**
9. **REMOVE REAR SEAT SIDE GARNISH RH (w/o Rear Seat Side Airbag) (See page IR-43)**
10. **REMOVE REAR SEAT SIDE AIRBAG ASSEMBLY LH (w/ Rear Seat Side Airbag) (See page RS-460)**
11. **REMOVE REAR SEAT SIDE AIRBAG ASSEMBLY RH (w/ Rear Seat Side Airbag)**
    HINT:
    Use the same procedure for the RH side and LH side.
12. **REMOVE ROOF SIDE INNER GARNISH ASSEMBLY LH (See page IR-42)**
13. **REMOVE ROOF SIDE INNER GARNISH ASSEMBLY RH (See page IR-43)**
14. **DISCONNECT REAR SEAT 3 POINT TYPE BELT ASSEMBLY LH (See page SB-40)**
15. **DISCONNECT REAR SEAT 3 POINT TYPE BELT ASSEMBLY RH (See page SB-40)**
16. **DISCONNECT REAR SEAT INNER WITH CENTER BELT ASSEMBLY RH (See page SB-40)**
17. **REMOVE REAR SEAT SHOULDER BELT HOLE COVER (See page SB-41)**
18. **REMOVE CENTER STOP LIGHT SET (w/o Rear Sunshade) (See page LI-159)**
19. **REMOVE PACKAGE TRAY TRIM PANEL ASSEMBLY (w/o Rear Sunshade) (See page SB-41)**
20. **REMOVE PACKAGE TRAY TRIM PANEL ASSEMBLY (w/ Rear Sunshade) (See page IR-20)**

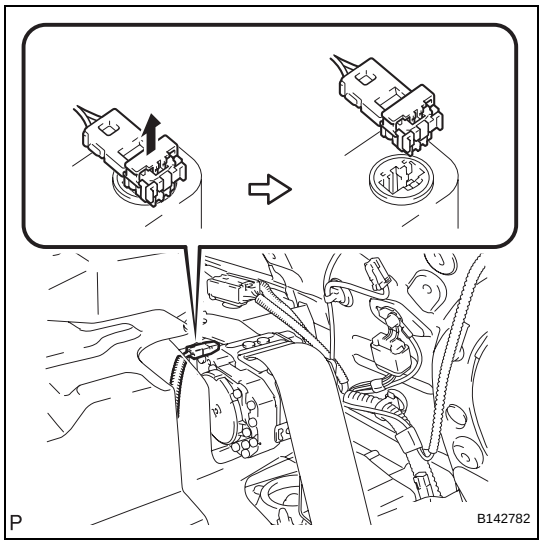

21. REMOVE REAR SEAT 3 POINT TYPE BELT ASSEMBLY

(a) Using a screwdriver, pull out the locking button in the direction shown by the arrow to release the lock, and disconnect the pretensioner connector as shown in the illustration.

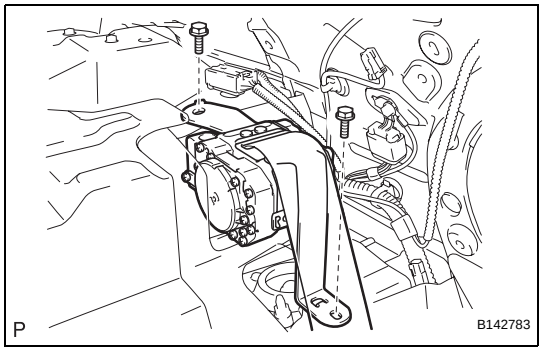

(b) Remove the 2 bolts and the rear seat 3 point type belt assembly.

INSTALLATION

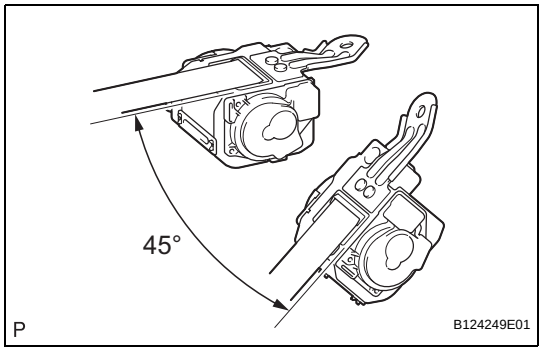

1. INSTALL REAR SEAT 3 POINT TYPE BELT ASSEMBLY

(a) Check the degree of tilt when the ELR begins to lock.

(1) Check that the belt does not lock at less than 15 degrees of tilt in any direction but locks at over 45 degrees of tilt while gently pulling the belt.

NOTICE:

Do not disassemble the retractor.

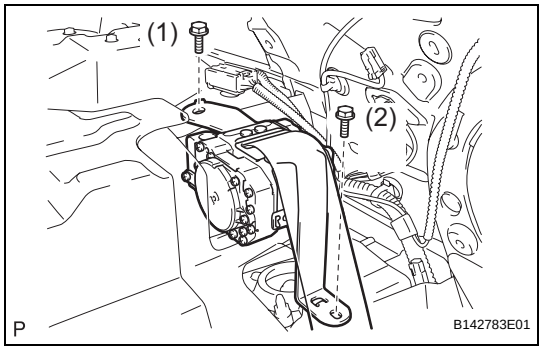

(b) Temporarily install the rear seat 3 point type belt assembly with the 2 bolts.

(c) Fully tighten the rear side bolt first, then the front side bolt to install the rear seat 3 point type belt assembly.

Torque: for Front bolt
7.5 N*m (77 kgf*cm, 66 in.*lbf)
for Rear bolt
42 N*m (428 kgf*cm, 31 ft.*lbf)

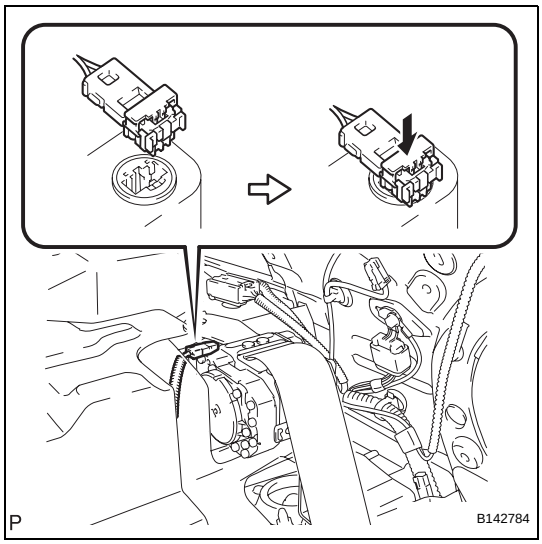

(d) Connect the pretensioner connector and lock the locking button as shown in the illustration.

2. **INSTALL PACKAGE TRAY TRIM PANEL ASSEMBLY (w/o Rear Sunshade) (See page SB-42)**
3. **INSTALL PACKAGE TRAY TRIM PANEL ASSEMBLY (w/ Rear Sunshade) (See page IR-23)**
4. **INSTALL CENTER STOP LIGHT SET (w/o Rear Sunshade) (See page LI-159)**
5. **INSTALL REAR SEAT SHOULDER BELT HOLE COVER (See page SB-42)**
6. **CONNECT REAR SEAT INNER WITH CENTER BELT ASSEMBLY RH (See page SB-42)**
7. **INSTALL REAR SEAT 3 POINT TYPE BELT ASSEMBLY LH (See page SB-42)**
8. **INSTALL REAR SEAT 3 POINT TYPE BELT ASSEMBLY RH (See page SB-43)**
9. **INSTALL ROOF SIDE INNER GARNISH ASSEMBLY LH (See page IR-62)**
10. **INSTALL ROOF SIDE INNER GARNISH ASSEMBLY RH (See page IR-65)**
11. **INSTALL REAR SEAT SIDE AIRBAG ASSEMBLY LH (w/ Rear Seat Side Airbag) (See page RS-460)**
12. **INSTALL REAR SEAT SIDE AIRBAG ASSEMBLY RH (w/ Rear Seat Side Airbag)**
    HINT:
    Use the same procedure for the RH side and LH side.
13. **INSTALL REAR SEAT SIDE GARNISH LH (w/o Rear Seat Side Airbag) (See page IR-62)**
14. **INSTALL REAR SEAT SIDE GARNISH RH (w/o Rear Seat Side Airbag) (See page IR-65)**
15. **INSTALL REAR DOOR SCUFF PLATE LH (See page IR-63)**
16. **INSTALL REAR DOOR SCUFF PLATE RH (See page IR-65)**
17. **INSTALL REAR SEATBACK ASSEMBLY (See page SE-121)**
18. **INSTALL REAR CENTER SEAT HEADREST ASSEMBLY**
19. **INSTALL REAR SEAT HEADREST ASSEMBLY**
20. **INSTALL REAR SEAT CUSHION ASSEMBLY (See page SE-121)**
21. **CONNECT CABLE TO NEGATIVE BATTERY TERMINAL**

22. PERFORM INITIALIZATION

NOTICE:

Some systems need initialization after reconnecting the cable to the negative battery terminal (See page IN-33).

23. INSPECT SRS WARNING LIGHT

(See page RS-37)

SB

DISPOSAL

HINT:
When scrapping vehicles equipped with a seat belt pretensioner or disposing of a rear seat outer belt (with a seat belt pretensioner), always deploy the seat belt pretensioner first in accordance with the procedures described below. If any abnormality occurs during deployment of the seat belt pretensioner, contact the SERVICE DEPT. of the TOYOTA MOTOR SALES, U.S.A., INC.

1. DISPOSE OF REAR SEAT OUTER BELT ASSEMBLY (WHEN INSTALLED IN VEHICLE)

CAUTION:

- **Never dispose of a rear seat outer belt assembly with a pretensioner that has not been deployed.**
- **The seat belt pretensioner produces an exploding sound when it deploys, so perform the operation outdoors where it will not disturb local residents.**
- **When deploying a rear seat outer belt (with a seat belt pretensioner), perform the operation at least 10 m (33 ft) away from the rear seat outer belt.**
- **Use gloves and safety glasses when handling a rear seat belt with a deployed pretensioner.**
- **Always wash your hands with water after completing the operation.**
- **Do not apply water, etc. to a rear seat outer belt with a deployed pretensioner.**
- **When deploying the seat belt pretensioner, always use the specified SST (SRS airbag deployment tool). Perform the operation in a place away from electrical interference.**
- **Be sure to follow the procedures listed below when deploying the seat belt pretensioner.**

(a) Check the function of SST.
SST 09082-00700, 09082-00770
CAUTION:
When deploying the seat belt pretensioner, always use the specified SST.

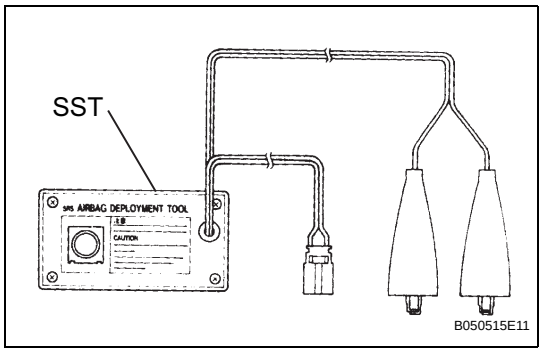

(1) Connect the red clip of the SST to the battery positive (+) terminal and the black clip to the battery negative (-) terminal.
HINT:
At this time, do not connect the yellow connector that will later be connected to the seat belt pretensioner.

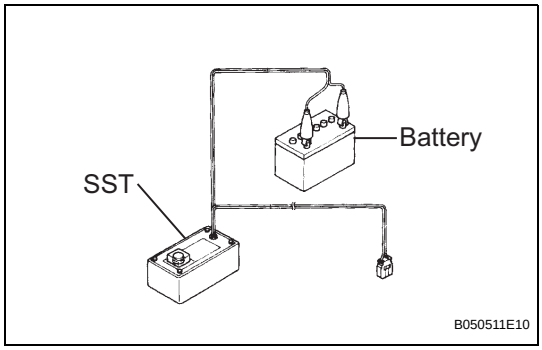

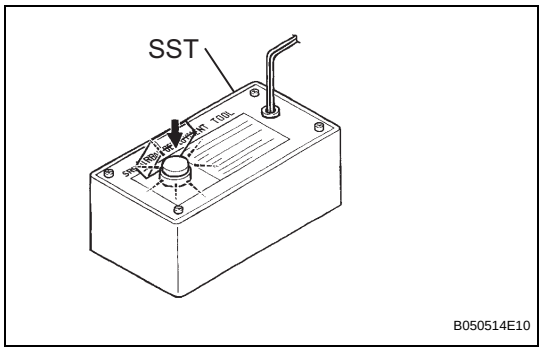

(2) Press the SST deployment switch, and check that the LED of the SST deployment switch lights up.
CAUTION:
If the LED is lit when the deployment switch is not pressed, the SST may be malfunctioning. Therefore, do not use the SST.

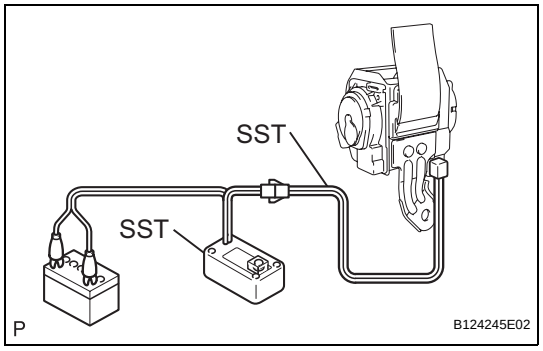

(b) Connect SST.
(1) Connect 2 SST, and then connect them to the rear seat outer belt pretensioner.
SST 09082-00700, 09082-00770
NOTICE:
To avoid damaging the SST connector and wire harness, do not lock the secondary lock of the pretensioner connector.

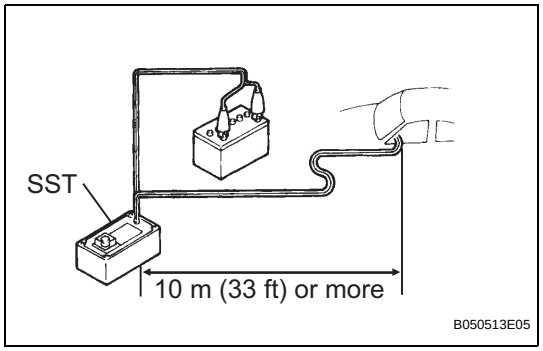

(2) Move the SST at least 10 m (33 ft) away from the front of the vehicle.
(3) Close all the doors and windows of the vehicle.
NOTICE:
Do not damage the SST wire harness.

(c) Deploy the rear seat outer belt pretensioner.
(1) Confirm that no one is inside the vehicle or within a 10 m (33 ft) radius of the vehicle.
(2) Connect the red clip of the SST to the battery positive (+) terminal and the black clip to the negative (-) terminal.
(3) Press the SST deployment switch and deploy the rear seat outer belt pretensioner.
HINT:
The seat belt pretensioner will deploy at the same time as the LED of the SST illuminates.

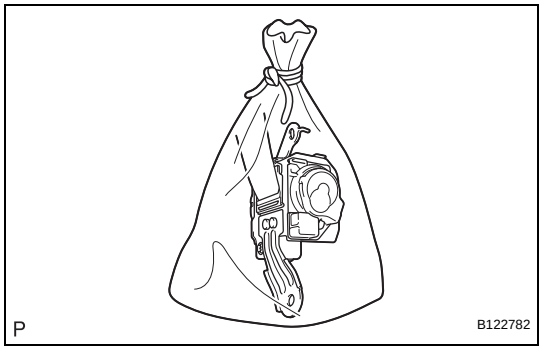

(d) Dispose of the rear seat outer belt assembly.
(1) Remove the rear seat outer belt assembly and SST.
(2) Place the outer belt in a plastic bag, tie the end tightly, and dispose of it in the same way as other general part disposal.
CAUTION:
- **The outer belt becomes very hot when the rear seat outer belt pretensioner is deployed, so leave it untouched for at least 30 minutes after it has been deployed.**
- **Use gloves and safety glasses when handling an outer belt with a pretensioner that has been deployed.**

SB

- **Always wash your hands with water after completing the operation.**
- **Do not apply water, etc. to a rear seat outer belt assembly with a pretensioner that has been deployed.**

HINT:
When scrapping a vehicle, deploy the rear seat outer belt pretensioners, and then scrap the vehicle with the deployed outer belt installed.

2. DISPOSE OF REAR SEAT OUTER BELT ASSEMBLY (WHEN NOT INSTALLED IN VEHICLE)

NOTICE:

- **Never dispose of a rear seat outer belt assembly with a pretensioner that has not been deployed.**
- **The seat belt pretensioner produces an exploding sound when it deploys, so perform the operation outdoors where it will not disturb local residents.**
- **When deploying a rear seat outer belt (with a seat belt pretensioner), perform the operation at least 10 m (33 ft) away from the rear seat outer belt.**
- **Use gloves and safety glasses when handling a rear seat belt with a deployed pretensioner.**
- **Always wash your hands with water after completing the operation.**
- **Do not apply water, etc. to a rear seat outer belt with a deployed pretensioner.**
- **When disposing of a pretensioner equipped front seat outer belt, never deploy the belt in the customer's vehicle.**
- **Be sure to follow the procedures listed below when deploying the seat belt pretensioner.**

(a) Check the function of SST.
SST 09082-00700, 09082-00770
CAUTION:
When deploying the seat belt pretensioner, always use the specified SST.

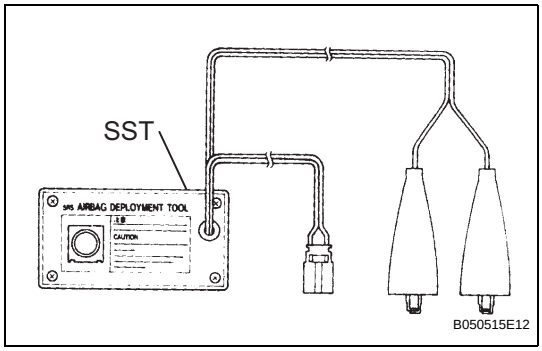

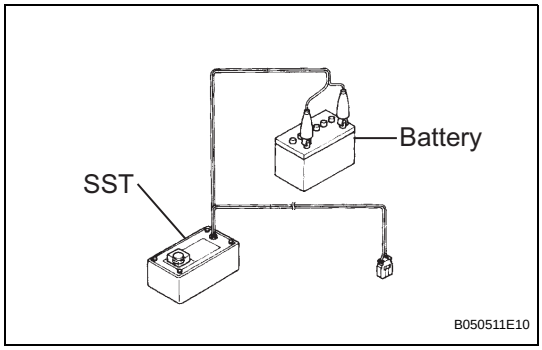

(1) Connect the red clip of the SST to the battery positive (+) terminal and the black clip to the battery negative (-) terminal.
HINT:
At this time, do not connect the yellow connector that will later be connected to the seat belt pretensioner.

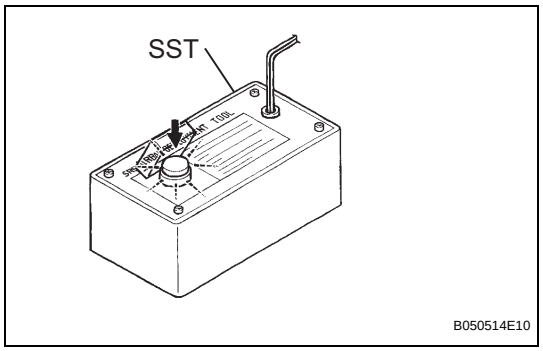

(2) Press the SST deployment switch, and check that the LED of the SST deployment switch lights up.
CAUTION:
If the LED is lit when the deployment switch is not pressed, the SST may be malfunctioning. Therefore, do not use the SST.

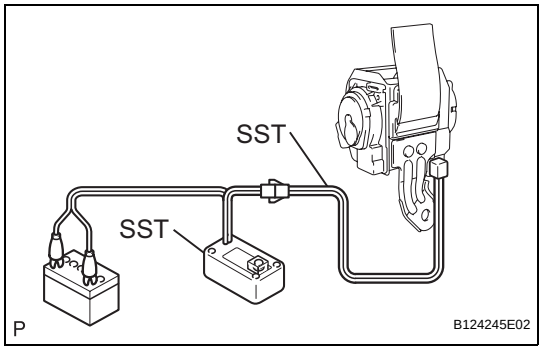

(b) Connect SST.
(1) Connect 2 SST, and then connect them to the rear seat outer belt pretensioner.
SST 09082-00700, 09082-00770
NOTICE:
To avoid damaging the SST connector and wire harness, do not lock the secondary lock of the pretensioner connector.

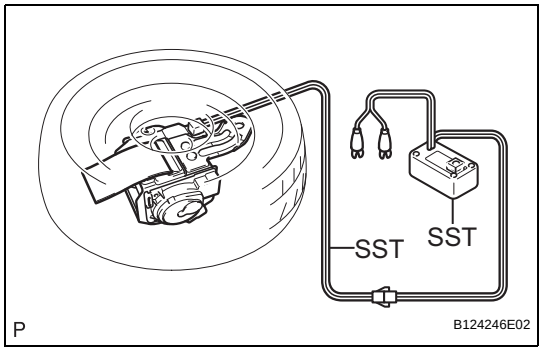

(2) Place the outer belt on the ground and cover it with a tire and wheel assembly.
NOTICE:
Position the rear seat outer belt assembly as shown in the illustration.
(3) Position and hold the SST at least 10 m (33 ft) away from the wheel.
NOTICE:
Do not damage the SST wire harness.

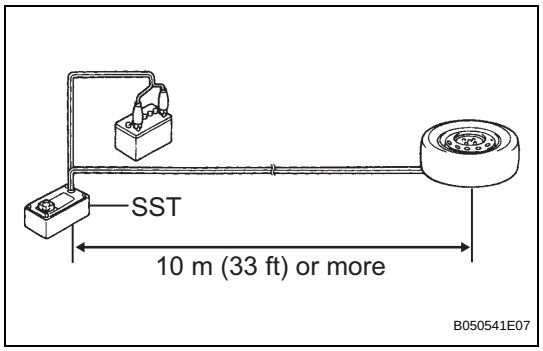

(c) Deploy the rear seat outer belt pretensioner.
(1) Check that no one is within a 10 m (33 ft) radius of the wheel.
(2) Connect the red clip of the SST to the battery positive (+) terminal and the black clip to the battery negative (-) terminal.
(3) Press the SST deployment switch and deploy the rear seat outer belt pretensioner.
HINT:
The seat belt pretensioner will deploy at the same time as the LED of the SST illuminates.

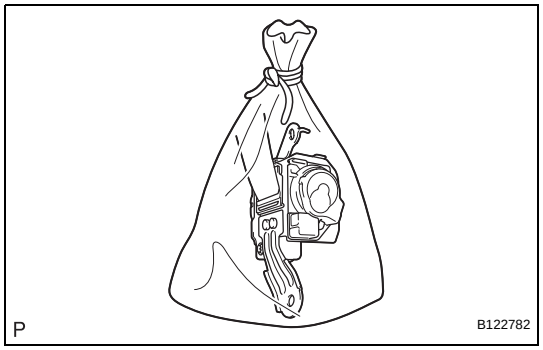

(d) Dispose of the rear seat outer belt assembly.
(1) Remove the wheel and SST.

(2) Place the outer belt in a plastic bag, tie the end tightly, and dispose of it in the same way as other general part disposal.

CAUTION:

- **The outer belt becomes very hot when the rear seat outer belt pretensioner is deployed, so leave it untouched for at least 30 minutes after it has been deployed.**
- **Use gloves and safety glasses when handling an outer belt with a pretensioner that has been deployed.**
- **Always wash your hands with water after completing the operation.**
- **Do not apply water, etc. to a rear seat outer belt assembly with a pretensioner that has been deployed.**

HINT:

When scrapping a vehicle, deploy the rear seat outer belt pretensioners, and then scrap the vehicle with the deployed outer belt installed.

SEAT BELT CONTROL ECU

COMPONENTS

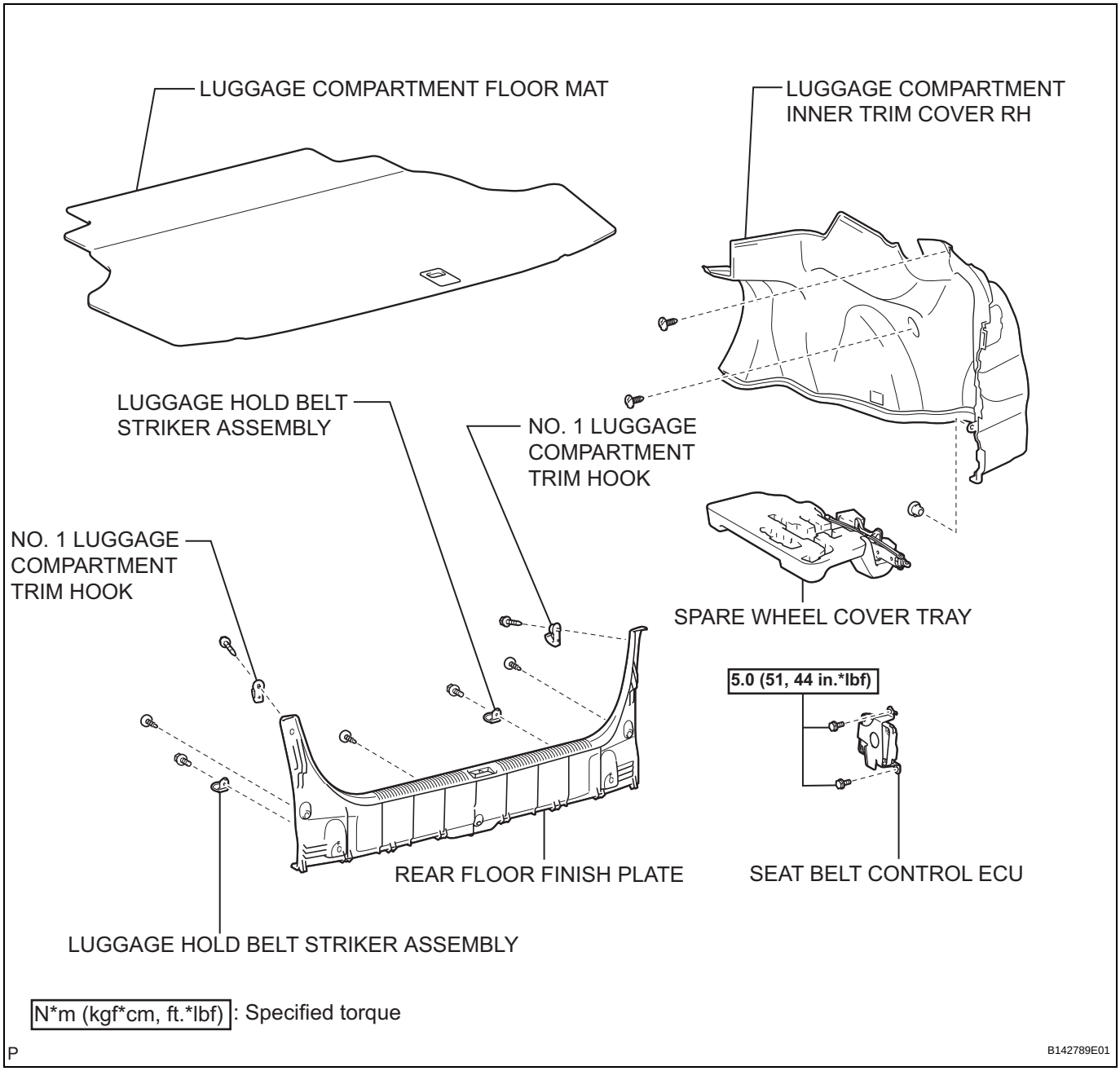

REMOVAL

1. **DISCONNECT CABLE FROM NEGATIVE BATTERY TERMINAL**
   CAUTION:
   Wait for 90 seconds after disconnecting the cable to prevent airbag deployment (See page RS-1).
2. **REMOVE LUGGAGE COMPARTMENT FLOOR MAT**
3. **REMOVE SPARE WHEEL COVER TRAY**
4. **REMOVE LUGGAGE HOLD BELT STRIKER ASSEMBLY (See page ED-82)**
5. **REMOVE NO. 1 LUGGAGE COMPARTMENT TRIM HOOK (See page ED-83)**
6. **REMOVE REAR FLOOR FINISH PLATE (See page ED-83)**
7. **REMOVE LUGGAGE COMPARTMENT INNER TRIM COVER RH (See page ED-83)**
8. **REMOVE SEAT BELT CONTROL ECU**
   (a) Disconnect the connector.
   (b) Remove the 2 bolts.
   (c) Disengage the claw and clip and remove the seat belt control ECU.

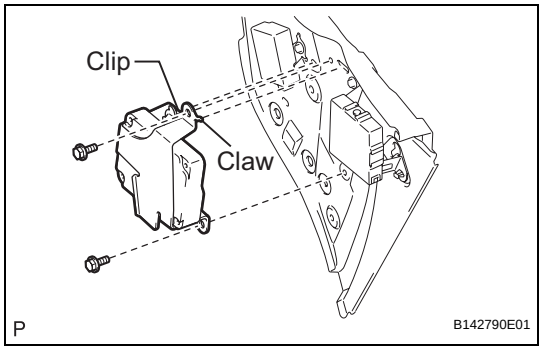

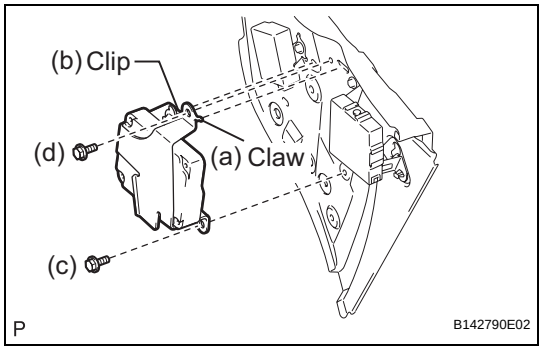

INSTALLATION

1. **INSTALL SEAT BELT CONTROL ECU**
   (a) Engage the claw.
   (b) Engage the clip.
   (c) Install the seat belt control ECU with the 2 bolts.
   Torque: 5.0 N*m (51 kgf*cm, 44 in.*lbf)
   (d) Connect the connector.
2. **INSTALL LUGGAGE COMPARTMENT INNER TRIM COVER RH (See page ED-88)**
3. **INSTALL REAR FLOOR FINISH PLATE (See page ED-88)**
4. **INSTALL NO. 1 LUGGAGE COMPARTMENT TRIM HOOK (See page ED-89)**
5. **INSTALL LUGGAGE HOLD BELT STRIKER ASSEMBLY (See page ED-89)**
6. **INSTALL SPARE WHEEL COVER TRAY**
7. **INSTALL LUGGAGE COMPARTMENT FLOOR MAT**
8. **CONNECT CABLE TO NEGATIVE BATTERY TERMINAL**

9. PERFORM INITIALIZATION

NOTICE:

Some systems need initialization after reconnecting the cable to the negative battery terminal (See page IN-33).

10. INSPECT SRS WARNING LIGHT

(See page RS-37)

TD

HOW TO PROCEED WITH TROUBLESHOOTING

HINT:
- Use this procedure to troubleshoot the theft deterrent system.
- The intelligent tester should be used in step 3.

1 VEHICLE BROUGHT TO WORKSHOP

NEXT

2 CUSTOMER PROBLEM ANALYSIS

(a) Interview the customer to confirm the trouble (See page IN-39).

NEXT

3 INSPECT COMMUNICATION FUNCTION OF CAN COMMUNICATION SYSTEM

(a) Use the intelligent tester to check for normal function of the CAN communication system.
Result

Result	Proceed To
CAN DTC is not output	A
CAN DTC is output	See page CA-49

B → **Go to CAN communication system**

A

4 SYMPTOM SIMULATION

NEXT

5 PROBLEM SYMPTOMS TABLE

(a) If the fault is not listed in the problem symptoms table, proceed to A.
(b) If the fault is listed in the problem symptoms table, proceed to B.

B → **Go to step 7**

A

6	PERFORM TROUBLESHOOTING ACCORDING TO MALFUNCTION SYMPTOM

(a) System description (See page TD-6)
(b) Terminals of ECU (See page TD-18)

7	ADJUST, REPAIR OR REPLACE

NEXT

8	CONFIRMATION TEST

NEXT

END

TD

CUSTOMIZE PARAMETERS

HINT:
The following items can be customized.

NOTICE:

- **After confirming whether the items requested by the customer are applicable or not for customization, perform customizing operations.**
- **Be sure to record the current settings before customization.**
- **When troubleshooting, make sure that the item in question is not set to "OFF" as a result of customization (Example: For the symptom, "the wireless function does not operate", first check that the wireless function is not set to "OFF", then perform troubleshooting).**

1. CUSTOMIZE

(a) Connect the intelligent tester (with CAN VIM) to the DLC3.
(b) Turn the engine switch on (IG).
(c) Enter the following menus: CUSTOMIZE / INDIVIDUAL CHANGE / SECURITY.

THEFT DETERRENT SYSTEM

DISPLAY (ITEM)	DEFAULT	CONTENTS	SETTING
PASSIVE MODE (Passive Arming Mode)	OFF	PASSIVE MODE is a function that switches theft deterrent system from arming preparation state to armed state 30 seconds after key is not in the actuation area and all doors, engine hood and luggage compartment door are closed, even if doors are not locked by wireless or door key lock operation. In PASSIVE MODE, if you do not perform following operations within 14 seconds after door is opened during armed state, theft deterrent system will judge that condition as a theft and switch to alarm sounding state – Unlock any door by key or wireless operation – Turn the engine switch on (IG) – Open luggage compartment door by wireless operation	ON/OFF
WARN BY HORN (Warning by horn)	ON	Function that makes vehicle horn and theft deterrent horn able to be used as a warning device	ON/OFF
ENTRY DELAY (Entry delay time)	14 s	Function that changes entry delay time (time before warning starts) for PASSIVE MODE	0 s/14 s/30 s

PROBLEM SYMPTOMS TABLE

HINT:

- Troubleshooting of the theft deterrent system is based on the premise that the door lock control system and the wireless door lock control system are operating normally. Accordingly, before troubleshooting the theft deterrent system, first make certain that the door lock control system and the wireless door lock control system are operating normally.
- The following is the troubleshooting procedure for the theft deterrent system of a vehicle with the smart key system.
- Inspect the fuse and relay before investigating the suspected areas shown in the table below.

Theft deterrent system:

Symptom	Suspected Area	See page
Theft deterrent system cannot be set	1. Security Indicator Light Circuit	TD-32
	2. ECU Power Source Circuit	TD-35
	3. Driver side Door Key Lock and Unlock Switch Circuit	DL-52
	4. Door Courtesy Switch Circuit	LI-94
	5. Luggage Compartment Door Courtesy Switch Circuit	DL-47
	6. Engine Hood Courtesy Switch Circuit	TD-23
	7. Replace certification ECU	-
	8. If the symptom(s) still occur after the above areas are inspected and proved to be normal, replace the main body ECU (Instrument panel J/B)	-
Security indicator does not blink when theft deterrent system is set	1. Security Indicator Light Circuit	TD-32
	2. Replace certification ECU	-
	3. If the symptom(s) still occur after the above areas are inspected and proved to be normal, replace the main body ECU (Instrument panel J/B)	-
Alarm sounding state cannot be canceled when engine switch turned on (IG)	Go to SMART ACCESS SYSTEM WITH PUSH BUTTON START	ST-28
Theft deterrent system can be set even when a door is open	1. Door Courtesy Switch Circuit	LI-94
	2. If the symptom(s) still occur after the above areas are inspected and proved to be normal, replace the main body ECU (Instrument panel J/B)	-
Vehicle horns (low pitched, high pitched) do not sound while theft deterrent system is in warning operation	1. Horn Circuit	TD-26
	2. If the symptom(s) still occur after the above areas are inspected and proved to be normal, replace the main body ECU (Instrument panel J/B)	-
Hazard warning lights do not flash while theft deterrent system is in warning operation	1. Wire harness	-
	2. Turn Signal Flasher Assembly	LI-229
	3. If the symptom(s) still occur after the above areas are inspected and proved to be normal, replace the main body ECU (Instrument panel J/B)	-
Interior light does not light up while theft deterrent system is in warning operation	1. Interior Light Circuit	LI-100
	2. If the symptom(s) still occur after the above areas are inspected and proved to be normal, replace the main body ECU (Instrument panel J/B)	-
Security horn does not sound while theft deterrent system is in warning operation	1. Security Horn Circuit	TD-28
	2. Replace certification ECU	-
	3. If the symptom(s) still occur after the above areas are inspected and proved to be normal, replace the main body ECU (Instrument panel J/B)	-

Symptom	Suspected Area	See page
Hazard warning lights flash even when theft deterrent system is not set	1. Wire harness	-
	2. Turn Singal Flasher Assembly	LI-229
	3. If the symptom(s) still occur after the above areas are inspected and proved to be normal, replace the main body ECU (Instrument panel J/B)	-
Interior light comes on even when theft deterrent system is not set	1. Interior Light Circuit	LI-100
	2. If the symptom(s) still occur after the above areas are inspected and proved to be normal, replace the main body ECU (Instrument panel J/B)	-

SYSTEM DIAGRAM

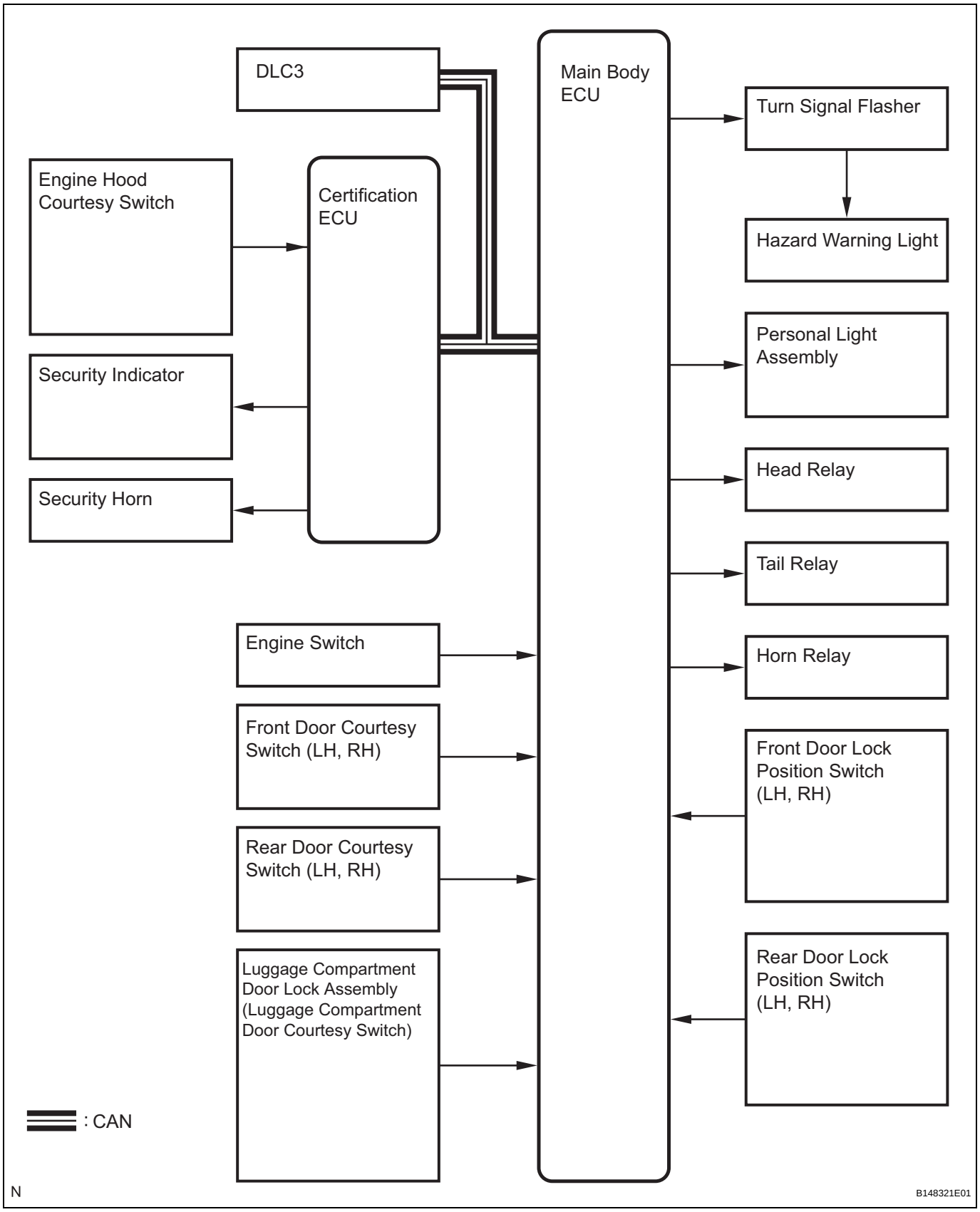

TD

TD

SYSTEM DESCRIPTION

1. OUTLINE OF THEFT DETERRENT SYSTEM

- The theft deterrent system can be set by locking the doors using the transmitter or key, or by opening and closing the doors.
- The alarm function will activate when someone attempts forcibly to lock any of the doors or open any of the doors, engine hood, and luggage door while the system is in the armed state.
- In the alarm sounding state, the system illuminates the interior light and blinks the taillights, headlights, and hazard warning lights. At the same time, the system sounds the vehicle horns and security horn to deter break-in and theft as well as to warn people around the vehicle.
- The theft deterrent system has 2 modes; one is the active arming mode (see ACTIVE ARMING MODE) and the other is passive arming mode (see PASSIVE ARMING MODE). The passive arming mode can be switched ON/OFF using the specified method.
- Each mode has 4 states; a disarmed state, an arming preparation state, an armed state and an alarm sounding state.

(a) Disarmed state:
- The alarm function is not operating.
- The theft deterrent system is not operating.

(b) Arming preparation state:
- The time until the system goes into the armed state.
- The theft deterrent system is not operating.

(c) Armed state:
- The theft deterrent system is operating.

(d) Alarm sounding state:
- Alarm function is operating.

Alarm time:
Approx. 60 sec.

Refer to the table below for alarm methods and time:

Alarm Method	Headlight	Blinking
	Taillight	Blinking
	Hazard Warning Light	Blinking
	Interior Light	Illuminating
	Vehicle Horn	Sounding (approx. 0.4 second cycles)
	Security Horn	Sounding (approx. 0.4 second cycles)
Alarm Time	Approx. 60 sec.	

HINT:
If any of the doors are unlocked when the key is not in the actuation area during the armed state, a forced door lock signal will be output (see FORCED DOOR LOCK CONTROL).

2. FUNCTION OF MAIN COMPONENT

Component	Function
Security indicator	Informs driver of theft deterrent system status.
Security horn	Sounds when attempted brake-in or theft is detected.
Headlights	Blink when attempted break-in or theft is detected.
Taillights	Blink when attempted break-in or theft is detected.
Hazard warning lights	Blink when attempted break-in or theft is detected.
Interior light	Lights up when attempted break-in or theft is detected.
Vehicle horns	Sound when attempted break-in or theft is detected.
Door courtesy light switch	Detects door status (open or closed).
Door lock position switch	Detects door status (locked or unlocked).
Engine hood courtesy switch	Detects engine hood status (open or closed).
Luggage compartment door courtesy switch	Detects luggage compartment door status (open or closed).
Certification ECU	• Receives engine hood courtesy switch status. • Sends operation signal to security indicator and security horn.

3. ACTIVE ARMING MODE

HINT:

Active arming mode starts the alarm control immediately after the doors are locked.

TD

(a) Active arming mode:
This system activates as described in the diagram below when one of items for each condition is met.

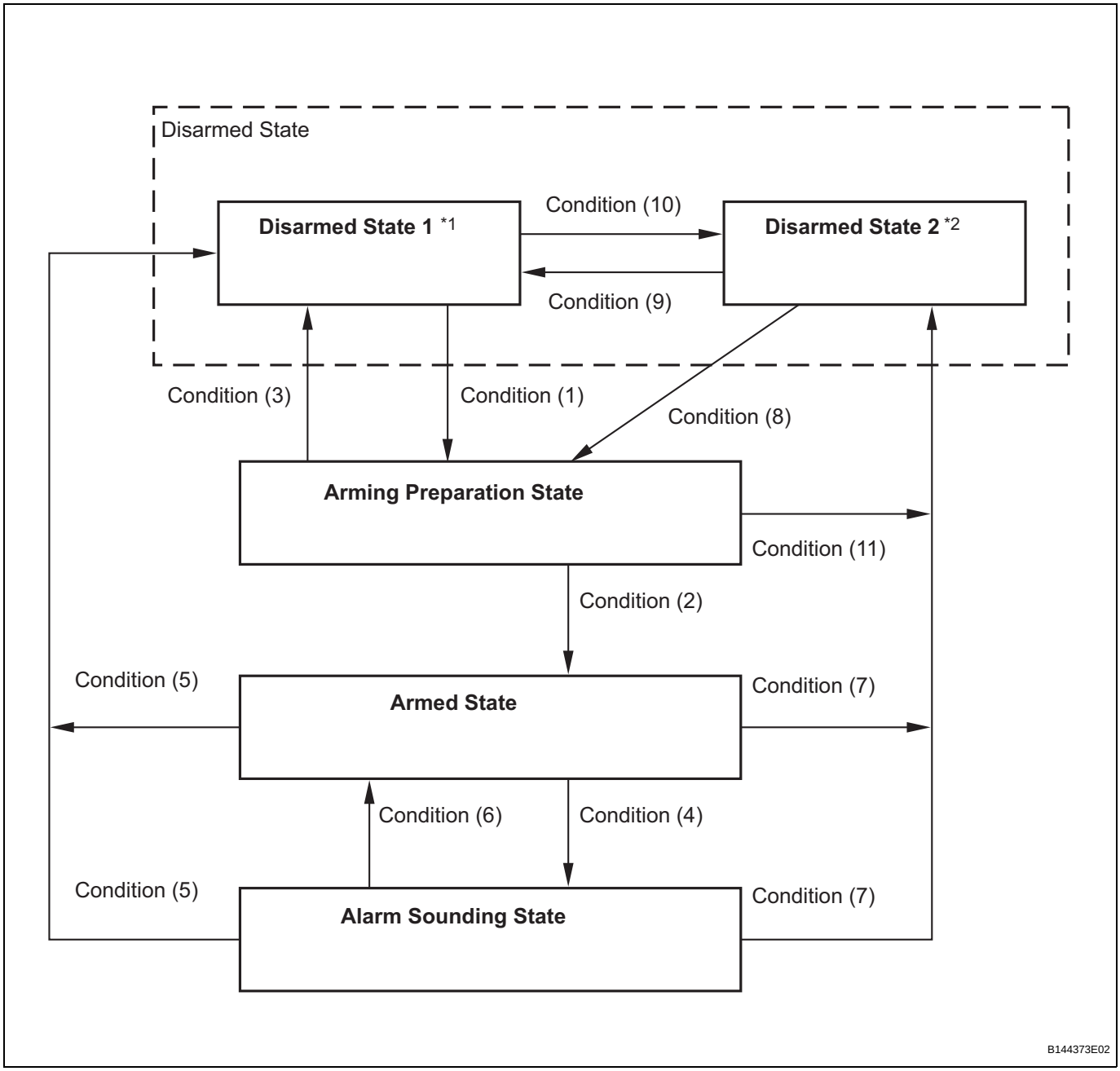

HINT:
- *1: Disarmed state 1 is the normal disarmed state.
- *2: Disarmed state 2 is set from either the disarmed state 1 or the arming preparation state.

Condition	Item
Condition (1)	In the disarmed state 1, when the key is not in the actuation area, the system state is switched if one of the following conditions is met. 1. With all doors, engine hood and luggage compartment door closed, lock all doors by key operation. 2. With all doors, engine hood and luggage compartment door closed, lock all doors by wireless operation. 3. With engine hood and luggage compartment door closed and all doors locked with any door still opened, close the open door.

Condition	Item
Condition (2)	After condition (1) is met, allow approx. 30 seconds to elapse.
Condition (3)	1. Unlock any door. 2. Open any door. 3. Turn the engine switch on (IG or ACC). 4. Reconnect battery.
Condition (4)	1. Open engine hood. 2. Open luggage compartment door. 3. Reconnect battery. 4. Open any door. 5. Unlock any door when all doors are locked, without using wireless operation. 6. Turn the engine switch off. After 5 seconds or more have elapsed, turn the engine switch on (IG).
Condition (5)	1. Unlock only driver's door or all doors by wireless operation. 2. Unlock only driver's door or all doors by key operation. 3. Turn the engine switch on (IG) and run the engine for more than 2 seconds.
Condition (6)	After approx. 60 seconds, alarm stops and system returns to armed state.
Condition (7)	Open the luggage compartment door by wireless operation.
Condition (8)	1. Close the engine hood when the luggage compartment door is closed. 2. Close the luggage compartment door when the engine hood is closed.
Condition (9)	1. Unlock any door. 2. Open any door. 3. Turn the engine switch from off to on (IG or ACC). 4. Reconnect the battery.
Condition (10)	In the disarmed state 1, when the key is not in the actuation area, the system state is switched if one of the following conditions is met. 1. With all doors closed, and the engine hood or luggage compartment door open, lock all doors by wireless operation. 2. With all doors closed, and the engine hood or luggage compartment door open, lock all doors by key operation. 3. With the engine hood or luggage compartment door open and all doors locked with any door still open, close the open door.
Condition (11)	1. Open engine hood. 2. Open luggage compartment door by switch or wireless operation.

4. PASSIVE ARMING MODE

HINT:

- This mode starts the alarm control after the key is out of the actuation area and doors are closed.
- This mode can be switched ON/OFF by the specified method.
- The alarm is initially set (when shipped from the factory) to active arming mode (not passive arming mode).
- During passive arming mode, the theft deterrent system goes into the armed state even if the doors are not locked.
- Detecting that the doors are unlocked does not set off the alarm during passive arming mode.
- A forced door lock signal is not output during passive arming mode (see FORCED DOOR LOCK CONTROL).
- Although the theft deterrent system detects that the doors are opened during passive arming mode, the alarm will not go off immediately because an entry delay time is set.
- If the condition (1) of active arming mode is met during passive arming mode, the theft deterrent system will switch to active arming mode.

TD

(a) Passive arming mode:
This system activates as described in the diagram below when one of items for each condition is met.

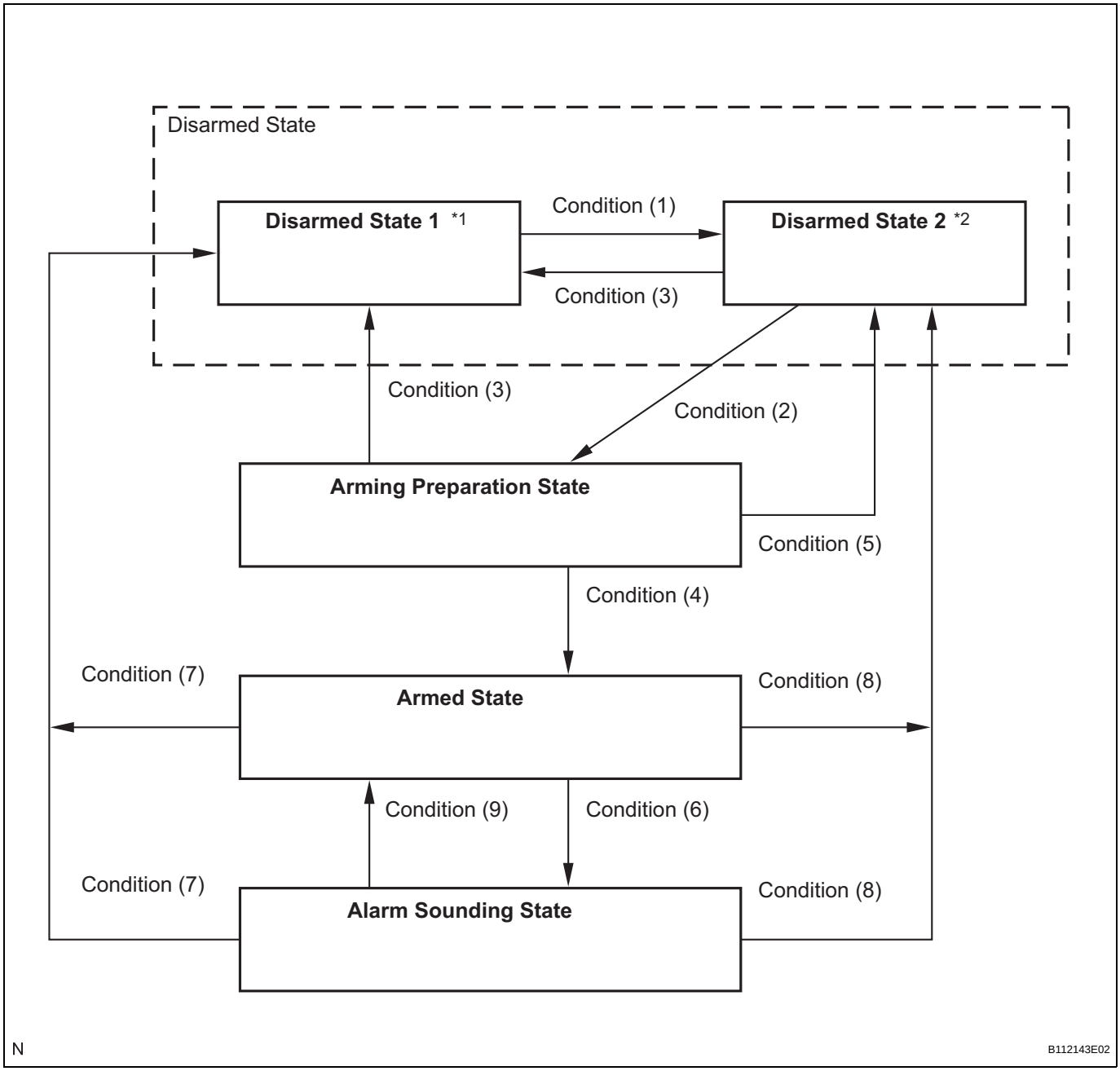

HINT:
- *1: Disarmed state 1 is the normal disarmed state.
- *2: Disarmed state 2 is set from either the disarmed state 1 or the arming preparation state.

Condition	Item
Condition (1)	1. With any door open, turn the engine switch off. 2. With the engine switch off, open any door.
Condition (2)	All doors, engine hood and luggage compartment door are closed.
Condition (3)	1. Unlock only driver's door or all doors by wireless operation. 2. Unlock only driver's door or all doors by key operation. 3. Reconnect battery. 4. Turn the engine switch on (IG or ACC).

Condition	Item
Condition (4)	After condition (1) is met, allow approx. 30 seconds to elapse.
Condition (5)	1. Open any door. 2. Open engine hood. 3. Open luggage compartment door. 4. Unlock luggage compartment door.
Condition (6)	1. Open any door and allow entry delay time*1 to elapse. 2. Open engine hood. 3. Open luggage compartment door. 4. Reconnect battery. 5. Turn the engine switch off. After 5 seconds or more have elapsed, turn the engine switch on (IG).
Condition (7)	1. Unlock only driver's door or all doors by wireless operation. 2. Unlock only driver's door or all doors by key operation. 3. Turn the engine switch on (IG) and run the engine for more than 2 seconds. 4. Turn the engine switch on (IG) within 5 seconds after turning it off or during it is on (IG).
Condition (8)	Open luggage compartment door by wireless operation.
Condition (9)	After approx. 60 sec., alarm stops and system returns to armed state.

HINT:
*1: When any door is opened while all the doors are closed during passive arming mode, the entry delay time starts. If the switch condition (armed state → disarmed state 1 or 2) is met during the entry delay time, the theft deterrent system will return to disarmed state 1 or 2. However, if the switch condition for disarmed state 1 or 2 is not met, the theft deterrent system will recognize it as a theft and set off the alarm. Entry delay time of 0, 14 or 30 sec. can be selected by the customizing function.

5. FORCED DOOR LOCK CONTROL

(a) The forced door lock control prevents the vehicle from being tampered with. Immediately after a door is unlocked (alarm starts), the door is forced to lock by a forced door lock signal.

(1) Conditions that force the doors to lock:
When the key is not in the actuation area and both of the following conditions are met.
- The theft deterrent system is in the alarm sounding state of active arming mode.
- Any door is unlocked.

6. ALARM MEMORY FUNCTION

(a) If the alarm is set off (tampering is detected) while the theft deterrent system is armed, it will be recorded by the alarm memory function. Whenever the theft deterrent system is cancelled, the alarm memory function causes the taillights to light up for 2 seconds in order to inform you that the alarm has been set off.

(1) Conditions of the alarm memory function that cause the taillights to light up:
When the theft deterrent system has entered the alarm sounding state (tampering has been detected) even once, the taillights will light up for 2 seconds if any of the following conditions is met.
- Switched to the disarmed state from the armed state during active arming mode.
- Switched to the disarmed state 1 from the armed state during passive arming mode.

HINT:
Active arming mode: See ACTIVE ARMING MODE.
Passive arming mode: See PASSIVE ARMING MODE.

7. PANIC ALARM CONTROL

(a) The panic alarm control makes it possible to voluntarily set off the panic alarm by pressing the PANIC switch on the wireless transmitter.

(1) Conditions that cause the panic alarm control to set off the panic alarm:
The panic alarm control sets off the panic alarm by pressing the PANIC switch on the wireless transmitter under the following conditions:
- The engine switch is off.
- The theft deterrent system is not in the alarm sounding state. (This condition is common both to active arming mode and to passive arming mode.)

(2) Conditions that cause the panic alarm control to shut off the alarm:
The panic alarm control shuts off the panic alarm when any of the following conditions is met during panic alarm operation:
- The engine switch is turned on (IG).
- The panic alarm switch is turned on again.
- Any of the switches on the wireless transmitter (LOCK/UNLOCK or LUGGAGE OPEN) is pressed.
- The panic alarm ends (approx. 60 sec. have passed).

- The theft deterrent system switches to the alarm sounding state. Under this condition, the theft deterrent system is controlling the alarm rather than the panic alarm control. In order to cancel this alarm, refer to the theft deterrent system alarm sounding state cancellation procedure. (This condition is common both to active arming mode to passive arming mode.)

8. SECURITY INDICATOR OUTPUT

(a) The certification ECU outputs a signal to light up the security indicator, according to the state of the theft deterrent system. However, some of the actual lighting conditions of the security indicator are different from the output signals of the certification ECU.

Output:

State of Theft Deterrent System*	Security Indicator	
	Output Signals from Certification ECU	Actual Lighting Condition
Disarmed state 1, 2	OFF	OFF (Immobiliser system unset) BLINKING (Immobiliser system set)
Arming preparation state	ON	ON
Armed state	OFF	BLINKING
Alarm sounding state	ON	ON

Blinking cycle:

Time	Security Indicator
0.2 sec.	ON
1.8 sec.	OFF

HINT:

- *: The above condition is common both to active arming mode and to passive arming mode.
- When the immobiliser system is set, the security indicator blinks during both the disarmed state and the armed state, due to the output signals from the immobiliser system.

TD

CUSTOMIZE PARAMETERS

HINT:
The following items can be customized.

NOTICE:

- **After confirming whether the items requested by the customer are applicable or not for customization, perform customizing operations.**
- **Be sure to record the current settings before customization.**
- **When troubleshooting, make sure that the item in question is not set to "OFF" as a result of customization (Example: For the symptom, "the wireless function does not operate", first check that the wireless function is not set to "OFF", then perform troubleshooting).**

1. CUSTOMIZE

(a) Connect the intelligent tester (with CAN VIM) to the DLC3.
(b) Turn the engine switch on (IG).
(c) Enter the following menus: CUSTOMIZE / INDIVIDUAL CHANGE / SECURITY.

THEFT DETERRENT SYSTEM

DISPLAY (ITEM)	DEFAULT	CONTENTS	SETTING
PASSIVE MODE (Passive Arming Mode)	OFF	PASSIVE MODE is a function that switches theft deterrent system from arming preparation state to armed state 30 seconds after key is not in the actuation area and all doors, engine hood and luggage compartment door are closed, even if doors are not locked by wireless or door key lock operation. In PASSIVE MODE, if you do not perform following operations within 14 seconds after door is opened during armed state, theft deterrent system will judge that condition as a theft and switch to alarm sounding state – Unlock any door by key or wireless operation – Turn the engine switch on (IG) – Open luggage compartment door by wireless operation	ON/OFF
WARN BY HORN (Warning by horn)	ON	Function that makes vehicle horn and theft deterrent horn able to be used as a warning device	ON/OFF
ENTRY DELAY (Entry delay time)	14 s	Function that changes entry delay time (time before warning starts) for PASSIVE MODE	0 s/14 s/30 s

PROBLEM SYMPTOMS TABLE

HINT:

- Troubleshooting of the theft deterrent system is based on the premise that the door lock control system and the wireless door lock control system are operating normally. Accordingly, before troubleshooting the theft deterrent system, first make certain that the door lock control system and the wireless door lock control system are operating normally.
- The following is the troubleshooting procedure for the theft deterrent system of a vehicle with the smart key system.
- Inspect the fuse and relay before investigating the suspected areas shown in the table below.

Theft deterrent system:

Symptom	Suspected Area	See page
Theft deterrent system cannot be set	1. Security Indicator Light Circuit	TD-32
	2. ECU Power Source Circuit	TD-35
	3. Driver side Door Key Lock and Unlock Switch Circuit	DL-52
	4. Door Courtesy Switch Circuit	LI-94
	5. Luggage Compartment Door Courtesy Switch Circuit	DL-47
	6. Engine Hood Courtesy Switch Circuit	TD-23
	7. Replace certification ECU	-
	8. If the symptom(s) still occur after the above areas are inspected and proved to be normal, replace the main body ECU (Instrument panel J/B)	-
Security indicator does not blink when theft deterrent system is set	1. Security Indicator Light Circuit	TD-32
	2. Replace certification ECU	-
	3. If the symptom(s) still occur after the above areas are inspected and proved to be normal, replace the main body ECU (Instrument panel J/B)	-
Alarm sounding state cannot be canceled when engine switch turned on (IG)	Go to SMART ACCESS SYSTEM WITH PUSH BUTTON START	ST-28
Theft deterrent system can be set even when a door is open	1. Door Courtesy Switch Circuit	LI-94
	2. If the symptom(s) still occur after the above areas are inspected and proved to be normal, replace the main body ECU (Instrument panel J/B)	-
Vehicle horns (low pitched, high pitched) do not sound while theft deterrent system is in warning operation	1. Horn Circuit	TD-26
	2. If the symptom(s) still occur after the above areas are inspected and proved to be normal, replace the main body ECU (Instrument panel J/B)	-
Hazard warning lights do not flash while theft deterrent system is in warning operation	1. Wire harness	-
	2. Turn Signal Flasher Assembly	LI-229
	3. If the symptom(s) still occur after the above areas are inspected and proved to be normal, replace the main body ECU (Instrument panel J/B)	-
Interior light does not light up while theft deterrent system is in warning operation	1. Interior Light Circuit	LI-100
	2. If the symptom(s) still occur after the above areas are inspected and proved to be normal, replace the main body ECU (Instrument panel J/B)	-
Security horn does not sound while theft deterrent system is in warning operation	1. Security Horn Circuit	TD-28
	2. Replace certification ECU	-
	3. If the symptom(s) still occur after the above areas are inspected and proved to be normal, replace the main body ECU (Instrument panel J/B)	-

Symptom	Suspected Area	See page
Hazard warning lights flash even when theft deterrent system is not set	1. Wire harness	-
	2. Turn Singal Flasher Assembly	LI-229
	3. If the symptom(s) still occur after the above areas are inspected and proved to be normal, replace the main body ECU (Instrument panel J/B)	-
Interior light comes on even when theft deterrent system is not set	1. Interior Light Circuit	LI-100
	2. If the symptom(s) still occur after the above areas are inspected and proved to be normal, replace the main body ECU (Instrument panel J/B)	-

TERMINALS OF ECU

1. CHECK MAIN BODY ECU (INSTRUMENT PANEL J/B)

(a) Disconnect the main body ECU (instrument panel J/B) connectors.

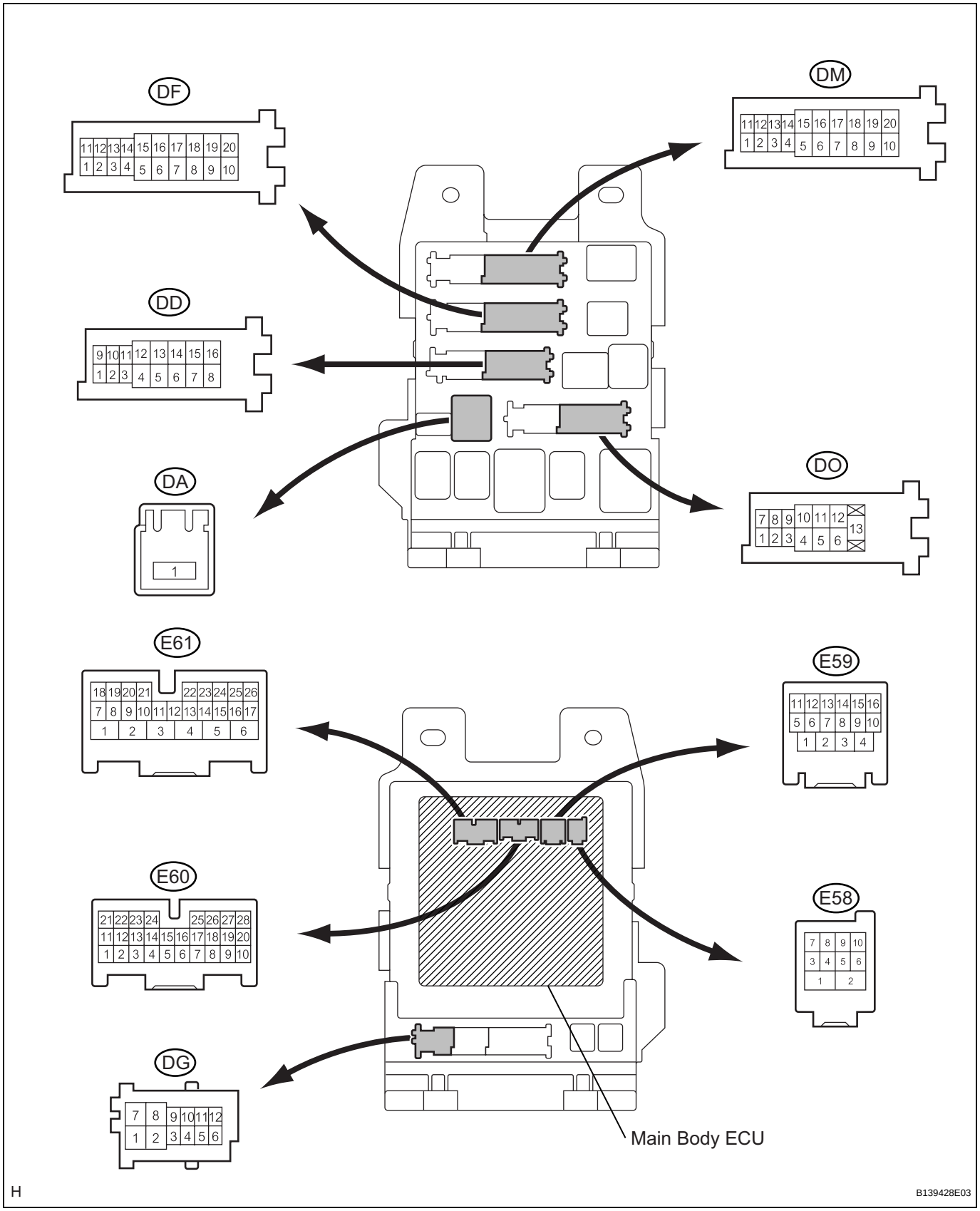

(b) Measure the resistance and voltage between each terminal of the wire harness side connectors and body ground.

Symbols (Terminal No.)	Wiring Color	Terminal Description	Condition	Specified Condition
GND3 (E59-1) - Body ground	W-B - Body ground	Ground	Always	Below 1 Ω
RCTY (E60-7) - Body ground	GR - Body ground	Rear courtesy light switch RH input	Rear door RH CLOSED (OFF) → OPEN (ON)	10 kΩ or higher → Below 1 Ω
PCTY (E60-21) - Body ground	G - Body ground	Passenger side courtesy light switch input	Passenger side door CLOSED (OFF) → OPEN (ON)	10 kΩ or higher → Below 1 Ω
LGCY (E60-25) - Body ground	W - Body ground	Luggage compartment door courtesy light switch input	Luggage compartment door CLOSED (OFF) → OPEN (ON)	10 kΩ or higher → Below 1 Ω
DCTY (E61-24) - Body ground	GR - Body ground	Driver side door courtesy light switch input	Driver side door CLOSED (OFF) → OPEN (ON)	10 kΩ or higher → Below 1 Ω
ACC (DA-1) - Body ground	W - Body ground	Ignition power supply (ACC signal)	Engine switch on (ACC) → off	10 to 14 V → Below 1 V
IG (DA-1) - Body ground	W - Body ground	Ignition power supply (IG signal)	Engine switch on (IG) → off	10 to 14 V → Below 1 V
BATB (DA-1) - Body ground	W - Body ground	+B (power battery system) power supply	Always	10 to 14 V
ALTB (DD-16) - Body ground	W - Body ground	+B (power system alternator system) power supply	Always	10 to 14 V
GND1 (DF-10) - Body ground	W-B - Body ground	Ground	Always	Below 1 Ω
LCTY (DO-7) - Body ground	B - Body ground	Rear courtesy light switch LH input	Rear door LH CLOSED (OFF) → OPEN (ON)	10 kΩ or higher → Below 1 Ω

If the result is not as specified, there may be a malfunction on the wire harness side.

(c) Reconnect the main body ECU (instrument panel J/B) connectors.

(d) Measure the voltage between each terminal of the wire harness side connectors and body ground.

Symbols (Terminal No.)	Wiring Color	Terminal Description	Condition	Specified Condition
HAZ (E59-4) - Body ground	W - Body ground	Turn signal flasher relay signal	System is in alarm sounding state	Below 1 V
HORN (DD-11) - Body ground	B - Body ground	Vehicle horn drive	Vehicle horn is sounding (Theft deterrent system is in alarm sounding state)	Pulse generation (0 V ← → 12 V)

If the result is not as specified, the ECU may have a malfunction.

2. CHECK CERTIFICATION ECU ASSEMBLY

(a) Disconnect the E13 and E14 ECU connectors.

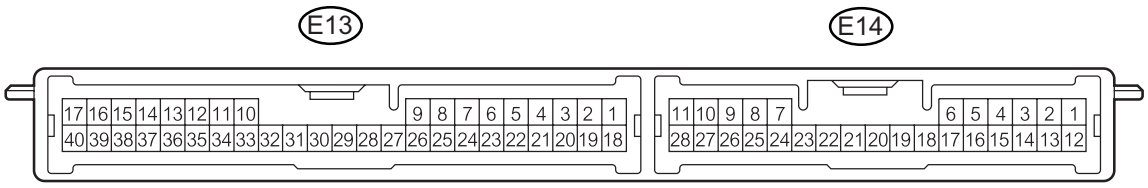

H

E125964E07

(b) Measure the voltage and resistance of the wire harness side connector.

Symbols (Terminal No.)	Wiring Color	Terminal Description	Condition	Specified Condition
+B1 (E13-1) - E (E13-17)	W - W-B	Battery power supply	Always	10 to 14 V
E (E13-17) - Body ground	W-B - Body ground	Ground	Always	Below 1 Ω
HSW (E14-24) - Body ground	R - Body ground	Engine hood courtesy switch	Engine hood OPEN (OFF) → CLOSED (ON)	10 kΩ or higher → Below 1 Ω

If the result is not as specified, there may be a malfunction on the wire harness side.

(c) Reconnect the E13 and E14 ECU connectors.

(d) Measure the voltage of the connector.

Symbols (Terminal No.)	Wiring Color	Terminal Description	Condition	Specified Condition
IND (E13-2) - Body ground	Y - Body ground	Security indicator output	Security indicator is on (It lights up only in arming preparation state or alarm sounding state. It flashes when immobiliser is operating.)	3 to 6 V
SH (E14-20) - Body ground	P - Body ground	Security horn drive	Security horn is sounding (Theft deterrent system is in alarm sounding state)	Pulse generation (0 V ← → 12 V)

If the result is not as specified, the ECU may have a malfunction.

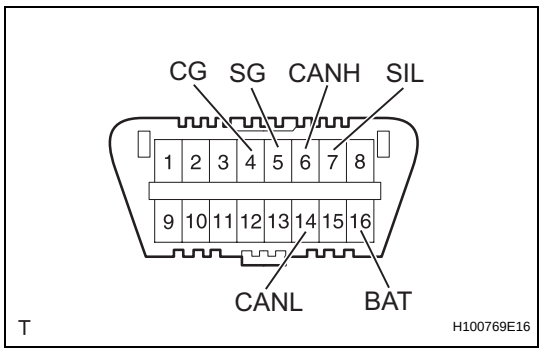

DIAGNOSIS SYSTEM

1. CHECK DLC3

(a) The main body ECU uses ISO 15765-4 for communication protocol. The terminal arrangement of the DLC3 complies with SAE J1962 and matches the ISO 15765-4 format.

Symbols (Terminal No.)	Terminal Description	Condition	Specified Condition
SIL (7) - SG (5)	Bus "+" line	During transmission	Pulse generation
CG (4) - Body ground	Chassis ground	Always	Below 1 Ω
SG (5) - Body ground	Signal ground	Always	Below 1 Ω
BAT (16) - Body ground	Battery positive	Always	11 to 14 V
CANH (6) - CANL (14)	CAN bus line	Engine switch off*	54 to 69 Ω
CANH (6) - CG (4)	HIGH-level CAN bus line	Engine switch off*	200 Ω or higher
CANL (14) - CG (4)	LOW-level CAN bus line	Engine switch off*	200 Ω or higher
CANH (6) - BAT (16)	HIGH-level CAN bus line	Engine switch off*	6 kΩ or higher
CANL (14) - BAT (16)	LOW-level CAN bus line	Engine switch off*	6 kΩ or higher

NOTICE:

***: Before measuring the resistance, leave the vehicle as is for at least 1 minute and do not operate the engine switch, any other switches or the doors.**

If the result is not as specified, the DLC3 may have a malfunction. Repair or replace the harness and connector.

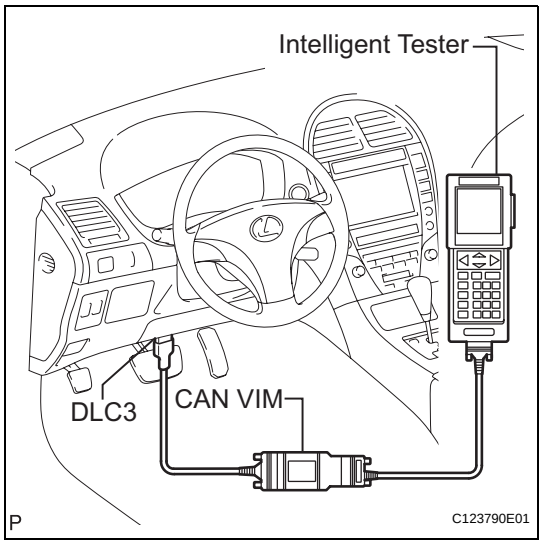

(b) Connect the cable of the intelligent tester (with CAN VIM) to the DLC3, turn the engine switch on (IG) and attempt to use the intelligent tester. If the screen displays a communication error message, a problem exists in the vehicle or in the tester.
- If communication is normal when the tool is connected to another vehicle, inspect the DLC3 on the original vehicle.
- If communication is still impossible when the tool is connected to another vehicle, the problem is probably in the tool itself. Consult the Service Department listed in the tool's instruction manual.

Engine Hood Courtesy Switch Circuit

DESCRIPTION

The engine hood courtesy switch is located in the hood lock. This switch turns off when the engine hood is opened and turns on when the engine hood is closed.

WIRING DIAGRAM

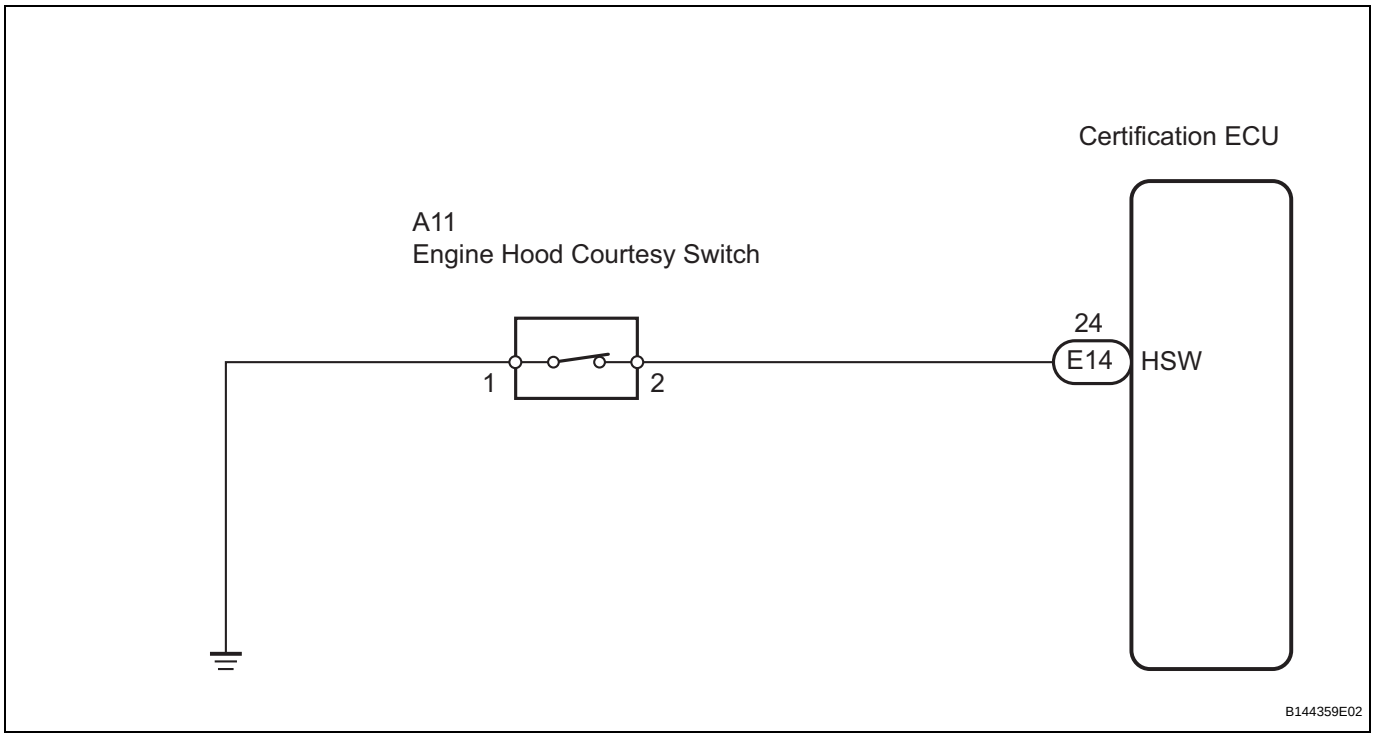

INSPECTION PROCEDURE

1	INSPECT ENGINE HOOD COURTESY SWITCH

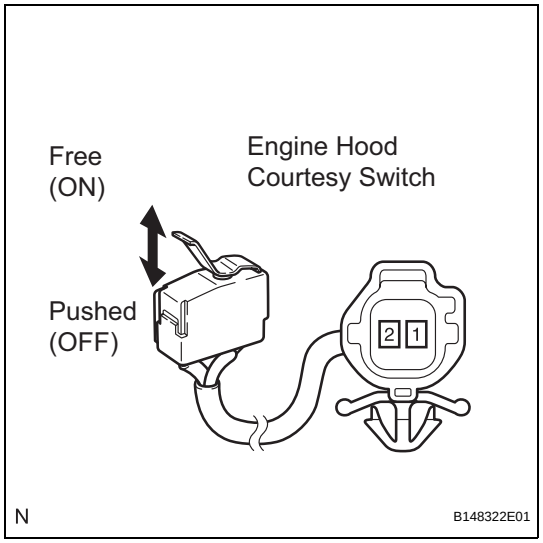

(a) Remove the courtesy switch from the hood lock.
(b) Measure the resistance according to the value(s) in the table below.

Standard resistance

Tester Connection	Switch Position	Specified Condition
1 - 2	Free (ON)	Below 1 Ω
	Pushed (OFF)	10 kΩ or higher

NG → **REPLACE HOOD LOCK ASSEMBLY**

OK

TD

2	CHECK HARNESS AND CONNECTOR (ENGINE HOOD COURTESY SWITCH - BODY GROUND)

Wire Harness Side Connector Front View:

N B110524E04

(a) Disconnect the A11 switch connector.
(b) Measure the resistance according to the value(s) in the table below.

Standard resistance

Tester Connection	Specified Condition
A11-1 - Body ground	Below 1 Ω

NG → **REPAIR OR REPLACE HARNESS OR CONNECTOR**

OK

3	CHECK HARNESS AND CONNECTOR (CERTIFICATION ECU - ENGINE HOOD COURTESY SWITCH)

Connector Wire Harness View:

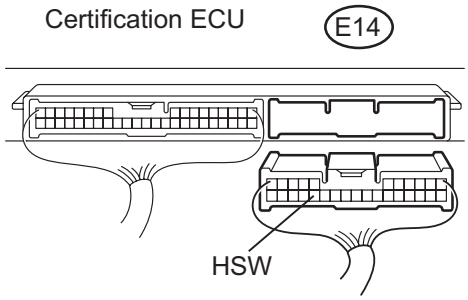

Wire Harness Side Connector Front View:

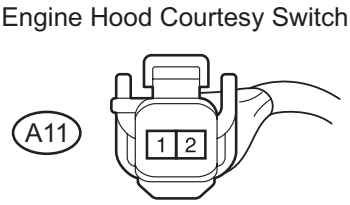

N B148323E01

(a) Disconnect the E14 ECU connector.
(b) Measure the resistance according to the value(s) in the table below.

Standard resistance

Symbol (Tester Connection)	Specified Condition
HSW (E14-24) - (A11-2)	Below 1 Ω
HSW (E14-24) - Body ground	10 kΩ or higher

NG → **REPAIR OR REPLACE HARNESS OR CONNECTOR**

OK

PROCEED TO NEXT CIRCUIT INSPECTION SHOWN IN PROBLEM SYMPTOMS TABLE

Horn Circuit

DESCRIPTION

When the theft deterrent system is switched from the armed state to the alarm sounding state, the main body ECU transmits a signal to cause the horn to sound at intervals of 0.4 seconds.

WIRING DIAGRAM

TD

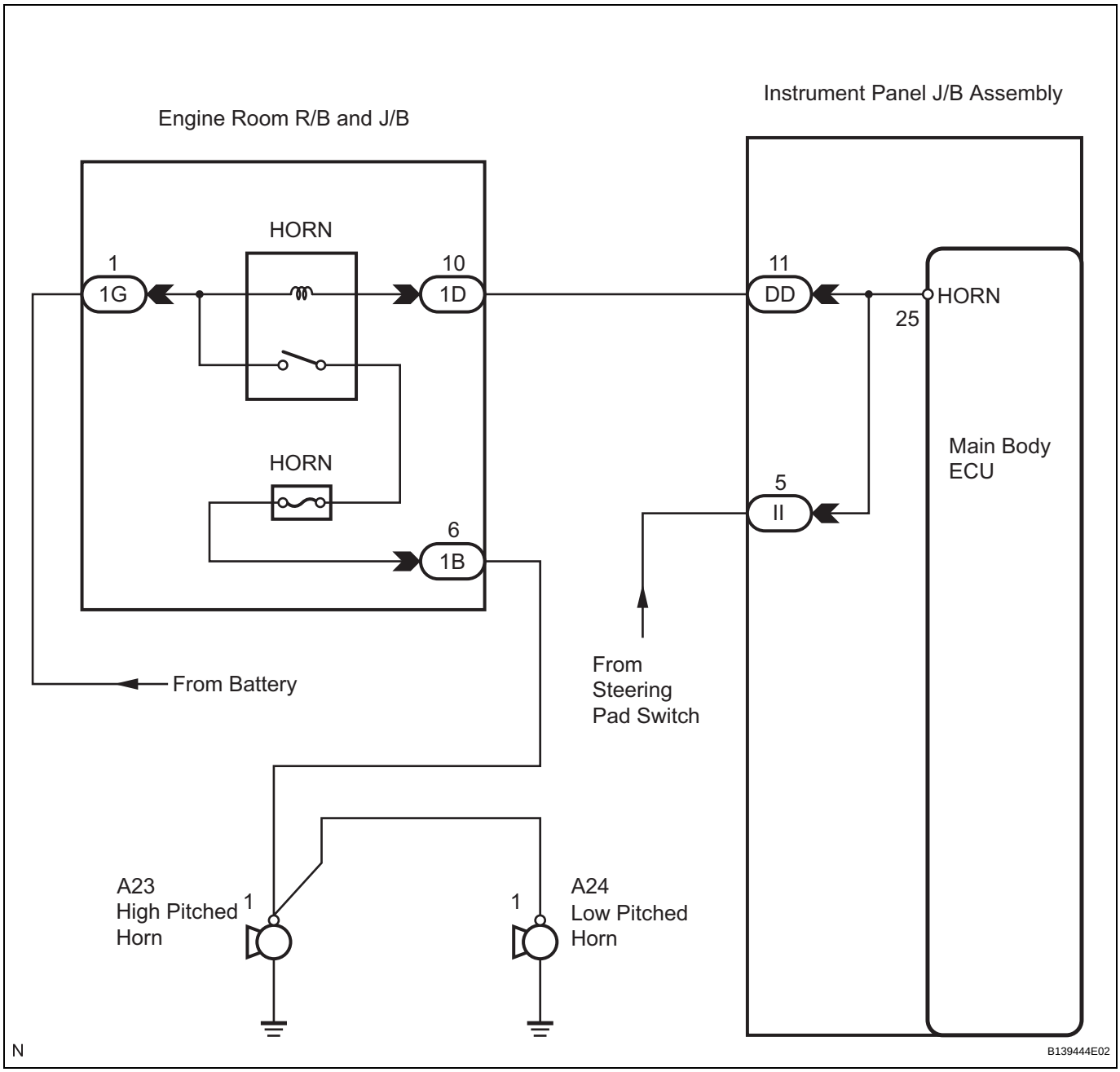

INSPECTION PROCEDURE

1	READ VALUE OF INTELLIGENT TESTER

(a) Connect the intelligent tester (with CAN VIM) to the DLC3.

(b) Turn the engine switch on (IG).
(c) Press the intelligent tester main switch on.
(d) Select the item below in the DATA LIST and then check the display on the tester.

MAIN BODY (Main body ECU):

Item	Test Details	Diagnostic Note
VEHICLE HORN	Vehicle horns ON/OFF	-

OK:
The horns sound normally when "ON" is displayed on the tester screen.

NG → **Go to step 2**

OK

PROCEED TO NEXT CIRCUIT INSPECTION SHOWN IN PROBLEM SYMPTOMS TABLE

2 INSPECT HORNS

(a) Press the horn switch and check if the horns sound.

Result

Result	Proceed to
Horns sound	A
Horns do not sound	B

B → **GO TO HORN SYSTEM (See page HO-3)**

A

PROCEED TO NEXT CIRCUIT INSPECTION SHOWN IN PROBLEM SYMPTOMS TABLE

Security Horn Circuit

DESCRIPTION

When the theft deterrent system is changed from the armed state to the alarm sounding state, the certification ECU can control the security horn.

WIRING DIAGRAM

TD

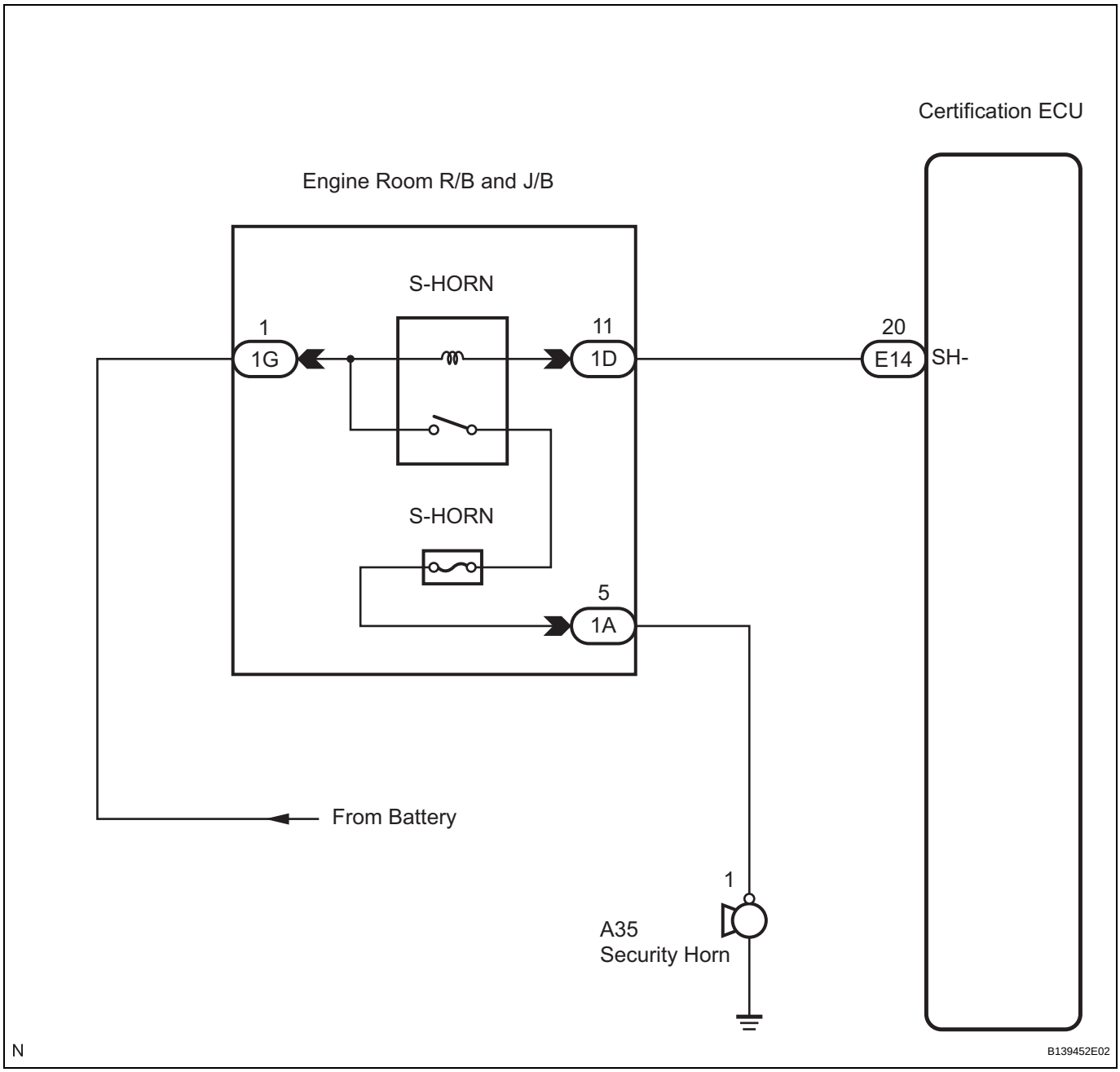

INSPECTION PROCEDURE

1	PERFORM ACTIVE TEST BY INTELLIGENT TESTER

(a) Connect the intelligent tester (with CAN VIM) to the DLC3.

(b) Turn the engine switch on (IG).
(c) Press the intelligent tester main switch on.
(d) Select the item below in the ACTIVE TEST and then check that the security horn operates.

SMART (Certification ECU):

Item	Test Details	Diagnostic Note
SECURITY HORN	Security horn ON/OFF	-

OK:
The security horn sounds or stops correctly when it is operated through the intelligent tester.

NG → **Go to step 2**

OK

PROCEED TO NEXT CIRCUIT INSPECTION SHOWN IN PROBLEM SYMPTOMS TABLE

2 INSPECT SECURITY HORN ASSEMBLY

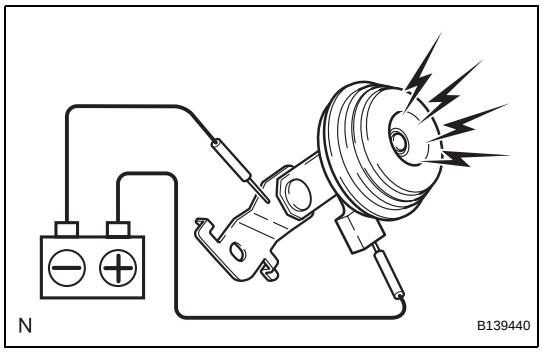

(a) Remove the security horn assembly.
(b) Check operation of the horn.
OK

Measurement Condition	Specified Condition
Battery positive (+) → Terminal 1	Horn sounds
Battery negative (-) → Horn body	

NG → **REPLACE SECURITY HORN ASSEMBLY**

OK

TD

3	CHECK HARNESS AND CONNECTOR (ENGINE ROOM J/B - SECURITY HORN ASSEMBLY)

Wire Harness Side Connector Front View:

Engine Room J/B

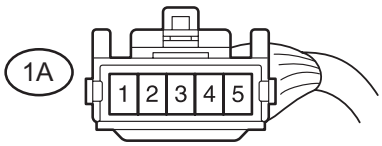

Security Horn Assembly

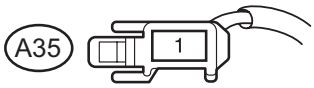

N B139441E02

(a) Disconnect the 1A J/B connector and the A35 horn connector.
(b) Measure the resistance according to the value(s) in the table below.
Standard resistance

Tester Connection	Specified Condition
1A-5 - A35-1	Below 1 Ω
1A-5 - Body ground	10 kΩ or higher

NG → **REPAIR OR REPLACE HARNESS OR CONNECTOR**

OK

4	CHECK HARNESS AND CONNECTOR (CERTIFICATION ECU - ENGINE ROOM J/B)

Connector Wire Harness View:

Certification ECU

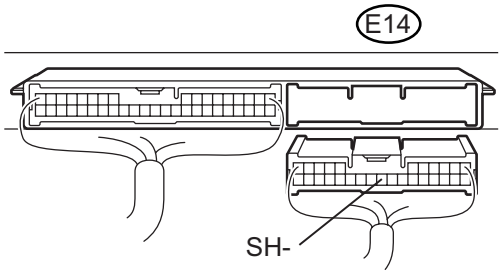

Wire Harness Side Connector Front View:

Engine Room J/B

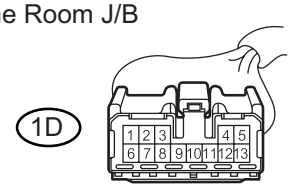

B148327E01

(a) Disconnect the E14 ECU connector and 1D J/B connector.
(b) Measure the resistance according to the value(s) in the table below.
Standard resistance

Symbol (Tester Connection)	Specified Condition
SH- (E14-20) - (1D-11)	Below 1 Ω
SH- (E14-20) - Body ground	10 kΩ or higher

NG → **REPAIR OR REPLACE HARNESS OR CONNECTOR**

OK

5	CHECK HARNESS AND CONNECTOR (ENGINE ROOM J/B - BATTERY)

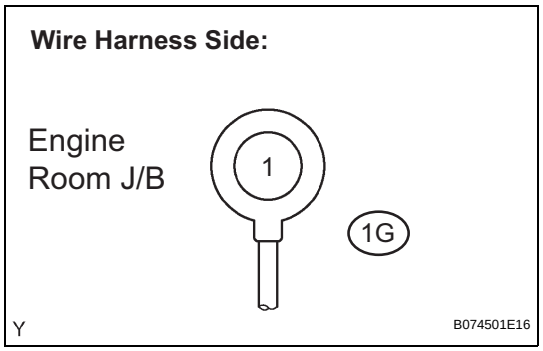

(a) Disconnect the 1G J/B connector.
(b) Measure the voltage according to the value(s) in the table below.

Standard voltage

Tester Connection	Specified Condition
1G-1 - Body ground	10 to 14 V

NG → **REPAIR OR REPLACE HARNESS OR CONNECTOR**

OK

PROCEED TO NEXT CIRCUIT INSPECTION SHOWN IN PROBLEM SYMPTOMS TABLE

TD

Security Indicator Light Circuit

DESCRIPTION

Even when the theft deterrent system is in the disarmed state, the security indicator blinks due to a signal output from the immobiliser system. The security indicator blinks continuously due to a continuous signal received from the immobiliser system while in the armed state.
The certification ECU causes the security indicator to light up or blink only during the arming preparation state and alarm sounding state.

WIRING DIAGRAM

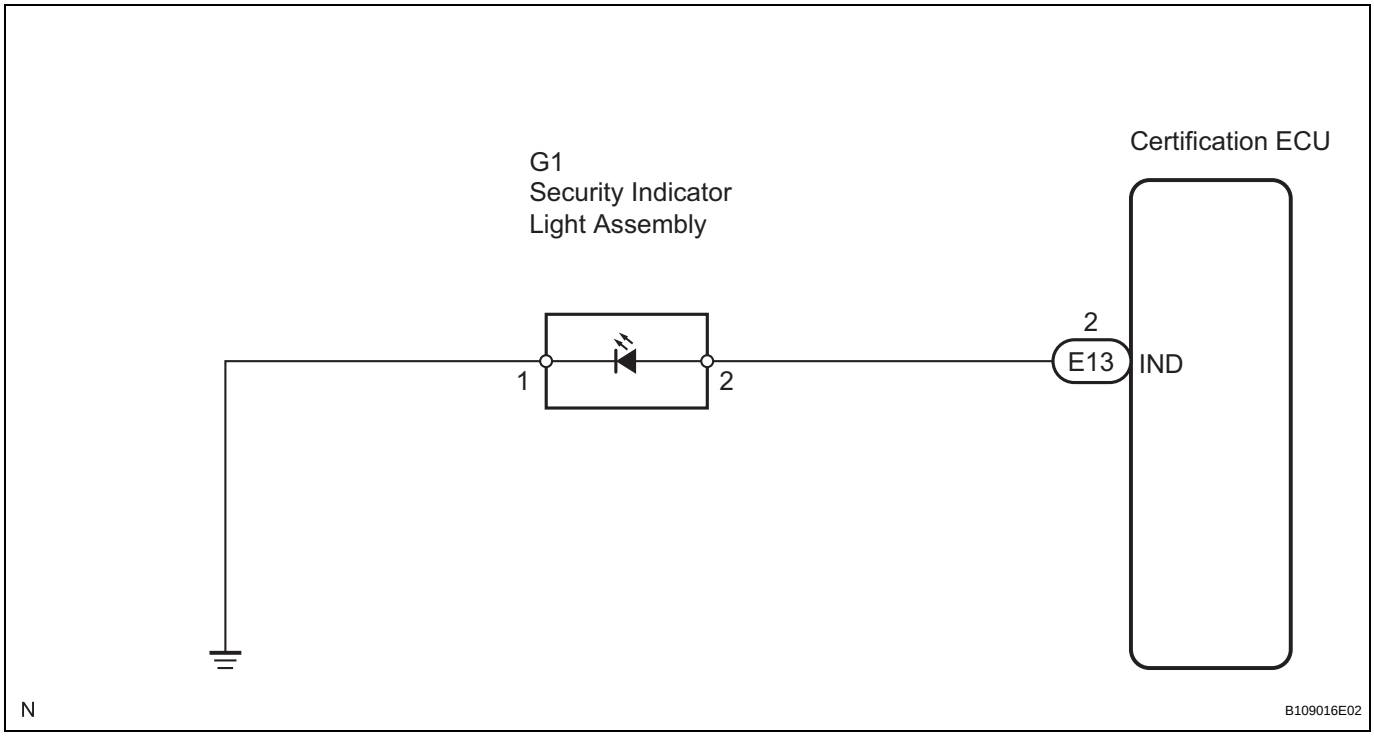

INSPECTION PROCEDURE

1	PERFORM ACTIVE TEST BY INTELLIGENT TESTER

(a) Connect the intelligent tester (with CAN VIM) to the DLC3.
(b) Turn the engine switch on (IG).
(c) Press the intelligent tester main switch on.
(d) Select the item below in the ACTIVE TEST and then check that the indicator operates.

SMART (Certification ECU):

Item	Test Details	Diagnostic Note
SECURITY INDIC	Security indicator ON/OFF	-

OK:
The security indicator light flashes or goes off correctly when operating it through the intelligent tester.

NG → **Go to step 2**

OK

PROCEED TO NEXT CIRCUIT INSPECTION SHOWN IN PROBLEM SYMPTOMS TABLE

2 CHECK SECURITY INDICATOR LIGHT ASSEMBLY

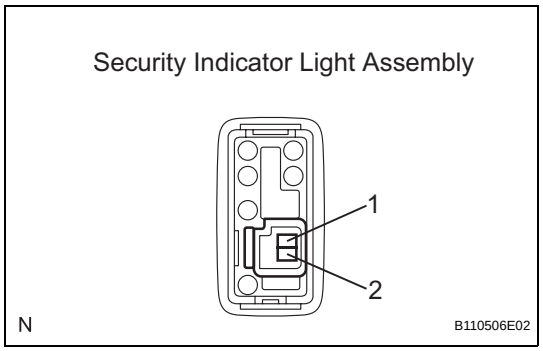

(a) Remove the security indicator light assembly.
(b) Apply battery voltage to the terminals of the security indicator and check the lighting condition.
OK

Measurement Condition	Specified Operation
Battery positive (+) - Terminal 2 Battery negative (-) - Terminal 1	Indicator light comes on.

NG → **REPLACE SECURITY INDICATOR LIGHT ASSEMBLY**

OK

3 CHECK HARNESS AND CONNECTOR (CERTIFICATION ECU - SECURITY INDICATOR LIGHT)

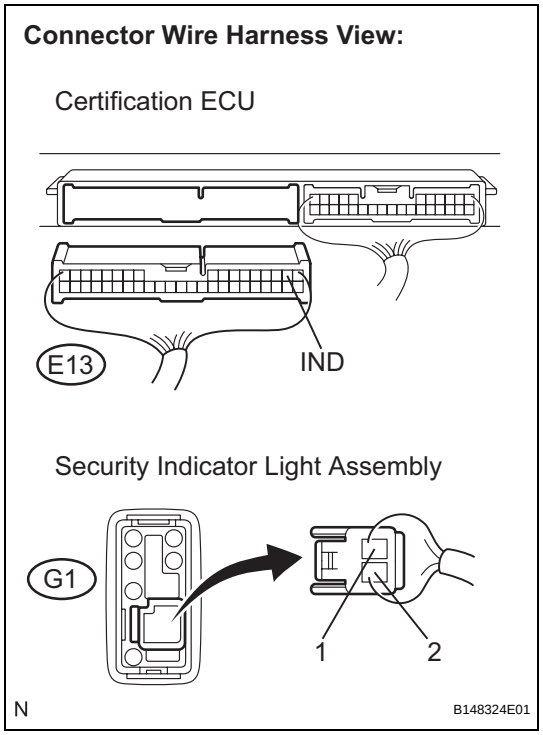

(a) Disconnect the E13 ECU connector.
(b) Measure the resistance according to the value(s) in the table below.
Standard resistance

Symbol (Tester Connection)	Specified Condition
IND (E13-2) - (G1-2)	Below 1 Ω
IND (E13-2) - Body ground	10 kΩ or higher

NG → **REPAIR OR REPLACE HARNESS OR CONNECTOR**

OK

TD

4	CHECK HARNESS AND CONNECTOR (SECURITY INDICATOR LIGHT ASSEMBLY - BODY GROUND)

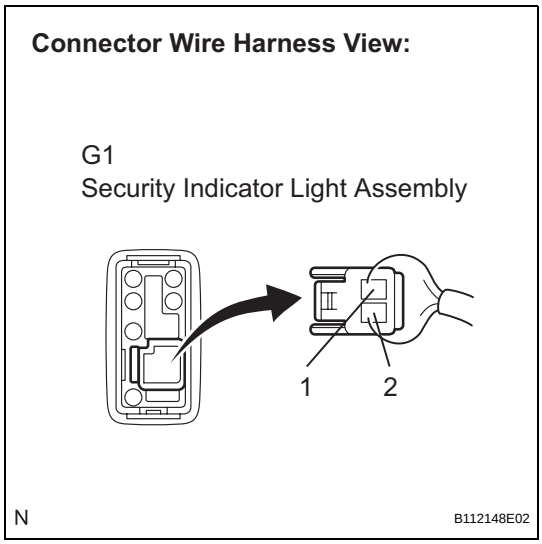

(a) Measure the resistance according to the value(s) in the table below.

Standard resistance

Tester Connection	Specified Condition
G1-1 - Body ground	Below 1 Ω

NG → **REPAIR OR REPLACE HARNESS OR CONNECTOR**

OK

PROCEED TO NEXT CIRCUIT INSPECTION SHOWN IN PROBLEM SYMPTOMS TABLE

ECU Power Source Circuit

DESCRIPTION

This circuit provides power for main body ECU operation.

WIRING DIAGRAM

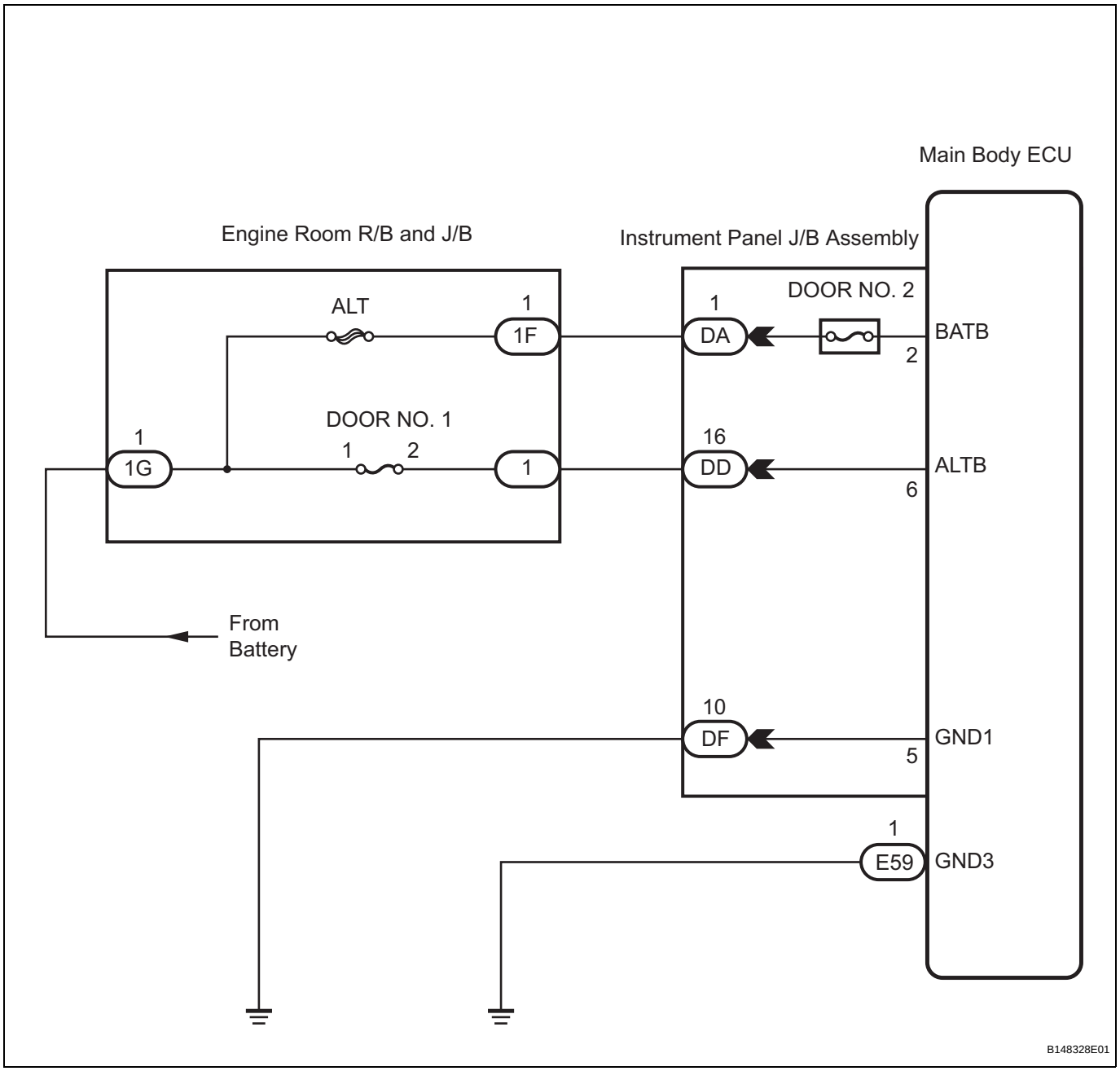

TD

INSPECTION PROCEDURE

1	CHECK INSTRUMENT PANEL JUNCTION BLOCK ASSEMBLY (MAIN BODY ECU) (POWER SOURCE)

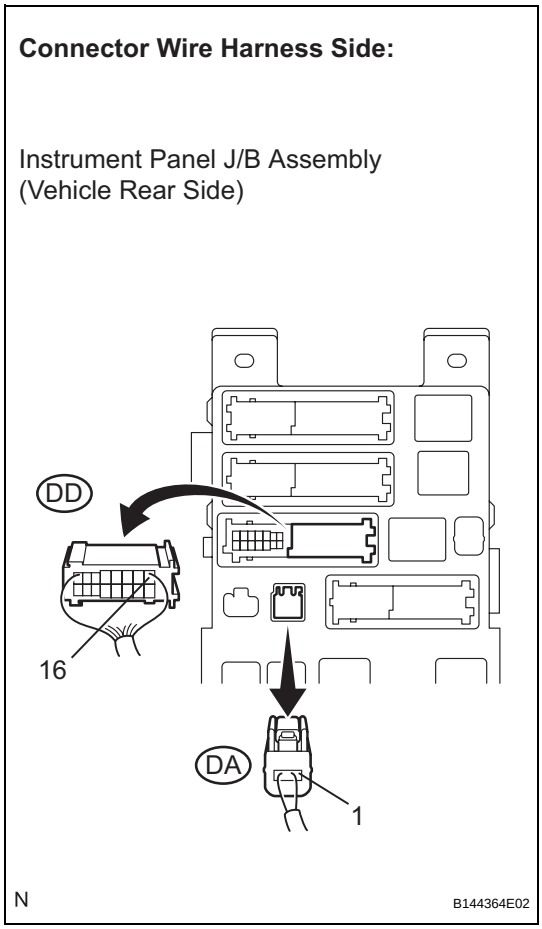

(a) Disconnect the DD and DA J/B connectors.
(b) Measure the voltage according to the value(s) in the table below.

Standard voltage

Tester Connection	Specified Condition
DD-16 - Body ground	10 to 14 V
DA-1 - Body ground	10 to 14 V

NG → **REPAIR OR REPLACE HARNESS OR CONNECTOR**

OK

2	CHECK HARNESS AND CONNECTOR (INSTRUMENT PANEL J/B, MAIN BODY ECU - BODY GROUND)

Connector Wire Harness View:

Instrument Panel J/B Assembly
(Vehicle Rear Side)

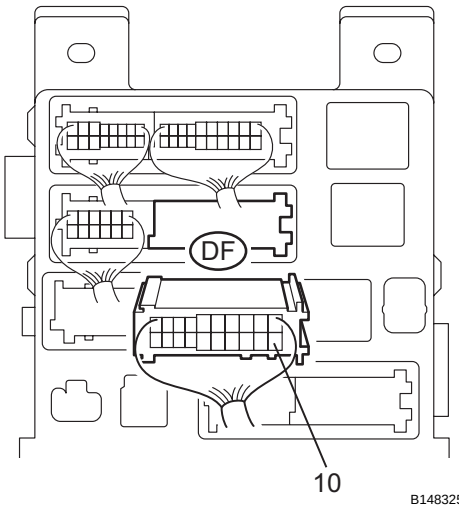

N B148325E01

(a) Disconnect the DF J/B connector.
(b) Measure the resistance according to the value(s) in the table below.

Standard resistance

Tester Connection	Specified Condition
DF-10 - Body ground	Below 1 Ω

TD

Connector Wire Harness View:

Main Body ECU

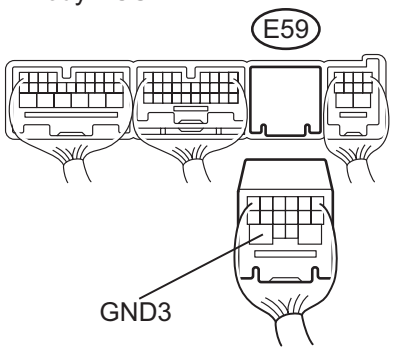

N B148326E01

(c) Disconnect the E59 main body ECU connector.
(d) Measure the resistance according to the value(s) in the table below.

Standard resistance

Symbol (Tester Connection)	Specified Condition
GND3 (E59-1) - Body ground	Below 1 Ω

NG → **REPAIR OR REPLACE HARNESS OR CONNECTOR**

OK

REPLACE PROCEED TO NEXT CIRCUIT INSPECTION SHOWN IN PROBLEM SYMPTOMS TABLE

TERMINALS OF ECU

1. CHECK MAIN BODY ECU (INSTRUMENT PANEL J/B)

(a) Disconnect the main body ECU (instrument panel J/B) connectors.

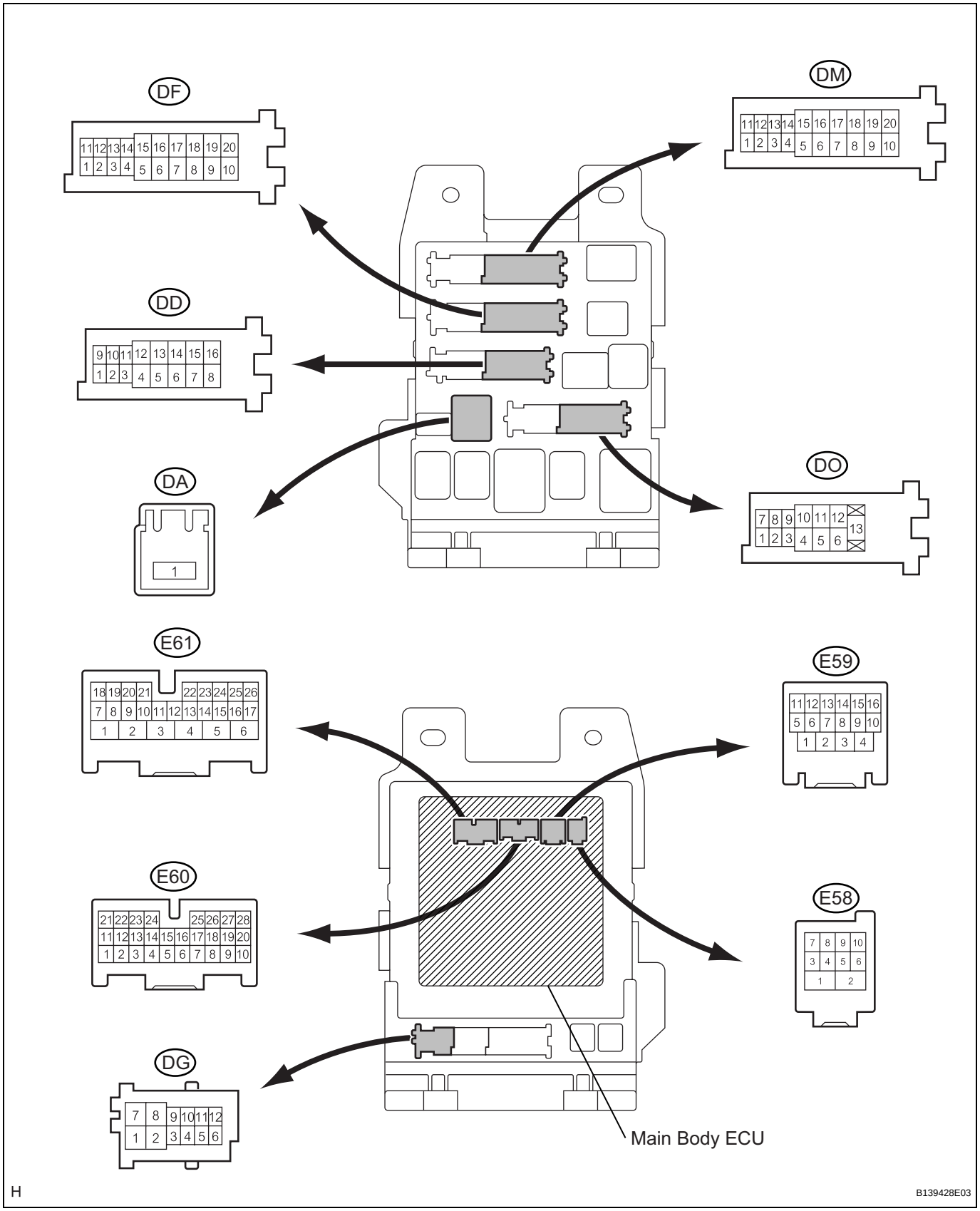

(b) Measure the resistance and voltage between each terminal of the wire harness side connectors and body ground.

Symbols (Terminal No.)	Wiring Color	Terminal Description	Condition	Specified Condition
GND3 (E59-1) - Body ground	W-B - Body ground	Ground	Always	Below 1 Ω
RCTY (E60-7) - Body ground	GR - Body ground	Rear courtesy light switch RH input	Rear door RH CLOSED (OFF) → OPEN (ON)	10 kΩ or higher → Below 1 Ω
PCTY (E60-21) - Body ground	G - Body ground	Passenger side courtesy light switch input	Passenger side door CLOSED (OFF) → OPEN (ON)	10 kΩ or higher → Below 1 Ω
LGCY (E60-25) - Body ground	W - Body ground	Luggage compartment door courtesy light switch input	Luggage compartment door CLOSED (OFF) → OPEN (ON)	10 kΩ or higher → Below 1 Ω
DCTY (E61-24) - Body ground	GR - Body ground	Driver side door courtesy light switch input	Driver side door CLOSED (OFF) → OPEN (ON)	10 kΩ or higher → Below 1 Ω
ACC (DA-1) - Body ground	W - Body ground	Ignition power supply (ACC signal)	Engine switch on (ACC) → off	10 to 14 V → Below 1 V
IG (DA-1) - Body ground	W - Body ground	Ignition power supply (IG signal)	Engine switch on (IG) → off	10 to 14 V → Below 1 V
BATB (DA-1) - Body ground	W - Body ground	+B (power battery system) power supply	Always	10 to 14 V
ALTB (DD-16) - Body ground	W - Body ground	+B (power system alternator system) power supply	Always	10 to 14 V
GND1 (DF-10) - Body ground	W-B - Body ground	Ground	Always	Below 1 Ω
LCTY (DO-7) - Body ground	B - Body ground	Rear courtesy light switch LH input	Rear door LH CLOSED (OFF) → OPEN (ON)	10 kΩ or higher → Below 1 Ω

If the result is not as specified, there may be a malfunction on the wire harness side.

(c) Reconnect the main body ECU (instrument panel J/B) connectors.

(d) Measure the voltage between each terminal of the wire harness side connectors and body ground.

Symbols (Terminal No.)	Wiring Color	Terminal Description	Condition	Specified Condition
HAZ (E59-4) - Body ground	W - Body ground	Turn signal flasher relay signal	System is in alarm sounding state	Below 1 V
HORN (DD-11) - Body ground	B - Body ground	Vehicle horn drive	Vehicle horn is sounding (Theft deterrent system is in alarm sounding state)	Pulse generation (0 V ← → 12 V)

If the result is not as specified, the ECU may have a malfunction.

2. CHECK CERTIFICATION ECU ASSEMBLY

(a) Disconnect the E13 and E14 ECU connectors.

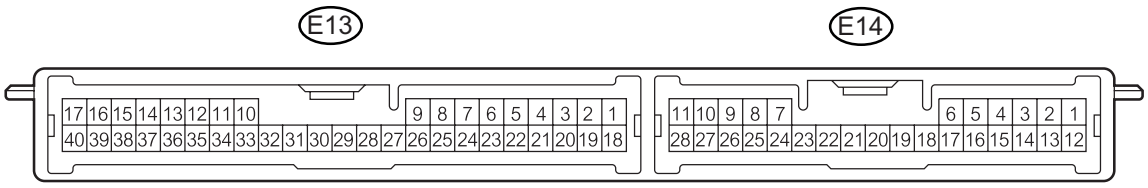

H

E125964E07

(b) Measure the voltage and resistance of the wire harness side connector.

Symbols (Terminal No.)	Wiring Color	Terminal Description	Condition	Specified Condition
+B1 (E13-1) - E (E13-17)	W - W-B	Battery power supply	Always	10 to 14 V
E (E13-17) - Body ground	W-B - Body ground	Ground	Always	Below 1 Ω
HSW (E14-24) - Body ground	R - Body ground	Engine hood courtesy switch	Engine hood OPEN (OFF) → CLOSED (ON)	10 kΩ or higher → Below 1 Ω

If the result is not as specified, there may be a malfunction on the wire harness side.

(c) Reconnect the E13 and E14 ECU connectors.

(d) Measure the voltage of the connector.

Symbols (Terminal No.)	Wiring Color	Terminal Description	Condition	Specified Condition
IND (E13-2) - Body ground	Y - Body ground	Security indicator output	Security indicator is on (It lights up only in arming preparation state or alarm sounding state. It flashes when immobiliser is operating.)	3 to 6 V
SH (E14-20) - Body ground	P - Body ground	Security horn drive	Security horn is sounding (Theft deterrent system is in alarm sounding state)	Pulse generation (0 V ← → 12 V)

If the result is not as specified, the ECU may have a malfunction.

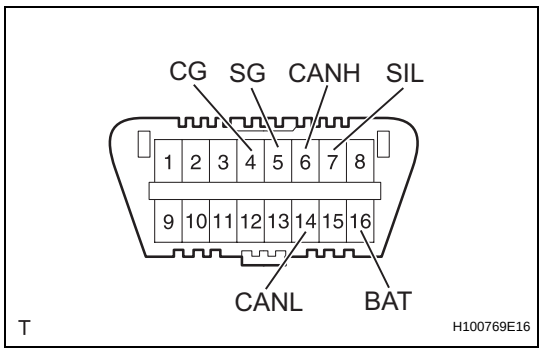

DIAGNOSIS SYSTEM

1. CHECK DLC3

(a) The main body ECU uses ISO 15765-4 for communication protocol. The terminal arrangement of the DLC3 complies with SAE J1962 and matches the ISO 15765-4 format.

Symbols (Terminal No.)	Terminal Description	Condition	Specified Condition
SIL (7) - SG (5)	Bus "+" line	During transmission	Pulse generation
CG (4) - Body ground	Chassis ground	Always	Below 1 Ω
SG (5) - Body ground	Signal ground	Always	Below 1 Ω
BAT (16) - Body ground	Battery positive	Always	11 to 14 V
CANH (6) - CANL (14)	CAN bus line	Engine switch off*	54 to 69 Ω
CANH (6) - CG (4)	HIGH-level CAN bus line	Engine switch off*	200 Ω or higher
CANL (14) - CG (4)	LOW-level CAN bus line	Engine switch off*	200 Ω or higher
CANH (6) - BAT (16)	HIGH-level CAN bus line	Engine switch off*	6 kΩ or higher
CANL (14) - BAT (16)	LOW-level CAN bus line	Engine switch off*	6 kΩ or higher

NOTICE:

***: Before measuring the resistance, leave the vehicle as is for at least 1 minute and do not operate the engine switch, any other switches or the doors.**

If the result is not as specified, the DLC3 may have a malfunction. Repair or replace the harness and connector.

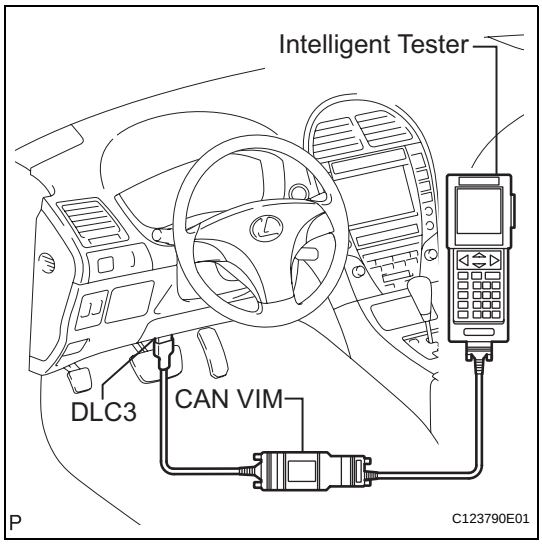

(b) Connect the cable of the intelligent tester (with CAN VIM) to the DLC3, turn the engine switch on (IG) and attempt to use the intelligent tester. If the screen displays a communication error message, a problem exists in the vehicle or in the tester.
- If communication is normal when the tool is connected to another vehicle, inspect the DLC3 on the original vehicle.
- If communication is still impossible when the tool is connected to another vehicle, the problem is probably in the tool itself. Consult the Service Department listed in the tool's instruction manual.

DATA LIST / ACTIVE TEST

1. DATA LIST

HINT:
Using the intelligent tester DATA LIST allows switch, sensor, actuator and other item values to be read without removing any parts. Reading the DATA LIST early in troubleshooting is one way to shorten labor time.

(a) Connect the intelligent tester (with CAN VIM) to the DLC3.
(b) Turn the engine switch on (IG).
(c) Enter the following menus: DIAGNOSIS / OBD/ MOBD / MAIN BODY or SMART / DATA LIST / DIAG&CUSTOMIZE.
(d) Read the DATA LIST according to the display on the tester.

MAIN BODY (Main body ECU):

Tester Display	Measurement Item/Range	Normal Condition	Diagnostic Note
ACC SW	Engine switch signal / ON or OFF	ON: Engine switch is on (ACC) OFF: Engine switch is off	-
IG SW	Engine switch signal / ON or OFF	ON: Engine switch is on (IG) OFF: Engine switch is off	-
D DOR CTY SW	D door courtesy switch / ON or OFF	ON: Driver side door is OPEN OFF: Driver side door is CLOSED	-
P DOR CTY SW	P door courtesy switch / ON or OFF	ON: Front passenger side door is OPEN OFF: Front passenger side door is CLOSED	-
RR DOR CTY SW	Rear right door courtesy switch / ON or OFF	ON: Rear right door is OPEN OFF: Rear right door is CLOSED	-
RL DOR CTY SW	Rear left door courtesy switch / ON or OFF	ON: Rear left door is OPEN OFF: Rear left door is CLOSED	-
LUGG COURTSY SW	Luggage compartment door courtesy switch / ON or OFF	ON: Luggage compartment door is OPEN OFF: Luggage compartment door is CLOSED	-
D LOCK POS SW	Driver's door lock position switch / ON or OFF	ON: Driver's door is UNLOCKED OFF: Driver's door is LOCKED	-
P LOCK POS SW	Passenger door lock position switch / ON or OFF	ON: Passenger door is UNLOCKED OFF: Passenger door is LOCKED	-
RR LOCK POS SW	Rear right door lock position switch / ON or OFF	ON: Rear right door is UNLOCKED OFF: Rear right door is LOCKED	-
RL LOCK POS SW	Rear left door lock position switch / ON or OFF	ON: Rear left door is UNLOCKED OFF: Rear left door is LOCKED	-

SMART (Certification ECU):

Tester Display	Measurement Item/Range	Normal Condition	Diagnostic Note
PASSIVE MODE	Passive mode / ON or OFF	ON: Passive mode ON OFF: Passive mode OFF	-
WARN BY HORN	Warning by horn / ON or OFF	ON: Vehicle horns sound during alarm sounding state OFF: Vehicle horns do not sound during alarm sounding state	-
ENTRY DELAY	Entry delay time during passive mode	0s: Entry delay time is 0 sec. 14s: Entry delay time is 14 sec. 30s: Entry delay time is 30 sec.	-

TD

2. ACTIVE TEST

HINT:

Performing the intelligent tester ACTIVE TEST allows relay, VSV, actuator and other items to be operated without removing any parts. Performing the ACTIVE TEST early in troubleshooting is one way to shorten the labor time. The DATA LIST can be displayed during the ACTIVE TEST.

(a) Connect the intelligent tester (with CAN VIM) to the DLC3.
(b) Turn the engine switch on (IG).
(c) Enter the following menus: DIAGNOSIS / OBD/ MOBD / MAIN BODY or SMART / ACTIVE TEST.
(d) Perform the ACTIVE TEST according to the display on the tester.

MAIN BODY (Main body ECU):

Tester Display	Test Part	Control Range	Diagnostic Note
HAZARD	Hazard warning light	ON/OFF	-
VEHICLE HORN	Vehicle horn	ON/OFF	-

SMART (Certification ECU):

Tester Display	Test Part	Control Range	Diagnostic Note
SECURITY INDIC	Security indicator	ON/OFF	-
SECURITY HORN	Security horn	ON/OFF	-

Engine Hood Courtesy Switch Circuit

DESCRIPTION

The engine hood courtesy switch is located in the hood lock. This switch turns off when the engine hood is opened and turns on when the engine hood is closed.

WIRING DIAGRAM

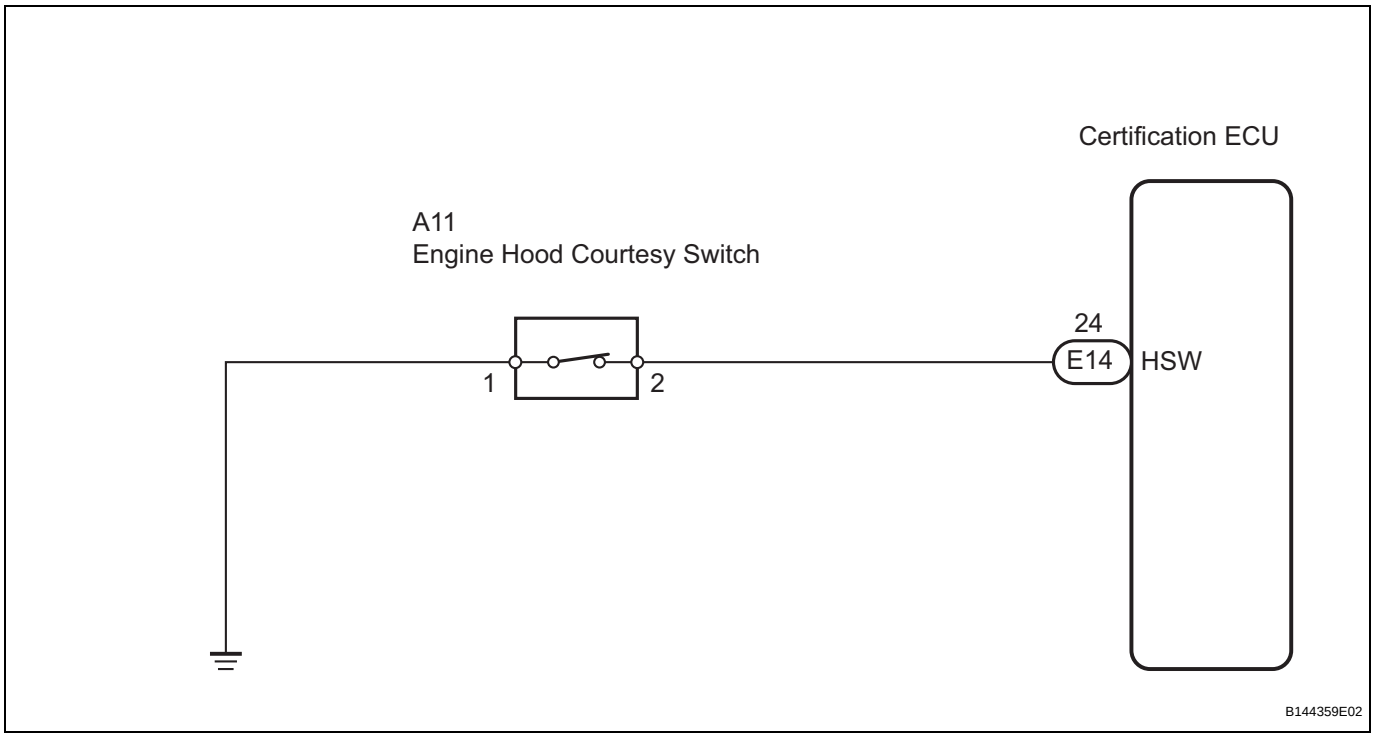

INSPECTION PROCEDURE

1	INSPECT ENGINE HOOD COURTESY SWITCH

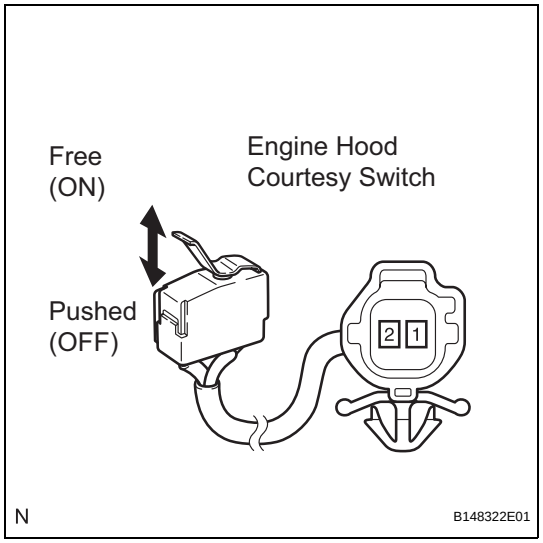

(a) Remove the courtesy switch from the hood lock.
(b) Measure the resistance according to the value(s) in the table below.

Standard resistance

Tester Connection	Switch Position	Specified Condition
1 - 2	Free (ON)	Below 1 Ω
	Pushed (OFF)	10 kΩ or higher

NG → **REPLACE HOOD LOCK ASSEMBLY**

OK

TD

2	CHECK HARNESS AND CONNECTOR (ENGINE HOOD COURTESY SWITCH - BODY GROUND)

Wire Harness Side Connector Front View:

N B110524E04

(a) Disconnect the A11 switch connector.
(b) Measure the resistance according to the value(s) in the table below.

Standard resistance

Tester Connection	Specified Condition
A11-1 - Body ground	Below 1 Ω

NG → **REPAIR OR REPLACE HARNESS OR CONNECTOR**

OK

3	CHECK HARNESS AND CONNECTOR (CERTIFICATION ECU - ENGINE HOOD COURTESY SWITCH)

Connector Wire Harness View:

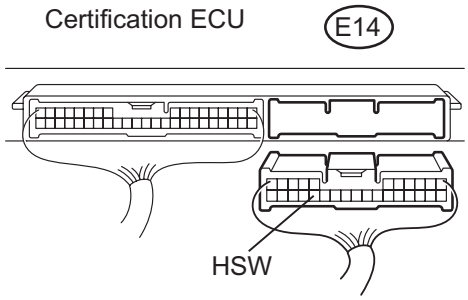

Wire Harness Side Connector Front View:

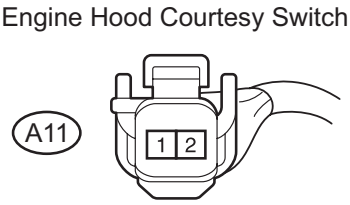

N B148323E01

(a) Disconnect the E14 ECU connector.
(b) Measure the resistance according to the value(s) in the table below.

Standard resistance

Symbol (Tester Connection)	Specified Condition
HSW (E14-24) - (A11-2)	Below 1 Ω
HSW (E14-24) - Body ground	10 kΩ or higher

NG → **REPAIR OR REPLACE HARNESS OR CONNECTOR**

OK

PROCEED TO NEXT CIRCUIT INSPECTION SHOWN IN PROBLEM SYMPTOMS TABLE

Horn Circuit

DESCRIPTION

When the theft deterrent system is switched from the armed state to the alarm sounding state, the main body ECU transmits a signal to cause the horn to sound at intervals of 0.4 seconds.

WIRING DIAGRAM

TD

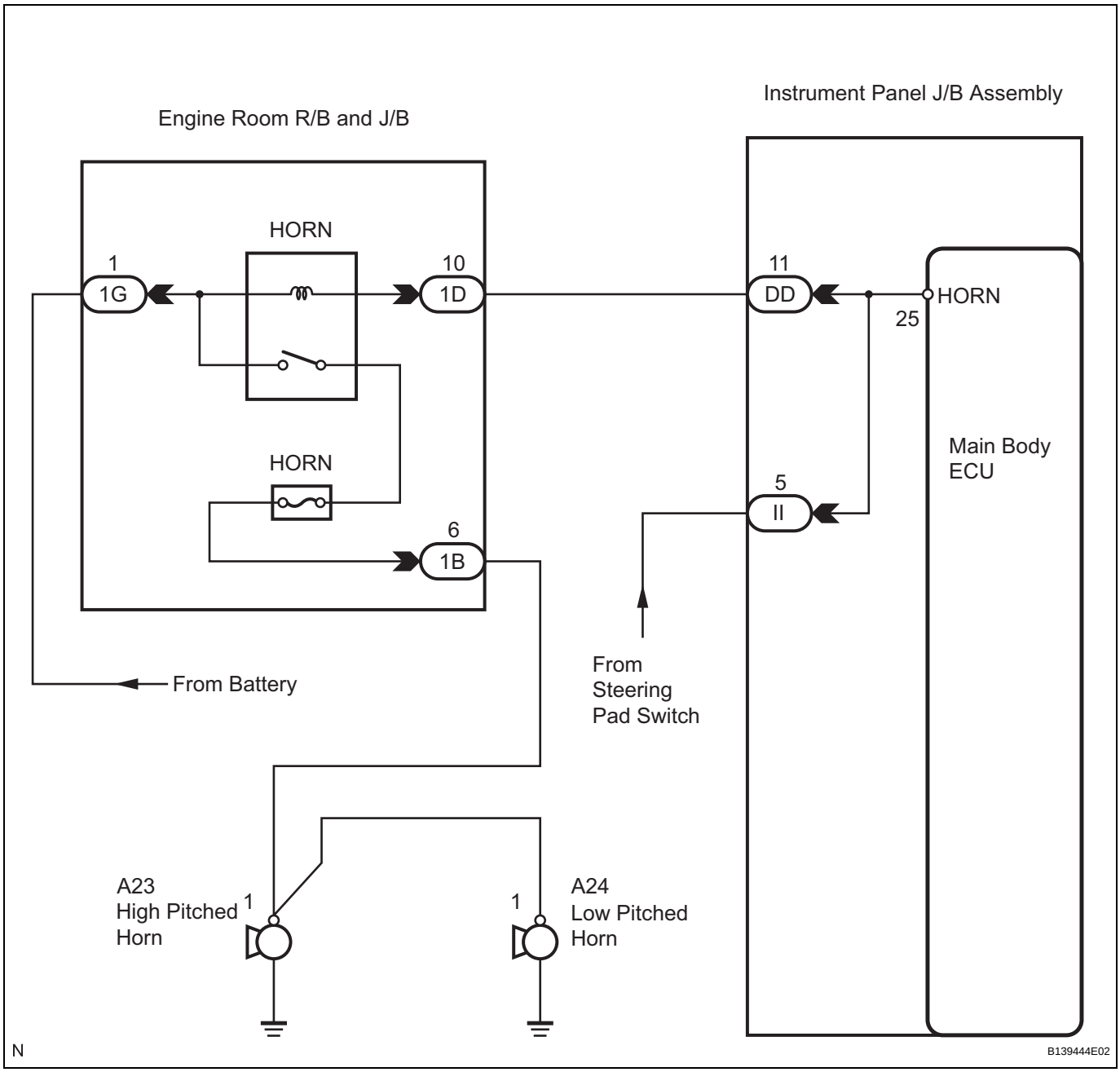

INSPECTION PROCEDURE

1	READ VALUE OF INTELLIGENT TESTER

(a) Connect the intelligent tester (with CAN VIM) to the DLC3.

(b) Turn the engine switch on (IG).
(c) Press the intelligent tester main switch on.
(d) Select the item below in the DATA LIST and then check the display on the tester.

MAIN BODY (Main body ECU):

Item	Test Details	Diagnostic Note
VEHICLE HORN	Vehicle horns ON/OFF	-

OK:
The horns sound normally when "ON" is displayed on the tester screen.

NG → **Go to step 2**

OK

PROCEED TO NEXT CIRCUIT INSPECTION SHOWN IN PROBLEM SYMPTOMS TABLE

2 INSPECT HORNS

(a) Press the horn switch and check if the horns sound.

Result

Result	Proceed to
Horns sound	A
Horns do not sound	B

B → **GO TO HORN SYSTEM (See page HO-3)**

A

PROCEED TO NEXT CIRCUIT INSPECTION SHOWN IN PROBLEM SYMPTOMS TABLE

Security Horn Circuit

DESCRIPTION

When the theft deterrent system is changed from the armed state to the alarm sounding state, the certification ECU can control the security horn.

WIRING DIAGRAM

TD

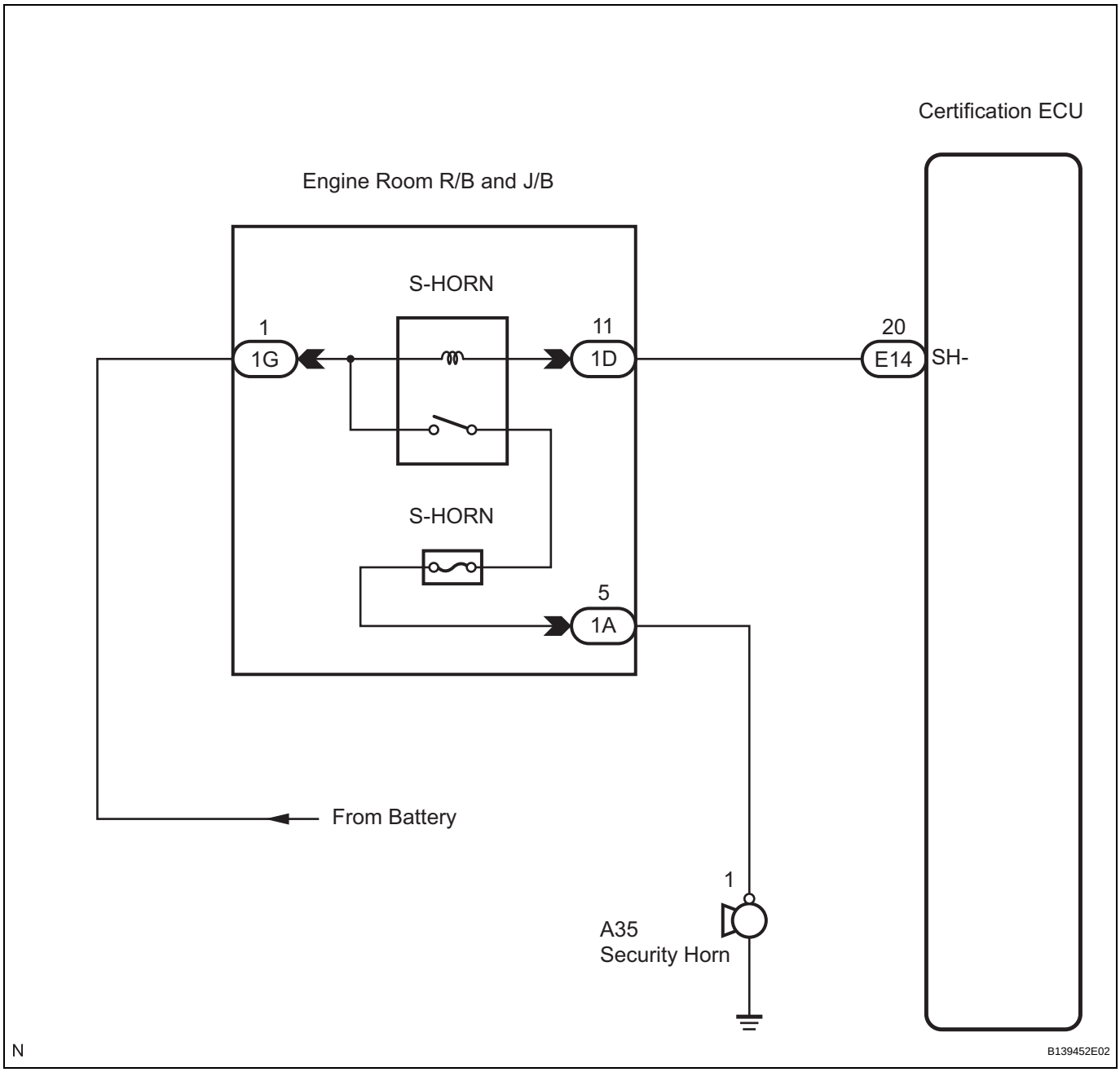

INSPECTION PROCEDURE

1	PERFORM ACTIVE TEST BY INTELLIGENT TESTER

(a) Connect the intelligent tester (with CAN VIM) to the DLC3.

(b) Turn the engine switch on (IG).
(c) Press the intelligent tester main switch on.
(d) Select the item below in the ACTIVE TEST and then check that the security horn operates.

SMART (Certification ECU):

Item	Test Details	Diagnostic Note
SECURITY HORN	Security horn ON/OFF	-

OK:
The security horn sounds or stops correctly when it is operated through the intelligent tester.

NG → **Go to step 2**

OK

PROCEED TO NEXT CIRCUIT INSPECTION SHOWN IN PROBLEM SYMPTOMS TABLE

2 INSPECT SECURITY HORN ASSEMBLY

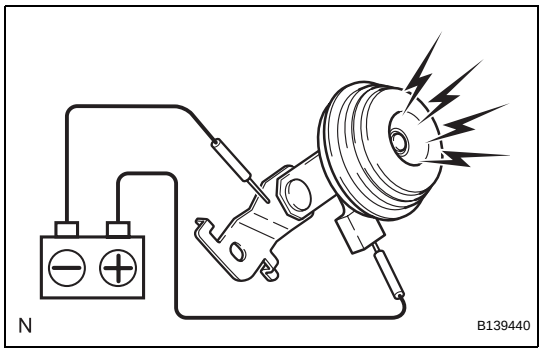

(a) Remove the security horn assembly.
(b) Check operation of the horn.
OK

Measurement Condition	Specified Condition
Battery positive (+) → Terminal 1	Horn sounds
Battery negative (-) → Horn body	

NG → **REPLACE SECURITY HORN ASSEMBLY**

OK

TD

3	CHECK HARNESS AND CONNECTOR (ENGINE ROOM J/B - SECURITY HORN ASSEMBLY)

Wire Harness Side Connector Front View:

Engine Room J/B

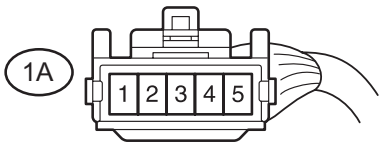

Security Horn Assembly

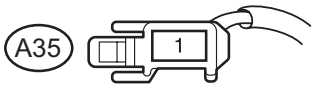

N B139441E02

(a) Disconnect the 1A J/B connector and the A35 horn connector.
(b) Measure the resistance according to the value(s) in the table below.
Standard resistance

Tester Connection	Specified Condition
1A-5 - A35-1	Below 1 Ω
1A-5 - Body ground	10 kΩ or higher

NG → **REPAIR OR REPLACE HARNESS OR CONNECTOR**

OK

4	CHECK HARNESS AND CONNECTOR (CERTIFICATION ECU - ENGINE ROOM J/B)

Connector Wire Harness View:

Certification ECU

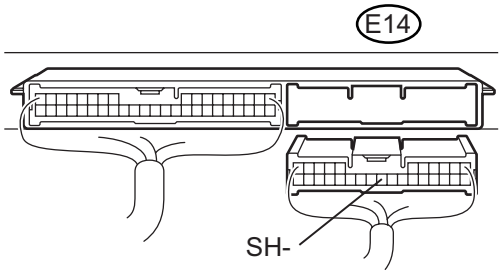

Wire Harness Side Connector Front View:

Engine Room J/B

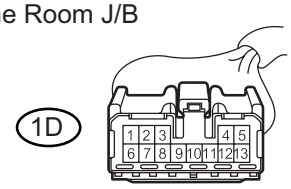

B148327E01

(a) Disconnect the E14 ECU connector and 1D J/B connector.
(b) Measure the resistance according to the value(s) in the table below.
Standard resistance

Symbol (Tester Connection)	Specified Condition
SH- (E14-20) - (1D-11)	Below 1 Ω
SH- (E14-20) - Body ground	10 kΩ or higher

NG → **REPAIR OR REPLACE HARNESS OR CONNECTOR**

OK

5	CHECK HARNESS AND CONNECTOR (ENGINE ROOM J/B - BATTERY)

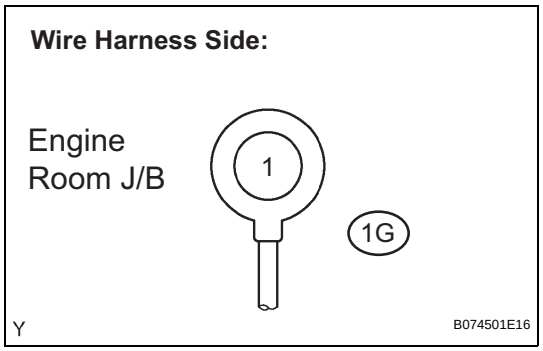

(a) Disconnect the 1G J/B connector.
(b) Measure the voltage according to the value(s) in the table below.

Standard voltage

Tester Connection	Specified Condition
1G-1 - Body ground	10 to 14 V

NG → **REPAIR OR REPLACE HARNESS OR CONNECTOR**

OK

PROCEED TO NEXT CIRCUIT INSPECTION SHOWN IN PROBLEM SYMPTOMS TABLE

TD

Security Indicator Light Circuit

DESCRIPTION

Even when the theft deterrent system is in the disarmed state, the security indicator blinks due to a signal output from the immobiliser system. The security indicator blinks continuously due to a continuous signal received from the immobiliser system while in the armed state.
The certification ECU causes the security indicator to light up or blink only during the arming preparation state and alarm sounding state.

WIRING DIAGRAM

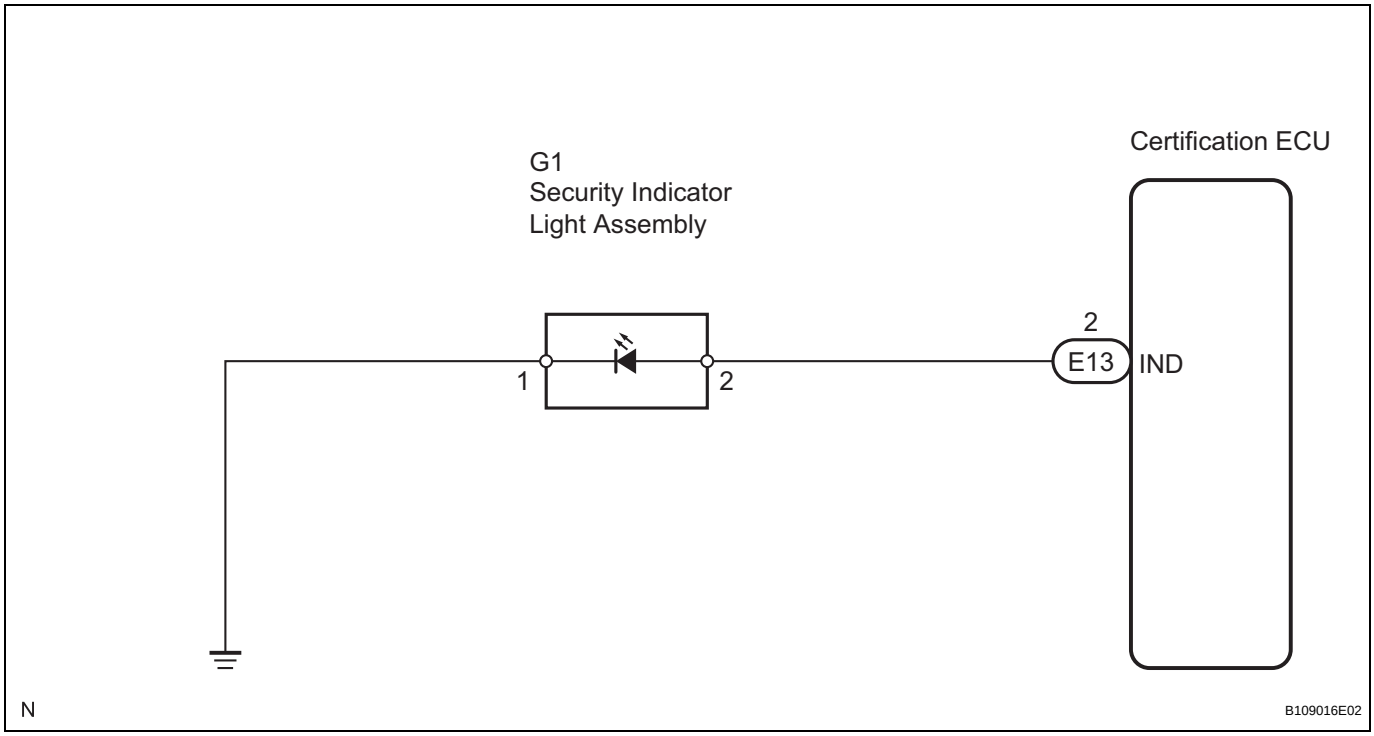

INSPECTION PROCEDURE

1	PERFORM ACTIVE TEST BY INTELLIGENT TESTER

(a) Connect the intelligent tester (with CAN VIM) to the DLC3.
(b) Turn the engine switch on (IG).
(c) Press the intelligent tester main switch on.
(d) Select the item below in the ACTIVE TEST and then check that the indicator operates.

SMART (Certification ECU):

Item	Test Details	Diagnostic Note
SECURITY INDIC	Security indicator ON/OFF	-

OK:
The security indicator light flashes or goes off correctly when operating it through the intelligent tester.

NG → **Go to step 2**

OK

PROCEED TO NEXT CIRCUIT INSPECTION SHOWN IN PROBLEM SYMPTOMS TABLE

2 CHECK SECURITY INDICATOR LIGHT ASSEMBLY

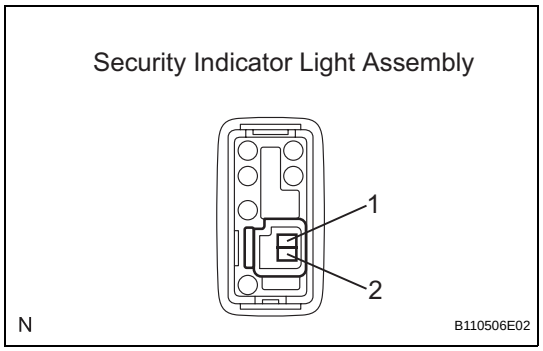

(a) Remove the security indicator light assembly.
(b) Apply battery voltage to the terminals of the security indicator and check the lighting condition.
OK

Measurement Condition	Specified Operation
Battery positive (+) - Terminal 2 Battery negative (-) - Terminal 1	Indicator light comes on.

NG → **REPLACE SECURITY INDICATOR LIGHT ASSEMBLY**

OK

3 CHECK HARNESS AND CONNECTOR (CERTIFICATION ECU - SECURITY INDICATOR LIGHT)

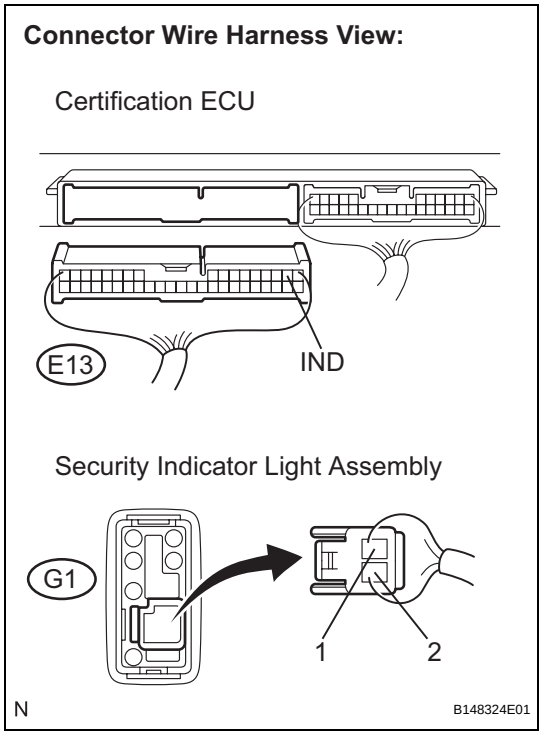

(a) Disconnect the E13 ECU connector.
(b) Measure the resistance according to the value(s) in the table below.
Standard resistance

Symbol (Tester Connection)	Specified Condition
IND (E13-2) - (G1-2)	Below 1 Ω
IND (E13-2) - Body ground	10 kΩ or higher

NG → **REPAIR OR REPLACE HARNESS OR CONNECTOR**

OK

TD

4	CHECK HARNESS AND CONNECTOR (SECURITY INDICATOR LIGHT ASSEMBLY - BODY GROUND)

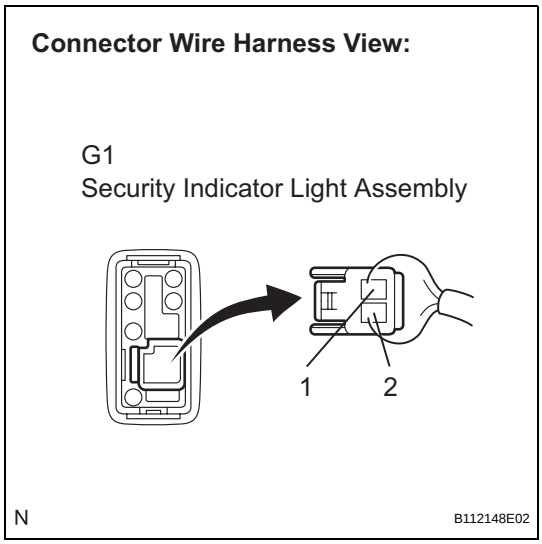

(a) Measure the resistance according to the value(s) in the table below.

Standard resistance

Tester Connection	Specified Condition
G1-1 - Body ground	Below 1 Ω

NG → **REPAIR OR REPLACE HARNESS OR CONNECTOR**

OK

PROCEED TO NEXT CIRCUIT INSPECTION SHOWN IN PROBLEM SYMPTOMS TABLE

ECU Power Source Circuit

DESCRIPTION

This circuit provides power for main body ECU operation.

WIRING DIAGRAM

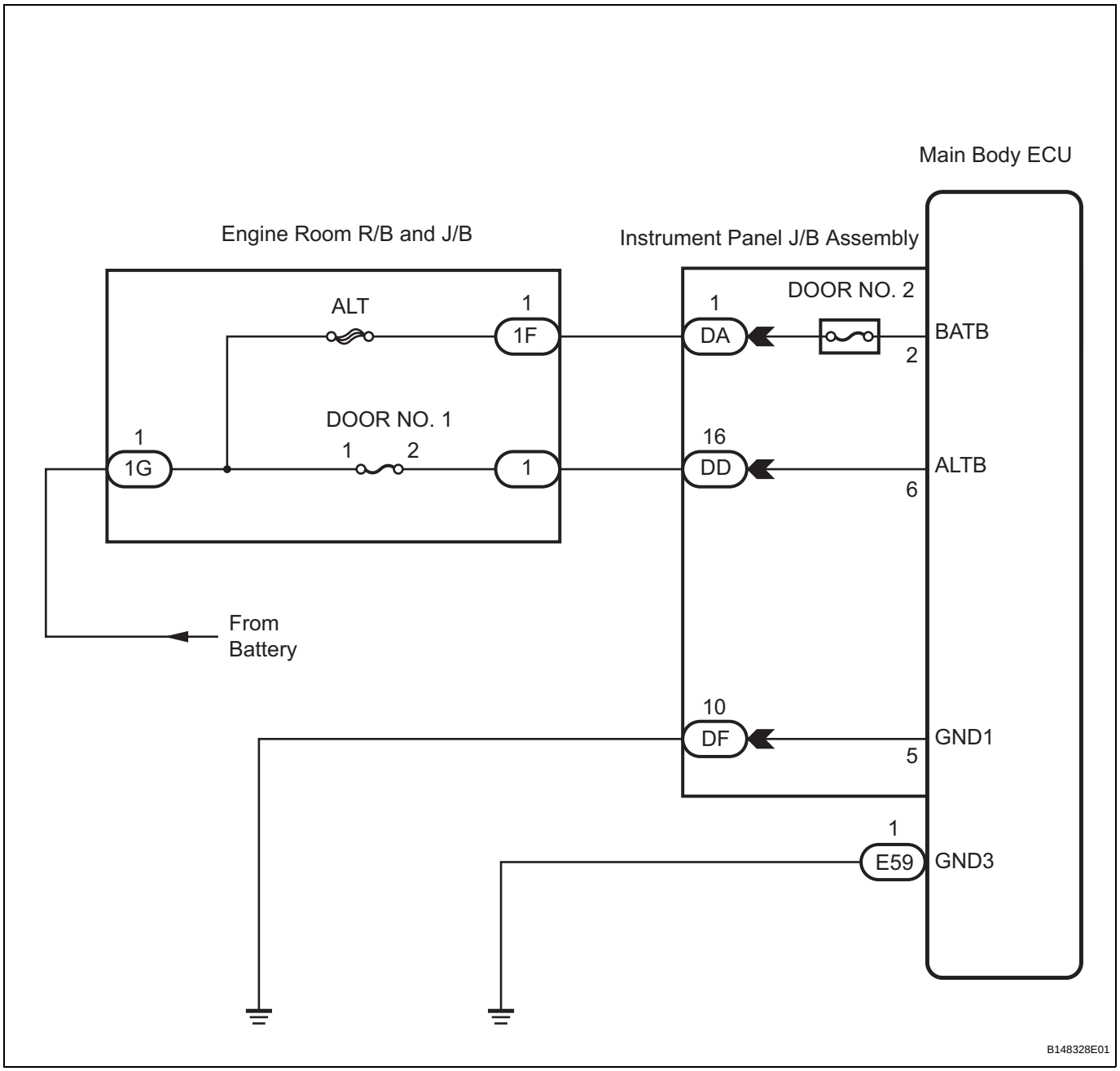

TD

INSPECTION PROCEDURE

1	CHECK INSTRUMENT PANEL JUNCTION BLOCK ASSEMBLY (MAIN BODY ECU) (POWER SOURCE)

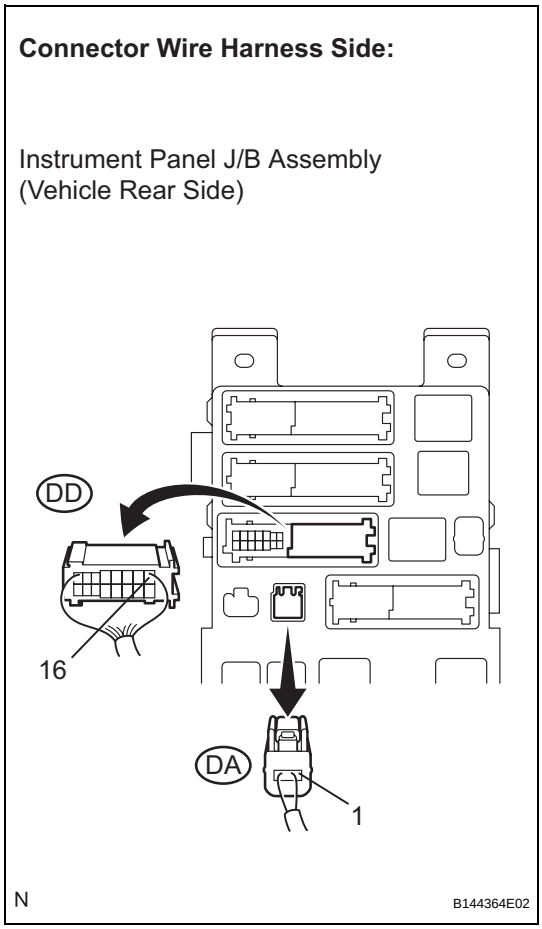

(a) Disconnect the DD and DA J/B connectors.
(b) Measure the voltage according to the value(s) in the table below.

Standard voltage

Tester Connection	Specified Condition
DD-16 - Body ground	10 to 14 V
DA-1 - Body ground	10 to 14 V

NG → **REPAIR OR REPLACE HARNESS OR CONNECTOR**

OK

2	CHECK HARNESS AND CONNECTOR (INSTRUMENT PANEL J/B, MAIN BODY ECU - BODY GROUND)

Connector Wire Harness View:

Instrument Panel J/B Assembly
(Vehicle Rear Side)

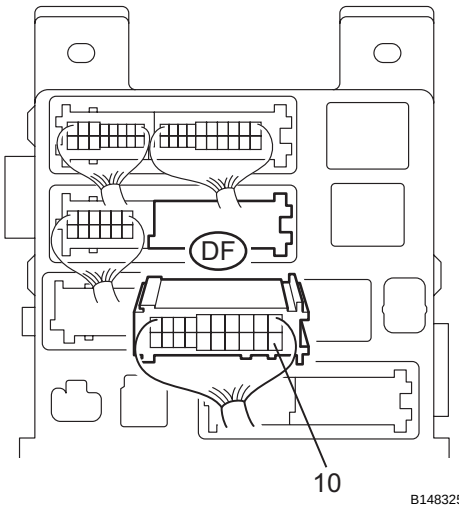

N B148325E01

(a) Disconnect the DF J/B connector.
(b) Measure the resistance according to the value(s) in the table below.

Standard resistance

Tester Connection	Specified Condition
DF-10 - Body ground	Below 1 Ω

TD

Connector Wire Harness View:

Main Body ECU

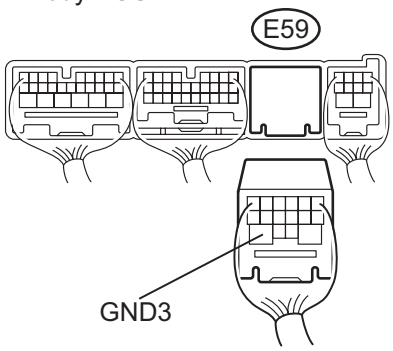

N B148326E01

(c) Disconnect the E59 main body ECU connector.
(d) Measure the resistance according to the value(s) in the table below.

Standard resistance

Symbol (Tester Connection)	Specified Condition
GND3 (E59-1) - Body ground	Below 1 Ω

NG → **REPAIR OR REPLACE HARNESS OR CONNECTOR**

OK

REPLACE PROCEED TO NEXT CIRCUIT INSPECTION SHOWN IN PROBLEM SYMPTOMS TABLE

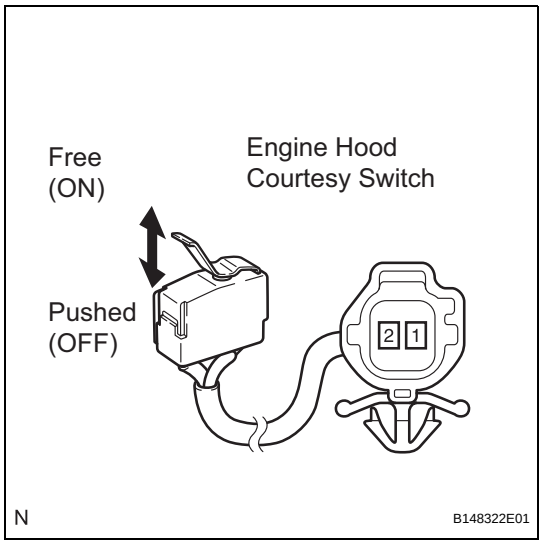

INSPECTION

1. INSPECT ENGINE HOOD COURTESY SWITCH

(a) Measure the resistance according to the value(s) in the table below.

Standard resistance

Tester Connection	Switch Position	Specified Condition
1 - 2	Free (ON)	Below 1 Ω
	Pushed (OFF)	10 kΩ or higher

If the result is not as specified, replace the hood lock assembly.

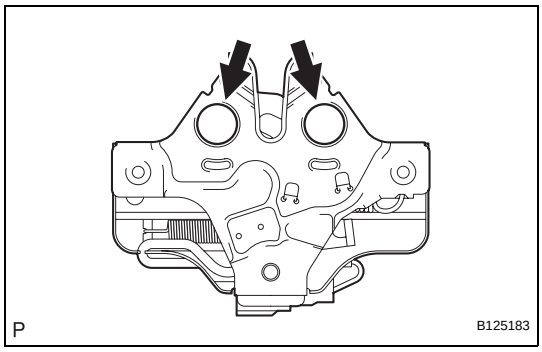

INSTALLATION

1. INSTALL HOOD LOCK ASSEMBLY

(a) Apply MP grease to the sliding areas of the lock.

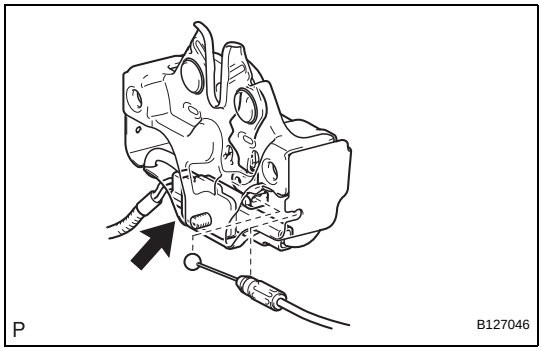

(b) Connect the hood lock control cable and connector.

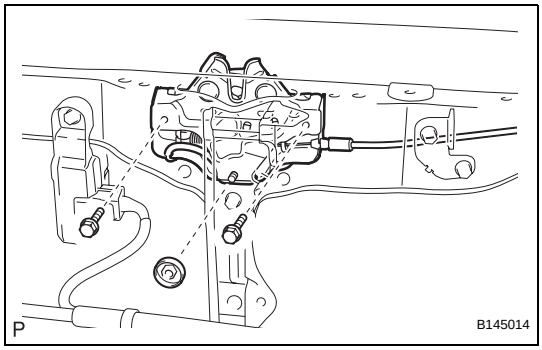

(c) Install the hood lock assembly with the 2 bolts and nut.

Torque: 8.0 N*m (82 kgf*cm, 71 in.*lbf)

(d) Install a new hood lock nut cap.

2. INSTALL MILLIMETER WAVE RADAR SENSOR ASSEMBLY (w/ Dynamic Radar Cruise Control System) (See page CC-128)

3. INSTALL FRONT BUMPER ASSEMBLY (See page ET-14)

4. INSTALL COOL AIR INTAKE DUCT SEAL (See page ET-14)

5. ADJUST MILLIMETER WAVE RADAR SENSOR ASSEMBLY (w/ Dynamic Radar Cruise Control System) (See page CC-122)

6. **VEHICLE PREPARATION FOR FOG LIGHT AIM (See page LI-141)**
7. **PREPARATION FOR FOG LIGHT (See page LI-142)**
8. **FOG LIGHT AIMING INSPECTION (See page LI-143)**
9. **FOG LIGHT AIMING ADJUSTMENT (See page LI-144)**

SYSTEM DIAGRAM

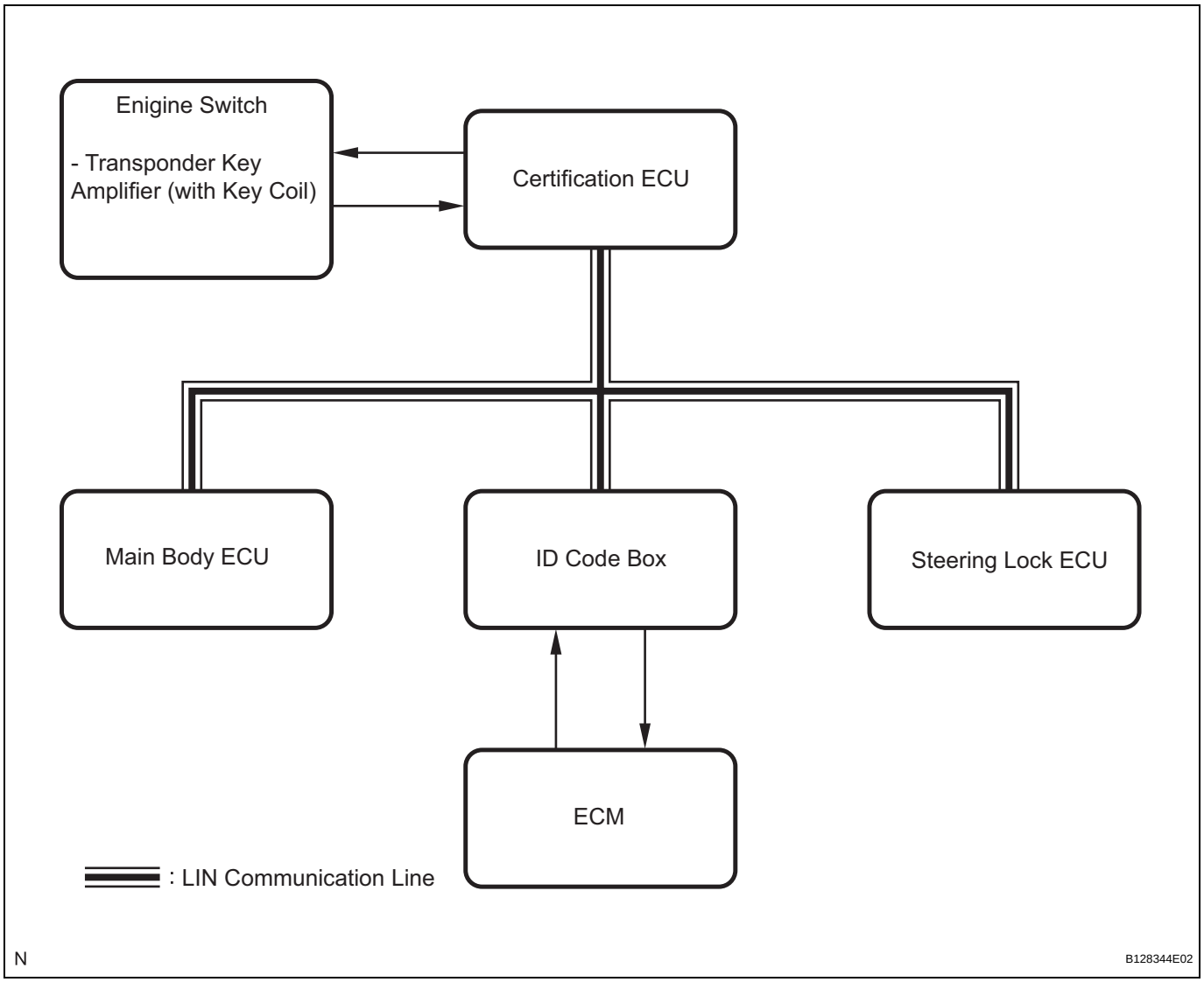

Communication table:

Transmitting ECU (Transmitter)	Receiving ECU (Receiver)	Signals	Communication method
Main body ECU	Certification ECU	Key code recognition signal	LIN
ID code box	Certification ECU	DTC (B2791) signal	LIN
ID code box	Steering lock ECU	• Steering lock release signal • Matching request random number signal	LIN
ID code box	Certification ECU	Matching request random number signal	LIN

SYSTEM DESCRIPTION

1. ENGINE IMMOBILISER SYSTEM DESCRIPTION

(a) The immobiliser system is a theft deterrent system that determines whether to disable starting of the SFI system based on a comparison of the key's ID codes and the vehicle's pre-registered code. The immobiliser system compares the vehicle certification ECU's pre-registered ID code with the ID of the key-embedded transponder chip. If the ID codes do not match, the immobiliser system activates and the SFI system cannot be started. The certification ECU manages communication with the ECM, main body ECU, steering lock ECU and ID code box. When the ID codes of the transponder chip and certification ECU match, the certification ECU authorizes the SFI system to start.

2. FUNCTION OF MAIN COMPONENT

Component	Outline
Transponder key coil/amplifier (built into engine switch)	Receives key ID code, amplifies ID code and outputs the code to the certification ECU.
Indoor electrical key oscillator	Transmits key detection signals within the detection area in the vehicle interior upon receiving a transmission request signal from the certification ECU. Certification ECU request signal is activated when the key is brought into the vehicle interior and the engine switch is pushed.
Door control receiver	Receives an ID code from the key in the actuation area and transmits it to the certification ECU.
Security indicator	Illuminates or starts flashing. Illumination is controlled by the certification ECU.

3. SYSTEM FUNCTION

(a) Using entry function

(1) When the driver (or passenger) is sitting in the vehicle while carrying the key, and the engine switch is pressed while the brake pedal is depressed, the main body ECU recognizes that the engine start operation has occurred and sends a certification request signal to the certification ECU. Upon receipt of the certification request signal, the certification ECU sends a request signal to the indoor electrical key oscillator. Upon receipt of the request signal, the indoor electrical key oscillator sends a request signal to detect if the key is inside the vehicle. When the key receives this request signal, it answers by sending an ID code containing a response code through the glass antenna to the door control receiver. Upon receipt of the ID code, the certification ECU analyzes the code. If the interior certification passes, then the main body ECU sends a certification pass response signal. When the main body ECU receives this signal, the ACC relay is switched on and the IG1 and IG2 relays are switched on in sequence. At this time, the

engine switch indicator illuminates in green. Then the certification ECU checks that the power source mode has been changed and sends a steering lock command signal to the main body ECU. After receiving this signal, the main body ECU supplies power to the steering lock actuator. Then (via the ID code box) the steering lock ECU confirms that the certification ECU is certified and drives the steering actuator motor until the steering lock is unlocked. After unlocking the steering lock, an unlock completed signal is sent to the certification ECU. Upon receipt of this signal, the certification ECU sends an unset command signal to the ID code box. Once this signal is received, the ID code box confirms that the certification ECU is certified, sends an immobiliser unset command signal to the ECM and sends a security indicator light off signal to the certification ECU.

(b) Not using the entry function (when key battery is depleted)

(1) When the driver is sitting in the vehicle while carrying the key and the brake pedal is depressed, the main body ECU recognizes that the stop light switch is on and sends a key confirmation request signal to the certification ECU. Upon receipt of this signal, the certification ECU drives the immobiliser amplifier built in the engine switch. At this time, the engine switch sends an RF wave communication signal to the immobiliser. If the driver holds the key up to the engine switch at this time, the engine switch receives the immobiliser RF wave signal and responds by sending a radio wave signal. When the engine switch receives the radio wave signal from the key, it duplicates the signal and sends an ID code to the certification ECU. Upon receipt of the ID code, the code is analyzed. If the certification passes, a key certification pass response signal is sent to the main body ECU while simultaneously sending a sound buzzer request signal to the meter ECU. When the main body ECU receives this signal, the ACC relay is switched on and the IG1 and IG2 relays are switched on in sequence. At this time, the engine switch indicator illuminates in green. Then the certification ECU checks that the power source mode has been changed and sends a steering lock command signal to the main body ECU. After receiving this signal, the main body ECU supplies power to the steering lock actuator. Then (via the ID code box) the steering lock ECU confirms that the certification ECU is certified and drives the steering actuator

motor until the steering lock is unlocked. After unlocking the steering lock, an unlock completed signal is sent to the certification ECU. Upon receipt of this signal, the certification ECU sends an unset command signal to the ID code box. Once this signal is received, the ID code box confirms that the certification ECU is certified, sends an immobiliser unset command signal to the ECM and sends a security indicator light off signal to the certification ECU.

HOW TO PROCEED WITH TROUBLESHOOTING

HINT:
- Use the following procedures to troubleshoot the engine immobiliser system.
- The intelligent tester should be used in steps 3 and 5.

1 VEHICLE BROUGHT TO WORKSHOP

NEXT

2 CRANK ENGINE FOR MORE THAN 10 SECONDS

NEXT

3 CHECK FOR DTCS

(a) Check for DTCs and note any codes that are output (See page EI-25).
(b) Delete the DTCs.
(c) Recheck for DTCs. Based on the DTCs output above, try to duplicate the SFI system DTC or engine immobiliser system DTC by simulating the symptoms indicated by the DTC.

Result

Result	Proceed to
DTC output does not reoccur	A
SFI system DTC output reoccurs	B (See page ES-59)
Engine immobiliser system DTC output reoccurs	C (See page EI-27)

B → **GO TO SFI SYSTEM**

C → **GO TO DTC CHART**

A

4 PROBLEM SYMPTOMS TABLE

(a) If the fault is not listed on the problem symptoms table, proceed to A.
(b) If the fault is listed on the problem symptoms table, proceed to B.

B → **GO TO STEP 6**

A

5	OVERALL ANALYSIS AND TROUBLESHOOTING

(a) DATA LIST/ACTIVE TEST (See page EI-25)
(b) TERMINALS OF ECU (See page EI-16)

NEXT

6	ADJUST, REPAIR OR REPLACE

NEXT

7	CONFIRMATION TEST

NEXT

END

HOW TO PROCEED WITH TROUBLESHOOTING

HINT:
- Use the following procedures to troubleshoot the engine immobiliser system.
- The intelligent tester should be used in steps 3 and 5.

1 VEHICLE BROUGHT TO WORKSHOP

NEXT

2 CRANK ENGINE FOR MORE THAN 10 SECONDS

NEXT

3 CHECK FOR DTCS

(a) Check for DTCs and note any codes that are output (See page EI-25).
(b) Delete the DTCs.
(c) Recheck for DTCs. Based on the DTCs output above, try to duplicate the SFI system DTC or engine immobiliser system DTC by simulating the symptoms indicated by the DTC.

Result

Result	Proceed to
DTC output does not reoccur	A
SFI system DTC output reoccurs	B (See page ES-59)
Engine immobiliser system DTC output reoccurs	C (See page EI-27)

B → **GO TO SFI SYSTEM**

C → **GO TO DTC CHART**

A

4 PROBLEM SYMPTOMS TABLE

(a) If the fault is not listed on the problem symptoms table, proceed to A.
(b) If the fault is listed on the problem symptoms table, proceed to B.

B → **GO TO STEP 6**

A

5	OVERALL ANALYSIS AND TROUBLESHOOTING

(a) DATA LIST/ACTIVE TEST (See page EI-25)
(b) TERMINALS OF ECU (See page EI-16)

NEXT

6	ADJUST, REPAIR OR REPLACE

NEXT

7	CONFIRMATION TEST

NEXT

END

REGISTRATION

1. DESCRIPTION OF CODE REGISTRATION

HINT:

- ID codes are the same as recognition codes for the wireless transmitter and the engine immobiliser function. Registering an ID code enables the smart access system with push-button start, the wireless door lock control function and the engine immobiliser function to be operated.
- Code registration is needed when the certification ECU, ID code box, steering lock ECU or key is replaced with a new one.

(a) PROCEDURE "1"

The vehicle with the smart access system with push-button start system does not have a key slot. Therefore, hold the key close to the engine switch to register the key, as shown in the illustration below.

Hold the electrical key with its ornament surface within a range of 10 mm (0.39 in.) or less from the engine switch.

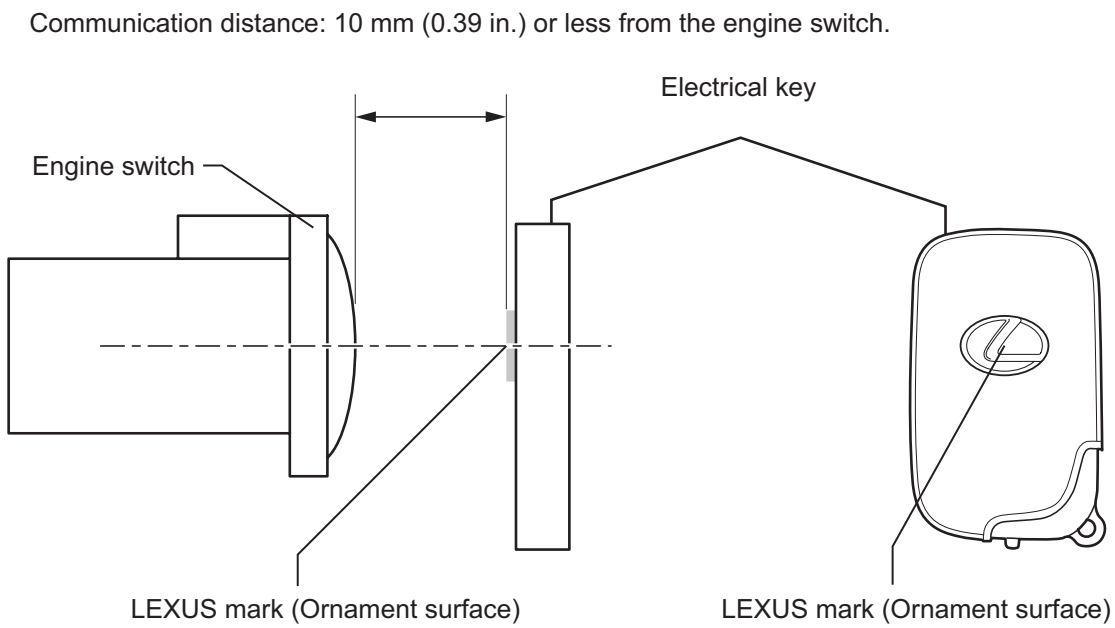

P

B124182E01

2. PART REPLACEMENT KEY REGISTRATION

(a) The following table shows ECU replacement and key registration procedures in case the malfunctioning ECU has been identified after troubleshooting the smart access system with push-button start.

HINT:

- The following procedures indicated in the table below require the use of the intelligent tester:
  - New key ID registration
  - Additional key ID registration
  - Key ID erasure
  - ECU code registration
- If all of the registered keys are not available, replacement of the ID code box is also required.
- A maximum of 7 keys can be registered.

Part to be replaced	Condition		Procedure	Reference
Certification ECU	Customer has brought all keys		1. Replace certification ECU	-
			2. Reregister all keys (new key ID registration)	PROCEDURE "B"
	Some keys are lost	Key ID codes can be registered and erased	1. Erase key codes (key ID erasure)	PROCEDURE "D"
			2. Perform additional key registration procedure (additional key ID registration)	PROCEDURE "C"
			3. Replace certification ECU	-
			4. Reregister all keys (new key ID registration) HINT: If some keys are not registered during above steps, they will be disabled because they cannot be registered later	PROCEDURE "B"
		Key ID codes cannot be either registered or erased	1. Replace certification ECU	-
			2. Replace ID code box	-
			3. Reregister all keys (new key ID registration) HINT: If key codes cannot be erased or additional keys cannot be registered due to a malfunction in certification ECU, replace ID code box and certification ECU. If some keys are not registered during above steps, they will be disabled because they cannot be registered later	PROCEDURE "A"
			4. ECU communication ID registration	PROCEDURE "F"
ID code box	At least 1 key is available		1. Replace ID code box	-
			2. Register recognition codes in ECUs (ECU code registration)	PROCEDURE "E"
			3. ECU communication ID registration	PROCEDURE "F"
	All keys are lost		1. Replace ID code box	-
			2. Replace certification ECU	-
			3. Reregister all keys (new key ID registration) HINT: If some keys are not registered during above steps, they will be disabled because they cannot be registered later	PROCEDURE "A"
			4. ECU communication ID registration	PROCEDURE "F"

Part to be replaced	Condition	Procedure	Reference
Steering lock ECU	Customer has brought at least 1 key	1. Replace steering lock ECU	-
		2. Register recognition codes in ECUs (ECU code registration)	PROCEDURE "E"
	All keys are lost	1. Replace steering lock ECU	-
		2. Replace certification ECU	-
		3. Replace ID code box	-
		4. Reregister all keys (new key ID registration) HINT: If some keys are not registered during above steps, they will be disabled because they cannot be registered later	PROCEDURE "A"
		5. ECU communication ID registration	PROCEDURE "F"
Main body ECU	No condition required	Replace main body ECU	-
ECM	No condition required	1. Replace ECM	-
		2. ECU communication ID registration	PROCEDURE "F"
Key	Customer has brought at least 1 key	1. Using remaining key, erase lost key code (key ID erasure)	PROCEDURE "D"
		2. Register additional keys as necessary (additional key ID registration)	PROCEDURE "E"
	All keys are lost	1. Replace certification ECU	-
		2. Replace ID code box	-
		3. Register all keys (new key ID registration) HINT: If customer brings lost keys at later date, they can be registered using additional key ID registration function	PROCEDURE "A"
		4. ECU communication ID registration	PROCEDURE "F"

3. KEY REGISTRATION

(a) PROCEDURE "A"

New key ID registration (when replacing certification ECU and ID code box, or certification ECU, ID code box and steering lock ECU)

Process	Procedure
1. Start of registration	1. Connect intelligent tester (with CAN VIM) to DLC3 2. Turn engine switch on (IG) 3. Select "SMART ACCESS / ID UTILITY / SMART CODE REG" from tester menu HINT: The engine switch cannot be turned on (IG) more than 10 times. After connecting tester, turn tester on while turning driver's side door courtesy light switch on and off repeatedly at 1.5-second intervals or less to continue key registration procedure
2. Confirmation of ECU code	Perform operation according to prompts on tester screen HINT: The mode is automatically selected by tester, new registration mode or add mode
3. Verification of unregistered key *1	Hold unregistered key close to engine switch (For details, refer to PROCEDURE "1")
	Confirm that wireless door lock buzzer sounds. Place unregistered key on front passenger's side seat
	Confirm that wireless door lock buzzer sounds
4. Registration of ID code	Perform operation according to prompts on tester screen
5. End of registration	Finish new key ID code registration

*1: Repeat this process for each key which is to be registered for the vehicle. Finish the procedure for each key within 30 seconds. If the procedure for any of the keys has not been finished within the specified time, perform registration procedures from process 1 again. Make sure that only 1 key is in the cabin during registration procedures. If 2 or more keys are in the cabin simultaneously, electric waves will interfere with each other, preventing normal registration.

(b) PROCEDURE "B"
New key ID registration (when replacing certification ECU)

Process	Procedure
1. Start of registration	1. Connect intelligent tester (with CAN VIM) to DLC3 2. Turn engine switch on (IG) 3. Select "SMART ACCESS / ID UTILITY / SMART CODE REG" from tester menu HINT: The engine switch cannot be turned on (IG) more than 10 times. After connecting tester, turn tester on while turning driver's side door courtesy light switch on and off repeatedly at 1.5-second intervals or less to continue key registration procedure
2. Confirmation of ECU code	Perform operation according to prompts on tester screen HINT: The mode is automatically selected by tester, new registration mode or add mode
3. Confirmation of all registered keys *1	Hold unregistered key close to engine switch (For details, refer to PROCEDURE "1")
	Confirm that wireless door lock buzzer sounds
4. Confirmation of ECU code	Perform operation according to prompts on tester screen
5. Verification of unregistered key *2	Hold unregistered key close to engine switch (For details, refer to PROCEDURE "1")
	Confirm that wireless door lock buzzer sounds. Place unregistered key on front passenger side seat
	Confirm that wireless door lock buzzer sounds
5. Registration of ID code	Perform operation according to prompts on tester screen
6. End of registration	Finish new key ID code registration

*1: Repeat this process for each key registered for the vehicle. Finish the procedure for each key within 30 seconds. If the procedure for any of the keys has not been finished within the specified time, perform registration procedures from process 1 again. If performing the key confirmation procedure for a key, the security indicator comes on and remains on until all the keys are confirmed.
*2: Repeat this process for each key which is to be registered for the vehicle. Finish the procedure for each key within 30 seconds. If the procedure for any of the keys has not been finished within the specified time, perform registration procedures from 1 again. Make sure that only 1 key is in the cabin during registration procedures. If 2 or more keys are in the cabin simultaneously, electric waves will interfere with each other, preventing normal registration.

(c) PROCEDURE "C"
Additional key ID registration

Process	Procedure
1. Start of registration	1. Connect intelligent tester (with CAN VIM) to DLC3 2. Turn engine switch on (IG) 3. Select "SMART ACCESS / ID UTILITY / SMART CODE REG" from tester menu
2. Confirmation of registered key *1	Perform operation according to prompts on intelligent tester screen HINT: The mode is automatically selected by tester, new registration mode or add mode
	Hold unregistered key close to engine switch (For details, refer to PROCEDURE "1")
	Confirm that wireless door lock buzzer sounds once
3. Confirmation of ECU code	Perform operation according to prompts on tester screen
4. Verification of unregistered key *2	Hold unregistered key close to engine switch (For details, refer to PROCEDURE "1")
	Confirm that wireless door lock buzzer sounds. Place unregistered key on front passenger's side seat
	Confirm that wireless door lock buzzer sounds
5. Registration of ID code	Perform operation according to prompts on tester screen
6. End of registration	Finish key ID code registration

*1: Perform this process for one of the keys registered for the vehicle. Finish the procedure within 30 seconds. If the procedure has not been finished within the specified time, perform registration procedures from process 1 again.
*2: Repeat this process for each key which is to be registered for the vehicle. Finish the procedure for each key within 30 seconds. If the procedure for any of the keys has not been finished within the specified time, perform registration procedures from 1 again. Make sure that only 1 key is in the cabin during registration procedures. If 2 or more keys are in the cabin simultaneously, electric waves will interfere with each other, preventing normal registration.

(d) PROCEDURE "D"
Key ID erasure
HINT:
Erase all registered key codes except one.

Process	Procedure
1. Start of erasure	1. Connect intelligent tester (with CAN VIM) to DLC3 2. Turn engine switch on (IG) 3. Select "SMART ACCESS / ID UTILITY / SMART CODE ERS" from tester menu
2. Confirmation of registered key *1	Perform operation according to prompts on intelligent tester screen
	Hold unregistered key close to engine switch (For details, refer to PROCEDURE "1")
	Confirm that wireless door lock buzzer sounds once
3. Confirmation of ECU code	Perform operation according to prompts on tester screen
4. Erasure of ID code	Perform operation according to prompts on tester screen
5. End of erasure	Finish key ID code erasure

*1: Perform this process for one of the keys registered for the vehicle. Finish the procedure within 30 seconds. If the procedure has not been finished within the specified time, perform erasure procedures from process 1 again.

(e) PROCEDURE "E"
ECU code registration

Process	Procedure
1. Start of registration	1. Connect intelligent tester (with CAN VIM) to DLC3 2. Turn engine switch on (IG) 3. Select "SMART ACCESS / ID UTILITY / ECU COMM ID REG / ID Code Box and Steering Lock" from tester menu
2. Confirmation of registered key *1	Hold unregistered key close to engine switch (For details, refer to PROCEDURE "1")
	Confirm that wireless door lock buzzer sounds once
3. Registration of ECU code	Perform operation according to prompts on tester screen
4. End of registration	Finish ECU code registration

*1: Perform this process for one of the keys registered for the vehicle. Finish the procedure within 30 seconds. If the procedure has not been finished within the specified time, perform erasure procedures from process 1 again.

(f) PROCEDURE "F"
ECU communication ID registration

NOTICE:

- **The ECU communication ID should be registered when the ID code box and/or the ECM is replaced in order to match these ECM communication ID.**
- **The engine cannot be started unless the ECM communication ID matches.**

Register the ECU communication ID.

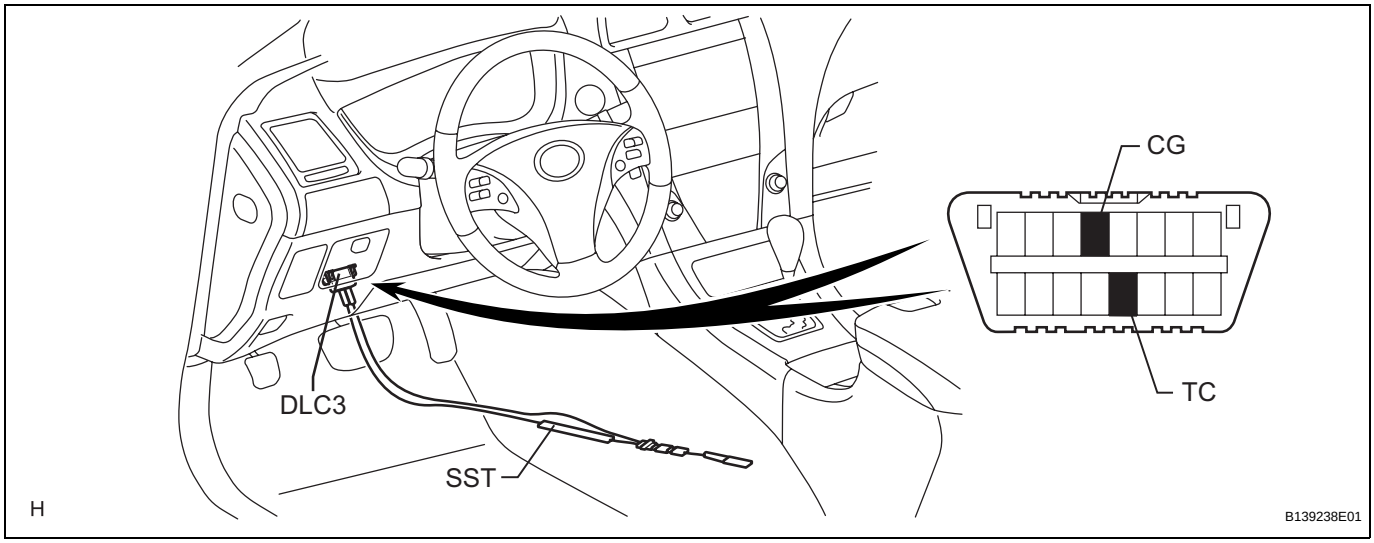

(1) Using SST, connect terminals TC and CG of the DLC3.
SST 09843-18040

(2) Turn the engine switch on (IG) and leave it for 30 minutes.
HINT:
Do not start the engine.
(3) Turn the engine switch off and disconnect terminals TC and CG.
(4) Check that the engine starts.

PROBLEM SYMPTOMS TABLE

HINT:
Use the table below to help determine the cause of the problem symptom. The potential cases of the symptoms are listed in order of probability in the "Suspected Area" column of the table. Check each symptom by checking the suspected area in the order they are listed. Replace parts as necessary.

ENGINE IMMOBILISER SYSTEM

Symptom	Suspected Area	See page
Engine does not start	1. Key	EI-25
	2. ID code box power source circuit	EI-49
	3. Certification ECU power source circuit	EI-51
	4. Steering lock ECU power source circuit	SR-74
	5. Smart access system with push button start	ST-15
	6. SFI system	ES-10

TERMINALS OF ECU

1. CHECK ENGINE SWITCH

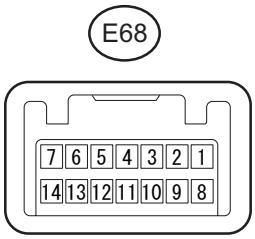

B146454E02

(a) Disconnect the E68 switch connector.
(b) Measure the resistance according to the value(s) in the table below.

Symbols (Terminal No.)	Wiring Color	Terminal Description	Condition	Specified Condition
AGND (E68-8) - Body ground	V - Body ground	Ground	Always	Below 1 Ω

If the result is not as specified, there may be a malfunction on the wire harness side.

(c) Reconnect the E68 switch connector.
(d) Measure the resistance and voltage according to the value(s) in the table below.

Symbols (Terminal No.)	Wiring Color	Terminal Description	Condition	Specified Condition
AGND (E68-8) - Body ground	V - Body ground	Ground	Always	Below 1 Ω
VC5 (E68-14) - AGND (E68-8)	O - V	Power supply	Key is not in cabin	Below 1 V
			Press engine switch	4.6 to 5.4 V
CODE (E68-10) - AGND (E68-8)	W - V	Demodulated signal of key code data	Key is not in cabin	Below 1 V
			Press engine switch and hold key close to engine switch*	Pulse generation (see waveform 1)
TXCT (E68-9) - AGND (E68-8)	GR - V	Key code output signal	Key is not in cabin	Below 1 V
			Press engine switch and hold key close to engine switch*	Pulse generation (see waveform 2)

HINT:
*: Remove the key battery before performing this inspection.
If the result is not as specified, the switch may have a malfunction.

EI

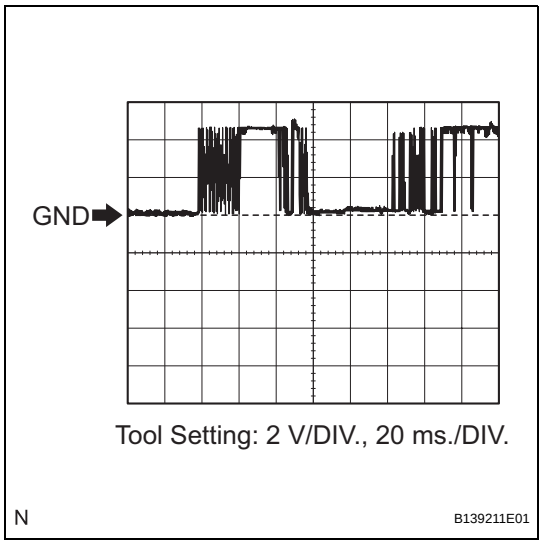

(e) Inspect using an oscilloscope.
(1) Waveform 1 (Reference)

Item	Content
Symbols (Terminal No.)	CODE (E68-10) - AGND (E68-8)
Tool Setting	2 V/DIV., 20 ms./DIV.
Condition	Press engine switch and hold key close to engine switch*

HINT:
*: Remove the key battery before performing this inspection.

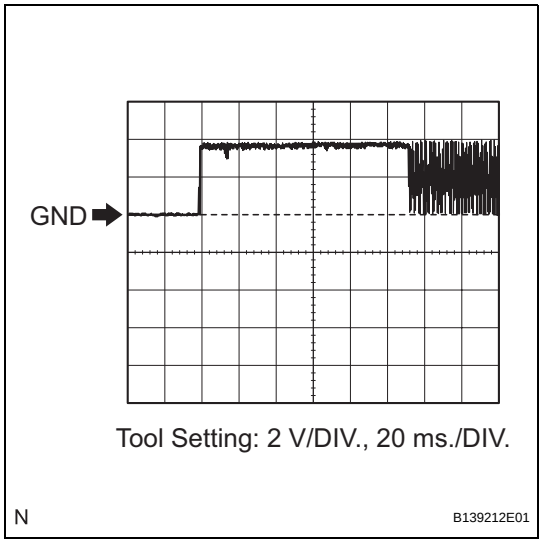

(2) Waveform 2 (Reference)

Item	Content
Symbols (Terminal No.)	TXCT (E68-9) - AGND (E68-8)
Tool Setting	2 V/DIV., 20 ms./DIV.
Condition	Press engine switch and hold key close to engine switch*

HINT:
*: Remove the key battery before performing this inspection.

2. CHECK CERTIFICATION ECU

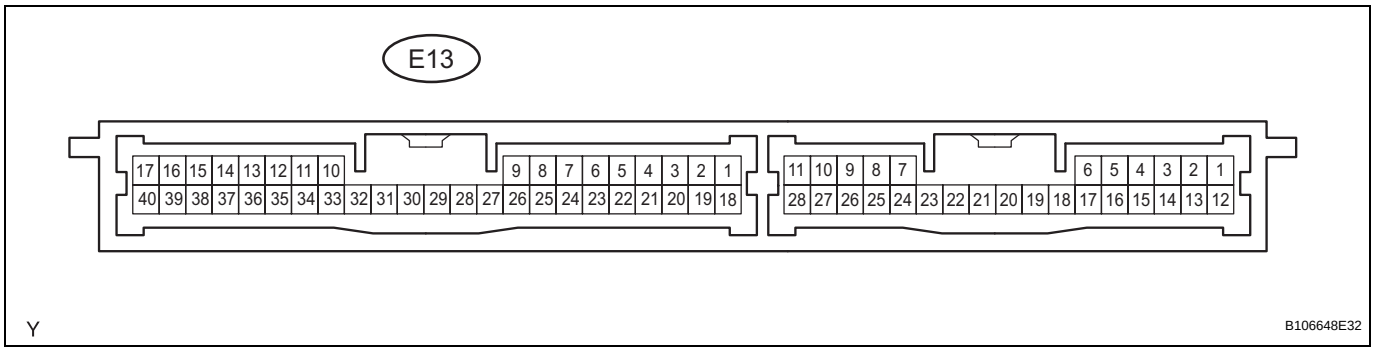

(a) Disconnect the E13 ECU connector.
(b) Measure the resistance and voltage according to the value(s) in the table below.

Symbols (Terminal No.)	Wiring Color	Terminal Description	Condition	Specified Condition
E (E13-17) - Body ground	W-B - Body ground	Ground	Always	Below 1 Ω
+B1 (E13-1) - E (E13-17)	W - W-B	+B power supply	Always	10 to 14 V
IG (E13-18) - E (E13-17)	B - W-B	Ignition power supply	Power switch off	Below 1 V

If the result is not as specified, there may be a malfunction on the wire harness side.
(c) Reconnect the E13 ECU connector.

(d) Measure the resistance and voltage according to the value(s) in the table below.

Symbols (Terminal No.)	Wiring Color	Terminal Description	Condition	Specified Condition
AGND (E13-40) - Body ground	V - Body ground	Power switch ground	Always	Below 1 Ω
VC5 (E13-30) - AGND (E13-40)	O - V	Power switch power supply	Key is not in cabin	Below 1 V
			Press engine switch*	4.6 to 5.4 V
CODE (E13-9) - AGND (E13-40)	W - V	Power switch CODE input	Key is not in cabin	Below 1 V
			Press engine switch and hold key close to engine switch*	Pulse generation (see waveform 1)
TXCT (E13-8) - AGND (E13-40)	GR - V	Power switch TXCT output	Key is not in cabin	Below 1 V
			Press engine switch and hold key close to engine switch*	Pulse generation (see waveform 2)

HINT:
*: Remove the key battery before performing this inspection.
If the result is not as specified, the ECU may have a malfunction.

(e) Inspect using an oscilloscope.
(1) Waveform 1 (Reference)

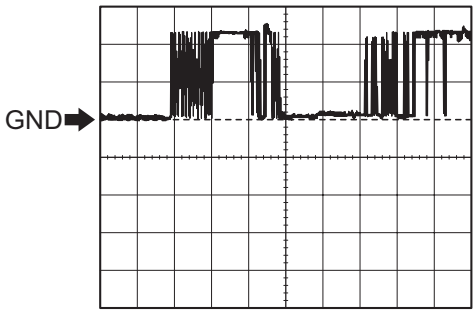

Tool Setting: 2 V/DIV., 20 ms./DIV.

N B139211E01

Item	Content
Symbols (Terminal No.)	CODE (E13-9) - AGND (E13-40)
Tool Setting	2 V/DIV., 20 ms./DIV.
Condition	Press engine switch and hold key close to engine switch*

HINT:
*: Remove the key battery before performing this inspection.

(2) Waveform 2 (Reference)

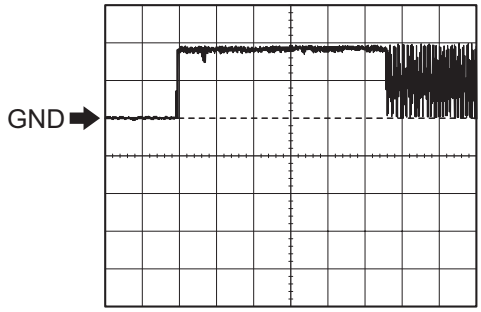

Tool Setting: 2 V/DIV., 20 ms./DIV.

N B139212E01

Item	Content
Symbols (Terminal No.)	TXCT (E13-8) - AGND (E13-40)
Tool Setting	2 V/DIV., 20 ms./DIV.
Condition	Press engine switch and hold key close to engine switch*

HINT:
*: Remove the key battery before performing this inspection.

EI

3. CHECK ID CODE BOX

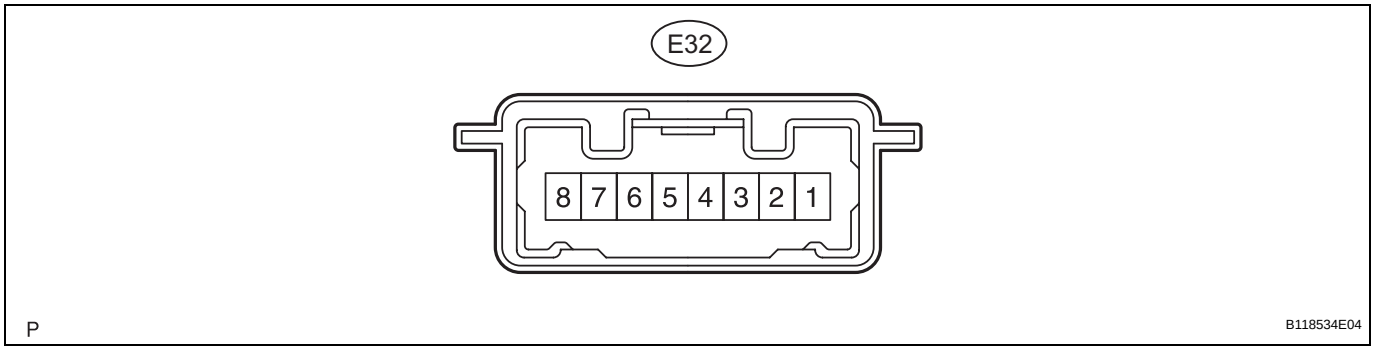

(a) Disconnect the E32 ECU connector.
(b) Measure the resistance and voltage according to the value(s) in the table below.

Symbols (Terminal No.)	Wiring Color	Terminal Description	Condition	Specified Condition
GND (E32-8) - Body ground	W-B - Body ground	Ground	Always	Below 1 Ω
+B (E32-1) - GND (E32-8)	W - W-B	+B power supply	Always	10 to 14 V

If the result is not as specified, there may be a malfunction on the wire harness side.
(c) Reconnect the E32 ECU connector.
(d) Measure the voltage according to the value(s) in the table below.

Symbols (Terminal No.)	Wiring Color	Terminal Description	Condition	Specified Condition
EFII (E32-5) - GND (E32-8)	BR - W-B	ECM input signal	Engine switch off	Below 1 V
			Engine switch on (IG)	Pulse generation (see waveform 1)
EFIO (E32-6) - GND (E32-8)	L - W-B	ECM output signal	Engine switch off	Below 1 V
			Engine switch on (IG)	Pulse generation (see waveform 2)

If the result is not as specified, the ECU may have a malfunction.

(e) Inspect using an oscilloscope.
(1) Waveform 1 (Reference)

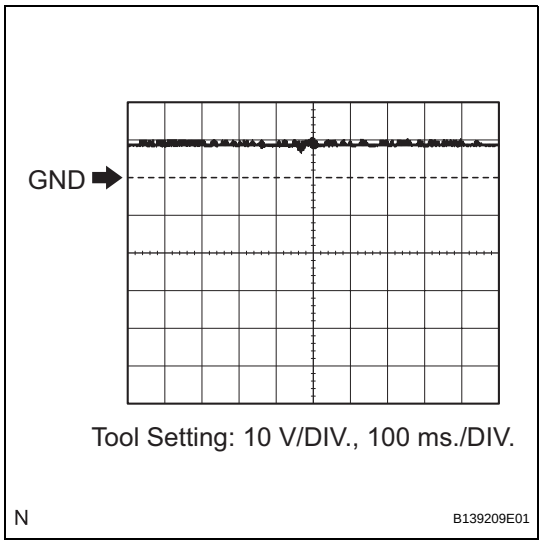

Item	Content
Symbols (Terminal No.)	EFII (E32-5) - GND (E32-8)
Tool Setting	10 V/DIV., 100 ms./DIV.
Condition	Engine switch on (IG)

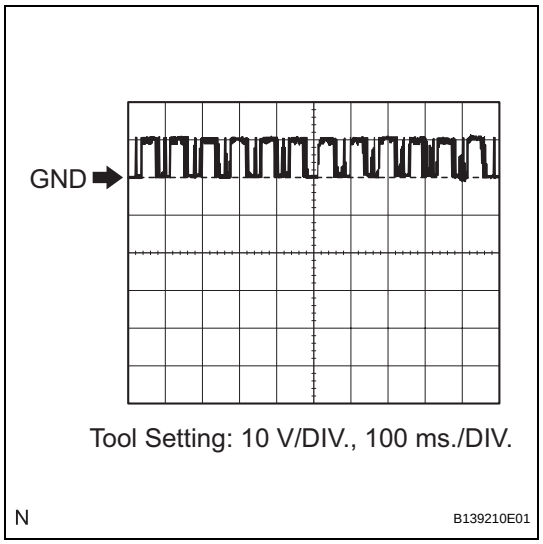

(2) Waveform 2 (Reference)

Item	Content
Symbols (Terminal No.)	EFIO (E32-6) - GND (E32-8)
Tool Setting	10 V/DIV., 100 ms./DIV.
Condition	Engine switch on (IG)

4. CHECK STEERING CONTROL ECU

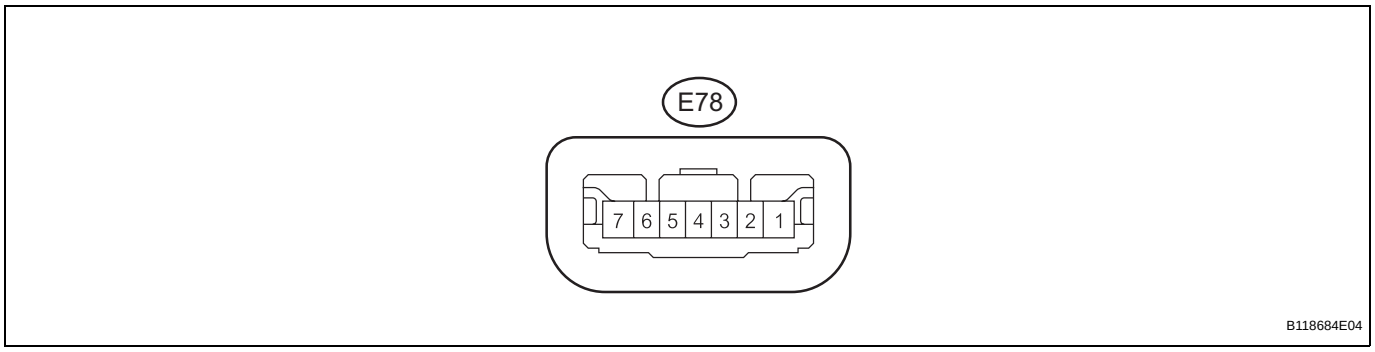

(a) Disconnect the E78 ECU connector.
(b) Measure the resistance and voltage according to the value(s) in the table below.

Symbols (Terminal No.)	Wiring Color	Terminal Description	Condition	Specified Condition
SGND (E78-2) - Body ground	W-B - Body ground	Ground	Always	Below 1 Ω
GND (E78-1) - Body ground	W-B - Body ground	Ground	Always	Below 1 Ω
B (E78-7) - Body ground	B - Body ground	+B power supply	Always	10 to 14 V
IG2 (E78-6) - Body ground	B - Body ground	Ignition power supply	Engine switch off	0 V
			Engine switch on (IG)	10 to 14 V

If the result is not as specified, there may be a malfunction on the wire harness side.

5. CHECK ECM

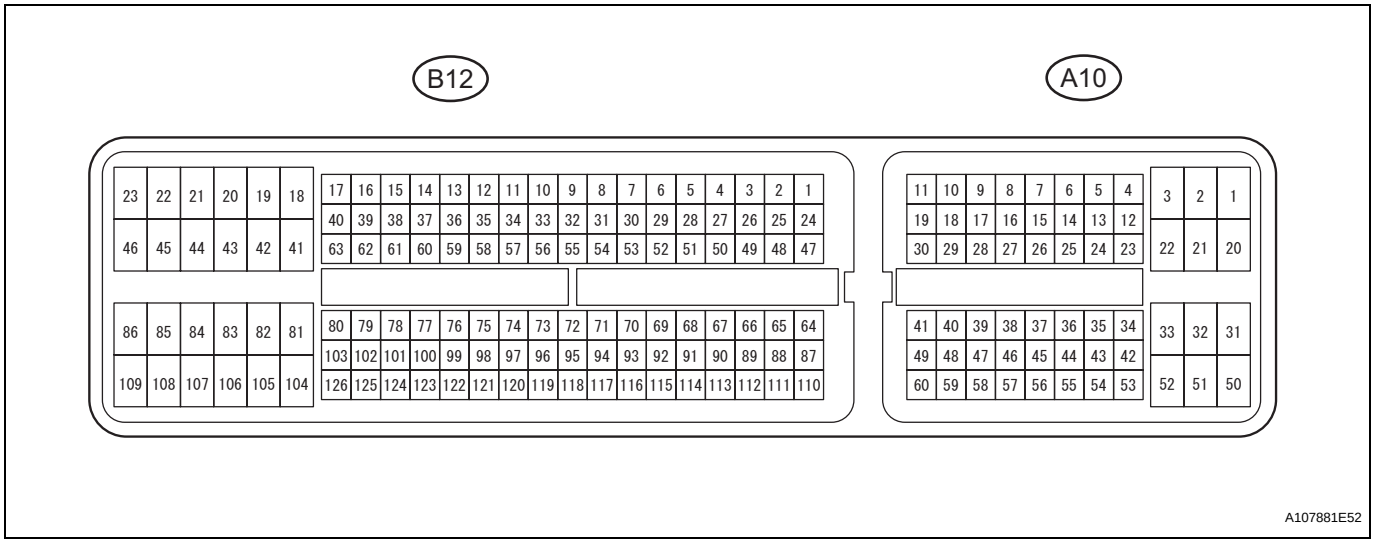

(a) Measure the resistance and voltage according to the value(s) in the table below.

Symbols (Terminal No.)	Wiring Color	Terminal Description	Condition	Specified Condition
E1 (B12-81) - Body ground	W-B - Body ground	Ground	Always	Below 1 Ω
E01 (B12-22) - Body ground	W-B - Body ground	Ground	Always	Below 1 Ω
E02 (B12-21) - Body ground	B-W - Body ground	Ground	Always	Below 1 Ω
E03 (B12-104) - Body ground	B - Body ground	Ground	Always	Below 1 Ω
E04 (B12-23) - Body ground	W - Body ground	Ground	Always	Below 1 Ω
E05 (B12-46) - Body ground	W - Body ground	Ground	Always	Below 1 Ω
ME01 (B12-20) - Body ground	B - Body ground	Ground	Always	Below 1 Ω
BATT (A10-20) - E1 (B12-81)	Y - W-B	Battery (for measuring battery voltage and for ECM memory)	Always	10 to 14 V
+B (A10-2) - E1 (B12-81)	R - W-B	Power source of ECM	Engine switch off	Below 1 V
			Engine switch on (IG)	10 to 14 V
+B2 (A10-1) - E1 (B12-81)	R - W-B	Power source of ECM	Engine switch off	Below 1 V
			Engine switch on (IG)	10 to 14 V
IMI (A10-11) - E1 (B12-81)	Y - W-B	Immobiliser code ECU input signal	Engine switch off	Below 1 V
			Engine switch on (IG)	Pulse generation (see waveform 1)
IMO (A10-10) - E1 (B12-81)	G - W-B	Immobiliser code ECU output signal	Engine switch off	Below 1 V
			Engine switch on (IG)	Pulse generation (see waveform 2)

If the result is not as specified, the ECM may have a malfunction.

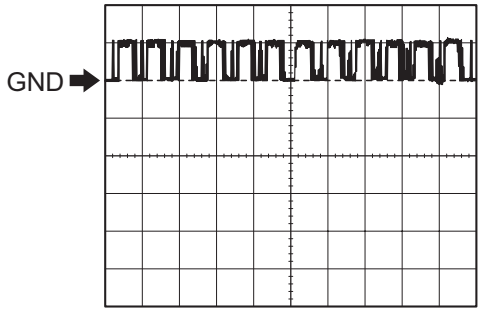

Tool Setting: 10 V/DIV., 100 ms./DIV.

N B139210E01

(b) Inspect using an oscilloscope.

(1) Waveform 1 (Reference)

Item	Content
Symbols (Terminal No.)	IMI (A10-11) - E1 (B12-81)
Tool Setting	10 V/DIV., 100 ms./DIV.
Condition	Engine switch on (IG)

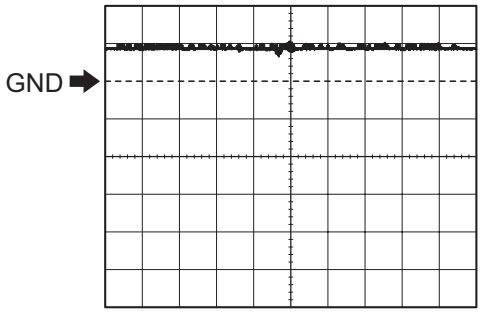

Tool Setting: 10 V/DIV., 100 ms./DIV.

N B139209E01

(2) Waveform 2 (Reference)

Item	Content
Symbols (Terminal No.)	IMO (A10-10) - E1 (B12-81)
Tool Setting	10 V/DIV., 100 ms./DIV.
Condition	Engine switch on (IG)

6. CHECK MAIN BODY ECU (INSTRUMENT PANEL J/B)

(a) Disconnect the DF junction block connectors.

(b) Disconnect the E59, E61 and E60 main body ECU connectors.

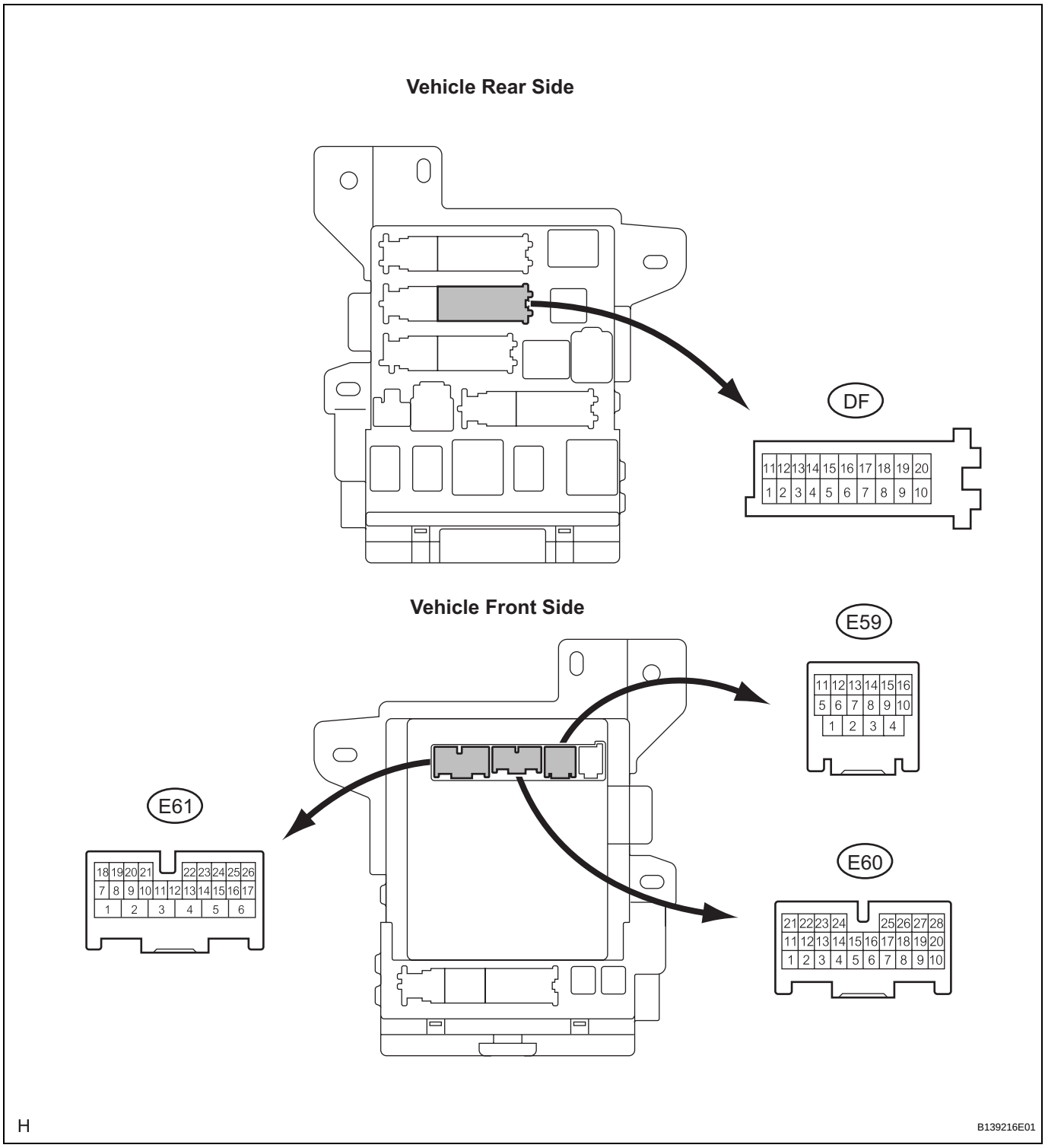

(c) Measure the resistance and voltage according to the value(s) in the table below.

Symbols (Terminal No.)	Wiring Color	Terminal Description	Condition	Specified Condition
GND1 (DF-10) - Body ground	W-B - Body ground	Ground	Always	Below 1 Ω
GND3 (E59-1) - Body ground	W-B - Body ground	Ground	Always	Below 1 Ω
AM1 (E61-6) - Body ground	L - Body ground	+B power supply	Always	10 to 14 V
AM2 (E60-1) - Body ground	L - Body ground	+B power supply	Always	10 to 14 V

If the result is not as specified, there may be a malfunction on the wire harness side.

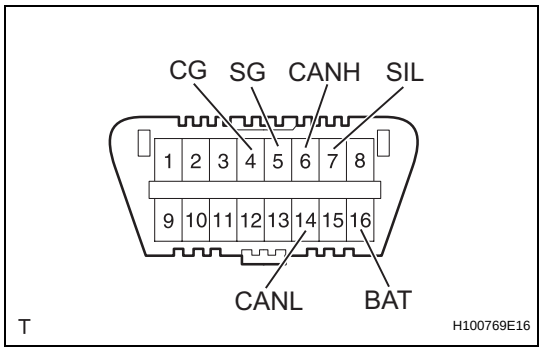

DIAGNOSIS SYSTEM

1. CHECK DLC3

(a) The vehicle's ECU uses ISO 15765-4 for communication protocol. The terminal arrangement of the DLC3 complies with SAE J1962 and matches the ISO 15765-4 format.

EI

Symbols (Terminal No.)	Terminal Description	Condition	Specified Condition
SIL (7) - SG (5)	Bus "+" line	During transmission	Pulse generation
CG (4) - Body ground	Chassis ground	Always	Below 1 Ω
SG (5) - Body ground	Signal ground	Always	Below 1 Ω
BAT (16) - Body ground	Battery positive	Always	10 to 14 V
CANH (6) - CANL (14)	CAN bus line	Engine switch off*	54 to 69 Ω
CANH (6) - CG (4)	HIGH-level CAN bus line	Engine switch off*	200 Ω or higher
CANL (14) - CG (4)	LOW-level CAN bus line	Engine switch off*	200 Ω or higher
CANH (6) - BAT (16)	HIGH-level CAN bus line	Engine switch off*	6 kΩ or higher
CANL (14) - BAT (16)	LOW-level CAN bus line	Engine switch off*	6 kΩ or higher

NOTICE:
***: Before measuring the resistance, leave the vehicle as is for at least 1 minute and do not operate the engine switch, any other switches or the doors.**
If the result is not as specified, the DLC3 may have a malfunction. Repair or replace the harness and connector.

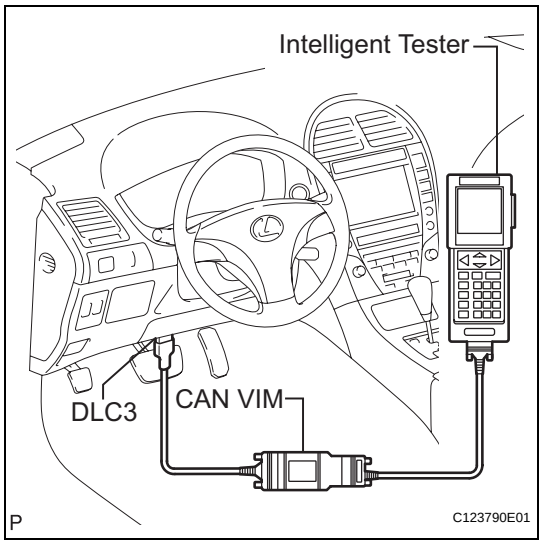

(b) Connect the cable of the intelligent tester (with CAN VIM) to the DLC3, turn the engine switch on (IG) and attempt to use the intelligent tester. If the screen displays a communication error message, a problem exists in the vehicle side or tester side.
HINT:
- If communication is normal when the tool is connected to another vehicle, inspect the DLC3 on the original vehicle.
- If communication is still impossible when the tool is connected to another vehicle, the problem is probably in the tool itself. Consult the Service Department listed in the tool's instruction manual.

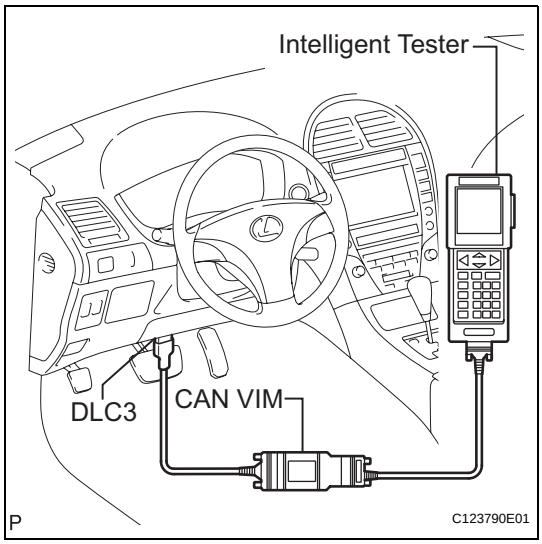

DTC CHECK / CLEAR

1. CHECK DTC

(a) Connect the intelligent tester to the Controller Area Network Vehicle Interface Module (CAN VIM). Then connect the CAN VIM to the DLC3.

(b) Turn the engine switch on (IG).

(c) Read the DTCs by following the directions on the tester screen.
HINT:
Refer to the intelligent tester operator's manual for further details.

2. CLEAR DTC

(a) Connect the intelligent tester (with CAN VIM) to the DLC3.

(b) Turn the engine switch on (IG).

(c) Erase the DTCs by following the directions on the tester's screen.
HINT:
Refer to the intelligent tester operator's manual for further details.

DATA LIST / ACTIVE TEST

1. READ DATA LIST

HINT:
Using the intelligent tester to read the DATA LIST allows the values or states of switches, sensors, actuators and other items to be read without removing any parts. This non-intrusive inspection can be very useful as intermittent conditions or signals may be discovered before parts or wiring is disturbed. Reading the DATA LIST information early in troubleshooting is one way to save diagnostic time.

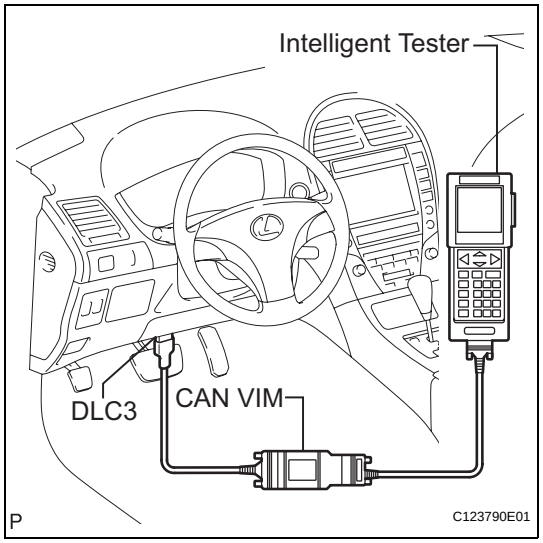

(a) Connect the intelligent tester (with CAN VIM) to the DLC3.
(b) Turn the engine switch on (IG).
(c) Read the DATA LIST.

SMART ACCESS:

Tester Display	Measurement Item/Range	Normal Condition	Diagnostic Note
IG SW	Engine switch on (IG) signal / ON or OFF	ON: Engine switch on (ACC, IG) or start OFF: Engine switch off	-
ACC SW	Engine switch on (ACC) signal / ON or OFF	ON: Engine switch on (ACC, IG) or start OFF: Engine switch off	-
IMMOBILISER	Immobiliser system status / SET or UNSET	SET: Key is not in cabin UNSET: Key is in cabin	-
MASTER KEY	Master key code signal / MATCH or NO MATCH	MATCH: Master key code is sent NO MATCH: Unmatched master key code is sent	-
SUB KEY	Sub-key (Master key) code signal / MATCH or NO MATCH	MATCH: Sub-key (master key) code is sent NO MATCH: Unmatched sub-key (master key) code is sent	-
BCC	Transponder chip signal / OK or NG	OK: Correct data sent NG: Incorrect data sent	-
STATUS	Transponder chip data / OK or NG	OK: Data OK NG: Data error	-
ENCRYPT CODE	Transponder chip signal / OK or NG	OK: Correct data sent NG: Incorrect data sent	-
SERIAL NUMBER	Transponder chip signal / OK or NG	OK: Correct data sent NG: Incorrect data sent	-
FRAME	Transponder chip signal / OK or NG	OK: Correct data sent NG: Incorrect data sent	-
RESPONSE	Transponder chip signal / OK or NG	OK: Correct data sent NG: Incorrect data sent	-

EI

2. PERFORM ACTIVE TEST

HINT:
Performing the intelligent tester's ACTIVE TEST allows relay, VSV, actuator and other items to be operated without removing any parts. Performing the ACTIVE TEST early in troubleshooting is one way to save time. The DATA LIST can be displayed during the ACTIVE TEST.

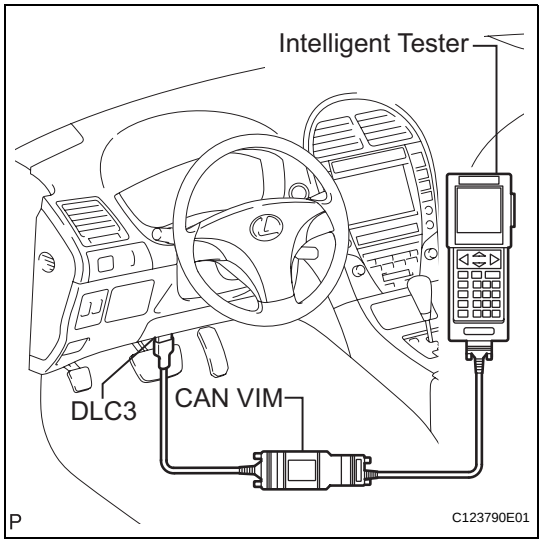

(a) Connect the intelligent tester (with CAN VIM) to the DLC3.
(b) Turn the engine switch on (IG).
(c) Perform the ACTIVE TEST by following the directions on the tester screen.

SMART ACCESS:

Tester Display	Test Part	Control Range	Diagnostic Note
SECURITY INDIC	Turn security indicator	ON/OFF	-

DIAGNOSTIC TROUBLE CODE CHART

CERTIFICATION ECU DIAGNOSTIC TROUBLE CODE CHART

DTC Code	Detection Item	Trouble Area	See page
B2784	Antenna Coil Open / Short	1. Wire harness 2. Engine switch 3. Certification ECU	EI-28
B2785	Communication Malfunction between ECUs Connected by LIN	1. Wire harness 2. Certification ECU 3. Main body ECU 4. Steering lock ECU 5. ID code box	EI-30
B2786	No Response from Steering Lock ECU	1. Wire harness 2. Certification ECU 3. Steering lock ECU	EI-34
B2789	No Response from ID BOX	1. Wire harness 2. Certification ECU 3. ID code box	EI-37
B278A	Short to GND in Immobiliser System Power Source Circuit	1. Wire harness 2. Engine switch 3. Certification ECU	EI-40
B2790	ID BOX EEPROM Malfunction	ID code box	EI-43
B2791	Communication Condition Failure between ECM	-	EI-44

ECM DIAGNOSTIC TROUBLE CODE CHART

DTC Code	Detection Item	Trouble Area	See page
B2799	Engine Immobiliser System Malfunction	1. Wire harness 2. ECM 3. ID code box	EI-46

HINT:
The DTCs for the engine immobiliser system are specified above. If other codes are output, check the DTC chart for the SFI system.

DTC	B2784	Antenna Coil Open / Short

DESCRIPTION

This DTC is output when there is an open or short in the key coil (built into the engine switch).

DTC No.	DTC Detection Condition	Trouble Area
B2784	Antenna coil is open/shorted	• Wire harness • Engine switch • Certification ECU

EI

WIRING DIAGRAM

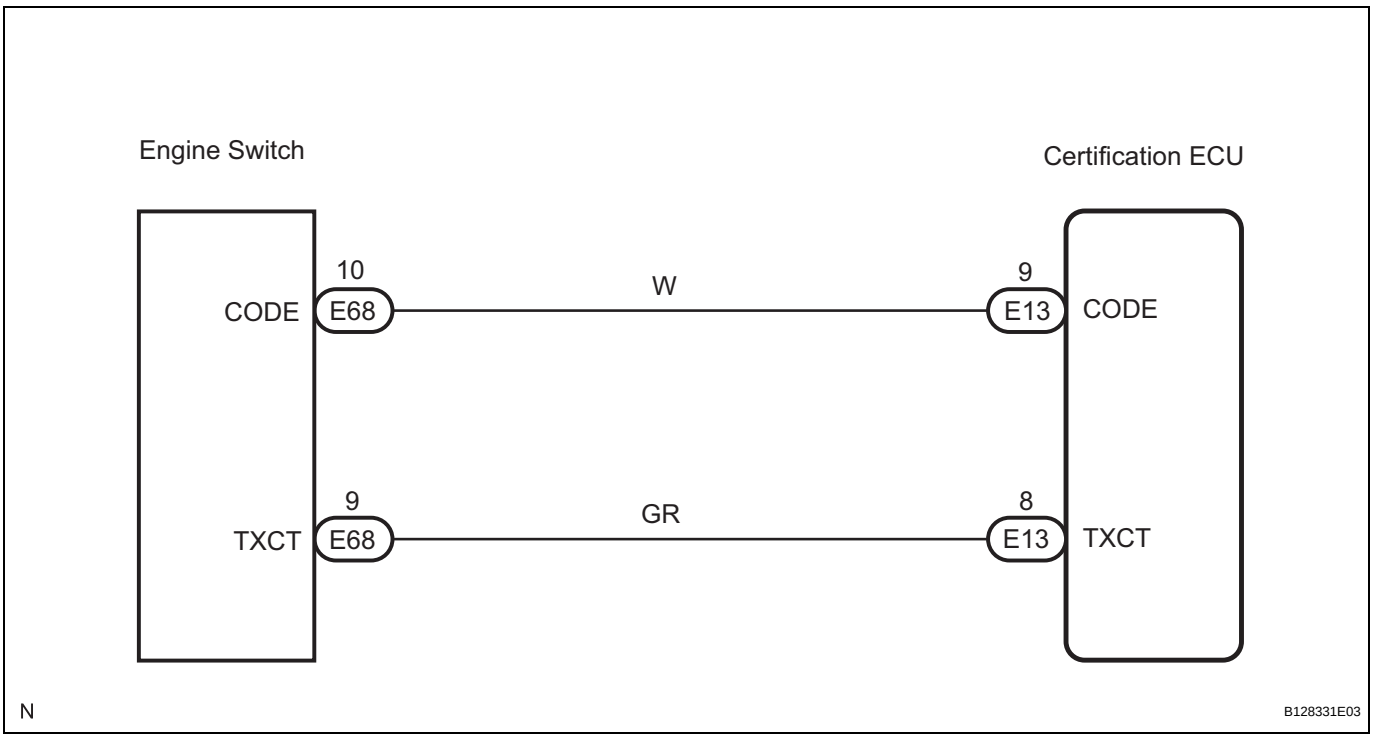

INSPECTION PROCEDURE

NOTICE:

If the certification ECU is replaced, register the key and ECU communication ID (See page EI-9).

1	CHECK DTC OUTPUT

(a) Delete the DTCs (See page EI-25).

(b) Recheck for DTCs (See page EI-25).

Result

Result	Proceed to
B2784 output reoccurs	A
B2784 output does not reoccur	B

B → **USE SIMULATION METHOD TO CHECK**

A

2 CHECK HARNESS AND CONNECTOR (CERTIFICATION ECU - ENGINE SWITCH)

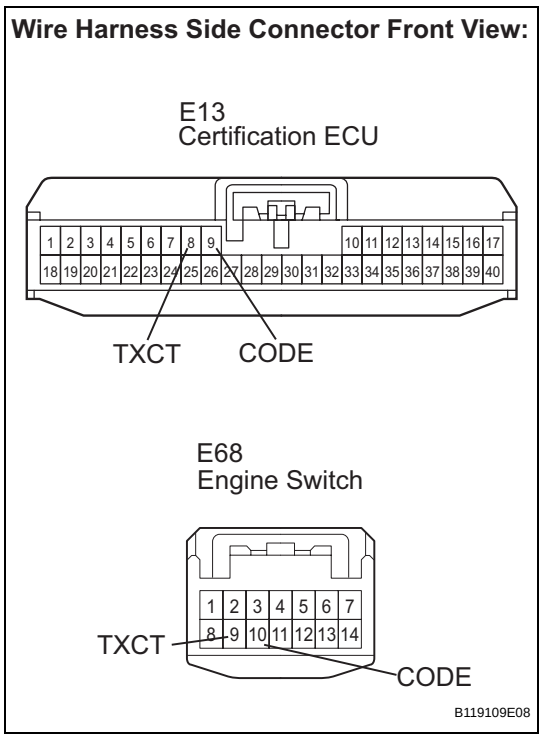

(a) Disconnect the E13 ECU and E68 switch connectors.
(b) Measure the resistance according to the value(s) in the table below.

Standard resistance

Tester Connection	Specified Condition
E13-9 (CODE) - E68-10 (CODE)	Below 1 Ω
E13-8 (TXCT) - E68-9 (TXCT)	
E13-9 (CODE) - Body ground	10 kΩ or higher
E13-8 (TXCT) - Body ground	

NG → **REPAIR OR REPLACE HARNESS OR CONNECTOR**

OK

3 CHECK ENGINE SWITCH

(a) After replacing the engine switch (See page ST-158) with a normal one, check that the engine starts.
OK:
The engine starts.

NG → **REPLACE CERTIFICATION ECU**

OK

END

EI

DTC	B2785	Communication Malfunction between ECUs Connected by LIN

DESCRIPTION

This DTC is output when LIN communication from the certification ECU stops for a certain amount of time.
HINT:
If this DTC B2785 is detected simultaneously with DTC B2786 , B2789 or B2287, troubleshoot DTC B2786, B2789 or B2287 first.

DTC No.	B2785	B2786	B2789	B2287	Trouble Area
DTC Output	○	○	-	-	Wire harness (Certification ECU - Steering lock ECU)
	○	-	○	-	Wire harness (Certification ECU - ID code box)
	○	-	-	○	Wire harness (Certification - Main body ECU)

○: DTC is output
-: DTC is not output

DTC No.	DTC Detection Condition	Trouble Area
B2785	• LIN communication from certification ECU stops for a certain amount of time • Open or short in wire harness between ECUs	• Wire harness • Certification ECU • Main body ECU • Steering lock ECU • ID code box

WIRING DIAGRAM

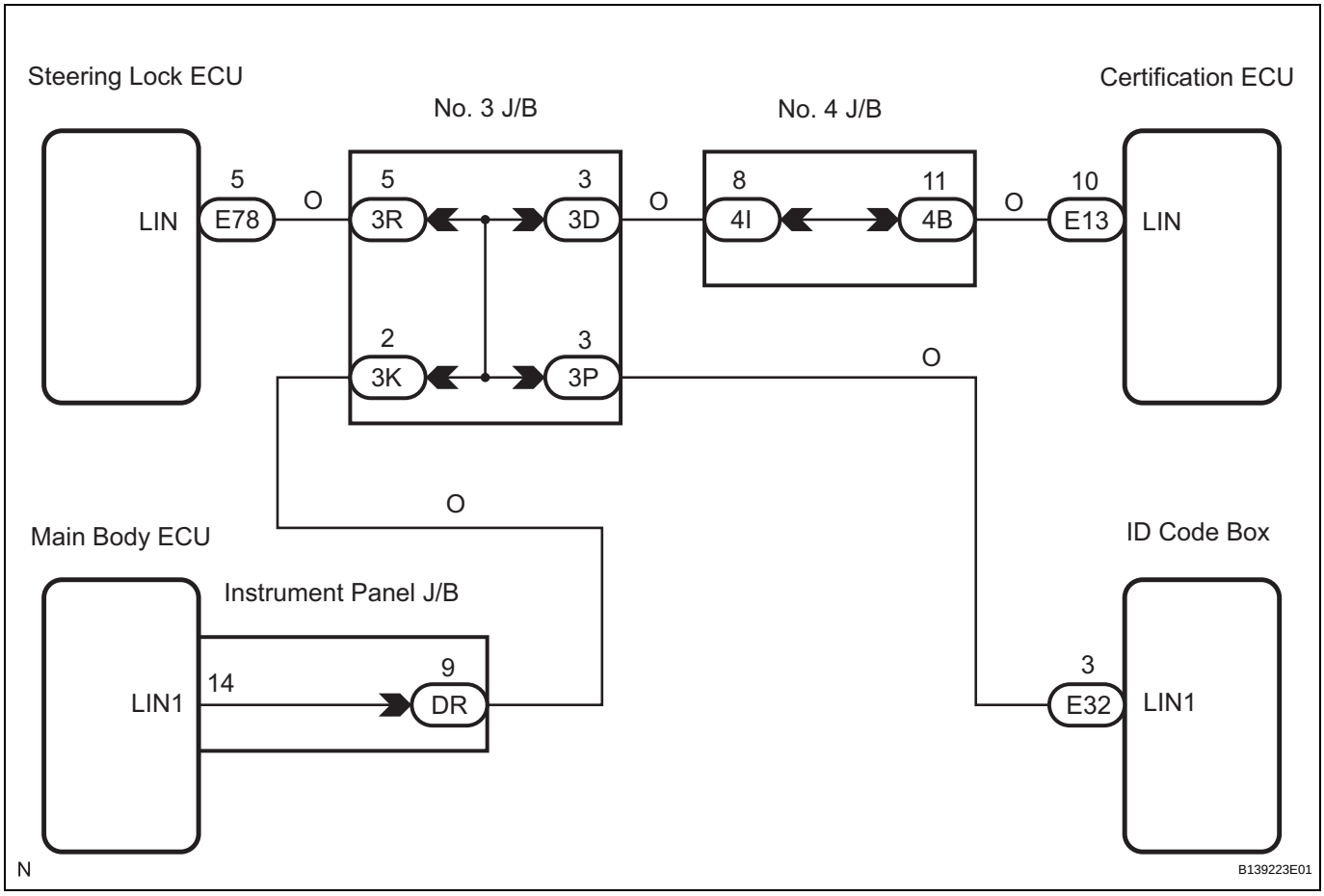

INSPECTION PROCEDURE

NOTICE:

- **If the certification ECU or ID code box is replaced, register the key and ECU communication ID (See page EI-9).**
- **If the steering lock ECU or main body ECU is replaced, register the ECU code and ECU communication ID (See page EI-9).**

1 CHECK DTC OUTPUT

(a) Delete the DTCs (See page EI-25).
(b) Recheck for DTCs (See page EI-25).
Result

Result	Proceed to
B2785 output reoccurs	A
B2785 output does not reoccur	B

B → **USE SIMULATION METHOD TO CHECK**

A

2 REPLACE CERTIFICATION ECU

(a) Replace the certification ECU.

NEXT

3 ELECTRICAL KEY REGISTRATION

(a) Register the electrical key code in the certification ECU (See page EI-9).

NEXT

4 ECU COMMUNICATION ID REGISTRATION

(a) Register the ECU communication ID between the ID code box and ECM (See page EI-9).

NEXT

5 CHECK DTC OUTPUT

(a) Delete the DTCs (See page EI-25).
(b) Recheck for DTCs (See page EI-25).
Result

Result	Proceed to
B2785 output reoccurs	A
B2785 output does not reoccur	B

B → END

A

6	REPLACE MAIN BODY ECU

(a) Replace the main body ECU.

NEXT

EI

7	ECU CODE REGISTRATION

(a) Register the ECU code between the ECUs connected by LIN communication (See page EI-9).

NEXT

8	CHECK DTC OUTPUT

(a) Delete the DTCs (See page EI-25).
(b) Recheck for DTCs (See page EI-25).
Result

Result	Proceed to
B2785 output reoccurs	A
B2785 output does not reoccur	B

B → END

A

9	REPLACE STEERING LOCK ECU

(a) Replace the steering lock ECU.

NEXT

10	ECU CODE REGISTRATION

(a) Register the ECU code between the ECUs connected by LIN communication (See page EI-9).

NEXT

11	CHECK DTC OUTPUT

(a) Delete the DTCs (See page EI-25).
(b) Recheck for DTCs (See page EI-25).
Result

Result	Proceed to
B2785 output reoccurs	A

Result	Proceed to
B2785 output does not reoccur	B

B → END

A

REPLACE ID CODE BOX

DTC	B2786	No Response from Steering Lock ECU

DESCRIPTION

This DTC is output when the certification ECU does not receive LIN communication from the steering lock ECU for 10 seconds.

DTC No.	DTC Detection Condition	Trouble Area
B2786	• Certification ECU does not receive LIN communication from steering lock ECU for 10 seconds • Open or short in wire harness between ECUs	• Wire harness • Certification ECU • Steering lock ECU

EI

WIRING DIAGRAM

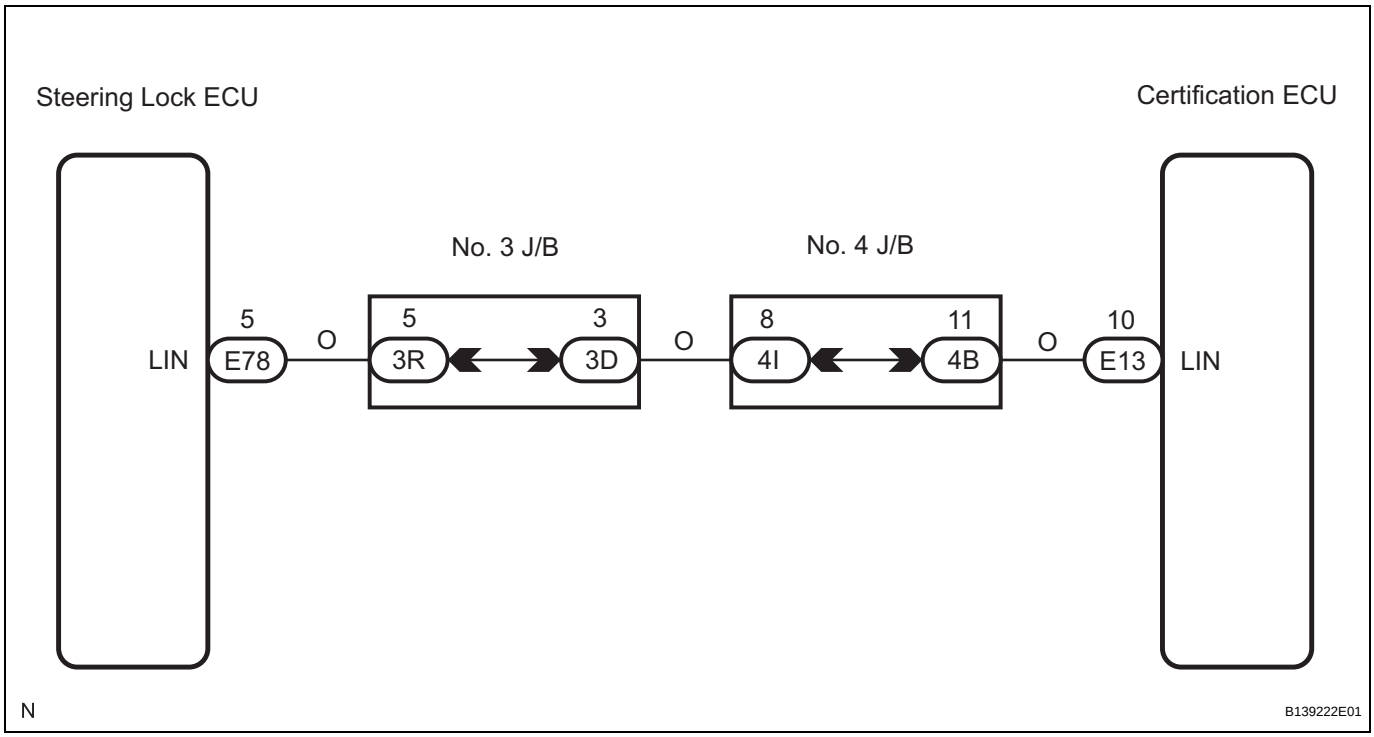

INSPECTION PROCEDURE

NOTICE:

- **If the certification ECU is replaced, register the key and ECU communication ID (See page EI-9).**
- **If the steering lock ECU is replaced, register the ECU code and ECU communication ID (See page EI-9).**

1	CHECK DTC OUTPUT

(a) Delete the DTCs (See page EI-25).
(b) Recheck for DTCs (See page EI-25).
Result

Result	Proceed to
B2786 output reoccurs	A
B2786 output does not reoccur	B

B	USE SIMULATION METHOD TO CHECK

A

2 CHECK HARNESS AND CONNECTOR (CERTIFICATION ECU - STEERING LOCK ECU)

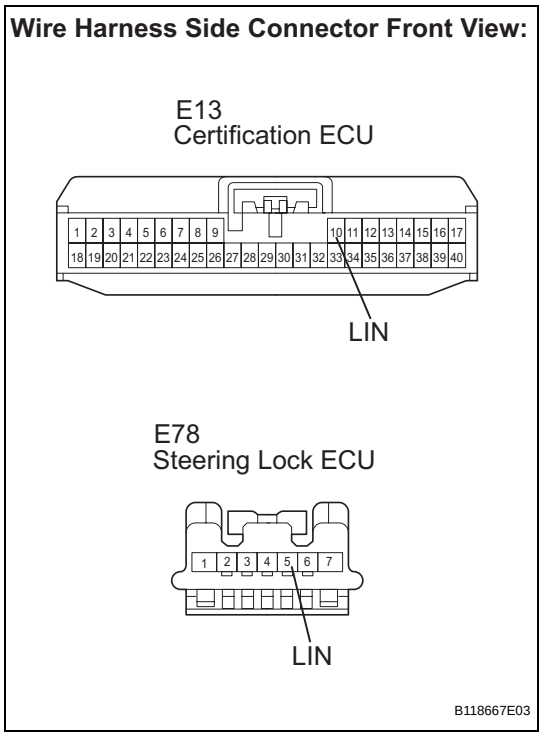

(a) Disconnect the E13 and E78 ECU connectors.
(b) Measure the resistance according to the value(s) in the table below.

Standard resistance

Tester Connection	Specified Condition
E13-10 (LIN) - E78-5 (LIN)	Below 1 Ω
E13-10 (LIN) - Body ground	10 kΩ or higher

NG → **REPAIR OR REPLACE HARNESS OR CONNECTOR**

OK

3 REPLACE CERTIFICATION ECU

(a) Replace the certification ECU.

NEXT

4 ELECTRICAL KEY REGISTRATION

(a) Register the electrical key code in the certification ECU (See page EI-9).

NEXT

5 ECU COMMUNICATION ID REGISTRATION

(a) Register the ECU communication ID between the ID code box and ECM (See page EI-9).

NEXT

6 CHECK DTC OUTPUT

(a) Delete the DTCs (See page EI-25).

EI

(b) Recheck for DTCs (See page EI-25).

Result

Result	Proceed to
B2786 output reoccurs	A
B2786 output does not reoccur	B

B → **END**

A

EI

REPLACE STEERING LOCK ECU

DTC	B2789	No Response from ID BOX

DESCRIPTION

This DTC is output when the certification ECU does not receive LIN communication from the ID code box for 10 seconds.

DTC No.	DTC Detection Condition	Trouble Area
B2789	• Certification ECU does not receive LIN communication from ID code box for 10 seconds • Open or short in wire harness between ECUs	• Wire harness • Certification ECU • ID code box

WIRING DIAGRAM

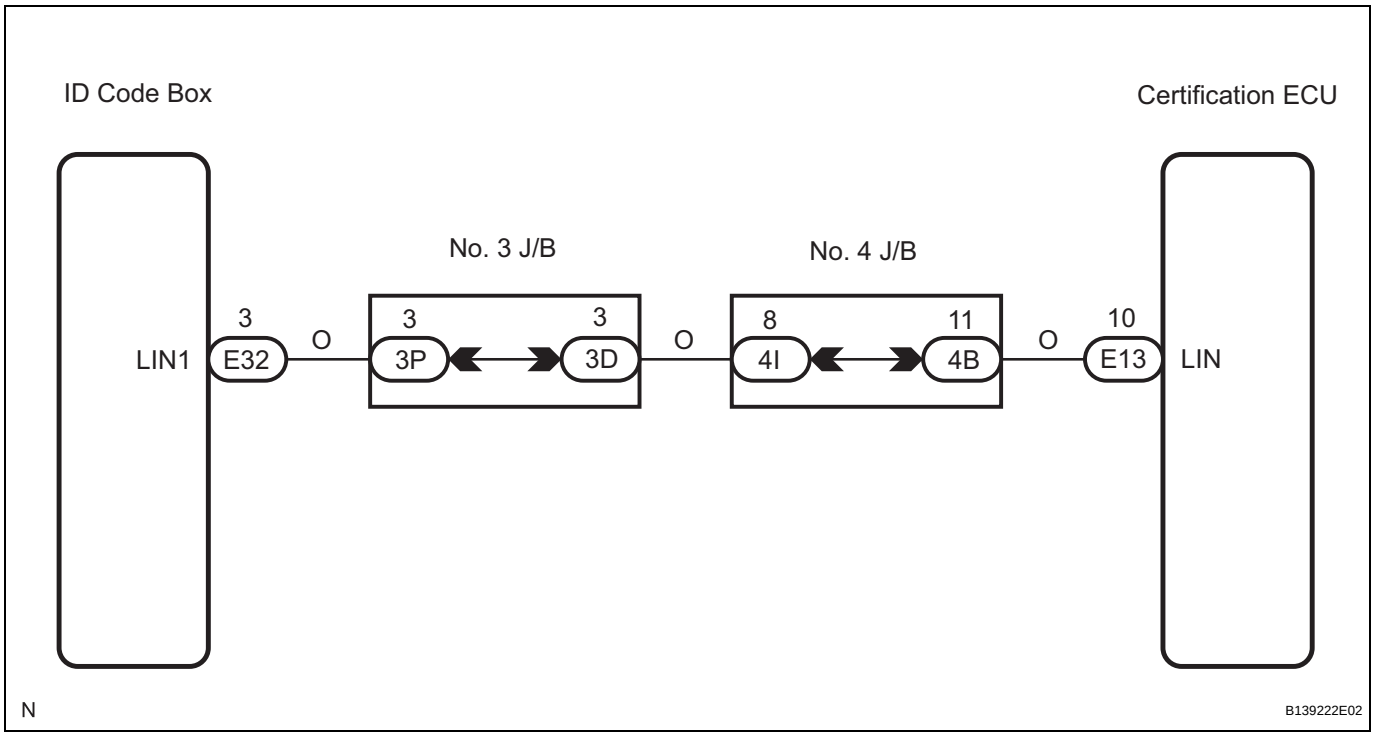

INSPECTION PROCEDURE

NOTICE:

If the certification ECU or ID code box is replaced, register the key and ECU communication ID (See page EI-9).

1	CHECK DTC OUTPUT

(a) Delete the DTCs (See page EI-25).
(b) Recheck for DTCs (See page EI-25).
Result

Result	Proceed to
B2789 output reoccurs	A
B2789 output does not reoccur	B

B	USE SIMULATION METHOD TO CHECK

A

2 CHECK HARNESS AND CONNECTOR (CERTIFICATION ECU - ID CODE BOX)

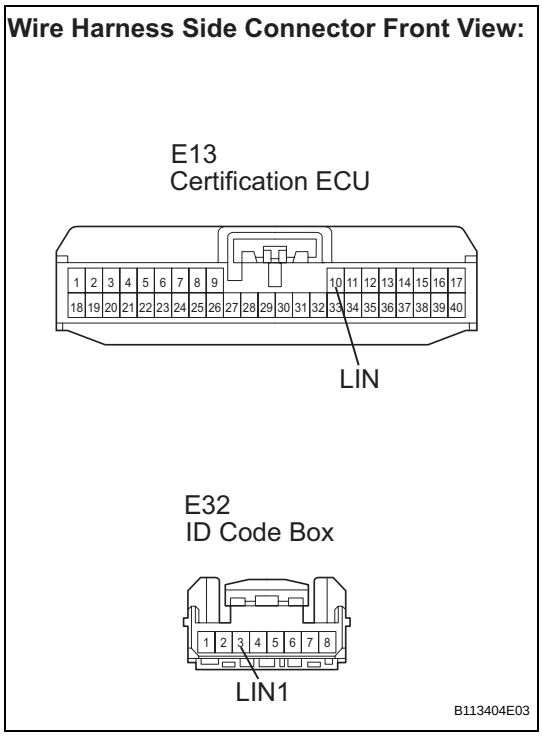

(a) Disconnect the E13 ECU and E32 ID code box connectors.

(b) Measure the resistance according to the value(s) in the table below.

Standard resistance

Tester Connection	Specified Condition
E13-10 (LIN) - E32-3 (LIN1)	Below 1 Ω
E13-10 (LIN) - Body ground	10 kΩ or higher

NG → **REPAIR OR REPLACE HARNESS OR CONNECTOR**

OK

3 REPLACE CERTIFICATION ECU

(a) Replace the certification ECU.

NEXT

4 ELECTRICAL KEY REGISTRATION

(a) Register the electrical key code in the certification ECU (See page EI-9).

NEXT

5 ECU COMMUNICATION ID REGISTRATION

(a) Register the ECU communication ID between the ID code box and ECM (See page EI-9).

NEXT

6 CHECK DTC OUTPUT

(a) Delete the DTCs (See page EI-25).

(b) Recheck for DTCs (See page EI-25).

Result

Result	Proceed to
B2789 output reoccurs	A
B2789 output does not reoccur	B

B → **END**

A

REPLACE ID CODE BOX

DTC	B278A	Short to GND in Immobiliser System Power Source Circuit

DESCRIPTION

This DTC is output when the engine switch power source supply line is open or shorted.

DTC No.	DTC Detection Condition	Trouble Area
B278A	Engine switch power source supply line is open or shorted	• Wire harness • Engine switch • Certification ECU

EI

WIRING DIAGRAM

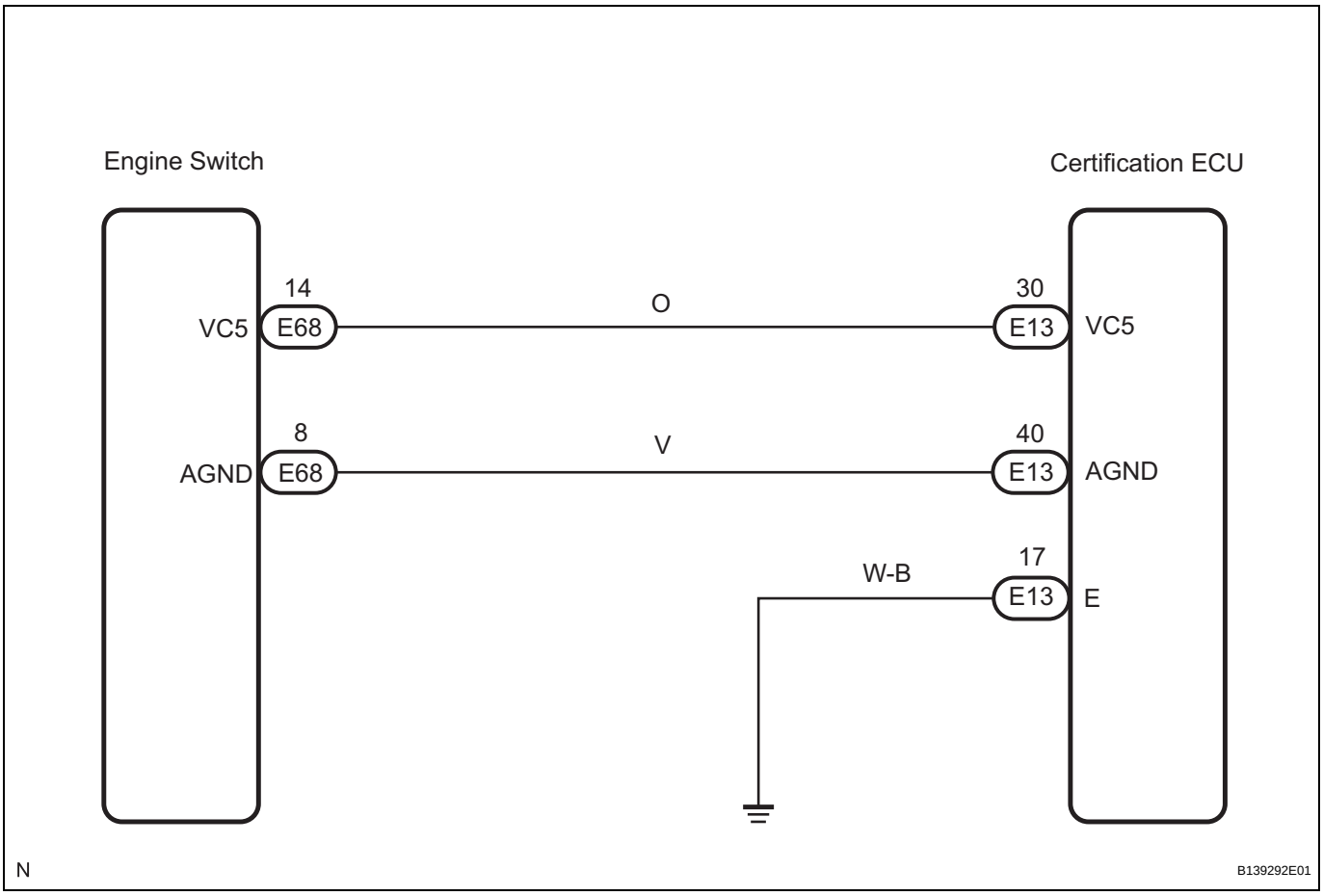

INSPECTION PROCEDURE

NOTICE:

If the certification ECU is replaced, register the key and ECU communication ID (See page EI-9).

1	CHECK DTC OUTPUT

(a) Delete the DTCs (See page EI-25).

(b) Recheck for DTCs (See page EI-25).

Result

Result	Proceed to
B278A output reoccurs	A
B278A output does not reoccur	B

B → **USE SIMULATION METHOD TO CHECK**

A

2 CHECK HARNESS AND CONNECTOR (CERTIFICATION ECU - ENGINE SWITCH)

Wire Harness Side Connector Front View:

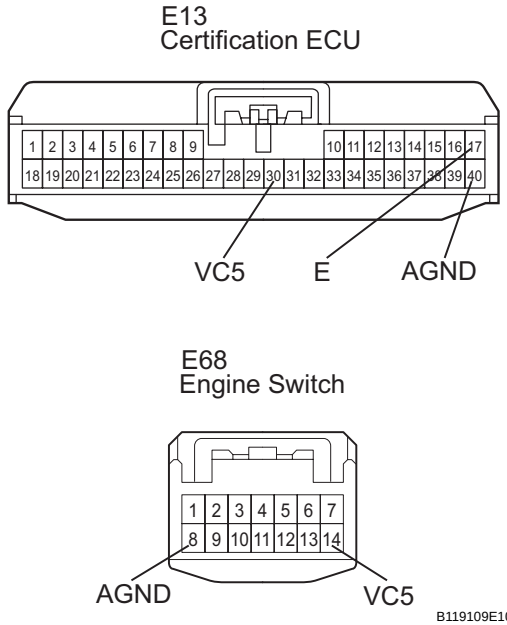

(a) Disconnect the E13 ECU and E68 switch connectors.
(b) Measure the resistance according to the value(s) in the table below.

Standard resistance

Tester Connection	Specified Condition
E13-30 (VC5) - E68-14 (VC5)	Below 1 Ω
E13-40 (AGND) - E68-8 (AGND)	
E13-17 (E) - Body ground	
E13-30 (VC5) - Body ground	10 kΩ or higher
E13-40 (AGND) - Body ground	

NG → **REPAIR OR REPLACE HARNESS OR CONNECTOR**

OK

3 CHECK HARNESS AND CONNECTOR (ENGINE SWITCH POWER SOURCE)

Wire Harness Side Connector Rear View:

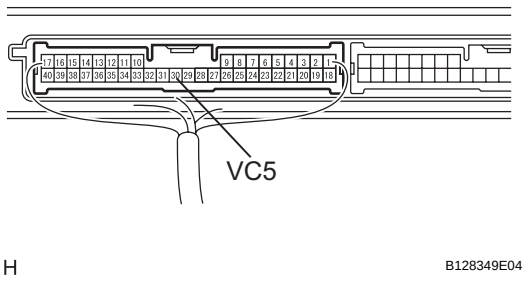

(a) Reconnect the E13 ECU and E68 switch connectors.
(b) Measure the voltage according to the value(s) in the table below.

Standard voltage

Tester Connection	Condition	Specified Condition
E13-30 (VC5) - Body ground	Key is not in cabin	Below 1 V
	Engine switch pressed	4.6 to 5.4 V

NG → **REPLACE CERTIFICATION ECU**

OK

EI

4	CHECK HARNESS AND CONNECTOR (ENGINE SWITCH BODY GROUND)

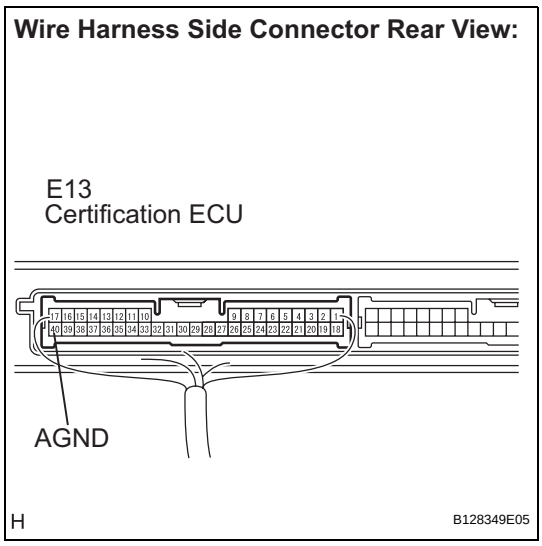

(a) Measure the resistance according to the value(s) in the table below.

Standard resistance

Tester Connection	Specified Condition
E13-40 (AGND) - Body ground	Below 1 Ω

NG → **REPLACE CERTIFICATION ECU**

OK

REPLACE ENGINE SWITCH (See page ST-158)

DTC	B2790	ID BOX EEPROM Malfunction

DESCRIPTION

This DTC is output when the ID code box detects an internal malfunction.

DTC No.	DTC Detection Condition	Trouble Area
B2790	ID code box detects internal malfunction	ID code box

INSPECTION PROCEDURE

NOTICE:

If the ID code box is replaced, register the key and ECU communication ID (See page EI-9).

1	REPLACE ID CODE BOX

NEXT

END

DTC	B2791	Communication Condition Failure between ECM

DESCRIPTION

This DTC is output when the ID code box does not respond to a verification request signal from the ECM.
HINT:

- If the engine switch is turned off immediately after the engine starts, DTC B2791 will be detected. If DTC B2791 is cleared, this DTC will not reoccur because it does not indicate a malfunction.
- If this DTC B2791 is detected simultaneously with DTC B2799, troubleshoot B2799 first.

DTC No.	DTC Detection Condition	Trouble Area
B2791	ID code box does not respond to a verification request signal from ECM • Perform this step when the engine switch is turned off immediately after the engine starts.	-

WIRING DIAGRAM

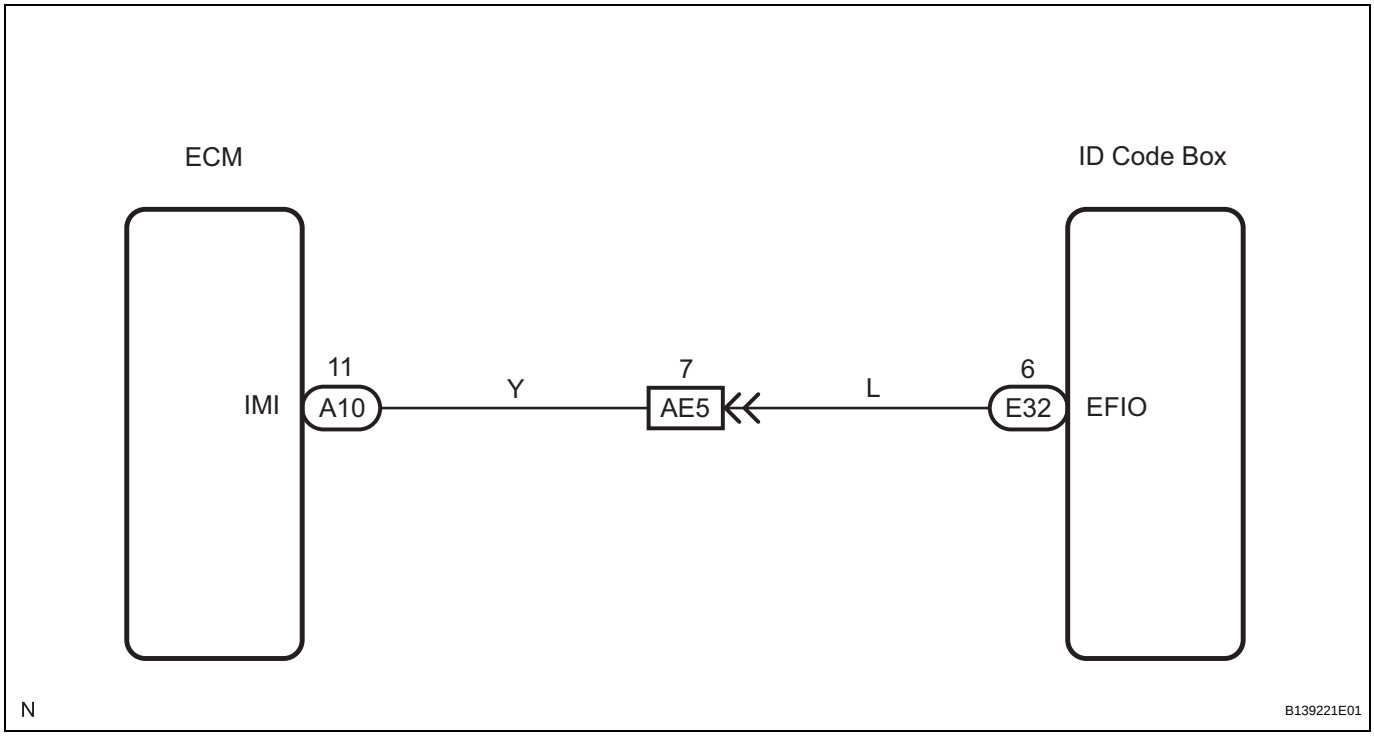

INSPECTION PROCEDURE

NOTICE:

If the engine can be started even when DTC B2791 is output, the ID code box can be considered normal. Be sure to recheck for DTCs after clearing the DTCs (See page EI-25).

1	CHECK ENGINE START

(a) Delete the DTCs (See page EI-25).
(b) Check that the engine starts.
Result

Result	Proceed to
Engine does not start	**A**

Result	Proceed to
Engine starts	B

HINT:
Perform this step when the engine switch is turned off immediately after the engine starts.

B → **END**

A

2 CHECK DTC OUTPUT

EI

(a) Recheck for DTCs (See page EI-25).
Result

Result	Proceed to
B2791 and other DTC output	A
No DTC output	B

HINT:
If the engine does not start, DTC B2791 will not be detected separately from other DTCs because DTC B2791 will be output together with other DTCs. Troubleshoot DTCs other than DTC B2791.

B → **GO TO SMART ACCESS SYSTEM WITH PUSH-BUTTON START (See page ST-17)**

A

REPAIR CIRCUITS INDICATED BY OUTPUT DTCS

DTC	B2799	Engine Immobiliser System Malfunction

DESCRIPTION

This DTC is output when one of the following occurs: 1) the ECM detects errors in its own communications with the ID code box; 2) the ECM detects errors in the communication lines; or 3) the ECU communication ID between the ID code box and ECM is different and an engine start is attempted. Before troubleshooting for this DTC, make sure no certification ECU DTCs are present. If present, troubleshoot the certification ECU DTCs first.

DTC No.	DTC Detection Condition	Trouble Area
B2799	One of following conditions is met: • Error in communication between ECM and ID code box • Error in communication lines • Communication ID is different between ID code box and ECM during communication	• Wire harness • ECM • ID code box

EI

WIRING DIAGRAM

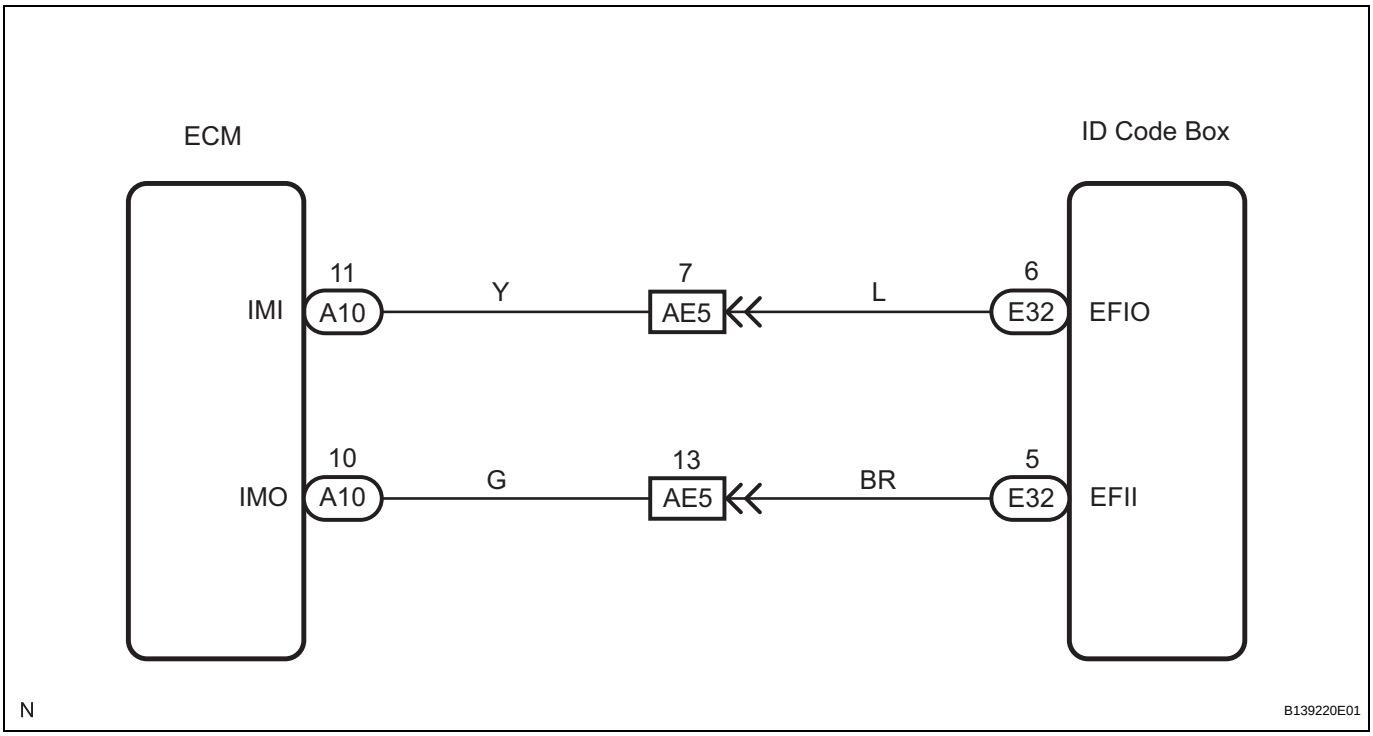

INSPECTION PROCEDURE

NOTICE:

- **If the ID code box is replaced, register the key and ECU communication ID (See page EI-9).**
- **If the ECM is replaced, register the ECU communication ID (See page EI-9).**

1	CHECK DTC OUTPUT

(a) Delete the DTCs (See page EI-25).
(b) Recheck for DTCs (See page EI-25).
Result

Result	Proceed to
B2799 output reoccurs	A

Result	Proceed to
B2799 output does not reoccur	B

B → **USE SIMULATION METHOD TO CHECK**

A

2 RE-REGISTER ECU COMMUNICATION ID

(a) Re-register the ECU communication ID (See page EI-9) between the ID code box and ECM.
(b) Check that the engine starts.
OK:
The engine starts.

OK → **END**

NG

3 CHECK HARNESS AND CONNECTOR (ID CODE BOX - ECM)

Wire Harness Side Connector Front View:

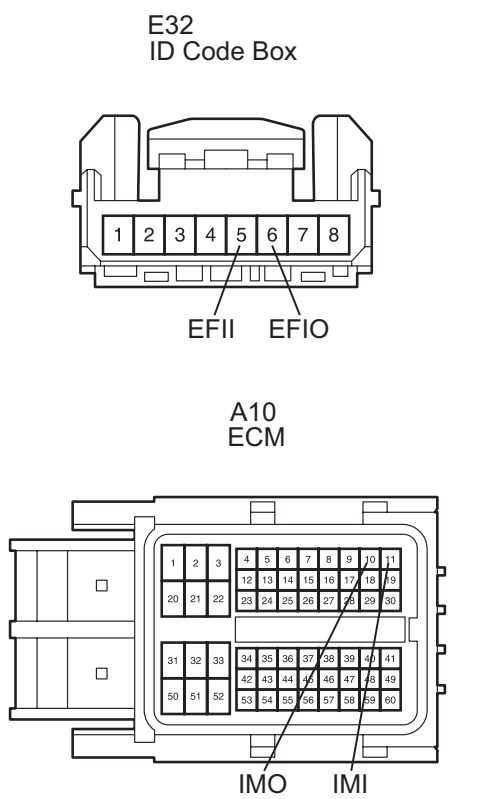

(a) Disconnect the E32 ID code box and A10 ECM connectors.
(b) Measure the resistance according to the value(s) in the table below.
Standard resistance

Tester Connection	Specified Condition
E32-5 (EFII) - A10-10 (IMO)	Below 1 Ω
E32-6 (EFIO) - A10-11 (IMI)	
E32-5 (EFII) - Body ground	10 kΩ or higher
E32-6 (EFIO) - Body ground	

NG → **REPAIR OR REPLACE HARNESS OR CONNECTOR**

OK

EI

4	REPLACE ECM

(a) Replace the ECM (See page ES-543).

NEXT

5	ECU COMMUNICATION ID REGISTRATION

(a) Register the ECU communication ID between the ID code box and ECM (See page EI-9).

EI

NEXT

6	CHECK DTC OUTPUT

(a) Delete the DTCs (See page EI-25).
(b) Recheck for DTCs (See page EI-25).
Result

Result	Proceed to
B2799 output reoccurs	A
B2799 output does not reoccur	B

B → END

A

REPLACE ID CODE BOX

ID Code Box Power Source Circuit

DESCRIPTION

This circuit provides power to operate the ID code box.

WIRING DIAGRAM

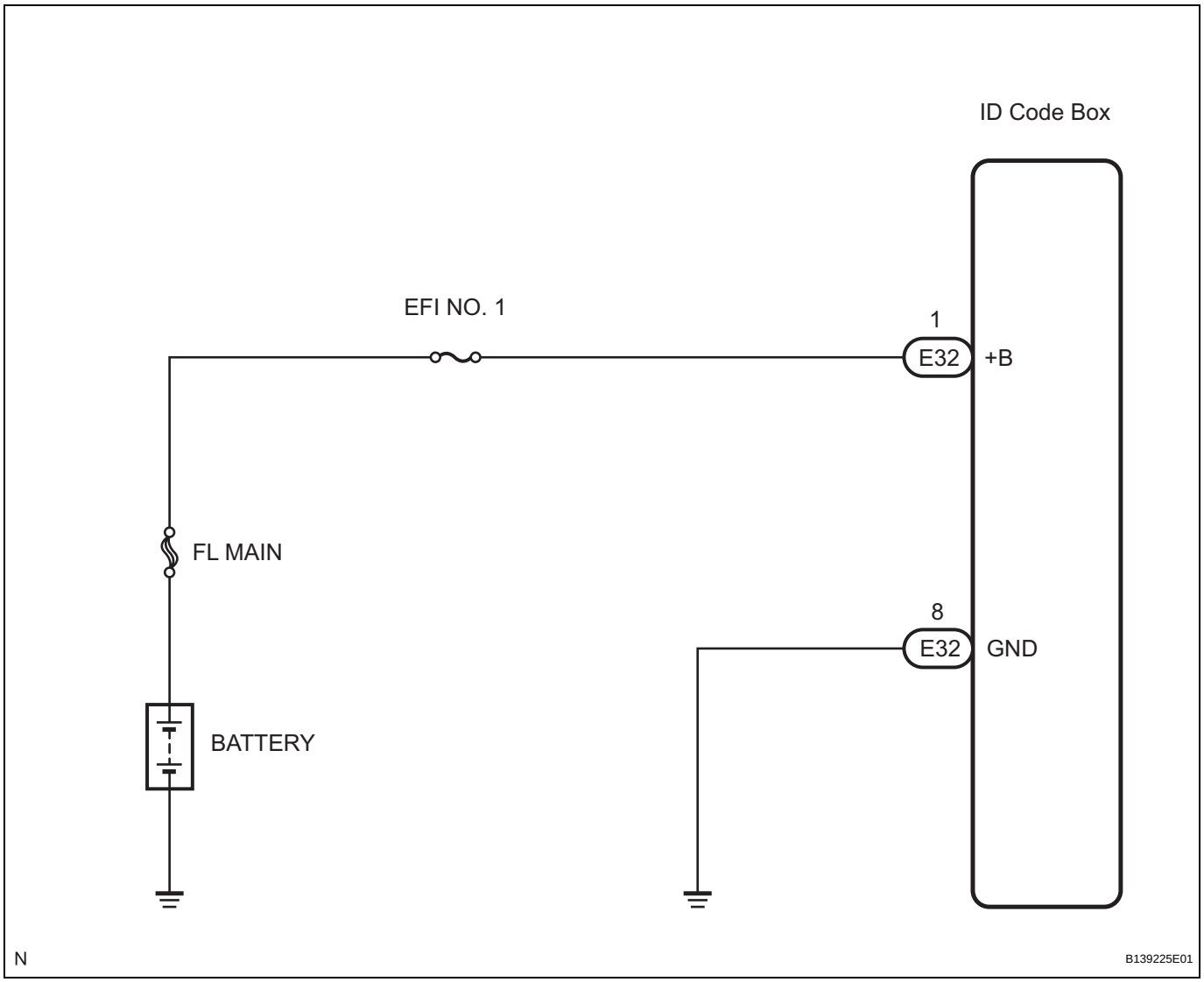

INSPECTION PROCEDURE

NOTICE:

If the ID code box is replaced, register the key and ECU communication ID (See page EI-9).

1	INSPECT FUSE (EFI NO. 1)

(a) Remove the EFI No. 1 fuse from the No. 1 engine room R/B.

(b) Measure the resistance of the fuse.

Standard resistance:

Below 1 Ω

NG → **REPLACE FUSE**

OK

2 CHECK HARNESS AND CONNECTOR (ID CODE BOX - BATTERY)

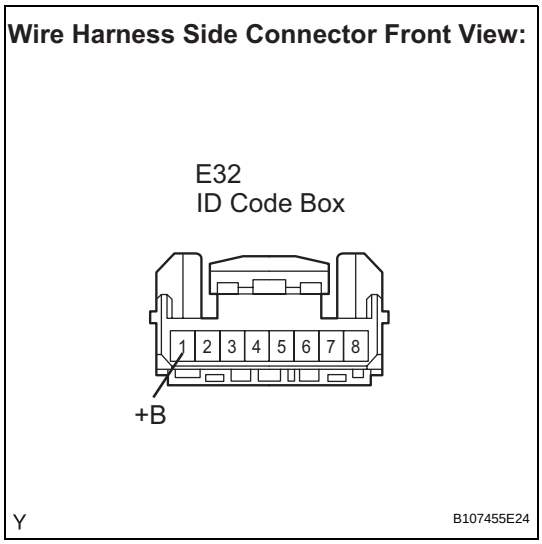

(a) Disconnect the E32 ID code box connector.
(b) Measure the voltage according to the value(s) in the table below.

Standard voltage

Tester Connection	Specified Condition
E32-1 (+B) - Body ground	10 to 14 V

NG → **REPAIR OR REPLACE HARNESS OR CONNECTOR**

OK

3 CHECK HARNESS AND CONNECTOR (ID CODE BOX - BODY GROUND)

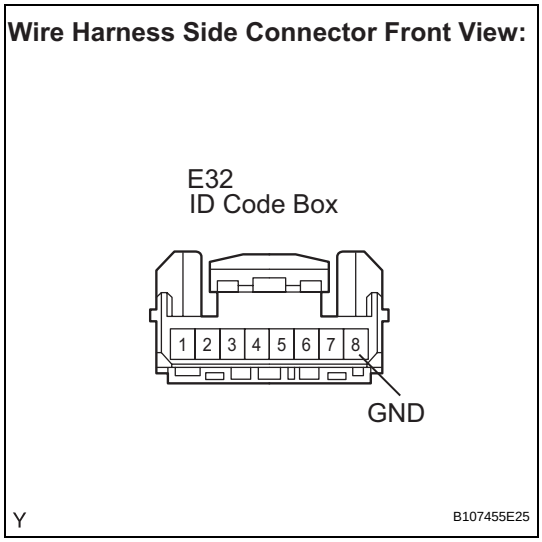

(a) Measure the resistance according to the value(s) in the table below.

Standard resistance

Tester Connection	Specified Condition
E32-8 (GND) - Body ground	Below 1 Ω

NG → **REPAIR OR REPLACE HARNESS OR CONNECTOR**

OK

PROCEED TO NEXT CIRCUIT INSPECTION SHOWN IN PROBLEM SYMPTOMS TABLE

Certification ECU Power Source Circuit

DESCRIPTION

This circuit provides power to operate the certification ECU.

WIRING DIAGRAM

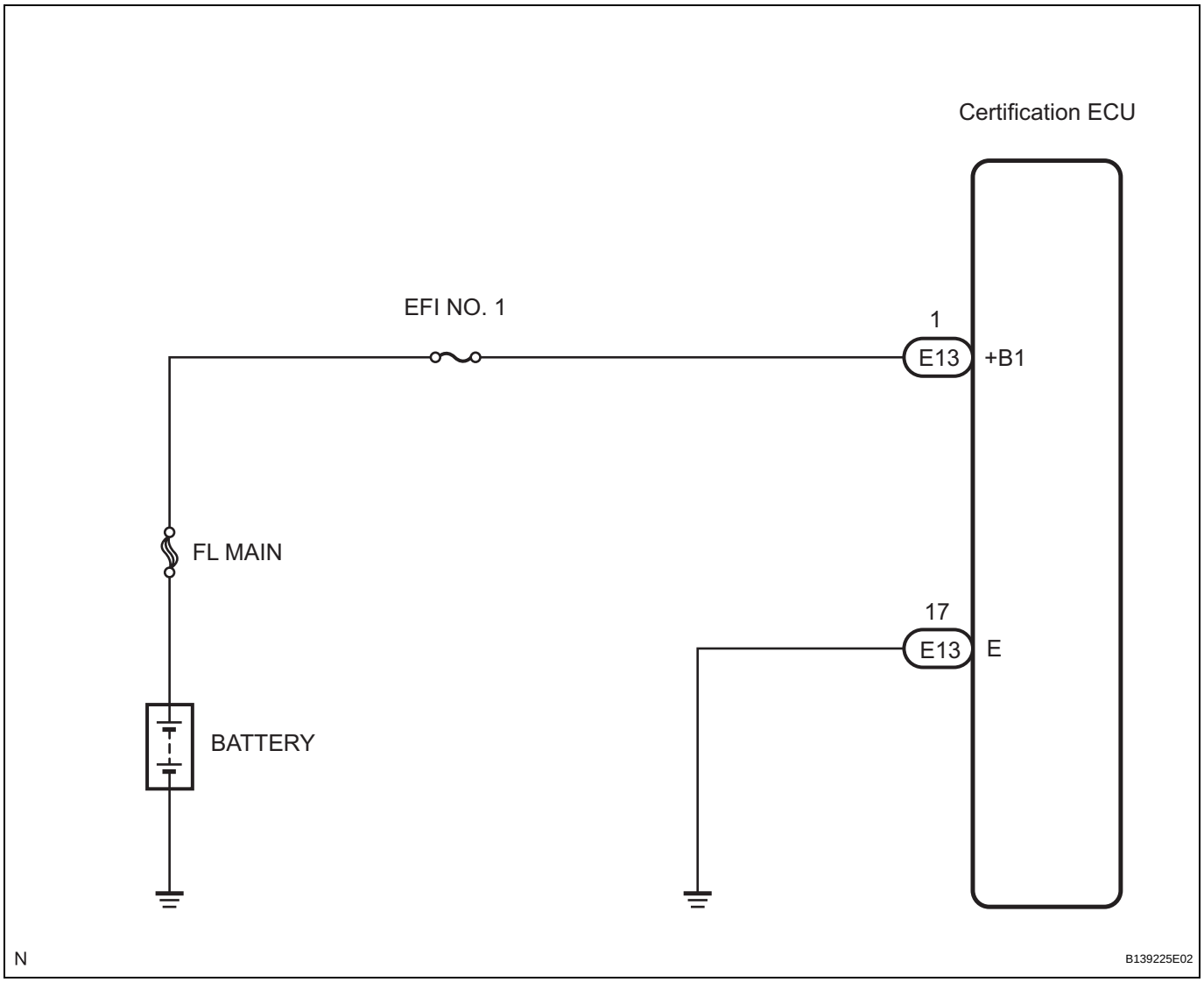

INSPECTION PROCEDURE

NOTICE:

If the certification ECU is replaced, register the key and ECU communication ID (See page EI-9).

1	INSPECT FUSE (EFI NO. 1)

(a) Remove the EFI No. 1 fuse from the No. 1 engine room R/B.

(b) Measure the resistance of the fuse.

Standard resistance:

Below 1 Ω

NG → **REPLACE FUSE**

OK

2 CHECK WIRE HARNESS (CERTIFICATION ECU - BATTERY)

Wire Harness Side Connector Front View:

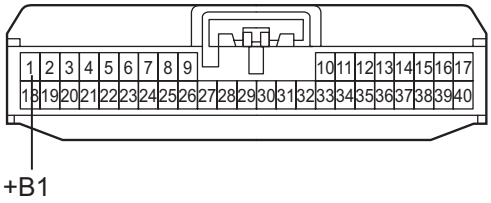

(a) Disconnect the E13 ECU connector.
(b) Measure the voltage according to the value(s) in the table below.
Standard voltage

Tester Connection	Specified Condition
E13-1 (+B1) - Body ground	10 to 14 V

NG → **REPAIR OR REPLACE HARNESS OR CONNECTOR**

OK

3 CHECK HARNESS AND CONNECTOR (CERTIFICATION ECU - BODY GROUND)

Wire Harness Side Connector Front View:

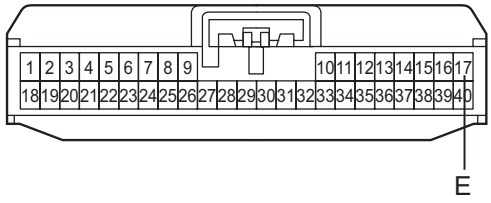

(a) Measure the resistance according to the value(s) in the table below.
Standard resistance

Tester Connection	Specified Condition
E13-17 (E) - Body ground	Below 1 Ω

NG → **REPAIR OR REPLACE HARNESS OR CONNECTOR**

OK

PROCEED TO NEXT CIRCUIT INSPECTION SHOWN IN PROBLEM SYMPTOMS TABLE

REGISTRATION

1. DESCRIPTION OF CODE REGISTRATION

HINT:

- ID codes are the same as recognition codes for the wireless transmitter and the engine immobiliser function. Registering an ID code enables the smart access system with push-button start, the wireless door lock control function and the engine immobiliser function to be operated.
- Code registration is needed when the certification ECU, ID code box, steering lock ECU or key is replaced with a new one.

(a) PROCEDURE "1"

The vehicle with the smart access system with push-button start system does not have a key slot. Therefore, hold the key close to the engine switch to register the key, as shown in the illustration below.

Hold the electrical key with its ornament surface within a range of 10 mm (0.39 in.) or less from the engine switch.

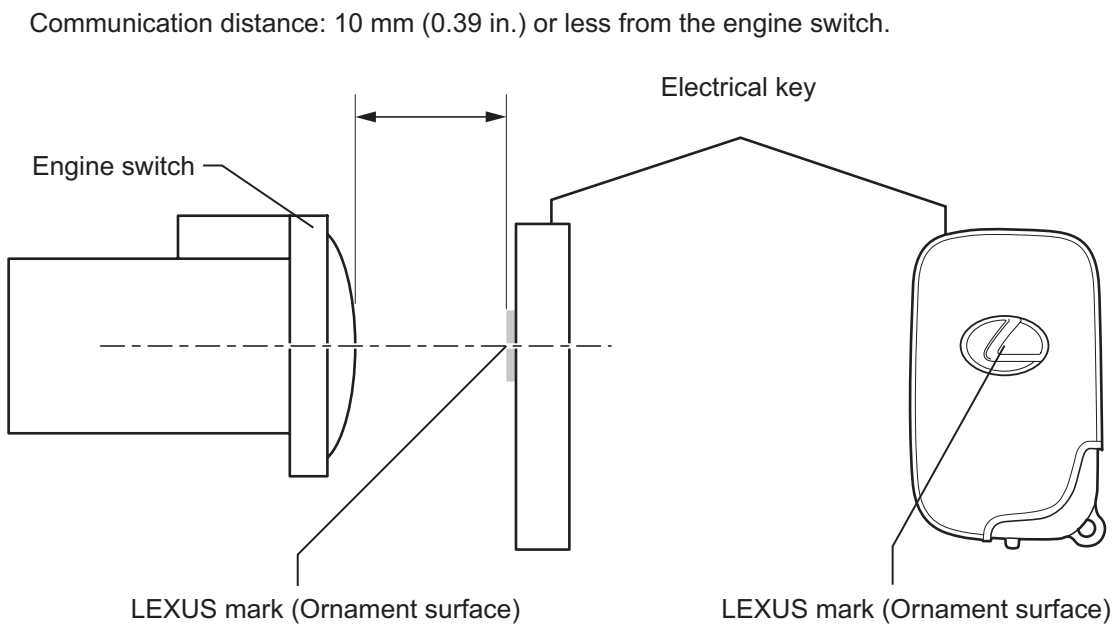

P

B124182E01

2. PART REPLACEMENT KEY REGISTRATION

(a) The following table shows ECU replacement and key registration procedures in case the malfunctioning ECU has been identified after troubleshooting the smart access system with push-button start.

HINT:

- The following procedures indicated in the table below require the use of the intelligent tester:
  - New key ID registration
  - Additional key ID registration
  - Key ID erasure
  - ECU code registration
- If all of the registered keys are not available, replacement of the ID code box is also required.
- A maximum of 7 keys can be registered.

Part to be replaced	Condition		Procedure	Reference
Certification ECU	Customer has brought all keys		1. Replace certification ECU	-
			2. Reregister all keys (new key ID registration)	PROCEDURE "B"
	Some keys are lost	Key ID codes can be registered and erased	1. Erase key codes (key ID erasure)	PROCEDURE "D"
			2. Perform additional key registration procedure (additional key ID registration)	PROCEDURE "C"
			3. Replace certification ECU	-
			4. Reregister all keys (new key ID registration) HINT: If some keys are not registered during above steps, they will be disabled because they cannot be registered later	PROCEDURE "B"
		Key ID codes cannot be either registered or erased	1. Replace certification ECU	-
			2. Replace ID code box	-
			3. Reregister all keys (new key ID registration) HINT: If key codes cannot be erased or additional keys cannot be registered due to a malfunction in certification ECU, replace ID code box and certification ECU. If some keys are not registered during above steps, they will be disabled because they cannot be registered later	PROCEDURE "A"
			4. ECU communication ID registration	PROCEDURE "F"
ID code box	At least 1 key is available		1. Replace ID code box	-
			2. Register recognition codes in ECUs (ECU code registration)	PROCEDURE "E"
			3. ECU communication ID registration	PROCEDURE "F"
	All keys are lost		1. Replace ID code box	-
			2. Replace certification ECU	-
			3. Reregister all keys (new key ID registration) HINT: If some keys are not registered during above steps, they will be disabled because they cannot be registered later	PROCEDURE "A"
			4. ECU communication ID registration	PROCEDURE "F"

Part to be replaced	Condition	Procedure	Reference
Steering lock ECU	Customer has brought at least 1 key	1. Replace steering lock ECU	-
		2. Register recognition codes in ECUs (ECU code registration)	PROCEDURE "E"
	All keys are lost	1. Replace steering lock ECU	-
		2. Replace certification ECU	-
		3. Replace ID code box	-
		4. Reregister all keys (new key ID registration) HINT: If some keys are not registered during above steps, they will be disabled because they cannot be registered later	PROCEDURE "A"
		5. ECU communication ID registration	PROCEDURE "F"
Main body ECU	No condition required	Replace main body ECU	-
ECM	No condition required	1. Replace ECM	-
		2. ECU communication ID registration	PROCEDURE "F"
Key	Customer has brought at least 1 key	1. Using remaining key, erase lost key code (key ID erasure)	PROCEDURE "D"
		2. Register additional keys as necessary (additional key ID registration)	PROCEDURE "E"
	All keys are lost	1. Replace certification ECU	-
		2. Replace ID code box	-
		3. Register all keys (new key ID registration) HINT: If customer brings lost keys at later date, they can be registered using additional key ID registration function	PROCEDURE "A"
		4. ECU communication ID registration	PROCEDURE "F"

3. KEY REGISTRATION

(a) PROCEDURE "A"

New key ID registration (when replacing certification ECU and ID code box, or certification ECU, ID code box and steering lock ECU)

Process	Procedure
1. Start of registration	1. Connect intelligent tester (with CAN VIM) to DLC3 2. Turn engine switch on (IG) 3. Select "SMART ACCESS / ID UTILITY / SMART CODE REG" from tester menu HINT: The engine switch cannot be turned on (IG) more than 10 times. After connecting tester, turn tester on while turning driver's side door courtesy light switch on and off repeatedly at 1.5-second intervals or less to continue key registration procedure
2. Confirmation of ECU code	Perform operation according to prompts on tester screen HINT: The mode is automatically selected by tester, new registration mode or add mode
3. Verification of unregistered key *1	Hold unregistered key close to engine switch (For details, refer to PROCEDURE "1")
	Confirm that wireless door lock buzzer sounds. Place unregistered key on front passenger's side seat
	Confirm that wireless door lock buzzer sounds
4. Registration of ID code	Perform operation according to prompts on tester screen
5. End of registration	Finish new key ID code registration

*1: Repeat this process for each key which is to be registered for the vehicle. Finish the procedure for each key within 30 seconds. If the procedure for any of the keys has not been finished within the specified time, perform registration procedures from process 1 again. Make sure that only 1 key is in the cabin during registration procedures. If 2 or more keys are in the cabin simultaneously, electric waves will interfere with each other, preventing normal registration.

(b) PROCEDURE "B"
New key ID registration (when replacing certification ECU)

Process	Procedure
1. Start of registration	1. Connect intelligent tester (with CAN VIM) to DLC3 2. Turn engine switch on (IG) 3. Select "SMART ACCESS / ID UTILITY / SMART CODE REG" from tester menu HINT: The engine switch cannot be turned on (IG) more than 10 times. After connecting tester, turn tester on while turning driver's side door courtesy light switch on and off repeatedly at 1.5-second intervals or less to continue key registration procedure
2. Confirmation of ECU code	Perform operation according to prompts on tester screen HINT: The mode is automatically selected by tester, new registration mode or add mode
3. Confirmation of all registered keys *1	Hold unregistered key close to engine switch (For details, refer to PROCEDURE "1")
	Confirm that wireless door lock buzzer sounds
4. Confirmation of ECU code	Perform operation according to prompts on tester screen
5. Verification of unregistered key *2	Hold unregistered key close to engine switch (For details, refer to PROCEDURE "1")
	Confirm that wireless door lock buzzer sounds. Place unregistered key on front passenger side seat
	Confirm that wireless door lock buzzer sounds
5. Registration of ID code	Perform operation according to prompts on tester screen
6. End of registration	Finish new key ID code registration

*1: Repeat this process for each key registered for the vehicle. Finish the procedure for each key within 30 seconds. If the procedure for any of the keys has not been finished within the specified time, perform registration procedures from process 1 again. If performing the key confirmation procedure for a key, the security indicator comes on and remains on until all the keys are confirmed.
*2: Repeat this process for each key which is to be registered for the vehicle. Finish the procedure for each key within 30 seconds. If the procedure for any of the keys has not been finished within the specified time, perform registration procedures from 1 again. Make sure that only 1 key is in the cabin during registration procedures. If 2 or more keys are in the cabin simultaneously, electric waves will interfere with each other, preventing normal registration.

(c) PROCEDURE "C"
Additional key ID registration

Process	Procedure
1. Start of registration	1. Connect intelligent tester (with CAN VIM) to DLC3 2. Turn engine switch on (IG) 3. Select "SMART ACCESS / ID UTILITY / SMART CODE REG" from tester menu
2. Confirmation of registered key *1	Perform operation according to prompts on intelligent tester screen HINT: The mode is automatically selected by tester, new registration mode or add mode
	Hold unregistered key close to engine switch (For details, refer to PROCEDURE "1")
	Confirm that wireless door lock buzzer sounds once
3. Confirmation of ECU code	Perform operation according to prompts on tester screen
4. Verification of unregistered key *2	Hold unregistered key close to engine switch (For details, refer to PROCEDURE "1")
	Confirm that wireless door lock buzzer sounds. Place unregistered key on front passenger's side seat
	Confirm that wireless door lock buzzer sounds
5. Registration of ID code	Perform operation according to prompts on tester screen
6. End of registration	Finish key ID code registration

*1: Perform this process for one of the keys registered for the vehicle. Finish the procedure within 30 seconds. If the procedure has not been finished within the specified time, perform registration procedures from process 1 again.
*2: Repeat this process for each key which is to be registered for the vehicle. Finish the procedure for each key within 30 seconds. If the procedure for any of the keys has not been finished within the specified time, perform registration procedures from 1 again. Make sure that only 1 key is in the cabin during registration procedures. If 2 or more keys are in the cabin simultaneously, electric waves will interfere with each other, preventing normal registration.

(d) PROCEDURE "D"
Key ID erasure
HINT:
Erase all registered key codes except one.

Process	Procedure
1. Start of erasure	1. Connect intelligent tester (with CAN VIM) to DLC3 2. Turn engine switch on (IG) 3. Select "SMART ACCESS / ID UTILITY / SMART CODE ERS" from tester menu
2. Confirmation of registered key *1	Perform operation according to prompts on intelligent tester screen
	Hold unregistered key close to engine switch (For details, refer to PROCEDURE "1")
	Confirm that wireless door lock buzzer sounds once
3. Confirmation of ECU code	Perform operation according to prompts on tester screen
4. Erasure of ID code	Perform operation according to prompts on tester screen
5. End of erasure	Finish key ID code erasure

*1: Perform this process for one of the keys registered for the vehicle. Finish the procedure within 30 seconds. If the procedure has not been finished within the specified time, perform erasure procedures from process 1 again.

(e) PROCEDURE "E"
ECU code registration

Process	Procedure
1. Start of registration	1. Connect intelligent tester (with CAN VIM) to DLC3 2. Turn engine switch on (IG) 3. Select "SMART ACCESS / ID UTILITY / ECU COMM ID REG / ID Code Box and Steering Lock" from tester menu
2. Confirmation of registered key *1	Hold unregistered key close to engine switch (For details, refer to PROCEDURE "1")
	Confirm that wireless door lock buzzer sounds once
3. Registration of ECU code	Perform operation according to prompts on tester screen
4. End of registration	Finish ECU code registration

*1: Perform this process for one of the keys registered for the vehicle. Finish the procedure within 30 seconds. If the procedure has not been finished within the specified time, perform erasure procedures from process 1 again.

(f) PROCEDURE "F"
ECU communication ID registration

NOTICE:

- **The ECU communication ID should be registered when the ID code box and/or the ECM is replaced in order to match these ECM communication ID.**
- **The engine cannot be started unless the ECM communication ID matches.**

Register the ECU communication ID.

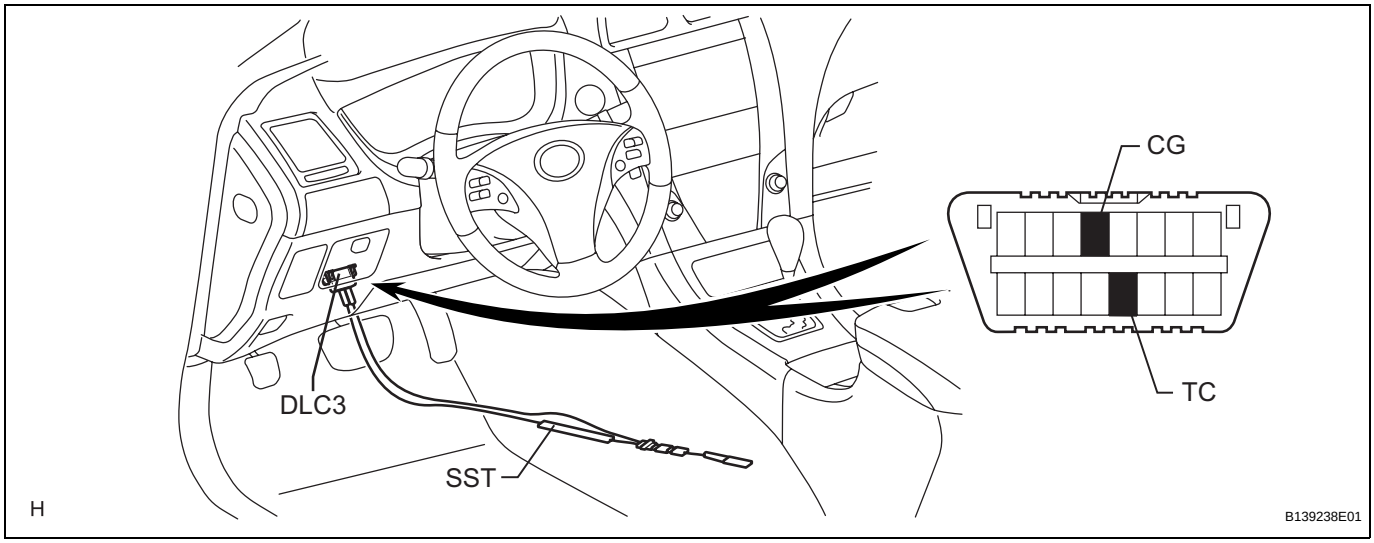

(1) Using SST, connect terminals TC and CG of the DLC3.
SST 09843-18040

(2) Turn the engine switch on (IG) and leave it for 30 minutes.
HINT:
Do not start the engine.
(3) Turn the engine switch off and disconnect terminals TC and CG.
(4) Check that the engine starts.

PROBLEM SYMPTOMS TABLE

HINT:
Use the table below to help determine the cause of the problem symptom. The potential cases of the symptoms are listed in order of probability in the "Suspected Area" column of the table. Check each symptom by checking the suspected area in the order they are listed. Replace parts as necessary.

ENGINE IMMOBILISER SYSTEM

Symptom	Suspected Area	See page
Engine does not start	1. Key	EI-25
	2. ID code box power source circuit	EI-49
	3. Certification ECU power source circuit	EI-51
	4. Steering lock ECU power source circuit	SR-74
	5. Smart access system with push button start	ST-15
	6. SFI system	ES-10

TERMINALS OF ECU

1. CHECK ENGINE SWITCH

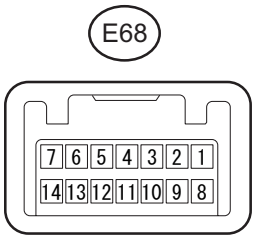

B146454E02

(a) Disconnect the E68 switch connector.
(b) Measure the resistance according to the value(s) in the table below.

Symbols (Terminal No.)	Wiring Color	Terminal Description	Condition	Specified Condition
AGND (E68-8) - Body ground	V - Body ground	Ground	Always	Below 1 Ω

If the result is not as specified, there may be a malfunction on the wire harness side.

(c) Reconnect the E68 switch connector.
(d) Measure the resistance and voltage according to the value(s) in the table below.

Symbols (Terminal No.)	Wiring Color	Terminal Description	Condition	Specified Condition
AGND (E68-8) - Body ground	V - Body ground	Ground	Always	Below 1 Ω
VC5 (E68-14) - AGND (E68-8)	O - V	Power supply	Key is not in cabin	Below 1 V
			Press engine switch	4.6 to 5.4 V
CODE (E68-10) - AGND (E68-8)	W - V	Demodulated signal of key code data	Key is not in cabin	Below 1 V
			Press engine switch and hold key close to engine switch*	Pulse generation (see waveform 1)
TXCT (E68-9) - AGND (E68-8)	GR - V	Key code output signal	Key is not in cabin	Below 1 V
			Press engine switch and hold key close to engine switch*	Pulse generation (see waveform 2)

HINT:
*: Remove the key battery before performing this inspection.
If the result is not as specified, the switch may have a malfunction.

EI

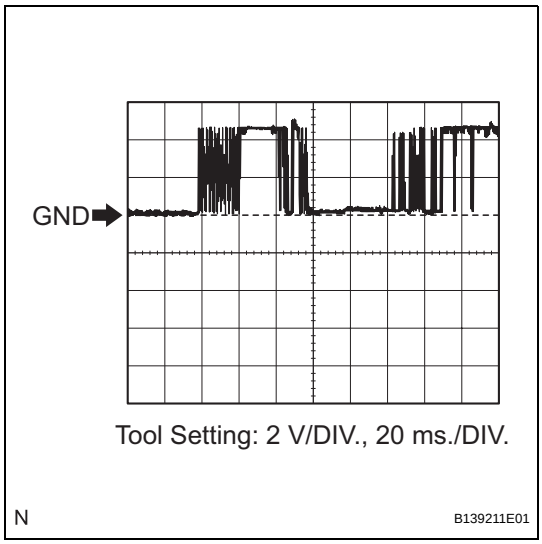

(e) Inspect using an oscilloscope.
(1) Waveform 1 (Reference)

Item	Content
Symbols (Terminal No.)	CODE (E68-10) - AGND (E68-8)
Tool Setting	2 V/DIV., 20 ms./DIV.
Condition	Press engine switch and hold key close to engine switch*

HINT:
*: Remove the key battery before performing this inspection.

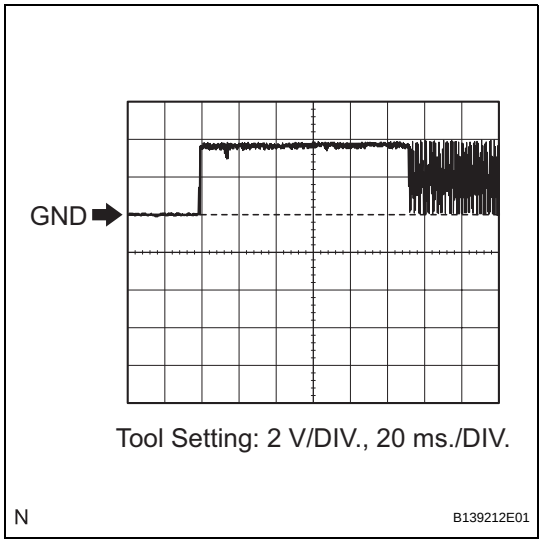

(2) Waveform 2 (Reference)

Item	Content
Symbols (Terminal No.)	TXCT (E68-9) - AGND (E68-8)
Tool Setting	2 V/DIV., 20 ms./DIV.
Condition	Press engine switch and hold key close to engine switch*

HINT:
*: Remove the key battery before performing this inspection.

2. CHECK CERTIFICATION ECU

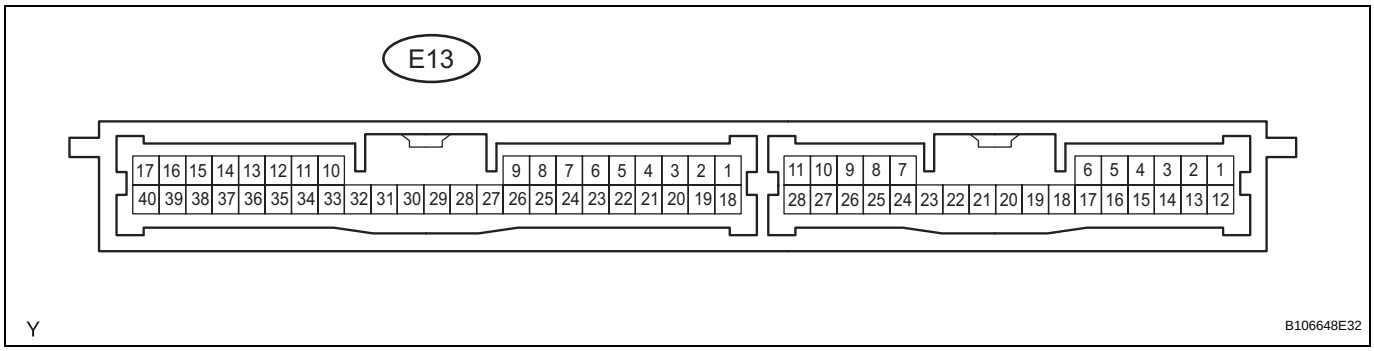

(a) Disconnect the E13 ECU connector.
(b) Measure the resistance and voltage according to the value(s) in the table below.

Symbols (Terminal No.)	Wiring Color	Terminal Description	Condition	Specified Condition
E (E13-17) - Body ground	W-B - Body ground	Ground	Always	Below 1 Ω
+B1 (E13-1) - E (E13-17)	W - W-B	+B power supply	Always	10 to 14 V
IG (E13-18) - E (E13-17)	B - W-B	Ignition power supply	Power switch off	Below 1 V

If the result is not as specified, there may be a malfunction on the wire harness side.
(c) Reconnect the E13 ECU connector.

(d) Measure the resistance and voltage according to the value(s) in the table below.

Symbols (Terminal No.)	Wiring Color	Terminal Description	Condition	Specified Condition
AGND (E13-40) - Body ground	V - Body ground	Power switch ground	Always	Below 1 Ω
VC5 (E13-30) - AGND (E13-40)	O - V	Power switch power supply	Key is not in cabin	Below 1 V
			Press engine switch*	4.6 to 5.4 V
CODE (E13-9) - AGND (E13-40)	W - V	Power switch CODE input	Key is not in cabin	Below 1 V
			Press engine switch and hold key close to engine switch*	Pulse generation (see waveform 1)
TXCT (E13-8) - AGND (E13-40)	GR - V	Power switch TXCT output	Key is not in cabin	Below 1 V
			Press engine switch and hold key close to engine switch*	Pulse generation (see waveform 2)

HINT:
*: Remove the key battery before performing this inspection.
If the result is not as specified, the ECU may have a malfunction.

(e) Inspect using an oscilloscope.
(1) Waveform 1 (Reference)

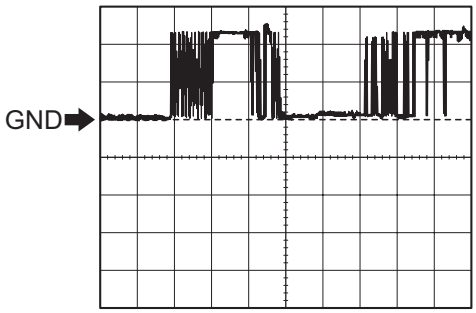

Tool Setting: 2 V/DIV., 20 ms./DIV.

N B139211E01

Item	Content
Symbols (Terminal No.)	CODE (E13-9) - AGND (E13-40)
Tool Setting	2 V/DIV., 20 ms./DIV.
Condition	Press engine switch and hold key close to engine switch*

HINT:
*: Remove the key battery before performing this inspection.

(2) Waveform 2 (Reference)

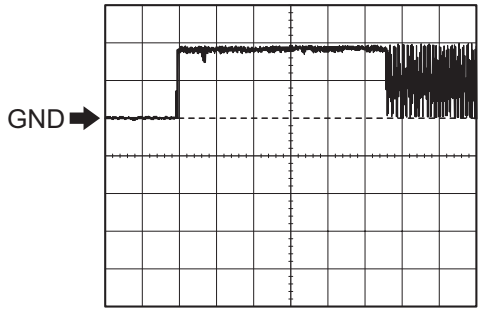

Tool Setting: 2 V/DIV., 20 ms./DIV.

N B139212E01

Item	Content
Symbols (Terminal No.)	TXCT (E13-8) - AGND (E13-40)
Tool Setting	2 V/DIV., 20 ms./DIV.
Condition	Press engine switch and hold key close to engine switch*

HINT:
*: Remove the key battery before performing this inspection.

EI

3. CHECK ID CODE BOX

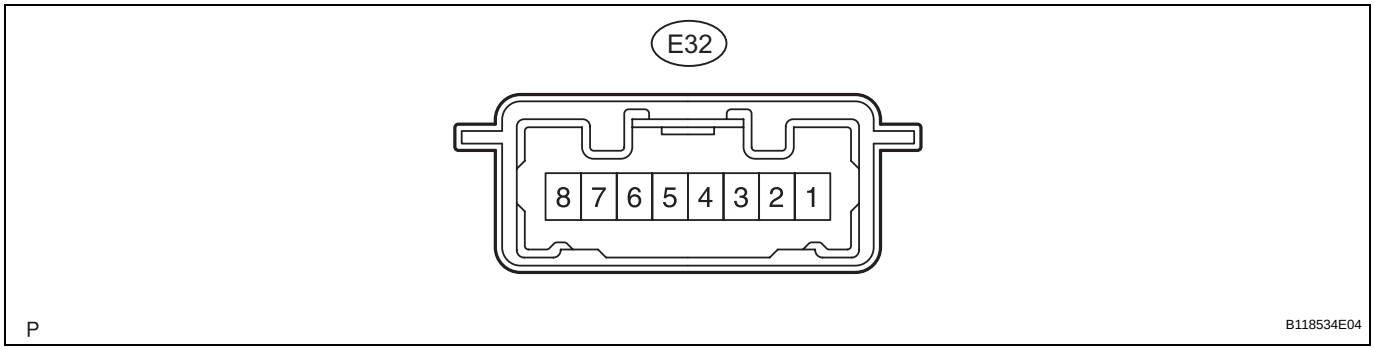

(a) Disconnect the E32 ECU connector.
(b) Measure the resistance and voltage according to the value(s) in the table below.

Symbols (Terminal No.)	Wiring Color	Terminal Description	Condition	Specified Condition
GND (E32-8) - Body ground	W-B - Body ground	Ground	Always	Below 1 Ω
+B (E32-1) - GND (E32-8)	W - W-B	+B power supply	Always	10 to 14 V

If the result is not as specified, there may be a malfunction on the wire harness side.
(c) Reconnect the E32 ECU connector.
(d) Measure the voltage according to the value(s) in the table below.

Symbols (Terminal No.)	Wiring Color	Terminal Description	Condition	Specified Condition
EFII (E32-5) - GND (E32-8)	BR - W-B	ECM input signal	Engine switch off	Below 1 V
			Engine switch on (IG)	Pulse generation (see waveform 1)
EFIO (E32-6) - GND (E32-8)	L - W-B	ECM output signal	Engine switch off	Below 1 V
			Engine switch on (IG)	Pulse generation (see waveform 2)

If the result is not as specified, the ECU may have a malfunction.

(e) Inspect using an oscilloscope.
(1) Waveform 1 (Reference)

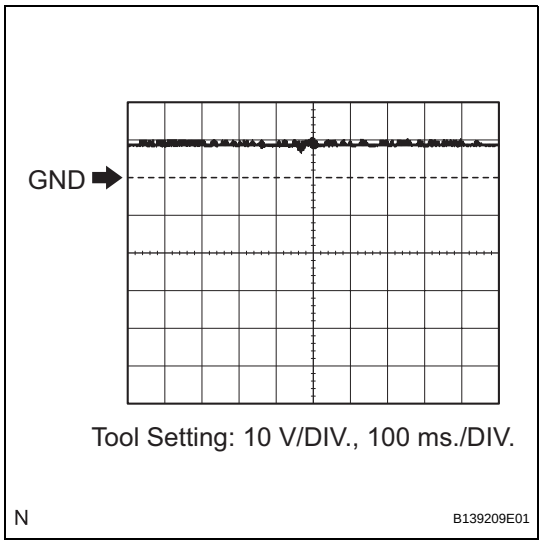

Item	Content
Symbols (Terminal No.)	EFII (E32-5) - GND (E32-8)
Tool Setting	10 V/DIV., 100 ms./DIV.
Condition	Engine switch on (IG)

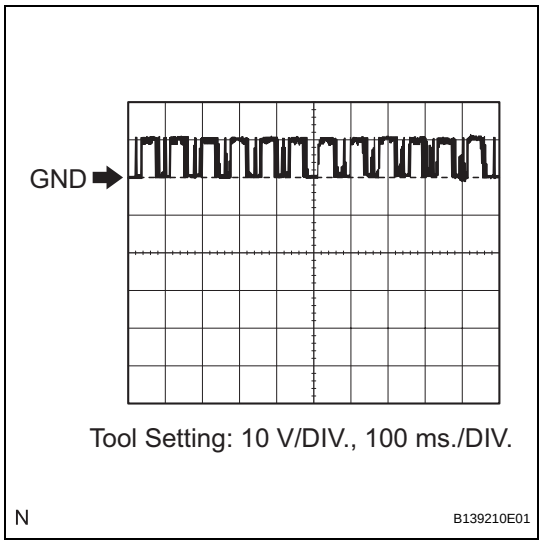

(2) Waveform 2 (Reference)

Item	Content
Symbols (Terminal No.)	EFIO (E32-6) - GND (E32-8)
Tool Setting	10 V/DIV., 100 ms./DIV.
Condition	Engine switch on (IG)

4. CHECK STEERING CONTROL ECU

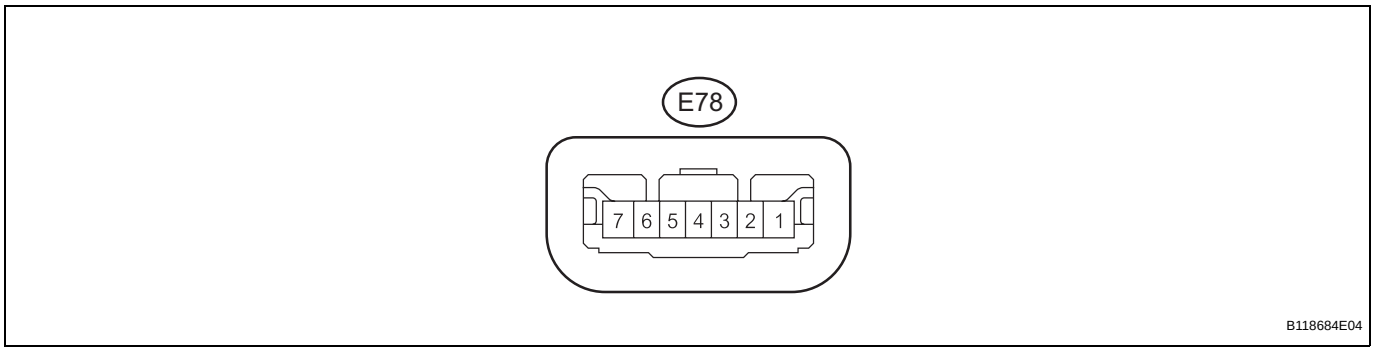

(a) Disconnect the E78 ECU connector.
(b) Measure the resistance and voltage according to the value(s) in the table below.

Symbols (Terminal No.)	Wiring Color	Terminal Description	Condition	Specified Condition
SGND (E78-2) - Body ground	W-B - Body ground	Ground	Always	Below 1 Ω
GND (E78-1) - Body ground	W-B - Body ground	Ground	Always	Below 1 Ω
B (E78-7) - Body ground	B - Body ground	+B power supply	Always	10 to 14 V
IG2 (E78-6) - Body ground	B - Body ground	Ignition power supply	Engine switch off	0 V
			Engine switch on (IG)	10 to 14 V

If the result is not as specified, there may be a malfunction on the wire harness side.

5. CHECK ECM

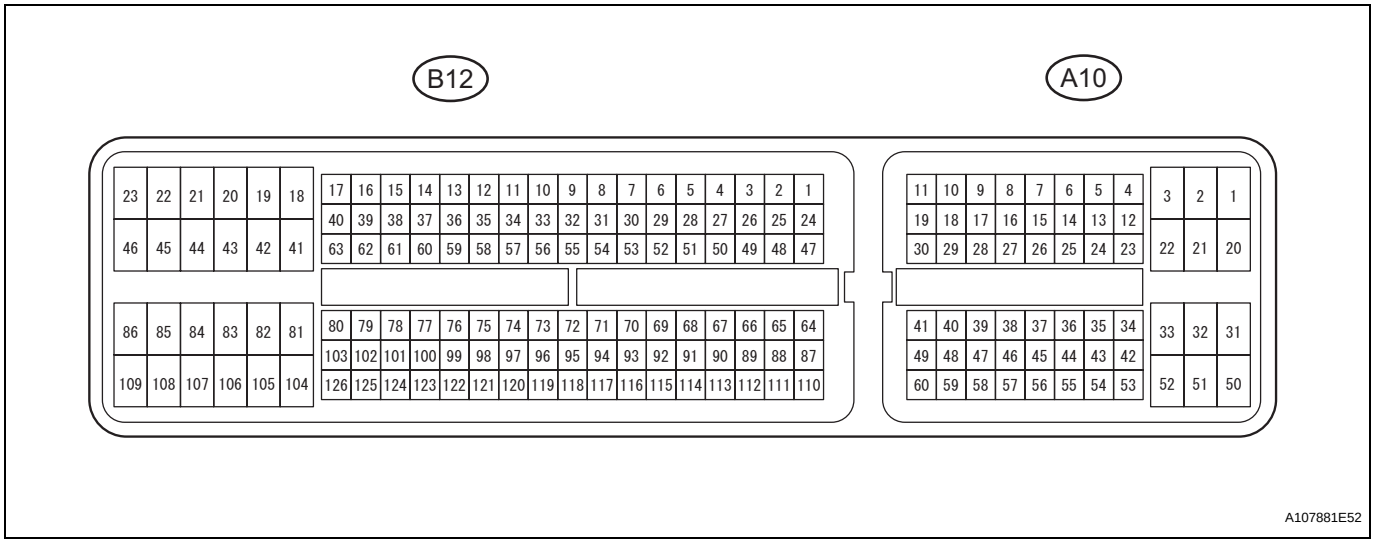

(a) Measure the resistance and voltage according to the value(s) in the table below.

Symbols (Terminal No.)	Wiring Color	Terminal Description	Condition	Specified Condition
E1 (B12-81) - Body ground	W-B - Body ground	Ground	Always	Below 1 Ω
E01 (B12-22) - Body ground	W-B - Body ground	Ground	Always	Below 1 Ω
E02 (B12-21) - Body ground	B-W - Body ground	Ground	Always	Below 1 Ω
E03 (B12-104) - Body ground	B - Body ground	Ground	Always	Below 1 Ω
E04 (B12-23) - Body ground	W - Body ground	Ground	Always	Below 1 Ω
E05 (B12-46) - Body ground	W - Body ground	Ground	Always	Below 1 Ω
ME01 (B12-20) - Body ground	B - Body ground	Ground	Always	Below 1 Ω
BATT (A10-20) - E1 (B12-81)	Y - W-B	Battery (for measuring battery voltage and for ECM memory)	Always	10 to 14 V
+B (A10-2) - E1 (B12-81)	R - W-B	Power source of ECM	Engine switch off	Below 1 V
			Engine switch on (IG)	10 to 14 V
+B2 (A10-1) - E1 (B12-81)	R - W-B	Power source of ECM	Engine switch off	Below 1 V
			Engine switch on (IG)	10 to 14 V
IMI (A10-11) - E1 (B12-81)	Y - W-B	Immobiliser code ECU input signal	Engine switch off	Below 1 V
			Engine switch on (IG)	Pulse generation (see waveform 1)
IMO (A10-10) - E1 (B12-81)	G - W-B	Immobiliser code ECU output signal	Engine switch off	Below 1 V
			Engine switch on (IG)	Pulse generation (see waveform 2)

If the result is not as specified, the ECM may have a malfunction.

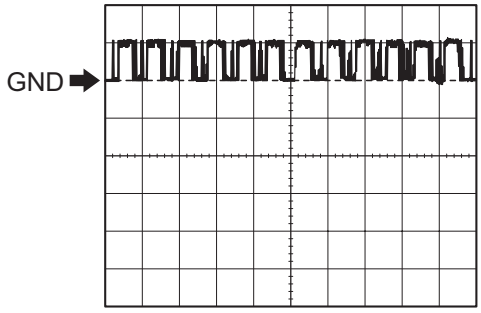

Tool Setting: 10 V/DIV., 100 ms./DIV.

N B139210E01

(b) Inspect using an oscilloscope.

(1) Waveform 1 (Reference)

Item	Content
Symbols (Terminal No.)	IMI (A10-11) - E1 (B12-81)
Tool Setting	10 V/DIV., 100 ms./DIV.
Condition	Engine switch on (IG)

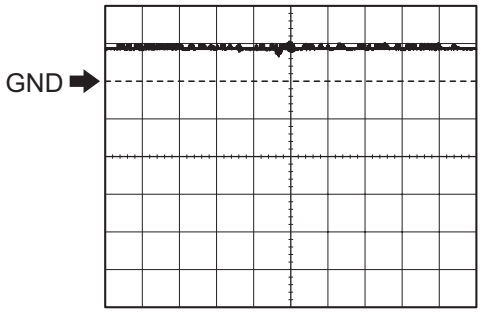

Tool Setting: 10 V/DIV., 100 ms./DIV.

N B139209E01

(2) Waveform 2 (Reference)

Item	Content
Symbols (Terminal No.)	IMO (A10-10) - E1 (B12-81)
Tool Setting	10 V/DIV., 100 ms./DIV.
Condition	Engine switch on (IG)

6. CHECK MAIN BODY ECU (INSTRUMENT PANEL J/B)

(a) Disconnect the DF junction block connectors.

(b) Disconnect the E59, E61 and E60 main body ECU connectors.

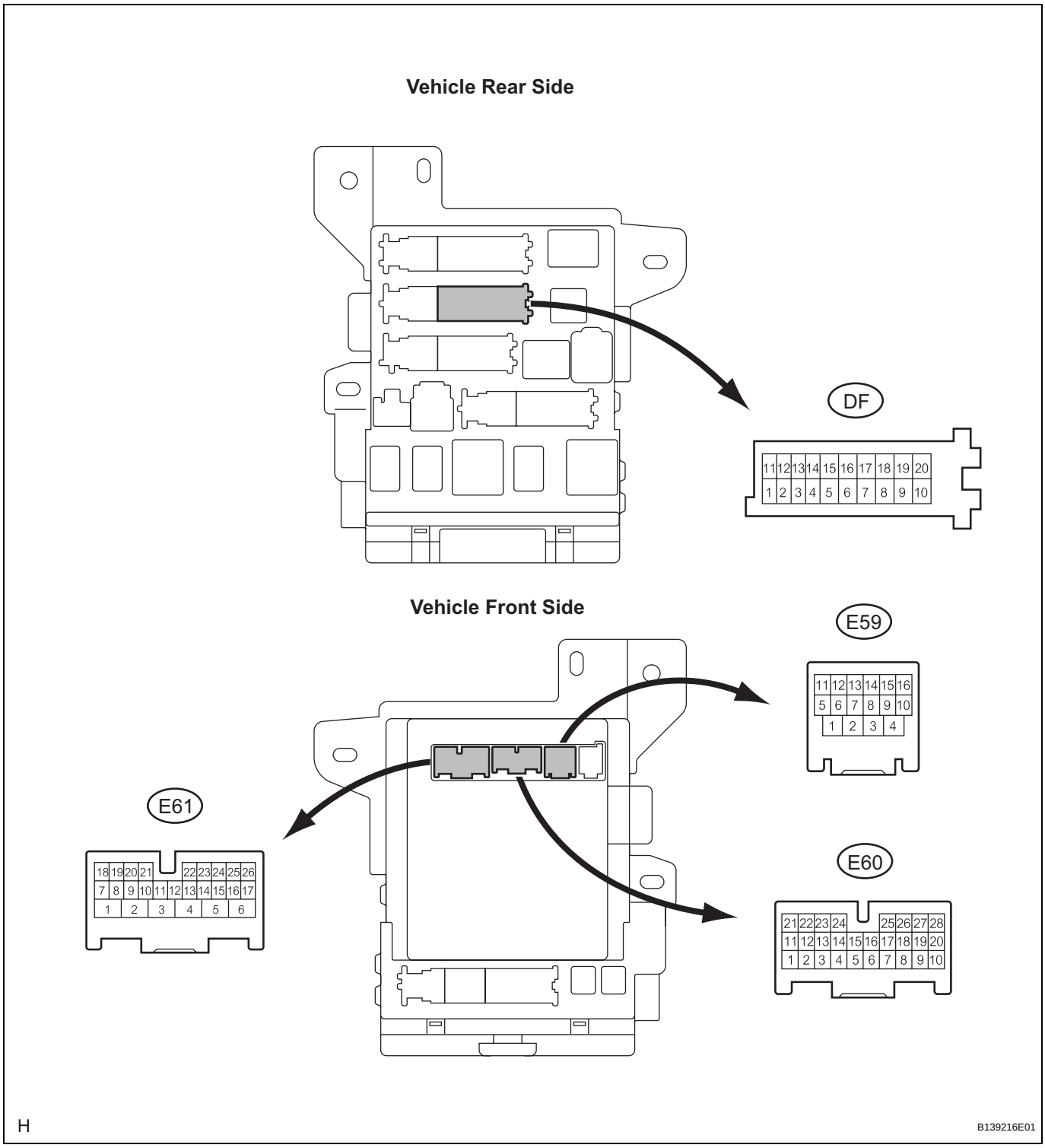

(c) Measure the resistance and voltage according to the value(s) in the table below.

Symbols (Terminal No.)	Wiring Color	Terminal Description	Condition	Specified Condition
GND1 (DF-10) - Body ground	W-B - Body ground	Ground	Always	Below 1 Ω
GND3 (E59-1) - Body ground	W-B - Body ground	Ground	Always	Below 1 Ω
AM1 (E61-6) - Body ground	L - Body ground	+B power supply	Always	10 to 14 V
AM2 (E60-1) - Body ground	L - Body ground	+B power supply	Always	10 to 14 V

If the result is not as specified, there may be a malfunction on the wire harness side.

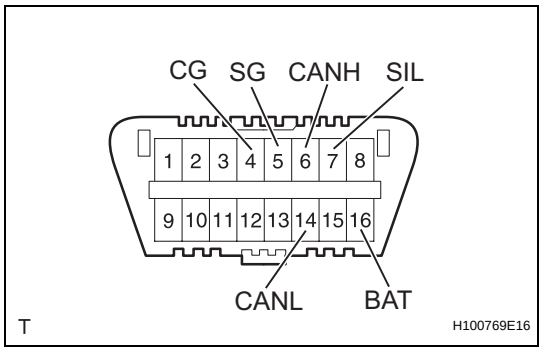

DIAGNOSIS SYSTEM

1. CHECK DLC3

(a) The vehicle's ECU uses ISO 15765-4 for communication protocol. The terminal arrangement of the DLC3 complies with SAE J1962 and matches the ISO 15765-4 format.

EI

Symbols (Terminal No.)	Terminal Description	Condition	Specified Condition
SIL (7) - SG (5)	Bus "+" line	During transmission	Pulse generation
CG (4) - Body ground	Chassis ground	Always	Below 1 Ω
SG (5) - Body ground	Signal ground	Always	Below 1 Ω
BAT (16) - Body ground	Battery positive	Always	10 to 14 V
CANH (6) - CANL (14)	CAN bus line	Engine switch off*	54 to 69 Ω
CANH (6) - CG (4)	HIGH-level CAN bus line	Engine switch off*	200 Ω or higher
CANL (14) - CG (4)	LOW-level CAN bus line	Engine switch off*	200 Ω or higher
CANH (6) - BAT (16)	HIGH-level CAN bus line	Engine switch off*	6 kΩ or higher
CANL (14) - BAT (16)	LOW-level CAN bus line	Engine switch off*	6 kΩ or higher

NOTICE:
***: Before measuring the resistance, leave the vehicle as is for at least 1 minute and do not operate the engine switch, any other switches or the doors.**
If the result is not as specified, the DLC3 may have a malfunction. Repair or replace the harness and connector.

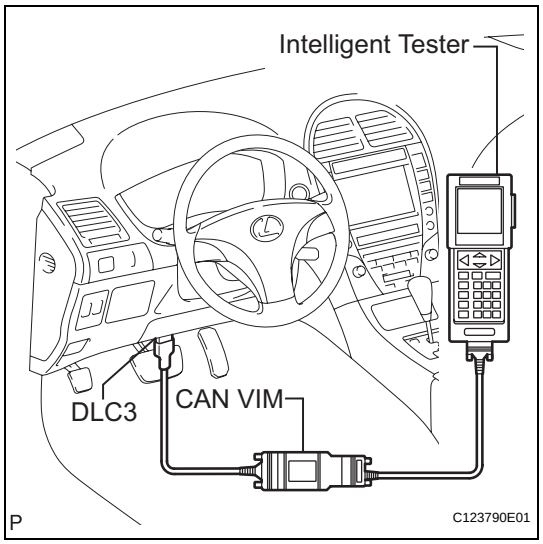

(b) Connect the cable of the intelligent tester (with CAN VIM) to the DLC3, turn the engine switch on (IG) and attempt to use the intelligent tester. If the screen displays a communication error message, a problem exists in the vehicle side or tester side.
HINT:
- If communication is normal when the tool is connected to another vehicle, inspect the DLC3 on the original vehicle.
- If communication is still impossible when the tool is connected to another vehicle, the problem is probably in the tool itself. Consult the Service Department listed in the tool's instruction manual.

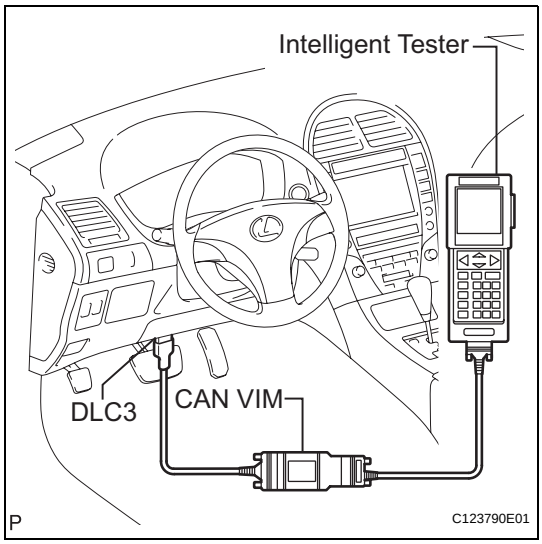

DTC CHECK / CLEAR

1. CHECK DTC

(a) Connect the intelligent tester to the Controller Area Network Vehicle Interface Module (CAN VIM). Then connect the CAN VIM to the DLC3.

(b) Turn the engine switch on (IG).

(c) Read the DTCs by following the directions on the tester screen.
HINT:
Refer to the intelligent tester operator's manual for further details.

2. CLEAR DTC

(a) Connect the intelligent tester (with CAN VIM) to the DLC3.

(b) Turn the engine switch on (IG).

(c) Erase the DTCs by following the directions on the tester's screen.
HINT:
Refer to the intelligent tester operator's manual for further details.

DATA LIST / ACTIVE TEST

1. READ DATA LIST

HINT:
Using the intelligent tester to read the DATA LIST allows the values or states of switches, sensors, actuators and other items to be read without removing any parts. This non-intrusive inspection can be very useful as intermittent conditions or signals may be discovered before parts or wiring is disturbed. Reading the DATA LIST information early in troubleshooting is one way to save diagnostic time.

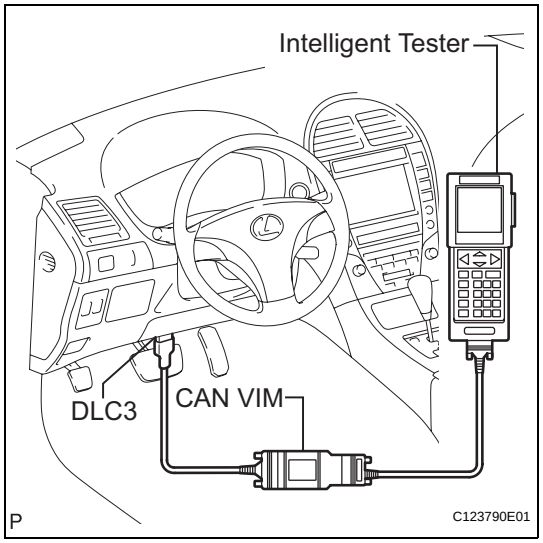

(a) Connect the intelligent tester (with CAN VIM) to the DLC3.
(b) Turn the engine switch on (IG).
(c) Read the DATA LIST.

SMART ACCESS:

Tester Display	Measurement Item/Range	Normal Condition	Diagnostic Note
IG SW	Engine switch on (IG) signal / ON or OFF	ON: Engine switch on (ACC, IG) or start OFF: Engine switch off	-
ACC SW	Engine switch on (ACC) signal / ON or OFF	ON: Engine switch on (ACC, IG) or start OFF: Engine switch off	-
IMMOBILISER	Immobiliser system status / SET or UNSET	SET: Key is not in cabin UNSET: Key is in cabin	-
MASTER KEY	Master key code signal / MATCH or NO MATCH	MATCH: Master key code is sent NO MATCH: Unmatched master key code is sent	-
SUB KEY	Sub-key (Master key) code signal / MATCH or NO MATCH	MATCH: Sub-key (master key) code is sent NO MATCH: Unmatched sub-key (master key) code is sent	-
BCC	Transponder chip signal / OK or NG	OK: Correct data sent NG: Incorrect data sent	-
STATUS	Transponder chip data / OK or NG	OK: Data OK NG: Data error	-
ENCRYPT CODE	Transponder chip signal / OK or NG	OK: Correct data sent NG: Incorrect data sent	-
SERIAL NUMBER	Transponder chip signal / OK or NG	OK: Correct data sent NG: Incorrect data sent	-
FRAME	Transponder chip signal / OK or NG	OK: Correct data sent NG: Incorrect data sent	-
RESPONSE	Transponder chip signal / OK or NG	OK: Correct data sent NG: Incorrect data sent	-

EI

2. PERFORM ACTIVE TEST

HINT:
Performing the intelligent tester's ACTIVE TEST allows relay, VSV, actuator and other items to be operated without removing any parts. Performing the ACTIVE TEST early in troubleshooting is one way to save time. The DATA LIST can be displayed during the ACTIVE TEST.

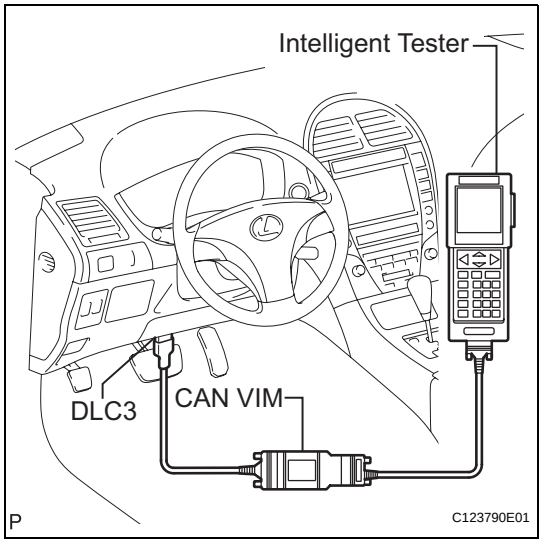

(a) Connect the intelligent tester (with CAN VIM) to the DLC3.
(b) Turn the engine switch on (IG).
(c) Perform the ACTIVE TEST by following the directions on the tester screen.

SMART ACCESS:

Tester Display	Test Part	Control Range	Diagnostic Note
SECURITY INDIC	Turn security indicator	ON/OFF	-

DIAGNOSTIC TROUBLE CODE CHART

CERTIFICATION ECU DIAGNOSTIC TROUBLE CODE CHART

DTC Code	Detection Item	Trouble Area	See page
B2784	Antenna Coil Open / Short	1. Wire harness 2. Engine switch 3. Certification ECU	EI-28
B2785	Communication Malfunction between ECUs Connected by LIN	1. Wire harness 2. Certification ECU 3. Main body ECU 4. Steering lock ECU 5. ID code box	EI-30
B2786	No Response from Steering Lock ECU	1. Wire harness 2. Certification ECU 3. Steering lock ECU	EI-34
B2789	No Response from ID BOX	1. Wire harness 2. Certification ECU 3. ID code box	EI-37
B278A	Short to GND in Immobiliser System Power Source Circuit	1. Wire harness 2. Engine switch 3. Certification ECU	EI-40
B2790	ID BOX EEPROM Malfunction	ID code box	EI-43
B2791	Communication Condition Failure between ECM	-	EI-44

ECM DIAGNOSTIC TROUBLE CODE CHART

DTC Code	Detection Item	Trouble Area	See page
B2799	Engine Immobiliser System Malfunction	1. Wire harness 2. ECM 3. ID code box	EI-46

HINT:
The DTCs for the engine immobiliser system are specified above. If other codes are output, check the DTC chart for the SFI system.

DTC	B2784	Antenna Coil Open / Short

DESCRIPTION

This DTC is output when there is an open or short in the key coil (built into the engine switch).

DTC No.	DTC Detection Condition	Trouble Area
B2784	Antenna coil is open/shorted	• Wire harness • Engine switch • Certification ECU

EI

WIRING DIAGRAM

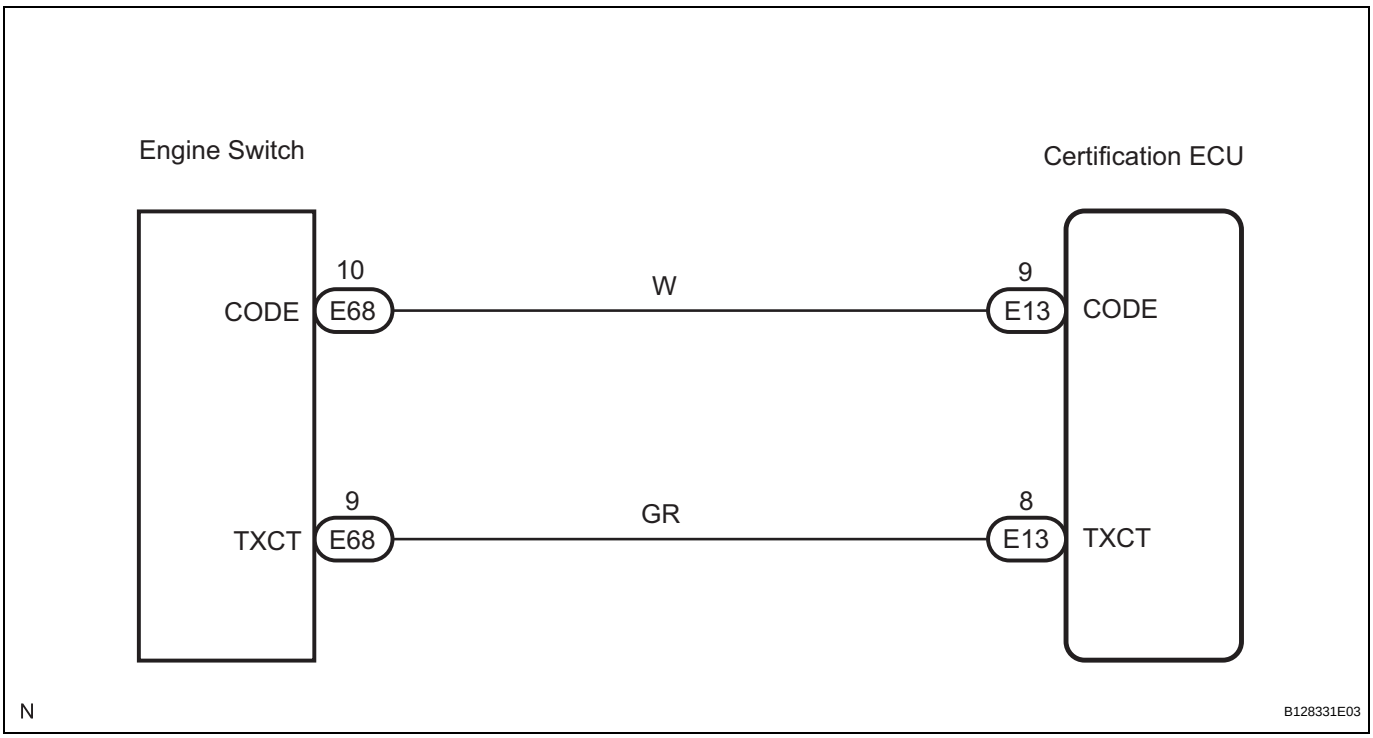

INSPECTION PROCEDURE

NOTICE:

If the certification ECU is replaced, register the key and ECU communication ID (See page EI-9).

1	CHECK DTC OUTPUT

(a) Delete the DTCs (See page EI-25).

(b) Recheck for DTCs (See page EI-25).

Result

Result	Proceed to
B2784 output reoccurs	A
B2784 output does not reoccur	B

B → **USE SIMULATION METHOD TO CHECK**

A

2 CHECK HARNESS AND CONNECTOR (CERTIFICATION ECU - ENGINE SWITCH)

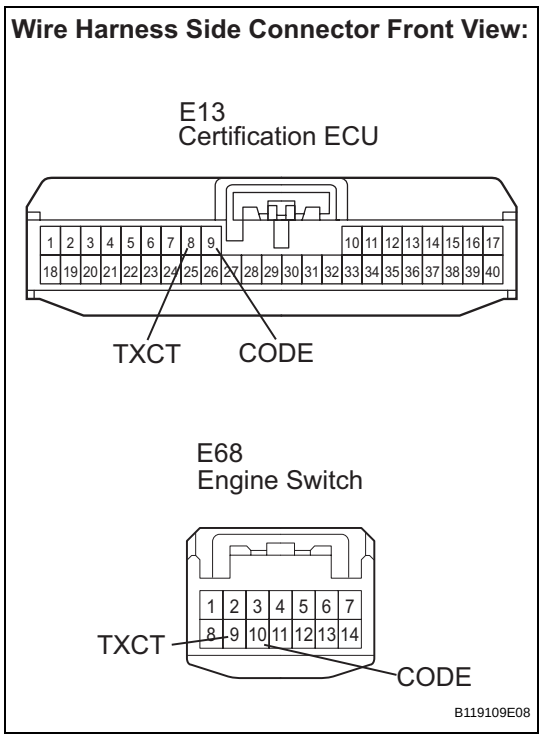

(a) Disconnect the E13 ECU and E68 switch connectors.
(b) Measure the resistance according to the value(s) in the table below.

Standard resistance

Tester Connection	Specified Condition
E13-9 (CODE) - E68-10 (CODE)	Below 1 Ω
E13-8 (TXCT) - E68-9 (TXCT)	
E13-9 (CODE) - Body ground	10 kΩ or higher
E13-8 (TXCT) - Body ground	

NG → **REPAIR OR REPLACE HARNESS OR CONNECTOR**

OK

3 CHECK ENGINE SWITCH

(a) After replacing the engine switch (See page ST-158) with a normal one, check that the engine starts.
OK:
The engine starts.

NG → **REPLACE CERTIFICATION ECU**

OK

END

EI

DTC	B2785	Communication Malfunction between ECUs Connected by LIN

DESCRIPTION

This DTC is output when LIN communication from the certification ECU stops for a certain amount of time.
HINT:
If this DTC B2785 is detected simultaneously with DTC B2786 , B2789 or B2287, troubleshoot DTC B2786, B2789 or B2287 first.

DTC No.	B2785	B2786	B2789	B2287	Trouble Area
DTC Output	○	○	-	-	Wire harness (Certification ECU - Steering lock ECU)
	○	-	○	-	Wire harness (Certification ECU - ID code box)
	○	-	-	○	Wire harness (Certification - Main body ECU)

○: DTC is output
-: DTC is not output

DTC No.	DTC Detection Condition	Trouble Area
B2785	• LIN communication from certification ECU stops for a certain amount of time • Open or short in wire harness between ECUs	• Wire harness • Certification ECU • Main body ECU • Steering lock ECU • ID code box

WIRING DIAGRAM

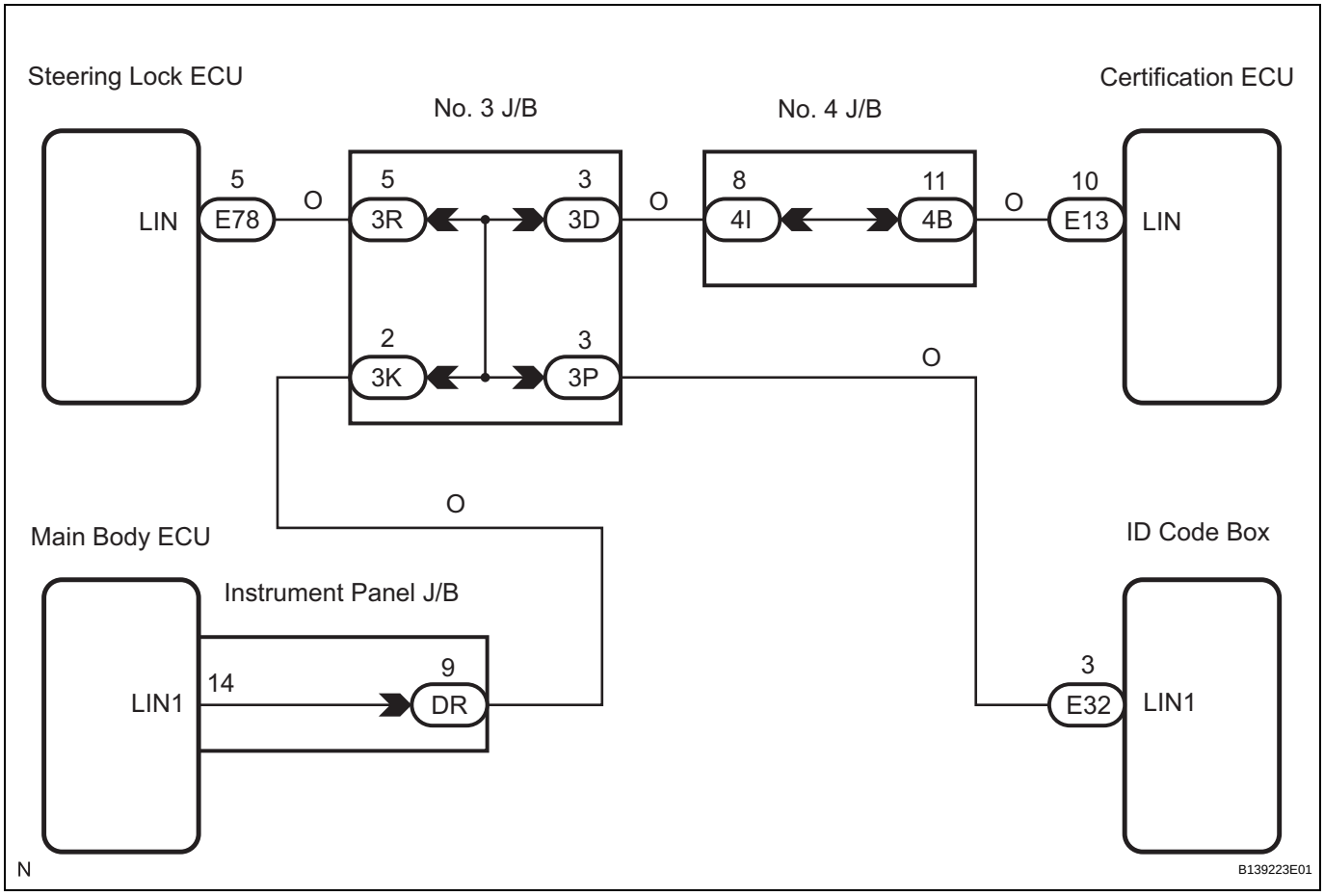

INSPECTION PROCEDURE

NOTICE:

- **If the certification ECU or ID code box is replaced, register the key and ECU communication ID (See page EI-9).**
- **If the steering lock ECU or main body ECU is replaced, register the ECU code and ECU communication ID (See page EI-9).**

1 CHECK DTC OUTPUT

(a) Delete the DTCs (See page EI-25).
(b) Recheck for DTCs (See page EI-25).
Result

Result	Proceed to
B2785 output reoccurs	A
B2785 output does not reoccur	B

B → **USE SIMULATION METHOD TO CHECK**

A

2 REPLACE CERTIFICATION ECU

(a) Replace the certification ECU.

NEXT

3 ELECTRICAL KEY REGISTRATION

(a) Register the electrical key code in the certification ECU (See page EI-9).

NEXT

4 ECU COMMUNICATION ID REGISTRATION

(a) Register the ECU communication ID between the ID code box and ECM (See page EI-9).

NEXT

5 CHECK DTC OUTPUT

(a) Delete the DTCs (See page EI-25).
(b) Recheck for DTCs (See page EI-25).
Result

Result	Proceed to
B2785 output reoccurs	A
B2785 output does not reoccur	B

B → END

A

6	REPLACE MAIN BODY ECU

(a) Replace the main body ECU.

NEXT

EI

7	ECU CODE REGISTRATION

(a) Register the ECU code between the ECUs connected by LIN communication (See page EI-9).

NEXT

8	CHECK DTC OUTPUT

(a) Delete the DTCs (See page EI-25).
(b) Recheck for DTCs (See page EI-25).
Result

Result	Proceed to
B2785 output reoccurs	A
B2785 output does not reoccur	B

B → END

A

9	REPLACE STEERING LOCK ECU

(a) Replace the steering lock ECU.

NEXT

10	ECU CODE REGISTRATION

(a) Register the ECU code between the ECUs connected by LIN communication (See page EI-9).

NEXT

11	CHECK DTC OUTPUT

(a) Delete the DTCs (See page EI-25).
(b) Recheck for DTCs (See page EI-25).
Result

Result	Proceed to
B2785 output reoccurs	A

Result	Proceed to
B2785 output does not reoccur	B

B → END

A

REPLACE ID CODE BOX

DTC	B2786	No Response from Steering Lock ECU

DESCRIPTION

This DTC is output when the certification ECU does not receive LIN communication from the steering lock ECU for 10 seconds.

DTC No.	DTC Detection Condition	Trouble Area
B2786	• Certification ECU does not receive LIN communication from steering lock ECU for 10 seconds • Open or short in wire harness between ECUs	• Wire harness • Certification ECU • Steering lock ECU

EI

WIRING DIAGRAM

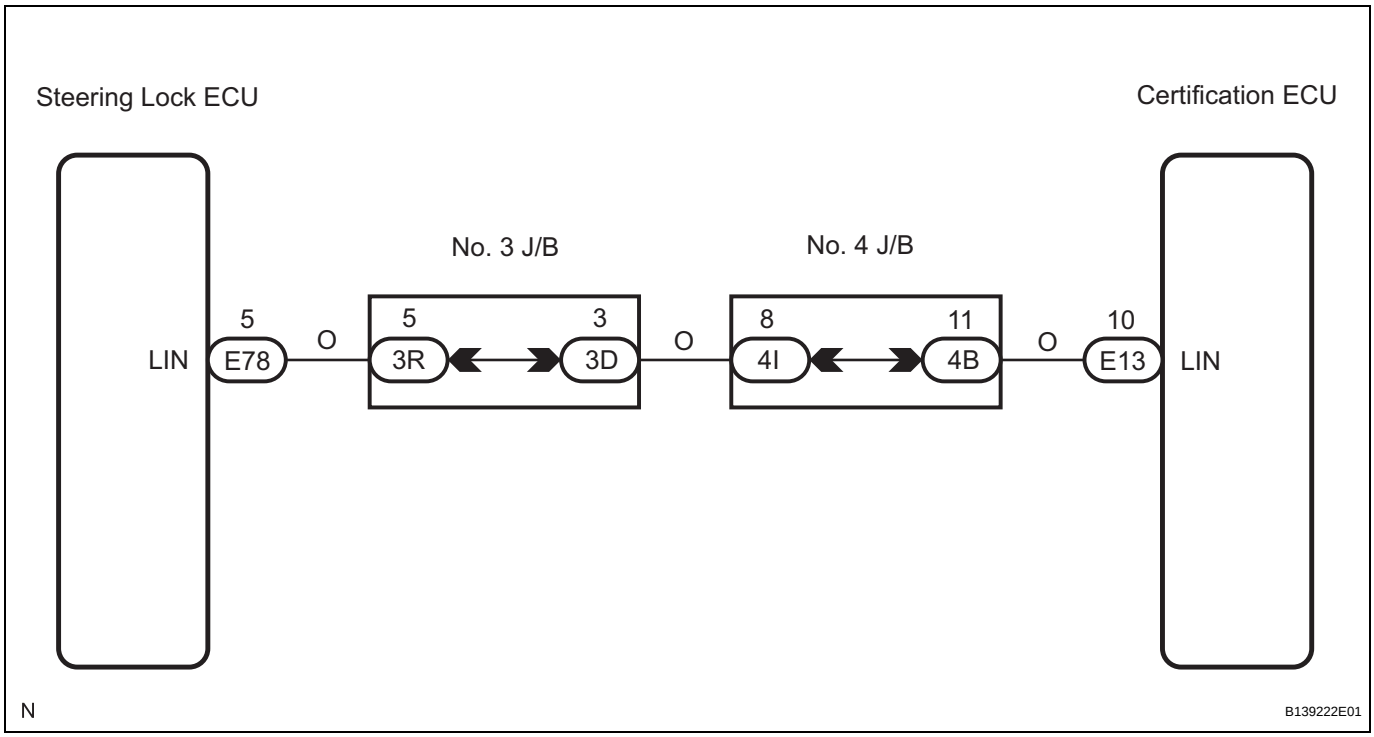

INSPECTION PROCEDURE

NOTICE:

- **If the certification ECU is replaced, register the key and ECU communication ID (See page EI-9).**
- **If the steering lock ECU is replaced, register the ECU code and ECU communication ID (See page EI-9).**

1	CHECK DTC OUTPUT

(a) Delete the DTCs (See page EI-25).
(b) Recheck for DTCs (See page EI-25).
Result

Result	Proceed to
B2786 output reoccurs	A
B2786 output does not reoccur	B

B	USE SIMULATION METHOD TO CHECK

A

2 CHECK HARNESS AND CONNECTOR (CERTIFICATION ECU - STEERING LOCK ECU)

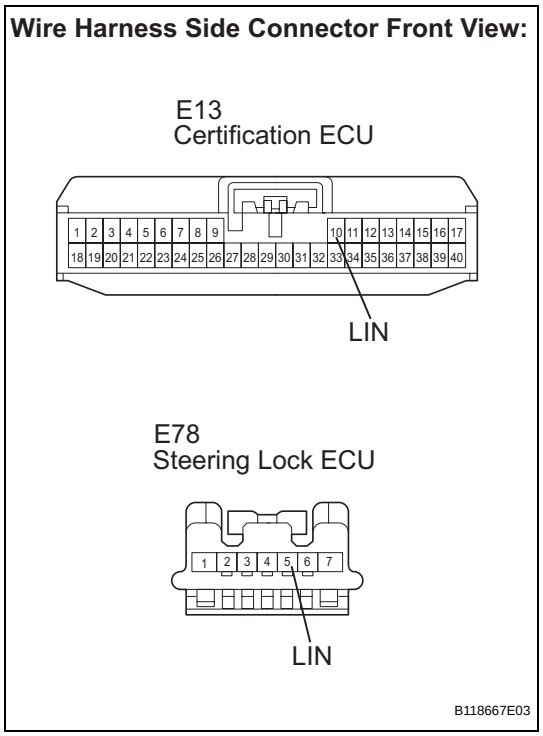

(a) Disconnect the E13 and E78 ECU connectors.
(b) Measure the resistance according to the value(s) in the table below.

Standard resistance

Tester Connection	Specified Condition
E13-10 (LIN) - E78-5 (LIN)	Below 1 Ω
E13-10 (LIN) - Body ground	10 kΩ or higher

NG → **REPAIR OR REPLACE HARNESS OR CONNECTOR**

OK

3 REPLACE CERTIFICATION ECU

(a) Replace the certification ECU.

NEXT

4 ELECTRICAL KEY REGISTRATION

(a) Register the electrical key code in the certification ECU (See page EI-9).

NEXT

5 ECU COMMUNICATION ID REGISTRATION

(a) Register the ECU communication ID between the ID code box and ECM (See page EI-9).

NEXT

6 CHECK DTC OUTPUT

(a) Delete the DTCs (See page EI-25).

EI

(b) Recheck for DTCs (See page EI-25).

Result

Result	Proceed to
B2786 output reoccurs	A
B2786 output does not reoccur	B

B → **END**

A

EI

REPLACE STEERING LOCK ECU

DTC	B2789	No Response from ID BOX

DESCRIPTION

This DTC is output when the certification ECU does not receive LIN communication from the ID code box for 10 seconds.

DTC No.	DTC Detection Condition	Trouble Area
B2789	• Certification ECU does not receive LIN communication from ID code box for 10 seconds • Open or short in wire harness between ECUs	• Wire harness • Certification ECU • ID code box

WIRING DIAGRAM

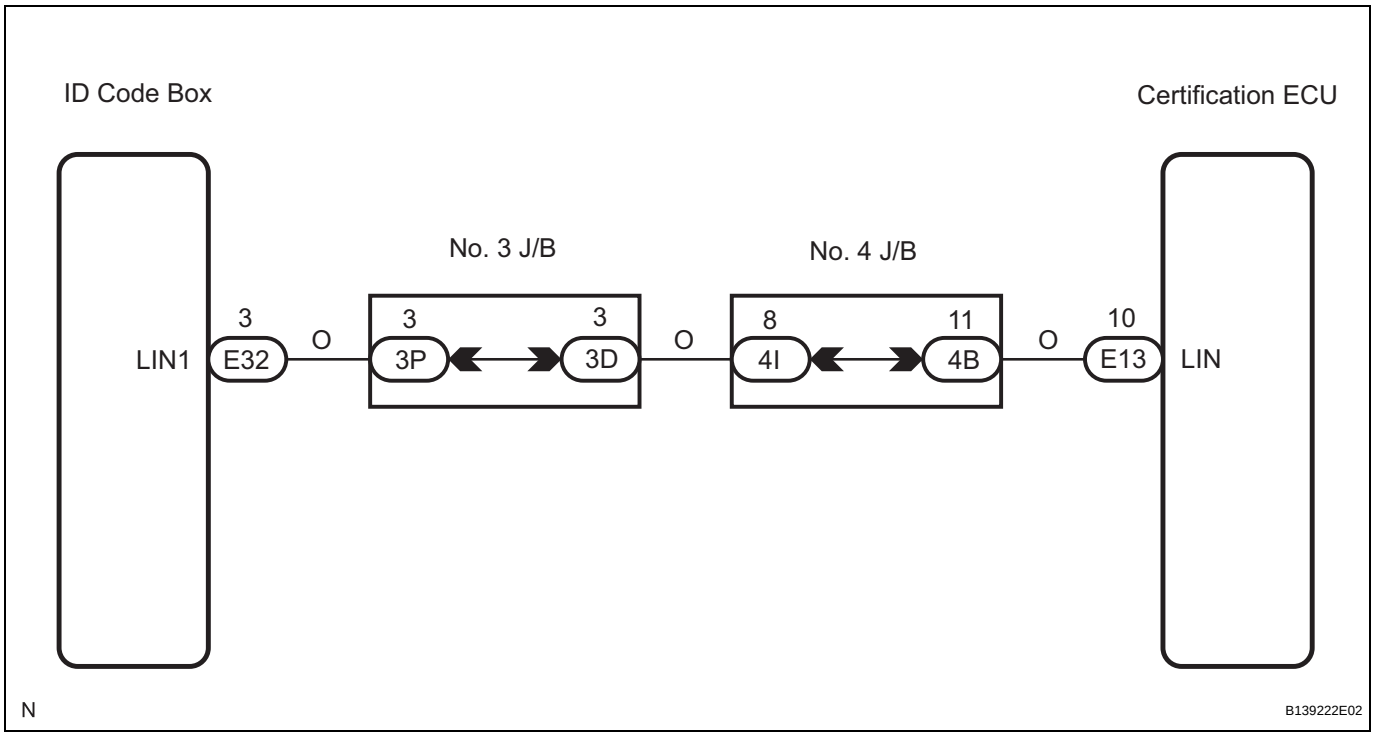

INSPECTION PROCEDURE

NOTICE:

If the certification ECU or ID code box is replaced, register the key and ECU communication ID (See page EI-9).

1	CHECK DTC OUTPUT

(a) Delete the DTCs (See page EI-25).
(b) Recheck for DTCs (See page EI-25).
Result

Result	Proceed to
B2789 output reoccurs	A
B2789 output does not reoccur	B

B	USE SIMULATION METHOD TO CHECK

A

2 CHECK HARNESS AND CONNECTOR (CERTIFICATION ECU - ID CODE BOX)

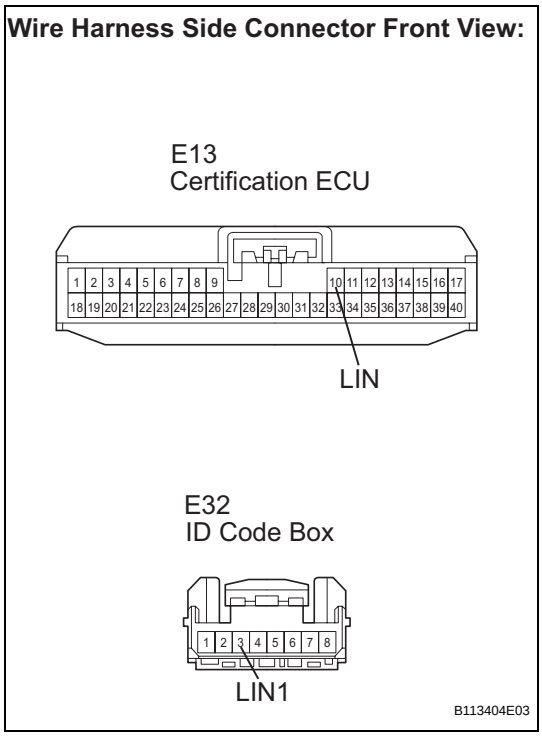

(a) Disconnect the E13 ECU and E32 ID code box connectors.

(b) Measure the resistance according to the value(s) in the table below.

Standard resistance

Tester Connection	Specified Condition
E13-10 (LIN) - E32-3 (LIN1)	Below 1 Ω
E13-10 (LIN) - Body ground	10 kΩ or higher

NG → **REPAIR OR REPLACE HARNESS OR CONNECTOR**

OK

3 REPLACE CERTIFICATION ECU

(a) Replace the certification ECU.

NEXT

4 ELECTRICAL KEY REGISTRATION

(a) Register the electrical key code in the certification ECU (See page EI-9).

NEXT

5 ECU COMMUNICATION ID REGISTRATION

(a) Register the ECU communication ID between the ID code box and ECM (See page EI-9).

NEXT

6 CHECK DTC OUTPUT

(a) Delete the DTCs (See page EI-25).

(b) Recheck for DTCs (See page EI-25).

Result

Result	Proceed to
B2789 output reoccurs	A
B2789 output does not reoccur	B

B → **END**

A

REPLACE ID CODE BOX

PROBLEM SYMPTOMS TABLE

HINT:
Be sure to perform the SYMPTOM SIMULATION procedure before replacing the ECM. If these symptoms do not persist, the cause of the problem may be a poor intermittent electrical contact (open or short) of a wire harness or connector.

Cruise control system

Symptom	Suspected Area	See page
Vehicle speed cannot be set. (The CRUISE main indicator light comes on.)	1. Cruise control switch circuit	CC-23
	2. Combination meter	ME-14
	3. Vehicle speed sensor circuit	CC-18
	4. Stop light switch circuit	CC-19
	5. Park/Neutral position sensor circuit	AX-170
	6. If the symptoms still occur after the above areas have been inspected and have proven to be normal, replace the ECM.	ES-543
Pushing the ON-OFF button does not turn the cruise control system on. (Vehicle speed cannot be set.)	1. Stop light switch circuit	CC-19
	2. Vehicle speed sensor circuit	CC-18
	3. Cruise control switch circuit	CC-23
	4. Park/Neutral position sensor circuit	AX-170
	5. Combination meter	ME-14
	6. If the symptoms still occur after the above areas have been inspected and have proven to be normal, replace the ECM.	ES-543
Pushing the ON-OFF button does not turn the cruise control system on. (Vehicle speed can be set.)	1. Cruise main indicator light circuit	CC-29
	2. If the symptoms still occur after the above area has been inspected and has proven to be normal, replace the ECM.	ES-543
The cruise control is canceled while it is operating.	1. Stop light switch circuit	CC-19
	2. Park/Neutral position sensor circuit	AX-170
	3. Cruise control switch circuit	CC-23
	4. Vehicle speed sensor circuit	CC-18
	5. If the symptoms still occur after the above areas have been inspected and have proven to be normal, replace the ECM.	ES-543
Pulling back on the control main switch does not cancel the cruise control. (The CRUISE main indicator light remains on.)	1. Cruise control switch circuit	CC-23
	2. If the symptoms still occur after the above area has been inspected and has proven to be normal, replace the ECM.	ES-543
Pulling back on the control main switch does not cancel the cruise control. (The CRUISE main indicator light goes off.)	ECM	ES-543
The cruise control is not canceled when vehicle speed drops below the low speed limit. (The CRUISE main indicator light remains on.)	1. Vehicle speed sensor circuit	CC-18
	2. If the symptoms still occur after the above area has been inspected and has proven to be normal, replace the ECM.	ES-543
The cruise control is not canceled when vehicle speed drops below the low speed limit. (The CRUISE main indicator light goes off.)	ECM	ES-543
Depressing the brake pedal does not cancel the cruise control. (The CRUISE main indicator light remains on.)	1. Stop light switch circuit	CC-19
	2. If the symptoms still occur after the above area has been inspected and has proven to be normal, replace the ECM.	ES-543
Depressing the brake pedal does not cancel the cruise control. (The CRUISE main indicator light goes off.)	ECM	ES-543
Moving the shift lever does not cancel the cruise control.	1. Park/Neutral position switch circuit	AX-170
	2. If the symptoms still occur after the above area has been inspected and has proven to be normal, replace the ECM.	ES-543
Hunting (Speed is not constant.)	1. Vehicle speed sensor circuit	CC-18
	2. If the symptoms still occur after the above area has been inspected and has proven to be normal, replace the ECM.	ES-543

Symptom	Suspected Area	See page
The CRUISE main indicator light remains blinking.	1. TC and CG terminal circuit	CC-30
	2. If the symptoms still occur after the above area has been inspected and has proven to be normal, replace the ECM.	ES-543

TERMINALS OF ECM

1. CHECK ECM

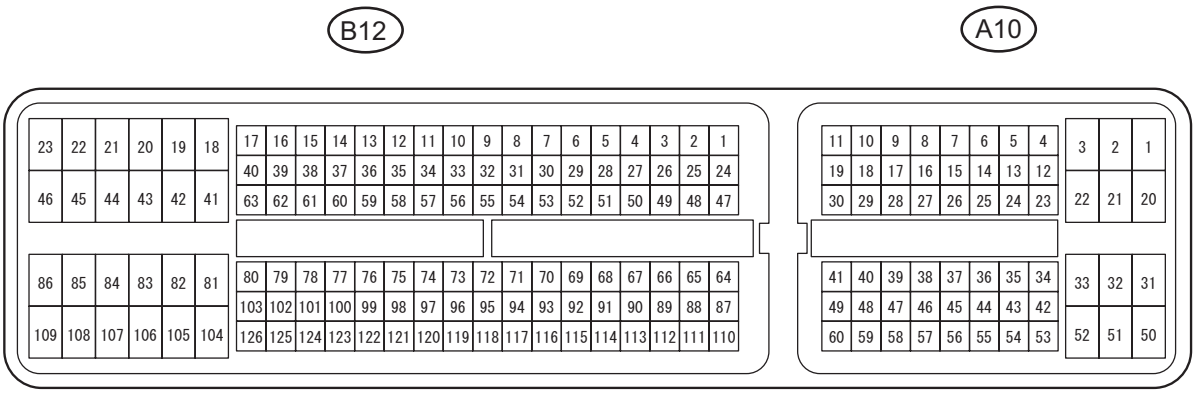

Symbols (Terminals No.)	Wiring Color	Terminal Description	Condition	Specified Condition
A10-27 (TC) - B12-81 (E1)	P - W-B	Ground	Engine switch on (IG)	10 to 14 V
A10-27 (TC) - B12-81 (E1)	P - W-B	Ground	Connect terminals TC and CG of DLC3	Below 1 V
A10-36 (STP) - B12-81 (E1)	W - W-B	Stop light signal	Engine switch on (IG), Depress brake pedal	10 to 14 V
A10-36 (STP) - B12-81 (E1)	W - W-B	Stop light signal	Engine switch on (IG), Release brake pedal	Below 1 V
A10-35 (ST1-) - B12-81 (E1)	GR - W-B	Stop light signal	Engine switch on (IG), Depress brake pedal	Below 1 V
A10-35 (ST1-) - B12-81 (E1)	GR - W-B	Stop light signal	Engine switch on (IG), Release brake pedal	10 to 14 V
A10-40 (CCS) - B12-81 (E1)	W - W-B	Cruise control main switch circuit	Engine switch on (IG)	10 to 14 V
A10-40 (CCS) - B12-81 (E1)	W - W-B	Cruise control main switch circuit	Engine switch on (IG), CANCEL switch ON	6.6 to 10.1 V
A10-40 (CCS) - B12-81 (E1)	W - W-B	Cruise control main switch circuit	Engine switch on (IG), SET/COAST switch ON	4.5 to 7.1 V
A10-40 (CCS) - B12-81 (E1)	W - W-B	Cruise control main switch circuit	Engine switch on (IG), RES/ACC switch ON	2.3 to 4.0 V
A10-40 (CCS) - B12-81 (E1)	W - W-B	Cruise control main switch circuit	Engine switch on (IG), MAIN switch ON	Below 1 V

DIAGNOSIS SYSTEM

1. DESCRIPTION

The ECM controls the cruise control system of the vehicle. The data and DTCs relating to the cruise control system can be read from the DLC3 of the vehicle. If either DTC or CRUISE OK is not displayed on the multi-information display on the combination meter when checking for DTCs, there may be a problem with either the combination meter or the CAN communication system. Use the intelligent tester to check and solve the problem.

2. CHECK DLC3

(a) The ECU uses ISO 15765-4 for communication. The terminal arrangement of the DLC3 complies with SAE J1962 and matches the ISO 15765-4 format.

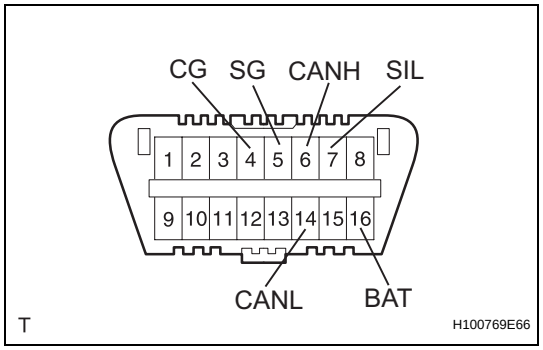

Symbols (Terminals No.)	Terminal Description	Condition	Specified Condition
SIL (7) - SG (5)	Bus "+" line	During transmission	Pulse generation
CG (4) - Body ground	Chassis ground	Always	Below 1 Ω
SG (5) - Body ground	Signal ground	Always	Below 1 Ω
BAT (16) - Body ground	Battery positive	Always	10 to 14 V
CANH (6) - CANL (14)	CAN bus line	Engine switch off*	54 to 69 Ω
CANH (6) - CG (4)	HIGH-level CAN bus line	Engine switch off*	200 Ω or higher
CANL (14) - CG (4)	LOW-level CAN bus line	Engine switch off*	200 Ω or higher
CANH (6) - BAT (16)	HIGH-level CAN bus line	Engine switch off*	6 kΩ or higher
CANL (14) - BAT (16)	LOW-level CAN bus line	Engine switch off*	6 kΩ or higher

NOTICE:

***: Before measuring the resistance, leave the vehicle as is for at least 1 minute and do not operate the engine switch, any other switches or the doors.**

If the result is not as specified, the DLC3 may have a malfunction. Repair or replace the harness and connector.

HINT:

Connect the cable of the intelligent tester to the DLC3, turn the engine switch on (IG) and attempt to use the tester. If the display indicates that a communication error has occurred, there is a problem either with the vehicle or with the tester.

- If communication is normal when the tester is connected to another vehicle, inspect the DLC3 of the original vehicle.

PROBLEM SYMPTOMS TABLE

HINT:
Be sure to perform the SYMPTOM SIMULATION procedure before replacing the ECM. If these symptoms do not persist, the cause of the problem may be a poor intermittent electrical contact (open or short) of a wire harness or connector.

Cruise control system

Symptom	Suspected Area	See page
Vehicle speed cannot be set. (The CRUISE main indicator light comes on.)	1. Cruise control switch circuit	CC-23
	2. Combination meter	ME-14
	3. Vehicle speed sensor circuit	CC-18
	4. Stop light switch circuit	CC-19
	5. Park/Neutral position sensor circuit	AX-170
	6. If the symptoms still occur after the above areas have been inspected and have proven to be normal, replace the ECM.	ES-543
Pushing the ON-OFF button does not turn the cruise control system on. (Vehicle speed cannot be set.)	1. Stop light switch circuit	CC-19
	2. Vehicle speed sensor circuit	CC-18
	3. Cruise control switch circuit	CC-23
	4. Park/Neutral position sensor circuit	AX-170
	5. Combination meter	ME-14
	6. If the symptoms still occur after the above areas have been inspected and have proven to be normal, replace the ECM.	ES-543
Pushing the ON-OFF button does not turn the cruise control system on. (Vehicle speed can be set.)	1. Cruise main indicator light circuit	CC-29
	2. If the symptoms still occur after the above area has been inspected and has proven to be normal, replace the ECM.	ES-543
The cruise control is canceled while it is operating.	1. Stop light switch circuit	CC-19
	2. Park/Neutral position sensor circuit	AX-170
	3. Cruise control switch circuit	CC-23
	4. Vehicle speed sensor circuit	CC-18
	5. If the symptoms still occur after the above areas have been inspected and have proven to be normal, replace the ECM.	ES-543
Pulling back on the control main switch does not cancel the cruise control. (The CRUISE main indicator light remains on.)	1. Cruise control switch circuit	CC-23
	2. If the symptoms still occur after the above area has been inspected and has proven to be normal, replace the ECM.	ES-543
Pulling back on the control main switch does not cancel the cruise control. (The CRUISE main indicator light goes off.)	ECM	ES-543
The cruise control is not canceled when vehicle speed drops below the low speed limit. (The CRUISE main indicator light remains on.)	1. Vehicle speed sensor circuit	CC-18
	2. If the symptoms still occur after the above area has been inspected and has proven to be normal, replace the ECM.	ES-543
The cruise control is not canceled when vehicle speed drops below the low speed limit. (The CRUISE main indicator light goes off.)	ECM	ES-543
Depressing the brake pedal does not cancel the cruise control. (The CRUISE main indicator light remains on.)	1. Stop light switch circuit	CC-19
	2. If the symptoms still occur after the above area has been inspected and has proven to be normal, replace the ECM.	ES-543
Depressing the brake pedal does not cancel the cruise control. (The CRUISE main indicator light goes off.)	ECM	ES-543
Moving the shift lever does not cancel the cruise control.	1. Park/Neutral position switch circuit	AX-170
	2. If the symptoms still occur after the above area has been inspected and has proven to be normal, replace the ECM.	ES-543
Hunting (Speed is not constant.)	1. Vehicle speed sensor circuit	CC-18
	2. If the symptoms still occur after the above area has been inspected and has proven to be normal, replace the ECM.	ES-543

Symptom	Suspected Area	See page
The CRUISE main indicator light remains blinking.	1. TC and CG terminal circuit	CC-30
	2. If the symptoms still occur after the above area has been inspected and has proven to be normal, replace the ECM.	ES-543

TERMINALS OF ECM

1. CHECK ECM

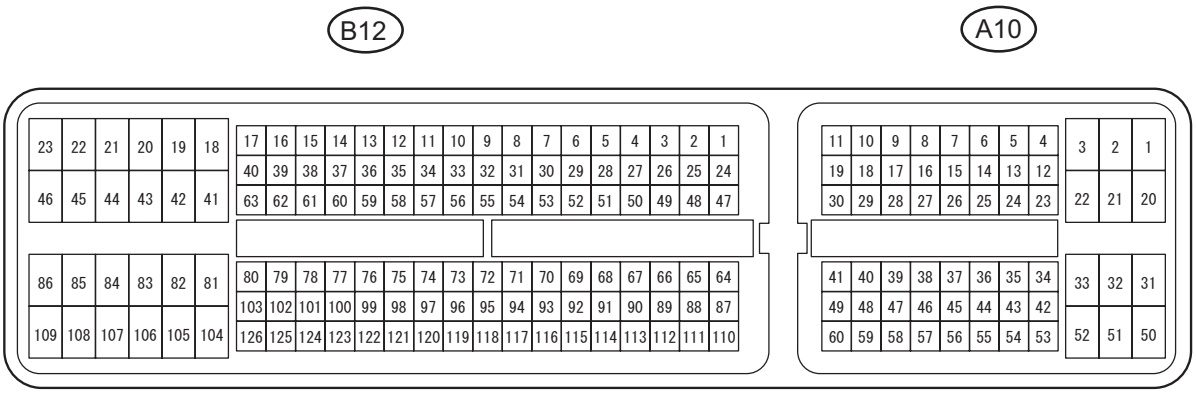

Symbols (Terminals No.)	Wiring Color	Terminal Description	Condition	Specified Condition
A10-27 (TC) - B12-81 (E1)	P - W-B	Ground	Engine switch on (IG)	10 to 14 V
A10-27 (TC) - B12-81 (E1)	P - W-B	Ground	Connect terminals TC and CG of DLC3	Below 1 V
A10-36 (STP) - B12-81 (E1)	W - W-B	Stop light signal	Engine switch on (IG), Depress brake pedal	10 to 14 V
A10-36 (STP) - B12-81 (E1)	W - W-B	Stop light signal	Engine switch on (IG), Release brake pedal	Below 1 V
A10-35 (ST1-) - B12-81 (E1)	GR - W-B	Stop light signal	Engine switch on (IG), Depress brake pedal	Below 1 V
A10-35 (ST1-) - B12-81 (E1)	GR - W-B	Stop light signal	Engine switch on (IG), Release brake pedal	10 to 14 V
A10-40 (CCS) - B12-81 (E1)	W - W-B	Cruise control main switch circuit	Engine switch on (IG)	10 to 14 V
A10-40 (CCS) - B12-81 (E1)	W - W-B	Cruise control main switch circuit	Engine switch on (IG), CANCEL switch ON	6.6 to 10.1 V
A10-40 (CCS) - B12-81 (E1)	W - W-B	Cruise control main switch circuit	Engine switch on (IG), SET/COAST switch ON	4.5 to 7.1 V
A10-40 (CCS) - B12-81 (E1)	W - W-B	Cruise control main switch circuit	Engine switch on (IG), RES/ACC switch ON	2.3 to 4.0 V
A10-40 (CCS) - B12-81 (E1)	W - W-B	Cruise control main switch circuit	Engine switch on (IG), MAIN switch ON	Below 1 V

DIAGNOSIS SYSTEM

1. DESCRIPTION

The ECM controls the cruise control system of the vehicle. The data and DTCs relating to the cruise control system can be read from the DLC3 of the vehicle. If either DTC or CRUISE OK is not displayed on the multi-information display on the combination meter when checking for DTCs, there may be a problem with either the combination meter or the CAN communication system. Use the intelligent tester to check and solve the problem.

2. CHECK DLC3

(a) The ECU uses ISO 15765-4 for communication. The terminal arrangement of the DLC3 complies with SAE J1962 and matches the ISO 15765-4 format.

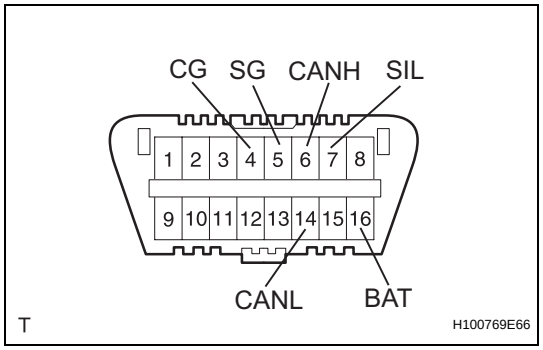

Symbols (Terminals No.)	Terminal Description	Condition	Specified Condition
SIL (7) - SG (5)	Bus "+" line	During transmission	Pulse generation
CG (4) - Body ground	Chassis ground	Always	Below 1 Ω
SG (5) - Body ground	Signal ground	Always	Below 1 Ω
BAT (16) - Body ground	Battery positive	Always	10 to 14 V
CANH (6) - CANL (14)	CAN bus line	Engine switch off*	54 to 69 Ω
CANH (6) - CG (4)	HIGH-level CAN bus line	Engine switch off*	200 Ω or higher
CANL (14) - CG (4)	LOW-level CAN bus line	Engine switch off*	200 Ω or higher
CANH (6) - BAT (16)	HIGH-level CAN bus line	Engine switch off*	6 kΩ or higher
CANL (14) - BAT (16)	LOW-level CAN bus line	Engine switch off*	6 kΩ or higher

NOTICE:

***: Before measuring the resistance, leave the vehicle as is for at least 1 minute and do not operate the engine switch, any other switches or the doors.**

If the result is not as specified, the DLC3 may have a malfunction. Repair or replace the harness and connector.

HINT:

Connect the cable of the intelligent tester to the DLC3, turn the engine switch on (IG) and attempt to use the tester. If the display indicates that a communication error has occurred, there is a problem either with the vehicle or with the tester.

- If communication is normal when the tester is connected to another vehicle, inspect the DLC3 of the original vehicle.

- If communication is still not possible when the tester is connected to another vehicle, the problem may be in the tester itself. Consult the Service Department listed in the tester's instruction manual.

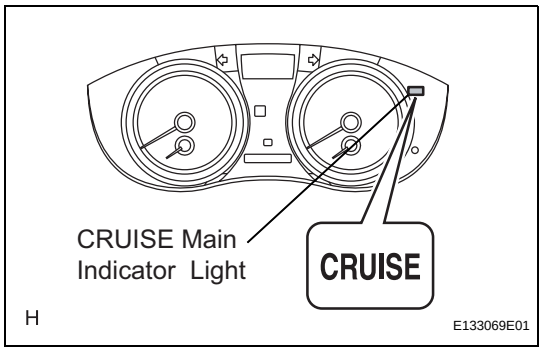

3. CHECK INDICATOR

(a) Turn the engine switch on (IG).

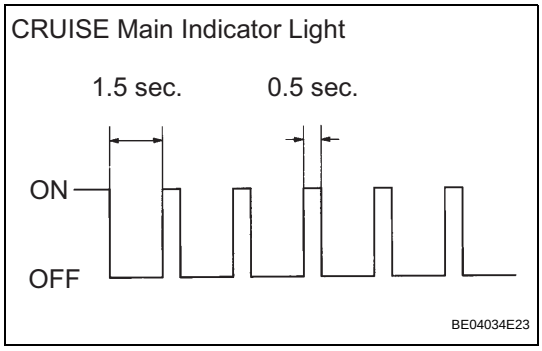

(b) Check that the CRUISE main indicator light illuminates when the cruise control main switch is turned on, and that the indicator light turns off when the main switch is turned off. If the results are not as specified, inspect the CRUISE main indicator light circuit (See page CC-29).

HINT:

While driving with cruise control, the ECM activates AUTO CANCEL of the cruise control system when a malfunction occurs in one of the following: vehicle speed sensors, stop light switch, or other related parts. When AUTO CANCEL is activated, the CRUISE main indicator light outputs the blinking pattern shown to the left. At the same time, data of the malfunction is stored as a DTC.

DTC CHECK / CLEAR

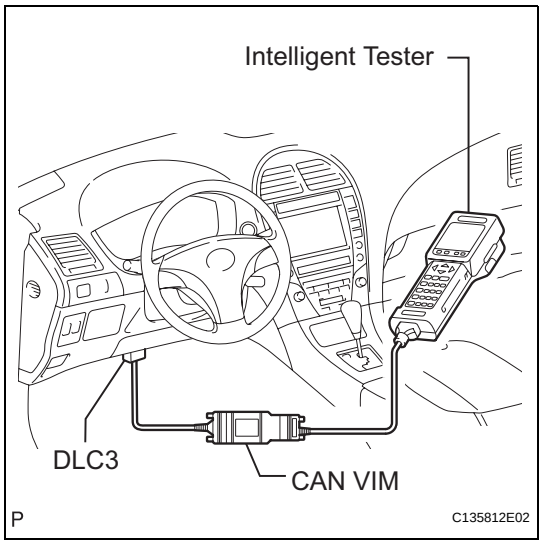

1. DTC CHECK

(a) Connect the intelligent tester to the DLC3.

(1) Connect the intelligent tester to the Controller Area Network Vehicle Interface Module (CAN VIM). Then connect the CAN VIM to the Data Link Connector 3 (DLC3).

(b) Turn the engine switch on (IG).

(c) Read the DTCs by following the prompts on the tester screen.

HINT:

Refer to the intelligent tester operator's manual for further details.

2. DTC CLEAR

(a) Connect the intelligent tester to the DLC3.

(b) Turn the engine switch on (IG).

(c) Operate the intelligent tester to erase the codes.

HINT:

Refer to the intelligent tester operator's manual for further details.

FAIL-SAFE CHART

HINT:
If the following conditions are detected while the cruise control is in operation, the system clears the stored vehicle speed in the ECM and cancels the cruise control operation.

Vehicle Condition	Auto Cancel Condition	Re-operation Condition
CRUISE main indicator light blinks	• There is open or short in stop light switch circuit • There is problem with vehicle speed signal • There is problem with throttle position sensor and motor	Turn cruise control main switch on again
CRUISE main indicator light blinks	• There is problem with input circuit of stop light switch circuit • There is problem with cancel circuit	• Turn cruise control main switch on again • Turn engine switch off then on again
Cruise control is cancelled (The indicator light remains on)	• Vehicle speed is lower than low speed limit (approx. 40 km/h (25 mph)) while running with cruise control on • VSC operates	Push cruise control main switch to + (ACCEL)/RES (RESUME)
	• Vehicle speed is lower than stored speed by approx. 16 km/h (9.9 mph) or more	Push cruise control main switch to - (COAST)/ SET

DIAGNOSTIC TROUBLE CODE CHART

If a trouble code is displayed during the DTC check, check the trouble areas listed for that code in the table below and proceed to the appropriate page.

Cruise control system

DTC Code	Detection Item	Trouble Area	See page
P0500	Vehicle Speed Sensor Malfunction	1. Vehicle speed sensor 2. Vehicle speed sensor signal circuit 3. Combination meter assembly 4. ECM	CC-18
P0503	Vehicle Speed Sensor "A" Intermittent / Erratic / High	1. Vehicle speed sensor 2. Vehicle speed sensor circuit 3. Combination meter assembly 4. ECM	CC-18
P0571	Brake Switch "A" Circuit	1. Stop light switch 2. Stop light switch circuit 3. ECM	CC-19
P0607	Control Module Performance	ECM	CC-22

DTC	P0500	Vehicle Speed Sensor Malfunction

DTC	P0503	Vehicle Speed Sensor "A" Intermittent / Erratic / High

DESCRIPTION

Refer to DTC P0500 (See page ES-275).

DTC No.	DTC Detection Condition	Trouble Area
P0500	The vehicle speed signal from the vehicle speed sensor is cut for 0.14 sec. or more while cruise control is in operation	• Vehicle speed sensor • Vehicle speed sensor signal circuit • Combination meter • ECM
P0503	Momentary interruption and noise are detected when a rapid change of vehicle speed occurs while cruise control is in operation	• Vehicle speed sensor • Vehicle speed sensor signal circuit • Combination meter • ECM

WIRING DIAGRAM

Refer to DTC P0500 (See page ES-276).

INSPECTION PROCEDURE

Refer to DTC P0500 (See page ES-276).

DTC	P0571	Brake Switch "A" Circuit

DESCRIPTION

When the brake pedal is depressed, the stop light switch sends a signal to the ECM. When the ECM receives this signal, it cancels the cruise control. The fail-safe function operates to enable normal driving even if there is a malfunction in the stop light signal circuit. The cancellation condition occurs when voltage is applied to terminal STP. When the brake is applied, voltage is normally applied to terminal STP of the ECM through the STOP fuse and the stop light switch, and the ECM turns the cruise control off.

DTC No.	DTC Detection Condition	Trouble Area
P0571	When voltage of STP terminal and that of ST1- terminal of ECM are less than 1 V for 0.5 sec. or more	• Stop light switch • Stop light switch circuit • ECM

CC

WIRING DIAGRAM

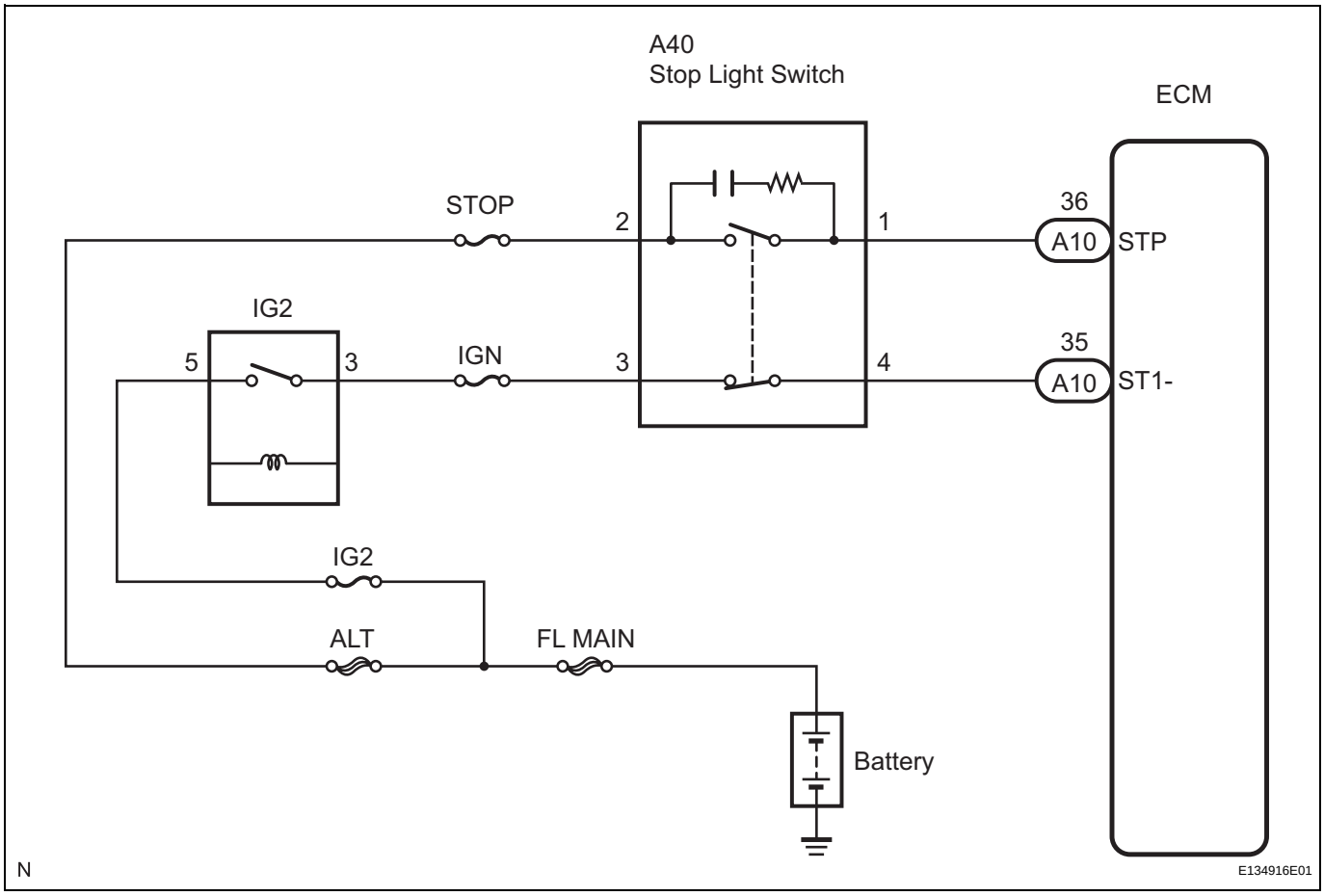

INSPECTION PROCEDURE

1	READ VALUE ON INTELLIGENT TESTER

(a) Connect the intelligent tester to the DLC3.
(b) Turn the engine switch on (IG), and turn the intelligent tester main switch on.

(c) Check the DATA LIST for proper functioning of the stop light switch.

ECM (Cruise control):

Tester Display	Measurement Item/Range	Normal Condition	Diagnostic Note
STP LIGHT SW M	Stop light switch signal (Main CPU) / ON or OFF	ON: Brake pedal depressed OFF: Brake pedal released	-

OK:
When the brake pedal is operated, the display changes as shown above.

OK → **REPLACE ECM (See page ES-543)**

NG

CC

2 CHECK HARNESS AND CONNECTOR (STOP LIGHT SWITCH - BATTERY)

Stop Light Switch Wire Harness Side Connector Front View:

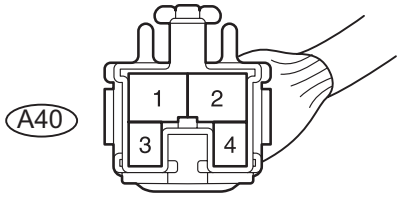

N E135377E01

(a) Disconnect the A40 connector from the stop light switch.
(b) Measure the voltage according to the value(s) in the table below.
Standard voltage

Tester Connection	Condition	Specified Condition
A40-2 - Body ground	Always	10 to 14 V
A40-3 - Body ground	Engine switch on (IG)	10 to 14 V

NG → **REPAIR OR REPLACE HARNESS OR CONNECTOR**

OK

3 INSPECT STOP LIGHT SWITCH

Stop Light Switch:

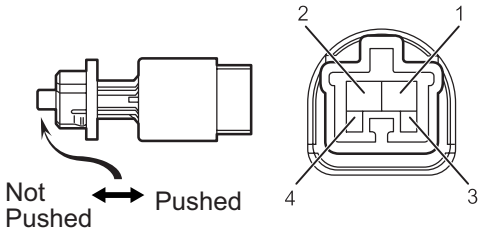

E133721E01

(a) Remove the stop light switch. (See page BR-59)
(b) Measure the resistance according to the value(s) in the table below.
Standard resistance

Tester Connection	Switch Condition	Specified Condition
1 - 2	Switch pin not pushed	Below 1 Ω
3 - 4	Switch pin not pushed	10 kΩ or higher
1 - 2	Switch pin pushed	10 kΩ or higher
3 - 4	Switch pin pushed	Below 1 Ω

(c) Install the stop light switch.

NG → **REPLACE STOP LIGHT SWITCH (See page BR-59)**

OK

4	CHECK ECM

ECM Wire Harness Side Connector Front Side View:

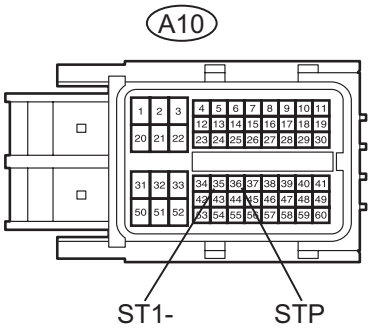

E135382E01

(a) Reconnect the stop light switch connector.
(b) Disconnect the A10 connector from the ECM.
(c) Turn the engine switch on (IG).
(d) Measure the voltage according to the value(s) in the table below.

Standard voltage

Tester Connection	Brake Pedal Condition	Specified Condition
A10-36 (STP) - Body ground	Depressed	10 to 14 V
A10-36 (STP) - Body ground	Released	Below 1 V
A10-35 (ST1-) - Body ground	Depressed	Below 1 V
A10-35 (ST1-) - Body ground	Released	10 to 14 V

NG → **REPAIR OR REPLACE HARNESS OR CONNECTOR (STOP LIGHT SWITCH - ECM)**

OK

REPLACE ECM (See page ES-543)

CC

DTC	P0607	Control Module Performance

DESCRIPTION

This DTC indicates internal abnormalities of the ECM.

DTC No.	DTC Detection Condition	Trouble Area
P0607	When both of the following conditions are met: • STP signals input to the ECM supervisory CPU and control ECU are different for 0.15 sec. or more • 0.4 sec. have passed after cruise cancel input signal (STP input) is input to the ECM	ECM

HINT:
The ECM receives signals from each sensor to control all functions of the cruise control system. When a trouble code is detected, the fail-safe function remains on until the engine switch is turned off.

INSPECTION PROCEDURE

1	REPLACE ECM

HINT:
(See page ES-543)

NEXT

END

Cruise Control Switch Circuit

DESCRIPTION

The cruise control main switch operates 7 functions: SET, - (COAST), TAP-DOWN, RES (RESUME), + (ACCEL), TAP-UP, and CANCEL. The SET, TAP-DOWN, and - (COAST) functions, and the RES (RESUME), TAP-UP, and + (ACCEL) functions are operated with the same switch. The cruise control main switch is an automatic return type switch which turns on only while operating it in the direction of each arrow and turns off after releasing it. The internal contact point of the cruise control main switch is turned on with the switch operation. Then the ECM reads the voltage value that has been changed by the switch operation to control SET, - (COAST), RES (RESUME), + (ACCEL), and CANCEL.

WIRING DIAGRAM

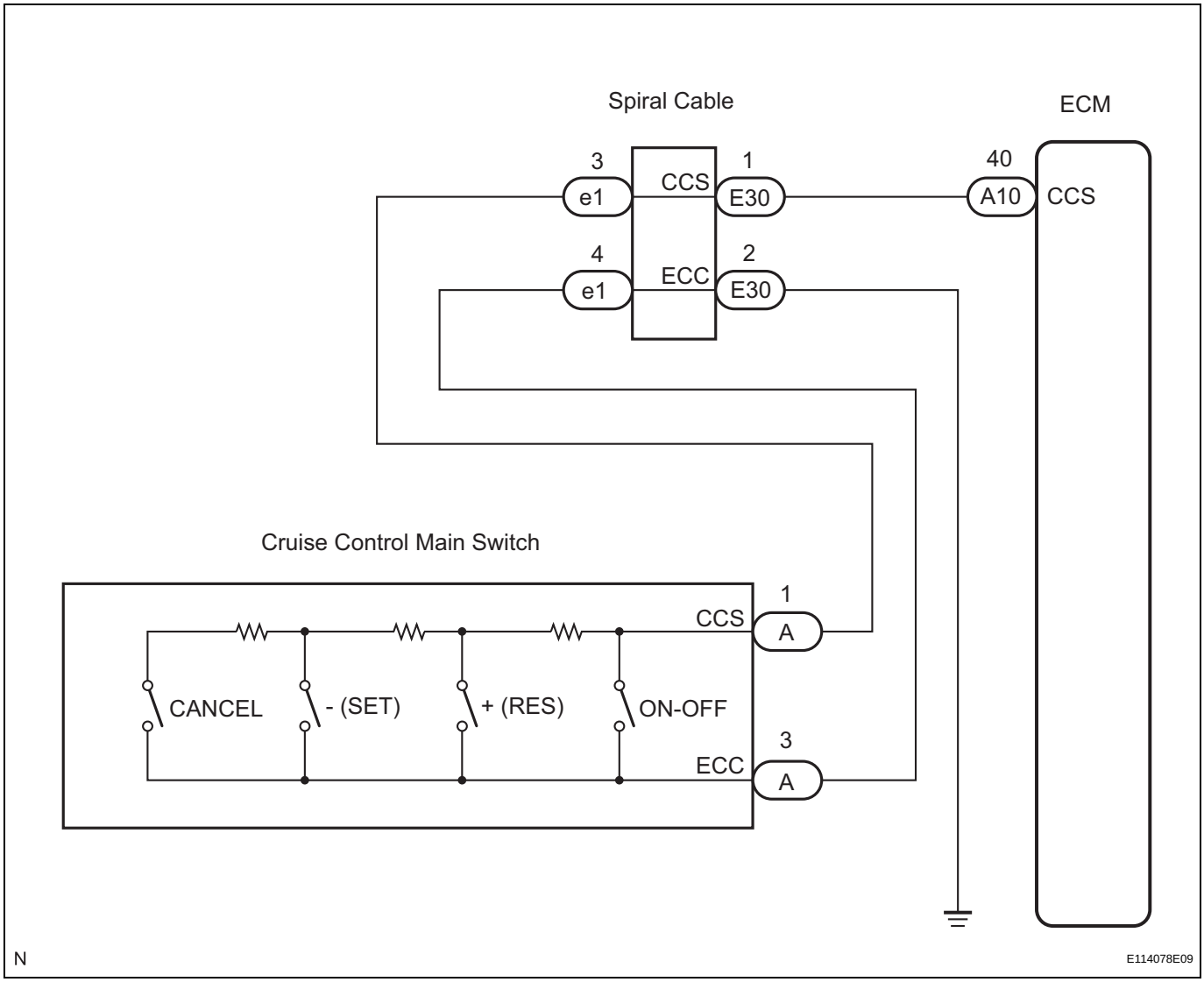

INSPECTION PROCEDURE

1	READ VALUE ON INTELLIGENT TESTER

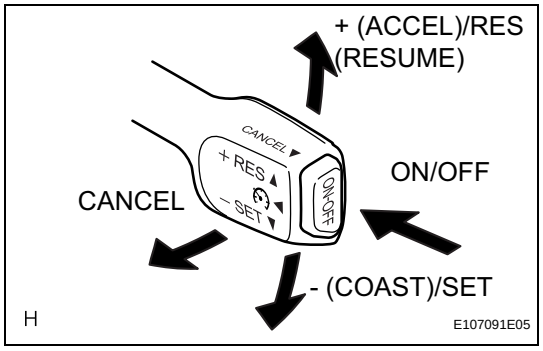

(a) Connect the intelligent tester to the DLC3.
(b) Turn the engine switch on (IG) and turn the intelligent tester main switch on.
(c) Check the DATA LIST for proper functioning of the cruise control main switch.

CC

ECM (Cruise control):

Tester Display	Measurement Item/Range	Normal Condition	Diagnostic Note
MAIN SW (MAIN)	Main switch signal (Main CPU)/ ON or OFF	ON: Main switch on OFF: Main switch off	-
CANCEL SW	CANCEL switch signal/ON or OFF	ON: CANCEL switch on OFF: CANCEL switch off	-
SET/COAST SW	SET/COAST switch signal/ON or OFF	ON: - (COAST)/SET switch on OFF: - (COAST)/SET switch off	-
RES/ACC SW	RES/ACC switch signal/ON or OFF	ON: + (ACCEL)/RES (RESUME) switch on OFF: + (ACCEL)/RES (RESUME) switch off	-

OK:
When the cruise control main switch is operated, the display changes as shown above.

Result

Result	Proceed to
OK	**A**
NG (All items are defective)	**B**
NG (1 to 3 items are defective)	**C**

A → **PROCEED TO NEXT CIRCUIT INSPECTION SHOWN IN PROBLEM SYMPTOMS TABLE**

C → **REPLACE CRUISE CONTROL MAIN SWITCH (See page CC-114)**

B

2	INSPECT CRUISE CONTROL MAIN SWITCH

(a) Remove the cruise control main switch (See page CC-114).
(b) Measure the resistance according to the value(s) in the table below.

Cruise Control Main Switch:

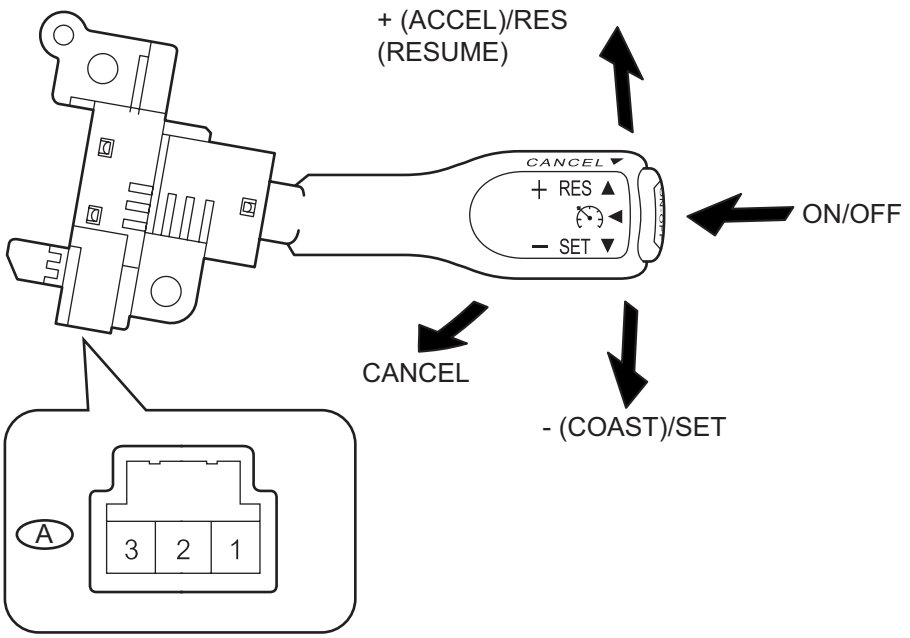

H

E106137E10

Standard resistance

Tester Connection	Switch Condition	Specified Condition
A-1 (CCS) - A-3 (ECC)	Neutral	10 kΩ or higher
	+ (ACCEL)/RES (RESUME)	216 to 264 Ω
	- (COAST)/SET	567 to 693 Ω
	CANCEL	1,386 to 1,694 Ω
	Main Switch on	Below 1 Ω

NG → **REPLACE CRUISE CONTROL MAIN SWITCH (See page CC-114)**

OK

3	**CHECK HARNESS AND CONNECTOR (CRUISE CONTROL MAIN SWITCH - SPIRAL CABLE)**

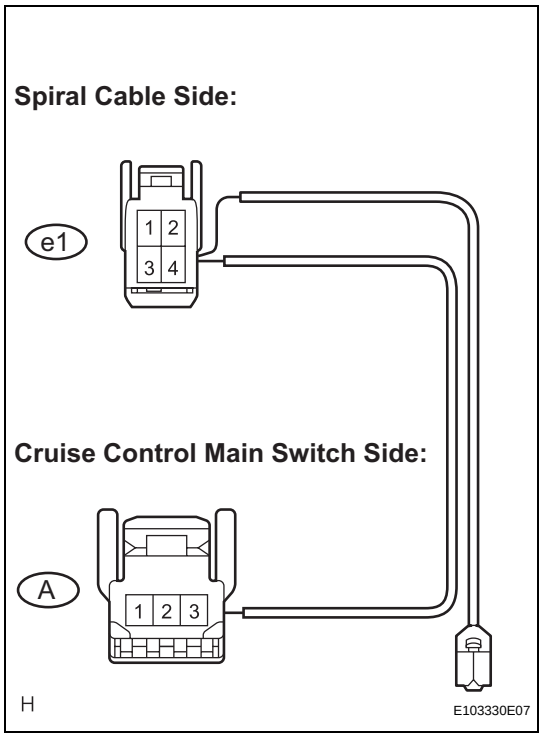

(a) Disconnect the e1 connector from the spiral cable.
(b) Measure the resistance according to the value(s) in the table below.

Standard resistance

Tester connection	Condition	Specified Condition
A-1 - e1-3	Always	Below 1 Ω
A-3 - e1-4	Always	Below 1 Ω

NG → **REPAIR OR REPLACE HARNESS OR CONNECTOR**

OK

CC

4	CHECK SPIRAL CABLE

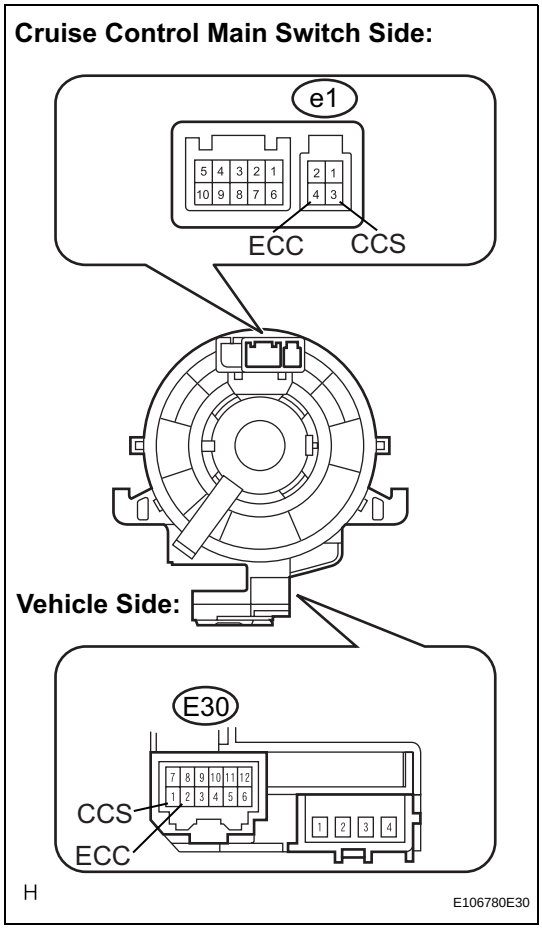

NOTICE:
The spiral cable is an important part of the SRS airbag system. Incorrect removal or installation of the spiral cable may cause airbag deployment. Be sure to read the page shown in the brackets.

HINT:
- Removal (See page RS-379)
- Installation (See page RS-382)

(a) Remove the spiral cable.
(b) Measure the resistance according to the value(s) in the table below.
Standard resistance

Tester Connection	Spiral Cable Position	Specified Condition
e1-3 - E30-1 (CCS)	Center	Below 1 Ω
	2.5 rotations to the left	
	2.5 rotations to the right	
e1-4 - E30-2 (ECC)	Center	Below 1 Ω
	2.5 rotations to the left	
	2.5 rotations to the right	

HINT:
The spiral cable makes a maximum of approximately 5 rotations.

NG → **REPLACE SPIRAL CABLE (See page RS-379)**

OK

5	CHECK WIRE HARNESS (SPIRAL CABLE - ECM AND BODY GROUND)

Spiral Cable Vehicle Side Connector Front View:

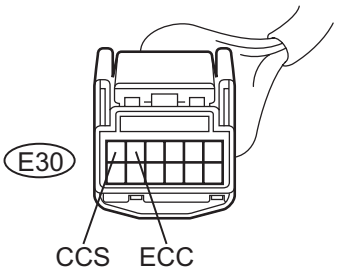

ECM Wire Harness Side Connector Front View:

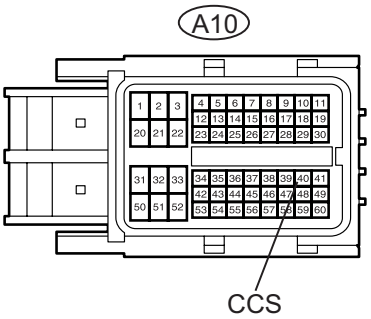

E135383E01

(a) Measure the resistance according to the value(s) in the table below.

Standard resistance

Tester Connection	Condition	Specified Condition
E30-1 - A10-40 (CCS)	Always	Below 1 Ω
A10-40 (CCS) - Body ground	Always	10 kΩ or higher
E30-2 (ECC) - Body ground	Always	Below 1 Ω

NG → **REPAIR OR REPLACE HARNESS OR CONNECTOR**

OK

REPLACE ECM (See page ES-543)

CC

Cruise Main Indicator Light Circuit

DESCRIPTION

- The ECM detects a cruise control switch signal and sends it to the combination meter through the CAN communication system. Then the CRUISE main indicator light comes on.
- The CRUISE main indicator light circuit uses CAN communication. If there is a malfunction in this circuit, check for DTCs in the CAN communication system before troubleshooting this circuit.

INSPECTION PROCEDURE

CC

1 PERFORM ACTIVE TEST USING INTELLIGENT TESTER

(a) Connect the intelligent tester to the DLC3.
(b) Check the CRUISE main indicator light by performing ACTIVE TEST.

Combination meter

Tester Display	Test Part	Control Range	Diagnostic Note
CRUISE INDIC	Turns CRUISE main indicator light	ON / OFF	-

OK:
Indicator light comes on / goes off.

NG → **REPLACE COMBINATION METER ASSEMBLY (See page ME-67)**

OK

2 READ VALUE ON INTELLIGENT TESTER

(a) Connect the intelligent tester to the DLC3.
(b) Turn the engine switch on (IG) and turn the intelligent tester main switch on.
(c) Check the DATA LIST for proper functioning of the CRUISE main indicator light.

ECM (Cruise control):

Tester Display	Measurement Item/Range	Normal Condition	Diagnostic Note
CCS INDICATOR M	Cruise indicator signal (Main CPU) / ON or OFF	ON: "CRUISE" on OFF: "CRUISE" off	-

OK:
When the cruise control main switch is operated, the display changes as shown above.

NG → **REPLACE ECM (See page ES-543)**

OK

PROCEED TO NEXT CIRCUIT INSPECTION SHOWN IN PROBLEM SYMPTOMS TABLE

TC and CG Terminal Circuit

DESCRIPTION

Connecting terminals TC and CG of the DLC3 causes the system to enter self-diagnostic mode. If a malfunction is present, DTCs will be output.
HINT:
When a particular warning light remains blinking, a ground short in the wiring of terminal TC of the DLC3 or an internal ground short in the relevant ECU is suspected.

WIRING DIAGRAM

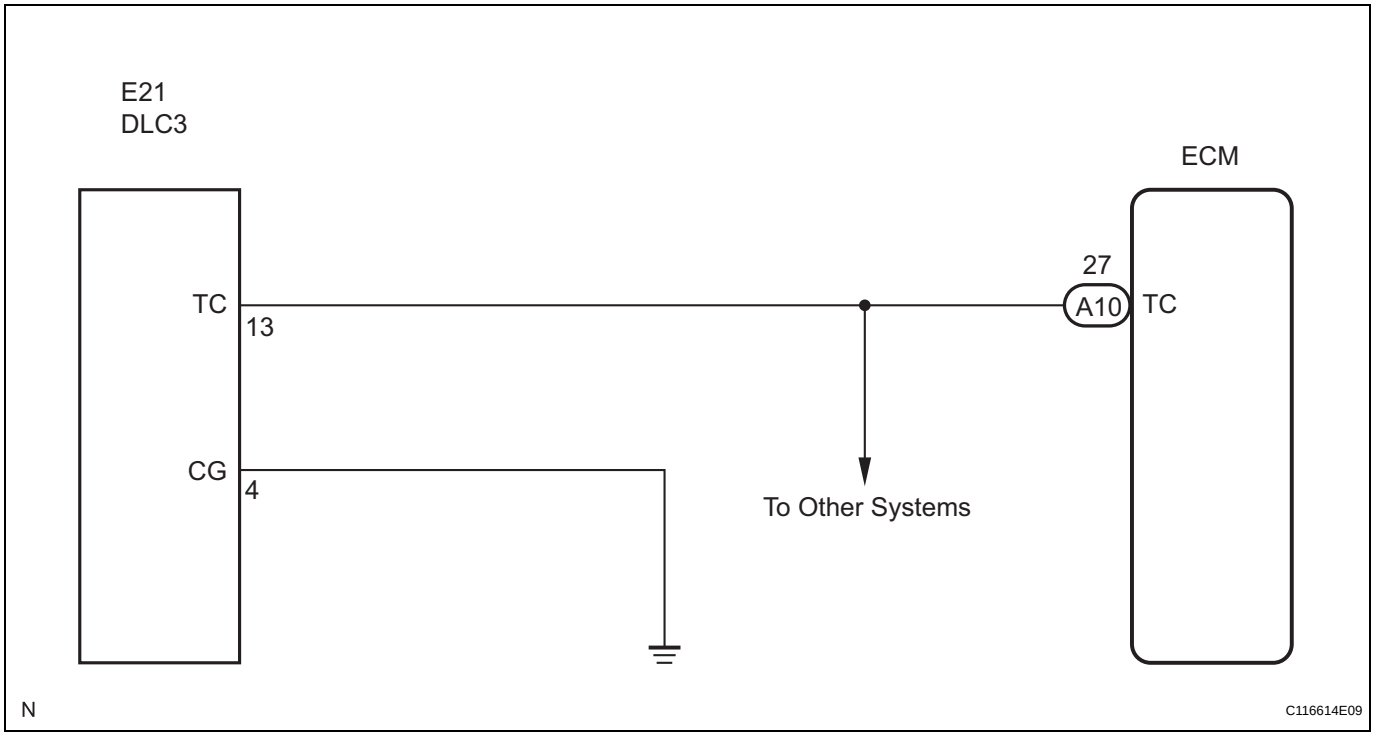

INSPECTION PROCEDURE

1 CHECK WIRE HARNESS (TERMINAL TC of DLC3 - ECM)

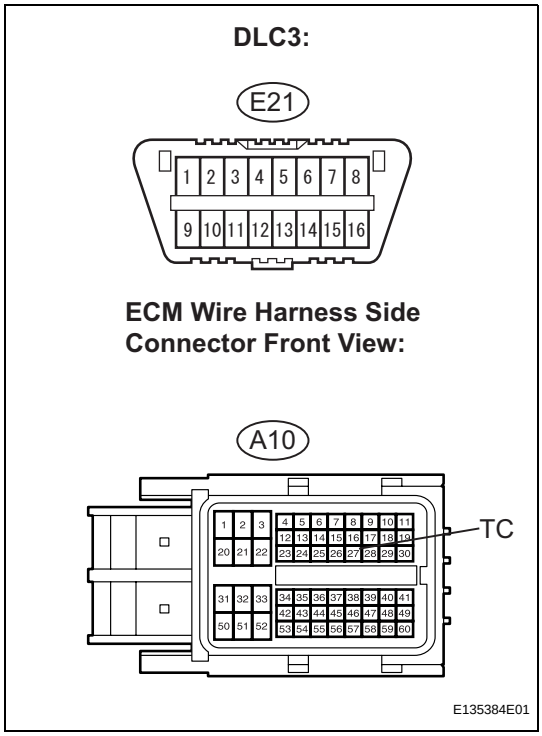

(a) Disconnect the A10 connector from the ECM.
(b) Measure the resistance according to the value(s) in the table below.

Standard resistance

Tester Connection	Condition	Specified Condition
A10-27 (TC) - E21-13 (TC)	Always	Below 1 Ω

NG → **REPAIR OR REPLACE HARNESS OR CONNECTOR (DLC3 - ECM)**

OK

2 CHECK WIRE HARNESS (TERMINAL CG of DLC3 - BODY GROUND)

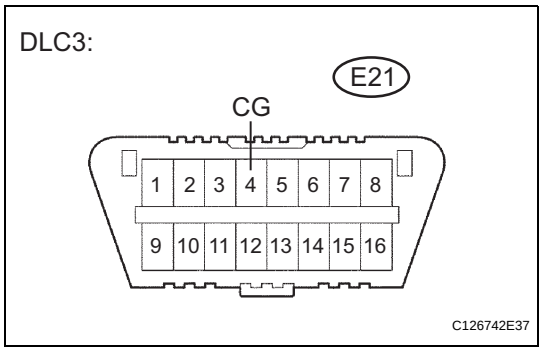

(a) Measure the resistance according to the value(s) in the table below.

Standard resistance

Tester Connection	Condition	Specified condition
E21-4 (CG) - Body ground	Always	Below 1 Ω

NG → **REPAIR OR REPLACE HARNESS OR CONNECTOR (DLC3 - BODY GROUND)**

OK

3	CHECK WIRE HARNESS (TERMINAL TC of DLC3 - BODY GROUND)

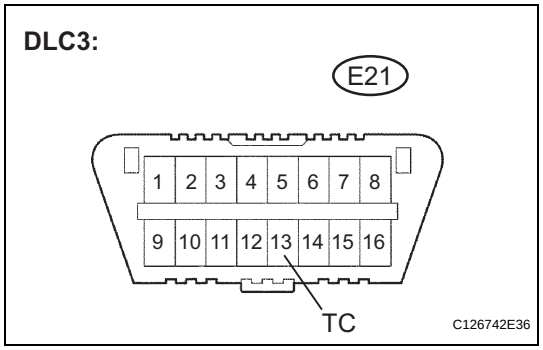

(a) Measure the resistance according to the value(s) in the table below.

Standard resistance

Tester Connection	Condition	Specified Condition
E21-13 (TC) - Body ground	Always	10 kΩ or higher

NG → **REPAIR OR REPLACE HARNESS OR CONNECTOR OR EACH ECU**

OK

PROCEED TO NEXT CIRCUIT INSPECTION SHOWN IN PROBLEM SYMPTOMS TABLE

CC

- If communication is still not possible when the tester is connected to another vehicle, the problem may be in the tester itself. Consult the Service Department listed in the tester's instruction manual.

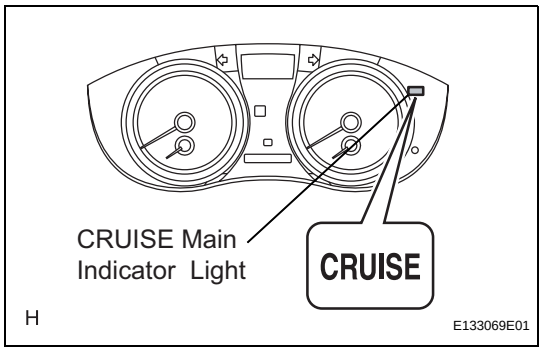

3. CHECK INDICATOR

(a) Turn the engine switch on (IG).

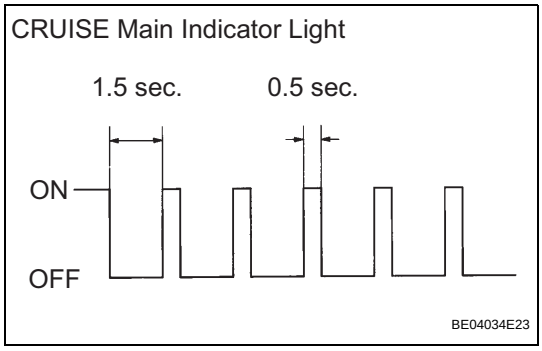

(b) Check that the CRUISE main indicator light illuminates when the cruise control main switch is turned on, and that the indicator light turns off when the main switch is turned off. If the results are not as specified, inspect the CRUISE main indicator light circuit (See page CC-29).

HINT:

While driving with cruise control, the ECM activates AUTO CANCEL of the cruise control system when a malfunction occurs in one of the following: vehicle speed sensors, stop light switch, or other related parts. When AUTO CANCEL is activated, the CRUISE main indicator light outputs the blinking pattern shown to the left. At the same time, data of the malfunction is stored as a DTC.

DTC CHECK / CLEAR

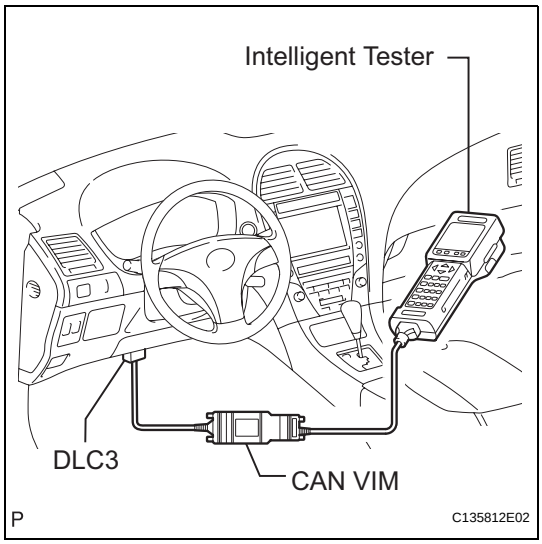

1. DTC CHECK

(a) Connect the intelligent tester to the DLC3.

(1) Connect the intelligent tester to the Controller Area Network Vehicle Interface Module (CAN VIM). Then connect the CAN VIM to the Data Link Connector 3 (DLC3).

(b) Turn the engine switch on (IG).

(c) Read the DTCs by following the prompts on the tester screen.

HINT:

Refer to the intelligent tester operator's manual for further details.

2. DTC CLEAR

(a) Connect the intelligent tester to the DLC3.

(b) Turn the engine switch on (IG).

(c) Operate the intelligent tester to erase the codes.

HINT:

Refer to the intelligent tester operator's manual for further details.

FAIL-SAFE CHART

HINT:
If the following conditions are detected while the cruise control is in operation, the system clears the stored vehicle speed in the ECM and cancels the cruise control operation.

Vehicle Condition	Auto Cancel Condition	Re-operation Condition
CRUISE main indicator light blinks	• There is open or short in stop light switch circuit • There is problem with vehicle speed signal • There is problem with throttle position sensor and motor	Turn cruise control main switch on again
CRUISE main indicator light blinks	• There is problem with input circuit of stop light switch circuit • There is problem with cancel circuit	• Turn cruise control main switch on again • Turn engine switch off then on again
Cruise control is cancelled (The indicator light remains on)	• Vehicle speed is lower than low speed limit (approx. 40 km/h (25 mph)) while running with cruise control on • VSC operates	Push cruise control main switch to + (ACCEL)/RES (RESUME)
	• Vehicle speed is lower than stored speed by approx. 16 km/h (9.9 mph) or more	Push cruise control main switch to - (COAST)/ SET

SYSTEM DESCRIPTION

1. GENERAL

(a) The dynamic radar cruise control system has two cruise control modes: the constant speed control mode and vehicle-to-vehicle distance control mode.
- The vehicle-to-vehicle distance control mode is always selected when starting the dynamic radar cruise control system.
- Operation of the constant speed control mode is the same as that for a conventional cruise control system.

(b) This system maintains the vehicle running at the speed that the driver has set, as long as there are no vehicles ahead in the same lane. Then, the system maintains the vehicle distance that has been set by the driver. If the system detects a vehicle driving at a slower speed ahead while the driver is driving at a constant speed, it closes the throttle valve to decelerate. If further deceleration is required, the system controls the brake actuator in order to apply the brakes. Thereafter, if there are no vehicles ahead within the set vehicle-to-vehicle distance because either the vehicle ahead or the driver has changed lanes, the system accelerates slowly to reach the set vehicle speed and resumes driving at the constant speed.

(c) The constant speed control mode is designed to maintain a constant cruising speed. The vehicle-to-vehicle distance control mode is designed to control constant speed cruising function, deceleration cruising function, follow-up cruising function, and acceleration cruising function.

(d) The millimeter wave radar sensor and the distance control ECU control the system while the vehicle-to-vehicle distance control mode is in operation, and send signals to each actuator and ECU.

(e) In vehicle-to-vehicle distance control mode, the dynamic radar cruise control system receives signals from the yaw rate (deceleration sensor) and the steering angle sensor. Based on these signals, it then estimates curve radius and compensates for information on the preceding vehicle while turning. It can also compensate for the brake control when approaching another vehicle.

(f) This system judges the presence of a vehicle in front and the distance to it based on the signals from the radar sensor while the vehicle-to-vehicle distance control mode is in operation. Using this information, the system informs the driver of any danger with the warning buzzer, performs brake control, and turns on the stop light when approaching the vehicle in front.

(g) The following illustration shows a control example under the following conditions: own vehicle speed is 100 km/h (62 mph) and the speed of the vehicle in front is 80 km/h (50 mph).

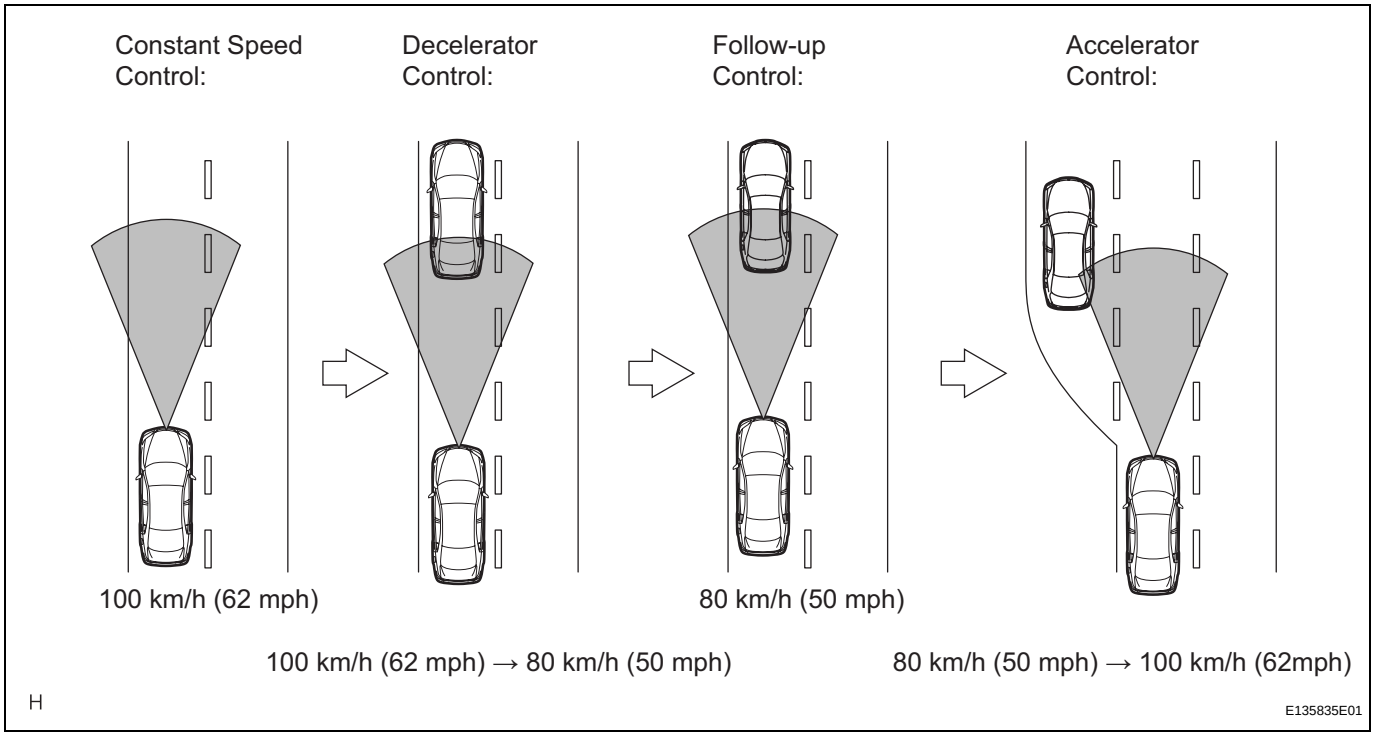

HINT:
- Vehicle distance increases and decreases in accordance with vehicle speed.
- Controlling condition is indicated on the multi-information display in the combination meter.

2. FUNCTION OF MAIN COMPONENTS

Item	Outline
Combination Meter (CRUISE Main Indicator Light)	• Comes on when the main switch is ON • If the distance control ECU detects a malfunction, this light flashes to warn the driver
Combination Meter (Master Warning Light)	If the ECM or distance control ECU detects an automatic cancel signal while the vehicle is operating under cruise control, this light comes on to inform the driver
Combination Meter (Buzzer)	If the ECM or distance control ECU detects an automatic cancel signal while the vehicle is operating under cruise control, this buzzer sounds only once to inform the driver
Combination Meter (Multi-information Display)	• While the system is in the vehicle-to-vehicle distance control mode, the multi-information display receives signals from the distance control ECU, in order to display system conditions in the graphic area • If the ECM or distance control ECU detects a malfunction signal while the vehicle is operating under cruise control, a warning message will be displayed in the warning area to inform the driver • While the system is in the radar sensor adjustment mode, the adjustment angle detected by the distance control ECU will be displayed in the warning area to inform the driver
Cruise Control Main Switch (Main Switch)	Turns the cruise control system ON/OFF
Cruise Control Main Switch (Control Switch)	• Vehicle speed setting, deceleration setting, preset speed resumption, acceleration setting, and canceling signals are output to the ECM through the operation of this switch • Switches the control mode: constant speed control mode and vehicle-to-vehicle distance control mode

Item	Outline
Steering Pad Switch (Distance Control Switch)	While the system is in the vehicle-to-vehicle distance control mode, the driver can operate the steering pad switch (distance control switch) to select the vehicle-to-vehicle distance in three stages: long, middle, and short
Stop Light Switch	Detects the depression of the brake pedal and transmits its signal to the ECM
Combination Switch (Wiper Switch)	Transmits wiper control switch information to the distance control ECU
Millimeter Wave Radar Sensor	Radiates radar rays forward, uses the reflected rays for detecting the presence of a vehicle in front, vehicle-to-vehicle distance, and relative speed, and transmits this information to the distance control ECU
Steering Angle Sensor	Detects the angle and direction of steering and transmits its signal to the distance control ECU
Vehicle Speed Sensor (SP1)	A vehicle speed signal which is output from the skid control ECU is sent to the ECM via the meter
Yaw Rate Sensor	Detects the yaw rate of the vehicle and transmits its signal to the distance control ECU
Brake Actuator (Skid Control ECU)	• Actuates the brakes in accordance with signals from the skid control ECU • While the system is in the vehicle-to-vehicle distance control mode, the skid control ECU actuates the brake actuator in accordance with a brake request signal received from the distance control ECU • Upon receiving a signal from the distance control ECU, the skid control ECU sounds the skid control buzzer
Skid Control Buzzer	This buzzer sounds upon receiving a signal from the skid control ECU
ECM	• Controls the dynamic radar cruise control system in accordance with signals from switches, sensors, and the distance control ECU • If the ECM detects a malfunction in the dynamic radar cruise control system, it will output DTCs (Diagnostic Trouble Codes)
Throttle Position Sensor and Motor	Upon receiving a signal from the ECM, the throttle control motor actuates the throttle valve
Distance Control ECU	While the system is in the vehicle-to-vehicle distance control mode, the distance control ECU detects a vehicle in front based on a signal from the millimeter wave radar sensor. Then, the distance control ECU calculates the acceleration or deceleration rate in order to attain the target vehicle-to-vehicle distance, and outputs a request signal to the ECM and skid control ECU

CC

3. LIMIT CONTROL

(a) Low speed limit

the lowest possible limit of the speed setting range is set at approximately 45 km/h (27 mph). The cruise control system cannot be set when the driving vehicle speed is below the low speed limit. Cruise control operation will be automatically canceled but the stored vehicle speed will be retained when the vehicle speed drops below the low speed limit of 40 km/h (25 mph) while the cruise control is in operation.

(b) High speed limit (constant speed control mode)

The highest possible limit of the speed setting range is set at approximately 200 km/h (125 mph). The cruise control system will be set at the high speed limit when the cruise control is set and the vehicle speed is over the high speed limit. Also, + (ACCEL)/ RES (RESUME) cannot be used to increase speed beyond the high speed limit.

(c) High speed limit (vehicle-to-vehicle distance control mode)
The highest possible limit of the speed setting range is set at approximately 85 mph in USA and 135 km/h in Canada.

4. CRUISE CONTROL OPERATION

The cruise control main switch operates 8 functions: SET, - (COAST), TAP-DOWN, RES (RESUME), + (ACCEL), TAP-UP, CANCEL, and MODE. The SET, TAP-DOWN, and - (COAST) functions, and the RES (RESUME), TAP-UP, and + (ACCEL) functions are operated with the same switch. The cruise control main switch assembly is an automatic return type switch which turns on only while operating it in the direction of each arrow and turns off after releasing it. The dynamic radar cruise control system has two cruise control modes: the constant speed control mode and vehicle-to-vehicle distance control mode.

- The vehicle-to-vehicle distance control mode is always selected when starting up the dynamic radar cruise control system.
- Operation of the constant speed control mode is the same as that for a conventional cruise control system.

(a) MODE CONTROL
Pushing the switch to MODE for more than 1 second while driving with the cruise control main switch ON-OFF button on (RADAR READY is on) switches the mode to the constant speed control mode.

(b) SET CONTROL (Constant speed control mode)
The vehicle speed is stored and constant speed control is maintained when pushing the switch to -(COAST)/SET while driving with the vehicle speed within the set speed range (between the low and high speed limits) after pushing the cruise control main switch ON-OFF button on, and entering the constant speed control mode.

(c) SET CONTROL (Vehicle-to-vehicle distance control mode)
The vehicle speed is stored and vehicle-to-vehicle control is maintained when pushing the switch to -(COAST)/SET while driving with the cruise control main switch on (RADAR READY is on), and vehicle speed is within the set speed range (between the low and high speed limits).

(d) - (COAST) CONTROL (Constant speed control mode)
When the cruise control main switch is set to - (COAST)/SET and held in that position while the cruise control system is operating, the ECM sends a "throttle valve opening angle 0°" demand signal to the cruise control system. Then the vehicle speed, when the cruise control main switch is released, is stored and maintained.
HINT:
An actual throttle valve opening angle of 0° is not possible due to the idle speed control, etc.

(e) - (COAST) CONTROL (Vehicle-to-vehicle distance control mode)
When - (COAST)/SET on the cruise control main switch is pressed and held while the vehicle-to-vehicle distance control mode is in operation, the stored vehicle speed decreases by approximately 5 km/h (CANADA) or 5 mph (USA) per second.

(f) TAP-DOWN - (CONTROL) (Constant speed control mode)
When tapping down the cruise control main switch to - (COAST)/SET (for approximately 0.6 seconds) while the constant speed control mode is in operation, the stored vehicle speed decreases each time by approximately 1.6 km/h (1 mph). When the cruise control main switch is released from - (COAST)/SET and the difference between the driving and stored vehicle speed is more than 5 km/h (3 mph), the driving vehicle speed is stored and constant speed control is maintained.

(g) TAP-DOWN CONTROL (Vehicle-to-vehicle distance control mode)
When tapping down the cruise control main switch to - (COAST)/SET (for approximately 0.6 seconds) while the vehicle-to-vehicle distance control mode is in operation, the stored vehicle speed decreases each time by approximately 5 km/h (CANADA) or 5 mph (USA).

(h) + (ACCEL) CONTROL (Constant speed control mode)
The throttle valve motor of the throttle position sensor and motor is instructed by the ECM to open the throttle valve when + (ACCEL)/RES (RESUME) on the cruise control main switch is pressed and held while the constant speed control mode is in operation. When the cruise control main switch is released from + (ACCEL)/RES (RESUME), the vehicle speed is stored and constant speed control is maintained.

(i) + (ACCEL) CONTROL (Vehicle-to-vehicle distance control mode)
When + (ACCEL)/RES (RESUME) on the cruise control main switch is pressed and held while the vehicle-to-vehicle distance control mode is in operation, the stored vehicle speed increases by approximately 5 km/h (CANADA) or 5 mph (USA) per second. Pushing the cruise control main switch to + (ACCEL)/RES (RESUME) while following the vehicle in front with the vehicle-to-vehicle distance control mode does not increase the actual vehicle speed, but changes only the set vehicle speed.

(j) TAP-UP CONTROL (Constant speed control mode)
When tapping up the cruise control main switch to + (ACCEL)/RES (RESUME) (for approximately 0.6 seconds) while the constant speed control mode is in operation, the stored vehicle speed increases each time by approximately 1.6 km/h (1 mph). However, when the difference between the driving and the stored vehicle speeds is more than 5 km/h (3 mph), the stored vehicle speed will not be changed.

(k) TAP-UP CONTROL (Vehicle-to-vehicle distance control mode)
When tapping up the cruise control main switch to + (ACCEL)/RES (RESUME) (for approximately 0.6 seconds) while the vehicle-to-vehicle distance control mode is in operation, the stored vehicle speed increases each time by approximately 5 km/h (CANADA) or 5 mph (USA).

(l) MANUAL CANCEL CONTROL
Performing any of the following cancels the cruise control system while it is in operation (the stored vehicle speed in the ECM is maintained).
- Pulling the cruise control main switch to CANCEL
- Depressing the brake pedal
- The shift lever is moved from the D to the N position or the transaxle is shifted to the 3rd, 2nd, or 1st gear with the shift lever in the S position.
- Turning the cruise control main switch off (the stored vehicle speed in the ECM is not maintained).

(m) RES (RESUME) CONTROL (Constant speed control mode)
If cruise control operation was canceled under any of the manual cancel conditions (other than turning the cruise control main switch off and the driving vehicle speed is below the low speed limit), and if driving speed is above the low speed limit, pushing the cruise control main switch to + (ACCEL)/RES (RESUME) restores vehicle speed memorized at the time of cancellation, and maintains constant speed control.

(n) RES (RESUME) CONTROL (Vehicle to vehicle distance control mode)
If cruise control operation was canceled under any of the manual cancel conditions (other than turning the cruise control main switch off), and if driving speed is above the low speed limit, pushing the cruise control main switch to + (ACCEL)/RES (RESUME) restores vehicle speed memorized at the time of cancellation, and maintains constant speed control.

5. BRAKE CONTROL

The distance control ECU determines the distance to the vehicle in front, relative speed, target decreasing speed, and deceleration rate. Based on these data, the ECU transmits a brake demand signal to the skid control ECU via the ECM.

6. DOWN SHIFT CONTROL

During uphill driving with cruise control, the transmission may downshift due to automatic transmission control. If the system determines that the uphill inclination has become smaller based on the throttle valve opening angle, the transmission will upshift automatically after a certain amount of time has elapsed.

7. AUTO CANCEL (FAIL-SAFE)

This system has an automatic cancellation function (fail-safe) (See page CC-62).

HOW TO PROCEED WITH TROUBLESHOOTING

HINT:
- Use the following procedures to troubleshoot the dynamic radar cruise control system.
- *: Use the intelligent tester.

1 VEHICLE BROUGHT TO WORKSHOP

NEXT

2 CUSTOMER PROBLEM ANALYSIS

NEXT

3 PROBLEM SYMPTOM CONFIRMATION

Result

Condition	Proceed to
Symptom occurs	A
Symptom does not occur	B

A → **Go to step 4**

B

SYMPTOM SIMULATION

4 INSPECT BATTERY VOLTAGE

Standard voltage:
11 to 14 V
If the voltage is below 11 V, replace or recharge the battery before proceeding to the next step.

NEXT

5 CHECK CAN COMMUNICATION SYSTEM*

(a) Use the intelligent tester to check for normal function of the CAN communication system.
(b) Check for DTCs.

Result

Condition	Proceed to
DTC is not output	A
DTC is output	B

B → Go to CAN COMMUNICATION SYSTEM

A

6	DTC CHECK*

Result

Condition	Proceed to
DTC is output	A
DTC is not output	B

B → Go to step 8

A

7	DTC CHART

NEXT

Go to step 9

8	PROBLEM SYMPTOMS TABLE

NEXT

9	CIRCUIT INSPECTION

NEXT

10	TERMINALS OF ECM

NEXT

11	IDENTIFICATION OF PROBLEM

NEXT

12	REPAIR OR REPLACE

NEXT

13	**CONFIRMATION TEST**

NEXT

END

ROAD TEST

1. PROBLEM SYMPTOM CONFIRMATION

HINT:
The dynamic radar cruise control system has two cruise control modes: the constant speed control mode and vehicle-to-vehicle distance control mode.

- The vehicle-to-vehicle distance control mode is always selected when starting up the dynamic radar cruise control system.
- Operation of the constant speed control mode is the same as that for a conventional cruise control system.

CC

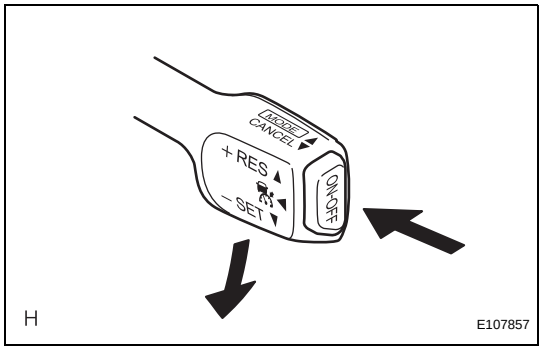

(a) Inspect the SET function.
  (1) Turn the main switch on.
  (2) Drive at the required speed between 45 km/h (27 mph) and 135 km/h (85 mph).
  (3) Push the cruise control main switch to - (COAST)/SET.
  (4) After releasing the switch, check that the vehicle cruises at the set speed.

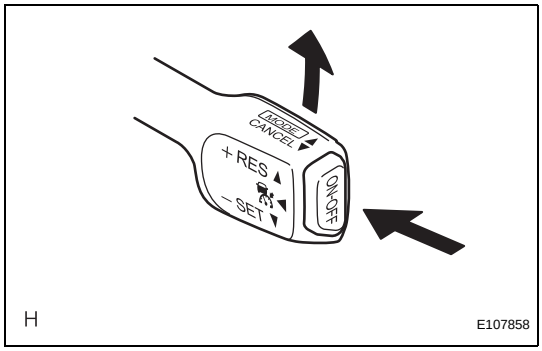

(b) Inspect the ACCELERATION function.
  (1) Turn the main switch on.
  (2) Drive at the required speed between 45 km/h (27 mph) and 135 km/h (85 mph).
  (3) Push the cruise control main switch to - (COAST)/SET.
  (4) Check that vehicle speed increases while the cruise control main switch is pushed to + (ACCEL)/RES (RESUME), and that the vehicle cruises at the newly set speed when the switch is released.
  (5) Push the cruise control main switch to + (ACCEL)/RES (RESUME) and then release it immediately. Check that vehicle speed increases* (tap-up control).
  HINT:
  *: Constant speed control mode: increases by 1.6 km/h (1.0 mph); vehicle-to-vehicle distance control mode: increases by 5 km/h (5 mph)

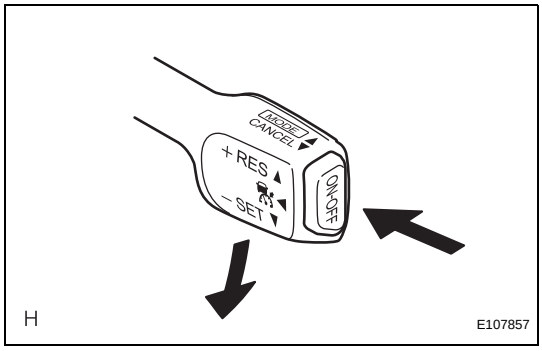

(c) Inspect the - (COAST) function.
  (1) Turn the main switch on.
  (2) Drive at the required speed between 45 km/h (27 mph) and 135 km/h (85 mph).
  (3) Push the cruise control main switch to - (COAST)/SET.
  (4) Check that vehicle speed decreases while the cruise control main switch is pushed to - (COAST)/SET, and the vehicle cruises at the newly set speed when the switch is released.

(5) Push the cruise control main switch to - (COAST)/SET, and then release it immediately. Check that vehicle speed decreases* (tap-down control).
HINT:
*: Constant speed control mode: decreases by 1.6 km/h (1.0 mph); vehicle-to-vehicle distance control mode: decreases by 5 km/h (5 mph).

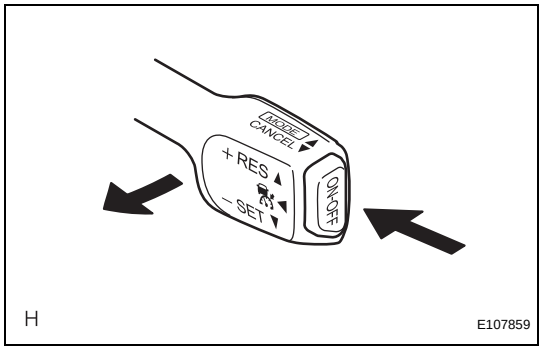

(d) Inspect the CANCEL function.
(1) Turn the main switch on.
(2) Drive at the required speed between 45 km/h (27 mph) and 135 km/h (85 mph).
(3) Push the cruise control main switch to - (COAST)/SET.
(4) When performing any one of the following, check that the cruise control system is canceled and that the normal driving mode is reset.
- Pulling the cruise control main switch to CANCEL
- Depressing the brake pedal
- The shift lever is moved from the D to the N position or the transmission is shifted to the 3rd, 2nd, or 1st gear with the shift lever in the S position
- Turning the main switch off

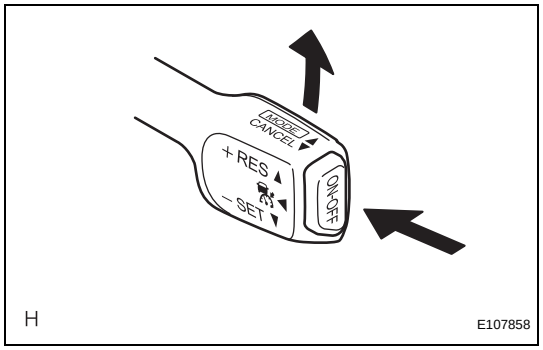

(e) Inspect the RES (RESUME) function.
(1) Turn the main switch on.
(2) Drive at the required speed between 45 km/h (27 mph) and 135 km/h (85 mph).
(3) Push the cruise control main switch to - (COAST)/SET.
(4) Cancel the cruise control system by performing any of the above operations (other than turning the main switch off).
(5) After pushing the cruise control main switch to + (ACCEL)/RES (RESUME) at a driving speed of more than 40 km/h (25 mph), check that the vehicle resumes the speed set prior to the cancellation.
HINT:
The stored vehicle speed is retained even if vehicle speed drops below 40 km/h (25 mph) once. The previously stored vehicle speed can be resumed by pushing the cruise control main switch to + (ACCEL)/RES (RESUME) when vehicle speed returned to approximately 40 km/h (25 mph) or more.

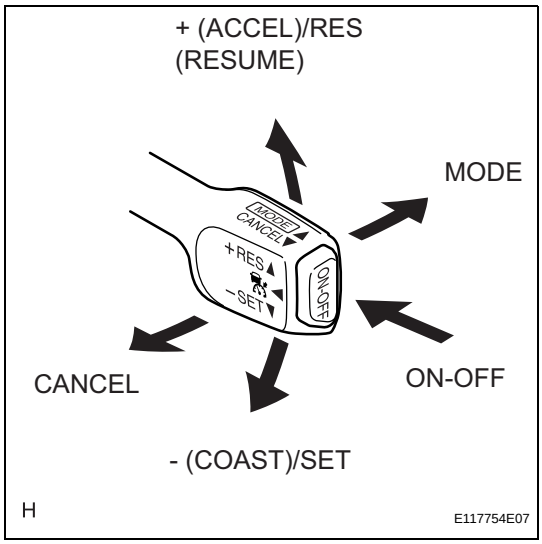

OPERATION CHECK

1. INPUT SIGNAL CHECK

(a) Connect the intelligent tester to the DLC3.

(b) Check the cruise control main switch using the DATA LIST function in the intelligent tester (ON-OFF, CANCEL, - (COAST)/SET, + (ACCEL)/RES (RESUME), and MODE).

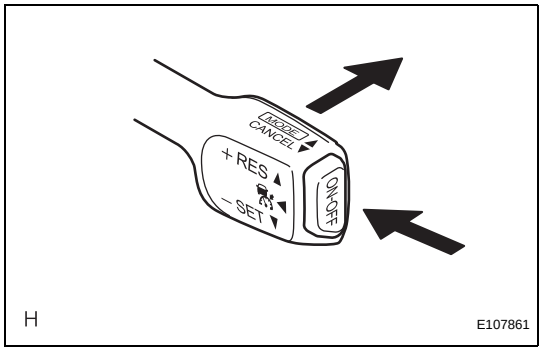

2. INSPECT MODE SWITCH

(a) Turn the engine switch on (IG).

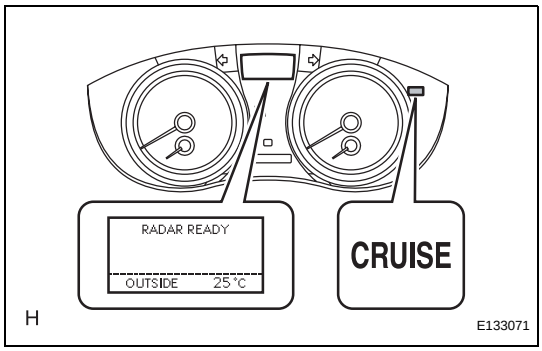

(b) Turn the cruise control main switch on. Then push the main switch to MODE for 1 second or more to change to the constant speed control mode.

NOTICE:

Do not push any other switches before pushing the main switch to MODE. If another switch is pushed, turn the main switch off and repeat the procedure above.

HINT:

If a malfunction is detected, turn the engine switch off and repeat the procedure above.

3. INSPECT STEERING PAD SWITCH ASSEMBLY

(a) Turn the engine switch on (IG).

(b) Turn the cruise control main switch on.

(c) Turn on the distance control switch of the steering pad switch.

(d) Check that the indication of the vehicle-to-vehicle distance, which is shown on the multi-information display on the combination meter, changes from long to middle to short in that order.

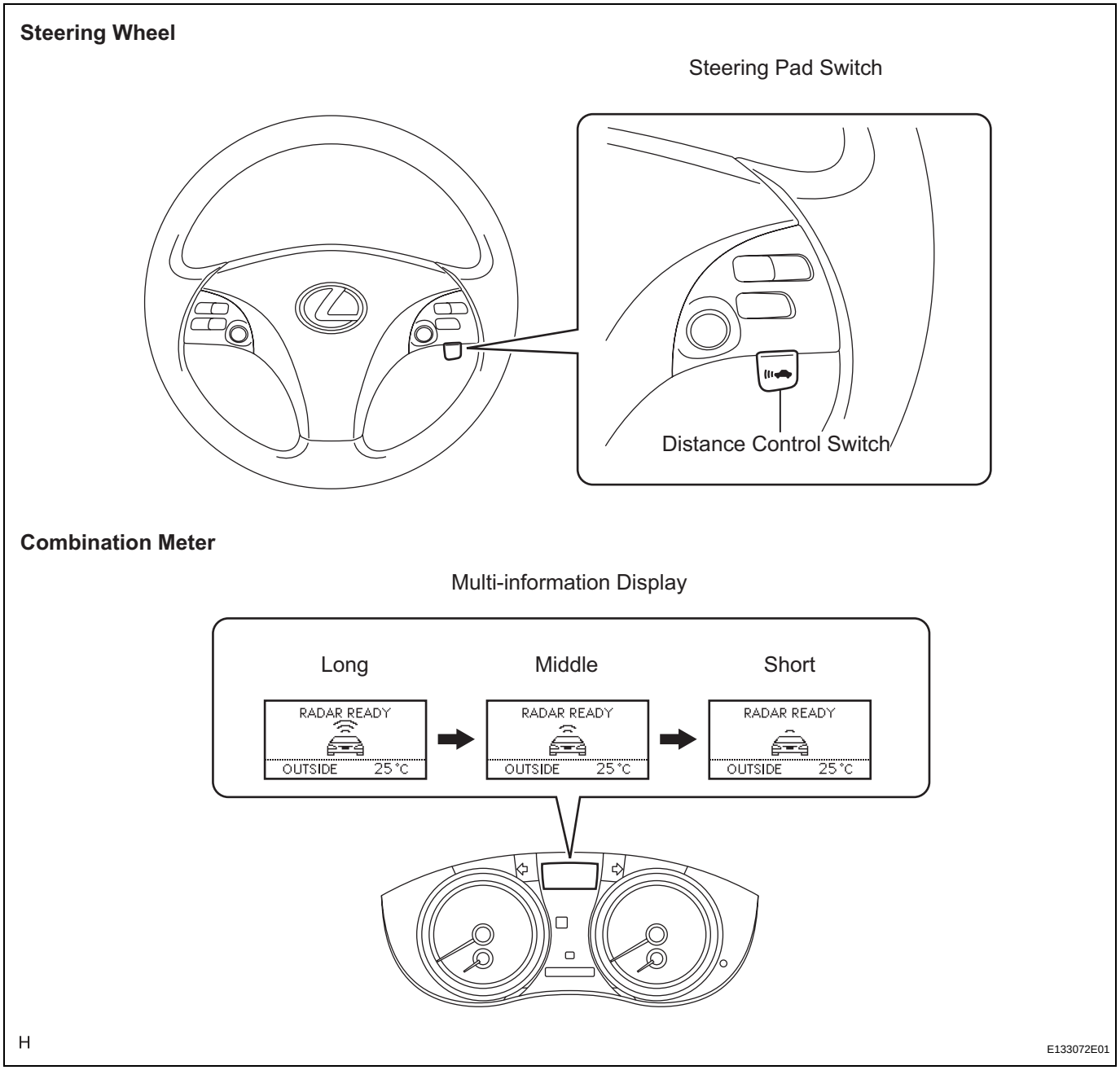

HINT:
The indication is automatically set to long each time the engine is started.

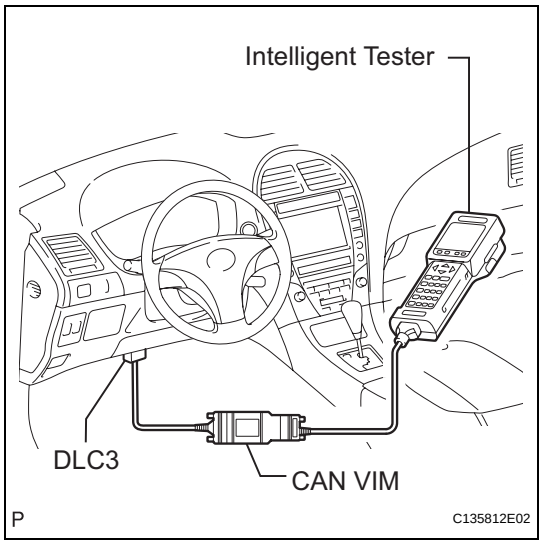

DTC CHECK / CLEAR

1. CHECK DTC

(a) Connect the intelligent tester to the DLC3.

(1) Connect the intelligent tester to the Controller Area Network Vehicle Interface Module (CAN VIM). Then connect the CAN VIM to the Data Link Connector 3 (DLC3).

(b) Turn the engine switch on (IG).

(c) Read the DTCs by following the prompts on the tester screen.

HINT:

Refer to the intelligent tester operator's manual for further details.

2. CLEAR DTC

(a) Connect the intelligent tester to the DLC3.

(b) Turn the engine switch on (IG).

(c) Operate the intelligent tester to erase the codes.

HINT:

Refer to the intelligent tester operator's manual for further details.

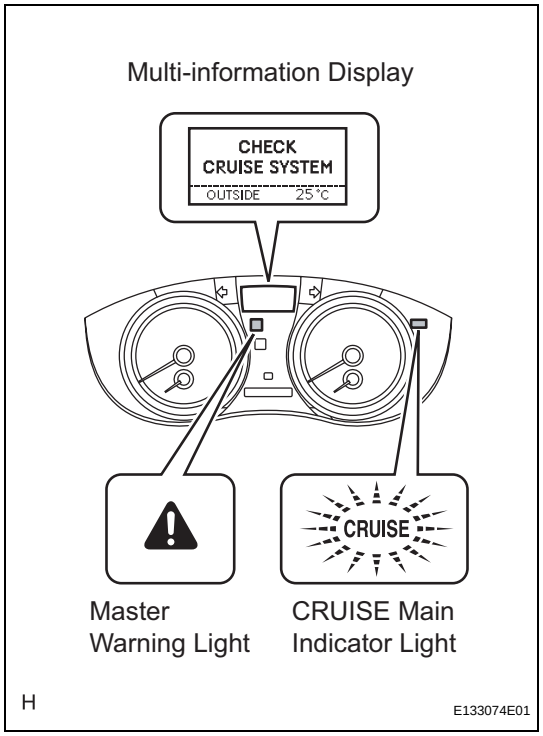

FAIL-SAFE CHART

1. Constant speed control mode and vehicle-to-vehicle distance control mode:

If the following conditions are detected while the dynamic radar cruise control system is in operation, the system clears the stored vehicle speed in the ECM and cancels the dynamic radar cruise control operation.

Vehicle Condition	Auto Cancel Condition	Fail-safe Deactivation Condition
• CRUISE main indicator light blinks • Master warning light comes on • "Check Cruise System" is displayed • "Pong" warning sound is heard	• Open or short in stop light switch circuit • Problem with vehicle speed signal • Problem with throttle position sensor and motor	Turn cruise control main switch ON again

CC

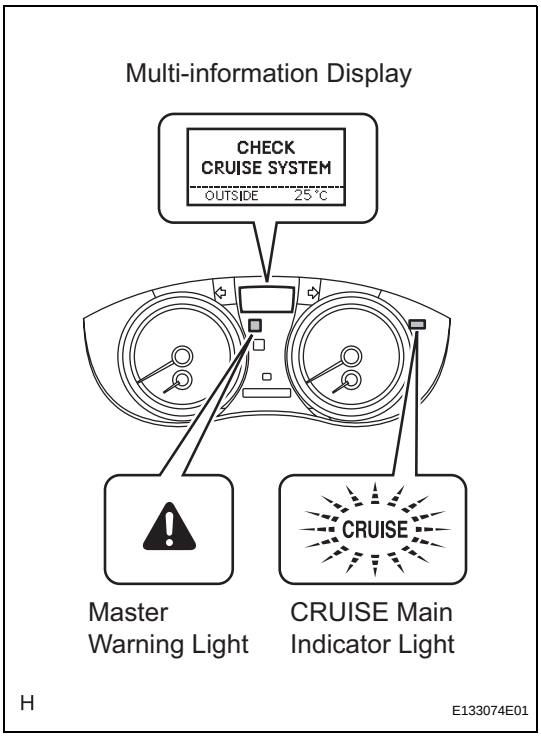

2. Vehicle-to-vehicle distance control mode:
If the following conditions are detected while the dynamic radar cruise control system is in operation, the system clears the stored vehicle speed in the ECM and cancels the dynamic radar cruise control operation.

Vehicle Condition	Auto Cancel Condition	Fail-safe Deactivation Condition
• CRUISE main indicator light blinks • Master warning light comes on • "Check Cruise System" is displayed • "Pong" warning sound is heard	• There is problem with millimeter wave radar sensor • Beam axis of millimeter wave radar sensor deviates	Engine switch on (IG) again

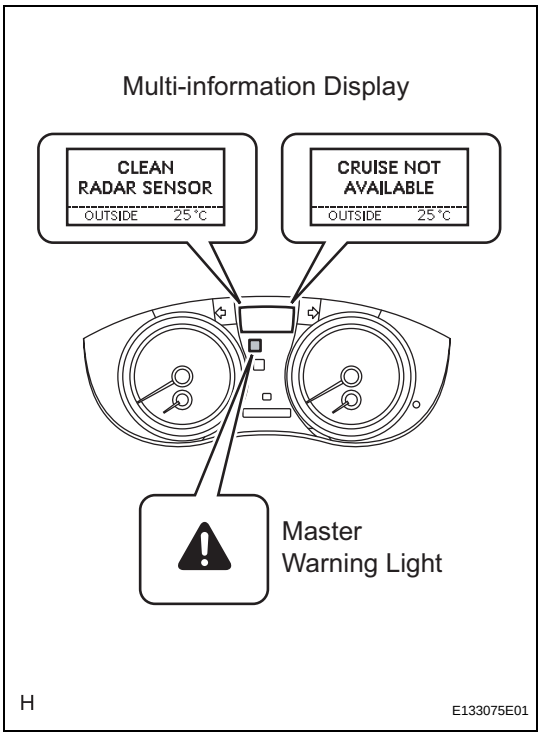

3. Vehicle-to-vehicle distance control mode:
If the following conditions are detected while the dynamic radar cruise control system is in operation, the system maintains the stored vehicle speed in the ECM and cancels the dynamic radar cruise control operation.

Vehicle Condition	Auto Cancel Condition	Fail-safe Deactivation Condition
• Master warning light comes on • "Clean Radar Sensor" is displayed • "Pong" warning sound is heard	There is dirt on millimeter wave radar sensor	Recover from condition on left (RESUME operation is possible after recovery)

Vehicle Condition	Auto Cancel Condition	Fail-safe Deactivation Condition
• Master warning light comes on • "Cruise not Available" is displayed • "Pong" warning sound is heard	• Wiper switch is in HI position • Millimeter wave radar sensor is least sensitive because of bad weather such as rain, fog, snow, and sandstorms	• Recover from condition on left (RESUME operation is possible after recovery) • Turn cruise control main switch ON again

4. Constant speed control mode and vehicle-to-vehicle distance control mode:

If the following conditions are detected while the dynamic radar cruise control system is in operation, the system clears the stored vehicle speed and cancels the dynamic radar cruise control operation.

Vehicle Condition	Auto Cancel Condition	Fail-safe Deactivation Condition
CRUISE main indicator light goes off	• Vehicle speed is lower than low speed limit (approx. 40 km/h (25 mph)) while running with cruise control on • Vehicle speed is lower than stored vehicle speed by 16 km/h (1.0 mph) or more while running with cruise control on	• Push the cruise control main switch to RESUME/ACCEL

DIAGNOSTIC TROUBLE CODE CHART

If a trouble code is displayed during the DTC check, check the trouble areas listed for that code in the table below and proceed to the appropriate page.

NOTICE:

- **When the distance control ECU and/or ECM are replaced with a new one, initialization must be performed.**
- **When the millimeter wave radar sensor is replaced with a new one, adjustment of the radar sensor beam axis must be performed.**

Dynamic radar cruise control system

CC

DTC Code	Detection Item	Trouble Area	See page
P0500	Vehicle Speed Sensor Malfunction	-Vehicle speed sensor -Vehicle speed sensor signal circuit -Combination meter assembly -ECM	CC-68
P0503	Vehicle Speed Sensor "A" Intermittent / Erratic / High	-Vehicle speed sensor -Vehicle speed sensor signal circuit -Combination meter assembly -ECM	CC-68
P0571	Brake Switch "A" Circuit	-Stop light switch -Stop light switch circuit -ECM	CC-69
P0607	Control Module Performance	-ECM (This DTC indicates malfunction in ECM. When this DTC is output, it is necessary to replace ECM)	CC-72
P1570	Radar Sensor Malfunction	-Millimeter wave radar sensor	CC-73
P1572	Improper Aiming of Radar Sensor Beam Axis	-Millimeter wave radar sensor	CC-74
P1575	Warning Buzzer Malfunction	-Skid control buzzer -Skid control buzzer circuit -ABS & traction actuator (Skid control ECU)	CC-75
P1578	Brake System Malfunction	-VSC system	CC-76
P1615	Communication Error from Distance Control ECU to ECM	-Communication circuit -Distance control ECU -ECM	CC-77
P1616	Communication Error from ECM to Distance Control ECU	-Communication circuit -Distance control ECU -ECM	CC-78
P1617	Distance Control ECU Malfunction	-Distance control ECU	CC-79
P1630	Communication Error from VSC to ECM	-Communication circuit -ABS & traction actuator (Skid control ECU) -ECM	CC-81
P1631	Communication Error from ECM to VSC	-Communication circuit -ECM -ABS & traction actuator (Skid control ECU)	CC-82
U0100	Lost Communication with ECM/ PCM "A"	-Communication circuit -ECM -Distance control ECU	CC-78

DTC Code	Detection Item	Trouble Area	See page
U0100	Lost Communication with ECM/ PCM "A"	-Communication circuit -ECM -ABS & traction actuator (Skid control ECU)	CC-82
U0122	Lost Communication with Vehicle Dynamics Control Module	-Communication circuit -ABS & traction actuator (Skid control ECU) -ECM	CC-81
U0123	Communication Error of Yaw Rate Sensor	-Communication circuit -Yaw rate sensor -Distance control ECU -ECM	CC-83
U0126	Lost Communication with Steering Angle Sensor Module	-Communication circuit -Steering angle sensor -Distance control ECU -ECM	CC-84
U0235	Lost Communication with Cruise Control Front Distance Range Sensor	-Communication circuit -Millimeter wave radar sensor -Distance control ECU	CC-85
U1101	Lost Communication with Distance Control ECU	-Communication circuit -Distance control ECU -ECM	CC-77
U1102	Lost Communication with Radar Sensor	-Communication circuit -Millimeter wave radar sensor -Distance control ECU	CC-88

DTC	P0500	Vehicle Speed Sensor Malfunction

DTC	P0503	Vehicle Speed Sensor "A" Intermittent / Erratic / High

DESCRIPTION

Refer to DTC P0500 (See page ES-275).

DTC No.	DTC Detection Condition	Trouble Area
P0500	The vehicle speed signal from the vehicle speed sensor is cut for 0.14 sec. or more while cruise control is in operation	• Vehicle speed sensor • Vehicle speed sensor signal circuit • Combination meter assembly • ECM
P0503	Momentary interruption and noise are detected when a rapid change of vehicle speed occurs while cruise control is in operation	• Vehicle speed sensor • Vehicle speed sensor signal circuit • Combination meter assembly • ECM

WIRING DIAGRAM

Refer to DTC P0500 (See page ES-276).

INSPECTION PROCEDURE

NOTICE:

- **When the distance control ECU and/or ECM are replaced with a new one, initialization must be performed (See page CC-119).**
- **When the millimeter wave radar sensor is replaced with a new one, adjustment of the radar sensor beam axis must be performed (See page CC-122).**

Refer to DTC P0500 (2GR-FSE) (See page ES-276).

DTC	P0571	Brake Switch "A" Circuit

DESCRIPTION

When the brake pedal is depressed, the stop light switch sends a signal to the ECM. When the ECM receives this signal, it cancels the cruise control. The fail-safe function operates to enable normal driving even if there is a malfunction in the stop light signal circuit. The cancellation condition occurs when voltage is applied to terminal STP. When the brake is applied, voltage is normally applied to terminal STP of the ECM through the STOP SW fuse and the stop light switch, and the ECM turns the cruise control off.

DTC No.	DTC Detection Condition	Trouble Area
P0571	Voltage of STP terminal and that of ST1- terminal of ECM are less than 1 V for 0.5 sec. or more	• Stop light switch • Stop light switch circuit • ECM

CC

WIRING DIAGRAM

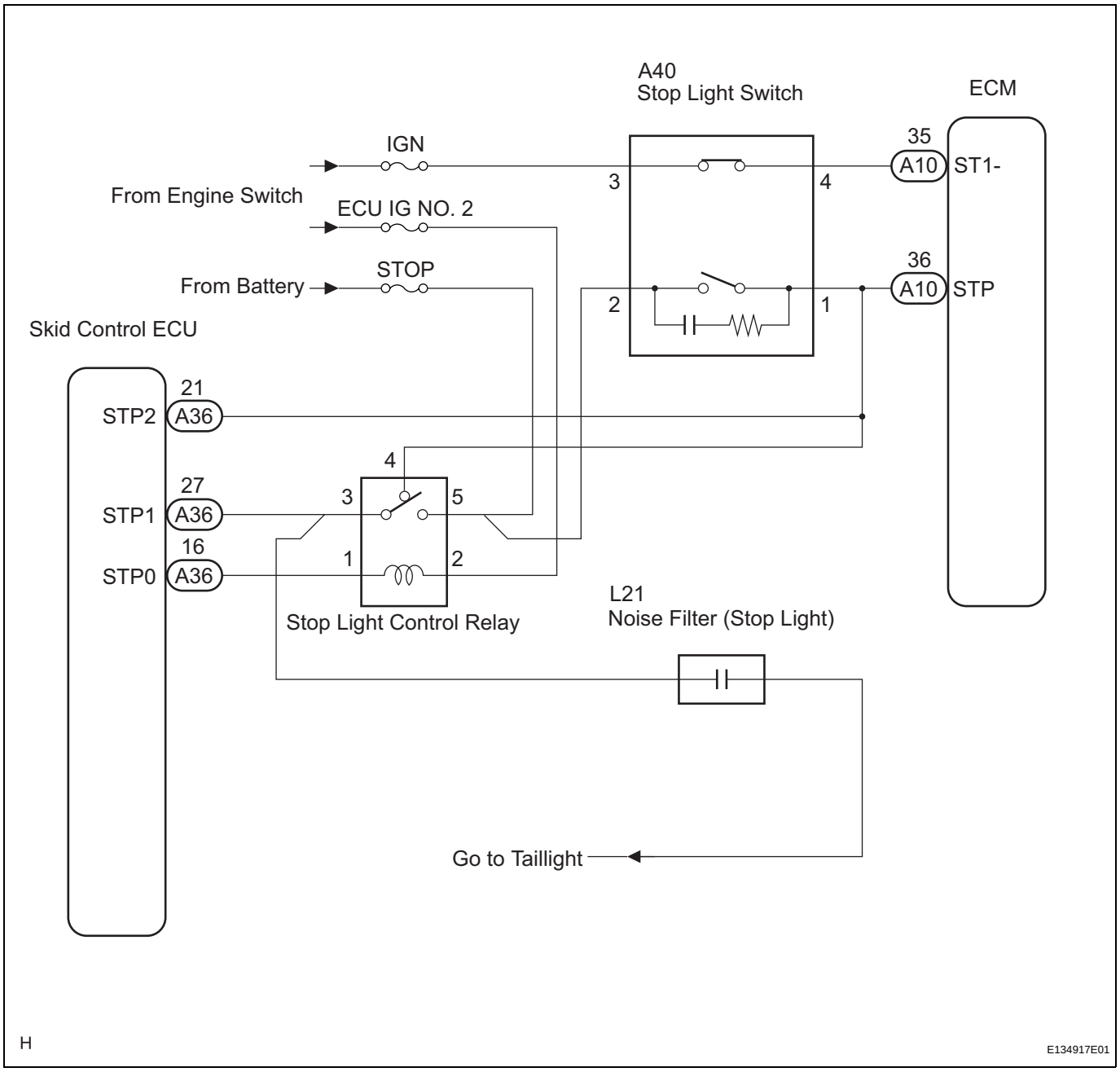

CC

INSPECTION PROCEDURE

NOTICE:

When the distance control ECU and/or ECM are replaced with a new one, initialization must be performed (See page CC-119).

1 CHECK DTC

(a) Check for a DTC (See page CC-61).

Result

Condition	Proceed to
DTC C1249 and/or C1380 are not output	A
DTC C1249 and/or C1380 are output	B

B → **GO TO ANTI-LOCK BRAKE SYSTEM (See page BC-17)**

A

2 READ VALUE ON INTELLIGENT TESTER

(a) Connect the intelligent tester to the DLC3.
(b) Turn the engine switch on (IG), and turn the intelligent tester main switch on.
(c) Check the DATA LIST for proper functioning of the stop light switch.

ECM (Cruise control):

Tester Display	Measurement Item/Range	Normal Condition	Diagnostic Note
STP LIGHT SW M	Stop light switch signal (Main CPU) / ON or OFF	ON: Brake pedal depressed OFF: Brake pedal released	-

OK:

When the brake pedal is operated, the display changes as shown above.

OK → **REPLACE ECM (See page ES-543)**

NG

3 INSPECT STOP LIGHT SWITCH

Stop Light Switch:

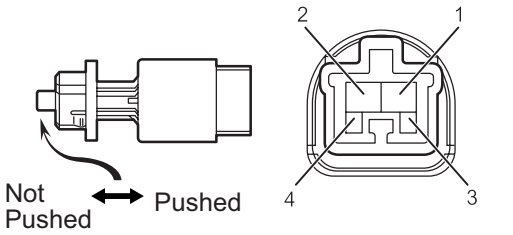

(a) Disconnect the stop light switch connector.
(b) Measure the resistance according to the value(s) in the table below.

Standard resistance

Tester Connection	Switch Condition	Specified Condition
1 - 2	Switch pin not pushed	Below 1 Ω
3 - 4	Switch pin not pushed	10 kΩ or higher
1 - 2	Switch pin pushed	10 kΩ or higher
3 - 4	Switch pin pushed	Below 1 Ω

NG → **REPLACE STOP LIGHT SWITCH (See page BR-59)**

OK

4 CHECK WIRE HARNESS (STOP LIGHT SWITCH - BATTERY)

Stop Light Switch Wire Harness Side Connector Front View:

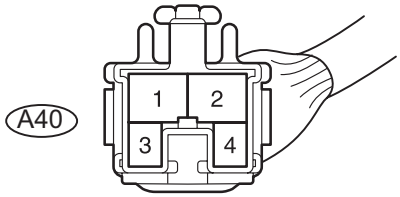

(a) Measure the voltage according to the value(s) in the table below.

Standard voltage

Tester Connection	Condition	Specified Condition
A40-2 - Body ground	Always	10 to 14 V
A40-3 - Body ground	Engine switch on (IG)	10 to 14 V

NG → **REPAIR OR REPLACE HARNESS OR CONNECTOR**

OK

5 CHECK ECM

ECM Wire Harness Side Connector Front Side View:

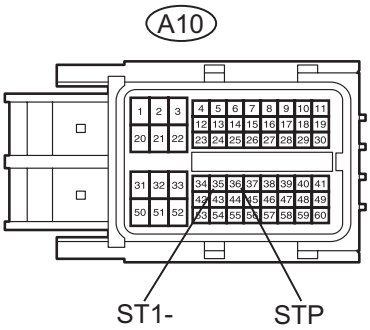

(a) Reconnect the stop light switch connector.
(b) Disconnect the A10 connector from the ECM.
(c) Turn the engine switch on (IG).
(d) Measure the voltage according to the value(s) in the table below.

Standard voltage

Tester Connection	Brake Pedal Condition	Specified Condition
A10-36 (STP) - Body ground	Depressed	10 to 14 V
A10-36 (STP) - Body ground	Released	Below 1 V
A10-35 (ST1-) - Body ground	Depressed	Below 1 V
A10-35 (ST1-) - Body ground	Released	10 to 14 V

NG → **REPAIR OR REPLACE HARNESS OR CONNECTOR (STOP LIGHT SWITCH - ECM)**

OK

REPLACE ECM (See page ES-543)

CC

DTC	P0607	Control Module Performance

DESCRIPTION

This DTC indicates a malfunction in the ECM.
HINT:
The ECM receives signals from each sensor to control all the functions of the cruise control with the microcomputer. When a malfunction is detected, fail-safe remains on until the engine switch is turned off.

DTC No.	DTC Detection Condition	Trouble Area
P0607	The ECM has a supervisory CPU and control ECU inside. When each input STP signal is different for 0.15 sec. or more, this trouble code is output. This trouble code is also output after 0.4 sec. has passed from the time a cruise cancel input signal (STP input) is input to the ECM.	ECM

INSPECTION PROCEDURE

NOTICE:
When the distance control ECU and/or ECM are replaced with a new one, initialization must be performed (See page CC-119).

1	REPLACE ECM

HINT:
(See page CC-119)

NEXT

END

DTC	P1570	Radar Sensor Malfunction

DESCRIPTION

The millimeter wave radar sensor emits radar beams towards an object in front and measures the distance and direction of the object by receiving the beam reflections. Based on the reflections, the sensor calculates the difference in speed between your own vehicle and an object in front. This data is transmitted to the distance control ECU.

DTC No.	DTC Detection Condition	Trouble Area
P1570	The ECM detects a radar sensor malfunction signal for 0.15 sec. or more while the dynamic radar cruise control is in operation	Millimeter wave radar sensor

HINT:
The millimeter wave radar sensor monitors the millimeter wave circuit activation by itself. This DTC is output when one of the following occurs: 1) the monitor is malfunctioning, 2) an EEPROM error is detected, 3) a voltage error is detected, and 4) the radar sensor is not adjusted. When raindrops or snowflakes strike the millimeter wave radar sensor face, the distance between the vehicle in front and your own vehicle cannot be measured correctly. The dynamic radar cruise control system functions by detecting the beam reflections from the vehicle directly in front. In the following cases, the system may not be able to detect the vehicle in front and may not properly maintain the correct vehicle-to-vehicle distance:

- The vehicle in front is a tall trailer.
- Emission from the vehicle in front or vehicle in other lanes are heavy.

INSPECTION PROCEDURE

NOTICE:

When the millimeter wave radar sensor is replaced with a new one, adjustment of the radar sensor beam axis must be performed (See page CC-119).

1	ADJUST MILLIMETER WAVE RADAR SENSOR

Refer to adjustment (See page CC-122).
HINT:
It is necessary to make the ECM recognize specification information (whether the vehicle is equipped with the dynamic radar cruise control system or not). When this procedure has not been carried out, this DTC may be output.

(a) Clear the DTCs and then recheck for DTCs.
OK:
DTC is not output

NG → **REPLACE MILLIMETER WAVE RADAR SENSOR (See page CC-122)**

OK

SYSTEM IS OK

DTC	P1572	Improper Aiming of Radar Sensor Beam Axis

DESCRIPTION

This DTC is output when the scanning angle of the millimeter wave radar sensor is incorrect. This DTC is also output when the millimeter wave radar sensor beam axis is determined to be in an incorrect position.

DTC No.	DTC Detection Condition	Trouble Area
P1572	The ECU detects that the millimeter wave radar sensor beam axis is in an incorrect position (0.15 sec. or more) while the dynamic radar cruise control is in operation	Millimeter wave radar sensor

INSPECTION PROCEDURE

NOTICE:

When the millimeter wave radar sensor is replaced with a new one, adjustment of the radar sensor beam axis must be performed (See page CC-122).

1	ADJUST MILLIMETER WAVE RADAR SENSOR

Refer to adjustment (See page CC-122).

HINT:

It is necessary to make the ECM recognize specification information (whether the vehicle is equipped with the dynamic radar cruise control system or not). If this procedure has not been carried out, this DTCs may be output.

(a) Clear the DTCs and then recheck for DTCs.

OK:

DTC is not output

NG → **REPLACE MILLIMETER WAVE RADAR SENSOR (See page CC-122)**

OK

SYSTEM IS OK

DTC	P1575	Warning Buzzer Malfunction

DESCRIPTION

The ABS & traction actuator (skid control ECU) receives an alarm demand signal from the ECU and operates the skid control buzzer. The buzzer sounds to warn that the distance between the vehicle in front and your own vehicle is decreasing.

DTC No.	DTC Detection Condition	Trouble Area
P1575	The ECM receives a buzzer abnormal signal for 0.2 sec. or more while the dynamic radar cruise control is in operation	• Skid control buzzer • Skid control buzzer circuit • ABS & traction actuator (Skid control ECU)

HINT:
If the vehicle ahead in the same lane significantly decreases its speed or another vehicle moves in front of your vehicle, adequate deceleration cannot be applied and the vehicle-to-vehicle distance will shorten. At this time, the system sounds the buzzer and the master warning light blinks to inform the driver. This circuit uses CAN communication. Therefore, if there are any malfunctions in the communication circuit, one or more DTCs in the CAN communication system are output.

WIRING DIAGRAM

Refer to the skid control buzzer circuit (See page BC-170).

INSPECTION PROCEDURE

Refer to the skid control buzzer circuit (See page BC-170).

DTC	P1578	Brake System Malfunction

DESCRIPTION

This DTC is output when the VSC system has a problem. Check the VSC system when this DTC is output.

DTC No.	DTC Detection Condition	Trouble Area
P1578	The ECM receives a brake system error signal for 0.2 sec. or more while the dynamic radar cruise control is in operation	VSC system

INSPECTION PROCEDURE

HINT:
This circuit uses CAN communication. Therefore, if there are any malfunctions in the communication circuit, one or more DTCs in the CAN communication system are output.

1	CHECK BRAKE SYSTEM

(a) Refer to HOW TO PROCEED WITH TROUBLESHOOTING (See page BC-17).

NEXT

END

DTC	P1615	Communication Error from Distance Control ECU to ECM

DTC	U1101	Lost Communication with Distance Control ECU

DESCRIPTION

The distance control ECU receives information about the area in front of the vehicle from the millimeter wave radar sensor and then sends a brake control demand signal (deceleration demand) and diagnosis signals, such as millimeter wave radar sensor grime signals or millimeter wave radar sensor malfunction signals, to the ECM.

DTC No.	DTC Detection Condition	Trouble Area
P1615	While the dynamic radar cruise control is either preparing for operation or operating, if communication data from the distance control ECU is logically inconsistent for a certain amount of time, the ECM records this logical error code	• Communication circuit • Distance control ECU • ECM
U1101	While the dynamic radar cruise control is either preparing for operation or operating, if communication data from the distance control ECU is invalid for a certain amount of time, the ECM records this communication cut off code	• Communication circuit • Distance control ECU • ECM

INSPECTION PROCEDURE

NOTICE:

When the distance control ECU and/or ECM are replaced with a new one, initialization must be performed (See page CC-119).

HINT:

This circuit uses CAN communication. Therefore, if there are any malfunctions in the communication circuit, one or more DTCs in the CAN communication system are output.

1	CHECK CAN COMMUNICATION SYSTEM

(a) Refer to HOW TO PROCEED WITH TROUBLESHOOTING (See page CA-11).

NEXT

END

DTC	P1616	Communication Error from ECM to Distance Control ECU

DTC	U0100	Lost Communication with ECM/PCM "A"

DESCRIPTION

The ECM receives signals from each sensor and ECU, then sends signals such as A/T signals, cruise control operation signals, low speed operation signals, brake control operation signals, and radar light emission prohibiting signals, to the distance control ECU. The ECM is the only component that has a function to record and output the DTCs in the dynamic radar cruise control system. Therefore, if the distance control ECU detects a communication error from the ECM, it sends a malfunction signal back to the ECM.

DTC No.	DTC Detection Condition	Trouble Area
P1616	While the dynamic radar cruise control is either preparing for operation or operating, if the ECM continuously receives a logical error signal from the distance control ECU for more than a specific amount of time, the ECM records this logical error code	• Communication circuit • ECM • Distance control ECU
U0100	While the dynamic radar cruise control is either preparing for operation or operating, if the ECM continuously receives a communication cut off signal from the distance control ECU for more than a specific amount of time, the ECM records this communication cut off code	• Communication circuit • ECM • Distance control ECU

INSPECTION PROCEDURE

NOTICE:

When the distance control ECU and/or are replaced with a new one, initialization must be performed (See page CC-119).

HINT:

This circuit uses CAN communication. Therefore, if there are any malfunctions in the communication circuit, one or more DTCs in the CAN communication system are output.

1	CHECK CAN COMMUNICATION SYSTEM

(a) Refer to HOW TO PROCEED WITH TROUBLESHOOTING (See page CA-11).

NEXT

END

DTC	P1617	Distance Control ECU Malfunction

DESCRIPTION

In the dynamic radar cruise control system, the ECM and the distance control ECU communicate with one another to control the system based on some designation information. If the designation information of the ECM and distance control ECU is different or the distance control ECU is malfunctioning, this DTC is recorded.

DTC No.	DTC Detection Condition	Trouble Area
P1617	While the dynamic radar cruise control is either preparing for operation or operating, if a designation signal from the ECM and a designation return signal from the distance control ECU do not match or the distance control ECU is malfunctioning for more than a specific amount of time, the ECM records this trouble code	Distance control ECU

INSPECTION PROCEDURE

NOTICE:

When the distance control ECU and/or ECM are replaced with a new one, initialization must be performed (See page CC-119).

1	CONFIRM DESIGNATION INFORMATION

(a) Confirm the designation information.
  (1) Turn the engine switch on (IG).
  (2) Turn the cruise control main switch on.
  (3) With the brake pedal depressed, push the cruise control main switch to + (ACCEL)/RES (RESUME) 3 times within 3 seconds. Check that the skid control buzzer sounds at this time.

OK:

The skid control buzzer sounds. (Initialization is performed.)

NOTICE:

- **Do not turn the light control switch on at this time because the beam axis automatic adjustment mode has already started, which could lead to incorrect beam axis. If the light control switch is turned on by mistake, readjust the beam axis (refer to page for beam axis adjustment) (See page CC-122).**
- **If initialization cannot be performed, first inspect the stop light switch circuit, cruise main switch circuit, and skid control buzzer circuit.**

NG → **REPLACE DISTANCE CONTROL ECU (See page CC-118)**

OK

2	CHECK DTC

(a) Clear the DTCs and then recheck for DTCs.
Result

Result	Proceed to
DTC is not output	A
DTC is output	B

HINT:
If DTC P1617 is still output after replacing the distance control ECU, replace the ECM.

B → **REPLACE DISTANCE CONTROL ECU (See page CC-118)**

A

END

DTC	P1630	Communication Error from VSC to ECM

DTC	U0122	Lost Communication with Vehicle Dynamics Control Module

DESCRIPTION

The skid control ECU sends signals such as cruise control cancel demand signals and brake operation demand from ECM response signals to the ECM when the dynamic radar cruise control system is in operation.

DTC No.	DTC Detection Condition	Trouble Area
P1630	While the dynamic radar cruise control is either preparing for operation or operating, if communication data from the skid control ECU is logically inconsistent for a certain amount of time, the ECM records this logical error code	• Communication circuit • ABS & traction actuator (Skid control ECU) • ECM
U0122	While dynamic radar cruise control is either preparing for operation or operating, if communication data from the skid control ECU is invalid for a certain amount of time, the ECM records this communication cut off code	• Communication circuit • ABS & traction actuator (Skid control ECU) • ECM

CC

INSPECTION PROCEDURE

NOTICE:

When the distance control ECU and/or ECM are replaced with a new one, initialization must be performed (See page CC-119).

HINT:

This circuit uses CAN communication. Therefore, if there are any malfunctions in the communication circuit, one or more DTCs in the CAN communication system are output.

1	CHECK CAN COMMUNICATION SYSTEM

(a) Refer to HOW TO PROCEED WITH TROUBLESHOOTING (See page CA-11).

NEXT

END

DTC	P1631	Communication Error from ECM to VSC

DTC	U0100	Lost Communication with ECM/PCM "A"

DESCRIPTION

The ECM sends signals such as A/T information signals, dynamic radar cruise control operation signals, brake operation demand signals, and buzzer operation demand signals to the skid control ECU when the dynamic radar cruise control is in operation. The ECM is the only component that has a function to record and output the DTCs in the dynamic radar cruise control system. Therefore, if the skid control ECU detects a communication error from the ECM, it sends a malfunction signal back to the ECM.

DTC No.	DTC Detection Condition	Trouble Area
P1631	While the dynamic radar cruise control is either preparing for operation or operating, if the ECM continuously receives a logical error signal from the skid control ECU for a certain amount of time, the ECM records this logical error code	• Communication circuit • ECM • ABS & traction actuator (Skid control ECU)
U0100	While the dynamic radar cruise control is either preparing for operation or operating, if the ECM continuously receives a communication cut off signal from the ABS & traction actuator (skid control ECU) for a certain amount of time, the ECM records this communication cut off code	• Communication circuit • ECM • ABS & traction actuator (Skid control ECU)

INSPECTION PROCEDURE

NOTICE:

When the distance control ECU and/or ECM are replaced with a new one, initialization must be performed (See page CC-119).

HINT:

This circuit uses CAN communication. Therefore, if there are any malfunctions in the communication circuit, one or more DTCs in the CAN communication system are output.

1	CHECK CAN COMMUNICATION SYSTEM

Refer to HOW TO PROCEED WITH TROUBLESHOOTING (See page CA-11).

NEXT

END

DTC	U0123	Communication Error of Yaw Rate Sensor

DESCRIPTION

This circuit detects the yaw rate of the vehicle and transmits its signal to the skid control ECU and distance control ECU.

DTC No.	DTC Detection Condition	Trouble Area
U0123	While the dynamic radar cruise control is either preparing for operation or operating, the ECM continuously receives a yaw rate sensor malfunction signal for a certain amount of time	• Communication circuit • Yaw rate sensor • Distance control ECU • ECM

INSPECTION PROCEDURE

NOTICE:

When the distance control ECU and/or ECM are replaced with a new one, initialization must be performed (See page CC-119).

HINT:

This circuit uses CAN communication. Therefore, if there are any malfunctions in the communication circuit, one or more DTCs in the CAN communication system are output.

1	CHECK CAN COMMUNICATION SYSTEM

(a) Refer to HOW TO PROCEED WITH TROUBLESHOOTING (See page CA-11).

NEXT

END

DTC	U0126	Lost Communication with Steering Angle Sensor Module

DESCRIPTION

This circuit detects the angle and direction of the steering wheel and automatically transmits a signal to the skid control ECU and distance control ECU.

DTC No.	DTC Detection Condition	Trouble Area
U0126	While the dynamic radar cruise control is either preparing for operation or operating, if the ECM continuously receives a steering sensor communication error signal for a certain amount of time, the distance control ECU sends a signal to the ECM to record this trouble code	• Communication circuit • Steering angle sensor • Distance control ECU • ECM

INSPECTION PROCEDURE

NOTICE:

When the distance control ECU and/or ECM are replaced with a new one, initialization must be performed (See page CC-119).

HINT:

This circuit uses CAN communication. Therefore, if there are any malfunctions in the communication circuit, one or more DTCs in the CAN communication system are output.

1	CHECK CAN COMMUNICATION SYSTEM

(a) Refer to HOW TO PROCEED WITH TROUBLESHOOTING (See page CA-11).

NEXT

END

DTC	U0235	Lost Communication with Cruise Control Front Distance Range Sensor

DESCRIPTION

The millimeter wave radar sensor and distance control ECU transmit the data for general vehicle control and diagnosis function along the communication line. The millimeter wave radar sensor transmits information about the vehicle in front to the distance control ECU.

DTC No.	DTC Detection Condition	Trouble Area
U0235	The ECM detects a communication error signal (from the millimeter wave radar sensor to the distance control ECU) for 0.15 sec. or more while the dynamic radar cruise control is in operation	• Communication circuit • Millimeter wave radar sensor • Distance control ECU

CC

WIRING DIAGRAM

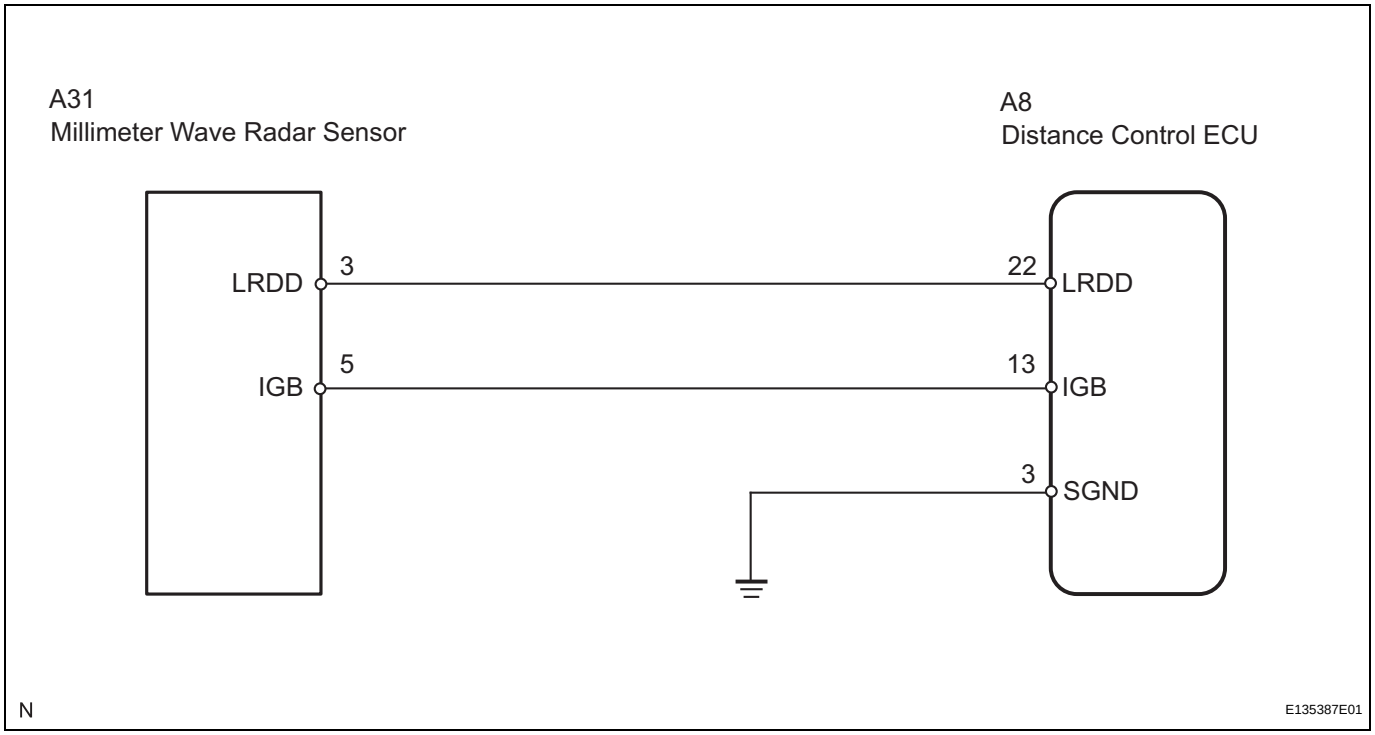

INSPECTION PROCEDURE

NOTICE:

- **When the distance control ECU and/or ECM are replaced with a new one, initialization must be performed (See page CC-119).**
- **When the millimeter wave radar sensor is replaced with a new one, adjustment of the radar sensor beam axis must be performed (See page CC-122).**

CC

1 CHECK HARNESS AND CONNECTOR (DISTANCE CONTROL ECU - MILLIMETER WAVE RADAR SENSOR)

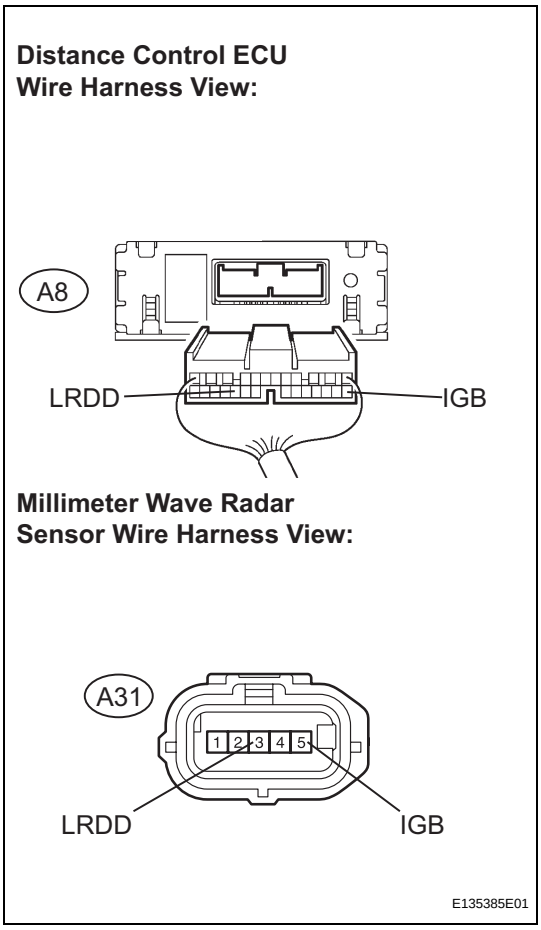

(a) Disconnect the distance control ECU and millimeter wave radar sensor connectors.

(b) Measure the resistance according to the value(s) in the table below.

Standard resistance

Tester Connection	Condition	Specified Condition
A8-22 (LRDD) - A31-3 (LRDD)	Always	Below 1 Ω
A8-13 (IGB) - A31-5 (IGB)	Always	Below 1 Ω
A8-22 (LRDD) - Body ground	Always	10 kΩ or higher
A8-13 (IGB) - Body ground	Always	10 kΩ or higher

NG → **REPAIR OR REPLACE HARNESS OR CONNECTOR**

OK

2 CHECK DISTANCE CONTROL ECU

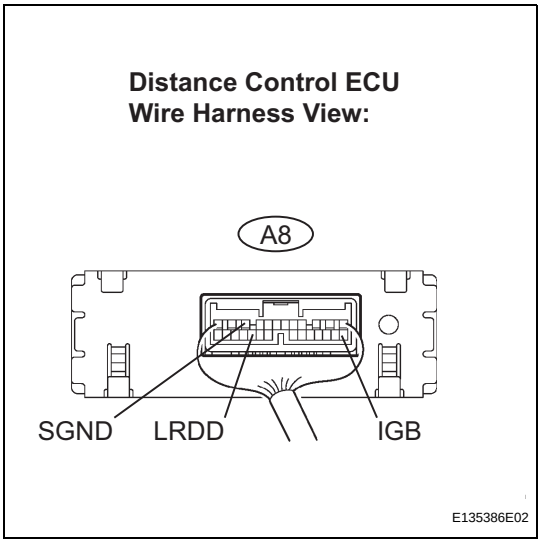

(a) Disconnect the millimeter wave radar sensor connector.

(b) Measure the voltage according to the value(s) in the table below.

Standard voltage

Tester Connection	Condition	Specified Condition
A8-13 (IGB) - Body ground	Engine switch on (IG)	10 to 14 V
A8-22 (LRDD) - A8-10 (SGND)	Engine switch on (IG)	4.5 to 5.5 V

NG → **REPLACE DISTANCE CONTROL ECU (See page CC-118)**

OK

3 CHECK MILLIMETER WAVE RADAR SENSOR

Millimeter Wave Radar Sensor Wire Harness Side Connector Front View:

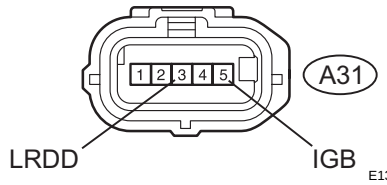

(a) Reconnect the millimeter wave radar sensor connector.

(b) Measure the voltage according to the value(s) in the table below.

Standard voltage

Tester connection	Condition	Specified Condition
A31-5 (IGB) - Body ground	**Engine switch on (IG)**	**10 to 14 V**

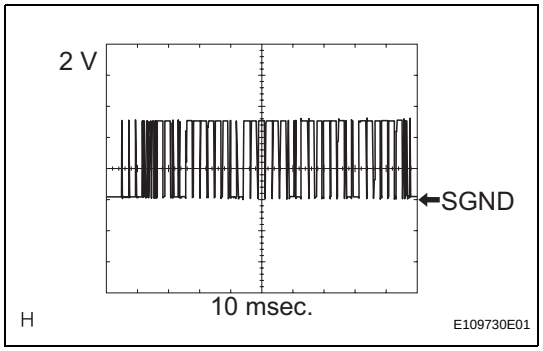

(c) Check the signal waveform.

Item	Contents
Terminal	A31-3 (LRDD) - Body ground
Tool setting	2 V/DIV., 10 msec./DIV.
Vehicle condition	Engine switch on (IG)

OK:

A waveform similar to that in the illustration on the left is output.

NG → **REPLACE MILLIMETER WAVE RADAR SENSOR (See page CC-122)**

OK

END (INTERMITTENT PROBLEM IS PRESENT)

CC

DTC	U1102	Lost Communication with Radar Sensor

DESCRIPTION

The millimeter wave radar sensor and distance control ECU transmit the data for general vehicle control and diagnosis function along the communication line. The distance control ECU determines the curve radius information based on signals from the steering wheel and yaw rate sensor. The distance control ECU transmits the current vehicle speed and curve radius information to the millimeter wave radar sensor.

DTC No.	DTC Detection Condition	Trouble Area
U1102	The ECM detects a communication error signal (from the distance control ECU to the millimeter wave radar sensor) for 0.15 sec. or more while the dynamic radar cruise control is in operation	• Communication circuit • Millimeter wave radar sensor • Distance control ECU

CC

WIRING DIAGRAM

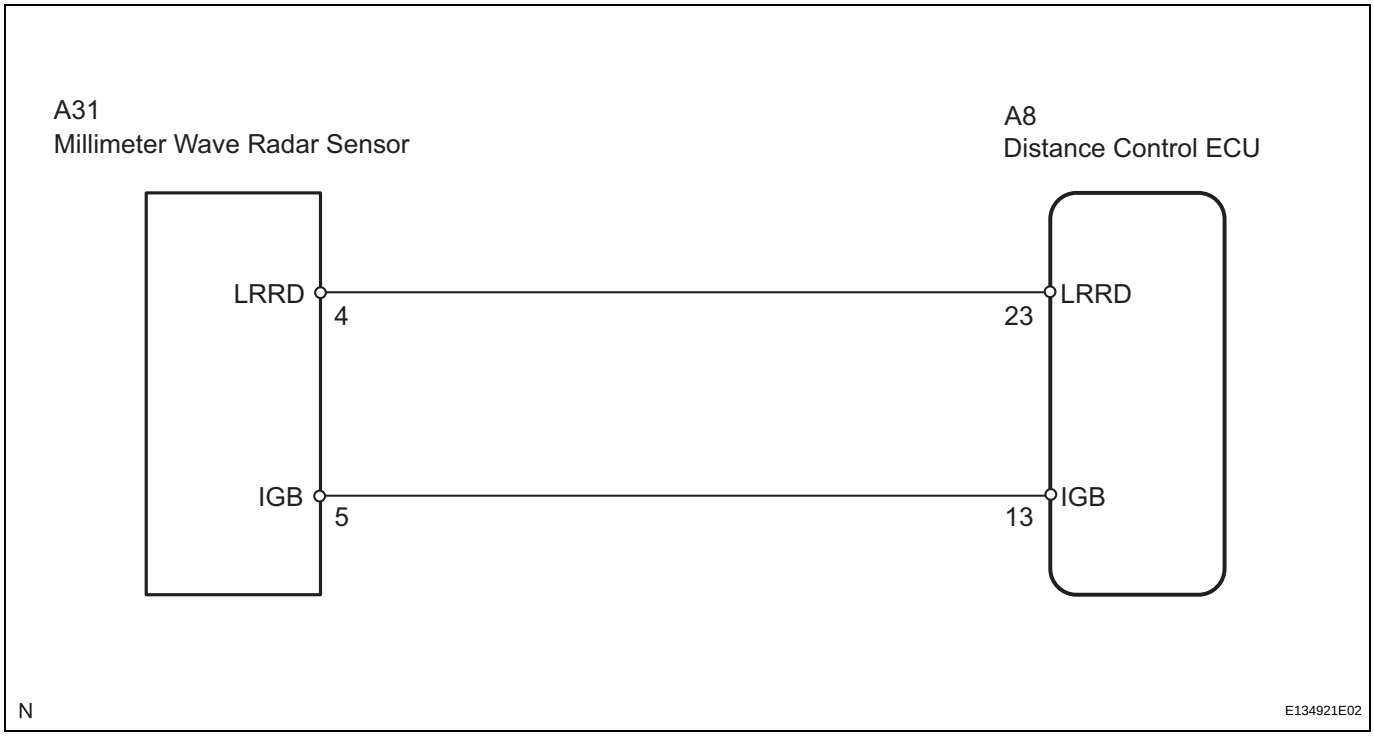

INSPECTION PROCEDURE

NOTICE:

- **When the distance control ECU and/or ECM are replaced with a new one, initialization must be performed (See page CC-119).**
- **When the millimeter wave radar sensor is replaced with a new one, adjustment of the radar sensor beam axis must be performed (See page CC-122).**

1 CHECK HARNESS AND CONNECTOR (DISTANCE CONTROL ECU - MILLIMETER WAVE RADAR SENSOR)

Distance Control ECU Wire Harness View:

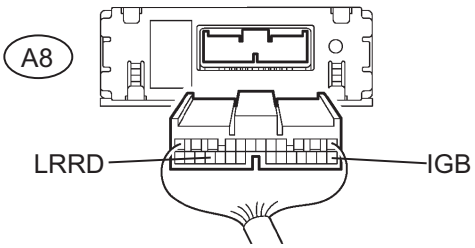

Millimeter Wave Radar Sensor Wire Harness View:

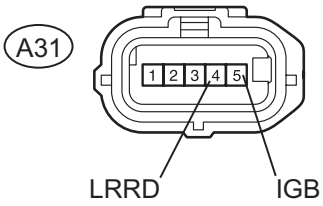

E135385E02

(a) Disconnect the distance control ECU and millimeter wave radar sensor connectors.

(b) Measure the resistance according to the value(s) in the table below.

Standard resistance

Tester Connection	Condition	Specified Condition
A8-23 (LRRD) - A31-4 (LRRD)	Always	Below 1 Ω
A8-13 (IGB) - A31-5 (IGB)	Always	Below 1 Ω
A8-23 (LRRD) - Body ground	Always	10 kΩ or higher
A8-13 (IGB) - Body ground	Always	10 kΩ or higher

NG → **REPAIR OR REPLACE HARNESS OR CONNECTOR**

OK

2 CHECK DISTANCE CONTROL ECU

Distance Control ECU Wire Harness View:

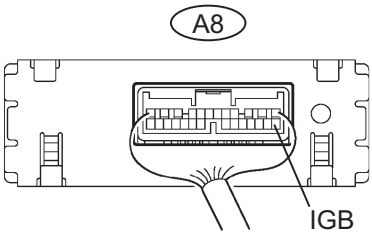

E135386E04

(a) Measure the voltage according to the value(s) in the table below.

Standard voltage

Tester Connection	Condition	Specified Condition
A8-13 (IGB) - Body ground	Engine switch on (IG)	10 to 14 V

NG → **REPLACE DISTANCE CONTROL ECU (See page CC-118)**

CC

OK

3 CHECK MILLIMETER WAVE RADAR SENSOR

Millimeter Wave Radar Sensor Wire Harness Side Connector Front View:

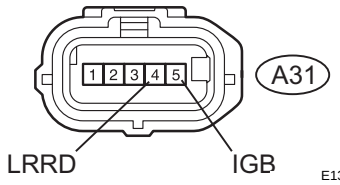

(a) Measure the voltage according to the value(s) in the table below.

Standard voltage

Tester Connection	Condition	Specified Condition
A31-5 (IGB) - Body ground	**Engine switch on (IG)**	**10 to 14 V**

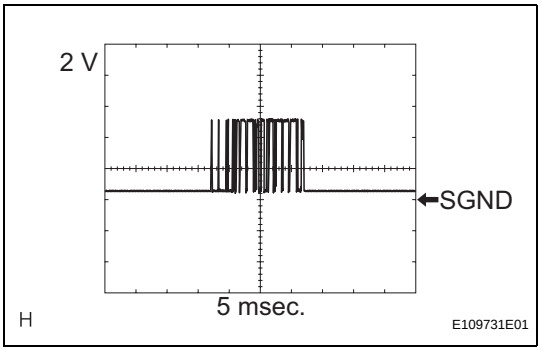

(b) Check the signal waveform.

Item	Contents
Terminal	A31-4 (LRRD) - Body ground
Tool setting	2 V/DIV., 10 msec./DIV.
Vehicle condition	Engine switch on (IG)

OK:

A waveform similar to that in the illustration on the left is output.

NG → **REPLACE MILLIMETER WAVE RADAR SENSOR (See page CC-122)**

OK

END (INTERMITTENT PROBLEM IS PRESENT)

CC

Cruise Main Indicator Light Circuit

DESCRIPTION

When the cruise control main switch is on, the CRUISE main indicator light and RADAR READY indicator come on. This indicates the control condition (presence or absence of a vehicle in front, vehicle-to-vehicle distance, and set vehicle speed) and fail-safe state through the CAN communication system. The master warning light and CRUISE main indicator light come on and vehicle-to-vehicle distance information is displayed on the combination meter as the alarm buzzer sounds. Items such as "Clean Radar Sensor", "Cruise not Available", "Check Cruise System", and "Radar Ready" are displayed on the multi-information display on the combination meter when the ECM detects signals from each sensor and actuator and sends them to the combination meter via the CAN communication system.

HINT:

If the vehicle in front in the same lane significantly decreases vehicle speed or another vehicle moves in front of your vehicle, adequate deceleration cannot be applied and the vehicle-to-vehicle distance will shorten. At this time, the system sounds the buzzer and the master warning light blinks to warn the driver. Each indicator in the dynamic radar cruise control uses CAN for communication. Therefore, if there are any malfunctions in this circuit, check for DTCs in the CAN communication system before troubleshooting this circuit.

INSPECTION PROCEDURE

NOTICE:

When the distance control ECU and/or ECM are replaced with a new one, initialization must be performed (See page CC-119).

1 PERFORM ACTIVE TEST USING INTELLIGENT TESTER

(a) Connect the intelligent tester to the DLC3.
(b) Select the ACTIVE TEST, use the intelligent tester to generate a control command, and then check that the CRUISE main indicator light comes on.

Tester Display	Test Part	Control Range	Diagnostic Note
CRUISE INDIC	Turns CRUISE main indicator light	ON / OFF	-

OK:

Indicator light comes on.

NG → **REPLACE COMBINATION METER ASSEMBLY (See page ME-67)**

OK

2 READ VALUE ON INTELLIGENT TESTER

(a) Connect the intelligent tester to the DLC3.
(b) Turn the engine switch on (IG), and turn the intelligent tester main switch on.

(c) Check the DATA LIST for proper functioning of the CRUISE main indicator light.

ECM (Cruise control):

Tester Display	Measurement Item/Range	Normal Condition	Diagnostic Note
CCS READY M	Cruise control system standby condition (Main CPU) / ON or OFF	Each time main switch is pushed, ON/OFF changes	1
CCS INDICATOR M	Cruise indicator signal (Main CPU) / ON or OFF	ON : "CCS READY" ON OFF : "CCS READY" OFF	2

OK:

When the cruise control main switch is operated, the display changes as shown above.

HINT:

1 is OK, but 2 is NG → DTC output or ECM failure

NG → **REPLACE ECM (See page ES-543)**

OK

PROCEED TO NEXT CIRCUIT INSPECTION SHOWN IN PROBLEM SYMPTOMS TABLE

DATA LIST / ACTIVE TEST

1. READ DATA LIST

HINT:
Using the intelligent tester's DATA LIST allows switch, sensor, actuator, and other item values to be read without removing any parts. Reading the DATA LIST early in troubleshooting is one way to save time.

(a) Connect the intelligent tester to the DLC3.
(b) Turn the engine switch on (IG).
(c) Read the DATA LIST according to the display on the tester.

ECM (Cruise control):

CC

Tester Display	Measurement Item/Range	Normal Condition	Diagnostic Note
VEHICLE SPD	Vehicle speed / min.: 0 km/h (0 mph), max.: 255 km/h (158 mph)	Actual vehicle speed	-
MEMORY SPD	Cruise control memorized speed / min.: 0 km/h (0 mph), max.: 200 km/h (125 mph)	Actual stored vehicle speed	-
THROTTLE	Throttle opening angle / min.: 0°, max.: 125°	Actual demanded throttle angle	-
CCS OPER STATUS	Cruise control condition / ON or OFF	ON: Cruise control activated OFF: Cruise control operation stopped	-
CRUISE CONTROL	Cruise control system active condition / ON or OFF	ON: Cruise control activated OFF: Cruise control deactivated	-
CCS INDICATOR M	Cruise indicator signal (Main CPU) / ON or OFF	ON: "CRUISE" on OFF: "CRUISE" off	"2"
CCS READY M	Cruise control system standby condition (Main CPU) / ON or OFF	Each time main switch is pushed, ON/OFF changes	"1"
MAIN SW (MAIN)	Main switch signal (Main CPU) / ON or OFF	ON: Main switch on OFF: Main switch off	"3"
MAIN SW (SUB)	Main switch signal (Sub CPU) / ON or OFF	ON: Main switch on OFF: Main switch off	"3"
CANCEL SW	CANCEL switch signal / ON or OFF	ON: CANCEL switch on OFF: CANCEL switch off	-
SET/COAST SW	SET / COAST switch signal / ON or OFF	ON: SET / COAST switch on OFF: SET / COAST switch off	-
RES/ACC SW	RES / ACC switch signal / ON or OFF	ON: RES / ACC switch on OFF: RES / ACC switch off	-
STP LIGHT SW M	Stop light switch signal (Main CPU) / ON or OFF	ON: Brake pedal depressed OFF: Brake pedal released	-

HINT:
- "3" is OK but "1" is NG → ECM failure
- "1" is OK but "2" is NG → DTC output or ECM failure
- "3" is OK but CRUISE main indicator light does not illuminate → CRUISE main indicator light, wire harness, or ECM failure

2. PERFORM ACTIVE TEST

HINT:
Performing the intelligent tester's ACTIVE TEST allows relays, VSVs, actuators, and other items to be operated without removing any parts. Performing the ACTIVE TEST early in troubleshooting is one way to save time. The DATA LIST can be displayed during the ACTIVE TEST.

(a) Connect the intelligent tester to the DLC3.
(b) Turn the engine switch on (IG).
(c) Perform the ACTIVE TEST according to the display on the tester.
HINT:
The engine switch must be turned on (IG) to proceed to ACTIVE TEST using the intelligent tester.

Combination meter

Tester Display	Test Part	Control Range	Diagnostic Note
CRUISE INDIC	Turns CRUISE main indicator light	ON / OFF	-

CRUISE CONTROL MAIN SWITCH

COMPONENTS

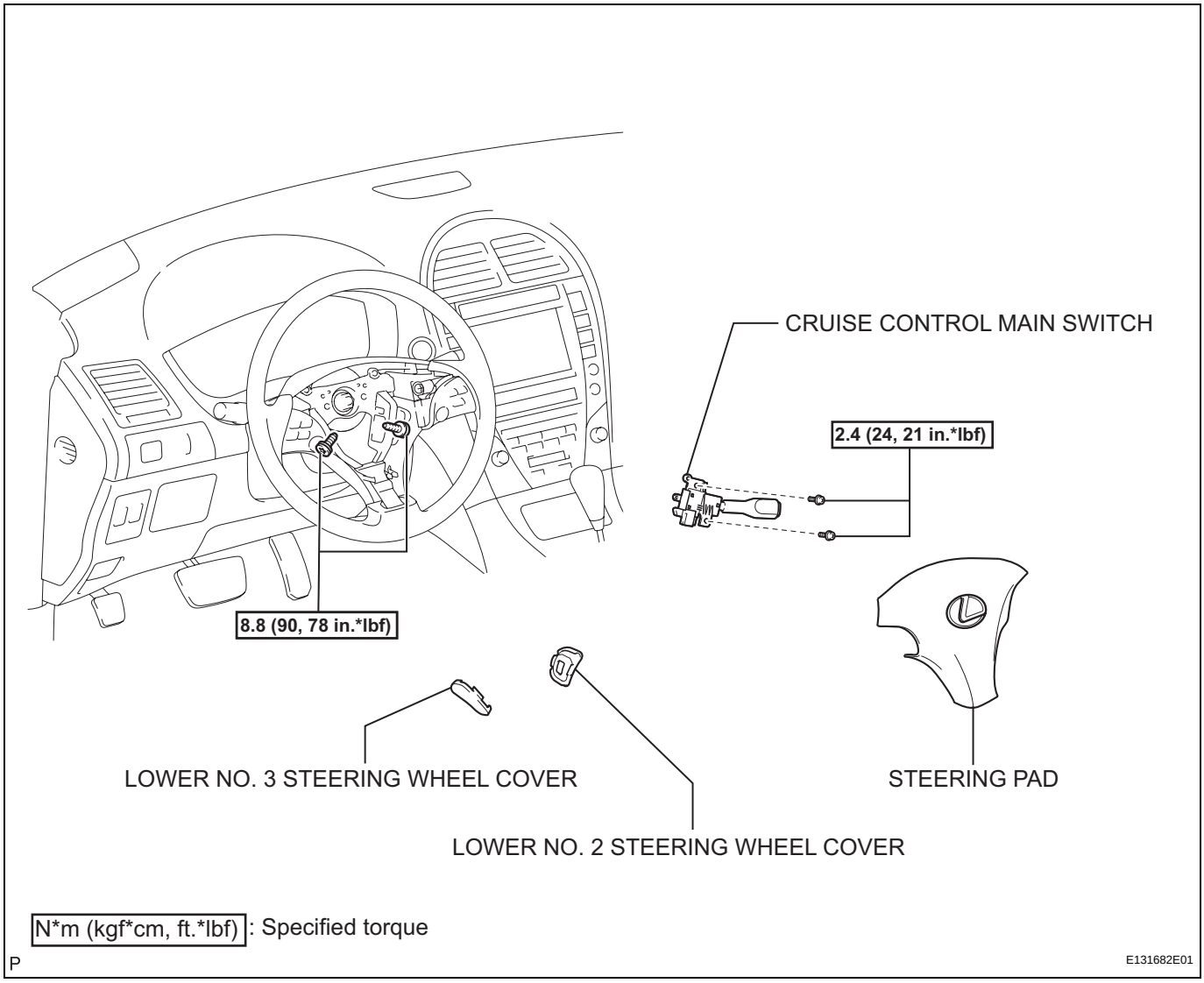

N*m (kgf*cm, ft.*lbf) : Specified torque

P

E131682E01

REMOVAL

1. **DISCONNECT CABLE FROM NEGATIVE BATTERY TERMINAL**
   CAUTION:
   Wait for 90 seconds after disconnecting the cable to prevent airbag deployment (See page RS-1).
2. **REMOVE LOWER NO. 3 STEERING WHEEL COVER (See page RS-367)**
3. **REMOVE LOWER NO. 2 STEERING WHEEL COVER (See page RS-367)**
4. **REMOVE STEERING PAD (See page RS-367)**
5. **REMOVE CRUISE CONTROL MAIN SWITCH**
   (a) Disconnect the connector.
   (b) Remove the 2 screws and the cruise control main switch.

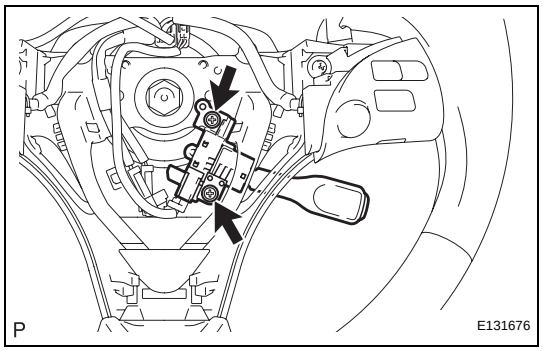

DIAGNOSTIC TROUBLE CODE CHART

If a trouble code is displayed during the DTC check, check the trouble areas listed for that code in the table below and proceed to the appropriate page.

Cruise control system

DTC Code	Detection Item	Trouble Area	See page
P0500	Vehicle Speed Sensor Malfunction	1. Vehicle speed sensor 2. Vehicle speed sensor signal circuit 3. Combination meter assembly 4. ECM	CC-18
P0503	Vehicle Speed Sensor "A" Intermittent / Erratic / High	1. Vehicle speed sensor 2. Vehicle speed sensor circuit 3. Combination meter assembly 4. ECM	CC-18
P0571	Brake Switch "A" Circuit	1. Stop light switch 2. Stop light switch circuit 3. ECM	CC-19
P0607	Control Module Performance	ECM	CC-22

DTC	P0500	Vehicle Speed Sensor Malfunction

DTC	P0503	Vehicle Speed Sensor "A" Intermittent / Erratic / High

DESCRIPTION

Refer to DTC P0500 (See page ES-275).

DTC No.	DTC Detection Condition	Trouble Area
P0500	The vehicle speed signal from the vehicle speed sensor is cut for 0.14 sec. or more while cruise control is in operation	• Vehicle speed sensor • Vehicle speed sensor signal circuit • Combination meter • ECM
P0503	Momentary interruption and noise are detected when a rapid change of vehicle speed occurs while cruise control is in operation	• Vehicle speed sensor • Vehicle speed sensor signal circuit • Combination meter • ECM

WIRING DIAGRAM

Refer to DTC P0500 (See page ES-276).

INSPECTION PROCEDURE

Refer to DTC P0500 (See page ES-276).

DTC	P0571	Brake Switch "A" Circuit

DESCRIPTION

When the brake pedal is depressed, the stop light switch sends a signal to the ECM. When the ECM receives this signal, it cancels the cruise control. The fail-safe function operates to enable normal driving even if there is a malfunction in the stop light signal circuit. The cancellation condition occurs when voltage is applied to terminal STP. When the brake is applied, voltage is normally applied to terminal STP of the ECM through the STOP fuse and the stop light switch, and the ECM turns the cruise control off.

DTC No.	DTC Detection Condition	Trouble Area
P0571	When voltage of STP terminal and that of ST1- terminal of ECM are less than 1 V for 0.5 sec. or more	• Stop light switch • Stop light switch circuit • ECM

CC

WIRING DIAGRAM

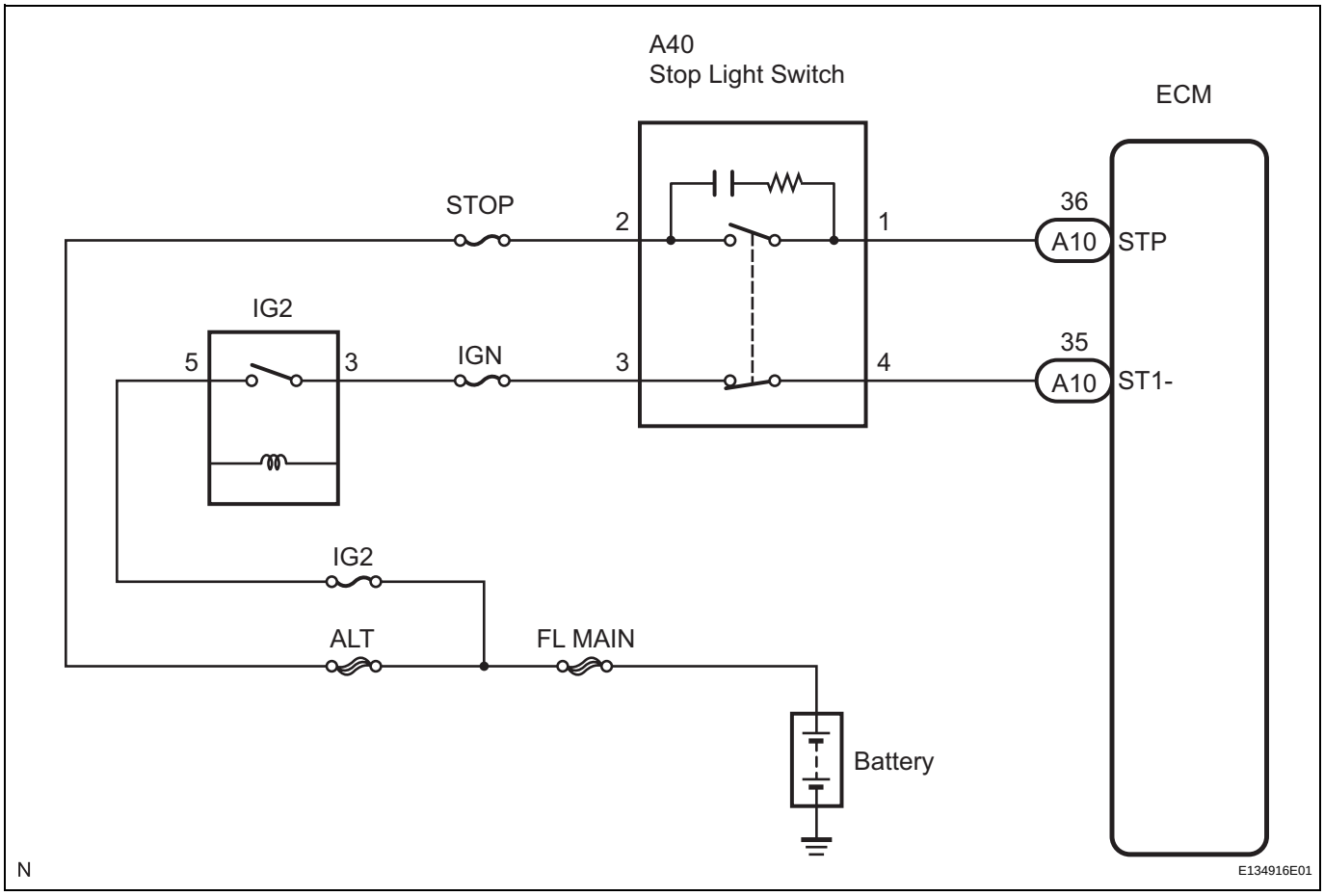

INSPECTION PROCEDURE

1	READ VALUE ON INTELLIGENT TESTER

(a) Connect the intelligent tester to the DLC3.
(b) Turn the engine switch on (IG), and turn the intelligent tester main switch on.

(c) Check the DATA LIST for proper functioning of the stop light switch.

ECM (Cruise control):

Tester Display	Measurement Item/Range	Normal Condition	Diagnostic Note
STP LIGHT SW M	Stop light switch signal (Main CPU) / ON or OFF	ON: Brake pedal depressed OFF: Brake pedal released	-

OK:
When the brake pedal is operated, the display changes as shown above.

OK → **REPLACE ECM (See page ES-543)**

NG

CC

2 CHECK HARNESS AND CONNECTOR (STOP LIGHT SWITCH - BATTERY)

Stop Light Switch Wire Harness Side Connector Front View:

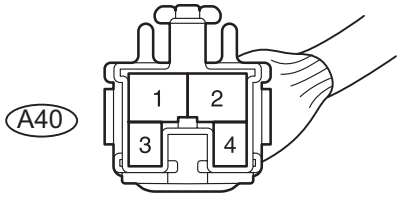

N E135377E01

(a) Disconnect the A40 connector from the stop light switch.
(b) Measure the voltage according to the value(s) in the table below.
Standard voltage

Tester Connection	Condition	Specified Condition
A40-2 - Body ground	Always	10 to 14 V
A40-3 - Body ground	Engine switch on (IG)	10 to 14 V

NG → **REPAIR OR REPLACE HARNESS OR CONNECTOR**

OK

3 INSPECT STOP LIGHT SWITCH

Stop Light Switch:

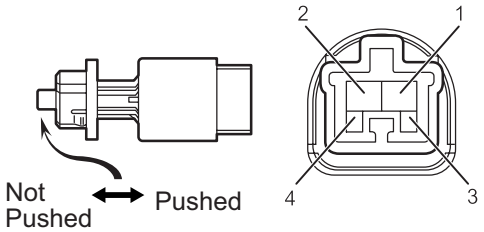

E133721E01

(a) Remove the stop light switch. (See page BR-59)
(b) Measure the resistance according to the value(s) in the table below.
Standard resistance

Tester Connection	Switch Condition	Specified Condition
1 - 2	Switch pin not pushed	Below 1 Ω
3 - 4	Switch pin not pushed	10 kΩ or higher
1 - 2	Switch pin pushed	10 kΩ or higher
3 - 4	Switch pin pushed	Below 1 Ω

(c) Install the stop light switch.

NG → **REPLACE STOP LIGHT SWITCH (See page BR-59)**

OK

4	CHECK ECM

ECM Wire Harness Side Connector Front Side View:

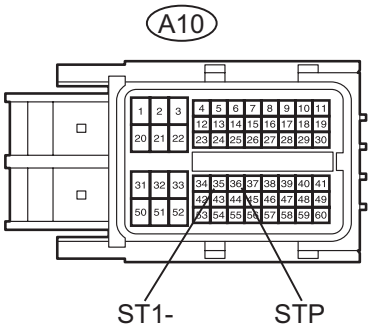

E135382E01

(a) Reconnect the stop light switch connector.
(b) Disconnect the A10 connector from the ECM.
(c) Turn the engine switch on (IG).
(d) Measure the voltage according to the value(s) in the table below.

Standard voltage

Tester Connection	Brake Pedal Condition	Specified Condition
A10-36 (STP) - Body ground	Depressed	10 to 14 V
A10-36 (STP) - Body ground	Released	Below 1 V
A10-35 (ST1-) - Body ground	Depressed	Below 1 V
A10-35 (ST1-) - Body ground	Released	10 to 14 V

NG → **REPAIR OR REPLACE HARNESS OR CONNECTOR (STOP LIGHT SWITCH - ECM)**

OK

REPLACE ECM (See page ES-543)

CC

DISTANCE CONTROL ECU

COMPONENTS

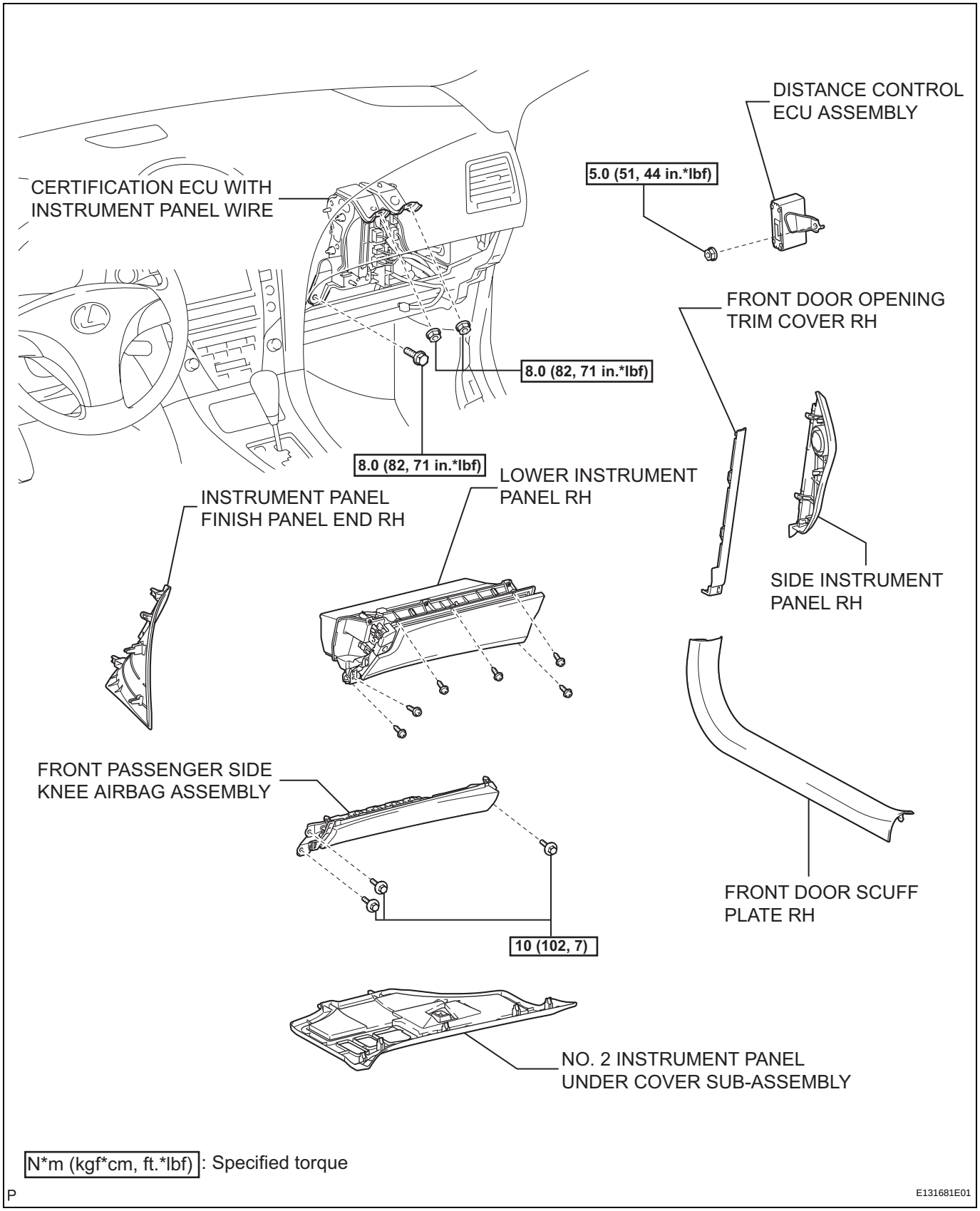

CC

CC

REMOVAL

1. **DISCONNECT CABLE FROM NEGATIVE BATTERY TERMINAL**
   CAUTION:
   Wait for 90 seconds after disconnecting the cable to prevent airbag deployment (See page RS-1).
2. **REMOVE INSTRUMENT PANEL FINISH PANEL END RH (See page IP-15)**
3. **REMOVE FRONT DOOR SCUFF PLATE RH (See page IR-42)**
4. **REMOVE FRONT DOOR OPENING TRIM COVER RH (See page IR-42)**
5. **REMOVE NO. 2 INSTRUMENT PANEL UNDER COVER SUB-ASSEMBLY (See page IP-15)**
6. **REMOVE SIDE INSTRUMENT PANEL RH (See page IP-15)**
7. **REMOVE FRONT PASSENGER SIDE KNEE AIRBAG ASSEMBLY (See page RS-396)**
8. **REMOVE LOWER INSTRUMENT PANEL RH (See page IP-16)**
9. **REMOVE DISTANCE CONTROL ECU ASSEMBLY**
   (a) Remove the 2 nuts and the bolt and disengage the certification ECU with instrument panel wire.

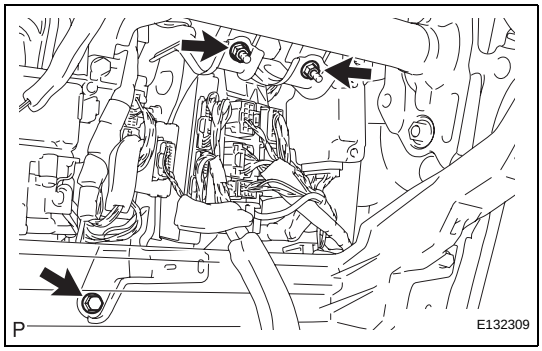

   (b) Turn the certification ECU with instrument panel wire in the direction indicated by the arrow.
   NOTICE:
   Do not apply excessive force.
   (c) Disconnect the connectors.

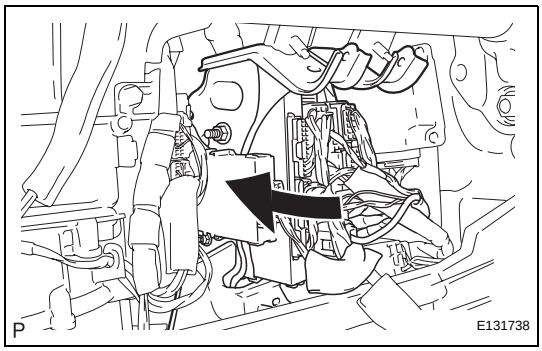

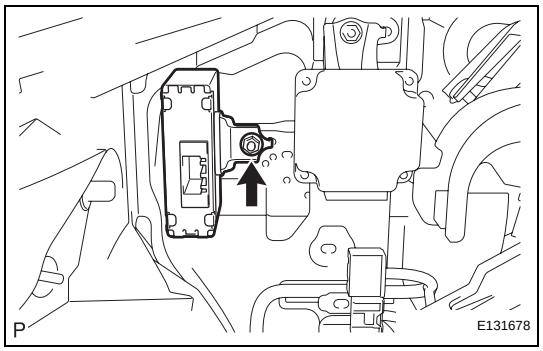

(d) Remove the nut and the distance control ECU assembly.

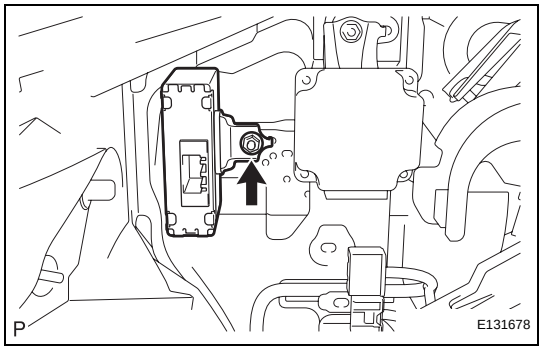

INSTALLATION

1. **INSTALL DISTANCE CONTROL ECU ASSEMBLY**
   (a) Install the distance control ECU assembly with the nut.
   Torque: 5.0 N*m (51 kgf*cm, 44 in.*lbf)
   NOTICE:
   Do not install the distance control ECU if it has been damaged or impacted in any way.
   (b) Connect the connector.

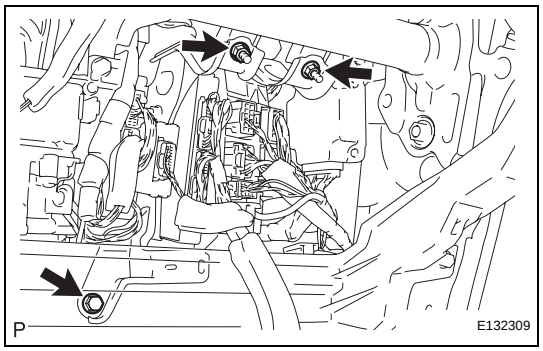

   (c) Install the certification ECU with instrument panel wire with the 2 nuts and bolt.
   Torque: 8.0 N*m (82 kgf*cm, 71 in.*lbf)
2. **INSTALL LOWER INSTRUMENT PANEL RH (See page IP-42)**
3. **INSTALL FRONT PASSENGER SIDE KNEE AIRBAG ASSEMBLY (See page RS-396)**
4. **INSTALL SIDE INSTRUMENT PANEL RH (See page IP-43)**
5. **INSTALL NO. 2 INSTRUMENT PANEL UNDER COVER SUB-ASSEMBLY (See page IP-44)**
6. **INSTALL FRONT DOOR OPENING TRIM COVER RH (See page IR-65)**
7. **INSTALL FRONT DOOR SCUFF PLATE RH (See page IR-65)**
8. **INSTALL INSTRUMENT PANEL FINISH PANEL END RH (See page IP-44)**
9. **CONNECT CABLE TO NEGATIVE BATTERY TERMINAL**
10. **INITIALIZE DISTANCE CONTROL ECU ASSEMBLY**
    NOTICE:
    After replacing the distance control ECU, it is necessary to initialize the distance control ECU so that the ECU can recognize the specification of the vehicle.
    (a) Be sure to perform the following procedures after replacing the distance control ECU.
    (1) Turn the engine switch on (IG).
    (2) Turn the cruise control main switch on.

CC

(3) With the brake pedal depressed, push the cruise control main switch to RES/ACC 3 times within 3 seconds. Check that the buzzer sounds at this time.
NOTICE:
Do not turn the headlight dimmer switch on at this time because the optical axis automatic adjustment mode has already started, which may lead to an incorrect optical axis setting. If the headlight dimmer switch is turned on by mistake, readjust the optical axis (See page CC-122).

11. PERFORM INITIALIZATION
NOTICE:
Some systems need initialization when disconnecting the cable from the negative battery terminal (See page IN-33).

12. INSPECT FRONT PASSENGER SIDE KNEE AIRBAG ASSEMBLY (See page RS-395)

13. INSPECT SRS WARNING LIGHT
(See page RS-37)

DTC	P0607	Control Module Performance

DESCRIPTION

This DTC indicates internal abnormalities of the ECM.

DTC No.	DTC Detection Condition	Trouble Area
P0607	When both of the following conditions are met: • STP signals input to the ECM supervisory CPU and control ECU are different for 0.15 sec. or more • 0.4 sec. have passed after cruise cancel input signal (STP input) is input to the ECM	ECM

HINT:
The ECM receives signals from each sensor to control all functions of the cruise control system. When a trouble code is detected, the fail-safe function remains on until the engine switch is turned off.

INSPECTION PROCEDURE

1	REPLACE ECM

HINT:
(See page ES-543)

NEXT

END

Cruise Control Switch Circuit

DESCRIPTION

The cruise control main switch operates 7 functions: SET, - (COAST), TAP-DOWN, RES (RESUME), + (ACCEL), TAP-UP, and CANCEL. The SET, TAP-DOWN, and - (COAST) functions, and the RES (RESUME), TAP-UP, and + (ACCEL) functions are operated with the same switch. The cruise control main switch is an automatic return type switch which turns on only while operating it in the direction of each arrow and turns off after releasing it. The internal contact point of the cruise control main switch is turned on with the switch operation. Then the ECM reads the voltage value that has been changed by the switch operation to control SET, - (COAST), RES (RESUME), + (ACCEL), and CANCEL.

WIRING DIAGRAM

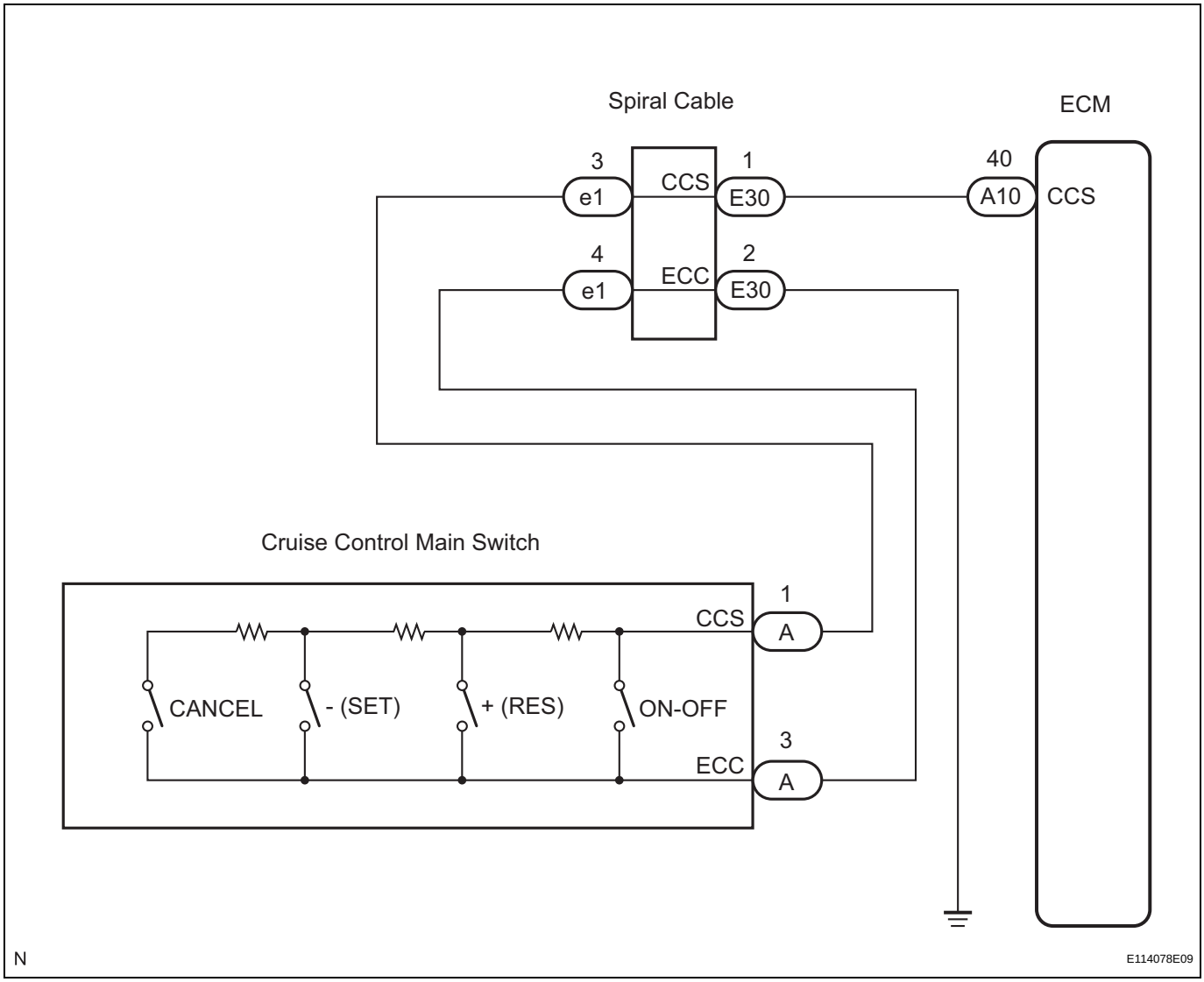

INSPECTION PROCEDURE

1	READ VALUE ON INTELLIGENT TESTER

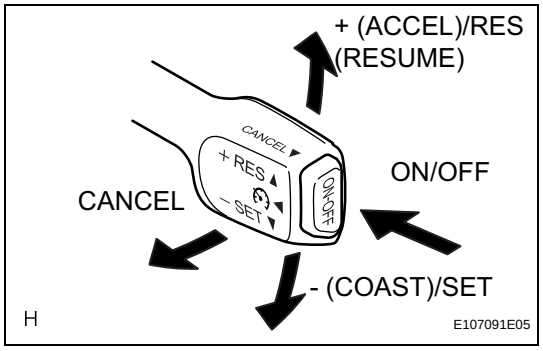

(a) Connect the intelligent tester to the DLC3.
(b) Turn the engine switch on (IG) and turn the intelligent tester main switch on.
(c) Check the DATA LIST for proper functioning of the cruise control main switch.

CC

ECM (Cruise control):

Tester Display	Measurement Item/Range	Normal Condition	Diagnostic Note
MAIN SW (MAIN)	Main switch signal (Main CPU)/ ON or OFF	ON: Main switch on OFF: Main switch off	-
CANCEL SW	CANCEL switch signal/ON or OFF	ON: CANCEL switch on OFF: CANCEL switch off	-
SET/COAST SW	SET/COAST switch signal/ON or OFF	ON: - (COAST)/SET switch on OFF: - (COAST)/SET switch off	-
RES/ACC SW	RES/ACC switch signal/ON or OFF	ON: + (ACCEL)/RES (RESUME) switch on OFF: + (ACCEL)/RES (RESUME) switch off	-

OK:
When the cruise control main switch is operated, the display changes as shown above.

Result

Result	Proceed to
OK	**A**
NG (All items are defective)	**B**
NG (1 to 3 items are defective)	**C**

A → **PROCEED TO NEXT CIRCUIT INSPECTION SHOWN IN PROBLEM SYMPTOMS TABLE**

C → **REPLACE CRUISE CONTROL MAIN SWITCH (See page CC-114)**

B

2	INSPECT CRUISE CONTROL MAIN SWITCH

(a) Remove the cruise control main switch (See page CC-114).
(b) Measure the resistance according to the value(s) in the table below.

Cruise Control Main Switch:

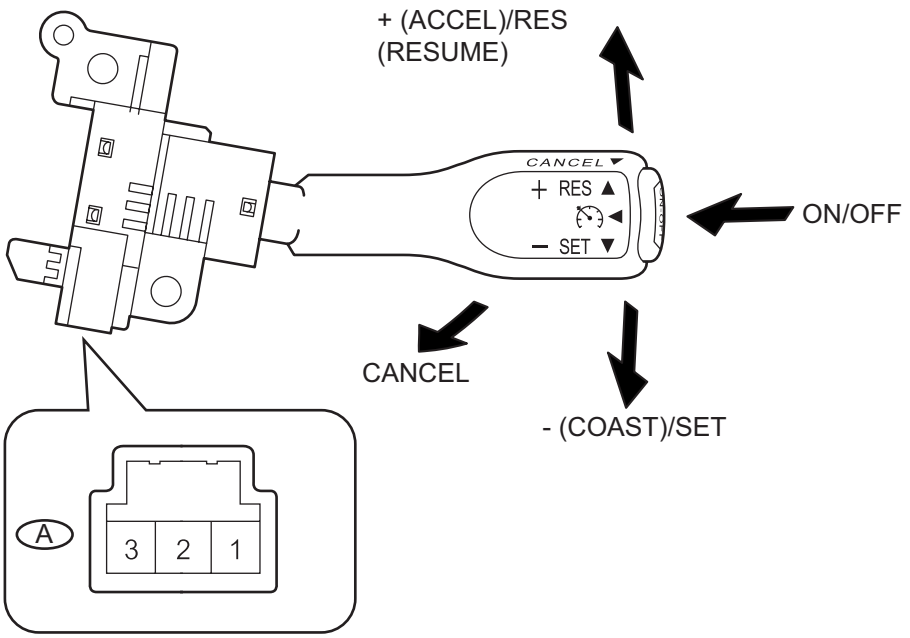

H

E106137E10

Standard resistance

Tester Connection	Switch Condition	Specified Condition
A-1 (CCS) - A-3 (ECC)	Neutral	10 kΩ or higher
	+ (ACCEL)/RES (RESUME)	216 to 264 Ω
	- (COAST)/SET	567 to 693 Ω
	CANCEL	1,386 to 1,694 Ω
	Main Switch on	Below 1 Ω

NG → **REPLACE CRUISE CONTROL MAIN SWITCH (See page CC-114)**

OK

3	**CHECK HARNESS AND CONNECTOR (CRUISE CONTROL MAIN SWITCH - SPIRAL CABLE)**

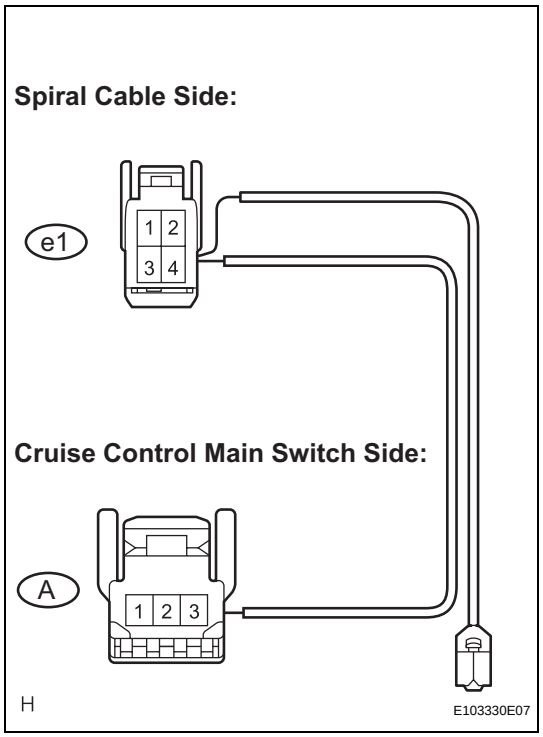

(a) Disconnect the e1 connector from the spiral cable.
(b) Measure the resistance according to the value(s) in the table below.

Standard resistance

Tester connection	Condition	Specified Condition
A-1 - e1-3	Always	Below 1 Ω
A-3 - e1-4	Always	Below 1 Ω

NG → **REPAIR OR REPLACE HARNESS OR CONNECTOR**

OK

CC

4	CHECK SPIRAL CABLE

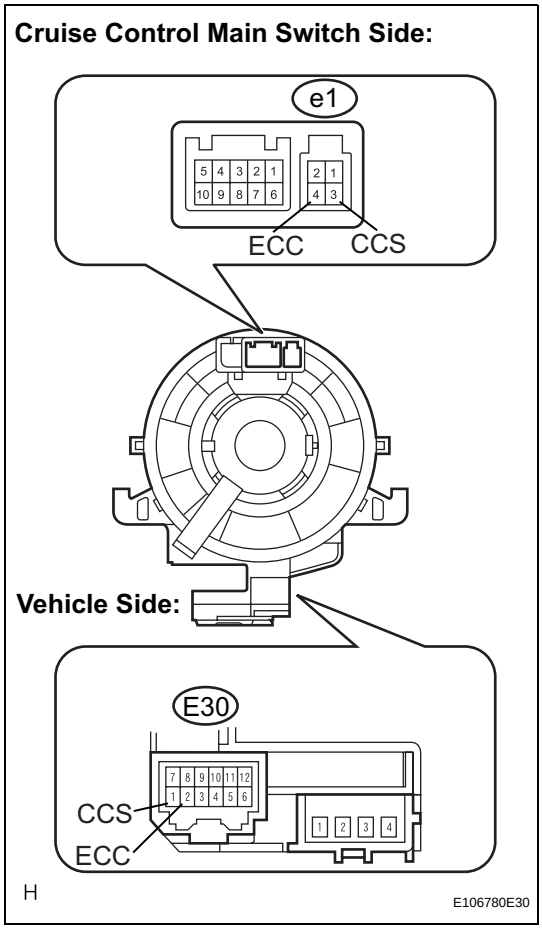

NOTICE:
The spiral cable is an important part of the SRS airbag system. Incorrect removal or installation of the spiral cable may cause airbag deployment. Be sure to read the page shown in the brackets.

HINT:
- Removal (See page RS-379)
- Installation (See page RS-382)

(a) Remove the spiral cable.
(b) Measure the resistance according to the value(s) in the table below.
Standard resistance

Tester Connection	Spiral Cable Position	Specified Condition
e1-3 - E30-1 (CCS)	Center	Below 1 Ω
	2.5 rotations to the left	
	2.5 rotations to the right	
e1-4 - E30-2 (ECC)	Center	Below 1 Ω
	2.5 rotations to the left	
	2.5 rotations to the right	

HINT:
The spiral cable makes a maximum of approximately 5 rotations.

NG → **REPLACE SPIRAL CABLE (See page RS-379)**

OK

5	CHECK WIRE HARNESS (SPIRAL CABLE - ECM AND BODY GROUND)

Spiral Cable Vehicle Side Connector Front View:

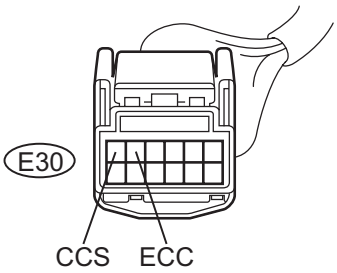

ECM Wire Harness Side Connector Front View:

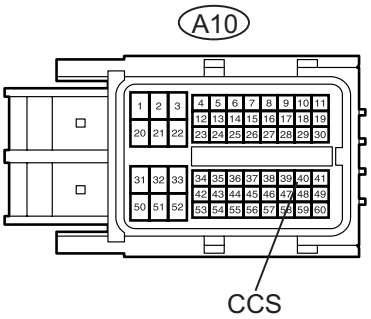

E135383E01

(a) Measure the resistance according to the value(s) in the table below.

Standard resistance

Tester Connection	Condition	Specified Condition
E30-1 - A10-40 (CCS)	Always	Below 1 Ω
A10-40 (CCS) - Body ground	Always	10 kΩ or higher
E30-2 (ECC) - Body ground	Always	Below 1 Ω

NG → **REPAIR OR REPLACE HARNESS OR CONNECTOR**

OK

REPLACE ECM (See page ES-543)

CC

MILLIMETER WAVE RADAR SENSOR

COMPONENTS

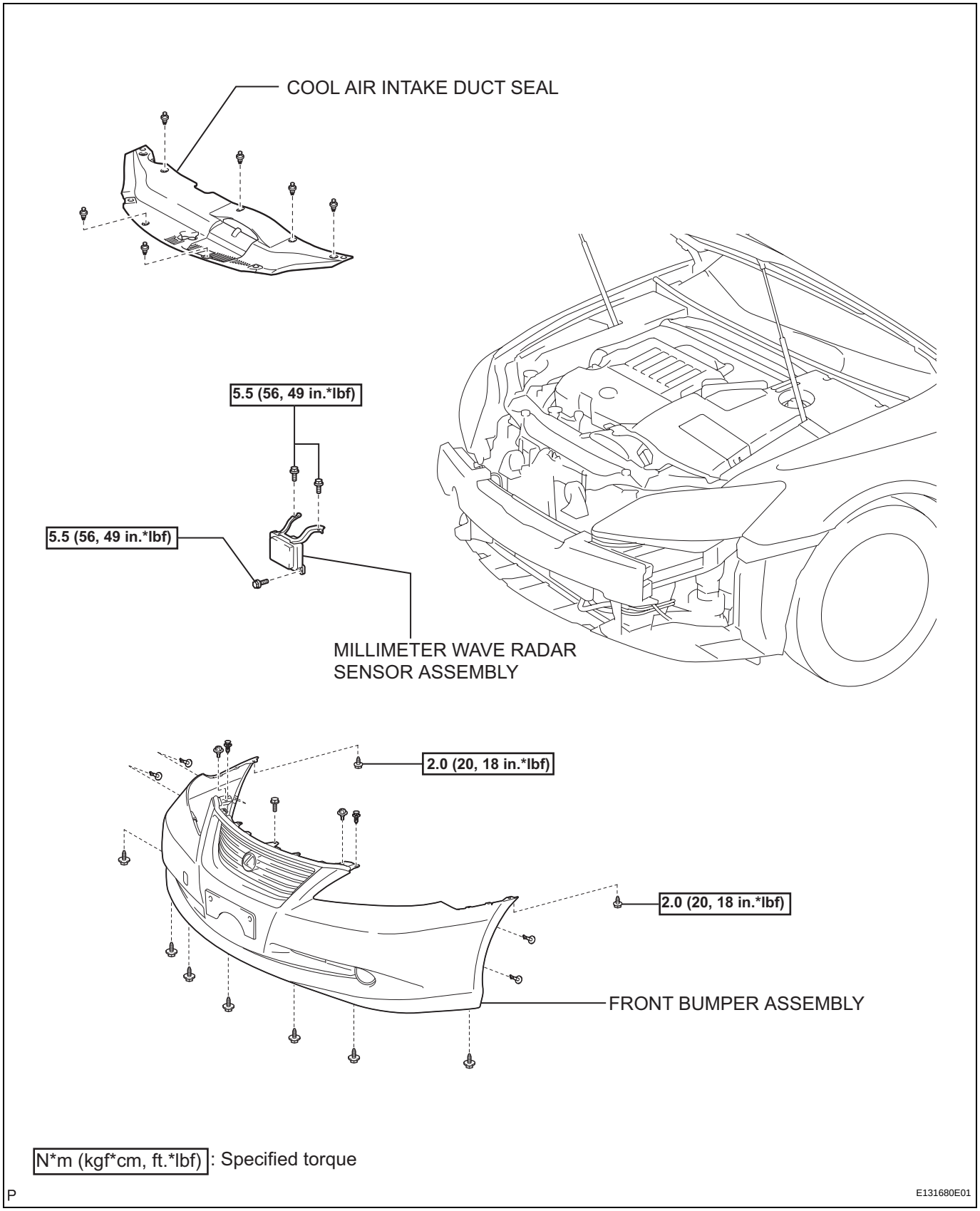

CC

REMOVAL

1. **DISCONNECT CABLE FROM NEGATIVE BATTERY TERMINAL**
   CAUTION:
   Wait for 90 seconds after disconnecting the cable to prevent airbag deployment (See page RS-1).
2. **REMOVE COOL AIR INTAKE DUCT SEAL (See page EM-22)**
3. **REMOVE FRONT BUMPER ASSEMBLY (See page ET-5)**
4. **REMOVE MILLIMETER WAVE RADAR SENSOR ASSEMBLY**
   (a) Disconnect the connector.
   (b) Remove the 3 bolts and the millimeter wave radar sensor assembly.

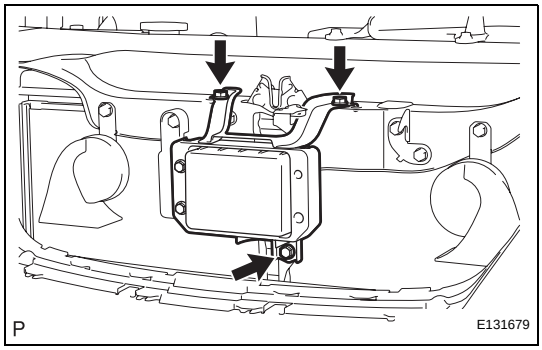

ADJUSTMENT

HINT:

- After replacing the ECM on vehicles with radar cruise control system, it is necessary to initialize the ECM so that the ECM can recognize the radar cruise control system (See page ES-544)
- After replacing the distance control ECU, it is necessary to initialize the distance control ECU so that ECU can recognize the specification of the vehicle (See page CC-119).
- There is a limitation on radar beam axis adjustment.
- Since the radar sensor is installed in the radiator support upper and hood lock support sub-assembly, it is important that the laser sensor, bumper reinforcement, and other related parts are installed properly.
- When the sensor is removed from the vehicle for trouble diagnosis or repair, it is necessary to adjust the radar beam axis after the operation.

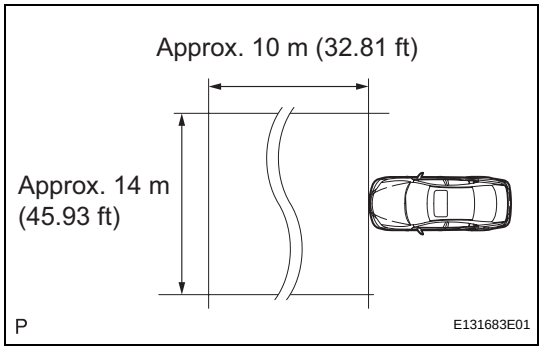

1. ADJUST MILLIMETER WAVE RADAR SENSOR

CAUTION:

Exposure to radio frequency emissions is hazardous to your health. It is hazardous to your health to be within 20 cm (7.9 in.) of the device's radio frequency aperture.

NOTICE:

- **This device complies with FCC radio frequency emission regulations.**
- **Perform measurements on a level surface.**
- **Make sure that no large pieces of metal are within a 10 m (32.81 ft) x 14 m (45.93 ft) area in front of the vehicle. If possible, the surrounding area should also be free of large metal objects.**

(a) Before adjusting the radar beam axis, prepare the vehicle as follows:

(1) Check the tire pressure and adjust it if necessary.

(2) Remove all excess weight from the vehicle (luggage, heavy objects, etc.).

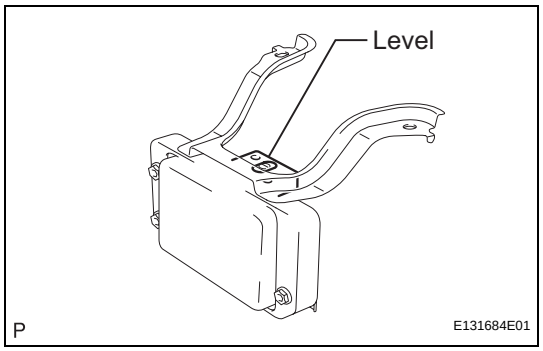

(b) Check and adjust the vertical direction of the radar sensor.

(1) Remove dust, oil, and foreign matter from the radar sensor's level rack.

(2) Set a level on the radar sensor's level rack.

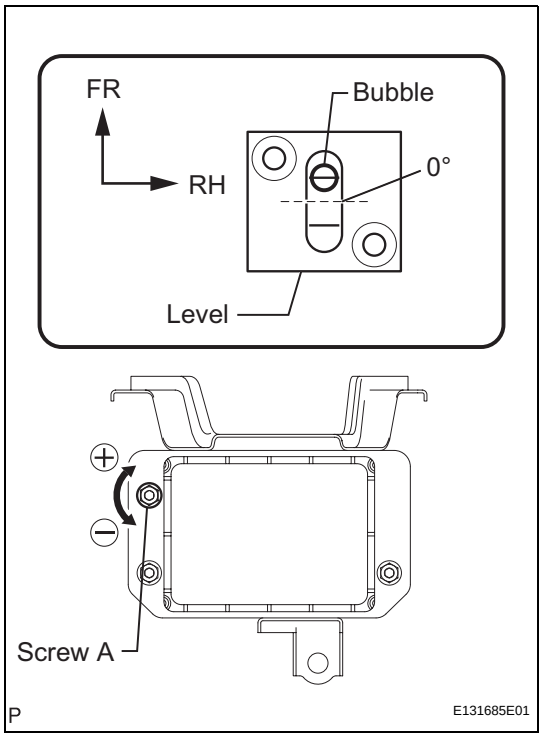

(3) Check that the air bubble is within the red frame on the level.

OK:

The air bubble is within the red frame on the level.
If the bubble is not indicated with the red frame, use a hexagon wrench to adjust screw A until the air bubble is within the red frame.

HINT:

- The adjustable range indicated with the red frame on the level is + - 0.2°.
- The target angle is +0.2° (upward angle of 0.2°).

CC

Result

Adjustment Direction	Adjustment Procedure	Adjustment Angle
Vertical adjustment	• **Upward direction: Turn screw A to negative (-) side** • **Downward direction: Turn screw A to positive (+) side**	**Approx. 1.0° per turn**

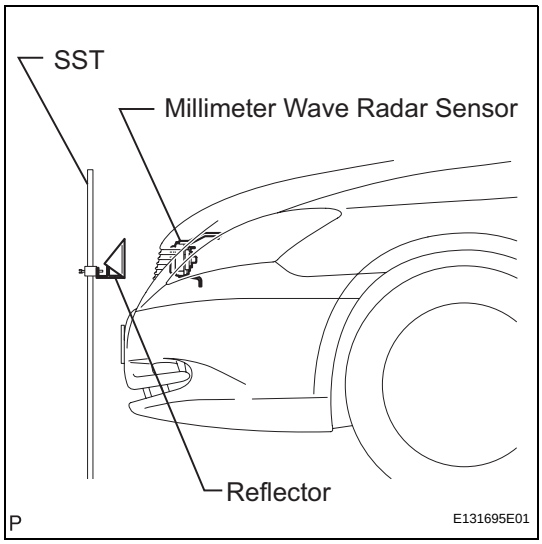

(c) Adjust the reflector height.

(1) Adjust the reflector so that the center of the SST reflector is the same height as the millimeter wave radar sensor.

SST 09870-60000 (09870-60010, 09870-60040)

HINT:

Prepare a 10 m (32.81 ft) string, a string with a sharp-pointed weight (plumb bob), and a 5 m (16.41 ft) tape measure.

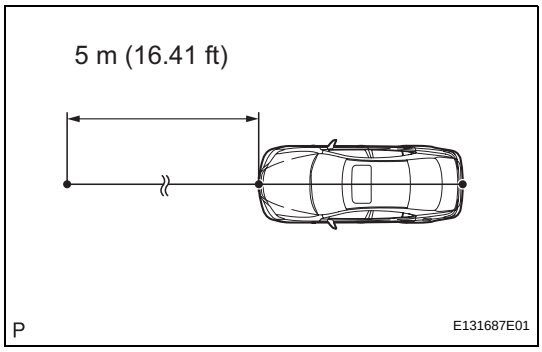

(d) Place the reflector.

(1) Hang the string (with weight) from the center of the vehicle's rear emblem. Mark the vehicle's rear center point on the ground. Repeat the same procedure for the front of the vehicle.

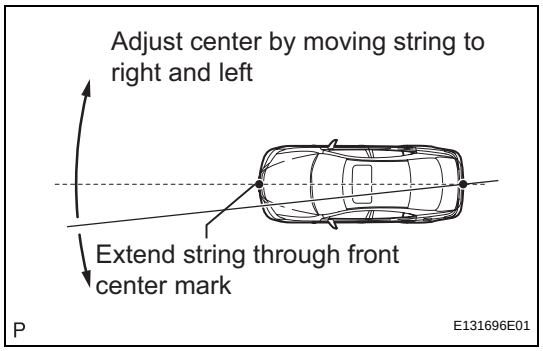

(2) Set one end of the 10 m (32.82 ft) string on the vehicle's rear center point. Run the string over the vehicle's front center point to a position 5 m (16.41 ft) beyond the vehicle front center point, as shown in the illustration. Mark the 5 m (16.41 ft) position.

(3) Using a tape measure, measure 12 mm (0.47 in.) to the left of the 5 m (16.41 ft) position. Place the reflector at that position.

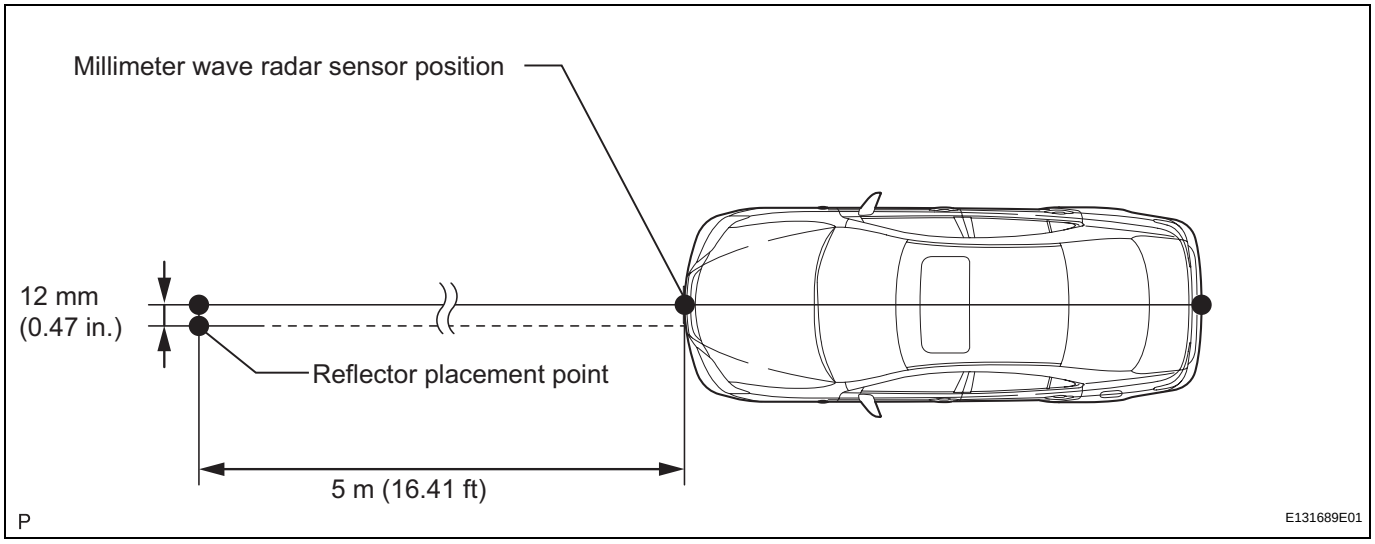

NOTICE:
Perform the operation as precisely as possible.

(e) Adjust the radar beam axis.

(1) Connect the intelligent tester to the Controller Area Network Vehicle Interface Module (CAN VIM). Then connect the CAN VIM to the Data Link Connectors 3 (DLC3).

(2) Turn the engine switch on (IG).

(3) Turn the intelligent tester main switch on, and turn the cruise control main switch on.

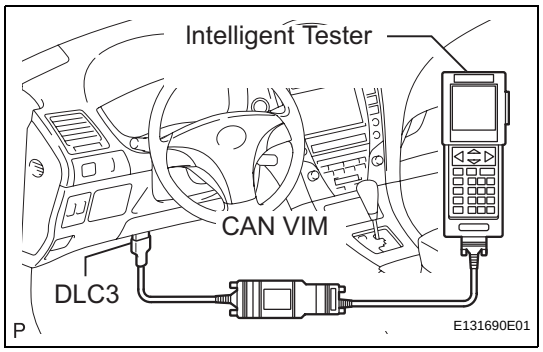

(4) Select "1: OBD/MOBD".

(5) Press the "ENTER" key.

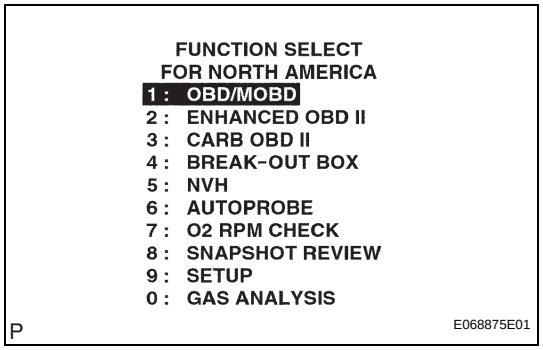

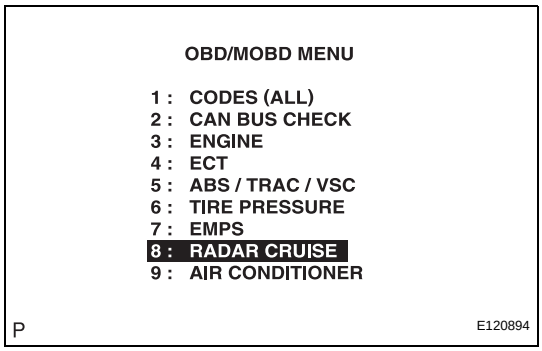

(6) Select "8: RADAR CRUISE".
(7) Press the "ENTER" key.

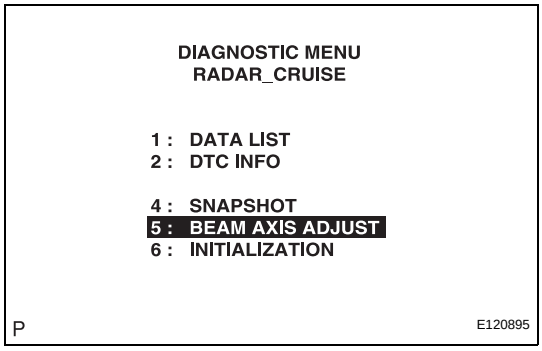

(8) Select "5: BEAM AXIS ADJUST".
(9) Press the "ENTER" key.
HINT:
- Pressing the "ENTER" key will make the ECM transfer to BEAM AXIS ADJUST MODE.
- If an error message is displayed on the screen, initialization of the distance control ECU may not be completed. Initialize the distance control ECU (See page CC-119).
- When the ECM transfers to BEAM AXIS ADJUST MODE, the buzzer sounds for 1 second.

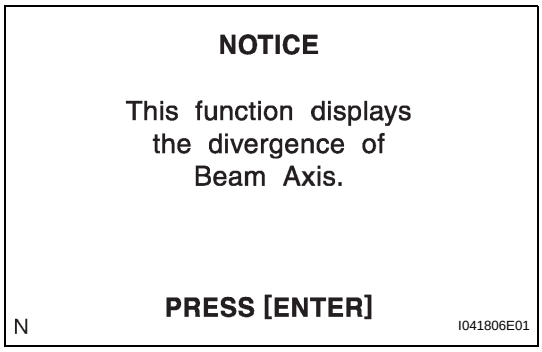

(10) Press the "ENTER" key.

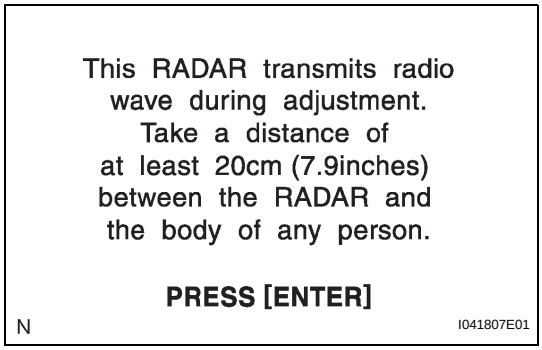

(11) Press the "ENTER" key.

CC

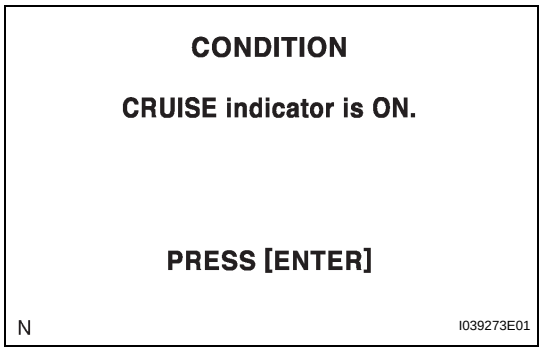

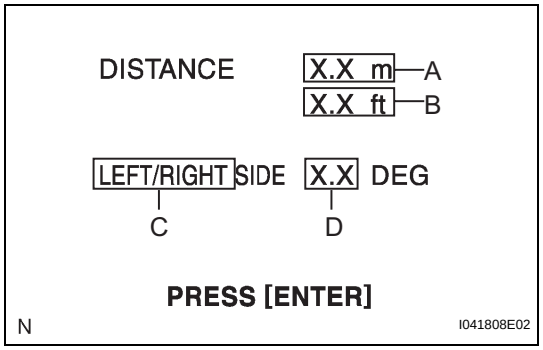

(12) After the CRUISE main indicator light comes on, press the "ENTER" key.

(13) Press the "ENTER" key.

(14) Check that a distance of 5 m (16.41 ft) is displayed on the tester.
HINT:
If the distance is 0 m (0 ft), the sensor cannot detect the target. Reconfirm that there is no metal around the vehicle.
1. Check that a value between 0.0 and 6.3 is displayed in the meter display, area A.
2. Check that a value between 0.0 and 20.67 is displayed in the feet display, area B.
3. Check that LEFT or RIGHT is displayed in area C.
4. Check that an angle value between 0.0 and 6.3 is displayed in area D.
While using the intelligent tester BEAM AXIS ADJUST MODE, the actual direction and angle of the radar sensor may be different from the intelligent tester's data. In such a case, the deviation is displayed on the combination meter's multi-information display.

(f) Check and adjust the horizontal direction of the radar sensor.

(1) Check that the divergence of the radar beam axis is 0° .
Standard:
0° (Both right and left)
If the axis is not as specified, use a hexagon wrench to adjust screw B until the divergence of the radar beam axis is 0°.

(2) Based on the measured divergence of the beam axis, turn and adjust screw B for horizontal adjustment of the millimeter wave radar sensor using a hexagon wrench.

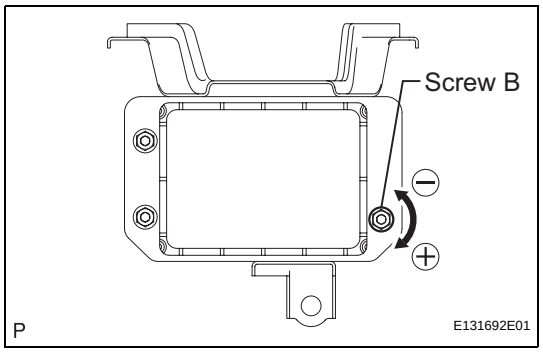

Result

Adjustment Direction	Adjustment Procedure	Adjustment Angle
Horizontal adjustment	• **Right direction: Turn screw B to positive (+) side.** • **Left direction: Turn screw B to negative (-) side.**	**Approx. 0.33° per turn**

CC

HINT:
- If "LEFT SIDE: 1.0°" is displayed, the divergence is 1.0° in the left direction. Turn screw B approximately 3 turns to the negative (-) side.
- If the value does not change to 0°, it is likely that the sensor is aiming at something different. Reconfirm that there are no reflective materials around the vehicle.

(3) Reset the radar sensor's driving learning values. Prepare a type of metal that can block radio waves, such as aluminum foil. Cover the radar sensor's left half with the metal for 10 seconds.
NOTICE:
Be sure to keep the reflector in place and make sure that there is nothing between the sensor's left half and the reflector.
HINT:
When the reset is completed, the buzzer sounds for 10 seconds.

(4) Disconnect the intelligent tester from the DLC3.

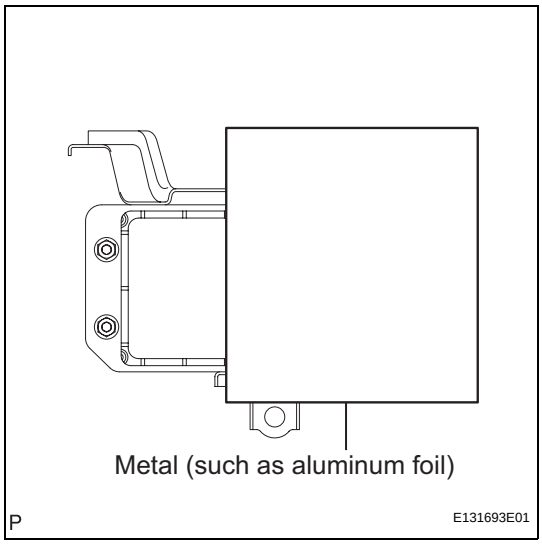

(g) Recheck and readjust the vertical direction of the radar sensor.
(1) Set a level on the radar sensor's level rack.

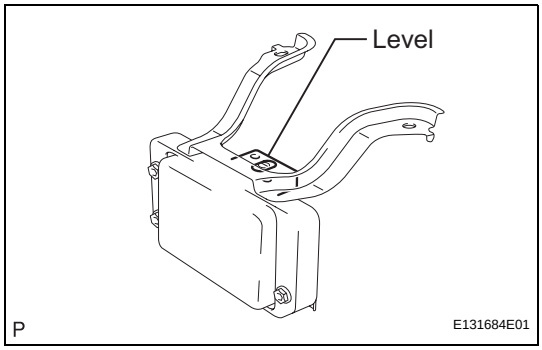

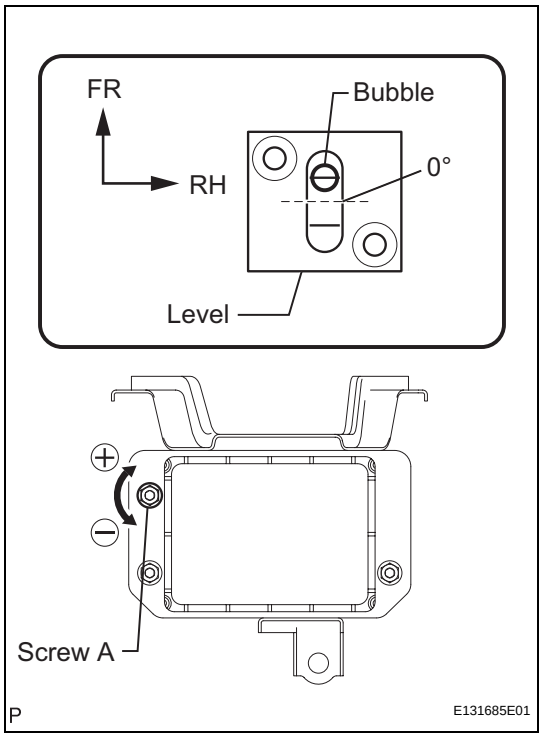

(2) Check that the level's air bubble is within the red frame.

OK:

Level's air bubble is within the red frame. If the bubble is not within the red frame, use a hexagon wrench to adjust screw A until the level's air bubble is within the red frame.

HINT:

- The adjustable range indicated with the red frame is + - 0.2°.
- The target angle is +0.2° (upward angle of 0.2°).

CC

Result

Adjustment Direction	Adjustment Procedure	Adjustment Angle
Vertical adjustment	• **Upward direction: Turn screw A to negative (-) side** • **Downward direction: Turn screw A to positive (+) side**	**Approx. 1.0° per turn**

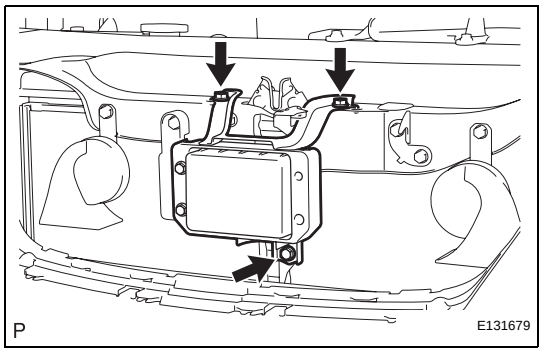

INSTALLATION

1. **INSTALL MILLIMETER WAVE RADAR SENSOR ASSEMBLY**
   (a) Install the millimeter wave radar sensor assembly with the 3 bolts.
   Torque: 5.5 N*m (56 kgf*cm, 49 in.*lbf)
   (b) Connect the connector.
2. **INSTALL FRONT BUMPER ASSEMBLY (See page ET-14)**
3. **INSTALL COOL AIR INTAKE DUCT SEAL (See page EM-50)**
4. **CONNECT CABLE TO NEGATIVE BATTERY TERMINAL**
5. **ADJUST MILLIMETER WAVE RADAR SENSOR (See page CC-122)**
6. **PERFORM INITIALIZATION**
   NOTICE:
   Some systems need initialization after reconnecting the cable to the negative battery terminal (See page IN-33).
7. **VEHICLE PREPARATION FOR FOG LIGHT AIM (See page LI-141)**

8. **PREPARATION FOR FOG LIGHT AIMING (See page LI-142)**
9. **FOG LIGHT AIMING INSPECTION (See page LI-143)**
10. **FOG LIGHT AIMING ADJUSTMENT (See page LI-144)**

Cruise Main Indicator Light Circuit

DESCRIPTION

- The ECM detects a cruise control switch signal and sends it to the combination meter through the CAN communication system. Then the CRUISE main indicator light comes on.
- The CRUISE main indicator light circuit uses CAN communication. If there is a malfunction in this circuit, check for DTCs in the CAN communication system before troubleshooting this circuit.

INSPECTION PROCEDURE

CC

1 PERFORM ACTIVE TEST USING INTELLIGENT TESTER

(a) Connect the intelligent tester to the DLC3.
(b) Check the CRUISE main indicator light by performing ACTIVE TEST.

Combination meter

Tester Display	Test Part	Control Range	Diagnostic Note
CRUISE INDIC	Turns CRUISE main indicator light	ON / OFF	-

OK:
Indicator light comes on / goes off.

NG → **REPLACE COMBINATION METER ASSEMBLY (See page ME-67)**

OK

2 READ VALUE ON INTELLIGENT TESTER

(a) Connect the intelligent tester to the DLC3.
(b) Turn the engine switch on (IG) and turn the intelligent tester main switch on.
(c) Check the DATA LIST for proper functioning of the CRUISE main indicator light.

ECM (Cruise control):

Tester Display	Measurement Item/Range	Normal Condition	Diagnostic Note
CCS INDICATOR M	Cruise indicator signal (Main CPU) / ON or OFF	ON: "CRUISE" on OFF: "CRUISE" off	-

OK:
When the cruise control main switch is operated, the display changes as shown above.

NG → **REPLACE ECM (See page ES-543)**

OK

PROCEED TO NEXT CIRCUIT INSPECTION SHOWN IN PROBLEM SYMPTOMS TABLE

TC and CG Terminal Circuit

DESCRIPTION

Connecting terminals TC and CG of the DLC3 causes the system to enter self-diagnostic mode. If a malfunction is present, DTCs will be output.
HINT:
When a particular warning light remains blinking, a ground short in the wiring of terminal TC of the DLC3 or an internal ground short in the relevant ECU is suspected.

WIRING DIAGRAM

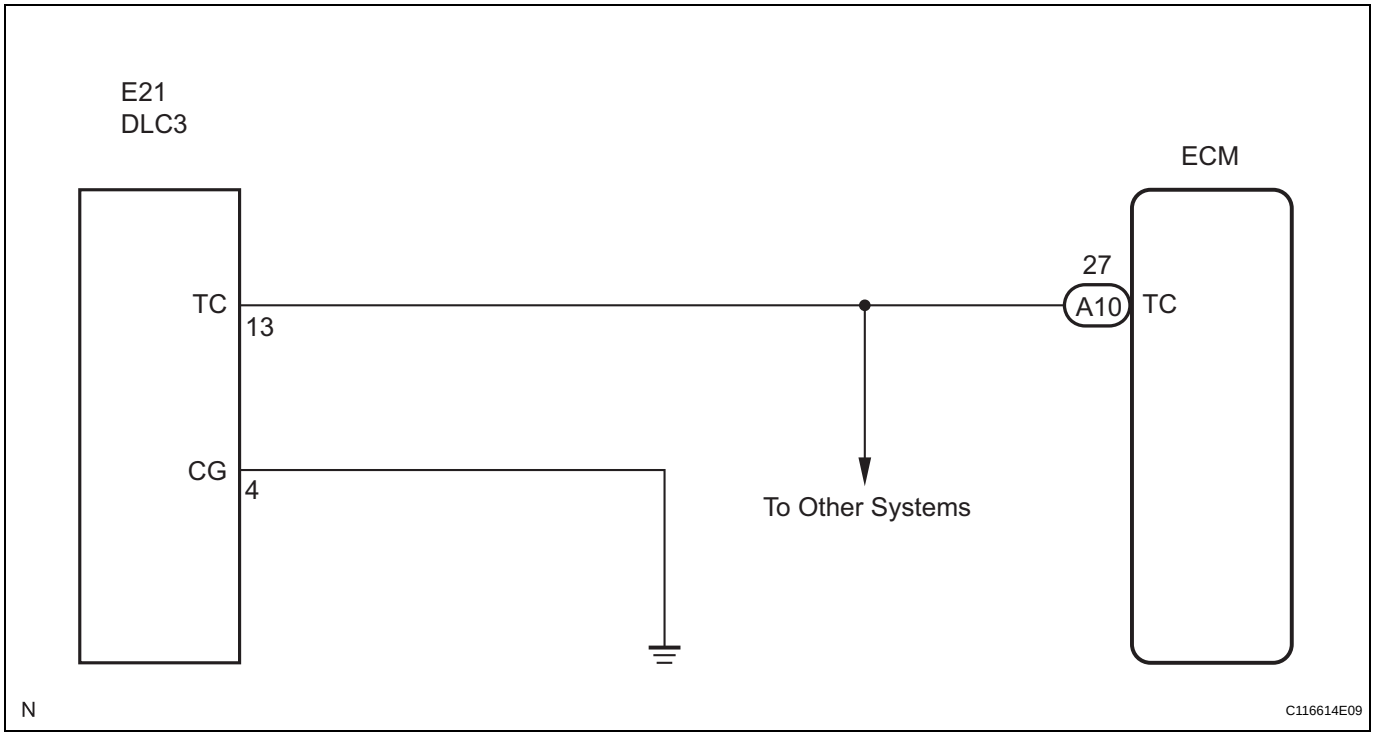

INSPECTION PROCEDURE

1 CHECK WIRE HARNESS (TERMINAL TC of DLC3 - ECM)

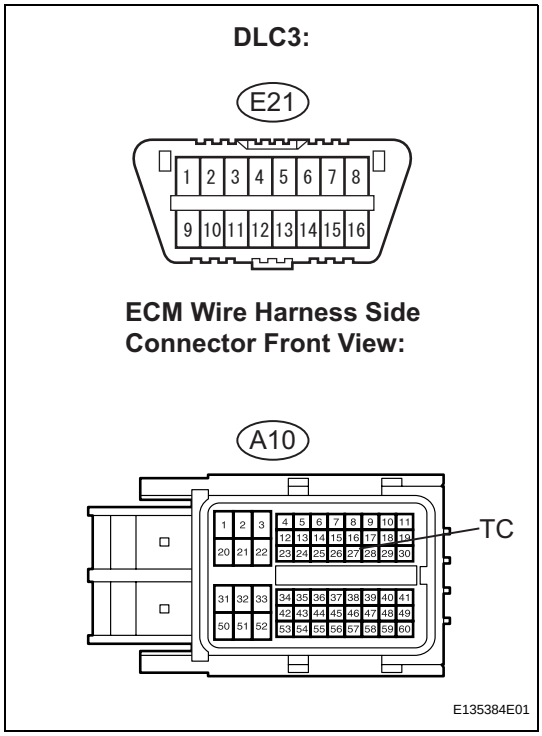

(a) Disconnect the A10 connector from the ECM.
(b) Measure the resistance according to the value(s) in the table below.

Standard resistance

Tester Connection	Condition	Specified Condition
A10-27 (TC) - E21-13 (TC)	Always	Below 1 Ω

NG → **REPAIR OR REPLACE HARNESS OR CONNECTOR (DLC3 - ECM)**

OK

2 CHECK WIRE HARNESS (TERMINAL CG of DLC3 - BODY GROUND)

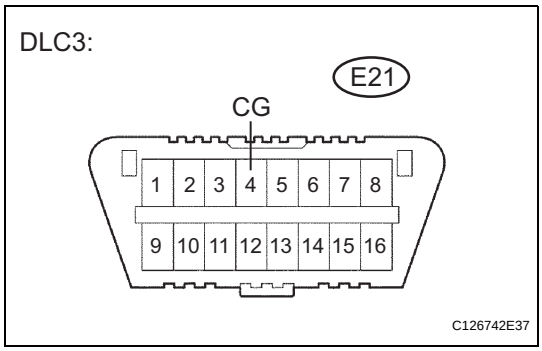

(a) Measure the resistance according to the value(s) in the table below.

Standard resistance

Tester Connection	Condition	Specified condition
E21-4 (CG) - Body ground	Always	Below 1 Ω

NG → **REPAIR OR REPLACE HARNESS OR CONNECTOR (DLC3 - BODY GROUND)**

OK

3	CHECK WIRE HARNESS (TERMINAL TC of DLC3 - BODY GROUND)

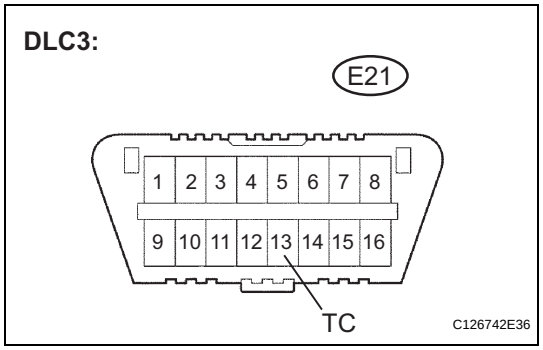

(a) Measure the resistance according to the value(s) in the table below.

Standard resistance

Tester Connection	Condition	Specified Condition
E21-13 (TC) - Body ground	Always	10 kΩ or higher

NG → **REPAIR OR REPLACE HARNESS OR CONNECTOR OR EACH ECU**

OK

PROCEED TO NEXT CIRCUIT INSPECTION SHOWN IN PROBLEM SYMPTOMS TABLE

CC

PARTS LOCATION

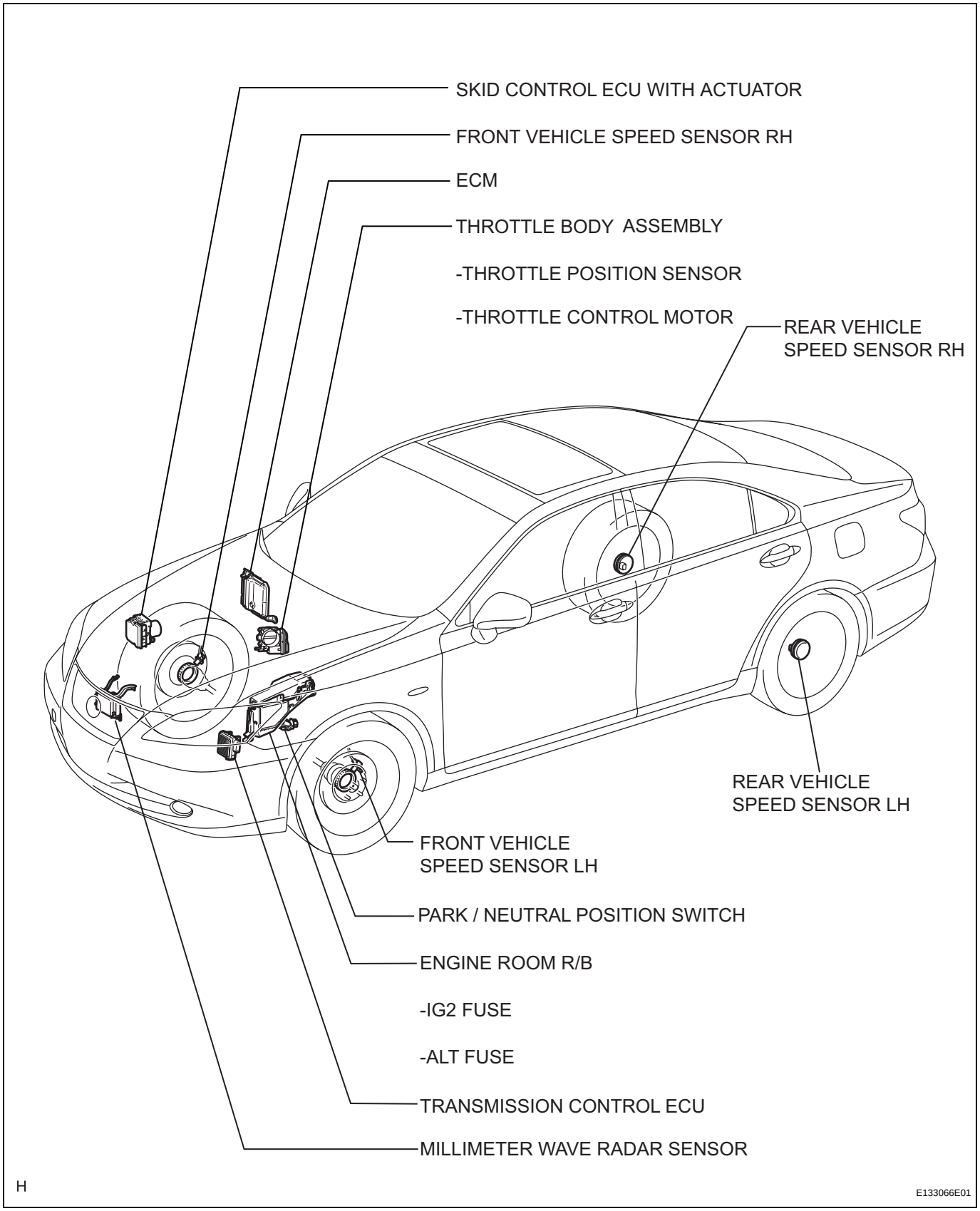

CC

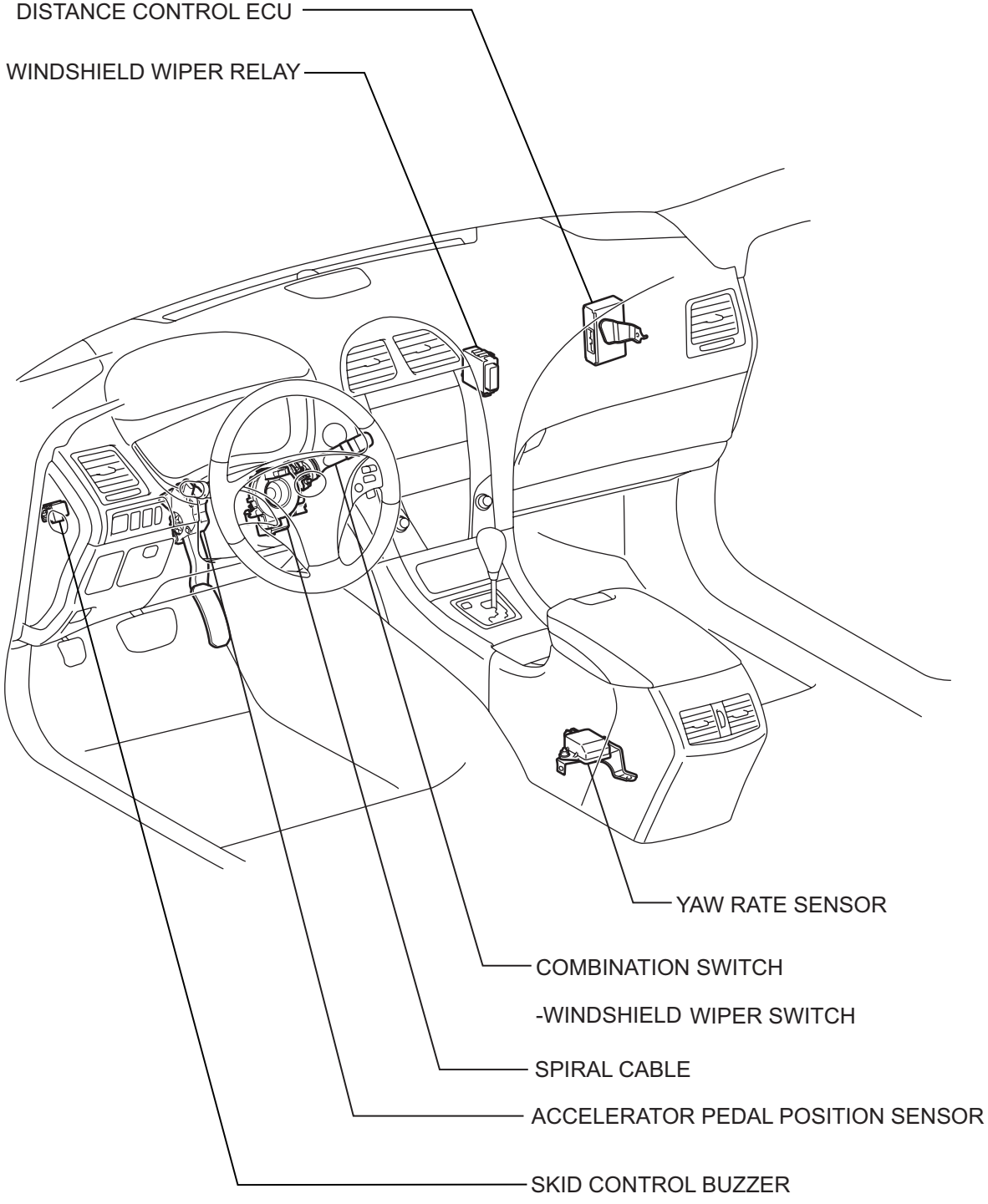

H

E133067E01

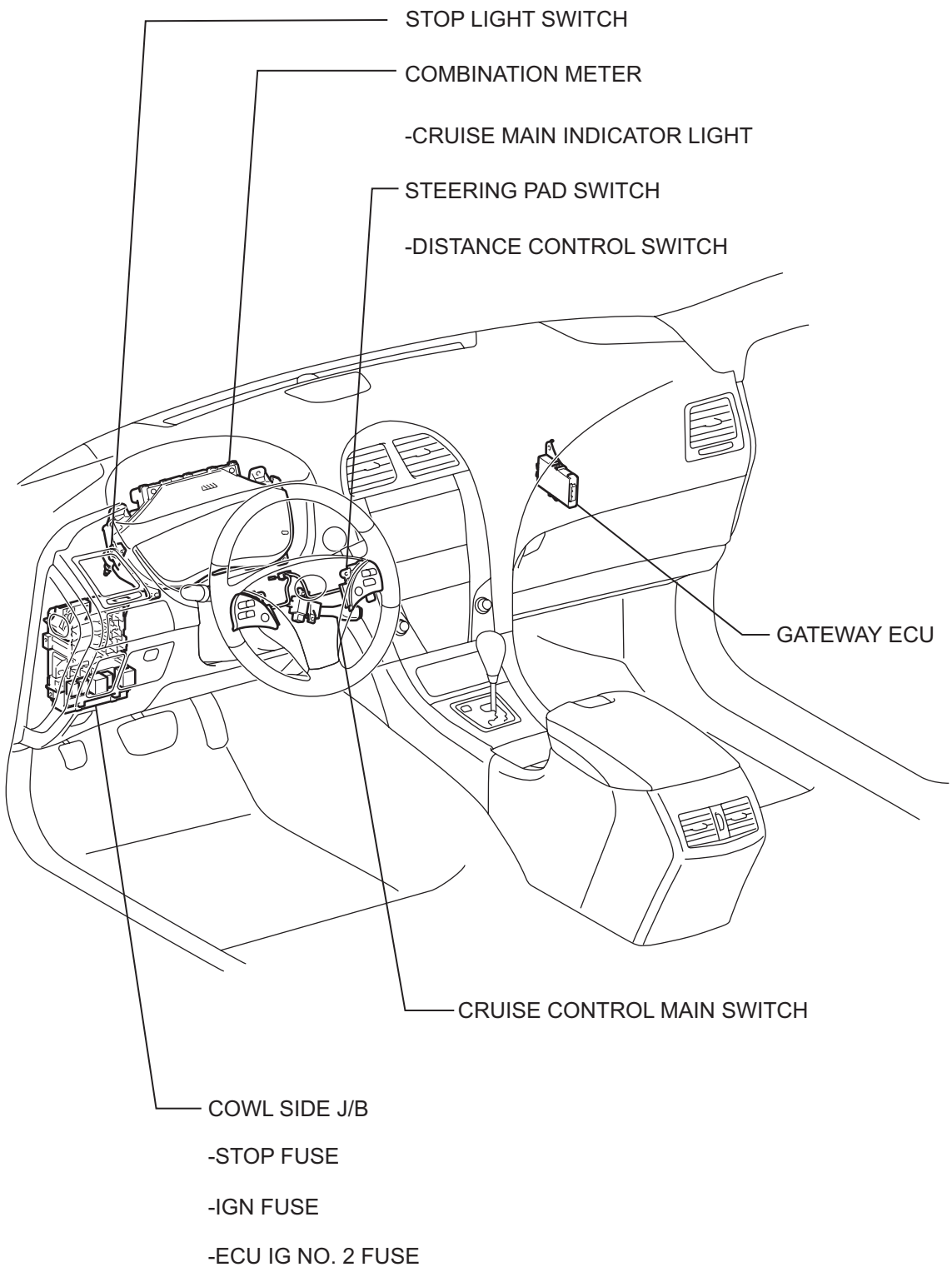

H

E133068E01

CC

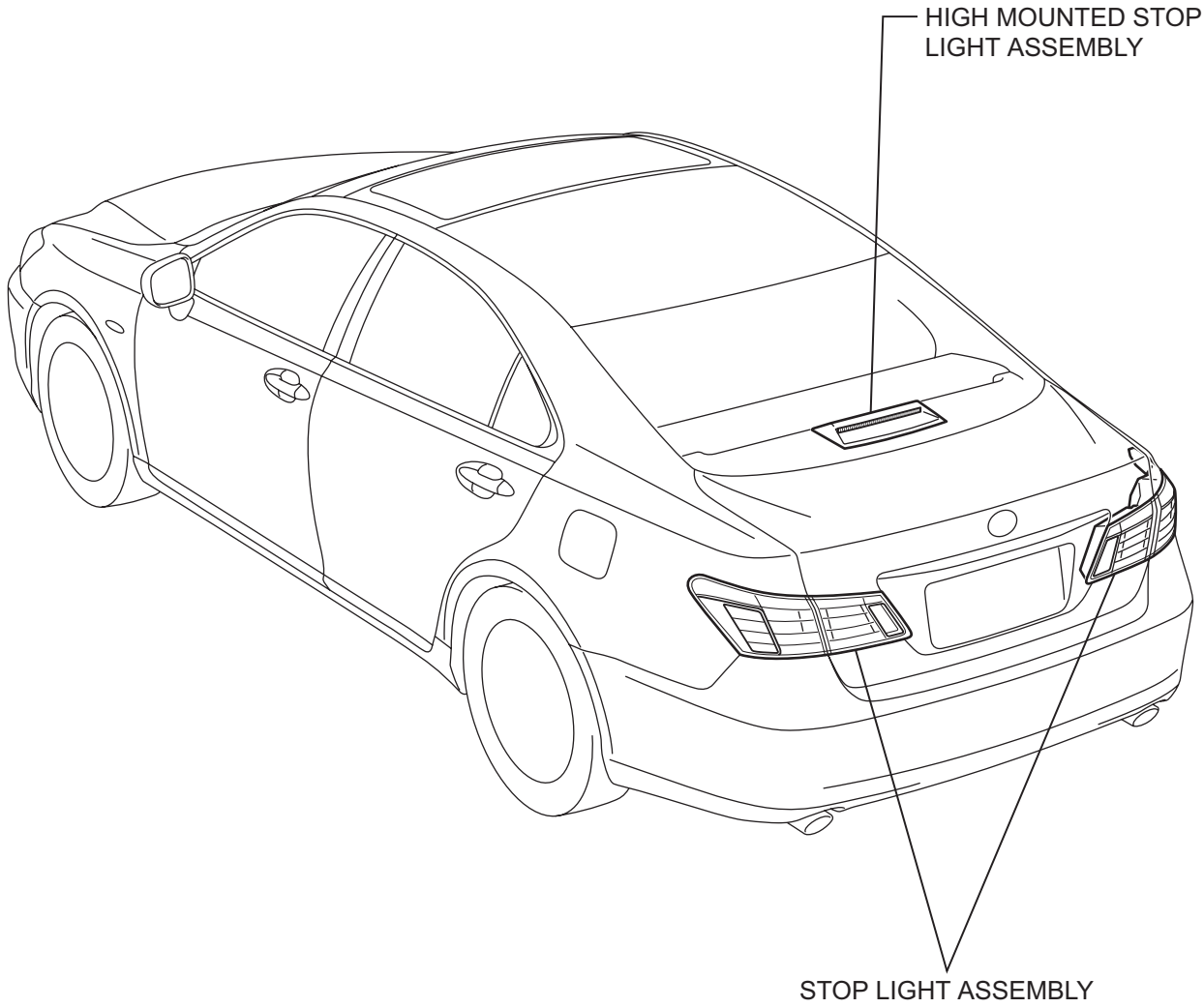

H

E133078E01

SYSTEM DIAGRAM

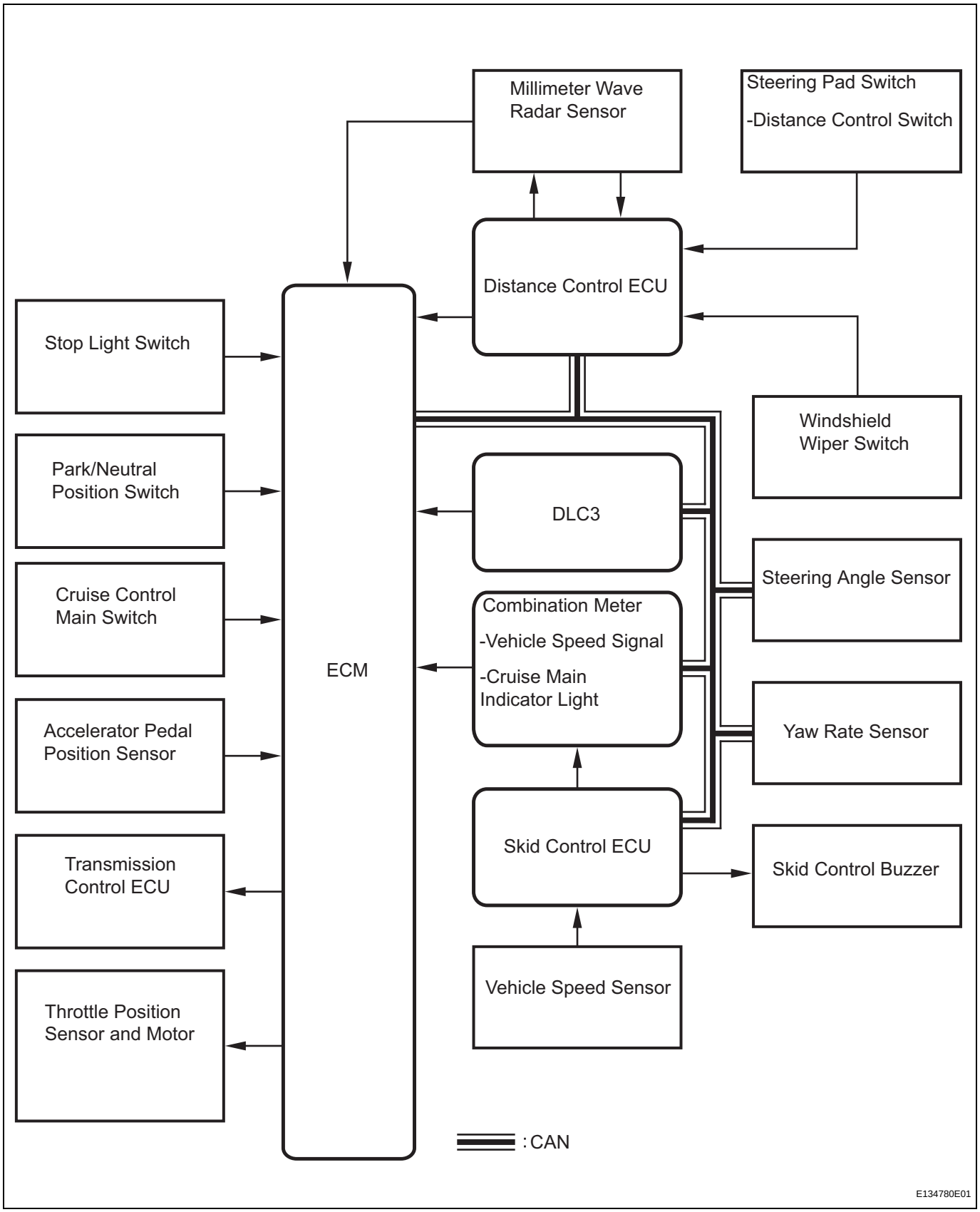

CC

Communication table

Sender ECU	Receiver ECU	Signal	Line
ECM	Distance Control ECU	• A/T transmission signal • Cruise control operation signal • Accelerator pedal idle signal • Set vehicle distance signal • Brake demand response signal • Stored vehicle speed signal • Current vehicle speed signal • Cruise control switch signal • Brake control operation signal • Dynamic radar cruise designation signal • Brake control interrupting signal • Cruise control demand opening angle signal	CAN
Distance Control ECU	ECM	• Millimeter wave radar sensor beam axis deviation signal • Millimeter wave radar sensor malfunction signal • Dirt present on millimeter wave radar sensor signal • Bad weather detection signal • Communication error signal (from distance control ECU to millimeter wave radar sensor) • Communication error signal (from ECM to distance control ECU) • Communication error signal (from skid control ECU to distance control ECU) • Yaw rate communication error signal • Steering angle sensor communication error signal • Distance control ECU voltage signal • Dynamic radar cruise designation response signal • Estimated vehicle speed signal • Vehicle-to-vehicle distance signal • Vehicle-to-vehicle distance control signal • Brake control demand signal • Throttle fully closed demand signal • Approach warning signal (Skid control buzzer demand signal) • Cruise target deceleration gradient signal • Vehicle-to-vehicle distance control acceleration signal • Downshift demand signal	CAN
ECM	Skid Control ECU	• Cruise target deceleration gradient signal • Cruise target deceleration signal • Throttle fully closed demand signal • Brake control demand signal • Cruise control operation signal	CAN

Sender ECU	Receiver ECU	Signal	Line
Skid Control ECU	Distance Control ECU	• Wheel speed signal • Speed sensor power drop signal • Speed sensor condition signal • Yaw rate sensor signal • Yaw rate sensor zero point error signal	CAN
Skid Control ECU	ECM	• Brake component malfunction signal • Brake control malfunction signal • Drive wheel slip signal • Cruise control cancel signal • Skid control buzzer malfunction signal • Communication logic error signal (from ECM to skid control ECU) • Brake demand response signal • Brake control interrupting signal • Brake control operation signal	CAN
Steering Angle Sensor	Distance Control ECU	• +B open circuit signal • Sensor malfunction signal • Steering angle signal • Sensor zero point signal	CAN
Yaw Rate Sensor	Distance Control ECU	• Yaw rate sensor signal • Yaw rate sensor voltage signal	CAN
ECM	Combination Meter (Meter ECU)	• Cruise control diagnosis signal (DTC) • Preceding vehicle detection signal • Approach warning signal • Vehicle-to-vehicle distance signal • Dirt present on millimeter wave radar sensor signal • Bad weather detection signal • Vehicle-to-vehicle distance control signal • Vehicle-to-vehicle distance control check mode signal • Vehicle-to-vehicle distance control standby condition signal • Constant speed cruise signal • CRUISE indicator operation signal • Cruise control warning signal • Dynamic radar cruise warning signal • Cruise control vehicle speed signal	CAN
Distance Control ECU	Combination Meter (Meter ECU)	• Vehicle-to-vehicle distance signal • Preceding vehicle detection signal	CAN

SYSTEM DESCRIPTION

1. GENERAL

(a) The dynamic radar cruise control system has two cruise control modes: the constant speed control mode and vehicle-to-vehicle distance control mode.
- The vehicle-to-vehicle distance control mode is always selected when starting the dynamic radar cruise control system.
- Operation of the constant speed control mode is the same as that for a conventional cruise control system.

(b) This system maintains the vehicle running at the speed that the driver has set, as long as there are no vehicles ahead in the same lane. Then, the system maintains the vehicle distance that has been set by the driver. If the system detects a vehicle driving at a slower speed ahead while the driver is driving at a constant speed, it closes the throttle valve to decelerate. If further deceleration is required, the system controls the brake actuator in order to apply the brakes. Thereafter, if there are no vehicles ahead within the set vehicle-to-vehicle distance because either the vehicle ahead or the driver has changed lanes, the system accelerates slowly to reach the set vehicle speed and resumes driving at the constant speed.

(c) The constant speed control mode is designed to maintain a constant cruising speed. The vehicle-to-vehicle distance control mode is designed to control constant speed cruising function, deceleration cruising function, follow-up cruising function, and acceleration cruising function.

(d) The millimeter wave radar sensor and the distance control ECU control the system while the vehicle-to-vehicle distance control mode is in operation, and send signals to each actuator and ECU.

(e) In vehicle-to-vehicle distance control mode, the dynamic radar cruise control system receives signals from the yaw rate (deceleration sensor) and the steering angle sensor. Based on these signals, it then estimates curve radius and compensates for information on the preceding vehicle while turning. It can also compensate for the brake control when approaching another vehicle.

(f) This system judges the presence of a vehicle in front and the distance to it based on the signals from the radar sensor while the vehicle-to-vehicle distance control mode is in operation. Using this information, the system informs the driver of any danger with the warning buzzer, performs brake control, and turns on the stop light when approaching the vehicle in front.

(g) The following illustration shows a control example under the following conditions: own vehicle speed is 100 km/h (62 mph) and the speed of the vehicle in front is 80 km/h (50 mph).

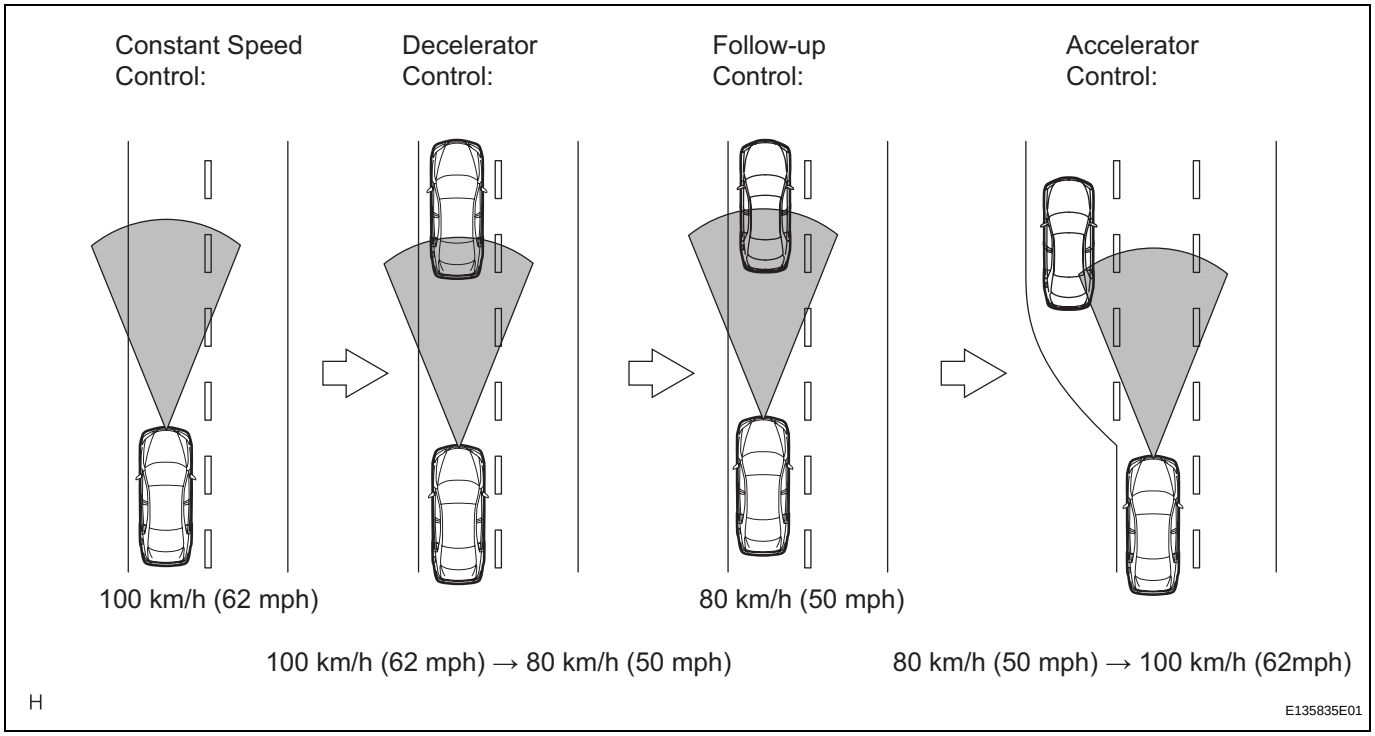

HINT:
- Vehicle distance increases and decreases in accordance with vehicle speed.
- Controlling condition is indicated on the multi-information display in the combination meter.

2. FUNCTION OF MAIN COMPONENTS

Item	Outline
Combination Meter (CRUISE Main Indicator Light)	• Comes on when the main switch is ON • If the distance control ECU detects a malfunction, this light flashes to warn the driver
Combination Meter (Master Warning Light)	If the ECM or distance control ECU detects an automatic cancel signal while the vehicle is operating under cruise control, this light comes on to inform the driver
Combination Meter (Buzzer)	If the ECM or distance control ECU detects an automatic cancel signal while the vehicle is operating under cruise control, this buzzer sounds only once to inform the driver
Combination Meter (Multi-information Display)	• While the system is in the vehicle-to-vehicle distance control mode, the multi-information display receives signals from the distance control ECU, in order to display system conditions in the graphic area • If the ECM or distance control ECU detects a malfunction signal while the vehicle is operating under cruise control, a warning message will be displayed in the warning area to inform the driver • While the system is in the radar sensor adjustment mode, the adjustment angle detected by the distance control ECU will be displayed in the warning area to inform the driver
Cruise Control Main Switch (Main Switch)	Turns the cruise control system ON/OFF
Cruise Control Main Switch (Control Switch)	• Vehicle speed setting, deceleration setting, preset speed resumption, acceleration setting, and canceling signals are output to the ECM through the operation of this switch • Switches the control mode: constant speed control mode and vehicle-to-vehicle distance control mode

Item	Outline
Steering Pad Switch (Distance Control Switch)	While the system is in the vehicle-to-vehicle distance control mode, the driver can operate the steering pad switch (distance control switch) to select the vehicle-to-vehicle distance in three stages: long, middle, and short
Stop Light Switch	Detects the depression of the brake pedal and transmits its signal to the ECM
Combination Switch (Wiper Switch)	Transmits wiper control switch information to the distance control ECU
Millimeter Wave Radar Sensor	Radiates radar rays forward, uses the reflected rays for detecting the presence of a vehicle in front, vehicle-to-vehicle distance, and relative speed, and transmits this information to the distance control ECU
Steering Angle Sensor	Detects the angle and direction of steering and transmits its signal to the distance control ECU
Vehicle Speed Sensor (SP1)	A vehicle speed signal which is output from the skid control ECU is sent to the ECM via the meter
Yaw Rate Sensor	Detects the yaw rate of the vehicle and transmits its signal to the distance control ECU
Brake Actuator (Skid Control ECU)	• Actuates the brakes in accordance with signals from the skid control ECU • While the system is in the vehicle-to-vehicle distance control mode, the skid control ECU actuates the brake actuator in accordance with a brake request signal received from the distance control ECU • Upon receiving a signal from the distance control ECU, the skid control ECU sounds the skid control buzzer
Skid Control Buzzer	This buzzer sounds upon receiving a signal from the skid control ECU
ECM	• Controls the dynamic radar cruise control system in accordance with signals from switches, sensors, and the distance control ECU • If the ECM detects a malfunction in the dynamic radar cruise control system, it will output DTCs (Diagnostic Trouble Codes)
Throttle Position Sensor and Motor	Upon receiving a signal from the ECM, the throttle control motor actuates the throttle valve
Distance Control ECU	While the system is in the vehicle-to-vehicle distance control mode, the distance control ECU detects a vehicle in front based on a signal from the millimeter wave radar sensor. Then, the distance control ECU calculates the acceleration or deceleration rate in order to attain the target vehicle-to-vehicle distance, and outputs a request signal to the ECM and skid control ECU

CC

3. LIMIT CONTROL

(a) Low speed limit

the lowest possible limit of the speed setting range is set at approximately 45 km/h (27 mph). The cruise control system cannot be set when the driving vehicle speed is below the low speed limit. Cruise control operation will be automatically canceled but the stored vehicle speed will be retained when the vehicle speed drops below the low speed limit of 40 km/h (25 mph) while the cruise control is in operation.

(b) High speed limit (constant speed control mode)

The highest possible limit of the speed setting range is set at approximately 200 km/h (125 mph). The cruise control system will be set at the high speed limit when the cruise control is set and the vehicle speed is over the high speed limit. Also, + (ACCEL)/ RES (RESUME) cannot be used to increase speed beyond the high speed limit.

(c) High speed limit (vehicle-to-vehicle distance control mode)
The highest possible limit of the speed setting range is set at approximately 85 mph in USA and 135 km/h in Canada.

4. CRUISE CONTROL OPERATION

The cruise control main switch operates 8 functions: SET, - (COAST), TAP-DOWN, RES (RESUME), + (ACCEL), TAP-UP, CANCEL, and MODE. The SET, TAP-DOWN, and - (COAST) functions, and the RES (RESUME), TAP-UP, and + (ACCEL) functions are operated with the same switch. The cruise control main switch assembly is an automatic return type switch which turns on only while operating it in the direction of each arrow and turns off after releasing it. The dynamic radar cruise control system has two cruise control modes: the constant speed control mode and vehicle-to-vehicle distance control mode.

- The vehicle-to-vehicle distance control mode is always selected when starting up the dynamic radar cruise control system.
- Operation of the constant speed control mode is the same as that for a conventional cruise control system.

(a) MODE CONTROL
Pushing the switch to MODE for more than 1 second while driving with the cruise control main switch ON-OFF button on (RADAR READY is on) switches the mode to the constant speed control mode.

(b) SET CONTROL (Constant speed control mode)
The vehicle speed is stored and constant speed control is maintained when pushing the switch to -(COAST)/SET while driving with the vehicle speed within the set speed range (between the low and high speed limits) after pushing the cruise control main switch ON-OFF button on, and entering the constant speed control mode.

(c) SET CONTROL (Vehicle-to-vehicle distance control mode)
The vehicle speed is stored and vehicle-to-vehicle control is maintained when pushing the switch to -(COAST)/SET while driving with the cruise control main switch on (RADAR READY is on), and vehicle speed is within the set speed range (between the low and high speed limits).

(d) - (COAST) CONTROL (Constant speed control mode)
When the cruise control main switch is set to - (COAST)/SET and held in that position while the cruise control system is operating, the ECM sends a "throttle valve opening angle 0°" demand signal to the cruise control system. Then the vehicle speed, when the cruise control main switch is released, is stored and maintained.
HINT:
An actual throttle valve opening angle of 0° is not possible due to the idle speed control, etc.

(e) - (COAST) CONTROL (Vehicle-to-vehicle distance control mode)
When - (COAST)/SET on the cruise control main switch is pressed and held while the vehicle-to-vehicle distance control mode is in operation, the stored vehicle speed decreases by approximately 5 km/h (CANADA) or 5 mph (USA) per second.

(f) TAP-DOWN - (CONTROL) (Constant speed control mode)
When tapping down the cruise control main switch to - (COAST)/SET (for approximately 0.6 seconds) while the constant speed control mode is in operation, the stored vehicle speed decreases each time by approximately 1.6 km/h (1 mph). When the cruise control main switch is released from - (COAST)/SET and the difference between the driving and stored vehicle speed is more than 5 km/h (3 mph), the driving vehicle speed is stored and constant speed control is maintained.

(g) TAP-DOWN CONTROL (Vehicle-to-vehicle distance control mode)
When tapping down the cruise control main switch to - (COAST)/SET (for approximately 0.6 seconds) while the vehicle-to-vehicle distance control mode is in operation, the stored vehicle speed decreases each time by approximately 5 km/h (CANADA) or 5 mph (USA).

(h) + (ACCEL) CONTROL (Constant speed control mode)
The throttle valve motor of the throttle position sensor and motor is instructed by the ECM to open the throttle valve when + (ACCEL)/RES (RESUME) on the cruise control main switch is pressed and held while the constant speed control mode is in operation. When the cruise control main switch is released from + (ACCEL)/RES (RESUME), the vehicle speed is stored and constant speed control is maintained.

(i) + (ACCEL) CONTROL (Vehicle-to-vehicle distance control mode)
When + (ACCEL)/RES (RESUME) on the cruise control main switch is pressed and held while the vehicle-to-vehicle distance control mode is in operation, the stored vehicle speed increases by approximately 5 km/h (CANADA) or 5 mph (USA) per second. Pushing the cruise control main switch to + (ACCEL)/RES (RESUME) while following the vehicle in front with the vehicle-to-vehicle distance control mode does not increase the actual vehicle speed, but changes only the set vehicle speed.

(j) TAP-UP CONTROL (Constant speed control mode)
When tapping up the cruise control main switch to + (ACCEL)/RES (RESUME) (for approximately 0.6 seconds) while the constant speed control mode is in operation, the stored vehicle speed increases each time by approximately 1.6 km/h (1 mph). However, when the difference between the driving and the stored vehicle speeds is more than 5 km/h (3 mph), the stored vehicle speed will not be changed.

(k) TAP-UP CONTROL (Vehicle-to-vehicle distance control mode)
When tapping up the cruise control main switch to + (ACCEL)/RES (RESUME) (for approximately 0.6 seconds) while the vehicle-to-vehicle distance control mode is in operation, the stored vehicle speed increases each time by approximately 5 km/h (CANADA) or 5 mph (USA).

(l) MANUAL CANCEL CONTROL
Performing any of the following cancels the cruise control system while it is in operation (the stored vehicle speed in the ECM is maintained).
- Pulling the cruise control main switch to CANCEL
- Depressing the brake pedal
- The shift lever is moved from the D to the N position or the transaxle is shifted to the 3rd, 2nd, or 1st gear with the shift lever in the S position.
- Turning the cruise control main switch off (the stored vehicle speed in the ECM is not maintained).

(m) RES (RESUME) CONTROL (Constant speed control mode)
If cruise control operation was canceled under any of the manual cancel conditions (other than turning the cruise control main switch off and the driving vehicle speed is below the low speed limit), and if driving speed is above the low speed limit, pushing the cruise control main switch to + (ACCEL)/RES (RESUME) restores vehicle speed memorized at the time of cancellation, and maintains constant speed control.

(n) RES (RESUME) CONTROL (Vehicle to vehicle distance control mode)
If cruise control operation was canceled under any of the manual cancel conditions (other than turning the cruise control main switch off), and if driving speed is above the low speed limit, pushing the cruise control main switch to + (ACCEL)/RES (RESUME) restores vehicle speed memorized at the time of cancellation, and maintains constant speed control.

5. BRAKE CONTROL

The distance control ECU determines the distance to the vehicle in front, relative speed, target decreasing speed, and deceleration rate. Based on these data, the ECU transmits a brake demand signal to the skid control ECU via the ECM.

6. DOWN SHIFT CONTROL

During uphill driving with cruise control, the transmission may downshift due to automatic transmission control. If the system determines that the uphill inclination has become smaller based on the throttle valve opening angle, the transmission will upshift automatically after a certain amount of time has elapsed.

7. AUTO CANCEL (FAIL-SAFE)

This system has an automatic cancellation function (fail-safe) (See page CC-62).

HOW TO PROCEED WITH TROUBLESHOOTING

HINT:
- Use the following procedures to troubleshoot the dynamic radar cruise control system.
- *: Use the intelligent tester.

1 VEHICLE BROUGHT TO WORKSHOP

NEXT

2 CUSTOMER PROBLEM ANALYSIS

NEXT

3 PROBLEM SYMPTOM CONFIRMATION

Result

Condition	Proceed to
Symptom occurs	A
Symptom does not occur	B

A → **Go to step 4**

B

SYMPTOM SIMULATION

4 INSPECT BATTERY VOLTAGE

Standard voltage:
11 to 14 V
If the voltage is below 11 V, replace or recharge the battery before proceeding to the next step.

NEXT

5 CHECK CAN COMMUNICATION SYSTEM*

(a) Use the intelligent tester to check for normal function of the CAN communication system.
(b) Check for DTCs.

Result

Condition	Proceed to
DTC is not output	A
DTC is output	B

B → Go to CAN COMMUNICATION SYSTEM

A

6	DTC CHECK*

Result

Condition	Proceed to
DTC is output	A
DTC is not output	B

B → Go to step 8

A

7	DTC CHART

NEXT

Go to step 9

8	PROBLEM SYMPTOMS TABLE

NEXT

9	CIRCUIT INSPECTION

NEXT

10	TERMINALS OF ECM

NEXT

11	IDENTIFICATION OF PROBLEM

NEXT

12	REPAIR OR REPLACE

NEXT

13	**CONFIRMATION TEST**

NEXT

END

SYSTEM DIAGRAM

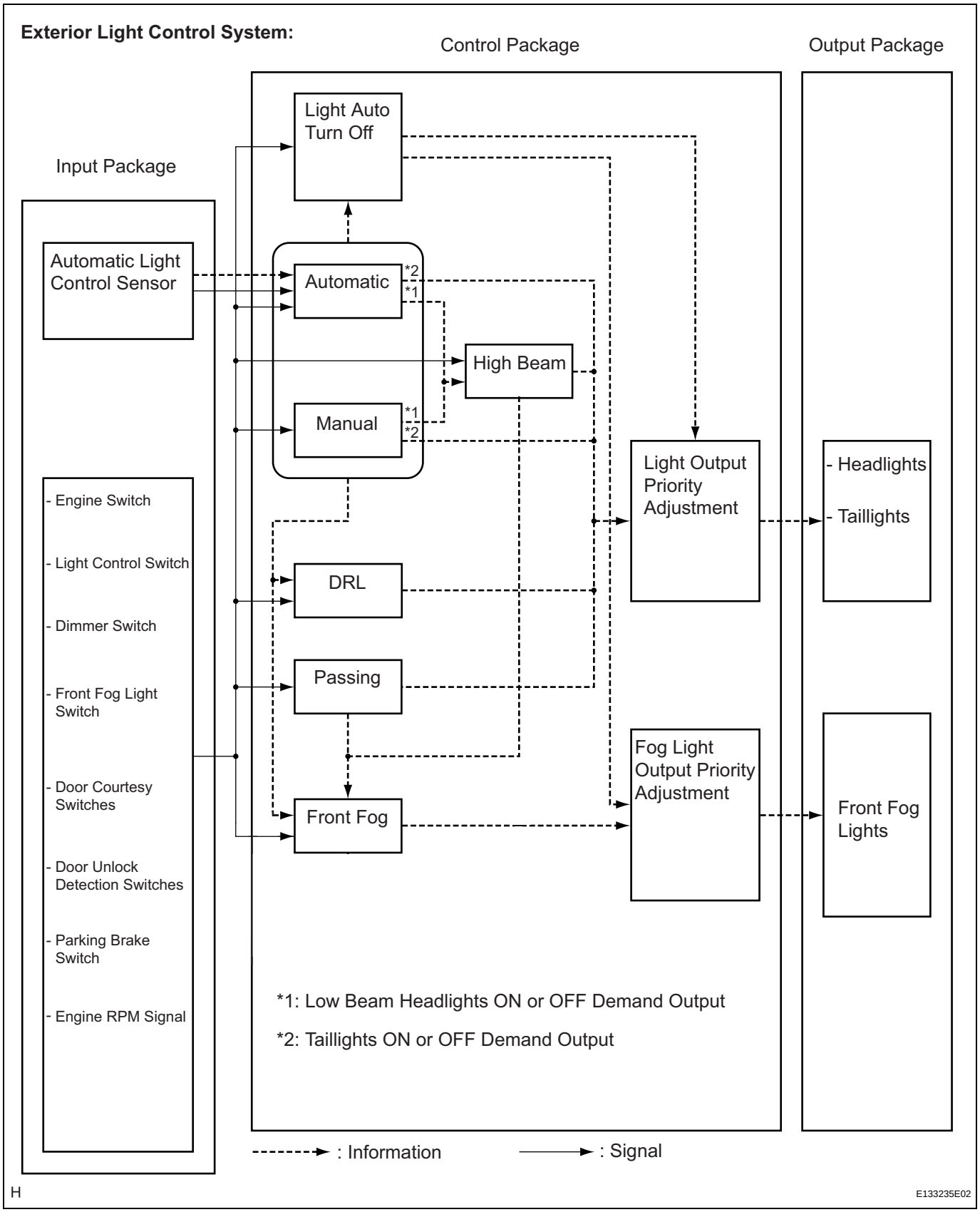

LI

Illumination Control System (Illuminated Entry System):

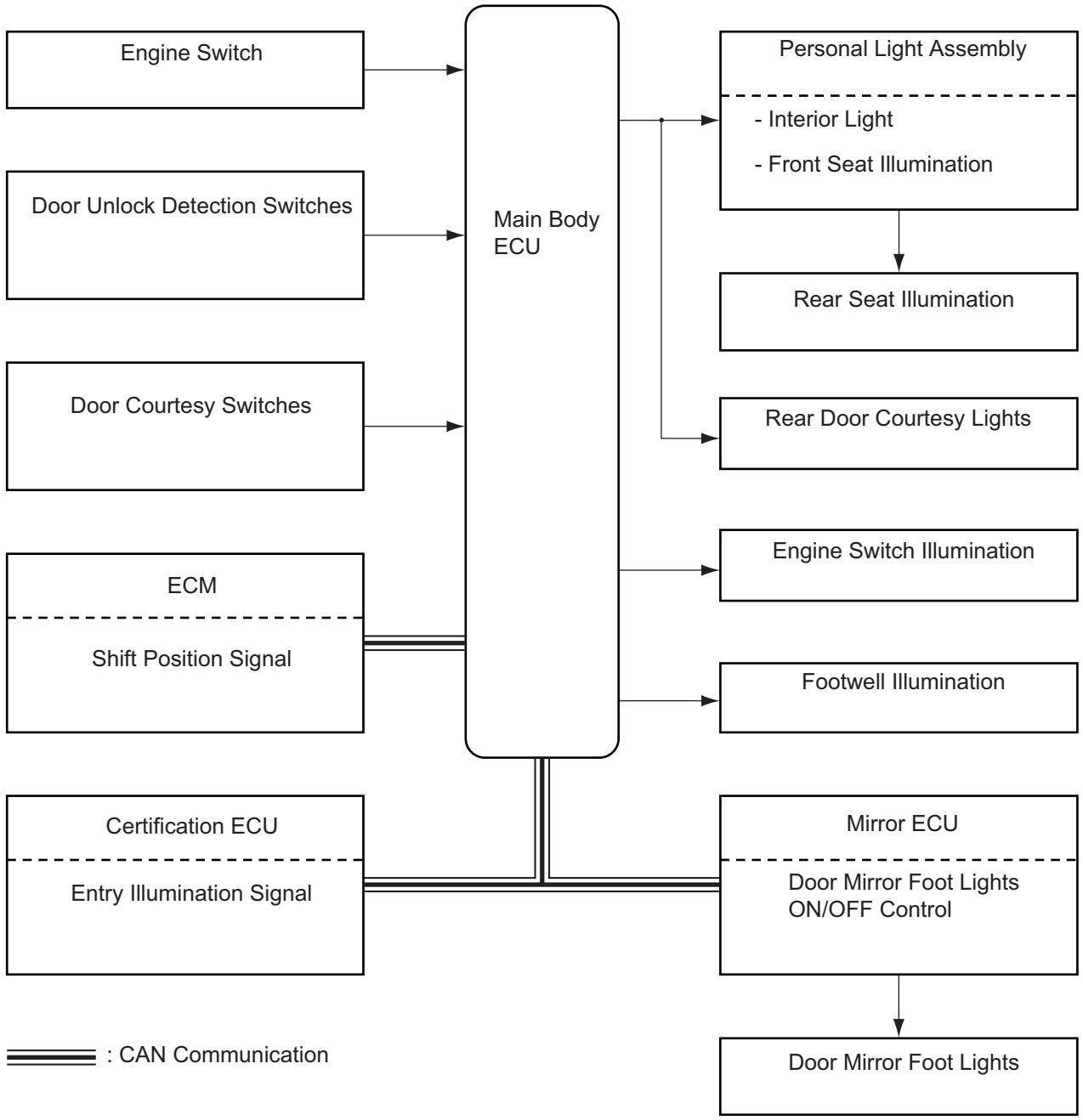

H

E136307E01

Automatic Headlight Beam Level Control System:

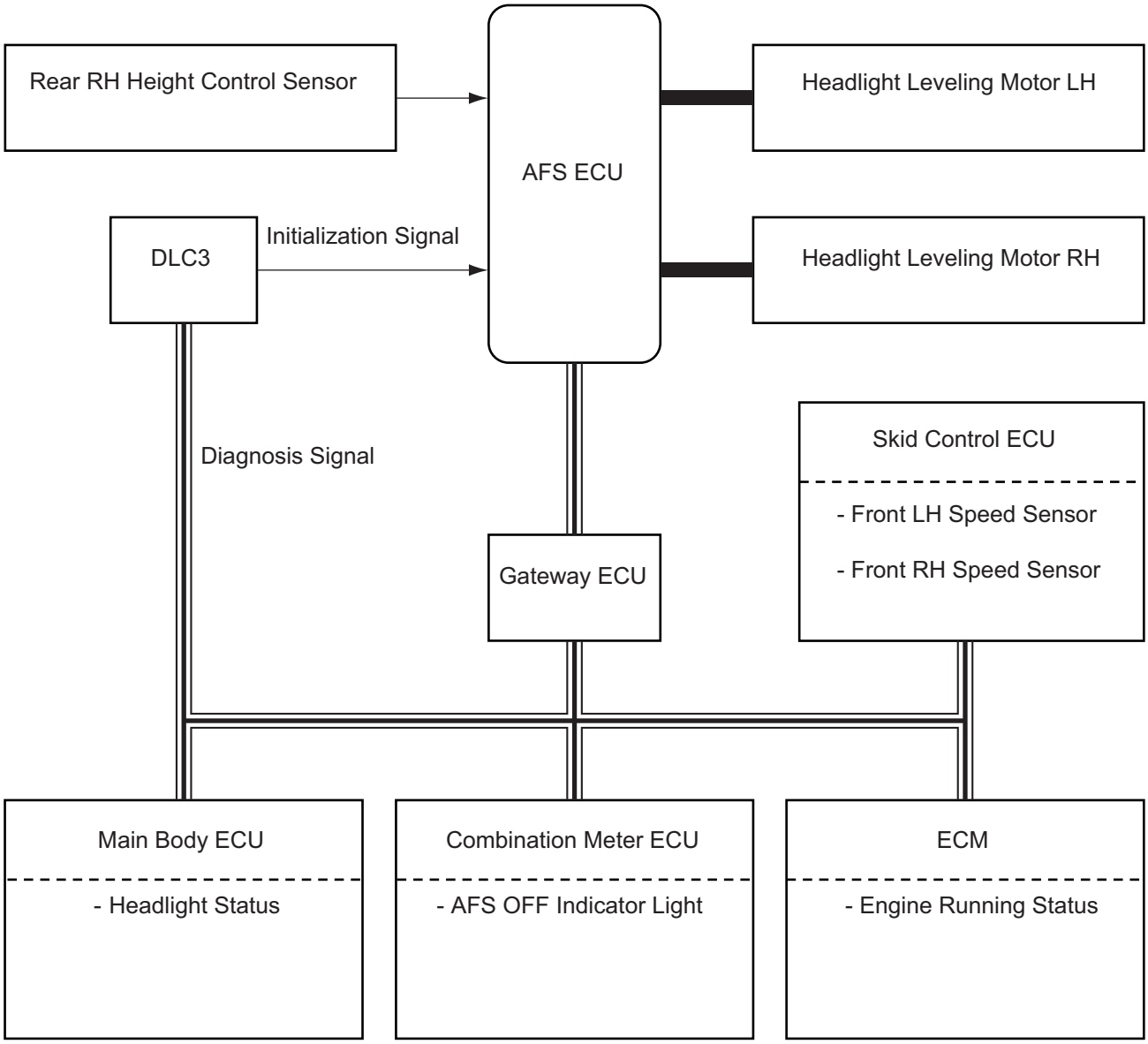

: CAN Communication

: LIN Communication

H

E133220E05

Intelligent AFS (Ataptive Front-Lighting System):

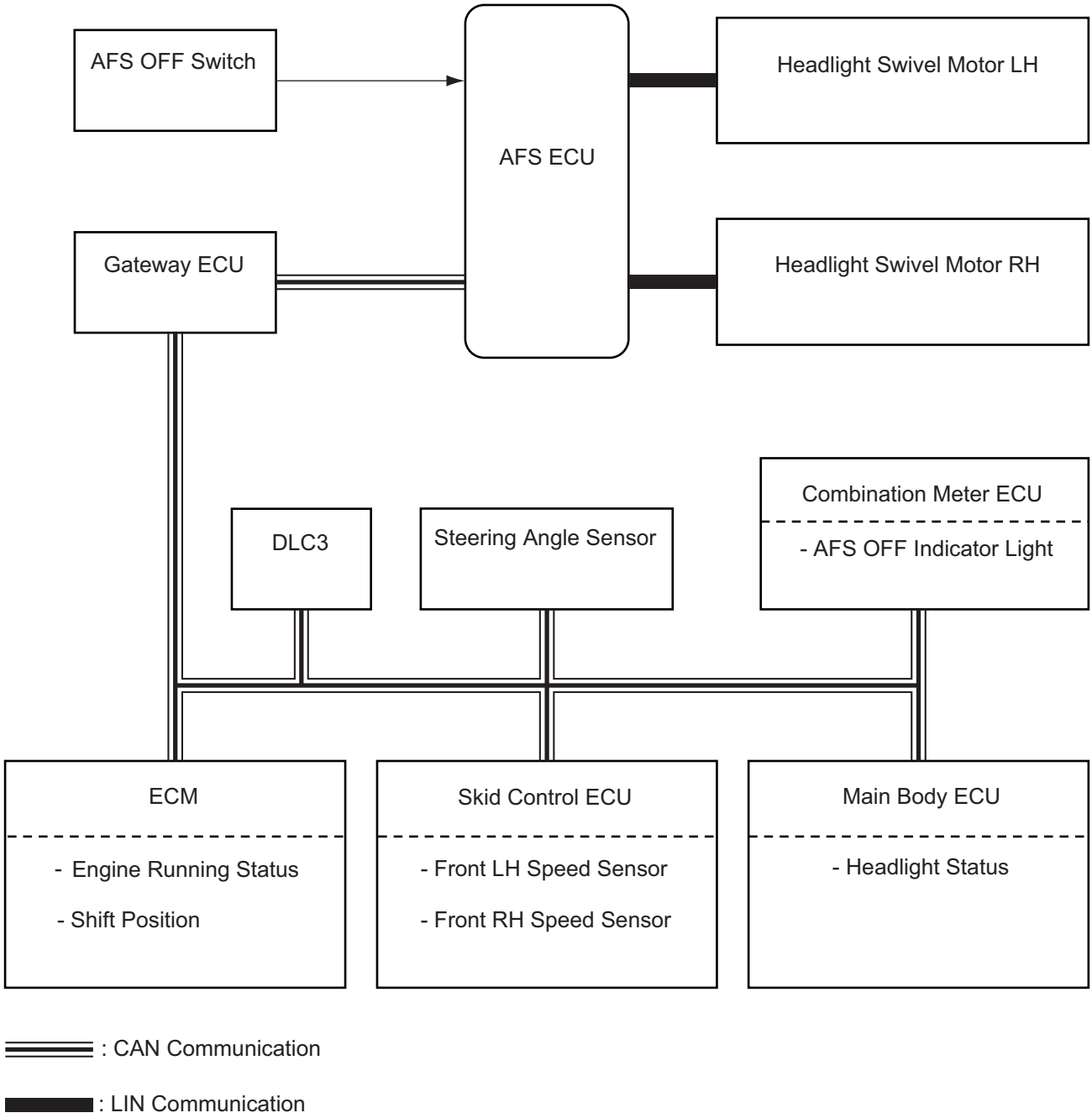

H

E133221E01

HID Headlight System:

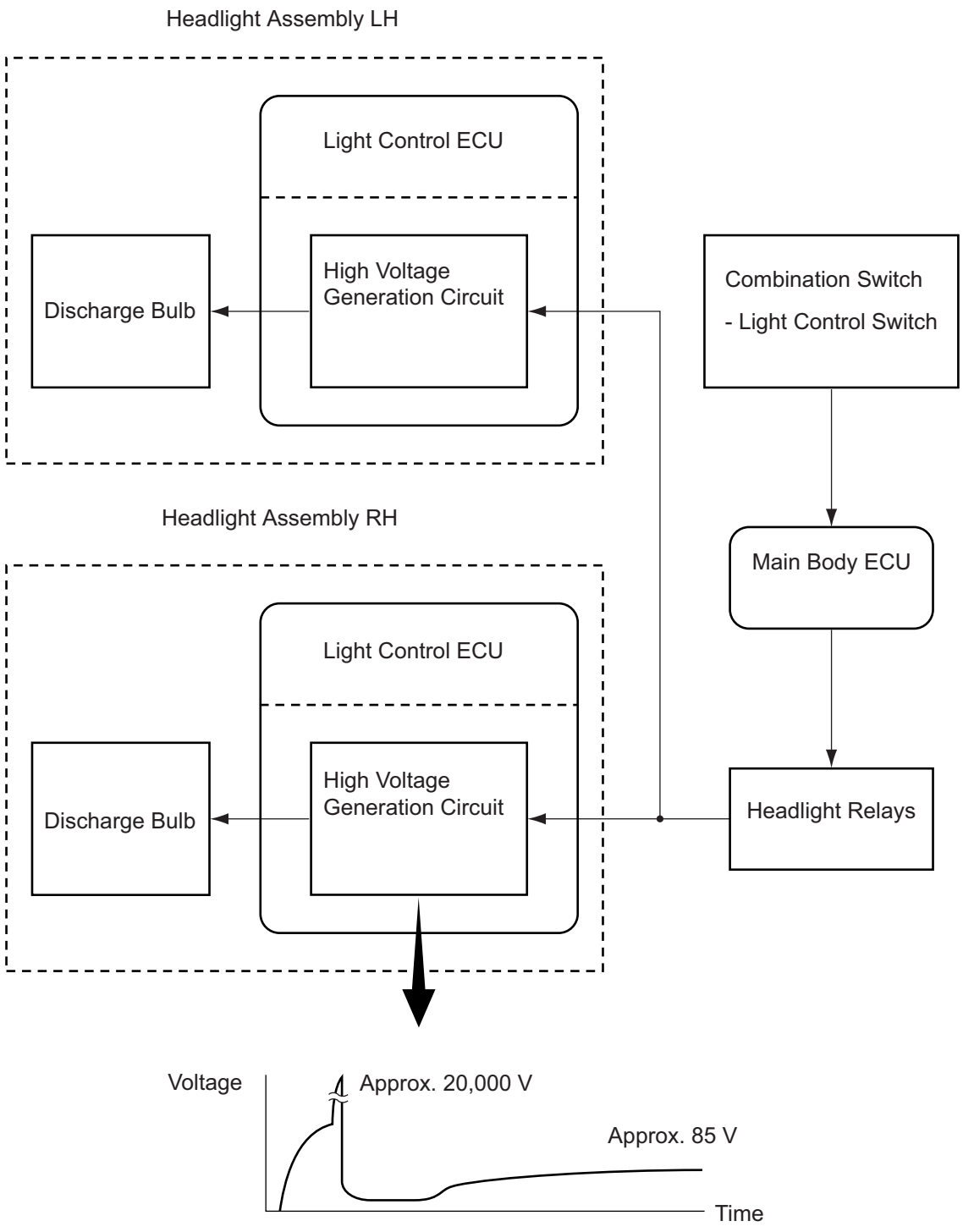

H

E133219E01

SYSTEM DESCRIPTION

1. EXTERIOR LIGHT CONTROL SYSTEM

The exterior light control system has the following functions.

- Automatic Light Control
- Manual Light Control
- High Beam Control
- Passing Light Control
- Front Fog Light Control
- Daytime Running Light Control
- Light Auto Turn off Control

(a) Automatic Light Control

Diagram:

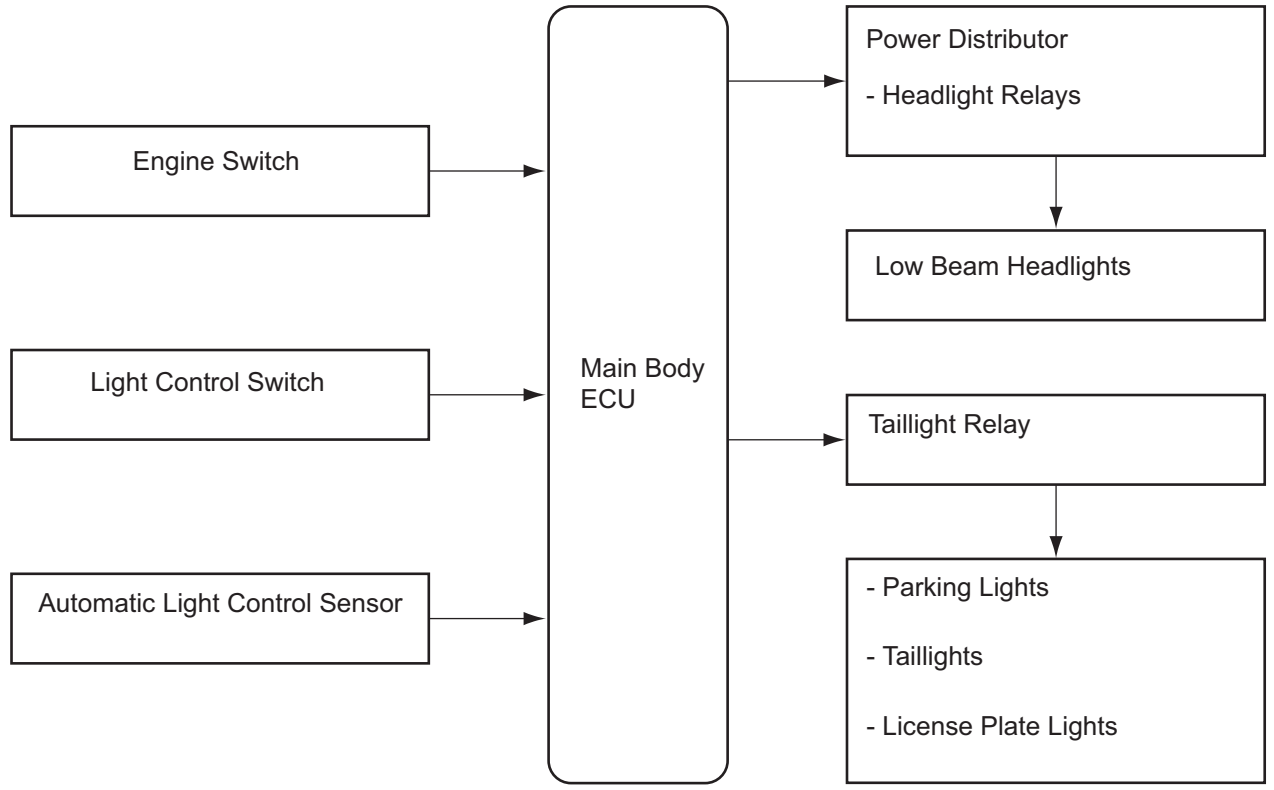

H

E133236E01

(1) General
When the light control switch is in the AUTO position, the automatic light control sensor detects ambient light levels and outputs it to the main body ECU. The main body ECU controls the low beam headlights and taillights (parking lights, taillights and license plate lights) according to the signal. By this function, at night, when entering a tunnel etc, the taillights and low beam headlights come on automatically. If the timing of turning the lights ON/OFF does not meet the user's preferences, the sensitivity of the automatic light control system can be changed using the intelligent tester.
HINT:
The main body ECU controls the low beam headlights and taillights concurrently, and turns the taillights and low beam headlights on or off at the same time according to the ambient light levels.

(2) Fail-Safe
If the main body ECU detects a malfunction in the automatic light control sensor, the main body ECU effects fail-safe control to prohibit the automatic light control. If the headlights or taillights are on, the lights will remain on until the light control switch is turned off.

(b) Manual Light Control

(1) General
The function is similar to the automatic light control, except the function is controlled according to the driver's inputs.

(2) When the light control switch is turned to the TAIL position, the main body ECU turns the taillights on. When the light control switch is turned to the HEAD position, the main body ECU turns the low beam headlights and taillights on.

(c) High Beam Control

(1) General
High beam control functions to illuminate farther ahead than normal.

(2) When either of the following conditions is met, the high beam headlights come on.
- Dimmer switch in HIGH position and light control switch in HEAD position.
- Dimmer switch in HIGH position, light control switch in AUTO position, and low beam headlights are on.

(d) Passing Light Control
(1) General
Passing light control functions to illuminate the high beam headlights in order to allow an oncoming vehicle to become aware of the vehicle's presence while driving with poor visibility.
(2) When the dimmer switch is turned to the HIGH FLASH position, the high beam headlights come on.

(e) Front Fog Light Control
(1) General
The front fog light control functions to maintain visibility in the road ahead of the vehicle while driving with poor visibility, such as when driving in a dense fog.
(2) When all of the following conditions are met, the front fog lights come on.
- Low beam headlights are ON.
- Front fog light switch is ON.
- High beam headlights are OFF.

(3) When any of the following conditions is met, the front fog lights turn off.
- Front fog light switch is OFF.
- Low beam headlights are OFF.
- High beam headlights are ON.

(f) Daytime Running Light Control

Diagram:

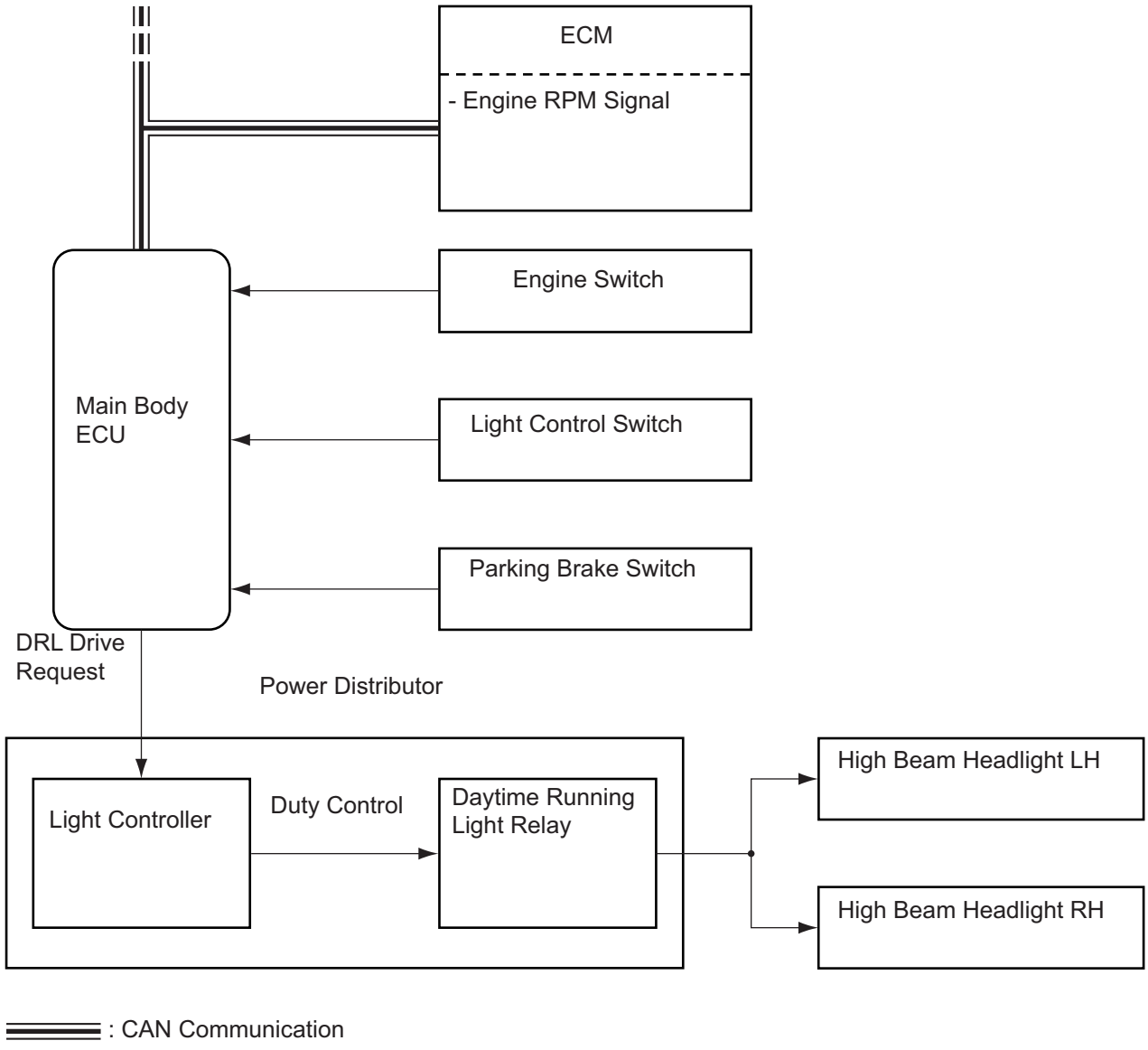

H

E133222E01

(1) This function is designed to automatically illuminate the headlights (dimmed HI beams), during the daytime to make the car more visible to other vehicles.
- The main body ECU and power distributor control this system. The main body ECU transmits a turn ON signal to the power distributor and the power distributor illuminates the HI beams using a duty control.
- This system is enabled when the conditions given below are met:
  - Engine switch is on (IG).
  - Engine is running.
  - Light control switch is in OFF, TAIL or AUTO position (if headlight-on control is not being performed by the automatic light control).
  - Parking brake switch is OFF.

(g) Auto Turn off Control

Diagram:

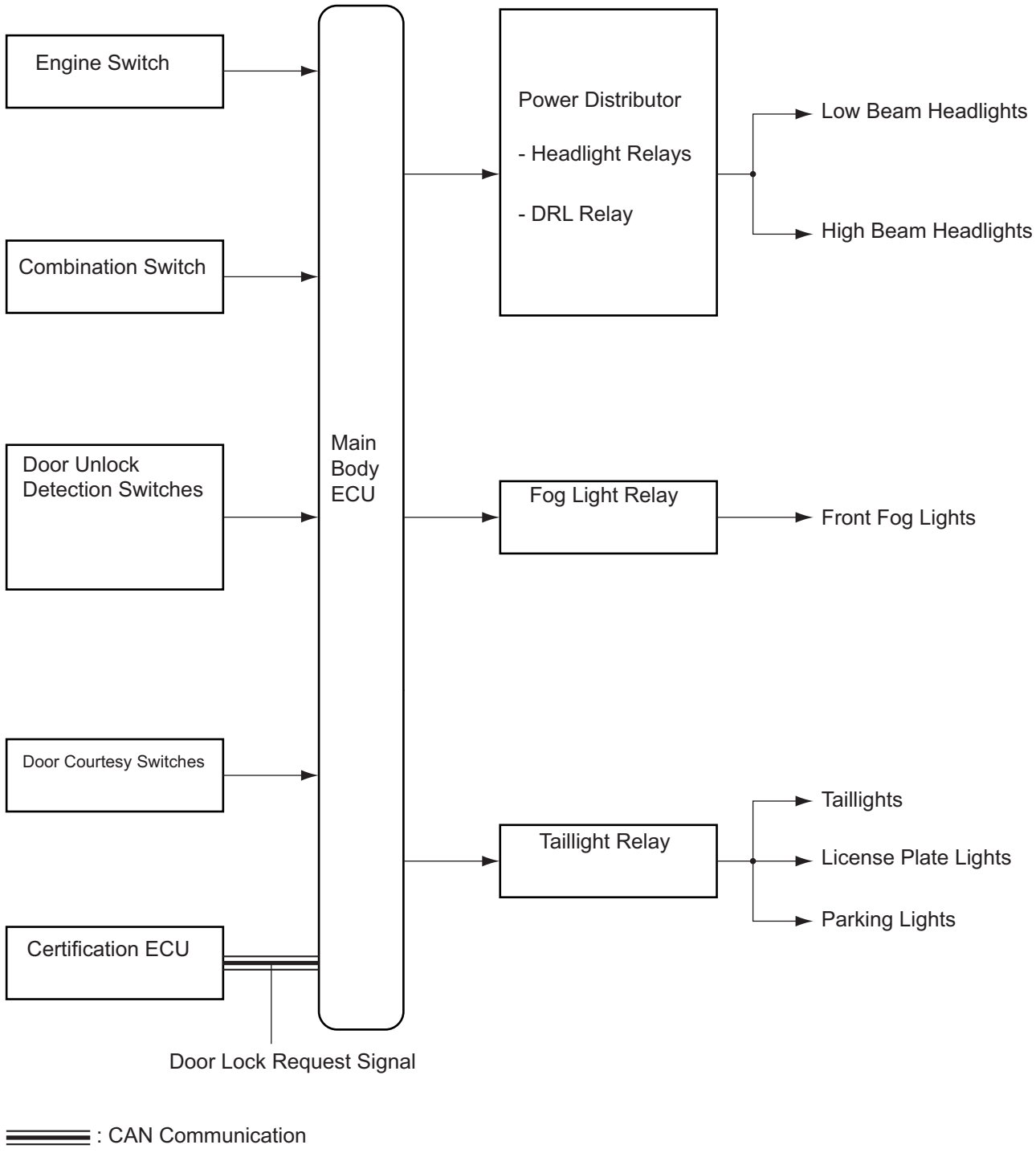

H

E133224E03

(1) General

- The light auto turn-off system is used to prevent the driver from leaving the vehicle with the exterior lights (headlights, fog lights, parking lights, taillights, or license plate lights) ON.
- If the engine switch is turned off and any door is opened and all doors (including the luggage compartment door) are closed with exterior lights are ON (low beam headlights are ON), this system turns them OFF approximately 30 seconds after door closure. However, with all the doors locked when the lock button on the wireless remote control is pushed, the exterior lights are turned OFF immediately.
- When the engine switch is turned off and the driver side door is opened with the exterior lights ON (low beam headlights are OFF), this system turns them OFF immediately.

2. POWER DISTRIBUTOR

(a) General

- The power distributor is built into the engine room relay block, and uses a small mechanical relay and semiconductor relay for a compact and lightweight design.
- The power distributor has a headlight control function. This function dims the high beam headlights in accordance with operation signals from the main body ECU while the daytime running light system is operating.
- The power distributor dims the high beam headlights using a duty control.

- When a short circuit occurs between the power distributor and high beam headlight bulb, a fail-safe function operates to stop the DRL relay operation.

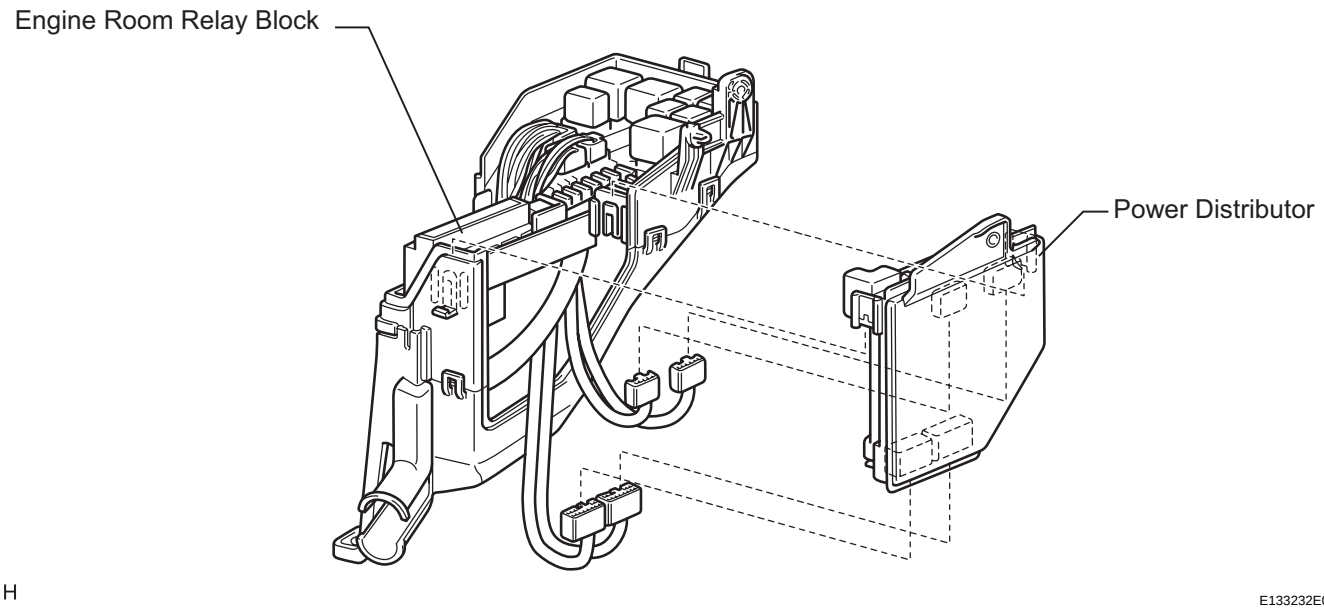

(b) The components of the power distributor are shown below.

Component	Relay
Mechanical Relay	• Horn Relay • A/F Relay • Security Horn Relay • EFI Relay • Circuit Opening Relay • Headlight Relay RH (*1) • Headlight Relay LH (*1)
Semiconductor Relay	• Daytime Running Light Relay • Headlight Relay RH (*2) • Headlight Relay LH (*2)

*1: for halogen headlight
*2: for HID headlight

3. HID HEADLIGHT SYSTEM

(a) General

The HID (High Intensity Discharge) headlight system uses a discharge bulb as its light source for the Lo beam. Discharge bulbs are superior to halogen bulbs.

- Discharge bulbs have the following features.
  - The light emitted by the bulb is close in color to sunlight. The light shines ahead over a broader area and further forward, increasing the area visible to the driver.
  - Less power is consumed.
- This system consists of discharge bulbs and light control ECUs.

LI

- The light control ECUs transform the voltage that is input from the battery to a high voltage of up to 20,000 V and applies it to the discharge bulbs in order to illuminate them.
- A fail-safe function is provided as a countermeasure against the high voltage that is generated in case that a problem occurs in the headlight system.

4. ILLUMINATED ENTRY SYSTEM

(a) General

- The illuminated entry system controls 6 kinds of lights: seat illumination (front and rear), interior light, rear door courtesy lights, engine switch illumination, footwell illumination and door mirror foot lights.
- The illuminated entry system controls the interior light when the personal light switch is OFF and the DOOR switch is ON.
- The illuminated entry system controls the seat illumination when the seat illumination switch is OFF and the DOOR switch is ON.

(b) Interior Light Control

- The interior light control (interior light, seat illumination, rear door courtesy lights, and engine switch illumination) consists primarily of the fade-in/fade-out function and timer illumination function.
- This function provides convenience when getting in or out of the vehicle at night.
- This function is controlled by the main body ECU. The operation and condition of this control are described below.

Operation	Condition
Fade in	When any of the following conditions is met, the interior light, front seat illumination, rear seat illumination, rear door courtesy lights, and engine switch illumination fade in. • The key enters any actuation area around the doors when the engine switch is off and all doors are closed. • Any door is opened. • Any door is unlocked when the engine switch is off and all doors are closed. • The engine switch is turned from on (ACC) to off when all doors are closed.
Fade out immediately	When either of the following conditions is met, the interior light, front seat illumination, rear seat illumination, rear door courtesy lights, and engine switch illumination fade out. • The engine switch is turned from off to on (ACC or IG) when all doors are closed. • All doors are locked when the engine switch is off.
Illuminate for approximately 15 seconds, and then fade out	All doors are closed when the engine switch is off.

(c) Footwell Illumination Control

- The footwell illumination control consists primarily of the fade-in/fade-out function, timer illumination function, and dimmer function.
- This function provides convenience when getting in or out of the vehicle as well as creates a comfortable mood in the cabin at night.
- This function is controlled by the main body ECU. The operation and condition of this control are described below.

Operation	Condition
Fade in	When any of the following conditions is met, the footwell illumination fades in. • Any door is opened. • Any door is unlocked when the engine switch is off and all doors are closed. • The engine switch is turned from off to on (IG) when all doors are closed.
Fade out immediately	When either of the following conditions is met, the footwell illumination fades out immediately. • All doors are closed when the engine switch is off and all doors are locked. • All doors are locked when the engine switch is off.
Illuminate for approximately 15 seconds, and then fade out	When either of the following conditions is met, the footwell illumination illuminates for approximately 15 seconds and then fade out. • The engine switch is turned from on (IG) to off when all door are closed. • All doors are closed when the engine switch is off.
Dim	When either of the following conditions is met, the footwell illumination dims. • The shift lever is adjusted to any position other than P when the footwell light is on, the engine switch is on (IG), and the shift lever is in the P position. • The engine switch is turned from off to on (IG) when the shift lever is in any position other than P.

(d) Door Mirror Foot Light Control

- The foot light control consists primarily of the fade-in/fade-out function and timer illumination function.
- This control is controlled by the mirror ECU. The operation and condition of this control are described below.

Operation	Condition
Fade in (During 15 seconds)	When any of the following conditions is met, the door mirror foot light fades in. • The key enters any actuation area around the doors. • The driver or front passenger side door is opened when the footwell illumination is on. • Any door is unlocked when the shift lever is in the P position.
Fade out	When either of the following conditions is met, the door mirror foot light fades out. • The shift lever is put into any position other than P when the engine switch is on (IG) and the footwell illumination is on. • All doors are locked when the footwell illumination is on.

(e) Battery Saving Control

(1) General

If the vehicle is left with the doors open for a long time, this function will operate to automatically turn off the lights illuminated by the illuminated entry function (interior light control and footwell illumination control).

(2) Battery saving control is controlled by the main body ECU. When the following two conditions have been met, the main body ECU turns off the lights.

- The key is not in the actuation area.
- There is no change in the condition of the doors for 20 minutes.

HINT:

If the key is in the actuation area or any of the doors is opened, the count of the battery save times will be cleared.

5. AUTOMATIC HEADLIGHT BEAM LEVEL CONTROL SYSTEM

(a) General

- When the headlights are on, the automatic headlight beam level control system operates the headlight leveling motor in accordance with movement of the vehicle.
- The automatic headlight beam level control system mainly consists of the AFS ECU, rear height control sensor, and two headlight leveling motors. The AFS ECU controls the system.
- The AFS ECU calculates changes in the vehicle posture based on signals from the rear RH height control sensor and each ECU.
- The ECU then controls the headlight leveling motor based on this information, in order to change the headlight reflector angle.

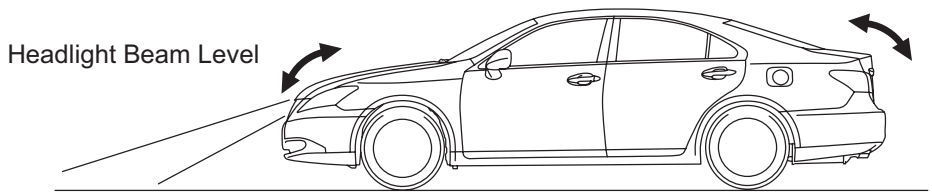

(b) Function of Main Components

Component		Outline
AFS ECU		• Calculates changes in the vehicle posture based on the signals from the height control sensor and each ECU. • Outputs a control signal to the headlight leveling motor, based on the detected value. • Provides initial set control, fail-safe function, and diagnosis function.
Headlight Leveling Motor		• Based on the signals received from the AFS ECU, the motors move the reflectors in the headlights to vary the Lo beam. • Uses a step motor to precisely regulate the angle of the reflectors.
Rear RH Height Control Sensor		Detects the height of the rear of the vehicle.
Skid Control ECU		Transmits a speed sensor signal (Front LH and RH) to the AFS ECU.
ECM		Transmits an engine running status signal to the AFS ECU.
Main Body ECU		Transmits a headlight status signal.
Combination Meter (Meter ECU)	AFS OFF Indicator Light	When the system malfunctions, the meter ECU alerts the driver by flashing the AFS OFF indicator light in accordance with the signal from the AFS ECU.

(c) Initial Set Control

When the engine is started, the AFS ECU drives the headlight leveling motor and moves the headlight reflector to the lower limit position and returns it to the proper position. The AFS ECU thus assesses the position of the headlight for reference control.

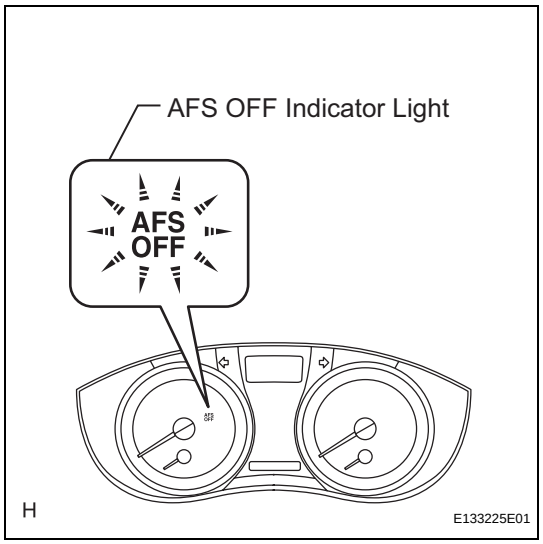

(d) Fail-Safe
If the AFS ECU detects a malfunction in the automatic headlight beam level control system, the AFS ECU effects fail-safe control. At the same time, the meter ECU flashes the AFS OFF indicator light in order to inform the driver of the problem.
NOTICE:
Initialize the AFS ECU after the vehicle height changes due to replacement of the suspension, or after performing such operation as removal and reinstallation or replacement of the rear height control sensor sub-assembly or AFS ECU.

6. INTELLIGENT AFS (Adaptive Front-lighting System)

(a) General
- An intelligent AFS (Adaptive Front-lighting System) is used in order to ensure a wide Lo beam lighting area and realize excellent visibility during turns by moving the Lo beam.

- The intelligent AFS uses medium-to-high speed control and low speed control. In the medium-to-high speed control, the system calculates the target lighting angle based on the steering angle and vehicle speed and changes the swivel angle of the low-beam headlights individually. During the low speed control, the system calculates the target lighting angle based on the steering angle and changes the swivel angle of the low-beam headlight on the side facing into the turn.

Medium-to-High Speed Control:

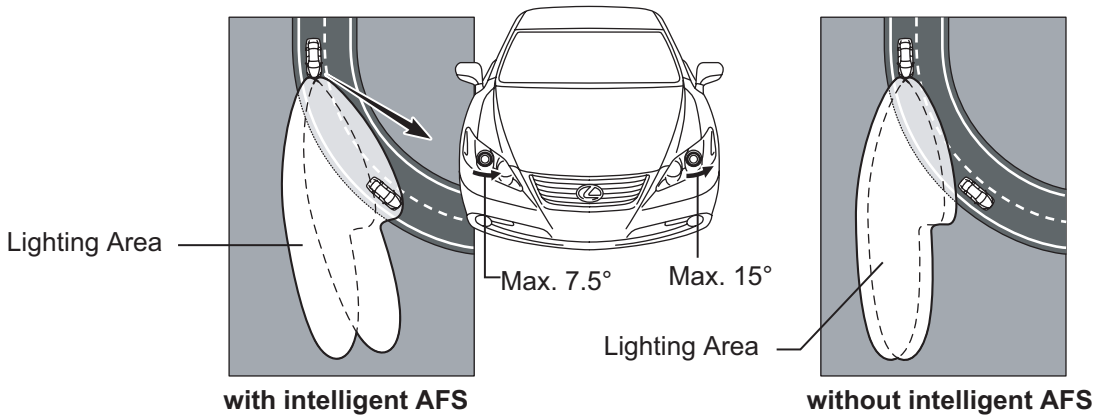

Low Speed Control:

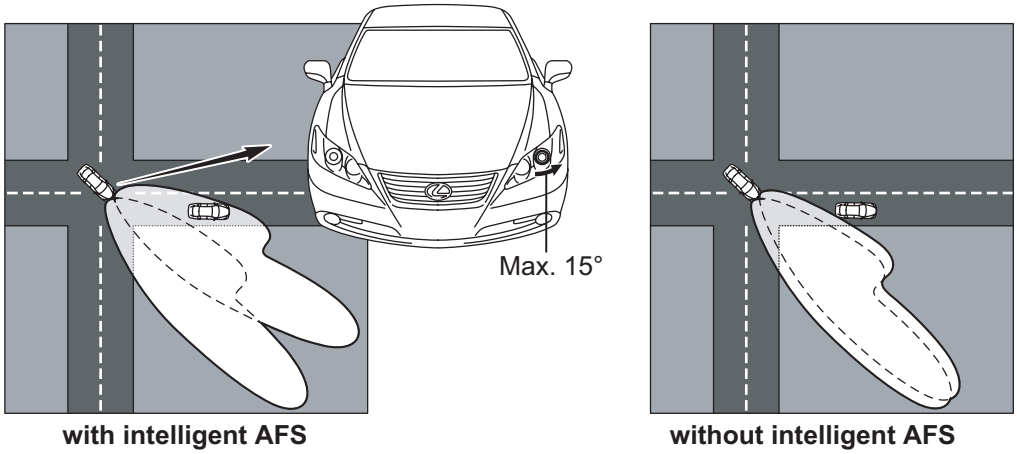

H

E133230E01

(b) Function of Main Components

Component	Outline
AFS ECU	Receives various signals, calculates the target lighting angle, and actuates the headlight swivel actuator.
Headlight Swivel Motor	• Driven by the AFS ECU, the motor moves the Lo beam left or right to the angle calculated by the AFS ECU. • A step motor is used for the headlight swivel motor. The AFS ECU determines the Lo beam angle based on the number of steps (position) of the step motor.
Steering Angle Sensor	Detects the steering angle and direction and outputs this signal to the AFS ECU.
AFS OFF Switch	Pressing this switch disables the operation of the intelligent AFS.
Skid Control ECU	Transmits a speed sensor signal (Front LH and RH) to the AFS ECU.

Component		Outline
ECM		• Transmits an engine running status signal to the AFS ECU. • Transmits a shift position signal to the AFS ECU. The AFS ECU determines whether the vehicle is moving forward or backward based on this signal.
Main Body ECU		Transmits a headlight status signal.
Combination Meter (Meter ECU)	AFS OFF Indicator Light	When the system malfunctions, the meter ECU flashes the AFS OFF indicator light based on the signal from the AFS ECU to alert the driver.

(c) Low Speed Control
- The AFS ECU performs the low speed control when all the following conditions are fulfilled.
  - Engine is running.
  - Vehicle is moving forward at a speed of 10 km/h (6 mph) or more.
  - Steering angle is 6° or more.
  - Low beam headlights are ON.
  - Daytime running light function is not operating.
  - AFS OFF switch is OFF.

LI

Swivel Angle Range:

Driving Condition	Low Beam	
	Left	Right
Right Turn	0° Fixed	0° to 10° to Right
Left Turn	0° to 15° to Left	0° Fixed

(d) Medium-to-High Speed Control
- The AFS ECU performs the medium-to-high speed control when all the following conditions are fulfilled.
  - Engine is running.
  - Vehicle is moving forward at a speed of 30 km/h (19 mph) or more.
  - Steering angle is 7.5° or more.
  - Low beam headlights are ON.
  - Daytime running light function is not operating.
  - AFS OFF switch is OFF.

Swivel Angle Range:

Driving Condition	Low Beam	
	Left	Right
Right Turn	0° to 5° to Right	0° to 10° to Right
Left Turn	0° to 15° to Left	0° to 7.5°to Left

(e) Initial Set Control
When the engine is started, the AFS ECU drives the headlight swivel motor and moves the projector headlight to the operation limit in the direction toward the vehicle center and returns it to the proper position. The AFS ECU thus assesses the position of the headlight for reference control.

(f) Fail-Safe
If the AFS ECU detects a malfunction in the intelligent AFS, the AFS ECU effects fail-safe control. At the same time, the meter ECU flashes the AFS OFF indicator light in order to inform the driver of the problem.

HOW TO PROCEED WITH TROUBLESHOOTING

HINT:
- Use the following procedures to troubleshoot the lighting system.
- *: Use the intelligent tester.

1	VEHICLE BROUGHT TO WORKSHOP

NEXT

LI

2	CUSTOMER PROBLEM ANALYSIS CHECK AND SYMPTOM CHECK

NEXT

3	INSPECT BATTERY VOLTAGE

Standard voltage:
11 to 14 V
If the voltage is below 11 V, recharge or replace the battery before proceeding.

NEXT

4	INSPECT CAN COMMUNICATION SYSTEM*

(a) Use the intelligent tester to check if the CAN communication system is functioning normally.

Result

Result	Proceed to
CAN communication system DTC is not output	A
CAN communication system DTC is output	B

B → **Go to CAN communication system**

A

5	CHECK FOR DTC*

Result

Result	Proceed to
DTC is not output	A
DTC is output	B

B → **Go to step 8**

A

6	PROBLEM SYMPTOMS TABLE

Result

Result	Proceed to
Fault is not listed in problem symptoms table	A
Fault is listed in problem symptoms table	B

B → Go to step 8

A

7	OVERALL ANALYSIS AND TROUBLESHOOTING*

(a) Data List / Active Test (See page LI-45)
(b) Terminals of ECU (See page LI-37)

NEXT

8	ADJUST, REPAIR OR REPLACE

NEXT

9	CONFIRMATION TEST

NEXT

END

CUSTOMIZE PARAMETERS

NOTICE:

- **Before attempting to customize vehicle settings, confirm whether it is possible to make the change that the customer has requested.**
- **Be sure to record the current value before customizing.**
- **In case of performing the troubleshooting, pay attention because there is a possibility that the function has been disabled by customizing. (Example: In case of the symptom in which "The wireless operation does not function", check that the wireless operation has not been disabled by customizing, then perform the troubleshooting.)**

ILLUMINATED ENTRY:

Display	Default	Contents	Setting
LIGHTING TIME	15 s	Changes the lighting time of the front seat illumination, rear seat illumination, interior light, rear door courtesy lights, and engine switch illumination after closing the door. It will quickly fade out when the engine switch is turned on (IG). (Front personal switches are OFF, DOOR switch is ON, and seat illumination switch is OFF)	7.5 s / 15 s / 30 s
ILLUMI SYSTEM	ON	Lights up the footwell illumination when one of the following occurs: the engine switch is turned on (IG), or any door is unlocked or opened.	ON / OFF
LIGHT CONTROL	ON	Dims (ON setting) or turns off (OFF setting) the footwell illumination under the following conditions: Engine switch on (IG), shift lever not in P, and all doors closed.	ON / OFF
I/L ON / UNLOCK	ON	Lights up the front seat illumination, rear seat illumination, interior light, rear door courtesy lights, footwell illumination, and engine switch illumination when the doors are unlocked.	ON / OFF
I/L ON / ACC OFF	ON	Lights up the front seat illumination, rear seat illumination, interior light, rear door courtesy lights, and engine switch illumination when the engine switch is turned off.	ON / OFF

LIGHT CONTROL:

Display	Default	Contents	Setting
LIGHT OFF DELAY	30 s	Keeps the exterior lights on for a certain period of time after turning the engine switch off and closing all the doors with the low beam headlights on.	OFF / 30 s / 60 s / 90 s
SENSITIVITY	NORMAL	Adjusts the sensitivity of the automatic light control system.	LIGHT 2 / LIGHT 1 / NORMAL / DARK 1 / DARK 2
DRL FUNCTION (*1)	ON	ON / OFF of the DRL function	ON / OFF
DISP EX ON SEN	NORMAL	Changes the ambient brightness level required to dim the lights such as the indicator lights of the combination meter, A/C indicator light, and clock.	LIGHT 2 / LIGHT 1 / NORMAL / DARK 1 / DARK 2
DISP EX OFF SEN	NORMAL	Changes the ambient brightness level required to cancel the dimming of the lights such as the indicator lights of the combination meter, A/C indicator light, and clock.	LIGHT 2 / LIGHT 1 / NORMAL / DARK 1 / DARK 2

HINT:
*1: for U.S.A package models.

INITIALIZATION

1. HEIGHT CONTROL SENSOR SIGNAL INITIALIZATION

NOTICE:

- **Initialize the height control sensor signal after the vehicle height changes due to replacement of the suspension or after performing such operations as removal and reinstallation or replacement of the rear height control sensor sub-assembly.**
- **When the AFS ECU is replaced, the initialization is also necessary.**
- **Adjust the headlight aim after initializing the AFS ECU (See page LI-129).**
- **When a malfunction is detected in the headlight beam level control system, the height control sensor signal initialization is impossible. Perform troubleshooting before initialization.**

1	PREPARE VEHICLE FOR INITIALIZATION

(a) Make sure that approximately 10 liters of fuel is in the tank.
(b) Unload the trunk and vehicle, ensuring that the spare tire, tools, and jack are in their original positions.
(c) Check that there are no passengers in the vehicle.
(d) Turn off the headlights.

NEXT

2	CHECK WARNING LIGHT

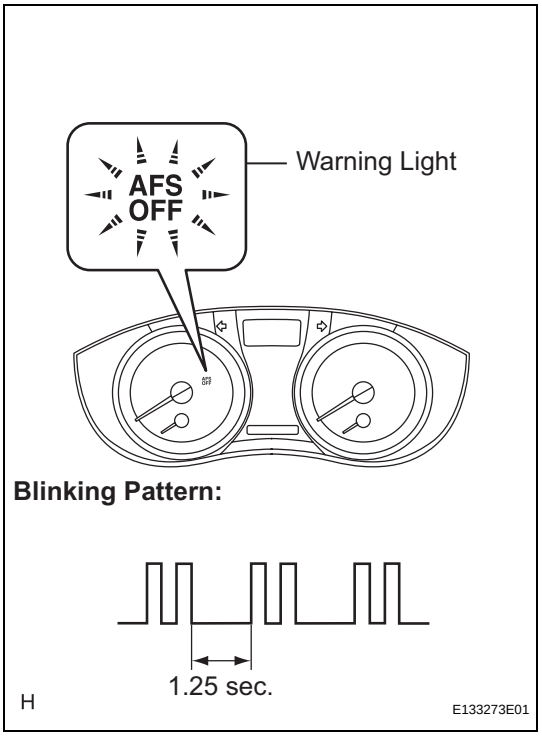

(a) Turn the engine switch on (IG), and check the AFS OFF indicator light.

OK

Condition	Specified Condition
The AFS ECU is replaced with a new one.	**Indicator light continuously blinks twice at 2 Hz as shown in the illustration.**
Removal and reinstallation of the AFS ECU, replacement of the rear height control sensor sub-assembly, removal and reinstallation of the rear height control sensor sub-assembly, replacement of the suspension, etc. is performed.	**Indicator light comes on for approximately 3 seconds, and then goes off (bulb check function).**

HINT:

- If the indicator light does not come on when turning the engine switch on (IG), inspect and repair according to "PROBLEM SYMPTOMS TABLE" (See page LI-32).
- If there is a problem with initialized data memorized in the AFS ECU, the warning light blinks twice at 2 Hz as shown in the illustration when the engine switch is turned on (IG).

NG → **GO TO PROBLEM SYMPTOMS TABLE**

OK

3 INITIALIZATION

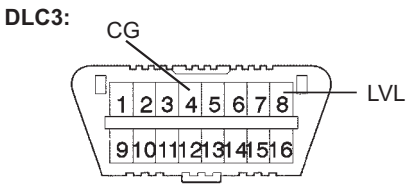

E106867E12

(a) Connect terminals 4 (CG) and 8 (LVL) of the DLC3 using SST.

SST 09843-18040

(b) Flash the low beam headlights 3 times by turning the light control switch within 20 seconds after connecting the terminals.

NOTICE:

- **Turn the low beam headlights on or off at approximately 1-second intervals.**
- **Be sure to operate the light control switch from the outside of the vehicle.**

(c) Check the warning light.

OK

Condition	Specified Condition
AFS ECU is replaced with a new one.	**Blinks twice at 2 Hz → Blinks 3 times at 2 Hz, and then goes off (refer to illustration 1).**
Removal and reinstallation of the AFS ECU, replacement of the rear height control sensor sub-assembly, removal and reinstallation of the rear height control sensor sub-assembly, replacement of the suspension, etc. is performed.	**Off → Blinks 3 times at 2 Hz, and then goes off (refer to illustration 2).**

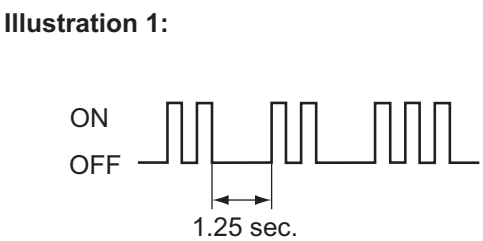

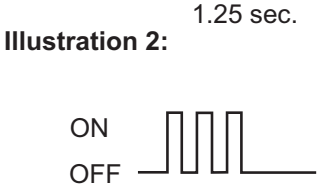

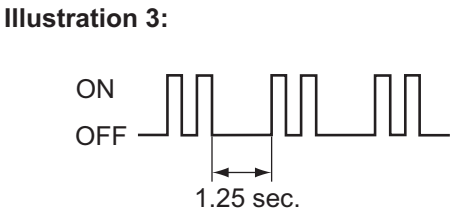

H E121525E01

HINT:

- If calculated vehicle height is not between full-bound and full-rebound, the height control sensor initialization will end abnormally, and the indicator light will blink twice at 2 Hz continuously as shown in illustration 3. Disconnect the SST from the DLC3 and turn the engine switch off. Then, restart from procedure 2.
- If initialization cannot be finished normally, check the LVL terminal circuit (See page LI-120), or inspect and repair according to "PROBLEM SYMPTOMS TABLE" (See page LI-32).

NG → **PERFORM TROUBLESHOOTING**

OK

END

PROBLEM SYMPTOMS TABLE

1. Headlight system:

Symptom	Suspected Area	See page
One side LO-beam headlight does not illuminate	1. H-LP RL fuse or H-LP LL fuse	-
	2. Bulb	-
	3. Harness or connector	-
	4. Power distributor (Engine room J/B)	-
Both left and right LO-beam headlights do not illuminate	1. Light control switch circuit	LI-90
	2. Headlight relay circuit	LI-74
	3. Main body ECU (Instrument panel J/B)	-
One side HI-beam headlight does not illuminate	1. H-LP RH fuse or H-LP LH fuse	-
	2. Bulb	-
	3. Harness or connector	-
	4. Power distributor (Engine room J/B)	-
Both left and right HI-beam headlights do not illuminate	1. Light control switch circuit	LI-90
	2. Headlight (HI-BEAM) circuit	LI-79
	3. Main body ECU (Instrument panel J/B)	-
"HIGH FLASH" (Passing) does not illuminate	1. Light control switch circuit	LI-90
	2. Main body ECU (Instrument panel J/B)	-
LO-beam headlights or HI-beam headlights do not go off	1. Headlight dimmer switch assembly	LI-189
	2. Power distributor (Engine room J/B)	-
	3. Harness or connector	-
	4. Main body ECU (Instrument panel J/B)	-

2. Daytime running light system:

Symptom	Suspected Area	See page
Daytime running light system does not operate	1. Light control switch circuit	LI-90
	2. Parking brake switch circuit	LI-110
	3. Power distributor (Engine room J/B)	-
	4. Main body ECU (Instrument panel J/B)	-
	5. ECM	-

3. Taillight system:

Symptom	Suspected Area	See page
Front parking light does not illuminate	1. Bulb	-
	2. Harness or connector	-
Rear taillight does not illuminate	1. Bulb	-
	2. Light failure sensor	LI-225
	3. Harness or connector	-
License plate light does not illuminate	1. License plate light assembly	-
	2. Harness or connector	-
Rear side marker light does not illuminate	1. Bulb	-
	2. Harness or connector	-
Taillight system does not operate (Rear taillight, parking lights, rear side marker light, and license plate lights do not illuminate)	1. TAIL fuse	-
	2. Taillight relay	LI-232
	3. Light control switch circuit	LI-90
	4. Taillight relay circuit	LI-112
	5. Main body ECU (Instrument panel J/B)	-

4. Stop light system:

Symptom	Suspected Area	See page
Stop light system does not operate	1. Stop fuse	-
	2. Stop light switch	LI-200
	3. Stop light control relay (with dynamic radar cruise control)	BC-205
	4. Harness or connector	-
One side stop light does not illuminate	1. Bulb	-
	2. Harness or connector	-
Both left and right stop lights do not illuminate	1. Bulb	-
	2. Light failure sensor	LI-225
	3. Harness or connector	-
Hi-mounted stop light does not illuminate	1. High mounted stop light assembly	-
	2. Harness or connector	-

5. Front fog light system:

Symptom	Suspected Area	See page
One side fog light does not illuminate	1. Bulb	-
	2. Harness or connector	-
Both left and right fog lights do not illuminate (Taillight system is normal)	1. FR FOG fuse	-
	2. FOG relay	LI-233
	3. Light control switch circuit	LI-90
	4. Front fog light circuit	LI-85
	5. Main body ECU (Instrument panel J/B)	-

6. Turn signal and hazard warning system:

Symptom	Suspected Area	See page
Hazard warning lights do not operate (Turn signal lights are normal)	1. HAZ fuse	-
	2. Hazard warning signal switch	LI-194
	3. Turn signal flasher assembly	LI-229
	4. Harness or connector	-
Turn signal lights do not operate (Hazard warning lights are normal)	1. GAUGE No. 1 fuse	-
	2. Headlight dimmer switch assembly (Turn signal switch)	LI-189
	3. Turn signal flasher assembly	LI-229
	4. Harness or connector	-
"Hazard" and "Turn" do not operate	1. Turn signal flasher assembly	LI-229
	2. Hazard warning signal switch	LI-194
	3. Headlight dimmer switch assembly (Turn signal switch)	LI-189
	4. Harness or connector	-
Turn signal lights do not operate in one direction	1. Headlight dimmer switch assembly (Turn signal switch)	LI-189
	2. Turn signal flasher assembly	LI-229
	3. Harness or connector	-
Only one bulb does not operate	1. Bulb	-
	2. Harness or connector	-

7. Back-up light system:

Symptom	Suspected Area	See page
One side back-up light does not illuminate	1. Bulb	-
	2. Harness or connector	-
Both left and right back-up lights do not illuminate	1. GAUGE No. 1 fuse	-
	2. Park/Neutral position switch	AX-185
	3. Harness or connector	-

8. Illuminated entry system (Interior light control):

Symptom	Suspected Area	See page
Only interior light does not illuminate	1. Personal light assembly	LI-160
Only rear seat illumination does not come on	1. Rear room light assembly	LI-162
	2. Harness or connector	-
Only front seat illumination does not come on	1. Personal light assembly	LI-160
Only rear door courtesy light does not illuminate	1. Bulb	-
	2. Rear door courtesy light assembly	LI-166
	3. Harness or connector	-
Engine switch illumination does not illuminate	1. Engine switch illumination circuit	LI-105
	2. Main body ECU (Instrument panel J/B)	-
Interior light and seat illumination do not illuminate	1. Interior light circuit	LI-100
	2. Main body ECU (Instrument panel J/B)	-
Interior light control (Interior light, seat illumination and engine switch illumination) does not operate normally	1. Door courtesy switch circuit	LI-94
	2. Door lock position switch circuit	LI-98
	3. Interior light circuit	LI-100
	4. Engine switch illumination	LI-105
	5. Engine switch	ST-158
	6. Harness or connector	-
	7. Main body ECU (Instrument panel J/B)	-

9. Illuminated entry system (Footwell illumination control):

Symptom	Suspected Area	See page
One side footwell illumination does not come on	1. Footwell light	LI-181
	2. Harness or connector	-
Footwell illumination control does not operate normally (Interior light control is normal)	1. Footwell light circuit	LI-103
	2. Main body ECU	-

10. Illuminated entry system (Door mirror foot light control):

Symptom	Suspected Area	See page
One side door mirror foot light does not come on	1. Door mirror foot light	LI-185
	2. Harness or connector	-
Door mirror foot light control does not operate normally (Footwell illumination control is normal)	1. Door mirror foot light circuit	LI-108
	2. Mirror ECU power source circuit	MI-32
	3. Mirror ECU	-
	4. Main body ECU	-

11. Vanity light system:

Symptom	Suspected Area	See page
Vanity light does not illuminate	1. Bulb	-
	2. Vanity light assembly	LI-173
	3. Visor assembly (Vanity light switch)	-
	4. Harness or connector	-

12. Luggage compartment light system:

Symptom	Suspected Area	See page
Luggage compartment light does not illuminate	1. Luggage compartment light	LI-169
	2. Luggage compartment door lock assembly (Door courtesy switch)	LI-207
	3. Harness or connector	-

13. Glove box light system:

Symptom	Suspected Area	See page
Glove box light does not illuminate	1. Glove box light assembly	LI-171
	2. Harness or connector	-

14. Door courtesy light system:

Symptom	Suspected Area	See page
Driver side door courtesy light does not illuminate	1. Bulb	-
	2. Driver side door courtesy light assembly	LI-166
	3. Driver side door courtesy switch	LI-166
	4. Harness or connector	-
Front passenger side door courtesy light does not illuminate	1. Bulb	-
	2. Front passenger side door courtesy light assembly	LI-166
	3. Front passenger side door courtesy switch	LI-203
	4. Harness or connector	-
Rear LH door courtesy light does not illuminate	1. Bulb	-
	2. Rear LH door courtesy light assembly	LI-166
	3. Rear LH door courtesy switch	LI-207
	4. Harness or connector	-
Rear RH door courtesy light does not illuminate	1. Bulb	-
	2. Rear RH door courtesy light assembly	LI-166
	3. Rear RH door courtesy switch	LI-207
	4. Harness or connector	-

15. Personal light system:

Symptom	Suspected Area	See page
Front personal lights do not illuminate	1. Personal light assembly	LI-160
	2. Harness or connector	-
Rear LH personal lights do not illuminate	1. Rear LH room light assembly	LI-162
	2. Harness or connector	-
Rear RH personal lights do not illuminate	1. Rear RH room light assembly	LI-162
	2. Harness or connector	-

16. Automatic light control system:

Symptom	Suspected Area	See page
Automatic light control system does not operate normally	1. Light control switch circuit	LI-90
	2. Automatic light control sensor circuit	LI-49
	3. Engine switch	ST-158
	4. Main body ECU (Instrument panel J/B)	-

17. Light auto turn off system:

Symptom	Suspected Area	See page
Light auto turn off system does not operate normally	1. Light control switch circuit	LI-90
	2. Door courtesy switch circuit	LI-94
	3. Door lock position switch circuit	LI-98
	4. Main body ECU (Instrument panel J/B)	-

18. Battery saving system:

Symptom	Suspected Area	See page
Battery saving function does not operate	1. Door courtesy switch circuit	LI-94
	2. Engine switch	ST-158
	3. Main body ECU (Instrument panel J/B)	-

19. AFS

Symptom	Suspected Area	See page
AFS does not operate.	1. Check DTC	-
	1. Power source circuit	LI-116
	2. AFS OFF switch circuit	LI-118
	3. AFS ECU	-
AFS OFF indicator light does not come on when turning the engine switch on (IG)	1. AFS ECU	-
	2. Combination meter	-

TERMINALS OF ECU

1. CHECK MAIN BODY ECU (INSTRUMENT PANEL J/B)

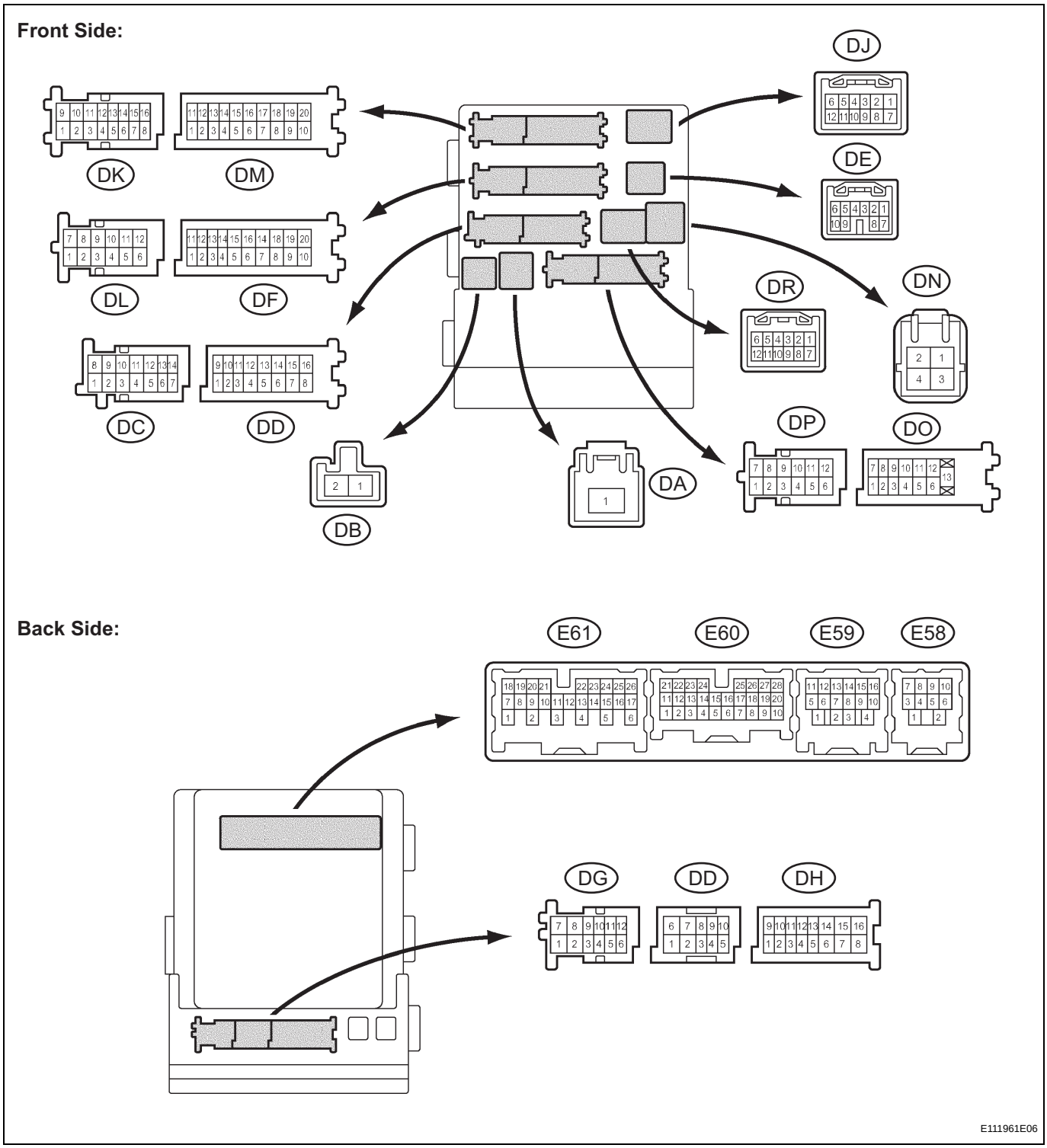

(a) Disconnect the DA, DD, DF and E59 J/B connectors.

(b) Measure the voltage and resistance between the specified terminals of the wire harness side connectors and body ground.

Standard voltage

Symbols	Wiring Color	Terminal Description	Condition	Specified Condition
BATB (DA-1) - Body ground	W - Body ground	Battery power supply	Always	10 to 14 V
ALTB (DD-16) - Body ground	W - Body ground	Generator power supply	Always	10 to 14 V

Standard resistance

Symbols	Wiring Color	Terminal Description	Condition	Specified Condition
GND1 (DF-10) - Body ground	W-B - Body ground	Ground	Always	Below 1 Ω
GND3 (E59-1) - Body ground	W-B - Body ground	Ground	Always	Below 1 Ω

If the result is not as specified, there may be a malfunction on the wire harness side.

(c) Reconnect the DA, DD, DF, and E59 J/B connectors.

(d) Measure the resistance and voltage between the specified terminals of the J/B connectors and body ground.

Standard resistance

Symbols	Wiring Color	Terminal Description	Condition	Specified Condition
CLTE (E60-18) - Body ground	W - Body ground	Automatic light control sensor ground	Always	Below 1 Ω

Standard voltage

Symbols	Wiring Color	Terminal Description	Condition	Specified Condition
PKB (DC-14) - Body ground	L - Body ground	Parking brake switch input	Parking brake switch ON	Below 1 V
			Parking brake switch OFF	10 to 14 V
HRLY (DD-3) - Body ground	P - Body ground	Headlight relay drive output	Light control switch in HEAD	Below 1 V
			Light control switch not in HEAD	10 to 14 V
DRL (DD-9) - Body ground	V - Body ground	High beam headlights drive output	High beam headlights ON	Below 1 V
			High beam headlights OFF	10 to 14 V
HU (DG-5) - Body ground	W - Body ground	Dimmer switch HIGH input	Dimmer switch in HIGH or HIGH FLASH	10 to 14 V
			Dimmer switch in LOW	Below 1 V
LCTY (DO-7) - Body ground	B - Body ground	Rear left door courtesy switch input	Rear left door open	Below 1 V
			Rear left door closed	10 to 14 V
LSWL (DP-5) - Body ground	GR - Body ground	Rear left door lock position switch input	Rear left door locked	10 to 14 V
			Rear left door unlocked	Below 1 V
ILE (DR-5) - Body ground	BR - Body ground	Interior light and seat illumination drive output	Interior light and seat illumination OFF	10 to 14 V
			Interior light and seat illumination ON	Below 1 V
CANH (E59-5) - Body ground	BR - Body ground	Control system CAN communication	Engine switch on (IG)	Pulse generation
			Engine switch off	Below 1 V

Symbols	Wiring Color	Terminal Description	Condition	Specified Condition
CANL (E59-6) - Body ground	GR - Body ground	Control system CAN communication	Engine switch on (IG)	Pulse generation
			Engine switch off	Below 1 V
CANN (E59-15) - Body ground	W - Body ground	Body system CAN communication	Engine switch on (IG)	Pulse generation
			Engine switch off	Below 1 V
CANP (E59-16) - Body ground	B - Body ground	Body system CAN communication	Engine switch on (IG)	Pulse generation
			Engine switch off	Below 1 V
FSPT (E59-11) - Body ground	BR - Body ground	Footwell illumination drive output	Footwell illumination OFF	10 to 14 V
			Footwell illumination ON	Below 1 V
HEAD (E60-17) - Body ground	L - Body ground	Light control switch HEAD input	Light control switch in HEAD	Below 1 V
			Light control switch not in HEAD	10 to 14 V
CLTS (E60-19) - Body ground	LG - Body ground	Automatic light control sensor signal input	Engine switch off	Below 1 V
			Automatic light control system operates	Pulse generation (See waveform 1)
CLTB (E60-20) - Body ground	BR - Body ground	Automatic light control sensor power supply output	Engine switch off	Below 1 V
			Engine switch on (IG) and light control switch in AUTO	10 to 14 V
PCTY (E60-21) - Body ground	G - Body ground	Passenger side door courtesy switch input	Passenger side door open	Below 1 V
			Passenger side door closed	10 to 14 V
LGCY (E60-25) - Body ground	W - Body ground	Luggage courtesy switch input	Luggage compartment door open	Below 1 V
			Luggage compartment door closed	10 to 14 V
LSWP (E60-27) - Body ground	LG - Body ground	Passenger side door lock position switch input	Passenger side door locked	10 to 14 V
			Passenger side door unlocked	Below 1 V
FFOG (E60-28) - Body ground	GR - Body ground	Front fog light switch input	Front fog light switch ON	Below 1 V
			Front fog light switch OFF	10 to 14 V
LSWR (E60-5) - Body ground	Y - Body ground	Rear right door lock position switch input	Rear right door locked	10 to 14 V
			Rear right door unlocked	Below 1 V
RCTY (E60-7) - Body ground	GR - Body ground	Rear right door courtesy switch input	Rear right door open	Below 1 V
			Rear right door closed	10 to 14 V
HF (E61-13) - Body ground	R - Body ground	Dimmer switch HIGH FLASH signal input	Dimmer switch in HIGH FLASH position	Below 1 V
			Dimmer switch not in HIGH FLASH position	10 to 14 V
SSW2 (E61-16) - Body ground	V - Body ground	Engine switch input	Engine switch pushed	Below 1 V
			Engine switch not pushed	10 to 14 V
SSW1 (E61-17) - Body ground	L - Body ground	Engine switch input	Engine switch on (IG)	10 to 14 V
			Engine switch off	Below 1 V
A (E61-21) - Body ground	Y - Body ground	Light control switch AUTO signal input	Light control switch in AUTO	Below 1 V
			Light control switch not in AUTO	10 to 14 V

Symbols	Wiring Color	Terminal Description	Condition	Specified Condition
ACCD (E61-22) - Body ground	R - Body ground	Accessory relay drive output	Engine switch on (ACC)	Below 1 V
			Engine switch off	10 to 14 V
TAIL (E61-23) - Body ground	B - Body ground	Light control switch TAIL signal input	Light control switch in TAIL or HEAD	Below 1 V
			Light control switch in neither TAIL nor HEAD	10 to 14 V
DCTY (E61-24) - Body ground	GR - Body ground	Driver side door courtesy switch input	Driver side door open	Below 1 V
			Driver side door closed	10 to 14 V
IG1D (E61-3) - Body ground	LG - Body ground	Ignition 1 relay drive output	Engine switch on (IG)	Below 1 V
			Engine switch off	10 to 14 V
FFGO (E61-4) - Body ground	G - Body ground	Front fog light relay drive output	Light control switch in HEAD and front fog light switch ON	Below 1 V
			Front fog light switch OFF	10 to 14 V
LSWD (E61-9) - Body ground	L - Body ground	Driver side door lock position switch input	Driver side door locked	10 to 14 V
			Driver side door unlocked	Below 1 V
SWIL (E61-25) - Body ground	R - Body ground	Engine switch illumination drive output	Engine switch illumination ON	10 to 14 V
			Engine switch illumination OFF	Below 1 V

If the result is not as specified, the main body ECU (instrument panel J/B) may have a malfunction.

(1) Waveform 1

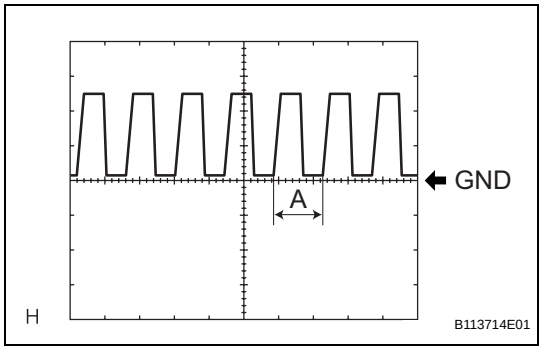

Item	Contents
Tool setting	5 V/DIV., 5 ms./DIV.

HINT:
If the ambient light becomes brighter, width A becomes narrower.

2. CHECK AFS ECU

(a) Disconnect the A22 ECU connector.

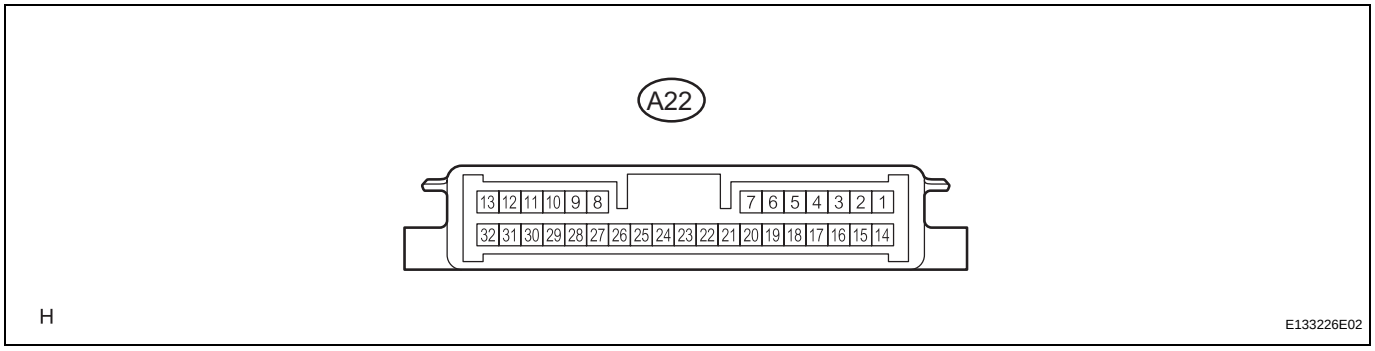

(b) Measure the voltage and resistance between the specified terminals of the wire harness side connectors and body ground.

Standard voltage

Symbols (Terminal No.)	Wiring Color	Terminal Description	Condition	Specified Condition
IGS (A22-14) - Body ground	Y - Body ground	Swivel motor power supply	Engine switch off	Below 1 V
			Engine switch on (IG)	10 to 14 V

LI

Symbols (Terminal No.)	Wiring Color	Terminal Description	Condition	Specified Condition
IG (A22-15) - Body ground	GR - Body ground	AFS ECU power supply	Engine switch off	Below 1 V
			Engine switch on (IG)	10 to 14 V

Standard resistance

Symbols (Terminal No.)	Wiring Color	Terminal Description	Condition	Specified Condition
E1 (A22-22) - Body ground	W - Body ground	AFS ECU ground	Always	Below 1 Ω

If the result is not as specified, there may be a malfunction on the wire harness side.

(c) Reconnect the A22 ECU connector.

(d) Measure the resistance and voltage according to the value(s) in the table below.

Standard resistance

Symbols (Terminal No.)	Wiring Color	Terminal Description	Condition	Specified Condition
SGR (A22-21) - E1 (A22-22)	O - W	Rear height control sensor ground	Always	Below 1 Ω
SMGL (A22-23) - E1 (A22-22)	G - W	Swivel motor LH ground	Always	Below 1 Ω
SMGR (A22-24) - E1 (A22-22)	P - W	Swivel motor RH ground	Always	Below 1 Ω
LH- (A22-27) - E1 (A22-22)	GR - W	Leveling motor LH ground	Always	Below 1 Ω
RH- (A22-28) - E1 (A22-22)	V - W	Leveling motor RH ground	Always	Below 1 Ω

Standard voltage

Symbols (Terminal No.)	Wiring Color	Terminal Description	Condition	Specified Condition
SMBL (A22-1) - E1 (A22-22)	L - W	Swivel motor LH power supply	Engine switch off	Below 1 V
			Engine switch on (IG)	10 to 14 V
SMBR (A22-2) - E1 (A22-22)	G - W	Swivel motor RH power supply	Engine switch off	Below 1 V
			Engine switch on (IG)	10 to 14 V
LHT (A22-3) - E1 (A22-22)	Y - W	Leveling motor LH power supply	Engine switch off	Below 1 V
			Engine switch on (IG)	10 to 16 V
RHT (A22-4) - E1 (A22-22)	R - W	Leveling motor RH power supply	Engine switch off	Below 1 V
			Engine switch on (IG)	10 to 14 V
INIT (A22-7) - E1 (A22-22)	L - W	Initialization signal	Terminal LVL and terminal GND of DLC3 connected	Below 1 V
			Terminal LVL and terminal GND of DLC3 not connected	10 to 14 V
SMR (A22-10) - E1 (A22-22)	L - W	Swivel motor RH LIN communication	Engine switch off	Below 1 V
			Engine switch on (IG)	Pulse generation
RH+ (A22-11) - E1 (A22-22)	LG - W	Leveling motor RH LIN communication	Engine switch off	Below 1 V
			Engine switch on (IG)	Pulse generation
MPX1 (A22-12) - E1 (A22-22)	L - W	CAN communication	Engine switch off	Below 1 V
			Engine switch on (IG)	Pulse generation
MPX2 (A22-13) - E1 (A22-22)	Y - W	CAN communication	Engine switch off	Below 1 V
			Engine switch on (IG)	Pulse generation
SHRL (A22-19) - SGR (A22-21)	P - O	Rear height control sensor signal	Engine switch off	Below 1 V
			Engine switch on (IG)	0 V to 4.5 V
SML (A22-29) - E1 (A22-22)	R - W	Swivel motor LH LIN communication	Engine switch off	Below 1 V
			Engine switch on (IG)	Pulse generation

Symbols (Terminal No.)	Wiring Color	Terminal Description	Condition	Specified Condition
LH+ (A22-30) - E1 (A22-22)	W - W	Leveling motor LH LIN communication	Engine switch off	Below 1 V
			Engine switch on (IG)	Pulse generation
MSW (A22-32) - E1 (A22-22)	BR - W	AFS OFF switch signal	Engine switch on (IG), AFS OFF switch OFF (not pushed)	10 to 14 V
			Engine switch on (IG), AFS OFF switch ON (pushed)	Below 1 V

If the result is not as specified, the ECU may have a malfunction.

DIAGNOSIS SYSTEM

1. DESCRIPTION

(a) Lighting system data and the Diagnostic Trouble Codes (DTCs) can be read from the Data Link Connector 3 (DLC3) of the vehicle. When the system seems to be malfunctioning, use the intelligent tester to check for malfunctions and perform repairs.

2. CHECK DLC3

(a) The ECU uses ISO 15765-4 for communication. The terminal arrangement of the DLC3 complies with SAE J1962 and matches the ISO 15765-4 format.

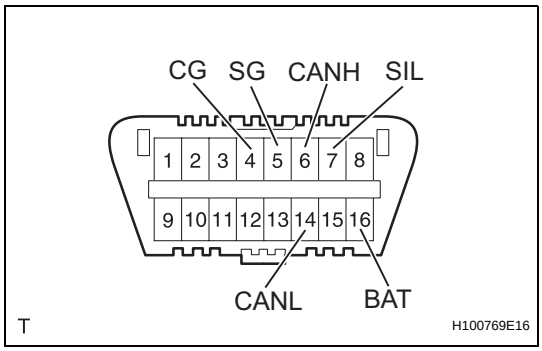

Symbols (Terminal No.)	Terminal Description	Condition	Specified Condition
SIL (7) - SG (5)	Bus "+" line	During transmission	Pulse generation
CG (4) - Body ground	Chassis ground	Always	Below 1 Ω
SG (5) - Body ground	Signal ground	Always	Below 1 Ω
BAT (16) - Body ground	Battery positive	Always	11 to 14 V
CANH (6) - CANL (14)	CAN bus line	Engine switch off*	54 to 69 Ω
CANH (6) - CG (4)	HIGH-level CAN bus line	Engine switch off*	200 Ω or higher
CANL (14) - CG (4)	LOW-level CAN bus line	Engine switch off*	200 Ω or higher
CANH (6) - BAT (16)	HIGH-level CAN bus line	Engine switch off*	6 kΩ or higher
CANL (14) - BAT (16)	LOW-level CAN bus line	Engine switch off*	6 kΩ or higher

NOTICE:
***Before measuring the resistance, leave the vehicle as is for at least 1minute and do not operate the engine switch, any other switches, or the doors.**
If the result is not as specified, the DLC3 may have a malfunction. Repair or replace the harness and connector.

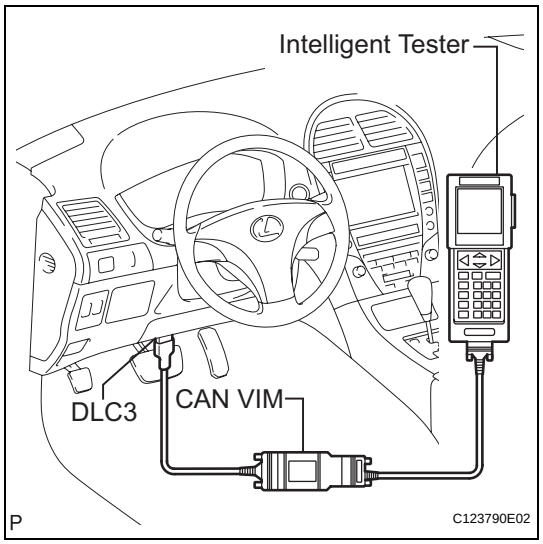

(b) Connect the cable of the intelligent tester to the DLC3, turn the engine switch on (IG) and attempt to use the tester. If the display indicates that a communication error has occurred, there is a problem either with the vehicle or with the tester.
HINT:
- If communication is normal when the tester is connected to another vehicle, inspect the DLC3 of the original vehicle.
- If communication is still not possible when the tester is connected to another vehicle, the problem may be in the tester itself. Consult the Service Department listed in the tester's instruction manual.

3. INSPECT BATTERY VOLTAGE
Standard voltage:
11 to 14 V
If the voltage is below 11 V, recharge or replace the battery before proceeding.

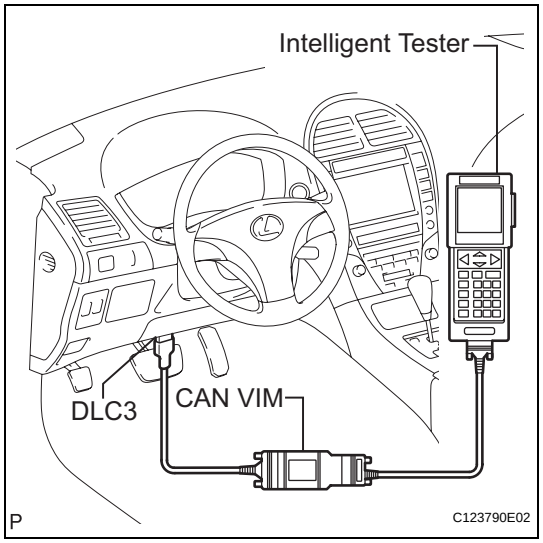

DTC CHECK / CLEAR

1. CHECK DTC
(a) Connect the intelligent tester to the DLC3.
(b) Turn the engine switch on (IG).
(c) Read the DTCs by following the directions on the tester screen.
HINT:
Refer to the intelligent tester operator's manual for further details.

2. CLEAR DTC
(a) Connect the intelligent tester to the DLC3.
(b) Turn the engine switch on (IG).
(c) Erase the DTCs by following the directions on the tester screen.
HINT:
Refer to the intelligent tester operator's manual for further details.

DATA LIST / ACTIVE TEST

1. READ DATA LIST

HINT:
Using the intelligent tester DATA LIST allows switch, actuator and other item values to be read without removing any parts. Reading the DATA LIST early in troubleshooting is one way to save time.

(a) Connect the intelligent tester to the DLC3.
(b) Turn the engine switch on (IG).
(c) Read the DATA LIST according to the display on the tester.

MAIN BODY (MAIN BODY ECU):

Tester Display	Measurement Item/Range	Normal Condition	Diagnostic Note
ACC SW	Engine switch ACC signal / ON or OFF	ON: Engine switch on (ACC or IG) OFF: Engine switch off	-
IG SW	Engine switch IG signal / ON or OFF	ON: Engine switch on (IG) OFF: Engine switch off	-
D DOR CTY SW	Driver side door courtesy switch signal / ON or OFF	ON: Driver side door is open OFF: Driver side door is closed	-
P DOR CTY SW	Passenger side door courtesy switch signal / ON or OFF	ON: Front passenger side door is open OFF: Front passenger side door is closed	-
RR DOR CTY SW	Rear right door courtesy switch signal / ON or OFF	ON: Rear right door is open OFF: Rear right door is closed	-
RL DOR CTY SW	Rear left door courtesy switch signal / ON or OFF	ON: Rear left door is open OFF: Rear left door is closed	-
LUGG COURTSY SW	Luggage compartment door courtesy switch signal / ON or OFF	ON: Luggage compartment door is open OFF: Luggage compartment door is closed	-
D LOCK POS SW	Driver side door lock position switch signal / ON or OFF	ON: Driver side door is unlocked OFF: Driver side door is locked	-
P LOCK POS SW	Passenger side door lock position switch signal / ON or OFF	ON: Front passenger side door is unlocked OFF: Front passenger side door is locked	-
RR LOCK POS SW	Rear right door lock position switch signal / ON or OFF	ON: Rear right door is unlocked OFF: Rear right door is locked	-
RL LOCK POS SW	Rear left door lock position switch signal / ON or OFF	ON: Rear left door is unlocked OFF: Rear left door is locked	-
DIMMER SW	Dimmer switch HIGH signal / ON or OFF	ON: Dimmer switch in HIGH or HIGH FLASH OFF: Dimmer switch in LOW	-
HIGH FLASHER SW	Dimmer switch HIGH FLASH signal / ON or OFF	ON: Dimmer switch in HIGH FLASH OFF: Dimmer switch not in HIGH FLASH	-
F FOG LIGHT SW	Fog light switch signal / ON or OFF	ON: Fog light switch ON OFF: Fog light switch OFF	-
AUTO LIGHT SW	Light control switch AUTO signal / ON or OFF	ON: Light control switch in AUTO OFF: Light control switch not in AUTO	-
HEAD LIGHT SW	Light control switch HEAD signal / ON or OFF	ON: Light control switch in HEAD OFF: Light control switch not in HEAD	-

Tester Display	Measurement Item/Range	Normal Condition	Diagnostic Note
TAIL LIGHT SW	Light control switch TAIL signal / ON or OFF	ON: Light control switch in TAIL or HEAD OFF: Light control switch in neither TAIL nor HEAD	-
ILLUMINATE RATE	Illumination rate information / 0 ms to 99.99 ms	0.8 ms to 22.0 ms (Value is output according to ambient illuminance)	-
PARKING BRAKE SW	Parking brake switch signal / ON or OFF	ON: Parking brake switch is ON OFF: Parking brake switch is OFF	-

AFS (AFS ECU):

Tester Display	Measurement Item/Range	Normal Condition	Diagnostic Note
AFS OFF SW	AFS OFF switch signal / ON or OFF	ON: AFS OFF switch pushed OFF: AFS OFF switch not pushed	-
TRAVEL DIR	Traveling Direction / NOT FWD or FWD	NOT FWD: Shift lever in R or N FWD: Shift lever not in R and N	-
LO BEAM STATE	Low beam headlight state / ON or OFF	ON: Low beam headlights ON OFF: Low beam headlights OFF	-
HI BEAM STATE	High beam headlight state / ON or OFF	ON: High beam headlights ON OFF: High beam headlights OFF	-
DRL STATE	Daytime running light state / ON or OFF	ON: Daytime running lights (dimmed high beam headlights) ON OFF: Daytime running lights (dimmed high beam headlights) OFF	-
ENGINE	Engine state / RUN or STOP	RUN: Engine is running STOP: Engine is stop	-
+B	IG power supply voltage value / 0 to 20 V	Condition can be displayed	-
HEIGHT SENS VOL	Rear height control sensor power supply value / 0 to 5 V	Condition can be displayed	-
RR HEIGHT SENS	Rear height control sensor signal value / 0 to 5 V	Condition can be displayed	-
STEER SENS SIG	Steering angle sensor signal value / -384° to 382.5°	Condition can be displayed	-
STR CENTER POS	Steering angle sensor center position / -3072° to 3070.5°	Condition can be displayed	-
FR WHEEL SPD	Front right wheel speed / 0 to 327.67 km/h	Condition can be displayed	-
FL WHEEL SPD	Front left wheel speed / 0 to 327.67 km/h	Condition can be displayed	-
VEHICLE SPD	Vehicle speed / 0 to 327.67 km/h	Condition can be displayed	-
REAR H FLG	Result of rear vehicle height calibration / VALID or INVALID	Condition can be displayed	-
INIT COUNT	Number of times for initialization / 0 to 255	Condition can be displayed	-
# CODES	Number of trouble codes / 0 to 255	Condition can be displayed	-

2. PERFORM ACTIVE TEST

HINT:

Performing the intelligent tester ACTIVE TEST allows a relay, VSV, actuator, and other items to be operated without removing any parts. Performing the ACTIVE TEST early in troubleshooting is one way to save time. The DATA LIST can be displayed during the ACTIVE TEST.

(a) Connect the intelligent tester to the DLC3.

(b) Turn the engine switch on (IG).
(c) Perform the ACTIVE TEST according to the display on the tester.

MAIN BODY (MAIN BODY ECU):

Tester Display	Test Part	Control Range	Diagnostic Note
F FOG LIGHT RLY	Front fog light relay (Taillights are ON)	ON / OFF	-
HEAD LIGHT	Headlight relay	ON / OFF	-
HEAD LIGHT (HI)	High beam headlights	ON / OFF	-
TAIL LIGHT	Taillight relay	ON / OFF	-
DIMMER SIG	Dimmer signal	ON / OFF	-
STEP LIGHT	Footwell illumination	ON / OFF	-
ILLUMI OUTPUT	Interior light, front seat illumination, rear seat illumination, and rear door courtesy lights (Front personal switches are OFF, DOOR switch is ON, seat illumination switch is OFF, and all doors are closed)	ON / OFF	-

AFS (AFS ECU):

Tester Display	Test Part	Control Range	Diagnostic Note
LEVELING MTR	Leveling motor	UP / OFF	-
		DOWN / OFF	-
SWIVEL MTR (RH)	Swivel motor RH	RIGHT / OFF	-
		LEFT / OFF	-
SWIVEL MTR (LH)	Swivel motor LH	RIGHT / OFF	-
		LEFT / OFF	-
AFS OFF IND	AFS OFF indicator	ON / OFF	-

DIAGNOSTIC TROUBLE CODE CHART

Lighting System

DTC Code	Detection Item	Trouble Area	See page
B1244	Light Sensor Circuit Malfunction	1. Automatic light control sensor 2. Harness or connector 3. Main body ECU (Instrument panel J/B)	LI-49
B2410	Headlight Swivel Motor LH Communication Malfunction	1. Headlight swivel motor LH 2. Harness or connector 3. AFS ECU	LI-52
B2411	Headlight Swivel Motor RH Communication Malfunction	1. Headlight swivel motor RH 2. Harness or connector 3. AFS ECU	LI-52
B2412	Headlight Swivel Motor LH Malfunction	1. Headlight swivel motor LH 2. Harness or connector 3. AFS ECU	LI-55
B2413	Headlight Swivel Motor RH Malfunction	1. Headlight swivel motor RH 2. Harness or connector 3. AFS ECU	LI-55
B2414	Steering Position Sensor Malfunction	1. Steering angle sensor 2. AFS ECU	LI-59
B2415	Vehicle Speed Sensor Malfunction	1. Skid control ECU 2. AFS ECU	LI-61
B2416	Height Control Sensor Malfunction	1. Rear height control sensor 2. Harness or connector 3. AFS ECU	LI-63
B2417	Headlight Beam Level Control Motor LH Malfunction	1. Headlight leveling motor LH 2. Harness or connector 3. AFS ECU	LI-66
B2418	Headlight Beam Level Control Motor RH Malfunction	1. Headlight leveling motor RH 2. Harness or connector 3. AFS ECU	LI-66
B2420	AFS ECU Malfunction	1. AFS ECU	LI-69
B2424	Headlight Leveling Motor LH Communication Malfunction	1. Headlight leveling motor LH 2. Harness or connector 3. AFS ECU	LI-70
B2425	Headlight Leveling Motor RH Communication Malfunction	1. Headlight leveling motor RH 2. Harness or connector 3. AFS ECU	LI-70
B2427	CAN Communication Malfunction	1. CAN communication system 2. AFS ECU	LI-73

DTC	B1244	Light Sensor Circuit Malfunction

DESCRIPTION

The automatic light control sensor detects ambient light, converts it into an electrical signal, and outputs it to the main body ECU. The main body ECU turns on or off the headlights and taillights according to the signal.

DTC No.	DTC Detecting Condition	Trouble Area
B1244	• Malfunction in automatic light control sensor • Open or short in automatic light control sensor circuit	• Automatic light control sensor • Harness or connector • Main body ECU (Instrument panel J/B)

WIRING DIAGRAM

LI

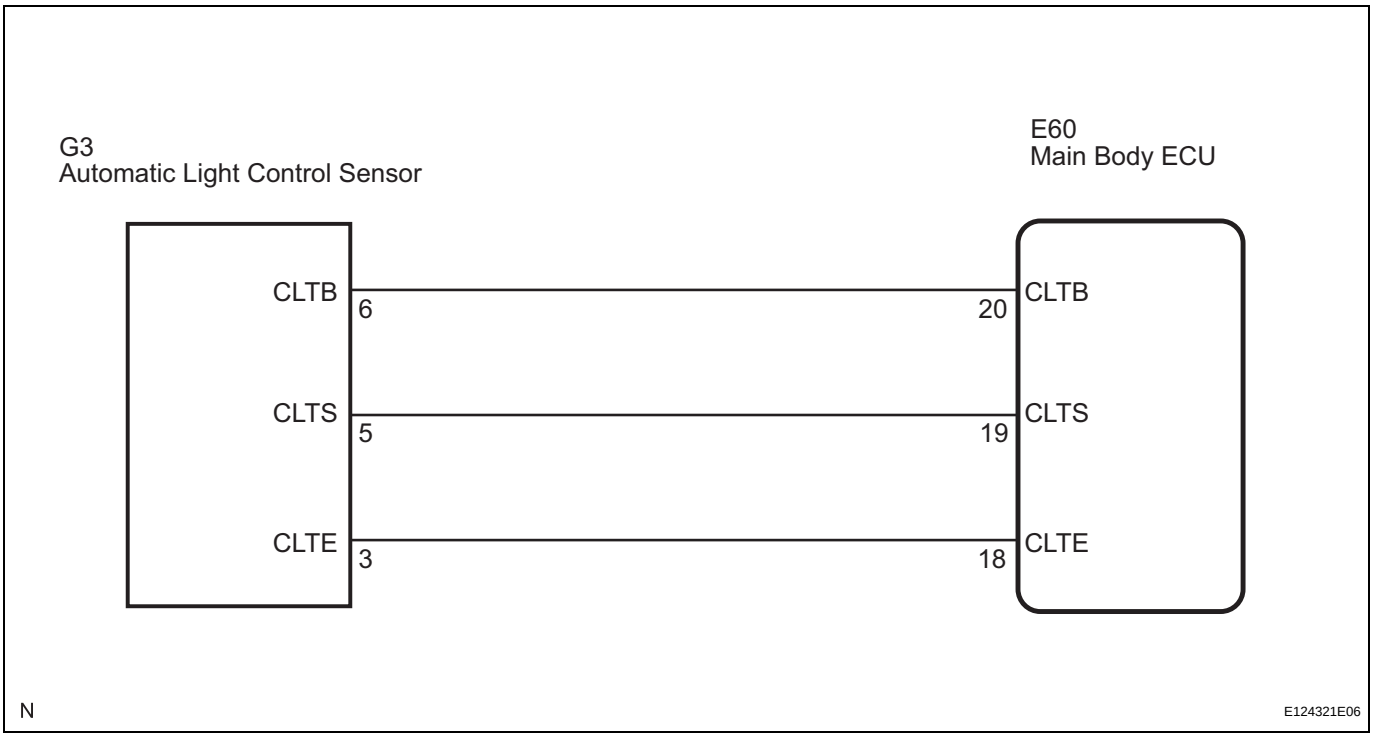

INSPECTION PROCEDURE

1	READ VALUE OF INTELLIGENT TESTER

(a) Connect the intelligent tester to the DLC3.
(b) Turn the engine switch on (IG) and turn the intelligent tester main switch on.
(c) Select the item below in the DATA LIST, and read the display on the intelligent tester.

MAIN BODY (MAIN BODY ECU):

Tester Display	Measurement Item/Range	Normal Condition	Diagnostic Note
ILLUMINATE RATE	Illumination rate information / 0 ms to 99.99 ms	0.8 ms to 22.0 ms (Value is output according to ambient light levels)	-

OK:
Normal condition listed above is displayed.

NG → **Go to step 2**

OK

REPLACE INSTRUMENT PANEL JUNCTION BLOCK ASSEMBLY

2 CHECK HARNESS AND CONNECTOR (MAIN BODY ECU - AUTOMATIC LIGHT CONTROL SENSOR)

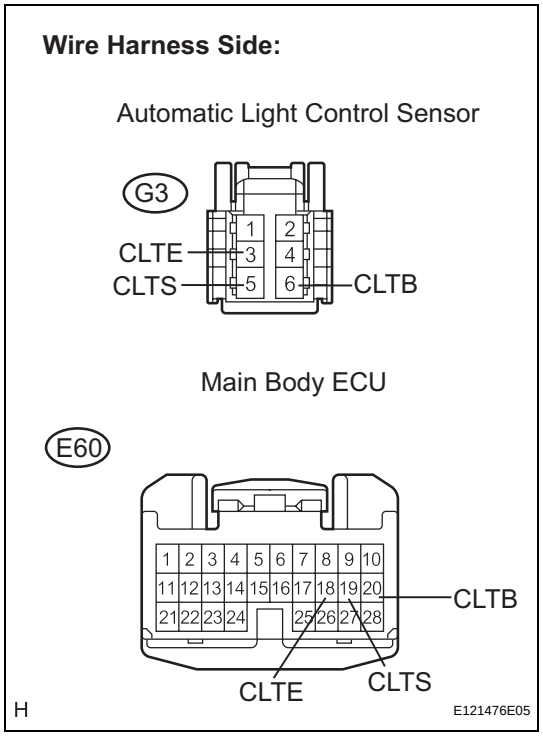

(a) Disconnect the G3 automatic light control sensor connector.
(b) Disconnect the E60 main body ECU connector.
(c) Measure the resistance according to the value(s) in the table below.

Standard resistance

Tester Connection	Condition	Specified Condition
E60-18 (CLTE) - G3-3 (CLTE)	Always	Below 1 Ω
E60-19 (CLTS) - G3-5 (CLTS)	Always	Below 1 Ω
E60-20 (CLTB) - G3-6 (CLTB)	Always	Below 1 Ω
E60-18 (CLTE) - Body ground	Always	10 kΩ or higher
E60-19 (CLTS) - Body ground	Always	10 kΩ or higher
E60-20 (CLTB) - Body ground	Always	10 kΩ or higher

NG → **REPAIR OR REPLACE HARNESS OR CONNECTOR**

OK

3 INSPECT MAIN BODY ECU (INSTRUMENT PANEL JUNCTION BLOCK ASSEMBLY)

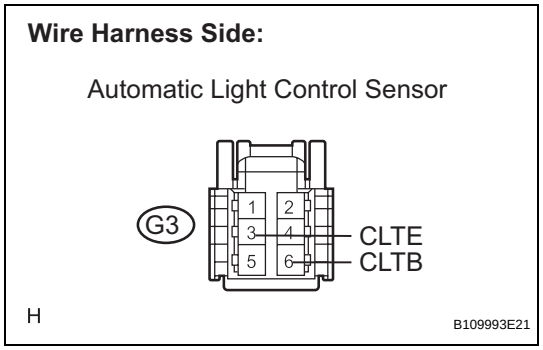

(a) Reconnect the main body ECU connector.
(b) Measure the voltage and resistance according to the value(s) in the table below.

Standard voltage

Tester Connection	Condition	Specified Condition
G3-6 (CLTB) - G3-3 (CLTE)	Engine switch off	Below 1 V
G3-6 (CLTB) - G3-3 (CLTE)	Engine switch on (IG)	10 to 14 V

Standard resistance

Tester Connection	Condition	Specified Condition
G3-3 (CLTE) - Body ground	Always	Below 1 Ω

NG → **REPLACE INSTRUMENT PANEL JUNCTION BLOCK ASSEMBLY**

LI

OK

4 INSPECT AUTOMATIC LIGHT CONTROL SENSOR

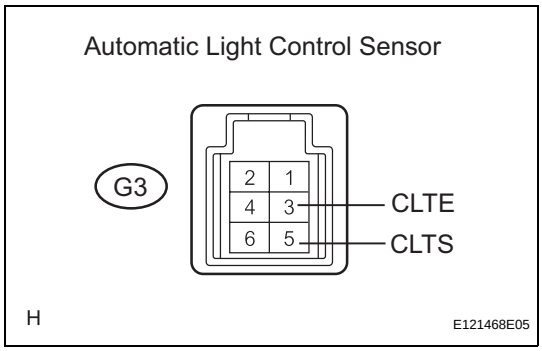

(a) Reconnect the automatic light control sensor connector.
(b) Connect an oscilloscope to the automatic light control sensor connector.

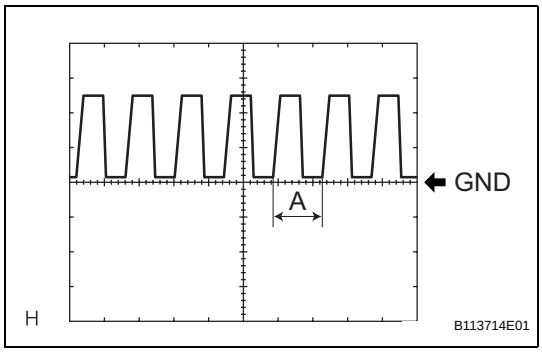

(c) Check the waveform.
OK

Tester Connection	Tool Setting	Condition	Specified Condition
G3-3 (CLTE) - G3-5 (CLTS)	5 V/DIV., 5 ms./DIV.	Engine switch on (IG), light control switch in AUTO	Correct waveform is as shown

HINT:
If the ambient light becomes brighter, width A becomes narrower.

NG → **REPLACE AUTOMATIC LIGHT CONTROL SENSOR**

OK

REPLACE INSTRUMENT PANEL JUNCTION BLOCK ASSEMBLY

DTC	B2410	Headlight Swivel Motor LH Communication Malfunction

DTC	B2411	Headlight Swivel Motor RH Communication Malfunction

DESCRIPTION

The AFS ECU receives a signal from the headlight swivel motor using LIN communication.

DTC No.	DTC Detecting Condition	Trouble Area
B2410	• Malfunction in headlight swivel motor LH • Open or short in headlight swivel motor LH communication circuit	• Headlight swivel motor LH • Harness or connector • AFS ECU
B2411	• Malfunction in headlight swivel motor RH • Open or short in headlight swivel motor RH communication circuit	• Headlight swivel motor RH • Harness or connector • AFS ECU

LI

WIRING DIAGRAM

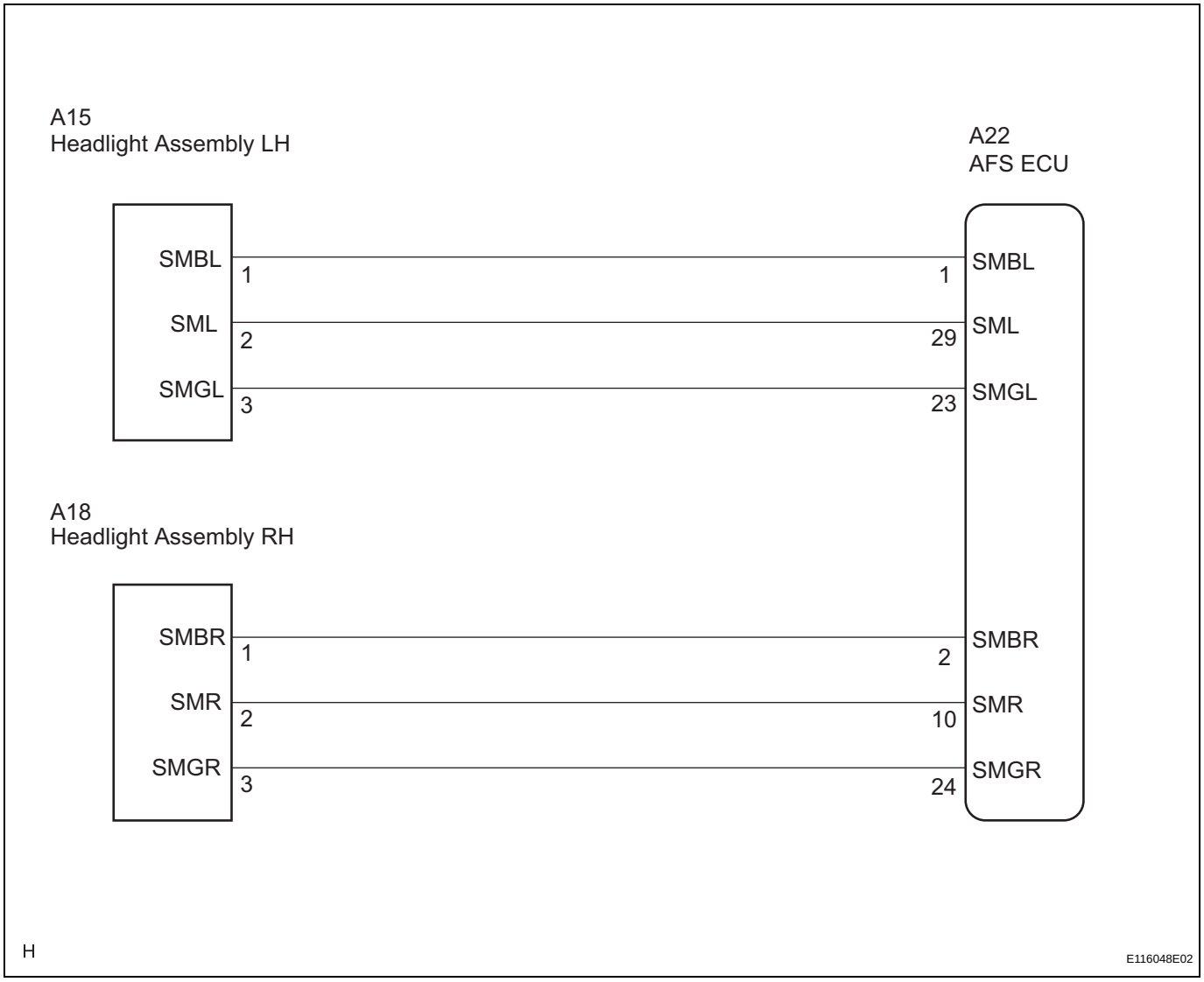

INSPECTION PROCEDURE

1	CHECK HARNESS AND CONNECTOR

(a) Disconnect the A22 AFS ECU connector.

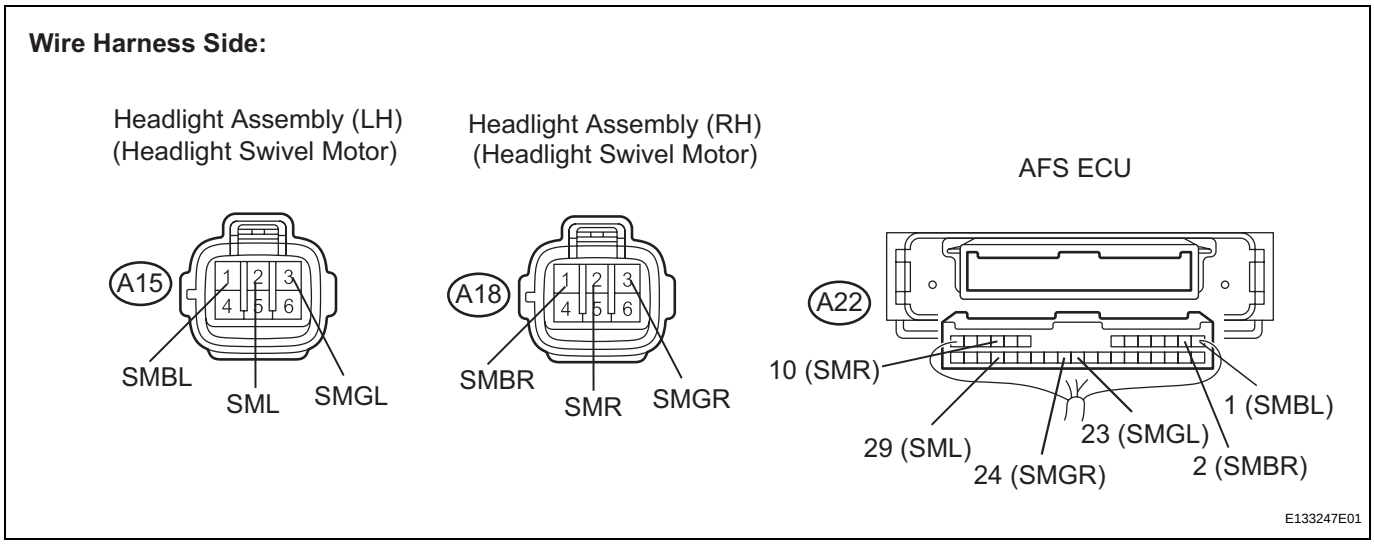

(b) Disconnect the A15 or A18 headlight assembly connector.

(c) Measure the resistance according to the value(s) in the table below.

Standard resistance:

LH Side (B2410)

Tester Connection	Condition	Specified Condition
A22-1 (SMBL) - A15-1 (SMBL)	Always	Below 1 Ω
A22-23 (SMGL) - A15-3 (SMGL)	Always	Below 1 Ω
A22-29 (SML) - A15-2 (SML)	Always	Below 1 Ω
A22-1 (SMBL) - Body ground	Always	10 kΩ or higher
A22-23 (SMGL) - Body ground	Always	10 kΩ or higher
A22-29 (SML) - Body ground	Always	10 kΩ or higher

RH Side (B2411)

Tester Connection	Condition	Specified Condition
A22-2 (SMBR) - A18-1 (SMBR)	Always	Below 1 Ω
A22-10 (SMR) - A18-2 (SMR)	Always	Below 1 Ω
A22-24 (SMGR) - A18-3 (SMGR)	Always	Below 1 Ω
A22-2 (SMBR) - Body ground	Always	10 kΩ or higher
A22-10 (SMR) - Body ground	Always	10 kΩ or higher
A22-24 (SMGR) - Body ground	Always	10 kΩ or higher

NG → **REPAIR OR REPLACE HARNESS OR CONNECTOR**

OK

2	**REPLACE HEADLIGHT REFLECTOR (HEADLIGHT SWIVEL MOTOR)**

OK:
Returns to normal operation.

NG → **REPLACE AFS ECU**

OK

END

DTC	B2412	Headlight Swivel Motor LH Malfunction

DTC	B2413	Headlight Swivel Motor RH Malfunction

DESCRIPTION

The swivel motor receives a signal from the AFS ECU to operate and sends a signal indicating the direction of the headlight and condition of the headlight swivel motor to the AFS ECU.

DTC No.	DTC Detecting Condition	Trouble Area
B2412	• Malfunction in headlight swivel motor LH • Open or short in headlight swivel motor LH circuit	• Headlight swivel motor LH • Harness or connector • AFS ECU
B2413	• Malfunction in headlight swivel motor RH • Open or short in headlight swivel motor RH circuit	• Headlight swivel motor RH • Harness or connector • AFS ECU

WIRING DIAGRAM

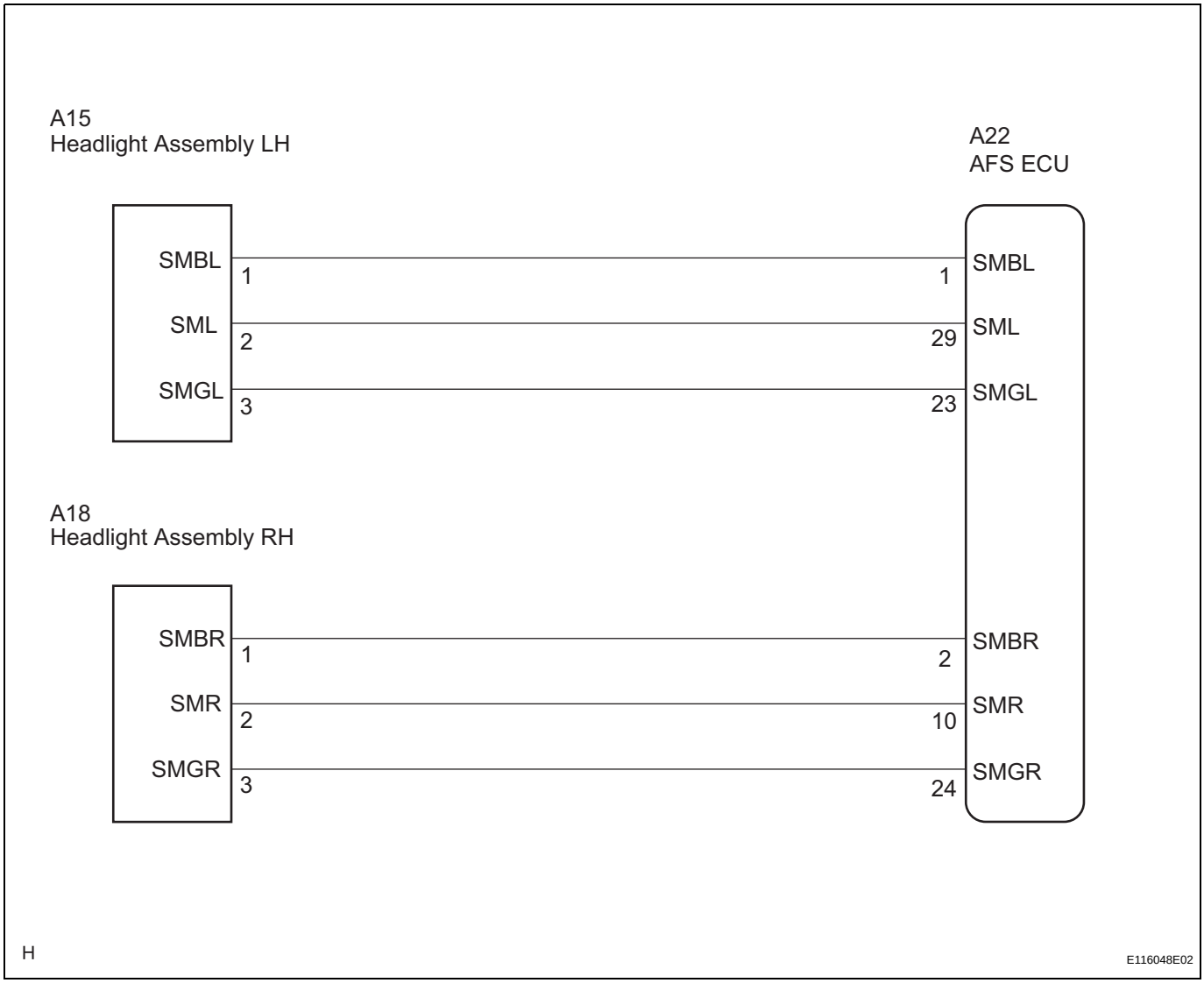

INSPECTION PROCEDURE

1	PERFORM ACTIVE TEST USING INTELLIGENT TESTER

(a) Connect the intelligent tester to the DLC3.
(b) Turn the engine switch on (IG) and turn the intelligent tester main switch on.
(c) Select the items below in the ACTIVE TEST and then check that the motor operates.

AFS (AFS ECU):

Tester Display	Test Part	Control Range	Diagnostic Note
SWIVEL MTR (RH)	Swivel motor RH	RIGHT / OFF	-
		LEFT / OFF	-
SWIVEL MTR (LH)	Swivel motor LH	RIGHT / OFF	-
		LEFT / OFF	-

OK:
Swivel motors operate normally.

NG → **Go to step 2**

OK

REPLACE AFS ECU

2	CHECK HARNESS AND CONNECTOR (POWER SOURCE CIRCUIT)

HINT:
(See page LI-116)

NG → **REPAIR OR REPLACE HARNESS OR CONNECTOR**

OK

3	CHECK HARNESS AND CONNECTOR (AFS ECU - HEADLIGHT ASSEMBLY)

(a) Disconnect the A22 AFS ECU connector.

LI

Wire Harness Side:

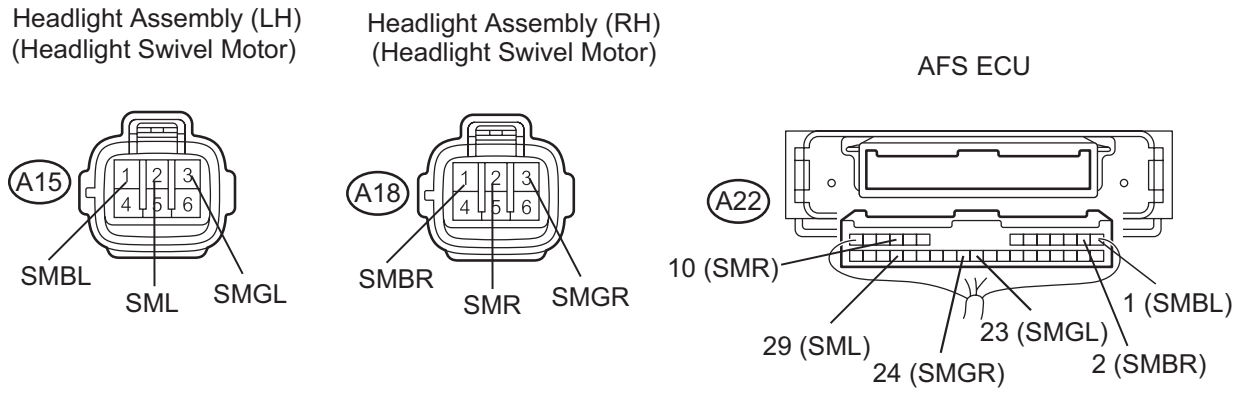

(b) Disconnect the A15 or A18 headlight assembly connector.

(c) Measure the resistance according to the value(s) in the table below.

Standard resistance:

LH Side (B2412)

Tester Connection	Condition	Specified Condition
A22-1 (SMBL) - A15-1 (SMBL)	Always	Below 1 Ω
A22-23 (SMGL) - A15-3 (SMGL)	Always	Below 1 Ω
A22-29 (SML) - A15-2 (SML)	Always	Below 1 Ω
A22-1 (SMBL) - Body ground	Always	10 kΩ or higher
A22-23 (SMGL) - Body ground	Always	10 kΩ or higher
A22-29 (SML) - Body ground	Always	10 kΩ or higher

RH Side (B2413)

Tester Connection	Condition	Specified Condition
A22-2 (SMBR) - A18-1 (SMBR)	Always	Below 1 Ω
A22-10 (SMR) - A18-2 (SMR)	Always	Below 1 Ω
A22-24 (SMGR) - A18-3 (SMGR)	Always	Below 1 Ω
A22-2 (SMBR) - Body ground	Always	10 kΩ or higher
A22-10 (SMR) - Body ground	Always	10 kΩ or higher
A22-24 (SMGR) - Body ground	Always	10 kΩ or higher

NG → **REPAIR OR REPLACE HARNESS OR CONNECTOR**

OK

4 INSPECT AFS ECU

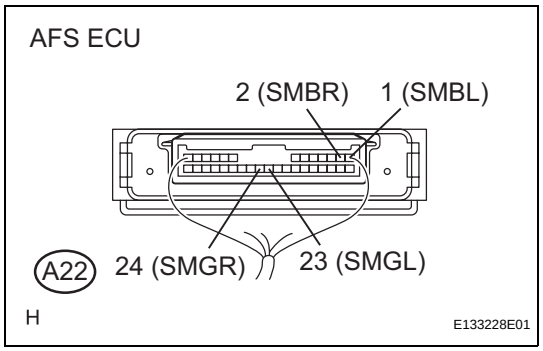

(a) Reconnect the A22 AFS ECU connector.
(b) Measure the voltage according to the value(s) in the table below.
Standard voltage:
LH Side (B2412)

Tester Connection	Condition	Specified Condition
A22-1 (SMBL) - A22-23 (SMGL)	Engine switch off	Below 1 V
	Engine switch on (IG)	10 to 14 V

RH Side (B2413)

Tester Connection	Condition	Specified Condition
A22-2 (SMBR) - A22-24 (SMGR)	Engine switch off	Below 1 V
	Engine switch on (IG)	10 to 14 V

NG → **REPLACE AFS ECU**

OK

5 REPLACE HEADLIGHT REFLECTOR (HEADLIGHT SWIVEL MOTOR)

OK:
Returns to normal operation.

NG → **REPLACE AFS ECU**

OK

END

LI

DTC	B2414	Steering Position Sensor Malfunction

DESCRIPTION

The AFS ECU receives signals indicating the swerve-angle from the steering angle sensor using CAN communication.

DTC No.	DTC Detecting Condition	Trouble Area
B2414	• Malfunction in steering angle sensor • AFS ECU	• Steering angle sensor • AFS ECU

WIRING DIAGRAM

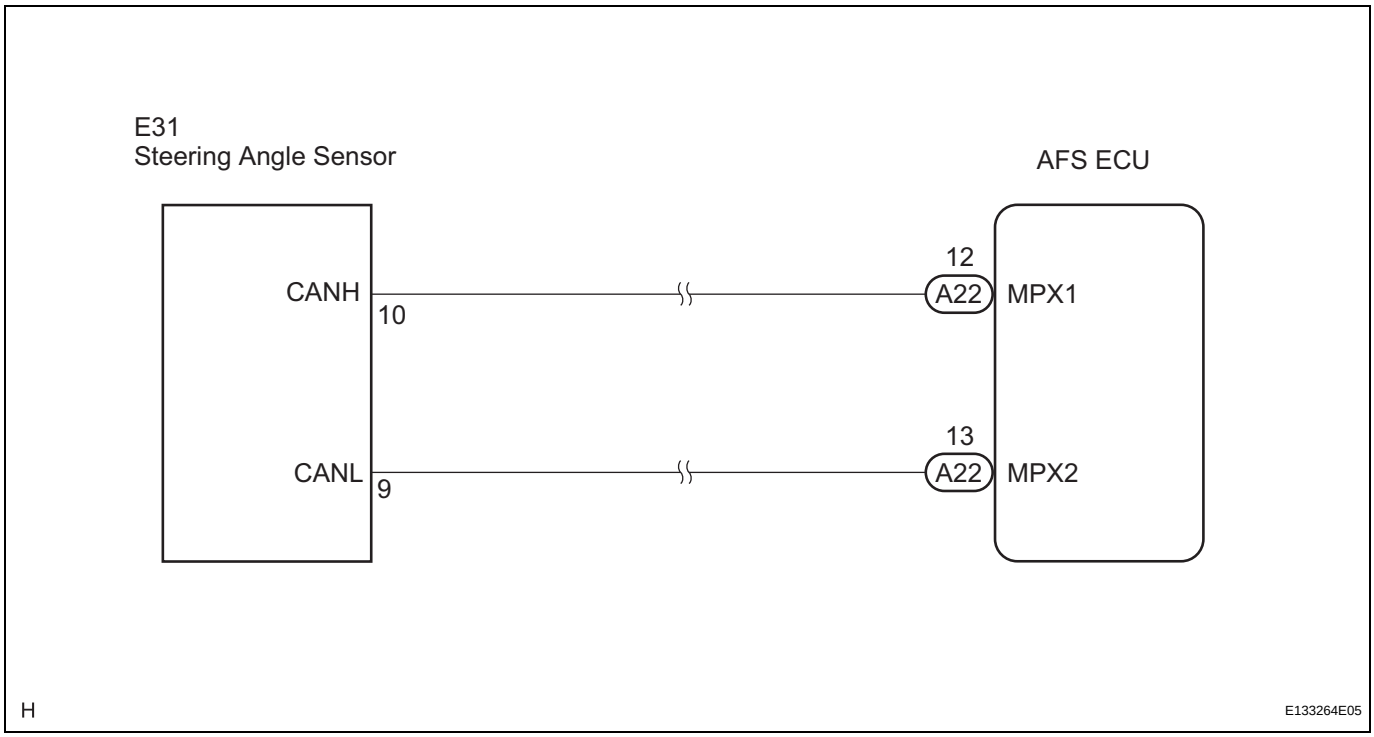

INSPECTION PROCEDURE

1	READ VALUE OF INTELLIGENT TESTER

(a) Connect the intelligent tester to the DLC3.
(b) Turn the engine switch on (IG) and turn the intelligent tester main switch on.
(c) Select the item below in the DATA LIST and read the display on the intelligent tester.

AFS (AFS ECU):

Tester Display	Measurement Item/Range	Normal Condition	Diagnostic Note
STEER SENS SIG	Steering angle sensor signal value / -382.5° to 382.5°	Approx. 0° (When steering wheel is centered)	-

OK:
Normal condition listed above is displayed.

NG → **Go to step 2**

OK

REPLACE AFS ECU

2	**CHECK DTC (CAN COMMUNICATION SYSTEM)**

HINT:
(See page CA-41)
OK:
Normal system code is output.

NG → **GO TO CAN COMMUNICATION SYSTEM**

OK

3	**CHECK DTC (VEHICLE STABILITY CONTROL SYSTEM)**

HINT:
(See page BC-43)
OK:
Normal system code is output.

NG → **GO TO VEHICLE STABILITY CONTROL SYSTEM**

OK

4	**REPLACE STEERING ANGLE SENSOR**

OK:
Returns to normal operation.

NG → **REPLACE AFS ECU**

OK

END

DTC	B2415	Vehicle Speed Sensor Malfunction

DESCRIPTION

The AFS ECU receives signals indicating the front wheel speed from the skid control ECU using CAN communication.

DTC No.	DTC Detecting Condition	Trouble Area
B2415	• Malfunction in skid control ECU • Malfunction in AFS ECU	• Skid control ECU • AFS ECU

WIRING DIAGRAM

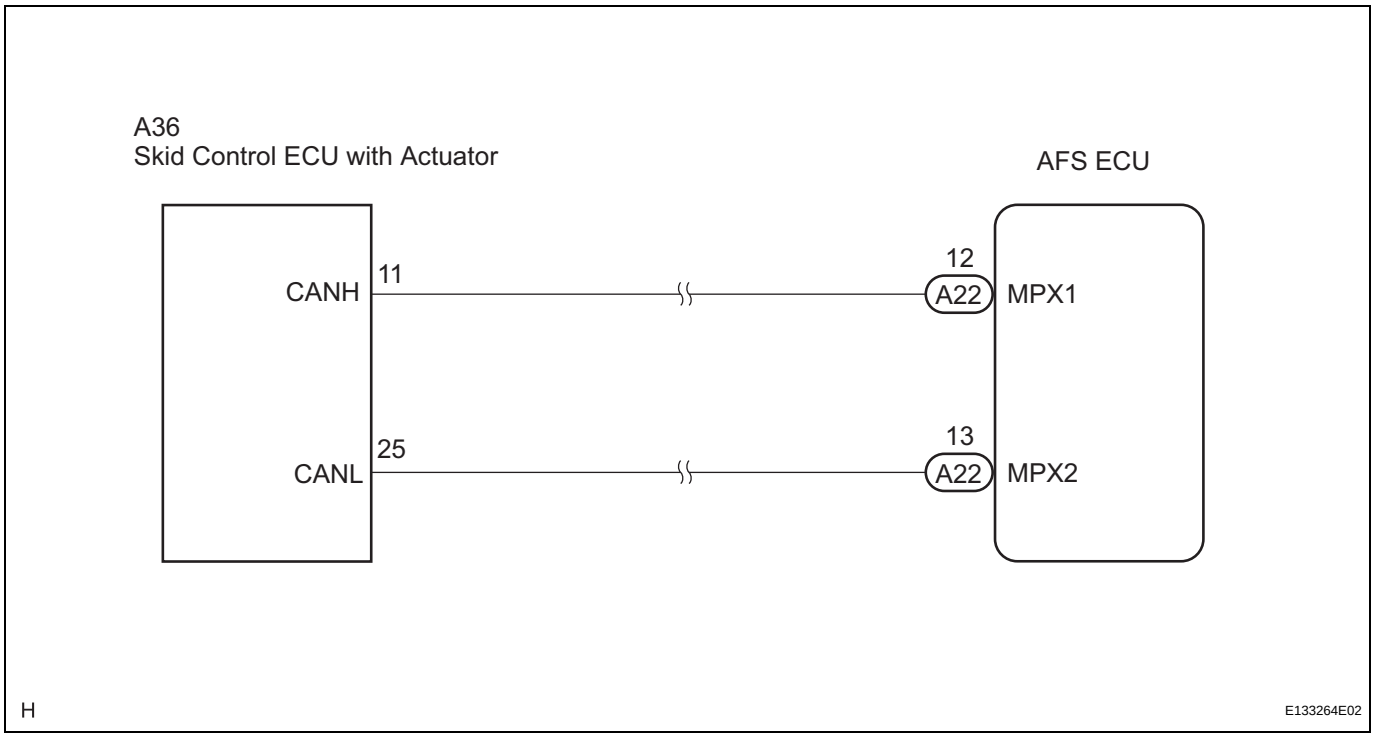

INSPECTION PROCEDURE

1	CHECK DTC (CAN COMMUNICATION SYSTEM)

HINT:
(See page CA-41)
OK:
Normal system code is output.

NG → **GO TO CAN COMMUNICATION**

OK

2	CHECK DTC (VEHICLE STABILITY SYSTEM)

HINT:
(See page BC-43)
OK:
Normal system code is output.

NG → **GO TO VEHICLE STABILITY CONTROL SYSTEM**

OK

3	**REPLACE SKID CONTROL ECU**

OK:
Returns to normal operation.

NG → **REPLACE AFS ECU**

OK

END

DTC	B2416	Height Control Sensor Malfunction

DESCRIPTION

The AFS ECU receives signals indicating the height of the vehicle from the rear height control sensor.

DTC No.	DTC Detecting Condition	Trouble Area
B2416	• Malfunction in rear height control sensor sub-assembly • Open or short in rear height control sensor circuit	• Rear height control sensor • Harness or connector • AFS ECU

WIRING DIAGRAM

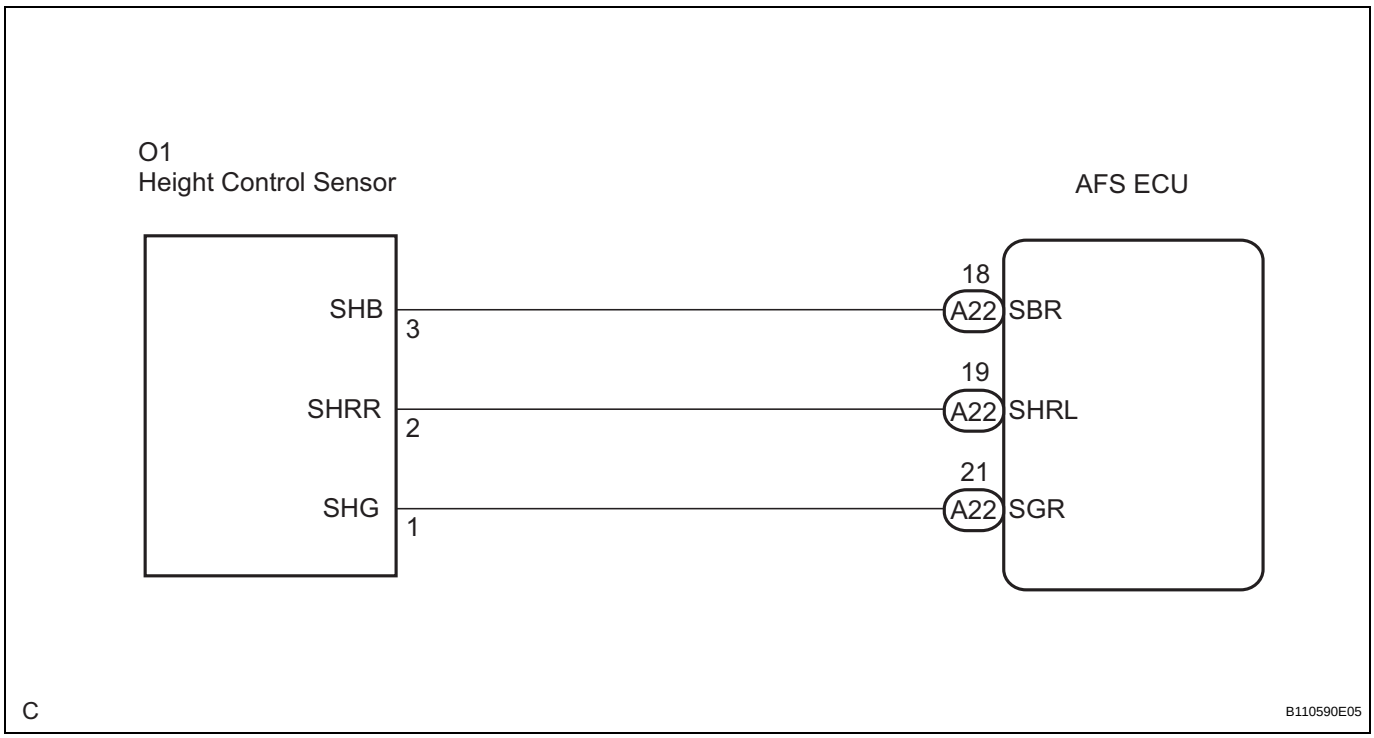

INSPECTION PROCEDURE

1	READ VALUE OF INTELLIGENT TESTER

(a) Connect the intelligent tester to the DLC3.
(b) Turn the engine switch on (IG) and turn the intelligent tester main switch on.
(c) Select the items below in the DATA LIST, and read the display on the intelligent tester.

AFS (AFS ECU):

Tester Display	Measurement Item/Range	Normal Condition	Diagnostic Note
RR HEIGHT SENS SENS	Rear height control sensor signal value / 0 to 5 V	Approx. 2.5 V	-
HEIGHT SENSE VAL	Rear height control sensor power supply value / 0 to 5 V	Approx. 5.0 V	-

OK:
Normal conditions listed above are displayed.

NG → **Go to step 2**

OK

REPLACE AFS ECU

2 CHECK HARNESS AND CONNECTOR (AFS ECU - REAR HEIGHT CONTROL SENSOR SUB-ASSEMBLY)

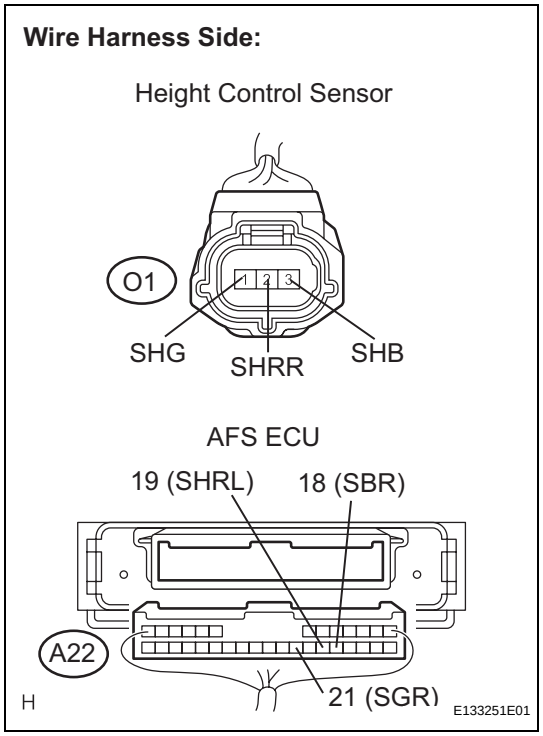

(a) Disconnect the A22 AFS ECU connector.
(b) Disconnect the O1 rear height control sensor sub-assembly connector.
(c) Measure the resistance according to the value(s) in the table below.

Standard resistance

Tester Connection	Condition	Specified Condition
A22-18 (SBR) - O1-3 (SHB)	Always	Below 1 Ω
A22-19 (SHRL) - O1-2 (SHRR)	Always	Below 1 Ω
A22-21 (SGR) - O1-1 (SHG)	Always	Below 1 Ω
A22-18 (SBR) - Body ground	Always	10 kΩ or higher
A22-19 (SHRL) - Body ground	Always	10 kΩ or higher
A22-21 (SGR) - Body ground	Always	10 kΩ or higher

NG → **REPAIR OR REPLACE HARNESS OR CONNECTOR**

OK

3 INSPECT AFS ECU

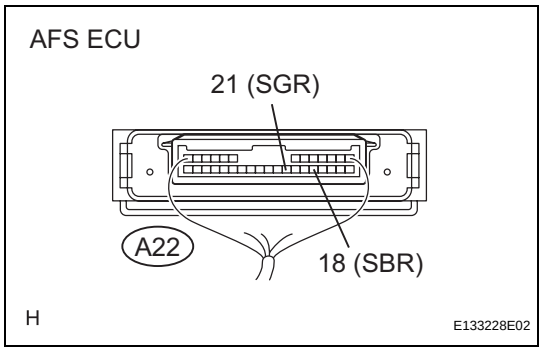

(a) Reconnect the A22 AFS ECU connector.
(b) Measure the voltage according to the value(s) in the table below.

Standard voltage

Tester Condition	Condition	Specified Condition
SBR (A22-18) - SGR (A22-21)	Engine switch on (IG)	4.5 to 5.5 V

NG → **REPLACE AFS ECU**

OK

LI

4	INSPECT REAR HEIGHT CONTROL SENSOR SUB-ASSEMBLY

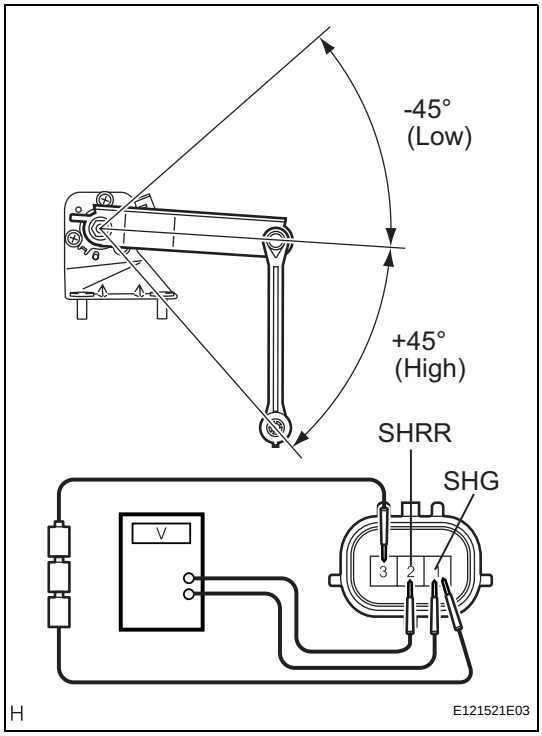

(a) Connect 3 dry cell batteries (1.5 V) in series.
(b) Remove the rear height control sensor sub-assembly.
(c) Connect the positive (+) lead from the battery to terminal 3, and the negative (-) lead from the battery to terminal 1.
(d) Measure the voltage between terminals 2 and 1 while slowly moving the link up and down.

Standard voltage

Tester Condition	Condition	Specified Condition
2 (SHRR) - 1 (SHG)	+45° (High)	Approx. 4.05 V
	0° (Normal)	Approx. 2.25 V
	-45° (Low)	Approx. 0.45 V

NG → **REPLACE REAR HEIGHT CONTROL SENSOR SUB-ASSEMBLY**

OK

REPLACE AFS ECU

LI

DTC	B2417	Headlight Beam Level Control Motor LH Malfunction

DTC	B2418	Headlight Beam Level Control Motor RH Malfunction

DESCRIPTION

The headlight leveling motor receives a signal from the AFS ECU to operate. The AFS ECU receives a signal indicating the operating conditions of the headlight leveling motor.

DTC No.	DTC Detecting Condition	Trouble Area
B2417	• Malfunction in headlight leveling motor LH • Open or short in headlight leveling motor LH circuit	• Headlight leveling motor LH • Harness or connector • AFS ECU
B2418	• Malfunction in headlight leveling motor RH • Open or short in headlight leveling motor RH circuit	• Headlight leveling motor RH • Harness or connector • AFS ECU

LI

WIRING DIAGRAM

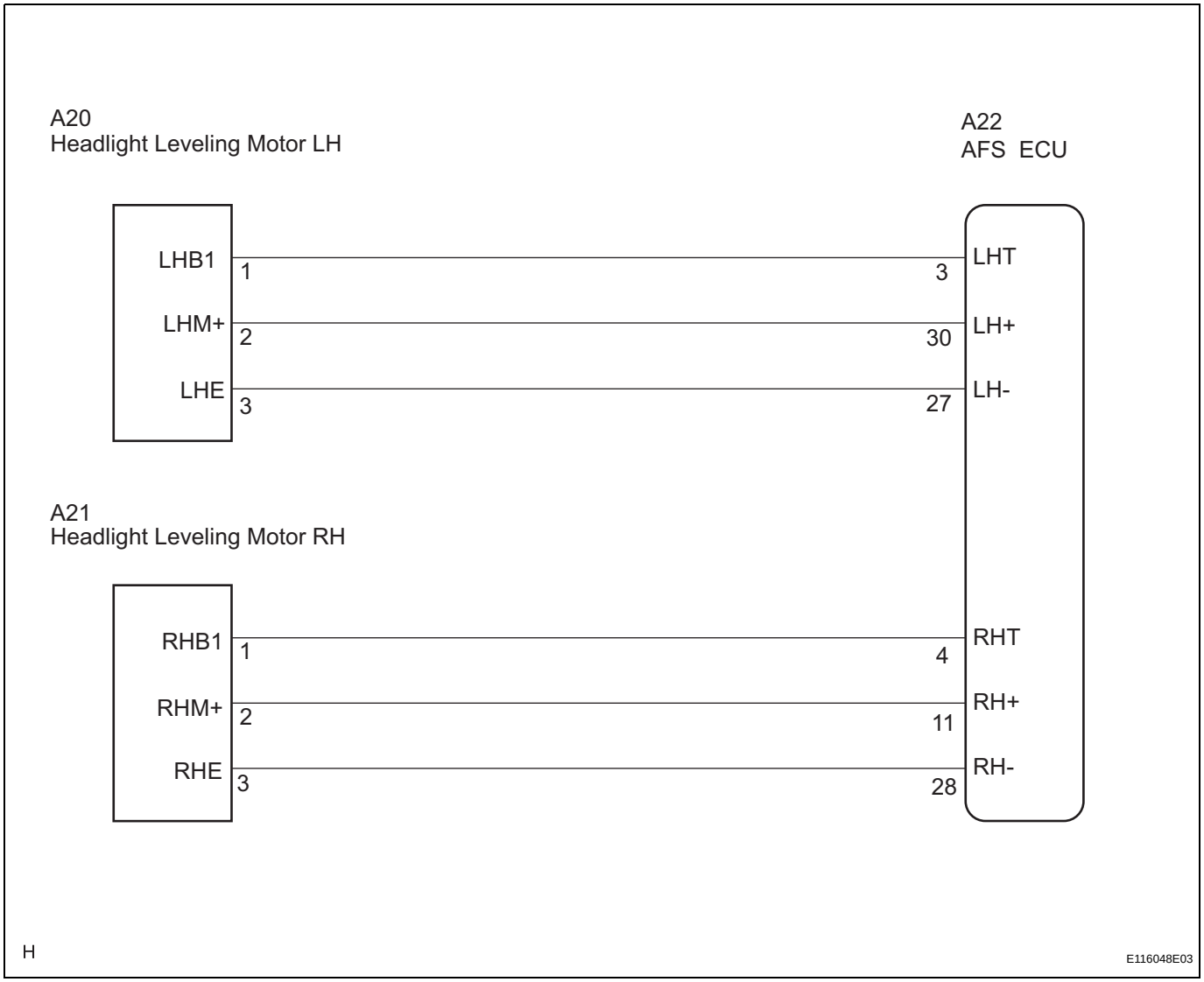

INSPECTION PROCEDURE

1	PERFORM ACTIVE TEST USING INTELLIGENT TESTER

(a) Connect the intelligent tester to the DLC3.
(b) Turn the engine switch on (IG) and turn the intelligent tester main switch on.
(c) Select the items below in the ACTIVE TEST and then check that the motor operates.

AFS (AFS ECU):

Tester Display	Test Part	Control Range	Diagnostic Note
LEVELING MTR	Leveling motor	UP / OFF	-
		DOWN / OFF	-

OK:
Headlight leveling motors operate normally.

NG → **Go to step 2**

OK

REPLACE AFS ECU

2	CHECK HARNESS AND CONNECTOR (POWER SOURCE CIRCUIT)

HINT:
(See page LI-116)

NG → **REPAIR OR REPLACE HARNESS OR CONNECTOR**

OK

3	CHECK HARNESS AND CONNECTOR (AFS ECU - HEADLIGHT LEVELING MOTOR)

(a) Disconnect the A22 AFS ECU connector.

Wire Harness Side:

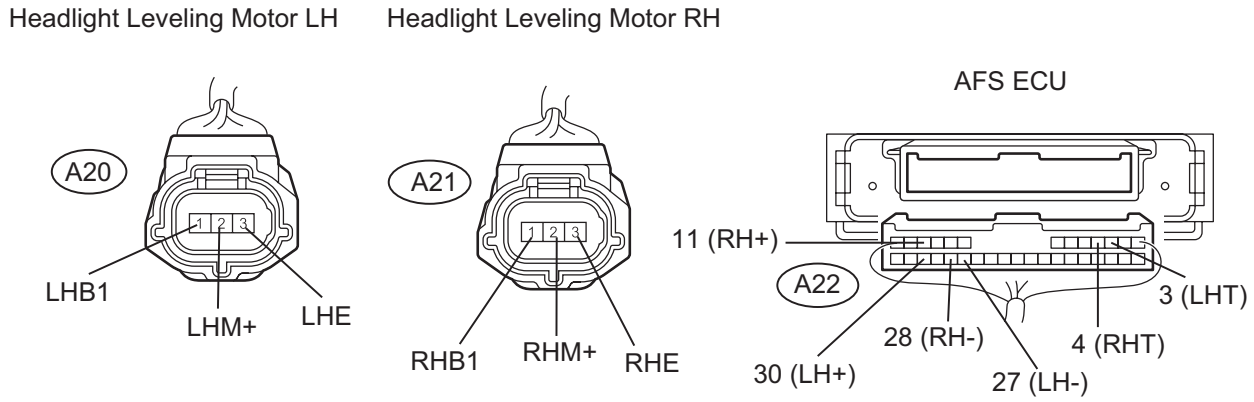

(b) Disconnect the A20 or A21 headlight leveling motor connector.

(c) Measure the resistance according to the value(s) in the table below.

Standard resistance:

LH Side (B2412)

Tester Connection	Condition	Specified Condition
A22-3 (LHT) - A20-1 (LHB1)	Always	Below 1 Ω
A22-27 (LH-) - A20-3 (LHE)	Always	Below 1 Ω
A22-30 (LH+) - A20-2 (LHM+)	Always	Below 1 Ω
A22-3 (LHT) - Body ground	Always	10 kΩ or higher
A22-27 (LH-) - Body ground	Always	10 kΩ or higher
A22-30 (LH+) - Body ground	Always	10 kΩ or higher

RH Side (B2413)

Tester Connection	Condition	Specified Condition
A22-4 (RHT) - A21-1 (RHB1)	Always	Below 1 Ω
A22-28 (RH-) - A21-3 (RHE)	Always	Below 1 Ω
A22-11 (RH+) - A21-2 (RHM+)	Always	Below 1 Ω
A22-4 (RHT) - Body ground	Always	10 kΩ or higher
A22-28 (RH-) - Body ground	Always	10 kΩ or higher
A22-11 (RH+) - Body ground	Always	10 kΩ or higher

NG → **REPAIR OR REPLACE HARNESS OR CONNECTOR**

OK

4 **REPLACE HEADLIGHT UNIT (HEADLIGHT LEVELING MOTOR)**

OK:

Returns to normal operation.

NG → **REPLACE AFS ECU**

OK

END

DTC	B2420	AFS ECU Malfunction

DESCRIPTION

When the AFS ECU detects a malfunction in itself, a DTC is output.

DTC No.	DTC Detecting Condition	Trouble Area
B2420	Malfunction of AFS ECU	AFS ECU

INSPECTION PROCEDURE

1	REPLACE AFS ECU

NEXT

END

DTC	B2424	Headlight Leveling Motor LH Communication Malfunction

DTC	B2425	Headlight Leveling Motor RH Communication Malfunction

DESCRIPTION

The AFS ECU receives a signal from the headlight swivel motor using LIN communication.

DTC No.	DTC Detecting Condition	Trouble Area
B2424	• Malfunction in headlight leveling motor LH • Open or short in headlight leveling motor LH communication circuit	• Headlight leveling motor LH • Harness or connector • AFS ECU
B2425	• Malfunction in headlight leveling motor RH • Open or short in headlight leveling motor RH communication circuit	• Headlight leveling motor RH • Harness or connector • AFS ECU

WIRING DIAGRAM

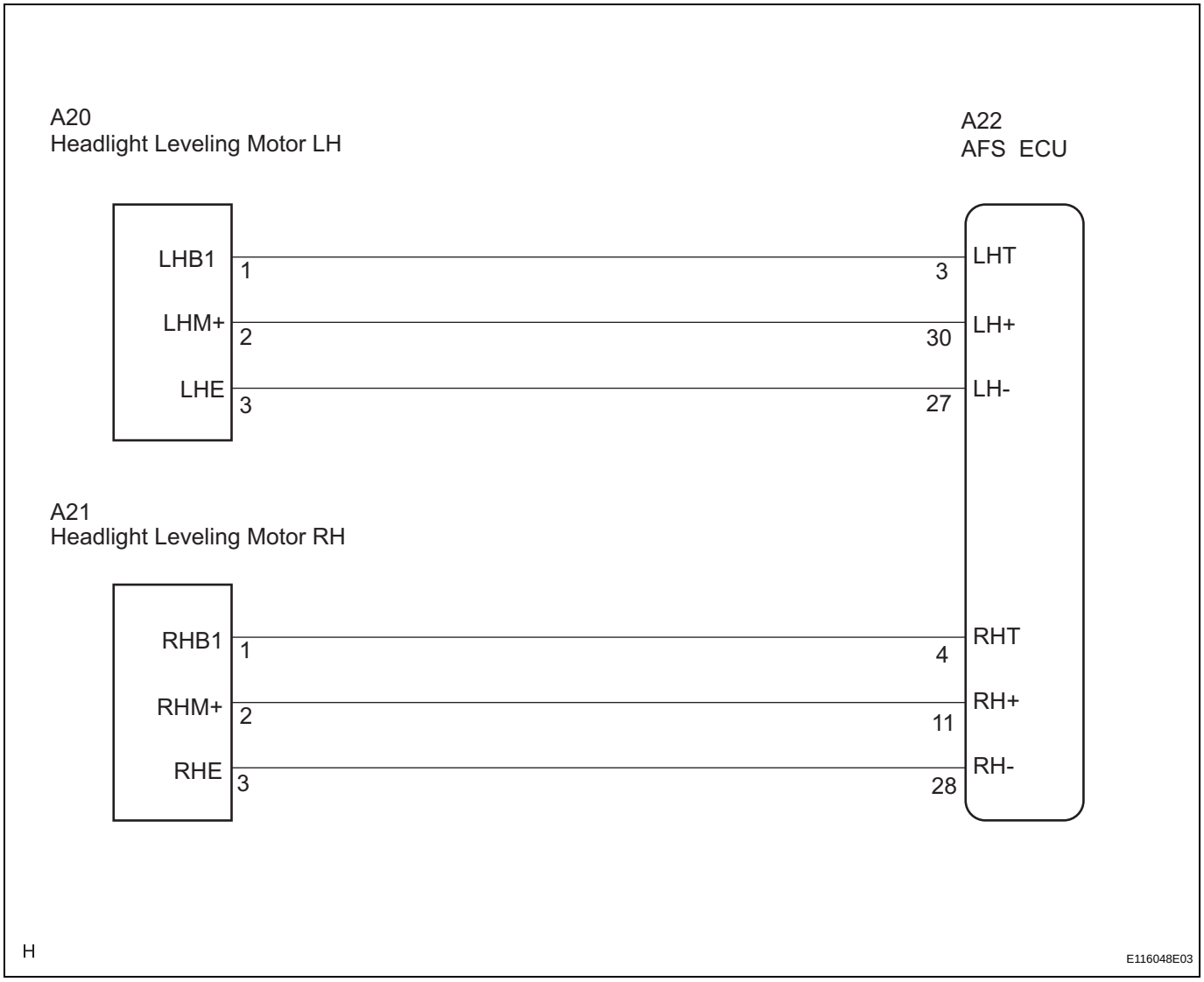

INSPECTION PROCEDURE

1	CHECK HARNESS AND CONNECTOR (AFS ECU - HEADLIGHT ASSEMBLY)

(a) Disconnect the A22 AFS ECU connector.

Wire Harness Side:

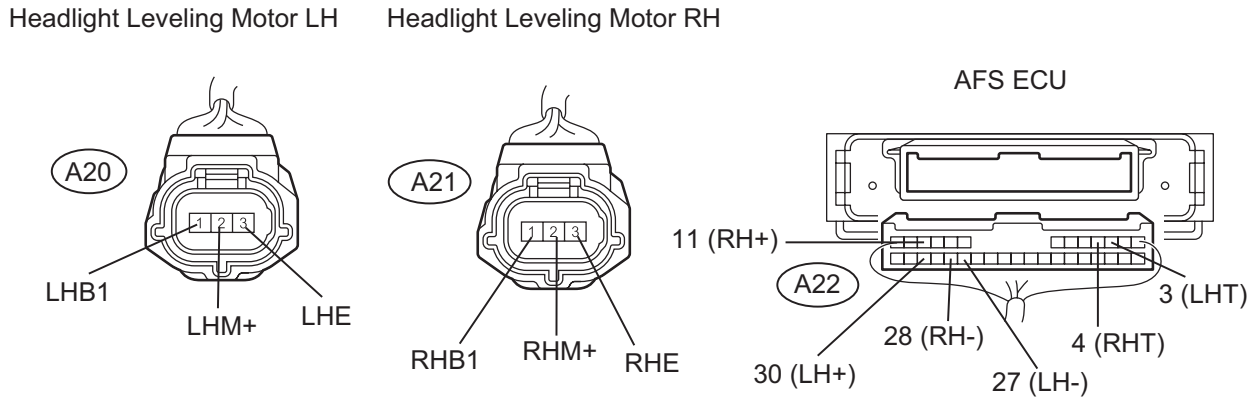

(b) Disconnect the A20 or A21 headlight leveling motor connector.

(c) Measure the resistance according to the value(s) in the table below.

Standard resistance:

LH Side (B2424)

Tester Connection	Condition	Specified Condition
A22-3 (LHT) - A20-1 (LHB1)	Always	Below 1 Ω
A22-27 (LH-) - A20-3 (LHE)	Always	Below 1 Ω
A22-30 (LH+) - A20-2 (LHM+)	Always	Below 1 Ω
A22-3 (LHT) - Body ground	Always	10 kΩ or higher
A22-27 (LH-) - Body ground	Always	10 kΩ or higher
A22-30 (LH+) - Body ground	Always	10 kΩ or higher

RH Side (B2425)

Tester Connection	Condition	Specified Condition
A22-4 (RHT) - A21-1 (RHB1)	Always	Below 1 Ω
A22-28 (RH-) - A21-3 (RHE)	Always	Below 1 Ω
A22-11 (RH+) - A21-2 (RHM+)	Always	Below 1 Ω
A22-4 (RHT) - Body ground	Always	10 kΩ or higher
A22-28 (RH-) - Body ground	Always	10 kΩ or higher
A22-11 (RH+) - Body ground	Always	10 kΩ or higher

NG → REPAIR OR REPLACE HARNESS OR CONNECTOR

OK

2	REPLACE HEADLIGHT UNIT (HEADLIGHT LEVELING MOTOR)

OK:
Returns to normal operation.

NG → REPLACE AFS ECU

OK

END

DTC	B2427	CAN Communication Malfunction

DESCRIPTION

- The AFS ECU receives an engine running status signal and shift position signal from the ECM using CAN communication.
- The AFS ECU receives front LH and RH speed sensor signals from the skid control ECU using CAN communication.
- The AFS ECU receives the headlight status signal from the main body ECU using CAN communication.
- The AFS ECU sends an AFS OFF indicator light ON or OFF demand signal to the combination meter ECU using CAN communication.

DTC No.	DTC Detecting Condition	Trouble Area
B2414	• Malfunction in CAN communication system • AFS ECU	• CAN communication system • AFS ECU

INSPECTION PROCEDURE

1	CHECK DTC (CAN COMMUNICATION SYSTEM)

HINT:
(See page CA-41)
OK:
Normal system code is output.

NG → **GO TO CAN COMMUNICATION SYSTEM**

OK

REPLACE AFS ECU

Headlight Relay Circuit

DESCRIPTION

The main body ECU receives a signal from the light control switch, and turns on the low beam headlights.
HINT:

- The headlight relays are installed in the power distributor, so unlike conventional relays, it cannot be removed for inspection.
- If only a low beam headlight bulb on one side does not illuminate, inspect the bulb, fuse, or wire harness that is related to the bulb.
- If both right and left low beam headlights do not illuminate when the light control switch is turned to the HEAD position, read the light control switch HEAD signal value in the data list and perform the headlight relay active test to determine if the malfunction exists on either the switch side or the relay side.

WIRING DIAGRAM

for Halogen Headlight:

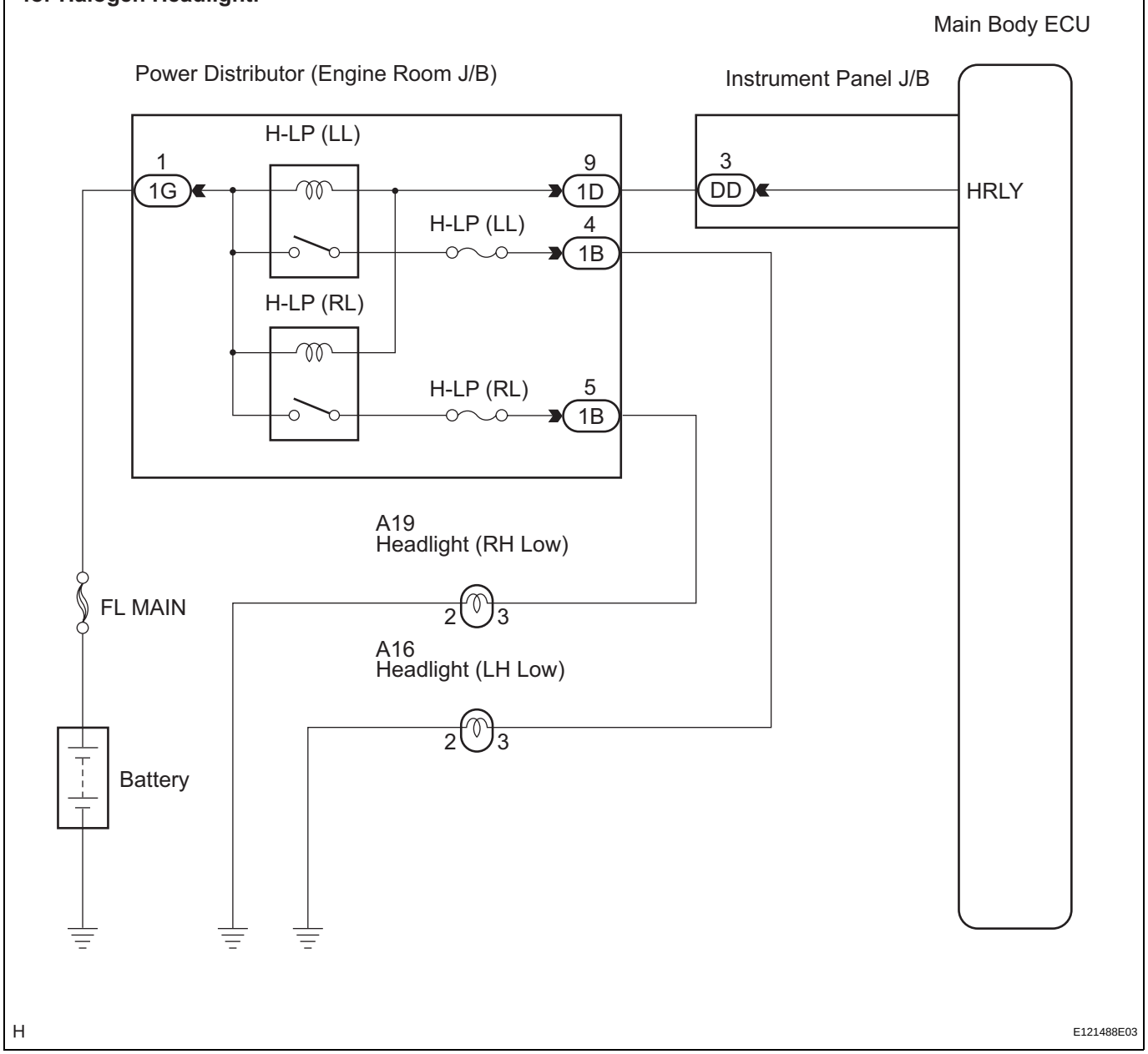

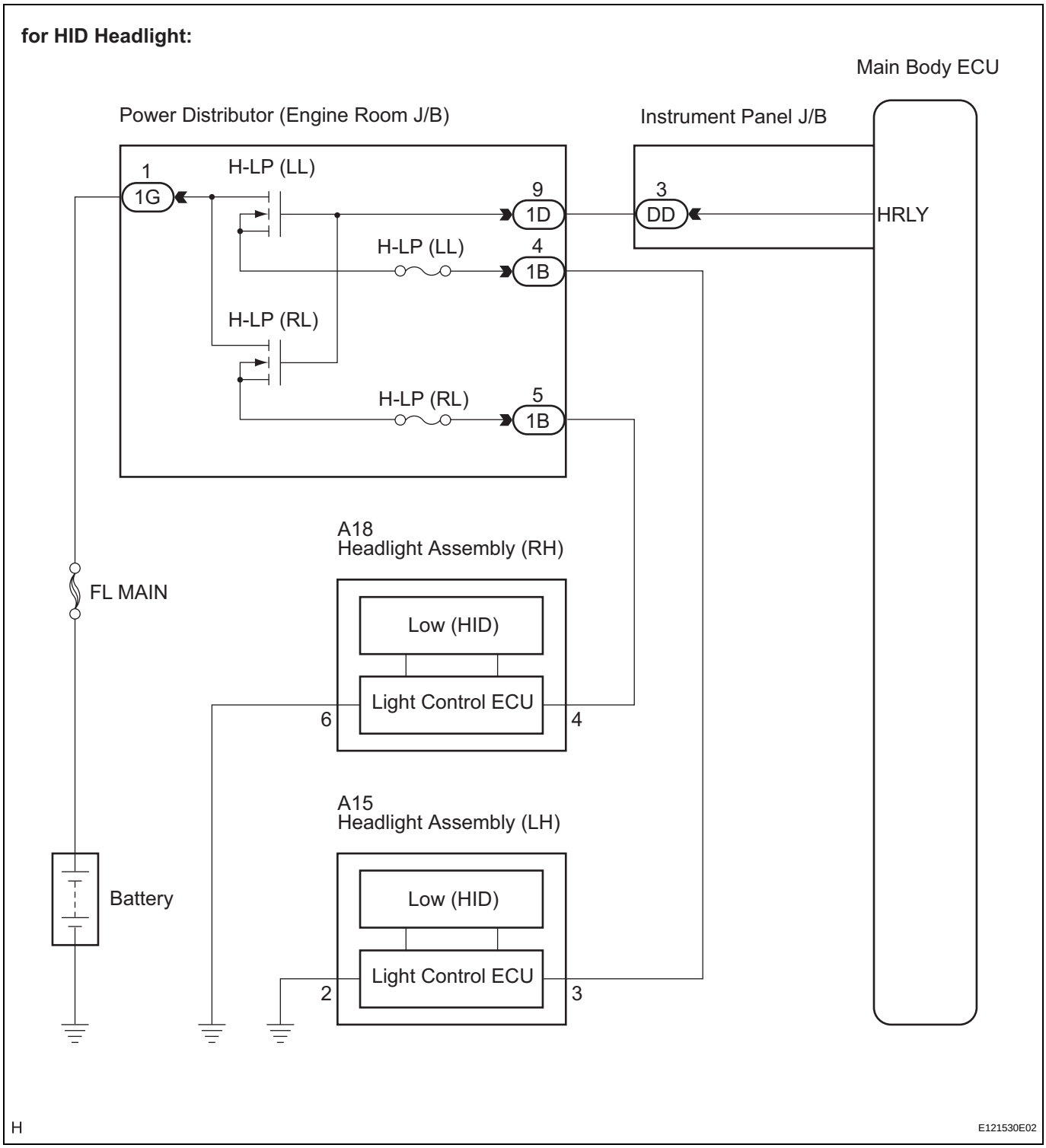

INSPECTION PROCEDURE

1	PERFORM ACTIVE TEST USING INTELLIGENT TESTER

(a) Connect the intelligent tester to the DLC3.
(b) Turn the engine switch on (IG) and turn the intelligent tester main switch on.

(c) Select the item below in the ACTIVE TEST and then check that the relay operates.

MAIN BODY (MAIN BODY ECU):

Tester Display	Test Part	Control Range	Diagnostic Note
HEAD LIGHT	Headlight relay	ON / OFF	-

OK:

Headlight relays operate. (Low beam headlights illuminate.)

OK → **PROCEED TO NEXT CIRCUIT INSPECTION SHOWN IN PROBLEM SYMPTOMS TABLE**

NG

2 INSPECT ENGINE ROOM JUNCTION BLOCK ASSEMBLY

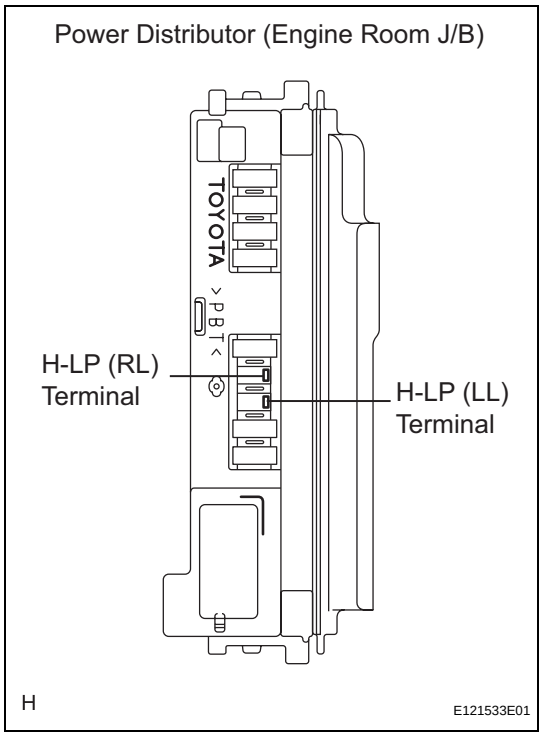

(a) Remove the H-LP (RL) fuse and H-LP (LL) fuse from the engine room junction block assembly.

(b) Measure the voltage between the loading slot of each fuse and body ground.

Standard voltage

Tester Connection	Condition	Specified Condition
H-LP (RL) Terminal - Body ground	Light control switch in HEAD	10 to 14 V
H-LP (LL) Terminal - Body ground	Light control switch in HEAD	10 to 14 V

OK → **REPAIR OR REPLACE HARNESS OR CONNECTOR (FUSE - BODY GROUND)**

NG

3 INSPECT INSTRUMENT PANEL JUNCTION BLOCK ASSEMBLY

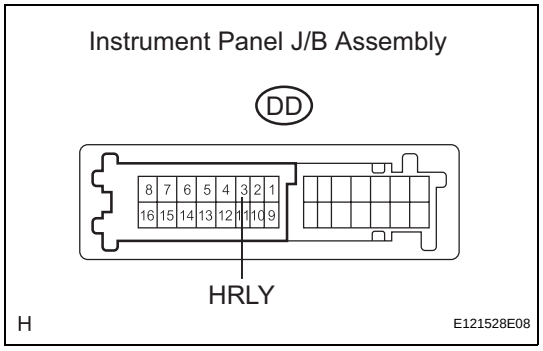

(a) Measure the voltage according to the value(s) in the table below.

Standard voltage

Tester Connection	Condition	Specified Condition
DD-3 (HRLY) - Body ground	Light control switch OFF → HEAD	10 to 14 V → Below 1 V

OK → **REPLACE ENGINE ROOM JUNCTION BLOCK ASSEMBLY**

LI

NG

4 INSPECT INSTRUMENT PANEL JUNCTION BLOCK ASSEMBLY

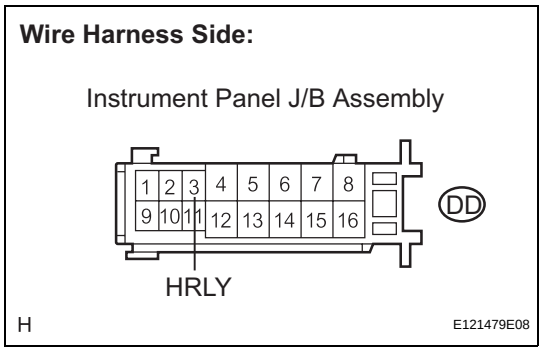

(a) Disconnect the DD instrument panel junction block assembly connector.
(b) Measure the voltage according to the value(s) in the table below.

Standard voltage

Tester Connection	Condition	Specified Condition
DD-3 (HRLY) - Body ground	Always	10 to 14 V

OK → **REPLACE INSTRUMENT PANEL JUNCTION BLOCK ASSEMBLY**

LI

NG

5 INSPECT ENGINE ROOM JUNCTION BLOCK LOCK ASSEMBLY

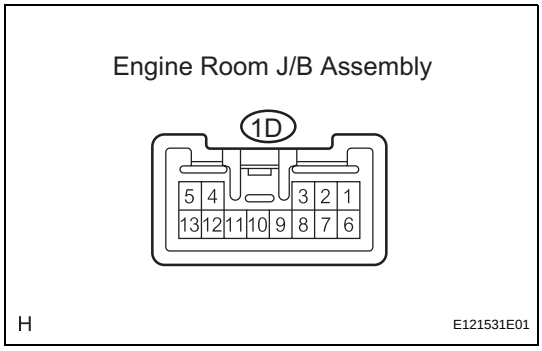

(a) Disconnect the 1D engine room J/B assembly connector.
(b) Measure the voltage according to the value(s) in the table below.

Standard voltage

Tester Connection	Condition	Specified Condition
1D-9 - Body ground	Always	10 to 14 V

OK → **REPAIR OR REPLACE HARNESS OR CONNECTOR (ENGINE ROOM J/B ASSEMBLY - INSTRUMENT PANEL J/B ASSEMBLY)**

NG

6 CHECK HARNESS AND CONNECTOR (BATTERY - ENGINE ROOM J/B ASSEMBLY)

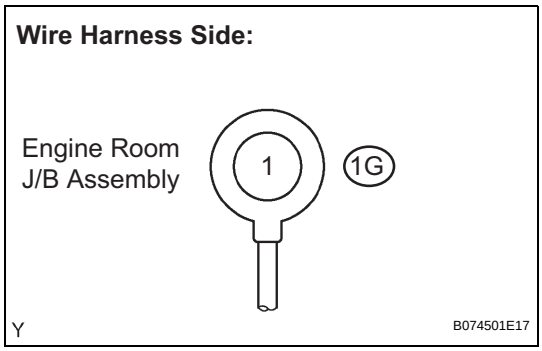

(a) Disconnect the 1G engine room junction block assembly connector.
(b) Measure the voltage according to the value(s) in the table below.

Standard voltage

Tester Connector	Condition	Specified Condition
1G-1 - Body ground	Always	10 to 14 V

NG → **REPAIR OR REPLACE HARNESS OR CONNECTOR**

OK

REPLACE ENGINE ROOM JUNCTION BLOCK ASSEMBLY

Headlight (HI-BEAM) Circuit

DESCRIPTION

When either of the following conditions is met, the high beam headlights come on.

- Dimmer switch in HIGH position and light control switch in HEAD position.
- Dimmer switch in HIGH position, light control switch in AUTO position, and low beam headlights are on.

HINT:

- The power distributor has a fail-safe function control. If a short circuit occurs between the power distributor and high beam headlight bulb, the power distributor stops the DRL relay operation.
- The DRL relay is built into the power distributor, so unlike conventional relays, it cannot be removed for inspection.
- If only a high beam headlight on one side does not illuminate, inspect the fuse, bulb, or wire harness that is related to the bulb.
- If both right and left high beam headlights do not illuminate, read the dimmer switch HIGH signal value in the data list, and perform the DRL relay active test to determine if the malfunction exists on either the switch side or the relay side.

WIRING DIAGRAM

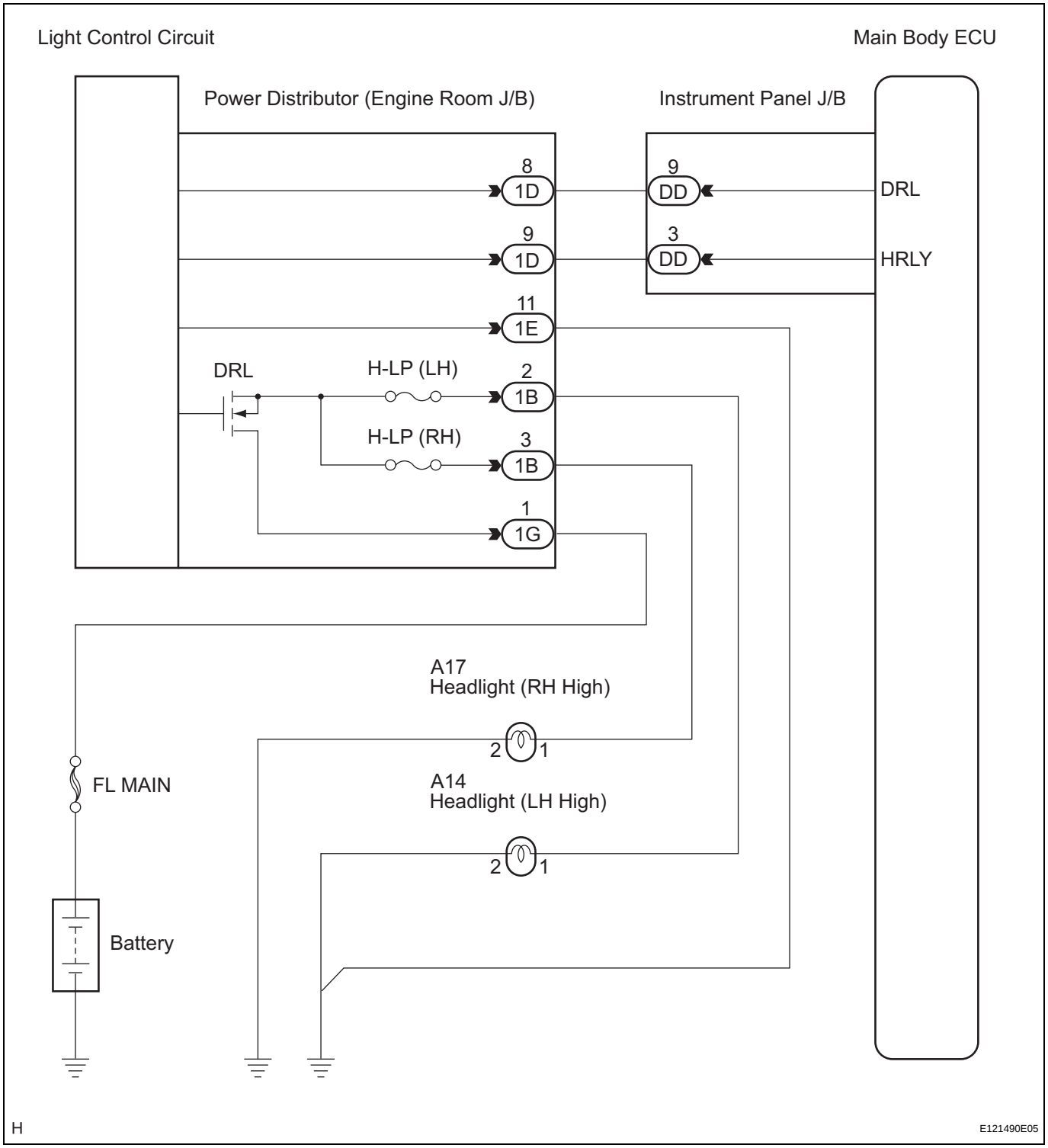

INSPECTION PROCEDURE

1	PERFORM ACTIVE TEST USING INTELLIGENT TESTER

(a) Connect the intelligent tester to the DLC3.
(b) Turn the engine switch on (IG) and turn the intelligent tester main switch on.

LI

(c) Select the item below in the ACTIVE TEST and then check that the relay operates.

MAIN BODY (MAIN BODY ECU):

Tester Display	Test Part	Control Range	Diagnostic Note
HEAD LIGHT (HI)	DRL relay	ON / OFF	-

OK:
Relay operates. (High beam headlights illuminate.)

OK → **PROCEED TO NEXT CIRCUIT INSPECTION SHOWN IN PROBLEM SYMPTOMS TABLE**

NG

LI

2 CHECK HARNESS AND CONNECTOR (SHORT IN RELAY-DRIVEN CIRCUIT)

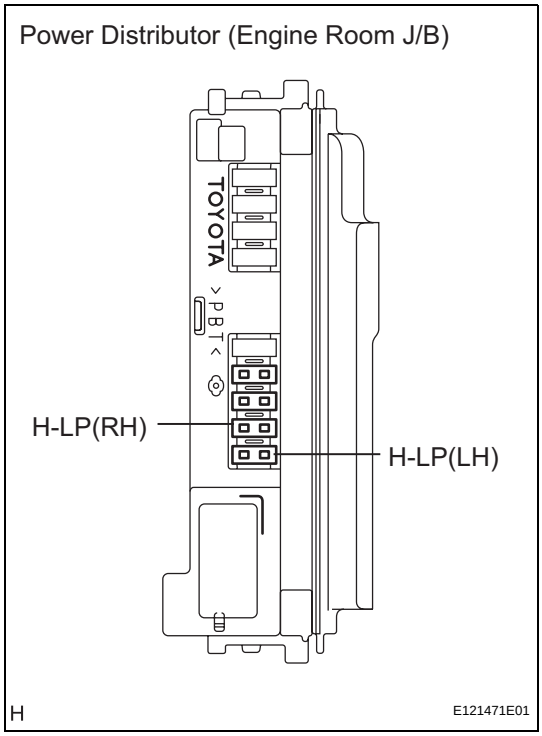

(a) Remove the H-LP (RH) fuse from the engine room junction block assembly.
(b) Turn the light control switch to the HEAD position and turn the dimmer switch to the HIGH position.
(c) Check if the high beam headlight LH illuminates.
(d) Turn the dimmer switch to the LOW position.
(e) Install the H-LP (RH) fuse and remove the H-LP (LH) fuse.
(f) Turn the dimmer switch to the HIGH position.
(g) Check if the high beam headlight RH illuminates.
OK:
Either high beam headlight LH or RH illuminates.

OK → **REPAIR OR REPLACE HARNESS OR CONNECTOR (SHORT CIRCUIT BETWEEN FUSE AND BULB)**

NG

3 INSPECT ENGINE ROOM JUNCTION BLOCK ASSEMBLY

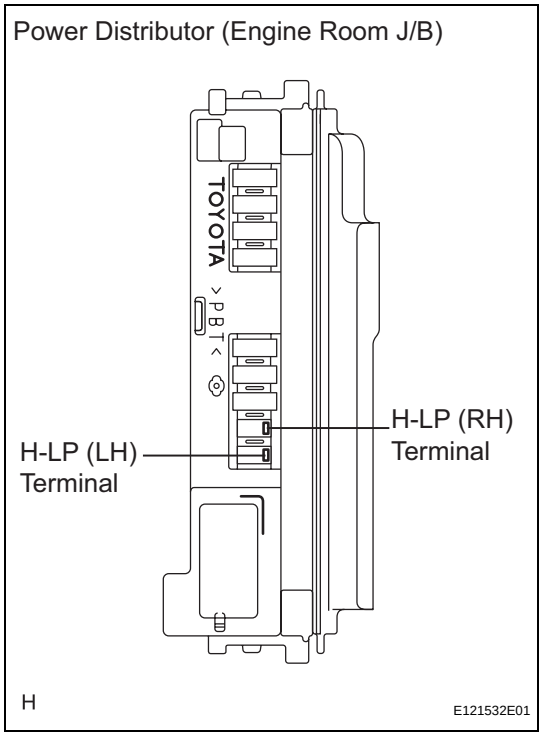

(a) Remove the H-LP (RH) fuse and H-LP (LH) fuse from the engine room junction block assembly.

(b) Measure the voltage between the loading slot of each fuse and body ground.

Standard voltage

Tester Connection	Condition	Specified Condition
H-LP (RH) terminal - Body ground	Light control switch in HEAD and dimmer switch in HIGH	10 to 14 V
H-LP (LH) terminal - Body ground	Light control switch in HEAD and dimmer switch in HIGH	10 to 14 V

OK → **REPAIR OR REPLACE HARNESS OR CONNECTOR (OPEN CIRCUIT BETWEEN FUSE AND BODY GROUND)**

NG

4 INSPECT INSTRUMENT PANEL JUNCTION BLOCK ASSEMBLY

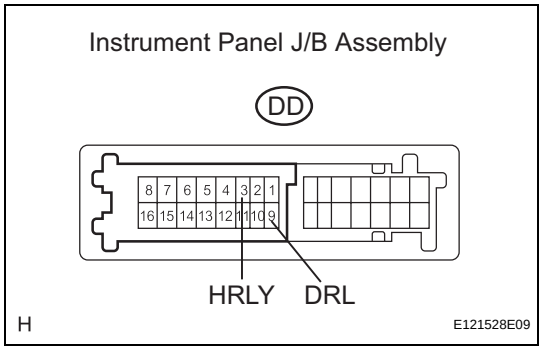

(a) Measure the voltage according to the value(s) in the table below.

Standard voltage

Tester Connection	Condition	Specified Condition
DD-3 (HRLY) - Body ground	Light control switch OFF → HEAD	10 to 14 V → Below 1 V
DD-9 (DRL) - Body ground	Light control switch in HEAD, dimmer switch LOW → HIGH	10 to 14 V → Below 1 V

OK → **REPLACE ENGINE ROOM JUNCTION BLOCK ASSEMBLY**

NG

LI

5 INSPECT INSTRUMENT PANEL JUNCTION BLOCK ASSEMBLY

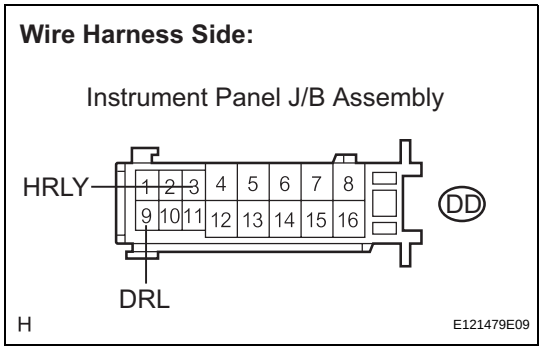

(a) Disconnect the DD instrument panel junction block connector.
(b) Measure the voltage according to the value(s) in the table below.
Standard voltage

Tester Connection	Condition	Specified Condition
DD-3 (HRLY) - Body ground	Always	10 to 14 V
DD-9 (DRL) - Body ground	Always	10 to 14 V

OK → **REPLACE INSTRUMENT PANEL JUNCTION BLOCK ASSEMBLY**

NG

6 INSPECT ENGINE ROOM JUNCTION BLOCK ASSEMBLY

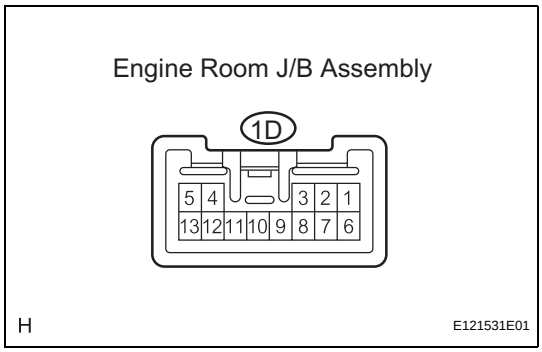

(a) Disconnect the 1D engine room junction block assembly connector.
(b) Measure the voltage according to the value(s) in the table below.
Standard voltage

Tester Connection	Condition	Specified Condition
1D-8 - Body ground	Always	10 to 14 V
1D-9 - Body ground	Always	10 to 14 V

OK → **REPAIR OR REPLACE HARNESS OR CONNECTOR (ENGINE ROOM J/B ASSEMBLY - INSTRUMENT PANEL J/B ASSEMBLY)**

NG

7 CHECK HARNESS AND CONNECTOR (ENGINE ROOM J/B ASSEMBLY - BATTERY AND BODY GROUND)

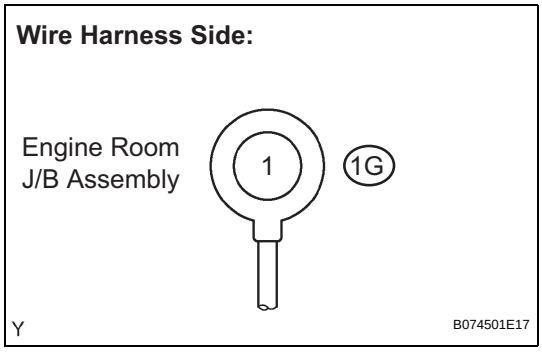

(a) Disconnect the 1G engine room junction block assembly connector.
(b) Measure the voltage according to the value(s) in the table below.
Standard voltage

Tester Connection	Condition	Specified Condition
1G-1 - Body ground	Always	10 to 14 V

Wire Harness Side:

Engine Room J/B Assembly

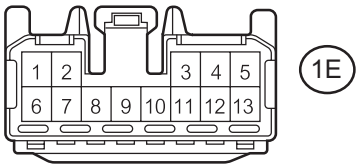

H E121481E01

(c) Disconnect the 1E engine room J/B assembly connector.

(d) Measure the resistance according to the value(s) in the table below.

Standard resistance

Tester Connection	Condition	Specified Condition
1E-11 - Body ground	Always	Below 1 Ω

OK → **REPLACE ENGINE ROOM JUNCTION BLOCK ASSEMBLY**

NG

REPAIR OR REPLACE HARNESS OR CONNECTOR

Front Fog Light Circuit

DESCRIPTION

When all of the following conditions are met, the front fog lights come on.
- Low beam headlights are ON.
- Front fog light switch is ON.
- High beam headlights are OFF.

When any of the following conditions is met, the front fog lights turn off.
- Front fog light switch is OFF.
- Low beam headlights are OFF.
- High beam headlights are ON.

HINT:
- Before performing troubleshooting of the front fog light system, check that the taillight system and headlight system are normal.
- If only a front fog light on one side does not illuminate, inspect the bulb or wire harness that is related to the bulb.
- If both right and left front fog lights do not illuminate, read the front fog light switch value in the data list and perform the front fog light relay active test to determine if the malfunction exists on either the switch side or the relay side.

WIRING DIAGRAM

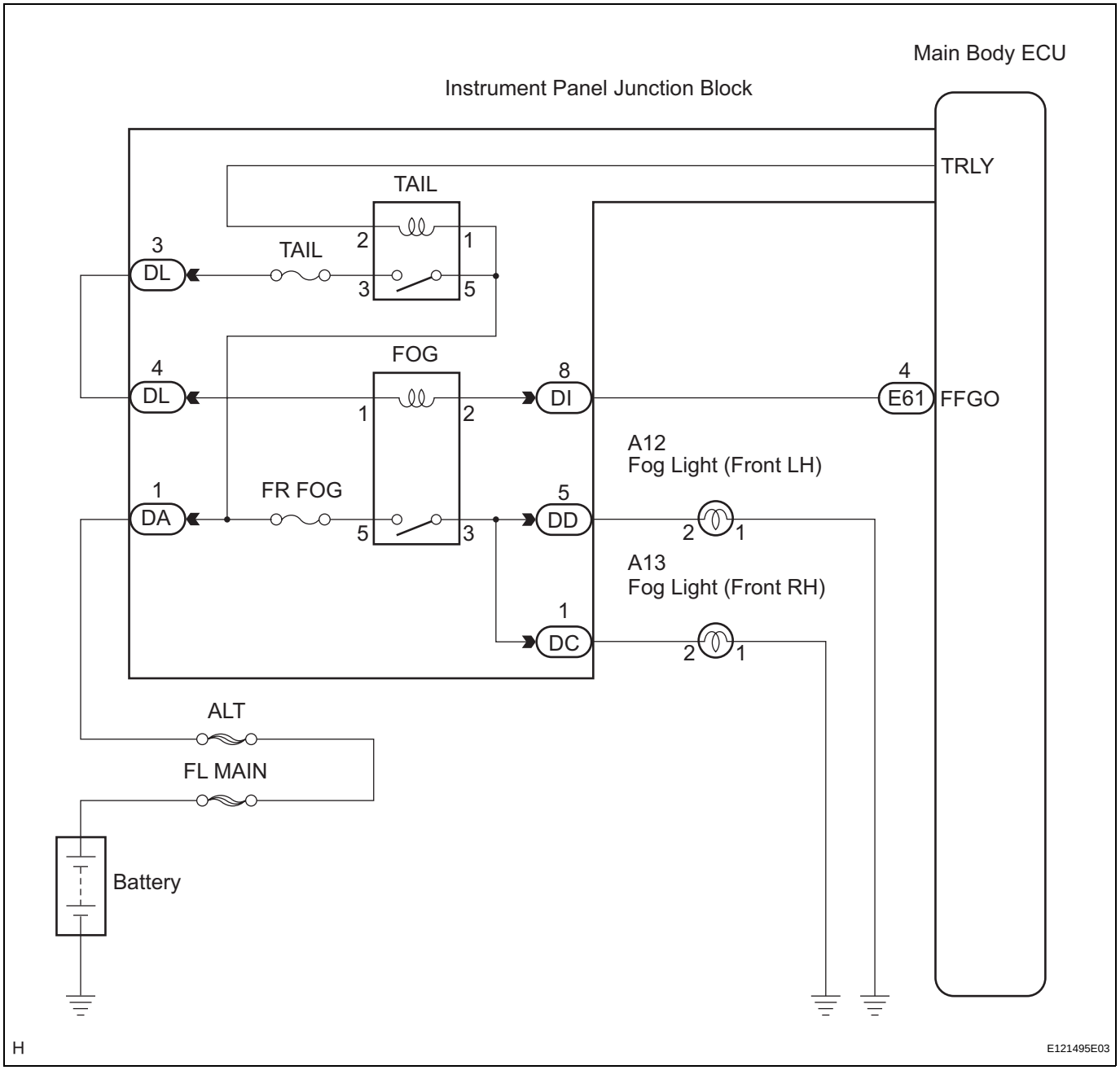

INSPECTION PROCEDURE

1	PERFORM ACTIVE TEST USING INTELLIGENT TESTER

(a) Connect the intelligent tester to the DLC3.
(b) Turn the engine switch on (IG) and turn the intelligent tester main switch on.
(c) Select the item below in the ACTIVE TEST and then check that the relay operates.

MAIN BODY (MAIN BODY ECU):

Tester Display	Test Part	Control Range	Diagnostic Note
F FOG LIGHT RLY	Front fog light relay (Taillights are ON)	ON / OFF	-

OK:
Front fog light relay operates. (Front fog lights come on.)

OK → **PROCEED TO NEXT CIRCUIT INSPECTION SHOWN IN PROBLEM SYMPTOMS TABLE**

NG

2 INSPECT FUSE (FR FOG)

(a) Remove the FR FOG fuse from the instrument panel J/B assembly.
(b) Measure the resistance of the fuse.
Standard resistance:
Below 1 Ω

NG → **REPLACE FUSE**

OK

3 INSPECT FOG LIGHT RELAY

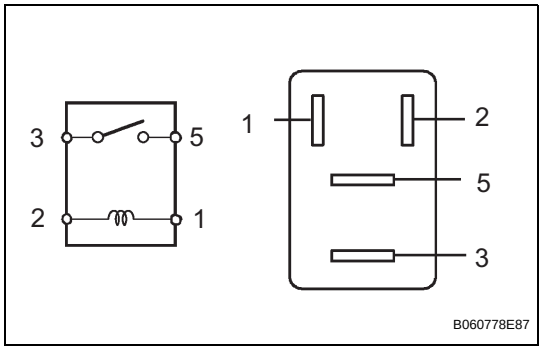

(a) Remove the front fog light relay from the instrument panel junction block assembly.
(b) Measure the resistance according to the value(s) in the table below.
Standard resistance

Tester Connection	Specified Condition
3 - 5	10 kΩ or higher
	Below 1 Ω (When battery voltage is applied to terminals 1 and 2)

NG → **REPLACE FOG LIGHT RELAY**

OK

4 INSPECT INSTRUMENT PANEL JUNCTION BLOCK ASSEMBLY

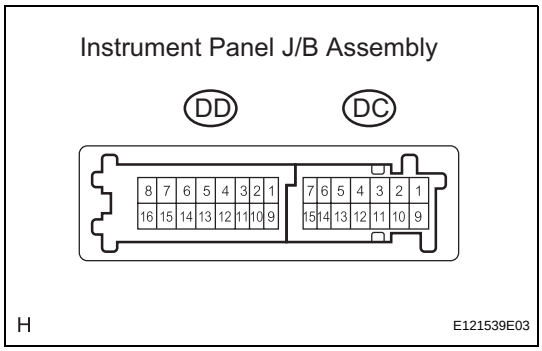

(a) Measure the voltage according to the value(s) in the table below.
Standard voltage

Tester Connection	Condition	Specified Condition
DC-1 - Body ground	Light control switch in HEAD, front fog light switch OFF → ON	Below 1 V → 10 to 14 V
DD-5 - Body ground	Light control switch in HEAD, front fog light switch OFF → ON	Below 1 V → 10 to 14 V

OK → **REPAIR OR REPLACE HARNESS OR CONNECTOR (INSTRUMENT PANEL J/B ASSEMBLY - BODY GROUND)**

NG

5 INSPECT INSTRUMENT PANEL JUNCTION BLOCK ASSEMBLY

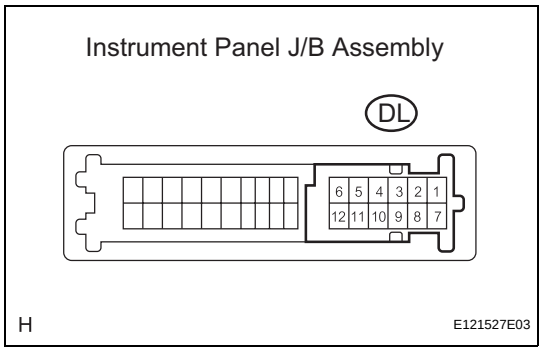

(a) Measure the voltage according to the value(s) in the table below.

Standard voltage

Tester Connection	Condition	Specified Condition
DL-3 - Body ground	Light control switch OFF → TAIL	Below 1 V → 10 to 14 V

NG → **REPLACE INSTRUMENT PANEL JUNCTION BLOCK ASSEMBLY**

OK

6 CHECK HARNESS AND CONNECTOR (BETWEEN CONNECTOR DL-3 AND CONNECTOR DL-4)

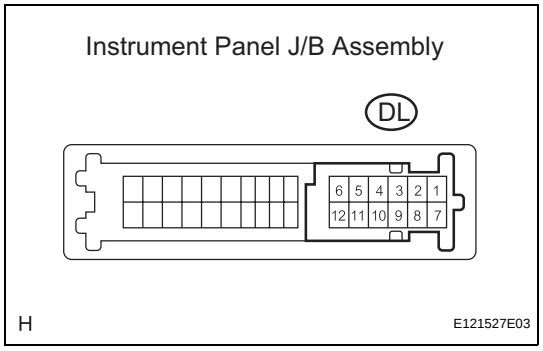

(a) Measure the voltage according to the value(s) in the table below.

Standard voltage

Tester Connection	Condition	Specified Condition
DL-4 - Body ground	Light control switch OFF → TAIL	Below 1 V → 10 to 14 V

NG → **REPAIR OR REPLACE HARNESS OR CONNECTOR**

OK

7 INSPECT INSTRUMENT PANEL JUNCTION BLOCK ASSEMBLY

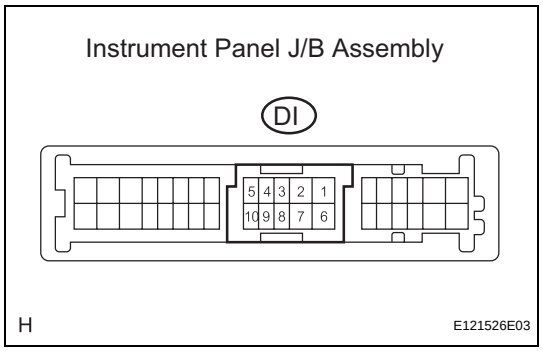

(a) Disconnect the DI instrument panel assembly connector.

(b) Measure the voltage according to the value(s) in the table below.

Standard voltage

Tester Connection	Condition	Specified Condition
DI-8 - Body ground	Light control switch OFF → TAIL	Below 1 V → 10 to 14 V

NG → **REPLACE INSTRUMENT PANEL JUNCTION BLOCK ASSEMBLY**

OK

8	**CHECK HARNESS AND CONNECTOR (BODY ECU - INSTRUMENT PANEL JUNCTION BLOCK ASSEMBLY)**

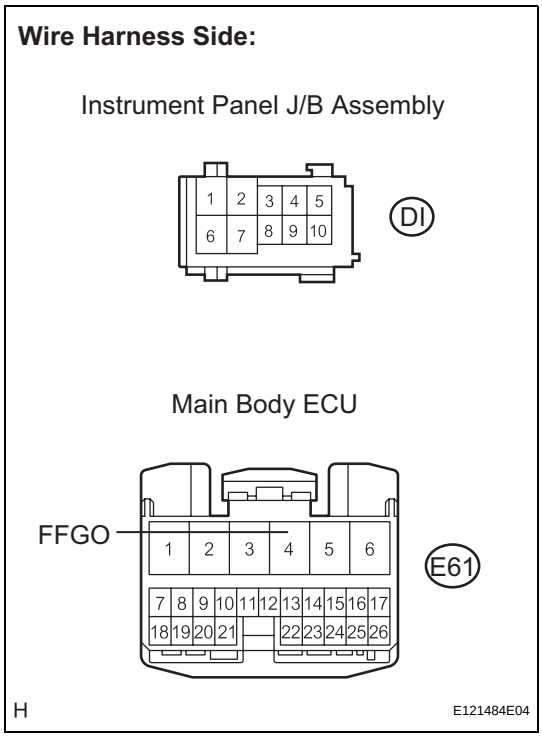

(a) Disconnect the E61 main body ECU connector.
(b) Measure the resistance according to the value(s) in the table below.
Standard resistance

Tester Connection	Condition	Specified Condition
E61-4 - DI-8	Always	Below 1 Ω

NG → **REPAIR OR REPLACE HARNESS OR CONNECTOR**

OK

REPLACE INSTRUMENT PANEL JUNCTION BLOCK ASSEMBLY

Light Control Switch Circuit

DESCRIPTION

The main body ECU receives the following signals:

- Light control switch TAIL, HEAD, or AUTO signal.
- Dimmer switch HIGH or HIGH FLASH (PASS) signal.
- Front fog light switch signal.
- Rear fog light switch signal.

HINT:

- When performing troubleshooting, inspect the switch that is related to the malfunction. For example, if both right and left low beam headlights do not illuminate, read the light control switch HEAD signal value only in the data list. If the value is normal, perform the headlight relay active test.

WIRING DIAGRAM

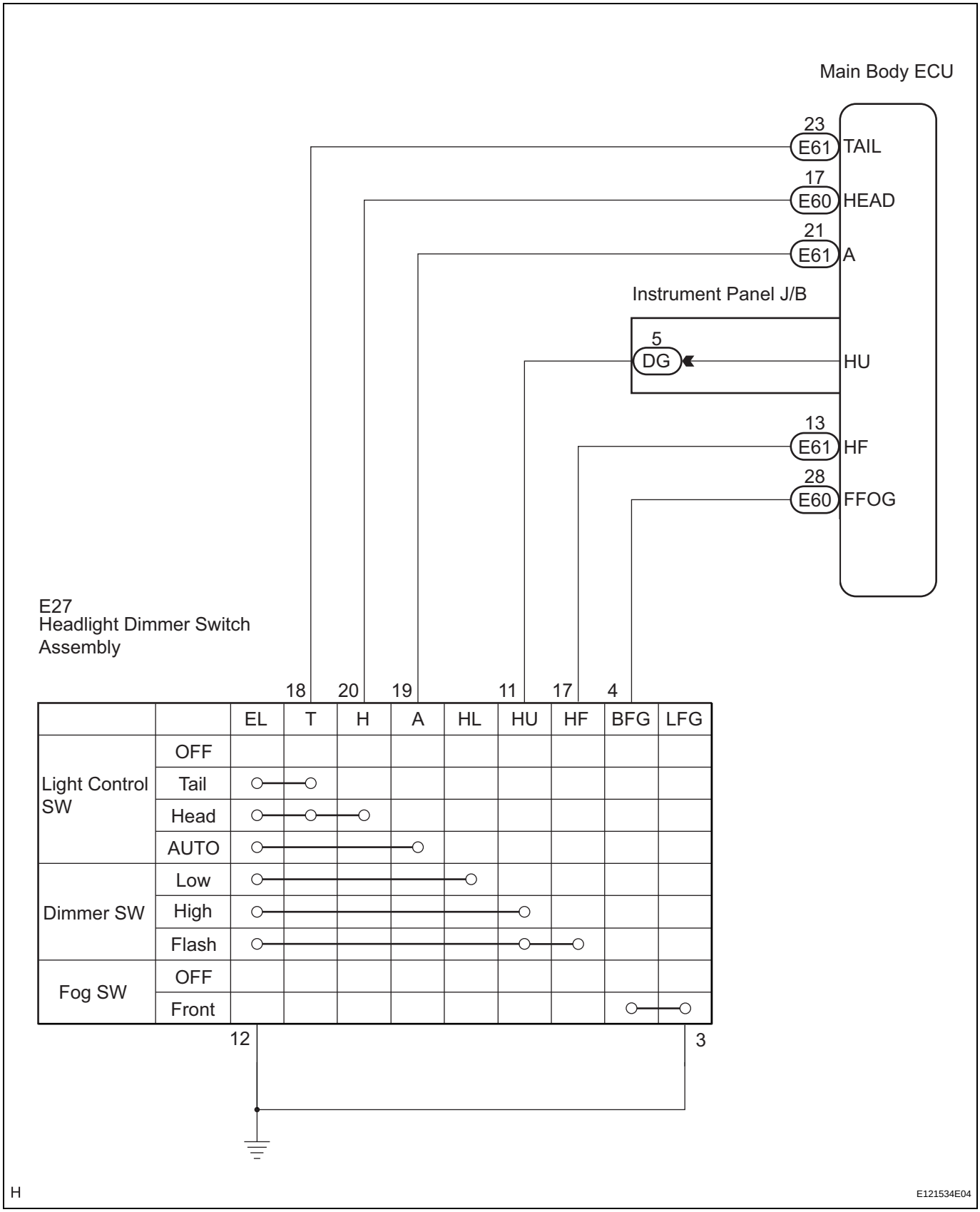

		EL	T	H	A	HL	HU	HF	BFG	LFG
Light Control SW	OFF									
	Tail	○	○							
	Head	○	○	○						
	AUTO	○			○					
Dimmer SW	Low	○				○				
	High	○					○			
	Flash	○					○	○		
Fog SW	OFF									
	Front								○	○

INSPECTION PROCEDURE

1	READ VALUE OF INTELLIGENT TESTER

(a) Connect the intelligent tester to the DLC3.
(b) Turn the engine switch on (IG) and turn the intelligent tester main switch on.
(c) Select the items below in the DATA LIST, and read the display on the intelligent tester.

MAIN BODY (MAIN BODY ECU):

Tester Display	Measurement Item/Range	Normal Condition	Diagnostic Note
DIMMER SW	Dimmer switch HIGH signal / ON or OFF	ON: Dimmer switch in HIGH or HIGH FLASH OFF: Dimmer switch in LOW	-
HIGH FLASHER SW	Dimmer switch HIGH FLASH signal / ON or OFF	ON: Dimmer switch in HIGH FLASH OFF: Dimmer switch not in HIGH FLASH	-
F FOG LIGHT SW	Fog light switch signal / ON or OFF	ON: Fog light switch ON OFF: Fog light switch OFF	-
AUTO LIGHT SW	Light control switch AUTO signal / ON or OFF	ON: Light control switch in AUTO OFF: Light control switch not in AUTO	-
HEAD LIGHT SW	Light control switch HEAD signal / ON or OFF	ON: Light control switch in HEAD OFF: Light control switch not in HEAD	-
TAIL LIGHT SW	Light control switch TAIL signal / ON or OFF	ON: Light control switch in TAIL or HEAD OFF: Light control switch in neither TAIL nor HEAD	-

OK:
Normal conditions listed above are displayed.

OK → **PROCEED TO NEXT CIRCUIT INSPECTION SHOWN IN PROBLEM SYMPTOMS TABLE**

NG

2	INSPECT HEADLIGHT DIMMER SWITCH ASSEMBLY

HINT:
(See page LI-189)
OK:
Headlight dimmer switch assembly is normal.

NG → **REPLACE HEADLIGHT DIMMER SWITCH ASSEMBLY**

OK

3	CHECK HARNESS AND CONNECTOR (INSTRUMENT PANEL J/B ASSEMBLY - SWITCH ASSEMBLY)

Wire Harness Side:

Headlight Dimmer Switch Assembly

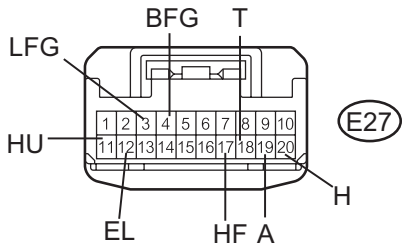

Main Body ECU

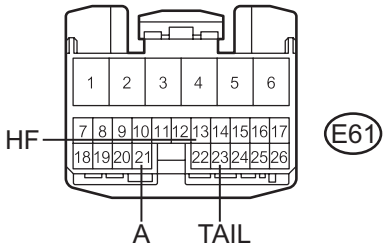

Main Body ECU

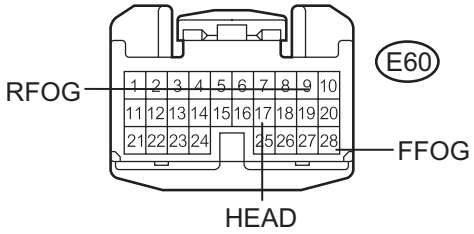

Instrument Panel J/B Assembly

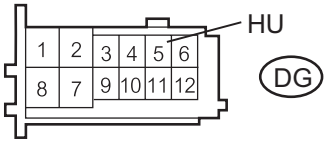

H E121507E06

(a) Disconnect the E27 headlight dimmer switch assembly connector.
(b) Disconnect the E60 and E61 main body ECU connectors.
(c) Disconnect the DG instrument panel J/B connector.
(d) Measure the resistance according to the value(s) in the table below.

Standard resistance

Tester Connection	Condition	Specified Condition
E27-4 (BFG) - E60-28 (FFOG)	Always	Below 1 Ω
E27-11 (HU) - DG-5 (HU)	Always	Below 1 Ω
E27-17 (HF) - E61-13 (HF)	Always	Below 1 Ω
E27-18 (T) - E61-23 (TAIL)	Always	Below 1 Ω
E27-19 (A) - E61-21 (A)	Always	Below 1 Ω
E27-20 (H) - E60-17 (HEAD)	Always	Below 1 Ω
E27-3 (LFG) - Body ground	Always	10 kΩ or higher
E27-4 (BFG) - Body ground	Always	10 kΩ or higher
E27-11 (HU) - Body ground	Always	10 kΩ or higher
E27-17 (HF) - Body ground	Always	10 kΩ or higher
E27-18 (T) - Body ground	Always	10 kΩ or higher
E27-19 (A) - Body ground	Always	10 kΩ or higher
E27-20 (H) - Body ground	Always	10 kΩ or higher
E27-12 (EL) - Body ground	Always	Below 1 Ω

NG → **REPAIR OR REPLACE HARNESS OR CONNECTOR**

OK

REPLACE INSTRUMENT PANEL JUNCTION BLOCK ASSEMBLY

Door Courtesy Switch Circuit

DESCRIPTION

The main body ECU detects the condition of the door courtesy switches.
HINT:

- The main body ECU receives driver side, passenger side, rear LH, and rear RH door courtesy switch signals to control the illuminated entry system.
- The main body ECU receives driver side, passenger side, rear LH, rear RH, and luggage compartment door courtesy switch signals to control the light auto turn off system.
- When performing troubleshooting, inspect the switch that is related to the malfunction only. For example, if the illuminated entry system does not operate when opening the passenger side door with the engine switch off, inspect the passenger side door courtesy switch circuit only.

WIRING DIAGRAM

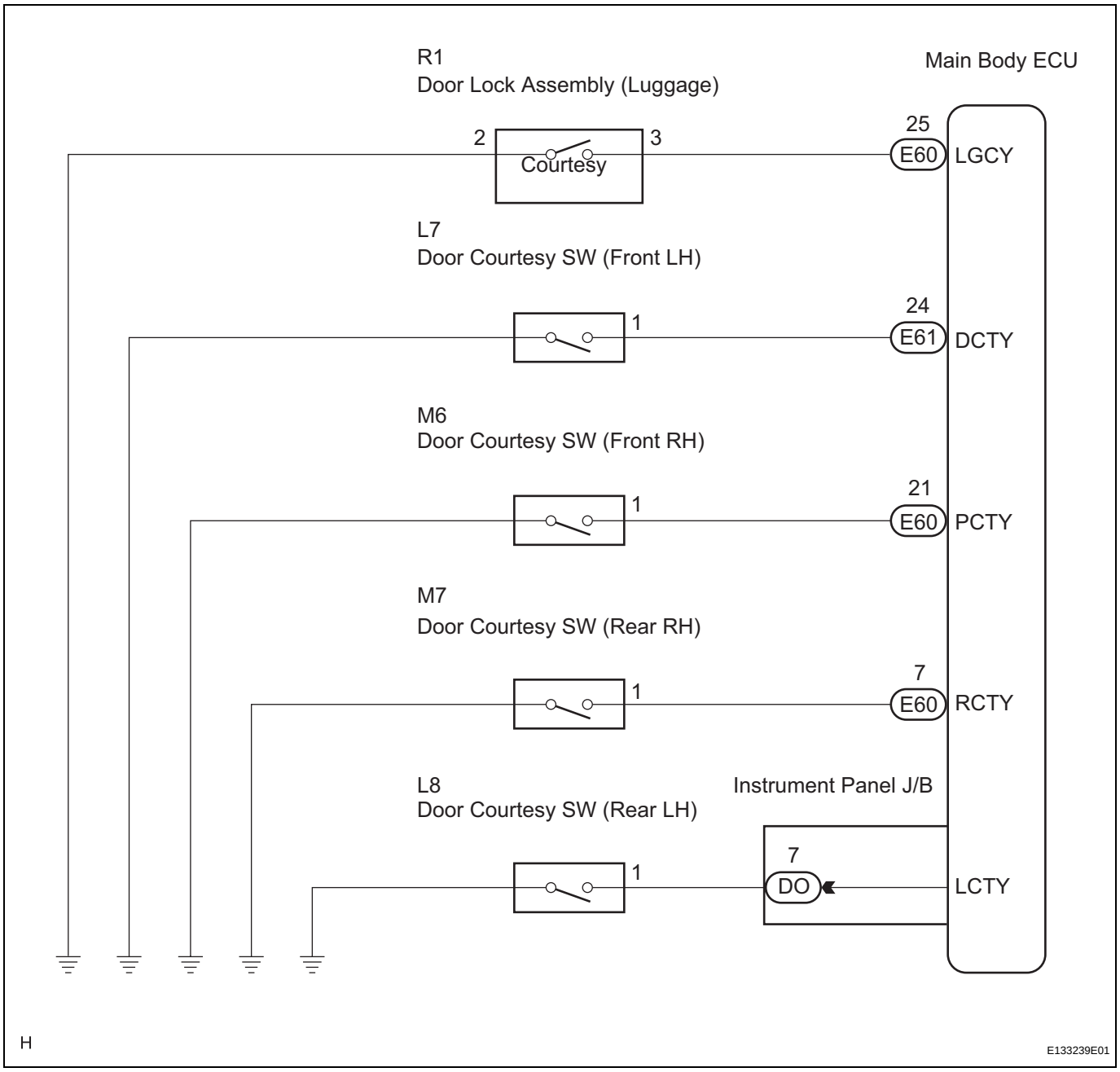

INSPECTION PROCEDURE

1	READ VALUE OF INTELLIGENT TESTER

(a) Connect the intelligent tester to the DLC3.
(b) Turn the engine switch on (IG) and turn the intelligent tester main switch on.
(c) Select the items below in the DATA LIST, and read the display on the intelligent tester.

MAIN BODY (MAIN BODY ECU):

Tester Display	Measurement Item/Range	Normal Condition	Diagnostic Note
D DOR CTY SW	Driver side door courtesy switch signal / ON or OFF	ON: Driver side door is open OFF: Driver side door is closed	-
P DOR CTY SW	Passenger side door courtesy switch signal / ON or OFF	ON: Passenger side door is open OFF: Passenger side door is closed	-
RR DOR CTY SW	Rear right door courtesy switch signal / ON or OFF	ON: Rear right door is open OFF: Rear right door is closed	-
RL DOR CTY SW	Rear left door courtesy switch signal / ON or OFF	ON: Rear left door is open OFF: Rear left door is closed	-
LUGG COURTSY SW	Luggage compartment door courtesy switch signal / ON or OFF	ON: Luggage compartment door is open OFF: Luggage compartment door is closed	-

OK:
Normal conditions listed above are displayed.

OK → **PROCEED TO NEXT CIRCUIT INSPECTION SHOWN IN PROBLEM SYMPTOMS TABLE**

NG

2	INSPECT DOOR COURTESY SWITCH

(a) Inspect the front door courtesy switch (See page LI-203).
(b) Inspect the rear door courtesy switch (See page LI-205).
(c) Inspect the luggage compartment door courtesy switch (See page LI-207).
OK:
Door courtesy switches are normal.

NG → **REPLACE DOOR COURTESY SWITCH**

OK

3	CHECK HARNESS AND CONNECTOR (MAIN BODY ECU - DOOR COURTESY SWITCH)

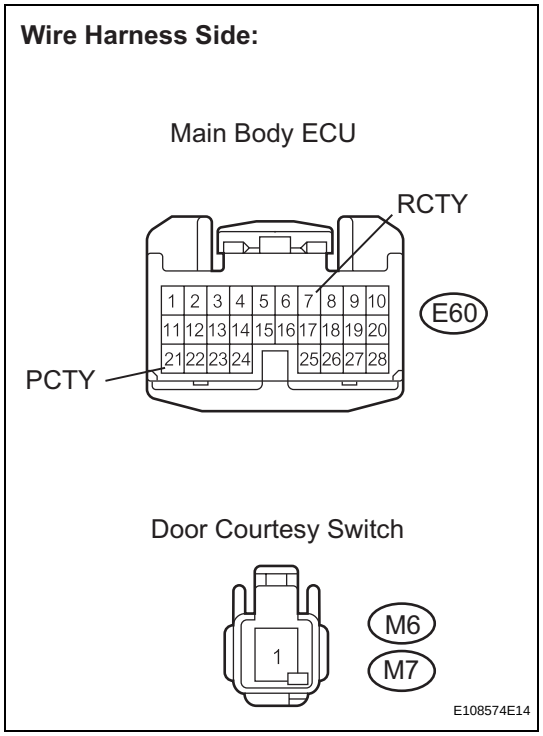

(a) Check the harness and connector between the main body ECU and door courtesy switches (passenger side and rear RH).
   (1) Disconnect the E60 main body ECU connector.
   (2) Disconnect the M6 and M7 switch connectors.
   (3) Measure the resistance according to the value(s) in the table below.
   Standard resistance

Tester Connection	Condition	Specified Condition
E60-7 (RCTY) - M7-1 (Rear RH)	Always	Below 1 Ω
E60-21 (PCTY) - M6-1 (Front passenger side)	Always	Below 1 Ω
E60-7 (RCTY) - Body ground	Always	10 kΩ or higher
E60-21 (PCTY) - Body ground	Always	10 kΩ or higher

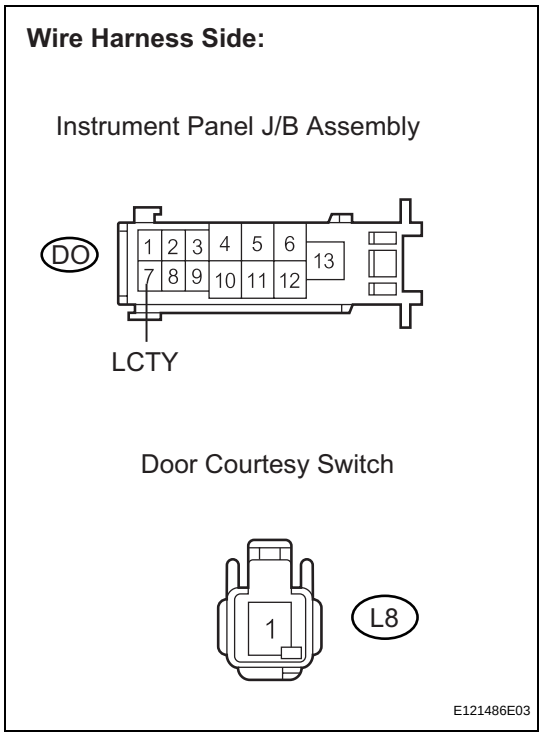

(b) Check the harness and connector between the instrument panel junction block assembly and rear LH door courtesy switch.
   (1) Disconnect the DO instrument panel J/B assembly connector.
   (2) Disconnect the L8 switch connector.
   (3) Measure the resistance according to the value(s) in the table below.
   Standard resistance

Tester Connection	Condition	Specified Condition
DO-7 (LCTY) - L8-1 (Rear LH)	Always	Below 1 Ω
DO-7 (LCTY) - Body ground	Always	10 kΩ or higher

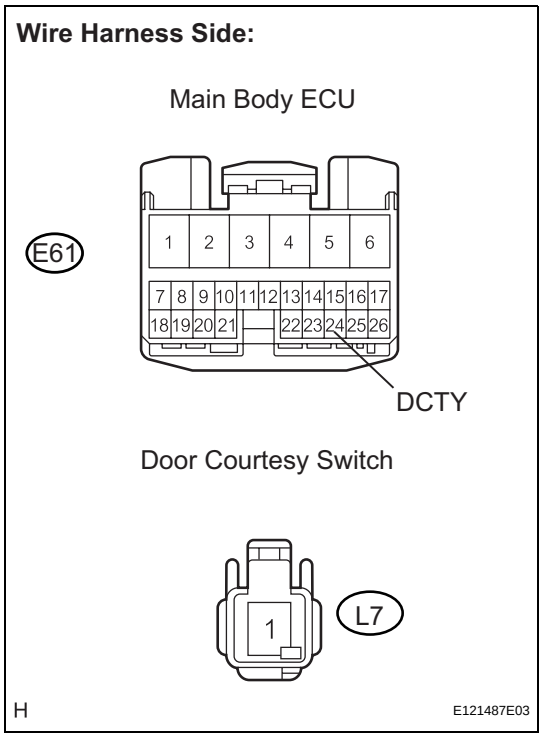

(c) Check the harness and connector between the main body ECU and driver side door courtesy switch.
(1) Disconnect the E61 main body ECU connector.
(2) Disconnect the L7 switch connector.
(3) Measure the resistance according to the value(s) in the table below.

Standard resistance

Tester Connection	Condition	Specified Condition
E61-24 (DCTY) - L7-1 (Driver side)	Always	Below 1 Ω
E61-24 (DCTY) - Body ground	Always	10 kΩ or higher

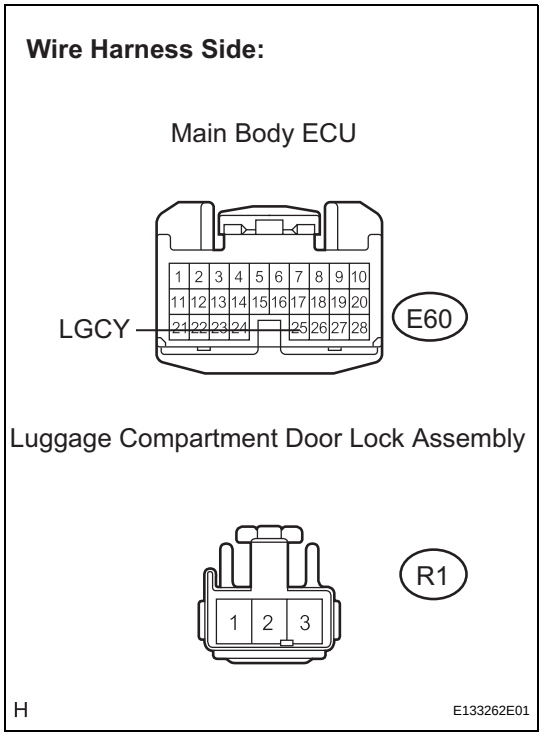

(d) Check the harness and connector between the main body ECU and luggage compartment door courtesy switch.
(1) Disconnect the E60 main body ECU connector.
(2) Disconnect the R1 switch connector.
(3) Measure the resistance according to the value(s) in the table below.

Standard resistance

Tester Connection	Condition	Specified Condition
E60-25 (LGCY) - R1-3 (Luggage door)	Always	Below 1 Ω
E60-25 (LGCY) - Body ground	Always	10 kΩ or higher

NG → **REPAIR OR REPLACE HARNESS OR CONNECTOR**

OK

REPLACE INSTRUMENT PANEL JUNCTION BLOCK ASSEMBLY

Door LOCK Position Circuit

DESCRIPTION

The main body ECU receives driver side, passenger side, rear LH side, and rear RH side door lock position switch signals to control the illuminated entry system and light auto turn off system.

WIRING DIAGRAM

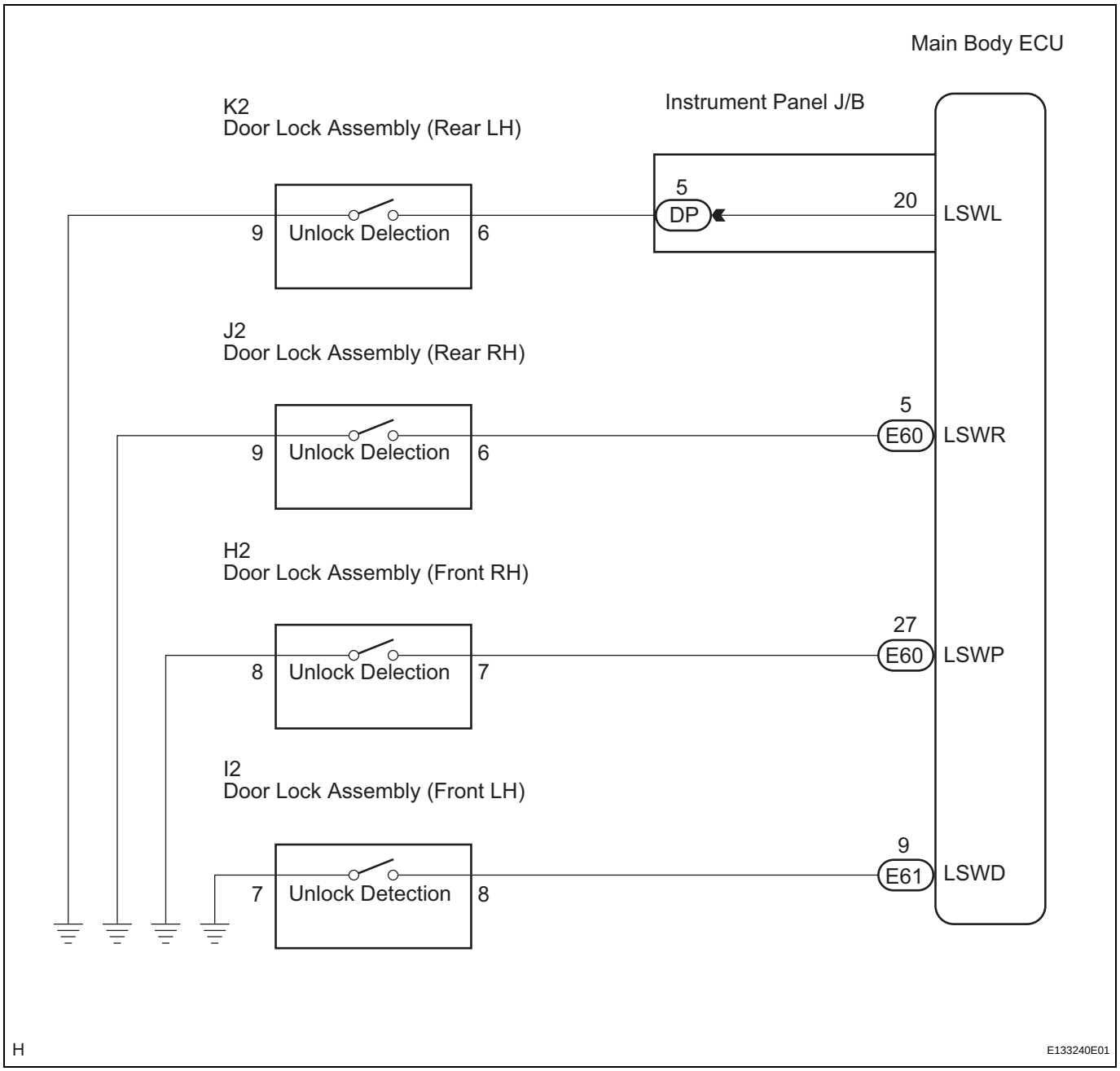

INSPECTION PROCEDURE

1	READ VALUE OF INTELLIGENT TESTER

(a) Connect the intelligent tester to the DLC3.

(b) Turn the engine switch on (IG) and turn the intelligent tester main switch on.
(c) Select the items below in the DATA LIST, and read the display on the intelligent tester.

MAIN BODY (MAIN BODY ECU):

Tester Display	Measurement Item/Range	Normal Condition	Diagnostic Note
D LOCK POS SW	Driver side door lock position switch signal / ON or OFF	ON: Driver side door is unlocked OFF: Driver side door is locked	-
P LOCK POS SW	Passenger side door lock position switch signal / ON or OFF	ON: Passenger side door is unlocked OFF: Passenger side door is locked	-
RR LOCK POS SW	Rear right door lock position switch signal / ON or OFF	ON: Rear right door is unlocked OFF: Rear right door is locked	-
RL LOCK POS SW	Rear left door lock position switch signal / ON or OFF	ON: Rear left door is unlocked OFF: Rear left door is locked	-

OK:
Normal conditions listed above are displayed.

NG → **GO TO POWER DOOR LOCK CONTROL SYSTEM**

OK

PROCEED TO NEXT CIRCUIT INSPECTION SHOWN IN PROBLEM SYMPTOMS TABLE

Interior Light Circuit

DESCRIPTION

The interior light control of the illuminated entry system is controlled by the main body ECU. The operation and condition of this control are described below.

Operation	Condition
Fade in	When any of the following conditions is met, the interior light, front seat illumination, rear seat illumination and rear door courtesy lights fade in. • The key enters any actuation area around the doors when the engine switch is off and all doors are closed. • Any door is opened. • Any door is unlocked when the engine switch is off and all doors are closed. • The engine switch is turned from on (ACC) to off when all doors are closed.
Fade out immediately	When either of the following conditions is met, the interior light, front seat illumination, rear seat illumination and rear door courtesy lights fade out. • The engine switch is turned from off to on (ACC or IG) when all doors are closed. • All doors are locked when the engine switch is off.
Illuminate for approximately 15 seconds, and then fade out	All doors are closed when the engine switch is off.

HINT:
When any of the lights do not illuminate, perform the inspection according to the PROBLEM SYMPTOMS TABLE. When all of the lights (interior light, front seat illumination, rear seat illumination, and rear door courtesy lights) do not illuminate, perform the ACTIVE TEST of the illuminated entry system. If it is normal, there may be a malfunction in the door courtesy switch circuit, door lock position switch circuit, or engine switch circuit.

WIRING DIAGRAM

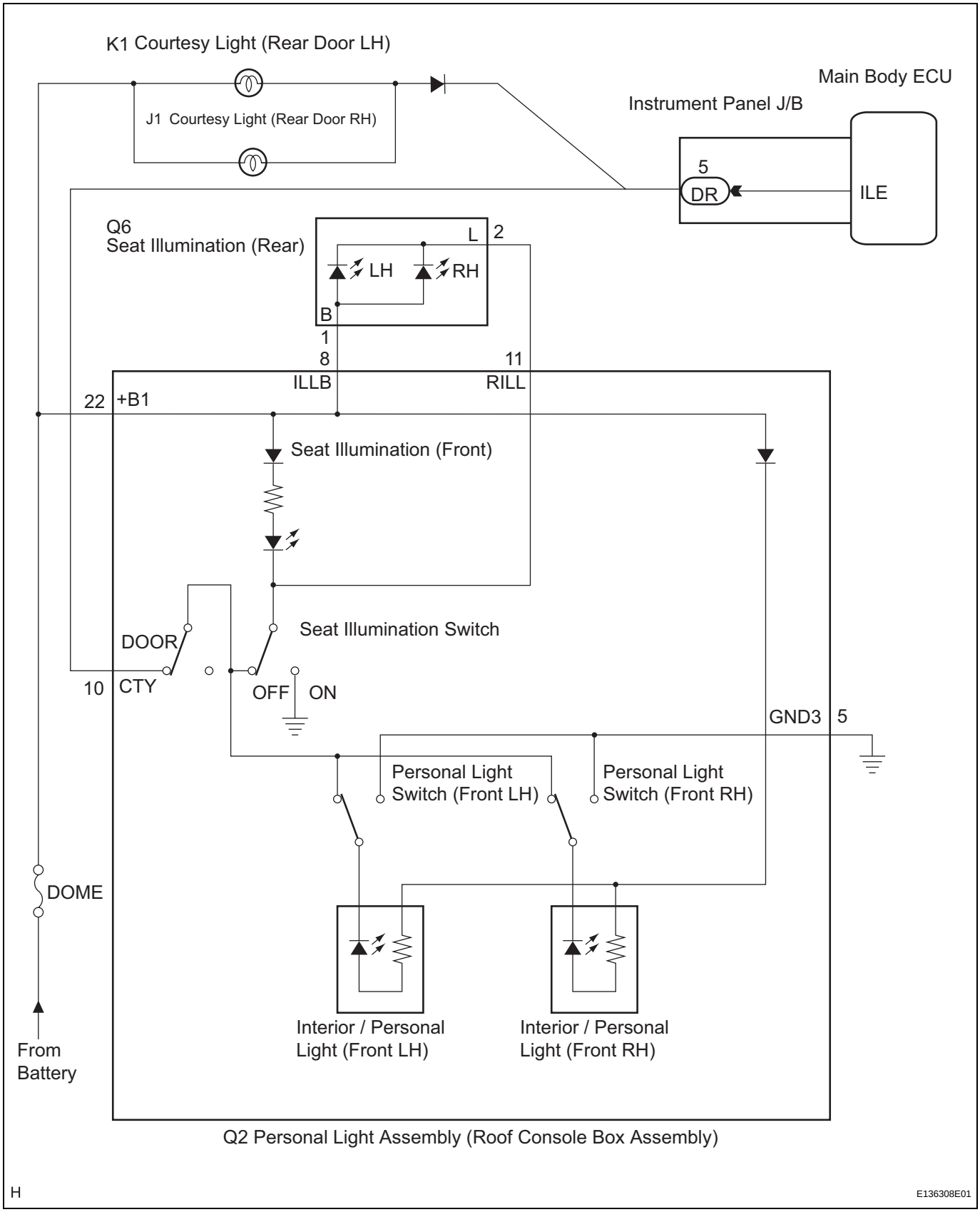

LI

INSPECTION PROCEDURE

1	PERFORM ACTIVE TEST USING INTELLIGENT TESTER

(a) Connect the intelligent tester to the DLC3.
(b) Turn the engine switch on (IG) and turn the intelligent tester main switch on.
(c) Select the item(s) below in the ACTIVE TEST, and check the operation.

MAIN BODY (MAIN BODY ECU):

Tester Display	Test Part	Control Range	Diagnostic Note
ILLUMI OUTPUT	Interior light, front seat illumination, rear seat illumination and rear door courtesy lights (Front personal switches are OFF, DOOR switch is ON, seat illumination switch is OFF, and all doors are closed)	ON / OFF	-

OK:
Each light illuminates.

OK → **PROCEED TO NEXT CIRCUIT INSPECTION SHOWN IN PROBLEM SYMPTOMS TABLE**

NG

2	CHECK HARNESS AND CONNECTOR (BATTERY - INSTRUMENT PANEL J/B AND BATTERY)

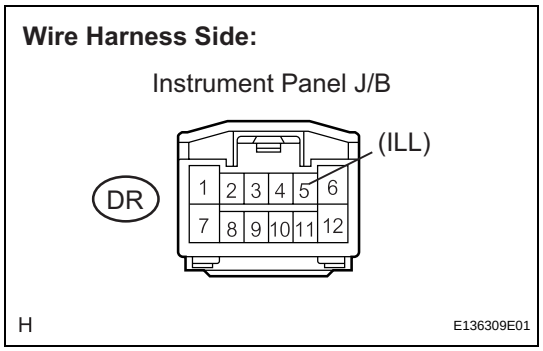

(a) Disconnect the DR instrument panel J/B connector.
(b) Measure the voltage according to the value(s) in the table below.
Standard voltage

Tester Connection	Condition	Specified Condition
DR-5 (ILL) - Body ground	Always	10 to 14 V

NG → **REPAIR OR REPLACE HARNESS OR CONNECTOR**

OK

REPLACE INSTRUMENT PANEL JUNCTION BLOCK ASSEMBLY

LI

Footwell Light Circuit

DESCRIPTION

The footwell illumination control is controlled by the main body ECU. The operation and condition of this control are described below.

Operation	Condition
Fade in	When any of the following conditions is met, the footwell illumination fades in. • Any door is opened. • Any door is unlocked when the engine switch is off and all doors are closed. • The engine switch is turned from off to on (IG) when all doors are closed.
Fade out immediately	When either of the following conditions is met, the footwell illumination fades out immediately. • All doors are closed when the engine switch is off and all doors are locked. • All doors are locked when the engine switch is off.
Illuminate for approximately 15 seconds, and then fade out	When either of the following conditions is met, the footwell illumination illuminates for approximately 15 seconds and then fade out. • The engine switch is turned from on (IG) to off when all door are closed. • All doors are closed when the engine switch is off.
Dim	When either of the following conditions is met, the footwell illumination dims. • The shift lever is adjusted to any position other than P when the footwell light is on, the engine switch is on (IG), and the shift lever is in the P position. • The engine switch is turned from off to on (IG) when the shift lever is in any position other than P.

LI

HINT:
- Before performing troubleshooting of the footwell illumination control, check that the interior light control of the illuminated entry system is normal.
- When one side footwell illumination does not come on, check the light or wire harness that is related to the light. When both right and left footwell lights do not come on, perform the ACTIVE TEST of the footwell illumination.

WIRING DIAGRAM

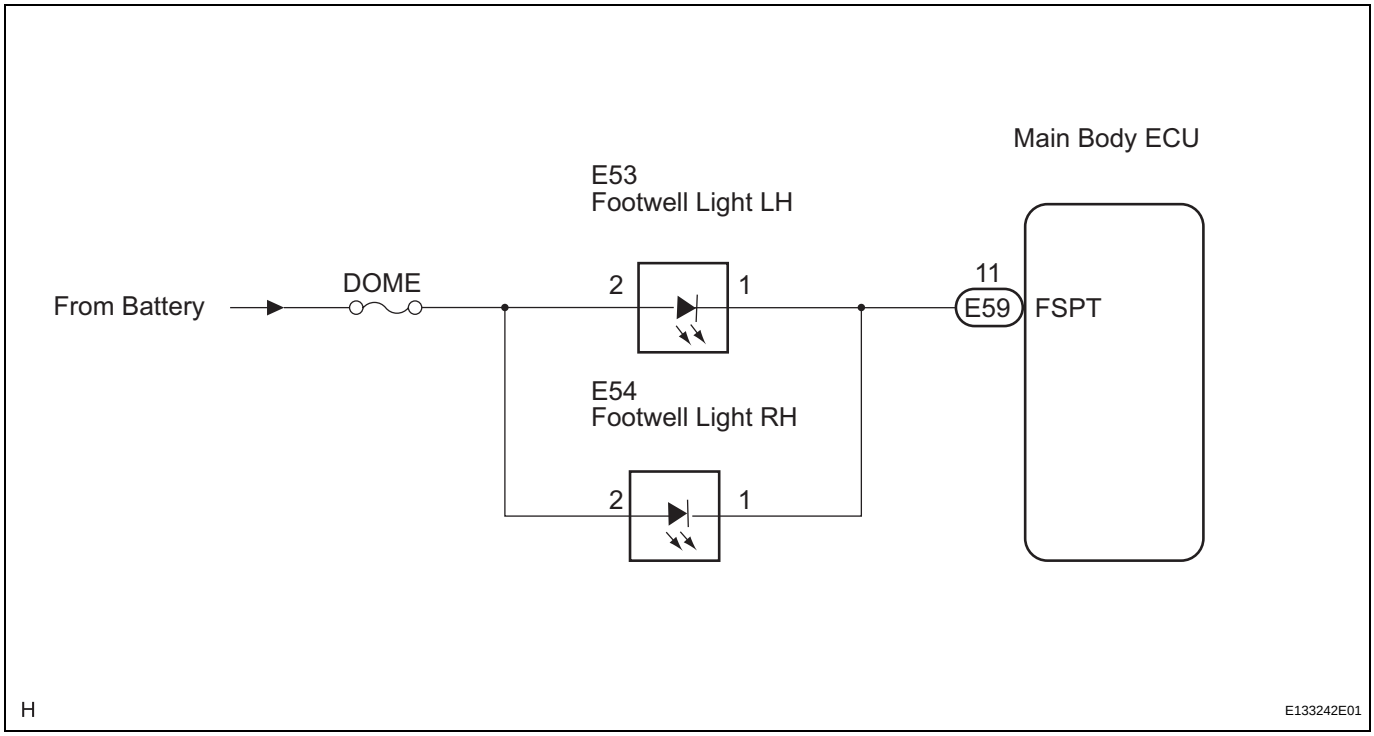

INSPECTION PROCEDURE

1	PERFORM ACTIVE TEST USING INTELLIGENT TESTER

(a) Connect the intelligent tester to the DLC3.
(b) Turn the engine switch on (IG).
(c) Turn the intelligent tester main switch on.
(d) Select the item(s) below in the ACTIVE TEST, and check the operation.

MAIN BODY (MAIN BODY ECU):

Tester Display	Test Part	Control Range	Diagnostic Note
STEP LIGHT	Footwell lights	ON / OFF	-

OK:
Footwell lights come on.

OK → **PROCEED TO NEXT CIRCUIT INSPECTION SHOWN IN PROBLEM SYMPTOMS TABLE**

NG

2	CHECK HARNESS AND CONNECTOR (MAIN BODY ECU - BATTERY)

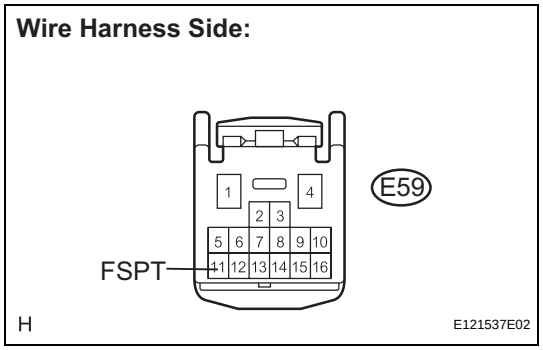

(a) Disconnect the E59 main body ECU connector.
(b) Measure the voltage according to the value(s) in the table.

Standard voltage

Tester Connection	Condition	Specified Condition
E59-11 (FSPT) - Body ground	Always	10 to 14 V

NG → **REPAIR OR REPLACE HARNESS OR CONNECTOR**

OK

REPLACE INSTRUMENT PANEL JUNCTION BLOCK ASSEMBLY

LI

Engine Switch Illumination Circuit

DESCRIPTION

The engine switch illumination is controlled by the main body ECU. The operation and condition of this control are described below (Light control switch is OFF).

Operation	Condition
Fade in	When any of the following conditions is met, the engine switch illumination fades in. • The key enters any actuation area around the doors when the engine switch is off and all doors are closed. • Any door is opened. • Any door is unlocked when the engine switch is off and all doors are closed. • The engine switch is turned from on (ACC) to off when all doors are closed.
Fade out immediately	When either of the following conditions is met, the engine switch illumination fades out. • The engine switch is turned from off to on (ACC or IG) when all doors are closed. • All doors are locked when the engine switch is off.
Illuminate for approximately 15 seconds, and then fade out	All doors are closed when the engine switch is off.

WIRING DIAGRAM

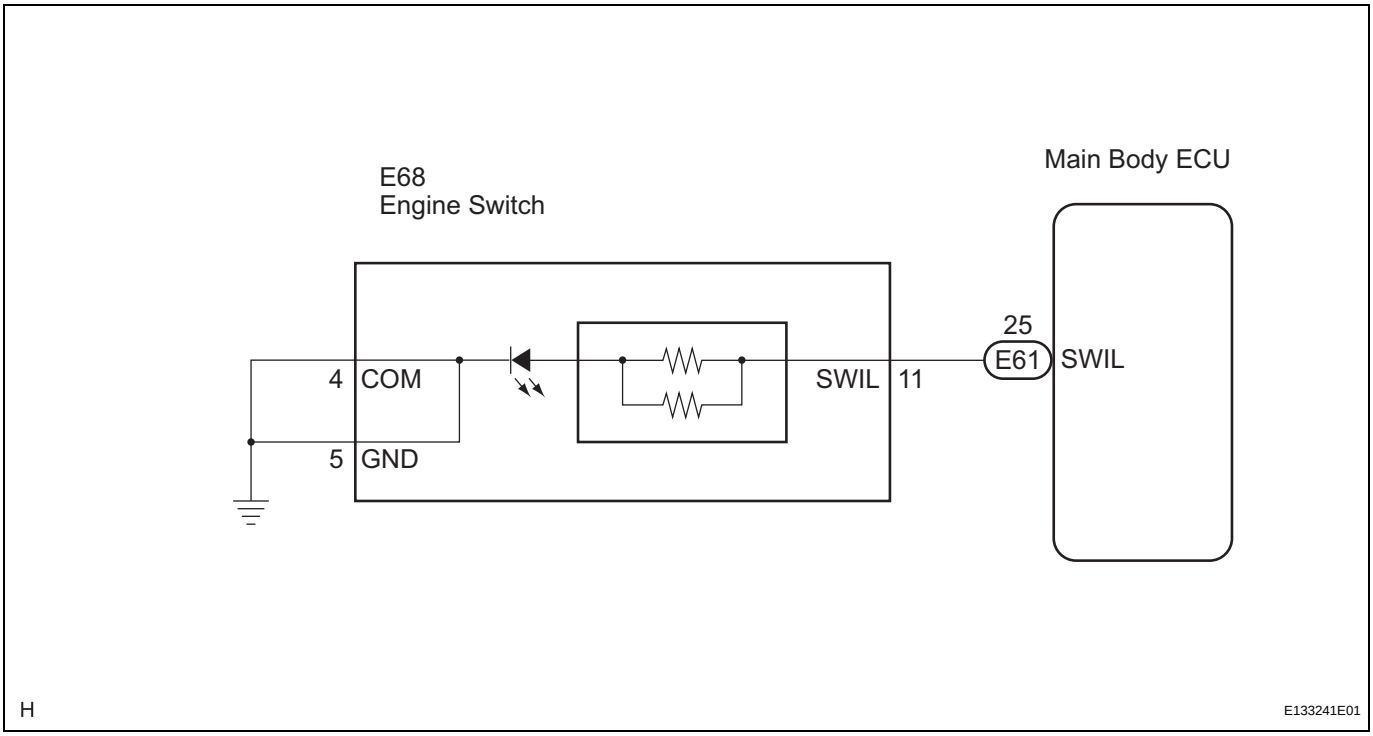

INSPECTION PROCEDURE

1	PERFORM ACTIVE TEST USING INTELLIGENT TESTER

(a) Connect the intelligent tester to the DLC3.
(b) Turn the engine switch on (IG).
(c) Turn the intelligent tester main switch on.

(d) Select the item(s) below in the ACTIVE TEST, and check the operation.

MAIN BODY (MAIN BODY ECU):

Tester Display	Test Part	Control Range	Diagnostic Note
LIGHTING IND	Engine switch illumination	ON / OFF	-

OK:

Engine switch illumination comes on.

OK → **PROCEED TO NEXT CIRCUIT INSPECTION SHOWN IN PROBLEM SYMPTOMS TABLE**

NG

2 INSPECT ENGINE SWITCH

(a) Remove the engine switch.

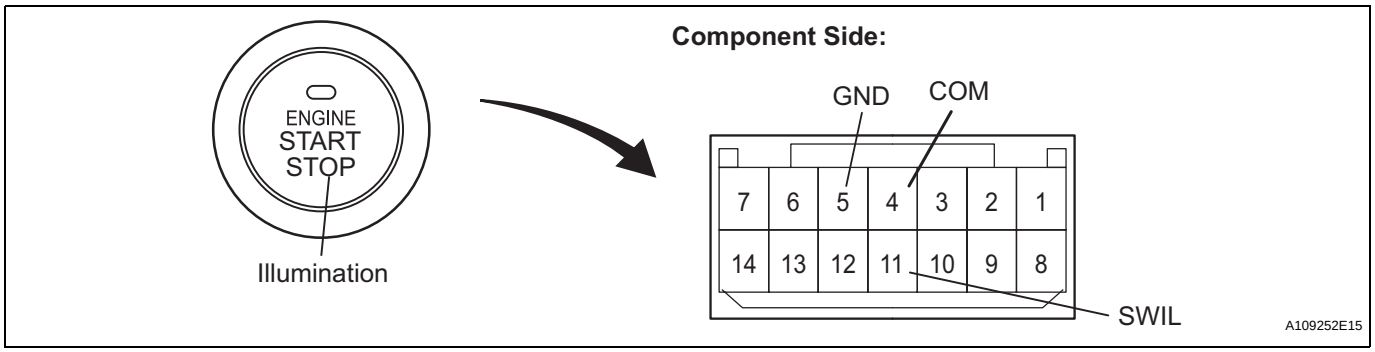

(b) Apply battery voltage to the engine switch.

(c) Check that the illumination comes on.

OK

Measurement Condition	Specified Condition
Battery positive (+) → Terminal 11 (SWIL) **Battery negative (-) → Terminal 5 (GND) or 4 (COM)**	**Engine switch illumination comes on**

NG → **REPLACE ENGINE SWITCH**

OK

3	**CHECK HARNESS AND CONNECTOR (ENGINE SWITCH - MAIN BODY ECU AND BODY GROUND)**

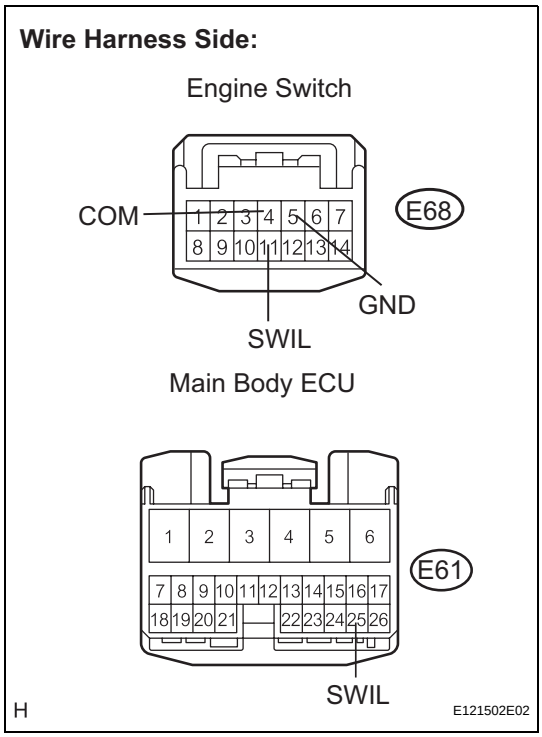

(a) Disconnect the E61 main body ECU connector.
(b) Disconnect the E68 engine switch connector.
(c) Measure the resistance according to the value(s) in the table below.

Standard resistance

Tester Connection	Condition	Specified Condition
E68-11 (SWIL) - E61-25 (SWIL)	Always	Below 1 Ω
E68-4 (COM) or E68-5 (GND) - Body ground	Always	Below 1 Ω
E68-11 (SWIL) - Body ground	Always	10 kΩ or higher

NG → **REPAIR OR REPLACE HARNESS OR CONNECTOR**

OK

REPLACE INSTRUMENT PANEL JUNCTION BLOCK ASSEMBLY

LI

Door Mirror Foot Light Circuit

DESCRIPTION

The door mirror foot light is controlled by the mirror ECU. The operation and condition of this control are described below.

Operation	Condition
Fade in (During 15 seconds)	When any of the following conditions is met, the door mirror foot light fades in. • The key enters any actuation area around the doors. • The driver or front passenger side door is opened when the footwell illumination is on. • Any door is unlocked when the shift lever is in the P position.
Fade out	When either of the following conditions is met, the door mirror foot light fades out. • The shift lever is put into any position other than P when the engine switch is on (IG) and the foot well illumination is on. • All doors are locked when the footwell illumination is on.

WIRING DIAGRAM

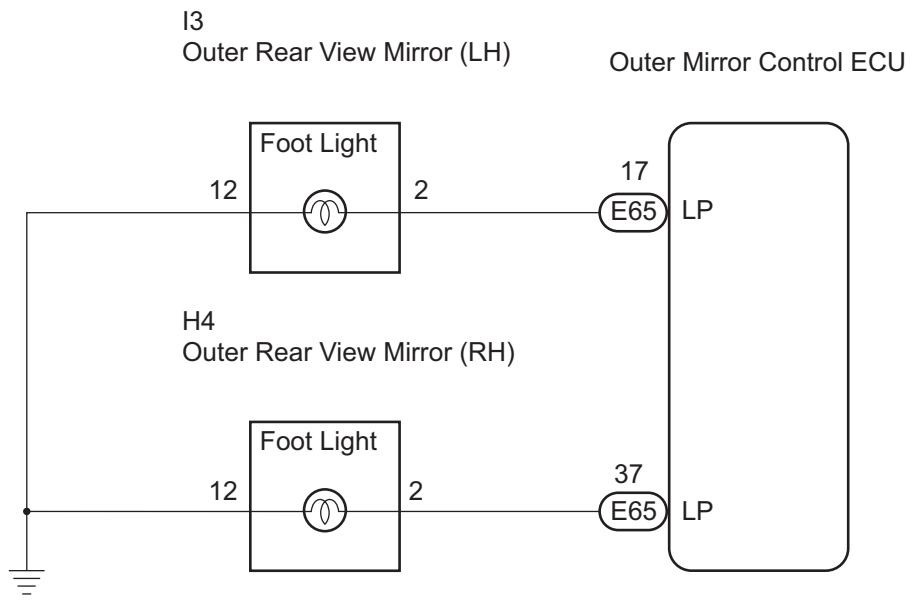

H

E133244E01

INSPECTION PROCEDURE

1	INSPECT OUTER REAR VIEW MIRROR ASSEMBLY (DOOR MIRROR FOOT LIGHT)

HINT:
(See page LI-185).

NG → **REPLACE OUTER REAR VIEW MIRROR ASSEMBLY**

OK

2	CHECK HARNESS AND CONNECTOR (OUTER REAR VIEW MIRROR - ECU AND BODY GROUND)

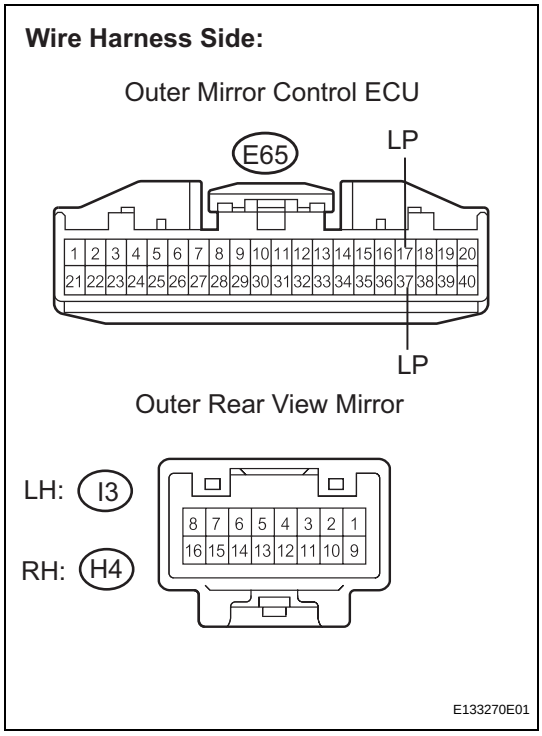

(a) Disconnect the E65 outer mirror control ECU connector.
(b) Disconnect the I3 or H4 outer rear view mirror connector.
(c) Measure the resistance according to the value(s) in the table.

Standard resistance:

LH Side

Tester Connection	Condition	Specified Condition
E65-17 (LP) - I3-2	Always	Below 1 Ω
I3-12 - Body ground	Always	Below 1 Ω
E65-17 (LP) - Body ground	Always	10 kΩor higher

RH Side

Tester Connection	Condition	Specified Condition
E65-37 (LP) - H4-2	Always	Below 1 Ω
H4-12 - Body ground	Always	Below 1 Ω
E65-37 (LP) - Body ground	Always	10 kΩor higher

NG → **REPAIR OR REPLACE HARNESS OR CONNECTOR**

OK

PROCEED TO NEXT CIRCUIT INSPECTION SHOWN IN PROBLEM SYMPTOMS TABLE

Parking Brake Switch Circuit

DESCRIPTION

The main body ECU receives a parking brake switch signal to control the daytime running light system.

WIRING DIAGRAM

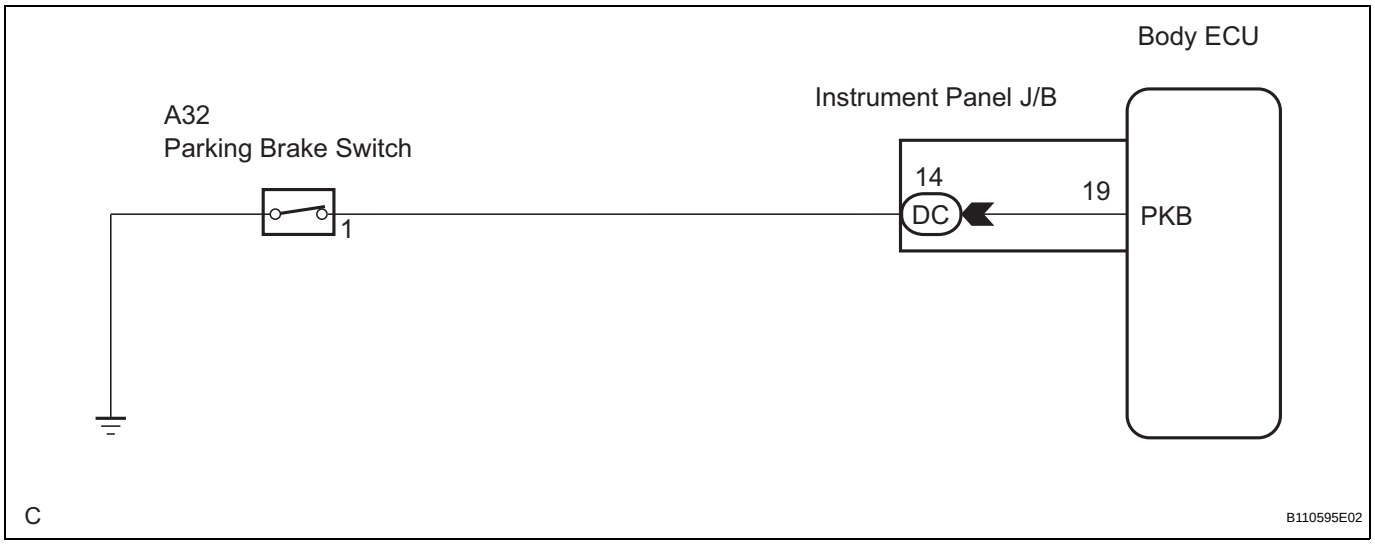

INSPECTION PROCEDURE

1	READ VALUE OF INTELLIGENT TESTER

(a) Connect the intelligent tester to the DLC3.
(b) Turn the engine switch on (IG) and turn the intelligent tester main switch on.
(c) Select the item below in the DATA LIST, and read the display on the intelligent tester.

MAIN BODY (MAIN BODY ECU):

Tester Display	Measurement Item/Range	Normal Condition	Diagnostic Note
PARKING BRAKE SW	Parking brake SW signal / ON or OFF	ON: Parking brake switch is ON OFF: Parking brake switch is OFF	-

OK:
Normal conditions listed above are displayed.

OK → **PROCEED TO NEXT CIRCUIT INSPECTION SHOWN IN PROBLEM SYMPTOMS TABLE**

NG

LI

2 INSPECT PARKING BRAKE SWITCH ASSEMBLY

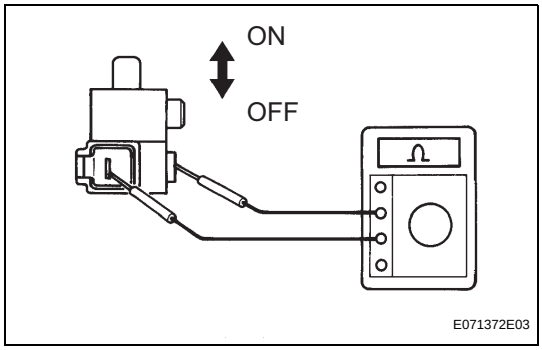

(a) Remove the parking brake switch assembly.
(b) Measure the resistance according to the value(s) in the table below.
Standard resistance

Tester Connection	Condition	Specified Condition
1 - Switch body	Shaft is pushed in (OFF)	10 kΩ or higher
1 - Switch body	Shaft is not pushed in (ON)	Below 1 Ω

NG → **REPLACE PARKING BRAKE SWITCH ASSEMBLY**

LI

OK

3 CHECK HARNESS AND CONNECTOR (SWITCH - INSTRUMENT PANEL J/B ASSEMBLY)

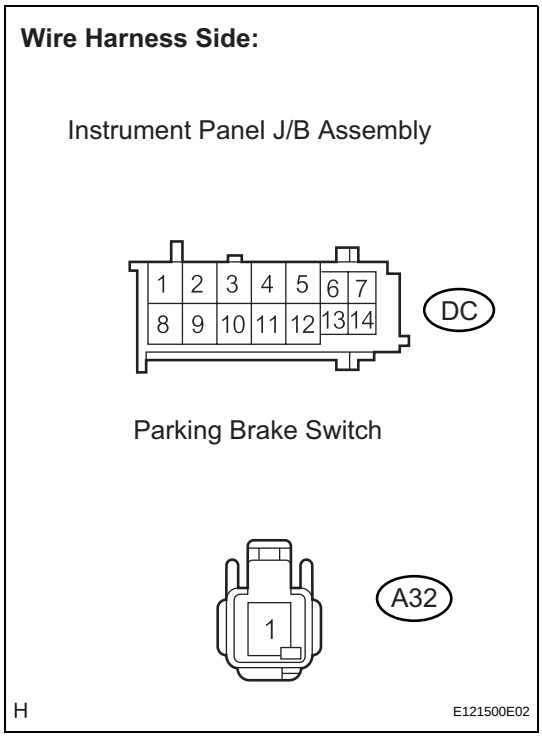

(a) Disconnect the DC instrument panel junction block assembly connector.
(b) Disconnect the A32 switch connector.
(c) Measure the resistance according to the value(s) in the table below.
Standard resistance

Tester Connection	Condition	Specified Condition
DC-14 - A32-1	Always	Below 1 Ω
DC-14 - Body ground	Always	10 kΩ or higher

NG → **REPAIR OR REPLACE HARNESS OR CONNECTOR**

OK

REPLACE INSTRUMENT PANEL JUNCTION BLOCK ASSEMBLY

Taillight Relay Circuit

DESCRIPTION

The main body ECU receives a signal from the light control switch, and turns the taillight relay on.
HINT:

- When any of the lights do not illuminate, check the bulb or wire harness that is related to the bulb.
- When all of the lights that are related to the TAIL relay do not illuminate and the TAIL fuse is normal, read the light control switch TAIL signal value in the data list and perform the taillight relay active test to determine if the malfunction exists on either the switch side or the relay side.

WIRING DIAGRAM

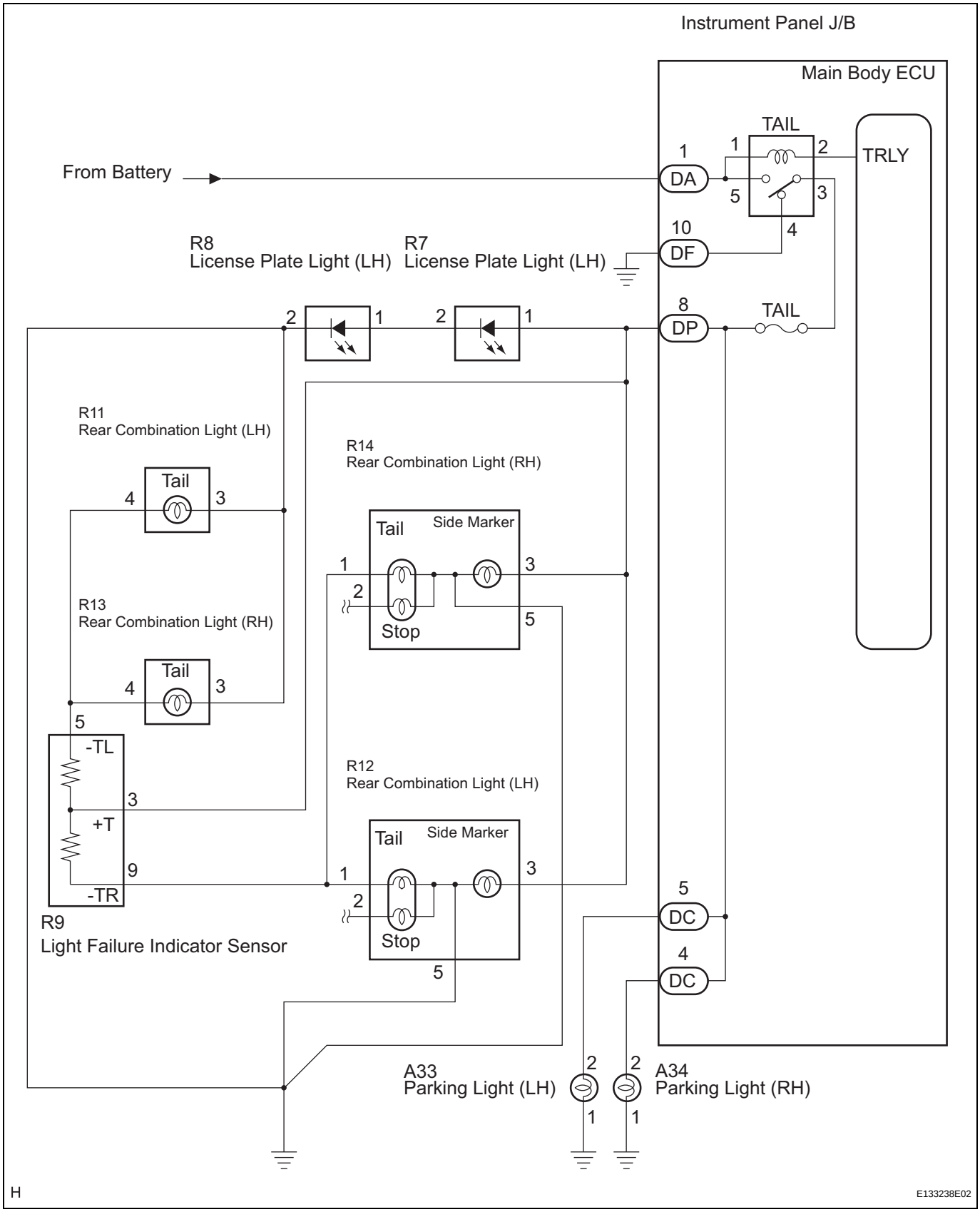

LI

INSPECTION PROCEDURE

1	PERFORM ACTIVE TEST USING INTELLIGENT TESTER

(a) Connect the intelligent tester to the DLC3.
(b) Turn the engine switch on (IG) and turn the intelligent tester main switch on.
(c) Select the item below in the ACTIVE TEST and then check that the relay operates.

MAIN BODY (MAIN BODY ECU):

Tester Display	Test Part	Control Range	Diagnostic Note
TAIL LIGHT	Taillight relay	ON / OFF	-

OK:
Taillight relay operates. (Taillights illuminate.)

OK → **PROCEED TO NEXT CIRCUIT INSPECTION SHOWN IN PROBLEM SYMPTOMS TABLE**

NG

2	INSPECT FUSE (TAIL)

(a) Remove the TAIL fuse from the instrument panel J/B assembly.
(b) Measure the resistance of the fuse.
Standard resistance:
Below 1 Ω

NG → **REPLACE FUSE**

OK

3	INSPECT TAILLIGHT RELAY

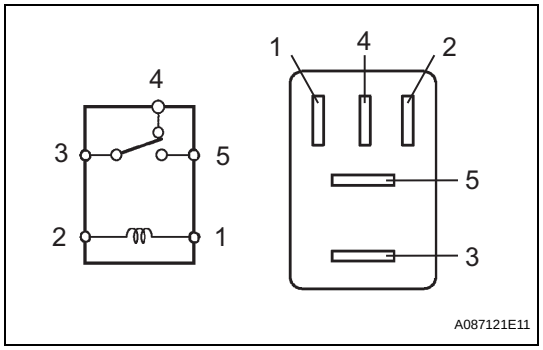

(a) Remove the taillight relay from the instrument panel J/B assembly.
(b) Measure the resistance according to the value(s) in the table below.
Standard resistance

Tester Connection	Specified Condition
3 - 5	10 kΩ or higher
	Below 1 Ω (When battery voltage is applied to terminals 1 and 2)
3 - 4	Below 1 Ω
	10 kΩ or higher (When battery voltage is applied to terminals 1 and 2)

NG → **REPLACE TAILLIGHT RELAY**

OK

4	INSPECT INSTRUMENT PANEL JUNCTION BLOCK ASSEMBLY

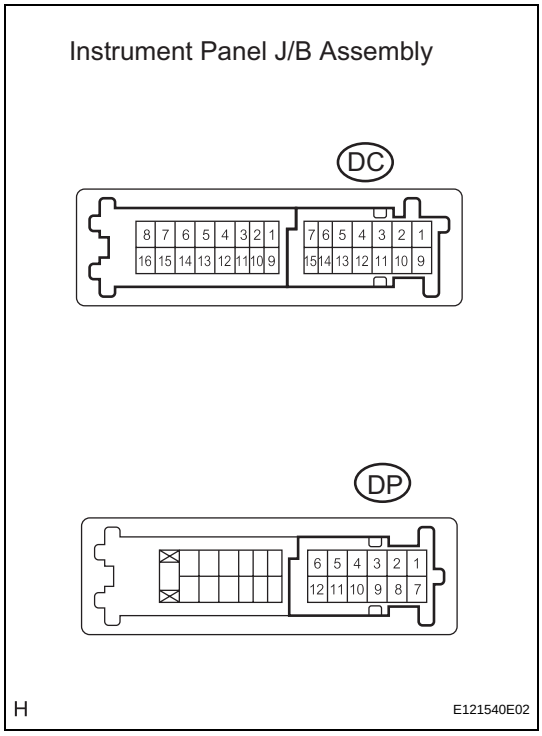

(a) Disconnect the DP and DC instrument panel J/B assembly connectors.
(b) Measure the voltage according to the value(s) in the table below.
Standard voltage

Tester Connection	Condition	Specified Condition
DC-4 - Body ground	Light control switch OFF → TAIL	Below 1 V → 10 to 14 V
DC-5 - Body ground	Light control switch OFF → TAIL	Below 1 V → 10 to 14 V
DP-8 - Body ground	Light control switch OFF → TAIL	Below 1 V → 10 to 14 V

OK → **REPAIR OR REPLACE HARNESS OR CONNECTOR (INSTRUMENT PANEL JUNCTION BLOCK ASSEMBLY - BODY GROUND)**

NG

5	CHECK HARNESS AND CONNECTOR (BATTERY - INSTRUMENT PANEL JUNCTION BLOCK ASSEMBLY)

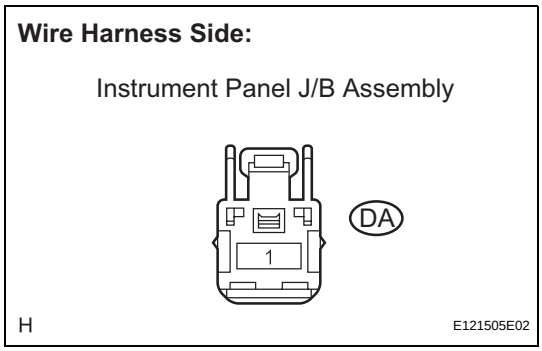

(a) Disconnect the DA instrument panel J/B assembly connector.
(b) Measure the voltage according to the value(s) in the table below.
Standard voltage

Tester Connection	Condition	Specified Condition
DA-1 - Body ground	Always	10 to 14 V

NG → **REPAIR OR REPLACE HARNESS OR CONNECTOR**

OK

REPLACE INSTRUMENT PANEL JUNCTION BLOCK ASSEMBLY

LI

AFS ECU Power Source Circuit

DESCRIPTION

This circuit detects the state of the engine switch. The AFS ECU receives it from the engine switch.

WIRING DIAGRAM

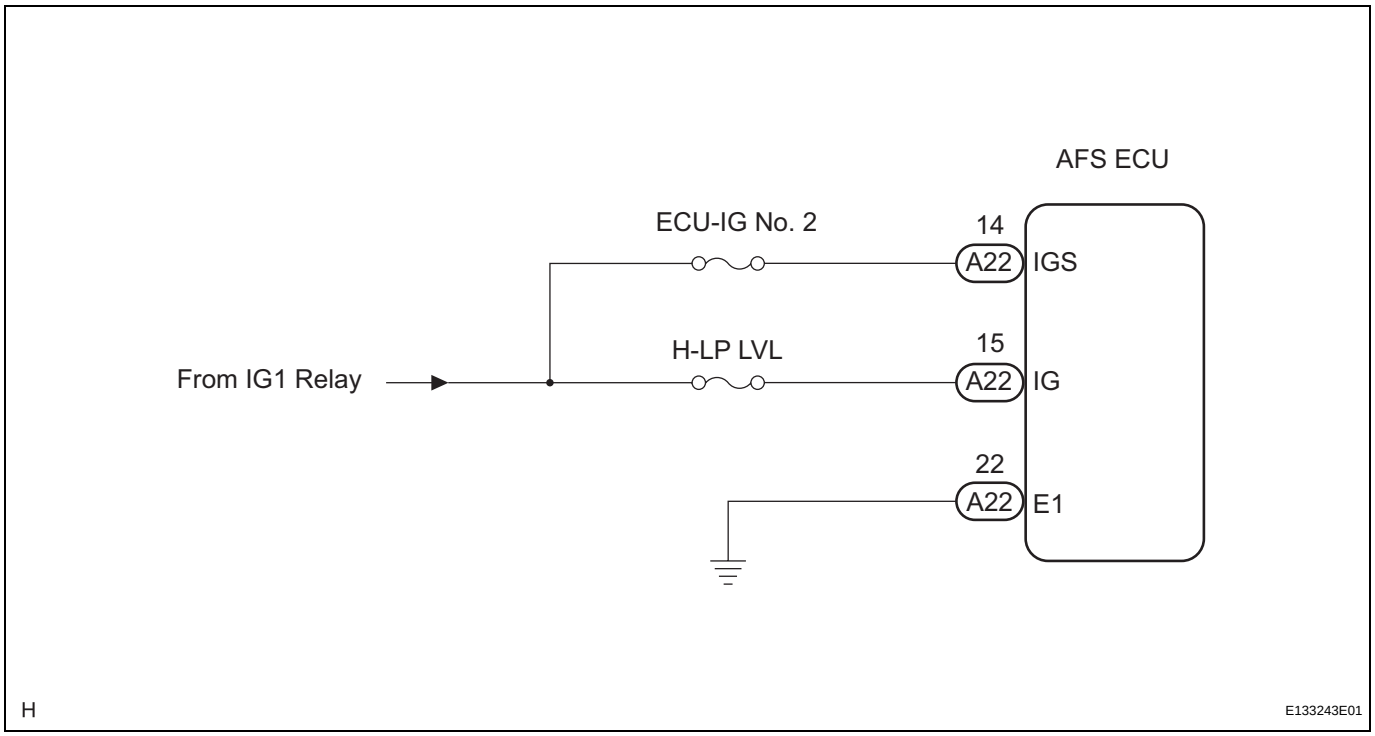

INSPECTION PROCEDURE

1	INSPECT FUSE (ECU-IG NO. 2 OR H-LP LVL)

(a) Remove the ECU-IG No. 2 fuse or H-LP LVL fuse from the instrument panel junction block assembly.

(b) Measure the resistance of the fuse.

Standard resistance:

Below 1 Ω

NG → **REPLACE FUSE**

OK

2 INSPECT AFS ECU

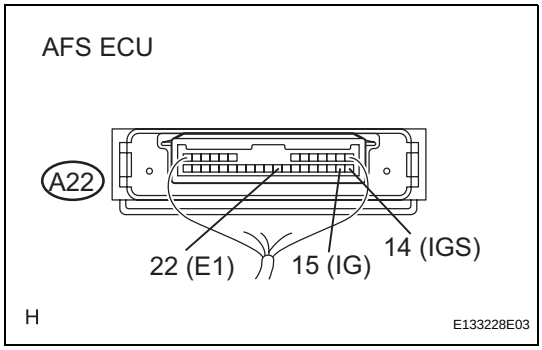

(a) Measure the voltage according to the value(s) in the table below.

Standard voltage

Tester Connection	Condition	Specified Condition
A22-14 (IGS) - A22-22 (E1)	Engine switch off	Below 1 V
A22-14 (IGS) - A22-22 (E1)	Engine switch on (IG)	10 to 14 V
A22-15 (IG) - A22-22 (E1)	Engine switch off	Below 1 V
A22-15 (IG) - A22-22 (E1)	Engine switch on (IG)	10 to 14 V

OK → **PROCEED TO NEXT CIRCUIT INSPECTION SHOWN IN PROBLEM SYMPTOMS TABLE**

NG ↓

3 CHECK WIRE HARNESS (AFS ECU - BATTERY AND BODY GROUND)

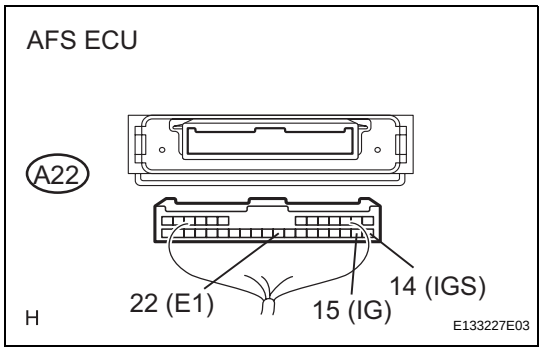

(a) Disconnect the A22 AFS ECU connector.

(b) Measure the voltage and resistance according to the value(s) in the table below.

Standard voltage

Tester Connection	Condition	Specified Condition
A22-14 (IGS) - Body ground	Engine switch on (IG)	10 to 14 V
A22-15 (IG) - Body ground	Engine switch on (IG)	10 to 14 V

Standard resistance

Tester Connection	Condition	Specified Condition
A22-22 (E1) - Body ground	Always	Below 1 Ω

NG → **REPAIR OR REPLACE HARNESS OR CONNECTOR**

OK ↓

REPLACE AFS ECU

AFS OFF Switch Circuit

DESCRIPTION

When the AFS switch is pushed (ON), the AFS ECU will cancel the intelligent AFS control and turns on the AFS OFF indicator light.

WIRING DIAGRAM

INSPECTION PROCEDURE

1	READ VALUE OF INTELLIGENT TESTER

(a) Connect the intelligent tester to the DLC3.
(b) Turn the engine switch on (IG).
(c) Turn the intelligent tester main switch on.
(d) Turn the clearance sonar main switch on.
(e) Select the item below in the DATA LIST, and read its value displayed on the intelligent tester.

AFS (AFS ECU)

Tester Display	Measurement Item/Range	Normal Condition	Diagnostic Note
AFS OFF SW	AFS OFF switch signal ON / OFF	ON: AFS OFF switch pushed (ON) OFF: AFS OFF switch not pushed (OFF)	-

OK → **PROCEED TO NEXT CIRCUIT INSPECTION SHOWN IN PROBLEM SYMPTOMS TABLE**

NG

2	INSPECT AFS OFF SWITCH

HINT:
(See page LI-198)

NG → **REPLACE AFS OFF SWITCH**

OK

3	CHECK HARNESS AND CONNECTOR (AFS OFF SWITCH - AFS ECU AND BODY GROUND)

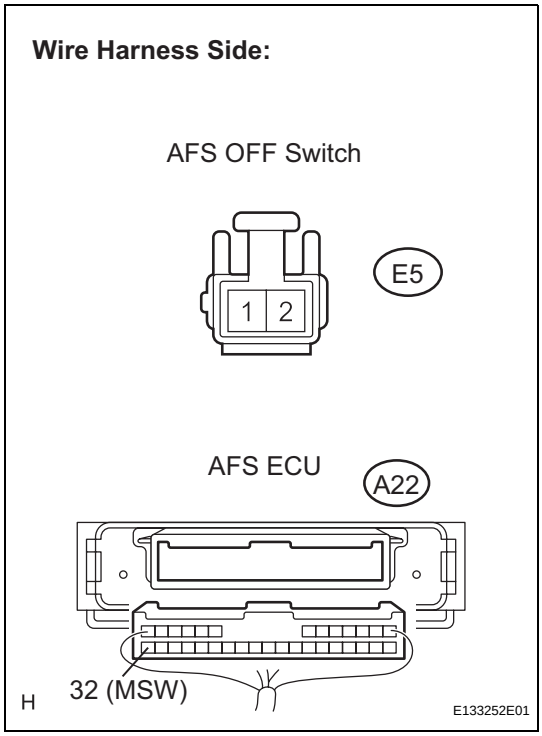

(a) Disconnect the A22 AFS ECU connector.
(b) Disconnect the E5 AFS OFF switch connector.
(c) Measure the resistance according to the value (s) in the table below.

Standard resistance

Tester Connection	Condition	Specified Condition
A22-32 (MSW) - E5-2	Always	Below 1 Ω
E5-1 - Body ground	Always	Below 1 Ω
A22-32 (MSW) - Body ground	Always	Below 1 Ω

NG → **REPAIR OR REPLACE HARNESS OR CONNECTOR**

OK

REPLACE AFS ECU

LVL Terminal Circuit

DESCRIPTION

By connecting terminals LVL and CG of the DLC3, the AFS ECU initializes the height control sensor signal.

WIRING DIAGRAM

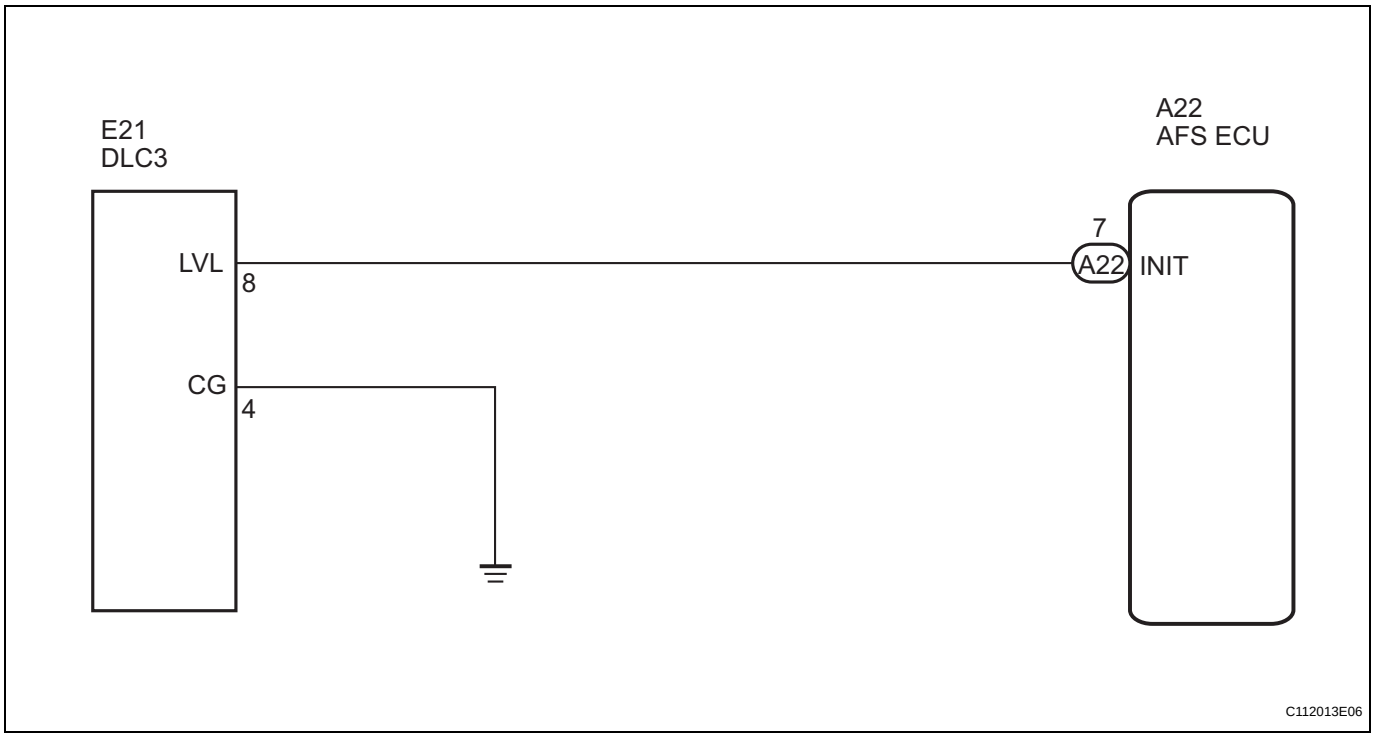

INSPECTION PROCEDURE

1	INSPECT DLC3 TERMINAL VOLTAGE

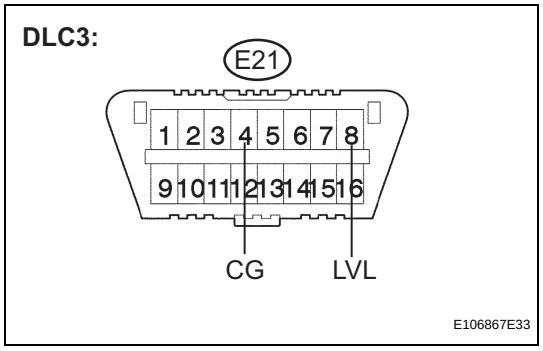

(a) Measure the voltage according to the value(s) in the table below.

Standard voltage

Tester Connection	Condition	Specified Condition
E21-4 (CG) - Body ground	Engine switch on (IG)	10 to 14 V
E21-4 (CG) - Body ground	Engine switch off	Below 1 V

OK → **PROCEED TO NEXT CIRCUIT INSPECTION SHOWN IN PROBLEM SYMPTOMS TABLE**

NG

2 CHECK HARNESS AND CONNECTOR (DLC3 - HEADLIGHT BEAM LEVEL CONTROL ECU)

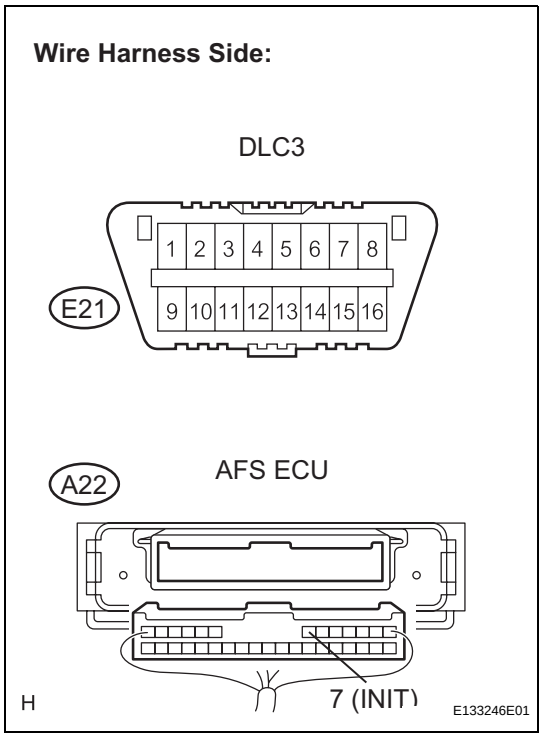

(a) Disconnect the A22 AFS ECU connector.
(b) Measure the resistance according to the value(s) in the table below.

Standard resistance

Tester Connection	Condition	Specified Condition
A22-7 (INIT) - E21-8 (LVL)	Always	Below 1 Ω
A22-7 (INIT) - Body ground	Always	10 kΩ or higher

NG → **REPAIR OR REPLACE HARNESS OR CONNECTOR**

OK

3 CHECK HARNESS AND CONNECTOR (DLC3 - BODY GROUND)

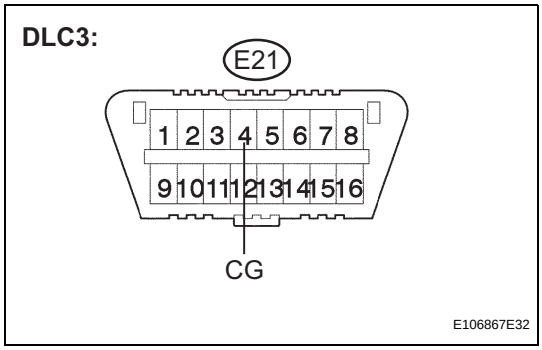

(a) Measure the resistance according to the value(s) in the table below.

Standard resistance

Tester Connection	Condition	Specified Condition
E21-4 (CG) - Body ground	Always	Below 1 Ω

NG → **REPAIR OR REPLACE HARNESS OR CONNECTOR**

OK

REPLACE AFS ECU

HOW TO PROCEED WITH TROUBLESHOOTING

HINT:
- Use the following procedures to troubleshoot the lighting system.
- *: Use the intelligent tester.

1	VEHICLE BROUGHT TO WORKSHOP

NEXT

LI

2	CUSTOMER PROBLEM ANALYSIS CHECK AND SYMPTOM CHECK

NEXT

3	INSPECT BATTERY VOLTAGE

Standard voltage:
11 to 14 V
If the voltage is below 11 V, recharge or replace the battery before proceeding.

NEXT

4	INSPECT CAN COMMUNICATION SYSTEM*

(a) Use the intelligent tester to check if the CAN communication system is functioning normally.

Result

Result	Proceed to
CAN communication system DTC is not output	A
CAN communication system DTC is output	B

B → **Go to CAN communication system**

A

5	CHECK FOR DTC*

Result

Result	Proceed to
DTC is not output	A
DTC is output	B

B → **Go to step 8**

A

6	PROBLEM SYMPTOMS TABLE

Result

Result	Proceed to
Fault is not listed in problem symptoms table	A
Fault is listed in problem symptoms table	B

B → Go to step 8

A

7	OVERALL ANALYSIS AND TROUBLESHOOTING*

(a) Data List / Active Test (See page LI-45)
(b) Terminals of ECU (See page LI-37)

NEXT

8	ADJUST, REPAIR OR REPLACE

NEXT

9	CONFIRMATION TEST

NEXT

END

REMOVAL

1. **DISCONNECT CABLE FROM NEGATIVE BATTERY TERMINAL (for HID Headlight)**
2. **REMOVE COOL AIR INTAKE DUCT SEAL (See page ET-4)**
3. **REMOVE FRONT BUMPER ASSEMBLY (See page ET-5)**
4. **REMOVE HOOD HINGE COVER (See page WW-38)**
5. **REMOVE ENGINE ROOM SIDE COVER (See page WW-39)**
6. **REMOVE HOOD TO FRONT FENDER SEAL**
7. **REMOVE HEADLIGHT ASSEMBLY**
   (a) Remove the 3 bolts and screw.
   (b) Disconnect the connectors and remove the headlight assembly.

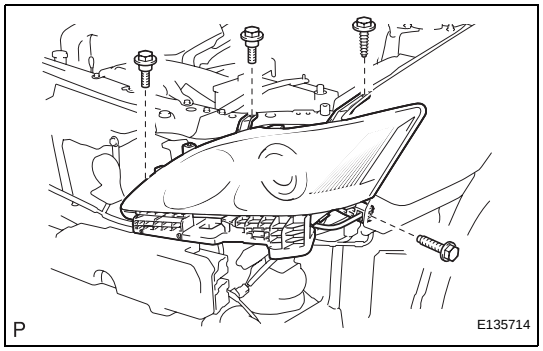

DISASSEMBLY

1. **REMOVE FRONT BUMPER SIDE SUPPORT**
   (a) Remove the 3 screws and the front bumper side support.

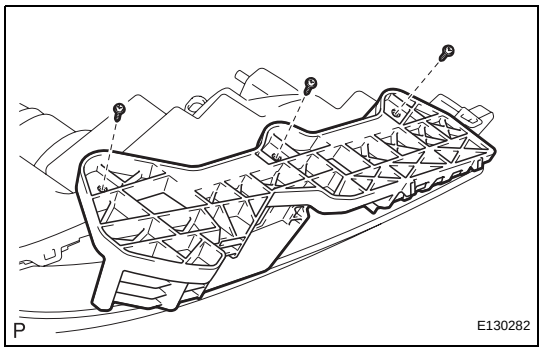

2. **REMOVE NO. 2 HEADLIGHT BULB**
   (a) Remove the No. 2 headlight bulb as shown in the illustration.

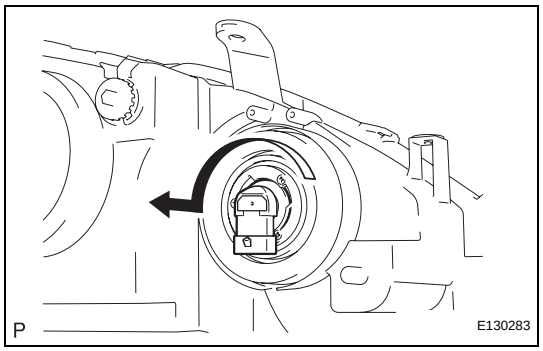

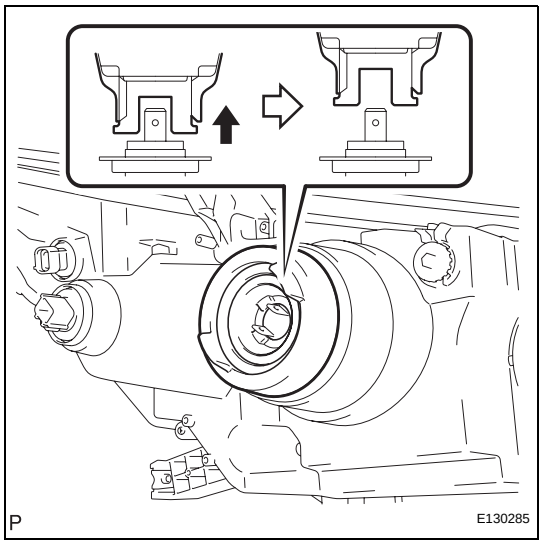

3. REMOVE ADAPTER ASSEMBLY (for Halogen Headlight)

(a) Remove the adapter assembly as shown in the illustration.

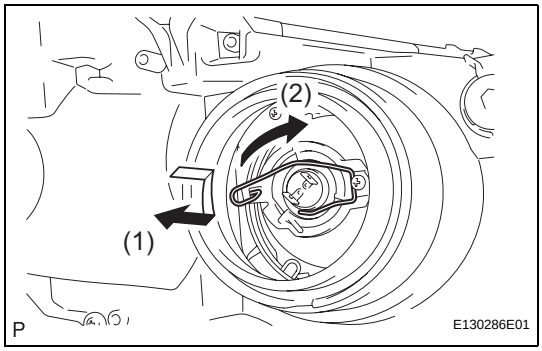

4. REMOVE NO. 1 HEADLIGHT BULB (for Halogen Headlight)

(a) Release the set spring and remove the No. 1 headlight bulb as shown in the illustration.

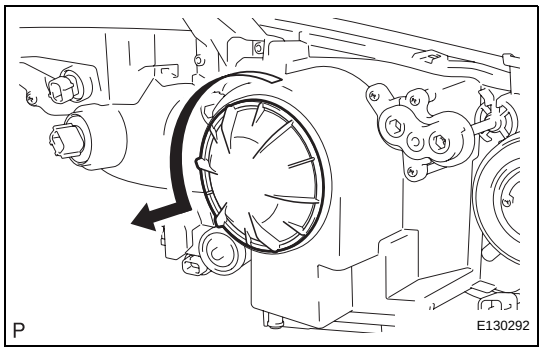

5. REMOVE HEADLIGHT SOCKET COVER (for HID Headlight)

(a) Remove the headlight socket cover as shown in the illustration.

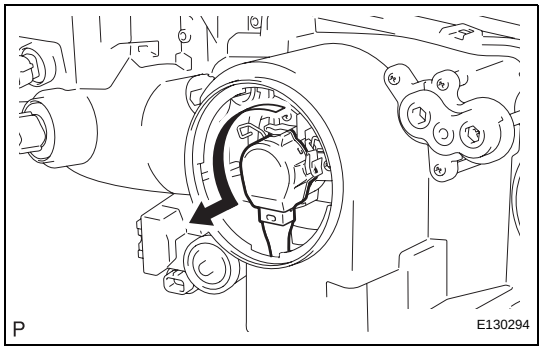

6. REMOVE DISCHARGE HEADLIGHT BULB (for HID Headlight)

(a) Separate the light control ECU socket as shown in the illustration.

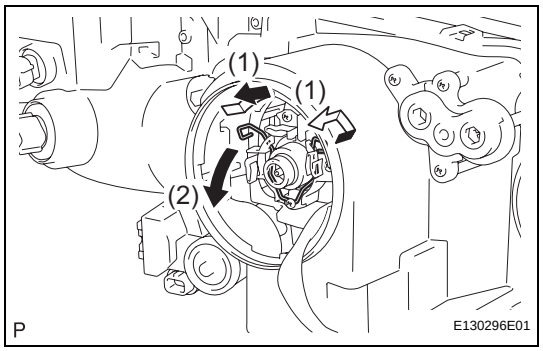

(b) Release the set spring and remove the discharge headlight bulb as shown in the illustration.

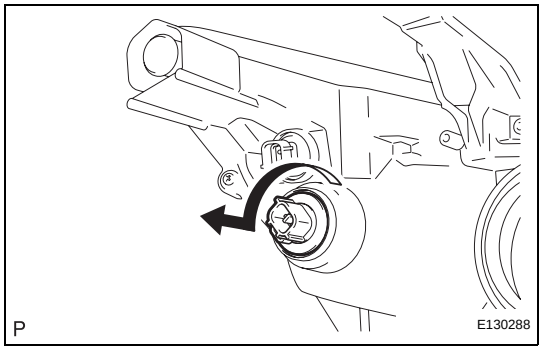

7. REMOVE FRONT TURN SIGNAL LIGHT BULB

(a) Turn the front turn signal light bulb and the front turn signal light socket in the direction indicated by the arrow and remove them as a unit.

(b) Remove the front turn signal light bulb from the front turn signal light socket.

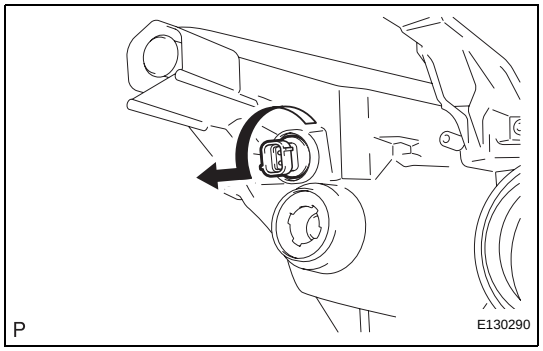

8. REMOVE CLEARANCE LIGHT BULB

(a) Turn the clearance light bulb and the clearance light socket in the direction indicated by the arrow and remove them as a unit.

(b) Remove the clearance light bulb from the clearance light socket.

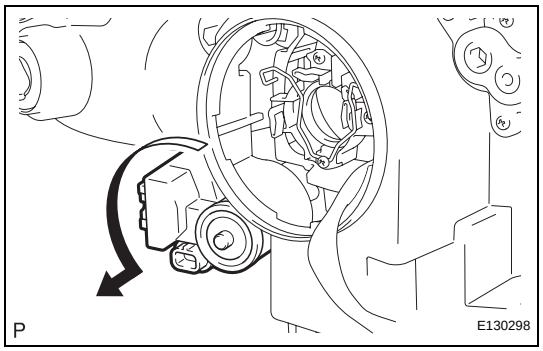

9. REMOVE HEADLIGHT LEVELING MOTOR (for HID Headlight)

(a) Align the notches of the headlight leveling motor and the housing, and pull out the headlight leveling motor slightly.

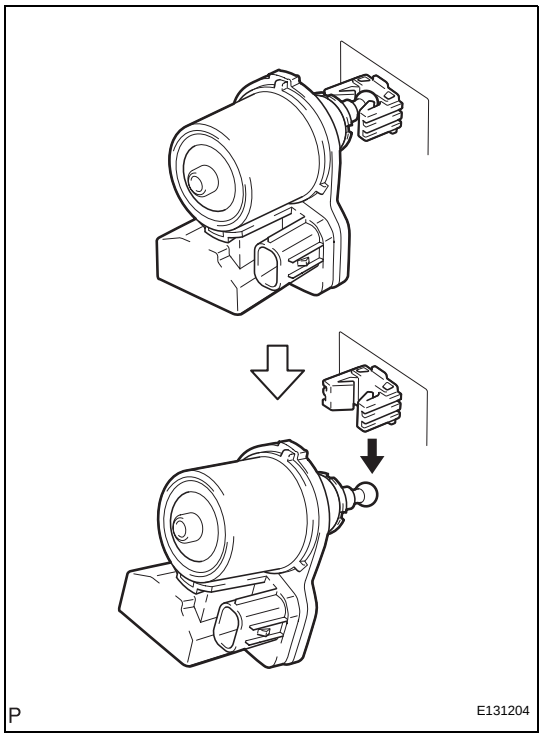

(b) Lower the tip of the headlight leveling motor to disengage it from the reflector and remove the headlight leveling motor.

10. REMOVE HEADLIGHT LEVELING MOTOR BASE PACKING (for HID Headlight)

(a) Remove the headlight leveling motor base packing.
NOTICE:
After the headlight leveling motor base packing is removed, be sure to replace it with a new one. Failure to do this may cause water ingress.

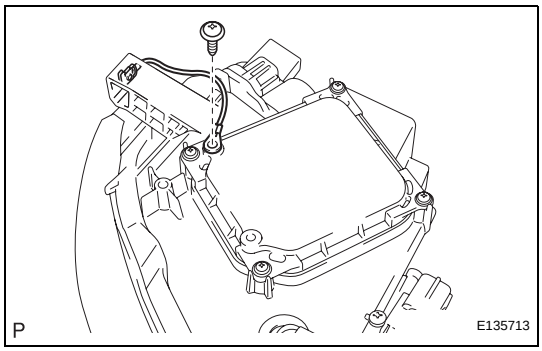

11. REMOVE HEADLIGHT PROTECTOR (for HID Headlight)

(a) Remove the screw and the headlight protector.

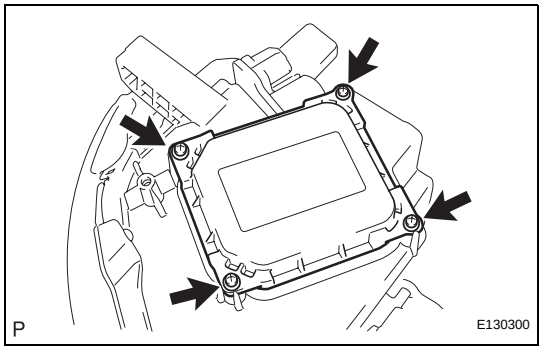

12. REMOVE LIGHT CONTROL ECU SUB-ASSEMBLY (for HID Headlight)

(a) Remove the 4 screws.

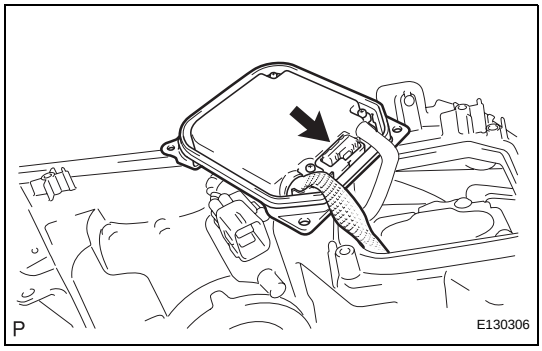

(b) Disconnect the connector and remove the light control ECU sub-assembly.

13. REMOVE HEADLIGHT GASKET (for HID Headlight)

(a) Remove the headlight gasket.
NOTICE:
After the headlight gasket is removed, be sure to replace it with a new one. Failure to do this may cause water ingress.

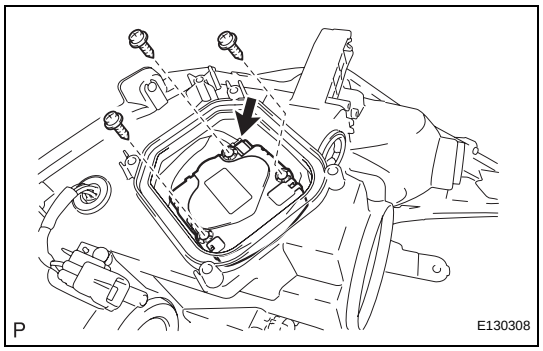

14. REMOVE HEADLIGHT SWIVEL MOTOR (for HID Headlight)

(a) Disconnect the connector.

(b) Remove the 3 screws and the headlight swivel motor.

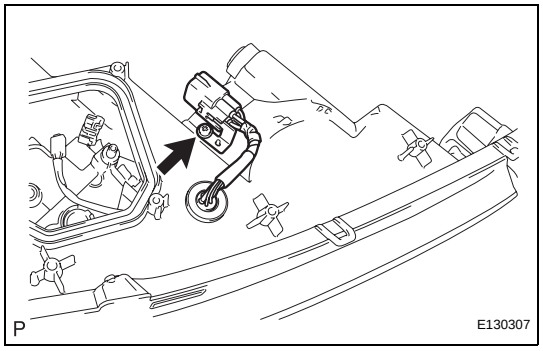

15. REMOVE HEADLIGHT CORD (for HID Headlight)

(a) Remove the screw and the headlight cord.

ADJUSTMENT

HINT:
It is possible that a bulb is incorrectly installed, affecting headlight aim. Bulb installation should be considered prior to performing the adjustment procedure.

1. VEHICLE PREPARATION FOR HEADLIGHT AIM ADJUSTMENT

(a) Prepare the vehicle according to the following conditions:
- Ensure there is no damage or deformation to the body around the headlights.
- Fill the fuel tank.
- Make sure that the oil is filled to the specified level.
- Make sure that the coolant is filled to the specified level.
- Inflate the tires to the appropriate pressure.
- Unload the trunk and vehicle, ensuring that the spare tire, tools, and jack are in their original positions.
- Sit a person of average weight (68 kg, 150 lb) in the driver's seat.
- Vehicles with height adjustable suspension should set the vehicle height to the lowest setting prior to adjusting the headlight aim.
- Vehicles with manually adjustable headlights should be adjusted to "0".

2. PREPARATION FOR HEADLIGHT AIMING (Using a headlight aim test machine)

(a) Adjust the headlight aim in accordance with the headlight aim test machine instructions.

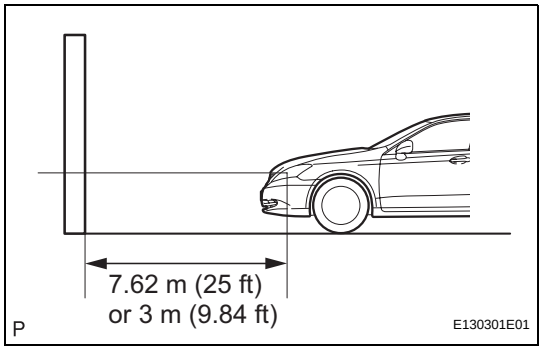

3. PREPARATION FOR HEADLIGHT AIMING (Using a Screen)

(a) Prepare the vehicle:
- Place the vehicle in a location that is dark enough to clearly observe the cutoff line. The cutoff line is a distinct line, below which light from the headlights can be observed and above which it cannot.
- Place the vehicle at a 90° angle to the wall.
- Create a 7.62 m (25 ft) distance between the vehicle (headlight bulb center) and the wall.
- Make sure that the vehicle is on a level surface.

- Bounce the vehicle up and down to settle the suspension.
  NOTICE:
  A distance of 7.62 m (25 ft) between the vehicle (headlight bulb center) and the wall is necessary for proper aim adjustment. If sufficient space is not available, secure a distance of exactly 3 m (9.84 ft) to allow for checking and adjustment of headlight aim. (The size of the target zone will change with the distance, so follow the instructions in the illustration.)

(b) Prepare a piece of thick white paper (approximately 2 m (6.6 ft) (height) x 4 m (13.1 ft) (width)) to use as a screen.

(c) Draw a vertical line down the center of the screen (V line).

(d) Set the screen as shown in the illustration.

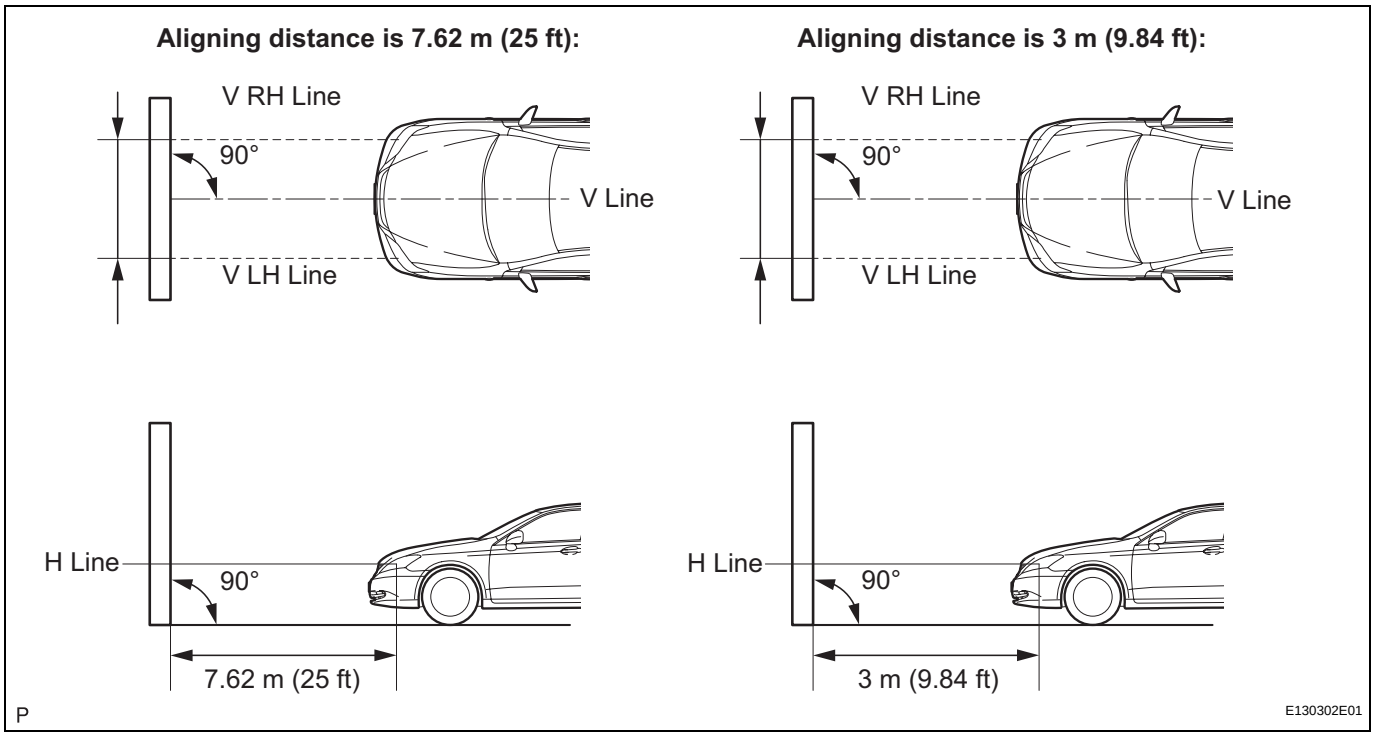

HINT:
- Stand the screen perpendicular to the ground.
- Align the V line on the screen with the center of the vehicle.

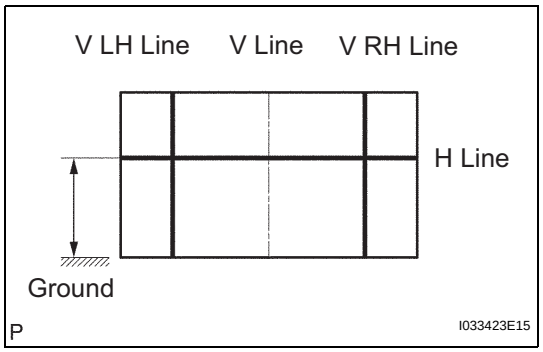

(e) Draw base lines (H, V LH, and V RH lines) on the screen as shown in the illustration.
HINT:
- The base lines differ for "low-beam inspection" and "high-beam inspection."
- Mark the headlight bulb center marks on the screen. If the center mark cannot be observed on the headlight, use the center of the headlight bulb or the manufacturer's name marked on the headlight as the center mark.

LI

(1) H Line (Headlight height):
Draw a horizontal line across the screen so that it passes through the center marks. The H line should be at the same height as the headlight bulb center marks of the low-beam headlights.

(2) V LH Line, V RH Line (Center mark position of left-hand (LH) and right-hand (RH) headlights):
Draw two vertical lines so that they intersect the H line at each center mark (aligned with the center of the low-beam headlight bulbs).

4. HEADLIGHT AIMING INSPECTION

(a) Cover the headlight or disconnect the connector of the headlight on the opposite side to prevent light from the headlight that is not being inspected from affecting the headlight aiming inspection.
NOTICE:
Do not keep the headlight covered for more than 3 minutes. The headlight lens is made of synthetic resin, which may melt or be damaged due to excessive heat.
HINT:
When checking the aim of the high-beam, cover the low-beam or disconnect the connector.

(b) Start the engine.

(c) Turn on the headlight and check if the cutoff line matches the preferred cutoff line in the following illustration.

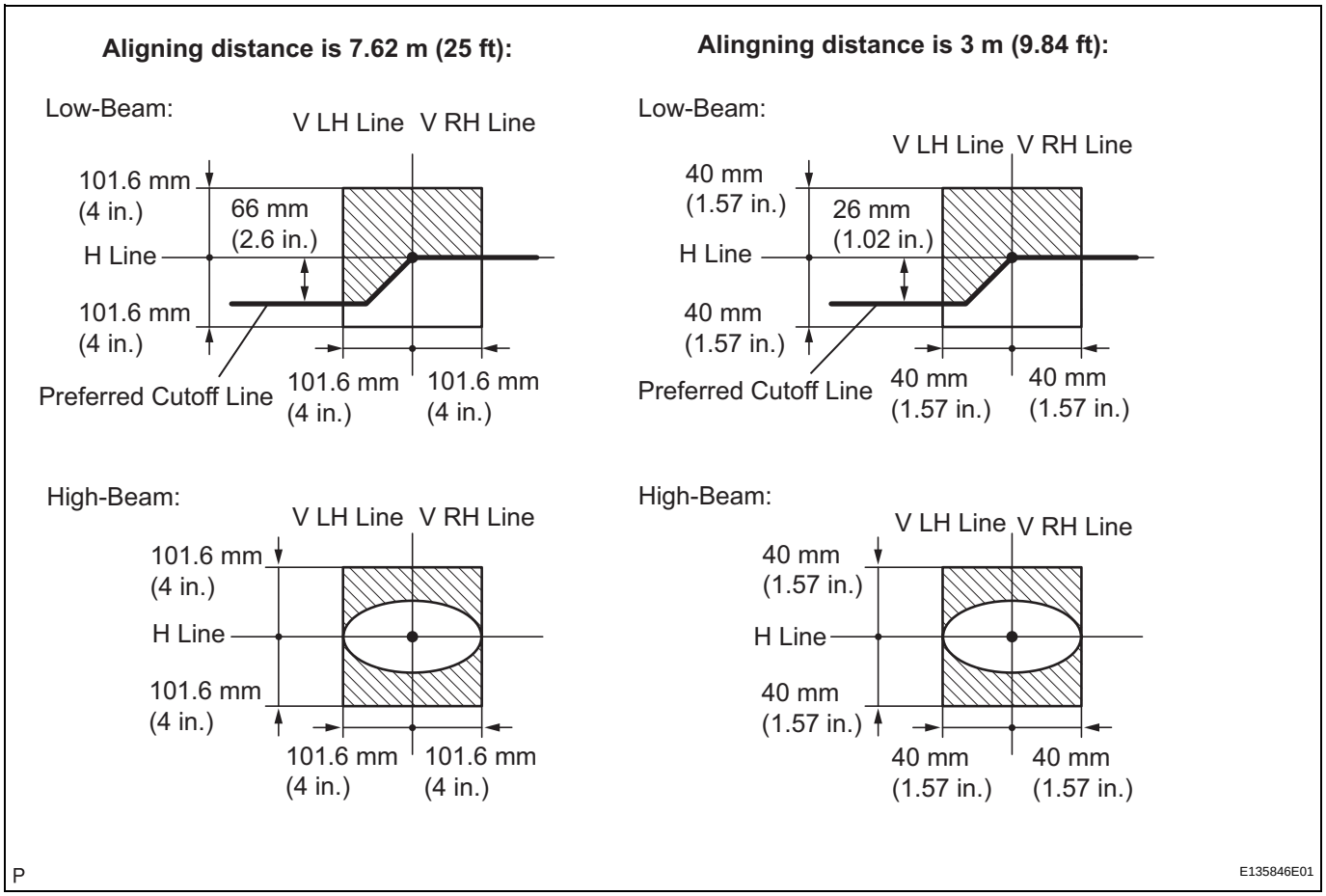

HINT:

- Since the low beam light and the high beam light on each side have separate reflectors, it is necessary to check and adjust the aim separately for both.
- If the alignment distance is 7.62 m (25 ft):
  The cutoff line should be within 101.6 mm (4 in.) above or below the H line as well as 101.6 mm (4 in.) left or right of the V line with low-beam (SAE J599).
- If the alignment distance is 3 m (9.84 ft):
  The low beam cutoff line should be within 40 mm (1.57 in.) above or below the H line as well as 40 mm (1.57 in.) left or right of the V line (SAE J599).
- If the alignment distance is 7.62 m (25 ft):
  The high beam center of intensity should be within 101.6 mm (4 in.) above or below the H line as well as 101.6 mm (4 in.) left or right of the V line (SAE J599).

- If the alignment distance is 3 m (9.84 ft):
  The high beam center of intensity should be within 40 mm (1.57 in.) above or below the H line as well as 40 mm (1.57 in.) left or right of the V line (SAE J599).
- If the alignment distance is 7.62 m (25 ft):
  The low beam cutoff line should be 66 mm (2.6 in.) below the H line (preferred cutoff line target).
- If the alignment distance is 3 m (9.84 ft):
  The low beam cutoff line should be 26 mm (1.02 in.) below the H line (preferred cutoff line target).

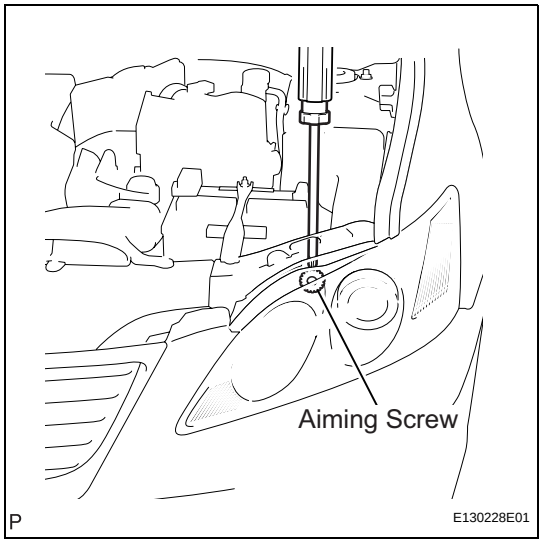

5. HEADLIGHT AIMING ADJUSTMENT

(a) Adjust the aim vertically:
Adjust the headlight aim into the specified range by turning the aiming screw with a screwdriver.
NOTICE:
The final turn of the aiming screw should be made in the clockwise direction. If the screw is tightened excessively, loosen it and then retighten it, so that the final turn of the screw is in the clockwise direction.
HINT:
- The low-beam light and the high-beam light are a unit. Adjusting the aim on the low-beam to the correct position should also result in the high-beam adjustment being correct.
- If it is not possible to correctly adjust headlight aim, check bulb, headlight unit, and headlight unit reflector installation.
- The headlight aim moves up when turning the aiming screw clockwise, and moves down when turning the aiming screw counterclockwise.

REASSEMBLY

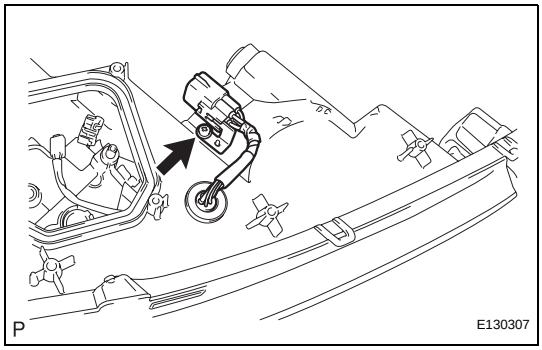

1. INSTALL HEADLIGHT CORD (for HID Headlight)

(a) Install the headlight cord with the screw.

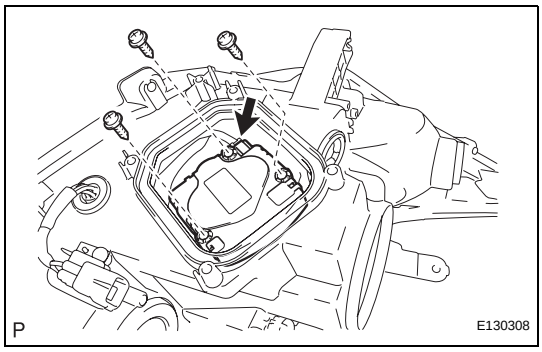

2. INSTALL HEADLIGHT SWIVEL MOTOR (for HID Headlight)

(a) Install the headlight swivel motor with the 3 screws.
(b) Connect the connector.

3. INSTALL HEADLIGHT GASKET (for HID Headlight)

(a) Install a new headlight gasket.
NOTICE:
After the headlight gasket is removed, be sure to replace it with a new one. Failure to do this may cause water ingress.

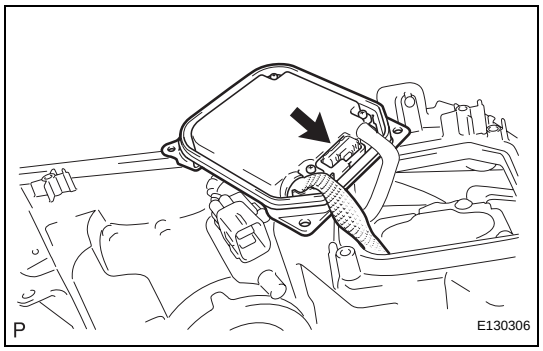

4. INSTALL LIGHT CONTROL ECU SUB-ASSEMBLY (for HID Headlight)

(a) Connect the connector.

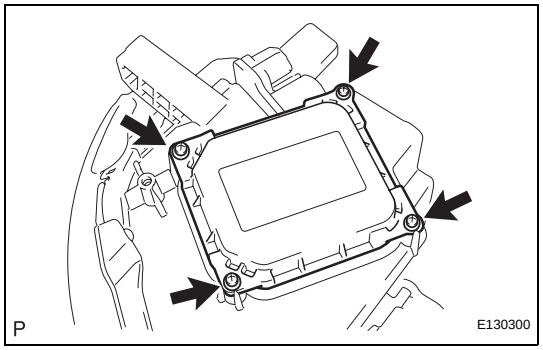

(b) Install the headlight control ECU sub-assembly with the 4 screws.

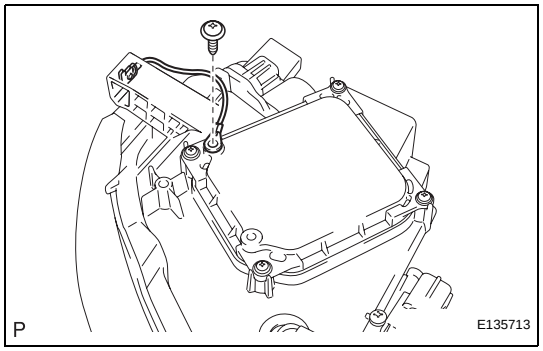

5. INSTALL HEADLIGHT PROTECTOR (for HID Headlight)

(a) Install the headlight protector with the screw.

6. INSTALL HEADLIGHT LEVELING MOTOR BASE PACKING (for HID Headlight)

(a) Install a new headlight leveling motor base packing.

NOTICE:

After the headlight leveling motor base packing is removed, be sure to replace it with a new one. Failure to do this may cause water ingress.

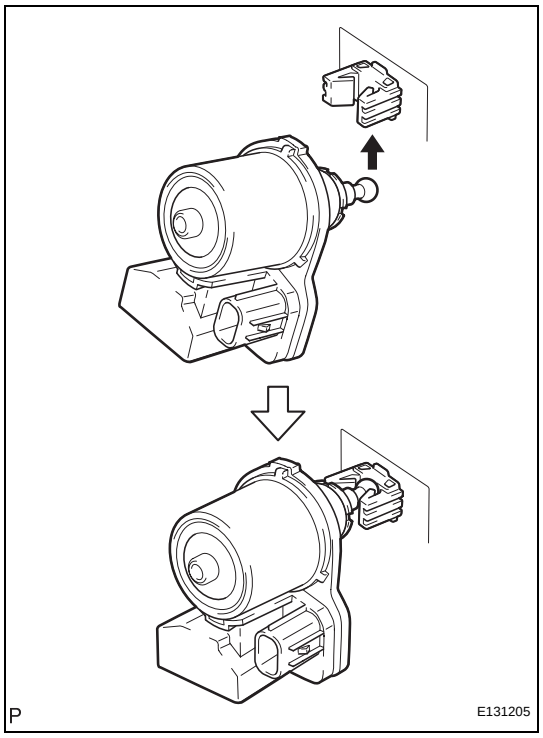

7. INSTALL HEADLIGHT LEVELING MOTOR (for HID Headlight)

(a) Engage the tip of the headlight leveling motor with the reflector.

LI

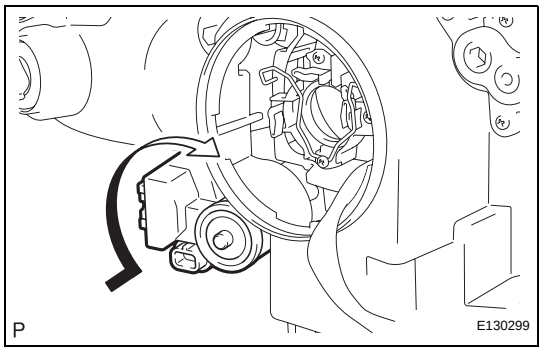

(b) Turn the headlight leveling motor to install it.

8. INSTALL CLEARANCE LIGHT BULB

(a) Install the clearance light bulb to the clearance light socket.

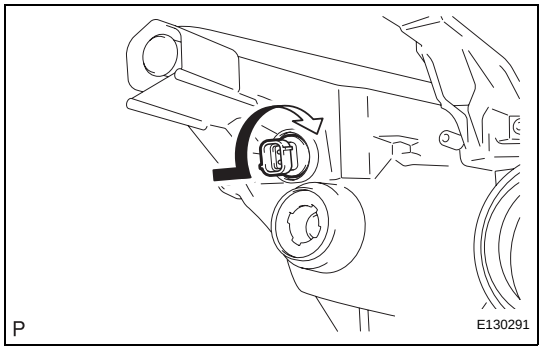

(b) Turn the clearance light bulb and clearance light socket in the direction indicated by the arrow and install them as a unit.

9. INSTALL FRONT TURN SIGNAL LIGHT BULB

(a) Install the front turn signal light bulb to the front turn signal light socket.

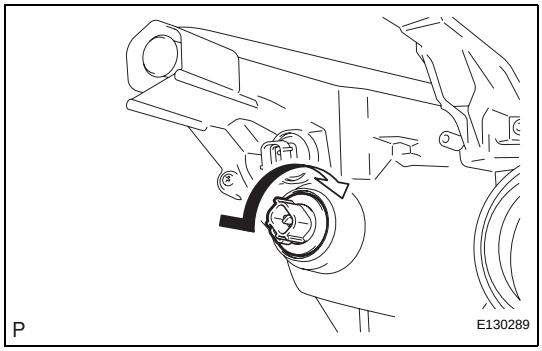

(b) Turn the front turn signal light bulb and front turn signal light socket in the direction indicated by the arrow and install them as a unit.

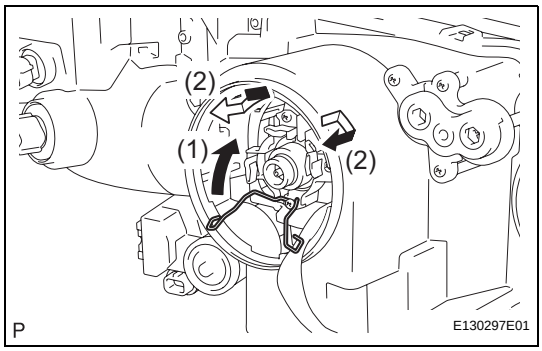

10. INSTALL DISCHARGE HEADLIGHT BULB (for HID Headlight)

(a) Lock the set spring to install the discharge headlight bulb as shown in the illustration.

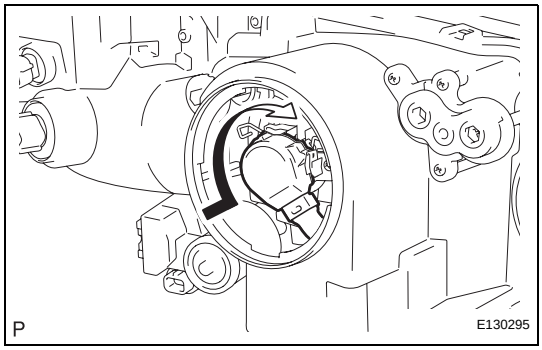

(b) Turn the socket of the light control ECU sub-assembly in the direction indicated by the arrow to connect the socket.

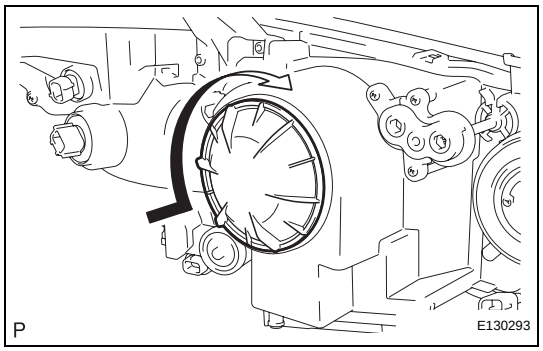

11. INSTALL HEADLIGHT SOCKET COVER (for HID Headlight)

(a) Install the headlight socket cover as shown in the illustration.

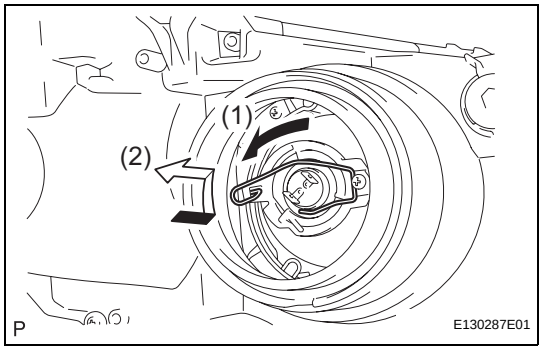

12. INSTALL NO. 1 HEADLIGHT BULB (for Halogen Headlight)

(a) Lock the set spring to install the No. 1 headlight bulb as shown in the illustration.

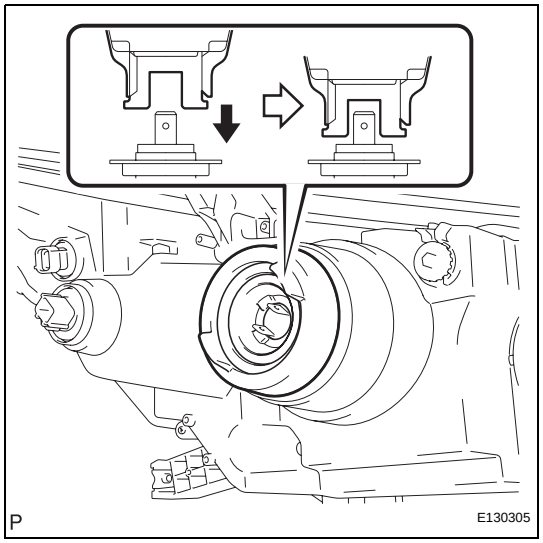

13. INSTALL ADAPTER ASSEMBLY (for Halogen Headlight)

(a) Install the adapter assembly as shown in the illustration.

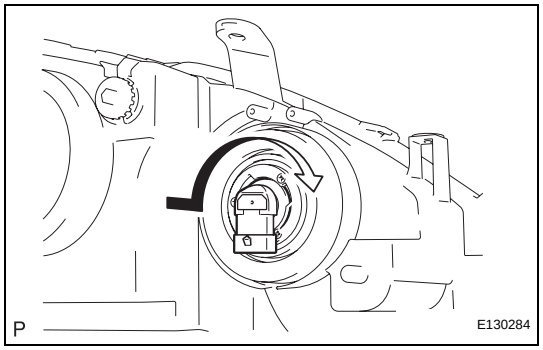

14. INSTALL NO. 2 HEADLIGHT BULB

(a) Install the No. 2 headlight bulb as shown in the illustration.

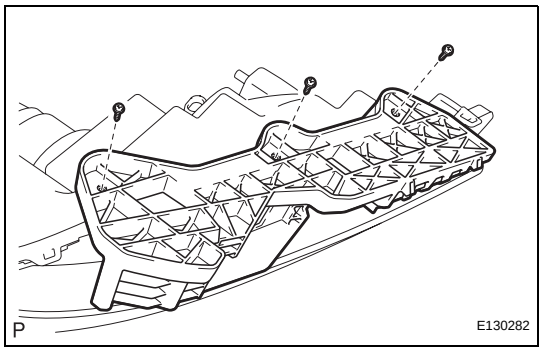

15. INSTALL FRONT BUMPER SIDE SUPPORT

(a) Install the front bumper side support with the 3 screws.

CUSTOMIZE PARAMETERS

NOTICE:

- **Before attempting to customize vehicle settings, confirm whether it is possible to make the change that the customer has requested.**
- **Be sure to record the current value before customizing.**
- **In case of performing the troubleshooting, pay attention because there is a possibility that the function has been disabled by customizing. (Example: In case of the symptom in which "The wireless operation does not function", check that the wireless operation has not been disabled by customizing, then perform the troubleshooting.)**

ILLUMINATED ENTRY:

Display	Default	Contents	Setting
LIGHTING TIME	15 s	Changes the lighting time of the front seat illumination, rear seat illumination, interior light, rear door courtesy lights, and engine switch illumination after closing the door. It will quickly fade out when the engine switch is turned on (IG). (Front personal switches are OFF, DOOR switch is ON, and seat illumination switch is OFF)	7.5 s / 15 s / 30 s
ILLUMI SYSTEM	ON	Lights up the footwell illumination when one of the following occurs: the engine switch is turned on (IG), or any door is unlocked or opened.	ON / OFF
LIGHT CONTROL	ON	Dims (ON setting) or turns off (OFF setting) the footwell illumination under the following conditions: Engine switch on (IG), shift lever not in P, and all doors closed.	ON / OFF
I/L ON / UNLOCK	ON	Lights up the front seat illumination, rear seat illumination, interior light, rear door courtesy lights, footwell illumination, and engine switch illumination when the doors are unlocked.	ON / OFF
I/L ON / ACC OFF	ON	Lights up the front seat illumination, rear seat illumination, interior light, rear door courtesy lights, and engine switch illumination when the engine switch is turned off.	ON / OFF

LIGHT CONTROL:

Display	Default	Contents	Setting
LIGHT OFF DELAY	30 s	Keeps the exterior lights on for a certain period of time after turning the engine switch off and closing all the doors with the low beam headlights on.	OFF / 30 s / 60 s / 90 s
SENSITIVITY	NORMAL	Adjusts the sensitivity of the automatic light control system.	LIGHT 2 / LIGHT 1 / NORMAL / DARK 1 / DARK 2
DRL FUNCTION (*1)	ON	ON / OFF of the DRL function	ON / OFF
DISP EX ON SEN	NORMAL	Changes the ambient brightness level required to dim the lights such as the indicator lights of the combination meter, A/C indicator light, and clock.	LIGHT 2 / LIGHT 1 / NORMAL / DARK 1 / DARK 2
DISP EX OFF SEN	NORMAL	Changes the ambient brightness level required to cancel the dimming of the lights such as the indicator lights of the combination meter, A/C indicator light, and clock.	LIGHT 2 / LIGHT 1 / NORMAL / DARK 1 / DARK 2

HINT:
*1: for U.S.A package models.

INITIALIZATION

1. HEIGHT CONTROL SENSOR SIGNAL INITIALIZATION

NOTICE:

- **Initialize the height control sensor signal after the vehicle height changes due to replacement of the suspension or after performing such operations as removal and reinstallation or replacement of the rear height control sensor sub-assembly.**
- **When the AFS ECU is replaced, the initialization is also necessary.**
- **Adjust the headlight aim after initializing the AFS ECU (See page LI-129).**
- **When a malfunction is detected in the headlight beam level control system, the height control sensor signal initialization is impossible. Perform troubleshooting before initialization.**

1	PREPARE VEHICLE FOR INITIALIZATION

(a) Make sure that approximately 10 liters of fuel is in the tank.
(b) Unload the trunk and vehicle, ensuring that the spare tire, tools, and jack are in their original positions.
(c) Check that there are no passengers in the vehicle.
(d) Turn off the headlights.

NEXT

2	CHECK WARNING LIGHT

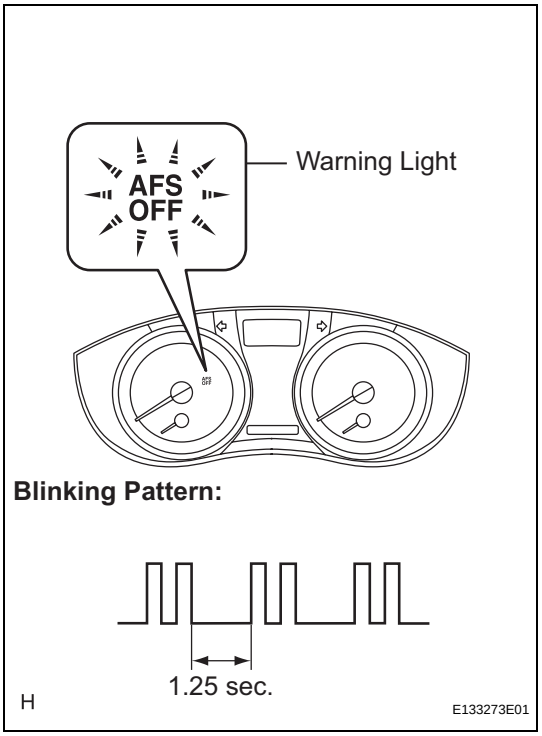

(a) Turn the engine switch on (IG), and check the AFS OFF indicator light.

OK

Condition	Specified Condition
The AFS ECU is replaced with a new one.	**Indicator light continuously blinks twice at 2 Hz as shown in the illustration.**
Removal and reinstallation of the AFS ECU, replacement of the rear height control sensor sub-assembly, removal and reinstallation of the rear height control sensor sub-assembly, replacement of the suspension, etc. is performed.	**Indicator light comes on for approximately 3 seconds, and then goes off (bulb check function).**

HINT:

- If the indicator light does not come on when turning the engine switch on (IG), inspect and repair according to "PROBLEM SYMPTOMS TABLE" (See page LI-32).
- If there is a problem with initialized data memorized in the AFS ECU, the warning light blinks twice at 2 Hz as shown in the illustration when the engine switch is turned on (IG).

NG → **GO TO PROBLEM SYMPTOMS TABLE**

OK

3 INITIALIZATION

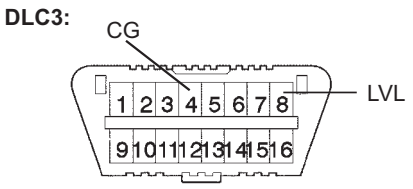

E106867E12

(a) Connect terminals 4 (CG) and 8 (LVL) of the DLC3 using SST.

SST 09843-18040

(b) Flash the low beam headlights 3 times by turning the light control switch within 20 seconds after connecting the terminals.

NOTICE:

- **Turn the low beam headlights on or off at approximately 1-second intervals.**
- **Be sure to operate the light control switch from the outside of the vehicle.**

(c) Check the warning light.

OK

Condition	Specified Condition
AFS ECU is replaced with a new one.	**Blinks twice at 2 Hz → Blinks 3 times at 2 Hz, and then goes off (refer to illustration 1).**
Removal and reinstallation of the AFS ECU, replacement of the rear height control sensor sub-assembly, removal and reinstallation of the rear height control sensor sub-assembly, replacement of the suspension, etc. is performed.	**Off → Blinks 3 times at 2 Hz, and then goes off (refer to illustration 2).**

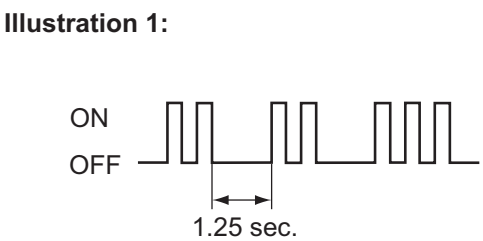

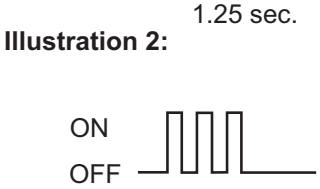

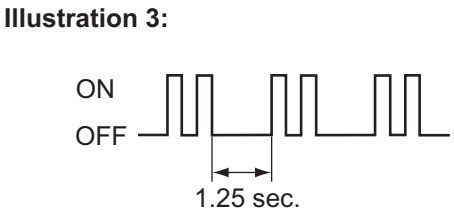

H E121525E01

HINT:

- If calculated vehicle height is not between full-bound and full-rebound, the height control sensor initialization will end abnormally, and the indicator light will blink twice at 2 Hz continuously as shown in illustration 3. Disconnect the SST from the DLC3 and turn the engine switch off. Then, restart from procedure 2.
- If initialization cannot be finished normally, check the LVL terminal circuit (See page LI-120), or inspect and repair according to "PROBLEM SYMPTOMS TABLE" (See page LI-32).

NG → **PERFORM TROUBLESHOOTING**

OK

END

PROBLEM SYMPTOMS TABLE

1. Headlight system:

Symptom	Suspected Area	See page
One side LO-beam headlight does not illuminate	1. H-LP RL fuse or H-LP LL fuse	-
	2. Bulb	-
	3. Harness or connector	-
	4. Power distributor (Engine room J/B)	-
Both left and right LO-beam headlights do not illuminate	1. Light control switch circuit	LI-90
	2. Headlight relay circuit	LI-74
	3. Main body ECU (Instrument panel J/B)	-
One side HI-beam headlight does not illuminate	1. H-LP RH fuse or H-LP LH fuse	-
	2. Bulb	-
	3. Harness or connector	-
	4. Power distributor (Engine room J/B)	-
Both left and right HI-beam headlights do not illuminate	1. Light control switch circuit	LI-90
	2. Headlight (HI-BEAM) circuit	LI-79
	3. Main body ECU (Instrument panel J/B)	-
"HIGH FLASH" (Passing) does not illuminate	1. Light control switch circuit	LI-90
	2. Main body ECU (Instrument panel J/B)	-
LO-beam headlights or HI-beam headlights do not go off	1. Headlight dimmer switch assembly	LI-189
	2. Power distributor (Engine room J/B)	-
	3. Harness or connector	-
	4. Main body ECU (Instrument panel J/B)	-

2. Daytime running light system:

Symptom	Suspected Area	See page
Daytime running light system does not operate	1. Light control switch circuit	LI-90
	2. Parking brake switch circuit	LI-110
	3. Power distributor (Engine room J/B)	-
	4. Main body ECU (Instrument panel J/B)	-
	5. ECM	-

3. Taillight system:

Symptom	Suspected Area	See page
Front parking light does not illuminate	1. Bulb	-
	2. Harness or connector	-
Rear taillight does not illuminate	1. Bulb	-
	2. Light failure sensor	LI-225
	3. Harness or connector	-
License plate light does not illuminate	1. License plate light assembly	-
	2. Harness or connector	-
Rear side marker light does not illuminate	1. Bulb	-
	2. Harness or connector	-
Taillight system does not operate (Rear taillight, parking lights, rear side marker light, and license plate lights do not illuminate)	1. TAIL fuse	-
	2. Taillight relay	LI-232
	3. Light control switch circuit	LI-90
	4. Taillight relay circuit	LI-112
	5. Main body ECU (Instrument panel J/B)	-

4. Stop light system:

Symptom	Suspected Area	See page
Stop light system does not operate	1. Stop fuse	-
	2. Stop light switch	LI-200
	3. Stop light control relay (with dynamic radar cruise control)	BC-205
	4. Harness or connector	-
One side stop light does not illuminate	1. Bulb	-
	2. Harness or connector	-
Both left and right stop lights do not illuminate	1. Bulb	-
	2. Light failure sensor	LI-225
	3. Harness or connector	-
Hi-mounted stop light does not illuminate	1. High mounted stop light assembly	-
	2. Harness or connector	-

5. Front fog light system:

Symptom	Suspected Area	See page
One side fog light does not illuminate	1. Bulb	-
	2. Harness or connector	-
Both left and right fog lights do not illuminate (Taillight system is normal)	1. FR FOG fuse	-
	2. FOG relay	LI-233
	3. Light control switch circuit	LI-90
	4. Front fog light circuit	LI-85
	5. Main body ECU (Instrument panel J/B)	-

6. Turn signal and hazard warning system:

Symptom	Suspected Area	See page
Hazard warning lights do not operate (Turn signal lights are normal)	1. HAZ fuse	-
	2. Hazard warning signal switch	LI-194
	3. Turn signal flasher assembly	LI-229
	4. Harness or connector	-
Turn signal lights do not operate (Hazard warning lights are normal)	1. GAUGE No. 1 fuse	-
	2. Headlight dimmer switch assembly (Turn signal switch)	LI-189
	3. Turn signal flasher assembly	LI-229
	4. Harness or connector	-
"Hazard" and "Turn" do not operate	1. Turn signal flasher assembly	LI-229
	2. Hazard warning signal switch	LI-194
	3. Headlight dimmer switch assembly (Turn signal switch)	LI-189
	4. Harness or connector	-
Turn signal lights do not operate in one direction	1. Headlight dimmer switch assembly (Turn signal switch)	LI-189
	2. Turn signal flasher assembly	LI-229
	3. Harness or connector	-
Only one bulb does not operate	1. Bulb	-
	2. Harness or connector	-

7. Back-up light system:

Symptom	Suspected Area	See page
One side back-up light does not illuminate	1. Bulb	-
	2. Harness or connector	-
Both left and right back-up lights do not illuminate	1. GAUGE No. 1 fuse	-
	2. Park/Neutral position switch	AX-185
	3. Harness or connector	-

8. Illuminated entry system (Interior light control):

Symptom	Suspected Area	See page
Only interior light does not illuminate	1. Personal light assembly	LI-160
Only rear seat illumination does not come on	1. Rear room light assembly	LI-162
	2. Harness or connector	-
Only front seat illumination does not come on	1. Personal light assembly	LI-160
Only rear door courtesy light does not illuminate	1. Bulb	-
	2. Rear door courtesy light assembly	LI-166
	3. Harness or connector	-
Engine switch illumination does not illuminate	1. Engine switch illumination circuit	LI-105
	2. Main body ECU (Instrument panel J/B)	-
Interior light and seat illumination do not illuminate	1. Interior light circuit	LI-100
	2. Main body ECU (Instrument panel J/B)	-
Interior light control (Interior light, seat illumination and engine switch illumination) does not operate normally	1. Door courtesy switch circuit	LI-94
	2. Door lock position switch circuit	LI-98
	3. Interior light circuit	LI-100
	4. Engine switch illumination	LI-105
	5. Engine switch	ST-158
	6. Harness or connector	-
	7. Main body ECU (Instrument panel J/B)	-

9. Illuminated entry system (Footwell illumination control):

Symptom	Suspected Area	See page
One side footwell illumination does not come on	1. Footwell light	LI-181
	2. Harness or connector	-
Footwell illumination control does not operate normally (Interior light control is normal)	1. Footwell light circuit	LI-103
	2. Main body ECU	-

10. Illuminated entry system (Door mirror foot light control):

Symptom	Suspected Area	See page
One side door mirror foot light does not come on	1. Door mirror foot light	LI-185
	2. Harness or connector	-
Door mirror foot light control does not operate normally (Footwell illumination control is normal)	1. Door mirror foot light circuit	LI-108
	2. Mirror ECU power source circuit	MI-32
	3. Mirror ECU	-
	4. Main body ECU	-

11. Vanity light system:

Symptom	Suspected Area	See page
Vanity light does not illuminate	1. Bulb	-
	2. Vanity light assembly	LI-173
	3. Visor assembly (Vanity light switch)	-
	4. Harness or connector	-

12. Luggage compartment light system:

Symptom	Suspected Area	See page
Luggage compartment light does not illuminate	1. Luggage compartment light	LI-169
	2. Luggage compartment door lock assembly (Door courtesy switch)	LI-207
	3. Harness or connector	-

13. Glove box light system:

Symptom	Suspected Area	See page
Glove box light does not illuminate	1. Glove box light assembly	LI-171
	2. Harness or connector	-

14. Door courtesy light system:

Symptom	Suspected Area	See page
Driver side door courtesy light does not illuminate	1. Bulb	-
	2. Driver side door courtesy light assembly	LI-166
	3. Driver side door courtesy switch	LI-166
	4. Harness or connector	-
Front passenger side door courtesy light does not illuminate	1. Bulb	-
	2. Front passenger side door courtesy light assembly	LI-166
	3. Front passenger side door courtesy switch	LI-203
	4. Harness or connector	-
Rear LH door courtesy light does not illuminate	1. Bulb	-
	2. Rear LH door courtesy light assembly	LI-166
	3. Rear LH door courtesy switch	LI-207
	4. Harness or connector	-
Rear RH door courtesy light does not illuminate	1. Bulb	-
	2. Rear RH door courtesy light assembly	LI-166
	3. Rear RH door courtesy switch	LI-207
	4. Harness or connector	-

15. Personal light system:

Symptom	Suspected Area	See page
Front personal lights do not illuminate	1. Personal light assembly	LI-160
	2. Harness or connector	-
Rear LH personal lights do not illuminate	1. Rear LH room light assembly	LI-162
	2. Harness or connector	-
Rear RH personal lights do not illuminate	1. Rear RH room light assembly	LI-162
	2. Harness or connector	-

16. Automatic light control system:

Symptom	Suspected Area	See page
Automatic light control system does not operate normally	1. Light control switch circuit	LI-90
	2. Automatic light control sensor circuit	LI-49
	3. Engine switch	ST-158
	4. Main body ECU (Instrument panel J/B)	-

17. Light auto turn off system:

Symptom	Suspected Area	See page
Light auto turn off system does not operate normally	1. Light control switch circuit	LI-90
	2. Door courtesy switch circuit	LI-94
	3. Door lock position switch circuit	LI-98
	4. Main body ECU (Instrument panel J/B)	-

18. Battery saving system:

Symptom	Suspected Area	See page
Battery saving function does not operate	1. Door courtesy switch circuit	LI-94
	2. Engine switch	ST-158
	3. Main body ECU (Instrument panel J/B)	-

19. AFS

Symptom	Suspected Area	See page
AFS does not operate.	1. Check DTC	-
	1. Power source circuit	LI-116
	2. AFS OFF switch circuit	LI-118
	3. AFS ECU	-
AFS OFF indicator light does not come on when turning the engine switch on (IG)	1. AFS ECU	-
	2. Combination meter	-

FOG LIGHT ASSEMBLY

COMPONENTS

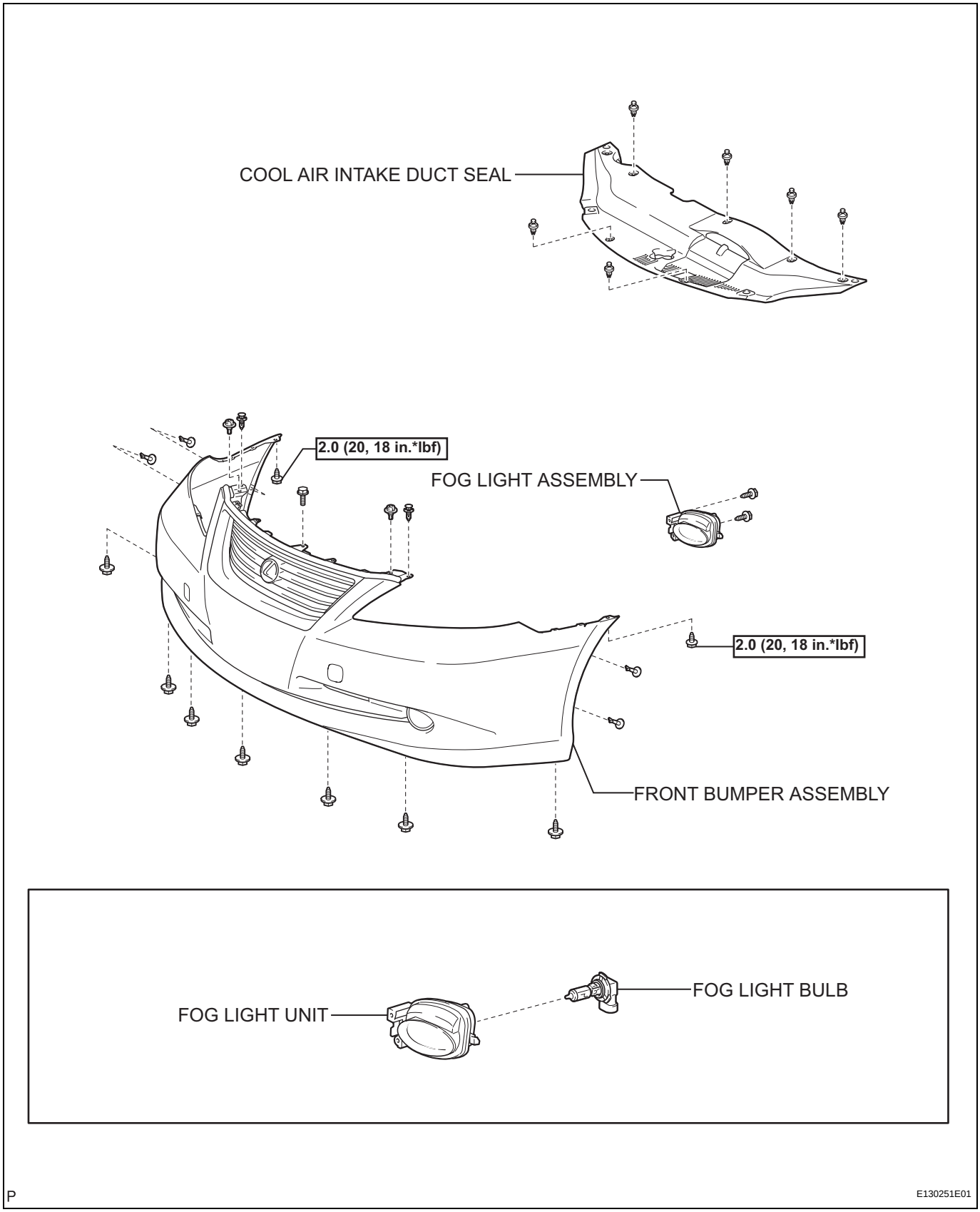

REMOVAL

1. **REMOVE COOL AIR INTAKE DUCT SEAL (See page ET-4)**
2. **REMOVE FRONT BUMPER ASSEMBLY (See page ET-5)**
3. **REMOVE FOG LIGHT ASSEMBLY**
   (a) Remove the 2 screws.
   (b) Disengage the claw and remove the fog light assembly.

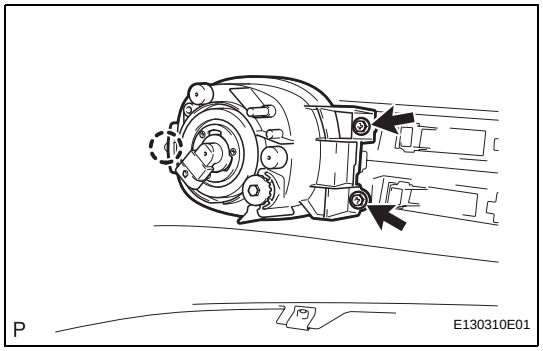

DISASSEMBLY

1. **REMOVE FOG LIGHT BULB**
   (a) Remove the fog light bulb as shown in the illustration.

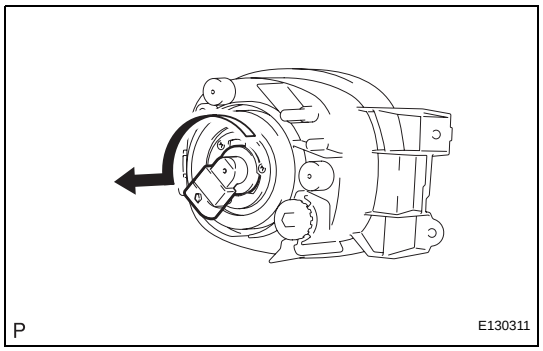

ADJUSTMENT

HINT:
It is possible that a bulb is incorrectly installed, affecting fog light aim. Bulb installation should be considered prior to performing the adjustment procedure.

1. VEHICLE PREPARATION FOR FOG LIGHT AIM ADJUSTMENT

(a) Prepare the vehicle according to the following conditions:
- Ensure there is no damage or deformation to the body around the fog lights.
- Fill the fuel tank.
- Make sure that the oil is filled to the specified level.
- Make sure that the coolant is filled to the specified level.
- Inflate the tires to the appropriate pressure.
- Unload the trunk and vehicle, ensuring that the spare tire, tools, and jack are in their original positions.
- Sit a person of average weight (68 kg, 150 lb) in the driver's seat.
- Vehicles with height adjustable suspension should set the vehicle height to the lowest setting prior to adjusting the fog light aim.

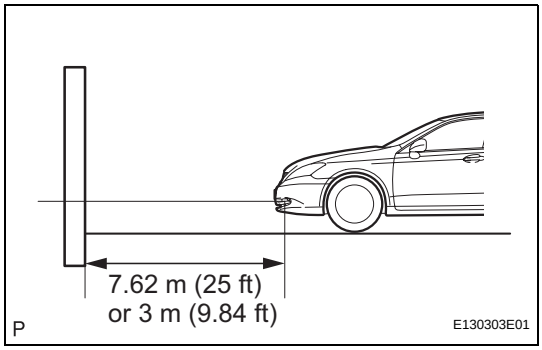

2. PREPARATION FOR FOG LIGHT AIMING

(a) Prepare the vehicle:
- Place the vehicle in a location that is dark enough to clearly observe the cutoff line. The cutoff line is a distinct line, below which light from the fog lights can be observed and above which it cannot.
- Place the vehicle at a 90° angle to the wall.
- Create a 7.62 m (25 ft) distance between the vehicle (fog light bulb center) and the wall.
- Make sure that the vehicle is on a level surface.
- Bounce the vehicle up and down to settle the suspension.

  NOTICE:
  A distance of 7.62 m (25 ft) between the vehicle (fog light bulb center) and the wall is necessary for proper aim adjustment. If unavailable, secure a distance of exactly 3 m (9.84 ft) for check and adjustment. (The target zone will change with the distance, so follow the instructions in the illustration.)

(b) Prepare a piece of thick white paper (approximately 2 m (6.6 ft) (height) x 4 m (13.1 ft) (width)) to use as a screen.

(c) Draw a vertical line down the center of screen (V line).

(d) Set the screen as shown in the illustration.

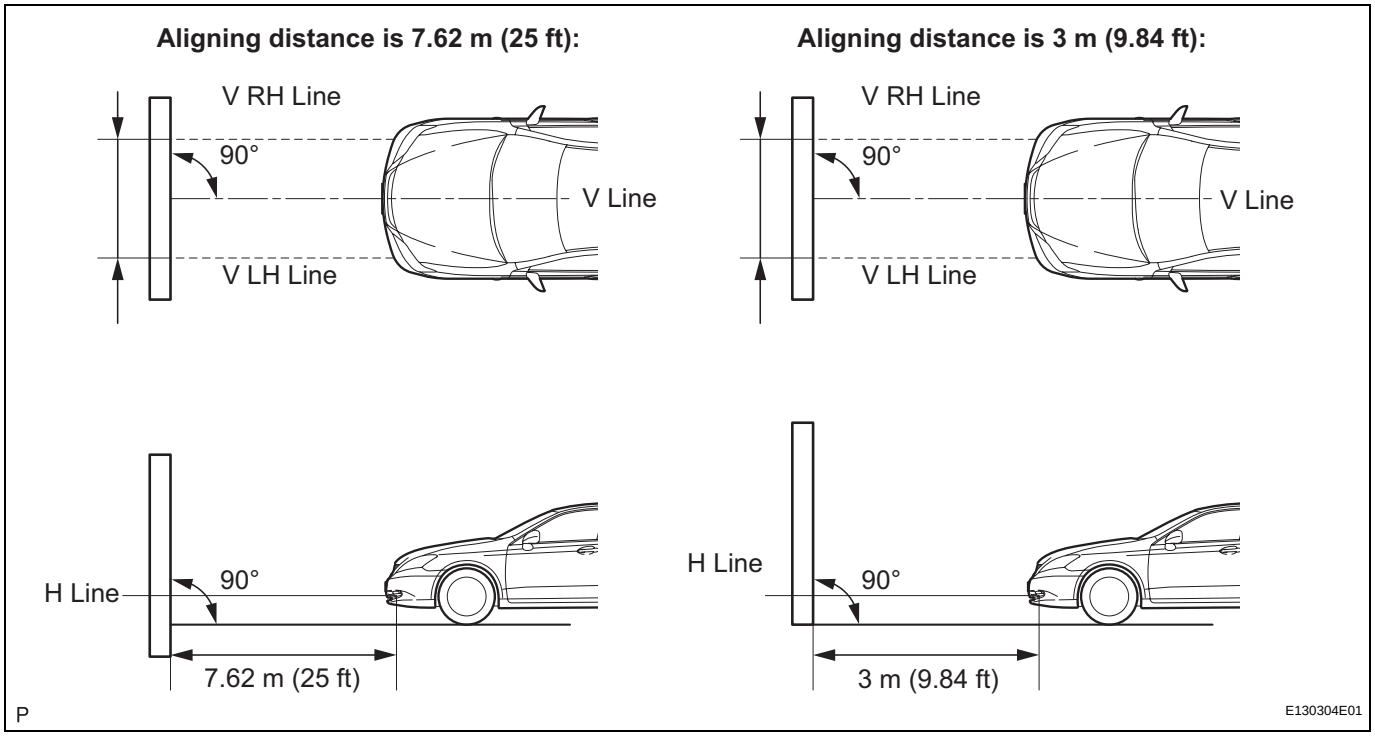

HINT:
- Stand the screen perpendicular to the ground.
- Align the V line on the screen with the center of the vehicle.

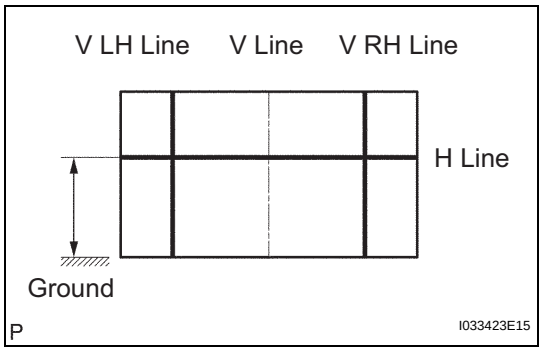

(e) Draw base lines (H, V LH, and V RH lines) on the screen as shown in the illustration.
HINT:
Mark the fog light bulb center marks on the screen. If the center mark cannot be observed on the fog light, use the center of the fog light bulb or the manufacturer's name marked on the fog light as the center mark.
(1) H Line (Fog light height):
Draw a horizontal line across the screen so that it passes through the center marks. The H line should be at the same height as the fog light bulb center marks of the low-beam fog lights.
(2) V LH Line, V RH Line (Center mark position of left-hand (LH) and right-hand (RH) fog lights):
Draw two vertical lines so that they intersect the H line at each center mark.

3. FOG LIGHT AIMING INSPECTION

(a) Cover the fog light or disconnect the connector of the fog light on the opposite side to prevent light from the fog light that is not being inspected from affecting the fog light aiming inspection.
NOTICE:
Do not keep the fog light covered for more than 3 minutes. The fog light lens is made of synthetic resin, which may melt or be damaged due to excessive heat.

LI

(b) Start the engine.
(c) Turn on the fog light and check if the cut off line falls within the specified area in the following illustration.

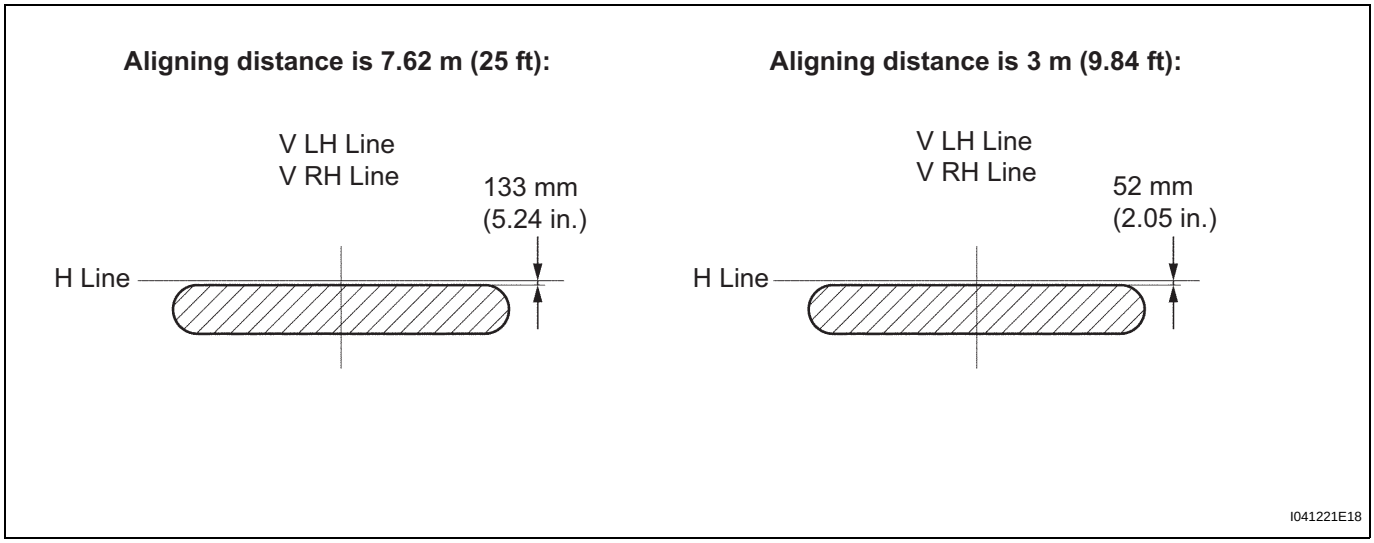

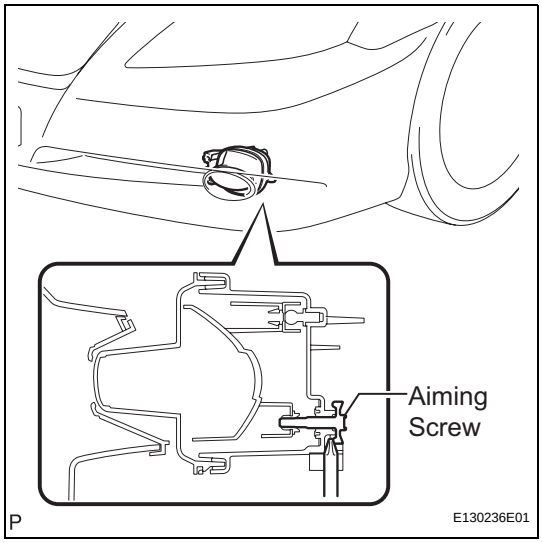

4. FOG LIGHT AIMING ADJUSTMENT

(a) Adjust the aim vertically:
Adjust the aim of each fog light to the specified range by turning each aiming screw with a screwdriver.
NOTICE:
The final turn of the aiming screw should be made in the clockwise direction. If the screw is tightened excessively, loosen it and then retighten it, so that the final turn of the screw is in the clockwise direction.
HINT:
If it is not possible to correctly adjust fog light aim, check bulb, fog light unit, and fog light unit reflector installation.

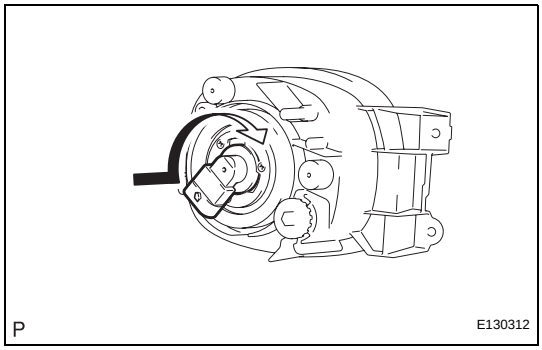

REASSEMBLY

1. INSTALL FOG LIGHT BULB

(a) Install the fog light bulb as shown in the illustration.

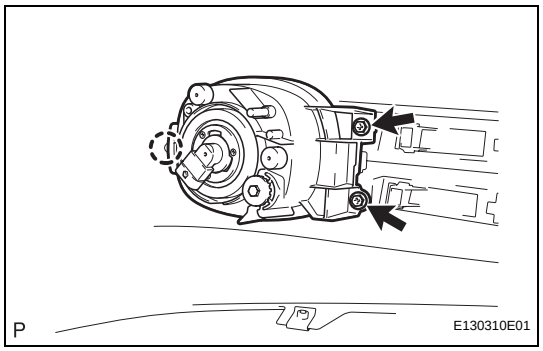

INSTALLATION

1. **INSTALL FOG LIGHT ASSEMBLY**
   (a) Engage the claw.
   (b) Install the fog light assembly with the 2 screws.
2. **INSTALL FRONT BUMPER ASSEMBLY (See page ET-14)**
3. **INSTALL COOL AIR INTAKE DUCT SEAL (See page ET-14)**
4. **VEHICLE PREPARATION FOR FOG LIGHT AIM ADJUSTMENT (See page LI-141)**
5. **PREPARATION FOR FOG LIGHT AIMING (See page LI-142)**
6. **FOG LIGHT AIMING INSPECTION (See page LI-143)**
7. **FOG LIGHT AIMING ADJUSTMENT (See page LI-144)**

TERMINALS OF ECU

1. CHECK MAIN BODY ECU (INSTRUMENT PANEL J/B)

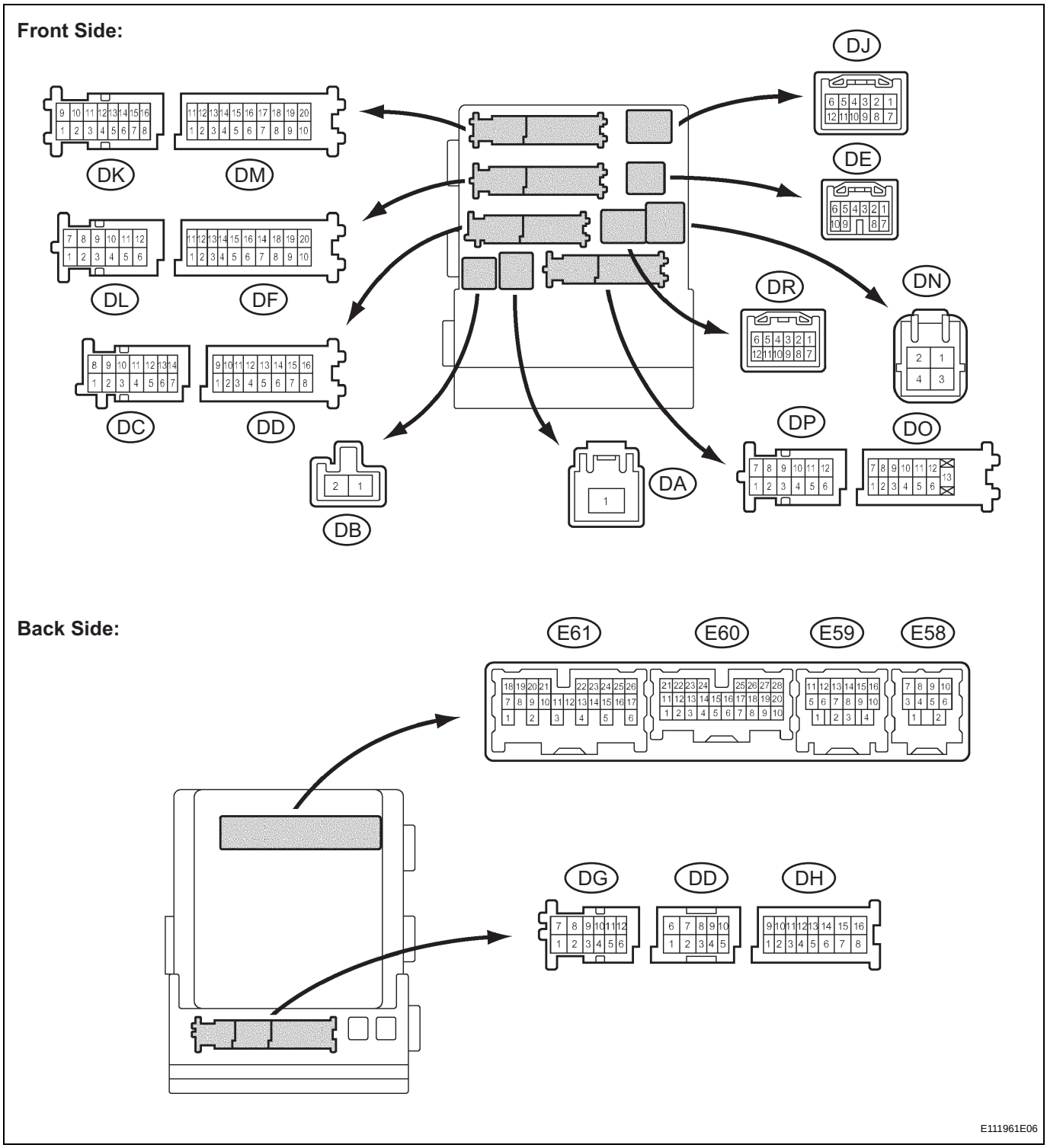

(a) Disconnect the DA, DD, DF and E59 J/B connectors.

(b) Measure the voltage and resistance between the specified terminals of the wire harness side connectors and body ground.

Standard voltage

Symbols	Wiring Color	Terminal Description	Condition	Specified Condition
BATB (DA-1) - Body ground	W - Body ground	Battery power supply	Always	10 to 14 V
ALTB (DD-16) - Body ground	W - Body ground	Generator power supply	Always	10 to 14 V

Standard resistance

Symbols	Wiring Color	Terminal Description	Condition	Specified Condition
GND1 (DF-10) - Body ground	W-B - Body ground	Ground	Always	Below 1 Ω
GND3 (E59-1) - Body ground	W-B - Body ground	Ground	Always	Below 1 Ω

If the result is not as specified, there may be a malfunction on the wire harness side.

(c) Reconnect the DA, DD, DF, and E59 J/B connectors.

(d) Measure the resistance and voltage between the specified terminals of the J/B connectors and body ground.

Standard resistance

Symbols	Wiring Color	Terminal Description	Condition	Specified Condition
CLTE (E60-18) - Body ground	W - Body ground	Automatic light control sensor ground	Always	Below 1 Ω

Standard voltage

Symbols	Wiring Color	Terminal Description	Condition	Specified Condition
PKB (DC-14) - Body ground	L - Body ground	Parking brake switch input	Parking brake switch ON	Below 1 V
			Parking brake switch OFF	10 to 14 V
HRLY (DD-3) - Body ground	P - Body ground	Headlight relay drive output	Light control switch in HEAD	Below 1 V
			Light control switch not in HEAD	10 to 14 V
DRL (DD-9) - Body ground	V - Body ground	High beam headlights drive output	High beam headlights ON	Below 1 V
			High beam headlights OFF	10 to 14 V
HU (DG-5) - Body ground	W - Body ground	Dimmer switch HIGH input	Dimmer switch in HIGH or HIGH FLASH	10 to 14 V
			Dimmer switch in LOW	Below 1 V
LCTY (DO-7) - Body ground	B - Body ground	Rear left door courtesy switch input	Rear left door open	Below 1 V
			Rear left door closed	10 to 14 V
LSWL (DP-5) - Body ground	GR - Body ground	Rear left door lock position switch input	Rear left door locked	10 to 14 V
			Rear left door unlocked	Below 1 V
ILE (DR-5) - Body ground	BR - Body ground	Interior light and seat illumination drive output	Interior light and seat illumination OFF	10 to 14 V
			Interior light and seat illumination ON	Below 1 V
CANH (E59-5) - Body ground	BR - Body ground	Control system CAN communication	Engine switch on (IG)	Pulse generation
			Engine switch off	Below 1 V

Symbols	Wiring Color	Terminal Description	Condition	Specified Condition
CANL (E59-6) - Body ground	GR - Body ground	Control system CAN communication	Engine switch on (IG)	Pulse generation
			Engine switch off	Below 1 V
CANN (E59-15) - Body ground	W - Body ground	Body system CAN communication	Engine switch on (IG)	Pulse generation
			Engine switch off	Below 1 V
CANP (E59-16) - Body ground	B - Body ground	Body system CAN communication	Engine switch on (IG)	Pulse generation
			Engine switch off	Below 1 V
FSPT (E59-11) - Body ground	BR - Body ground	Footwell illumination drive output	Footwell illumination OFF	10 to 14 V
			Footwell illumination ON	Below 1 V
HEAD (E60-17) - Body ground	L - Body ground	Light control switch HEAD input	Light control switch in HEAD	Below 1 V
			Light control switch not in HEAD	10 to 14 V
CLTS (E60-19) - Body ground	LG - Body ground	Automatic light control sensor signal input	Engine switch off	Below 1 V
			Automatic light control system operates	Pulse generation (See waveform 1)
CLTB (E60-20) - Body ground	BR - Body ground	Automatic light control sensor power supply output	Engine switch off	Below 1 V
			Engine switch on (IG) and light control switch in AUTO	10 to 14 V
PCTY (E60-21) - Body ground	G - Body ground	Passenger side door courtesy switch input	Passenger side door open	Below 1 V
			Passenger side door closed	10 to 14 V
LGCY (E60-25) - Body ground	W - Body ground	Luggage courtesy switch input	Luggage compartment door open	Below 1 V
			Luggage compartment door closed	10 to 14 V
LSWP (E60-27) - Body ground	LG - Body ground	Passenger side door lock position switch input	Passenger side door locked	10 to 14 V
			Passenger side door unlocked	Below 1 V
FFOG (E60-28) - Body ground	GR - Body ground	Front fog light switch input	Front fog light switch ON	Below 1 V
			Front fog light switch OFF	10 to 14 V
LSWR (E60-5) - Body ground	Y - Body ground	Rear right door lock position switch input	Rear right door locked	10 to 14 V
			Rear right door unlocked	Below 1 V
RCTY (E60-7) - Body ground	GR - Body ground	Rear right door courtesy switch input	Rear right door open	Below 1 V
			Rear right door closed	10 to 14 V
HF (E61-13) - Body ground	R - Body ground	Dimmer switch HIGH FLASH signal input	Dimmer switch in HIGH FLASH position	Below 1 V
			Dimmer switch not in HIGH FLASH position	10 to 14 V
SSW2 (E61-16) - Body ground	V - Body ground	Engine switch input	Engine switch pushed	Below 1 V
			Engine switch not pushed	10 to 14 V
SSW1 (E61-17) - Body ground	L - Body ground	Engine switch input	Engine switch on (IG)	10 to 14 V
			Engine switch off	Below 1 V
A (E61-21) - Body ground	Y - Body ground	Light control switch AUTO signal input	Light control switch in AUTO	Below 1 V
			Light control switch not in AUTO	10 to 14 V

Symbols	Wiring Color	Terminal Description	Condition	Specified Condition
ACCD (E61-22) - Body ground	R - Body ground	Accessory relay drive output	Engine switch on (ACC)	Below 1 V
			Engine switch off	10 to 14 V
TAIL (E61-23) - Body ground	B - Body ground	Light control switch TAIL signal input	Light control switch in TAIL or HEAD	Below 1 V
			Light control switch in neither TAIL nor HEAD	10 to 14 V
DCTY (E61-24) - Body ground	GR - Body ground	Driver side door courtesy switch input	Driver side door open	Below 1 V
			Driver side door closed	10 to 14 V
IG1D (E61-3) - Body ground	LG - Body ground	Ignition 1 relay drive output	Engine switch on (IG)	Below 1 V
			Engine switch off	10 to 14 V
FFGO (E61-4) - Body ground	G - Body ground	Front fog light relay drive output	Light control switch in HEAD and front fog light switch ON	Below 1 V
			Front fog light switch OFF	10 to 14 V
LSWD (E61-9) - Body ground	L - Body ground	Driver side door lock position switch input	Driver side door locked	10 to 14 V
			Driver side door unlocked	Below 1 V
SWIL (E61-25) - Body ground	R - Body ground	Engine switch illumination drive output	Engine switch illumination ON	10 to 14 V
			Engine switch illumination OFF	Below 1 V

If the result is not as specified, the main body ECU (instrument panel J/B) may have a malfunction.

(1) Waveform 1

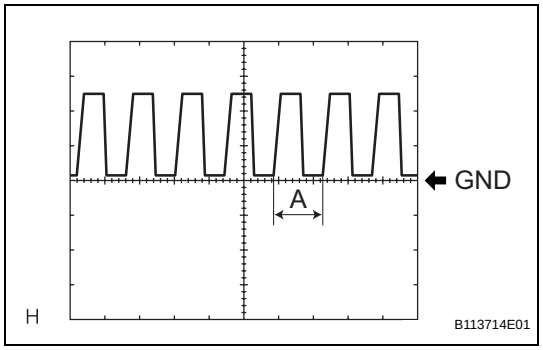

Item	Contents
Tool setting	5 V/DIV., 5 ms./DIV.

HINT:
If the ambient light becomes brighter, width A becomes narrower.

2. CHECK AFS ECU

(a) Disconnect the A22 ECU connector.

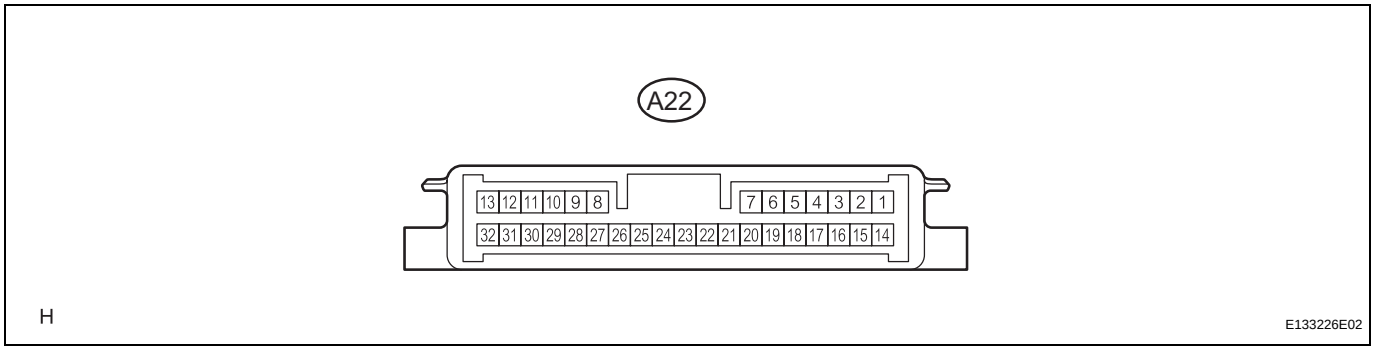

(b) Measure the voltage and resistance between the specified terminals of the wire harness side connectors and body ground.

Standard voltage

Symbols (Terminal No.)	Wiring Color	Terminal Description	Condition	Specified Condition
IGS (A22-14) - Body ground	Y - Body ground	Swivel motor power supply	Engine switch off	Below 1 V
			Engine switch on (IG)	10 to 14 V

LI

Symbols (Terminal No.)	Wiring Color	Terminal Description	Condition	Specified Condition
IG (A22-15) - Body ground	GR - Body ground	AFS ECU power supply	Engine switch off	Below 1 V
			Engine switch on (IG)	10 to 14 V

Standard resistance

Symbols (Terminal No.)	Wiring Color	Terminal Description	Condition	Specified Condition
E1 (A22-22) - Body ground	W - Body ground	AFS ECU ground	Always	Below 1 Ω

If the result is not as specified, there may be a malfunction on the wire harness side.

(c) Reconnect the A22 ECU connector.

(d) Measure the resistance and voltage according to the value(s) in the table below.

Standard resistance

Symbols (Terminal No.)	Wiring Color	Terminal Description	Condition	Specified Condition
SGR (A22-21) - E1 (A22-22)	O - W	Rear height control sensor ground	Always	Below 1 Ω
SMGL (A22-23) - E1 (A22-22)	G - W	Swivel motor LH ground	Always	Below 1 Ω
SMGR (A22-24) - E1 (A22-22)	P - W	Swivel motor RH ground	Always	Below 1 Ω
LH- (A22-27) - E1 (A22-22)	GR - W	Leveling motor LH ground	Always	Below 1 Ω
RH- (A22-28) - E1 (A22-22)	V - W	Leveling motor RH ground	Always	Below 1 Ω

Standard voltage

Symbols (Terminal No.)	Wiring Color	Terminal Description	Condition	Specified Condition
SMBL (A22-1) - E1 (A22-22)	L - W	Swivel motor LH power supply	Engine switch off	Below 1 V
			Engine switch on (IG)	10 to 14 V
SMBR (A22-2) - E1 (A22-22)	G - W	Swivel motor RH power supply	Engine switch off	Below 1 V
			Engine switch on (IG)	10 to 14 V
LHT (A22-3) - E1 (A22-22)	Y - W	Leveling motor LH power supply	Engine switch off	Below 1 V
			Engine switch on (IG)	10 to 16 V
RHT (A22-4) - E1 (A22-22)	R - W	Leveling motor RH power supply	Engine switch off	Below 1 V
			Engine switch on (IG)	10 to 14 V
INIT (A22-7) - E1 (A22-22)	L - W	Initialization signal	Terminal LVL and terminal GND of DLC3 connected	Below 1 V
			Terminal LVL and terminal GND of DLC3 not connected	10 to 14 V
SMR (A22-10) - E1 (A22-22)	L - W	Swivel motor RH LIN communication	Engine switch off	Below 1 V
			Engine switch on (IG)	Pulse generation
RH+ (A22-11) - E1 (A22-22)	LG - W	Leveling motor RH LIN communication	Engine switch off	Below 1 V
			Engine switch on (IG)	Pulse generation
MPX1 (A22-12) - E1 (A22-22)	L - W	CAN communication	Engine switch off	Below 1 V
			Engine switch on (IG)	Pulse generation
MPX2 (A22-13) - E1 (A22-22)	Y - W	CAN communication	Engine switch off	Below 1 V
			Engine switch on (IG)	Pulse generation
SHRL (A22-19) - SGR (A22-21)	P - O	Rear height control sensor signal	Engine switch off	Below 1 V
			Engine switch on (IG)	0 V to 4.5 V
SML (A22-29) - E1 (A22-22)	R - W	Swivel motor LH LIN communication	Engine switch off	Below 1 V
			Engine switch on (IG)	Pulse generation

Symbols (Terminal No.)	Wiring Color	Terminal Description	Condition	Specified Condition
LH+ (A22-30) - E1 (A22-22)	W - W	Leveling motor LH LIN communication	Engine switch off	Below 1 V
			Engine switch on (IG)	Pulse generation
MSW (A22-32) - E1 (A22-22)	BR - W	AFS OFF switch signal	Engine switch on (IG), AFS OFF switch OFF (not pushed)	10 to 14 V
			Engine switch on (IG), AFS OFF switch ON (pushed)	Below 1 V

If the result is not as specified, the ECU may have a malfunction.

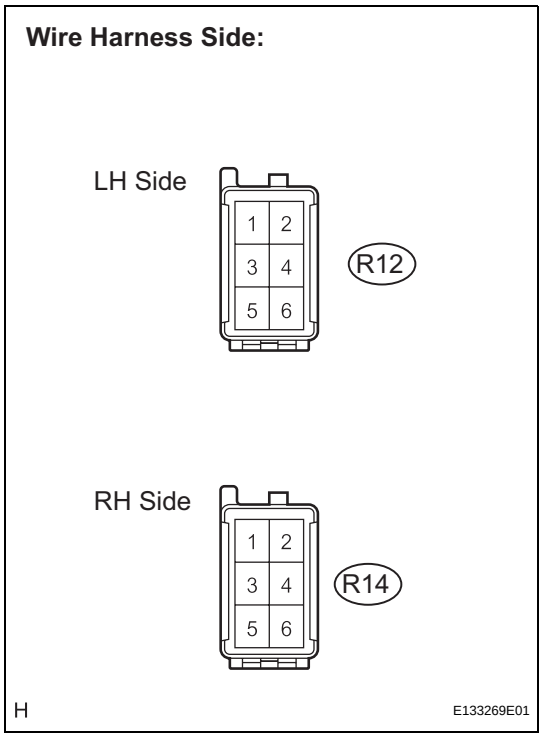

ON-VEHICLE INSPECTION

1. INSPECT REAR OUTER COMBINATION LIGHT ASSEMBLY

(a) Disconnect the connector from the rear outer combination light.

(b) Measure the voltage according to the value(s) in the table below.

Standard voltage:

LH Side

Tester Connection	Condition	Specified Condition
R12-2 - R12-5 (E)	Brake pedal released → depressed	Below 1 V → 10 to 14 V
R12-1 - R12-5 (E)	Light control switch OFF → TAIL	Below 1 V → 10 to 14 V
R12-1 - R12-5 (E)	Light control switch OFF → TAIL	Below 1 V → 10 to 14 V

RH Side

Tester Connection	Condition	Specified Condition
R14-2 - R14-5 (E)	Brake pedal released → depressed	Below 1 V → 10 to 14 V
R14-1 - R14-5 (E)	Light control switch OFF → TAIL	Below 1 V → 10 to 14 V
R14-1 - R14-5 (E)	Light control switch OFF → TAIL	Below 1 V → 10 to 14 V

If the result is not as specified, there is a malfunction on the wire harness side.

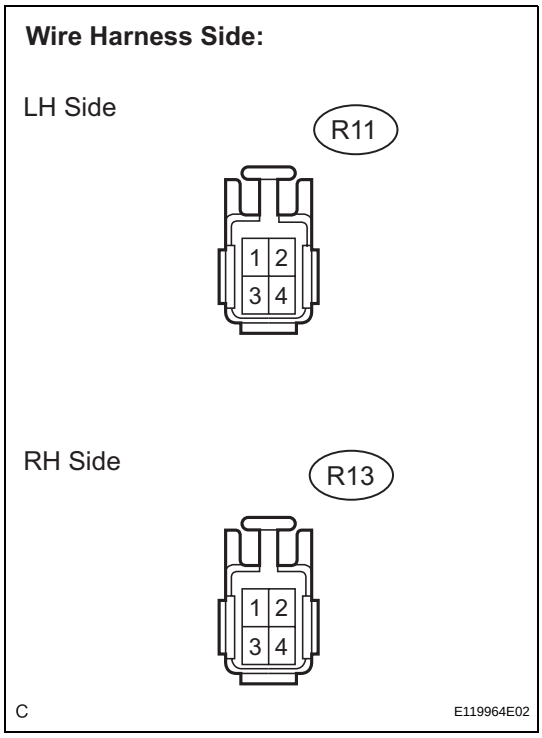

2. INSPECT REAR INNER COMBINATION LIGHT ASSEMBLY

(a) Disconnect the connector from the rear inner combination light.

(b) Measure the voltage according to the value(s) in the table below.

Standard voltage:

LH Side

Tester Connection	Condition	Specified Condition
R11-4 - R11-3	Light control switch OFF → TAIL	Below 1 V → 10 to 14 V

RH Side

Tester Connection	Condition	Specified Condition
R13-4 - R11-3	Light control switch OFF → TAIL	Below 1 V → 10 to 14 V

If the result is not as specified, there is a malfunction on the wire harness side.

REMOVAL

1. **REMOVE LUGGAGE COMPARTMENT FLOOR MAT**
2. **REMOVE NO. 2 SPARE WHEEL COVER**
3. **REMOVE SPARE WHEEL COVER TRAY**
4. **REMOVE LUGGAGE HOLD BELT STRIKER ASSEMBLY (See page ED-82)**
5. **REMOVE NO. 1 LUGGAGE COMPARTMENT TRIM HOOK (See page ED-83)**
6. **REMOVE REAR FLOOR FINISH PLATE (See page ED-83)**
7. **REMOVE LUGGAGE COMPARTMENT INNER TRIM COVER LH (See page ED-83)**
8. **REMOVE REAR BUMPER ASSEMBLY (w/o Intuitive Parking Assist System) (See page ET-18)**
9. **REMOVE LUGGAGE COMPARTMENT INNER TRIM COVER RH (w/ Intuitive Parking Assist System) (See page ED-83)**
10. **REMOVE REAR BUMPER ASSEMBLY (w/ Intuitive Parking Assist System) (See page ET-19)**
11. **REMOVE REAR COMBINATION LIGHT ASSEMBLY**
    (a) Disconnect the connector and clamp.

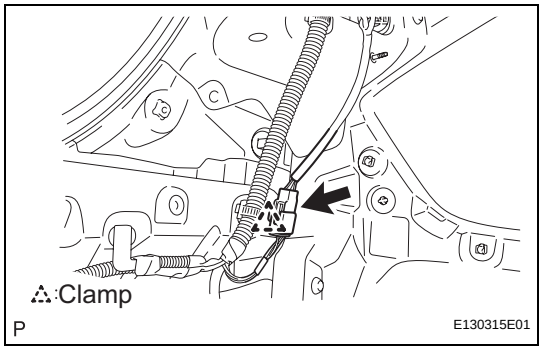

    (b) Remove the screw and 3 nuts.
    (c) Disengage the clip and remove the rear combination light assembly.

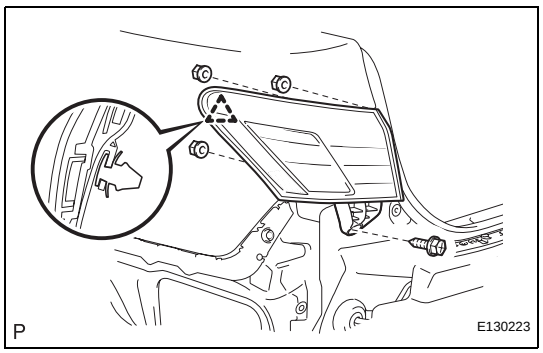

12. **REMOVE LUGGAGE COMPARTMENT DOOR ASSIST GRIP (See page ET-71)**
13. **REMOVE LUGGAGE LOCK CONTROL CABLE PLATE (See page ET-71)**
14. **REMOVE LUGGAGE COMPARTMENT DOOR INSIDE HANDLE (See page ET-71)**
15. **REMOVE LUGGAGE COMPARTMENT DOOR COVER (See page ET-72)**

LI

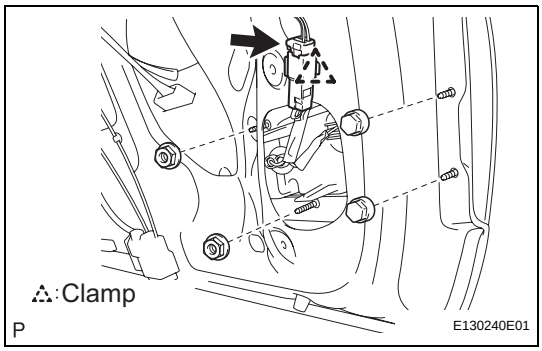

16. REMOVE REAR LIGHT ASSEMBLY

(a) Disconnect the connector and clamp.

(b) Remove the 4 nuts and remove the rear light assembly.

DISASSEMBLY

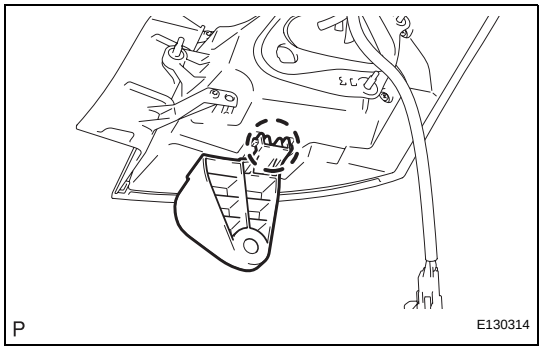

1. REMOVE REAR BUMPER RETAINER UPPER

(a) Disengage the claw and remove the rear bumper retainer upper.

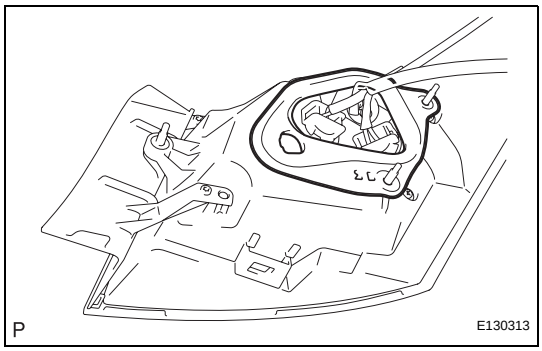

2. REMOVE REAR COMBINATION LIGHT GASKET

(a) Remove the rear combination light gasket.

NOTICE:

- **Be sure to remove all traces of the old gasket from the body.**
- **Do not reuse the removed gasket. Be sure to install a new rear combination light gasket to prevent water ingress.**

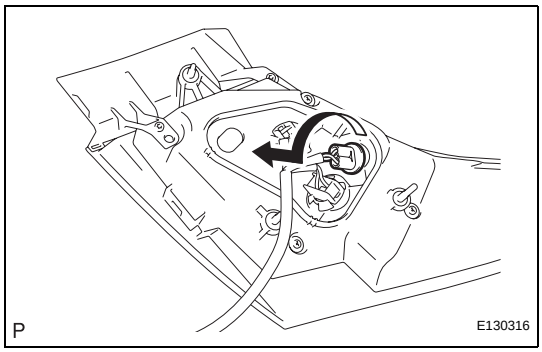

3. REMOVE REAR SIDE MARKER LIGHT BULB

(a) Turn the rear side marker light bulb and the rear combination light socket and wire sub-assembly in the direction indicated by the arrow and remove them as a unit.

(b) Remove the rear side marker light bulb from the rear combination light socket and wire sub-assembly.

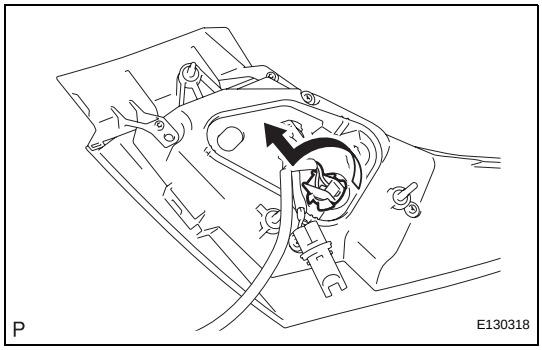

4. REMOVE REAR TURN SIGNAL LIGHT BULB

(a) Turn the rear turn signal light bulb and the rear combination light socket and wire sub-assembly in the direction indicated by the arrow and remove them as a unit.

(b) Remove the rear turn signal light bulb from the rear combination light socket and wire sub-assembly.

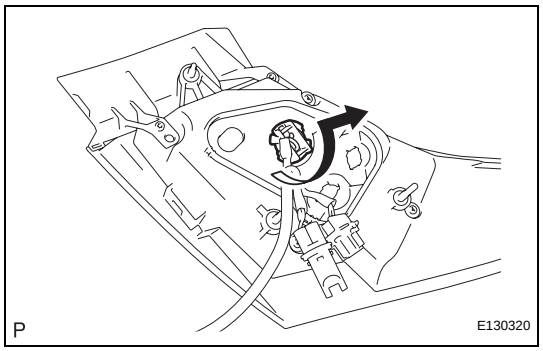

5. REMOVE TAIL AND STOP LIGHT BULB

(a) Turn the tail and stop light bulb and the rear combination light socket and wire sub-assembly in the direction indicated by the arrow and remove them as a unit.

(b) Remove the tail and stop light bulb from the rear combination light socket and wire sub-assembly.

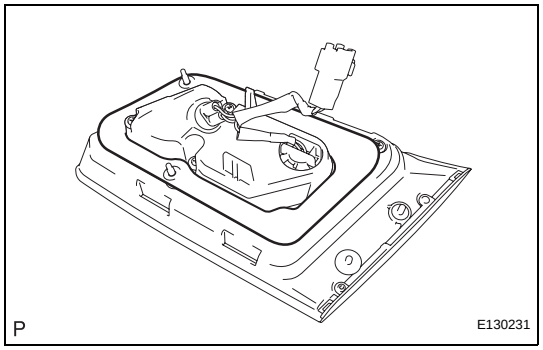

6. REMOVE REAR LIGHT GASKET

(a) Remove the rear light gasket.

NOTICE:

- **Be sure to remove all traces of the old gasket from the body.**
- **Do not reuse the removed gasket. Be sure to install a new rear light gasket to prevent water ingress.**

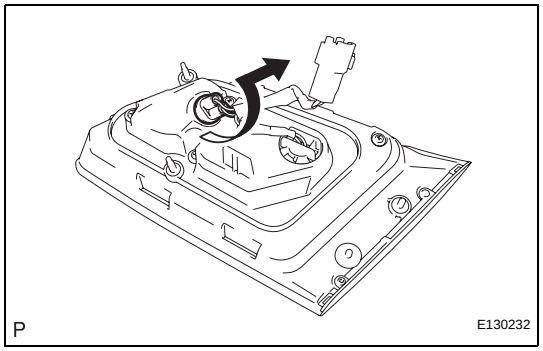

7. REMOVE BACK UP LIGHT BULB

(a) Turn the back up light bulb and the rear light socket and wire in the direction indicated by the arrow and remove them as a unit.

(b) Remove the back up light bulb from the rear light socket and wire.

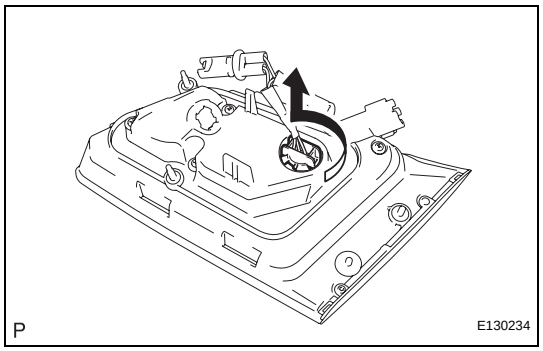

8. REMOVE TAIL LIGHT BULB

(a) Turn the tail light bulb and the rear light socket and wire in the direction indicated by the arrow and remove them as a unit.

(b) Remove the tail light bulb from the rear light socket and wire.

REASSEMBLY

1. INSTALL TAIL LIGHT BULB

(a) Install the tail light bulb to the tail and rear light socket and wire.

(b) Turn the tail light bulb and rear light socket and wire in the direction indicated by the arrow and install them as a unit.

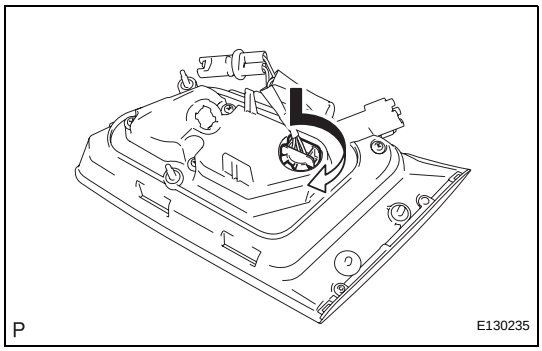

2. INSTALL BACK UP LIGHT BULB

(a) Install the back up light bulb to the rear light socket and wire.

(b) Turn the back up light bulb and rear light socket and wire in the direction indicated by the arrow and install them as a unit.

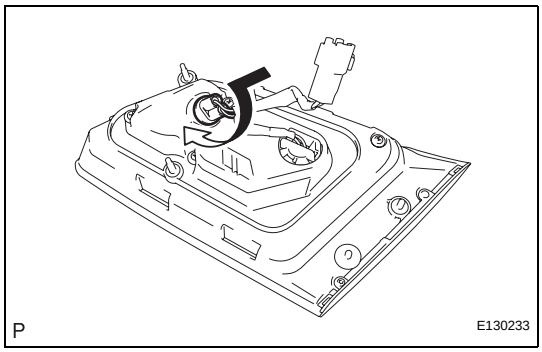

3. INSTALL REAR LIGHT GASKET

(a) Install a new rear light gasket.

NOTICE:

- **Be sure to remove all traces of the old gasket from the body.**
- **Do not reuse the removed gasket. Be sure to install a new rear light gasket to prevent water ingress.**

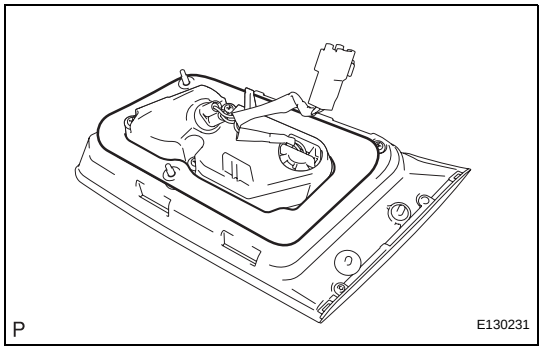

4. INSTALL TAIL AND STOP LIGHT BULB

(a) Install the tail and stop light bulb to the tail and rear combination light socket and wire sub-assembly.

(b) Turn the tail and stop light bulb and rear combination light socket and wire sub-assembly in the direction indicated by the arrow and install them as a unit.

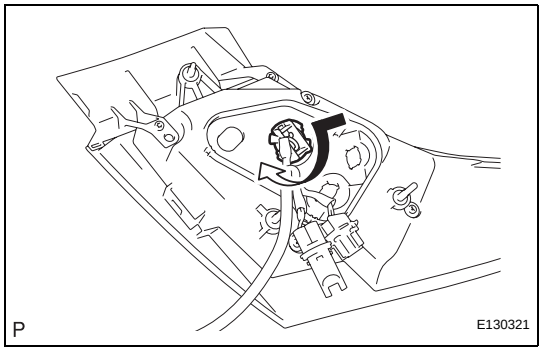

5. INSTALL REAR TURN SIGNAL LIGHT BULB

(a) Install the rear turn signal light bulb to the rear combination light socket and wire sub-assembly.

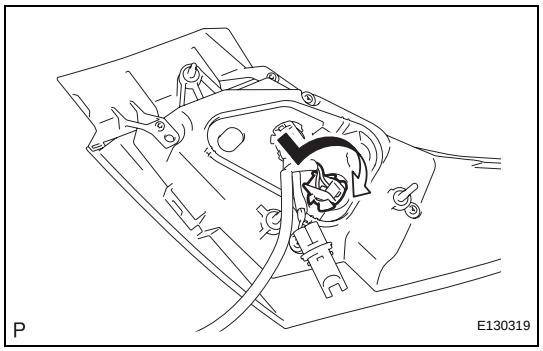

(b) Turn the rear turn signal light bulb and rear combination light socket and wire sub-assembly in the direction indicated by the arrow and install them as a unit.

6. INSTALL REAR SIDE MARKER LIGHT BULB

(a) Install the rear side marker light bulb to the rear combination light socket and wire sub-assembly.

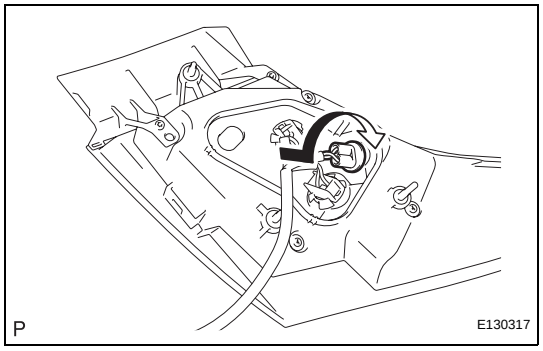

(b) Turn the rear side marker light bulb and rear combination light socket and wire sub-assembly in the direction indicated by the arrow and install them as a unit.

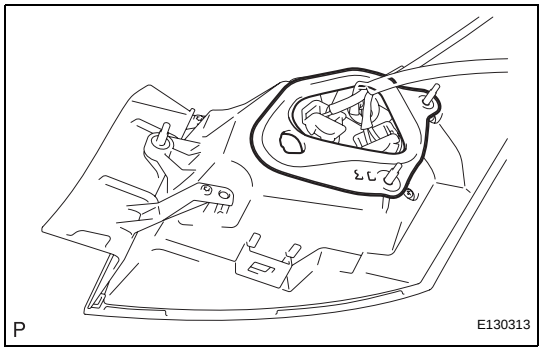

7. INSTALL REAR COMBINATION LIGHT GASKET

(a) Install a new rear combination light gasket.
NOTICE:
- **Be sure to remove all traces of the old gasket from the body.**
- **Do not reuse the removed gasket. Be sure to install a new rear combination light gasket to prevent water ingress.**

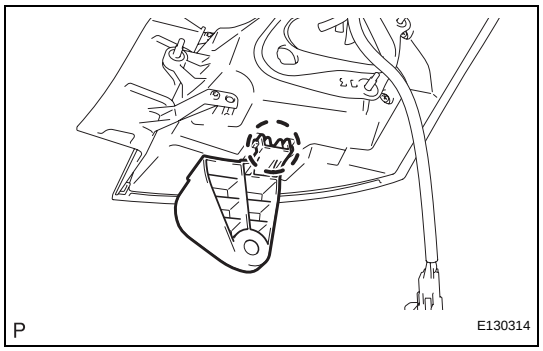

8. INSTALL REAR BUMPER RETAINER UPPER

(a) Engage the claw and install the rear bumper retainer upper.

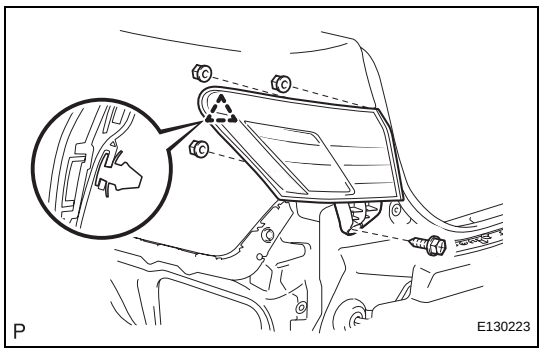

INSTALLATION

1. INSTALL REAR COMBINATION LIGHT ASSEMBLY

(a) Engage the clip and install the rear combination light assembly with the screw and 3 nuts.
Torque: 5.4 N*m (55 kgf*cm, 48 in.*lbf)

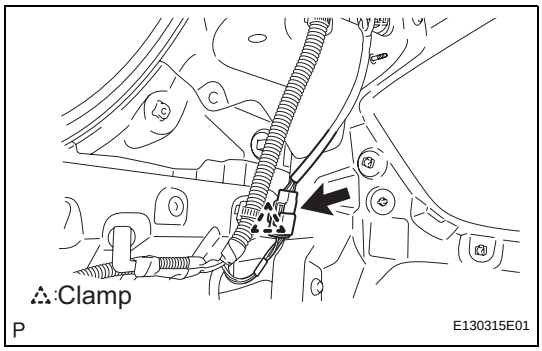

(b) Connect the connector and clamp.

2. **INSTALL REAR BUMPER ASSEMBLY (w/o Intuitive Parking Assist System) (See page ET-23)**
3. **INSTALL REAR BUMPER ASSEMBLY (w/ Intuitive Parking Assist System) (See page ET-23)**
4. **INSTALL LUGGAGE COMPARTMENT INNER TRIM COVER RH (w/ Intuitive Parking Assist System) (See page ED-88)**
5. **INSTALL LUGGAGE COMPARTMENT INNER TRIM COVER LH (See page ED-88)**
6. **INSTALL REAR FLOOR FINISH PLATE (See page ED-88)**
7. **INSTALL NO. 1 LUGGAGE COMPARTMENT TRIM HOOK (See page ED-89)**
8. **INSTALL LUGGAGE HOLD BELT STRIKER ASSEMBLY (See page ED-89)**
9. **INSTALL SPARE WHEEL COVER TRAY**
10. **INSTALL NO. 2 SPARE WHEEL COVER**
11. **INSTALL LUGGAGE COMPARTMENT FLOOR MAT**
12. **INSTALL REAR LIGHT ASSEMBLY**
    (a) Install the rear light assembly with the 4 nuts.
    Torque: 5.4 N*m (55 kgf*cm, 48 in.*lbf)
    (b) Connect the connector and clamp.
13. **INSTALL LUGGAGE COMPARTMENT DOOR COVER (See page ET-74)**
14. **INSTALL LUGGAGE COMPARTMENT DOOR INSIDE HANDLE (See page ET-74)**
15. **INSTALL LUGGAGE LOCK CONTROL CABLE PLATE (See page ET-75)**
16. **INSTALL LUGGAGE COMPARTMENT DOOR ASSIST GRIP (See page ET-75)**

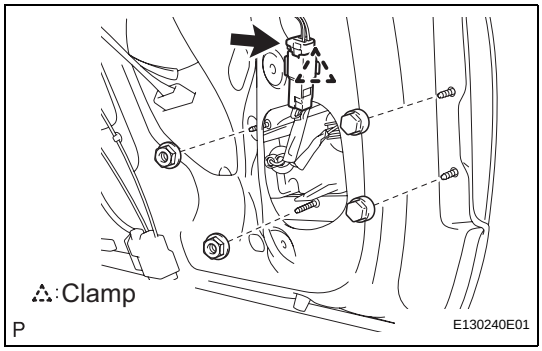

DIAGNOSIS SYSTEM

1. DESCRIPTION

(a) Lighting system data and the Diagnostic Trouble Codes (DTCs) can be read from the Data Link Connector 3 (DLC3) of the vehicle. When the system seems to be malfunctioning, use the intelligent tester to check for malfunctions and perform repairs.

2. CHECK DLC3

(a) The ECU uses ISO 15765-4 for communication. The terminal arrangement of the DLC3 complies with SAE J1962 and matches the ISO 15765-4 format.

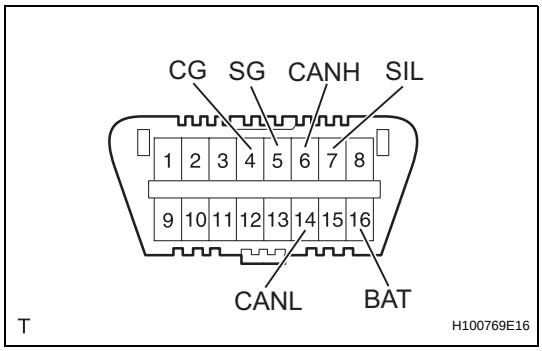

Symbols (Terminal No.)	Terminal Description	Condition	Specified Condition
SIL (7) - SG (5)	Bus "+" line	During transmission	Pulse generation
CG (4) - Body ground	Chassis ground	Always	Below 1 Ω
SG (5) - Body ground	Signal ground	Always	Below 1 Ω
BAT (16) - Body ground	Battery positive	Always	11 to 14 V
CANH (6) - CANL (14)	CAN bus line	Engine switch off*	54 to 69 Ω
CANH (6) - CG (4)	HIGH-level CAN bus line	Engine switch off*	200 Ω or higher
CANL (14) - CG (4)	LOW-level CAN bus line	Engine switch off*	200 Ω or higher
CANH (6) - BAT (16)	HIGH-level CAN bus line	Engine switch off*	6 kΩ or higher
CANL (14) - BAT (16)	LOW-level CAN bus line	Engine switch off*	6 kΩ or higher

NOTICE:
***Before measuring the resistance, leave the vehicle as is for at least 1minute and do not operate the engine switch, any other switches, or the doors.**
If the result is not as specified, the DLC3 may have a malfunction. Repair or replace the harness and connector.

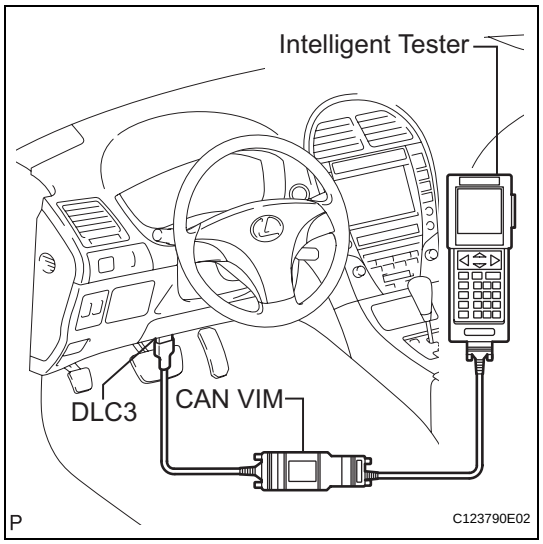

(b) Connect the cable of the intelligent tester to the DLC3, turn the engine switch on (IG) and attempt to use the tester. If the display indicates that a communication error has occurred, there is a problem either with the vehicle or with the tester.
HINT:
- If communication is normal when the tester is connected to another vehicle, inspect the DLC3 of the original vehicle.
- If communication is still not possible when the tester is connected to another vehicle, the problem may be in the tester itself. Consult the Service Department listed in the tester's instruction manual.

3. INSPECT BATTERY VOLTAGE
Standard voltage:
11 to 14 V
If the voltage is below 11 V, recharge or replace the battery before proceeding.

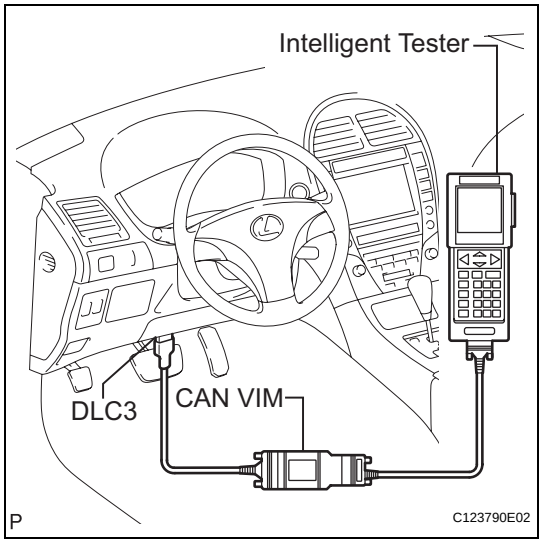

DTC CHECK / CLEAR

1. CHECK DTC
(a) Connect the intelligent tester to the DLC3.
(b) Turn the engine switch on (IG).
(c) Read the DTCs by following the directions on the tester screen.
HINT:
Refer to the intelligent tester operator's manual for further details.

2. CLEAR DTC
(a) Connect the intelligent tester to the DLC3.
(b) Turn the engine switch on (IG).
(c) Erase the DTCs by following the directions on the tester screen.
HINT:
Refer to the intelligent tester operator's manual for further details.

REMOVAL

1. **REMOVE LUGGAGE COMPARTMENT DOOR ASSIST GRIP (See page ET-71)**
2. **REMOVE LUGGAGE LOCK CONTROL CABLE PLATE (See page ET-71)**
3. **REMOVE LUGGAGE COMPARTMENT DOOR INSIDE HANDLE (See page ET-71)**
4. **REMOVE LUGGAGE COMPARTMENT DOOR COVER (See page ET-72)**
5. **REMOVE REAR LIGHT ASSEMBLY LH (See page LI-149)**
6. **REMOVE REAR LIGHT ASSEMBLY RH**
   HINT:
   Use the same procedures for the RH side and the LH side.
7. **REMOVE LUGGAGE DOOR OPENING SWITCH ASSEMBLY (See page DL-203)**
8. **REMOVE LUGGAGE COMPARTMENT DOOR OUTSIDE GARNISH SUB-ASSEMBLY (See page ET-72)**
9. **REMOVE TELEVISION CAMERA ASSEMBLY (w/ Rear View Monitor System) (See page PM-105)**
10. **REMOVE LUGGAGE COMPARTMENT DOOR OUTSIDE GARNISH SUB-ASSEMBLY (w/ Rear View Monitor System) (See page ET-73)**
11. **REMOVE LICENSE PLATE LIGHT ASSEMBLY**
    (a) Disconnect the connector.
    (b) Disengage the 2 claws and remove the license plate light assembly as shown in the illustration.

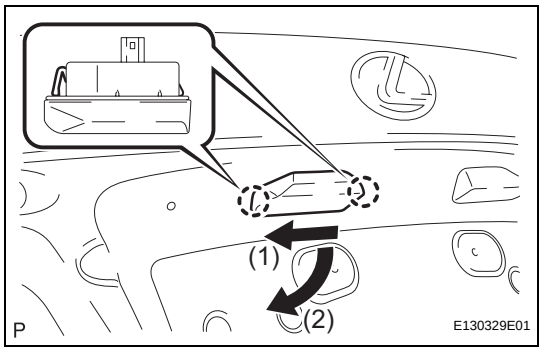

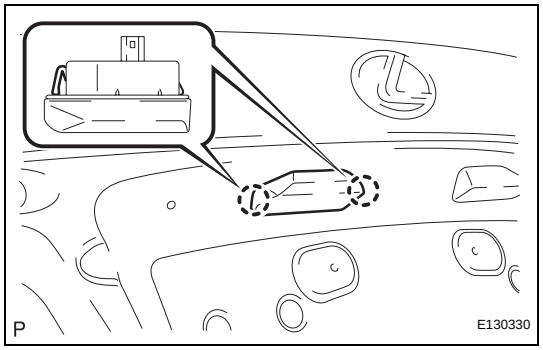

INSTALLATION

1. **INSTALL LICENSE PLATE LIGHT ASSEMBLY**
   (a) Engage the 2 claws and install the license plate light assembly.
   (b) Connect the connector.
2. **INSTALL LUGGAGE COMPARTMENT DOOR OUTSIDE GARNISH SUB-ASSEMBLY (See page ET-73)**

3. **INSTALL LUGGAGE COMPARTMENT DOOR OUTSIDE GARNISH SUB-ASSEMBLY (w/ Rear View Monitor System) (See page ET-74)**
4. **INSTALL TELEVISION CAMERA ASSEMBLY (w/ Rear View Monitor System) (See page PM-105)**
5. **INSTALL LUGGAGE DOOR OPENING SWITCH ASSEMBLY (See page DL-203)**
6. **INSTALL REAR LIGHT ASSEMBLY LH (See page LI-154)**
7. **INSTALL REAR LIGHT ASSEMBLY RH**
   HINT:
   Use the same procedures for the RH side and the LH side.
8. **INSTALL LUGGAGE COMPARTMENT DOOR COVER (See page ET-74)**
9. **INSTALL LUGGAGE COMPARTMENT DOOR INSIDE HANDLE (See page ET-74)**
10. **INSTALL LUGGAGE LOCK CONTROL CABLE PLATE (See page ET-75)**
11. **INSTALL LUGGAGE COMPARTMENT DOOR ASSIST GRIP (See page ET-75)**

FAIL-SAFE CHART

1. HID headlight system

The light control ECU operates in the fail-safe mode if an abnormal condition such as those listed below has been detected.

Item	Outline
Detection of abnormal input voltage (High input voltage)	If voltage that is input to the light control ECU is approximately 20 V or more, the ECU stops illuminating the headlights, and resumes when the voltage drops to 16 V or less.
Detection of abnormal input voltage (Low input voltage)	If voltage that is input to the light control ECU is 6 V or less, the ECU stops illuminating the low beam headlights, and resumes when the voltage is 10 V or more.
Detection of abnormal output • Open in output side circuit • Short between output terminals • Short between output terminal and body ground	If an abnormal condition occurs in the voltage that is output by the light control ECU, the ECU stops illuminating the low beam headlights and will maintain this state until the power is reinstated (by turning the light control switch from OFF to HEAD)
Detection of bulb flashing	If the bulb flashing repeats within approximately 5 seconds and continues for approximately 60 seconds, the light control ECU stops illuminating low beam headlights and will maintain this state until the power is reinstated (by turning the light control switch from OFF to HEAD)
Detection of abnormal light voltage (Low light voltage)	After approximately 80 seconds since input voltage is supplied, if the light voltage is below approximately 31 V for approximately 0.5 seconds, the light control ECU stops illuminating the low beam headlights and will maintain this state until the power is reinstated (by turning the light control switch from OFF to HEAD)
Detection of abnormal light voltage (High light voltage)	If the light voltage is above approximately 69 V for approximately 0.5 seconds, the light control ECU stops illuminating the low beam headlights and will maintain this state until the power is reinstated (by turning the light control switch from OFF to HEAD)

2. Automatic headlight beam level control system

If the AFS ECU detects a malfunction in the automatic headlight beam level control system or intelligent AFS, it will take the actions indicated in the table below.

Trouble Area	Condition (Fail-Safe Control for Automatic Headlight Beam Level Control)	AFS OFF Indicator Light
Headlight Swivel Motor Malfunction	Continues control until a position that is 0.65° less than the current position is reached.	Flash
Steering Angle Sensor Signal Malfunction	Continues control.	Flash
Speed Sensor Signal Malfunction	• Continues to control using the normal speed sensor signal if one signal fails. • Judges that the vehicle speed is 0 km/h and continues to control if both speed sensor signals fail.	Flash
Height Control Sensor Signal Malfunction	• Stops the operation after returning to the initial position (Fail at higher than the initial position). • Stops the operation at the current position (Fail at lower than the initial position).	Flash
Headlight Leveling Motor Malfunction	Normal Side Headlight Leveling Motor • Stops the operation after returning to the initial position (Fail at higher than the initial position). • Stops at the current position (Fail at lower than the initial position).	Flash
	Abnormal Side Headlight Leveling Motor • Stops at the current position.	
Communication Signal Malfunction	Skid Control ECU: • Judges that the vehicle speed is 0 km/h (0 mph) and continues control.	Flash
	Steering Angle Sensor: • Normally controls the system.	

3. Intelligent AFS

If the AFS ECU detects a malfunction in the intelligent AFS or automatic headlight beam level control system, it will take the actions indicated in the table below.

Trouble Area	Condition (Fail-Safe Control for Intelligent AFS Control)	AFS OFF Indicator Light
Headlight Swivel Motor	Normal Side Headlight Swivel Motor: • Stops operating after returning to the initial position.	Flash
	Abnormal Side Headlight Swivel Motor: • Stops at the current position.	
Steering Angle Sensor Signal Malfunction	Stops operating after returning to the initial position.	Flash
Speed Sensor Signal Malfunction	Stops operating after returning to the initial position.	Flash
Height Control Sensor Signal Malfunction	Stops operating after returning to the initial position.	Flash
Headlight Leveling Motor	Stops operating after returning to the initial position.	Flash
Communication Signal Malfunction	Main Body ECU: • Stops operating after returning to the initial position.	Flash
	ECM: • Stops operating after returning to the initial position.	
	Skid Control ECU: • Stops operating after returning to the initial position.	
	Steering Angle Sensor: • Stops operating after returning to the initial position.	

4. Automatic light control system

If the main body ECU detects a malfunction in the automatic light control sensor, the main body ECU effects fail-safe control to prohibit the automatic light control. If the low beam headlights and taillights are on, the lights will remain on until the light control switch is turned off.

HIGH MOUNTED STOP LIGHT ASSEMBLY

COMPONENTS

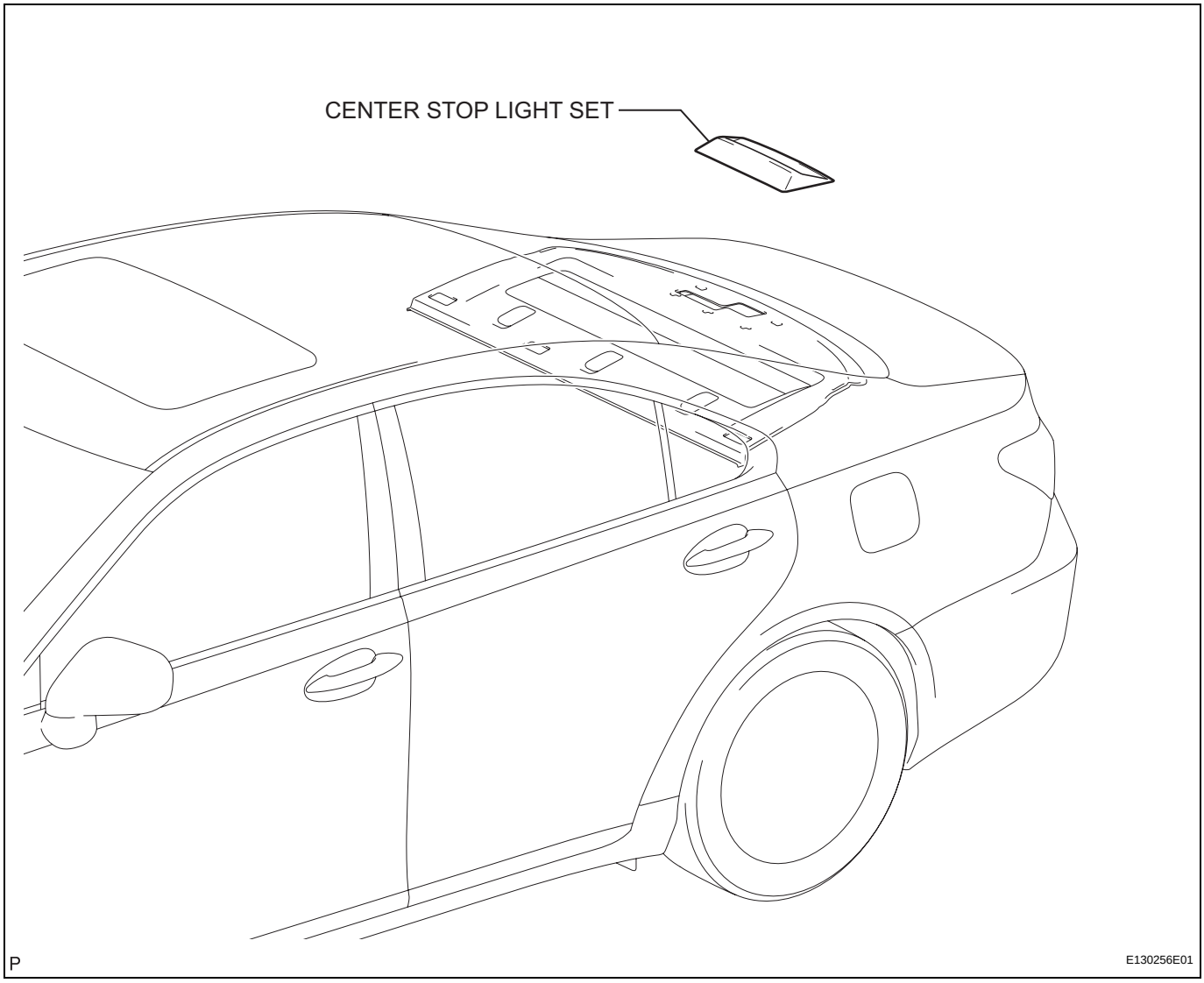

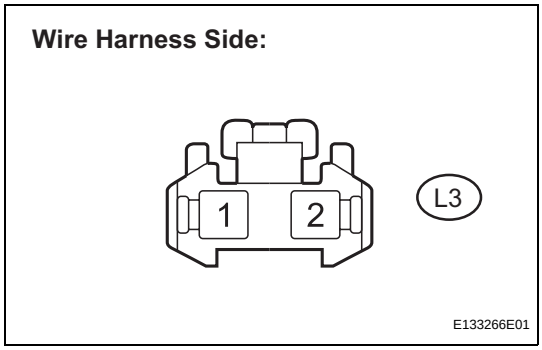

ON-VEHICLE INSPECTION

1. INSPECT HIGH MOUNTED STOP LIGHT ASSEMBLY

(a) Disconnect the high mounted stop light connector.

(b) Measure the voltage according to the value(s) in the table below.

Standard voltage

Tester Connection	Condition	Specified Condition
L3-1 - L3-2	Brake pedal released	Below 1 V
L3-1 - L3-2	Brake pedal depressed	10 to 14 V

If the result is not as specified, there is a malfunction on the wire harness side.

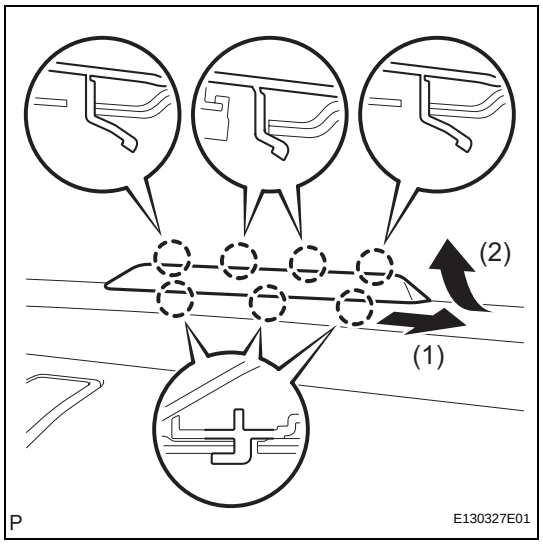

REMOVAL

1. REMOVE CENTER STOP LIGHT SET

(a) Disengage the 7 claws and disconnect the center stop light set as shown in the illustration.

(b) Disconnect the connector and remove the center stop light set.

INSTALLATION

1. INSTALL CENTER STOP LIGHT SET

(a) Connect the connector.

(b) Engage the 7 claws and install the center stop light set as shown in the illustration.

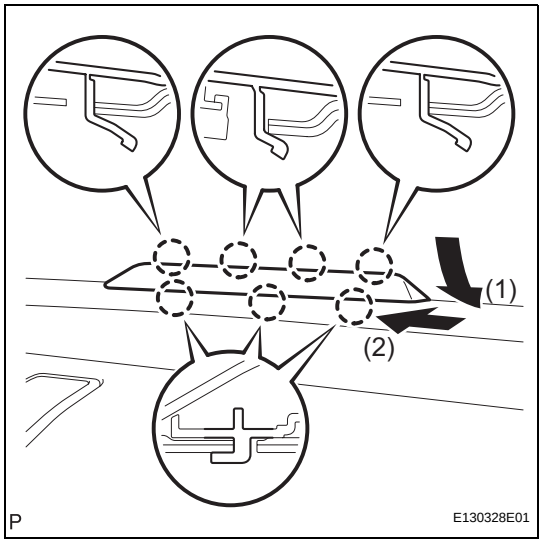

DATA LIST / ACTIVE TEST

1. READ DATA LIST

HINT:
Using the intelligent tester DATA LIST allows switch, actuator and other item values to be read without removing any parts. Reading the DATA LIST early in troubleshooting is one way to save time.

(a) Connect the intelligent tester to the DLC3.
(b) Turn the engine switch on (IG).
(c) Read the DATA LIST according to the display on the tester.

MAIN BODY (MAIN BODY ECU):

Tester Display	Measurement Item/Range	Normal Condition	Diagnostic Note
ACC SW	Engine switch ACC signal / ON or OFF	ON: Engine switch on (ACC or IG) OFF: Engine switch off	-
IG SW	Engine switch IG signal / ON or OFF	ON: Engine switch on (IG) OFF: Engine switch off	-
D DOR CTY SW	Driver side door courtesy switch signal / ON or OFF	ON: Driver side door is open OFF: Driver side door is closed	-
P DOR CTY SW	Passenger side door courtesy switch signal / ON or OFF	ON: Front passenger side door is open OFF: Front passenger side door is closed	-
RR DOR CTY SW	Rear right door courtesy switch signal / ON or OFF	ON: Rear right door is open OFF: Rear right door is closed	-
RL DOR CTY SW	Rear left door courtesy switch signal / ON or OFF	ON: Rear left door is open OFF: Rear left door is closed	-
LUGG COURTSY SW	Luggage compartment door courtesy switch signal / ON or OFF	ON: Luggage compartment door is open OFF: Luggage compartment door is closed	-
D LOCK POS SW	Driver side door lock position switch signal / ON or OFF	ON: Driver side door is unlocked OFF: Driver side door is locked	-
P LOCK POS SW	Passenger side door lock position switch signal / ON or OFF	ON: Front passenger side door is unlocked OFF: Front passenger side door is locked	-
RR LOCK POS SW	Rear right door lock position switch signal / ON or OFF	ON: Rear right door is unlocked OFF: Rear right door is locked	-
RL LOCK POS SW	Rear left door lock position switch signal / ON or OFF	ON: Rear left door is unlocked OFF: Rear left door is locked	-
DIMMER SW	Dimmer switch HIGH signal / ON or OFF	ON: Dimmer switch in HIGH or HIGH FLASH OFF: Dimmer switch in LOW	-
HIGH FLASHER SW	Dimmer switch HIGH FLASH signal / ON or OFF	ON: Dimmer switch in HIGH FLASH OFF: Dimmer switch not in HIGH FLASH	-
F FOG LIGHT SW	Fog light switch signal / ON or OFF	ON: Fog light switch ON OFF: Fog light switch OFF	-
AUTO LIGHT SW	Light control switch AUTO signal / ON or OFF	ON: Light control switch in AUTO OFF: Light control switch not in AUTO	-
HEAD LIGHT SW	Light control switch HEAD signal / ON or OFF	ON: Light control switch in HEAD OFF: Light control switch not in HEAD	-

Tester Display	Measurement Item/Range	Normal Condition	Diagnostic Note
TAIL LIGHT SW	Light control switch TAIL signal / ON or OFF	ON: Light control switch in TAIL or HEAD OFF: Light control switch in neither TAIL nor HEAD	-
ILLUMINATE RATE	Illumination rate information / 0 ms to 99.99 ms	0.8 ms to 22.0 ms (Value is output according to ambient illuminance)	-
PARKING BRAKE SW	Parking brake switch signal / ON or OFF	ON: Parking brake switch is ON OFF: Parking brake switch is OFF	-

AFS (AFS ECU):

Tester Display	Measurement Item/Range	Normal Condition	Diagnostic Note
AFS OFF SW	AFS OFF switch signal / ON or OFF	ON: AFS OFF switch pushed OFF: AFS OFF switch not pushed	-
TRAVEL DIR	Traveling Direction / NOT FWD or FWD	NOT FWD: Shift lever in R or N FWD: Shift lever not in R and N	-
LO BEAM STATE	Low beam headlight state / ON or OFF	ON: Low beam headlights ON OFF: Low beam headlights OFF	-
HI BEAM STATE	High beam headlight state / ON or OFF	ON: High beam headlights ON OFF: High beam headlights OFF	-
DRL STATE	Daytime running light state / ON or OFF	ON: Daytime running lights (dimmed high beam headlights) ON OFF: Daytime running lights (dimmed high beam headlights) OFF	-
ENGINE	Engine state / RUN or STOP	RUN: Engine is running STOP: Engine is stop	-
+B	IG power supply voltage value / 0 to 20 V	Condition can be displayed	-
HEIGHT SENS VOL	Rear height control sensor power supply value / 0 to 5 V	Condition can be displayed	-
RR HEIGHT SENS	Rear height control sensor signal value / 0 to 5 V	Condition can be displayed	-
STEER SENS SIG	Steering angle sensor signal value / -384° to 382.5°	Condition can be displayed	-
STR CENTER POS	Steering angle sensor center position / -3072° to 3070.5°	Condition can be displayed	-
FR WHEEL SPD	Front right wheel speed / 0 to 327.67 km/h	Condition can be displayed	-
FL WHEEL SPD	Front left wheel speed / 0 to 327.67 km/h	Condition can be displayed	-
VEHICLE SPD	Vehicle speed / 0 to 327.67 km/h	Condition can be displayed	-
REAR H FLG	Result of rear vehicle height calibration / VALID or INVALID	Condition can be displayed	-
INIT COUNT	Number of times for initialization / 0 to 255	Condition can be displayed	-
# CODES	Number of trouble codes / 0 to 255	Condition can be displayed	-

2. PERFORM ACTIVE TEST

HINT:

Performing the intelligent tester ACTIVE TEST allows a relay, VSV, actuator, and other items to be operated without removing any parts. Performing the ACTIVE TEST early in troubleshooting is one way to save time. The DATA LIST can be displayed during the ACTIVE TEST.

(a) Connect the intelligent tester to the DLC3.

(b) Turn the engine switch on (IG).
(c) Perform the ACTIVE TEST according to the display on the tester.

MAIN BODY (MAIN BODY ECU):

Tester Display	Test Part	Control Range	Diagnostic Note
F FOG LIGHT RLY	Front fog light relay (Taillights are ON)	ON / OFF	-
HEAD LIGHT	Headlight relay	ON / OFF	-
HEAD LIGHT (HI)	High beam headlights	ON / OFF	-
TAIL LIGHT	Taillight relay	ON / OFF	-
DIMMER SIG	Dimmer signal	ON / OFF	-
STEP LIGHT	Footwell illumination	ON / OFF	-
ILLUMI OUTPUT	Interior light, front seat illumination, rear seat illumination, and rear door courtesy lights (Front personal switches are OFF, DOOR switch is ON, seat illumination switch is OFF, and all doors are closed)	ON / OFF	-

AFS (AFS ECU):

Tester Display	Test Part	Control Range	Diagnostic Note
LEVELING MTR	Leveling motor	UP / OFF	-
		DOWN / OFF	-
SWIVEL MTR (RH)	Swivel motor RH	RIGHT / OFF	-
		LEFT / OFF	-
SWIVEL MTR (LH)	Swivel motor LH	RIGHT / OFF	-
		LEFT / OFF	-
AFS OFF IND	AFS OFF indicator	ON / OFF	-

PERSONAL LIGHT ASSEMBLY

COMPONENTS

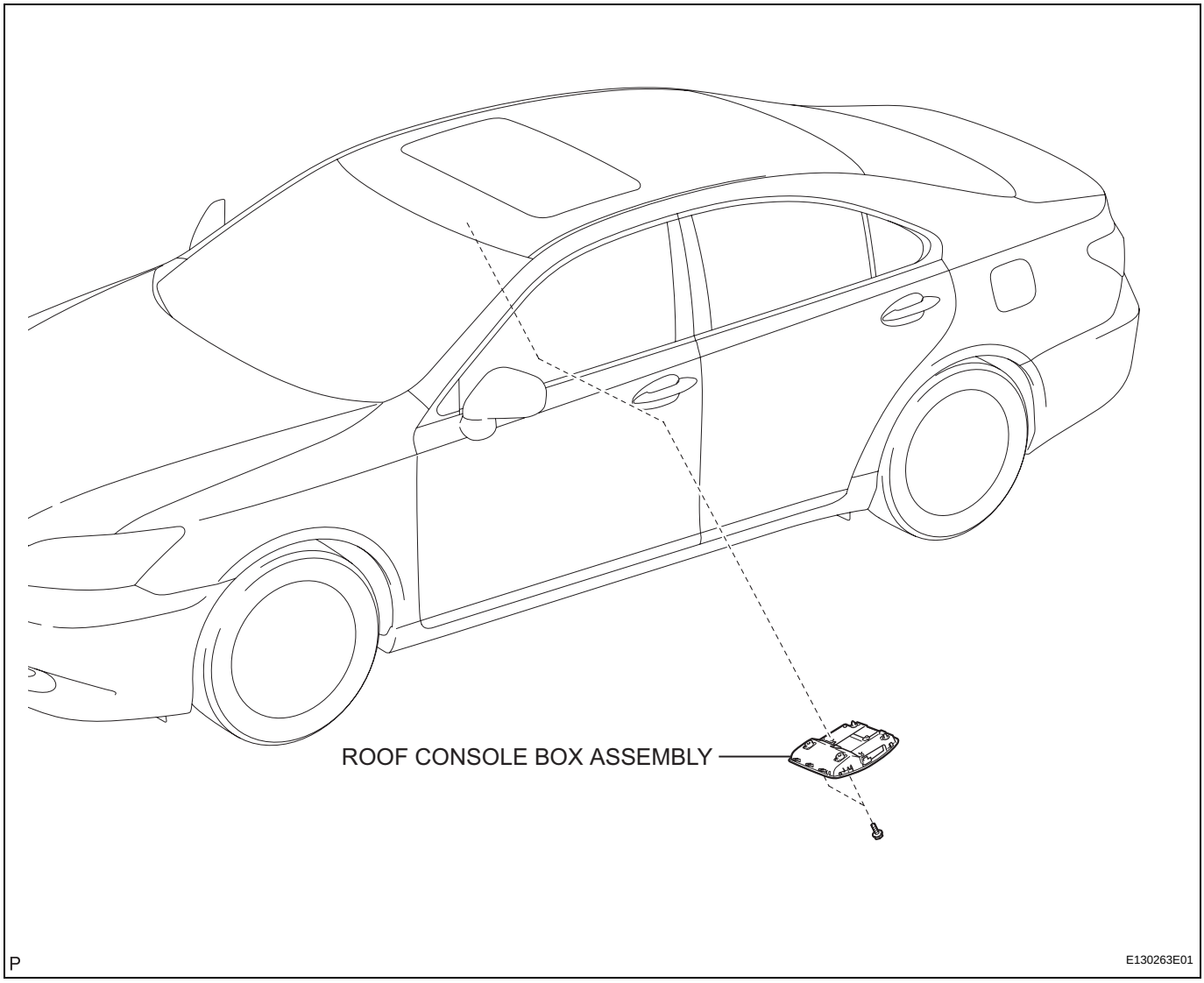

REMOVAL

1. REMOVE ROOF CONSOLE BOX ASSEMBLY (See page IR-44)

INSPECTION

1. INSPECT ROOF CONSOLE BOX ASSEMBLY (PERSONAL LIGHT ASSEMBLY)

(a) Disconnect the Q2 personal light assembly connector.

(b) Measure the voltage and resistance according to the value(s) in the table below.

Standard voltage

Tester Connection	Condition	Specified Condition
Q2-22 (+B1) - Body ground	Always	10 to 14 V

Standard resistance

Tester Connection	Condition	Specified Condition
Q2-5 (GND3) - Body ground	Always	Below 1 Ω

If the result is not specified, there is a malfunction on the wire harness side.

(c) Apply battery voltage to the roof console box assembly connector.

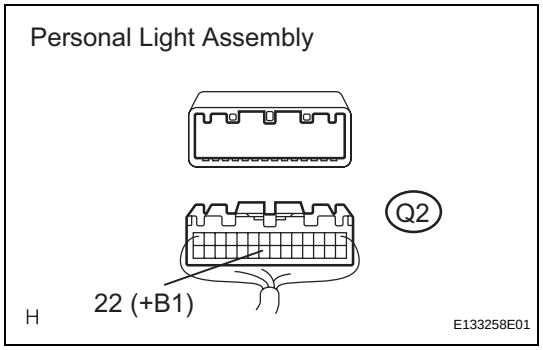

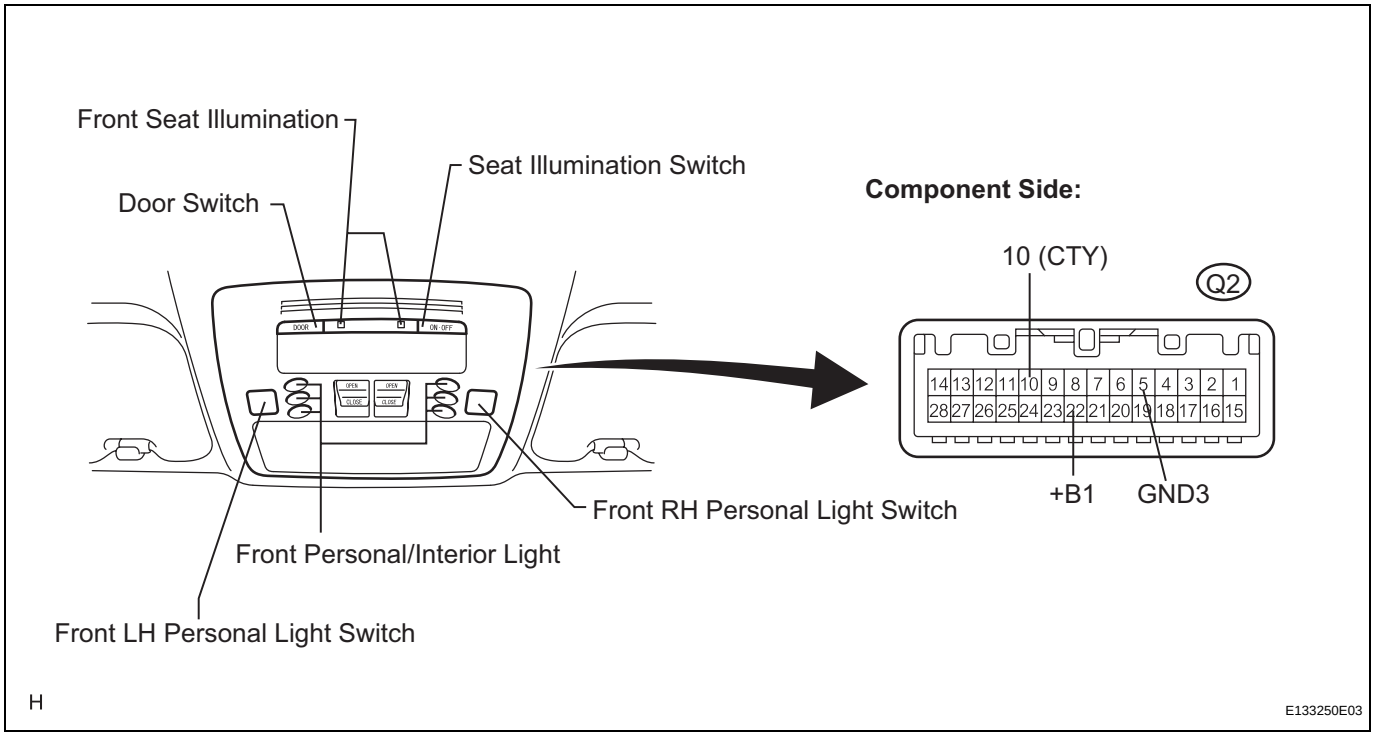

LI

(d) Check that each light comes on.
OK

Measurement Condition	Switch Condition	Specified Condition
Battery positive (+) → Terminal Q2-22 (+B1) Battery negative (-) → Terminal Q2-10 (CTY)	DOOR switch is pushed (ON), seat illumination switch is not pushed (OFF), and personal light switch is not pushed (OFF)	Interior light and front seat illumination come on
Battery positive (+) → Terminal Q2-22 (+B1) Battery negative (-) → Terminal Q2-5 (GND3)	Front RH personal light switch ON	Front RH personal light comes on
	Front LH personal light switch ON	Front LH personal light comes on
Battery positive (+) → Terminal Q2-22 (+B1) Battery negative (-) → Body ground	Front seat illumination switch is pushed (ON)	Front seat illumination comes on

If the result is not as specified, replace the roof console box assembly.

DIAGNOSTIC TROUBLE CODE CHART

Lighting System

DTC Code	Detection Item	Trouble Area	See page
B1244	Light Sensor Circuit Malfunction	1. Automatic light control sensor 2. Harness or connector 3. Main body ECU (Instrument panel J/B)	LI-49
B2410	Headlight Swivel Motor LH Communication Malfunction	1. Headlight swivel motor LH 2. Harness or connector 3. AFS ECU	LI-52
B2411	Headlight Swivel Motor RH Communication Malfunction	1. Headlight swivel motor RH 2. Harness or connector 3. AFS ECU	LI-52
B2412	Headlight Swivel Motor LH Malfunction	1. Headlight swivel motor LH 2. Harness or connector 3. AFS ECU	LI-55
B2413	Headlight Swivel Motor RH Malfunction	1. Headlight swivel motor RH 2. Harness or connector 3. AFS ECU	LI-55
B2414	Steering Position Sensor Malfunction	1. Steering angle sensor 2. AFS ECU	LI-59
B2415	Vehicle Speed Sensor Malfunction	1. Skid control ECU 2. AFS ECU	LI-61
B2416	Height Control Sensor Malfunction	1. Rear height control sensor 2. Harness or connector 3. AFS ECU	LI-63
B2417	Headlight Beam Level Control Motor LH Malfunction	1. Headlight leveling motor LH 2. Harness or connector 3. AFS ECU	LI-66
B2418	Headlight Beam Level Control Motor RH Malfunction	1. Headlight leveling motor RH 2. Harness or connector 3. AFS ECU	LI-66
B2420	AFS ECU Malfunction	1. AFS ECU	LI-69
B2424	Headlight Leveling Motor LH Communication Malfunction	1. Headlight leveling motor LH 2. Harness or connector 3. AFS ECU	LI-70
B2425	Headlight Leveling Motor RH Communication Malfunction	1. Headlight leveling motor RH 2. Harness or connector 3. AFS ECU	LI-70
B2427	CAN Communication Malfunction	1. CAN communication system 2. AFS ECU	LI-73

DTC	B1244	Light Sensor Circuit Malfunction

DESCRIPTION

The automatic light control sensor detects ambient light, converts it into an electrical signal, and outputs it to the main body ECU. The main body ECU turns on or off the headlights and taillights according to the signal.

DTC No.	DTC Detecting Condition	Trouble Area
B1244	• Malfunction in automatic light control sensor • Open or short in automatic light control sensor circuit	• Automatic light control sensor • Harness or connector • Main body ECU (Instrument panel J/B)

WIRING DIAGRAM

LI

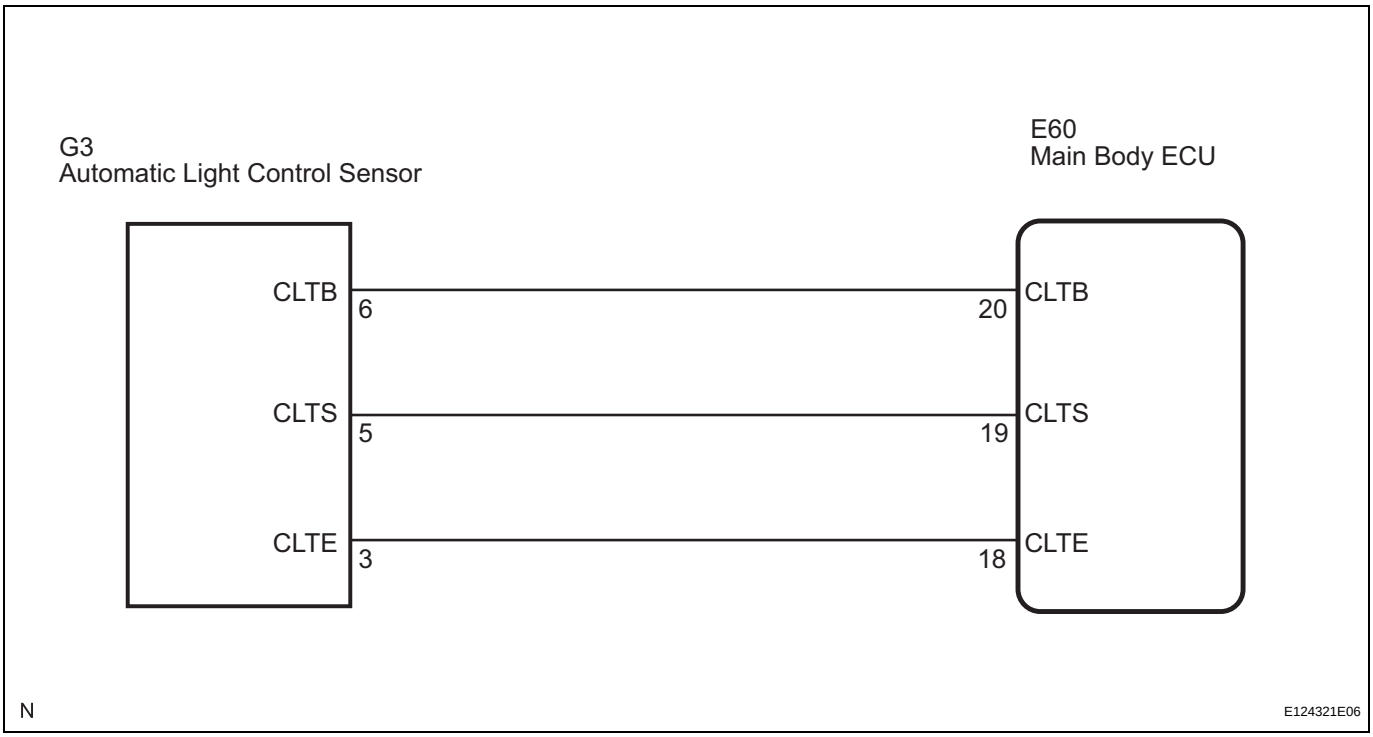

INSPECTION PROCEDURE

1	READ VALUE OF INTELLIGENT TESTER

(a) Connect the intelligent tester to the DLC3.
(b) Turn the engine switch on (IG) and turn the intelligent tester main switch on.
(c) Select the item below in the DATA LIST, and read the display on the intelligent tester.

MAIN BODY (MAIN BODY ECU):

Tester Display	Measurement Item/Range	Normal Condition	Diagnostic Note
ILLUMINATE RATE	Illumination rate information / 0 ms to 99.99 ms	0.8 ms to 22.0 ms (Value is output according to ambient light levels)	-

OK:
Normal condition listed above is displayed.

NG → **Go to step 2**

OK

REPLACE INSTRUMENT PANEL JUNCTION BLOCK ASSEMBLY

2 CHECK HARNESS AND CONNECTOR (MAIN BODY ECU - AUTOMATIC LIGHT CONTROL SENSOR)

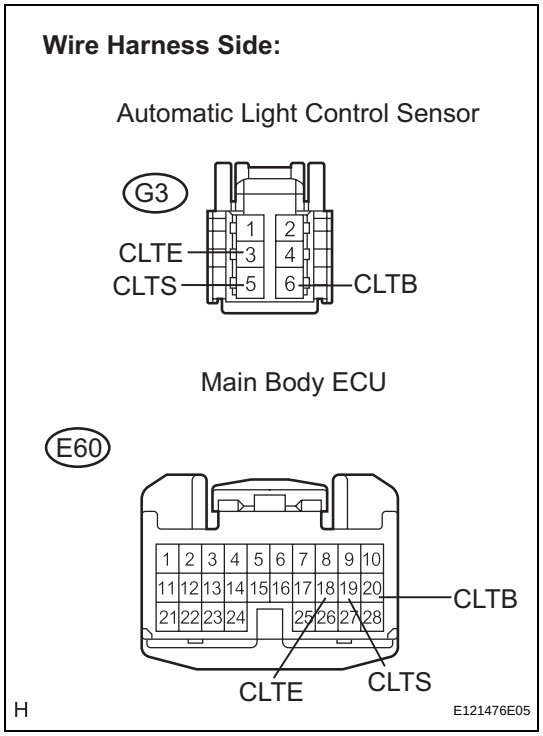

(a) Disconnect the G3 automatic light control sensor connector.
(b) Disconnect the E60 main body ECU connector.
(c) Measure the resistance according to the value(s) in the table below.

Standard resistance

Tester Connection	Condition	Specified Condition
E60-18 (CLTE) - G3-3 (CLTE)	Always	Below 1 Ω
E60-19 (CLTS) - G3-5 (CLTS)	Always	Below 1 Ω
E60-20 (CLTB) - G3-6 (CLTB)	Always	Below 1 Ω
E60-18 (CLTE) - Body ground	Always	10 kΩ or higher
E60-19 (CLTS) - Body ground	Always	10 kΩ or higher
E60-20 (CLTB) - Body ground	Always	10 kΩ or higher

NG → **REPAIR OR REPLACE HARNESS OR CONNECTOR**

OK

3 INSPECT MAIN BODY ECU (INSTRUMENT PANEL JUNCTION BLOCK ASSEMBLY)

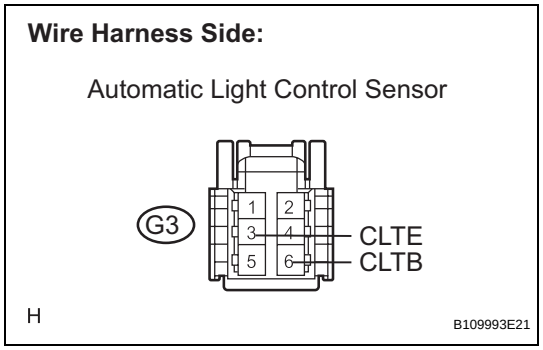

(a) Reconnect the main body ECU connector.
(b) Measure the voltage and resistance according to the value(s) in the table below.

Standard voltage

Tester Connection	Condition	Specified Condition
G3-6 (CLTB) - G3-3 (CLTE)	Engine switch off	Below 1 V
G3-6 (CLTB) - G3-3 (CLTE)	Engine switch on (IG)	10 to 14 V

Standard resistance

Tester Connection	Condition	Specified Condition
G3-3 (CLTE) - Body ground	Always	Below 1 Ω

NG → **REPLACE INSTRUMENT PANEL JUNCTION BLOCK ASSEMBLY**

LI

OK

4 INSPECT AUTOMATIC LIGHT CONTROL SENSOR

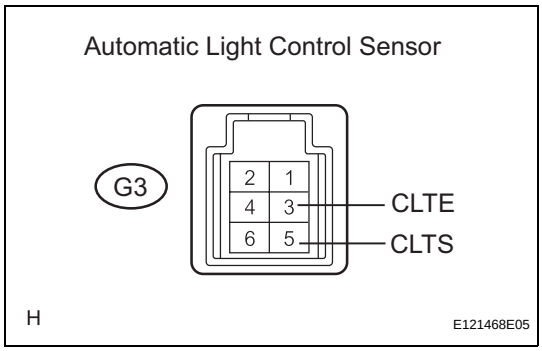

(a) Reconnect the automatic light control sensor connector.
(b) Connect an oscilloscope to the automatic light control sensor connector.

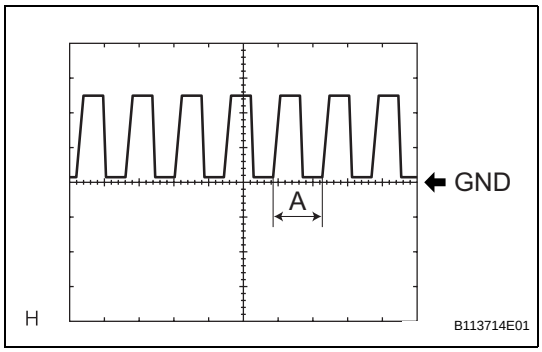

(c) Check the waveform.
OK

Tester Connection	Tool Setting	Condition	Specified Condition
G3-3 (CLTE) - G3-5 (CLTS)	5 V/DIV., 5 ms./DIV.	Engine switch on (IG), light control switch in AUTO	Correct waveform is as shown

HINT:
If the ambient light becomes brighter, width A becomes narrower.

NG → **REPLACE AUTOMATIC LIGHT CONTROL SENSOR**

OK

REPLACE INSTRUMENT PANEL JUNCTION BLOCK ASSEMBLY

REAR ROOM LIGHT ASSEMBLY

COMPONENTS

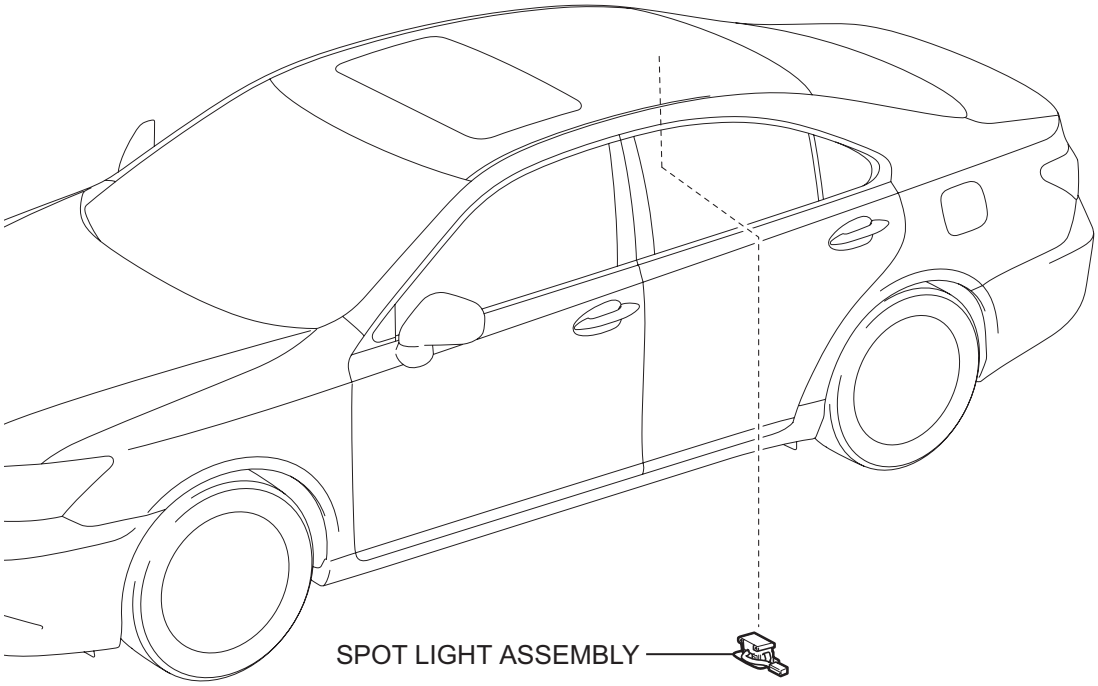

P

E135646E01

REMOVAL

1. **REMOVE SPOT LIGHT ASSEMBLY (for Standard) (See page IR-46)**
2. **REMOVE SPOT LIGHT ASSEMBLY (for Glass Roof) (See page IR-46)**

INSPECTION

1. **INSPECT SPOT LIGHT ASSEMBLY (REAR SEAT ILLUMINATION)**
   (a) Disconnect the Q6 spot light assembly connector.
   (b) Measure the voltage according to the value(s) in the table below.
   Standard voltage

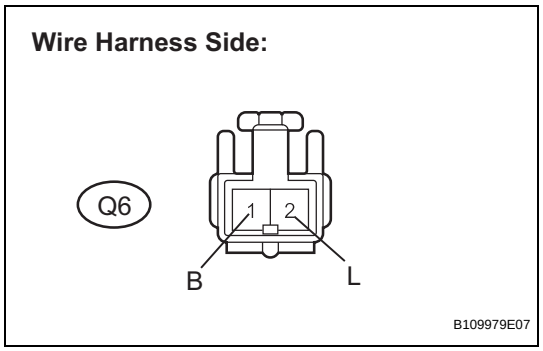

Tester Connection	Condition	Specified Condition
Q6-1 (B) - Q6-2 (L)	Seat illumination switch is not pushed (OFF)	Below 1 V
Q6-1 (B) - Q6-2 (L)	Seat illumination switch is pushed (ON)	10 to 14 V

If the result is not as specified, there is a malfunction on the wire harness side.

   (c) Apply battery voltage to the spot light assembly connector.
   (d) Check that the rear seat illumination comes on.
   OK

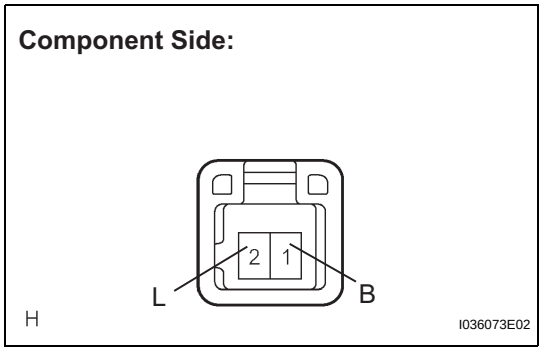

Measurement Condition	Switch Condition	Specified Condition
Battery positive (+) → Terminal Q6-1 (B) Battery negative (-) → Terminal Q6-2 (L)	Always	Rear seat illumination comes on

If the result is not as specified, replace the spot light assembly.

LI

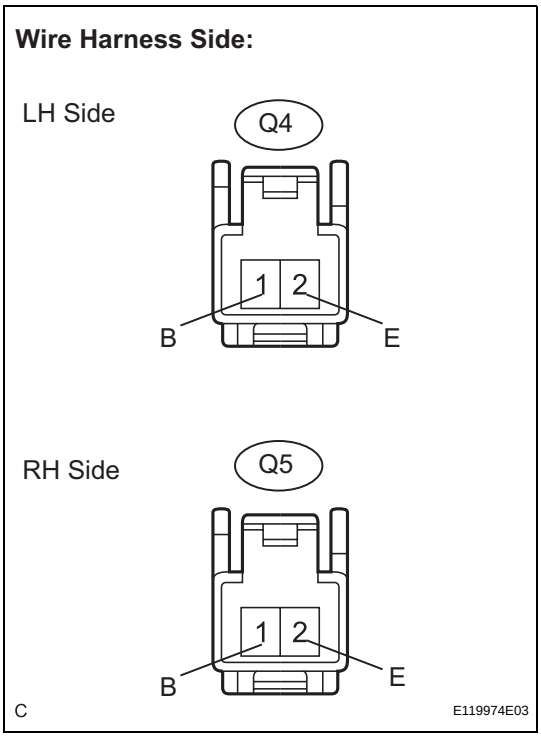

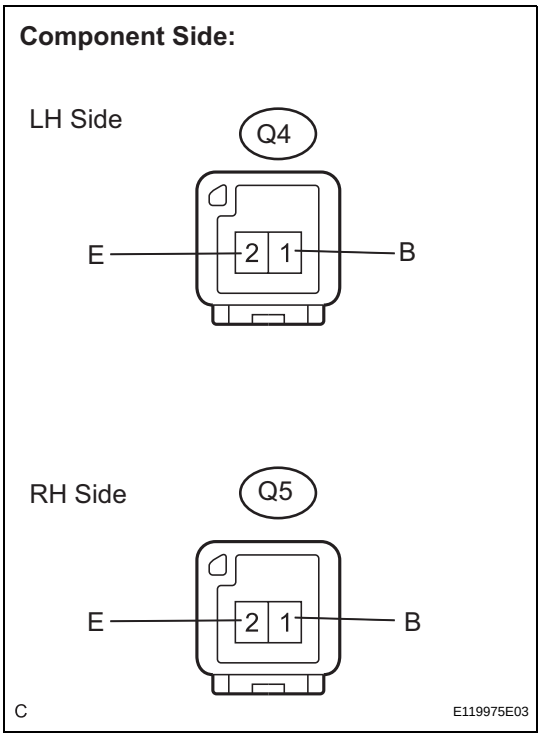

2. INSPECT REAR ROOM LIGHT ASSEMBLY (REAR PERSONAL LIGHT)

(a) Disconnect the Q4 or Q5 rear room light assembly connector.

(b) Measure the voltage according to the value(s) in the table below.

Standard voltage

Tester Connection	Condition	Specified Condition
Q4-1 (B) - Q4-2 (E)	Front LH personal light switch is not pushed (OFF)	Below 1 V
Q4-1 (B) - Q4-2 (E)	Front LH personal light switch is pushed (ON)	10 to 14 V
Q5-1 (B) - Q5-2 (E)	Front RH personal light switch is not pushed (OFF)	Below 1 V
Q5-1 (B) - Q5-2 (E)	Front RH personal light switch is pushed (ON)	10 to 14 V

If the result is not specified, there is a malfunction on the wire harness side.

(c) Apply battery voltage to the spot light assembly connector.

(d) Check that the rear personal light comes on.

OK

Measurement Condition	Switch Condition	Specified Condition
Battery positive (+) → Terminal Q4-1 Battery negative (-) → Terminal Q4-2	Rear LH personal light switch is pushed (ON)	Rear LH personal light comes on
Battery positive (+) → Terminal Q5-1 Battery negative (-) → Terminal Q5-2	Rear RH personal light switch is pushed (ON)	Rear RH personal light comes on

If the result is not as specified, replace the rear room light assembly.

INSTALLATION

1. INSTALL NO. 1 LUGGAGE COMPARTMENT LIGHT ASSEMBLY

(a) Connect the connector.

(b) Engage the claw and install the No. 1 luggage compartment light assembly.

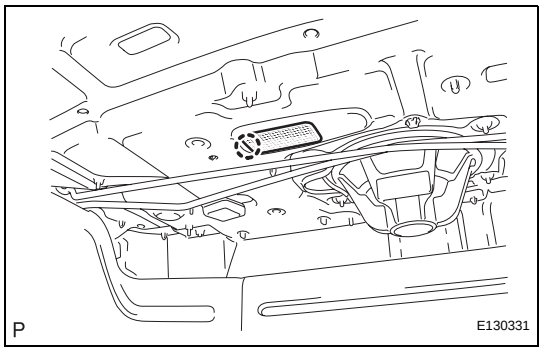

DOOR COURTESY LIGHT

COMPONENTS

for Front Side:

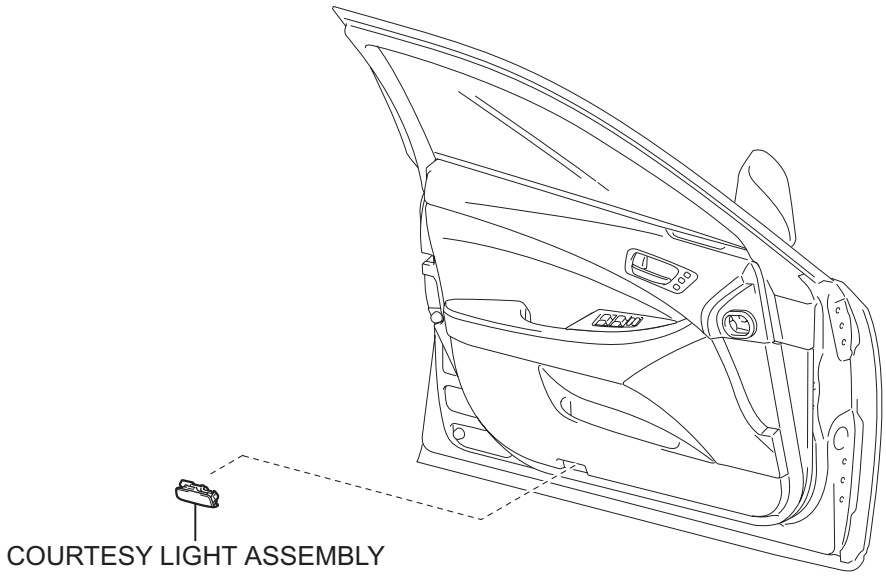

for Rear Side:

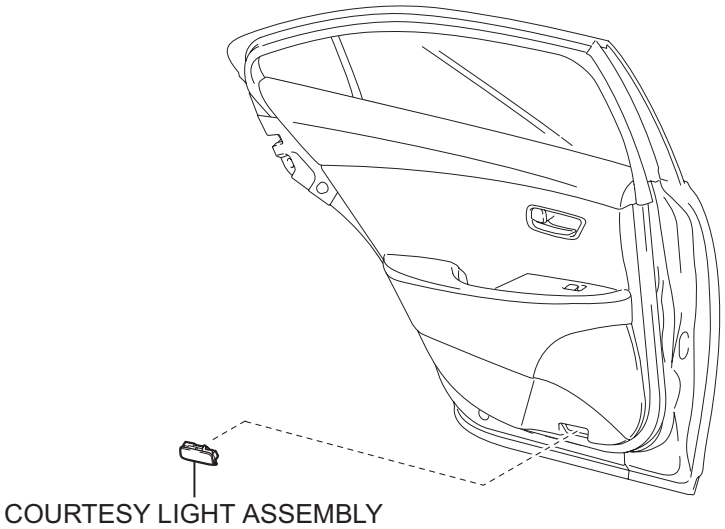

P

E130258E01

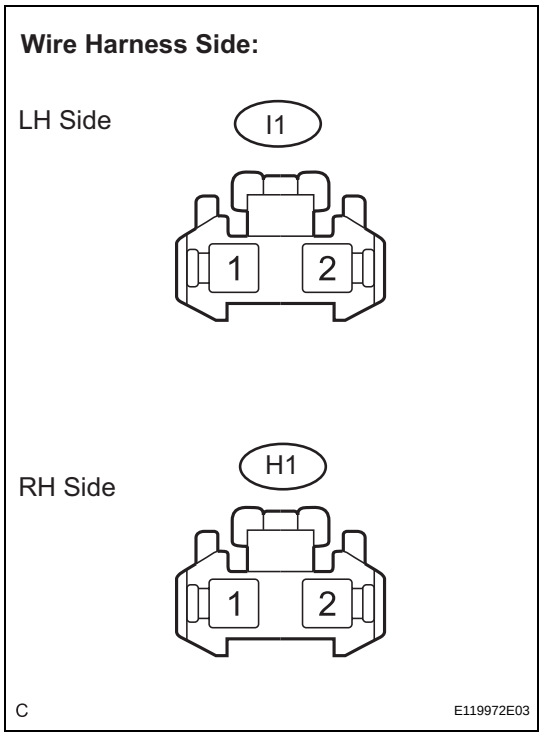

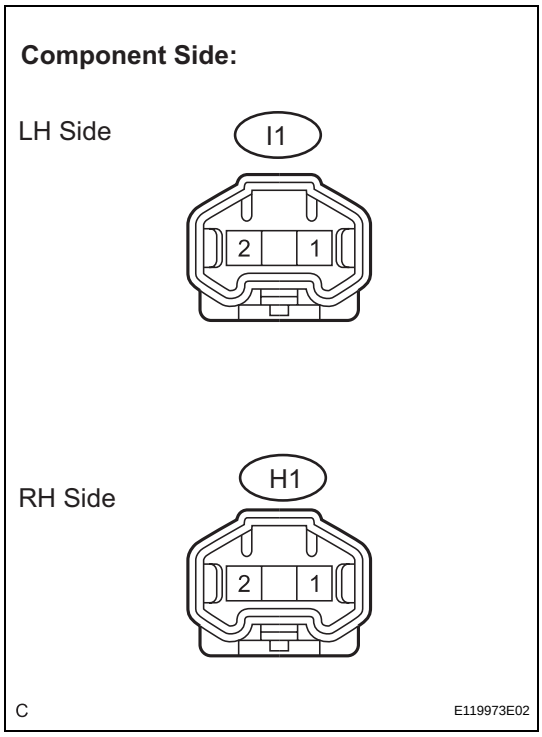

REMOVAL

1. **REMOVE COURTESY LIGHT ASSEMBLY (for Front Side) (See page ED-34)**
2. **REMOVE COURTESY LIGHT ASSEMBLY (for Rear Side) (See page ED-59)**

INSPECTION

1. **INSPECT COURTESY LIGHT ASSEMBLY (for Front Side)**
   (a) Disconnect the I1 or H1 front courtesy light assembly connector.
   (b) Measure the voltage according to the value(s) in the table below.
   Standard voltage:
   LH Side

Tester Connection	Condition	Specified Condition
I1-1 - I1-2	Front LH door is opened	10 to 14 V
	Front LH door is closed	Below 1 V

RH Side

Tester Connection	Condition	Specified Condition
H1-1 - H1-2	Front RH door is opened	10 to 14 V
	Front RH door is closed	Below 1 V

If the result is not as specified, there is a malfunction on the wire harness side.

   (c) Apply battery voltage to the courtesy light assembly connector.
   (d) Check that the courtesy light comes on.
   OK

Measurement Condition	Specified Condition
Battery positive (+) → Terminal 1 Battery negative (-) → Terminal 2	Courtesy light comes on

If the result is not as specified, replace the bulb or courtesy light assembly.

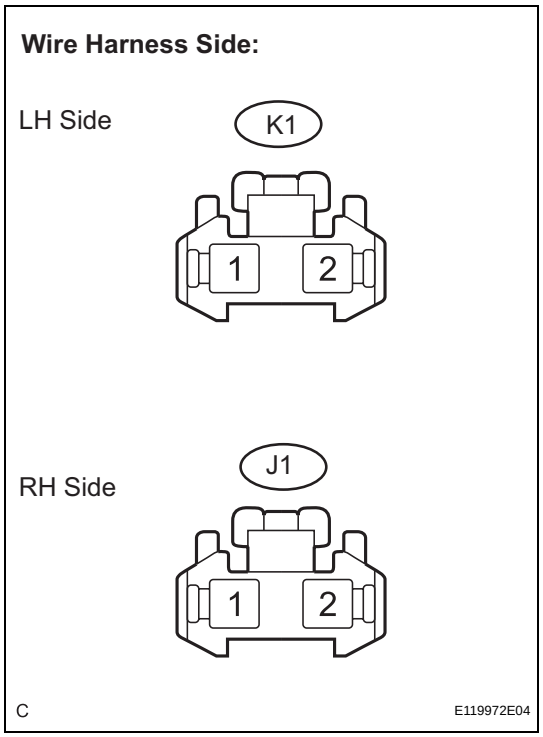

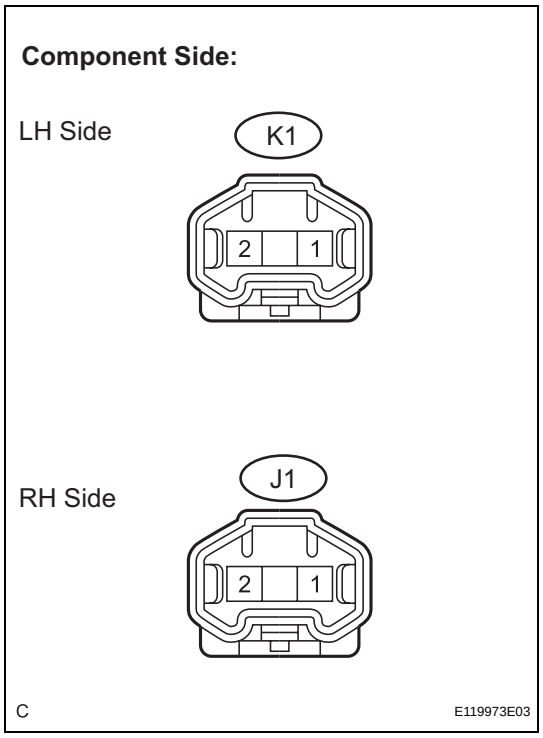

2. INSPECT COURTESY LIGHT ASSEMBLY (for Rear Side)

(a) Disconnect the K1 or J1 rear courtesy light assembly connector.

(b) Measure the voltage according to the value(s) in the table below.

Standard voltage:

LH Side

Tester Connection	Condition	Specified Condition
K1-1 - K1-2	Rear LH door is opened	10 to 14 V
	Rear LH door is closed	Below 1 V

RH Side

Tester Connection	Condition	Specified Condition
J1-1 - J1-2	Rear RH door is opened	10 to 14 V
	Rear RH door is closed	Below 1 V

If the result is not as specified, there is a malfunction on the wire harness side.

(c) Apply battery voltage to the courtesy light assembly connector.

(d) Check that the courtesy light comes on.

OK

Measurement Condition	Specified Condition
Battery positive (+) → Terminal 1 Battery negative (-) → Terminal 2	Courtesy light comes on

If the result is not as specified, replace the bulb or courtesy light assembly.

INSTALLATION

1. INSTALL VANITY LIGHT ASSEMBLY (See page IR-56)

LUGGAGE COMPARTMENT ROOM LIGHT

COMPONENTS

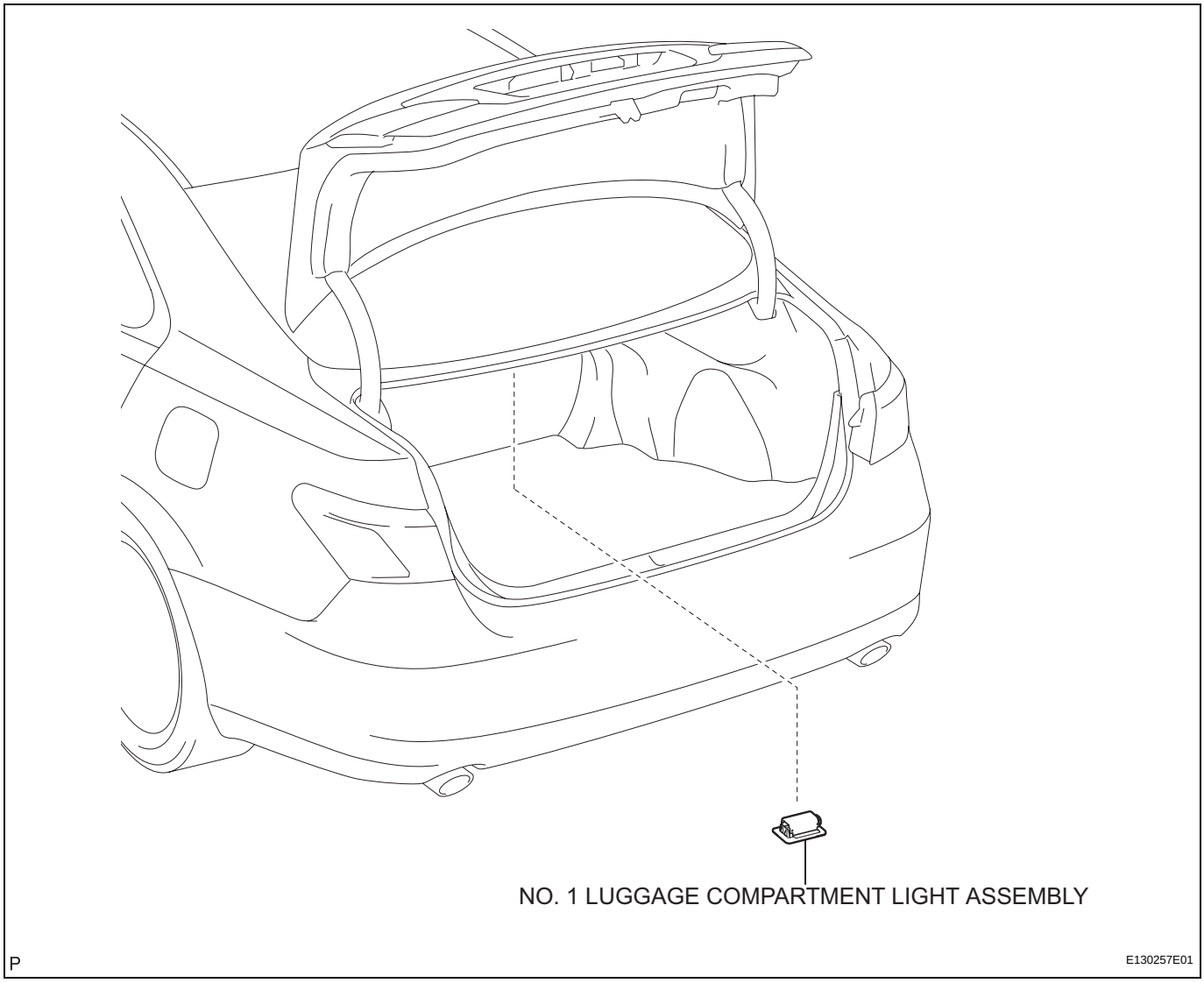

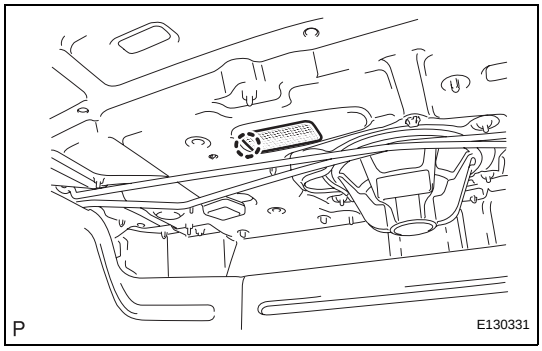

REMOVAL

1. REMOVE NO. 1 LUGGAGE COMPARTMENT LIGHT ASSEMBLY

(a) Disengage the claw and disconnect the No. 1 luggage compartment light assembly.

(b) Disconnect the connector and remove the No. 1 luggage compartment light assembly.

Wire Harness Side:

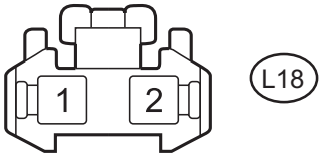

E133266E02

INSPECTION

1. INSPECT NO. 1 LUGGAGE COMPARTMENT LIGHT ASSEMBLY

(a) Disconnect the L18 No. 1 luggage compartment light assembly connector.

(b) Measure the voltage according to the value(s) in the table below.

Standard voltage

Tester Connection	Condition	Specified Condition
L18-1 - L18-2	Luggage compartment door is closed	Below 1 V
	Luggage compartment door is opened	10 to 14 V

If the result is not specified, there is a malfunction on the wire harness side.

Component Side:

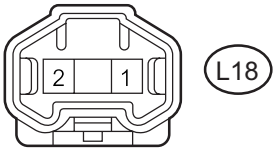

H

B113722E01

(c) Apply battery voltage to the No. 1 luggage compartment light assembly connector.

(d) Check that the No. 1 luggage compartment light comes on.

OK

Measurement Condition	Specified Condition
Battery positive (+) → Terminal L18-1 Battery negative (-) → Terminal L18-2	Luggage compartment light comes on

If the result is not as specified, replace the bulb or No. 1 luggage compartment light assembly.

LI

LI

REMOVAL

1. **REMOVE INSTRUMENT PANEL FINISH PANEL END LH (See page IP-13)**
2. **REMOVE INSTRUMENT PANEL FINISH PANEL END RH (See page IP-15)**
3. **REMOVE SHIFT LEVER KNOB SUB-ASSEMBLY (See page IP-16)**
4. **REMOVE UPPER CONSOLE PANEL ASSEMBLY WITH FRONT ASH RECEPTACLE (See page IP-16)**
5. **REMOVE HEATER SEAT SWITCH CONSOLE BASE (w/o Seat Heater System) (See page IP-17)**
6. **REMOVE HEATER SEAT SWITCH CONSOLE BASE (w/ Seat Heater System) (See page IP-18)**
7. **REMOVE CONSOLE BOX POCKET (See page IP-18)**
8. **REMOVE CONSOLE BOX CARPET (See page IP-18)**
9. **REMOVE CONSOLE REAR END PANEL SUB-ASSEMBLY (See page IP-19)**
10. **REMOVE REAR CONSOLE BOX ASSEMBLY (See page IP-19)**
11. **REMOVE CONSOLE COMPARTMENT DOOR SUB-ASSEMBLY (See page IP-54)**
12. **REMOVE CONSOLE BOX ILLUMINATION LIGHT ASSEMBLY (See page IP-55)**

INSPECTION

1. **INSPECT CONSOLE BOX ILLUMINATION LIGHT ASSEMBLY**
   (a) Disconnect the F1 console box illumination light assembly connector.
   (b) Measure the voltage according to the value(s) in the table below.
   Standard voltage

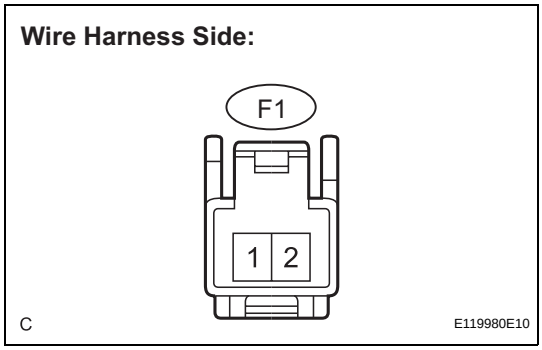

Tester Connection	Condition	Specified Condition
F1-2 - F1-1	Light control switch in TAIL	10 to 14 V
J46-2 - J46-1	Light control switch OFF	Below 1 V

If the result is not as specified, there is a malfunction on the wire harness side.

Component Side:

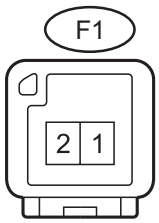

C E119981E04

(c) Apply battery voltage to the console box illumination light assembly connector.

(d) Check that the console box illumination light comes on.

OK

Measurement Condition	Specified Condition
Battery positive (+) → Terminal 2 **Battery negative (-) → Terminal 1**	**Console box illumination light comes on**

If the result is not as specified, replace the console box illumination light assembly.

GLOVE BOX LIGHT

COMPONENTS

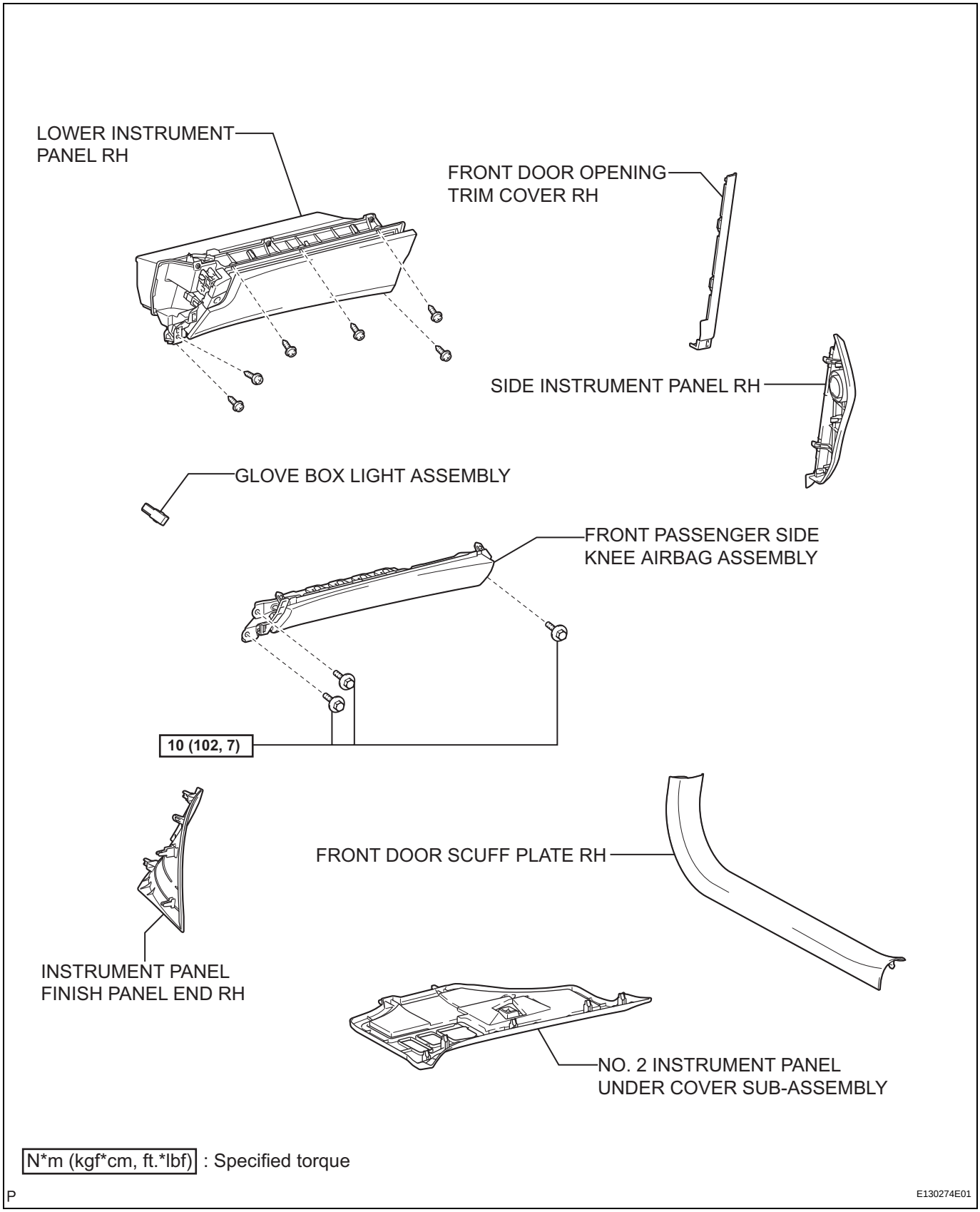

REMOVAL

1. **PRECAUTION**
   CAUTION:
   Be sure to read "PRECAUTION" thoroughly before servicing (See page RS-1).
2. **DISCONNECT CABLE FROM NEGATIVE BATTERY TERMINAL**
   NOTICE:
   Wait for 90 seconds after disconnecting the cable to prevent airbag deployment.
3. **REMOVE INSTRUMENT PANEL FINISH PANEL END RH (See page IP-15)**
4. **REMOVE FRONT DOOR SCUFF PLATE RH (See page IR-42)**
5. **REMOVE FRONT DOOR OPENING TRIM COVER RH (See page IR-42)**
6. **REMOVE NO. 2 INSTRUMENT PANEL UNDER COVER SUB-ASSEMBLY (See page IP-15)**
7. **REMOVE SIDE INSTRUMENT PANEL RH (See page IP-15)**
8. **REMOVE FRONT PASSENGER SIDE KNEE AIRBAG ASSEMBLY (See page RS-396)**
9. **REMOVE LOWER INSTRUMENT PANEL RH (See page IP-16)**
10. **REMOVE GLOVE BOX LIGHT ASSEMBLY**
    (a) Remove the glove box light assembly as shown in the illustration.

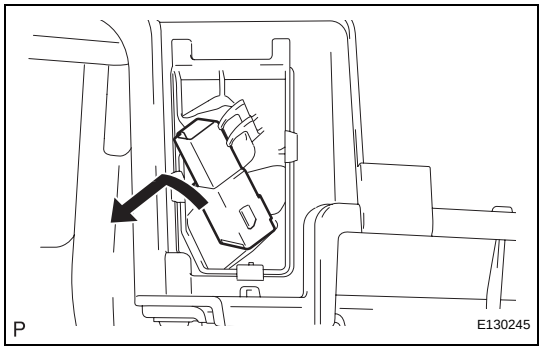

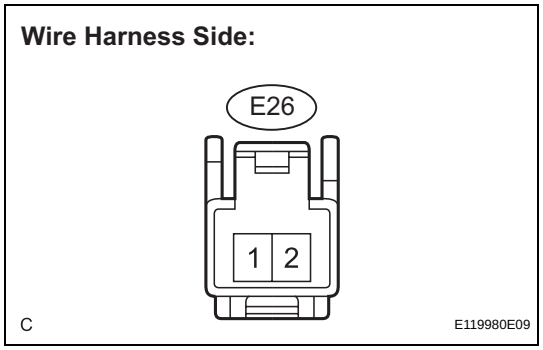

INSPECTION

1. **INSPECT GLOVE BOX LIGHT ASSEMBLY**
   (a) Disconnect the E26 glove box light assembly connector.
   (b) Measure the voltage according to the value(s) in the table below.
   Standard voltage

Tester Connection	Condition	Specified Condition
E26-2 - E26-1	Light control switch in TAIL	10 to 14 V
	Light control switch OFF	Below 1 V

If the result is not as specified, there is a malfunction on the wire harness side.

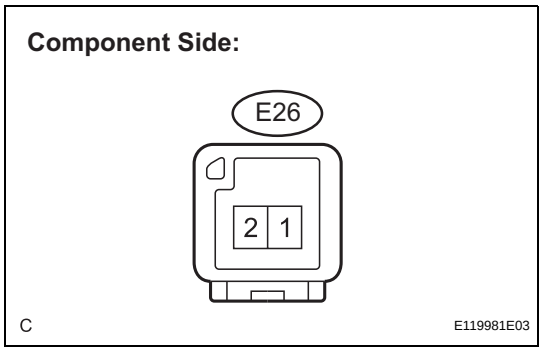

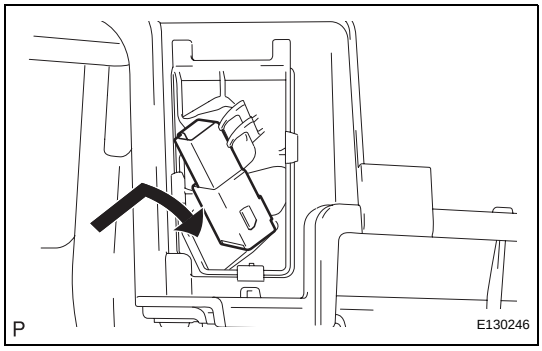

(c) Apply battery voltage to the glove box light assembly connector.

(d) Check that the glove box light comes on.

OK

Measurement Condition	Condition	Specified Condition
Battery positive (+) → Terminal 2 Battery negative (-) → Terminal 1	**Glove box light switch ON**	**Glove box light comes on**

If the result is not as specified, replace the glove box light assembly.

INSTALLATION

1. INSTALL GLOVE BOX LIGHT ASSEMBLY

(a) Install the glove box light assembly as shown in the illustration.

2. INSTALL LOWER INSTRUMENT PANEL RH (See page IP-42)

3. INSTALL FRONT PASSENGER SIDE KNEE AIRBAG ASSEMBLY (See page RS-396)

4. INSTALL SIDE INSTRUMENT PANEL RH (See page IP-43)

5. INSTALL NO. 2 INSTRUMENT PANEL UNDER COVER SUB-ASSEMBLY (See page IP-44)

6. INSTALL FRONT DOOR OPENING TRIM COVER RH (See page IR-65)

7. INSTALL FRONT DOOR SCUFF PLATE RH (See page IR-65)

8. INSTALL INSTRUMENT PANEL FINISH PANEL END RH (See page IP-44)

9. CONNECT CABLE TO NEGATIVE BATTERY TERMINAL

10. INSPECT SRS WARNING LIGHT

(See page RS-37)

11. PERFORM INITIALIZATION

NOTICE:

Some systems need initialization after reconnecting the cable to the negative battery terminal (See page IN-33).

INSTALLATION

1. **INSTALL CONSOLE BOX ILLUMINATION LIGHT ASSEMBLY (See page IP-56)**
2. **INSTALL CONSOLE COMPARTMENT DOOR SUB-ASSEMBLY (See page IP-56)**
3. **INSTALL REAR CONSOLE BOX ASSEMBLY (See page IP-39)**
4. **INSTALL CONSOLE REAR END PANEL SUB-ASSEMBLY (See page IP-40)**
5. **INSTALL CONSOLE BOX CARPET (See page IP-41)**
6. **INSTALL CONSOLE BOX POCKET (See page IP-41)**
7. **INSTALL HEATER SEAT SWITCH CONSOLE BASE (w/o Seat Heater System) (See page IP-41)**
8. **INSTALL HEATER SEAT SWITCH CONSOLE BASE (w/ Seat Heater System) (See page IP-41)**
9. **INSTALL UPPER CONSOLE PANEL ASSEMBLY WITH FRONT ASH RECEPTACLE (See page IP-42)**
10. **INSTALL SHIFT LEVER KNOB SUB-ASSEMBLY (See page IP-42)**
11. **INSTALL INSTRUMENT PANEL FINISH PANEL END RH (See page IP-44)**
12. **INSTALL INSTRUMENT PANEL FINISH PANEL END LH (See page IP-46)**

VANITY LIGHT

COMPONENTS

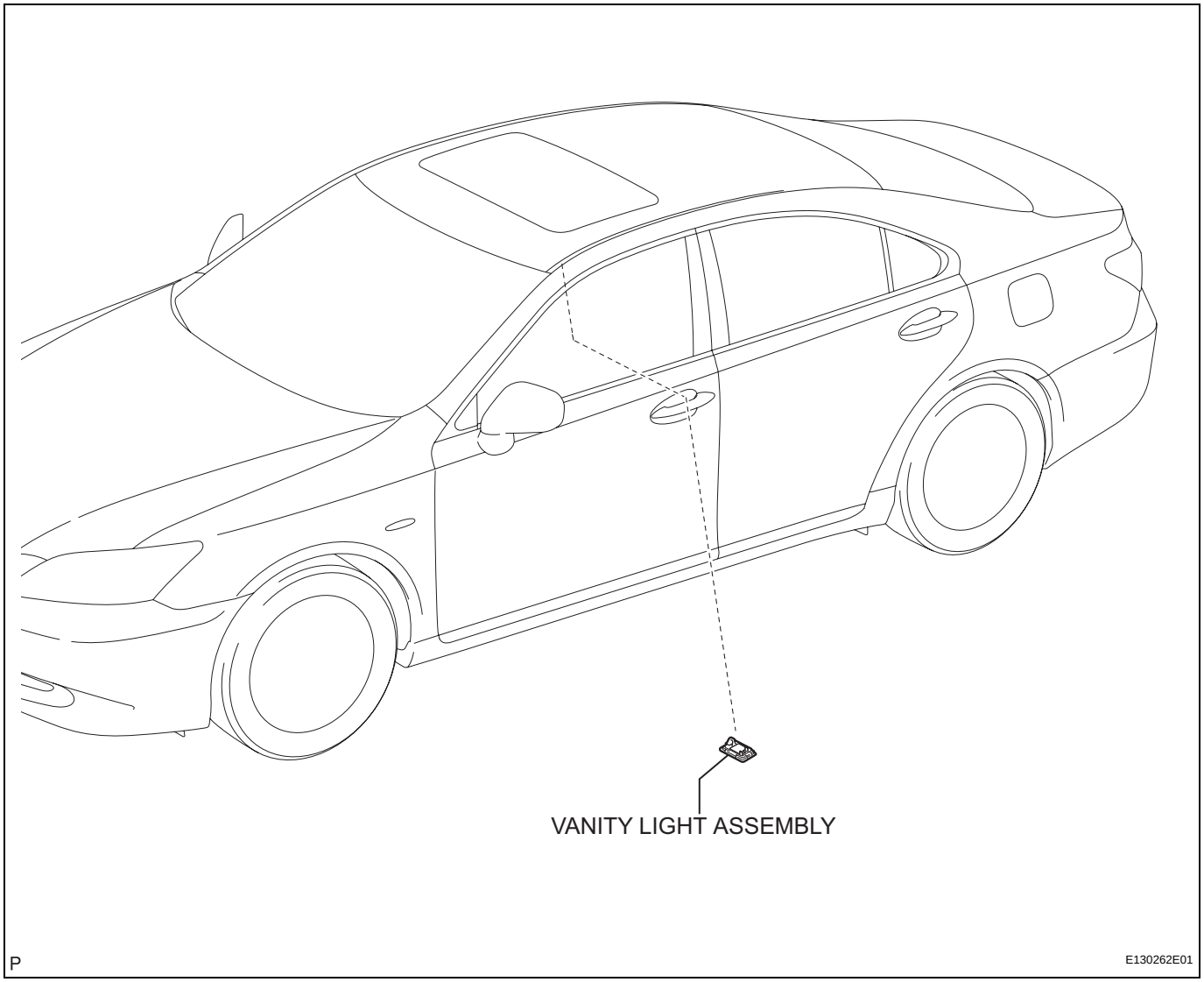

REMOVAL

1. **REMOVE VANITY LIGHT ASSEMBLY (See page IR-50)**

INSPECTION

1. **INSPECT VANITY LIGHT ASSEMBLY**
   (a) Disconnect the Q8 or Q9 vanity light assembly connector.
   (b) Measure the voltage according to the value(s) in the table below.
   Standard voltage:
   LH Side

Tester Connection	Condition	Specified Condition
Q8-1 - Q8-2	Vanity light switch ON	10 to 14 V
	Vanity light switch OFF	Below 1 V

RH Side

Tester Connection	Condition	Specified Condition
Q9-1 - Q9-2	Vanity light switch ON	10 to 14 V
	Vanity light switch OFF	Below 1 V

If the result is not as specified, there is a malfunction on the wire harness side.

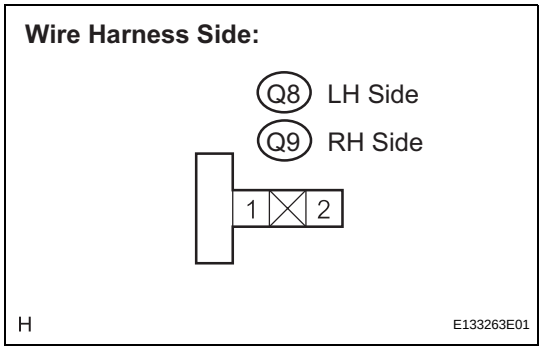

   (c) Apply battery voltage to the vanity light assembly connector.
   (d) Check that the vanity light comes on.
   OK

Measurement Condition	Specified Condition
Battery positive (+) → Terminal 1 Battery negative (-) → Terminal 2	Vanity light comes on

If the result is not as specified, replace the bulb or vanity light assembly.

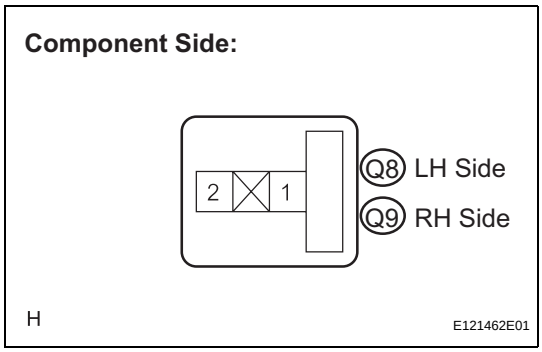

LI

INSTALLATION

1. **INSTALL OUTER REAR VIEW MIRROR ASSEMBLY (See page MI-49)**
2. **INSTALL OUTER MIRROR PROTECTOR (See page ED-51)**
3. **INSTALL DOOR FRAME GARNISH (See page ED-51)**
4. **INSTALL FRONT DOOR INNER GLASS WEATHERSTRIP (See page ED-52)**
5. **INSTALL FRONT DOOR TRIM BOARD SUB-ASSEMBLY (See page ED-52)**
6. **INSTALL DOOR ARMREST COVER (See page ED-53)**
7. **INSTALL COURTESY LIGHT ASSEMBLY (See page ED-53)**
8. **INSTALL FRONT DOOR ARMREST BASE PANEL ASSEMBLY (See page ED-53)**
9. **INSTALL FRONT DOOR INSIDE HANDLE BEZEL PLUG (See page ED-54)**

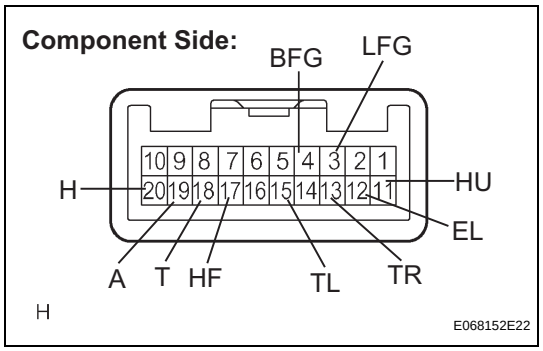

INSPECTION

1. INSPECT HEADLIGHT DIMMER SWITCH ASSEMBLY

(a) Measure the resistance according to the value(s) in the table below.

Standard resistance:

Light control switch

Tester Connection	Switch Condition	Specified Condition
12 (EL) - 20 (H) - 18 (T) - 19 (A)	OFF	10 kΩ or higher
12 (EL) - 18 (T)	TAIL	Below 1 Ω
12 (EL) - 20 (H) - 18 (T)	HEAD	Below 1 Ω
12 (EL) - 19 (A)	AUTO	Below 1 Ω

Dimmer switch

Tester Connection	Switch Condition	Specified Condition
17 (HF) - 12 (EL)	FLASH	Below 1 Ω
11 (HU) - 12 (EL)	HIGH	Below 1 Ω

Turn signal switch

Tester Connection	Switch Condition	Specified Condition
13 (TR) - 12 (EL) - 15 (TL)	OFF	10 kΩ or higher
13 (TR) - 12 (EL)	RH	Below 1 Ω
15 (TL) - 12 (EL)	LH	Below 1 Ω

Fog light switch

Tester Connection	Switch Condition	Specified Condition
3 (LFG) - 4 (BFG)	OFF	10 kΩ or higher
3 (LFG) - 4 (BFG)	ON	Below 1 Ω

If the result is not as specified, replace the headlight dimmer switch assembly.

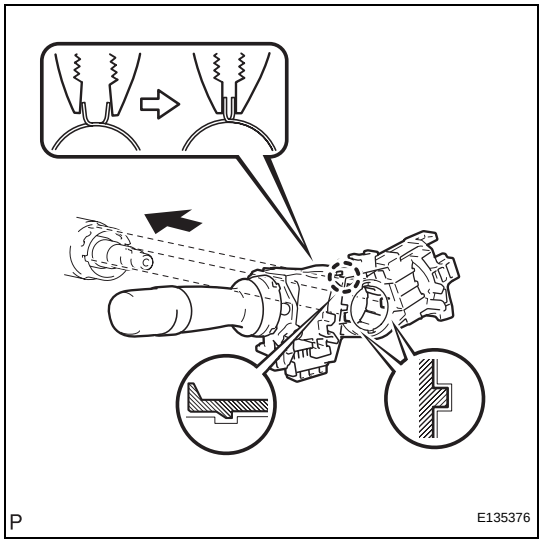

INSTALLATION

1. INSTALL HEADLIGHT DIMMER SWITCH ASSEMBLY

(a) Engage the claw while loosening the clamp as shown in the illustration.

LI

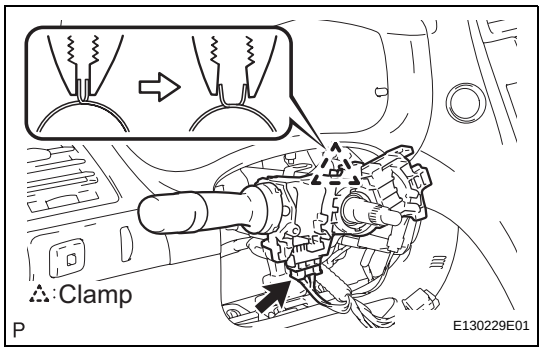

(b) Install the headlight dimmer switch assembly with the clamp.
(c) Connect the connector.

2. **INSTALL TILT AND TELESCOPIC SWITCH (See page SR-86)**
3. **INSTALL WINDSHIELD WIPER SWITCH ASSEMBLY (See page WW-56)**
4. **INSTALL SPIRAL CABLE WITH STEERING ANGLE SENSOR (See page RS-382)**
5. **INSTALL STEERING COLUMN COVER (See page SR-87)**
6. **ADJUST SPIRAL CABLE (See page RS-382)**
7. **INSTALL STEERING WHEEL ASSEMBLY (See page SR-87)**
8. **INSPECT STEERING WHEEL CENTER POINT**
9. **INSTALL STEERING PAD (See page RS-368)**
10. **INSTALL LOWER NO. 3 STEERING WHEEL COVER (See page RS-369)**
11. **INSTALL LOWER NO. 2 STEERING WHEEL COVER (See page RS-369)**
12. **CONNECT CABLE TO NEGATIVE BATTERY TERMINAL**
13. **INSPECT STEERING PAD (See page RS-369)**
14. **INSPECT SRS WARNING LIGHT**
    (See page RS-37)
15. **PERFORM INITIALIZATION**
    NOTICE:
    Some systems need initialization after reconnecting the cable to the negative battery terminal (See page IN-33).

LI

FOOTWELL LIGHT

COMPONENTS

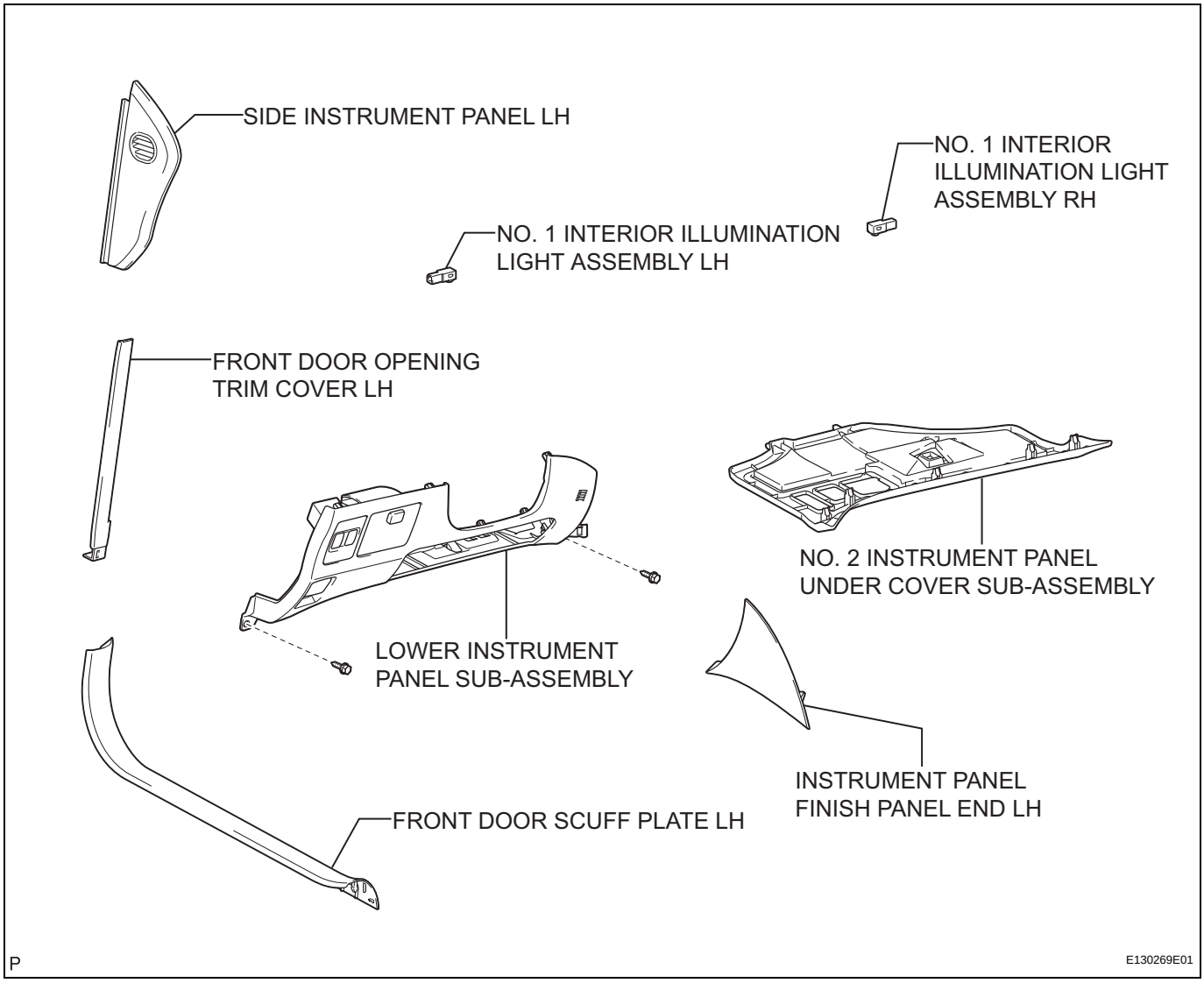

REMOVAL

1. **REMOVE FRONT DOOR SCUFF PLATE LH (See page IR-39)**
2. **REMOVE FRONT DOOR OPENING TRIM COVER LH (See page IR-39)**
3. **REMOVE SIDE INSTRUMENT PANEL LH (See page IP-12)**
4. **REMOVE INSTRUMENT PANEL FINISH PANEL END LH (See page IP-13)**
5. **REMOVE LOWER INSTRUMENT PANEL SUB-ASSEMBLY (See page IP-13)**
6. **REMOVE NO. 1 INTERIOR ILLUMINATION LIGHT ASSEMBLY LH**
   (a) Disengage the 2 claws and remove the No. 1 interior illumination light assembly LH.
7. **REMOVE NO. 2 INSTRUMENT PANEL UNDER COVER SUB-ASSEMBLY (See page IP-15)**

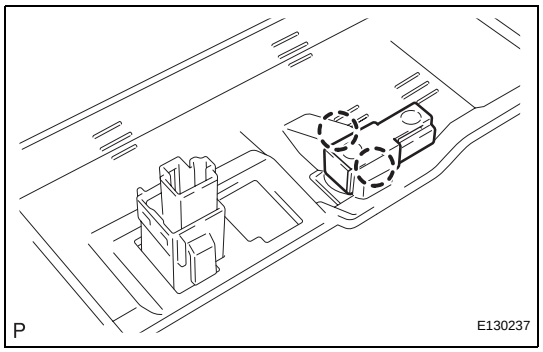

8. **REMOVE NO. 1 INTERIOR ILLUMINATION LIGHT ASSEMBLY RH**
   Disengage the 2 claws and remove the No. 1 interior illumination light assembly RH.

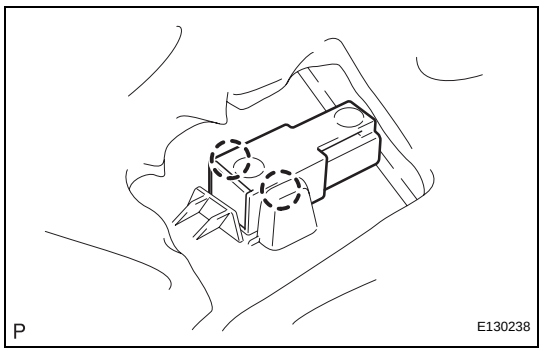

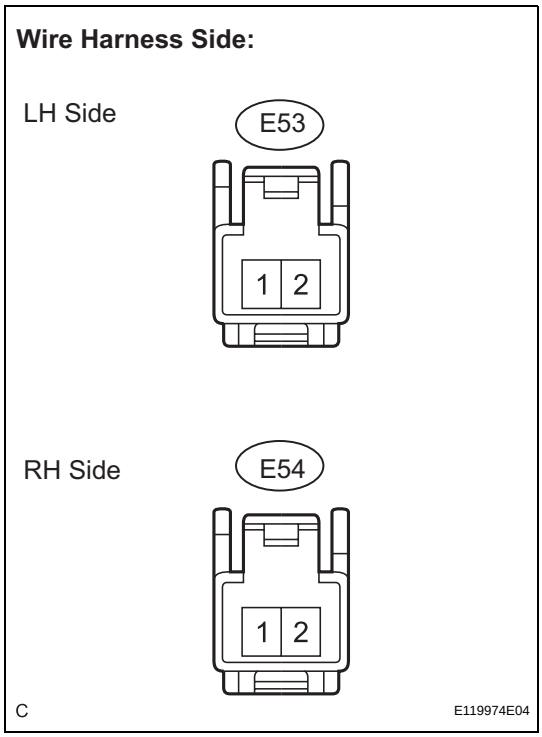

INSPECTION

1. INSPECT FOOTWELL LIGHT

(a) Disconnect the E53 or E54 footwell light connector.

(b) Measure the voltage according to the value(s) in the tables below.

Standard voltage:

LH Side

Tester Connection	Condition	Specified Condition
E53-2 - E53-1	Any door is opened.	10 to 14 V
	Any door is unlocked when the engine switch is off and all doors are closed.	10 to 14 V
	The engine switch is turned from off to on (IG) when all doors are closed.	10 to 14 V
	The engine switch is turned from on (IG) to off when all door are closed.	Below 1 V
	All doors are locked when the engine switch is off.	Below 1 V

RH Side

Tester Connection	Condition	Specified Condition
E54-2 - E54-1	Any door is opened.	10 to 14 V
	Any door is unlocked when the engine switch is off and all doors are closed.	10 to 14 V
	The engine switch is turned from off to on (IG) when all doors are closed.	10 to 14 V
	The engine switch is turned from on (IG) to off when all door are closed.	Below 1 V
	All doors are locked when the engine switch is off.	Below 1 V

If the result is not as specified, there is a malfunction on the wire harness side.

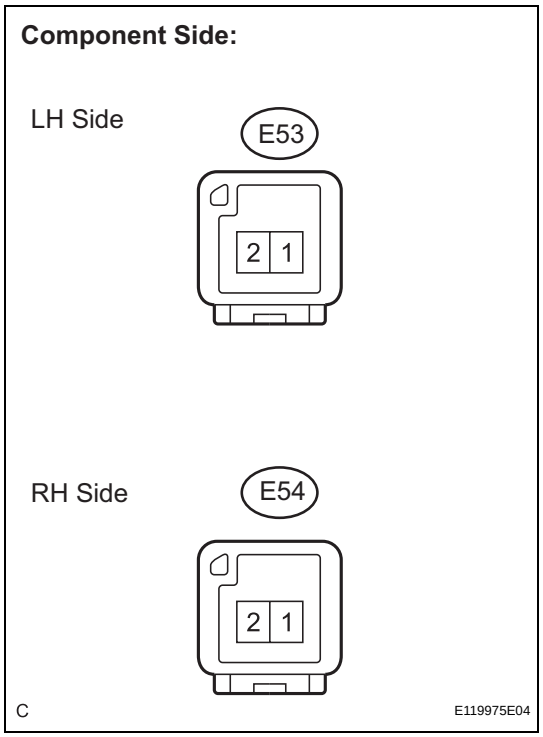

(c) Apply battery voltage to the footwell light connector.
(d) Check that the footwell light comes on.
OK

Measurement Condition	Specified Condition
Battery positive (+) → Terminal 2 Battery negative (-) → Terminal 1	Footwell light comes on

If the result is not as specified, replace the footwell light assembly.

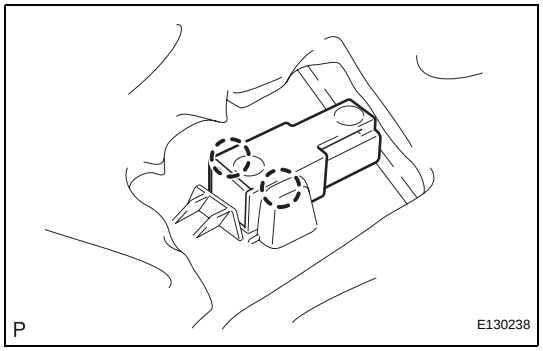

INSTALLATION

1. **INSTALL NO. 1 INTERIOR ILLUMINATION LIGHT ASSEMBLY RH**
   (a) Engage the 2 claws and install the No. 1 interior illumination light assembly RH.
2. **INSTALL NO. 2 INSTRUMENT PANEL UNDER COVER SUB-ASSEMBLY (See page IP-44)**

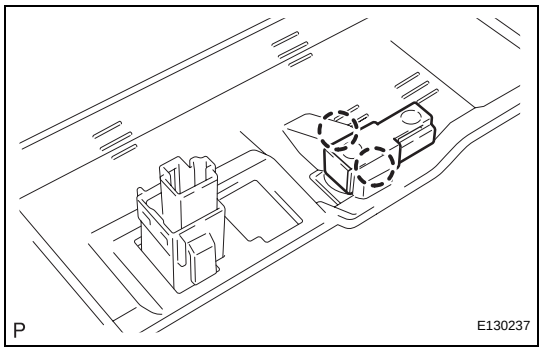

3. **INSTALL NO. 1 INTERIOR ILLUMINATION LIGHT ASSEMBLY LH**
   (a) Engage the 2 claws and install the No. 1 interior illumination light assembly LH.
4. **INSTALL LOWER INSTRUMENT PANEL SUB-ASSEMBLY (See page IP-46)**
5. **INSTALL INSTRUMENT PANEL FINISH PANEL END LH (See page IP-46)**
6. **INSTALL SIDE INSTRUMENT PANEL LH (See page IP-47)**
7. **INSTALL FRONT DOOR OPENING TRIM COVER LH (See page IR-64)**
8. **INSTALL FRONT DOOR SCUFF PLATE LH (See page IR-65)**

LI

REMOVAL

1. **REMOVE SHIFT LEVER KNOB SUB-ASSEMBLY (See page IP-16)**
2. **REMOVE NO. 2 INSTRUMENT PANEL REGISTER ASSEMBLY (See page IP-17)**
3. **REMOVE UPPER CONSOLE PANEL ASSEMBLY WITH FRONT ASH RECEPTACLE (See page IP-16)**
4. **REMOVE INSTRUMENT PANEL FINISH PANEL END LH (See page IP-13)**
5. **REMOVE INSTRUMENT PANEL FINISH PANEL END RH (See page IP-15)**
6. **REMOVE INTEGRATION CONTROL PANEL WITH RADIO RECEIVER ASSEMBLY (w/o Navigation System) (See page AV-168)**
7. **REMOVE NO. 1 RADIO BRACKET (w/o Navigation System) (See page AV-168)**
8. **REMOVE NO. 2 RADIO BRACKET (w/o Navigation System) (See page AV-169)**
9. **REMOVE RADIO RECEIVER ASSEMBLY (w/o Navigation System) (See page AV-169)**
10. **REMOVE HEATER CONTROL HOUSING SUB-ASSEMBLY (w/o Navigation System) (See page AC-227)**
11. **REMOVE CENTER CLUSTER MODULE CONTROL ASSEMBLY (w/o Navigation System) (See page AC-227)**
12. **REMOVE MULTI-DISPLAY WITH RADIO RECEIVER ASSEMBLY (w/ Navigation System) (See page AV-170)**
13. **REMOVE NO. 1 RADIO BRACKET (w/ Navigation System) (See page AV-170)**
14. **REMOVE NO. 2 RADIO BRACKET (w/ Navigation System) (See page AV-170)**
15. **REMOVE MULTI-DISPLAY ASSEMBLY (w/ Navigation System) (See page NS-234)**

INSPECTION

1. **INSPECT AIR CONDITION PANEL SUB-ASSEMBLY (w/o Navigation System)**
   (a) Measure the resistance according to the value(s) in the table below.
   Standard resistance

Tester Connection	Condition	Specified Condition
7 (TB) - 18 (GND)	Hazard warning switch OFF	10 kΩ or higher
7 (TB) - 18 (GND)	Hazard warning switch ON	Below 1 Ω

Component Side:

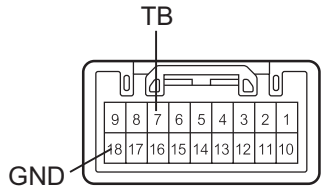

H E133261E01

If the result is not as specified, replace the air condition panel sub-assembly.

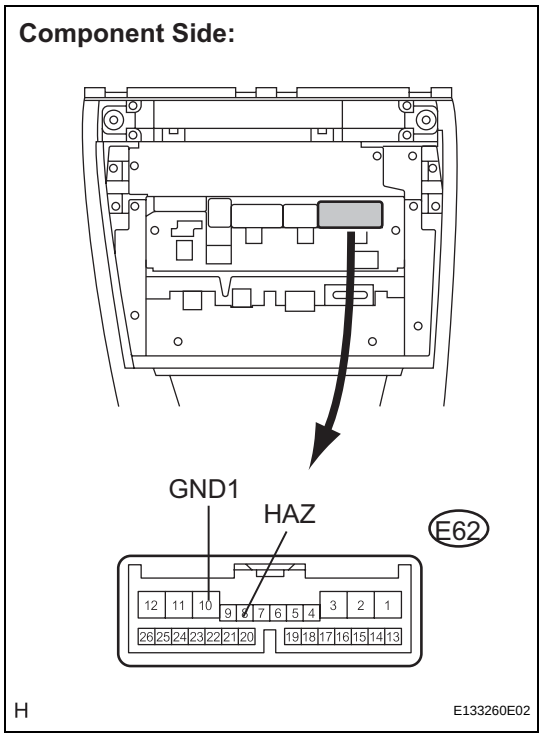

2. INSPECT MULTI-DISPLAY WITH RADIO RECEIVER ASSEMBLY (w/ Navigation System)

(a) Measure the resistance according to the value(s) in the table below.

Standard resistance

Tester Connection	Condition	Specified Condition
E62-8 (HAZ) - E62-10 (GND1)	Hazard warning switch OFF	10 kΩ or higher
E62-8 (HAZ) - E62-10 (GND1)	Hazard warning switch ON	Below 1 Ω

If the result is not as specified, replace the multi-display with radio receiver assembly.

DOOR MIRROR FOOT LIGHT

COMPONENTS

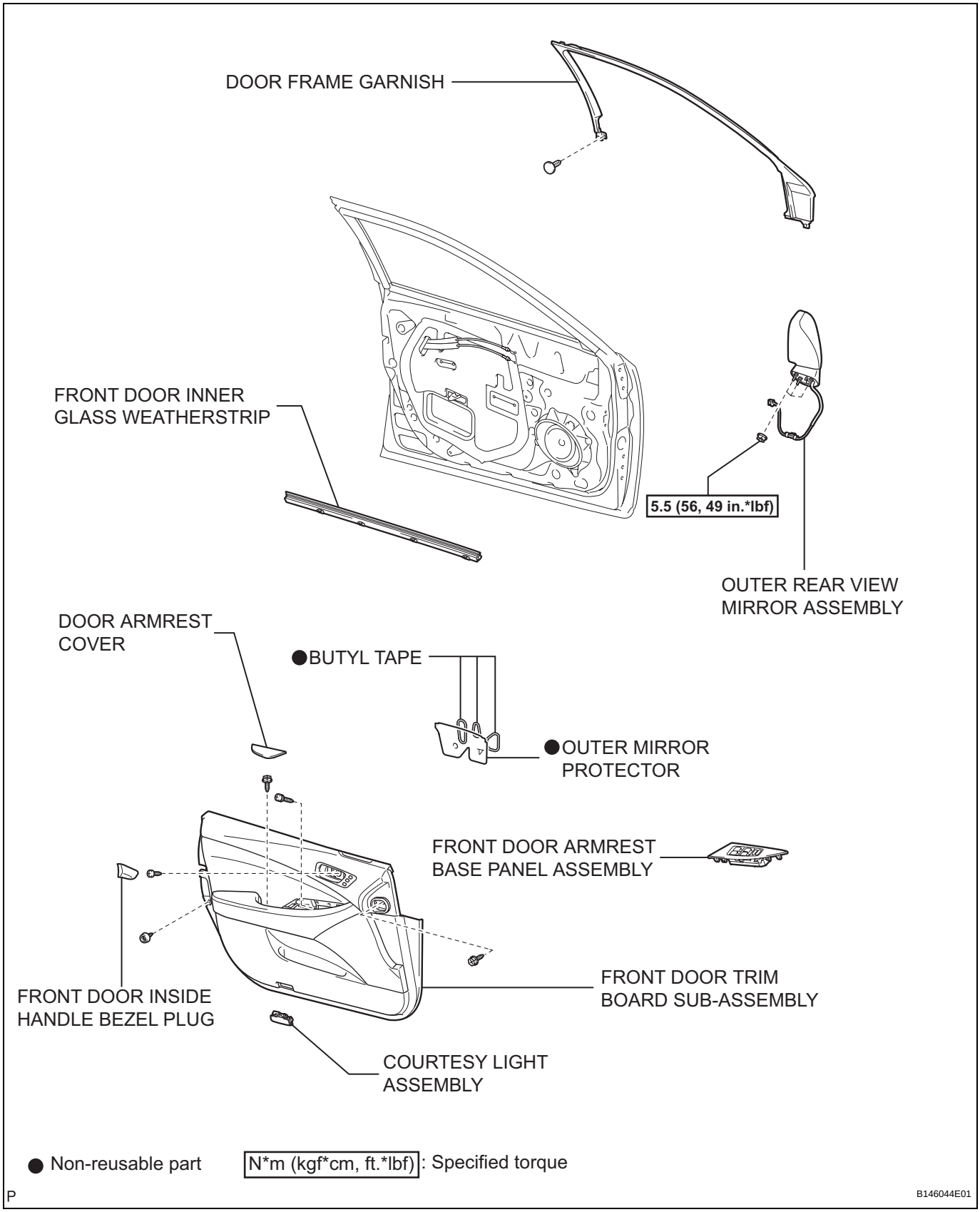

REMOVAL

1. **REMOVE FRONT DOOR INSIDE HANDLE BEZEL PLUG (See page ED-32)**
2. **REMOVE FRONT DOOR ARMREST BASE PANEL ASSEMBLY (See page ED-33)**
3. **REMOVE COURTESY LIGHT ASSEMBLY (See page ED-34)**
4. **REMOVE DOOR ARMREST COVER (See page ED-34)**
5. **REMOVE FRONT DOOR TRIM BOARD SUB-ASSEMBLY (See page ED-34)**
6. **REMOVE FRONT DOOR INNER GLASS WEATHERSTRIP (See page ED-35)**
7. **REMOVE DOOR FRAME GARNISH (See page ED-35)**
8. **REMOVE OUTER MIRROR PROTECTOR (See page ED-35)**
9. **REMOVE OUTER REAR VIEW MIRROR ASSEMBLY (See page MI-46)**

INSPECTION

1. **INSPECT DOOR MIRROR FOOT LIGHT**
   (a) Disconnect the connector from the outer rear view mirror assembly.
   (b) Measure the voltage according to the value(s) in the tables below.
   Standard voltage:
   LH Side

Tester Connection	Condition	Specified Condition
I3-2 - I3-12	Doors are unlocked by the transmitter	10 to 14 V
I3-2 - I3-12	All doors are locked	Below 1 V

RH Side

Tester Connection	Condition	Specified Condition
H4-2 - H4-12	Doors are unlocked by the transmitter	10 to 14 V
H4-2 - H4-12	All doors are locked	Below 1 V

If the result is not as specified, there is a malfunction on the wire harness side.

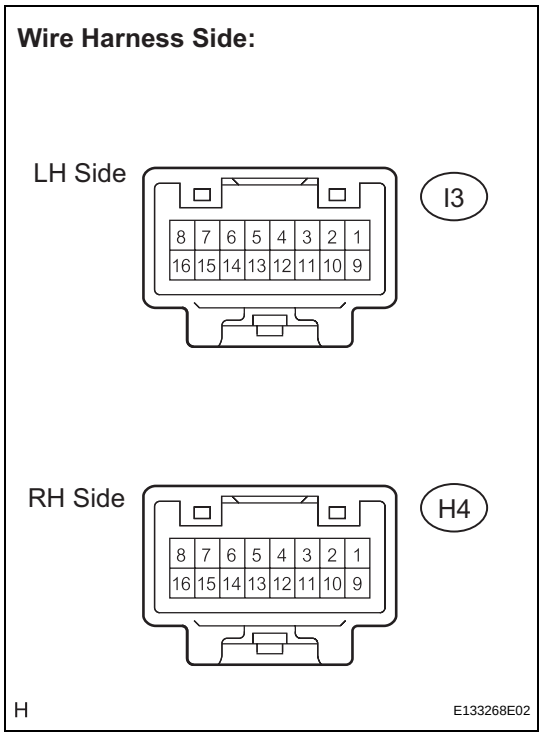

Component Side:

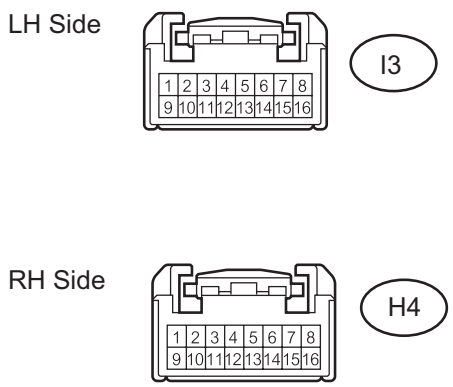

E133267E03

(c) Apply battery voltage to the outer rear view mirror assembly connector.

(d) Check that the door mirror foot light comes on.

OK

Measurement Condition	Specified Condition
Battery positive (+) → Terminal 2 **Battery negative (-) → Terminal 12**	**Door mirror foot light comes on**

If the result is not as specified, replace the outer rear view mirror assembly.

INSTALLATION

1. **INSTALL CENTER CLUSTER MODULE CONTROL ASSEMBLY (w/o Navigation System) (See page AC-228)**
2. **INSTALL HEATER CONTROL HOUSING SUB-ASSEMBLY (w/o Navigation System) (See page AC-229)**
3. **INSTALL RADIO RECEIVER ASSEMBLY (w/o Navigation System) (See page AV-171)**
4. **INSTALL NO. 2 RADIO BRACKET (w/o Navigation System) (See page AV-172)**
5. **INSTALL NO. 1 RADIO BRACKET (w/o Navigation System) (See page AV-172)**
6. **INSTALL INTEGRATION CONTROL PANEL WITH RADIO RECEIVER ASSEMBLY (w/o Navigation System) (See page AV-172)**
7. **INSTALL MULTI-DISPLAY ASSEMBLY (w/ Navigation System) (See page NS-234)**
8. **INSTALL NO. 2 RADIO BRACKET (w/ Navigation System) (See page AV-173)**
9. **INSTALL NO. 1 RADIO BRACKET (w/ Navigation System) (See page AV-173)**
10. **INSTALL MULTI-DISPLAY WITH RADIO RECEIVER ASSEMBLY (w/ Navigation System) (See page AV-173)**
11. **INSTALL INSTRUMENT PANEL FINISH PANEL END LH (See page IP-46)**
12. **INSTALL INSTRUMENT PANEL FINISH PANEL END RH (See page IP-44)**
13. **INSTALL UPPER CONSOLE PANEL ASSEMBLY WITH FRONT ASH RECEPTACLE (See page IP-42)**
14. **INSTALL NO. 2 INSTRUMENT PANEL REGISTER ASSEMBLY (See page IP-41)**
15. **INSTALL SHIFT LEVER KNOB SUB-ASSEMBLY (See page IP-42)**
16. **ADJUST CLOCK**

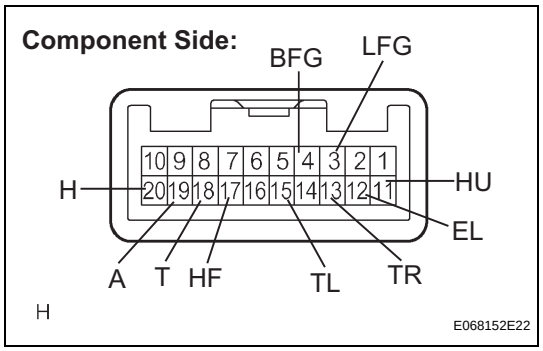

INSPECTION

1. INSPECT HEADLIGHT DIMMER SWITCH ASSEMBLY

(a) Measure the resistance according to the value(s) in the table below.

Standard resistance:

Light control switch

Tester Connection	Switch Condition	Specified Condition
12 (EL) - 20 (H) - 18 (T) - 19 (A)	OFF	10 kΩ or higher
12 (EL) - 18 (T)	TAIL	Below 1 Ω
12 (EL) - 20 (H) - 18 (T)	HEAD	Below 1 Ω
12 (EL) - 19 (A)	AUTO	Below 1 Ω

Dimmer switch

Tester Connection	Switch Condition	Specified Condition
17 (HF) - 12 (EL)	FLASH	Below 1 Ω
11 (HU) - 12 (EL)	HIGH	Below 1 Ω

Turn signal switch

Tester Connection	Switch Condition	Specified Condition
13 (TR) - 12 (EL) - 15 (TL)	OFF	10 kΩ or higher
13 (TR) - 12 (EL)	RH	Below 1 Ω
15 (TL) - 12 (EL)	LH	Below 1 Ω

Fog light switch

Tester Connection	Switch Condition	Specified Condition
3 (LFG) - 4 (BFG)	OFF	10 kΩ or higher
3 (LFG) - 4 (BFG)	ON	Below 1 Ω

If the result is not as specified, replace the headlight dimmer switch assembly.

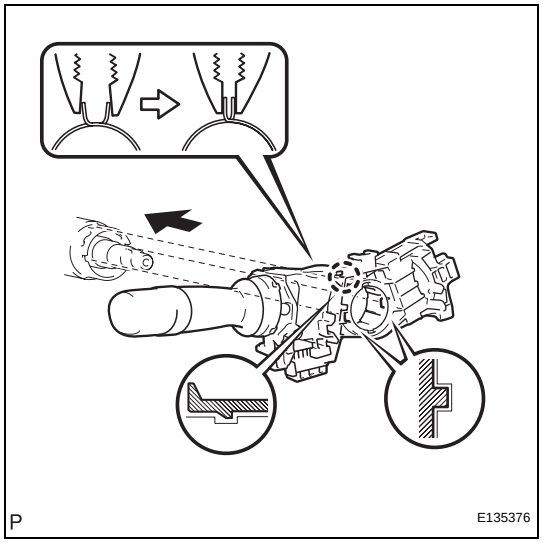

INSTALLATION

1. INSTALL HEADLIGHT DIMMER SWITCH ASSEMBLY

(a) Engage the claw while loosening the clamp as shown in the illustration.

LI

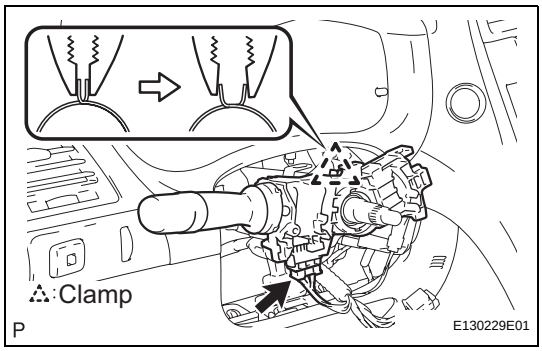

(b) Install the headlight dimmer switch assembly with the clamp.
(c) Connect the connector.

2. **INSTALL TILT AND TELESCOPIC SWITCH (See page SR-86)**
3. **INSTALL WINDSHIELD WIPER SWITCH ASSEMBLY (See page WW-56)**
4. **INSTALL SPIRAL CABLE WITH STEERING ANGLE SENSOR (See page RS-382)**
5. **INSTALL STEERING COLUMN COVER (See page SR-87)**
6. **ADJUST SPIRAL CABLE (See page RS-382)**
7. **INSTALL STEERING WHEEL ASSEMBLY (See page SR-87)**
8. **INSPECT STEERING WHEEL CENTER POINT**
9. **INSTALL STEERING PAD (See page RS-368)**
10. **INSTALL LOWER NO. 3 STEERING WHEEL COVER (See page RS-369)**
11. **INSTALL LOWER NO. 2 STEERING WHEEL COVER (See page RS-369)**
12. **CONNECT CABLE TO NEGATIVE BATTERY TERMINAL**
13. **INSPECT STEERING PAD (See page RS-369)**
14. **INSPECT SRS WARNING LIGHT**
    (See page RS-37)
15. **PERFORM INITIALIZATION**
    NOTICE:
    Some systems need initialization after reconnecting the cable to the negative battery terminal (See page IN-33).

LI

LI

REMOVAL

1. **REMOVE SHIFT LEVER KNOB SUB-ASSEMBLY (See page IP-16)**
2. **REMOVE NO. 2 INSTRUMENT PANEL REGISTER ASSEMBLY (See page IP-17)**
3. **REMOVE UPPER CONSOLE PANEL ASSEMBLY WITH FRONT ASH RECEPTACLE (See page IP-16)**
4. **REMOVE INSTRUMENT PANEL FINISH PANEL END LH (See page IP-13)**
5. **REMOVE INSTRUMENT PANEL FINISH PANEL END RH (See page IP-15)**
6. **REMOVE INTEGRATION CONTROL PANEL WITH RADIO RECEIVER ASSEMBLY (w/o Navigation System) (See page AV-168)**
7. **REMOVE NO. 1 RADIO BRACKET (w/o Navigation System) (See page AV-168)**
8. **REMOVE NO. 2 RADIO BRACKET (w/o Navigation System) (See page AV-169)**
9. **REMOVE RADIO RECEIVER ASSEMBLY (w/o Navigation System) (See page AV-169)**
10. **REMOVE HEATER CONTROL HOUSING SUB-ASSEMBLY (w/o Navigation System) (See page AC-227)**
11. **REMOVE CENTER CLUSTER MODULE CONTROL ASSEMBLY (w/o Navigation System) (See page AC-227)**
12. **REMOVE MULTI-DISPLAY WITH RADIO RECEIVER ASSEMBLY (w/ Navigation System) (See page AV-170)**
13. **REMOVE NO. 1 RADIO BRACKET (w/ Navigation System) (See page AV-170)**
14. **REMOVE NO. 2 RADIO BRACKET (w/ Navigation System) (See page AV-170)**
15. **REMOVE MULTI-DISPLAY ASSEMBLY (w/ Navigation System) (See page NS-234)**

INSPECTION

1. **INSPECT AIR CONDITION PANEL SUB-ASSEMBLY (w/o Navigation System)**
   (a) Measure the resistance according to the value(s) in the table below.
   Standard resistance

Tester Connection	Condition	Specified Condition
7 (TB) - 18 (GND)	Hazard warning switch OFF	10 kΩ or higher
7 (TB) - 18 (GND)	Hazard warning switch ON	Below 1 Ω

Component Side:

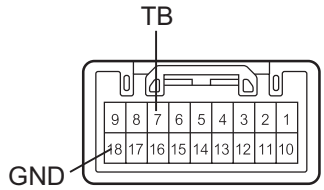

H E133261E01

If the result is not as specified, replace the air condition panel sub-assembly.

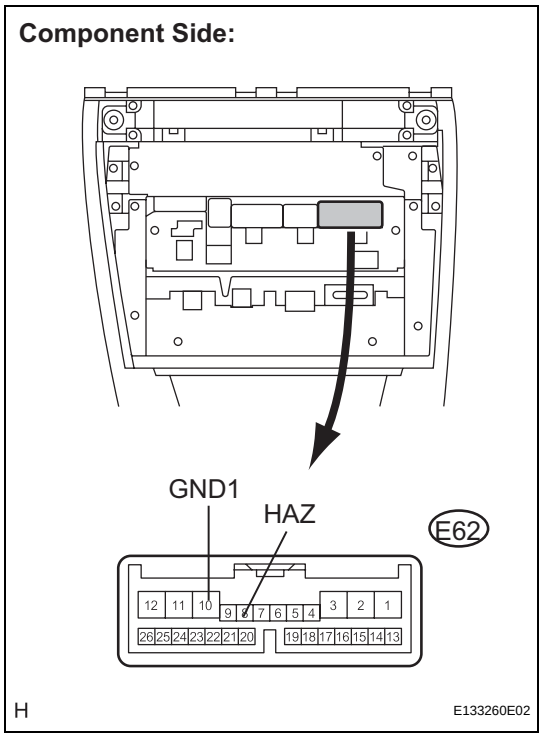

2. INSPECT MULTI-DISPLAY WITH RADIO RECEIVER ASSEMBLY (w/ Navigation System)

(a) Measure the resistance according to the value(s) in the table below.

Standard resistance

Tester Connection	Condition	Specified Condition
E62-8 (HAZ) - E62-10 (GND1)	Hazard warning switch OFF	10 kΩ or higher
E62-8 (HAZ) - E62-10 (GND1)	Hazard warning switch ON	Below 1 Ω

If the result is not as specified, replace the multi-display with radio receiver assembly.

AFS OFF SWITCH

COMPONENTS

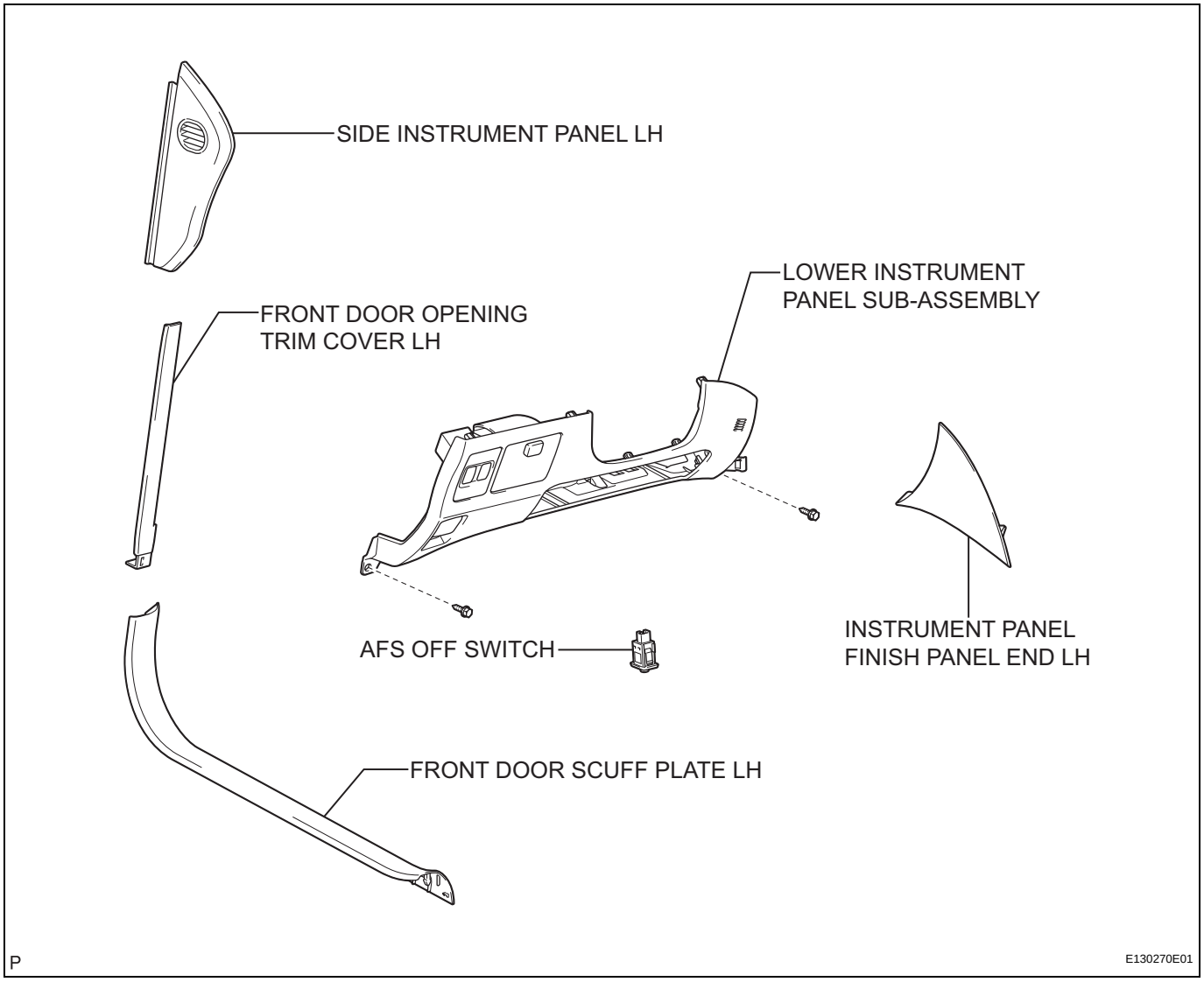

LI

REMOVAL

1. **REMOVE FRONT DOOR SCUFF PLATE LH (See page IR-39)**
2. **REMOVE FRONT DOOR OPENING TRIM COVER LH (See page IR-39)**
3. **REMOVE SIDE INSTRUMENT PANEL LH (See page IP-12)**
4. **REMOVE INSTRUMENT PANEL FINISH PANEL END LH (See page IP-13)**
5. **REMOVE LOWER INSTRUMENT PANEL SUB-ASSEMBLY (See page IP-13)**
6. **REMOVE AFS OFF SWITCH**
   (a) Disengage the 2 claws and remove the AFS OFF switch.

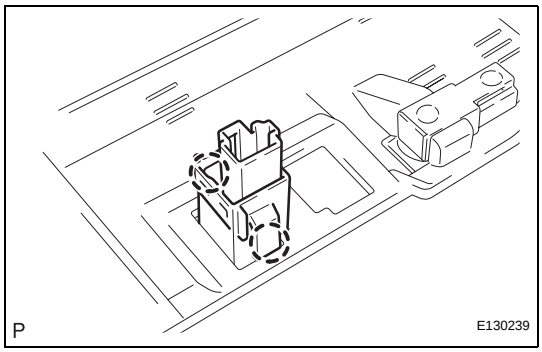

INSPECTION

1. **INSPECT AFS OFF SWITCH**
   (a) Measure the resistance according to the value(s) in the table below.
   Standard resistance

Tester Connection	Switch Condition	Specified Condition
1 - 2	Not pushed (OFF)	10 kΩ or higher
	Pushed (ON)	Below 1 Ω

If the result is not specified, replace the AFS OFF switch

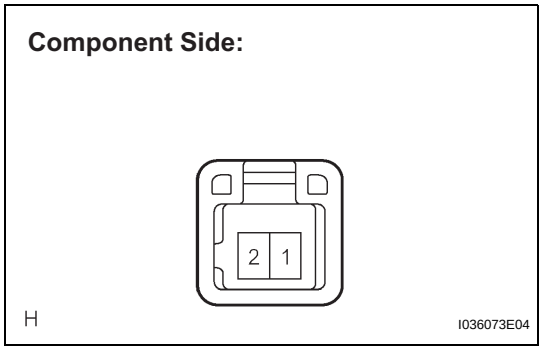

INSTALLATION

1. **INSTALL AFS OFF SWITCH**
   (a) Engage the 2 claws and install the AFS OFF switch.
2. **INSTALL LOWER INSTRUMENT PANEL SUB-ASSEMBLY (See page IP-46)**
3. **INSTALL INSTRUMENT PANEL FINISH PANEL END LH (See page IP-46)**
4. **INSTALL SIDE INSTRUMENT PANEL LH (See page IP-47)**
5. **INSTALL FRONT DOOR OPENING TRIM COVER LH (See page IR-64)**
6. **INSTALL FRONT DOOR SCUFF PLATE LH (See page IR-65)**

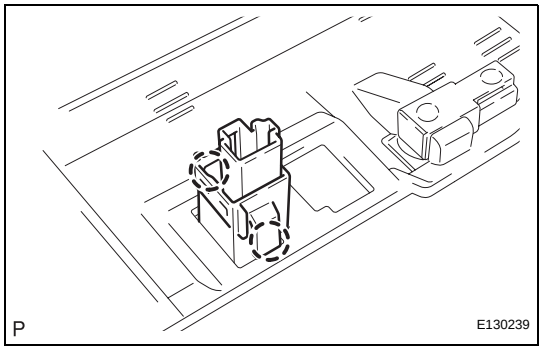

INSTALLATION

1. INSTALL FRONT DOOR COURTESY SWITCH ASSEMBLY

(a) Connect the connector.

(b) Using a "TORX" socket wrench (T30), install the front door courtesy switch assembly with the "TORX" bolt.
Torque: 8.0 N*m (82 kgf*cm, 71 in.*lbf)

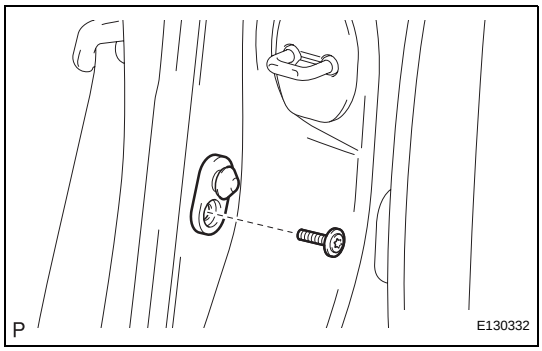

STOP LIGHT SWITCH

COMPONENTS

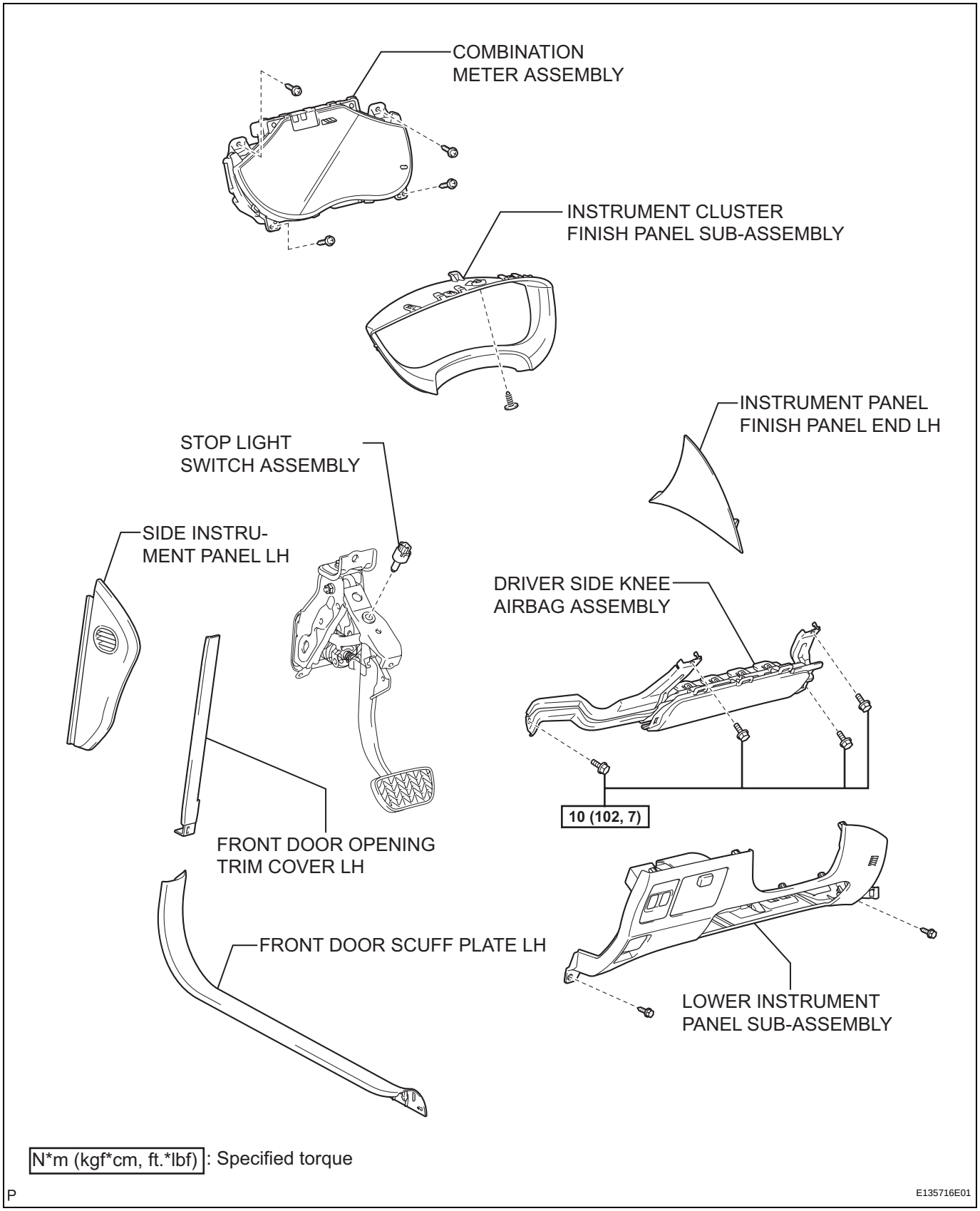

LI

LI

REMOVAL

1. **PRECAUTION**
   CAUTION:
   Be sure to read "PRECAUTION" thoroughly before servicing (See page RS-1).
2. **DISCONNECT CABLE FROM NEGATIVE BATTERY TERMINAL**
   NOTICE:
   Wait for 90 seconds after disconnecting the cable to prevent airbag deployment.
3. **REMOVE FRONT DOOR SCUFF PLATE LH (See page IR-39)**
4. **REMOVE FRONT DOOR OPENING TRIM COVER LH (See page IR-39)**
5. **REMOVE SIDE INSTRUMENT PANEL LH (See page IP-12)**
6. **REMOVE INSTRUMENT PANEL FINISH PANEL END LH (See page IP-13)**
7. **REMOVE LOWER INSTRUMENT PANEL SUB-ASSEMBLY (See page IP-13)**
8. **REMOVE DRIVER SIDE KNEE AIRBAG ASSEMBLY (See page RS-386)**
9. **REMOVE INSTRUMENT CLUSTER FINISH PANEL SUB-ASSEMBLY (See page ME-68)**
10. **REMOVE COMBINATION METER ASSEMBLY (See page ME-69)**
11. **REMOVE STOP LIGHT SWITCH ASSEMBLY (See page BR-59)**

INSPECTION

1. **INSPECT STOP LIGHT SWITCH ASSEMBLY**
   (a) Measure the resistance according to the value(s) in the table below.
   Standard resistance

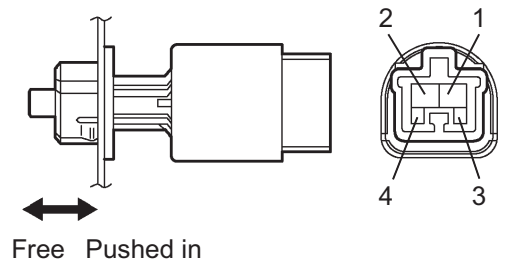

Tester Connection	Switch Position	Specified Condition
1 - 2	Switch pin free	10 kΩ or higher
3 - 4	Switch pin free	Below 1 Ω
1 - 2	Switch pin pushed in	Below 1 Ω
3 - 4	Switch pin pushed in	10 kΩ or higher

If the result is not as specified, replace the stop light switch assembly.

INSTALLATION

1. INSTALL REAR DOOR COURTESY SWITCH ASSEMBLY

(a) Connect the connector.

(b) Using a "TORX" socket wrench (T30), install the rear door courtesy switch assembly with the "TORX" bolt.
Torque: 8.0 N*m (82 kgf*cm, 71 in.*lbf)

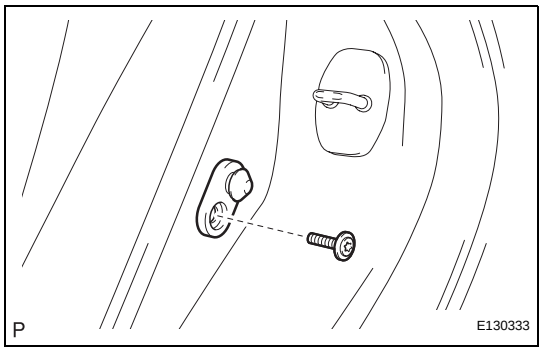

FRONT DOOR COURTESY SWITCH

COMPONENTS

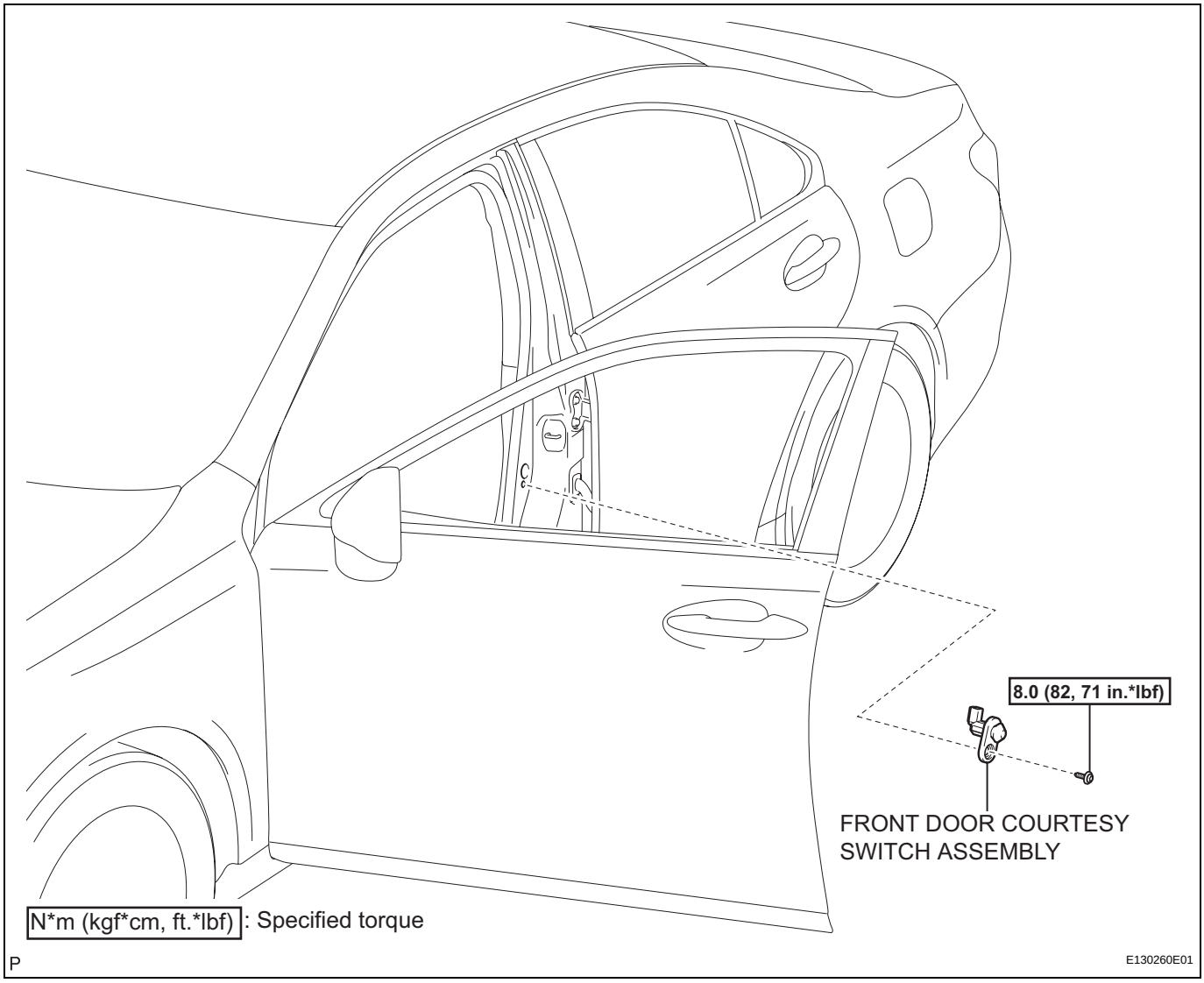

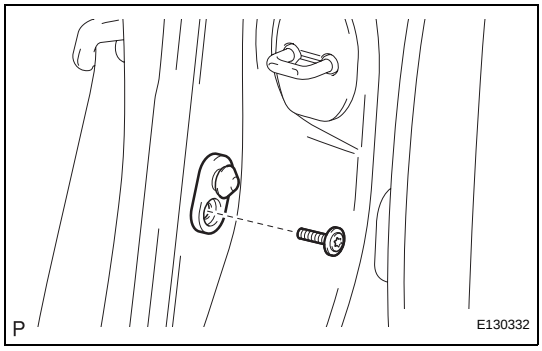

REMOVAL

1. **REMOVE FRONT DOOR COURTESY SWITCH ASSEMBLY**
   (a) Using a "TORX" socket wrench (T30), remove the "TORX" bolt.
   (b) Disconnect the connector and remove the front door courtesy switch assembly.

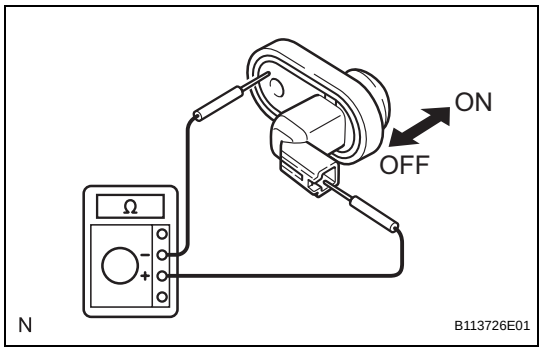

INSPECTION

1. INSPECT FRONT DOOR COURTESY SWITCH

(a) Measure the resistance according to the value(s) in the table below.

Standard resistance

Tester Connection	Switch Condition	Specified Condition
1 - Switch body	Pushed (OFF)	10 kΩ or higher
1 - Switch body	Not pushed (ON)	Below 1 Ω

If the result is not as specified, replace the front door courtesy switch.

INSTALLATION

1. **INSTALL LUGGAGE COMPARTMENT DOOR LOCK ASSEMBLY (See page ED-91)**
2. **INSTALL LUGGAGE COMPARTMENT DOOR COVER (See page ET-74)**
3. **INSTALL LUGGAGE COMPARTMENT DOOR INSIDE HANDLE (See page ET-74)**
4. **INSTALL LUGGAGE LOCK CONTROL CABLE PLATE (See page ET-75)**
5. **INSTALL LUGGAGE COMPARTMENT DOOR ASSIST GRIP (See page ET-75)**

REAR DOOR COURTESY SWITCH

COMPONENTS

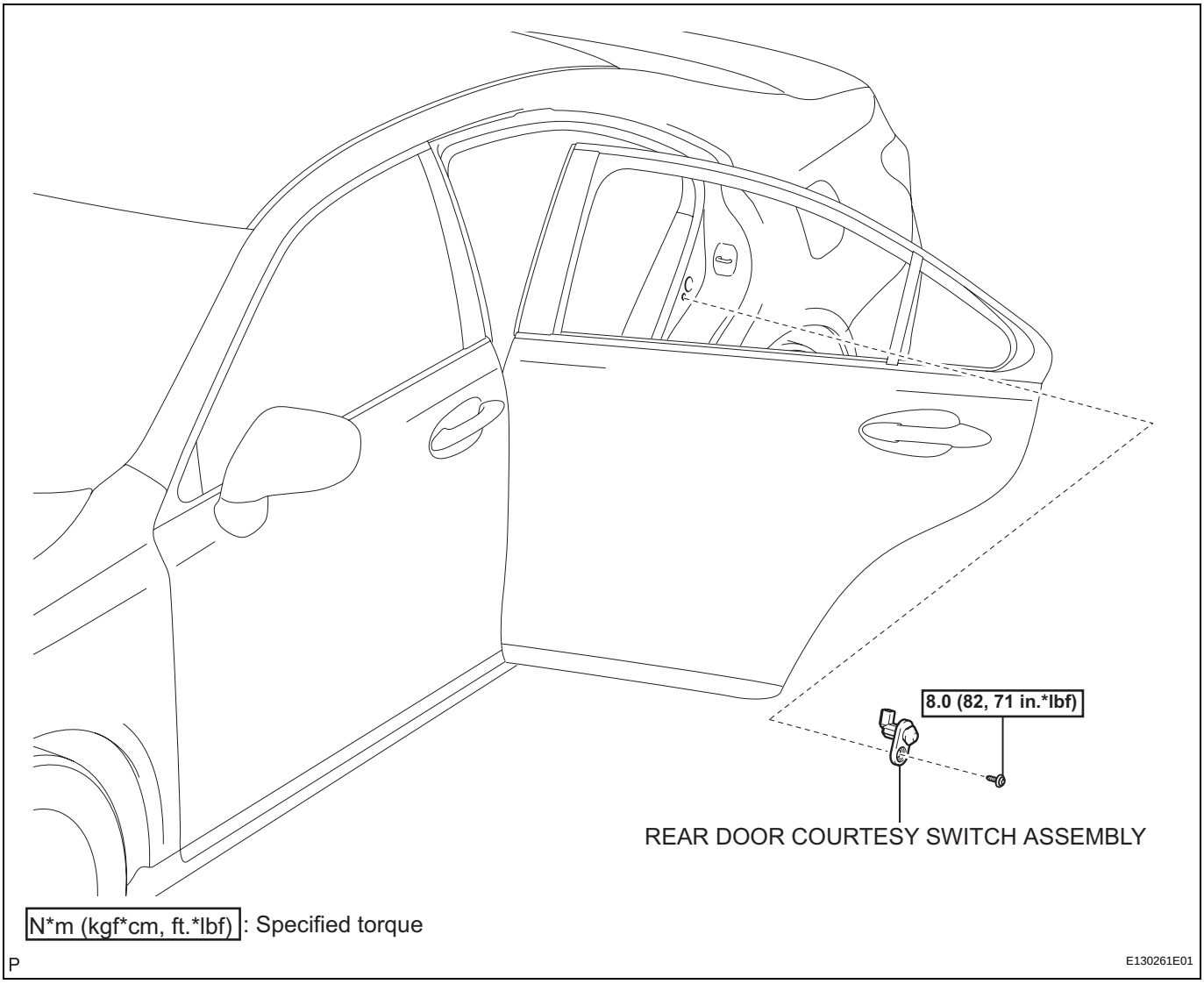

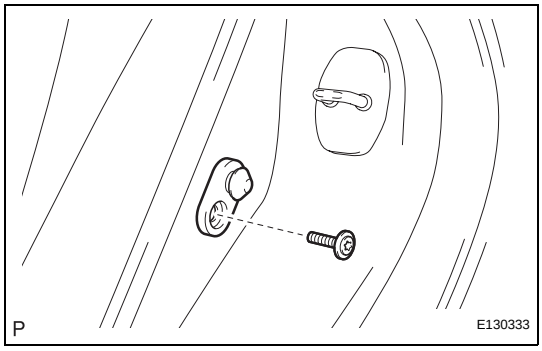

REMOVAL

1. **REMOVE REAR DOOR COURTESY SWITCH ASSEMBLY**
   (a) Using a "TORX" socket wrench (T30), remove the "TORX" bolt.
   (b) Disconnect the connector and remove the rear door courtesy switch assembly.

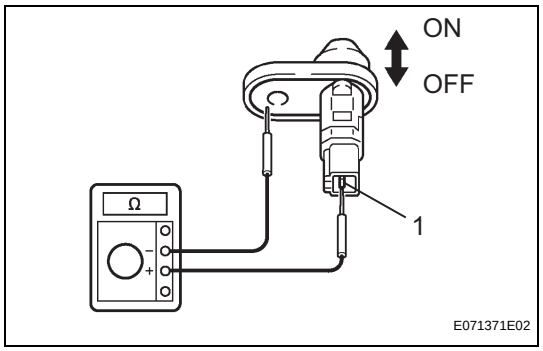

INSPECTION

1. INSPECT REAR DOOR COURTESY SWITCH

(a) Measure the resistance according to the value(s) in the table below.

Standard resistance

Tester Connection	Switch Condition	Specified Condition
1 - Switch body	Pushed (OFF)	10 kΩ or higher
1 - Switch body	Not pushed (ON)	Below 1 Ω

If the result is not as specified, replace the rear door courtesy switch.

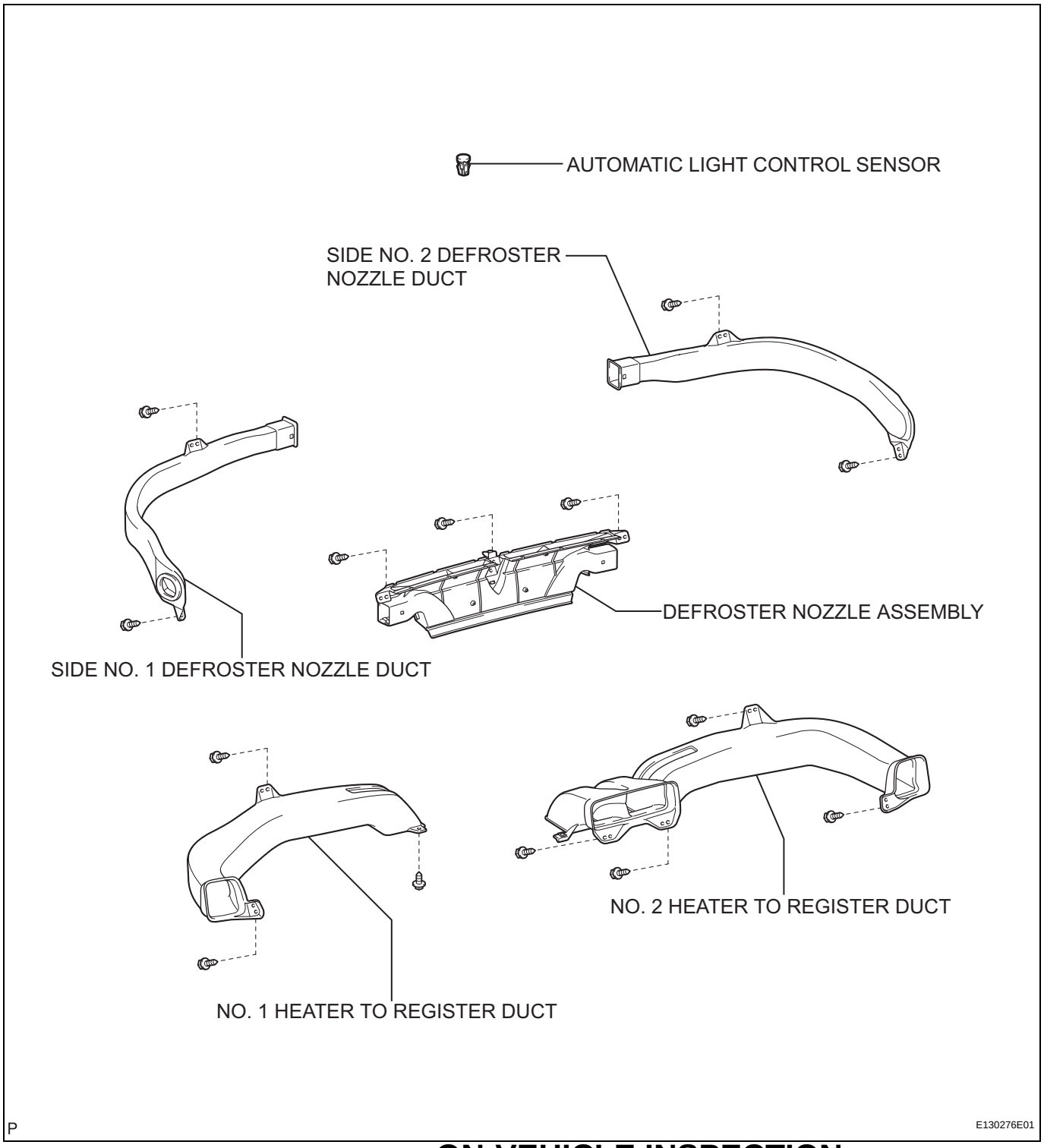

Wire Harness Side:

Automatic Light Control Sensor

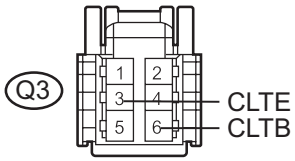

H B109993E23

ON-VEHICLE INSPECTION

1. INSPECT AUTOMATIC LIGHT CONTROL SENSOR

(a) Disconnect the Q3 automatic light control sensor connector.

(b) Measure the voltage and resistance according to the value(s) in the table below.

Standard voltage

Tester Connection	Condition	Specified Condition
Q3-6 (CLTB) - Q3-3 (CLTE)	Engine switch off	Below 1 V
	Engine switch on (IG)	10 to 14 V

Standard resistance

Tester Connection	Specified Condition
Q3-3 (CLTE) - Body ground	Below 1 Ω

If the result is not as specified, there is malfunction on the wire harness side.

(c) Reconnect the automatic light control sensor connector.

(d) Connect an oscilloscope to the automatic light control sensor connector.

(e) Check the waveform.
OK

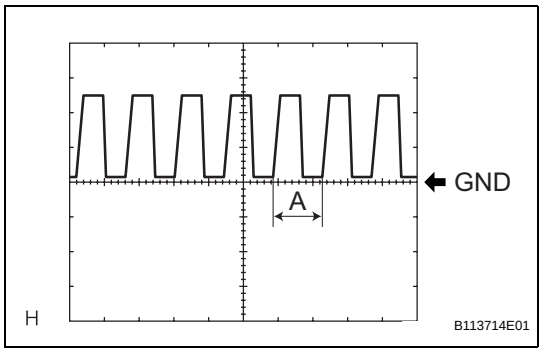

Tester Connection	Tool Setting	Condition	Specified Condition
Q3-3 (CLTE) - Q3-5 (CLTS)	5 V/DIV., 5 ms./DIV	Engine switch on (IG), light control switch in AUTO	Correct waveform is as shown

HINT:
If the ambient light becomes brighter, width A becomes narrower.
If the result is not as specified, replace the automatic light control sensor.

BACK DOOR COURTESY SWITCH

COMPONENTS

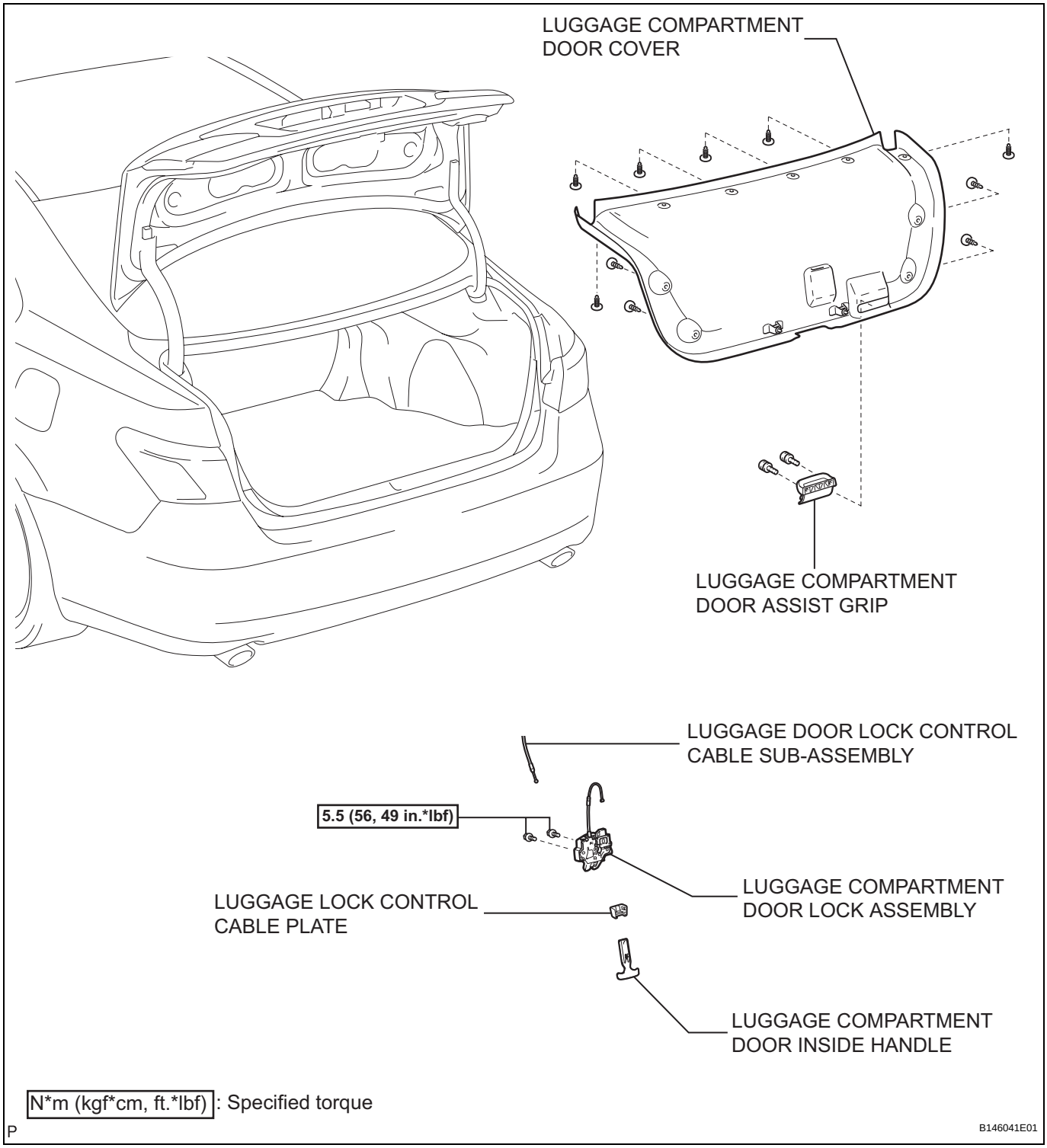

REMOVAL

1. **REMOVE LUGGAGE COMPARTMENT DOOR ASSIST GRIP (See page ET-71)**
2. **REMOVE LUGGAGE LOCK CONTROL CABLE PLATE (See page ET-71)**
3. **REMOVE LUGGAGE COMPARTMENT DOOR INSIDE HANDLE (See page ET-71)**
4. **REMOVE LUGGAGE COMPARTMENT DOOR COVER (See page ET-72)**
5. **REMOVE LUGGAGE COMPARTMENT DOOR LOCK ASSEMBLY (See page ED-91)**

INSPECTION

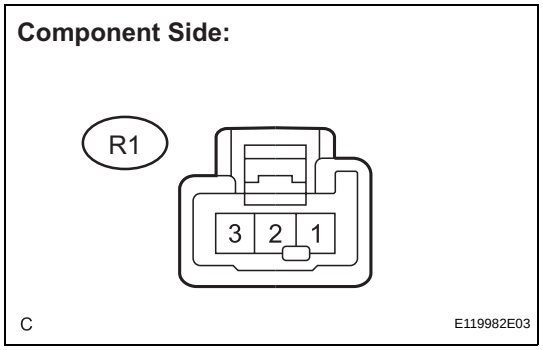

1. **INSPECT LUGGAGE COMPARTMENT DOOR LOCK ASSEMBLY (BACK DOOR COURTESY SWITCH)**
   (a) Measure the resistance according to the value(s) in the table below.
   Standard resistance

Tester Connection	Switch Condition	Specified Condition
R1-2 - R1-3	Back door courtesy switch OFF	10 kΩ or higher
	Back door courtesy switch ON	Below 1 Ω

If the result is not as specified, replace the luggage compartment door lock assembly.

LI

REMOVAL

1. **PRECAUTION**
   CAUTION:
   Be sure to read "PRECAUTION" thoroughly before servicing (See page RS-1).
2. **ALIGN FRONT WHEELS FACING STRAIGHT AHEAD**
3. **DISCONNECT CABLE FROM NEGATIVE BATTERY TERMINAL**
   NOTICE:
   Wait for 90 seconds after disconnecting the cable to prevent airbag deployment.
4. **REMOVE LOWER NO. 3 STEERING WHEEL COVER (See page RS-367)**
5. **REMOVE LOWER NO. 2 STEERING WHEEL COVER (See page RS-367)**
6. **REMOVE STEERING PAD (See page RS-367)**
7. **REMOVE STEERING WHEEL ASSEMBLY (See page SR-80)**
8. **REMOVE FRONT DOOR SCUFF PLATE LH (See page IR-39)**
9. **REMOVE FRONT DOOR OPENING TRIM COVER LH (See page IR-39)**
10. **REMOVE SIDE INSTRUMENT PANEL LH (See page IP-12)**
11. **REMOVE INSTRUMENT PANEL FINISH PANEL END LH (See page IP-13)**
12. **REMOVE LOWER INSTRUMENT PANEL SUB-ASSEMBLY (See page IP-13)**
13. **REMOVE STEERING COLUMN COVER (See page IP-13)**
14. **REMOVE TURN SIGNAL SWITCH ASSEMBLY WITH SPIRAL CABLE (See page SR-80)**
15. **REMOVE TILT & TELESCOPIC SWITCH (See page SR-80)**
16. **REMOVE INSTRUMENT CLUSTER FINISH PANEL SUB-ASSEMBLY (See page IP-14)**
17. **REMOVE COMBINATION METER ASSEMBLY (See page IP-14)**
18. **REMOVE NO. 1 SWITCH HOLE BASE (See page IP-14)**
19. **REMOVE INSTRUMENT PANEL FINISH PANEL END RH (See page IP-15)**
20. **REMOVE FRONT DOOR SCUFF PLATE RH (See page IR-42)**

21. **REMOVE FRONT DOOR OPENING TRIM COVER RH (See page IR-42)**
22. **REMOVE NO. 2 INSTRUMENT PANEL UNDER COVER SUB-ASSEMBLY (See page IP-15)**
23. **REMOVE SIDE INSTRUMENT PANEL RH (See page IP-15)**
24. **REMOVE FRONT PASSENGER SIDE KNEE AIRBAG ASSEMBLY (See page RS-396)**
25. **REMOVE LOWER INSTRUMENT PANEL RH (See page IP-16)**
26. **REMOVE SHIFT LEVER KNOB SUB-ASSEMBLY (See page IP-16)**
27. **REMOVE UPPER CONSOLE PANEL ASSEMBLY WITH FRONT ASH RECEPTACLE (See page IP-16)**
28. **REMOVE NO. 2 INSTRUMENT PANEL REGISTER ASSEMBLY (See page IP-17)**
29. **REMOVE INTEGRATION CONTROL PANEL WITH RADIO RECEIVER ASSEMBLY (w/o Navigation System) (See page AV-168)**
30. **REMOVE MULTI-DISPLAY WITH RADIO RECEIVER ASSEMBLY (w/ Navigation System) (See page AV-170)**
31. **REMOVE HEATER SEAT SWITCH CONSOLE BASE (w/o Seat Heater System) (See page IP-17)**
32. **REMOVE HEATER SEAT SWITCH CONSOLE BASE (w/ Seat Heater System) (See page IP-18)**
33. **REMOVE CONSOLE BOX POCKET (See page IP-18)**
34. **REMOVE CONSOLE BOX CARPET (See page IP-18)**
35. **REMOVE CONSOLE REAR END PANEL SUB-ASSEMBLY (See page IP-19)**
36. **REMOVE REAR CONSOLE BOX ASSEMBLY (See page IP-19)**
37. **REMOVE FRONT PILLAR GARNISH LH (See page IR-39)**
38. **REMOVE NO. 1 INSTRUMENT PANEL SPEAKER PANEL SUB-ASSEMBLY (See page IP-20)**
39. **REMOVE FRONT NO. 2 SPEAKER ASSEMBLY (for LH Side) (See page AV-184)**
40. **REMOVE NO. 1 INSTRUMENT PANEL REGISTER ASSEMBLY (See page IP-20)**
41. **REMOVE FRONT PILLAR GARNISH RH (See page IR-42)**
42. **REMOVE NO. 2 INSTRUMENT PANEL SPEAKER PANEL SUB-ASSEMBLY (See page IP-21)**

43. **REMOVE FRONT NO. 2 SPEAKER ASSEMBLY (for RH Side) (See page IP-21)**
44. **REMOVE NO. 3 INSTRUMENT PANEL REGISTER ASSEMBLY (See page IP-21)**
45. **REMOVE NO. 1 SPEAKER HOLE COVER (See page IP-21)**
46. **REMOVE FRONT STEREO COMPONENT SPEAKER ASSEMBLY (See page AV-188)**
47. **REMOVE NO. 1 INSTRUMENT PANEL MOUNTING BRACKET (See page IP-22)**
48. **REMOVE PUSH START SWITCH (See page IP-22)**
49. **DISCONNECT INSTRUMENT PANEL WIRE ASSEMBLY (See page RS-414)**
50. **REMOVE ROOM TEMPERATURE SENSOR (See page AC-214)**
51. **REMOVE INSTRUMENT PANEL SAFETY PAD ASSEMBLY (w/o DVD Player) (See page IP-22)**
52. **REMOVE INSTRUMENT PANEL SAFETY PAD ASSEMBLY (w/ DVD Player) (See page IP-24)**
53. **REMOVE SIDE NO. 1 DEFROSTER NOZZLE DUCT (See page IP-27)**
54. **REMOVE SIDE NO. 2 DEFROSTER NOZZLE DUCT (See page IP-28)**
55. **REMOVE DEFROSTER NOZZLE ASSEMBLY (See page IP-28)**
56. **REMOVE NO. 1 HEATER TO REGISTER DUCT (See page IP-28)**
57. **REMOVE NO. 2 HEATER TO REGISTER DUCT (See page IP-28)**
58. **REMOVE AUTOMATIC LIGHT CONTROL SENSOR**
    (a) Disconnect the connector.
    (b) Disengage the 2 claws and remove the automatic light control sensor.

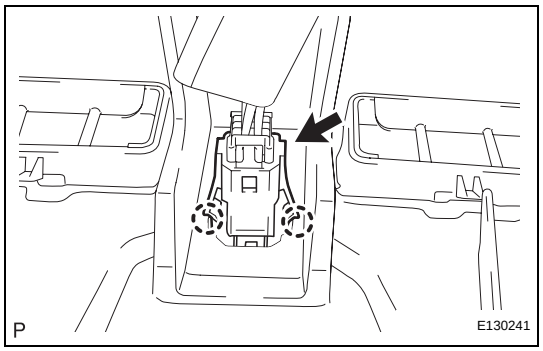

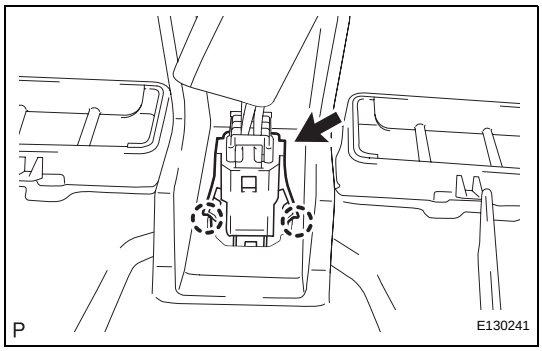

INSTALLATION

1. **INSTALL AUTOMATIC LIGHT CONTROL SENSOR**
   (a) Engage the 2 claws and install the automatic light control sensor.
   (b) Connect the connector.
2. **INSTALL NO. 2 HEATER TO REGISTER DUCT (See page IP-32)**
3. **INSTALL NO. 1 HEATER TO REGISTER DUCT (See page IP-32)**
4. **INSTALL DEFROSTER NOZZLE ASSEMBLY (See page IP-32)**
5. **INSTALL SIDE NO. 2 DEFROSTER NOZZLE DUCT (See page IP-32)**
6. **INSTALL SIDE NO. 1 DEFROSTER NOZZLE DUCT (See page IP-32)**
7. **INSTALL INSTRUMENT PANEL SAFETY PAD ASSEMBLY (w/o DVD Player) (See page IP-33)**
8. **INSTALL INSTRUMENT PANEL SAFETY PAD ASSEMBLY (w/ DVD Player) (See page IP-35)**
9. **INSTALL ROOM TEMPERATURE SENSOR (See page AC-215)**
10. **CONNECT INSTRUMENT PANEL WIRE ASSEMBLY (See page RS-416)**
11. **INSTALL PUSH START SWITCH (See page IP-37)**
12. **INSTALL NO. 1 INSTRUMENT PANEL MOUNTING BRACKET (See page IP-38)**
13. **INSTALL FRONT STEREO COMPONENT SPEAKER ASSEMBLY (See page AV-188)**
14. **INSTALL NO. 1 SPEAKER HOLE COVER (See page IP-38)**
15. **INSTALL NO. 3 INSTRUMENT PANEL REGISTER ASSEMBLY (See page IP-39)**
16. **INSTALL FRONT NO. 2 SPEAKER ASSEMBLY (for RH Side) (See page IP-39)**
17. **INSTALL NO. 2 INSTRUMENT PANEL SPEAKER PANEL SUB-ASSEMBLY (See page IP-39)**
18. **INSTALL FRONT PILLAR GARNISH RH (See page IR-65)**
19. **INSTALL NO. 1 INSTRUMENT PANEL REGISTER ASSEMBLY (See page IP-38)**
20. **INSTALL FRONT NO. 2 SPEAKER ASSEMBLY (for LH Side) (See page AV-185)**
21. **INSTALL NO. 1 INSTRUMENT PANEL SPEAKER PANEL SUB-ASSEMBLY (See page IP-39)**

22. **INSTALL FRONT PILLAR GARNISH LH (See page IR-64)**
23. **INSTALL REAR CONSOLE BOX ASSEMBLY (See page IP-39)**
24. **INSTALL CONSOLE REAR END PANEL SUB-ASSEMBLY (See page IP-40)**
25. **INSTALL CONSOLE BOX CARPET (See page IP-41)**
26. **INSTALL CONSOLE BOX POCKET (See page IP-41)**
27. **INSTALL HEATER SEAT SWITCH CONSOLE BASE (w/o Seat Heater System) (See page IP-41)**
28. **INSTALL HEATER SEAT SWITCH CONSOLE BASE (w/ Seat Heater System) (See page IP-41)**
29. **INSTALL INTEGRATION CONTROL PANEL WITH RADIO RECEIVER ASSEMBLY (w/o Navigation System) (See page AV-172)**
30. **INSTALL MULTI-DISPLAY WITH RADIO RECEIVER ASSEMBLY (w/ Navigation System) (See page AV-173)**
31. **INSTALL NO. 2 INSTRUMENT PANEL REGISTER ASSEMBLY (See page IP-41)**
32. **INSTALL UPPER CONSOLE PANEL ASSEMBLY WITH FRONT ASH RECEPTACLE (See page IP-42)**
33. **INSTALL SHIFT LEVER KNOB SUB-ASSEMBLY (See page IP-42)**
34. **INSTALL LOWER INSTRUMENT PANEL RH (See page IP-42)**
35. **INSTALL FRONT PASSENGER SIDE KNEE AIRBAG ASSEMBLY (See page RS-396)**
36. **INSTALL SIDE INSTRUMENT PANEL RH (See page IP-43)**
37. **INSTALL NO. 2 INSTRUMENT PANEL UNDER COVER SUB-ASSEMBLY (See page IP-44)**
38. **INSTALL FRONT DOOR OPENING TRIM COVER RH (See page IR-65)**
39. **INSTALL FRONT DOOR SCUFF PLATE RH (See page IR-65)**
40. **INSTALL INSTRUMENT PANEL FINISH PANEL END RH (See page IP-44)**
41. **INSTALL NO. 1 SWITCH HOLE BASE (See page IP-44)**
42. **INSTALL COMBINATION METER ASSEMBLY (See page IP-45)**
43. **INSTALL INSTRUMENT CLUSTER FINISH PANEL SUB-ASSEMBLY (See page IP-45)**

44. **INSTALL TURN SIGNAL SWITCH ASSEMBLY WITH SPIRAL CABLE (See page SR-86)**
45. **INSTALL TILT & TELESCOPIC SWITCH (See page SR-86)**
46. **INSTALL STEERING COLUMN COVER (See page IP-46)**
47. **INSTALL SPIRAL CABLE SUB-ASSEMBLY (See page RS-382)**
48. **INSTALL LOWER INSTRUMENT PANEL SUB-ASSEMBLY (See page IP-46)**
49. **INSTALL INSTRUMENT PANEL FINISH PANEL END LH (See page IP-46)**
50. **INSTALL SIDE INSTRUMENT PANEL LH (See page IP-47)**
51. **INSTALL FRONT DOOR OPENING TRIM COVER LH (See page IR-64)**
52. **INSTALL FRONT DOOR SCUFF PLATE LH (See page IR-65)**
53. **INSTALL STEERING WHEEL ASSEMBLY (See page SR-87)**
54. **INSTALL STEERING PAD (See page RS-368)**
55. **INSTALL LOWER NO. 3 STEERING WHEEL COVER (See page RS-369)**
56. **INSTALL LOWER NO. 2 STEERING WHEEL COVER (See page RS-369)**
57. **CONNECT CABLE TO NEGATIVE BATTERY TERMINAL**
58. **INSPECT STEERING PAD (See page RS-369)**
59. **INSPECT SRS WARNING LIGHT**
    (See page RS-37).
60. **PERFORM INITIALIZATION**
    NOTICE:
    Some systems need initialization after reconnecting the cable to the negative battery terminal (See page IN-33).

LI

REMOVAL

1. **REMOVE LUGGAGE COMPARTMENT FLOOR MAT**
2. **REMOVE SPARE WHEEL COVER**
3. **REMOVE SPARE WHEEL COVER TRAY**
4. **REMOVE LUGGAGE HOLD BELT STRIKER ASSEMBLY (See page ED-82)**
5. **REMOVE NO. 1 LUGGAGE COMPARTMENT TRIM HOOK (See page ED-83)**
6. **REMOVE REAR FLOOR FINISH PLATE (See page ED-83)**
7. **REMOVE LUGGAGE COMPARTMENT INNER TRIM COVER LH (See page ED-83)**
8. **REMOVE LIGHT FAILURE SENSOR**
   (a) Disengage the connector.
   (b) Disengage the clamp and remove the light failure sensor.

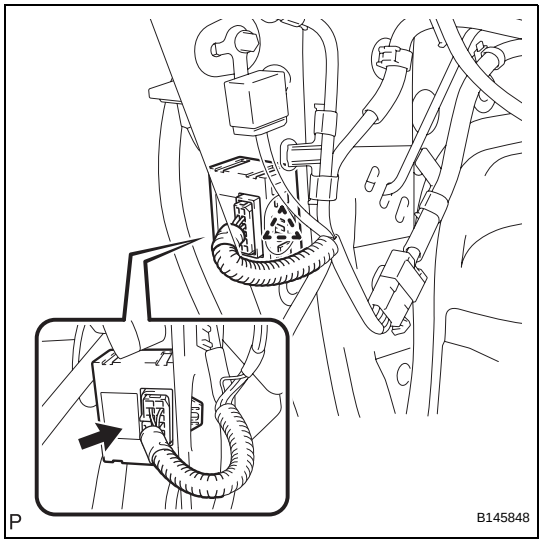

INSTALLATION

1. **INSTALL LIGHT FAILURE SENSOR**
   (a) Engage the clamp and install the light failure sensor.
   (b) Connect the connector.
2. **INSTALL LUGGAGE COMPARTMENT INNER TRIM COVER LH (See page ED-88)**
3. **INSTALL REAR FLOOR FINISH PLATE (See page ED-88)**
4. **INSTALL NO. 1 LUGGAGE COMPARTMENT TRIM HOOK (See page ED-89)**
5. **INSTALL LUGGAGE HOLD BELT STRIKER ASSEMBLY (See page ED-89)**
6. **INSTALL SPARE WHEEL COVER TRAY**
7. **INSTALL SPARE WHEEL COVER**
8. **INSTALL LUGGAGE COMPARTMENT FLOOR MAT**

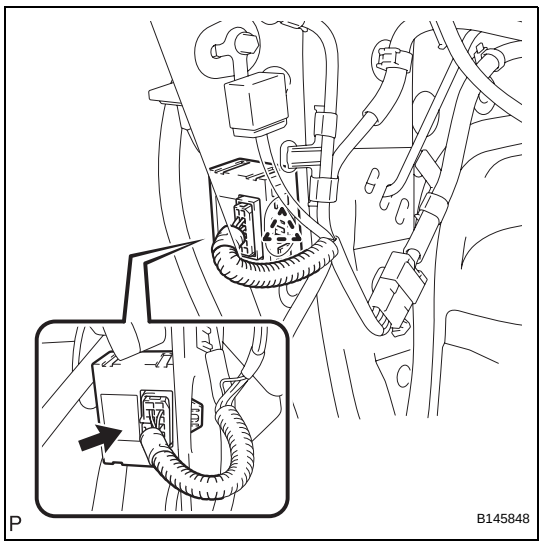

LI

REMOVAL

1. **REMOVE FRONT DOOR SCUFF PLATE LH (See page IR-39)**
2. **REMOVE FRONT DOOR OPENING TRIM COVER LH (See page IR-39)**
3. **REMOVE SIDE INSTRUMENT PANEL LH (See page IP-12)**
4. **REMOVE INSTRUMENT PANEL FINISH PANEL END LH (See page IP-13)**
5. **REMOVE LOWER INSTRUMENT PANEL SUB-ASSEMBLY (See page IP-13)**
6. **REMOVE NO. 1 SWITCH HOLE BASE (See page IP-14)**
7. **REMOVE TURN SIGNAL FLASHER ASSEMBLY**
   (a) Disconnect the connector.
   (b) Remove the clamp and the turn signal flasher assembly.

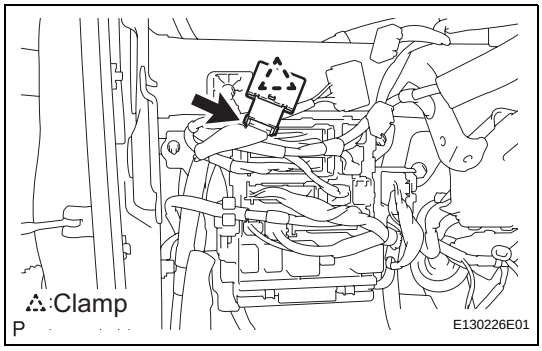

INSTALLATION

1. **INSTALL TURN SIGNAL FLASHER ASSEMBLY**
   (a) Install the clamp and the turn signal flasher assembly.
   (b) Connect the connector.
2. **INSTALL NO. 1 SWITCH HOLE BASE (See page IP-44)**
3. **INSTALL LOWER INSTRUMENT PANEL SUB-ASSEMBLY (See page IP-46)**
4. **INSTALL INSTRUMENT PANEL FINISH PANEL END LH (See page IP-46)**
5. **INSTALL SIDE INSTRUMENT PANEL LH (See page IP-47)**
6. **INSTALL FRONT DOOR OPENING TRIM COVER LH (See page IR-64)**
7. **INSTALL FRONT DOOR SCUFF PLATE LH (See page IR-65)**

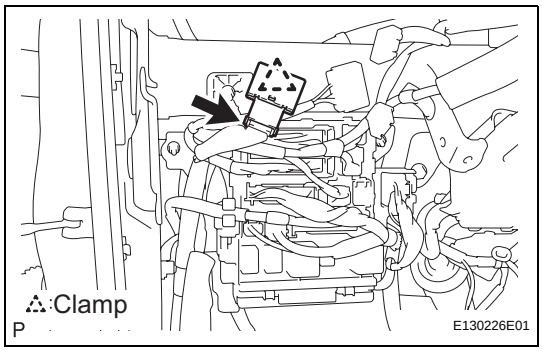

LIGHT FAILURE SENSOR

COMPONENTS

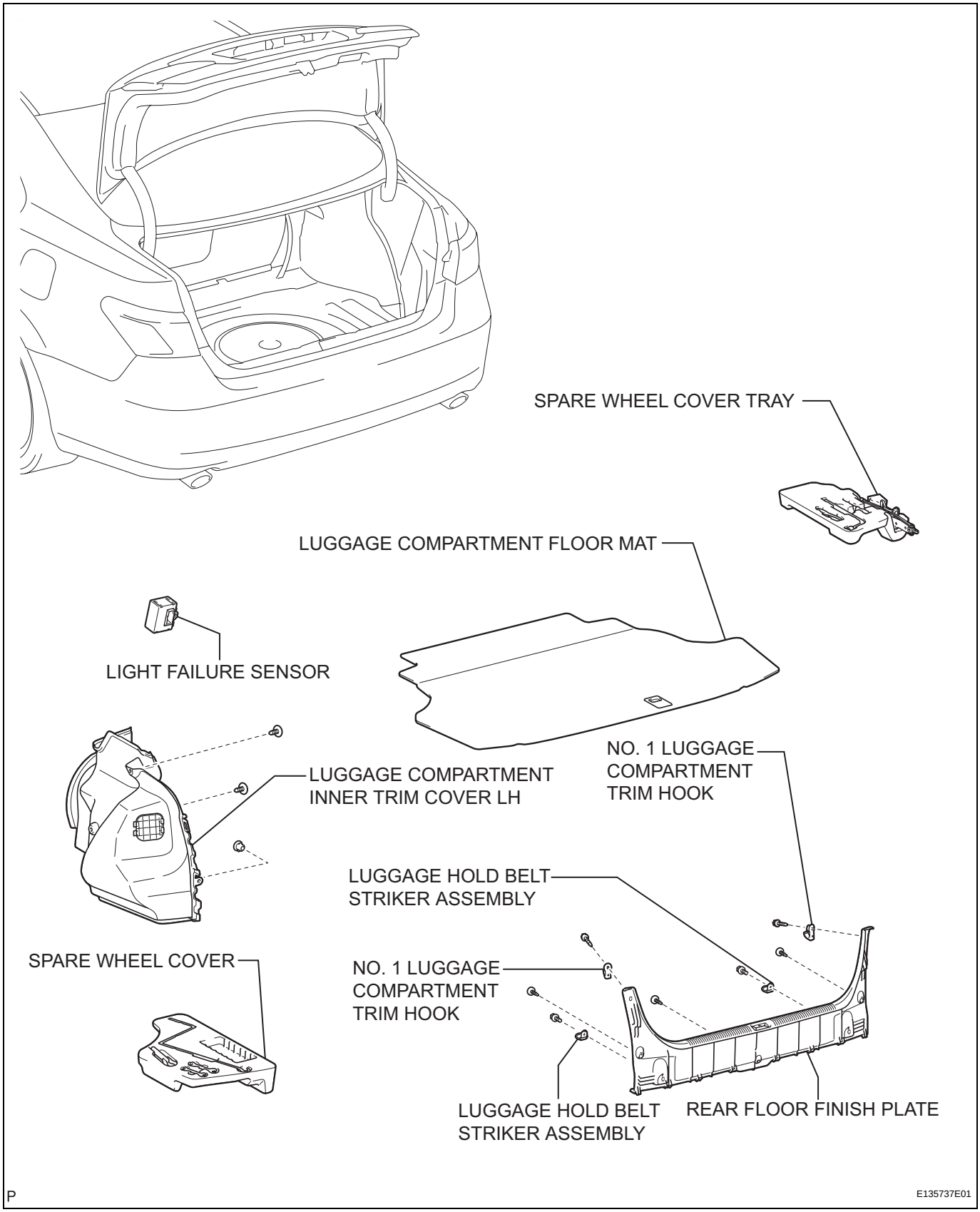

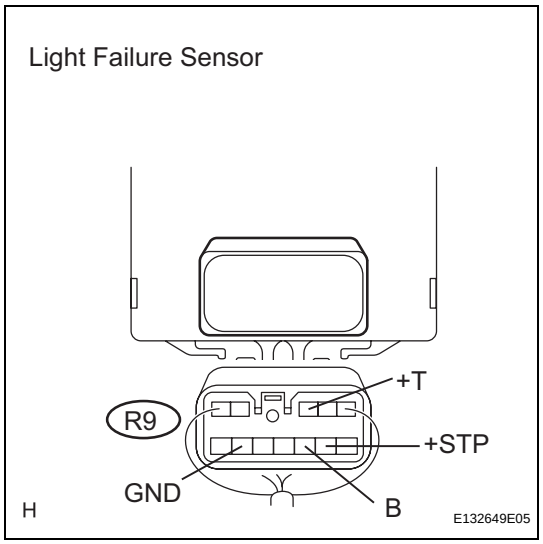

ON-VEHICLE INSPECTION

1. INSPECT LIGHT FAILURE SENSOR

(a) Disconnect the R9 light failure sensor connector.

(b) Measure the voltage and resistance according to the value(s) in the table below.

Standard voltage

Tester Connection	Condition	Specified Condition
R9-3 (+T) - R9-11 (E)	Light control switch in TAIL	10 to 14 V
	Light control switch OFF	Below 1 V
R9-7 (+STP) - R9-11 (E)	Brake pedal depressed	10 to 14 V
	Brake pedal released	Below 1 V
R9-8 (B) - R9-11 (E)	Always	10 to 14 V

Standard resistance

Tester Connection	Condition	Specified Condition
R9-11 (E) - Body ground	Always	Below 1 Ω

If the result is not as specified, there is a malfunction on the wire harness side.

(c) Reconnect the light failure indicator sensor connector.

(d) Measure the voltage according to the value(s) in the table below.

Standard voltage

Tester Connection	Condition	Specified Condition
R9-2 (-STP) - Body ground)	Brake pedal depressed	10 to 14 V
	Brake pedal released	Below 1 V
R9-5 (-TL) - Body ground)	Light control switch in TAIL	10 to 14 V
	Light control switch OFF	Below 1 V
R9-9 (-TR) - Body ground)	Light control switch in TAIL	10 to 14 V
	Light control switch OFF	Below 1 V

If the result is not as specified, repair or replace the wire harness between the sensor and bulb, or replace the light failure indicator sensor.

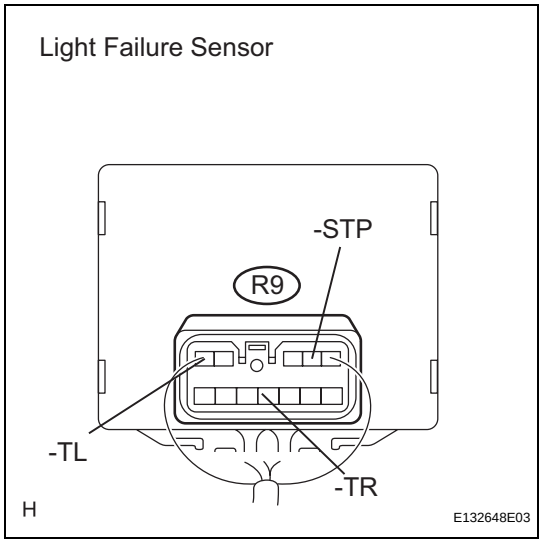

AFS ECU

COMPONENTS

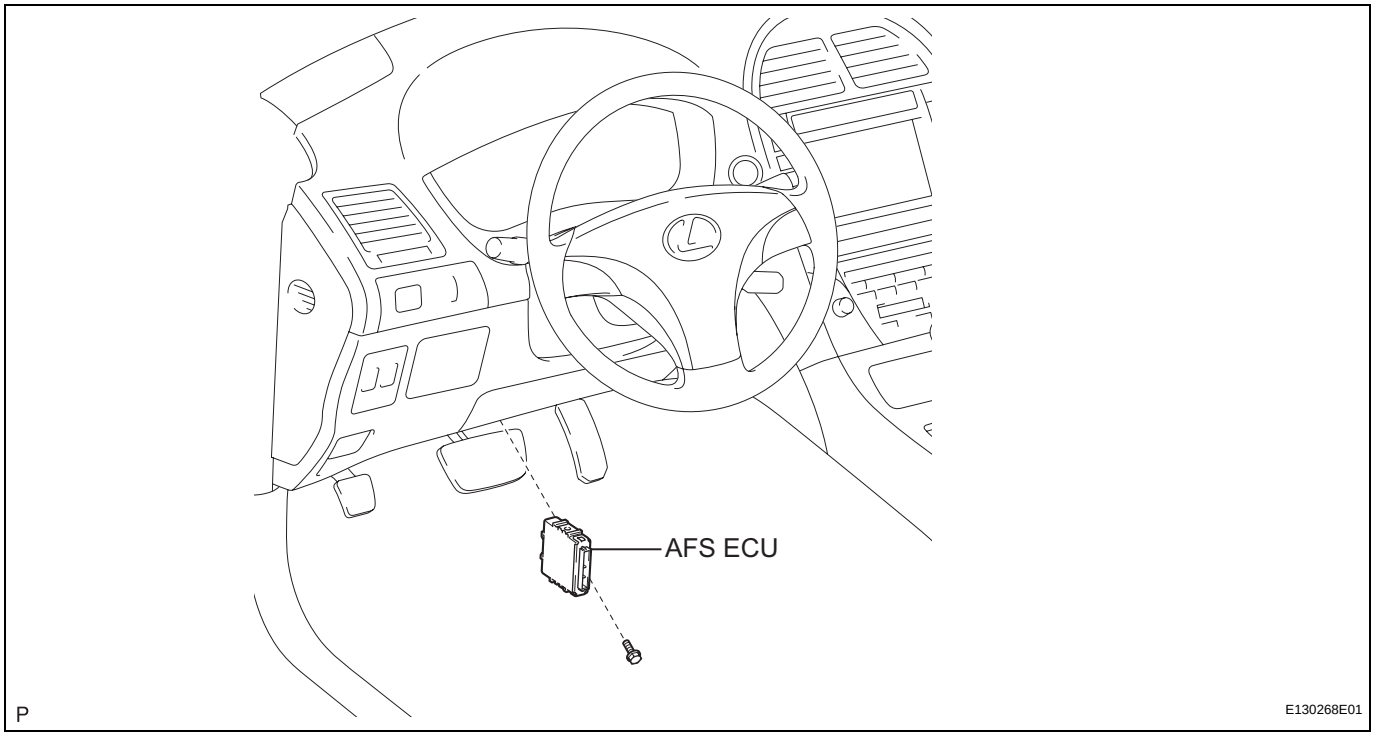

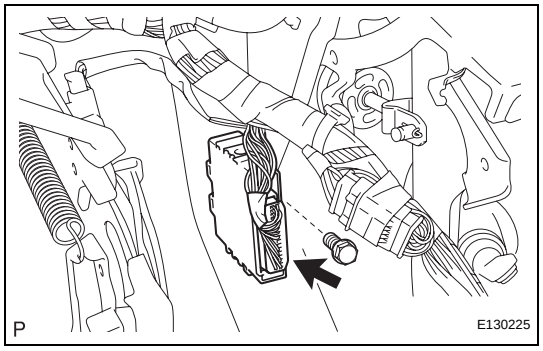

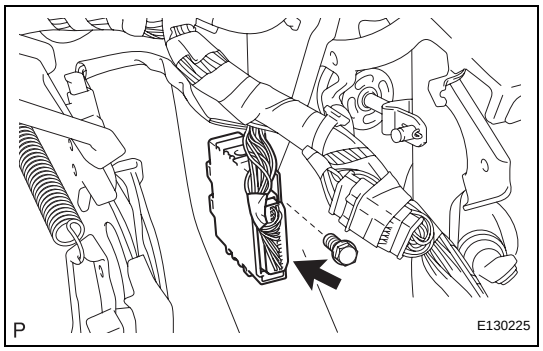

REMOVAL

1. **REMOVE AFS ECU**
   (a) Disconnect the connector.
   (b) Remove the bolt and the AFS ECU.

INSTALLATION

1. **INSTALL AFS ECU**
   (a) Install the AFS ECU with the bolt.
   (b) Connect the connector.
2. **HEIGHT CONTROL SENSOR SIGNAL INITIALIZATION**
   (See page LI-30).
3. **VEHICLE PREPARATION FOR HEADLIGHT AIM ADJUSTMENT (See page LI-129)**
4. **PREPARATION FOR HEADLIGHT AIMING (Using a headlight aim test machine) (See page LI-129)**
5. **PREPARATION FOR HEADLIGHT AIMING (Using a Screen) (See page LI-130)**
6. **HEADLIGHT AIMING INSPECTION (See page LI-131)**

7. **HEADLIGHT AIMING ADJUSTMENT (See page LI-133)**

TURN SIGNAL FLASHER ASSEMBLY

COMPONENTS

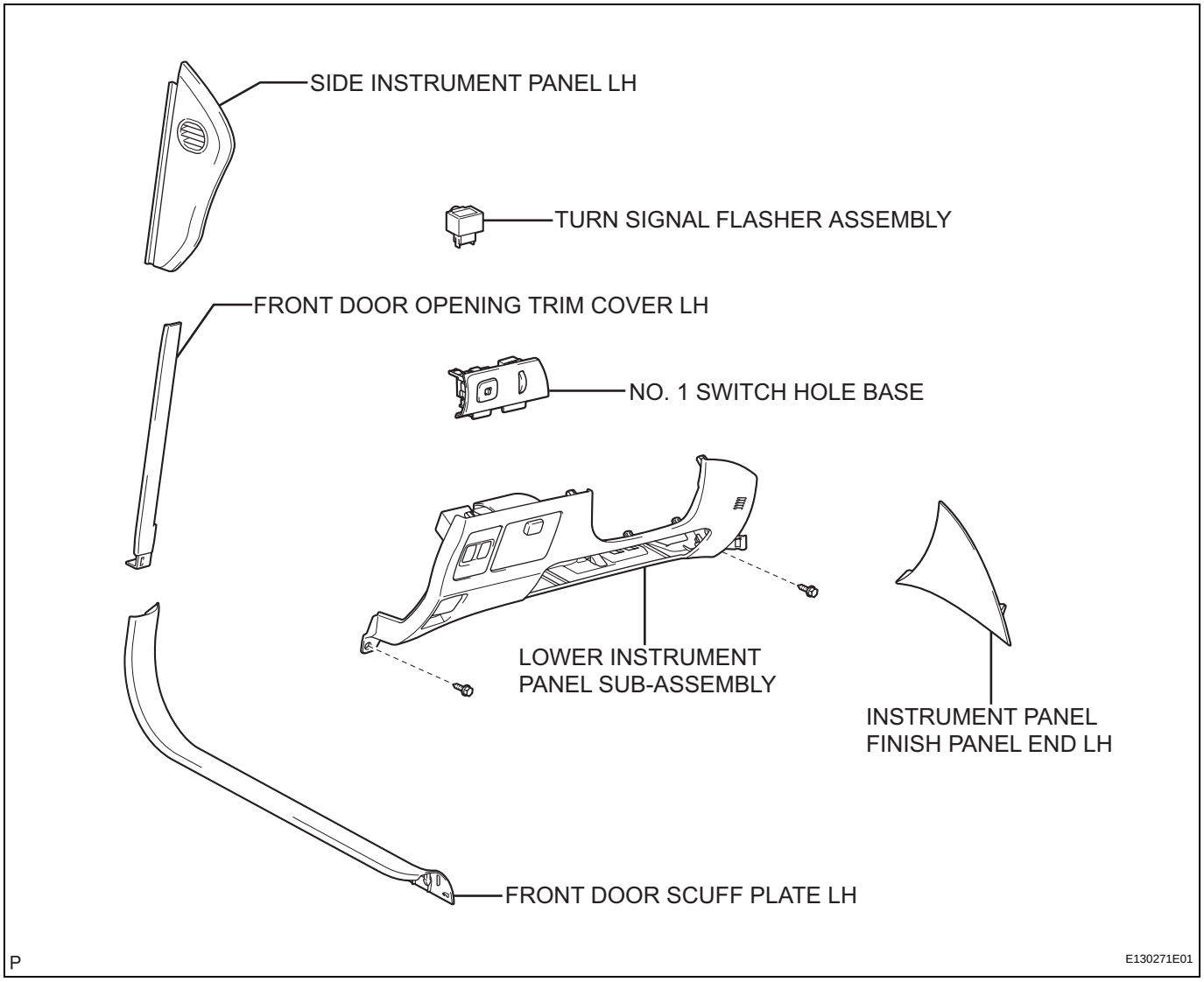

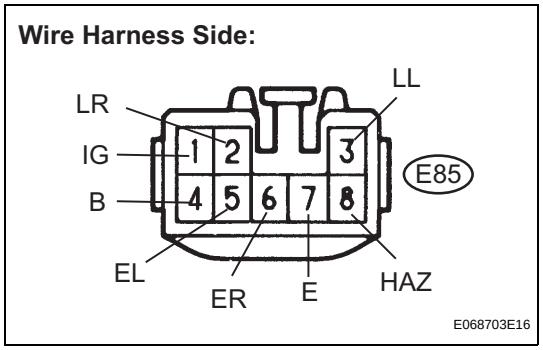

ON-VEHICLE INSPECTION

1. INSPECT TURN SIGNAL FLASHER ASSEMBLY

(a) Disconnect the E85 turn signal flasher assembly connector.

(b) Measure the voltage and resistance according the value(s) in the table below.

Standard voltage

Tester Connection	Condition	Specified Condition
E85-1 (IG) - Body ground	Engine switch off	Below 1 V
E85-1 (IG) - Body ground	Engine switch on (IG)	10 to 14 V
E85-4 (B) - Body ground	Always	10 to 14 V

Standard resistance

Tester Connection	Condition	Specified Condition
E85-5 (EL) - Body ground	Turn signal switch OFF	10 kΩ or higher
E85-5 (EL) - Body ground	Turn signal switch in LH position	Below 1 Ω
E85-6 (ER) - Body ground	Turn signal switch OFF	10 kΩ or higher
E85-6 (ER) - Body ground	Turn signal switch in RH position	Below 1 Ω
E85-7 (E) - Body ground	Always	Below 1 Ω
E85-8 (HAZ) - Body ground	Hazard warning switch OFF	10 kΩ or higher
E85-8 (HAZ) - Body ground	Hazard warning switch ON	Below 1 Ω

If the result is not as specified, there is a malfunction on the wire harness side.

(c) Reconnect the turn signal flasher assembly connector.

(d) Measure the voltage according to the valve(s) in the table below.

Standard voltage

Tester Connection	Condition	Specified Condition
E85-2 (LR) - Body ground	Hazard warning switch OFF	Below 1 V
E85-2 (LR) - Body ground	Hazard warning switch ON	10 to 14 V (60 to 120 times per minute)
E85-2 (LR) - Body ground	Turn signal switch OFF	Below 1 V
E85-2 (LR) - Body ground	Engine switch on (IG) and turn signal switch in RH position	10 to 14 V (60 to 120 times per minute)
E85-3 (LL)- Body ground	Hazard warning switch OFF	Below 1 V
E85-3 (LL) - Body ground	Hazard warning switch ON	10 to 14 V (60 to 120 times per minute)
E85-3 (LL) - Body ground	Turn signal switch OFF	Below 1 V
E85-3 (LL) - Body ground	Engine switch on (IG) and turn signal switch in LH position	10 to 14 V (60 to 120 times per minute)
E85-5 (EL) - Body ground	Engine switch on (IG) and turn signal switch OFF	10 to 14 V
E85-5 (EL) - Body ground	Engine switch on (IG) and turn signal switch in LH position	Below 1 V
E85-6 (ER) - Body ground	Engine switch on (IG) and turn signal switch OFF	10 to 14 V
E85-6 (ER) - Body ground	Engine switch on (IG) and turn signal switch in RH position	Below 1 V
E85-8 (HAZ) - Body ground	Hazard warning switch OFF	10 to 14 V
E85-8 (HAZ) - Body ground	Hazard warning switch ON	Below 1 V

If the result is not as specified, replace the turn signal flasher assembly.

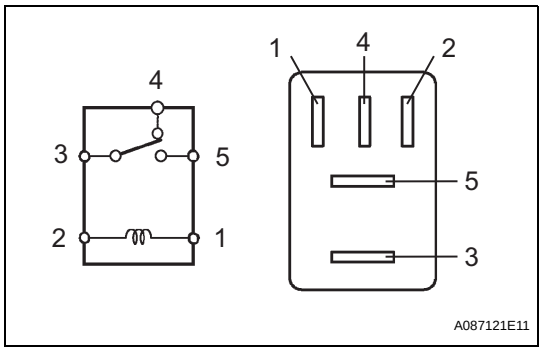

TAILLIGHT RELAY

ON-VEHICLE INSPECTION

1. INSPECT TAILLIGHT RELAY

(a) Remove the taillight relay from the instrument panel J/B assembly.

(b) Measure the resistance according to the value(s) in the table below.

Standard resistance

Tester Connection	Specified Condition
3 - 5	10 kΩ or higher
	Below 1 Ω (When battery voltage is applied to terminals 1 and 2)
3 - 4	Below 1 Ω
	10 kΩ or higher (When battery voltage is applied to terminals 1 and 2)

If the result is not as specified, replace the taillight relay.

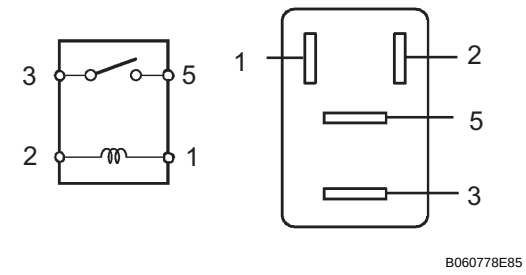

FOG LIGHT RELAY

ON-VEHICLE INSPECTION

1. INSPECT FOG LIGHT RELAY

(a) Remove the fog light relay from the instrument panel J/B assembly.

(b) Measure the resistance according to the value(s) in the table below.

Standard resistance

Tester Connection	Specified Condition
3 - 5	10 kΩ or higher
	Below 1 Ω (When battery voltage is applied to terminals 1 and 2)

If the result is not as specified, replace the fog light relay.

HOW TO PROCEED WITH TROUBLESHOOTING

HINT:
- Use the following procedures to troubleshoot the wiper and washer system.
- *: Use the intelligent tester.

1 VEHICLE BROUGHT TO WORKSHOP

NEXT

2 PROBLEM SYMPTOM CONFIRMATION

WW

Result

Result	Proceed to
Symptom does not occur	A
Symptom occurs	B

B → GO TO STEP 4

A

3 SYMPTOM SIMULATION

NEXT

4 PROBLEM SYMPTOMS TABLE

NEXT

5 CIRCUIT INSPECTION*

NEXT

6 TERMINALS OF ECU

NEXT

7 IDENTIFICATION OF PROBLEM

NEXT

8	**REPAIR OR REPLACE**

NEXT

9	**CONFIRMATION TEST**

NEXT

END

PROBLEM SYMPTOMS TABLE

HINT:

- Use the table below to help determine the cause of the problem symptom. The potential cases of the symptoms are listed in order of probability in the "Suspected Area" column of the table. Check each symptom by checking the suspected areas in order they are listed. Replace parts as necessary.
- Inspect the fuses and relays related to the system before inspecting the suspected areas below.

Front Wiper and Washer System:

Symptom	Suspected Area	See page
Front wiper and washer system does not operate	1. Power source circuit	WW-28
	2. Windshield wiper relay assembly (Auto wiper relay)	-
Front wiper system does not operate	1. Wiper motor power source circuit	WW-14
	2. Windshield wiper relay assembly (Auto wiper relay)	-
Front wiper system does not operate in LO or HI	1. Wiper and washer switch circuit	WW-16
	2. Front wiper motor circuit	WW-12
	3. Windshield wiper relay assembly (Auto wiper relay)	-
Front wiper system does not operate in AUTO	1. Rain sensor tape (*)	-
	2. Wiper and washer switch circuit	WW-16
	3. Rain sensor circuit	WW-20
	4. Rain sensor	-
	5. Windshield wiper relay assembly (Auto wiper relay)	-
Front washer system does not operate	1. Washer motor circuit	WW-22
	2. Wiper and washer switch	WW-55
	3. Windshield wiper relay assembly (Auto wiper relay)	-

HINT:

*: Before beginning diagnosis of the rain sensor, first check if the rain sensor tape is correctly installed.

Others:

Symptom	Suspected Area	See page
Washer fluid level warning system does not operate	1. Washer fluid level warning switch circuit	WW-26
	2. Combination meter assembly	-

TERMINALS OF ECU

1. CHECK WINDSHIELD WIPER RELAY ASSEMBLY (AUTO WIPER RELAY)

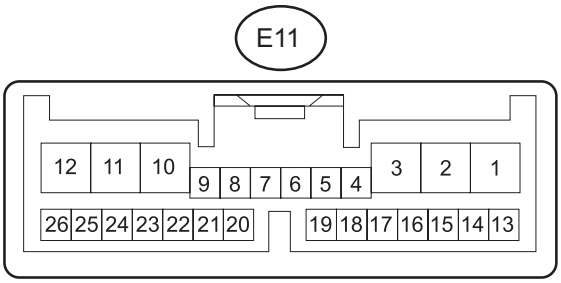

E125552E03

(a) Disconnect the E11 relay connector.
(b) Measure the voltage and resistance according to the value(s) in the table below.

Symbols (Terminal No.)	Wiring Color	Terminal Description	Condition	Specified Condition
W (E11-4) - Body ground	L - Body ground	Front washer switch circuit	Front washer switch is ON	Below 1 Ω
			Front washer switch is OFF	10 kΩ or higher
IG (E11-12) - Body ground	L - Body ground	IG signal circuit	Engine switch on (IG)	10 to 14 V
			Engine switch off	Below 1 V
WIG (E11-23) - Body ground	B - Body ground	WIG signal circuit	Engine switch on (IG)	10 to 14 V
			Engine switch off	Below 1 V
E (E11-26) - Body ground	W-B - Body ground	Body ground	Always	Below 1 Ω

If the result is not as specified, there may be a malfunction on the wire harness side.
(c) Reconnect the E11 relay connector.
(d) Measure the voltage according to the value(s) in the table below.

Symbols (Terminal No.)	Wiring Color	Terminal Description	Condition	Specified Condition
+2S (E11-1) - Body ground	Y - Body ground	Front wiper LO speed signal circuit	Engine switch on (IG), front wiper switch LO	10 to 14 V
			Engine switch on (IG), front wiper switch except LO	Below 1 V
+1 (E11-2) - Body ground	Y - Body ground	Front wiper motor LO speed signal circuit	Front wiper motor is in LO operation	10 to 14 V
			Front wiper motor is OFF	Below 1 V
+2 (E11-3) - Body ground	R - Body ground	Front wiper motor HI speed signal circuit	Front wiper motor is in HI operation	10 to 14 V
			Front wiper motor is OFF	Below 1 V
W (E11-4) - Body ground	L - Body ground	Front washer motor circuit	Front washer switch is ON	Below 1 V
			Front washer switch is OFF	10 to 14 V

WW

Symbols (Terminal No.)	Wiring Color	Terminal Description	Condition	Specified Condition
+SM (E11-10) - Body ground	W - Body ground	Front wiper motor operation signal	Front wiper motor is in LO or HI operation	10 to 14 V
			Front wiper motor is OFF	Below 1 V
C1 (E11-17) - C0 (E11-16)	P - R	IG signal circuit	Engine switch on (IG)	10 to 14 V
			Engine switch off	Below 1 V

If the result is not as specified, the relay may have a malfunction.

HOW TO PROCEED WITH TROUBLESHOOTING

HINT:
- Use the following procedures to troubleshoot the wiper and washer system.
- *: Use the intelligent tester.

1 VEHICLE BROUGHT TO WORKSHOP

NEXT

2 PROBLEM SYMPTOM CONFIRMATION

WW

Result

Result	Proceed to
Symptom does not occur	A
Symptom occurs	B

B → GO TO STEP 4

A

3 SYMPTOM SIMULATION

NEXT

4 PROBLEM SYMPTOMS TABLE

NEXT

5 CIRCUIT INSPECTION*

NEXT

6 TERMINALS OF ECU

NEXT

7 IDENTIFICATION OF PROBLEM

NEXT

8	**REPAIR OR REPLACE**

NEXT

9	**CONFIRMATION TEST**

NEXT

END

FAIL-SAFE CHART

1. FRONT WIPER SYSTEM

(a) When the windshield wiper switch assembly is in any position other than "OFF" and the blades are frozen or a wiper pivot is seized, a malfunction is detected by the windshield wiper relay assembly (auto wiper relay) and the wiper operation is stopped.
HINT:
Recovery condition: Engine switch off or windshield wiper switch assembly off.

(b) When the rain sensor is malfunctioning and the windshield wiper switch assembly is in the AUTO position, the front wiper system will use the mode that the rain sensor is determined to be appropriate before the rain sensor malfunctioned.
HINT:
Recovery condition: Signal level error cancellation from rain sensor.

(c) When the rain sensor overheats and the front wiper is in the HI operation mode, the front wiper system is changed to the LO operation mode.
HINT:
- Recovery condition: Engine switch off or wiper operation signal is not AUTO or LO.
- A mode change is not carried out when the rain sensor is malfunctioning in high temperature, or in low temperature.

DATA LIST / ACTIVE TEST

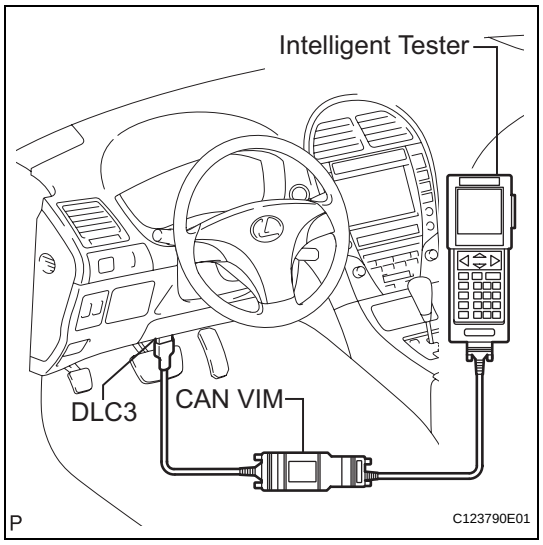

1. READ DATA LIST

HINT:
Using the intelligent tester to read the DATA LIST allows the values or states of switches, sensors, actuators, and other items to be read without removing any parts. This nonintrusive inspection can be very useful as intermittent conditions or signals may be discovered before parts or wiring is disturbed. Reading the DATA LIST information early in troubleshooting is one way to save diagnostic time.

(a) Connect the intelligent tester to the DLC3.
(b) Turn the engine switch on (IG).
(c) Read the DATA LIST.

METER:

Tester Display	Measurement Item/Range	Normal Condition	Diagnostic Note
WASHER SW	Washer fluid level switch / ON or OFF	ON: Washer jar is empty OFF: Washer jar is full	-

Front Wiper Motor Circuit

DESCRIPTION

The auto wiper relay controls the front wiper motor.

WIRING DIAGRAM

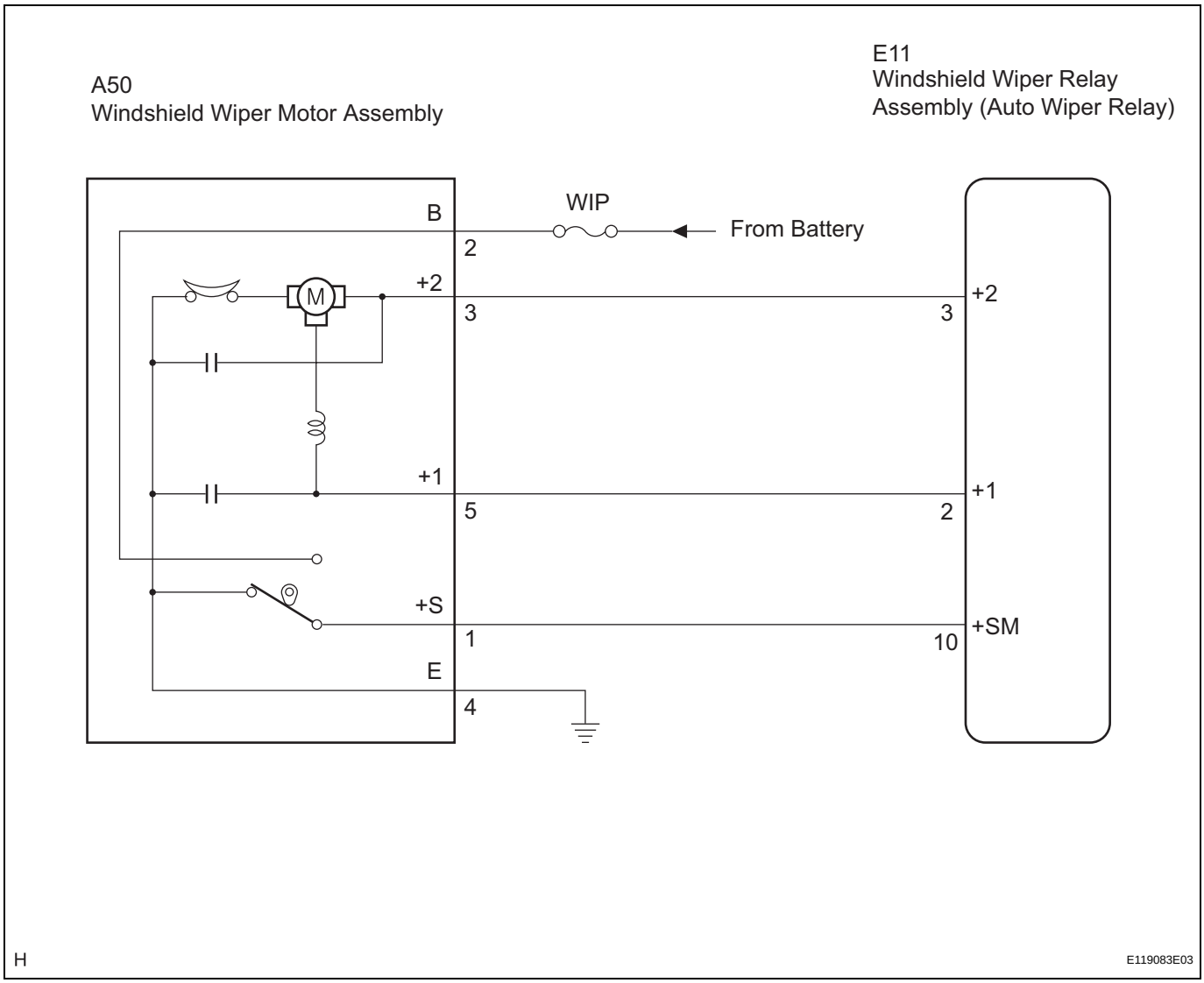

WW

INSPECTION PROCEDURE

1 INSPECT WINDSHIELD WIPER MOTOR ASSEMBLY

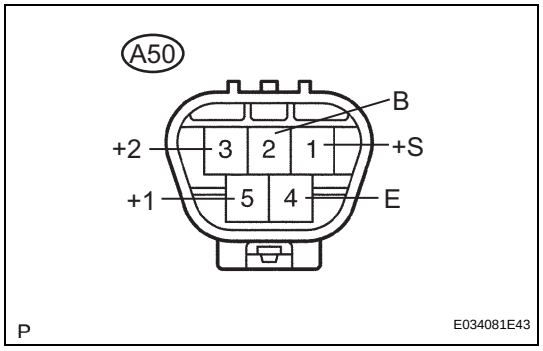

(a) Remove the windshield wiper motor assembly (See page WW-58).

(b) Check the LO operation.

(1) Connect the positive (+) battery lead to terminal A50-5 (+1) of the connector, and the negative (-) battery lead to terminal A50-4 (E), and check that the motor operates at a low speed.

(c) Check the HI operation.

(1) Connect the positive (+) battery lead to terminal A50-3 (+2) of the connector, and the negative (-) battery lead to terminal A50-1 (+S), and check that the motor operates at a high speed.

NG → **REPLACE WINDSHIELD WIPER MOTOR ASSEMBLY**

OK

2 CHECK HARNESS AND CONNECTOR (WIPER MOTOR - WIPER RELAY, BODY GROUND)

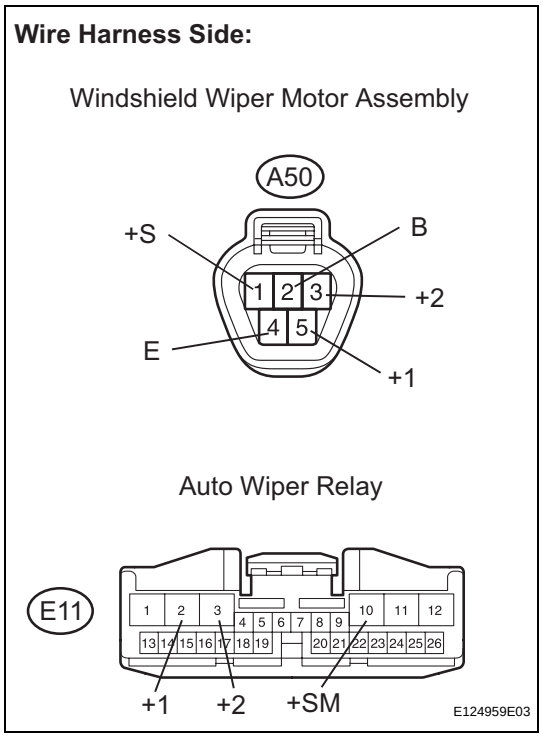

(a) Disconnect the A50 windshield wiper motor assembly connector.

(b) Disconnect the E11 windshield wiper relay assembly (auto wiper relay) connector.

(c) Measure the resistance according to the value(s) in the table below.

Standard resistance

Tester Connection	Condition	Specified Condition
A50-1 (+S) - E11-10 (+SM)	Always	Below 1 Ω
A50-1 (+S) - Body ground	Always	10 kΩ or higher
A50-3 (+2) - E11-3 (+2)	Always	Below 1 Ω
A50-3 (+2) - Body ground	Always	10 kΩ or higher
A50-4 (E) - Body ground	Always	Below 1 Ω
A50-5 (+1) - E11-2 (+1)	Always	Below 1 Ω
A50-5 (+1) - Body ground	Always	10 kΩ or higher

NG → **REPAIR OR REPLACE HARNESS OR CONNECTOR**

OK

PROCEED TO NEXT CIRCUIT INSPECTION SHOWN IN PROBLEM SYMPTOMS TABLE

WW

Wiper Motor Power Source Circuit

DESCRIPTION

This circuit provides power to the windshield wiper motor assembly.

WIRING DIAGRAM

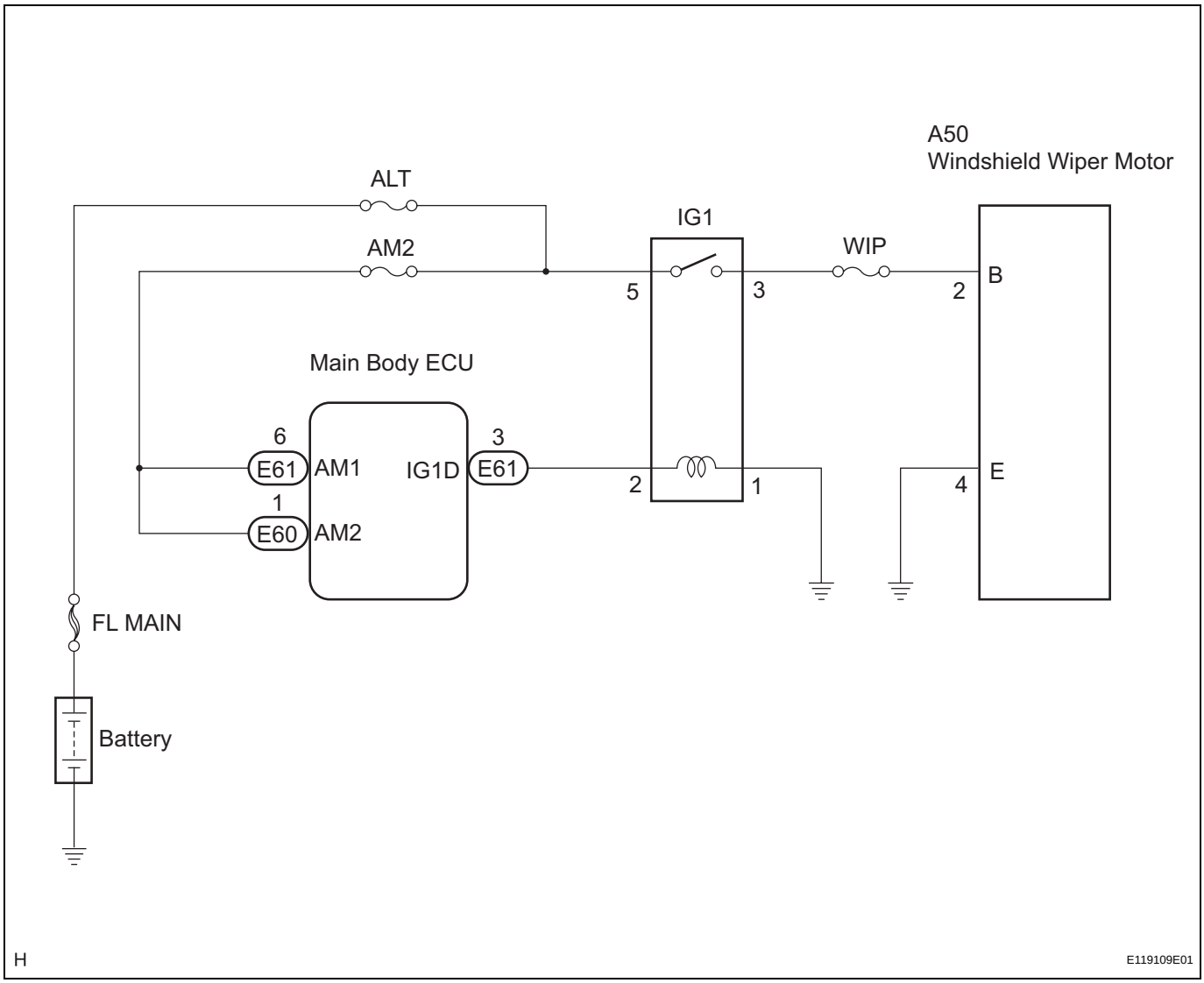

INSPECTION PROCEDURE

1	INSPECT FUSE (WIP)

(a) Remove the WIP fuse from the instrument panel J/B.
(b) Measure the resistance of the fuse.
Standard resistance:
Below 1 Ω

NG → **REPLACE FUSE**

OK

2 INSPECT IG1 RELAY

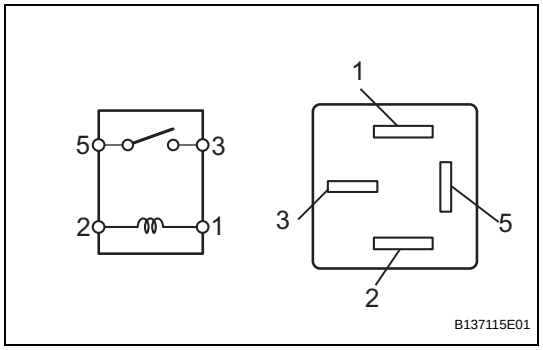

(a) Remove the IG1 relay from the instrument panel J/B.
(b) Measure the resistance of the relay.
Standard resistance

Tester Connection	Condition	Specified Condition
3 - 5	Always	10 kΩ or higher
	When battery voltage is applied to terminals 1 and 2	Below 1 Ω

NG → **REPLACE IG1 RELAY**

OK

WW

3 CHECK HARNESS AND CONNECTOR (WIPER MOTOR - BATTERY, BODY GROUND)

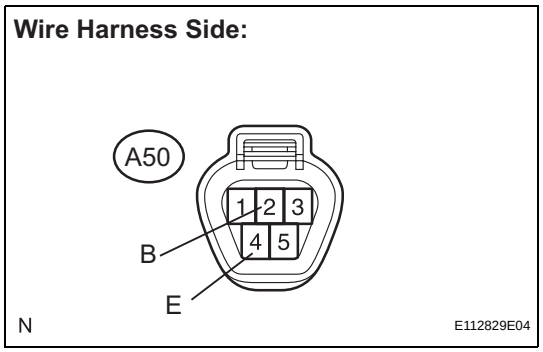

(a) Disconnect the A50 windshield wiper motor assembly connector.
(b) Measure the voltage according to the value(s) in the table below.
Standard voltage

Tester Connection	Condition	Specified Condition
A50-2 (B) - Body ground	Engine switch on (IG)	10 to 14 V

(c) Measure the resistance according to the value(s) in the table below.
Standard resistance

Tester Connection	Condition	Specified Condition
A50-4 (E) - Body ground	Always	Below 1 Ω

NG → **REPAIR OR REPLACE HARNESS OR CONNECTOR**

OK

PROCEED TO NEXT CIRCUIT INSPECTION SHOWN IN PROBLEM SYMPTOMS TABLE

Wiper and Washer Switch Circuit

DESCRIPTION

This circuit detects the state of the windshield wiper switch assembly and sends it to the windshield wiper relay assembly (auto wiper relay).

WIRING DIAGRAM

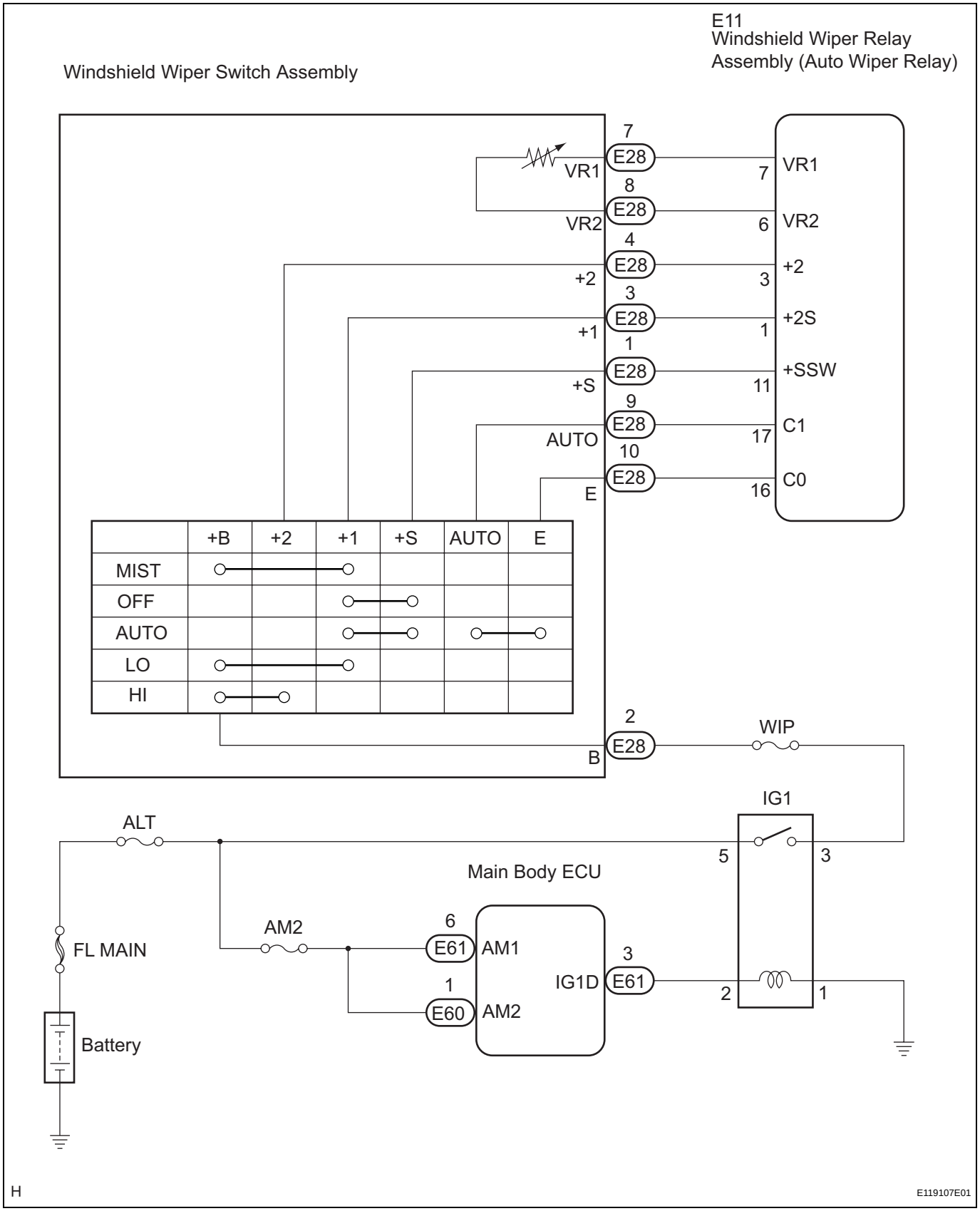

WW

INSPECTION PROCEDURE

1	CHECK WINDSHIELD WIPER SWITCH ASSEMBLY (WIPER SWITCH AND WASHER SWITCH)

Windshield Wiper Switch Assembly:

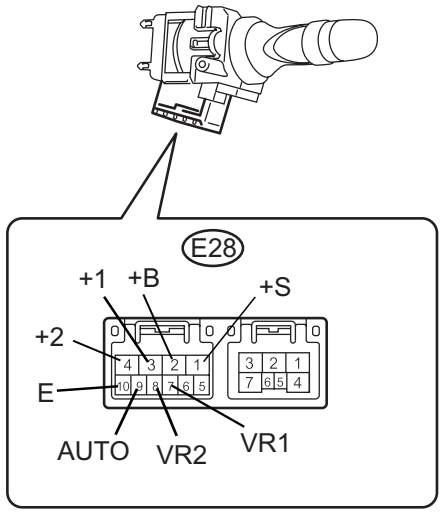

H E119108E01

(a) Remove the windshield wiper switch assembly (See page WW-54).

(b) Measure the resistance according to the value(s) in the table below.

Standard resistance

Tester Connection	Switch Connection	Specified Condition
E28-2 (+B) - E28-4 (+2)	HI	Below 1 Ω
E28-3 (+1) - E28-2 (+B)	MIST	
	LO	
E28-3 (+1) - E28-1 (+S)	OFF	
E28-9 (AUTO) - E28-10 (E)	AUTO	
E28-7 (VR1) - E28-8 (VR2)	AUTO	Approximately 50 kΩ

NG → **REPLACE WINDSHIELD WIPER SWITCH ASSEMBLY**

OK

2	CHECK HARNESS AND CONNECTOR (WIPER SWITCH - AUTO WIPER RELAY, BODY GROUND)

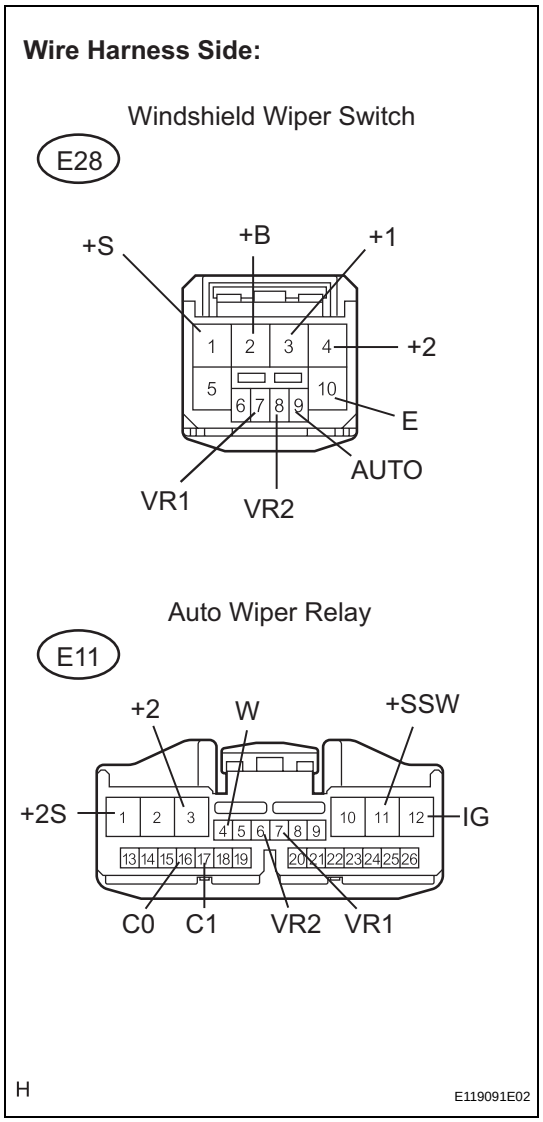

(a) Disconnect the E11 windshield wiper relay assembly (auto wiper relay) connector.

(b) Measure the resistance according to the value(s) in the table below.

Standard resistance

Tester Connection	Condition	Specified Condition
E28-1 (+S) - E11-11 (+SSW)	Always	Below 1 Ω
E28-1 (+S) - Body ground	Always	10 kΩ or higher
E28-2 (+B) - E11-12 (IG)	Always	Below 1 Ω
E28-2 (+B) - Body ground	Always	10 kΩ or higher
E28-3 (+1) - E11-1 (+2S)	Always	Below 1 Ω
E28-3 (+1) - Body ground	Always	10 kΩ or higher
E28-4 (+2) - E11-3 (+2)	Always	Below 1 Ω
E28-4 (+2) - Body ground	Always	10 kΩ or higher
E28-7 (VR1) - E11-7 (VR1)	Always	Below 1 Ω
E28-7 (VR1) - Body ground	Always	10 kΩ or higher
E28-8 (VR2) - E11-6 (VR2)	Always	Below 1 Ω
E28-8 (VR2) - Body ground	Always	10 kΩ or higher
E28-9 (AUTO) - E11-17 (C1)	Always	Below 1 Ω
E28-9 (AUTO) - Body ground	Always	10 kΩ or higher
E28-10 (E) - E11-16 (C0)	Always	Below 1 Ω
E28-10 (E) - Body ground	Always	Below 1 Ω

NG → **REPAIR OR REPLACE HARNESS OR CONNECTOR**

OK

PROCEED TO NEXT CIRCUIT INSPECTION SHOWN IN PROBLEM SYMPTOMS TABLE

WW

Rain Sensor Circuit

DESCRIPTION

This circuit provides power to operate the rain sensor.
The auto wiper system operates when the windshield wiper switch assembly is in the AUTO position.

WIRING DIAGRAM

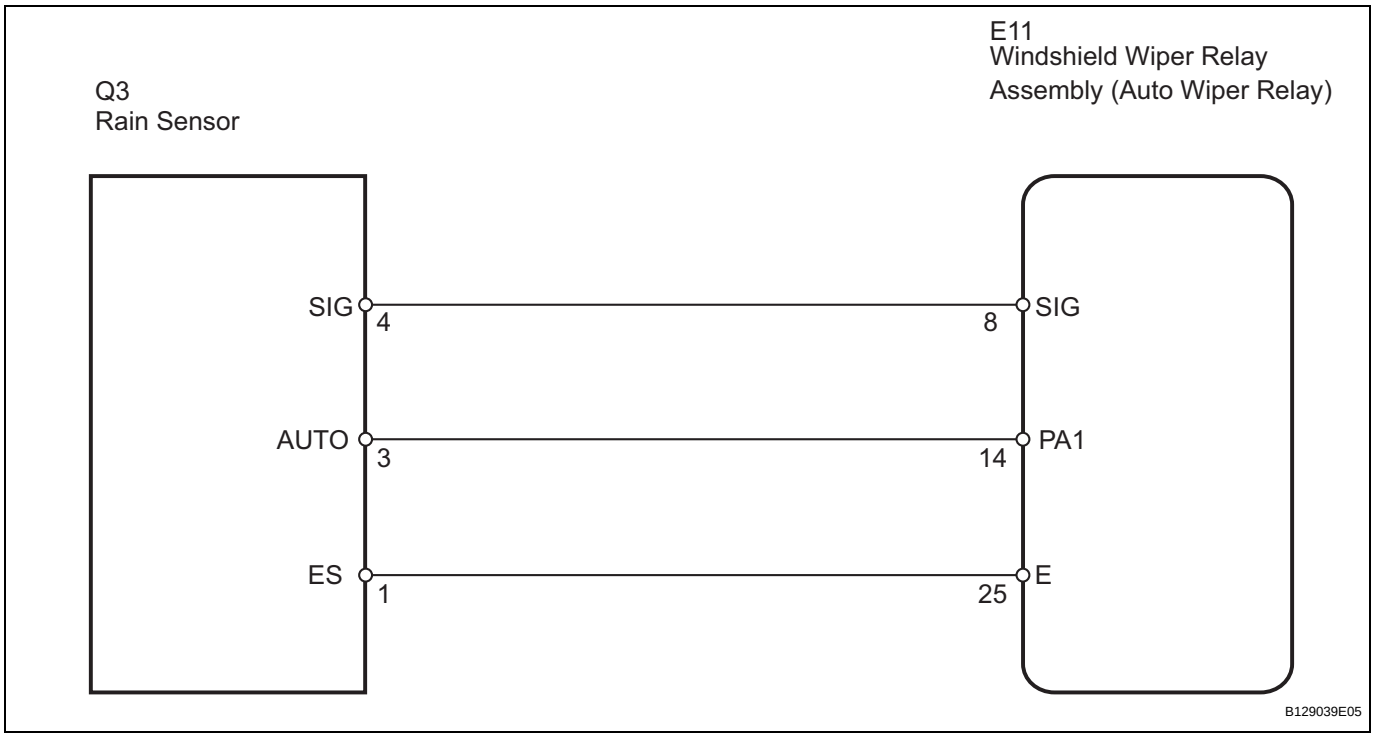

WW

INSPECTION PROCEDURE

1	CHECK HARNESS AND CONNECTOR (WIPER RELAY - RAIN SENSOR)

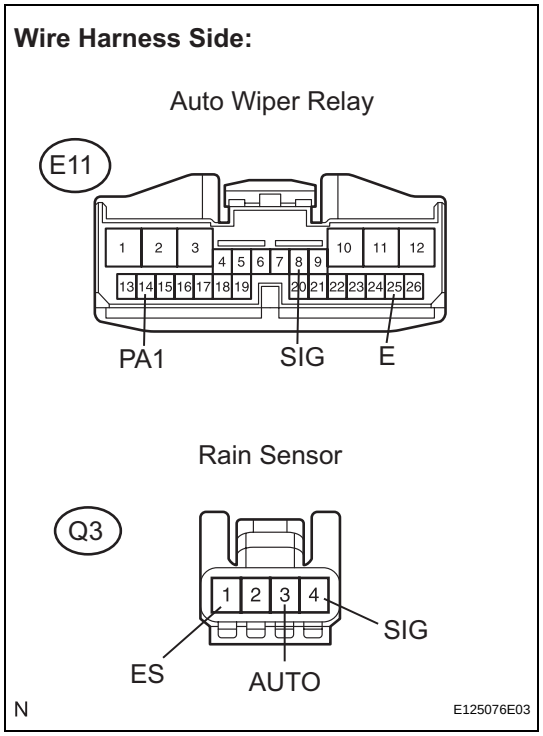

(a) Disconnect the E11 windshield wiper relay assembly (auto wiper relay) connector.
(b) Disconnect the Q3 rain sensor connector.
(c) Measure the resistance according to the value(s) in the table below.

Standard resistance

Tester Connection	Condition	Specified Condition
E11-8 (SIG) - Q3-4 (SIG)	Always	Below 1 Ω
E11-14 (PA1) - Q3-3 (AUTO)	Always	Below 1 Ω
E11-25 (E) - Q3-1 (ES)	Always	Below 1 Ω
Q3-4 (SIG) - Body ground	Always	10 kΩ or higher
Q3-3 (AUTO) - Body ground	Always	10 kΩ or higher
Q3-1 (ES) - Body ground	Always	Below 1 Ω

NG → **REPAIR OR REPLACE HARNESS OR CONNECTOR**

OK

PROCEED TO NEXT CIRCUIT INSPECTION SHOWN IN PROBLEM SYMPTOMS TABLE

WW

Washer Motor Circuit

DESCRIPTION

The windshield wiper relay assembly (auto wiper relay) controls the front washer motor.

WIRING DIAGRAM

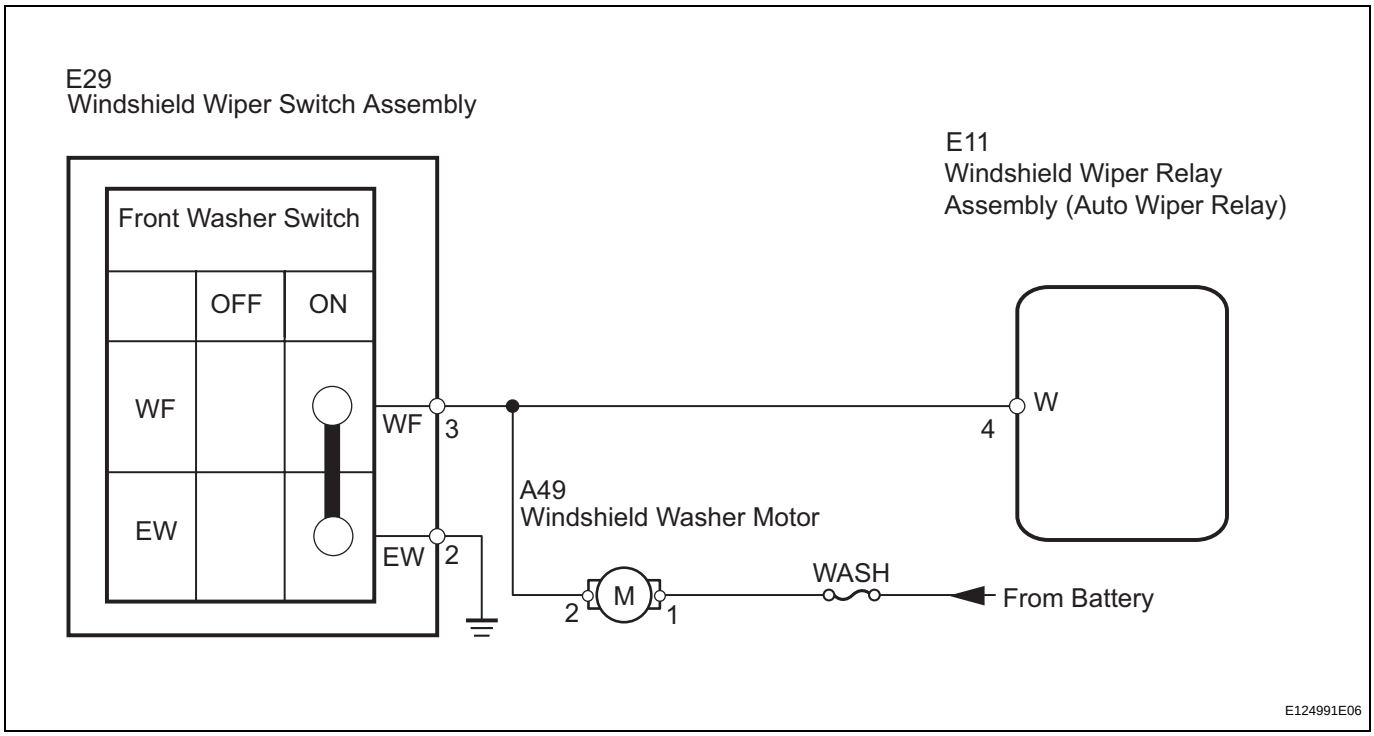

INSPECTION PROCEDURE

1	INSPECT FUSE (WASH)

(a) Remove the WASH fuse from the instrument panel J/B.
(b) Measure the resistance of the fuse.
Standard resistance:
Below 1 Ω

NG → **REPLACE FUSE**

OK

2 INSPECT WINDSHIELD WIPER SWITCH ASSEMBLY (WASHER SWITCH)

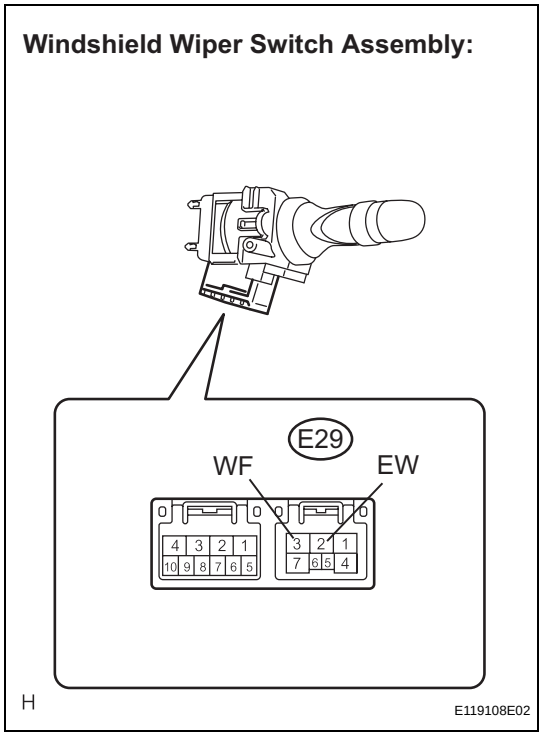

(a) Remove the windshield wiper switch assembly (See page WW-54).

(b) Measure the resistance according to the value(s) in the table below.

Standard resistance

Tester Connection	Switch Connection	Specified Condition
E29-2 (EW) - E29-3 (WF)	ON	Below 1 Ω
	OFF	10 kΩ or higher

NG → **REPLACE WINDSHIELD WIPER SWITCH ASSEMBLY**

OK

3 INSPECT WINDSHIELD WASHER MOTOR AND PUMP ASSEMBLY

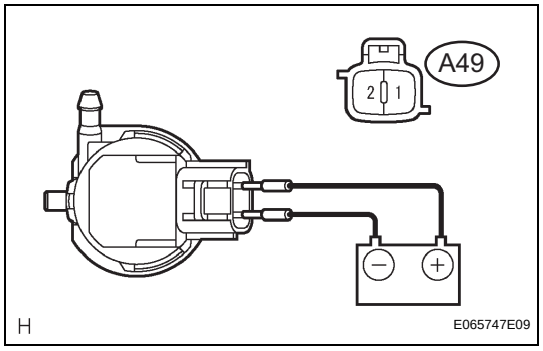

(a) Remove the washer jar.

(b) Apply battery voltage to the windshield washer motor connector and check the operation of the windshield washer motor assembly.

OK

Measurement Condition	Specified Condition
Battery positive (+) → Terminal A49-1 Battery negative (-) → Terminal A49-2	Washer fluid flows from washer jar

HINT:
The check should be performed with the windshield washer motor and pump installed to the washer jar.

NG → **REPLACE WINDSHIELD WASHER MOTOR AND PUMP ASSEMBLY**

OK

4 CHECK HARNESS AND CONNECTOR (BATTERY - WASHER MOTOR)

(a) Measure the voltage according to the value(s) in the table below.

WW

Standard voltage

Tester connection	Condition	Specified condition
A49-1 - Body ground	Engine switch on (IG)	10 to 14 V

NG → **REPAIR OR REPLACE HARNESS OR CONNECTOR**

OK

5 CHECK HARNESS AND CONNECTOR (WASHER MOTOR - WIPER RELAY, WASHER SWITCH)

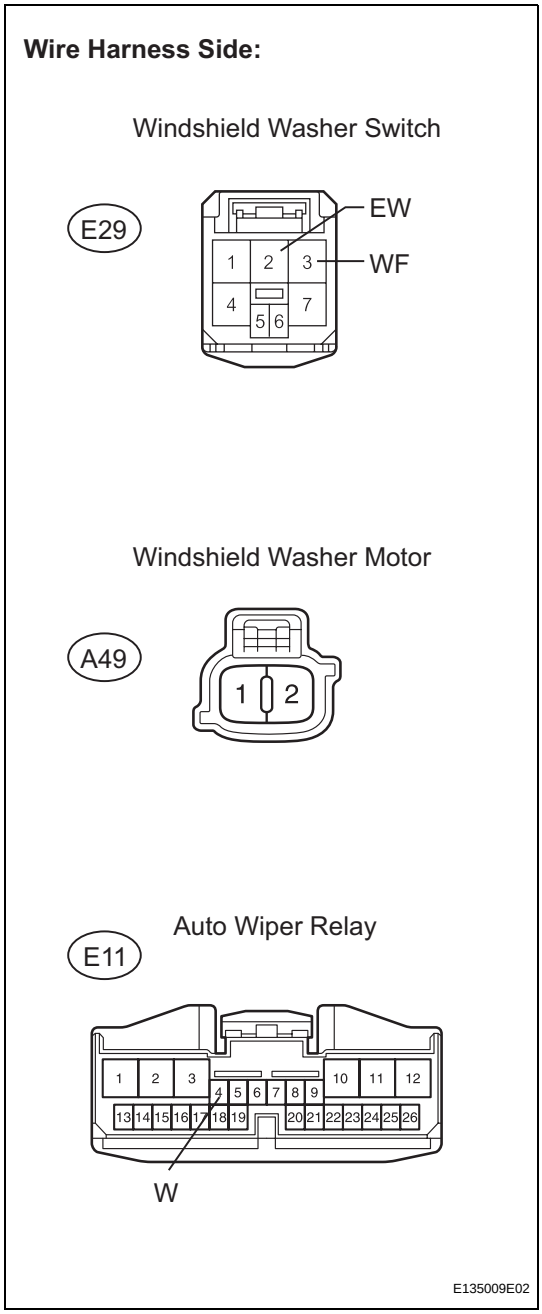

(a) Disconnect the E11 windshield wiper relay assembly (auto wiper relay) connector.

(b) Measure the resistance according to the value(s) in the table below.

Standard resistance

Tester Connection	Condition	Specified Condition
A49-2 - E11-4 (W)	Always	Below 1 Ω
E29-3 (WF) - A49-2	Always	Below 1 Ω

NG → **REPAIR OR REPLACE HARNESS OR CONNECTOR**

WW

OK

PROCEED TO NEXT CIRCUIT INSPECTION SHOWN IN PROBLEM SYMPTOMS TABLE

Washer Fluid Level Warning Switch Circuit

DESCRIPTION

When the volume of washer fluid decreases to below a certain level (when the washer fluid level warning switch is turned ON), the combination meter warns the driver through the master warning light illumination, the buzzer and the warning message on the multi-information display.

WIRING DIAGRAM

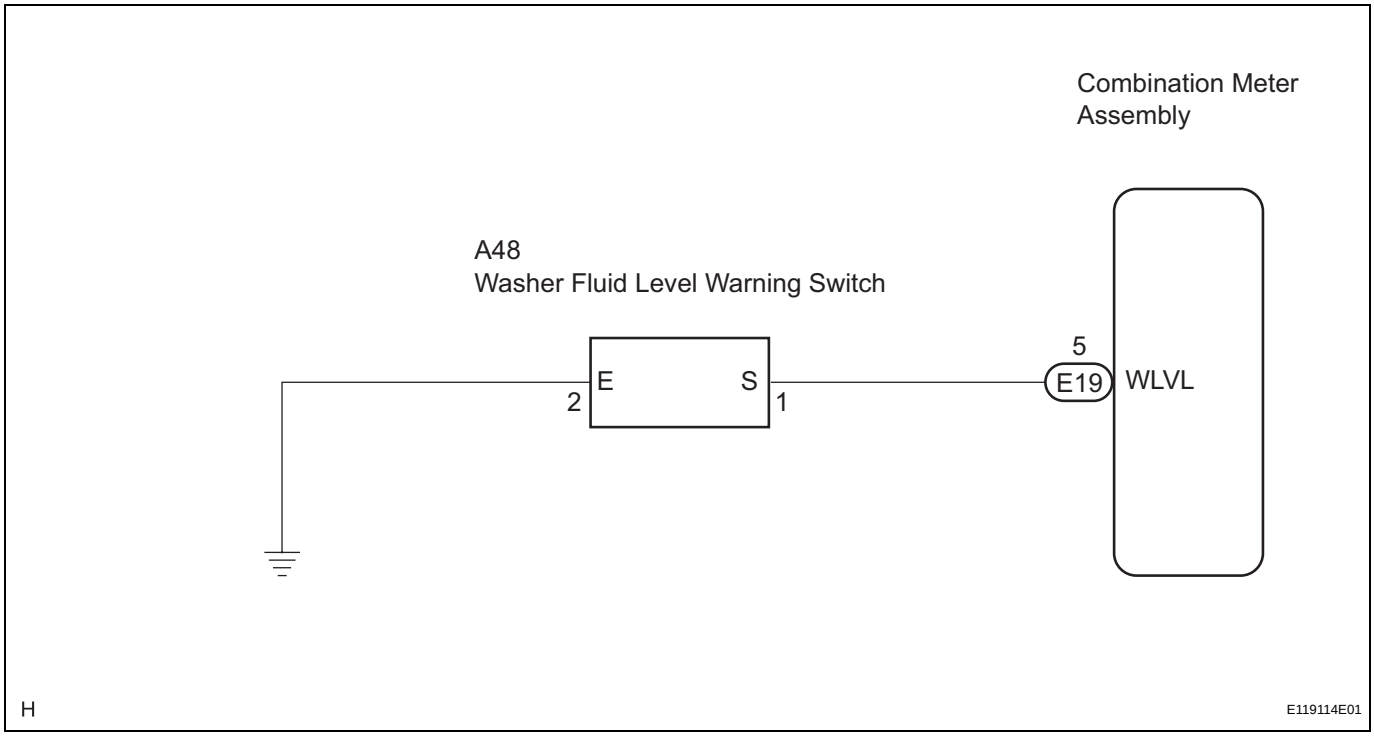

INSPECTION PROCEDURE

1	READ VALUE OF INTELLIGENT TESTER (WASHER LEVEL)

(a) Connect the intelligent tester to the DLC3.
(b) Turn the engine switch on (IG) and turn the intelligent tester main switch on.
(c) Select the item below in the DATA LIST, and read the displays on the intelligent tester.

METER:

Tester Display	Measurement Item/Range	Normal Condition	Diagnostic Note
WASHER SW	Washer fluid level switch / ON or OFF	ON: Washer jar is empty OFF: Washer jar is full	-

NG → **Go to step 2**

OK

PROCEED TO NEXT CIRCUIT INSPECTION SHOWN IN PROBLEM SYMPTOMS TABLE

2 CHECK HARNESS AND CONNECTOR (COMBINATION METER - WARNING SWITCH, BODY GROUND)

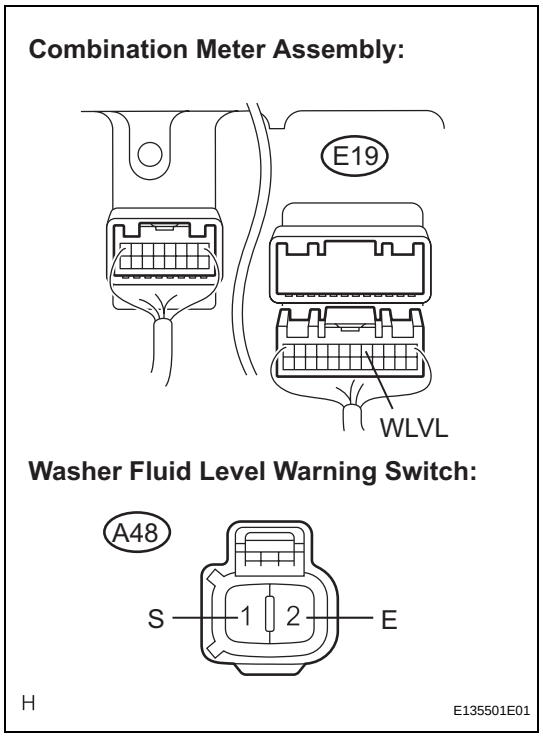

(a) Disconnect the E19 combination meter assembly connector.
(b) Disconnect the A48 washer fluid level warning switch connector.
(c) Measure the resistance according to the value(s) in the table below.

Standard resistance

Tester Connection	Condition	Specified Condition
E19-5 (WLVL) - A48-1 (S)	Always	Below 1 Ω
A48-1 (S) - Body ground	Always	10 kΩ or higher
A48-2 (E) - Body ground	Always	Below 1 Ω

NG → **REPAIR OR REPLACE HARNESS OR CONNECTOR**

OK

3 CHECK WASHER FLUID LEVEL WARNING SWITCH ASSEMBLY

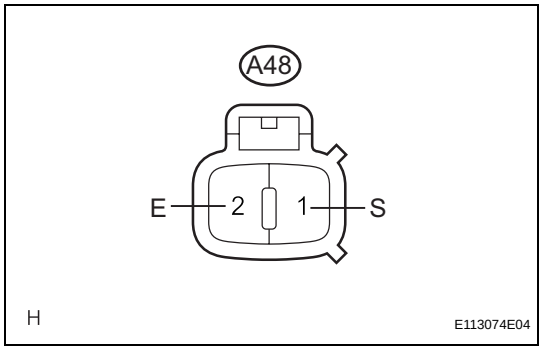

(a) Measure the resistance according to the value(s) in the table below.

Standard resistance

Tester Connection	Condition	Specified Condition
A48-1 (S) - A48-2 (E)	Washer jar is empty	Below 1 Ω
A48-1 (S) - A48-2 (E)	Washer jar is full	10 kΩ or higher

NG → **REPLACE WASHER FLUID LEVEL WARNING SWITCH ASSEMBLY**

OK

PROCEED TO NEXT CIRCUIT INSPECTION SHOWN IN PROBLEM SYMPTOMS TABLE

WW

Power Source Circuit

DESCRIPTION

This circuit provides power to the windshield wiper relay assembly (auto wiper relay).

WIRING DIAGRAM

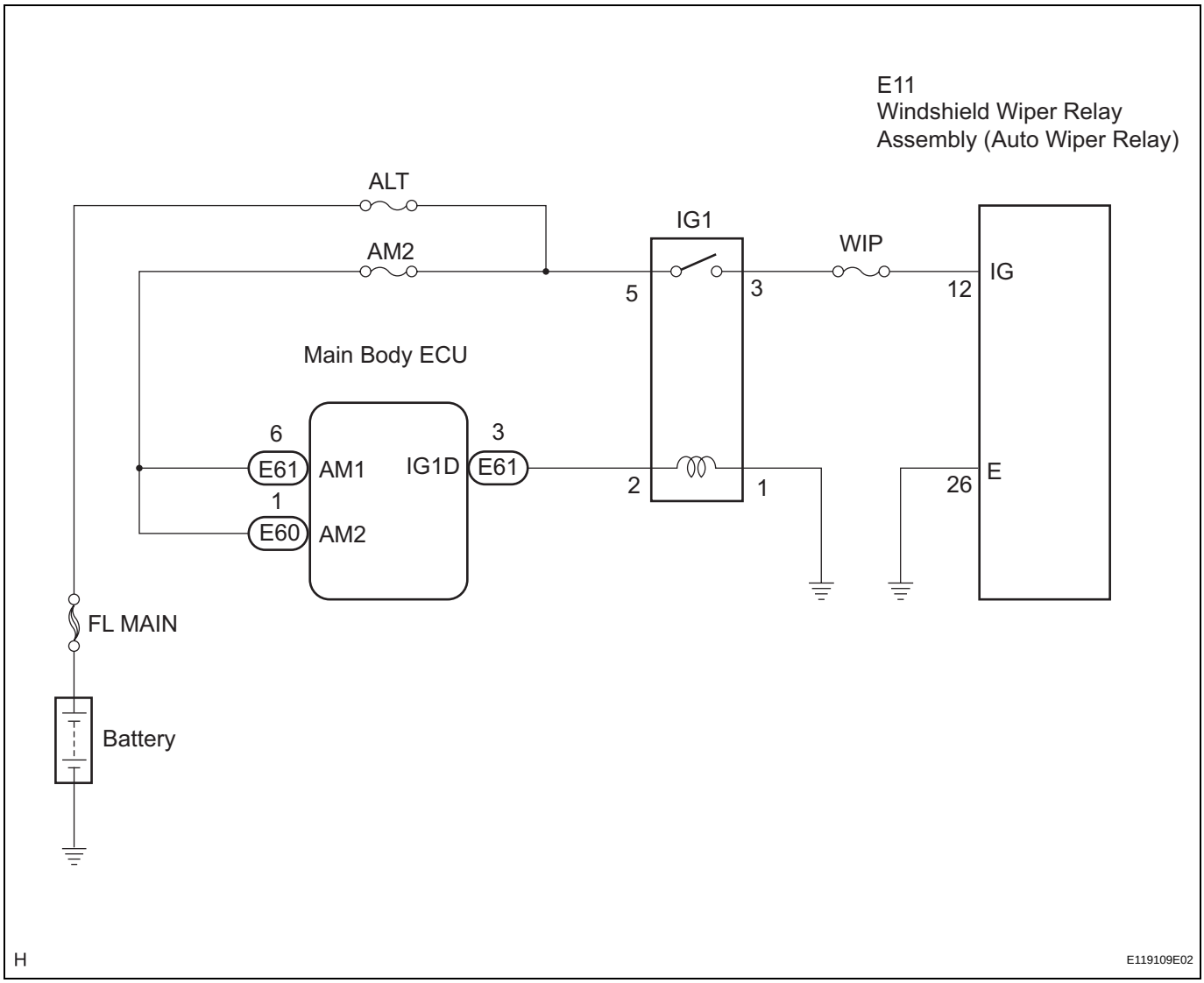

INSPECTION PROCEDURE

1	INSPECT FUSE (WIP)

(a) Remove the WIP fuse from the instrument panel J/B.
(b) Measure the resistance of the fuse.
Standard resistance:
Below 1 Ω

NG → **REPLACE FUSE**

OK

2 INSPECT IG1 RELAY

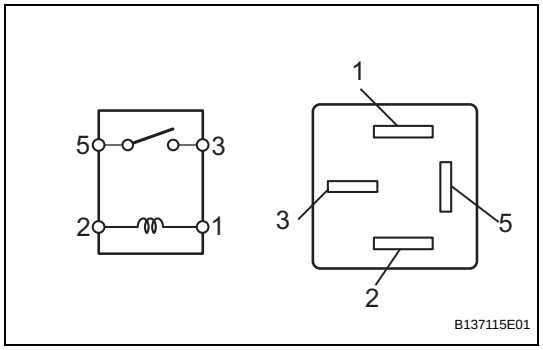

(a) Remove the IG1 relay from the instrument panel J/B.
(b) Measure the resistance of the relay.
Standard resistance

Tester Connection	Condition	Specified Condition
3 - 5	Always	10 kΩ or higher
	When battery voltage is applied to terminals 1 and 2	Below 1 Ω

NG → **REPLACE IG1 RELAY**

OK

3 CHECK HARNESS AND CONNECTOR (WIPER RELAY - BATTERY, BODY GROUND)

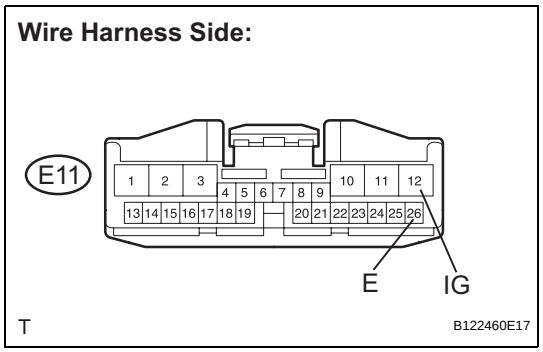

(a) Disconnect the E11 windshield wiper relay assembly (auto wiper relay) connector.
(b) Measure the voltage according to the value(s) in the table below.
Standard voltage

Tester Connection	Condition	Specified Condition
E11-12 (IG) - Body ground	Engine switch on (IG)	10 to 14 V

(c) Measure the resistance according to the value(s) in the table below.
Standard resistance

Tester Connection	Condition	Specified Condition
E11-26 (E) - Body ground	Always	Below 1 Ω

NG → **REPAIR OR REPLACE HARNESS OR CONNECTOR**

OK

PROCEED TO NEXT CIRCUIT INSPECTION SHOWN IN PROBLEM SYMPTOMS TABLE

WW

FAIL-SAFE CHART

1. FRONT WIPER SYSTEM

(a) When the windshield wiper switch assembly is in any position other than "OFF" and the blades are frozen or a wiper pivot is seized, a malfunction is detected by the windshield wiper relay assembly (auto wiper relay) and the wiper operation is stopped.
HINT:
Recovery condition: Engine switch off or windshield wiper switch assembly off.

(b) When the rain sensor is malfunctioning and the windshield wiper switch assembly is in the AUTO position, the front wiper system will use the mode that the rain sensor is determined to be appropriate before the rain sensor malfunctioned.
HINT:
Recovery condition: Signal level error cancellation from rain sensor.

(c) When the rain sensor overheats and the front wiper is in the HI operation mode, the front wiper system is changed to the LO operation mode.
HINT:
- Recovery condition: Engine switch off or wiper operation signal is not AUTO or LO.
- A mode change is not carried out when the rain sensor is malfunctioning in high temperature, or in low temperature.

DATA LIST / ACTIVE TEST

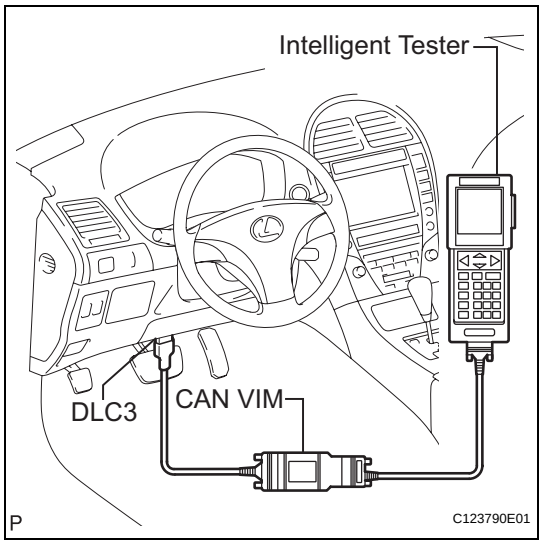

1. READ DATA LIST

HINT:
Using the intelligent tester to read the DATA LIST allows the values or states of switches, sensors, actuators, and other items to be read without removing any parts. This nonintrusive inspection can be very useful as intermittent conditions or signals may be discovered before parts or wiring is disturbed. Reading the DATA LIST information early in troubleshooting is one way to save diagnostic time.

(a) Connect the intelligent tester to the DLC3.
(b) Turn the engine switch on (IG).
(c) Read the DATA LIST.

METER:

Tester Display	Measurement Item/Range	Normal Condition	Diagnostic Note
WASHER SW	Washer fluid level switch / ON or OFF	ON: Washer jar is empty OFF: Washer jar is full	-

Front Wiper Motor Circuit

DESCRIPTION

The auto wiper relay controls the front wiper motor.

WIRING DIAGRAM

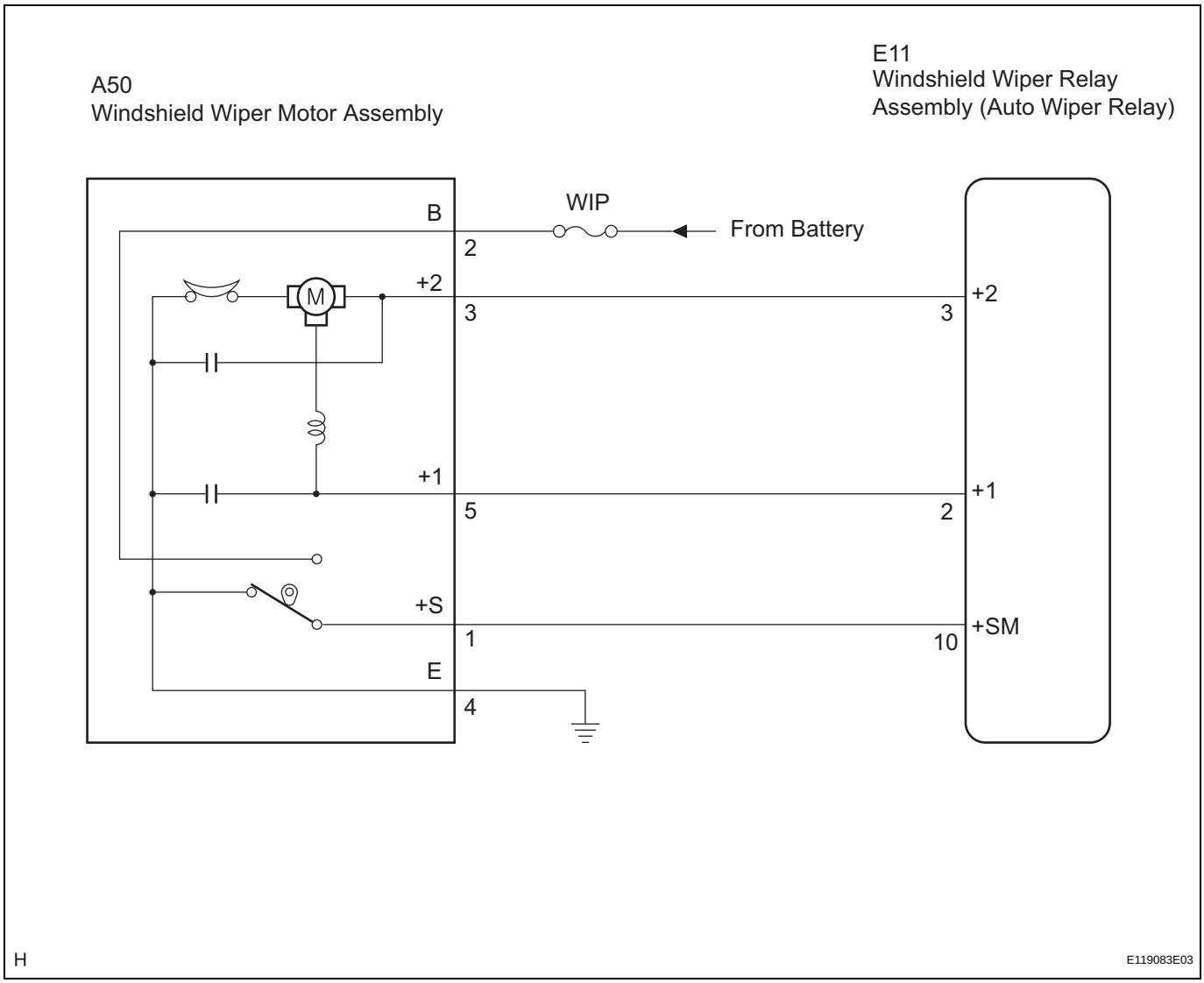

WW

INSPECTION PROCEDURE

1 INSPECT WINDSHIELD WIPER MOTOR ASSEMBLY

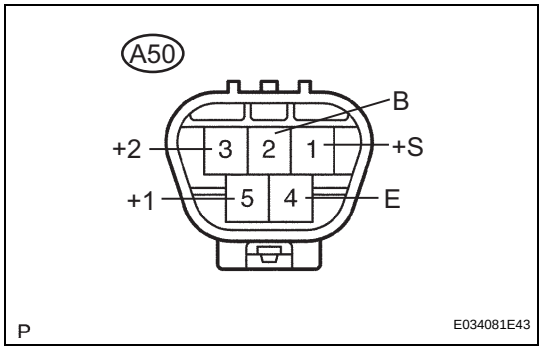

(a) Remove the windshield wiper motor assembly (See page WW-58).

(b) Check the LO operation.

(1) Connect the positive (+) battery lead to terminal A50-5 (+1) of the connector, and the negative (-) battery lead to terminal A50-4 (E), and check that the motor operates at a low speed.

(c) Check the HI operation.

(1) Connect the positive (+) battery lead to terminal A50-3 (+2) of the connector, and the negative (-) battery lead to terminal A50-1 (+S), and check that the motor operates at a high speed.

NG → **REPLACE WINDSHIELD WIPER MOTOR ASSEMBLY**

OK

2 CHECK HARNESS AND CONNECTOR (WIPER MOTOR - WIPER RELAY, BODY GROUND)

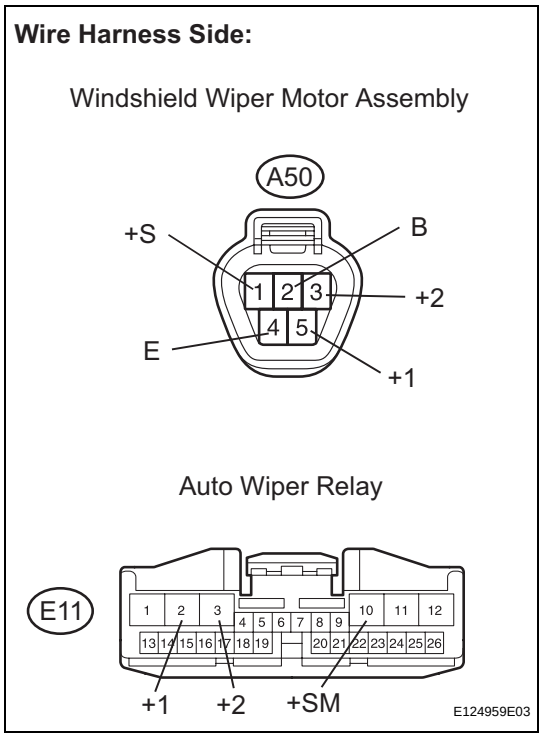

(a) Disconnect the A50 windshield wiper motor assembly connector.

(b) Disconnect the E11 windshield wiper relay assembly (auto wiper relay) connector.

(c) Measure the resistance according to the value(s) in the table below.

Standard resistance

Tester Connection	Condition	Specified Condition
A50-1 (+S) - E11-10 (+SM)	Always	Below 1 Ω
A50-1 (+S) - Body ground	Always	10 kΩ or higher
A50-3 (+2) - E11-3 (+2)	Always	Below 1 Ω
A50-3 (+2) - Body ground	Always	10 kΩ or higher
A50-4 (E) - Body ground	Always	Below 1 Ω
A50-5 (+1) - E11-2 (+1)	Always	Below 1 Ω
A50-5 (+1) - Body ground	Always	10 kΩ or higher

NG → **REPAIR OR REPLACE HARNESS OR CONNECTOR**

OK

PROCEED TO NEXT CIRCUIT INSPECTION SHOWN IN PROBLEM SYMPTOMS TABLE

WW

Wiper Motor Power Source Circuit

DESCRIPTION

This circuit provides power to the windshield wiper motor assembly.

WIRING DIAGRAM

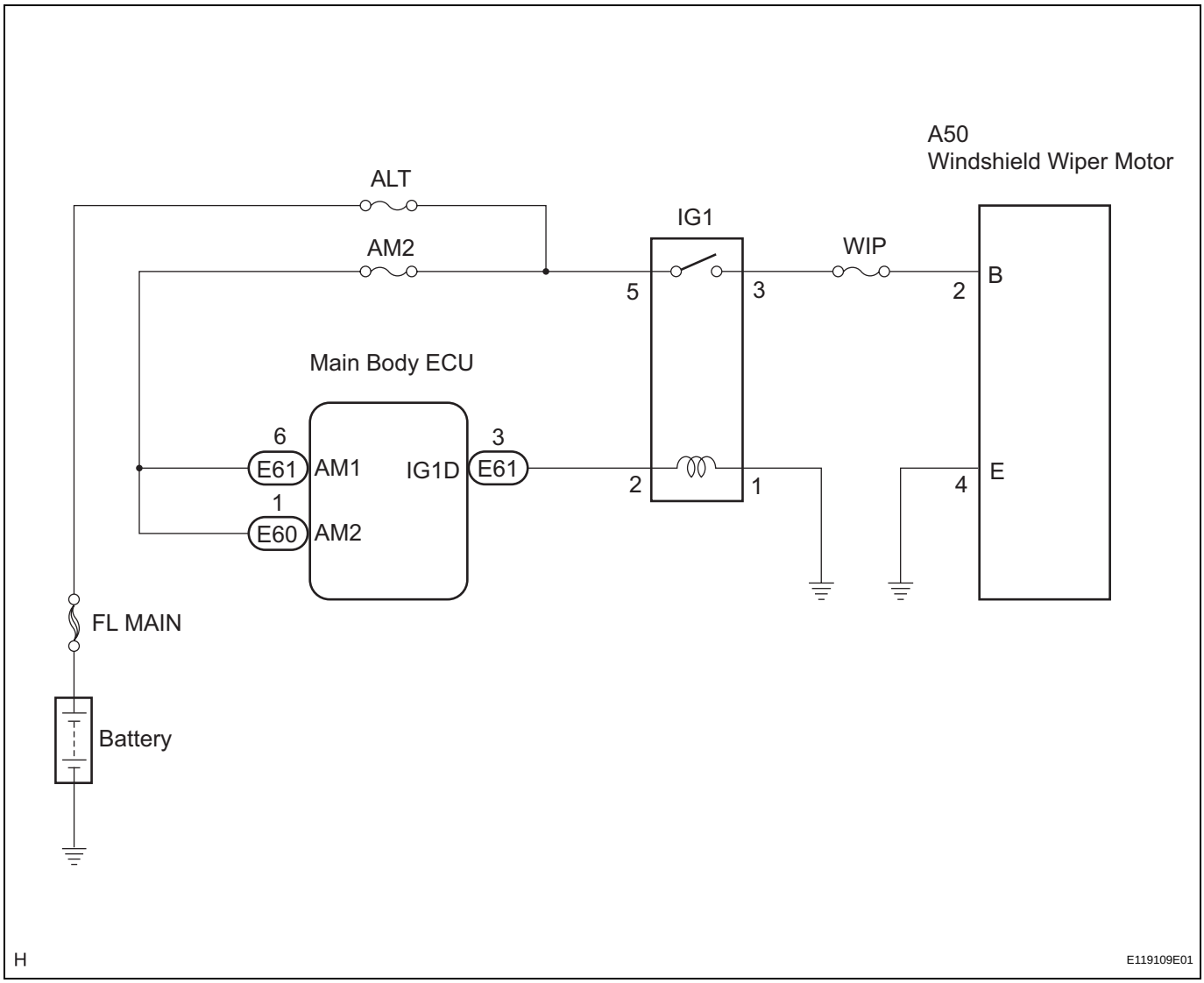

INSPECTION PROCEDURE

1	INSPECT FUSE (WIP)

(a) Remove the WIP fuse from the instrument panel J/B.
(b) Measure the resistance of the fuse.
Standard resistance:
Below 1 Ω

NG → **REPLACE FUSE**

OK

2 INSPECT IG1 RELAY

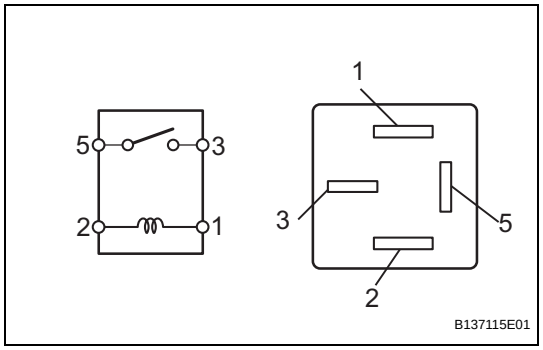

(a) Remove the IG1 relay from the instrument panel J/B.
(b) Measure the resistance of the relay.
Standard resistance

Tester Connection	Condition	Specified Condition
3 - 5	Always	10 kΩ or higher
	When battery voltage is applied to terminals 1 and 2	Below 1 Ω

NG → **REPLACE IG1 RELAY**

OK

WW

3 CHECK HARNESS AND CONNECTOR (WIPER MOTOR - BATTERY, BODY GROUND)

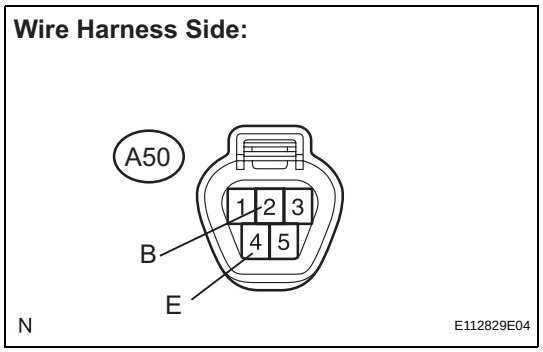

(a) Disconnect the A50 windshield wiper motor assembly connector.
(b) Measure the voltage according to the value(s) in the table below.
Standard voltage

Tester Connection	Condition	Specified Condition
A50-2 (B) - Body ground	Engine switch on (IG)	10 to 14 V

(c) Measure the resistance according to the value(s) in the table below.
Standard resistance

Tester Connection	Condition	Specified Condition
A50-4 (E) - Body ground	Always	Below 1 Ω

NG → **REPAIR OR REPLACE HARNESS OR CONNECTOR**

OK

PROCEED TO NEXT CIRCUIT INSPECTION SHOWN IN PROBLEM SYMPTOMS TABLE

REMOVAL

1. **REMOVE COOL AIR INTAKE DUCT SEAL (See page ET-4)**

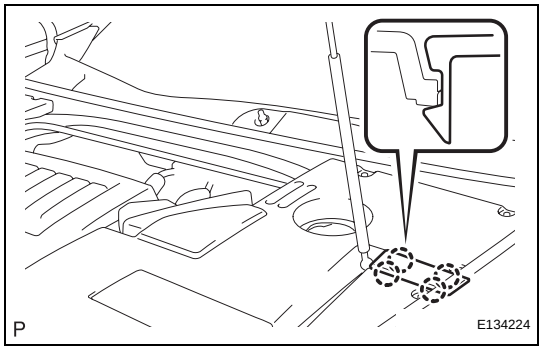

2. **REMOVE HOOD HINGE COVER (for LH Side)**
   (a) Disengage the 4 claws and remove the hood hinge cover.

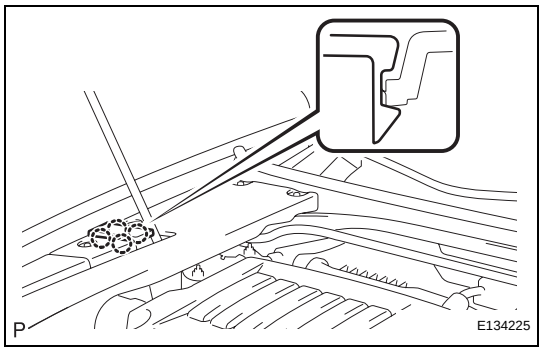

3. **REMOVE HOOD HINGE COVER (for RH Side)**
   (a) Disengage the 4 claws and remove the hood hinge cover.

WW

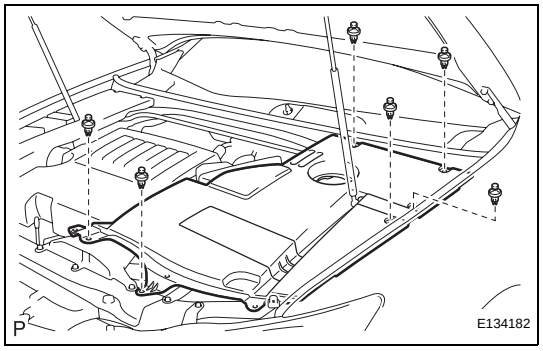

4. **REMOVE ENGINE ROOM SIDE COVER LH**
   (a) Remove the 6 clips, and the engine room side cover LH.

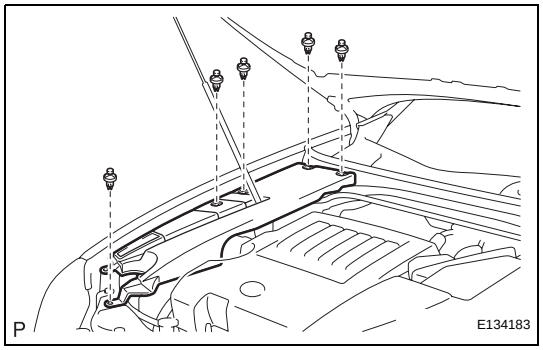

5. **REMOVE ENGINE ROOM SIDE COVER RH**
   (a) Remove the 5 clips, and the engine room side cover RH.

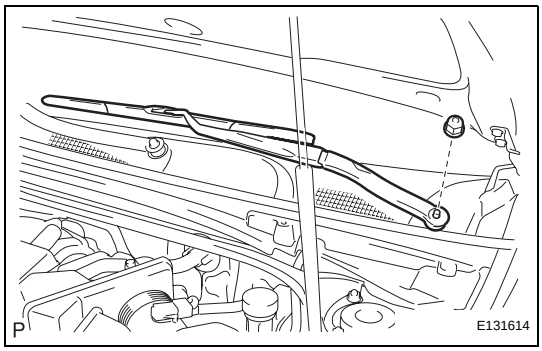

6. REMOVE FRONT WIPER ARM AND BLADE ASSEMBLY LH

(a) Remove the nut, and the front wiper arm and blade assembly LH.

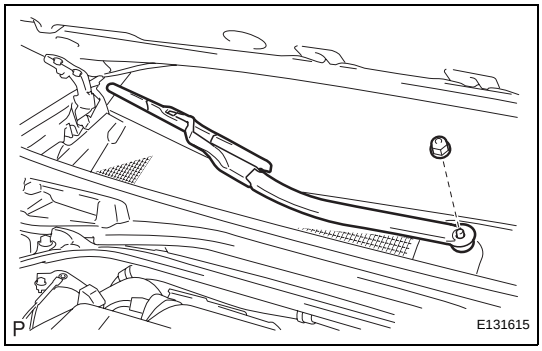

7. REMOVE FRONT WIPER ARM AND BLADE ASSEMBLY RH

(a) Remove the nut, and the front wiper arm and blade assembly RH.

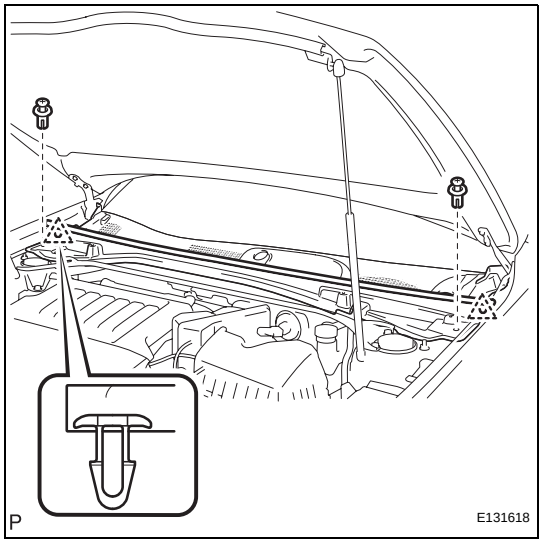

8. REMOVE COWL TOP VENTILATOR LOUVER SUB-ASSEMBLY

(a) Disengage the 2 clips and separate the hood to cowl top seal.

(b) Remove the 2 clips.

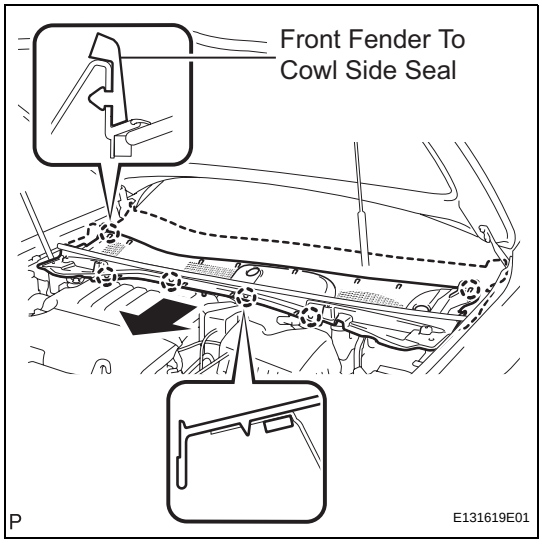

(c) Disengage the 6 claws and remove the cowl top ventilator louver sub-assembly as shown in the illustration.

NOTICE:

When removing the cowl top ventilator louver sub-assembly, hold the front fender to cowl side seals by hand to prevent them from coming off the windshield. The front fender to cowl side seals are attached to the windshield with double-sided tape. Once the front fender to cowl side seals come off, the adhesion of the tape is reduced. The double-sided tape is not available as a supply part. If the tape loses its adhesion, it is necessary to apply new high-heat resistant double-sided tape and install the front fender to cowl side seals to the windshield.

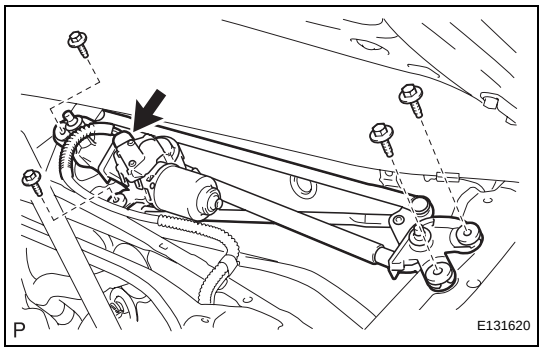

9. REMOVE WINDSHIELD WIPER MOTOR AND LINK ASSEMBLY

(a) Disconnect the connector.

(b) Remove the 4 bolts and the windshield wiper motor and link assembly.

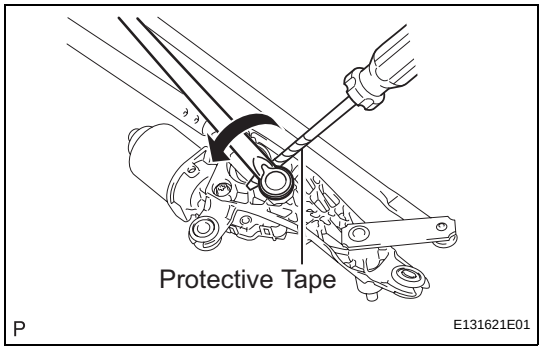

10. REMOVE WINDSHIELD WIPER MOTOR ASSEMBLY

(a) Using a screwdriver, separate the No. 2 windshield wiper link rod from the crank arm pivot of the front wiper motor assembly as shown in the illustration.
HINT:
Tape the screwdriver tip before use.

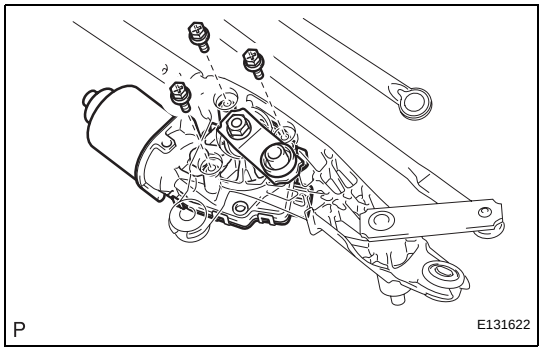

(b) Remove the 3 bolts and the windshield wiper motor assembly from the windshield wiper link assembly.

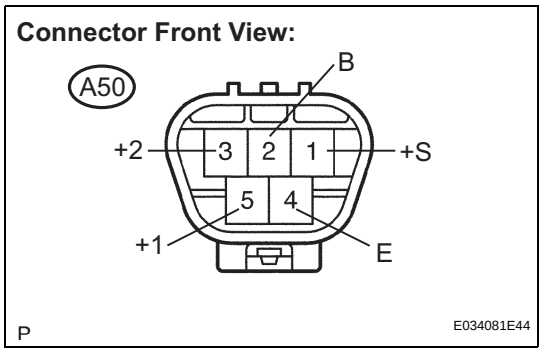

INSPECTION

1. INSPECT WINDSHIELD WIPER MOTOR ASSEMBLY

(a) LO Operation Check

(1) Connect a positive (+) battery lead to terminal A50-5 (+1) of the connector, and a negative (-) battery lead to terminal A50-4 (E), and check that the motor operates at a low speed (LO).

(b) HI Operation Check

(1) Connect a positive (+) lead to terminal A50-3 (+2) of the connector, and a negative (-) battery lead to terminal A50-4 (E), and check that the motor operates at a high speed (HI).

WW

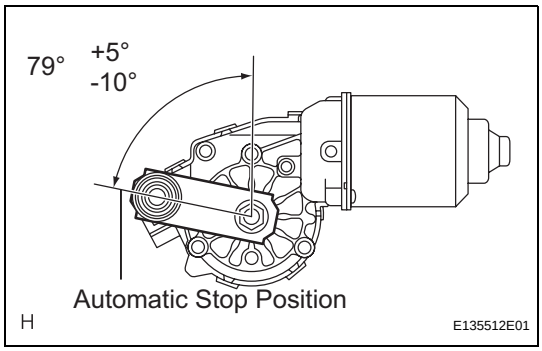

(c) Automatic Stop Operation Check

(1) Put matchmarks on the windshield wiper motor assembly. The matchmarks will be used to confirm the return of the motor shaft to the park position.

(2) Connect a positive (+) battery lead to terminal A50-5 (+1) of the connector on the wiper motor and connect a negative battery lead to terminal A50-4 (E) of the wiper motor. With the motor operating at a low speed (LO), disconnect terminal A50-5 (+1) to stop the wiper motor at a position where the matchmarks do not line up.
HINT:
In the following step, connections will be made at the wiper motor to allow verification of the operation of the park contacts that are operated by the cam in the wiper motor. After the connections have been made, when the motor is not in the park position, current will flow from terminal A50-2 (B) through the park contacts in the wiper motor, to terminal A50-1 (+S). The current will then flow through the jumper wire to terminal A50-5 (+1) through the motor to ground (causing it to operate). When the motor reaches the park position, the park contacts should open, stopping the operation of the wiper motor in the correct location. Terminals A50-2 (B) and A50-1 (+S) are connected by the internal cam in the wiper motor when the wiper motor is not in the park position. Terminals A50-1 (+S) and A50-4 (E) are connected by the internal cam in the wiper motor when the wiper motor is in the park position.

(3) With the ground wire still attached from the previous step, connect a jumper lead between terminal A50-1 (+S) and terminal A50-5 (+1). Next, connect a positive (+) battery lead to terminal A50-2 (B) to cause the wiper motor to operate at a low speed. If the wiper motor is operating correctly, the wiper will operate until it reaches the park position. When it reaches the park position, it will automatically stop.

(4) Verify that the matchmarks on the windshield wiper motor assembly are lined up.

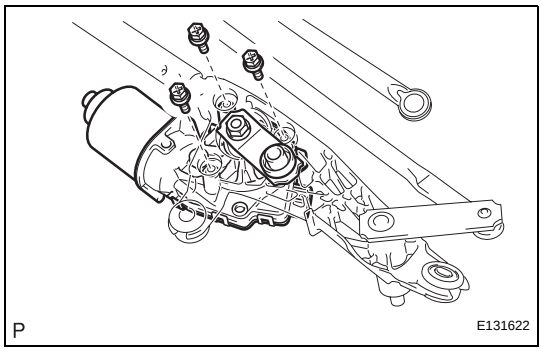

INSTALLATION

1. INSTALL WINDSHIELD WIPER MOTOR ASSEMBLY

(a) Install the windshield wiper motor assembly with the 3 bolts.
Torque: 5.4 N*m (55 kgf*cm, 48 in.*lbf)

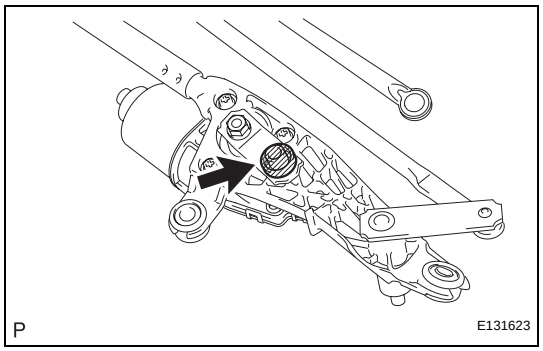

(b) Apply MP grease to the crank arm pivot of the windshield wiper motor assembly.

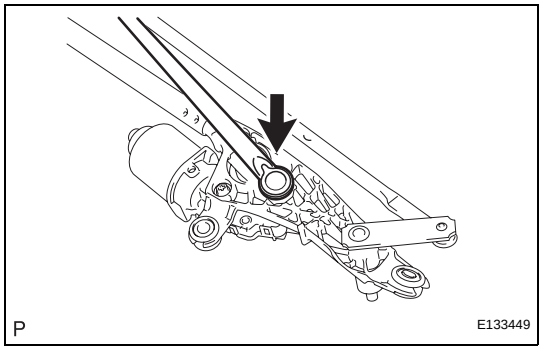

(c) Install the No. 2 windshield wiper link rod to the pivot of the windshield wiper motor assembly.

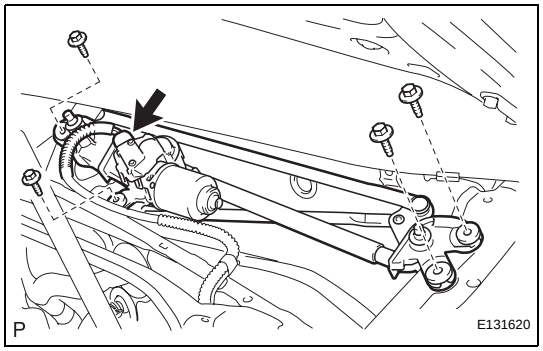

2. INSTALL WINDSHIELD WIPER MOTOR AND LINK ASSEMBLY

(a) Install the windshield wiper motor and link assembly with the 4 bolts.
Torque: 5.5 N*m (56 kgf*cm, 49 in.*lbf)

(b) Connect the connector.

3. INSTALL FRONT FENDER TO COWL SIDE SEAL RH

HINT:
In cases where double-sided tape cannot be reused.

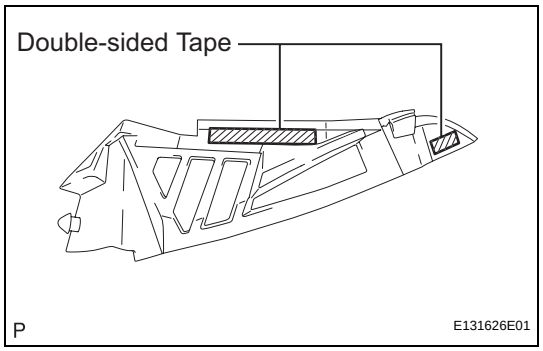

(a) Apply double-sided tape to locations as shown in the illustration.
HINT:
The double-sided tape is not available as a supply part. Use commercial high-heat resistant double-sided tape.

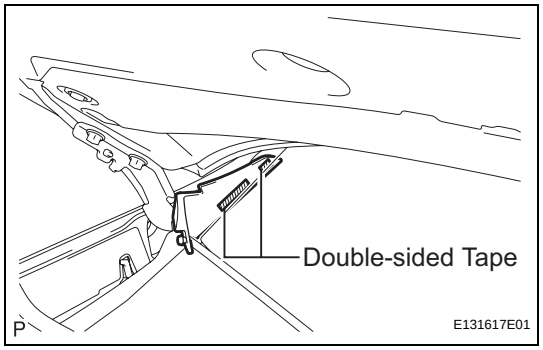

(b) Fix the double-sided tape to install the front fender to cowl side seal RH.

4. INSTALL FRONT FENDER TO COWL SIDE SEAL LH

HINT:
In cases where double-sided tape cannot be reused.

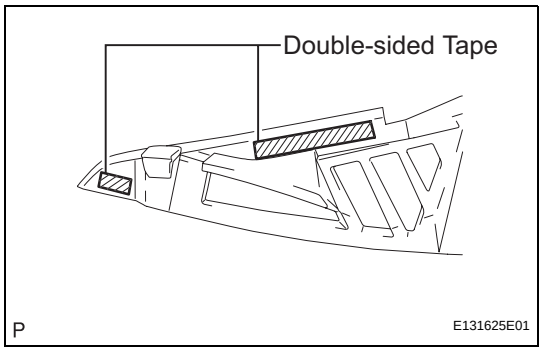

(a) Apply new double-sided tape to locations as shown in the illustration.
HINT:
The double-sided tape is not available as a supply part. Use commercial high-heat resistant double-sided tape.

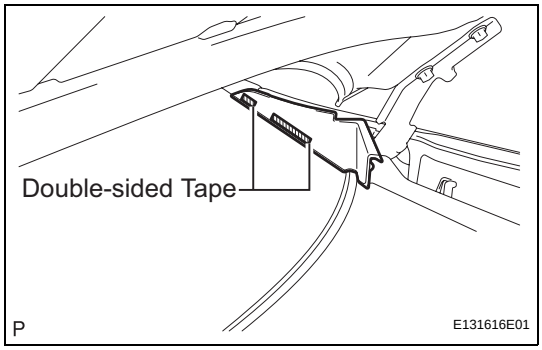

(b) Fix the double-sided tape to install the front fender to cowl side seal LH.

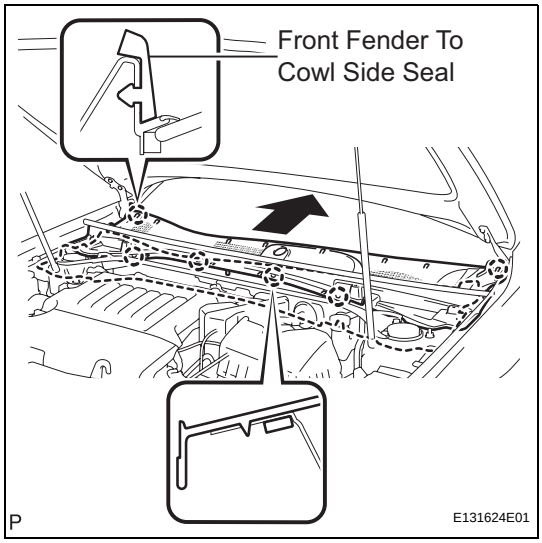

5. INSTALL COWL TOP VENTILATOR LOUVER SUB-ASSEMBLY

(a) Engage the 6 claws and install the cowl top ventilator louver sub-assembly as shown in the illustration.
NOTICE:
When installing the cowl top ventilator louver sub-assembly, hold the front fender to cowl side seals by hand to prevent them from coming off the windshield. The front fender to cowl side seals are attached to the windshield with double-sided tape. Once the front fender to cowl side seals come off, the adhesion of the tape is reduced. The double-sided tape is not available as a supply part. If the tape loses its adhesion, it is necessary to apply new high-heat resistant double-sided tape and install the front fender to cowl side seals to the windshield.

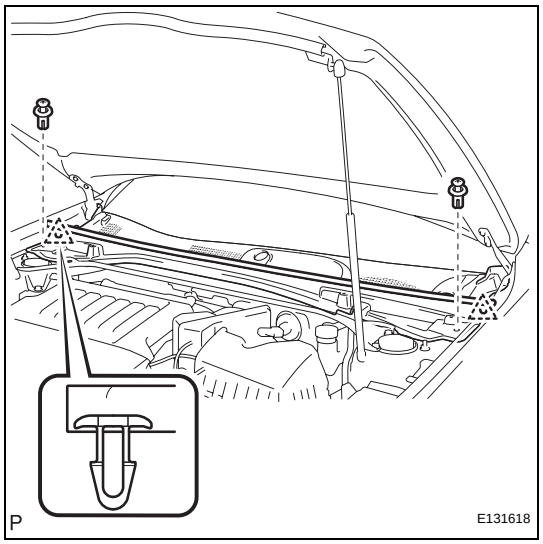

(b) Install the 2 clips.
(c) Engage the 2 clips and install the hood to cowl top seal.

6. INSTALL FRONT WIPER ARM AND BLADE ASSEMBLY LH

(a) Operate the wiper and stop the windshield wiper motor at the automatic stop position.

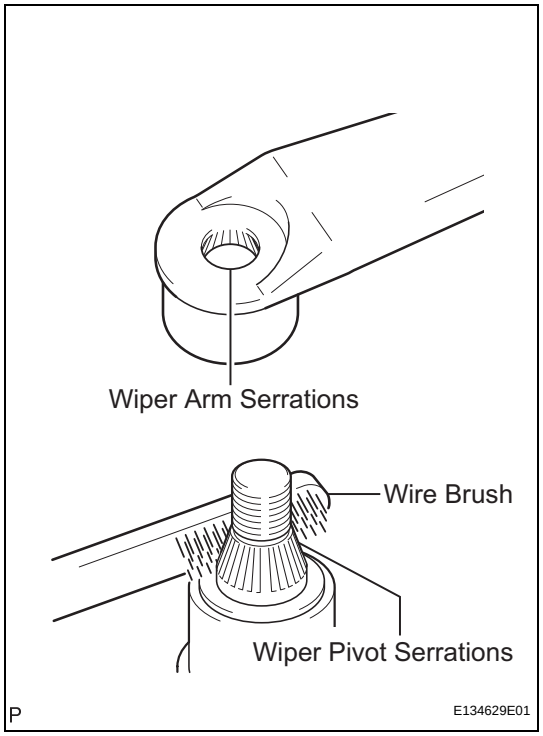

(b) Clean the wiper arm serrations.
(c) When reinstalling:
  (1) Clean the wiper pivot serrations with a wire brush.

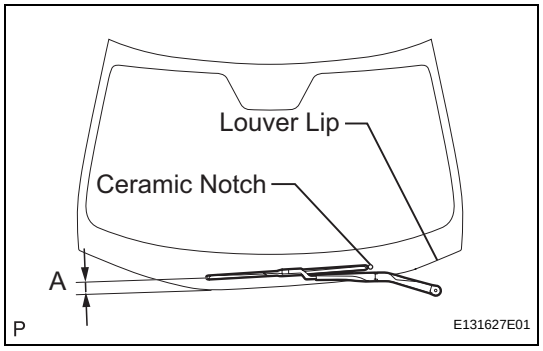

(d) Install the front wiper arm and blade assembly LH with the nut to the position shown in the illustration.
Torque: 22 N*m (224 kgf*cm, 16 ft.*lbf)
HINT:
Hold the arm hinge by hand to fasten the nut.

Area	Measurement
A	18 to 33 mm (0.71 to 1.30 in.)

7. INSTALL FRONT WIPER ARM AND BLADE ASSEMBLY RH

(a) Operate the wiper and stop the windshield wiper motor at the automatic stop position.

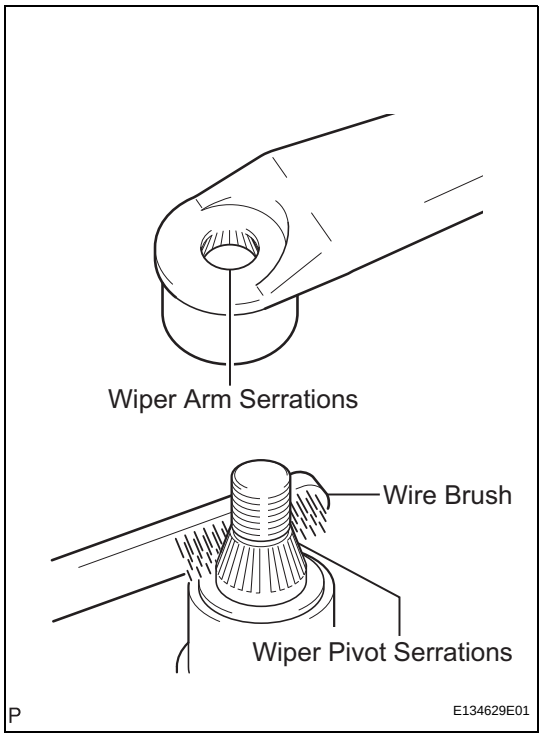

(b) Clean the wiper arm serrations.
(c) When reinstalling:
  (1) Clean the wiper pivot serrations with a wire brush.

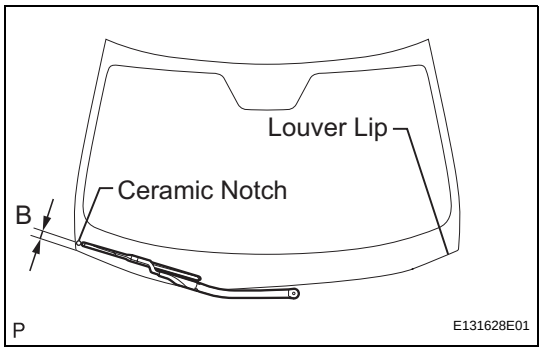

(d) Install the front wiper arm and blade assembly RH with the nut to the position shown in the illustration.
Torque: 22 N*m (224 kgf*cm, 16 ft.*lbf)
HINT:
Hold the arm hinge by hand to fasten the nut.

Area	Measurement
B	20 to 35 mm (0.79 to 1.38 in.)

(e) Operate the front wipers while spraying washer fluid on the windshield glass. Make sure that the front wipers function properly and the wipers do not come into contact with the vehicle body.

WW

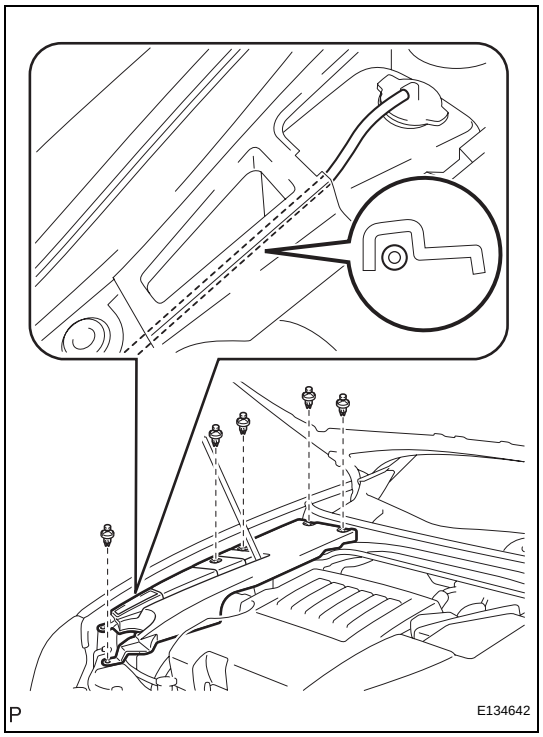

8. INSTALL ENGINE ROOM SIDE COVER RH

(a) Install the engine room side cover RH with the 5 clips.

NOTICE:

When installing the engine room side cover RH, make sure that the engine coolant reservoir hose is positioned as shown in the illustration.

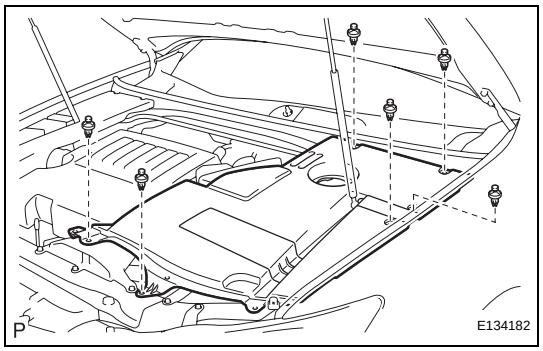

9. INSTALL ENGINE ROOM SIDE COVER LH

(a) Install the engine room side cover LH with the 6 clips.

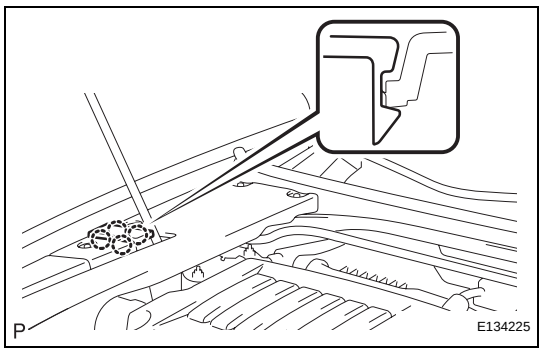

10. INSTALL HOOD HINGE COVER (for RH Side)

(a) Engage the 4 claws and install the hood hinge cover.

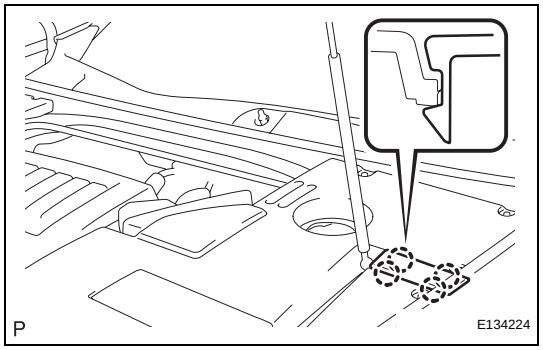

11. INSTALL HOOD HINGE COVER (for LH Side)

(a) Engage the 4 claws and install the hood hinge cover.

12. INSTALL COOL AIR INTAKE DUCT SEAL (See page ET-14)

WW

Wiper and Washer Switch Circuit

DESCRIPTION

This circuit detects the state of the windshield wiper switch assembly and sends it to the windshield wiper relay assembly (auto wiper relay).

WIRING DIAGRAM

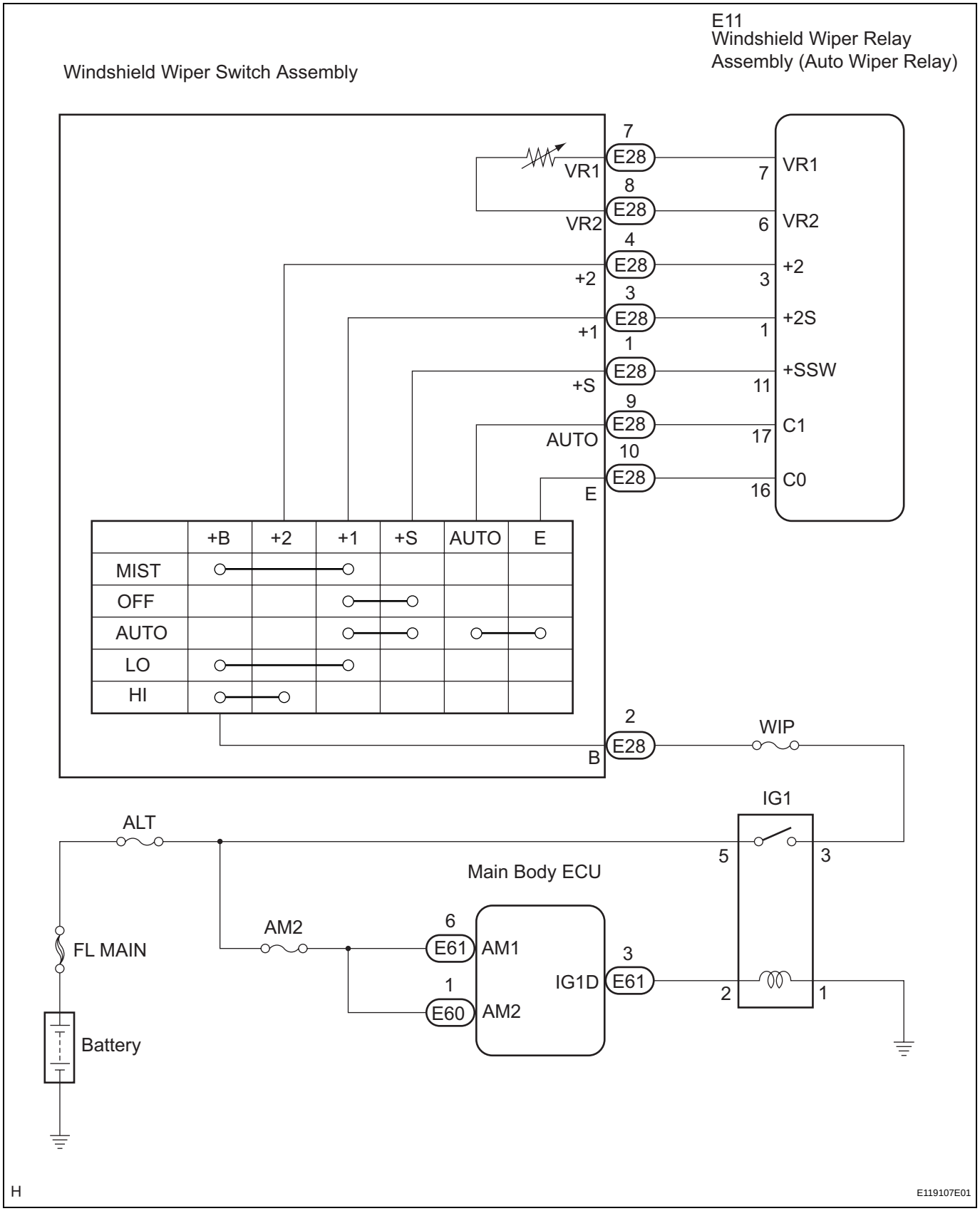

WW

INSPECTION PROCEDURE

1	CHECK WINDSHIELD WIPER SWITCH ASSEMBLY (WIPER SWITCH AND WASHER SWITCH)

Windshield Wiper Switch Assembly:

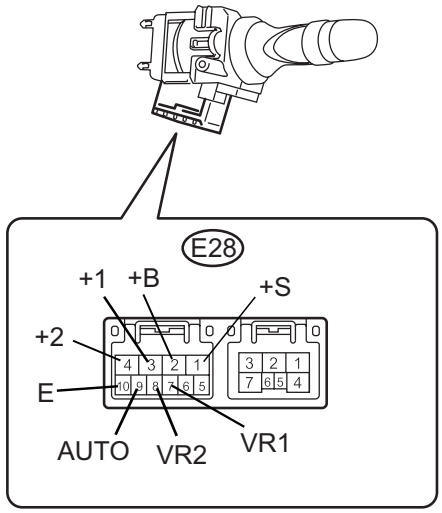

H E119108E01

(a) Remove the windshield wiper switch assembly (See page WW-54).

(b) Measure the resistance according to the value(s) in the table below.

Standard resistance

Tester Connection	Switch Connection	Specified Condition
E28-2 (+B) - E28-4 (+2)	HI	Below 1 Ω
E28-3 (+1) - E28-2 (+B)	MIST	
	LO	
E28-3 (+1) - E28-1 (+S)	OFF	
E28-9 (AUTO) - E28-10 (E)	AUTO	
E28-7 (VR1) - E28-8 (VR2)	AUTO	Approximately 50 kΩ

NG → **REPLACE WINDSHIELD WIPER SWITCH ASSEMBLY**

OK

2	CHECK HARNESS AND CONNECTOR (WIPER SWITCH - AUTO WIPER RELAY, BODY GROUND)

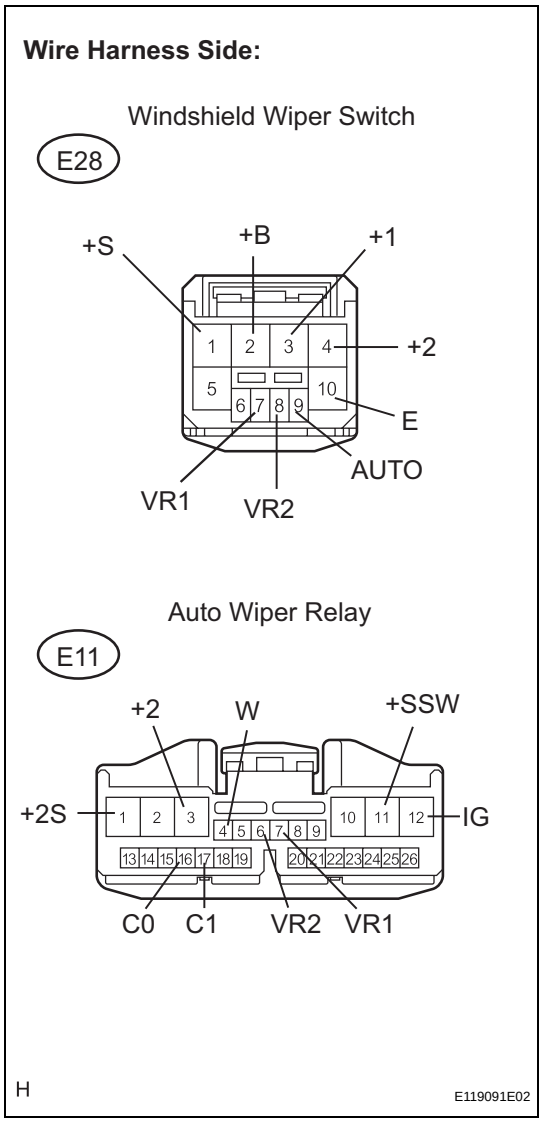

(a) Disconnect the E11 windshield wiper relay assembly (auto wiper relay) connector.

(b) Measure the resistance according to the value(s) in the table below.

Standard resistance

Tester Connection	Condition	Specified Condition
E28-1 (+S) - E11-11 (+SSW)	Always	Below 1 Ω
E28-1 (+S) - Body ground	Always	10 kΩ or higher
E28-2 (+B) - E11-12 (IG)	Always	Below 1 Ω
E28-2 (+B) - Body ground	Always	10 kΩ or higher
E28-3 (+1) - E11-1 (+2S)	Always	Below 1 Ω
E28-3 (+1) - Body ground	Always	10 kΩ or higher
E28-4 (+2) - E11-3 (+2)	Always	Below 1 Ω
E28-4 (+2) - Body ground	Always	10 kΩ or higher
E28-7 (VR1) - E11-7 (VR1)	Always	Below 1 Ω
E28-7 (VR1) - Body ground	Always	10 kΩ or higher
E28-8 (VR2) - E11-6 (VR2)	Always	Below 1 Ω
E28-8 (VR2) - Body ground	Always	10 kΩ or higher
E28-9 (AUTO) - E11-17 (C1)	Always	Below 1 Ω
E28-9 (AUTO) - Body ground	Always	10 kΩ or higher
E28-10 (E) - E11-16 (C0)	Always	Below 1 Ω
E28-10 (E) - Body ground	Always	Below 1 Ω

NG → **REPAIR OR REPLACE HARNESS OR CONNECTOR**

OK

PROCEED TO NEXT CIRCUIT INSPECTION SHOWN IN PROBLEM SYMPTOMS TABLE

WW

Rain Sensor Circuit

DESCRIPTION

This circuit provides power to operate the rain sensor.
The auto wiper system operates when the windshield wiper switch assembly is in the AUTO position.

WIRING DIAGRAM

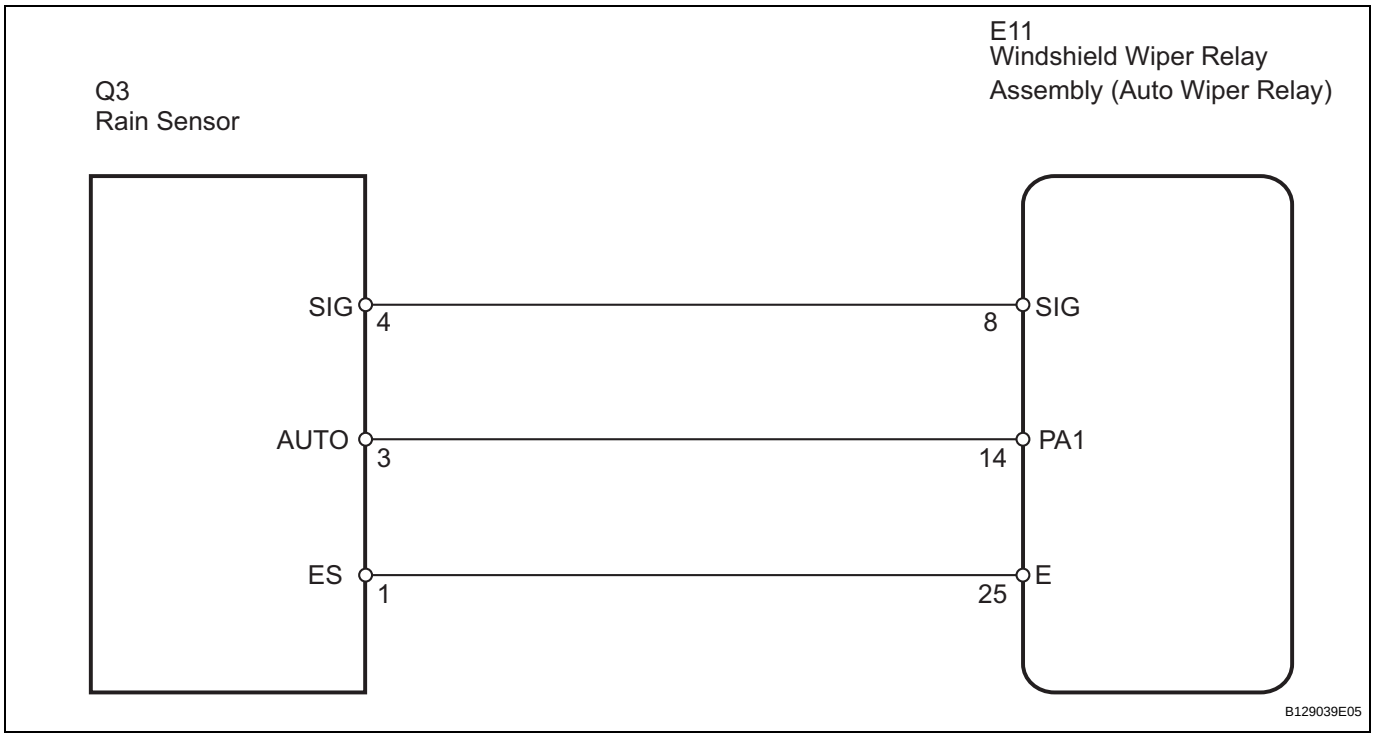

WW

INSPECTION PROCEDURE

1	CHECK HARNESS AND CONNECTOR (WIPER RELAY - RAIN SENSOR)

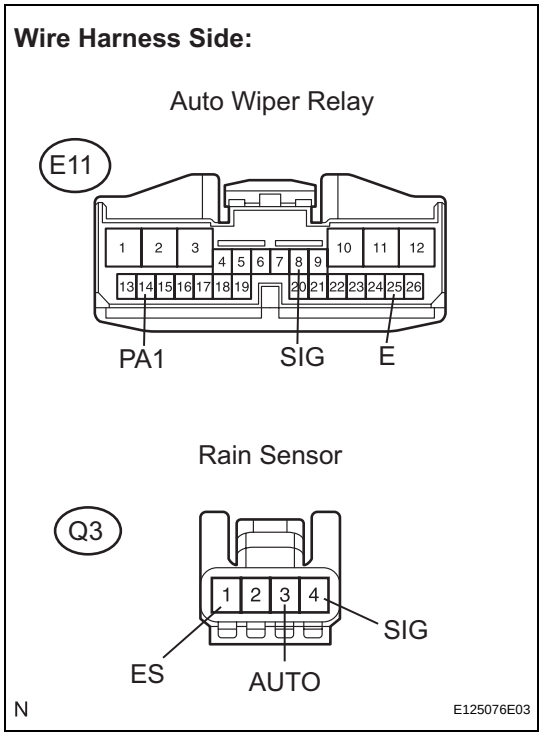

(a) Disconnect the E11 windshield wiper relay assembly (auto wiper relay) connector.
(b) Disconnect the Q3 rain sensor connector.
(c) Measure the resistance according to the value(s) in the table below.

Standard resistance

Tester Connection	Condition	Specified Condition
E11-8 (SIG) - Q3-4 (SIG)	Always	Below 1 Ω
E11-14 (PA1) - Q3-3 (AUTO)	Always	Below 1 Ω
E11-25 (E) - Q3-1 (ES)	Always	Below 1 Ω
Q3-4 (SIG) - Body ground	Always	10 kΩ or higher
Q3-3 (AUTO) - Body ground	Always	10 kΩ or higher
Q3-1 (ES) - Body ground	Always	Below 1 Ω

NG → **REPAIR OR REPLACE HARNESS OR CONNECTOR**

OK

PROCEED TO NEXT CIRCUIT INSPECTION SHOWN IN PROBLEM SYMPTOMS TABLE

WW

Washer Motor Circuit

DESCRIPTION

The windshield wiper relay assembly (auto wiper relay) controls the front washer motor.

WIRING DIAGRAM

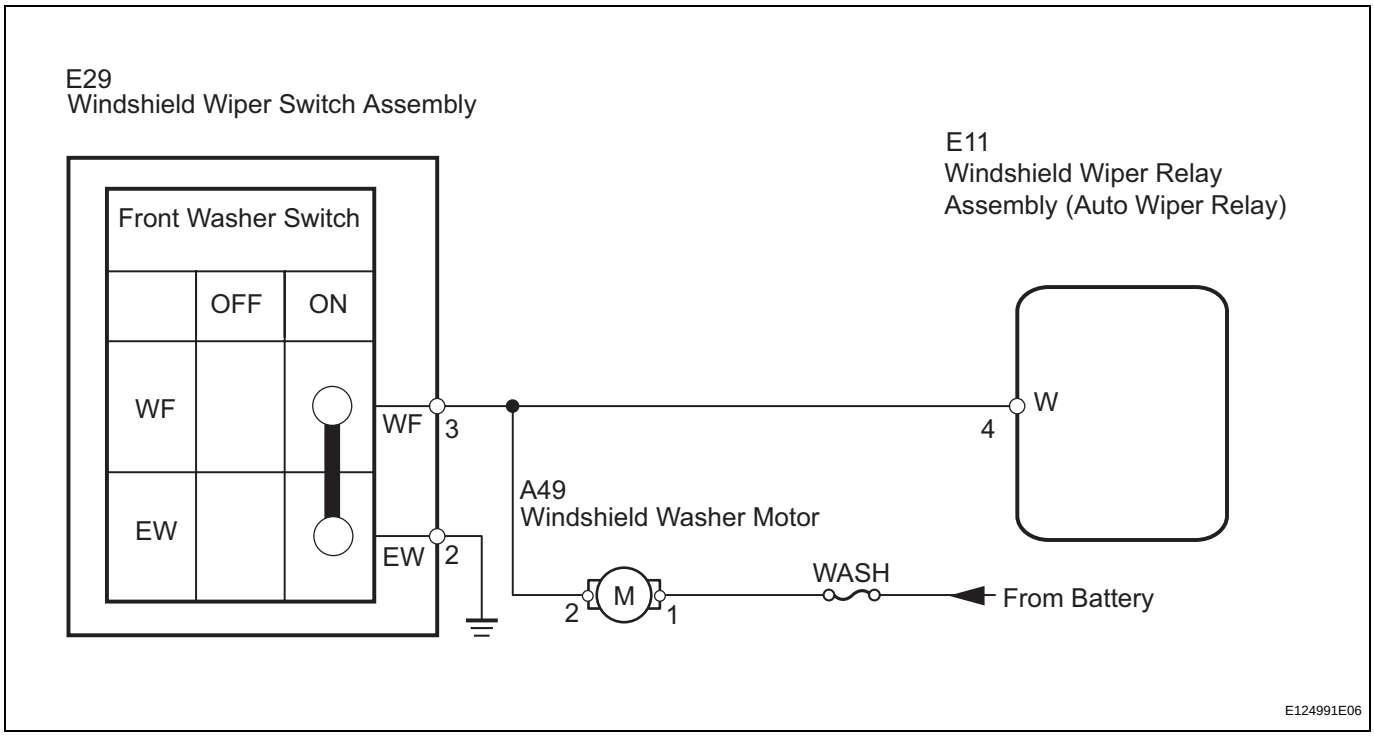

INSPECTION PROCEDURE

1	INSPECT FUSE (WASH)

(a) Remove the WASH fuse from the instrument panel J/B.
(b) Measure the resistance of the fuse.
Standard resistance:
Below 1 Ω

NG → **REPLACE FUSE**

OK

2 INSPECT WINDSHIELD WIPER SWITCH ASSEMBLY (WASHER SWITCH)

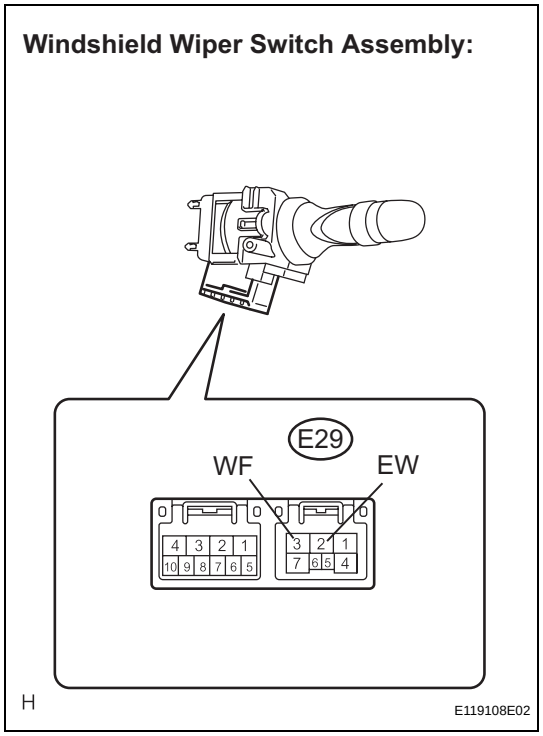

(a) Remove the windshield wiper switch assembly (See page WW-54).

(b) Measure the resistance according to the value(s) in the table below.

Standard resistance

Tester Connection	Switch Connection	Specified Condition
E29-2 (EW) - E29-3 (WF)	ON	Below 1 Ω
	OFF	10 kΩ or higher

NG → **REPLACE WINDSHIELD WIPER SWITCH ASSEMBLY**

OK

3 INSPECT WINDSHIELD WASHER MOTOR AND PUMP ASSEMBLY

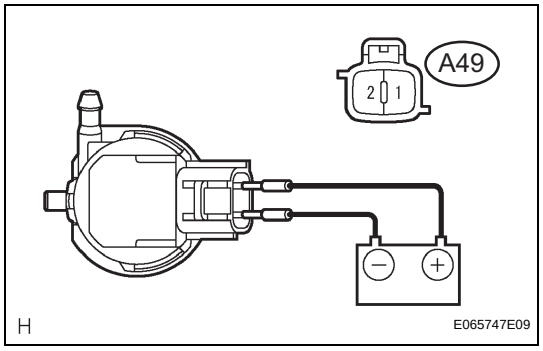

(a) Remove the washer jar.

(b) Apply battery voltage to the windshield washer motor connector and check the operation of the windshield washer motor assembly.

OK

Measurement Condition	Specified Condition
Battery positive (+) → Terminal A49-1 Battery negative (-) → Terminal A49-2	Washer fluid flows from washer jar

HINT:
The check should be performed with the windshield washer motor and pump installed to the washer jar.

NG → **REPLACE WINDSHIELD WASHER MOTOR AND PUMP ASSEMBLY**

OK

4 CHECK HARNESS AND CONNECTOR (BATTERY - WASHER MOTOR)

(a) Measure the voltage according to the value(s) in the table below.

WW

Standard voltage

Tester connection	Condition	Specified condition
A49-1 - Body ground	Engine switch on (IG)	10 to 14 V

NG → **REPAIR OR REPLACE HARNESS OR CONNECTOR**

OK

5 CHECK HARNESS AND CONNECTOR (WASHER MOTOR - WIPER RELAY, WASHER SWITCH)

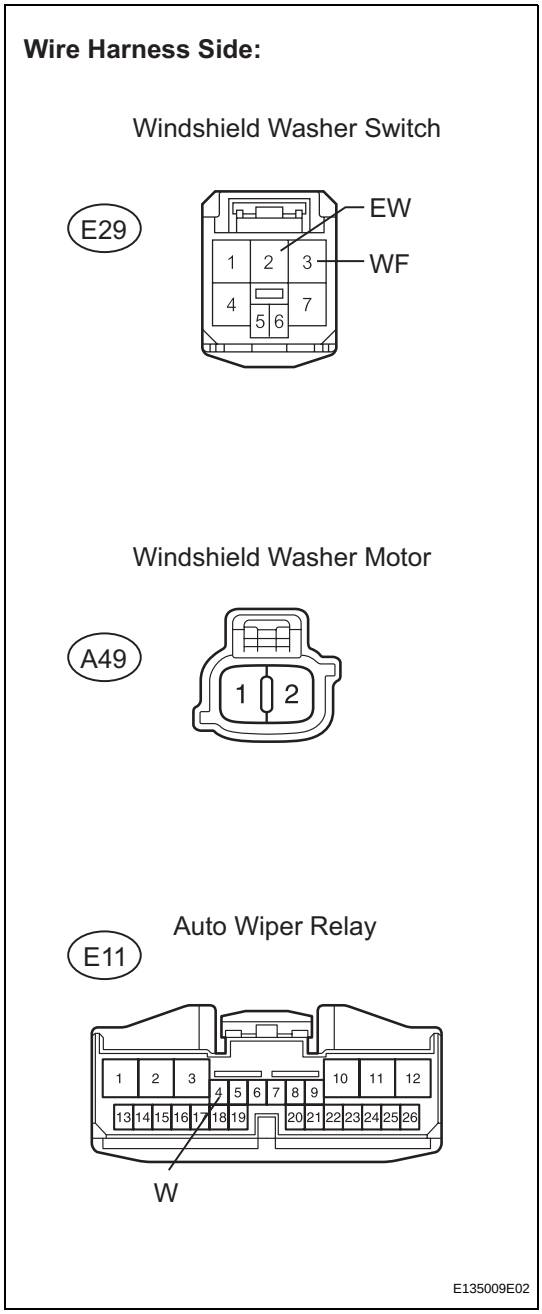

(a) Disconnect the E11 windshield wiper relay assembly (auto wiper relay) connector.

(b) Measure the resistance according to the value(s) in the table below.

Standard resistance

Tester Connection	Condition	Specified Condition
A49-2 - E11-4 (W)	Always	Below 1 Ω
E29-3 (WF) - A49-2	Always	Below 1 Ω

NG → **REPAIR OR REPLACE HARNESS OR CONNECTOR**

WW

OK

PROCEED TO NEXT CIRCUIT INSPECTION SHOWN IN PROBLEM SYMPTOMS TABLE

WIPER SWITCH

COMPONENTS

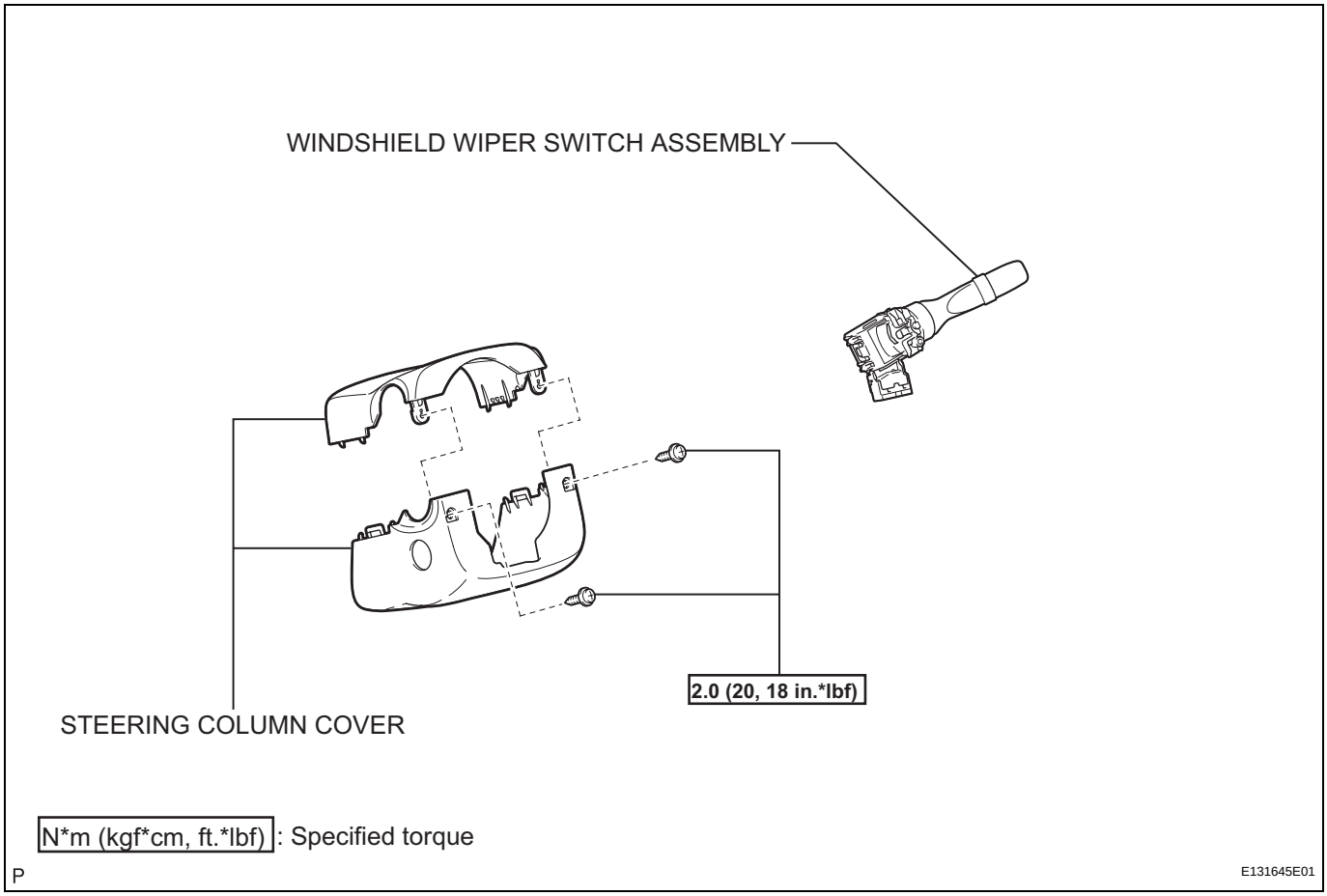

WW

REMOVAL

1. **REMOVE STEERING COLUMN COVER (See page SR-80)**

2. **REMOVE WINDSHIELD WIPER SWITCH ASSEMBLY**
   (a) Disconnect the 2 connectors.
   (b) Disengage the claw and remove the windshield wiper switch assembly as shown in the illustration.
   NOTICE:
   If the claw is pushed with excessive force, it may break.

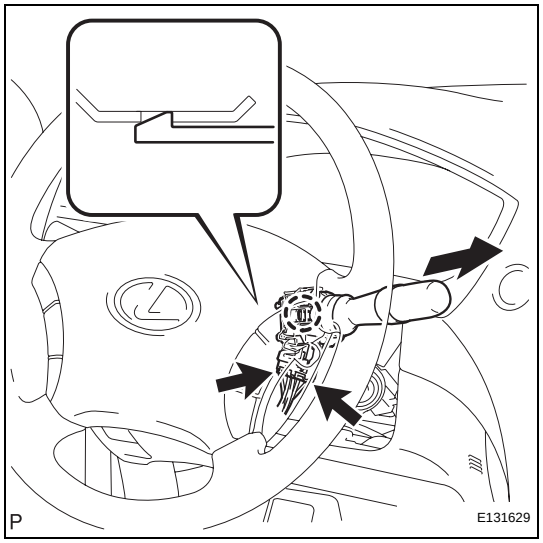

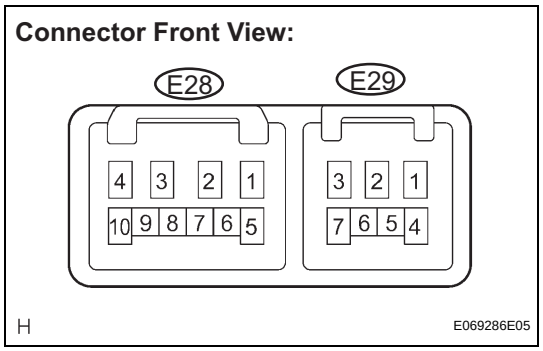

INSPECTION

1. **INSPECT WINDSHIELD WIPER SWITCH ASSEMBLY**
   (a) Check for continuity of the windshield wiper switch assembly.
   (1) Measure the resistance according to the value(s) in the table below.
   Standard resistance:
   Front Wiper Switch

Tester Connection	Switch Condition	Specified Condition
E28-3 (+1) - E28-2 (+B)	MIST	Below 1 Ω
	LO	
E28-3 (+1) - E28-1 (+S)	OFF	
E28-9 (AUTO) - E28-10 (E)	AUTO	
E28-2 (+B) - E28-4 (+2)	HI	

Front Washer Switch

Tester Connection	Switch Position	Specified Resistance
E29-3 (WF) - E29-2 (EW)	OFF	10 kΩ or higher
E29-3 (WF) - E29-2 (EW)	ON	Below 1 Ω

   (b) Intermittent Operation Check
   (1) Connect the voltmeter (+) terminal to terminal E28-3 (+1) of the connector and the voltmeter (-) terminal to terminal E29-2 (EW).
   (2) Connect a positive (+) battery lead to terminal E28-2 (+B) of the connector and a negative (-) battery lead to terminals E29-2 (EW) and E28-1 (+S).
   (3) Turn the wiper switch to the INT position.
   (4) Connect a positive (+) battery lead to terminal E28-1 (+S) of the connector for 5 seconds.

WW

(5) Connect a negative (-) battery lead to terminal E28-4 (+2) of the connector. Operate the intermittent wiper adjustment ring and measure the voltage between terminals E28-3 (+1) and E29-2 (EW).

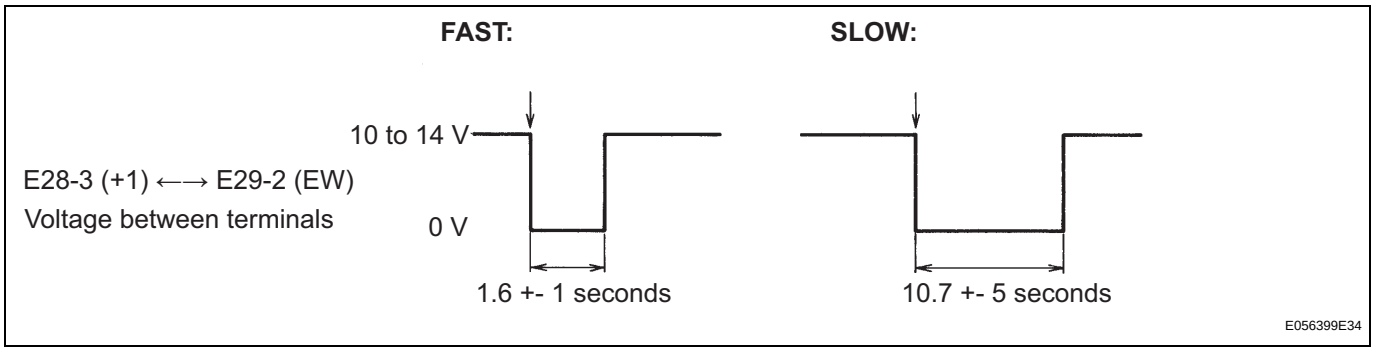

WW

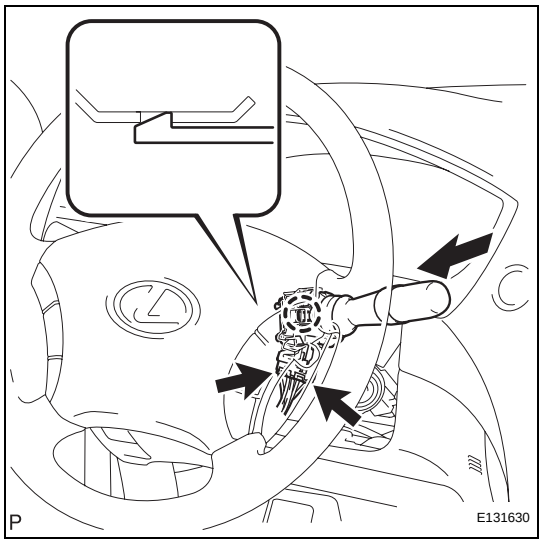

INSTALLATION

1. INSTALL WINDSHIELD WIPER SWITCH ASSEMBLY

(a) Engage the claw and install the windshield wiper switch assembly as shown in the illustration.

(b) Connect the 2 connectors.

2. INSTALL STEERING COLUMN COVER (See page SR-87)

Washer Fluid Level Warning Switch Circuit

DESCRIPTION

When the volume of washer fluid decreases to below a certain level (when the washer fluid level warning switch is turned ON), the combination meter warns the driver through the master warning light illumination, the buzzer and the warning message on the multi-information display.

WIRING DIAGRAM

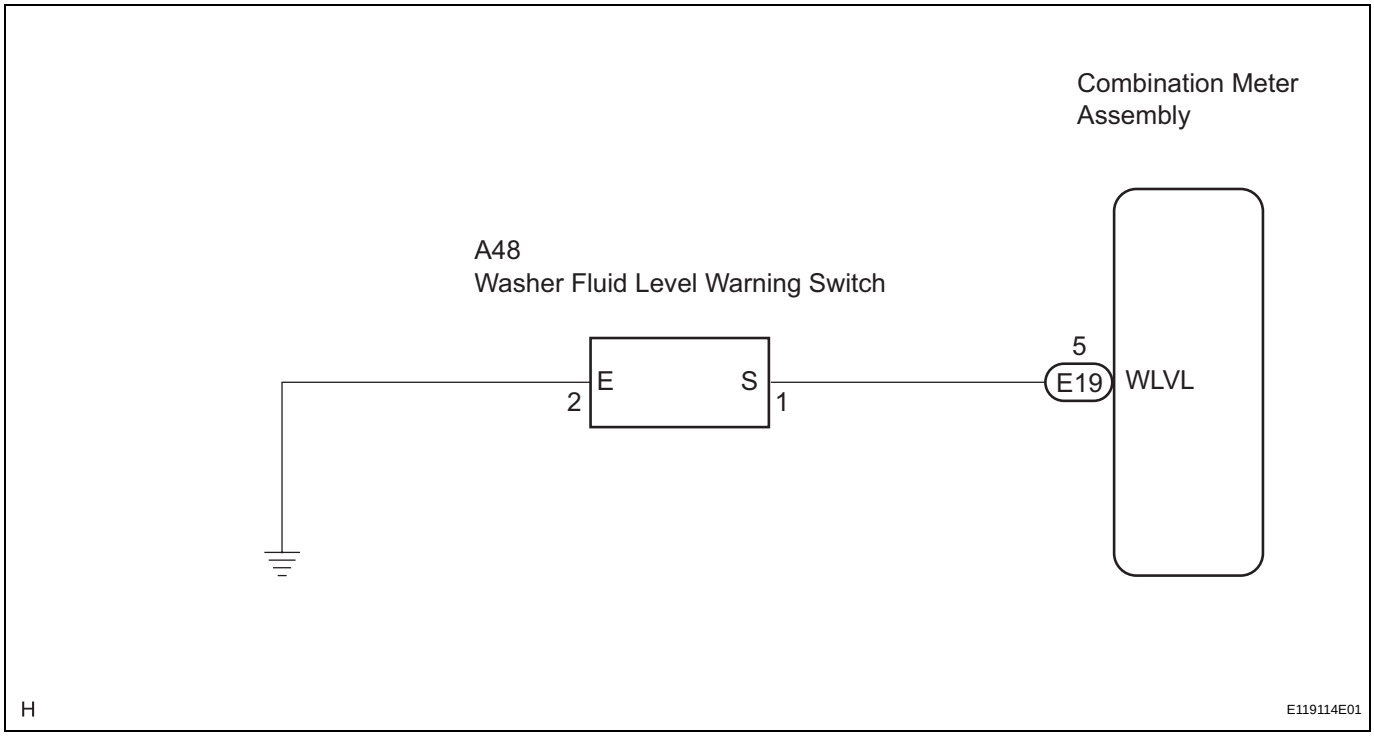

INSPECTION PROCEDURE

1	READ VALUE OF INTELLIGENT TESTER (WASHER LEVEL)

(a) Connect the intelligent tester to the DLC3.
(b) Turn the engine switch on (IG) and turn the intelligent tester main switch on.
(c) Select the item below in the DATA LIST, and read the displays on the intelligent tester.

METER:

Tester Display	Measurement Item/Range	Normal Condition	Diagnostic Note
WASHER SW	Washer fluid level switch / ON or OFF	ON: Washer jar is empty OFF: Washer jar is full	-

NG → **Go to step 2**

OK

PROCEED TO NEXT CIRCUIT INSPECTION SHOWN IN PROBLEM SYMPTOMS TABLE

2 CHECK HARNESS AND CONNECTOR (COMBINATION METER - WARNING SWITCH, BODY GROUND)

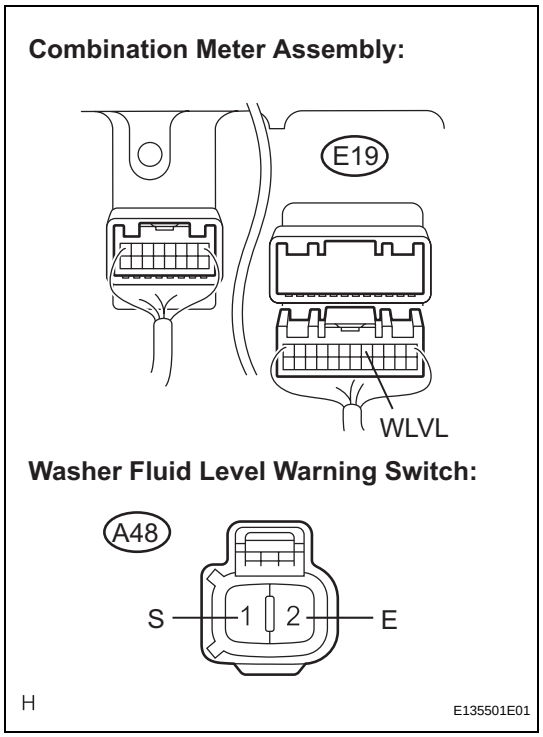

(a) Disconnect the E19 combination meter assembly connector.
(b) Disconnect the A48 washer fluid level warning switch connector.
(c) Measure the resistance according to the value(s) in the table below.

Standard resistance

Tester Connection	Condition	Specified Condition
E19-5 (WLVL) - A48-1 (S)	Always	Below 1 Ω
A48-1 (S) - Body ground	Always	10 kΩ or higher
A48-2 (E) - Body ground	Always	Below 1 Ω

NG → **REPAIR OR REPLACE HARNESS OR CONNECTOR**

OK

3 CHECK WASHER FLUID LEVEL WARNING SWITCH ASSEMBLY

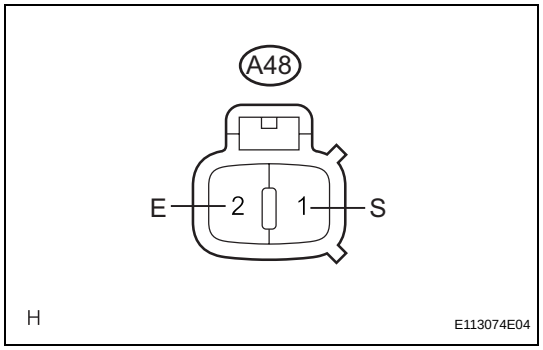

(a) Measure the resistance according to the value(s) in the table below.

Standard resistance

Tester Connection	Condition	Specified Condition
A48-1 (S) - A48-2 (E)	Washer jar is empty	Below 1 Ω
A48-1 (S) - A48-2 (E)	Washer jar is full	10 kΩ or higher

NG → **REPLACE WASHER FLUID LEVEL WARNING SWITCH ASSEMBLY**

OK

PROCEED TO NEXT CIRCUIT INSPECTION SHOWN IN PROBLEM SYMPTOMS TABLE

WW

FRONT WASHER MOTOR

COMPONENTS

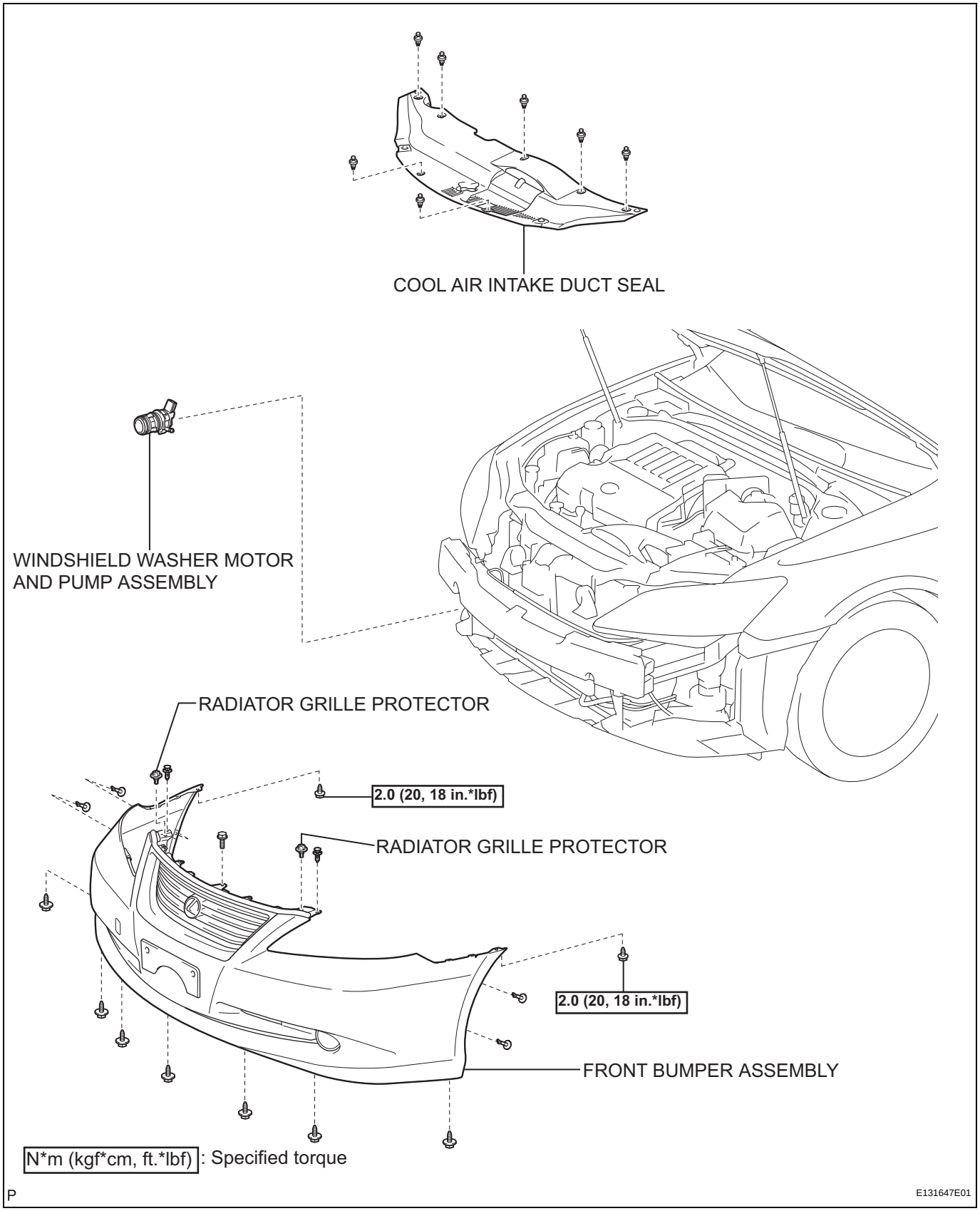

WW

REMOVAL

1. **REMOVE COOL AIR INTAKE DUCT SEAL (See page ET-4)**

2. **REMOVE FRONT BUMPER ASSEMBLY (See page ET-5)**

3. **DRAIN WASHER FLUID**
   (a) Disconnect the washer hose from the windshield washer motor and pump assembly, and drain the washer fluid.

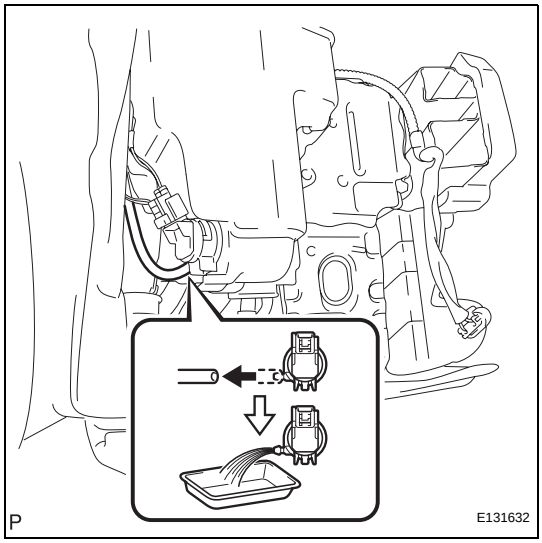

4. **REMOVE WINDSHIELD WASHER MOTOR AND PUMP ASSEMBLY**
   (a) Disconnect the connector.
   (b) Remove the windshield washer motor and pump assembly.

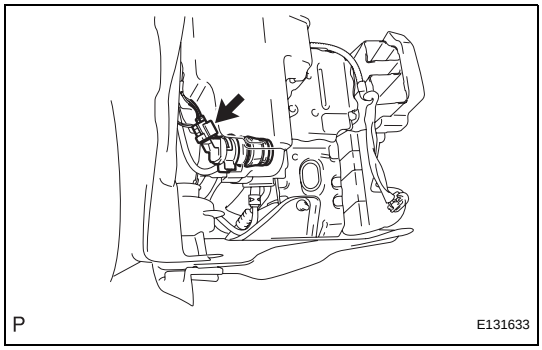

Power Source Circuit

DESCRIPTION

This circuit provides power to the windshield wiper relay assembly (auto wiper relay).

WIRING DIAGRAM

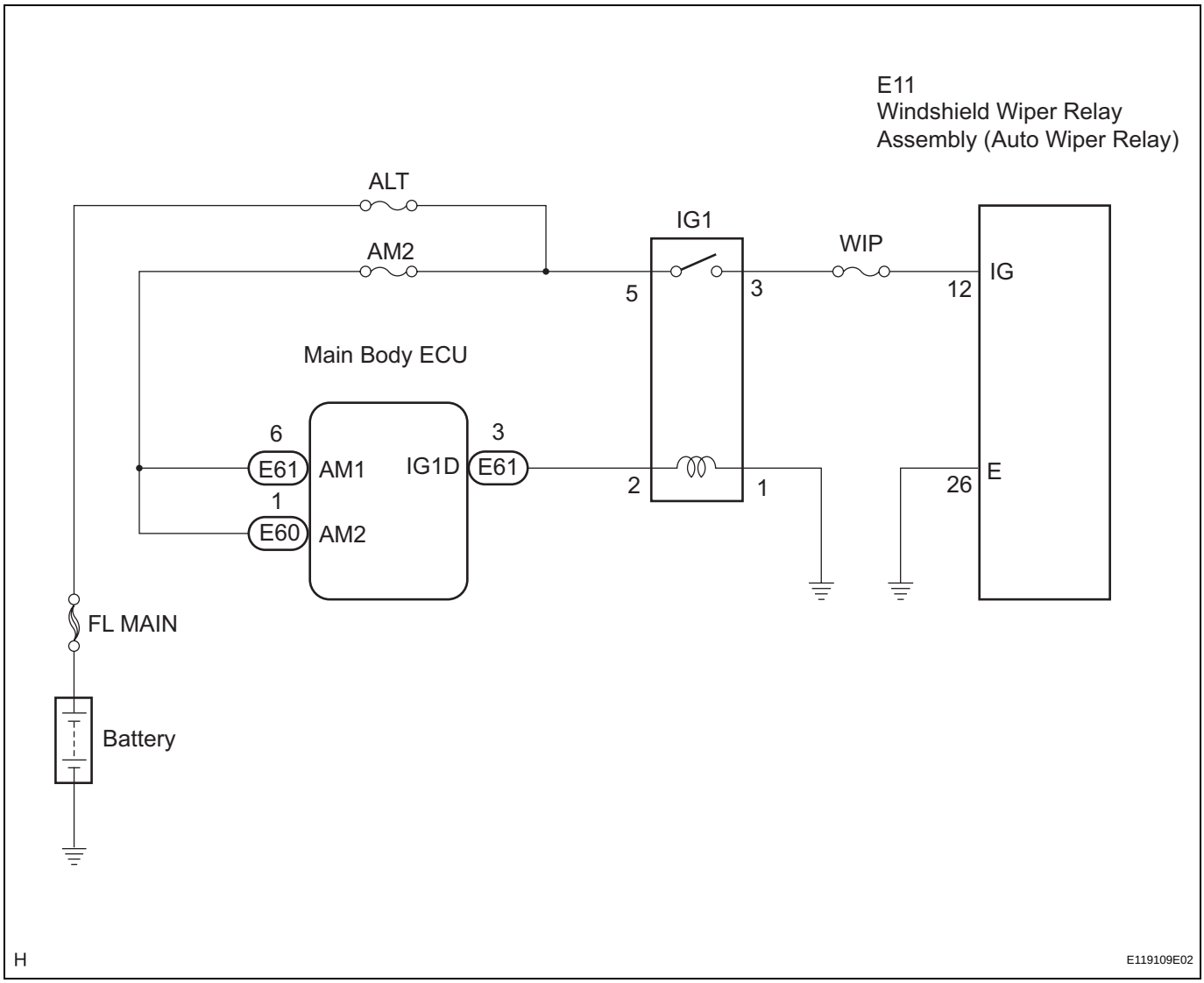

INSPECTION PROCEDURE

1	INSPECT FUSE (WIP)

(a) Remove the WIP fuse from the instrument panel J/B.
(b) Measure the resistance of the fuse.
Standard resistance:
Below 1 Ω

NG → **REPLACE FUSE**

OK

2 INSPECT IG1 RELAY

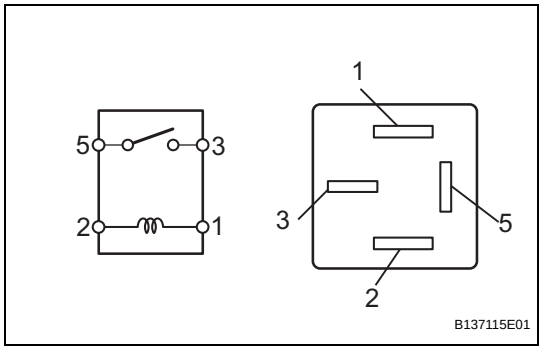

(a) Remove the IG1 relay from the instrument panel J/B.
(b) Measure the resistance of the relay.
Standard resistance

Tester Connection	Condition	Specified Condition
3 - 5	Always	10 kΩ or higher
	When battery voltage is applied to terminals 1 and 2	Below 1 Ω

NG → **REPLACE IG1 RELAY**

OK

3 CHECK HARNESS AND CONNECTOR (WIPER RELAY - BATTERY, BODY GROUND)

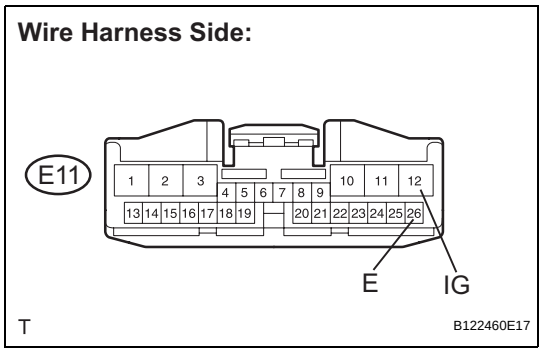

(a) Disconnect the E11 windshield wiper relay assembly (auto wiper relay) connector.
(b) Measure the voltage according to the value(s) in the table below.
Standard voltage

Tester Connection	Condition	Specified Condition
E11-12 (IG) - Body ground	Engine switch on (IG)	10 to 14 V

(c) Measure the resistance according to the value(s) in the table below.
Standard resistance

Tester Connection	Condition	Specified Condition
E11-26 (E) - Body ground	Always	Below 1 Ω

NG → **REPAIR OR REPLACE HARNESS OR CONNECTOR**

OK

PROCEED TO NEXT CIRCUIT INSPECTION SHOWN IN PROBLEM SYMPTOMS TABLE

WW

WASHER NOZZLE

ON-VEHICLE INSPECTION

1. INSPECT WASHER NOZZLE SUB-ASSEMBLY

(a) With the engine running, check the position that the washer fluid hits the windshield.

Standard:

Washer fluid hits the windshield in the areas shown in the illustration.

HINT:

If the result is not as specified, replace the washer nozzle.

for Standard:

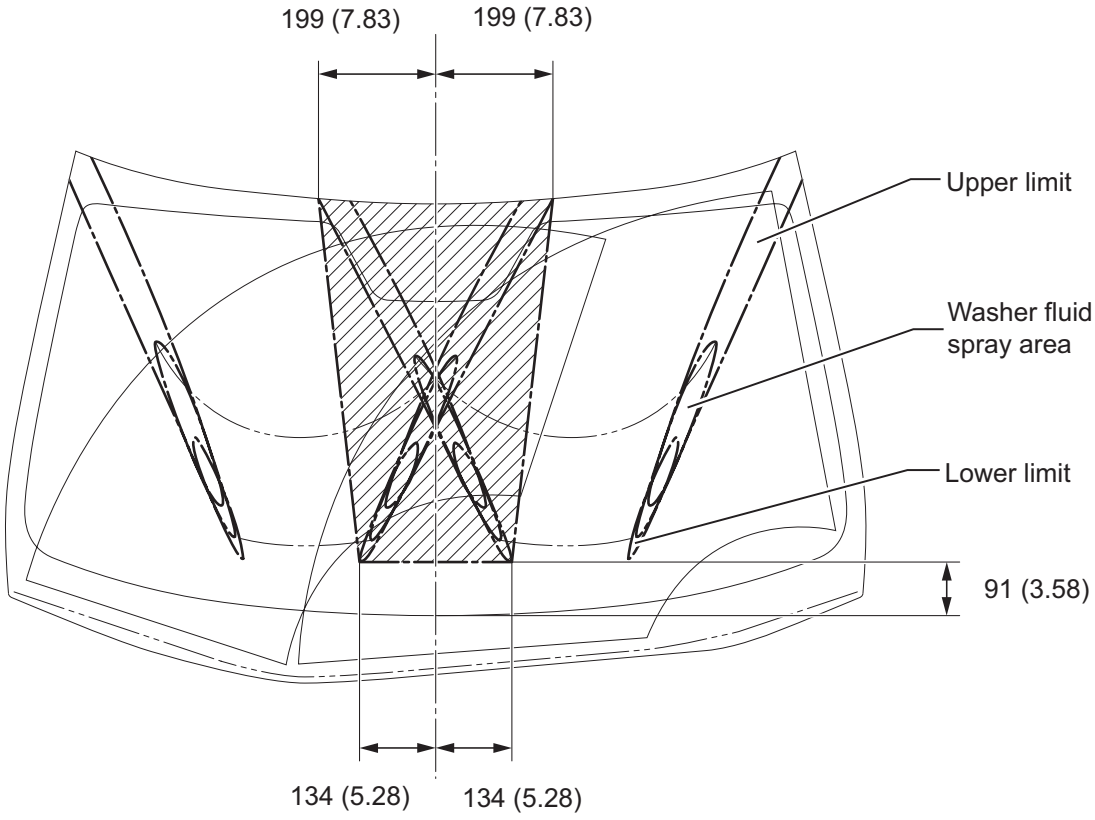

for Glass Roof:

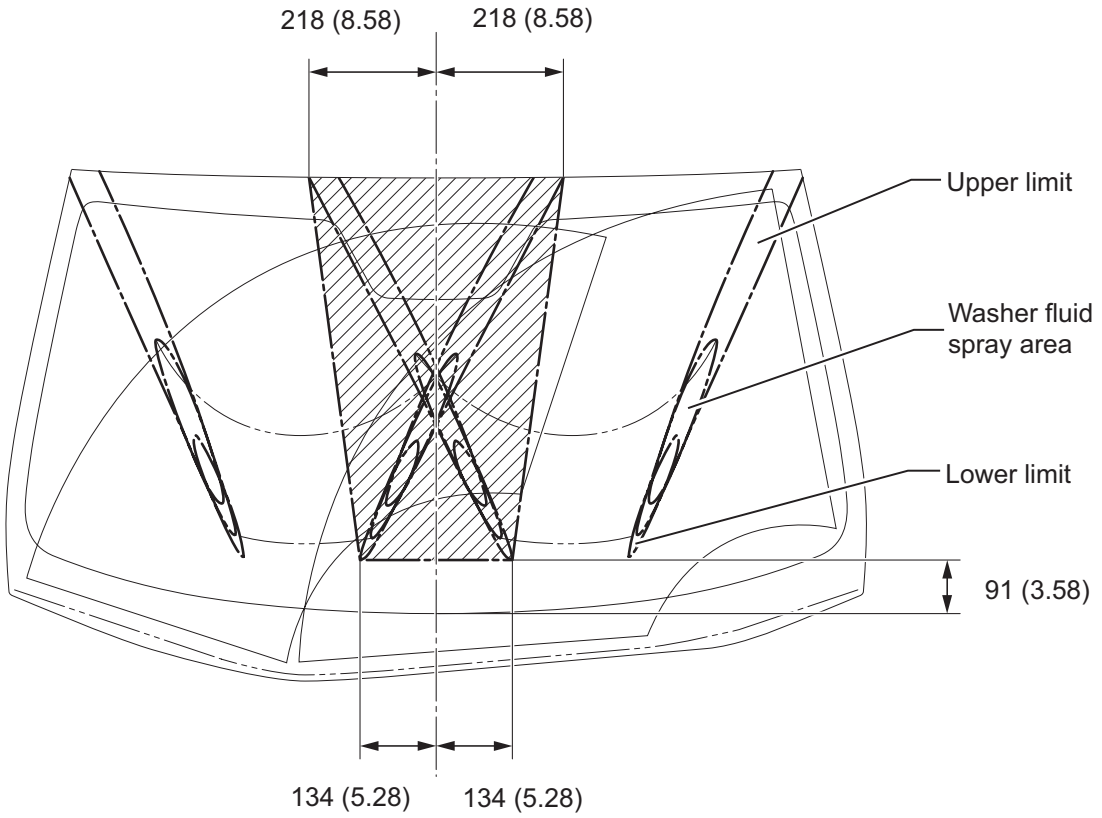

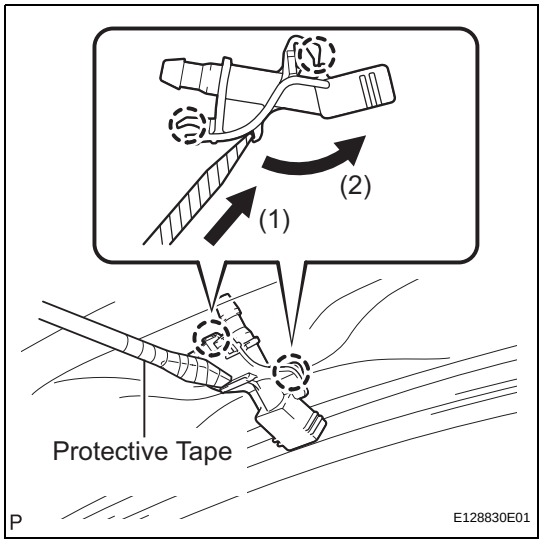

ADJUSTMENT

1. ADJUST WASHER NOZZLE SUB-ASSEMBLY

(a) Using a screwdriver, disengage the 2 claws and separate the washer nozzle sub-assembly as shown in the illustration.

NOTICE:

Be careful not to damage the windshield.

HINT:

Tape the screwdriver tip before use.

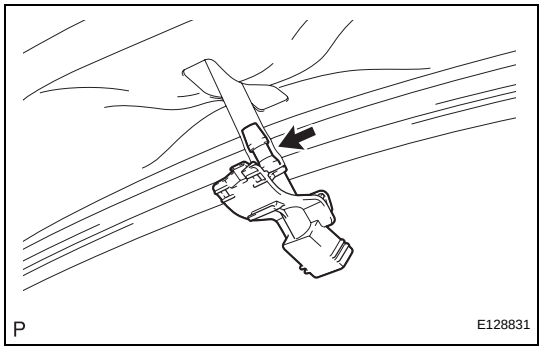

(b) Disconnect the washer nozzle sub-assembly from the washer hose.

NOTICE:

Washer nozzles cannot be reused.

(c) Select a washer nozzle sub-assembly so that the washer fluid spray area is within the standard.

Available Washer Nozzles:

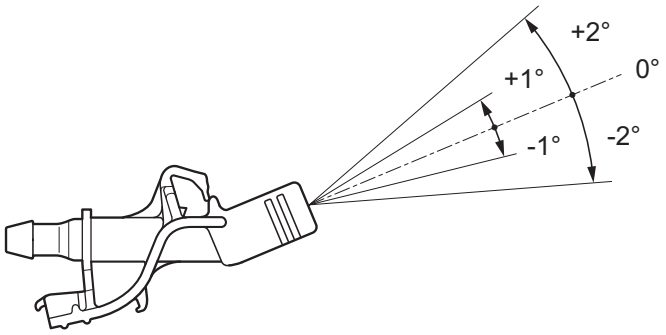

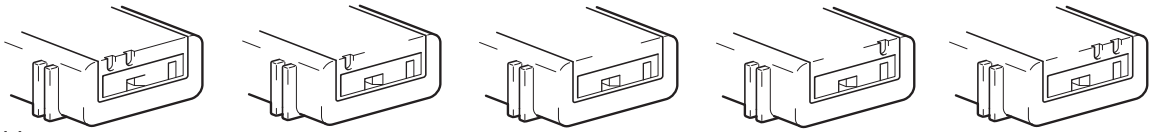

Washer Fluid Spray Angle	-2°	-1°	0°	+1°	+2°
Part Number	85381-30210	85381-30190	85381-30170	85381-30180	85381-30200

P

E128832E03

(d) Connect the selected washer nozzle sub-assembly to the washer hose.

(e) Engage the 2 claws and install the washer nozzle sub-assembly.

WW

SYSTEM DIAGRAM

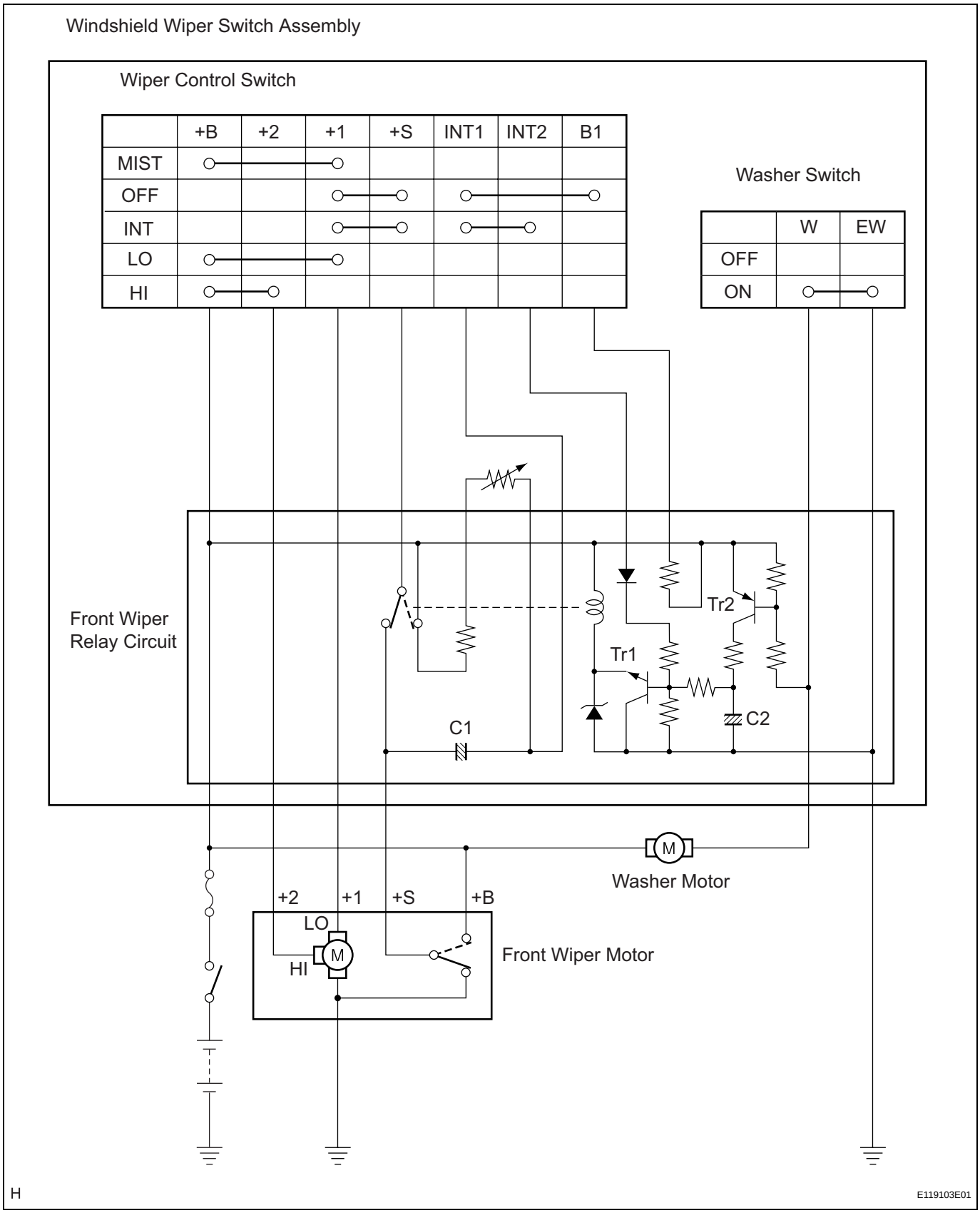

WW

SYSTEM DESCRIPTION

1. WASHER LINKED OPERATION

(a) This system operates the front wipers at a low speed immediately after a jet of washer fluid when the front washer switch is turned on for approximately 0.3 seconds or more. If the switch is turned off within approximately 1.5 seconds, the system stops the wipers when the switch is turned off. If the switch is turned on for approximately 1.5 seconds or more, the system stops the wipers approximately 2.2 seconds after the switch is turned off.

2. INTERMITTENT OPERATION

(a) The system operates the front wipers once in approximately 1.6 to 10.7 seconds when the front wiper switch is turned to the INT position. The intermittent time can be adjusted between 1.6 and 10.7 seconds.

(b) If the wiper control switch is turned to the INT position, current flows from the already charged capacitor C1 to Tr1 (transistor) through terminals INT1 and INT2 of the wiper control switch. When Tr1 turns on, current flows from terminal +S of the wiper control switch to terminal +1 of the wiper control switch, to terminal +1 of the wiper motor, to the wiper motor, and finally to the ground, causing the wiper motor to operate. At the same time, current flows from capacitor C1 to terminal INT1 of the wiper control switch and then INT2. When the current flow from capacitor C1 ends, Tr1 turns off to stop the relay contact point and halt the wiper motor. When the relay contact point turns off, capacitor C1 begins to charge again and Tr1 remains off until charging has been completed. This period corresponds to the intermittent time. When capacitor C1 is fully charged, Tr1 turns on and then the relay contact point activates, causing the motor to operate. This cycle is the intermittent operation. The intermittent time can be adjusted by using the intermittent time adjust dial (variable resistor) to change the charge time of capacitor C1.

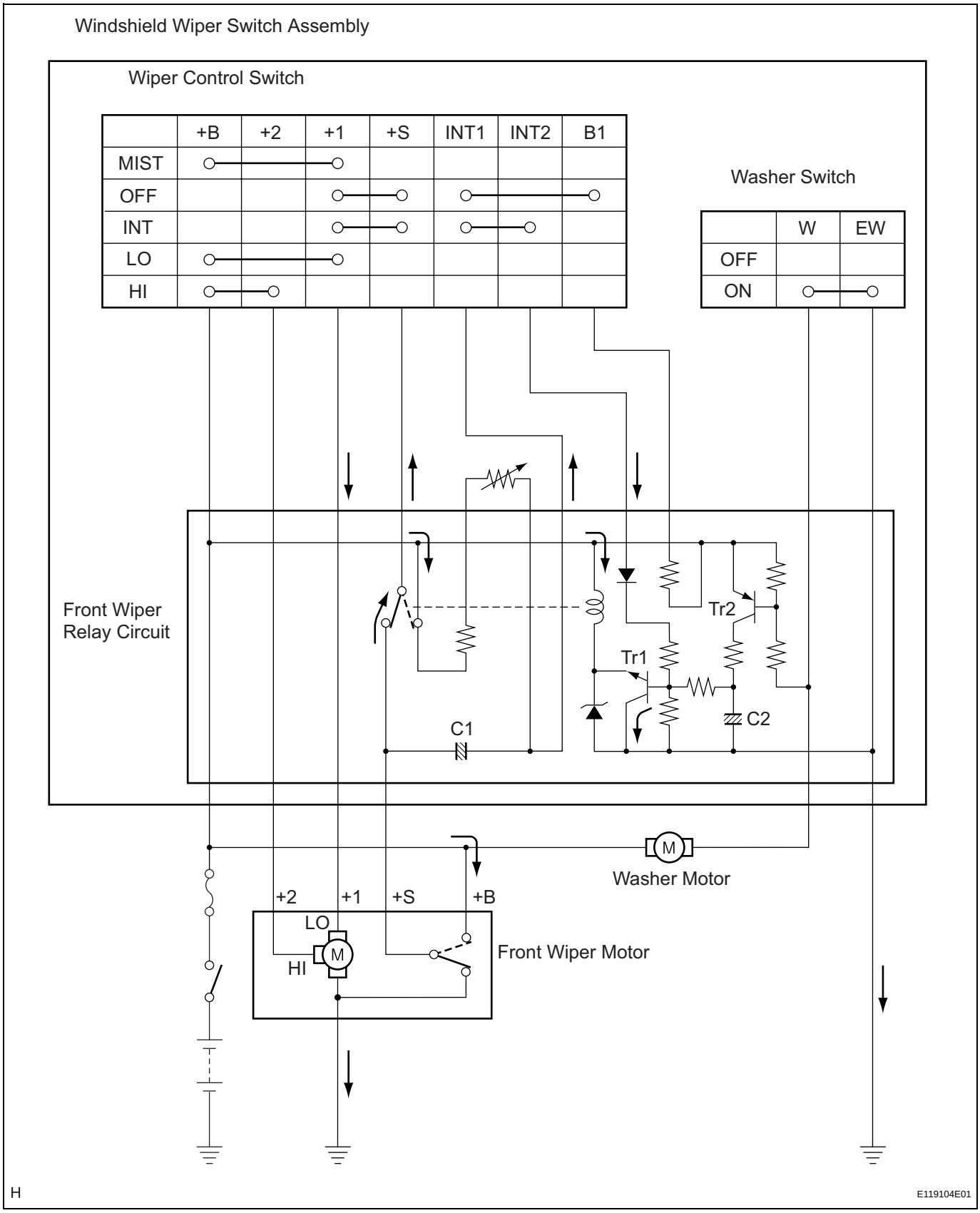
Windshield Wiper Switch Assembly
Wiper Control Switch
+B
+2
+1
+S
INT1
INT2
B1
MIST
OFF
INT
LO
HI
Washer Switch
W
EW
OFF
ON
Front Wiper Relay Circuit
Tr2
Tr1
C1
C2
M
Washer Motor
+2
+1
+S
+B
LO
HI
M
Front Wiper Motor
H
E119104E01

WW

RAIN SENSOR

COMPONENTS

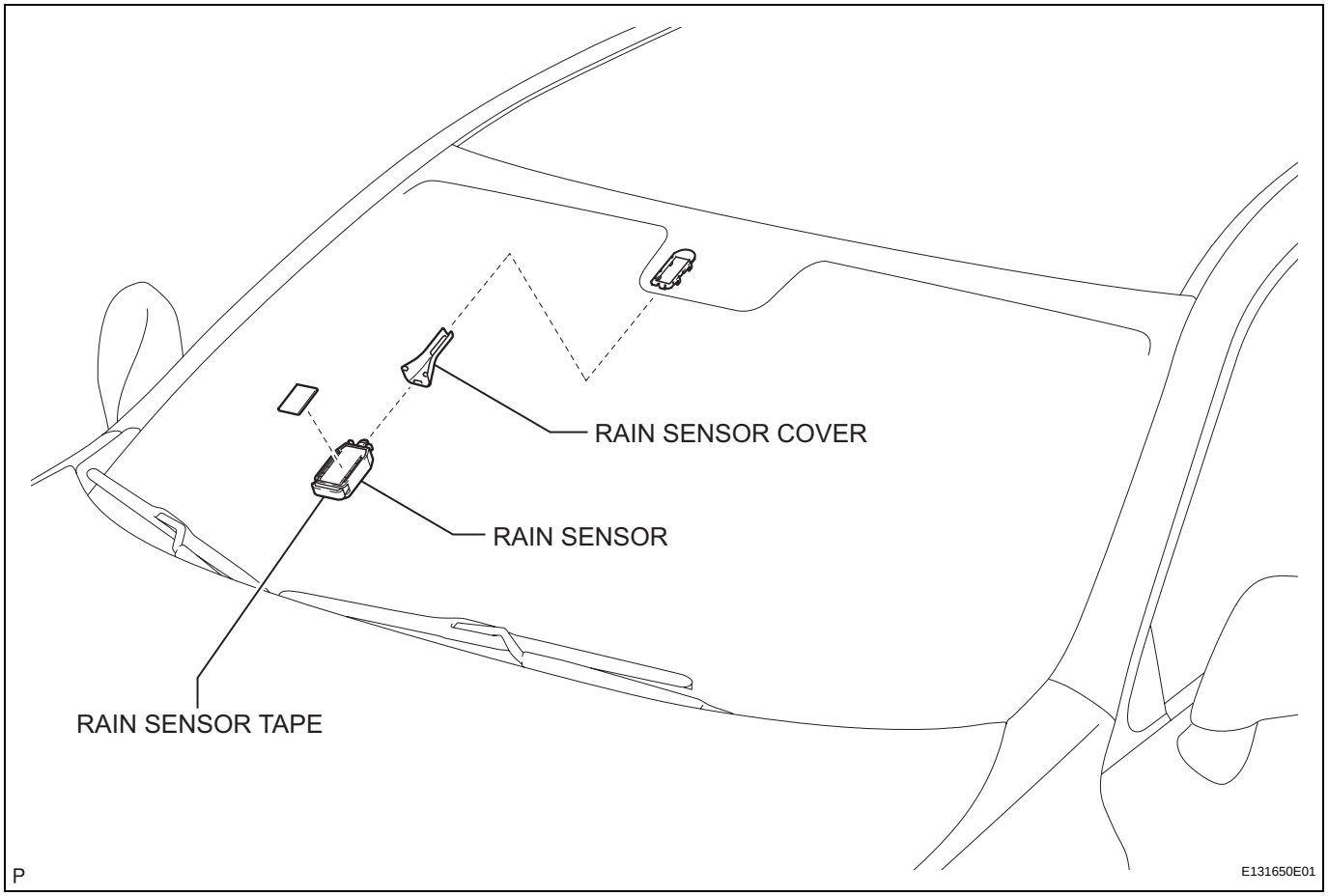

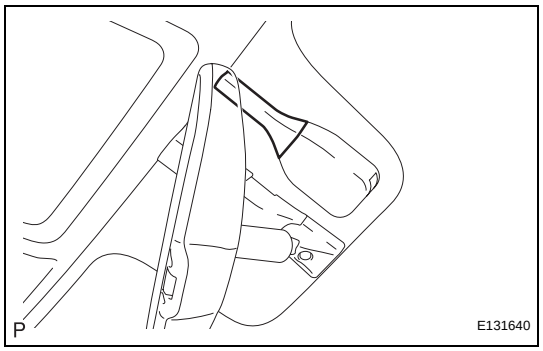

REMOVAL

1. REMOVE RAIN SENSOR COVER

(a) Remove the rain sensor cover.

2. REMOVE RAIN SENSOR

HINT:
This step should be performed only when the rain sensor tape needs to be replaced.

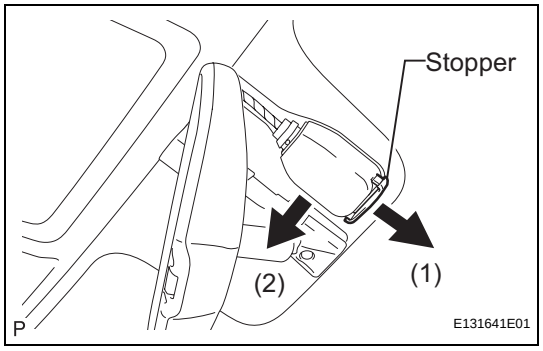

(a) Release the stopper by pulling the stopper down and disconnect the rain sensor as shown in the illustration.

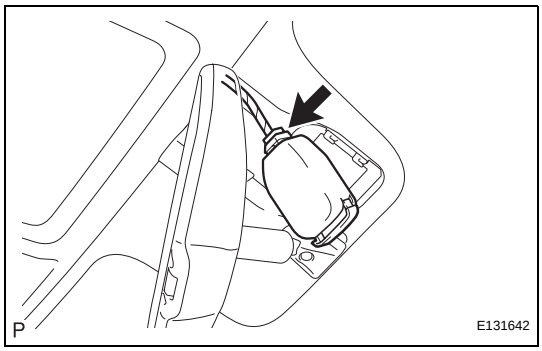

(b) Disconnect the connector and remove the rain sensor.

3. REMOVE RAIN SENSOR TAPE

HINT:
This step should be performed only when the rain sensor tape needs to be replaced.

(a) Remove the rain sensor tape.
NOTICE:
The rain sensor tape can be reused, however, replace it with a new one if it is dirty or damaged.

INSTALLATION

1. INSTALL RAIN SENSOR TAPE

NOTICE:

The rain sensor tape can be reused, however, replace it with a new one if it is dirty or damaged.

HINT:

This step should be performed only when the rain sensor tape needs to be replaced.

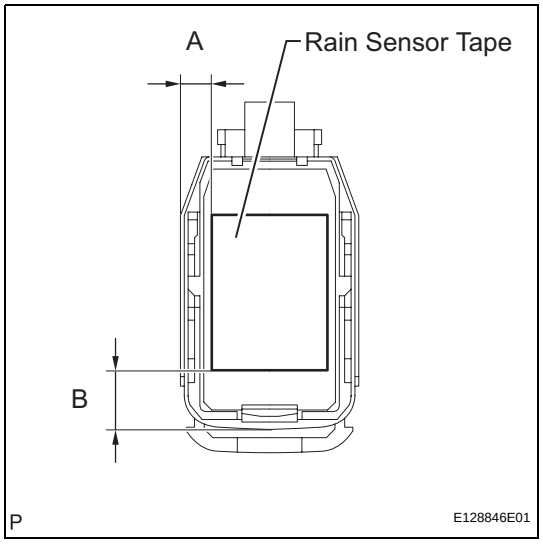

(a) Remove the releasing sheet (yellow side) from new rain sensor tape and apply the tape to the position indicated in the illustration (the sensor part of the rain sensor) while pushing out air bubbles with your fingers.

(b) Remove the releasing sheet (white side) from the rain sensor tape.

NOTICE:

- **Check that the old rain sensor tape is not left on the windshield glass. If the tape is still on the windshield glass, remove it before installing the rain sensor.**
- **Do not touch the sensor tape surface or the glass surface directly with your fingers.**
- **Clean up dirt on the glass with a cloth, etc.**

Area	Measurement
A	7.3 mm (0.287 in.)
B	13.5 mm (0.531 in.)

2. INSTALL RAIN SENSOR

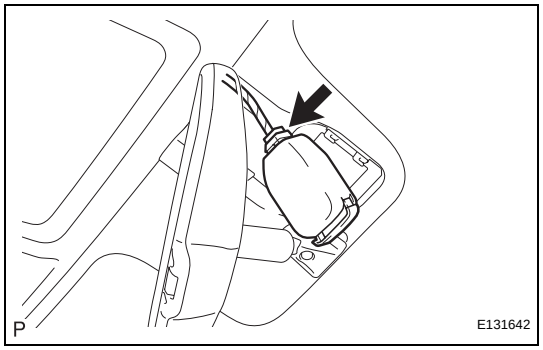

(a) Connect the connector.

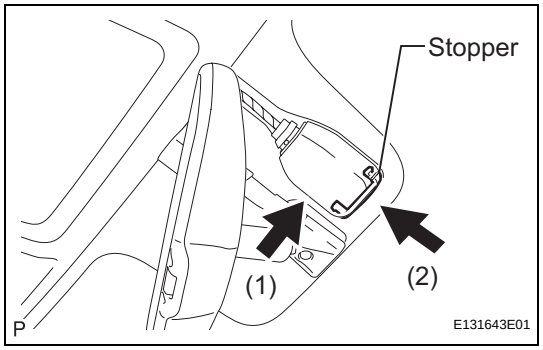

(b) Gradually attach the rain sensor to the glass surface to prevent air bubbles from forming between them.

(c) Push in the stopper.

NOTICE:

- **Do not touch the sensor tape surface or the glass surface directly with your fingers.**
- **Clean up dirt on the glass with a cloth, etc.**
- **After installing the rain sensor, there should be no air bubbles between the windshield glass and the rain sensor tape.**

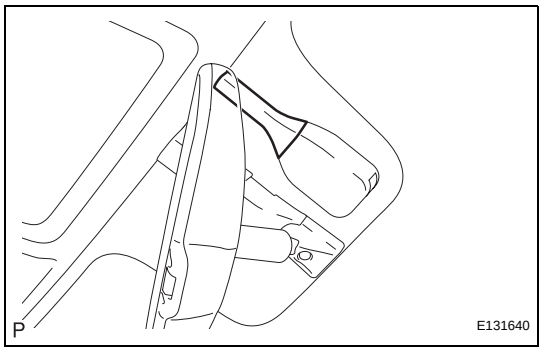

3. INSTALL RAIN SENSOR COVER

(a) Install the rain sensor cover.

SYSTEM DESCRIPTION

1. POWER DOOR LOCK CONTROL SYSTEM DESCRIPTION

(a) The power door lock system locks/unlocks all the doors.
The master switch and the door control switch on the passenger door send "lock/unlock" request signals to the main body ECU. Then, the main body ECU sends these request signals to the lock motors in each door to lock/unlock all the doors at once in response to the inputs.
Operating the driver's door lock using a mechanical key sends request signals to lock/unlock the doors to the main body ECU via the master switch. "2-step unlock function" is optional for unlocking procedures of the key-linked lock for the driver side door.

2. FUNCTION OF MAIN COMPONENT

Components	Function
Multiplex network master switch assembly (Manual door lock switch)	Door control switch on master switch assembly locks/unlocks all doors.
Door control switch	Door control switch on passenger side door locks/unlocks all doors.
Door courtesy switch	Placed on each door. Detects door status (open or closed) and outputs data to main body ECU. Turns on when door is open and turns off when door is closed.
Driver side door lock	• Built-in motor locks/unlocks door. • Built-in door control switch (key-linked) detects door key operation's door status (locked or unlocked) and outputs data to main body ECU. • Built-in position switch detects door status (locked or unlocked) and outputs data to main body ECU. This switch turns off when door is locked and turns on when door is unlocked.
Front passenger side door lock, luggage compartment door lock, rear LH and RH door locks	• Built-in motor locks/unlocks door. • Built-in position switch detects door status (locked or unlocked) and outputs data to main body ECU. This switch turns off when door is locked and turns on when door is unlocked.

3. SYSTEM FUNCTION

HINT:
The following functions' default settings are ON. Some of these functions can be customized (See page DL-11).

(a) This system is controlled by the main body ECU. The main body ECU outputs signals to each door lock motor. The door lock control system of the ES350 has the following functions:

Function	Outline
Manual lock and unlock function	This function can lock or unlock all doors by the door lock control switch operation.
Key-linked lock and unlock function	This function, which is linked with the key cylinder, can lock or unlock all the doors when a lock or unlock operation is effected.
Manual unlock prohibition function	Performing the door lock operation with an electrical key or a transmitter will prohibit the unlock operation by the door lock control switch.
Key lock-in prevention function (Electrical key)	If a each door lock or driver's door lock operation is performed when the electrical key is in the cabin, all the doors will be unlocked.

Function	Outline
Shift-linked automatic door lock function	When the conditions listed below are met consecutively, this function causes all the doors to be automatically locked. • The engine switch is on (IG). • All doors are closed. • The shift lever is moved out of the P position. • Any of the doors are unlocked.
Shift-linked automatic door unlock function	When the engine switch is on (IG), if moving the shift lever to the P position from any other position, all the doors will be automatically unlocked.
One-motion open	When the door is locked, this function enables the door to be unlocked by pulling the inside handle of the driver's or front passenger's door.
2-step unlock function	This function is provided to unlock the driver's door by turning the key cylinder once and to unlock the remaining doors by turning it the second time.
Speed-sensitive automatic door lock function	When the conditions listed below are met consecutively, this function causes all the doors to be automatically locked. • Vehicle speed is higher than approximately 20 km/h (13 mph). • All doors are closed. • Any one of the door is unlocked.
Collision door lock release function	If the SRS airbag system has been deployed, and the main body ECU has detected the signal that is output by the center airbag sensor assembly, the main body ECU unlocks all the doors.
Opening driver's door-linked automatic door unlock	All doors are unlocked automatically when the driver's door is opened within 10 seconds after the power source is changed from "IG-ON" to the "ACC" or "OFF".

HOW TO PROCEED WITH TROUBLESHOOTING

HINT:
- Use the following procedures to troubleshoot the power door lock control system.
- The intelligent tester should be used in step 5.

1	VEHICLE BROUGHT TO WORKSHOP

NEXT

2	CUSTOMER PROBLEM ANALYSIS CHECK

HINT:
- In troubleshooting, confirm that the problem symptoms have been accurately identified. Preconceptions should be discarded in order to make an accurate judgment. To clearly understand what the problem symptoms are, it is extremely important to ask the customer about the problem and the conditions at the time the malfunction occurred.
- Gather as much information as possible for reference. Past problems that seem unrelated may also help in some cases.
- The following 5 items are important points in the problem analysis:

What	Vehicle model, system name
When	Date, time, occurrence frequency
Where	Road conditions
Under what conditions?	Running conditions, driving conditions, weather conditions
How did it happen?	Problem symptoms

NEXT

3	INSPECT BATTERY VOLTAGE

Standard Voltage:
11 to 14 V
If the voltage is below 11 V, recharge or replace the battery before proceeding to the next step.

NEXT

4	PROBLEM SYMPTOMS TABLE

Result

Result	Proceed to
Fault is not listed in problem symptoms table	**A**
Fault is listed in problem symptoms table	**B**

B → **GO TO STEP 6**

A

5	**OVERALL ANALYSIS AND TROUBLESHOOTING**

(a) Terminals of ECU
(See page DL-13)
(b) DATA LIST/ACTIVE TEST
(See page DL-17)

NEXT

6	**REPAIR OR REPLACE**

NEXT

7	**CONFIRMATION TEST**

NEXT

END

CUSTOMIZE PARAMETERS

1. CUSTOMIZING FUNCTION WITH INTELLIGENT TESTER

HINT:

The following items can be customized.

NOTICE:

- **Before attempting to customize vehicle settings, confirm whether it is possible to make the change that the customer has requested.**
- **Be sure to record the current settings before customizing.**
- **When troubleshooting, make sure that the item in question has not been disabled using the customizing function.**

DOOR LOCK:

Display (Item)	Default	Contents	Setting
AUTO UNLK/SHIFT (Unlock w/ engine switch on (IG), shift P, speed 0 km/h (0 mph))	ON	Function that unlocks doors when the shift lever is moved to the P position from any other position while the engine switch is on (IG)	ON/OFF
ALL UNLK/OPN-CL (All unlock w/ D door open-close)	OFF	Function that unlocks all other doors when opening driver side door within 10 seconds after turning the engine switch off from on (IG)	ON/OFF
UNLK/KEY TWICE (Unlock w/ 2 times D key operation)	ON	• Function that unlocks only the driver side door when the driver side door key cylinder is turned to unlock once and unlocks all the doors when it is turned to unlock twice • In the OFF setting, turning it once unlocks all doors	ON/OFF
AUTO LOCK/SHIFT (Auto lock/shift not P)	ON	Function that locks doors when the shift lever is moved from the P position to any other position	ON/OFF
AUTO LOCK	OFF	Function that locks doors when vehicle reaches a vehicle speed 20 km/h (13 mph)	ON/OFF

WIRELESS D LOCK:

Display (Item)	Default	Contents	Setting
AUTO LOCK DELAY	60s	Function that selects AUTO LOCK time (30 sec. or 60 sec.)	30s/60s

PROBLEM SYMPTOMS TABLE

POWER DOOR LOCK CONTROL SYSTEM:

Symptom	Suspected Area	See page
All doors cannot be locked/unlocked simultaneously by neither door control switch nor door key cylinder	Power source circuit (Main body ECU)	DL-13
	Replace main body ECU (Instrument panel J/B)	-
All doors cannot be locked/unlocked simultaneously by driver side door control switch	Replace multiplex network master switch	DL-56
	Replace main body ECU (Instrument panel J/B)	-
All doors cannot be locked/unlocked simultaneously by front passenger side door control switch	Door control switch circuit (Front passenger side door)	DL-56
	Replace main body ECU (Instrument panel J/B)	-
All doors cannot be locked/unlocked simultaneously by door key cylinder	Driver side door key lock and unlock switch circuit	DL-52
	Multiplex network master switch assembly	DL-13
	Replace main body ECU (Instrument panel J/B)	-
Driver side door lock does not operate	Driver side door lock motor circuit	DL-35
	Replace main body ECU (Instrument panel J/B)	-
Passenger side door lock does not operate	Front passenger side door lock motor circuit	DL-38
	Replace main body ECU (Instrument panel J/B)	-
Rear LH side door lock does not operate	Rear door lock motor LH circuit	DL-41
	Replace main body ECU (Instrument panel J/B)	-
Rear RH side door lock does not operate	Rear door lock motor RH circuit	DL-44
	Replace main body ECU (Instrument panel J/B)	-
Luggage compartment door unlock does not operate	Luggage compartment door lock circuit	DL-49
	Luggage compartment door courtesy switch circuit	DL-47
	Replace main body ECU (Instrument panel J/B)	-
Key lock-in prevention function does not work properly (manual operation and key-linked lock are active)	Door courtesy switch circuit (Driver side)	LI-94
	Smart access system with push-button start	DL-121
	Replace main body ECU (Instrument panel J/B)	-
Shift-linked automatic door lock does not operate	CAN communication system	CA-11
	Replace main body ECU (Instrument panel J/B)	-
One or more doors cannot be locked/unlocked simultaneously (Wireless key operation)	Wireless door lock system	DL-70
	Driver side door unlock detection switch circuit	DL-23
	Front passenger door unlock detection switch circuit	DL-26
	Rear door unlock detection switch LH circuit	DL-29
	Rear door unlock detection switch RH circuit	DL-32
	Replace main body ECU (Instrument panel J/B)	-
One or more doors cannot be locked/unlocked simultaneously (Theft deterrent operation)	Theft deterrent system	TD-16
	Driver side door unlock detection switch circuit	DL-23
	Front passenger door unlock detection switch circuit	DL-26
	Rear door unlock detection switch LH circuit	DL-29
	Rear door unlock detection switch RH circuit	DL-32
	Replace main body ECU (Instrument panel J/B)	-

TERMINALS OF ECU

1. CHECK MAIN BODY ECU (INSTRUMENT PANEL JUNCTION BLOCK)

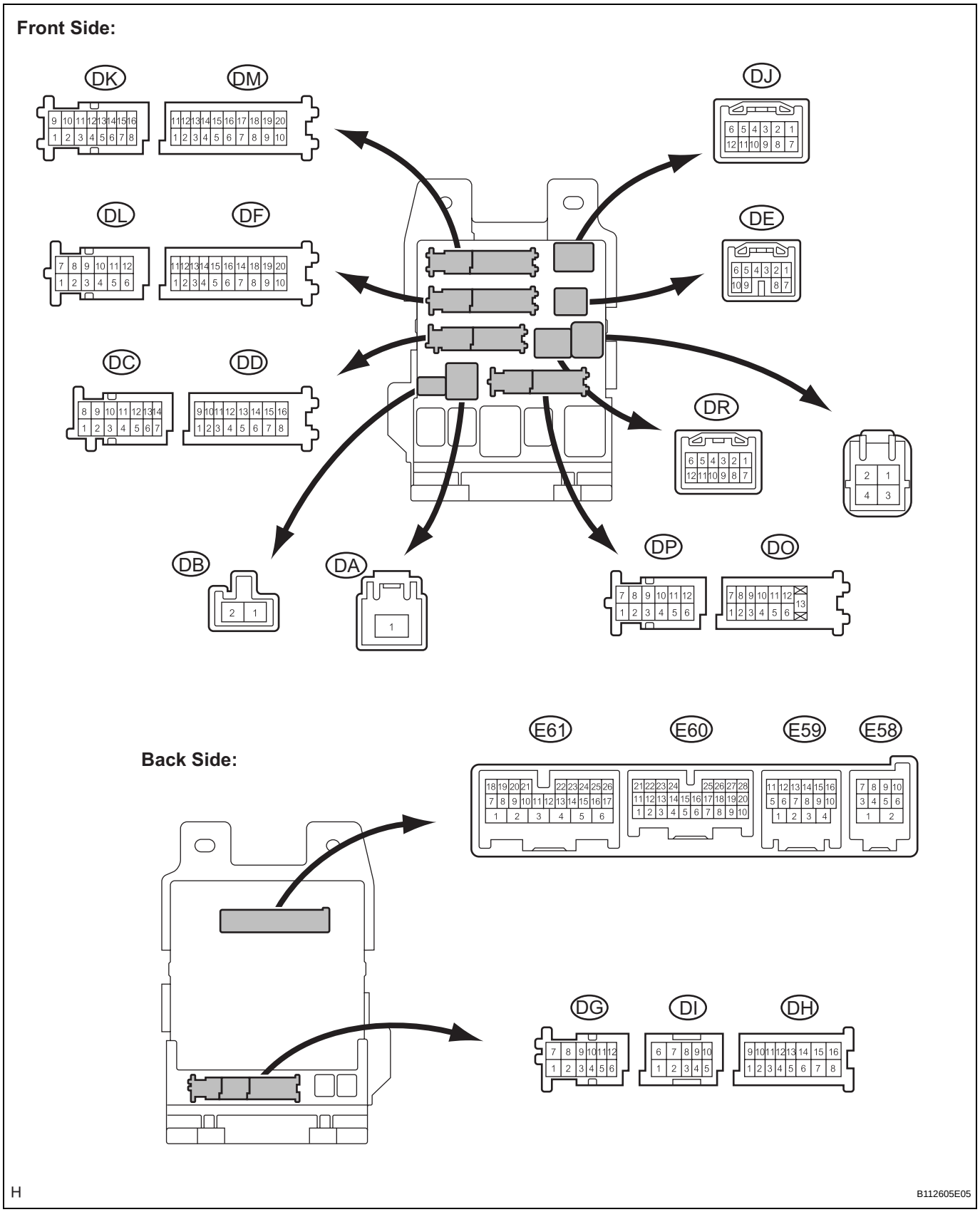

(a) Disconnect the E60, E61, DO, DK, DM, DD, DA, DF, DJ, and E58 J/B and ECU connectors.
(b) Measure the voltage and resistance according to the value(s) in the table below.

Symbols (Terminal No.)	Wiring Color	Terminal Description	Condition	Specified Condition
DCTY (E61-24) - Body ground	GR - Body ground	Driver door courtesy switch input	Driver door CLOSED → OPEN	10 kΩ or higher → Below 1 Ω
RCTY (E60-7) - Body ground	GR - Body ground	Rear right door courtesy switch input	Rear right door CLOSED → OPEN	10 kΩ or higher → Below 1 Ω
PCTY (E60-21) - Body ground	G - Body ground	Passenger door courtesy switch input	Passenger door CLOSED → OPEN	10 kΩ or higher → Below 1 Ω
LCTY (DO-7) - Body ground	B - Body ground	Rear left door courtesy switch input	Rear left door CLOSED → OPEN	10 kΩ or higher → Below 1 Ω
GND3 (E59-1) - Body ground	W-B - Body ground	Ground	Always	Below 1 Ω
IG (DF-11) - Body ground	B - Body ground	Engine power supply	Engine switch on (IG) → off	10 to 14 V → Below 1 V
GND1 (DF-10) - Body ground	W-B - Body ground	Ground	Always	Below 1 Ω
ACC (DF-2) - Body ground	L - Body ground	ACC power supply	Engine switch on (ACC) → OFF	10 to 14 V → Below 1 V
L1 (DJ-3) - Body ground	R - Body ground	Door control switch LOCK input	Passenger door control switch OFF → LOCK	10 kΩ or higher → Below 1 Ω
UL1 (DJ-4) - Body ground	G - Body ground	Door control switch UNLOCK input	Passenger door control switch OFF → UNLOCK	10 kΩ or higher → Below 1 Ω
LGCY (E60-25) - Body ground	W - Body ground	Luggage compartment door courtesy switch input	Luggage compartment door CLOSED → OPEN	10 kΩ or higher → Below 1 Ω

If the result is not as specified, there may be a malfunction on the wire harness side.
(c) Reconnect the J/B and ECU connectors.
(d) Measure the voltage according to the value(s) in the table below.

Symbols (Terminal No.)	Wiring Color	Terminal Description	Condition	Specified Condition
LSWL (DP-5) - Body ground	GR - Body ground	Rear left door lock position switch input	Rear left door UNLOCK → LOCK	Below 1 V → 10 to 14 V (or pulse generation)
LSWD (E61-9) - Body ground	L - Body ground	Driver door lock position switch input	Driver door UNLOCK → LOCK	Below 1 V → 10 to 14 V (or pulse generation)
GSW (DE-8) - Body ground	B - Body ground	Center airbag sensor signal	Engine switch on (IG)	4.5 to 5.5 V
UL3 (E61-10) - Body ground	V - Body ground	Driver door key-linked door unlock input	Using mechanical key, operate driver door lock cylinder to LOCK → UNLOCK	Below 1 V → 10 to 14 V (or pulse generation)
L2 (DK-16) - Body ground	BR - Body ground	Driver door key-linked door lock input	Using mechanical key, operate driver door lock cylinder to UNLOCK → LOCK	Below 1 V → 10 to 14 V (or pulse generation)
ACT+ (DJ-1) - Body ground	L - Body ground	Door lock motor LOCK drive output (Front passenger door)	Door control switch (Master switch or passenger side switch) or driver side door key cylinder OFF → LOCK → OFF	Below 1 V → 10 to 14 V → Below 1 V
ACT+ (DP-11) - Body ground	L - Body ground	Door lock motor LOCK drive output (Rear door LH)	Door control switch (Master switch or passenger side switch) or driver side door key cylinder OFF → LOCK → OFF	Below 1 V → 10 to 14 V → Below 1 V

Symbols (Terminal No.)	Wiring Color	Terminal Description	Condition	Specified Condition
ACT+ (DF-5) - Body ground	L - Body ground	Door lock motor LOCK drive output (Rear door RH)	Door control switch (Master switch or passenger side switch) or driver side door key cylinder OFF → LOCK → OFF	Below 1 V → 10 to 14 V → Below 1 V
ACT- (DP-6) - Body ground	LG - Body ground	Door lock motor UNLOCK drive output (Rear door LH)	Door control switch (Master switch or passenger side switch) or driver side door key cylinder OFF → UNLOCK → OFF	Below 1 V → 10 to 14 V → Below 1 V
ACT- (DF-18) - Body ground	LG - Body ground	Door lock motor UNLOCK drive output (Rear door RH)	Door control switch (Master switch or passenger side switch) or driver side door key cylinder OFF → UNLOCK → OFF	Below 1 V → 10 to 14 V → Below 1 V
TR+ (E61-1) - Body ground	B - Body ground	Door lock motor UNLOCK drive output (Luggage compartment door)	Luggage compartment open switch (Transmitter) or luggage compartment door key cylinder OFF → UNLOCK → OFF	Below 1 V → 10 to 14 V → Below 1 V
ACTD (E61-5) - Body ground	GR - Body ground	Door lock motor UNLOCK drive output (Driver door)	Door control switch (Master switch or passenger side switch) or driver side door key cylinder OFF → UNLOCK → OFF	Below 1 V → 10 to 14 V → Below 1 V
ACT+ (DK-2) - Body ground	L - Body ground	Door lock motor LOCK drive output (Driver door)	Door control switch (Master switch or passenger side switch) or driver side door key cylinder OFF → LOCK → OFF	Below 1 V → 10 to 14 V → Below 1 V
ACT- (DJ-2) - Body ground	LG - Body ground	Door lock motor UNLOCK drive output (Front passenger)	Door control switch (Master switch or passenger side switch) or driver side door key cylinder OFF → UNLOCK → OFF	Below 1 V → 10 to 14 V → Below 1 V
LSWR (E60-5) - Body ground	Y - Body ground	Rear right door lock position switch input	Rear right door UNLOCK → LOCK	Below 1 V → 10 to 14 V (or pulse generation)
LSWP (E60-27) - Body ground	LG - Body ground	Passenger door lock position switch input	Passenger door UNLOCK → LOCK	Below 1 V → 10 to 14 V (or pulse generation)

If the result is not as specified, the main body ECU (instrument panel J/B) may have a malfunction.

DATA LIST / ACTIVE TEST

1. READ DATA LIST

HINT:
Using the intelligent tester's DATA LIST allows switch, sensor, actuator, and other item values to be read without removing any parts. Reading the DATA LIST early in troubleshooting is one way to save time.

(a) Connect the intelligent tester to the DLC3.
(b) Turn the engine switch on (IG).
(c) Enter the following menus: DIAGNOSIS / ENHANCED OBD II / DATA LIST.
(d) Read the DATA LIST according to the display on the tester.

MAIN BODY:

Tester Display	Measurement Item/Range	Normal Condition	Diagnostic Note
D DOR CTY SW	Driver side door courtesy light switch signal/ON or OFF	ON: Driver side door is OPEN OFF: Driver side door is CLOSED	-
P DOR CTY SW	Passenger side door courtesy light switch signal/ON or OFF	ON: Passenger side door is OPEN OFF: Passenger side door is CLOSED	-
RR DOR CTY SW	Rear right door courtesy light switch signal/ON or OFF	ON: Rear right door is OPEN OFF: Rear right door is CLOSED	-
RL DOR CTY SW	Rear left door courtesy light switch signal/ON or OFF	ON: Rear left door is OPEN OFF: Rear left door is CLOSED	-
D LOCK POS SW	Driver side door lock position switch signal/ON or OFF	ON: Driver side door is unlocked OFF: Driver side door is locked	-
P LOCK POS SW	Front passenger side door lock position switch signal/ON or OFF	ON: Front passenger side door is unlocked OFF: Front passenger side door is locked	-
RR LOCK POS SW	Rear right door lock position switch signal/ON or OFF	ON: Rear right door is unlocked OFF: Rear right door is locked	-
RL LOCK POS SW	Rear left door lock position switch signal/ON or OFF	ON: Rear left door is unlocked OFF: Rear left door is locked	-
LUGG COURTSY SW	Luggage compartment door courtesy light switch signal/ON or OFF	ON: Luggage compartment door is OPEN OFF: Luggage compartment door is CLOSED	-
D/L SW-LOCK	Door control switch lock signal/ ON or OFF	ON: Door control switch is pushed to lock position OFF: Door control switch is not pushed to lock position	-
D/L SW-UNLOCK	Door control switch unlock signal/ ON or OFF	ON: Door control switch is pushed to unlock position OFF: Door control switch is not pushed to unlock position	-
DOR KEY SW-LOCK	Driver door lock/unlock switch lock signal (key-linked lock switch)/ON or OFF	ON: Driver side door key cylinder is turned to lock position OFF: Driver side door key cylinder is turned to unlock position	-
DOR KEY SW-ULCK	Driver door lock/unlock switch unlock signal (key-linked unlock switch)/ON or OFF	ON: Driver side door key cylinder is turned to unlock position OFF: Driver side door key cylinder is turned to lock position	-
D DOR KEY SW-UL	Driver door lock/unlock switch unlock signal (2 times key-linked unlock switch)/ON or OFF	ON: Driver side door key cylinder is turned to unlock position OFF: Driver side door key cylinder is turned to lock position	-

2. PERFORM ACTIVE TEST

HINT:

Performing the intelligent tester's ACTIVE TEST allows relays, VSVs, actuators, and other items to be operated without removing any parts. Performing the ACTIVE TEST early in troubleshooting is one way to save time. The DATA LIST can be displayed during the ACTIVE TEST.

(a) Connect the intelligent tester to the DLC3.
(b) Turn the engine switch on (IG).
(c) Enter the following menus: DIAGNOSIS / ENHANCED OBD II / ACTIVE TEST.
(d) Perform the ACTIVE TEST according to the display on the tester.

MAIN BODY:

Tester Display	Test Part	Control Range	Diagnostic Note
DOOR LOCK	Operate door lock motor	LOCK/UNLOCK	-
D DOOR UNLOCK	Operate driver door lock motor	LOCK/UNLOCK	-
SHOCK UNLOCK	Operate collision door lock release function	LOCK/UNLOCK	-
TRUNK/BDOR OPEN	Operate luggage compartment door lock motor	UNLOCK	-

DIAGNOSTIC TROUBLE CODE CHART

HINT:
If a trouble code is indicated during the DTC check, check the circuit listed for that code in the table below. Then proceed to the appropriate page.

Power door lock control system:

DTC Code	Detection Item	Trouble Area	See page
B1243	GSW Terminal Circuit Malfunction	1. Main body ECU (Instrument Panel J/B) 2. Center airbag sensor 3. Wire harness	DL-20

DTC	B1243	GSW Terminal Circuit Malfunction

DESCRIPTION

If the collision door lock release function does not operate normally, or an open or short in the GWS input circuit of the main body ECU is detected, DTC B1243 will be output.
HINT:
If DTC B1243 is output, the speed-sensitive automatic door lock function, shift-linked automatic door unlock function, and collision door lock release function will be prohibited.

DTC No.	DTC Detection Condition	Trouble Area
B1243	A malfunction occurs in the GWS input circuit of the main body ECU.	• Main body ECU (Instrument Panel J/B) • Center airbag sensor • Wire harness

WIRING DIAGRAM

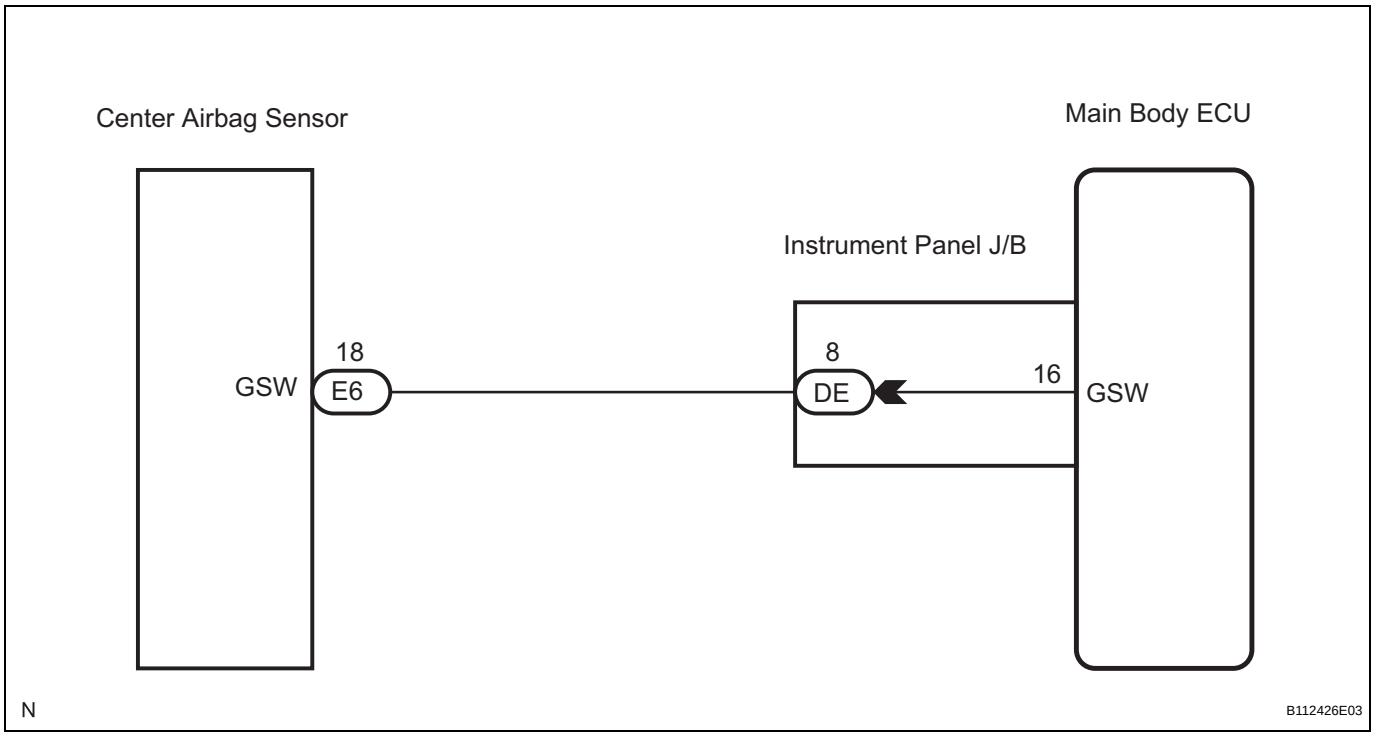

INSPECTION PROCEDURE

1	CHECK HARNESS AND CONNECTOR (CENTER AIRBAG SENSOR - MAIN BODY ECU)

(a) Connect the negative (-) terminal cable to the battery, and wait for at least 90 seconds.

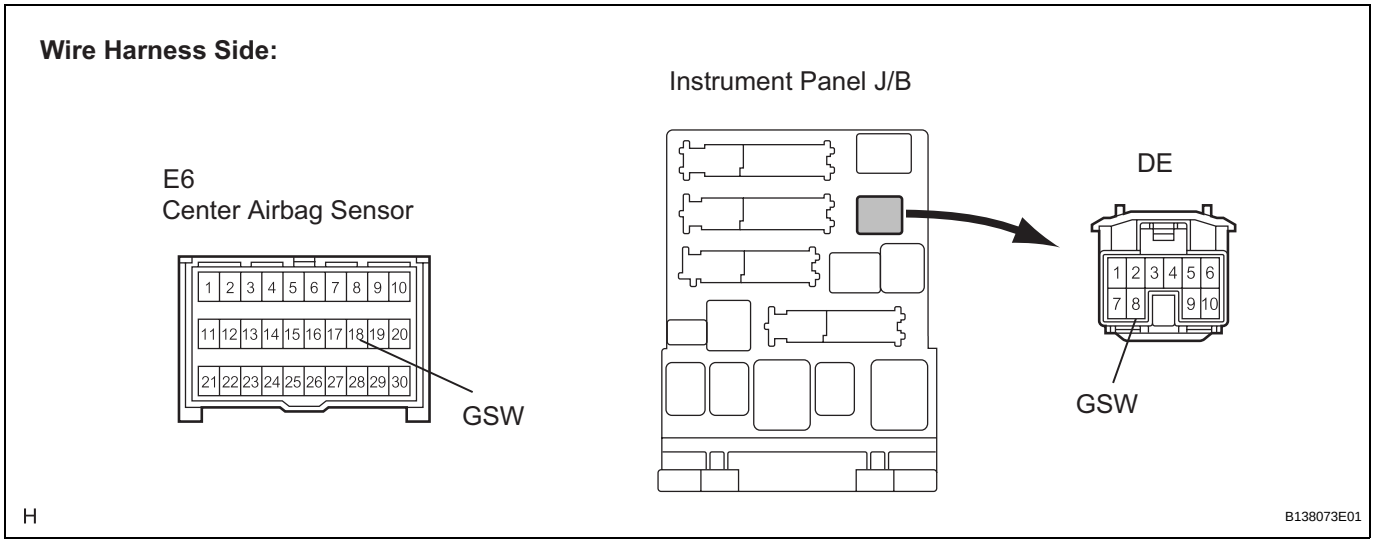

DL

(b) Disconnect the center airbag sensor E6 and J/B DE connectors.

(c) Measure the resistance according to the value(s) in the table below.

Standard resistance

Tester Connection (Symbols)	Condition	Specified Condition
E6-18 (GSW) - DE-8 (GSW)	Always	Below 1 Ω
DE-8 (GSW) - Body ground	Always	10 kΩ or higher

NG → **REPAIR OR REPLACE HARNESS OR CONNECTOR**

OK

2 INSPECT MAIN BODY ECU

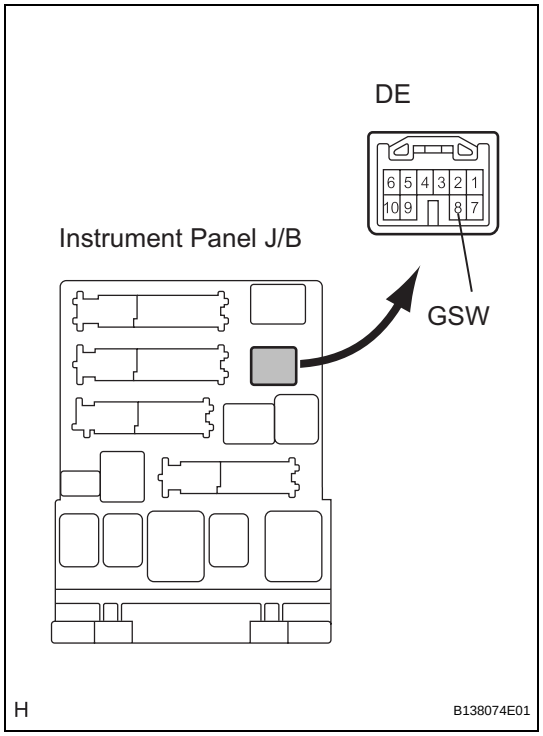

(a) Reconnect the center airbag sensor E6 and J/B DE connectors.
(b) Turn the engine switch on (IG).
(c) Measure the voltage according to the value(s) in the table below.

Standard voltage

Tester Connection (Symbols)	Condition	Specified Condition
DE-8 (GSW) - Body ground	Engine switch on (IG)	4.5 to 5.5 V

NG → **REPLACE MAIN BODY ECU**

OK

REPLACE CENTER AIRBAG SENSOR

DL

Driver Side Door UNLOCK Detection Switch Circuit

DESCRIPTION

The driver's door unlock detection switch is built into the driver's door lock assembly. The switch turns on when the driver's door is locked and turns off when the door is unlocked.
The main body ECU is connected to the driver's door lock assembly via terminal LSWD and driver's door lock/unlock state signals are input to the main body ECU.
The main body ECU applies voltage to the door unlock detection switch via terminal LSWD. When the door unlock detection switch is on (there is continuity between the switch terminals), a lock state signal is input to the main body ECU. When the switch is off (there is no continuity between the switch terminals), an unlock state signal is input.

WIRING DIAGRAM

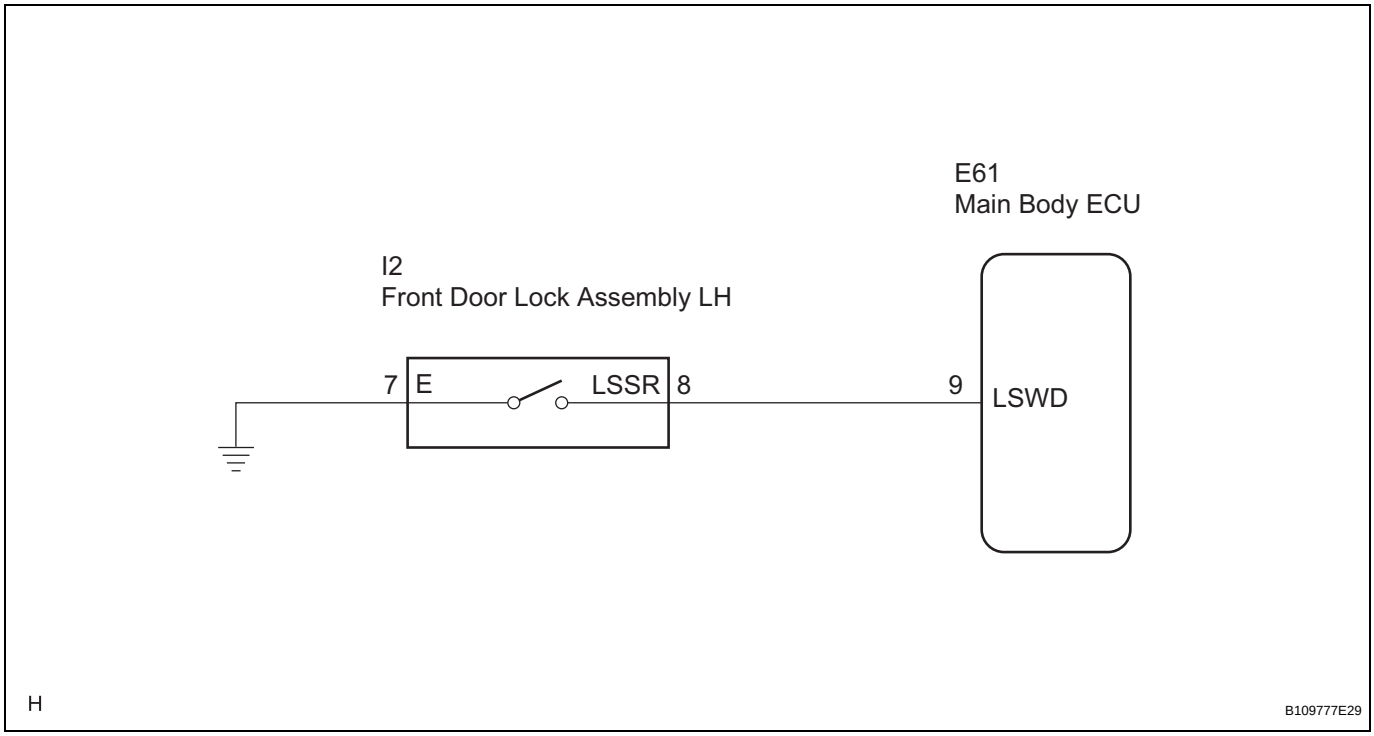

INSPECTION PROCEDURE

1	READ VALUE OF DATA LIST (DOOR UNLOCK DETECTION SWITCH)

(a) Check the DATA LIST to ensure proper function of the door unlock detection switch.

MAIN BODY:

Item	Measurement Item / Display (Range)	Normal Condition	Diagnostic Note
D LOCK POS SW	Driver side door unlock detection switch signal /ON or OFF	ON: Driver side door is unlocked OFF: Driver side door is locked	-

OK:
The display is as specified in the normal condition column.

NG → **Go to step 2**

OK

PROCEED TO NEXT CIRCUIT INSPECTION SHOWN IN PROBLEM SYMPTOMS TABLE

2 INSPECT FRONT DOOR LOCK ASSEMBLY (DOOR UNLOCK DETECTION SWITCH)

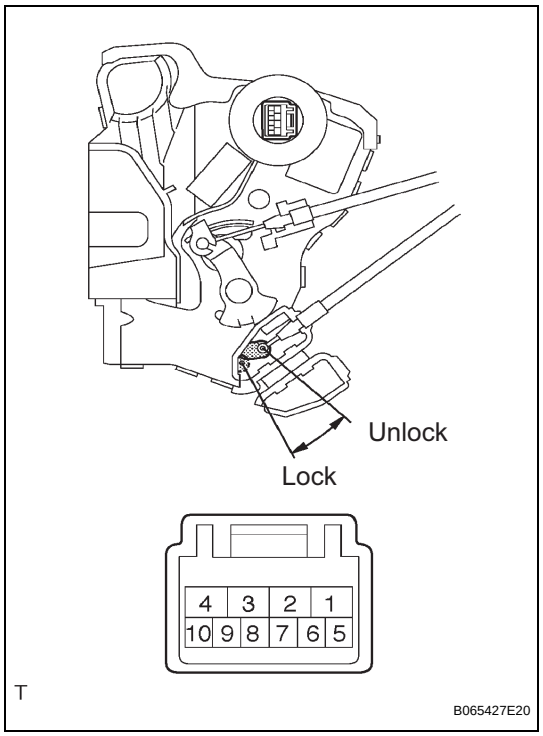

(a) Remove the front door lock assembly LH.
(b) Measure the resistance according to the value(s) in the table below.

Standard resistance

Tester Connection	Measurement Condition	Door Lock Condition	Specified Condition
7 - 8	Battery positive (+) → Terminal 4 Battery negative (-) → Terminal 1	Lock	10 kΩ or higher
7 - 8	Battery positive (+) → Terminal 1 Battery negative (-) → Terminal 4	Unlock	Below 1 Ω

NG → **REPLACE FRONT DOOR LOCK ASSEMBLY**

OK

DL

3	CHECK WIRE HARNESS (FRONT DOOR LOCK ASSEMBLY - MAIN BODY ECU)

Wire Harness Side:

I2
Front Door Lock Assembly LH

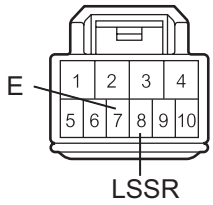

E61
Main Body ECU

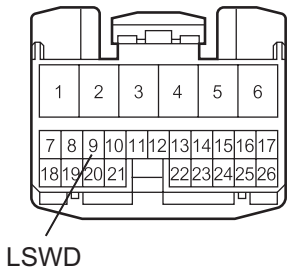

H

B112606E03

(a) Disconnect the front door lock assembly LH connector.
(b) Disconnect the main body ECU connector.
(c) Measure the resistance according to the value(s) in the table below.

Standard resistance

Tester Connection (Symbols)	Condition	Specified Condition
I2-8 (LSSR) - E61-9 (LSWD)	Always	Below 1 Ω
I2-8 (LSSR) - Body ground	Always	10 kΩ or higher
I2-7 (E) - Body ground	Always	Below 1 Ω

NG → **REPAIR OR REPLACE HARNESS OR CONNECTOR**

OK

REPLACE MAIN BODY ECU

Front Passenger Side Door UNLOCK Detection Switch Circuit

DESCRIPTION

The front passenger door unlock detection switch is built into the front passenger door lock assembly. The switch turns on when the front passenger door is locked and turns off when the door is unlocked.
The main body ECU is connected to the front passenger door lock assembly via terminal LSWP and front passenger door lock/unlock state signals are input to the ECU.
The main body ECU applies voltage to the door unlock detection switch via terminal LSWP. When the door unlock detection switch is on (there is continuity between the switch terminals), a lock state signal is input to the ECU. When the switch is off (there is no continuity between the switch terminals), an unlock state signal is input.

WIRING DIAGRAM

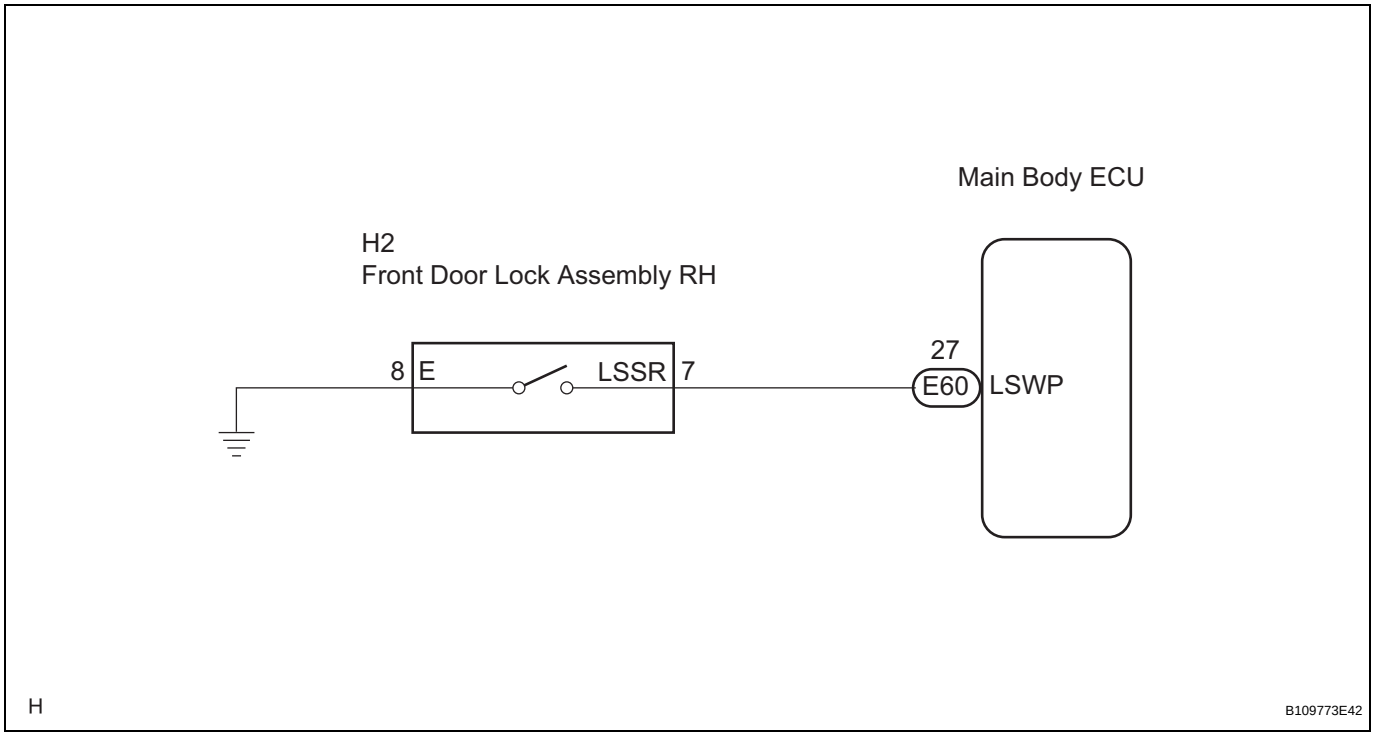

INSPECTION PROCEDURE

1	READ VALUE OF DATA LIST (DOOR UNLOCK DETECTION SWITCH)

(a) Check the DATA LIST to ensure proper function of the door unlock detection switch.

MAIN BODY:

Item	Measurement Item / Display (Range)	Normal Condition	Diagnostic Note
P LOCK POS SW	Passenger side door lock position switch signal /ON or OFF	ON: Passenger side door lock is in UNLOCK position OFF: Passenger side door lock is in LOCK position	-

OK:

The display is as specified in the normal condition column.

NG → **Go to step 2**

OK

PROCEED TO NEXT CIRCUIT INSPECTION SHOWN IN PROBLEM SYMPTOMS TABLE

2 INSPECT FRONT DOOR LOCK ASSEMBLY (DOOR UNLOCK DETECTION SWITCH)

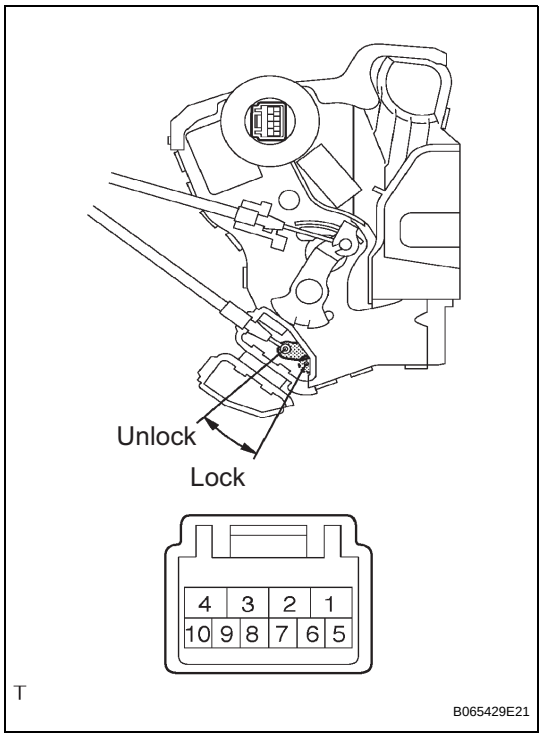

(a) Remove the front door lock assembly RH.
(b) Measure the resistance according to the value(s) in the table below.

Standard resistance

Tester Connection	Measurement Condition	Door Lock Condition	Specified Condition
7 - 8	Battery positive (+) → Terminal 4 Battery negative (-) → Terminal 1	LOCK	10 kΩ or higher
7 - 8	Battery positive (+) → Terminal 1 Battery negative (-) → Terminal 4	UNLOCK	Below 1 Ω

NG → **REPLACE FRONT DOOR LOCK ASSEMBLY**

OK

DL

3 CHECK WIRE HARNESS (FRONT DOOR LOCK ASSEMBLY - MAIN BODY ECU)

Wire Harness Side:

H2
Front Door Lock Assembly RH

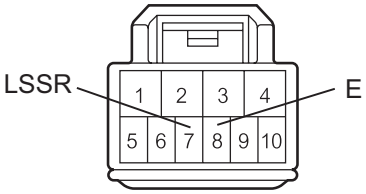

E60
Main Body ECU

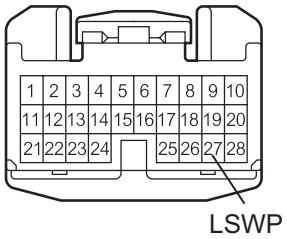

H

B111708E18

(a) Disconnect the front door lock assembly RH connector.
(b) Disconnect the ECU connector.
(c) Measure the resistance according to the value(s) in the table below.

Standard resistance

Tester Connection (Symbols)	Condition	Specified Condition
H2-7 (LSSR) - E60-27 (LSWP)	Always	Below 1 Ω
H2-7 (LSSR) - Body ground	Always	10 kΩ or higher
H2-8 (E) - Body ground	Always	Below 1 Ω

NG → **REPAIR OR REPLACE HARNESS OR CONNECTOR**

DL

OK

REPLACE MAIN BODY ECU

Rear Door UNLOCK Detection Switch LH Circuit

DESCRIPTION

The rear left door unlock detection switch is built into the rear left door lock assembly. The switch turns on when the rear left door is locked and turns off when the door is unlocked.
The main body ECU is connected to the rear left door lock assembly via terminal LSWL and rear left door lock/unlock state signals are input to the ECU.
The main body ECU applies voltage to the door unlock detection switch via terminal LSWL. When the door unlock detection switch is on (there is continuity between the switch terminals), a lock state signal is input to the ECU. When the switch is off (there is no continuity between the switch terminals), an unlock state signal is input.

WIRING DIAGRAM

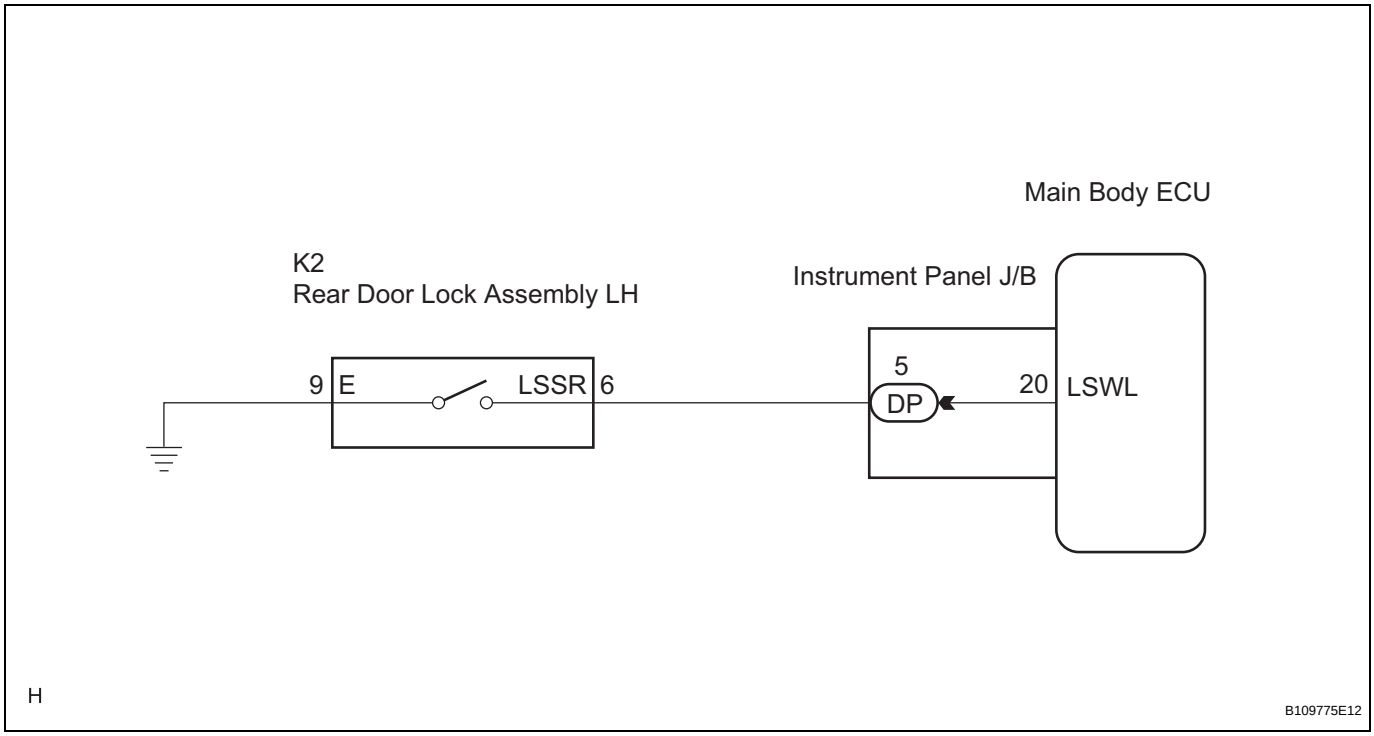

INSPECTION PROCEDURE

1	READ VALUE OF DATA LIST (UNLOCK DETECTION SWITCH)

(a) Check the DATA LIST to ensure proper function of the door unlock detection switch.

MAIN BODY:

Item	Measurement Item / Display (Range)	Normal Condition	Diagnostic Note
RL LOCK POS SW	Rear left door lock position switch signal / ON or OFF	ON: Rear left door lock is in UNLOCK position OFF: Rear left door lock is in LOCK position	-

OK:

The display is as specified in the normal condition column.

NG → **Go to step 2**

OK

PROCEED TO NEXT CIRCUIT INSPECTION SHOWN IN PROBLEM SYMPTOMS TABLE

2 INSPECT REAR DOOR LOCK ASSEMBLY (UNLOCK DETECTION SWITCH)

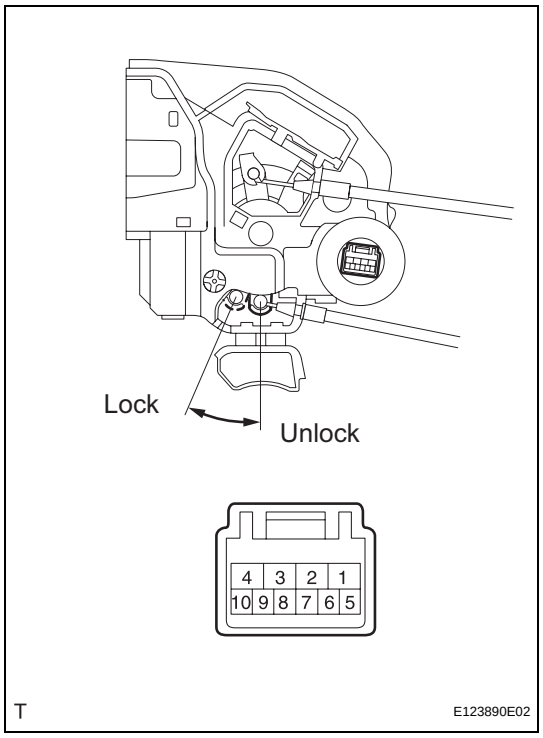

(a) Remove the rear door lock assembly LH.

(b) Measure the resistance according to the value(s) in the table below.

Standard resistance

Tester Connection	Measurement Condition	Door Lock Condition	Specified Condition
6 - 9	Battery positive (+) → Terminal 4 Battery negative (-) → Terminal 1	Lock	10 kΩ or higher
6 - 9	Battery positive (+) → Terminal 1 Battery negative (-) → Terminal 4	Unlock	Below 1 Ω

NG → **REPLACE REAR DOOR LOCK ASSEMBLY**

OK

3 CHECK WIRE HARNESS (REAR DOOR LOCK ASSEMBLY - MAIN BODY ECU)

(a) Disconnect the rear door lock assembly LH connector.

DL

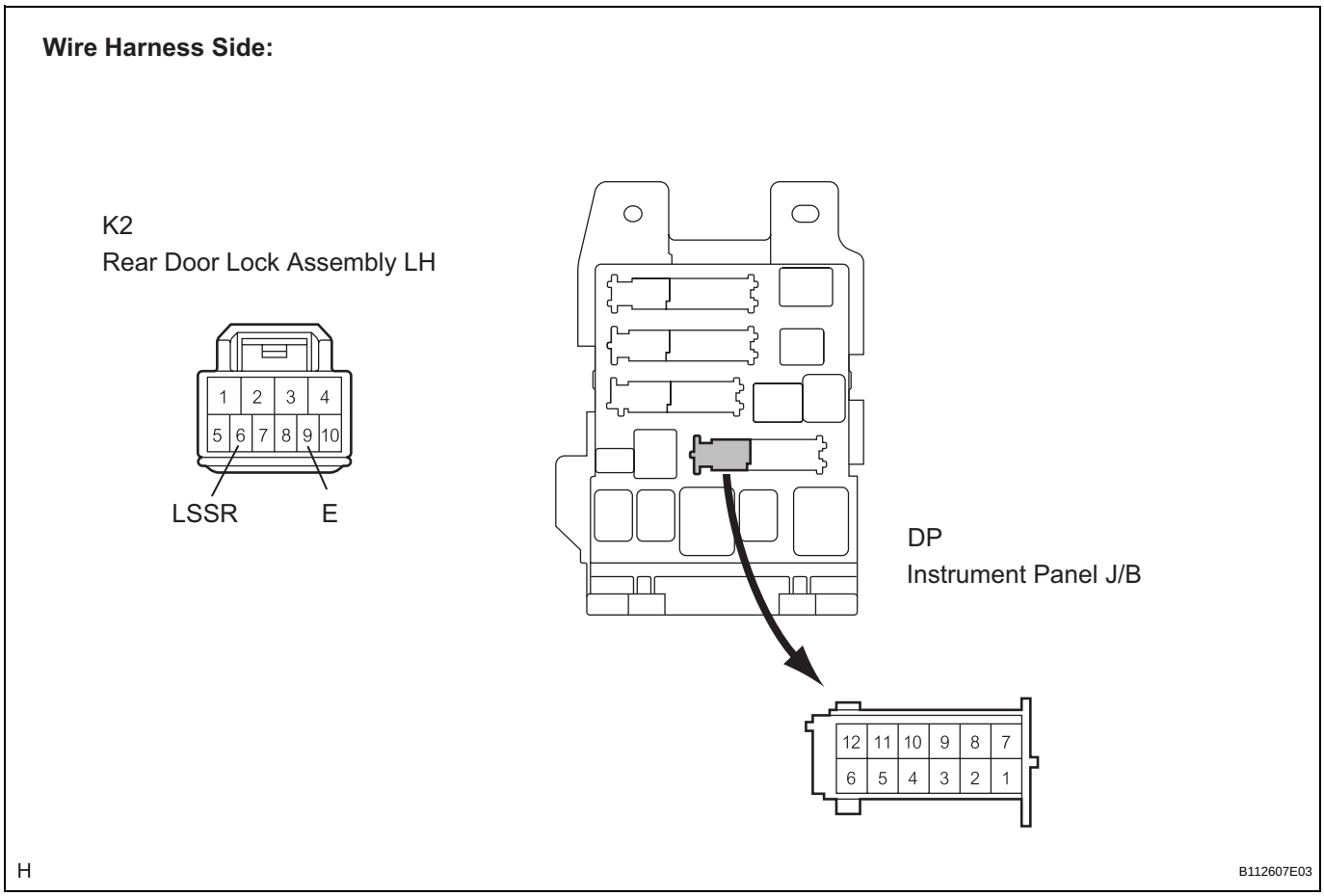

(b) Disconnect the ECU (instrument panel J/B) connector.
(c) Measure the resistance according to the value(s) in the table below.

Standard resistance

Tester Connection (Symbols)	Condition	Specified Condition
K2-6 (LSSR) - DP-5	Always	Below 1 Ω
K2-6 (LSSR) - Body ground	Always	10 kΩ or higher
K2-9 (E) - Body ground	Always	Below 1 Ω

NG → **REPAIR OR REPLACE HARNESS OR CONNECTOR**

OK

REPLACE MAIN BODY ECU (INSTRUMENT PANEL J/B)

DL

Rear Door UNLOCK Detection Switch RH Circuit

DESCRIPTION

The rear right door unlock detection switch is built into the rear right door lock assembly. The switch turns on when the rear right door is locked and turns off when the door is unlocked.
The main body ECU is connected to the rear right door lock assembly via terminal LSWR and rear right door lock/unlock state signals are input to the ECU.
The main body ECU applies voltage to the door unlock detection switch via terminal LSWR. When the door unlock detection switch is on (there is continuity between the switch terminals), a lock state signal is input to the ECU. When the switch is off (there is no continuity between the switch terminals), an unlock state signal is input.

WIRING DIAGRAM

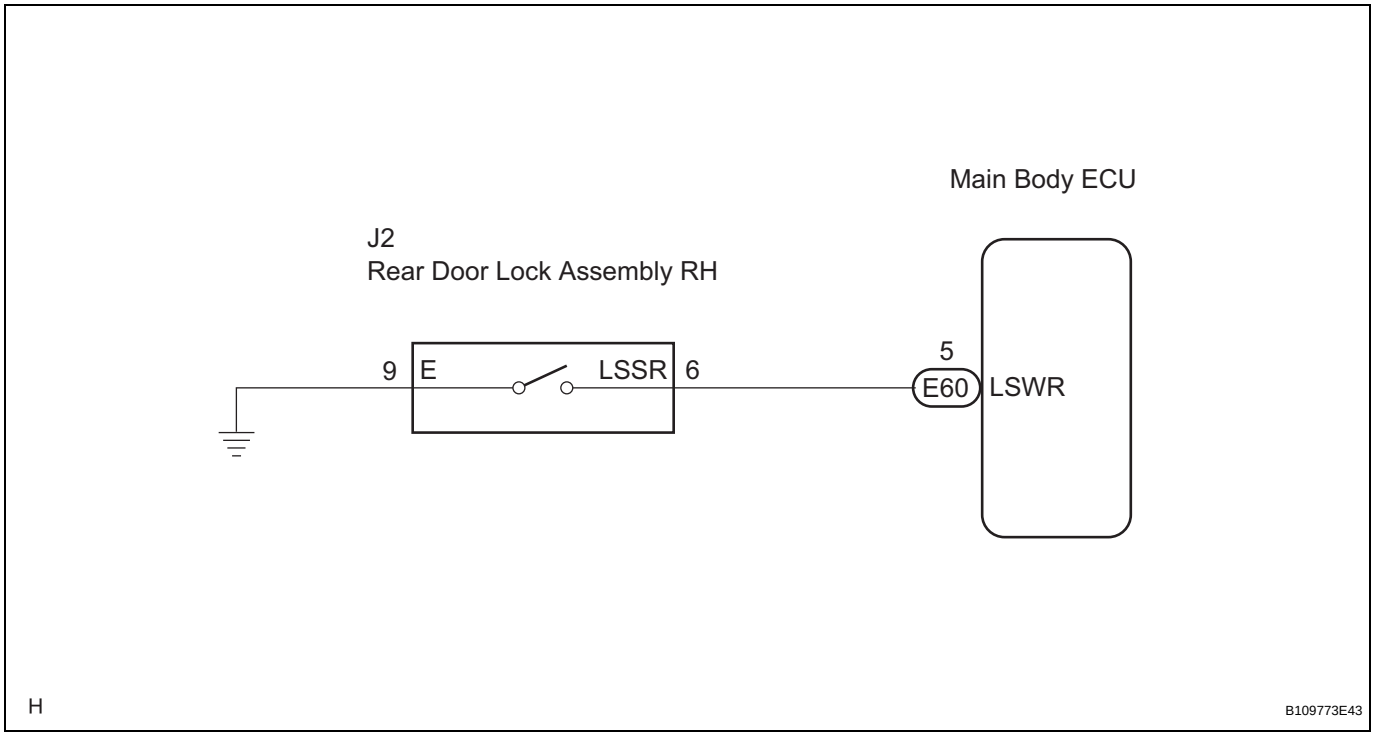

INSPECTION PROCEDURE

1	READ VALUE OF DATA LIST (UNLOCK DETECTION SWITCH)

(a) Check the DATA LIST to ensure proper function of the door unlock detection switch.

MAIN BODY:

Item	Measurement Item / Display (Range)	Normal Condition	Diagnostic Note
RR LOCK POS SW	Rear right door lock position switch signal / ON or OFF	ON: Rear right door lock is in UNLOCK position OFF: Rear right door lock is in LOCK position	-

OK:

The display is as specified in the normal condition column.

NG → **Go to step 2**

OK

PROCEED TO NEXT CIRCUIT INSPECTION SHOWN IN PROBLEM SYMPTOMS TABLE

2 INSPECT REAR DOOR LOCK ASSEMBLY (UNLOCK DETECTION SWITCH)

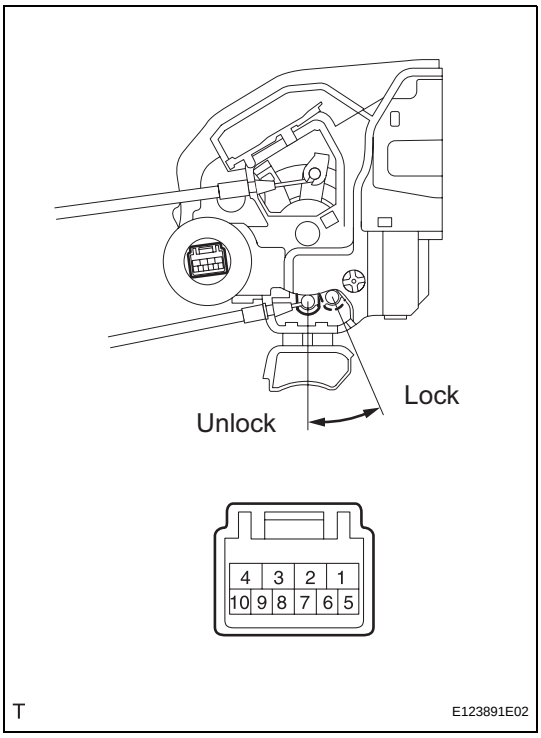

(a) Remove the rear door lock assembly RH.
(b) Measure the resistance according to the value(s) in the table below.

Standard resistance

Tester Connection	Measurement Condition	Door Lock Condition	Specified Condition
6 - 9	Battery positive (+) → Terminal 4 Battery negative (-) → Terminal 1	Lock	10 kΩ or higher
6 - 9	Battery positive (+) → Terminal 1 Battery negative (-) → Terminal 4	Unlock	Below 1 Ω

NG → **REPLACE REAR DOOR LOCK ASSEMBLY**

OK

3 CHECK WIRE HARNESS (REAR DOOR LOCK - MAIN BODY ECU (INSTRUMENT PANEL J/B))

(a) Disconnect the rear door lock assembly RH connector.

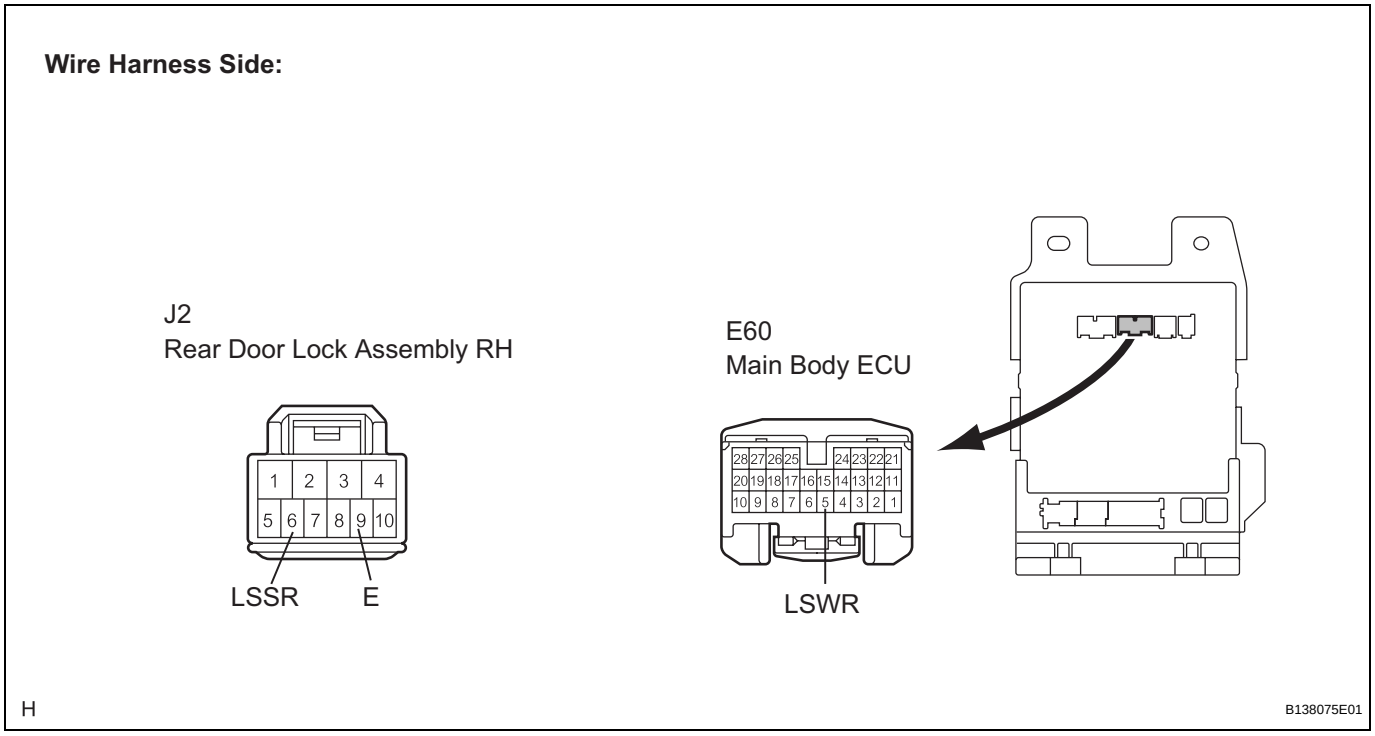

(b) Disconnect the ECU (instrument panel J/B) connector.

(c) Measure the resistance according to the value(s) in the table below.

Standard resistance

Tester Connection (Symbols)	Condition	Specified Condition
J2-6 (LSSR) - E60-5 (LSWR)	Always	Below 1 Ω
J2-6 (LSSR) - Body ground	Always	10 kΩ or higher
J2-9 (E) - Body ground	Always	Below 1 Ω

NG → **REPAIR OR REPLACE HARNESS OR CONNECTOR**

OK

REPLACE MAIN BODY ECU (INSTRUMENT PANEL J/B)

DL

Driver Side Door Lock Motor Circuit

DESCRIPTION

The driver's door lock motor is built into the driver's door lock assembly.
The main body ECU controls the driver's door lock motor to lock/unlock the driver's door. This ECU applies current from terminal ACT+ to terminal ACTD to operate the motor to lock the door. It reverses the direction of the current flow to operate the motor to unlock the door.

WIRING DIAGRAM

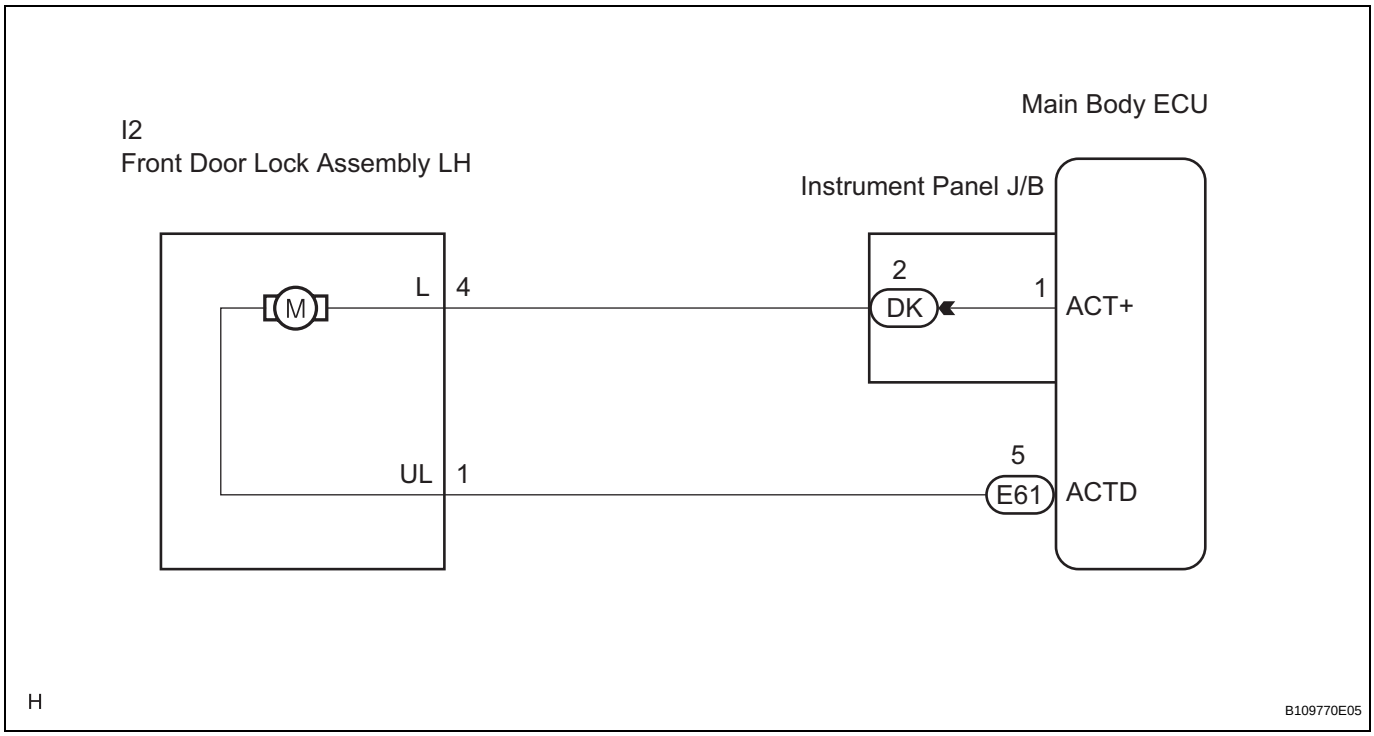

INSPECTION PROCEDURE

1	**INSPECT FRONT DOOR LOCK ASSEMBLY (DOOR LOCK MOTOR)**

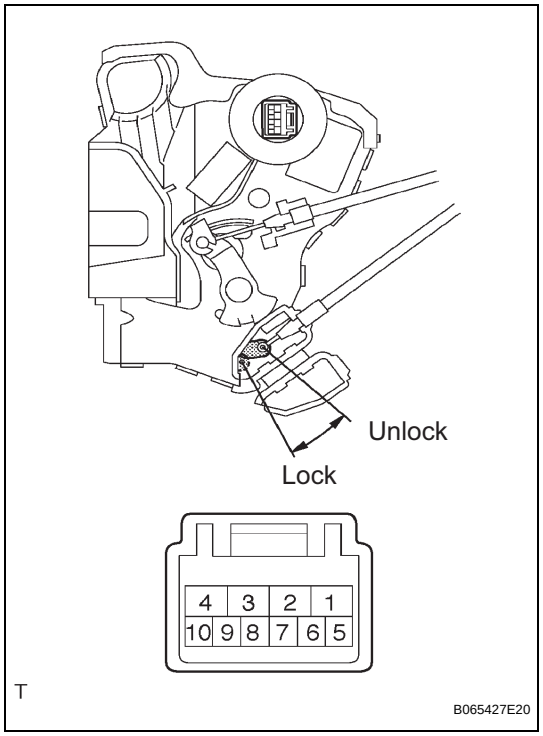

(a) Remove the front door lock assembly LH.
(b) Apply battery voltage and check operation of the door lock motor.
OK

Measurement Condition	Specified Condition
Battery positive (+) → Terminal 4 Battery negative (-) → Terminal 1	**Lock**
Battery positive (+) → Terminal 1 Battery negative (-) → Terminal 4	**Unlock**

NG → **REPLACE FRONT DOOR LOCK ASSEMBLY**

OK

2	**CHECK WIRE HARNESS (FRONT DOOR LOCK - MAIN BODY ECU (INSTRUMENT PANEL J/B))**

(a) Disconnect the front door lock assembly LH connector.

DL

Wire Harness Side:

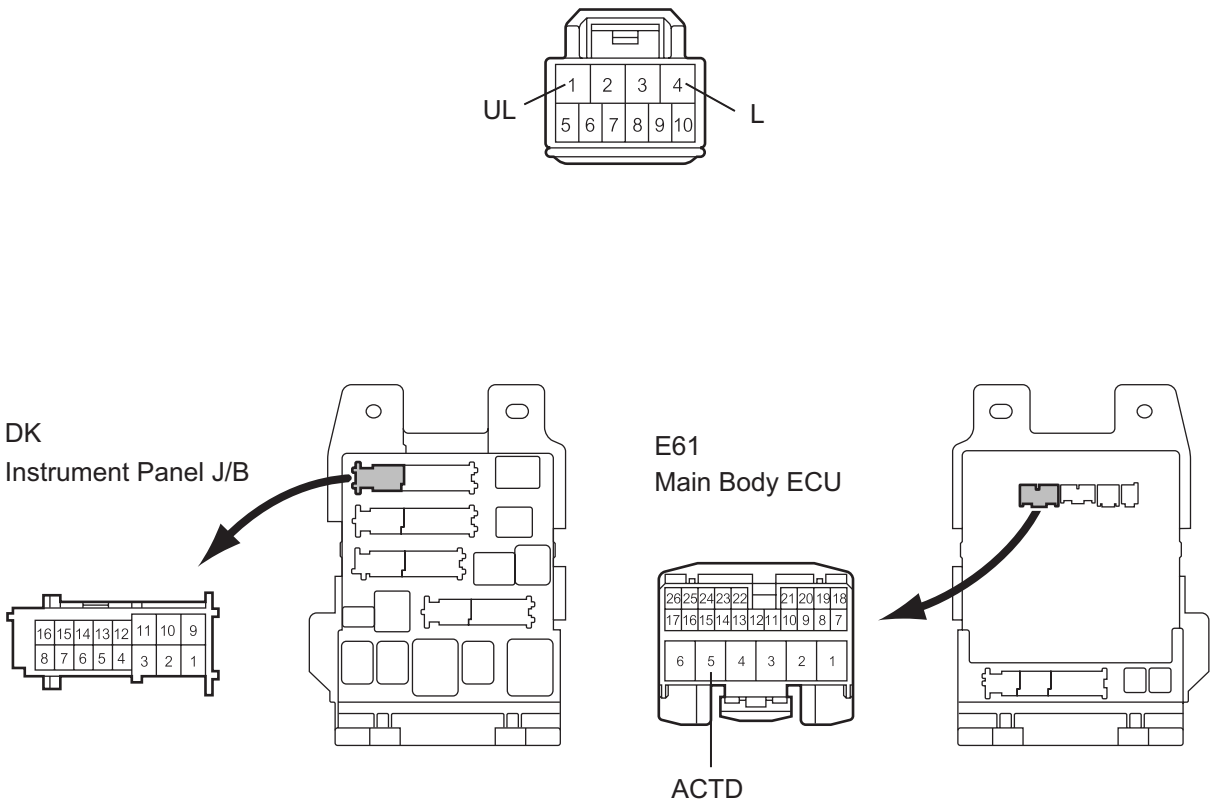

H B112609E04

(b) Disconnect the ECU (instrument panel J/B) connector.

(c) Measure the resistance according to the value(s) in the table below.

Standard resistance

Tester Connection (Symbols)	Condition	Specified Condition
I2-4 (L) - DK-2	Always	Below 1 Ω
I2-1 (UL) - E61-5 (ACTD)	Always	Below 1 Ω
DK-2 - Body ground	Always	10 kΩ or higher
E61-5 (ACTD) - Body ground	Always	10 kΩ or higher

NG → **REPAIR OR REPLACE HARNESS OR CONNECTOR**

OK

PROCEED TO NEXT CIRCUIT INSPECTION SHOWN IN PROBLEM SYMPTOMS TABLE

Front Passenger Side Door Lock Motor Circuit

DESCRIPTION

The front passenger door lock motor is built into the front passenger door lock assembly.
The main body ECU controls the front passenger door lock motor to lock/unlock the front passenger door. This ECU applies current from terminal ACT+ to terminal ACT- to operate the motor to lock the door. It reverses the direction of the current flow to operate the motor to unlock the door.

WIRING DIAGRAM

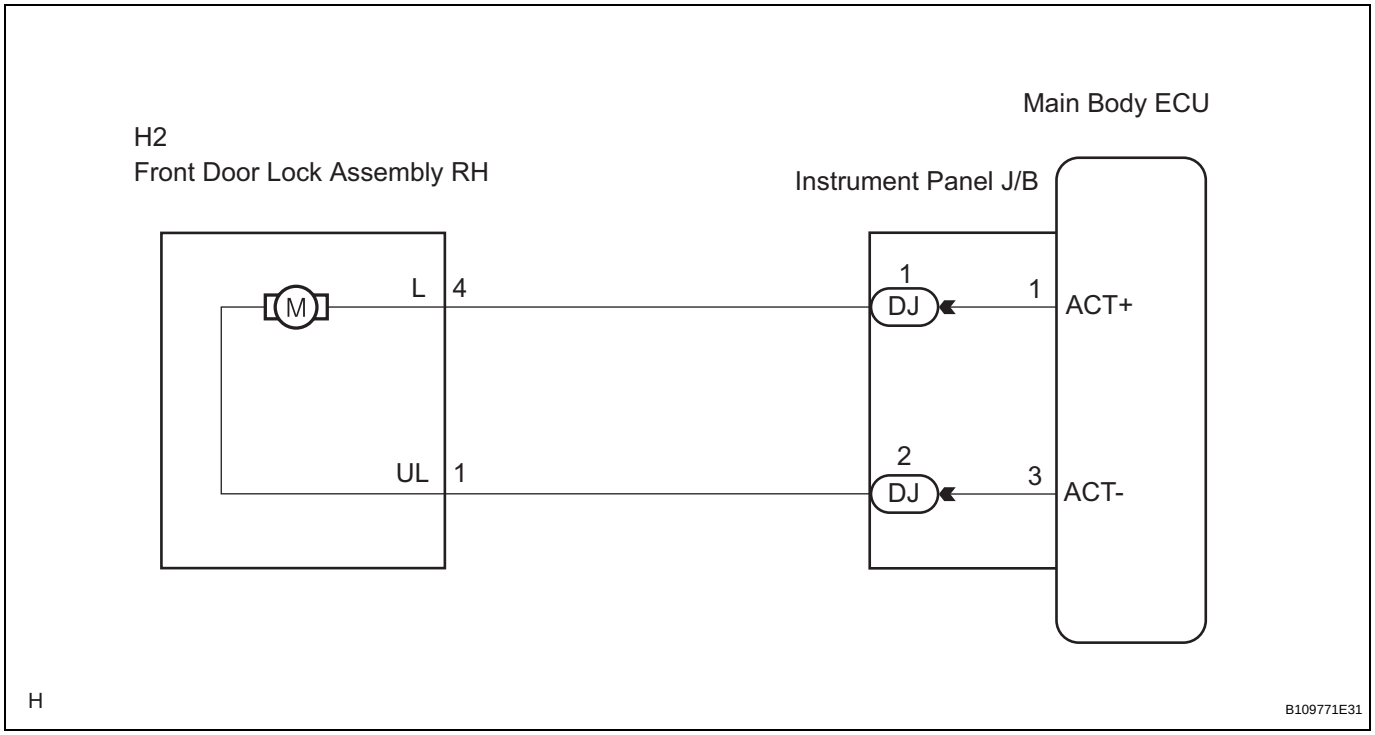

INSPECTION PROCEDURE

1	**INSPECT FRONT DOOR LOCK ASSEMBLY (DOOR LOCK MOTOR)**

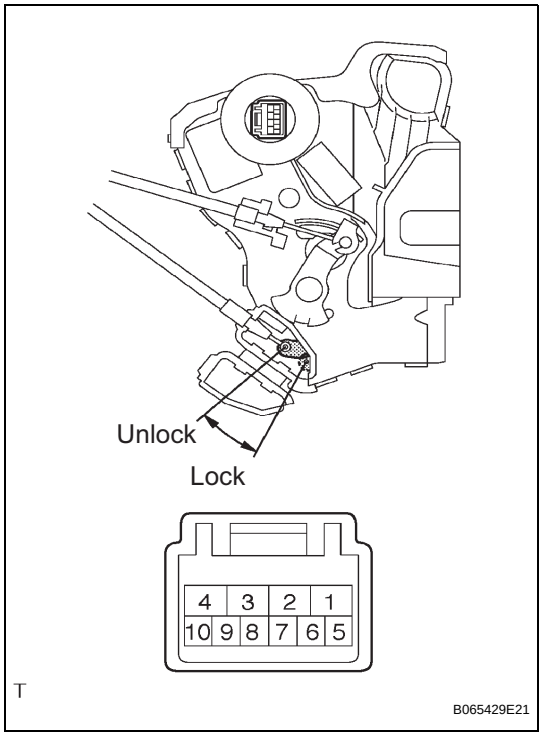

(a) Remove the front door lock assembly RH.
(b) Apply battery voltage and check operation of the door lock motor.
OK

Measurement Condition	Specified Condition
Battery positive (+) → Terminal 4 Battery negative (-) → Terminal 1	**Lock**
Battery positive (+) → Terminal 1 Battery negative (-) → Terminal 4	**Unlock**

NG → **REPLACE FRONT DOOR LOCK ASSEMBLY**

OK

2	**CHECK WIRE HARNESS (FRONT DOOR LOCK - MAIN BODY ECU (INSTRUMENT PANEL J/B))**

(a) Disconnect the front door lock assembly RH connector.

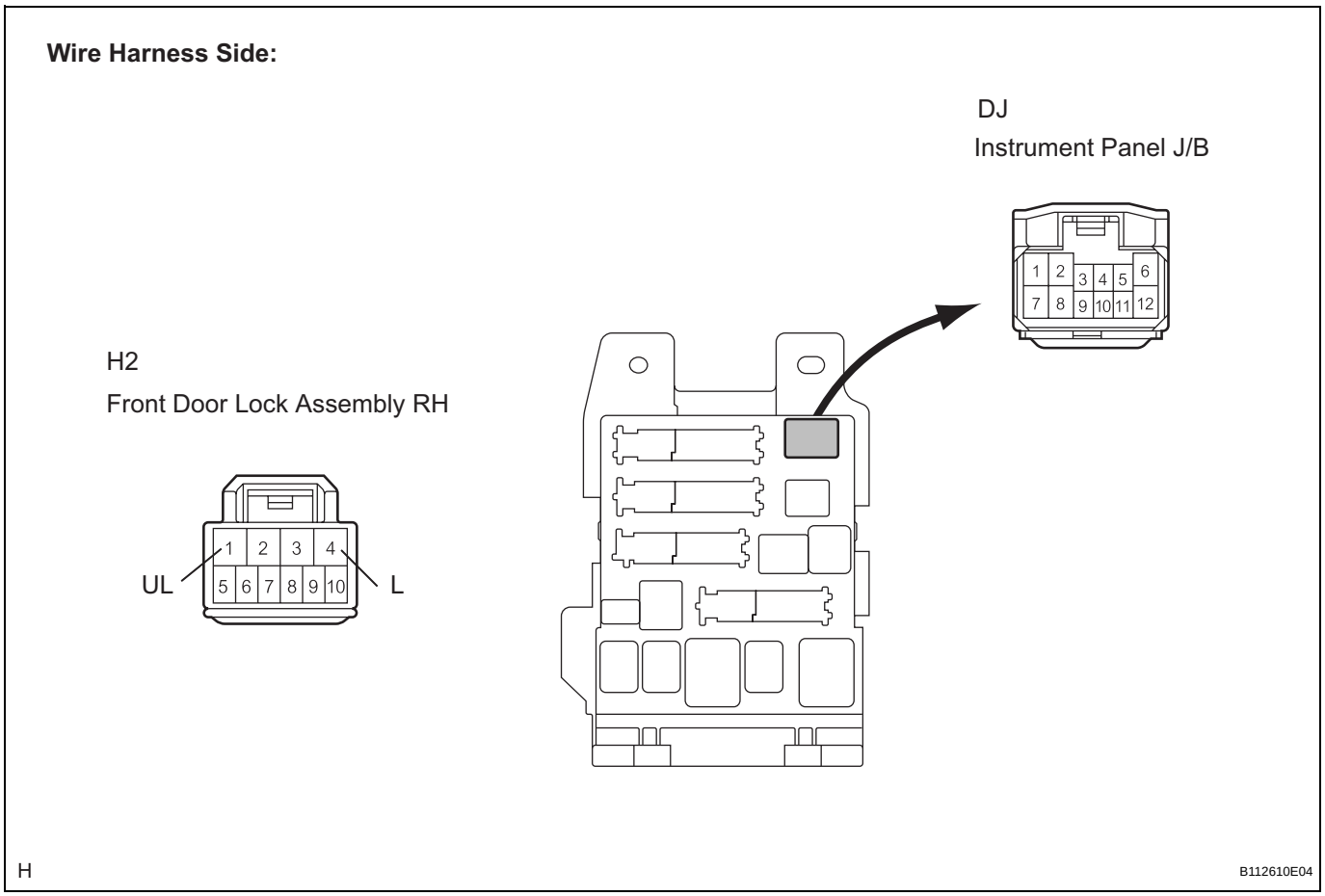

(b) Disconnect the ECU (instrument panel J/B) connector.

(c) Measure the resistance according to the value(s) in the table below.

Standard resistance

Tester Connection (Symbols)	Condition	Specified Condition
H2-4 (L) - DJ-1	Always	Below 1 Ω
H2-1 (UL) - DJ-2	Always	Below 1 Ω
DJ-1 - Body ground	Always	10 kΩ or higher
DJ-2 - Body ground	Always	10 kΩ or higher

NG → **REPAIR OR REPLACE HARNESS OR CONNECTOR**

OK

PROCEED TO NEXT CIRCUIT INSPECTION SHOWN IN PROBLEM SYMPTOMS TABLE

DL

Rear Door Lock Motor LH Circuit

DESCRIPTION

The rear left door lock motor is built into the rear left door lock assembly.
The main body ECU controls the rear left door lock motor to lock/unlock the rear left door. This ECU applies current from terminal ACT+ to terminal ACT- to operate the motor to lock the door. It reverses the direction of the current flow to operate the motor to unlock the door.

WIRING DIAGRAM

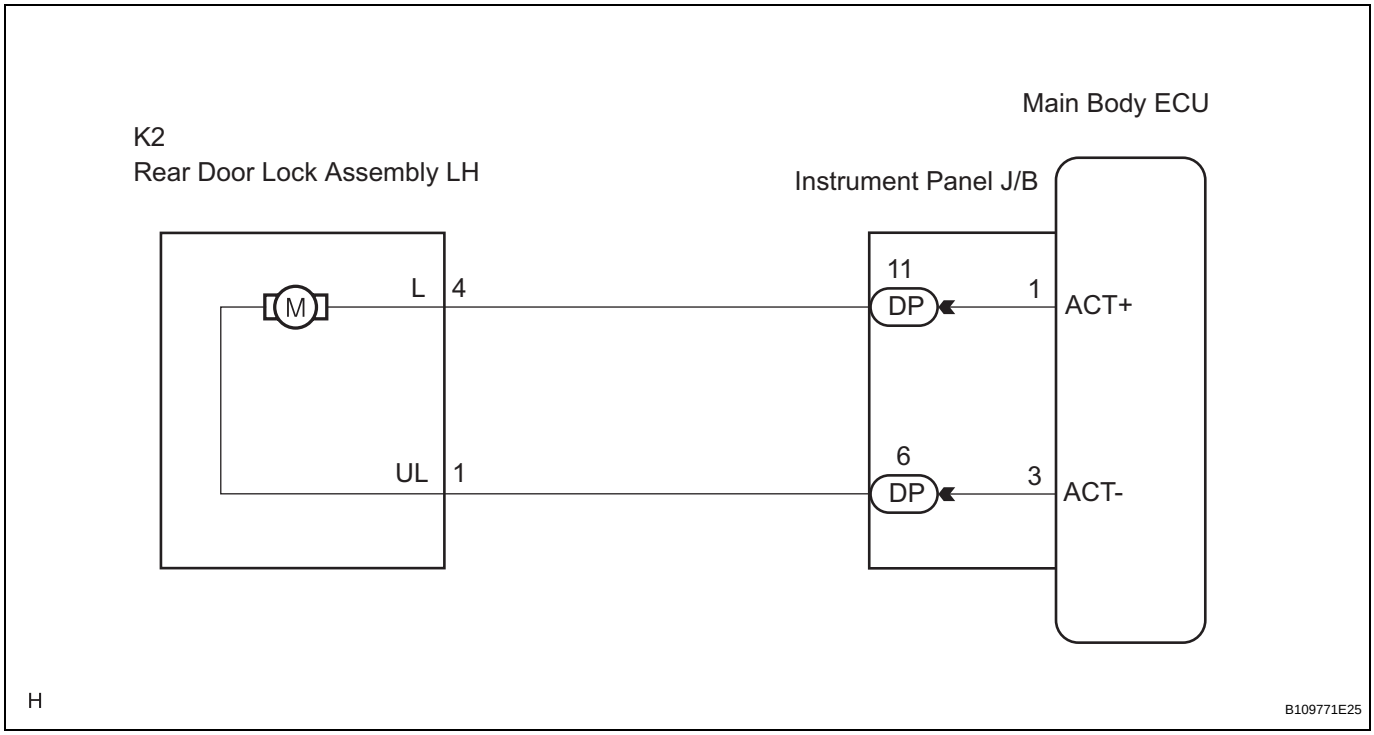

INSPECTION PROCEDURE

1	**INSPECT REAR DOOR LOCK ASSEMBLY**

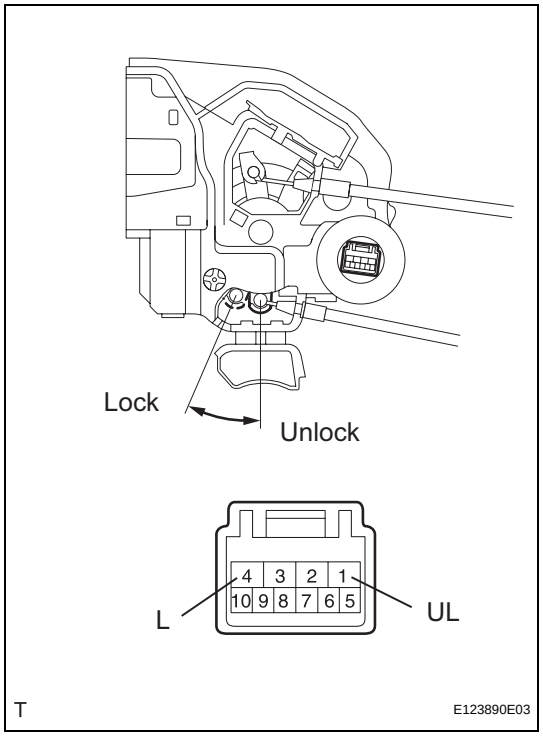

(a) Remove the rear door lock assembly LH.
(b) Apply battery voltage and check operation of the door lock motor.
OK

Measurement Condition	Specified Condition
Battery positive (+) → Terminal 4 Battery negative (-) → Terminal 1	**Lock**
Battery positive (+) → Terminal 1 Battery negative (-) → Terminal 4	**Unlock**

NG → **REPLACE REAR DOOR LOCK ASSEMBLY**

OK

2	**CHECK WIRE HARNESS (REAR DOOR LOCK - MAIN BODY ECU (INSTRUMENT PANEL J/B))**

(a) Disconnect the rear door lock assembly LH connector.

DL

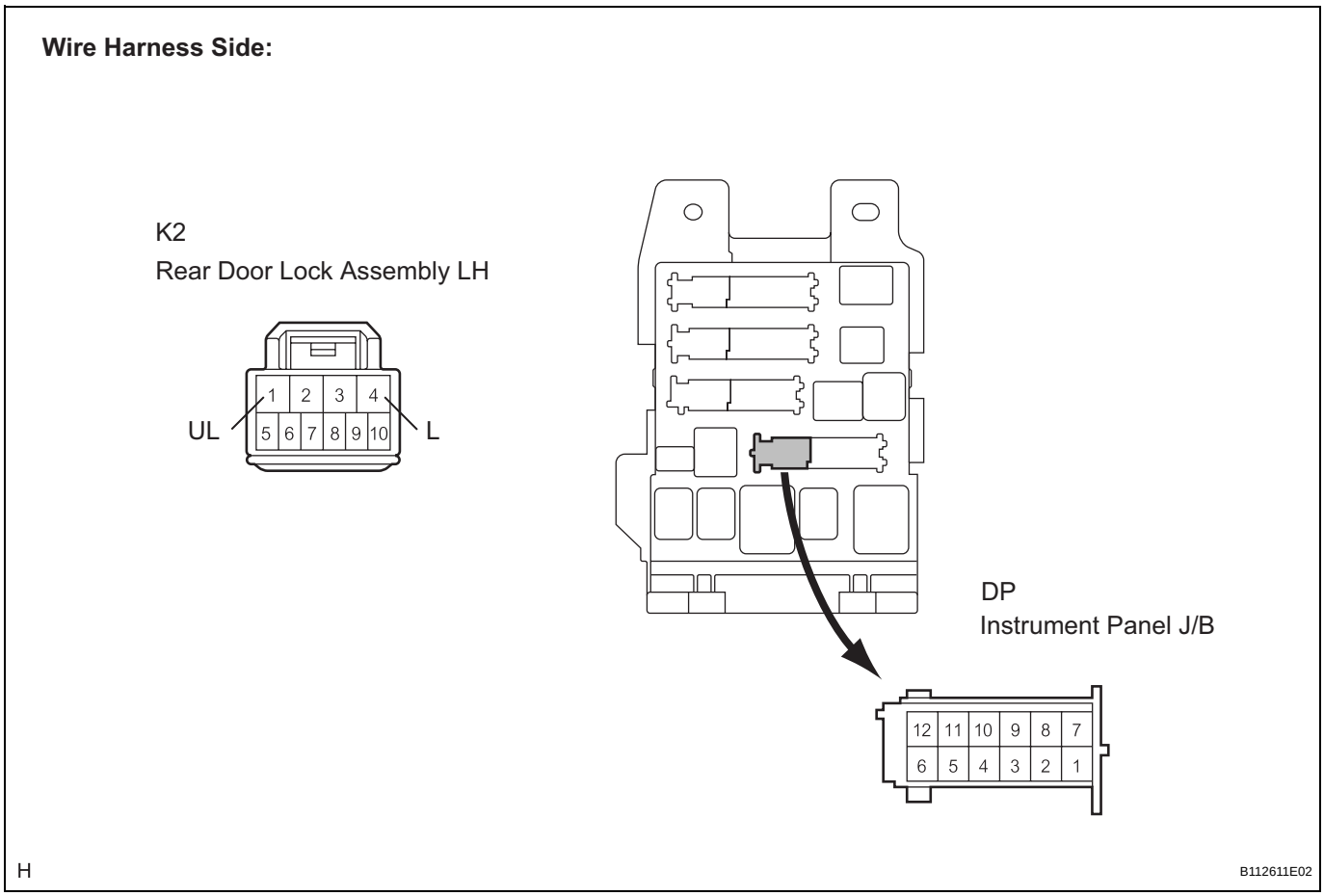

(b) Disconnect the ECU (instrument panel J/B) connector.
(c) Measure the resistance according to the value(s) in the table below.

Standard resistance

Tester Connection (Symbols)	Condition	Specified Condition
K2-4 (L) - DP-11	Always	Below 1 Ω
K2-1 (UL) - DP-6	Always	Below 1 Ω
DP-11 - Body ground	Always	10 kΩ or higher
DP-6 - Body ground	Always	10 kΩ or higher

NG → **REPAIR OR REPLACE HARNESS OR CONNECTOR**

OK

PROCEED TO NEXT CIRCUIT INSPECTION SHOWN IN PROBLEM SYMPTOMS TABLE

Rear Door Lock Motor RH Circuit

DESCRIPTION

The rear right door lock motor is built into the rear right door lock assembly.
The main body ECU controls the rear right door lock motor to lock/unlock the rear right door. This ECU applies current from terminal ACT+ to terminal ACT- to operate the motor to lock the door. It reverses the direction of the current flow to operate the motor to unlock the door.

WIRING DIAGRAM

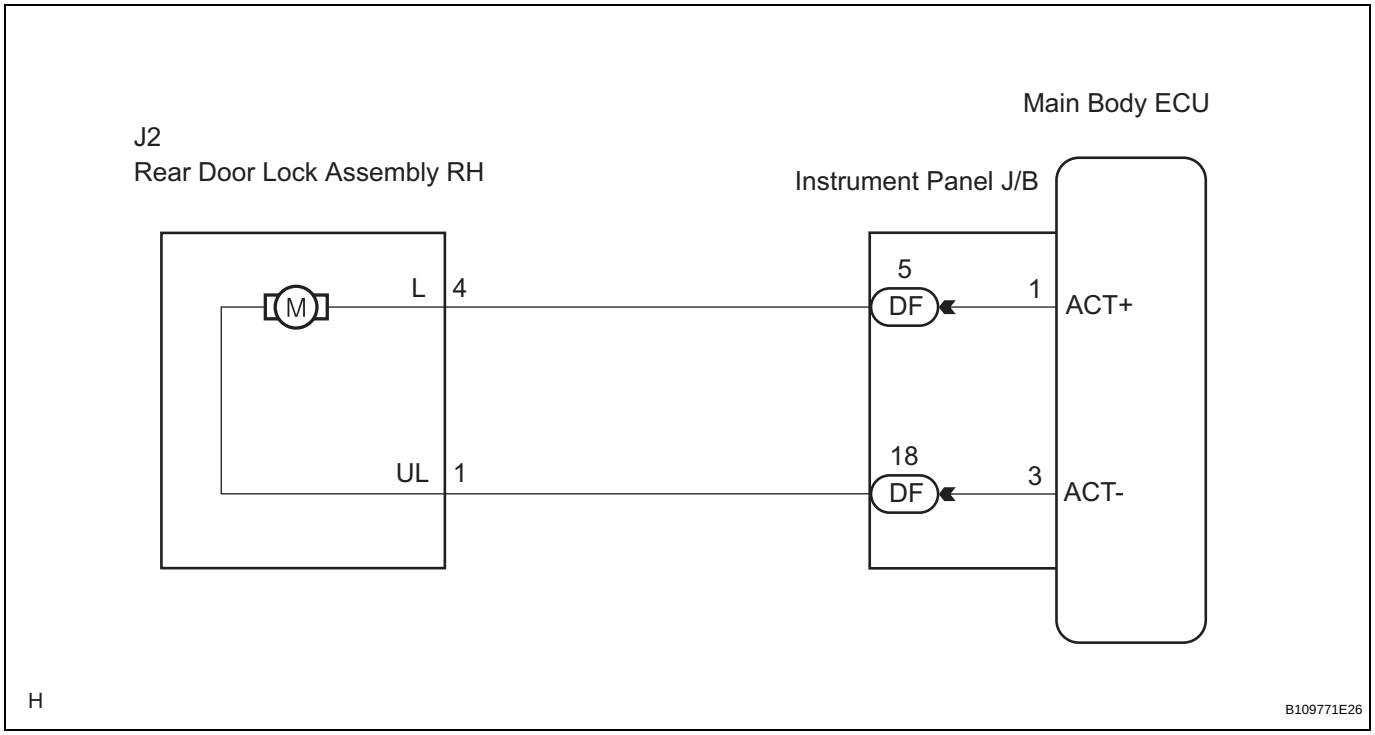

INSPECTION PROCEDURE

1	**INSPECT REAR DOOR LOCK ASSEMBLY**

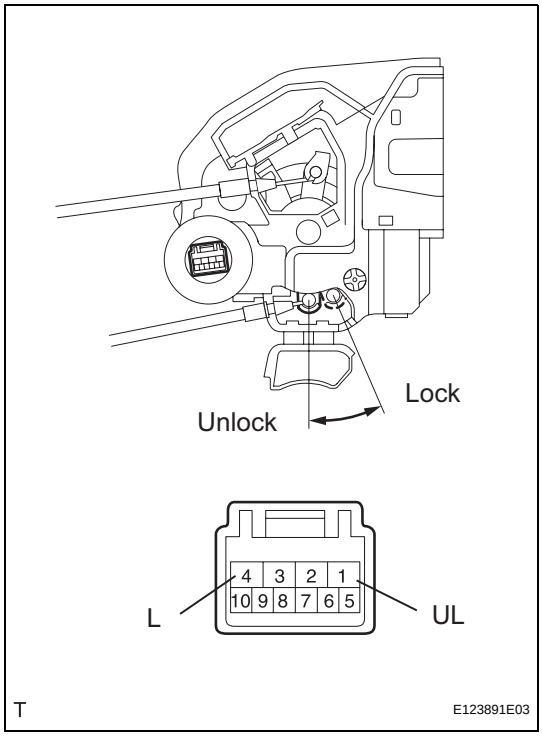

(a) Remove the rear door lock assembly RH.
(b) Apply battery voltage and check operation of the door lock motor.
OK

Measurement Condition	Specified Condition
Battery positive (+) → Terminal 4 Battery negative (-) → Terminal 1	**Lock**
Battery positive (+) → Terminal 1 Battery negative (-) → Terminal 4	**Unlock**

NG → **REPLACE REAR DOOR LOCK ASSEMBLY**

OK

2	**CHECK WIRE HARNESS (REAR DOOR LOCK - MAIN BODY ECU (INSTRUMENT PANEL J/B))**

(a) Disconnect the rear door lock assembly RH connector.

DL

Wire Harness Side:

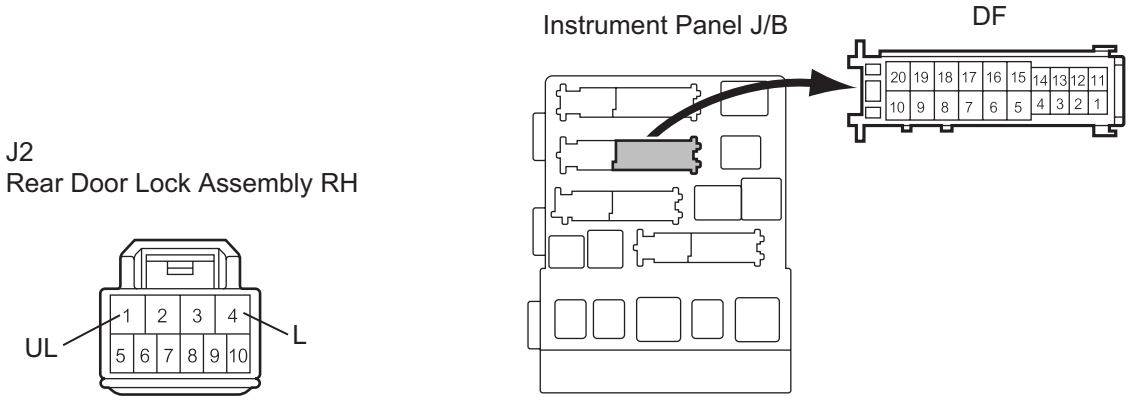

B138122E02

(b) Disconnect the ECU (instrument panel J/B) connector.

(c) Measure the resistance according to the value(s) in the table below.

Standard resistance

Tester Connection (Symbols)	Condition	Specified Condition
J2-4 (L) - DF-5	Always	Below 1 Ω
J2-1 (UL) - DF-18	Always	Below 1 Ω
DF-5 - Body ground	Always	10 kΩ or higher
DF-18 - Body ground	Always	10 kΩ or higher

NG → **REPAIR OR REPLACE HARNESS OR CONNECTOR**

OK

PROCEED TO NEXT CIRCUIT INSPECTION SHOWN IN PROBLEM SYMPTOMS TABLE

DL

Luggage Compartment Door Courtesy Switch Circuit

DESCRIPTION

The door courtesy switch turns on when the door is open and turns off when the door is closed.
The main body ECU detects the condition of the door courtesy switch.

WIRING DIAGRAM

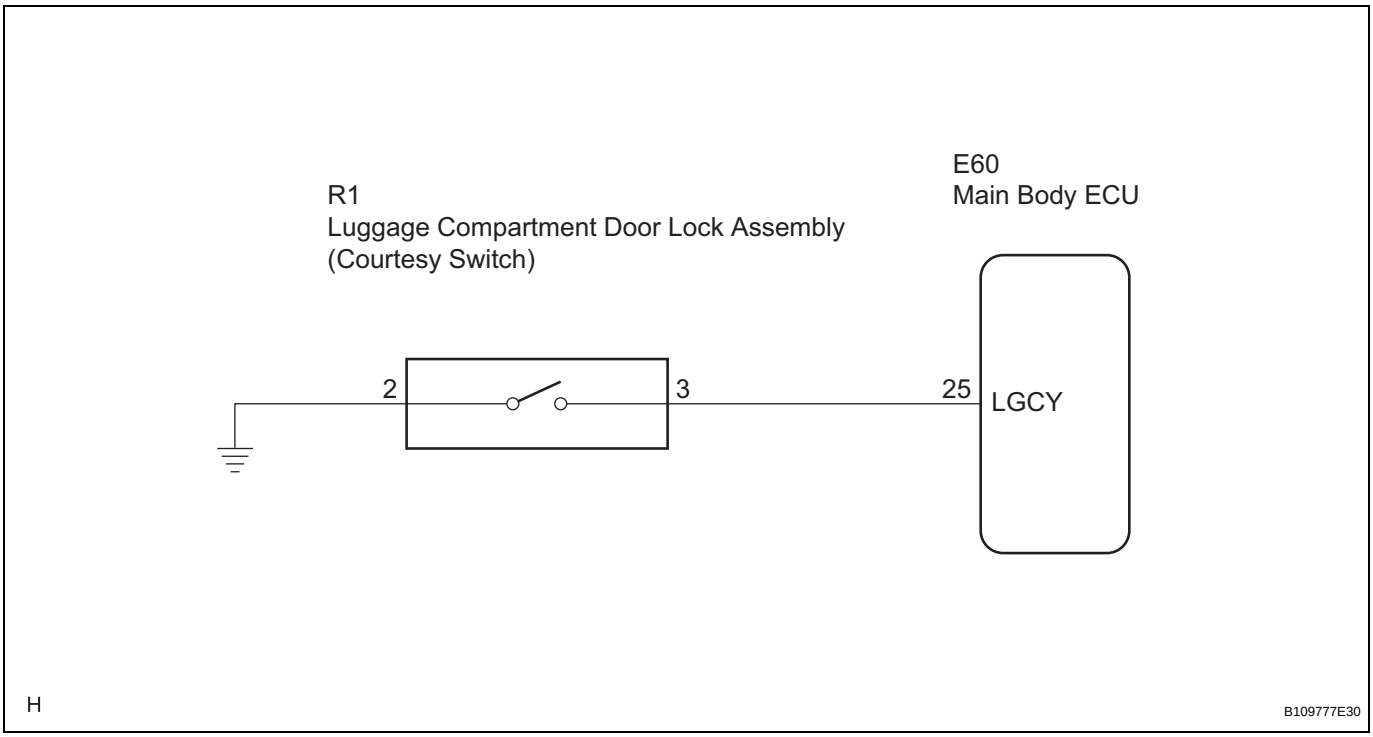

INSPECTION PROCEDURE

1	READ VALUE OF DATA LIST (DOOR COURTESY SWITCH)

(a) Check the DATA LIST for proper functioning of the door courtesy switch.

MAIN BODY:

Item	Measurement Item / Display (Range)	Normal Condition	Diagnostic Note
LUGG COURTSY SW	Luggage compartment door courtesy light switch signal / ON or OFF	ON: Luggage compartment door is OPEN OFF: Luggage compartment door is CLOSED	-

OK:
"ON" (door is open) and "OFF" (door is closed) appear on the screen.

NG → **Go to step 2**

OK

PROCEED TO NEXT CIRCUIT INSPECTION SHOWN IN PROBLEM SYMPTOMS TABLE

2 INSPECT LUGGAGE COMPARTMENT DOOR LOCK ASSEMBLY (DOOR COURTESY SWITCH)

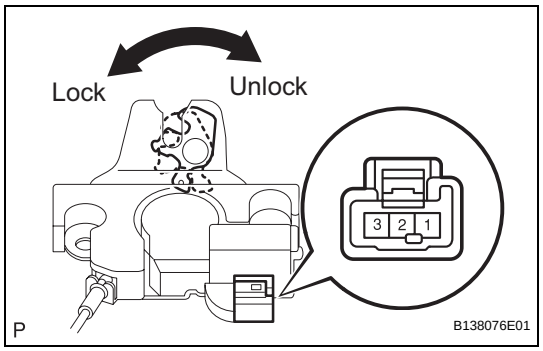

(a) Remove the luggage compartment door lock.
(b) Measure the resistance between the specified terminals of the switch.

Standard resistance

Tester Connection	Condition	Specified Condition
2 - 3	UNLOCK	Below 1 Ω
2 - 3	LOCK	10 kΩ or higher

NG → **REPLACE LUGGAGE COMPARTMENT DOOR LOCK ASSEMBLY**

OK

3 CHECK WIRE HARNESS (LUGGAGE COMPARTMENT DOOR LOCK - MAIN BODY ECU)

Wire Harness Side:

E60 Main Body ECU

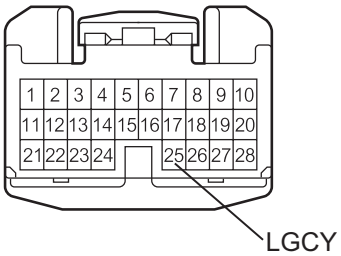

R1 Luggage Compartment Door Lock Assembly (Door Courtesy Switch)

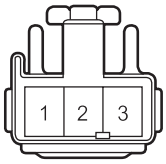

H B137940E02

(a) Disconnect the ECU connector.
(b) Measure the resistance according to the value(s) in the table below.

Standard resistance

Tester Connection (Symbols)	Condition	Specified Condition
R1-3 - E60-25 (LGCY)	Always	Below 1 Ω
R1-3 - Body ground	Always	10 kΩ or higher
R1-2 - Body ground	Always	Below 1 Ω

NG → **REPAIR OR REPLACE HARNESS OR CONNECTOR**

OK

PROCEED TO NEXT CIRCUIT INSPECTION SHOWN IN PROBLEM SYMPTOMS TABLE

DL

Luggage Compartment Door Lock Circuit

DESCRIPTION

The luggage compartment door unlock motor is built into the luggage compartment door lock assembly. The main body ECU receives a luggage compartment door unlock signal from the electrical key switch and operates the door lock motor.

WIRING DIAGRAM

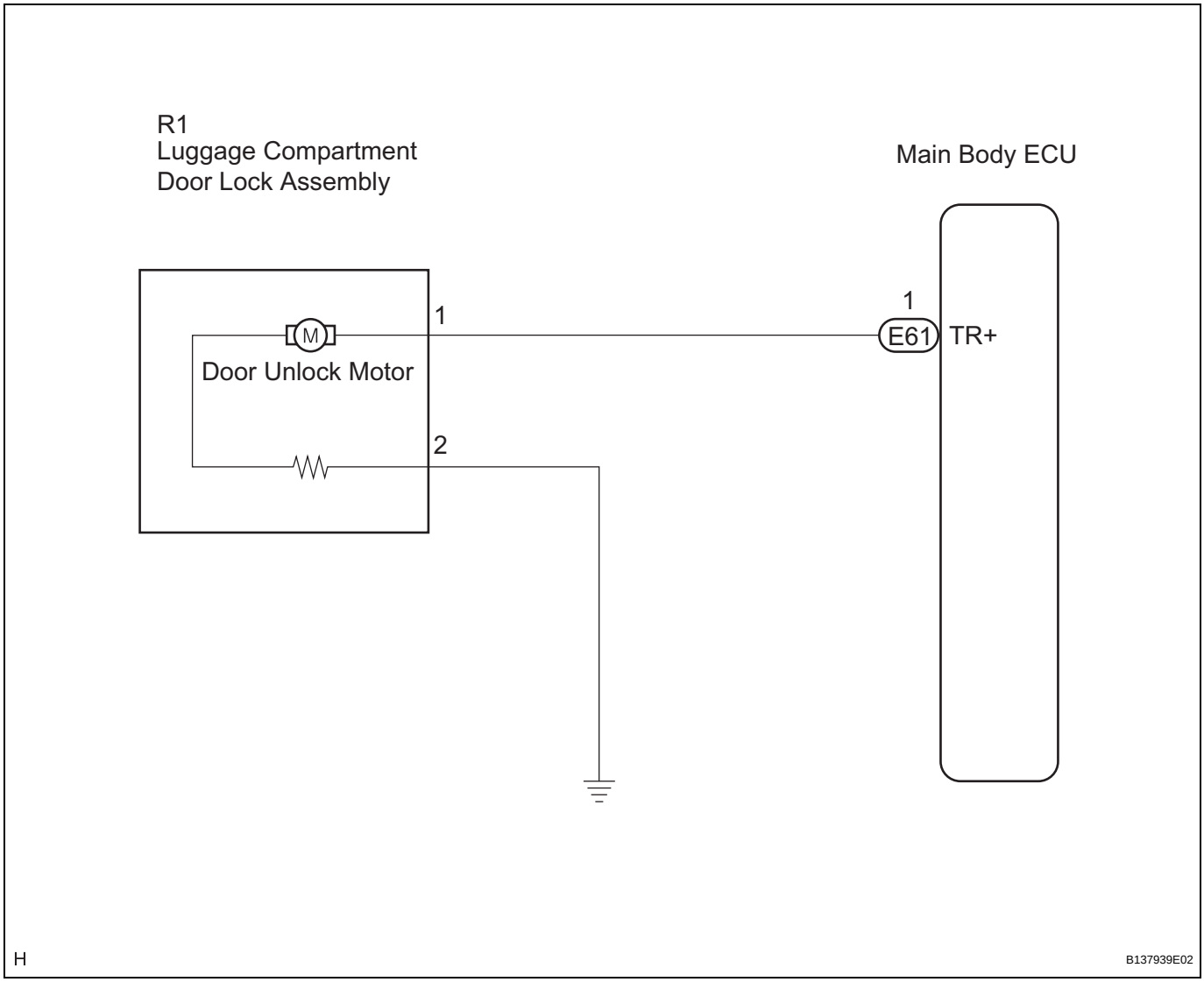

INSPECTION PROCEDURE

1	PERFORM ACTIVE TEST (LUGGAGE COMPARTMENT DOOR)

(a) Select the ACTIVE TEST, use the intelligent tester to generate a control command, and then check that the door lock operates.

MAIN BODY:

Item	Test Details	Diagnostic Note
TRUNK/BDOR OPEN	Operate luggage compartment door lock motor UNLOCK	-

OK:
Door lock is locked/unlocked.

NG → **Go to step 2**

OK

PROCEED TO NEXT CIRCUIT INSPECTION SHOWN IN PROBLEM SYMPTOMS TABLE

2 INSPECT LUGGAGE COMPARTMENT DOOR LOCK ASSEMBLY (DOOR UNLOCK MOTOR)

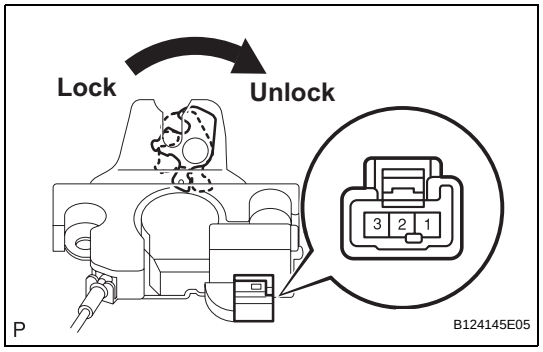

(a) Remove the luggage compartment door lock assembly.
(b) Move the luggage compartment door lock to the lock position.
(c) Apply battery voltage and check operation of the door lock motor.
OK

Measurement Condition	Specified Condition
Battery positive (+) → Terminal 1 Battery negative (-) → Terminal 2	Unlock

NG → **REPLACE LUGGAGE COMPARTMENT DOOR LOCK ASSEMBLY**

OK

DL

3	CHECK WIRE HARNESS (LUGGAGE COMPARTMENT DOOR LOCK - MAIN BODY ECU)

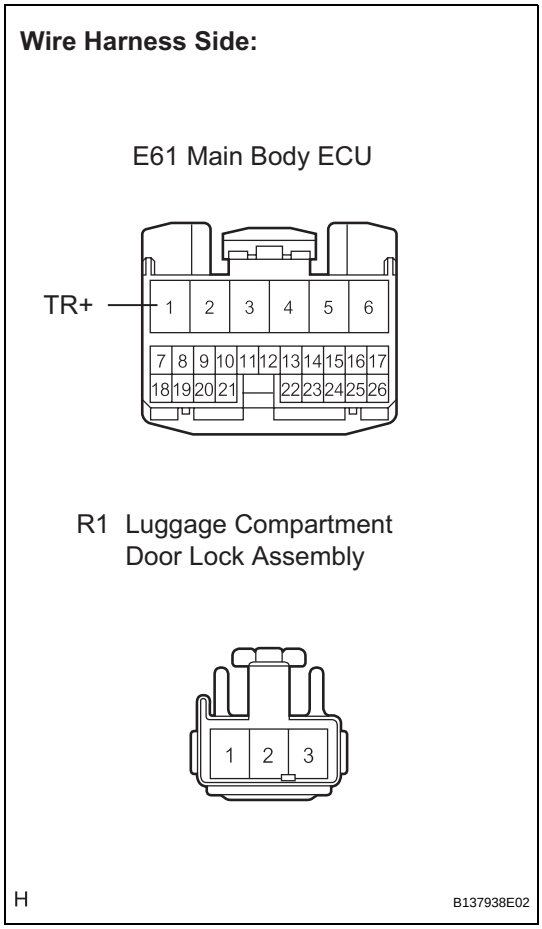

(a) Disconnect the ECU connector.
(b) Measure the resistance according to the value(s) in the table below.

Standard resistance

Tester Connection (Symbols)	Condition	Specified Condition
E61-1 (TR+) - R1-1	Always	Below 1 Ω
R1-1 - Body ground	Always	10 kΩ or higher
R1-2 - Body ground	Always	Below 1 Ω

NG → **REPAIR OR REPLACE HARNESS OR CONNECTOR**

OK

PROCEED TO NEXT CIRCUIT INSPECTION SHOWN IN PROBLEM SYMPTOMS TABLE

Driver Side Door Key Lock and Unlock Switch Circuit

DESCRIPTION

The driver's door key lock and unlock switch is built into the driver's door lock assembly.
When the driver's door key cylinder is turned to lock all the doors by mechanical key, there is continuity between terminals L and E of the key lock and unlock switch. When the cylinder is turned to unlock the door(s), there is continuity between terminals UL and E.
Terminals L2 and UL3 of the main body ECU are connected to the door lock assembly, and door lock/unlock request signals (by mechanical key) are input to the main body ECU.
The main body ECU constantly applies voltage to terminal L of the driver's door lock assembly via terminal L2. When the driver's door key cylinder is turned to lock all the doors by mechanical key, current flows from terminal L2 to terminal L.
The main body ECU also applies constant voltage to terminal UL of the door lock assembly via terminal UL3. When the door key cylinder is turned in the direction to unlock the door(s) by mechanical key, current flows from terminal UL3 to terminal UL.

WIRING DIAGRAM

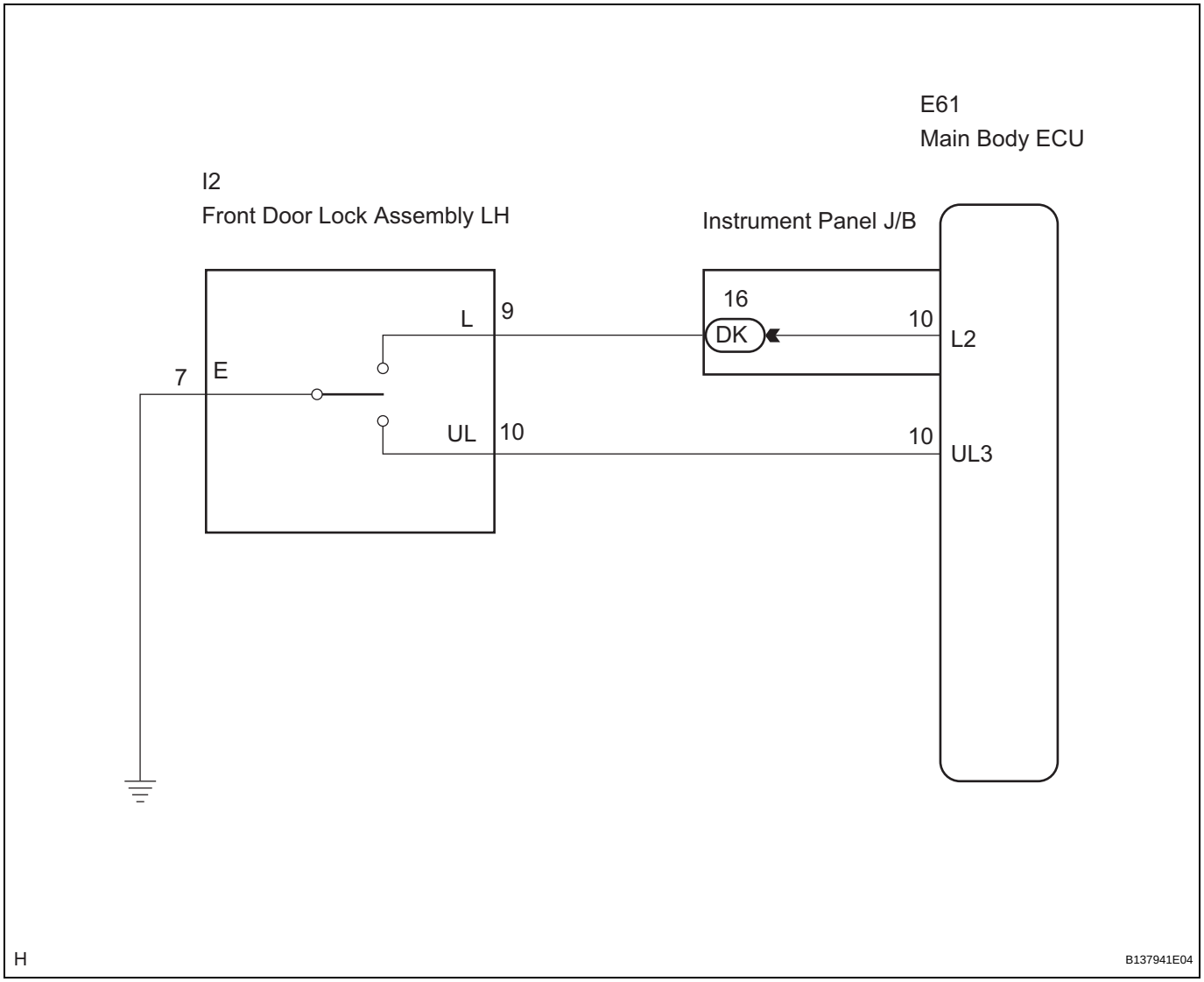

INSPECTION PROCEDURE

1	READ VALUE OF DATA LIST

(a) Check the DATA LIST to ensure proper function of the door unlock detection switch.

MAIN BODY:

Item	Measurement Item / Display (Range)	Normal Condition	Diagnostic Note
DOR KEY SW-LOCK	Driver door lock/unlock switch lock signal (key-linked lock switch) /ON or OFF	ON: Driver side door key cylinder is turned to LOCK OFF: Driver side door key cylinder is not turned to LOCK	-
DOR KEY SW-ULCK	Driver door lock/unlock switch unlock signal (key-linked unlock switch) /ON or OFF	ON: Driver side door key cylinder is turned to UNLOCK OFF: Driver side door key cylinder is not turned to UNLOCK	-

DL

OK:
The display is as specified in the normal condition column.

NG → **Go to step 2**

OK

PROCEED TO NEXT CIRCUIT INSPECTION SHOWN IN PROBLEM SYMPTOMS TABLE

2	INSPECT FRONT DOOR LOCK ASSEMBLY (DOOR KEY LOCK AND UNLOCK SWITCH)

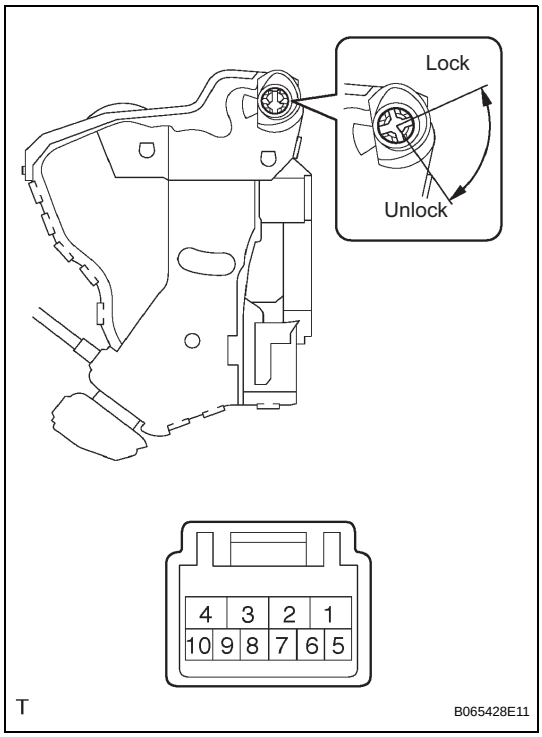

(a) Remove the front door lock assembly LH.
(b) Measure the resistance according to the value(s) in the table below.
Standard resistance

Tester Connection	Condition	Specified Condition
7 - 9	ON (Door lock set to LOCK)	Below 1 Ω
7 - 9 7 - 10	OFF (Free)	10 kΩ or higher
7 - 10	ON (Door lock set to UNLOCK)	Below 1 Ω

NG → **REPLACE FRONT DOOR LOCK ASSEMBLY**

OK

3	CHECK WIRE HARNESS (FRONT DOOR LOCK ASSEMBLY - MAIN BODY ECU)

(a) Disconnect the front door lock assembly LH connector.

Wire Harness Side:

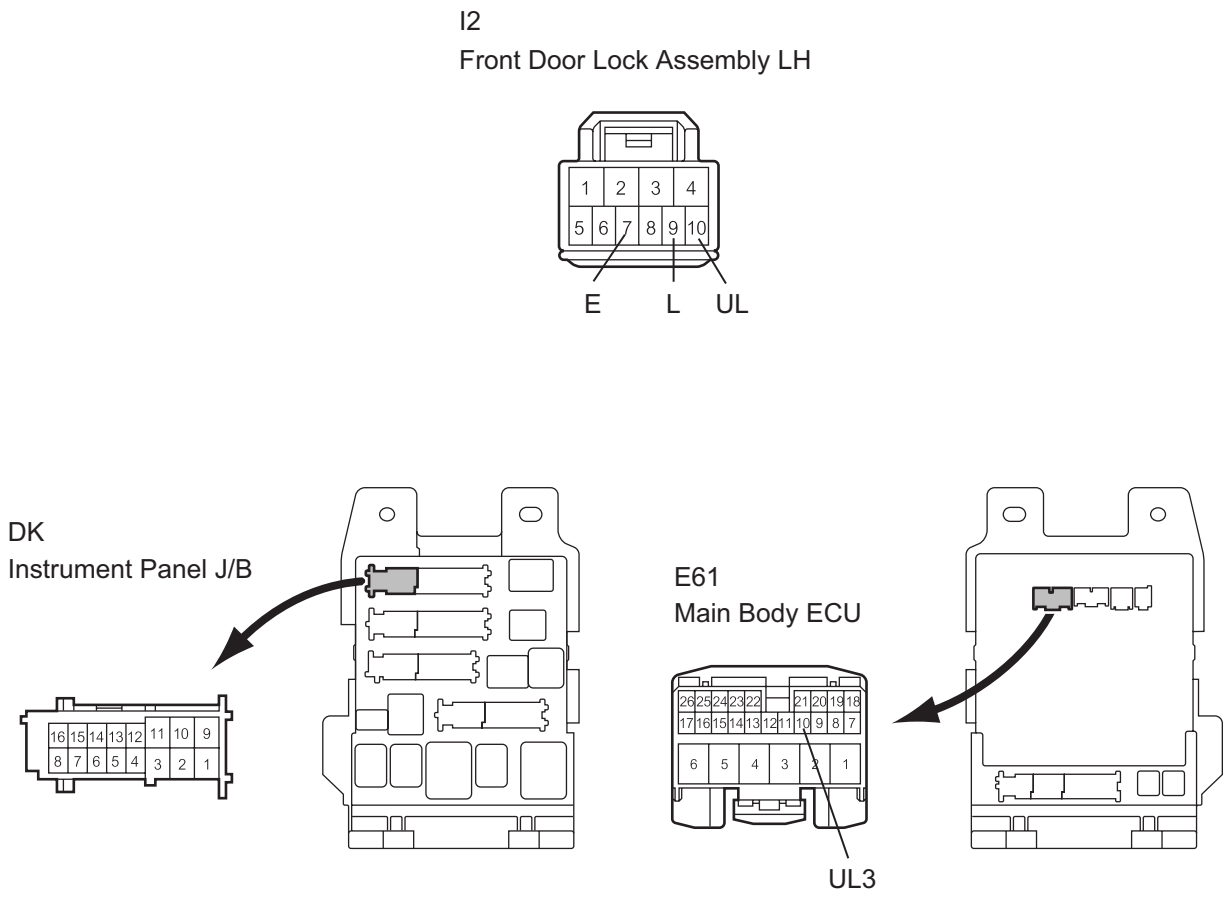

H B112609E05

(b) Disconnect the main body ECU connector.

(c) Measure the resistance according to the value(s) in the table below.

Standard resistance

Tester Connection (Symbols)	Condition	Specified Condition
I2-9 (L) - DK-16	Always	Below 1 Ω
I2-10 (UL) - E61-10 (UL3)	Always	Below 1 Ω
I2-7 (E) - Body ground	Always	Below 1 Ω
I2-9 (L) - Body ground	Always	10 kΩ or higher
I2-10 (UL) - Body ground	Always	10 kΩ or higher

NG → **REPAIR OR REPLACE HARNESS OR CONNECTOR**

DL

OK

REPLACE MAIN BODY ECU

Door Control Switch Circuit

DESCRIPTION

When the lock side of the door control switch is pressed, continuity is established between terminal 2 and terminal 3 of the switch. When the unlock side of the switch is pressed, continuity is established between terminal 4 and terminal 3.
Terminals L1 and UL1 of the main body ECU are connected to the door control switch and door lock/unlock request signals (by door control switch operation) are input to the ECU.
The main body ECU constantly applies voltage to terminal 2 of the door control switch via terminal L1. When the door control switch is operated to lock all doors, current flows from terminal L1 to terminal 2. The main body ECU determines that this is door lock request signal input.
The main body ECU also applies constant voltage to terminal 4 of the door control switch via terminal UL1. When the door control switch is operated to unlock the doors, current flows from terminal UL1 to terminal 4. The main body ECU determines that this is door unlock request signal input.

WIRING DIAGRAM

PASSENGER SIDE:

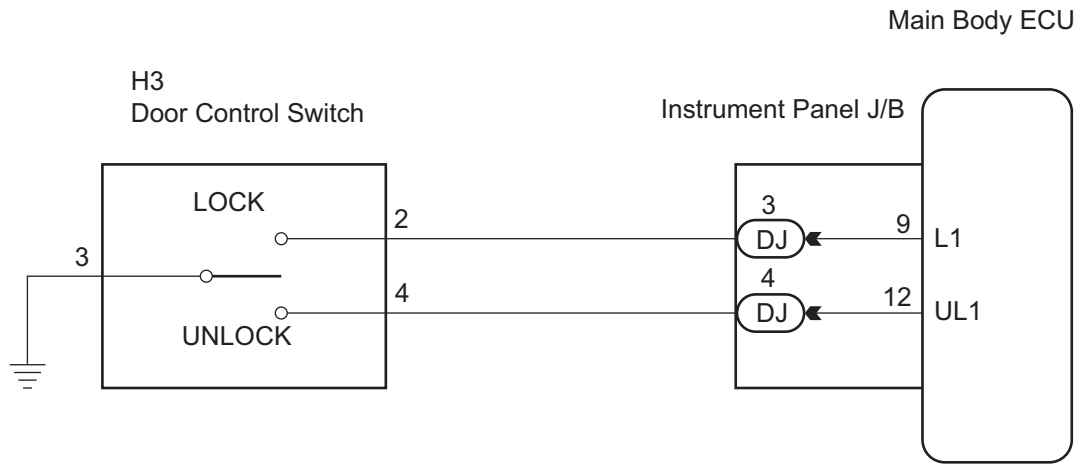

H

B109774E15

INSPECTION PROCEDURE

1	**INSPECT DOOR CONTROL SWITCH ASSEMBLY**

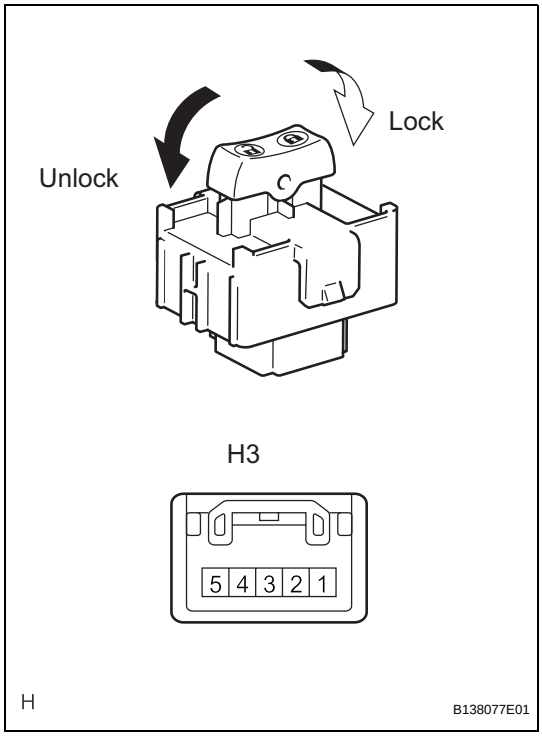

(a) Inspect passenger side.
  (1) Remove the door control switch assembly.
  (2) Measure the resistance according to the value(s) in the table below.
  Standard resistance

Tester Connection	Switch Condition	Specified Condition
H3-2 - H3-3	Lock	Below 1 Ω
H3-2 - H3-3 H3-4 - H3-3	OFF (Free)	10 kΩ or higher
H3-4 - H3-3	Unlock	Below 1 Ω

NG → **REPLACE DOOR CONTROL SWITCH**

OK

2	**CHECK WIRE HARNESS (DOOR CONTROL SWITCH - MAIN BODY ECU (INSTRUMENT PANEL J/B))**

(a) Disconnect the door control switch connector.

DL

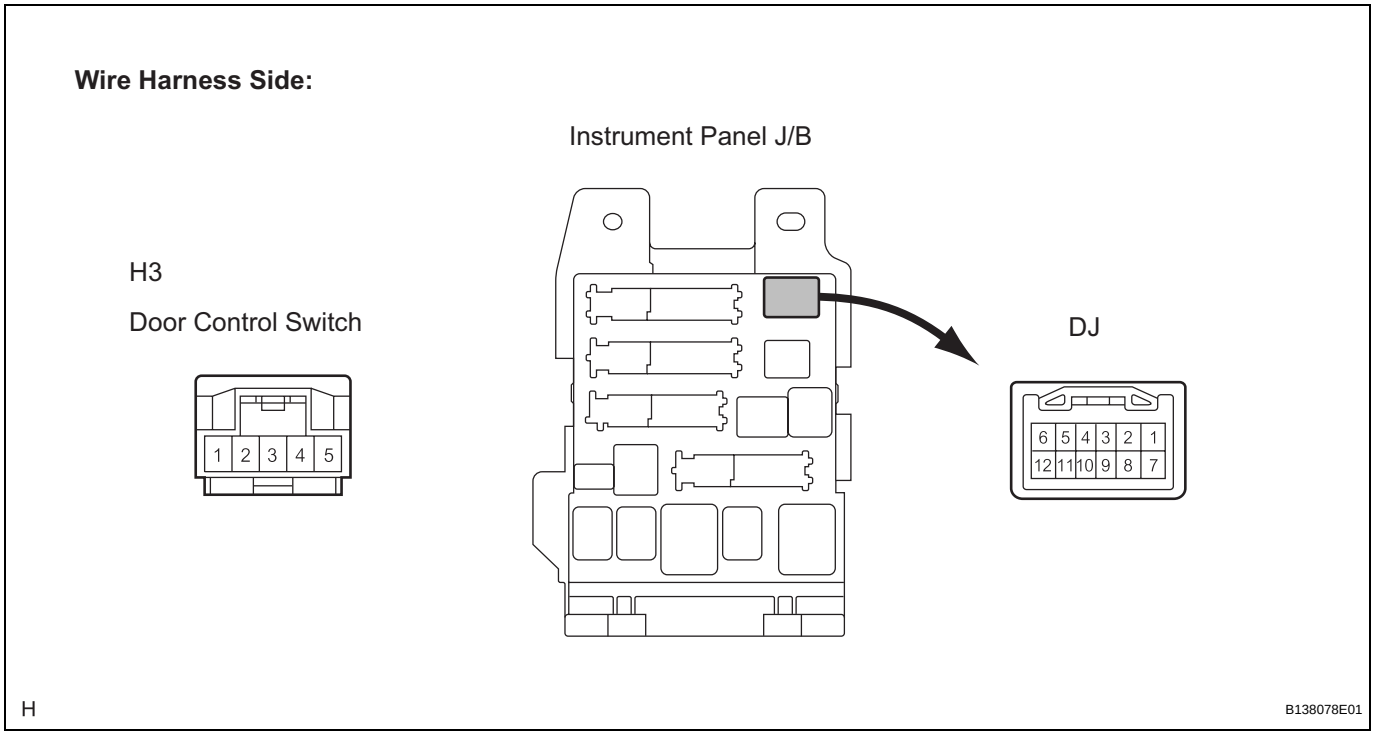

(b) Disconnect the ECU (instrument panel J/B) connector.

(c) Measure the resistance according to the value(s) in the table below.

Standard resistance

Tester Connection	Condition	Specified Condition
H3-2 - DJ-3	Always	Below 1 Ω
H3-4 - DJ-4	Always	Below 1 Ω
H3-3 - Body ground	Always	Below 1 Ω
DJ-3 - Body ground	Always	10 kΩ or higher
DJ-4 - Body ground	Always	10 kΩ or higher

NG → **REPAIR OR REPLACE HARNESS OR CONNECTOR**

OK

PROCEED TO NEXT CIRCUIT INSPECTION SHOWN IN PROBLEM SYMPTOMS TABLE

DL

OPERATION CHECK

1. CHECK ELECTRICAL DOOR LOCK OPERATION

NOTICE:

The initial condition that the customizing function using the intelligent tester is not chosen is shown.

(a) Check the basic function.

(1) Check that all doors lock when the door control switch (for manual operation) is turned to LOCK and all doors unlock when turned to UNLOCK.

(2) Check that all doors lock when the driver side door lock key cylinder is turned to LOCK using the mechanical key.

(b) Check the electrical key lock-in prevention function.

NOTICE:

In order to prevent the electrical key from being actually locked-in, the following inspection should be performed with the driver side door window open.

(1) Place the electrical key in the cabin.

(2) With the driver side door open, check that all doors unlock immediately after the door lock knob for the driver side door is turned to LOCK.

(3) With the driver side door open, check that all doors unlock immediately after the door control switch (for manual operation) is turned to LOCK.

(4) With the driver side door open, turn the driver side door lock knob to LOCK, and then close the driver side door. Then check that all doors unlock.

(c) Check the security function.

(1) Close all doors with the driver side door window open so that the door control switch can be operated from outside the vehicle.

(2) Pull out the electrical key, open the driver side door and then close and lock the door using the electrical key. Under this condition, check that all doors do not unlock when the door control switch (for manual operation) is turned to UNLOCK from outside the vehicle.

(3) Pull out the electrical key, and close and lock the driver side door by mechanical key operation. Under this condition, check that all doors do not unlock when the door control switch (for manual operation) is turned to UNLOCK from outside the vehicle.

(4) Pull out the electrical key, close the driver side door, and lock the door by wireless door lock operation. Under this condition, check that all doors do not unlock when the door control switch (for manual operation) is turned to UNLOCK from outside the vehicle.

HINT:

Check that the security function is canceled under the following conditions:

- The engine switch on (IG).
- The driver side door is unlocked using the transmitter or the electrical key.
- The door control switch (for manual operation) is turned to UNLOCK after the door control knob is turned to UNLOCK manually.

(d) Check the illumination function.
(1) Set the room light switch to the DOOR position.
(2) With all doors locked, check that driver's door unlock when the driver side door lock cylinder is turned to UNLOCK using the key. At the same time, the room light comes on.
(3) Check that the room light goes off in approximately 15 seconds if the doors have not been opened.

(e) Check the AUTO lock function.
(1) Lock all doors.
(2) Unlock driver's door using the electrical key.
(3) Allow 30 or 60 seconds to elapse while all doors remain closed and the electrical key switch and the entry unlock switch remain untouched. Then, check that all doors will lock automatically.

(f) Check the automatic locking function interlocked with the shift lever.
(1) When any door, driver's door or passenger's door is unlocked with all doors closed and the engine started, check that all doors automatically lock when the shift lever is moved into any position from the P position.
(2) When any door is unlocked after all doors automatically lock, check that all doors attempt to automatically lock once again (retry function). The retry function is canceled when any of the following conditions is fulfilled:
- All doors are locked.
- Any door is opened.
- The shift lever is moved into the P position.
- The doors are locked or unlocked by the user.
- The engine switch is turned off.
- The engine is stopped.

OPERATION CHECK

1. FUNCTIONS AND OPERATING CONDITIONS

(a) The wireless door LOCK/UNLOCK function:
This wireless door lock control function operates only when the following 4 conditions are met:
(1) There is no wireless transmitter in the cabin.
(2) All the doors are closed.
(3) The power door lock system is functioning normally.
(4) The function is not disabled by customization.
HINT:
The UNLOCK function operates even when any of the doors are open.

(b) The wireless transmitter operational range differs depending on the situation.
(1) The operational range differs depending on the user, the way the transmitter is held, and the location.
(2) In certain areas, the operational range will be reduced due to the vehicle body shape and the influence of the surrounding environment.
(3) Since the transmitter uses weak radio waves, the operational range may be reduced or the transmitter may not function if interference or stronger radio waves occur in the area where the transmitter is used.
(4) When the battery is low, the operational range is reduced and/or the transmitter may not function.
HINT:
If the transmitter has been left in a place that is exposed to direct sunlight, such as on the instrument panel, the battery may be weakened or other problems may occur.

2. CHECK WIRELESS DOOR LOCK CONTROL FUNCTIONS

HINT:
- The switches built into the door control transmitter send radio waves to the door lock control receiver.
- The operational range must be taken into account during checks.

(a) Establish conditions that allow the wireless control function to be operated successfully.

(b) Check these basic functions.
(1) Check that all the doors lock when the LOCK switch is pressed.
(2) Check that the driver's door unlocks when the UNLOCK switch is pressed once, and all doors unlock when pressed twice within 3 seconds.

(c) Check the automatic lock function.
(1) Check that if the driver's door or all doors are unlocked with the UNLOCK switch and none of the doors are opened or locked within approximately 60 seconds, the doors automatically re-lock.

(2) Check that if the driver's door or all doors are unlocked with the UNLOCK switch and a door is opened or locked within approximately 60 seconds, the automatic lock function does not operate.

(d) Check the interior light ON function.
HINT:
Turn the interior light switch to the DOOR position before the check.
(1) Check that the interior light comes on simultaneously with the unlocking operation when the UNLOCK switch has been pressed.
(2) Check that the interior light goes off in approximately 15 seconds if none of the doors is opened after the unlocking operation.

(e) Check the answer back function.
(1) When the doors are locked by wireless operation, the hazard warning lights flash once and the wireless door lock buzzer sounds once.
(2) When the doors are unlocked by wireless operation, the hazard warning lights flash twice and the wireless door lock buzzer sounds twice.
(3) When the luggage compartment door is opened by wireless operation, the wireless door lock buzzer sounds.

(f) Check the switch operation fail-safe function.
(1) Check that the doors cannot be locked by operating a switch while the wireless transmitter is in the cabin.
(2) Check that the doors cannot be locked or unlocked by operating a switch on the unregistered transmitter, and that the doors are locked and unlocked by operating a switch on the registered transmitter.

(g) Check the chattering prevention function.
(1) Check that the corresponding operation occurs only once, and does not repeat itself while the switch is kept pressed. Check that the corresponding operation is carried out when the switch is operated repeatedly at 1-second intervals.

(h) Check the luggage compartment door opener function.
(1) Check that the luggage compartment door opens when the LUGGAGE OPEN switch is held down for 0.8 seconds or more.

(i) Check the door ajar warning function.
(1) Check that the wireless door lock buzzer sounds for approximately 10 seconds when the LOCK switch is pressed with any of the doors ajar or open.

(j) Check the wireless interlock function.
(1) Check that the all power windows and sliding roof* start opening when the UNLOCK switch is pressed for 2.4 seconds or more, and they stop when the switch is released.
HINT:
*: with sliding roof

(k) Check the memory call function (See page SE-11).

CUSTOMIZE PARAMETERS

HINT:
The following items can be customized.

NOTICE:

- **After confirming whether the items requested by the customer are applicable or not for customization, perform customizing operations.**
- **Be sure to record the current settings before customization.**
- **When troubleshooting, make sure that the item in question is not set to "OFF" as a result of customization (Example: For the symptom, "the wireless function does not operate", first check that the wireless function is not set to "OFF", then perform troubleshooting).**

1. CUSTOMIZE

(a) Connect the intelligent tester (with CAN VIM) to the DLC3.
(b) Turn the engine switch on (IG).
(c) Enter the following menus: CUSTOMIZE / INDIVIDUAL CHANGE / WIRELESS D LOCK.

WIRELESS DOOR LOCK CONTROL SYSTEM

Display (item)	Default	Function	Setting
TRUNK LID OPER (Wireless trunk opener function setting)	0.8 s PR ON	This function changes operation method of transmitter to open luggage compartment door. 1 TIME: Push 1 time 2 TIMES: Push 2 times 0.8 s PR: Push and hold for 0.8 seconds OFF: Does not operate	1 TIME/2 TIMES/0.8 s PR/ OFF
WIRELESS OPER (Wireless door lock control function)	ON	Function that turns wireless door lock function ON/OFF	ON/OFF
TRUNK LID OPER (Wireless trunk opener function setting)	0.8 s PR ON	This function changes operation method of transmitter to open luggage compartment door. 1 TIME: Push 1 time 2 TIMES: Push 2 times 0.8 s PR: Push and hold for 0.8 seconds OFF: Does not operate	1 TIME/2 TIMES/0.8 s PR/ OFF
HAZARD ANS BACK (Hazard answer-back for wireless door lock control)	ON	• When the doors are locked by wireless operation, the hazard warning lights flash once. • When the doors are unlocked by wireless operation, the hazard warning lights flash twice.	ON/OFF
OPEN DOOR WARN (Door ajar warning)	ON	The buzzer sounds when LOCK is pressed when any of the doors are ajar.	ON/OFF
AUTO LOCK DELAY (Auto lock time)	60 s	This function regulates the interval between unlocking and automatic relocking of doors.	30 s/60 s
UNLOCK /2OPER (Wireless unlock operated twice)	ON	This function unlocks the driver's door when the UNLOCK switch is pressed once, and unlocks all doors when pressed twice within 3 seconds. If set to OFF, pressing UNLOCK once unlocks all doors.	ON/OFF
ALARM FUNCTION (Panic function)	ON	This function operates the theft deterrent system when PANIC is pressed and held for 0.8 seconds.	ON/OFF

Display (item)	Default	Function	Setting
WIRELS BUZZ VOL (Wireless buzzer volume)	LEVEL7	This function adjusts the volume of the wireless buzzer.	LEVEL0 to LEVEL7

PROBLEM SYMPTOMS TABLE

If a normal system code is displayed during the DTC check, but the problem still occurs, check the circuits for each problem symptom in the order given in the table below and proceed to the relevant troubleshooting page.

HINT:

- The following is the troubleshooting procedure for the wireless door lock control of a vehicle without the smart key system.
- Inspect the fuse and relay before investigating the suspected areas shown in the table below.
- Inspect each malfunction circuit in numerical order for its corresponding symptom.

WIRELESS DOOR LOCK CONTROL SYSTEM:

Symptom	Suspected Area	See page
The wireless door lock control system does not operate.	1. Perform the operation check	DL-67
	2. Check if the CAN communication DTC is output	CA-49
	3. Door control transmitter	DL-175
	4. Door courtesy switch circuit	LI-94
	5. Luggage compartment door courtesy switch	DL-47
	6. Power source circuit	DL-86
	7. Replace door control receiver	-
	8. Replace certification ECU	-
	9. If the symptom still occurs after the above areas have been inspected and proved to be normal, replace the main body ECU (Instrument panel J/B)	-
The automatic lock function does not operate normally.	1. Perform the operation check	DL-67
	2. Door courtesy switch circuit	LI-94
	3. If the symptom still occurs after the above areas have been inspected and proved to be normal, replace the main body ECU (Instrument panel J/B)	-
The illuminated entry function only does not operate.	1. Perform the operation check	DL-67
	2. Lighting system	LI-32
	3. If the symptom still occurs after the above areas have been inspected and proved to be normal, replace the main body ECU (Instrument panel J/B)	-
The answer back function does not operate (Wireless door lock buzzer).	1. Perform the operation check	DL-67
	2. Wireless door lock buzzer circuit	DL-83
	3. Replace certification ECU	-
	4. If the symptom still occurs after the above areas have been inspected and proved to be normal, replace the main body ECU (Instrument panel J/B)	-
The answer back function does not operate (Hazard warning light).	1. Perform the operation check	DL-67
	2. Wire harness	-
	3. Turn signal flasher assembly	LI-229
	4. If the symptom still occurs after the above areas have been inspected and proved to be normal, replace the main body ECU (Instrument panel J/B)	-
The door ajar warning function only does not operate.	1. Perform the operation check	DL-67
	2. Door courtesy switch circuit	LI-94
	3. If the symptom still occurs after the above areas have been inspected and proved to be normal, replace the main body ECU (Instrument panel J/B)	-

Symptom	Suspected Area	See page
The panic alarm function only does not operate.	1. Perform the operation check	DL-67
	2. Door control transmitter	DL-175
	3. If the symptom still occurs after the above areas have been inspected and proved to be normal, replace the main body ECU (Instrument panel J/B)	-
The panic alarm function does not operate (Vehicle horn).	1. Perform the operation check	DL-67
	2. Horn circuit	TD-26
	3. If the symptom still occurs after the above areas have been inspected and proved to be normal, replace the main body ECU (Instrument panel J/B)	-
The panic alarm function does not operate (Security horn).	1. Perform the operation check	DL-67
	2. Security horn circuit	TD-28
	3. Replace certification ECU	-
	4. If the symptom still occurs after the above areas have been inspected and proved to be normal, replace the main body ECU (Instrument panel J/B)	-
The panic alarm function does not operate (Hazard warning light).	1. Perform the operation check	DL-67
	2. Wire harness	-
	3. Turn signal flasher assembly	LI-229
	4. If the symptom still occurs after the above areas have been inspected and proved to be normal, replace the main body ECU (Instrument panel J/B)	-
The panic alarm function does not operate (Headlight or taillight).	1. Perform the operation check	DL-67
	2. Lighting system	LI-32
	3. If the symptom still occurs after the above areas have been inspected and proved to be normal, replace the main body ECU (Instrument panel J/B)	-

TERMINALS OF ECU

1. CHECK MAIN BODY ECU (INSTRUMENT PANEL J/B)

(a) Disconnect the main body ECU (instrument panel J/B) connectors.

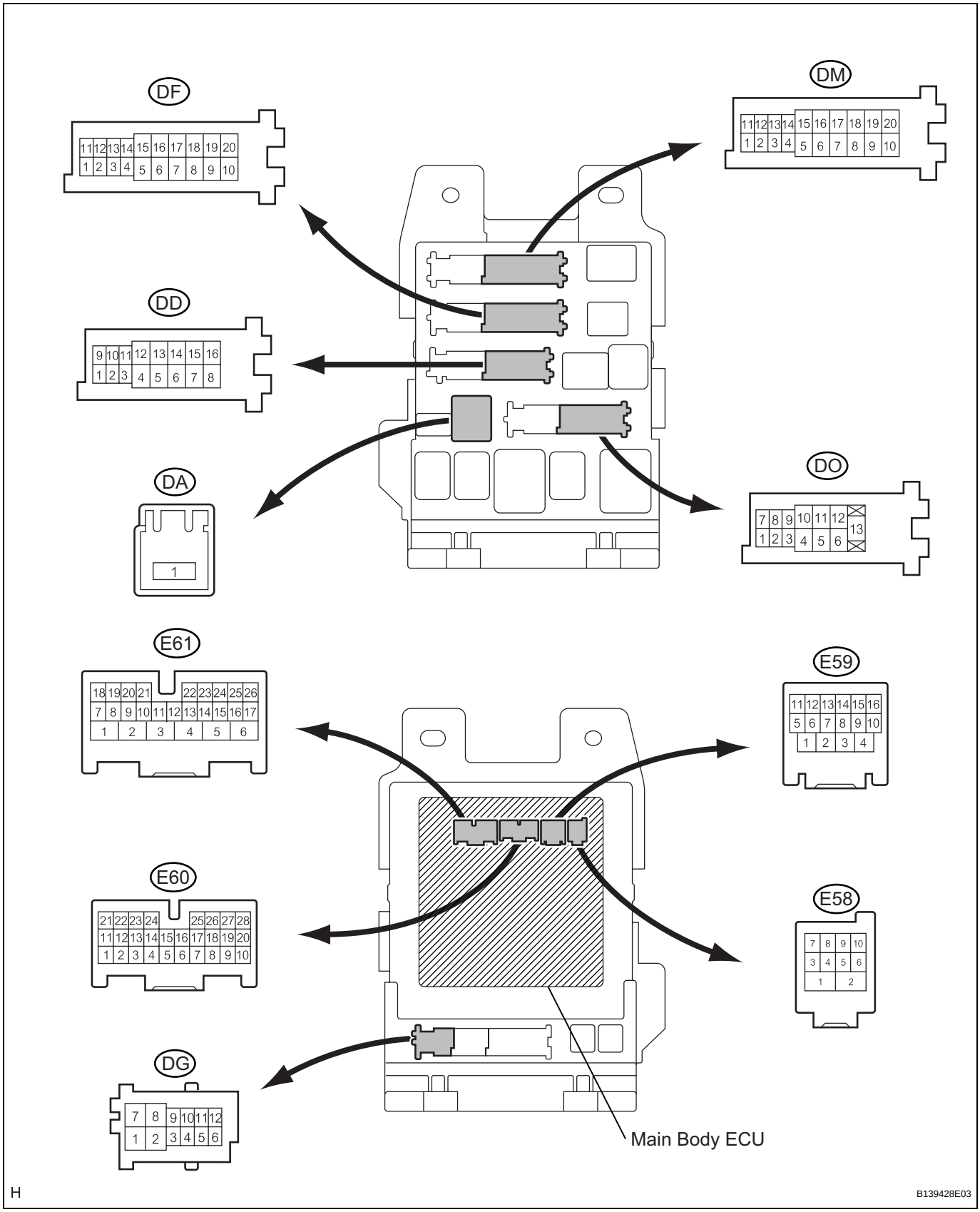

(b) Measure the resistance and voltage between each terminal of the wire harness side connectors and body ground.

Symbols (Terminal No.)	Wiring Color	Terminal Description	Condition	Specified Condition
GND3 (E59-1) - Body ground	W-B - Body ground	Ground	Always	Below 1 Ω
RCTY (E60-7) - Body ground	GR - Body ground	Rear courtesy light switch RH input	Rear door RH CLOSED (OFF) → OPEN (ON)	10 kΩ or higher → Below 1 Ω
PCTY (E60-21) - Body ground	G - Body ground	Passenger side courtesy light switch input	Passenger side door CLOSED (OFF) → OPEN (ON)	10 kΩ or higher → Below 1 Ω
LGCY (E60-25) - Body ground	W - Body ground	Luggage compartment door courtesy light switch input	Luggage compartment door CLOSED (OFF) → OPEN (ON)	10 kΩ or higher → Below 1 Ω
DCTY (E61-24) - Body ground	GR - Body ground	Driver side door courtesy light switch input	Driver side door CLOSED (OFF) → OPEN (ON)	10 kΩ or higher → Below 1 Ω
ACC (DA-1) - Body ground	W - Body ground	Ignition power supply (ACC signal)	Engine switch on (ACC) → off	10 to 14 V → Below 1 V
IG (DA-1) - Body ground	W - Body ground	Ignition power supply (IG signal)	Engine switch on (IG) → off	10 to 14 V → Below 1 V
BATB (DA-1) - Body ground	W - Body ground	+B (power battery system) power supply	Always	10 to 14 V
ALTB (DD-16) - Body ground	W - Body ground	+B (power system alternator system) power supply	Always	10 to 14 V
GND1 (DF-10) - Body ground	W-B - Body ground	Ground	Always	Below 1 Ω
LCTY (DO-7) - Body ground	B - Body ground	Rear courtesy light switch LH input	Rear door LH CLOSED (OFF) → OPEN (ON)	10 kΩ or higher → Below 1 Ω

If the result is not as specified, there may be a malfunction on the wire harness side.

(c) Reconnect the main body (instrument panel J/B) connectors.

(d) Measure the voltage between each terminal of the wire harness side connectors and body ground.

Symbols (Terminal No.)	Wiring Color	Terminal Description	Condition	Specified Condition
HAZ (E59-4) - Body ground	W - Body ground	Turn signal flasher relay signal	Any transmitter switch is pressed → not pressed	Below 1 V → 10 to 14 V*1
TR+ (E61-1) - Body ground	B - Body ground	Luggage compartment door opener motor input	Luggage compartment door CLOSED (LOCKED) → OPEN (UNLOCKED)	Below 1 V → 10 to 14 V*2

HINT:

- *1: When operating the answer back function.
- *2: When operating the motor.

2. CHECK CERTIFICATION ECU ASSEMBLY

(a) Disconnect the E13 ECU connector.

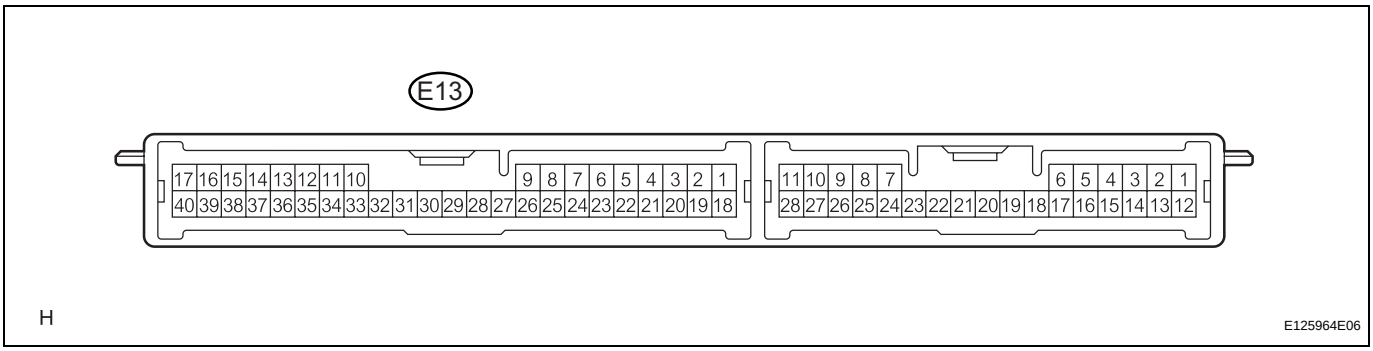

(b) Measure the voltage and resistance of the wire harness side connector.

Symbols (Terminal No.)	Wiring Color	Terminal Description	Condition	Specified Condition
+B1 (E13-1) - E (E13-17)	W - W-B	Battery power supply	Always	10 to 14 V
E (E13-17) - Body ground	W-B - Body ground	Ground	Always	Below 1 Ω
IG (E13-18) - E (E13-17)	B - W-B	IG power supply	Engine switch on (IG)	10 to 14 V
IG (E13-18) - E (E13-17)	B - W-B	IG power supply	Engine switch off	Below 1 V

If the result is not as specified, there may be a malfunction on the wire harness side.

(c) Reconnect the E13 ECU connector.

(d) Measure the voltage of the connector.

Symbols (Terminal No.)	Wiring Color	Terminal Description	Condition	Specified Condition
BZR (E13-21) - Body ground	O - Body ground	Wireless door lock buzzer	Wireless door lock buzzer OFF → ON	0 V → Pulse generation
RC0 (E13-29) - E (E13-17)	G - W-B	Door control receiver power supply	Engine switch off, all doors closed and transmitter switch not pressed	Below 1 V
RC0 (E13-29) - E (E13-17)	G - W-B	Door control receiver power supply	Engine switch off, all doors closed and transmitter switch pressed	4.6 to 5.4 V
RDA (E13-38) - E (E13-17)	Y - W-B	Door control receiver output signal	Engine switch off, all doors closed and transmitter switch not pressed	10 to 14 V
RDA (E13-38) - E (E13-17)	Y - W-B	Door control receiver output signal	Engine switch off, all doors closed and transmitter switch pressed	Pulse generation

If the result is not as specified, the ECU may have a malfunction.

DIAGNOSIS SYSTEM

1. DESCRIPTION

The main body ECU stores trouble codes when trouble occurs on the vehicle.
The diagnostic system allows for reading of the trouble codes from the DLC3.
Use the intelligent tester to check and solve the problem.

2. CHECK DLC3

(a) The main body ECU uses ISO 15765-4 for communication protocol. The terminal arrangement of the DLC3 complies with SAE J1962 and matches the ISO 15765-4 format.

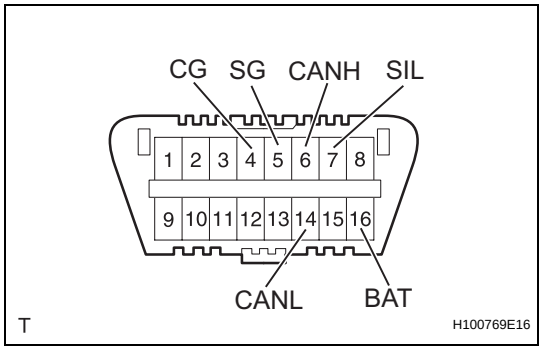

DL

Symbols (Terminal No.)	Terminal Description	Condition	Specified Condition
SIL (7) - SG (5)	Bus "+" line	During transmission	Pulse generation
CG (4) - Body ground	Chassis ground	Always	Below 1 Ω
SG (5) - Body ground	Signal ground	Always	Below 1 Ω
BAT (16) - Body ground	Battery positive	Always	11 to 14 V
CANH (6) - CANL (14)	CAN bus line	Engine switch off*	54 to 69 Ω
CANH (6) - CG (4)	HIGH-level CAN bus line	Engine switch off*	200 Ω or higher
CANL (14) - CG (4)	LOW-level CAN bus line	Engine switch off*	200 Ω or higher
CANH (6) - BAT (16)	HIGH-level CAN bus line	Engine switch off*	6 kΩ or higher
CANL (14) - BAT (16)	LOW-level CAN bus line	Engine switch off*	6 kΩ or higher

NOTICE:
***: Before measuring the resistance, leave the vehicle as is for at least 1 minute and do not operate the engine switch, any other switches or the doors.**
If the result is not as specified, the DLC3 may have a malfunction. Repair or replace the harness and connector.

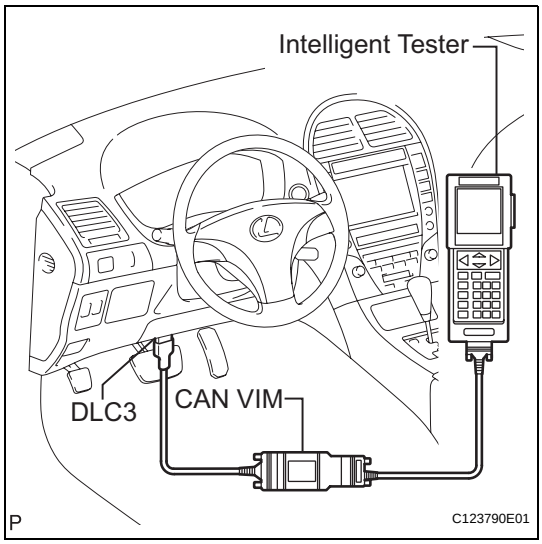

(b) Connect the cable of the intelligent tester (with CAN VIM) to the DLC3, turn the engine switch on (IG) and attempt to use the intelligent tester. If the screen displays a communication error message, a problem exists in the vehicle or in the tester.
- If communication is normal when the tool is connected to another vehicle, inspect the DLC3 on the original vehicle.
- If communication is still impossible when the tool is connected to another vehicle, the problem is probably in the tool itself. Consult the Service Department listed in the tool's instruction manual.

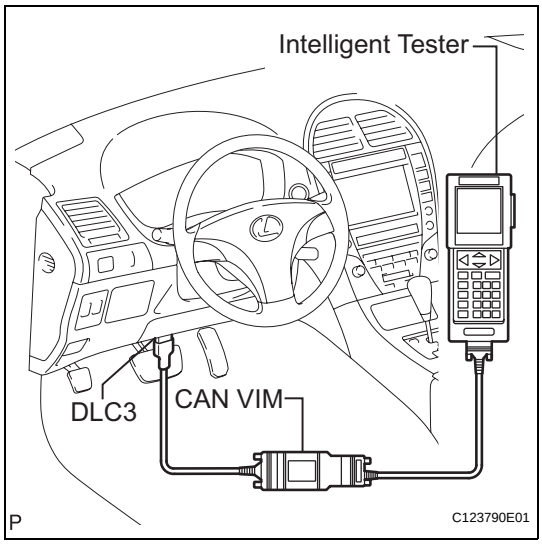

DL

DTC CHECK / CLEAR

1. CHECK DTC

(a) Connect the intelligent tester to the DLC3.
(b) Turn the engine switch on (IG).
(c) Enter the following menu items: DIAGNOSIS / ENHANCED OBD II / DTC INFO / CURRENT CODES.
(d) Read the DTC by following the prompts on the tester screen.
HINT:
Refer to the intelligent tester operator's manual for further details.

2. CLEAR DTC

(a) Connect the intelligent tester to the DLC3.
(b) Turn the engine switch on (IG).
(c) Enter the following menu items: DIAGNOSIS / ENHANCED OBD II / DTC INFO / CLEAR CODES.
(d) Erase the DTC by following the directions on the tester screen.

HINT:
Refer to the intelligent tester operator's manual for further details.

DATA LIST / ACTIVE TEST

1. DATA LIST

HINT:
Using the intelligent tester DATA LIST allows switch, sensor, actuator and other item values to be read without removing any parts. Reading the DATA LIST early in troubleshooting is one way to shorten labor time.

(a) Connect the intelligent tester (with CAN VIM) to the DLC3.
(b) Turn the engine switch on (IG).
(c) Enter the following menus: DIAGNOSIS / OBD/ MOBD / BODY or SMART / DATA LIST / DIAG&CUSTOMIZE.
(d) Read the DATA LIST according to the display on the tester.

MAIN BODY (Main body ECU):

Tester Display	Measurement Item/Range	Normal Condition	Diagnostic Note
WIRELESS OPER	Wireless door lock control function / ON or OFF	ON: Operating OFF: Not operating	-
HAZARD ANS BACK	Hazard answer-back of wireless / ON or OFF	ON: Operating OFF: Not operating	-
OPEN DOOR WARN	Open door warning / ON or OFF	ON: Operating OFF: Not operating	-
AUTO LOCK DELAY	Automatic lock time / 60 s or 30 s	60 s: 60 seconds 30 s: 30 seconds	-
UNLOCK /2OPER	2 times operation of wireless unlock / ON or OFF	ON: All doors unlock when UNLOCK is pressed twice OFF: All doors unlock when UNLOCK is pressed once	-
TRUNK LID OPER	Luggage compartment door open function type / 1 TIME/2 TIME/ 0.8 s PR/ OFF	1 TIME: Luggage compartment door opens when LUGGAGE OPEN switch is pressed once 2 TIME: Luggage compartment door opens when LUGGAGE OPEN switch is pressed twice 0.8 s PR: Luggage compartment door opens when LUGGAGE OPEN switch is pressed and held down for 0.8 seconds OFF: Not operating	-

SMART (Certification ECU):

Tester Display	Measurement Item/Range	Normal Condition	Diagnostic Note
ALARM FUNCTION	Panic function / ON or OFF	ON: Operating OFF: Not operating	-
WIRELS BUZZ VOL	Wireless buzzer volume / LEVEL0 to LEVEL7	LEVEL7: Biggest volume LEVEL6 LEVEL5 LEVEL4 LEVEL3 LEVEL2 LEVEL1 : Smallest volume LEVEL0: No sound	-

2. ACTIVE TEST

HINT:
Performing the intelligent tester ACTIVE TEST allows relay, VSV, actuator and other items to be operated without removing any parts. Performing the ACTIVE TEST early in troubleshooting is one way to shorten the labor time. The DATA LIST can be displayed during the ACTIVE TEST.

(a) Connect the intelligent tester (with CAN VIM) to the DLC3.
(b) Turn the engine switch on (IG).
(c) Enter the following menus: DIAGNOSIS / OBD/ MOBD / BODY or SMART / ACTIVE TEST.
(d) Perform the ACTIVE TEST according to the display on the tester.

MAIN BODY (Main body ECU):

Tester Display	Test Part	Control Range	Diagnostic Note
HAZARD	Turns the turn signal flasher relay	ON/OFF	Observe headlight and rear combination light for correct operation
VEHICLE HORN	Turns the vehicle horns	ON/OFF	-
TRUNK/BDOR OPEN	Turns the luggage compartment door opener motor	ON/OFF	Observe luggage compartment door

SMART (Certification ECU):

Tester Display	Test Part	Control Range	Diagnostic Note
WIRELESS BUZZER	Turns the wireless door lock buzzer	ON/OFF	-

DIAGNOSTIC TROUBLE CODE CHART

HINT:
If a trouble code is indicated during the DTC check, check the circuit listed for that code in the table below. Then proceed to the appropriate page.

WIRELESS DOOR LOCK CONTROL SYSTEM:

DTC Code	Detection Item	Trouble Area	See page
B1242	Wireless Door Lock Tuner Circuit Malfunction	1. Door control receiver 2. Wire harness 3. Certification ECU	DL-80

DTC	B1242	Wireless Door Lock Tuner Circuit Malfunction

DESCRIPTION

- The electrical key antenna is used to receive electric waves relating to the entry functions of the smart access system with push-button start. The certification ECU decodes the requested smart access system with push-button start operation by identifying a key code based on electric waves received via the electrical key antenna and the door control receiver.
- The door control receiver receives a signal from the wireless door control transmitter and sends signals to the main body ECU through the certification ECU.
- The certification ECU then sends a command, according to the requested operation, to each ECU. (e.g. If door lock operation is requested, the ECU sends a door lock command to the main body ECU.)

DTC No.	DTC Detection Condition	Trouble Area
B1242	The certification ECU detects that there is a short in the circuit between terminals RSSI, or between terminals DATA and RDA.	• Door control receiver • Wire harness • Certification ECU

DL

WIRING DIAGRAM

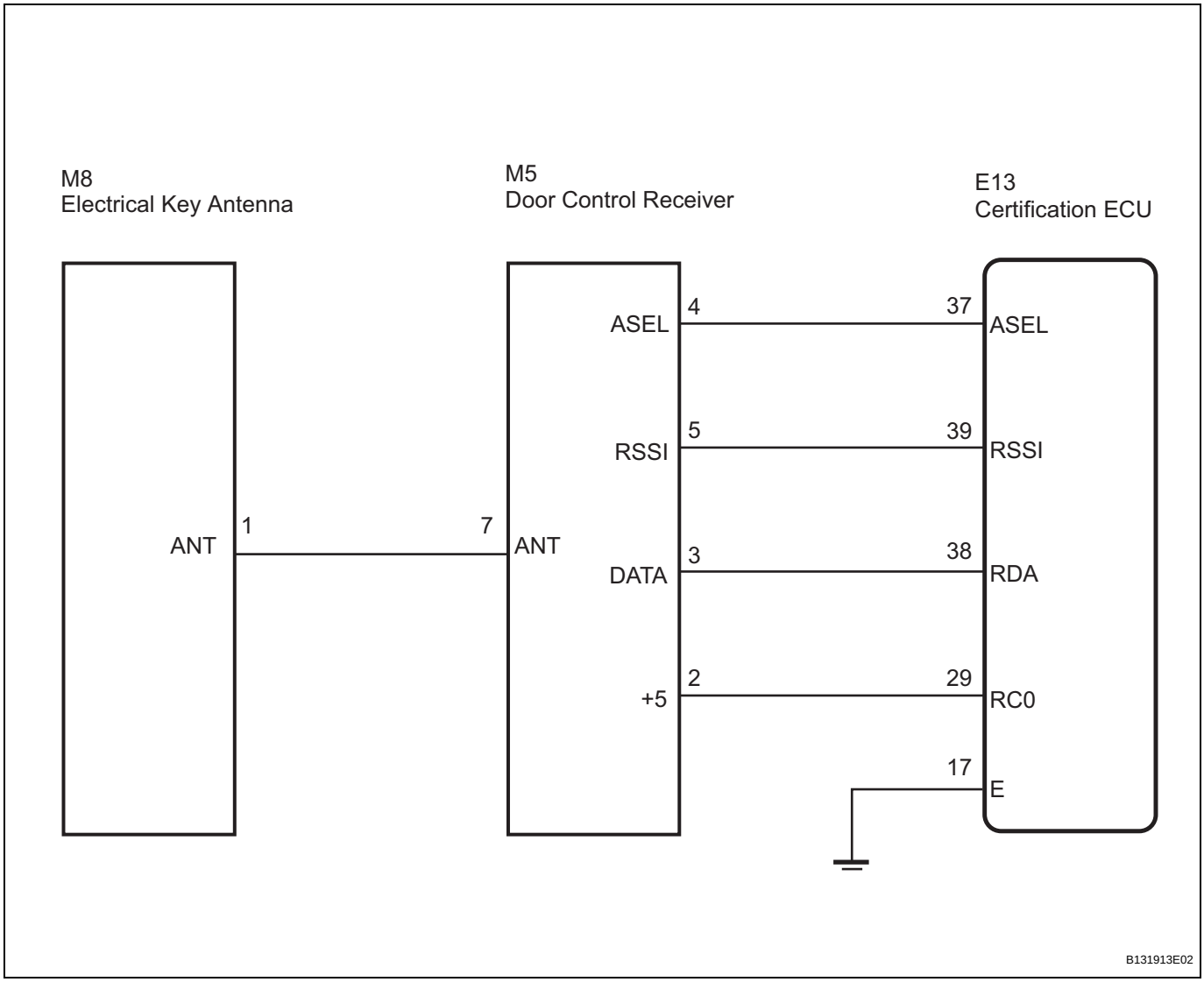

INSPECTION PROCEDURE

1 CHECK HARNESS AND CONNECTOR (CERTIFICATION ECU - DOOR CONTROL RECEIVER)

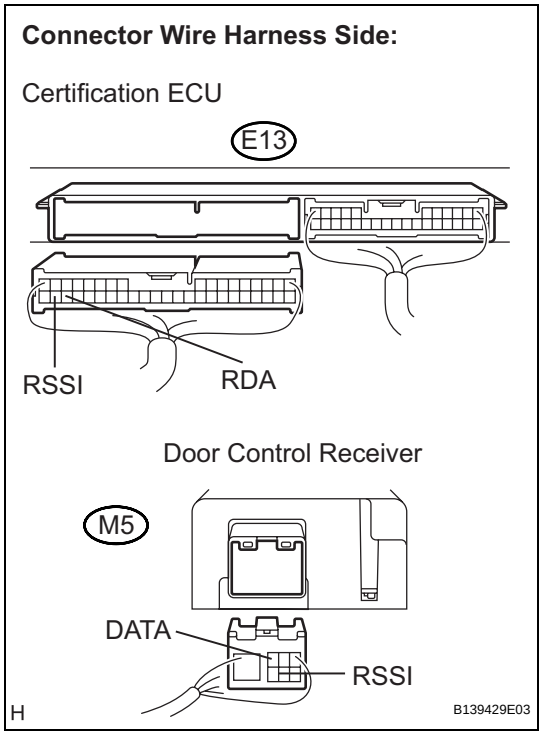

(a) Disconnect the E13 certification ECU connector and M5 door control receiver connector.
(b) Measure the resistance according to the value(s) in the table below.

Standard resistance

Symbol (Tester Connection)	Condition	Specified Condition
RSSI (E13-39) - RSSI (M5-5)	Always	Below 1 Ω
RDA (E13-38) - DATA (M5-3)	Always	Below 1 Ω
RSSI (E13-39) - RDA (E13-38)	Always	10 kΩ or higher
RSSI (E13-39) - Body ground	Always	10 kΩ or higher
RDA (E13-38) - Body ground	Always	10 kΩ or higher

NG → **REPAIR OR REPLACE HARNESS OR CONNECTOR**

OK

2 INSPECT CERTIFICATION ECU

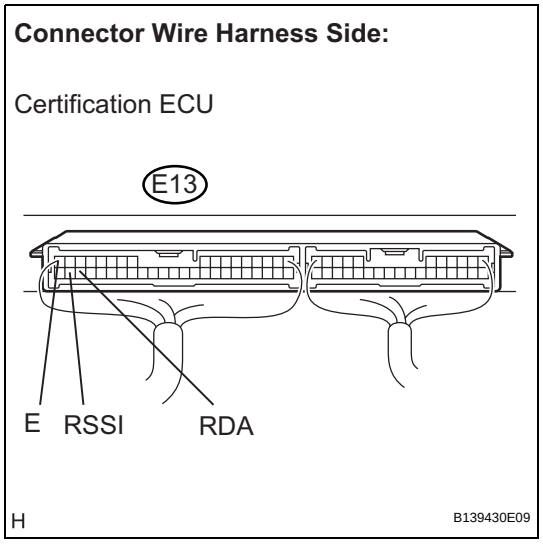

(a) Reconnect the E13 ECU connector.
(b) Measure the voltage according to the value(s) in the table below.

Standard voltage

Symbol (Tester Connection)	Condition	Specified Condition
RSSI (E13-39) - E (E13-17)	Engine switch OFF, all doors closed, the electrical key is not in the actuation area	Below 1 V
	Engine switch OFF, all doors closed, the electrical key is in the actuation area	4.6 to 5.4 V
RDA (E13-38) - E (E13-17)	Engine switch OFF, all doors closed and transmitter switch not pressed	Below 1 V
	Engine switch OFF, all doors closed and transmitter switch pressed	4.6 to 5.4 V

NG → **REPLACE CERTIFICATION ECU**

DL

OK

3	REPLACE DOOR CONTROL RECEIVER

(a) Replace the door control receiver with a normal one.
(b) Perform the registration procedure (See page EI-9).
OK:
The system returns to normal operation.

NG → **REPLACE CERTIFICATION ECU**

OK

END

Wireless Door Lock Buzzer Circuit

DESCRIPTION

The certification ECU activates the wireless door lock buzzer when detecting a lock/unlock signal from the door control transmitter.

WIRING DIAGRAM

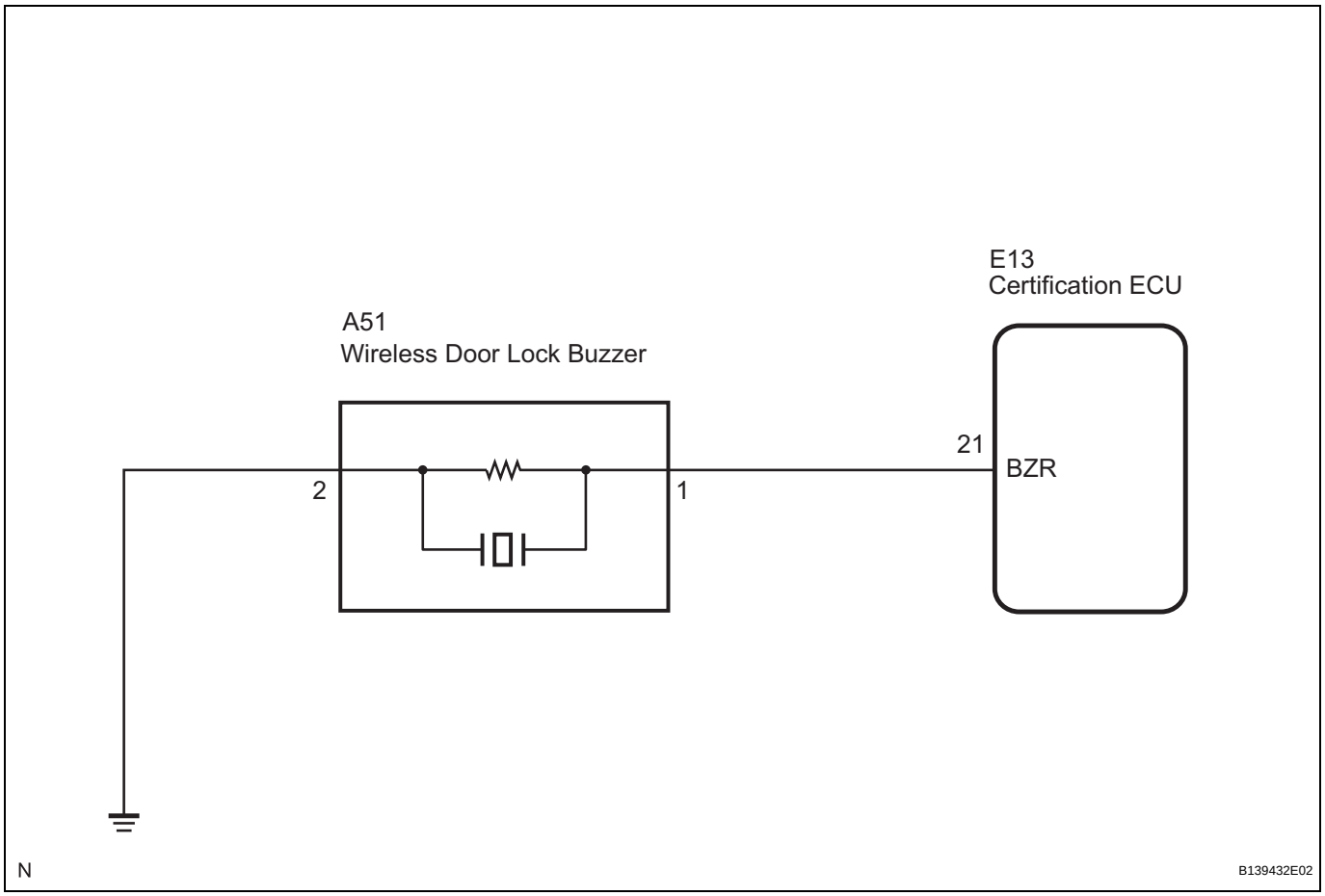

INSPECTION PROCEDURE

1	PERFORM ACTIVE TEST BY INTELLIGENT TESTER

(a) Connect the intelligent tester (with CAN VIM) to the DLC3.
(b) Turn the engine switch on (IG).
(c) Press the intelligent tester main switch on.
(d) Select the item below in the ACTIVE TEST and then check that the buzzer operates.

SMART (Certification ECU):

Item	Test Details	Diagnostic Note
WIRELESS BUZZER	Wireless door lock buzzer ON/OFF	-

OK:
The wireless door lock buzzer sounds or goes off correctly when operating it through the intelligent tester.

NG → **Go to step 2**

OK

PROCEED TO NEXT CIRCUIT INSPECTION SHOWN IN PROBLEM SYMPTOMS TABLE

2 CHECK HARNESS AND CONNECTOR (CERTIFICATION ECU - WIRELESS DOOR LOCK BUZZER - BODY GROUND)

Connector Wire Harness View:

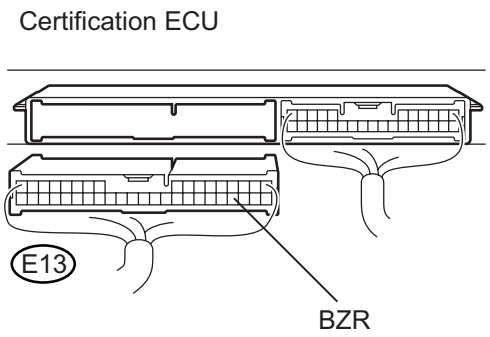

Wire Harness Side Connector Front View:

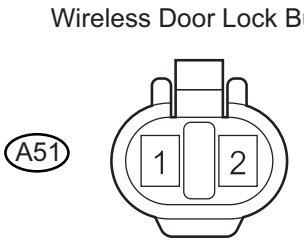

H B139431E02

(a) Disconnect the E13 certification ECU connector and A51 wireless door lock buzzer connector.
(b) Measure the resistance according to the value(s) in the table below.
Standard resistance

Symbol (Tester Connection)	Condition	Specified Condition
BZR (E13-21) - A51-1	Always	Below 1 Ω
BZR (E13-21) - Body ground	Always	10 kΩ or higher
A51-2 - Body ground	Always	Below 1 Ω

NG → **REPAIR OR REPLACE HARNESS OR CONNECTOR**

OK

3	INSPECT WIRELESS DOOR LOCK BUZZER

Wireless Door Lock Buzzer:

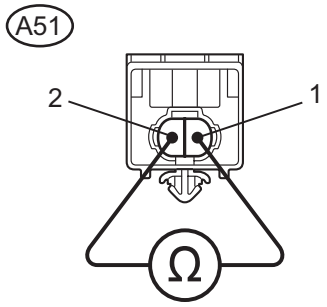

N B110079E10

(a) Measure the resistance according to the value(s) in the table below.
HINT:
The buzzer activation circuit is built into the ECU, not into the buzzer itself. When battery voltage is applied directly to the buzzer, the buzzer will not sound.

Standard resistance

Tester Connection	Condition	Specified Condition
A51-1 - A51-2	Always	Approx. 1 kΩ

NG → **REPLACE WIRELESS DOOR LOCK BUZZER**

OK

PROCEED TO NEXT CIRCUIT INSPECTION SHOWN IN PROBLEM SYMPTOMS TABLE

Power Source Circuit

DESCRIPTION

The certification ECU provides power for the door control receiver operation.

WIRING DIAGRAM

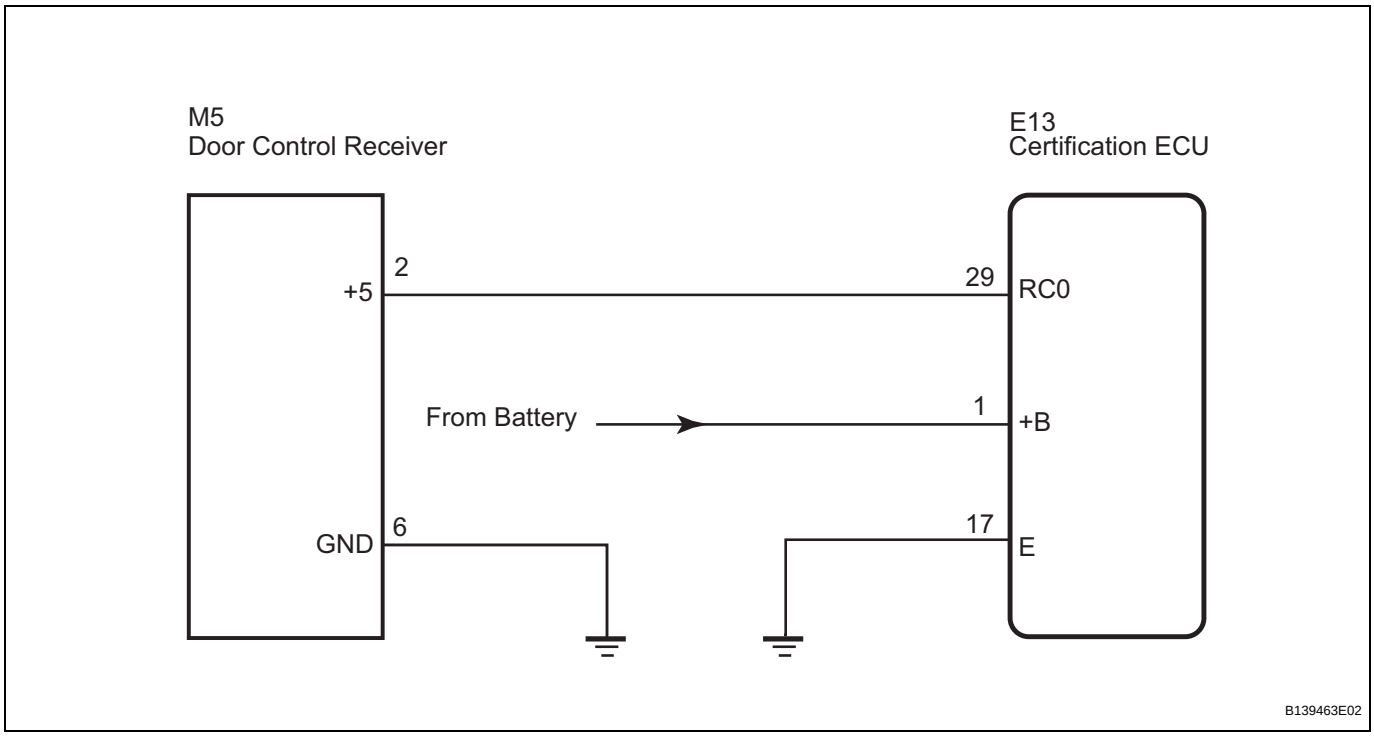

INSPECTION PROCEDURE

1	INSPECT CERTIFICATION ECU (+B TERMINAL)

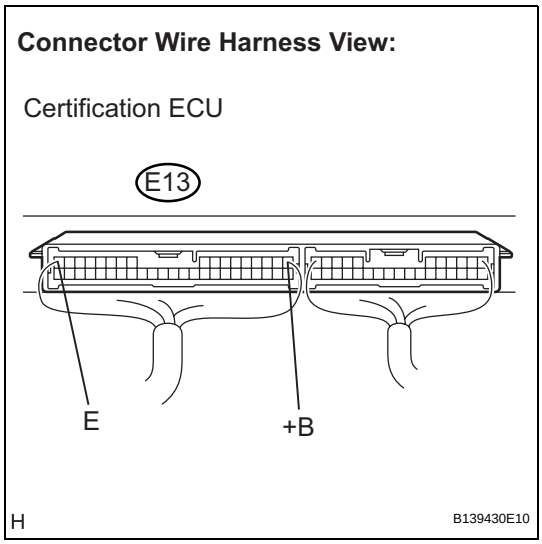

(a) Measure the voltage according to value(s) in the table below.

Standard voltage

Symbol (Tester Connection)	Condition	Specified Condition
+B (E13-1) - E (E13-17)	Always	10 to 14 V

NG → **REPAIR OR REPLACE HARNESS OR CONNECTOR**

OK

2 INSPECT CERTIFICATION ECU (RC0 TERMINAL)

Connector Wire Harness View:

Certification ECU

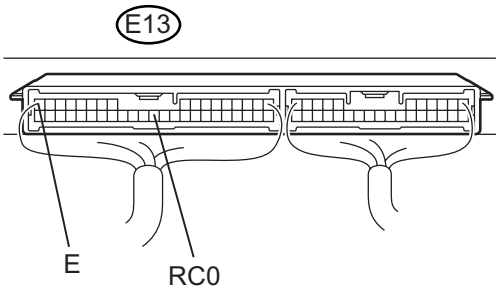

H B139430E11

(a) Measure the voltage according to the value(s) in the table below.
Standard voltage

Symbol (Tester Connection)	Condition	Specified Condition
RC0 (E13-29) - E (E13-17)	Engine switch off, all doors closed and transmitter switch not pressed	Below 1 V
	Engine switch off, all doors closed and transmitter switch pressed	4.6 to 5.4 V

OK → **Go to step 4**

NG

3 CHECK HARNESS AND CONNECTOR (CERTIFICATION ECU - BATTERY - BODY GROUND)

Connector Wire Harness Side:

Certification ECU

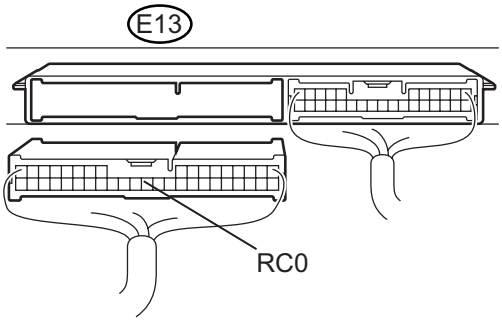

H E125974E11

(a) Disconnect the E13 certification ECU connector.
(b) Measure the voltage and resistance according to the value(s) in the table below.
Standard

Symbol (Tester Connection)	Condition	Specified Condition
RC0 (E13-29) - Body ground	Always	Below 1 V
	Always	10 kΩ or higher

NG → **REPAIR OR REPLACE HARNESS OR CONNECTOR**

OK

REPLACE CERTIFICATION ECU

DL

4 CHECK HARNESS AND CONNECTOR (CERTIFICATION ECU - DOOR CONTROL RECEIVER)

Connector Wire Harness View:

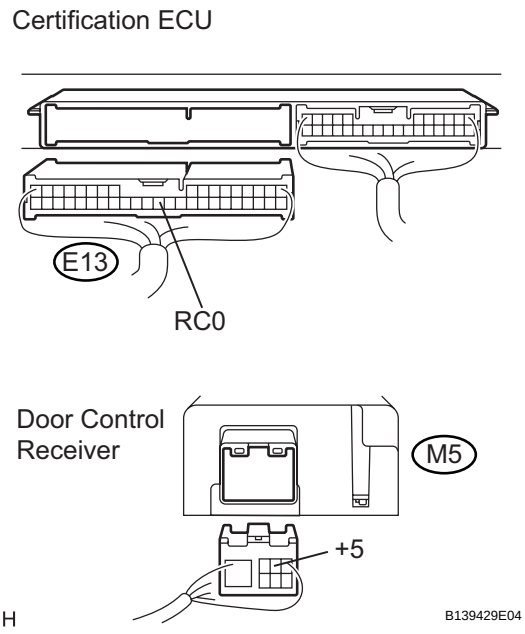

(a) Disconnect the M5 door control receiver connector.
(b) Measure the resistance according to the value(s) in the table below.

Standard resistance

Symbol (Tester Connection)	Condition	Specified Condition
RC0 (E13-29) - +5 (M5-2)	Always	Below 1 Ω

NG → **REPAIR OR REPLACE HARNESS OR CONNECTOR**

OK

5 CHECK HARNESS AND CONNECTOR (BODY GROUND)

Connector Wire Harness View:

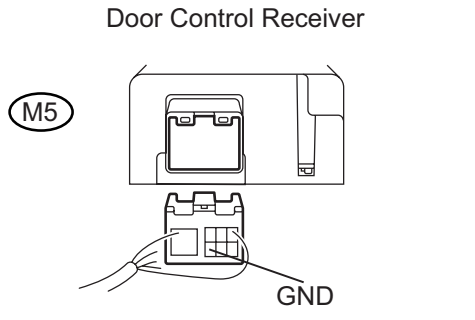

(a) Measure the resistance according to the value(s) in the table below.

Standard resistance

Symbol (Tester Connection)	Condition	Specified Condition
GND (M5-6) - Body ground	Always	Below 1 Ω

NG → **REPAIR OR REPLACE HARNESS OR CONNECTOR**

OK

PROCEED TO NEXT CIRCUIT INSPECTION SHOWN IN PROBLEM SYMPTOMS TABLE

CUSTOMIZE PARAMETERS

1. CUSTOMIZING FUNCTION WITH INTELLIGENT TESTER

HINT:

The following items can be customized.

NOTICE:

- **Before attempting to customize vehicle settings, confirm whether it is possible to make the change that the customer has requested.**
- **Be sure to record the current settings before customizing.**
- **When troubleshooting, make sure that the item in question has not been disabled using the customizing function.**

DOOR LOCK:

Display (Item)	Default	Contents	Setting
AUTO UNLK/SHIFT (Unlock w/ engine switch on (IG), shift P, speed 0 km/h (0 mph))	ON	Function that unlocks doors when the shift lever is moved to the P position from any other position while the engine switch is on (IG)	ON/OFF
ALL UNLK/OPN-CL (All unlock w/ D door open-close)	OFF	Function that unlocks all other doors when opening driver side door within 10 seconds after turning the engine switch off from on (IG)	ON/OFF
UNLK/KEY TWICE (Unlock w/ 2 times D key operation)	ON	• Function that unlocks only the driver side door when the driver side door key cylinder is turned to unlock once and unlocks all the doors when it is turned to unlock twice • In the OFF setting, turning it once unlocks all doors	ON/OFF
AUTO LOCK/SHIFT (Auto lock/shift not P)	ON	Function that locks doors when the shift lever is moved from the P position to any other position	ON/OFF
AUTO LOCK	OFF	Function that locks doors when vehicle reaches a vehicle speed 20 km/h (13 mph)	ON/OFF

WIRELESS D LOCK:

Display (Item)	Default	Contents	Setting
AUTO LOCK DELAY	60s	Function that selects AUTO LOCK time (30 sec. or 60 sec.)	30s/60s

PROBLEM SYMPTOMS TABLE

POWER DOOR LOCK CONTROL SYSTEM:

Symptom	Suspected Area	See page
All doors cannot be locked/unlocked simultaneously by neither door control switch nor door key cylinder	Power source circuit (Main body ECU)	DL-13
	Replace main body ECU (Instrument panel J/B)	-
All doors cannot be locked/unlocked simultaneously by driver side door control switch	Replace multiplex network master switch	DL-56
	Replace main body ECU (Instrument panel J/B)	-
All doors cannot be locked/unlocked simultaneously by front passenger side door control switch	Door control switch circuit (Front passenger side door)	DL-56
	Replace main body ECU (Instrument panel J/B)	-
All doors cannot be locked/unlocked simultaneously by door key cylinder	Driver side door key lock and unlock switch circuit	DL-52
	Multiplex network master switch assembly	DL-13
	Replace main body ECU (Instrument panel J/B)	-
Driver side door lock does not operate	Driver side door lock motor circuit	DL-35
	Replace main body ECU (Instrument panel J/B)	-
Passenger side door lock does not operate	Front passenger side door lock motor circuit	DL-38
	Replace main body ECU (Instrument panel J/B)	-
Rear LH side door lock does not operate	Rear door lock motor LH circuit	DL-41
	Replace main body ECU (Instrument panel J/B)	-
Rear RH side door lock does not operate	Rear door lock motor RH circuit	DL-44
	Replace main body ECU (Instrument panel J/B)	-
Luggage compartment door unlock does not operate	Luggage compartment door lock circuit	DL-49
	Luggage compartment door courtesy switch circuit	DL-47
	Replace main body ECU (Instrument panel J/B)	-
Key lock-in prevention function does not work properly (manual operation and key-linked lock are active)	Door courtesy switch circuit (Driver side)	LI-94
	Smart access system with push-button start	DL-121
	Replace main body ECU (Instrument panel J/B)	-
Shift-linked automatic door lock does not operate	CAN communication system	CA-11
	Replace main body ECU (Instrument panel J/B)	-
One or more doors cannot be locked/unlocked simultaneously (Wireless key operation)	Wireless door lock system	DL-70
	Driver side door unlock detection switch circuit	DL-23
	Front passenger door unlock detection switch circuit	DL-26
	Rear door unlock detection switch LH circuit	DL-29
	Rear door unlock detection switch RH circuit	DL-32
	Replace main body ECU (Instrument panel J/B)	-
One or more doors cannot be locked/unlocked simultaneously (Theft deterrent operation)	Theft deterrent system	TD-16
	Driver side door unlock detection switch circuit	DL-23
	Front passenger door unlock detection switch circuit	DL-26
	Rear door unlock detection switch LH circuit	DL-29
	Rear door unlock detection switch RH circuit	DL-32
	Replace main body ECU (Instrument panel J/B)	-

SMART ACCESS SYSTEM WITH PUSH-BUTTON START

PRECAUTION

NOTICE:
Some systems need to be initialized after reconnecting the negative (-) battery terminal (See page IN-33).

1. PRECAUTIONS WHEN USING INTELLIGENT TESTER

(a) When troubleshooting the smart access system with push-button start using the intelligent tester with the engine switch off, connect the intelligent tester to the vehicle and repeat turning any of the courtesy light switches on and off until communication between the tester and the vehicle begins (the interval between ON and OFF should be less than 1.5 seconds).

(b) After DTCs are all cleared, check if the trouble occurs again 6 seconds after the engine switch is turned on (IG).

2. PRECAUTIONS FOR EACH FUNCTION

(a) Precautions for the electrical key:
The electrical key is a precision instrument. Be sure to observe the following:
(1) Do not drop or strike the electrical key.
(2) Do not keep the electrical key in a high temperature area for a long time.
(3) Do not use an ultrasonic washing machine to clean the electrical key.
(4) Keep the electrical key away from magnets or magnetized items during use.
(5) Do not attach any stickers to the electrical key.
(6) If an electrical key is lost, delete all registered electrical key ID codes and then reregister the remaining electrical keys.

(b) Precautions for the entry unlock function:
(1) As the sensor is built into the backside of the outside door handle, the user must touch the backside of the handle when performing the unlock function.
(2) If touched with gloved hands, the response of the door may be delayed.
(3) During the entry unlock operation, if the door handle is pulled before the door unlocks, the unlock function cannot be completed. Confirm that the door has been unlocked before pulling the door handle to open the door.

(4) Make sure that the doors are unlocked when touching the touch sensor on the outside door handle while the electrical key is being carried.
If the doors cannot be unlocked, the certification ECU orders the main body ECU to perform the door unlock operation 4 times at intervals of 0.75 seconds.
At this time, the door may not be unlocked because the handle is being pulled due to some mechanical reasons.
Be sure to return the door handle to its original position.
If the door cannot be opened by pulling the handle, perform the entry unlock operation again.

(5) If the electrical key is too close to the oscillator on the outside of the vehicle, the door may not be unlocked because the electrical key cannot react to the strong wave output from the transmitter.

(6) If the electrical key is within the vehicle exterior detection area, the door can be unlocked even when a person other than the person carrying the electrical key holds the door handle.
However, the doors other than the door that the codes match will not be unlocked.
(If the electrical key is within the driver side door's detection area outside the vehicle, the doors will be unlocked when the person carrying the electrical key holds the driver side door handle. However, if any door handle other than that of the driver side door is held, the doors will not be unlocked.)

(7) If a door is not opened after the door unlock operation, the doors automatically lock after approximately 60 seconds.

(8) If a large amount of water is applied to the door handle due to a car wash or heavy rain, the electrical key being within the vehicle exterior detection area may cause the doors to be unlocked.
However, the doors will be locked again after approximately 60 seconds if a door is not opened.

(9) If the electrical key of the smart access system with push-button start is used while it is being carried with the electrical key of another smart access system with push-button start, the time before the entry unlock operation will become longer than usual. This is not a malfunction.

(c) Precautions for the entry lock function:

(1) When performing the entry lock operation, firmly press the lock switch on the outside door handle. If pressed too quickly or lightly, the entry lock may not operate.

(2) It is possible that signals output from the indoor electrical key antenna may leak through the window. Also, if the electrical key is too close to a door oscillator, the oscillator output signals are too strong and the electrical key cannot respond. As a result, when the electrical key is near the vehicle interior (window, door handle), the entry lock function may not operate. Also, the electrical key reminder warning buzzer may sound and the entry unlock operation may stop functioning. In this situation, move the electrical key away from the vehicle interior (window, door handle), perform the entry lock operation and perform the entry unlock operation.

(3) Do not touch the lock switch while opening or closing the door.
If the lock switch is pressed when opening or closing the door while the electrical key is being carried, the door ajar warning buzzer sounds (beeps outside the vehicle for 10 seconds).

(4) If the electrical key is on the instrument panel, rear package tray, floor, or in the glove box, the electrical key reminder function may not operate and the electrical key may be locked in the vehicle. Always carry the electrical key.

(5) If the electrical key is outside the vehicle but is very close to a window or door handle (the ECU determines that the electrical key is inside the vehicle) and the transmitter or mechanical key is used to lock the doors (entry lock is not used), entry unlock will not operate. To unlock the doors, perform a wireless door unlock operation. The entry lock function operates in this way to prevent the user from unintentionally unlocking the doors from outside the vehicle. For example, when a user operates the wireless door lock operation from inside the vehicle, radio waves from a door oscillator may leak into the vehicle interior and the doors may unlock.

(6) To allow the user enough time to check if the doors are locked after performing a door lock operation (entry lock function or wireless door lock operation), the entry unlock function will not be permitted for 3 seconds after the door lock operation.

(d) Precautions for the entry ignition function:

(1) To start the engine, first depress the brake pedal firmly until the engine switch indicator illuminates green.

(2) When operating the engine switch, firmly press the switch. If the switch is pressed too quickly, power source control and engine starting may not operate.
(3) While driving the vehicle, continuously pressing the engine switch for 3 seconds or more will turn off the engine. Do not touch the engine switch while driving, except in an emergency.
(4) Do not touch the engine switch with oily hands.
(5) If the vehicle has been in a high temperature location for an extended period of time, be careful when touching the engine switch. It may be very hot and lead to burns.
(6) Take care to avoid spilling beverages on the engine switch. Keep all liquids away from the engine switch.
(7) Do not use the engine switch if it seems to be sticking or feels abnormal.
(8) The vehicle continually records the power source mode (off, on (ACC), on (IG), start). When the battery cable is disconnected and reconnected, the power source mode will return to the mode that was selected before disconnecting the battery cable. Always turn the power off before disconnecting the battery cable. When the vehicle battery is fully depleted, power will be cut. As a result, the power source mode before the power was cut cannot be recognized, so be extremely careful.
(9) Do not connect any electronic products to the ACC, IG1 or IG2 coil side wiring, as the vehicle power supply may be unable to be turned on, or other problems may occur.
(10) After the battery cable has been disconnected and reconnected, the engine will not start on the first attempt. The engine will start normally on the second attempt.
(11) When starting the engine immediately after reconnecting the battery cable, connect the cable and wait at least 10 seconds before attempting to start the engine. The engine may not start when attempting an engine start immediately after disconnecting and reconnecting the battery cable.
(12) If the electrical key is held over the engine switch to start the engine because the electrical key battery is depleted, the following warnings will sound:
- Driver's door open → closed:
  - An exit warning if the shift lever is in a position other than P and the power source is in a mode other than off.

– An exit warning if the shift lever is in the P position and the power source is in a mode other than off.

- Doors other than the driver door open → closed:
  Warning to inform that the electrical key has been taken out of the vehicle.

These warnings will sound because whether the electrical key is in the cabin or not cannot be determined. They do not indicate system malfunctions.

(e) Precautions for luggage compartment door entry function:
Even if the electrical key is within the electrical key oscillator (outside luggage compartment) detection area, the luggage compartment door cannot be opened if the electrical key is in the following areas:
- Near the center of the bumper
- Too close to the ground or in a high place

(f) Precautions for the function to prevent electrical key confinement in the luggage compartment:
(1) Do not place the electrical key in the luggage compartment.
If the luggage compartment is closed with the electrical key in it when all the doors are locked, the alarm to indicate electrical key confinement will operate (beeping sound for 2 seconds outside of the vehicle). However, the alarm may not operate for some reason relating to the electrical key location (near the spare tire or the side of the luggage compartment), the electrical key condition (covered with metal or near metal), or ambient radio waves.
(2) If the luggage compartment is closed with the electrical key in it when any of the doors is unlocked or open, the electrical key confinement prevention function will not operate. In this case, use the luggage compartment opener in the cabin to open the luggage compartment and take out the electrical key.

(3) The alarm may erroneously operate in the following conditions. If you can confirm that you are carrying the electrical key or that the electrical key is in the cabin, there is no problem. The entry luggage compartment open function may not operate if the alarm erroneously operates. In this case, use the luggage compartment opener in the cabin or perform a wireless operation to open the luggage compartment.
- The electrical key is brought into the cabin after the luggage compartment is opened, and then the luggage compartment is closed.
- The luggage compartment is closed by the person who is carrying the electrical key.

(4) If the alarm operates when the luggage compartment is closed with all the doors locked, the electrical key is in the cabin or luggage compartment. Check the cabin and luggage compartment to find the electrical key.

(5) If the luggage compartment is closed with the electrical key in it when all the doors are locked, the alarm will sound and the luggage compartment can be opened. This may increase the risk of the vehicle being stolen.

(6) Do not open or close the luggage compartment after all the doors are locked if you want to keep the spare electrical keys in the cabin. As a result, the alarm may sound and the luggage compartment can be opened. This may increase the risk of the vehicle being stolen.

(g) Precautions for the battery built into the electrical key and the vehicle battery:

(1) The electrical key is constantly checking for signals from the vehicle, which requires power from the electrical key's built-in battery. The life of the battery is approximately 1 to 2 years depending on the usage conditions. Be sure to replace the battery when its power is low. When replacing the battery, do not touch the inner circuit board or other inner parts.

(2) The electrical key is constantly checking for signals from the vehicle using battery power to determine whether the electrical key is being used or not. Even if the user is carrying 2 electrical keys and only 1 electrical key is used, both electrical keys will consume battery power.

(3) The electrical key receives radio waves at approximately 314 MHz. If the electrical key continuously receives strong, identical frequency waves, this may drain the electrical key's battery. Store the electrical key at least 1 m (3.3 ft) from TVs, personal computers, or other electrical products.

(4) When a door is being locked, the vehicle battery is used to transmit radio waves. The battery may be dead if the vehicle remains stopped for a long time. If the vehicle is not used for a long time, remove the battery from the vehicle or cancel the smart key system.

(5) When a door is being locked with the electrical key in the detection area of a door oscillator, the battery is used for regular communication between the electrical key and vehicle. If the vehicle is not used, keep the electrical key away from the vehicle (more than 2 m (6.6 ft)).

(6) After disconnecting and reconnecting the battery cable, the entry unlock function may not operate. If this occurs, perform a wireless door unlock and lock operation.

(h) Precautions for the entry unlock mode switching function:

(1) Perform the entry unlock mode switching function within a 1 m (3.3 ft) area around the vehicle.

(2) The entry unlock mode switching function cannot be performed within 5 seconds of the previous mode change. Wait 5 seconds or more before performing a mode change.

CUSTOMIZE PARAMETERS

1. CUSTOMIZING FUNCTION WITH INTELLIGENT TESTER

HINT:
The items in the table below can be customized.

NOTICE:

- **When the customer requests a change in a function, first make sure that the function can be customized.**
- **Be sure to make a note of the current setting before customizing.**
- **When troubleshooting a function, first make sure that the function is set to the default setting.**

SMART:

Display (Item)	Default	Contents	Setting
PARK WAIT TIME (Wait time to permit opening door after locking)	2.5s	Function that sets waiting time to permit opening door after door is locked with entry lock function.	0.5s / 1.5s / 2.5s / 5.0s
IGNITION AREA (SMART ignition available area)	ALL	Function to choose the available area for electrical key to start E/G and cancel the steering lock.	FRONT / ALL
TRUNK OPEN MODE (Luggage compartment opening operation)	ON	Function to open a luggage compartment when the driver has the electrical key and presses the luggage open button.	ON / OFF

WIRELESS DOOR LOCK:

Display (Item)	Default	Contents	Setting
ALARM FUNCTION (Panic function)	ON	Function to operate the theft deterrent system by keeping pressing the lock button of the transmitter for 2.5 seconds. If there is a panic button, press the panic button instead of the lock button.	ON / OFF
WIRELS BUZZ VOL	Level 7	Function to adjust the volume of the wireless door lock buzzer.	Level 0 / 1 / 2 / 3 / 4 / 5 / 6 / 7

WARNING:

Display (Item)	Default	Contents	Setting
KEY LOW-BATT WRN	ON	Function to set a warning function for the time when a key battery becomes weak.	ON / OFF

2. Entry Unlock Mode Switching Function

(a) To change the vehicle to entry unlock mode switching function, make sure the vehicle power is off and simultaneously press and hold the electrical key's LOCK switch and another electrical key switch for 4.5 seconds.
When the switches are pressed and held for 4.5 seconds, the entry door unlock mode changes in the following order: driver door mode, all door mode.

NOTICE:
After pressing and holding the switches for 4.5 seconds, wait 4.5 seconds before performing the same procedure again.

- Driver door unlock mode:
  When the driver door's touch sensor is touched, only the driver door unlocks. When another touch sensor is touched, all doors unlock.

- All door unlock mode:
  When the touch sensor is touched, all doors unlock.

(b) The certification ECU receives this signal from the entry door control receiver and changes the smart access system with push-button start to the entry unlock mode.

(c) The certification ECU sounds the buzzers of the wireless door lock buzzer and combination meter to inform the user that the mode has been switched.

Mode	Wireless Door Lock Buzzer	Combination Meter		
		Multi-information Display		Buzzer
Driver Door (Default)	ON OFF Sounds 3 times	Displayed for 5 sec.	Driver door “open” indication	Sounds once
All Doors (Customized)	ON OFF Sounds 2 times	Displayed for 5 sec.	All door “open” indication	Sounds once

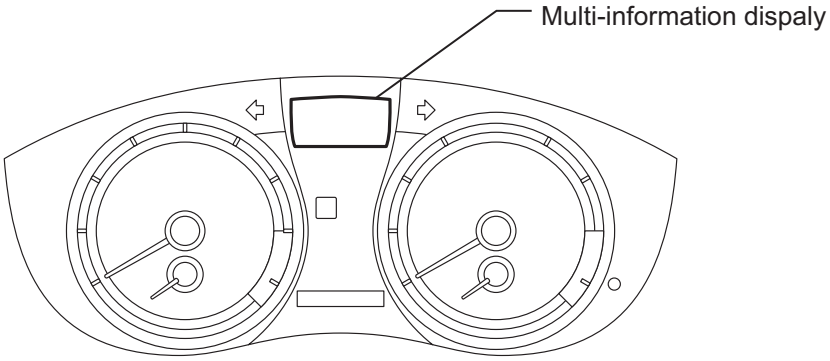

N B138051E01

HINT:
The function only changes the entry unlock mode of the smart access system with push-button start. It does not switch the unlocking of the wireless door lock control.

3. Electrical Key Cancel

The electrical key cancel operation disables the following functions:

- Entry Ignition
- Entry Unlock/Lock
- Entry Luggage Compartment Open
- Electrical Key Lock-in Prevention
- Warning
- Memory Call

(a) The operation procedures are as follows:
Precondition:
Engine switch off, driver side door closed and unlocked.

(1) Unlock the driver side door once with the UNLOCK switch of the electrical key.
(2) Open the driver door within 5 seconds.
(3) Unlock the driver side door twice with the UNLOCK switch of the electrical key within 5 seconds.
(4) Repeat open → close twice for the driver door within 30 seconds, and open again.
(Driver door: Open → Close → Open → Close → Open)
(5) Unlock the driver side door twice with the UNLOCK switch of the electrical key within 5 seconds.
(6) Repeat open → close once for the driver door within 30 seconds, and open again.
(Driver door: Open → Close → Open)
(7) Close the driver door within 5 seconds.
When electrical key cancel is activated, the wireless door lock buzzer sounds twice.
To return to the original condition, perform the procedures again. When the original condition is returned, the wireless door lock buzzer sounds once.

PROBLEM SYMPTOMS TABLE

HINT:

- Use the table below to help determine the cause of the problem symptoms. The potential causes of the symptoms are listed in order of probability in the "Suspected area" column of the table. Check each symptom by checking the suspected areas in the order they are listed. Replace parts as necessary.
- Inspect the fuses and relays related to this system before inspecting the suspected areas below.

SMART KEY SYSTEM (ENTRY):

Symptom	Suspected Area	See page
Entry lock/unlock does not operate.	1. Check for DTCs in the smart access system with push-button start (Starting function).	ST-28
	2. Refer to PROBLEM SYMPTOMS TABLE of the power door lock control system ("All doors cannot be locked/unlocked simultaneously by neither door control switch nor door key cylinder").	DL-12
	3. Courtesy light switch circuit	LI-94
	4. Lock position switch circuit	-
	- Driver door	DL-23
	- Front passenger door	DL-26
	- Rear passenger door LH	DL-29
	- Rear passenger door RH	DL-32
	5. Entry lock switch circuit	DL-149
	6. Touch sensor circuit	DL-154
	7. Antenna circuit	DL-160
	8. Refer to "ID code matching inside the cabin cannot be performed".	-
	9. Door oscillator circuit	DL-143
	10. Replace the main body ECU.	-
	11. Replace the certification ECU.	-
Luggage compartment does not open (when the electrical key is outside the vehicle).	1. Check for DTCs in the smart access system with push-button start (Starting function).	ST-28
	2. Check if any function is cancelled due to customization.	DL-119
	3. Refer to PROBLEM SYMPTOM TABLE of the luggage compartment door opener system ("Luggage compartment door opener does not operate").	ED-3
	4. Operate the luggage compartment opener switch on the electrical key to check the wireless function.	DL-67
	5. Refer to PROBLEM SYMPTOMS TABLE of the wireless door lock control system ("The wireless door lock control system does not operate").	DL-70
	6. Check operation of the cabin oscillator in ACTIVE TEST.	DL-131
	7. Luggage oscillator circuit	DL-162
	8. Luggage compartment door open switch circuit	DL-168
	9. Replace the main body ECU.	-
	10. Replace the certification ECU.	-
All entry function does not operate.	1. Registration of the key.	EI-9
	2. Certification ECU power source circuit	DL-170
	3. Replace certification ECU.	-

Symptom	Suspected Area	See page
Function to prevent electrical key confinement in the luggage compartment does not operate. (The luggage compartment does not open.)	1. Check for DTCs in the smart access system with push-button start (Starting function).	ST-28
	2. Power door lock control system	DL-12
	3. Courtesy light switch circuit	LI-94
	4. Lock position switch circuit	-
	- Driver door	DL-23
	- Front passenger door	DL-26
	- Rear passenger door LH	DL-29
	- Rear passenger door RH	DL-32
	5. Check if any function is not cancelled due to customization.	DL-119
	6. Operate the LOCK/UNLOCK switch on the key to check the wireless function.	DL-67
	7. Refer to PROBLEM SYMPTOMS TABLE of the wireless door lock control system ("The wireless door lock control system does not operate").	DL-70
	8. Check operation of the cabin oscillator in ACTIVE TEST.	DL-131
	9. Luggage oscillator circuit	DL-162
	10. Replace the main body ECU.	-
	11. Replace the certification ECU.	-
Function to prevent electrical key confinement in the luggage compartment does not operate. (The alarm does not sound.)	1. Check if the function to prevent electrical key confinement in the luggage compartment operates.	DL-135
	2. Check if answer back is performed when the wireless door lock is operated.	DL-67
	3. Replace the certification ECU.	-
The outside alarm of the answer back and entry systems does not sound.	1. Check if the function to prevent electrical key confinement in the luggage compartment operates.	DL-135
	2. Check that "WIRELESS BUZZER" and "HAZARD" in the ACTIVE TEST are YES. (If it is NO, go to wireless door lock system.)	DL-131
	3. Wireless door lock tuner circuit (DTC B1242)	DL-139
	4. Replace the certification ECU.	-
The inside alarm of the entry system does not sound.	1. Operate the LOCK/UNLOCK switch on the electrical key to check the wireless function.	DL-67
	2. Refer to PROBLEM SYMPTOMS TABLE of the wireless door lock control system ("Wireless door lock function").	DL-70
	3. Check if the electrical key reminder buzzer sounds.	DL-135
	4. Replace the certification ECU.	-
ID code matching inside the cabin cannot be performed.	1. Check if any function is cancelled due to customization.	DL-119
	2. Operate the LOCK/UNLOCK switch on the key to check the wireless function.	DL-67
	3. Refer to PROBLEM SYMPTOMS TABLE of the wireless door lock control system ("The wireless door lock control system does not operate").	DL-70
	4. Check the cabin oscillator operation in the ACTIVE TEST.	DL-131
	5. Room oscillator circuit	DL-165
	6. Luggage oscillator circuit	DL-162
	7. Replace the certification ECU.	-

Symptom	Suspected Area	See page
ID code matching outside the cabin cannot be performed.	1. Check if any function is cancelled due to customization.	DL-119
	2. Operate the LOCK/UNLOCK switch on the electrical key to check the wireless function.	DL-67
	3. Refer to PROBLEM SYMPTOMS TABLE of the wireless door lock control system ("The wireless door lock control system does not operate").	DL-70
	4. Check operation of each door oscillator in ACTIVE TEST.	DL-131
	5. Door oscillator circuit	DL-143
	6. Normal	-
Key reminder buzzer does not sound.	1. Perform ACTIVE TEST for the combination meter.	ME-29
	2. Check "COURTESY SW" in the DATA LIST of the door control system.	DL-17
	3. Check the key reminder buzzer when the engine switch is on (ACC) and the drivers door is opened.	-
	4. Check if the steering wheel is locked when all power supplies are OFF and the drivers door is opened.	-
	5. Refer to PROBLEM SYMPTOMS TABLE of the steering lock system ("Steering wheel cannot be locked").	SR-54
	6. Check that the "LCK BAR STUCK" item in the DATA LIST of the certification ECU displays OK.	SR-58
	7. Replace the steering lock ECU.	-
	8. Replace the certification ECU.	-

TERMINALS OF ECU

1. CHECK CERTIFICATION ECU

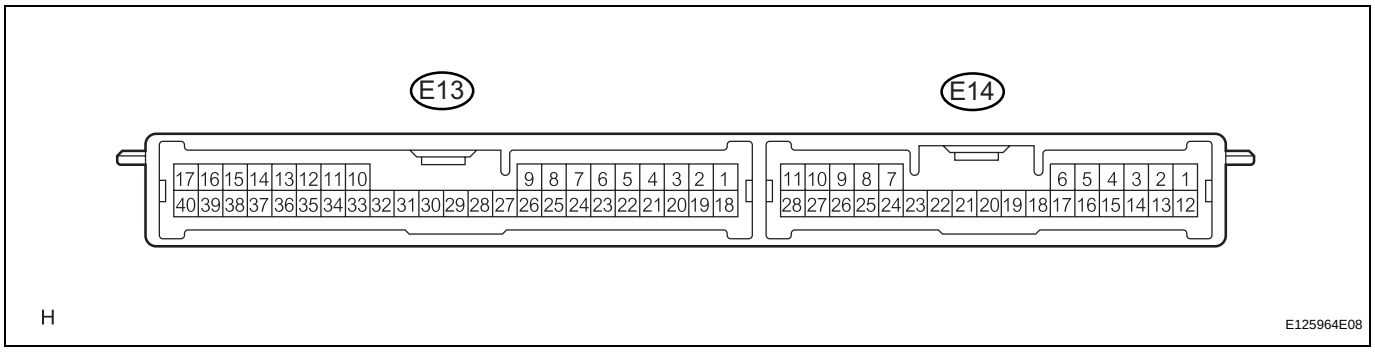

(a) Disconnect the E13 ECU connector.
(b) Measure the voltage and resistance according to the value(s) in the table below.

Symbols (Terminal No.)	Wiring Color	Terminal Description	Condition	Specified Condition
+B1 (E13-1) - Body ground	W - Body ground	+B power supply	Always	10 to 14 V
IG (E13-18) - Body ground	B - Body ground	Ignition power supply	Engine switch off	Below 1 V
IG (E13-18) - Body ground	B - Body ground	Ignition power supply	Engine switch on (IG)	10 to 14 V
E (E13-17) - Body ground	W-B - Body ground	Ground	Always	Below 1 Ω
ACC (E13-19) - Body ground	L - Body ground	ACC power supply	Engine switch off	Below 1 V
ACC (E13-19) - Body ground	L - Body ground	ACC power supply	Engine switch on (ACC)	10 to 14 V
TSW1 (E13-3) - Body ground	GR - Body ground	Entry lock switch signal	Front lock switch LH not pushed	10 kΩ or higher
TSW1 (E13-3) - Body ground	GR - Body ground	Entry lock switch signal	Front lock switch LH pushed	Below 1 Ω
TSW2 (E13-4) - Body ground	LG - Body ground	Entry lock switch signal	Front lock switch RH not pushed	10 kΩ or higher
TSW2 (E13-4) - Body ground	LG - Body ground	Entry lock switch signal	Front lock switch RH pushed	Below 1 Ω
TSW3 (E14-25) - Body ground	LG - Body ground	Entry lock switch signal	Rear lock switch LH not pushed	10 kΩ or higher
TSW3 (E14-25) - Body ground	LG - Body ground	Entry lock switch signal	Rear lock switch LH pushed	Below 1 Ω
TSW4 (E14-26) - Body ground	BR - Body ground	Entry lock switch signal	Rear lock switch RH not pushed	10 kΩ or higher
TSW4 (E14-26) - Body ground	BR - Body ground	Entry lock switch signal	Rear lock switch RH pushed	Below 1 Ω
LIN (E13-10) - Body ground	O - Body ground	LIN line	Always	10 kΩ or higher
CANH (E13-27) - Body ground	R - Body ground	CAN line	Always	10 kΩ or higher
CANL (E13-28) - Body ground	W - Body ground	CAN line	Always	10 kΩ or higher
AGND (E13-40) - Body ground	V - Body ground	Ground	Always	Below 1 Ω
TSW5 (E13-7) - Body ground	G - Body ground	Luggage compartment opener switch signal	Opener switch OFF	10 kΩ or higher
TSW5 (E13-7) - Body ground	G - Body ground	Luggage compartment opener switch signal	Opener switch ON	Below 1 Ω

If the result is not as specified, the wire harness side may have a malfunction.

(c) Reconnect the E13 ECU connector.

(d) Measure the voltage according to the value(s) in the table below.

Symbols (Terminal No.)	Wiring Color	Terminal Description	Condition	Specified Condition
CLG1 (E13-33) - CG1B (E13-34)	LG - L	Door electrical key oscillator (front LH) sensor signal	All doors closed, all doors locked and engine switch off	Alternating between 5 V and below 1 V
CLG1 (E13-33) - CG1B (E13-34)	LG - L	Door electrical key oscillator (front LH) sensor signal	Door unlocked or door open	Below 1 V
SEN1 (E13-22) - E (E13-17)	B - W-B	Touch sensor detection signal	Outside door handle touched	Below 1 V
SEN1 (E13-22) - E (E13-17)	B - W-B	Touch sensor detection signal	Outside door handle not touched (Have the electrical key outside the cabin)	10 to 14 V
SEL1 (E13-5) - E (E13-17)	V - W-B	Touch sensor activation control signal	Move the key more than 5 m (16.4 ft) away from the front door LH	10 to 14 V
SEL1 (E13-5) - E (E13-17)	V - W-B	Touch sensor activation control signal	Bring key to the outside handle	Below 1 V
CLG2 (E13-35) - CG2B (E13-36)	W - B	Door electrical key oscillator (front RH) sensor signal	All doors closed, all doors locked and engine switch off	Alternating between 5 V and below 1 V
CLG2 (E13-35) - CG2B (E13-36)	W - B	Door electrical key oscillator (front RH) sensor signal	Door unlocked or door open	Below 1 V
SEN2 (E13-23) - E (E13-17)	O - W-B	Touch sensor detection signal	Outside door handle touched	Below 1 V
SEN2 (E13-23) - E (E13-17)	O - W-B	Touch sensor detection signal	Outside door handle not touched (Have the electrical key outside the cabin)	10 to 14 V
SEL2 (E13-6) - E (E13-17)	P - W-B	Touch sensor activation control signal	Move the key more than 5 m (16.4 ft) away from the front door RH	10 to 14 V
SEL2 (E13-6) - E (E13-17)	P - W-B	Touch sensor activation control signal	Bring key to the outside handle	Below 1 V
CLG3 (E14-8) - CG3B (E14-9)	R - G	Door electrical key oscillator (rear LH) sensor signal	All door closed, all doors locked and engine switch off	Alternating between 5 V and below 1 V
CLG3 (E14-8) - CG3B (E14-9)	R - G	Door electrical key oscillator (rear LH) sensor signal	Door unlocked or door open	Below 1 V
SEN3 (E14-28) - E (E13-17)	O - W-B	Touch sensor detection signal	Outside door handle touched	Below 1 V
SEN3 (E14-28) - E (E13-17)	O - W-B	Touch sensor detection signal	Outside door handle not touched (Have the electrical key outside the cabin)	10 to 14 V
SEL3 (E14-1) - E (E13-17)	W - W-B	Touch sensor activation control signal	Make the key more than 5 m (16.4 ft) away from the rear door LH	10 to 14 V
SEL3 (E14-1) - E (E13-17)	W - W-B	Touch sensor activation control signal	Bring key to the outside handle	Below 1 V
CLG4 (E14-10) - CG4B (E14-11)	G - R	Door electrical key oscillator (rear RH) sensor signal	All door closed, all doors locked and engine switch off	Alternating between 5 V and below 1 V
CLG4 (E14-10) - CG4B (E14-11)	G - R	Door electrical key oscillator (rear RH) sensor signal	Door unlocked or door open	Below 1 V

Symbols (Terminal No.)	Wiring Color	Terminal Description	Condition	Specified Condition
SEN4 (E14-27) - E (E13-17)	G - W-B	Touch sensor detection signal	Outside door handle touched	Below 1 V
SEN4 (E14-27) - E (E13-17)	G - W-B	Touch sensor detection signal	Outside door handle not touched (Have the electrical key outside the cabin)	10 to 14 V
SEL4 (E14-2) - E (E13-17)	GR - W-B	Touch sensor activation control signal	Make the key more than 5 m (16.4 ft) away from the rear door RH	10 to 14 V
SEL4 (E14-2) - E (E13-17)	GR - W-B	Touch sensor activation control signal	Bring key to the outside handle	Below 1 V
CLG5 (E13-11) - CG5B (E13-12)	R - W	Indoor electrical key oscillator (front) sensor signal	Within 30 seconds driver side door opened and closed, engine switch off	Alternating between 5 V and below 1 V
CLG5 (E13-11) - CG5B (E13-12)	R - W	Indoor electrical key oscillator (front) sensor signal	Engine switch on (IG)	Below 1 V
CLG6 (E13-13) - CG6B (E13-14)	Y - B	Indoor electrical key oscillator (rear) sensor signal	Within 30 seconds after driver side door opened and closed, engine switch off	Alternating between 5 V and below 1 V
CLG6 (E13-13) - CG6B (E13-14)	Y - B	Indoor electrical key oscillator (rear) sensor signal	Engine switch on (IG)	Below 1 V
CLG7 (E13-15) - CG7B (E13-16)	G - R	Luggage electrical key oscillator (inner) sensor signal	Luggage compartment door opening switch ON	Alternating between 5 V and below 1 V
CLG7 (E13-15) - CG7B (E13-16)	G - R	Luggage electrical key oscillator (inner) sensor signal	Luggage compartment door opening switch OFF	Below 1 V
CLG8 (E13-31) - CG8B (E13-32)	LG - L	Luggage electrical key oscillator (outer) sensor signal	Luggage compartment door opening switch ON	Alternating between 5 V and below 1 V
CLG8 (E13-31) - CG8B (E13-32)	LG - L	Luggage electrical key oscillator (outer) sensor signal	Luggage compartment door opening switch OFF	Below 1 V
RC0 (E13-29) - E (E13-17)	G - W-B	Entry door control receiver power source	Engine switch off, all doors closed and electrical key switch on	4.5 to 5.5 V
RC0 (E13-29) - E (E13-17)	G - W-B	Entry door control receiver power source	Engine switch off, all doors closed and electrical key switch off	Below 1 V
RSSI (E13-39) - E (E13-17)	R - W-B	Entry door control receiver electric wave existence signal	Engine switch off, all doors closed, the electrical key is not in the action area	10 to 14 V
RSSI (E13-39) - E (E13-17)	R - W-B	Entry door control receiver electric wave existence signal	Engine switch off, all doors closed, the electrical key is in the action area	Below 1 V
RDA (E13-38) - E (E13-17)	Y - W-B	Entry door control receiver data input signal	Engine switch off, all doors closed and electrical key switch off	10 to 14 V (Pulse generation)
RDA (E13-38) - E (E13-17)	Y - W-B	Entry door control receiver data input signal	Engine switch off, all doors closed and electrical key switch on	Pulse generation
RDA (E13-38) - Body ground	Y - Body ground	Tuner input signal	Engine switch off, all doors closed, the electrical key is not in the action area	10 to 14 V (Pulse generation)
RDA (E13-38) - Body ground	Y - Body ground	Tuner input signal	The electrical key is in the action area.	Pulse generation

Symbols (Terminal No.)	Wiring Color	Terminal Description	Condition	Specified Condition
ASEL (E13-37) - Body ground	V - Body ground	Cabin / luggage receiver select signal	Engine switch off, luggage compartment door closed and the electrical key is in the luggage action area	4.6 to 6.0 V
ASEL (E13-37) - Body ground	V - Body ground	Cabin / luggage receiver select signal	Engine switch off, luggage compartment door open	Below 1 V
VC5 (E13-30) - Body ground	O - Body ground	Transponder key amplifier power supply	Electrical key is not in the cabin.	Below 1 V
VC5 (E13-30) - Body ground	O - Body ground	Transponder key amplifier power supply	Have the electrical key outside the cabin and open the driver's door.	4.5 to 5.5 V
TXCT (E13-8) - Body ground	GR - Body ground	Transponder key amplifier output signal	Electrical key is not in the cabin.	Below 1 V
TXCT (E13-8) - Body ground	GR - Body ground	Transponder key amplifier output signal	Have the electrical key outside the cabin and open the driver's door.	Pulse generation (see waveform 1)
CODE (E13-9) - Body ground	W - Body ground	Transponder key amplifier communication signal	Electrical key is not in the cabin.	Below 1 V
CODE (E13-9) - Body ground	W - Body ground	Transponder key amplifier communication signal	Have the electrical key outside the cabin and open the driver's door. Hold the electrical key close to the engine switch with the brake pedal depressed.	Pulse generation (see waveform 2)
BZR (E13-21) - Body ground	O - Body ground	Wireless door lock buzzer signal	Wireless door lock buzzer OFF	Below 1 V
BZR (E13-21) - Body ground	O - Body ground	Wireless door lock buzzer signal	Wireless door lock buzzer ON	Pulse generation

DL

If the result is not as specified, the ECU may have a malfunction.

(e) Inspect using an oscilloscope.
Waveform 1 (Reference):

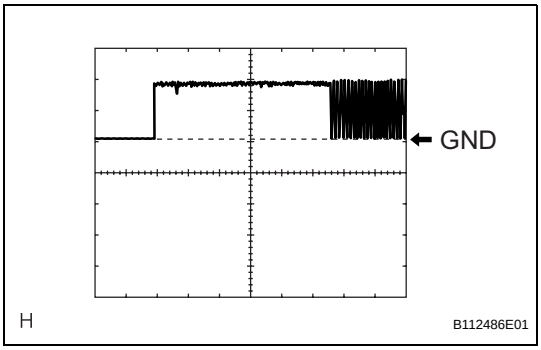

Terminal	TXCT - Body ground
Tool Setting	2 V/DIV., 10 ms./DIV.
Condition	Have the electrical key outside the cabin and open the driver's door.

(f) Inspect using an oscilloscope.
Waveform 2 (Reference):

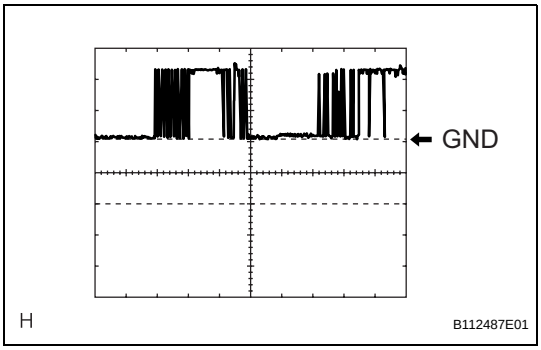

Terminal	CODE - Body ground
Tool Setting	2 V/DIV., 20 ms./DIV.
Condition	Have the electrical key outside the cabin and open the driver's door. Hold the electrical key close to the engine switch with the brake pedal depressed.

2. MAIN BODY ECU (INSTRUMENT PANEL JUNCTION BLOCK)

(a) Measure the voltage and resistance according to the value(s) in the table below.

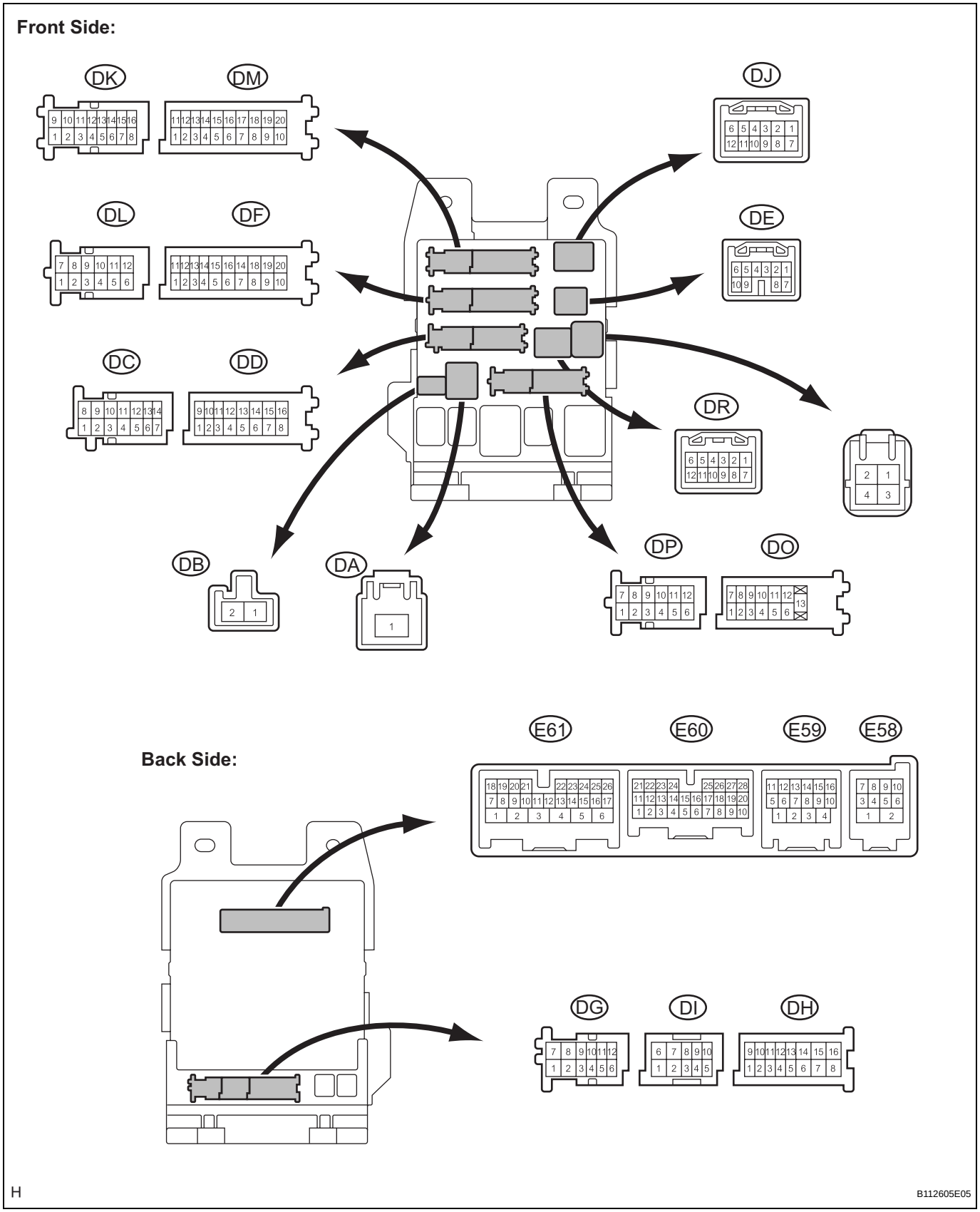

Symbols (Terminal No.)	Wiring Color	Terminal Description	Condition	Specified Condition
CANN (E59-15) - Body ground	W - Body ground	CAN Line	Always	10 kΩ or higher
CANP (E59-16) - Body ground	B - Body ground	CAN Line	Always	10 kΩ or higher
STP (DL-7) - Body ground	W - Body ground	Stop light switch signal	Brake pedal depressed	10 to 14 V
STP (DL-7) - Body ground	W - Body ground	Stop light switch signal	Brake pedal depressed	Below 1 V

If the result is not as specified, the junction block may have a malfunction.

DIAGNOSIS SYSTEM

1. DESCRIPTION

(a) Smart access system with push-button start data and the Diagnostic Trouble Codes (DTCs) can be read from the Data Link Connector 3 (DLC3) of the vehicle. When the system seems to be malfunctioning, use the intelligent tester to check for malfunctions and perform repairs.

2. CHECK DLC3

The ECU uses ISO 15765-4 for communication. The terminal arrangement of the DLC3 complies with SAE J1962 and matches the ISO 15765-4 format.

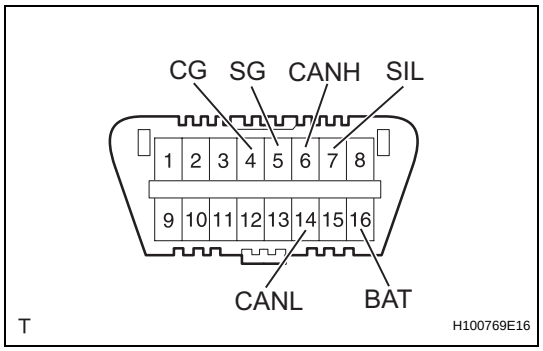

Symbols (Terminal No.)	Terminal Description	Condition	Specified Condition
SIL (7) - SG (5)	Bus "+" line	During transmission	Pulse generation
CG (4) - Body ground	Chassis ground	Always	Below 1 Ω
SG (5) - Body ground	Signal ground	Always	Below 1 Ω
BAT (16) - Body ground	Battery positive	Always	11 to 14 V
CANH (6) - CANL (14)	CAN bus line	Engine switch OFF*	54 to 69 Ω
CANH (6) - Battery positive (+)	HIGH-level CAN bus line	Engine switch OFF*	6 kΩ or higher
CANH (6) - CG (4)	HIGH-level CAN bus line	Engine switch OFF*	200 Ω or higher
CANL (14) - Battery positive (+)	LOW-level CAN bus line	Engine switch OFF*	6 kΩ or higher
CANL (14) - CG (4)	LOW-level CAN bus line	Engine switch OFF*	200 Ω or higher

NOTICE:

***: Before measuring the resistance, leave the vehicle as is for at least 1 minute and do not operate the engine switch, any other switches or the doors.**

If the result is not as specified, the DLC3 may have a malfunction. Repair or replace the harness and connector.

HINT:

Connect the cable of the intelligent tester (with CAN VIM) to the DLC3, turn the engine switch on (IG) and attempt to use the tester. If the display indicates that a communication error has occurred, there is a problem either with the vehicle or with the tester.

- If communication is normal when the tester is connected to another vehicle, inspect the DLC3 of the original vehicle.
- If communication is still not possible when the tester is connected to another vehicle, the problem may be in the tester itself. Consult the Service Department listed in the tester's instruction manual.

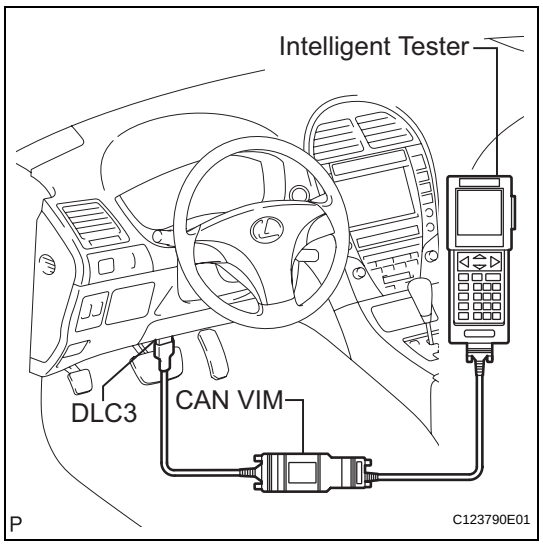

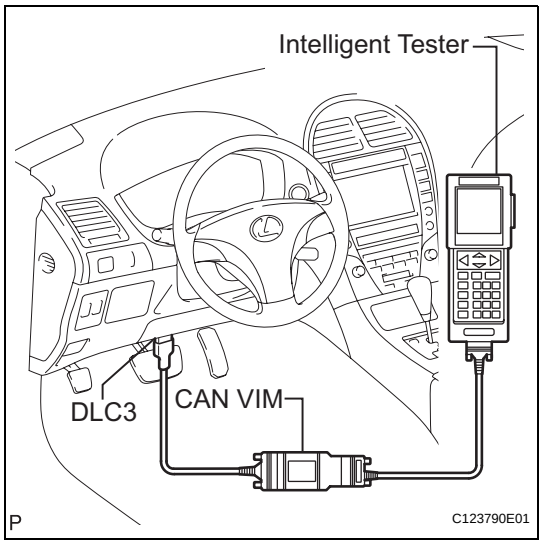

DTC CHECK / CLEAR

1. CHECK DTC

(a) Connect the intelligent tester to the DLC3.
(b) Turn the engine switch on (IG).
(c) Enter the following menu items: DIAGNOSIS / ENHANCED OBD II / DTC INFO / CURRENT CODES.
(d) Read the DTC by following the prompts on the tester screen.
HINT:
Refer to the intelligent tester operator's manual for further details.

2. CLEAR DTC

(a) Connect the intelligent tester to the DLC3.
(b) Turn the engine switch on (IG).
(c) Enter the following menu items: DIAGNOSIS / ENHANCED OBD II / DTC INFO / CLEAR CODES.
(d) Erase the DTC by following the directions on the tester screen.

HINT:
Refer to the intelligent tester operator's manual for further details.

DATA LIST / ACTIVE TEST

1. READ DATA LIST

HINT:
Using the intelligent tester's DATA LIST allows switch, sensor, actuator and other item values to be read without removing any parts. Reading the DATA LIST relay in troubleshooting is one way to save time.

(a) Connect the intelligent tester to the DLC3.
(b) Turn the engine switch on (IG). When the intelligent tester cannot be turned on due to a malfunction or other problem, refer to "precautions when using the intelligent tester" (See page DL-89).
(c) Enter the following menus: DIAGNOSIS / ENHANCED OBD II / DATA LIST.
(d) Read the DATA LIST according to the display on the tester.

SMART ACCESS (Certification ECU):

Tester Display	Measurement Item/Range	Normal Condition	Diagnostic Note
D TOUCH SENSOR	Driver side door touch sensor / ON or OFF	ON: Sensor is touched OFF: Sensor is not touched	-
P TOUCH SENSOR	Front passenger side door touch sensor / ON or OFF	ON: Sensor is touched OFF: Sensor is not touched	-
DR TOUCH SENSOR	Rear door touch sensor LH / ON or OFF	ON: Sensor is touched OFF: Sensor is not touched	-
PR TOUCH SENSOR	Rear door touch sensor RH / ON or OFF	ON: Sensor is touched OFF: Sensor is not touched	-
D TRIGGER SW	Driver side door lock switch / ON or OFF	ON: Switch is touched OFF: Switch is not touched	-
P TRIGGER SW	Front passenger side door lock switch / ON or OFF	ON: Switch is touched OFF: Switch is not touched	-
DR TRIGGER SW	Rear door lock switch LH / ON or OFF	ON: Switch is touched OFF: Switch is not touched	-
PR TRIGGER SW	Rear door lock switch RH / ON or OFF	ON: Switch is touched OFF: Switch is not touched	-
TR/B-DOOR UNLK	Luggage compartment door unlock switch / ON or OFF	ON: Switch is pushed OFF: Switch is not pushed	-
IG SW	Engine switch / ON or OFF	ON: Engine switch is on (IG) OFF: Engine switch is off	-
ACC SW	Engine switch / ON or OFF	ON: Engine switch is on (ACC) OFF: Engine switch is off	-
P/S 10-MIN	Power save counter - 10 minutes / Min: 0; Max: 255	Power save counter after door LOCK/UNLOCK-10 minutes	-
P/S 5-DAY	Power save counter - 5 days / Min: 0; Max: 255	Power save counter after door LOCK/UNLOCK-5 days	-
P/S 14-DAY	Power save counter - 14 days / Min: 0; Max: 255	Power save counter after door LOCK/UNLOCK-14 days	-
UNMATCH V-ID	Unmatched vehicle-ID / YES or NO	YES: Key ID matches vehicle NO: Key ID does not match vehicle	-
NO RESPONSE	No response / YES or NO	YES: Response from key NO: No response from key	-
UNMATCH FORMAT	Unmatched response code and format / YES or NO	YES: Key ID code matches NO: Key ID code does not match	-
LOW BATTERY	Key low battery / YES or NO	YES: Key battery voltage drops NO: Key battery voltage is normal	-

Tester Display	Measurement Item/Range	Normal Condition	Diagnostic Note
WRONG CODE	ID code difference / YES or NO	YES: Key ID code matches NO: Key ID code does not match	-
WRONG C CODE	Challenge code difference (Response) / YES or NO	YES: Key ID code matches NO: Key ID code does not match	-
WRONG ID CODE	ID code difference / YES or NO	YES: Key ID code matches NO: Key ID code does not match	-
WRONG ROL CODE	Rolling code difference / YES or NO	YES: Key rolling code matches NO: Key rolling code does not match	-
DOOR UNLOCK MOD	Door unlock mode / ALL, EACH, D_DOOR	Mode status is displayed	-
FUNCTION CANCEL	Entry door lock function cancel / ON or OFF	Mode status is displayed	-
MASTER KEY	Master key / MATCH or NO MATCH	MATCH: Key code is sent NO MATCH: Unmatched key code	-
SUB KEY	Sub key / MATCH or NO MATCH	MATCH: Key code is sent NO MATCH: Unmatched key code	-
BCC	Transponder chip data / OK or NG	OK: Correct data sensing NG: Incorrect data sensing	-
STATUS	Transponder chip data / OK or NG	OK: Data OK NG: Data error	-
ENCRYPT CODE	Transponder chip data / OK or NG	OK: Data OK NG: Data error	-
SERIAL NUMBER	Transponder chip data / OK or NG	OK: Data OK NG: Data error	-
FRAME	Transponder chip data / OK or NG	OK: Data OK NG: Data error	-
RESPONSE	Transponder chip data / OK or NG	OK: With no response NG: With a response	-
#CODES	Diagnostic trouble code / Min.: 0, Max.: 255	-	-
IGNITION AREA	Ignition available area / FRONT or ALL	Customization status is displayed	-
PARK WAIT TIME	Parking wait time / 0.5s, 1.5s, 2.5s, 5s	Customization status is displayed	-
TRUNK OPEN MODE	Luggage compartment door open mode with vehicle locked / ON or OFF	Customization status is displayed	-
WIRELS BUZZ VOL	Wireless buzzer volume / LEVEL 0, 1, 2, 3, 4, 5, 6, 7	Customization status is displayed	-
KEY LO-BATT WRN	Key low battery warning / ON or OFF	Customization status is displayed	-

MAIN BODY:

Tester Display	Measurement Item/Range	Normal Condition	Diagnostic Note
LUGG COURTESY SW	Luggage compartment door courtesy light switch signal / ON or OFF	ON: Luggage compartment door open OFF: Luggage compartment door closed	-
D DOR CTY SW	Driver side door courtesy light switch signal / ON or OFF	ON: Driver side door open OFF: Driver side door closed	-
P DOR CTY SW	Front passenger side door courtesy light switch signal / ON or OFF	ON: Front passenger side door open OFF: Front passenger side door closed	-
RL DOR CTY SW	Rear door courtesy light switch LH signal / ON or OFF	ON: Rear door open OFF: Rear door closed	-

Tester Display	Measurement Item/Range	Normal Condition	Diagnostic Note
RR DOR CTY SW	Rear door courtesy light switch RH signal / ON or OFF	ON: Rear door open OFF: Rear door closed	-
IG SW	Engine switch / ON or OFF	ON: Engine switch is on (IG) OFF: Engine switch is off	-
ACC SW	Engine switch / ON or OFF	ON: Engine switch is on (ACC) OFF: Engine switch is off	-

2. PERFORM ACTIVE TEST

HINT:

Performing the intelligent tester's ACTIVE TEST allows relay, VSV, actuator and other items to be operated without removing any parts. Performing the ACTIVE TEST early in troubleshooting is one way to save time. The DATA LIST can be displayed during the ACTIVE TEST.

(a) Connect the intelligent tester to the DLC3.
(b) Turn the engine switch on (IG).
(c) Enter the following menus: DIAGNOSIS / ENHANCED OBD II / ACTIVE TEST.
(d) Perform the ACTIVE TEST according to the display on the tester.

SMART ACCESS (Certification ECU):

Tester Display	Test Part	Control Range	Diagnostic Note
OVERHEAD TUNER	Door control receiver	ON / OFF	-
IN LUG TUNER	Luggage receiver	ON / OFF	-
D TRANSMITTER	Driver side electrical key oscillator	ON / OFF	-
P TRANSMITTER	Front passenger side electrical key oscillator	ON / OFF	-
DR TRANSMITTER	Rear door electrical key oscillator LH	ON / OFF	-
PR TRANSMITTER	Rear door electrical key oscillator RH	ON / OFF	-
FR TRANSMITTER	Indoor electrical key oscillator (console)	ON / OFF	-
RR TRANSMITTER	Indoor electrical key oscillator (rear seat)	ON / OFF	-
IN_BDR TRNSMTTR	Luggage compartment door inner oscillator	ON / OFF	-
BDOOR TRNSMTTR	Luggage compartment door outer oscillator	ON / OFF	-
D SELECT SIG	Driver side select	ON / OFF	-
P SELECT SIG	Front passenger side select	ON / OFF	-
DR SELECT SIG	Rear LH side select	ON / OFF	-
PR SELECT SIG	Rear RH side select	ON / OFF	-
BDOR SELECT SIG	Luggage compartment select	ON / OFF	-
WIRELESS BUZZER	Wireless buzzer	ON / OFF	-

MAIN BODY:

Tester Display	Test Part	Control Range	Diagnostic Note
TRNK/BDOR OPEN	Luggage compartment door open signal	ON / OFF	-
HAZARD	Hazard warning light	ON / OFF	-

DIAGNOSTIC TROUBLE CODE CHART

HINT:
If a trouble code is indicated during the DTC check, check the circuit listed for that code in the table below. Then proceed to the appropriate page.

Power door lock control system:

DTC Code	Detection Item	Trouble Area	See page
B1242	Wireless Door Lock Tuner Circuit Malfunction	1. Electrical key antenna 2. Door control receiver 3. Wire harness 4. Certification ECU	DL-139

ON-VEHICLE INSPECTION

1. SMART ACCESS SYSTEM WITH PUSH-BUTTON START OPERATION INSPECTION

HINT:
Refer to PROBLEM SYMPTOMS TABLE if the results of the following checks are not normal (See page DL-121).

(a) Check the entry unlock function.
  (1) Use the wireless lock operation to lock the doors. With the electrical key in your possession, touch a door's outside handle (touch sensor) and check that the door unlocks.

(b) Check the entry unlock operation's detection area.

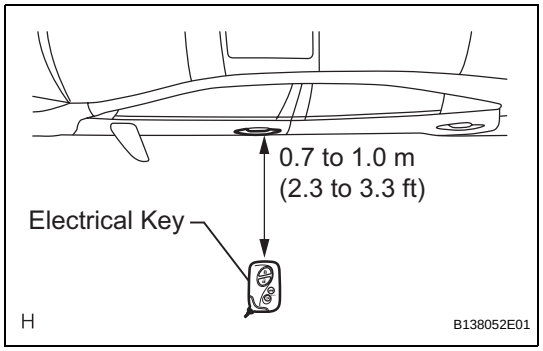

  (1) Step 1: Hold the electrical key at the same height as the door's outside handle (approximately 0.8 m (2.6 ft)). Pay attention to the direction of the electrical key in the illustration.
  (2) Step 2: When the electrical key is brought within 0.7 to 1.0 m (2.3 to 3.3 ft) of the vehicle, check that the system enters unlock standby mode.
  HINT:
  Unlock standby mode is signified by the electrical key's red LED illuminating.
  (3) Step 3: After the system enters unlock standby mode, touch the outside handle's sensor within 3 seconds. Check that the door unlocks.
  NOTICE:
  The electrical key cannot communicate with the system within a 0.2 m (0.6 ft) radius of each outside handle.

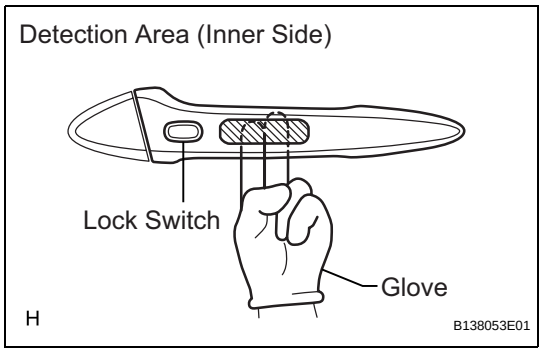

  (4) Step 4: Repeat steps 2 and 3 for the remaining doors.
  (5) Step 5: Inspect the door electrical key oscillator's response sensitivity. Wear protective gloves, set the system to unlock standby mode, and check that touching the inner side of the outside handle (the highlighted area in the illustration) with your finger causes the door to unlock.
  NOTICE:
  When touching the highlighted area, tapping too quickly or having extended contact may not trigger the sensor. In such a case, the door will not unlock.
  (6) Step 6: Repeat step 5 for the remaining doors.

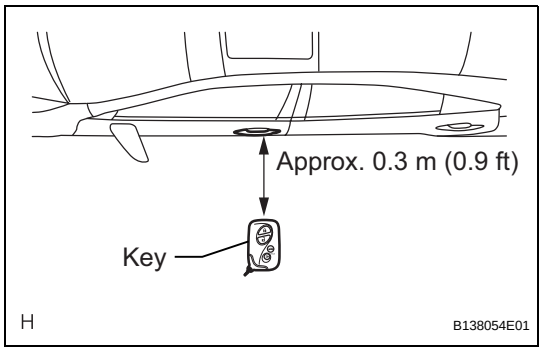

(c) Check the entry lock function.
  (1) Step 1: Close all of the vehicle's doors. With the electrical key in your possession outside the vehicle, check that pressing the lock switch locks the doors.
  (2) Step 2: Inspect the entry lock operation's detection area and the indoor electrical key antenna for wave leaks. Hold the electrical key at a height of 1 m (3.3 ft) (0.1 m (0.3 ft) above the lower edge of the window frame). Pay attention to the direction and position of the electrical key in the illustration. When the electrical key is approximately 0.3 m (0.9 ft) from the vehicle and the lock switch is pressed, check that the all doors lock and the warning buzzer (for when the electrical key is forgotten) does not sound. If the warning buzzer sounds, the indoor electrical key antenna may have a wave leak.
  HINT:
  Do not press the lock switch with the same hand that is holding the electrical key because the electrical key cannot communicate with the system within a 0.2 m (0.6 ft) radius of the outside handle. The doors will not lock.
  (3) Step 3: Repeat steps 1 and 2 for the remaining doors.

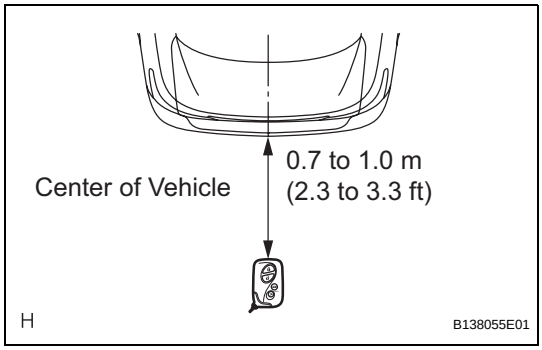

(d) Check the entry luggage compartment door open function.
  (1) Close the luggage compartment door. With the electrical key in your possession, check that pressing the power luggage door open switch opens the luggage compartment door.
  (2) Inspect the entry luggage compartment door open operation's detection area. Hold the electrical key at the same height as the power luggage door open switch (approximately 0.8 m (2.6 ft)) and align the key with the center of the rear of the vehicle. Pay attention to the direction of the electrical key shown in the illustration. When the electrical key is brought within 0.7 to 1.0 m (2.3 to 3.3 ft) of the vehicle, check that pressing the power luggage door open switch opens the luggage compartment door.

(e) Check the entry ignition function.
  (1) When the engine is off:
  With the electrical key in your possession and the brake pedal depressed, check that pressing the engine switch releases the steering wheel lock and starts the engine.
  HINT:
  The engine can be started only when the engine switch indicator illuminates in green.

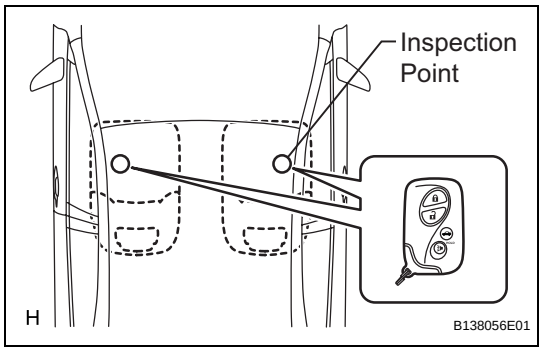

(2) When the engine is running:
With the electrical key in your possession, check that pressing the engine switch stops the engine.
HINT:
The shift position must be P to stop the engine.

(3) Inspect the entry ignition operation's detection area. Pay attention to the direction of the electrical key in the illustration. When the electrical key is in either of the 2 inspection points in the illustration, check that the engine can start.
NOTICE:
The engine cannot be started when the electrical key is on the instrument panel, rear package tray, or in the glove box.

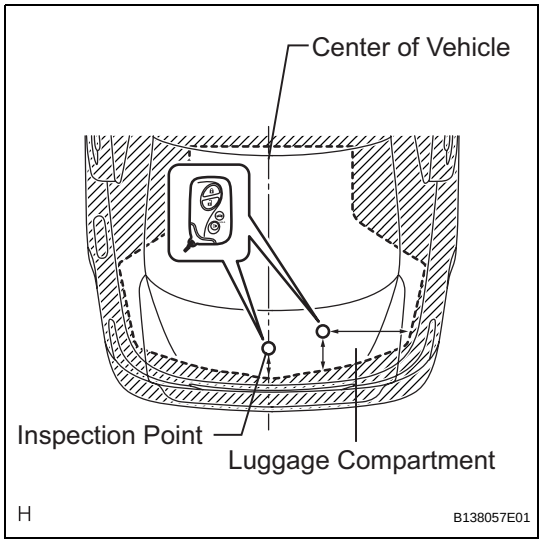

(f) Check the electrical key lock-in prevention function.

(1) Place the electrical key in the luggage compartment with all doors locked. Check that: 1) closing the luggage compartment door triggers the electrical key's wireless buzzer (which lasts approximately 2 seconds), and 2) pressing the power luggage door open switch opens the luggage compartment door.

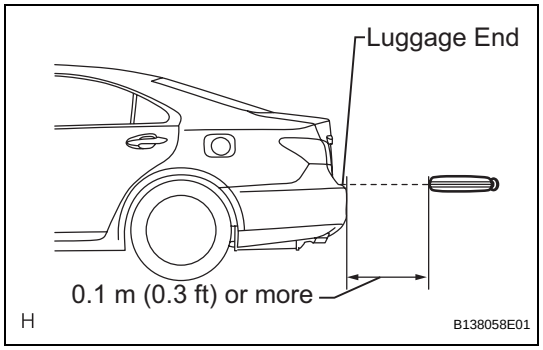

(2) Inspect the electrical key lock-in prevention's detection area. Pay attention to the direction of the electrical key shown in the illustration. When the electrical key is in either of the 2 inspection points in the illustration, check that: 1) closing the luggage compartment door sounds the electrical key's wireless buzzer, and 2) pressing the power luggage door open switch opens the luggage compartment door.
NOTICE:
If the electrical key is inside a metal storage item, such as a metal briefcase or metal box, the electrical key will not be detected by the system.

(3) Inspect the electrical key lock-in prevention's detection area and the entry door control receiver for wave leaks. Hold the electrical key at the same height as the lower edge of the luggage compartment door and align the key with the center of the rear of the vehicle. Pay attention to the direction and position of the electrical key shown in the illustration. When the electrical key is over 0.1 m (0.3 ft) from the vehicle's rear bumper, check that the electrical key's wireless buzzer does not sound.
If the warning buzzer sounds, the entry door control receiver may have a wave leak.

(g) Check the electrical key cancel function.
(1) While the engine switch is on (IG), check that the power luggage door open switch, entry ignition, electrical key lock-in prevention and warning are the only switch in the smart access system with push-button start that can be operated.
(2) While the electrical key cancel function (smart access system with push-button start cancel function) is ON, check that all functions in the smart access system with push-button start cannot be operated.

(h) Check the answer-back function (hazard warning light flashing and buzzer sounding).

Entry Operation	Hazard Warning Light	Buzzer
Entry Door Lock	Flashes once	Sounds once
Entry Door Unlock	Flashes twice	Sounds twice
Entry Luggage Compartment Door Open	Does not flash	Does not sound

(i) Check that the electrical key reminder warning buzzer sounds.
(1) Carry the electrical key in the vehicle and close the driver side door. Then turn the engine switch off or on (ACC). Turn the engine switch off and the steering lock is unlocked or engine switch is on (ACC).
(2) Open the driver side door and check that the buzzer sounds intermittently.

(j) Check that the electrical key reminder warning buzzer stops.
(1) When the buzzer is sounding, check that the buzzer stops sounding if either of the following is performed:
- Close the driver side door (front door courtesy light switch is off).
- Turn the engine switch on (IG, ACC) and lock the steering lock.

DTC	B1242	Wireless Door Lock Tuner Circuit Malfunction

DESCRIPTION

- The electrical key antenna and the door control receiver are used as antennas for the entry and wireless door lock functions of the smart access system with push-button start.
- The certification ECU decodes the requested smart access system with push-button start operation by identifying a key code based on electric waves received via the electrical key antenna and the door control receiver. The ECU then sends a command, according to the requested operation, to each ECU. (e.g. If door lock operation is requested, the ECU sends a door lock command to the main body ECU.)

DTC No.	DTC Detection Condition	Trouble Area
B1242	If the certification ECU detects that terminal RDA or RSSI is short-circuited, this DTC is stored.	• Electrical key antenna • Door control receiver • Wire harness • Certification ECU

WIRING DIAGRAM

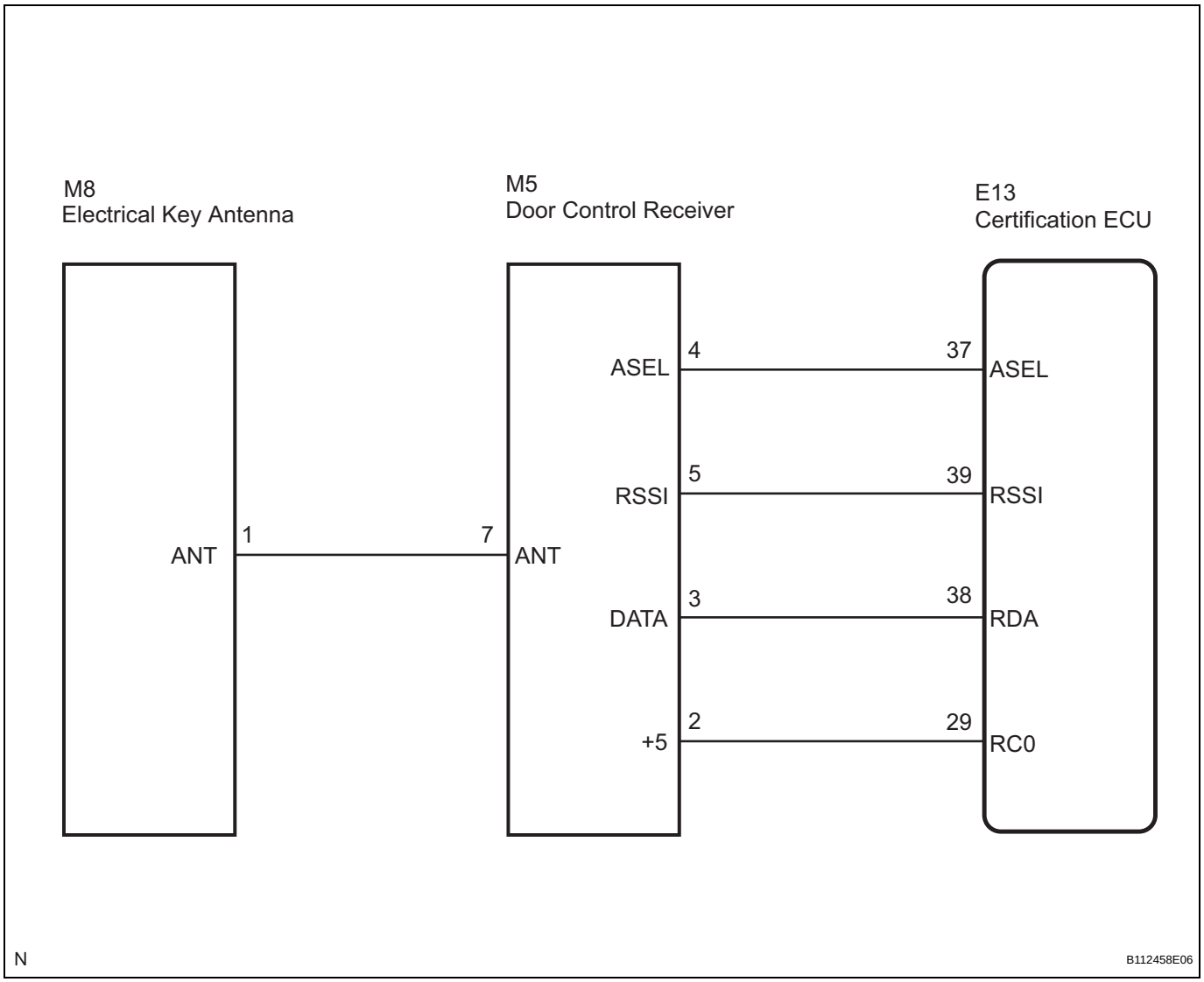

INSPECTION PROCEDURE

1	CHECK HARNESS AND CONNECTOR (CERTIFICATION ECU - DOOR CONTROL RECEIVER)

Certification ECU:

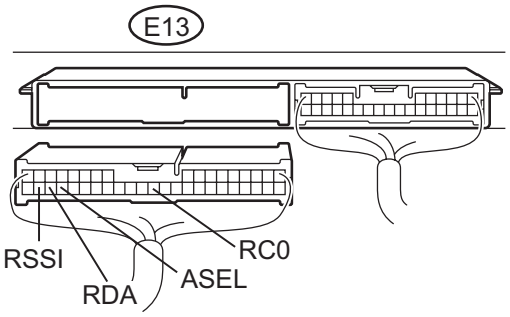

Door Control Receiver:

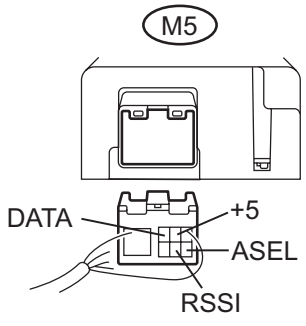

H B137962E02

(a) Disconnect the E13 ECU connector.
(b) Disconnect the M5 receiver connector.
(c) Measure the resistance according to the value(s) in the table below.

Standard resistance

Tester Connection (Symbols)	Condition	Specified Condition
E13-37 (ASEL) - M5-4 (ASEL)	Always	Below 1 Ω
E13-39 (RSSI) - M5-5 (RSSI)	Always	Below 1 Ω
E13-38 (RDA) - M5-3 (DATA)	Always	Below 1 Ω
E13-29 (RC0) - M5-2 (+5)	Always	Below 1 Ω
E13-37 (ASEL) - Body ground	Always	10 kΩ or higher
E13-39 (RSSI) - Body ground	Always	10 kΩ or higher
E13-38 (RDA) - Body ground	Always	10 kΩ or higher
E13-29 (RC0) - Body ground	Always	10 kΩ or higher

NG → **REPAIR OR REPLACE HARNESS OR CONNECTOR**

OK

DL

2 CHECK HARNESS AND CONNECTOR (DOOR CONTROL RECEIVER - ELECTRICAL KEY ANTENNA)

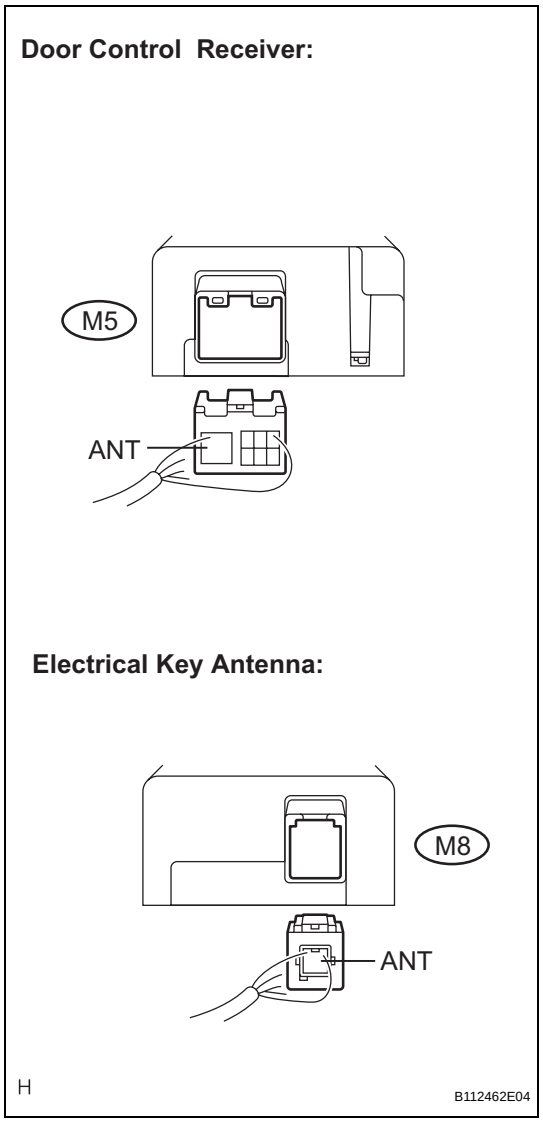

(a) Disconnect the M8 antenna connector.
(b) Measure the resistance according to the value(s) in the table below.
HINT:
Perform the measurement with the M5 receiver connector disconnected.

Standard resistance

Tester Connection (Symbols)	Condition	Specified Condition
M5-7 (ANT) - M8-1 (ANT)	Always	Below 1 Ω
M5-7 (ANT) - Body ground	Always	10 kΩ or higher

NG → **REPAIR OR REPLACE HARNESS OR CONNECTOR**

OK

3 CHECK AND REPLACE DOOR CONTROL RECEIVER (RECONFIRM DTC)

(a) Replace the receiver.
(b) Clear the DTCs and repeat the procedure to recheck for DTCs (See page DL-131).
OK:
DTC is not output.

OK → **END (RECEIVER IS DEFECTIVE)**

NG

DL

4	CHECK AND REPLACE ELECTRICAL KEY ANTENNA (RECONFIRM DTC)

(a) Replace the antenna.
(b) Clear the DTCs and repeat the procedure to recheck for DTCs (See page DL-131).
OK:
DTC is not output.

OK → **END (ANTENNA IS DEFECTIVE)**

NG

REPLACE CERTIFICATION ECU

Door Oscillator Circuit

DESCRIPTION

Door oscillators are built into each door. Each of them forms its own action area around its door and detects the presence of the electrical key.

WIRING DIAGRAM

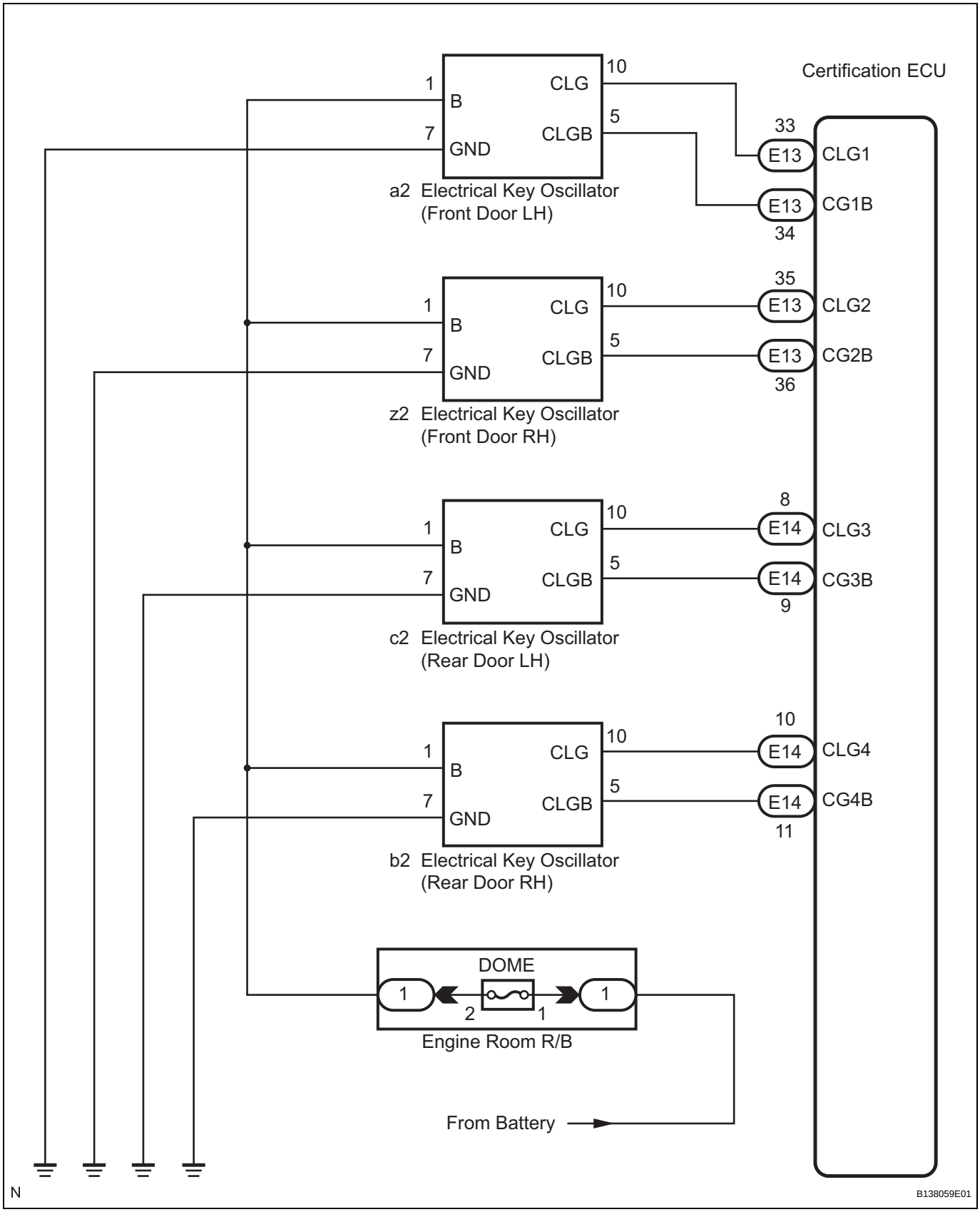

DL

INSPECTION PROCEDURE

1	INSPECT ELECTRICAL KEY OSCILLATOR

Electrical Key Oscillator:

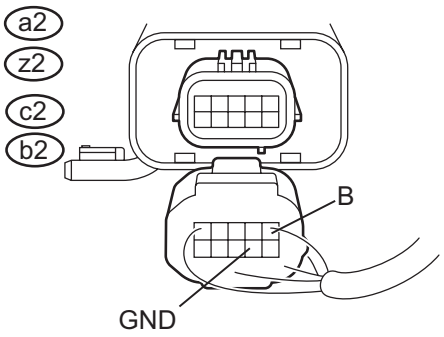

H B112463E05

(a) Disconnect the oscillator connectors.
(b) Measure the voltage according to the value(s) in the table below.

Standard voltage:

Front LH side

Tester Connection (Symbols)	Condition	Specified Condition
a2-1 (B) - a2-7 (GND)	Always	10 to 14 V

Front RH side

Tester Connection (Symbols)	Condition	Specified Condition
z2-1 (B) - z2-7 (GND)	Always	10 to 14 V

Rear LH side

Tester Connection (Symbols)	Condition	Specified Condition
c2-1 (B) - c2-7 (GND)	Always	10 to 14 V

Rear RH side

Tester Connection (Symbols)	Condition	Specified Condition
b2-1 (B) - b2-7 (GND)	Always	10 to 14 V

NG → **REPAIR OR REPLACE HARNESS OR CONNECTOR**

OK

DL

2	CHECK HARNESS AND CONNECTOR (ELECTRICAL KEY OSCILLATOR - CERTIFICATION ECU)

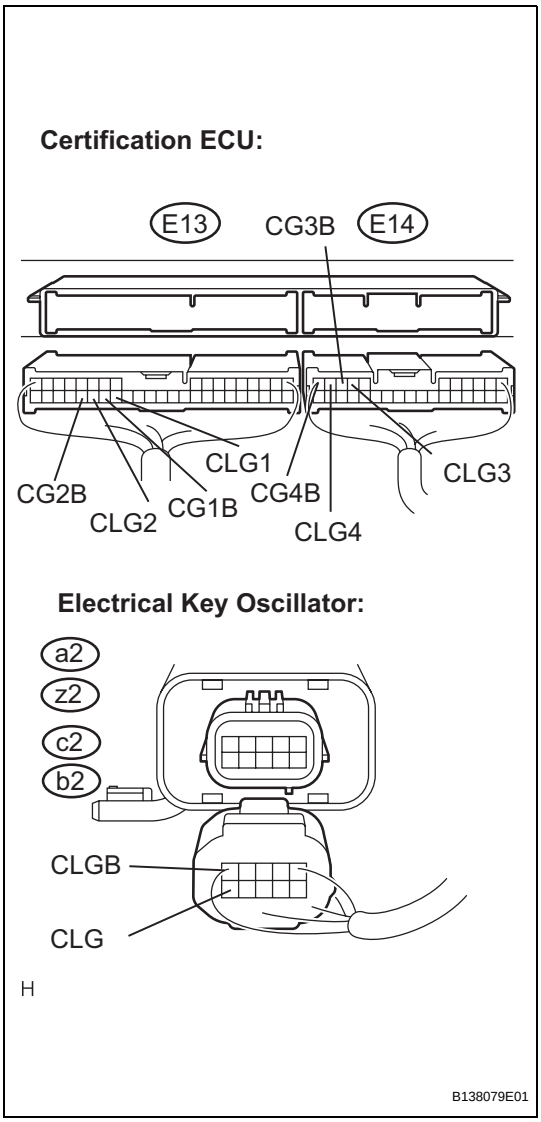

(a) Disconnect the E13 and E14 ECU connectors.
(b) Measure the resistance according to the value(s) in the table below.

Standard resistance:

Front LH side

Tester Connection (Symbols)	Condition	Specified Condition
E13-33 (CLG1) - a2-10 (CLG)	Always	Below 1 Ω
E13-34 (CG1B) - a2-5 (CLGB)	Always	Below 1 Ω
E13-33 (CLG1) - Body ground	Always	10 kΩ or higher
E13-34 (CG1B) - Body ground	Always	10 kΩ or higher

Front RH side

Tester Connection (Symbols)	Condition	Specified Condition
E13-35 (CLG2) - z2-10 (CLG)	Always	Below 1 Ω
E13-36 (CG2B) - z2-5 (CLGB)	Always	Below 1 Ω
E13-35 (CLG2) - Body ground	Always	10 kΩ or higher
E13-36 (CG2B) - Body ground	Always	10 kΩ or higher

Rear LH side

Tester Connection (Symbols)	Condition	Specified Condition
E14-8 (CLG3) - c2-10 (CLG)	Always	Below 1 Ω
E14-9 (CG3B) - c2-5 (CLGB)	Always	Below 1 Ω
E14-8 (CLG3) - Body ground	Always	10 kΩ or higher
E14-9 (CG3B) - Body ground	Always	10 kΩ or higher

Rear RH side

Tester Connection (Symbols)	Condition	Specified Condition
E14-10 (CLG4) - b2-10 (CLG)	Always	Below 1 Ω
E14-11 (CG4B) - b2-5 (CLGB)	Always	Below 1 Ω
E14-10 (CLG4) - Body ground	Always	10 kΩ or higher
E14-11 (CG4B) - Body ground	Always	10 kΩ or higher

NG → **REPAIR OR REPLACE HARNESS OR CONNECTOR**

OK

3	CHECK AND REPLACE ELECTRICAL KEY OSCILLATOR (CHECK OPERATION OF OSCILLATOR)

(a) Replace the door oscillator.

(b) Check that the entry LOCK/UNLOCK function operates normally.
OK:
Entry LOCK/UNLOCK function operates normally.

OK → **END (ELECTRICAL KEY OSCILLATOR IS DEFECTIVE)**

NG

4 PERFORM ACTIVE TEST BY INTELLIGENT TESTER (CERTIFICATION ECU OUTPUT SIGNAL)

Certification ECU:

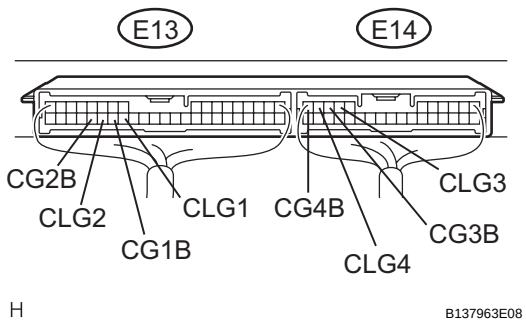

(a) Reconnect the ECU and the oscillator connectors.
(b) Connect the intelligent tester to the DLC3.
(c) Turn the engine switch on (IG).
(d) Enter the following menus: DIAGNOSIS / ENHANCED OBD II / ACTIVE TEST.
(e) Following the display on the tester, select the "ACTIVE TEST".
SMART ACCESS (Certification ECU):

Item	Vehicle Condition/Test Details
D TRANSMITTER	Door Oscillator ON/OFF
P TRANSMITTER	Door Oscillator ON/OFF
DR TRANSMITTER	Door Oscillator ON/OFF
PR TRANSMITTER	Door Oscillator ON/OFF

(f) Measure the frequency according to the value(s) in the table below.
Standard:
Front LH side

Tester Connection (Symbols)	Condition	Specified Condition
E13-33 (CLG1) - E13-34 (CG1B)	During ACTIVE TEST	Frequency is generated (higher than 0 Hz)

Front RH side

Tester Connection (Symbols)	Condition	Specified Condition
E13-35 (CLG2) - E13-36 (CG2B)	During ACTIVE TEST	Frequency is generated (higher than 0 Hz)

Rear LH side

Tester Connection (Symbols)	Condition	Specified Condition
E14-8 (CLG3) - E14-9 (CG3B)	During ACTIVE TEST	Frequency is generated (higher than 0 Hz)

Rear RH side

Tester Connection (Symbols)	Condition	Specified Condition
E14-10 (CLG4) - E14-11 (CG4B)	During ACTIVE TEST	Frequency is generated (higher than 0 Hz)

NG → **REPLACE CERTIFICATION ECU**

DL

OK

PROCEED TO NEXT CIRCUIT INSPECTION SHOWN IN PROBLEM SYMPTOMS TABLE

Entry Lock Switch Circuit

DESCRIPTION

The entry lock switches (trigger switch) are built into the door outside handles of the all doors. The certification ECU detects the conditions of each lock switch.

WIRING DIAGRAM

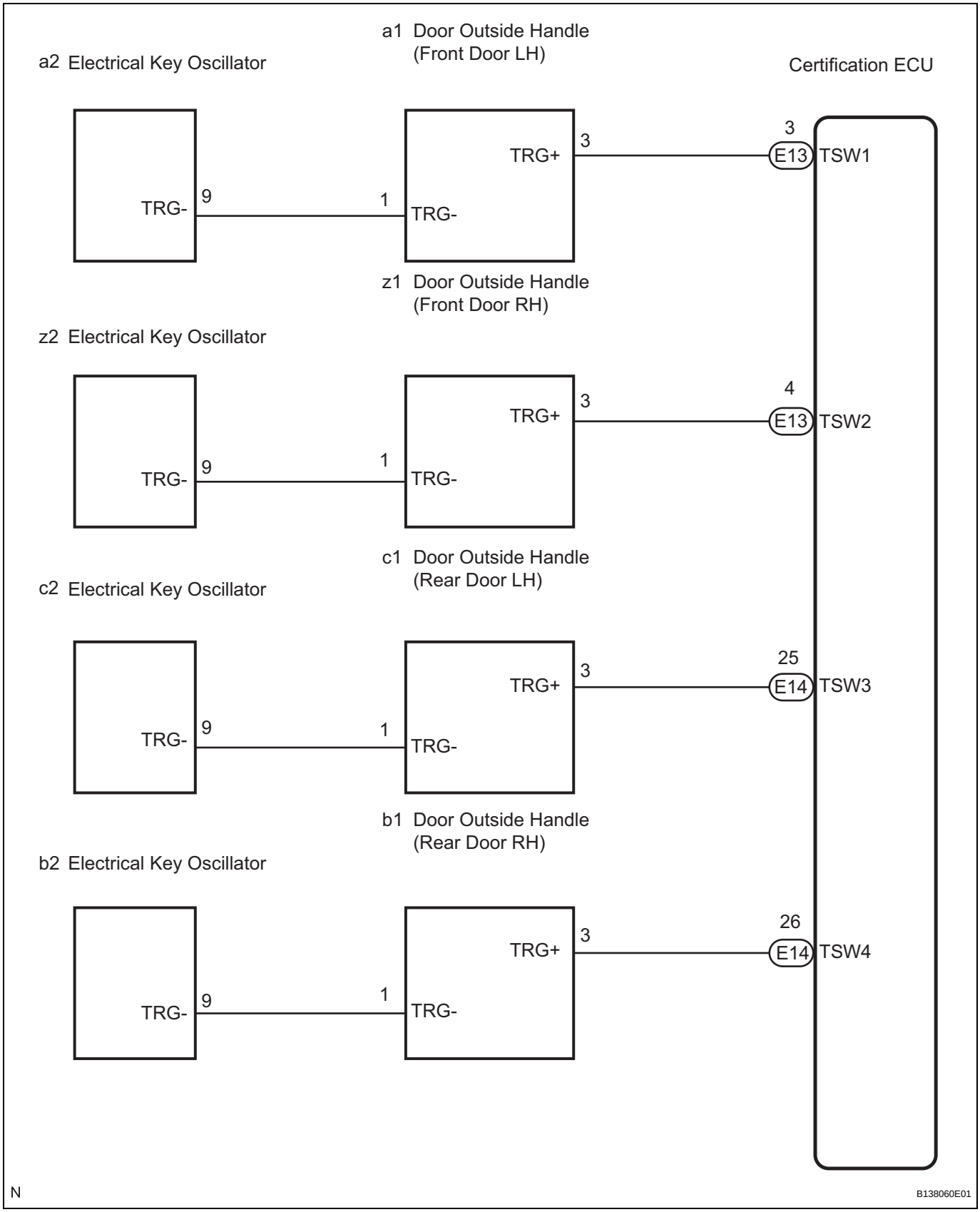

DL

INSPECTION PROCEDURE

1	INSPECT ENTRY LOCK SWITCH

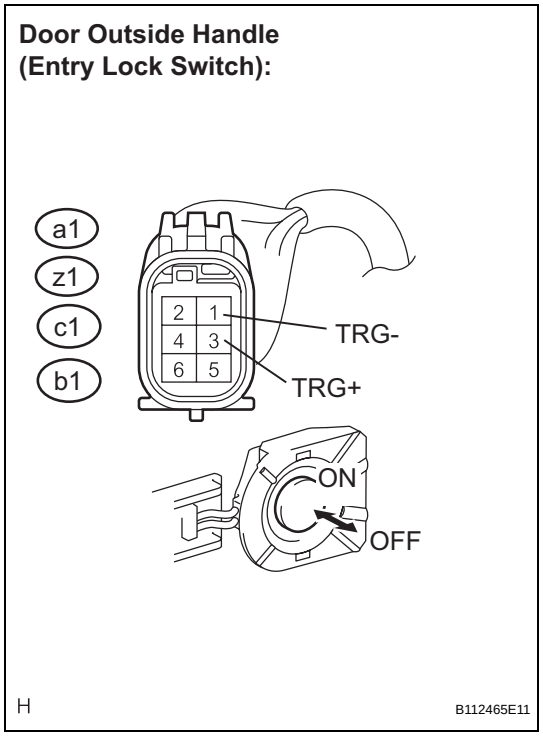

(a) Remove the outside handle.
(b) Disconnect the connectors.
(c) Measure the resistance according to the value(s) in the table below.

Standard resistance:

Front LH side

Tester Connection (Symbols)	Condition	Specified Condition
a1-1 (TRG-) - a1-3 (TRG+)	Lock switch not pushed	10 kΩ or higher
	Lock switch pushed	Below 1 Ω

Front RH side

Tester Connection (Symbols)	Condition	Specified Condition
z1-1 (TRG-) - z1-3 (TRG+)	Lock switch not pushed	10 kΩ or higher
	Lock switch pushed	Below 1 Ω

Rear LH side

Tester Connection (Symbols)	Condition	Specified Condition
c1-1 (TRG-) - c1-3 (TRG+)	Lock switch not pushed	10 kΩ or higher
	Lock switch pushed	Below 1 Ω

Rear RH side

Tester Connection (Symbols)	Condition	Specified Condition
b1-1 (TRG-) - b1-3 (TRG+)	Lock switch not pushed	10 kΩ or higher
	Lock switch pushed	Below 1 Ω

NG → **REPLACE OUTSIDE HANDLE ASSEMBLY**

OK

DL

2	CHECK HARNESS AND CONNECTOR (CERTIFICATION ECU - ENTRY LOCK SWITCH)

Certification ECU:

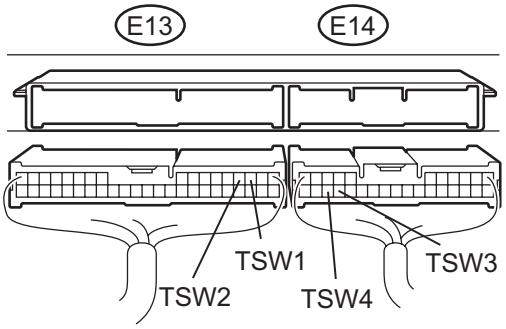

Door Outside Handle (Lock Switch) Wire Harness Side:

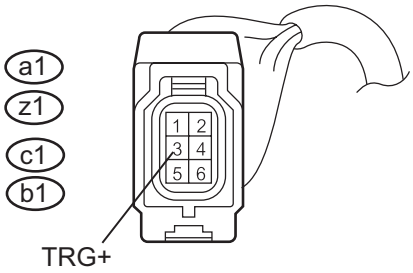

H

B138080E01

(a) Disconnect the E13 and E14 ECU connectors.

(b) Measure the resistance according to the value(s) in the table below.

Standard resistance:

Front LH side

Tester Connection (Symbols)	Condition	Specified Condition
E13-3 (TSW1) - a1-3 (TRG+)	Always	Below 1 Ω
E13-3 (TSW1) - Body ground	Always	10 kΩ or higher

Front RH side

Tester Connection (Symbols)	Condition	Specified Condition
E13-4 (TSW2) - z1-3 (TRG+)	Always	Below 1 Ω
E13-4 (TSW2) - Body ground	Always	10 kΩ or higher

Rear LH side

Tester Connection (Symbols)	Condition	Specified Condition
E14-25 (TSW3) - c1-3 (TRG+)	Always	Below 1 Ω
E14-25 (TSW3) - Body ground	Always	10 kΩ or higher

Rear RH side

Tester Connection (Symbols)	Condition	Specified Condition
E14-26 (TSW4) - b1-3 (TRG+)	Always	Below 1 Ω
E14-26 (TSW4) - Body ground	Always	10 kΩ or higher

NG → **REPAIR OR REPLACE HARNESS OR CONNECTOR**

OK

DL

3 CHECK HARNESS AND CONNECTOR (ELECTRICAL KEY OSCILLATOR - ENTRY LOCK SWITCH)

Door Outside Handle (Lock Switch) Wire Harness Side:

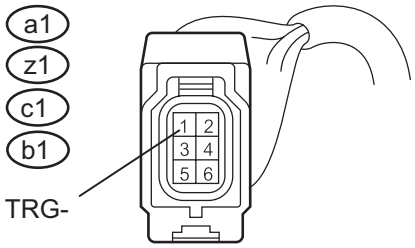

Electrical Key Oscillator:

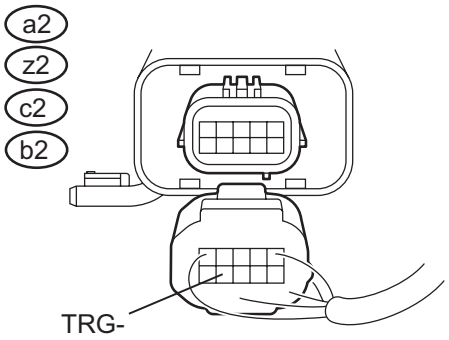

H B112467E10

(a) Disconnect the electrical key oscillator connector.
(b) Measure the resistance according to the value(s) in the table below.

Standard resistance:

Front LH side

Tester Connection (Symbols)	Condition	Specified Condition
a2-9 (TRG-) - a1-1 (TRG-)	Always	Below 1 Ω
a2-9 (TRG-) - Body ground	Always	10 kΩ or higher

Front RH side

Tester Connection (Symbols)	Condition	Specified Condition
z2-9 (TRG-) - z1-1 (TRG-)	Always	Below 1 Ω
z2-9 (TRG-) - Body ground	Always	10 kΩ or higher

Rear LH side

Tester Connection (Symbols)	Condition	Specified Condition
c2-9 (TRG-) - c1-1 (TRG-)	Always	Below 1 Ω
c2-9 (TRG-) - Body ground	Always	10 kΩ or higher

Rear RH side

Tester Connection (Symbols)	Condition	Specified Condition
b2-9 (TRG-) - b1-1 (TRG-)	Always	Below 1 Ω
b2-9 (TRG-) - Body ground	Always	10 kΩ or higher

NG → **REPAIR OR REPLACE HARNESS OR CONNECTOR**

OK

4 CHECK AND REPLACE ELECTRICAL KEY OSCILLATOR

(a) Replace the electrical key oscillator.
(b) Check that the entry LOCK/UNLOCK function operates normally.

OK:

Entry LOCK/UNLOCK function operates normally.

NG → **PROCEED TO NEXT CIRCUIT INSPECTION SHOWN IN PROBLEM SYMPTOMS TABLE**

OK

END (ELECTRICAL KEY OSCILLATOR IS DEFECTIVE)

DL

Touch Sensor Circuit

DESCRIPTION

The touch sensor are built into the door outside handles of the all doors. This circuit receives a signal indicating whether a touch sensor signal is detected.

WIRING DIAGRAM

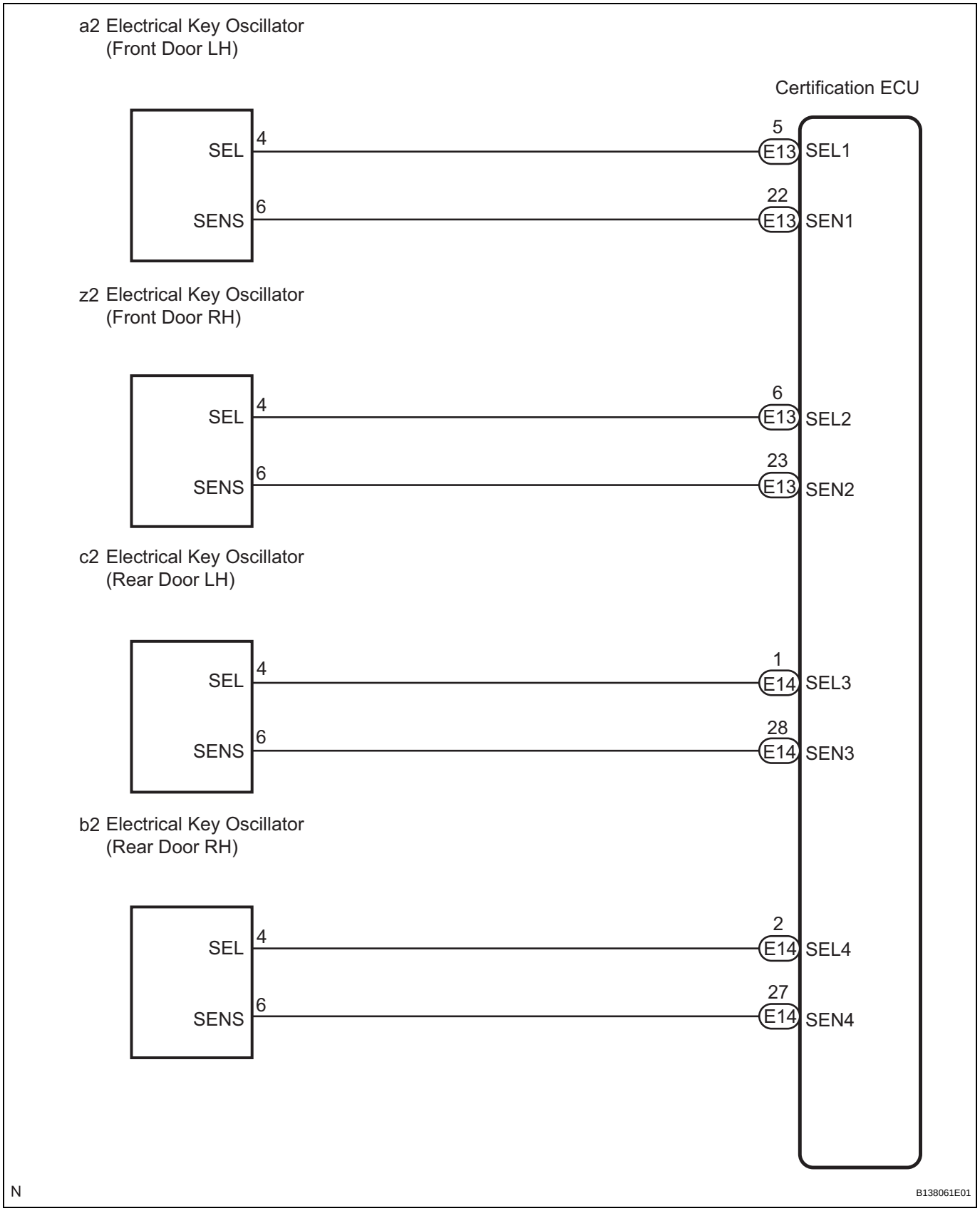

INSPECTION PROCEDURE

1	READ VALUE OF INTELLIGENT TESTER

(a) Connect the intelligent tester to the DLC3.
(b) Turn the engine switch on (IG).
(c) Following the display on the tester, select "DATA LIST".

SMART ACCESS (Certification ECU):

Item	Measurement Item/Range (Display)	Normal Condition	Diagnostic Note
D TOUCH SENSOR	Status of touch sensor front LH/ ON or OFF	ON: Touch sensor is touched OFF: Touch sensor is not touched	-
P TOUCH SENSOR	Status of touch sensor front RH/ ON or OFF	ON: Touch sensor is touched OFF: Touch sensor is not touched	-
DR TOUCH SENSOR	Rear door touch sensor LH/ON or OFF	ON: Sensor is touched OFF: Sensor is not touched	-
PR TOUCH SENSOR	Rear door touch sensor RH/ON or OFF	ON: Sensor is touched OFF: Sensor is not touched	-

DL

OK:
"ON" (screen is touched) or "OFF" (screen is not touched) appears on the tester screen.

OK → **PROCEED TO NEXT CIRCUIT INSPECTION SHOWN IN PROBLEM SYMPTOMS TABLE**

NG

2 CHECK HARNESS AND CONNECTOR (CERTIFICATION ECU - ELECTRICAL KEY OSCILLATOR)

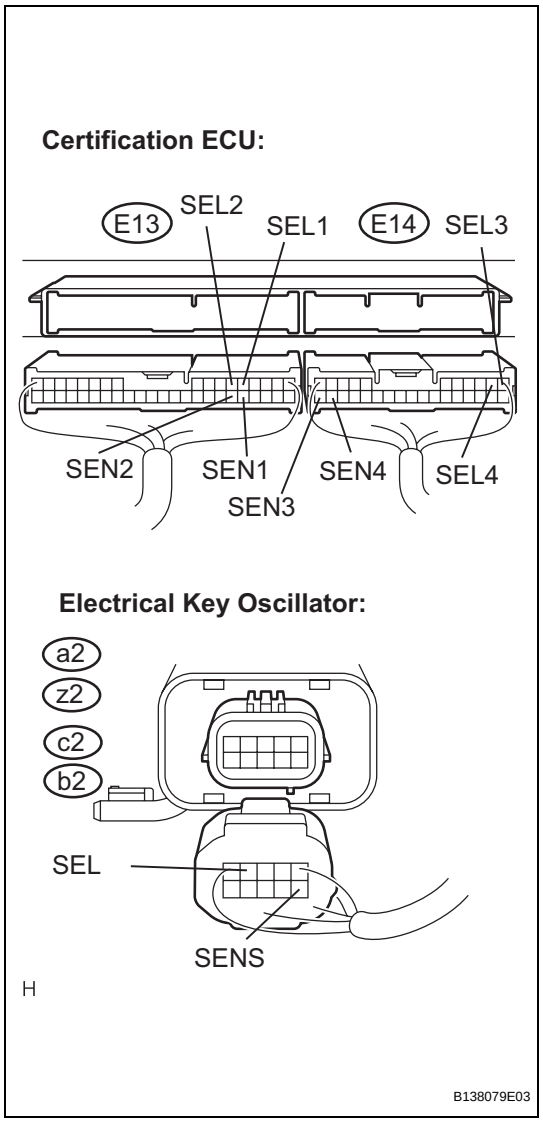

(a) Disconnect the E13 and E14 ECU connectors.
(b) Disconnect the oscillator connectors.
(c) Measure the resistance according to the value(s) in the table below.

Standard resistance:

Front LH side

Tester Connection (Symbols)	Condition	Specified Condition
E13-5 (SEL1) - a2-4 (SEL)	Always	Below 1 Ω
E13-22 (SEN1) - a2-6 (SENS)	Always	Below 1 Ω
E13-5 (SEL1) - Body ground	Always	10 kΩ or higher
E13-22 (SEN1) - Body ground	Always	10 kΩ or higher

Front RH side

Tester Connection (Symbols)	Condition	Specified Condition
E13-6 (SEL2) - z2-4 (SEL)	Always	Below 1 Ω
E13-23 (SEN2) - z2-6 (SENS)	Always	Below 1 Ω
E13-6 (SEL2) - Body ground	Always	10 kΩ or higher
E13-23 (SEN2) - Body ground	Always	10 kΩ or higher

Rear LH side

Tester Connection (Symbols)	Condition	Specified Condition
E14-1 (SEL3) - c2-4 (SEL)	Always	Below 1 Ω
E14-28 (SEN3) - c2-6 (SENS)	Always	Below 1 Ω
E14-1 (SEL3) - Body ground	Always	10 kΩ or higher
E14-28 (SEN3) - Body ground	Always	10 kΩ or higher

Rear RH side

Tester Connection (Symbols)	Condition	Specified Condition
E14-2 (SEL4) - b2-4 (SEL)	Always	Below 1 Ω
E14-27 (SEN4) - b2-6 (SENS)	Always	Below 1 Ω
E14-2 (SEL4) - Body ground	Always	10 kΩ or higher
E14-27 (SEN4) - Body ground	Always	10 kΩ or higher

NG → **REPAIR OR REPLACE HARNESS OR CONNECTOR**

OK

3 CHECK AND REPLACE ELECTRICAL KEY OSCILLATOR (CHECK OPERATION OF OSCILLATOR)

(a) Replace the electrical key oscillator.
(b) Check that the entry UNLOCK function operates normally.

OK:

Entry UNLOCK function operates normally.

OK → **END (ELECTRICAL KEY OSCILLATOR IS DEFECTIVE)**

NG

4 INSPECT CERTIFICATION ECU

Certification ECU:

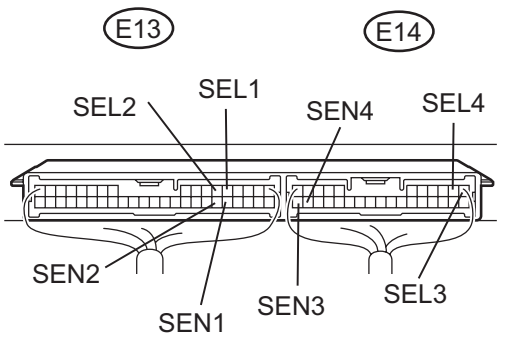

(a) Reconnect the ECU and the oscillator connectors.
(b) Connect the intelligent tester to the DLC3.
(c) Turn the engine switch on (IG).
(d) Measure the voltage according to the value(s) in the table below.

Standard voltage:

Front LH side

Tester Connection (Symbols)	Condition	Specified Condition
E13-5 (SEL1) - Body ground	Move the key more than 5 m (16.4 ft) away from the front door LH	10 to 14 V
E13-5 (SEL1) - Body ground	Bring key to the outside handle	Below 1 V
E13-22 (SEN1) - Body ground	Front door LH outside handle is not held (Bring the electrical key to the outside handle)	10 to 14 V
E13-22 (SEN1) - Body ground	Front door LH outside handle is held	Below 1 V

Front RH side

Tester Connection (Symbols)	Condition	Specified Condition
E13-6 (SEL2) - Body ground	Move the key more than 5 m (16.4 ft) away from the front door RH	10 to 14 V
E13-6 (SEL2) - Body ground	Bring key to the outside handle	Below 1 V
E13-23 (SEN2) - Body ground	Front door RH outside handle is not held (Bring the electrical key to the outside handle)	10 to 14 V
E13-23 (SEN2) - Body ground	Front door RH outside handle is held	Below 1 V

Rear LH side

Tester Connection (Symbols)	Condition	Specified Condition
E14-1 (SEL3) - Body ground	Move the key more than 5 m (16.4 ft) away from the rear door LH	10 to 14 V
E14-1 (SEL3) - Body ground	Bring key to the outside handle	Below 1 V
E14-28 (SEN3) - Body ground	Rear door LH outside handle is not held (Bring the electrical key outside the handle)	10 to 14 V
E14-28 (SEN3) - Body ground	Rear door LH outside handle is held	Below 1 V

Rear RH side

Tester Connection (Symbols)	Condition	Specified Condition
E14-2 (SEL4) - Body ground	Move the key more than 5 m (16.4 ft) away from the rear door RH	10 to 14 V
E14-2 (SEL4) - Body ground	Bring key to the outside handle	Below 1 V
E14-27 (SEN4) - Body ground	Rear door RH outside handle is not held (Bring the electrical key outside the handle)	10 to 14 V
E14-27 (SEN4) - Body ground	Rear door RH outside handle is held	Below 1 V

NG → **REPLACE CERTIFICATION ECU**

OK

PROCEED TO NEXT CIRCUIT INSPECTION SHOWN IN PROBLEM SYMPTOMS TABLE

Antenna Circuit

DESCRIPTION

The antenna are built into the door outside handles of the all doors. Terminals ANT1 and ANT2 of the antenna (door outside handle) detect if the electrical key is within the action area around the door outside handle.

WIRING DIAGRAM

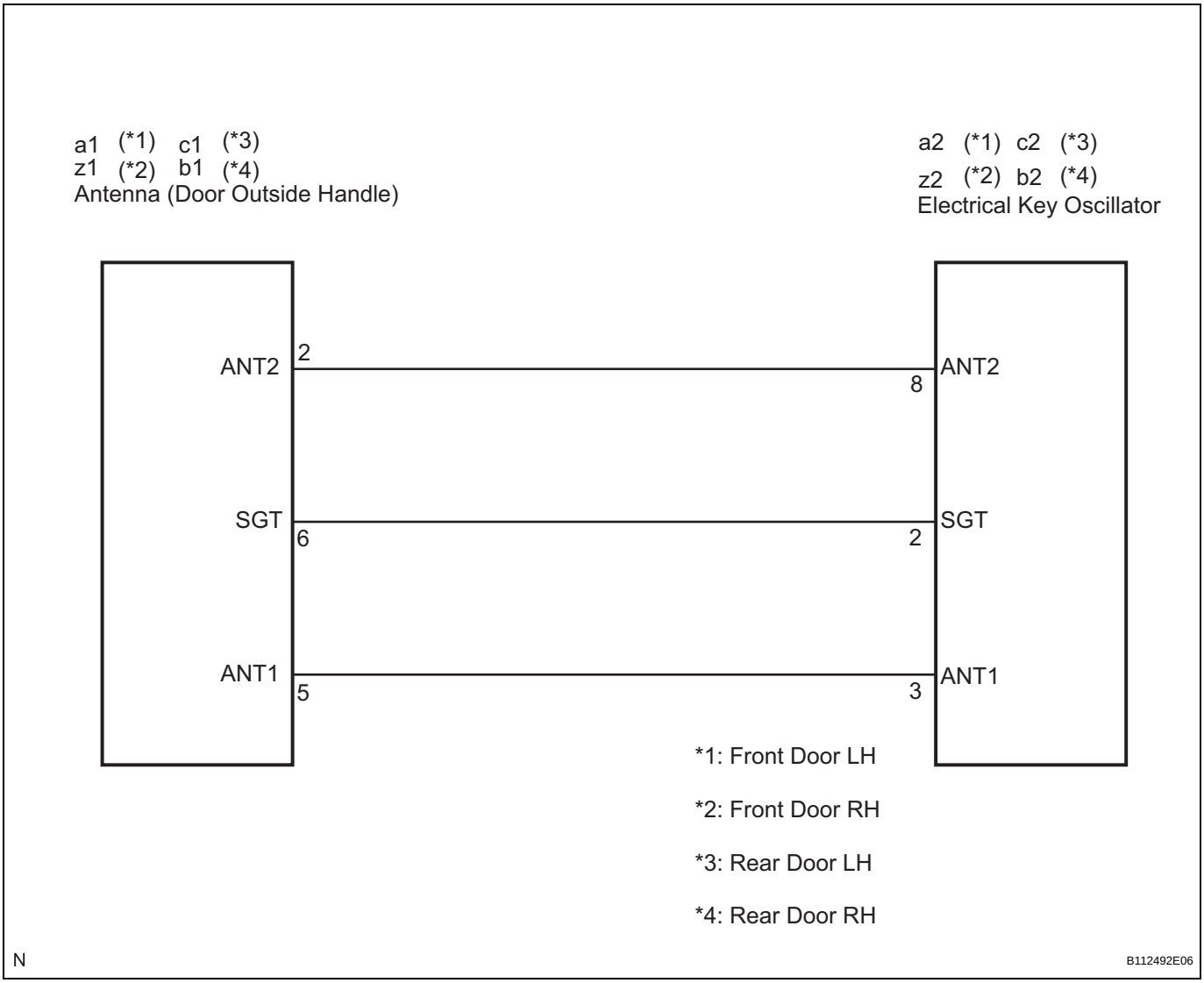

DL

INSPECTION PROCEDURE

1 CHECK HARNESS AND CONNECTOR (ELECTRICAL KEY OSCILLATOR - ANTENNA)

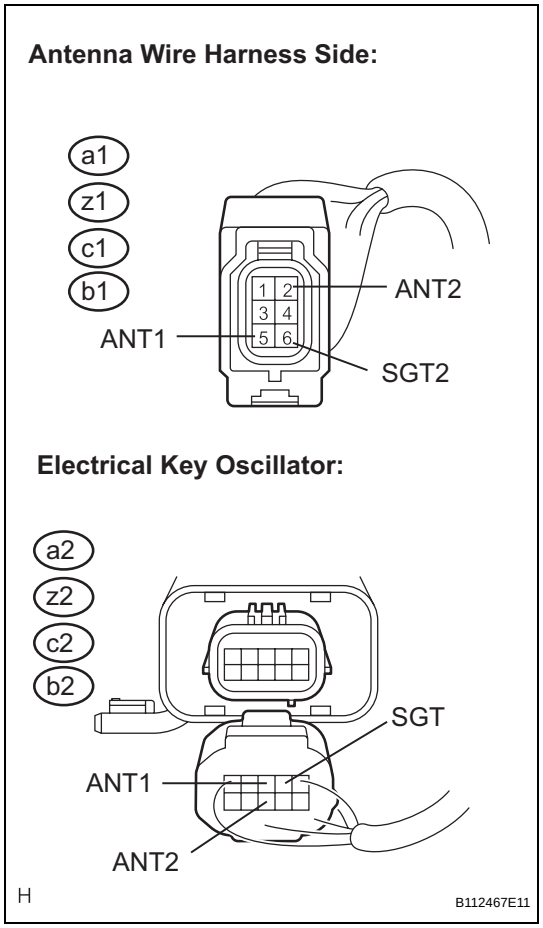

(a) Remove the outside handle.
(b) Disconnect the antenna and door oscillator connectors.
(c) Measure the resistance according to the value(s) in the table below.

Standard resistance

Tester Connection (Symbols)	Condition	Specified Condition
a1 (*1), z1 (*2), c1 (*3), b1 (*4)-2 (ANT2) - a2 (*1), z2 (*2), c2 (*3), b2 (*4)-8 (ANT2)	Always	Below 1 Ω
a1 (*1), z1 (*2), c1 (*3), b1 (*4)-6 (SGT) - a2 (*1), z2 (*2), c2 (*3), b2 (*4)-2 (SGT)	Always	Below 1 Ω
a1 (*1), z1 (*2), c1 (*3), b1 (*4)-5 (ANT1) - a2 (*1), z2 (*2), c2 (*3), b2 (*4)-3 (ANT1)	Always	Below 1 Ω
a1 (*1), z1 (*2), c1 (*3), b1 (*4)-2 (ANT2) - Body ground	Always	10 kΩ or higher
a1 (*1), z1 (*2), c1 (*3), b1 (*4)-6 (SGT) - Body ground	Always	10 kΩ or higher
a1 (*1), z1 (*2), c1 (*3), b1 (*4)-5 (ANT1) - Body ground	Always	10 kΩ or higher

*1: Front Door LH
*2: Front Door RH
*3: Rear Door LH
*4: Rear Door RH

NG → **REPAIR OR REPLACE HARNESS OR CONNECTOR**

OK

2 CHECK AND REPLACE DOOR OUTSIDE HANDLE

(a) Replace the door outside handle.
(b) Check that the entry LOCK/UNLOCK function operates normally.

OK:

Entry LOCK/UNLOCK function operates normally.

NG → **PROCEED TO NEXT CIRCUIT INSPECTION SHOWN IN PROBLEM SYMPTOMS TABLE**

OK

END (DOOR OUTSIDE HANDLE IS DEFECTIVE)

DL

Luggage Oscillator Circuit

DESCRIPTION

The certification ECU activates the inner and outer luggage compartment oscillators. The power is supplied from the certification ECU to both the inner and outer luggage compartment oscillators. The inner and outer luggage compartment oscillator circuits have the same wiring. If the entry luggage compartment function has a problem, check both the inner and outer luggage compartment oscillator circuits.

WIRING DIAGRAM

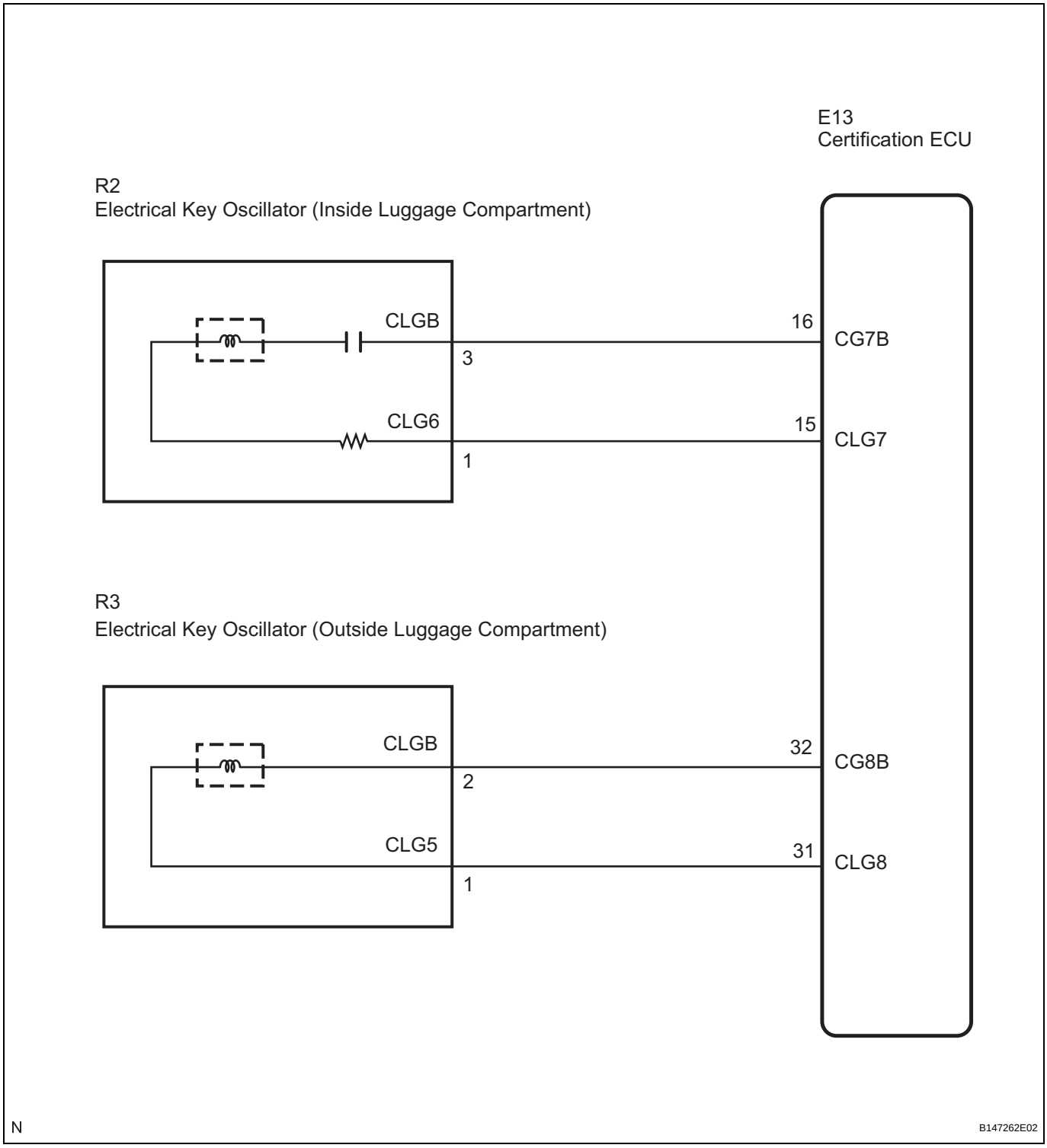

INSPECTION PROCEDURE

1	CHECK HARNESS AND CONNECTOR (CERTIFICATION ECU - ELECTRICAL KEY OSCILLATOR)

Certification ECU:

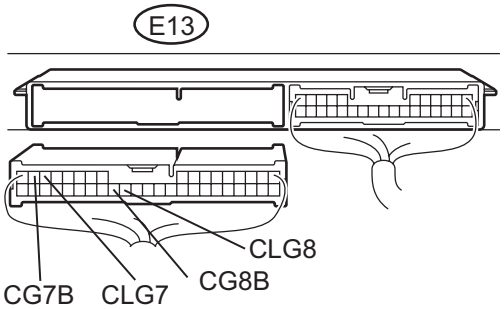

Electrical Key Oscillator

(Inside Luggage Compartment):

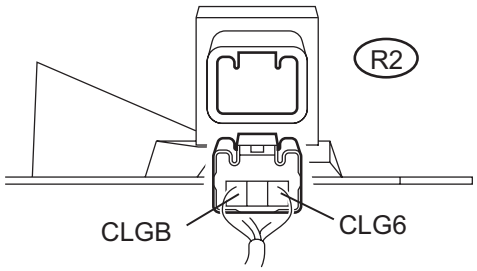

Electrical Key Oscillator

(Outside Luggage Compartment):

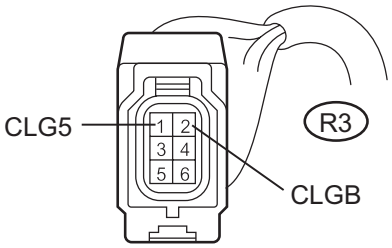

H B137965E02

(a) Disconnect the E13 ECU connector.
(b) Disconnect the oscillator connectors.
(c) Measure the resistance according to the value(s) in the table below.

Standard resistance:
Inside Luggage Compartment

Tester Connection (Symbols)	Condition	Specified Condition
E13-16 (CG7B) - R2-3 (CLGB)	Always	Below 1 Ω
E13-15 (CLG7) - R2-1 (CLG6)	Always	Below 1 Ω
E13-16 (CG7B) - Body ground	Always	10 kΩ or higher
E13-15 (CLG7) - Body ground	Always	10 kΩ or higher

Outside Luggage Compartment

Tester Connection (Symbols)	Condition	Specified Condition
E13-32 (CG8B) - R3-2 (CLGB)	Always	Below 1 Ω
E13-31 (CLG8) - R3-1 (CLG5)	Always	Below 1 Ω
E13-32 (CG8B) - Body ground	Always	10 kΩ or higher
E13-31 (CLG8) - Body ground	Always	10 kΩ or higher

NG → **REPAIR OR REPLACE HARNESS OR CONNECTOR**

OK

DL

2 CHECK AND REPLACE ELECTRICAL KEY OSCILLATOR

(a) Replace the electrical key oscillator.
(b) Check that the luggage compartment door entry LOCK/UNLOCK function operates normally.
OK:
Luggage compartment door entry LOCK/UNLOCK function operates normally.

OK → **END (ELECTRICAL KEY OSCILLATOR IS DEFECTIVE)**

NG

3 PERFORM ACTIVE TEST BY INTELLIGENT TESTER

DL

Certification ECU:

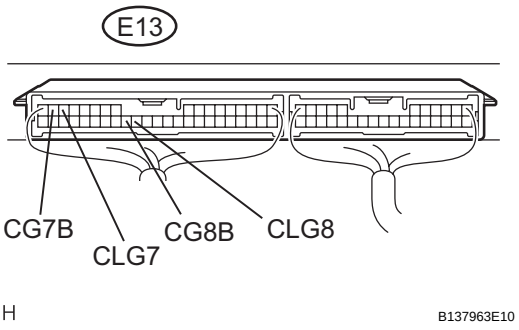

(a) Reconnect the oscillator and the ECU connectors.
(b) Connect the intelligent tester to the DLC3.
(c) Turn the engine switch on (IG).
(d) Following the display on the tester, select the "ACTIVE TEST".
SMART ACCESS (Certification ECU):

Item	Vehicle Condition/Test Details
IN-BDR TRNSMTTR	Electrical key oscillator (Luggage compartment inner) ON/OFF
BDOOR TRNSMTTR	Electrical key oscillator (Luggage compartment outer) ON/OFF

(e) Measure the frequency according to the value(s) in the table below.
Standard:
Inside Luggage Compartment

Tester Connection (Symbols)	Condition	Specified Condition
E13-16 (CG7B) - E13-15 (CLG7)	During ACTIVE TEST	Frequency is generated (higher than 0 Hz)

Outside Luggage Compartment

Tester Connection (Symbols)	Condition	Specified Condition
E13-32 (CG8B) - E13-31 (CLG8)	During ACTIVE TEST	Frequency is generated (higher than 0 Hz)

NG → **REPLACE CERTIFICATION ECU**

OK

PROCEED TO NEXT CIRCUIT INSPECTION SHOWN IN PROBLEM SYMPTOMS TABLE

Room Oscillator Circuit

DESCRIPTION

The certification ECU activates the electrical key oscillators (console and rear seat). The power is supplied from the certification ECU to both the electrical key oscillators (console and rear seat). The electrical key oscillators (console and rear seat) circuits have the same wiring. If the smart access system with push-button start does not operate properly inside the vehicle, check both the electrical key oscillators (console and rear seat) circuits.

WIRING DIAGRAM

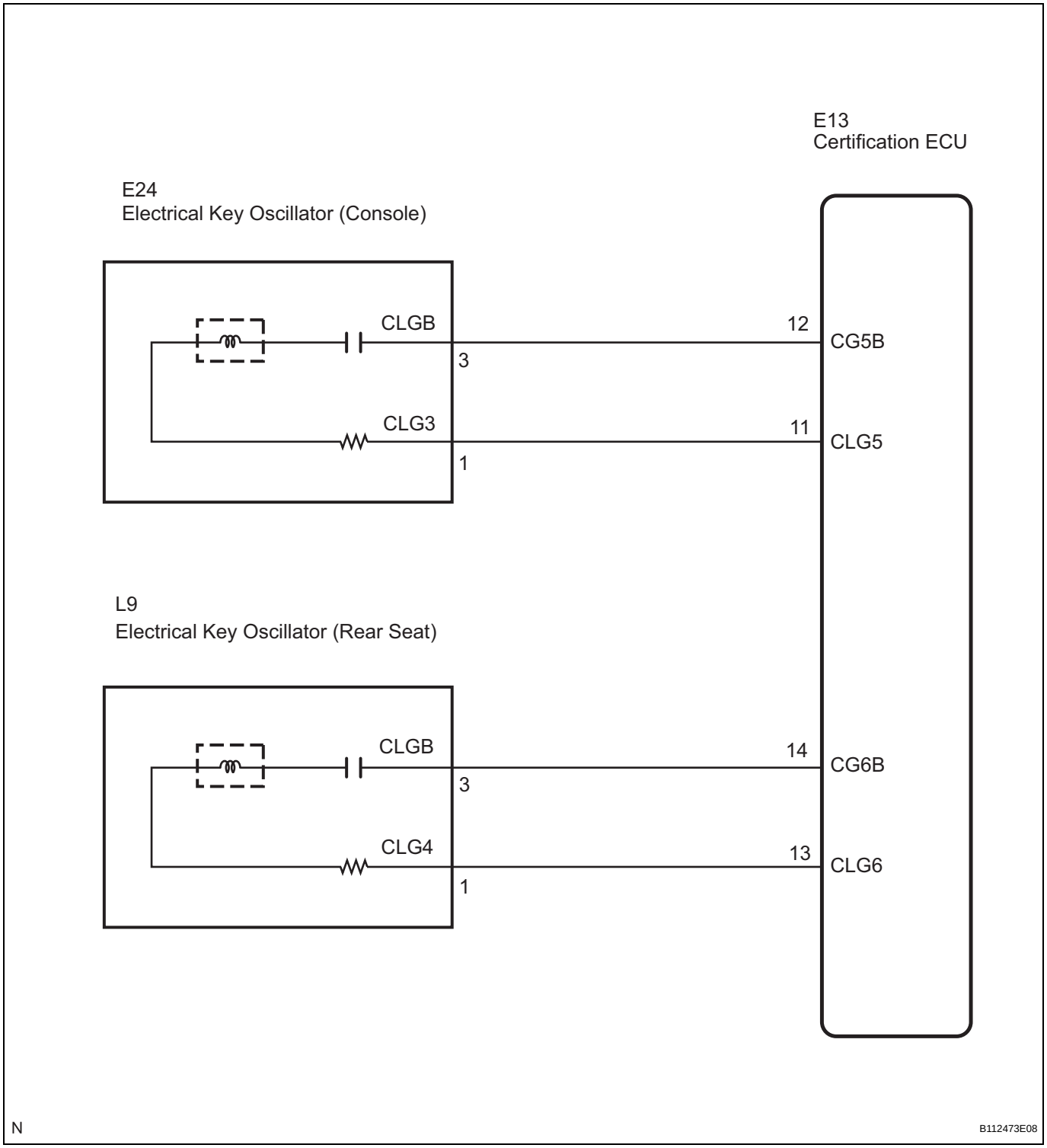

INSPECTION PROCEDURE

1	CHECK HARNESS AND CONNECTOR (CERTIFICATION ECU - ELECTRICAL KEY OSCILLATOR)

Certification ECU:

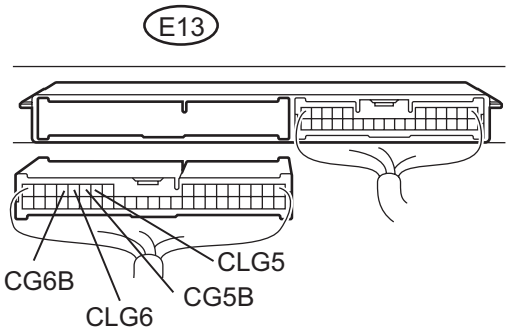

Electrical Key Oscillator (Console):

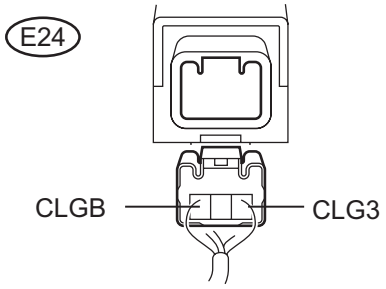

Electrical Key Oscillator (Rear Seat):

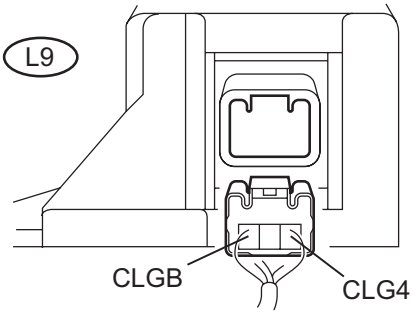

H B137966E02

(a) Disconnect the E13 ECU connector.
(b) Disconnect the oscillator connectors.
(c) Measure the resistance according to the value(s) in the table below.

Standard resistance:

Console

Tester Connection (Symbols)	Condition	Specified Condition
E13-12 (CG5B) - E24-3 (CLGB)	Always	Below 1 Ω
E13-11 (CLG5) - E24-1 (CLG3)	Always	Below 1 Ω
E13-12 (CG5B) - Body ground	Always	10 kΩ or higher
E13-11 (CLG5) - Body ground	Always	10 kΩ or higher

Rear Seat

Tester Connection (Symbols)	Condition	Specified Condition
E13-14 (CG6B) - L9-3 (CLGB)	Always	Below 1 Ω
E13-13 (CLG6) - L9-1 (CLG4)	Always	Below 1 Ω
E13-14 (CG6B) - Body ground	Always	10 kΩ or higher
E13-13 (CLG6) - Body ground	Always	10 kΩ or higher

NG → **REPAIR OR REPLACE HARNESS OR CONNECTOR**

OK

2	CHECK AND REPLACE ELECTRICAL KEY OSCILLATOR

(a) Replace the electrical key oscillator.
(b) Check that the entry LOCK/UNLOCK function operates normally.
OK:
Entry LOCK/UNLOCK function operates normally.

OK → **END (ELECTRICAL KEY OSCILLATOR IS DEFECTIVE)**

NG

3	PERFORM ACTIVE TEST BY INTELLIGENT TESTER (CERTIFICATION ECU OUTPUT SIGNAL)

Certification ECU:

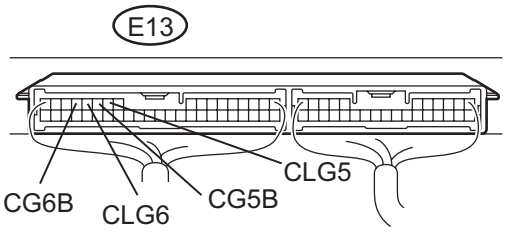

H B137963E11

(a) Reconnect the oscillator and the ECU connectors.
(b) Connect the intelligent tester to the DLC3.
(c) Turn the engine switch on (IG).
(d) Following the display on the tester, select the "ACTIVE TEST".
SMART ACCESS (Certification ECU):

Item	Vehicle Condition/Test Details
FR TRANSMITTER	Electrical key oscillator (console) ON/OFF
RR TRANSMITTER	Electrical key oscillator (rear seat) ON/OFF

(e) Measure the frequency according to the value(s) in the table below.
Standard:
Console

Tester Connection (Symbols)	Condition	Specified Condition
E13-12 (CG5B) - E13-11 (CLG5)	During ACTIVE TEST	Frequency is generated (higher than 0 Hz)

Rear Seat

Tester Connection (Symbols)	Condition	Specified Condition
E13-14 (CG6B) - E13-13 (CLG6)	During ACTIVE TEST	Frequency is generated (higher than 0 Hz)

NG → **REPLACE CERTIFICATION ECU**

OK

PROCEED TO NEXT CIRCUIT INSPECTION SHOWN IN PROBLEM SYMPTOMS TABLE

Luggage Compartment Door Open Switch Circuit

DESCRIPTION

If the certification ECU detects that the luggage compartment open switch is pressed when the driver is carrying the electrical key or when the electrical key is unlocked in the luggage compartment door, the certification ECU sends a luggage compartment door open motor drive request signal to the main body ECU.

WIRING DIAGRAM

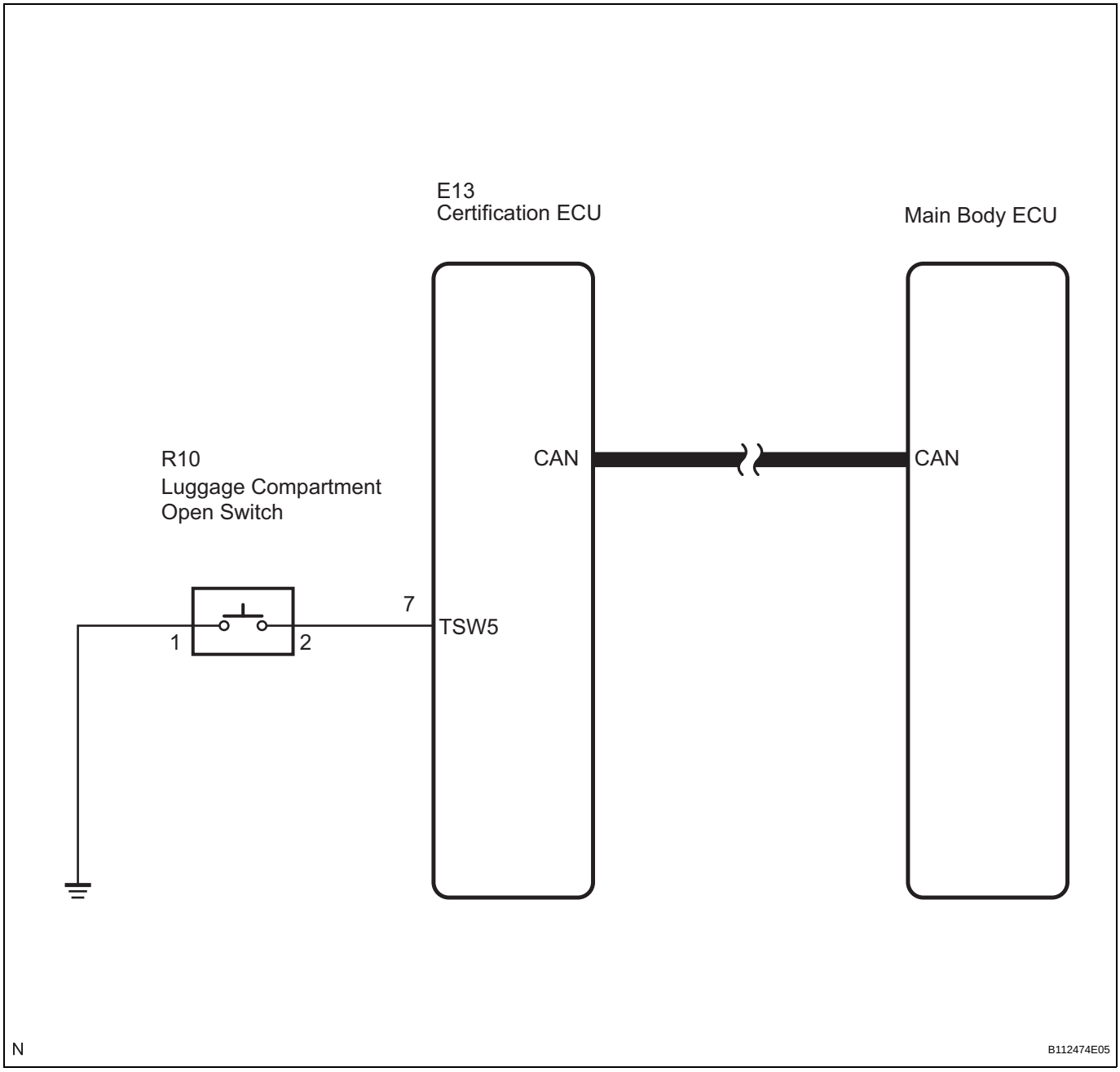

INSPECTION PROCEDURE

1 CHECK HARNESS AND CONNECTOR (CERTIFICATION ECU - LUGGAGE COMPARTMENT OPEN SWITCH)

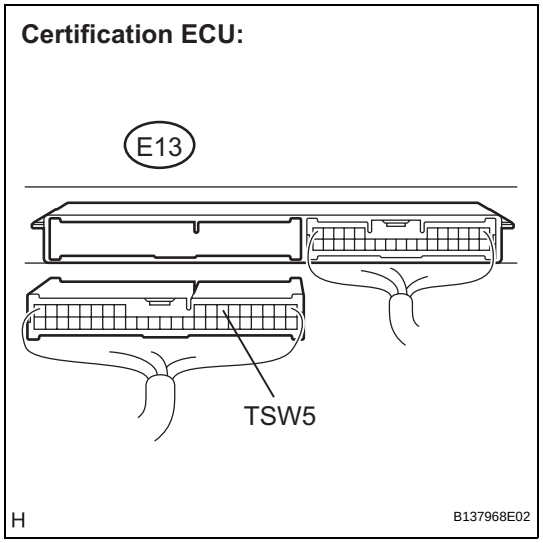

(a) Disconnect the E13 ECU connector.
(b) Measure the resistance according to the value(s) in the table below.

Standard resistance

Tester Connection (Symbols)	Condition	Specified Condition
E13-7 (TSW5) - Body ground	Luggage compartment open switch not pushed (OFF)	10 kΩ or higher
	Luggage compartment open switch pushed (ON)	Below 1 Ω

OK → **PROCEED TO NEXT CIRCUIT INSPECTION SHOWN IN PROBLEM SYMPTOMS TABLE**

NG

2 INSPECT LUGGAGE COMPARTMENT OPEN SWITCH

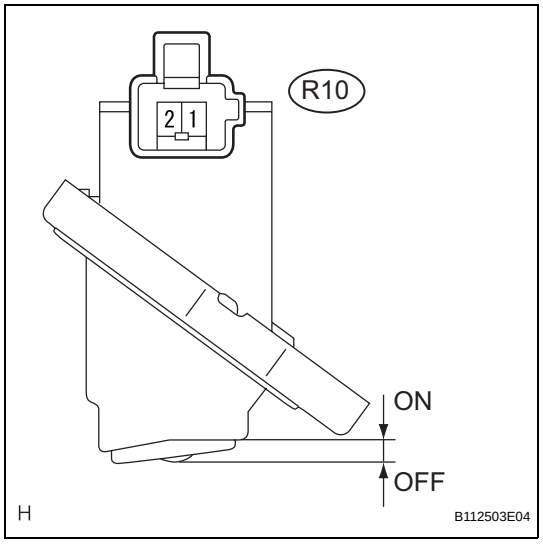

(a) Disconnect the switch connector.
(b) Measure the resistance according to the value(s) in the table below.

Standard resistance

Tester Connection	Condition	Specified Condition
R10-1 - R10-2	Luggage compartment open switch not pushed (OFF)	10 kΩ or higher
	Luggage compartment open switch pushed (ON)	Below 1 Ω

NG → **REPLACE LUGGAGE COMPARTMENT OPEN SWITCH**

OK

REPLACE CERTIFICATION ECU

DL

Certification ECU Power Source Circuit

DESCRIPTION

This is the power source circuit of the certification ECU.
The certification ECU controls the following:

- Electrical key verification confirmation
- Cabin and door oscillator control
- Entry door LOCK/UNLOCK request to the main body ECU
- Steering LOCK/UNLOCK request
- Immobiliser SET/UNSET request to the ID code box

WIRING DIAGRAM

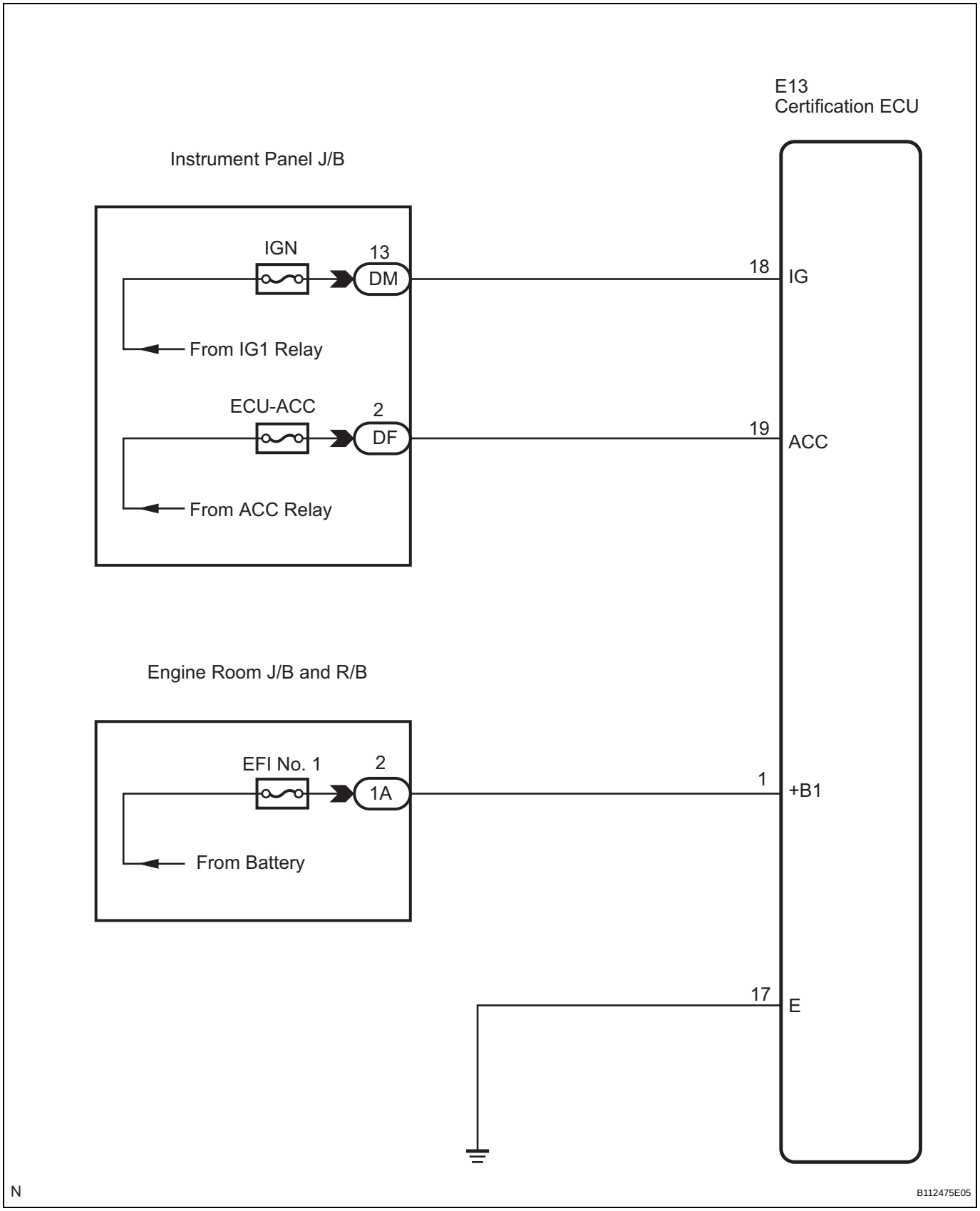

INSPECTION PROCEDURE

1	CHECK HARNESS AND CONNECTOR (POWER SOURCE CIRCUIT)

Certification ECU:

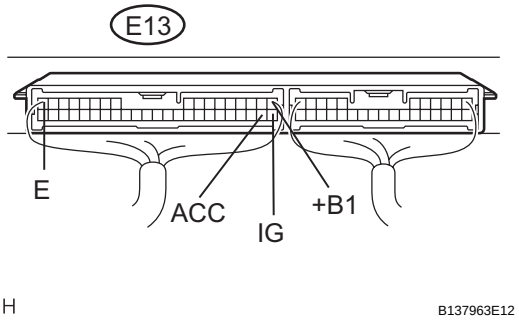

(a) Disconnect the E13 certification ECU connector.

(b) Measure the voltage according to the value(s) in the table below.

Standard voltage

Tester Connection (Symbols)	Condition	Specified Condition
E13-1 (+B1) - Body ground	Always	10 to 14 V
E13-18 (IG) - Body ground	Engine switch OFF	Below 1 V
	Engine switch ON (IG)	10 to 14 V
E13-19 (ACC) - Body ground	Engine switch OFF	Below 1 V
	Engine switch ON (ACC)	10 to 14 V

(c) Measure the resistance according to the value(s) in the table below.

Standard resistance

Tester Connection (Symbols)	Condition	Specified Condition
E13-17 (E) - Body ground	Always	Below 1 Ω

NG → **REPAIR OR REPLACE HARNESS OR CONNECTOR**

OK

PROCEED TO NEXT CIRCUIT INSPECTION SHOWN IN PROBLEM SYMPTOMS TABLE

TERMINALS OF ECU

1. CHECK MAIN BODY ECU (INSTRUMENT PANEL JUNCTION BLOCK)

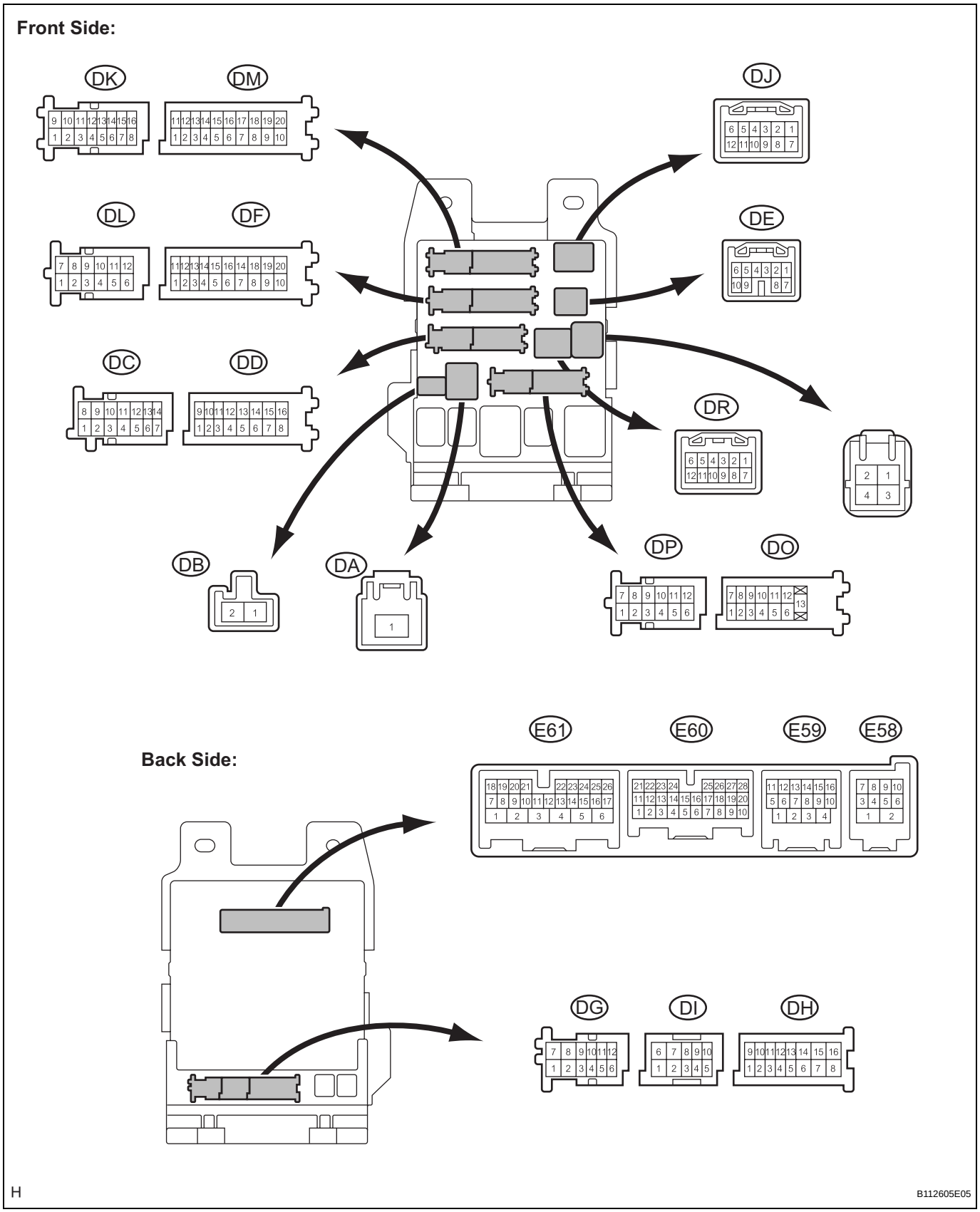

(a) Disconnect the E60, E61, DO, DK, DM, DD, DA, DF, DJ, and E58 J/B and ECU connectors.
(b) Measure the voltage and resistance according to the value(s) in the table below.

Symbols (Terminal No.)	Wiring Color	Terminal Description	Condition	Specified Condition
DCTY (E61-24) - Body ground	GR - Body ground	Driver door courtesy switch input	Driver door CLOSED → OPEN	10 kΩ or higher → Below 1 Ω
RCTY (E60-7) - Body ground	GR - Body ground	Rear right door courtesy switch input	Rear right door CLOSED → OPEN	10 kΩ or higher → Below 1 Ω
PCTY (E60-21) - Body ground	G - Body ground	Passenger door courtesy switch input	Passenger door CLOSED → OPEN	10 kΩ or higher → Below 1 Ω
LCTY (DO-7) - Body ground	B - Body ground	Rear left door courtesy switch input	Rear left door CLOSED → OPEN	10 kΩ or higher → Below 1 Ω
GND3 (E59-1) - Body ground	W-B - Body ground	Ground	Always	Below 1 Ω
IG (DF-11) - Body ground	B - Body ground	Engine power supply	Engine switch on (IG) → off	10 to 14 V → Below 1 V
GND1 (DF-10) - Body ground	W-B - Body ground	Ground	Always	Below 1 Ω
ACC (DF-2) - Body ground	L - Body ground	ACC power supply	Engine switch on (ACC) → OFF	10 to 14 V → Below 1 V
L1 (DJ-3) - Body ground	R - Body ground	Door control switch LOCK input	Passenger door control switch OFF → LOCK	10 kΩ or higher → Below 1 Ω
UL1 (DJ-4) - Body ground	G - Body ground	Door control switch UNLOCK input	Passenger door control switch OFF → UNLOCK	10 kΩ or higher → Below 1 Ω
LGCY (E60-25) - Body ground	W - Body ground	Luggage compartment door courtesy switch input	Luggage compartment door CLOSED → OPEN	10 kΩ or higher → Below 1 Ω

If the result is not as specified, there may be a malfunction on the wire harness side.
(c) Reconnect the J/B and ECU connectors.
(d) Measure the voltage according to the value(s) in the table below.

Symbols (Terminal No.)	Wiring Color	Terminal Description	Condition	Specified Condition
LSWL (DP-5) - Body ground	GR - Body ground	Rear left door lock position switch input	Rear left door UNLOCK → LOCK	Below 1 V → 10 to 14 V (or pulse generation)
LSWD (E61-9) - Body ground	L - Body ground	Driver door lock position switch input	Driver door UNLOCK → LOCK	Below 1 V → 10 to 14 V (or pulse generation)
GSW (DE-8) - Body ground	B - Body ground	Center airbag sensor signal	Engine switch on (IG)	4.5 to 5.5 V
UL3 (E61-10) - Body ground	V - Body ground	Driver door key-linked door unlock input	Using mechanical key, operate driver door lock cylinder to LOCK → UNLOCK	Below 1 V → 10 to 14 V (or pulse generation)
L2 (DK-16) - Body ground	BR - Body ground	Driver door key-linked door lock input	Using mechanical key, operate driver door lock cylinder to UNLOCK → LOCK	Below 1 V → 10 to 14 V (or pulse generation)
ACT+ (DJ-1) - Body ground	L - Body ground	Door lock motor LOCK drive output (Front passenger door)	Door control switch (Master switch or passenger side switch) or driver side door key cylinder OFF → LOCK → OFF	Below 1 V → 10 to 14 V → Below 1 V
ACT+ (DP-11) - Body ground	L - Body ground	Door lock motor LOCK drive output (Rear door LH)	Door control switch (Master switch or passenger side switch) or driver side door key cylinder OFF → LOCK → OFF	Below 1 V → 10 to 14 V → Below 1 V

Symbols (Terminal No.)	Wiring Color	Terminal Description	Condition	Specified Condition
ACT+ (DF-5) - Body ground	L - Body ground	Door lock motor LOCK drive output (Rear door RH)	Door control switch (Master switch or passenger side switch) or driver side door key cylinder OFF → LOCK → OFF	Below 1 V → 10 to 14 V → Below 1 V
ACT- (DP-6) - Body ground	LG - Body ground	Door lock motor UNLOCK drive output (Rear door LH)	Door control switch (Master switch or passenger side switch) or driver side door key cylinder OFF → UNLOCK → OFF	Below 1 V → 10 to 14 V → Below 1 V
ACT- (DF-18) - Body ground	LG - Body ground	Door lock motor UNLOCK drive output (Rear door RH)	Door control switch (Master switch or passenger side switch) or driver side door key cylinder OFF → UNLOCK → OFF	Below 1 V → 10 to 14 V → Below 1 V
TR+ (E61-1) - Body ground	B - Body ground	Door lock motor UNLOCK drive output (Luggage compartment door)	Luggage compartment open switch (Transmitter) or luggage compartment door key cylinder OFF → UNLOCK → OFF	Below 1 V → 10 to 14 V → Below 1 V
ACTD (E61-5) - Body ground	GR - Body ground	Door lock motor UNLOCK drive output (Driver door)	Door control switch (Master switch or passenger side switch) or driver side door key cylinder OFF → UNLOCK → OFF	Below 1 V → 10 to 14 V → Below 1 V
ACT+ (DK-2) - Body ground	L - Body ground	Door lock motor LOCK drive output (Driver door)	Door control switch (Master switch or passenger side switch) or driver side door key cylinder OFF → LOCK → OFF	Below 1 V → 10 to 14 V → Below 1 V
ACT- (DJ-2) - Body ground	LG - Body ground	Door lock motor UNLOCK drive output (Front passenger)	Door control switch (Master switch or passenger side switch) or driver side door key cylinder OFF → UNLOCK → OFF	Below 1 V → 10 to 14 V → Below 1 V
LSWR (E60-5) - Body ground	Y - Body ground	Rear right door lock position switch input	Rear right door UNLOCK → LOCK	Below 1 V → 10 to 14 V (or pulse generation)
LSWP (E60-27) - Body ground	LG - Body ground	Passenger door lock position switch input	Passenger door UNLOCK → LOCK	Below 1 V → 10 to 14 V (or pulse generation)

If the result is not as specified, the main body ECU (instrument panel J/B) may have a malfunction.

DOOR CONTROL TRANSMITTER

COMPONENTS

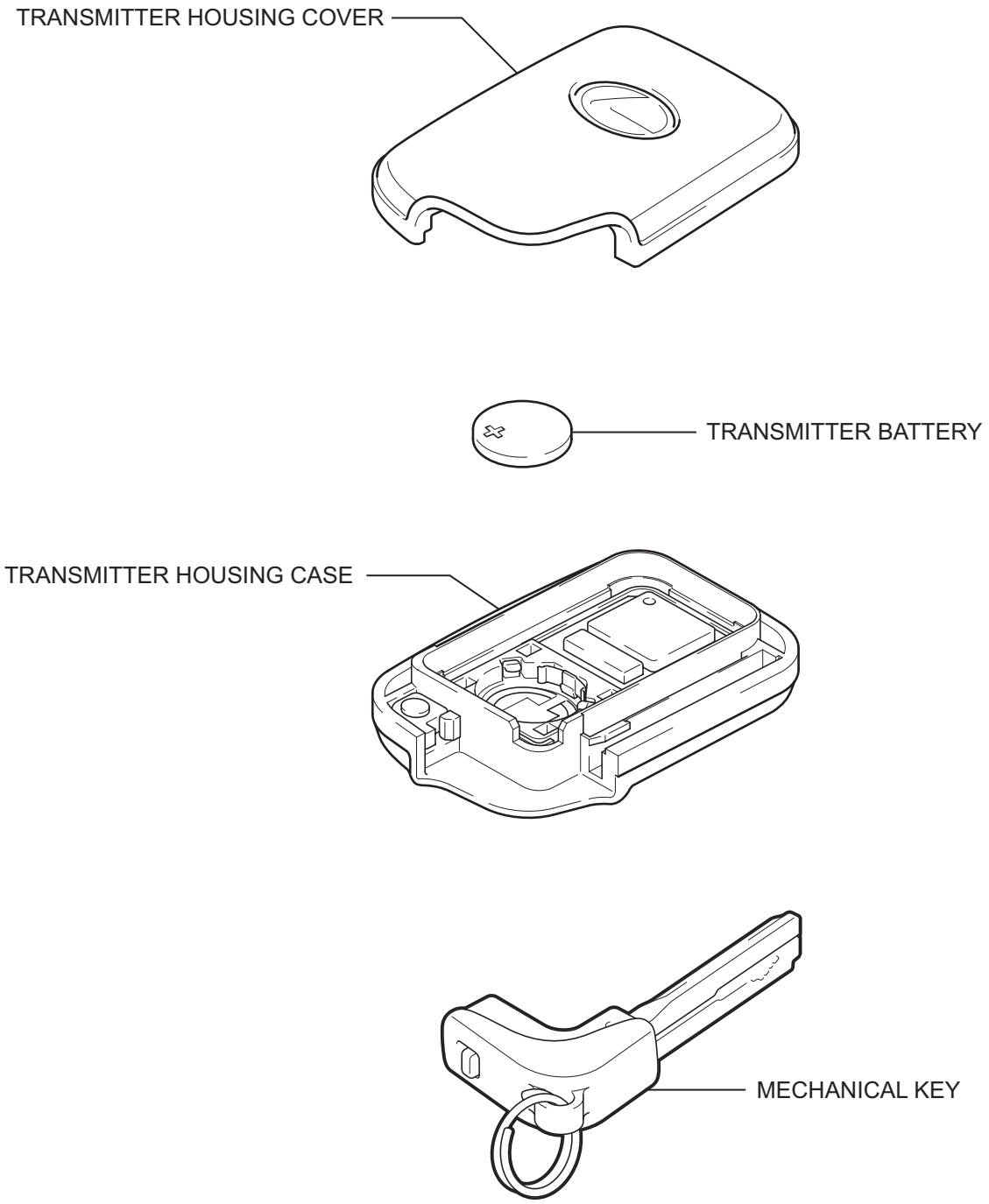

P

B128442E01

REMOVAL

1. REMOVE TRANSMITTER BATTERY

NOTICE:

Take extra care when handling these precision electronic components.

(a) Remove the mechanical key.

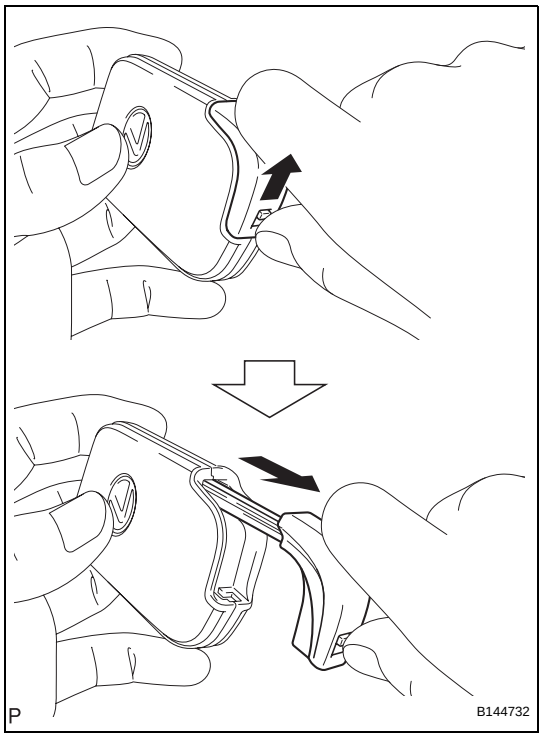

(b) Insert a screwdriver into the gap, and turn the screwdriver to detach the cover.

HINT:

Tape the screwdriver tip before use.

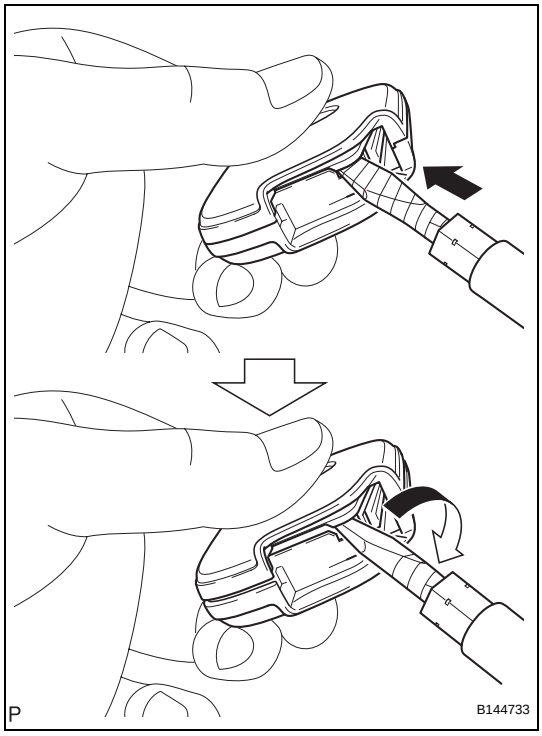

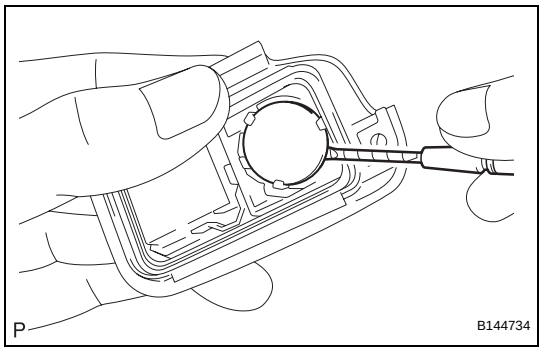

(c) Insert a screwdriver into the gap and gently remove the battery (lithium battery).

NOTICE:

- **Do not push the terminals with your finger.**
- **Do not forcibly pry up the battery (lithium battery) because doing so will deform the terminals.**
- **Do not touch the battery with wet hands. Water may result in corrosion.**
- **Do not touch or move any components inside the transmitter because handling the components may interfere with proper operation of the transmitter.**

INSPECTION

1. INSPECT DOOR CONTROL TRANSMITTER

(a) Inspect operation of the transmitter.

(1) Remove the battery (lithium battery) from the transmitter (See page DL-174).

(2) Install a new or non-depleted battery (lithium battery).
HINT:
When a new or non-depleted battery is not available, first connect 2 new 1.5 V batteries in series. Then connect leads to the batteries and use the leads to apply 3 V to the transmitter, as shown in the illustration.

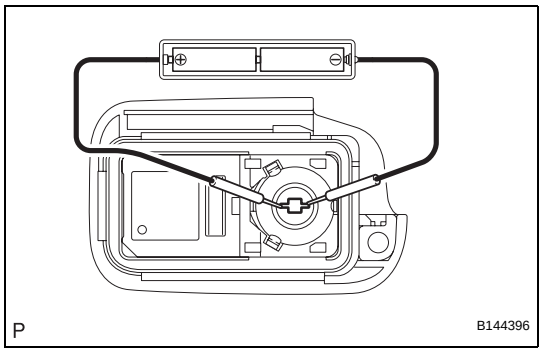

(3) In a location that is approximately 1 m (3.28 ft) away from the driver side outside door handle, test the transmitter by pointing it at the vehicle and pressing a transmitter's switch.
OK:
The door lock can be operated via the transmitter. The LED lights up more than once.
HINT:
- The operational area differs depending on the user, the way the transmitter is held and the location.
- The transmitter's faint electric waves may be affected if the area has strong electric waves or noise. The transmitter's operation area may be reduced or the transmitter may not function.

(b) Inspect the battery capacity.
HINT:
- When checking the amount of energy left in the battery (lithium battery), the battery must be checked while it is installed in the transmitter (a resistance of 1.2 kΩ is applied to the battery).
- If the transmitter is malfunctioning, the voltage reading of the energy left in the battery will be inaccurate.

(1) Remove the battery (lithium battery) from the transmitter (See page DL-174).

(2) Connect a wire to the negative (-) terminal of the transmitter and install the battery.

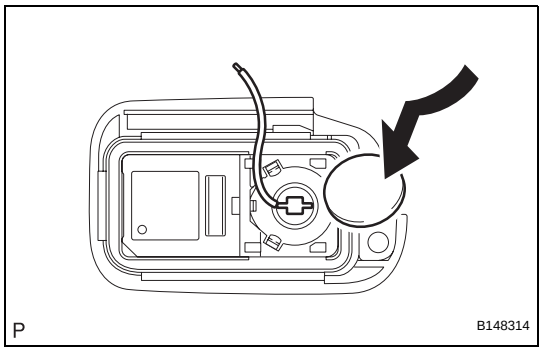

DL

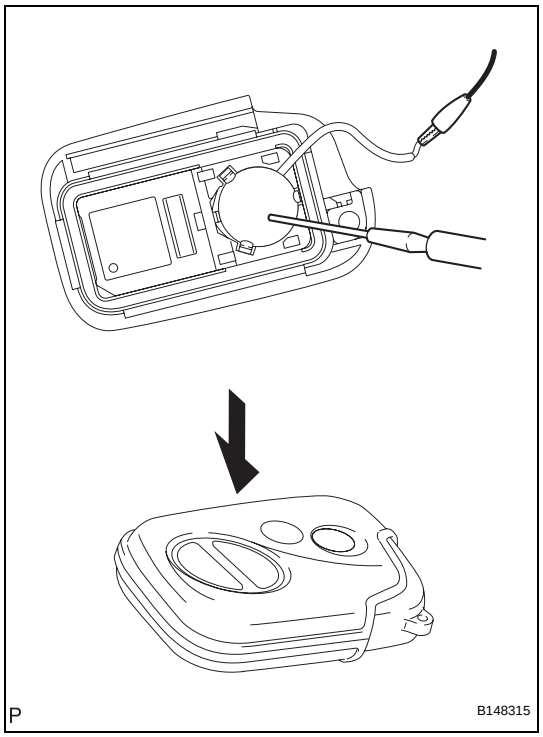

(3) Connect the tester's positive (+) lead to the battery (lithium battery) and the negative (-) battery lead to the wire.

(4) Press one of the switches on the transmitter for approximately 1 second.

(5) Press the switch on the transmitter again to check the voltage.

Standard voltage:
2.5 V or higher

HINT:

- When the temperature of the battery is low, the inspection will not be accurate. When the outcome of the test is less than 2.5 V, conduct the test again after leaving the battery in a place with a temperature of 18°C (64°F) for more than 30 minutes.
- Read the voltage immediately after the switch is pressed. When 0.8 seconds have passed after the switch is pressed, the automatic power-off function starts and resistance applied to the battery will cease. The voltage of the battery will be 2.5 V or more.
- Press the switch at least 3 times before reading the voltage. If the battery temperature has just returned to 18°C (64°F), the voltage may be unusually high for the first or second voltage reading.

INSTALLATION

1. INSTALL TRANSMITTER BATTERY

(a) Install a new battery (lithium battery) with the positive (+) side up as shown in the illustration.

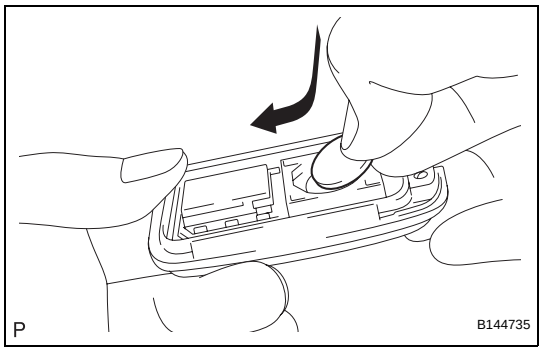

(b) Press down gently on the battery to set it in place.

NOTICE:

- **Be sure that the positive and negative sides of the transmitter battery are positioned correctly.**
- **Be careful not to bend the terminals of the transmitter battery during installation.**
- **Keep the interior of the transmitter case free of dust, water and oil.**

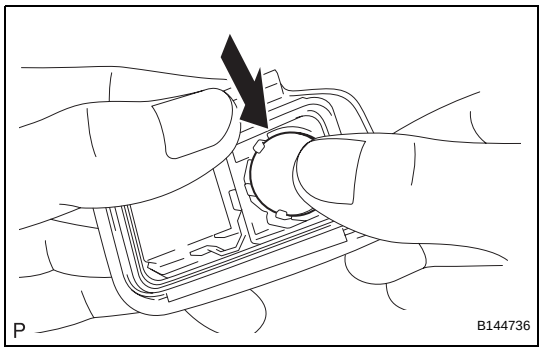

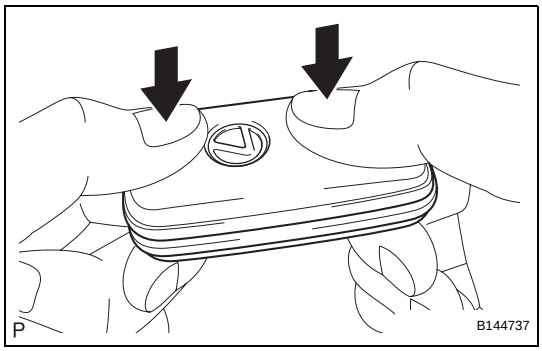

(c) Install the cover by pressing down on it as shown in the illustration.

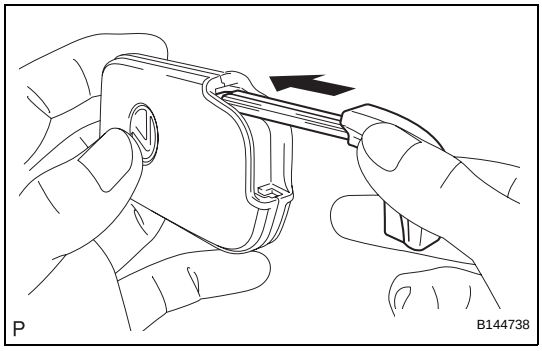

(d) Install the mechanical key.
HINT:
After the installation, press one of the transmitter's switches and check that the LED illuminates.

DIAGNOSIS SYSTEM

1. DESCRIPTION

(a) Power door lock control system data and Diagnostic Trouble Codes (DTCs) can be read through the Data Link Connector 3 (DLC3) of the vehicle. When the system seems to be malfunctioning, use the intelligent tester to check for malfunctions and perform repairs.

2. CHECK DLC3

HINT:
The vehicle uses the ISO 15765-4 communication protocol. The terminal arrangement of the DLC3 complies with SAE J1962 and matches the ISO 15765-4 format.

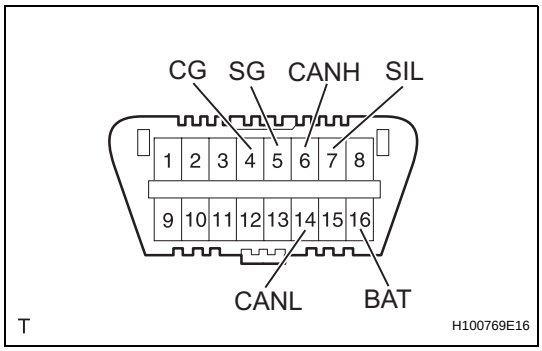

Symbols (Terminal No.)	Terminal Description	Condition	Specified Condition
CG (4) - Body ground	Chassis ground	Always	Below 1 Ω
SG (5) - Body ground	Signal ground	Always	Below 1 Ω
SIL (7) - SG (5)	Bus "+" line	During transmission	Pulse generation
BAT (16) - Body ground	Battery positive	Always	10 to 14 V
CANH (6) - CANL (14)	CAN bus line	Engine Switch OFF*	54 to 69 Ω
CANH (6) - CG (4)	HIGH-level CAN bus line	Engine Switch OFF*	200 Ω or more
CANL (14) - CG (4)	LOW-level CAN bus line	Engine Switch OFF*	200 Ω or more
CANH (6) - BAT (16)	HIGH-level CAN bus line	Engine Switch OFF*	6 kΩ or more
CANL (14) - BAT (16)	LOW-level CAN bus line	Engine Switch OFF*	6 kΩ or more

NOTICE:
***: Before measuring the resistance, leave the vehicle as is for at least 1 minute and do not operate the engine switch, any other switches or the doors.**
If the result is not as specified, the DLC3 may have a malfunction. Repair or replace the harness and connector.

HINT:
Connect the cable of the intelligent tester to the DLC3, turn the engine switch on (IG) and attempt to use the tester. If the display indicates that a communication error has occurred, there is a problem either with the vehicle or with the tester.

- If communication is normal when the tester is connected to another vehicle, inspect the DLC3 of the original vehicle.
- If communication is still not possible when the tester is connected to another vehicle, the problem may be in the tester itself. Consult the Service Department listed in the tester's instruction manual.

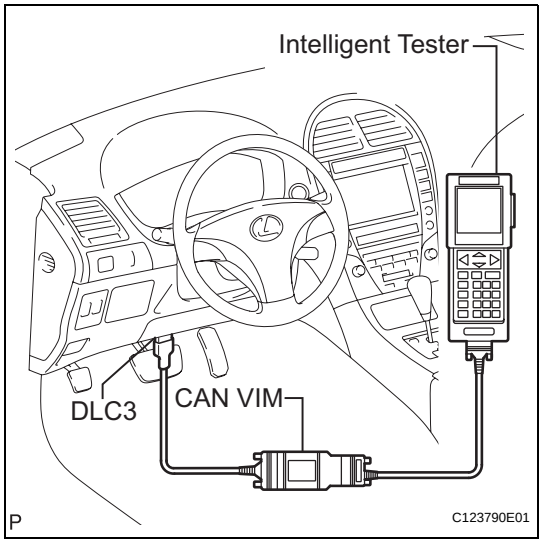

3. INSPECT BATTERY VOLTAGE

Standard voltage:
11 to 14 V

If the voltage is below 11 V, recharge or replace the battery before proceeding.

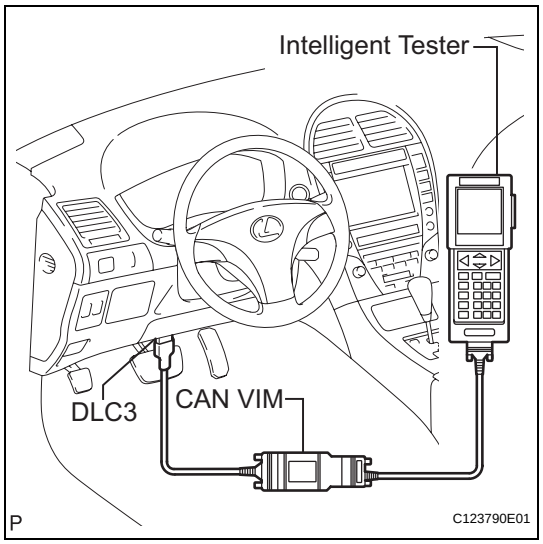

DTC CHECK / CLEAR

1. CHECK DTC

(a) Connect the intelligent tester to the DLC3.
(b) Turn the engine switch on (IG).
(c) Enter the following menu items: DIAGNOSIS / ENHANCED OBD II / DTC INFO / CURRENT CODES.
(d) Read the DTC by following the prompts on the tester screen.
HINT:
Refer to the intelligent tester operator's manual for further details.

2. CLEAR DTC

(a) Connect the intelligent tester to the DLC3.
(b) Turn the engine switch on (IG).
(c) Enter the following menu items: DIAGNOSIS / ENHANCED OBD II / DTC INFO / CLEAR CODES.
(d) Erase the DTC by following the directions on the tester screen.

HINT:
Refer to the intelligent tester operator's manual for further details.

DATA LIST / ACTIVE TEST

1. READ DATA LIST

HINT:
Using the intelligent tester's DATA LIST allows switch, sensor, actuator, and other item values to be read without removing any parts. Reading the DATA LIST early in troubleshooting is one way to save time.

(a) Connect the intelligent tester to the DLC3.
(b) Turn the engine switch on (IG).
(c) Enter the following menus: DIAGNOSIS / ENHANCED OBD II / DATA LIST.
(d) Read the DATA LIST according to the display on the tester.

MAIN BODY:

Tester Display	Measurement Item/Range	Normal Condition	Diagnostic Note
D DOR CTY SW	Driver side door courtesy light switch signal/ON or OFF	ON: Driver side door is OPEN OFF: Driver side door is CLOSED	-
P DOR CTY SW	Passenger side door courtesy light switch signal/ON or OFF	ON: Passenger side door is OPEN OFF: Passenger side door is CLOSED	-
RR DOR CTY SW	Rear right door courtesy light switch signal/ON or OFF	ON: Rear right door is OPEN OFF: Rear right door is CLOSED	-
RL DOR CTY SW	Rear left door courtesy light switch signal/ON or OFF	ON: Rear left door is OPEN OFF: Rear left door is CLOSED	-
D LOCK POS SW	Driver side door lock position switch signal/ON or OFF	ON: Driver side door is unlocked OFF: Driver side door is locked	-
P LOCK POS SW	Front passenger side door lock position switch signal/ON or OFF	ON: Front passenger side door is unlocked OFF: Front passenger side door is locked	-
RR LOCK POS SW	Rear right door lock position switch signal/ON or OFF	ON: Rear right door is unlocked OFF: Rear right door is locked	-
RL LOCK POS SW	Rear left door lock position switch signal/ON or OFF	ON: Rear left door is unlocked OFF: Rear left door is locked	-
LUGG COURTSY SW	Luggage compartment door courtesy light switch signal/ON or OFF	ON: Luggage compartment door is OPEN OFF: Luggage compartment door is CLOSED	-
D/L SW-LOCK	Door control switch lock signal/ ON or OFF	ON: Door control switch is pushed to lock position OFF: Door control switch is not pushed to lock position	-
D/L SW-UNLOCK	Door control switch unlock signal/ ON or OFF	ON: Door control switch is pushed to unlock position OFF: Door control switch is not pushed to unlock position	-
DOR KEY SW-LOCK	Driver door lock/unlock switch lock signal (key-linked lock switch)/ON or OFF	ON: Driver side door key cylinder is turned to lock position OFF: Driver side door key cylinder is turned to unlock position	-
DOR KEY SW-ULCK	Driver door lock/unlock switch unlock signal (key-linked unlock switch)/ON or OFF	ON: Driver side door key cylinder is turned to unlock position OFF: Driver side door key cylinder is turned to lock position	-
D DOR KEY SW-UL	Driver door lock/unlock switch unlock signal (2 times key-linked unlock switch)/ON or OFF	ON: Driver side door key cylinder is turned to unlock position OFF: Driver side door key cylinder is turned to lock position	-

2. PERFORM ACTIVE TEST

HINT:

Performing the intelligent tester's ACTIVE TEST allows relays, VSVs, actuators, and other items to be operated without removing any parts. Performing the ACTIVE TEST early in troubleshooting is one way to save time. The DATA LIST can be displayed during the ACTIVE TEST.

(a) Connect the intelligent tester to the DLC3.
(b) Turn the engine switch on (IG).
(c) Enter the following menus: DIAGNOSIS / ENHANCED OBD II / ACTIVE TEST.
(d) Perform the ACTIVE TEST according to the display on the tester.

MAIN BODY:

Tester Display	Test Part	Control Range	Diagnostic Note
DOOR LOCK	Operate door lock motor	LOCK/UNLOCK	-
D DOOR UNLOCK	Operate driver door lock motor	LOCK/UNLOCK	-
SHOCK UNLOCK	Operate collision door lock release function	LOCK/UNLOCK	-
TRUNK/BDOR OPEN	Operate luggage compartment door lock motor	UNLOCK	-

DIAGNOSTIC TROUBLE CODE CHART

HINT:
If a trouble code is indicated during the DTC check, check the circuit listed for that code in the table below. Then proceed to the appropriate page.

Power door lock control system:

DTC Code	Detection Item	Trouble Area	See page
B1243	GSW Terminal Circuit Malfunction	1. Main body ECU (Instrument Panel J/B) 2. Center airbag sensor 3. Wire harness	DL-20

DTC	B1243	GSW Terminal Circuit Malfunction

DESCRIPTION

If the collision door lock release function does not operate normally, or an open or short in the GWS input circuit of the main body ECU is detected, DTC B1243 will be output.
HINT:
If DTC B1243 is output, the speed-sensitive automatic door lock function, shift-linked automatic door unlock function, and collision door lock release function will be prohibited.

DTC No.	DTC Detection Condition	Trouble Area
B1243	A malfunction occurs in the GWS input circuit of the main body ECU.	• Main body ECU (Instrument Panel J/B) • Center airbag sensor • Wire harness

WIRING DIAGRAM

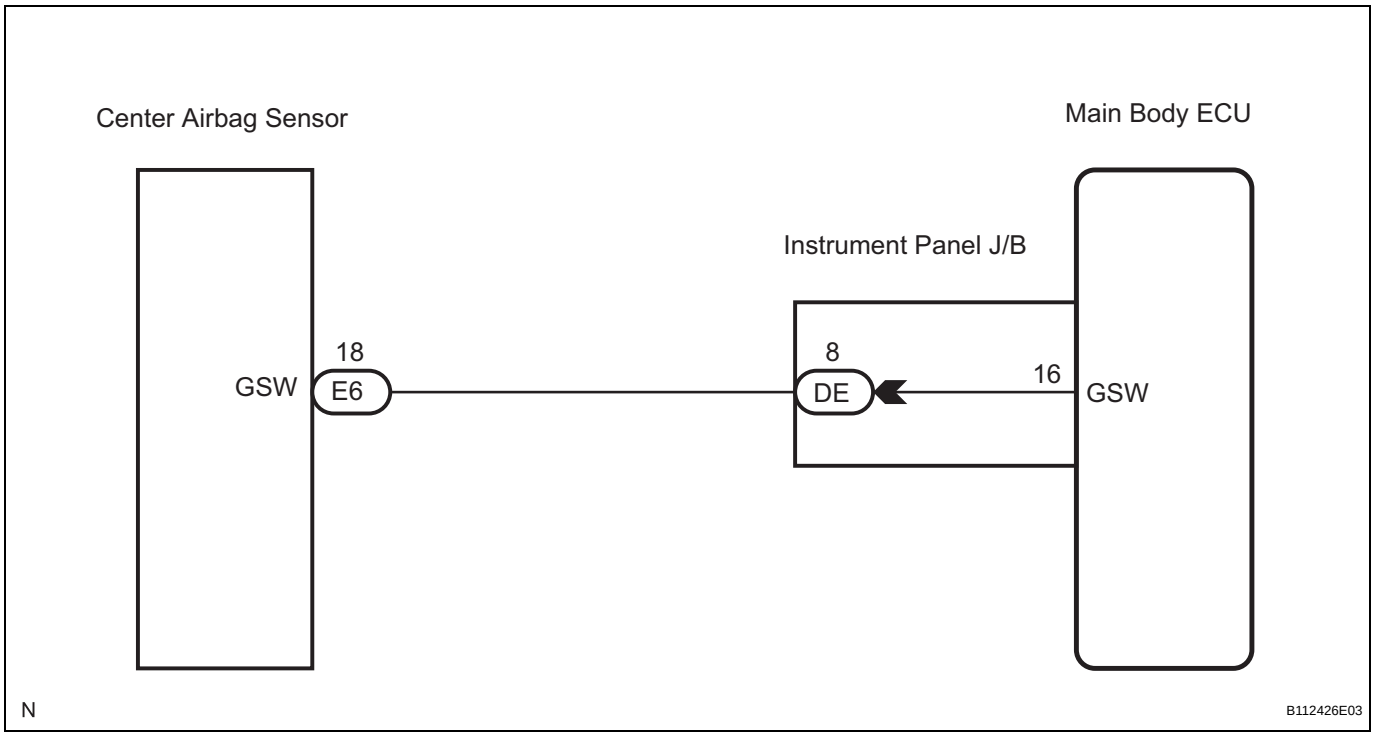

INSPECTION PROCEDURE

1	CHECK HARNESS AND CONNECTOR (CENTER AIRBAG SENSOR - MAIN BODY ECU)

(a) Connect the negative (-) terminal cable to the battery, and wait for at least 90 seconds.

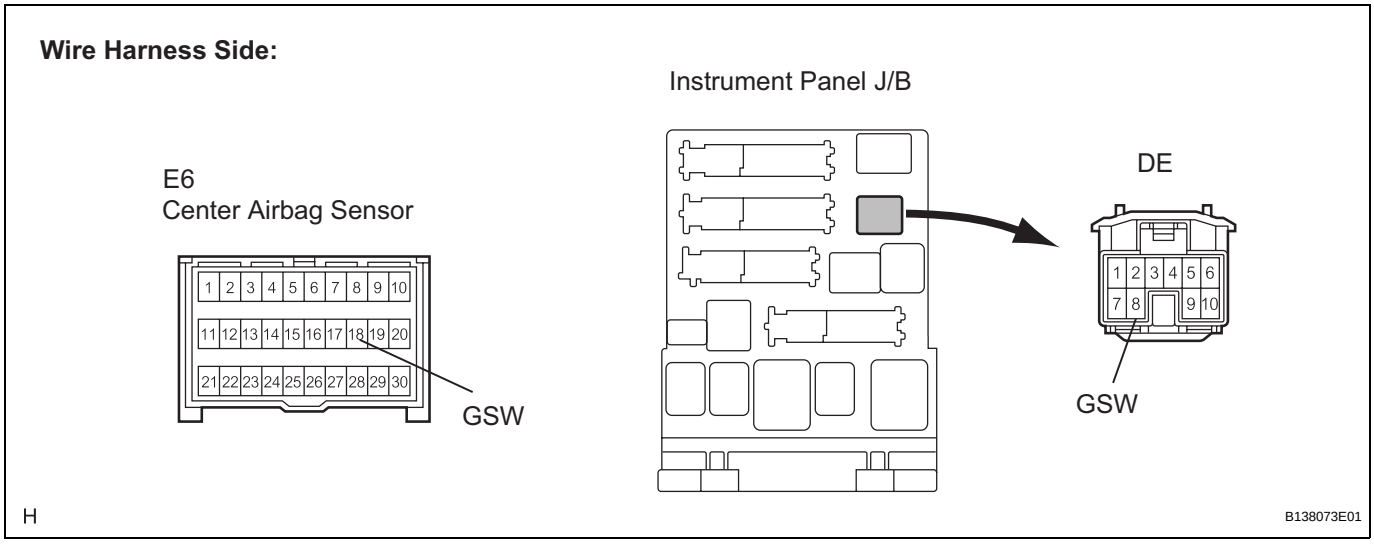

DL

(b) Disconnect the center airbag sensor E6 and J/B DE connectors.

(c) Measure the resistance according to the value(s) in the table below.

Standard resistance

Tester Connection (Symbols)	Condition	Specified Condition
E6-18 (GSW) - DE-8 (GSW)	Always	Below 1 Ω
DE-8 (GSW) - Body ground	Always	10 kΩ or higher

NG → **REPAIR OR REPLACE HARNESS OR CONNECTOR**

OK

2 INSPECT MAIN BODY ECU

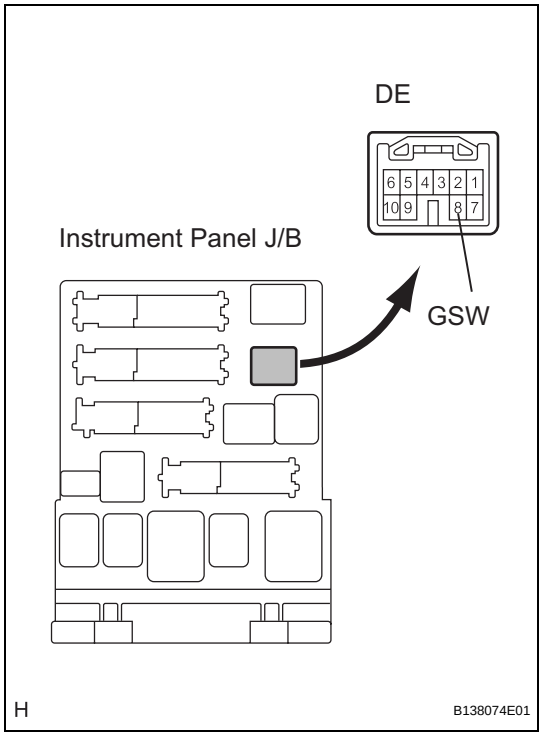

(a) Reconnect the center airbag sensor E6 and J/B DE connectors.
(b) Turn the engine switch on (IG).
(c) Measure the voltage according to the value(s) in the table below.

Standard voltage

Tester Connection (Symbols)	Condition	Specified Condition
DE-8 (GSW) - Body ground	Engine switch on (IG)	4.5 to 5.5 V

NG → **REPLACE MAIN BODY ECU**

OK

REPLACE CENTER AIRBAG SENSOR

DL

Driver Side Door UNLOCK Detection Switch Circuit

DESCRIPTION

The driver's door unlock detection switch is built into the driver's door lock assembly. The switch turns on when the driver's door is locked and turns off when the door is unlocked.
The main body ECU is connected to the driver's door lock assembly via terminal LSWD and driver's door lock/unlock state signals are input to the main body ECU.
The main body ECU applies voltage to the door unlock detection switch via terminal LSWD. When the door unlock detection switch is on (there is continuity between the switch terminals), a lock state signal is input to the main body ECU. When the switch is off (there is no continuity between the switch terminals), an unlock state signal is input.

WIRING DIAGRAM

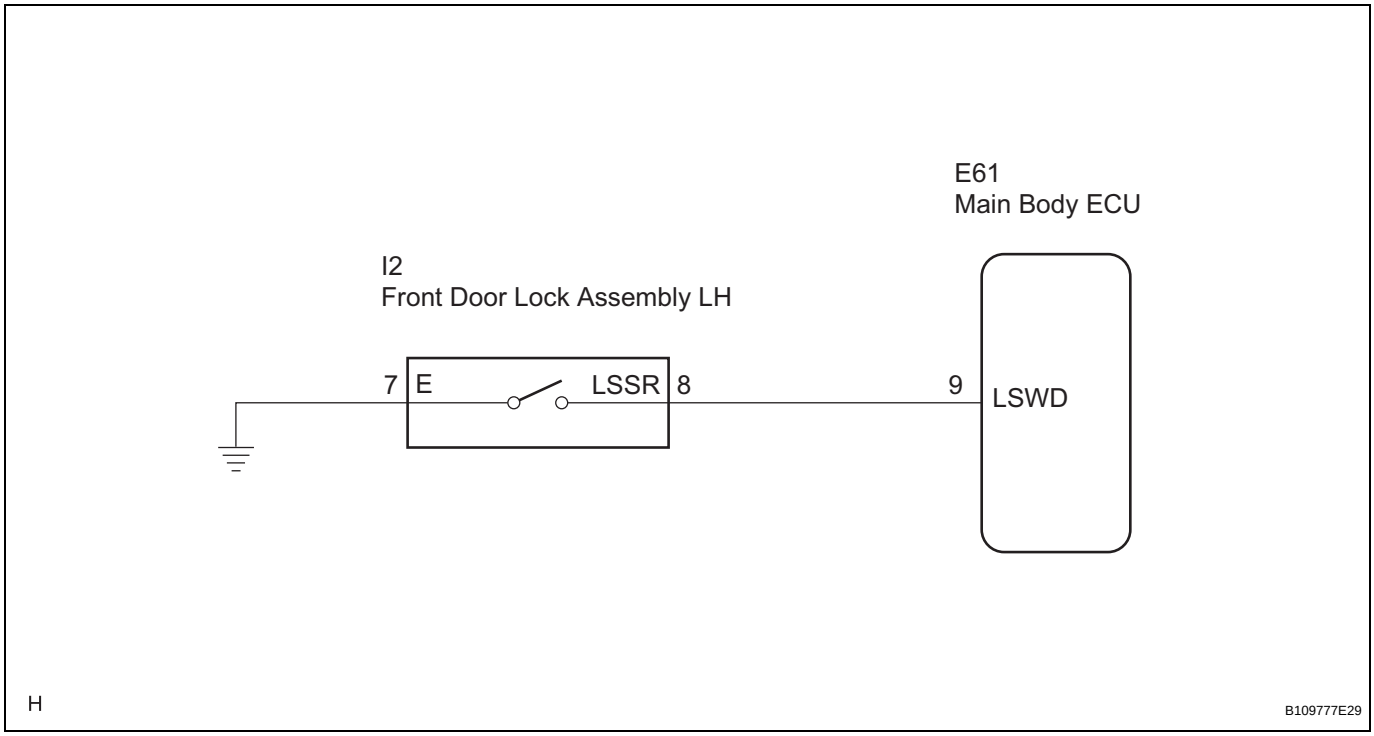

INSPECTION PROCEDURE

1	READ VALUE OF DATA LIST (DOOR UNLOCK DETECTION SWITCH)

(a) Check the DATA LIST to ensure proper function of the door unlock detection switch.

MAIN BODY:

Item	Measurement Item / Display (Range)	Normal Condition	Diagnostic Note
D LOCK POS SW	Driver side door unlock detection switch signal /ON or OFF	ON: Driver side door is unlocked OFF: Driver side door is locked	-

OK:
The display is as specified in the normal condition column.

NG → **Go to step 2**

OK

PROCEED TO NEXT CIRCUIT INSPECTION SHOWN IN PROBLEM SYMPTOMS TABLE

2 INSPECT FRONT DOOR LOCK ASSEMBLY (DOOR UNLOCK DETECTION SWITCH)

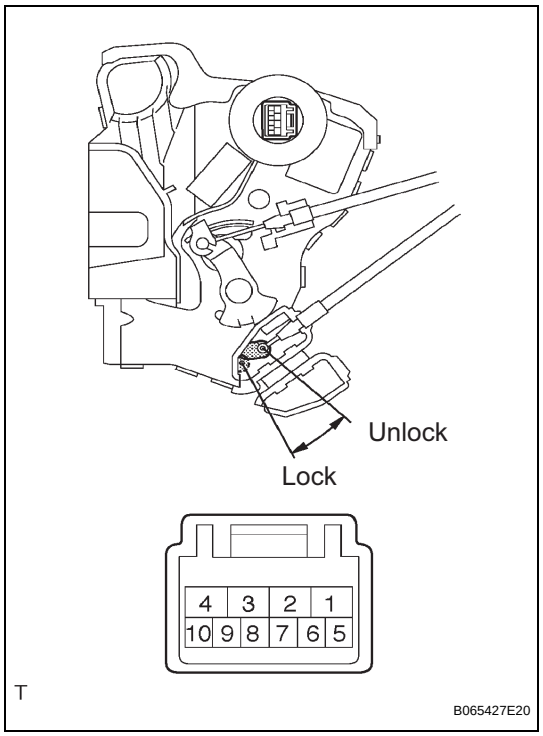

(a) Remove the front door lock assembly LH.
(b) Measure the resistance according to the value(s) in the table below.

Standard resistance

Tester Connection	Measurement Condition	Door Lock Condition	Specified Condition
7 - 8	Battery positive (+) → Terminal 4 Battery negative (-) → Terminal 1	Lock	10 kΩ or higher
7 - 8	Battery positive (+) → Terminal 1 Battery negative (-) → Terminal 4	Unlock	Below 1 Ω

NG → **REPLACE FRONT DOOR LOCK ASSEMBLY**

OK

DL

3	CHECK WIRE HARNESS (FRONT DOOR LOCK ASSEMBLY - MAIN BODY ECU)

Wire Harness Side:

I2
Front Door Lock Assembly LH

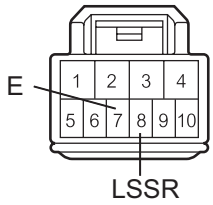

E61
Main Body ECU

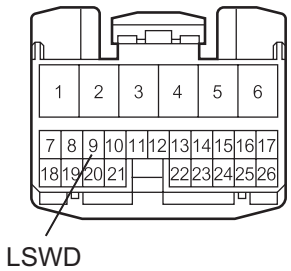

H

B112606E03

(a) Disconnect the front door lock assembly LH connector.
(b) Disconnect the main body ECU connector.
(c) Measure the resistance according to the value(s) in the table below.

Standard resistance

Tester Connection (Symbols)	Condition	Specified Condition
I2-8 (LSSR) - E61-9 (LSWD)	Always	Below 1 Ω
I2-8 (LSSR) - Body ground	Always	10 kΩ or higher
I2-7 (E) - Body ground	Always	Below 1 Ω

NG → **REPAIR OR REPLACE HARNESS OR CONNECTOR**

OK

REPLACE MAIN BODY ECU

Front Passenger Side Door UNLOCK Detection Switch Circuit

DESCRIPTION

The front passenger door unlock detection switch is built into the front passenger door lock assembly. The switch turns on when the front passenger door is locked and turns off when the door is unlocked.
The main body ECU is connected to the front passenger door lock assembly via terminal LSWP and front passenger door lock/unlock state signals are input to the ECU.
The main body ECU applies voltage to the door unlock detection switch via terminal LSWP. When the door unlock detection switch is on (there is continuity between the switch terminals), a lock state signal is input to the ECU. When the switch is off (there is no continuity between the switch terminals), an unlock state signal is input.

WIRING DIAGRAM

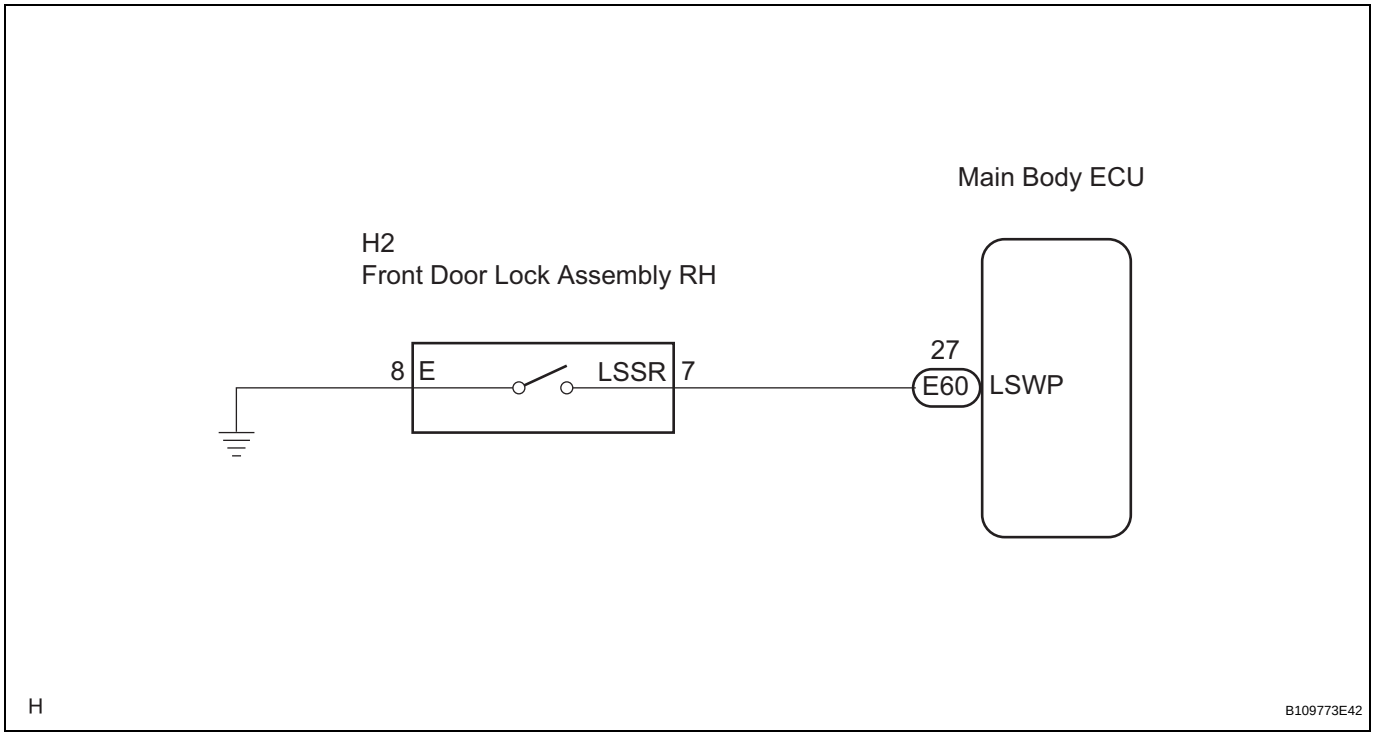

INSPECTION PROCEDURE

1	READ VALUE OF DATA LIST (DOOR UNLOCK DETECTION SWITCH)

(a) Check the DATA LIST to ensure proper function of the door unlock detection switch.

MAIN BODY:

Item	Measurement Item / Display (Range)	Normal Condition	Diagnostic Note
P LOCK POS SW	Passenger side door lock position switch signal /ON or OFF	ON: Passenger side door lock is in UNLOCK position OFF: Passenger side door lock is in LOCK position	-

OK:

The display is as specified in the normal condition column.

NG → **Go to step 2**

OK

PROCEED TO NEXT CIRCUIT INSPECTION SHOWN IN PROBLEM SYMPTOMS TABLE

2 INSPECT FRONT DOOR LOCK ASSEMBLY (DOOR UNLOCK DETECTION SWITCH)

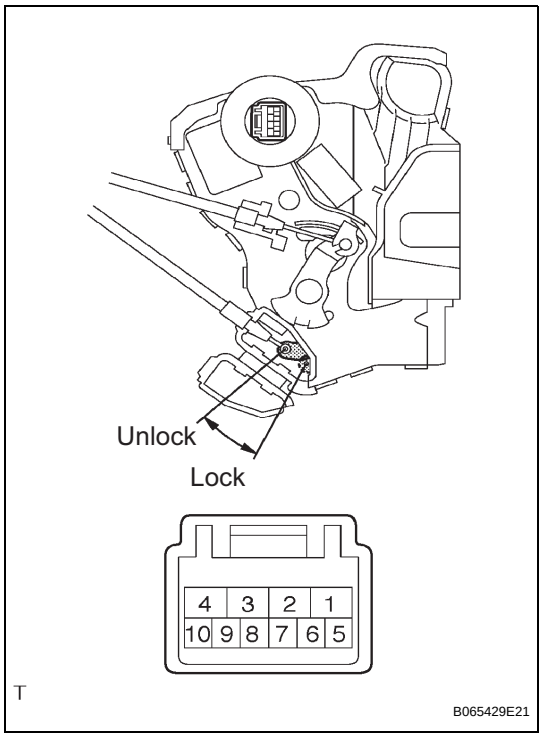

(a) Remove the front door lock assembly RH.
(b) Measure the resistance according to the value(s) in the table below.

Standard resistance

Tester Connection	Measurement Condition	Door Lock Condition	Specified Condition
7 - 8	Battery positive (+) → Terminal 4 Battery negative (-) → Terminal 1	LOCK	10 kΩ or higher
7 - 8	Battery positive (+) → Terminal 1 Battery negative (-) → Terminal 4	UNLOCK	Below 1 Ω

NG → **REPLACE FRONT DOOR LOCK ASSEMBLY**

OK

DL

3 CHECK WIRE HARNESS (FRONT DOOR LOCK ASSEMBLY - MAIN BODY ECU)

Wire Harness Side:

H2
Front Door Lock Assembly RH

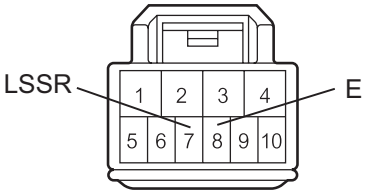

E60
Main Body ECU

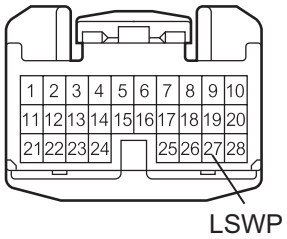

H

B111708E18

(a) Disconnect the front door lock assembly RH connector.
(b) Disconnect the ECU connector.
(c) Measure the resistance according to the value(s) in the table below.

Standard resistance

Tester Connection (Symbols)	Condition	Specified Condition
H2-7 (LSSR) - E60-27 (LSWP)	Always	Below 1 Ω
H2-7 (LSSR) - Body ground	Always	10 kΩ or higher
H2-8 (E) - Body ground	Always	Below 1 Ω

NG → **REPAIR OR REPLACE HARNESS OR CONNECTOR**

DL

OK

REPLACE MAIN BODY ECU

LUGGAGE COMPARTMENT DOOR OPENER OUTER SWITCH

COMPONENTS

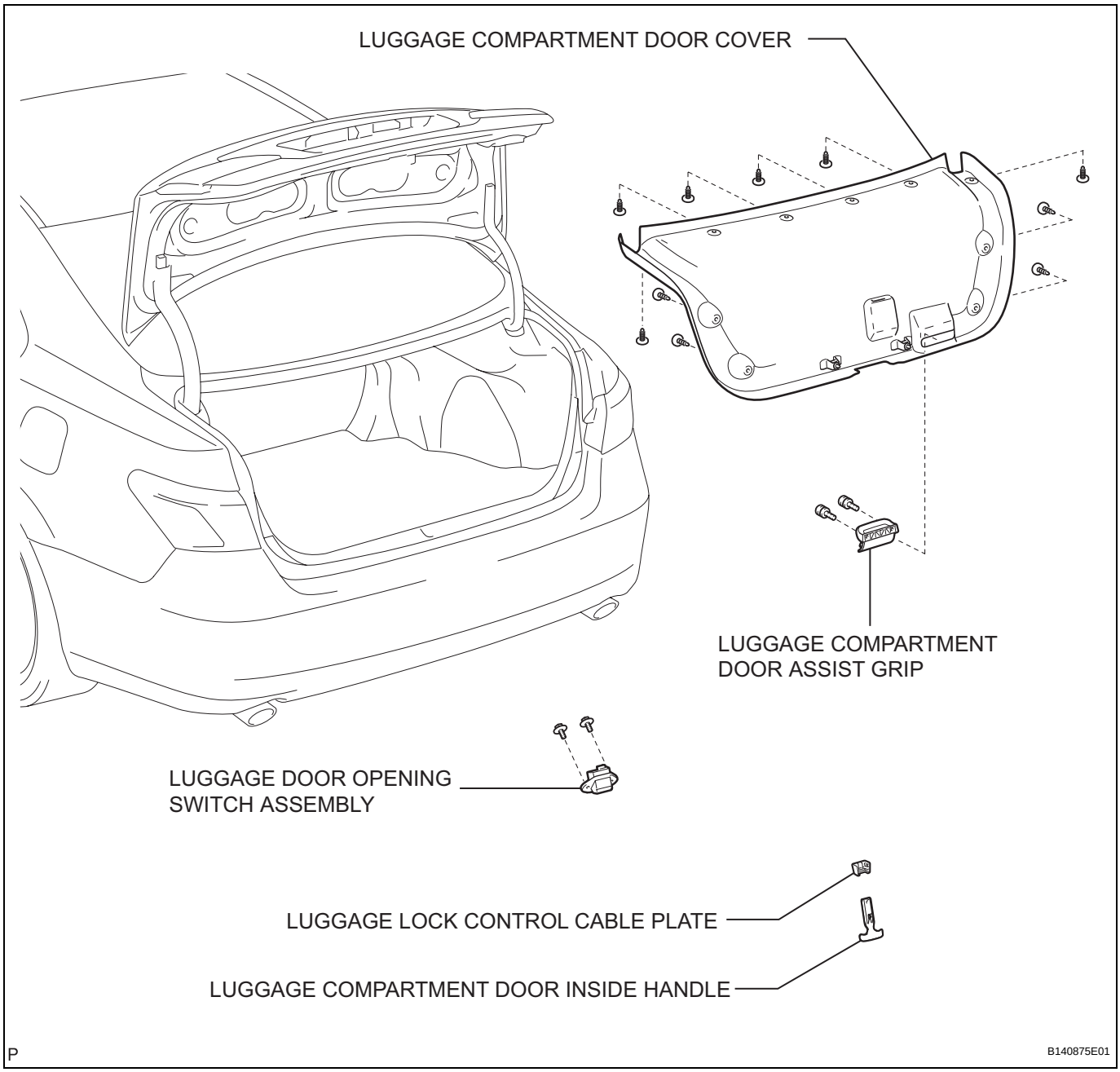

REMOVAL

1. **REMOVE LUGGAGE COMPARTMENT DOOR ASSIST GRIP (See page ET-71)**
2. **REMOVE LUGGAGE LOCK CONTROL CABLE PLATE (See page ET-71)**
3. **REMOVE LUGGAGE COMPARTMENT DOOR INSIDE HANDLE (See page ET-71)**
4. **REMOVE LUGGAGE COMPARTMENT DOOR COVER (See page ET-72)**
5. **REMOVE LUGGAGE DOOR OPENING SWITCH ASSEMBLY**
   (a) Disconnect the connector.
   (b) Remove the 2 bolts and the luggage door opening switch assembly.

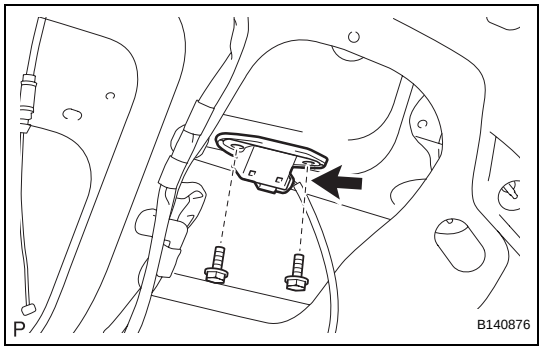

INSPECTION

1. **INSPECT LUGGAGE KEY ELECTRICAL SWITCH**
   (a) Disconnect the switch connector.
   (b) Measure the resistance according to the value(s) in the table below.
   Standard resistance

Tester connection	Condition	Specified condition
R10-1 - R10-2	Luggage compartment open switch not pushed (OFF)	10 kΩ or higher
	Luggage compartment open switch pushed (ON)	Below 1 Ω

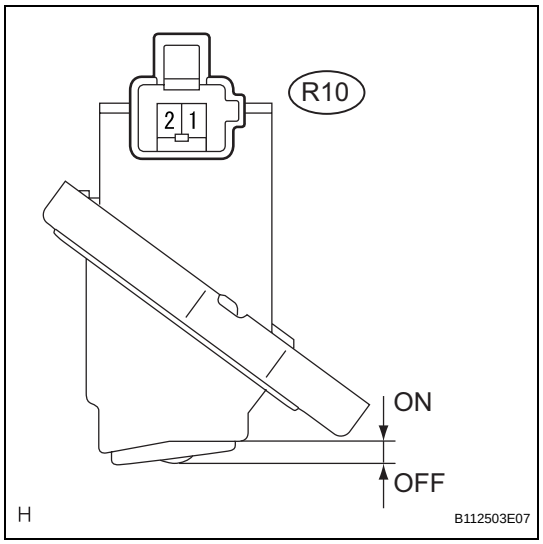

INSTALLATION

1. **INSTALL LUGGAGE DOOR OPENING SWITCH ASSEMBLY**
   (a) Install the luggage door opening switch assembly with the 2 bolts.
   (b) Connect the connector.
2. **INSTALL LUGGAGE COMPARTMENT DOOR COVER (See page ET-74)**
3. **INSTALL LUGGAGE COMPARTMENT DOOR INSIDE HANDLE (See page ET-74)**
4. **INSTALL LUGGAGE LOCK CONTROL CABLE PLATE (See page ET-75)**
5. **INSTALL LUGGAGE COMPARTMENT DOOR ASSIST GRIP (See page ET-75)**

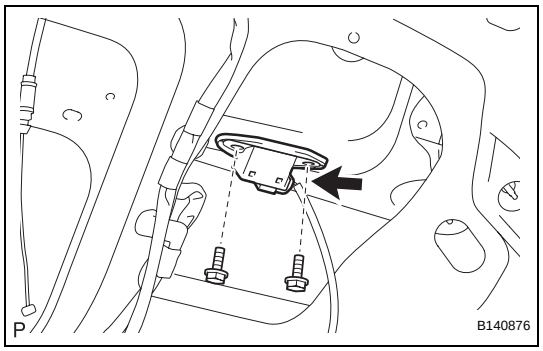

SYSTEM DESCRIPTION

1. METER GAUGE

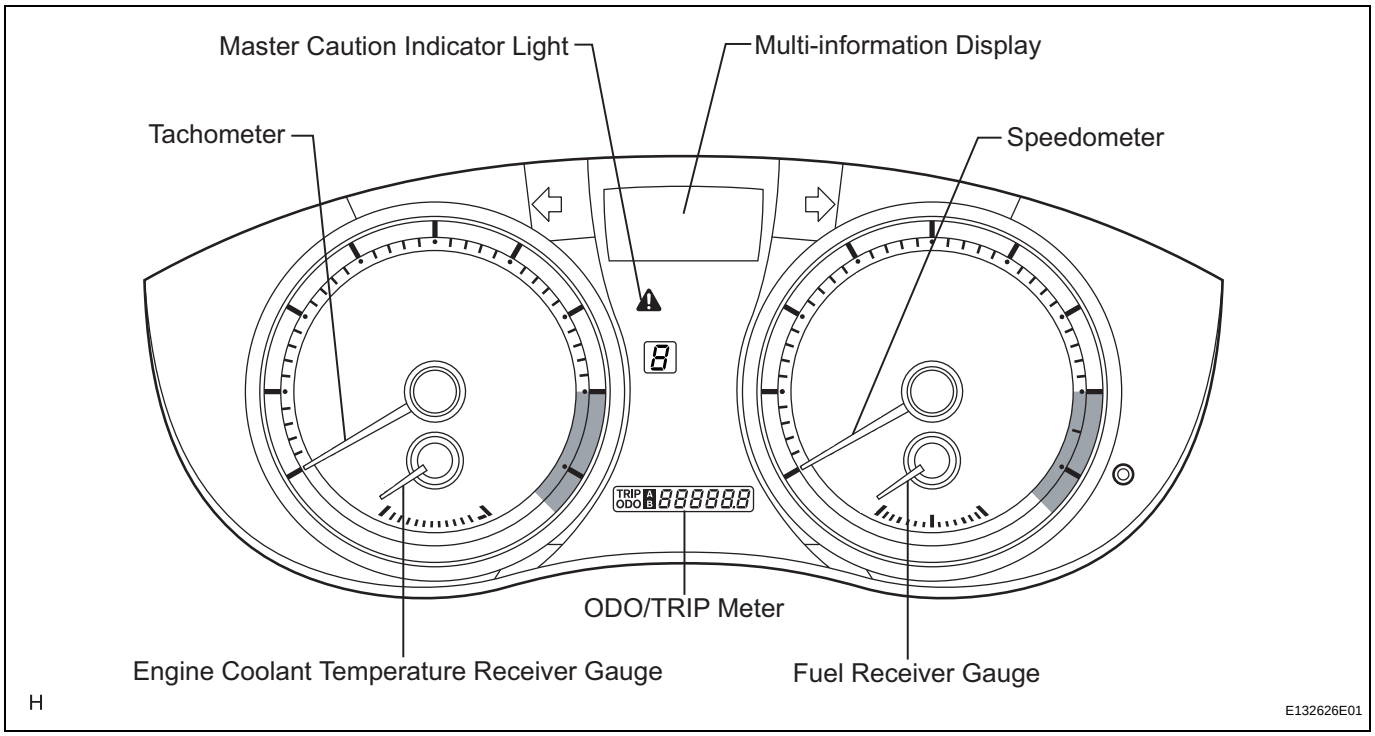

METER GAUGE:

Item	Detail
Speedometer	Indicates the vehicle speed receiving a signal from the skid control ECU. (CAN (CAN No. 1 Bus))
Tachometer	Indicates the engine speed based on a signal received from the ECM. (CAN (CAN No. 1 Bus))
Engine Coolant Temperature Receiver Gauge	Indicates the engine coolant temperature based on a signal received from the ECM. (CAN (CAN No. 1 Bus))
Fuel Receiver Gauge	Indicates the fuel level based on a signal received from the fuel sender gauge. (Direct Line)

WARNING/INDICATOR:

Item	Detail
TURN SIGNAL	Receives a turn signal from the turn signal flasher. (Direct Line)
BEAM	Receives a beam indicator light signal from the main body ECU. (CAN (CAN No. 1 Bus))
CHARGE	Receives a charge indicator light signal from the generator. (Direct Line)
CHECK E/G	Receives a check engine warning light signal from the ECM. (Direct Line)
DOOR	Open door indicator light comes on receiving a door condition signal from the main body ECU. (CAN (CAN MS Bus))
D-BELT	Receives a driver side seat belt signal from the center airbag sensor assembly. (CAN (CAN No. 1 Bus))
P-BELT	Receives a passenger side seat belt signal from the center airbag sensor assembly and transmits a passenger side seat belt condition signal to the clock assembly. (Direct Line)
HEAD (*1)	Receives a HEAD indicator light signal from the main body ECU. (CAN (CAN No. 1 Bus))
TAIL (*2)	Receives a TAIL indicator light signal from the main body ECU. (CAN (CAN No. 1 Bus))
Fr. FOG	Receives a front fog indicator light signal from the main body ECU. (CAN (CAN No. 1 Bus))
A/T SHIFT	Receives an A/T shift condition signal from the park / neutral position switch and the ECM. (CAN (CAN No. 1 Bus))
FUEL	Receives a fuel signal from the fuel sender gauge. (Direct Line)
ABS	Receives an ABS signal from the skid control ECU. (CAN (CAN No. 1 Bus))
SLIP	Receives a SLIP signal from the skid control ECU. (CAN (CAN No. 1 Bus))
BRAKE	Receives a brake signal from the brake fluid level warning switch (Direct Line) and the skid control ECU. (CAN (CAN No. 1 Bus))

Item	Detail
CRUISE	Receives a cruise signal from the ECM. (CAN (CAN No. 1 Bus))
AIRBAG	Receives an airbag signal from the center airbag sensor assembly. (CAN (CAN No. 1 Bus))
PCS (*3)	Receives PCS signal from the seat belt control ECU. (CAN (CAN No. 2 Bus))
Tire pressure (*4)	Receives a tire pressure signal from the tire pressure warning ECU. (Direct Line)
AFS OFF (*5)	Receives an AFS OFF signal from the AFS ECU. (CAN (CAN No. 2 Bus))
Master caution indicator light	Master caution indicator light comes on to indicate that an oil maintenance resetting procedure has finished.

*1: for U.S.A.
*2: for Canada
*3: with Pre-collision System
*4: with Tire Pressure Warning System
*5: with AFS
HINT:
- The multi-information display has been located in the center of the combination meter assembly.
- The display shows a message or animation for each of the functions described in the table below.

MULTI-INFORMATION DISPLAY:

ME

Item		Detail
Cruise Information	• Outside Temperature • Driving Range • Average Fuel Consumption • Average Fuel Consumption After Refueling • Current Fuel Consumption • Average Speed	• Six types of information (outside temperature, driving range, average fuel consumption, average fuel consumption after refueling, current fuel consumption and average speed) can be displayed. • The display can be switched by using the DISP switch.
Warning	• Door Warning • Oil Replacement Reminder (*1)	Interrupts the multi-information display immediately when a warning occurs.
Dynamic Radar Cruise Display (*2)		Displays the operating condition of the dynamic radar cruise control.
Intuitive Parking Assist Display (*3)		Displays the location of an obstacle and the approximate distance between the vehicle and the obstacle and displays malfunction warning messages about frozen sensors or the presence of dirt on the sensors.
Diagnosis		DTC (Diagnostic Trouble Code) for the brake control system (TRAC and VSC) can be displayed.

*1: for U.S.A.
*2: with Dynamic Radar Cruise Control System
*3: with Intuitive Parking Assist System

2. MULTI-INFORMATION DISPLAY

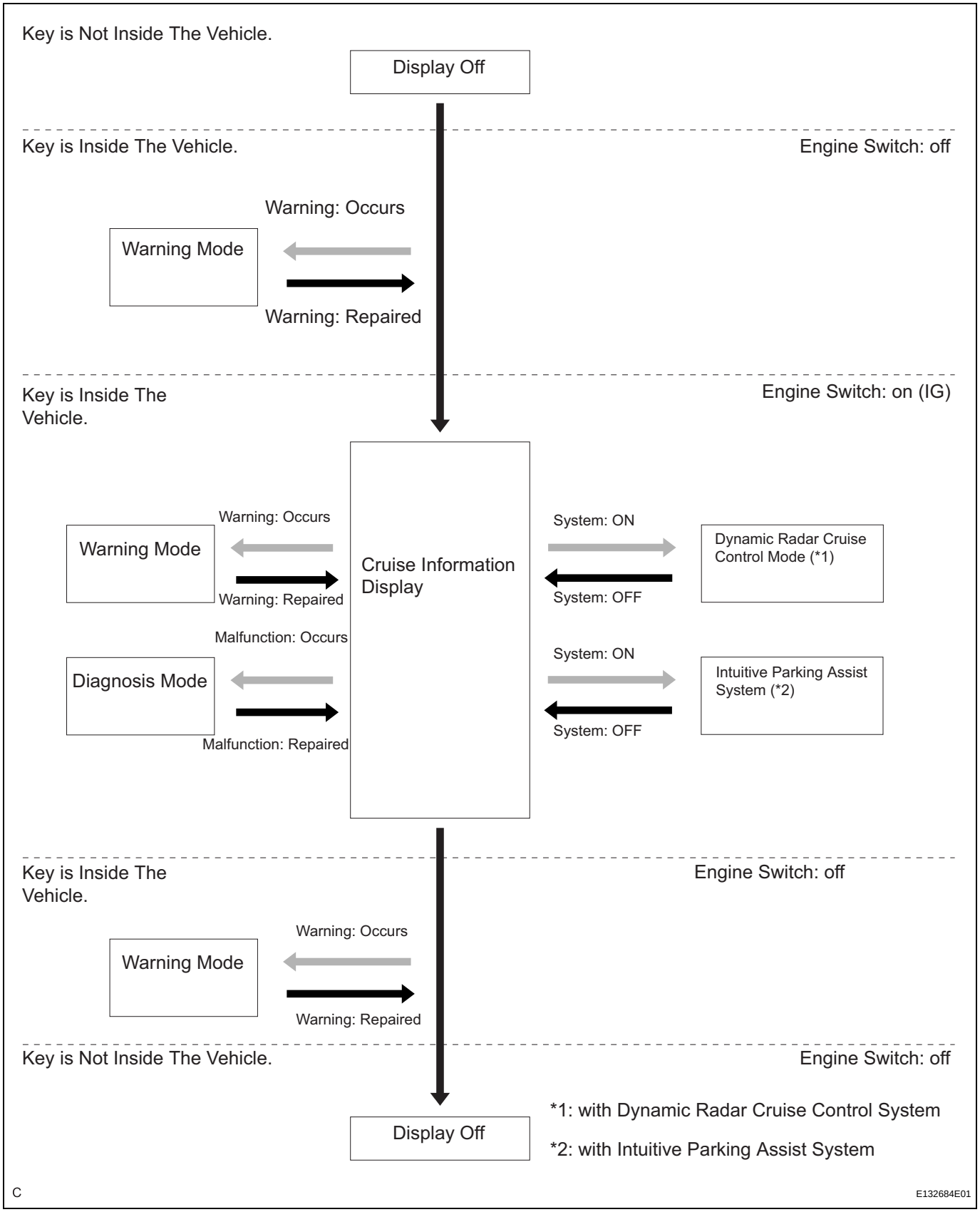

ME

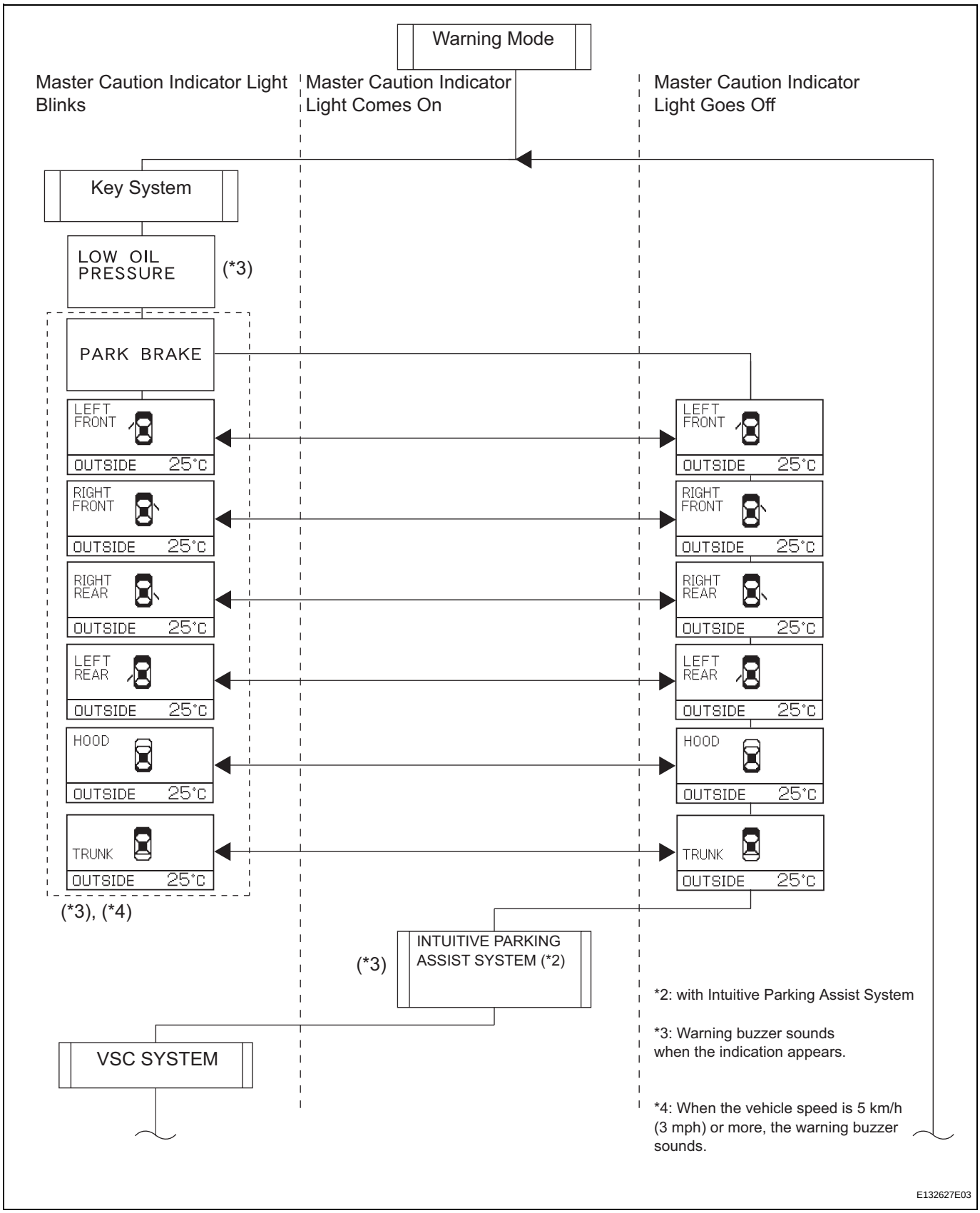
Warning Mode
Master Caution Indicator Light Blinks
Master Caution Indicator Light Comes On
Master Caution Indicator Light Goes Off
Key System
LOW OIL PRESSURE
(*3)
PARK BRAKE
LEFT FRONT
OUTSIDE 25°C
RIGHT FRONT
OUTSIDE 25°C
RIGHT REAR
OUTSIDE 25°C
LEFT REAR
OUTSIDE 25°C
HOOD
OUTSIDE 25°C
TRUNK
OUTSIDE 25°C
(*3), (*4)
(*3)
INTUITIVE PARKING ASSIST SYSTEM (*2)
VSC SYSTEM
*2: with Intuitive Parking Assist System
*3: Warning buzzer sounds when the indication appears.
*4: When the vehicle speed is 5 km/h (3 mph) or more, the warning buzzer sounds.
E132627E03

ME

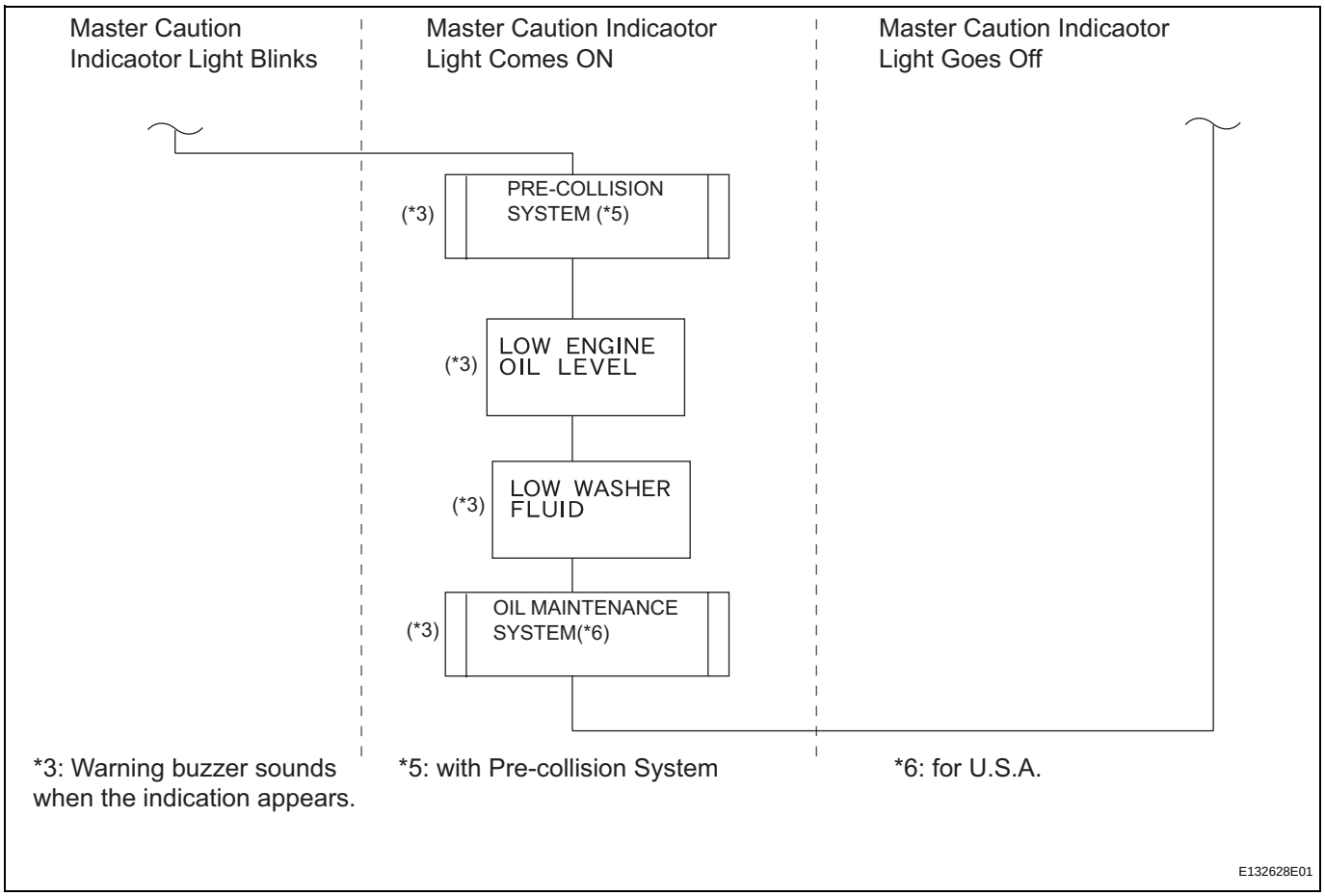
Master Caution Indicaotor Light Blinks
Master Caution Indicaotor Light Comes ON
Master Caution Indicaotor Light Goes Off
(*3)
PRE-COLLISION SYSTEM (*5)
(*3)
LOW ENGINE OIL LEVEL
(*3)
LOW WASHER FLUID
(*3)
OIL MAINTENANCE SYSTEM(*6)
*3: Warning buzzer sounds when the indication appears.
*5: with Pre-collision System
*6: for U.S.A.
E132628E01

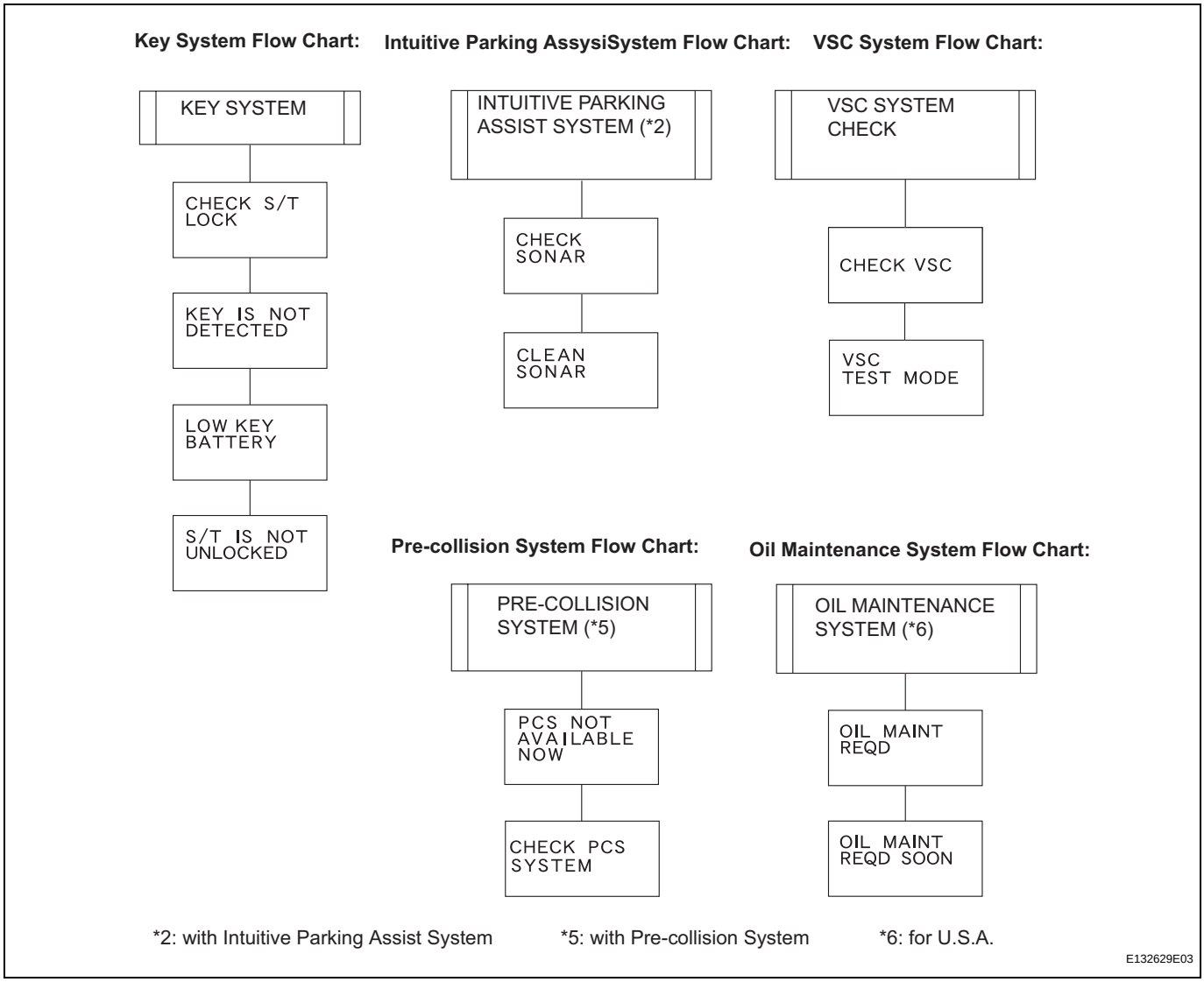

ME

3. DIAGNOSIS SYSTEM

Example:

E132630E01

HINT:

- Diagnosis information can be displayed on the multi-information display after connecting a jumper wire between TC and CG of the DLC3 (See page BC-39).
- The multi-information display shows "DIAG VSC" before meter CPU receives the diagnosis information signal from the skid control ECU.

- The multi-information display shows "DIAG VSC 23" when meter CPU receives the diagnosis information signal from the skid control ECU.
- The multi-information display shows "DIAG VSC OK" when meter CPU receives the no diagnosis information signal from the skid control ECU.

HOW TO PROCEED WITH TROUBLESHOOTING

1	VEHICLE BROUGHT TO WORKSHOP

NEXT

2	CUSTOMER PROBLEM ANALYSIS

NEXT

3	CHECK CAN COMMUNICATION SYSTEM

(a) Check for DTC output.
HINT:
See page CA-41.

- **CAN DTC OUTPUT (PROCEED TO "CAN COMMUNICATION SYSTEM")**
- **NO CAN DTC (GO TO STEP 4)**

4	PROBLEM SYMPTOM CONFIRMATION

- **SYMPTOM DOES NOT OCCUR (GO TO STEP 5)**
- **SYMPTOMS OCCURS (GO TO STEP 6)**

5	SYMPTOM SIMULATION

NEXT

6	PROBLEM SYMPTOMS TABLE

HINT:
See page ME-16.

NEXT

7	CIRCUIT INSPECTION

NEXT

8	**REPAIR OR REPLACE**

NEXT

9	**CONFIRMATION TEST**

NEXT

END

HOW TO PROCEED WITH TROUBLESHOOTING

1	VEHICLE BROUGHT TO WORKSHOP

NEXT

2	CUSTOMER PROBLEM ANALYSIS

NEXT

3	CHECK CAN COMMUNICATION SYSTEM

(a) Check for DTC output.
HINT:
See page CA-41.

- **CAN DTC OUTPUT (PROCEED TO "CAN COMMUNICATION SYSTEM")**
- **NO CAN DTC (GO TO STEP 4)**

4	PROBLEM SYMPTOM CONFIRMATION

- **SYMPTOM DOES NOT OCCUR (GO TO STEP 5)**
- **SYMPTOMS OCCURS (GO TO STEP 6)**

5	SYMPTOM SIMULATION

NEXT

6	PROBLEM SYMPTOMS TABLE

HINT:
See page ME-16.

NEXT

7	CIRCUIT INSPECTION

NEXT

8	**REPAIR OR REPLACE**

NEXT

9	**CONFIRMATION TEST**

NEXT

END

CUSTOMIZE PARAMETERS

1. COMBINATION METER ASSEMBLY

NOTICE:

Be sure to record the current value before customizing.

HINT:

The following items can be customized using intelligent tester.

METER:

Display (Item)	Default	Contents	Setting
SEAT-BELT WARN	D/P ON	Function to change the setting of the seat belt buzzer.	D/P ON, D ON, P ON, D/P OFF

HINT:

This setting is only valid for the buzzer which sounds at the 5 km/h (3 mph) or more.

INITIALIZATION

1. OIL MAINTENANCE INFORMATION MODE RESET OPERATION

HINT:

- The trip meter reset knob is located on the lower right side of the combination meter assembly.
- This reset operation is required only for U.S.A..

(a) Turn the engine switch on (IG).

(b) Press the ODO/TRIP switch until the TRIP A appears.

(c) Turn the engine switch off.

(d) Turn the engine switch on (IG) while pressing and holding the trip meter reset knob. Hold the trip meter reset knob until the following conditions are met and 5 seconds have passed.

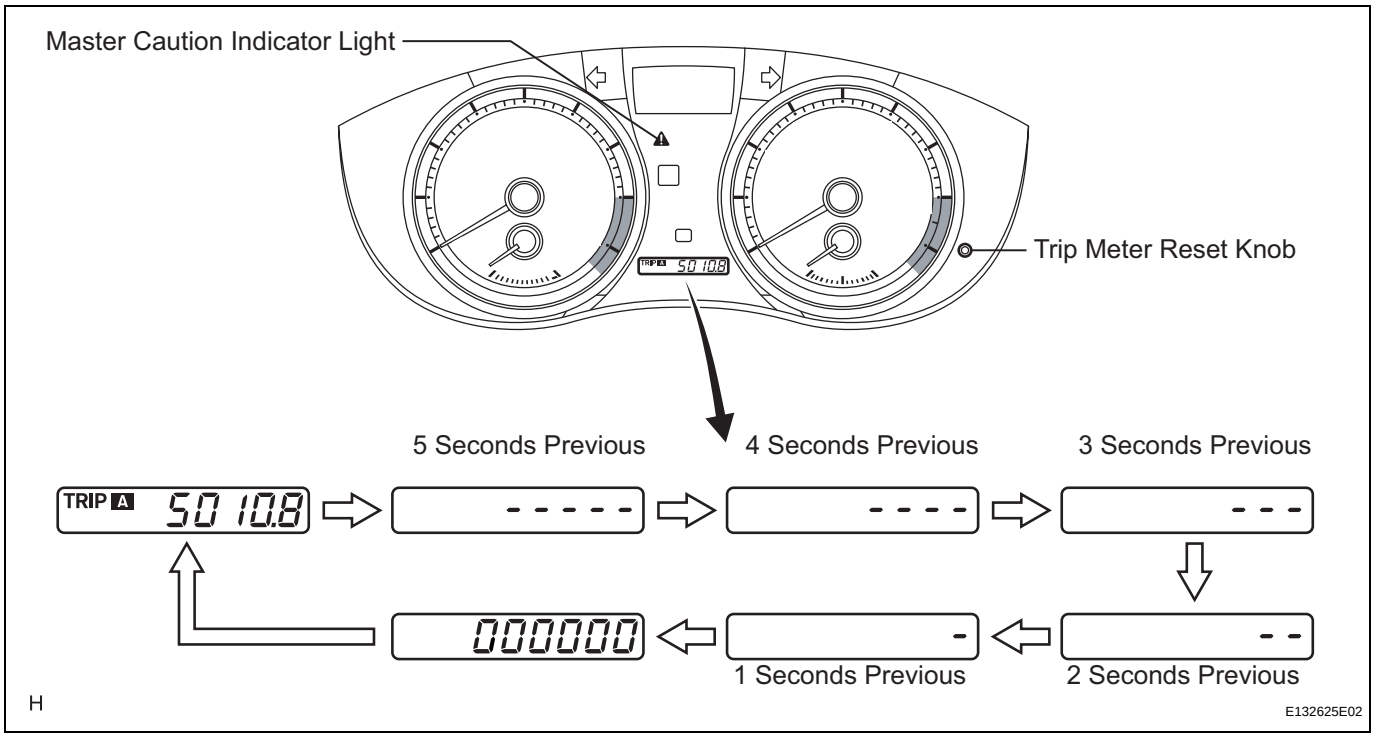

- The multi-information display shows "MAINT REQD RESET MODE".
- The master caution indicator light illuminates.
- When oil change reminder light turns off, the reset is complete.

(e) When the bar disappears and LCD will display "000000" for 1 second, the master caution indicator light turns off, the reset is complete.

ME

PROBLEM SYMPTOMS TABLE

ENTIRE SYSTEM:

Symptom	Suspected Area	See page
Entire combination meter does not operate.	Power Source Circuit	ME-40
Operating light control rheostat does not change light brightness.	Light Control Rheostat Circuit	ME-55
Meter illumination is always dark.	Meter Illumination Circuit	ME-60
Meter illumination does not dim at night.	Meter Illumination Circuit	ME-63

METER GAUGES:

Symptom	Suspected Area	See page
Speedometer malfunction	Speedometer Circuit	ME-42
Tachometer malfunction	Tachometer Circuit	ME-45
Fuel receiver gauge malfunction	Fuel Receiver Gauge Circuit	ME-48
Engine coolant temperature malfunction	Engine Coolant Temperature Receiver Gauge Circuit	ME-52

WARNING LIGHTS:

Symptom	Suspected Area	See page
Check engine warning light does not come on.	1. MIL Circuit	ES-465
	2. Wire Harness or Connector	-
	3. Combination Meter Assembly	ME-67
Charge warning light does not come on.	1. Combination Meter (LED)	ME-29
	2. Wire Harness or Connector	-
	3. Generator	-
	4. Combination Meter Assembly	ME-67
Brake warning light does not come on.	1. Combination Meter (LED)	ME-29
	2. Wire Harness or Connector	-
	3. Brake Warning Light Circuit	BC-162
	4. Combination Meter Assembly	ME-67
Brake warning light does not go off.	1. Combination Meter (LED)	ME-29
	2. Wire Harness or Connector	-
	3. Brake Warning Light Circuit	BC-154
	4. Combination Meter Assembly	ME-67
ABS warning light does not come on.	1. Combination Meter (LED)	ME-29
	2. Wire Harness or Connector	-
	3. ABS Warning Light Circuit	BC-146
	4. Combination Meter Assembly	ME-67
ABS warning light does not go off.	1. Combination Meter (LED)	ME-29
	2. Wire Harness or Connector	-
	3. ABS Warning Light Circuit	BC-141
	4. Combination Meter Assembly	ME-67
Airbag warning light does not come on.	1. Combination Meter (LED)	ME-29
	2. Airbag Warning Light Circuit	RS-298
	3. Wire Harness or Connector	-
	4. Combination Meter Assembly	ME-67
Airbag warning light does not go off.	1. Combination Meter (LED)	ME-29
	2. Airbag Warning Light Circuit	RS-294
	3. Wire Harness or Connector	-
	4. Combination Meter Assembly	ME-67

Symptom	Suspected Area	See page
Open door warning light does not come on.	1. Combination Meter (LED)	ME-29
	2. Wire Harness or Connector	-
	3. Door Courtesy Switch	LI-203
	4. Main Body ECU	-
	5. Combination Meter Assembly	ME-67
Fuel level warning light does not come on.	1. Combination Meter (LED)	ME-29
	2. Wire Harness or Connector	-
	3. Fuel Sender Gauge Assembly	ME-74
	4. Combination Meter Assembly	ME-67
Driver seat belt warning light does not come on.	1. Combination Meter (LED)	ME-29
	2. Wire Harness or Connector	-
	3. Driver Seat Belt Warning Light Circuit	SB-13
	4. Combination Meter Assembly	ME-67
Tire pressure warning light does not come on. (with Tire Pressure Warning System)	1. Combination Meter (LED)	ME-29
	2. Wire Harness or Connector	-
	3. Tire Pressure Warning System	TW-23
	4. Combination Meter Assembly	ME-67

INDICATOR LIGHTS:

Symptom	Suspected Area	See page
Shift indicator light does not come on.	1. Combination Meter (LED)	ME-29
	2. Wire Harness or Connector	-
	3. Park/Neutral Position Switch Circuit	AX-170
	4. Transmission Control Switch Circuit	AX-166
	5. ECM	ES-543
	6. Combination Meter Assembly	ME-67
Turn indicator light does not come on.	1. Wire Harness or Connector	-
	2. Turn Indicator Light Circuit	LI-32
	3. Combination Meter Assembly	ME-67
SLIP indicator light does not come on.	1. Combination Meter (LED)	ME-29
	2. Wire Harness or Connector	-
	3. SLIP Indicator Light Circuit	BC-168
	4. Combination Meter Assembly	ME-67
SLIP indicator light does not go off.	1. Combination Meter (LED)	ME-29
	2. Wire Harness or Connector	-
	3. SLIP Indicator Light Circuit	BC-164
	4. Combination Meter Assembly	ME-67
CRUISE indicator light does not come on.	1. Combination Meter (LED)	ME-29
	2. Wire Harness or Connector	-
	3. Cruise Main Indicator Light Circuit (without Dynamic Radar Cruise Control System)	CC-29
	4. Cruise Main Indicator Light Circuit (with Dynamic Radar Cruise Control System)	CC-109
	5. Combination Meter Assembly	ME-67
High beam indicator light does not come on.	1. Wire Harness of Connector	-
	2. Headlight Dimmer Switch	LI-189
	3. Combination Meter Assembly	ME-67
Master caution indicator light does not come on.	1. Combination Meter (LED)	ME-29
	2. Combination Meter Assembly	ME-67

Symptom	Suspected Area	See page
PCS indicator light malfunction (with Pre-collision System)	1. Combination Meter (LED)	ME-29
	2. Seat Belt Control ECU	-
	3. Combination Meter Assembly	ME-67
Rr LIGHT indicator light does not go off.	1. Combination Meter (LED)	ME-29
	2. Wire Harness or Connector	-
	3. Taillight Circuit	LI-32
	4. Light Failure Sensor	ME-84
	5. Combination Meter Assembly	ME-67
HEAD indicator light does not come on. (for U.S.A.)	1. Combination Meter (LED)	ME-29
	2. Wire Harness or Connector	-
	3. Main Body ECU	-
	4. Combination Meter Assembly	ME-67
TAIL indicator light does not come on. (for Canada)	1. Combination Meter (LED)	ME-29
	2. Wire Harness or Connector	-
	3. Main Body ECU	-
	4. Combination Meter Assembly	ME-67
AFS OFF indicator light does not come on. (with AFS)	1. Combination Meter (LED)	ME-29
	2. AFS ECU	-
	3. Combination Meter Assembly	ME-67
Fr FOG indicator light does not come on.	1. Combination Meter (LED)	ME-29
	2. Wire Harness or Connector	-
	3. Main Body ECU	-
	4. Combination Meter Assembly	ME-67

ME

MULTI-INFORMATION DISPLAY:

Symptom	Suspected Area	See page
Multi-information display does not light up.	1. Combination Meter (Perform ACTIVE TEST by intelligent Tester)	ME-29
	2. Combination Meter Assembly	ME-67
Door open warning display is not available.	1. Main Body ECU	-
	2. Combination Meter Assembly	ME-67
Maintenance required display malfunction (for U.S.A.)	1. Combination Meter Assembly (Oil Maintenance Resetting Procedure)	ME-15
	2. Combination Meter Assembly	ME-67
Outside temperature display malfunction	1. Outside Temperature Sensor Circuit	AC-218
	2. Wire Harness or Connector	-
	3. Combination Meter Assembly	ME-67
Driving range display malfunction	1. ECM	-
	2. Skid Control ECU	-
	3. Combination Meter Assembly	ME-67
Average fuel consumption/Average fuel consumption after refueling display malfunction	1. ECM	-
	2. Combination Meter Assembly	ME-67
Current fuel consumption display malfunction	1. ECM	-
	2. Combination Meter Assembly	ME-67
Average speed display malfunction	1. Skid Control ECU	-
	2. Combination Meter Assembly	ME-67
Dynamic radar cruise control system display malfunction (with Dynamic Radar Cruise Control System)	1. Cruise Control System	-
	2. Combination Meter Assembly	ME-67
Moon roof open display malfunction	1. Sliding Roof Control System	-
	2. Combination Meter Assembly	ME-67

Symptom	Suspected Area	See page
Steering lock display malfunction	1. Steering Lock System	-
	2. Combination Meter Assembly	ME-67
Low oil pressure display malfunction	1. Engine Oil Pressure Switch	ME-76
	2. Wire Harness or Connector	-
	3. Combination Meter Assembly	ME-67
Low engine oil level display malfunction	1. Engine Oil Level Sensor	ME-77
	2. Wire Harness or Connector	-
	3. Combination Meter Assembly	ME-67
Low washer fluid display malfunction	1. Washer Fluid Level Switch	ME-34
	2. Wire Harness or Connector	-
	3. Combination Meter Assembly	ME-67
Check PCS display malfunction (with Pre-collision System)	1. Pre-Collision System	-
	2. Combination Meter Assembly	ME-67

OTHERS:

Symptom	Suspected Area	See page
Front passenger seat belt warning light does not come on.	1. Combination Meter (LED)	ME-29
	2. Wire Harness or Connector	-
	3. Front Passenger Seat Belt Warning Light Circuit	SB-15
	4. Combination Meter Assembly	ME-67
	5. Heater Control Panel	AC-227
	6. Multi-display Assembly	OT-9

DATA LIST / ACTIVE TEST

1. DATA LIST

Using the intelligent tester to read the DATA LIST allows the values or states of switches, sensors, actuators and other items to be read without removing any parts. This non-intrusive inspection can be very useful because intermittent conditions or signals may be discovered before parts or wiring is disturbed. Reading the DATA LIST information early in troubleshooting is one way to save diagnostic time.

(a) Warm up the engine.
(b) Turn the engine switch off.
(c) Connect the intelligent tester to the DLC3.
(d) Turn the engine switch on (IG).
(e) Turn the tester on.
(f) Enter the following menus: DIAGNOSIS / OBD/ MOBD / METER / DATA LIST.
(g) Check values by referring to the table below.

METER:

Tester Display	Measurement Item/Range	Normal Condition	Diagnostic Note
TAIL CANCEL SW	Tail cancel switch is OFF/ON	OFF: Rheostat knob is not fully turned up	-
		ON: Rheostat knob is fully turned up	-
ODO/TRIP SW	ODO/TRIP switch is OFF/ON	OFF: Switch is released	-
		ON: Switch is pushed	-
P-BELT BUCKL SW	Front passenger buckle switch is OFF/ON	OFF: Seat belt is fastened	-
		ON: Seat belt is unfastened	-
SPEED METER	Vehicle speed/Min.: 0 km/h (0 mph), Max.: 255 km/h (158 mph)	Almost same as actual vehicle speed (When driving)	-
TACHO METER	Engine speed/Min.: 0 rpm, Max.: 12,750 rpm	Almost same at the meter rpm (When engine is running)	-
COOLANT TEMP	Engine coolant temperature: 0°C (32°F) to 127.5°C (261.5°F)	After warning up: 80 to 95°C (176 to 203°F)	-
WASHER SW	Washer level switch is OFF/ON	OFF: Washer level is not low	-
		ON: Washer level is low	-
OIL LEVEL SW	Oil level warning switch is OFF/ ON	OFF: Oil level is more than low	-
		ON: Oil level is less than low	-
MULTI DISP SW	MODE switch in the steering pad is OFF/ON	OFF: Mode switch is OFF	-
		ON: Mode switch is ON	-
+B VOLTAGE VAL	Battery voltage/Min.: 0 V, Max.: 25.5 V	10 to 14 V	-
OIL MAINTENANCE (*)	Oil maintenance warning value: Min.: 0, Max. 25,500	The running distance after performing oil maintenance resetting procedure is displayed	If the value is 5,000 (mph) or more, perform oil maintenance resetting procedure after changing the oil.
FUEL GAUGE	Fuel input signal Min.: 0 (L), Max. 127.5 (L)	Fuel gauge indicates (E): 7.5 (L)	-
		Fuel gauge indicates (1/2): 35.0 (L)	-
		Fuel gauge indicates (F): 62.9 (L)	-
AMBIENT TEMP	Outside temperature: Min.: -40°C (-40°F) to 50°C (122°F)	Almost same as actual outside temperature	The temperature displayed on the multi-information display is -40 to 50°C (-40 to 122°F)
RHEOSTAT	Light Control Rheostat/Min.: 0%, Max.: 100%	Light control rheostat switch is Dark (0%) → Bright (100%)	-

Tester Display	Measurement Item/Range	Normal Condition	Diagnostic Note
OUTSIDE LIGHT	Quantity of outside light/Min.: 0%, Max.: 100%	Outside light is Dark (0%) → Bright (100%)	-
ECM/PCM DTC 1 to 3	Communication error: not occurred/occurred	Not occurred: UNREC	-
		Occurred: REC	-
ECM/PCM ODO 1 to 3	Distance when DTC is output Min.: 0, Max.: 999999	-	-
ABS/VSC DTC 1 to 3	Communication error: not occurred/occurred	Not occurred: UNREC	-
		Occurred: REC	-
ABS/VSC ODO 1 to 3	Distance when DTC is output Min.: 0, Max.: 999999	-	-
SEAT-BELT WARN	The inquiry of the seat belt warning buzzer is D/P ON, D ON, P ON, D/P OFF	The customized setting of the inquiry of the seat belt warning buzzer is displayed	-
CODES#	The number of the DTC which is currently output	0	-

*: for U.S.A.

ABS/TRAC/VSC:

Tester Display	Measurement Item/Range	Normal Condition	Diagnostic Note
FR/FL/RR/RL WHEEL SPD	Vehicle speed/Min.: 0 km/h (0 mph), Max.: 326 km/h (202 mph)	Almost same as actual vehicle speed (When driving)	-
VEHICLE SPD	Vehicle speed/Min.: 0 km/h (0 mph), Max.: 326 km/h (202 mph)	Almost same as actual vehicle speed (When driving)	-

ME

ENGINE:

Tester Display	Measurement Item/Range	Normal Condition	Diagnostic Note
ENGINE SPD	Vehicle speed/Min.: 0 rpm, Max.: 16,383.75 rpm	Almost same as actual engine speed (When engine running)	-
COOLANT TEMP	Engine coolant temperature: Min.: -40°C (-40°F), Max: 140°C (284°F)	80 to 100°C (176 to 212°F): After warming up	• If -40°C (-40°F): sensor circuit open • If 140°C (284°F) or more: sensor circuit shorted

2. ACTIVE TEST

Using the intelligent tester to perform Active Tests allows the relay, actuator, and other items to operate without removing any parts. This non-intrusive functional inspection can be very useful because intermittent operation may be discovered before parts or wiring is disturbed. Performing ACTIVE TEST early in troubleshooting is one way to save diagnostic time. DATA LIST information can be display while performing ACTIVE TEST.

(a) Connect the intelligent tester to the DLC3.
(b) Turn the engine switch on (IG).
(c) Turn the tester on.
(d) Enter the following menus: DIAGNOSIS / OBD/ MOBD / METER / ACTIVE TEST.
(e) From the display on the tester, perform the "ACTIVE TEST".

METER:

Tester Display	Test Part	Control Range	Diagnostic Note
SPEED METER	Speedometer	0, 40, 80, 120 mph (*1)	-
		0, 40, 80, 120, 160, 200, 240 km/h (*2))	

Tester Display	Test Part	Control Range	Diagnostic Note
TACHOMETER	Tachometer	0, 1,000, 2,000, 3,000, 4,000, 5,000, 6,000, 7,000 (rpm)	-
FUEL GAUGE	Fuel receiver gauge	EMPTY, 1/2, FULL	-
COOLANT TEMP	Engine coolant temperature receiver gauge	LOW, NORM, HIGH	-
A/T INDIC (1)	A/T shift indicator light	A/T shift indicator light D, N, R, P is OFF/ON	-
A/T INDIC (2)	A/T gear range indicator light	A/T gear range indicator light S is OFF/ON	-
METER DISPLAY1	Multi-information display	All the dots in the multi-information display OFF/ON	Confirm that the vehicle is stopped, engine idling
METER DISPLAY2	A/T shift indicator display	The segments in the combination meter assembly OFF/ON	Confirm that the vehicle is stopped, engine idling
SRS WARN	Airbag warning light	Airbag warning light is OFF/ON	-
DOORS ALL OPEN	Open door warning light	Open door warning light is OFF/ON	-
P-BELT REMIND	Front passenger side seat belt warning light	Front passenger side seat belt warning light is OFF/ON	-
D-BELT REMIND	Driver side seat belt warning light	Driver side seat belt warning light is OFF/ON	-
ABS WARN	ABS warning light	ABS warning light is OFF/ON	Confirm that the vehicle is stopped, engine idling
SLIP INDIC	Slip indicator light	Slip indicator light is OFF/ON	-
HIGH BEAM INDIC	Hi-beam indicator light	Hi-beam indicator light is OFF/ON	-
HEADLIGHT INDIC (*1)	Head indicator light	Head indicator light is OFF/ON	-
TAILLIGHT INDIC (*2)	Tail indicator light	Tail indicator light is OFF/ON	-
Fr FOG INDIC	Front fog indicator light	Front fog indicator light is OFF/ON	Confirm that the vehicle is stopped, engine idling
Rr LIGHT INDIC	Rear light indicator light	Rear light indicator light is OFF/ON	Confirm that the vehicle is stopped, engine idling
PRECRASH INDIC (*3)	Precrash indicator light	Precrash indicator light is OFF/ON	Confirm that the vehicle is stopped, engine idling
D DOOR OPEN	Open door warning light	Open door warning light is OFF/ON	Confirm that the vehicle is stopped, engine idling
P DOOR OPEN	Front passenger door indicator	Open door warning light is OFF/ON	Confirm that the vehicle is stopped, engine idling
RR DOOR OPEN	Open door warning light	Open door warning light is OFF/ON	Confirm that the vehicle is stopped, engine idling
RL DOOR OPEN	Open door warning light	Open door warning light is OFF/ON	Confirm that the vehicle is stopped, engine idling
LUGG DOOR OPEN	Open door warning light	Open door warning light is OFF/ON	Confirm that the vehicle is stopped, engine idling
AFS INDICATOR (*4)	AFS off indicator light	AFS off indicator light is OFF/ON	Confirm that the vehicle is stopped, engine idling
LOW FUEL WARN	Low fuel warning light	Fuel warning light is OFF/ON	-
TIRE PRESS WARN (*5)	Tire pressure warning light	Tire pressure warning light is OFF/ON	-
CRUISE INDIC	Cruise indicator light	Cruise indicator light is OFF/ON	-
BRAKE WARN	Brake warning light	Brake warning light is OFF/ON	Confirm that the vehicle is stopped, engine idling
MST WARN INDIC	Master caution indicator light	Master caution indicator light is OFF/ON	Confirm that the vehicle is stopped, engine idling

*1: for U.S.A.
*2: for Canada
*3: with Pre-collision System
*4: with AFS
*5: with Tire Pressure Warning System

MAIN BODY:

Tester Display	Test Part	Control Range	Diagnostic Note
DIMMER SIG	Auto dimmer signal	Auto dimmer signal OFF/ON	-

DIAGNOSTIC TROUBLE CODE CHART

DTC Code	Detection Item	Trouble Area	See page
U0100	Lost Communication with ECM/PCM "A"	1. ECM 2. CAN communication system	ME-36
U0129	Lost Communication with Skid Control ECU	1. ABS and traction actuator assembly (Skid control ECU) 2. CAN communication system	ME-38

ON-VEHICLE INSPECTION

1. INSPECT SPEEDOMETER

(a) Check the operation.

(1) Using a speedometer tester (calibrated chassis dynamometer), check the speedometer indication according to the table below.

Reference: mph (for U.S.A.)

Chassis Dynamometer Indication	Acceptable Range
20 mph	20.0 to 23.0 mph
40 mph	40.0 to 43.5 mph
60 mph	60.0 to 64.0 mph
80 mph	80.0 to 84.5 mph
100 mph	100.0 to 105.0 mph
120 mph	120.0 to 125.5 mph
140 mph	140.0 to 146.0 mph
160 mph	160.0 to 166.5 mph

Reference: km/h (for Canada)

ME

Chassis Dynamometer Indication	Acceptable range Data in ( ) is for reference
20 km/h	(17.5 to 21.5 km/h)
40 km/h	38.0 to 42.0 km/h
60 km/h	58.0 to 63.0 km/h
80 km/h	78.0 to 84.0 km/h
100 km/h	98.5 to 104.5 km/h
120 km/h	119.0 to 125.0 km/h
140 km/h	139.0 to 146.0 km/h
160 km/h	159.0 to 167.0 km/h
180 km/h	179.0 to 188.0 km/h
200 km/h	199.0 to 209.0 km/h
220 km/h	219.0 to 230.0 km/h
240 km/h	239.0 to 251.0 km/h

NOTICE:
Tire wear as well as over or under inflation will cause errors.

(2) Check the deviation from the acceptable range of the speedometer indication.

Reference:
Less than 0.5 km/h (0.3 mph)

HINT:
If the indication is not as specified, go to problem symptoms table (See page ME-16).

2. INSPECT TACHOMETER

(a) Connect a tune-up tachometer, and start the engine.

(b) Compare the test results with the tachometer indications.

DC 13.5 V, at 25°C (77°F):

Tune-up Tachometer indication (rpm)	Acceptable range Data in ( ) is for reference
700	630 to 770
1,000	(900 to 1,100)
2,000	(1,850 to 2,150)

Tune-up Tachometer indication (rpm)	Acceptable range Data in ( ) is for reference
3,000	2,800 to 3,200
4,000	(3,800 to 4,200)
5,000	4,800 to 5,200
6,000	(5,750 to 6,250)
7,000	6,700 to 7,300
8,000	(7,700 to 8,300)

HINT:
If the indication is not as specified, go to the problem symptoms table (See page ME-16).

3. INSPECT ENGINE OIL PRESSURE SWITCH

(a) Disconnect the connector from the engine oil pressure switch.
(b) Turn the engine switch on (IG).
(c) Ground the terminal of the wire harness side connector, then check the low oil pressure warning light.
OK:
Oil pressure warning message comes on.
HINT:
If the warning message is not displayed, go to the problem symptoms table (See page ME-16).

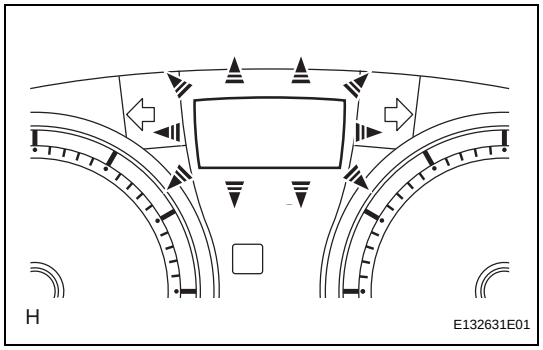

4. INSPECT MULTI-INFORMATION DISPLAY

(a) Turn the engine switch off.
(b) Press the "DISP" button and hold it down.
(c) Turn the engine switch on (IG).
OK:
All the dots in the multi-information display come on.
HINT:
This test is also available on "ACTIVE TEST" (See page ME-29).
(d) Turn the engine switch off to finish this test mode.
HINT:
If the result is not as specified, replace the combination meter assembly.

5. INSPECT ENGINE OIL LEVEL SENSOR

(a) Disconnect the engine oil level sensor connector.
(b) Turn the engine switch on (IG), and check the multi-information display.
OK:
Low engine oil level message is displayed.
HINT:
If the warning message is not displayed, go to the problem symptoms table (See page ME-16).

6. INSPECT WASHER LEVEL SWITCH

(a) Disconnect the connector from the washer level switch.
(b) Turn the engine switch on (IG).

(c) Ground the terminal of the wire harness side connector, then check the multi-information display.

OK:

Washer level warning message is displayed.

HINT:

If the warning message is not displayed, go to the problem symptoms table (See page ME-16).

DTC	U0100	Lost Communication with ECM/PCM "A"

DESCRIPTION

The combination meter assembly communicates with the ECM via the CAN communication lines (CAN No. 1 Bus).

DTC No.	DTC Detection Conditions	Trouble Areas
U0100	When either of following conditions detected: 1. Vehicle speed 5 km/h (3.1 mph) or more and IG voltage 10.5 V or more 2. No communication with ECM continues for 3 seconds or more (No communication to ECM or skid control ECU continues for 60 seconds or more)	• CAN communication system • ECM

WIRING DIAGRAM

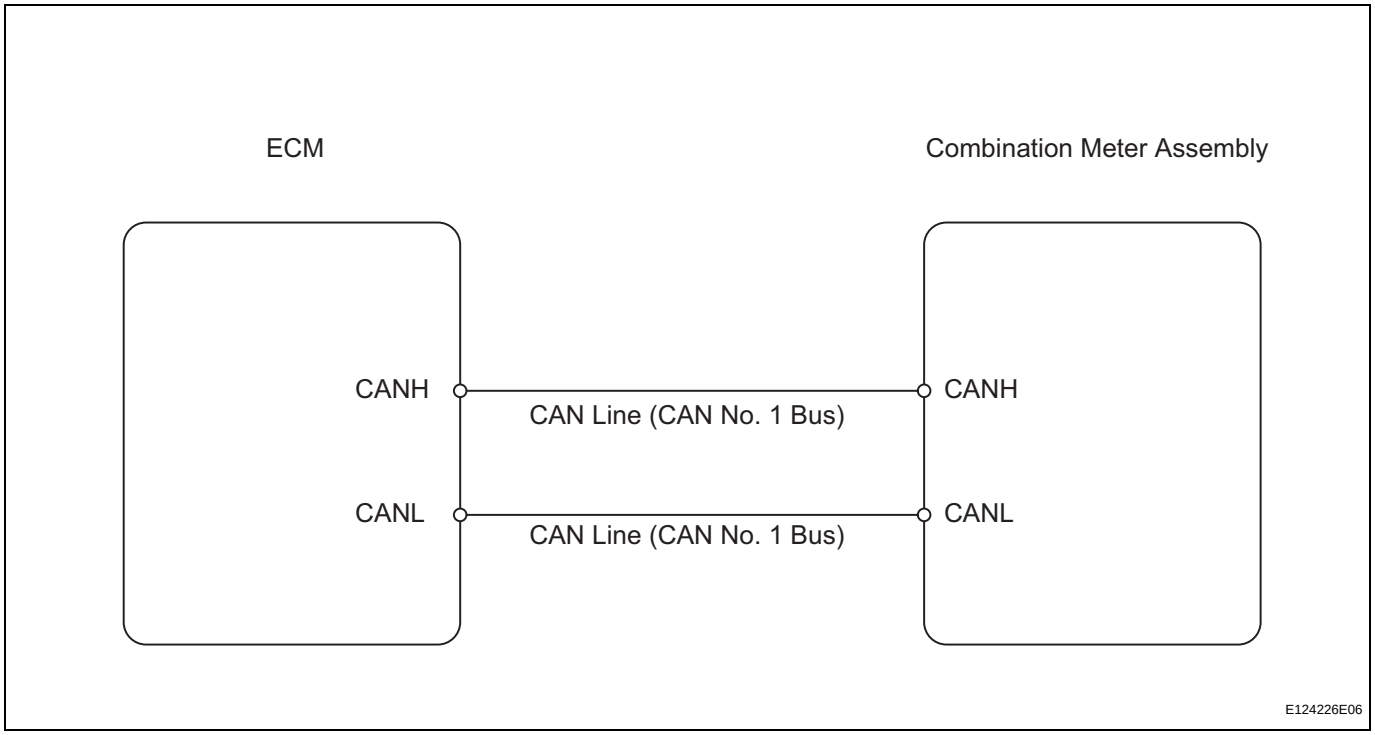

INSPECTION PROCEDURE

1	CONFIRM DTC OUTPUT

(a) Connect the intelligent tester to the DLC3.
(b) Turn the engine switch on (IG).
(c) Turn the tester on.
(d) Clear the stored DTCs by selecting the following menu items on the tester: DIAGNOSIS / OBD/MOBD / METER / DTC INFO / CLEAR CODES.
(e) Drive the vehicle at more than 5 km/h (3.1 mph) for at least 60 seconds.
(f) Stop the vehicle.
(g) Check for DTCs (See page CA-11).

Result

Result	Proceed to
DTC output	A (See page CA-49)
DTC not output	B

B → **USE SIMULATION METHOD TO CHECK**

A

GO TO CAN COMMUNICATION SYSTEM

DTC	U0129	Lost Communication with Skid Control ECU

DESCRIPTION

The combination meter assembly communicates with the ABS and traction actuator assembly (skid control ECU) via the CAN communication system (CAN No. 1 Bus).

DTC No.	DTC Detection Conditions	Trouble Areas
U0129	When either of following conditions detected: 1. 15 seconds have elapsed since engine started and IG voltage 10.5 V or more 2. No communication with ABS and traction actuator (skid control ECU) continues for 3 seconds or more (No communication with ECM or skid control ECU continues for 60 seconds or more)	• ABS and traction actuator (Skid control ECU) • CAN communication system

WIRING DIAGRAM

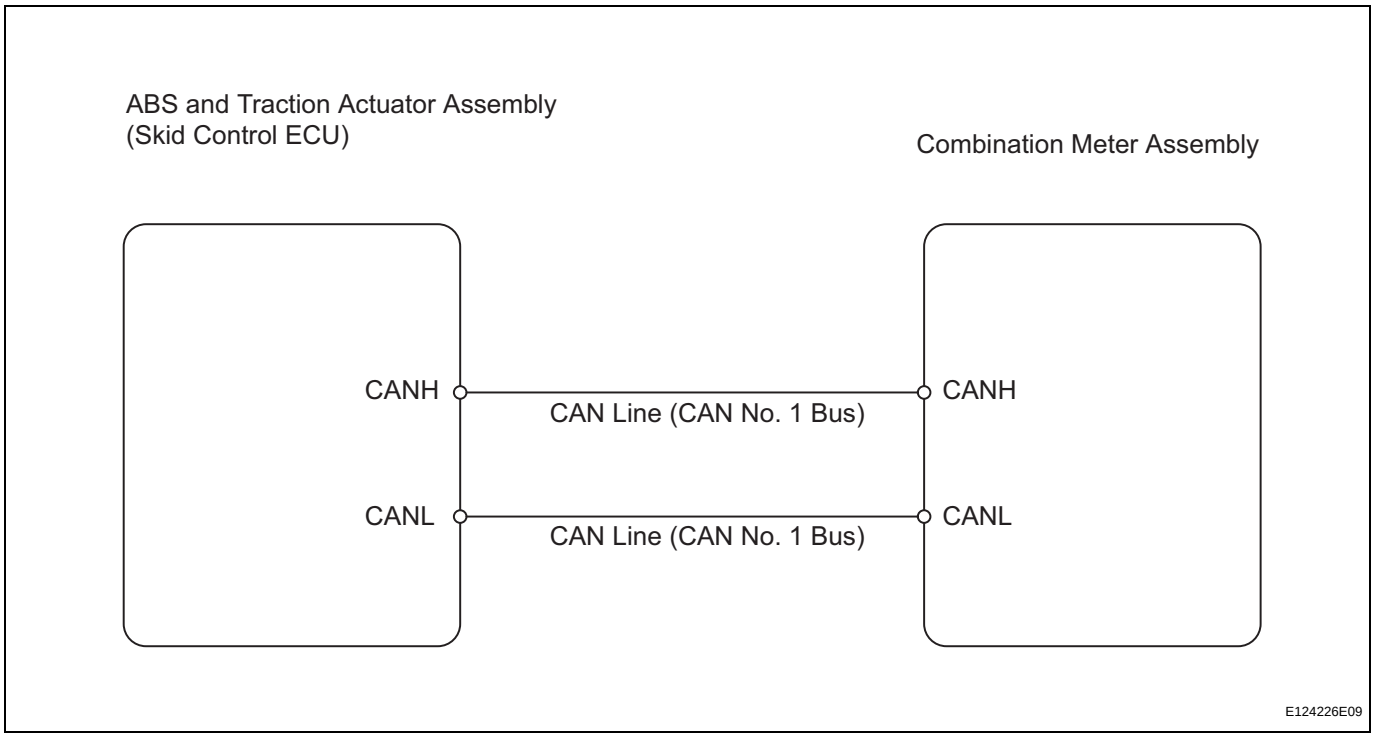

INSPECTION PROCEDURE

1	CONFIRM DTC OUTPUT

(a) Connect the intelligent tester to the DLC3.
(b) Turn the engine switch on (IG).
(c) Turn the tester on.
(d) Clear the stored DTCs by selecting the following menu items on the tester: DIAGNOSIS / OBD/MOBD / METER / DTC INFO / CLEAR CODES.
(e) Drive the vehicle at more than 5 km/h (3.1 mph) for at least 60 seconds.
(f) Stop the vehicle.
(g) Check for DTCs (See page CA-11).

Result

Result	Proceed to
DTC output	A (See page CA-49)
DTC not output	B

B → **USE SIMULATION METHOD TO CHECK**

A

GO TO CAN COMMUNICATION SYSTEM

Entire Combination Meter does not Operate

DESCRIPTION

This circuit is the power source circuit for the meter. This circuit provides two types of power sources; one is a constant power source mainly used as a backup power source, and the other is a power source mainly used for signal transmission. The constant power source is mainly used as a backup power source of the meter CPU, however, it is also used for communication. If a voltage of 12 V is not applied to terminal IG+ when the engine switch is on (IG), the indicator will not operate.

WIRING DIAGRAM

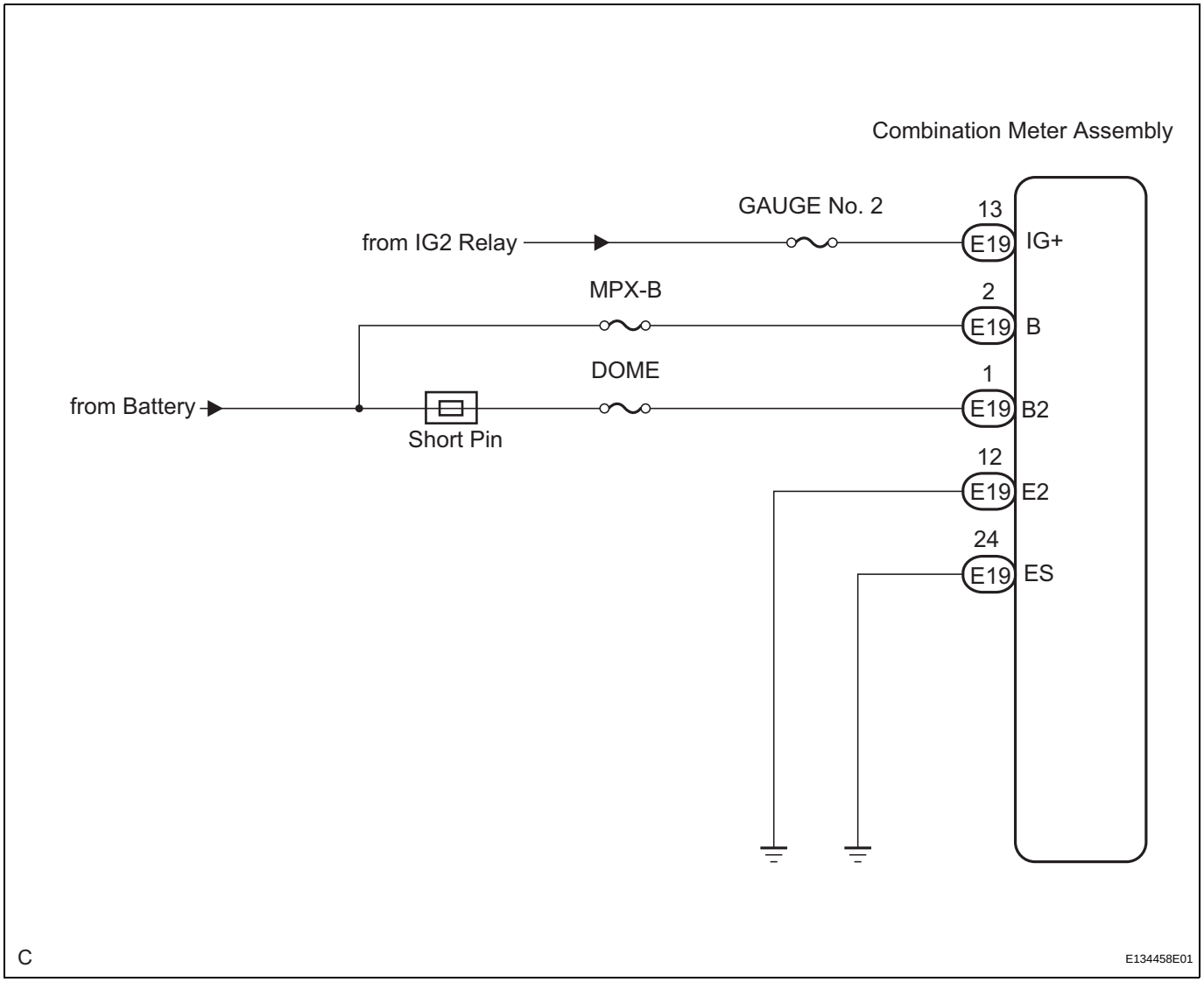

ME

INSPECTION PROCEDURE

1	INSPECT COMBINATION METER ASSEMBLY

Combination Meter Assembly Wire Harness View:

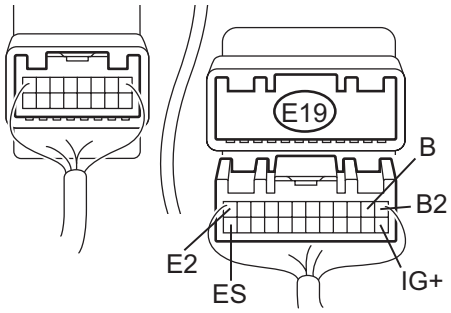

H

E132615E01

(a) Disconnect the E19 connector.

(b) Measure the resistance according to the value(s) in the table below.

Standard resistance

Tester Connection	Condition	Specified Condition
E19-12 (E2) - Body ground	Always	Below 1 Ω
E19-24 (ES) - Body ground	Always	Below 1 Ω

(c) Measure the voltage according to the value(s) in the table below.

Standard voltage

Tester Connection	Condition	Specified Condition
E19-13 (IG+) - Body ground	Turn the engine switch on (IG)	10 to 14 V
E19-1 (B2) - Body ground	Always	10 to 14 V
E19-2 (B) - Body ground	Always	10 to 14 V

NG → **REPAIR OR REPLACE HARNESS OR CONNECTOR**

OK

REPLACE COMBINATION METER ASSEMBLY

ME

Speedometer Malfunction

DESCRIPTION

The meter CPU receives vehicle speed signals from the skid control ECU via the CAN communication lines (CAN No. 1 Bus). The vehicle speed sensor detects the voltage that varies according to the vehicle speed. The skid control ECU supplies power to the vehicle speed sensor. The skid control ECU detects vehicle speed signals based on the pulses of the voltage.

WIRING DIAGRAM

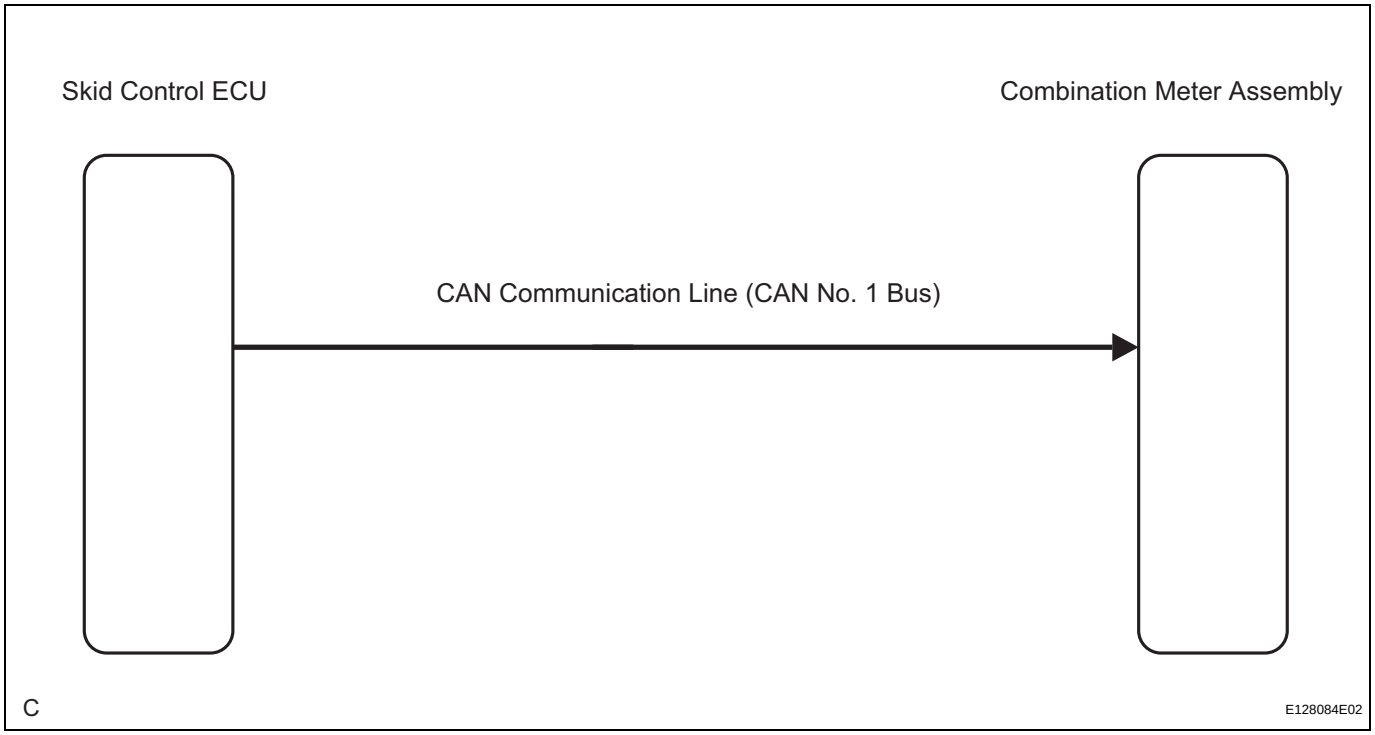

ME

INSPECTION PROCEDURE

1	CHECK CAN COMMUNICATION SYSTEM

(a) Check if CAN communication DTC is output (See page CA-11).

Result

Result	Proceed to
CAN communication DTC is not output.	A
CAN communication DTC is output.	B (See page CA-49)

B → **GO TO CAN COMMUNICATION SYSTEM**

A

2	PERFORM ACTIVE TEST BY INTELLIGENT TESTER

(a) Connect the intelligent tester to the DLC3.
(b) Turn the engine switch on (IG).

(c) Turn the tester ON.
(d) Enter the following menus: DIAGNOSIS / OBD/MOBD / METER / ACTIVE TEST.
(e) Check the operation by referring to the values in the table below.

METER:

Tester Display	Test Part	Control Range	Diagnostic Note
SPEED METER	Speedometer	0, 40, (24), 80 (48), 120 (72), 160 (96), 200 (120), 240 (149) km/h (mph)	-

OK:
Needle indication is normal.

NG → **REPLACE COMBINATION METER ASSEMBLY**

OK

3 READ VALUE OF INTELLIGENT TESTER

ME

(a) Connect the intelligent tester to the DLC3.
(b) Turn the engine switch on (IG).
(c) Turn the tester ON.
(d) Enter the following menus: DIAGNOSIS / OBD/MOBD / METER / DATA TEST.
(e) Check the values by referring to the values in the table below.

METER:

Tester Display	Measurement Item/Range	Normal Condition	Diagnostic Note
SPEED METER	Vehicle speed/Min.: 0 km/h (0 mph), Max.: 255 km/h (158 mph)	Almost same as actual speed (When driving)	-

OK:
Vehicle speed displayed on the tester is almost the same as the actual vehicle speed measured using a speedometer tester (calibrated chassis dynamometer).

NG → **Go to step 4**

OK

REPLACE COMBINATION METER ASSEMBLY

4 READ VALUE OF INTELLIGENT TESTER

(a) Connect the intelligent tester to the DLC3.
(b) Turn the engine switch on (IG).
(c) Turn the tester ON.
(d) Enter the following menus: DIAGNOSIS / OBD/MOBD / ABS/TRAC/VSC / DATA LIST.

(e) Check the values by referring to the table below.

ABS/TRAC/VSC:

Tester Display	Measurement Item/Range	Normal Condition	Diagnostic Note
(FL/FR/RL/RR) WHEEL SPD	Vehicle speed/Min.: 0 km/h (0 mph), Max.: 326 km/h (202 mph)	Almost same as actual speed (When driving)	-

OK:

Vehicle speed displayed on the tester is almost the same as the actual vehicle speed measured using a speedometer tester (calibrated chassis dynamometer).

NG → **GO TO BRAKE CONTROL SYSTEM**

OK

5 REPLACE SKID CONTROL ECU

(a) Replace the skid control ECU with a new or a normal one.

OK:

The operation of the speedometer returns to normal.

NG → **REPLACE COMBINATION METER ASSEMBLY**

OK

END

Tachometer Malfunction

DESCRIPTION

In this circuit, the meter CPU receives engine revolution signals from the ECM using the CAN communication lines (CAN No. 1 Bus). The meter CPU displays engine revolution data that is calculated based on the data received from the ECM.

WIRING DIAGRAM

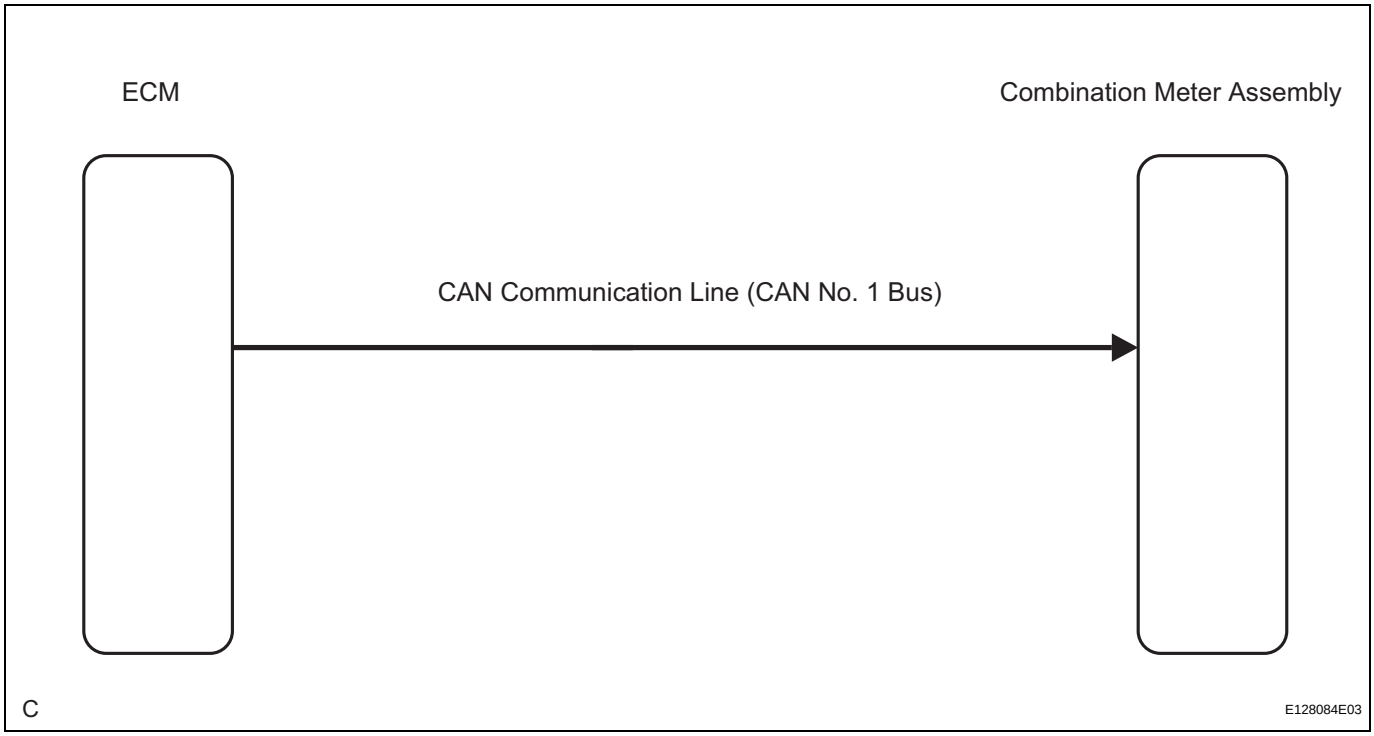

ME

INSPECTION PROCEDURE

1	CHECK CAN COMMUNICATION SYSTEM

(a) Check if CAN communication DTC is output (See page CA-11).

Result

Result	Proceed to
CAN communication DTC is not output.	A
CAN communication DTC is output.	B (See page CA-49)

B → GO TO CAN COMMUNICATION SYSTEM

A

2	PERFORM ACTIVE TEST BY INTELLIGENT TESTER

(a) Connect the intelligent tester to the DLC3.
(b) Turn the engine switch on (IG).
(c) Turn the tester ON.

(d) Enter the following menus: DIAGNOSIS / OBD/MOBD / METER / ACTIVE TEST.
(e) Check the operation by referring to the values in the table below.

METER:

Tester Display	Test Part	Control Range	Diagnostic Note
TACHO METER	Tachometer	0, 1,000, 2,000, 3,000, 4,000, 5,000, 6,000, 7,000 (rpm)	-

OK:
Needle indication is normal.

NG → **REPLACE COMBINATION METER ASSEMBLY**

OK

3 READ VALUE OF INTELLIGENT TESTER (ENGINE SPEED SIGNAL)

(a) Connect the intelligent tester to the DLC3.
(b) Turn the engine switch on (IG).
(c) Turn the tester ON.
(d) Enter the following menus: DIAGNOSIS / OBD/MOBD / METER / ACTIVE TEST.
(e) Check the values by referring to the values in the table below.

METER:

Tester Display	Measurement Item/Range	Normal Condition	Diagnostic Note
TACHO METER	Engine speed/Min.: 0 rpm, Max.: 12,750 rpm	Almost same as actual engine speed (When engine is running)	If data received from the ECM exceeds the range that can be displayed on the meter, the meter continues to display the maximum value of the range.

OK:
Engine speed displayed on the tester is almost the same as the actual engine speed.

NG → **Go to step 4**

OK

REPLACE COMBINATION METER ASSEMBLY

4 READ VALUE OF INTELLIGENT TESTER (ENGINE SPEED SIGNAL)

(a) Connect the intelligent tester to the DLC3.
(b) Turn the engine switch on (IG).
(c) Turn the tester ON.
(d) Enter the following menus: DIAGNOSIS / OBD/MOBD / ENGINE / DATA LIST.

(e) Check the values by referring to the table below.

ENGINE:

Tester Display	Measurement Item/Range	Normal Condition	Diagnostic Note
ENGINE SPD	Engine speed/Min.: 0 rpm, Max.: 16,383.75 rpm	Almost same as actual engine speed (When engine is running)	-

OK:
Engine speed displayed on the tester is almost the same as the actual engine speed.

NG → **GO TO SFI SYSTEM**

OK

5	REPLACE ECM

(a) Replace the ECM with a new or a normal one.

OK:
The operation of the tachometer returns to normal.

NG → **REPLACE COMBINATION METER ASSEMBLY**

OK

END

Fuel Receiver Gauge Malfunction

DESCRIPTION

The meter CPU uses the fuel sender gauge assembly to determine the level of the fuel in the fuel tank. The resistance of the fuel sender gauge will vary between approximately 15 Ω with the float at the full position, and 410 Ω with the float at the empty position. The meter outputs battery voltage through two 820 Ω resistors that are mounted in parallel inside the meter ECU. The meter CPU measures the voltage between the variable resistor in the fuel sender gauge and the two resistors mounted in parallel in the meter. Voltage measured at this point will vary as the float of the fuel sender gauge is moved. The highest voltage observed should be approximately half of battery voltage.
HINT:
The fuel level warning light will come on when the fuel level is below 10.5 liters.

WIRING DIAGRAM

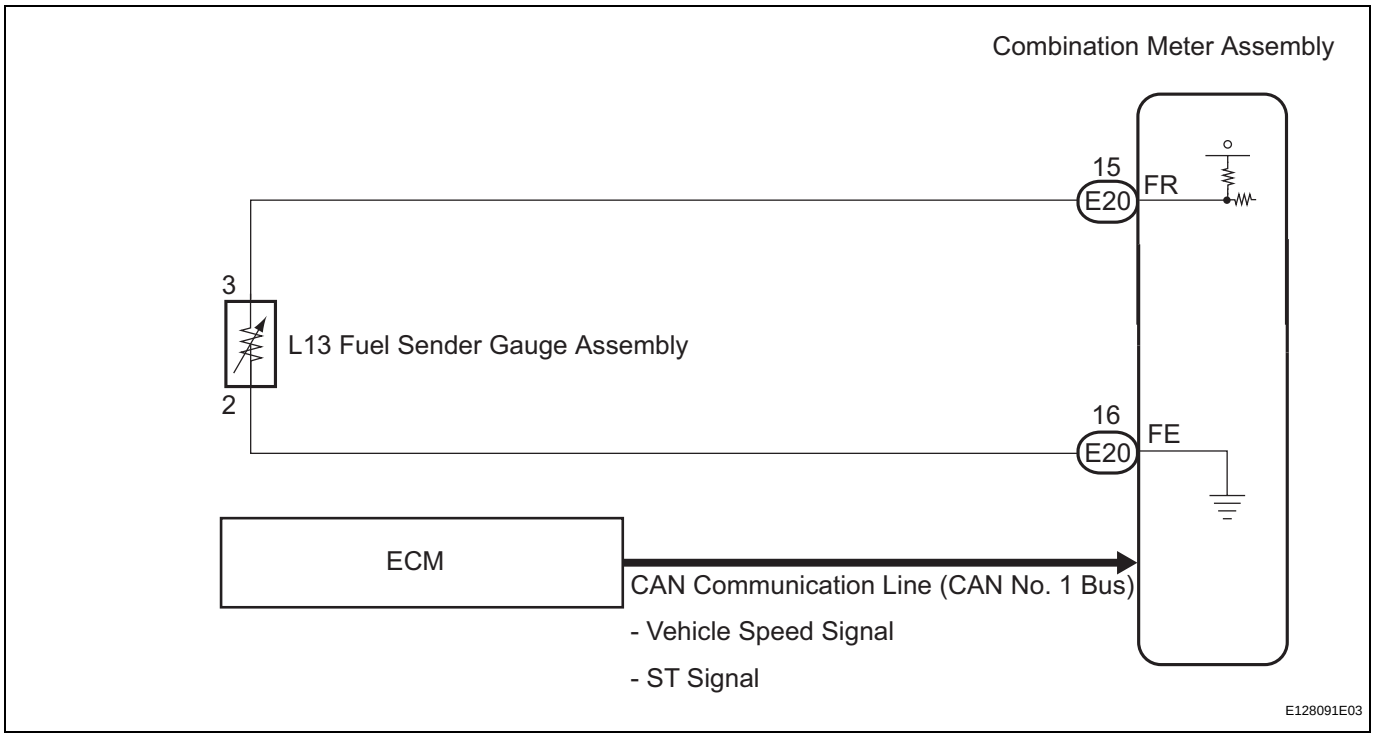

ME

INSPECTION PROCEDURE

1	CHECK CAN COMMUNICATION SYSTEM

(a) Check if CAN communication DTC is output (See page CA-11).

Result

Result	Proceed to
CAN communication DTC is not output	A
CAN communication DTC is output	B (See page CA-49)

B → GO TO CAN COMMUNICATION SYSTEM

A

2	PERFORM ACTIVE TEST BY INTELLIGENT TESTER

(a) Connect the intelligent tester to the DLC3.
(b) Turn the engine switch on (IG).
(c) Turn the tester ON.
(d) Enter following menus: DIAGNOSIS / OBD/MOBD / METER / ACTIVE TEST.
(e) Check the operation by referring to the table below.

METER:

Tester Display	Test Part	Control Range	Diagnostic Note
FUEL GAUGE	Fuel receiver gauge	EMPTY, 1/2, FULL	-

OK:
Needle indication is normal.

NG → **REPLACE COMBINATION METER ASSEMBLY**

OK

ME

3	READ VALUE OF INTELLIGENT TESTER

(a) Connect the intelligent tester to the DLC3.
(b) Turn the engine switch on (IG).
(c) Turn the tester ON.
(d) Enter following menus: DIAGNOSIS / OBD/MOBD / METER / DATA LIST.
(e) Check the values by referring to the table below.

METER:

Tester Display	Measurement Item/Range	Normal Condition	Diagnostic Note
FUEL GAUGE	Fuel input signal Min.: 0, Max.: 127.5 (L)	Fuel gauge indicates (E): 7.5 (L) Fuel gauge indicates (1/2): 35.0 (L) Fuel gauge indicates (F): 62.9 (L)	-

OK:
Fuel value signal displayed on the tester is almost the same as needle indication.

NG → **REPLACE COMBINATION METER ASSEMBLY**

OK

4	**CHECK HARNESS AND CONNECTOR (COMBINATION METER - FUEL SENDER GAUGE ASSEMBLY)**

Combination Meter Assembly Wire Harness View:

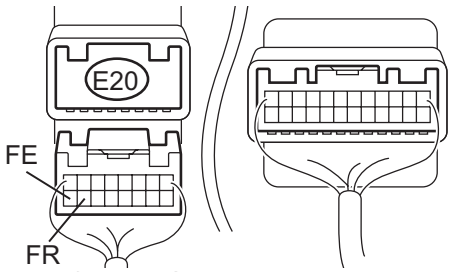

Fuel Sender Gauge Connector Front View:

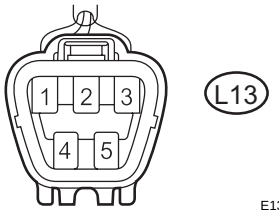

E132658E01

(a) Disconnect the E20 and L13 connectors.
(b) Measure the resistance according to the value(s) in the table below.

Standard resistance

Tester Connection	Condition	Specified Condition
E20-16 (FE) - L13-2	Always	Below 1 Ω
E20-15 (FR) - L13-3	Always	Below 1 Ω
L13-2 - Body ground	Always	10 kΩ or higher
E20-16 - Body ground	Always	10 kΩ or higher

NG → **REPAIR OR REPLACE HARNESS OR CONNECTOR**

OK

5	**INSPECT FUEL SENDER GAUGE ASSEMBLY**

Fuel Sender Gauge Assembly:

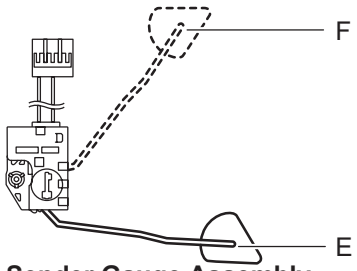

Fuel Sender Gauge Assembly Wire Harness View:

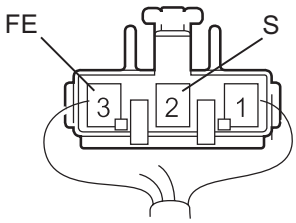

E132659E01

(a) Disconnect the fuel sender gauge connector.
(b) Remove the fuel sender gauge assembly.
(c) Check that the float moves smoothly between F and E.
(d) Measure the resistance between the terminals 2 (S) and 3 (FE) of the connector according to the value(s) in the table below.

Standard resistance

Float Level	Resistance (Ω)
F	13.5 to 16.5
Between E and F	13.5 to 414.5 (Gradually changes)
E	405.5 to 414.5

NG → **REPLACE FUEL SENDER GAUGE ASSEMBLY**

ME

OK

6	REPLACE COMBINATION METER ASSEMBLY

(a) Replace the combination meter assembly with a new one or a normal one.

OK:

The operation of the combination meter assembly returns to normal.

NG → **REPLACE ECM**

OK

END

Engine Coolant Temperature Receiver Gauge Malfunction

DESCRIPTION

- In this circuit, the meter CPU receives engine coolant temperature signals from the ECM using the CAN communication lines (CAN No. 1 Bus).
- The meter CPU displays engine coolant temperature that is calculated based on the data received from the ECM.

WIRING DIAGRAM

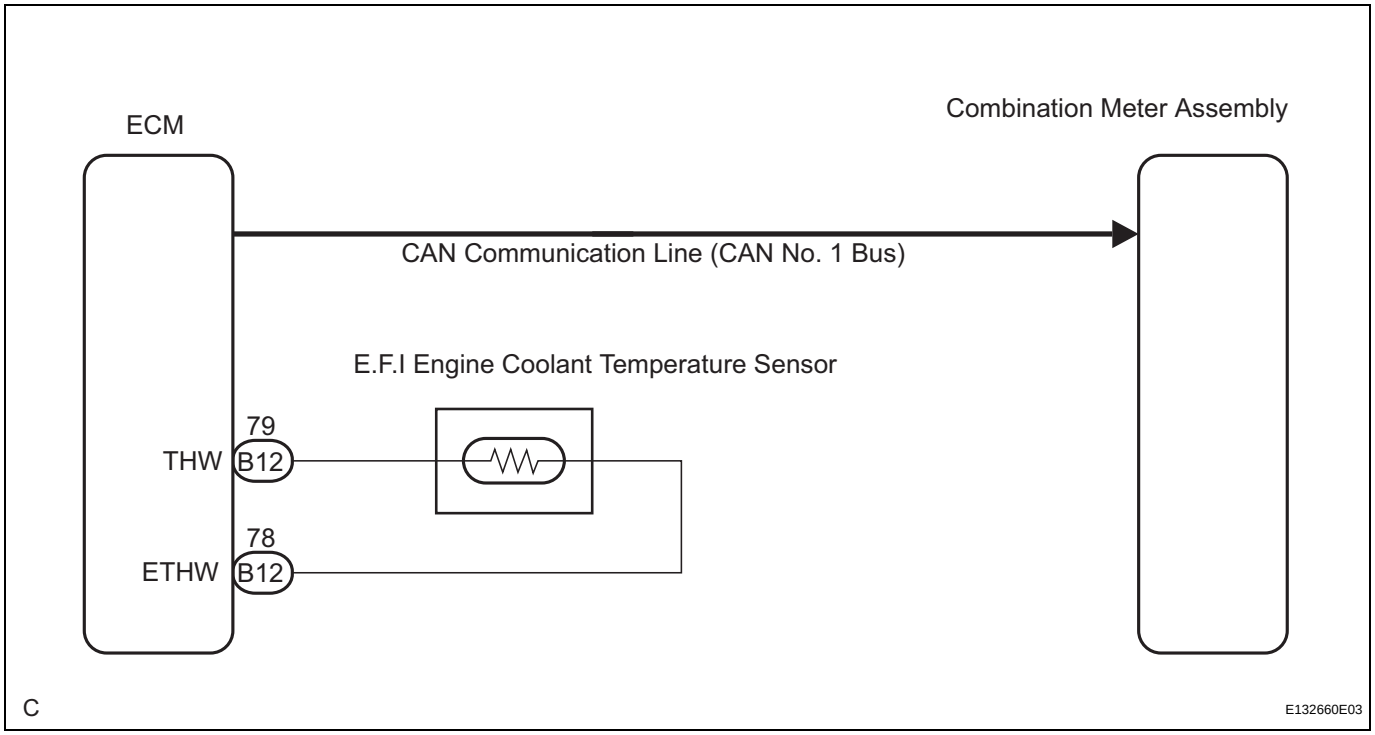

INSPECTION PROCEDURE

HINT:
If there is an open or short in the engine coolant temperature sensor circuit, the ECM outputs the DTCs. Perform troubleshooting with the "SFI System" (See page ES-41).

1	CHECK CAN COMMUNICATION SYSTEM

(a) Check if CAN communication DTC is output (See page CA-11).

Result

Result	Proceed to
CAN communication DTC is not output.	A
CAN communication DTC is output.	B (See page CA-49)

B → GO TO CAN COMMUNICATION SYSTEM

A

2	PERFORM ACTIVE TEST BY INTELLIGENT TESTER

(a) Connect the intelligent tester to the DLC3.
(b) Turn the engine switch on (IG).
(c) Turn the tester ON.
(d) Enter the following menus: DIAGNOSIS / OBD/MOBD / METER / ACTIVE TEST.
(e) Check the operation by referring to the values in the table below.

METER:

Tester Display	Test Part	Control Range	Diagnostic Note
COOLANT TEMP	Engine coolant temperature receiver gauge	LOW, NORMAL, HI	-

OK:
Needle indication is normal.

NG → **REPLACE COMBINATION METER ASSEMBLY**

ME

OK

3	READ VALUE OF INTELLIGENT TESTER

(a) Connect the intelligent tester to the DLC3.
(b) Turn the engine switch on (IG).
(c) Turn the tester ON.
(d) Enter the following menus: DIAGNOSIS / OBD/MOBD / METER / DATA LIST.

METER:

Tester Display	Measurement Item/Range	Normal Condition	Diagnostic Note
COOLANT TEMP	Engine coolant temperature/Min.: 0°C (32°F), Max.: 127.5°C (261.5°F)	After warming up: 80 to 95°C (176 to 203°F)	• If -40°C (-40°F): Sensor circuit open • If 140°C (284°F) or more: Sensor circuit shorted

OK:
Engine coolant temperature value displayed on the tester is almost the same as needle indication.

NG → **REPLACE COMBINATION METER ASSEMBLY**

OK

4	READ VALUE OF INTELLIGENT TESTER

(a) Connect the intelligent tester to the DLC3.
(b) Turn the engine switch on (IG).
(c) Turn the tester ON.
(d) Enter the following menus: DIAGNOSIS / OBD/MOBD / ENGINE / DATA LIST.

(e) Check the values by referring to the values in the table below.

ENGINE:

Tester Display	Measurement Item/Range	Normal Condition	Diagnostic Note
WATER TEMP	Engine coolant temperature/Min.: -40°C (-40°F), Max.: 140°C (284°F)	After warming up: 80 to 100°C (176 to 212°F)	-

OK:

Engine coolant temperature value displayed on the tester is almost the same as actual engine coolant temperature.

NG → **REPLACE ECM**

OK

5	**REPLACE COMBINATION METER ASSEMBLY**

(a) Replace the combination meter assembly with a new or a normal one.

OK:

The operation of the combination meter assembly returns to normal.

NG → **REPLACE ECM**

OK

END

Operating Light Control Rheostat does not Change Light Brightness

DESCRIPTION

The meter CPU receives signals for adjusting illumination on the meter this circuit. The meter CPU detects the illumination level selected by the user according to the position of the rheostat knob.
HINT:

- This model is equipped with an Optitron meter, therefore the meter illuminates even in the daytime.
- The meter illumination level can be adjusted by turning the rheostat.
- The meter illumination dims when the light control switch is turned to the TAIL or HEAD position at night.
- Turning the rheostat knob fully upwards cancels the above dimmer control.

WIRING DIAGRAM

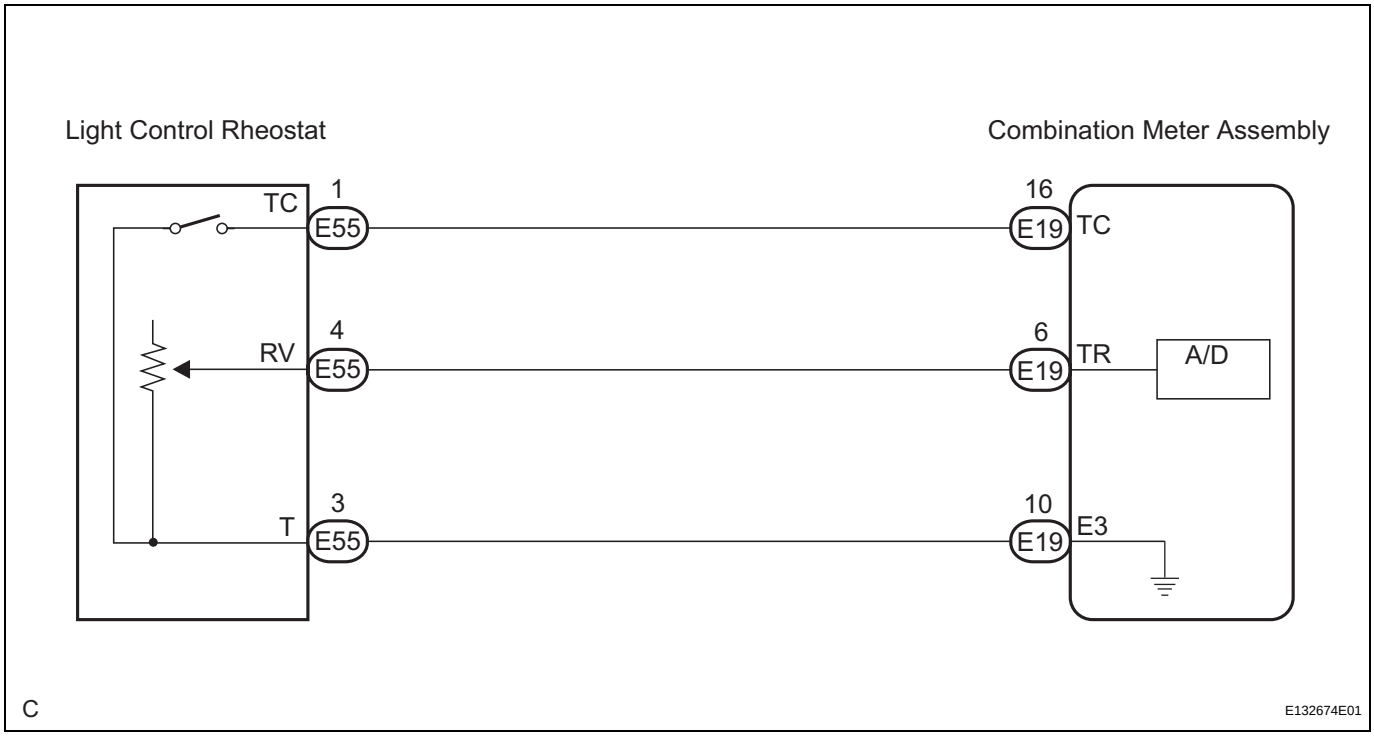

INSPECTION PROCEDURE

1	SYSTEM CHECK

(a) Turn the engine switch on (IG).
(b) Turn the light control rheostat knob fully upwards.
(c) Turn the light control rheostat knob fully downwards.
(d) Turn the light control rheostat knob fully upwards and light control switch is on TAIL/HEAD.
(e) Check the meter illumination.

Result

Result	Proceed to
Meter illumination does not change when operating the light control rheostat knob	A
Dimmer cancel does not operate (Meter illumination does not dim).	B

B → **Go to step 3**

A

2 READ VALUE OF INTELLIGENT TESTER (RHEOSTAT)

(a) Connect the intelligent tester to the DLC3.
(b) Turn the engine switch on (IG).
(c) Turn the tester ON.
(d) Enter the following menus: DIAGNOSIS / OBD/MOBD / METER / DATA LIST.
(e) Check the values by referring to the table below.

METER:

Tester Display	Measurement Item/Range	Normal Condition	Diagnostic Note
RHEOSTAT	Light control rheostat/Min.: 0%, Max.: 100%	Light control rheostat switch is Dark (0%) → Bright (100%)	-

OK:
The value displayed on the tester gradually changes as the actual rheostat operation.

NG → **Go to step 4**

ME

OK

3 READ VALUE OF INTELLIGENT TESTER (TAIL CANCEL SW)

(a) Connect the intelligent tester to the DLC3.
(b) Turn the engine switch on (IG).
(c) Turn the tester ON.
(d) Enter the following menus: DIAGNOSIS / OBD/MOBD / METER / DATA LIST.
(e) Check the values by referring to the table below.

METER:

Tester Display	Measurement Item/Range	Normal Condition	Diagnostic Note
TAIL CANCEL SW	Tail cancel switch is OFF/ON	OFF: Light control rheostat position is except above	-
		ON: Light control rheostat turns fully upwards	-

OK:
Condition displayed on the tester is the same as the actual rheostat position.

NG → **Go to step 6**

OK

REPLACE COMBINATION METER ASSEMBLY

4 INSPECT LIGHT CONTROL RHEOSTAT

Light Control Rheostat Component View:

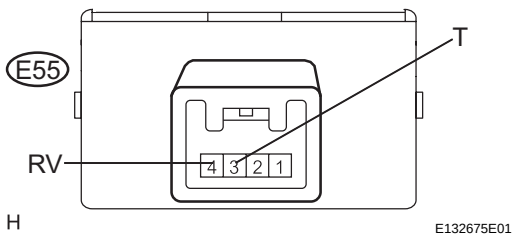

(a) Remove the light control rheostat.
(b) Measure the resistance according to the value(s) in the table below.

Standard resistance

Tester Connection	Condition	Specified Condition
E55-3 (T) - E55-4 (RV)	Turn the rheostat knob fully upwards	8 kΩ or higher
E55-3 (T) - E55-4 (RV)	Rheostat knob is between MIN. and MAX.	The value changes gradually (Between below 1 to 8 kΩ)
E55-3 (T) - E55-4 (RV)	Turn the rheostat knob fully downwards	Below 1 Ω

NG → **REPLACE LIGHT CONTROL RHEOSTAT**

OK

ME

5 CHECK HARNESS AND CONNECTOR (COMBINATION METER - LIGHT CONTROL RHEOSTAT)

Light Control Rheostat Wire Harness View:

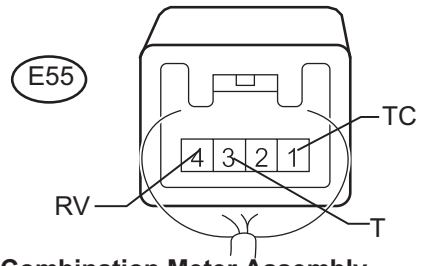

Combination Meter Assembly Wire Harness View:

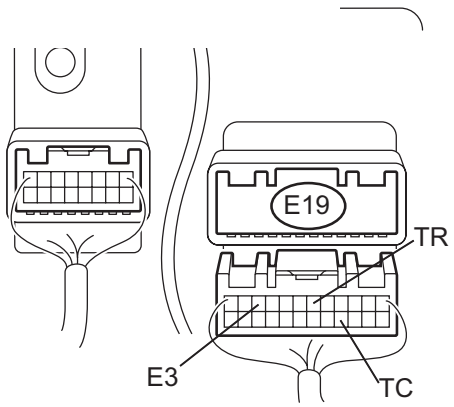

(a) Disconnect the E19 and E55 connectors.
(b) Measure the resistance according to the value(s) in the table below.

Standard resistance

Tester Connection	Condition	Specified Condition
E19-6 (TR) - E55-4 (RV)	Always	Below 1 Ω
E19-10 (E3) - E55-3 (T)	Always	Below 1 Ω
E19-16 (TC) - E55-1 (TC)	Always	Below 1 Ω
E55-1 (TC) - Body ground	Always	10 kΩ or higher
E55-3 (T) - Body ground	Always	10 kΩ or higher
E55-4 (RV) - Body ground	Always	10 kΩ or higher

NG → **REPAIR OR REPLACE HARNESS OR CONNECTOR**

OK

REPLACE COMBINATION METER ASSEMBLY

6 INSPECT LIGHT CONTROL RHEOSTAT

Light Control Rheostat Component View:

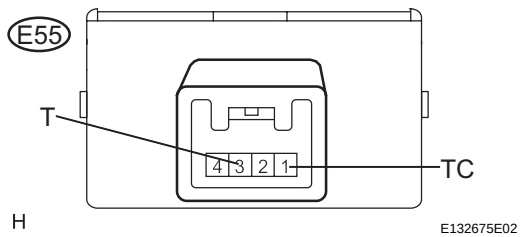

(a) Remove the light control rheostat with connector still connected.

(b) Measure the resistance according to the value(s) in the table below.

Standard resistance

Tester Connection	Condition	Specified Condition
E55-1 (TC) - E55-3 (T)	Turn the rheostat knob fully downwards	Below 1 Ω
E55-1 (TC) - E55-3 (T)	Turn the rheostat knob fully upwards	8 kΩ or higher

NG → **REPLACE LIGHT CONTROL RHEOSTAT**

ME

OK

7 CHECK HARNESS AND CONNECTOR (COMBINATION METER - LIGHT CONTROL RHEOSTAT)

Light Control Rheostat Wire Harness View:

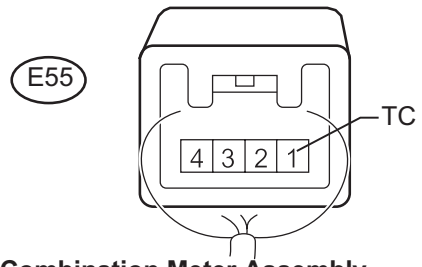

Combination Meter Assembly Wire Harness View:

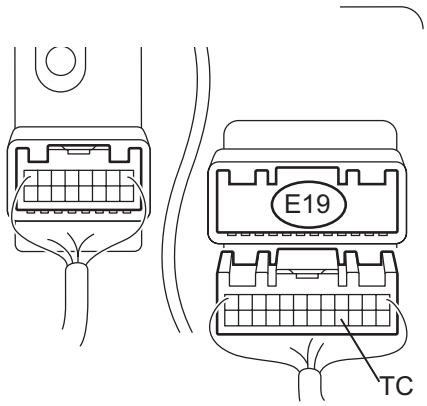

(a) Disconnect the E19 and E55 connectors.

(b) Measure the resistance according to the value(s) in the table below.

Standard resistance

Tester Connection	Condition	Specified Condition
E55-1 (TC) - E19-16 (TC)	Always	Below 1 Ω
E55-1 (TC) - Body ground	Always	10 kΩ or higher

NG → **REPAIR OR REPLACE HARNESS OR CONNECTOR**

OK

REPLACE COMBINATION METER ASSEMBLY

Meter Illumination is Always Dark

DESCRIPTION

In this circuit, the meter CPU receives auto dimmer signals from the main body ECU using the CAN communication lines (CAN MS Bus). When the meter CPU receives an auto dimmer signal, it dims the meter illumination. The main body ECU determines whether it is daytime, twilight, or nighttime based on the waveform transmitted from the automatic light control sensor. If the main body ECU determines that it is daytime, the ECU does not send auto dimmer signals. Therefore, the meter illumination (warning and indicator lights) will not dim even if the driver accidentally turns the light control switch to the TAIL or HEAD position in daytime.

HINT:

When the meter illumination is always dark, there may be a malfunction in automatic light control sensor, main body ECU, CAN communication system, wire harness or connector, or combination meter assembly.

WIRING DIAGRAM

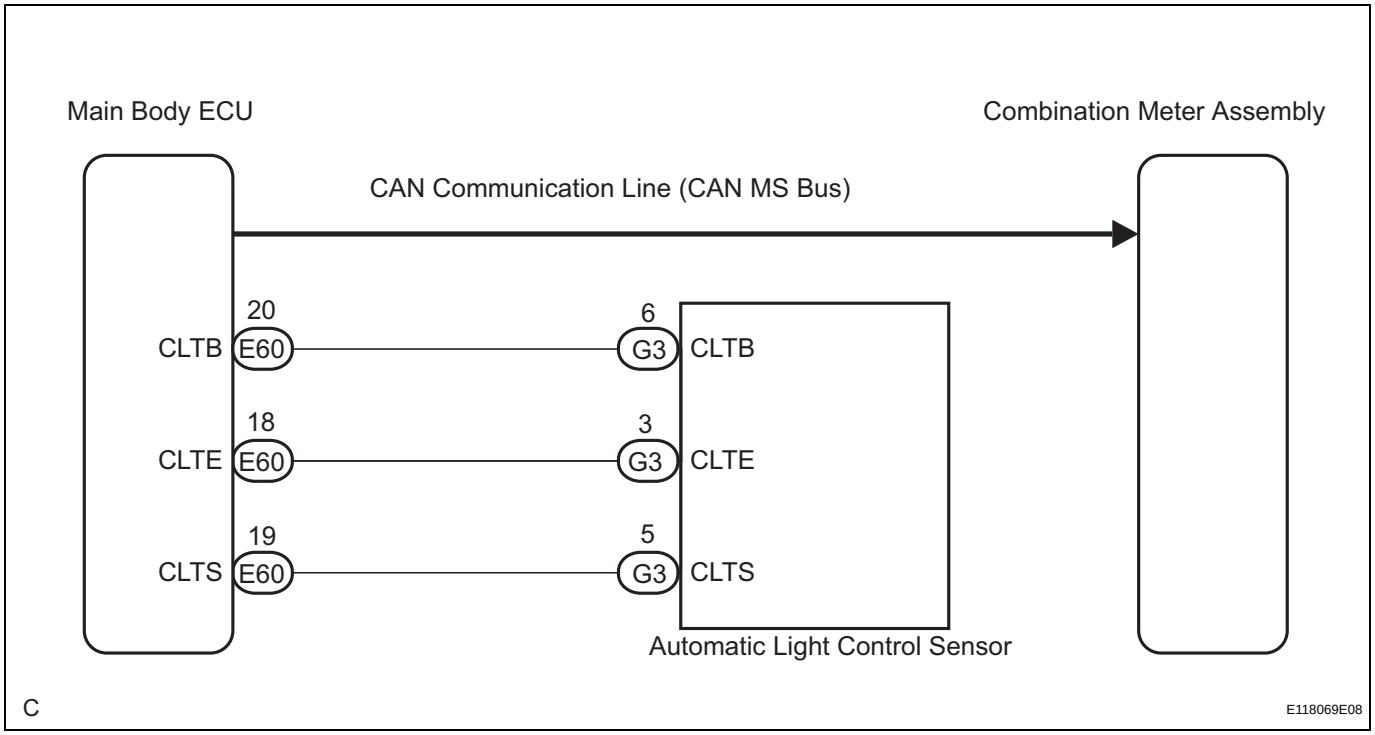

ME

INSPECTION PROCEDURE

1	CHECK CAN COMMUNICATION SYSTEM

(a) Check if CAN communication DTC is output (See page CA-11).

Result

Result	Proceed to
CAN communication DTC is not output.	A
CAN communication DTC is output.	B (See page CA-49)

B → GO TO CAN COMMUNICATION SYSTEM

A

2 CHECK DTC

(a) Check if DTC B1244 is output (See page LI-43).

Result

Result	Proceed to
B1244 is not output	A
B1244 is output	B (See page LI-49)

B → **GO TO LIGHTING SYSTEM**

A

3 PERFORM ACTIVE TEST BY INTELLIGENT TESTER

ME

(a) Connect the intelligent tester to the DLC3.
(b) Turn the engine switch on (IG).
(c) Turn the tester ON.
(d) Turn the light control rheostat to the TAIL/HEAD position.
(e) Enter the following menus: DIAGNOSIS / BODY / MAIN BODY / ACTIVE TEST.
(f) Check the meter illumination.

MAIN BODY:

Tester Display	Test Part	Control Range	Diagnostic Note
DIMMER SIG	Auto dimmer signal	Auto dimmer signal OFF/ON	-

OK:
The meter illumination is dimmed when the DIMMER SIG is ON.
HINT:
Refer to the sensitivity setting in the customization table of the automatic light control system (See page LI-29).

NG → **Go to step 4**

OK

CHECK LIGHTING SETTING

4 REPLACE COMBINATION METER ASSEMBLY

(a) Replace the combination meter assembly with a new or a normal one.

OK:
The operation of the combination meter assembly returns to normal.

NG → **REPLACE MAIN BODY ECU**

OK

END

Meter Illumination does not Dim at Night

DESCRIPTION

In this circuit, the meter CPU receives auto dimmer signals from the main body ECU using the CAN communication lines (CAN MS Bus). When the meter CPU receives an auto dimmer signal, it dims the meter illumination. The main body ECU determines whether it is daytime, twilight, or nighttime based on the waveform transmitted from the automatic light control sensor. If the main body ECU determines that it is daytime, the ECU does not send auto dimmer signals. Therefore, the meter illumination (warning and indicator lights) will not dim even if the driver accidentally turns the light control switch to the TAIL or HEAD position in daytime.

HINT:

When the meter illumination does not dim at night, the light control rheostat position is at the tail cancel position, or there may be a malfunction in automatic light control sensor, main body ECU, CAN communication system, wire harness or connector, or combination meter assembly.

WIRING DIAGRAM

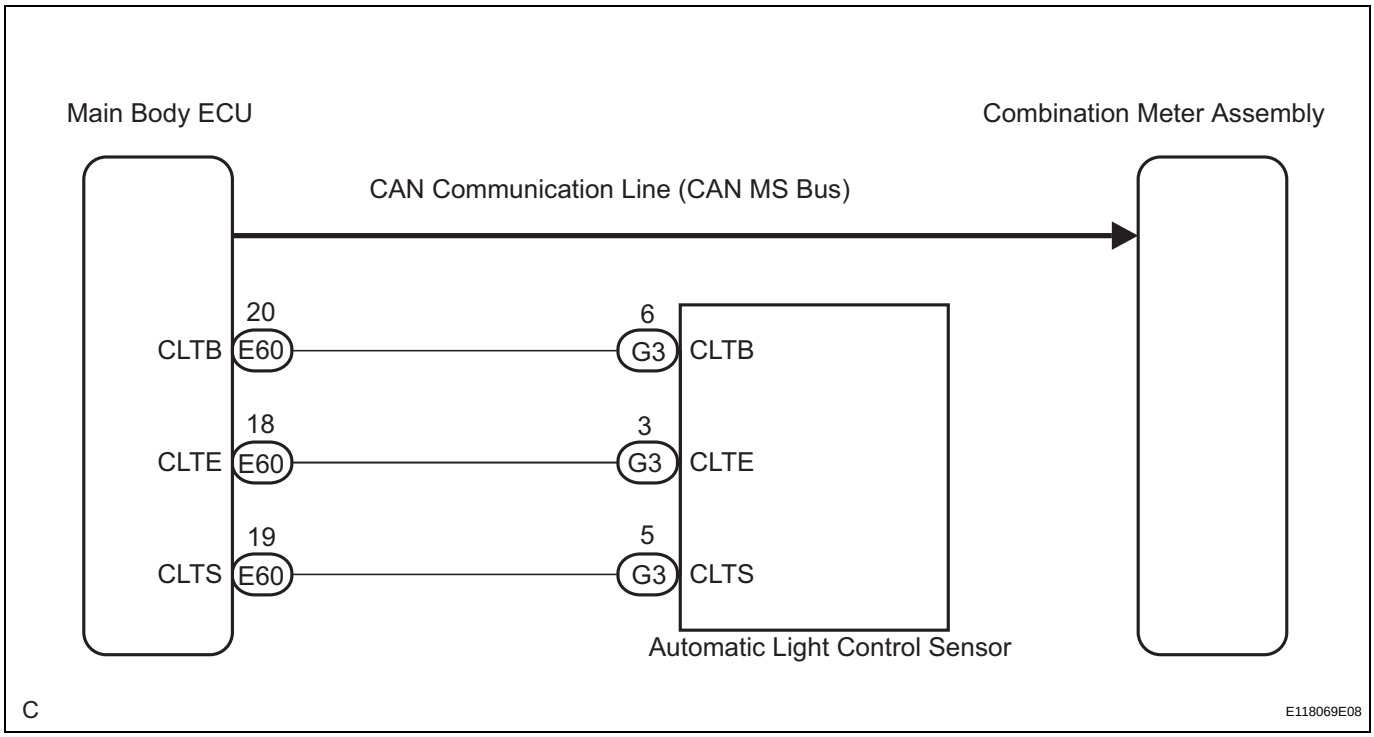

INSPECTION PROCEDURE

1	CHECK CAN COMMUNICATION SYSTEM

(a) Check if CAN communication DTC is output (See page CA-11).

Result

Result	Proceed to
CAN communication DTC is not output.	A
CAN communication DTC is output.	B (See page CA-49)

B → GO TO CAN COMMUNICATION SYSTEM

A

2 CHECK DTC

(a) Check if DTC B1244 is output (See page LI-43).

Result

Result	Proceed to
B1244 is not output	A
B1244 is output	B (See page LI-49)

B → **GO TO LIGHTING SYSTEM**

A

3 PERFORM ACTIVE TEST BY INTELLIGENT TESTER

(a) Connect the intelligent tester to the DLC3.
(b) Turn the engine switch on (IG).
(c) Turn the tester ON.
(d) Turn the light control rheostat to the TAIL/HEAD position.
(e) Enter the following menus: DIAGNOSIS / BODY / MAIN BODY / ACTIVE TEST.
(f) Check the meter illumination.

MAIN BODY:

Tester Display	Test Part	Control Range	Diagnostic Note
DIMMER SIG	Auto dimmer signal	Auto dimmer signal OFF/ON	-

OK:
The meter illumination is dimmed when the DIMMER SIG is ON.

HINT:
Refer to the sensitivity setting in the customization table of the automatic light control system (See page LI-29).

NG → **Go to step 4**

OK

CHECK LIGHTING SETTING

4 REPLACE COMBINATION METER ASSEMBLY

(a) Replace the combination meter assembly with a new or a normal one.

OK:
The operation of the combination meter assembly returns to normal.

NG → **REPLACE MAIN BODY ECU**

ME

OK

END

CUSTOMIZE PARAMETERS

1. COMBINATION METER ASSEMBLY

NOTICE:

Be sure to record the current value before customizing.

HINT:

The following items can be customized using intelligent tester.

METER:

Display (Item)	Default	Contents	Setting
SEAT-BELT WARN	D/P ON	Function to change the setting of the seat belt buzzer.	D/P ON, D ON, P ON, D/P OFF

HINT:

This setting is only valid for the buzzer which sounds at the 5 km/h (3 mph) or more.

INITIALIZATION

1. OIL MAINTENANCE INFORMATION MODE RESET OPERATION

HINT:

- The trip meter reset knob is located on the lower right side of the combination meter assembly.
- This reset operation is required only for U.S.A..

(a) Turn the engine switch on (IG).

(b) Press the ODO/TRIP switch until the TRIP A appears.

(c) Turn the engine switch off.

(d) Turn the engine switch on (IG) while pressing and holding the trip meter reset knob. Hold the trip meter reset knob until the following conditions are met and 5 seconds have passed.

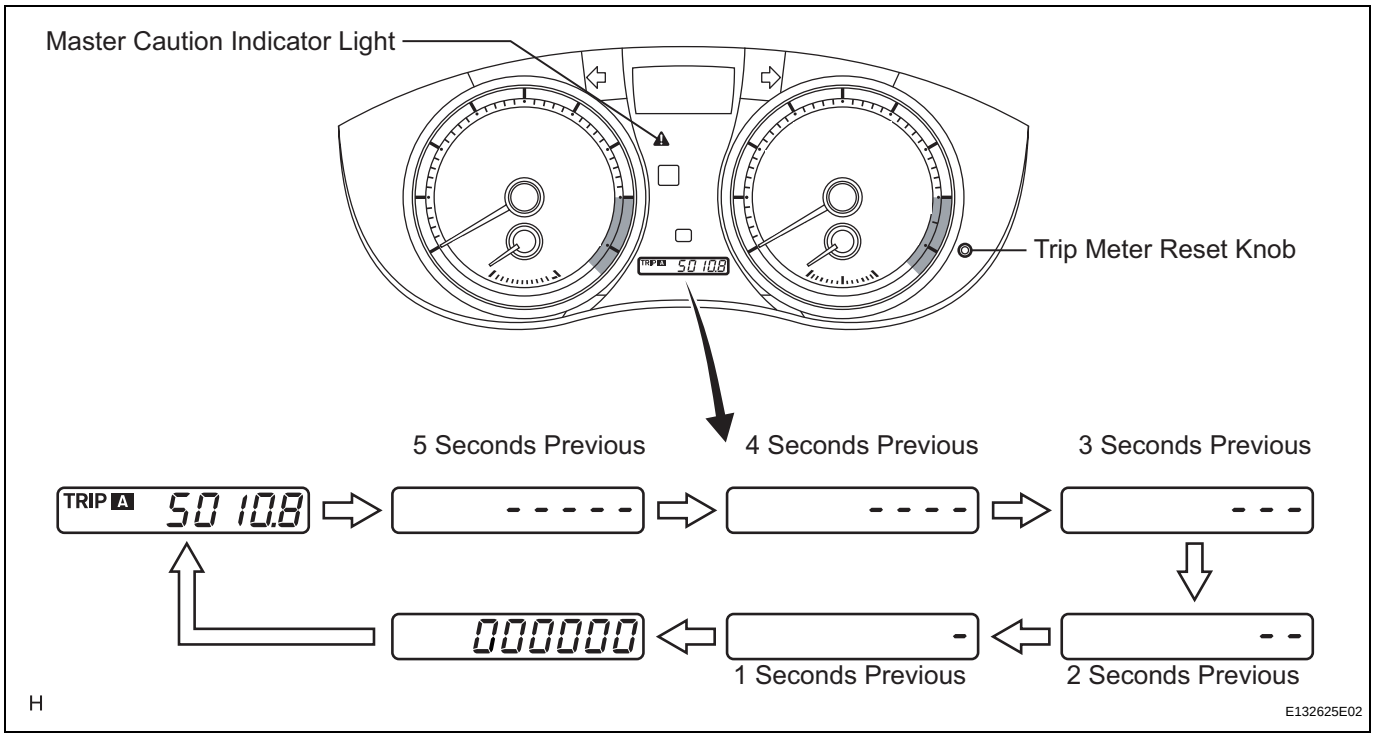

- The multi-information display shows "MAINT REQD RESET MODE".
- The master caution indicator light illuminates.
- When oil change reminder light turns off, the reset is complete.

(e) When the bar disappears and LCD will display "000000" for 1 second, the master caution indicator light turns off, the reset is complete.

ME

COMBINATION METER

COMPONENTS

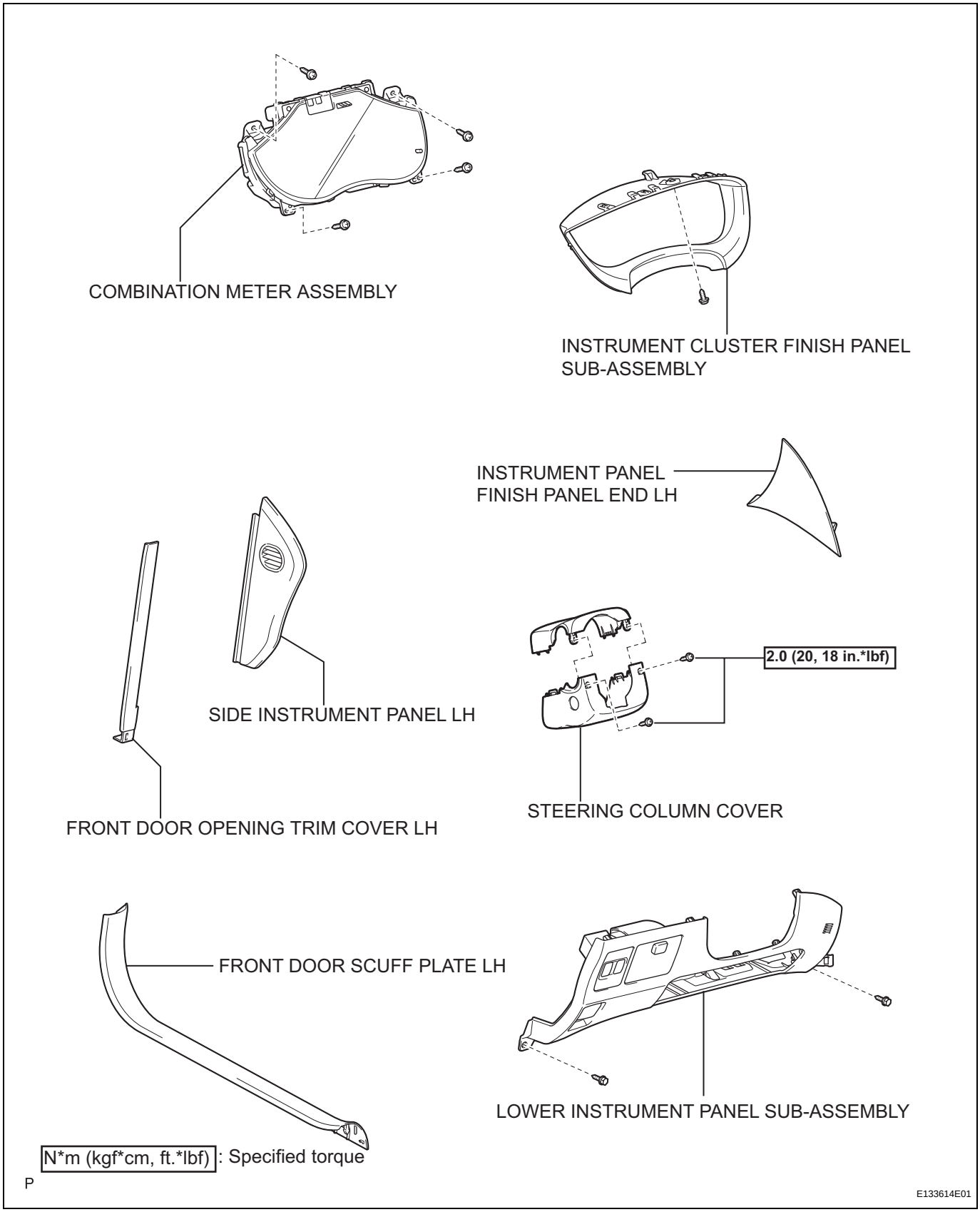

ME

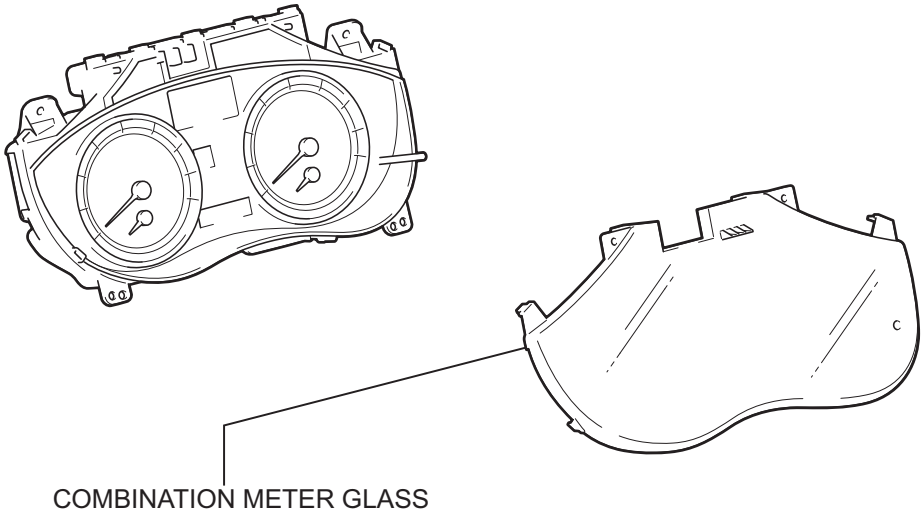

P

E133609E01

REMOVAL

1. **DISCONNECT CABLE FROM NEGATIVE BATTERY TERMINAL**
   CAUTION:
   Wait for 90 seconds after disconnecting the cable to prevent airbag deployment (See page RS-1).
2. **REMOVE FRONT DOOR SCUFF PLATE LH (See page IR-39)**
3. **REMOVE FRONT DOOR OPENING TRIM COVER LH (See page IR-39)**
4. **REMOVE SIDE INSTRUMENT PANEL LH (See page IP-12)**
5. **REMOVE INSTRUMENT PANEL FINISH PANEL END LH (See page IP-13)**
6. **REMOVE LOWER INSTRUMENT PANEL SUB-ASSEMBLY (See page IP-13)**
7. **REMOVE STEERING COLUMN COVER**
   (a) Turn the steering wheel assembly to the right and remove the screw as shown in the illustration.

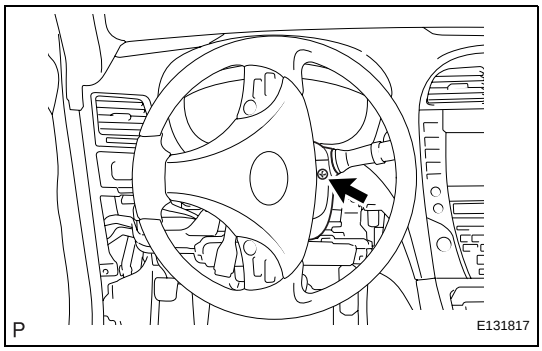

   (b) Turn the steering wheel assembly to the left and remove the screw as shown in the illustration.

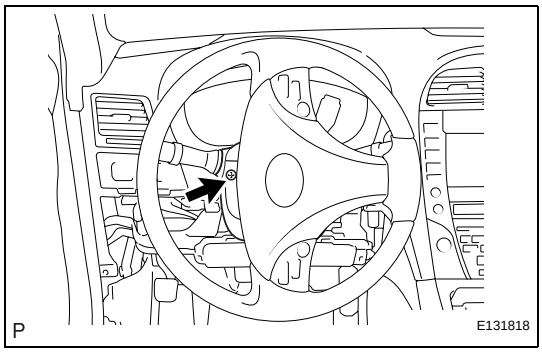

   (c) Disengage the 2 claws and remove the steering column cover lower.

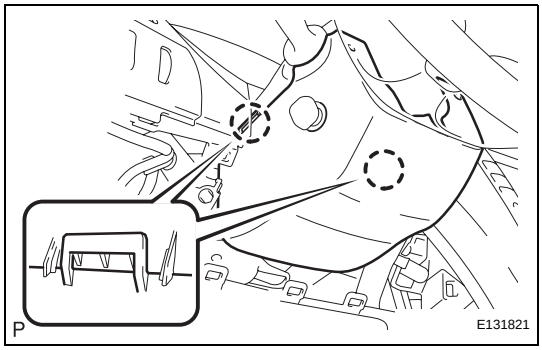

ME

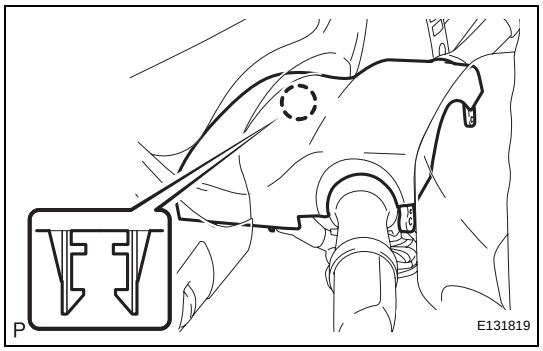

(d) Disengage the claw and remove the steering column cover upper.

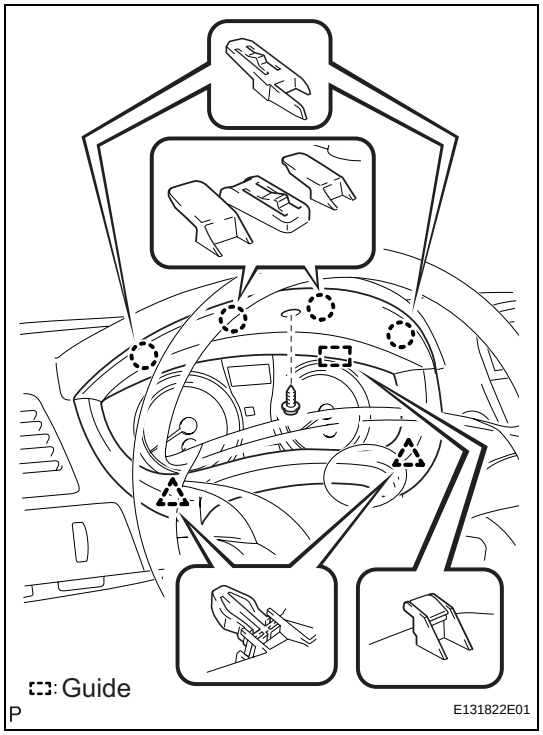

8. REMOVE INSTRUMENT CLUSTER FINISH PANEL SUB-ASSEMBLY

(a) Remove the screw.
(b) Disengage the 2 clips.
(c) Disengage the 4 claws and guide, and remove the instrument cluster finish panel sub-assembly.

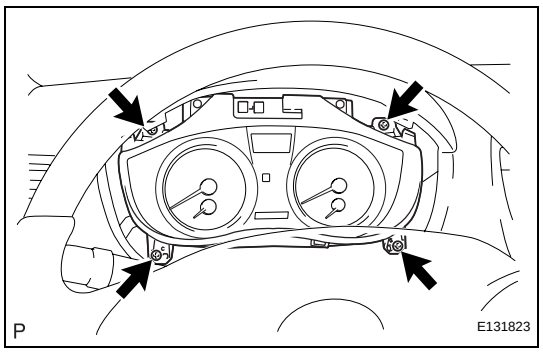

9. REMOVE COMBINATION METER ASSEMBLY

(a) Remove the 4 screws.

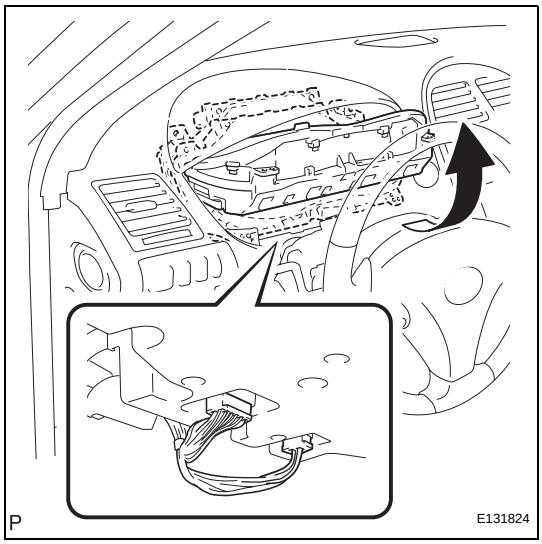

(b) Disconnect the 2 connectors as shown in the illustration.

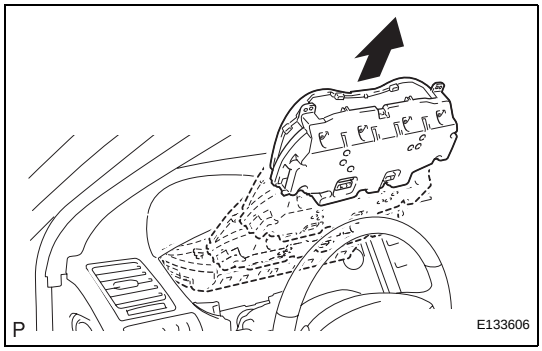

(c) Remove the combination meter assembly as shown in the illustration.

DISASSEMBLY

1. REMOVE COMBINATION METER GLASS

(a) Disengage the 8 claws and remove the combination meter glass.

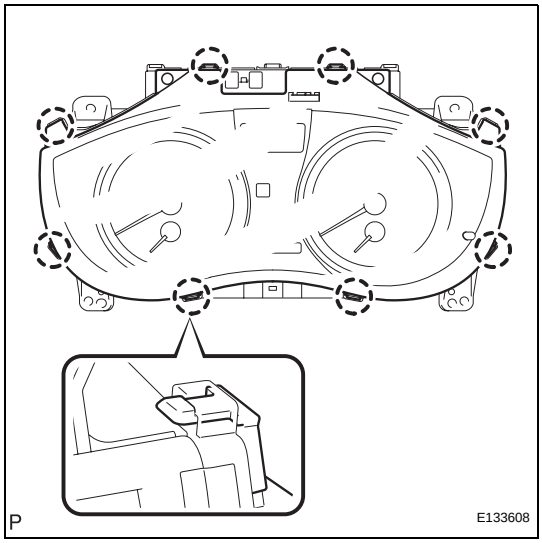

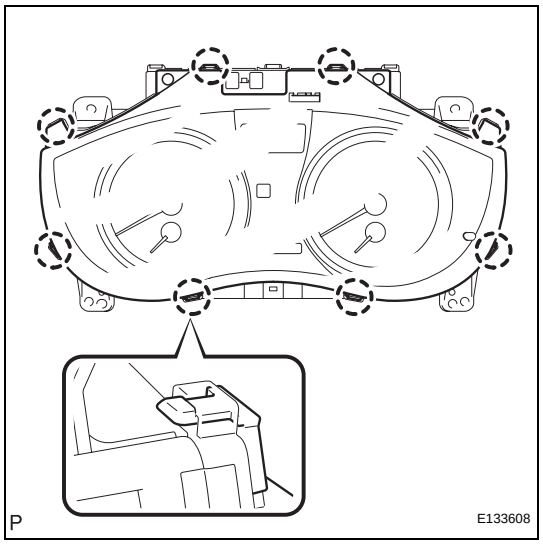

REASSEMBLY

1. INSTALL COMBINATION METER GLASS

(a) Engage the 8 claws and install the combination meter glass.

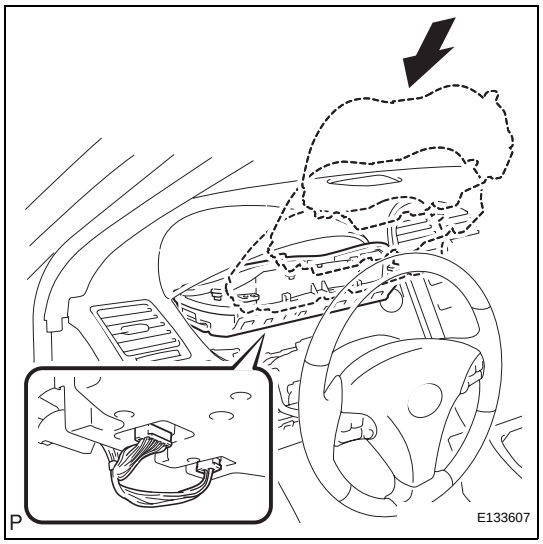

INSTALLATION

1. INSTALL COMBINATION METER ASSEMBLY

(a) Connect the 2 connectors as shown in the illustration.

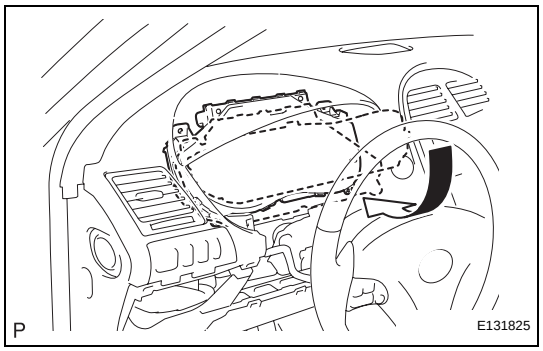

(b) Install the combination meter assembly as shown in the illustration.

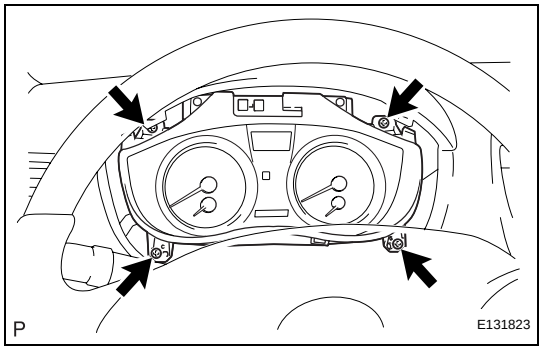

(c) Install the 4 screws.

ME

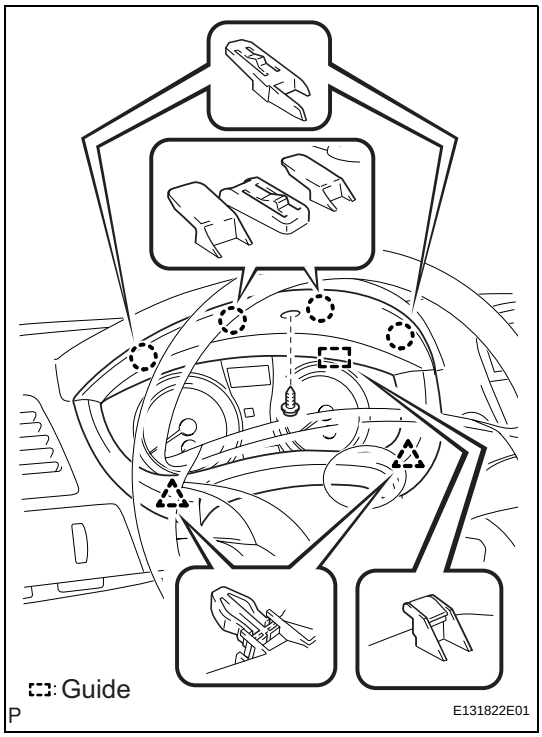

2. **INSTALL INSTRUMENT CLUSTER FINISH PANEL SUB-ASSEMBLY**
   (a) Engage the guide and 4 claws.
   (b) Engage the 2 clips.
   (c) Install the instrument cluster finish panel sub-assembly with the screw.

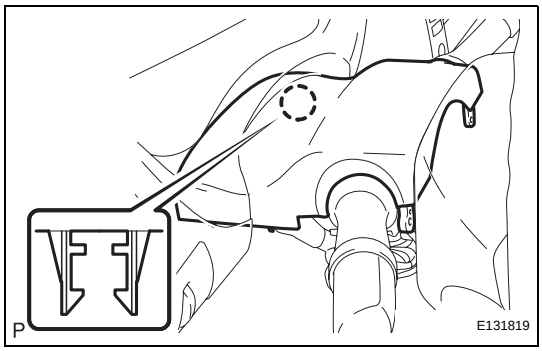

3. **INSTALL STEERING COLUMN COVER**
   (a) Engage the claw and install the upper steering column cover.

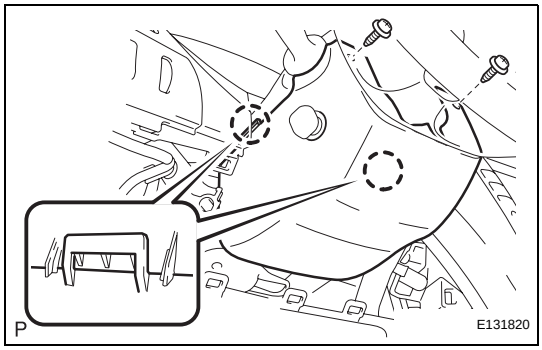

   (b) Engage the 2 claws.
   (c) Install the lower steering column cover with the 2 screws.
   Torque: 2.0 N*m (20 kgf*cm, 18 in.*lbf)

4. **INSTALL LOWER INSTRUMENT PANEL SUB-ASSEMBLY (See page IP-46)**

5. **INSTALL INSTRUMENT PANEL FINISH PANEL END LH (See page IP-46)**

6. **INSTALL SIDE INSTRUMENT PANEL LH (See page IP-47)**

7. **INSTALL FRONT DOOR OPENING TRIM COVER LH (See page IR-64)**

8. **INSTALL FRONT DOOR SCUFF PLATE LH (See page IR-65)**

9. **CONNECT CABLE TO NEGATIVE BATTERY TERMINAL**

10. PERFORM INITIALIZATION

NOTICE:

Some systems need initialization after reconnecting the cable to the negative battery terminal (See page IN-33).

PROBLEM SYMPTOMS TABLE

ENTIRE SYSTEM:

Symptom	Suspected Area	See page
Entire combination meter does not operate.	Power Source Circuit	ME-40
Operating light control rheostat does not change light brightness.	Light Control Rheostat Circuit	ME-55
Meter illumination is always dark.	Meter Illumination Circuit	ME-60
Meter illumination does not dim at night.	Meter Illumination Circuit	ME-63

METER GAUGES:

Symptom	Suspected Area	See page
Speedometer malfunction	Speedometer Circuit	ME-42
Tachometer malfunction	Tachometer Circuit	ME-45
Fuel receiver gauge malfunction	Fuel Receiver Gauge Circuit	ME-48
Engine coolant temperature malfunction	Engine Coolant Temperature Receiver Gauge Circuit	ME-52

WARNING LIGHTS:

Symptom	Suspected Area	See page
Check engine warning light does not come on.	1. MIL Circuit	ES-465
	2. Wire Harness or Connector	-
	3. Combination Meter Assembly	ME-67
Charge warning light does not come on.	1. Combination Meter (LED)	ME-29
	2. Wire Harness or Connector	-
	3. Generator	-
	4. Combination Meter Assembly	ME-67
Brake warning light does not come on.	1. Combination Meter (LED)	ME-29
	2. Wire Harness or Connector	-
	3. Brake Warning Light Circuit	BC-162
	4. Combination Meter Assembly	ME-67
Brake warning light does not go off.	1. Combination Meter (LED)	ME-29
	2. Wire Harness or Connector	-
	3. Brake Warning Light Circuit	BC-154
	4. Combination Meter Assembly	ME-67
ABS warning light does not come on.	1. Combination Meter (LED)	ME-29
	2. Wire Harness or Connector	-
	3. ABS Warning Light Circuit	BC-146
	4. Combination Meter Assembly	ME-67
ABS warning light does not go off.	1. Combination Meter (LED)	ME-29
	2. Wire Harness or Connector	-
	3. ABS Warning Light Circuit	BC-141
	4. Combination Meter Assembly	ME-67
Airbag warning light does not come on.	1. Combination Meter (LED)	ME-29
	2. Airbag Warning Light Circuit	RS-298
	3. Wire Harness or Connector	-
	4. Combination Meter Assembly	ME-67
Airbag warning light does not go off.	1. Combination Meter (LED)	ME-29
	2. Airbag Warning Light Circuit	RS-294
	3. Wire Harness or Connector	-
	4. Combination Meter Assembly	ME-67

Symptom	Suspected Area	See page
Open door warning light does not come on.	1. Combination Meter (LED)	ME-29
	2. Wire Harness or Connector	-
	3. Door Courtesy Switch	LI-203
	4. Main Body ECU	-
	5. Combination Meter Assembly	ME-67
Fuel level warning light does not come on.	1. Combination Meter (LED)	ME-29
	2. Wire Harness or Connector	-
	3. Fuel Sender Gauge Assembly	ME-74
	4. Combination Meter Assembly	ME-67
Driver seat belt warning light does not come on.	1. Combination Meter (LED)	ME-29
	2. Wire Harness or Connector	-
	3. Driver Seat Belt Warning Light Circuit	SB-13
	4. Combination Meter Assembly	ME-67
Tire pressure warning light does not come on. (with Tire Pressure Warning System)	1. Combination Meter (LED)	ME-29
	2. Wire Harness or Connector	-
	3. Tire Pressure Warning System	TW-23
	4. Combination Meter Assembly	ME-67

INDICATOR LIGHTS:

Symptom	Suspected Area	See page
Shift indicator light does not come on.	1. Combination Meter (LED)	ME-29
	2. Wire Harness or Connector	-
	3. Park/Neutral Position Switch Circuit	AX-170
	4. Transmission Control Switch Circuit	AX-166
	5. ECM	ES-543
	6. Combination Meter Assembly	ME-67
Turn indicator light does not come on.	1. Wire Harness or Connector	-
	2. Turn Indicator Light Circuit	LI-32
	3. Combination Meter Assembly	ME-67
SLIP indicator light does not come on.	1. Combination Meter (LED)	ME-29
	2. Wire Harness or Connector	-
	3. SLIP Indicator Light Circuit	BC-168
	4. Combination Meter Assembly	ME-67
SLIP indicator light does not go off.	1. Combination Meter (LED)	ME-29
	2. Wire Harness or Connector	-
	3. SLIP Indicator Light Circuit	BC-164
	4. Combination Meter Assembly	ME-67
CRUISE indicator light does not come on.	1. Combination Meter (LED)	ME-29
	2. Wire Harness or Connector	-
	3. Cruise Main Indicator Light Circuit (without Dynamic Radar Cruise Control System)	CC-29
	4. Cruise Main Indicator Light Circuit (with Dynamic Radar Cruise Control System)	CC-109
	5. Combination Meter Assembly	ME-67
High beam indicator light does not come on.	1. Wire Harness of Connector	-
	2. Headlight Dimmer Switch	LI-189
	3. Combination Meter Assembly	ME-67
Master caution indicator light does not come on.	1. Combination Meter (LED)	ME-29
	2. Combination Meter Assembly	ME-67

Symptom	Suspected Area	See page
PCS indicator light malfunction (with Pre-collision System)	1. Combination Meter (LED)	ME-29
	2. Seat Belt Control ECU	-
	3. Combination Meter Assembly	ME-67
Rr LIGHT indicator light does not go off.	1. Combination Meter (LED)	ME-29
	2. Wire Harness or Connector	-
	3. Taillight Circuit	LI-32
	4. Light Failure Sensor	ME-84
	5. Combination Meter Assembly	ME-67
HEAD indicator light does not come on. (for U.S.A.)	1. Combination Meter (LED)	ME-29
	2. Wire Harness or Connector	-
	3. Main Body ECU	-
	4. Combination Meter Assembly	ME-67
TAIL indicator light does not come on. (for Canada)	1. Combination Meter (LED)	ME-29
	2. Wire Harness or Connector	-
	3. Main Body ECU	-
	4. Combination Meter Assembly	ME-67
AFS OFF indicator light does not come on. (with AFS)	1. Combination Meter (LED)	ME-29
	2. AFS ECU	-
	3. Combination Meter Assembly	ME-67
Fr FOG indicator light does not come on.	1. Combination Meter (LED)	ME-29
	2. Wire Harness or Connector	-
	3. Main Body ECU	-
	4. Combination Meter Assembly	ME-67

ME

MULTI-INFORMATION DISPLAY:

Symptom	Suspected Area	See page
Multi-information display does not light up.	1. Combination Meter (Perform ACTIVE TEST by intelligent Tester)	ME-29
	2. Combination Meter Assembly	ME-67
Door open warning display is not available.	1. Main Body ECU	-
	2. Combination Meter Assembly	ME-67
Maintenance required display malfunction (for U.S.A.)	1. Combination Meter Assembly (Oil Maintenance Resetting Procedure)	ME-15
	2. Combination Meter Assembly	ME-67
Outside temperature display malfunction	1. Outside Temperature Sensor Circuit	AC-218
	2. Wire Harness or Connector	-
	3. Combination Meter Assembly	ME-67
Driving range display malfunction	1. ECM	-
	2. Skid Control ECU	-
	3. Combination Meter Assembly	ME-67
Average fuel consumption/Average fuel consumption after refueling display malfunction	1. ECM	-
	2. Combination Meter Assembly	ME-67
Current fuel consumption display malfunction	1. ECM	-
	2. Combination Meter Assembly	ME-67
Average speed display malfunction	1. Skid Control ECU	-
	2. Combination Meter Assembly	ME-67
Dynamic radar cruise control system display malfunction (with Dynamic Radar Cruise Control System)	1. Cruise Control System	-
	2. Combination Meter Assembly	ME-67
Moon roof open display malfunction	1. Sliding Roof Control System	-
	2. Combination Meter Assembly	ME-67

Symptom	Suspected Area	See page
Steering lock display malfunction	1. Steering Lock System	-
	2. Combination Meter Assembly	ME-67
Low oil pressure display malfunction	1. Engine Oil Pressure Switch	ME-76
	2. Wire Harness or Connector	-
	3. Combination Meter Assembly	ME-67
Low engine oil level display malfunction	1. Engine Oil Level Sensor	ME-77
	2. Wire Harness or Connector	-
	3. Combination Meter Assembly	ME-67
Low washer fluid display malfunction	1. Washer Fluid Level Switch	ME-34
	2. Wire Harness or Connector	-
	3. Combination Meter Assembly	ME-67
Check PCS display malfunction (with Pre-collision System)	1. Pre-Collision System	-
	2. Combination Meter Assembly	ME-67

OTHERS:

Symptom	Suspected Area	See page
Front passenger seat belt warning light does not come on.	1. Combination Meter (LED)	ME-29
	2. Wire Harness or Connector	-
	3. Front Passenger Seat Belt Warning Light Circuit	SB-15
	4. Combination Meter Assembly	ME-67
	5. Heater Control Panel	AC-227
	6. Multi-display Assembly	OT-9

FUEL SENDER GAUGE ASSEMBLY

COMPONENTS

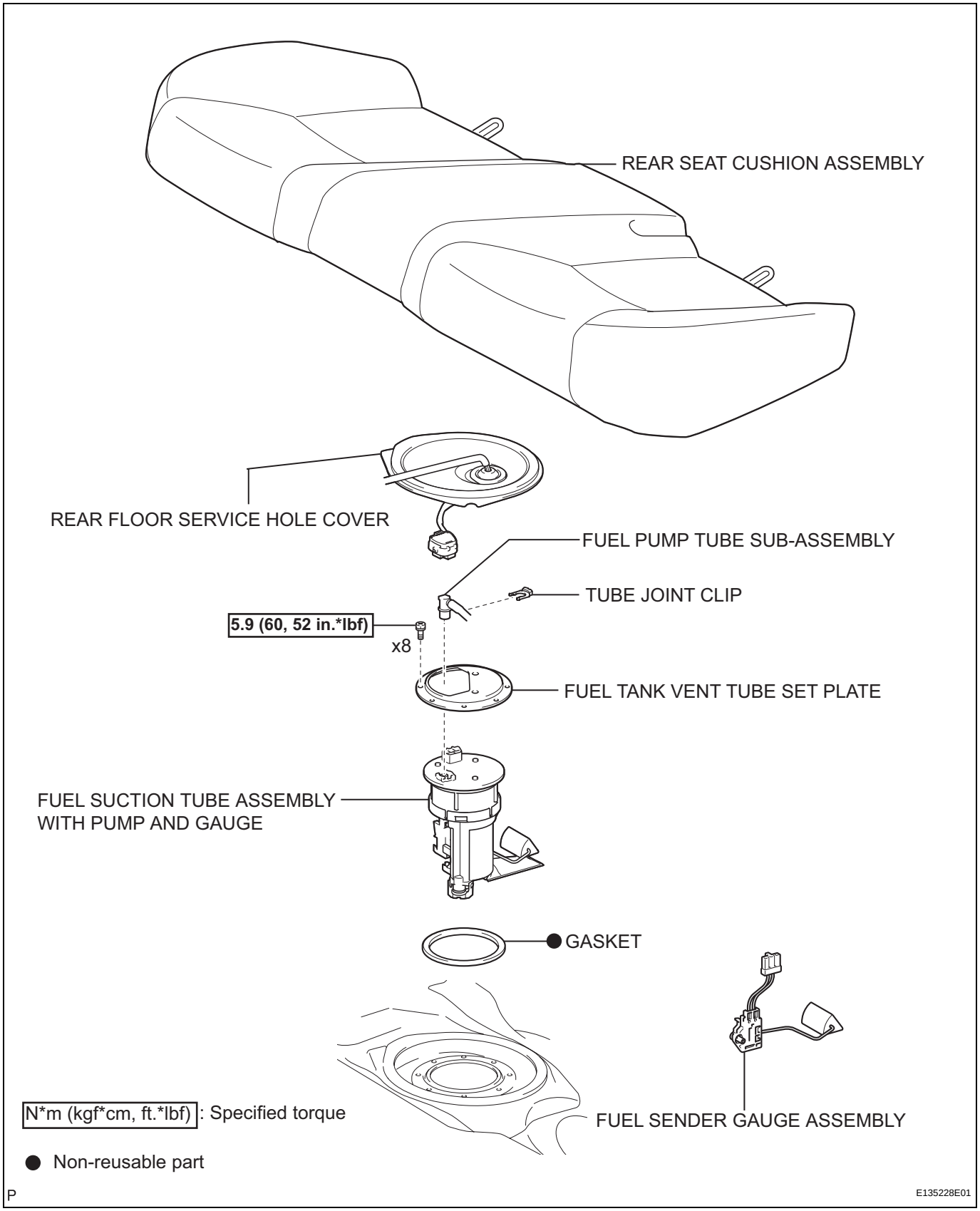

ME

ME

REMOVAL

1. **DISCHARGE FUEL SYSTEM PRESSURE**
   HINT:
   (See page FU-1)
2. **DISCONNECT CABLE FROM NEGATIVE BATTERY TERMINAL**
   CAUTION:
   Wait for 90 seconds after disconnecting the cable to prevent airbag deployment (See page RS-1).
3. **REMOVE REAR SEAT CUSHION ASSEMBLY (See page SE-113)**
4. **REMOVE REAR FLOOR SERVICE HOLE COVER (See page FU-26)**
5. **SEPARATE FUEL PUMP TUBE SUB-ASSEMBLY (See page FU-26)**
6. **REMOVE FUEL TANK VENT TUBE SET PLATE (See page FU-26)**
7. **REMOVE FUEL SUCTION TUBE ASSEMBLY WITH PUMP AND GAUGE (See page FU-27)**
8. **REMOVE FUEL SENDER GAUGE ASSEMBLY (See page FU-27)**

INSPECTION

1. **INSPECT FUEL SENDER GAUGE ASSEMBLY**
   (a) Remove the fuel sender gauge assembly.
   (b) Check that the float moves smoothly between F and E.
   (c) Measure the resistance between the terminals 2 (S) and 3 (FE) of the connector according to the value(s) in the table below.
   Standard resistance:
   Main

Float Level	Resistance (Ω)
F	13.5 to 16.5
Between E and F	13.5 to 414.5 (Gradually changes)
E	405.5 to 414.5

HINT:
If the value is not as specified, replace the fuel sender gauge assembly.

Fuel Sender Gauge Assembly:

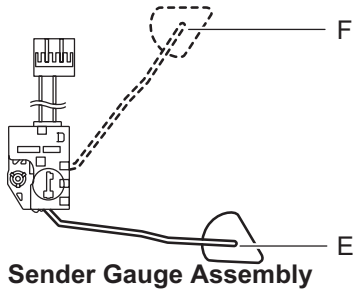

Fuel Sender Gauge Assembly Wire Harness View:

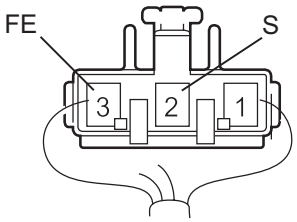

E132659E01

TERMINALS OF ECU

1. COMBINATION METER ASSEMBLY

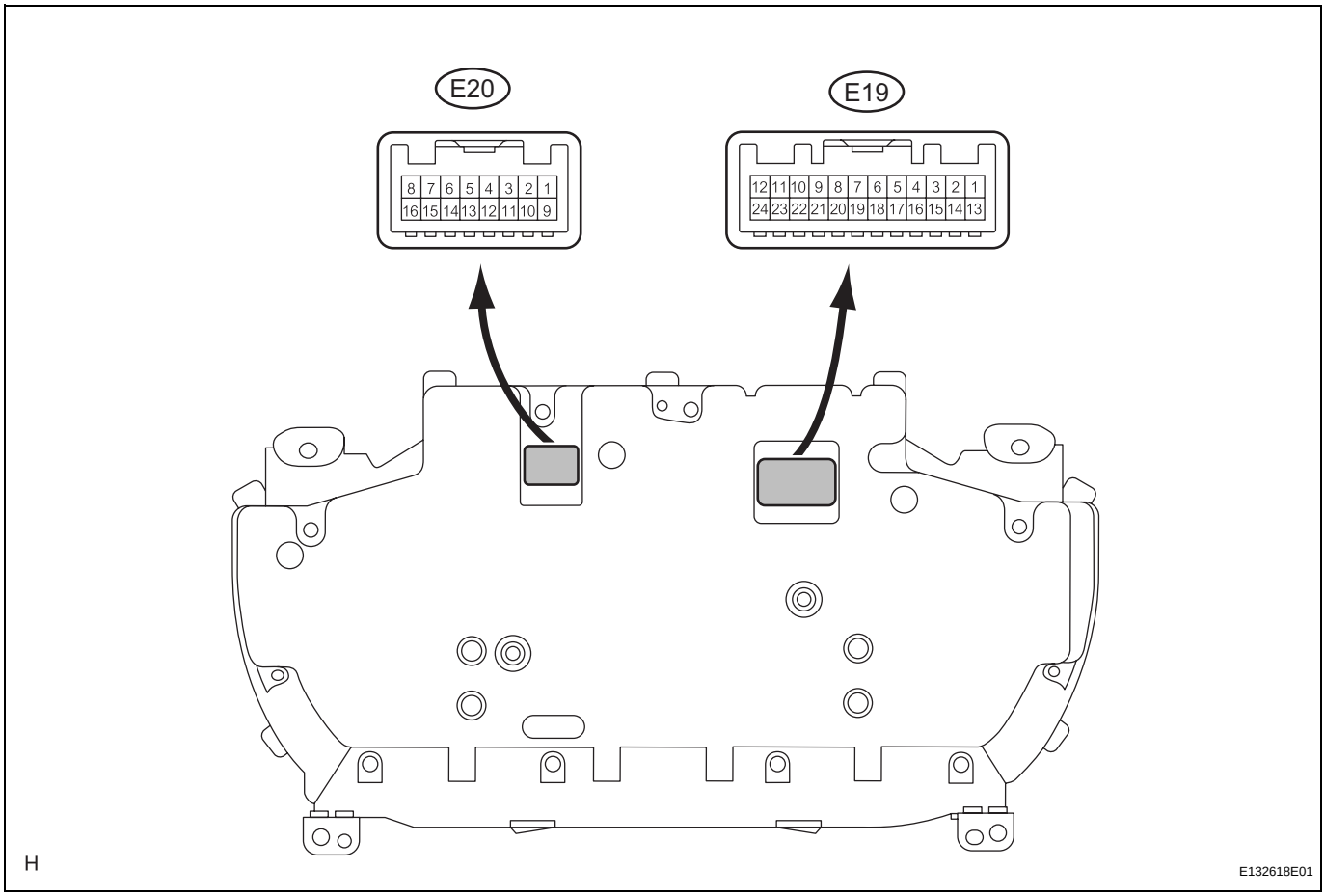

ME

Symbols (Terminal No.)	Wiring Color	Terminal Description	Condition	Specified Condition
B2 (E19-1) - Body ground	R - Body ground	Battery	Always	10 to 14 V
B (E19-2) - Body ground	V - Body ground	Battery	Always	10 to 14 V
WLVL (E19-5) - Body ground	LG - Body ground	Washer level warning switch signal	Engine switch on (IG), washer level warning display ON	Below 1 V
			Engine switch on (IG), washer level warning display off	10 to 14 V
TR (E19-6) - Body ground	G - Body ground	Light control rheostat signal	Engine switch on (IG), turn the light control rheostat knob fully downwards	Below 1 V
			Engine switch on (IG), turn the light control knob rheostat fully upwards	4 to 6 V
TIRE (E19-7) (*) - Body ground	L - Body ground	Tire pressure warning light signal	Engine switch on (IG), tire pressure warning light ON	0.9 to 3.2 V
			Engine switch on (IG), tire pressure warning light off	3.2 V or higher
S (E19-8) - Body ground	B - Body ground	Engine oil pressure warning light signal	Engine switch on (IG), engine oil pressure warning light OFF	10 to 14 V
			Engine switch on (IG), engine oil pressure warning light ON	Below 1 V

Symbols (Terminal No.)	Wiring Color	Terminal Description	Condition	Specified Condition
P/SB (E19-9) - Body ground	P - Body ground	Passenger seat belt warning light signal	Sit on the front passenger seat, engine switch on (IG), front passenger seat belt warning light OFF	10 to 14 V
			Sit on the front passenger seat, engine switch on (IG), front passenger seat belt warning light Blinks	10 to 14 V ←→ Below 1 V
E3 (E19-10) - Body ground	P - Body ground	Ground (Rheostat ground)	Always	Below 1 V
ILL- (E19-11) - Body ground	BR - Body ground	Illumination signal	Engine switch on (IG)	Below 1 V ←→ 10 to 14 V
E2 (E19-12) - Body ground	W-B - Body ground	Ground (Power ground)	Always	Below 1 V
IG+ (E19-13) - Body ground	LG - Body ground	Engine switch signal	Turn the engine switch off	Below 1 V
			Engine switch on (IG)	10 to 14 V
TC (E19-16) - Body ground	O - Body ground	Tail cancel signal (Light control rheostat signal)	Engine switch on (IG), turn the light control rheostat knob fully downwards	Below 1 V
			Engine switch on (IG), turn the light control knob rheostat fully upwards	4 to 6 V
CANH (E19-17) - Body ground	B - Body ground	CAN communication signal	-	-
CANL (E19-18) - Body ground	W - Body ground	CAN communication signal	-	-
S (E19-20) - Body ground	GR - Body ground	Light failure sensor signal	Engine switch on (IG), rear light indicator light OFF	10 to 14 V
			Engine switch on (IG), rear light indicator light ON	Below 1 V
MSSL (E19-22) - Body ground	G - Body ground	Steering pad switch signal	Engine switch on (IG), DISP switch off	4 to 6 V
			Engine switch on (IG), DISP switch ON	Below 1 V
CHG- (E19-23) - Body ground	B - Body ground	Charge warning light signal	Engine switch on (IG), CHARGE warning light OFF	10 to 14 V
			Engine switch on (IG), CHARGE warning light ON	Below 1 V
ES (E19-24) - Body ground	W-B - Body ground	Ground (Signal ground)	Always	Below 1 V
B (E20-1) - Body ground	G - Body ground	Turn indicator light signal	Engine switch on (IG), turn signal RH indicator light OFF	Below 1 V
			Engine switch on (IG), turn signal RH indicator light is blinking	10 to 14 V ←→ Below 1 V
B (E20-2) - Body ground	B - Body ground	Turn indicator light signal	Engine switch on (IG), turn signal LH indicator light OFF	Below 1 V
			Engine switch on (IG), turn signal LH indicator light is blinking	10 to 14 V ←→ Below 1 V
CHK (E20-4) - Body ground	BR - Body ground	Malfunction indicator lamp signal	Engine switch on (IG), CHECK ENGINE warning light ON	Below 3 V
			Engine switch on (IG), CHECK ENGINE warning light OFF	10 to 14 V

Symbols (Terminal No.)	Wiring Color	Terminal Description	Condition	Specified Condition
B/LE (E20-6) - Body ground	LG - Body ground	Brake fluid level warning light signal	Engine switch on (IG), BRAKE warning light OFF	10 to 14 V
			Engine switch on (IG), BRAKE warning light ON	Below 1 V
+S (E20-12) - Body ground	SB - Body ground	Speed signal for other systems (Output)	Turn the wheel slowly	Pulse generation (See waveform)
OIL (E20-13) - Body ground	LG - Body ground	Engine oil level sensor	Engine switch on (IG), engine oil level is full	Below 1 V
			Engine switch on (IG), engine oil level is low	10 to 14 V
SI (E20-14) - Body ground	BR - Body ground	Speed signal for other systems (Input)	Engine switch on (IG), turn the wheel slowly	Pulse generation (See waveform)
FR (E20-15) - Body ground	GR - Body ground	Fuel signal	Engine switch on (IG), fuel level is FULL	Below 1 V
			Engine switch on (IG), fuel level is EMPTY	3 to 7 V
FE (E20-16) - Body ground	P - Body ground	Ground (Fuel ground)	Always	Below 1 V

*: with Tire Pressure Warning System

ME

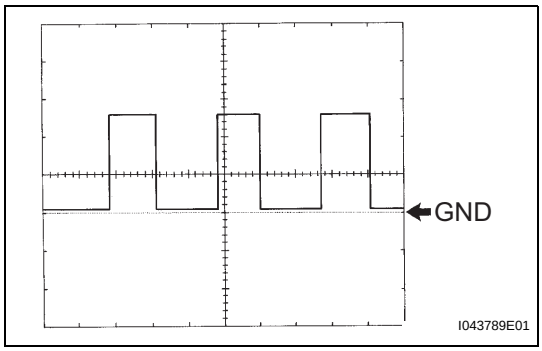

(a) Waveform (Reference): Using oscilloscope:

Item	Condition
Tool setting	5 V/DIV., 20 ms./DIV.
Vehicle condition	Driving at approx. 20 km/h (12 mph)

2. COMBINATION METER INNER CIRCUIT

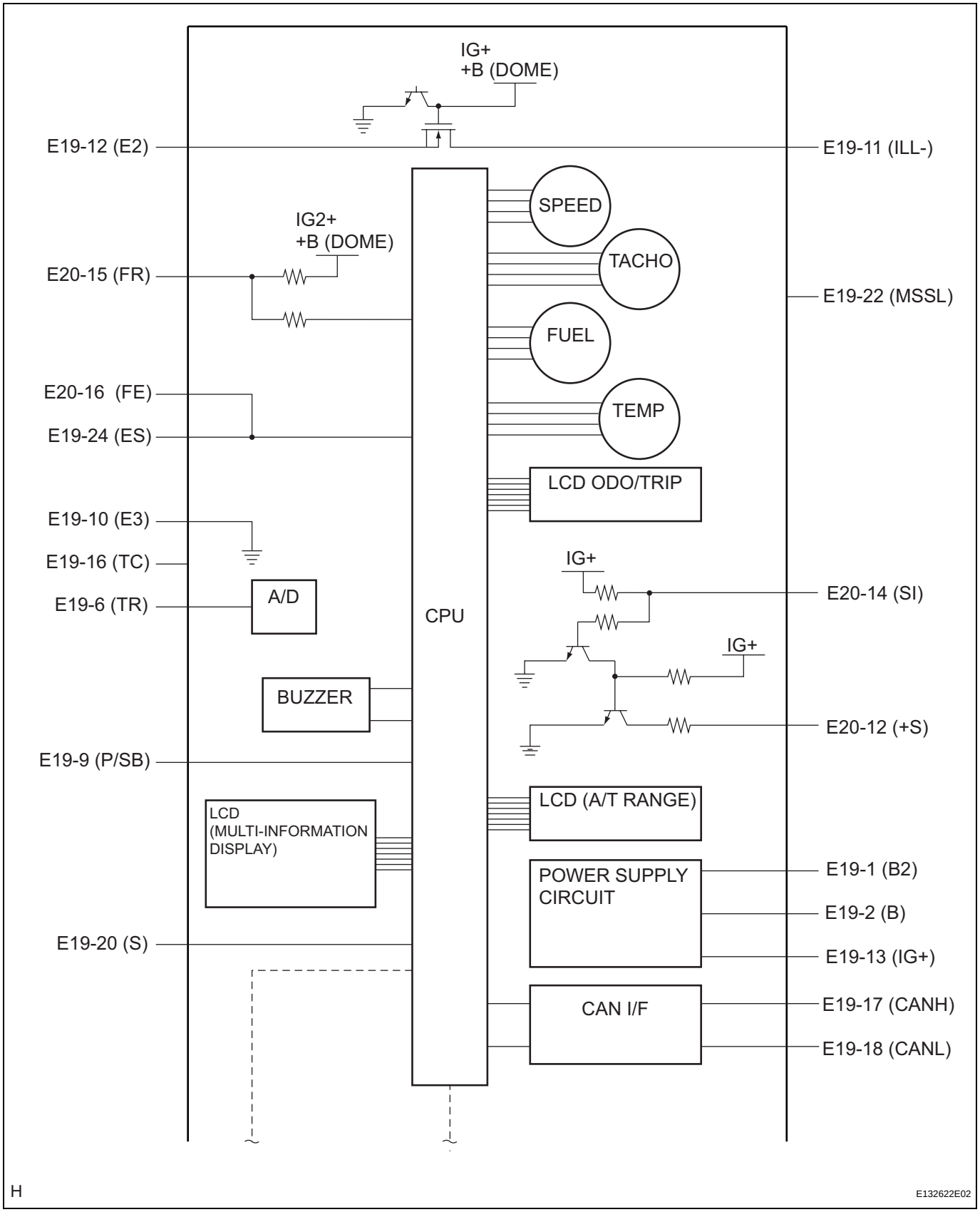

ME

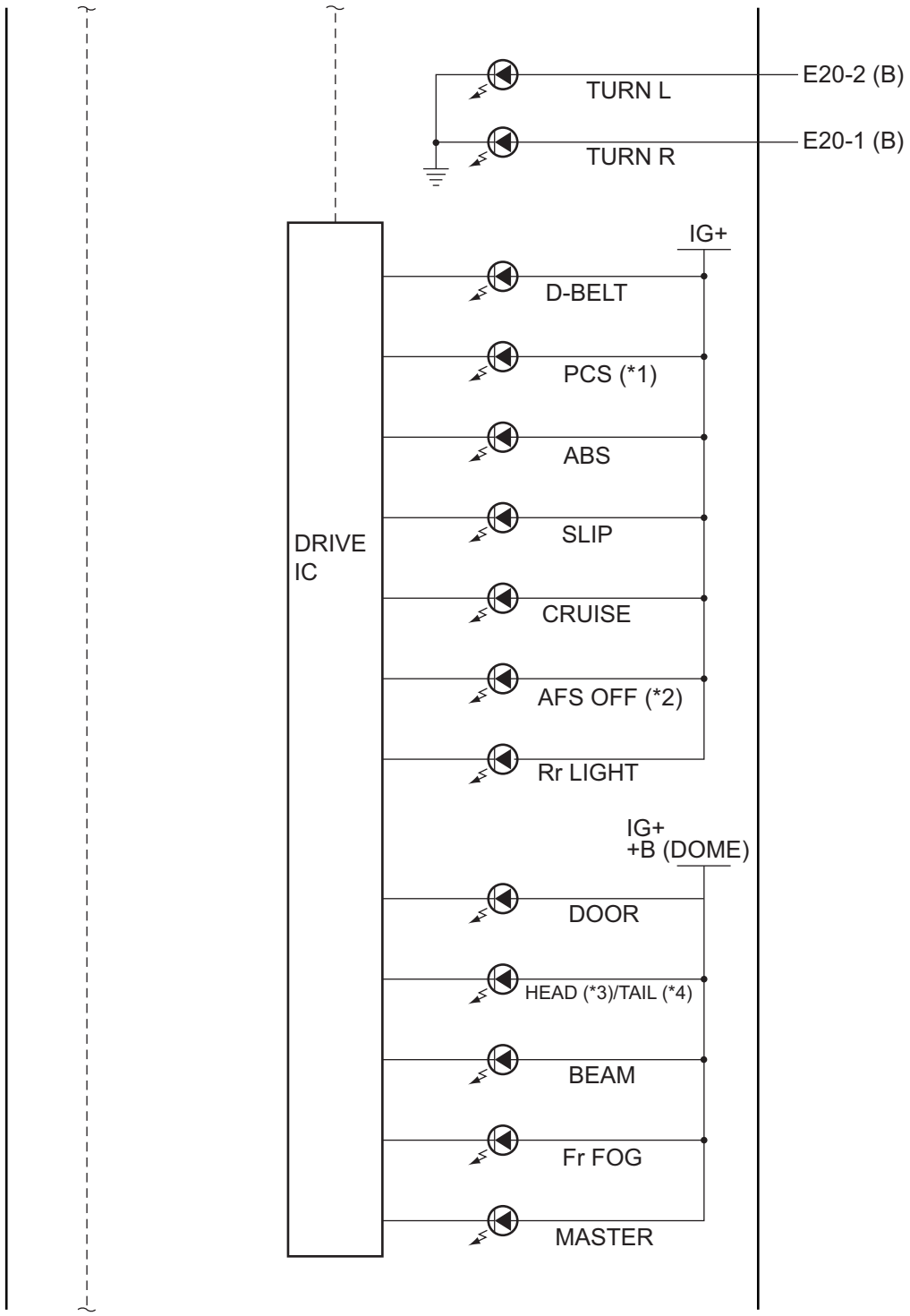

*1: with Pre-collision System *2: with AFS *3: for U.S.A. *4: for Canada

H

E132623E02

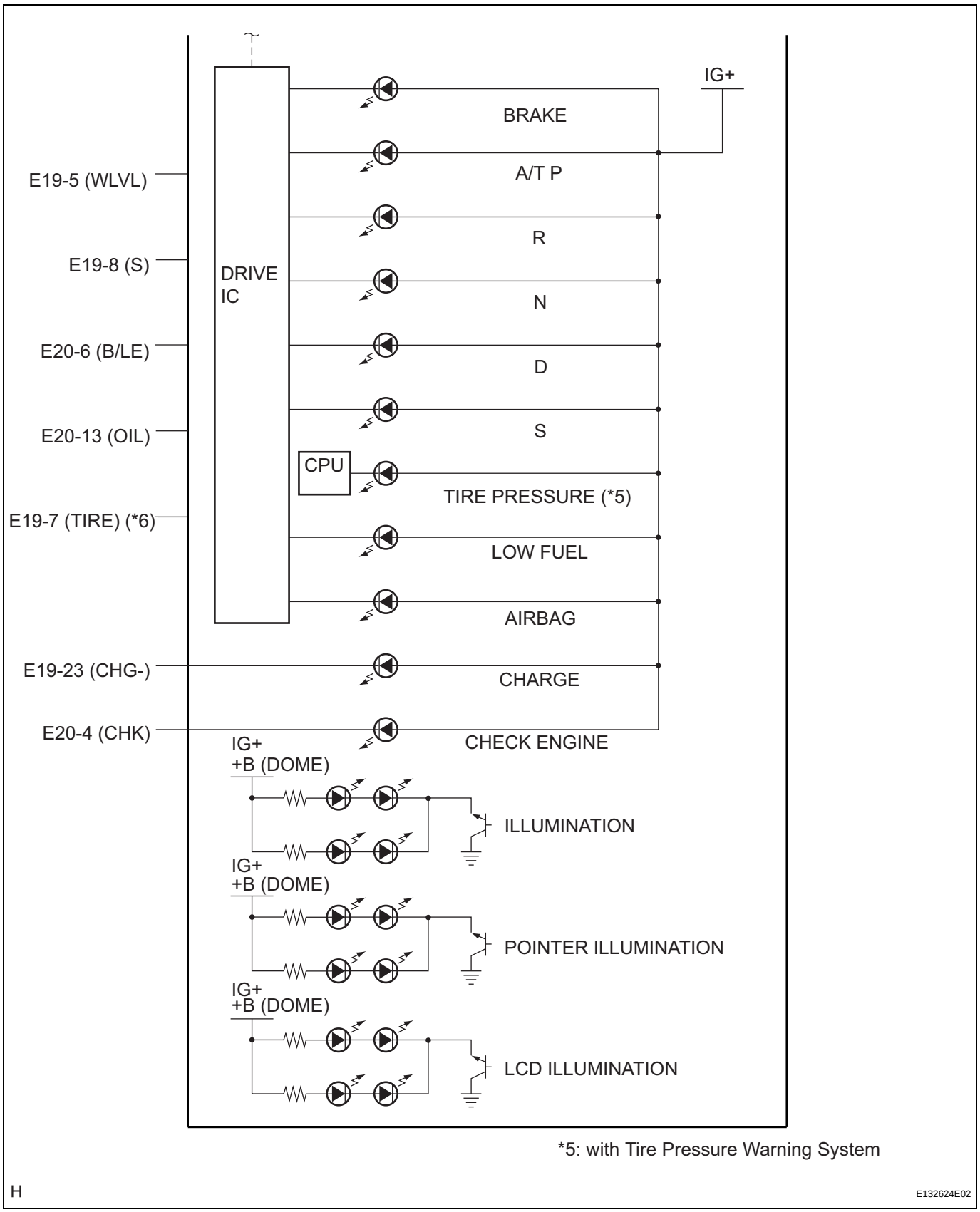
IG+
BRAKE
A/T P
R
N
D
S
TIRE PRESSURE (*5)
LOW FUEL
AIRBAG
CHARGE
CHECK ENGINE
E19-5 (WLVL)
E19-8 (S)
E20-6 (B/LE)
E20-13 (OIL)
E19-7 (TIRE) (*6)
E19-23 (CHG-)
E20-4 (CHK)
DRIVE IC
CPU
IG+
+B (DOME)
ILLUMINATION
POINTER ILLUMINATION
LCD ILLUMINATION
*5: with Tire Pressure Warning System
H
E132624E02

ME

Terminal No.		Wire Harness Side
E19	1	DOME Fuse (B2)
	2	MPX-B Fuse (B)
	3	-
	4	-
	5	Washer Level Switch (WLVL)
	6	Light Control Rheostat (TR)
	7	Tire Pressure Warning ECU (TIRE) (*)
	8	Oil Pressure Warning Switch (S)
	9	Clock Assembly (P/SB)
	10	Light Control Rheostat (E3)
	11	PANEL Fuse (ILL-)
	12	Ground (E2)
	13	No. 2 GAUGE Fuse (IG+)
	14	-
	15	-
	16	Tail Cancel Switch (Light Control Rheostat) (TC)
	17	CAN Communication Line (CANH)
	18	CAN Communication Line (CANL)
	19	-
	20	Light Failure Sensor (S)
	21	-
	22	Steering Pad Switch (MSSL)
	23	Alternator L Terminal (CHG-)
	24	Ground (ES)
E20	1	Turn Signal Flasher (B)
	2	Turn Signal Flasher (B)
	3	-
	4	ECM (CHK)
	5	-
	6	Brake Fluid Level Warning Switch (B/LE)
	7	-
	8	-
	9	-
	10	-
	11	-
	12	Each part that uses speed signal (+S)
	13	Engine Oil Level Sensor (OIL)
	14	Skid Control ECU (SI)
	15	Fuel Sender Gauge Assembly (FR)
	16	Fuel Sender Gauge Assembly (FE)

*: with Tire Pressure Warning System

ENGINE OIL PRESSURE SWITCH

ON-VEHICLE INSPECTION

1. INSPECT ENGINE OIL PRESSURE SWITCH ASSEMBLY

(a) Disconnect the connector from the oil pressure switch assembly.

(b) With the switch still installed, measure the resistance between the terminal of the engine oil pressure switch and engine ground.

Standard resistance:

Engine stopped:

Below 1 Ω

Engine idling:

10 kΩ or higher

HINT:

If the value is not as specified, replace the engine oil pressure switch.

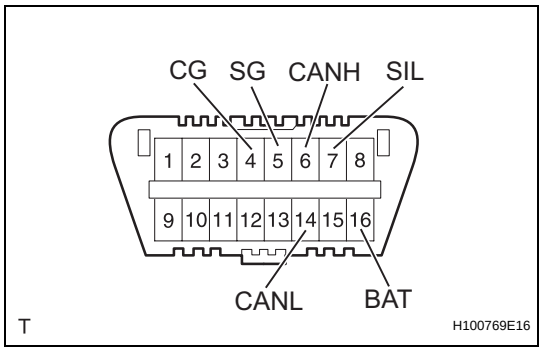

DIAGNOSIS SYSTEM

1. CHECK DLC3

(a) The ECU uses ISO 15765-4 for communication. The terminal arrangement of the DLC3 complies with SAE J1962 and matches ISO 15765-4 format. If the result is not as specified, the DLC3 may have a malfunction. Repair or replace harness or connector.

Symbols (Terminal No.)	Terminal Description	Condition	Specified Condition
SIL (7) - SG (5)	Bus "+" line	During transmission	Pulse generation
CG (4) - Body ground	Chassis ground	Always	Below 1 Ω
CG (4) - Body ground	Signal ground	Always	Below 1 Ω
BAT (16) - Body ground	Battery positive	Always	11 to 14 V
CANH (6) - CANL (14)	CAN bus line	Engine switch off	54 to 69 Ω
CANH (6) - CG (4)	HIGH-level CAN bus line	Engine switch off*	200 Ω or higher
CANL (14) - CG (4)	LOW-level CAN bus line	Engine switch off*	200 Ω or higher
CANH (6) - BAT (16)	HIGH-level CAN bus line	Engine switch off*	6 kΩ or higher
CANL (14) - CG (4)	LOW-level CAN bus line	Engine switch off*	6 kΩ or higher

NOTICE:

***: Before measuring the resistance, leave the vehicle as is for at least 1 minute and do not operate the engine switch, any other switches or the doors.**

If the result is not as specified, the DLC3 may have a malfunction. Repair or replace harness or connector.

HINT:

If the display shows an error message after having connected the cable of the intelligent tester to the DLC3, turned the engine switch on (IG), and operated the tester, there is a problem on either the vehicle side or the tool side.

- If communication is normal when the tool is connected to another vehicle, inspect the DLC3 on the original vehicle.
- If communication is still impossible when the tool is connected to another vehicle, the problem is probably in the tool itself. Consult the Service Department listed in the tool's instruction manual.

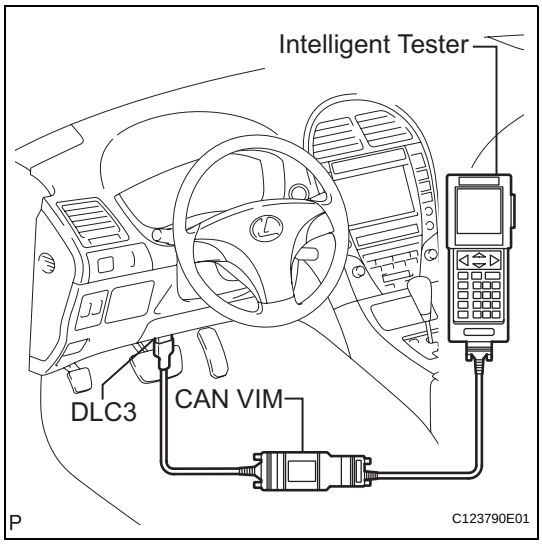

DTC CHECK / CLEAR

1. CHECK DTC

(a) Connect the intelligent tester (with CAN VIM) to the DLC3.

(b) Turn the engine switch on (IG) and turn the intelligent tester on.

(c) Enter the following menus: DIAGNOSTICS / OBD/ MOBD / METER / DTC INFO / CURRENT CODES.

(d) Check for DTCs.

2. CLEAR DTC

(a) Connect the intelligent tester (with CAN VIM) to the DLC3.

(b) Turn the engine switch on (IG) and turn the intelligent tester on.

(c) Enter the following menus: DIAGNOSTICS / OBD/ MOBD / METER / DTC INFO / CURRENT CODES.

(d) Erase DTCs by pressing the YES button on the tester.

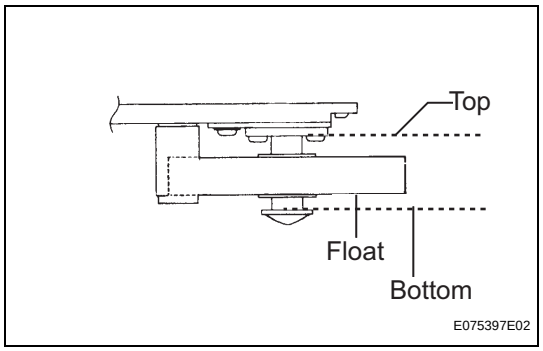

ENGINE OIL LEVEL SENSOR

ON-VEHICLE INSPECTION

1. INSPECT ENGINE OIL LEVEL SENSOR

(a) Remove the engine oil level sensor.

(b) Measure the resistance according to the value(s) in the table below.

Standard resistance

Tester Connection	Condition	Specified Condition
1 - 2	Float position is at the top	Below 1 Ω
1 - 2	Float position is at the bottom	10 kΩ or higher

HINT:
If the value is not as specified, replace the engine oil level sensor.

FAIL-SAFE CHART

ENGINE COOLANT TEMPERATURE GAUGE:

Condition	Response	Recovery
Engine coolant temperature data is interrupted for 3 seconds.	The gauge needle indicates between / and C.	Engine coolant temperature data is received.

SHIFT INDICATOR:

Condition	Response	Recovery
Shift position data is interrupted for 3 seconds.	All indicator lights go off.	Normal data is received.

ABS, EBD, BA, TRAC, AND VSC:

Condition	Response	Recovery
ABS, brake, slip data is interrupted for 1 second.	The warning light comes on.	Normal data is received.

DOOR:

Condition	Response	Recovery
Each door condition data is interrupted for 10 seconds.	The data received most recently remains indicated.	Normal data is received.

DRIVER SIDE SEAT BELT:

Condition	Response	Recovery
Driver side front seat inner belt assembly data is interrupted for 10 seconds.	The data received most recently remains indicated.	Normal data is received.

TIRE PRESSURE (*1):

Condition	Response	Recovery
Tire pressure data is interrupted for 10 seconds.	The tire pressure indicator light blinks for 60 to 64 seconds, then comes on.	Normal data is received.

OIL MAINTENANCE (*2):

Condition	Response	Recovery
The running distance after performing oil maintenance reminder light resetting procedure is interrupted.	Oil change reminder light comes on.	Normal data is received.

HEAD (*2)/TAIL (*3):

Condition	Response	Recovery
Regular data is interrupted for 10 seconds.	The data received most recently remains indicated.	Normal data is received.

BEAM:

Condition	Response	Recovery
Regular data is interrupted for 10 seconds.	The data received most recently remains indicated.	Normal data is received.

AIRBAG:

Condition	Response	Recovery
Airbag data is interrupted for 10 seconds or there is a malfunction in the combination meter (meter CPU).	The warning light comes on.	Normal data is received.

FRONT PASSENGER SIDE SEAT BELT:

Condition	Response	Recovery
Regular data is interrupted for 10 seconds.	The data received most recently remains indicated.	Normal data is received.

FRONT FOG LIGHT:

Condition	Response	Recovery
Regular data is interrupted for 10 seconds.	The data received most recently remains indicated.	Normal data is received.

AFS:

Condition	Response	Recovery
Regular data is interrupted for 3 seconds.	The data received most recently remains indicated.	Normal data is received.

MULTI-INFORMATION DISPLAY:

Condition	Response	Recovery
Cruise information data is interrupted for 60 seconds.	The display becomes blank (only measurement units are displayed).	Normal data is received.

*1: with Tire Pressure Warning System
*2: for U.S.A.
*3: for Canada

DATA LIST / ACTIVE TEST

1. DATA LIST

Using the intelligent tester to read the DATA LIST allows the values or states of switches, sensors, actuators and other items to be read without removing any parts. This non-intrusive inspection can be very useful because intermittent conditions or signals may be discovered before parts or wiring is disturbed. Reading the DATA LIST information early in troubleshooting is one way to save diagnostic time.

(a) Warm up the engine.
(b) Turn the engine switch off.
(c) Connect the intelligent tester to the DLC3.
(d) Turn the engine switch on (IG).
(e) Turn the tester on.
(f) Enter the following menus: DIAGNOSIS / OBD/ MOBD / METER / DATA LIST.
(g) Check values by referring to the table below.

METER:

Tester Display	Measurement Item/Range	Normal Condition	Diagnostic Note
TAIL CANCEL SW	Tail cancel switch is OFF/ON	OFF: Rheostat knob is not fully turned up	-
		ON: Rheostat knob is fully turned up	-
ODO/TRIP SW	ODO/TRIP switch is OFF/ON	OFF: Switch is released	-
		ON: Switch is pushed	-
P-BELT BUCKL SW	Front passenger buckle switch is OFF/ON	OFF: Seat belt is fastened	-
		ON: Seat belt is unfastened	-
SPEED METER	Vehicle speed/Min.: 0 km/h (0 mph), Max.: 255 km/h (158 mph)	Almost same as actual vehicle speed (When driving)	-
TACHO METER	Engine speed/Min.: 0 rpm, Max.: 12,750 rpm	Almost same at the meter rpm (When engine is running)	-
COOLANT TEMP	Engine coolant temperature: 0°C (32°F) to 127.5°C (261.5°F)	After warning up: 80 to 95°C (176 to 203°F)	-
WASHER SW	Washer level switch is OFF/ON	OFF: Washer level is not low	-
		ON: Washer level is low	-
OIL LEVEL SW	Oil level warning switch is OFF/ ON	OFF: Oil level is more than low	-
		ON: Oil level is less than low	-
MULTI DISP SW	MODE switch in the steering pad is OFF/ON	OFF: Mode switch is OFF	-
		ON: Mode switch is ON	-
+B VOLTAGE VAL	Battery voltage/Min.: 0 V, Max.: 25.5 V	10 to 14 V	-
OIL MAINTENANCE (*)	Oil maintenance warning value: Min.: 0, Max. 25,500	The running distance after performing oil maintenance resetting procedure is displayed	If the value is 5,000 (mph) or more, perform oil maintenance resetting procedure after changing the oil.
FUEL GAUGE	Fuel input signal Min.: 0 (L), Max. 127.5 (L)	Fuel gauge indicates (E): 7.5 (L)	-
		Fuel gauge indicates (1/2): 35.0 (L)	-
		Fuel gauge indicates (F): 62.9 (L)	-
AMBIENT TEMP	Outside temperature: Min.: -40°C (-40°F) to 50°C (122°F)	Almost same as actual outside temperature	The temperature displayed on the multi-information display is -40 to 50°C (-40 to 122°F)
RHEOSTAT	Light Control Rheostat/Min.: 0%, Max.: 100%	Light control rheostat switch is Dark (0%) → Bright (100%)	-

Tester Display	Measurement Item/Range	Normal Condition	Diagnostic Note
OUTSIDE LIGHT	Quantity of outside light/Min.: 0%, Max.: 100%	Outside light is Dark (0%) → Bright (100%)	-
ECM/PCM DTC 1 to 3	Communication error: not occurred/occurred	Not occurred: UNREC	-
		Occurred: REC	-
ECM/PCM ODO 1 to 3	Distance when DTC is output Min.: 0, Max.: 999999	-	-
ABS/VSC DTC 1 to 3	Communication error: not occurred/occurred	Not occurred: UNREC	-
		Occurred: REC	-
ABS/VSC ODO 1 to 3	Distance when DTC is output Min.: 0, Max.: 999999	-	-
SEAT-BELT WARN	The inquiry of the seat belt warning buzzer is D/P ON, D ON, P ON, D/P OFF	The customized setting of the inquiry of the seat belt warning buzzer is displayed	-
CODES#	The number of the DTC which is currently output	0	-

*: for U.S.A.

ABS/TRAC/VSC:

Tester Display	Measurement Item/Range	Normal Condition	Diagnostic Note
FR/FL/RR/RL WHEEL SPD	Vehicle speed/Min.: 0 km/h (0 mph), Max.: 326 km/h (202 mph)	Almost same as actual vehicle speed (When driving)	-
VEHICLE SPD	Vehicle speed/Min.: 0 km/h (0 mph), Max.: 326 km/h (202 mph)	Almost same as actual vehicle speed (When driving)	-

ME

ENGINE:

Tester Display	Measurement Item/Range	Normal Condition	Diagnostic Note
ENGINE SPD	Vehicle speed/Min.: 0 rpm, Max.: 16,383.75 rpm	Almost same as actual engine speed (When engine running)	-
COOLANT TEMP	Engine coolant temperature: Min.: -40°C (-40°F), Max: 140°C (284°F)	80 to 100°C (176 to 212°F): After warming up	• If -40°C (-40°F): sensor circuit open • If 140°C (284°F) or more: sensor circuit shorted

2. ACTIVE TEST

Using the intelligent tester to perform Active Tests allows the relay, actuator, and other items to operate without removing any parts. This non-intrusive functional inspection can be very useful because intermittent operation may be discovered before parts or wiring is disturbed. Performing ACTIVE TEST early in troubleshooting is one way to save diagnostic time. DATA LIST information can be display while performing ACTIVE TEST.

(a) Connect the intelligent tester to the DLC3.
(b) Turn the engine switch on (IG).
(c) Turn the tester on.
(d) Enter the following menus: DIAGNOSIS / OBD/ MOBD / METER / ACTIVE TEST.
(e) From the display on the tester, perform the "ACTIVE TEST".

METER:

Tester Display	Test Part	Control Range	Diagnostic Note
SPEED METER	Speedometer	0, 40, 80, 120 mph (*1)	-
		0, 40, 80, 120, 160, 200, 240 km/h (*2))	

Tester Display	Test Part	Control Range	Diagnostic Note
TACHOMETER	Tachometer	0, 1,000, 2,000, 3,000, 4,000, 5,000, 6,000, 7,000 (rpm)	-
FUEL GAUGE	Fuel receiver gauge	EMPTY, 1/2, FULL	-
COOLANT TEMP	Engine coolant temperature receiver gauge	LOW, NORM, HIGH	-
A/T INDIC (1)	A/T shift indicator light	A/T shift indicator light D, N, R, P is OFF/ON	-
A/T INDIC (2)	A/T gear range indicator light	A/T gear range indicator light S is OFF/ON	-
METER DISPLAY1	Multi-information display	All the dots in the multi-information display OFF/ON	Confirm that the vehicle is stopped, engine idling
METER DISPLAY2	A/T shift indicator display	The segments in the combination meter assembly OFF/ON	Confirm that the vehicle is stopped, engine idling
SRS WARN	Airbag warning light	Airbag warning light is OFF/ON	-
DOORS ALL OPEN	Open door warning light	Open door warning light is OFF/ON	-
P-BELT REMIND	Front passenger side seat belt warning light	Front passenger side seat belt warning light is OFF/ON	-
D-BELT REMIND	Driver side seat belt warning light	Driver side seat belt warning light is OFF/ON	-
ABS WARN	ABS warning light	ABS warning light is OFF/ON	Confirm that the vehicle is stopped, engine idling
SLIP INDIC	Slip indicator light	Slip indicator light is OFF/ON	-
HIGH BEAM INDIC	Hi-beam indicator light	Hi-beam indicator light is OFF/ON	-
HEADLIGHT INDIC (*1)	Head indicator light	Head indicator light is OFF/ON	-
TAILLIGHT INDIC (*2)	Tail indicator light	Tail indicator light is OFF/ON	-
Fr FOG INDIC	Front fog indicator light	Front fog indicator light is OFF/ON	Confirm that the vehicle is stopped, engine idling
Rr LIGHT INDIC	Rear light indicator light	Rear light indicator light is OFF/ON	Confirm that the vehicle is stopped, engine idling
PRECRASH INDIC (*3)	Precrash indicator light	Precrash indicator light is OFF/ON	Confirm that the vehicle is stopped, engine idling
D DOOR OPEN	Open door warning light	Open door warning light is OFF/ON	Confirm that the vehicle is stopped, engine idling
P DOOR OPEN	Front passenger door indicator	Open door warning light is OFF/ON	Confirm that the vehicle is stopped, engine idling
RR DOOR OPEN	Open door warning light	Open door warning light is OFF/ON	Confirm that the vehicle is stopped, engine idling
RL DOOR OPEN	Open door warning light	Open door warning light is OFF/ON	Confirm that the vehicle is stopped, engine idling
LUGG DOOR OPEN	Open door warning light	Open door warning light is OFF/ON	Confirm that the vehicle is stopped, engine idling
AFS INDICATOR (*4)	AFS off indicator light	AFS off indicator light is OFF/ON	Confirm that the vehicle is stopped, engine idling
LOW FUEL WARN	Low fuel warning light	Fuel warning light is OFF/ON	-
TIRE PRESS WARN (*5)	Tire pressure warning light	Tire pressure warning light is OFF/ON	-
CRUISE INDIC	Cruise indicator light	Cruise indicator light is OFF/ON	-
BRAKE WARN	Brake warning light	Brake warning light is OFF/ON	Confirm that the vehicle is stopped, engine idling
MST WARN INDIC	Master caution indicator light	Master caution indicator light is OFF/ON	Confirm that the vehicle is stopped, engine idling

*1: for U.S.A.
*2: for Canada
*3: with Pre-collision System
*4: with AFS
*5: with Tire Pressure Warning System

MAIN BODY:

Tester Display	Test Part	Control Range	Diagnostic Note
DIMMER SIG	Auto dimmer signal	Auto dimmer signal OFF/ON	-

DIAGNOSTIC TROUBLE CODE CHART

DTC Code	Detection Item	Trouble Area	See page
U0100	Lost Communication with ECM/PCM "A"	1. ECM 2. CAN communication system	ME-36
U0129	Lost Communication with Skid Control ECU	1. ABS and traction actuator assembly (Skid control ECU) 2. CAN communication system	ME-38

ON-VEHICLE INSPECTION

1. INSPECT SPEEDOMETER

(a) Check the operation.

(1) Using a speedometer tester (calibrated chassis dynamometer), check the speedometer indication according to the table below.

Reference: mph (for U.S.A.)

Chassis Dynamometer Indication	Acceptable Range
20 mph	20.0 to 23.0 mph
40 mph	40.0 to 43.5 mph
60 mph	60.0 to 64.0 mph
80 mph	80.0 to 84.5 mph
100 mph	100.0 to 105.0 mph
120 mph	120.0 to 125.5 mph
140 mph	140.0 to 146.0 mph
160 mph	160.0 to 166.5 mph

Reference: km/h (for Canada)

ME

Chassis Dynamometer Indication	Acceptable range Data in ( ) is for reference
20 km/h	(17.5 to 21.5 km/h)
40 km/h	38.0 to 42.0 km/h
60 km/h	58.0 to 63.0 km/h
80 km/h	78.0 to 84.0 km/h
100 km/h	98.5 to 104.5 km/h
120 km/h	119.0 to 125.0 km/h
140 km/h	139.0 to 146.0 km/h
160 km/h	159.0 to 167.0 km/h
180 km/h	179.0 to 188.0 km/h
200 km/h	199.0 to 209.0 km/h
220 km/h	219.0 to 230.0 km/h
240 km/h	239.0 to 251.0 km/h

NOTICE:
Tire wear as well as over or under inflation will cause errors.

(2) Check the deviation from the acceptable range of the speedometer indication.

Reference:
Less than 0.5 km/h (0.3 mph)

HINT:
If the indication is not as specified, go to problem symptoms table (See page ME-16).

2. INSPECT TACHOMETER

(a) Connect a tune-up tachometer, and start the engine.

(b) Compare the test results with the tachometer indications.

DC 13.5 V, at 25°C (77°F):

Tune-up Tachometer indication (rpm)	Acceptable range Data in ( ) is for reference
700	630 to 770
1,000	(900 to 1,100)
2,000	(1,850 to 2,150)

Tune-up Tachometer indication (rpm)	Acceptable range Data in ( ) is for reference
3,000	2,800 to 3,200
4,000	(3,800 to 4,200)
5,000	4,800 to 5,200
6,000	(5,750 to 6,250)
7,000	6,700 to 7,300
8,000	(7,700 to 8,300)

HINT:
If the indication is not as specified, go to the problem symptoms table (See page ME-16).

3. INSPECT ENGINE OIL PRESSURE SWITCH

(a) Disconnect the connector from the engine oil pressure switch.
(b) Turn the engine switch on (IG).
(c) Ground the terminal of the wire harness side connector, then check the low oil pressure warning light.
OK:
Oil pressure warning message comes on.
HINT:
If the warning message is not displayed, go to the problem symptoms table (See page ME-16).

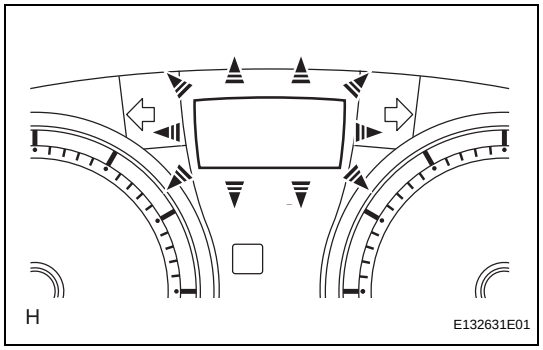

4. INSPECT MULTI-INFORMATION DISPLAY

(a) Turn the engine switch off.
(b) Press the "DISP" button and hold it down.
(c) Turn the engine switch on (IG).
OK:
All the dots in the multi-information display come on.
HINT:
This test is also available on "ACTIVE TEST" (See page ME-29).
(d) Turn the engine switch off to finish this test mode.
HINT:
If the result is not as specified, replace the combination meter assembly.

5. INSPECT ENGINE OIL LEVEL SENSOR

(a) Disconnect the engine oil level sensor connector.
(b) Turn the engine switch on (IG), and check the multi-information display.
OK:
Low engine oil level message is displayed.
HINT:
If the warning message is not displayed, go to the problem symptoms table (See page ME-16).

6. INSPECT WASHER LEVEL SWITCH

(a) Disconnect the connector from the washer level switch.
(b) Turn the engine switch on (IG).

(c) Ground the terminal of the wire harness side connector, then check the multi-information display.

OK:

Washer level warning message is displayed.

HINT:

If the warning message is not displayed, go to the problem symptoms table (See page ME-16).

LIGHT FAILURE SENSOR

INSPECTION

1. INSPECT LIGHT FAILURE SENSOR

(a) Remove the taillight bulb or stop light bulb.

(b) Turn the engine switch on (IG) and check the rear light indicator light.

(c) OK:

The rear light indicator light comes on.

HINT:

If the indicator light does not come on, check the light failure indicator (See page LI-32).

DTC	U0100	Lost Communication with ECM/PCM "A"

DESCRIPTION

The combination meter assembly communicates with the ECM via the CAN communication lines (CAN No. 1 Bus).

DTC No.	DTC Detection Conditions	Trouble Areas
U0100	When either of following conditions detected: 1. Vehicle speed 5 km/h (3.1 mph) or more and IG voltage 10.5 V or more 2. No communication with ECM continues for 3 seconds or more (No communication to ECM or skid control ECU continues for 60 seconds or more)	• CAN communication system • ECM

WIRING DIAGRAM

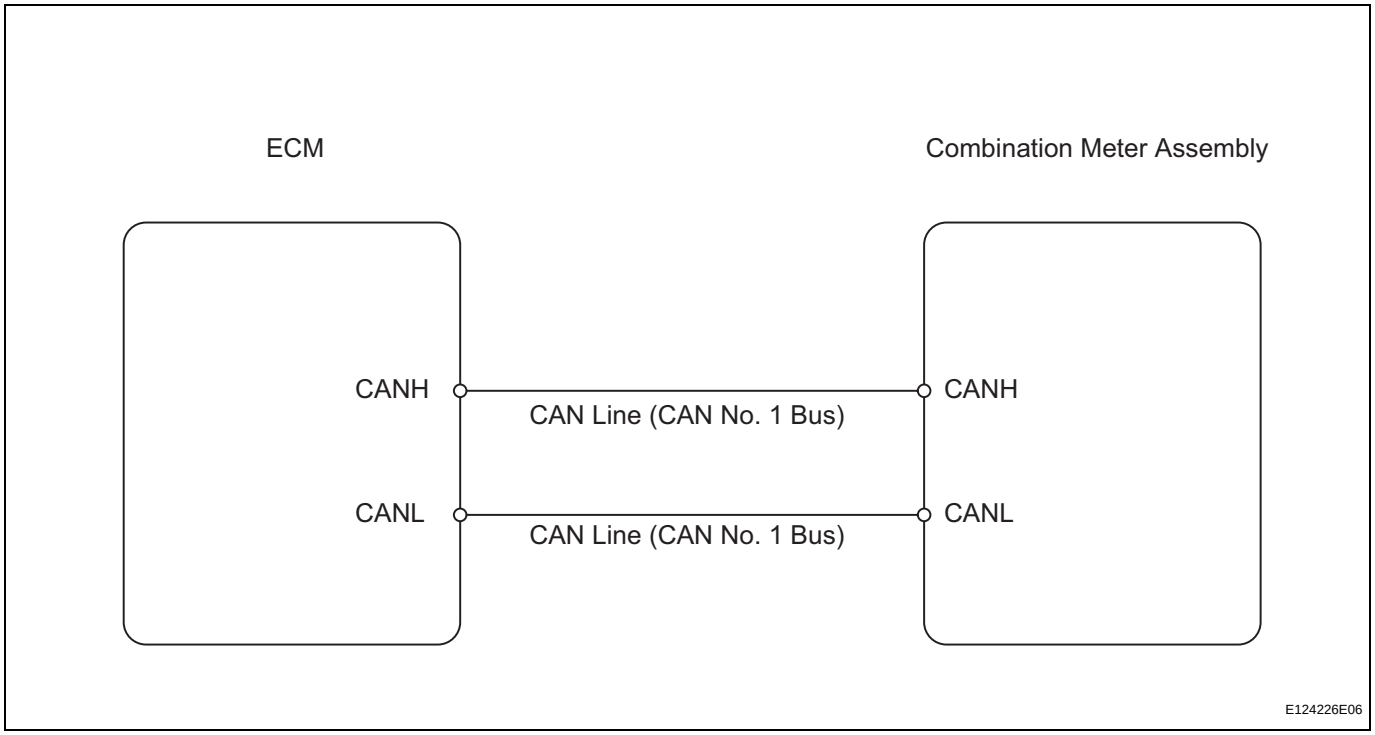

INSPECTION PROCEDURE

1	CONFIRM DTC OUTPUT

(a) Connect the intelligent tester to the DLC3.
(b) Turn the engine switch on (IG).
(c) Turn the tester on.
(d) Clear the stored DTCs by selecting the following menu items on the tester: DIAGNOSIS / OBD/MOBD / METER / DTC INFO / CLEAR CODES.
(e) Drive the vehicle at more than 5 km/h (3.1 mph) for at least 60 seconds.
(f) Stop the vehicle.
(g) Check for DTCs (See page CA-11).

Result

Result	Proceed to
DTC output	A (See page CA-49)
DTC not output	B

B → **USE SIMULATION METHOD TO CHECK**

A

GO TO CAN COMMUNICATION SYSTEM

HOW TO PROCEED WITH TROUBLESHOOTING

1 VEHICLE BROUGHT TO WORKSHOP

NEXT

2 INSPECT BATTERY VOLTAGE

Standard voltage:
11 to 14 V
If the voltage is below 11 V, recharge or replace the battery before proceeding.

NEXT

3 BASIC INSPECTION

AV

(a) Turn the engine switch on (IG).
(b) Check whether or not the radio receiver turns on.

Result

Result	Proceed to
Radio receiver turns on	A
Radio receiver does not turn on	B

B → **Go to step 6**

A

4 CHECK FOR DTC

(a) Check for DTCs and note any codes that are output.
(b) Delete the DTCs.
(c) Recheck by simulating the operation indicated by the DTC.
HINT:
- If the system cannot enter the diagnosis mode, inspect the AVC-LAN and all the components that connect to the AVC-LAN for short circuits and repair or replace the problem part.
- Even if the malfunction symptom is not confirmed, check the DTCs. This is because the system stores past DTCs.
- Check and clear past DTCs. Then check for DTCs.

Result

Result	Proceed to
DTC is output again	A
DTC is not output	B

B → **Go to step 6**

A

5 DIAGNOSTIC TROUBLE CODE CHART

Find the output code on the diagnostic trouble code chart (See page AV-29).

NEXT

Go to step 8

6 PROBLEM SYMPTOMS TABLE

Refer to the problem symptoms table (See page AV-14).

Result

Result	Proceed to
Fault is not listed in problem symptoms table	A
Fault is listed in problem symptoms table	B

B → **Go to step 8**

A

7 OVERALL ANALYSIS AND TROUBLESHOOTING

(a) Terminals of ECU (See page AV-16).

NEXT

8 ADJUST, REPAIR OR REPLACE

NEXT

9 CONFIRMATION TEST

NEXT

END

IDENTIFICATION OF NOISE SOURCE

1. Radio Description

(a) Radio frequency band

(1) Radio broadcasts use the radio frequency bands shown in the table below.

Frequency	30 kHz	300 kHz	30 MHz	30 MHz	300 MHz
Designation	LF	MF	HF	VHF	
Radio Wave		AM ↔		FM ↔	
Modulation	Amplitude modulation			Frequency modulation	

LF: Low Frequency MF: Medium Frequency HF: High Frequency VHF: Very High Frequency

E108734E01

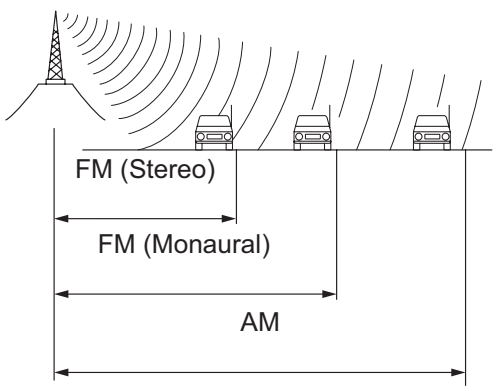

T E108735E01

(b) Service area

(1) The service areas of AM and FM broadcasts are vastly different. Sometimes an AM broadcast can be received very clearly but an FM stereo cannot. FM stereo has the smallest service area, and is prone to pick up static and other types of interference such as noise.

(c) Radio reception problems

HINT:

In addition to static, other problems such as "phasing", "multipath", and "fade out" exist. These problems are not caused by electrical noise, but by the radio signal propagation method itself.

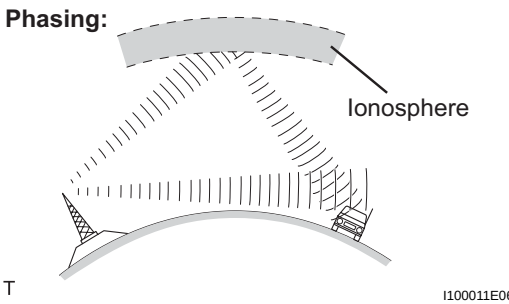

T I100011E06

(1) Phasing

AM broadcasts are susceptible to electrical interference and another kind of interference called phasing. Occurring only at night, phasing is the interference created when a vehicle receives 2 radio wave signals from the same transmitter. One signal is reflected off the ionosphere and the other signal is received directly from the transmitter.

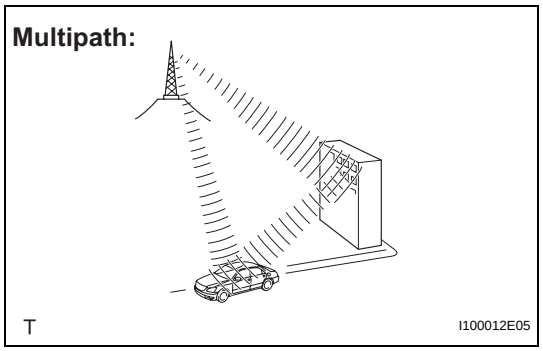

(2) Multipath
Multipath is a type of interference created when a vehicle receives 2 radio wave signals from the same transmitter. One signal is reflected off buildings or mountains and the other signal is received directly from the transmitter.

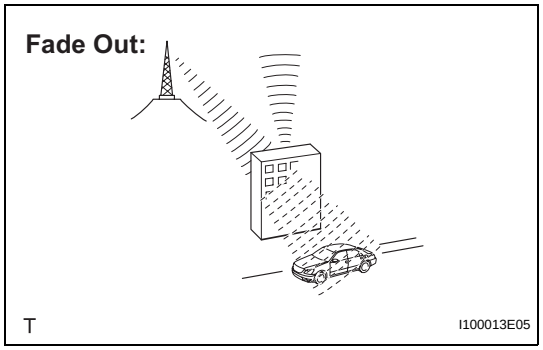

(3) Fade out
Fade out is caused by objects (buildings, mountains, and other such large obstacles) that deflect away part of a signal, resulting in a weaker signal when the object is between the transmitter and vehicle. High frequency radio waves, such as FM broadcasts, are easily deflected by obstructions. Low frequency radio waves, such as AM broadcasts, are much more difficult to deflect.

(d) Noise problem
Technicians must have a clear understanding about each customer's noise complaint. Use the following table to diagnose noise problems.

Radio Frequency	Noise Occurrence Condition	Presumable Cause
AM	Noise occurs in a specified area	Foreign noise
AM	Noise occurs when listening to an intermittent broadcast	An identical program transmitted from multiple towers can cause noise where the signals overlap
AM	Noise occurs only at night	Music beat from a distant broadcast
FM	Noise occurs while driving in a specified area	Multipath or phasing noise resulting from a change in FM frequency

HINT:
If the noise does not match the examples above, refer to the descriptions about phasing and multipath.

PROBLEM SYMPTOMS TABLE

HINT:
- Before inspecting the suspected areas listed in the table below, check the fuse and relay.
- Before inspecting the suspected areas listed in the table below, check for DTCs.
- Methods used to verify the cause of the problem are listed in order of probability in the suspected area column.

Audio Function:

Symptom	Suspected Area	See page
Pressing power switch does not turn on system.	1. Proceed to "Pressing Power Switch does not Turn on System"	AV-82
	2. Radio receiver power source circuit	AV-162
	3. AVC-LAN circuit	AV-133
	4. Radio receiver	AV-167
Panel switch does not function.	1. Steering pad switch circuit	AV-105
	2. AVC-LAN circuit	AV-133
	3. Radio receiver	AV-167
No sound can be heard from speakers (audio is mute).	1. AVC-LAN circuit	AV-133
	2. Radio receiver power source circuit	AV-162
	3. Proceed to "No Sound can be Heard from Speakers"	AV-83
	4. Stereo component amplifier power source circuit	AV-164
	5. Proceed to "Sound Signal Circuit between Radio Receiver and Stereo Component Amplifier"	AV-124
	6. Speaker circuit	AV-115
	7. Proceed to "Mute Signal Circuit between Radio Receiver and Stereo Component Amplifier"	AV-129
	8. Stereo component amplifier	AV-176
	9. Radio receiver	AV-167
Only DVD sound cannot be heard or sound quality is bad. (with DVD Changer)	1. Proceed to "DVD Sound Signal Circuit between Radio Receiver and Stereo Component Amplifier"	AV-148
	2. Stereo component amplifier	AV-176
	3. Radio receiver	AV-167
Sound quality is bad in all modes. (Volume is too low.)	1. Proceed to "Poor Sound Quality in All Modes (Low Volume)"	AV-98
	2. Speaker circuit	AV-115
	3. Proceed to "Sound Signal Circuit between Radio Receiver and Stereo Component Amplifier"	AV-124
	4. Proceed to "Mute Signal Circuit between Radio Receiver and Stereo Component Amplifier"	AV-129
	5. Stereo component amplifier	AV-176
	6. Radio receiver	AV-167
ASL does not function.	Proceed to "Vehicle Speed Signal Circuit between Stereo Component Amplifier and Combination Meter"	AV-135
External device sound cannot be heard or sound quality is bad. (Stereo jack is used.)	1. Radio receiver power source circuit	AV-162
	2. Proceed to "Sound Signal Circuit between Radio Receiver and Stereo Jack Adapter"	AV-127
	3. Stereo jack adapter (Audio terminal)	AV-240
	4. Radio receiver	AV-167
Abnormal noise occurs.	1. Proceed to "Noise occurs"	AV-80
	2. Stereo component amplifier	AV-176
	3. Radio receiver	AV-167
Radio broadcast cannot be received or poor reception.	Proceed to "Radio Broadcast cannot be Received or Poor Reception"	AV-92

Symptom	Suspected Area	See page
CD cannot be inserted/played or CD is ejected right after insertion.	1. Radio receiver power source circuit	AV-162
	2. Proceed to "CD cannot be Inserted/Played or CD is Ejected Right After Insertion"	AV-88
CD cannot be ejected.	1. Radio receiver power source circuit	AV-162
	2. Proceed to "CD cannot be Ejected"	AV-87
Sound quality is bad only when CD is played. (Volume is too low.)	Proceed to "Sound Quality is Bad Only when CD is Played (Volume is Too Low)"	AV-84
CD sound skips.	Proceed to "CD Sound Skips"	AV-90
Radio receiver cannot be dimmed at night.	1. Dimmer signal circuit	AV-145
	2. Radio receiver	AV-167
Radio receiver cannot be illuminated at night.	Illumination circuit	AV-108
Cassette tape cannot be inserted or played. (*1)	1. Radio receiver power source circuit	AV-162
	2. "Cassette Tape cannot be Inserted or Played"	AV-86
Cassette tape cannot be ejected. (*1)	1. Radio receiver power source circuit	AV-162
	2. "Cassette Tape cannot be Ejected"	AV-85
Sound quality is bad only when playing tape. (*1)	"Sound Quality is Bad Only when Playing Tape"	AV-96
Tape is tangled due to incorrect tape speed or auto-reverse malfunction. (*1)	"Tape is Tangled due to Incorrect Tape Speed or Auto-Reverse Malfunction"	AV-97

Steering Pad Switch Function:

Symptom	Suspected Area	See page
Audio system cannot be operated with steering pad switch.	1. Steering pad switch circuit	AV-105
	2. Radio receiver	AV-167
Steering pad switch cannot be illuminated at night.	Illumination circuit	AV-108

"Bluetooth" Function (*1):

Symptom	Suspected Area	See page
Cellular phone registration failure, phone directory transfer failure.	Proceed to "Cellular Phone Registration Failure, Phone Directory Transfer Failure"	AV-99
Cellular phone cannot send/receive.	1. Proceed to "Cellular Phone cannot Send / Receive"	AV-101
	2. Steering pad switch circuit	AV-105
	3. Radio receiver	AV-167
The other callers voice cannot be heard, is too quiet, or distorted.	1. Proceed to "The Other Callers Voice cannot be Heard, is too Quiet, or Distorted"	AV-103
	2. Proceed to "Cellular Phone Voice Circuit between Radio Receiver and Stereo Component Amplifier"	AV-140
	3. Radio receiver	AV-167
	4. Stereo component amplifier	AV-176
The other caller cannot hear your voice, or your voice is too quiet or distorted.	1. Proceed to "The Other Caller cannot Hear Your Voice, or Your Voice is too Quiet or Distorted"	AV-104
	2. Proceed to "Microphone Circuit between Microphone and Radio Receiver"	AV-142
	3. Microphone	AV-250
	4. Radio receiver	AV-167

*1: for Radio Receiver with Built-in "Bluetooth" Handsfree Function

TERMINALS OF ECU

1. RADIO RECEIVER

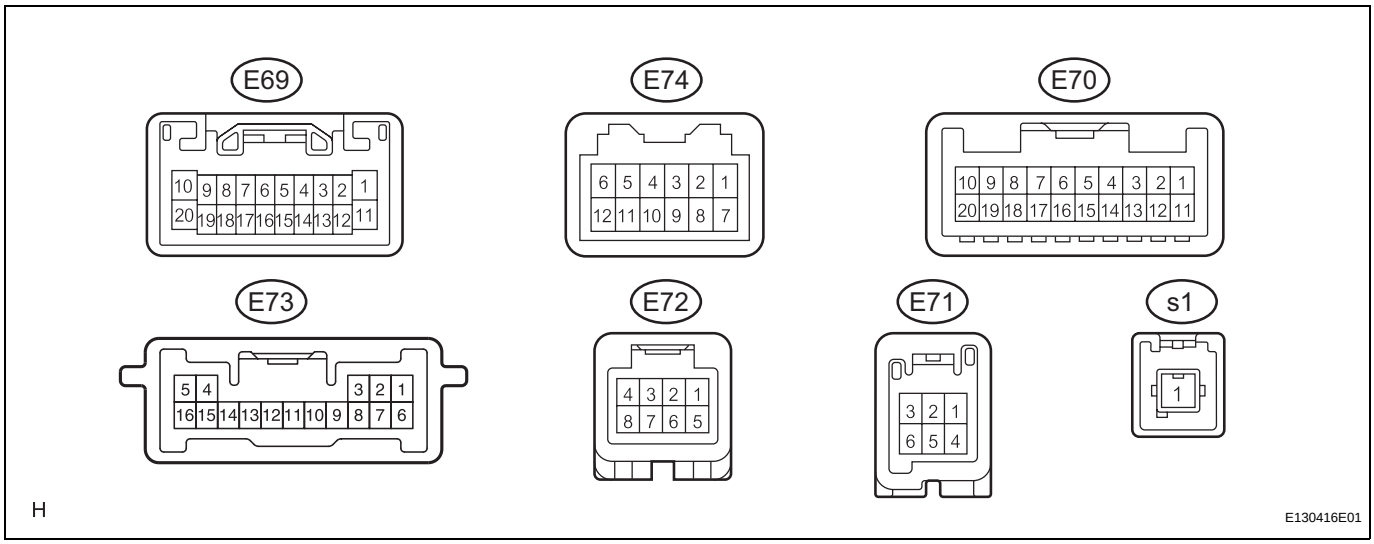

Symbols (Terminal No.)	Wiring Color	Terminal Description	Condition	Specification
B (E69-1) - GND (E69-20)	L - W-B	Battery	Always	10 to 14 V
ILL+ (E69-2) - GND (E69-20)	G - W-B	Illumination signal	Light control switch OFF	Below 1 V
ILL+ (E69-2) - GND (E69-20)	G - W-B	Illumination signal	Light control switch TAIL	10 to 14 V
ATX+ (E69-5) - GND (E69-20)	G - W-B	AVC-LAN communication signal	Turn engine switch on (ACC)	2 to 3 V
MUTE (E69-7) - GND (E69-20)	GR - W-B	Mute signal	Audio system is playing	Above 3.5 V
MUTE (E69-7) - GND (E69-20)	GR - W-B	Mute signal	Audio system is changing	Below 1 V
R+ (E69-8) - GND (E69-20)	R - W-B	Sound signal (Right)	Audio system is playing	A waveform synchronized with sounds is output
L+ (E69-9) - GND (E69-20)	B - W-B	Sound signal (Left)	Audio system is playing	A waveform synchronized with sounds is output
SLD (E69-10) - Body ground	Shielded - Body ground	Shielded ground	Always	Below 1 V
ACC (E69-11) - GND (E69-20)	GR - W-B	Accessory (ON)	Turn engine switch off	Below 1 V
ACC (E69-11) - GND (E69-20)	GR - W-B	Accessory (ON)	Turn engine switch on (ACC)	10 to 14 V
ILL- (E69-12) - GND (E69-20)	W - W-B	Illumination signal	Light control switch OFF	Below 1 V
ILL- (E69-12) - GND (E69-20)	W - W-B	Illumination signal	Light control switch TAIL	10 to 14 V
ANT (E69-13) - GND (E69-20)	LG - W-B	Power source of antenna	Radio switch ON and AM or FM	10 to 14 V
ATX- (E69-15) - GND (E69-20)	R - W-B	AVC-LAN communication signal	Turn engine switch on (ACC)	2 to 3 V
R- (E69-18) - GND (E69-20)	G - W-B	Sound signal (Right)	Audio system is playing	A waveform synchronized with sounds is output
L- (E69-19) - GND (E69-20)	W - W-B	Sound signal (Left)	Audio system is playing	A waveform synchronized with sounds is output
GND (E69-20) - Body ground	W-B - Body ground	Ground	Always	Below 1 V
SWG (E70-6) - GND (E69-20)	B - W-B	Steering pad switch ground	Always	Below 1 V
SW1 (E70-7) - GND (E69-20)	O - W-B	Steering pad switch signal	Steering pad switch not operated	4 V or higher
SW1 (E70-7) - GND (E69-20)	O - W-B	Steering pad switch signal	SEEK+ switch pushed	Approx. 0.5 V
SW1 (E70-7) - GND (E69-20)	O - W-B	Steering pad switch signal	SEEK- switch pushed	Approx. 0.9 V
SW1 (E70-7) - GND (E69-20)	O - W-B	Steering pad switch signal	VOL+ switch pushed	Approx. 2.0 V
SW1 (E70-7) - GND (E69-20)	O - W-B	Steering pad switch signal	VOL- switch pushed	Approx. 3.4 V

Symbols (Terminal No.)	Wiring Color	Terminal Description	Condition	Specification
SW2 (E70-8) - GND (E69-20)	V - W-B	Steering pad switch signal	Steering pad switch not operated	4 V or more
SW2 (E70-8) - GND (E69-20)	V - W-B	Steering pad switch signal	MODE switch pushed	Approx. 0.5 V
SW2 (E70-8) - GND (E69-20) (*4)	V - W-B	Steering pad switch signal	ON HOOK switch pushed	Approx. 0.9 V
SW2 (E70-8) - GND (E69-20) (*4)	V - W-B	Steering pad switch signal	OFF HOOK switch pushed	Approx. 2.0 V
SW2 (E70-8) - GND (E69-20) (*1)	V - W-B	Steering pad switch signal	VOICE switch pushed	Approx. 3.4 V
TX+ (E70-9) - GND (E69-20) (*1)	L - W-B	AVC-LAN communication signal	Turn engine switch on (ACC)	2 to 3 V
TX- (E70-10) - GND (E69-20) (*1)	LG - W-B	AVC-LAN communication signal	Turn engine switch on (ACC)	2 to 3 V
IO1+ (E70-11) - GND (E69-20) (*4)	Y - W-B	"Bluetooth" voice signal	"Bluetooth" handsfree voice signal is playing	A waveform synchronized with sounds is output
IO1- (E70-12) - GND (E69-20) (*4)	BR - W-B	"Bluetooth" voice signal	"Bluetooth" handsfree voice signal is playing	A waveform synchronized with sounds is output
ARI (E70-15) - GND (E69-20) (*2)	B - W-B	Sound signal (Right)	External device is playing (When stereo jack adapter is used)	A waveform synchronized with sounds is output
ASGN (E70-16) - GND (E69-20) (*2)	W - W-B	Ground	Always	Below 1 V
ALI (E70-17) - GND (E69-20) (*2)	R - W-B	Sound signal (Left)	External device is playing (When stereo jack adapter is used)	A waveform synchronized with sounds is output
AUXI (E70-19) - GND (E69-20) (*2)	G - W-B	External device connection detection signal	External device is connected	Below 1 V
ADIM (E70-20) - GND (E69-20)	L - W-B	Illumination (auto dimmer) signal	Turn engine switch on (IG), headlight dimmer switch in TAIL or ON and auto light control sensor covered by hand	Above 9 V
ARI (E71-2) - GND (E69-20) (*3)	B - W-B	Sound signal (Right)	External device is playing (When stereo jack adapter is used)	A waveform synchronized with sounds is output
ASGN (E71-5) - GND (E69-20) (*3)	W - W-B	Ground	Always	Below 1 V
ALI (E71-3) - GND (E69-20) (*3)	R - W-B	Sound signal (Left)	External device is playing (When stereo jack adapter is used)	A waveform synchronized with sounds is output
AUXI (E71-6) - GND (E69-20) (*3)	G - W-B	External device connection detection signal	External device is connected	Below 1 V
NTSC (E72-1) - GND (E69-20) (*3)	BR - W-B	DVD image signal	DVD played on multi-display	Pulse generation Refer to waveform 1
GND (E72-2) - Body ground (*3)	Y - Body ground	Ground	Always	Below 1 V
SLD (E72-3) - Body ground (*3)	Shielded - Body ground	Shielded - Body ground	Always	Below 1 V
DVD (s1-1) - GND (E69-20) (*3)	B - W-B	Digital sound signal	DVD played on multi-display	Pulse generation
MIC- (E73-1) - GND (E69-20) (*4)	R - W-B	Microphone voice signal	"Bluetooth" handsfree function is ON	A waveform synchronized with sounds is output
MIC+ (E73-2) - GND (E69-20) (*4)	G - W-B	Microphone voice signal	"Bluetooth" handsfree function is ON	A waveform synchronized with sounds is output
TSW- (E73-3) - GND (E69-20) (*4)	W - W-B	Ground	Always	Below 1 V
+B (E73-5) - GND (E69-20) (*4)	L - W-B	Battery	Always	10 to 14 V
MGND (E73-6) - GND (E69-20) (*4)	W - W-B	Ground	Always	Below 1 V

Symbols (Terminal No.)	Wiring Color	Terminal Description	Condition	Specification
MCVD (E73-7) - GND (E69-20) (*4)	W - W-B	Microphone AMP power supply	Turn engine switch on (IG)	5 V
GND (E73-14) - Body ground (*4)	W-B - Body ground	Ground	Always	Below 1 V
ACC (E73-16) - GND (E69-20) (*4)	GR - W-B	Accessory (ON)	Turn engine switch on (ACC)	10 to 14 V

*1: with Navigation System
*2: for CD Changer Models
*3: for DVD Changer Models
*4: for Radio Receiver with Built-in "Bluetooth" Handsfree Function

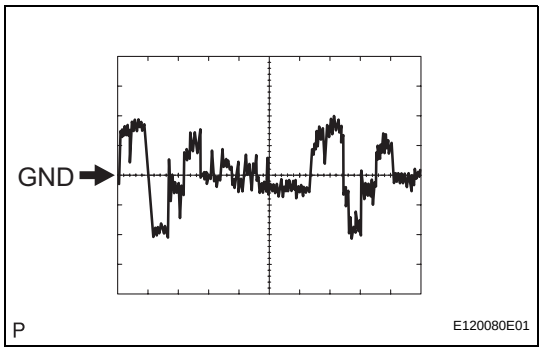

(a) Reference: waveform 1
HINT:
- Terminal: NTSC - Body ground
- Setting: 200 mV/DIV, 10 μs/DIV
- Condition: DVD played on multi-display.

2. STEREO COMPONENT AMPLIFIER

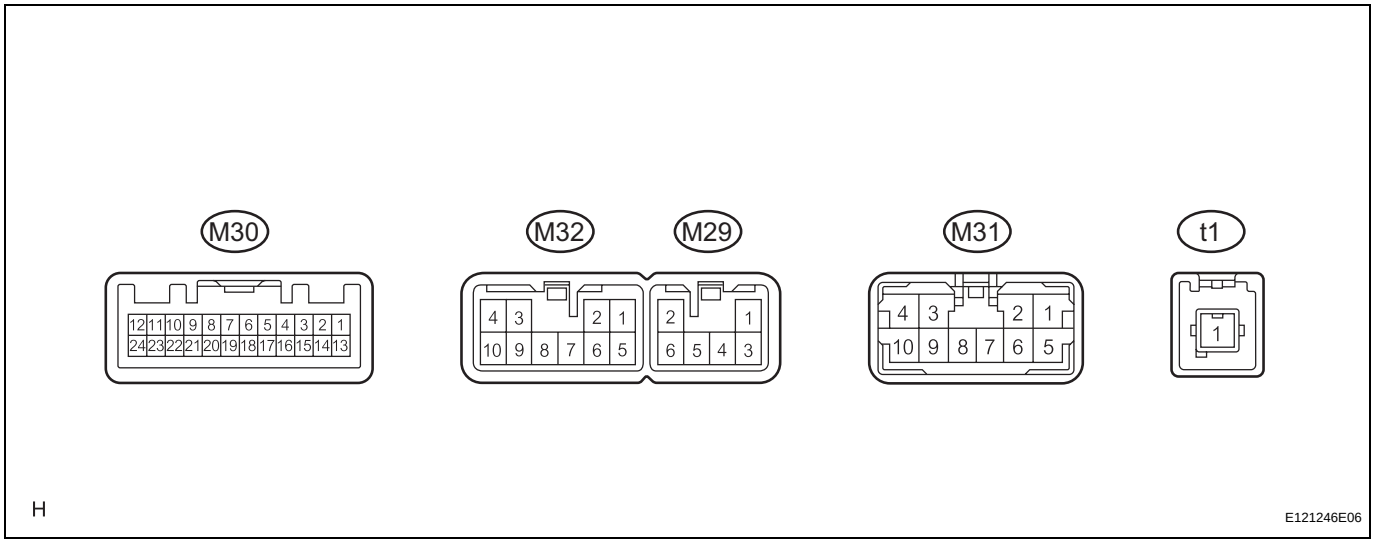

Symbols (Terminal No.)	Wiring Color	Terminal Description	Condition	Specification
+B (M29-1) - GND (M29-2)	L - W-B	Battery	Always	10 to 14 V
GND (M29-2) - Body ground	W-B - Body ground	Ground	Always	Below 1 V
+B2 (M29-3) - GND (M29-2) (*1)	L - W-B	Battery	Always	10 to 14 V
GND2 (M29-6) - Body ground	W-B - Body ground	Ground	Always	Below 1 V
WF1+ (M32-1) - GND (M29-2)	G - W-B	Sound signal	Audio system is playing	A waveform synchronized with sounds is output
WF2+ (M32-2) - GND (M29-2)	R - W-B	Sound signal	Audio system is playing	A waveform synchronized with sounds is output
SR+ (M32-2) - GND (M29-2) (*1)	R - W-B	Sound signal	Audio system is playing	A waveform synchronized with sounds is output
CTR+ (M32-3) - GND (M29-2)	R - W-B	Sound signal	Audio system is playing	A waveform synchronized with sounds is output
WFL+ (M32-4) - GND (M29-2) (*1)	R - W-B	Sound signal	Audio system is playing	A waveform synchronized with sounds is output

Symbols (Terminal No.)	Wiring Color	Terminal Description	Condition	Specification
WF1- (M32-5) - GND (M29-2) (*1)	B - W-B	Sound signal	Audio system is playing	A waveform synchronized with sounds is output
WF2- (M32-6) - GND (M29-2)	W - W-B	Sound signal	Audio system is playing	A waveform synchronized with sounds is output
SR- (M32-6) - GND (M29-2) (*1)	W - W-B	Sound signal	Audio system is playing	A waveform synchronized with sounds is output
SL- (M32-7) - GND (M29-2) (*1)	P - W-B	Sound signal	Audio system is playing	A waveform synchronized with sounds is output
SL+ (M32-8) - GND (M29-2) (*1)	V - W-B	Sound signal	Audio system is playing	A waveform synchronized with sounds is output
CTR- (M32-9) - GND (M29-2)	W - W-B	Sound signal	Audio system is playing	A waveform synchronized with sounds is output
WFL- (M32-10) - GND (M29-2) (*1)	W - W-B	Sound signal	Audio system is playing	A waveform synchronized with sounds is output
WFR+ (M31-1) - GND (M29-2) (*1)	G - W-B	Sound signal	Audio system is playing	A waveform synchronized with sounds is output
FL+ (M31-2) - GND (M29-2)	P - W-B	Sound signal	Audio system is playing	A waveform synchronized with sounds is output
RL+ (M31-3) - GND (M29-2)	B - W-B	Sound signal	Audio system is playing	A waveform synchronized with sounds is output
RR+ (M31-4) - GND (M29-2)	R - W-B	Sound signal	Audio system is playing	A waveform synchronized with sounds is output
WFR- (M31-5) - GND (M29-2) (*1)	B - W-B	Sound signal	Audio system is playing	A waveform synchronized with sounds is output
FL- (M31-6) - GND (M29-2)	V - W-B	Sound signal	Audio system is playing	A waveform synchronized with sounds is output
FR- (M31-7) - GND (M29-2)	L - W-B	Sound signal	Audio system is playing	A waveform synchronized with sounds is output
FR+ (M31-8) - GND (M29-2)	LG - W-B	Sound signal	Audio system is playing	A waveform synchronized with sounds is output
RL- (M31-9) - GND (M29-2)	Y - W-B	Sound signal	Audio system is playing	A waveform synchronized with sounds is output
RR- (M31-10) - GND (M29-2)	W - W-B	Sound signal	Audio system is playing	A waveform synchronized with sounds is output
MUTE (M30-1) - GND (M29-2)	GR - W-B	Mute signal	Audio system is playing	Above 3.5 V
MUTE (M30-1) - GND (M29-2)	GR - W-B	Mute signal	Audio system is changing	Below 1 V
L- (M30-2) - GND (M29-2)	W - W-B	Sound signal (Left)	Audio system is playing	A waveform synchronized with sounds is output
L+ (M30-3) - GND (M29-2)	B - W-B	Sound signal (Left)	Audio system is playing	A waveform synchronized with sounds is output
R- (M30-4) - GND (M29-2)	G - W-B	Sound signal (Right)	Audio system is playing	A waveform synchronized with sounds is output
R+ (M30-5) - GND (M29-2)	R - W-B	Sound signal (Right)	Audio system is playing	A waveform synchronized with sounds is output
SLD (M30-6) - Body ground	Shielded - Body ground	Shielded ground	Always	Below 1 V
TX- (M30-7) - GND (M29-2)	R - W-B	AVC-LAN communication signal	Turn engine switch on (ACC)	2 to 3 V
TX+ (M30-8) - GND (M29-2)	G - W-B	AVC-LAN communication signal	Turn engine switch on (ACC)	2 to 3 V
SPD (M30-11) - GND (M29-2)	SB - W-B	Speed signal	Turn engine switch on (IG), drive wheels are turned slowly	Pulse generation
ACC (M30-12) - GND (M29-2)	GR - W-B	Accessory (ON)	Turn engine switch off	Below 1 V
ACC (M30-12) - GND (M29-2)	GR - W-B	Accessory (ON)	Turn engine switch on (ACC)	10 to 14 V

Symbols (Terminal No.)	Wiring Color	Terminal Description	Condition	Specification
II1- (M30-14) - GND (M29-2)	BR - W-B	Voice guidance signal	Navigation voice or "Bluetooth" handsfree voice signal is provided	A waveform synchronized with sounds is output
II1+ (M30-15) - GND (M29-2)	Y - W-B	Voice guidance signal	Navigation voice or "Bluetooth" handsfree voice signal is provided	A waveform synchronized with sounds is output
DVD (t1-1) - GND (M29-2) (*1)	B - W-B	Digital sound signal	DVD played on multi-display	Pulse generation

*1: with Rear Header Speaker

DTC CHECK / CLEAR

HINT:
If the system cannot enter the diagnostic mode, inspect all AVC-LAN communication signals and repair or replace problem parts.
(See page AV-133)

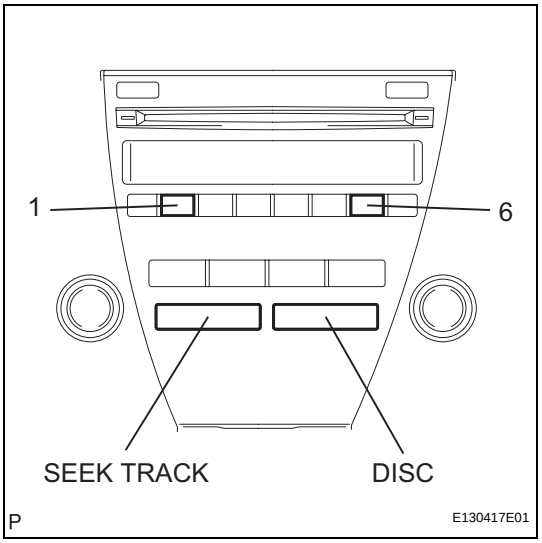

1. ENTERING DIAGNOSTIC MODE

(a) Turn the engine switch on (ACC).
(b) Turn off the audio system.
(c) While pressing the preset switches "1" and "6" at the same time, press the "DISC" switch 3 times.
HINT:
A beep is emitted 3 times and the diagnostic function is activated. The system enters the all element illumination mode and the switch check mode.

2. ALL ELEMENT ILLUMINATION MODE AND SWITCH CHECK MODE

HINT:
Illumination status of all switches and operations of the panel switches can be checked.

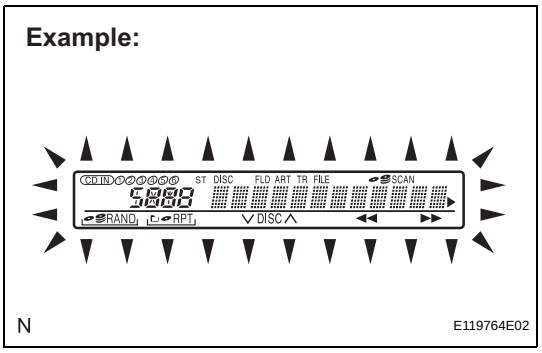

(a) Check that all elements are on.
(b) When pressing each panel switch, check that a beep is emitted.
NOTICE:
Pressing the "SEEK TRACK UP" switch transfers the screen to the stereo jack adapter connection check screen. Check the operation of this switch by confirming the transfer of the screen.

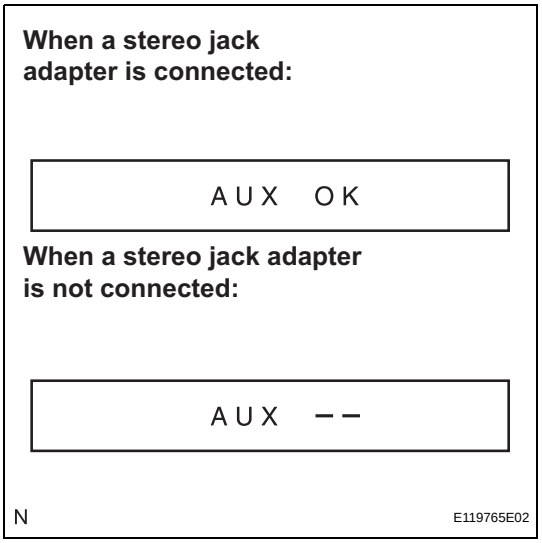

3. STEREO JACK ADAPTER CONNECTION CHECK MODE

(a) Press the "SEEK TRACK UP" switch.
(b) Check if the stereo jack adapter is recognized.
HINT:
Vehicles that do not have a stereo jack adapter also have this function.
NOTICE:
This function is not to check connection information on an external device, but to check recognition information on a stereo jack adapter.

4. SERVICE CHECK MODE

(a) Press the "SEEK TRACK UP" switch.
HINT:
For details of the service check mode, refer to "6. CHECK DTC" and "7. DTC CLEAR/RECHECK".

5. FINISHING DIAGNOSTIC MODE

(a) Press the "DISC" switch for 2 seconds or more, or turn the engine switch off.

AV

6. CHECK DTC

HINT:
Illustrations may differ from the actual vehicle depending on the device settings and options. Therefore, some detailed areas may not be shown exactly the same as on the actual vehicle.

(a) Reference:
In the system check mode, the system check and the diagnostic memory check are performed, and the check results are displayed in ascending order of the component codes (physical address).

Terms	Meaning
Component code (Physical address)	Three-digit code (in hexadecimal) given to each device comprising AVC-LAN. Corresponding to its function, individual symbol is provided.
Logical address	Two-digit code (in hexadecimal) given to each function and device unit in each device comprising AVC-LAN.

(b) Service check result display

Display	Previous term	Meaning	Action to be taken
good	Good (normal)	No DTCs are detected in both "System Check Mode" and "Diagnostic Memory Mode".	-
nCon	No connection	The system recognized the component when it was registered, but the component gives no response to the "Diagnostic Mode ON Request".	Check the power source circuit and the communication circuit of the component indicated by the component code (physical address).
ECHn	Exchange	One or more DTCs for "Exchange" are detected in either "System Check Mode" or "Diagnostic Memory Mode".	Go to the detailed information mode to check the trouble area referring to the DTC list.
CHEC	Check	When no DTCs are detected for "Exchange", one or more DTCs for "Check" are detected in either "System Check Mode" or "Diagnostic Memory Mode".	Go to the detailed information mode to check the trouble area referring to the DTC list.
OLd	Old version	Old DTC application is identified and DTC is detected in either "System Check Mode" or "Diagnostic Memory Mode".	-
nrES	No response	The device gives no response to any one of "System Check Mode ON Request", "System Check Result Request", and "Diagnostic Memory Request".	Check the power source circuit and the communication circuit of the component indicated by the component code (physical address).

(c) Device name and physical address

Physical Address No.	Name
190	Radio receiver
440	Stereo component amplifier
19D (*1)	"Bluetooth" handsfree module

*1: for Radio Receiver with Built-in "Bluetooth" Handsfree Function

(d) Service check mode
(1) Press the "SEEK TRACK" switch to see the check result of each component.

(2) The component code (physical address) is displayed first, and then the check result follows.
HINT:
- If all check results are "good", the system judges that no DTC exists.
- If the preset switch "1" is pressed in the service check mode, service check is performed again.
- This illustration is only an example and may differ in cases such as for each option part and output DTCs.

Service Check Mode:

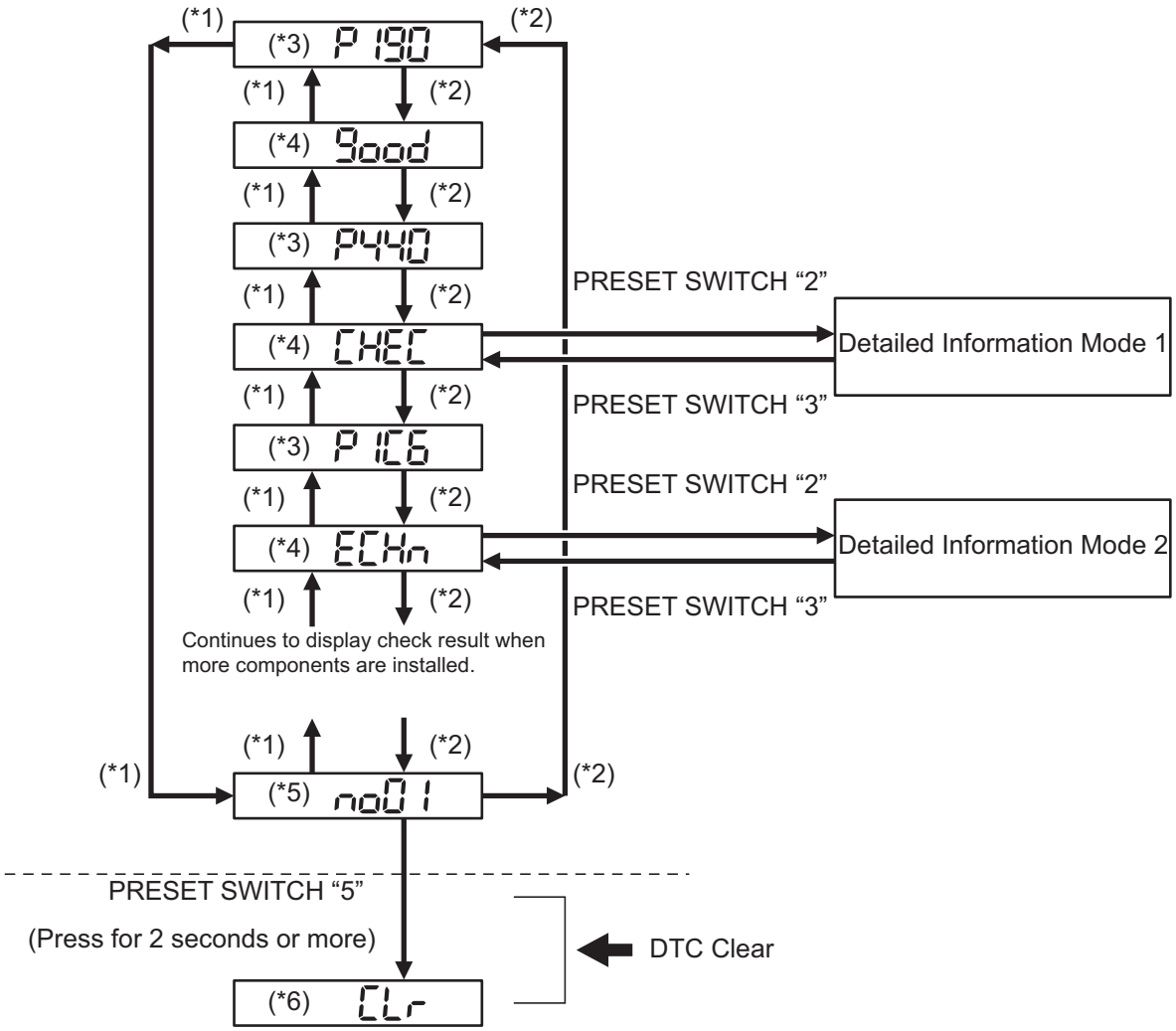

*1: SEEK TRACK DOWN

*2: SEEK TRACK UP

*3: P...Indicates physical address

190/440/1C6...Physical address

*4: Result

*5: Up-to-date connection check number

*6: Memory clear

P

E110920E07

(e) Detailed information mode 1

HINT:

- "Detailed information mode 1" is displayed when there is no response to "System Check Result Request" and DTC is detected only in "Diagnostic Memory Request".
- The component device code (physical address) is displayed first, and then the check result follows.

AV

- This illustration is only an example and may differ in cases such as for each option part and output DTCs.

(1) Press the preset switch "2" to go to the "Detailed Information Mode 1".

(2) Press the "SEEK TRACK" switch to display the physical address and DTC of the component.

(3) Press the preset switch "3" to go to the "Service Check Mode".

(4) Distinguish between the displays of the responses to "System Check Result Request" and "Diagnostic Memory Request". In order to distinguish the information detected in "System Check Mode" and "Diagnostic Memory Mode" in "ECHn", "CHEC", and "OLd" in "Detailed Information Mode 1", refer to the following:
   - "SyS" is displayed before the detailed codes detected as a result of "System Check Result Request" are displayed.
   - "COdE" is displayed before the detailed codes detected as a result of "Diagnostic Memory Request" are displayed.

   HINT:
   - The response to "System Check Result Request" is the current information given from each ECU as a result of the system check.
   - The response to "Diagnostic Memory Request" contains the information received from each ECU or stored in each ECU in the past.
   - The response to "Diagnostic Memory Request" is the output DTCs as a result of the diagnostic memory check or the DTCs received from each ECU.
   - "System Check Result Request (SyS)" is displayed first, and then the logical address and DTC appear in order.
   - "Diagnostic Memory Request (COdE)" is displayed first, and then the logical address, DTC, sub-code, connection check number, and the number of occurrence appear in order.

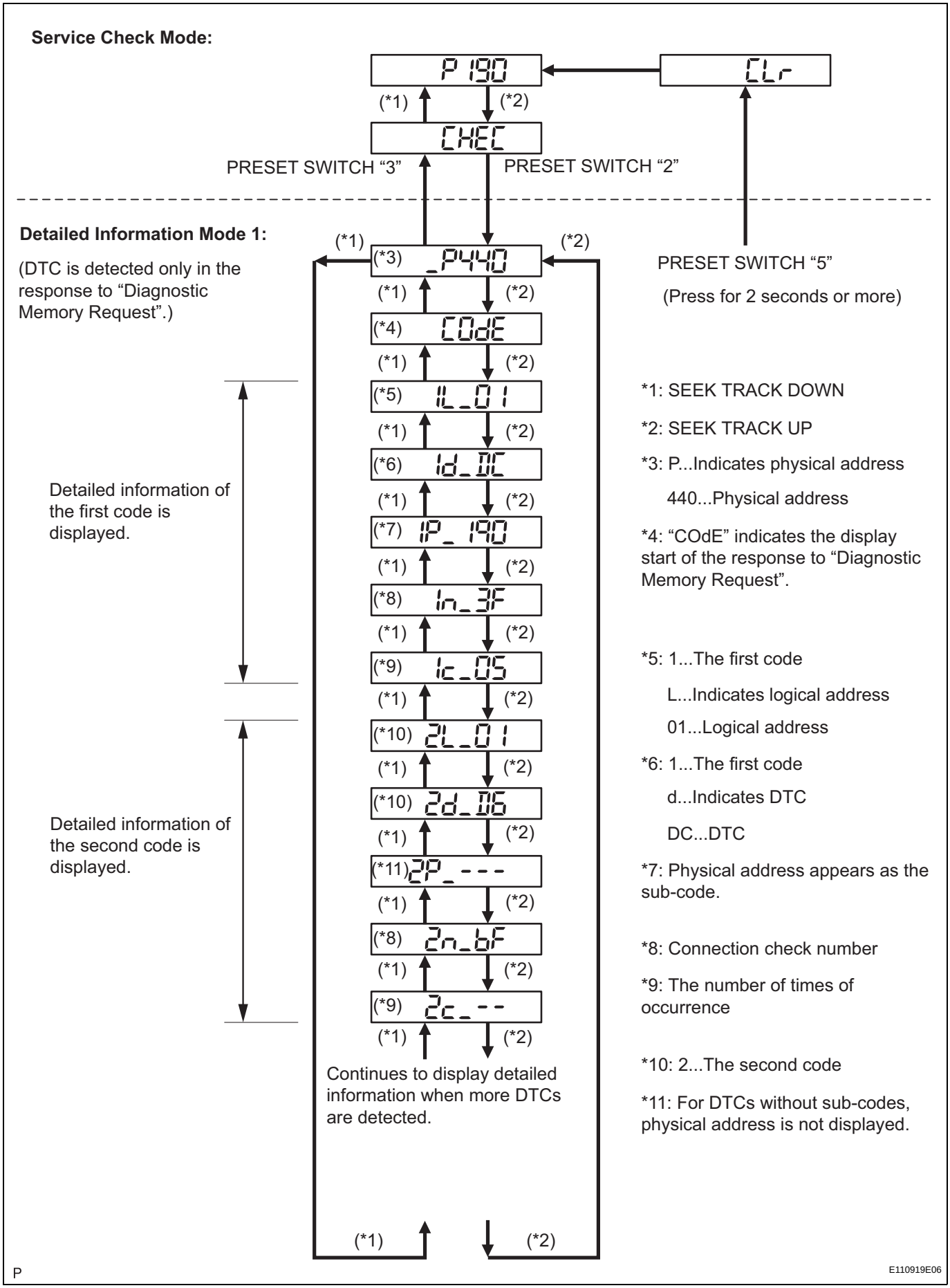
Service Check Mode:
P190
CLr
(*1)
(*2)
CHEC
PRESET SWITCH “3”
PRESET SWITCH “2”
Detailed Information Mode 1:
(DTC is detected only in the response to “Diagnostic Memory Request”.)
(*3) _P440
PRESET SWITCH “5”
(Press for 2 seconds or more)
(*4) COdE
(*5) 1L_01
(*6) 1d_DC
(*7) 1P_190
(*8) 1n_3F
(*9) 1c_05
(*10) 2L_01
(*10) 2d_D6
(*11) 2P_---
(*8) 2n_bF
(*9) 2c_--
Detailed information of the first code is displayed.
Detailed information of the second code is displayed.
Continues to display detailed information when more DTCs are detected.
*1: SEEK TRACK DOWN
*2: SEEK TRACK UP
*3: P...Indicates physical address
440...Physical address
*4: “COdE” indicates the display start of the response to “Diagnostic Memory Request”.
*5: 1...The first code
L...Indicates logical address
01...Logical address
*6: 1...The first code
d...Indicates DTC
DC...DTC
*7: Physical address appears as the sub-code.
*8: Connection check number
*9: The number of times of occurrence
*10: 2...The second code
*11: For DTCs without sub-codes, physical address is not displayed.
P
E110919E06

AV

(f) Detailed information mode 2

HINT:

- "Detailed information mode 2" is displayed when DTCs are detected in the responses to both "System Check Result Request" and "Diagnostic Memory Request".
- The component device code (physical address) is displayed first, and then the check result follows.
- This illustration is only an example and may differ in cases such as for each option part and output DTCs.

(1) Press the preset switch "2" to go to the "Detailed Information Mode 2".

(2) Press the "SEEK TRACK" switch to display the physical address and DTC of the component.

(3) Press the preset switch "3" to go to the "Service Check Mode".

(4) Distinguish between the displays of the responses to "System Check Result Request" and "Diagnostic Memory Request". In order to distinguish the information detected in "System Check Mode" and "Diagnostic Memory Mode" in "ECHn", "CHEC", and "OLd" in "Detailed Information Mode 2", refer to the following:

- "SyS" is displayed before the detailed codes detected as a result of "System Check Result Request" are displayed.
- "COdE" is displayed before the detailed codes detected as a result of "Diagnostic Memory Request" are displayed.

  HINT:

  - The response to "System Check Result Request" is the current information given from each ECU as a result of the system check.
  - The response to "Diagnostic Memory Request" contains the information received from each ECU or stored in each ECU in the past.
  - The response to "Diagnostic Memory Request" is the output DTCs as a result of the diagnostic memory check or the DTCs received from each ECU.
  - "System Check Result Request (SyS)" is displayed first, and then the logical address and DTC appear in order.
  - "Diagnostic Memory Request (COdE)" is displayed first, and then the logical address, DTC, sub-code, connection check number, and the number of occurrence appear in order.

System Check Mode:

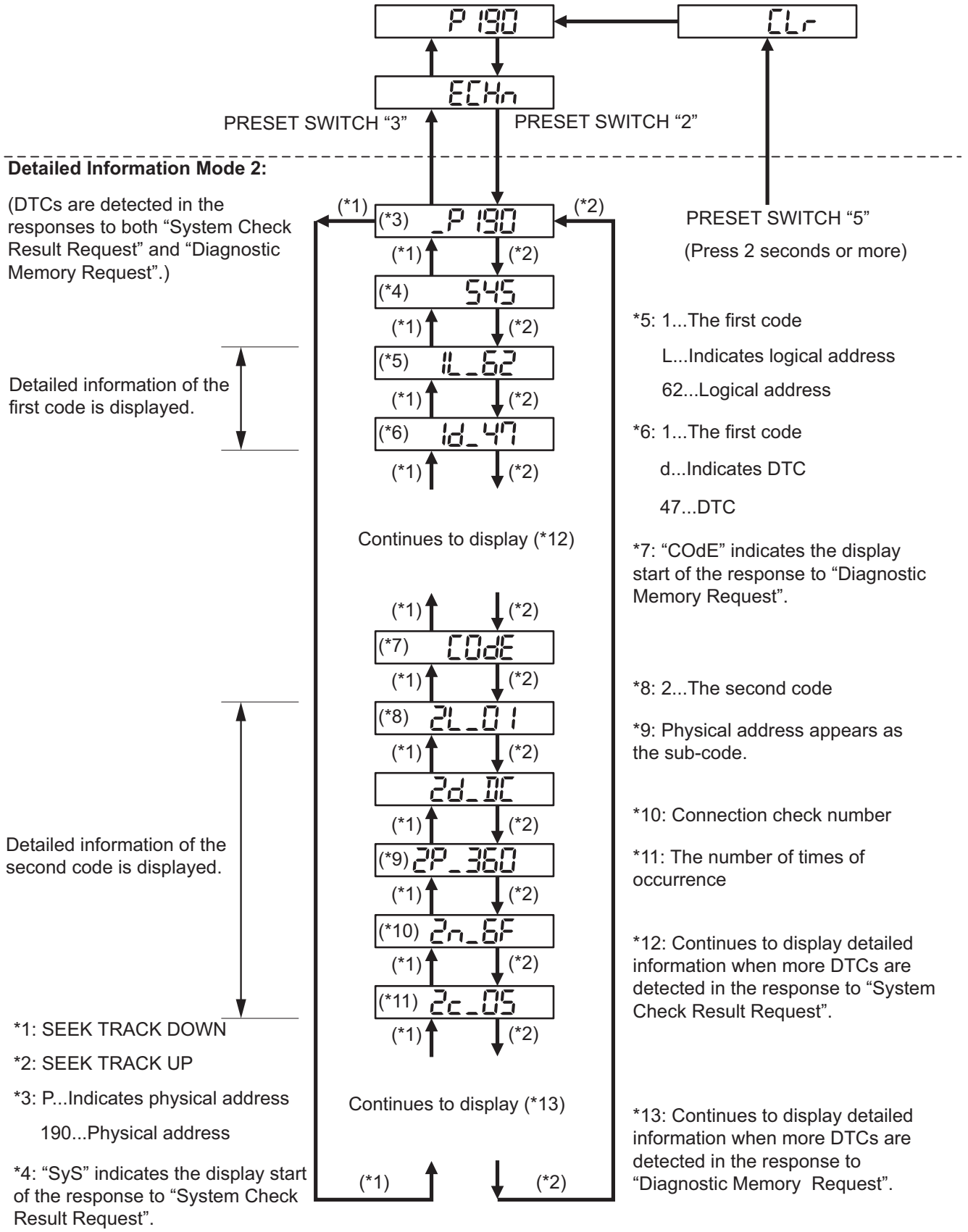

AV

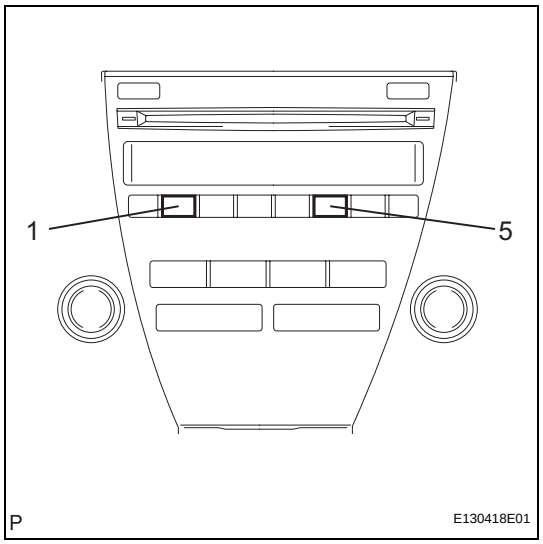

7. DTC CLEAR/RECHECK

(a) Clearing All DTC Memory (when clearing all the memory of the DTCs previously detected).

(1) When the preset switch "5" is pressed for 2 seconds or more during "Service Check Mode", the DTCs for all components are cleared. ("CLr" is displayed at this time.)

HINT:

- A beep sound is emitted once when the DTC memory is completely cleared.
- When the DTC memory for all the components is cleared, only the component codes (physical address) are displayed.
- After the DTC memory is cleared, the "Service Check Mode" is restored.

(b) Clearing Individual DTC Memory (when clearing the memory of the DTC previously detected individually).

(1) When the preset switch "5" is pressed for 2 seconds or more during "Detailed Information Mode 1" or "Detailed Information Mode 2", the DTCs for the target component are cleared.

HINT:

- A beep sound is emitted once when the DTC memory is completely cleared.
- When the DTC memory is cleared, only the component code (physical address) is displayed for the target component.
- After the DTC memory is cleared, the "Service Check Mode" is restored.
- To check DTCs, press the preset switch "1" and perform the system check again.

(c) Press the preset switch "1" to perform the service check again, and check that no DTCs are displayed for all the component codes (physical address).

DIAGNOSTIC TROUBLE CODE CHART

COMMUNICATION DIAGNOSIS:

DTC Code	Detection Item	Trouble Area	See page
01-21	ROM Error	Radio receiver	AV-33
01-22	RAM Error	Radio receiver	AV-33
01-D5	Absence of Registration Unit	1. Power source circuit of the component shown by the sub-code 2. AVC-LAN circuit between the radio receiver and the component shown by the sub-code 3. Component shown by the sub-code	AV-34
01-D6	No Master	1. Radio receiver power source circuit 2. Power source circuit of the component which has stored this code 3. AVC-LAN circuit between the radio receiver and the component which has stored this code 4. Component which has stored this code 5. Radio receiver	AV-36
01-D7	Connection Check Error	1. Radio receiver power source circuit 2. Power source circuit of the component which has stored this code 3. AVC-LAN circuit between the radio receiver and the component which has stored this code 4. Component which has stored this code 5. Radio receiver	AV-36
01-D8	No Response for Connection Check	1. Power source circuit of the component shown by the sub-code 2. AVC-LAN circuit between the radio receiver and the component shown by the sub-code 3. Component shown by the sub-code	AV-34
01-D9	Last Mode Error	1. Power source circuit of the component shown by the sub-code 2. AVC-LAN circuit between the radio receiver and the component shown by the sub-code 3. Component shown by the sub-code	AV-34
01-DA	No Response Against ON / OFF Command	1. Power source circuit of the component shown by the sub-code 2. AVC-LAN circuit between the radio receiver and the component shown by the sub-code 3. Component shown by the sub-code	AV-34

DTC Code	Detection Item	Trouble Area	See page
01-DB	Mode Status Error	1. Power source circuit of the component shown by the sub-code 2. AVC-LAN circuit between the radio receiver and the component shown by the sub-code 3. Component shown by the sub-code	AV-34
01-DC	Transmission Error	If the same sub-code is recorded in other components, check harness for power supply and communication system of all components shown by code	AV-41
01-DD	Master Reset	1. Radio receiver power source circuit 2. AVC-LAN circuit between the radio receiver and the component which has stored this code 3. Radio receiver 4. Component which has stored this code	AV-44
01-DE	Slave Reset	1. Power source circuit of the component shown by the sub-code 2. AVC-LAN circuit between the radio receiver and the component shown by the sub-code 3. Component shown by the sub-code	AV-34
01-DF	Master Error	1. Radio receiver power source circuit 2. AVC-LAN circuit between the radio receiver and the component which has stored this code 3. Radio receiver 4. Component which has stored this code	AV-49
01-E0	Registration Complete Indication Error	-	AV-53
01-E1	Voice Processing Device ON Error	1. Radio receiver power source circuit 2. AVC-LAN circuit between the radio receiver and the component which has stored this code 3. Radio receiver 4. Component which has stored this code	AV-44
01-E2	ON / OFF Indication Parameter Error	Radio receiver	AV-54
01-E3	Registration Demand Transmission	-	AV-53
01-E4	Multiple Frame Incomplete	-	AV-53

TELEPHONE:

DTC Code	Detection Item	Trouble Area	See page
57-47	"Bluetooth" Module Initialization Failed	Radio receiver	AV-55

RADIO UNIT:

DTC Code	Detection Item	Trouble Area	See page
60-10	AM Tuner PLL does not Lock	Radio receiver	AV-56
60-11	FM Tuner PLL does not Lock	Radio receiver	AV-56
60-42	Tuner Power Source Error	Radio receiver	AV-57

DTC Code	Detection Item	Trouble Area	See page
60-43	AM Tuner Error	Radio receiver	AV-57
60-44	FM Tuner Error	Radio receiver	AV-57
60-50	Malfunction in Internal IC	Radio receiver	AV-57

IN-DASH CD CHANGER:

DTC Code	Detection Item	Trouble Area	See page
63-10	CD Changer Mechanical Error	Radio receiver	AV-58
63-11	CD Insertion and Ejection Error	Radio receiver	AV-58
63-12	CD Reading Abnormal	Radio receiver	AV-58
63-41	Wrong Disc	1. CD 2. Radio receiver	AV-59
63-42	Disc cannot be Read	1. CD 2. Radio receiver	AV-59
63-43	CD-ROM Abnormal	1. CD 2. Radio receiver	AV-61
63-44	CD Abnormal	Radio receiver	AV-62
63-45	Eject Error	Radio receiver	AV-63
63-46	Scratched / Reversed Disc	1. CD 2. Radio receiver	AV-64
63-47	High Temperature	Radio receiver	AV-66
63-48	Excess Current	Radio receiver	AV-62
63-50	Tray Insertion / Ejection Error	Radio receiver	AV-62
63-51	Elevator Error	Radio receiver	AV-63
63-52	Clamp Error	Radio receiver	AV-63
63-78	DSP Error	Radio receiver	AV-67
63-7D	Disc cannot be Played	1. CD 2. Radio receiver	AV-68
63-7E	No Playable Files	1. CD 2. Radio receiver	AV-68
63-7F	Copyright Protection Error	1. CD 2. Radio receiver	AV-68

VOL:

DTC Code	Detection Item	Trouble Area	See page
74-40	Short in Speaker Circuit	1. Wire harness 2. Speaker 3. Stereo component amplifier	AV-69

DTC	01-21	ROM Error

DTC	01-22	RAM Error

DESCRIPTION

DTC No.	DTC Detection Condition	Trouble Area
01-21	A malfunction exists in ROM.	Radio receiver
01-22	A malfunction exists in RAM.	

INSPECTION PROCEDURE

HINT:
After the inspection is completed, clear the DTCs.

1	**REPLACE RADIO RECEIVER**

NEXT

END

DTC	01-D5	Absence of Registration Unit

DTC	01-D8	No Response for Connection Check

DTC	01-D9	Last Mode Error

DTC	01-DA	No Response Against ON / OFF Command

DTC	01-DB	Mode Status Error

DTC	01-DE	Slave Reset

DESCRIPTION

DTC No.	DTC Detection Condition	Trouble Area
01-D5 *1, *3	A device that the sub-code shows is (was) disconnected from the system when turning the engine switch on (ACC or IG). The communication condition with the device that the code shows cannot be obtained when the engine starts.	• Power source circuit of the component shown by the sub-code • AVC-LAN circuit between the radio receiver and the component shown by the sub-code • Component shown by the sub-code
01-D8 *2, *3	The device indicated by the sub-code is (was) disconnected from the system after the engine starts.	
01-D9 *1, *3	The device that had functioned before the engine stopped is (was) disconnected from the system when the engine switch is (was) on (ACC or IG).	
01-DA *3	No response is identified when changing mode. Sound and image do not change by switch operation.	
01-DB *1, *3	A dual alarm is detected.	
01-DE *3	A slave device has been disconnected after the engine starts.	

HINT:
- *1: Even if no fault is present, this trouble code may be stored depending on the battery condition or engine start voltage.
- *2: If the power connector is disconnected after the engine starts, this code is stored after 180 seconds.
- *3: If the device is reported as not existing during verification, check the power source circuit and AVC-LAN circuit for the device.

NOTICE:
- **Before starting troubleshooting, be sure to clear DTCs to erase codes stored due to the reasons described in the HINT above. Then, check for DTCs and troubleshoot according to the output DTCs.**
- **The radio receiver is the master unit.**
- **Be sure to clear and recheck DTCs after the inspection is completed to confirm that no DTCs are output.**

INSPECTION PROCEDURE

NOTICE:
Be sure to read DESCRIPTION before performing the following procedures.

1	**CHECK "RADIO RECEIVER COMMUNICATION ERROR" IN FLOW CHART**

Refer to the radio receiver communication error (See page AV-150).

NEXT

END

DTC	01-D6	No Master

DTC	01-D7	Connection Check Error

DESCRIPTION

DTC No.	DTC Detection Condition	Trouble Area
01-D6 *1	When either of the following conditions is met: • The device that stores (stored) the code has (had) been disconnected when the engine switch is on (ACC or IG) • The master device has (had) been disconnected when this code is stored	• Radio receiver power source circuit • Power source circuit of the component which has stored this code • AVC-LAN circuit between the radio receiver and the component which has stored this code • Component which has stored this code • Radio receiver
01-D7 *2	When either of the following conditions is met: • The device that stored the code has (had) been disconnected after the engine starts (started) • The master device has (had) been disconnected when this code is (was) stored	

HINT:
- *1: Even if no fault is present, this trouble code may be stored depending on the battery condition or engine start voltage.
- *2: When 210 seconds have elapsed after disconnecting the power supply connector of the master component with the engine switch on (ACC or IG), this code is stored.

AV

NOTICE:
- **Before starting troubleshooting, be sure to clear DTCs to erase codes stored due to the reasons described in the HINT above. Then, check for DTCs and troubleshoot according to the output DTCs.**
- **The radio receiver is the master unit.**
- **Be sure to clear and recheck DTCs after the inspection is completed to confirm that no DTCs are output.**

INSPECTION PROCEDURE

NOTICE:
Be sure to read DESCRIPTION before performing the following procedures.

1	CHECK RADIO RECEIVER POWER SOURCE CIRCUIT

Refer to the radio receiver power source circuit (See page AV-162).
If the power source circuit is operating normally, proceed to the next step.

NEXT

2	IDENTIFY THE COMPONENT WHICH HAS STORED THIS CODE

(a) Enter the diagnostic mode.

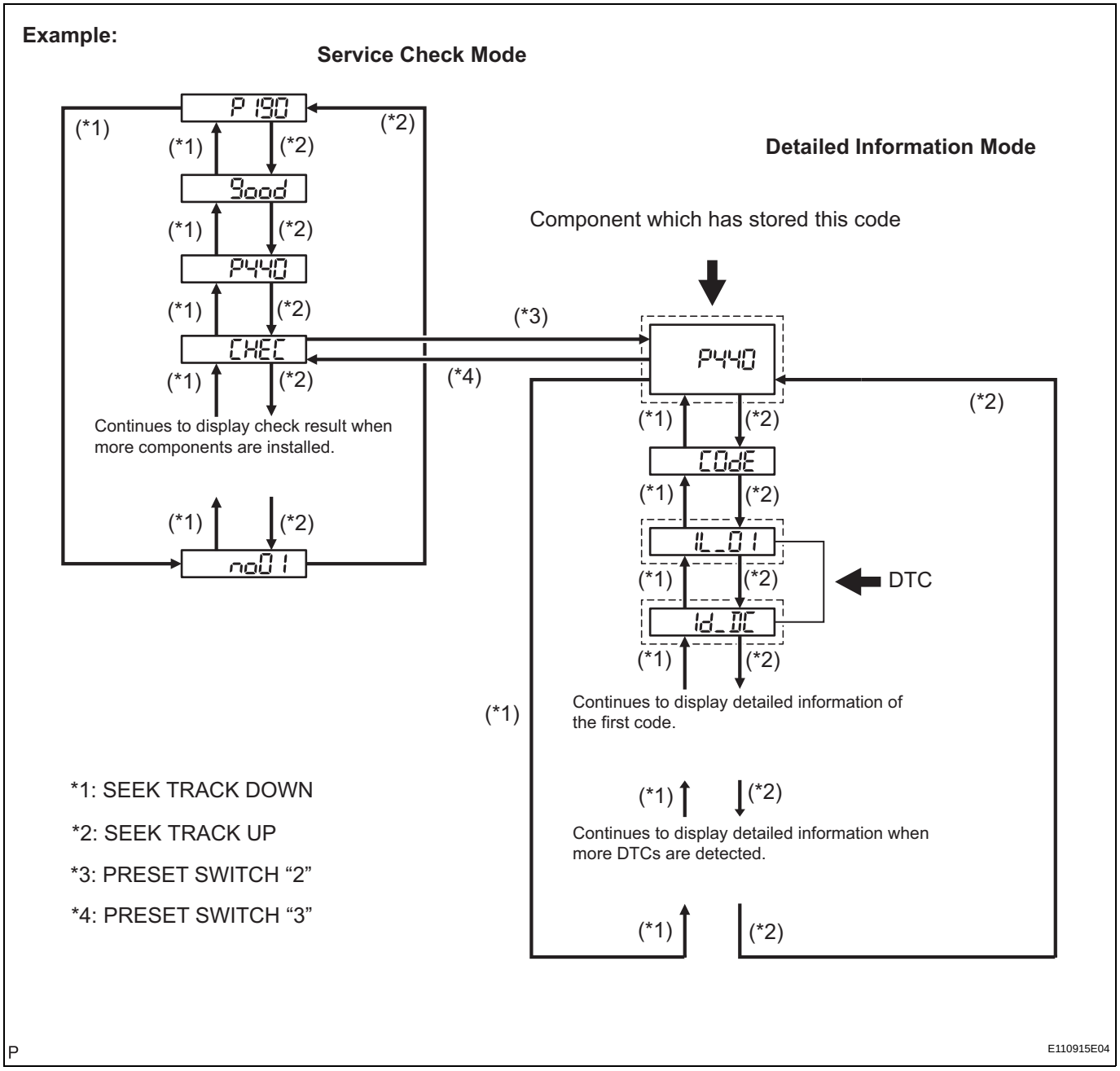

(b) Press the preset switch "3" to change to "Detailed Information Mode".

(c) Identify the component which has stored this code.

Component Table:

Component	Physical Address
Stereo component amplifier	440
"Bluetooth" handsfree module	19D

HINT:

- "440 (stereo component amplifier)" is the component which has stored this code in the example shown in the illustration.
- For details of the DTC display, refer to "DTC CHECK/ CLEAR" (See page AV-21).

AV

NEXT

3	CHECK COMPONENT WHICH HAS STORED THIS CODE

(a) Select the component which has stored this code.
HINT:
The "Bluetooth" handsfree module is built into the radio receiver. If there is a problem between the "Bluetooth" handsfree module and radio receiver, replace the radio receiver.

Component Table

Component	Proceed to
"Bluetooth" handsfree module	A
Except "Bluetooth" handsfree module	B

A → **REPLACE RADIO RECEIVER**

B

4	CHECK POWER SOURCE CIRCUIT OF COMPONENT WHICH HAS STORED THIS CODE

(a) Inspect the power source circuit of the component which has stored this code.
If the power source circuit is operating normally, proceed to the next step.

Component Table:

Component	Proceed to
Stereo component amplifier	Stereo component amplifier power source circuit (See page AV-164)

NEXT

5	INSPECT RADIO RECEIVER

Wire Harness View:

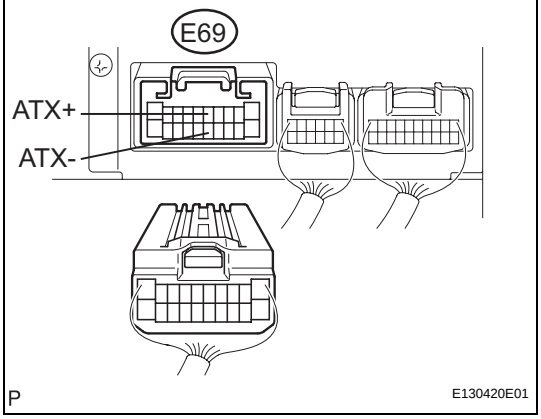

(a) Disconnect the radio receiver connectors.
(b) Measure the resistance according to the value(s) in the table below.
Standard resistance

Tester Connection	Condition	Specified Condition
ATX+ - ATX-	Always	60 to 80 Ω

NG → **REPLACE RADIO RECEIVER**

OK

6	CHECK HARNESS AND CONNECTOR (RADIO RECEIVER - COMPONENT WHICH HAS STORED THIS CODE)

HINT:
For details of the connectors, refer to the "TERMINALS OF ECU" (See page AV-16).

(a) Referring to the AVC-LAN wiring diagram below, check the AVC-LAN circuit between the radio receiver and the component which has stored this code.
   (1) Disconnect all connectors between the radio receiver and the component which has stored this code.
   (2) Check for an open or short in the AVC-LAN circuit between the radio receiver and the component which has stored this code.
   OK:
   There is no open or short circuit.

AVC-LAN WIRING DIAGRAM:

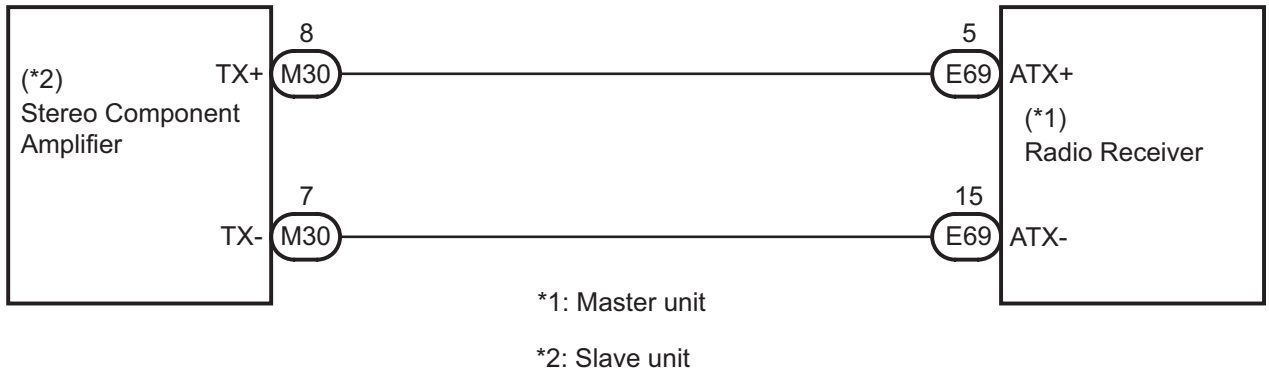

NG → **REPAIR OR REPLACE HARNESS OR CONNECTOR**

OK

7	REPLACE COMPONENT WHICH HAS STORED THIS CODE

(a) Replace the component which has stored this code with a normal one and check if the same problem occurs again.
   OK:
   Same problem does not occur.

NG → **REPLACE RADIO RECEIVER**

AV

OK

END

DTC	01-DC	Transmission Error

DESCRIPTION

DTC No.	DTC Detection Condition	Trouble Area
01-DC	Transmission to component shown by sub-code failed (Detecting this DTC does not always mean actual failure)	If the same sub-code is recorded in other components, check harness for power supply and communication system of all components shown by code

NOTICE:
- **The radio receiver is the master unit.**
- **Be sure to clear and recheck DTCs after the inspection is completed to confirm that no DTCs are output.**

INSPECTION PROCEDURE

NOTICE:
Be sure to read DESCRIPTION before performing the following procedures.

1 CHECK FOR DTC OF OTHER COMPONENTS

(a) Check if the component shown by the sub-code is displayed in the check result of the other components.
  (1) Check if "01-DC" is output for the other components.
  (2) If "01-DC" is output for any other components, check if the same physical address is displayed.
  Result

Result	Proceed to
"01-DC" is output and the same physical address is displayed	**A**
"01-DC" is not output or the same physical address is not displayed	**B**

HINT:
For the list of the components shown by sub-codes, refer to the table in step 2.

B → **Go to step 4**

A

2 IDENTIFY THE COMPONENT WHICH HAS STORED THIS CODE

(a) Enter the diagnostic mode.

AV

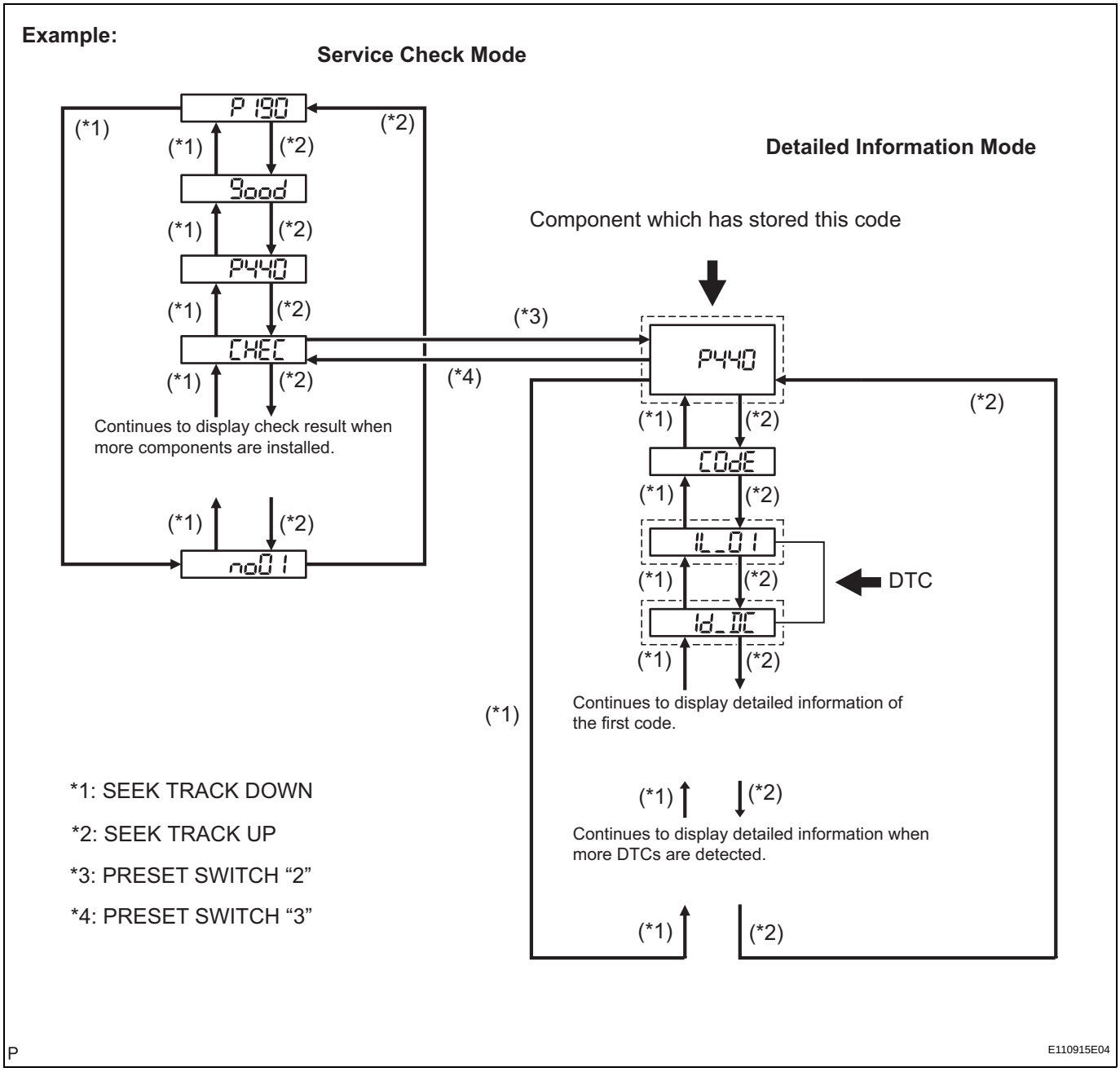

(b) Press the preset switch "3" to change to "Detailed Information Mode".

(c) Identify the component which has stored this code.

Component Table:

Component	Physical Address
Stereo component amplifier	440
"Bluetooth" handsfree module	19D
Radio receiver	190

HINT:

- "440 (stereo component amplifier)" is the component which has stored this code in the example shown in the illustration.
- For details of the DTC display, refer to "DTC CHECK/ CLEAR" (See page AV-21).

AV

NEXT

3	CHECK COMPONENT WHICH HAS STORED THIS CODE

(a) Select the component which has stored this code.
HINT:
The "Bluetooth" handsfree module is built into the radio receiver. If there is a problem between the "Bluetooth" handsfree module and radio receiver, replace the radio receiver.

Component Table:

Component	Proceed to
Stereo component amplifier	Stereo component amplifier communication error (See page AV-154)
"Bluetooth" handsfree module	"Bluetooth" handsfree module communication error (See page AV-158)
Radio receiver	Radio receiver communication error (See page AV-150)

NEXT

END

AV

4	CLEAR DTC

(a) Clear the DTCs (See page AV-21).
HINT:
If "01-DC" is output for only one component, this may not indicate a malfunction.

NEXT

5	RECHECK DTC

(a) Recheck for DTCs and check if the same trouble code occurs again.
OK:
Malfunction disappears.

NG → **Go to step 3**

OK

END

DTC	01-DD	Master Reset

DTC	01-E1	Voice Processing Device ON Error

DESCRIPTION

DTC No.	DTC Detection Condition	Trouble Area
01-DD	The device that should be the master has been disconnected after engine start	• Radio receiver power source circuit • AVC-LAN circuit between the radio receiver and the component which has stored this code • Radio receiver • Component which has stored this code
01-E1 *1	The AMP device records that the AMP output does not function even while the source device operates	

HINT:
*1: Even if no fault is present, this trouble code may be stored depending on the battery condition or engine start voltage.

NOTICE:

- **Before starting troubleshooting, be sure to clear DTCs to erase codes stored due to the reasons described in the HINT above. Then, check for DTCs and troubleshoot according to the output DTCs.**
- **The radio receiver is the master unit.**
- **Be sure to clear and recheck DTCs after the inspection is completed to confirm that no DTCs are output.**

INSPECTION PROCEDURE

NOTICE:

Be sure to read DESCRIPTION before performing the following procedures.

1	CHECK RADIO RECEIVER POWER SOURCE CIRCUIT

Refer to the radio receiver power source circuit (See page AV-162).
If the power source circuit is operating normally, proceed to the next step.

NEXT

2	**INSPECT RADIO RECEIVER**

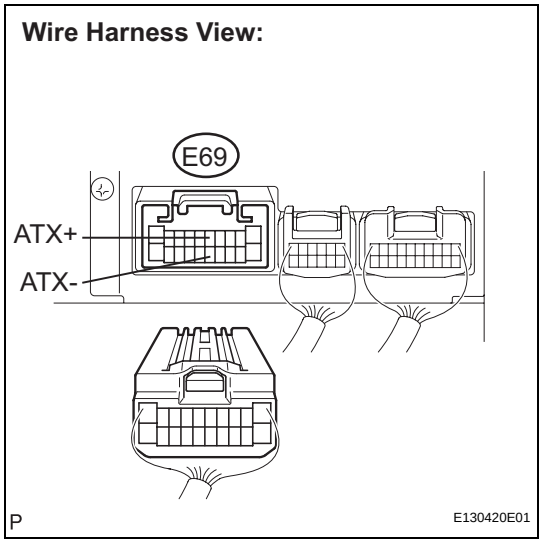

(a) Disconnect the radio receiver connectors.
(b) Measure the resistance according to the value(s) in the table below.

Standard resistance

Tester Connection	Condition	Specified Condition
ATX+ - ATX-	Always	60 to 80 Ω

NG → **REPLACE RADIO RECEIVER**

OK

3	**IDENTIFY THE COMPONENT WHICH HAS STORED THIS CODE**

(a) Enter the diagnostic mode.

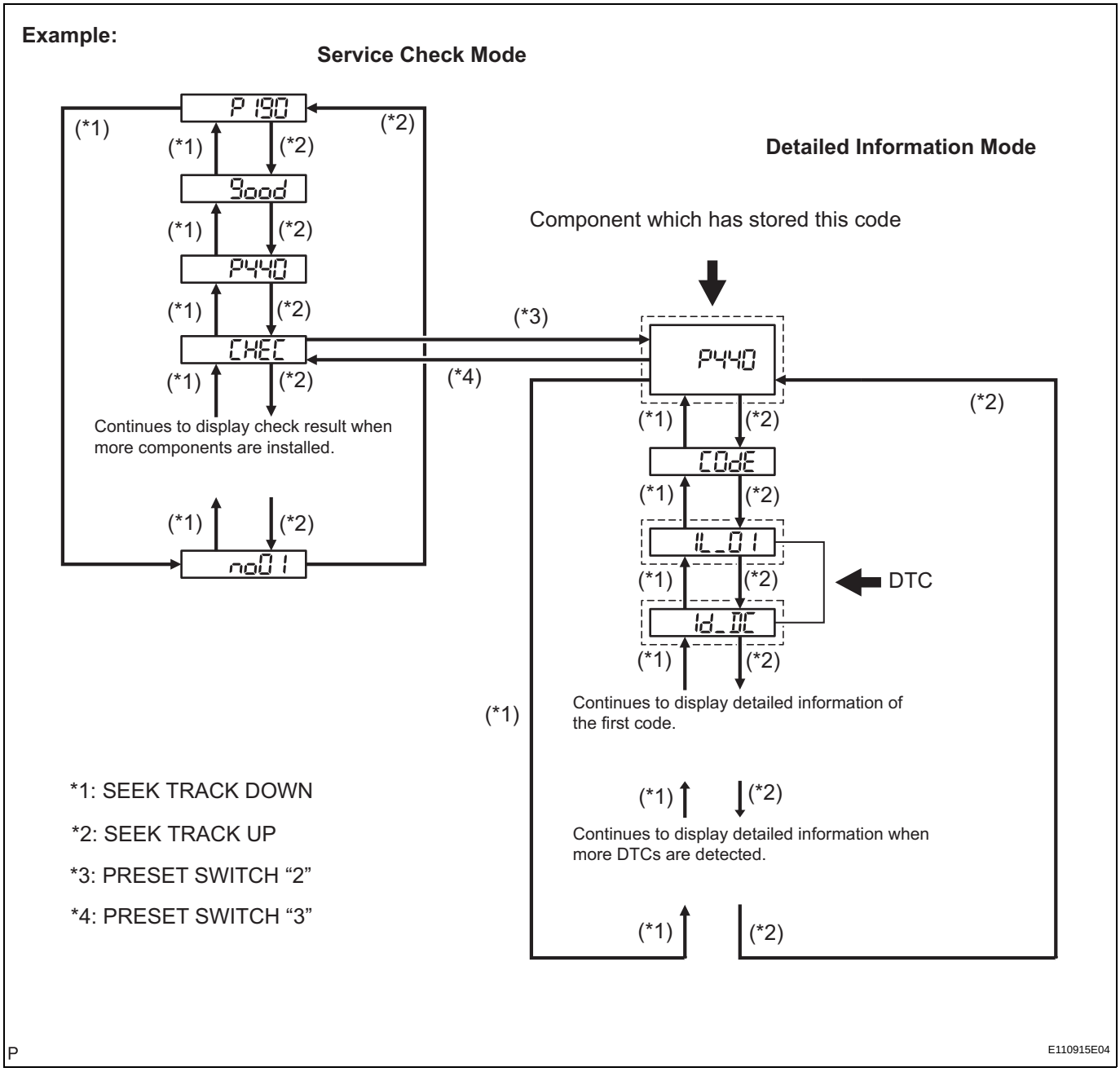

(b) Press the preset switch "3" to change to "Detailed Information Mode".

(c) Identify the component which has stored this code.

Component Table:

Component	Physical Address
Stereo component amplifier	440
"Bluetooth" handsfree module	19D

HINT:

- "440 (stereo component amplifier)" is the component which has stored this code in the example shown in the illustration.
- For details of the DTC display, refer to "DTC CHECK/ CLEAR" (See page AV-21).

AV

NEXT

4	CHECK COMPONENT WHICH HAS STORED THIS CODE

(a) Select the component which has stored this code.
HINT:
The "Bluetooth" handsfree module is built into the radio receiver. If there is a problem between the "Bluetooth" handsfree module and radio receiver, replace the radio receiver.

Component Table:

Component	Proceed to
"Bluetooth" handsfree module	A
Except "Bluetooth" handsfree module	B

A → **REPLACE RADIO RECEIVER**

B

5	CHECK HARNESS AND CONNECTOR (RADIO RECEIVER - COMPONENT WHICH HAS STORED THIS CODE)

AV

HINT:
For details of the connectors, refer to the "TERMINALS OF ECU" (See page AV-16).

(a) Referring to the AVC-LAN wiring diagram below, check the AVC-LAN circuit between the radio receiver and the component which has stored this code.
   (1) Disconnect all connectors between the radio receiver and the component which has stored this code.
   (2) Check for an open or short in the AVC-LAN circuit between the radio receiver and the component which has stored this code.
   OK:
   There is no open or short circuit.

AVC-LAN WIRING DIAGRAM:

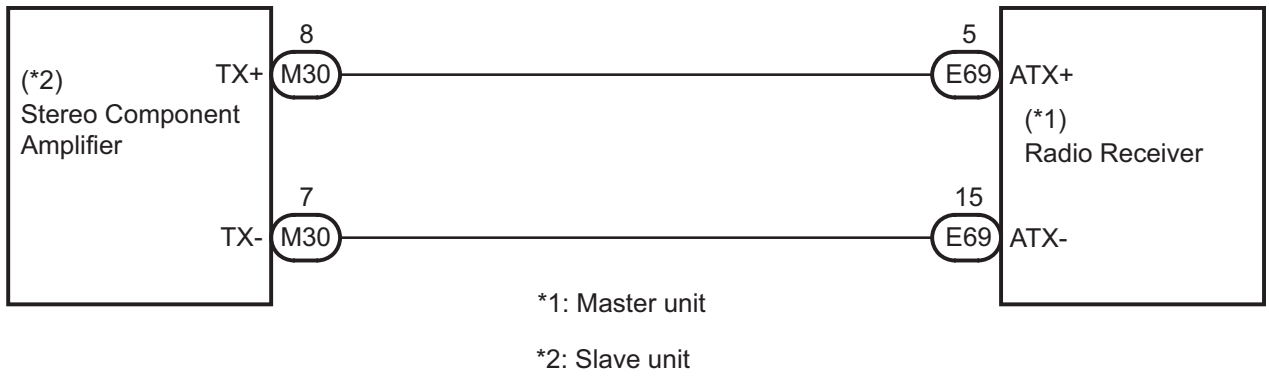

P E130419E01

NG → **REPAIR OR REPLACE HARNESS OR CONNECTOR**

OK

6	REPLACE RADIO RECEIVER

(a) Replace the radio receiver with a normal one and check if the same problem occurs again.
OK:
Same problem does not occur.

NG → **REPLACE COMPONENT WHICH HAS STORED THIS CODE**

OK

END

DTC	01-DF	Master Error

DESCRIPTION

DTC No.	DTC Detection Condition	Trouble Area
01-DF *1	The device with a display fails and the master is switched to the audio device. Also when a communication error between sub-master (audio) and master occurs, this code is stored.	• Radio receiver power source circuit • AVC-LAN circuit between the radio receiver and the component which has stored this code • Radio receiver • Component which has stored this code

HINT:
*1: When 210 seconds have elapsed after disconnecting the power supply connector of the master component with the engine switch on (ACC or IG), this code is stored.

NOTICE:

- **Before starting troubleshooting, be sure to clear DTCs to erase codes stored due to the reasons described in the HINT above. Then, check for DTCs and troubleshoot according to the output DTCs.**
- **The radio receiver is the master unit.**
- **Be sure to clear and recheck DTCs after the inspection is completed to confirm that no DTCs are output.**

INSPECTION PROCEDURE

AV

NOTICE:

Be sure to read DESCRIPTION before performing the following procedures.

1	CHECK RADIO RECEIVER POWER SOURCE CIRCUIT

Refer to the radio receiver power source circuit (See page AV-162).
If the power source circuit is operating normally, proceed to the next step.

NEXT

2	INSPECT RADIO RECEIVER

Wire Harness View:

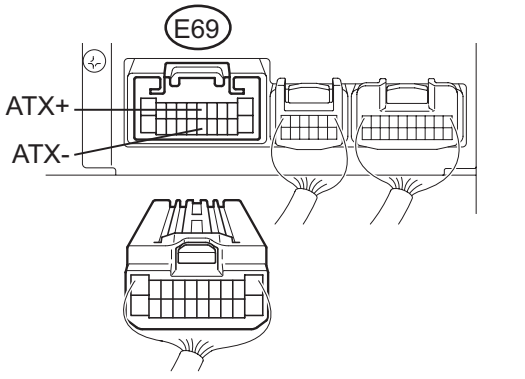

(a) Disconnect the radio receiver connectors.
(b) Measure the resistance according to the value(s) in the table below.

Standard resistance

Tester Connection	Condition	Specified Condition
ATX+ - ATX-	Always	60 to 80 Ω

NG → **CHECK HARNESS AND CONNECTOR (RADIO RECEIVER - COMPONENT WHICH HAS STORED THIS CODE)**

OK

3	IDENTIFY THE COMPONENT WHICH HAS STORED THIS CODE

(a) Enter the diagnostic mode.

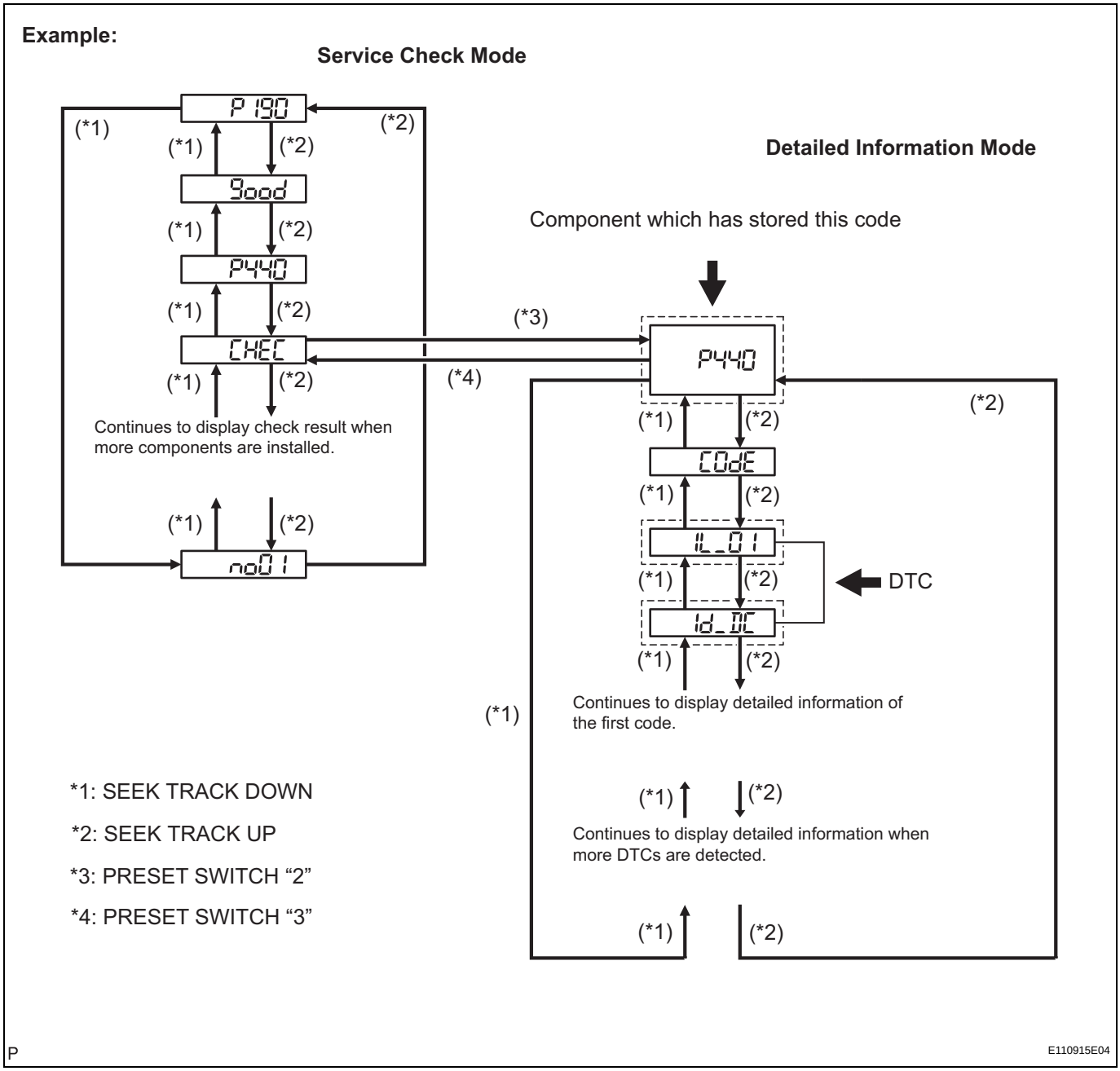

(b) Press the preset switch "3" to change to "Detailed Information Mode".

(c) Identify the component which has stored this code.

Component Table:

Component	Physical Address
Stereo component amplifier	440
"Bluetooth" handsfree module	19D

AV

HINT:
- "440 (stereo component amplifier)" is the component which has stored this code in the example shown in the illustration.
- For details of the DTC display, refer to the "DTC CHECK/ CLEAR" (See page AV-21).

NEXT

4	CHECK COMPONENT WHICH HAS STORED THIS CODE

(a) Select the component which has stored this code.
HINT:
The "Bluetooth" handsfree module is built into the radio receiver. If there is a problem between the "Bluetooth" handsfree module and radio receiver, replace the radio receiver.

Component Table:

Component	Proceed to
"Bluetooth" handsfree module	A
Except "Bluetooth" handsfree module	B

A → **REPLACE RADIO RECEIVER**

B

5	CHECK HARNESS AND CONNECTOR (RADIO RECEIVER - COMPONENT WHICH HAS STORED THIS CODE)

HINT:
For details of the connectors, refer to the "TERMINALS OF ECU" (See page AV-16).

(a) Referring to the AVC-LAN wiring diagram below, check the AVC-LAN circuit between the radio receiver and the component which has stored this code.
   (1) Disconnect all connectors between the radio receiver and the component which has stored this code.
   (2) Check for an open or short in the AVC-LAN circuit between the radio receiver and the component which has stored this code.
   OK:
   There is no open or short circuit.

AV

AVC-LAN WIRING DIAGRAM:

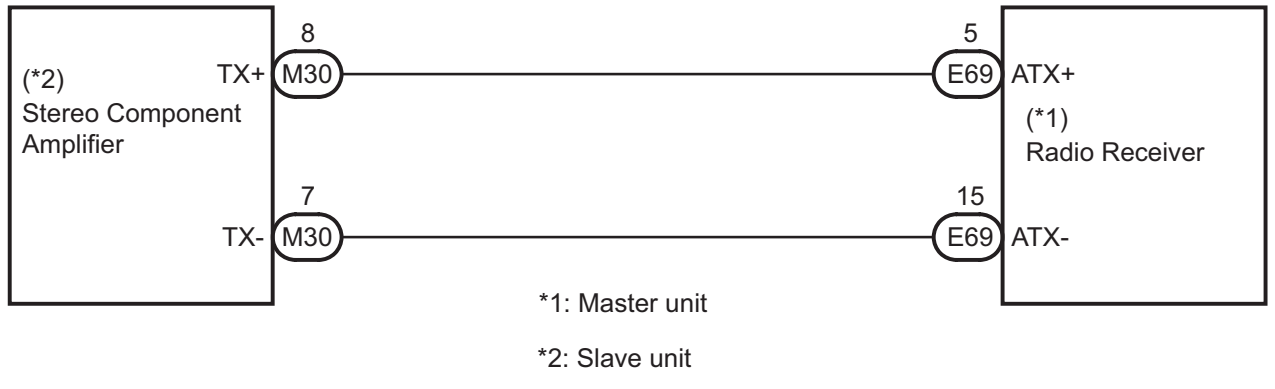

NG → **REPAIR OR REPLACE HARNESS OR CONNECTOR**

OK

AV

6	**REPLACE RADIO RECEIVER**

(a) Replace the radio receiver with a normal one and check if the same problem occurs again.
OK:
Same problem does not occur.

NG → **REPLACE COMPONENT WHICH HAS STORED THIS CODE**

OK

END

DTC	01-E0	Registration Complete Indication Error

DTC	01-E3	Registration Demand Transmission

DTC	01-E4	Multiple Frame Incomplete

DESCRIPTION

DTC No.	DTC Detection Condition	Trouble Area
01-E0	"Registration complete" signal from the master device cannot be received.	-
01-E3	The registration demand signal from the slave device is output. Or the registration demand signal is output by receiving connection confirmation signal from the sub-master device.	-
01-E4	The multiple frame transmission is incomplete.	-

HINT:
Even if no fault is present, this trouble code may be stored depending on the battery condition or engine start voltage.

INSPECTION PROCEDURE

HINT:
After the inspection is completed, clear the DTCs. These DTCs do not indicate a malfunction.

DTC	01-E2	ON / OFF Indication Parameter Error

DESCRIPTION

DTC No.	DTC Detection Condition	Trouble Area
01-E2	The command for ON/OFF control from the master device has a problem.	Radio receiver

INSPECTION PROCEDURE

HINT:
After the inspection is completed, clear the DTCs.

1	REPLACE RADIO RECEIVER

NEXT

END

DTC	57-47	Bluetooth Module Initialization Failed

DESCRIPTION

DTC No.	DTC Detection Condition	Trouble Area
57-47	• "Bluetooth" module is not installed. • Problem with "Bluetooth" module • Problem in communication line to "Bluetooth" module	Radio receiver

INSPECTION PROCEDURE

HINT:
After the inspection is completed, clear the DTCs.

1	REPLACE RADIO RECEIVER

NEXT

END

DTC	60-10	AM Tuner PLL does not Lock

DTC	60-11	FM Tuner PLL does not Lock

DESCRIPTION

DTC No.	DTC Detection Condition	Trouble Area
60-10	AM tuner PLL (phase locked loop) synchronization is impossible.	Radio receiver
60-11	FM tuner PLL (phase locked loop) synchronization is impossible.	

INSPECTION PROCEDURE

HINT:
After the inspection is completed, clear the DTCs.

1	REPLACE RADIO RECEIVER

NEXT

END

DTC	60-42	Tuner Power Source Error

DTC	60-43	AM Tuner Error

DTC	60-44	FM Tuner Error

DTC	60-50	Malfunction in Internal IC

DESCRIPTION

DTC No.	DTC Detection Condition	Trouble Area
60-42	The power source of the tuner is abnormal.	Radio receiver
60-43	The AM tuner is abnormal.	
60-44	The FM tuner is abnormal.	
60-50	A problem occurs in the IC inside the tuner unit and radio reception is not normal.	

INSPECTION PROCEDURE

HINT:
After the inspection is completed, clear the DTCs.

AV

1 CLEAR DTC

(a) Clear the DTCs (See page AV-21).

NEXT

2 RECHECK DTC

(a) Recheck for DTCs and check if the same trouble occurs again.
HINT:
If DTCs are detected frequently, replace the radio receiver.
OK:
Malfunction disappears.

NG → **REPLACE RADIO RECEIVER**

OK

END

DTC	63-10	CD Changer Mechanical Error

DTC	63-11	CD Insertion and Ejection Error

DTC	63-12	CD Reading Abnormal

DESCRIPTION

DTC No.	DTC Detection Condition	Trouble Area
63-10	A mechanical error in the CD changer is detected while the CD is not being inserted or ejected.	Radio receiver
63-11	CD insertion or ejection is failed.	
63-12	CD read problem occurs.	

INSPECTION PROCEDURE

HINT:
After the inspection is completed, clear the DTCs.

AV

1	REPLACE RADIO RECEIVER

NEXT

END

DTC	63-41	Wrong Disc

DTC	63-42	Disc cannot be Read

DESCRIPTION

DTC No.	DTC Detection Condition	Trouble Area
63-41	An unsuitable disc is inserted.	• CD • Radio receiver
63-42	The disc cannot be read.	

INSPECTION PROCEDURE

HINT:
After the inspection is completed, clear the DTCs.

1 CHECK DISC

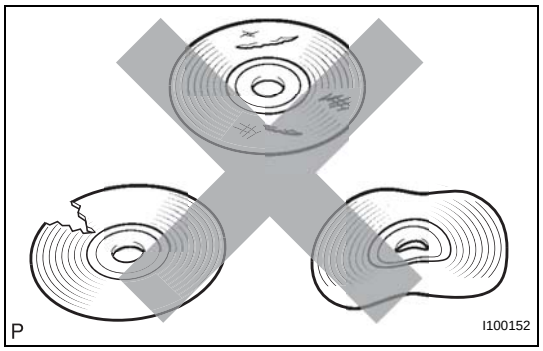

(a) Check that the disc is not deformed or cracked.
OK:
No deformation or cracks on the disc.

NG → **CHANGE DISC**

OK

2 DISC CLEANING

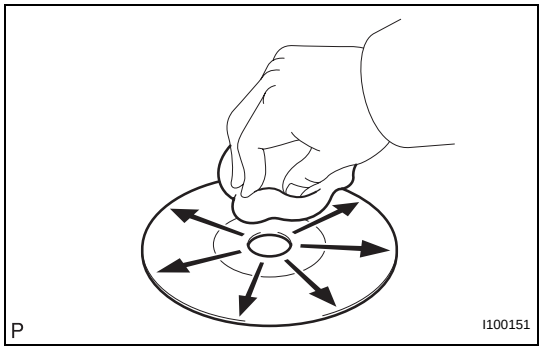

(a) Disc cleaning
(1) If dirt is on the disc surface, wipe it clean with a soft cloth from the inside to the outside in a radial direction.
NOTICE:
Do not use conventional record cleaner or anti-static preservative.

NEXT

3 CLEAR DTC

(a) Clear the DTCs (See page AV-21).

NEXT

AV

4	RECHECK DTC

(a) Recheck for DTCs and check if the same trouble occurs again.
OK:
Malfunction disappears.

OK → **END**

NG

5	REPLACE DISC WITH ANOTHER AND RECHECK

(a) Replace the disc with another and recheck.
(1) Replace the disc with another normal one.
(2) Clear the DTCs (See page AV-21).
(3) Recheck for DTCs and check if the same trouble occurs again.
OK:
Malfunction disappears.

NG → **REPLACE RADIO RECEIVER**

OK

END

DTC	63-43	CD-ROM Abnormal

DESCRIPTION

DTC No.	DTC Detection Condition	Trouble Area
63-43	CD-ROM operation is abnormal	• CD • Radio receiver

INSPECTION PROCEDURE

HINT:
After the inspection is completed, clear the DTCs.

1 CHECK IF A PROPER CD IS INSERTED

(a) Make sure that the CD is an audio CD or a CD with an MP3 or WMA file, and that it is not deformed, flawed, stained, burred, or otherwise defective.
OK:
Normal CD
HINT:
- Translucent or uniquely-shaped CDs cannot be played.
- CDs with adhesive paper labels should not be played.
- Commercial audio CDs can be played.
- CD-DA files on CD-ROMs, CD-Rs, and CD-RWs can be played.
- MP3 and WMA files on CD-ROMs, CD-Rs, and CD-RWs can be played.
- For details on playable CDs, refer to the Owner's Manual.

NG → **CD IS FAULTY**

OK ↓

2 REPLACE CD WITH ANOTHER AND RECHECK

(a) Replace the CD with another and recheck.
(1) Replace the CD with another normal one.
(2) Clear the DTCs (See page AV-21).
(3) Recheck for DTCs and check if the same trouble occurs again.
OK:
Malfunction disappears.

NG → **REPLACE RADIO RECEIVER**

OK ↓

END

AV

DTC	63-44	CD Abnormal

DTC	63-48	Excess Current

DTC	63-50	Tray Insertion / Ejection Error

DESCRIPTION

DTC No.	DTC Detection Condition	Trouble Area
63-44	Operation error in the CD mechanism	Radio receiver
63-48	Excess current is present in the CD changer.	
63-50	Malfunction in insertion/ejection system	

INSPECTION PROCEDURE

HINT:
After the inspection is completed, clear the DTCs.

AV

1 CLEAR DTC

(a) Clear the DTCs (See page AV-21).

NEXT

2 RECHECK DTC

(a) Recheck for DTCs and check if the same trouble occurs again.
HINT:
If DTCs are detected frequently, replace the radio receiver.
OK:
Malfunction disappears.

NG → **REPLACE RADIO RECEIVER**

OK

END

DTC	63-45	Eject Error

DTC	63-51	Elevator Error

DTC	63-52	Clamp Error

DESCRIPTION

DTC No.	DTC Detection Condition	Trouble Area
63-45	Magazine cannot be ejected.	Radio receiver
63-51	Mechanical error occurs during elevator operation.	
63-52	Error occurs in CD changer clamp.	

INSPECTION PROCEDURE

HINT:
After the inspection is completed, clear the DTCs.

1 CHECK RADIO RECEIVER

(a) Check if a disc can be changed, inserted, or ejected normally.
OK:
Malfunction disappears.

NG → **REPLACE RADIO RECEIVER**

OK

END

DTC	63-46	Scratched / Reversed Disc

DESCRIPTION

DTC No.	DTC Detection Condition	Trouble Area
63-46	Scratches or dirt is found on CD surface or CD is inserted upside down.	• CD • Radio receiver

INSPECTION PROCEDURE

HINT:
After the inspection is completed, clear the DTCs.

1 CHECK THAT CD IS INSERTED PROPERLY

(a) Check that the CD is not inserted upside down.
OK:
CD is properly inserted.

NG → **INSERT CD PROPERLY**

OK

AV

2 CHECK DISC

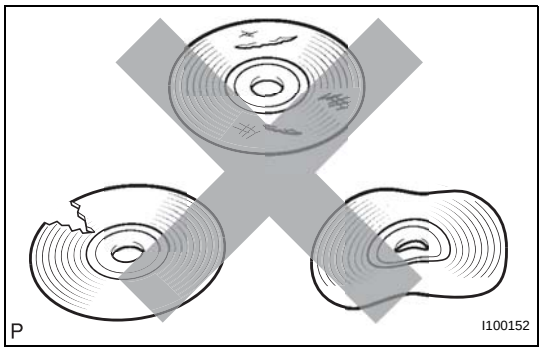

(a) Check that the disc is not deformed or cracked.
OK:
No deformation or cracks on the disc.

NG → **CHANGE DISC**

OK

3 DISC CLEANING

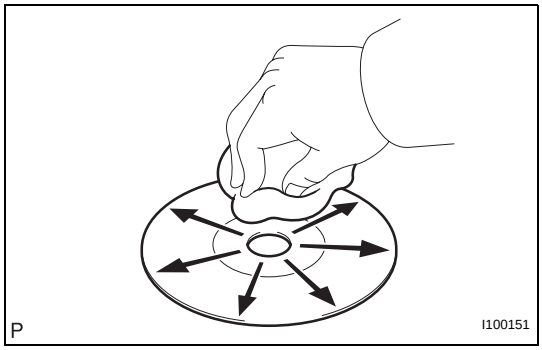

(a) Disc cleaning
(1) If dirt is on the disc surface, wipe it clean with a soft cloth from the inside to the outside in a radial direction.
NOTICE:
Do not use a conventional record cleaner or anti-static preservative.

NEXT

4	CLEAR DTC

(a) Clear the DTCs (See page AV-21).

NEXT

5	RECHECK DTC

(a) Recheck for DTCs and check if the same trouble occurs again.
OK:
Malfunction disappears.

OK → **END**

NG

6	REPLACE DISC WITH ANOTHER AND RECHECK

(a) Replace the disc with another and recheck.
(1) Replace the disc with another normal one.
(2) Clear the DTCs (See page AV-21).
(3) Recheck for DTCs and check if the same trouble occurs again.
OK:
Malfunction disappears.

NG → **REPLACE RADIO RECEIVER**

OK

END

DTC	63-47	High Temperature

DESCRIPTION

DTC No.	DTC Detection Condition	Trouble Area
63-47	Sensor detects that CD unit temperature is high (Over 80°C (176°F))	Radio receiver

INSPECTION PROCEDURE

HINT:
After the inspection is completed, clear the DTCs.

1 CHECK RADIO RECEIVER

(a) Park the vehicle in a cool place.
(b) Check that the temperature of the radio receiver becomes sufficiently low, then start the engine.
(c) Clear the DTCs and recheck for DTCs.
(d) Check if DTC 63-47 is output.
OK:
DTC 63-47 is not output.

NG → **REPLACE RADIO RECEIVER**

OK

END

DTC	63-78	DSP Error

DESCRIPTION

DTC No.	DTC Detection Condition	Trouble Area
63-78	An error occurs during the decode process (MP3/WMA)	Radio receiver

INSPECTION PROCEDURE

HINT:
After the inspection is completed, clear the DTCs.

NOTICE:

- **This code may be output even if there is no malfunction.**
- **If this code is output frequently, replace the radio receiver.**

1 CLEAR DTC

(a) Clear the DTCs (See page AV-21).

NEXT

2 RECHECK DTC

(a) Recheck for DTCs and check if the same trouble code occurs again.
OK:
Malfunction disappears.

NG → **REPLACE RADIO RECEIVER**

OK

END

AV

DTC	63-7D	Disc cannot be Played

DTC	63-7E	No Playable Files

DTC	63-7F	Copyright Protection Error

DESCRIPTION

DTC No.	DTC Detection Condition	Trouble Area
63-7D	• An incompatible MP3/WMA file is used. • Although the file has an extension of ".mp3" or ".wma", the header information cannot be read.	• CD • Radio receiver
63-7E	• A disc with no music data is used. • Playable files are not on the disc (MP3/WMA).	
63-7F	A copy-protected file, which cannot be played, is used.	

INSPECTION PROCEDURE

HINT:
After the inspection is completed, clear the DTCs.

AV

1	CHANGE DISC

(a) Insert a disc with a playable file and check if the disc can be played correctly.
HINT:
For details on playable files and discs, refer to the Owner's Manual.
OK:
The disc can be played correctly.

NG → **REPLACE RADIO RECEIVER**

OK

DISC IS FAULTY

DTC	74-40	Short in Speaker Circuit

DESCRIPTION

DTC No.	DTC Detection Condition	Trouble Area
74-40	A short is detected in the speaker output circuit.	• Wire harness • Speaker • Stereo component amplifier

This circuit has a fail-safe function.
- When a short in the speaker circuit is detected, all sound outputs are stopped.

WIRING DIAGRAM

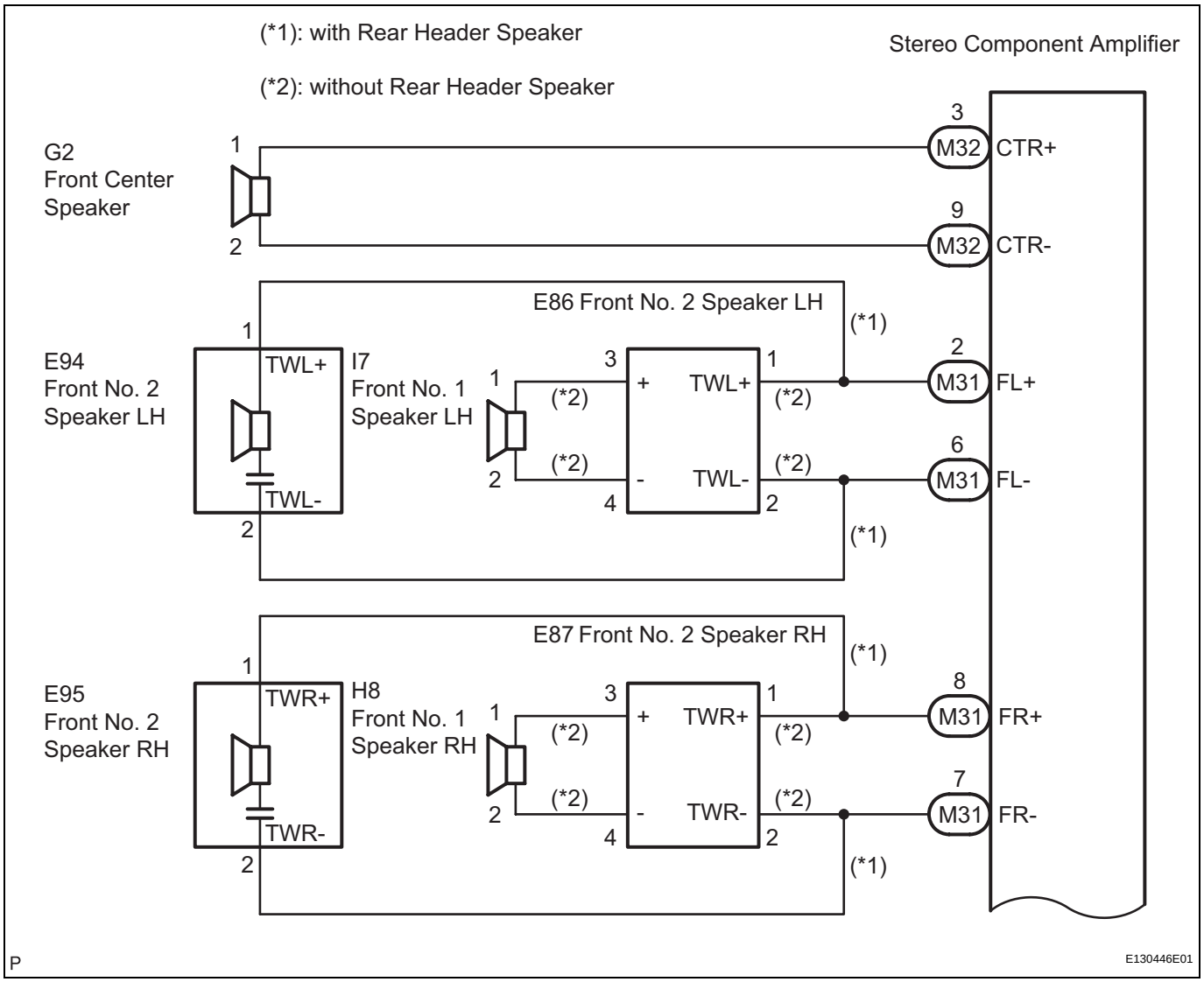

AV

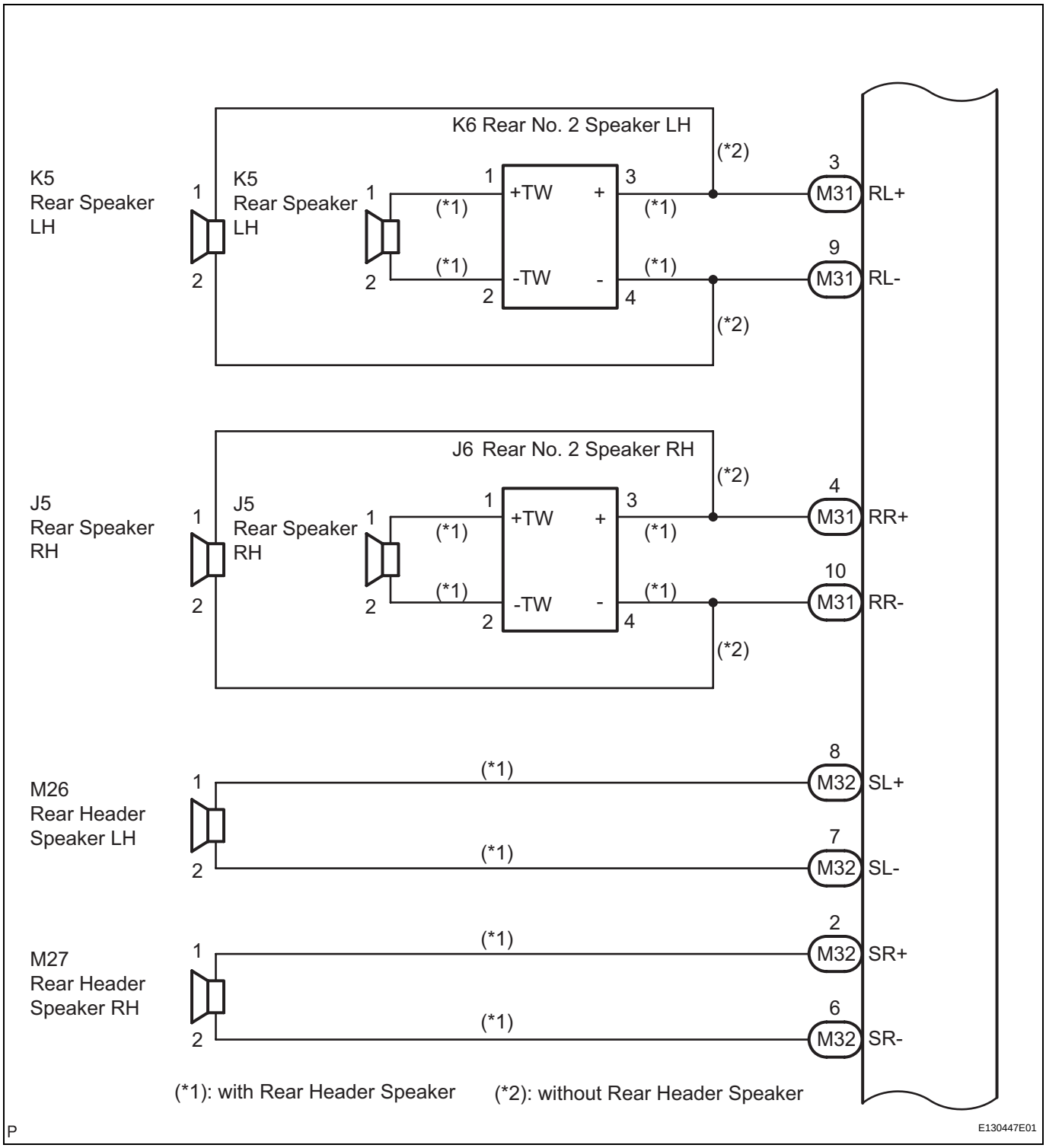
K6 Rear No. 2 Speaker LH
K5
Rear Speaker
LH
K5
Rear Speaker
LH
+TW
-TW
(*1)
(*2)
M31
RL+
RL-
J6 Rear No. 2 Speaker RH
J5
Rear Speaker
RH
J5
Rear Speaker
RH
RR+
RR-
M26
Rear Header
Speaker LH
M27
Rear Header
Speaker RH
M32
SL+
SL-
SR+
SR-
(*1): with Rear Header Speaker
(*2): without Rear Header Speaker
P
E130447E01

AV

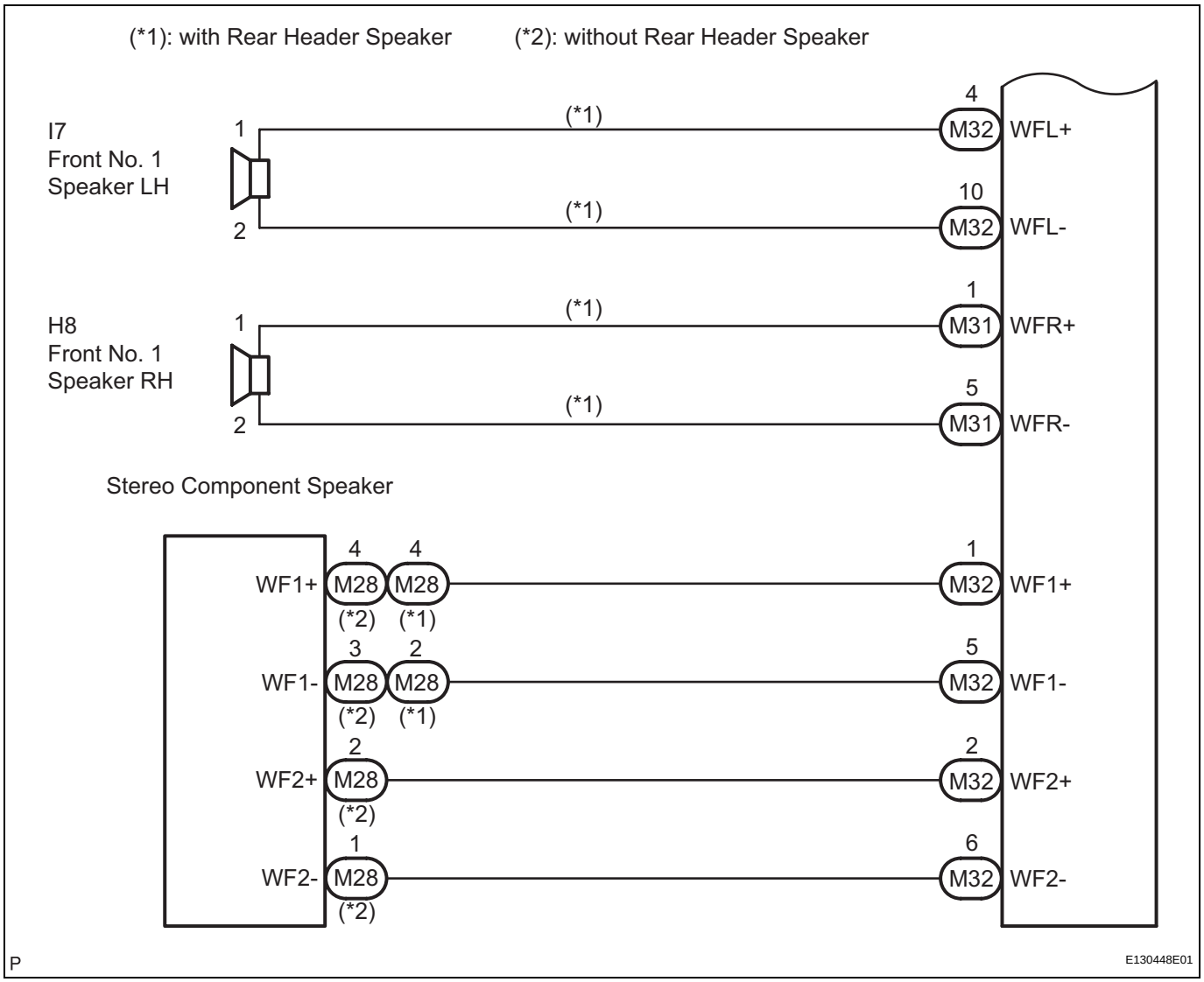

INSPECTION PROCEDURE

HINT:

After the inspection is completed, clear the DTCs.

1	**INSPECT STEREO COMPONENT AMPLIFIER**

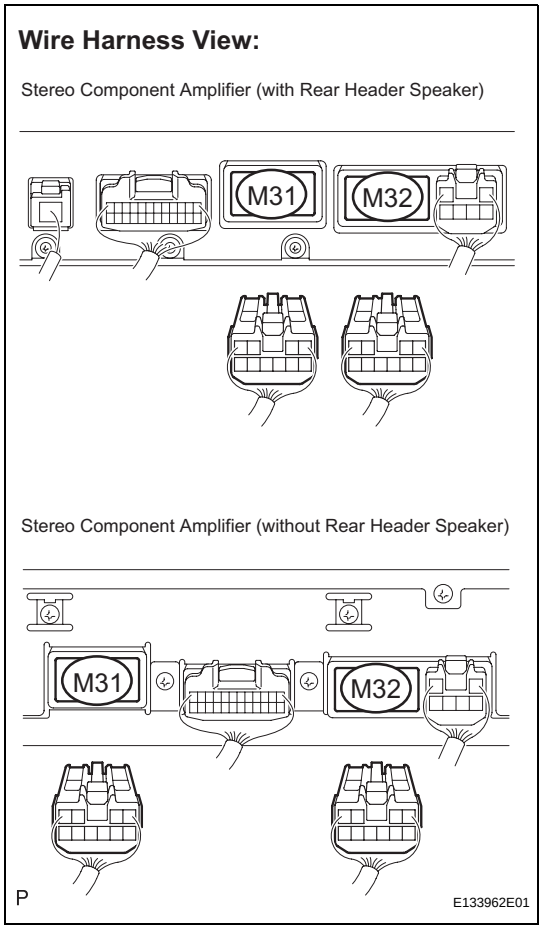

(a) Disconnect the stereo component amplifier connectors M31 and M32.
(b) Clear the DTCs and recheck for DTCs.
(c) Check if DTC 74-40 is output.
OK:
DTC 74-40 is not output.

NG → **REPLACE STEREO COMPONENT AMPLIFIER**

OK

2	**CHECK OPERATION**

(a) Reconnect the stereo component amplifier connector M31.
(b) Check if DTC 74-40 is output.
OK:
DTC 74-40 is not output.

NG → **Go to step 10**

OK

AV

3 CHECK HARNESS AND CONNECTOR

Wire Harness View:

Stereo Component Amplifier (with Rear Header Speaker)

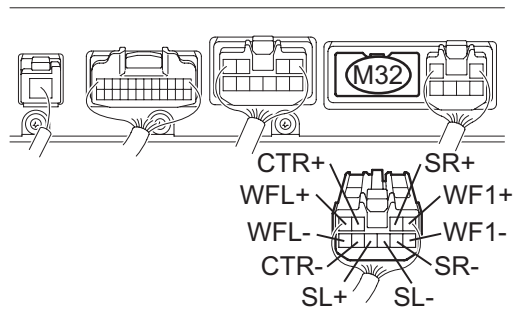

Stereo Component Amplifier (without Rear Header Speaker)

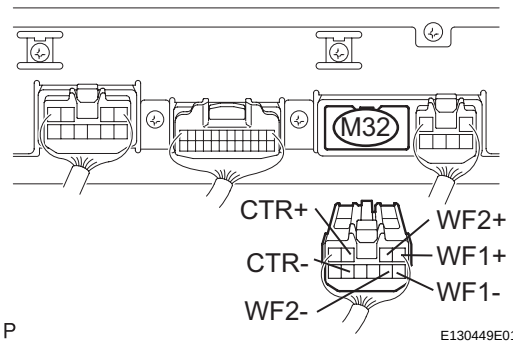

P E130449E01

(a) Disconnect the connectors shown in the illustration from the stereo component amplifier and speakers.

(b) Measure the resistance according to the value(s) in the table below.

Standard resistance

Tester Connection	Condition	Specified Condition
CTR+ - Body ground	Always	10 kΩ or higher
CTR- - Body ground	Always	10 kΩ or higher
SL+ - Body ground (*1)	Always	10 kΩ or higher
SL- - Body ground (*1)	Always	10 kΩ or higher
SR+ - Body ground (*1)	Always	10 kΩ or higher
SR- - Body ground (*1)	Always	10 kΩ or higher
WFL+ - Body ground (*1)	Always	10 kΩ or higher
WFL- - Body ground (*1)	Always	10 kΩ or higher
WF1+ - Body ground	Always	10 kΩ or higher
WF1- - Body ground	Always	10 kΩ or higher
WF2+ - Body ground (*2)	Always	10 kΩ or higher
WF2- - Body ground (*2)	Always	10 kΩ or higher

*1: with Rear Header Speaker
*2: without Rear Header Speaker

NG → **REPAIR OR REPLACE HARNESS OR CONNECTOR**

OK

4 CONFIRM MODEL

Result

Result	Proceed to
with Rear Header Speaker	A
without Rear Header Speaker	B

B → **Go to step 9**

A

5 INSPECT FRONT CENTER SPEAKER

(a) Resistance check.

(1) Measure the resistance between the terminals of the speaker.

Standard resistance:
Approximately 8 Ω

AV

NG → **REPLACE FRONT CENTER SPEAKER**

OK

6 INSPECT STEREO COMPONENT SPEAKER

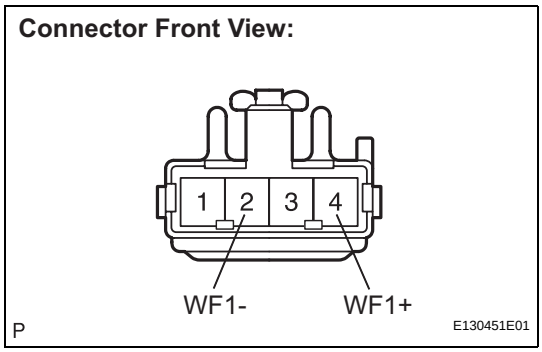

(a) Resistance check.
(1) Measure the resistance between the terminals of the speaker.
Standard resistance

Tester Connection	Condition	Specified Condition
WF1+ - WF1-	Always	Approximately 8 Ω

NG → **REPLACE STEREO COMPONENT SPEAKER**

OK

AV

7 INSPECT REAR HEADER SPEAKER (LEFT HAND)

(a) Resistance check.
(1) Measure the resistance between the terminals of the speaker.
Standard resistance:
Approximately 8 Ω

NG → **REPLACE REAR HEADER SPEAKER (LEFT HAND)**

OK

8 INSPECT REAR HEADER SPEAKER (RIGHT HAND)

(a) Resistance check.
(1) Measure the resistance between the terminals of the speaker.
Standard resistance:
Approximately 8 Ω

NG → **REPLACE REAR HEADER SPEAKER (RIGHT HAND)**

OK

REPLACE FRONT NO. 1 SPEAKER (LEFT HAND)

9 INSPECT FRONT CENTER SPEAKER

(a) Resistance check.

(1) Measure the resistance between the terminals of the speaker.
Standard resistance:
Approximately 10 Ω

NG → **REPLACE FRONT CENTER SPEAKER**

OK

REPLACE STEREO COMPONENT SPEAKER

10 CHECK HARNESS AND CONNECTOR

Wire Harness View:

Stereo Component Amplifier (with Rear Header Speaker)

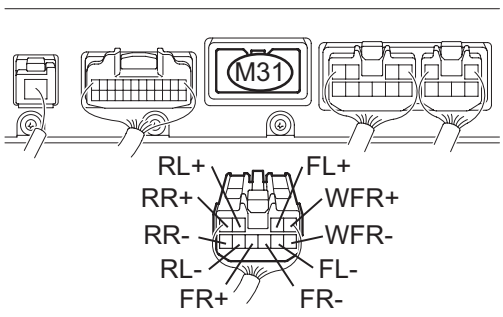

Stereo Component Amplifier (without Rear Header Speaker)

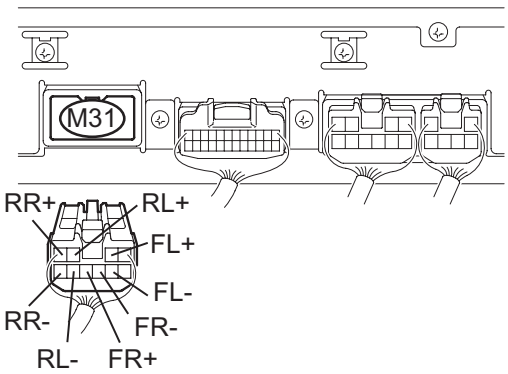

Connector Front View:

Rear No. 2 Speaker

Front No. 2 Speaker

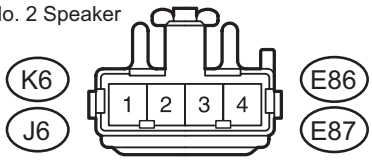

P

E130452E01

(a) Disconnect the connectors shown in the illustration from the stereo component amplifier and speakers.
(b) Measure the resistance according to the value(s) in the table below.
Standard resistance

Tester Connection	Condition	Specified Condition
FL+ - Body ground	Always	10 kΩ or higher
FL- - Body ground	Always	10 kΩ or higher
E86-3 - Body ground (*2)	Always	10 kΩ or higher
E86-4 - Body ground (*2)	Always	10 kΩ or higher
FR+ - Body ground	Always	10 kΩ or higher
FR- - Body ground	Always	10 kΩ or higher
E87-3 - Body ground (*2)	Always	10 kΩ or higher
E87-4 - Body ground (*2)	Always	10 kΩ or higher
RL+ - Body ground	Always	10 kΩ or higher
RL- - Body ground	Always	10 kΩ or higher
K6-3 - Body ground (*1)	Always	10 kΩ or higher
K6-4 - Body ground (*1)	Always	10 kΩ or higher
RR+ - Body ground	Always	10 kΩ or higher
RR- - Body ground	Always	10 kΩ or higher
J6-3 - Body ground (*1)	Always	10 kΩ or higher
J6-4 - Body ground (*1)	Always	10 kΩ or higher
WFR+ - Body ground (*1)	Always	10 kΩ or higher
WFR- - Body ground (*1)	Always	10 kΩ or higher

*1: with Rear Header Speaker
*2: without Rear Header Speaker

NG → **REPAIR OR REPLACE HARNESS OR CONNECTOR**

AV

OK

11	CONFIRM MODEL

Result

Result	Proceed to
with Rear Header Speaker	A
without Rear Header Speaker	B

B → **Go to step 18**

A

12	INSPECT FRONT NO. 2 SPEAKER (LEFT HAND)

(a) Reconnect the stereo component amplifier connector and front No. 2 speaker connector.
(b) Check that audio sound can be heard from the speaker.
OK:
Audio sound can be heard.

NG → **REPLACE FRONT NO. 2 SPEAKER (LEFT HAND)**

OK

13	INSPECT FRONT NO. 2 SPEAKER (RIGHT HAND)

(a) Reconnect the stereo component amplifier connector and front No. 2 speaker connector.
(b) Check that audio sound can be heard from the speaker.
OK:
Audio sound can be heard.

NG → **REPLACE FRONT NO. 2 SPEAKER (RIGHT HAND)**

OK

14	INSPECT REAR SPEAKER (LEFT HAND)

(a) Resistance check.
(1) Measure the resistance between the terminals of the speaker.
Standard resistance:
Approximately 8 Ω

NG → **REPLACE REAR SPEAKER (LEFT HAND)**

OK

AV

15	INSPECT REAR SPEAKER (RIGHT HAND)

(a) Resistance check.
(1) Measure the resistance between the terminals of the speaker.
Standard resistance:
Approximately 8 Ω

NG → **REPLACE REAR SPEAKER (RIGHT HAND)**

OK

16	INSPECT REAR NO. 2 SPEAKER (LEFT HAND)

(a) Reconnect the stereo component amplifier connector and rear No. 2 speaker connector.
(b) Check that audio sound can be heard from the speaker.
OK:
Audio sound can be heard.

NG → **REPLACE REAR NO. 2 SPEAKER (LEFT HAND)**

AV

OK

17	INSPECT REAR NO. 2 SPEAKER (RIGHT HAND)

(a) Reconnect the stereo component amplifier connector and rear No. 2 speaker connector.
(b) Check that audio sound can be heard from the speaker.
OK:
Audio sound can be heard.

NG → **REPLACE REAR NO. 2 SPEAKER (RIGHT HAND)**

OK

REPLACE FRONT NO. 1 SPEAKER (RIGHT HAND)

18	INSPECT FRONT NO. 1 SPEAKER (LEFT HAND)

(a) Resistance check.
(1) Measure the resistance between the terminals of the speaker.
Standard resistance:
Approximately 4 Ω

NG → **REPLACE FRONT NO. 1 SPEAKER (LEFT HAND)**

OK

19	**INSPECT FRONT NO. 1 SPEAKER (RIGHT HAND)**

(a) Resistance check.
(1) Measure the resistance between the terminals of the speaker.
Standard resistance:
Approximately 4 Ω

NG → **REPLACE FRONT NO. 1 SPEAKER (RIGHT HAND)**

OK

20	**INSPECT FRONT NO. 2 SPEAKER (LEFT HAND)**

(a) Reconnect the stereo component amplifier connector and front No. 2 speaker connector.
(b) Check that audio sound can be heard from the speaker.
OK:
Audio sound can be heard.

NG → **REPLACE FRONT NO. 2 SPEAKER (LEFT HAND)**

OK

21	**INSPECT FRONT NO. 2 SPEAKER (RIGHT HAND)**

(a) Reconnect the stereo component amplifier connector and front No. 2 speaker connector.
(b) Check that audio sound can be heard from the speaker.
OK:
Audio sound can be heard.

NG → **REPLACE FRONT NO. 2 SPEAKER (RIGHT HAND)**

OK

22	**INSPECT REAR SPEAKER (LEFT HAND)**

(a) Resistance check.
(1) Measure the resistance between the terminals of the speaker.
Standard resistance:
Approximately 4 Ω

NG → **REPLACE REAR SPEAKER (LEFT HAND)**

OK

REPLACE REAR SPEAKER (RIGHT HAND)

Noise Occurs

INSPECTION PROCEDURE

1 NOISE CONDITION

(a) Check in which direction the noise comes from (front left or right, or rear left or right).
(1) Check in which direction the noise comes from.
OK:
The location of the noise source can be determined.

NG → **Go to step 3**

OK ↓

2 CHECK SPEAKERS

(a) Check the installation conditions of the speaker units that are located near the noise source and that there are no cracks, scratches, deformation, or other failures.

Result

Condition	Proceed to
A speaker is installed incorrectly	A
Foreign objects are in the speaker	B
A speaker cone paper is broken	C
No malfunction is found	D

A → **REINSTALL SPEAKER**

B → **REMOVE FOREIGN OBJECT**

C → **REPLACE SPEAKER**

D ↓

3 CHECK NOISE CONDITIONS

(a) Check the noise condition.
HINT:
The radio has a noise prevention function to reduce noise when listening to the radio. If a loud noise occurs, check whether the ground at the antenna mounting base and the noise prevention unit are installed and wired correctly.

Conditions under which noise occurs	Noise Source
Noise increases when the accelerator pedal is depressed, but stops when the engine is stopped.	Generator
Noise occurs during A/C or heater operation.	Blower motor
Noise occurs when the vehicle accelerates rapidly on an unpaved road or after the engine switch is turned on (IG).	Fuel pump

Conditions under which noise occurs	Noise Source
Noise occurs when the horn switch is pressed and released or when pressed and held.	Horn
Noise occurs synchronously with the blink of the turn signal.	Flasher
Noise occurs during window washer operation.	Washer
Noise occurs while the engine is running, and continues even after the engine is stopped.	Engine coolant temperature sensor
Noise occurs during wiper operation.	Wiper
Noise occurs when the brake pedal is depressed.	Stop light switch
Others	Static electricity

HINT:

- In the chart's left column, find the situation that matches the customer's complaint. Then, in the right column, find the part that is causing the noise. Check the noise filter on or for the part.
- To save time and avoid a misdiagnosis, first make sure that the noise is not coming from outside the vehicle.
- Noise should be removed in descending order of loudness.
- Setting the radio to a frequency where no signal is received may make recognition of the noise problem easier.

OK:

The noise source can be determined.

NG → **REPAIR OR REPLACE NOISE SOURCE**

OK

PROCEED TO NEXT CIRCUIT INSPECTION SHOWN IN PROBLEM SYMPTOMS TABLE

Pressing Power Switch does not Turn on System

INSPECTION PROCEDURE

1	CHECK VEHICLE CONDITION

(a) Check that conditions in the cabin are not likely to cause condensation.
HINT:
This problem occurs when the cabin is humid and the temperature changes rapidly. This may produce condensation, resulting in a short circuit.
OK:
Condensation is not likely to be produced.

NG → **DRY OUT CABIN AND RECHECK CONDITION**

OK

PROCEED TO NEXT CIRCUIT INSPECTION SHOWN IN PROBLEM SYMPTOMS TABLE

No Sound can be Heard from Speakers

INSPECTION PROCEDURE

1	CHECK RADIO RECEIVER

(a) Check radio receiver setting.
  (1) Check that the volume is not set to "0".
  (2) Check that "MUTE" is off.
  OK:
  The volume is not set to "0" and "MUTE" is off.

OK → **END**

NG

PROCEED TO NEXT CIRCUIT INSPECTION SHOWN IN PROBLEM SYMPTOMS TABLE

Sound Quality is Bad Only when CD is Played (Volume is Too Low)

INSPECTION PROCEDURE

1	REPLACE CD WITH ANOTHER AND RECHECK

(a) Replace the CD with another one and recheck.
(1) Check if the problem recurs using another CD.
OK:
Malfunction disappears.

NG → **REPLACE RADIO RECEIVER**

OK

END

Cassette Tape cannot be Ejected

INSPECTION PROCEDURE

1	CHECK OPERATION

(a) Press the cassette tape EJECT switch of the radio receiver for 2 seconds or more and check that the cassette tape is ejected.
OK:
Cassette tape is ejected.

NG → **REPLACE RADIO RECEIVER**

OK ↓

2	CHECK CASSETTE TAPE

(a) Check that the ejected cassette tape does not have a peeling label, cassette body deformation or other problems.
OK:
No problems with cassette tape.

NG → **CASSETTE TAPE IS FAULTY**

OK ↓

3	REPLACE CASSETTE TAPE WITH ANOTHER AND RECHECK

(a) Replace the cassette tape with a normal one and check that the malfunction disappears.
OK:
Malfunction disappears.

NG → **REPLACE RADIO RECEIVER**

OK ↓

CASSETTE TAPE IS FAULTY

Cassette Tape cannot be Inserted or Played

INSPECTION PROCEDURE

1 CHECK FOR ANY FOREIGN OBJECT

(a) Check that the cassette tape player is free of foreign objects.
OK:
No foreign objects.

NG → **REMOVE FOREIGN OBJECT**

OK ↓

2 CHECK CASSETTE TAPE

(a) Check that the cassette tape is a normal tape for recording sounds.
OK:
Cassette tape is normal.

NG → **CASSETTE TAPE IS FAULTY**

OK ↓

3 CHECK RADIO RECEIVER

(a) Replace the cassette tape with a normal one and check that the malfunction disappears.
OK:
Malfunction disappears.

NG → **REPLACE RADIO RECEIVER**

OK ↓

CASSETTE TAPE IS FAULTY

CD cannot be Ejected

INSPECTION PROCEDURE

1 **CHECK OPERATION**

(a) Press the CD EJECT switch of the radio receiver for 2 seconds or more and check that the CD is ejected.
OK:
CD is ejected.

NG → **REPLACE RADIO RECEIVER**

OK

2 **REPLACE CD WITH ANOTHER AND RECHECK**

(a) Insert another CD and check if it is ejected.
OK:
CD is ejected.

NG → **REPLACE RADIO RECEIVER**

OK

END

CD cannot be Inserted / Played or CD is Ejected Right After Insertion

INSPECTION PROCEDURE

1 CHECK IF A PROPER CD IS INSERTED

(a) Make sure that the CD is an audio CD or a CD with an MP3 or WMA file, and that it is not deformed, flawed, stained, burred, or otherwise defective.
OK:
Normal CD.
HINT:
- Translucent or uniquely-shaped CDs cannot be played.
- CDs with adhesive paper labels should not be played.
- Commercial audio CDs can be played.
- CD-DA files on CD-ROMs, CD-Rs, and CD-RWs can be played.
- MP3 and WMA files on CD-ROMs, CD-Rs, and CD-RWs can be played.
- For details on playable CDs, refer to the Owner's Manual.

NG → **CHANGE DISC**

OK

2 CHECK THAT CD IS INSERTED PROPERLY

(a) Check whether or not the CD is inserted upside down.
OK:
CD is properly inserted.

NG → **INSERT CD PROPERLY**

OK

3 CHECK CD

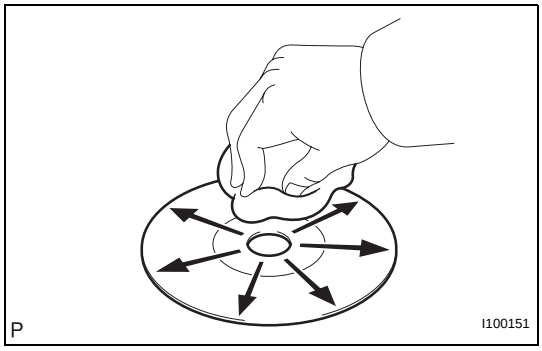

(a) Clean the disc by wiping it with a soft cloth from the inside to the outside in a radial direction.
OK:
Malfunction disappears.
NOTICE:
Do not use a conventional record cleaner or anti-static preservative.

NG → **Go to step 4**

AV

OK

END

4	**REPLACE CD WITH ANOTHER AND RECHECK**

(a) Replace the CD with a normal one and check that the malfunction disappears.
OK:
Malfunction disappears.

NG → **REPLACE RADIO RECEIVER**

OK

END

CD Sound Skips

INSPECTION PROCEDURE

1 CHECK CD

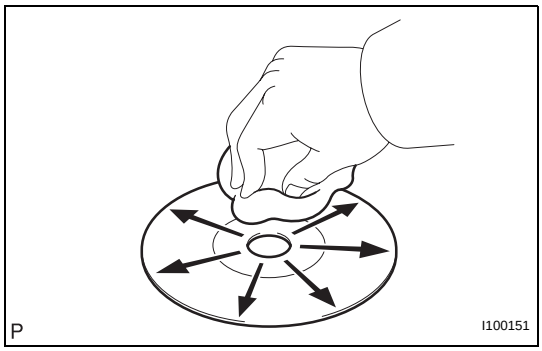

(a) Check the CD.
OK:
The CD is clean.
HINT:
If dirt is on the CD surface, wipe it clean with a soft cloth from the inside to the outside in a radial direction.
NOTICE:
Do not use a conventional record cleaner or anti-static preservative.

NG → **CLEAN CD**

OK

AV

2 CHECK CD

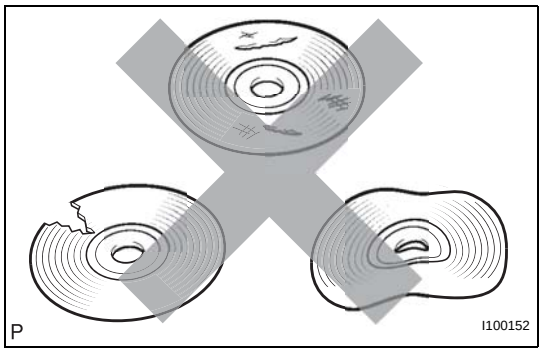

(a) Check that the CD is not deformed or cracked.
OK:
No deformation or cracks on the CD.

NG → **CHANGE DISC**

OK

3 CHECK OPERATION USING ANOTHER CD

(a) Check using another CD.
(1) Check if the problem recurs using another CD.
OK:
The problem does not occur.

OK → **END**

NG

4 CHECK RADIO RECEIVER

(a) Check the radio receiver installation condition.
(1) Check that the radio receiver is properly installed.
OK:
Radio receiver is properly installed.

NG → **REINSTALL RADIO RECEIVER PROPERLY**

OK

REPLACE RADIO RECEIVER

Radio Broadcast cannot be Received or Poor Reception

INSPECTION PROCEDURE

1 CHECK RADIO RECEIVER

(a) Check the radio's automatic station search function.
  (1) Move the vehicle to a location where radio wave reception is possible.
  (2) Check the radio's automatic station search function by activating it.
  OK:
  The radio's automatic station search function works properly.

OK → **REPLACE RADIO RECEIVER**

NG

2 INSPECT RADIO RECEIVER

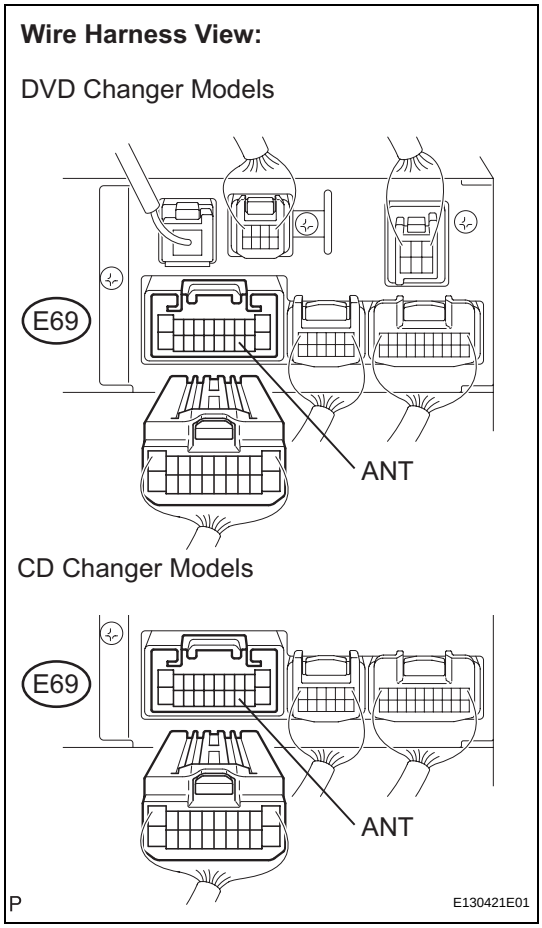

(a) Disconnect the radio receiver connector E69.
(b) Measure the voltage according to the value(s) in the table below.
Standard voltage

Tester Connection	Condition	Specified Condition
ANT - Body ground	Engine switch on (IG), Radio switch ON	10 to 14 V

NG → **REPLACE RADIO RECEIVER**

OK

3	CHECK OPTIONAL COMPONENTS

(a) Check optional components (sun-shade film, telephone antenna, etc.).
  (1) Check if any optional components, such as sun-shade film or telephone antenna that may decrease reception capacity, are installed.
  OK:
  Optional components are installed.
  NOTICE:
  Do not remove any optional components installed by the customer without his or her consent.

OK → **REMOVE OPTIONAL COMPONENTS AND CHECK AGAIN (SEE NOTICE ABOVE)**

NG

4	CHECK RADIO RECEIVER

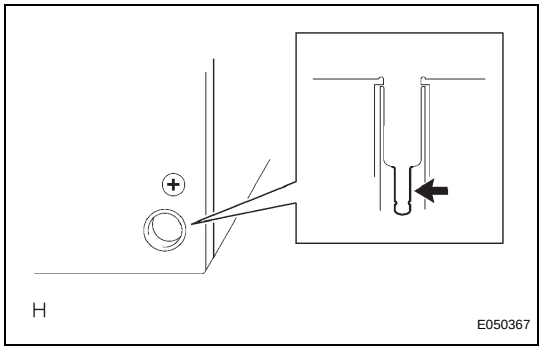

(a) Preparation for check
  (1) Remove the antenna plug from the radio receiver.
(b) Check for noise.
  (1) Turn the engine switch on (ACC) with the radio receiver connector connected.
  (2) Turn the radio on and put into AM mode.
  (3) Place a screwdriver, thin wire, or other metal object on the radio receiver's antenna jack and check that noise can be heard from the speaker.
  OK:
  Noise occurs.

NG → **REPLACE RADIO RECEIVER**

OK

AV

5	CHECK GLASS ANTENNA

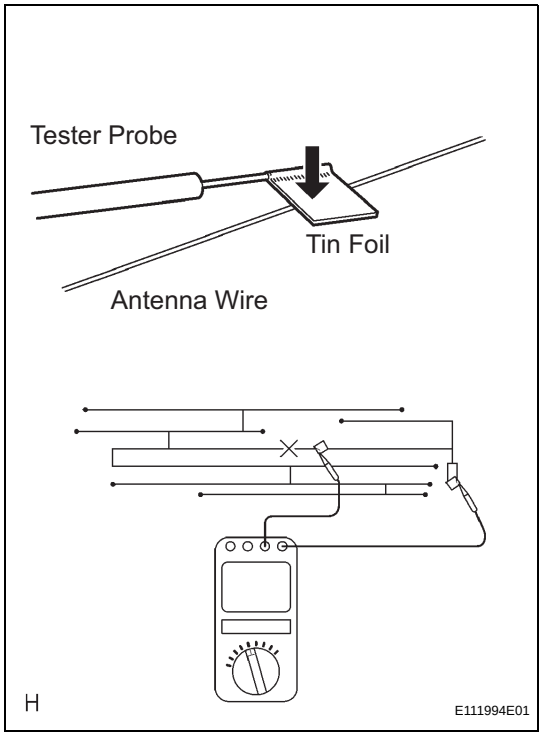

(a) Check for continuity of the antenna.
HINT:
Check for continuity at the center of each antenna wire as shown in the illustration.
NOTICE:
When cleaning the glass, wipe it in the direction of the wire with a soft dry cloth. Take care not to damage the wire. Do not use detergents or glass cleaners with abrasive ingredients. When measuring voltage, wrap a piece of tin foil around the tip of the negative probe and press the foil against the wire with your finger, as shown in the illustration.
OK:
There is continuity in the antenna.

NG → **REPAIR GLASS ANTENNA**

OK

6	CHECK ANTENNA CORD

(a) Remove the antenna plug of the radio receiver and antenna.
(b) Measure the resistance between the antenna cord's inner conductor and radio receiver to check for an open circuit in the antenna cord.
Standard resistance:
Below 1 Ω
(c) Measure the resistance between the antenna cord's inner conductor and body ground to check for a short circuit in the antenna cord.
Standard resistance:
10 kΩ or higher

NG → **REPLACE ANTENNA CORD**

OK

7	REPLACE AMPLIFIER ANTENNA

(a) Replace the amplifier antenna and check if radio broadcasts can be received normally.
OK:
Radio broadcasts can be received.

OK → **END**

NG

REPLACE RADIO RECEIVER

Sound Quality is Bad Only when Playing Tape

INSPECTION PROCEDURE

1 REPLACE CASSETTE TAPE WITH ANOTHER AND RECHECK

(a) Replace the cassette tape with another one and recheck.
  (1) Replace the cassette tape with another normal one to check if the same trouble occurs again.
  OK:
  Malfunction disappears.

OK → **CASSETTE TAPE IS FAULTY**

NG

2 CHECK FOR ANY FOREIGN OBJECT

(a) Check for foreign objects.
  (1) Check that there are no foreign objects or defects in the cassette tape player.
  OK:
  No foreign objects or defects.

NG → **REMOVE FOREIGN OBJECT**

OK

3 CLEAN HEAD AND CHECK OPERATION

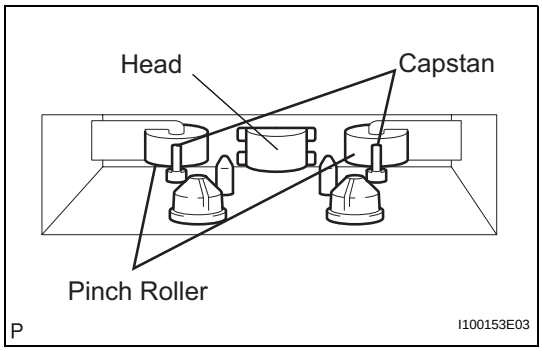

(a) Head cleaning
  (1) Raise the cassette door with your finger. Using a pencil or similar object, push in the guide.
  (2) Using a cleaning pen or cotton applicator soaked in cleaner, clean the head surface, pinch rollers and capstans.
  (3) Check if the same trouble occurs again.
  OK:
  Malfunction disappears.

NG → **REPLACE RADIO RECEIVER**

OK

HEAD IS DIRTY

Tape is Tangled due to Incorrect Tape Speed or Auto-Reverse Malfunction

INSPECTION PROCEDURE

1 CHECK FOR ANY FOREIGN OBJECT

(a) Check for any foreign objects.
(1) Check that there are no foreign objects or defects in the cassette tape player of the radio receiver.
OK:
No foreign objects or defects.

NG → **REMOVE FOREIGN OBJECT**

OK

2 REPLACE CASSETTE TAPE WITH ANOTHER (90 MIN. OR LESS) AND RECHECK

(a) Check the cassette tape player using a normal cassette tape.
(1) Replace the cassette tape with another normal one (90 minutes or less) to see if the same trouble occurs again.
OK:
Malfunction disappears.

OK → **CASSETTE TAPE IS FAULTY**

NG

3 CLEAN HEAD AND CHECK OPERATION

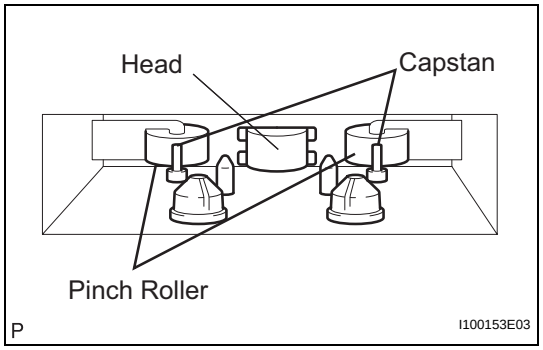

(a) Head cleaning
(1) Raise the cassette door with your finger. Using a pencil or similar object, push in the guide.
(2) Using a cleaning pen or cotton applicator soaked in cleaner, clean the head surface, pinch rollers and capstans.
(3) Check if the same trouble occurs again.
OK:
Malfunction disappears.

NG → **REPLACE RADIO RECEIVER**

OK

HEAD IS DIRTY

AV

Poor Sound Quality in All Modes (Low Volume)

INSPECTION PROCEDURE

1	CHECK AUDIO SETTINGS

(a) Set "BASS", "MID", and "TREB" to the initial values and check that sound is normal.
OK:
Malfunction disappears.

OK → **END**

NG

2	COMPARE WITH ANOTHER VEHICLE OF SAME MODEL

(a) Compare with another vehicle of the same model.
(1) Compare with another vehicle of the same model which does not have trouble to see if there is any difference in the sound quality.
OK:
No difference is found.

OK → **END**

NG

PROCEED TO NEXT CIRCUIT INSPECTION SHOWN IN PROBLEM SYMPTOMS TABLE

Cellular Phone Registration Failure, Phone Directory Transfer Failure

INSPECTION PROCEDURE

1 CHECK CURRENT CONDITIONS

(a) Proceed to the next step according to the table below.

Result

Conditions	Proceed to
Another "Bluetooth" compatible cellular phone is present.	A
Another "Bluetooth" compatible vehicle is present.	B
None of the above	C

B → **Go to step 3**

C → **Go to step 4**

A

2 CHECK USING ANOTHER CELLULAR PHONE

(a) Check if the system functions using another "Bluetooth" compatible cellular phone.
HINT:
- Confirm that either the same or a different version of another "Bluetooth" compatible cellular phone complies with the system.
- Depending on the version, some "Bluetooth" compatible cellular phones cannot be used.

OK:
The system functions.

NG → **REPLACE RADIO RECEIVER**

OK

USE A "BLUETOOTH" COMPATIBLE CELLULAR PHONE

3 CHECK USING ANOTHER "BLUETOOTH" COMPATIBLE VEHICLE

(a) Register the cellular phone with another vehicle and check if the system functions normally.
HINT:
Depending on the version, some "Bluetooth" compatible cellular phones cannot be used.

OK:
The system functions.

OK → **REPLACE RADIO RECEIVER**

NG

USE A "BLUETOOTH" COMPATIBLE CELLULAR PHONE

4	CHECK CELLULAR PHONE

(a) Check if the cellular phone is "Bluetooth" compatible.
HINT:
Some versions of "Bluetooth" compatible cellular phones may not function.
OK:
The phone is "Bluetooth" compatible.

NG → **USE A "BLUETOOTH" COMPATIBLE CELLULAR PHONE**

OK

5	CHECK CELLULAR PHONE

(a) Check if a call can be made from the cellular phone.
HINT:
When the battery is low, registration or directory transfer cannot be done.
OK:
A call can be made from the cellular phone.

NG → **REPAIR OR REPLACE CELLULAR PHONE**

OK

REPLACE RADIO RECEIVER

Cellular Phone cannot Send / Receive

INSPECTION PROCEDURE

1	CHECK "BLUETOOTH" SETTINGS

(a) Check if the "Bluetooth" settings are correct.
OK:
"Bluetooth" settings are correct.

NG → **SET SETTINGS CORRECTLY**

OK ↓

2	CHECK CELLULAR PHONE

(a) Check if the cellular phone is "Bluetooth" compatible.
HINT:
Some versions of "Bluetooth" compatible cellular phones may not function.
OK:
Phone is "Bluetooth" compatible.

NG → **END (ONLY A "BLUETOOTH" COMPATIBLE CELLULAR PHONE CAN BE USED)**

OK ↓

3	CHECK SETTINGS

(a) Check if the cellular phone functions.
HINT:
The cellular phone is unable to call under any of the following conditions.
- The cellular phone is locked.
- The directory is being transferred.
- The line is crossed.
- Transmission is regulated.
- The power is off.
- The cellular phone is not connected to "Bluetooth" ("BT" is displayed while connected).

OK:
None of the above conditions exist.

NG → **SET CORRECTLY**

OK ↓

4	CHECK CELLULAR PHONE

(a) Check if the cellular phone can make a call.

AV

HINT:
When the battery is low, calls cannot be made or received.
OK:
Cellular phone can make a call.

NG → **REPAIR OR REPLACE CELLULAR PHONE**

OK

5	CHECK RECEPTION

(a) Set the cellular phone so that it can receive calls.
(b) Place the cellular phone close to the radio receiver.
(c) Check if the cellular phone has reception according to the radio receiver.
OK:
Cellular phone has reception.

NG → **REPLACE RADIO RECEIVER**

OK

PROCEED TO NEXT CIRCUIT INSPECTION SHOWN IN PROBLEM SYMPTOMS TABLE

The Other Caller's Voice cannot be Heard, is too Quiet, or Distorted

INSPECTION PROCEDURE

1 CHECK CELLULAR PHONE

(a) Check if the voice on the other side can be heard using a cellular phone.
OK:
Voice can be heard.

NG → **REPAIR OR REPLACE CELLULAR PHONE**

OK ↓

2 CHECK AUDIO AND VISUAL SYSTEM

(a) Check that audio sound can be heard from the driver side speaker.
OK:
Audio sound can be heard.
HINT:
If audio sound cannot be heard, proceed to "No sound can be heard from speakers. (Audio is mute.)" in the PROBLEM SYMPTOMS TABLE (See page AV-14).

NG → **PROCEED TO NEXT CIRCUIT INSPECTION SHOWN IN PROBLEM SYMPTOMS TABLE**

OK ↓

3 CHECK SETTINGS

(a) Check that the received voice level setting on the cellular phone is not too low.
OK:
The received voice level setting is not too low.

NG → **SET VOLUME TO HIGH**

OK ↓

PROCEED TO NEXT CIRCUIT INSPECTION SHOWN IN PROBLEM SYMPTOMS TABLE

The Other Caller cannot Hear Your Voice, or Your Voice is too Quiet or Distorted

INSPECTION PROCEDURE

1	CHECK CELLULAR PHONE

(a) Check if the other side can hear your voice properly.
OK:
Your voice can be heard correctly.

NG → **REPLACE CELLULAR PHONE**

OK ↓

2	CHECK SETTINGS

(a) Check if the mute is set to ON.
OK:
Mute is not set to ON.

NG → **TURN MUTE OFF**

OK ↓

PROCEED TO NEXT CIRCUIT INSPECTION SHOWN IN PROBLEM SYMPTOMS TABLE

Steering Pad Switch Circuit

DESCRIPTION

This circuit sends an operation signal from the steering pad switch to the radio receiver.
If there is an open in the circuit, the audio system cannot be operated using the steering pad switch.
If there is a short in the circuit, the same condition as that when the switch is continuously depressed occurs.
Therefore, the radio receiver cannot be operated using the steering pad switch, and also the radio receiver itself cannot function.

WIRING DIAGRAM

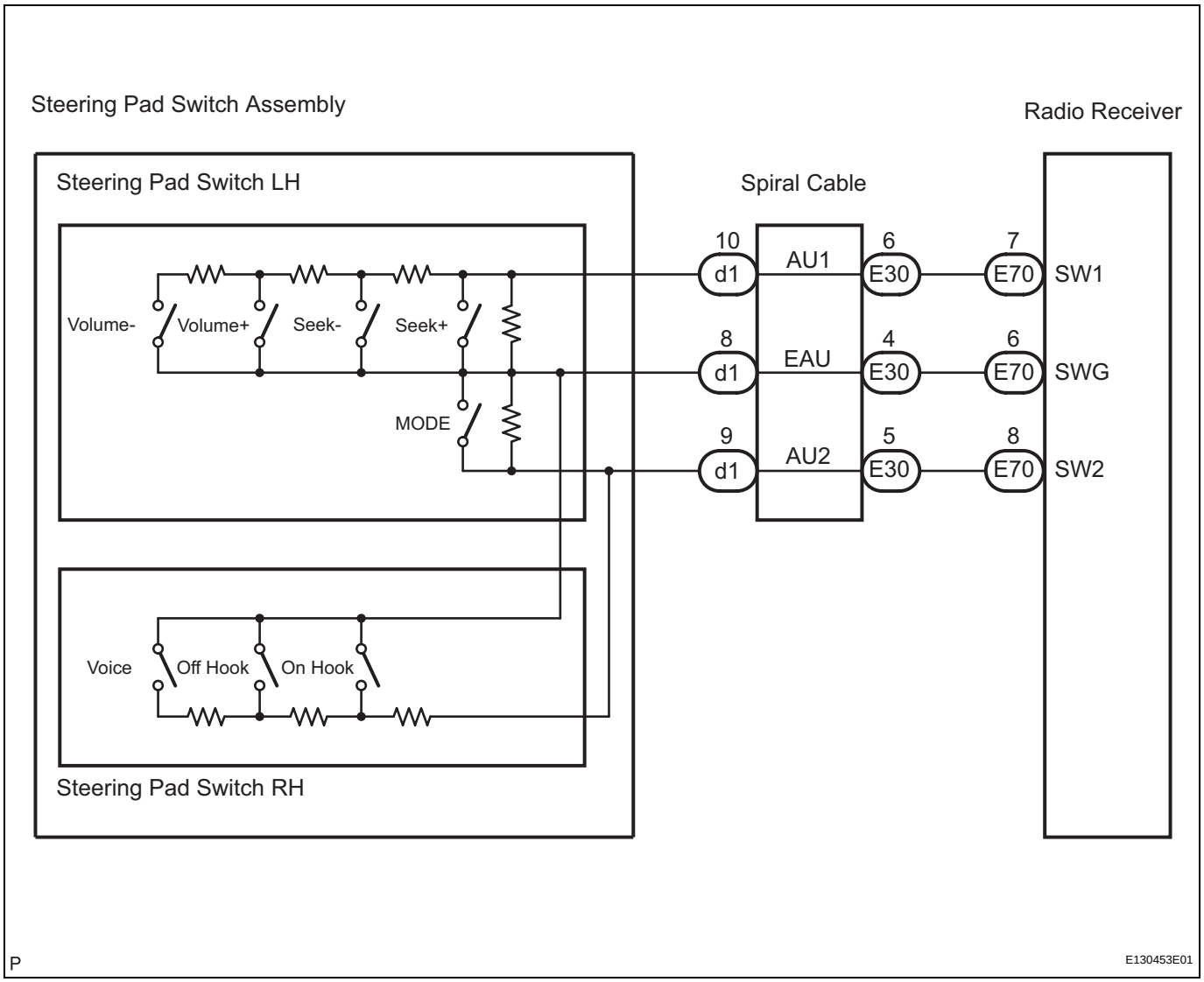

INSPECTION PROCEDURE

NOTICE:

The vehicle is equipped with an SRS (Supplemental Restraint System) which includes components such as airbags. Before servicing (including removal or installation of parts), be sure to read the precautionary notice for the Supplemental Restraint System (See page RS-1).

AV

1 INSPECT RADIO RECEIVER

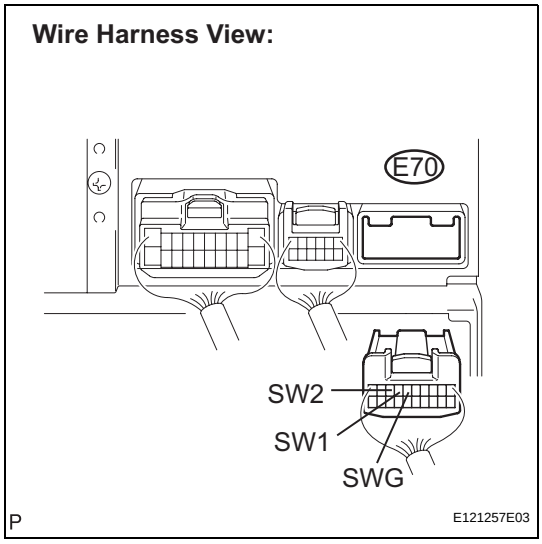

(a) Disconnect the radio receiver connector E70.
(b) Measure the resistance according to the value(s) in the table below.

Standard resistance

Tester Connection	Condition	Specified Condition
SW1 - SWG	No switch is pushed	Approx. 100 kΩ
SW1 - SWG	SEEK+ switch: push	0 to 2.5 Ω
SW1 - SWG	SEEK- switch: push	Approx. 0.3 kΩ
SW1 - SWG	VOL+ switch: push	Approx. 1 kΩ
SW1 - SWG	VOL- switch: push	Approx. 3.1 kΩ
SW2 - SWG	No switch is pushed	Approx. 100 kΩ
SW2 - SWG	MODE switch: push	0 to 2.5 Ω
SW2 - SWG	ON HOOK switch: push	Approx. 0.3 kΩ
SW2 - SWG	OFF HOOK switch: push	Approx. 1 kΩ

NG → **Go to step 2**

AV

OK

PROCEED TO NEXT CIRCUIT INSPECTION SHOWN IN PROBLEM SYMPTOMS TABLE

2 INSPECT STEERING PAD SWITCH ASSEMBLY

(a) Disconnect the steering pad switch assembly connector d1.

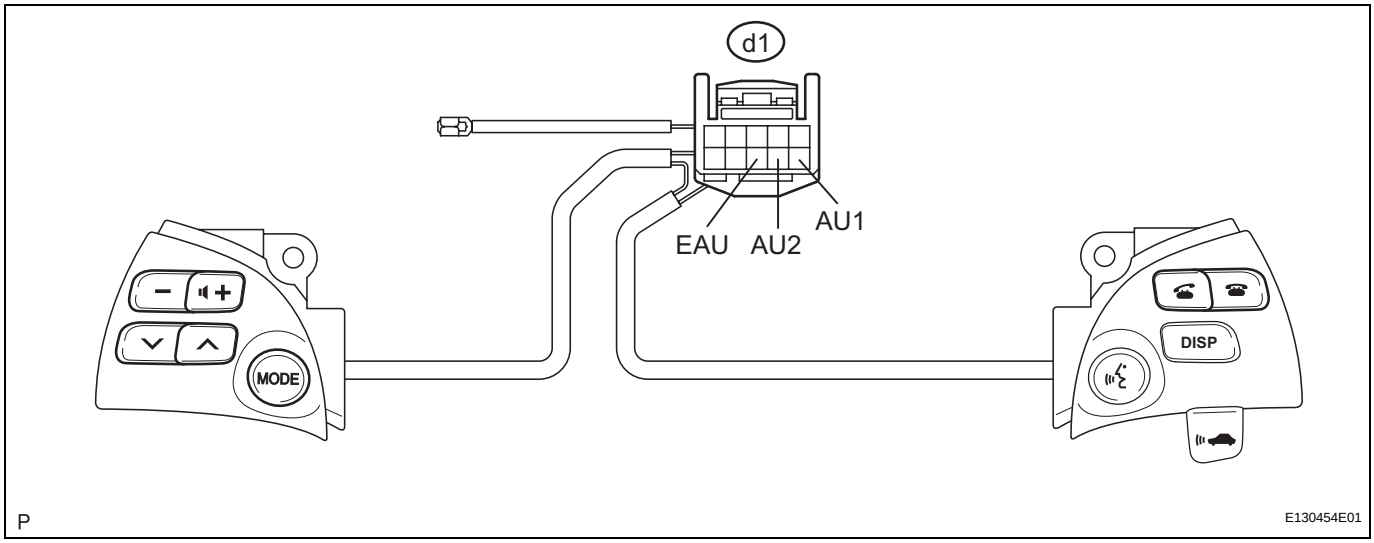

(b) Measure the resistance according to the values in the table below.

Standard resistance

Tester Connection	Condition	Specified Condition
AU1 - EAU	No switch is pushed	Approx. 100 kΩ
AU1 - EAU	SEEK+ switch: push	0 to 2.5 Ω

Tester Connection	Condition	Specified Condition
AU1 - EAU	SEEK- switch: push	Approx. 0.3 kΩ
AU1 - EAU	VOL+ switch: push	Approx. 1 kΩ
AU1 - EAU	VOL- switch: push	Approx. 3.1 kΩ
AU2 - EAU	No switch is pushed	Approx. 100 kΩ
AU2 - EAU	MODE switch: push	0 to 2.5 Ω
AU2 - EAU	ON HOOK switch: push	Approx. 0.3 kΩ
AU2 - EAU	OFF HOOK switch: push	Approx. 1 kΩ

NG → **REPLACE STEERING PAD SWITCH ASSEMBLY**

OK

3 INSPECT SPIRAL CABLE

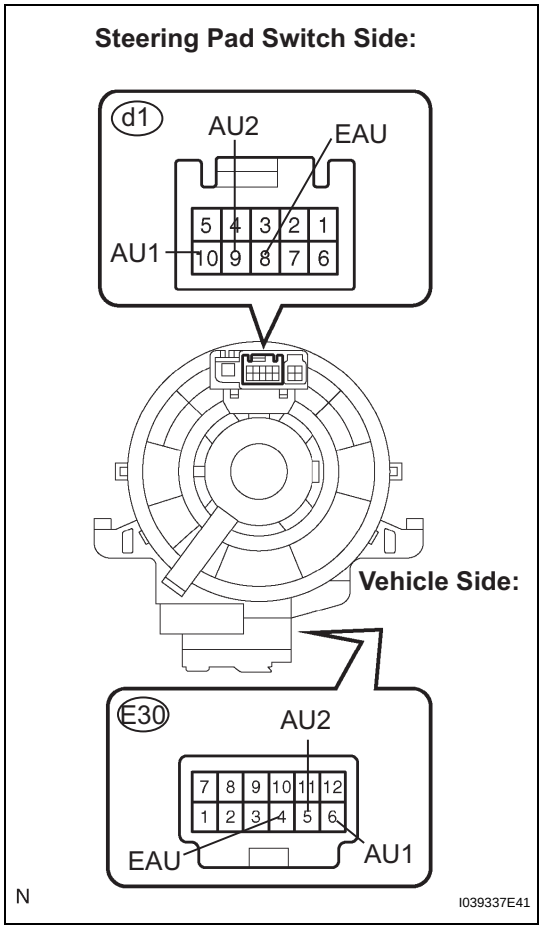

(a) Disconnect the steering pad switch assembly and spiral cable connectors.

(b) Measure the resistance according to the value(s) in the table below.

Standard resistance

Tester Connection	Spiral Cable Position	Specified Condition
EAU - EAU	Center	Below 1 Ω
	2.5 rotations to the left	
	2.5 rotations to the right	
AU1 - AU1	Center	Below 1 Ω
	2.5 rotations to the left	
	2.5 rotations to the right	
AU2 - AU2	Center	Below 1 Ω
	2.5 rotations to the left	
	2.5 rotations to the right	

NOTICE:
The spiral cable is an important part of the SRS airbag system. Incorrect removal or installation of the spiral cable may prevent the airbag from deploying. Be sure to read the page shown in the brackets.

HINT:
- Removal (See page RS-379)
- Installation (See page RS-382)

NG → **REPLACE SPIRAL CABLE**

OK

REPAIR OR REPLACE HARNESS OR CONNECTOR (SPIRAL CABLE - RADIO RECEIVER)

AV

Illumination Circuit

DESCRIPTION

Power is supplied to the radio receiver and steering pad switch assembly illumination when the light control switch is in the TAIL or HEAD position.

WIRING DIAGRAM

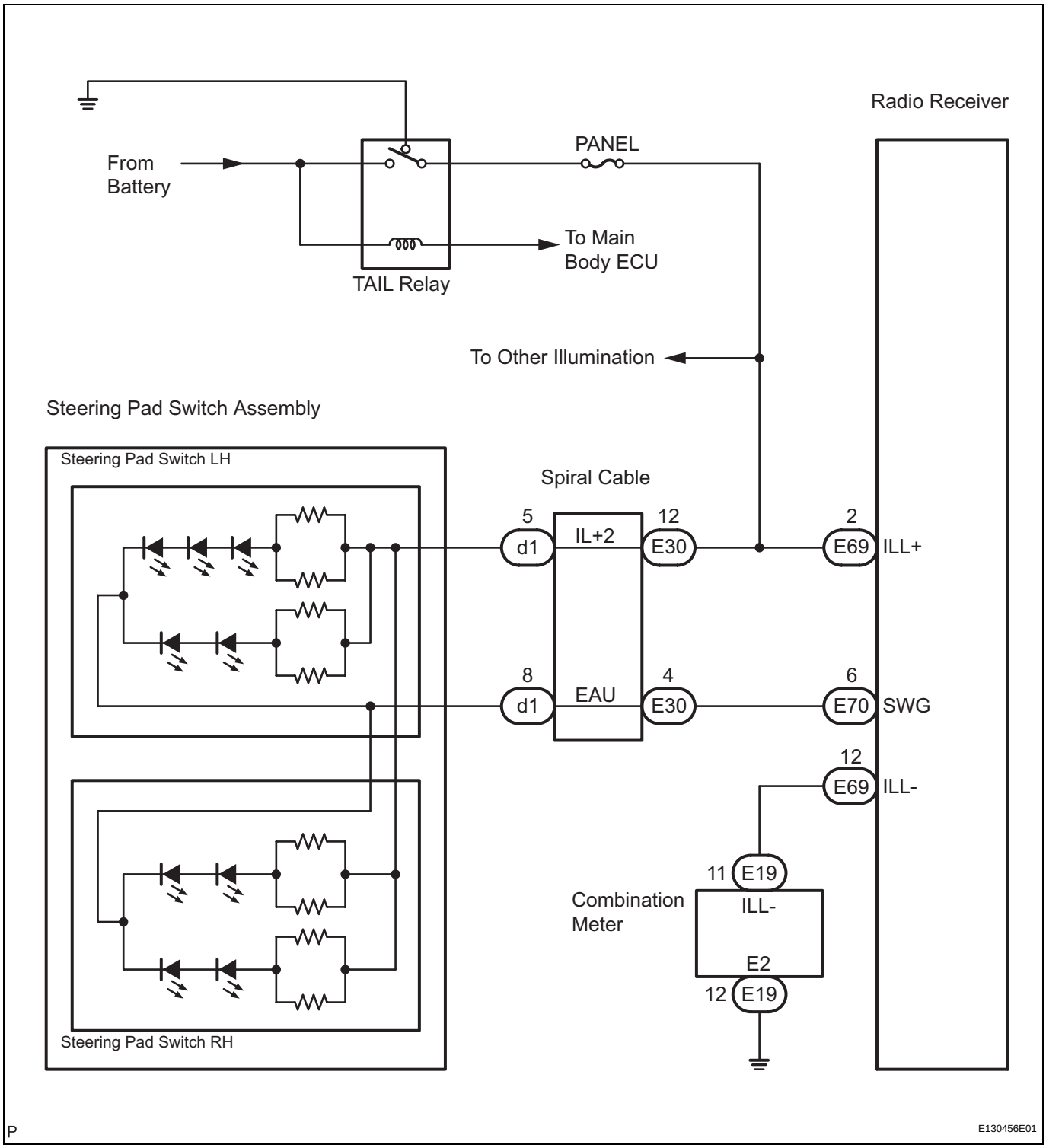

AV

INSPECTION PROCEDURE

NOTICE:

The vehicle is equipped with an SRS (Supplemental Restraint System) which includes components such as airbags. Before servicing (including removal or installation of parts), be sure to read the precautionary notice for the supplemental restraint system (See page RS-1).

1 CHECK ILLUMINATION

(a) Check if the illumination for the radio receiver, steering pad switch, cigarette lighter or others (seat heater switch, hazard switch, etc.) comes on when the light control switch is turned to the HEAD or TAIL position.

Result

Result	Proceed to
Illumination comes on for all components except steering pad switch.	A
Illumination comes on for all components except radio receiver.	B
No illumination comes on (radio receiver, hazard switch, cigarette lighter, etc.).	C
Illumination comes on only for glove box light and steering pad switch.	D

B → **Go to step 6**

C → **GO TO LIGHTING SYSTEM (See page LI-28)**

D → **GO TO METER / GAUGE SYSTEM (See page ME-14)**

A

2 CHECK HARNESS AND CONNECTOR (BATTERY - SPIRAL CABLE)

Spiral Cable Connector Front View:

(a) Disconnect the spiral cable connector.

(b) Measure the voltage according to the value(s) in the table below.

Standard voltage

Tester Connection	Condition	Specified Condition
IL+2 - Body ground	Light control switch TAIL or HEAD	10 to 14 V

NG → **REPAIR OR REPLACE HARNESS OR CONNECTOR**

OK

3 INSPECT STEERING PAD SWITCH ASSEMBLY

(a) Disconnect the steering pad switch assembly connector.

(b) Connect the positive (+) lead to terminal IL+2 and the negative (-) lead to terminal EAU of the steering pad switch assembly connector.

AV

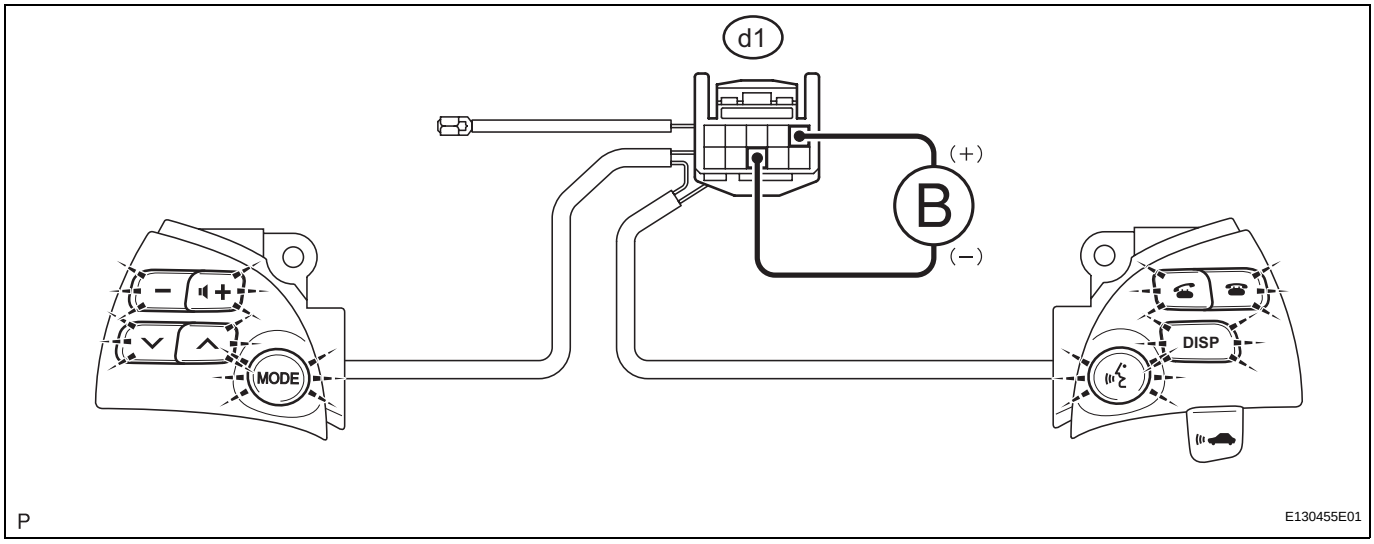

(c) Check if the illumination for the steering pad switch assembly comes on.

OK:

Illumination for the steering pad switch assembly comes on.

NG → **REPLACE STEERING PAD SWITCH ASSEMBLY**

OK

4 INSPECT SPIRAL CABLE

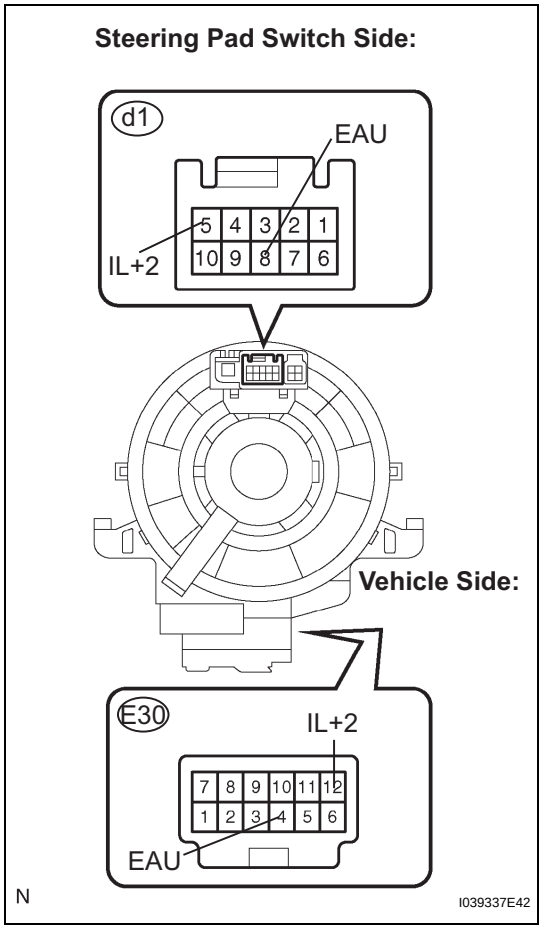

(a) Disconnect the steering pad switch assembly and spiral cable connectors.

(b) Measure the resistance according to the value(s) in the table below.

Standard resistance

Tester Connection	Spiral Cable Position	Specified Condition
EAU - EAU	Center	Below 1 Ω
	2.5 rotations to the left	
	2.5 rotations to the right	
IL+2 - IL+2	Center	Below 1 Ω
	2.5 rotations to the left	
	2.5 rotations to the right	

NOTICE:
The spiral cable is an important part of the SRS airbag system. Incorrect removal or installation of the spiral cable may prevent the airbag from deploying. Be sure to read the page shown in the brackets.

HINT:
- Removal (See page RS-379)
- Installation (See page RS-382)

NG → **REPLACE SPIRAL CABLE**

OK

AV

5	CHECK HARNESS AND CONNECTOR (SPIRAL CABLE - RADIO RECEIVER)

Radio Receiver Wire Harness View:

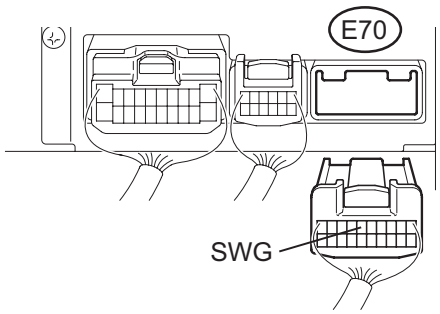

Spiral Cable Connector Front View:

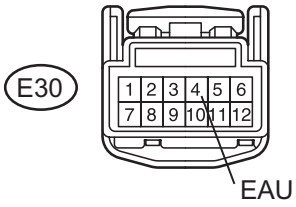

P E130422E01

(a) Disconnect the connectors from the radio receiver and spiral cable.

(b) Measure the resistance according to the value(s) in the table below.

Standard resistance

Tester Connection	Condition	Specified Condition
SWG - EAU	Always	Below 1 Ω
SWG - Body ground	Always	10 kΩ or higher

NG → **REPAIR OR REPLACE HARNESS OR CONNECTOR**

OK

REPLACE RADIO RECEIVER

AV

6 CHECK HARNESS AND CONNECTOR (BATTERY - RADIO RECEIVER)

Wire Harness View:

DVD Changer Models

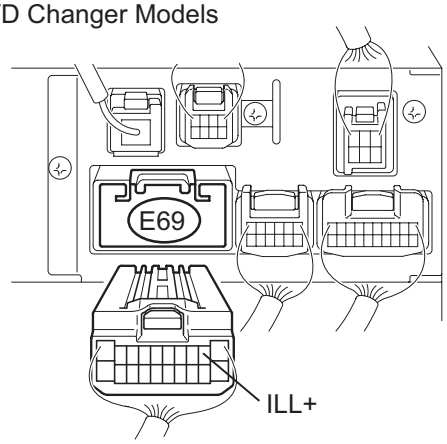

CD Changer Models

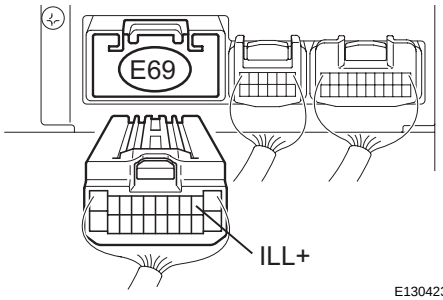

P E130423E01

(a) Disconnect the radio receiver connector E69.

(b) Measure the voltage according to the value(s) in the table below.

Standard voltage

Tester Connection	Condition	Specified Condition
ILL+ - Body ground	Light control switch TAIL or HEAD	10 to 14 V

NG → **REPAIR OR REPLACE HARNESS OR CONNECTOR**

OK

AV

7	CHECK HARNESS AND CONNECTOR (RADIO RECEIVER - COMBINATION METER)

Wire Harness View:

Radio Receiver (DVD Changer Models)

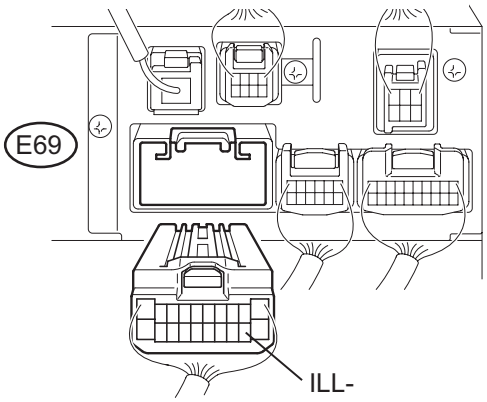

Radio Receiver (CD Changer Models)

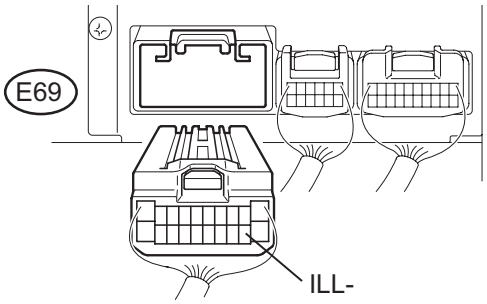

Combination Meter

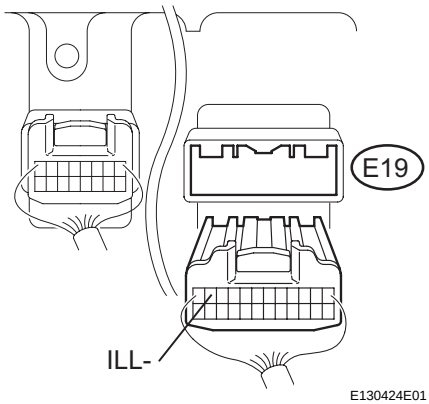

P E130424E01

(a) Disconnect the radio receiver connector and combination meter connector.

(b) Measure the resistance according to the value(s) in the table below.

Standard resistance

Tester Connection	Condition	Specified Condition
ILL- - ILL-	Always	Below 1 Ω
ILL- - Body ground	Always	10 kΩ or higher

NG → **REPAIR OR REPLACE HARNESS OR CONNECTOR**

OK

REPLACE RADIO RECEIVER

AV

Speaker Circuit

DESCRIPTION

The sound signal that has been amplified by the stereo component amplifier is sent to the speakers from the stereo component amplifier through this circuit.
If there is a short in this circuit, the stereo component amplifier detects it and stops output to the speakers. Thus, sound cannot be heard from the speakers even if there is no malfunction in the stereo component amplifier or speakers.

WIRING DIAGRAM

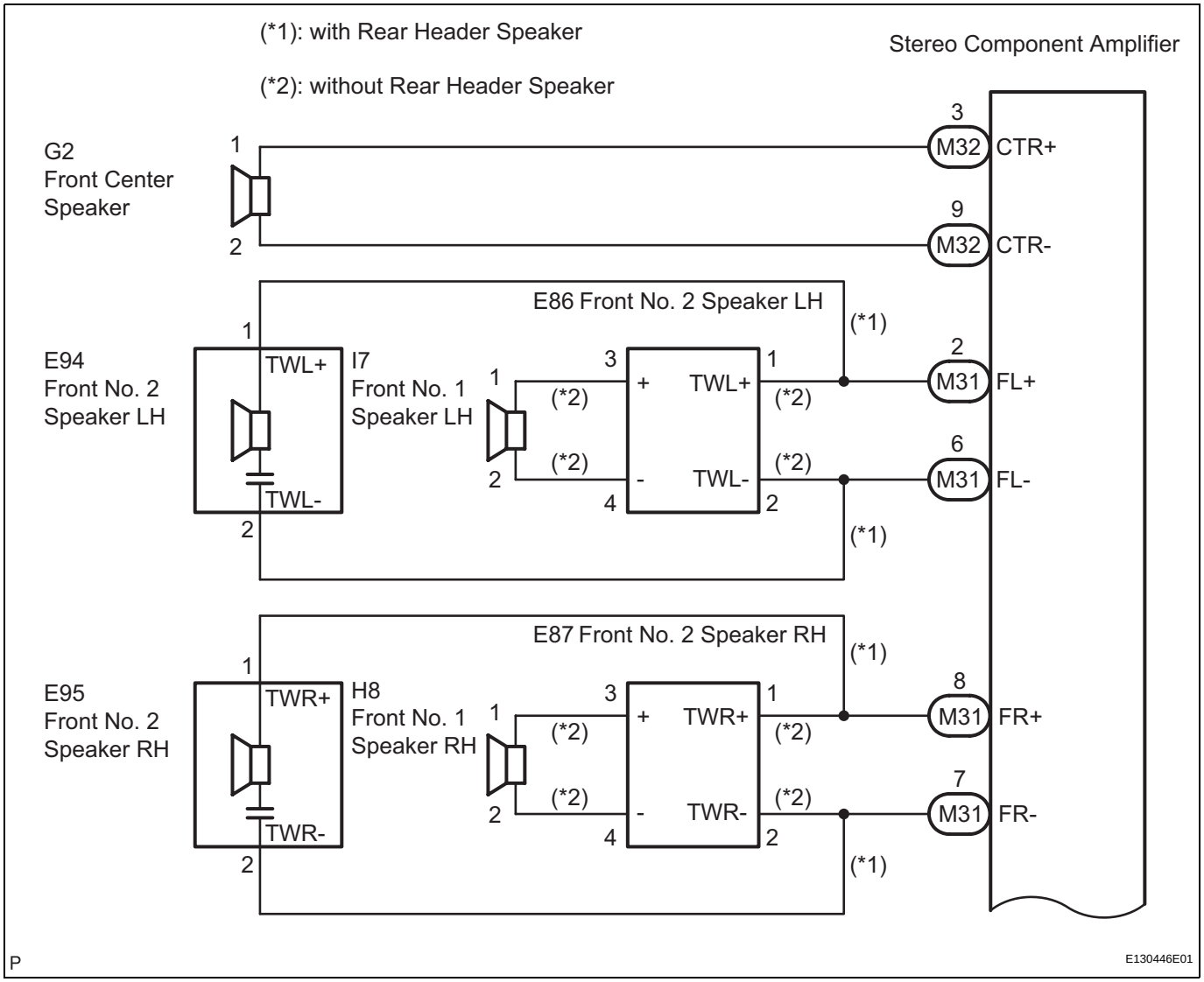

AV

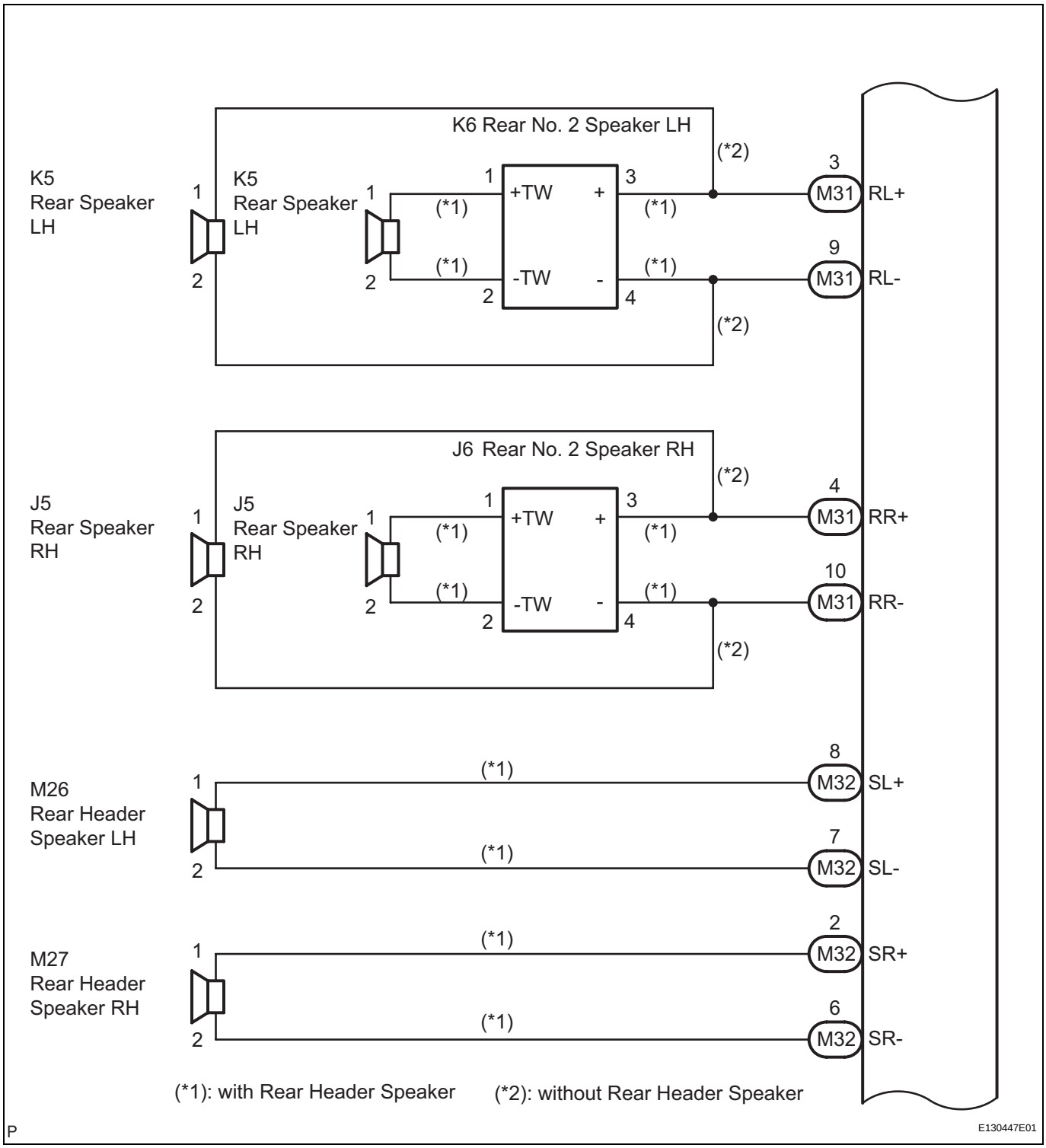
K6 Rear No. 2 Speaker LH
K5
Rear Speaker
LH
K5
Rear Speaker
LH
+TW
-TW
(*1)
(*2)
M31
RL+
RL-
J6 Rear No. 2 Speaker RH
J5
Rear Speaker
RH
J5
Rear Speaker
RH
RR+
RR-
M26
Rear Header
Speaker LH
M27
Rear Header
Speaker RH
M32
SL+
SL-
SR+
SR-
(*1): with Rear Header Speaker
(*2): without Rear Header Speaker
P
E130447E01

AV

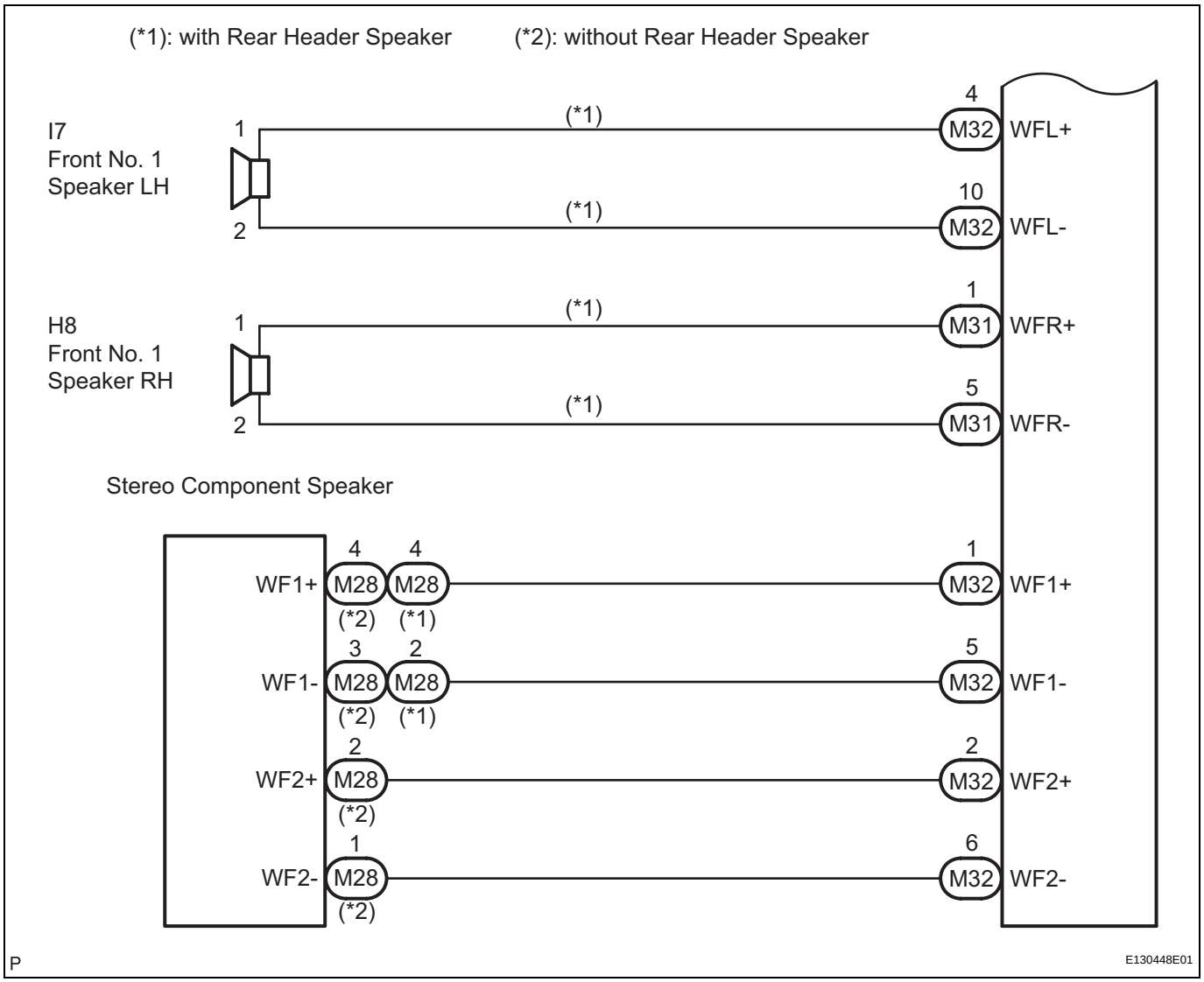
(*1): with Rear Header Speaker
(*2): without Rear Header Speaker
I7
Front No. 1
Speaker LH
1
2
(*1)
(*1)
4
M32
WFL+
10
M32
WFL-
H8
Front No. 1
Speaker RH
1
2
(*1)
(*1)
1
M31
WFR+
5
M31
WFR-
Stereo Component Speaker
WF1+
WF1-
WF2+
WF2-
4
4
3
2
2
1
M28
(*2)
(*1)
1
5
2
6
M32
WF1+
WF1-
WF2+
WF2-
P
E130448E01

AV

INSPECTION PROCEDURE

1	CHECK HARNESS AND CONNECTOR

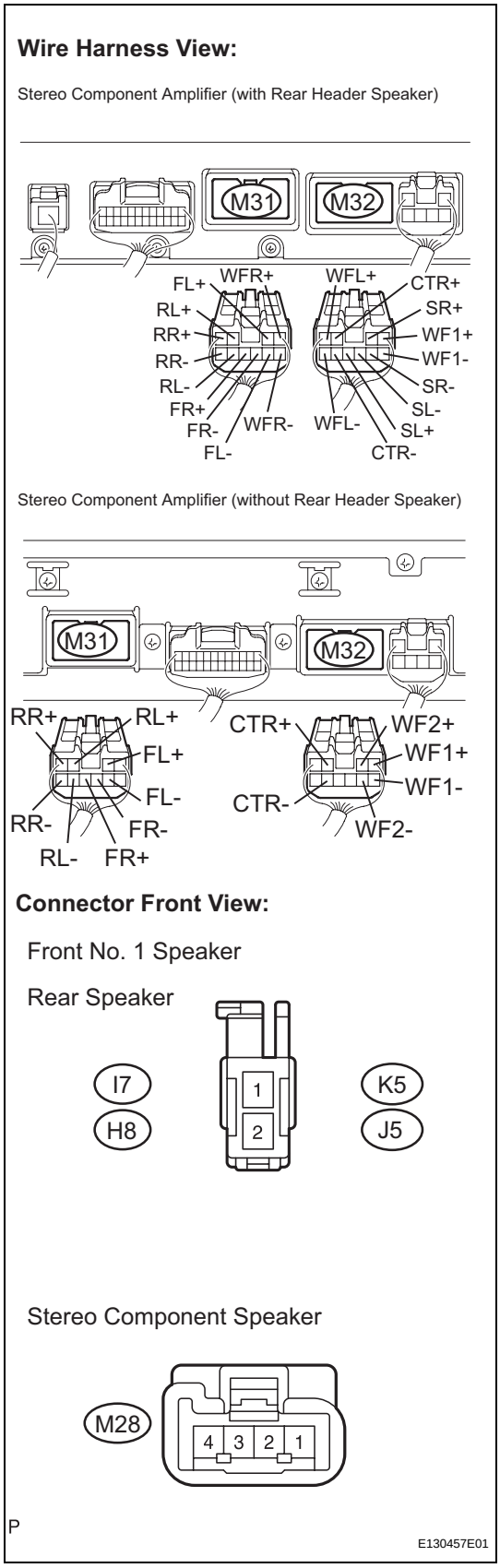

(a) Disconnect the connectors shown in the illustration from the stereo component amplifier and speakers.

(b) Measure the resistance between the front center speaker and the stereo component amplifier to check for an open circuit in the wire harness.
Standard resistance:
Below 1 Ω

(c) Measure the resistance between the front No. 2 speakers and stereo component amplifier to check for an open circuit in the wire harness.
Standard resistance:
Below 1 Ω

(d) without Rear Header Speaker:
Measure the resistance between the front No. 2 speakers and front No. 1 speakers to check for an open circuit in the wire harness.
Standard resistance:
Below 1 Ω

(e) without Rear Header Speaker:
Measure the resistance between the rear speakers and stereo component amplifier to check for an open circuit in the wire harness.
Standard resistance:
Below 1 Ω

(f) with Rear Header Speaker:
Measure the resistance between the rear No. 2 speakers and stereo component amplifier to check for an open circuit in the wire harness.
Standard resistance:
Below 1 Ω

AV

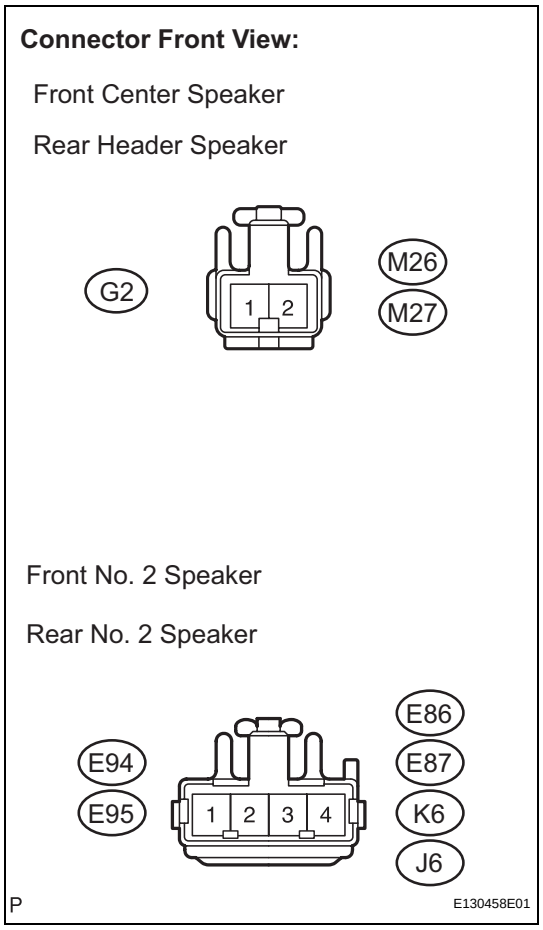

(g) with Rear Header Speaker:
Measure the resistance between the rear No. 2 speakers and rear speakers to check for an open circuit in the wire harness.
Standard resistance:
Below 1 Ω

(h) with Rear Header Speaker:
Measure the resistance between the rear header speakers and stereo component amplifier to check for an open circuit in the wire harness.
Standard resistance:
Below 1 Ω

(i) with Rear Header Speaker:
Measure the resistance between the front No. 1 speakers and stereo component amplifier to check for an open circuit in the wire harness.
Standard resistance:
Below 1 Ω

(j) Measure the resistance between the stereo component speaker and stereo component amplifier to check for an open circuit in the wire harness.
Standard resistance:
Below 1 Ω

NG → **REPAIR OR REPLACE HARNESS OR CONNECTOR**

OK

2 CONFIRM MODEL

Result

Result	Proceed to
with Rear Header Speaker	A
without Rear Header Speaker	B

B → **Go to step 10**

A

3 INSPECT FRONT CENTER SPEAKER

(a) Resistance check.
(1) Measure the resistance between the terminals of the speaker.
Standard resistance:
Approximately 8 Ω

NG → **REPLACE FRONT CENTER SPEAKER**

OK

AV

4	**INSPECT FRONT NO. 1 SPEAKER**

(a) Resistance check.
(1) Measure the resistance between the terminals of the speaker.
Standard resistance:
Approximately 8 Ω

NG → **REPLACE FRONT NO. 1 SPEAKER**

OK

5	**INSPECT FRONT NO. 2 SPEAKER**

(a) Check that the malfunction disappears when another speaker in good condition is installed.
OK:
Malfunction disappears.
HINT:
- Connect all the connectors to the front No. 2 speaker.
- When there is a possibility that either the right or left front speaker is detective, inspect by interchanging the right one with the left one.
- Perform the above inspection on both LH and RH sides.

NG → **REPLACE FRONT NO. 2 SPEAKER**

OK

6	**INSPECT REAR SPEAKER**

(a) Resistance check.
(1) Measure the resistance between the terminals of the speaker.
Standard resistance:
Approximately 8 Ω

NG → **REPLACE REAR SPEAKER**

OK

7	**INSPECT REAR NO. 2 SPEAKER**

(a) Check that the malfunction disappears when another speaker in good condition is installed.
OK:
Malfunction disappears.
HINT:
- Connect all the connectors to the rear No. 2 speaker.

- When there is a possibility that either the right or left rear speaker is detective, inspect by interchanging the right one with the left one.
- Perform the above inspection on both LH and RH sides.

NG → **REPLACE REAR NO. 2 SPEAKER**

OK

8 INSPECT REAR HEADER SPEAKER

(a) Resistance check.
(1) Measure the resistance between the terminals of the speaker.
Standard resistance:
Approximately 8 Ω

NG → **REPLACE REAR HEADER SPEAKER**

OK

9 INSPECT STEREO COMPONENT SPEAKER

Connector Front View:

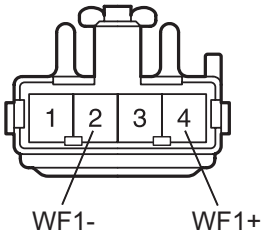

(a) Resistance check.
(1) Measure the resistance between the terminals of the speaker.
Standard resistance

Tester Connection	Condition	Specified Condition
WF1+ - WF1-	Always	Approximately 8 Ω

NG → **REPLACE STEREO COMPONENT SPEAKER**

OK

PROCEED TO NEXT CIRCUIT INSPECTION SHOWN IN PROBLEM SYMPTOMS TABLE

10 INSPECT FRONT CENTER SPEAKER

(a) Resistance check.
(1) Measure the resistance between the terminals of the speaker.
Standard resistance:
Approximately 10 Ω

NG → **REPLACE FRONT CENTER SPEAKER**

OK

11	INSPECT FRONT NO. 1 SPEAKER

(a) Resistance check.
(1) Measure the resistance between the terminals of the speaker.
Standard resistance:
Approximately 4 Ω

NG → **REPLACE FRONT NO. 1 SPEAKER**

OK

12	INSPECT FRONT NO. 2 SPEAKER

(a) Check that the malfunction disappears when another speaker in good condition is installed.
Standard:
Malfunction disappears.
HINT:
- Connect all the connectors to the front No. 2 speaker.
- When there is a possibility that either the right or left front speaker is detective, inspect by interchanging the right one with the left one.
- Perform the above inspection on both LH and RH sides.

NG → **REPLACE FRONT NO. 2 SPEAKER**

OK

13	INSPECT REAR SPEAKER

(a) Resistance check.
(1) Measure the resistance between the terminals of the speaker.
Standard resistance:
Approximately 4 Ω

NG → **REPLACE REAR SPEAKER**

OK

14 INSPECT STEREO COMPONENT SPEAKER

Connector Front View:

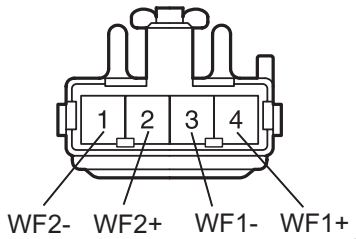

(a) Resistance check.
(1) Measure the resistance between the terminals of the speaker.
Standard resistance

Tester Connection	Condition	Specified Condition
WF1+ - WF1-	Always	Approximately 2.5 Ω
WF2+ - WF2-	Always	Approximately 2.5 Ω

NG → **REPLACE STEREO COMPONENT SPEAKER**

OK

PROCEED TO NEXT CIRCUIT INSPECTION SHOWN IN PROBLEM SYMPTOMS TABLE

AV

Sound Signal Circuit between Radio Receiver and Stereo Component Amplifier

DESCRIPTION

The radio receiver sends a sound signal to the stereo component amplifier through this circuit.
The sound signal that has been sent is amplified by the stereo component amplifier, and then is sent to the speakers.
If there is an open or short in the circuit, sound cannot be heard from the speakers even if there is no malfunction in the stereo component amplifier or speakers.

WIRING DIAGRAM

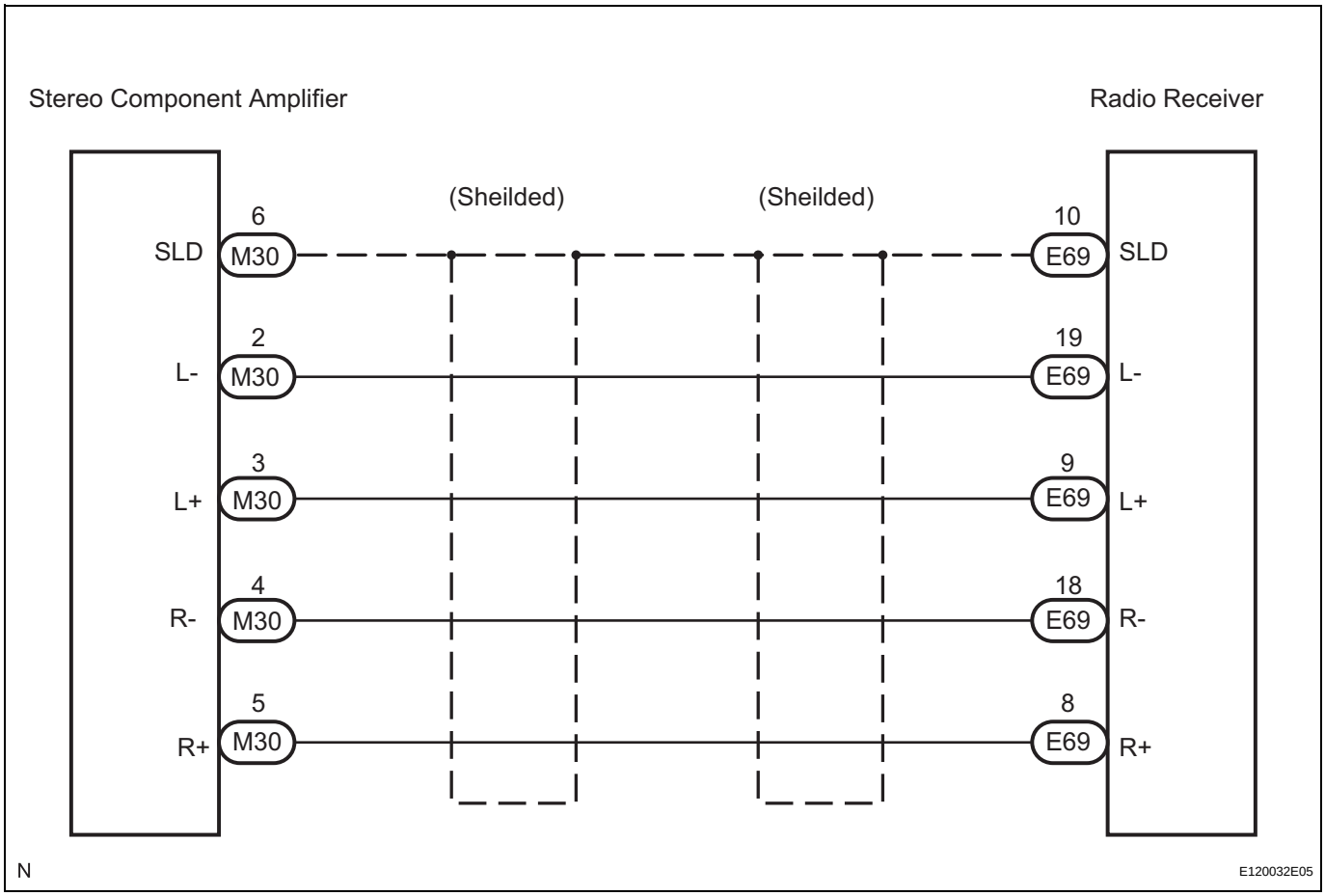

AV

INSPECTION PROCEDURE

1	**CHECK HARNESS AND CONNECTOR (RADIO RECEIVER - STEREO COMPONENT AMPLIFIER)**

Wire Harness View:

Radio Receiver (DVD Changer Models)

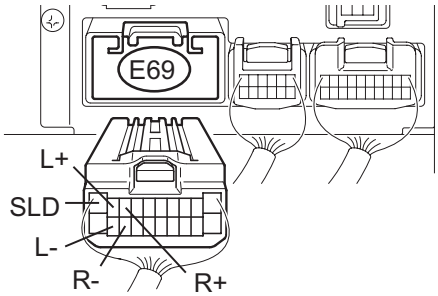

Radio Receiver (CD Changer Models)

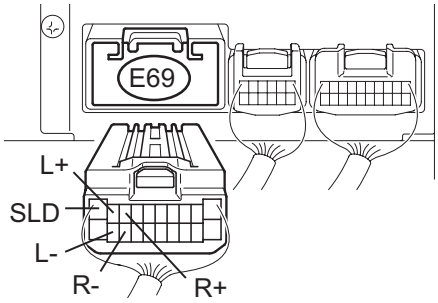

Stereo Component Amplifier
(with Rear Header Speaker)

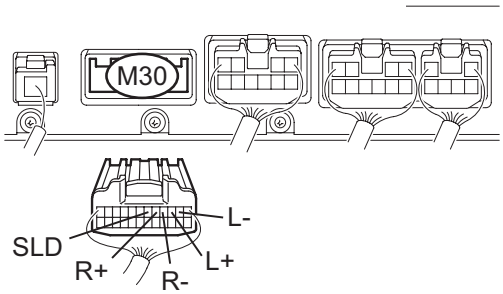

Stereo Component Amplifier
(without Rear Header Speaker)

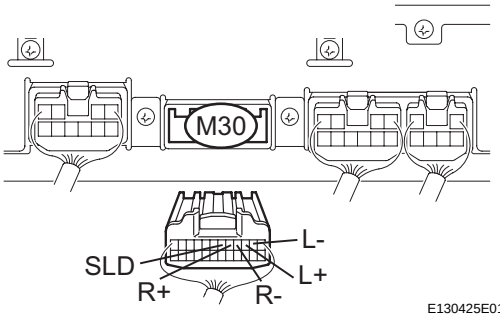

P E130425E01

(a) Disconnect the connectors from the radio receiver and stereo component amplifier.

(b) Measure the resistance according to the value(s) in the table below.

Standard resistance

Tester Connection	Condition	Specified Condition
L+ - L+	Always	Below 1 Ω
L- - L-	Always	Below 1 Ω
R+ - R+	Always	Below 1 Ω
R- - R-	Always	Below 1 Ω
SLD - SLD	Always	Below 1 Ω
L+ - Body ground	Always	10 kΩ or higher
L- - Body ground	Always	10 kΩ or higher
R+ - Body ground	Always	10 kΩ or higher
R- - Body ground	Always	10 kΩ or higher
SLD - Body ground	Always	10 kΩ or higher

AV

NG → **REPAIR OR REPLACE HARNESS OR CONNECTOR**

OK

PROCEED TO NEXT CIRCUIT INSPECTION SHOWN IN PROBLEM SYMPTOMS TABLE

Sound Signal Circuit between Radio Receiver and Stereo Jack Adapter

DESCRIPTION

The stereo jack adapter (audio terminal) sends an external device sound signal to the radio receiver through this circuit.
The sound signal that has been sent is amplified by the stereo component amplifier, and then is sent to the speakers.
If there is an open or short in the circuit, sound cannot be heard from the speakers even if there is no malfunction in the stereo component amplifier, radio receiver, or speakers.

WIRING DIAGRAM

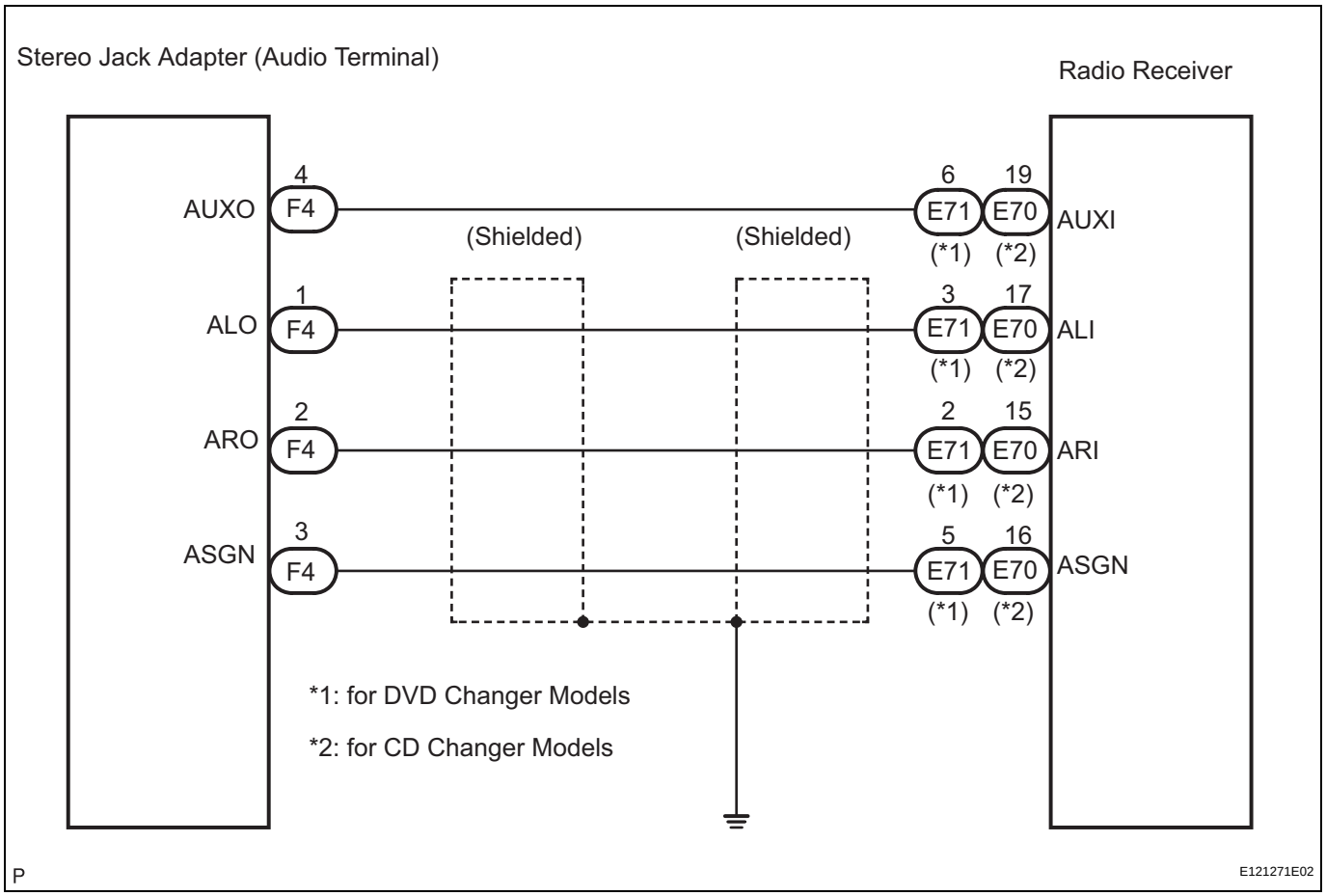

AV

INSPECTION PROCEDURE

1	**CHECK HARNESS AND CONNECTOR (RADIO RECEIVER - STEREO JACK ADAPTER (AUDIO TERMINAL))**

Wire Harness View:

Radio Receiver (CD Changer Models)

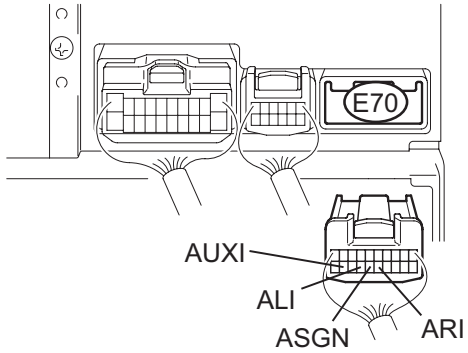

Radio Receiver (DVD Changer Models)

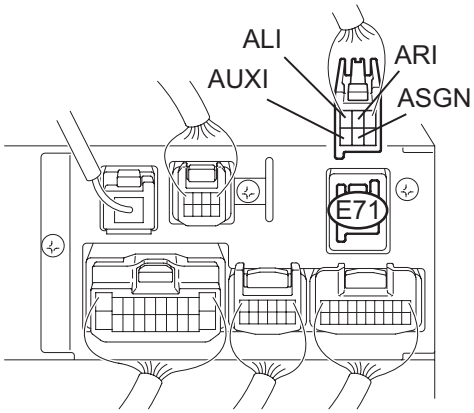

Connector Front View:

Stereo Jack Adapter (Audio Terminal)

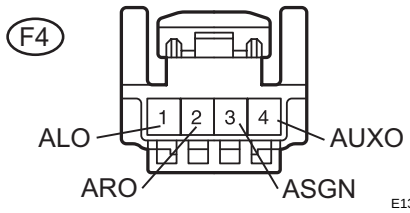

P E130459E01

(a) Disconnect the connectors from the stereo jack adapter (audio terminal) and radio receiver.

(b) Measure the resistance according to the value(s) in the table below.

Standard resistance

Tester Connection	Condition	Specified Condition
AUXO - AUXI	Always	Below 1 Ω
ASGN - ASGN	Always	Below 1 Ω
ARO - ARI	Always	Below 1 Ω
ALO - ALI	Always	Below 1 Ω
AUXO - Body ground	Always	10 kΩ or higher
ARO - Body ground	Always	10 kΩ or higher
ALO - Body ground	Always	10 kΩ or higher

NG → **REPAIR OR REPLACE HARNESS OR CONNECTOR**

OK

PROCEED TO NEXT CIRCUIT INSPECTION SHOWN IN PROBLEM SYMPTOMS TABLE

AV

Mute Signal Circuit between Radio Receiver and Stereo Component Amplifier

DESCRIPTION

This circuit sends a signal to the stereo component amplifier to mute noise. Because of that, the noise produced by changing the sound source ceases.
If there is an open in the circuit, noise can be heard from the speakers when changing the sound source.
If there is a short in the circuit, even though the stereo component amplifier is normal, no sound, or only an extremely small sound, can be produced.

WIRING DIAGRAM

INSPECTION PROCEDURE

1	**INSPECT STEREO COMPONENT AMPLIFIER**

Wire Harness View:

with Rear Header Speaker

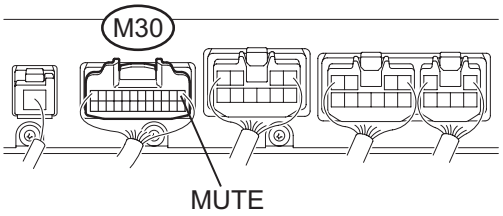

without Rear Header Speaker

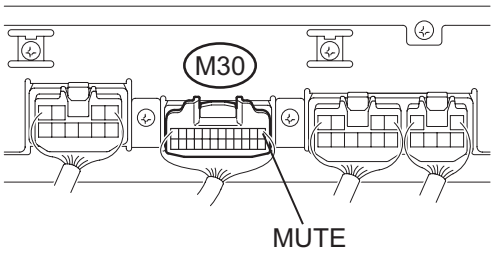

P E130426E01

(a) Measure the voltage according to the value(s) in the table below.

Standard voltage

Tester Connection	Condition	Specified Condition
MUTE - Body ground	Turn engine switch on (ACC), Audio system is playing → Changing	Above 3.5 V → Below 1 V

OK → **PROCEED TO NEXT CIRCUIT INSPECTION SHOWN IN PROBLEM SYMPTOMS TABLE**

NG

AV

2	**CHECK HARNESS AND CONNECTOR (RADIO RECEIVER - STEREO COMPONENT AMPLIFIER)**

Wire Harness View:

Radio Receiver (DVD Changer Models)

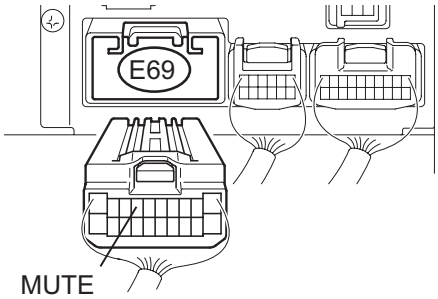

Radio Receiver (CD Changer Models)

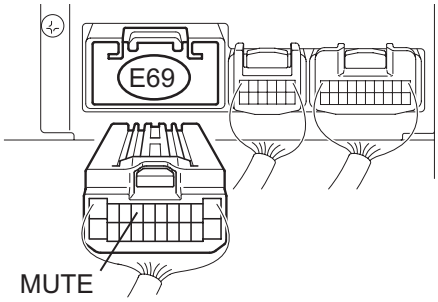

Stereo Component Amplifier
(with Rear Header Speaker)

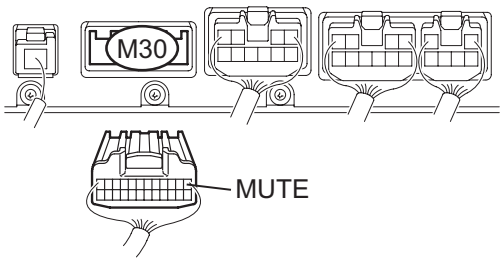

Stereo Component Amplifier
(without Rear Header Speaker)

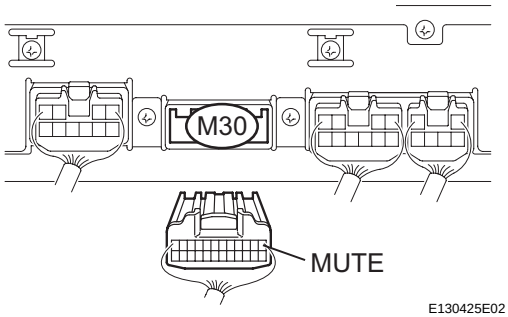

P E130425E02

(a) Disconnect the radio receiver connector E69 and stereo component amplifier connector M30.

(b) Measure the resistance according to the values in the table below.

Standard resistance

Tester Connection	Condition	Specified Condition
MUTE - MUTE	Always	Below 1 Ω
MUTE - Body ground	Always	10 kΩ or higher

NG → **REPAIR OR REPLACE HARNESS OR CONNECTOR**

AV

OK

3	INSPECT STEREO COMPONENT AMPLIFIER

Wire Harness View:

Radio Receiver (DVD Changer Models)

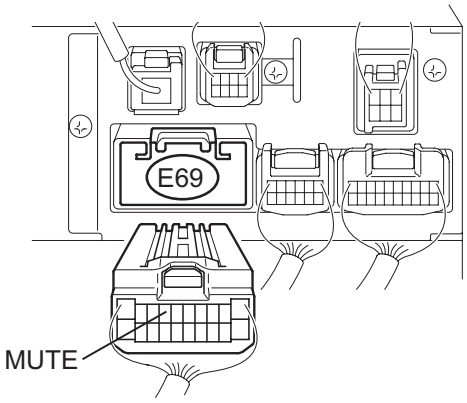

Radio Receiver (CD Changer Models)

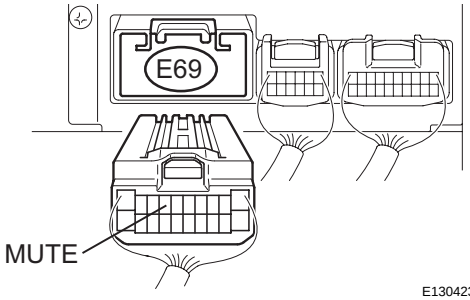

P E130423E02

(a) Reconnect the stereo component amplifier connector M30.

(b) Measure the voltage according to the value(s) in the table below.

Standard voltage

Tester Connection	Condition	Specified Condition
MUTE - Body ground	Turn engine switch on (ACC), Audio system is playing	Above 3.5 V

NG → **REPLACE STEREO COMPONENT AMPLIFIER**

OK

REPLACE RADIO RECEIVER

AV

AVC-LAN Circuit

DESCRIPTION

Each unit of the audio system connected to the AVC-LAN (communication bus) transfers the signal of each switch by communication.
When a short to +B or short to ground occurs in this AVC-LAN, the audio system will not function normally as the communication is discontinued.

INSPECTION PROCEDURE

1 INSPECT RADIO RECEIVER

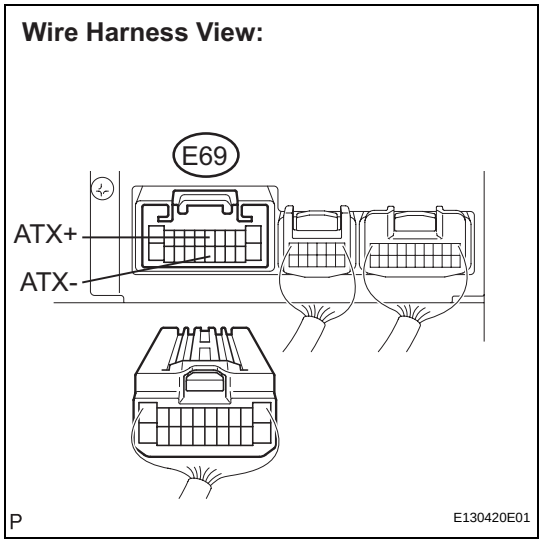

(a) Disconnect the radio receiver connectors.
(b) Measure the resistance according to the value(s) in the table below.
Standard resistance

Tester Connection	Condition	Specified Condition
ATX+ - ATX-	Always	60 to 80 Ω

NG → **REPLACE RADIO RECEIVER**

OK

2 CHECK HARNESS AND CONNECTOR

HINT:
For details of the connectors, refer to the "TERMINALS OF ECU" (See page AV-16).
(a) Referring to the AVC-LAN wiring diagram below, check all AVC-LAN circuits.
  (1) Disconnect all connectors in all AVC-LAN circuits.
  (2) Check for an open or short in all AVC-LAN circuits.
  OK:
  There is no open or short circuit.

AV

AVC-LAN WIRING DIAGRAM:

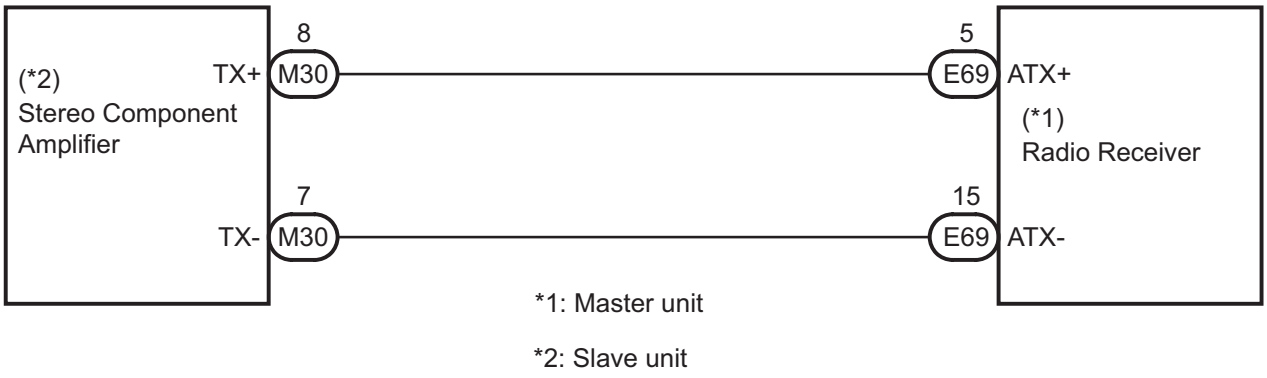

*1: Master unit

*2: Slave unit

P

E130419E01

NG → **REPAIR OR REPLACE HARNESS OR CONNECTOR**

OK

AV

PROCEED TO NEXT CIRCUIT INSPECTION SHOWN IN PROBLEM SYMPTOMS TABLE

Vehicle Speed Signal Circuit between Stereo Component Amplifier and Combination Meter

DESCRIPTION

This circuit is necessary for the ASL (Auto Sound Leveliser) built into the stereo component amplifier. Speed signals are received from the combination meter and used for the ASL.
The ASL function automatically adjusts the sound data in order to enable hearing the clear audio sound even when vehicle noise increases (as vehicle noise increases, the volume is turned up etc.).
HINT:

- A voltage of 12 V or 5 V is output from each ECU and then input to the combination meter. The signal is changed to a pulse signal at the transistor in the combination meter. Each ECU controls the respective system based on the pulse signal.
- If a short occurs in an ECU, all systems in the diagram below will not operate normally.

WIRING DIAGRAM

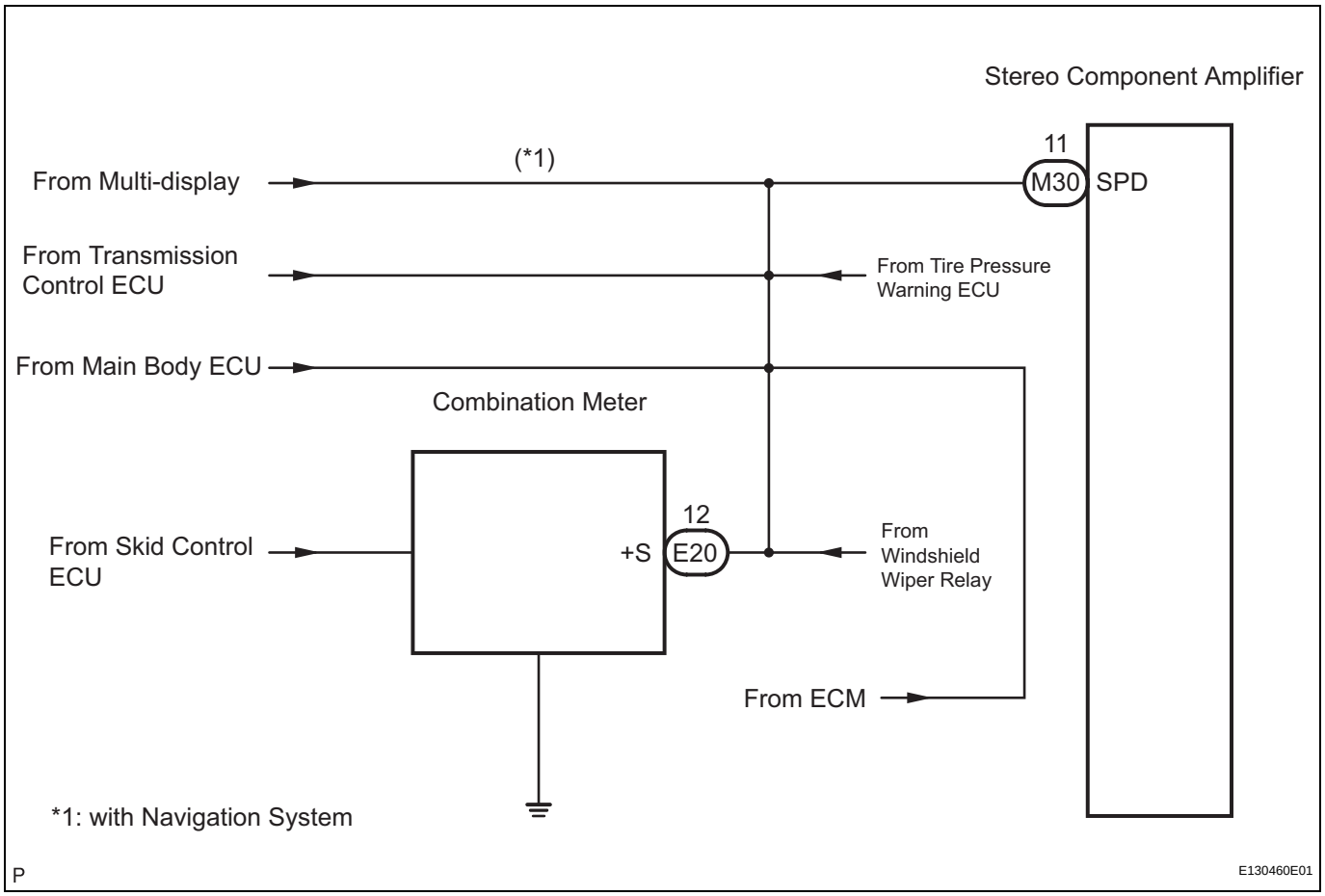

INSPECTION PROCEDURE

1	OPERATION OF SPEEDOMETER

(a) Drive the vehicle and check if the function of the speedometer on the combination meter is normal.

AV

OK:

Actual vehicle speed and the speed indicated on the speedometer are the same.

HINT:

The vehicle speed sensor is functioning normally when the indication on the speedometer is normal.

NG → **CHECK COMBINATION METER**

OK

2	**INSPECT STEREO COMPONENT AMPLIFIER**

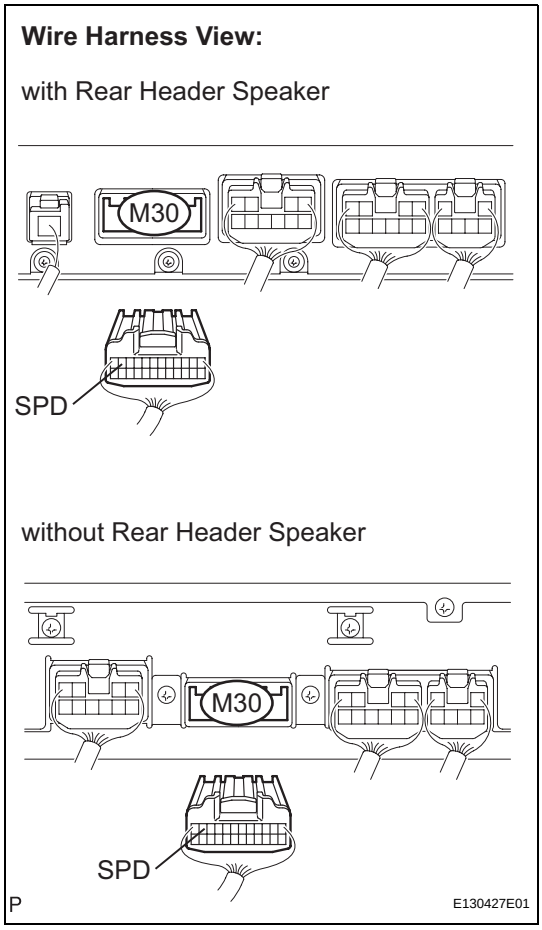

(a) Disconnect the stereo component amplifier connector M30.

(b) Measure the voltage.
  (1) Jack up either one of the drive wheels.
  (2) Move the shift lever to the neutral position.
  (3) Turn the engine switch on (IG).

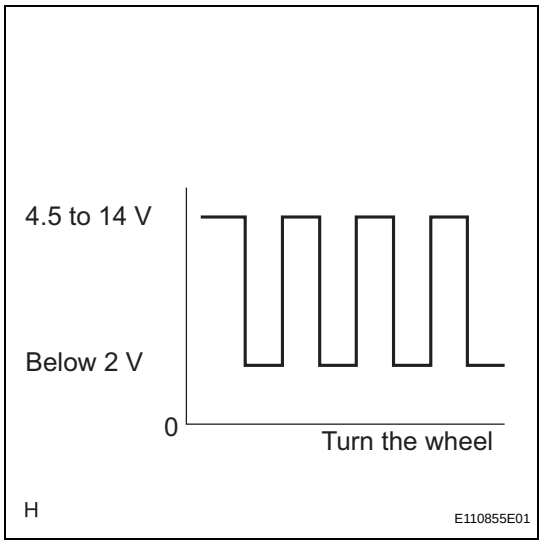

(4) Measure the voltage between terminal SPD of the wire harness connector and body ground when the drive wheels are turned slowly.
OK:
Voltage pulses as shown in the illustration.

NG → **Go to step 3**

OK

REPLACE STEREO COMPONENT AMPLIFIER

3	**CHECK HARNESS AND CONNECTOR (COMBINATION METER - STEREO COMPONENT AMPLIFIER)**

Wire Harness View:

Stereo Component Amplifier
(with Rear Header Speaker)

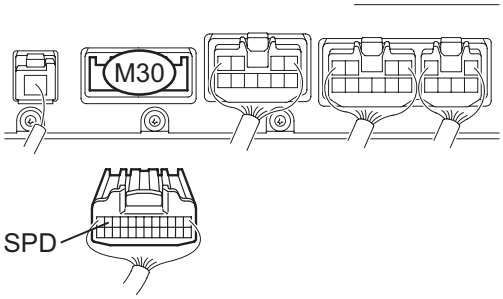

Stereo Component Amplifier
(without Rear Header Speaker)

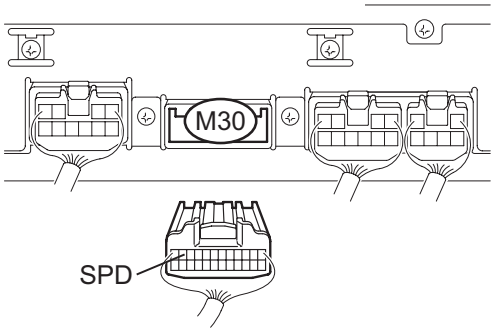

Combination Meter

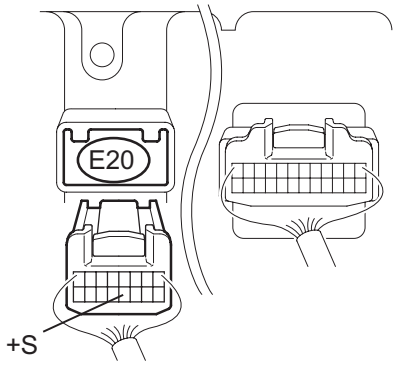

P E130428E01

(a) Disconnect the stereo component amplifier connector M30 and combination meter connector E20.
(b) Measure the resistance according to the value(s) in the table below.

Standard resistance

Tester Connection	Condition	Specified Condition
SPD - +S	Engine switch off	Below 1 Ω

NG → **REPAIR OR REPLACE HARNESS OR CONNECTOR**

OK

AV

4	**CHECK HARNESS AND CONNECTOR (COMBINATION METER - STEREO COMPONENT AMPLIFIER)**

Wire Harness View:

Stereo Component Amplifier
(with Rear Header Speaker)

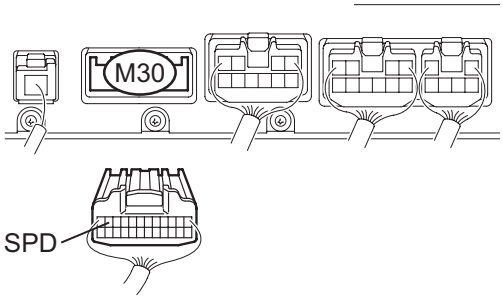

Stereo Component Amplifier
(without Rear Header Speaker)

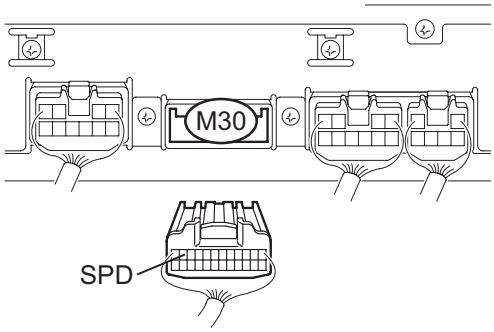

Combination Meter

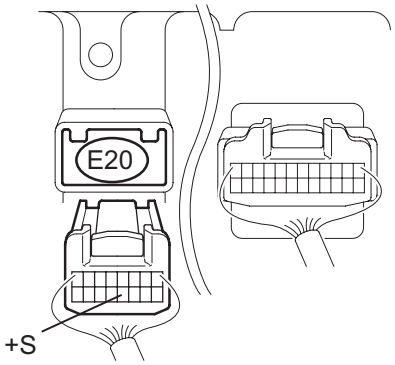

P E130428E01

(a) Disconnect the stereo component amplifier connector M30 and combination meter connector E20.

(b) Measure the resistance according to the value(s) in the table below.

Standard resistance

Tester Connection	Condition	Specified Condition
SPD - Body ground	Engine switch off	10 kΩ or higher

HINT:
If the resistance between terminal SPD and body ground is less than 10 kΩ, there may be a short in a wire harness, connector, or an ECU that is connected to the SPD signal wire.

NG → **REPAIR OR REPLACE HARNESS OR CONNECTOR OR CHECK EACH ECU**

AV

OK

REPLACE COMBINATION METER

Cellular Phone Voice Circuit between Radio Receiver and Stereo Component Amplifier

SYSTEM DESCRIPTION

This circuit is used when the cellular phone voice in the "Bluetooth" handsfree system is on.

WIRING DIAGRAM

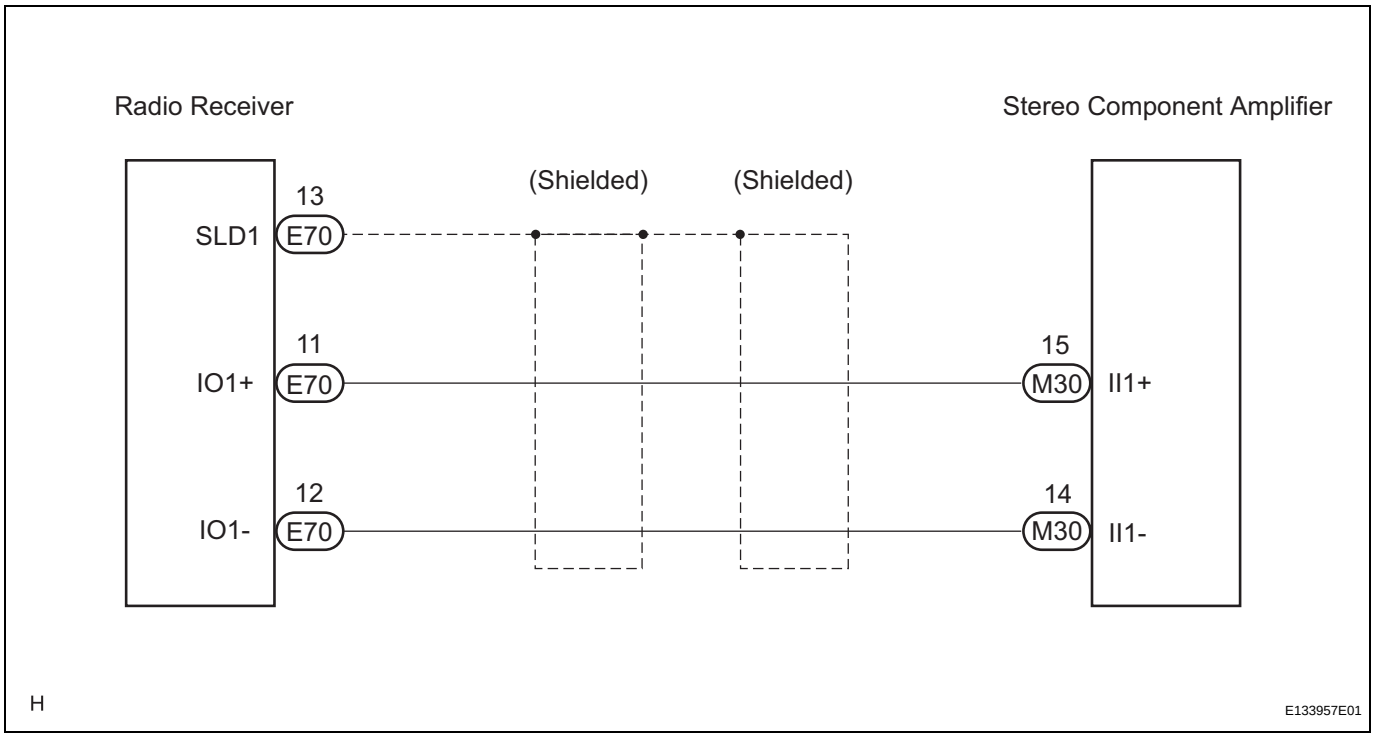

INSPECTION PROCEDURE

1	**CHECK HARNESS AND CONNECTOR (RADIO RECEIVER - STEREO COMPONENT AMPLIFIER)**

Wire Harness View:

Stereo Component Amplifier
(with Rear Header Speaker)

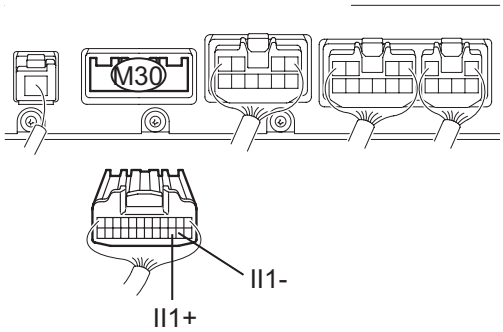

Stereo Component Amplifier
(without Rear Header Speaker)

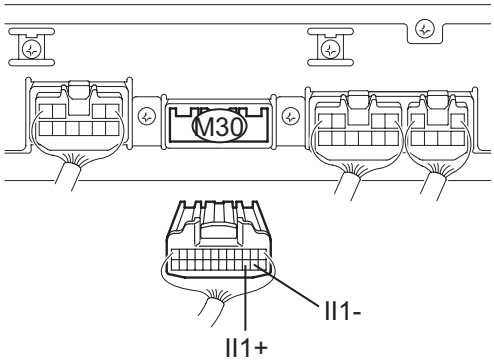

Radio Receiver

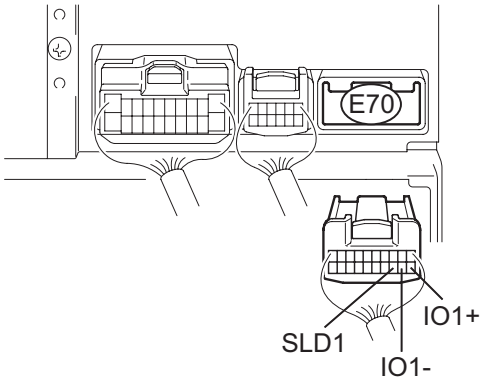

P E133958E01

(a) Disconnect the radio receiver connector E70 and stereo component amplifier connector M30.

(b) Measure the resistance according to the value(s) in the table below.

Standard resistance

Tester connection	Condition	Specified condition
IO1+ - II1+	Always	Below 1 Ω
IO1- - II1-	Always	Below 1 Ω
IO1+ - Body ground	Always	10 kΩ or higher
IO1- - Body ground	Always	10 kΩ or higher

NG → **REPAIR OR REPLACE HARNESS OR CONNECTOR**

OK

PROCEED TO NEXT CIRCUIT INSPECTION SHOWN IN PROBLEM SYMPTOMS TABLE

AV

Microphone Circuit between Microphone and Radio Receiver

DESCRIPTION

This circuit sends a microphone signal from the microphone to the radio receiver.
It also supplies power from the radio receiver to the microphone.

WIRING DIAGRAM

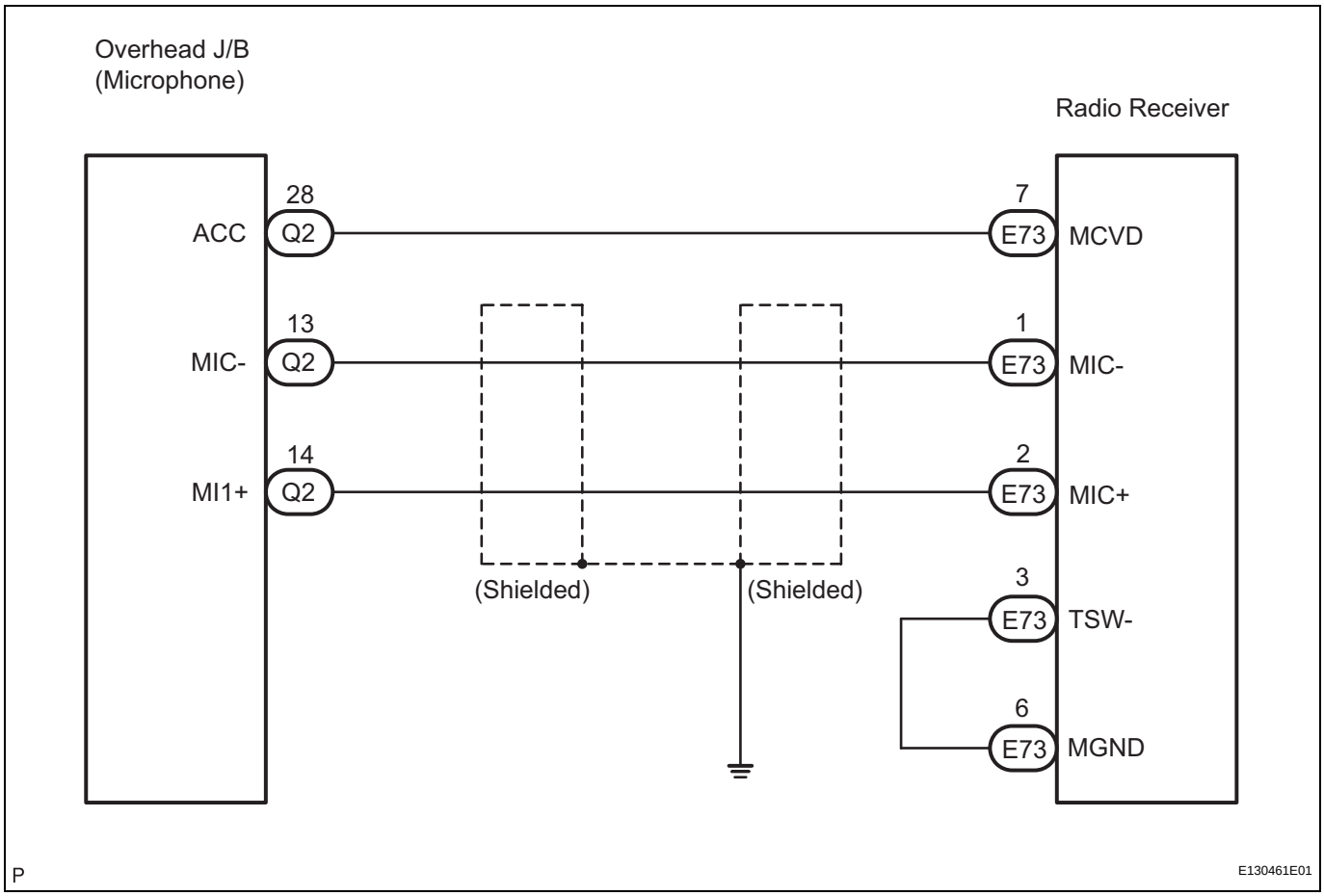

INSPECTION PROCEDURE

1 INSPECT RADIO RECEIVER

Wire Harness View:

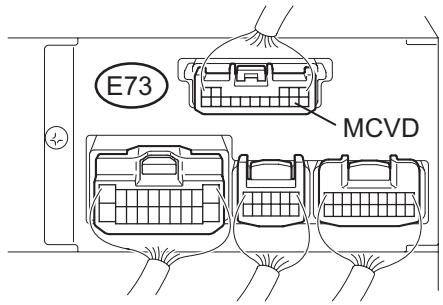

P E130429E01

(a) Measure the voltage according to the value(s) in the table below.
Standard voltage

Tester Connection	Condition	Specified Condition
MCVD - Body ground	Engine switch on (ACC)	4 to 6 V

NG → **REPLACE RADIO RECEIVER**

OK

2 CHECK HARNESS AND CONNECTOR (RADIO RECEIVER - BODY GROUND)

Wire Harness View:

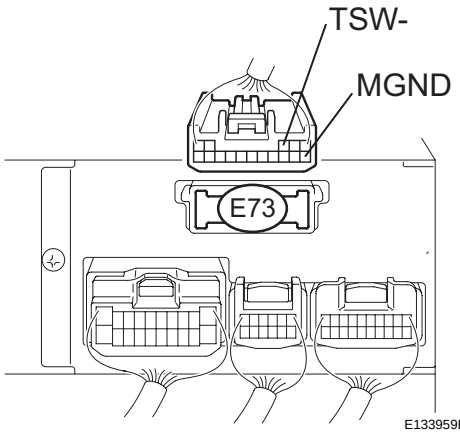

E133959E01

(a) Disconnect the radio receiver connector.
(b) Measure the resistance according to the value(s) in the table below.
Standard resistance

Tester Connection	Condition	Specified Condition
TSW- - MGND	Always	Below 1 Ω
TSW- - Body ground	Always	10 kΩ or higher

NG → **REPAIR OR REPLACE HARNESS OR CONNECTOR**

OK

AV

3	CHECK HARNESS AND CONNECTOR (OVERHEAD J/B (MICROPHONE) - RADIO RECEIVER)

Overhead J/B (Microphone) Connector Front View:

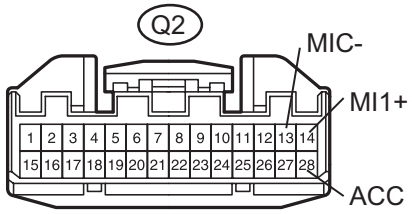

Radio Receiver Wire Harness View:

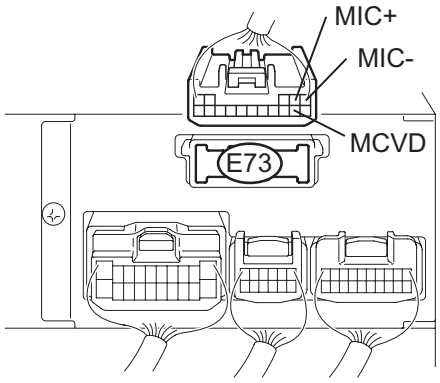

P E130462E01

(a) Disconnect the overhead J/B (microphone) connector.
(b) Measure the resistance according to the value(s) in the table below.

Standard resistance

Tester Connection	Condition	Specified Condition
MCVD - ACC	Always	Below 1 Ω
MI1+ - MIC+	Always	Below 1 Ω
MIC- - MIC-	Always	Below 1 Ω
ACC - Body ground	Always	10 kΩ or higher
MIC+ - Body ground	Always	10 kΩ or higher
MIC- - Body ground	Always	10 kΩ or higher

NG → **REPAIR OR REPLACE HARNESS OR CONNECTOR**

OK

PROCEED TO NEXT CIRCUIT INSPECTION SHOWN IN PROBLEM SYMPTOMS TABLE

AV

Dimmer Signal Circuit

DESCRIPTION

The main body ECU sends a panel illumination signal to the radio receiver through this circuit.
The main body ECU determines the ambient brightness based on the light level detected by the automatic light control sensor and performs dim control.

WIRING DIAGRAM

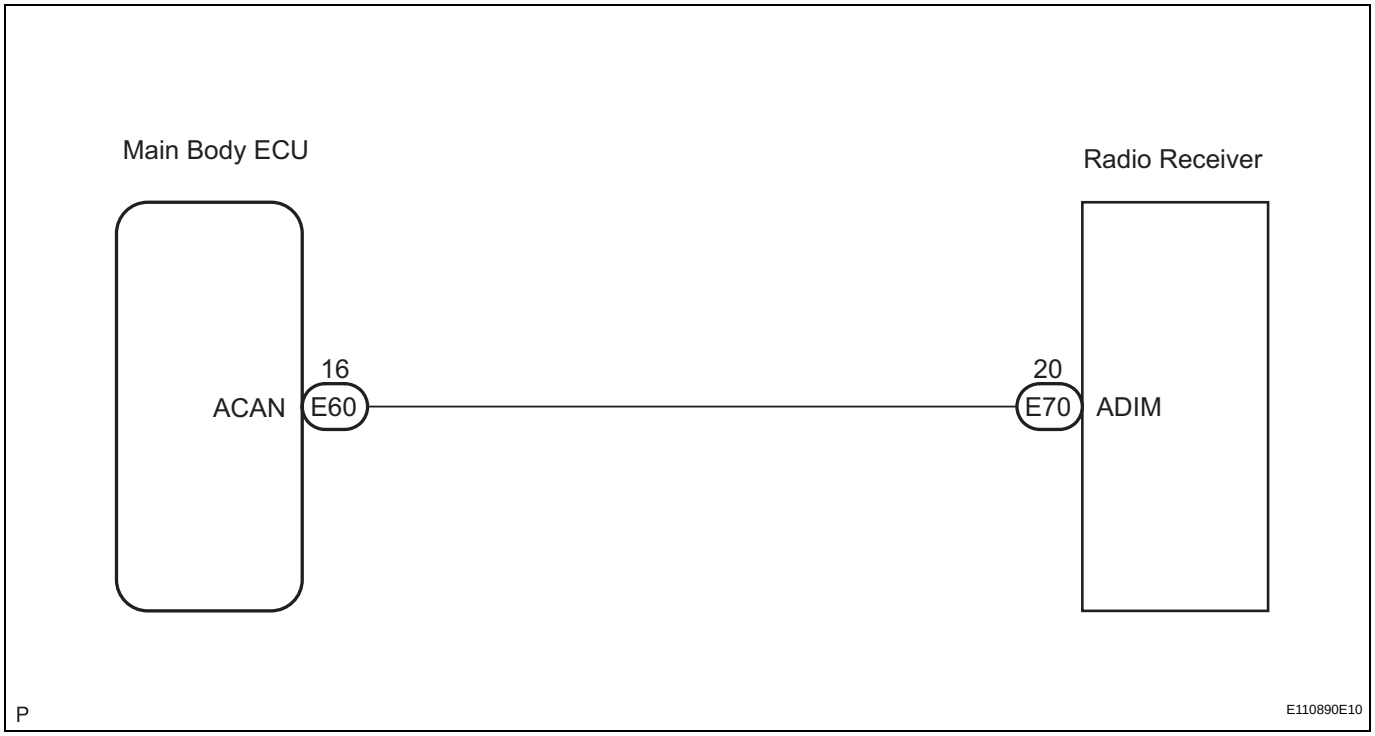

INSPECTION PROCEDURE

1	CHECK HARNESS AND CONNECTOR (RADIO RECEIVER - BODY ECU)

Wire Harness View:

Radio Receiver (DVD Changer Models)

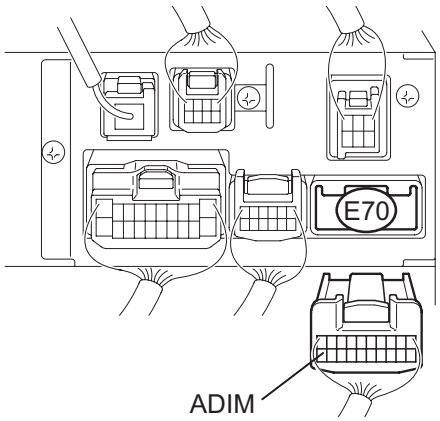

Radio Receiver (CD Changer Models)

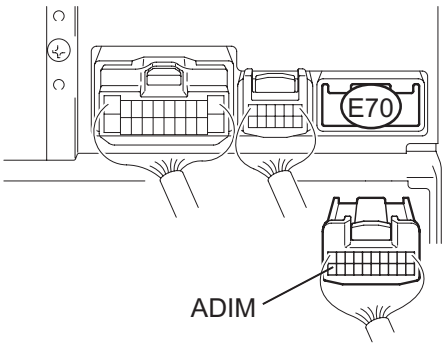

Main Body ECU

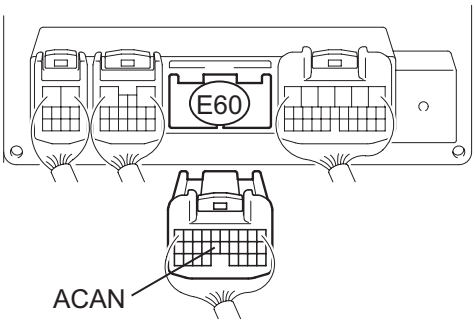

P

E133960E01

(a) Disconnect the radio receiver connector E70 and main body ECU connector E60.

(b) Measure the resistance according to the values in the table below.

Standard resistance

Tester connection	Condition	Specified condition
ADIM - ACAN	Always	Below 1 Ω
ADIM - Body ground	Always	10 kΩ or higher

NG → **REPAIR OR REPLACE HARNESS OR CONNECTOR**

OK

AV

2 INSPECT RADIO RECEIVER

Wire Harness View:

Radio Receiver (DVD Changer Models)

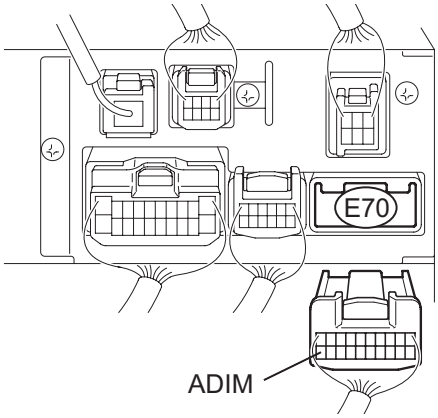

Radio Receiver (CD Changer Models)

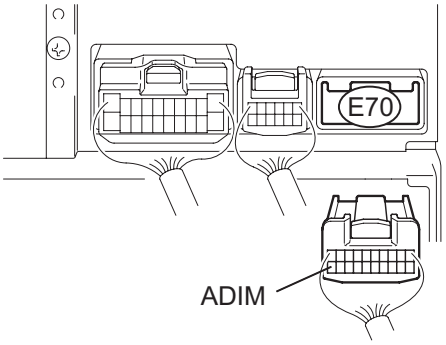

P E133961E01

(a) Connect the main body ECU connector.
(b) Turn the engine switch on (IG).
(c) Turn the light control switch to the TAIL or HEAD position.
(d) Measure the voltage according to the value(s) in the table below.

Standard voltage

Tester connection	Condition	Specified condition
ADIM - Body ground	Light control switch in TAIL or HEAD	10 to 14 V

NG → **GO TO LIGHTING SYSTEM (See page LI-28)**

OK

PROCEED TO NEXT CIRCUIT INSPECTION SHOWN IN PROBLEM SYMPTOMS TABLE

AV

DVD Sound Signal Circuit between Radio Receiver and Stereo Component Amplifier

DESCRIPTION

The radio receiver sends only DVD sound signal to the stereo component amplifier through this circuit. The sound signal that has been sent is amplified by the stereo component amplifier, and then is sent to the speakers.
If there is an open or short in the circuit, only DVD sound cannot be heard from the speakers even if there is no malfunction in the stereo component amplifier or speakers.

WIRING DIAGRAM

INSPECTION PROCEDURE

1	**CHECK HARNESS AND CONNECTOR (RADIO RECEIVER - STEREO COMPONENT AMPLIFIER)**

Radio Receiver Wire Harness View:

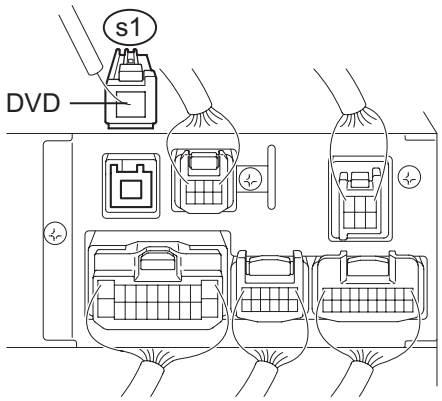

Stereo Component Amplifier Wire Harness View:

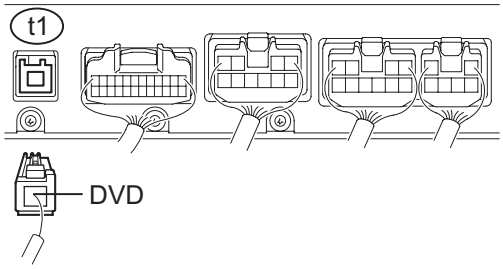

P E121266E01

(a) Disconnect the connectors from the radio receiver and stereo component amplifier.

(b) Measure the resistance according to the value(s) in the table below.

Standard resistance

Tester Connection	Condition	Specified Condition
DVD - DVD	Always	Below 1 Ω
DVD - Body ground	Always	10 kΩ or higher

NG → **REPAIR OR REPLACE HARNESS OR CONNECTOR**

OK

PROCEED TO NEXT CIRCUIT INSPECTION SHOWN IN PROBLEM SYMPTOMS TABLE

AV

Radio Receiver Communication Error

INSPECTION PROCEDURE

1	IDENTIFY THE COMPONENT SHOWN BY SUB-CODE

(a) Enter the diagnostic mode.

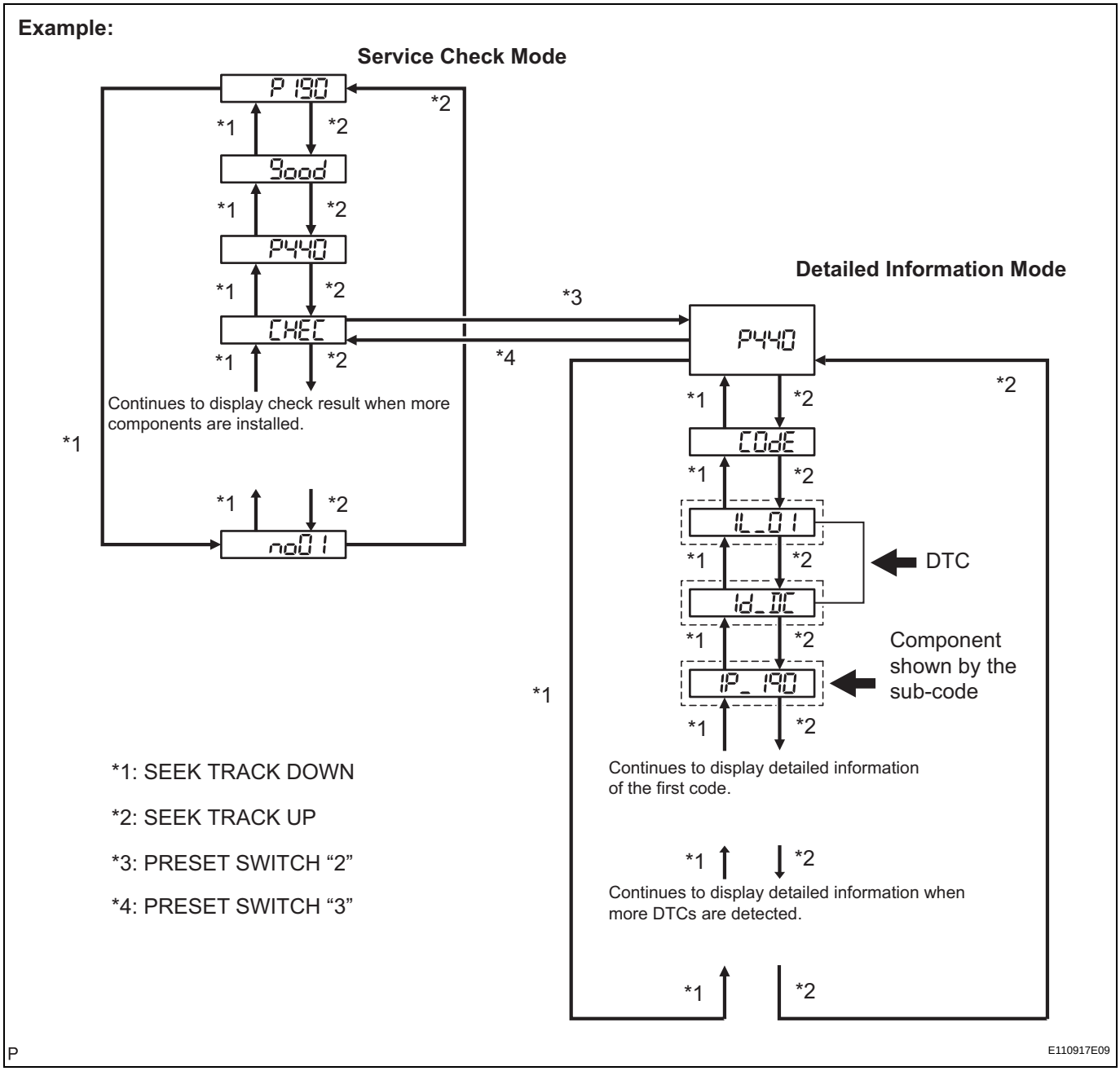

(b) Press the preset switch "3" to change to "Detailed Information Mode".

(c) Identify the component shown by the sub-code.

HINT:

- "190 (radio receiver)" is the component shown by the sub-code in the example shown in the illustration.

- For details of the DTC display, refer to "DTC CHECK/ CLEAR" (See page AV-21).

NEXT

2 CHECK COMPONENT SHOWN BY SUB-CODE

(a) Select the component shown by sub-code.
HINT:
The "Bluetooth" handsfree module is built into the radio receiver. If there is a problem between the "Bluetooth" handsfree module and radio receiver, replace the radio receiver.

Component Table:

Component	Proceed to
"Bluetooth" handsfree module (19D)	A
Except "Bluetooth" handsfree module	B

A → **REPLACE RADIO RECEIVER**

B

3 CHECK POWER SOURCE CIRCUIT OF COMPONENT SHOWN BY SUB-CODE

(a) Inspect the power source circuit of the component shown by the sub-code.
If the power source circuit is operating normally, proceed to the next step.

Component Table:

Component	Proceed to
Stereo component amplifier (440)	Stereo component amplifier power source circuit (See page AV-164)

NEXT

4 INSPECT RADIO RECEIVER

Wire Harness View:

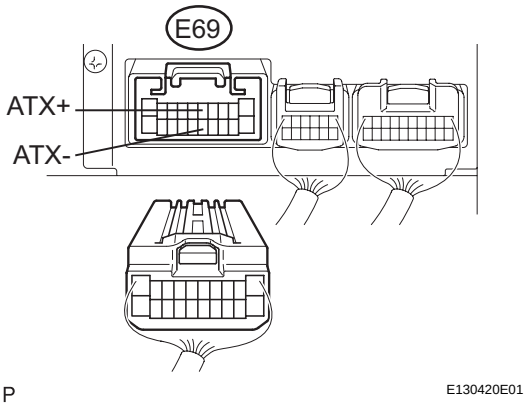

(a) Disconnect the radio receiver connectors.
(b) Measure the resistance according to the value(s) in the table below.

Standard resistance

Tester Connection	Condition	Specified Condition
ATX+ - ATX-	Always	60 to 80 Ω

NG → **REPLACE RADIO RECEIVER**

AV

OK

5	CHECK HARNESS AND CONNECTOR (RADIO RECEIVER - COMPONENT SHOWN BY SUB-CODE)

HINT:
- Start the check from the circuit that is near the component shown by the sub-code first.
- For details of the connectors, refer to the "TERMINALS OF ECU" (See page AV-16).

(a) Referring to the AVC-LAN wiring diagram below, check the AVC-LAN circuit between the radio receiver and the component shown by the sub-code.
  (1) Disconnect all connectors between the radio receiver and the component shown by sub-code.
  (2) Check for an open or short in the AVC-LAN circuit between the radio receiver and the component shown by the sub-code.
  OK:
  There is no open or short circuit.

AV

AVC-LAN WIRING DIAGRAM:

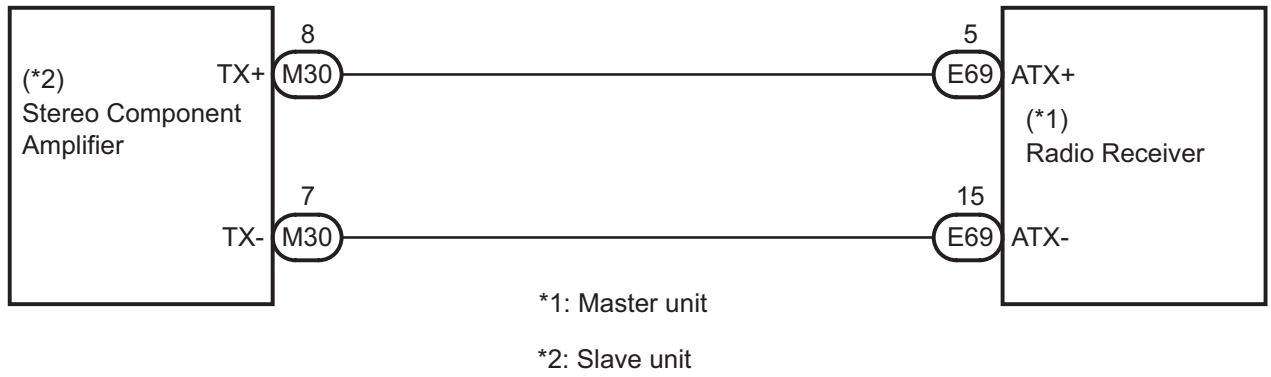

NG → **REPAIR OR REPLACE HARNESS OR CONNECTOR**

OK

6	REPLACE COMPONENT SHOWN BY SUB-CODE

(a) Replace the component shown by the sub-code with a normal one and check if the same problem occurs again.
  OK:
  Same problem does not occur.

NG → **REPLACE RADIO RECEIVER**

OK

END

Stereo Component Amplifier Communication Error

INSPECTION PROCEDURE

1	IDENTIFY THE COMPONENT SHOWN BY SUB-CODE

(a) Enter the diagnostic mode.

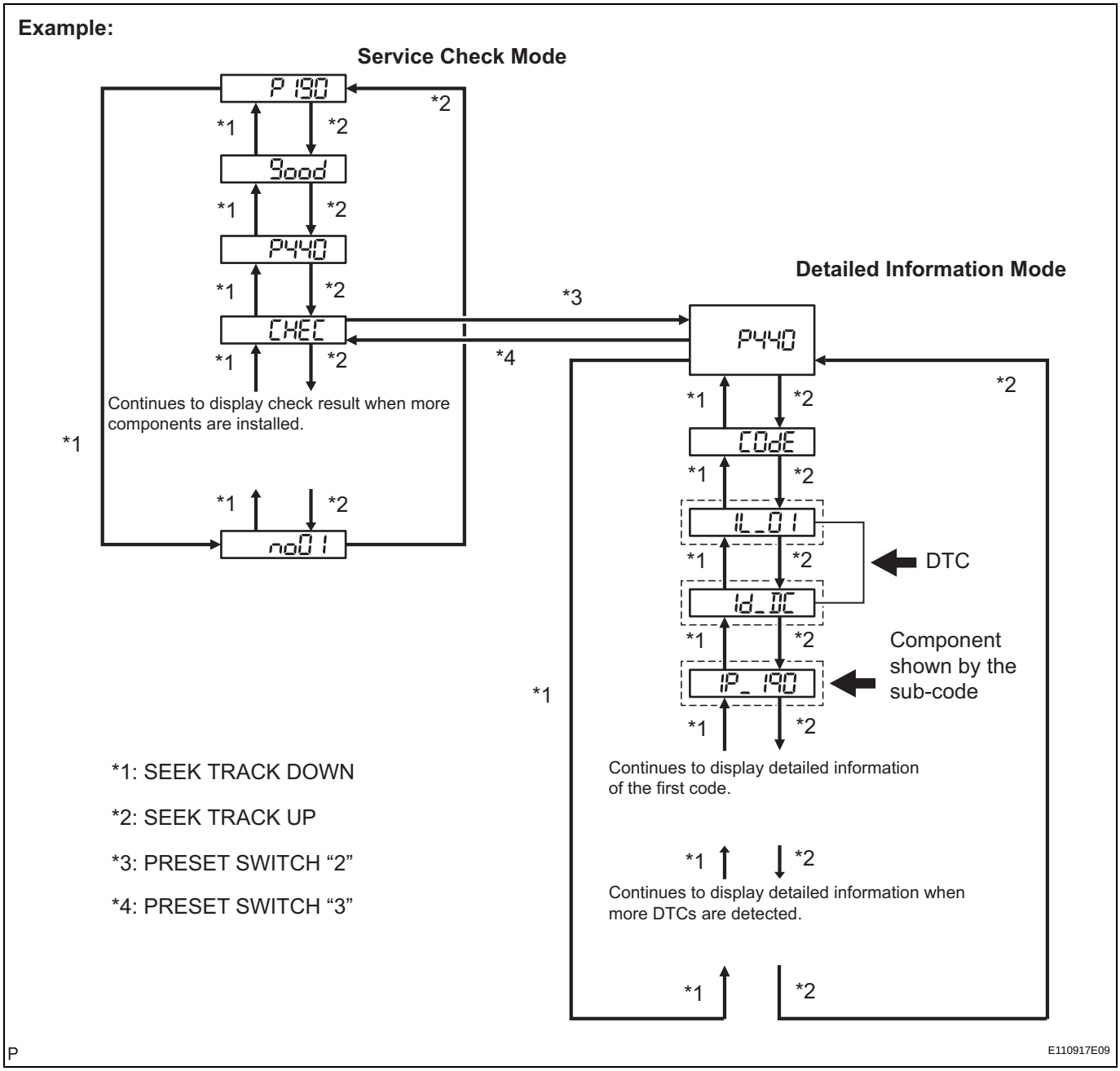

(b) Press the preset switch "3" to change to "Detailed Information Mode".

(c) Identify the component shown by the sub-code.

HINT:

- "190 (radio receiver)" is the component shown by the sub-code in the example shown in the illustration.

AV

- For details of the DTC display, refer to "DTC CHECK/ CLEAR" (See page AV-21).

NEXT

2 CHECK COMPONENT SHOWN BY SUB-CODE

(a) Select the component shown by sub-code.
HINT:
The "Bluetooth" handsfree module is built into the radio receiver. If there is a problem between the "Bluetooth" handsfree module and radio receiver, replace the radio receiver.

Component Table:

Component	Proceed to
"Bluetooth" handsfree module (19D)	A
Except "Bluetooth" handsfree module	B

A → **REPLACE RADIO RECEIVER**

B

3 CHECK POWER SOURCE CIRCUIT OF COMPONENT SHOWN BY SUB-CODE

(a) Inspect the power source circuit of the component shown by the sub-code.
If the power source circuit is operating normally, proceed to the next step.

Component Table:

Component	Proceed to
Radio receiver (190)	Radio receiver power source circuit (See page AV-162)

NEXT

4 INSPECT RADIO RECEIVER

Wire Harness View:

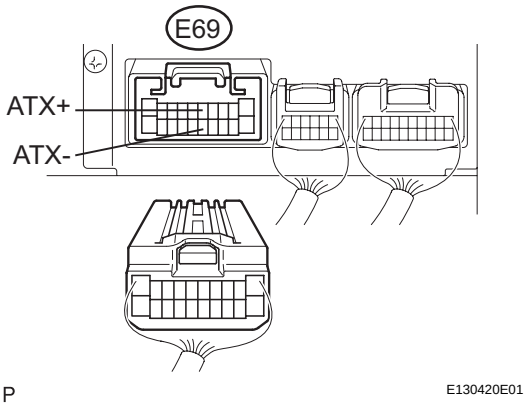

(a) Disconnect the radio receiver connectors.
(b) Measure the resistance according to the value(s) in the table below.

Standard resistance

Tester Connection	Condition	Specified Condition
ATX+ - ATX-	Always	60 to 80 Ω

NG → **REPLACE RADIO RECEIVER**

AV

OK

5	CHECK HARNESS AND CONNECTOR (STEREO COMPONENT AMPLIFIER - COMPONENT SHOWN BY SUB-CODE)

HINT:
- Start the check from the circuit that is near the component shown by the sub-code first.
- For details of the connectors, refer to the "TERMINALS OF ECU" (See page AV-16).

(a) Referring to the AVC-LAN wiring diagram below, check the AVC-LAN circuit between the stereo component amplifier and the component shown by the sub-code.
  (1) Disconnect all connectors between the stereo component amplifier and the component shown by sub-code.
  (2) Check for an open or short in the AVC-LAN circuit between the stereo component amplifier and the component shown by the sub-code.
  OK:
  There is no open or short circuit.

AV

AVC-LAN WIRING DIAGRAM:

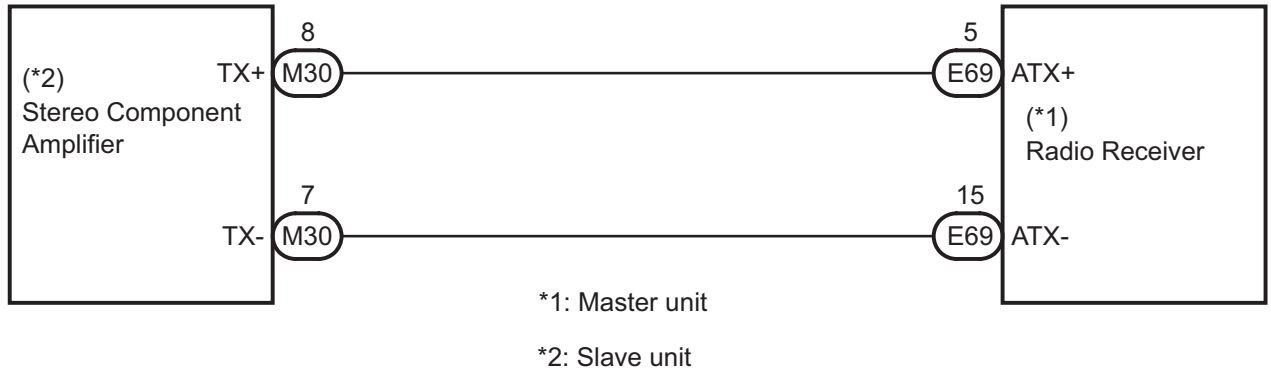

NG → **REPAIR OR REPLACE HARNESS OR CONNECTOR**

OK

6	REPLACE COMPONENT SHOWN BY SUB-CODE

(a) Replace the component shown by the sub-code with a normal one and check if the same problem occurs again.
  OK:
  Same problem does not occur.

NG → **REPLACE STEREO COMPONENT AMPLIFIER**

OK

END

Bluetooth Handsfree Module Communication Error

INSPECTION PROCEDURE

1	IDENTIFY THE COMPONENT SHOWN BY SUB-CODE

(a) Enter the diagnostic mode.

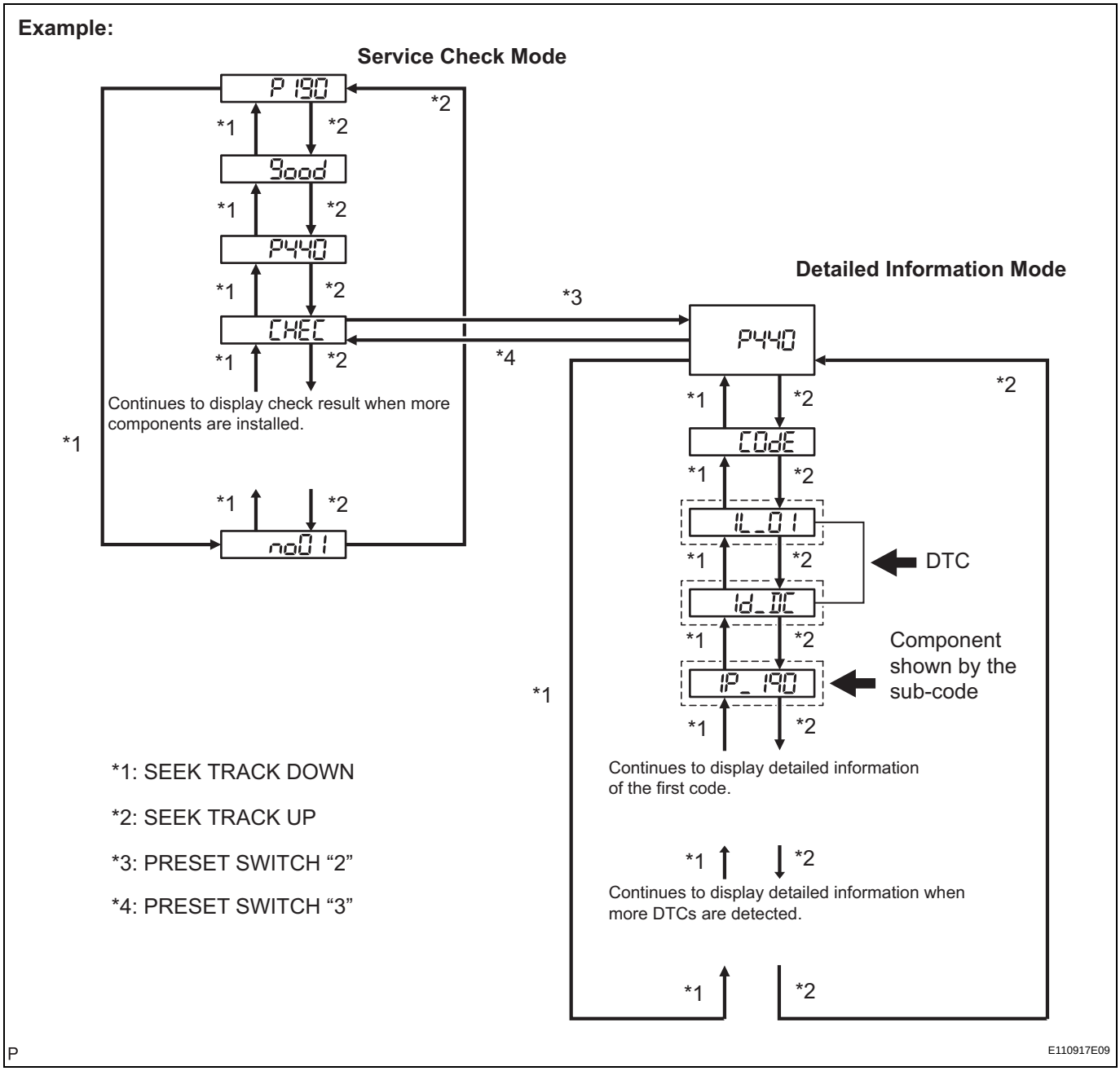

(b) Press the preset switch "3" to change to "Detailed Information Mode".

(c) Identify the component shown by the sub-code.

HINT:

- "190 (radio receiver)" is the component shown by the sub-code in the example shown in the illustration.

AV

- For details of the DTC display, refer to "DTC CHECK/ CLEAR" (See page AV-21).

NEXT

2 CHECK COMPONENT SHOWN BY SUB-CODE

(a) Select the component shown by sub-code.
HINT:
The "Bluetooth" handsfree module is built into the radio receiver. If there is a problem between the "Bluetooth" handsfree module and radio receiver, replace the radio receiver.

Component Table:

Component	Proceed to
Radio Receiver (190)	A
Except Radio Receiver	B

A → **REPLACE RADIO RECEIVER**

B

3 CHECK POWER SOURCE CIRCUIT OF COMPONENT SHOWN BY SUB-CODE

(a) Inspect the power source circuit of the component shown by the sub-code.
If the power source circuit is operating normally, proceed to the next step.

Component Table:

Component	Proceed to
Stereo component amplifier (440)	Stereo component amplifier power source circuit (See page AV-164)

NEXT

4 INSPECT RADIO RECEIVER

Wire Harness View:

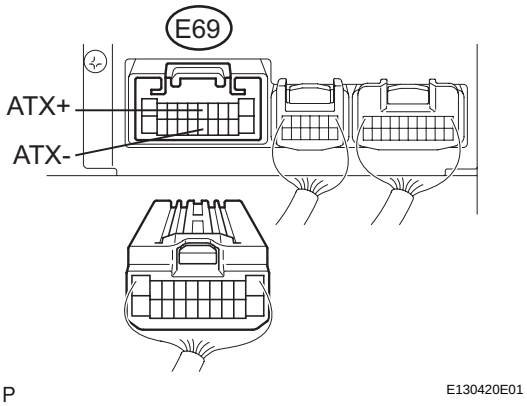

(a) Disconnect the radio receiver connector.
(b) Measure the resistance according to the value(s) in the table below.

Standard resistance

Tester connection	Condition	Specified condition
ATX+ (E69-5) - ATX- (E69-15)	Always	60 to 80 Ω

NG → **REPLACE RADIO RECEIVER**

AV

OK

5	CHECK HARNESS AND CONNECTOR ("BLUETOOTH" HANDSFREE MODULE - COMPONENT SHOWN BY SUB-CODE)

HINT:
- Start the check from the circuit that is near the component shown by the sub-code first.
- For details of the connectors, refer to the "TERMINALS OF ECU" (See page AV-16).

(a) Referring to the AVC-LAN wiring diagram below, check the AVC-LAN circuit between the "Bluetooth" handsfree module and the component shown by the sub-code.
  (1) Disconnect all connectors between the "Bluetooth" handsfree module and the component shown by the sub-code.
  (2) Check for an open or short in the AVC-LAN circuit between the "Bluetooth" handsfree module and the component shown by the sub-code.
  OK:
  There is no open or short circuit.

AV

AVC-LAN WIRING DIAGRAM:

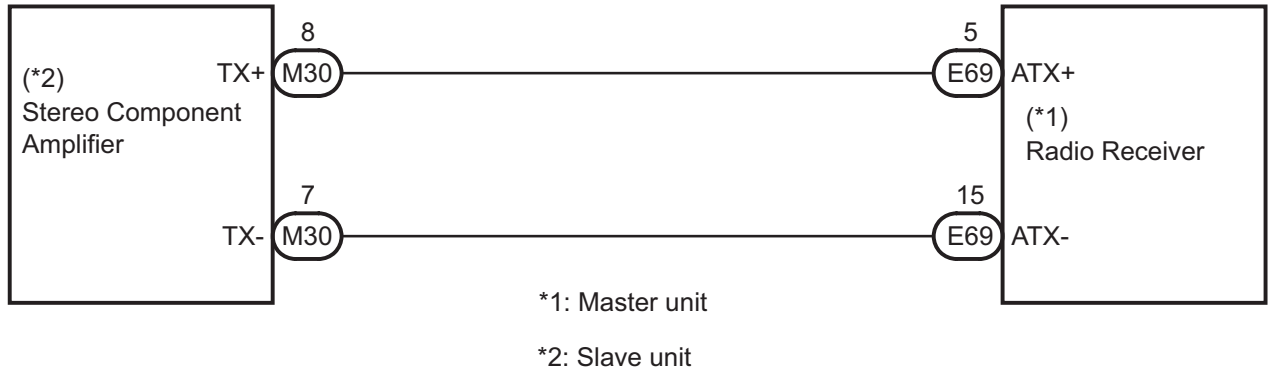

NG → **REPAIR OR REPLACE HARNESS OR CONNECTOR**

OK

6	REPLACE COMPONENT SHOWN BY SUB-CODE

(a) Replace the component shown by the sub-code with a normal one and check if the same problem occurs again.
  OK:
  Same problem does not occur.

NG → **REPLACE RADIO RECEIVER (BUILT-IN "BLUETOOTH" HANDSFREE MODULE)**

OK

END

Radio Receiver Power Source Circuit

DESCRIPTION

This circuit provides power to the radio receiver.

WIRING DIAGRAM

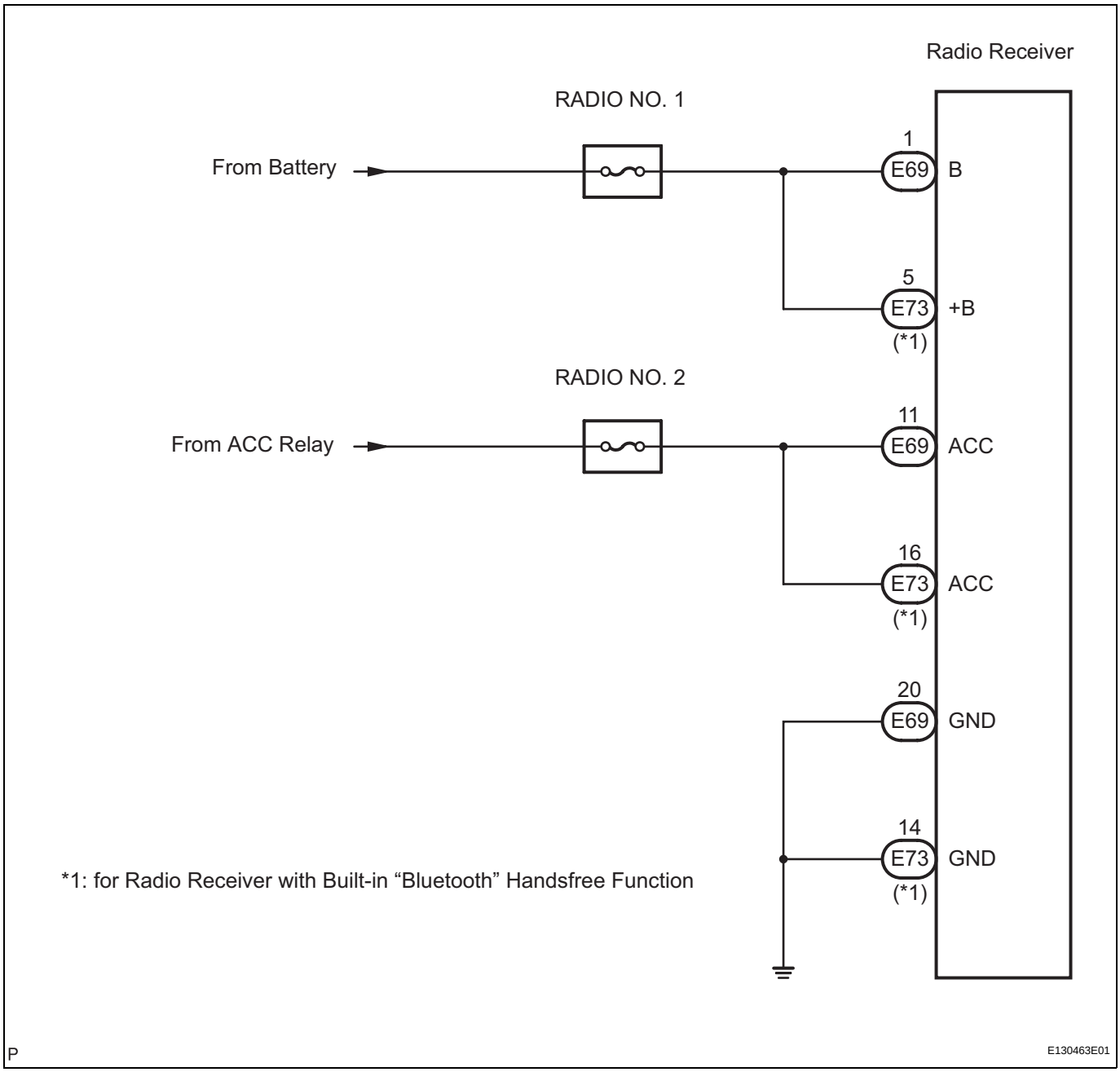

INSPECTION PROCEDURE

1	**INSPECT RADIO RECEIVER**

Wire Harness View:

Radio Receiver (DVD Changer Models)

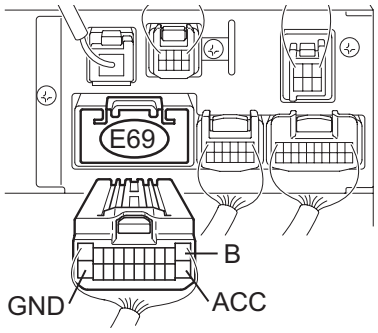

Radio Receiver (CD Changer Models)

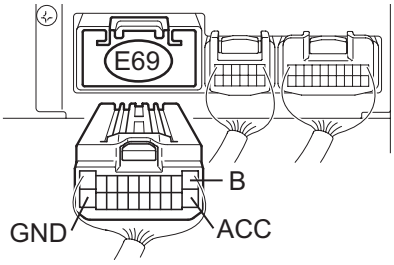

Radio Receiver (with “Bluetooth” Handsfree Module)

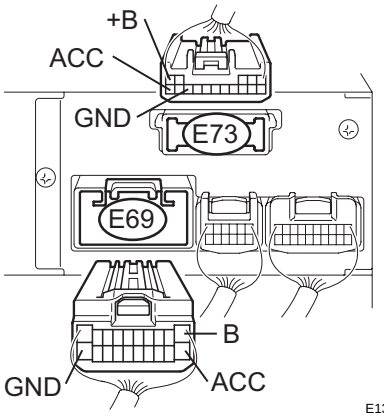

P E130464E01

(a) Disconnect the radio receiver connectors E69 and E73.

(b) Measure the resistance according to the value in the table below.

Standard resistance

Tester Connection	Condition	Specified Condition
GND - Body ground	Always	Below 1 Ω

(c) Measure the voltage according to the values in the table below.

Standard voltage

Tester Connection	Condition	Specified Condition
B - GND	Always	10 to 14 V
+B - GND (*1)	Always	10 to 14 V
ACC - GND	Engine switch on (ACC)	10 to 14 V

*1: for Radio Receiver with Built-in "Bluetooth" Handsfree Function

NG → **REPAIR OR REPLACE HARNESS OR CONNECTOR**

OK

PROCEED TO NEXT CIRCUIT INSPECTION SHOWN IN PROBLEM SYMPTOMS TABLE

AV

Stereo Component Amplifier Power Source Circuit

DESCRIPTION

This circuit provides power to the stereo component amplifier.

WIRING DIAGRAM

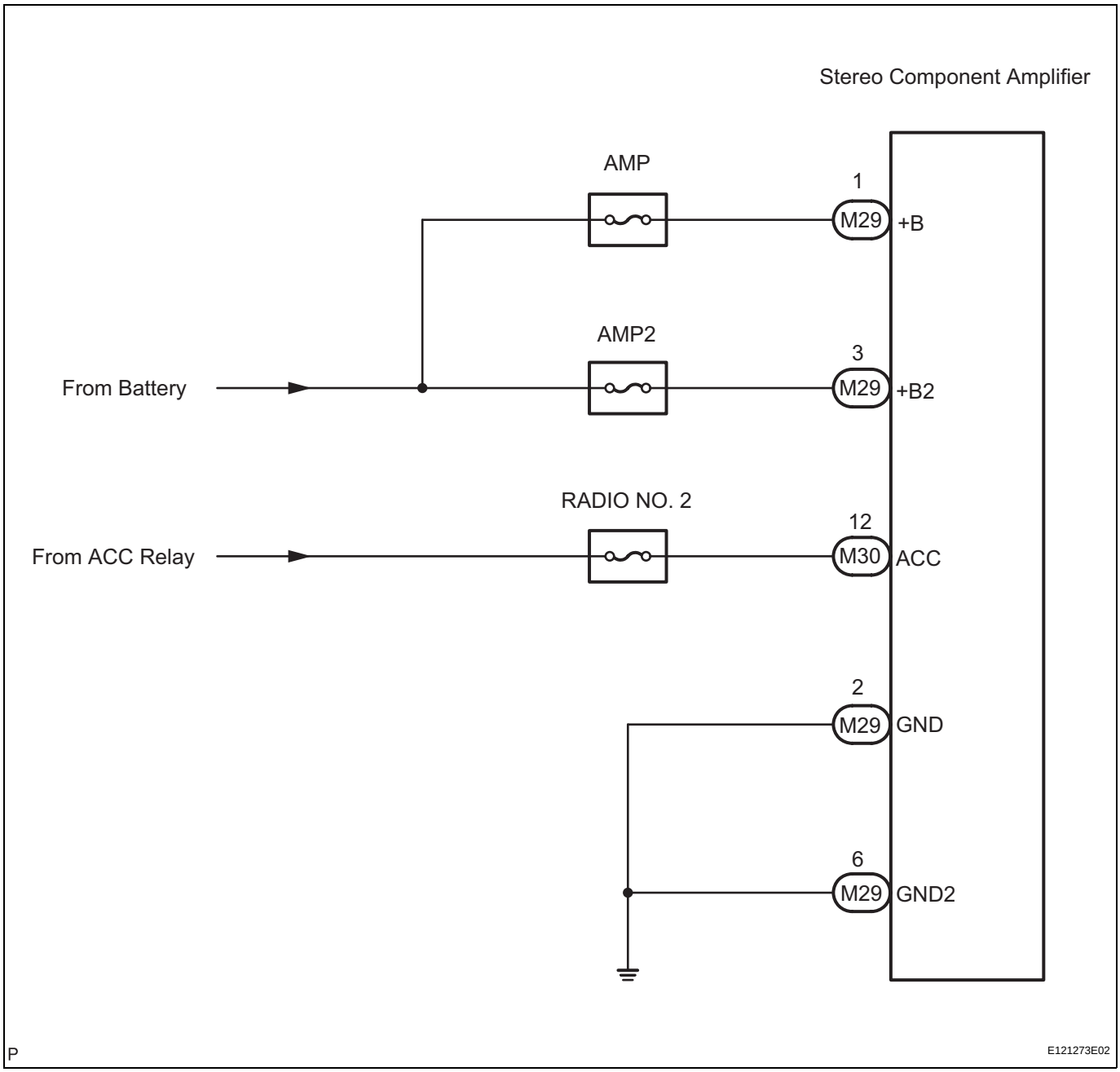

INSPECTION PROCEDURE

1	**INSPECT STEREO COMPONENT AMPLIFIER**

Wire Harness View:

with Rear Header Speaker

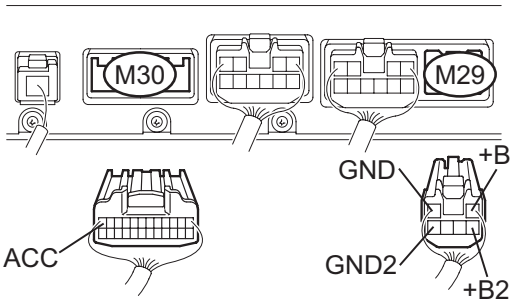

without Rear Header Speaker

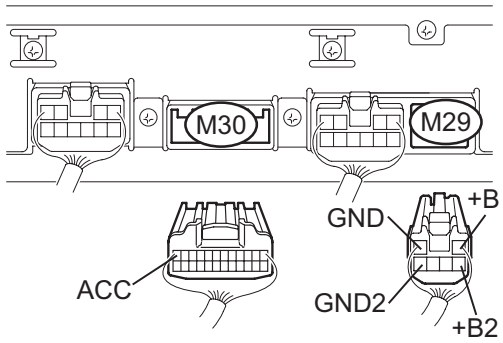

P E130430E01

(a) Disconnect the stereo component amplifier connectors.

(b) Measure the resistance according to the values in the table below.

Standard resistance

Tester Connection	Condition	Specified Condition
GND - Body ground	Always	Below 1 Ω
GND2 - Body ground	Always	Below 1 Ω

(c) Measure the voltage according to the values in the table below.

Standard voltage

Tester Connection	Condition	Specified Condition
+B - GND	Always	10 to 14 V
+B2 - GND	Always	10 to 14 V
ACC - GND	Engine switch on (ACC)	10 to 14 V

NG → **REPAIR OR REPLACE HARNESS OR CONNECTOR**

AV

OK

PROCEED TO NEXT CIRCUIT INSPECTION SHOWN IN PROBLEM SYMPTOMS TABLE

PROBLEM SYMPTOMS TABLE

HINT:
- Before inspecting the suspected areas listed in the table below, check the fuse and relay.
- Before inspecting the suspected areas listed in the table below, check for DTCs.
- Methods used to verify the cause of the problem are listed in order of probability in the suspected area column.

Audio Function:

Symptom	Suspected Area	See page
Pressing power switch does not turn on system.	1. Proceed to "Pressing Power Switch does not Turn on System"	AV-82
	2. Radio receiver power source circuit	AV-162
	3. AVC-LAN circuit	AV-133
	4. Radio receiver	AV-167
Panel switch does not function.	1. Steering pad switch circuit	AV-105
	2. AVC-LAN circuit	AV-133
	3. Radio receiver	AV-167
No sound can be heard from speakers (audio is mute).	1. AVC-LAN circuit	AV-133
	2. Radio receiver power source circuit	AV-162
	3. Proceed to "No Sound can be Heard from Speakers"	AV-83
	4. Stereo component amplifier power source circuit	AV-164
	5. Proceed to "Sound Signal Circuit between Radio Receiver and Stereo Component Amplifier"	AV-124
	6. Speaker circuit	AV-115
	7. Proceed to "Mute Signal Circuit between Radio Receiver and Stereo Component Amplifier"	AV-129
	8. Stereo component amplifier	AV-176
	9. Radio receiver	AV-167
Only DVD sound cannot be heard or sound quality is bad. (with DVD Changer)	1. Proceed to "DVD Sound Signal Circuit between Radio Receiver and Stereo Component Amplifier"	AV-148
	2. Stereo component amplifier	AV-176
	3. Radio receiver	AV-167
Sound quality is bad in all modes. (Volume is too low.)	1. Proceed to "Poor Sound Quality in All Modes (Low Volume)"	AV-98
	2. Speaker circuit	AV-115
	3. Proceed to "Sound Signal Circuit between Radio Receiver and Stereo Component Amplifier"	AV-124
	4. Proceed to "Mute Signal Circuit between Radio Receiver and Stereo Component Amplifier"	AV-129
	5. Stereo component amplifier	AV-176
	6. Radio receiver	AV-167
ASL does not function.	Proceed to "Vehicle Speed Signal Circuit between Stereo Component Amplifier and Combination Meter"	AV-135
External device sound cannot be heard or sound quality is bad. (Stereo jack is used.)	1. Radio receiver power source circuit	AV-162
	2. Proceed to "Sound Signal Circuit between Radio Receiver and Stereo Jack Adapter"	AV-127
	3. Stereo jack adapter (Audio terminal)	AV-240
	4. Radio receiver	AV-167
Abnormal noise occurs.	1. Proceed to "Noise occurs"	AV-80
	2. Stereo component amplifier	AV-176
	3. Radio receiver	AV-167
Radio broadcast cannot be received or poor reception.	Proceed to "Radio Broadcast cannot be Received or Poor Reception"	AV-92

Symptom	Suspected Area	See page
CD cannot be inserted/played or CD is ejected right after insertion.	1. Radio receiver power source circuit	AV-162
	2. Proceed to "CD cannot be Inserted/Played or CD is Ejected Right After Insertion"	AV-88
CD cannot be ejected.	1. Radio receiver power source circuit	AV-162
	2. Proceed to "CD cannot be Ejected"	AV-87
Sound quality is bad only when CD is played. (Volume is too low.)	Proceed to "Sound Quality is Bad Only when CD is Played (Volume is Too Low)"	AV-84
CD sound skips.	Proceed to "CD Sound Skips"	AV-90
Radio receiver cannot be dimmed at night.	1. Dimmer signal circuit	AV-145
	2. Radio receiver	AV-167
Radio receiver cannot be illuminated at night.	Illumination circuit	AV-108
Cassette tape cannot be inserted or played. (*1)	1. Radio receiver power source circuit	AV-162
	2. "Cassette Tape cannot be Inserted or Played"	AV-86
Cassette tape cannot be ejected. (*1)	1. Radio receiver power source circuit	AV-162
	2. "Cassette Tape cannot be Ejected"	AV-85
Sound quality is bad only when playing tape. (*1)	"Sound Quality is Bad Only when Playing Tape"	AV-96
Tape is tangled due to incorrect tape speed or auto-reverse malfunction. (*1)	"Tape is Tangled due to Incorrect Tape Speed or Auto-Reverse Malfunction"	AV-97

Steering Pad Switch Function:

Symptom	Suspected Area	See page
Audio system cannot be operated with steering pad switch.	1. Steering pad switch circuit	AV-105
	2. Radio receiver	AV-167
Steering pad switch cannot be illuminated at night.	Illumination circuit	AV-108

"Bluetooth" Function (*1):

Symptom	Suspected Area	See page
Cellular phone registration failure, phone directory transfer failure.	Proceed to "Cellular Phone Registration Failure, Phone Directory Transfer Failure"	AV-99
Cellular phone cannot send/receive.	1. Proceed to "Cellular Phone cannot Send / Receive"	AV-101
	2. Steering pad switch circuit	AV-105
	3. Radio receiver	AV-167
The other callers voice cannot be heard, is too quiet, or distorted.	1. Proceed to "The Other Callers Voice cannot be Heard, is too Quiet, or Distorted"	AV-103
	2. Proceed to "Cellular Phone Voice Circuit between Radio Receiver and Stereo Component Amplifier"	AV-140
	3. Radio receiver	AV-167
	4. Stereo component amplifier	AV-176
The other caller cannot hear your voice, or your voice is too quiet or distorted.	1. Proceed to "The Other Caller cannot Hear Your Voice, or Your Voice is too Quiet or Distorted"	AV-104
	2. Proceed to "Microphone Circuit between Microphone and Radio Receiver"	AV-142
	3. Microphone	AV-250
	4. Radio receiver	AV-167

*1: for Radio Receiver with Built-in "Bluetooth" Handsfree Function

REMOVAL

1. **REMOVE SHIFT LEVER KNOB SUB-ASSEMBLY (See page IP-16)**
2. **REMOVE UPPER CONSOLE PANEL ASSEMBLY WITH FRONT ASH RECEPTACLE (See page IP-16)**
3. **REMOVE INSTRUMENT PANEL FINISH PANEL END LH (See page IP-13)**
4. **REMOVE INSTRUMENT PANEL FINISH PANEL END RH (See page IP-15)**
5. **REMOVE NO. 2 INSTRUMENT PANEL REGISTER ASSEMBLY (See page IP-17)**
6. **REMOVE INTEGRATION CONTROL PANEL WITH RADIO RECEIVER ASSEMBLY (w/o Navigation System)**
   (a) Remove the 4 bolts.
   (b) Pull the integration control panel with radio receiver assembly toward the rear of the vehicle and disengage the 2 clips.
   (c) Disconnect each connector and remove the integration control panel with radio receiver assembly.

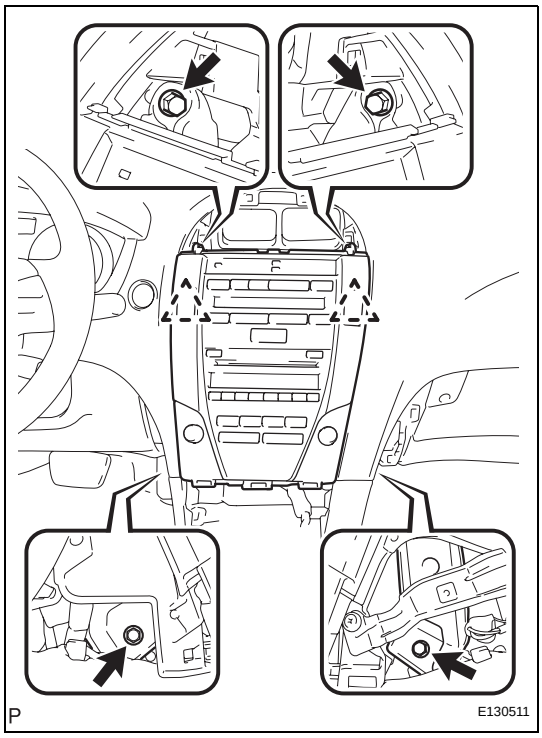

7. **REMOVE NO. 1 RADIO BRACKET (w/o Navigation System)**
   (a) Remove the 4 bolts, screw, and No. 1 radio bracket.

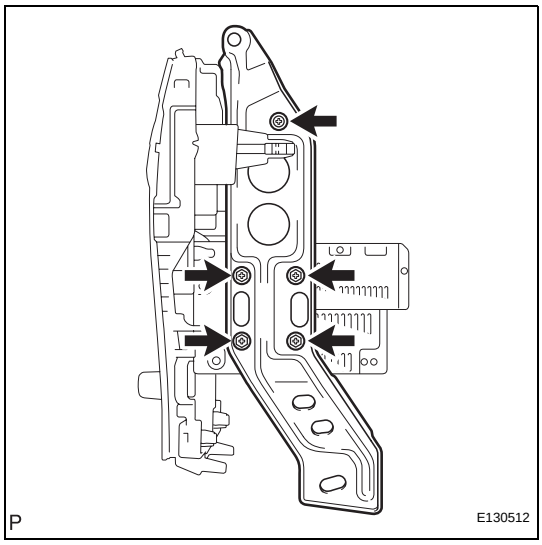

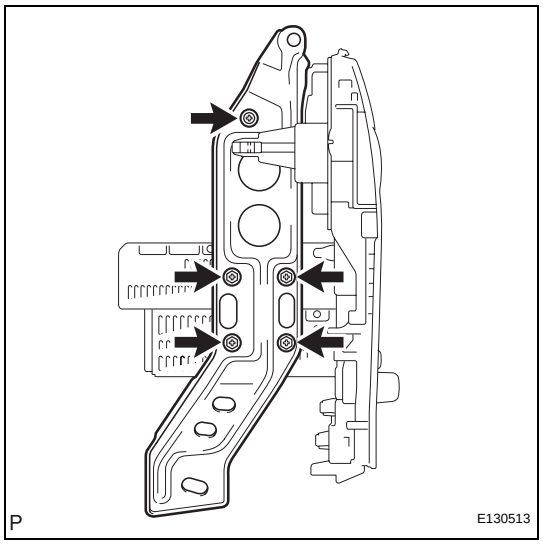

8. REMOVE NO. 2 RADIO BRACKET (w/o Navigation System)

(a) Remove the 4 bolts, screw, and No. 2 radio bracket.

9. REMOVE RADIO RECEIVER ASSEMBLY (w/o Navigation System)

(a) Disengage the 2 claws and 6 clips.

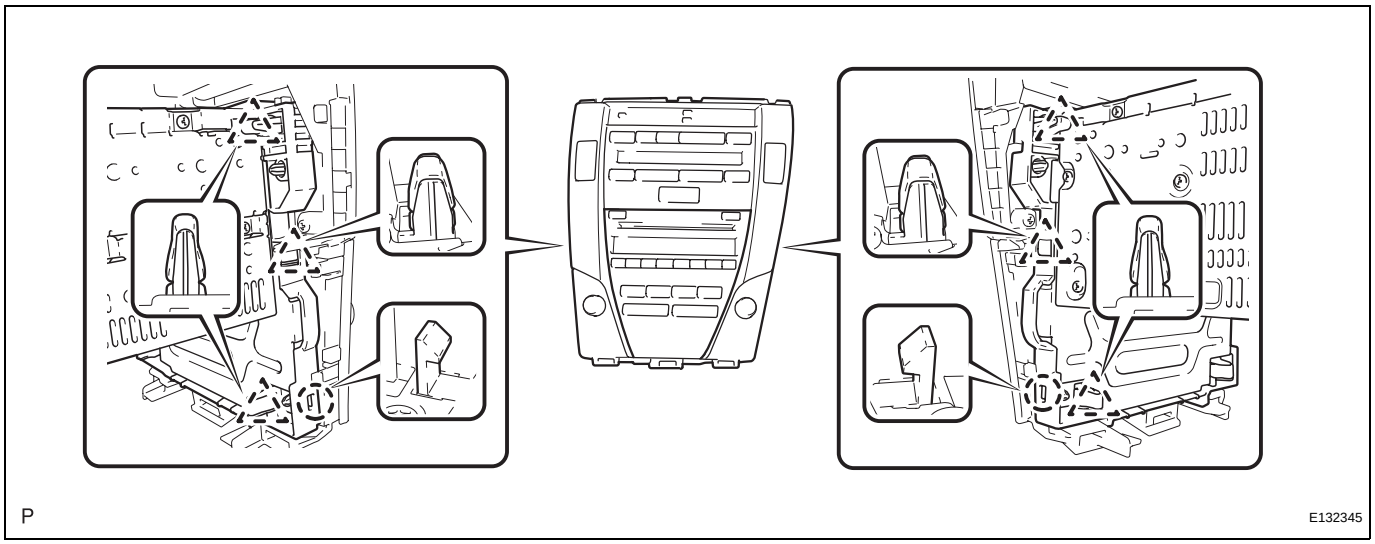

(b) Remove the radio receiver assembly.

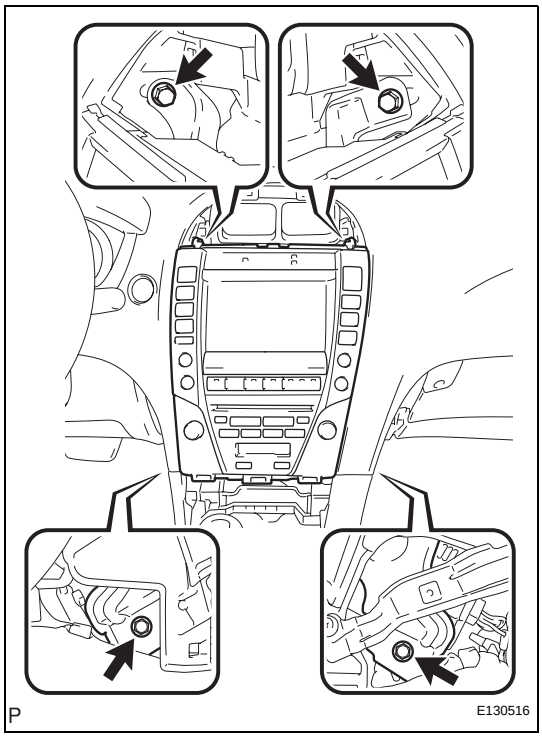

10. REMOVE MULTI-DISPLAY WITH RADIO RECEIVER ASSEMBLY (w/ Navigation System)

(a) Remove the 4 bolts.

(b) Pull the multi-display with radio receiver assembly toward the rear of the vehicle and disengage the 2 clips.

(c) Disconnect each connector and remove the multi-display with radio receiver assembly.

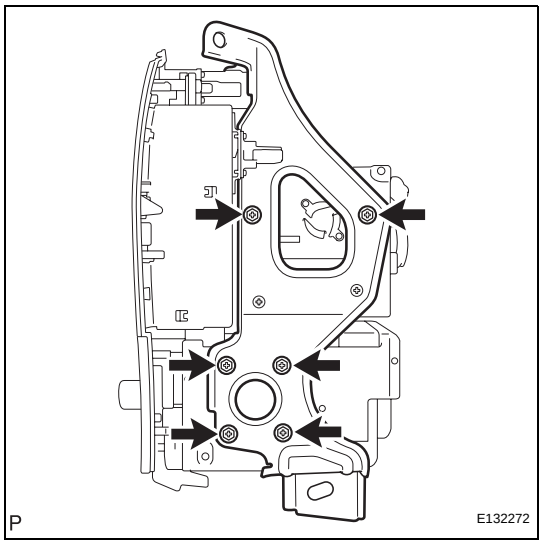

11. REMOVE NO. 1 RADIO BRACKET (w/ Navigation System)

(a) Remove the 6 bolts and No. 1 radio bracket.

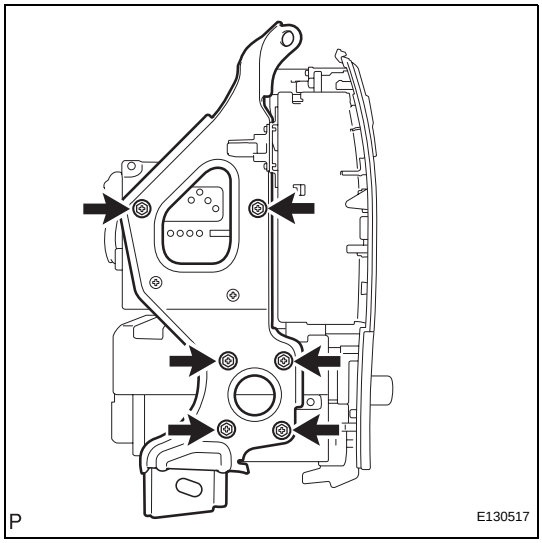

12. REMOVE NO. 2 RADIO BRACKET (w/ Navigation System)

(a) Remove the 6 bolts and No. 2 radio bracket.

13. REMOVE RADIO RECEIVER ASSEMBLY (w/ Navigation System)

(a) Disengage the 2 claws and 4 clips.

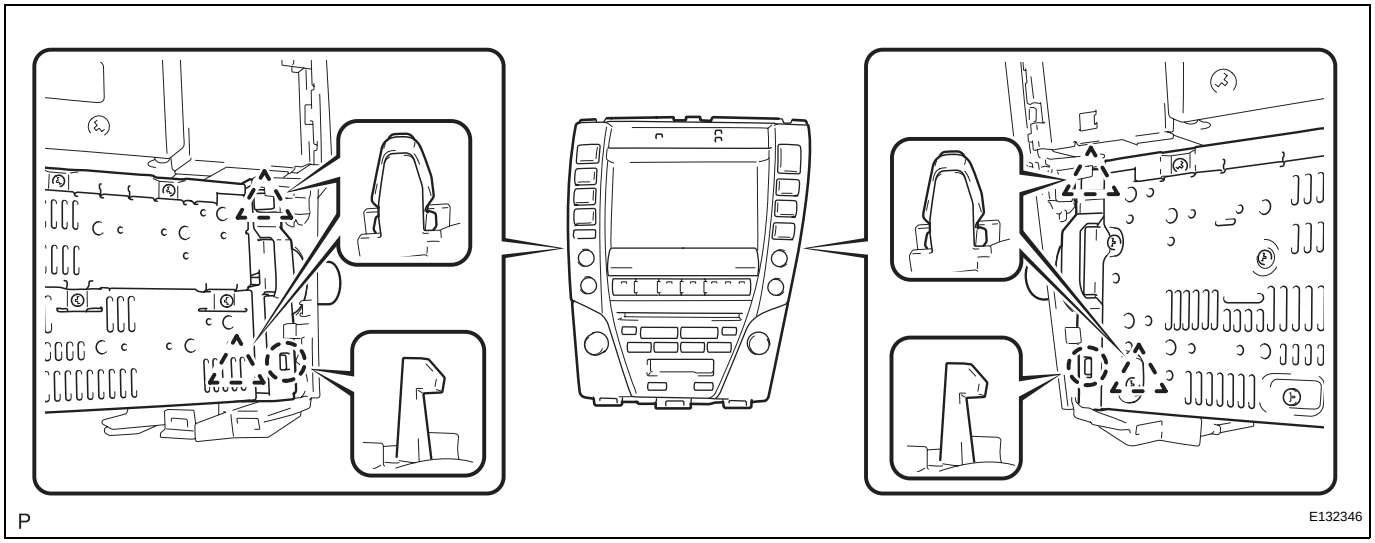

(b) Remove the radio receiver assembly.

INSTALLATION

1. **INSTALL RADIO RECEIVER ASSEMBLY (w/o Navigation System)**
   (a) Engage the 2 claws and 6 clips and install the radio receiver assembly.

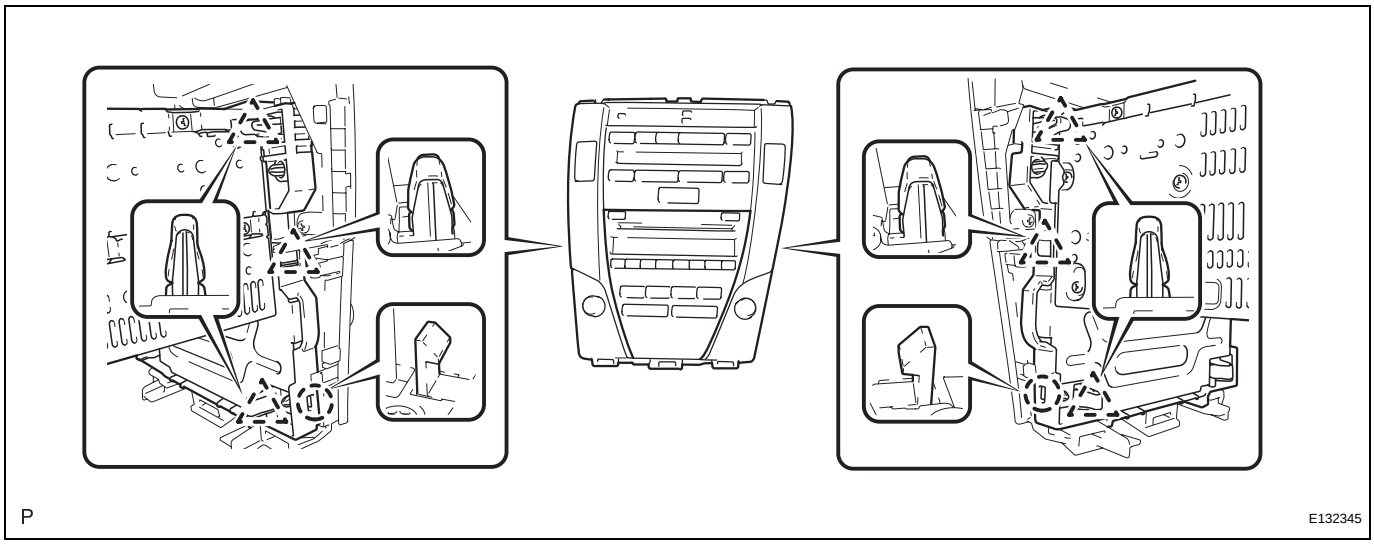

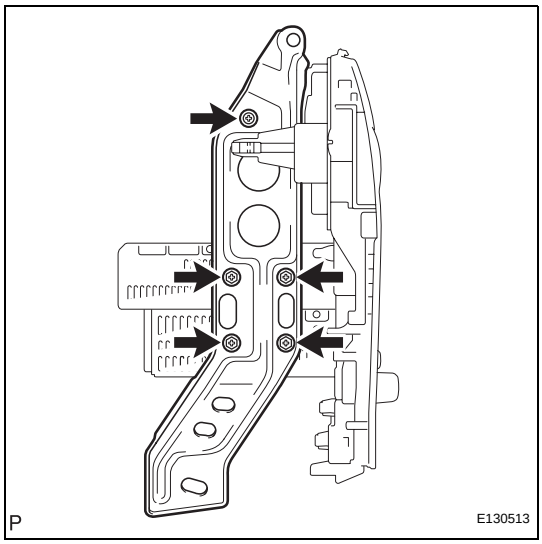

2. **INSTALL NO. 2 RADIO BRACKET (w/o Navigation System)**
   (a) Install the No. 2 radio bracket with the 4 bolts and screw.

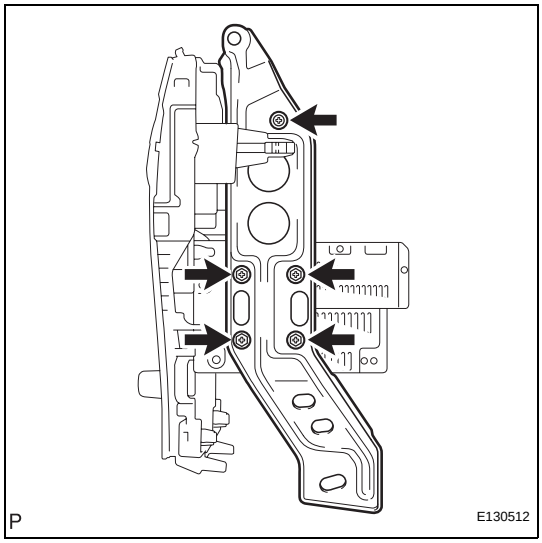

3. **INSTALL NO. 1 RADIO BRACKET (w/o Navigation System)**
   (a) Install the No. 1 radio bracket with the 4 bolts and screw.

4. **INSTALL INTEGRATION CONTROL PANEL WITH RADIO RECEIVER ASSEMBLY (w/o Navigation System)**
   (a) Connect each connector.

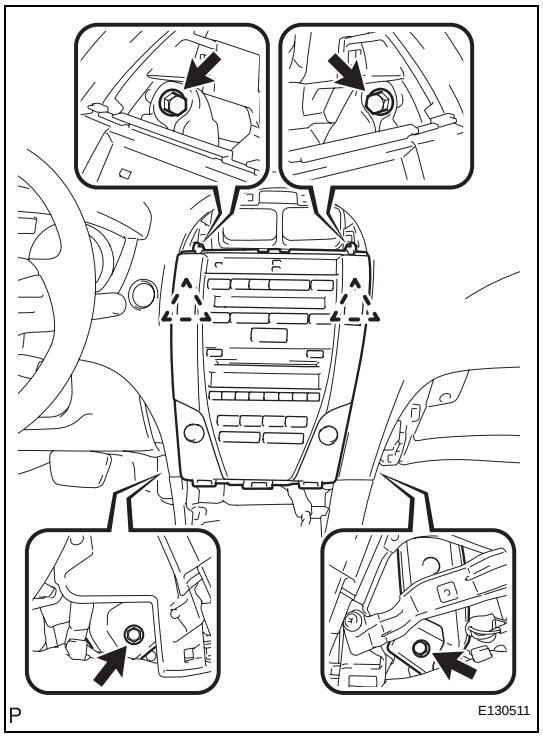

(b) Engage the 2 clips.
(c) Install the integration control panel with radio receiver assembly with the 4 bolts.

5. INSTALL RADIO RECEIVER ASSEMBLY (w/ Navigation System)

(a) Engage the 2 claws and 4 clips and install the radio receiver assembly.

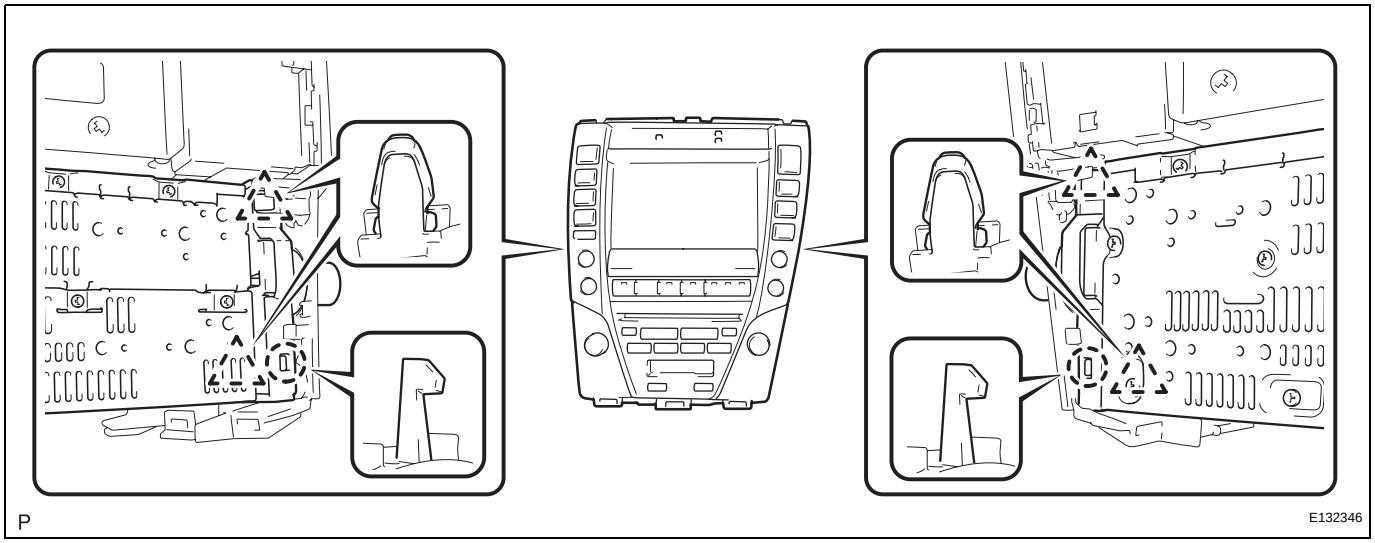

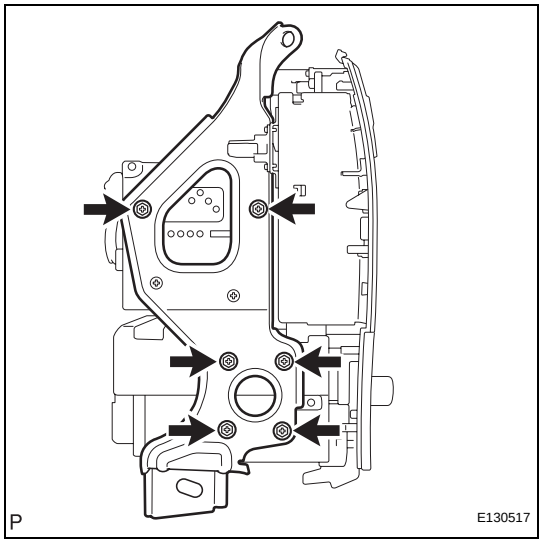

6. INSTALL NO. 2 RADIO BRACKET (w/ Navigation System)

(a) Install the No. 2 radio bracket with the 6 bolts.

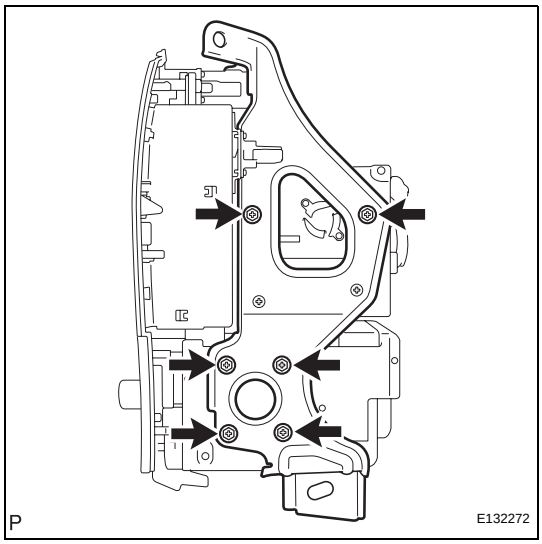

7. **INSTALL NO. 1 RADIO BRACKET (w/ Navigation System)**
   (a) Install the No. 1 radio bracket with the 6 bolts.

8. **INSTALL MULTI-DISPLAY WITH RADIO RECEIVER ASSEMBLY (w/ Navigation System)**
   (a) Connect each connector.

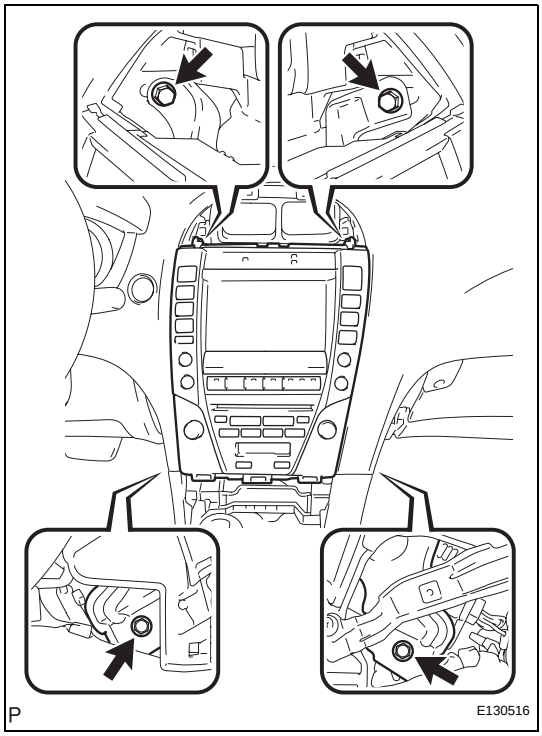

   (b) Engage the 2 clips.
   (c) Install the multi-display with radio receiver assembly with the 4 bolts.

9. **INSTALL INSTRUMENT PANEL FINISH PANEL END LH (See page IP-46)**

10. **INSTALL INSTRUMENT PANEL FINISH PANEL END RH (See page IP-44)**

11. **INSTALL UPPER CONSOLE PANEL ASSEMBLY WITH FRONT ASH RECEPTACLE (See page IP-42)**

12. **INSTALL NO. 2 INSTRUMENT PANEL REGISTER ASSEMBLY (See page IP-41)**

13. **INSTALL SHIFT LEVER KNOB SUB-ASSEMBLY (See page IP-42)**

14. **ADJUST CLOCK**

TERMINALS OF ECU

1. RADIO RECEIVER

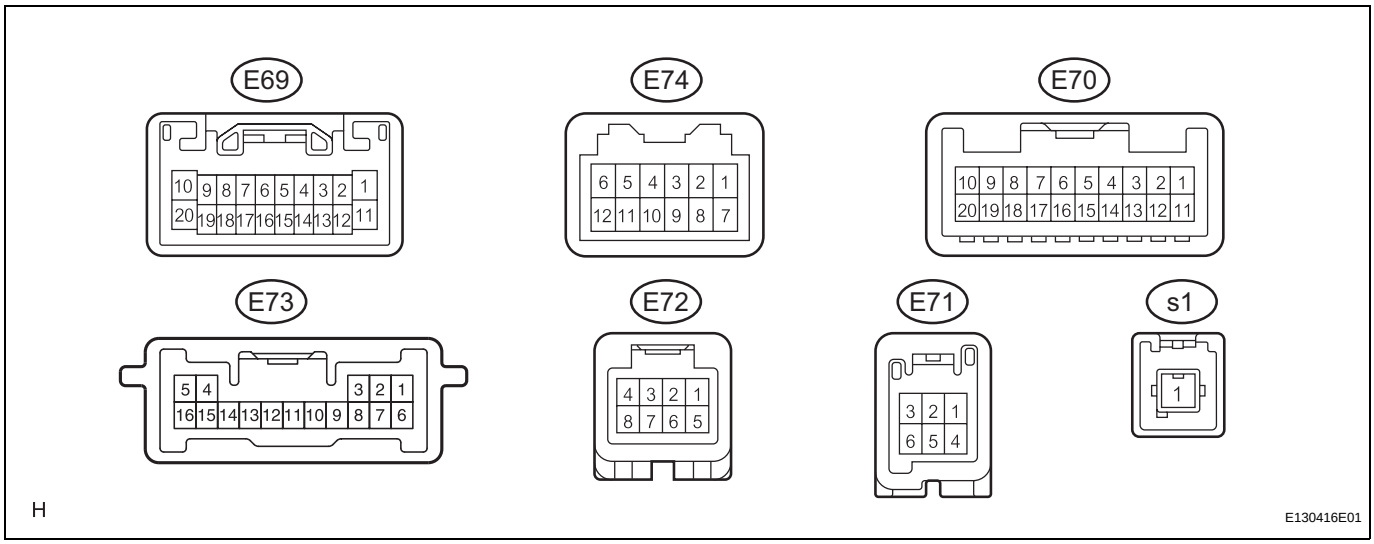

Symbols (Terminal No.)	Wiring Color	Terminal Description	Condition	Specification
B (E69-1) - GND (E69-20)	L - W-B	Battery	Always	10 to 14 V
ILL+ (E69-2) - GND (E69-20)	G - W-B	Illumination signal	Light control switch OFF	Below 1 V
ILL+ (E69-2) - GND (E69-20)	G - W-B	Illumination signal	Light control switch TAIL	10 to 14 V
ATX+ (E69-5) - GND (E69-20)	G - W-B	AVC-LAN communication signal	Turn engine switch on (ACC)	2 to 3 V
MUTE (E69-7) - GND (E69-20)	GR - W-B	Mute signal	Audio system is playing	Above 3.5 V
MUTE (E69-7) - GND (E69-20)	GR - W-B	Mute signal	Audio system is changing	Below 1 V
R+ (E69-8) - GND (E69-20)	R - W-B	Sound signal (Right)	Audio system is playing	A waveform synchronized with sounds is output
L+ (E69-9) - GND (E69-20)	B - W-B	Sound signal (Left)	Audio system is playing	A waveform synchronized with sounds is output
SLD (E69-10) - Body ground	Shielded - Body ground	Shielded ground	Always	Below 1 V
ACC (E69-11) - GND (E69-20)	GR - W-B	Accessory (ON)	Turn engine switch off	Below 1 V
ACC (E69-11) - GND (E69-20)	GR - W-B	Accessory (ON)	Turn engine switch on (ACC)	10 to 14 V
ILL- (E69-12) - GND (E69-20)	W - W-B	Illumination signal	Light control switch OFF	Below 1 V
ILL- (E69-12) - GND (E69-20)	W - W-B	Illumination signal	Light control switch TAIL	10 to 14 V
ANT (E69-13) - GND (E69-20)	LG - W-B	Power source of antenna	Radio switch ON and AM or FM	10 to 14 V
ATX- (E69-15) - GND (E69-20)	R - W-B	AVC-LAN communication signal	Turn engine switch on (ACC)	2 to 3 V
R- (E69-18) - GND (E69-20)	G - W-B	Sound signal (Right)	Audio system is playing	A waveform synchronized with sounds is output
L- (E69-19) - GND (E69-20)	W - W-B	Sound signal (Left)	Audio system is playing	A waveform synchronized with sounds is output
GND (E69-20) - Body ground	W-B - Body ground	Ground	Always	Below 1 V
SWG (E70-6) - GND (E69-20)	B - W-B	Steering pad switch ground	Always	Below 1 V
SW1 (E70-7) - GND (E69-20)	O - W-B	Steering pad switch signal	Steering pad switch not operated	4 V or higher
SW1 (E70-7) - GND (E69-20)	O - W-B	Steering pad switch signal	SEEK+ switch pushed	Approx. 0.5 V
SW1 (E70-7) - GND (E69-20)	O - W-B	Steering pad switch signal	SEEK- switch pushed	Approx. 0.9 V
SW1 (E70-7) - GND (E69-20)	O - W-B	Steering pad switch signal	VOL+ switch pushed	Approx. 2.0 V
SW1 (E70-7) - GND (E69-20)	O - W-B	Steering pad switch signal	VOL- switch pushed	Approx. 3.4 V

Symbols (Terminal No.)	Wiring Color	Terminal Description	Condition	Specification
SW2 (E70-8) - GND (E69-20)	V - W-B	Steering pad switch signal	Steering pad switch not operated	4 V or more
SW2 (E70-8) - GND (E69-20)	V - W-B	Steering pad switch signal	MODE switch pushed	Approx. 0.5 V
SW2 (E70-8) - GND (E69-20) (*4)	V - W-B	Steering pad switch signal	ON HOOK switch pushed	Approx. 0.9 V
SW2 (E70-8) - GND (E69-20) (*4)	V - W-B	Steering pad switch signal	OFF HOOK switch pushed	Approx. 2.0 V
SW2 (E70-8) - GND (E69-20) (*1)	V - W-B	Steering pad switch signal	VOICE switch pushed	Approx. 3.4 V
TX+ (E70-9) - GND (E69-20) (*1)	L - W-B	AVC-LAN communication signal	Turn engine switch on (ACC)	2 to 3 V
TX- (E70-10) - GND (E69-20) (*1)	LG - W-B	AVC-LAN communication signal	Turn engine switch on (ACC)	2 to 3 V
IO1+ (E70-11) - GND (E69-20) (*4)	Y - W-B	"Bluetooth" voice signal	"Bluetooth" handsfree voice signal is playing	A waveform synchronized with sounds is output
IO1- (E70-12) - GND (E69-20) (*4)	BR - W-B	"Bluetooth" voice signal	"Bluetooth" handsfree voice signal is playing	A waveform synchronized with sounds is output
ARI (E70-15) - GND (E69-20) (*2)	B - W-B	Sound signal (Right)	External device is playing (When stereo jack adapter is used)	A waveform synchronized with sounds is output
ASGN (E70-16) - GND (E69-20) (*2)	W - W-B	Ground	Always	Below 1 V
ALI (E70-17) - GND (E69-20) (*2)	R - W-B	Sound signal (Left)	External device is playing (When stereo jack adapter is used)	A waveform synchronized with sounds is output
AUXI (E70-19) - GND (E69-20) (*2)	G - W-B	External device connection detection signal	External device is connected	Below 1 V
ADIM (E70-20) - GND (E69-20)	L - W-B	Illumination (auto dimmer) signal	Turn engine switch on (IG), headlight dimmer switch in TAIL or ON and auto light control sensor covered by hand	Above 9 V
ARI (E71-2) - GND (E69-20) (*3)	B - W-B	Sound signal (Right)	External device is playing (When stereo jack adapter is used)	A waveform synchronized with sounds is output
ASGN (E71-5) - GND (E69-20) (*3)	W - W-B	Ground	Always	Below 1 V
ALI (E71-3) - GND (E69-20) (*3)	R - W-B	Sound signal (Left)	External device is playing (When stereo jack adapter is used)	A waveform synchronized with sounds is output
AUXI (E71-6) - GND (E69-20) (*3)	G - W-B	External device connection detection signal	External device is connected	Below 1 V
NTSC (E72-1) - GND (E69-20) (*3)	BR - W-B	DVD image signal	DVD played on multi-display	Pulse generation Refer to waveform 1
GND (E72-2) - Body ground (*3)	Y - Body ground	Ground	Always	Below 1 V
SLD (E72-3) - Body ground (*3)	Shielded - Body ground	Shielded - Body ground	Always	Below 1 V
DVD (s1-1) - GND (E69-20) (*3)	B - W-B	Digital sound signal	DVD played on multi-display	Pulse generation
MIC- (E73-1) - GND (E69-20) (*4)	R - W-B	Microphone voice signal	"Bluetooth" handsfree function is ON	A waveform synchronized with sounds is output
MIC+ (E73-2) - GND (E69-20) (*4)	G - W-B	Microphone voice signal	"Bluetooth" handsfree function is ON	A waveform synchronized with sounds is output
TSW- (E73-3) - GND (E69-20) (*4)	W - W-B	Ground	Always	Below 1 V
+B (E73-5) - GND (E69-20) (*4)	L - W-B	Battery	Always	10 to 14 V
MGND (E73-6) - GND (E69-20) (*4)	W - W-B	Ground	Always	Below 1 V

Symbols (Terminal No.)	Wiring Color	Terminal Description	Condition	Specification
MCVD (E73-7) - GND (E69-20) (*4)	W - W-B	Microphone AMP power supply	Turn engine switch on (IG)	5 V
GND (E73-14) - Body ground (*4)	W-B - Body ground	Ground	Always	Below 1 V
ACC (E73-16) - GND (E69-20) (*4)	GR - W-B	Accessory (ON)	Turn engine switch on (ACC)	10 to 14 V

*1: with Navigation System
*2: for CD Changer Models
*3: for DVD Changer Models
*4: for Radio Receiver with Built-in "Bluetooth" Handsfree Function

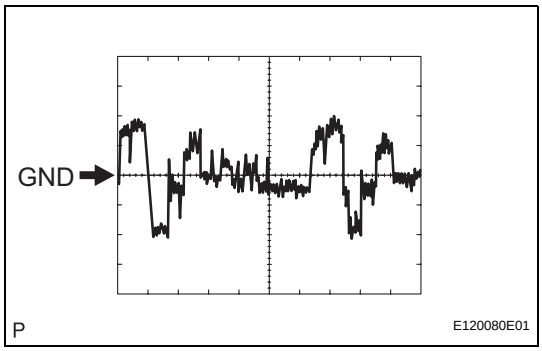

(a) Reference: waveform 1
HINT:
- Terminal: NTSC - Body ground
- Setting: 200 mV/DIV, 10 μs/DIV
- Condition: DVD played on multi-display.

2. STEREO COMPONENT AMPLIFIER

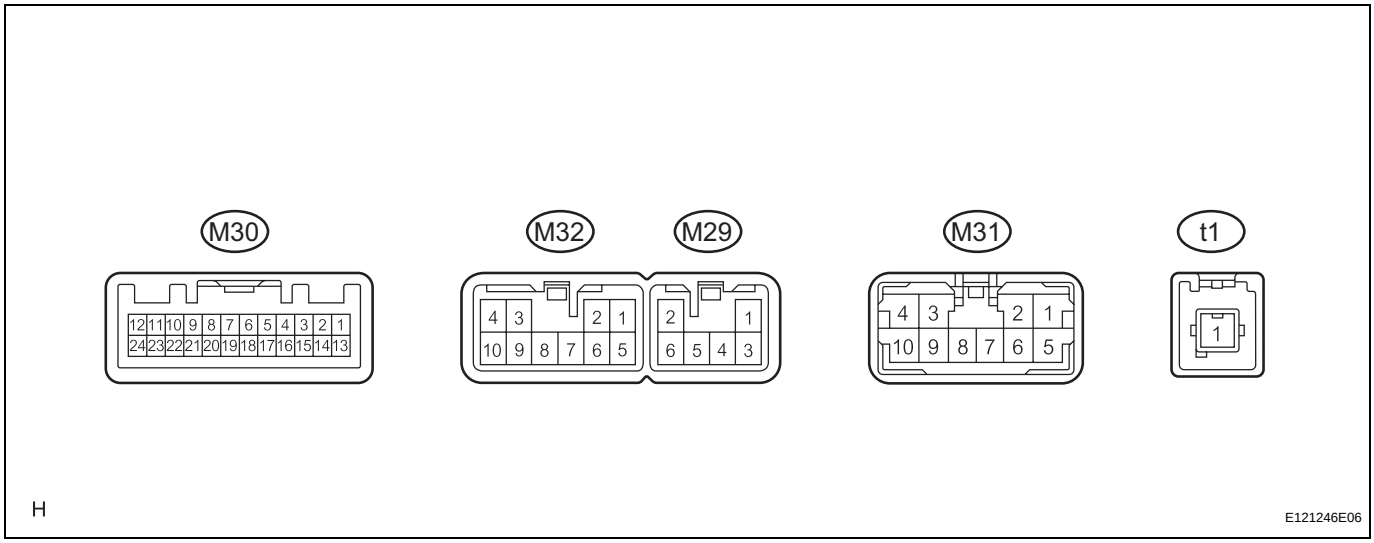

Symbols (Terminal No.)	Wiring Color	Terminal Description	Condition	Specification
+B (M29-1) - GND (M29-2)	L - W-B	Battery	Always	10 to 14 V
GND (M29-2) - Body ground	W-B - Body ground	Ground	Always	Below 1 V
+B2 (M29-3) - GND (M29-2) (*1)	L - W-B	Battery	Always	10 to 14 V
GND2 (M29-6) - Body ground	W-B - Body ground	Ground	Always	Below 1 V
WF1+ (M32-1) - GND (M29-2)	G - W-B	Sound signal	Audio system is playing	A waveform synchronized with sounds is output
WF2+ (M32-2) - GND (M29-2)	R - W-B	Sound signal	Audio system is playing	A waveform synchronized with sounds is output
SR+ (M32-2) - GND (M29-2) (*1)	R - W-B	Sound signal	Audio system is playing	A waveform synchronized with sounds is output
CTR+ (M32-3) - GND (M29-2)	R - W-B	Sound signal	Audio system is playing	A waveform synchronized with sounds is output
WFL+ (M32-4) - GND (M29-2) (*1)	R - W-B	Sound signal	Audio system is playing	A waveform synchronized with sounds is output

Symbols (Terminal No.)	Wiring Color	Terminal Description	Condition	Specification
WF1- (M32-5) - GND (M29-2) (*1)	B - W-B	Sound signal	Audio system is playing	A waveform synchronized with sounds is output
WF2- (M32-6) - GND (M29-2)	W - W-B	Sound signal	Audio system is playing	A waveform synchronized with sounds is output
SR- (M32-6) - GND (M29-2) (*1)	W - W-B	Sound signal	Audio system is playing	A waveform synchronized with sounds is output
SL- (M32-7) - GND (M29-2) (*1)	P - W-B	Sound signal	Audio system is playing	A waveform synchronized with sounds is output
SL+ (M32-8) - GND (M29-2) (*1)	V - W-B	Sound signal	Audio system is playing	A waveform synchronized with sounds is output
CTR- (M32-9) - GND (M29-2)	W - W-B	Sound signal	Audio system is playing	A waveform synchronized with sounds is output
WFL- (M32-10) - GND (M29-2) (*1)	W - W-B	Sound signal	Audio system is playing	A waveform synchronized with sounds is output
WFR+ (M31-1) - GND (M29-2) (*1)	G - W-B	Sound signal	Audio system is playing	A waveform synchronized with sounds is output
FL+ (M31-2) - GND (M29-2)	P - W-B	Sound signal	Audio system is playing	A waveform synchronized with sounds is output
RL+ (M31-3) - GND (M29-2)	B - W-B	Sound signal	Audio system is playing	A waveform synchronized with sounds is output
RR+ (M31-4) - GND (M29-2)	R - W-B	Sound signal	Audio system is playing	A waveform synchronized with sounds is output
WFR- (M31-5) - GND (M29-2) (*1)	B - W-B	Sound signal	Audio system is playing	A waveform synchronized with sounds is output
FL- (M31-6) - GND (M29-2)	V - W-B	Sound signal	Audio system is playing	A waveform synchronized with sounds is output
FR- (M31-7) - GND (M29-2)	L - W-B	Sound signal	Audio system is playing	A waveform synchronized with sounds is output
FR+ (M31-8) - GND (M29-2)	LG - W-B	Sound signal	Audio system is playing	A waveform synchronized with sounds is output
RL- (M31-9) - GND (M29-2)	Y - W-B	Sound signal	Audio system is playing	A waveform synchronized with sounds is output
RR- (M31-10) - GND (M29-2)	W - W-B	Sound signal	Audio system is playing	A waveform synchronized with sounds is output
MUTE (M30-1) - GND (M29-2)	GR - W-B	Mute signal	Audio system is playing	Above 3.5 V
MUTE (M30-1) - GND (M29-2)	GR - W-B	Mute signal	Audio system is changing	Below 1 V
L- (M30-2) - GND (M29-2)	W - W-B	Sound signal (Left)	Audio system is playing	A waveform synchronized with sounds is output
L+ (M30-3) - GND (M29-2)	B - W-B	Sound signal (Left)	Audio system is playing	A waveform synchronized with sounds is output
R- (M30-4) - GND (M29-2)	G - W-B	Sound signal (Right)	Audio system is playing	A waveform synchronized with sounds is output
R+ (M30-5) - GND (M29-2)	R - W-B	Sound signal (Right)	Audio system is playing	A waveform synchronized with sounds is output
SLD (M30-6) - Body ground	Shielded - Body ground	Shielded ground	Always	Below 1 V
TX- (M30-7) - GND (M29-2)	R - W-B	AVC-LAN communication signal	Turn engine switch on (ACC)	2 to 3 V
TX+ (M30-8) - GND (M29-2)	G - W-B	AVC-LAN communication signal	Turn engine switch on (ACC)	2 to 3 V
SPD (M30-11) - GND (M29-2)	SB - W-B	Speed signal	Turn engine switch on (IG), drive wheels are turned slowly	Pulse generation
ACC (M30-12) - GND (M29-2)	GR - W-B	Accessory (ON)	Turn engine switch off	Below 1 V
ACC (M30-12) - GND (M29-2)	GR - W-B	Accessory (ON)	Turn engine switch on (ACC)	10 to 14 V

Symbols (Terminal No.)	Wiring Color	Terminal Description	Condition	Specification
II1- (M30-14) - GND (M29-2)	BR - W-B	Voice guidance signal	Navigation voice or "Bluetooth" handsfree voice signal is provided	A waveform synchronized with sounds is output
II1+ (M30-15) - GND (M29-2)	Y - W-B	Voice guidance signal	Navigation voice or "Bluetooth" handsfree voice signal is provided	A waveform synchronized with sounds is output
DVD (t1-1) - GND (M29-2) (*1)	B - W-B	Digital sound signal	DVD played on multi-display	Pulse generation

*1: with Rear Header Speaker

REMOVAL

1. **REMOVE LUGGAGE COMPARTMENT FLOOR MAT**
2. **REMOVE SPARE WHEEL COVER TRAY**
3. **REMOVE LUGGAGE HOLD BELT STRIKER ASSEMBLY (See page ED-82)**
4. **REMOVE NO. 1 LUGGAGE COMPARTMENT TRIM HOOK (See page ED-83)**
5. **REMOVE REAR FLOOR FINISH PLATE (See page ED-83)**
6. **REMOVE LUGGAGE COMPARTMENT INNER TRIM COVER RH**
   (a) Remove the 3 clips and the luggage compartment inner trim cover RH.
7. **REMOVE CLEARANCE WARNING ECU ASSEMBLY (w/ Intuitive Parking Assist System) (See page PM-93)**
8. **REMOVE SEAT BELT CONTROL ECU (w/ Pre-collision System) (See page SB-65)**
9. **REMOVE STEREO COMPONENT AMPLIFIER ASSEMBLY WITH BRACKET**
   (a) Disconnect each connector.
   (b) Remove the 3 nuts and the stereo component amplifier assembly with bracket.

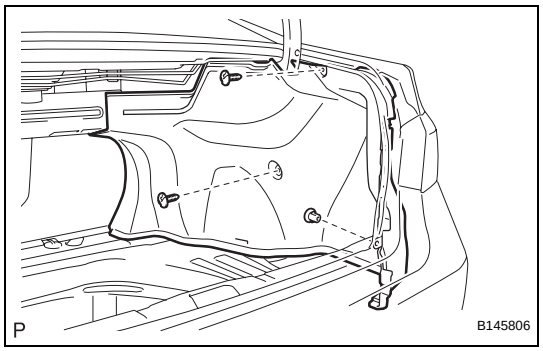

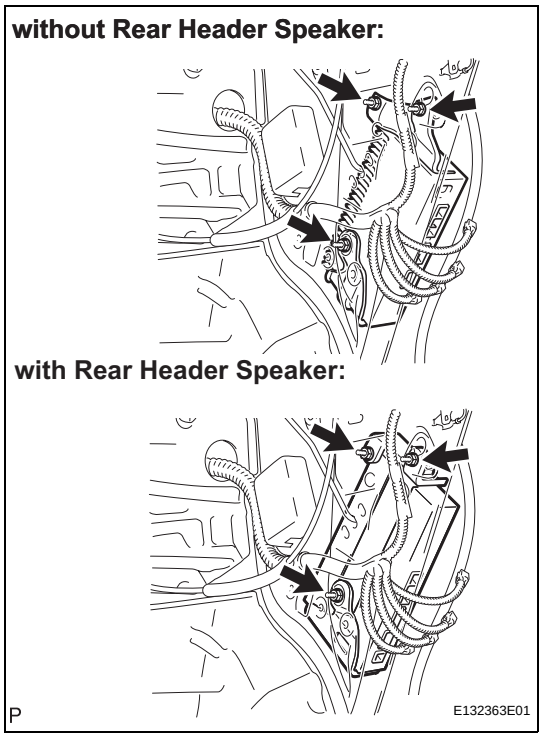

AV

without Rear Header Speaker:

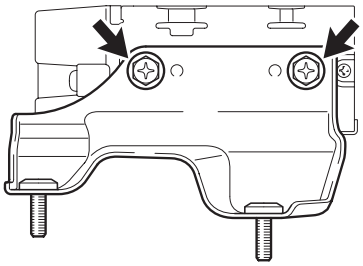

with Rear Header Speaker:

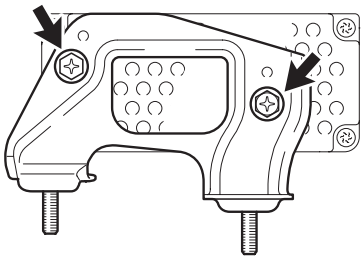

P E132279E01

10. REMOVE NO. 1 AMPLIFIER BRACKET

(a) Remove the 2 bolts and the No. 1 amplifier bracket.

AV

without Rear Header Speaker:

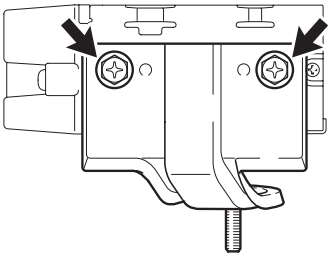

with Rear Header Speaker:

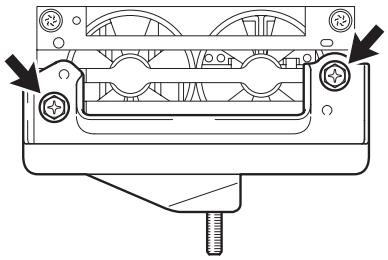

P E132280E01

11. REMOVE NO. 2 AMPLIFIER BRACKET

(a) Remove the 2 bolts and the No. 2 amplifier bracket.

12. REMOVE STEREO COMPONENT AMPLIFIER ASSEMBLY

DTC CHECK / CLEAR

HINT:
If the system cannot enter the diagnostic mode, inspect all AVC-LAN communication signals and repair or replace problem parts.
(See page AV-133)

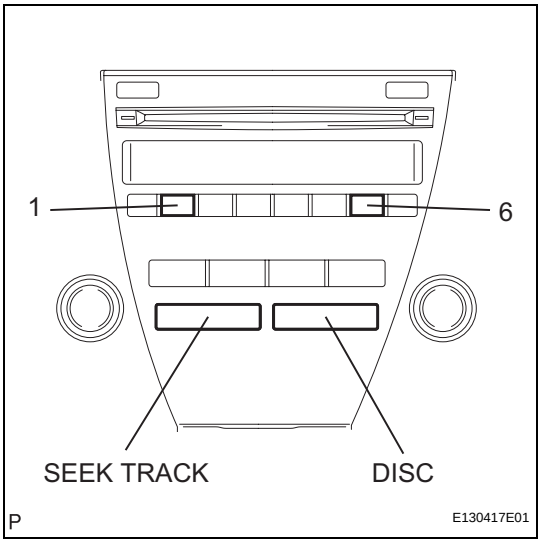

1. ENTERING DIAGNOSTIC MODE

(a) Turn the engine switch on (ACC).
(b) Turn off the audio system.
(c) While pressing the preset switches "1" and "6" at the same time, press the "DISC" switch 3 times.
HINT:
A beep is emitted 3 times and the diagnostic function is activated. The system enters the all element illumination mode and the switch check mode.

2. ALL ELEMENT ILLUMINATION MODE AND SWITCH CHECK MODE

HINT:
Illumination status of all switches and operations of the panel switches can be checked.

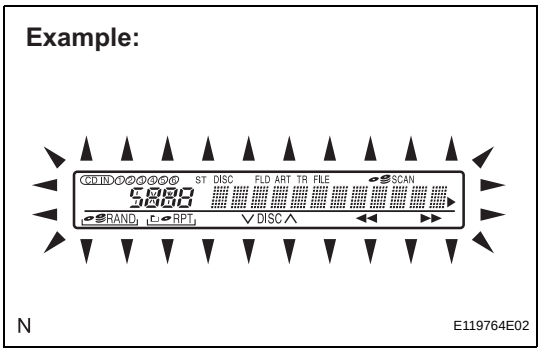

(a) Check that all elements are on.
(b) When pressing each panel switch, check that a beep is emitted.
NOTICE:
Pressing the "SEEK TRACK UP" switch transfers the screen to the stereo jack adapter connection check screen. Check the operation of this switch by confirming the transfer of the screen.

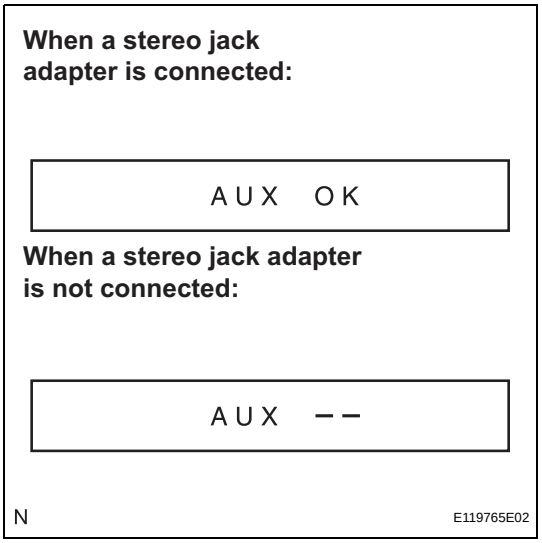

3. STEREO JACK ADAPTER CONNECTION CHECK MODE

(a) Press the "SEEK TRACK UP" switch.
(b) Check if the stereo jack adapter is recognized.
HINT:
Vehicles that do not have a stereo jack adapter also have this function.
NOTICE:
This function is not to check connection information on an external device, but to check recognition information on a stereo jack adapter.

4. SERVICE CHECK MODE

(a) Press the "SEEK TRACK UP" switch.
HINT:
For details of the service check mode, refer to "6. CHECK DTC" and "7. DTC CLEAR/RECHECK".

5. FINISHING DIAGNOSTIC MODE

(a) Press the "DISC" switch for 2 seconds or more, or turn the engine switch off.

AV

6. CHECK DTC

HINT:
Illustrations may differ from the actual vehicle depending on the device settings and options. Therefore, some detailed areas may not be shown exactly the same as on the actual vehicle.

(a) Reference:
In the system check mode, the system check and the diagnostic memory check are performed, and the check results are displayed in ascending order of the component codes (physical address).

Terms	Meaning
Component code (Physical address)	Three-digit code (in hexadecimal) given to each device comprising AVC-LAN. Corresponding to its function, individual symbol is provided.
Logical address	Two-digit code (in hexadecimal) given to each function and device unit in each device comprising AVC-LAN.

(b) Service check result display

Display	Previous term	Meaning	Action to be taken
good	Good (normal)	No DTCs are detected in both "System Check Mode" and "Diagnostic Memory Mode".	-
nCon	No connection	The system recognized the component when it was registered, but the component gives no response to the "Diagnostic Mode ON Request".	Check the power source circuit and the communication circuit of the component indicated by the component code (physical address).
ECHn	Exchange	One or more DTCs for "Exchange" are detected in either "System Check Mode" or "Diagnostic Memory Mode".	Go to the detailed information mode to check the trouble area referring to the DTC list.
CHEC	Check	When no DTCs are detected for "Exchange", one or more DTCs for "Check" are detected in either "System Check Mode" or "Diagnostic Memory Mode".	Go to the detailed information mode to check the trouble area referring to the DTC list.
OLd	Old version	Old DTC application is identified and DTC is detected in either "System Check Mode" or "Diagnostic Memory Mode".	-
nrES	No response	The device gives no response to any one of "System Check Mode ON Request", "System Check Result Request", and "Diagnostic Memory Request".	Check the power source circuit and the communication circuit of the component indicated by the component code (physical address).

(c) Device name and physical address

Physical Address No.	Name
190	Radio receiver
440	Stereo component amplifier
19D (*1)	"Bluetooth" handsfree module

*1: for Radio Receiver with Built-in "Bluetooth" Handsfree Function

(d) Service check mode
(1) Press the "SEEK TRACK" switch to see the check result of each component.

(2) The component code (physical address) is displayed first, and then the check result follows.
HINT:
- If all check results are "good", the system judges that no DTC exists.
- If the preset switch "1" is pressed in the service check mode, service check is performed again.
- This illustration is only an example and may differ in cases such as for each option part and output DTCs.

Service Check Mode:

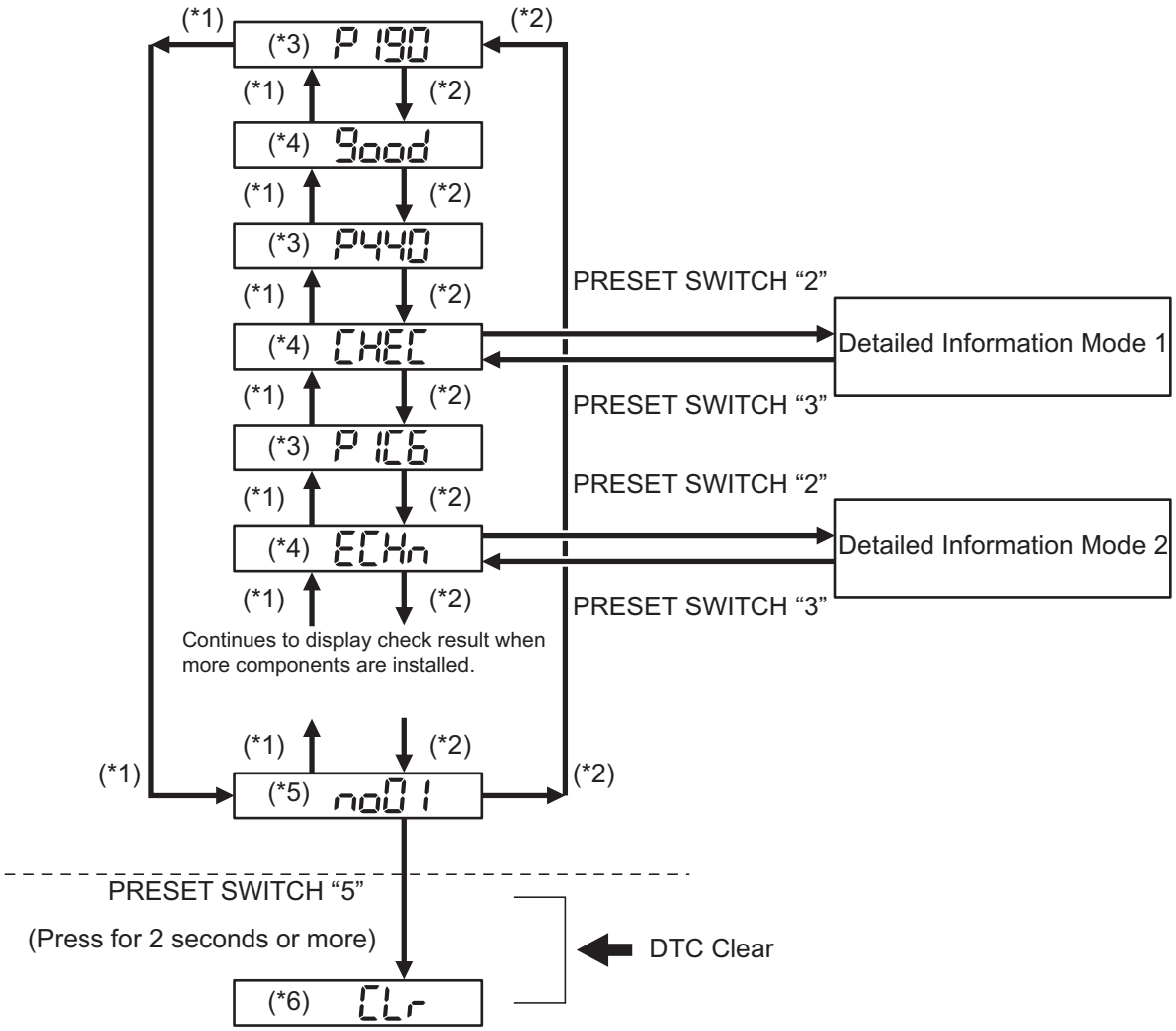

*1: SEEK TRACK DOWN

*2: SEEK TRACK UP

*3: P...Indicates physical address

190/440/1C6...Physical address

*4: Result

*5: Up-to-date connection check number

*6: Memory clear

P

E110920E07

(e) Detailed information mode 1

HINT:

- "Detailed information mode 1" is displayed when there is no response to "System Check Result Request" and DTC is detected only in "Diagnostic Memory Request".
- The component device code (physical address) is displayed first, and then the check result follows.

AV

- This illustration is only an example and may differ in cases such as for each option part and output DTCs.

(1) Press the preset switch "2" to go to the "Detailed Information Mode 1".

(2) Press the "SEEK TRACK" switch to display the physical address and DTC of the component.

(3) Press the preset switch "3" to go to the "Service Check Mode".

(4) Distinguish between the displays of the responses to "System Check Result Request" and "Diagnostic Memory Request". In order to distinguish the information detected in "System Check Mode" and "Diagnostic Memory Mode" in "ECHn", "CHEC", and "OLd" in "Detailed Information Mode 1", refer to the following:
   - "SyS" is displayed before the detailed codes detected as a result of "System Check Result Request" are displayed.
   - "COdE" is displayed before the detailed codes detected as a result of "Diagnostic Memory Request" are displayed.

   HINT:
   - The response to "System Check Result Request" is the current information given from each ECU as a result of the system check.
   - The response to "Diagnostic Memory Request" contains the information received from each ECU or stored in each ECU in the past.
   - The response to "Diagnostic Memory Request" is the output DTCs as a result of the diagnostic memory check or the DTCs received from each ECU.
   - "System Check Result Request (SyS)" is displayed first, and then the logical address and DTC appear in order.
   - "Diagnostic Memory Request (COdE)" is displayed first, and then the logical address, DTC, sub-code, connection check number, and the number of occurrence appear in order.

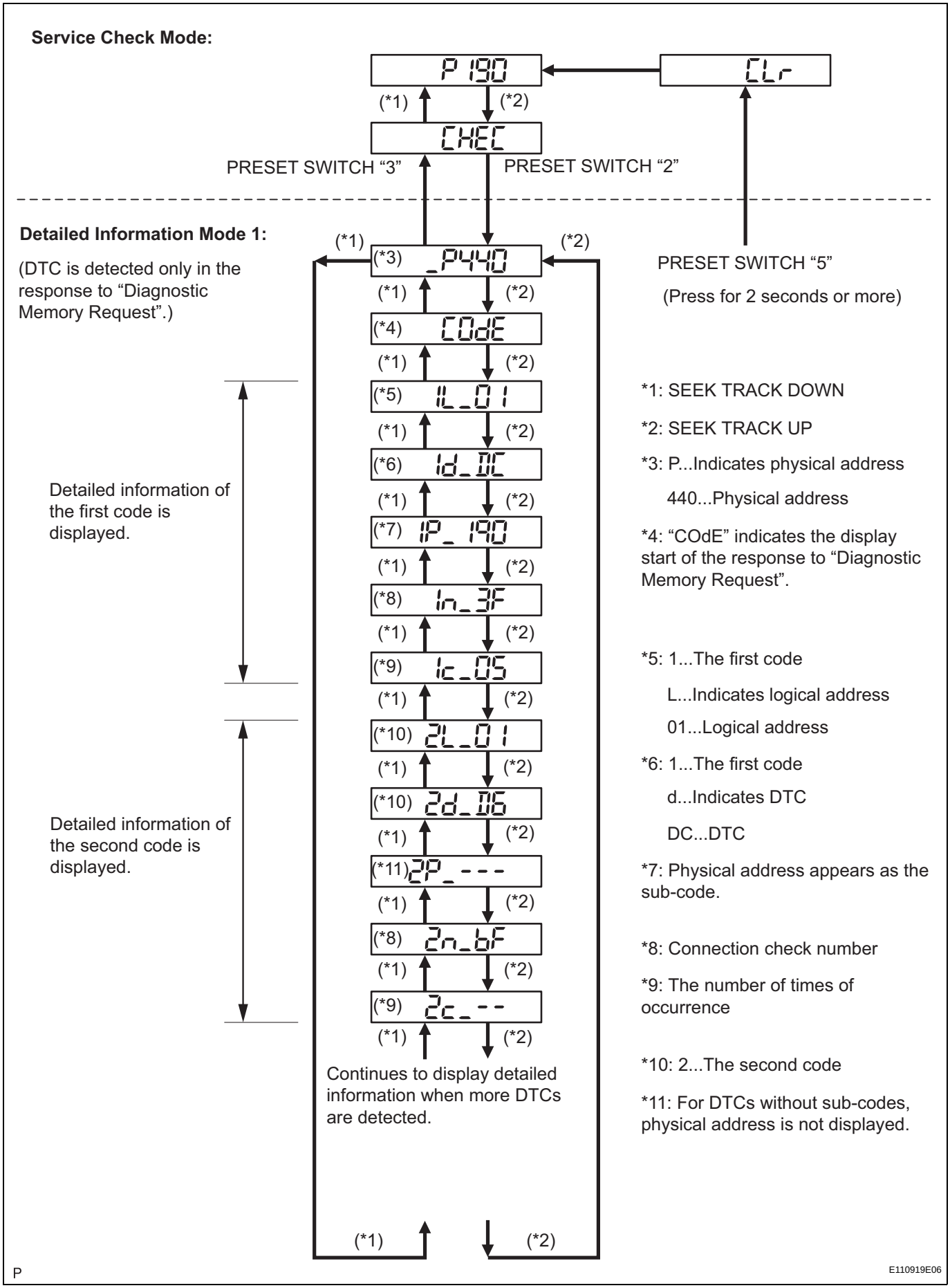
Service Check Mode:
P190
CLr
(*1)
(*2)
CHEC
PRESET SWITCH “3”
PRESET SWITCH “2”
Detailed Information Mode 1:
(DTC is detected only in the response to “Diagnostic Memory Request”.)
(*3) _P440
PRESET SWITCH “5”
(Press for 2 seconds or more)
(*4) COdE
(*5) 1L_01
(*6) 1d_DC
(*7) 1P_190
(*8) 1n_3F
(*9) 1c_05
(*10) 2L_01
(*10) 2d_D6
(*11) 2P_---
(*8) 2n_bF
(*9) 2c_--
Detailed information of the first code is displayed.
Detailed information of the second code is displayed.
Continues to display detailed information when more DTCs are detected.
*1: SEEK TRACK DOWN
*2: SEEK TRACK UP
*3: P...Indicates physical address
440...Physical address
*4: “COdE” indicates the display start of the response to “Diagnostic Memory Request”.
*5: 1...The first code
L...Indicates logical address
01...Logical address
*6: 1...The first code
d...Indicates DTC
DC...DTC
*7: Physical address appears as the sub-code.
*8: Connection check number
*9: The number of times of occurrence
*10: 2...The second code
*11: For DTCs without sub-codes, physical address is not displayed.
P
E110919E06

AV

(f) Detailed information mode 2

HINT:

- "Detailed information mode 2" is displayed when DTCs are detected in the responses to both "System Check Result Request" and "Diagnostic Memory Request".
- The component device code (physical address) is displayed first, and then the check result follows.
- This illustration is only an example and may differ in cases such as for each option part and output DTCs.

(1) Press the preset switch "2" to go to the "Detailed Information Mode 2".

(2) Press the "SEEK TRACK" switch to display the physical address and DTC of the component.

(3) Press the preset switch "3" to go to the "Service Check Mode".

(4) Distinguish between the displays of the responses to "System Check Result Request" and "Diagnostic Memory Request". In order to distinguish the information detected in "System Check Mode" and "Diagnostic Memory Mode" in "ECHn", "CHEC", and "OLd" in "Detailed Information Mode 2", refer to the following:

- "SyS" is displayed before the detailed codes detected as a result of "System Check Result Request" are displayed.
- "COdE" is displayed before the detailed codes detected as a result of "Diagnostic Memory Request" are displayed.

  HINT:

  - The response to "System Check Result Request" is the current information given from each ECU as a result of the system check.
  - The response to "Diagnostic Memory Request" contains the information received from each ECU or stored in each ECU in the past.
  - The response to "Diagnostic Memory Request" is the output DTCs as a result of the diagnostic memory check or the DTCs received from each ECU.
  - "System Check Result Request (SyS)" is displayed first, and then the logical address and DTC appear in order.
  - "Diagnostic Memory Request (COdE)" is displayed first, and then the logical address, DTC, sub-code, connection check number, and the number of occurrence appear in order.

System Check Mode:

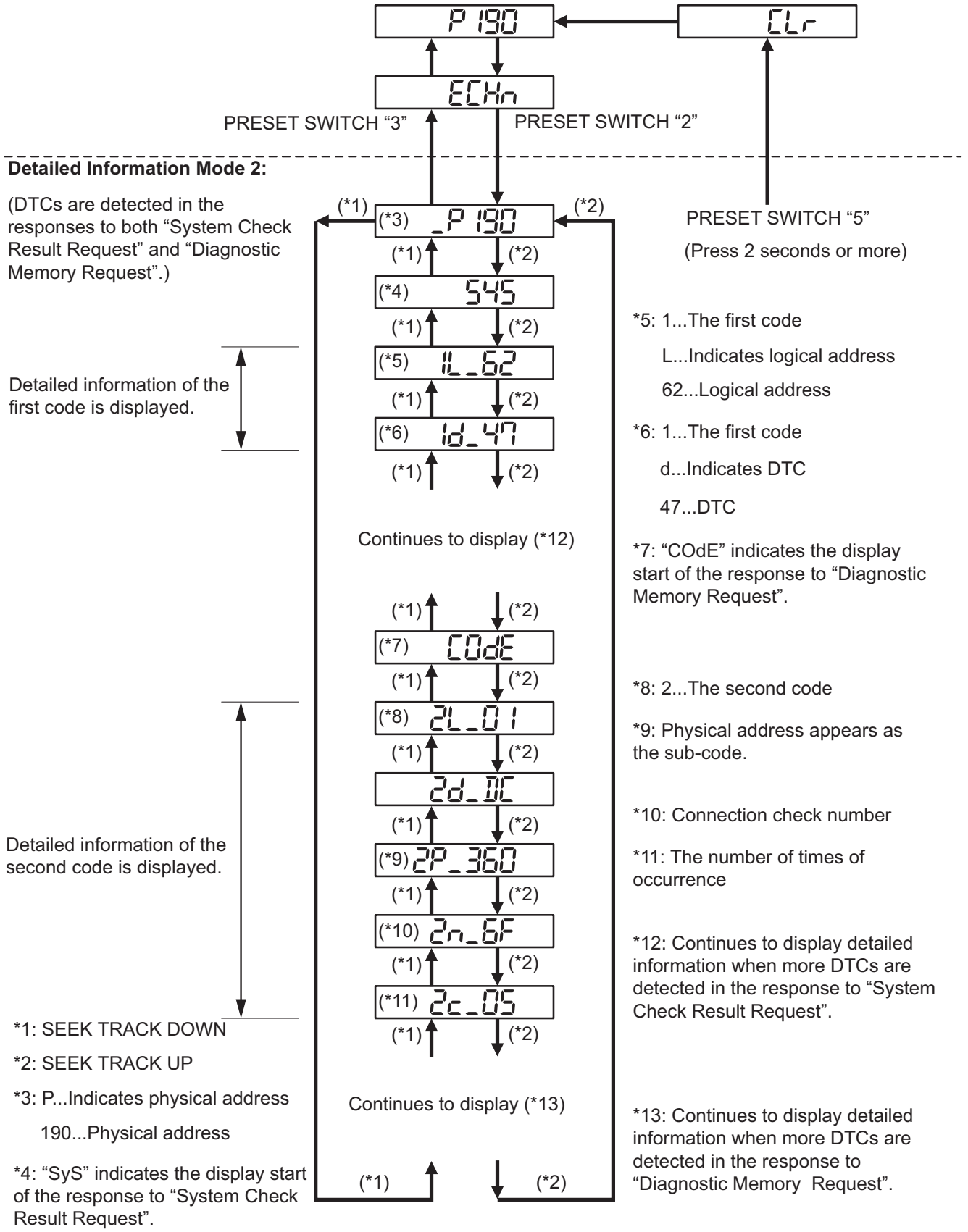

AV

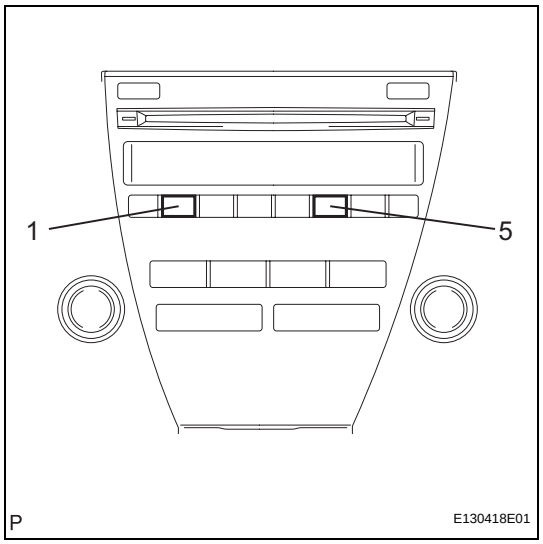

7. DTC CLEAR/RECHECK

(a) Clearing All DTC Memory (when clearing all the memory of the DTCs previously detected).

(1) When the preset switch "5" is pressed for 2 seconds or more during "Service Check Mode", the DTCs for all components are cleared. ("CLr" is displayed at this time.)

HINT:

- A beep sound is emitted once when the DTC memory is completely cleared.
- When the DTC memory for all the components is cleared, only the component codes (physical address) are displayed.
- After the DTC memory is cleared, the "Service Check Mode" is restored.

(b) Clearing Individual DTC Memory (when clearing the memory of the DTC previously detected individually).

(1) When the preset switch "5" is pressed for 2 seconds or more during "Detailed Information Mode 1" or "Detailed Information Mode 2", the DTCs for the target component are cleared.

HINT:

- A beep sound is emitted once when the DTC memory is completely cleared.
- When the DTC memory is cleared, only the component code (physical address) is displayed for the target component.
- After the DTC memory is cleared, the "Service Check Mode" is restored.
- To check DTCs, press the preset switch "1" and perform the system check again.

(c) Press the preset switch "1" to perform the service check again, and check that no DTCs are displayed for all the component codes (physical address).

ON-VEHICLE INSPECTION

1. INSPECT FRONT NO. 1 SPEAKER

HINT:
Remove interior parts so that the front No. 1 speaker can be seen.

(a) Check the speaker installation.
OK:
The speaker is securely installed.
If the result is not as specified, reinstall the front No. 1 speaker.

(b) Visually check the speaker.
OK:
The cone paper of the speaker is not torn.
If the result is not as specified, replace the front No. 1 speaker.

(c) Speaker resistance check
(1) Disconnect the front No. 1 speaker connector.
(2) Measure the resistance between the terminals of the speaker.
Standard resistance:
Approximately 4 Ω
If the result is not as specified, replace the front No. 1 speaker.

2. INSPECT FRONT NO. 2 SPEAKER

HINT:
Remove interior parts so that the front No. 2 speaker can be seen.

(a) Check the speaker installation.
OK:
The speaker is securely installed.
If the result is not as specified, reinstall the front No. 2 speaker.

(b) Visually check the speaker.
OK:
The cone paper of the speaker is not torn.
If the result is not as specified, replace the front No. 2 speaker.

REMOVAL

1. **REMOVE FRONT DOOR INSIDE HANDLE BEZEL PLUG (See page ED-32)**
2. **REMOVE FRONT DOOR ARMREST BASE PANEL ASSEMBLY (See page ED-33)**
3. **REMOVE COURTESY LIGHT ASSEMBLY (See page ED-34)**
4. **REMOVE DOOR ARMREST COVER (See page ED-34)**
5. **REMOVE FRONT DOOR TRIM BOARD SUB-ASSEMBLY (See page ED-34)**
6. **REMOVE FRONT DOOR INNER GLASS WEATHERSTRIP (See page ED-35)**
7. **REMOVE FRONT NO. 1 SPEAKER ASSEMBLY**
   (a) Disconnect the connector.
   (b) Remove the 4 screws and front No. 1 speaker assembly.
   NOTICE:
   Do not touch the cone part of the speaker.

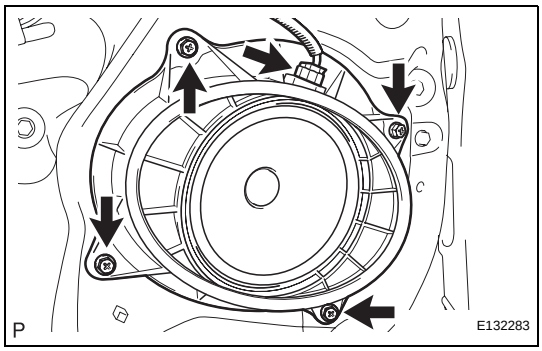

8. **REMOVE FRONT DOOR SCUFF PLATE (See page IR-39)**
9. **REMOVE FRONT DOOR OPENING TRIM COVER (See page IR-39)**
10. **REMOVE SIDE INSTRUMENT PANEL (See page IP-12)**
11. **REMOVE FRONT PILLAR GARNISH (See page IR-39)**
12. **REMOVE NO. 1 INSTRUMENT PANEL SPEAKER PANEL SUB-ASSEMBLY**
    (a) Using a screwdriver, disengage the 2 clips.
    HINT:
    Tape the screwdriver tip before use.
    (b) Disengage the 2 guides and remove the No. 1 instrument panel speaker panel sub-assembly.

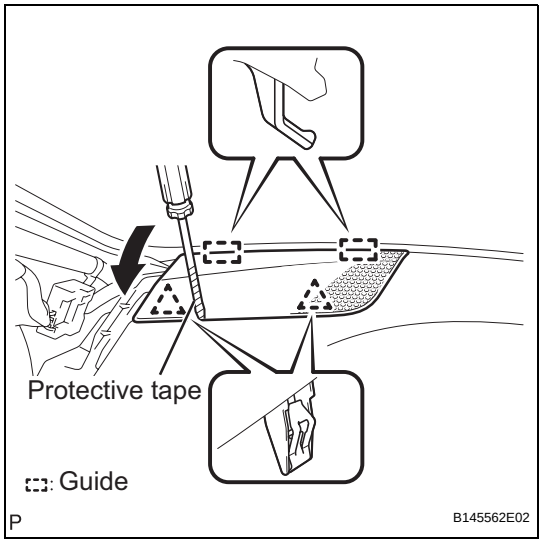

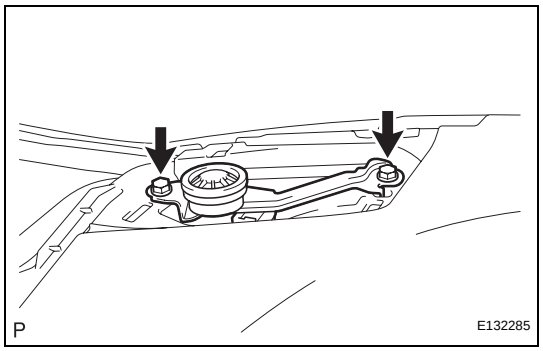

13. REMOVE FRONT NO. 2 SPEAKER ASSEMBLY

(a) Remove the 2 bolts and front No. 2 speaker assembly.

(b) Lift the front No. 2 speaker assembly and disconnect the connector to remove the front No. 2 speaker assembly.

NOTICE:

Do not touch the cone part of the speaker.

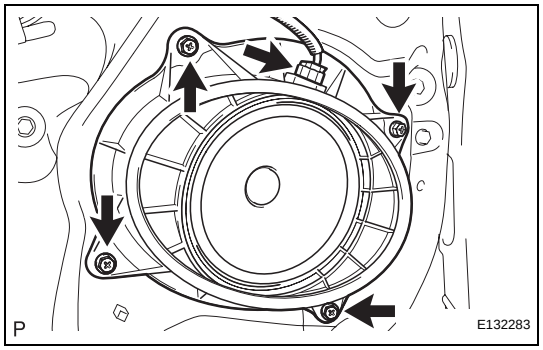

INSTALLATION

1. INSTALL FRONT NO. 1 SPEAKER ASSEMBLY

(a) Install the front No. 1 speaker assembly with the 4 screws.

(b) Connect the connector.

2. INSTALL FRONT DOOR INNER GLASS WEATHERSTRIP (See page ED-52)

3. INSTALL FRONT DOOR TRIM BOARD SUB-ASSEMBLY (See page ED-52)

4. INSTALL COURTESY LIGHT ASSEMBLY (See page ED-53)

5. INSTALL DOOR ARMREST COVER (See page ED-53)

6. INSTALL FRONT DOOR ARMREST BASE PANEL ASSEMBLY (See page ED-53)

7. INSTALL FRONT DOOR INSIDE HANDLE BEZEL PLUG (See page ED-54)

8. INSTALL FRONT NO. 2 SPEAKER ASSEMBLY

(a) Connect the connector.

(b) Install the front No. 2 speaker assembly with the 2 bolts.

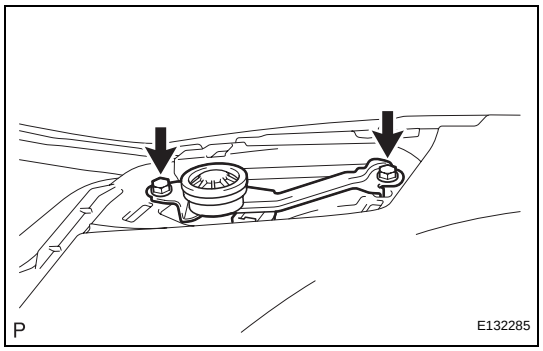

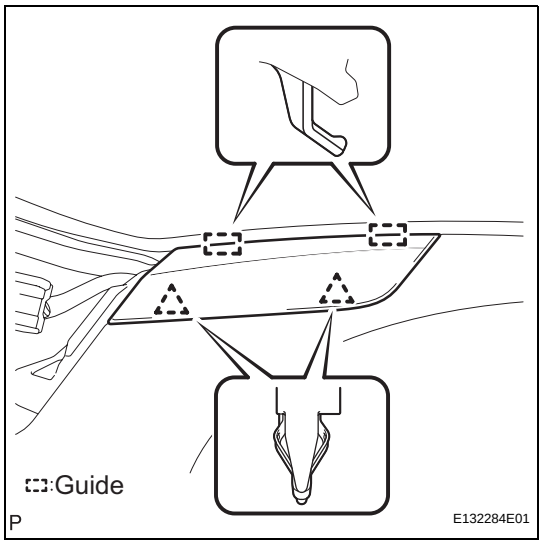

9. INSTALL NO. 1 INSTRUMENT PANEL SPEAKER PANEL SUB-ASSEMBLY

(a) Engage the 2 guides.

(b) Engage the 2 clips and install the No. 1 instrument panel speaker panel sub-assembly.

10. INSTALL FRONT PILLAR GARNISH (See page IR-64)

11. INSTALL SIDE INSTRUMENT PANEL (See page IP-47)

12. INSTALL FRONT DOOR OPENING TRIM COVER (See page IR-64)

13. INSTALL FRONT DOOR SCUFF PLATE (See page IR-65)

DIAGNOSTIC TROUBLE CODE CHART

COMMUNICATION DIAGNOSIS:

DTC Code	Detection Item	Trouble Area	See page
01-21	ROM Error	Radio receiver	AV-33
01-22	RAM Error	Radio receiver	AV-33
01-D5	Absence of Registration Unit	1. Power source circuit of the component shown by the sub-code 2. AVC-LAN circuit between the radio receiver and the component shown by the sub-code 3. Component shown by the sub-code	AV-34
01-D6	No Master	1. Radio receiver power source circuit 2. Power source circuit of the component which has stored this code 3. AVC-LAN circuit between the radio receiver and the component which has stored this code 4. Component which has stored this code 5. Radio receiver	AV-36
01-D7	Connection Check Error	1. Radio receiver power source circuit 2. Power source circuit of the component which has stored this code 3. AVC-LAN circuit between the radio receiver and the component which has stored this code 4. Component which has stored this code 5. Radio receiver	AV-36
01-D8	No Response for Connection Check	1. Power source circuit of the component shown by the sub-code 2. AVC-LAN circuit between the radio receiver and the component shown by the sub-code 3. Component shown by the sub-code	AV-34
01-D9	Last Mode Error	1. Power source circuit of the component shown by the sub-code 2. AVC-LAN circuit between the radio receiver and the component shown by the sub-code 3. Component shown by the sub-code	AV-34
01-DA	No Response Against ON / OFF Command	1. Power source circuit of the component shown by the sub-code 2. AVC-LAN circuit between the radio receiver and the component shown by the sub-code 3. Component shown by the sub-code	AV-34

DTC Code	Detection Item	Trouble Area	See page
01-DB	Mode Status Error	1. Power source circuit of the component shown by the sub-code 2. AVC-LAN circuit between the radio receiver and the component shown by the sub-code 3. Component shown by the sub-code	AV-34
01-DC	Transmission Error	If the same sub-code is recorded in other components, check harness for power supply and communication system of all components shown by code	AV-41
01-DD	Master Reset	1. Radio receiver power source circuit 2. AVC-LAN circuit between the radio receiver and the component which has stored this code 3. Radio receiver 4. Component which has stored this code	AV-44
01-DE	Slave Reset	1. Power source circuit of the component shown by the sub-code 2. AVC-LAN circuit between the radio receiver and the component shown by the sub-code 3. Component shown by the sub-code	AV-34
01-DF	Master Error	1. Radio receiver power source circuit 2. AVC-LAN circuit between the radio receiver and the component which has stored this code 3. Radio receiver 4. Component which has stored this code	AV-49
01-E0	Registration Complete Indication Error	-	AV-53
01-E1	Voice Processing Device ON Error	1. Radio receiver power source circuit 2. AVC-LAN circuit between the radio receiver and the component which has stored this code 3. Radio receiver 4. Component which has stored this code	AV-44
01-E2	ON / OFF Indication Parameter Error	Radio receiver	AV-54
01-E3	Registration Demand Transmission	-	AV-53
01-E4	Multiple Frame Incomplete	-	AV-53

TELEPHONE:

DTC Code	Detection Item	Trouble Area	See page
57-47	"Bluetooth" Module Initialization Failed	Radio receiver	AV-55

RADIO UNIT:

DTC Code	Detection Item	Trouble Area	See page
60-10	AM Tuner PLL does not Lock	Radio receiver	AV-56
60-11	FM Tuner PLL does not Lock	Radio receiver	AV-56
60-42	Tuner Power Source Error	Radio receiver	AV-57

DTC Code	Detection Item	Trouble Area	See page
60-43	AM Tuner Error	Radio receiver	AV-57
60-44	FM Tuner Error	Radio receiver	AV-57
60-50	Malfunction in Internal IC	Radio receiver	AV-57

IN-DASH CD CHANGER:

DTC Code	Detection Item	Trouble Area	See page
63-10	CD Changer Mechanical Error	Radio receiver	AV-58
63-11	CD Insertion and Ejection Error	Radio receiver	AV-58
63-12	CD Reading Abnormal	Radio receiver	AV-58
63-41	Wrong Disc	1. CD 2. Radio receiver	AV-59
63-42	Disc cannot be Read	1. CD 2. Radio receiver	AV-59
63-43	CD-ROM Abnormal	1. CD 2. Radio receiver	AV-61
63-44	CD Abnormal	Radio receiver	AV-62
63-45	Eject Error	Radio receiver	AV-63
63-46	Scratched / Reversed Disc	1. CD 2. Radio receiver	AV-64
63-47	High Temperature	Radio receiver	AV-66
63-48	Excess Current	Radio receiver	AV-62
63-50	Tray Insertion / Ejection Error	Radio receiver	AV-62
63-51	Elevator Error	Radio receiver	AV-63
63-52	Clamp Error	Radio receiver	AV-63
63-78	DSP Error	Radio receiver	AV-67
63-7D	Disc cannot be Played	1. CD 2. Radio receiver	AV-68
63-7E	No Playable Files	1. CD 2. Radio receiver	AV-68
63-7F	Copyright Protection Error	1. CD 2. Radio receiver	AV-68

VOL:

DTC Code	Detection Item	Trouble Area	See page
74-40	Short in Speaker Circuit	1. Wire harness 2. Speaker 3. Stereo component amplifier	AV-69

FRONT CENTER SPEAKER

COMPONENTS

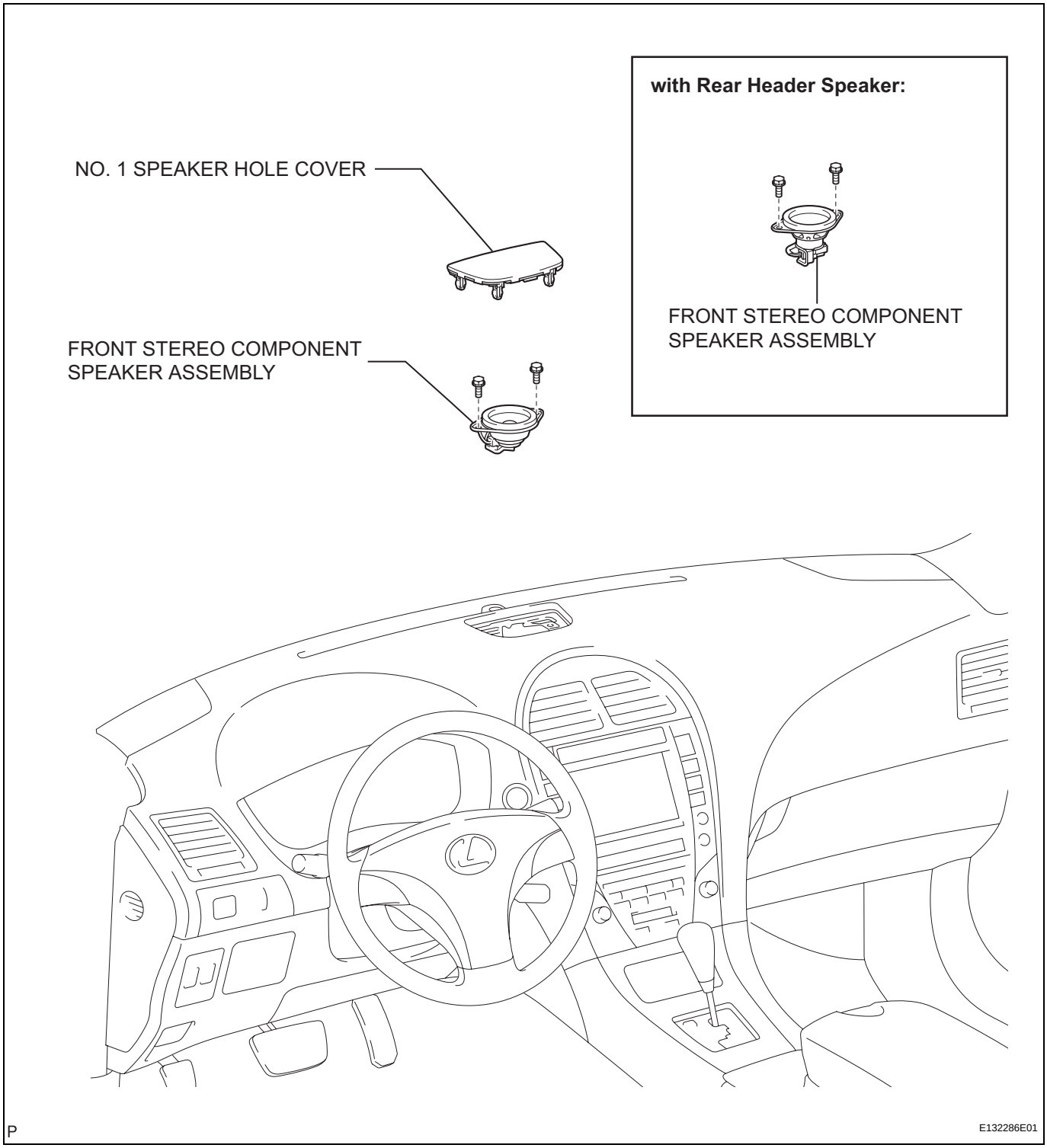

ON-VEHICLE INSPECTION

1. INSPECT FRONT CENTER SPEAKER

HINT:
Remove interior parts so that the front center speaker can be seen.

(a) Check the speaker installation.
OK:
The speaker is securely installed.
If the result is not as specified, reinstall the front center speaker.

(b) Visually check the speaker.
OK:
The cone paper of the speaker is not torn.
If the result is not as specified, replace the front center speaker.

(c) Speaker resistance check
(1) Disconnect the front center speaker connector.
(2) Measure the resistance between the terminals of the speaker.
Standard resistance:
7 to 9 Ω
If the result is not as specified, replace the front center speaker.

REMOVAL

1. REMOVE NO. 1 SPEAKER HOLE COVER

(a) Apply protective tape to the area shown in the illustration.

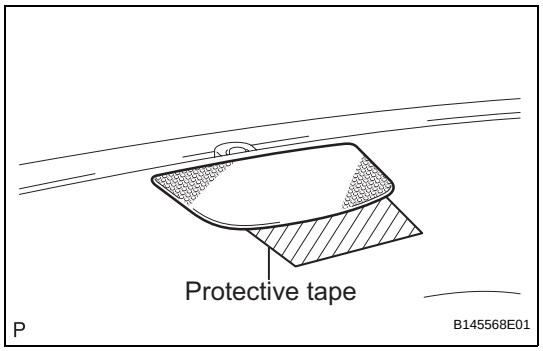

(b) Using a molding remover, disengage the 4 clips and remove the No. 1 speaker hole cover.

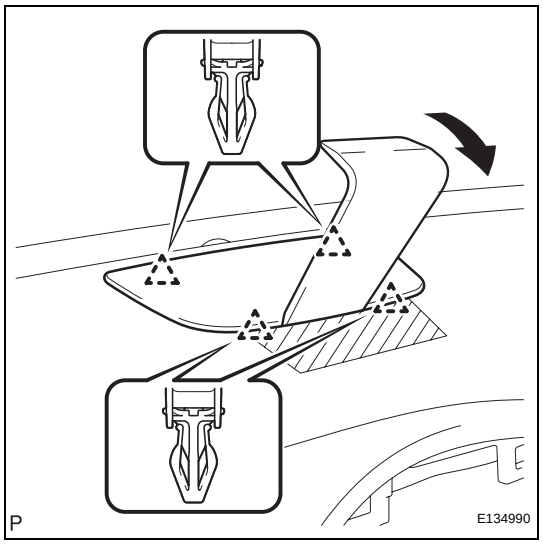

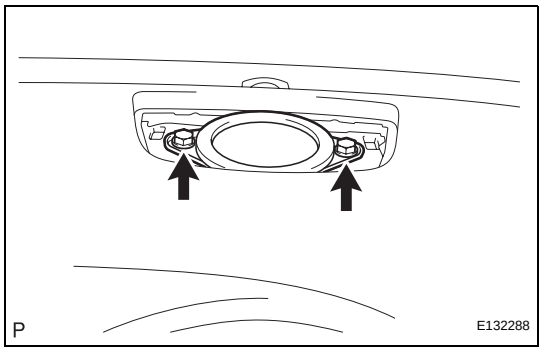

2. REMOVE FRONT STEREO COMPONENT SPEAKER ASSEMBLY

(a) Remove the 2 bolts.

(b) Lift the front stereo component speaker assembly and disconnect the connector to remove the stereo component speaker assembly.

NOTICE:

Do not touch the cone part of the speaker.

INSTALLATION

1. INSTALL FRONT STEREO COMPONENT SPEAKER ASSEMBLY

(a) Connect the connector.

(b) Install the front stereo component speaker assembly with the 2 bolts.

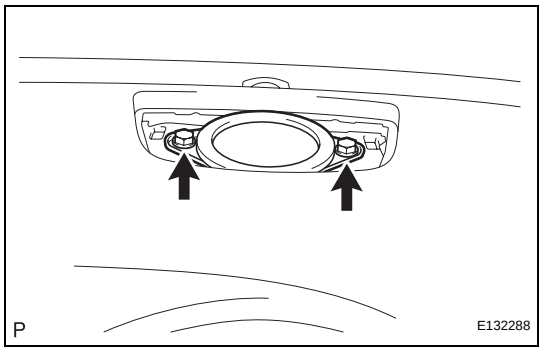

2. INSTALL NO. 1 SPEAKER HOLE COVER

(a) Engage the 4 clips and install the No. 1 speaker hole cover.

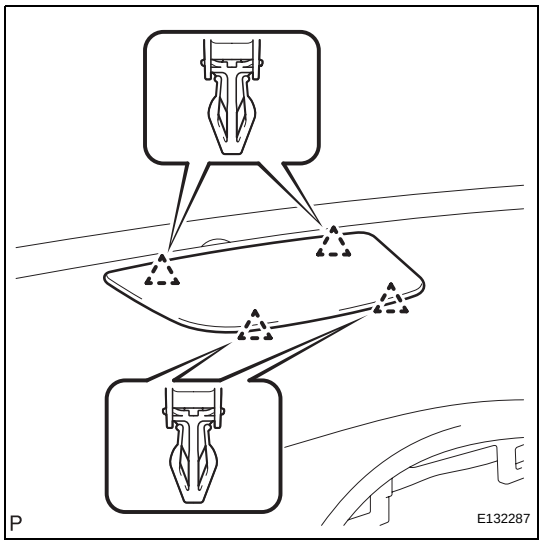

DTC	01-21	ROM Error

DTC	01-22	RAM Error

DESCRIPTION

DTC No.	DTC Detection Condition	Trouble Area
01-21	A malfunction exists in ROM.	Radio receiver
01-22	A malfunction exists in RAM.	

INSPECTION PROCEDURE

HINT:
After the inspection is completed, clear the DTCs.

1	**REPLACE RADIO RECEIVER**

NEXT

END

DTC	01-D5	Absence of Registration Unit

DTC	01-D8	No Response for Connection Check

DTC	01-D9	Last Mode Error

DTC	01-DA	No Response Against ON / OFF Command

DTC	01-DB	Mode Status Error

DTC	01-DE	Slave Reset

DESCRIPTION

DTC No.	DTC Detection Condition	Trouble Area
01-D5 *1, *3	A device that the sub-code shows is (was) disconnected from the system when turning the engine switch on (ACC or IG). The communication condition with the device that the code shows cannot be obtained when the engine starts.	• Power source circuit of the component shown by the sub-code • AVC-LAN circuit between the radio receiver and the component shown by the sub-code • Component shown by the sub-code
01-D8 *2, *3	The device indicated by the sub-code is (was) disconnected from the system after the engine starts.	
01-D9 *1, *3	The device that had functioned before the engine stopped is (was) disconnected from the system when the engine switch is (was) on (ACC or IG).	
01-DA *3	No response is identified when changing mode. Sound and image do not change by switch operation.	
01-DB *1, *3	A dual alarm is detected.	
01-DE *3	A slave device has been disconnected after the engine starts.	

HINT:
- *1: Even if no fault is present, this trouble code may be stored depending on the battery condition or engine start voltage.
- *2: If the power connector is disconnected after the engine starts, this code is stored after 180 seconds.
- *3: If the device is reported as not existing during verification, check the power source circuit and AVC-LAN circuit for the device.

NOTICE:
- **Before starting troubleshooting, be sure to clear DTCs to erase codes stored due to the reasons described in the HINT above. Then, check for DTCs and troubleshoot according to the output DTCs.**
- **The radio receiver is the master unit.**
- **Be sure to clear and recheck DTCs after the inspection is completed to confirm that no DTCs are output.**

INSPECTION PROCEDURE

NOTICE:
Be sure to read DESCRIPTION before performing the following procedures.

1	**CHECK "RADIO RECEIVER COMMUNICATION ERROR" IN FLOW CHART**

Refer to the radio receiver communication error (See page AV-150).

NEXT

END

REMOVAL

1. **REMOVE REAR DOOR INSIDE HANDLE BEZEL PLUG (See page ED-58)**
2. **REMOVE REAR DOOR ARMREST BASE PANEL ASSEMBLY (See page ED-59)**
3. **REMOVE REAR DOOR ARMREST COVER (See page ED-59)**
4. **REMOVE COURTESY LIGHT ASSEMBLY (See page ED-59)**
5. **REMOVE REAR DOOR TRIM BOARD SUB-ASSEMBLY (See page ED-60)**
6. **REMOVE REAR DOOR INNER GLASS WEATHERSTRIP (See page ED-61)**
7. **REMOVE REAR SPEAKER ASSEMBLY**
   (a) Disconnect the connector.
   (b) Remove the 3 screws and the rear speaker assembly.
   NOTICE:
   Do not touch the cone part of the speaker.

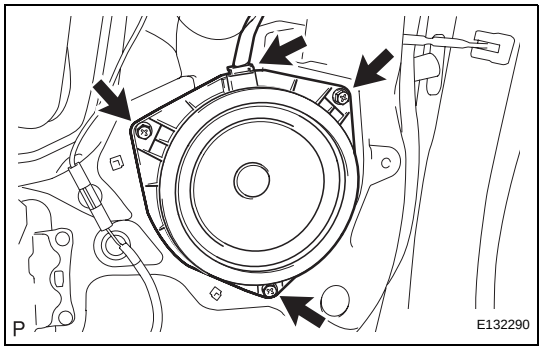

8. **REMOVE REAR NO. 2 SPEAKER ASSEMBLY (w/ Rear Header Speaker)**
   (a) Remove the 2 screws and the rear No. 2 speaker assembly.
   NOTICE:
   Do not touch the cone part of the speaker.

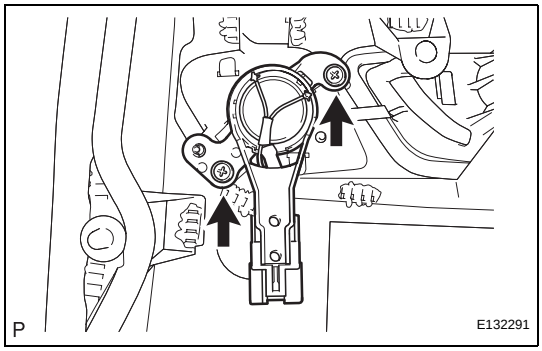

INSTALLATION

1. **INSTALL REAR SPEAKER ASSEMBLY**
   (a) Install the rear speaker assembly with the 3 screws.
   (b) Connect the connector.

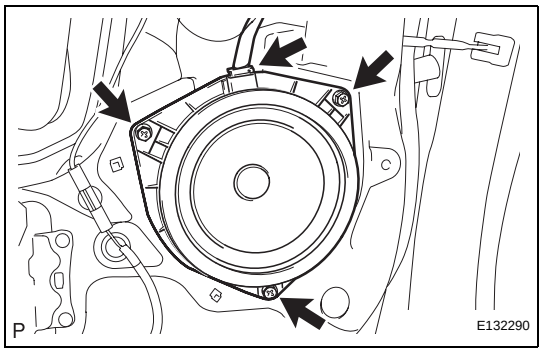

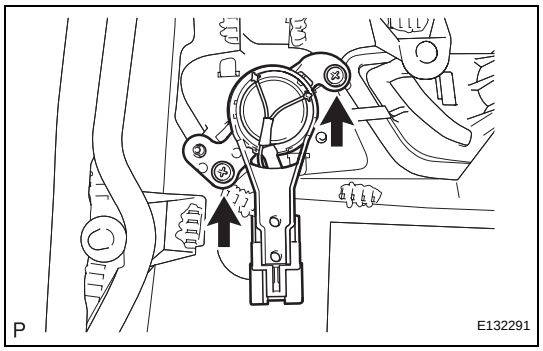

2. **INSTALL REAR NO. 2 SPEAKER ASSEMBLY (w/ Rear Header Speaker)**
   (a) Install the rear No. 2 speaker assembly with the 2 screws.
3. **INSTALL REAR DOOR INNER GLASS WEATHERSTRIP (See page ED-76)**
4. **INSTALL REAR DOOR TRIM BOARD SUB-ASSEMBLY (See page ED-76)**
5. **INSTALL COURTESY LIGHT ASSEMBLY (See page ED-77)**
6. **INSTALL REAR DOOR ARMREST COVER (See page ED-77)**
7. **INSTALL REAR DOOR ARMREST BASE PANEL ASSEMBLY (See page ED-78)**
8. **INSTALL REAR DOOR INSIDE HANDLE BEZEL PLUG (See page ED-78)**

DTC	01-D6	No Master

DTC	01-D7	Connection Check Error

DESCRIPTION

DTC No.	DTC Detection Condition	Trouble Area
01-D6 *1	When either of the following conditions is met: • The device that stores (stored) the code has (had) been disconnected when the engine switch is on (ACC or IG) • The master device has (had) been disconnected when this code is stored	• Radio receiver power source circuit • Power source circuit of the component which has stored this code • AVC-LAN circuit between the radio receiver and the component which has stored this code • Component which has stored this code • Radio receiver
01-D7 *2	When either of the following conditions is met: • The device that stored the code has (had) been disconnected after the engine starts (started) • The master device has (had) been disconnected when this code is (was) stored	

HINT:
- *1: Even if no fault is present, this trouble code may be stored depending on the battery condition or engine start voltage.
- *2: When 210 seconds have elapsed after disconnecting the power supply connector of the master component with the engine switch on (ACC or IG), this code is stored.

AV

NOTICE:
- **Before starting troubleshooting, be sure to clear DTCs to erase codes stored due to the reasons described in the HINT above. Then, check for DTCs and troubleshoot according to the output DTCs.**
- **The radio receiver is the master unit.**
- **Be sure to clear and recheck DTCs after the inspection is completed to confirm that no DTCs are output.**

INSPECTION PROCEDURE

NOTICE:
Be sure to read DESCRIPTION before performing the following procedures.

1	CHECK RADIO RECEIVER POWER SOURCE CIRCUIT

Refer to the radio receiver power source circuit (See page AV-162).
If the power source circuit is operating normally, proceed to the next step.

NEXT

2	IDENTIFY THE COMPONENT WHICH HAS STORED THIS CODE

(a) Enter the diagnostic mode.

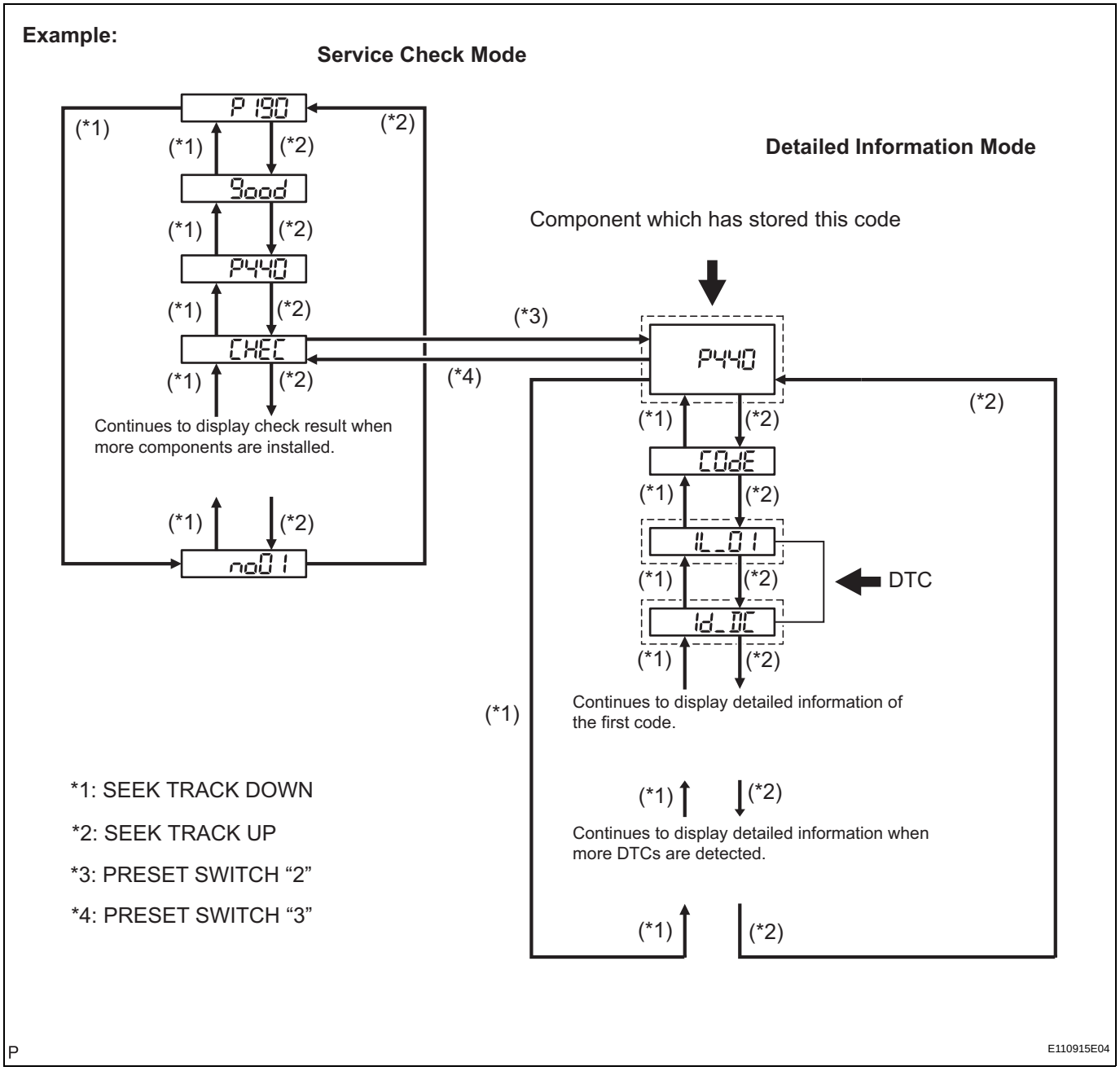

(b) Press the preset switch "3" to change to "Detailed Information Mode".

(c) Identify the component which has stored this code.

Component Table:

Component	Physical Address
Stereo component amplifier	440
"Bluetooth" handsfree module	19D

HINT:

- "440 (stereo component amplifier)" is the component which has stored this code in the example shown in the illustration.
- For details of the DTC display, refer to "DTC CHECK/ CLEAR" (See page AV-21).

AV

NEXT

3	CHECK COMPONENT WHICH HAS STORED THIS CODE

(a) Select the component which has stored this code.
HINT:
The "Bluetooth" handsfree module is built into the radio receiver. If there is a problem between the "Bluetooth" handsfree module and radio receiver, replace the radio receiver.

Component Table

Component	Proceed to
"Bluetooth" handsfree module	A
Except "Bluetooth" handsfree module	B

A → **REPLACE RADIO RECEIVER**

B

4	CHECK POWER SOURCE CIRCUIT OF COMPONENT WHICH HAS STORED THIS CODE

(a) Inspect the power source circuit of the component which has stored this code.
If the power source circuit is operating normally, proceed to the next step.

Component Table:

Component	Proceed to
Stereo component amplifier	Stereo component amplifier power source circuit (See page AV-164)

NEXT

5	INSPECT RADIO RECEIVER

Wire Harness View:

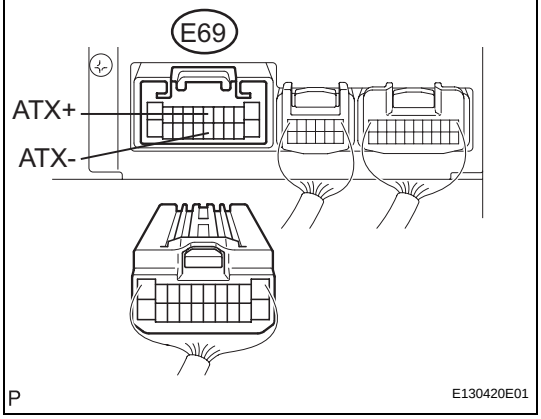

(a) Disconnect the radio receiver connectors.
(b) Measure the resistance according to the value(s) in the table below.
Standard resistance

Tester Connection	Condition	Specified Condition
ATX+ - ATX-	Always	60 to 80 Ω

NG → **REPLACE RADIO RECEIVER**

OK

6	CHECK HARNESS AND CONNECTOR (RADIO RECEIVER - COMPONENT WHICH HAS STORED THIS CODE)

HINT:
For details of the connectors, refer to the "TERMINALS OF ECU" (See page AV-16).

(a) Referring to the AVC-LAN wiring diagram below, check the AVC-LAN circuit between the radio receiver and the component which has stored this code.
   (1) Disconnect all connectors between the radio receiver and the component which has stored this code.
   (2) Check for an open or short in the AVC-LAN circuit between the radio receiver and the component which has stored this code.
   OK:
   There is no open or short circuit.

AVC-LAN WIRING DIAGRAM:

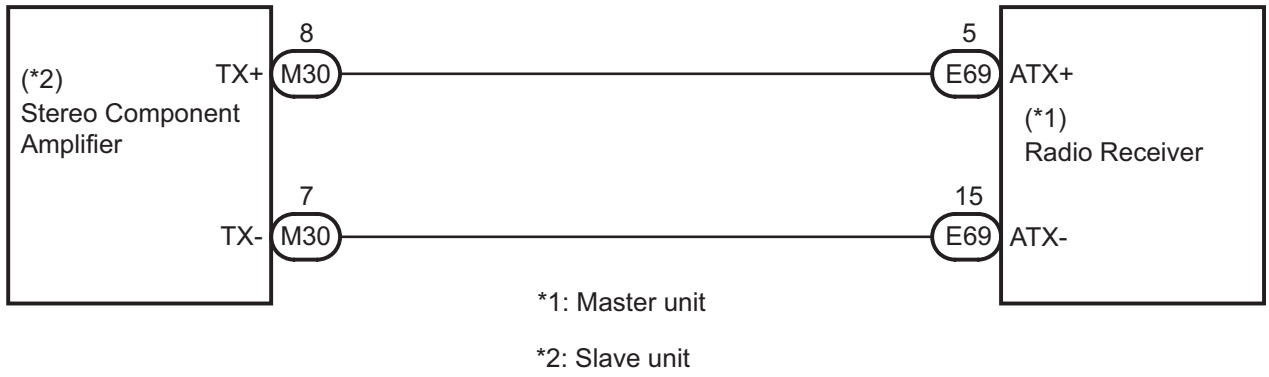

NG → **REPAIR OR REPLACE HARNESS OR CONNECTOR**

OK

7	REPLACE COMPONENT WHICH HAS STORED THIS CODE

(a) Replace the component which has stored this code with a normal one and check if the same problem occurs again.
   OK:
   Same problem does not occur.

NG → **REPLACE RADIO RECEIVER**

AV

OK

END

DTC	01-DC	Transmission Error

DESCRIPTION

DTC No.	DTC Detection Condition	Trouble Area
01-DC	Transmission to component shown by sub-code failed (Detecting this DTC does not always mean actual failure)	If the same sub-code is recorded in other components, check harness for power supply and communication system of all components shown by code

NOTICE:
- **The radio receiver is the master unit.**
- **Be sure to clear and recheck DTCs after the inspection is completed to confirm that no DTCs are output.**

INSPECTION PROCEDURE

NOTICE:
Be sure to read DESCRIPTION before performing the following procedures.

1 CHECK FOR DTC OF OTHER COMPONENTS

(a) Check if the component shown by the sub-code is displayed in the check result of the other components.
  (1) Check if "01-DC" is output for the other components.
  (2) If "01-DC" is output for any other components, check if the same physical address is displayed.
  Result

Result	Proceed to
"01-DC" is output and the same physical address is displayed	**A**
"01-DC" is not output or the same physical address is not displayed	**B**

HINT:
For the list of the components shown by sub-codes, refer to the table in step 2.

B → **Go to step 4**

A

2 IDENTIFY THE COMPONENT WHICH HAS STORED THIS CODE

(a) Enter the diagnostic mode.

AV

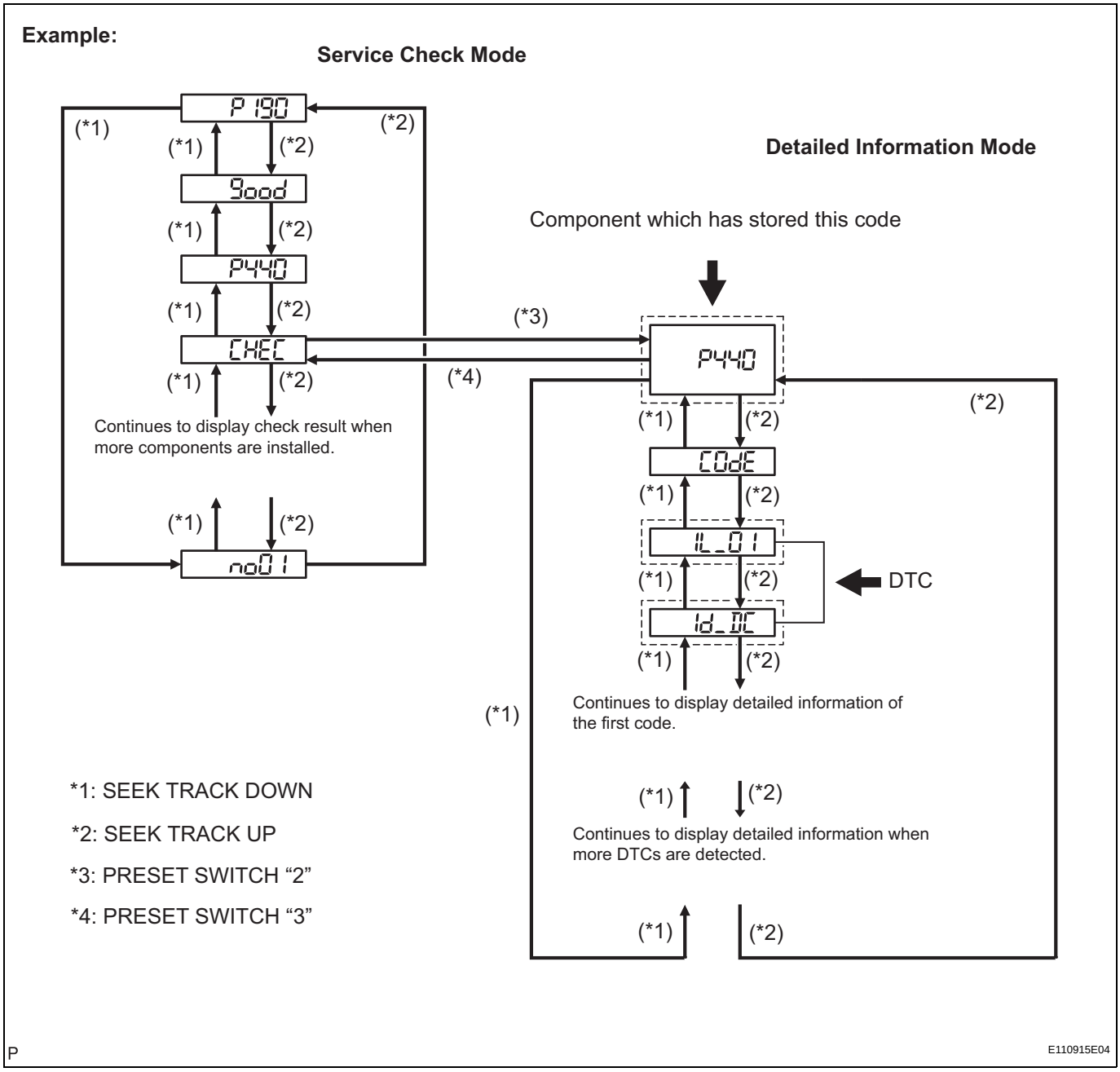

(b) Press the preset switch "3" to change to "Detailed Information Mode".

(c) Identify the component which has stored this code.

Component Table:

Component	Physical Address
Stereo component amplifier	440
"Bluetooth" handsfree module	19D
Radio receiver	190

HINT:

- "440 (stereo component amplifier)" is the component which has stored this code in the example shown in the illustration.
- For details of the DTC display, refer to "DTC CHECK/ CLEAR" (See page AV-21).

AV

NEXT

3	CHECK COMPONENT WHICH HAS STORED THIS CODE

(a) Select the component which has stored this code.
HINT:
The "Bluetooth" handsfree module is built into the radio receiver. If there is a problem between the "Bluetooth" handsfree module and radio receiver, replace the radio receiver.

Component Table:

Component	Proceed to
Stereo component amplifier	Stereo component amplifier communication error (See page AV-154)
"Bluetooth" handsfree module	"Bluetooth" handsfree module communication error (See page AV-158)
Radio receiver	Radio receiver communication error (See page AV-150)

NEXT

END

AV

4	CLEAR DTC

(a) Clear the DTCs (See page AV-21).
HINT:
If "01-DC" is output for only one component, this may not indicate a malfunction.

NEXT

5	RECHECK DTC

(a) Recheck for DTCs and check if the same trouble code occurs again.
OK:
Malfunction disappears.

NG → **Go to step 3**

OK

END

REMOVAL

1. **PRECAUTION**
   (See page IP-1)
2. **ALIGN FRONT WHEELS FACING STRAIGHT AHEAD**
3. **REMOVE SEAT BELT ANCHOR COVER CAP LH (See page SB-22)**
4. **DISCONNECT FRONT SEAT OUTER BELT ASSEMBLY LH (See page SB-22)**
5. **REMOVE FRONT SEAT HEADREST ASSEMBLY (for Driver Seat)**
6. **REMOVE FRONT SEAT OUTER TRACK BRACKET COVER LH (See page SE-83)**
7. **REMOVE FRONT SEAT INNER TRACK BRACKET COVER LH (See page SE-83)**
8. **REMOVE FRONT SEAT REAR OUTER TRACK BRACKET COVER LH (See page SE-83)**
9. **REMOVE FRONT SEAT REAR INNER TRACK BRACKET COVER LH (See page SE-83)**
10. **REMOVE FRONT SEAT ASSEMBLY LH (See page SE-83)**
11. **REMOVE SEAT BELT ANCHOR COVER CAP RH (See page RS-490)**
12. **DISCONNECT FRONT SEAT OUTER BELT ASSEMBLY RH (See page RS-490)**
13. **REMOVE FRONT SEAT HEADREST ASSEMBLY (for Front Passenger Seat)**
14. **REMOVE FRONT SEAT OUTER TRACK BRACKET COVER RH (See page RS-490)**
15. **REMOVE FRONT SEAT INNER TRACK BRACKET COVER RH (See page RS-490)**
16. **REMOVE FRONT SEAT REAR OUTER TRACK BRACKET COVER RH (See page RS-490)**
17. **REMOVE FRONT SEAT REAR INNER TRACK BRACKET COVER RH (See page RS-490)**
18. **REMOVE FRONT SEAT ASSEMBLY RH (See page RS-491)**
19. **REMOVE LOWER NO. 3 STEERING WHEEL COVER (See page RS-367)**
20. **REMOVE LOWER NO. 2 STEERING WHEEL COVER (See page RS-367)**
21. **REMOVE STEERING PAD (See page RS-367)**
22. **REMOVE STEERING WHEEL ASSEMBLY (See page SR-80)**

23. **REMOVE FRONT DOOR SCUFF PLATE LH (See page IR-39)**
24. **REMOVE FRONT DOOR OPENING TRIM COVER LH (See page IR-39)**
25. **REMOVE SIDE INSTRUMENT PANEL LH (See page IP-12)**
26. **REMOVE INSTRUMENT PANEL FINISH PANEL END LH (See page IP-13)**
27. **REMOVE LOWER INSTRUMENT PANEL SUB-ASSEMBLY (See page IP-13)**
28. **REMOVE STEERING COLUMN COVER (See page IP-13)**
29. **REMOVE TILT AND TELESCOPIC SWITCH (See page SR-80)**
30. **REMOVE TURN SIGNAL SWITCH ASSEMBLY WITH SPIRAL CABLE SUB-ASSEMBLY (See page SR-80)**
31. **REMOVE INSTRUMENT CLUSTER FINISH PANEL SUB-ASSEMBLY (See page IP-14)**
32. **REMOVE COMBINATION METER ASSEMBLY (See page IP-14)**
33. **REMOVE NO. 1 SWITCH HOLE BASE (See page IP-14)**
34. **REMOVE INSTRUMENT PANEL FINISH PANEL END RH (See page IP-15)**
35. **REMOVE FRONT DOOR SCUFF PLATE RH (See page IR-42)**
36. **REMOVE FRONT DOOR OPENING TRIM COVER RH (See page IR-42)**
37. **REMOVE NO. 2 INSTRUMENT PANEL UNDER COVER SUB-ASSEMBLY (See page IP-15)**
38. **REMOVE SIDE INSTRUMENT PANEL RH (See page IP-15)**
39. **REMOVE FRONT PASSENGER SIDE KNEE AIRBAG ASSEMBLY (See page RS-396)**
40. **REMOVE LOWER INSTRUMENT PANEL RH (See page IP-16)**
41. **REMOVE SHIFT LEVER KNOB SUB-ASSEMBLY (See page IP-16)**
42. **REMOVE UPPER CONSOLE PANEL ASSEMBLY WITH FRONT ASH RECEPTACLE (See page IP-16)**
43. **REMOVE NO. 2 INSTRUMENT PANEL REGISTER ASSEMBLY (See page IP-17)**
44. **REMOVE INTEGRATION CONTROL PANEL WITH RADIO RECEIVER ASSEMBLY (w/o Navigation System) (See page AV-168)**

45. **REMOVE MULTI-DISPLAY WITH RADIO RECEIVER ASSEMBLY (w/ Navigation System) (See page AV-170)**
46. **REMOVE HEATER SEAT SWITCH CONSOLE BASE (w/o Seat Heater System) (See page IP-17)**
47. **REMOVE HEATER SEAT SWITCH CONSOLE BASE (w/ Seat Heater System) (See page IP-18)**
48. **REMOVE CONSOLE BOX POCKET (See page IP-18)**
49. **REMOVE CONSOLE BOX CARPET (See page IP-18)**
50. **REMOVE CONSOLE REAR END PANEL SUB-ASSEMBLY (See page IP-19)**
51. **REMOVE REAR CONSOLE BOX ASSEMBLY (See page IP-19)**
52. **REMOVE FRONT PILLAR GARNISH LH (See page IR-39)**
53. **REMOVE NO. 1 INSTRUMENT PANEL SPEAKER PANEL SUB-ASSEMBLY (See page IP-20)**
54. **REMOVE FRONT NO. 2 SPEAKER ASSEMBLY (for LH Side) (See page AV-184)**
55. **REMOVE NO. 1 INSTRUMENT PANEL REGISTER ASSEMBLY (See page IP-20)**
56. **REMOVE FRONT PILLAR GARNISH RH (See page IR-42)**
57. **REMOVE NO. 2 INSTRUMENT PANEL SPEAKER PANEL SUB-ASSEMBLY (See page IP-21)**
58. **REMOVE FRONT NO. 2 SPEAKER ASSEMBLY (for RH Side) (See page IP-21)**
59. **REMOVE NO. 3 INSTRUMENT PANEL REGISTER ASSEMBLY (See page IP-21)**
60. **REMOVE NO. 1 SPEAKER HOLE COVER (See page IP-21)**
61. **REMOVE FRONT STEREO COMPONENT SPEAKER ASSEMBLY (See page AV-188)**
62. **REMOVE NO. 1 INSTRUMENT PANEL MOUNTING BRACKET (See page IP-22)**
63. **REMOVE PUSH START SWITCH (See page IP-22)**
64. **DISCONNECT INSTRUMENT PANEL WIRE ASSEMBLY (See page RS-414)**
65. **REMOVE ROOM TEMPERATURE SENSOR (See page AC-214)**
66. **REMOVE INSTRUMENT PANEL SAFETY PAD ASSEMBLY (w/o DVD Player) (See page IP-22)**
67. **REMOVE INSTRUMENT PANEL SAFETY PAD ASSEMBLY (w/ DVD Player) (See page IP-24)**

68. **REMOVE SIDE NO. 1 DEFROSTER NOZZLE DUCT (See page IP-27)**

69. **REMOVE SIDE NO. 2 DEFROSTER NOZZLE DUCT (See page IP-28)**

70. **REMOVE DEFROSTER NOZZLE ASSEMBLY (See page IP-28)**

71. **REMOVE NO. 1 HEATER TO REGISTER DUCT (See page IP-28)**

72. **REMOVE NO. 2 HEATER TO REGISTER DUCT (See page IP-28)**

73. **REMOVE NO. 2 ANTENNA CORD SUB-ASSEMBLY**
    (a) Disengage the 5 clamps and remove the No. 2 antenna cord sub-assembly.

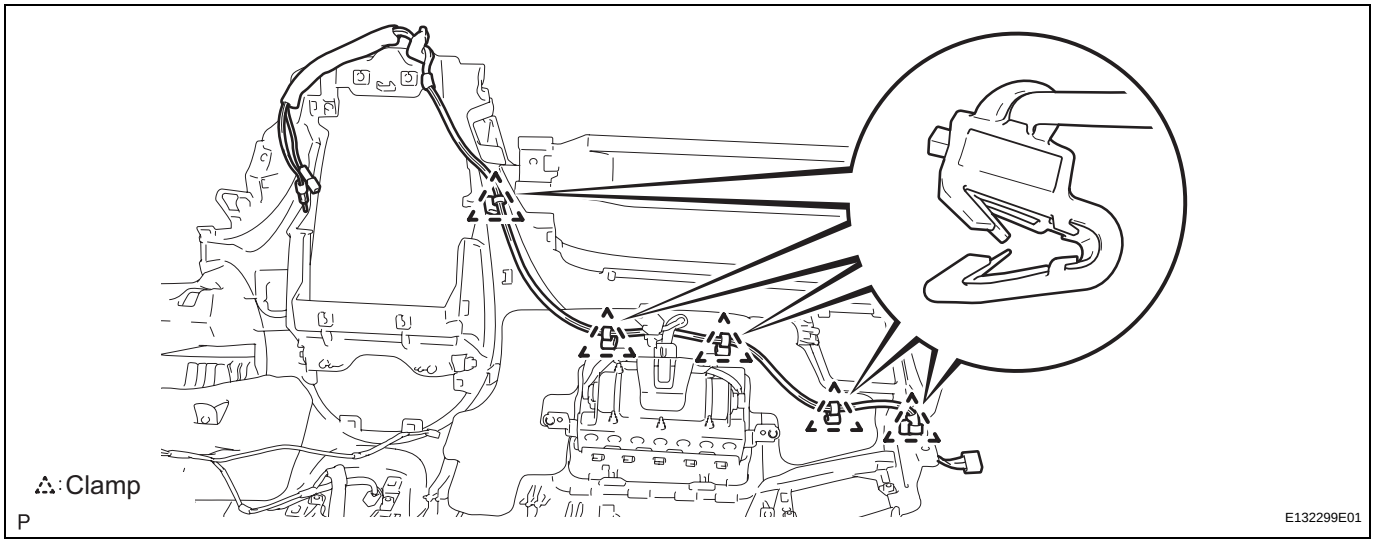

74. **REMOVE REAR SEAT CUSHION ASSEMBLY (See page SE-113)**

75. **REMOVE REAR SEAT HEADREST ASSEMBLY**

76. **REMOVE REAR CENTER SEAT HEADREST ASSEMBLY**

77. **REMOVE REAR SEATBACK ASSEMBLY (See page SE-113)**

78. **REMOVE REAR DOOR SCUFF PLATE LH (See page IR-39)**

79. **REMOVE LOWER CENTER PILLAR GARNISH LH (See page IR-40)**

80. **REMOVE UPPER CENTER PILLAR GARNISH LH (See page IR-41)**

81. **REMOVE REAR SEAT SIDE GARNISH LH (w/o Rear Seat Side Airbag) (See page IR-41)**

82. **REMOVE REAR SEAT SIDE AIRBAG ASSEMBLY LH (w/ Rear Seat Side Airbag) (See page RS-460)**

83. **REMOVE ROOF SIDE INNER GARNISH ASSEMBLY LH (See page IR-42)**
84. **REMOVE REAR DOOR SCUFF PLATE RH (See page IR-42)**
85. **REMOVE LOWER CENTER PILLAR GARNISH RH (See page IR-42)**
86. **REMOVE UPPER CENTER PILLAR GARNISH RH (See page IR-42)**
87. **REMOVE REAR SEAT SIDE GARNISH RH (w/o Rear Seat Side Airbag) (See page IR-43)**
88. **REMOVE REAR SEAT SIDE AIRBAG ASSEMBLY RH (w/ Rear Seat Side Airbag) (See page IR-43)**
89. **REMOVE ROOF SIDE INNER GARNISH ASSEMBLY RH (See page IR-43)**
90. **REMOVE NO. 2 CONSOLE BOX DUCT (See page AC-149)**
91. **REMOVE NO. 3 CONSOLE BOX DUCT (See page AC-149)**
92. **DISCONNECT TRANSMISSION CONTROL CABLE ASSEMBLY (See page AX-232)**
93. **REMOVE SHIFT LEVER ASSEMBLY (See page AX-233)**
94. **REMOVE FLOOR CARPET BRACKET LH (See page AC-148)**
95. **REMOVE FLOOR CARPET BRACKET RH (See page AC-148)**
96. **REMOVE LUGGAGE COMPARTMENT FLOOR MAT (w/ DVD Player)**
97. **REMOVE SPARE WHEEL COVER TRAY (w/ DVD Player)**
98. **REMOVE LUGGAGE HOLD BELT STRIKER ASSEMBLY (w/ DVD Player) (See page ED-82)**
99. **REMOVE NO. 1 LUGGAGE COMPARTMENT TRIM HOOK (w/ DVD Player) (See page ED-83)**
100. **REMOVE REAR FLOOR FINISH PLATE (w/ DVD Player) (See page ED-83)**
101. **REMOVE LUGGAGE COMPARTMENT INNER TRIM COVER RH (w/ DVD Player) (See page ED-83)**
102. **DISCONNECT STEREO COMPONENT AMPLIFIER ASSEMBLY CONNECTOR (w/ DVD Player) (See page IR-44)**
103. **REMOVE INNER REAR VIEW MIRROR STAY HOLDER COVER (See page MI-42)**
104. **REMOVE RAIN SENSOR COVER (w/ Rain Sensor) (See page WW-63)**

105. REMOVE ROOF CONSOLE BOX ASSEMBLY (See page IR-44)

106. REMOVE VISOR BRACKET COVER (See page IR-45)

107. REMOVE VISOR ASSEMBLY LH (See page IR-45)

108. REMOVE VISOR ASSEMBLY RH (See page IR-45)

109. REMOVE VISOR HOLDER (See page IR-45)

110. REMOVE COAT HOOK (See page IR-45)

111. REMOVE SPOT LIGHT ASSEMBLY (for Standard) (See page IR-46)

112. REMOVE SPOT LIGHT ASSEMBLY (for Glass Roof) (See page IR-46)

113. REMOVE ASSIST GRIP SUB-ASSEMBLY (See page IR-47)

114. REMOVE ROOF HEADLINING ASSEMBLY (for Standard) (See page IR-47)

115. REMOVE ROOF HEADLINING ASSEMBLY (for Glass Roof) (See page IR-48)

116. REMOVE ANTENNA CORD SUB-ASSEMBLY

(a) Peel the strips of the tape used to secure the antenna cord only to the extent that allows removal of the antenna cord.
HINT:
Tape is not available as a supply part. Try to leave as much tape as possible on the roof headlining so that the tape can be reused.

(b) Remove the antenna cord from the roof headlining.

for Standard:

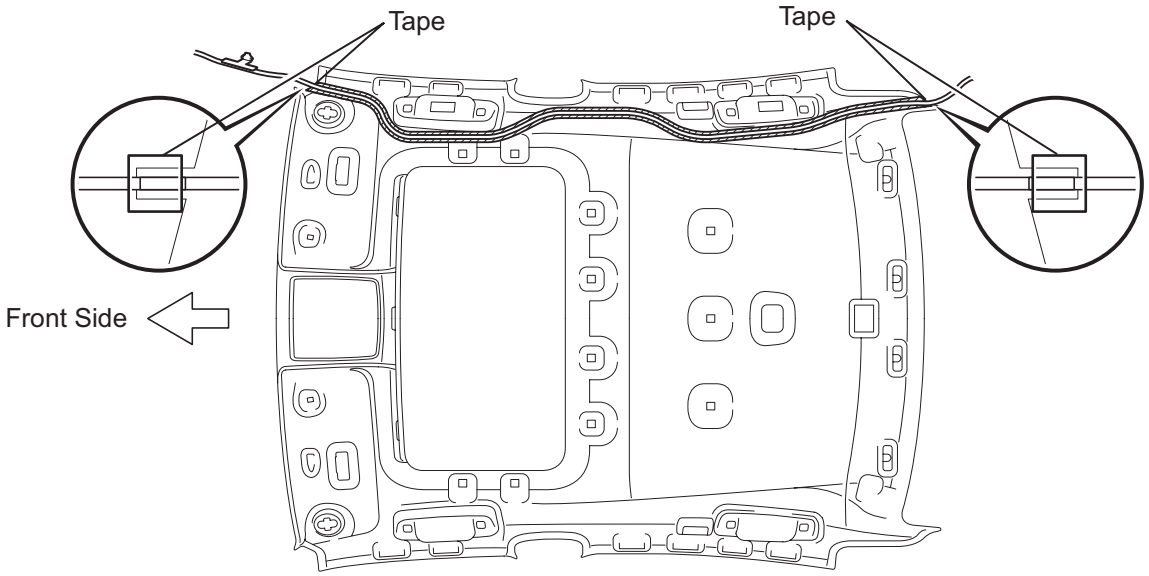

for Glass Roof:

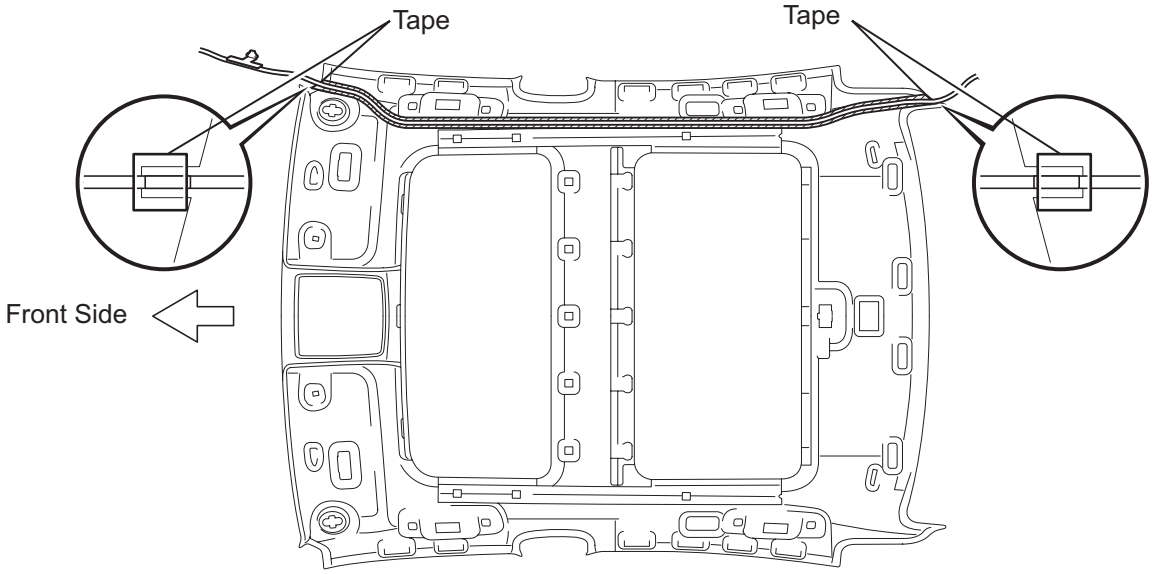

▨: Double-sided Tape

P

E132300E02

INSTALLATION

1. INSTALL ANTENNA CORD SUB-ASSEMBLY

HINT:

The double-sided tape and tape are not available as supply parts. If these tapes still have enough adhesion to secure the roof headlining and antenna cord, reuse the tapes. If the roof headlining has been replaced with a new one, or if the tape and/or the double-sided tape is no longer sticky, apply new tape following the procedures below.

(a) Apply new double-sided tape.

for Standard:

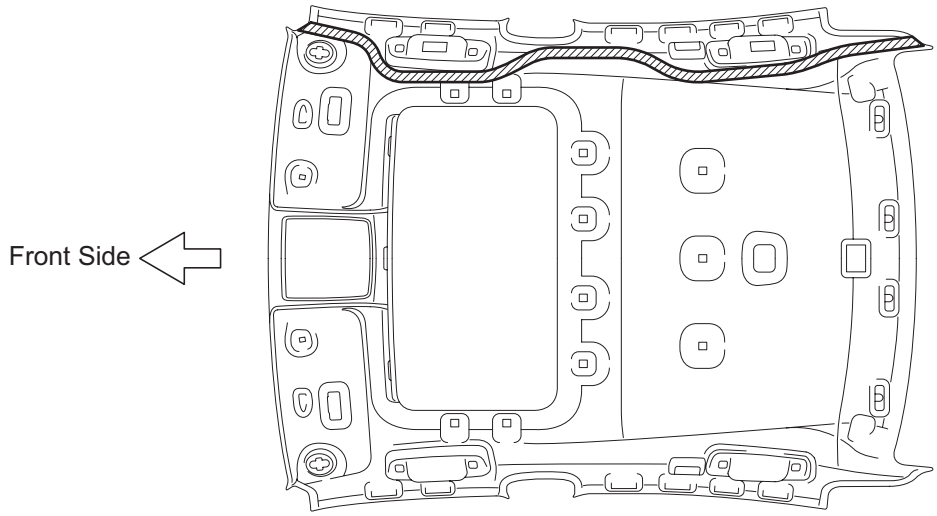

for Glass Roof:

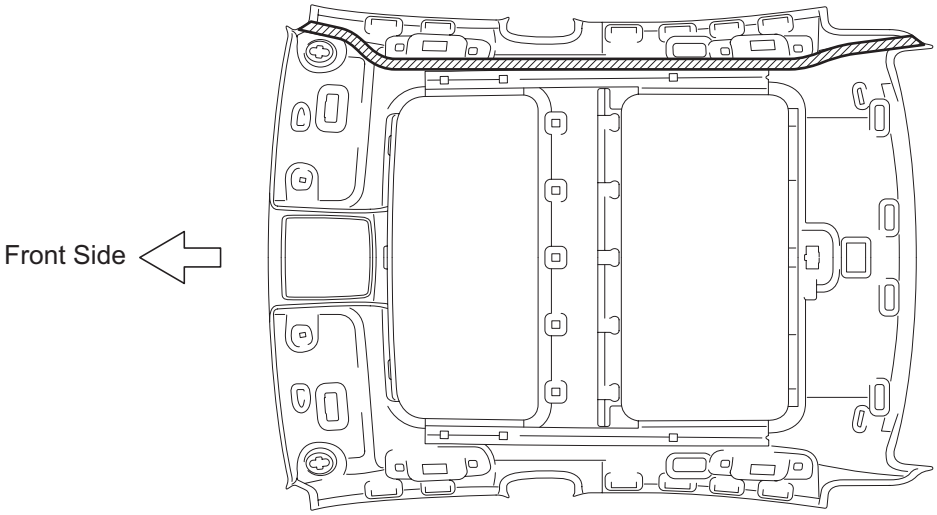

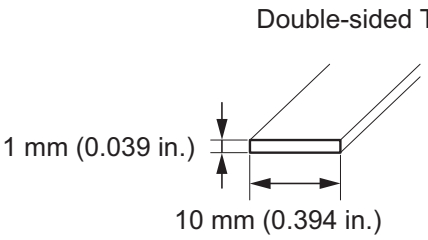

▨: Double-sided Tape

P

E132302E01

(1) Remove the double-sided tape from the roof headlining assembly.

(2) Peel off the appropriate amount of new double-sided tape. Be careful not to touch the adhesive surface.
(3) Apply the double-sided tape to the roof headlining while aligning the tape with the markings on the roof headlining assembly.
(4) Peel off the backing sheet from the double-sided tape.

(b) Install the antenna cord to the roof headlining assembly from the front of the vehicle.

for Standard:

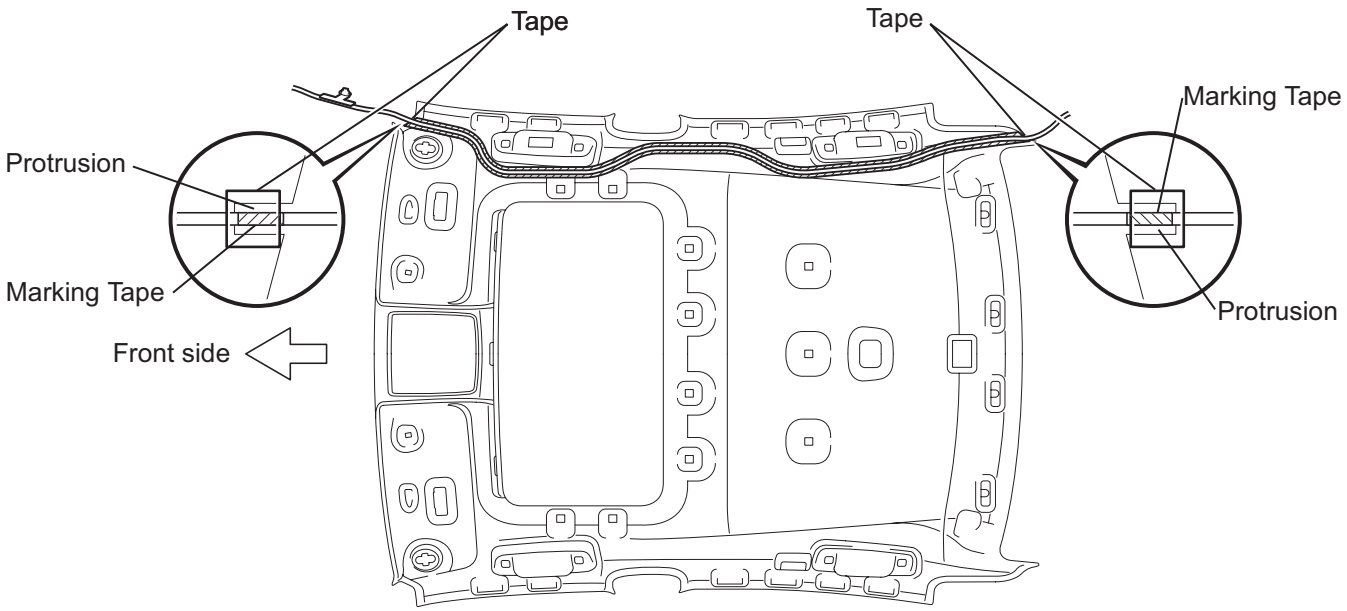

for Glass Roof:

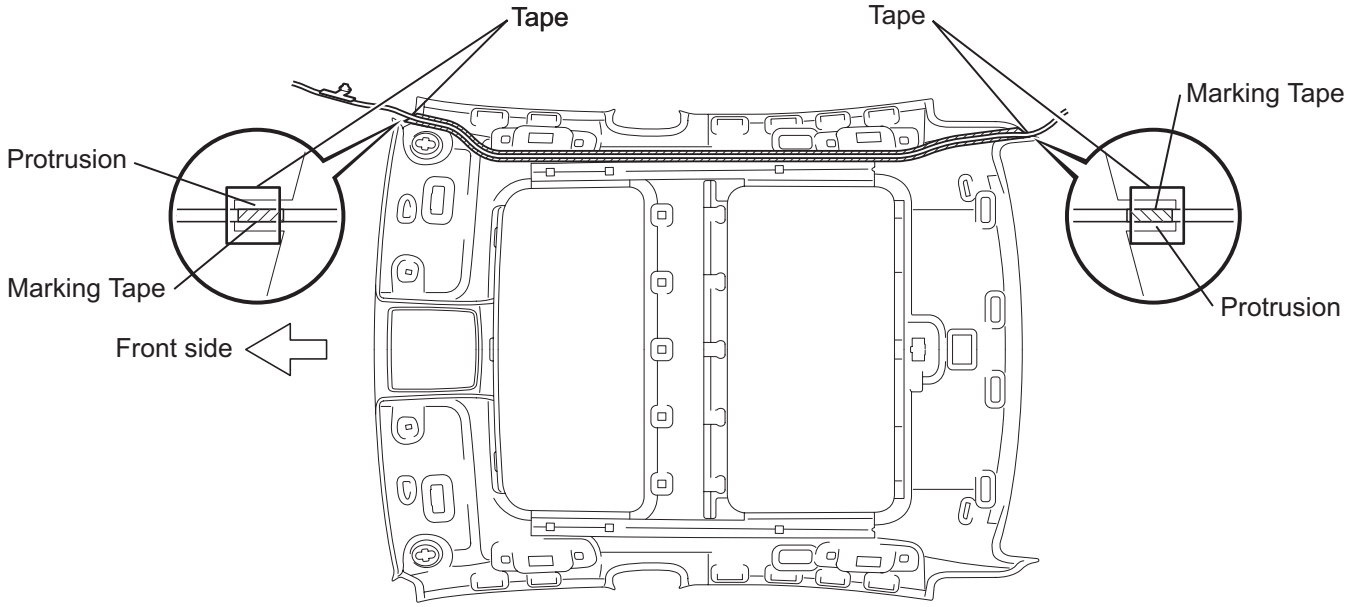

▨: Double-sided Tape

P

E132301E01

AV

(c) Put the strips of the tape back to the positions shown in the illustration in order to secure the antenna cord to the roof headlining assembly.
HINT:
- If the tape is no longer sticky, use other tape, such as packing tape, that has enough adhesion to secure the antenna cord to the roof headlining assembly.
- For the right front corner of the roof headlining assembly, align the marking tape on the antenna cord with the protrusion of the roof headlining, and wrap tape around the antenna cord and roof headlining assembly once or twice to securely hold them.
- For the right rear corner of the roof headlining assembly, align the marking tape on the antenna cord with the rear edge of the roof headlining, and secure the antenna cord to the roof headlining assembly with tape.

2. **INSTALL ROOF HEADLINING ASSEMBLY (for Standard) (See page IR-56)**
3. **INSTALL ROOF HEADLINING ASSEMBLY (for Glass Roof) (See page IR-57)**
4. **INSTALL ASSIST GRIP SUB-ASSEMBLY (See page IR-58)**
5. **INSTALL SPOT LIGHT ASSEMBLY (for Standard) (See page IR-59)**
6. **INSTALL SPOT LIGHT ASSEMBLY (for Glass Roof) (See page IR-59)**
7. **INSTALL COAT HOOK (See page IR-60)**
8. **INSTALL VISOR HOLDER (See page IR-60)**
9. **INSTALL VISOR ASSEMBLY LH (See page IR-60)**
10. **INSTALL VISOR ASSEMBLY RH (See page IR-60)**
11. **INSTALL VISOR BRACKET COVER (See page IR-60)**
12. **INSTALL ROOF CONSOLE BOX ASSEMBLY (See page IR-60)**
13. **INSTALL RAIN SENSOR COVER (w/ Rain Sensor) (See page WW-65)**
14. **INSTALL INNER REAR VIEW MIRROR STAY HOLDER COVER (See page MI-44)**
15. **CONNECT STEREO COMPONENT AMPLIFIER ASSEMBLY CONNECTOR (w/ DVD Player) (See page IR-61)**
16. **INSTALL LUGGAGE COMPARTMENT INNER TRIM COVER RH (w/ DVD Player) (See page ED-88)**
17. **INSTALL REAR FLOOR FINISH PLATE (w/ DVD Player) (See page ED-88)**

18. **INSTALL NO. 1 LUGGAGE COMPARTMENT TRIM HOOK (w/ DVD Player) (See page ED-89)**
19. **INSTALL LUGGAGE HOLD BELT STRIKER ASSEMBLY (w/ DVD Player) (See page ED-89)**
20. **INSTALL SPARE WHEEL COVER TRAY (w/ DVD Player)**
21. **INSTALL LUGGAGE COMPARTMENT FLOOR MAT (w/ DVD Player)**
22. **INSTALL FLOOR CARPET BRACKET LH**
23. **INSTALL FLOOR CARPET BRACKET RH**
24. **INSTALL SHIFT LEVER ASSEMBLY (See page AX-240)**
25. **CONNECT TRANSMISSION CONTROL CABLE ASSEMBLY (See page AX-241)**
26. **INSTALL NO. 2 CONSOLE BOX DUCT (See page AC-163)**
27. **INSTALL NO. 3 CONSOLE BOX DUCT (See page AC-163)**
28. **INSTALL ROOF SIDE INNER GARNISH ASSEMBLY LH (See page IR-62)**
29. **INSTALL REAR SEAT SIDE GARNISH LH (w/o Rear Seat Side Airbag) (See page IR-62)**
30. **INSTALL REAR SEAT SIDE AIRBAG ASSEMBLY LH (w/ Rear Seat Side Airbag) (See page RS-460)**
31. **INSTALL UPPER CENTER PILLAR GARNISH LH (See page IR-63)**
32. **INSTALL LOWER CENTER PILLAR GARNISH LH (See page IR-63)**
33. **INSTALL REAR DOOR SCUFF PLATE LH (See page IR-63)**
34. **INSTALL ROOF SIDE INNER GARNISH ASSEMBLY RH (See page IR-65)**
35. **INSTALL REAR SEAT SIDE GARNISH RH (w/o Rear Seat Side Airbag) (See page IR-65)**
36. **INSTALL REAR SEAT SIDE AIRBAG ASSEMBLY RH (w/ Rear Seat Side Airbag) (See page IR-65)**
37. **INSTALL UPPER CENTER PILLAR GARNISH RH (See page IR-65)**
38. **INSTALL LOWER CENTER PILLAR GARNISH RH (See page IR-65)**
39. **INSTALL REAR DOOR SCUFF PLATE RH (See page IR-65)**
40. **INSTALL REAR SEATBACK ASSEMBLY (See page SE-121)**

41. **INSTALL REAR CENTER SEAT HEADREST ASSEMBLY**

42. **INSTALL REAR SEAT HEADREST ASSEMBLY**

43. **INSTALL REAR SEAT CUSHION ASSEMBLY (See page SE-121)**

44. **INSTALL NO. 2 ANTENNA CORD SUB-ASSEMBLY**
    (a) Engage the 5 clamps and install the No. 2 antenna cord sub-assembly.

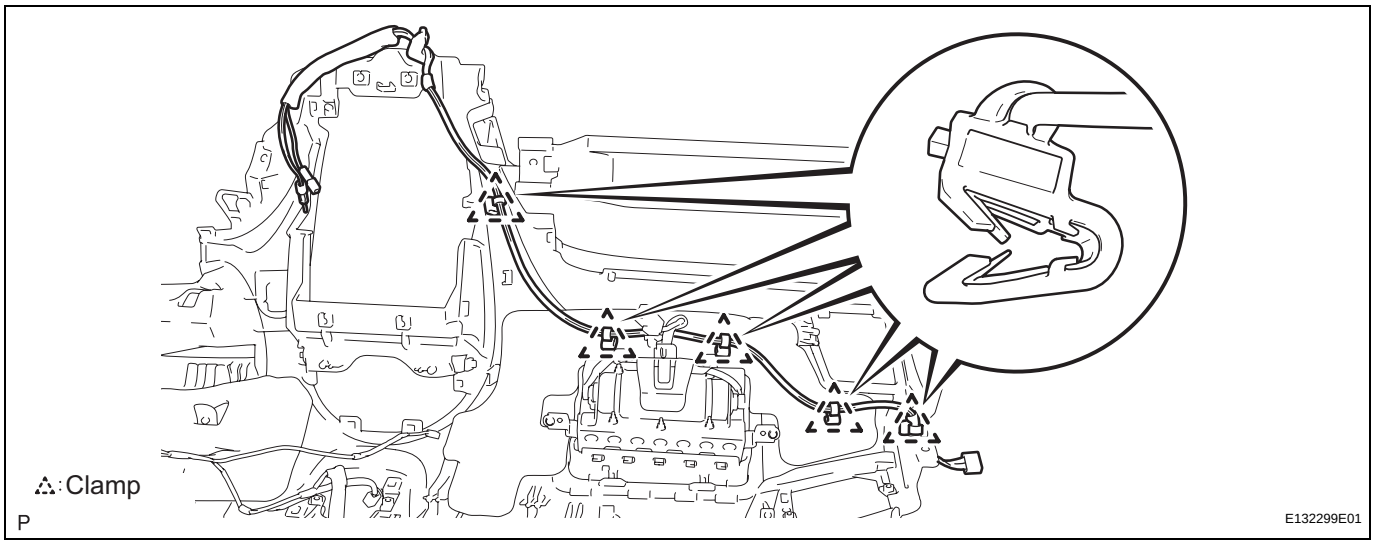

45. **INSTALL NO. 2 HEATER TO REGISTER DUCT (See page IP-32)**

46. **INSTALL NO. 1 HEATER TO REGISTER DUCT (See page IP-32)**

47. **INSTALL DEFROSTER NOZZLE ASSEMBLY (See page IP-32)**

48. **INSTALL SIDE NO. 2 DEFROSTER NOZZLE DUCT (See page IP-32)**

49. **INSTALL SIDE NO. 1 DEFROSTER NOZZLE DUCT (See page IP-32)**

50. **INSTALL INSTRUMENT PANEL SAFETY PAD ASSEMBLY (w/o DVD Player) (See page IP-33)**

51. **INSTALL INSTRUMENT PANEL SAFETY PAD ASSEMBLY (w/ DVD Player) (See page IP-35)**

52. **INSTALL ROOM TEMPERATURE SENSOR (See page AC-215)**

53. **CONNECT INSTRUMENT PANEL WIRE ASSEMBLY (See page RS-416)**

54. **INSTALL PUSH START SWITCH (See page IP-37)**

55. **INSTALL NO. 1 INSTRUMENT PANEL MOUNTING BRACKET (See page IP-38)**

56. **INSTALL FRONT STEREO COMPONENT SPEAKER ASSEMBLY (See page AV-188)**

57. **INSTALL NO. 1 SPEAKER HOLE COVER (See page IP-38)**
58. **INSTALL NO. 1 INSTRUMENT PANEL REGISTER ASSEMBLY (See page IP-38)**
59. **INSTALL FRONT NO. 2 SPEAKER ASSEMBLY (for LH Side) (See page AV-185)**
60. **INSTALL NO. 1 INSTRUMENT PANEL SPEAKER PANEL SUB-ASSEMBLY (See page IP-39)**
61. **INSTALL FRONT PILLAR GARNISH LH (See page IR-64)**
62. **INSTALL NO. 3 INSTRUMENT PANEL REGISTER ASSEMBLY (See page IP-39)**
63. **INSTALL FRONT NO. 2 SPEAKER ASSEMBLY (for RH Side) (See page IP-39)**
64. **INSTALL NO. 2 INSTRUMENT PANEL SPEAKER PANEL SUB-ASSEMBLY (See page IP-39)**
65. **INSTALL FRONT PILLAR GARNISH RH (See page IR-65)**
66. **INSTALL REAR CONSOLE BOX ASSEMBLY (See page IP-39)**
67. **INSTALL CONSOLE REAR END PANEL SUB-ASSEMBLY (See page IP-40)**
68. **INSTALL CONSOLE BOX CARPET (See page IP-41)**
69. **INSTALL CONSOLE BOX POCKET (See page IP-41)**
70. **INSTALL HEATER SEAT SWITCH CONSOLE BASE (w/o Seat Heater System) (See page IP-41)**
71. **INSTALL HEATER SEAT SWITCH CONSOLE BASE (w/ Seat Heater System) (See page IP-41)**
72. **INSTALL INTEGRATION CONTROL PANEL WITH RADIO RECEIVER ASSEMBLY (w/o Navigation System) (See page AV-172)**
73. **INSTALL MULTI-DISPLAY WITH RADIO RECEIVER ASSEMBLY (w/ Navigation System) (See page AV-173)**
74. **INSTALL NO. 2 INSTRUMENT PANEL REGISTER ASSEMBLY (See page IP-41)**
75. **INSTALL UPPER CONSOLE PANEL ASSEMBLY WITH FRONT ASH RECEPTACLE (See page IP-42)**
76. **INSTALL SHIFT LEVER KNOB SUB-ASSEMBLY (See page IP-42)**
77. **INSTALL LOWER INSTRUMENT PANEL RH (See page IP-42)**
78. **INSTALL FRONT PASSENGER SIDE KNEE AIRBAG ASSEMBLY (See page RS-396)**

79. **INSTALL SIDE INSTRUMENT PANEL RH (See page IP-43)**
80. **INSTALL NO. 2 INSTRUMENT PANEL UNDER COVER SUB-ASSEMBLY (See page IP-44)**
81. **INSTALL FRONT DOOR OPENING TRIM COVER RH (See page IR-65)**
82. **INSTALL FRONT DOOR SCUFF PLATE RH (See page IR-65)**
83. **INSTALL INSTRUMENT PANEL FINISH PANEL END RH (See page IP-44)**
84. **INSTALL NO. 1 SWITCH HOLE BASE (See page IP-44)**
85. **INSTALL COMBINATION METER ASSEMBLY (See page IP-45)**
86. **INSTALL INSTRUMENT CLUSTER FINISH PANEL SUB-ASSEMBLY (See page IP-45)**
87. **INSTALL TURN SIGNAL SWITCH ASSEMBLY WITH SPIRAL CABLE SUB-ASSEMBLY (See page SR-86)**
88. **INSTALL TILT AND TELESCOPIC SWITCH (See page SR-86)**
89. **INSTALL STEERING COLUMN COVER (See page IP-46)**
90. **ADJUST SPIRAL CABLE SUB-ASSEMBLY (See page RS-382)**
91. **INSTALL LOWER INSTRUMENT PANEL SUB-ASSEMBLY (See page IP-46)**
92. **INSTALL INSTRUMENT PANEL FINISH PANEL END LH (See page IP-46)**
93. **INSTALL SIDE INSTRUMENT PANEL LH (See page IP-47)**
94. **INSTALL FRONT DOOR OPENING TRIM COVER LH (See page IR-64)**
95. **INSTALL FRONT DOOR SCUFF PLATE LH (See page IR-65)**
96. **INSTALL STEERING WHEEL ASSEMBLY (See page SR-87)**
97. **INSTALL STEERING PAD (See page RS-368)**
98. **INSTALL LOWER NO. 3 STEERING WHEEL COVER (See page RS-369)**
99. **INSTALL LOWER NO. 2 STEERING WHEEL COVER (See page RS-369)**
100. **INSTALL FRONT SEAT ASSEMBLY LH (See page SE-109)**

101. INSTALL FRONT SEAT REAR OUTER TRACK BRACKET COVER LH (See page SE-110)

102. INSTALL FRONT SEAT REAR INNER TRACK BRACKET COVER LH (See page SE-110)

103. INSTALL FRONT SEAT OUTER TRACK BRACKET COVER LH (See page SE-110)

104. INSTALL FRONT SEAT INNER TRACK BRACKET COVER LH (See page SE-110)

105. INSTALL FRONT SEAT HEADREST ASSEMBLY (for Driver Seat)

106. CONNECT FRONT SEAT OUTER BELT ASSEMBLY LH (See page SB-25)

107. INSTALL SEAT BELT ANCHOR COVER CAP LH (See page SB-25)

108. INSTALL FRONT SEAT ASSEMBLY RH (See page RS-497)

109. INSTALL FRONT SEAT REAR OUTER TRACK BRACKET COVER RH (See page RS-498)

110. INSTALL FRONT SEAT REAR INNER TRACK BRACKET COVER RH (See page RS-498)

111. INSTALL FRONT SEAT OUTER TRACK BRACKET COVER RH (See page RS-498)

112. INSTALL FRONT SEAT INNER TRACK BRACKET COVER RH (See page RS-498)

113. INSTALL FRONT SEAT HEADREST ASSEMBLY (for Front Passenger Seat)

114. CONNECT FRONT SEAT OUTER BELT ASSEMBLY RH (See page RS-499)

115. INSTALL SEAT BELT ANCHOR COVER CAP RH (See page RS-499)

116. PERFORM INITIALIZATION
NOTICE:
Some systems need initialization after reconnecting the cable to the negative battery terminal (See page IN-33).

117. INSPECT SHIFT LEVER POSITION (See page AX-200)

118. ADJUST SHIFT LEVER POSITION (See page AX-200)

119. INSPECT FRONT SEAT ASSEMBLY (See page SE-110)

120. INSPECT STEERING PAD (See page RS-369)

121. INSPECT FRONT PASSENGER SIDE KNEE AIRBAG ASSEMBLY (See page RS-395)

122. INSPECT SRS WARNING LIGHT
(See page RS-37)

DTC	01-DD	Master Reset

DTC	01-E1	Voice Processing Device ON Error

DESCRIPTION

DTC No.	DTC Detection Condition	Trouble Area
01-DD	The device that should be the master has been disconnected after engine start	• Radio receiver power source circuit • AVC-LAN circuit between the radio receiver and the component which has stored this code • Radio receiver • Component which has stored this code
01-E1 *1	The AMP device records that the AMP output does not function even while the source device operates	

HINT:
*1: Even if no fault is present, this trouble code may be stored depending on the battery condition or engine start voltage.

NOTICE:

- **Before starting troubleshooting, be sure to clear DTCs to erase codes stored due to the reasons described in the HINT above. Then, check for DTCs and troubleshoot according to the output DTCs.**
- **The radio receiver is the master unit.**
- **Be sure to clear and recheck DTCs after the inspection is completed to confirm that no DTCs are output.**

INSPECTION PROCEDURE

NOTICE:

Be sure to read DESCRIPTION before performing the following procedures.

1	CHECK RADIO RECEIVER POWER SOURCE CIRCUIT

Refer to the radio receiver power source circuit (See page AV-162).
If the power source circuit is operating normally, proceed to the next step.

NEXT

2	**INSPECT RADIO RECEIVER**

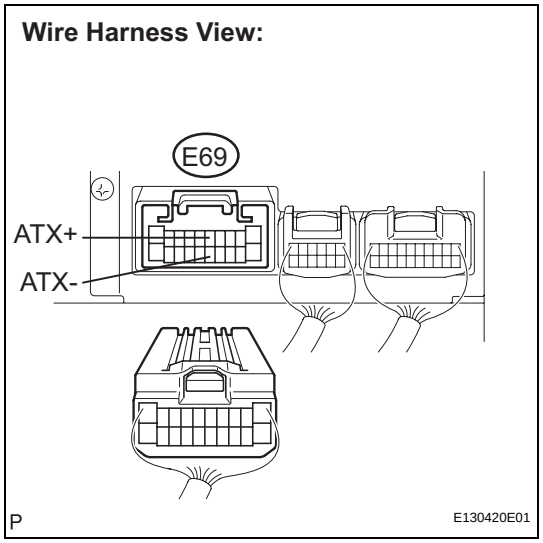

(a) Disconnect the radio receiver connectors.
(b) Measure the resistance according to the value(s) in the table below.

Standard resistance

Tester Connection	Condition	Specified Condition
ATX+ - ATX-	Always	60 to 80 Ω

NG → **REPLACE RADIO RECEIVER**

OK

3	**IDENTIFY THE COMPONENT WHICH HAS STORED THIS CODE**

(a) Enter the diagnostic mode.

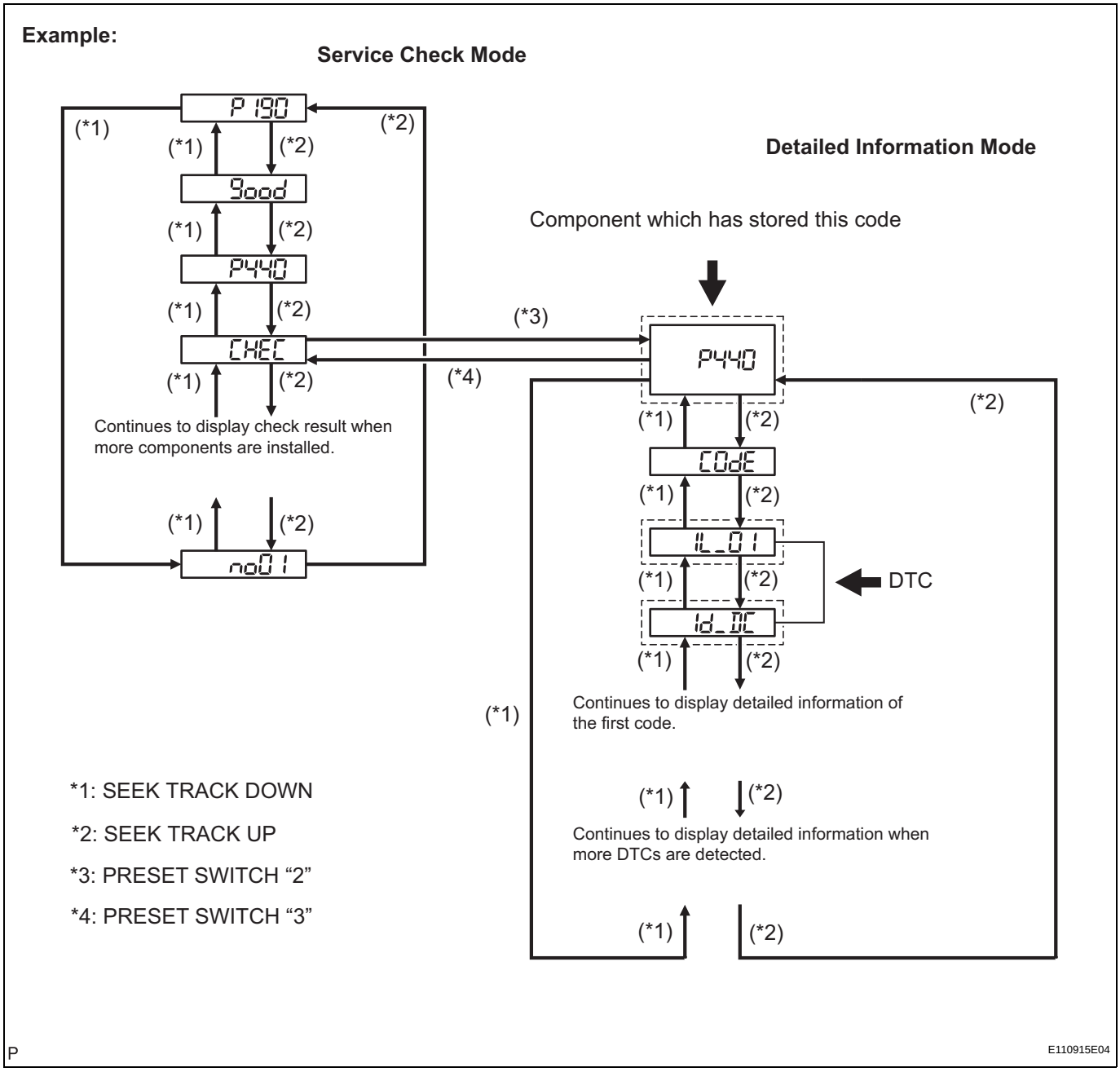

(b) Press the preset switch "3" to change to "Detailed Information Mode".

(c) Identify the component which has stored this code.

Component Table:

Component	Physical Address
Stereo component amplifier	440
"Bluetooth" handsfree module	19D

HINT:

- "440 (stereo component amplifier)" is the component which has stored this code in the example shown in the illustration.
- For details of the DTC display, refer to "DTC CHECK/ CLEAR" (See page AV-21).

AV

NEXT

4	CHECK COMPONENT WHICH HAS STORED THIS CODE

(a) Select the component which has stored this code.
HINT:
The "Bluetooth" handsfree module is built into the radio receiver. If there is a problem between the "Bluetooth" handsfree module and radio receiver, replace the radio receiver.

Component Table:

Component	Proceed to
"Bluetooth" handsfree module	A
Except "Bluetooth" handsfree module	B

A → **REPLACE RADIO RECEIVER**

B

5	CHECK HARNESS AND CONNECTOR (RADIO RECEIVER - COMPONENT WHICH HAS STORED THIS CODE)

AV

HINT:
For details of the connectors, refer to the "TERMINALS OF ECU" (See page AV-16).

(a) Referring to the AVC-LAN wiring diagram below, check the AVC-LAN circuit between the radio receiver and the component which has stored this code.
   (1) Disconnect all connectors between the radio receiver and the component which has stored this code.
   (2) Check for an open or short in the AVC-LAN circuit between the radio receiver and the component which has stored this code.
   OK:
   There is no open or short circuit.

AVC-LAN WIRING DIAGRAM:

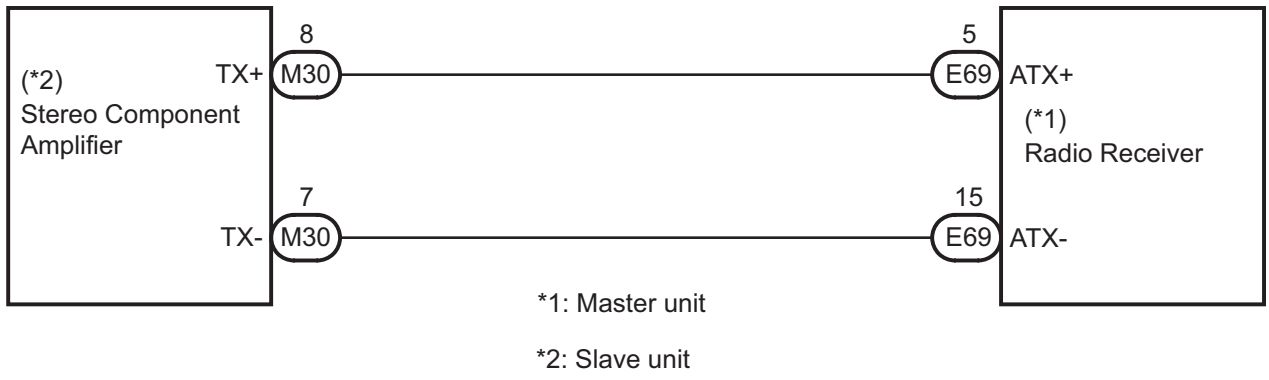

P E130419E01

NG → **REPAIR OR REPLACE HARNESS OR CONNECTOR**

OK

6	REPLACE RADIO RECEIVER

(a) Replace the radio receiver with a normal one and check if the same problem occurs again.
OK:
Same problem does not occur.

NG → **REPLACE COMPONENT WHICH HAS STORED THIS CODE**

OK

END

AUDIO TERMINAL

COMPONENTS

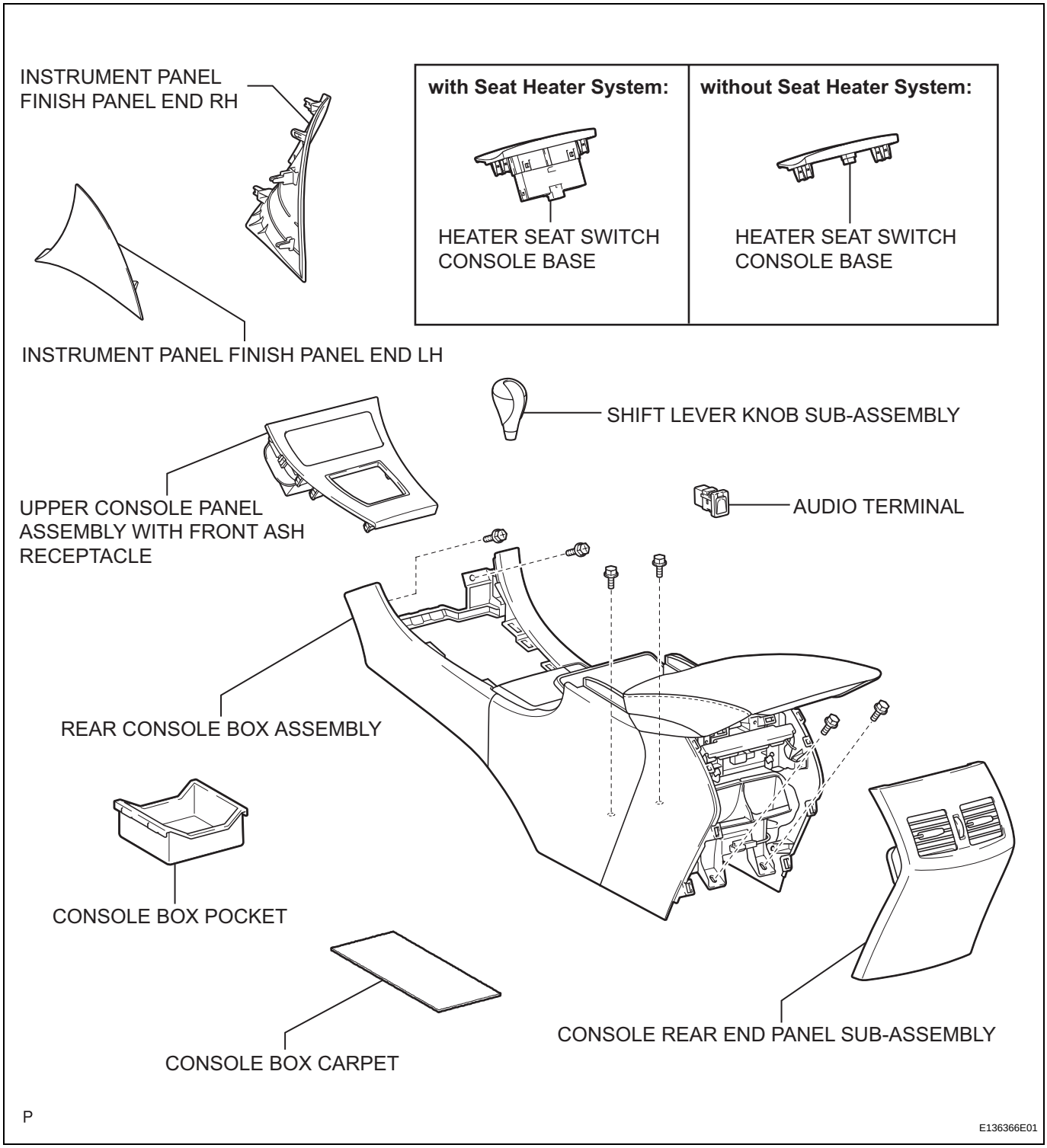

AV

REMOVAL

1. **REMOVE SHIFT LEVER KNOB SUB-ASSEMBLY (See page IP-16)**
2. **REMOVE INSTRUMENT PANEL FINISH PANEL END LH (See page IP-13)**
3. **REMOVE INSTRUMENT PANEL FINISH PANEL END RH (See page IP-15)**
4. **REMOVE UPPER CONSOLE PANEL ASSEMBLY WITH FRONT ASH RECEPTACLE (See page IP-16)**
5. **REMOVE HEATER SEAT SWITCH CONSOLE BASE (w/o Seat Heater System) (See page IP-17)**
6. **REMOVE HEATER SEAT SWITCH CONSOLE BASE (w/ Seat Heater System) (See page IP-18)**
7. **REMOVE CONSOLE BOX POCKET (See page IP-18)**
8. **REMOVE CONSOLE BOX CARPET (See page IP-18)**
9. **REMOVE CONSOLE REAR END PANEL SUB-ASSEMBLY (See page IP-19)**
10. **REMOVE REAR CONSOLE BOX ASSEMBLY (See page IP-19)**
11. **REMOVE AUDIO TERMINAL**
    (a) Disconnect the connector.

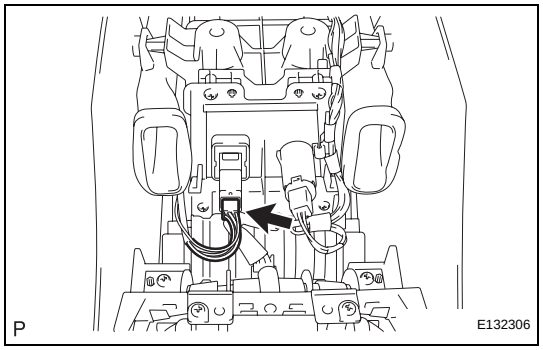

(b) Disengage the 2 claws and remove the audio terminal.

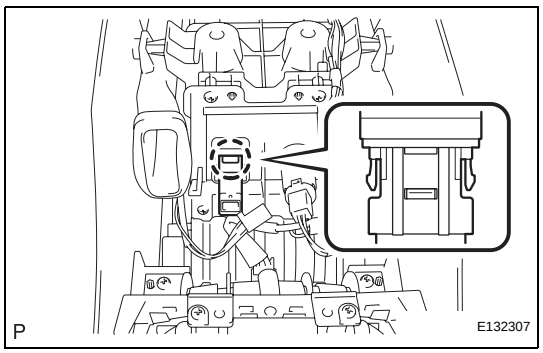

AV

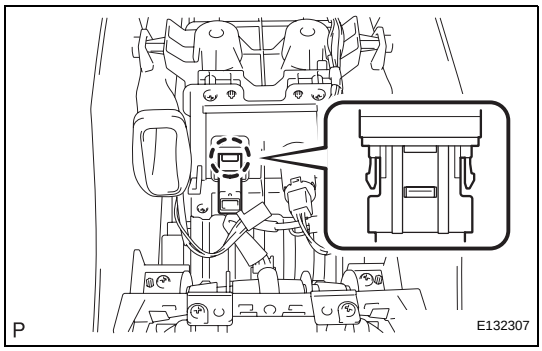

INSTALLATION

1. **INSTALL AUDIO TERMINAL**
   (a) Engage the 2 claws and install the audio terminal.

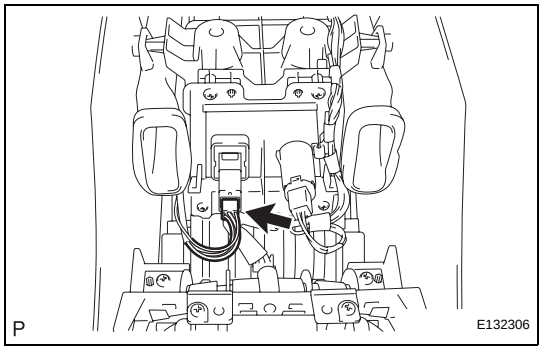

   (b) Connect the connector.

2. **INSTALL REAR CONSOLE BOX ASSEMBLY (See page IP-39)**
3. **INSTALL CONSOLE REAR END PANEL SUB-ASSEMBLY (See page IP-40)**
4. **INSTALL CONSOLE BOX CARPET (See page IP-41)**
5. **INSTALL CONSOLE BOX POCKET (See page IP-41)**
6. **INSTALL HEATER SEAT SWITCH CONSOLE BASE (w/o Seat Heater System) (See page IP-41)**
7. **INSTALL HEATER SEAT SWITCH CONSOLE BASE (w/ Seat Heater System) (See page IP-41)**
8. **INSTALL UPPER CONSOLE PANEL ASSEMBLY WITH FRONT ASH RECEPTACLE (See page IP-42)**
9. **INSTALL INSTRUMENT PANEL FINISH PANEL END RH (See page IP-44)**
10. **INSTALL INSTRUMENT PANEL FINISH PANEL END LH (See page IP-46)**
11. **INSTALL SHIFT LEVER KNOB SUB-ASSEMBLY (See page IP-42)**

STEERING PAD SWITCH

COMPONENTS

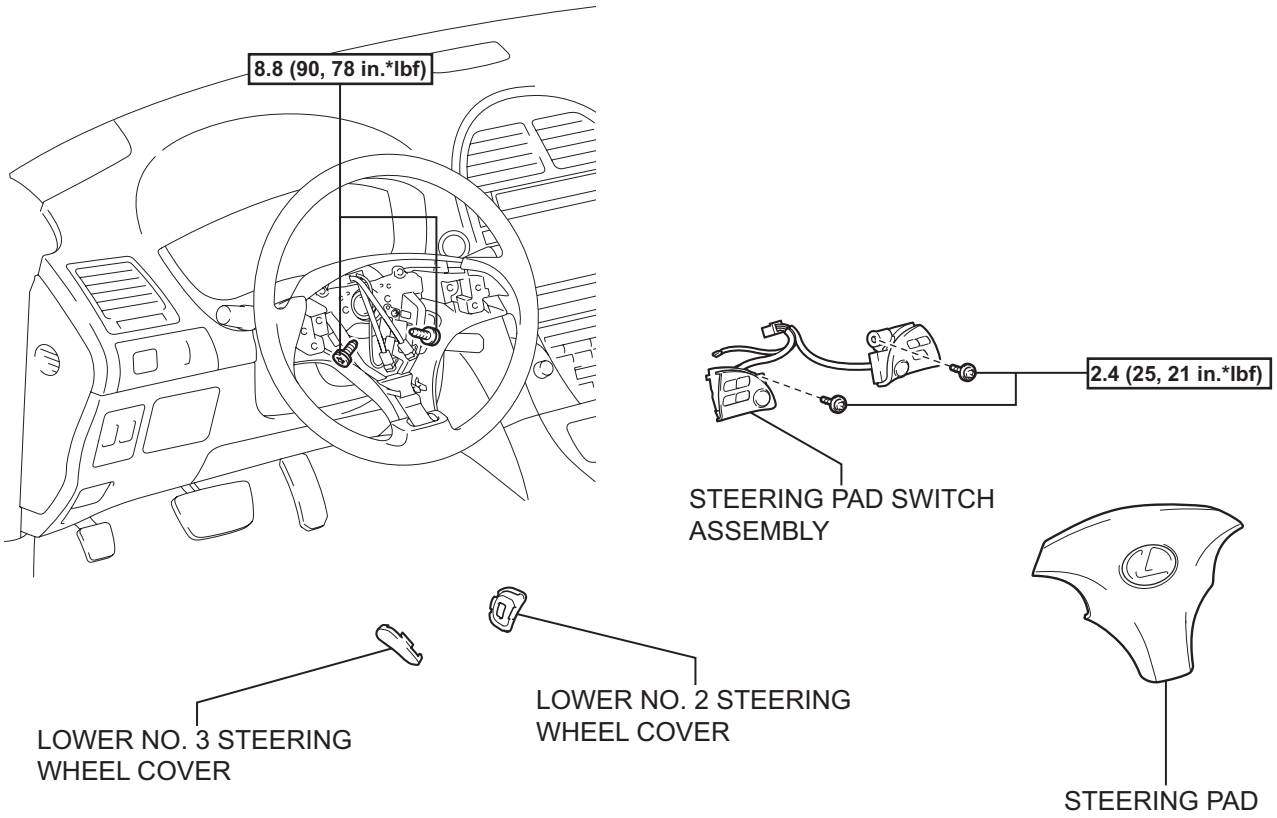

N*m (kgf*cm, ft.*lbf) : Specified torque

P

E132313E01

AV

REMOVAL

1. **DISCONNECT CABLE FROM NEGATIVE BATTERY TERMINAL**
   CAUTION:
   Wait for 90 seconds after disconnecting the cable to prevent airbag deployment (See page RS-1).
2. **REMOVE LOWER NO. 3 STEERING WHEEL COVER (See page RS-367)**
3. **REMOVE LOWER NO. 2 STEERING WHEEL COVER (See page RS-367)**
4. **REMOVE STEERING PAD (See page RS-367)**
5. **REMOVE STEERING PAD SWITCH ASSEMBLY**
   (a) Disconnect the pad switch connector from the spiral cable.
   (b) Remove the 2 screws.
   (c) Disengage the 4 claws and remove the steering pad switch assembly.

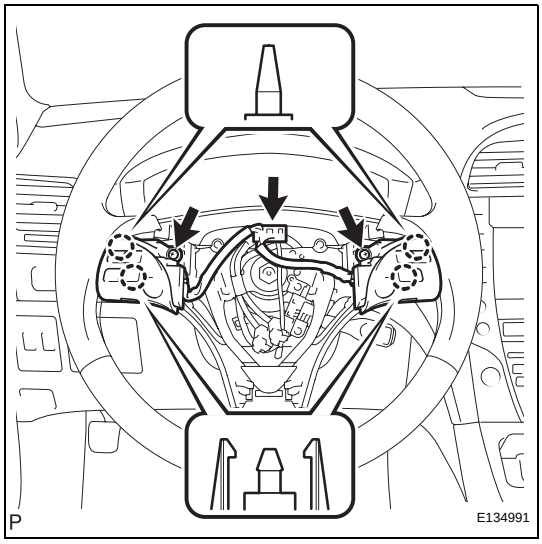

MICROPHONE

COMPONENTS

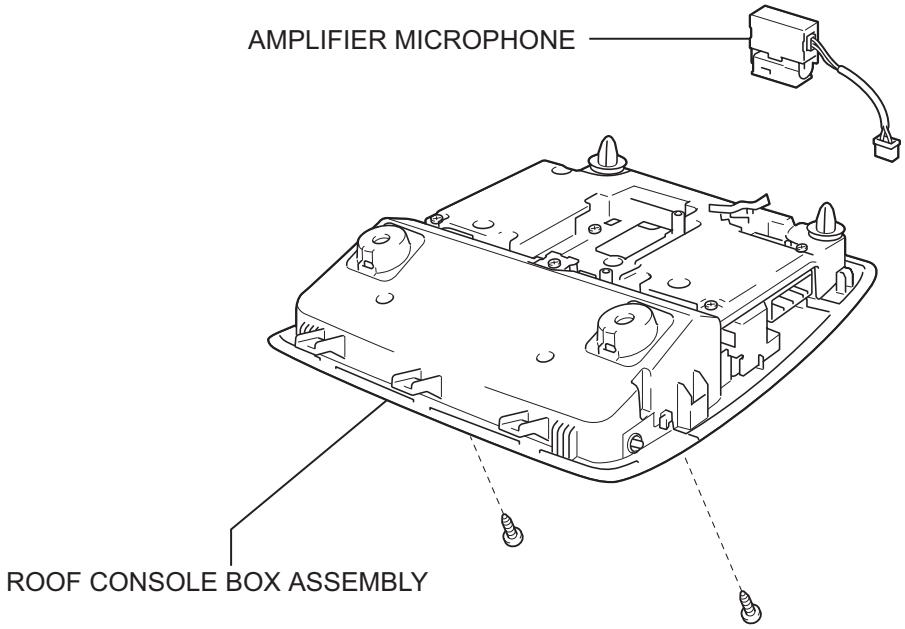

P

E132316E01

REMOVAL

1. **REMOVE ROOF CONSOLE BOX ASSEMBLY (See page IR-44)**

2. **REMOVE AMPLIFIER MICROPHONE**
   (a) Disconnect the connector.
   (b) Disengage the 2 claws and remove the amplifier microphone.

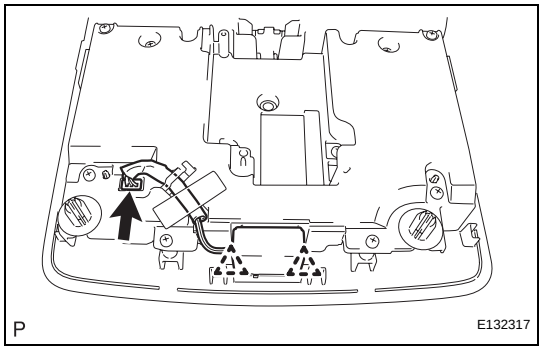

INSTALLATION

1. **INSTALL AMPLIFIER MICROPHONE**
   (a) Engage the 2 claws and install the amplifier microphone.
   (b) Connect the connector.

2. **INSTALL ROOF CONSOLE BOX ASSEMBLY (See page IR-60)**

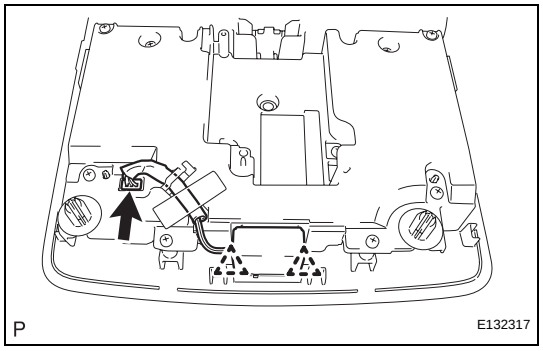

SYSTEM DESCRIPTION

1. Navigation system outline

(a) Vehicle position tracking methods

It is essential that the navigation system correctly tracks the current vehicle position and displays it on the map. There are 2 methods to track the current vehicle position: autonomous (dead reckoning) and GPS* (satellite) navigation. Both navigation methods are used in conjunction with each other.

*GPS (Global Positioning System)

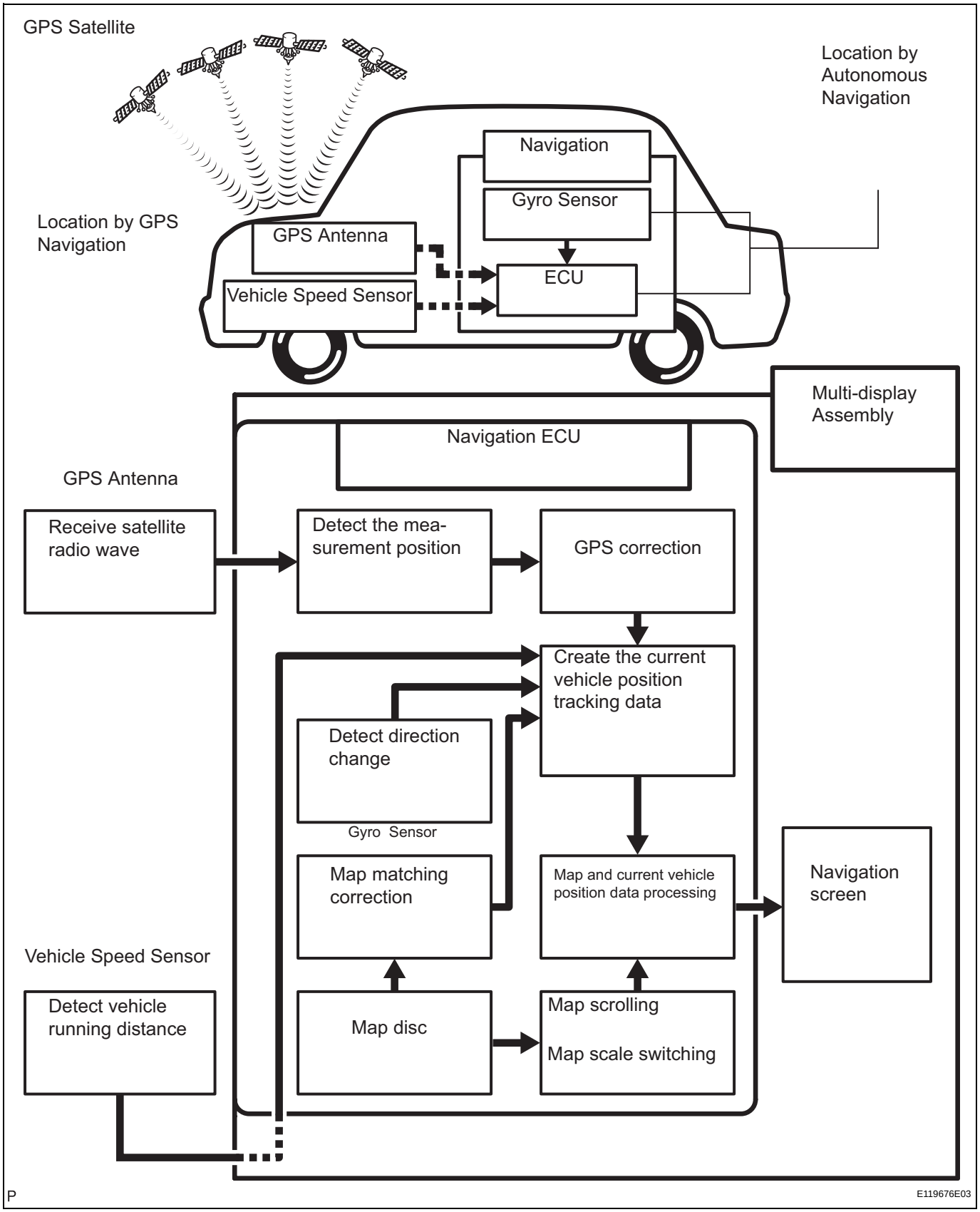

Operation	Description
Vehicle Position Calculation	The navigation ECU calculates the current vehicle position (direction and current position) using the direction deviation signal from the gyro sensor and the running distance signal from the vehicle speed sensor and creates the driving route.

NS

Operation	Description
Map Display Processing	The navigation ECU displays the vehicle track on the map by processing the vehicle position data, vehicle running track, and map data from the map disc.
Map Matching	The map data from the map disc is compared to the vehicle position and running track data. Then, the vehicle position is matched with the nearest road.
GPS Correction	The vehicle position is matched to the position measured by GPS. Then, the measurement position data from the GPS unit is compared with the vehicle position and running track data. If the position is widely different, the GPS measurement position is used.
Distance Correction	The running distance signal from the vehicle speed sensor includes the error caused by tire wear and slippage between the tires and road surface. Distance correction is performed to account for this. The navigation ECU automatically offsets the running distance signal to make up for the difference between it and the distance data of the map. The offset is automatically updated.

Navigation is performed even where the GPS radio wave does not reach.

- In a tunnel
- In an indoor parking lot
- Between tall buildings
- Under an overpass
- On a forest or tree-lined path

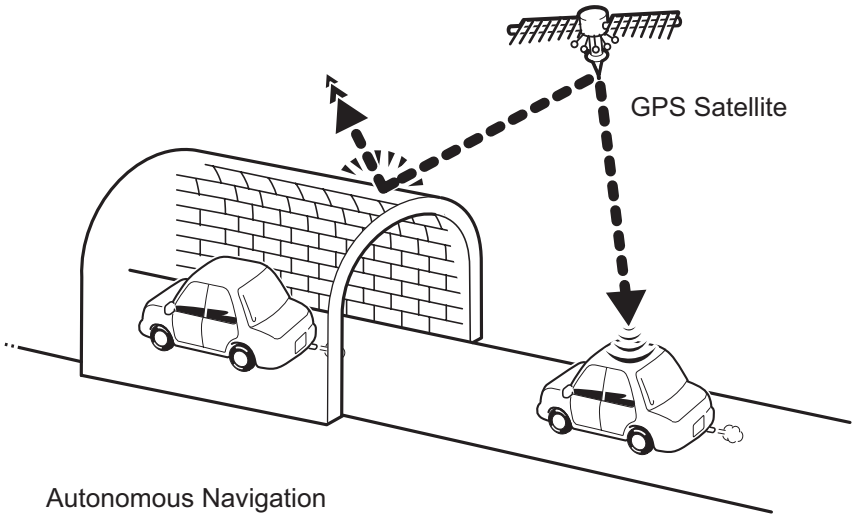

P

I100028E07

HINT:
The combination of autonomous and GPS navigation makes it possible to display the vehicle position even when the vehicle is in places where the GPS radio wave cannot receive a signal. When only autonomous navigation is used, however, the mapping accuracy may slightly decline.

(b) Autonomous navigation
This method determines the relative vehicle position based on the running track determined by the gyro and vehicle speed sensors located in the navigation ECU.

(1) Gyro sensor
Calculates the direction by detecting angular velocity. It is located in the navigation ECU.

(2) Vehicle speed sensor
Used to calculate the vehicle running distance.

(c) GPS navigation (Satellite navigation)
This method detects the absolute vehicle position using radio waves from a GPS satellite.
* GPS satellites were launched by the U.S. Department of Defence for military purposes.

Current longitude/latitude/altitude is determined using the radio wave arrival time from four satellites.

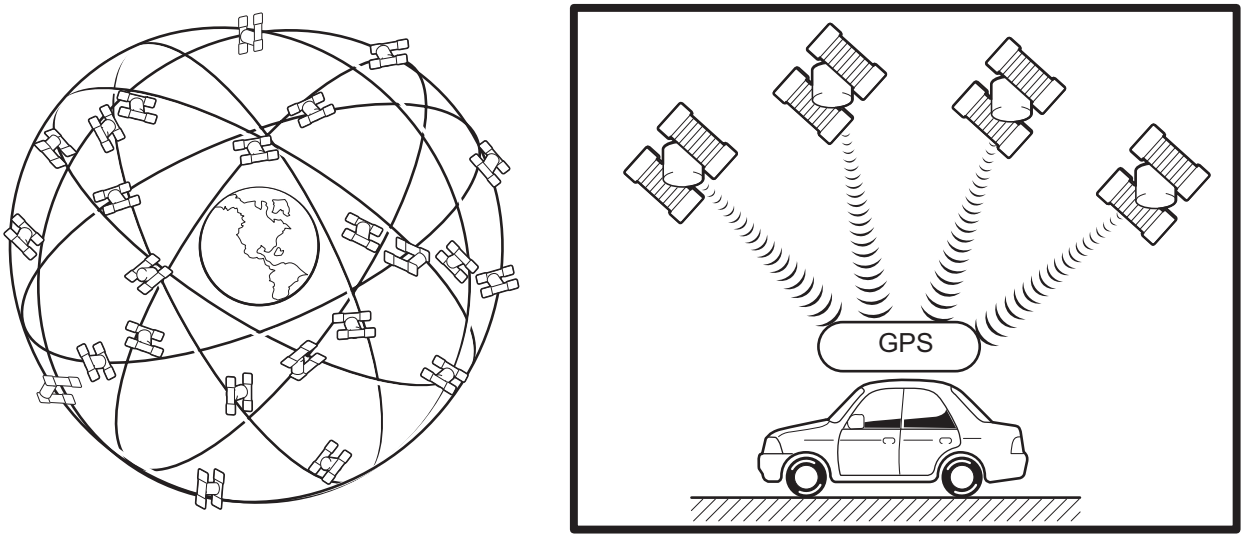

P

I100029E03

Number of satellites	Measurement	Description
2 or less	Measurement impossible	Vehicle position cannot be obtained because the number of satellites is not enough.
3	2-dimensional measurement is possible	Vehicle position is obtained based on the current longitude and latitude. (This is less precise than 3-dimensional measurement.)
4	3-dimensional measurement is possible	Vehicle position is obtained based on the current longitude, latitude and altitude.

(d) Map matching
The current driving route is calculated by autonomous navigation (according to the gyro sensor and vehicle speed sensor) and GPS navigation. This information is then compared with possible road shapes from the map data in the map disc and the vehicle position is set onto the most appropriate road.

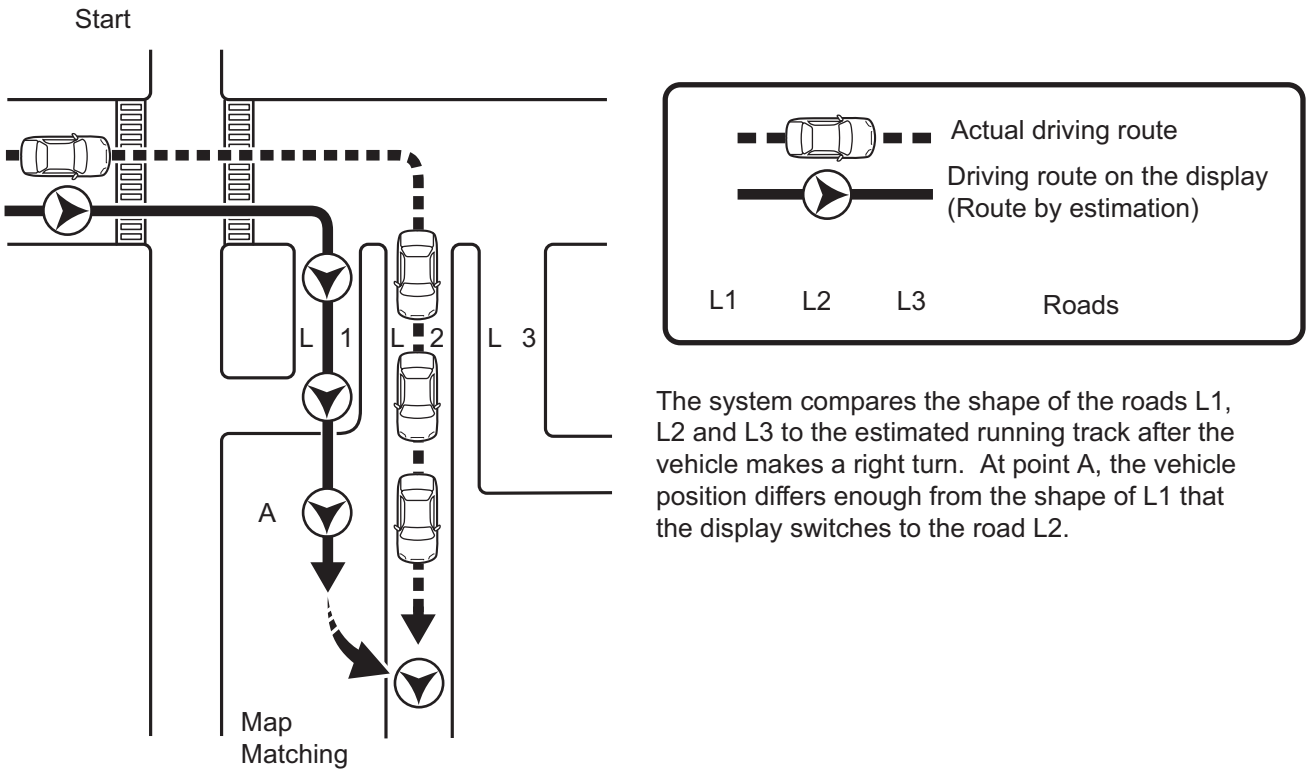

The system compares the shape of the roads L1, L2 and L3 to the estimated running track after the vehicle makes a right turn. At point A, the vehicle position differs enough from the shape of L1 that the display switches to the road L2.

P

I100030E07

2. DVD (Digital Versatile Disc) player outline (for navigation map)

(a) The navigation ECU uses a laser pickup to read the digital signals recorded on a DVD.

HINT:

- Do not disassemble any part of the navigation ECU.
- Do not apply oil to the navigation ECU.
- Do not insert anything but a DVD into the navigation ECU.

CAUTION:

Do not look directly at the laser pickup because the navigation ECU uses an invisible laser beam.

Be sure to only operate the navigation system as instructed.

3. DVD (Digital Versatile Disc) player outline (for Radio receiver (Built-in DVD changer))

(a) Usable discs

(1) DVD player

(2) Precaution for use of discs

NOTICE:

- **PAL or SECAM color television standard discs cannot be played. (Only NTSC discs can be played.)**
- **Keep the discs away from dirt. Be careful not to damage the discs or leave your fingerprints on them.**
- **Hold discs by the outer edge and center hole with the label side up.**
- **Leaving the disc exposed halfway out of the slot for a long time after pressing the disc eject button may cause deformation of the disc, marking the disc unusable.**
- **Do not use odd-shaped CDs because these may cause player malfunctions.**
- **Do not use discs whose recording portion is transparent or translucent because they may not be inserted, ejected, or played normally.**

4. Multi-display outline

(a) Touch switch

Touch switches are touch-sensitive (interactive) switches operated by touching the screen. When a switch is pressed, the outer glass bends in to contact the inner glass at the pressed position. By doing this, the voltage ratio is measured and the pressed position is detected.

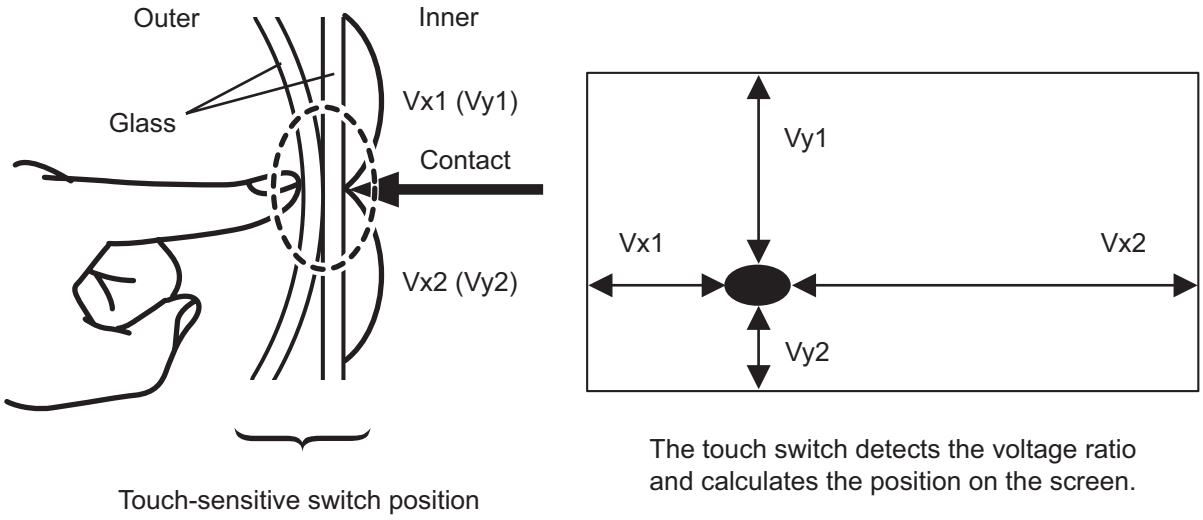

P

E106414E03

5. AVC-LAN Description

(a) What is AVC-LAN?

AVC-LAN, an abbreviation for "Audio Visual Communication Local Area Network", is a united standard developed by the manufacturers in affiliation with Toyota Motor Corporation. This standard pertains to audio and visual signals as well as switch and communication signals.

Example:

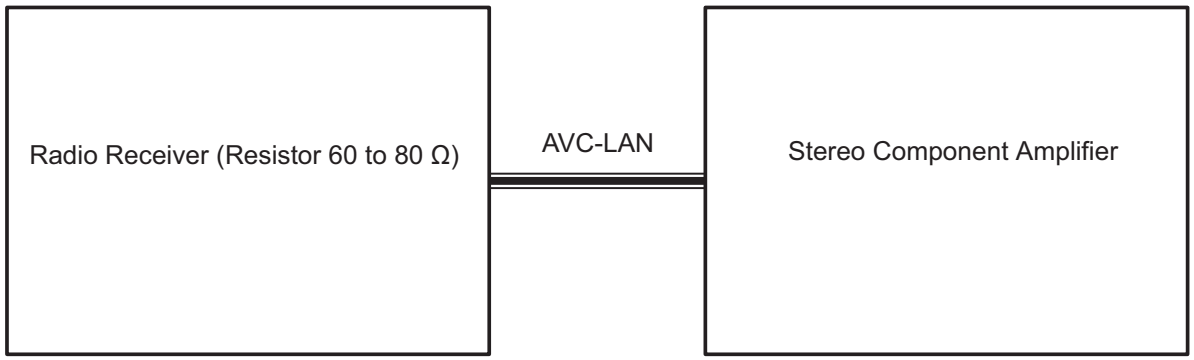

P

I100032E09

NS

(b) Purpose:

Recently, car audio systems have rapidly developed and the functions have vastly changed. The conventional car audio system is being integrated with multi-media interfaces similar to those in navigation systems. At the same time, customers are demanding higher quality from their audio systems. This is merely an overview of the standardization background. The specific purposes are as follows:

(1) To solve sound problems, etc. caused by using components of different manufacturers through signal standardization.

(2) To allow each manufacturer to concentrate on developing products they do best. From this, reasonably priced products can be produced.

HINT:

- If a short to +B or short to ground is detected in the AVC-LAN circuit, communication is interrupted and the audio system will stop functioning.
- If an audio system is equipped with a navigation system, the multi-display unit acts as the master unit.
  If an audio system is not equipped with a navigation system, the audio head unit acts as the master unit instead. If an audio system is equipped with a radio and navigation assembly, it is the master unit.

- The radio receiver contains a resistor that is necessary to enable communication on the different AVC-LAN circuits.
- The car audio system with an AVC-LAN circuit has a diagnostic function.
- Each component has a specified number (3-digit) called a physical address. Each function has a number (2-digit) called a logical address.

6. Communication system outline

(a) Components of the navigation system communicate with each other via the AVC-LAN.

(b) The radio receiver has enough resistance (60 to 80 Ω) necessary for communication.

(c) If a short circuit or open circuit occurs in the AVC-LAN circuit, communication is interrupted and the navigation system will stop functioning.

7. Diagnostic function outline

(a) The audio system has a diagnostic function (the result is indicated on the master unit).

(b) A 3-digit hexadecimal component code (physical address) is allocated to each component on the AVC-LAN. Using this code, the component in the diagnostic function can be displayed.

8. "Bluetooth" outline

(a) "Bluethooth" is a trademark owned by Bluetooth SIG. Inc.

(b) "Bluetooth" is a new wireless connection technology that uses the 2.4 GHz frequency band. This makes it possible to connect a cellular phone ("Bluetooth" compatible phone *1) to the multi-display (the "Bluetooth" system is built in), and use a hands-free function of the cellular phone, even if it is in a pocket or bag. As a result, it is not necessary to use a connector attached directly to the cellular phone.
*1: Some versions of "Bluetooth" compatible cellular phones may not function.

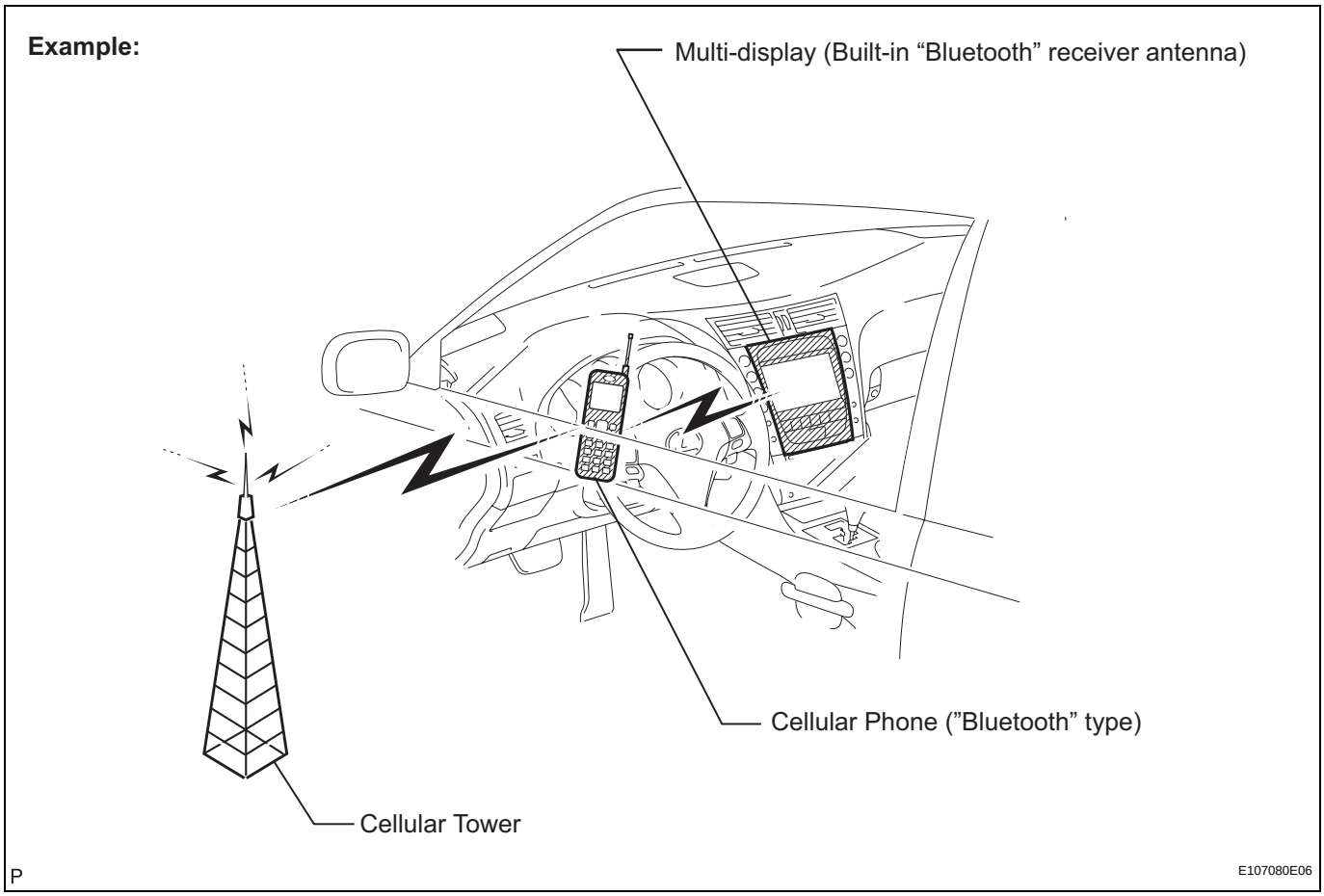

HINT:
The communication performance of "Bluetooth" may vary depending on obstructions or radio wave conditions between communication devices, electromagnetic radiation, communication device sensitivity, or antenna capacity.

HOW TO PROCEED WITH TROUBLESHOOTING

1	VEHICLE BROUGHT INTO A WORKSHOP

NEXT

2	DIAGNOSTIC QUESTIONING AND SYMPTOM CONFIRMATION

(a) Ask the customer about symptoms and confirm malfunctions.

→ **THE SCREEN DISPLAYS NOTHING (GO TO STEP 9, AND PROCEED TO "No Image Appears on Multi-display")**

→ **OTHER SYMPTOMS (GO TO STEP 3)**

3	CHECK CAN COMMUNICATION SYSTEM

NS

(a) Use the intelligent tester to check for normal function of the CAN communication system.

→ **A CODE IS OUTPUT (PROCEED TO "CAN COMMUNICATION SYSTEM")**

→ **A CODE IS NOT OUTPUT (GO TO STEP 4)**

4	CONFIRM THE SYSTEM NORMAL CONDITION

→ **APPLICABLE (THIS IS NOT A MALFUNCTION)**

→ **NOT APPLICABLE (GO TO STEP 5)**

5	CHECK FOR DTC

HINT:
If the system cannot enter the diagnostic mode, inspect each AVC-LAN communication component and repair or replace problem parts.

→ **A CODE IS OUTPUT (GO TO STEP 6)**

→ **A CODE IS NOT OUTPUT (GO TO STEP 9)**

6	CLEAR DTC

(a) Clear the DTCs and finish the diagnostic mode.
HINT:
The currently output DTCs may not indicate actual malfunctions depending on the vehicle conditions.

NEXT

7	RECHECK FOR DTC

HINT:
- If the system cannot enter the diagnosis mode, inspect the AVC-LAN and all the components that connect to the AVC-LAN for short circuits.
- Even if the malfunction symptom is not confirmed, check for diagnostic trouble codes. This is because the system stores past diagnostic trouble codes.
- Refer to the detailed description on the diagnostic screen, as necessary (See page NS-30).
- Check the diagnostic trouble code and inspect the area the code indicates.

A CODE IS OUTPUT (GO TO STEP 8)

A CODE IS NOT OUTPUT (GO TO STEP 9)

8	DIAGNOSTIC TROUBLE CODE CHART

(a) Find the output code on the diagnostic trouble code chart.

NEXT **GO TO STEP 11**

9	PROBLEM SYMPTOMS TABLE

(a) Find the applicable symptom code in the problem symptoms table (See page NS-41).
HINT:
If the symptom does not recur and no code is output, perform the symptom reproduction method (See page IN-34).

THERE IS AN APPLICABLE SYMPTOM CODE IN THE TABLE (GO TO STEP 11)

THERE IS NO APPLICABLE SYMPTOM CODE IN THE TABLE (GO TO STEP 10)

10	**CHECK THE ECU TERMINAL ARRANGEMENT BASED ON THE MALFUNCTION SYMPTOM**

NEXT

11	**CHECK THE CIRCUIT**

(a) Adjust, repair, or replace as necessary.

NEXT

12	**RECHECK FOR DIAGNOSTIC TROUBLE CODE**

HINT:
After deleting the DTCs, recheck for diagnostic trouble codes.

NEXT

13	**PERFORM CONFIRMATION TEST**

NEXT

END

DISPLAY CHECK MODE

HINT:
- This mode checks the color display on the multi-display.
- Illustrations may differ from the actual vehicle depending on the device settings and options. Therefore, some detailed areas may not be shown exactly the same as on the actual vehicle.

1. ENTER DIAGNOSTIC MODE (See page NS-48)

2. DISPLAY CHECK

(a) Select "Display Check" from the "Diagnosis MENU" screen.

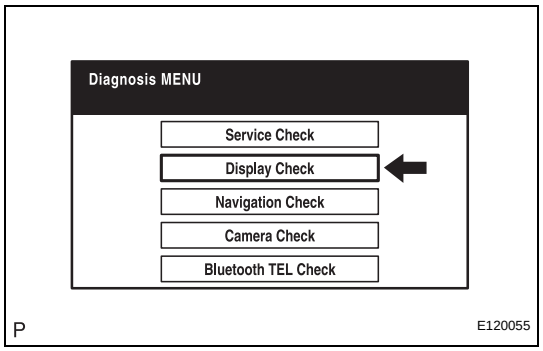

3. COLOR BAR CHECK

(a) Select "Color Bar Check" from the "Display Check" screen.

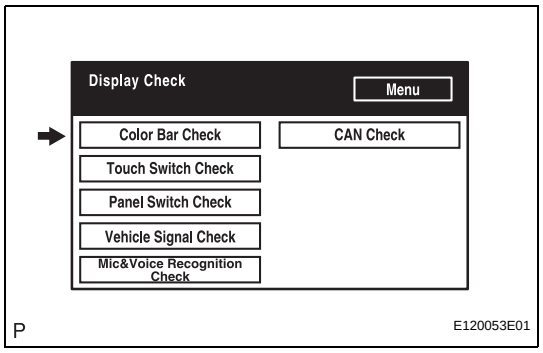

(b) Select a color bar from the "Color Bar Check Mode" screen.

(c) Check the display color.

HINT:
- The entire screen turns to the color or stripe selected.
- Touching the display will return to the "Color Bar Check" screen.

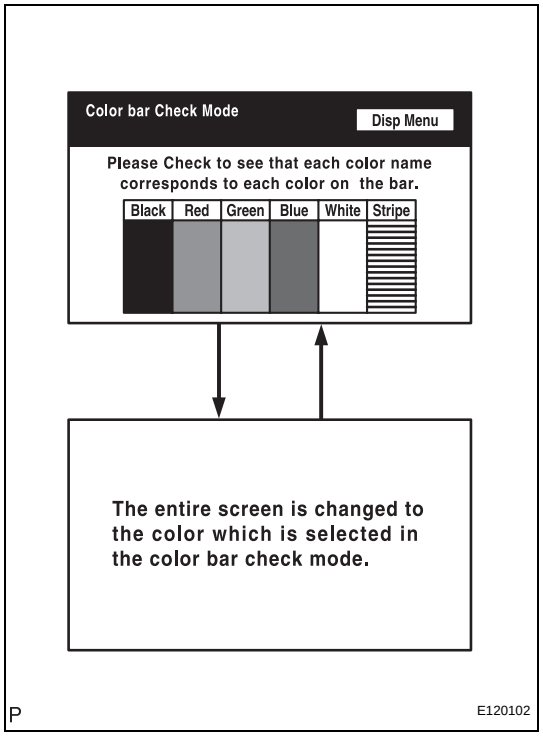

NS

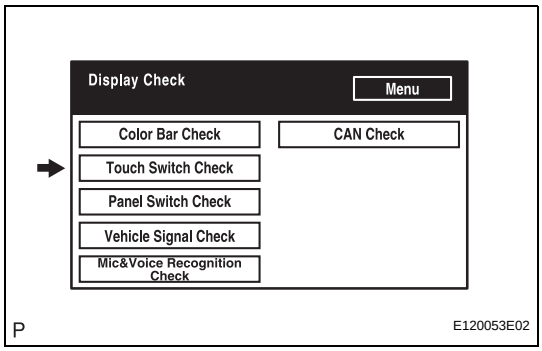

4. TOUCH SWITCH CHECK

(a) Select "Touch Switch Check" from the "Display Check" screen.

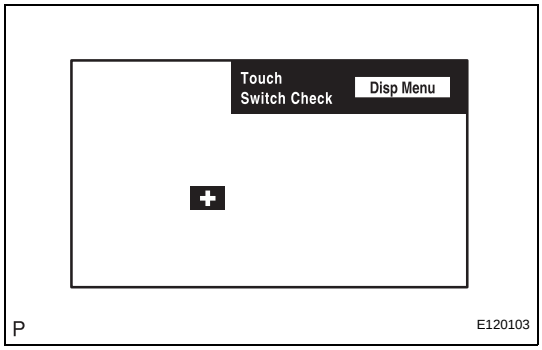

(b) Touch the display anywhere in the open area to perform the check when the "Touch Switch Check" screen is displayed.
HINT:
- A "+" mark is displayed where the display is touched.
- The "+" mark remains on the display even after the finger is removed.

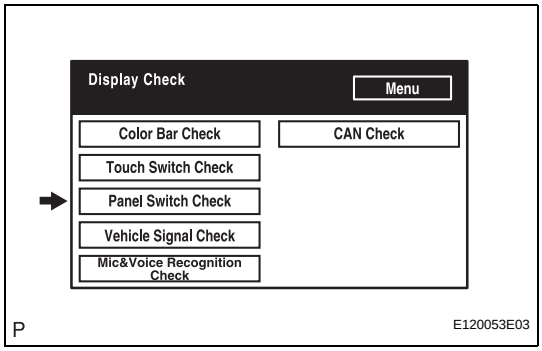

5. PANEL SWITCH CHECK

(a) Select "Panel Switch Check" from the "Display Check" screen.

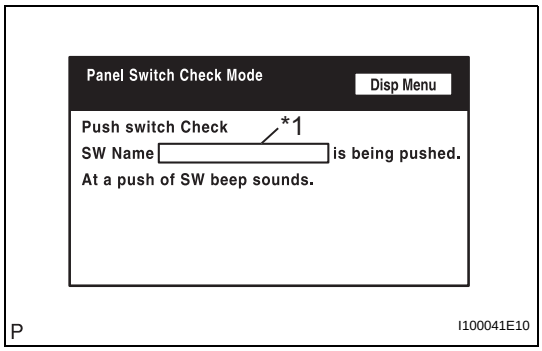

(b) Operate each switch and check that the switch name and condition are correctly displayed.

Display	Contents
Push switch name/*1	• Name of the pressed switch is displayed. • If more than one switch is pressed, "MULTIPLE" is displayed.

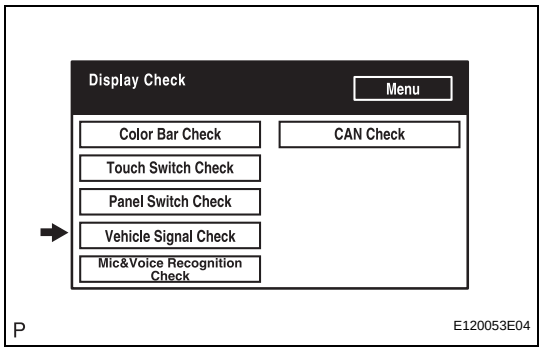

6. VEHICLE SIGNAL CHECK

(a) Select "Vehicle Signal Check" from the "Display Check" screen.

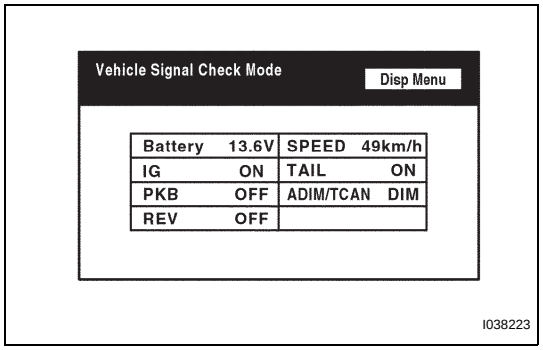

(b) When the "Vehicle Signal Check Mode" screen is displayed, check all the vehicle signal conditions.
HINT:
- Only conditions having inputs are displayed.
- This screen is updated once per second when input signals to the vehicle are changed.
- For details of this function, refer to DIAGNOSIS DISPLAY DETAILED DESCRIPTION (See page NS-30).

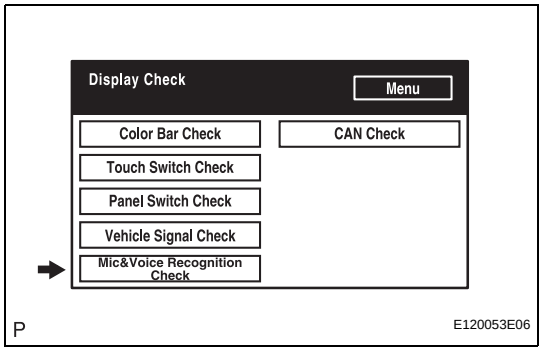

7. MIC & VOICE RECOGNITION CHECK

(a) Select "Mic & Voice Recognition Check" on the "Display Check" screen to display "MICROPHONE & VOICE RECOGNITION CHECK" screen.

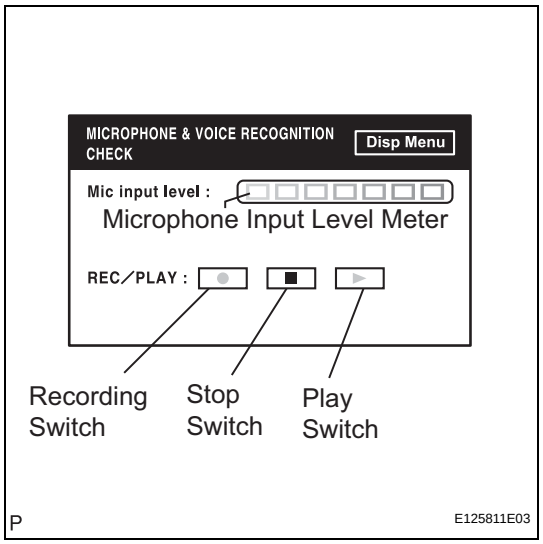

(b) When voice is input into the microphone, check that the microphone input level meter changes according to the input voice.

(c) Push the recording switch and perform voice recording.

(d) Check that the recorded voice is played normally.
HINT:
For details of this function, refer to DIAGNOSIS DISPLAY DETAILED DESCRIPTION (See page NS-30).

NS

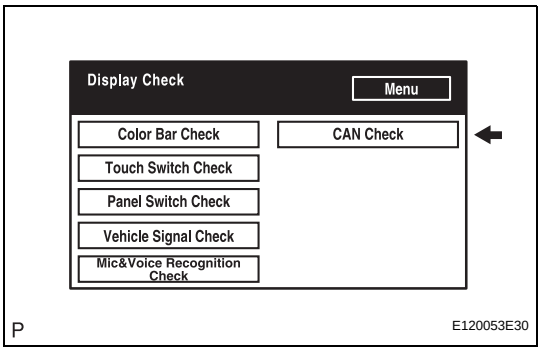

8. CAN CHECK

(a) Select "CAN check" from the "Display check" screen.

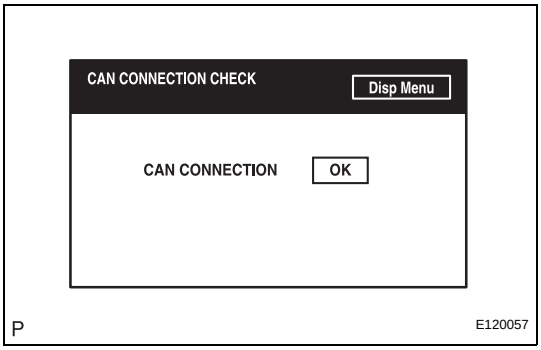

(b) Check the CAN connection check result.
HINT:
- This function operates only for the systems connected to the CAN system.
- For details of this function, refer to DIAGNOSIS DISPLAY DETAILED DESCRIPTION (See page NS-30).

NS

BLUETOOTH TEL CHECK MODE

HINT:
Illustrations may differ from the actual vehicle depending on the device settings and options. Therefore, some detailed areas may not be shown exactly the same as on the actual vehicle.

1. ENTER DIAGNOSTIC MODE (See page NS-48)

2. "BLUETOOTH" TEL CHECK

(a) Select ""Bluetooth" TEL Check" from the "Diagnosis MENU" screen.

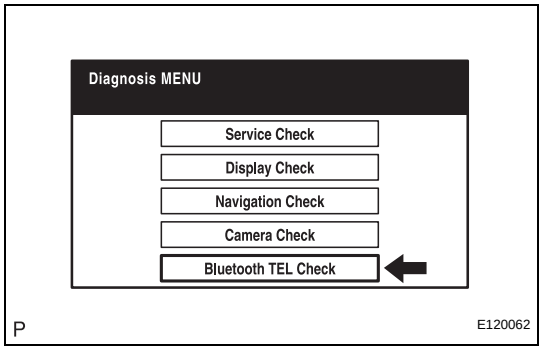

3. "BLUETOOTH" CHECK

(a) Select ""Bluetooth" Check" from the ""Bluetooth" Handsfree Check Menu" screen.

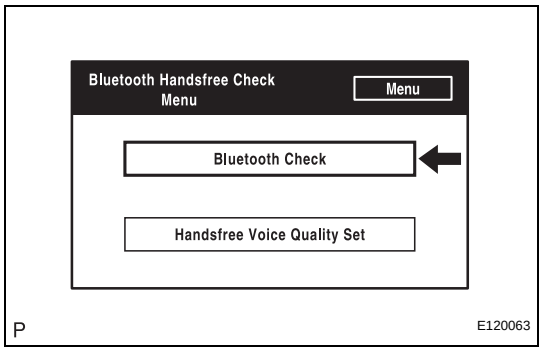

(b) Select "Serial Communication Log" from the ""Bluetooth" Check Menu" screen.

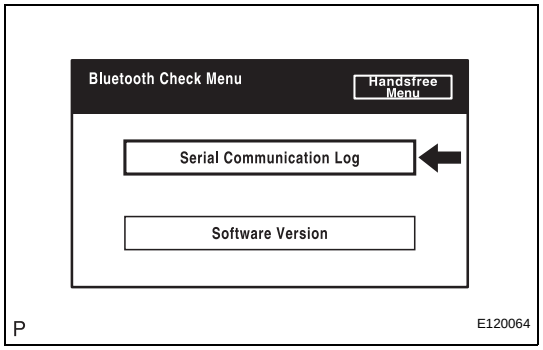

(1) The communication log data in the display ECU are displayed on this screen.
HINT:
The displayed data can be used as a reference.

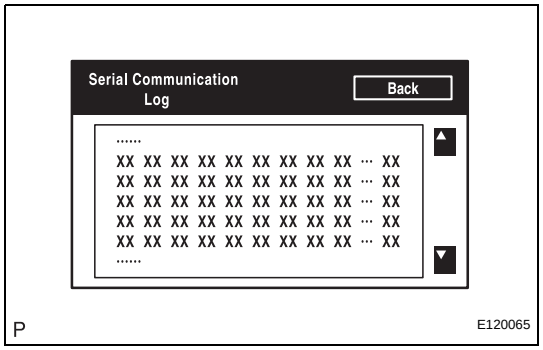

NS

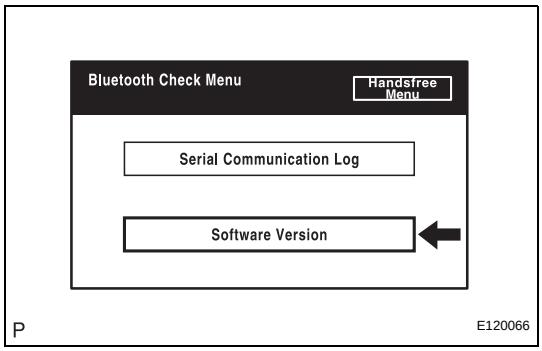

(c) Select "Software Version" from the ""Bluetooth" Check Menu" screen.

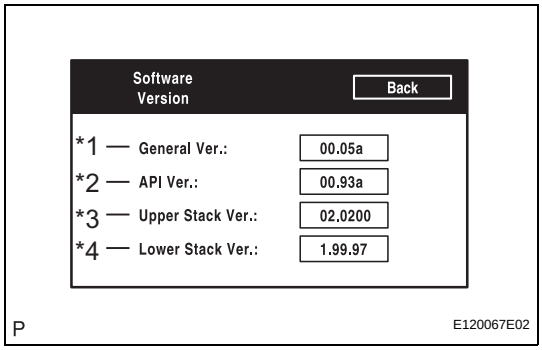

(1) Check the software version of the "Bluetooth" module.

Screen Description:

Display	Contents
General Version/*1	• General software version of "Bluetooth" module • If any of the API version, upper stack version, and low stack version is updated, the general version is upgraded.
API Version/*2	API software version is displayed.
Upper Stack Version/*3	Upper Stack version is displayed.
Lower Stack Version/*4	Lower Stack version is displayed.

HINT:
This function is controlled by the built-in display ECU.

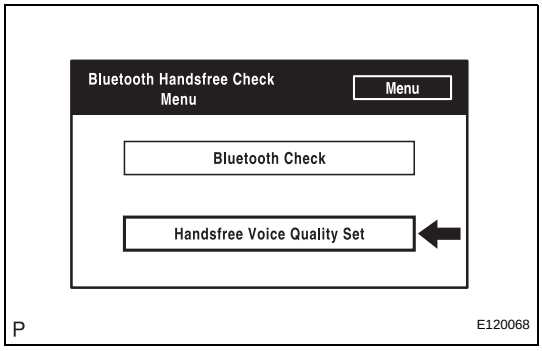

4. HANDSFREE VOICE QUALITY SET

(a) Select "Handsfree Voice Quality Set" from the ""Bluetooth" Handsfree Check Menu" screen.

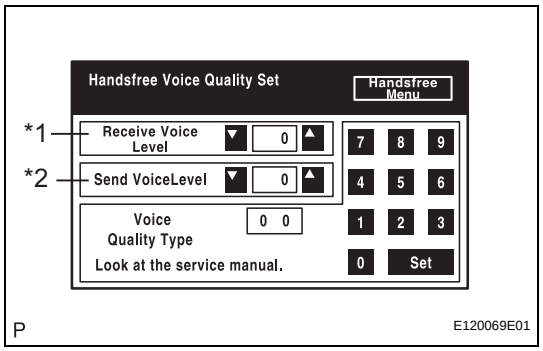

(b) Check the handsfree voice level.

Screen Description:

Display	Contents
Received voice level adjustment/*1	Setting possible for the voice level received from "Bluetooth" compatible phones.
Sent voice level adjustment/*2	Setting possible for the voice sent to "Bluetooth" compatible phones.

HINT:
This function is controlled by the built-in display ECU.
NOTICE:
"Voice Quality Type" should not be changed.

NAVIGATION CHECK MODE

HINT:
- This mode displays GPS satellite information.
- Illustrations may differ from the actual vehicle depending on the device settings and options. Therefore, some detailed areas may not be shown exactly the same as on the actual vehicle.

1. ENTER DIAGNOSTIC MODE (See page NS-48)

2. NAVIGATION CHECK

(a) Select "Navigation Check" from the "Diagnosis MENU" screen.

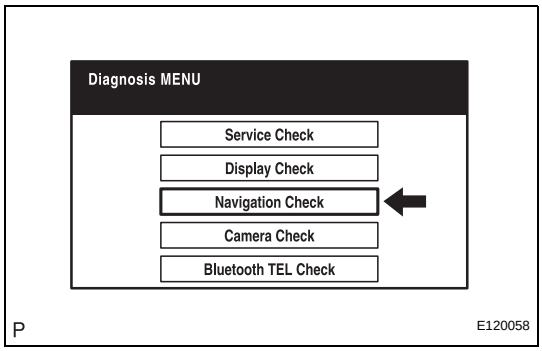

3. GPS INFORMATION

(a) Select "GPS Information" from the "Navigation Check" screen.

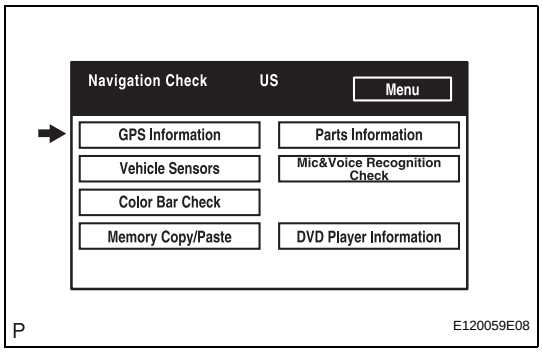

(b) When GPS information is displayed, check the GPS conditions.

HINT:
- This screen is updated once per second when input signals to the vehicle are changed.
- For details of this function, refer to DIAGNOSIS DISPLAY DETAILED DESCRIPTION (See page NS-30).

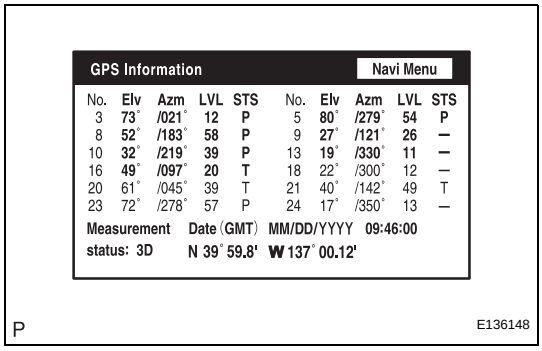

4. VEHICLE SENSORS

(a) Select "Vehicle Sensors" from the "Navigation Check" screen.

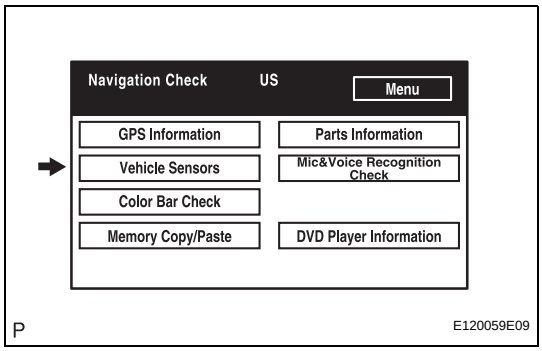

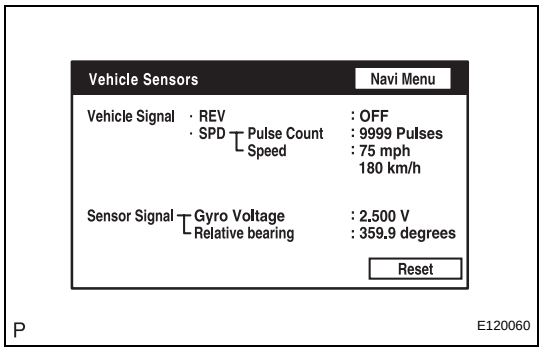

(b) Check all the signals and sensors when vehicle signal information is displayed.
HINT:
- This screen is updated once per second when input signals to the vehicle are changed.
- This screen displays vehicle signals input to the navigation ECU.
- For details of this function, refer to DIAGNOSIS DISPLAY DETAILED DESCRIPTION (See page NS-30).

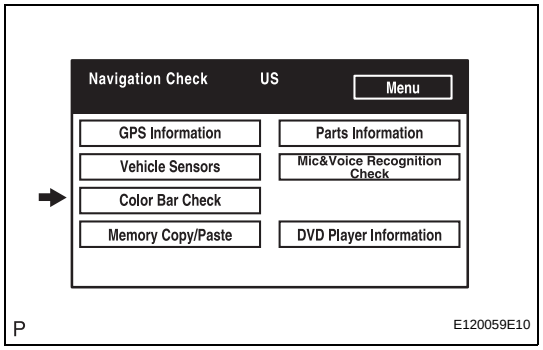

5. COLOR BAR CHECK

(a) Select "Color Bar Check" from the "Navigation Check" screen.

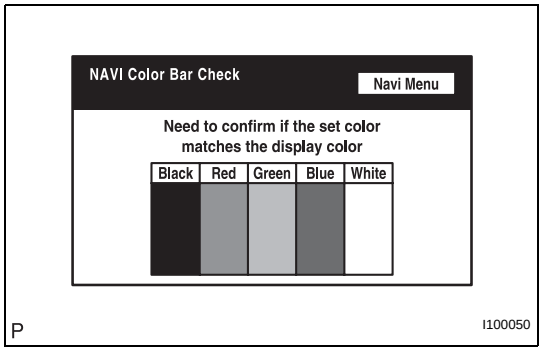

(b) Check each color of the color bar when the "NAVI Color Bar Check" screen is displayed.
HINT:
- Colors will not be displayed full-screen as in "Display Check Mode".
- This screen displays the navigation ECU display color.

NS

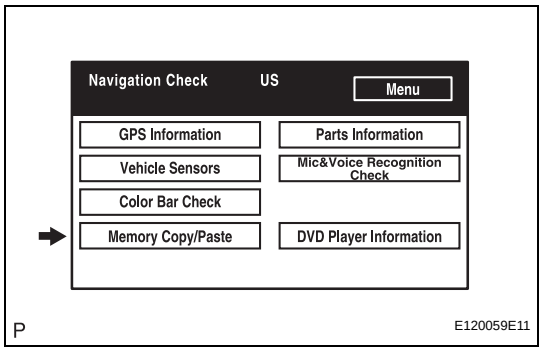

6. MEMORY COPY/PASTE CHECK

HINT:
This function cannot be used.

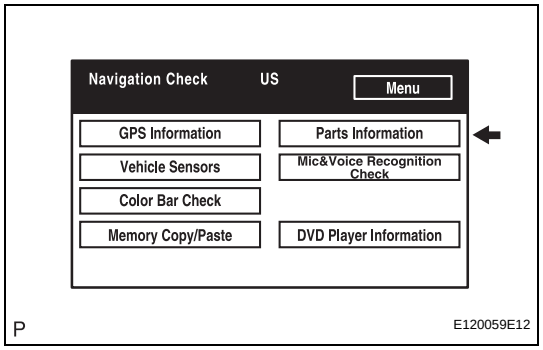

7. PARTS INFORMATION

(a) Select "Parts Information" from the "Navigation Check" screen.

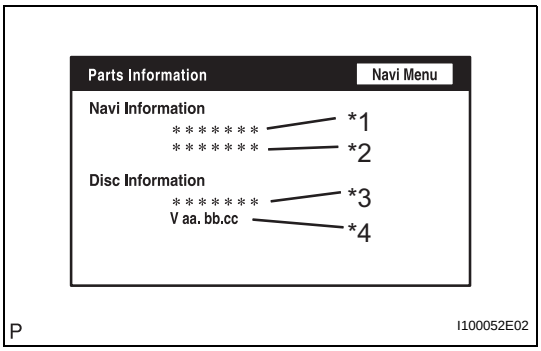

(b) Check the navigation and disc information when the "Parts Information" screen is displayed.

Screen Description:

Display	Contents
Navigation Manufacturer/*1	Navigation ECU manufacturer is displayed.
Navigation Version/*2	Navigation ECU version is displayed.
Disc Manufacturer/*3	Map disc manufacturer is displayed.
Disc Version/*4	Map disc version is displayed.

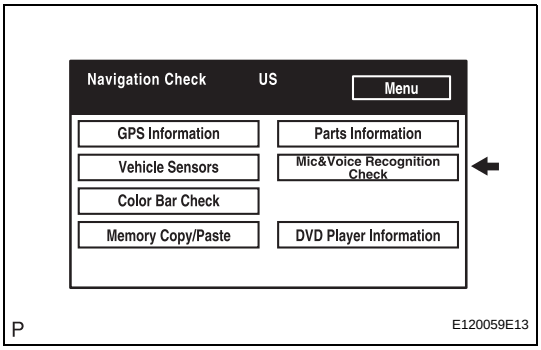

8. MIC & VOICE RECOGNITION CHECK

(a) Select "Mic & Voice Recognition Check" on the "Navigation Check" screen to display "MICROPHONE & VOICE RECOGNITION CHECK" screen.

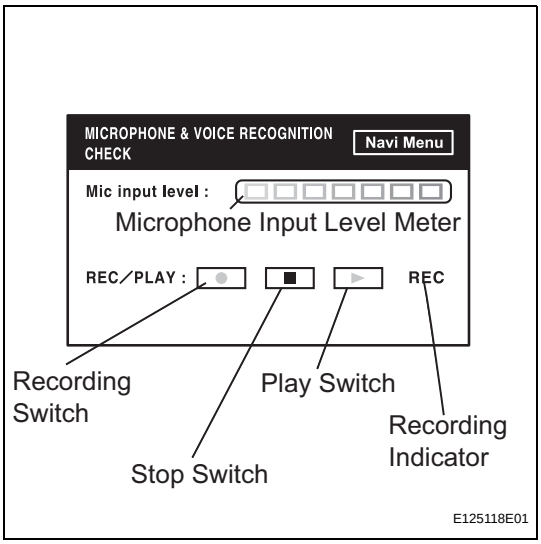

(b) When voice is input into the microphone, check that the microphone input level meter changes according to the input voice.

(c) Push the recording switch and perform voice recording.

(d) Check that the recording indicator remains on while recording and that the recorded voice is played normally.

HINT:

- For details of this function, refer to DIAGNOSIS DISPLAY DETAILED DESCRIPTION (See page NS-30).
- This function is controlled by the built-in navigation ECU.

NS

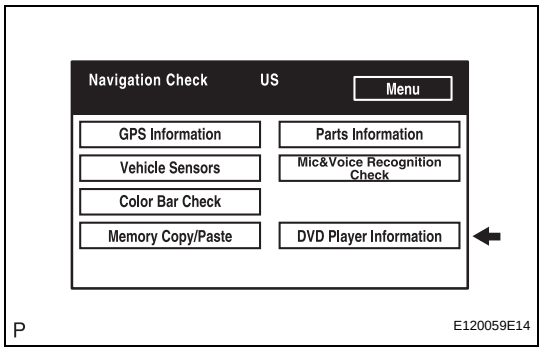

9. DVD PLAYER INFORMATION CHECK

(a) Select "DVD Player Information" from the "Navigation Check" screen.

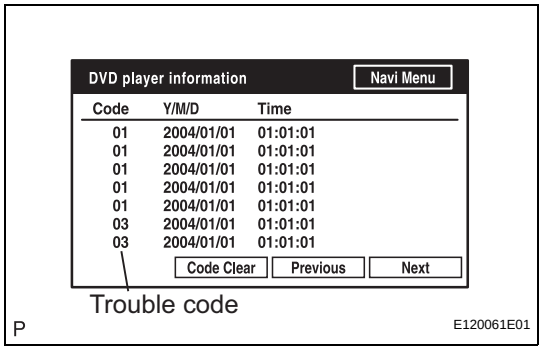

(b) Check for DTCs.

HINT:

- This is a DVD player check function in the navigation ECU.
- For details of this function, refer to DIAGNOSIS DISPLAY DETAILED DESCRIPTION (See page NS-30).

NS

DIAGNOSIS DISPLAY DETAILED DESCRIPTION

HINT:
- This section contains a detailed description of displays within diagnostic mode.
- Illustrations may differ from the actual vehicle depending on the device settings and options. Therefore, some detailed areas may not be shown exactly the same as on the actual vehicle.

1. SYSTEM CHECK

(a) System Check Mode Screen

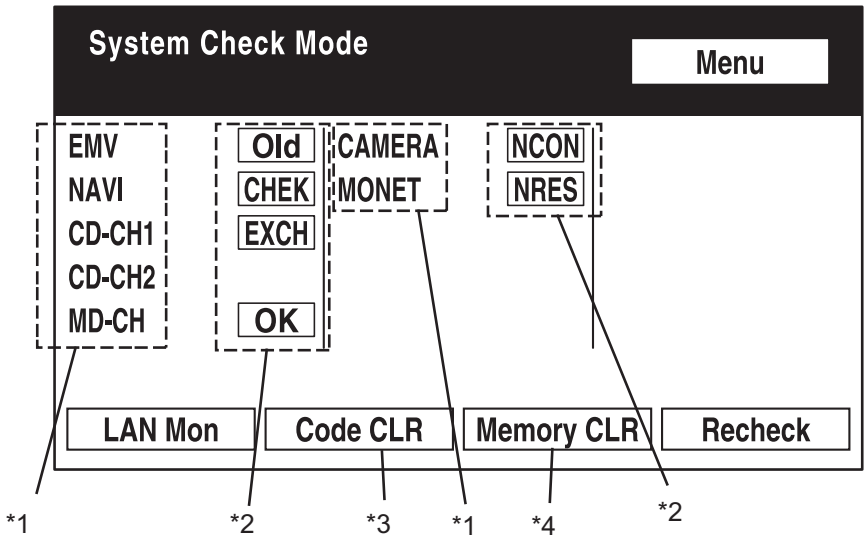

P

I100055E08

(1) Device Names and Hardware Address/*1

HINT:
- Registered device names are displayed.
- If a device name is unknown to the system, its physical address is shown instead.

Address No.	Name	Address No.	Name
110	EMV	120	AVX
128	1DIN TV	140	AVN
144	G-BOOK	178	NAVI
17C	MONET	190	AUDIO H/U
1AC	CAMERA-C	1B0	Rr-TV
1C0	Rr-CONT	19D	BT-HF
1C4	PANEL	1C6	G/W
1C8	FM-M-LCD	1D8	CONT-SW
1EC	Body	118	EMVN
1F1	XM	1F2	SIRIUS
230	TV-TUNER	240	CD-CH2
250	DVD-CH	280	CAMERA
360	CD-CH1	3A0	MD-CH

Address No.	Name	Address No.	Name
17D	TEL	440	DSP-AMP
530	ETC	1F6	RSE
1A0	DVD-P	1D6	CLOCK
238	DTV	480	AMP

(2) Check Result/*2
HINT:
Result codes for all devices are displayed.

Result	Meaning	Action
OK	The device did not respond with a DTC (excluding communication DTCs from the AVC-LAN).	-
EXCH	The device responds with a "replace"-type DTC.	Check the DTC in "Unit Check Mode" and replace the device.
CHEK	The device responds with a "check"-type DTC.	Check the DTC in "Unit Check Mode".
NCON	The device was previously present, but does not respond in diagnostic mode.	1. Check power supply wire harness of the device. 2. Check the AVC-LAN of the device.
Old	The device responds with an "old"-type DTC.	Check the DTC in "Unit Check Mode".
NRES	The device responds in diagnostic mode, but gives no DTC information.	1. Check power supply wire harness of the device. 2. Check the AVC-LAN of the device.

NS

(3) Code Clear/*3
- Present DTCs are cleared.
- Press the "Code CLR" switch for 3 seconds.

(4) Memory Clear/*4
- Present and past DTCs and registered connected device names are cleared.
- Press the "Memory CLR" switch for 3 seconds.

(b) Diagnosis MENU Screen

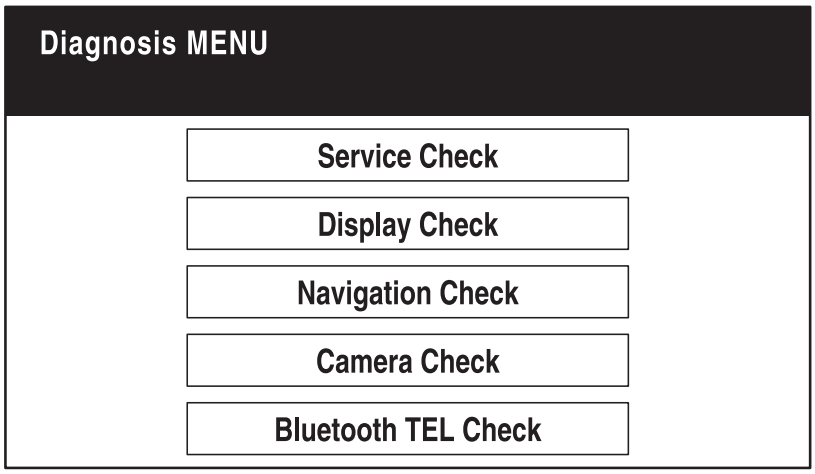

P

E120070

HINT:
Each item is grayed out or not displayed based on the device settings.

(c) Unit Check Mode Screen

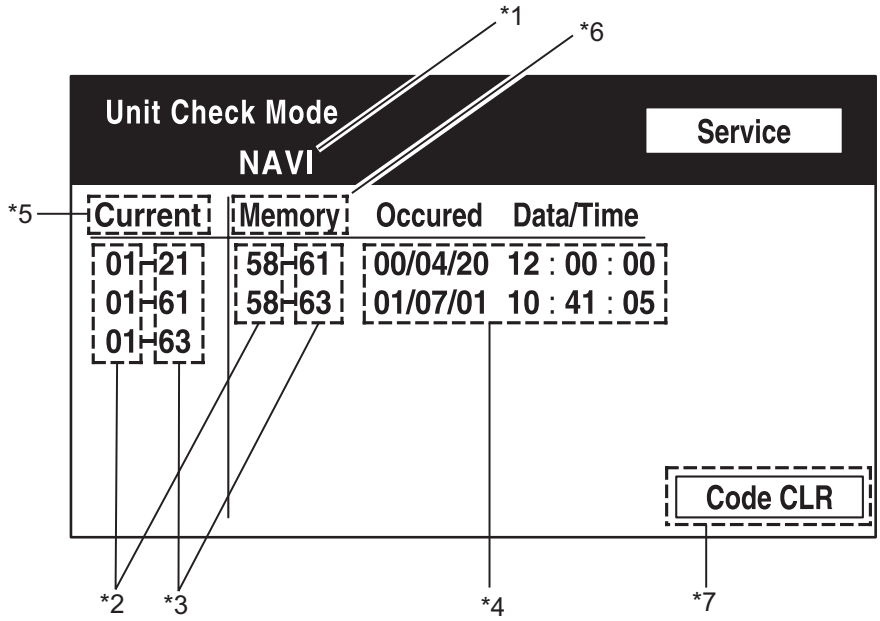

P

E120071E02

NS

Screen Description:

Display	Contents
Device name/*1	Target device
Segment/*2	Target device logical address
DTC/*3	DTC (Diagnostic Trouble Code)
Timestamp/*4	The time and date of past DTCs are displayed. (The year is displayed in 2-digit format.)
Present Code/*5	DTCs output at the service check are displayed.
Past Code/*6	Diagnostic memory results and recorded DTCs are displayed.
Diagnosis Clear Switch/*7	Pushing this switch for 3 seconds clears the diagnostic memory data of the target device. (Both response to diagnostic system check result and the displayed data are cleared.)

(d) LAN Monitor (Original) Screen

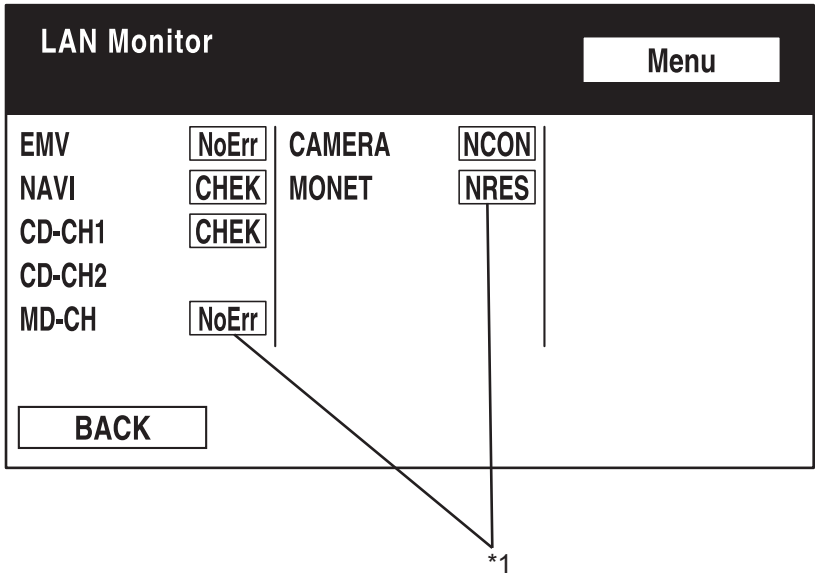

P

I100058E04

(1) Check Result/*1

HINT:

Check results of all the devices are displayed.

Result	Meaning	Action
No Err (OK)	There are no communication DTCs.	-
CHEK	The device responds with a "check" -type DTC.	Check the DTC in "Unit Check Mode".
NCON	The device was previously present, but does not respond in diagnostic mode.	1. Check power supply wire harness of the device. 2. Check the AVC-LAN of the device.
Old	The device responded with an "old" -type DTC.	Check the DTC in "Unit Check Mode".
NRES	The device responds in diagnostic mode, but gives no DTC information.	1. Check power supply wire harness of the device. 2. Check the AVC-LAN of the device.

NS

(e) LAN Monitor (Individual) Screen

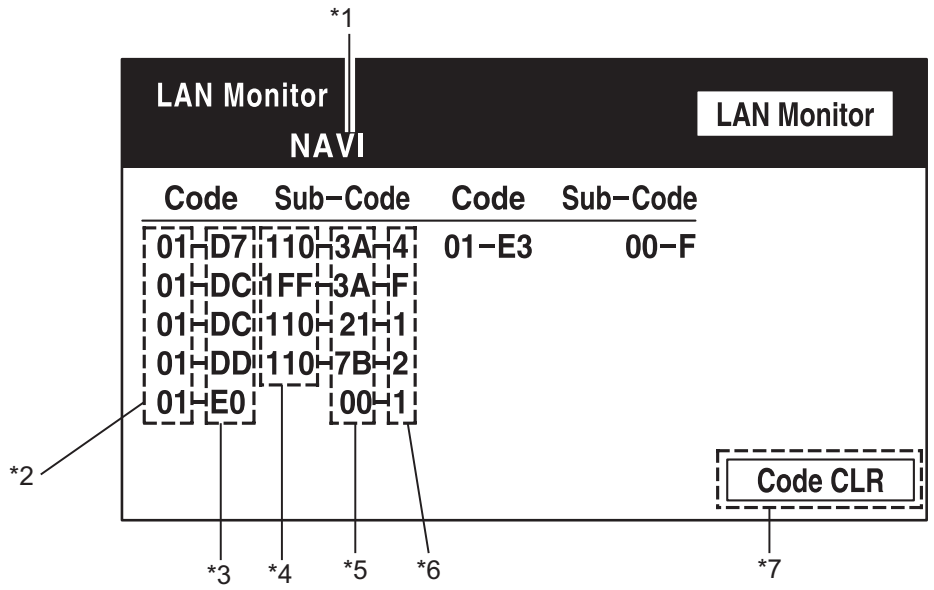

P

E120072E01

NS

Screen Description:

Display	Contents
Device name/*1	Target device
Segment/*2	Target logical address
DTC/*3	DTC (Diagnostic Trouble Code)
Sub-code (device address)/*4	Physical address stored with DTC (If there is no address, nothing is displayed.)
Connection check No./*5	Connection check number stored with DTC
DTC occurrence/*6	Number of times the same DTC has been recorded
Diagnosis Clear Switch/*7	Pushing this switch for 3 seconds clears the diagnostic memory data of the target device. (Both response to diagnostic system check result and the displayed data are cleared.)

2. DISPLAY CHECK

(a) Vehicle Signal Check Mode Screen

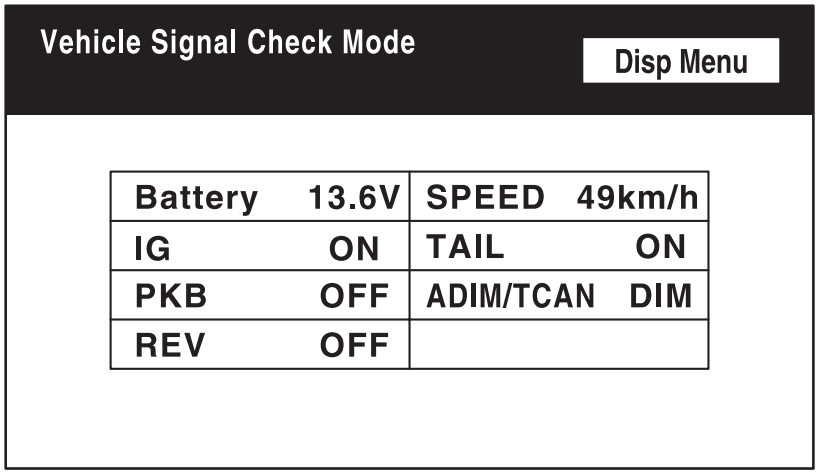

P I100060

NS

Screen Description:

Name	Contents
Battery	Battery voltage is displayed.
PKB	Parking brake ON/OFF state is displayed.
REV	Reverse signal ON/OFF state is displayed.
IG	Engine switch ON/OFF state is displayed.
ADIM/TCAN	Brightness state DIM (with) / BRIGHT (without) is displayed.
TAIL	TAIL signal (Light control switch) ON/OFF state is displayed.
SPEED	Vehicle speed is displayed in km/h.

HINT:

- Only items sending a vehicle signal will be displayed.
- This screen is updated once per second when input signals to the vehicle are changed.

(b) Microphone & Voice Recognition Check Screen

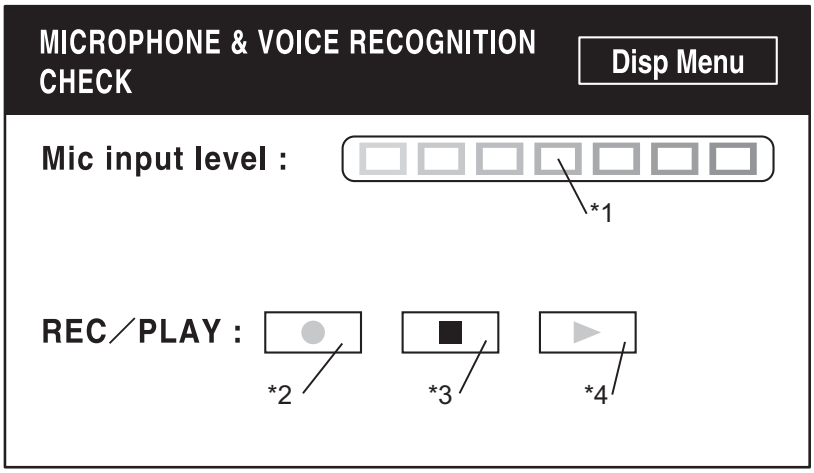

P

E125091E02

NS

Screen Description:

Name	Contents
Microphone input level meter/*1	Monitors the microphone input level every 100 ms and displays the results in 8 different levels.
Recording switch/*2	Starts recording.
Stop switch/*3	Stops recording.
Play switch/*4	Plays the recorded voice.

HINT:

- The microphone input function is on at all times when this screen is displayed.
- While recording or playing, the switches other than the stop switch cannot be pushed.
- When no voice is recorded, the play switch cannot be pushed.
- Recording will stop after 5 seconds or by pushing the stop switch.

(c) CAN Connection Check Screen

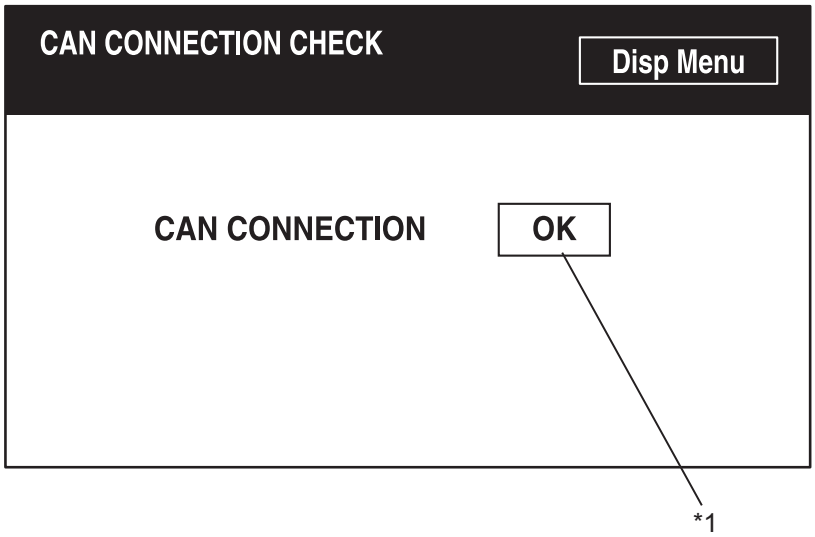

P

E120075E01

Screen Description:

Name	Contents
CAN Connection check result/*1	• For systems connected to the CAN system, the results of the CAN connection check are displayed. • "NG" - The engine switch is on (ACC or IG) and the CAN communication lines are malfunctioning or the CAN bus lines are not connected. • "OK" - The engine switch is on (ACC or IG) and the CAN communication lines are normal. • Blank - CAN connection check is performed with the engine switch on (ACC) or off.

HINT:

- This function operates only for the systems connected to the CAN system.
- When the engine switch is turned off, the bus lines are disconnected, or a malfunction occurs in the bus lines while the CAN connection check result is being displayed, the problem will be reflected on the screen in real time.

3. NAVIGATION CHECK

(a) Navigation Check Screen

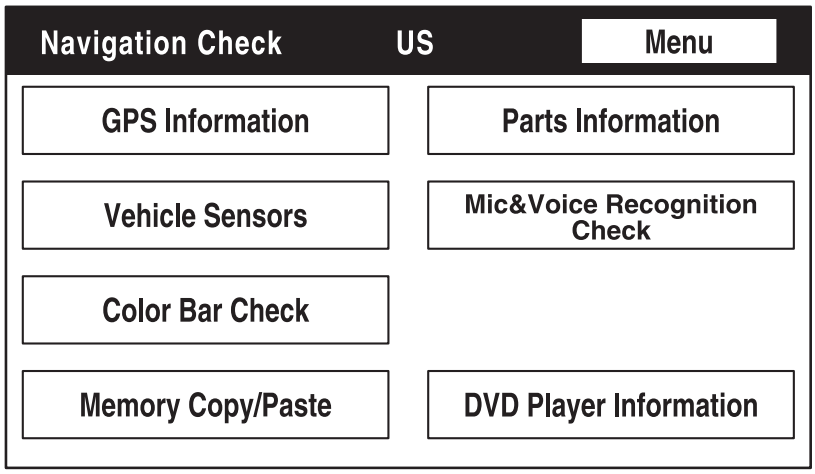

P

E120076E01

NS

HINT:
Each item is grayed out or not displayed based on the device settings.

(b) GPS Information Screen

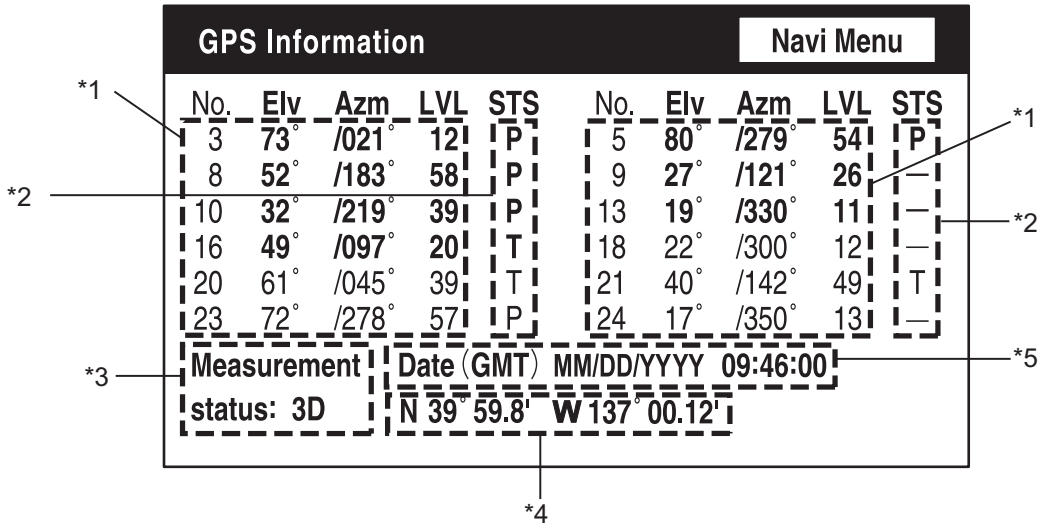

P

E136147E02

(1) Satellite information/*1
Information from a maximum of 12 satellites is displayed on the screen. This information includes the target GPS satellite number, elevation angle, direction, and signal level.

(2) Receiving condition/*2

(DENSO model):

Display	Contents
T	The system is receiving a GPS signal, but is not using it for location.
P	The system is using the GPS signal for location.
-	The system cannot receive a GPS signal.

(AISIN AW model):

Display	Contents
01H	The system cannot receive a GPS signal.
02H	The system is tracing a satellite.
03H	The system is receiving a GPS signal, but is not using it for location.
04H	The system is using the GPS signal for location.

Measurement information/*3:

Display	Contents
2D	2-dimensional location method is being used.
3D	3-dimensional location method is being used.
NG	Location data cannot be used.
Error	Reception error has occurred.
-	Any other state.

Position information/*4

Display	Contents
Position	Latitude and longitude information on the current position is displayed.

Date information/*5:

Display	Contents
Date	The date/time information obtained from GPS signal is displayed in Greenwich mean time (GMT). The last 4 digits are displayed.

(c) Vehicle Sensors Screen

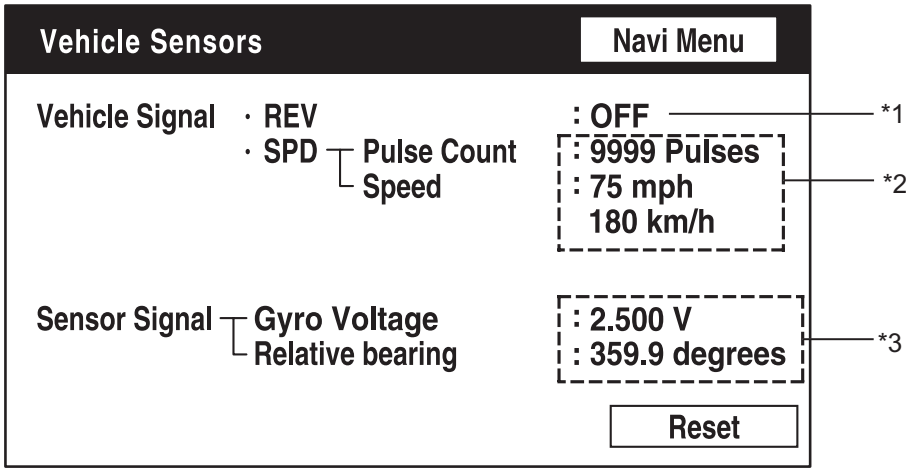

P

E120077E01

NS

Vehicle signal:

Display	Contents
REV/*1	REV signal ON/OFF state is displayed.
SPD/*2	SPD signal condition is displayed.

Sensor signal:

Display	Contents
Gyro sensor/*3	Gyro sensor output condition is displayed (when the vehicle runs straight or is stationary, the voltage is approximately 2.5 V).

HINT:
Signals are updated once per second only when vehicle sensor signals are changed.

(d) Microphone & Voice Recognition Check Screen

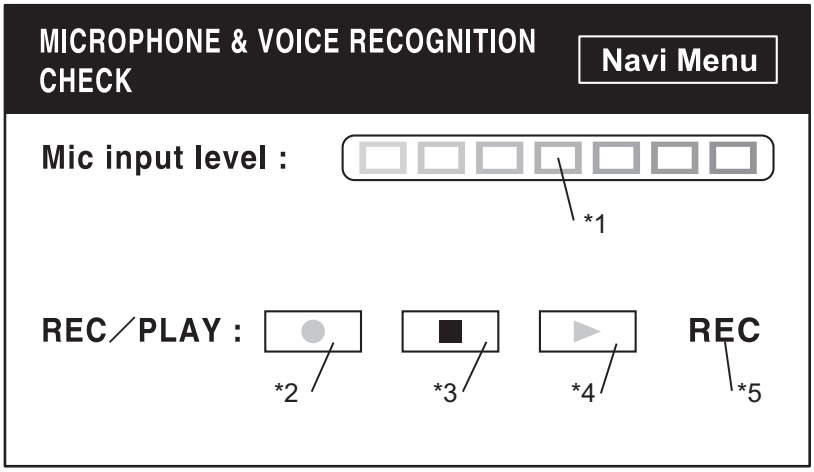

P

E125119E01

Screen Description:

Display	Contents
Microphone input level meter/*1	Monitors the microphone input level every 100 ms and displays the results in 8 different levels.
Recording switch/*2	Starts recording.
Stop switch/*3	Stops recording.
Play switch/*4	Plays the recorded voice.
Recording indicator/*5	Comes on while recording.

HINT:
- The microphone input function is on at all times when this screen is displayed.
- While recording or playing, the switches other than the stop switch cannot be pushed.
- When no voice is recorded, the play switch cannot be pushed.
- Recording will stop after 5 seconds or by pushing the stop switch.

(e) DVD Player Information Screen

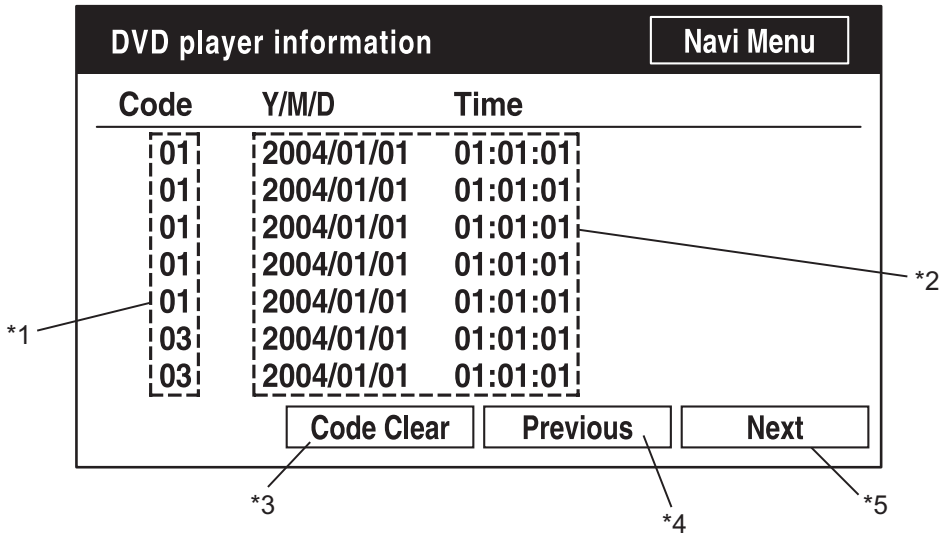

P E120078E01

Screen Description:

Display	Contents
Trouble code/*1	Each code corresponding to the malfunctions is displayed. For details, refer to "Trouble Code Description".
Occurrence time/*2	• The date (year, month, day) and time (hour, minute, second) when the trouble code was detected are displayed as a time stamp. (Greenwich mean time) • The time data to be displayed are received from the GPS receiver.
Trouble code clear switch/*3	All code data being displayed are cleared by pushing this switch for 3 seconds.
Returning switch/*4	The previous page is displayed. If the current displayed page is the first page, this switch cannot be operated.
Proceeding switch/*5	The next page is displayed. If the current displayed page is the last page, this switch cannot be operated.

Trouble Code Description:

Code	Malfunction	Countermeasure
01	Cannot be recognized	Replace navigation ECU.
03	Cannot be read	Follow the inspection procedure for DTC 58-42 (See page NS-100).

HINT:
This is a DVD player check function in the navigation ECU.

NS

PROBLEM SYMPTOMS TABLE

HINT:
- Before inspecting the suspected areas listed in the table below, check the fuse and relay.
- Before inspecting the suspected areas listed in the table below, check the DTCs.
- Methods used to verify the cause of the problem are listed in order of probability in the suspected area column.

Display function:

Symptom	Suspected Area	See page
Pressing PWR switch does not turn on system.	1. Proceed to "Pressing Power Switch does not Turn ON System"	NS-134
	2. Multi-display power source circuit	NS-228
	3. AVC-LAN circuit	NS-187
	4. Multi-display	NS-233
Black screen (No image appears on navigation/audio screen).	1. Proceed to "No Image Appears on Multi-display"	NS-135
	2. Multi-display power source circuit	NS-228
	3. Illumination circuit	NS-178
	4. AVC-LAN circuit	NS-187
	5. Multi-display	NS-233
Illumination for panel switch does not come on with TAIL switch on.	1. Proceed to "Illumination for Panel Switch does not Come on with Tail Switch ON"	NS-136
	2. Illumination circuit	NS-178
	3. Multi-display	NS-233
Display does not dim (Night Screen) with TAIL switch on.	1. Proceed to "Display does not DIM when Light Control Switch is Turned ON"	NS-137
	2. Dimmer signal circuit	NS-209
	3. Multi-display	NS-233
Power does not turn off (The screen remains on).	1. Multi-display power source circuit	NS-228
	2. Multi-display	NS-233
Panel switches do not function.	1. Proceed to "Panel Switches do not Function"	NS-138
	2. Steering pad switch circuit	NS-174
	3. Multi-display power source circuit	NS-228
	4. Multi-display	NS-233
Touch panel switch does not function.	1. Proceed to "Touch Panel Switch does not Function"	NS-139
	2. Steering pad switch circuit	NS-174
	3. Multi-display power source circuit	NS-228
	4. Multi-display	NS-233
Navigation screen is not displayed.	1. Proceed to "Display Signal Circuit between Navigation ECU and Multi-display"	NS-199
	2. Map disc	-
	3. Navigation ECU	NS-238
	4. Multi-display	NS-233
Navigation screen flicker or color distortion.	1. Proceed to "Screen Flicker or Color Distortion"	NS-140
	2. Proceed to "Display Signal Circuit between Navigation ECU and Multi-display"	NS-199
	3. Navigation ECU	NS-238
	4. Multi-display	NS-233

Symptom	Suspected Area	See page
DVD image cannot be displayed on multi-display. (Parking brake is on.) (*1)	1. Proceed to "Display Signal Circuit between Multi-display and Radio Receiver"	NS-201
	2. Parking brake switch circuit	NS-185
	3. Radio Receiver	AV-167
	4. Multi-display	NS-233
Navigation function switches can be operated while vehicle is running.	Proceed to "Vehicle Speed Signal Circuit between Multi-display and Combination Meter"	NS-189

*1: for Radio receiver with built-in DVD changer models.

Navigation function:

Symptom	Suspected Area	See page
Map disc cannot be inserted.	1. Proceed to "Map Disc cannot be Inserted"	NS-142
	2. Navigation ECU power source circuit	NS-230
	3. Navigation ECU	NS-238
Map disc cannot be ejected.	1. Proceed to "Map Disc cannot be Ejected"	NS-143
	2. Navigation ECU power source circuit	NS-230
	3. Navigation ECU	NS-238
Vehicle position mark deviates greatly.	1. Proceed to "Vehicle Position Mark Deviates Greatly"	NS-144
	2. GPS antenna	NS-250
	3. Navigation ECU	NS-238
Cursor or map rotates when vehicle is stopped.	1. Proceed to "Cursor or Map Rotates when Vehicle is Stopped"	NS-146
	2. Navigation ECU	NS-238
Vehicle position mark is not updated.	1. Proceed to "Vehicle Position Mark is not Updated"	NS-147
	2. Map disc	-
	3. Navigation ECU	NS-238
Current position display does not appear.	1. Proceed to "Current Position Display does not Appear"	NS-148
	2. Map disc	-
	3. GPS antenna	NS-250
	4. Navigation ECU	NS-238
GPS Mark is not displayed.	1. Proceed to "GPS Mark is not Displayed"	NS-149
	2. GPS antenna	NS-250
	3. Navigation ECU	NS-238
Voice guidance does not function.	1. Proceed to "Voice Guidance does not Function"	NS-152
	2. Navigation voice circuit	NS-196
	3. Map disc	-
	4. Navigation ECU	NS-238
	5. Stereo component amplifier	AV-176
Map display incomplete.	1. Proceed to "Map Display Incomplete"	NS-155
	2. Map disc	-
	3. Navigation ECU	NS-238
Route cannot be calculated.	1. Proceed to "Route cannot be Calculated"	NS-156
	2. Map disc	-
	3. Navigation ECU	NS-238
Voice recognition difficulty.	1. Proceed to "Voice Recognition Difficulty"	NS-157
	2. Navigation ECU	NS-238

Symptom	Suspected Area	See page
Voice is not recognized.	1. Proceed to "Voice is not Recognized"	NS-159
	2. Proceed to "Microphone circuit between Overhead J/B and Multi-display"	NS-204
	3. Proceed to "Microphone circuit between Multi-display and Navigation ECU"	NS-207
	4. Steering pad switch circuit	NS-174
	5. Microphone	AV-250
	6. Navigation ECU	NS-238
Speed signal does not change in the navigation check mode.	Proceed to "Vehicle Speed Signal Circuit between Navigation ECU and Multi-display"	NS-171
Reverse signal does not change in the navigation check mode.	Proceed to "Reverse Signal Circuit"	NS-193

Steering pad switch function:

Symptom	Suspected Area	See page
The system cannot be operated by the steering pad switch.	1. Steering pad switch circuit	NS-174
	2. Radio receiver	AV-167
Illumination for steering pad switch does not come on with tail switch on.	1. Illumination circuit	NS-178
	2. Radio receiver	AV-167

"Bluetooth" function:

Symptom	Suspected Area	See page
Cellular phone registration failure, phone directory transfer failure.	Proceed to "Cellular Phone Registration Failure, Phone Directory Transfer Failure"	NS-162
Cellular phone cannot send/receive.	1. Proceed to "Cellular Phone cannot Send/Receive"	NS-164
	2. Steering pad switch circuit	NS-174
	3. Radio receiver	AV-167
Cannot call in a certain place.	Proceed to "Cannot call in a Certain Place"	NS-166
The other caller's voice cannot be heard, is too quiet, or distorted.	1.Proceed to "The Other Caller's Voice cannot be Hear, is too Quiet, or Distorted"	NS-167
	2. Multi-display	NS-233
The other caller cannot hear your voice, or your voice is too quiet or distorted.	1. Proceed to "The Other Caller cannot Hear Your Voice, or Your Voice is too Quiet or Distorted"	NS-169
	2. Proceed to "Microphone circuit between Overhead J/B and Multi-display"	NS-204
	3. Microphone	AV-250
	4. Multi-display	NS-233

TERMINALS OF ECU

1. MULTI-DISPLAY

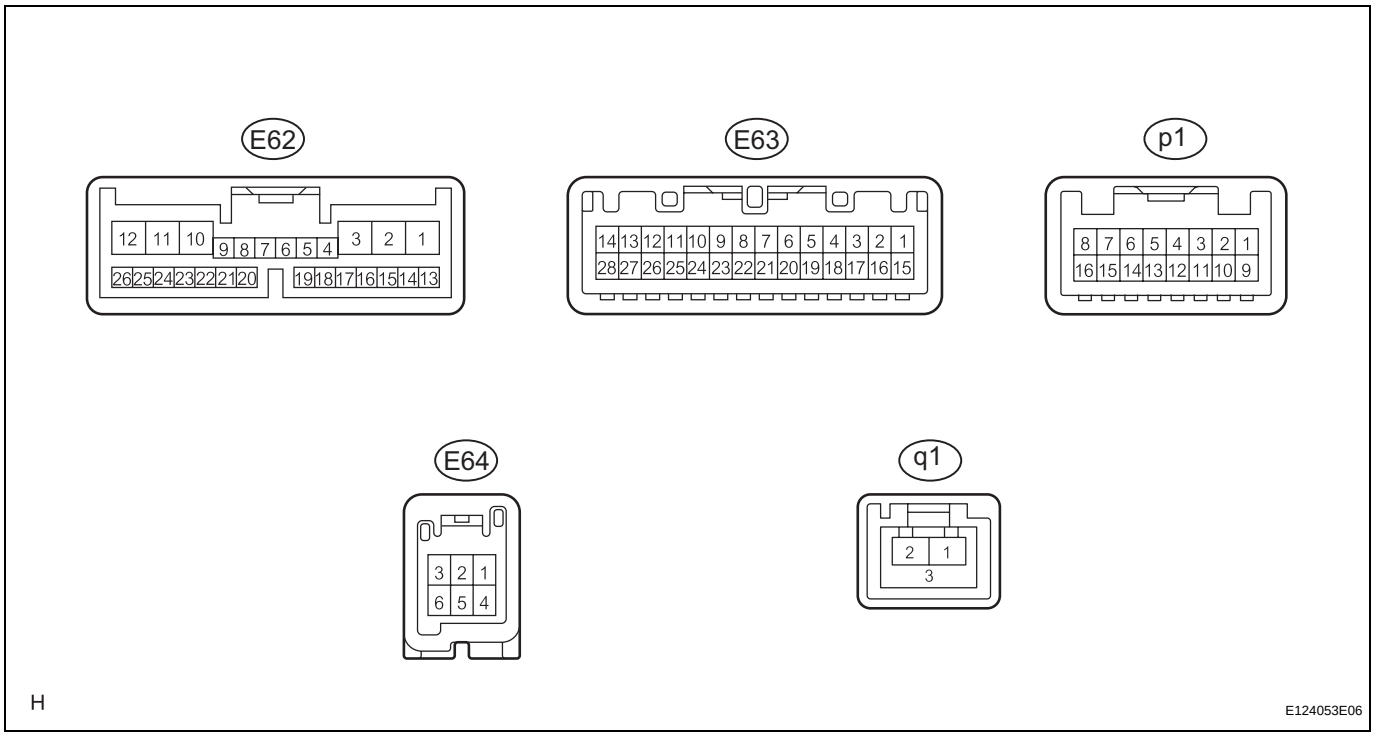

NS

Symbols (Terminal No.)	Wiring Color	Terminal Description	Condition	Specification
+B1 (E62-1) - GND1 (E62-10)	GR - W-B	Battery	Always	10 to 14 V
ACC (E62-2) - GND1 (E62-10)	GR - W-B	Accessory (ON)	Turn engine switch off	Below 1 V
ACC (E62-2) - GND1 (E62-10)	GR - W-B	Accessory (ON)	Turn engine switch on (ACC or IG)	10 to 14 V
IG (E62-3) - GND1 (E62-10)	B - W-B	Ignition (ON)	Turn engine switch off	Below 1 V
IG (E62-3) - GND1 (E62-10)	B - W-B	Ignition (ON)	Turn engine switch on (IG)	10 to 14 V
HILL (E62-5) - GND1 (E62-10)	BR - W-B	Illumination signal	Turn light control switch OFF	Below 1 V
HILL (E62-5) - GND1 (E62-6)	BR - W-B	Illumination signal	Turn light control switch ON	10 to 14 V
TC (E62-7) - GND1 (E62-10)	W - W-B	Diagnosis ON signal	Turn engine switch on (IG)	9 to 14 V
HAZ (E62-8) - GND1 (E62-10)	W - W-B	Hazard signal	Turn hazard switch OFF	Below 1 V
HAZ (E62-8) - GND1 (E62-10)	W - W-B	Hazard signal	Turn hazard switch ON	Pulse generation
ARON (E62-9) - GND1 (E62-10)	R - W-B	Passenger airbag ON signal	Turn engine switch on (IG), Passenger airbag on indicator light ON	10 to 14 V
GND1 (E62-10) - Body ground	W-B - Body ground	Ground	Always	Below 1 V
ILL- (E62-11) - GND1 (E62-10)	BR - W-B	Illumination signal	Turn light control switch OFF	Below 1 V
ILL- (E62-11) - GND1 (E62-10)	BR - W-B	Illumination signal	Turn light control switch ON	10 to 14 V
ILL+ (E62-12) - GND1 (E62-10)	G - W-B	Illumination signal	Turn light control switch OFF	Below 1 V

Symbols (Terminal No.)	Wiring Color	Terminal Description	Condition	Specification
ILL+ (E62-12) - GND1 (E62-10)	G - W-B	Illumination signal	Turn light control switch ON	10 to 14 V
REV (E62-13) - GND1 (E62-10)	Y - W-B	Reverse signal	See "Vehicle Signal Check" Mode (See page NS-21)	-
SPD (E62-14) - GND1 (E62-10)	SB - W-B	Speed signal from combination meter	See "Vehicle Signal Check" Mode (See page NS-21)	-
AIR (E62-20) - GND1 (E62-10)	B - W-B	Passenger airbag OFF signal	Turn engine switch on (IG), Passenger airbag off indicator light ON	10 to 14 V
PBEW (E62-21) - GND1 (E62-10)	P - W-B	Passenger seat belt warning signal	Turn engine switch on (IG), front passenger seat and front seat buckle switch ON (Belt unfastened)	10 to 14 V
PBEW (E62-21) - GND1 (E62-10)	P - W-B	Passenger seat belt warning signal	Turn engine switch on (IG), front passenger seat and front seat buckle switch OFF (Belt fastened)	Below 1 V
DR (E62-22) - GND1 (E62-10)	L - W-B	Dimmer signal	Turn engine switch on (IG), light control switch TAIL or ON and automatic light control sensor covered by hand	Above 9 V
PKB (E62-23) - GND1 (E62-10)	Y - W-B	Parking brake signal	See "Vehicle Signal Check" Mode (See page NS-21)	-
CANL (E62-25) - CANH (E62-26)	Y - L	CAN bus line	Go to CAN communication system (See page CA-16)	-
TX2- (E63-3) - GND1 (E62-10)	LG - W-B	AVC-LAN communication signal	Turn engine switch on (ACC)	2 to 3 V
TX2+ (E63-4) - GND1 (E62-10)	L - W-B	AVC-LAN communication signal	Turn engine switch on (ACC)	2 to 3 V
TSW- (E63-5) - GND1 (E62-10)	W - W-B	Telephone relation switch signal	Always	Below 1 V
MACC (E63-9) - GND1 (E62-10)	W - W-B	Microphone AMP power supply	Turn engine switch off	Below 1 V
MACC (E63-9) - GND1 (E62-10)	W - W-B	Microphone AMP power supply	Turn engine switch on (IG)	5 V
MIN- (E63-10) - GND1 (E62-10)	R - W-B	Microphone voice signal	See "Microphone & Voice Recognition Check" (See page NS-21)	-
MIN+ (E63-11) - GND1 (E62-10)	G - W-B	Microphone voice signal	See "Microphone & Voice Recognition Check" (See page NS-21)	-
SGND (E63-12) - GND1 (E62-10)	W - W-B	Signal ground	Always	Below 1 V
CA+ (E63-13) - GND1 (E62-10)	B - W-B	Television camera power supply	Turn engine switch on (IG), shift lever in R position	Approx. 6 V
CGND (E63-14) - Body ground	W - Body ground	Ground	Always	Below 1 V
IVO- (E63-21) - GND1 (E62-10)	BR - W-B	Voice guidance signal	Voice guidance is provided	A waveform synchronized with sounds is output
IVO+ (E63-22) - GND1 (E62-10)	Y - W-B	Voice guidance signal	Voice guidance is provided	A waveform synchronized with sounds is output
SLD (E63-23) - GND1 (E62-10)	Shielded - W-B	Shielded ground	Always	Below 1 V

Symbols (Terminal No.)	Wiring Color	Terminal Description	Condition	Specification
V+ (E63-27) - CGND (E63-14)	R - W	Television camera image signal	Turn engine switch on (IG), shift lever in R position	Pulse generation (Refer to waveform 1)
V- (E63-28) - CGND (E63-14)	Shielded - W	Shielded ground	Always	Below 1 V
NTSC (E64-1) - GND1 (E62-10)	BR - W-B	DVD image signal	DVD is played on radio receiver	Pulse generation (Refer to waveform 2)
SGD1 (E64-4) - GND1 (E62-10)	Y - W-B	Signal ground	Always	Below 1 V
SGND (E64-5) - Body ground	Shielded - Body ground	Shielded ground	Always	Below 1 V
TX- (p1-1) - GND (p1-6)	-	AVC-LAN communication signal	Turn engine switch on (ACC)	2 to 3 V
TX+ (p1-2) - GND (p1-6)	-	AVC-LAN communication signal	Turn engine switch on (ACC)	2 to 3 V
SGND (p1-3) - GND (p1-61)	-	Shielded ground	Always	Below 1 V
MCO- (p1-4) - GND (p1-6)	-	Microphone voice signal	See "Microphone & Voice Recognition Check" (See page NS-27)	-
MCO+ (p1-5) - GND (p1-6)	-	Microphone voice signal	See "Microphone & Voice Recognition Check" (See page NS-27)	-
GND (p1-6) - Body ground	-	Ground	Always	Below 1 V
ACC (p1-7) - GND (p1-6)	-	Accessory (ON)	Turn engine switch off	Below 1 V
ACC (p1-7) - GND (p1-6)	-	Accessory (ON)	Turn engine switch on (ACC)	10 to 14 V
BU+B (p1-8) - GND (p1-6)	-	Battery	Always	10 to 14 V
IVI- (p1-10) - GND (p1-6)	-	Voice guidance signal	Voice guidance is provided	A waveform synchronized with sounds is output
IVI+ (p1-11) - GND (p1-6)	-	Voice guidance signal	Voice guidance is provided	A waveform synchronized with sounds is output
REV (p1-15) - GND (p1-6)	-	Reverse signal	See "Vehicle Sensors" Mode (See page NS-27)	-
SPD (p1-16) - GND (p1-6)	-	Speed signal	See "Vehicle Sensors" Mode (See page NS-27)	-
GVI+ (q1-1) - GND (p1-6)	-	Digital image signal	Navigation display is on	Pulse generation
GVI- (q1-2) - GND (p1-6)	-	Digital image signal	Navigation display is on	Pulse generation
GVG1 (q1-3) - Body ground	-	Ground	Always	Below 1 V

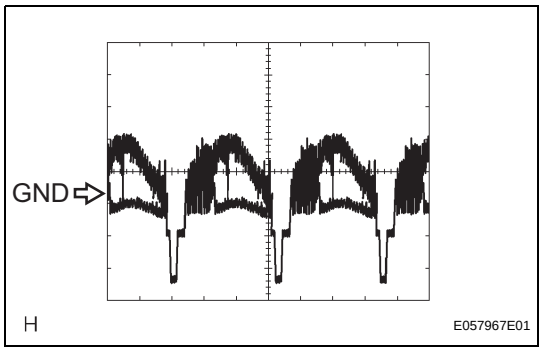

(a) Reference: waveform 1
HINT:
- Terminal: V+ - CGND
- Gauge set: 0.2 V/DIV., 0.2 μs/DIV.
- Condition: Engine switch: IG, shift lever: R position

NS

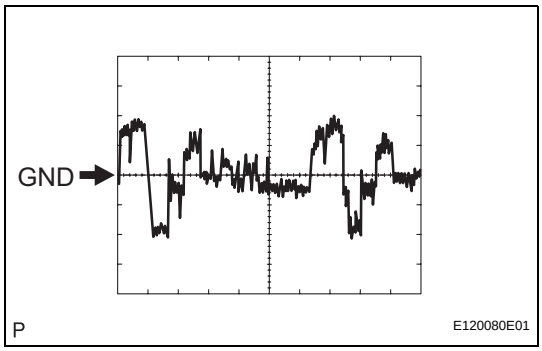

(b) Reference: waveform 2
HINT:
- Terminal: NTSC - Body ground
- Gauge set: 200 mV/DIV., 10 μs/DIV.
- Condition: DVD is played on multi-display

2. NAVIGATION ECU

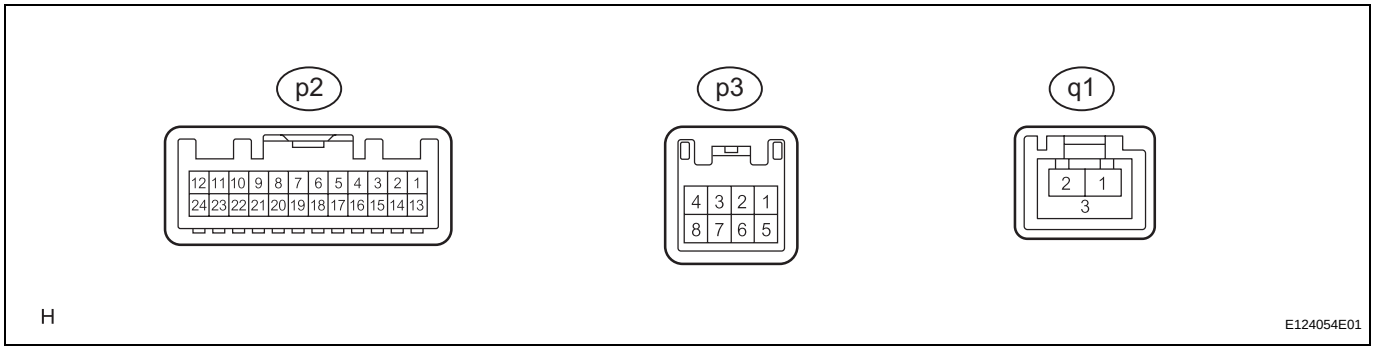

Symbols (Terminal No.)	Wiring Color	Terminal Description	Condition	Specification
BU+B (p2-1) - GND (p2-15)	-	Battery	Always	10 to 14 V
SPD (p2-4) - GND (p2-15)	-	Speed signal	See "Vehicle Sensors" Mode (See page NS-27)	-
SLD (p2-7) - GND (p2-15)	-	Shielded ground	Always	Below 1 V
IVI- (p2-8) - GND (p2-15)	-	Voice guidance signal	Voice guidance is provided	A waveform synchronized with sounds is output
IVI+ (p2-9) - GND (p2-15)	-	Voice guidance signal	Voice guidance is provided	A waveform synchronized with sounds is output
ACC (p2-13) - GND (p2-15)	-	Accessory (ON)	Turn engine switch off	Below 1 V
ACC (p2-13) - GND (p2-15)	-	Accessory (ON)	Turn engine switch on (ACC)	10 to 14 V
GND (p2-15) - Body ground	-	Ground	Always	Below 1 V
TX- (p2-18) - GND (p2-15)	-	AVC-LAN communication signal	Turn engine switch on (ACC)	2 to 3 V
TX+ (p2-19) - GND (p2-15)	-	AVC-LAN communication signal	Turn engine switch on (ACC)	2 to 3 V
REV (p2-20) - GND (p2-15)	-	Reverse signal	See "Vehicle Sensors" Mode (See page NS-27)	-
MCO+ (p3-3) - GND (p2-15)	-	Microphone voice signal	See "Microphone & Voice Recognition Check" (See page NS-27)	-
MCO- (p3-5) - GND (p2-15)	-	Microphone voice signal	See "Microphone & Voice Recognition Check" (See page NS-27)	-
SGND (p3-6) - GND (p2-15)	-	Shielded ground	Always	Below 1 V
GVI+ (q1-1) - GND (p2-15)	-	Digital image signal	Navigation display is on	Pulse generation
GVI- (q1-2) - GND (p2-15)	-	Digital image signal	Navigation display is on	Pulse generation
GND (q1-3) - Body ground	-	Ground	Always	Below 1 V

3. RADIO RECEIVER (See page AV-16)

4. STEREO COMPONENT AMPLIFIER (See page AV-16)

DTC CHECK / CLEAR

HINT:

- Illustrations may differ from the actual vehicle depending on the device settings and options. Therefore, some detailed areas may not be shown exactly the same as on the actual vehicle.
- If the system cannot enter the diagnostic mode, inspect all AVC-LAN communication components and repair or replace problem parts.
  (See page NS-187)
- After the engine switch is turned on (IG), check that the map is displayed before starting the diagnostic mode. Otherwise, some items cannot be checked.

1. START DIAGNOSTIC MODE

(a) There are 2 methods to start diagnostic mode. Start the mode by using one of them.

(b) Method 1

(1) Start the engine.

(2) While pressing and holding the "INFO" switch, operate the light control switch: OFF → Turn ON → Turn OFF → Turn ON → Turn OFF → Turn ON → Turn OFF.

(3) The diagnostic mode starts and the "System Check Mode" screen will be displayed. Service inspection starts automatically and the result will be displayed.

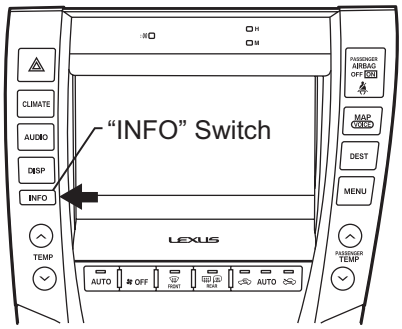

E134674E01

(c) Method 2

(1) Start the engine.

(2) Switch to the "Display Check" screen.

(3) From the display quality adjustment screen, touch the corners of the screen in the following order: upper left → lower left → upper left → lower left → upper left → lower left.

(4) The diagnostic mode starts and the "System Check Mode" screen will be displayed. Service inspection starts automatically and the result will be displayed.

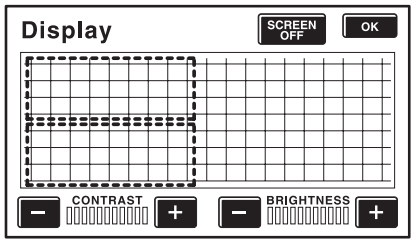

E109432

2. FINISH DIAGNOSTIC MODE

(a) There are 2 methods to end diagnostic mode. Use one of them.

(1) Turn the engine switch off.

(2) Press and hold the "DISP" switch for 3 seconds.

NS

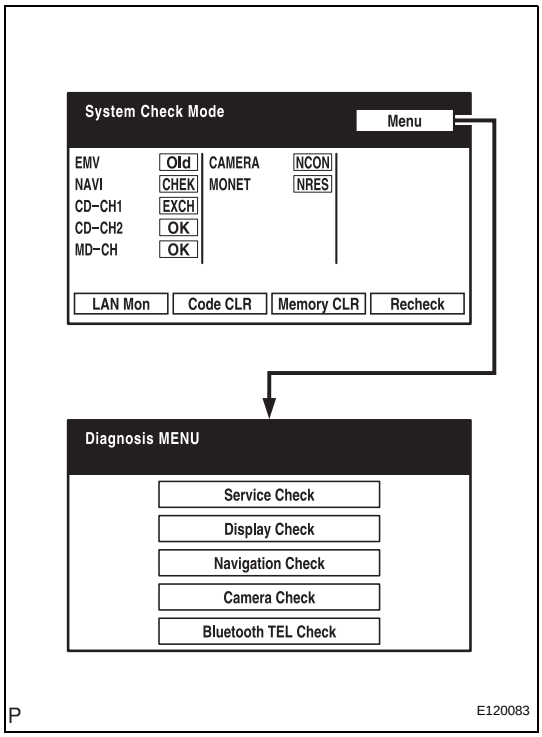

3. DIAGNOSIS MENU

(a) The "Diagnosis MENU" screen will be displayed by pressing the menu switch on the "System Check Mode" screen.

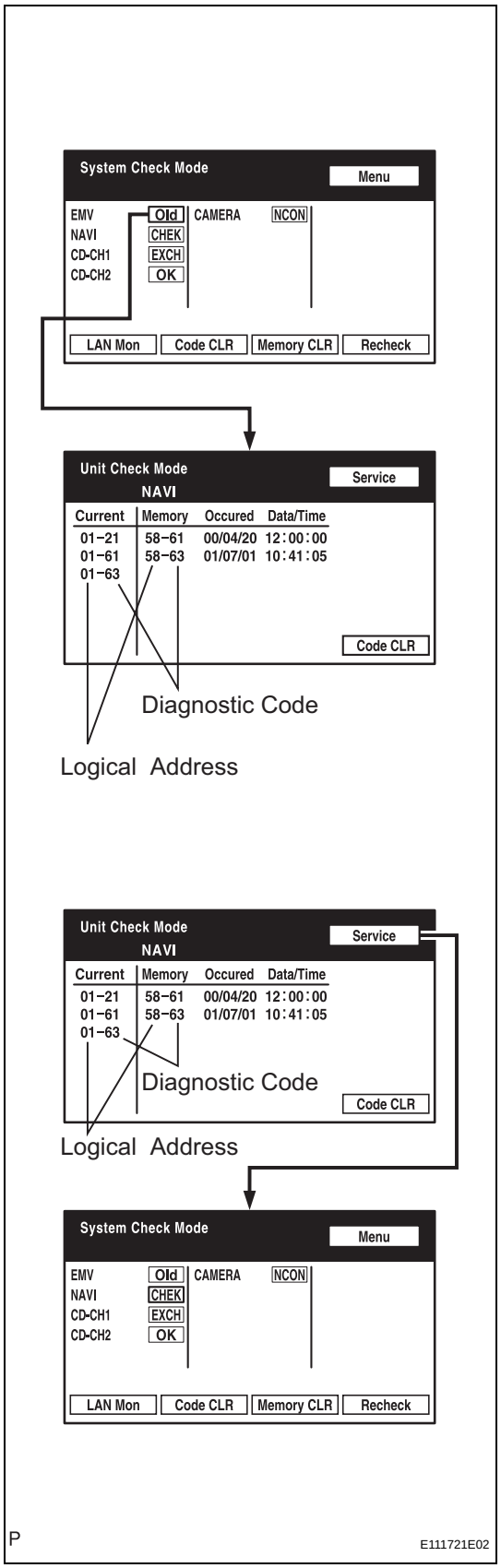

4. CHECK DTC

(a) Read the system check result.

(1) If the check result is "EXCH", "CHEK" or "Old", touch the displayed check result to view the results on the "Unit Check Mode" screen and record them.

HINT:

- If all check results are "OK", go to communication DTC check.
- If a device name is not known, its physical address is displayed.

HINT:

When proceeding to view the results of another device, press the service switch to return to the "System Check Mode" screen. Repeat this step.

NS

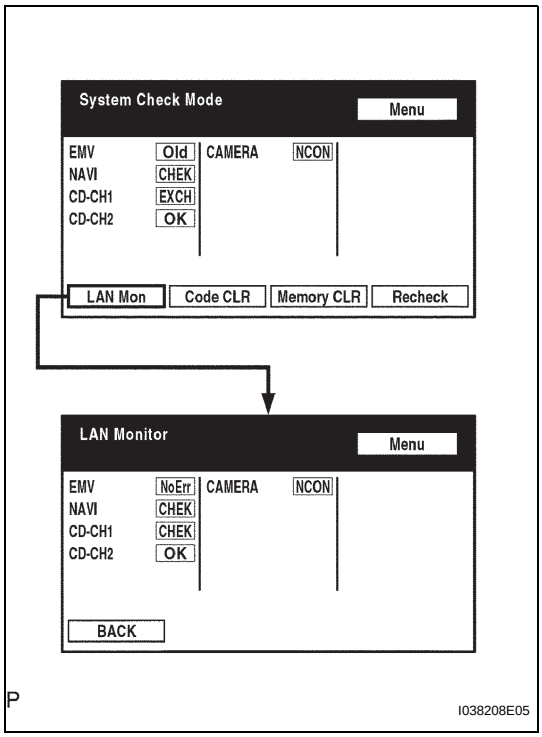

(b) Read the communication diagnostic check result.
(1) Return to the "System Check Mode" screen, and press the "LAN Mon" switch to enter the "LAN Monitor" screen.

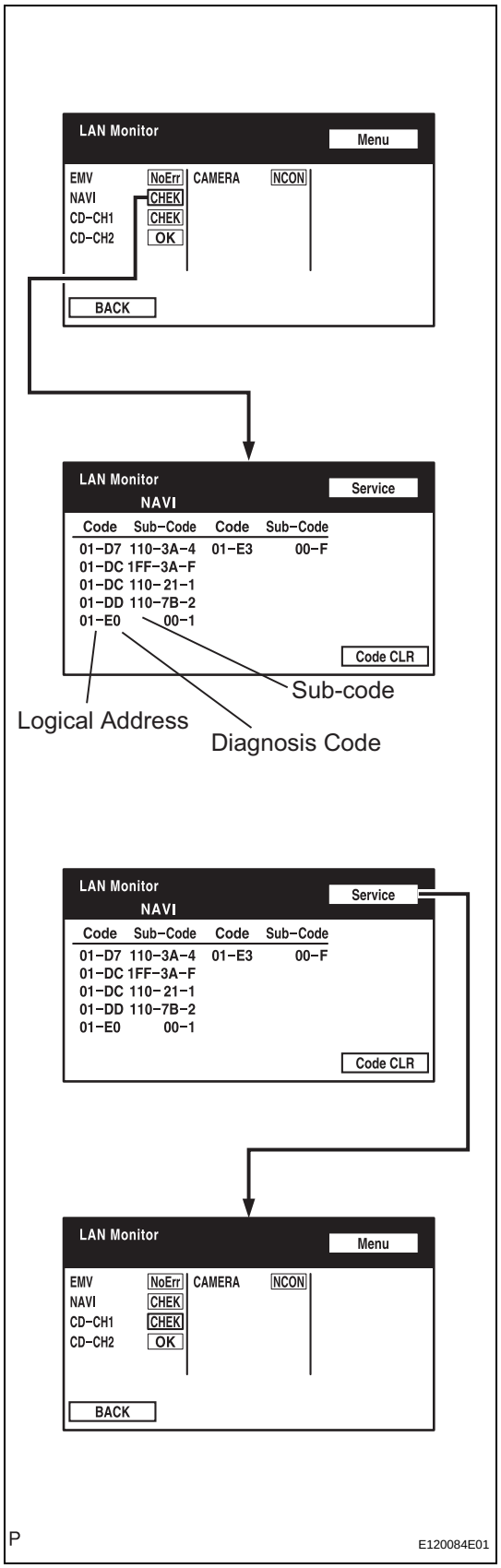

(2) If the check result is "CHEK" or "Old", touch the displayed check result to view the results on the individual communication diagnostic screen and record them.
HINT:
- If all check results are "No Err", the system judges that no DTC exists.
- The sub-code (relevant device) will be indicated by its physical address.
- When proceeding to view the results of another device, press the "Service" switch to return to the original "LAN Monitor" screen. Repeat this step.

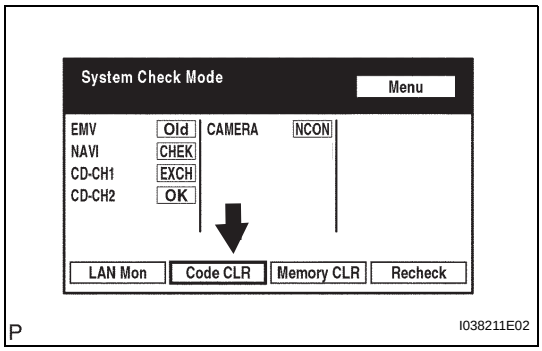

5. DTC CLEAR/RECHECK

(a) Clear DTC

(1) Press the "Code CLR" switch for 3 seconds.

(2) The check results are cleared.

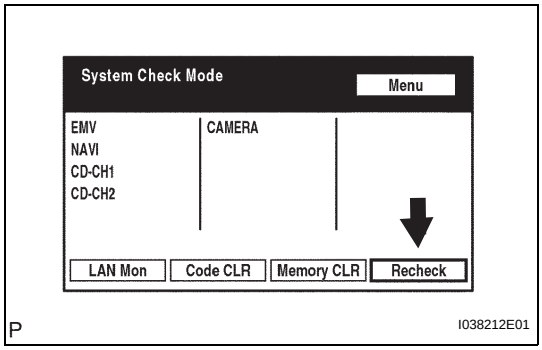

(b) Recheck

(1) Press the "Recheck" switch.

NS

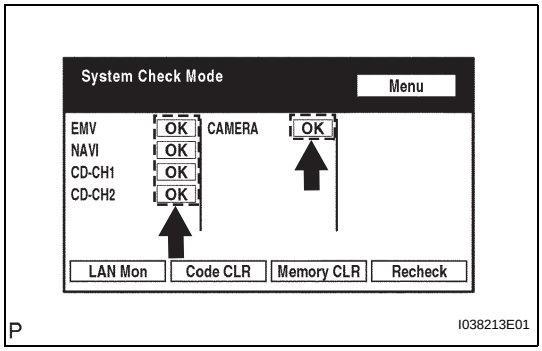

(2) Confirm that all diagnostic codes are "OK" when the check results are displayed. If a code other than "OK" is displayed, troubleshoot again.

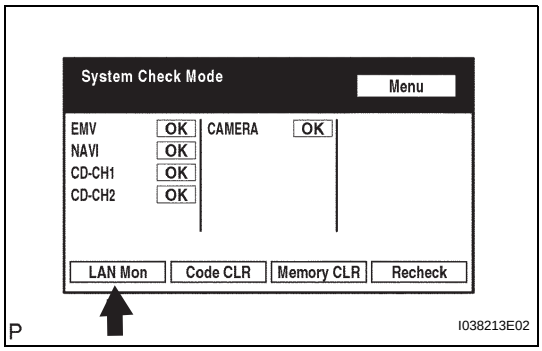

(3) Press the "LAN Mon" switch to change to the "LAN Monitor" screen.

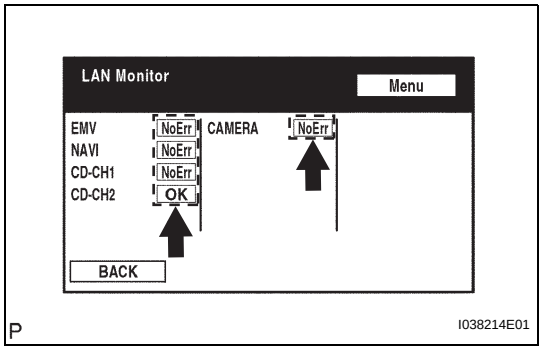

(4) Confirm that all diagnostic codes are "No Err". If a code other than "No Err" is displayed, troubleshoot again.

DTC	01-21	ROM Error

DTC	01-22	RAM Error

DESCRIPTION

DTC No.	DTC Detection Condition	Trouble Area
01-21	A malfunction exists in ROM.	Multi-display
01-22	A malfunction exists in RAM.	

INSPECTION PROCEDURE

HINT:
After the inspection is completed, clear the DTCs.

1	REPLACE MULTI-DISPLAY

NEXT

END

DTC	01-D5	Absence of Registration Unit

DTC	01-D8	No Response for Connection Check

DTC	01-D9	Last Mode Error

DTC	01-DA	No Response Against ON / OFF Command

DTC	01-DB	Mode Status Error

DTC	01-DE	Slave Reset

DESCRIPTION

DTC No.	DTC Detection Condition	Trouble Area
01-D5 *1, *3	• A component shown by the sub-code is (was) disconnected from the system when turning the engine switch on (ACC or IG). • The communication condition with the device that the code shows cannot be obtained when the engine starts.	• Power source circuit of the component shown by the sub-code • AVC-LAN circuit between the multi-display and the component shown by the sub-code • Component shown by the sub-code
01-D8 *2, *3	A component shown by the sub-code is (was) disconnected from the system after engine start.	
01-D9 *1, *3	The device that had functioned before the engine stopped is (was) disconnected from the system when the engine switch is (was) on (IG or ACC).	
01-DA *3	• No response is identified when changing mode. • Sound and image do not change by switch operation.	
01-DB *1, *3	A dual alarm is detected.	
01-DE *3	A slave device has been disconnected after engine start.	

NS

HINT:
- *1: Even if no fault is present, this trouble code may be stored depending on the battery condition or engine start voltage.
- *2: If the power connector is disconnected after the engine starts, this code is stored after 180 seconds.
- *3: If it is reported that the device does not exist during verification, check the power source circuit and AVC-LAN circuit for the device.

NOTICE:
- **Before starting troubleshooting, be sure to clear DTCs to erase codes stored due to the reasons described in the HINT above. Then, check for DTCs and troubleshoot according to the output DTCs.**
- **The multi-display is the master unit.**
- **Be sure to clear and recheck for DTCs after the inspection is completed to confirm that no DTCs are output.**

INSPECTION PROCEDURE

NOTICE:

Be sure to read DESCRIPTION before performing the following procedures.

1	CHECK "MULTI-DISPLAY COMMUNICATION ERROR" IN FLOW CHART

Refer to the multi-display communication error (See page NS-220).

NEXT

END

DTC	01-D6	No Master

DTC	01-D7	Connection Check Error

DESCRIPTION

DTC No.	DTC Detection Condition	Trouble Area
01-D6 *1	When either of the following conditions is met: • The component which has stored the code has (had) been disconnected when the engine switch is on (ACC or IG). • The master device has (had) been disconnected when this code is stored.	• Multi-display power source circuit • Power source circuit of the component which has stored this code • AVC-LAN circuit between the multi-display and the component which has stored this code • Component which has stored this code • Multi-display
01-D7 *2	When either of the following conditions is met: • The component which has stored the code has (had) been disconnected after the engine starts (started). • The master device has (had) been disconnected when this code is (was) stored.	

HINT:
- *1: Even if no fault is present, this trouble code may be stored depending on the battery condition or engine start voltage.
- *2: When 210 seconds have elapsed after disconnecting the power supply connector of the master component with the engine switch on (ACC or IG), this code is stored.

NOTICE:
- **Before starting troubleshooting, be sure to clear DTCs to erase codes stored due to the reasons described in the HINT above. Then, check for DTCs and troubleshoot according to the output DTCs.**
- **The multi-display is the master unit.**
- **Be sure to clear and recheck for DTCs after the inspection is completed to confirm that no DTCs are output.**

NS

INSPECTION PROCEDURE

NOTICE:
Be sure to read DESCRIPTION before performing the following procedures.

1	CHECK MULTI-DISPLAY POWER SOURCE CIRCUIT

Refer to the multi-display power source circuit (See page NS-228).
If the power source circuit is operating normally, proceed to the next step.

NEXT

2 IDENTIFY THE COMPONENT WHICH HAS STORED THIS CODE

Example:

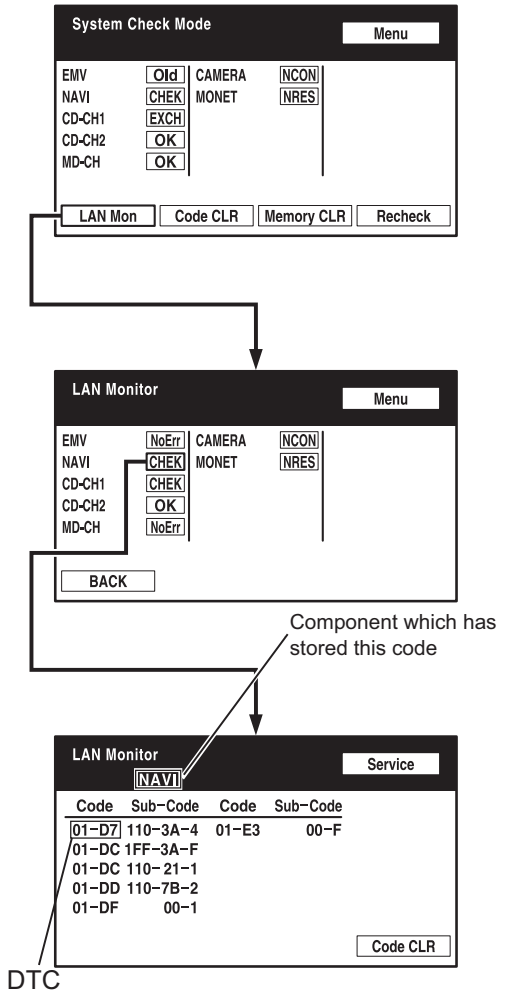

P E121199E01

(a) Enter the diagnostic mode.
(b) Press the "LAN Mon" switch to change to "LAN Monitor" mode.
(c) Identify the component which has stored this code.

Component Table:

Display	Component
AUDIO H/U	Radio receiver
DSP-AMP	Stereo component amplifier
NAVI	Navigation ECU

HINT:
"NAVI" is the component which has stored this code in the example shown in the illustration.

NS

NEXT

3 CHECK POWER SOURCE CIRCUIT OF COMPONENT WHICH HAS STORED THIS CODE

(a) Inspect the power source circuit of the component which has stored this code.
If the power source circuit is operating normally, proceed to the next step.

Component Table:

Component	Proceed to
Radio receiver (AUDIO H/U)	Radio receiver power source circuit (See page AV-162)
Stereo component amplifier (DSP-AMP)	Stereo component amplifier power source circuit (See page AV-164)
Navigation ECU (NAVI)	Navigation ECU power source circuit (See page NS-230)

NEXT

4	CHECK RADIO RECEIVER

DVD Changer Models
Wire Harness View:

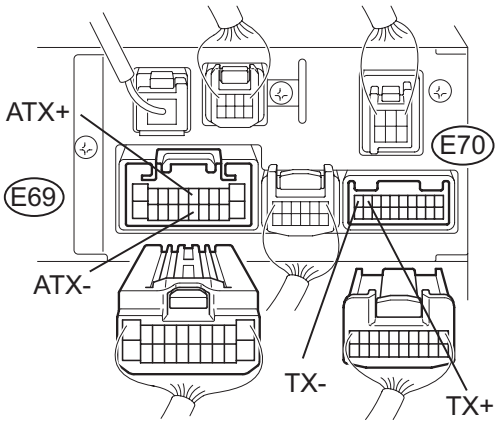

CD Changer Models
Wire Harness View:

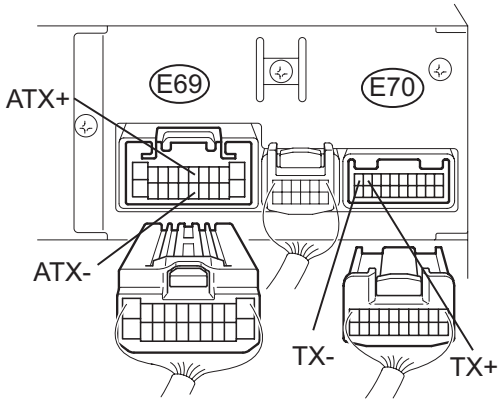

P E124056E03

(a) Disconnect the radio receiver connectors.
(b) Measure the resistance according to the value(s) in the table below.

Standard resistance

Tester Connection	Condition	Specified Condition
ATX+ (E69-5) - ATX- (E69-15)	Always	60 to 80 Ω
TX+ (E70-9) - TX- (E70-10)	Always	60 to 80 Ω

NG → **REPLACE RADIO RECEIVER**

OK

5	CHECK HARNESS AND CONNECTOR (MULTI-DISPLAY - COMPONENT WHICH HAS STORED THIS CODE)

HINT:
For details of the connectors, refer to "TERMINALS OF ECU" (See page NS-44).

(a) Referring to the AVC-LAN wiring diagram below, check the AVC-LAN circuit between the multi-display and the component which has stored this code.
  (1) Disconnect all connectors between the multi-display and the component which has stored this code.
  (2) Check for an open or short in the AVC-LAN circuit between the multi-display and the component which has stored this code.

NS

OK:
There is no open or short circuit.

AVC-LAN WIRING DIAGRAM:

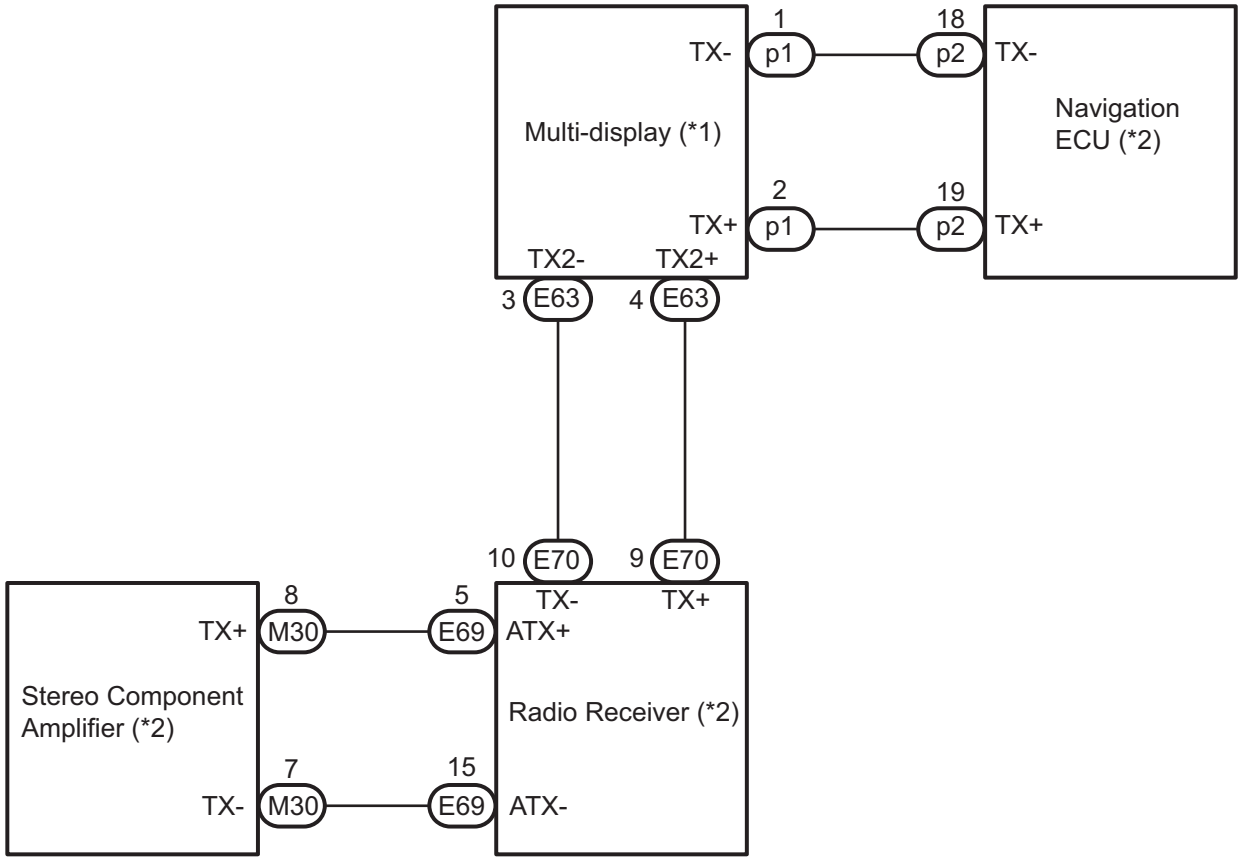

*1: Master Unit

*2: Slave Unit

P

E134675E01

NG → **REPAIR OR REPLACE HARNESS OR CONNECTOR**

OK

6	REPLACE COMPONENT WHICH HAS STORED THIS CODE

(a) Replace the component which has stored this code with a normal one and check if the same problem occurs again.
OK:
Same problem does not occur.

NS

NG → **REPLACE MULTI-DISPLAY**

OK

END

DTC 01-DC Transmission Error

DESCRIPTION

DTC No.	DTC Detection Condition	Trouble Area
01-DC	Transmission to component shown by sub-code failed. (Detecting this DTC does not always mean actual failure.)	If the same sub-code is recorded in other components, check harness for power supply and communication system of all components shown by code

NOTICE:
- **The multi-display is the master unit.**
- **Be sure to clear and recheck for DTCs after the inspection is completed to confirm that no DTCs are output.**

INSPECTION PROCEDURE

NOTICE:
Be sure to read DESCRIPTION before performing the following procedures.

1 CHECK FOR DTC OF OTHER COMPONENTS

(a) Check if the component shown by the sub-code is displayed in the check result of the other components.
(1) Check if "01-DC" is output for the other components.
(2) If "01-DC" is output for any other components, check if the same physical address is displayed.
HINT:
For the list of the components shown by sub-codes, refer to the table in step 2.
Result

Result	Proceed to
"01-DC" is output and the same physical address is displayed	**A**
"01-DC" is not output or the same physical address is not displayed	**B**

B → **Go to step 4**

A

NS

2 IDENTIFY THE COMPONENT WHICH HAS STORED THIS CODE

Example:

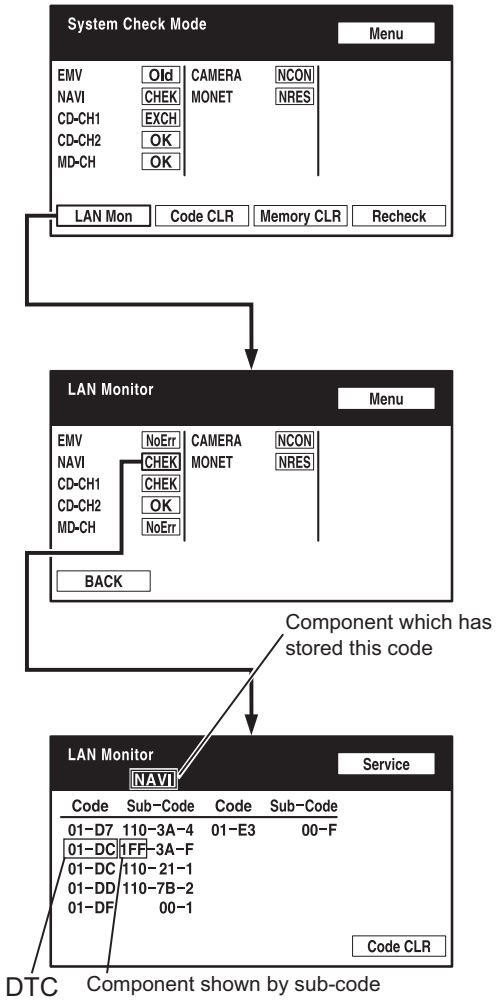

(a) Enter the diagnostic mode.
(b) Press the "LAN Mon" switch to change to "LAN Monitor" mode.
(c) Identify the component which has stored this code.

Component Table:

Display	Component
AUDIO H/U (190)	Radio receiver
DSP-AMP (440)	Stereo component amplifier
NAVI (178)	Navigation ECU
EMV (110)	Multi-display

HINT:
"NAVI" is the component which has stored this code in the example shown in the illustration.

NS

NEXT

3 CHECK COMPONENT WHICH HAS STORED THIS CODE

(a) Select the component which has stored this code.

Component Table:

Component	Proceed to
Radio receiver (AUDIO H/U)	Radio receiver communication error (See page NS-212)
Stereo component amplifier (DSP-AMP)	Stereo component amplifier communication error (See page NS-216)
Navigation ECU (NAVI)	Navigation ECU communication error (See page NS-224)
Multi-display (EMV)	Multi-display communication error (See page NS-220)

NEXT

END

4	**CLEAR DTC**

(a) Clear the DTCs (See page NS-48).
HINT:
If "01-DC" is output for only one component, this may not indicate a malfunction.

NEXT

5	**RECHECK FOR DTC**

(a) Recheck for DTCs and check if the same trouble occurs again.

OK:
Malfunction disappears.

NG → **Go to step 3**

OK

END

DTC	01-DD	Master Reset

DTC	01-E1	Voice Processing Device ON Error

DESCRIPTION

DTC No.	DTC Detection Condition	Trouble Area
01-DD	The device that should be the master has been disconnected after the engine starts.	• Multi-display power source circuit • AVC-LAN circuit between the multi-display and the component which has stored this code • Multi-display • Component which has stored this code
01-E1 *1	The AMP device records that the AMP output does not function even while the source device is operating.	

HINT:
*1: Even if no fault is present, this trouble code may be stored depending on the battery condition or engine start voltage.

NOTICE:

- **Before starting troubleshooting, be sure to clear DTCs to erase codes stored due to the reasons described in the HINT above. Then, check for DTCs and troubleshoot according to the output DTCs.**
- **The multi-display is the master unit.**
- **Be sure to clear and recheck for DTCs after the inspection is completed to confirm that no DTCs are output.**

NS

INSPECTION PROCEDURE

NOTICE:

Be sure to read DESCRIPTION before performing the following procedures.

1	CHECK MULTI-DISPLAY POWER SOURCE CIRCUIT

Refer to the multi-display power source circuit (See page NS-228).
If the power source circuit is operating normally, proceed to the next step.

NEXT

2	**INSPECT RADIO RECEIVER**

DVD Changer Models
Wire Harness View:

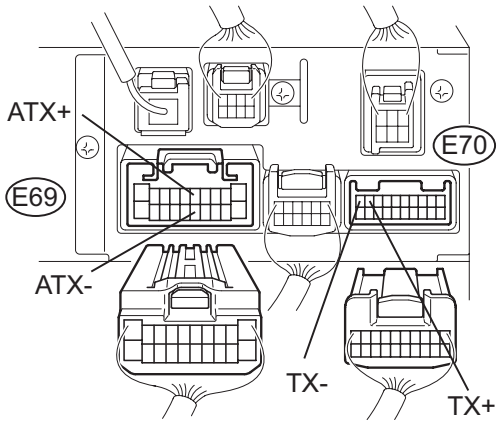

CD Changer Models
Wire Harness View:

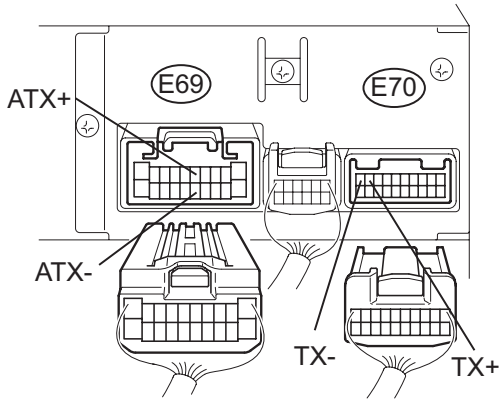

P E124056E03

(a) Disconnect the radio receiver connectors.
(b) Measure the resistance according to the value(s) in the table below.

Standard resistance

Tester Connection	Condition	Specified Condition
ATX+ (E69-5) - ATX- (E69-15)	Always	60 to 80 Ω
TX+ (E70-9) - TX- (E70-10)	Always	60 to 80 Ω

NG → **REPLACE RADIO RECEIVER**

OK

NS

3 IDENTIFY THE COMPONENT WHICH HAS STORED THIS CODE

Example:

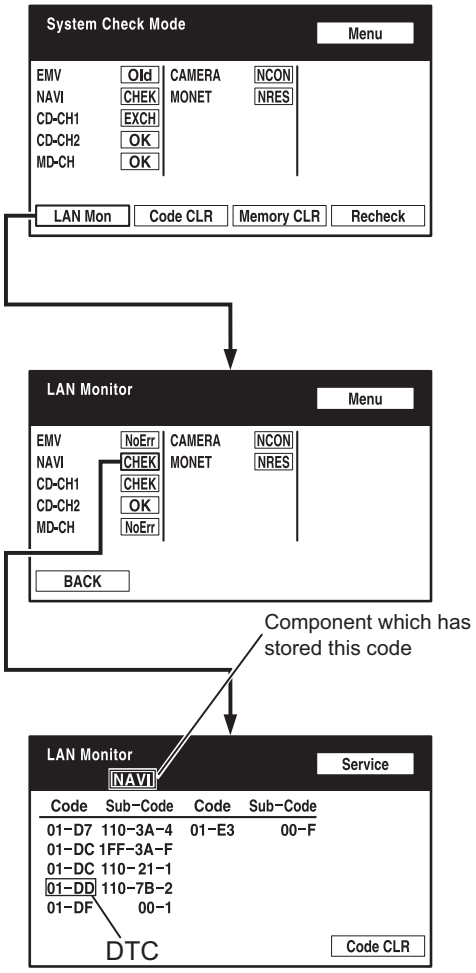

P E121199E03

(a) Enter the diagnostic mode.
(b) Press the "LAN Mon" switch to change to "LAN Monitor" mode.
(c) Identify the component which has stored this code.

Component Table:

Display	Component
AUDIO H/U	Radio receiver
DSP-AMP	Stereo component amplifier
NAVI	Navigation ECU

HINT:
"NAVI" is the component which has stored this code in the example shown in the illustration.

NS

NEXT

4 CHECK HARNESS AND CONNECTOR (MULTI-DISPLAY - COMPONENT WHICH HAS STORED THIS CODE)

HINT:
For details of the connectors, refer to "TERMINALS OF ECU" (See page NS-44).

(a) Referring to the AVC-LAN wiring diagram below, check the AVC-LAN circuit between the multi-display and the component which has stored this code.
  (1) Disconnect all connectors between the multi-display and the component which has stored this code.
  (2) Check for an open or short in the AVC-LAN circuit between the multi-display and the component which has stored this code.

OK:
There is no open or short circuit.

AVC-LAN WIRING DIAGRAM:

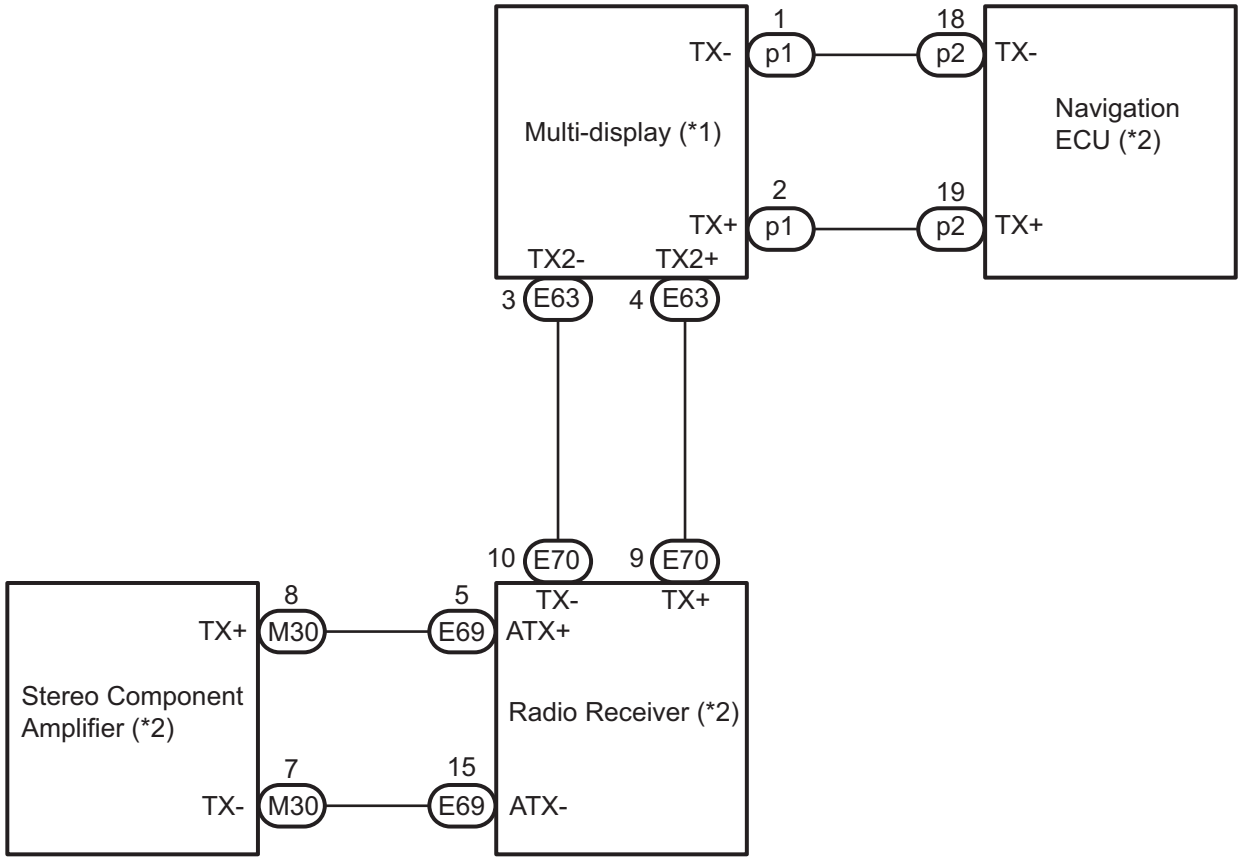

*1: Master Unit

*2: Slave Unit

P

E134675E01

NG → **REPAIR OR REPLACE HARNESS OR CONNECTOR**

OK

5	**REPLACE MULTI-DISPLAY**

(a) Replace the multi-display with a normal one and check if the same problem occurs again.
OK:
Same problem does not occur.

NS

NG → **REPLACE COMPONENT WHICH HAS STORED THIS CODE**

OK

END

DTC	01-DF	Master Error

DESCRIPTION

DTC No.	DTC Detection Condition	Trouble Area
01-DF *1	• The device with a display fails and the master is switched to the audio device. • A communication error between sub-master (radio receiver) and master occurs.	• Multi-display power source circuit • AVC-LAN circuit between the multi-display and the component which has stored this code • AVC-LAN circuit between the multi-display and the radio receiver • Multi-display • Component which has stored this code

HINT:
*1: When 210 seconds have elapsed after disconnecting the power supply connector of the master component with the engine switch on (ACC or IG), this code is stored.

NOTICE:

- **Before starting troubleshooting, be sure to clear DTCs to erase codes stored due to the reasons described in the HINT above. Then, check for DTCs and troubleshoot according to the output DTCs.**
- **The multi-display is the master unit.**
- **Be sure to clear and recheck for DTCs after the inspection is completed to confirm that no DTCs are output.**

NS

INSPECTION PROCEDURE

NOTICE:

Be sure to read DESCRIPTION before performing the following procedures.

1	CHECK MULTI-DISPLAY POWER SOURCE CIRCUIT

Refer to the multi-display power source circuit (See page NS-228).
If the power source circuit is operating normally, proceed to the next step.

NEXT

2 INSPECT RADIO RECEIVER

DVD Changer Models
Wire Harness View:

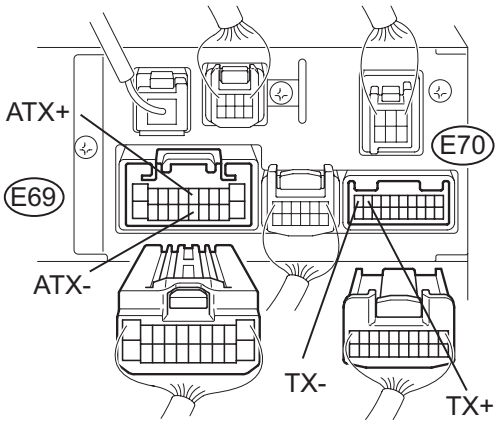

CD Changer Models
Wire Harness View:

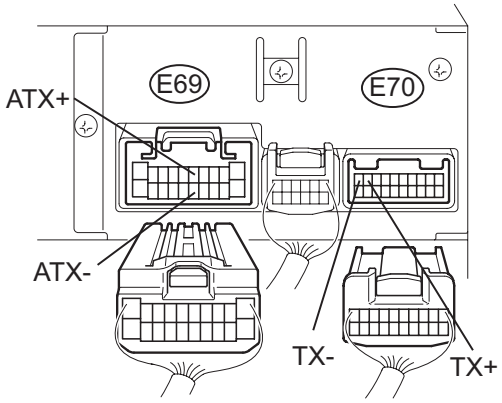

P E124056E03

(a) Disconnect the radio receiver connectors.
(b) Measure the resistance according to the value(s) in the table below.

Standard resistance

Tester Connection	Condition	Specified Condition
ATX+ (E69-5) - ATX- (E69-15)	Always	60 to 80 Ω
TX+ (E70-9) - TX- (E70-10)	Always	60 to 80 Ω

NG → **REPLACE RADIO RECEIVER**

OK

NS

3	IDENTIFY THE COMPONENT WHICH HAS STORED THIS CODE

Example:

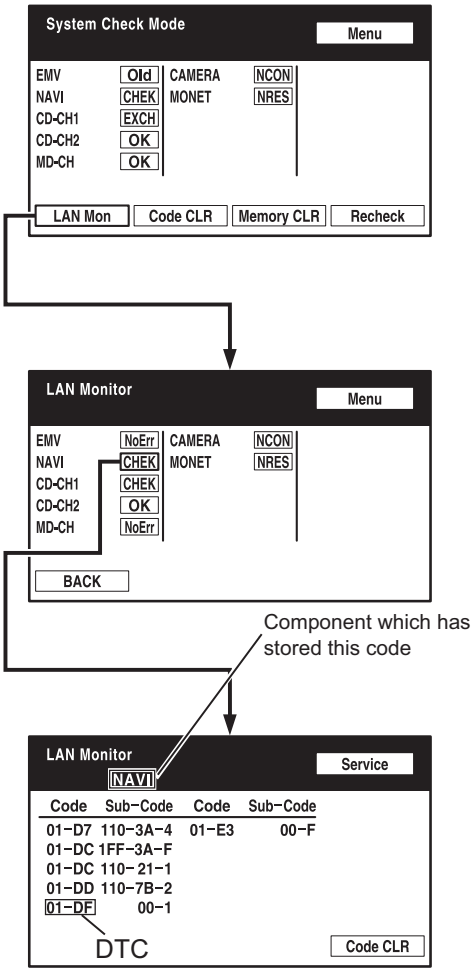

P E121199E04

(a) Enter the diagnostic mode.
(b) Press the "LAN Mon" switch to change to "LAN Monitor" mode.
(c) Identify the component which has stored this code.

Component Table:

Display	Component
AUDIO H/U	Radio receiver
DSP-AMP	Stereo component amplifier
NAVI	Navigation ECU

HINT:
"NAVI" is the component which has stored this code in the example shown in the illustration.

NS

NEXT

4	CHECK HARNESS AND CONNECTOR (MULTI-DISPLAY - COMPONENT WHICH HAS STORED THIS CODE)

HINT:
For details of the connectors, refer to "TERMINALS OF ECU" (See page NS-44).

(a) Referring to the AVC-LAN wiring diagram below, check the AVC-LAN circuit between the multi-display and the component which has stored this code.
  (1) Disconnect all connectors between the multi-display and the component which has stored this code.
  (2) Check for an open or short in the AVC-LAN circuit between the multi-display and the component which has stored this code.

OK:
There is no open or short circuit.

AVC-LAN WIRING DIAGRAM:

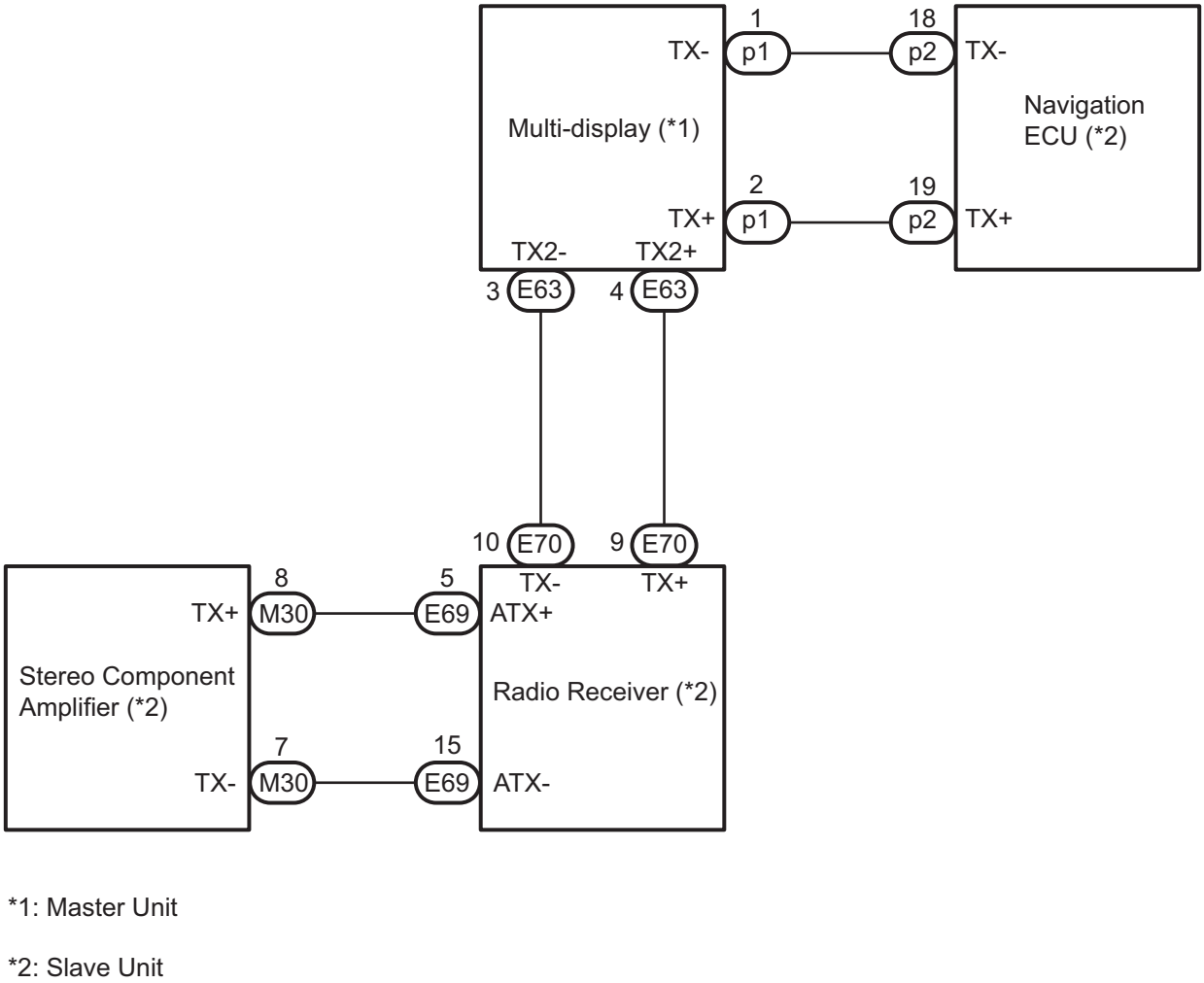

NG → **REPAIR OR REPLACE HARNESS OR CONNECTOR**

OK

5	CHECK HARNESS AND CONNECTOR (MULTI-DISPLAY - RADIO RECEIVER)

HINT:
For details of the connectors, refer to "TERMINALS OF ECU" (See page NS-44).

(a) Referring to the AVC-LAN wiring diagram below, check the AVC-LAN circuit between the multi-display and the radio receiver.

NS

(1) Disconnect all connectors between the multi-display and the radio receiver.
(2) Check for an open or short in the AVC-LAN circuit between the multi-display and the radio receiver.
OK:
There is no open or short circuit.

AVC-LAN WIRING DIAGRAM

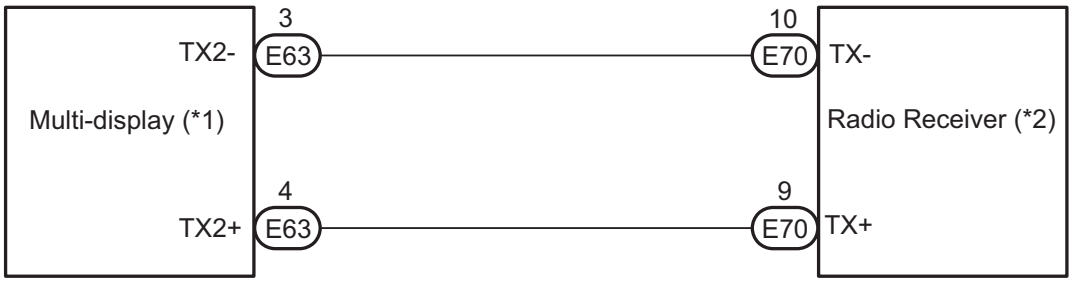

*1: Master Unit

*2: Slave Unit

P

E111831E17

NS

NG → **REPAIR OR REPLACE HARNESS OR CONNECTOR**

OK

6	REPLACE MULTI-DISPLAY

(a) Replace the multi-display with a normal one and check if the same problem occurs again.
OK:
Same problem does not occur.

NG → **REPLACE COMPONENT WHICH HAS STORED THIS CODE**

OK

END

DTC	01-E0	Registration Complete Indication Error

DTC	01-E3	Registration Demand Transmission

DTC	01-E4	Multiple Frame Incomplete

DESCRIPTION

DTC No.	DTC Detection Condition	Trouble Area
01-E0	"Registration complete" signal from the master device cannot be received.	-
01-E3	The registration demand signal from the slave device is output. Or the registration demand signal is output by receiving connection confirmation signal from the sub-master device.	-
01-E4	The multiple frame transmission is incomplete.	-

HINT:
Even if no fault is present, this trouble code may be stored depending on the battery condition or engine start voltage.

INSPECTION PROCEDURE

HINT:
- After the inspection is completed, clear the DTCs.
- These DTCs do not indicate a malfunction.

DTC	01-E2	ON / OFF Indication Parameter Error

DESCRIPTION

DTC No.	DTC Detection Condition	Trouble Area
01-E2	The signal for ON/OFF control from the master device has a problem.	Multi-display

INSPECTION PROCEDURE

HINT:
After the inspection is completed, clear the DTCs.

1	REPLACE MULTI-DISPLAY

NEXT

END

DTC	21-10	Panel Switch Error

DTC	21-11	Touch Switch Error

DTC	23-10	Panel Switch Error

DTC	23-11	Touch Switch Error

DTC	24-10	Panel Switch Error

DTC	24-11	Touch Switch Error

DTC	25-10	Panel Switch Error

DTC	25-11	Touch Switch Error

DESCRIPTION

DTC No.	DTC Detection Condition	Trouble Area
21-10	The panel switch detection circuit has a problem.	Multi-display
21-11	The touch panel switch has a problem.	
23-10	The panel switch detection circuit has a problem.	
23-11	The touch panel switch has a problem.	
24-10	The panel switch detection circuit has a problem.	
24-11	The touch panel switch has a problem.	
25-10	The panel switch detection circuit has a problem.	
25-11	The touch panel switch has a problem.	

INSPECTION PROCEDURE

HINT:
After the inspection is completed, clear the DTCs.

1	REPLACE MULTI-DISPLAY

NEXT

END

DTC	34-10	Error in Picture Circuit

DTC	34-11	No Current in Back-light

DTC	34-12	Excess Current in Back-light

DESCRIPTION

DTC No.	DTC Detection Condition	Trouble Area
34-10	Error in power supply system for picture circuit	Multi-display
34-11	Decline in power output from inverter circuit for back-light	
34-12	Excess power output from inverter circuit for back-light	

INSPECTION PROCEDURE

HINT:
After the inspection is completed, clear the DTCs.

1	REPLACE MULTI-DISPLAY

NS

NEXT

END

DTC	45-10	DVD Changer Mechanical Error

DTC	45-11	DVD Insertion and Ejection Error

DTC	45-12	DVD Reading Abnormal

DESCRIPTION

DTC No.	DTC Detection Condition	Trouble Area
45-10	A mechanical error in the DVD changer is detected while the DVD is not being inserted or ejected.	Radio receiver
45-11	DVD insertion or ejection is failed.	
45-12	DVD read problem occurs.	

INSPECTION PROCEDURE

HINT:
After the inspection is completed, clear the DTCs.

1	REPLACE RADIO RECEIVER

NEXT

END

DTC	45-41	Wrong Disc

DTC	45-42	Disc cannot be Read

DESCRIPTION

DTC No.	DTC Detection Condition	Trouble Area
45-41	An unsuitable disc is inserted.	• DVD • Radio receiver
45-42	The disc cannot be read.	

INSPECTION PROCEDURE

HINT:
After the inspection is completed, clear the DTCs.

1 CHECK DISC

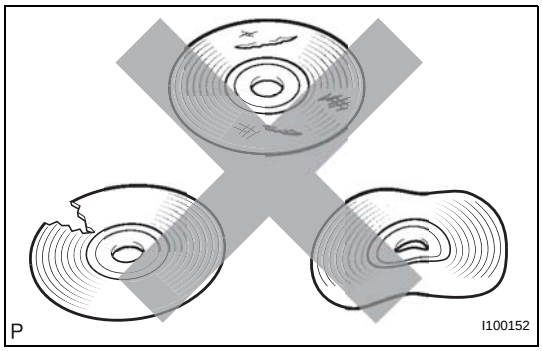

(a) Check that the disc is not deformed or cracked.
OK:
No deformation or cracks on the disc.

NG → **CHANGE DISC**

NS

OK

2 DISC CLEANING

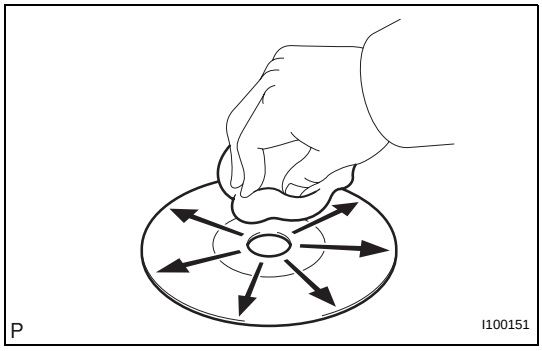

(a) Disc cleaning
(1) If dirt is on the disc surface, wipe it clean with a soft cloth from the inside to the outside in a radial direction.
NOTICE:
Do not use a conventional record cleaner or antistatic preservative.

NEXT

3 CLEAR DTC

(a) Clear the DTC (See page NS-48).

NEXT

4	RECHECK FOR DTC

(a) Recheck for DTCs and check if the same trouble occurs again.
OK:
Malfunction disappears.

OK → **END**

NG

5	REPLACE DISC WITH ANOTHER AND RECHECK

(a) Replace the disc with another and recheck.
(1) Replace the disc with another normal one.
(2) Clear the DTCs (See page NS-48).
(3) Recheck for DTCs and check if the same trouble occurs again.
OK:
Malfunction disappears.

NG → **REPLACE RADIO RECEIVER**

OK

END

DTC	45-43	DVD-ROM Abnormal

DESCRIPTION

DTC No.	DTC Detection Condition	Trouble Area
45-43	DVD-ROM operation is abnormal.	• DVD • Radio receiver

INSPECTION PROCEDURE

HINT:
After the inspection is completed, clear the DTCs.

1 CHECK IF A PROPER DVD IS INSERTED

(a) Make sure that the DVD is a video DVD or a CD with an MP3 or WMA file, and that it is not deformed, flawed, stained, burred, or otherwise defective.
OK:
Normal DVD or CD
HINT:
- Translucent or uniquely-shaped DVDs or CDs cannot be played.
- For details on playable DVDs or CDs, refer to the Owner's Manual.

NG → **DISC IS FAULTY**

OK ↓

2 CHANGE DISC

(a) Replace the disc with another and recheck.
(1) Replace the disc with another normal one.
(2) Clear the DTCs (See page NS-48).
(3) Recheck for DTCs and check if the same trouble occurs again.
OK:
Malfunction disappears.

NG → **REPLACE RADIO RECEIVER**

OK ↓

END

NS

DTC	45-44	DVD Malfunction

DTC	45-48	Excess Current

DTC	45-50	Tray Insertion / Ejection Error

DESCRIPTION

DTC No.	DTC Detection Condition	Trouble Area
45-44	Operation error in the DVD mechanism	Radio receiver
45-48	Excess current is present in the DVD changer.	
45-50	Malfunction in insertion/ejection system	

INSPECTION PROCEDURE

HINT:
After the inspection is completed, clear the DTCs.

1 CLEAR DTC

(a) Clear the DTCs (See page NS-48).

NS

NEXT

2 RECHECK FOR DTC

(a) Recheck for DTCs and check if the same trouble occurs again.
HINT:
If DTCs are detected frequently, replace the radio receiver.
OK:
Malfunction disappears.

NG → **REPLACE RADIO RECEIVER**

OK

END

DTC	45-45	Eject Error

DTC	45-51	Elevator Error

DTC	45-52	Clamp Error

DESCRIPTION

DTC No.	DTC Detection Condition	Trouble Area
45-45	Disc cannot be ejected.	Radio receiver
45-51	Mechanical error occurs during elevator operation.	
45-52	Error occurs in DVD changer clamp.	

INSPECTION PROCEDURE

HINT:
After the inspection is completed, clear the DTCs.

1 CHECK RADIO RECEIVER

(a) Check if a disc can be changed, inserted, or ejected normally.
OK:
Malfunction disappears.

NG → **REPLACE RADIO RECEIVER**

OK

END

DTC	45-46	Scratched/Reversed Disc

DESCRIPTION

DTC No.	DTC Detection Condition	Trouble Area
45-46	Scratches or dirt is found on DVD surface or DVD is inserted upside down.	• DVD • Radio receiver

INSPECTION PROCEDURE

HINT:
After the inspection is completed, clear the DTCs.

1 CHECK THAT CD IS INSERTED PROPERLY

(a) Check whether or not the disc is inserted upside down.
OK:
Disc is properly inserted.

NG → **INSERT DISC PROPERLY**

OK

2 CHECK DISC

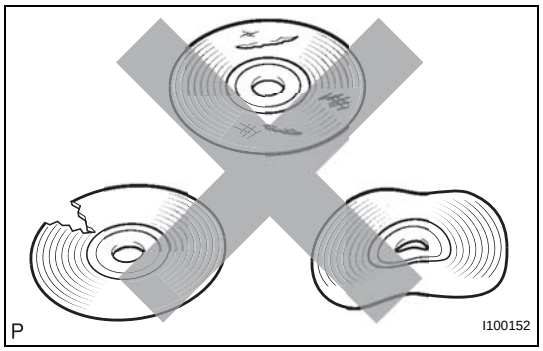

(a) Check that the disc is not deformed or cracked.
OK:
No deformation or cracks on the disc.

NG → **CHANGE DISC**

OK

3 DISC CLEANING

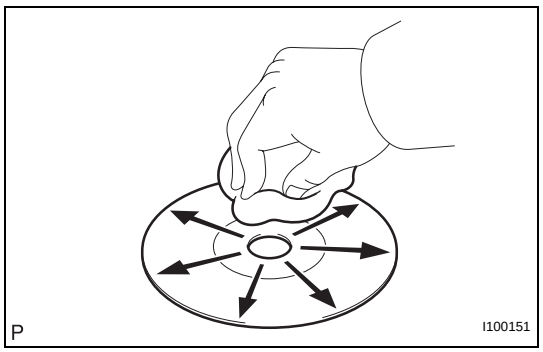

(a) Disc cleaning
(1) If dirt is on the disc surface, wipe it clean with a soft cloth from the inside to the outside in a radial direction.
NOTICE:
Do not use a conventional record cleaner or antistatic preservative.

NEXT

NS

4	CLEAR DTC

(a) Clear the DTC (See page NS-48).

NEXT

5	RECHECK FOR DTC

(a) Recheck for DTCs and check if the same trouble occurs again.
OK:
Malfunction disappears.

OK → **END**

NG

6	REPLACE DISC WITH ANOTHER AND RECHECK

(a) Replace the disc with another and recheck.
(1) Replace the disc with another normal one.
(2) Clear the DTCs (See page NS-48).
(3) Recheck for DTCs and check if the same trouble occurs again.
OK:
Malfunction disappears.

NG → **REPLACE RADIO RECEIVER**

OK

END

DTC	45-47	High Temperature

DESCRIPTION

DTC No.	DTC Detection Condition	Trouble Area
45-47	Sensor detects that DVD unit temperature is high. (Over 80°C (176°F))	Radio receiver

INSPECTION PROCEDURE

HINT:
After the inspection is completed, clear the DTCs.

1 CHECK RADIO RECEIVER

(a) Park the vehicle in a cool place.
(b) Check that the temperature of the radio receiver has become sufficiently low, and start the engine. Check that the malfunction disappears.
OK:
Malfunction disappears.

NG → **REPLACE RADIO RECEIVER**

OK

END

DTC	45-78	DSP Error

DESCRIPTION

DTC No.	DTC Detection Condition	Trouble Area
45-78	An error occurs during the decode process (MP3 / WMA).	Radio receiver

INSPECTION PROCEDURE

HINT:
After the inspection is completed, clear the DTCs.

NOTICE:

- **This code may be output even if there is no malfunction.**
- **If this code is output frequently, replace the radio receiver.**

1 CLEAR DTC

(a) Clear the DTCs (See page NS-48).

NEXT

2 RECHECK FOR DTC

(a) Recheck for DTCs and check if the same trouble code occurs again.
OK:
Malfunction disappears.

NG → **REPLACE RADIO RECEIVER**

OK

END

DTC	45-7D	Disc cannot be Played

DTC	45-7E	No Playable Files

DTC	45-7F	Copyright Protection Error

DESCRIPTION

DTC No.	DTC Detection Condition	Trouble Area
45-7D	• An incompatible MP3 - WMA file is used. • Although the file has an extension of ".mp3" or ".wma", the header information cannot be read.	• DVD • Radio receiver
45-7E	• A disc with no music data is used. • Playable files are not on the disc (MP3 - WMA).	
45-7F	A copy-protected file, which cannot be played, is used.	

INSPECTION PROCEDURE

HINT:
After the inspection is completed, clear the DTCs.

1	CHANGE DISC

NS

(a) Insert a disc with a playable file and check if the disc can be played correctly.
HINT:
For details on playable files and discs, refer to the Owner's Manual.
OK:
The disc can be played correctly.

NG → **REPLACE RADIO RECEIVER**

OK

DISC IS FAULTY

DTC	57-47	Bluetooth Module Initialization Failed

DESCRIPTION

DTC No.	DTC Detection Condition	Trouble Area
57-47	• Bluetooth module is not installed. • Problem with Bluetooth module • Problem in communication line to Bluetooth module	Multi-display

INSPECTION PROCEDURE

HINT:
After the inspection is completed, clear the DTCs.

1	REPLACE MULTI-DISPLAY

NEXT

END

DTC	58-10	Gyro Error

DTC	80-10	Gyro Error

DESCRIPTION

DTC No.	DTC Detection Condition	Trouble Area
58-10	Ground short, power supply short, or open circuit in the gyro signal	• Gyro sensor • Navigation ECU
80-10	Ground short, power supply short, or open circuit in the gyro signal	

INSPECTION PROCEDURE

HINT:
After the inspection is completed, clear the DTCs.

1 CHECK VEHICLE SENSOR (NAVIGATION CHECK MODE)

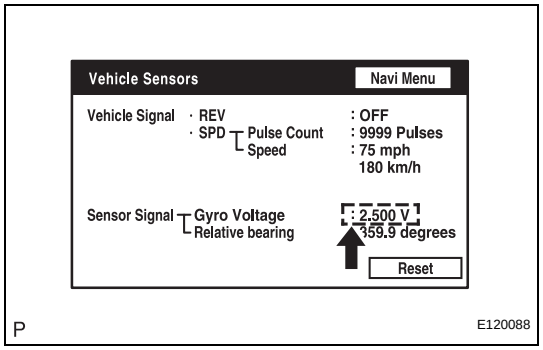

(a) Enter the "Navigation Check" mode (Vehicle Sensors) (See page NS-27).
(b) Check the gyro voltage.
Standard voltage:
0.1 to 4.5 V

NG → **REPLACE NAVIGATION ECU**

OK

2 CLEAR DTC

(a) Clear the DTCs (See page NS-48).

NEXT

3 RECHECK FOR DTC

(a) Recheck for DTCs and check if the same trouble occurs again.
HINT:
If DTCs are detected frequently, replace the navigation ECU.
OK:
Malfunction disappears.

NG → **REPLACE NAVIGATION ECU**

NS

OK

END

DTC	58-11	GPS Receiver Error

DTC	80-11	GPS Receiver Error

DESCRIPTION

DTC No.	DTC Detection Condition	Trouble Area
58-11	• RTC, ROM, and RAM of the GPS receiver and TCXO error • GPS receiver is failed.	Navigation ECU
80-11	• RTC, ROM, and RAM of the GPS receiver and TCXO error • GPS receiver is failed.	

INSPECTION PROCEDURE

HINT:
After the inspection is completed, clear the DTCs.

1	REPLACE NAVIGATION ECU

NEXT

NS

END

DTC	58-40	GPS Antenna Error

DTC	58-41	GPS Antenna Power Source Error

DTC	80-40	GPS Antenna Error

DTC	80-41	GPS Antenna Power Source Error

DESCRIPTION

DTC No.	DTC Detection Condition	Trouble Area
58-40	GPS antenna error	• Wire harness • GPS antenna • Navigation ECU
58-41	Error of the power source to the GPS antenna	
80-40	GPS antenna error	
80-41	Error of the power source to the GPS antenna	

INSPECTION PROCEDURE

HINT:
After the inspection is completed, clear the DTCs.

NS

1 CHECK HARNESS AND CONNECTOR (GPS ANTENNA - NAVIGATION ECU)

(a) Check that the GPS antenna cord is securely connected to the navigation ECU connector.
OK:
The cord is securely connected.

NG → **REPAIR OR REPLACE HARNESS OR CONNECTOR**

OK

2 REPLACE GPS ANTENNA

(a) Replace the GPS antenna with a normal one and check if the same problem occurs again.
(1) Clear the DTCs (See page NS-48).
(2) Recheck for DTCs and check if the same trouble occurs again.
OK:
Same problem does not occur.

NG → **REPLACE NAVIGATION ECU**

OK

END

DTC	58-42	Map Disc Read Error

DTC	80-42	Map Disc Read Error

DESCRIPTION

DTC No.	DTC Detection Condition	Trouble Area
58-42	• Player error • Scratches or dirt on the disc • Access to an invalid address due to software error	• Map disc • Navigation ECU
80-42	• Player error • Scratches or dirt on the disc • Access to an invalid address due to software error	

INSPECTION PROCEDURE

HINT:
After the inspection is completed, clear the DTCs.

1	CHECK MAP DISC

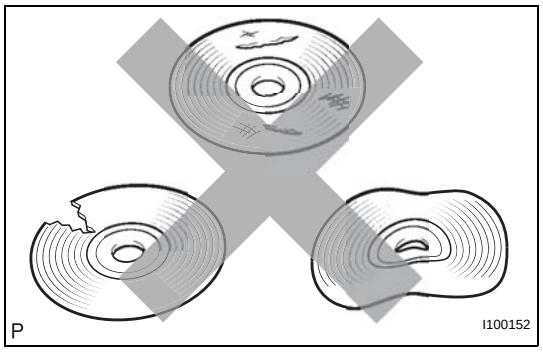

(a) Check that the map disc is not deformed or cracked.
OK:
No deformations or cracks on the map disc.

NG → **Go to step 4**

OK

2	DISC CLEANING

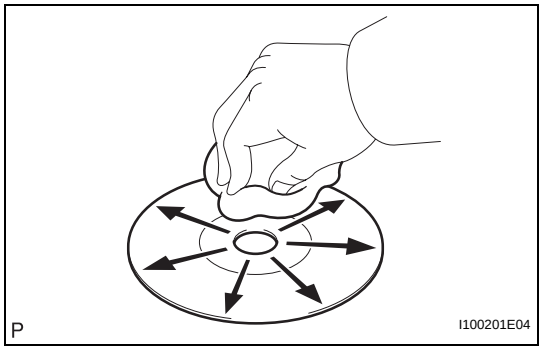

(a) Disc cleaning
(1) If dirt is on the disc surface, wipe it clean with a soft cloth from the inside to the outside in a radial direction.
NOTICE:
Do not use a conventional record cleaner or anti-static preservative.

NEXT

3	DTC CLEAR AND RECHECK

(a) Clear the DTCs (See page NS-48).

NS

(b) Recheck for DTCs and check if the same trouble occurs again.
OK:
Same problem does not occur.

OK → **END**

NG

4	REPLACE MAP DISC

(a) Replace the map disc.
(b) Clear the DTCs and recheck for DTCs.
(c) Check if the same trouble occurs again.
OK:
Same problem does not occur.

OK → **END**

NG

REPLACE NAVIGATION ECU

DTC	58-43	SPD Signal Error

DTC	80-43	SPD Signal Error

DESCRIPTION

DTC No.	DTC Detection Condition	Trouble Area
58-43	A difference between the GPS speed and SPD pulse is detected.	• Speed signal circuit • Navigation ECU
80-43	A difference between the GPS speed and SPD pulse is detected.	

INSPECTION PROCEDURE

HINT:
After the inspection is completed, clear the DTCs.

1	CHECK VEHICLE SENSOR (NAVIGATION CHECK MODE)

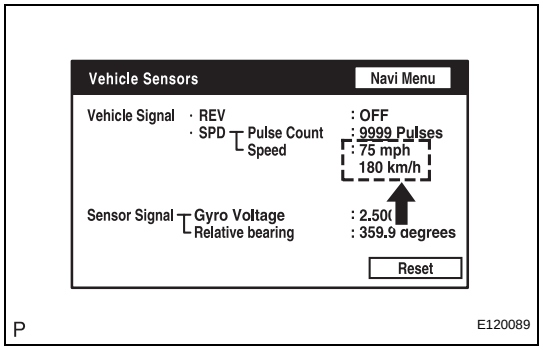

(a) Enter the "Navigation Check" mode (Vehicle Sensors) (See page NS-27).

(b) While driving the vehicle, compare the "SPD" indicator to the reading on the speedometer. Check if these readings are almost equal.

OK:

The readings are almost equal.

OK → **REPLACE NAVIGATION ECU**

NG

2	PROCEED TO NEXT CIRCUIT INSPECTION SHOWN IN PROBLEM SYMPTOMS TABLE

Refer to "Speed signal does not change in the navigation check mode" in the problem symptoms table (See page NS-41).

NEXT

END

NS

DTC	58-44	Player Error

DTC	80-44	Player Error

DESCRIPTION

DTC No.	DTC Detection Condition	Trouble Area
58-44	Map player error is detected.	Navigation ECU
80-44	Map player error is detected.	

INSPECTION PROCEDURE

HINT:
After the inspection is completed, clear the DTCs.

1 CHECK NAVIGATION ECU

(a) Check if a disc can be inserted or ejected normally.
OK:
A disc can be inserted or ejected normally.

NG → **REPLACE NAVIGATION ECU**

NS

OK

2 DTC CLEAR AND RECHECK

(a) Clear the DTCs (See page NS-48).
(b) Recheck for DTCs and check if the same trouble occurs again.
OK:
Same problem does not occur.

OK → **END**

NG

REPLACE NAVIGATION ECU

DTC	58-45	High Temperature

DTC	80-45	High Temperature

DESCRIPTION

DTC No.	DTC Detection Condition	Trouble Area
58-45	High map disc player temperature is detected. (Over 80°C (176°F))	Navigation ECU
80-45	High map disc player temperature is detected. (Over 80°C (176°F))	

INSPECTION PROCEDURE

HINT:
After the inspection is completed, clear the DTCs.

1	CHECK NAVIGATION ECU

(a) Park the vehicle in a cool place.
(b) Check that the temperature of the navigation ECU has become sufficiently low, then start the engine to verify the malfunction symptom.
OK:
Same problem does not occur.

NG → **REPLACE NAVIGATION ECU**

OK

END

NS

DTC	5C-40	Camera Picture Error

DESCRIPTION

DTC No.	DTC Detection Condition	Trouble Area
5C-40	Synchronous signal from the camera cannot be transmitted.	• Wire harness • Television camera assembly • Multi-display

WIRING DIAGRAM

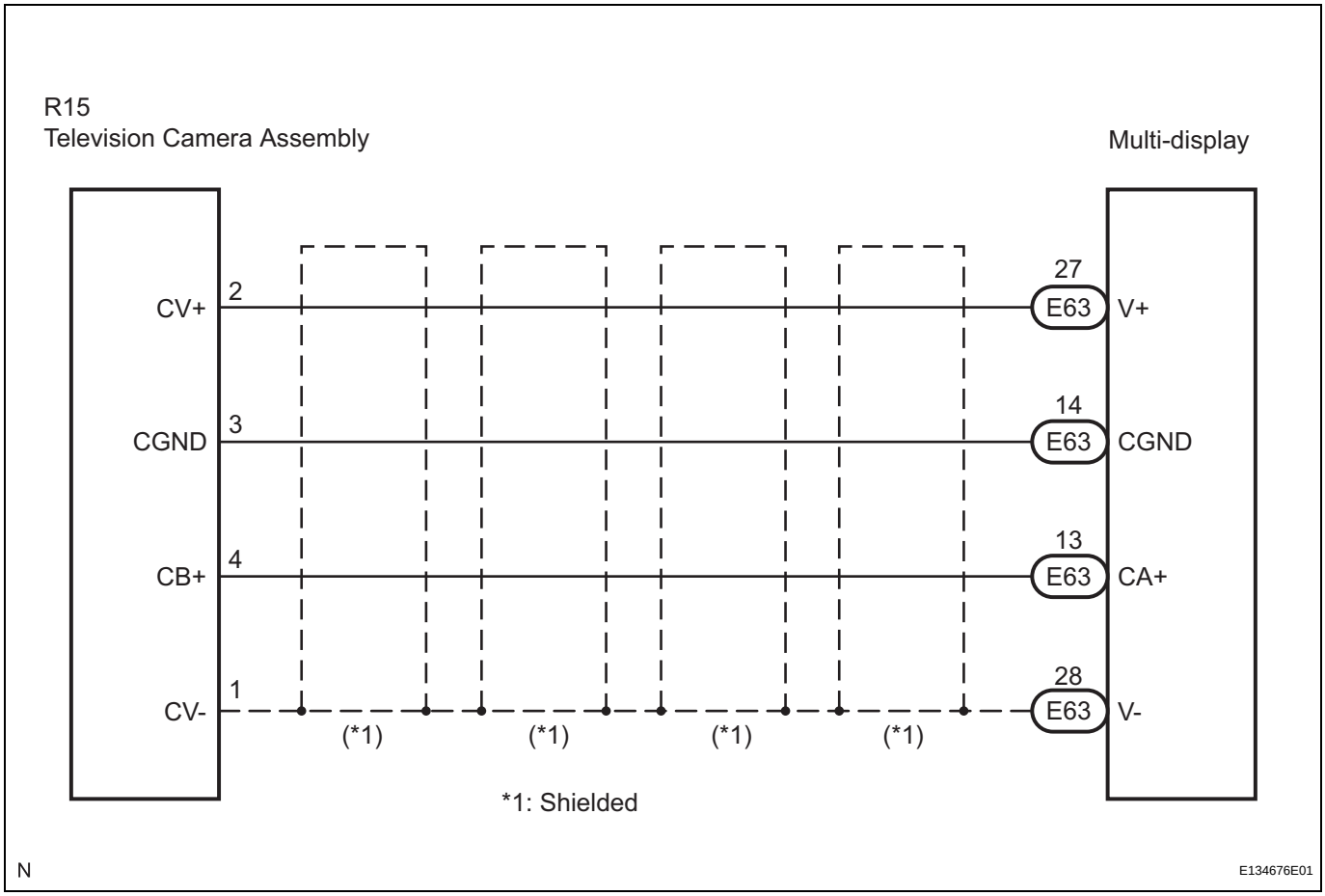

INSPECTION PROCEDURE

HINT:
After the inspection is completed, clear the DTCs.

1	CHECK HARNESS AND CONNECTOR (MULTI-DISPLAY - TELEVISION CAMERA ASSEMBLY)

(a) Disconnect the E63 connector from the multi-display.
(b) Disconnect the R15 connector from the television camera assembly.

NS

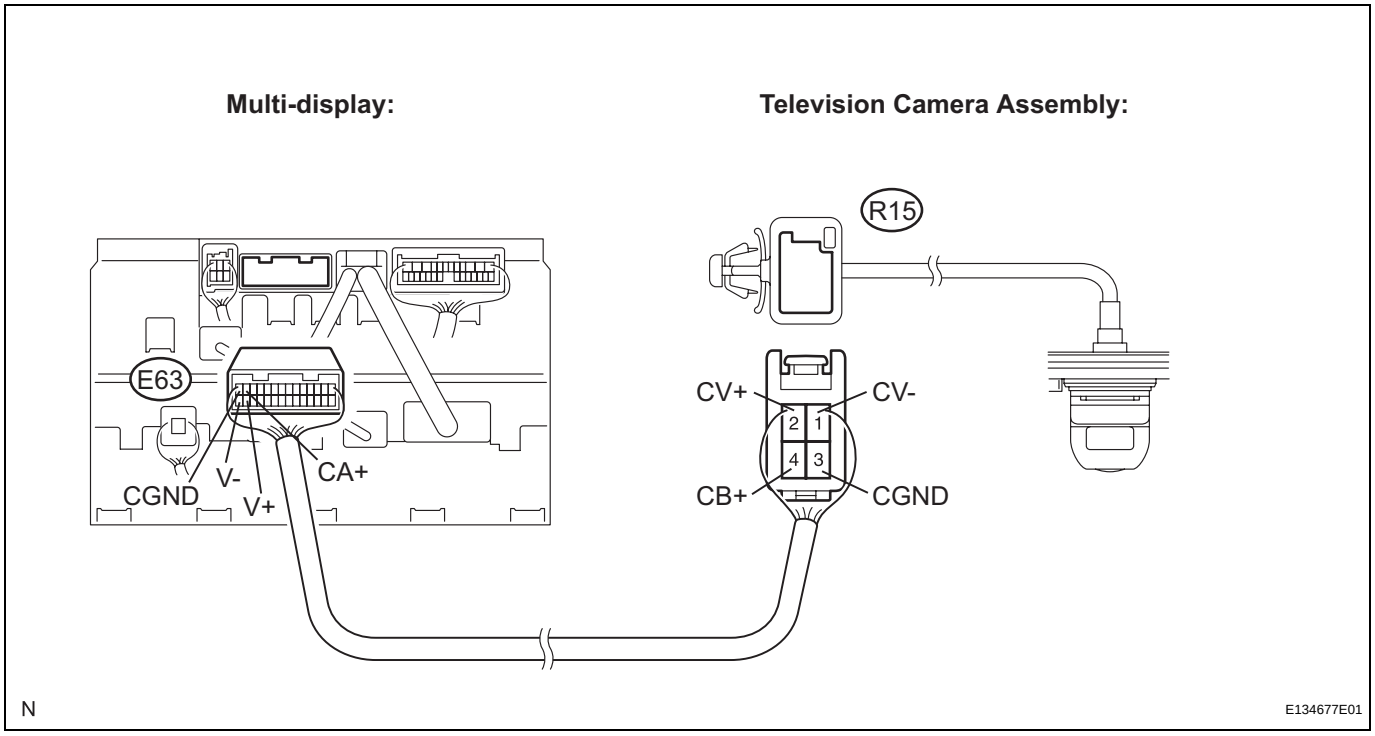

(c) Measure the resistance according to the value(s) in the table below.

NS

Standard resistance

Tester Connection (Terminal No.)	Condition	Specified Condition
CB+ (R15-4) - CA+ (E63-13)	Always	Below 1 Ω
CGND (R15-3) - CGND (E63-14)	Always	Below 1 Ω
CV+ (R15-2) - V+ (E63-27)	Always	Below 1 Ω
CV- (R15-1) - V- (E63-28)	Always	Below 1 Ω
CB+ (R15-4) - Body ground	Always	10 kΩ or higher
CGND (R15-3) - Body ground	Always	10 kΩ or higher
CV+ (R15-2) - Body ground	Always	10 kΩ or higher
CV- (R15-1) - Body ground	Always	10 kΩ or higher

NG → **REPAIR OR REPLACE HARNESS OR CONNECTOR**

OK

2	INSPECT MULTI-DISPLAY

(a) Reconnect the multi-display E63 connector.

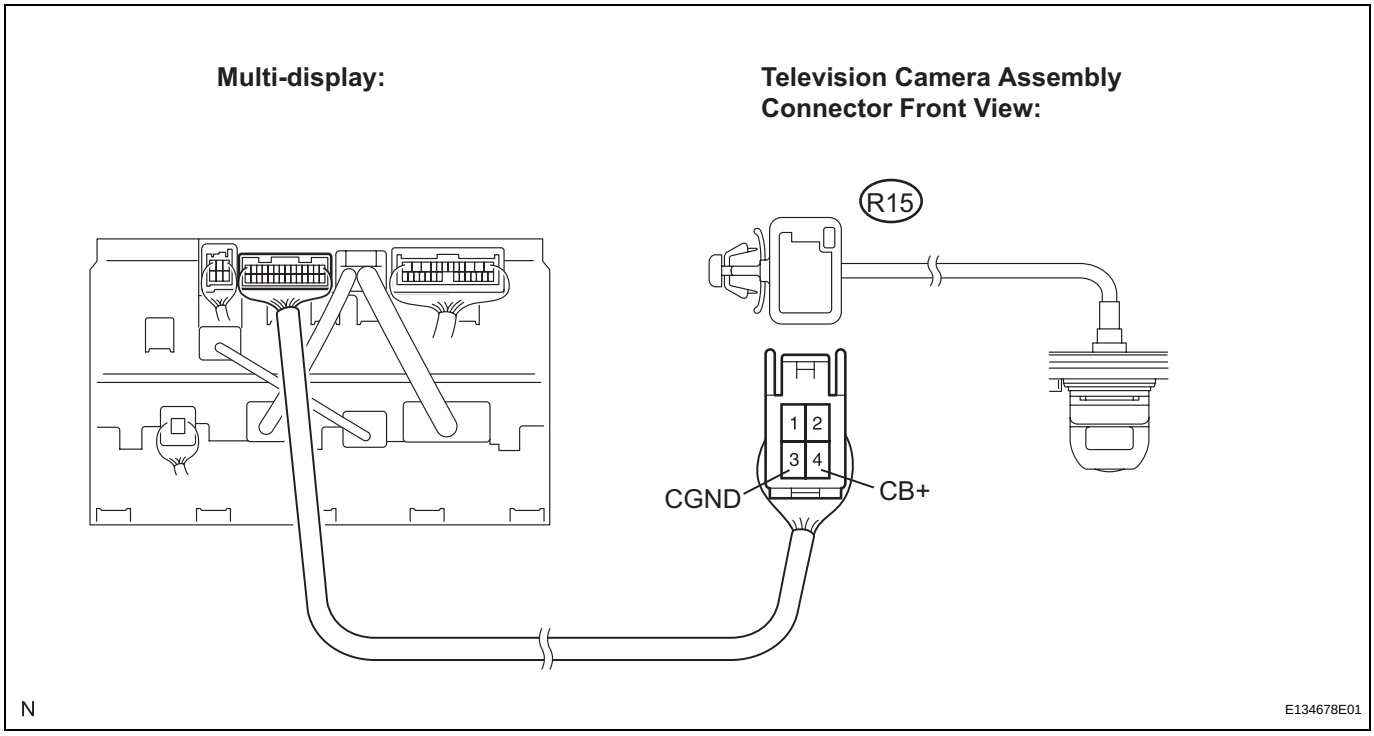

(b) Measure the voltage according to the value(s) in the table below.

NS

Standard voltage

Tester Connection (Terminal No.)	Condition	Specified Condition
CB+ (R15-4) - CGND (R15-3)	Engine switch on (IG), shift lever R position	Approx. 6 V

NG → **REPLACE MULTI-DISPLAY**

OK

REPLACE TELEVISION CAMERA ASSEMBLY

DTC	60-10	AM Tuner PLL does not Lock

DTC	60-11	FM Tuner PLL does not Lock

DESCRIPTION

DTC No.	DTC Detection Condition	Trouble Area
60-10	AM tuner PLL (phase locked loop) synchronization is impossible.	Radio receiver
60-11	FM tuner PLL (phase locked loop) synchronization is impossible.	

INSPECTION PROCEDURE

HINT:
After the inspection is completed, clear the DTCs.

1	REPLACE RADIO RECEIVER

NEXT

END

DTC	60-42	Tuner Power Source Error

DTC	60-43	AM Tuner Error

DTC	60-44	FM Tuner Error

DTC	60-50	Malfunction in Internal IC

DESCRIPTION

DTC No.	DTC Detection Condition	Trouble Area
60-42	The power source of the tuner is abnormal.	Radio receiver
60-43	The AM tuner is abnormal.	
60-44	The FM tuner is abnormal.	
60-50	A problem occurs in the IC inside the tuner unit and radio reception is not normal.	

INSPECTION PROCEDURE

HINT:
After the inspection is completed, clear the DTCs.

NS

1 CLEAR DTC

(a) Clear the DTCs (See page NS-48).

NEXT

2 RECHECK FOR DTC

(a) Recheck for DTCs and check if the same trouble occurs again.
HINT:
If DTCs are detected frequently, replace the radio receiver.
OK:
Malfunction disappears.

NG → **REPLACE RADIO RECEIVER**

OK

END

DTC	61-40	Mechanical Error of Media

DTC	61-41	Eject Error

DTC	61-42	Tape Tangling

DESCRIPTION

DTC No.	DTC Detection Condition	Trouble Area
61-40	A malfunction due to mechanical problem has occurred, or cassette tape is cut or entangled.	• Cassette tape • Radio receiver
61-41	A malfunction due to mechanical problem	
61-42	Cassette tape is tangled.	

INSPECTION PROCEDURE

HINT:
After the inspection is completed, clear the DTCs.

1 CHECK OPERATION

(a) Press the cassette tape EJECT switch of the radio receiver for 2 seconds or more and check that the cassette tape is ejected.
OK:
Cassette tape is ejected.

NG → **REPLACE RADIO RECEIVER**

OK

2 CHECK CASSETTE TAPE

(a) Check that the ejected cassette tape does not have a peeling label, cassette body deformation or other problems.
OK:
No problem with cassette tape.

NG → **CASSETTE TAPE IS FAULTY**

OK

3 REPLACE CASSETTE TAPE

(a) Replace the cassette tape with a normal one and check if the same problem occurs again.
(1) Clear the DTCs (See page NS-48).
(2) Recheck for DTCs and check if the same trouble occurs again.
OK:
Malfunction disappears.

NS

NG → **REPLACE RADIO RECEIVER**

OK

CASSETTE TAPE IS FAULTY

DTC	63-10	CD Changer Mechanical Error

DTC	63-11	CD Insertion and Ejection Error

DTC	63-12	CD Reading Abnormal

DESCRIPTION

DTC No.	DTC Detection Condition	Trouble Area
63-10	A mechanical error in the CD changer is detected while the CD is not being inserted or ejected.	Radio receiver
63-11	CD insertion or ejection is failed.	
63-12	CD read problem occurs.	

INSPECTION PROCEDURE

HINT:
After the inspection is completed, clear the DTCs.

1	REPLACE RADIO RECEIVER

NEXT

END

DTC	63-41	Wrong Disc

DTC	63-42	Disc cannot be Read

DESCRIPTION

DTC No.	DTC Detection Condition	Trouble Area
63-41	An unsuitable disc is inserted.	• CD • Radio receiver
63-42	The disc cannot be read.	

INSPECTION PROCEDURE

HINT:
After the inspection is completed, clear the DTCs.

1 CHECK DISC

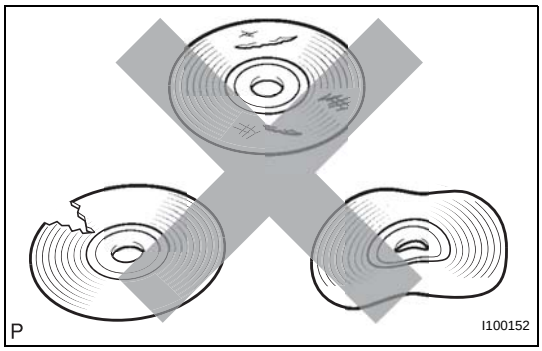

(a) Check that the disc is not deformed or cracked.
OK:
No deformations or cracks on the disc.

NG → **CHANGE DISC**

OK

2 DISC CLEANING

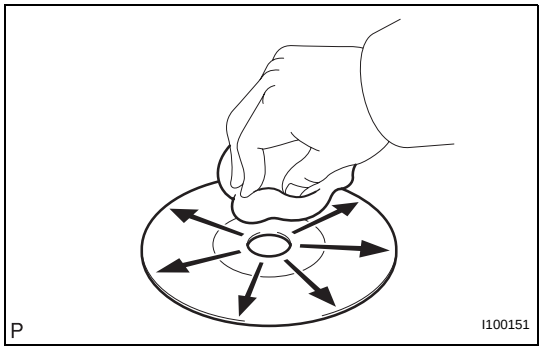

(a) Disc cleaning
(1) If dirt is on the disc surface, wipe it clean with a soft cloth from the inside to the outside in a radial direction.
NOTICE:
Do not use a conventional record cleaner or anti-static preservative.

NEXT

3 CLEAR DTC

(a) Clear the DTCs (See page NS-48).

NEXT

NS

4	RECHECK FOR DTC

(a) Recheck for DTCs and check if the same trouble occurs again.
OK:
Malfunction disappears.

OK → **END**

NG

5	REPLACE DISC WITH ANOTHER AND RECHECK

(a) Replace the disc with another and recheck.
(1) Replace the disc with another normal one.
(2) Clear the DTCs (See page NS-48).
(3) Recheck for DTCs and check if the same trouble occurs again.
OK:
Malfunction disappears.

NG → **REPLACE RADIO RECEIVER**

OK

END

DTC	63-43	CD-ROM Abnormal

DESCRIPTION

DTC No.	DTC Detection Condition	Trouble Area
63-43	CD-ROM operation is abnormal.	• CD • Radio receiver

INSPECTION PROCEDURE

HINT:
After the inspection is completed, clear the DTCs.

1 CHECK IF A PROPER CD IS INSERTED

(a) Make sure that the CD is an audio CD or a CD with an MP3 or WMA file, and that it is not deformed, flawed, stained, burred, or otherwise defective.
OK:
Normal CD
HINT:
- Translucent or uniquely-shaped CDs cannot be played.
- CD with adhesive paper labels should not be played.
- Commercial audio CDs can be played.
- CD-DA files on CD-ROMs, CD-Rs, and CD-RWs can be played.
- MP3 and WMA files on CD-ROMs, CD-Rs, and CD-RWs can be played.
- For details on playable CDs, refer to the Owner's Manual.

NG → **CD IS FAULTY**

OK

2 REPLACE CD WITH ANOTHER AND RECHECK

(a) Replace the CD with another and recheck.
(1) Replace the CD with another normal one.
(2) Clear the DTCs (See page NS-48).
(3) Recheck for DTCs and check if the same trouble occurs again.
OK:
Malfunction disappears.

NG → **REPLACE RADIO RECEIVER**

OK

END

DTC	63-44	CD Abnormal

DTC	63-48	Excess Current

DTC	63-50	Tray Insertion / Ejection Error

DESCRIPTION

DTC No.	DTC Detection Condition	Trouble Area
63-44	Operation error in the CD mechanism	Radio receiver
63-48	Excess current is present in the CD changer.	
63-50	Malfunction in insertion/ejection system	

INSPECTION PROCEDURE

HINT:
After the inspection is completed, clear the DTCs.

1 CLEAR DTC

(a) Clear the DTCs (See page NS-48).

NS

NEXT

2 RECHECK FOR DTC

(a) Recheck for DTCs and check if the same trouble occurs again.
HINT:
If DTCs are detected frequently, replace the radio receiver.
OK:
Malfunction disappears.

NG → **REPLACE RADIO RECEIVER**

OK

END

DTC	63-45	Eject Error

DTC	63-51	Elevator Error

DTC	63-52	Clamp Error

DESCRIPTION

DTC No.	DTC Detection Condition	Trouble Area
63-45	Magazine cannot be ejected.	Radio receiver
63-51	Mechanical error occurs during elevator operation.	
63-52	Error occurs in CD changer clamp.	

INSPECTION PROCEDURE

HINT:
After the inspection is completed, clear the DTCs.

1	CHECK RADIO RECEIVER

(a) Check if a disc can be changed, inserted, or ejected normally.
OK:
Malfunction disappears.

NG → **REPLACE RADIO RECEIVER**

OK

END

DTC	63-46	Scratched / Reversed Disc

DESCRIPTION

DTC No.	DTC Detection Condition	Trouble Area
63-46	Scratches or dirt is found on CD surface or CD is inserted upside down.	• CD • Radio receiver

INSPECTION PROCEDURE

HINT:
After the inspection is completed, clear the DTCs.

1 CHECK THAT CD IS INSERTED PROPERLY

(a) Check that the CD is not inserted upside down.
OK:
CD is properly inserted.

NG → **INSERT CD PROPERLY**

OK

2 CHECK DISC

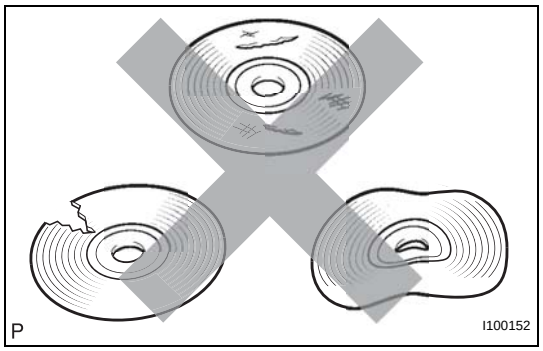

(a) Check that the disc is not deformed or cracked.
OK:
No deformations or cracks on the disc.

NG → **CHANGE DISC**

OK

3 DISC CLEANING

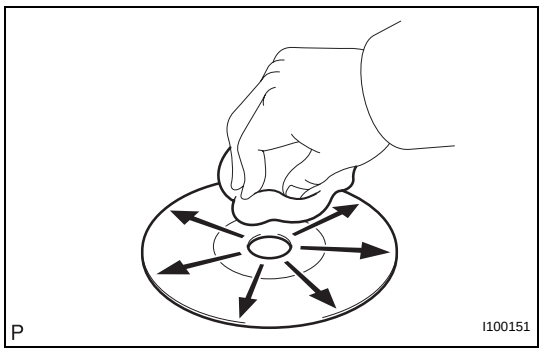

(a) Disc cleaning
(1) If dirt is on the disc surface, wipe it clean with a soft cloth from the inside to the outside in a radial direction.
NOTICE:
Do not use a conventional record cleaner or anti-static preservative.

NEXT

NS

4	CLEAR DTC

(a) Clear the DTCs (See page NS-48).

NEXT

5	RECHECK FOR DTC

(a) Recheck for DTCs and check if the same trouble occurs again.
OK:
Malfunction disappears.

OK → **END**

NG

6	REPLACE DISC WITH ANOTHER AND RECHECK

(a) Replace the disc with another and recheck.
(1) Replace the disc with another normal one.
(2) Clear the DTCs (See page NS-48).
(3) Recheck for DTCs and check if the same trouble occurs again.
OK:
Malfunction disappears.

NG → **REPLACE RADIO RECEIVER**

OK

END

DTC	63-47	High Temperature

DESCRIPTION

DTC No.	DTC Detection Condition	Trouble Area
63-47	Sensor detects that CD unit temperature is high. (Over 80°C (176°F))	Radio receiver

INSPECTION PROCEDURE

HINT:
After the inspection is completed, clear the DTCs.

1 CHECK RADIO RECEIVER

(a) Park the vehicle in a cool place.
(b) Check that the temperature of the radio receiver has become sufficiently low, then start the engine. Check that the malfunction disappears.
OK:
Malfunction disappears.

NG → **REPLACE RADIO RECEIVER**

OK

END

DTC	63-78	DSP Error

DESCRIPTION

DTC No.	DTC Detection Condition	Trouble Area
63-78	An error occurs during the decode process (MP3 / WMA).	Radio receiver

INSPECTION PROCEDURE

HINT:
After the inspection is completed, clear the DTCs.

NOTICE:

- **This code may be output even if there is no malfunction.**
- **If this code is output frequently, replace the radio receiver.**

1 CLEAR DTC

(a) Clear the DTCs (See page NS-48).

NEXT

2 RECHECK FOR DTC

(a) Recheck for DTCs and check if the same trouble occurs again.
OK:
Malfunction disappears.

NG → **REPLACE RADIO RECEIVER**

OK

END

DTC	63-7D	Disc cannot be Played

DTC	63-7E	No Playable Files

DTC	63-7F	Copyright Protection Error

DESCRIPTION

DTC No.	DTC Detection Condition	Trouble Area
63-7D	• An incompatible MP3 - WMA file is used. • Although the file has an extension of ".mp3" or ".wma", the header information cannot be read.	• CD • Radio receiver
63-7E	• A disc with no music data is used. • Playable files are not on the disc (MP3 - WMA).	
63-7F	A copy-protected file, which cannot be played, is used.	

INSPECTION PROCEDURE

HINT:
After the inspection is completed, clear the DTCs.

1	CHANGE DISC

NS

(a) Insert a disc with a playable file and check if the disc can be played correctly.
HINT:
For details on playable files and discs, refer to the Owner's Manual.
OK:
The disc can be played correctly.

NG → **REPLACE RADIO RECEIVER**

OK

DISC IS FAULTY

DTC	74-40	Short in Speaker Circuit

DESCRIPTION

DTC No.	DTC Detection Condition	Trouble Area
74-40	A short is detected in the speaker output circuit.	• Wire harness • Speaker • Stereo component amplifier

This circuit has a fail-safe function.
- When a short in the speaker circuit is detected, all sound outputs are stopped.

WIRING DIAGRAM

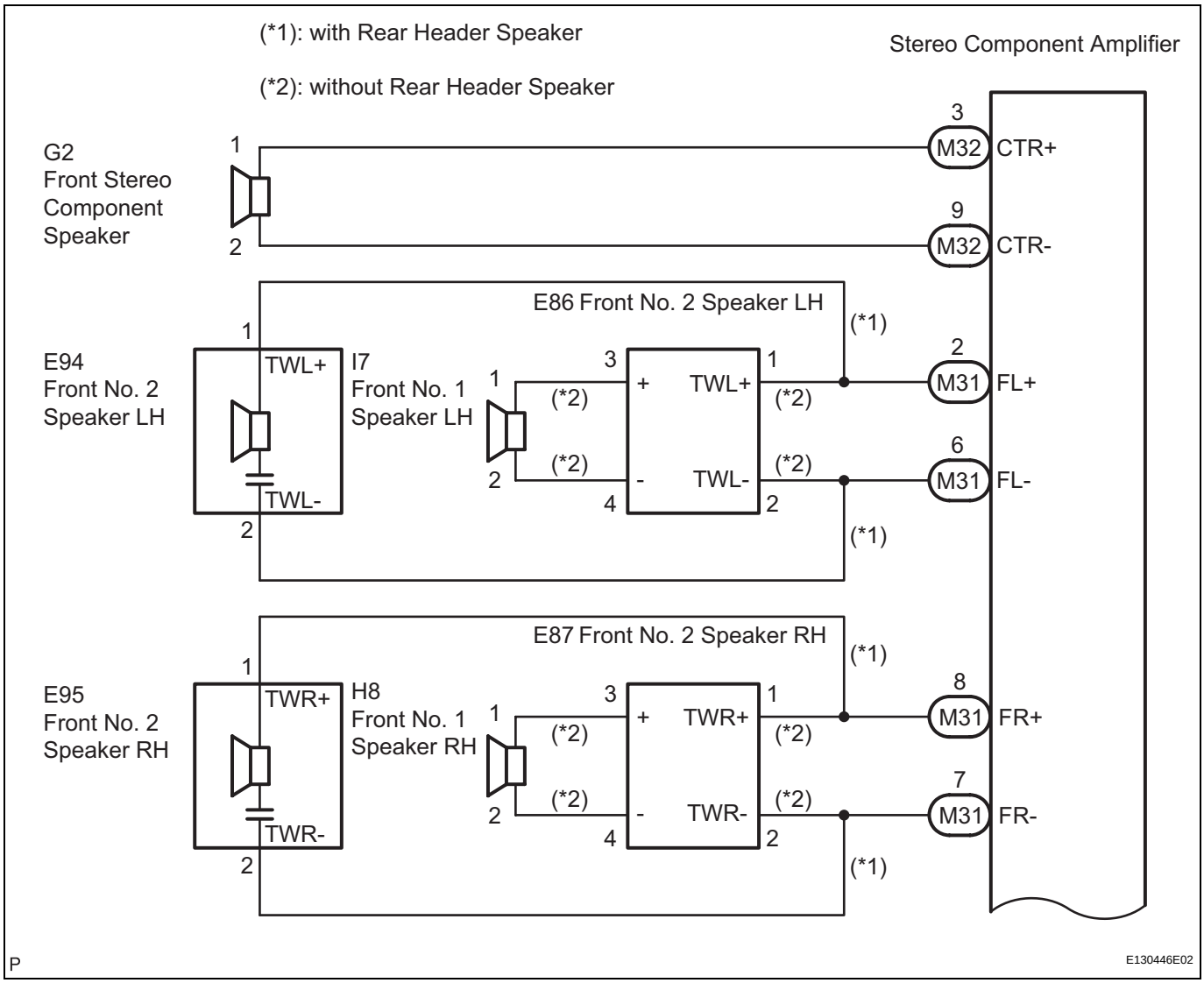

NS

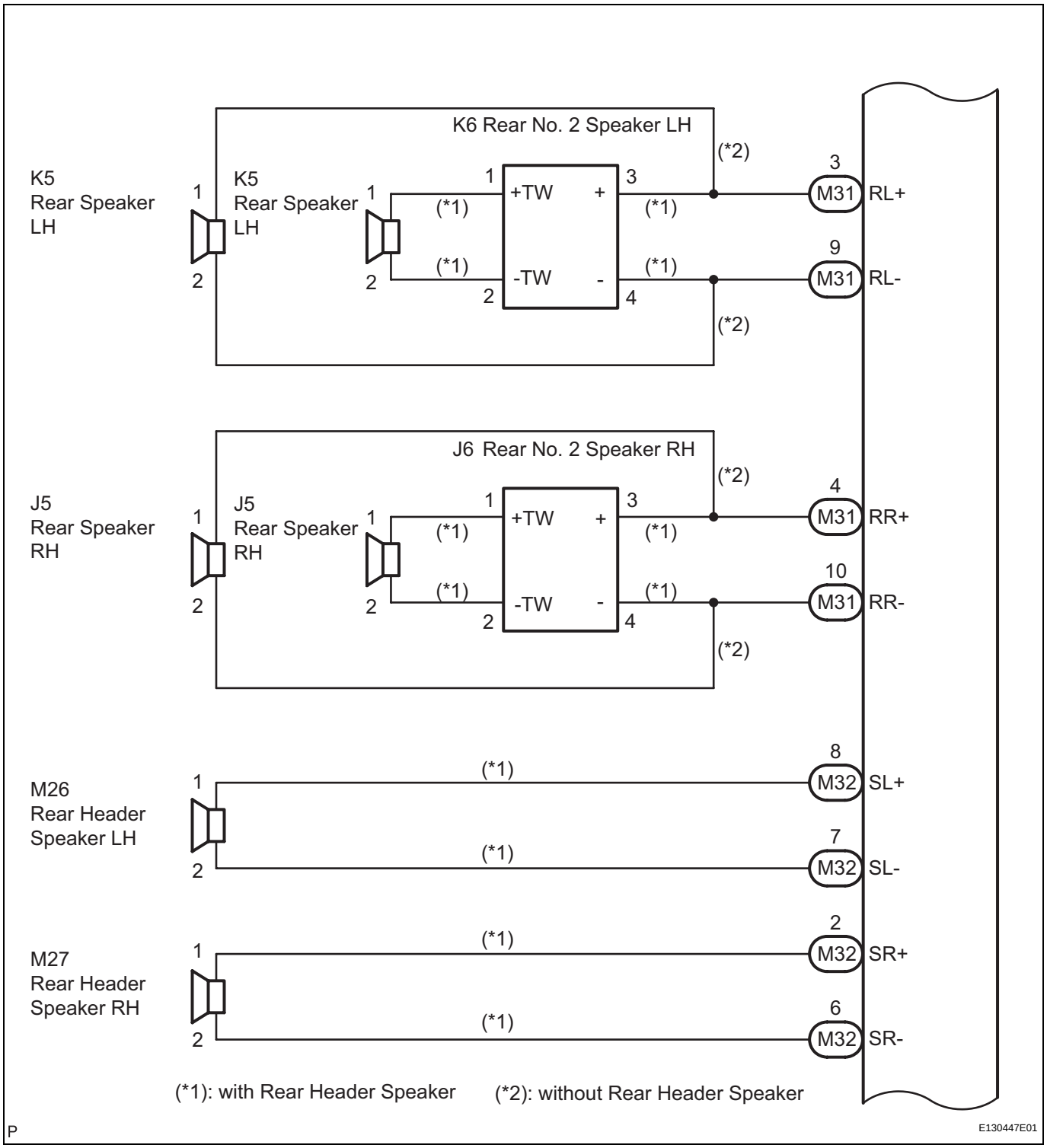
K6 Rear No. 2 Speaker LH
K5
Rear Speaker
LH
K5
Rear Speaker
LH
+TW
-TW
(*1)
(*2)
M31
RL+
RL-
J6 Rear No. 2 Speaker RH
J5
Rear Speaker
RH
J5
Rear Speaker
RH
RR+
RR-
M26
Rear Header
Speaker LH
M27
Rear Header
Speaker RH
M32
SL+
SL-
SR+
SR-
(*1): with Rear Header Speaker
(*2): without Rear Header Speaker
P
E130447E01

NS

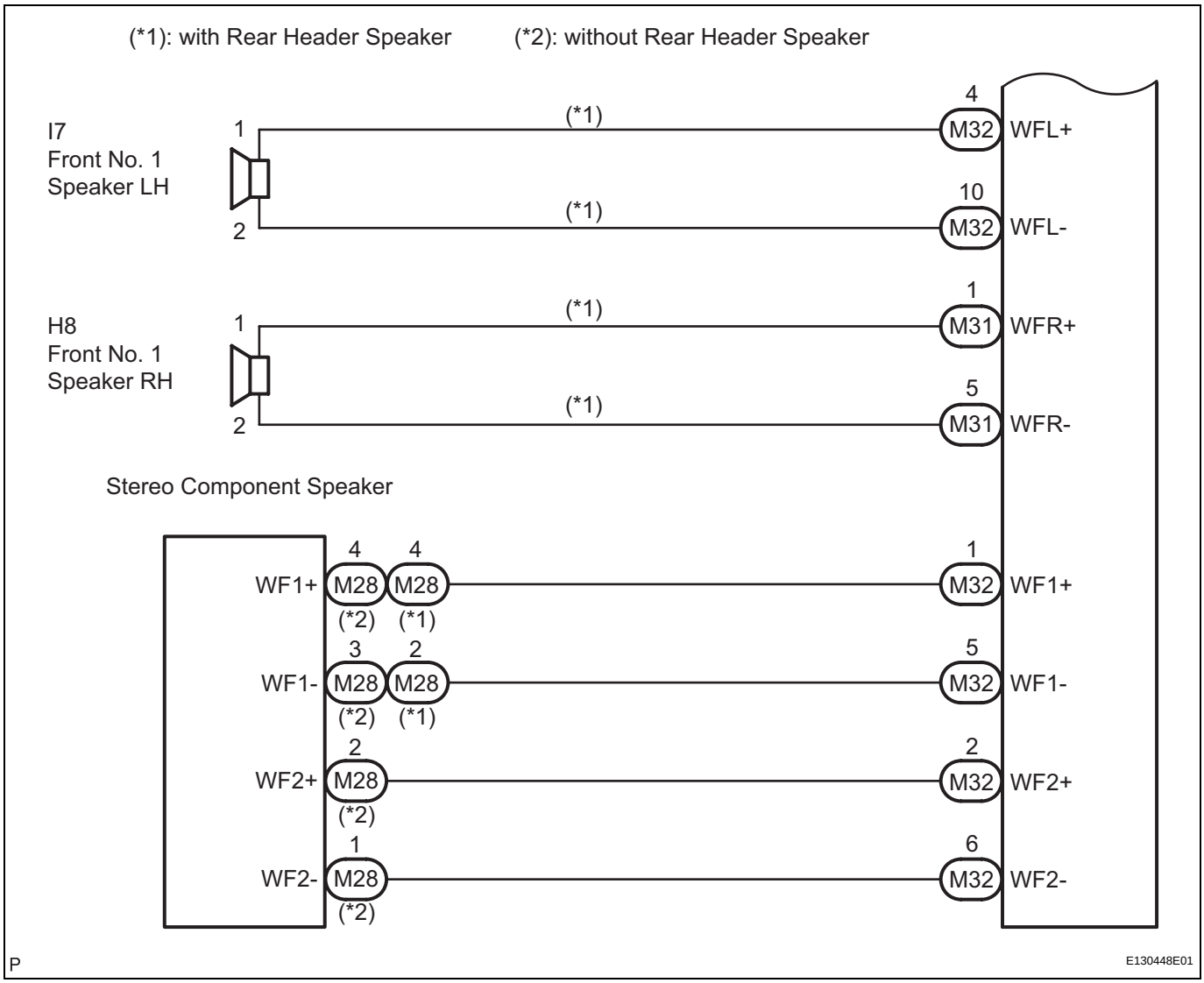

INSPECTION PROCEDURE

HINT:

After the inspection is completed, clear the DTCs.

1	INSPECT STEREO COMPONENT AMPLIFIER

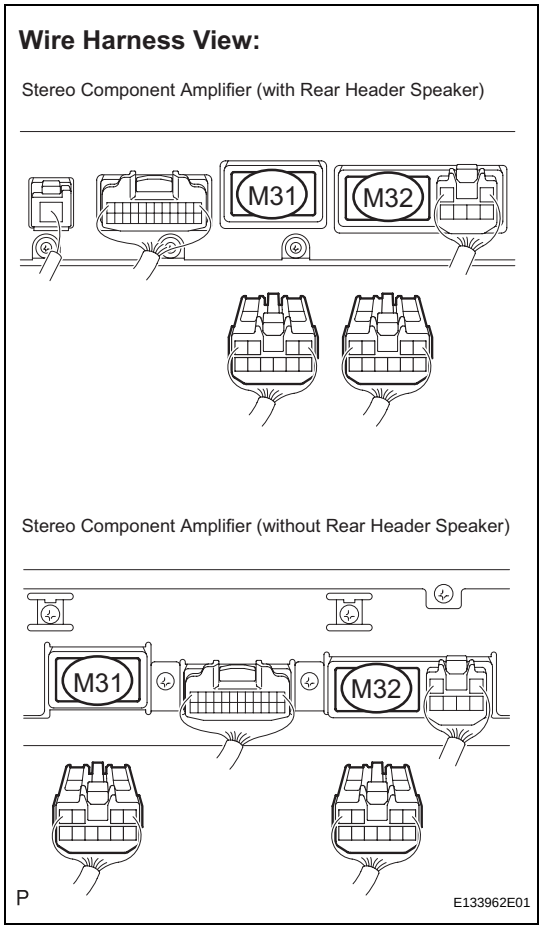

(a) Disconnect the stereo component amplifier connectors M31 and M32.
(b) Clear the DTCs and recheck for DTCs.
(c) Check if DTC 74-40 is output.
OK:
DTC 74-40 is not output.

NG → **REPLACE STEREO COMPONENT AMPLIFIER**

OK

2	CHECK OPERATION

(a) Reconnect the stereo component amplifier connector M31.
(b) Check if DTC 74-40 is output.
OK:
DTC 74-40 is not output.

NG → **Go to step 10**

OK

NS

3 CHECK HARNESS AND CONNECTOR

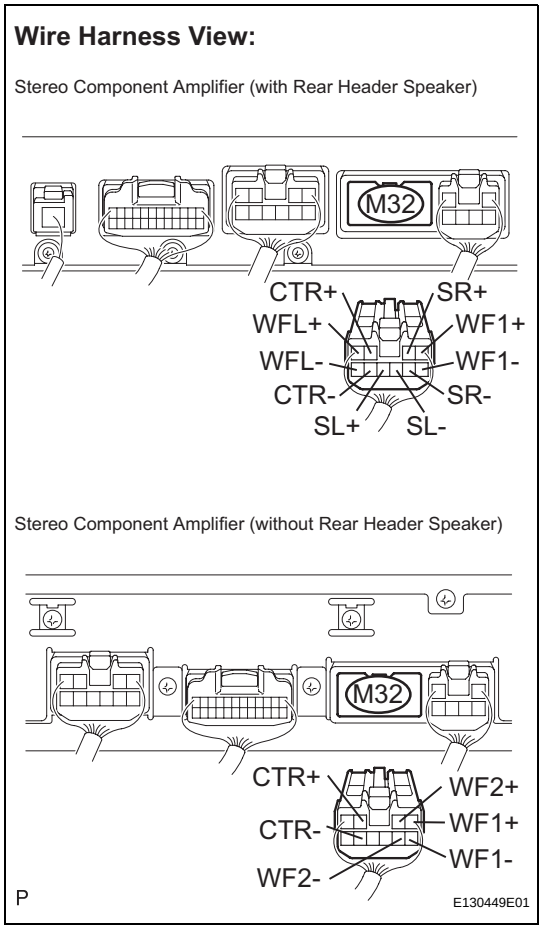

(a) Disconnect the connectors shown in the illustration from the stereo component amplifier and speakers.

(b) Measure the resistance according to the value(s) in the table below.

Standard resistance

Tester Connection	Condition	Specified Condition
CTR+ - Body ground	Always	10 kΩ or higher
CTR- - Body ground	Always	10 kΩ or higher
SL+ - Body ground (*1)	Always	10 kΩ or higher
SL- - Body ground (*1)	Always	10 kΩ or higher
SR+ - Body ground (*1)	Always	10 kΩ or higher
SR- - Body ground (*1)	Always	10 kΩ or higher
WFL+ - Body ground (*1)	Always	10 kΩ or higher
WFL- - Body ground (*1)	Always	10 kΩ or higher
WF1+ - Body ground	Always	10 kΩ or higher
WF1- - Body ground	Always	10 kΩ or higher
WF2+ - Body ground (*2)	Always	10 kΩ or higher
WF2- - Body ground (*2)	Always	10 kΩ or higher

*1: with Rear Header Speaker
*2: without Rear Header Speaker

NG → **REPAIR OR REPLACE HARNESS OR CONNECTOR**

OK

4 CONFIRM MODEL

Result

Result	Proceed to
with Rear Header Speaker	A
without Rear Header Speaker	B

B → **Go to step 9**

A

5 INSPECT FRONT STEREO COMPONENT SPEAKER

(a) Resistance check.

(1) Measure the resistance between the terminals of the speaker.

Standard resistance:
Approximately 8 Ω

NS

NG → **REPLACE FRONT STEREO COMPONENT SPEAKER**

OK

6 INSPECT STEREO COMPONENT SPEAKER

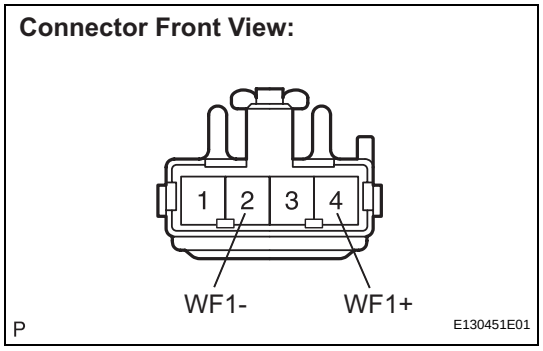

(a) Resistance check.
(1) Measure the resistance between the terminals of the speaker.
Standard resistance

Tester Connection	Condition	Specified Condition
WF1+ - WF1-	Always	Approximately 8 Ω

NG → **REPLACE STEREO COMPONENT SPEAKER**

OK

7 INSPECT REAR HEADER SPEAKER (LEFT HAND)

(a) Resistance check.
(1) Measure the resistance between the terminals of the speaker.
Standard resistance:
Approximately 8 Ω

NG → **REPLACE REAR HEADER SPEAKER (LEFT HAND)**

OK

8 INSPECT REAR HEADER SPEAKER (RIGHT HAND)

(a) Resistance check.
(1) Measure the resistance between the terminals of the speaker.
Standard resistance:
Approximately 8 Ω

NG → **REPLACE REAR HEADER SPEAKER (RIGHT HAND)**

OK

REPLACE FRONT NO. 1 SPEAKER (LEFT HAND)

9 INSPECT FRONT STEREO COMPONENT SPEAKER

(a) Resistance check.

NS

(1) Measure the resistance between the terminals of the speaker.
Standard resistance:
Approximately 10 Ω

NG → **REPLACE FRONT STEREO COMPONENT SPEAKER**

OK

REPLACE STEREO COMPONENT SPEAKER

10 CHECK HARNESS AND CONNECTOR

Wire Harness View:

Stereo Component Amplifier (with Rear Header Speaker)

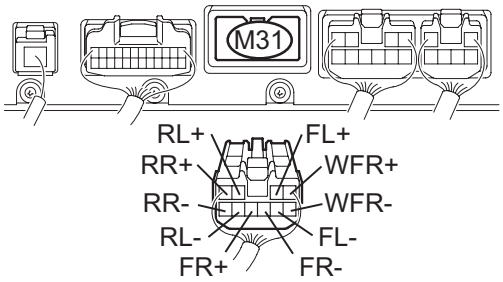

Stereo Component Amplifier (without Rear Header Speaker)

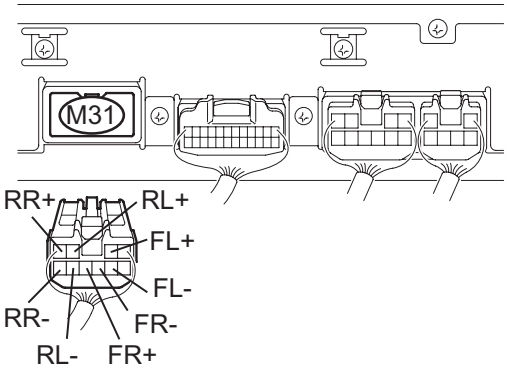

Connector Front View:

Rear No. 2 Speaker

Front No. 2 Speaker

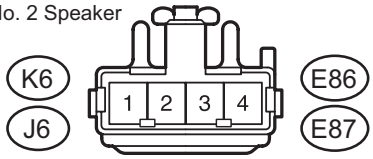

P

E130452E01

(a) Disconnect the connectors shown in the illustration from the stereo component amplifier and speakers.
(b) Measure the resistance according to the value(s) in the table below.
Standard resistance

Tester Connection	Condition	Specified Condition
FL+ - Body ground	Always	10 kΩ or higher
FL- - Body ground	Always	10 kΩ or higher
E86-3 - Body ground (*2)	Always	10 kΩ or higher
E86-4 - Body ground (*2)	Always	10 kΩ or higher
FR+ - Body ground	Always	10 kΩ or higher
FR- - Body ground	Always	10 kΩ or higher
E87-3 - Body ground (*2)	Always	10 kΩ or higher
E87-4 - Body ground (*2)	Always	10 kΩ or higher
RL+ - Body ground	Always	10 kΩ or higher
RL- - Body ground	Always	10 kΩ or higher
K6-3 - Body ground (*1)	Always	10 kΩ or higher
K6-4 - Body ground (*1)	Always	10 kΩ or higher
RR+ - Body ground	Always	10 kΩ or higher
RR- - Body ground	Always	10 kΩ or higher
J6-3 - Body ground (*1)	Always	10 kΩ or higher
J6-4 - Body ground (*1)	Always	10 kΩ or higher
WFR+ - Body ground (*1)	Always	10 kΩ or higher
WFR- - Body ground (*1)	Always	10 kΩ or higher

*1: with Rear Header Speaker
*2: without Rear Header Speaker

NG → **REPAIR OR REPLACE HARNESS OR CONNECTOR**

NS

OK

11	CONFIRM MODEL

Result

Result	Proceed to
with Rear Header Speaker	A
without Rear Header Speaker	B

B → **Go to step 18**

A

12	INSPECT FRONT NO. 2 SPEAKER (LEFT HAND)

(a) Reconnect the stereo component amplifier connector and front No. 2 speaker connector.
(b) Check that audio sound can be heard from the speaker.
OK:
Audio sound can be heard.

NG → **REPLACE FRONT NO. 2 SPEAKER (LEFT HAND)**

NS

OK

13	INSPECT FRONT NO. 2 SPEAKER (RIGHT HAND)

(a) Reconnect the stereo component amplifier connector and front No. 2 speaker connector.
(b) Check that audio sound can be heard from the speaker.
OK:
Audio sound can be heard.

NG → **REPLACE FRONT NO. 2 SPEAKER (RIGHT HAND)**

OK

14	INSPECT REAR SPEAKER (LEFT HAND)

(a) Resistance check.
(1) Measure the resistance between the terminals of the speaker.
Standard resistance:
Approximately 8 Ω

NG → **REPLACE REAR SPEAKER (LEFT HAND)**

OK

15	INSPECT REAR SPEAKER (RIGHT HAND)

(a) Resistance check.
(1) Measure the resistance between the terminals of the speaker.
Standard resistance:
Approximately 8 Ω

NG → **REPLACE REAR SPEAKER (RIGHT HAND)**

OK

16	INSPECT REAR NO. 2 SPEAKER (LEFT HAND)

(a) Reconnect the stereo component amplifier connector and rear No. 2 speaker connector.
(b) Check that audio sound can be heard from the speaker.
OK:
Audio sound can be heard.

NG → **REPLACE REAR NO. 2 SPEAKER (LEFT HAND)**

NS

OK

17	INSPECT REAR NO. 2 SPEAKER (RIGHT HAND)

(a) Reconnect the stereo component amplifier connector and rear No. 2 speaker connector.
(b) Check that audio sound can be heard from the speaker.
OK:
Audio sound can be heard.

NG → **REPLACE REAR NO. 2 SPEAKER (RIGHT HAND)**

OK

REPLACE FRONT NO. 1 SPEAKER (RIGHT HAND)

18	INSPECT FRONT NO. 1 SPEAKER (LEFT HAND)

(a) Resistance check.
(1) Measure the resistance between the terminals of the speaker.
Standard resistance:
Approximately 4 Ω

NG → **REPLACE FRONT NO. 1 SPEAKER (LEFT HAND)**

OK

19	INSPECT FRONT NO. 1 SPEAKER (RIGHT HAND)

(a) Resistance check.
(1) Measure the resistance between the terminals of the speaker.
Standard resistance:
Approximately 4 Ω

NG → **REPLACE FRONT NO. 1 SPEAKER (RIGHT HAND)**

OK

20	INSPECT FRONT NO. 2 SPEAKER (LEFT HAND)

(a) Reconnect the stereo component amplifier connector and front No. 2 speaker connector.
(b) Check that audio sound can be heard from the speaker.
OK:
Audio sound can be heard.

NG → **REPLACE FRONT NO. 2 SPEAKER (LEFT HAND)**

NS

OK

21	INSPECT FRONT NO. 2 SPEAKER (RIGHT HAND)

(a) Reconnect the stereo component amplifier connector and front No. 2 speaker connector.
(b) Check that audio sound can be heard from the speaker.
OK:
Audio sound can be heard.

NG → **REPLACE FRONT NO. 2 SPEAKER (RIGHT HAND)**

OK

22	INSPECT REAR SPEAKER (LEFT HAND)

(a) Resistance check.
(1) Measure the resistance between the terminals of the speaker.
Standard resistance:
Approximately 4 Ω

NG → **REPLACE REAR SPEAKER (LEFT HAND)**

OK

REPLACE REAR SPEAKER (RIGHT HAND)

Pressing Power Switch does not Turn on System

INSPECTION PROCEDURE

1	CHECK CABIN

(a) Check that conditions in the cabin are not likely to cause condensation.
HINT:
This problem occurs when the cabin is humid and the temperature rapidly changes. This condition may produce condensation, resulting in a short circuit.
OK:
Condensation is not likely to occur.

NG → **DRY CABIN AND RECHECK CONDITIONS**

OK

PROCEED TO NEXT CIRCUIT INSPECTION SHOWN IN PROBLEM SYMPTOMS TABLE

No Image Appears on Multi-display

INSPECTION PROCEDURE

1	CHECK DISPLAY SETTING

(a) Check that the display is not in "Screen OFF" mode.
OK:
The display setting is not in "Screen OFF" mode.

NG → **CHANGE SCREEN TO "SCREEN ON" MODE**

OK

2	CHECK IMAGE QUALITY SETTING

(a) Check that the screen color quality can be set.
OK:
Setting is possible.

NG → **Go to step 3**

NS

OK

PRESS PANEL SWITCH "DISPLAY" AND SET SCREEN COLOR QUALITY TO NORMAL

3	CHECK CABIN

(a) Check that condensation is not likely to occur in the cabin, and that the temperature is not high or extremely low in the cabin.
HINT:
- A humid cabin and a rapid change in temperature may lead to condensation, resulting in a short circuit.
- The appropriate cabin temperature is 20 to 30°C (68 to 86°F).

OK:
Condensation is not likely and temperature is not high or extremely low.

NG → **SET CABIN TO APPROPRIATE TEMPERATURE**

OK

PROCEED TO NEXT CIRCUIT INSPECTION SHOWN IN PROBLEM SYMPTOMS TABLE

Illumination for Panel Switch does not Come on with Tail Switch ON

INSPECTION PROCEDURE

1 CHECK VEHICLE SIGNAL (DISPLAY CHECK MODE)

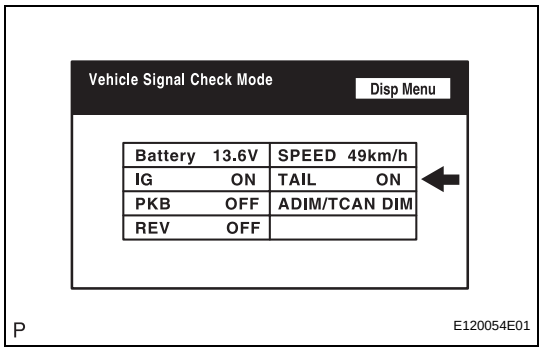

(a) Enter the "Display Check" mode (Vehicle Signal Check Mode) (See page NS-21).

(b) Check that the display changes between ON and OFF according to the light control switch operation.

OK

Light Control Switch	Display
TAIL or ON	ON
OFF	OFF

HINT:
This display is updated once per second. As a result, it is normal for the display to lag behind the actual change in the switch.

NG → **PROCEED TO NEXT CIRCUIT INSPECTION SHOWN IN PROBLEM SYMPTOMS TABLE**

OK

REPLACE MULTI-DISPLAY

NS

Display does not Dim when Light Control Switch is Turned ON

INSPECTION PROCEDURE

1 CHECK IMAGE QUALITY SETTING

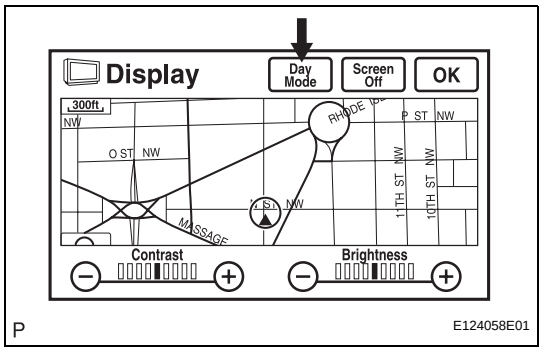

(a) Enter the display adjustment screen by pressing the "DISP" switch.
(b) Turn the light control switch to the TAIL position.
(c) Check if "DAY MODE" on the display is ON.
OK:
"DAY MODE" is ON.

NG → **Go to step 2**

OK

TURN "DAY MODE" SETTING OFF

NS

2 CHECK VEHICLE SIGNAL (DISPLAY CHECK MODE)

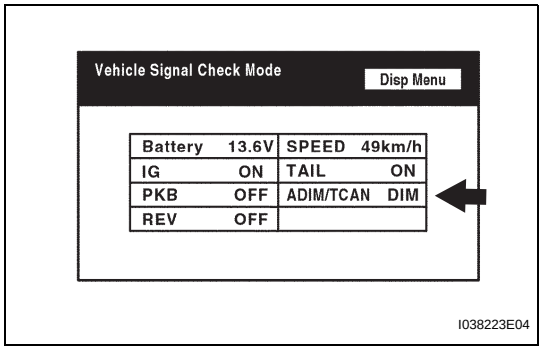

(a) Enter the "Display Check" mode (Vehicle Signal Check) (See page NS-21).
(b) Check that the display changes between DIM and BRIGHT according to the light control switch operation.
OK

Light Control Switch	Display
TAIL or HEAD	DIM
OFF	BRIGHT

HINT:
The display is updated once per second. It is normal for the display to lag behind the actual switch operation.

NG → **PROCEED TO NEXT CIRCUIT INSPECTION SHOWN IN PROBLEM SYMPTOMS TABLE**

OK

REPLACE MULTI-DISPLAY

Panel Switches do not Function

INSPECTION PROCEDURE

1 CHECK PANEL SWITCH

(a) Check for foreign matter around the switches that might prevent operation.
OK:
No foreign matter is found.

NG → **REMOVE ANY FOREIGN MATTER FOUND**

OK

2 CHECK PANEL SWITCH (DISPLAY CHECK MODE)

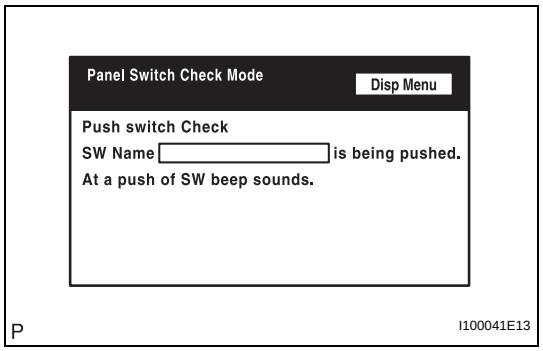

(a) Enter the "Display Check" mode (Panel Switch Check) (See page NS-21).
(b) Operate the abnormal switch and check if the switch name and status are correctly displayed.
OK:
The switch name and status are correctly displayed as operated.

NG → **PROCEED TO NEXT CIRCUIT INSPECTION SHOWN IN PROBLEM SYMPTOMS TABLE**

OK

REPLACE MULTI-DISPLAY

NS

Touch Panel Switch does not Function

INSPECTION PROCEDURE

1	CHECK TOUCH PANEL

(a) Check for foreign matter on the display.
OK:
The display is clean.

NG → **CLEAN DISPLAY AND RECHECK TOUCH PANEL**

OK

2	CHECK TOUCH SWITCH (DISPLAY CHECK MODE)

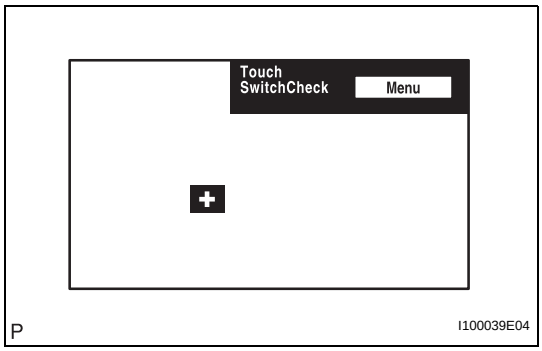

(a) Enter the "Display Check" mode (Touch Switch Check) (See page NS-21).
(b) Touch the display in the area where the switch malfunction occurs.
OK:
A "+" mark appears at the touched position.

NG → **PROCEED TO NEXT CIRCUIT INSPECTION SHOWN IN PROBLEM SYMPTOMS TABLE**

OK

REPLACE MULTI-DISPLAY

NS

Screen Flicker or Color Distortion

INSPECTION PROCEDURE

1 CHECK DISPLAY SETTING

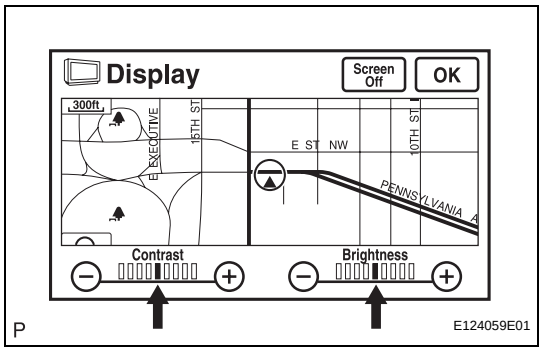

(a) Enter the display adjustment screen by pressing the "DISP" switch.

(b) Reset display settings (contrast, brightness) and check that the screen appears normal.

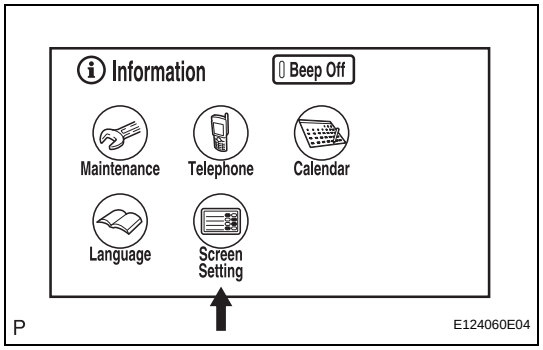

(c) Press the "INFO" switch and then select "Screen Setting."

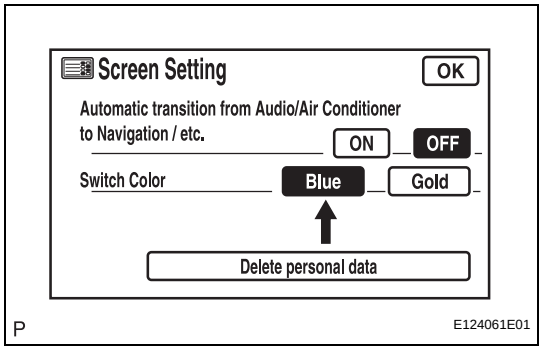

(d) Set the "Switch Color" to "Blue" (initial setting) and check if the display returns to normal.

OK:

Returns to normal.

NG → **Go to step 2**

OK

END

2 CHECK CABIN

(a) Check that the cabin temperature is warmer than -20°C (-4.0°F).

OK:

Cabin is warmer than -20°C (-4.0°F).

NG → **HEAT CABIN AND RECHECK TEMPERATURE**

NS

OK

3	CHECK COLOR BAR (DISPLAY CHECK MODE)

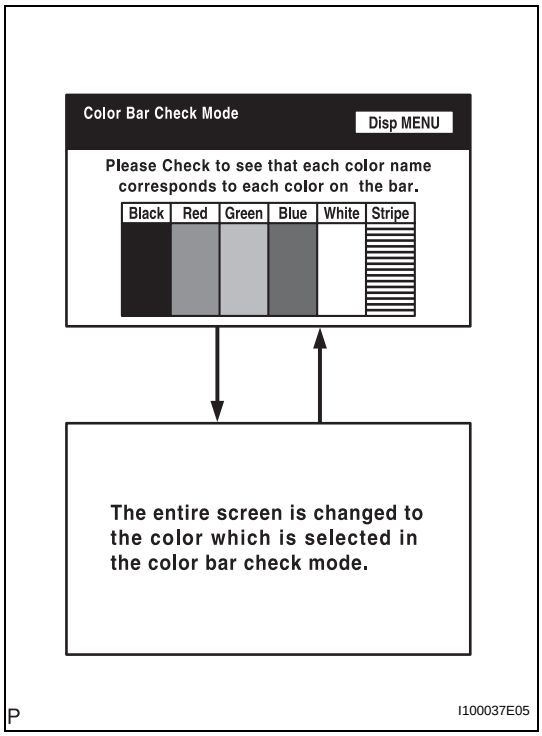

(a) Enter the "Display Check" mode (Color Bar Check) (See page NS-21).
(b) Check that the color bars match the displayed names.
OK:
Color bars match the displayed names.

NG → **REPLACE MULTI-DISPLAY**

OK

4	CHECK NAVI COLOR BAR (NAVIGATION CHECK MODE)

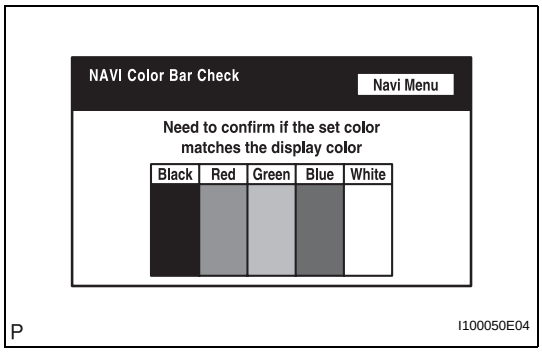

(a) Enter the "Navigation Check" mode (NAVI Color Bar Check) (See page NS-27).
(b) Check that the color bars match the displayed names.
OK:
Color bars match the displayed names.

OK → **REPLACE MULTI-DISPLAY**

NG

PROCEED TO NEXT CIRCUIT INSPECTION SHOWN IN PROBLEM SYMPTOMS TABLE

MAP Disc cannot be Inserted

INSPECTION PROCEDURE

1	CHECK MAP DISC

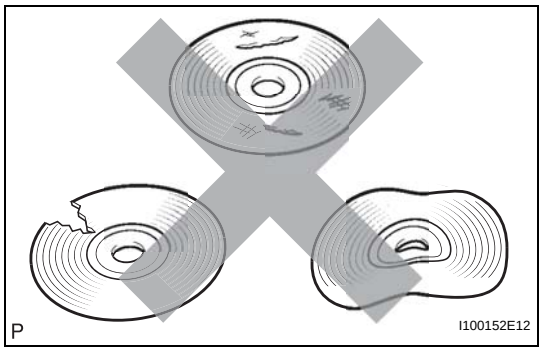

(a) Check that the map disc is not deformed or cracked.
OK:
No deformations or cracks on the map disc.

NG → **REPLACE MAP DISC**

OK

PROCEED TO NEXT CIRCUIT INSPECTION SHOWN IN PROBLEM SYMPTOMS TABLE

MAP Disc cannot be Ejected

INSPECTION PROCEDURE

1	CHECK MULTI-DISPLAY

(a) Turn the engine switch on (ACC).
(b) Keep pressing the MAP eject switch for 5 seconds and check if the disc is ejected by forced ejection.
OK:
The disc is ejected.

NG → **PROCEED TO NEXT CIRCUIT INSPECTION SHOWN IN PROBLEM SYMPTOMS TABLE**

OK

2	CHECK MAP DISC

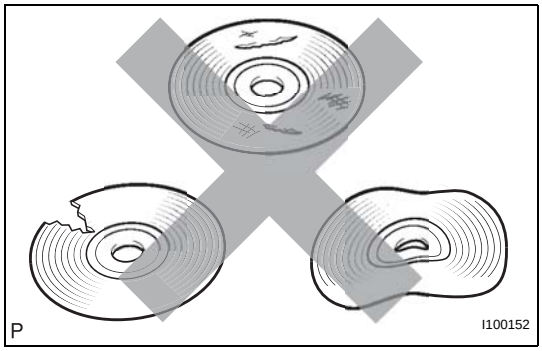

(a) Check that the map disc is not deformed or cracked.
OK:
No deformations or cracks on the map disc.

NG → **REPLACE MAP DISC**

OK

END

NS

Vehicle Position Mark Deviates Greatly

INSPECTION PROCEDURE

1 CHECK GPS MARK

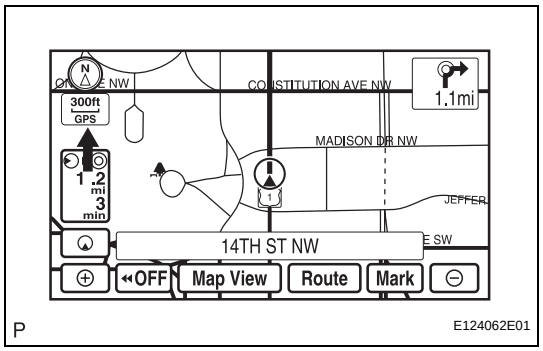

(a) Check that the GPS mark is displayed.
OK:
GPS mark is displayed.

NG → **GO TO "GPS MARK IS NOT DISPLAYED" IN PROBLEM SYMPTOMS TABLE**

OK

2 CHECK VEHICLE SENSOR (NAVIGATION CHECK MODE)

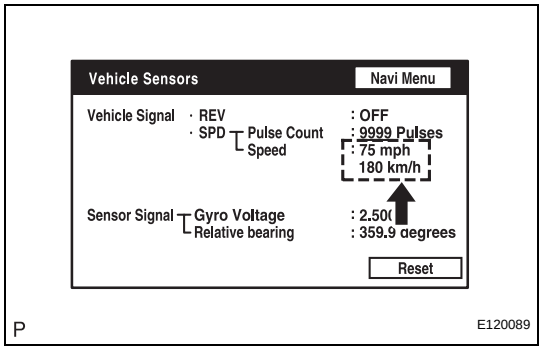

(a) Enter the "Navigation Check" mode (Vehicle Sensors) (See page NS-27).
(b) While driving the vehicle, compare the "Speed" indicator to the reading on the speedometer. Check that these readings are almost equal.
OK:
The readings are almost equal.

NG → **GO TO "SPEED SIGNAL DOES NOT CHANGE IN NAVIGATION CHECK MODE" IN PROBLEM SYMPTOMS TABLE**

OK

3 CHECK VEHICLE SENSOR (NAVIGATION CHECK MODE)

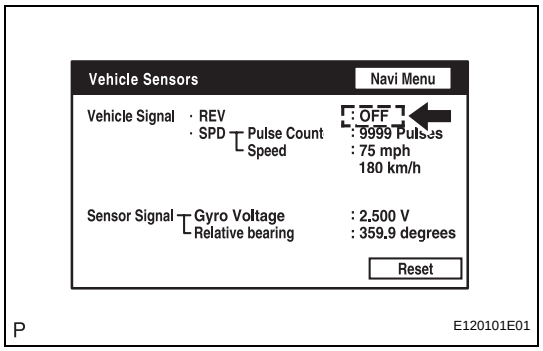

(a) Check that the display changes between ON and OFF according to the shift lever operation (P and R).
OK

Shift Lever Position	Display
P (A/T)	OFF
Reverse position	ON

HINT:
The display is updated once per second. It is normal for the display to lag behind the actual switch operation.

NG → **GO TO "REVERSE SIGNAL DOES NOT CHANGE IN NAVIGATION CHECK MODE" IN PROBLEM SYMPTOMS TABLE**

NS

OK

PROCEED TO NEXT CIRCUIT INSPECTION SHOWN IN PROBLEM SYMPTOMS TABLE

Cursor or MAP Rotates when Vehicle Stopped

INSPECTION PROCEDURE

1	CHECK CONDITION

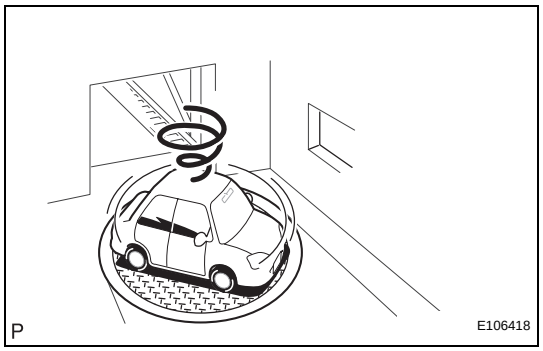

(a) Check with the customer if the vehicle has been turned by a turntable.

OK:

Vehicle has not been turned by turntable.

HINT:

If the vehicle is turned on a turntable with the engine switch on (IG), the system may store the angular velocity. As a result, the vehicle position cursor may deviate.

NG → **TURN ENGINE SWITCH ON (IG) WHEN VEHICLE IS COMPLETELY STOPPED**

OK

PROCEED TO NEXT CIRCUIT INSPECTION SHOWN IN PROBLEM SYMPTOMS TABLE

Vehicle Position Mark is not Updated

INSPECTION PROCEDURE

1 CHECK MAP DISC

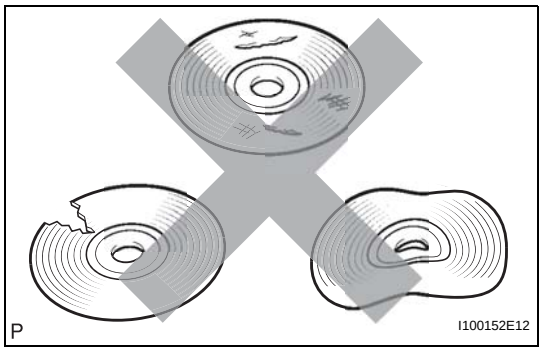

(a) Check that the map disc is not deformed or cracked.
OK:
No deformations or cracks on map disc.

NG → **REPLACE MAP DISC**

OK

2 CHECK NAVIGATION DISPLAY

NS

(a) Check if a touch scroll can be performed on the map display.
OK:
Touch scroll can be performed.

NG → **PROCEED TO NEXT CIRCUIT INSPECTION SHOWN IN PROBLEM SYMPTOMS TABLE**

OK

3 CHECK VEHICLE SENSOR (NAVIGATION CHECK MODE)

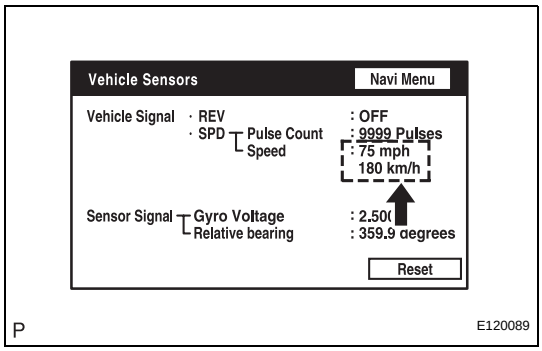

(a) Enter the "Navigation Check" mode (Vehicle Sensors) (See page NS-27).
(b) While driving the vehicle, compare the "Speed" indicator to the reading on the speedometer. Check if these readings are almost equal.
OK:
The readings are almost equal.

NG → **GO TO "SPEED SIGNAL DOES NOT CHANGE IN NAVIGATION CHECK MODE" IN PROBLEM SYMPTOMS TABLE**

OK

PROCEED TO NEXT CIRCUIT INSPECTION SHOWN IN PROBLEM SYMPTOMS TABLE

Current Position Display does not Appear

INSPECTION PROCEDURE

1	CHECK MAP DISC

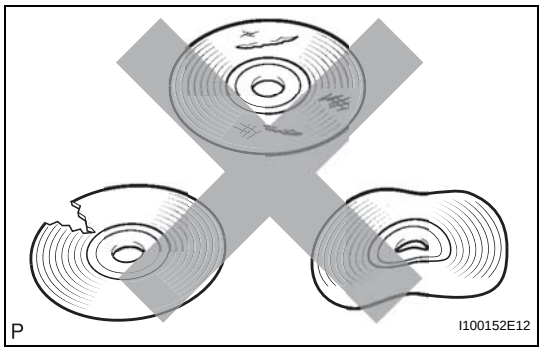

(a) Check that the map disc is not deformed or cracked.
OK:
No deformations or cracks on the map disc.

NG → **REPLACE MAP DISC**

OK

PROCEED TO NEXT CIRCUIT INSPECTION SHOWN IN PROBLEM SYMPTOMS TABLE

GPS Mark is not Displayed

INSPECTION PROCEDURE

1	CHECK CABIN

(a) Check the cabin for any object that might interrupt radio reception on the instrument panel. If such an object exists, remove it and check if the GPS mark reappears.
HINT:
The GPS uses extremely faint radio waves originating from satellites. If the signal is interrupted by obstructions or other radio waves, the GPS may not be able to properly receive the signal.
OK:
Mark appears.

NG → **Go to step 2**

OK

NORMAL OPERATION

2	CHECK SURROUNDINGS

(a) Check if the vehicle is in a location where GPS signal reception is poor. If the vehicle is in such a place, relocate the vehicle and check if the GPS mark reappears.
HINT:
The GPS uses 24 satellites in 6 orbits. At any point in time, 4 satellites should be able to pinpoint your vehicle. However, GPS signals may not reach the vehicle due to influence from the surroundings, vehicle direction, and time. For illustrated examples, see below.

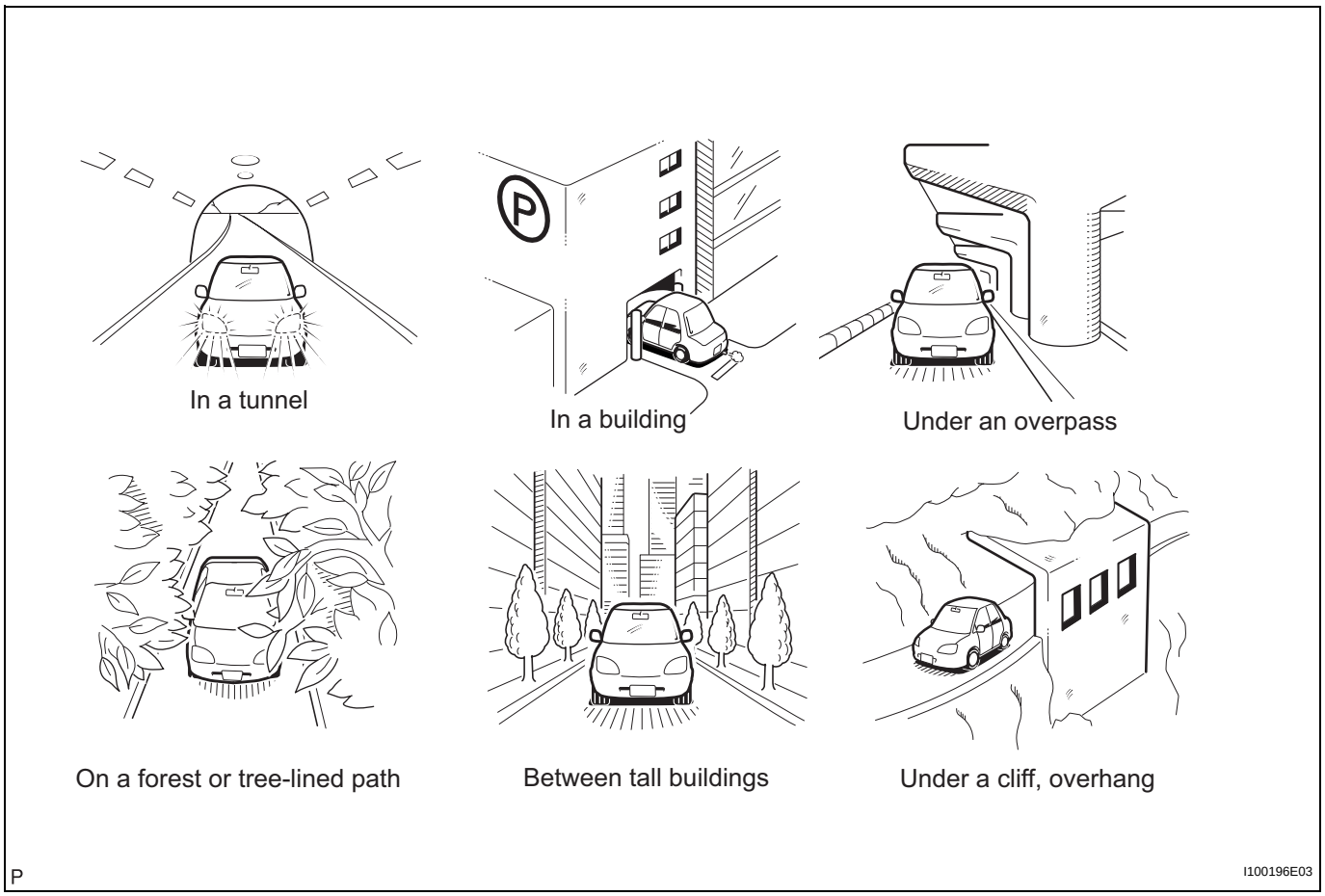

OK:
GPS mark is displayed.

NG → **Go to step 3**

OK

SYSTEM RETURN TO NORMAL

3 CHECK GPS INFORMATION (NAVIGATION CHECK MODE)

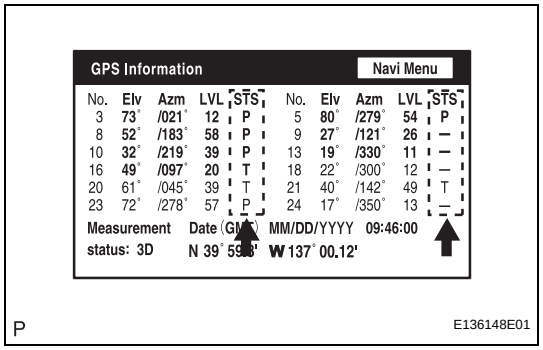

(a) Enter the "Navigation Check" mode (GPS Information) (See page NS-27).

(b) Check how many of the following codes appear in the "STS" column.

For DENSO Made:
T, P

For AISIN AW Made:
08H, 04H

OK:
At least 3 codes appear.

NG → **PROCEED TO NEXT CIRCUIT INSPECTION SHOWN IN PROBLEM SYMPTOMS TABLE**

NS

OK

REPLACE NAVIGATION ECU

Voice Guidance does not Function

INSPECTION PROCEDURE

1 CHECK NAVIGATION SYSTEM SETTING

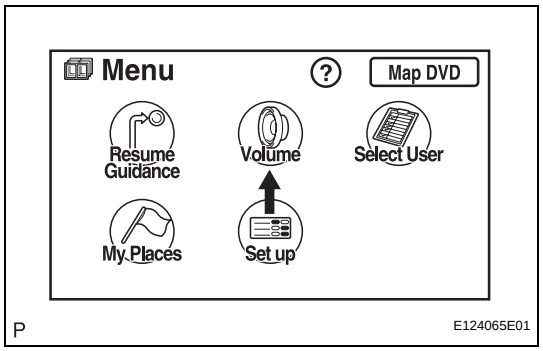

(a) Enter the "Menu" screen by pressing the "MENU" switch.
(b) Select "Volume".

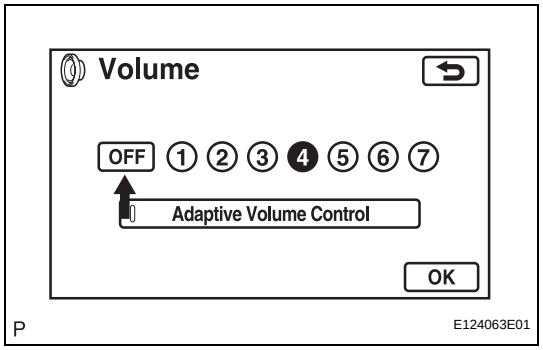

(c) Check that "OFF" is not selected.
OK:
"OFF" is not selected.

NG → **TURN VOICE GUIDANCE VOLUME UP TO 4 USING VOICE ADJUSTMENT SWITCHES**

OK

2 CHECK NAVIGATION SETTING

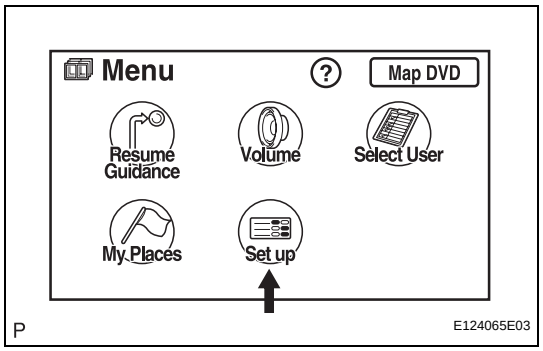

(a) Enter the "Menu" screen by pressing the "MENU" switch.
(b) Select "Set up".

NS

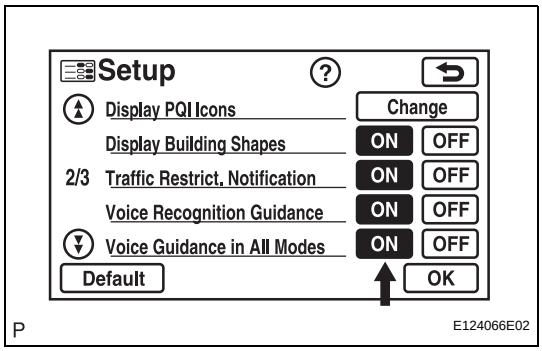

(c) Check that "Voice Guidance in All Modes" is not OFF.
OK:
Voice guidance in all modes is not OFF.

NG → **TURN VOICE GUIDANCE IN ALL MODES "ON"**

OK

3 CHECK NAVIGATION SETTING

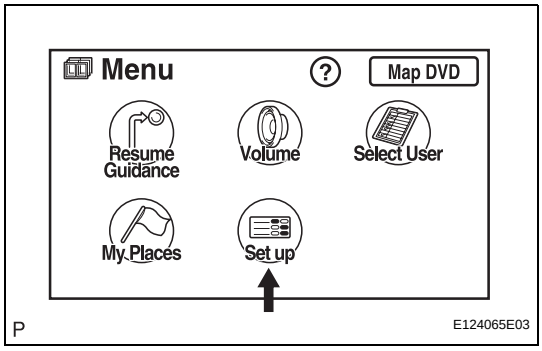

(a) Enter the "Menu" screen by pressing the "MENU" switch.
(b) Select "Set up".

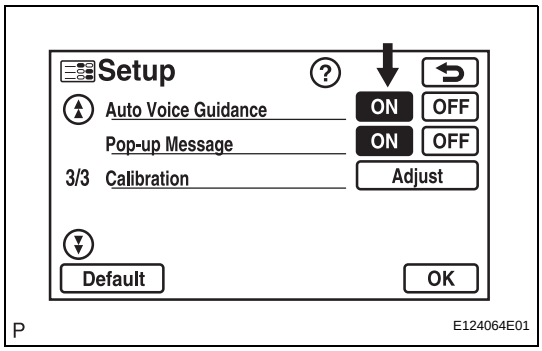

(c) Check that "Auto Voice Guidance" is not OFF.
OK:
Auto voice guidance is not OFF.

NG → **TURN AUTO VOICE GUIDANCE "ON"**

OK

4 CHECK MAP DISC

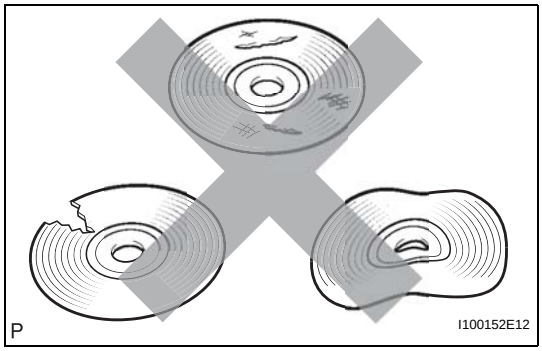

(a) Check that the map disc is not deformed or cracked.
OK:
No deformations or cracks on map disc.

NG → **REPLACE MAP DISC**

NS

OK

5	CHECK RADIO RECEIVER

(a) Check that audio sound can be heard from the driver side speaker.
OK:
Audio sound can be heard.

OK → **PROCEED TO NEXT CIRCUIT INSPECTION SHOWN IN PROBLEM SYMPTOMS TABLE**

NG

GO TO AUDIO AND VISUAL SYSTEM

MAP Display Incomplete

INSPECTION PROCEDURE

1	CHECK MAP DISC

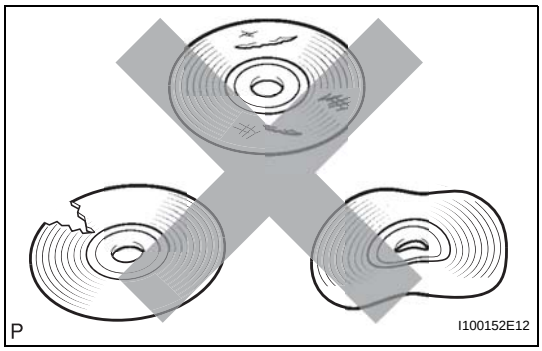

(a) Check that the map disc is not deformed or cracked.
OK:
No deformations or cracks on map disc.

NG → **REPLACE MAP DISC**

OK

2	CHECK NAVIGATION DISPLAY

NS

(a) Check that displays other than the navigation display are complete.
OK:
No other incomplete displays are found.

NG → **PROCEED TO NEXT CIRCUIT INSPECTION SHOWN IN PROBLEM SYMPTOMS TABLE**

OK

REPLACE NAVIGATION ECU

Route cannot be Calculated

INSPECTION PROCEDURE

1 CHECK MAP DISC

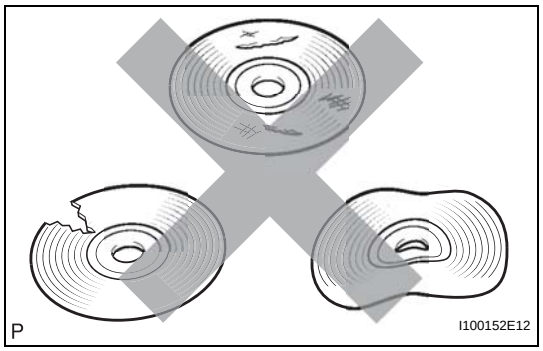

(a) Check that the map disc is not deformed or cracked.
OK:
No deformations or cracks on map disc.

NG → **REPLACE MAP DISC**

OK

2 SET DESTINATION

(a) Set another destination and check if the system can calculate the route correctly.
OK:
Route can be correctly calculated.

NG → **PROCEED TO NEXT CIRCUIT INSPECTION SHOWN IN PROBLEM SYMPTOMS TABLE**

OK

NORMAL OPERATION

NS

Voice Recognition Difficulty

INSPECTION PROCEDURE

1	CHECK CONDITION

(a) Check if the system's voice recognition level is low by using only one particular voice.
OK:
System's voice recognition level is low with any voice.
HINT:
System's voice recognition level varies depending on voice and pronunciation. This is not a malfunction.

NG → **END**

OK

2	CHECK MAP DISC

NS

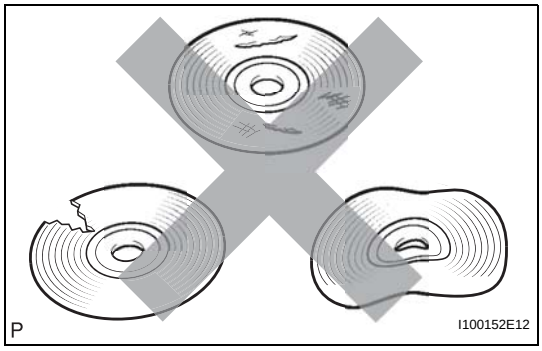

(a) Check that the map disc is not deformed or cracked.
OK:
No deformations or cracks on map disc.

NG → **REPLACE MAP DISC**

OK

3	CHECK MAP DISC

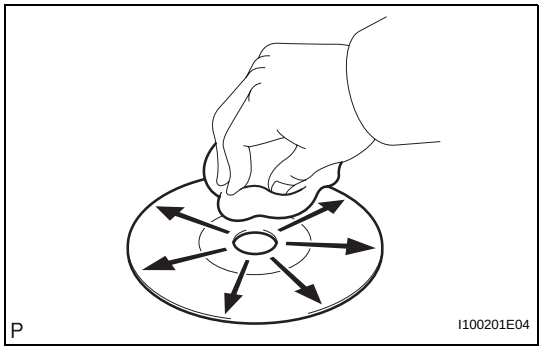

(a) Check for dirt on the map disc surface.
OK:
No dirt is on map disc surface.
NOTICE:
Do not use a conventional record cleaner or anti-static preservative.
HINT:
If the disc is dirty, clean the disc by wiping the disc surface radially with a soft cloth.

NG → **CLEAN MAP DISC**

OK

4	CHECK MICROPHONE (NAVIGATION CHECK MODE)

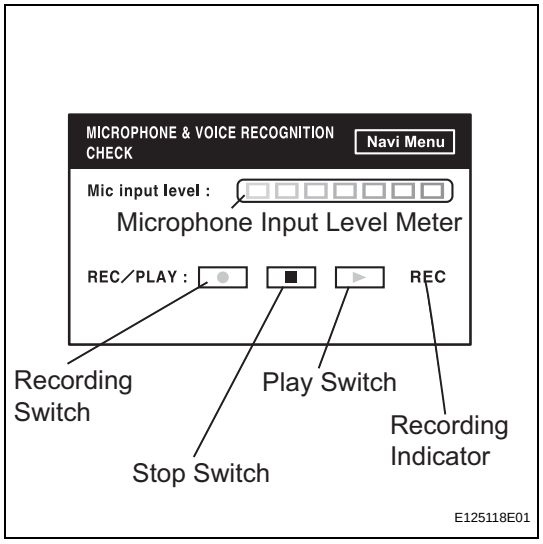

(a) Enter the "MICROPHONE & VOICE RECOGNITION CHECK" mode (See page NS-27).

(b) When voice is input into the microphone, check that the microphone input level meter changes according to the input voice.

(c) Push the recording switch and perform voice recording.
HINT:
Voice can be recorded up to 5 seconds.

(d) Check that the recording indicator remains on while recording and that the recorded voice is played normally without noise or distortion.
OK:
All check results are normal.

NG → **PROCEED TO NEXT CIRCUIT INSPECTION SHOWN IN PROBLEM SYMPTOMS TABLE**

OK

END

NS

Voice is not Recognized

INSPECTION PROCEDURE

1 CHECK NAVIGATION SETTINGS

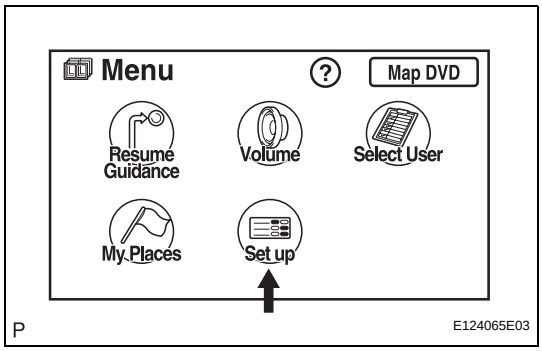

(a) Enter the "Menu" screen by pressing the "MENU" switch.
(b) Select "Set up".

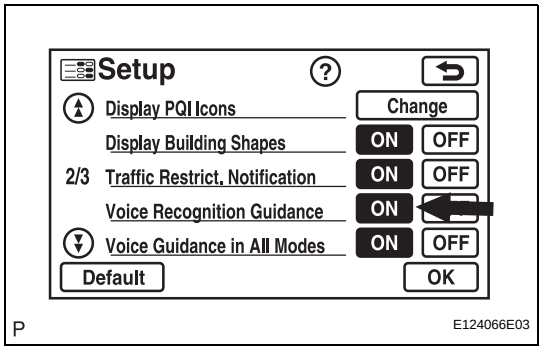

(c) Check that "Voice Recognition Guidance" is not OFF.
OK:
Voice Recognition Guidance is not OFF.

NG → **TURN VOICE RECOGNITION GUIDANCE "ON"**

OK

2 CHECK MAP DISC

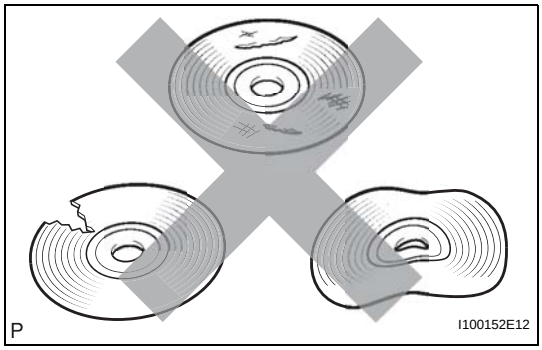

(a) Check that the map disc is not deformed or cracked.
OK:
No deformations or cracks on map disc.

NG → **REPLACE MAP DISC**

OK

NS

3 CHECK MAP DISC

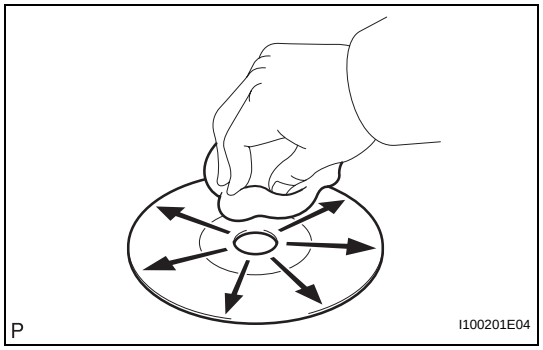

(a) Check for dirt on the map disc surface.
OK:
No dirt is on the map disc surface.
NOTICE:
Do not use a conventional record cleaner or anti-static preservative.
HINT:
If the disc is dirty, clean the disc by wiping the disc surface radially with a soft cloth.

NG → **CLEAN MAP DISC**

OK

4 CHECK MICROPHONE (NAVIGATION CHECK MODE)

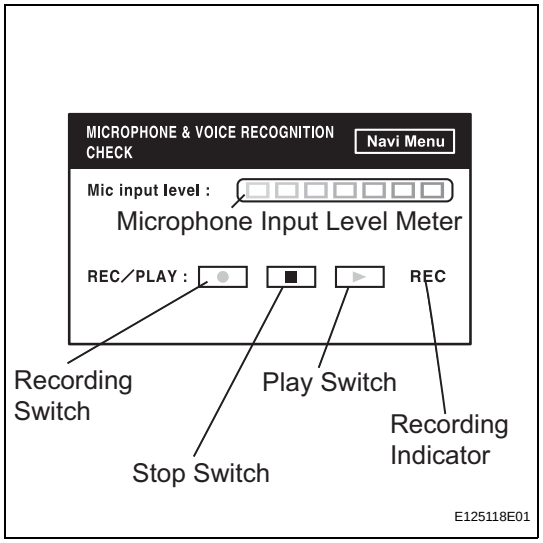

(a) Enter the "MICROPHONE & VOICE RECOGNITION CHECK" mode (See page NS-27).
(b) When voice is input into the microphone, check that the microphone input level meter changes according to the input voice.
(c) Push the recording switch and perform voice recording.
HINT:
Voice can be recorded up to 5 seconds.
(d) Check that the recording indicator remains on while recording and that the recorded voice is played normally without noise or distortion.
OK:
All check results are normal.

OK → **REPLACE NAVIGATION ECU**

NG

NS

5	CHECK MICROPHONE (DISPLAY CHECK MODE)

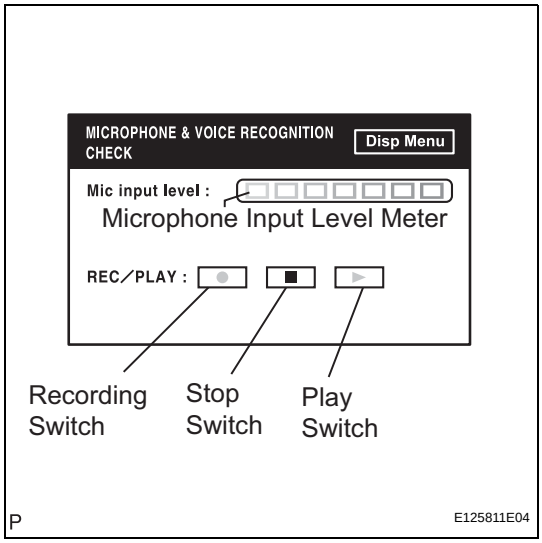

(a) Enter the "MICROPHONE & VOICE RECOGNITION CHECK" mode (See page NS-21).

(b) When voice is input into the microphone, check that the microphone input level meter changes according to the input voice.

(c) Push the recording switch and perform voice recording.
HINT:
Voice can be recorded up to 5 seconds.

(d) Check that the recorded voice is played normally without noise or distortion.
OK:
All check results are normal.

NG → **PROCEED TO NEXT CIRCUIT INSPECTION SHOWN IN PROBLEM SYMPTOMS TABLE**

OK

NS

END

Cellular Phone Registration Failure, Phone Directory Transfer Failure

INSPECTION PROCEDURE

1 CHECK CURRENT CONDITIONS

(a) Proceed to the next step according to the table below.

Result

Conditions	Proceed to
Another "Bluetooth" compatible cellular phone is present.	A
Another "Bluetooth" compatible vehicle is present.	B
None of the above	C

B → **Go to step 3**

C → **Go to step 4**

A

2 CHECK USING ANOTHER CELLULAR PHONE

(a) Check if the system functions using another "Bluetooth" compatible cellular phone.
HINT:
- Confirm that either the same or a different version of another "Bluetooth" compatible cellular phone complies with the system.
- Depending on the version, some "Bluetooth" compatible cellular phones cannot be used.

OK:
The system functions.

NG → **REPLACE MULTI-DISPLAY**

OK

USE A "BLUETOOTH" COMPATIBLE CELLULAR PHONE

3 CHECK USING ANOTHER "BLUETOOTH" COMPATIBLE VEHICLE

(a) Register the cellular phone with another vehicle and check if the system functions normally.
HINT:
Depending on the version, some "Bluetooth" compatible cellular phones cannot be used.

OK:
The system functions.

OK → **REPLACE MULTI-DISPLAY**

NG

USE A "BLUETOOTH" COMPATIBLE CELLULAR PHONE

4	CHECK CELLULAR PHONE

(a) Check if the cellular phone is "Bluetooth" compatible.
HINT:
Some versions of "Bluetooth" compatible cellular phones may not function.
OK:
The phone is "Bluetooth" compatible.

NG → **USE A "BLUETOOTH" COMPATIBLE CELLULAR PHONE**

OK

5	CHECK CELLULAR PHONE

NS

(a) Check if a call can be made from the cellular phone.
HINT:
When the battery is low, registration or directory transfer cannot be done.
OK:
A call can be made from the cellular phone.

NG → **REPAIR OR REPLACE CELLULAR PHONE**

OK

REPLACE MULTI-DISPLAY

Cellular Phone cannot Send / Receive

INSPECTION PROCEDURE

1 CHECK "BLUETOOTH" SETTINGS

(a) Check if the "Bluetooth" settings are correct.
OK:
"Bluetooth" settings are correct.

NG → **SET SETTINGS CORRECTLY**

OK

2 CHECK CELLULAR PHONE

(a) Check if the cellular phone is "Bluetooth" compatible.
HINT:
Some versions of "Bluetooth" compatible cellular phones may not function.
OK:
Phone is "Bluetooth" compatible.

NG → **END (ONLY A "BLUETOOTH" COMPATIBLE CELLULAR PHONE CAN BE USED)**

OK

3 CHECK SETTINGS

(a) Check if the cellular phone functions.
HINT:
The cellular phone is unable to call under any of the following conditions.
- The cellular phone is locked.
- The directory is being transferred.
- The line is crossed.
- Transmission is regulated.
- The power is off.
- The cellular phone is not connected to "Bluetooth" ("BT" is displayed while connected).

OK:
None of the above conditions exist.

NG → **SET SETTINGS CORRECTLY**

OK

4 CHECK CELLULAR PHONE

(a) Check if the cellular phone can make a call.

NS

HINT:
When the battery is low, calls cannot be made or received.
OK:
Cellular phone can make a call.

NG → **REPAIR OR REPLACE CELLULAR PHONE**

OK

5	CHECK RECEPTION

(a) Set the cellular phone so that it can receive calls.
(b) Place the cellular phone close to the multi-display.
(c) Check if the cellular phone has reception according to the multi-display.
OK:
Cellular phone has reception.

NG → **REPLACE MULTI-DISPLAY**

OK

PROCEED TO NEXT CIRCUIT INSPECTION SHOWN IN PROBLEM SYMPTOMS TABLE

Cannot Call in a Certain Place

INSPECTION PROCEDURE

1 CHECK SURROUNDING CONDITIONS

(a) Check if the cellular phone can make calls in a certain place.
OK:
It can make calls.

NG → **END (CELLULAR PHONES CAN ONLY FUNCTION IN CELLULAR SERVICE AREAS)**

OK

2 CHECK RECEPTION

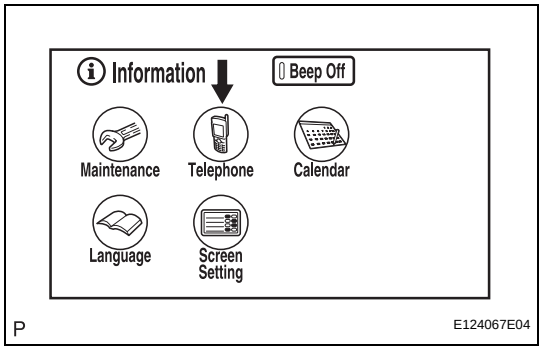

(a) Enter the "Information" screen by pressing the "INFO" switch.
(b) Select "Telephone".

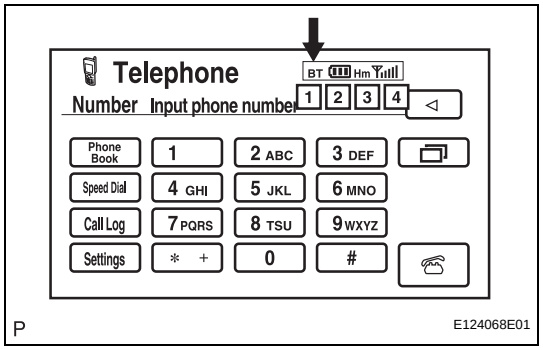

(c) Check the "Bluetooth" connection indicator (BT indicator).

Result

Condition	Procedure
Yellow color	Bring the cellular phone to a location where the BT mark turns blue.
Blue color	Replace multi-display.
No connection mark is displayed	Select a registered cellular phone or register a "Bluetooth" compatible phone.

NEXT

END

NS

The Other Caller's Voice cannot be Heard, is too Quiet, or Distorted

INSPECTION PROCEDURE

1 CHECK CELLULAR PHONE

(a) Check if the voice on the other side can be heard using a cellular phone.
OK:
Voice can be heard.

NG → **REPAIR OR REPLACE CELLULAR PHONE**

OK

2 CHECK NAVIGATION SYSTEM

(a) Check that voice guidance can be heard from the driver side speaker.
OK:
Voice guidance can be heard.

NG → **GO TO "VOICE GUIDANCE DOES NOT FUNCTION" IN PROBLEM SYMPTOMS TABLE**

OK

3 CHECK SETTINGS

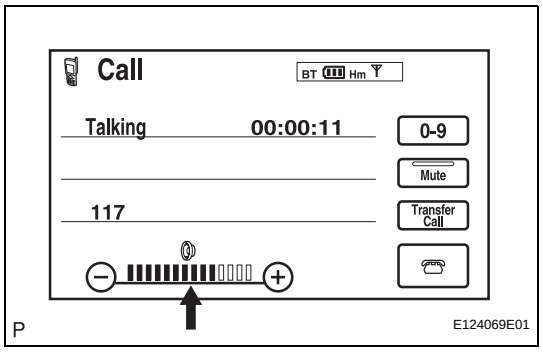

(a) Check if the volume level is set to low on the CALL screen.
OK:
The level is not set to low.

NG → **SET VOLUME TO HIGH**

OK

NS

4	CHECK SETTINGS

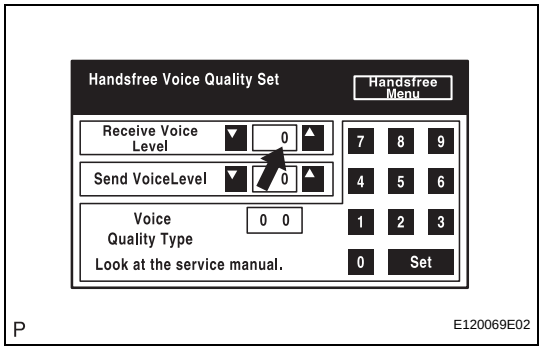

(a) Enter the "Handsfree Voice Quality Set" mode (See page NS-24).

(b) Check if the Receive Voice Level is set to "0".
HINT:
The Receive Voice Level can be set to 11 different levels, -5 to +5, with a 3 dB difference.

(c) Check if the Receive Voice Level is set to the minimum or maximum level.
HINT:
When the Receive Voice Level is set to the minimum or maximum level, the sound may be distorted.
NOTICE:
"Voice Quality Type" should not be changed.
OK:
The Receive Voice Level is set to "0".

NG → **SET RECEIVE VOICE LEVEL TO "0"**

OK

PROCEED TO NEXT CIRCUIT INSPECTION SHOWN IN PROBLEM SYMPTOMS TABLE

NS

The Other Caller cannot Hear Your Voice, or Your Voice is too Quiet or Distorted

INSPECTION PROCEDURE

1 CHECK CELLULAR PHONE

(a) Check if the other side can hear your voice properly.
OK:
Your voice can be heard correctly.

NG → **REPLACE CELLULAR PHONE**

OK

2 CHECK SETTINGS

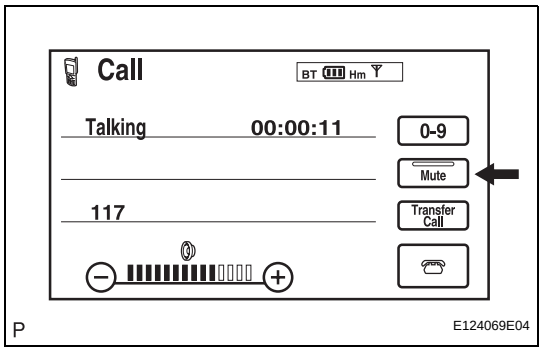

(a) Check if the mute switch is set to ON.
OK:
Mute switch is not set to ON.

NG → **TURN MUTE SWITCH OFF**

OK

3 CHECK SETTINGS

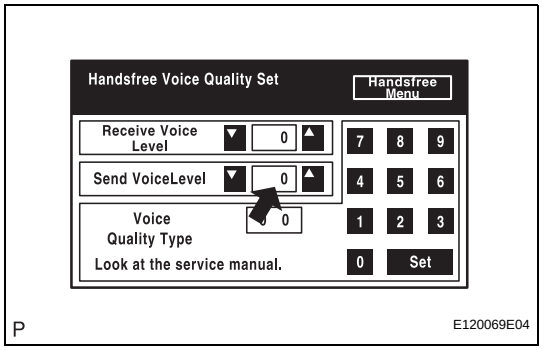

(a) Enter the "Handsfree Voice Quality Set" mode (See page NS-24).
(b) Check if the Send Voice Level is set to "0".
HINT:
The Send Voice Level can be set to 11 different levels, -5 to +5, with a 3 dB difference.
(c) Check if the Send Voice Level is set to the minimum or maximum level.
HINT:
When the Send Voice Level is set to the minimum or maximum level, the sound may be distorted.
NOTICE:
"Voice Quality Type" should not be changed.
OK:
The Send Voice Level is set to "0".

NG → **SET SEND VOICE LEVEL TO "0"**

OK

NS

4	CHECK MICROPHONE (DISPLAY CHECK MODE)

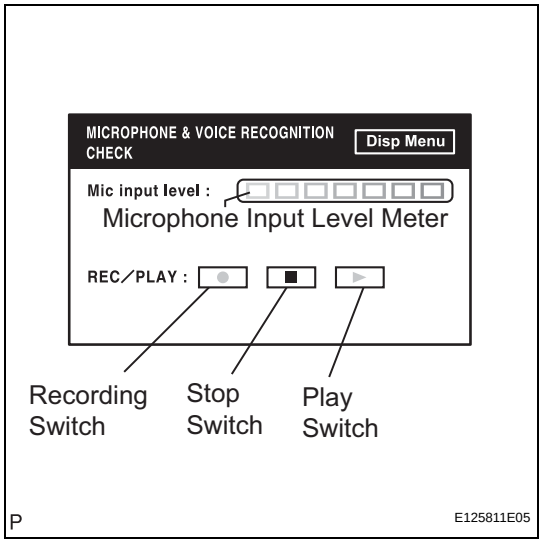

(a) Enter the "MICROPHONE & VOICE RECOGNITION CHECK" mode (See page NS-21).

(b) When voice is input into the microphone, check that the microphone input level meter changes according to the input voice.

(c) Push the recording switch and perform voice recording.
HINT:
Voice can be recorded up to 5 seconds.

(d) Check that the recorded voice is played normally without noise or distortion.
OK:
All check results are normal.

NG → **PROCEED TO NEXT CIRCUIT INSPECTION SHOWN IN PROBLEM SYMPTOMS TABLE**

OK

REPLACE MULTI-DISPLAY

Vehicle Speed Signal Circuit between Navigation ECU and Multi-Display

DESCRIPTION

The navigation ECU receives a vehicle speed signal from the multi-display and information about the GPS antenna, and then adjusts vehicle position.
HINT:

- A voltage of 12 V or 5 V is output from each ECU and then input to the combination meter. The signal is changed to a pulse signal at the transistor in the combination meter. Each ECU controls the respective system based on the pulse signal.
- If a short occurs in an ECU, all systems in the diagram below will not operate normally.

WIRING DIAGRAM

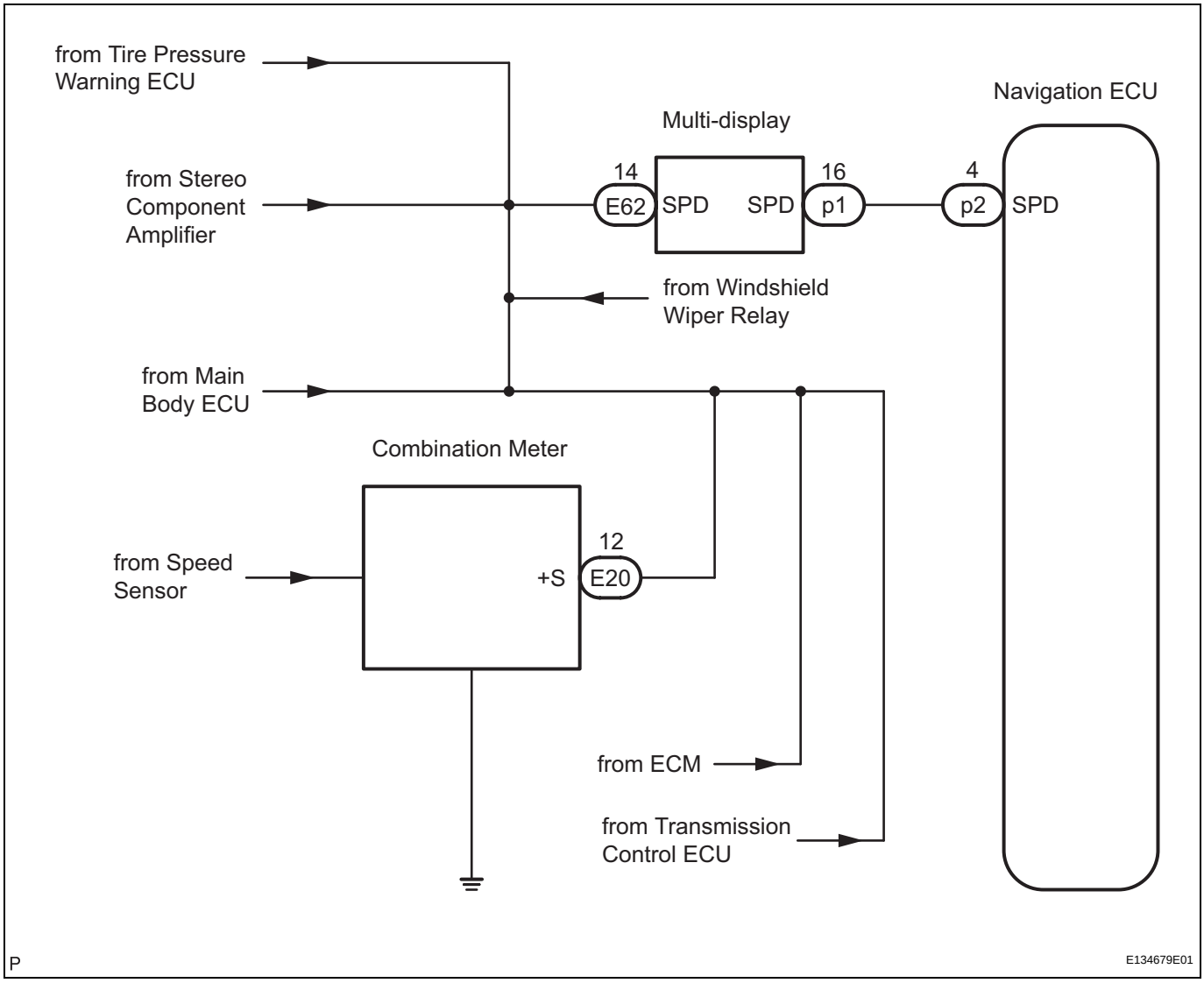

INSPECTION PROCEDURE

1 CHECK VEHICLE SIGNAL (DISPLAY CHECK MODE)

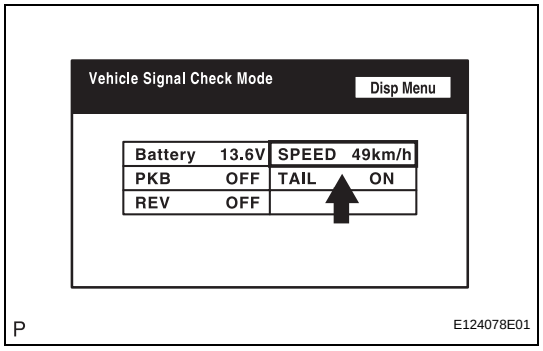

(a) Enter the "Display Check Mode (Vehicle Signal Check)" (See page NS-21).

(b) While driving, compare the "Speed" indicator to the reading on the speedometer. Check if these readings are almost the same.

OK:

The readings are almost the same.

NG → **GO TO "VEHICLE SPEED SIGNAL CIRCUIT BETWEEN MULTI-DISPLAY AND COMBINATION METER"**

OK

2 INSPECT NAVIGATION ECU

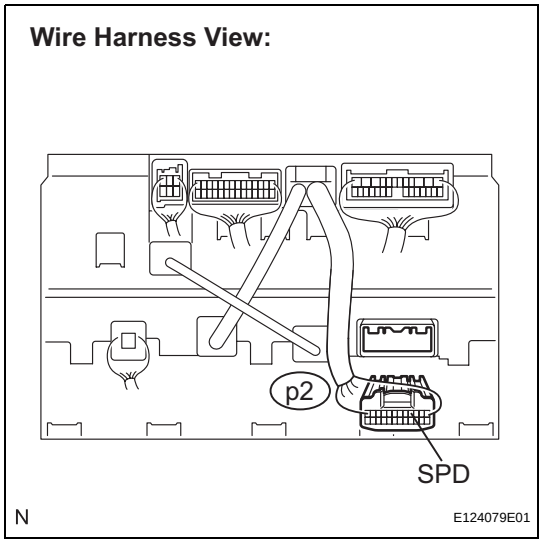

(a) Disconnect the navigation ECU connector p2.

(b) Measure voltage.

(1) Jack up either one of the drive wheels.

(2) Move the shift lever to the neutral position.

(3) Turn the engine switch on (IG).

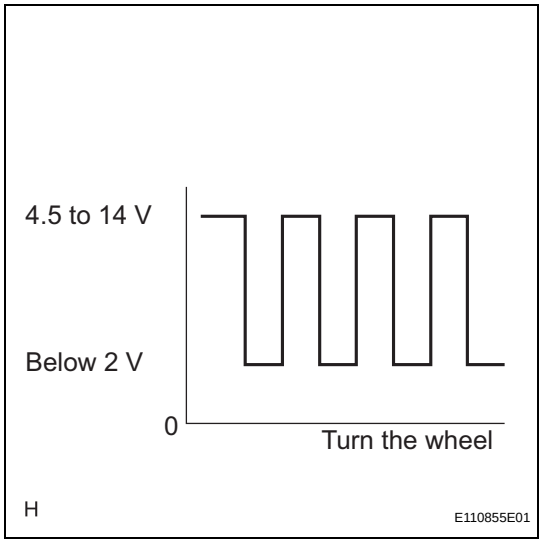

(4) Measure the voltage between terminal SPD of the navigation ECU and body ground when the drive wheels are turned slowly.

OK:

Voltage pulses as shown in the illustration.

OK → **REPLACE NAVIGATION ECU**

NS

NG

3	CHECK HARNESS AND CONNECTOR (NAVIGATION ECU - MULTI-DISPLAY)

Wire Harness View:

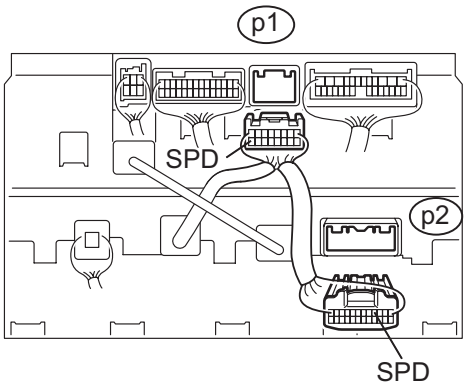

N E124093E09

(a) Disconnect the multi-display connector p1 and navigation ECU connector p2.

(b) Measure the resistance according to the value(s) in the table below.

Standard resistance

Tester Connection	Condition	Specified Condition
SPD - SPD	Always	Below 1 Ω
SPD - Body ground	Always	10 kΩ or higher

NG → **REPAIR OR REPLACE HARNESS OR CONNECTOR**

OK

REPLACE MULTI-DISPLAY

NS

Steering Pad Switch Circuit

DESCRIPTION

This circuit sends an operation signal from the steering pad switch to the radio receiver.
If there is an open in the circuit, the audio or navigation system cannot be operated using the steering pad switch.
If there is a short in the circuit, the resulting condition is the same as if the switch were continuously depressed. Therefore, the radio receiver or multi-display cannot be operated using the steering pad switch, and the radio receiver or multi-display itself cannot function.

WIRING DIAGRAM

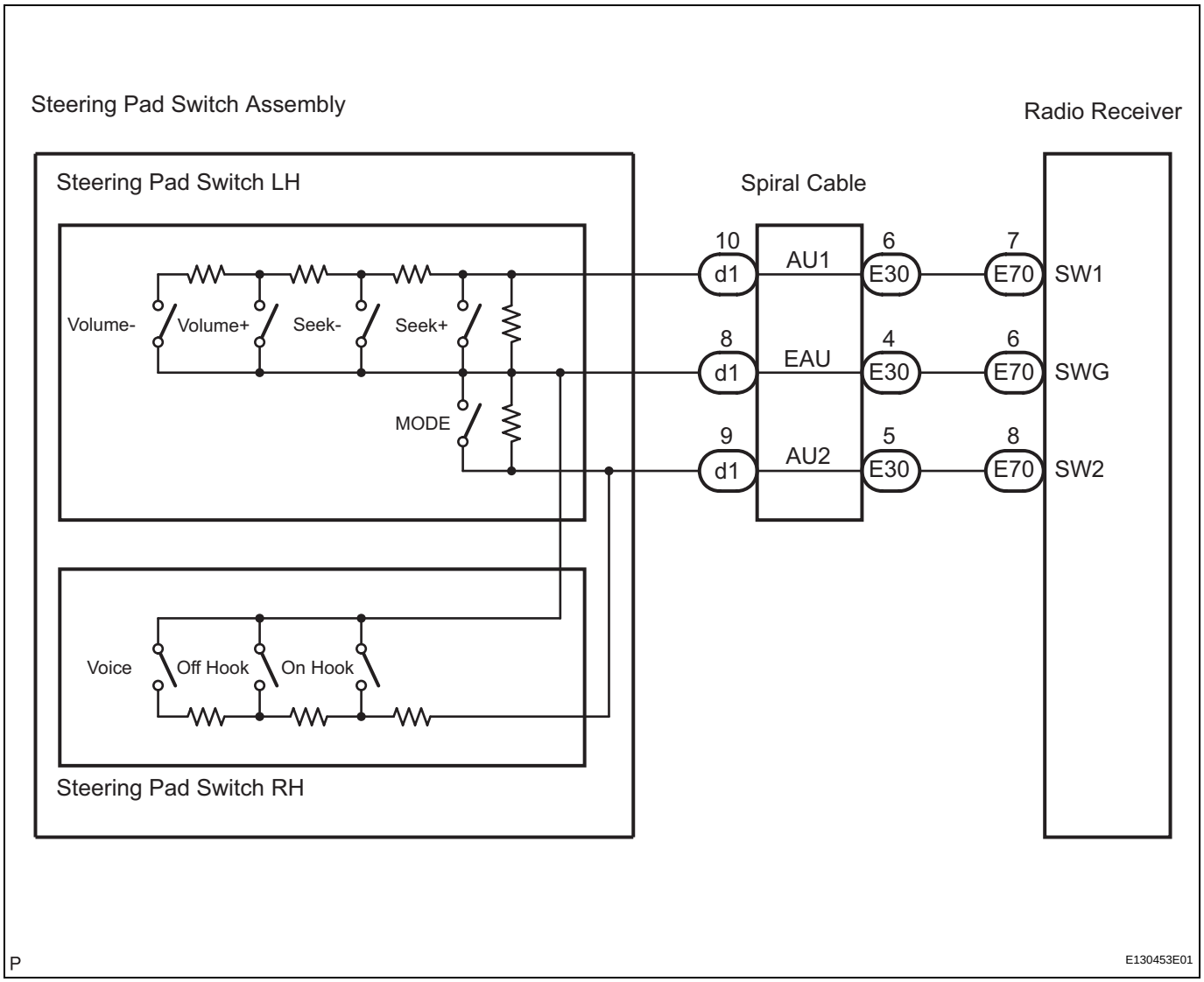

INSPECTION PROCEDURE

NOTICE:

The vehicle is equipped with an SRS (Supplemental Restraint System) which includes components such as airbags. Before servicing (including removal or installation of parts), be sure to read the precautionary notice for the Supplemental Restraint System (See page RS-1).

NS

1 INSPECT RADIO RECEIVER

Wire Harness View (DVD Changer Model):

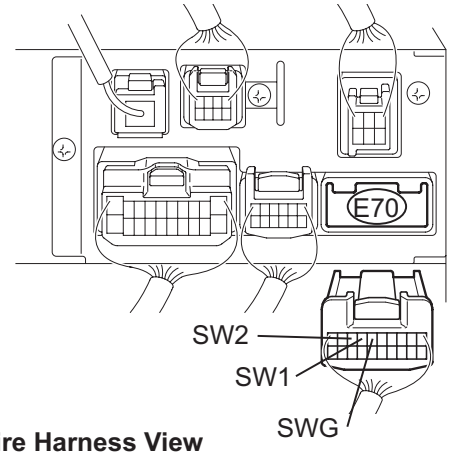

Wire Harness View (CD Changer Model):

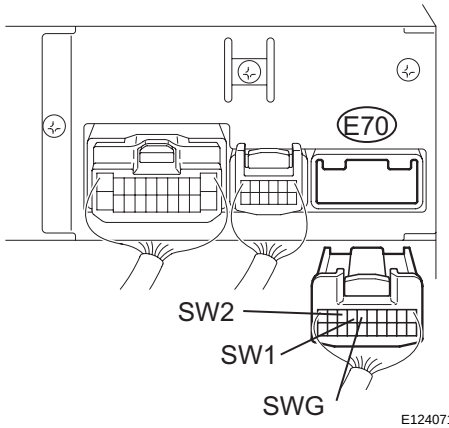

(a) Disconnect the radio receiver connector E70.
(b) Measure the resistance according to the value(s) in the table below.

Standard resistance

Tester Connection	Condition	Specified Condition
SW1 - SWG	No switch is pushed	Approx. 100 kΩ
SW1 - SWG	SEEK+ switch: push	Approx. 0 Ω
SW1 - SWG	SEEK- switch: push	Approx. 0.3 kΩ
SW1 - SWG	VOL+ switch: push	Approx. 1 kΩ
SW1 - SWG	VOL- switch: push	Approx. 3.1 kΩ
SW2 - SWG	No switch is pushed	Approx. 100 kΩ
SW2 - SWG	MODE switch: push	Approx. 0 Ω
SW2 - SWG	VOICE switch: push	Approx. 3.1 kΩ
SW2 - SWG	ON HOOK switch: push	Approx. 0.3 kΩ
SW2 - SWG	OFF HOOK switch: push	Approx. 1 kΩ

NG → **Go to step 2**

NS

OK

PROCEED TO NEXT CIRCUIT INSPECTION SHOWN IN PROBLEM SYMPTOMS TABLE

2 INSPECT STEERING PAD SWITCH ASSEMBLY

(a) Disconnect the steering pad switch assembly connector d1.

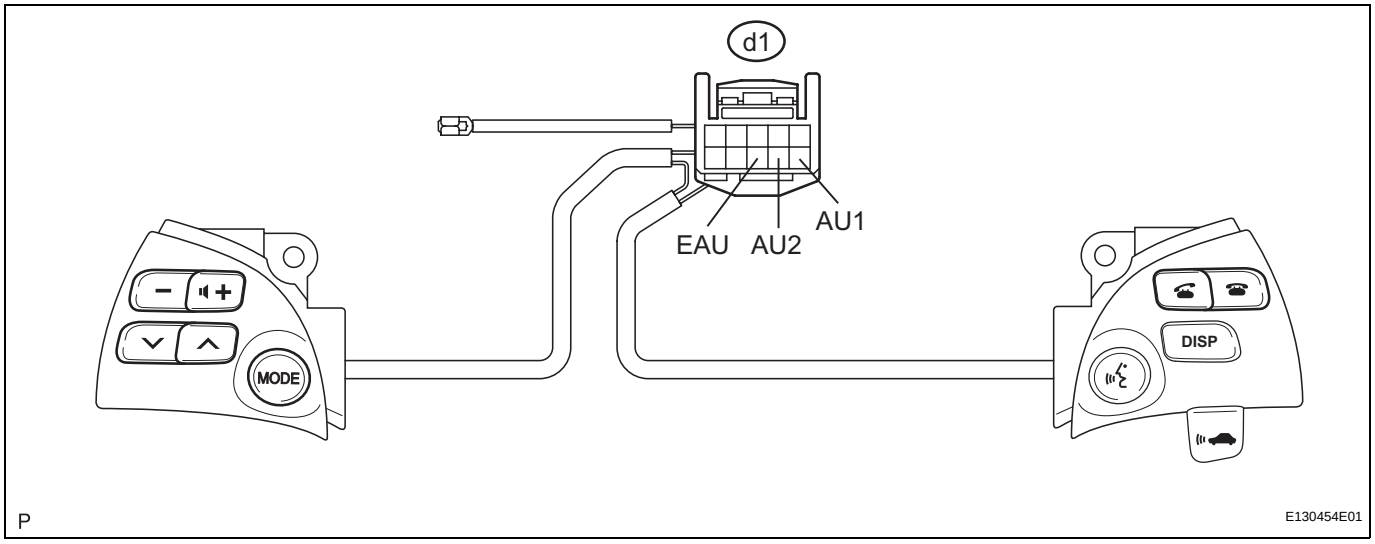

(b) Measure the resistance according to the value(s) in the table below.

Standard resistance

Tester Connection	Condition	Specified Condition
AU1 - EAU	No switch is pushed	Approx. 100 kΩ
AU1 - EAU	SEEK+ switch: push	Approx. 0 Ω
AU1 - EAU	SEEK- switch: push	Approx. 0.3 kΩ
AU1 - EAU	VOL+ switch: push	Approx. 1 kΩ
AU1 - EAU	VOL- switch: push	Approx. 3.1 kΩ
AU2 - EAU	No switch is pushed	Approx. 100 kΩ
AU2 - EAU	MODE switch: push	Approx. 0 Ω
AU2 - EAU	VOICE switch: push	Approx. 3.1 kΩ
AU2 - EAU	ON HOOK switch: push	Approx. 0.3 kΩ
AU2 - EAU	OFF HOOK switch: push	Approx. 1 kΩ

NG → **REPLACE STEERING PAD SWITCH ASSEMBLY**

OK

NS

3	INSPECT SPIRAL CABLE

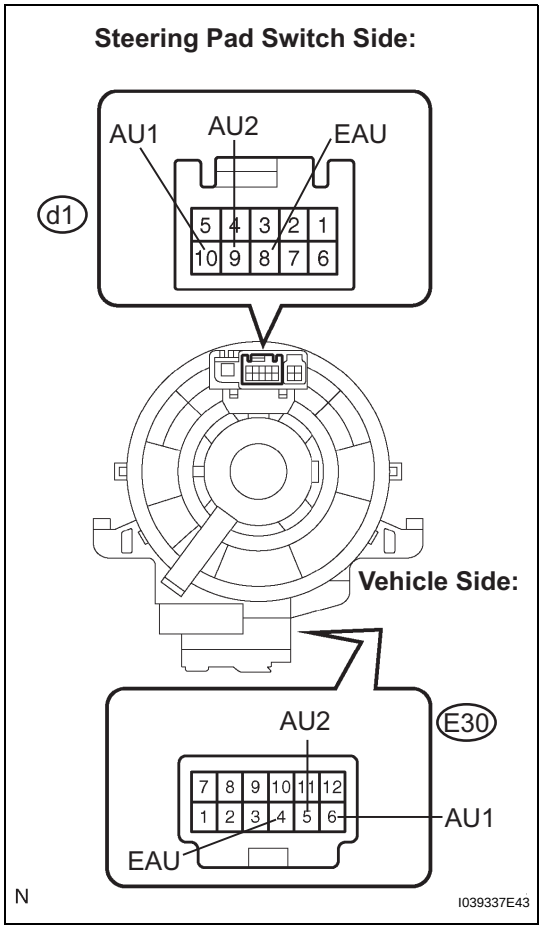

(a) Disconnect the steering pad switch assembly and spiral cable connectors.

(b) Measure the resistance according to the value(s) in the table below.

Standard resistance

Tester Connection	Spiral Cable Position	Specified Condition
EAU - EAU	Center	Below 1 Ω
	2.5 rotations to the left	
	2.5 rotations to the right	
AU1 - AU1	Center	Below 1 Ω
	2.5 rotations to the left	
	2.5 rotations to the right	
AU2 - AU2	Center	Below 1 Ω
	2.5 rotations to the left	
	2.5 rotations to the right	

NOTICE:
The spiral cable is an important part of the SRS airbag system. Incorrect removal or installation of the spiral cable may cause airbag deployment. Be sure to read the page shown in the brackets.

HINT:
- Removal (See page RS-379)
- Installation (See page RS-382)

NG → **REPLACE SPIRAL CABLE**

OK

REPAIR OR REPLACE HARNESS OR CONNECTOR (SPIRAL CABLE - RADIO RECEIVER)

NS

Illumination Circuit

DESCRIPTION

Power is supplied to the multi-display and steering pad switch assembly illumination when the light control switch is in the TAIL or HEAD position.

WIRING DIAGRAM

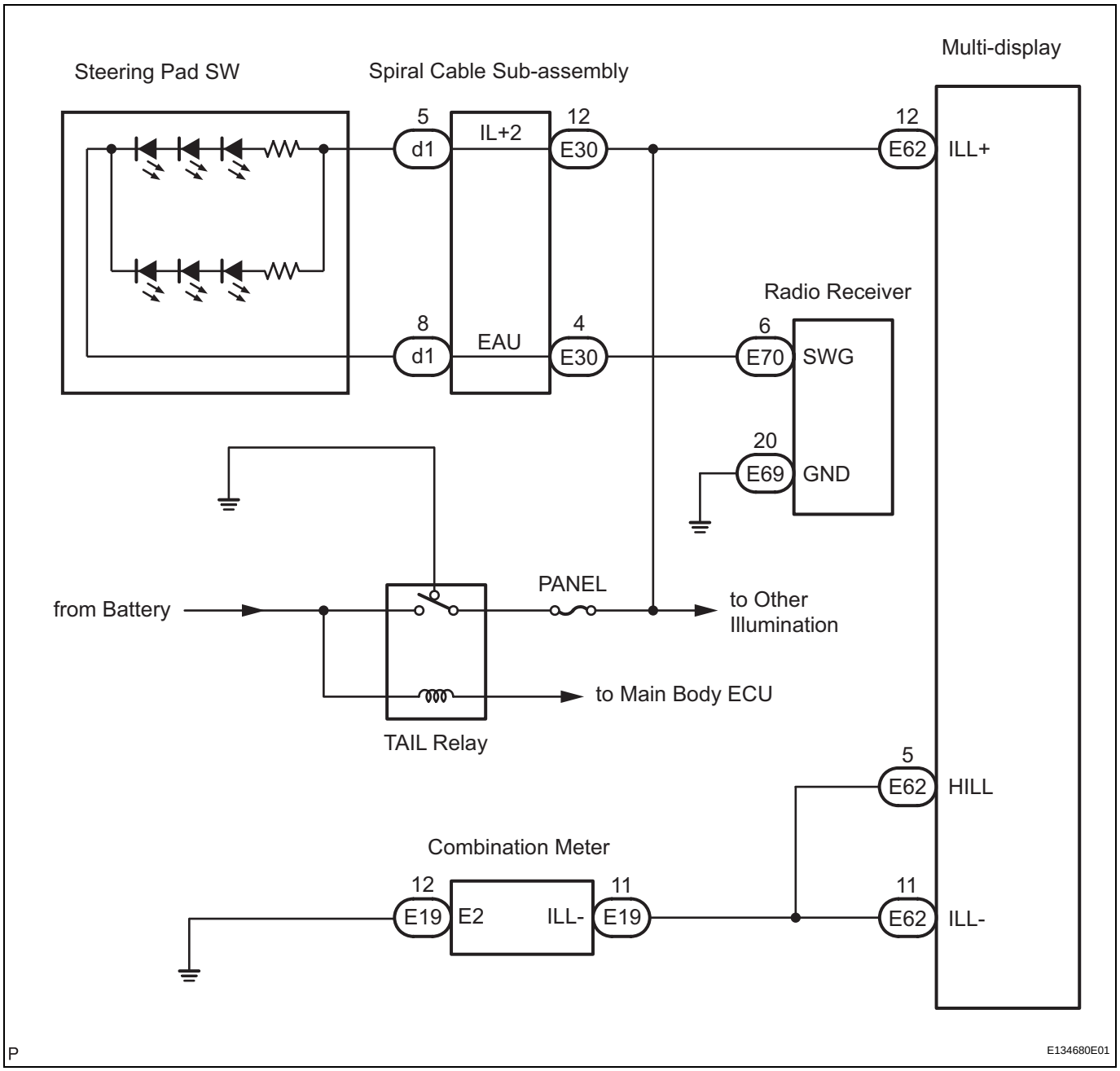

INSPECTION PROCEDURE

NOTICE:

The vehicle is equipped with an SRS (Supplemental Restraint System) which includes components such as airbags. Before servicing (including removal or installation of parts), be sure to read the precautionary notice for the Supplemental Restraint System (See page RS-1).

NS

1 CHECK ILLUMINATION

(a) Check if the illumination for the multi-display, steering pad switch assembly, glove box light, cigarette lighter, or others (seat heater switch, clock, etc.) comes on when the light control switch is turned to the HEAD or TAIL position.

Result

Condition	Proceed to
Illumination comes on for all components except steering pad switch.	A
Illumination comes on for all components except multi-display.	B
No illumination comes on (radio receiver, multi-display, glove box light, clock, cigarette lighter, etc.)	C
Illumination comes on only for glove box lighter, console light, and steering pad switch.	D

B → **Go to step 6**

C → **GO TO LIGHTING SYSTEM**

D → **GO TO COMBINATION METER SYSTEM**

NS

A

2 CHECK HARNESS AND CONNECTOR (BATTERY - SPIRAL CABLE)

Spiral Cable Connector Front View:

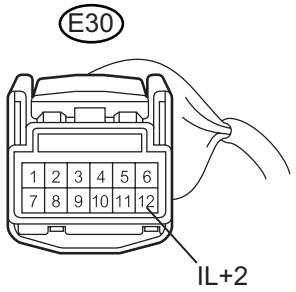

H E120026E14

(a) Disconnect the spiral cable connector.
(b) Measure the voltage according to the value(s) in the table below.

Standard voltage

Tester Connection	Condition	Specified Condition
IL+2 - Body ground	Light control SW TAIL or HEAD	10 to 14 V

NG → **REPAIR OR REPLACE HARNESS OR CONNECTOR**

OK

3 CHECK STEERING PAD SWITCH ASSEMBLY

(a) Disconnect the steering pad switch assembly connector.

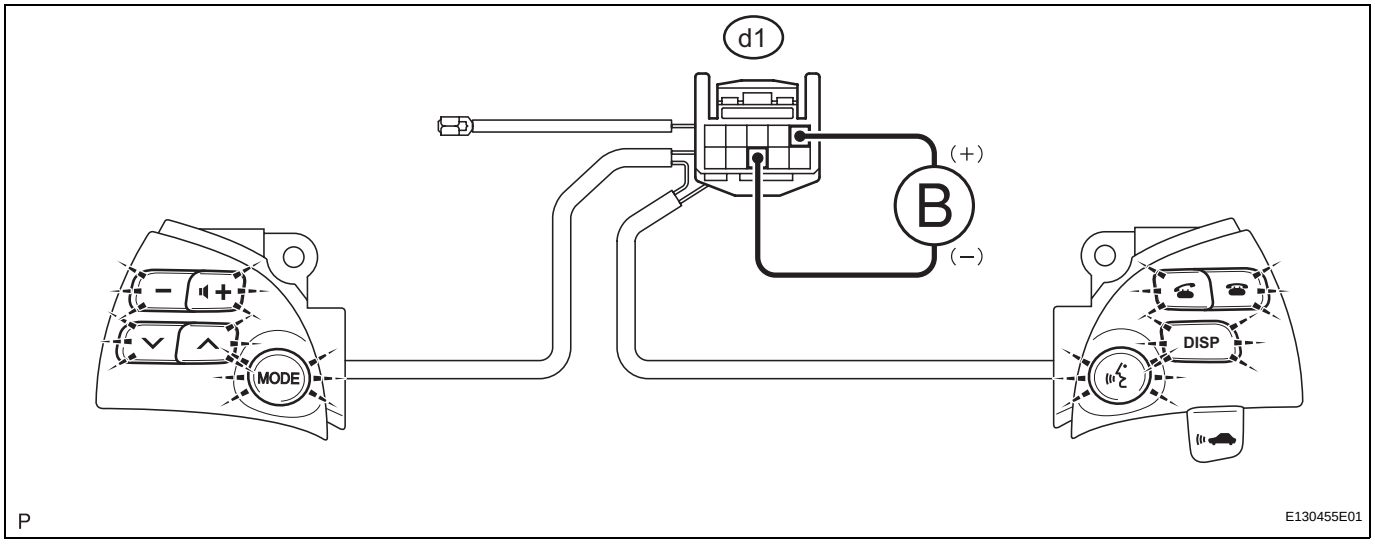

(b) Connect the positive (+) lead to terminal IL+2 and the negative (-) lead to terminal EAU of the steering pad switch assembly connector.

(c) Check if the illumination for the steering pad switch assembly comes on.

OK:

Illumination for the steering pad switch assembly comes on.

NS

NG → **REPLACE STEERING PAD SWITCH ASSEMBLY**

OK

4	INSPECT SPIRAL CABLE

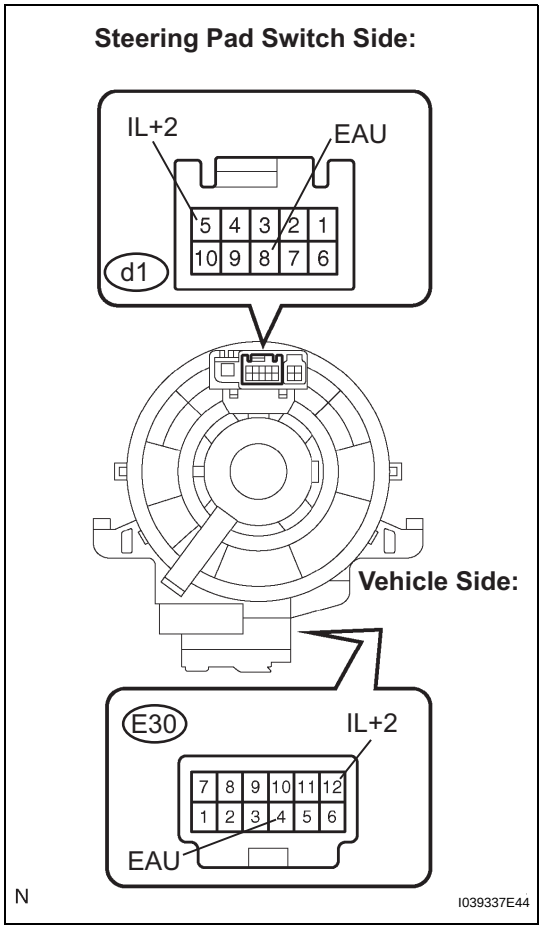

(a) Disconnect the steering pad switch assembly and spiral cable connectors.

(b) Measure the resistance according to the value(s) in the table below.

Standard resistance

Tester Connection	Spiral Cable Position	Specified Condition
EAU - EAU	Center	Below 1 Ω
	2.5 rotations to the left	
	2.5 rotations to the right	
IL+2 - IL+2	Center	Below 1 Ω
	2.5 rotations to the left	
	2.5 rotations to the right	

NOTICE:
The spiral cable is an important part of the SRS airbag system. Incorrect removal or installation of the spiral cable may cause airbag deployment. Be sure to read the page shown in the brackets.

HINT:
- Removal (See page RS-379)
- Installation (See page RS-382)

NG → **REPLACE SPIRAL CABLE**

OK

NS

5	CHECK HARNESS AND CONNECTOR (SPIRAL CABLE - RADIO RECEIVER)

Radio Receiver (DVD Changer Models) Wire Harness View:

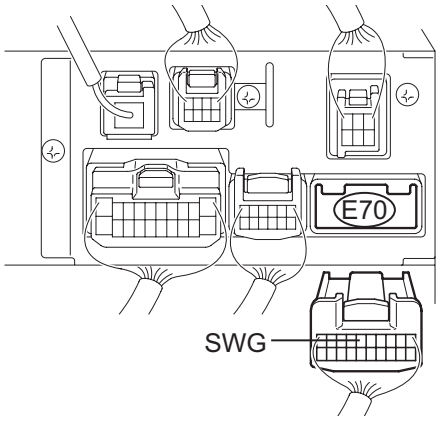

Radio Receiver (CD Changer Models) Wire Harness View:

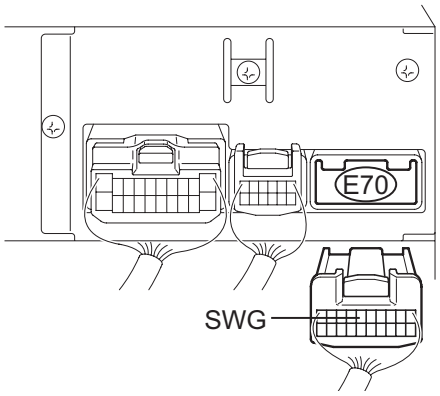

Spiral Cable Connector Front View:

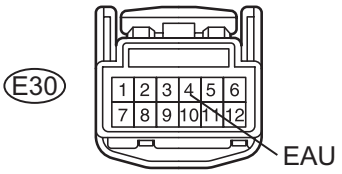

P E124074E05

(a) Disconnect the radio receiver and spiral cable connectors.

(b) Measure the resistance according to the value(s) in the table below.

Standard resistance

Tester Connection	Condition	Specified Condition
SWG - EAU	Always	Below 1 Ω
SWG - Body ground	Always	10 kΩ or higher

NG → **REPAIR OR REPLACE HARNESS OR CONNECTOR**

OK

REPLACE RADIO RECEIVER

NS

6 CHECK HARNESS AND CONNECTOR (BATTERY - MULTI-DISPLAY)

Wire Harness View:

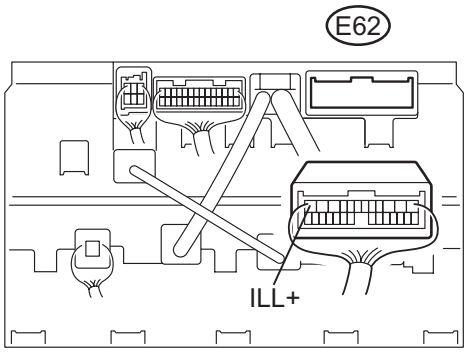

N E119725E10

(a) Disconnect the multi-display connector E62.
(b) Measure the voltage according to the value(s) in the table below.

Standard voltage

Tester Connection	Condition	Specified Condition
ILL+ - Body ground	Light control switch TAIL or HEAD	10 to 14 V

NG → **REPAIR OR REPLACE HARNESS OR CONNECTOR**

OK

NS

7 CHECK HARNESS AND CONNECTOR (MULTI-DISPLAY - COMBINATION METER)

Multi-display Wire Harness View:

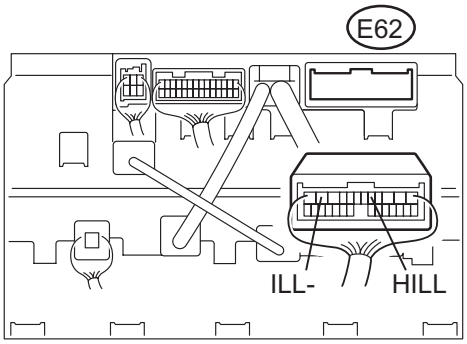

Combination Meter Wire Harness View:

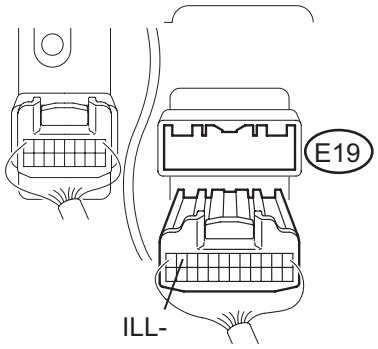

N E134681E01

(a) Disconnect the multi-display and combination meter connectors.
(b) Measure the resistance according to the value(s) in the table below.

Standard resistance

Tester Connection	Condition	Specified Condition
ILL- - ILL-	Always	Below 1 Ω
ILL- - HILL	Always	Below 1 Ω
ILL- - Body ground	Always	10 kΩ or higher
HILL - Body ground	Always	10 kΩ or higher

NG → **REPAIR OR REPLACE HARNESS OR CONNECTOR**

OK

PROCEED TO NEXT CIRCUIT INSPECTION SHOWN IN PROBLEM SYMPTOMS TABLE

Parking Brake Switch Circuit

DESCRIPTION

This circuit is from the parking brake switch to the multi-display.

WIRING DIAGRAM

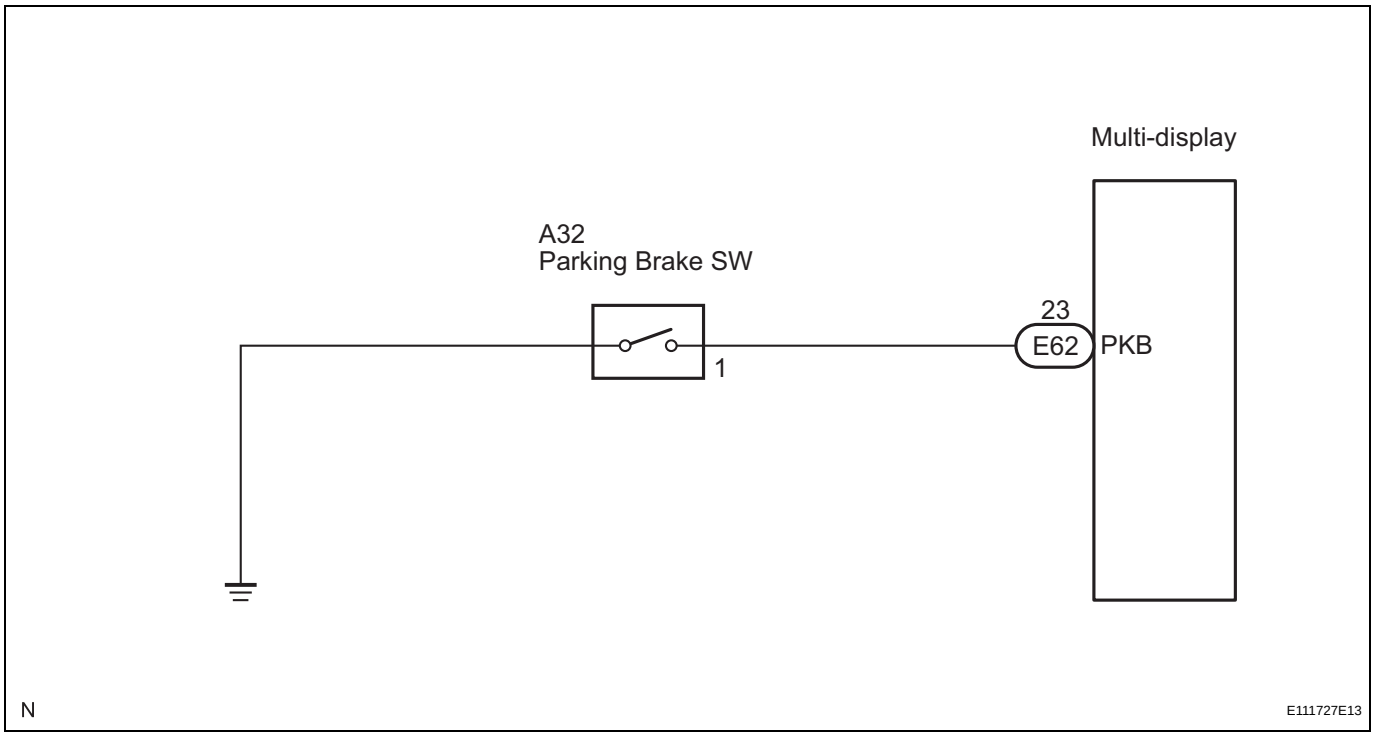

INSPECTION PROCEDURE

1	CHECK BRAKE WARNING LIGHT

(a) Check that the brake warning light comes on when the parking brake is applied and goes off when the parking brake is released.

OK:

The brake warning light operates as specified above.

OK → **Go to step 3**

NG

2 INSPECT PARKING BRAKE SWITCH

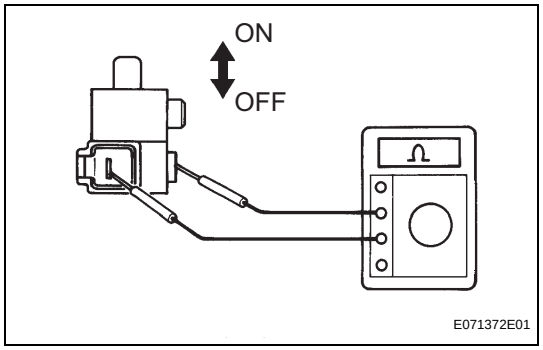

(a) Remove the parking brake switch.
(b) Measure the resistance according to the value(s) in the table below.

Standard resistance

Tester Connection	Condition	Specified Condition
Switch connector - Switch body	ON (When shaft is not pressed)	Below 1 Ω
Switch connector - Switch body	OFF (When shaft is pressed)	10 kΩ or higher

NG → **REPLACE PARKING BRAKE SWITCH**

OK

3 CHECK HARNESS AND CONNECTOR (MULTI-DISPLAY - PARKING BRAKE SWITCH)

Multi-display Wire Harness View:

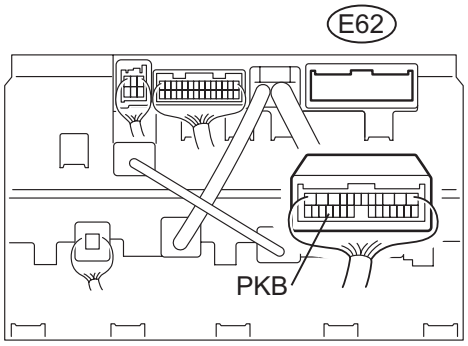

Parking Brake Switch Connector Front View:

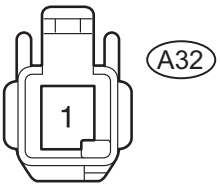

N E124076E02

(a) Disconnect the multi-display connector E62 and parking brake switch connector A32.
(b) Measure the resistance according to the value(s) in the table below.

Standard resistance

Tester Connection	Condition	Specified Condition
PKB - A32-1	Always	Below 1 Ω
PKB - Body ground	Always	10 kΩ or higher

NG → **REPAIR OR REPLACE HARNESS OR CONNECTOR**

OK

PROCEED TO NEXT CIRCUIT INSPECTION SHOWN IN PROBLEM SYMPTOMS TABLE

NS

AVC-LAN Circuit

DESCRIPTION

Each unit of the navigation system connected to the AVC-LAN (communication bus) transfers the signal of each switch by communication.
When a short to +B or short to ground occurs in this AVC-LAN, the navigation system will not function normally as the communication is discontinued.

INSPECTION PROCEDURE

1 INSPECT RADIO RECEIVER

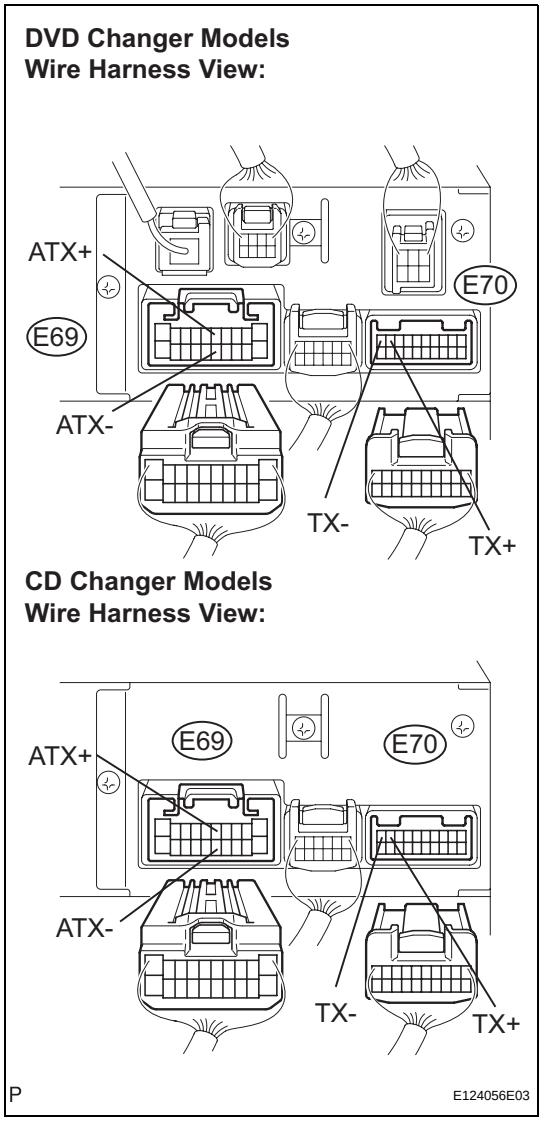

(a) Disconnect the radio receiver connectors.
(b) Measure the resistance according to the value(s) in the table below.

Standard resistance

Tester Connection	Condition	Specified Condition
ATX+ (E69-5) - ATX- (E69-15)	Always	60 to 80 Ω
TX+ (E70-9) - TX- (E70-10)	Always	60 to 80 Ω

NG → **REPLACE RADIO RECEIVER**

OK

2 CHECK HARNESS AND CONNECTOR

HINT:
For details of the connectors, refer to "TERMINALS OF ECU" (See page NS-44).

(a) Referring to the AVC-LAN wiring diagram below, check all AVC-LAN circuits.
  (1) Disconnect all connectors in all AVC-LAN circuits.
  (2) Check for an open or short in all AVC-LAN circuits.
  OK:
  There is no open or short circuit.

AVC-LAN WIRING DIAGRAM:

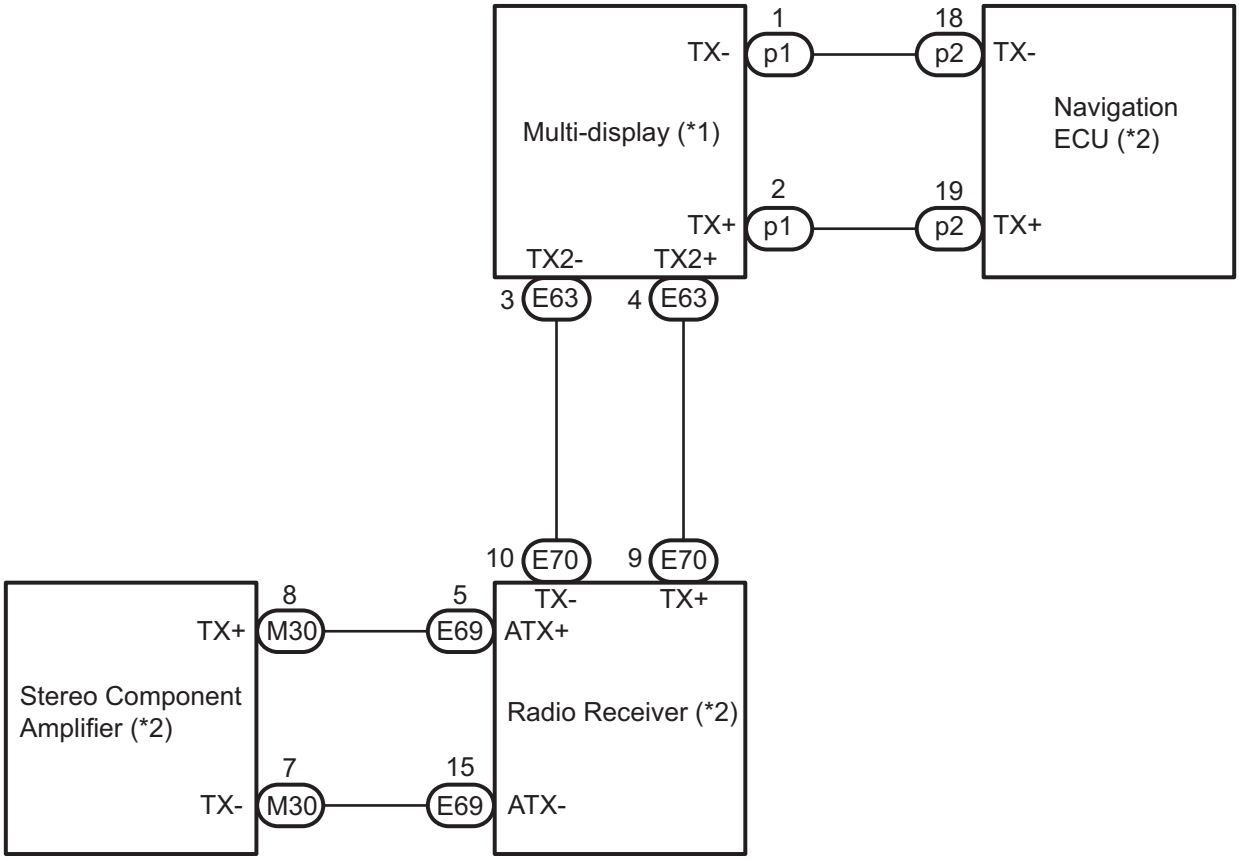

*1: Master Unit

*2: Slave Unit

P

E134675E01

NG → **REPAIR OR REPLACE HARNESS OR CONNECTOR**

OK

PROCEED TO NEXT CIRCUIT INSPECTION SHOWN IN PROBLEM SYMPTOMS TABLE

NS

Vehicle Speed Signal Circuit between Multi-display and Combination Meter

DESCRIPTION

The multi-display performs switch operation control during driving by receiving a vehicle speed signal from the combination meter.
HINT:

- A voltage of 12 V or 5 V is output from each ECU and then input to the combination meter. The signal is changed to a pulse signal at the transistor in the combination meter. Each ECU controls the respective system based on the pulse signal.
- If a short occurs in an ECU, all systems in the diagram below will not operate normally.

WIRING DIAGRAM

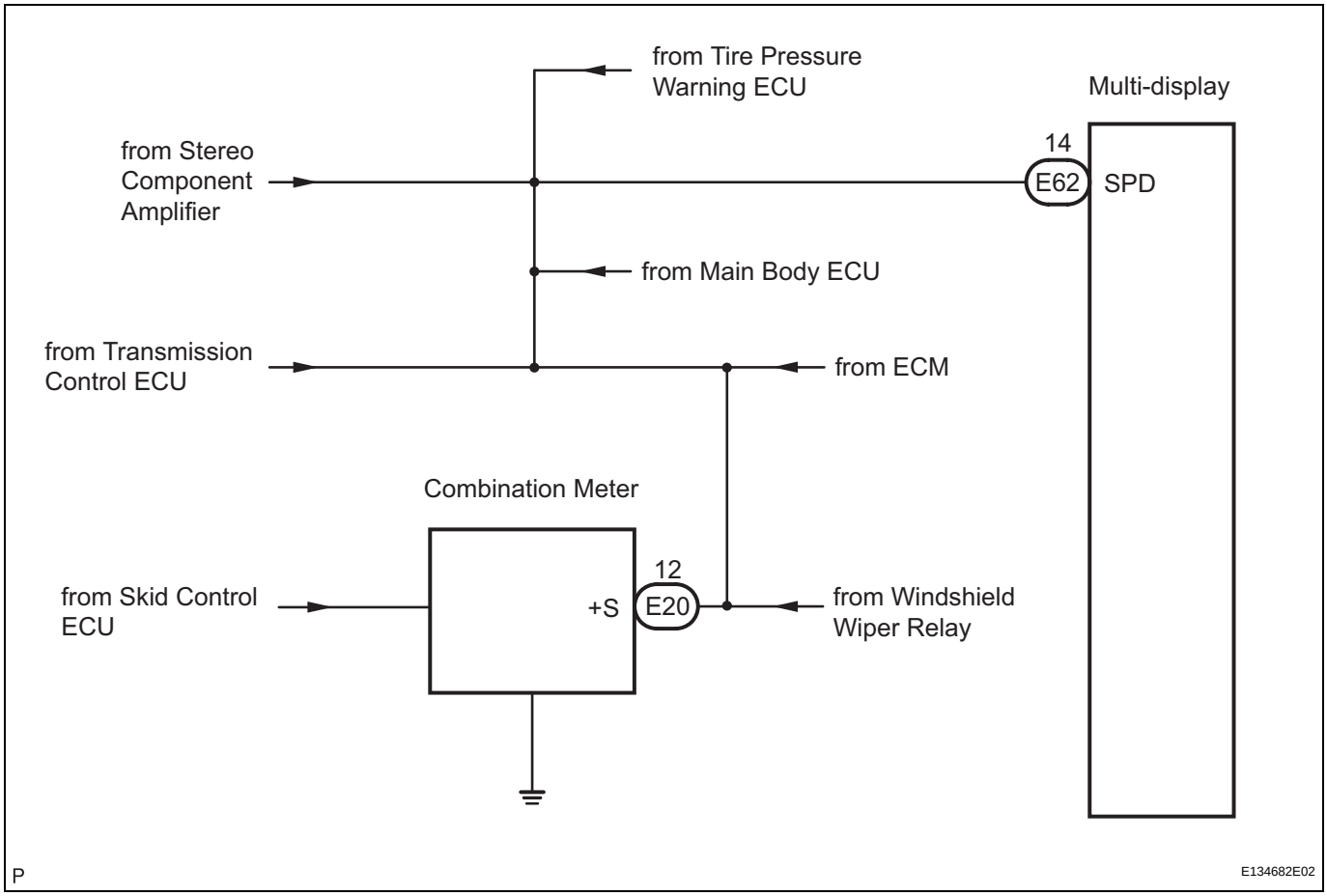

INSPECTION PROCEDURE

1	CHECK OPERATION OF SPEEDOMETER

(a) Drive the vehicle and check if the function of the speedometer in the combination meter is normal.
OK:
Actual vehicle speed and the speed indicated on the speedometer are the same.

HINT:
The vehicle speed sensor is functioning normally when the indication on the speedometer is normal.

NG → **GO TO COMBINATION METER SYSTEM**

OK

2 INSPECT MULTI-DISPLAY

Multi-display Wire Harness View:

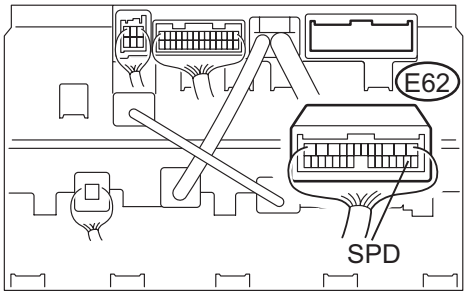

N E119725E11

(a) Disconnect the multi-display connector E62.
(b) Measure voltage.
  (1) Jack up either one of the drive wheels.
  (2) Move the shift lever to the neutral position.
  (3) Turn the engine switch on (IG).

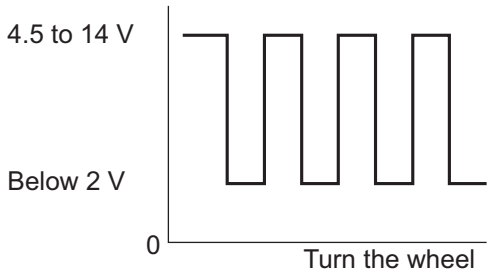

H E110855E01

(4) Measure the voltage between terminal SPD of the multi-display and body ground when the drive wheels are turned slowly.
OK:
Voltage pulses as shown in the illustration.

OK → **REPLACE MULTI-DISPLAY**

NG

NS

3 CHECK HARNESS AND CONNECTOR (COMBINATION METER - MULTI-DISPLAY)

Multi-display Wire Harness View:

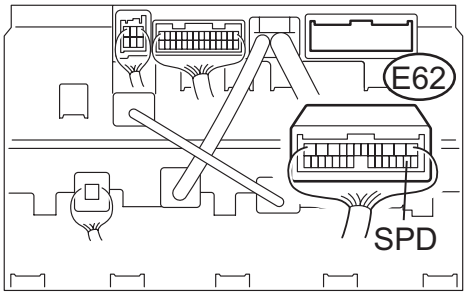

Combination Meter Wire Harness View:

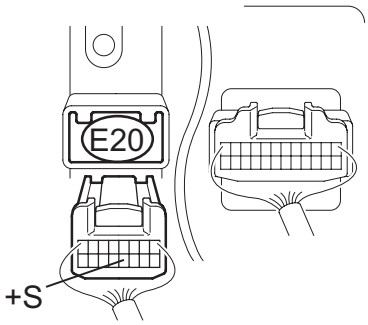

N E134683E01

(a) Disconnect the multi-display connector E62 and combination meter connector E20.
(b) Measure the resistance according to the value(s) in the table below.

Standard resistance

Tester Connection	Condition	Specified Condition
SPD - +S	Engine switch off	Below 1 Ω

NG → **REPAIR OR REPLACE HARNESS OR CONNECTOR**

OK

4 CHECK HARNESS AND CONNECTOR (MULTI-DISPLAY - BODY GROUND)

Multi-display Wire Harness View:

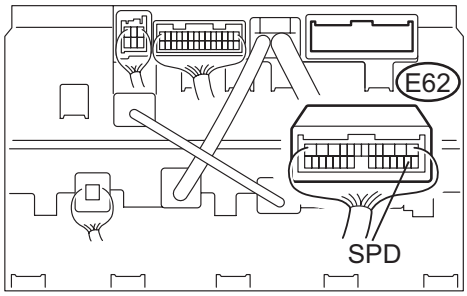

N E119725E11

(a) Measure the resistance according to the value(s) in the table below.

Standard resistance

Tester Connection	Condition	Specified Condition
SPD - Body ground	Engine switch off	10 kΩ or higher

HINT:
If the resistance between terminal SPD and body ground is less than 10 kΩ, there may be a short in a wire harness, connector, or an ECU that is connected to the SPD signal wire.

NG → **REPAIR OR REPLACE HARNESS OR CONNECTOR OR EACH ECU**

NS

OK

REPLACE COMBINATION METER

Reverse Signal Circuit

DESCRIPTION

The navigation ECU receives a reverse signal from the multi-display and information about the GPS antenna, and then adjusts vehicle position.

WIRING DIAGRAM

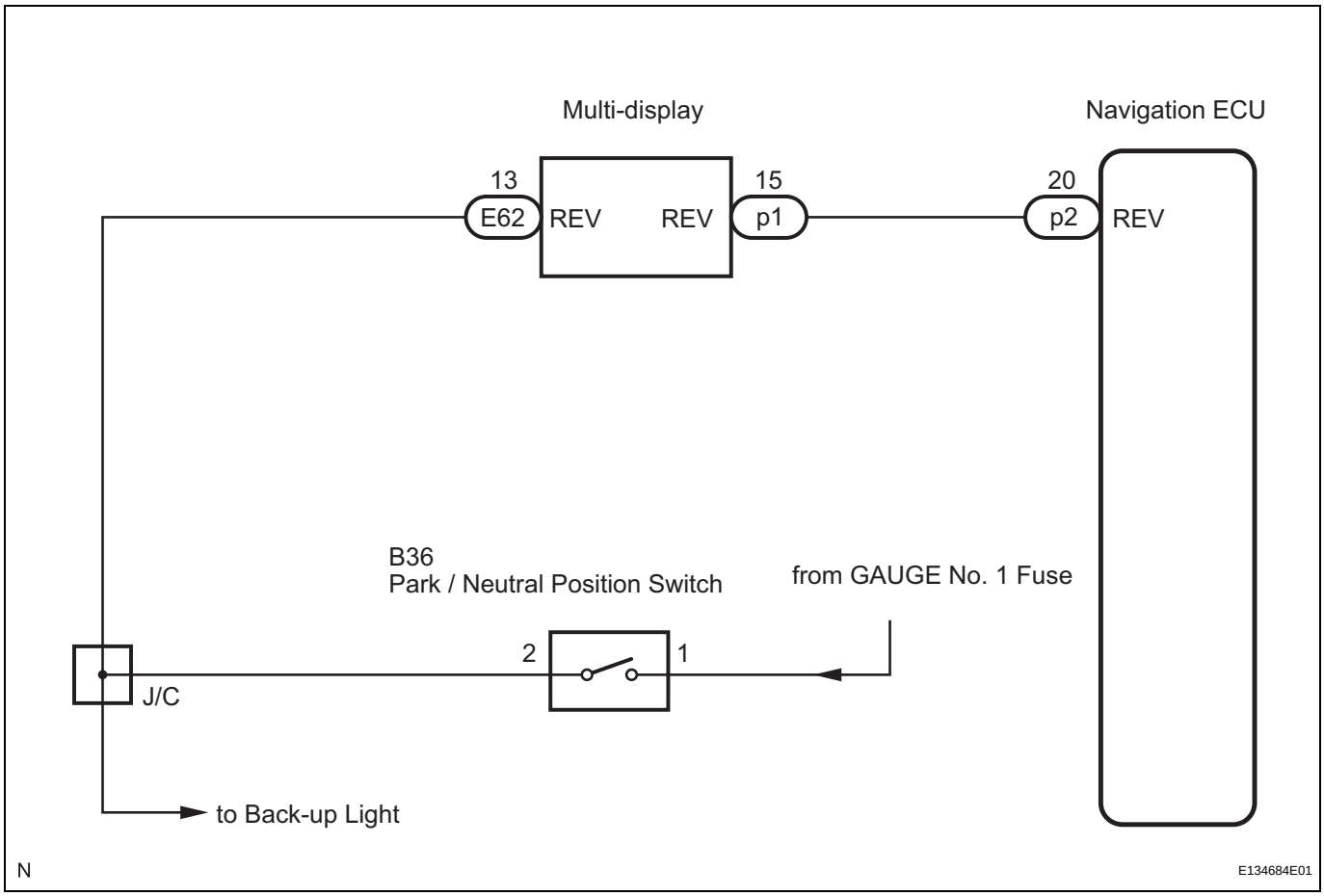

INSPECTION PROCEDURE

1	CHECK BACK-UP LIGHT

(a) Move the shift lever to the R position and check if the back-up lights come on.
OK:
The back-up lights come on.

NG → **GO TO LIGHTING SYSTEM**

OK

2 CHECK VEHICLE SIGNAL (DISPLAY CHECK MODE)

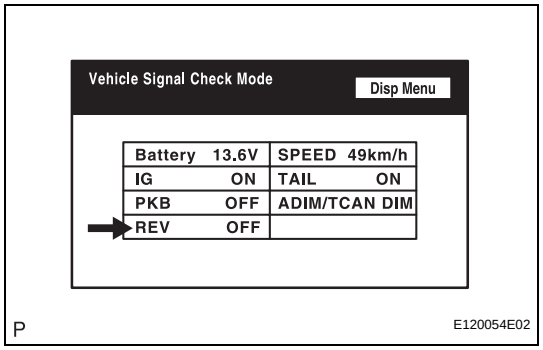

(a) Enter the "Display Check" mode (Vehicle Signal Check Mode) (See page NS-21).

(b) Check that the display changes between ON and OFF according to the shift lever operation (P and R).

OK

Shift Lever Position	Display
Reverse	ON
Except Reverse	OFF

HINT:
This display is updated once per second. As a result, it is normal for the display to lag behind the actual change in the switch.

NG → **Go to step 5**

OK

3 CHECK HARNESS AND CONNECTOR (NAVIGATION ECU - MULTI-DISPLAY)

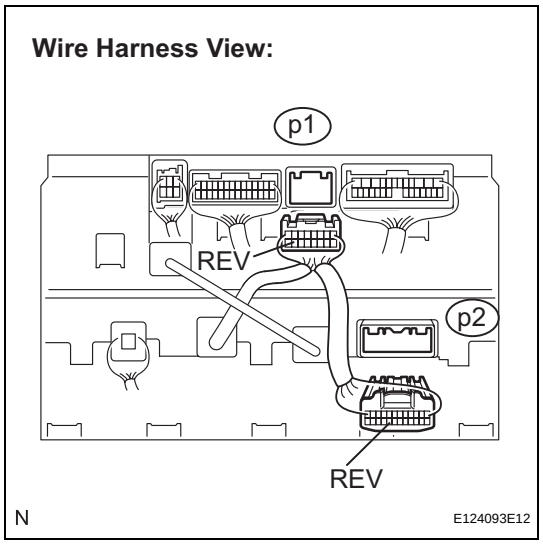

(a) Disconnect multi-display connector p1 and navigation ECU connector p2.

(b) Measure the resistance according to the value(s) in the table below.

Standard resistance

Tester Connection	Condition	Specified Condition
REV - REV	Always	Below 1 Ω
REV - Body ground	Always	10 kΩ or higher

NG → **REPAIR OR REPLACE HARNESS OR CONNECTOR**

OK

NS

4 INSPECT NAVIGATION ECU

Wire Harness View:

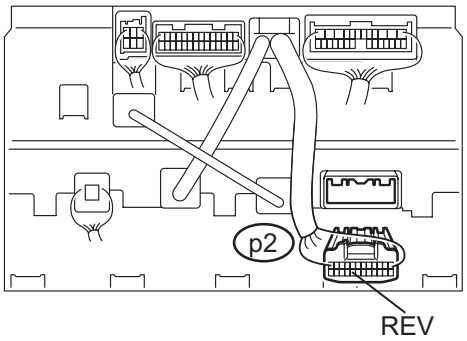

N E124079E04

(a) Reconnect the multi-display connector p1.
(b) Measure the voltage according to the value(s) in the table below.

Standard voltage

Tester Connection	Condition	Specified Condition
REV - Body ground	Engine switch is on (IG). Shift lever is moved to Reverse position.	10 to 14 V
REV - Body ground	Engine switch is on (IG). Shift lever is moved to any position except Reverse.	Below 1 V

NG → **REPLACE MULTI-DISPLAY**

OK

REPLACE NAVIGATION ECU

NS

5 INSPECT MULTI-DISPLAY

Wire Harness View:

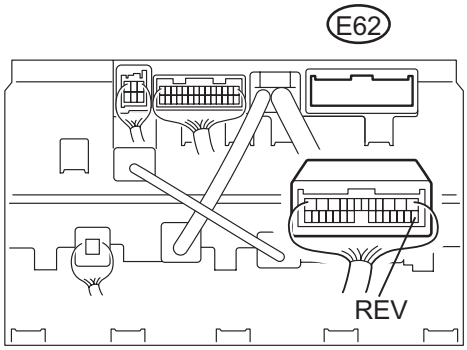

N E119725E12

(a) Disconnect the multi-display connector E62.
(b) Measure the voltage according to the value(s) in the table below.

Standard voltage

Tester Connection	Condition	Specified Condition
REV - Body ground	Engine switch is on (IG). Shift lever is moved to Reverse position.	10 to 14 V
REV - Body ground	Engine switch is on (IG). Shift lever is moved to any position except Reverse.	Below 1 V

OK → **REPLACE MULTI-DISPLAY**

NG

REPAIR OR REPLACE HARNESS OR CONNECTOR (MULTI-DISPLAY - PARK/NEUTRAL POSITION SWITCH)

Navigation Voice Circuit

DESCRIPTION

This circuit is used when the voice guidance in the navigation system is on.

WIRING DIAGRAM

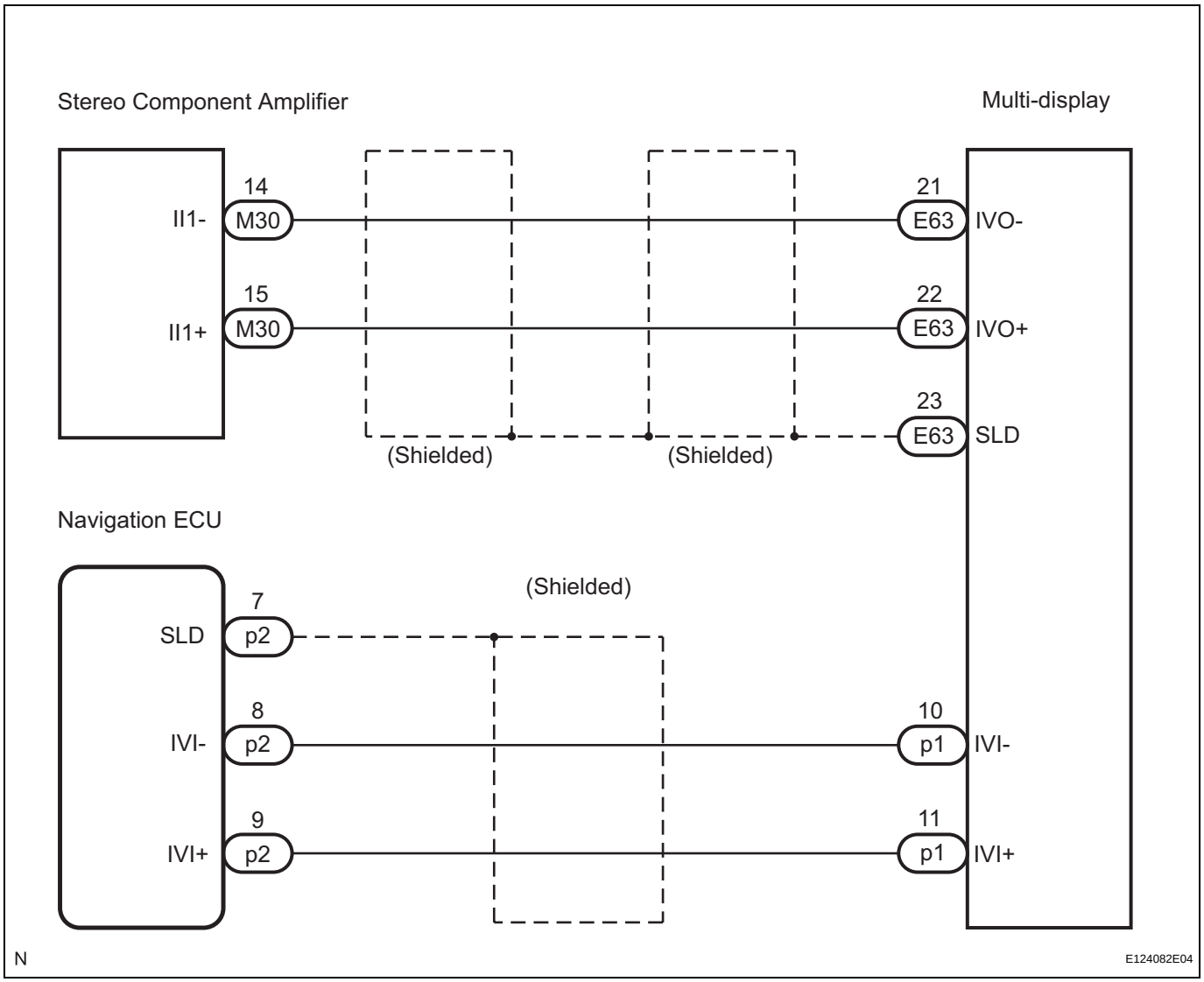

NS

INSPECTION PROCEDURE

1	CHECK HARNESS AND CONNECTOR (MULTI-DISPLAY - NAVIGATION ECU)

Wire Harness View:

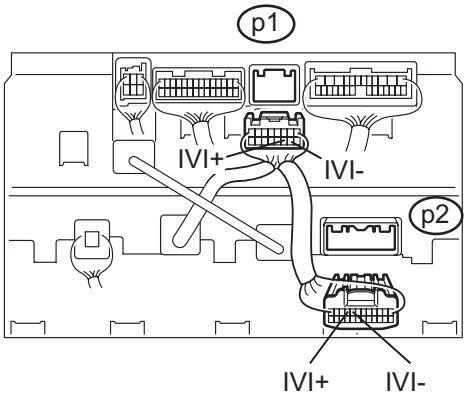

N E124093E11

(a) Disconnect the multi-display connector p1 and the navigation ECU connector p2.

(b) Measure the resistance according to the value(s) in the table below.

Standard resistance

Tester Connection	Condition	Specified Condition
IVI- - IVI-	Always	Below 1Ω
IVI+ - IVI+	Always	Below 1Ω
IVI- - Body ground	Always	10 kΩ or higher
IVI+ - Body ground	Always	10 kΩ or higher

NG → **REPAIR OR REPLACE HARNESS OR CONNECTOR**

OK

NS

2	CHECK HARNESS AND CONNECTOR (MULTI-DISPLAY - STEREO COMPONENT AMPLIFIER)

Multi-display Wire Harness View:

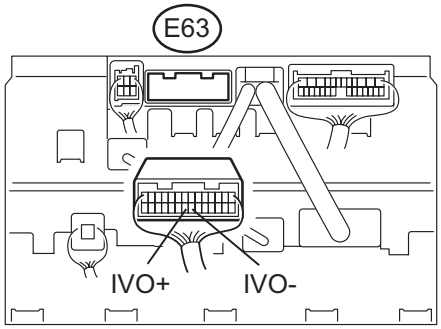

Stereo Component Amplifier (with Rear Header Speaker System) Wire Harness View:

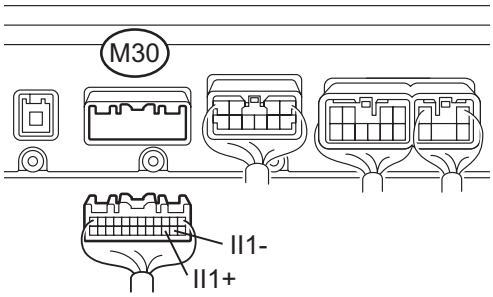

Stereo Component Amplifier (without Rear Header Speaker System) Wire Harness View:

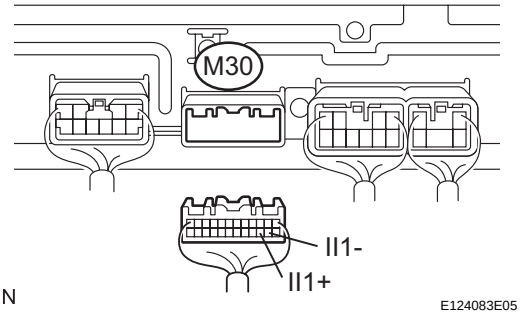

N

E124083E05

(a) Disconnect the multi-display connector E63 and stereo component amplifier connector M30.

(b) Measure the resistance according to the value(s) in the table below.

Standard resistance

Tester Connection	Condition	Specified Condition
IVO+ - II1+	Always	Below 1Ω
IVO- - II1-	Always	Below 1Ω
IVO+ - Body ground	Always	10 kΩ or higher
IVO- - Body ground	Always	10 kΩ or higher

NG → **REPAIR OR REPLACE HARNESS OR CONNECTOR**

OK

PROCEED TO NEXT CIRCUIT INSPECTION SHOWN IN PROBLEM SYMPTOMS TABLE

NS

Display Signal Circuit between Navigation ECU and Multi-display

DESCRIPTION

This is the display signal circuit from the navigation ECU to the multi-display.

WIRING DIAGRAM

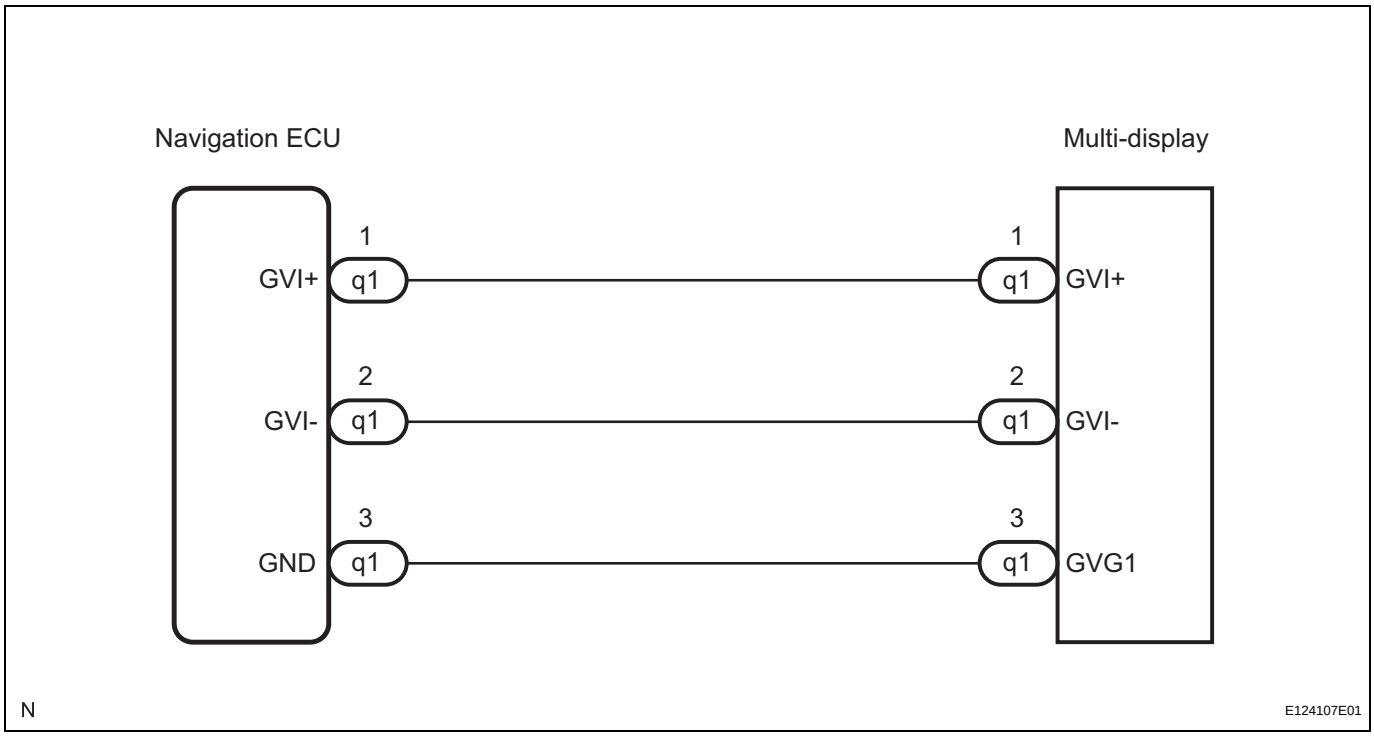

INSPECTION PROCEDURE

1	CHECK HARNESS AND CONNECTOR (NAVIGATION ECU - MULTI-DISPLAY)

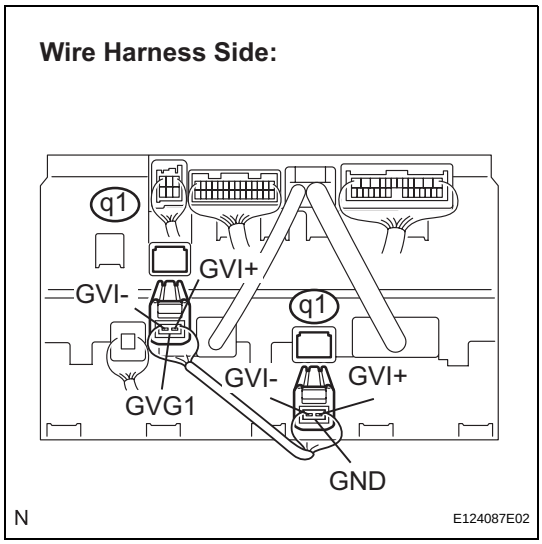

(a) Disconnect the navigation ECU connector q1 and multi-display connector q1.

(b) Measure the resistance according to the value(s) in the table below.

Standard resistance

Tester Connection	Condition	Specified Condition
GVI+ - GVI+	Always	Below 1 Ω
GVI- - GVI-	Always	Below 1 Ω
GVG1 - GND	Always	Below 1 Ω
GVI+ - Body ground	Always	10 kΩ or higher
GVI- - Body ground	Always	10 kΩ or higher

NG → **REPAIR OR REPLACE HARNESS OR CONNECTOR**

OK

PROCEED TO NEXT CIRCUIT INSPECTION SHOWN IN PROBLEM SYMPTOMS TABLE

Display Signal Circuit between Multi-display and Radio Receiver

DESCRIPTION

This is the DVD display signal circuit from the radio receiver to the multi-display.

WIRING DIAGRAM

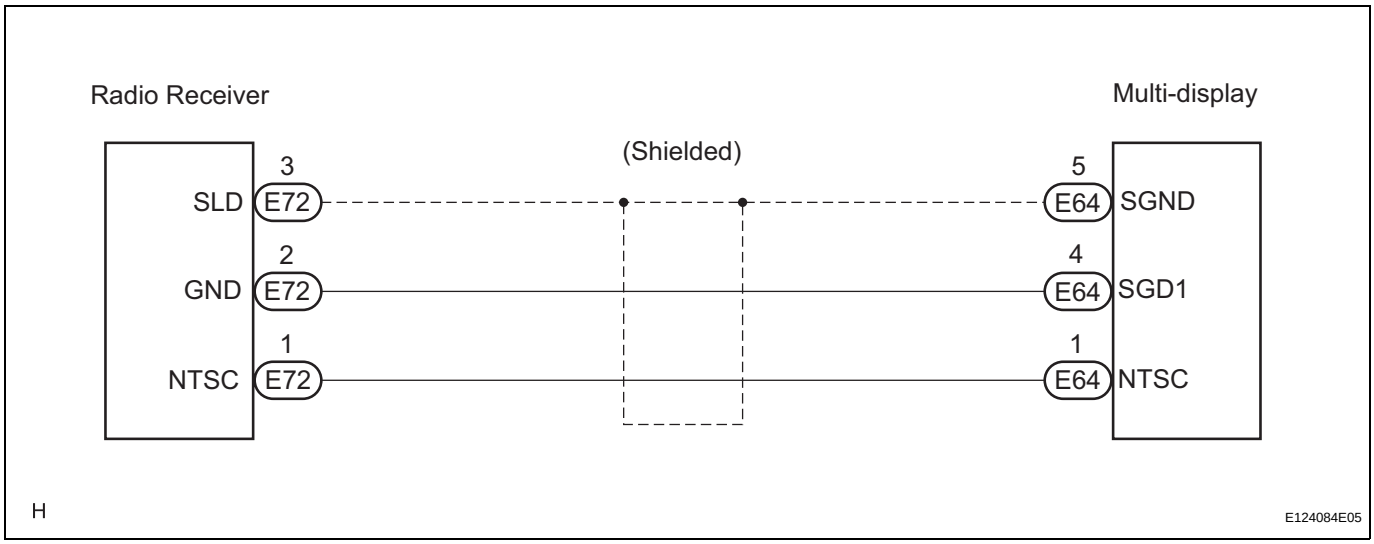

INSPECTION PROCEDURE

1 CHECK HARNESS AND CONNECTOR (RADIO RECEIVER - MULTI-DISPLAY)

Multi-display Wire Harness View:

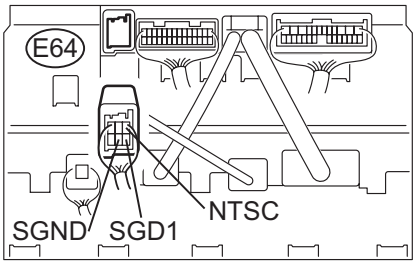

Radio Receiver Wire Harness View:

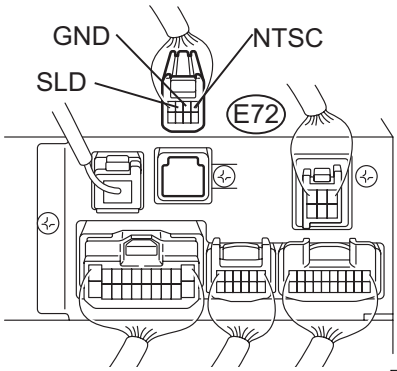

N E124085E02

(a) Disconnect the multi-display connector E64 and radio receiver E72 connector.

(b) Measure the resistance according to the value(s) in the table below.

Standard resistance

Tester Connection	Condition	Specified Condition
GND - SGD1	Always	Below 1 Ω
NTSC - NTSC	Always	Below 1 Ω
SLD - SGND	Always	Below 1 Ω
NTSC - Body ground	Always	10 kΩ or higher
GND - Body ground	Always	10 kΩ or higher

NG → **REPAIR OR REPLACE HARNESS OR CONNECTOR**

OK

2 INSPECT RADIO RECEIVER (OUTPUT SIGNAL)

Multi-display Wire Harness View:

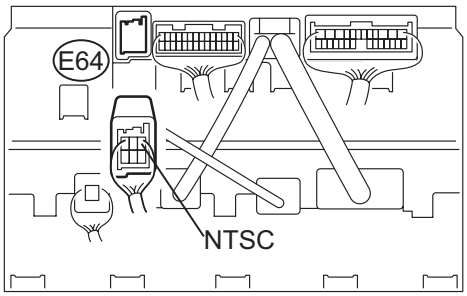

N E119727E02

(a) Reconnect the radio receiver connector E72.

NS

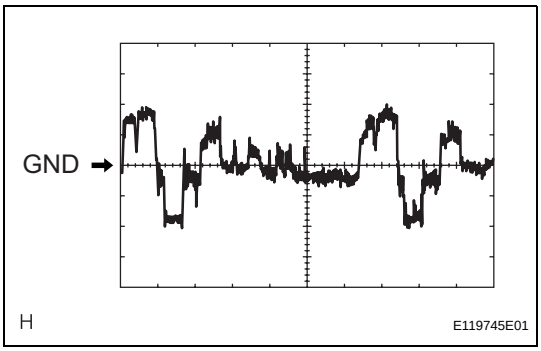

(b) Measure the waveform according to the table below.
OK

Tester Connection	Condition	Specified Condition
NTSC - Body ground	**DVD display is ON**	**A waveform synchronized with display signals is output**

HINT:
The waveform pattern may differ from that shown in the illustration below due to differences in oscilloscope settings. A normal radio receiver operating condition can be determined if any waveform is output.
Oscilloscope wave
Terminal: NTSC - Body ground
Setting: 200 mV/DIV. 10 μs/DIV.
Condition: DVD display is on.

NG → **REPLACE RADIO RECEIVER**

OK

PROCEED TO NEXT CIRCUIT INSPECTION SHOWN IN PROBLEM SYMPTOMS TABLE

Microphone Circuit between Overhead J/B and Multi-display

DESCRIPTION

This circuit sends a microphone signal from the overhead J/B to the multi-display. It also supplies power from the multi-display to the overhead J/B.

WIRING DIAGRAM

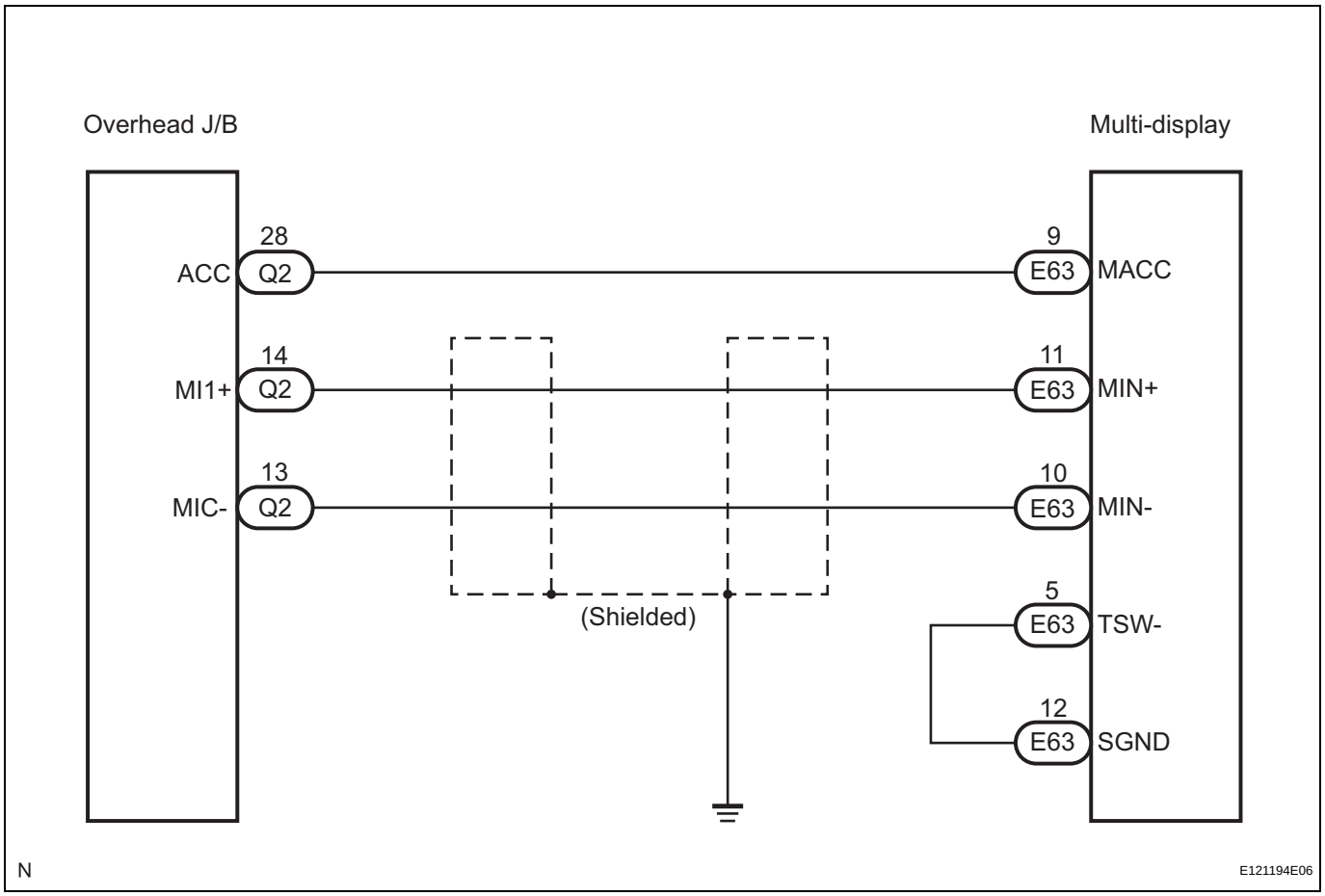

INSPECTION PROCEDURE

1 CHECK HARNESS AND CONNECTOR (OVERHEAD J/B - MULTI-DISPLAY)

Overhead J/B Wire Harness View:

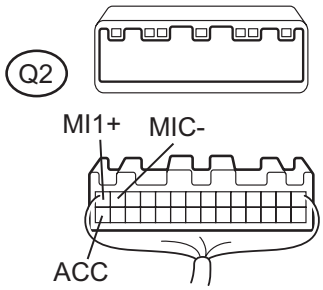

Multi-display Wire Harness View:

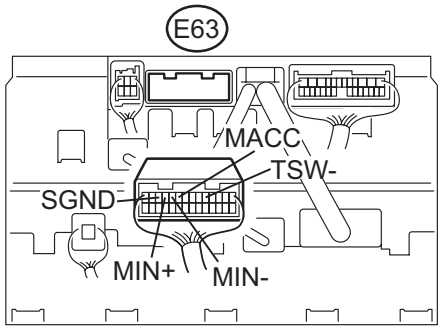

N E134685E01

(a) Disconnect the overhead J/B connector Q2 and multi-display connector E63.
(b) Measure the resistance according to the value(s) in the table below.

Standard resistance

Tester Connection	Condition	Specified Condition
ACC - MACC	Always	Below 1 Ω
MI1+ - MIN+	Always	Below 1 Ω
MIC- - MIN-	Always	Below 1 Ω
TSW- - SGND	Always	Below 1 Ω
ACC - Body ground	Always	10 kΩ or higher
MI1+ - Body ground	Always	10 kΩ or higher
MIC- - Body ground	Always	10 kΩ or higher

NG → **REPAIR OR REPLACE HARNESS OR CONNECTOR**

OK

2 INSPECT MULTI-DISPLAY

Wire Harness View:

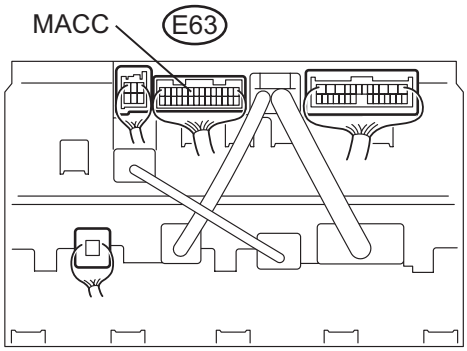

N E119733E02

(a) Reconnect the multi-display connector E63.
(b) Measure the voltage according to the value(s) in the table below.

Standard voltage

Tester Connection	Condition	Specified Condition
MACC - Body ground	Engine switch on (ACC)	4 to 6 V

NG → **REPLACE MULTI-DISPLAY**

NS

OK

PROCEED TO NEXT CIRCUIT INSPECTION SHOWN IN PROBLEM SYMPTOMS TABLE

Microphone Circuit between Multi-display and Navigation ECU

DESCRIPTION

This circuit sends a microphone signal from the multi-display to the navigation ECU.

WIRING DIAGRAM

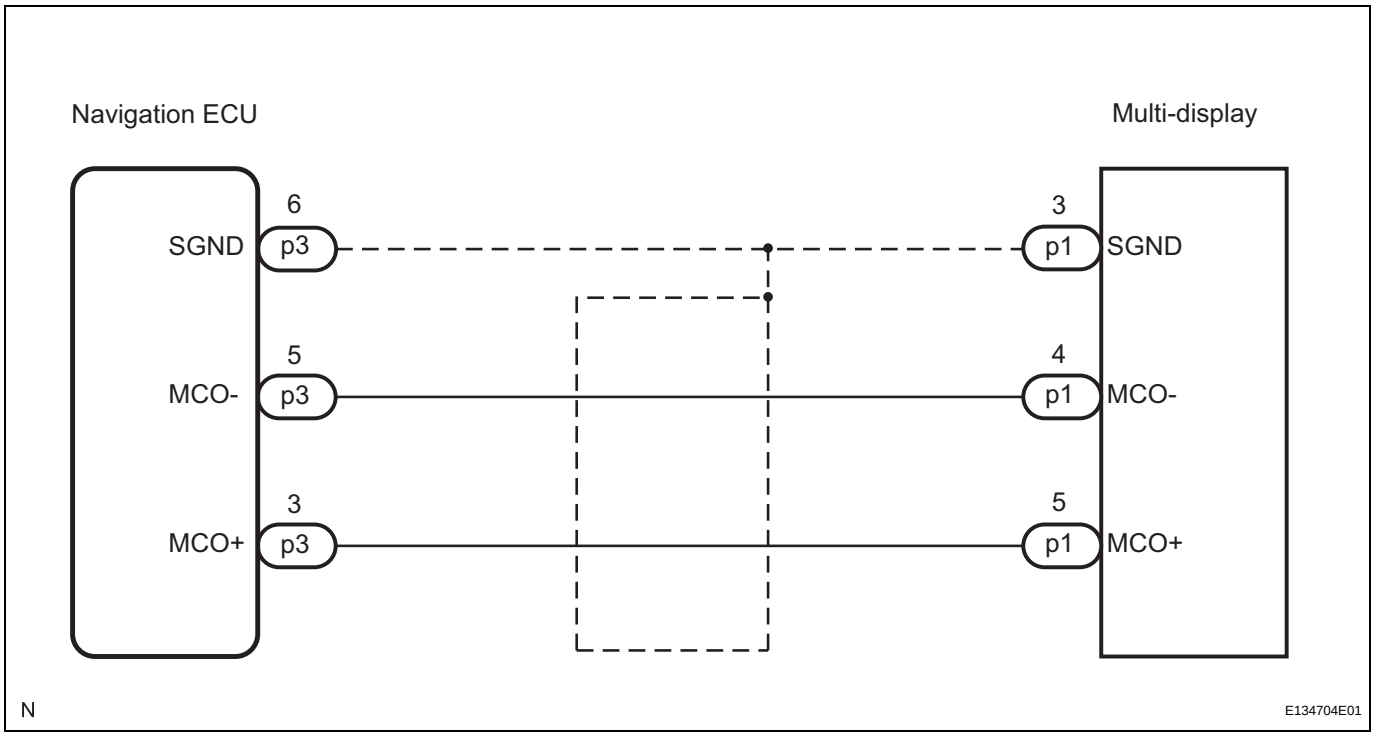

NS

INSPECTION PROCEDURE

1	CHECK HARNESS AND CONNECTOR (MULTI-DISPLAY - NAVIGATION ECU)

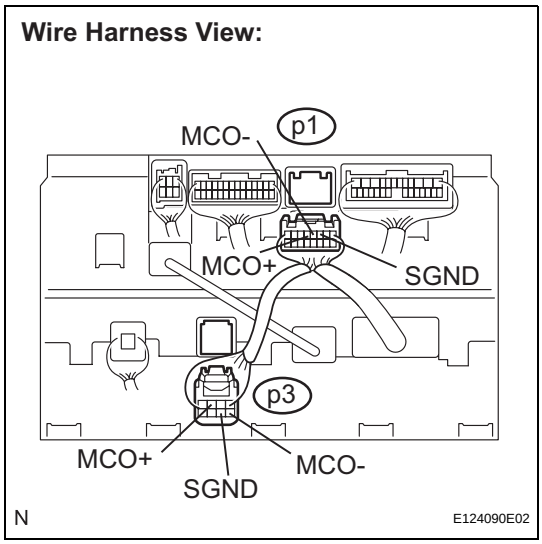

(a) Disconnect the multi-display connector p1 and navigation ECU connector p3.

(b) Measure the resistance according to the value(s) in the table below.

Standard resistance

Tester Connection	Condition	Specified Condition
MCO+ - MCO+	Always	Below 1 Ω
MCO- - MCO-	Always	Below 1 Ω
SGND - SGND	Always	Below 1 Ω
MCO+ - Body ground	Always	10 kΩ or higher
MCO- - Body ground	Always	10 kΩ or higher

NG → **REPAIR OR REPLACE HARNESS OR CONNECTOR**

OK

PROCEED TO NEXT CIRCUIT INSPECTION SHOWN IN PROBLEM SYMPTOMS TABLE

Dimmer Signal Circuit

DESCRIPTION

The multi-display dims the display and panel switches by receiving a TAIL cancel signal from the main body ECU.

WIRING DIAGRAM

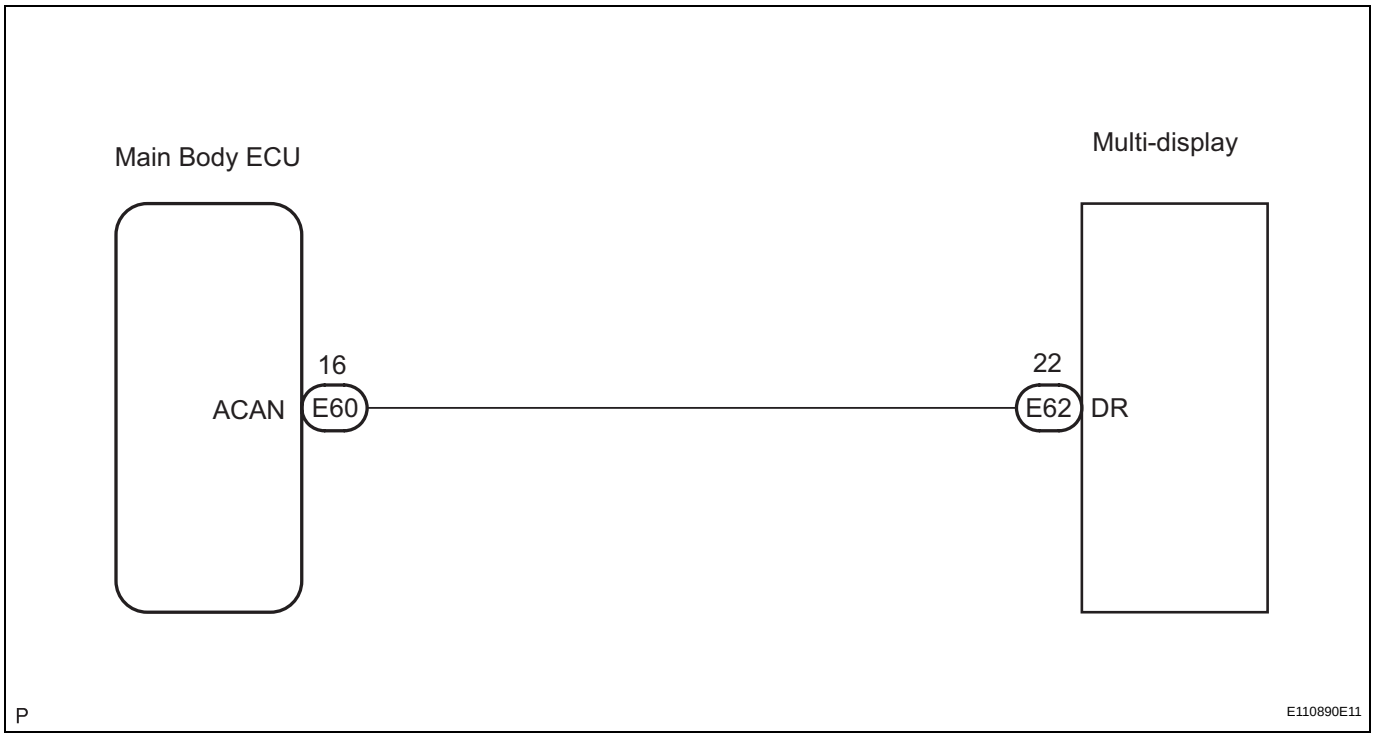

INSPECTION PROCEDURE

1 CHECK HARNESS AND CONNECTOR (MAIN BODY ECU - MULTI-DISPLAY)

Multi-display Wire Harness View:

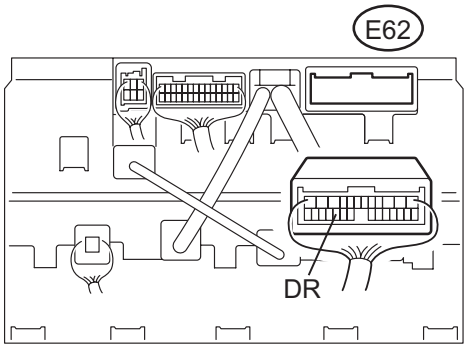

Main Body ECU Wire Harness View:

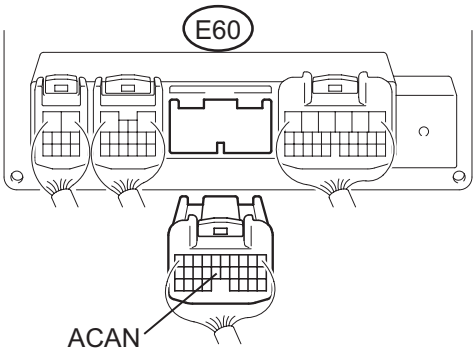

E134686E01

(a) Disconnect the main body ECU connector E60 and multi-display connector E62.
(b) Measure the resistance according to the value(s) in the table below.
Standard resistance

Tester Connection	Condition	Specified Condition
DR - ACAN	Always	Below 1 Ω
DR - Body ground	Always	10 kΩ or higher

NG → **REPAIR OR REPLACE HARNESS OR CONNECTOR**

OK

2 INSPECT MAIN BODY ECU (OUTPUT SIGNAL)

Multi-display Wire Harness View:

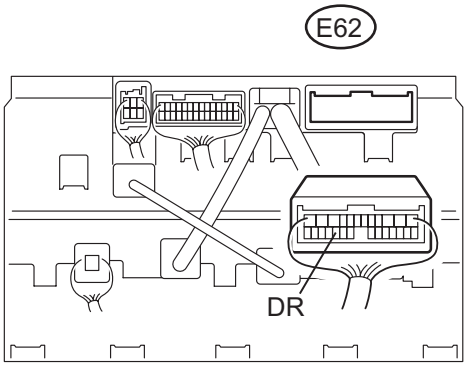

N E119725E13

(a) Reconnect the main body ECU connector.
(b) Turn the engine switch on (IG).
(c) Turn the light control switch to the TAIL or HEAD position.
(d) Measure the voltage according to the value(s) in the table below.
Standard voltage

Tester Connection	Condition	Specified Condition
DR - Body ground	Automatic light control sensor is covered.	Above 9 V

NG → **GO TO LIGHTING SYSTEM**

NS

OK

PROCEED TO NEXT CIRCUIT INSPECTION SHOWN IN PROBLEM SYMPTOMS TABLE

Radio Receiver Communication Error

INSPECTION PROCEDURE

1 IDENTIFY THE COMPONENT SHOWN BY SUB-CODE

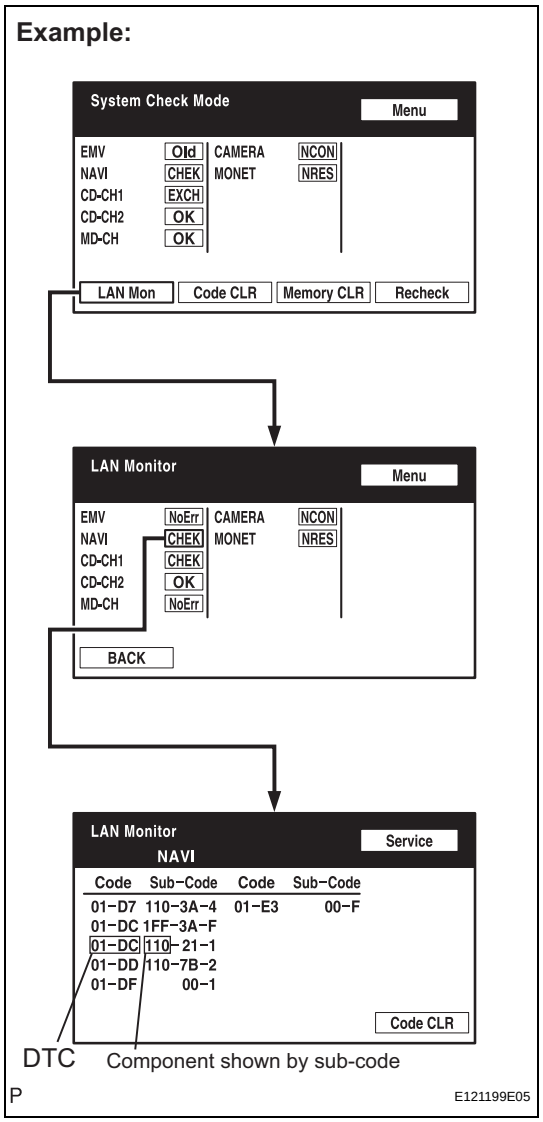

(a) Enter the diagnostic mode.
(b) Press the "LAN Mon" switch to change to "LAN Monitor" mode.
(c) Identify the component shown by the sub-code.
HINT:
- "110 (multi-display)" is the component shown by the sub-code in the example shown in the illustration.
- The sub-code will be indicated by its physical address.
- For the component list, refer to "DIAGNOSIS DISPLAY DETAILED DESCRIPTION" (See page NS-30).

NS

NEXT

2 CHECK POWER SOURCE CIRCUIT OF COMPONENT SHOWN BY SUB-CODE

(a) Inspect the power source circuit of the component shown by the sub-code.
If the power source circuit is operating normally, proceed to the next step.

Component Table:

Component	Proceed to
Stereo component amplifier (440)	Stereo component amplifier power source circuit (See page AV-164)
Multi-display (110)	Multi-display power source circuit (See page NS-228)

Component	Proceed to
Navigation ECU (178)	Navigation ECU power source circuit (See page NS-230)

NEXT

3 INSPECT RADIO RECEIVER

DVD Changer Models
Wire Harness View:

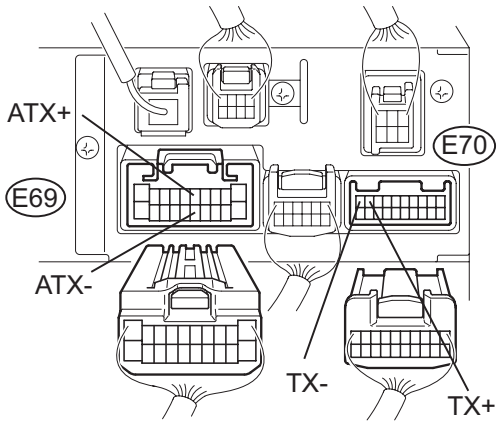

CD Changer Models
Wire Harness View:

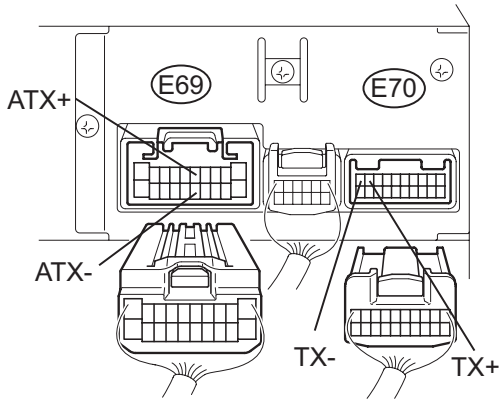

P E124056E03

(a) Disconnect the radio receiver connectors.
(b) Measure the resistance according to the value(s) in the table below.
Standard resistance

Tester Connection	Condition	Specified Condition
ATX+ (E69-5) - ATX- (E69-15)	Always	60 to 80 Ω
TX+ (E70-9) - TX- (E70-10)	Always	60 to 80 Ω

NG → **REPLACE RADIO RECEIVER**

OK

4 CHECK HARNESS AND CONNECTOR (RADIO RECEIVER - COMPONENT SHOWN BY SUB-CODE)

HINT:
- Start the check from the circuit that is near the component shown by the sub-code first.
- For details of the connectors, refer to "TERMINALS OF ECU" (See page NS-44).

(a) Referring to the AVC-LAN wiring diagram below, check the AVC-LAN circuit between the radio receiver and the component shown by the sub-code.

NS

(1) Disconnect all connectors between the radio receiver and the component shown by sub-code.
(2) Check for an open or short in the AVC-LAN circuit between the radio receiver and the component shown by the sub-code.
OK:
There is no open or short circuit.

AVC-LAN WIRING DIAGRAM:

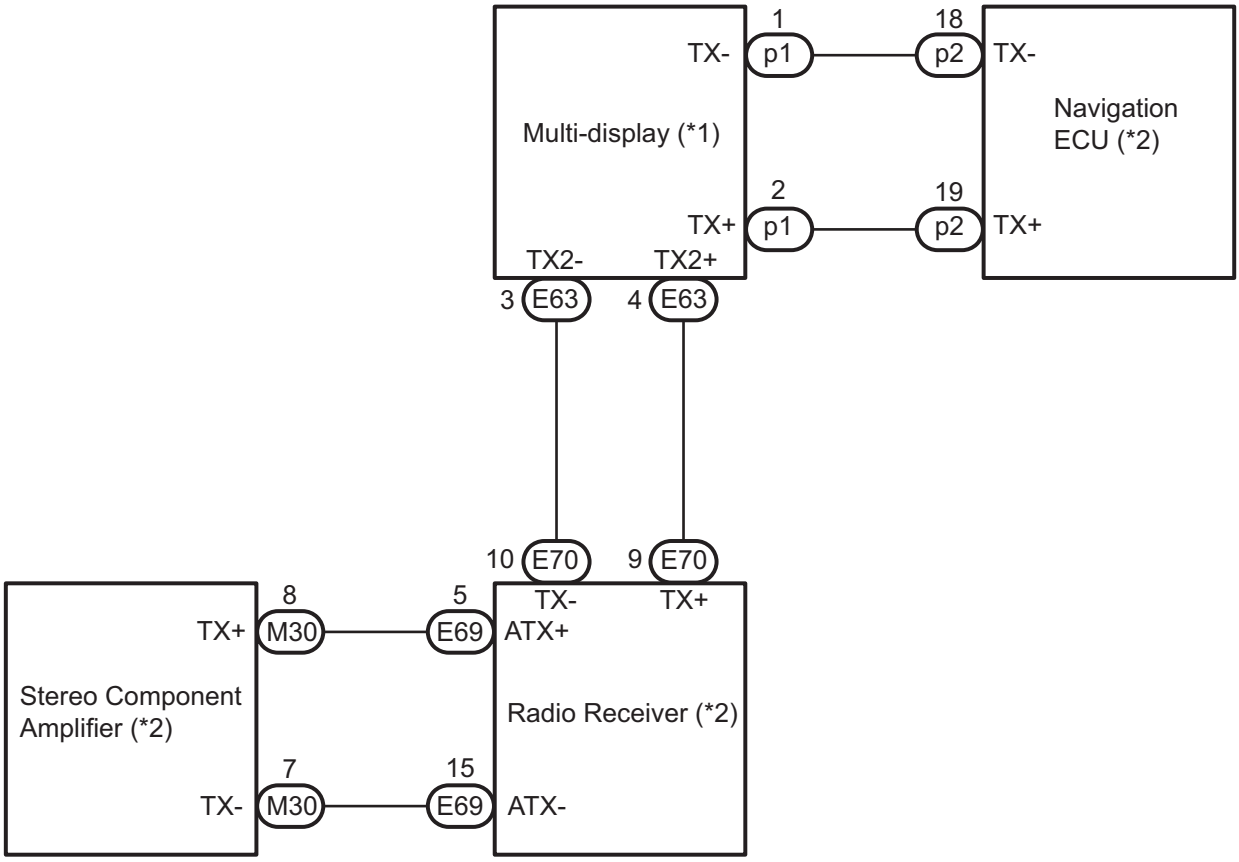

*1: Master Unit

*2: Slave Unit

P

E134675E01

NG → **REPAIR OR REPLACE HARNESS OR CONNECTOR**

OK

NS

5	REPLACE COMPONENT SHOWN BY SUB-CODE

(a) Replace the component shown by the sub-code with a normal one and check if the same problem occurs again.
OK:
Same problem does not occur.

NG → **REPLACE RADIO RECEIVER**

OK

END

Stereo Component Amplifier Communication Error

INSPECTION PROCEDURE

1 IDENTIFY THE COMPONENT SHOWN BY SUB-CODE

Example:

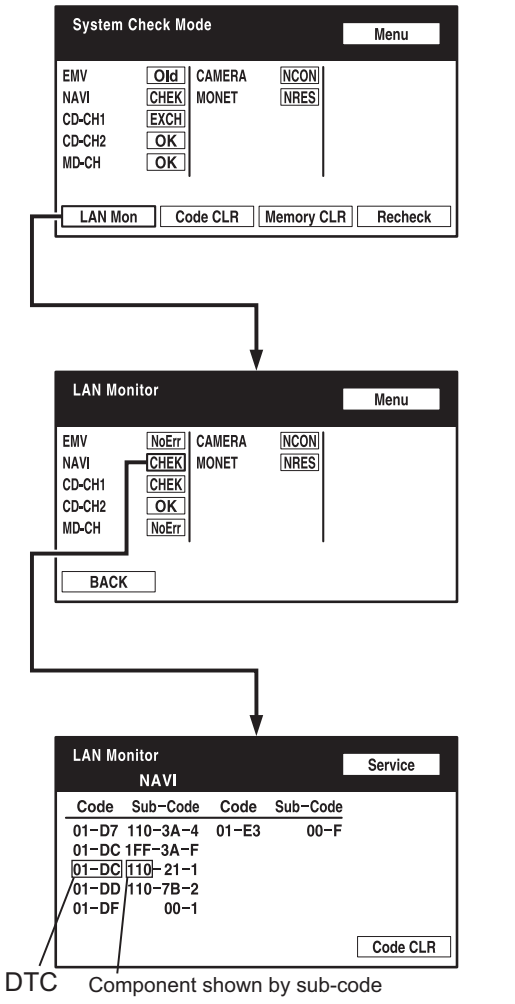

(a) Enter the diagnostic mode.
(b) Press the "LAN Mon" switch to change to "LAN Monitor" mode.
(c) Identify the component shown by the sub-code.
HINT:
- "110 (multi-display)" is the component shown by the sub-code in the example shown in the illustration.
- The sub-code will be indicated by its physical address.
- For the component list, refer to "DIAGNOSIS DISPLAY DETAILED DESCRIPTION" (See page NS-30).

NS

NEXT

2 CHECK POWER SOURCE CIRCUIT OF COMPONENT SHOWN BY SUB-CODE

(a) Inspect the power source circuit of the component shown by the sub-code.
If the power source circuit is operating normally, proceed to the next step.

Component Table:

Component	Proceed to
Radio receiver (190)	Radio receiver power source circuit (See page AV-162)
Multi-display (110)	Multi-display power source circuit (See page NS-228)

Component	Proceed to
Navigation ECU (178)	Navigation ECU power source circuit (See page NS-230)

NEXT

3 INSPECT RADIO RECEIVER

DVD Changer Models
Wire Harness View:

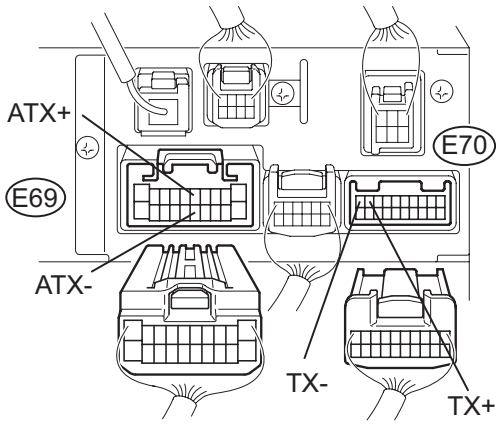

CD Changer Models
Wire Harness View:

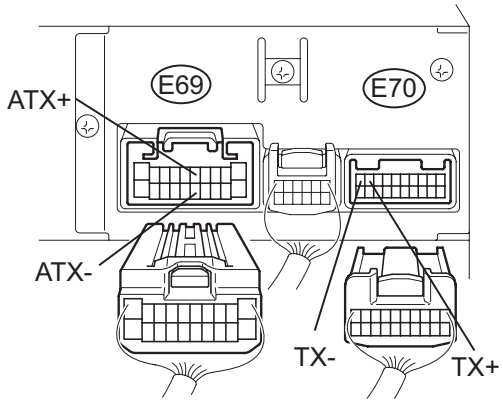

P E124056E03

(a) Disconnect the radio receiver connectors.
(b) Measure the resistance according to the value(s) in the table below.
Standard resistance

Tester Connection	Condition	Specified Condition
ATX+ (E69-5) - ATX- (E69-15)	Always	60 to 80 Ω
TX+ (E70-9) - TX- (E70-10)	Always	60 to 80 Ω

NG → **REPLACE RADIO RECEIVER**

OK

4 CHECK HARNESS AND CONNECTOR (STEREO COMPONENT AMPLIFIER - COMPONENT SHOWN BY SUB-CODE)

HINT:
- Start the check from the circuit that is near the component shown by the sub-code first.
- For details of the connectors, refer to "TERMINALS OF ECU" (See page NS-44).

(a) Referring to the AVC-LAN wiring diagram below, check the AVC-LAN circuit between the stereo component amplifier and the component shown by the sub-code.

NS

(1) Disconnect all connectors between the stereo component amplifier and the component shown by sub-code.
(2) Check for an open or short in the AVC-LAN circuit between the stereo component amplifier and the component shown by the sub-code.
OK:
There is no open or short circuit.

AVC-LAN WIRING DIAGRAM:

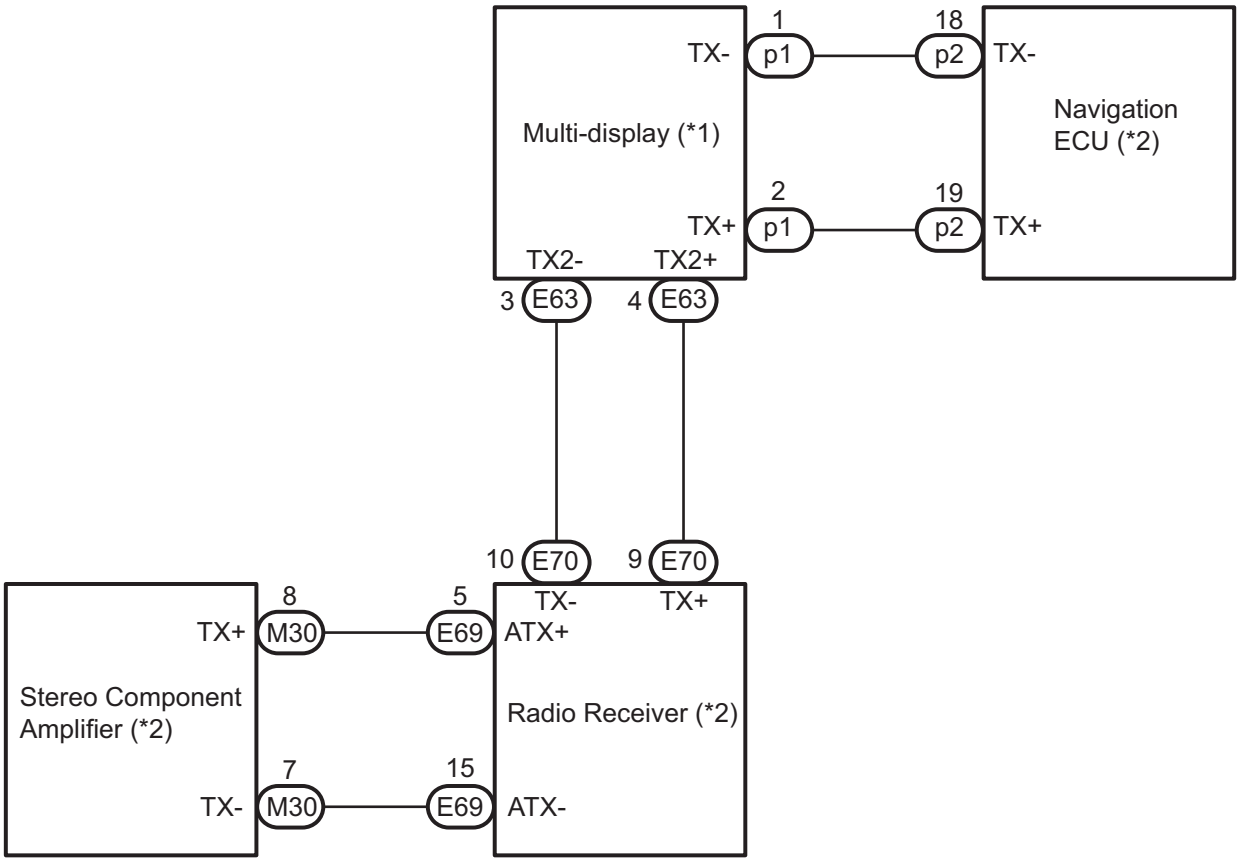

*1: Master Unit

*2: Slave Unit

P

E134675E01

NG → **REPAIR OR REPLACE HARNESS OR CONNECTOR**

OK

NS

5	REPLACE COMPONENT SHOWN BY SUB-CODE

(a) Replace the component shown by the sub-code with a normal one and check if the same problem occurs again.
OK:
Same problem does not occur.

NG → **REPLACE STEREO COMPONENT AMPLIFIER**

OK

END

Multi-display Communication Error

INSPECTION PROCEDURE

1 IDENTIFY THE COMPONENT SHOWN BY SUB-CODE

Example:

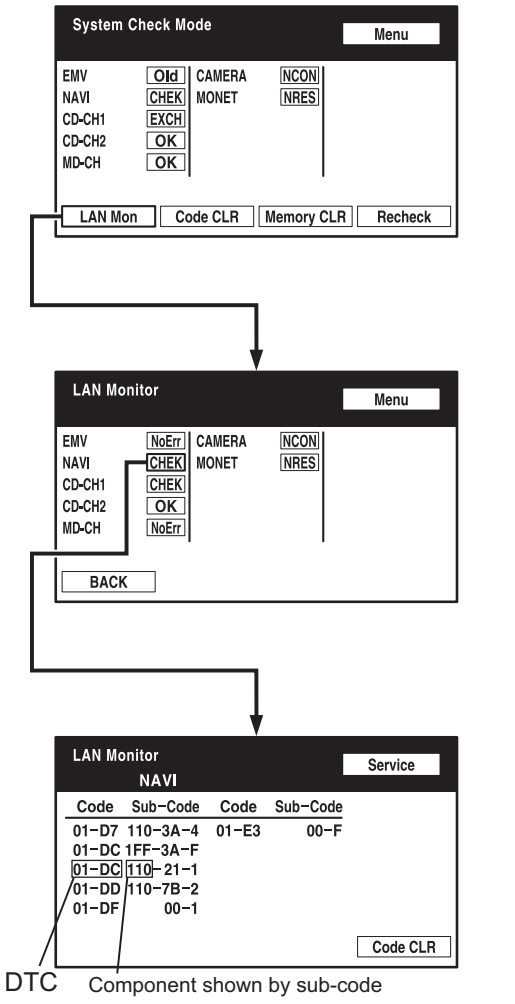

(a) Enter the diagnostic mode.
(b) Press the "LAN Mon" switch to change to "LAN Monitor" mode.
(c) Identify the component shown by the sub-code.
HINT:
- "110 (multi-display)" is the component shown by the sub-code in the example shown in the illustration.
- The sub-code will be indicated by its physical address.
- For the component list, refer to "DIAGNOSIS DISPLAY DETAILED DESCRIPTION" (See page NS-30).

NS

NEXT

2 CHECK POWER SOURCE CIRCUIT OF COMPONENT SHOWN BY SUB-CODE

(a) Inspect the power source circuit of the component shown by the sub-code.
If the power source circuit is operating normally, proceed to the next step.

Component Table:

Component	Proceed to
Radio receiver (190)	Radio receiver power source circuit (See page AV-162)
Stereo component amplifier (440)	Stereo component amplifier power source circuit (See page AV-164)

Component	Proceed to
Navigation ECU (178)	Navigation ECU power source circuit (See page NS-230)

NEXT

3 INSPECT RADIO RECEIVER

DVD Changer Models
Wire Harness View:

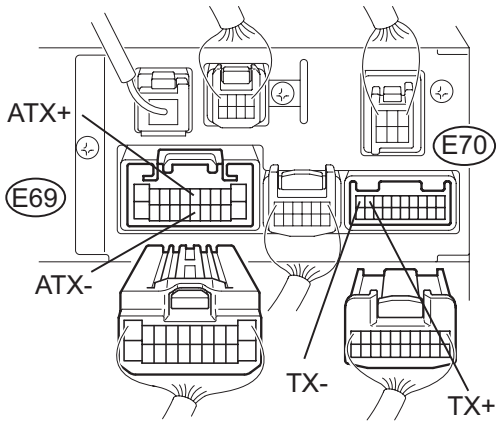

CD Changer Models
Wire Harness View:

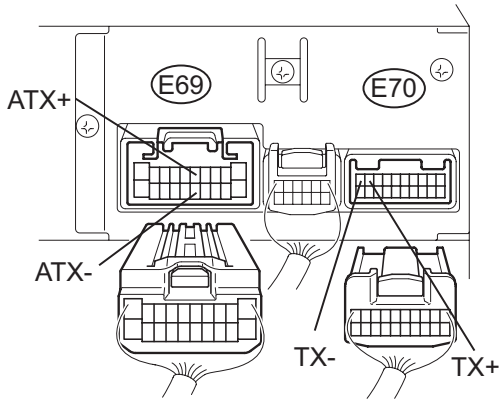

P E124056E03

(a) Disconnect the radio receiver connectors.
(b) Measure the resistance according to the value(s) in the table below.
Standard resistance

Tester Connection	Condition	Specified Condition
ATX+ (E69-5) - ATX- (E69-15)	Always	60 to 80 Ω
TX+ (E70-9) - TX- (E70-10)	Always	60 to 80 Ω

NG → **REPLACE RADIO RECEIVER**

OK

4 CHECK HARNESS AND CONNECTOR (MULTI-DISPLAY - COMPONENT SHOWN BY SUB-CODE)

HINT:
- Start the check from the circuit that is near the component shown by the sub-code first.
- For details of the connectors, refer to "TERMINALS OF ECU" (See page NS-44).

(a) Referring to the AVC-LAN wiring diagram below, check the AVC-LAN circuit between the multi-display and the component shown by the sub-code.

NS

(1) Disconnect all connectors between the multi-display and the component shown by sub-code.
(2) Check for an open or short in the AVC-LAN circuit between the multi-display and the component shown by the sub-code.
OK:
There is no open or short circuit.

AVC-LAN WIRING DIAGRAM:

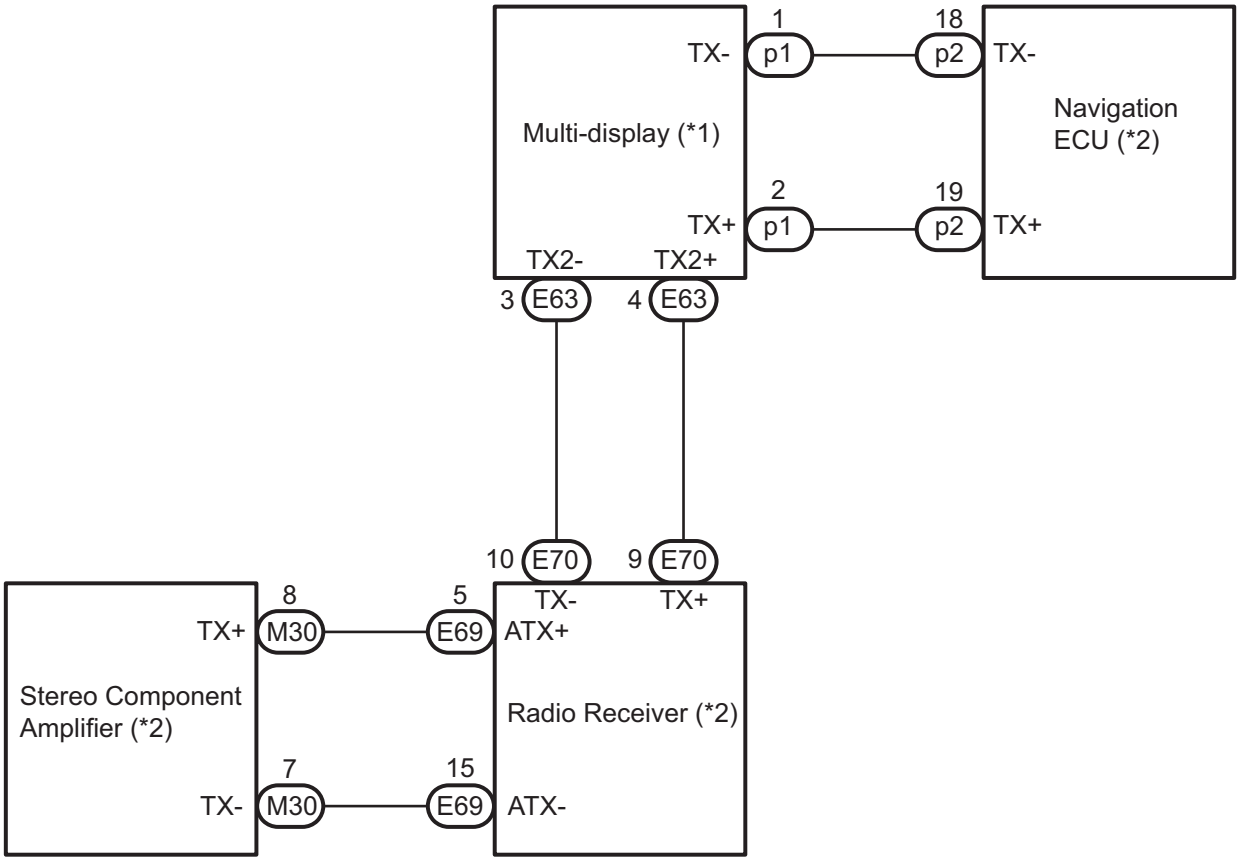

*1: Master Unit

*2: Slave Unit

P

E134675E01

NG → **REPAIR OR REPLACE HARNESS OR CONNECTOR**

OK

NS

5	REPLACE COMPONENT SHOWN BY SUB-CODE

(a) Replace the component shown by the sub-code with a normal one and check if the same problem occurs again.
OK:
Same problem does not occur.

NG → **REPLACE MULTI-DISPLAY**

OK

END

Navigation ECU Communication Error

INSPECTION PROCEDURE

1 IDENTIFY THE COMPONENT SHOWN BY SUB-CODE

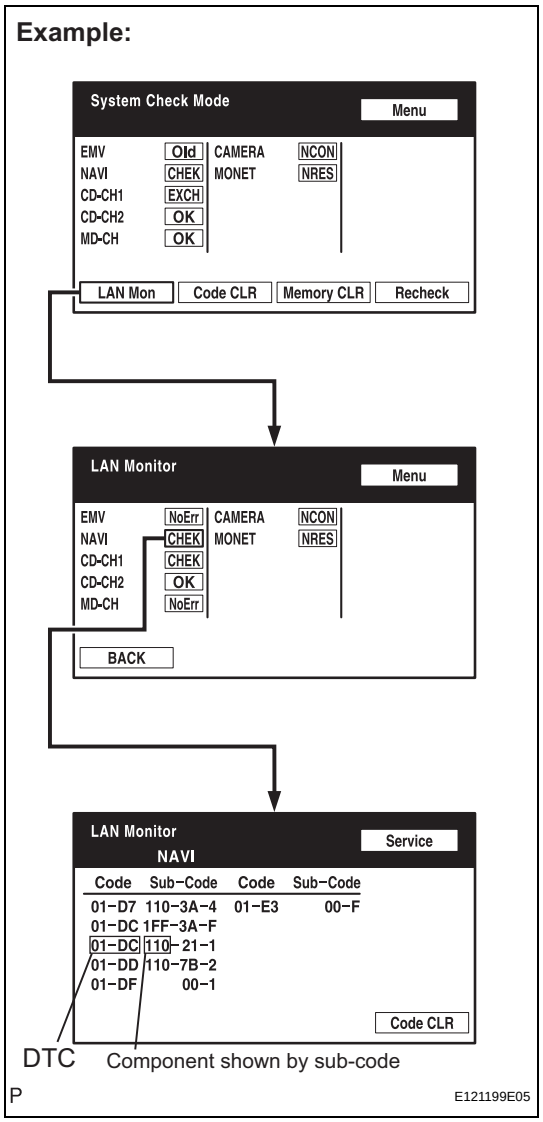

(a) Enter the diagnostic mode.
(b) Press the "LAN Mon" switch to change to "LAN Monitor" mode.
(c) Identify the component shown by the sub-code.
HINT:
- "110 (multi-display)" is the component shown by the sub-code in the example shown in the illustration.
- The sub-code will be indicated by its physical address.
- For the component list, refer to "DIAGNOSIS DISPLAY DETAILED DESCRIPTION" (See page NS-30).

NS

NEXT

2 CHECK POWER SOURCE CIRCUIT OF COMPONENT SHOWN BY SUB-CODE

(a) Inspect the power source circuit of the component shown by the sub-code.
If the power source circuit is operating normally, proceed to the next step.

Component Table:

Component	Proceed to
Radio receiver (190)	Radio receiver power source circuit (See page AV-162)
Stereo component amplifier (440)	Stereo component amplifier power source circuit (See page AV-164)

Component	Proceed to
Multi-display (110)	Multi-display power source circuit (See page NS-228)

NEXT

3 INSPECT RADIO RECEIVER

DVD Changer Models
Wire Harness View:

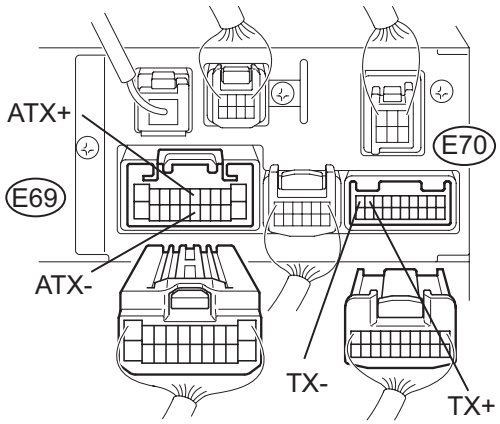

CD Changer Models
Wire Harness View:

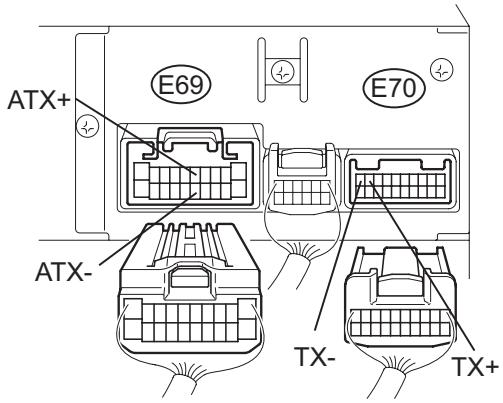

P E124056E03

(a) Disconnect the radio receiver connectors.
(b) Measure the resistance according to the value(s) in the table below.
Standard resistance

Tester Connection	Condition	Specified Condition
ATX+ (E69-5) - ATX- (E69-15)	Always	60 to 80 Ω
TX+ (E70-9) - TX- (E70-10)	Always	60 to 80 Ω

NG → **REPLACE RADIO RECEIVER**

OK

4 CHECK HARNESS AND CONNECTOR (NAVIGATION ECU - COMPONENT SHOWN BY SUB-CODE)

HINT:
- Start the check from the circuit that is near the component shown by the sub-code first.
- For details of the connectors, refer to "TERMINALS OF ECU" (See page NS-44).

(a) Referring to the AVC-LAN wiring diagram below, check the AVC-LAN circuit between the navigation ECU and the component shown by the sub-code.

NS

(1) Disconnect all connectors between the navigation ECU and the component shown by sub-code.
(2) Check for an open or short in the AVC-LAN circuit between the navigation ECU and the component shown by the sub-code.
OK:
There is no open or short circuit.

AVC-LAN WIRING DIAGRAM:

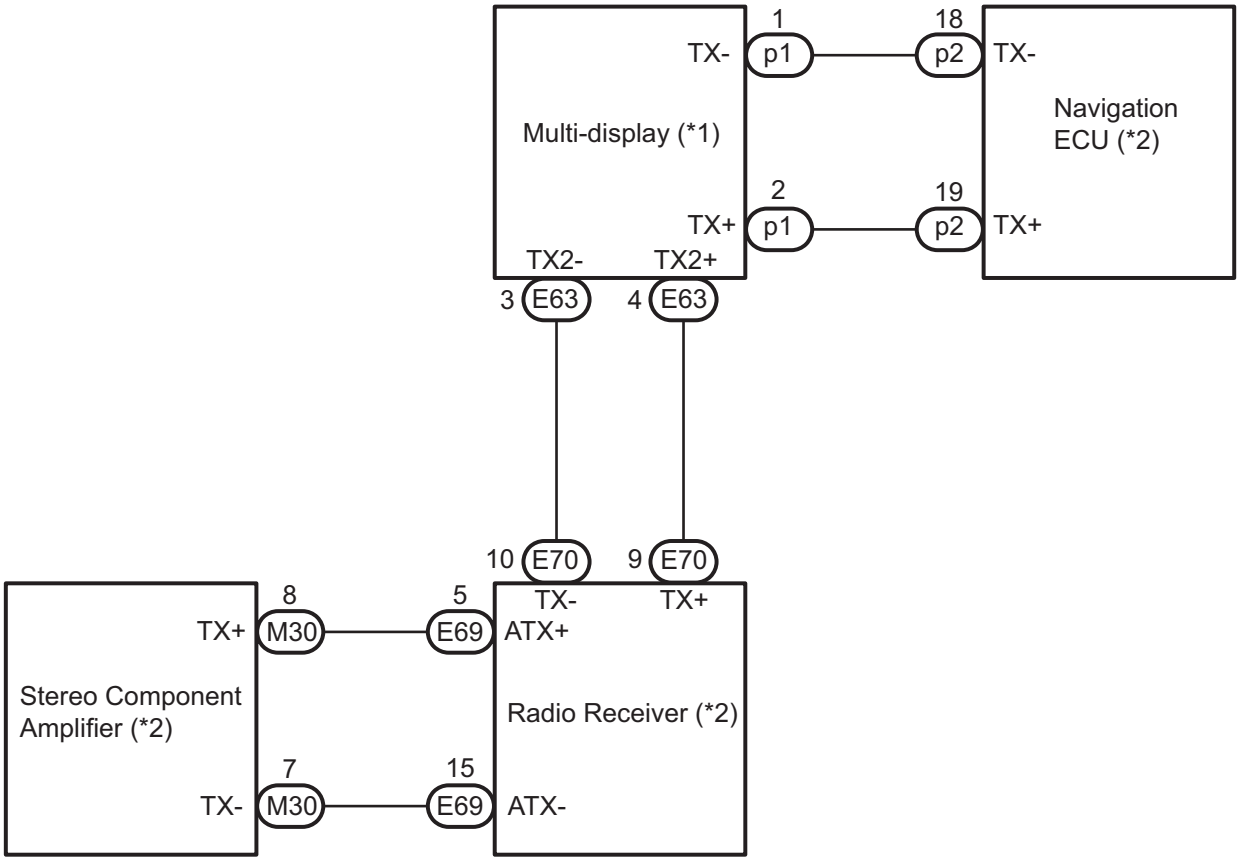

*1: Master Unit

*2: Slave Unit

P

E134675E01

NG → **REPAIR OR REPLACE HARNESS OR CONNECTOR**

OK

NS

5	REPLACE COMPONENT SHOWN BY SUB-CODE

(a) Replace the component shown by the sub-code with a normal one and check if the same problem occurs again.
OK:
Same problem does not occur.

NG → **REPLACE NAVIGATION ECU**

OK

END

Multi-display Power Source Circuit

DESCRIPTION

This is the power source circuit to operate the multi-display.

WIRING DIAGRAM

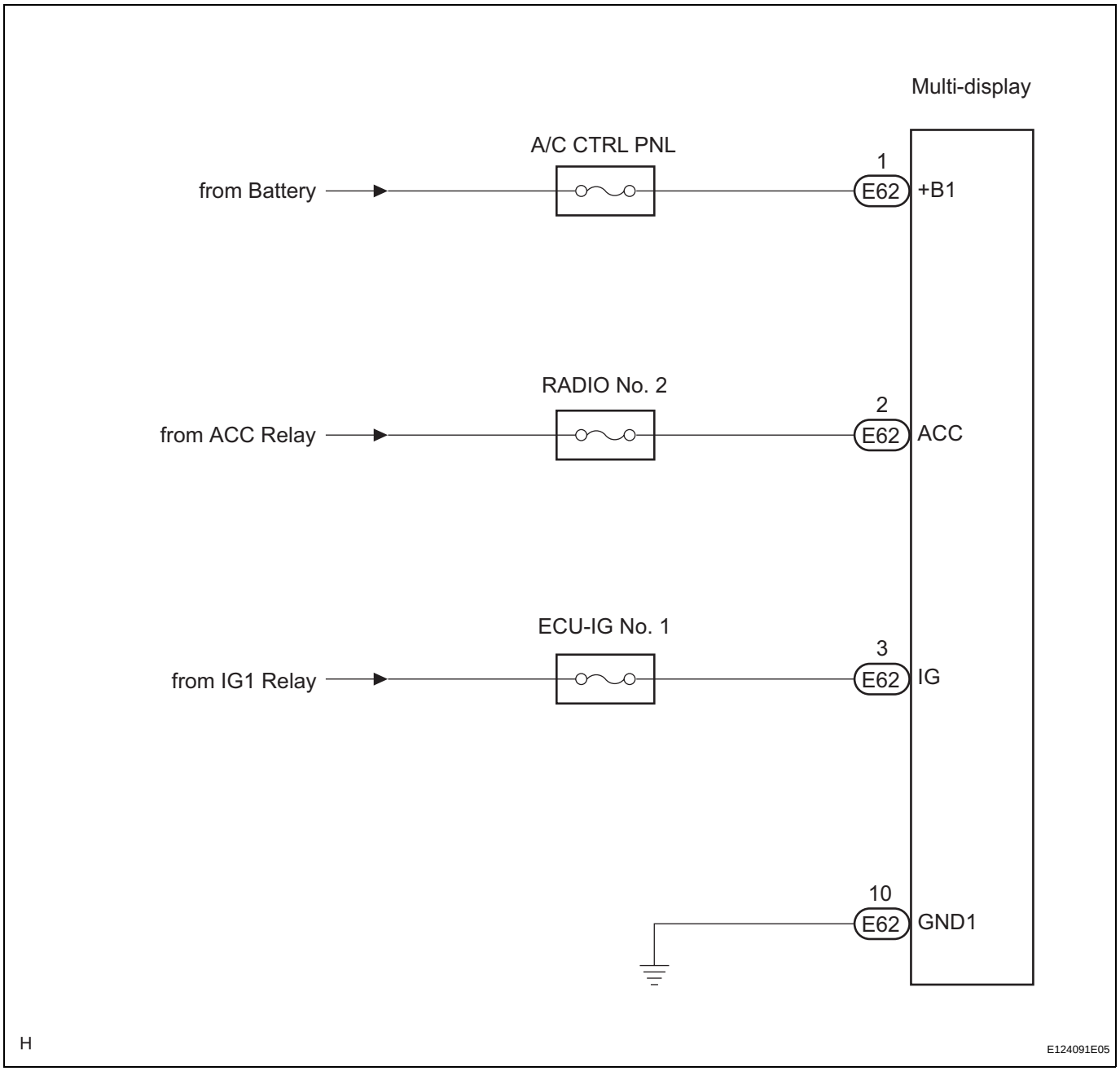

INSPECTION PROCEDURE

1	INSPECT MULTI-DISPLAY

Wire Harness View:

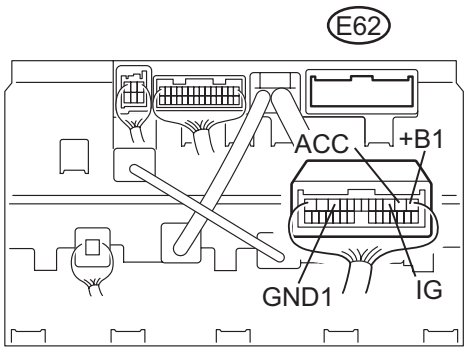

N E119725E14

(a) Disconnect the multi-display connector E62.
(b) Measure the resistance according to the value(s) in the table below.
Standard resistance

Tester Connection	Condition	Specified Condition
GND1 - Body ground	Always	Below 1 Ω

(c) Measure the voltage according to the value(s) in the table below.
Standard voltage

Tester Connection	Condition	Specified Condition
+B1 - GND1	Always	10 to 14 V
ACC - GND1	Engine switch on (ACC)	10 to 14 V
IG - GND1	Engine switch on (IG)	10 to 14 V

NG → **REPAIR OR REPLACE HARNESS OR CONNECTOR**

NS

OK

PROCEED TO NEXT CIRCUIT INSPECTION SHOWN IN PROBLEM SYMPTOMS TABLE

Navigation ECU Power Source Circuit

DESCRIPTION

This is the power source circuit to operate the navigation ECU.
The power is sent from the battery to the navigation ECU through the multi-display.

WIRING DIAGRAM

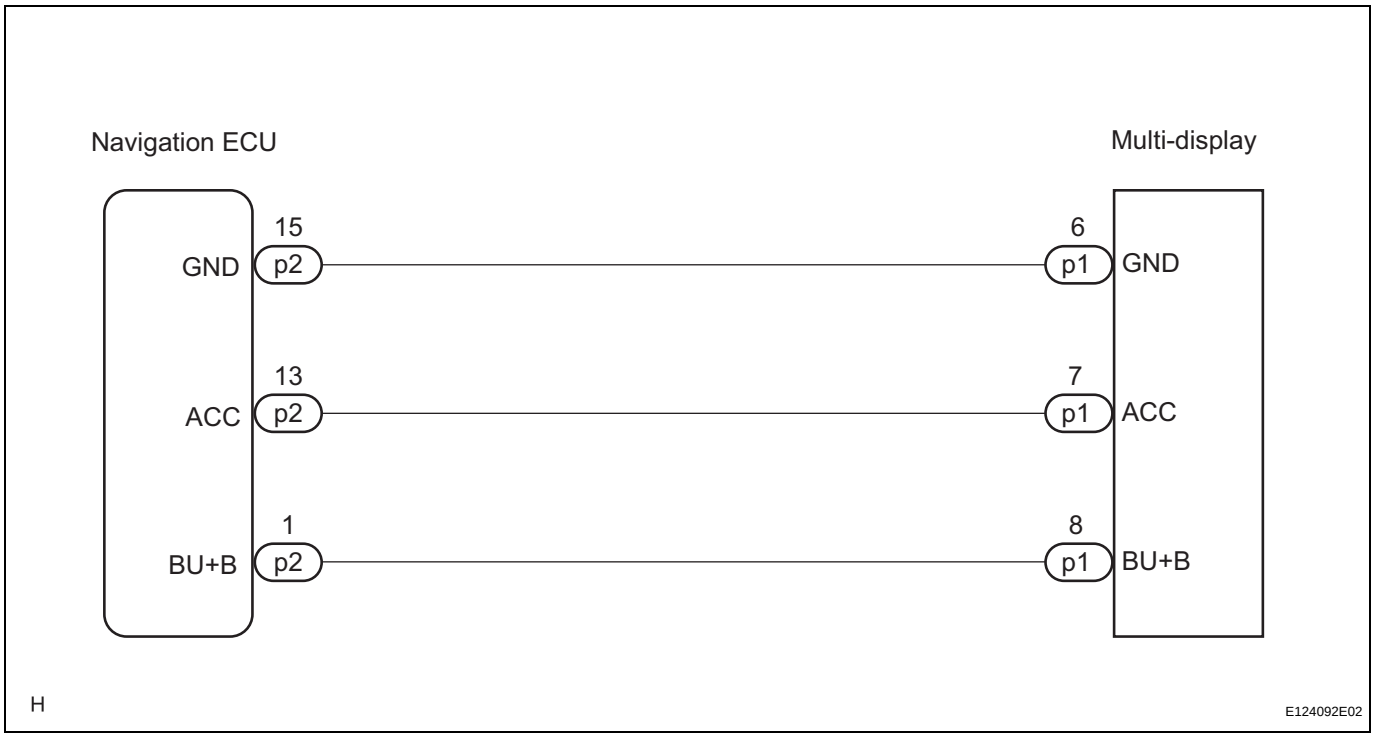

INSPECTION PROCEDURE

1	INSPECT NAVIGATION ECU

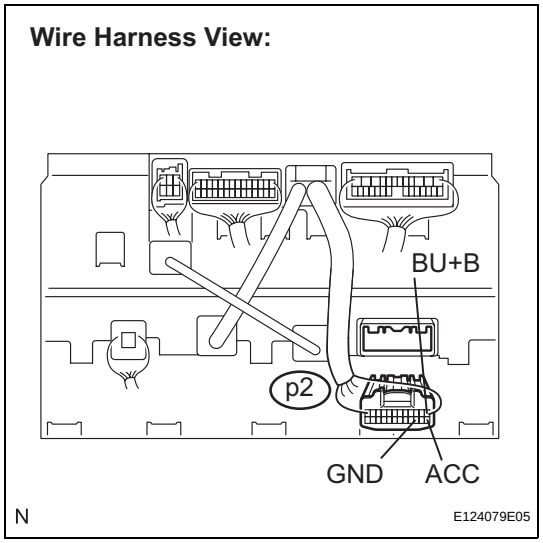

(a) Disconnect the navigation ECU connector p2.
(b) Measure the resistance according to the value(s) in the table below.
Standard resistance

Tester Connection	Condition	Specified Condition
GND - Body ground	Always	Below 1 Ω

(c) Measure the voltage according to the value(s) in the table below.
Standard voltage

Tester Connection	Condition	Specified Condition
BU+B - GND	Always	10 to 14 V
ACC - GND	Engine switch on (ACC)	10 to 14 V

NG → **Go to step 2**

NS

OK

PROCEED TO NEXT CIRCUIT INSPECTION SHOWN IN PROBLEM SYMPTOMS TABLE

2 CHECK HARNESS AND CONNECTOR (NAVIGATION ECU - MULTI-DISPLAY)

Wire Harness View:

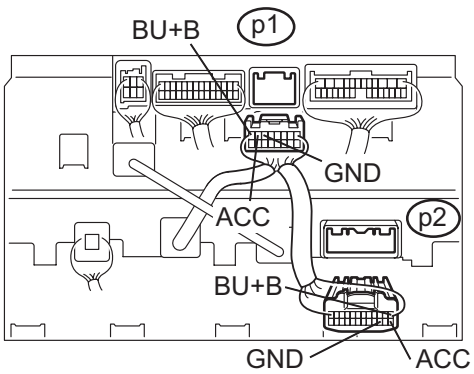

N E124093E10

(a) Disconnect the navigation ECU connector p2 and multi-display connector p1.

(b) Measure the resistance according to the value(s) in the table below.

Standard resistance

Tester Connection	Condition	Specified Condition
GND - GND	Always	Below 1 Ω
ACC - ACC	Always	Below 1 Ω
BU+B - BU+B	Always	Below 1 Ω
GND - Body ground	Always	10 kΩ or higher
ACC - Body ground	Always	10 kΩ or higher
BU+B - Body ground	Always	10 kΩ or higher

NG → **REPAIR OR REPLACE HARNESS OR CONNECTOR**

NS

OK

REPLACE MULTI-DISPLAY

SYSTEM NORMAL CONDITION CHECK

1. CHECK NORMAL CONDITION

(a) If the symptom is applicable to any of the following, it is intended behavior, and not a malfunction.

Symptom	Answer
A longer route than expected is chosen.	Depending on the road conditions, the navigation ECU may determine that a longer route is quicker.
Even when distance priority is high, the shortest route is not shown.	Some paths may not be advised due to safety concerns.
When the vehicle is put into motion immediately after the engine starts, the navigation system deviates from the actual position.	If the vehicle starts before the navigation system activates, the system may not react.
When running on certain types of roads, especially new roads, the vehicle position deviates from the actual position.	When the vehicle is driving on new roads not available on the map disc, the system attempts to match it to another nearby road, causing the position mark to deviate.

(b) The following symptoms are not a malfunction, but are caused by errors inherent in the GPS, gyro sensor, speed sensor, and navigation ECU.

(1) The current position mark may be displayed on a nearby parallel road.

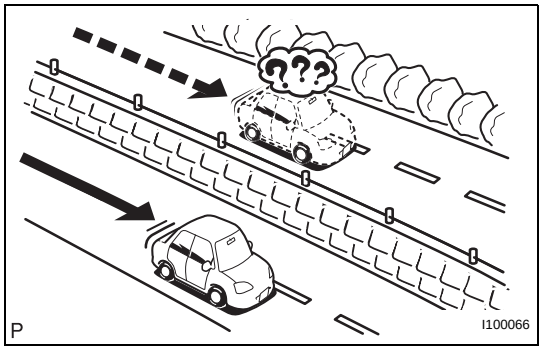

(2) Immediately after a fork in the road, the current vehicle position mark may be displayed on the wrong road.

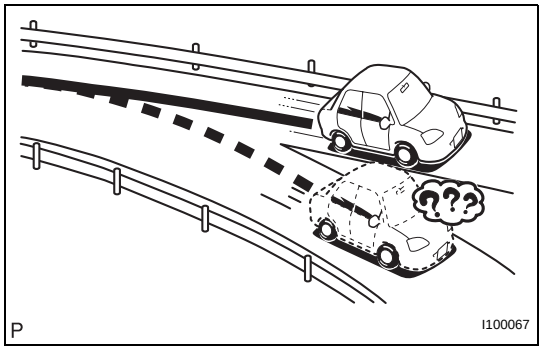

(3) When the vehicle turns right or left at an intersection, the current vehicle position mark may be displayed on a nearby parallel road.

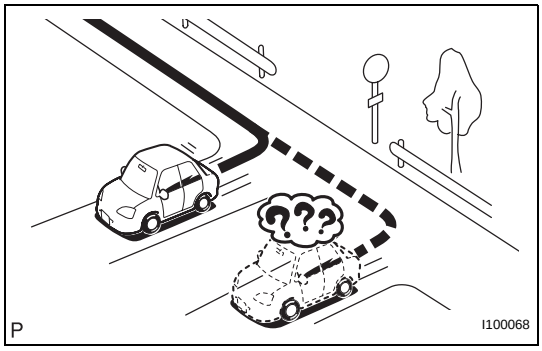

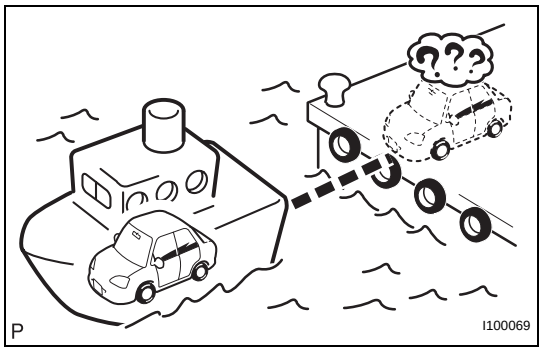

(4) When the vehicle is carried, such as on a ferry, and the vehicle itself is not running, the current vehicle position mark may be displayed in the position where the vehicle was until a measurement can be performed by GPS.

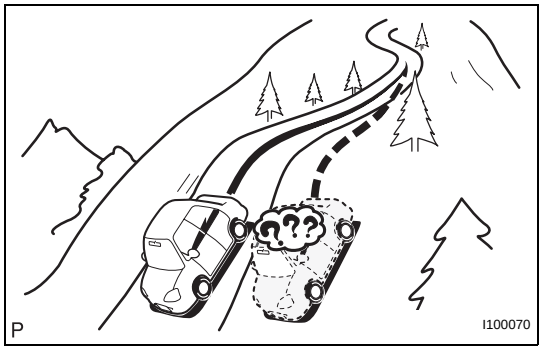

(5) When the vehicle runs on a steep hill, the current vehicle position mark may deviate from the correct position.

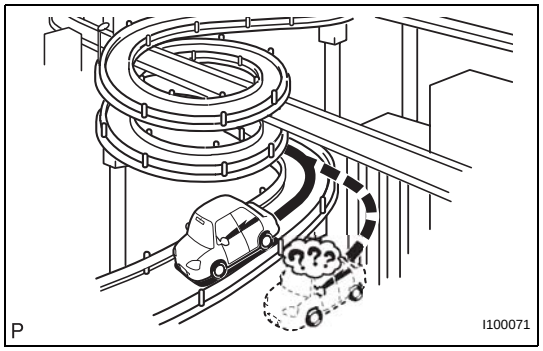

(6) When the vehicle makes a continuous turn of 360, 720, 1,080, etc. degrees, the current vehicle position mark may deviate from the correct position.

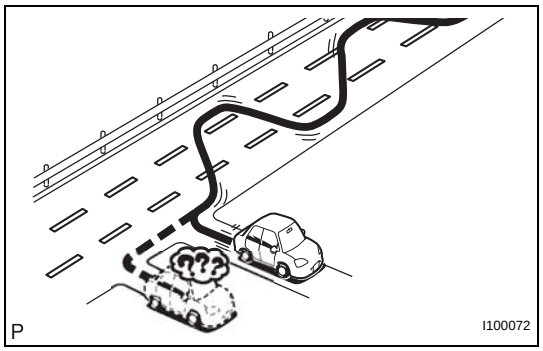

(7) When the vehicle moves erratically, such as constant lane changes, the current vehicle position mark may deviate from the correct position.

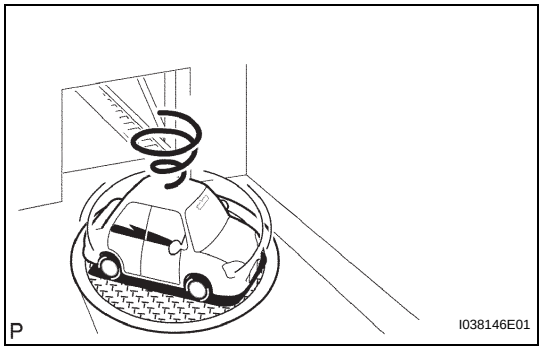

(8) When the engine switch is turned on (ACC or ON) on a turntable before parking, the current vehicle position mark may not point in the correct direction. The same will occur when the vehicle comes out of parking.

NS

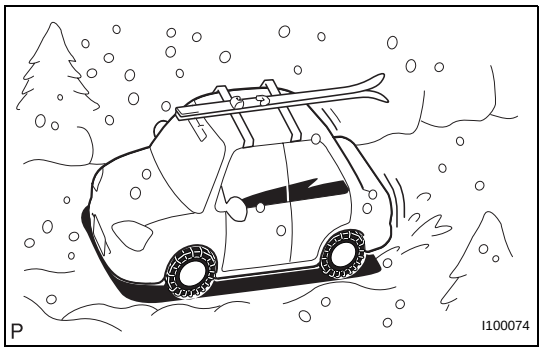

(9) When the vehicle runs on a snowy road or a mountain path with the chains installed or using a spare tire, the current vehicle position mark may deviate from the correct position.

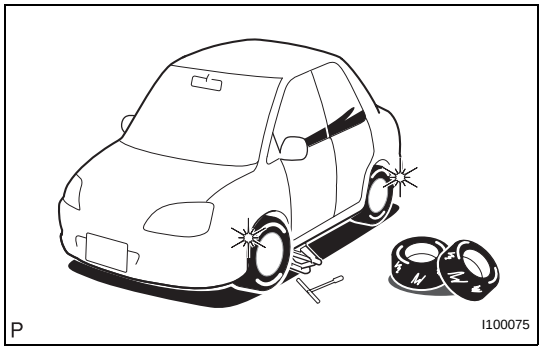

(10) When a tire is changed, the current vehicle position mark may deviate from the correct position.
HINT:
- Diameter of the tire may change, causing a speed sensor error.
- Performing the "tire change" in calibration mode will allow the system to correct the current vehicle position faster.

REMOVAL

1. **EJECT MAP DISC (See page NS-238)**
2. **REMOVE SHIFT LEVER KNOB SUB-ASSEMBLY (See page IP-16)**
3. **REMOVE UPPER CONSOLE PANEL ASSEMBLY WITH FRONT ASH RECEPTACLE (See page IP-16)**
4. **REMOVE INSTRUMENT PANEL FINISH PANEL END LH (See page IP-13)**
5. **REMOVE INSTRUMENT PANEL FINISH PANEL END RH (See page IP-15)**
6. **REMOVE NO. 2 INSTRUMENT PANEL REGISTER ASSEMBLY (See page IP-17)**
7. **REMOVE MULTI-DISPLAY WITH RADIO RECEIVER ASSEMBLY (See page AV-170)**
8. **REMOVE NO. 1 RADIO BRACKET (See page AV-170)**
9. **REMOVE NO. 2 RADIO BRACKET (See page AV-170)**
10. **REMOVE MULTI-DISPLAY ASSEMBLY**
    (a) Disengage the 2 claws and 4 clips.

NS

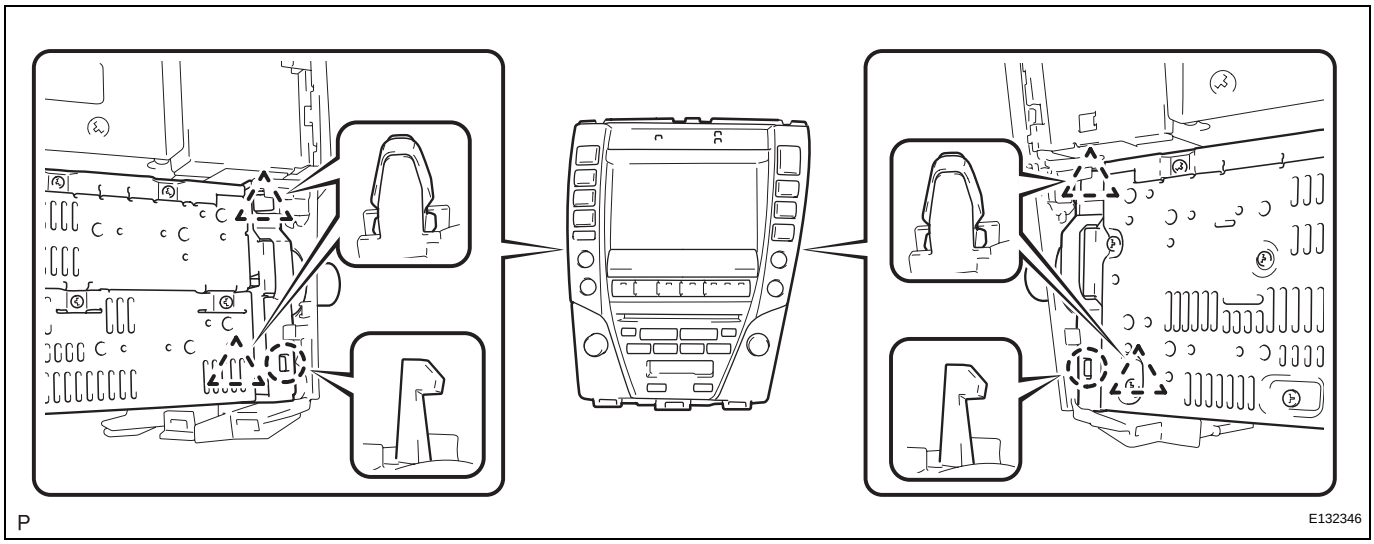

(b) Remove the multi-display assembly.

INSTALLATION

1. **INSTALL MULTI-DISPLAY ASSEMBLY**
   (a) Engage the 2 claws and 4 clips and install the multi-display assembly.

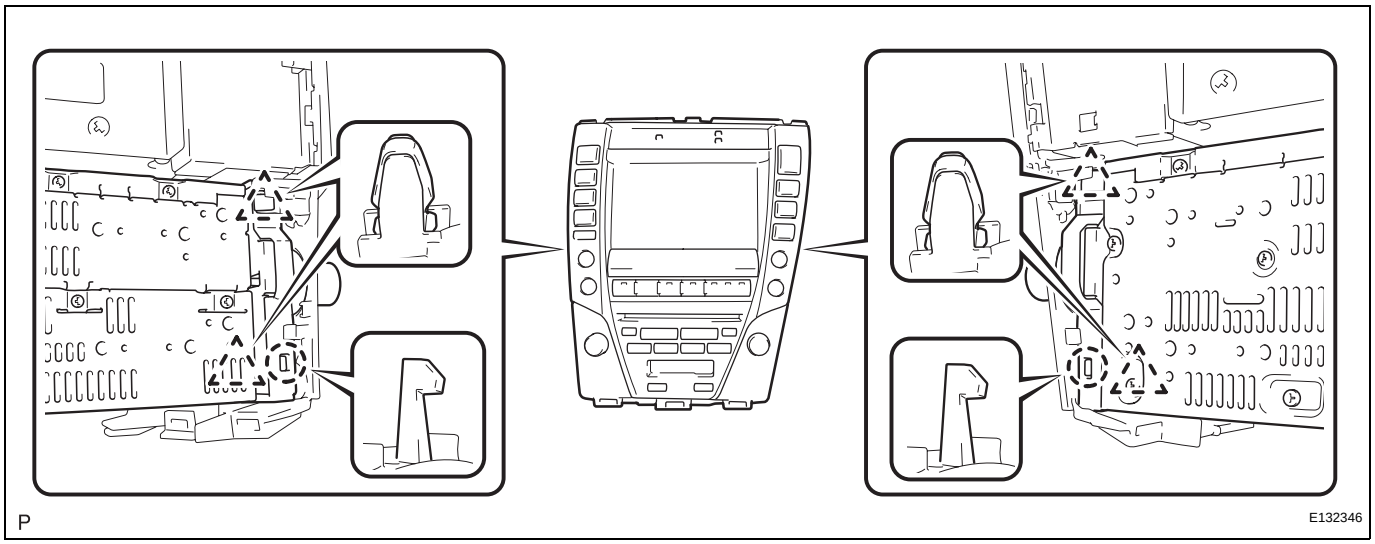

2. **INSTALL NO. 2 RADIO BRACKET (See page AV-173)**
3. **INSTALL NO. 1 RADIO BRACKET (See page AV-173)**
4. **INSTALL MULTI-DISPLAY WITH RADIO RECEIVER ASSEMBLY (See page AV-173)**
5. **INSTALL NO. 2 INSTRUMENT PANEL REGISTER ASSEMBLY (See page IP-41)**
6. **INSTALL INSTRUMENT PANEL FINISH PANEL END RH (See page IP-44)**
7. **INSTALL INSTRUMENT PANEL FINISH PANEL END LH (See page IP-46)**
8. **INSTALL UPPER CONSOLE PANEL ASSEMBLY WITH FRONT ASH RECEPTACLE (See page IP-42)**
9. **INSTALL SHIFT LEVER KNOB SUB-ASSEMBLY (See page IP-42)**
10. **INSERT MAP DISC (See page NS-241)**
11. **ADJUST CLOCK**

DISPLAY CHECK MODE

HINT:
- This mode checks the color display on the multi-display.
- Illustrations may differ from the actual vehicle depending on the device settings and options. Therefore, some detailed areas may not be shown exactly the same as on the actual vehicle.

1. ENTER DIAGNOSTIC MODE (See page NS-48)

2. DISPLAY CHECK

(a) Select "Display Check" from the "Diagnosis MENU" screen.

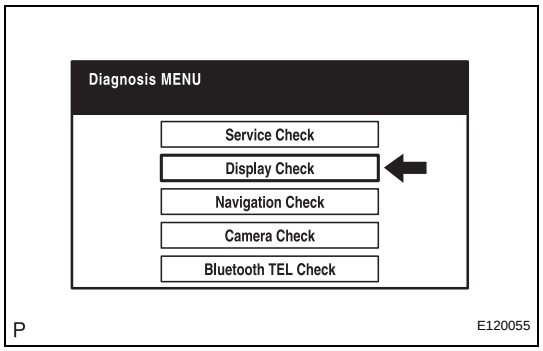

3. COLOR BAR CHECK

(a) Select "Color Bar Check" from the "Display Check" screen.

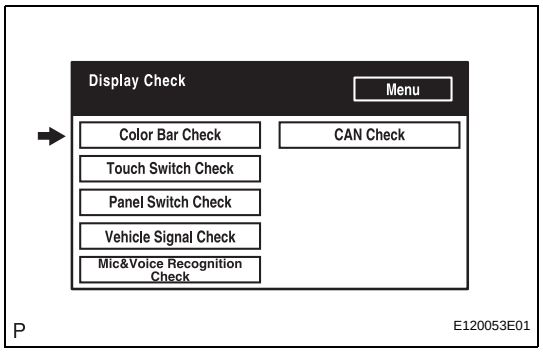

(b) Select a color bar from the "Color Bar Check Mode" screen.

(c) Check the display color.

HINT:
- The entire screen turns to the color or stripe selected.
- Touching the display will return to the "Color Bar Check" screen.

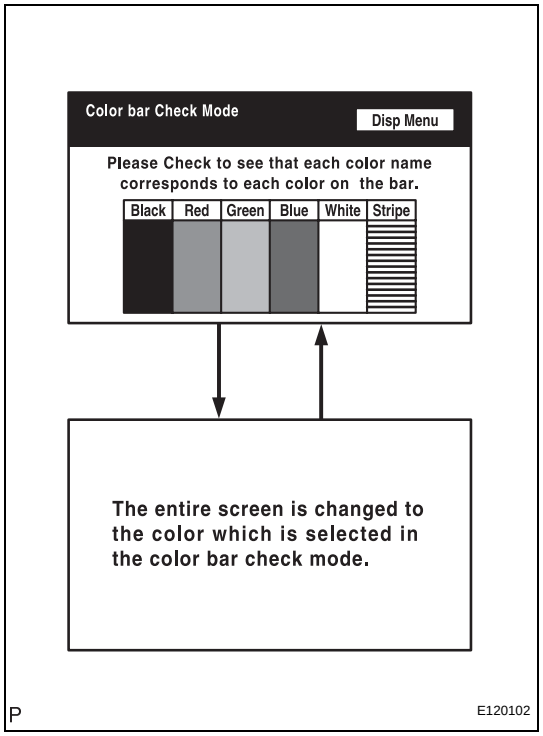

NS

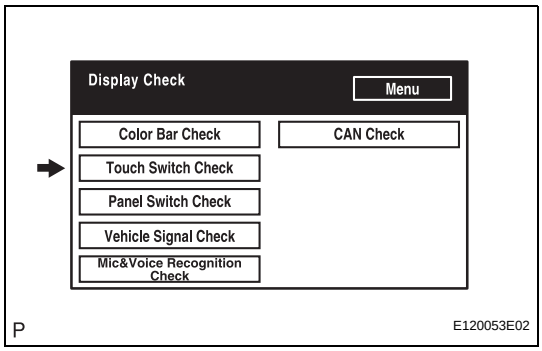

4. TOUCH SWITCH CHECK

(a) Select "Touch Switch Check" from the "Display Check" screen.

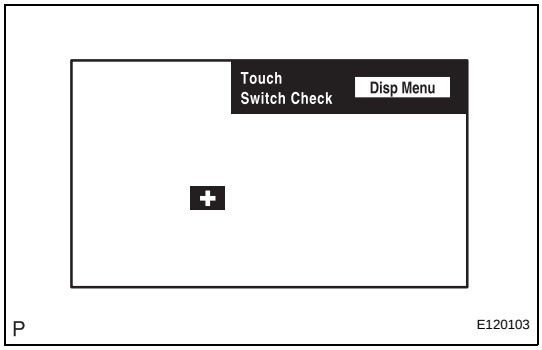

(b) Touch the display anywhere in the open area to perform the check when the "Touch Switch Check" screen is displayed.
HINT:
- A "+" mark is displayed where the display is touched.
- The "+" mark remains on the display even after the finger is removed.

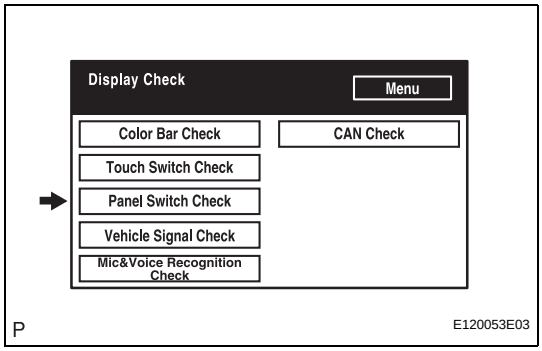

5. PANEL SWITCH CHECK

(a) Select "Panel Switch Check" from the "Display Check" screen.

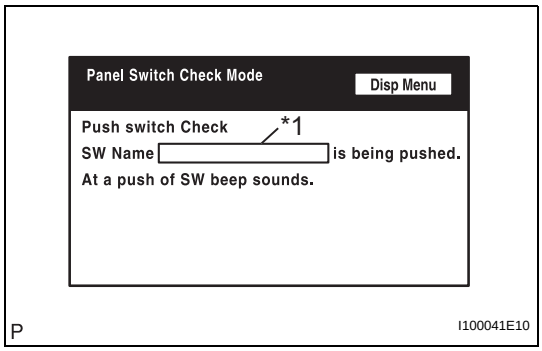

(b) Operate each switch and check that the switch name and condition are correctly displayed.

Display	Contents
Push switch name/*1	• Name of the pressed switch is displayed. • If more than one switch is pressed, "MULTIPLE" is displayed.

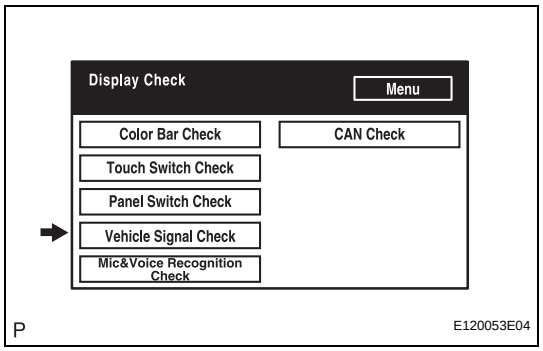

6. VEHICLE SIGNAL CHECK

(a) Select "Vehicle Signal Check" from the "Display Check" screen.

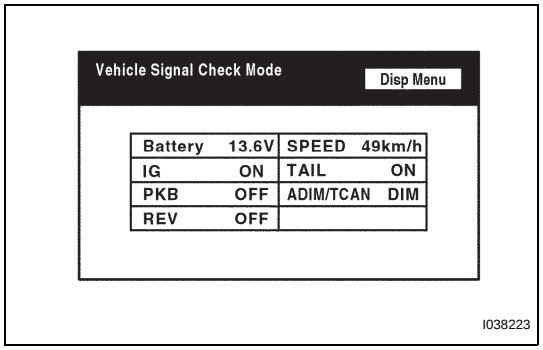

(b) When the "Vehicle Signal Check Mode" screen is displayed, check all the vehicle signal conditions.
HINT:
- Only conditions having inputs are displayed.
- This screen is updated once per second when input signals to the vehicle are changed.
- For details of this function, refer to DIAGNOSIS DISPLAY DETAILED DESCRIPTION (See page NS-30).

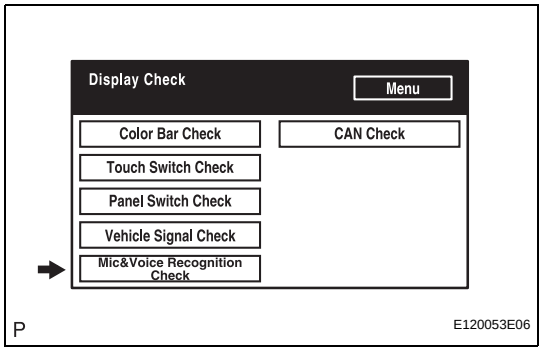

7. MIC & VOICE RECOGNITION CHECK

(a) Select "Mic & Voice Recognition Check" on the "Display Check" screen to display "MICROPHONE & VOICE RECOGNITION CHECK" screen.

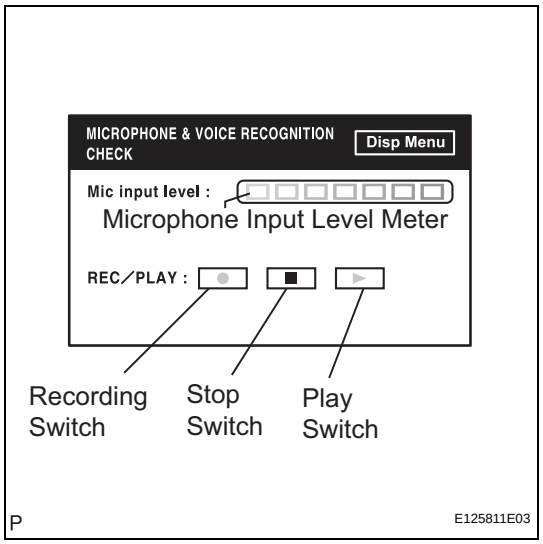

(b) When voice is input into the microphone, check that the microphone input level meter changes according to the input voice.

(c) Push the recording switch and perform voice recording.

(d) Check that the recorded voice is played normally.
HINT:
For details of this function, refer to DIAGNOSIS DISPLAY DETAILED DESCRIPTION (See page NS-30).

NS

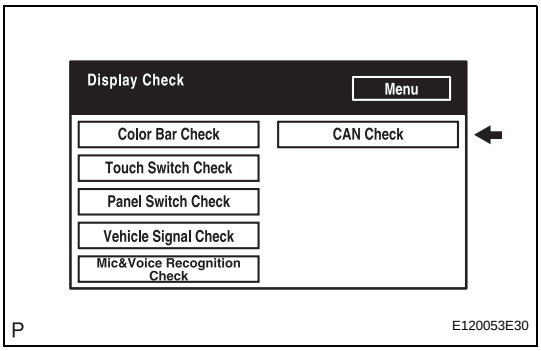

8. CAN CHECK

(a) Select "CAN check" from the "Display check" screen.

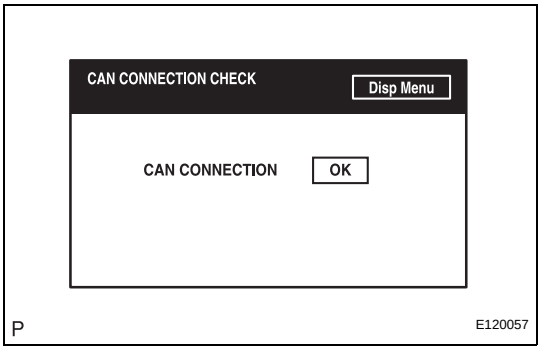

(b) Check the CAN connection check result.
HINT:
- This function operates only for the systems connected to the CAN system.
- For details of this function, refer to DIAGNOSIS DISPLAY DETAILED DESCRIPTION (See page NS-30).

NS

BLUETOOTH TEL CHECK MODE

HINT:
Illustrations may differ from the actual vehicle depending on the device settings and options. Therefore, some detailed areas may not be shown exactly the same as on the actual vehicle.

1. ENTER DIAGNOSTIC MODE (See page NS-48)

2. "BLUETOOTH" TEL CHECK

(a) Select ""Bluetooth" TEL Check" from the "Diagnosis MENU" screen.

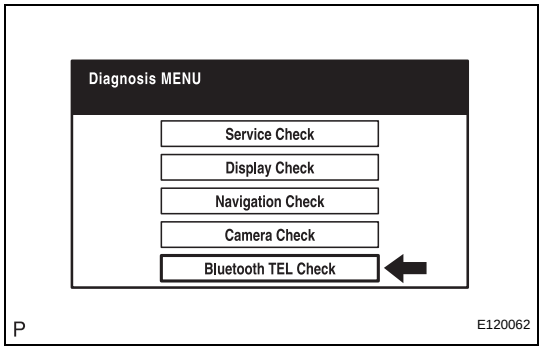

3. "BLUETOOTH" CHECK

(a) Select ""Bluetooth" Check" from the ""Bluetooth" Handsfree Check Menu" screen.

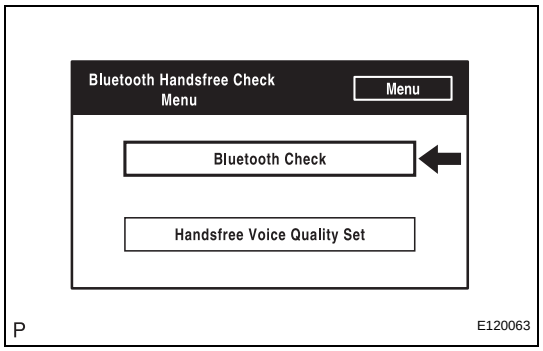

(b) Select "Serial Communication Log" from the ""Bluetooth" Check Menu" screen.

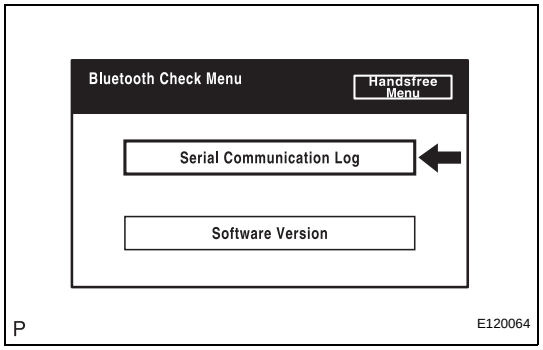

(1) The communication log data in the display ECU are displayed on this screen.
HINT:
The displayed data can be used as a reference.

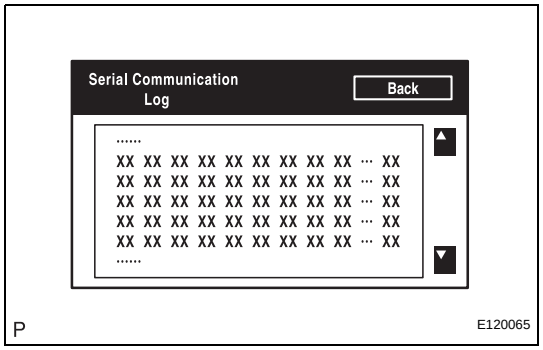

NS

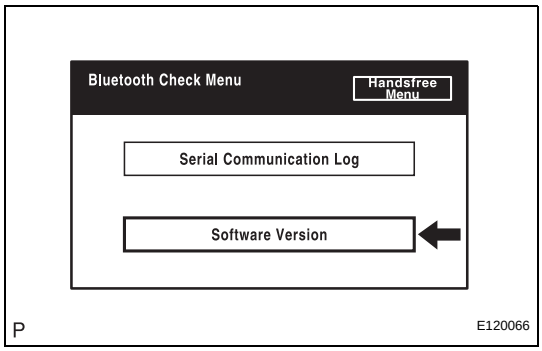

(c) Select "Software Version" from the ""Bluetooth" Check Menu" screen.

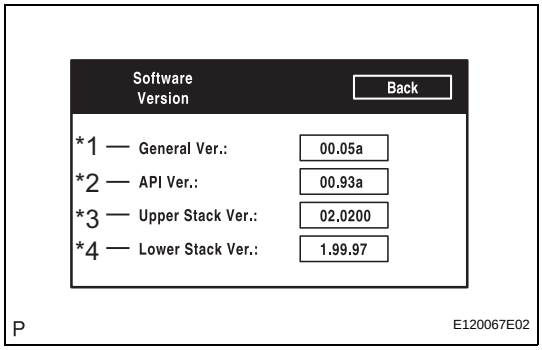

(1) Check the software version of the "Bluetooth" module.

Screen Description:

Display	Contents
General Version/*1	• General software version of "Bluetooth" module • If any of the API version, upper stack version, and low stack version is updated, the general version is upgraded.
API Version/*2	API software version is displayed.
Upper Stack Version/*3	Upper Stack version is displayed.
Lower Stack Version/*4	Lower Stack version is displayed.

HINT:
This function is controlled by the built-in display ECU.

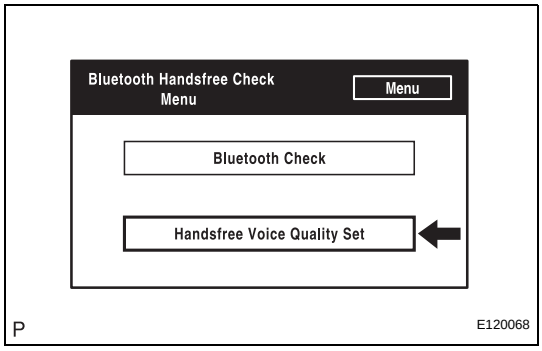

4. HANDSFREE VOICE QUALITY SET

(a) Select "Handsfree Voice Quality Set" from the ""Bluetooth" Handsfree Check Menu" screen.

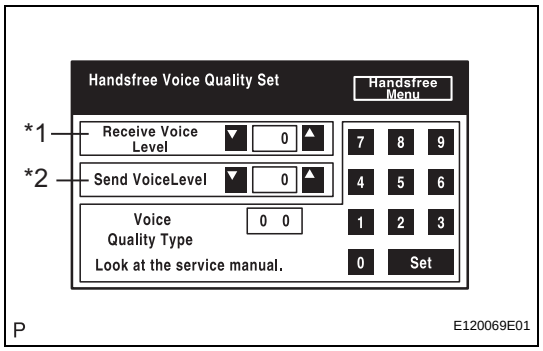

(b) Check the handsfree voice level.

Screen Description:

Display	Contents
Received voice level adjustment/*1	Setting possible for the voice level received from "Bluetooth" compatible phones.
Sent voice level adjustment/*2	Setting possible for the voice sent to "Bluetooth" compatible phones.

HINT:
This function is controlled by the built-in display ECU.
NOTICE:
"Voice Quality Type" should not be changed.

REMOVAL

1. EJECT MAP DISC

(a) Disengage the 8 claws and remove the cover as shown in the illustration.

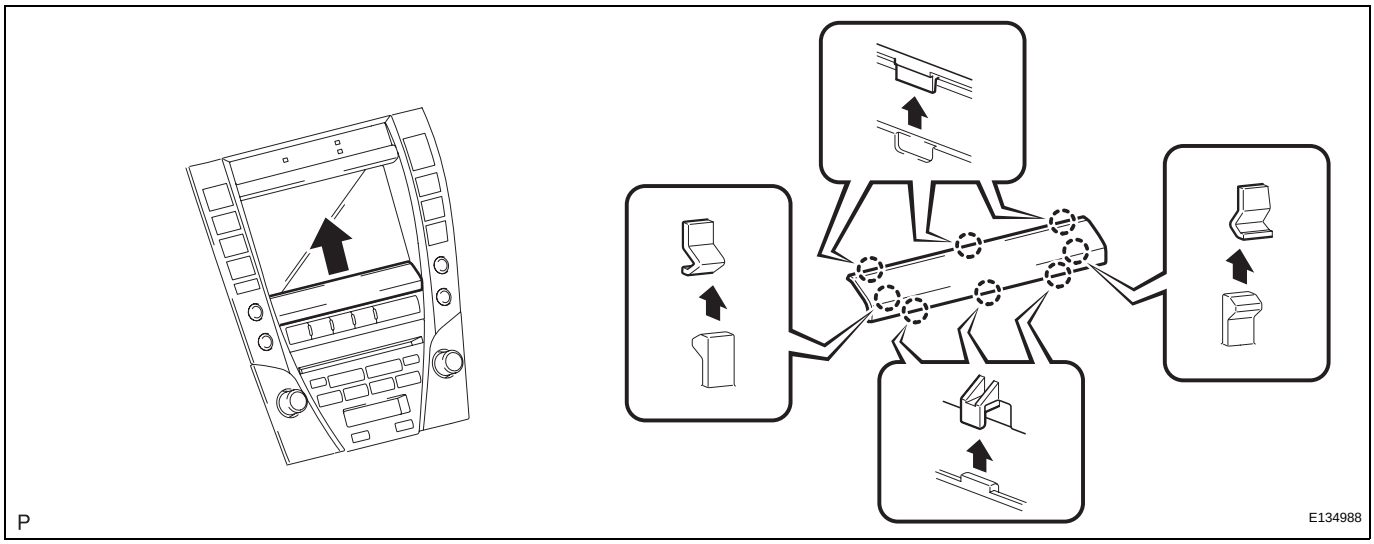

(b) Turn the engine switch on (ACC).
(c) Push the "MENU" button.
(d) Touch "Map DVD" on the navigation screen.
(e) Touch "EJECT DVD" on the navigation screen to eject the map disc.
(f) Turn the engine switch off.

2. REMOVE SHIFT LEVER KNOB SUB-ASSEMBLY (See page IP-16)

3. REMOVE UPPER CONSOLE PANEL ASSEMBLY WITH FRONT ASH RECEPTACLE (See page IP-16)

4. REMOVE INSTRUMENT PANEL FINISH PANEL END LH (See page IP-13)

5. REMOVE INSTRUMENT PANEL FINISH PANEL END RH (See page IP-15)

6. REMOVE NO. 2 INSTRUMENT PANEL REGISTER ASSEMBLY (See page IP-17)

7. REMOVE MULTI-DISPLAY WITH RADIO RECEIVER ASSEMBLY (See page AV-170)

8. REMOVE NO. 1 RADIO BRACKET (See page AV-170)

9. REMOVE NO. 2 RADIO BRACKET (See page AV-170)

10. REMOVE MULTI-DISPLAY ASSEMBLY

(a) Disengage the 2 claws and 4 clips.

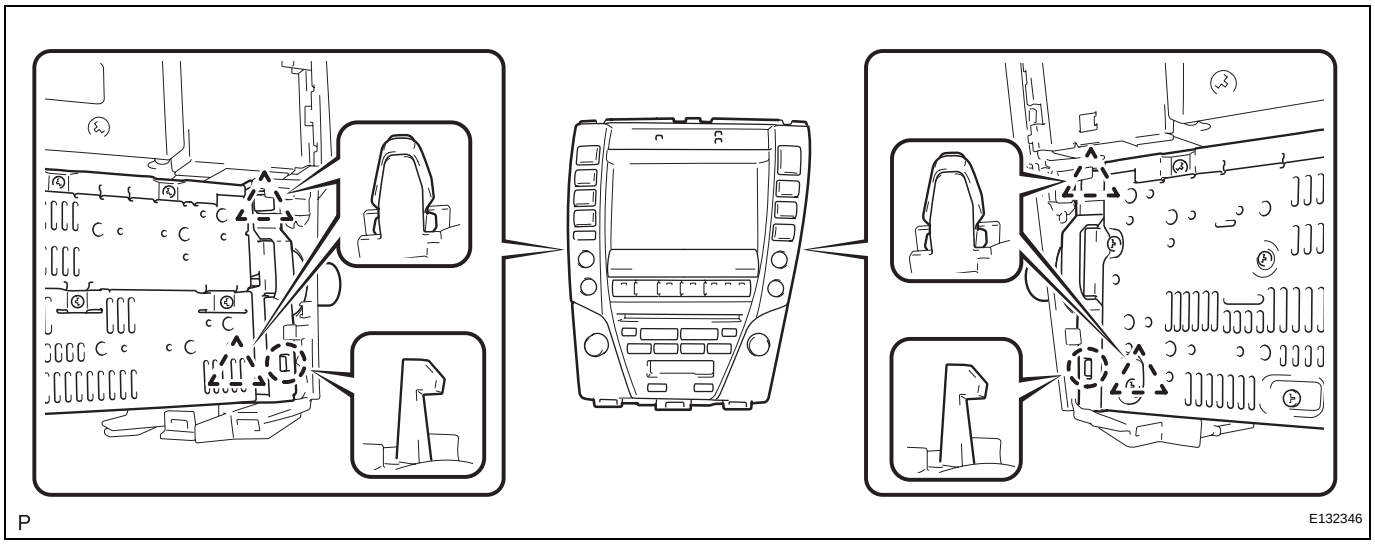

(b) Remove the multi-display assembly.

11. REMOVE NAVIGATION ECU

(a) Disconnect each connector.

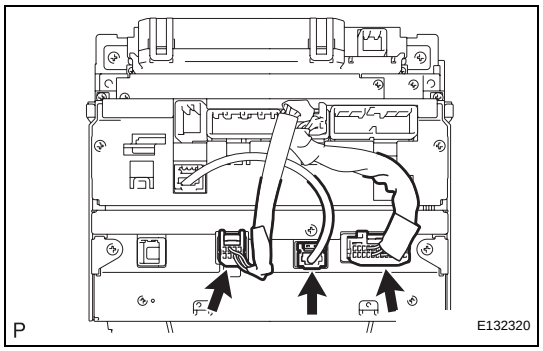

(b) Remove the 2 screws.

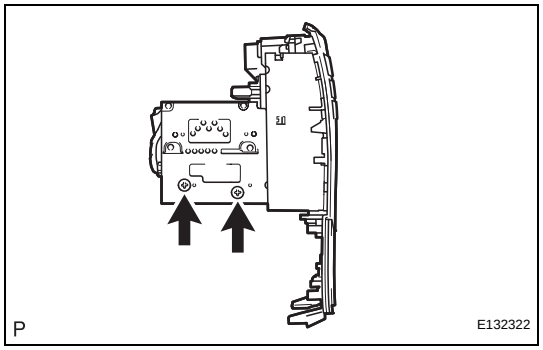

(c) Remove the 2 screws.

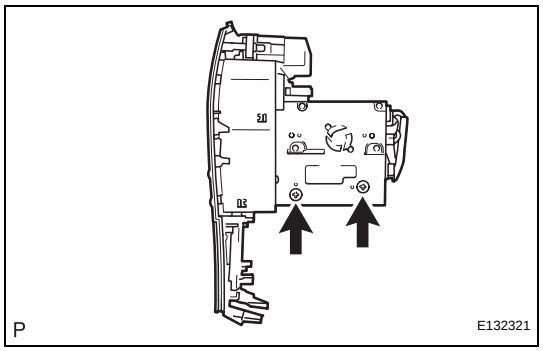

NS

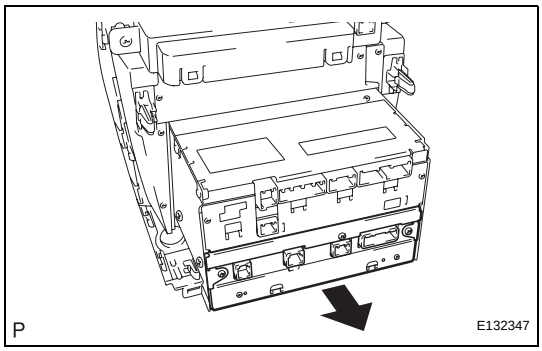

(d) Remove the navigation ECU as shown in the illustration.

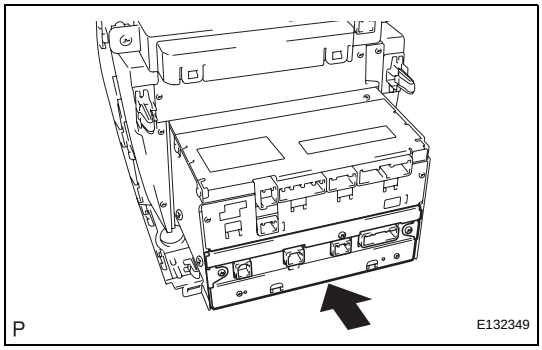

INSTALLATION

1. INSTALL NAVIGATION ECU

(a) Install the navigation ECU as shown in the illustration.

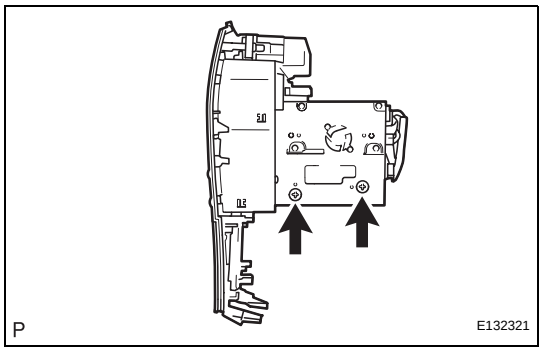

(b) Install the 2 screws.

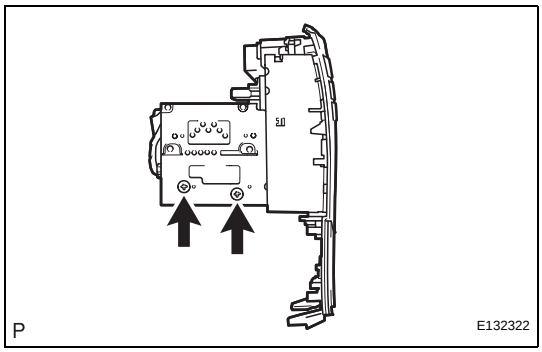

(c) Install the 2 screws.

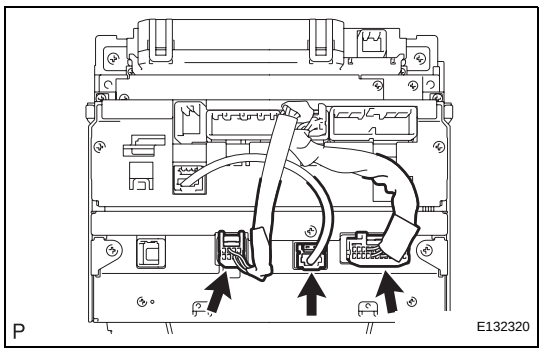

(d) Connect each connector.

2. INSTALL MULTI-DISPLAY ASSEMBLY

(a) Engage the 2 claws and 4 clips and install the multi-display assembly.

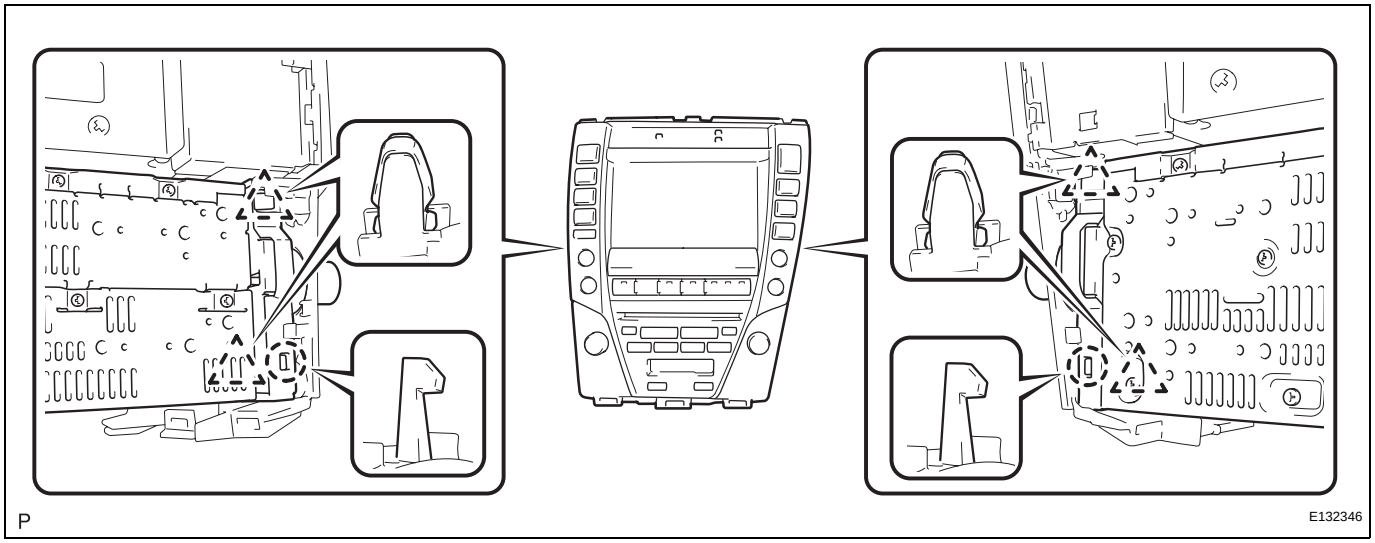

3. INSTALL NO. 2 RADIO BRACKET (See page AV-173)

4. INSTALL NO. 1 RADIO BRACKET (See page AV-173)

5. INSTALL MULTI-DISPLAY WITH RADIO RECEIVER ASSEMBLY (See page AV-173)

6. INSTALL INSTRUMENT PANEL FINISH PANEL END LH (See page IP-46)

7. INSTALL INSTRUMENT PANEL FINISH PANEL END RH (See page IP-44)

8. INSTALL UPPER CONSOLE PANEL ASSEMBLY WITH FRONT ASH RECEPTACLE (See page IP-42)

9. INSTALL NO. 2 INSTRUMENT PANEL REGISTER ASSEMBLY (See page IP-41)

10. INSTALL SHIFT LEVER KNOB SUB-ASSEMBLY (See page IP-42)

11. INSERT MAP DISC

(a) Turn the engine switch on (ACC).

(b) Insert the map disc.

(c) Engage the 8 claws and install the cover as shown in the illustration.

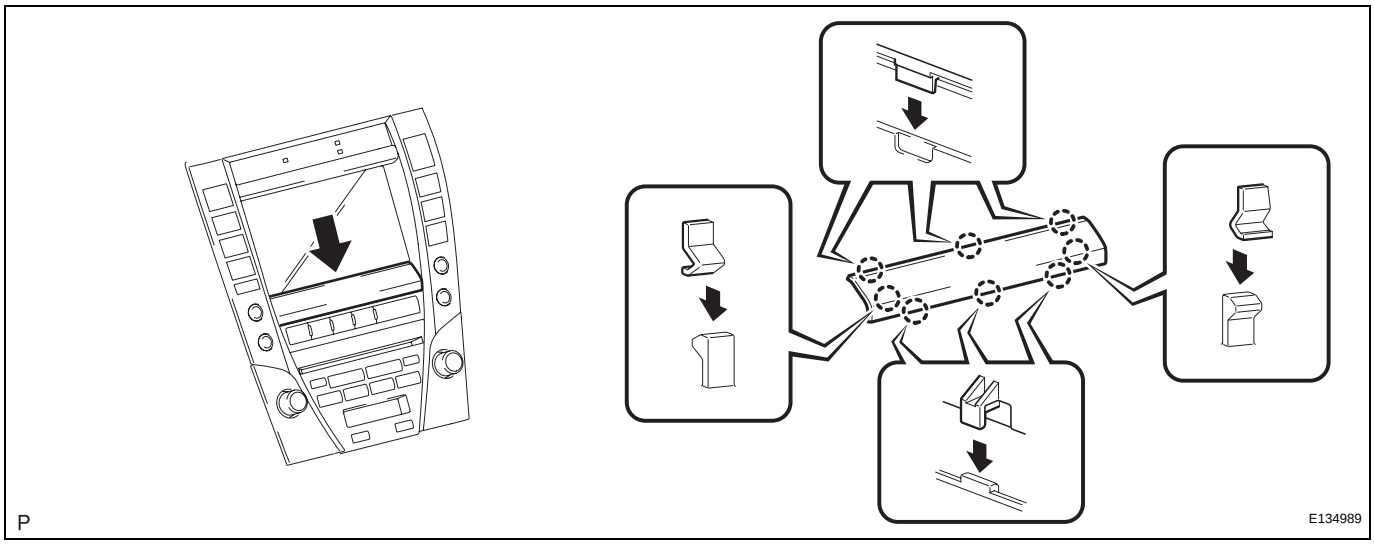

(d) Turn the engine switch off.

12. ADJUST CLOCK

NAVIGATION CHECK MODE

HINT:
- This mode displays GPS satellite information.
- Illustrations may differ from the actual vehicle depending on the device settings and options. Therefore, some detailed areas may not be shown exactly the same as on the actual vehicle.

1. ENTER DIAGNOSTIC MODE (See page NS-48)

2. NAVIGATION CHECK

(a) Select "Navigation Check" from the "Diagnosis MENU" screen.

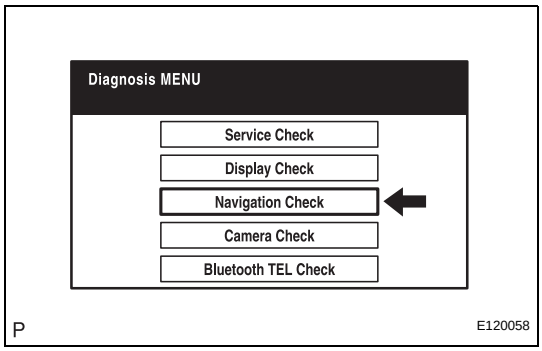

3. GPS INFORMATION

(a) Select "GPS Information" from the "Navigation Check" screen.

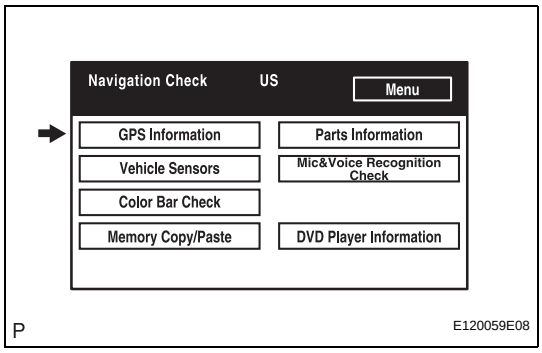

(b) When GPS information is displayed, check the GPS conditions.

HINT:
- This screen is updated once per second when input signals to the vehicle are changed.
- For details of this function, refer to DIAGNOSIS DISPLAY DETAILED DESCRIPTION (See page NS-30).

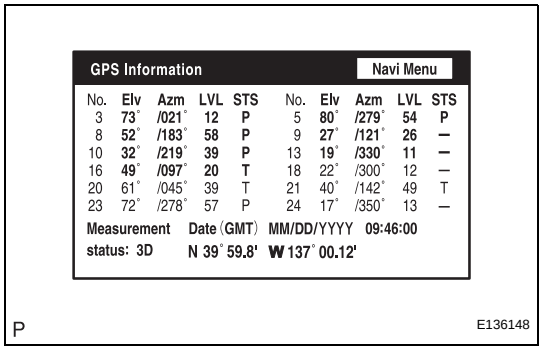

4. VEHICLE SENSORS

(a) Select "Vehicle Sensors" from the "Navigation Check" screen.

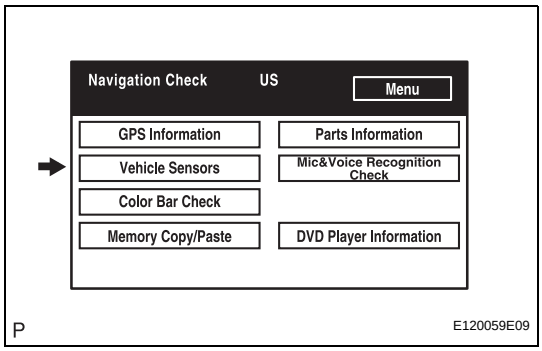

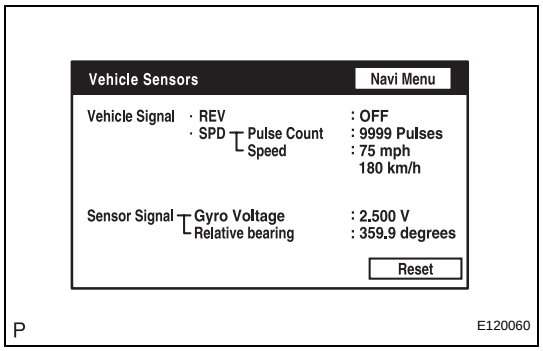

(b) Check all the signals and sensors when vehicle signal information is displayed.
HINT:
- This screen is updated once per second when input signals to the vehicle are changed.
- This screen displays vehicle signals input to the navigation ECU.
- For details of this function, refer to DIAGNOSIS DISPLAY DETAILED DESCRIPTION (See page NS-30).

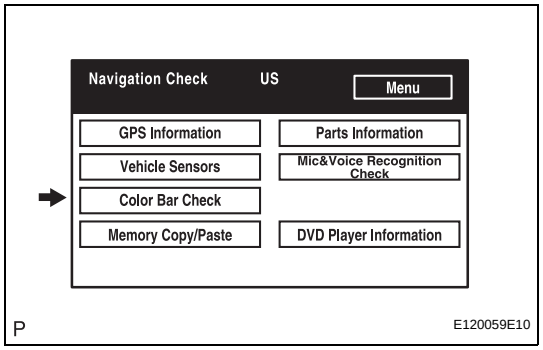

5. COLOR BAR CHECK

(a) Select "Color Bar Check" from the "Navigation Check" screen.

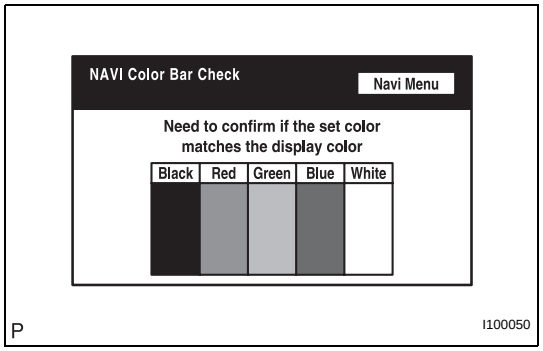

(b) Check each color of the color bar when the "NAVI Color Bar Check" screen is displayed.
HINT:
- Colors will not be displayed full-screen as in "Display Check Mode".
- This screen displays the navigation ECU display color.

NS

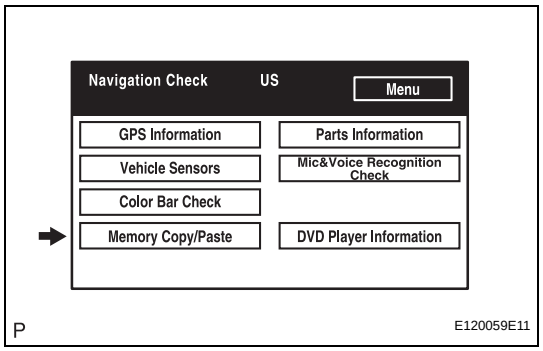

6. MEMORY COPY/PASTE CHECK

HINT:
This function cannot be used.

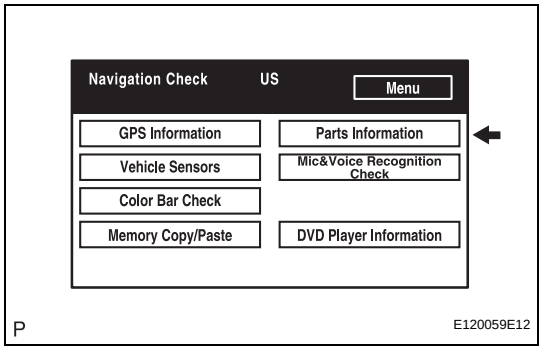

7. PARTS INFORMATION

(a) Select "Parts Information" from the "Navigation Check" screen.

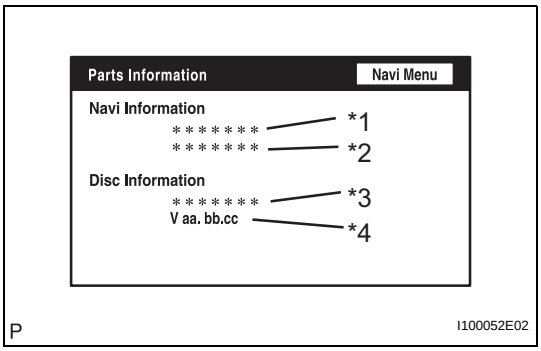

(b) Check the navigation and disc information when the "Parts Information" screen is displayed.

Screen Description:

Display	Contents
Navigation Manufacturer/*1	Navigation ECU manufacturer is displayed.
Navigation Version/*2	Navigation ECU version is displayed.
Disc Manufacturer/*3	Map disc manufacturer is displayed.
Disc Version/*4	Map disc version is displayed.

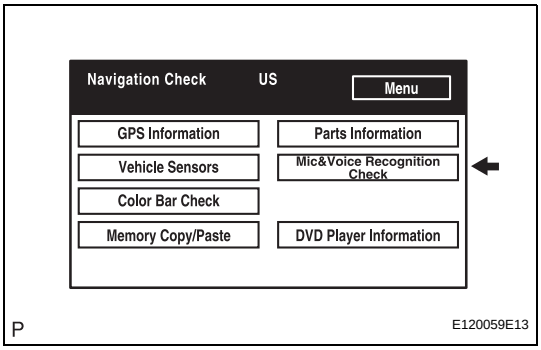

8. MIC & VOICE RECOGNITION CHECK

(a) Select "Mic & Voice Recognition Check" on the "Navigation Check" screen to display "MICROPHONE & VOICE RECOGNITION CHECK" screen.

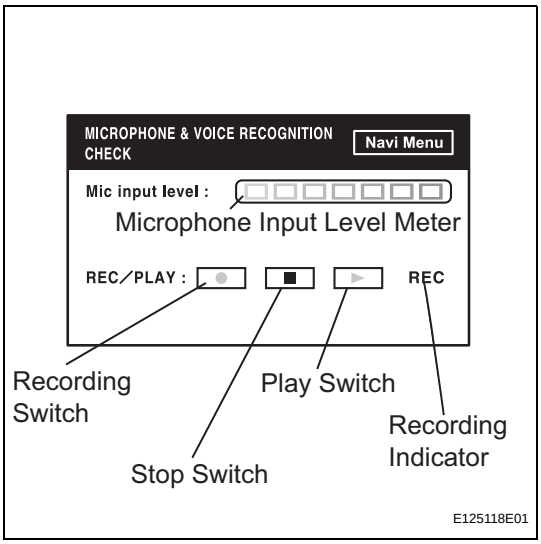

(b) When voice is input into the microphone, check that the microphone input level meter changes according to the input voice.

(c) Push the recording switch and perform voice recording.

(d) Check that the recording indicator remains on while recording and that the recorded voice is played normally.

HINT:

- For details of this function, refer to DIAGNOSIS DISPLAY DETAILED DESCRIPTION (See page NS-30).
- This function is controlled by the built-in navigation ECU.

NS

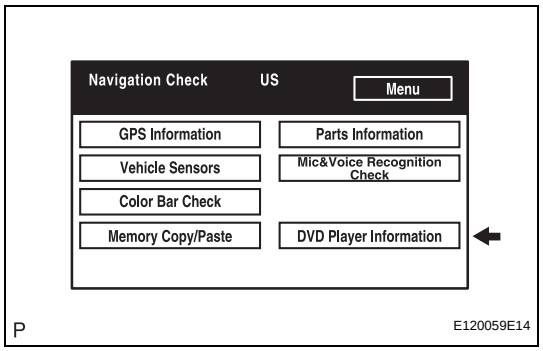

9. DVD PLAYER INFORMATION CHECK

(a) Select "DVD Player Information" from the "Navigation Check" screen.

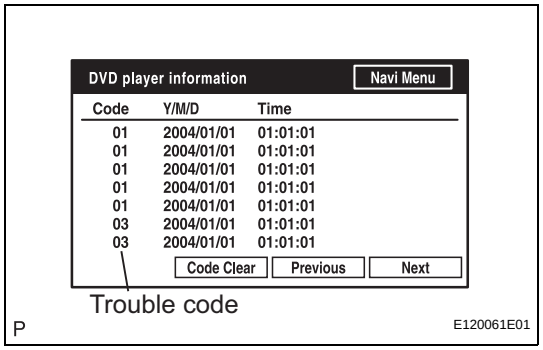

(b) Check for DTCs.

HINT:

- This is a DVD player check function in the navigation ECU.
- For details of this function, refer to DIAGNOSIS DISPLAY DETAILED DESCRIPTION (See page NS-30).

NS

DIAGNOSIS DISPLAY DETAILED DESCRIPTION

HINT:
- This section contains a detailed description of displays within diagnostic mode.
- Illustrations may differ from the actual vehicle depending on the device settings and options. Therefore, some detailed areas may not be shown exactly the same as on the actual vehicle.

1. SYSTEM CHECK

(a) System Check Mode Screen

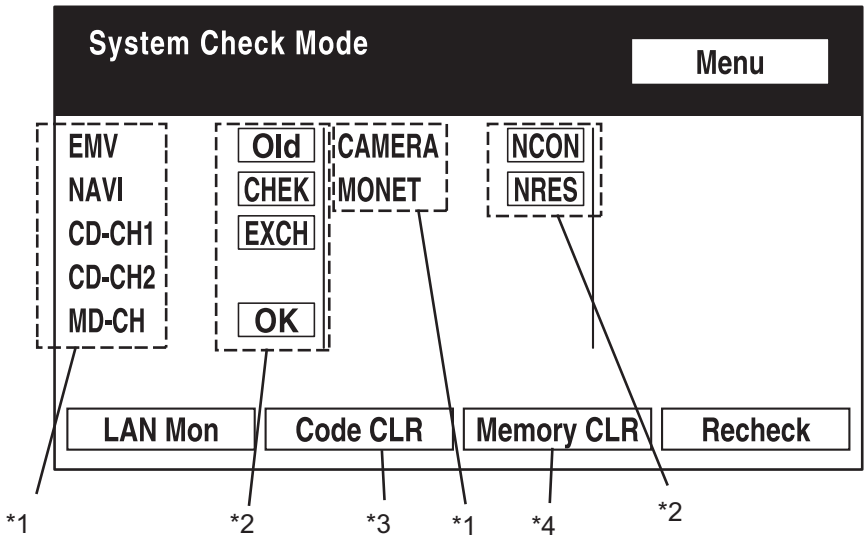

P

I100055E08

(1) Device Names and Hardware Address/*1

HINT:
- Registered device names are displayed.
- If a device name is unknown to the system, its physical address is shown instead.

Address No.	Name	Address No.	Name
110	EMV	120	AVX
128	1DIN TV	140	AVN
144	G-BOOK	178	NAVI
17C	MONET	190	AUDIO H/U
1AC	CAMERA-C	1B0	Rr-TV
1C0	Rr-CONT	19D	BT-HF
1C4	PANEL	1C6	G/W
1C8	FM-M-LCD	1D8	CONT-SW
1EC	Body	118	EMVN
1F1	XM	1F2	SIRIUS
230	TV-TUNER	240	CD-CH2
250	DVD-CH	280	CAMERA
360	CD-CH1	3A0	MD-CH

Address No.	Name	Address No.	Name
17D	TEL	440	DSP-AMP
530	ETC	1F6	RSE
1A0	DVD-P	1D6	CLOCK
238	DTV	480	AMP

(2) Check Result/*2
HINT:
Result codes for all devices are displayed.

Result	Meaning	Action
OK	The device did not respond with a DTC (excluding communication DTCs from the AVC-LAN).	-
EXCH	The device responds with a "replace"-type DTC.	Check the DTC in "Unit Check Mode" and replace the device.
CHEK	The device responds with a "check"-type DTC.	Check the DTC in "Unit Check Mode".
NCON	The device was previously present, but does not respond in diagnostic mode.	1. Check power supply wire harness of the device. 2. Check the AVC-LAN of the device.
Old	The device responds with an "old"-type DTC.	Check the DTC in "Unit Check Mode".
NRES	The device responds in diagnostic mode, but gives no DTC information.	1. Check power supply wire harness of the device. 2. Check the AVC-LAN of the device.

NS

(3) Code Clear/*3
- Present DTCs are cleared.
- Press the "Code CLR" switch for 3 seconds.

(4) Memory Clear/*4
- Present and past DTCs and registered connected device names are cleared.
- Press the "Memory CLR" switch for 3 seconds.

(b) Diagnosis MENU Screen

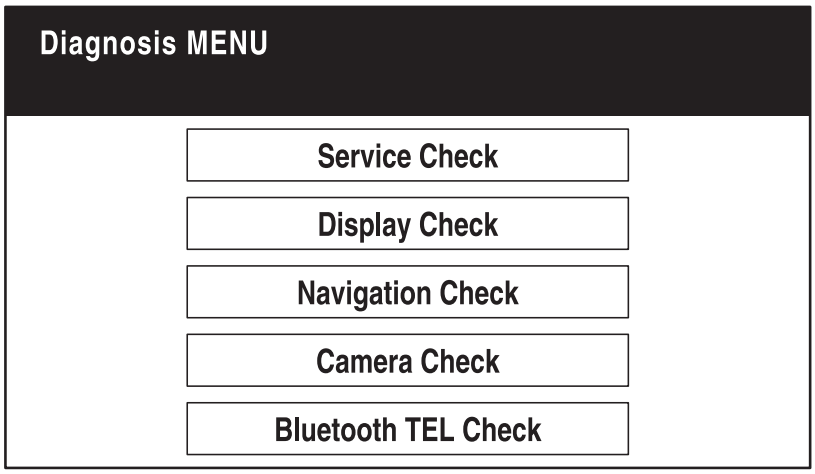

P

E120070

HINT:
Each item is grayed out or not displayed based on the device settings.

(c) Unit Check Mode Screen

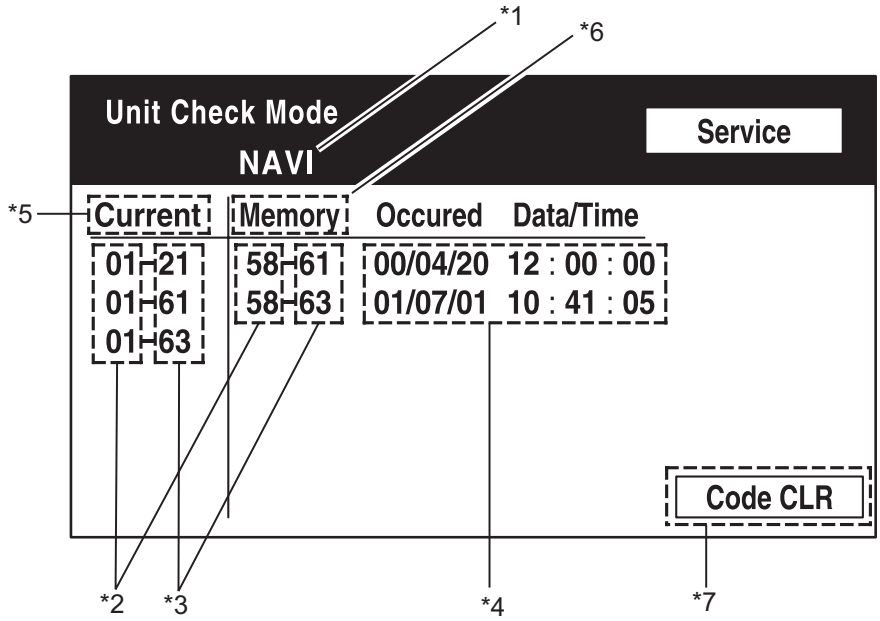

P

E120071E02

NS

Screen Description:

Display	Contents
Device name/*1	Target device
Segment/*2	Target device logical address
DTC/*3	DTC (Diagnostic Trouble Code)
Timestamp/*4	The time and date of past DTCs are displayed. (The year is displayed in 2-digit format.)
Present Code/*5	DTCs output at the service check are displayed.
Past Code/*6	Diagnostic memory results and recorded DTCs are displayed.
Diagnosis Clear Switch/*7	Pushing this switch for 3 seconds clears the diagnostic memory data of the target device. (Both response to diagnostic system check result and the displayed data are cleared.)

(d) LAN Monitor (Original) Screen

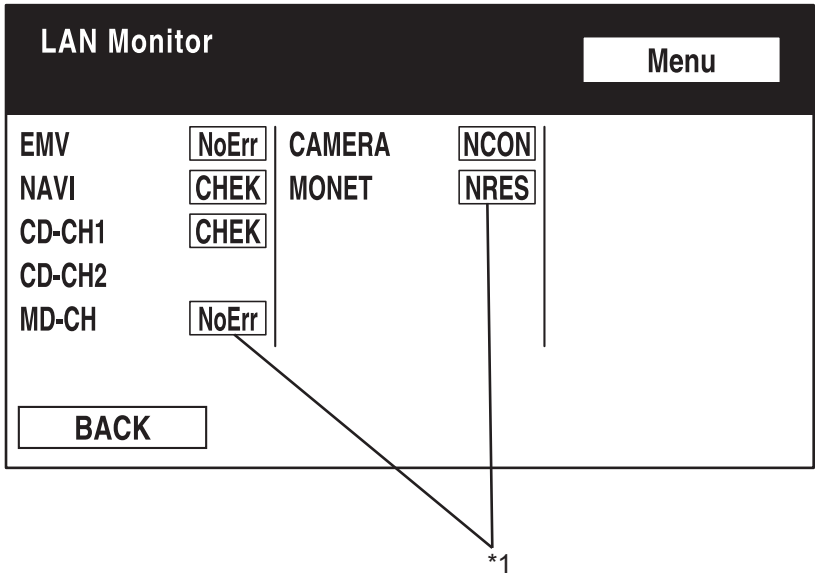

P

I100058E04

(1) Check Result/*1

HINT:

Check results of all the devices are displayed.

Result	Meaning	Action
No Err (OK)	There are no communication DTCs.	-
CHEK	The device responds with a "check" -type DTC.	Check the DTC in "Unit Check Mode".
NCON	The device was previously present, but does not respond in diagnostic mode.	1. Check power supply wire harness of the device. 2. Check the AVC-LAN of the device.
Old	The device responded with an "old" -type DTC.	Check the DTC in "Unit Check Mode".
NRES	The device responds in diagnostic mode, but gives no DTC information.	1. Check power supply wire harness of the device. 2. Check the AVC-LAN of the device.

NS

(e) LAN Monitor (Individual) Screen

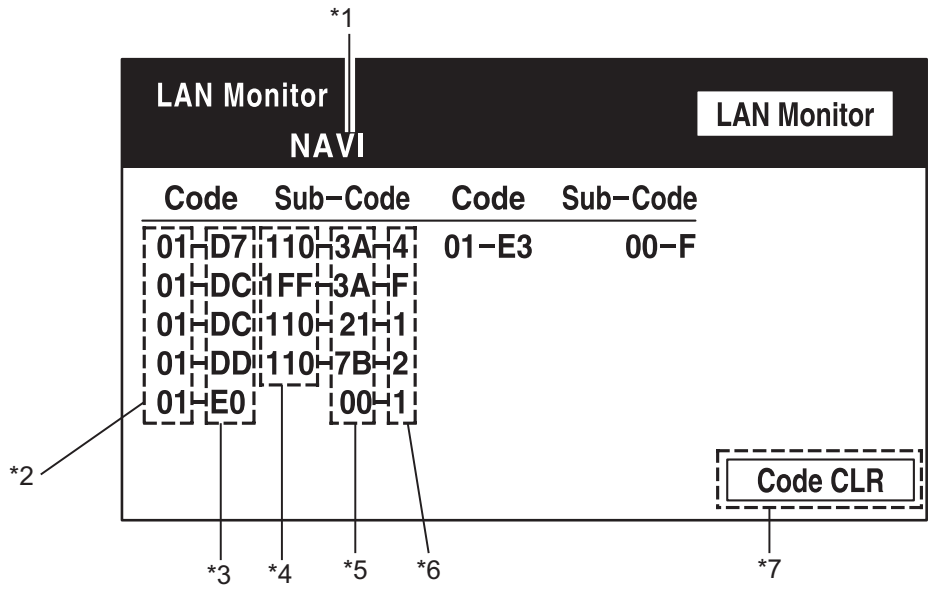

P

E120072E01

NS

Screen Description:

Display	Contents
Device name/*1	Target device
Segment/*2	Target logical address
DTC/*3	DTC (Diagnostic Trouble Code)
Sub-code (device address)/*4	Physical address stored with DTC (If there is no address, nothing is displayed.)
Connection check No./*5	Connection check number stored with DTC
DTC occurrence/*6	Number of times the same DTC has been recorded
Diagnosis Clear Switch/*7	Pushing this switch for 3 seconds clears the diagnostic memory data of the target device. (Both response to diagnostic system check result and the displayed data are cleared.)

2. DISPLAY CHECK

(a) Vehicle Signal Check Mode Screen

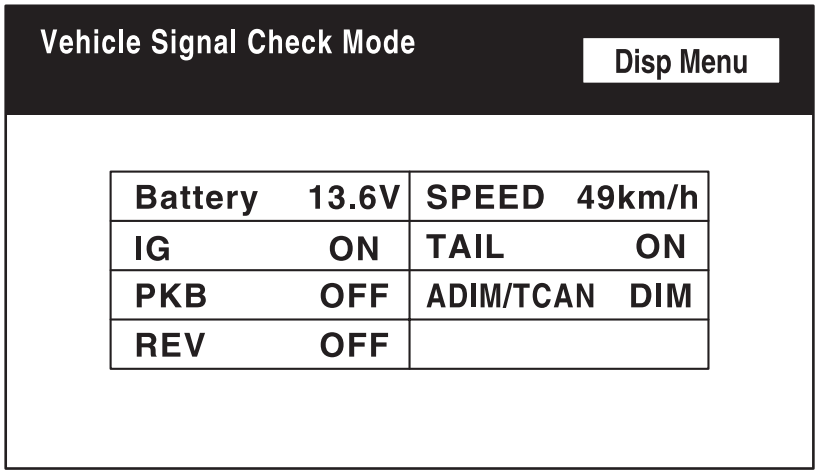

P I100060

NS

Screen Description:

Name	Contents
Battery	Battery voltage is displayed.
PKB	Parking brake ON/OFF state is displayed.
REV	Reverse signal ON/OFF state is displayed.
IG	Engine switch ON/OFF state is displayed.
ADIM/TCAN	Brightness state DIM (with) / BRIGHT (without) is displayed.
TAIL	TAIL signal (Light control switch) ON/OFF state is displayed.
SPEED	Vehicle speed is displayed in km/h.

HINT:

- Only items sending a vehicle signal will be displayed.
- This screen is updated once per second when input signals to the vehicle are changed.

(b) Microphone & Voice Recognition Check Screen

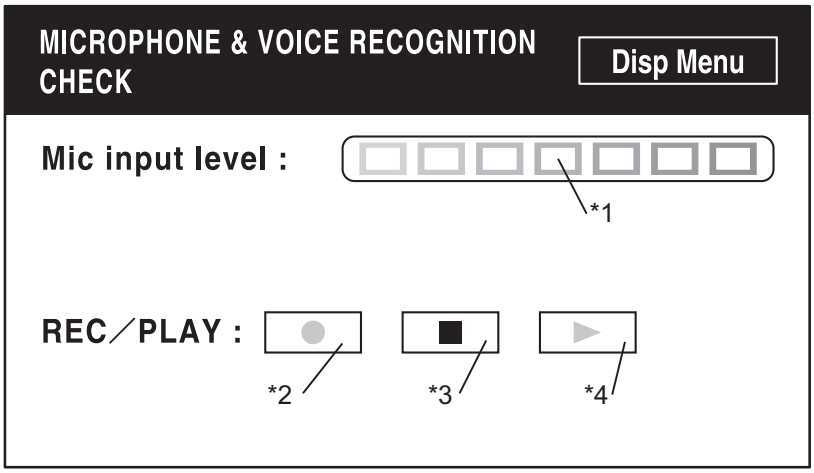

P

E125091E02

NS

Screen Description:

Name	Contents
Microphone input level meter/*1	Monitors the microphone input level every 100 ms and displays the results in 8 different levels.
Recording switch/*2	Starts recording.
Stop switch/*3	Stops recording.
Play switch/*4	Plays the recorded voice.

HINT:

- The microphone input function is on at all times when this screen is displayed.
- While recording or playing, the switches other than the stop switch cannot be pushed.
- When no voice is recorded, the play switch cannot be pushed.
- Recording will stop after 5 seconds or by pushing the stop switch.

(c) CAN Connection Check Screen

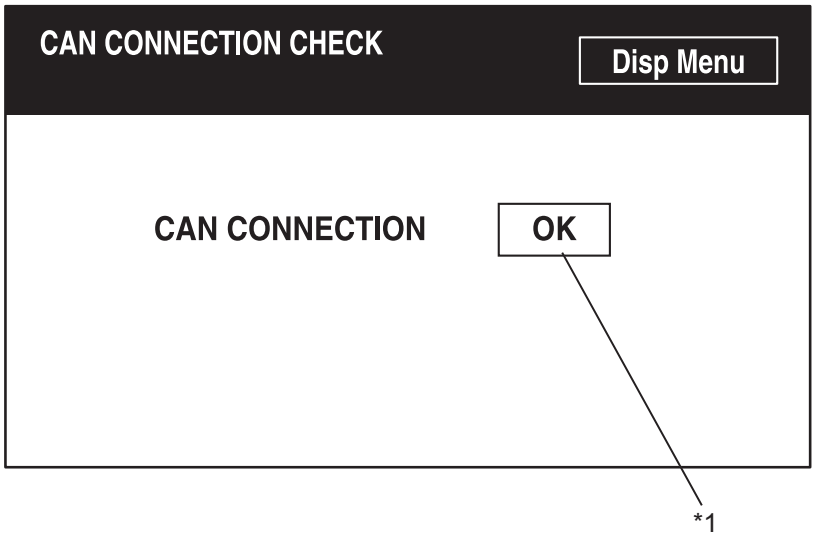

P

E120075E01

Screen Description:

Name	Contents
CAN Connection check result/*1	• For systems connected to the CAN system, the results of the CAN connection check are displayed. • "NG" - The engine switch is on (ACC or IG) and the CAN communication lines are malfunctioning or the CAN bus lines are not connected. • "OK" - The engine switch is on (ACC or IG) and the CAN communication lines are normal. • Blank - CAN connection check is performed with the engine switch on (ACC) or off.

HINT:

- This function operates only for the systems connected to the CAN system.
- When the engine switch is turned off, the bus lines are disconnected, or a malfunction occurs in the bus lines while the CAN connection check result is being displayed, the problem will be reflected on the screen in real time.

3. NAVIGATION CHECK

(a) Navigation Check Screen

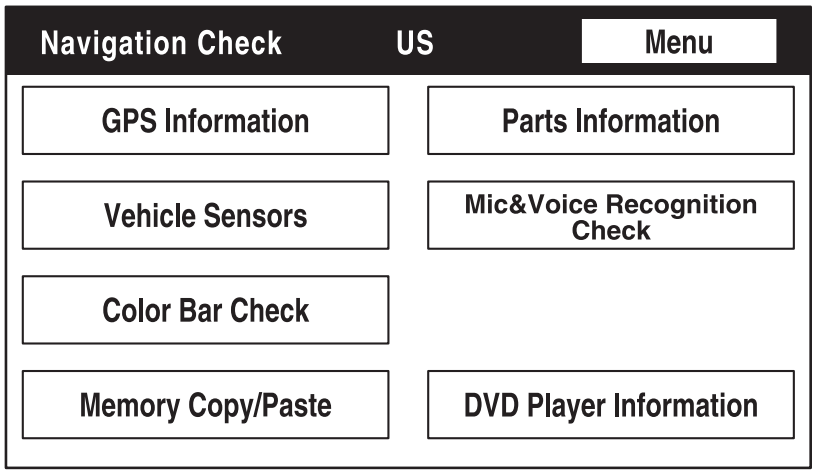

P

E120076E01

NS

HINT:
Each item is grayed out or not displayed based on the device settings.

(b) GPS Information Screen

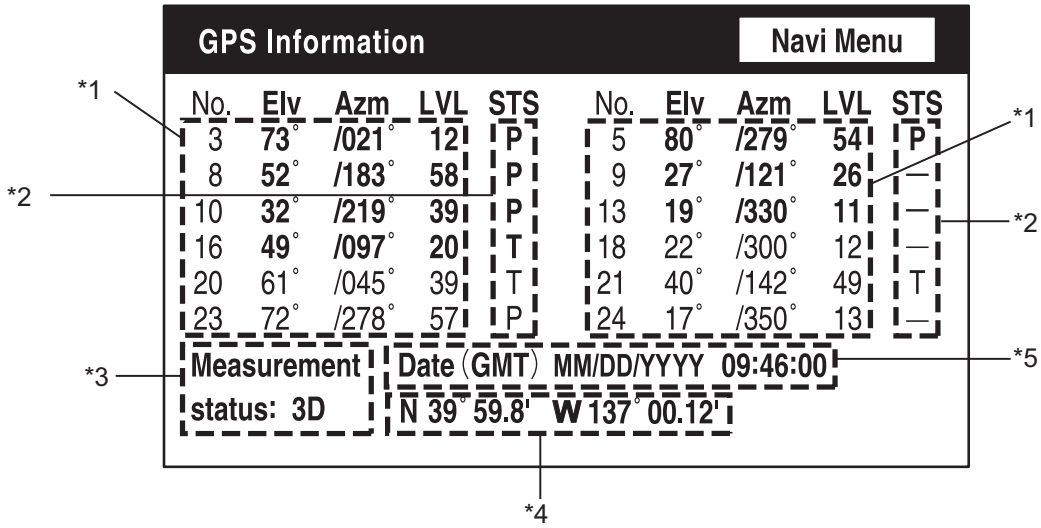

P

E136147E02

(1) Satellite information/*1
Information from a maximum of 12 satellites is displayed on the screen. This information includes the target GPS satellite number, elevation angle, direction, and signal level.

(2) Receiving condition/*2

(DENSO model):

Display	Contents
T	The system is receiving a GPS signal, but is not using it for location.
P	The system is using the GPS signal for location.
-	The system cannot receive a GPS signal.

(AISIN AW model):

Display	Contents
01H	The system cannot receive a GPS signal.
02H	The system is tracing a satellite.
03H	The system is receiving a GPS signal, but is not using it for location.
04H	The system is using the GPS signal for location.

Measurement information/*3:

Display	Contents
2D	2-dimensional location method is being used.
3D	3-dimensional location method is being used.
NG	Location data cannot be used.
Error	Reception error has occurred.
-	Any other state.

Position information/*4

Display	Contents
Position	Latitude and longitude information on the current position is displayed.

Date information/*5:

Display	Contents
Date	The date/time information obtained from GPS signal is displayed in Greenwich mean time (GMT). The last 4 digits are displayed.

(c) Vehicle Sensors Screen

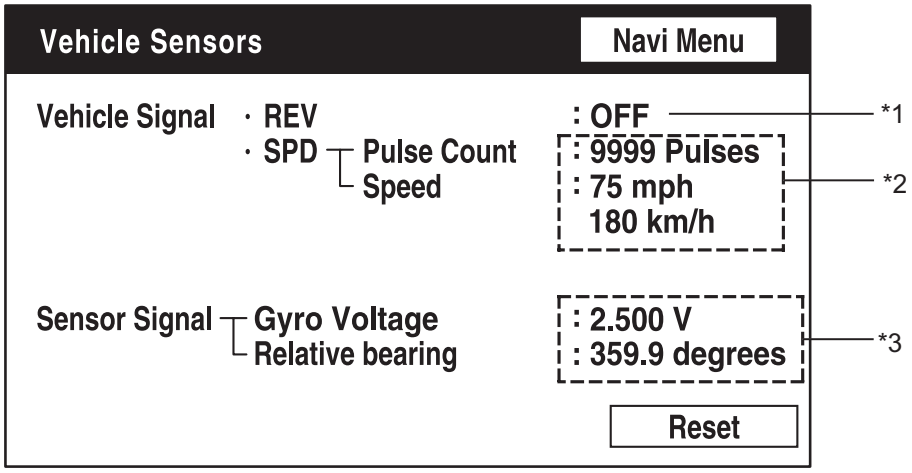

P

E120077E01

NS

Vehicle signal:

Display	Contents
REV/*1	REV signal ON/OFF state is displayed.
SPD/*2	SPD signal condition is displayed.

Sensor signal:

Display	Contents
Gyro sensor/*3	Gyro sensor output condition is displayed (when the vehicle runs straight or is stationary, the voltage is approximately 2.5 V).

HINT:
Signals are updated once per second only when vehicle sensor signals are changed.

(d) Microphone & Voice Recognition Check Screen

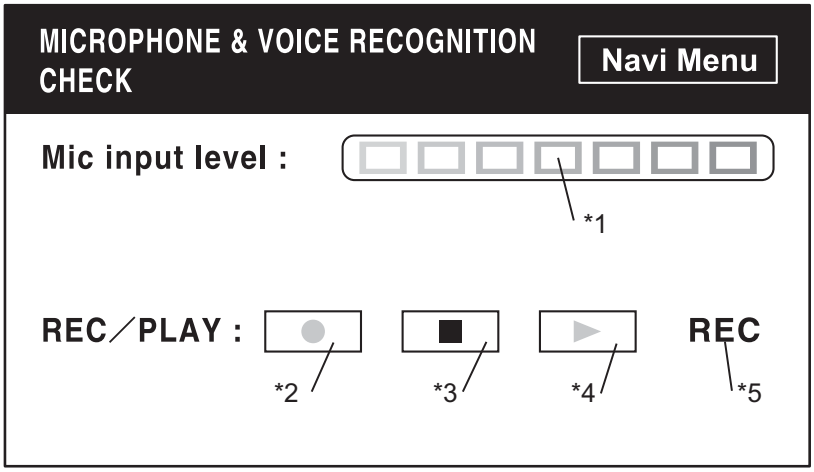

P

E125119E01

Screen Description:

Display	Contents
Microphone input level meter/*1	Monitors the microphone input level every 100 ms and displays the results in 8 different levels.
Recording switch/*2	Starts recording.
Stop switch/*3	Stops recording.
Play switch/*4	Plays the recorded voice.
Recording indicator/*5	Comes on while recording.

HINT:
- The microphone input function is on at all times when this screen is displayed.
- While recording or playing, the switches other than the stop switch cannot be pushed.
- When no voice is recorded, the play switch cannot be pushed.
- Recording will stop after 5 seconds or by pushing the stop switch.

(e) DVD Player Information Screen

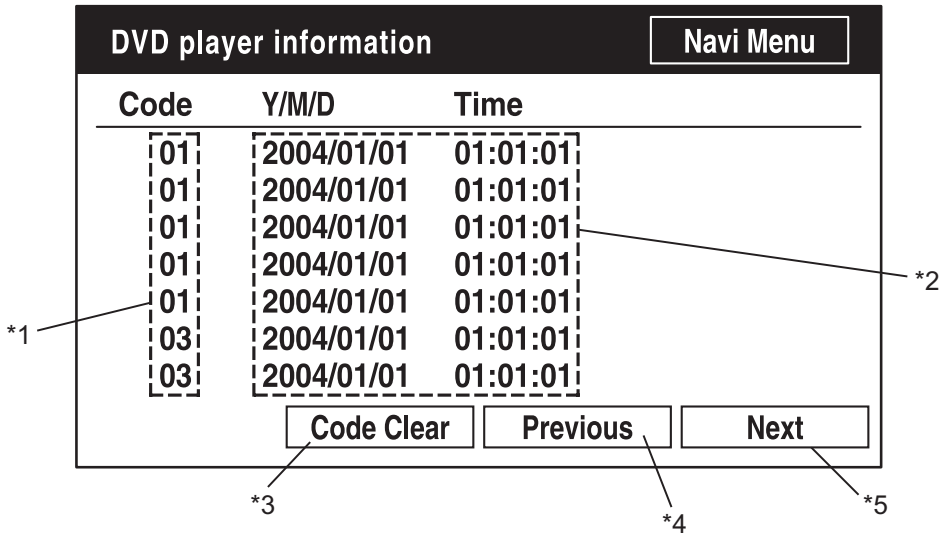

P E120078E01

Screen Description:

Display	Contents
Trouble code/*1	Each code corresponding to the malfunctions is displayed. For details, refer to "Trouble Code Description".
Occurrence time/*2	• The date (year, month, day) and time (hour, minute, second) when the trouble code was detected are displayed as a time stamp. (Greenwich mean time) • The time data to be displayed are received from the GPS receiver.
Trouble code clear switch/*3	All code data being displayed are cleared by pushing this switch for 3 seconds.
Returning switch/*4	The previous page is displayed. If the current displayed page is the first page, this switch cannot be operated.
Proceeding switch/*5	The next page is displayed. If the current displayed page is the last page, this switch cannot be operated.

Trouble Code Description:

Code	Malfunction	Countermeasure
01	Cannot be recognized	Replace navigation ECU.
03	Cannot be read	Follow the inspection procedure for DTC 58-42 (See page NS-100).

HINT:
This is a DVD player check function in the navigation ECU.

NS

REMOVAL

1. **PRECAUTION**
   (See page IP-1)
2. **TURN FRONT WHEELS TO FACE STRAIGHT AHEAD**
3. **DISCONNECT CABLE FROM NEGATIVE BATTERY TERMINAL**
   CAUTION:
   Waif for 90 seconds after disconnecting the cable to prevent airbag deployment (See page RS-1).
4. **REMOVE LOWER NO. 3 STEERING WHEEL COVER (See page RS-367)**
5. **REMOVE LOWER NO. 2 STEERING WHEEL COVER (See page RS-367)**
6. **REMOVE STEERING PAD (See page RS-367)**
7. **REMOVE STEERING WHEEL ASSEMBLY (See page SR-80)**
8. **REMOVE FRONT DOOR SCUFF PLATE LH (See page IR-39)**
9. **REMOVE FRONT DOOR OPENING TRIM COVER LH (See page IR-39)**
10. **REMOVE SIDE INSTRUMENT PANEL LH (See page IP-12)**
11. **REMOVE INSTRUMENT PANEL FINISH PANEL END LH (See page IP-13)**
12. **REMOVE LOWER INSTRUMENT PANEL SUB-ASSEMBLY (See page IP-13)**
13. **REMOVE STEERING COLUMN COVER (See page IP-13)**
14. **REMOVE TURN SIGNAL SWITCH ASSEMBLY WITH SPIRAL CABLE SUB-ASSEMBLY (See page SR-80)**
15. **REMOVE TILT AND TELESCOPIC SWITCH (See page SR-80)**
16. **REMOVE INSTRUMENT CLUSTER FINISH PANEL SUB-ASSEMBLY (See page IP-14)**
17. **REMOVE COMBINATION METER ASSEMBLY (See page IP-14)**
18. **REMOVE NO. 1 SWITCH HOLE BASE (See page IP-14)**
19. **REMOVE INSTRUMENT PANEL FINISH PANEL END RH (See page IP-15)**
20. **REMOVE FRONT DOOR SCUFF PLATE RH (See page IR-42)**
21. **REMOVE FRONT DOOR OPENING TRIM COVER RH (See page IR-42)**

22. **REMOVE NO. 2 INSTRUMENT PANEL UNDER COVER SUB-ASSEMBLY (See page IP-15)**
23. **REMOVE SIDE INSTRUMENT PANEL RH (See page IP-15)**
24. **REMOVE FRONT PASSENGER SIDE KNEE AIRBAG ASSEMBLY (See page RS-396)**
25. **REMOVE LOWER INSTRUMENT PANEL RH (See page IP-16)**
26. **REMOVE SHIFT LEVER KNOB SUB-ASSEMBLY (See page IP-16)**
27. **REMOVE UPPER CONSOLE PANEL ASSEMBLY WITH FRONT ASH RECEPTACLE (See page IP-16)**
28. **REMOVE NO. 2 INSTRUMENT PANEL REGISTER ASSEMBLY (See page IP-17)**
29. **REMOVE MULTI-DISPLAY WITH RADIO RECEIVER ASSEMBLY (See page AV-170)**
30. **REMOVE HEATER SEAT SWITCH CONSOLE BASE (w/o Seat Heater System) (See page IP-17)**
31. **REMOVE HEATER SEAT SWITCH CONSOLE BASE (w/ Seat Heater System) (See page IP-18)**
32. **REMOVE CONSOLE BOX POCKET (See page IP-18)**
33. **REMOVE CONSOLE BOX CARPET (See page IP-18)**
34. **REMOVE CONSOLE REAR END PANEL SUB-ASSEMBLY (See page IP-19)**
35. **REMOVE REAR CONSOLE BOX ASSEMBLY (See page IP-19)**
36. **REMOVE FRONT PILLAR GARNISH LH (See page IR-39)**
37. **REMOVE NO. 1 INSTRUMENT PANEL SPEAKER PANEL SUB-ASSEMBLY (See page IP-20)**
38. **REMOVE FRONT NO. 2 SPEAKER ASSEMBLY (for LH Side) (See page AV-184)**
39. **REMOVE NO. 1 INSTRUMENT PANEL REGISTER ASSEMBLY (See page IP-20)**
40. **REMOVE FRONT PILLAR GARNISH RH (See page IR-42)**
41. **REMOVE NO. 2 INSTRUMENT PANEL SPEAKER PANEL SUB-ASSEMBLY (See page IP-21)**
42. **REMOVE FRONT NO. 2 SPEAKER ASSEMBLY (for RH Side) (See page IP-21)**
43. **REMOVE NO. 3 INSTRUMENT PANEL REGISTER ASSEMBLY (See page IP-21)**
44. **REMOVE NO. 1 SPEAKER HOLE COVER (See page IP-21)**

45. **REMOVE FRONT STEREO COMPONENT SPEAKER ASSEMBLY (See page AV-188)**

46. **REMOVE NO. 1 INSTRUMENT PANEL MOUNTING BRACKET (See page IP-22)**

47. **REMOVE PUSH START SWITCH (See page IP-22)**

48. **DISCONNECT INSTRUMENT PANEL WIRE ASSEMBLY (See page RS-414)**

49. **REMOVE ROOM TEMPERATURE SENSOR (See page AC-214)**

50. **REMOVE INSTRUMENT PANEL SAFETY PAD ASSEMBLY (w/o DVD Player) (See page IP-22)**

51. **REMOVE INSTRUMENT PANEL SAFETY PAD ASSEMBLY (w/ DVD Player) (See page IP-24)**

52. **REMOVE SIDE NO. 1 DEFROSTER NOZZLE DUCT (See page IP-27)**

53. **REMOVE SIDE NO. 2 DEFROSTER NOZZLE DUCT (See page IP-28)**

54. **REMOVE DEFROSTER NOZZLE ASSEMBLY (See page IP-28)**

55. **REMOVE NO. 1 HEATER TO REGISTER DUCT (See page IP-28)**

56. **REMOVE NO. 2 HEATER TO REGISTER DUCT (See page IP-28)**

57. **REMOVE NAVIGATION ANTENNA ASSEMBLY**
    (a) Disengage the 2 clamps.
    (b) Remove the 2 screws and navigation antenna assembly.

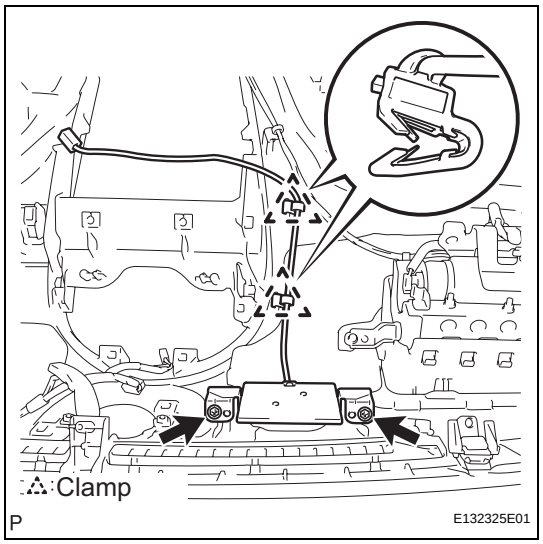

NS

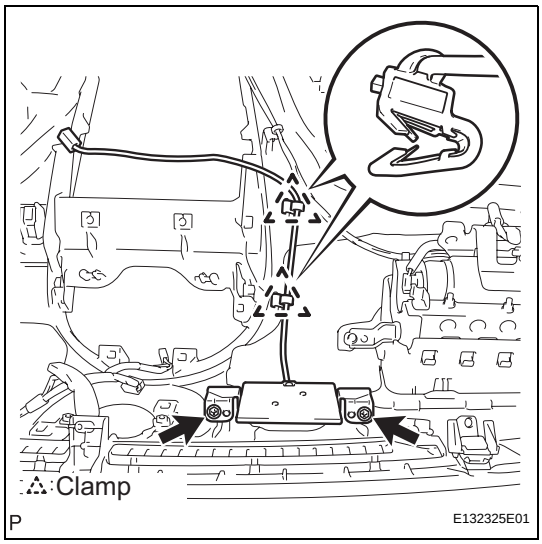

INSTALLATION

1. **INSTALL NAVIGATION ANTENNA ASSEMBLY**
   (a) Install the navigation antenna assembly with the 2 screws.
   (b) Engage the 2 clamps.
2. **INSTALL NO. 2 HEATER TO REGISTER DUCT (See page IP-32)**
3. **INSTALL NO. 1 HEATER TO REGISTER DUCT (See page IP-32)**
4. **INSTALL DEFROSTER NOZZLE ASSEMBLY (See page IP-32)**
5. **INSTALL SIDE NO. 2 DEFROSTER NOZZLE DUCT (See page IP-32)**
6. **INSTALL SIDE NO. 1 DEFROSTER NOZZLE DUCT (See page IP-32)**
7. **INSTALL INSTRUMENT PANEL SAFETY PAD ASSEMBLY (w/o DVD Player) (See page IP-33)**
8. **INSTALL INSTRUMENT PANEL SAFETY PAD ASSEMBLY (w/ DVD Player) (See page IP-35)**
9. **INSTALL ROOM TEMPERATURE SENSOR (See page AC-215)**
10. **CONNECT INSTRUMENT PANEL WIRE ASSEMBLY (See page RS-416)**
11. **INSTALL PUSH START SWITCH (See page IP-37)**
12. **INSTALL NO. 1 INSTRUMENT PANEL MOUNTING BRACKET (See page IP-38)**
13. **INSTALL FRONT STEREO COMPONENT SPEAKER ASSEMBLY (See page AV-188)**
14. **INSTALL NO. 1 SPEAKER HOLE COVER (See page IP-38)**
15. **INSTALL NO. 3 INSTRUMENT PANEL REGISTER ASSEMBLY (See page IP-39)**
16. **INSTALL FRONT NO. 2 SPEAKER ASSEMBLY (for RH Side) (See page IP-39)**
17. **INSTALL NO. 2 INSTRUMENT PANEL SPEAKER PANEL SUB-ASSEMBLY (See page IP-39)**
18. **INSTALL FRONT PILLAR GARNISH RH (See page IR-65)**
19. **INSTALL NO. 1 INSTRUMENT PANEL REGISTER ASSEMBLY (See page IP-38)**
20. **INSTALL FRONT NO. 2 SPEAKER ASSEMBLY (for LH Side) (See page AV-185)**
21. **INSTALL NO. 1 INSTRUMENT PANEL SPEAKER PANEL SUB-ASSEMBLY (See page IP-39)**

22. **INSTALL FRONT PILLAR GARNISH LH (See page IR-64)**
23. **INSTALL REAR CONSOLE BOX ASSEMBLY (See page IP-39)**
24. **INSTALL CONSOLE REAR END PANEL SUB-ASSEMBLY (See page IP-40)**
25. **INSTALL CONSOLE BOX CARPET (See page IP-41)**
26. **INSTALL CONSOLE BOX POCKET (See page IP-41)**
27. **INSTALL HEATER SEAT SWITCH CONSOLE BASE (w/o Seat Heater System) (See page IP-41)**
28. **INSTALL HEATER SEAT SWITCH CONSOLE BASE (w/ Seat Heater System) (See page IP-41)**
29. **INSTALL MULTI-DISPLAY WITH RADIO RECEIVER ASSEMBLY (See page AV-173)**
30. **INSTALL NO. 2 INSTRUMENT PANEL REGISTER ASSEMBLY (See page IP-41)**
31. **INSTALL UPPER CONSOLE PANEL ASSEMBLY WITH FRONT ASH RECEPTACLE (See page IP-42)**
32. **INSTALL SHIFT LEVER KNOB SUB-ASSEMBLY (See page IP-42)**
33. **INSTALL LOWER INSTRUMENT PANEL RH (See page IP-42)**
34. **INSTALL FRONT PASSENGER SIDE KNEE AIRBAG ASSEMBLY (See page RS-396)**
35. **INSTALL SIDE INSTRUMENT PANEL RH (See page IP-43)**
36. **INSTALL NO. 2 INSTRUMENT PANEL UNDER COVER SUB-ASSEMBLY (See page IP-44)**
37. **INSTALL FRONT DOOR OPENING TRIM COVER RH (See page IR-65)**
38. **INSTALL FRONT DOOR SCUFF PLATE RH (See page IR-65)**
39. **INSTALL INSTRUMENT PANEL FINISH PANEL END RH (See page IP-44)**
40. **INSTALL NO. 1 SWITCH HOLE BASE (See page IP-44)**
41. **INSTALL COMBINATION METER ASSEMBLY (See page IP-45)**
42. **INSTALL INSTRUMENT CLUSTER FINISH PANEL SUB-ASSEMBLY (See page IP-45)**
43. **INSTALL TURN SIGNAL SWITCH ASSEMBLY WITH SPIRAL CABLE SUB-ASSEMBLY (See page SR-86)**
44. **INSTALL TILT AND TELESCOPIC SWITCH (See page SR-86)**

45. **INSTALL STEERING COLUMN COVER (See page IP-46)**
46. **ADJUST SPIRAL CABLE SUB-ASSEMBLY (See page RS-382)**
47. **INSTALL LOWER INSTRUMENT PANEL SUB-ASSEMBLY (See page IP-46)**
48. **INSTALL INSTRUMENT PANEL FINISH PANEL END LH (See page IP-46)**
49. **INSTALL SIDE INSTRUMENT PANEL LH (See page IP-47)**
50. **INSTALL FRONT DOOR OPENING TRIM COVER LH (See page IR-64)**
51. **INSTALL FRONT DOOR SCUFF PLATE LH (See page IR-65)**
52. **INSTALL STEERING WHEEL ASSEMBLY (See page SR-87)**
53. **INSTALL STEERING PAD (See page RS-368)**
54. **INSTALL LOWER NO. 2 STEERING WHEEL COVER (See page RS-369)**
55. **INSTALL LOWER NO. 3 STEERING WHEEL COVER (See page RS-369)**
56. **CONNECT CABLE TO NEGATIVE BATTERY TERMINAL**
57. **PERFORM INITIALIZATION**
    NOTICE:
    Some systems need initialization after reconnecting the cable to the negative battery terminal (See page IN-33).
58. **INSPECT STEERING PAD (See page RS-369)**
59. **INSPECT FRONT PASSENGER SIDE KNEE AIRBAG ASSEMBLY (See page RS-395)**
60. **INSPECT SRS WARNING LIGHT**
    (See page RS-37)

PROBLEM SYMPTOMS TABLE

HINT:
- Before inspecting the suspected areas listed in the table below, check the fuse and relay.
- Before inspecting the suspected areas listed in the table below, check the DTCs.
- Methods used to verify the cause of the problem are listed in order of probability in the suspected area column.

Display function:

Symptom	Suspected Area	See page
Pressing PWR switch does not turn on system.	1. Proceed to "Pressing Power Switch does not Turn ON System"	NS-134
	2. Multi-display power source circuit	NS-228
	3. AVC-LAN circuit	NS-187
	4. Multi-display	NS-233
Black screen (No image appears on navigation/audio screen).	1. Proceed to "No Image Appears on Multi-display"	NS-135
	2. Multi-display power source circuit	NS-228
	3. Illumination circuit	NS-178
	4. AVC-LAN circuit	NS-187
	5. Multi-display	NS-233
Illumination for panel switch does not come on with TAIL switch on.	1. Proceed to "Illumination for Panel Switch does not Come on with Tail Switch ON"	NS-136
	2. Illumination circuit	NS-178
	3. Multi-display	NS-233
Display does not dim (Night Screen) with TAIL switch on.	1. Proceed to "Display does not DIM when Light Control Switch is Turned ON"	NS-137
	2. Dimmer signal circuit	NS-209
	3. Multi-display	NS-233
Power does not turn off (The screen remains on).	1. Multi-display power source circuit	NS-228
	2. Multi-display	NS-233
Panel switches do not function.	1. Proceed to "Panel Switches do not Function"	NS-138
	2. Steering pad switch circuit	NS-174
	3. Multi-display power source circuit	NS-228
	4. Multi-display	NS-233
Touch panel switch does not function.	1. Proceed to "Touch Panel Switch does not Function"	NS-139
	2. Steering pad switch circuit	NS-174
	3. Multi-display power source circuit	NS-228
	4. Multi-display	NS-233
Navigation screen is not displayed.	1. Proceed to "Display Signal Circuit between Navigation ECU and Multi-display"	NS-199
	2. Map disc	-
	3. Navigation ECU	NS-238
	4. Multi-display	NS-233
Navigation screen flicker or color distortion.	1. Proceed to "Screen Flicker or Color Distortion"	NS-140
	2. Proceed to "Display Signal Circuit between Navigation ECU and Multi-display"	NS-199
	3. Navigation ECU	NS-238
	4. Multi-display	NS-233

Symptom	Suspected Area	See page
DVD image cannot be displayed on multi-display. (Parking brake is on.) (*1)	1. Proceed to "Display Signal Circuit between Multi-display and Radio Receiver"	NS-201
	2. Parking brake switch circuit	NS-185
	3. Radio Receiver	AV-167
	4. Multi-display	NS-233
Navigation function switches can be operated while vehicle is running.	Proceed to "Vehicle Speed Signal Circuit between Multi-display and Combination Meter"	NS-189

*1: for Radio receiver with built-in DVD changer models.

Navigation function:

Symptom	Suspected Area	See page
Map disc cannot be inserted.	1. Proceed to "Map Disc cannot be Inserted"	NS-142
	2. Navigation ECU power source circuit	NS-230
	3. Navigation ECU	NS-238
Map disc cannot be ejected.	1. Proceed to "Map Disc cannot be Ejected"	NS-143
	2. Navigation ECU power source circuit	NS-230
	3. Navigation ECU	NS-238
Vehicle position mark deviates greatly.	1. Proceed to "Vehicle Position Mark Deviates Greatly"	NS-144
	2. GPS antenna	NS-250
	3. Navigation ECU	NS-238
Cursor or map rotates when vehicle is stopped.	1. Proceed to "Cursor or Map Rotates when Vehicle is Stopped"	NS-146
	2. Navigation ECU	NS-238
Vehicle position mark is not updated.	1. Proceed to "Vehicle Position Mark is not Updated"	NS-147
	2. Map disc	-
	3. Navigation ECU	NS-238
Current position display does not appear.	1. Proceed to "Current Position Display does not Appear"	NS-148
	2. Map disc	-
	3. GPS antenna	NS-250
	4. Navigation ECU	NS-238
GPS Mark is not displayed.	1. Proceed to "GPS Mark is not Displayed"	NS-149
	2. GPS antenna	NS-250
	3. Navigation ECU	NS-238
Voice guidance does not function.	1. Proceed to "Voice Guidance does not Function"	NS-152
	2. Navigation voice circuit	NS-196
	3. Map disc	-
	4. Navigation ECU	NS-238
	5. Stereo component amplifier	AV-176
Map display incomplete.	1. Proceed to "Map Display Incomplete"	NS-155
	2. Map disc	-
	3. Navigation ECU	NS-238
Route cannot be calculated.	1. Proceed to "Route cannot be Calculated"	NS-156
	2. Map disc	-
	3. Navigation ECU	NS-238
Voice recognition difficulty.	1. Proceed to "Voice Recognition Difficulty"	NS-157
	2. Navigation ECU	NS-238

Symptom	Suspected Area	See page
Voice is not recognized.	1. Proceed to "Voice is not Recognized"	NS-159
	2. Proceed to "Microphone circuit between Overhead J/B and Multi-display"	NS-204
	3. Proceed to "Microphone circuit between Multi-display and Navigation ECU"	NS-207
	4. Steering pad switch circuit	NS-174
	5. Microphone	AV-250
	6. Navigation ECU	NS-238
Speed signal does not change in the navigation check mode.	Proceed to "Vehicle Speed Signal Circuit between Navigation ECU and Multi-display"	NS-171
Reverse signal does not change in the navigation check mode.	Proceed to "Reverse Signal Circuit"	NS-193

Steering pad switch function:

Symptom	Suspected Area	See page
The system cannot be operated by the steering pad switch.	1. Steering pad switch circuit	NS-174
	2. Radio receiver	AV-167
Illumination for steering pad switch does not come on with tail switch on.	1. Illumination circuit	NS-178
	2. Radio receiver	AV-167

"Bluetooth" function:

Symptom	Suspected Area	See page
Cellular phone registration failure, phone directory transfer failure.	Proceed to "Cellular Phone Registration Failure, Phone Directory Transfer Failure"	NS-162
Cellular phone cannot send/receive.	1. Proceed to "Cellular Phone cannot Send/Receive"	NS-164
	2. Steering pad switch circuit	NS-174
	3. Radio receiver	AV-167
Cannot call in a certain place.	Proceed to "Cannot call in a Certain Place"	NS-166
The other caller's voice cannot be heard, is too quiet, or distorted.	1.Proceed to "The Other Caller's Voice cannot be Hear, is too Quiet, or Distorted"	NS-167
	2. Multi-display	NS-233
The other caller cannot hear your voice, or your voice is too quiet or distorted.	1. Proceed to "The Other Caller cannot Hear Your Voice, or Your Voice is too Quiet or Distorted"	NS-169
	2. Proceed to "Microphone circuit between Overhead J/B and Multi-display"	NS-204
	3. Microphone	AV-250
	4. Multi-display	NS-233

TERMINALS OF ECU

1. MULTI-DISPLAY

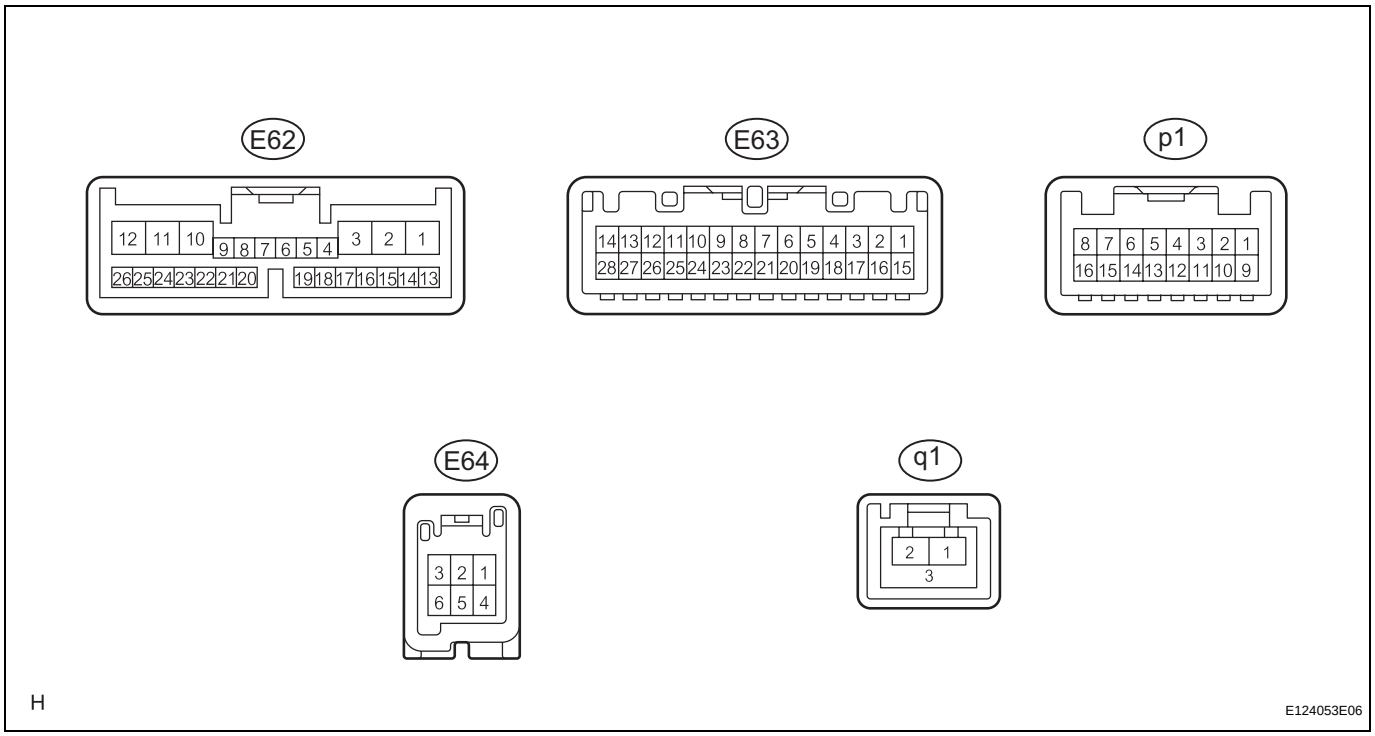

NS

Symbols (Terminal No.)	Wiring Color	Terminal Description	Condition	Specification
+B1 (E62-1) - GND1 (E62-10)	GR - W-B	Battery	Always	10 to 14 V
ACC (E62-2) - GND1 (E62-10)	GR - W-B	Accessory (ON)	Turn engine switch off	Below 1 V
ACC (E62-2) - GND1 (E62-10)	GR - W-B	Accessory (ON)	Turn engine switch on (ACC or IG)	10 to 14 V
IG (E62-3) - GND1 (E62-10)	B - W-B	Ignition (ON)	Turn engine switch off	Below 1 V
IG (E62-3) - GND1 (E62-10)	B - W-B	Ignition (ON)	Turn engine switch on (IG)	10 to 14 V
HILL (E62-5) - GND1 (E62-10)	BR - W-B	Illumination signal	Turn light control switch OFF	Below 1 V
HILL (E62-5) - GND1 (E62-6)	BR - W-B	Illumination signal	Turn light control switch ON	10 to 14 V
TC (E62-7) - GND1 (E62-10)	W - W-B	Diagnosis ON signal	Turn engine switch on (IG)	9 to 14 V
HAZ (E62-8) - GND1 (E62-10)	W - W-B	Hazard signal	Turn hazard switch OFF	Below 1 V
HAZ (E62-8) - GND1 (E62-10)	W - W-B	Hazard signal	Turn hazard switch ON	Pulse generation
ARON (E62-9) - GND1 (E62-10)	R - W-B	Passenger airbag ON signal	Turn engine switch on (IG), Passenger airbag on indicator light ON	10 to 14 V
GND1 (E62-10) - Body ground	W-B - Body ground	Ground	Always	Below 1 V
ILL- (E62-11) - GND1 (E62-10)	BR - W-B	Illumination signal	Turn light control switch OFF	Below 1 V
ILL- (E62-11) - GND1 (E62-10)	BR - W-B	Illumination signal	Turn light control switch ON	10 to 14 V
ILL+ (E62-12) - GND1 (E62-10)	G - W-B	Illumination signal	Turn light control switch OFF	Below 1 V

Symbols (Terminal No.)	Wiring Color	Terminal Description	Condition	Specification
ILL+ (E62-12) - GND1 (E62-10)	G - W-B	Illumination signal	Turn light control switch ON	10 to 14 V
REV (E62-13) - GND1 (E62-10)	Y - W-B	Reverse signal	See "Vehicle Signal Check" Mode (See page NS-21)	-
SPD (E62-14) - GND1 (E62-10)	SB - W-B	Speed signal from combination meter	See "Vehicle Signal Check" Mode (See page NS-21)	-
AIR (E62-20) - GND1 (E62-10)	B - W-B	Passenger airbag OFF signal	Turn engine switch on (IG), Passenger airbag off indicator light ON	10 to 14 V
PBEW (E62-21) - GND1 (E62-10)	P - W-B	Passenger seat belt warning signal	Turn engine switch on (IG), front passenger seat and front seat buckle switch ON (Belt unfastened)	10 to 14 V
PBEW (E62-21) - GND1 (E62-10)	P - W-B	Passenger seat belt warning signal	Turn engine switch on (IG), front passenger seat and front seat buckle switch OFF (Belt fastened)	Below 1 V
DR (E62-22) - GND1 (E62-10)	L - W-B	Dimmer signal	Turn engine switch on (IG), light control switch TAIL or ON and automatic light control sensor covered by hand	Above 9 V
PKB (E62-23) - GND1 (E62-10)	Y - W-B	Parking brake signal	See "Vehicle Signal Check" Mode (See page NS-21)	-
CANL (E62-25) - CANH (E62-26)	Y - L	CAN bus line	Go to CAN communication system (See page CA-16)	-
TX2- (E63-3) - GND1 (E62-10)	LG - W-B	AVC-LAN communication signal	Turn engine switch on (ACC)	2 to 3 V
TX2+ (E63-4) - GND1 (E62-10)	L - W-B	AVC-LAN communication signal	Turn engine switch on (ACC)	2 to 3 V
TSW- (E63-5) - GND1 (E62-10)	W - W-B	Telephone relation switch signal	Always	Below 1 V
MACC (E63-9) - GND1 (E62-10)	W - W-B	Microphone AMP power supply	Turn engine switch off	Below 1 V
MACC (E63-9) - GND1 (E62-10)	W - W-B	Microphone AMP power supply	Turn engine switch on (IG)	5 V
MIN- (E63-10) - GND1 (E62-10)	R - W-B	Microphone voice signal	See "Microphone & Voice Recognition Check" (See page NS-21)	-
MIN+ (E63-11) - GND1 (E62-10)	G - W-B	Microphone voice signal	See "Microphone & Voice Recognition Check" (See page NS-21)	-
SGND (E63-12) - GND1 (E62-10)	W - W-B	Signal ground	Always	Below 1 V
CA+ (E63-13) - GND1 (E62-10)	B - W-B	Television camera power supply	Turn engine switch on (IG), shift lever in R position	Approx. 6 V
CGND (E63-14) - Body ground	W - Body ground	Ground	Always	Below 1 V
IVO- (E63-21) - GND1 (E62-10)	BR - W-B	Voice guidance signal	Voice guidance is provided	A waveform synchronized with sounds is output
IVO+ (E63-22) - GND1 (E62-10)	Y - W-B	Voice guidance signal	Voice guidance is provided	A waveform synchronized with sounds is output
SLD (E63-23) - GND1 (E62-10)	Shielded - W-B	Shielded ground	Always	Below 1 V

Symbols (Terminal No.)	Wiring Color	Terminal Description	Condition	Specification
V+ (E63-27) - CGND (E63-14)	R - W	Television camera image signal	Turn engine switch on (IG), shift lever in R position	Pulse generation (Refer to waveform 1)
V- (E63-28) - CGND (E63-14)	Shielded - W	Shielded ground	Always	Below 1 V
NTSC (E64-1) - GND1 (E62-10)	BR - W-B	DVD image signal	DVD is played on radio receiver	Pulse generation (Refer to waveform 2)
SGD1 (E64-4) - GND1 (E62-10)	Y - W-B	Signal ground	Always	Below 1 V
SGND (E64-5) - Body ground	Shielded - Body ground	Shielded ground	Always	Below 1 V
TX- (p1-1) - GND (p1-6)	-	AVC-LAN communication signal	Turn engine switch on (ACC)	2 to 3 V
TX+ (p1-2) - GND (p1-6)	-	AVC-LAN communication signal	Turn engine switch on (ACC)	2 to 3 V
SGND (p1-3) - GND (p1-61)	-	Shielded ground	Always	Below 1 V
MCO- (p1-4) - GND (p1-6)	-	Microphone voice signal	See "Microphone & Voice Recognition Check" (See page NS-27)	-
MCO+ (p1-5) - GND (p1-6)	-	Microphone voice signal	See "Microphone & Voice Recognition Check" (See page NS-27)	-
GND (p1-6) - Body ground	-	Ground	Always	Below 1 V
ACC (p1-7) - GND (p1-6)	-	Accessory (ON)	Turn engine switch off	Below 1 V
ACC (p1-7) - GND (p1-6)	-	Accessory (ON)	Turn engine switch on (ACC)	10 to 14 V
BU+B (p1-8) - GND (p1-6)	-	Battery	Always	10 to 14 V
IVI- (p1-10) - GND (p1-6)	-	Voice guidance signal	Voice guidance is provided	A waveform synchronized with sounds is output
IVI+ (p1-11) - GND (p1-6)	-	Voice guidance signal	Voice guidance is provided	A waveform synchronized with sounds is output
REV (p1-15) - GND (p1-6)	-	Reverse signal	See "Vehicle Sensors" Mode (See page NS-27)	-
SPD (p1-16) - GND (p1-6)	-	Speed signal	See "Vehicle Sensors" Mode (See page NS-27)	-
GVI+ (q1-1) - GND (p1-6)	-	Digital image signal	Navigation display is on	Pulse generation
GVI- (q1-2) - GND (p1-6)	-	Digital image signal	Navigation display is on	Pulse generation
GVG1 (q1-3) - Body ground	-	Ground	Always	Below 1 V

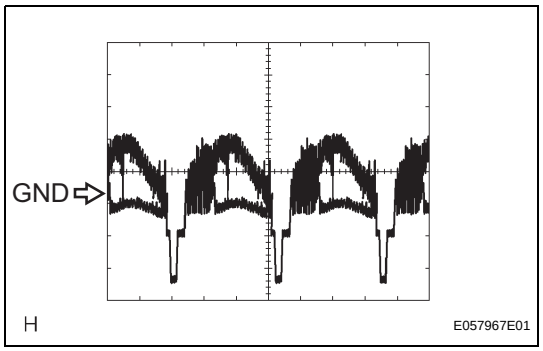

(a) Reference: waveform 1
HINT:
- Terminal: V+ - CGND
- Gauge set: 0.2 V/DIV., 0.2 μs/DIV.
- Condition: Engine switch: IG, shift lever: R position

NS

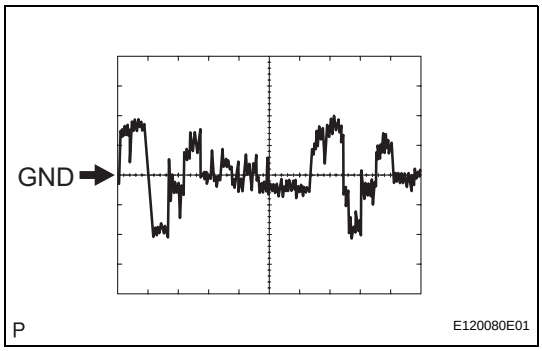

(b) Reference: waveform 2
HINT:
- Terminal: NTSC - Body ground
- Gauge set: 200 mV/DIV., 10 μs/DIV.
- Condition: DVD is played on multi-display

2. NAVIGATION ECU

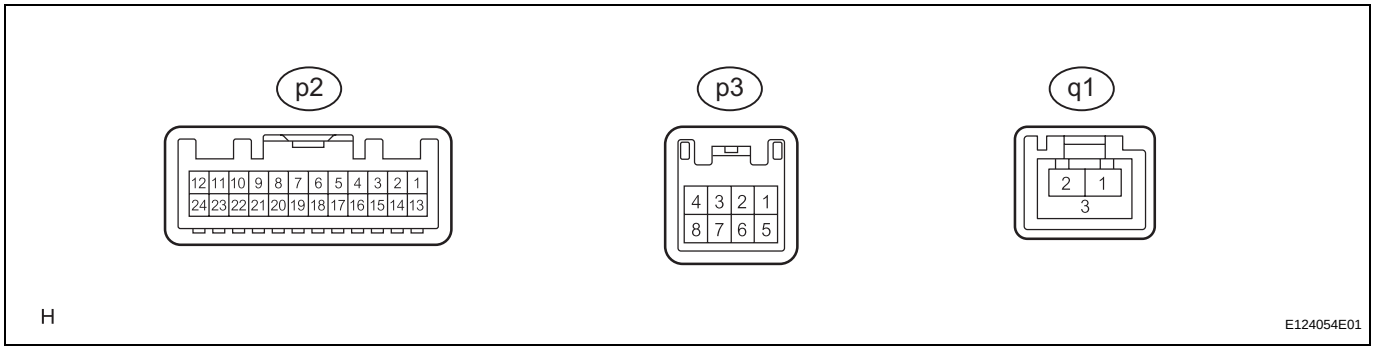

Symbols (Terminal No.)	Wiring Color	Terminal Description	Condition	Specification
BU+B (p2-1) - GND (p2-15)	-	Battery	Always	10 to 14 V
SPD (p2-4) - GND (p2-15)	-	Speed signal	See "Vehicle Sensors" Mode (See page NS-27)	-
SLD (p2-7) - GND (p2-15)	-	Shielded ground	Always	Below 1 V
IVI- (p2-8) - GND (p2-15)	-	Voice guidance signal	Voice guidance is provided	A waveform synchronized with sounds is output
IVI+ (p2-9) - GND (p2-15)	-	Voice guidance signal	Voice guidance is provided	A waveform synchronized with sounds is output
ACC (p2-13) - GND (p2-15)	-	Accessory (ON)	Turn engine switch off	Below 1 V
ACC (p2-13) - GND (p2-15)	-	Accessory (ON)	Turn engine switch on (ACC)	10 to 14 V
GND (p2-15) - Body ground	-	Ground	Always	Below 1 V
TX- (p2-18) - GND (p2-15)	-	AVC-LAN communication signal	Turn engine switch on (ACC)	2 to 3 V
TX+ (p2-19) - GND (p2-15)	-	AVC-LAN communication signal	Turn engine switch on (ACC)	2 to 3 V
REV (p2-20) - GND (p2-15)	-	Reverse signal	See "Vehicle Sensors" Mode (See page NS-27)	-
MCO+ (p3-3) - GND (p2-15)	-	Microphone voice signal	See "Microphone & Voice Recognition Check" (See page NS-27)	-
MCO- (p3-5) - GND (p2-15)	-	Microphone voice signal	See "Microphone & Voice Recognition Check" (See page NS-27)	-
SGND (p3-6) - GND (p2-15)	-	Shielded ground	Always	Below 1 V
GVI+ (q1-1) - GND (p2-15)	-	Digital image signal	Navigation display is on	Pulse generation
GVI- (q1-2) - GND (p2-15)	-	Digital image signal	Navigation display is on	Pulse generation
GND (q1-3) - Body ground	-	Ground	Always	Below 1 V

3. RADIO RECEIVER (See page AV-16)

4. STEREO COMPONENT AMPLIFIER (See page AV-16)

DTC CHECK / CLEAR

HINT:

- Illustrations may differ from the actual vehicle depending on the device settings and options. Therefore, some detailed areas may not be shown exactly the same as on the actual vehicle.
- If the system cannot enter the diagnostic mode, inspect all AVC-LAN communication components and repair or replace problem parts.
  (See page NS-187)
- After the engine switch is turned on (IG), check that the map is displayed before starting the diagnostic mode. Otherwise, some items cannot be checked.

1. START DIAGNOSTIC MODE

(a) There are 2 methods to start diagnostic mode. Start the mode by using one of them.

(b) Method 1

(1) Start the engine.

(2) While pressing and holding the "INFO" switch, operate the light control switch: OFF → Turn ON → Turn OFF → Turn ON → Turn OFF → Turn ON → Turn OFF.

(3) The diagnostic mode starts and the "System Check Mode" screen will be displayed. Service inspection starts automatically and the result will be displayed.

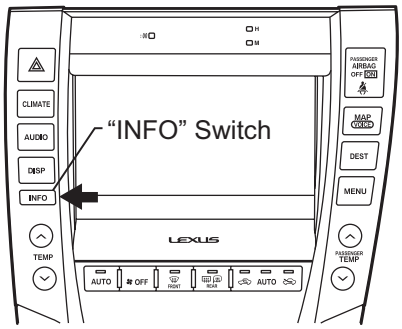

E134674E01

(c) Method 2

(1) Start the engine.

(2) Switch to the "Display Check" screen.

(3) From the display quality adjustment screen, touch the corners of the screen in the following order: upper left → lower left → upper left → lower left → upper left → lower left.

(4) The diagnostic mode starts and the "System Check Mode" screen will be displayed. Service inspection starts automatically and the result will be displayed.

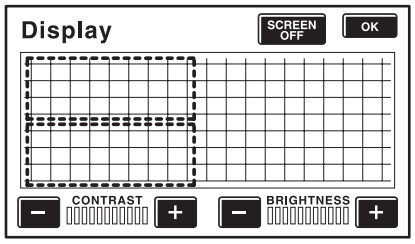

E109432

2. FINISH DIAGNOSTIC MODE

(a) There are 2 methods to end diagnostic mode. Use one of them.

(1) Turn the engine switch off.

(2) Press and hold the "DISP" switch for 3 seconds.

NS

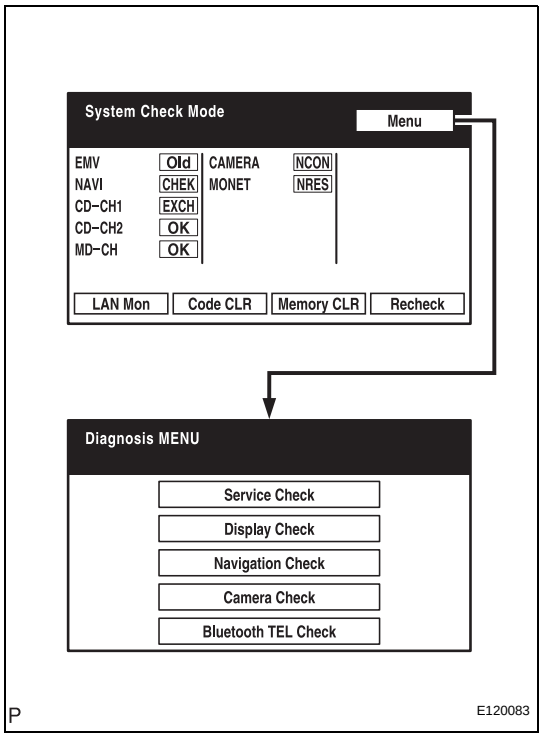

3. DIAGNOSIS MENU

(a) The "Diagnosis MENU" screen will be displayed by pressing the menu switch on the "System Check Mode" screen.

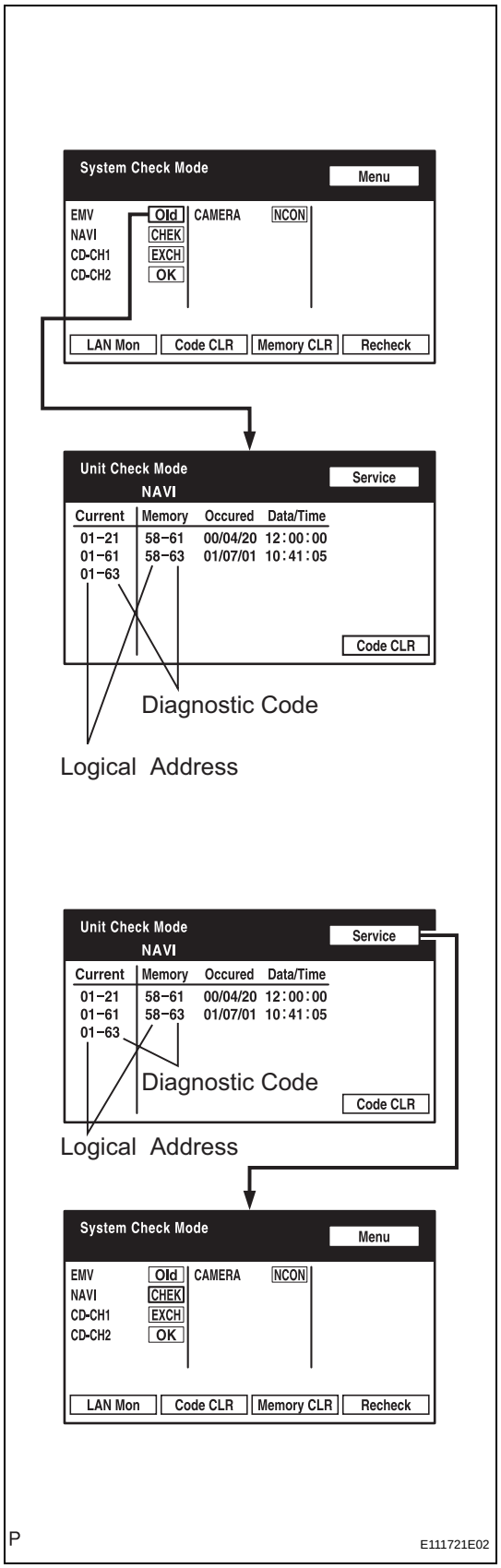

4. CHECK DTC

(a) Read the system check result.

(1) If the check result is "EXCH", "CHEK" or "Old", touch the displayed check result to view the results on the "Unit Check Mode" screen and record them.

HINT:

- If all check results are "OK", go to communication DTC check.
- If a device name is not known, its physical address is displayed.

HINT:

When proceeding to view the results of another device, press the service switch to return to the "System Check Mode" screen. Repeat this step.

NS

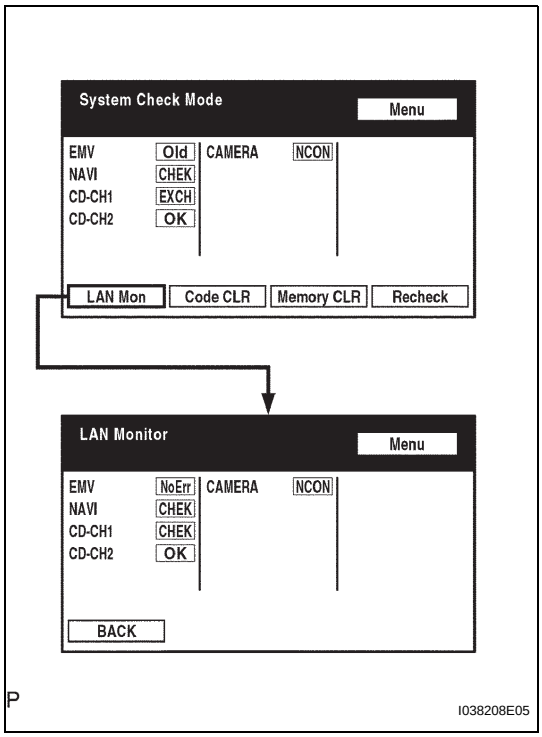

(b) Read the communication diagnostic check result.
(1) Return to the "System Check Mode" screen, and press the "LAN Mon" switch to enter the "LAN Monitor" screen.

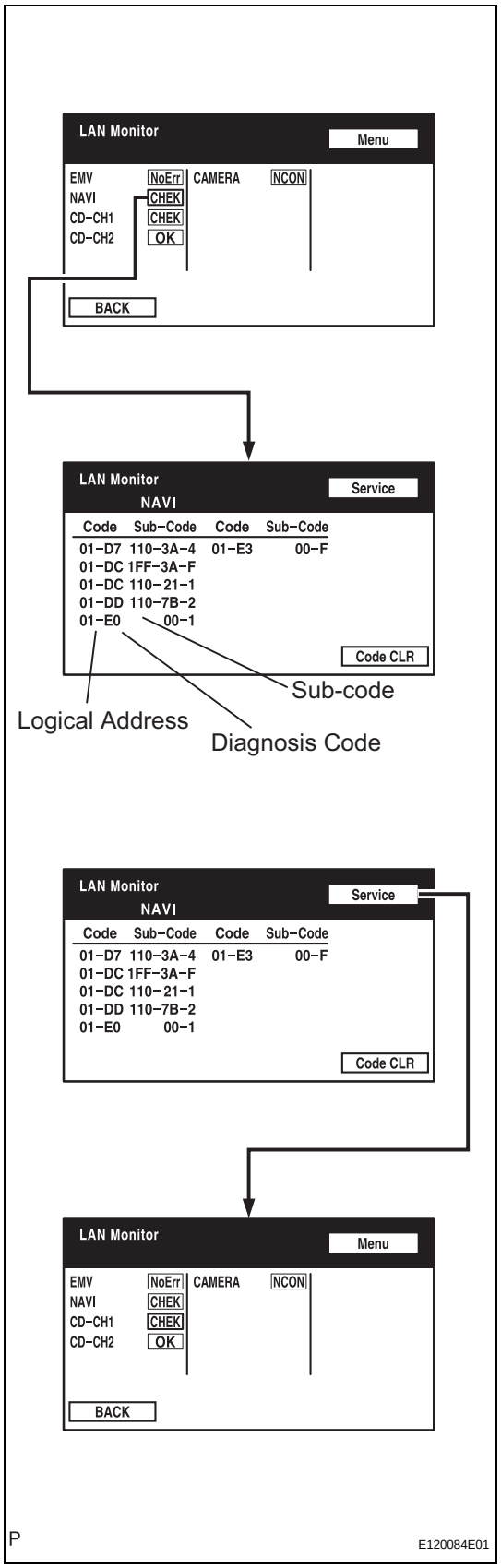

(2) If the check result is "CHEK" or "Old", touch the displayed check result to view the results on the individual communication diagnostic screen and record them.
HINT:
- If all check results are "No Err", the system judges that no DTC exists.
- The sub-code (relevant device) will be indicated by its physical address.
- When proceeding to view the results of another device, press the "Service" switch to return to the original "LAN Monitor" screen. Repeat this step.

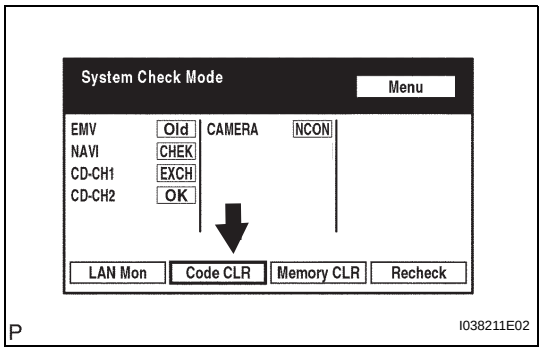

5. DTC CLEAR/RECHECK

(a) Clear DTC

(1) Press the "Code CLR" switch for 3 seconds.

(2) The check results are cleared.

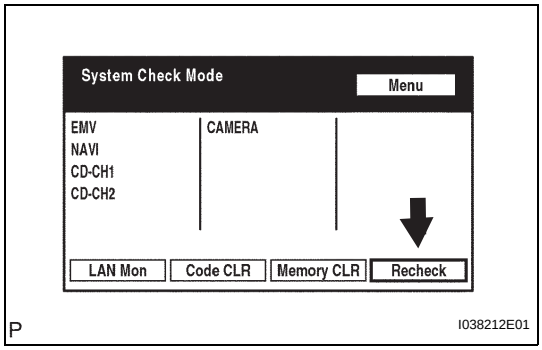

(b) Recheck

(1) Press the "Recheck" switch.

NS

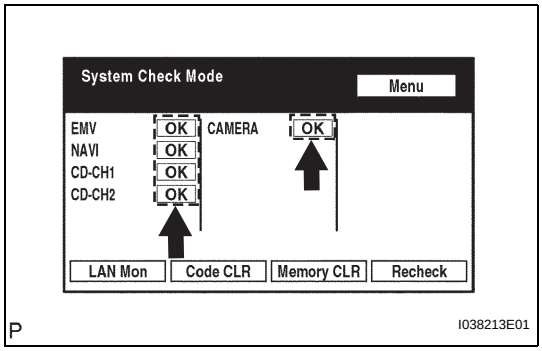

(2) Confirm that all diagnostic codes are "OK" when the check results are displayed. If a code other than "OK" is displayed, troubleshoot again.

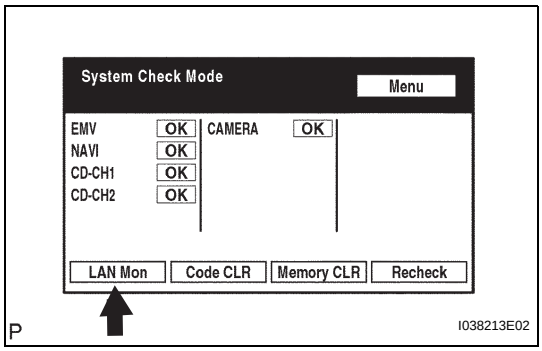

(3) Press the "LAN Mon" switch to change to the "LAN Monitor" screen.

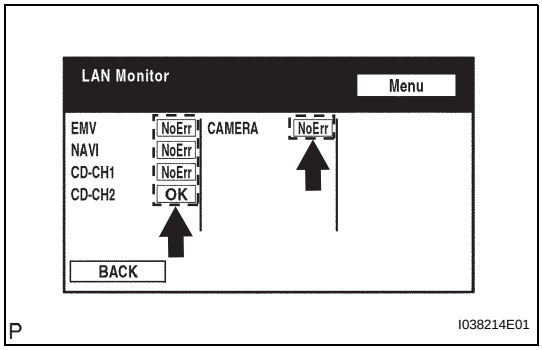

(4) Confirm that all diagnostic codes are "No Err". If a code other than "No Err" is displayed, troubleshoot again.

DIAGNOSTIC TROUBLE CODE CHART

COMMUNICATION DIAGNOSIS:

DTC Code	Detection Item	Trouble Area	See page
01-21	ROM Error	Multi-display	NS-59
01-22	RAM Error	Multi-display	NS-59
01-D5	Absence of Registration Unit	1. Power source circuit of the component shown by the sub-code 2. AVC-LAN circuit between the multi-display and the component shown by the sub-code 3. Component shown by the sub-code	NS-60
01-D6	No Master	1. Multi-display power source circuit 2. Power source circuit of the component which has stored this code 3. AVC-LAN circuit between the multi-display and the component which has stored this code 4. Component which has stored this code 5. Multi-display	NS-62
01-D7	Connection Check Error	1. Multi-display power source circuit 2. Power source circuit of the component which has stored this code 3. AVC-LAN circuit between the multi-display and the component which has stored this code 4. Component which has stored this code 5. Multi-display	NS-62
01-D8	No Response for Connection Check	1. Power source circuit of the component shown by the sub-code 2. AVC-LAN circuit between the multi-display and the component shown by the sub-code 3. Component shown by the sub-code	NS-60
01-D9	Last Mode Error	1. Power source circuit of the component shown by the sub-code 2. AVC-LAN circuit between the multi-display and the component shown by the sub-code 3. Component shown by the sub-code	NS-60
01-DA	No Response Against ON / OFF Command	1. Power source circuit of the component shown by the sub-code 2. AVC-LAN circuit between the multi-display and the component shown by the sub-code 3. Component shown by the sub-code	NS-60

DTC Code	Detection Item	Trouble Area	See page
01-DB	Mode Status Error	1. Power source circuit of the component shown by the sub-code 2. AVC-LAN circuit between the multi-display and the component shown by the sub-code 3. Component shown by the sub-code	NS-60
01-DC	Transmission Error	If the same sub-code is recorded in other components, check harness for power supply and communication system of all components shown by code	NS-67
01-DD	Master Reset	1. Multi-display power source circuit 2. AVC-LAN circuit between the multi-display and the component which has stored this code 3. Multi-display 4. Component which has stored this code	NS-70
01-DE	Slave Reset	1. Power source circuit of the component shown by the sub-code 2. AVC-LAN circuit between the multi-display and the component shown by the sub-code 3. Component shown by the sub-code	NS-60
01-DF	Master Error	1. Multi-display power source circuit 2. AVC-LAN circuit between the multi-display and the component which has stored this code 3. AVC-LAN circuit between the multi-display and the radio receiver 4. Multi-display 5. Component which has stored this code	NS-75
01-E0	Registration Complete Indication Error	-	NS-80
01-E1	Voice Processing Device ON Error	1. Multi-display power source circuit 2. AVC-LAN circuit between the multi-display and the component which has stored this code 3. Multi-display 4. Component which has stored this code	NS-70
01-E2	ON / OFF Indication Parameter Error	Multi-display	NS-81
01-E3	Registration Demand Transmission	-	NS-80
01-E4	Multiple Frame Incomplete	-	NS-80

SW:

DTC Code	Detection Item	Trouble Area	See page
21-10	Panel Switch Error	Multi-display	NS-82
21-11	Touch Switch Error	Multi-display	NS-82

SW WITH NAME:

DTC Code	Detection Item	Trouble Area	See page
23-10	Panel Switch Error	Multi-display	NS-82
23-11	Touch Switch Error	Multi-display	NS-82

SW CONVERTING:

DTC Code	Detection Item	Trouble Area	See page
24-10	Panel Switch Error	Multi-display	NS-82
24-11	Touch Switch Error	Multi-display	NS-82

COMMAND SW:

DTC Code	Detection Item	Trouble Area	See page
25-10	Panel Switch Error	Multi-display	NS-82
25-11	Touch Switch Error	Multi-display	NS-82

FRONT MONITOR:

DTC Code	Detection Item	Trouble Area	See page
34-10	Error in Picture Circuit	Multi-display	NS-83
34-11	No Current in Back-light	Multi-display	NS-83
34-12	Excess Current in Back-light	Multi-display	NS-83

DVD CHANGER:

DTC Code	Detection Item	Trouble Area	See page
45-10	DVD Changer Mechanical Error	Radio receiver	NS-84
45-11	DVD Insertion and Ejection Error	Radio receiver	NS-84
45-12	DVD Reading Abnormal	Radio receiver	NS-84
45-41	Wrong Disc	1. DVD 2. Radio receiver	NS-85
45-42	Disc cannot be Read	1. DVD 2. Radio receiver	NS-85
45-43	DVD-ROM Abnormal	1. DVD 2. Radio receiver	NS-87
45-44	DVD Malfunction	Radio receiver	NS-88
45-45	Eject Error	Radio receiver	NS-89
45-46	Scratched/Reversed Disc	1. DVD 2. Radio receiver	NS-90
45-47	High Temperature	Radio receiver	NS-92
45-48	Excess Current	Radio receiver	NS-88
45-50	Tray Insertion / Ejection Error	Radio receiver	NS-88
45-51	Elevator Error	Radio receiver	NS-89
45-52	Clamp Error	Radio receiver	NS-89
45-78	DSP Error	Radio receiver	NS-93
45-7D	Disc cannot be Played	1. DVD 2. Radio receiver	NS-94
45-7E	No Playable Files	1. DVD 2. Radio receiver	NS-94
45-7F	Copyright Protection Error	1. DVD 2. Radio receiver	NS-94

TELEPHONE:

DTC Code	Detection Item	Trouble Area	See page
57-47	Bluetooth Module Initialization Failed	Multi-display	NS-95

NAVI:

DTC Code	Detection Item	Trouble Area	See page
58-10	Gyro Error	1. Gyro sensor 2. Navigation ECU	NS-96
58-11	GPS Receiver Error	Navigation ECU	NS-98
58-40	GPS Antenna Error	1. Wire harness 2. GPS antenna 3. Navigation ECU	NS-99
58-41	GPS Antenna Power Source Error	1. Wire harness 2. GPS antenna 3. Navigation ECU	NS-99
58-42	Map Disc Read Error	1. Map Disc 2. Navigation ECU	NS-100
58-43	SPD Signal Error	1. Speed signal circuit 2. Navigation ECU	NS-102
58-44	Player Error	Navigation ECU	NS-103
58-45	High Temperature	Navigation ECU	NS-104

CAMERA UNIT:

DTC Code	Detection Item	Trouble Area	See page
5C-40	Camera Picture Error	1. Wire harness 2. Television camera assembly 3. Multi-display	NS-105

RADIO UNIT:

DTC Code	Detection Item	Trouble Area	See page
60-10	AM Tuner PLL does not Lock	Radio receiver	NS-108
60-11	FM Tuner PLL does not Lock	Radio receiver	NS-108
60-42	Tuner Power Source Error	Radio receiver	NS-109
60-43	AM Tuner Error	Radio receiver	NS-109
60-44	FM Tuner Error	Radio receiver	NS-109
60-50	Malfunction in Internal IC	Radio receiver	NS-109

CASSETTE PLAYER:

DTC Code	Detection Item	Trouble Area	See page
61-40	Mechanical Error of Media	1. Cassette tape 2. Radio receiver	NS-110
61-41	Eject Error	1. Cassette tape 2. Radio receiver	NS-110
61-42	Tape Tangling	1. Cassette tape 2. Radio receiver	NS-110

IN-DASH CD CHANGER:

DTC Code	Detection Item	Trouble Area	See page
63-10	CD Changer Mechanical Error	Radio receiver	NS-112
63-11	CD Insertion and Ejection Error	Radio receiver	NS-112
63-12	CD Reading Abnormal	Radio receiver	NS-112
63-41	Wrong Disc	1. CD 2. Radio receiver	NS-113
63-42	Disc cannot be Read	1. CD 2. Radio receiver	NS-113
63-43	CD-ROM Abnormal	1. CD 2. Radio receiver	NS-115
63-44	CD Abnormal	Radio receiver	NS-116
63-45	Eject Error	Radio receiver	NS-117
63-46	Scratched / Reversed Disc	1. CD 2. Radio receiver	NS-118

DTC Code	Detection Item	Trouble Area	See page
63-47	High Temperature	Radio receiver	NS-120
63-48	Excess Current	Radio receiver	NS-116
63-50	Tray Insertion / Ejection Error	Radio receiver	NS-116
63-51	Elevator Error	Radio receiver	NS-117
63-52	Clamp Error	Radio receiver	NS-117
63-78	DSP Error	Radio receiver	NS-121
63-7D	Disc cannot be Played	1. CD 2. Radio receiver	NS-122
63-7E	No Playable Files	1. CD 2. Radio receiver	NS-122
63-7F	Copyright Protection Error	1. CD 2. Radio receiver	NS-122

VOL:

DTC Code	Detection Item	Trouble Area	See page
74-40	Short in Speaker Circuit	1. Wire Harness 2. Stereo component amplifier 3. Speaker	NS-123

GPS:

DTC Code	Detection Item	Trouble Area	See page
80-10	Gyro Error	1. Gyro sensor 2. Navigation ECU	NS-96
80-11	GPS Receiver Error	Navigation ECU	NS-98
80-40	GPS Antenna Error	1. Wire harness 2. GPS antenna 3. Navigation ECU	NS-99
80-41	GPS Antenna Power Source Error	1. Wire harness 2. GPS antenna 3. Navigation ECU	NS-99
80-42	Map Disc Read Error	1. Map disc 2. Navigation ECU	NS-100
80-43	SPD Signal Error	1. Speed signal circuit 2. Navigation ECU	NS-102
80-44	Player Error	Navigation ECU	NS-103
80-45	High Temperature	Navigation ECU	NS-104

DTC	01-21	ROM Error

DTC	01-22	RAM Error

DESCRIPTION

DTC No.	DTC Detection Condition	Trouble Area
01-21	A malfunction exists in ROM.	Multi-display
01-22	A malfunction exists in RAM.	

INSPECTION PROCEDURE

HINT:
After the inspection is completed, clear the DTCs.

1	REPLACE MULTI-DISPLAY

NEXT

END

DTC	01-D5	Absence of Registration Unit

DTC	01-D8	No Response for Connection Check

DTC	01-D9	Last Mode Error

DTC	01-DA	No Response Against ON / OFF Command

DTC	01-DB	Mode Status Error

DTC	01-DE	Slave Reset

DESCRIPTION

DTC No.	DTC Detection Condition	Trouble Area
01-D5 *1, *3	• A component shown by the sub-code is (was) disconnected from the system when turning the engine switch on (ACC or IG). • The communication condition with the device that the code shows cannot be obtained when the engine starts.	• Power source circuit of the component shown by the sub-code • AVC-LAN circuit between the multi-display and the component shown by the sub-code • Component shown by the sub-code
01-D8 *2, *3	A component shown by the sub-code is (was) disconnected from the system after engine start.	
01-D9 *1, *3	The device that had functioned before the engine stopped is (was) disconnected from the system when the engine switch is (was) on (IG or ACC).	
01-DA *3	• No response is identified when changing mode. • Sound and image do not change by switch operation.	
01-DB *1, *3	A dual alarm is detected.	
01-DE *3	A slave device has been disconnected after engine start.	

NS

HINT:
- *1: Even if no fault is present, this trouble code may be stored depending on the battery condition or engine start voltage.
- *2: If the power connector is disconnected after the engine starts, this code is stored after 180 seconds.
- *3: If it is reported that the device does not exist during verification, check the power source circuit and AVC-LAN circuit for the device.

NOTICE:
- **Before starting troubleshooting, be sure to clear DTCs to erase codes stored due to the reasons described in the HINT above. Then, check for DTCs and troubleshoot according to the output DTCs.**
- **The multi-display is the master unit.**
- **Be sure to clear and recheck for DTCs after the inspection is completed to confirm that no DTCs are output.**

INSPECTION PROCEDURE

NOTICE:

Be sure to read DESCRIPTION before performing the following procedures.

1	CHECK "MULTI-DISPLAY COMMUNICATION ERROR" IN FLOW CHART

Refer to the multi-display communication error (See page NS-220).

NEXT

END

SYSTEM DIAGRAM

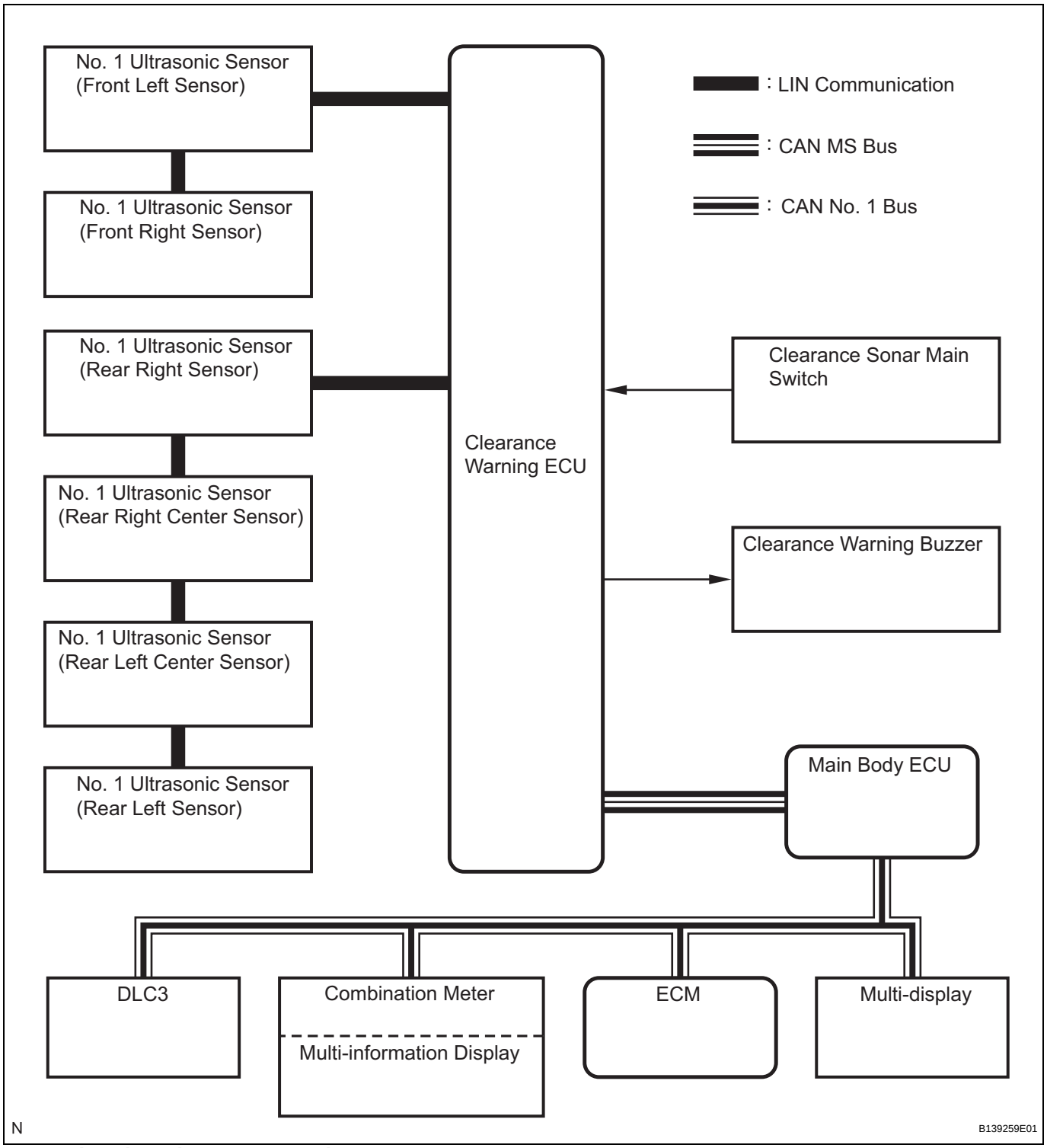

Input signal to clearance warning ECU:

Transmitting ECU (transmitter)	Signal	Communication Method
Combination Meter	Vehicle speed signal	CAN
ECM	Shift position signal	CAN
Multi-display	Clearance sonar system setting change signal	CAN

PM

Output signal from clearance warning ECU:

Receiving ECU	Signal	Communication Method
Combination Meter	Display signal	CAN
Multi-display	Display signal	CAN

SYSTEM DESCRIPTION

1. GENERAL

(a) This system uses ultrasonic sensors to detect any obstacles at the corners and the rear of the vehicle. The system then informs the driver of the distance between the sensors and the obstacles as well as their positions by indicating them on the multi-display or multi-information display and by sounding a buzzer.

2. FUNCTION OF COMPONENTS

Component	Function
Ultrasonic sensor (6)	Detects the distance between the vehicle and an obstacle
Clearance warning buzzer	Sounds the buzzer to inform the driver according to the distance to the obstacle
Multi-information display on the combination meter	Transmits a vehicle speed signal to the clearance warning ECU. • Displays the location of the obstacle and the approximate distance between the vehicle and the obstacle. • Informs the driver if the ultrasonic sensors malfunction, or if they freeze or become dirty
Clearance sonar main switch	Operating this switch allows the operation of intuitive parking assist to be enabled or disabled.
Multi-display	Displays the location of the obstacle and the approximate distance between the vehicle and the obstacle. The buzzer volume, distance required to sound the buzzer and distance required to trigger the display can be chosen on the setup screen for the intuitive parking assist system.
Clearance warning ECU	Judges the approximate distance between the vehicle and the obstacle based on the signals from the ultrasonic sensors and sends it to the multi-information display or the multi-display. Sounds the clearance warning buzzer.
ECM	Transmits a shift position signal to the clearance sonar ECU.

3. OPERATION EXPLANATION

(a) The operating condition of each intuitive parking assist differs according to its installed position as shown in the table below:

Installation Position	Operating Condition
Front Corner Sensor	• Engine switch is ON (IG). • Clearance sonar main switch is ON. • Shift position is except P. • Vehicle speed is approx. 10 km/h (6.2 mph) or less. The sensor stops operating when the vehicle speed exceeds 15 km/h (9.3 mph), and starts operating when the vehicle speed drops to below 10 km/h (6.2 mph).
Rear Corner Sensor	• Engine switch is ON (IG). • Clearance sonar main switch is ON. • Shift position is R. • Vehicle speed is approx. 10 km/h (6.2 mph) or less. The sensor stops operating when the vehicle speed exceeds 15 km/h (9.3 mph), and starts operating when the vehicle speed drops to below 10 km/h (6.2 mph).
Rear Center Sensor	• Engine switch is ON (IG). • Clearance sonar main switch is ON. • Shift position is R.

4. ECU OR SENORS WHICH COMMUNICATE THROUGH LIN COMMUNICATION

HINT:

- The clearance warning ECU and sensors communicate with each other using LIN communication.

- Allocation refers to the process of the clearance warning ECU setting aside IDs for the sensors.
- The vehicle has the sensors arranged in two groups. There is a front series and a rear series. The sensors are connected in a "daisy chain".

(a) Initialization mode:
An ID is allocated to each sensor and sensor diagnosis is performed.

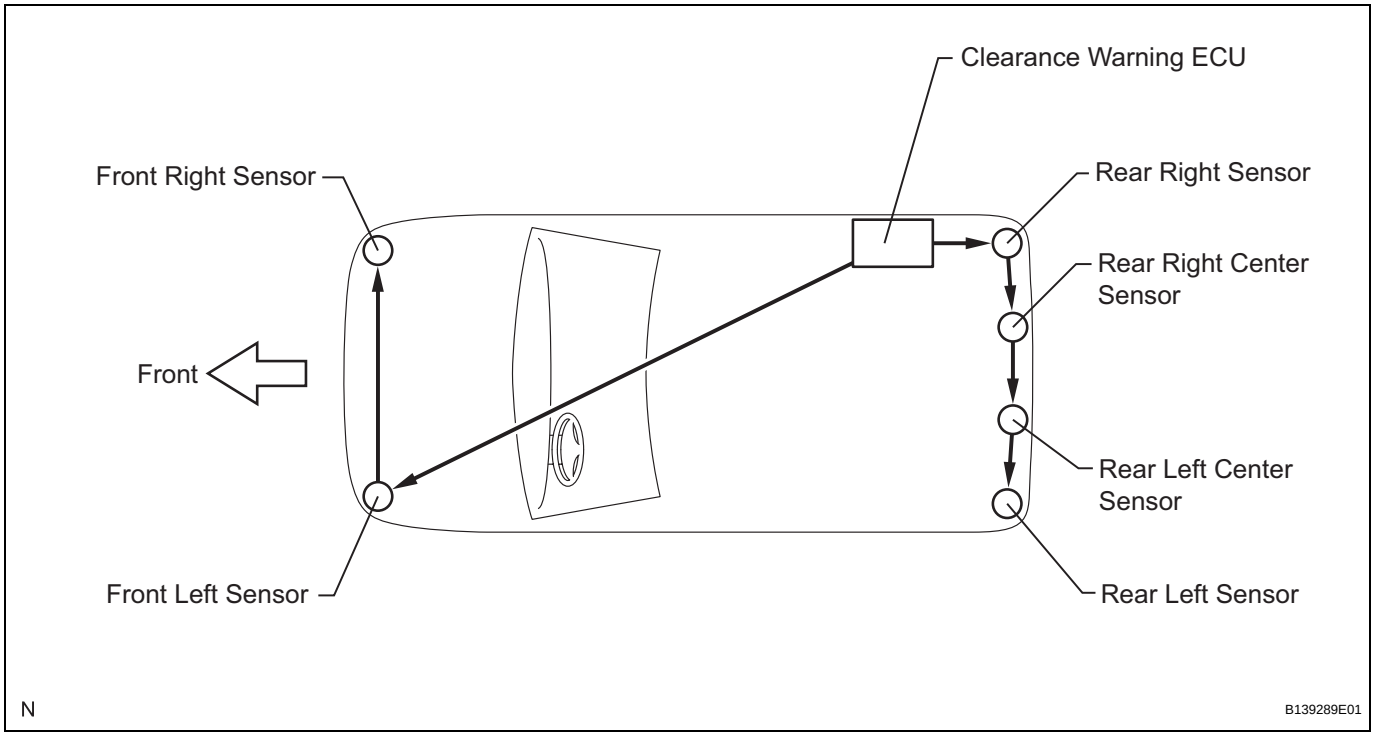

(1) When any of the following conditions are met, the clearance warning ECU provides power to the first sensors in each series (front left sensor and rear right sensor):
- The engine switch is turned on (IG).
- The sensor operating conditions (described previously) are met and the clearance sonar main switch is turned on.
- Vehicle speed is below 25 km/h (15.5 mph).

(2) After the power is supplied, the front left sensor and rear right sensor enter standby mode to receive an ID from the ECU. When a certain amount of time has elapsed, the ECU sends an ID allocation signal to these sensors.

(3) The front left sensor and rear right sensors receive the ID allocation signal from the ECU and perform self-diagnosis. When the sensor self-diagnosis is complete, the ECU sends an ID allocation confirmation signal to the sensors.

(4) After the ID allocation confirmation is performed, the ECU provides power to the second sensors in each series (front right sensor and rear right center sensor) via the first sensors. In the same manner as the first sensors, the second sensors enter the standby mode. When a certain amount of time has elapsed, the ECU sends an ID allocation signal to the second sensors.

(5) The above operation will be repeated until an ID is allocated to the last sensor, which is in the rear series (rear left sensor). Initialization ends when ID allocation to all ultrasonic sensors is complete.

(b) Detection mode:

After the initialization mode is complete, the system switches into the detection mode. In the detection mode, the clearance warning ECU sends information request signals and sensor activation signals to the ultrasonic sensors and receives detection result signals from the sensors.

(1) The clearance warning ECU regularly sends ID signals, information request signals, and sensor activation signals to an ultrasonic sensor according to the LIN schedule.

(2) When a certain amount of time has elapsed (sensor detection operation is complete), the clearance warning ECU sends an ID signal to the sensor to receive a detection result signal.

(3) The ultrasonic sensor sends a detection result signal or detection information signal to the ECU.

(4) The above operation is repeatedly performed for each ultrasonic sensor.

HOW TO PROCEED WITH TROUBLESHOOTING

HINT:
- Use these procedures to troubleshoot the clearance sonar system.
- *: Use the intelligent tester.

1 VEHICLE BROUGHT TO WORKSHOP

NEXT

2 CUSTOMER PROBLEM ANALYSIS

(a) Refer to HOW TO PROCEED WITH TROUBLESHOOTING (See page IN-39).

NEXT

3 CHECK AND CLEAR DTC*

(a) Refer to the DTC check/clear (See page PM-28).

PM

NEXT

4 CHECK INITIAL CHECK FUNCTION

(a) Refer to the operation check (See page PM-11).

Result

Result	Proceed to
Symptom does not occur	A
Symptom occurs	B

B → **Go to step 6**

A

5 SYMPTOM SIMULATION

(a) Refer to HOW TO PROCEED WITH TROUBLESHOOTING (See page IN-39).

NEXT

6 CHECK CAN COMMUNICATION SYSTEM*

(a) Refer to HOW TO PROCEED WITH TROUBLESHOOTING (See page CA-11).

HINT:
The clearance warning ECU is connected to the CAN communication system. Therefore, be sure to check that there are no problems in the CAN communication system before performing troubleshooting.

NEXT

7	DTC CHECK*

(a) Refer to the DTC check/clear (See page PM-28).

Result

Result	Proceed to
DTC is output	A
DTC is not output	B

B → Go to step 9

A

8	DTC CHART

(a) Refer to the diagnostic trouble code chart (See page PM-31).

NEXT

Go to step 10

9	PROBLEM SYMPTOMS TABLE

(a) Refer to the problem symptoms table (See page PM-25).

NEXT

10	CIRCUIT INSPECTION

NEXT

11	IDENTIFICATION OF PROBLEM

NEXT

12	REPAIR OR REPLACE

NEXT

13	CONFIRMATION TEST

NEXT

END

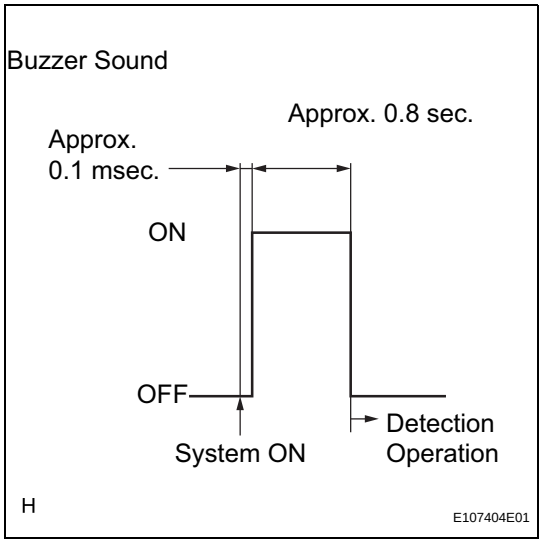

OPERATION CHECK

1. SELF-CHECK FUNCTION INSPECTION

(a) Turn the engine switch on (IG).

(b) When the intuitive parking assist system is turned on, check that the following occurs: 1) after 0.1 milliseconds, the buzzer sounds for approximately 0.8 seconds, and 2) the system starts the obstacle detection operation.

HINT:

- If a sensor has an open circuit or a sensor's detection operation malfunctions because it is wet or frozen, a malfunction display is shown on the multi-information display or multi-display, and the buzzer sounds.
- When the sensor condition returns to normal, the system ends normal clearance sonar mode.
- If the clearance sonar main switch is on and the engine switch is turned on (IG), the buzzer does not sound.

2. MALFUNCTION DISPLAY (MULTI-INFORMATION DISPLAY)

(a) Ultrasonic sensor open circuit

(1) If there is an open circuit between the ultrasonic sensor and the clearance warning ECU or if a sensor is malfunctioning, the malfunction is displayed as shown in the illustration.

Example (Front Left Sensor Disconnection):

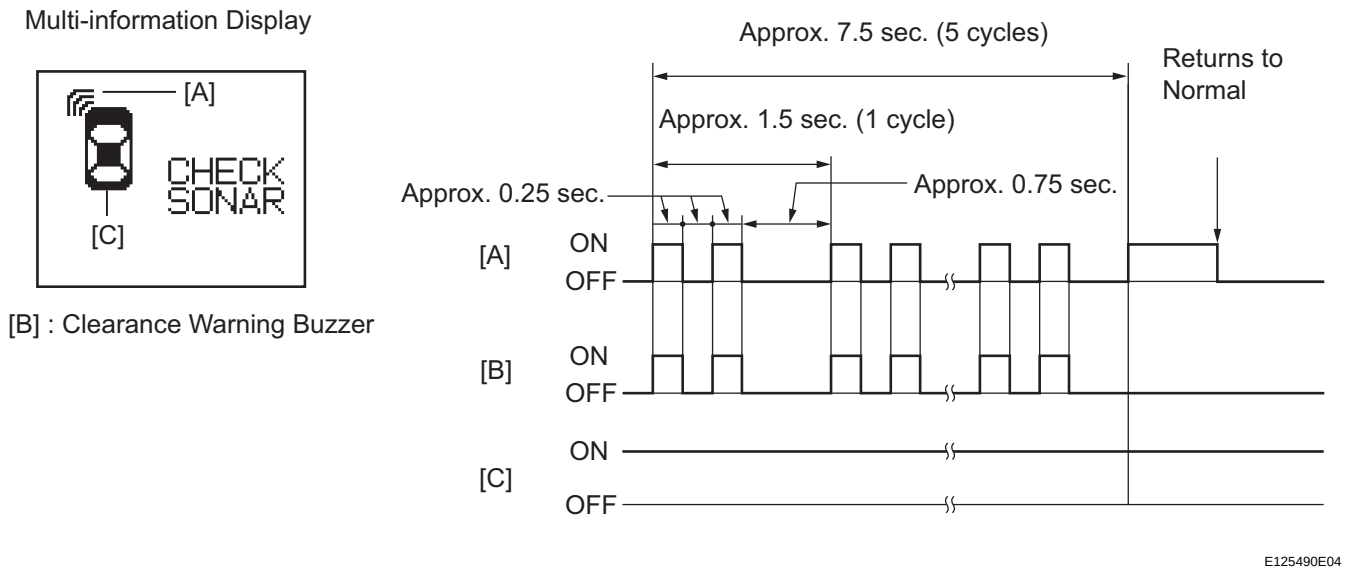

HINT:

- The example shows an open circuit in the ultrasonic sensor (front left sensor).
- If a sensor has an open circuit, refer to "Open circuit is displayed as a result of self-check" in the Problem Symptoms Table to inspect it.

PM

(b) Ultrasonic sensor frozen

(1) If a sensor is covered with foreign matter, such as mud or snow, the affected sensor is displayed as shown in the illustration.

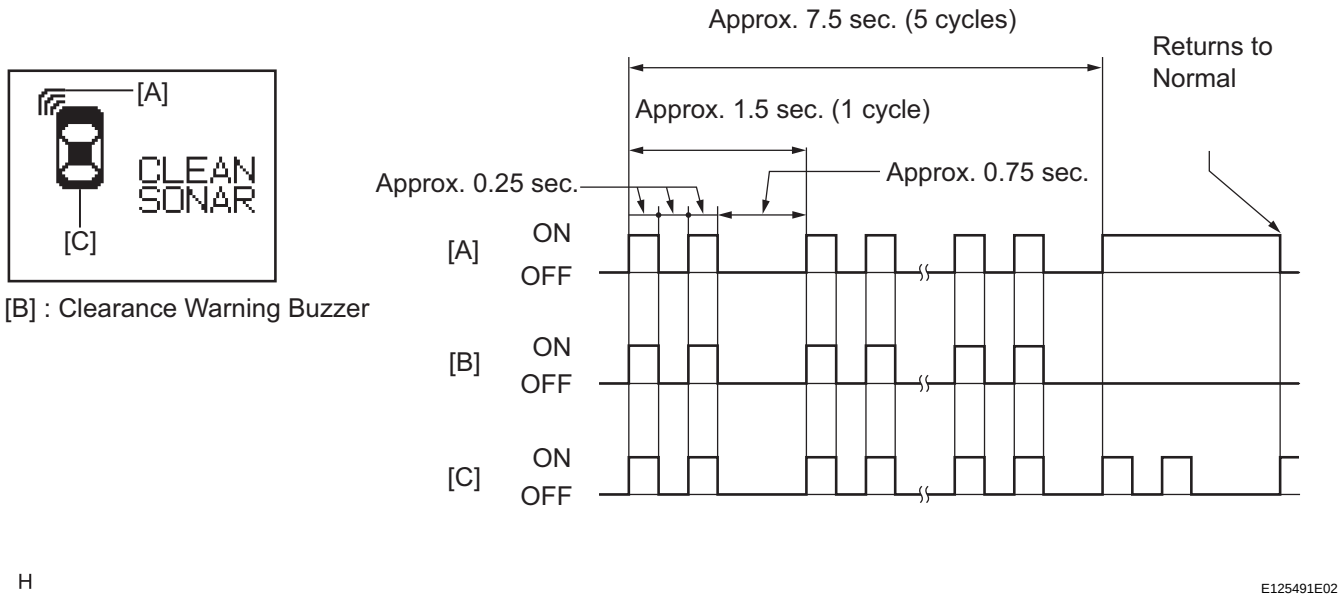

HINT:

- The example shows that the ultrasonic sensor (front left sensor) is covered with foreign matter.
- If "CLEAN SONAR" is displayed, cleaning the foreign matter from the sensor will return the sensor to normal.

3. MALFUNCTION DISPLAY (MULTI-DISPLAY)

(a) Ultrasonic sensor open circuit

(1) If there is an open circuit between the ultrasonic sensor and the clearance warning ECU or if a sensor is malfunctioning, the malfunction is displayed as shown in the illustration.

Ultrasonic Sensor Open Circuit:

Multi-display

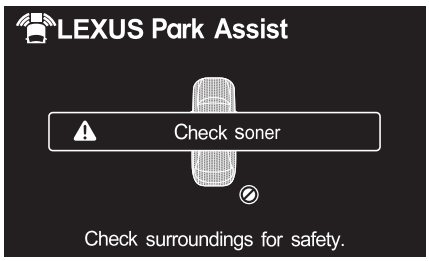

*Multi-display (Shift Lever Position R)

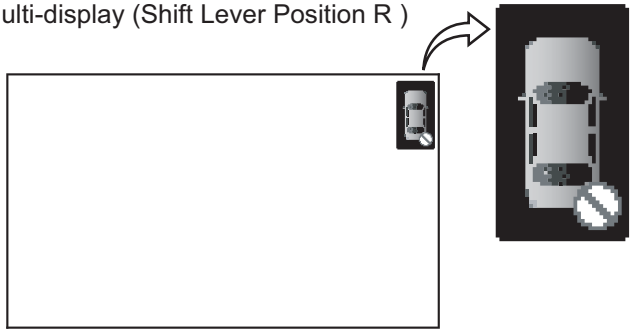

*: with Rear View Monitor System

E123663E03

HINT:

- This example shows an open circuit in the ultrasonic sensor (rear right sensor).
- If a sensor has an open circuit, refer to "Open circuit is displayed as a result of self-check" in the Problem Symptoms Table to inspect it.

(b) Ultrasonic sensor frozen

(1) If a sensor is covered with foreign matter, such as mud or snow, the affected sensor is displayed as shown in the illustration.

Ultrasonic Sensor Frozen:

Multi-display

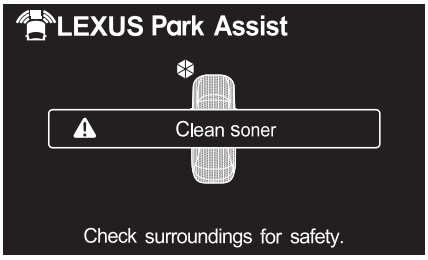

*Multi-display (Shift Lever Position R)

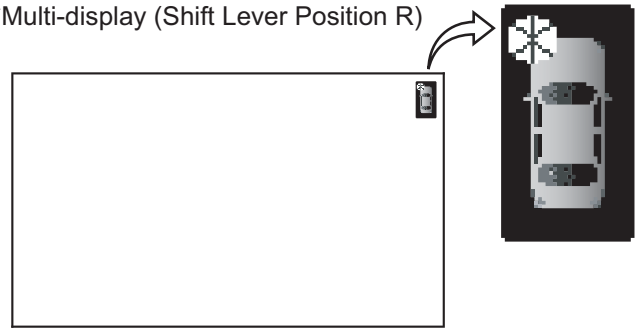

*: with Rear View Monitor System

E123664E02

HINT:

- The example shows that the ultrasonic sensor (front left sensor) is covered with foreign matter.

PM

- If "CLEAN SONAR" is displayed, cleaning the foreign matter from the sensor will return the sensor to normal.

4. DETECTION RANGE MEASUREMENT AND DISPLAY INSPECTION

(a) Detection range measurement

NOTICE:

Make sure the vehicle does not move by applying the parking brake firmly.

(1) Turn the engine switch on (IG).

(2) Move the shift lever to the reverse position to check the ultrasonic sensors (rear sensors).

(b) Turn the clearance sonar main switch on.

(c) Move a ϕ 60 mm (2.36 in.) pole near each sensor to measure its detection range.

(1) Measure the clearance sonar's detection range.

Clearance Sonar:

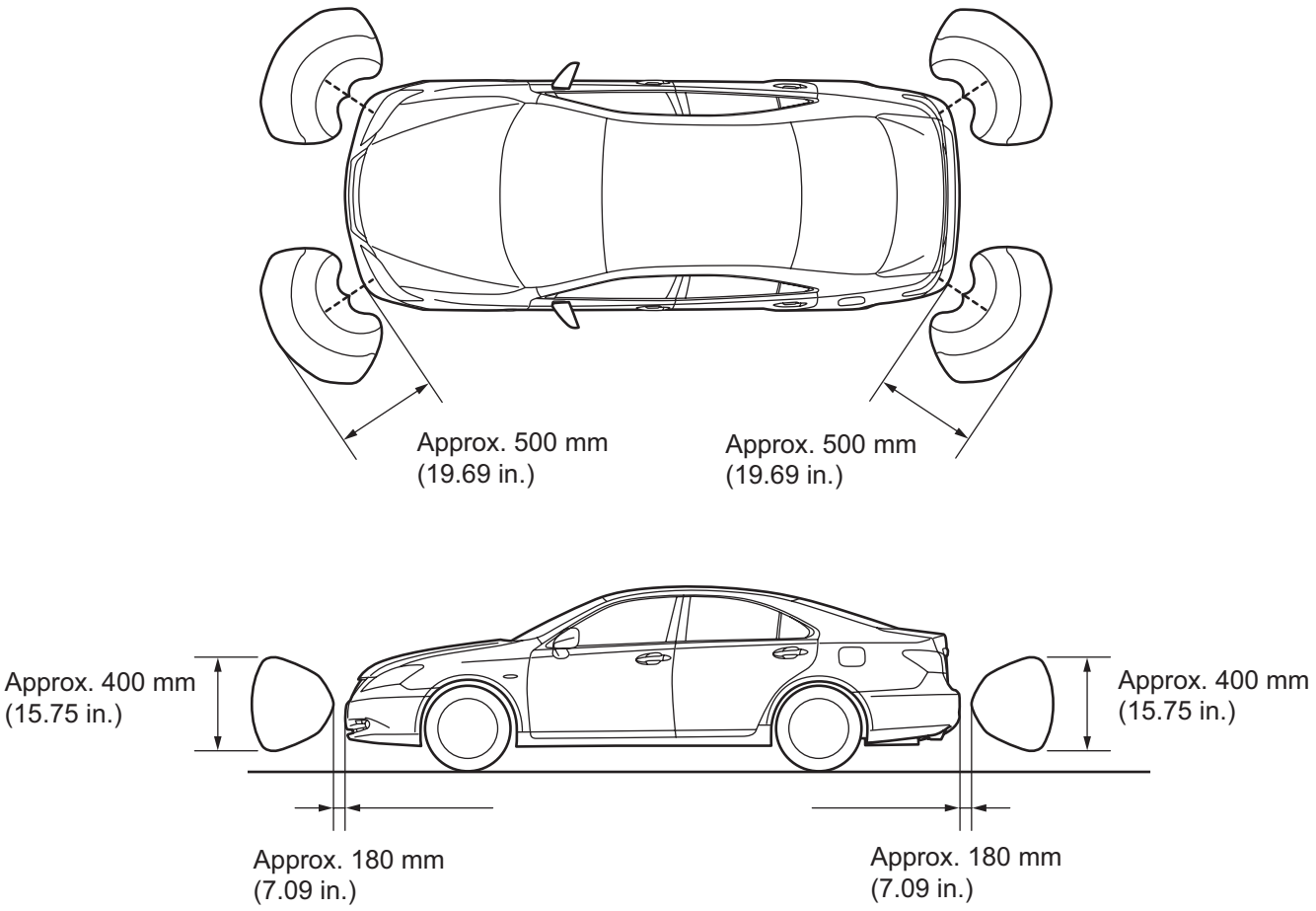

H

B139267E03

NOTICE:
These detection ranges are applicable when positioning the ϕ 60 mm (2.36 in.) pole parallel or perpendicular to the ground. The ranges vary depending on the measuring method and type of obstacle (such as walls).

(2) Measure the back sonar's detection range.

Back Sonar:

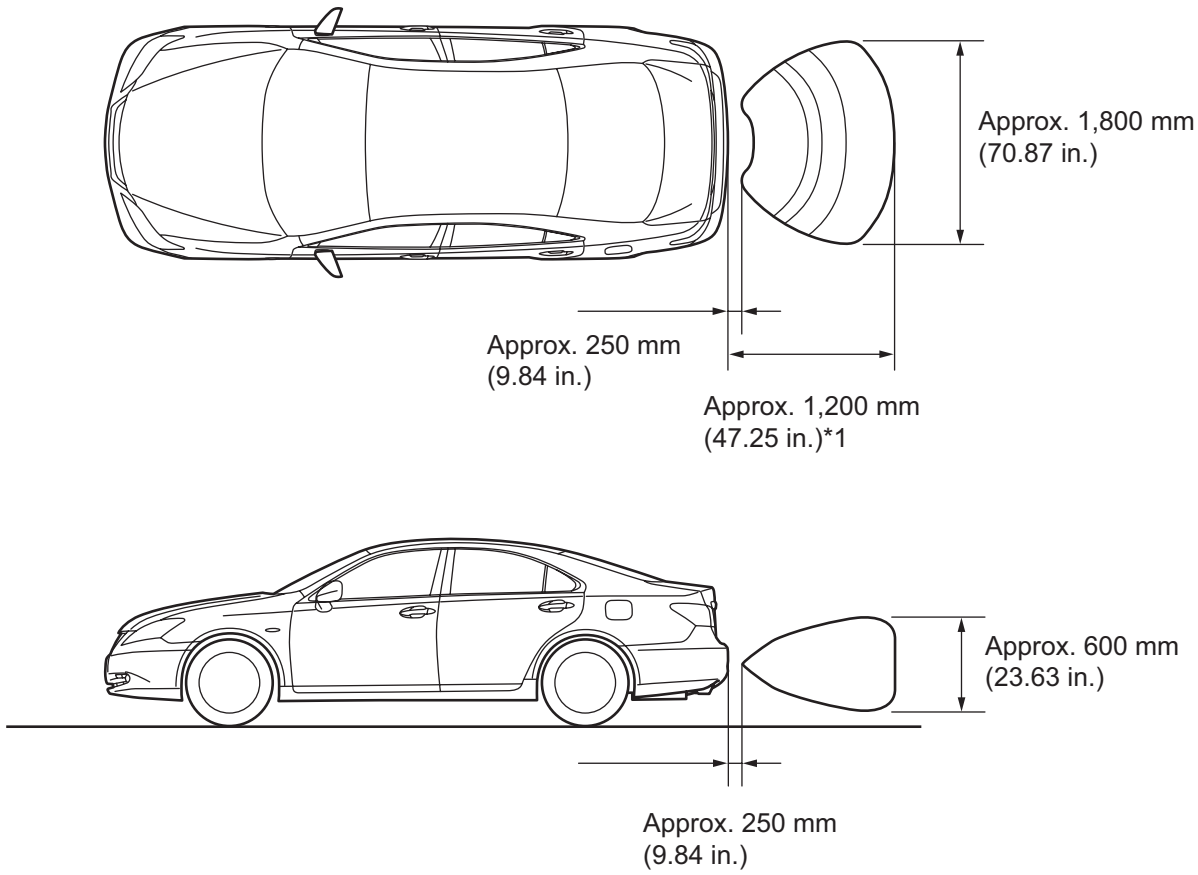

H

B139268E01

NOTICE:

- **These detection ranges are applicable when positioning the ϕ 60 mm (2.36 in.) pole parallel or perpendicular to the ground. The ranges vary depending on the measuring method and type of obstacle (such as walls).**

PM

- ***1: A pole with a diameter of approximately 60 mm (2.36 in.) can be detected within this detection area. If there is a cylinder-shaped object with a diameter of approximately 400 mm (15.74 in.), the detection area expands to approximately 1,500 mm (59.05 in.).**

(d) When the ultrasonic sensors (front clearance sonar) have detected an obstacle, check the display and buzzer sound.

Operation condition:

Engine Switch	Clearance Sonar Main Switch	Shift Lever Position	Vehicle Speed
ON (IG)	ON	In any position except P	10 km/h (6 mph) or less

(1) Check the buzzer sound according to the waveform shown in the illustration.

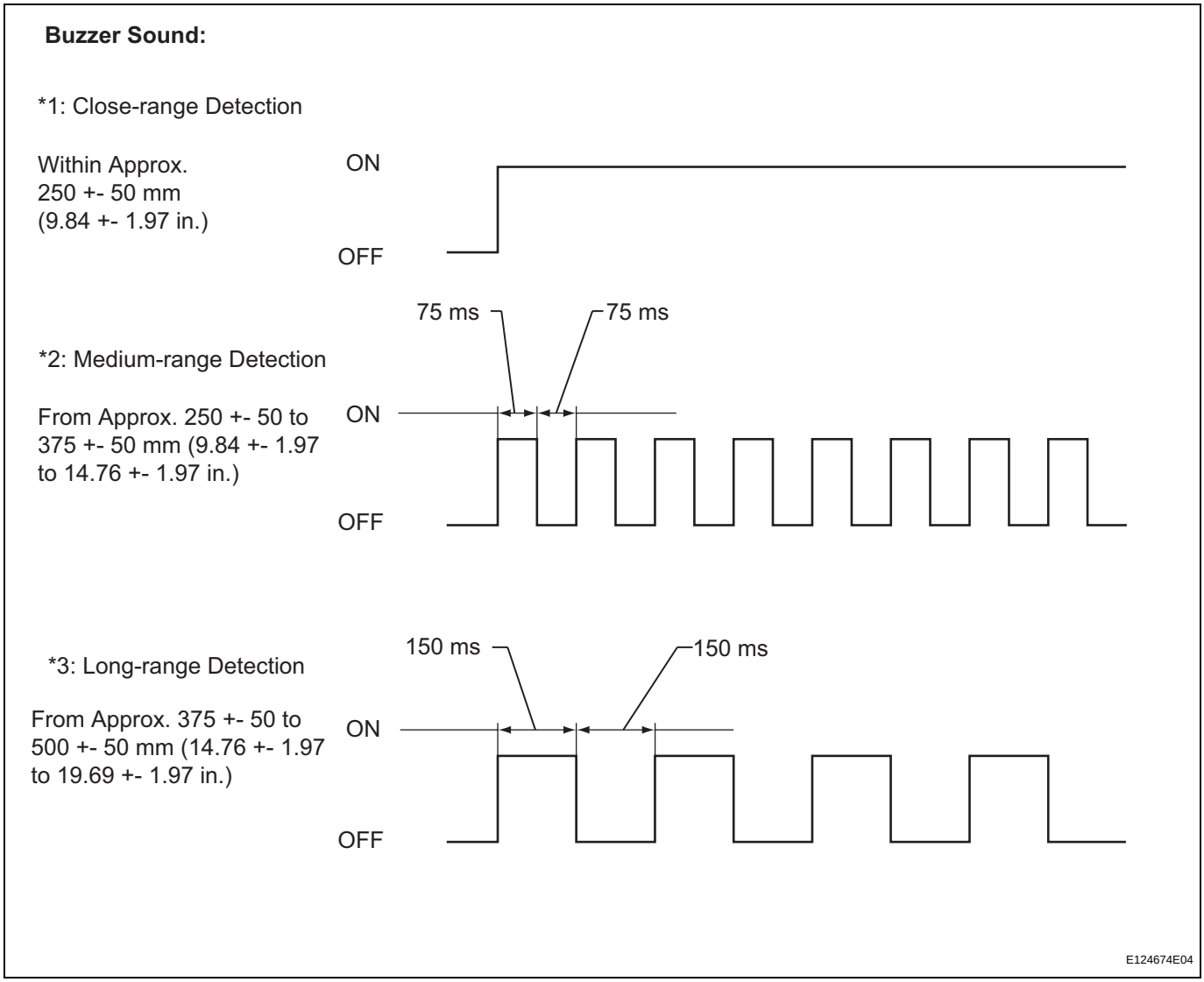

Multi-information display (shift lever position R)

Detection Range	During Detection
*1 Close-range detection Within approx. 250 +- 50 mm (9.84 +- 1.97 in.)	Buzzer: Sounds continuously Number of bars displayed: 1 (Blinking)

PM

Detection Range	During Detection
*2 Medium-range detection From approx. 250 +- 50 to 375 +- 50 mm (9.84 +- 1.97 to 14.76 +- 1.97 in.)	Buzzer: Sounds intermittently (ON: 75 ms / OFF: 75 ms) Number of bars displayed: 2 (illuminated)
*3 Long-range detection From approx. 375 +- 50 to 500 +- 50 mm (14.76 +- 1.97 to 19.69 +- 1.97 in.)	Buzzer: Sounds intermittently (ON: 150 ms / OFF: 150 ms) Number of bars displayed: 3 (illuminated)

Multi-display (shift lever position not in P)

Detection Range	During Detection
*1 Close-range detection Within approx. 250 +- 50 mm (9.84 +- 1.97 in.)	Buzzer: Sounds continuously Number of bars displayed: 1 (red illumination)
*2 Medium-range detection From approx. 250 +- 50 to 375 +- 50 mm (9.84 +- 1.97 to 14.76 +- 1.97 in.)	Buzzer: Sounds intermittently (ON: 75 ms / OFF: 75 ms) Number of bars displayed: 2 (yellow illumination)
*3 Long-range detection From approx. 375 +- 50 to 500 +- 50 mm (14.76 +- 1.97 to 19.69 +- 1.97 in.)	Buzzer: Sounds intermittently (ON: 150 ms / OFF: 150 ms) Number of bars displayed: 3 (yellow illumination)

with Rear view monitor (shift lever position R)

Detection Range	During Detection
*1 Close-range detection Within approx. 250 +- 50 mm (9.84 +- 1.97 in.)	Buzzer: Sounds continuously *4: Illumination (red)
*2 Medium-range detection From approx. 250 +- 50 to 375 +- 50 mm (9.84 +- 1.97 to 14.76 +- 1.97 in.)	Buzzer: Sounds intermittently (ON: 75 ms. / OFF: 75 ms) *4: Blinking (yellow)
*3 Long-range detection From approx. 375 +- 50 to 500 +- 50 mm (14.76 +- 1.97 to 19.69 +- 1.97 in.)	Buzzer: Sounds intermittently (ON: 150 ms / OFF: 150 ms) *4: Blinking (yellow)

HINT:

- Ultrasonic waves are used to measure the detection range; however, the detection range may vary depending on the ambient temperature.
- Refer to the illustration of the display below.

(2) Check the display according to the illustration below while the buzzer is sounding.

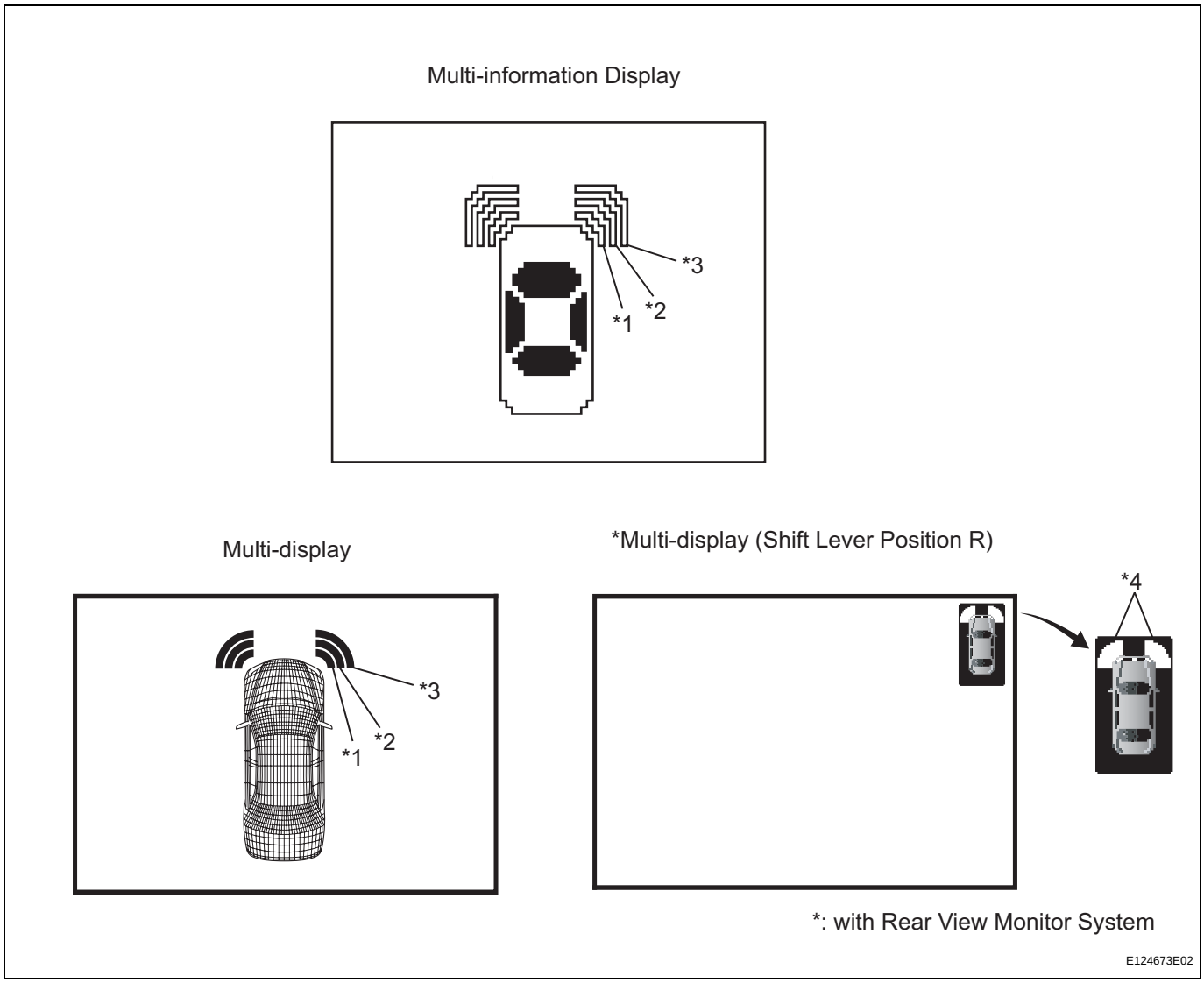

(e) When the ultrasonic sensors (back sonar) have detected an obstacle, check the display and buzzer sound.

Operation condition:

Engine Switch	Clearance Sonar Main Switch	Shift Lever Position
ON (IG)	ON	Reverse Position

(1) Check the buzzer sound according to the waveform shown in the illustration.

Buzzer Sound:

*1: Close-range Detection

Within Approx. 350 +- 50 mm (13.78 +- 1.97 in.)

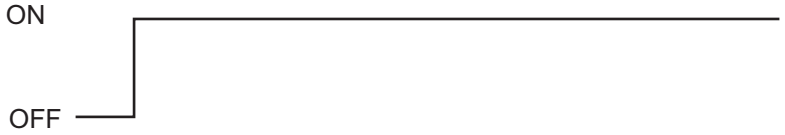

*2: Medium-range Detection

From Approx. 350 +- 50 to 450 +- 50 mm (13.78 +- 1.97 to 17.72 +- 1.97 in.)

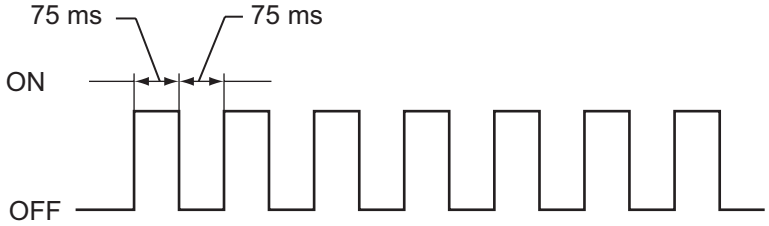

*3: Long-range Detection

From Approx. 450 +- 50 to 600 +- 60 mm (17.72 +- 1.97 to 23.62 +- 2.36 in.)

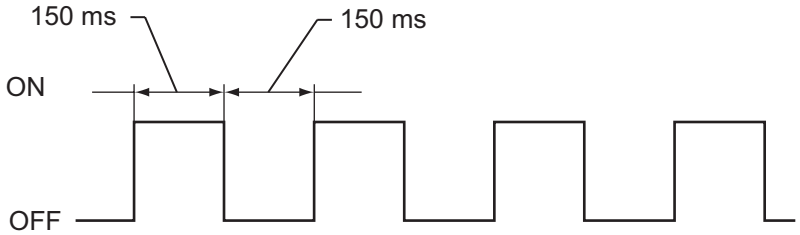

*4: Maximum Long-range Detection

From Approx. 600 +- 60 to 1,500 +- 150 mm (23.62 +- 2.36 to 59.06 +- 5.91 in.)

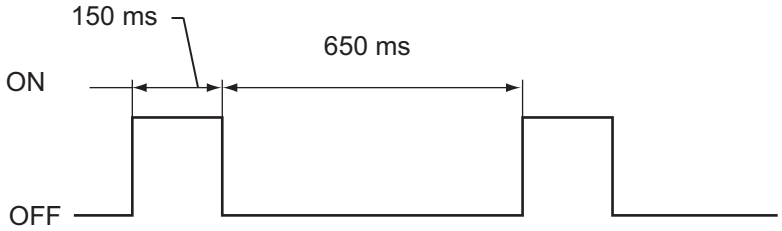

E124676E04

PM

Multi-information display (shift lever position R)

Detection Range	During Detection
*1 Close-range detection Within approx. 350 +- 50 mm (13.78 +- 1.97 in.)	Buzzer: Sounds continuously Number of bars displayed: 1 (blinking)
*2 Medium-range detection From approx. 350 +- 50 to 450 +- 50 mm (13.78 +- 1.97 to 17.72 +- 1.97 in.)	Buzzer: Sounds intermittently (ON: 75 ms / OFF: 75 ms) Number of bars displayed: 2 (illuminated)
*3 Long-range detection From approx. 450 +- 50 to 600 +- 60 mm (17.72 +- 1.97 to 23.62 +- 2.36 in.)	Buzzer: Sounds intermittently (ON: 150 ms / OFF: 150 ms) Number of bars displayed: 3 (illuminated)

Detection Range	During Detection
*4 Maximum long-range detection From approx. 600 +- 60 to 1,500 +-150 mm (23.62 +- 2.36 to 59.06 +- 5.91 in.)	Buzzer: Sounds intermittently (ON: 150 ms / OFF: 650 ms) Number of bars displayed: 4 (illuminated)

Multi-display (shift lever position R)

Detection Range	During Detection
*1 Close-range detection Within approx. 350 +- 50 mm (13.78 +- 1.97 in.)	Buzzer: Sounds continuously Number of bars displayed: 1 (red illumination)
*2 Medium-range detection From approx. 350 +- 50 to 450 +- 50 mm (13.78 +- 1.97 to 17.72 +- 1.97 in.)	Buzzer: Sounds intermittently (ON: 75 ms / OFF: 75 ms) Number of bars displayed: 2 (yellow illumination)
*3 Long-range detection From approx. 450 +- 50 to 600 +- 60 mm (17.72 +- 1.97 to 23.62 +- 2.36 in.)	Buzzer: Sounds intermittently (ON: 150 ms / OFF: 150 ms) Number of bars displayed: 3 (yellow illumination)
*4 Maximum long-range detection From approx. 600 +- 60 to 1,500 +-150 mm (23.62 +- 2.36 to 59.06 +- 5.91 in.)	Buzzer: Sounds intermittently (ON: 150 ms / OFF: 650 ms) Number of bars displayed: 4 (yellow illumination)

with Rear view monitor (shift lever position R)

Detection Range	During Detection
*1 Close-range detection Within approx. 350 +- 50 mm (13.78 +- 1.97 in.)	Buzzer: Sounds continuously *5: Illumination (red)
*2 Medium-range detection From approx. 350 +- 50 to 450 +- 50 mm (13.78 +- 1.97 to 17.72 +- 1.97 in.)	Buzzer: Sounds intermittently (ON: 75 ms / OFF: 75 ms) *5: Blinking (yellow)
*3 Long-range detection From approx. 450 +- 50 to 600 +- 50 mm (17.72 +- 1.97 to 23.62 +- 1.97 in.)	Buzzer: Sounds intermittently (ON: 150 ms / OFF: 150 ms) *5: Blinking (yellow)
*4 Maximum long-range detection From approx. 600 +- 50 to 1,500 mm (23.62 +- 1.97 to 59.06 in.)	Buzzer: Sounds intermittently (ON: 150 ms / OFF: 650 ms) *5: Blinking (yellow)

HINT:
- Ultrasonic waves are used to measure the detection range; however, the detection range may vary depending on the ambient temperature.
- Refer to the illustration of the display below.

(2) Check the display according to the illustration below while the buzzer is sounding.

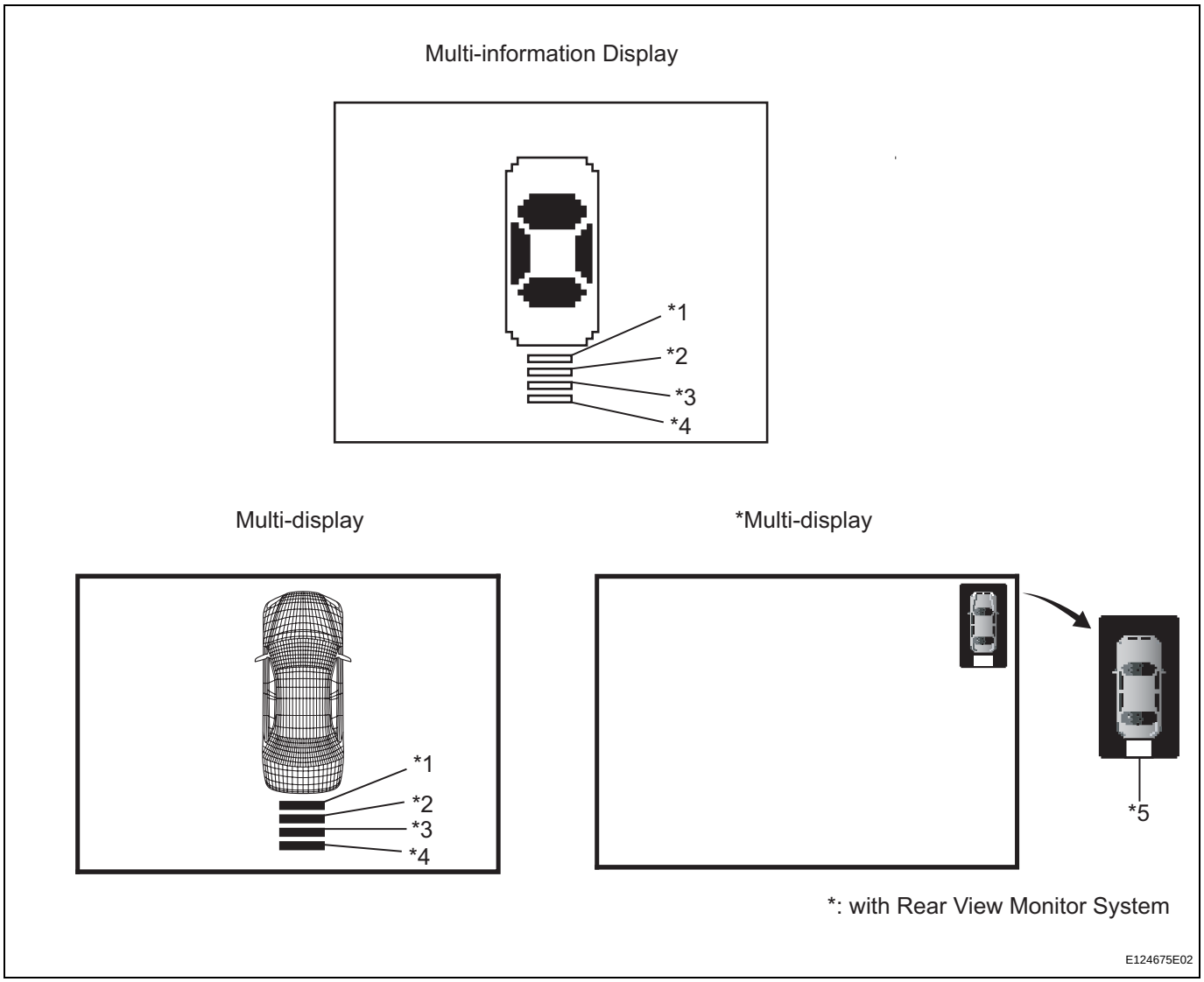

(f) When the ultrasonic sensors (rear clearance sonar) have detected an obstacle, check the display and buzzer sound.

Operation condition:

Engine Switch	Clearance Sonar Main Switch	Shift Lever Position	Vehicle Speed
ON (IG)	ON	Reverse Position	10 km/h (6 mph) or less

PM

(1) Check the buzzer sound according to the waveform shown in the illustration.

Buzzer Sound:

*1: Close-range Detection

Within Approx. 250 +- 50 mm (9.84 +- 1.97 in.)

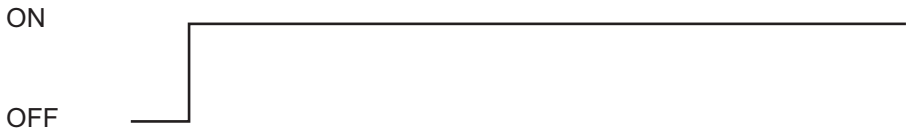

*2: Medium-range Detection

From Approx. 250 +- 50 to 375 +- 50 mm (9.84 +- 1.97 to 14.76 +- 1.97 in.)

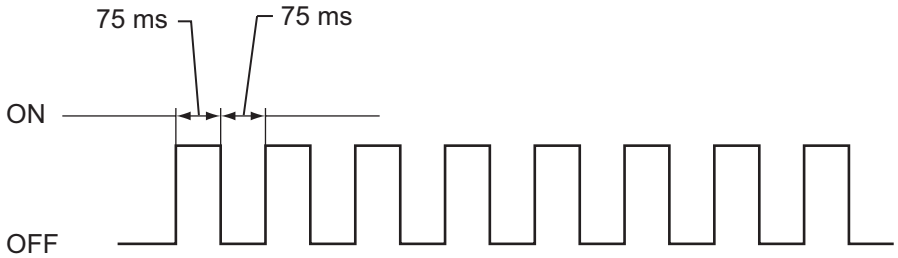

*3: Long-range Detection

From Approx. 375 +- 50 to 500 +- 50 mm (14.76 +- 1.97 to 19.69 +- 1.97 in.)

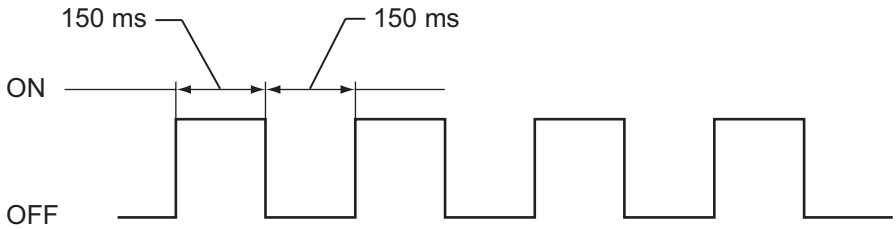

E124678E03

Multi-information display (shift lever position R)

Detection Range	During Detection
*1 Close-range detection Within approx. 250 +- 50 mm (9.84 +- 1.97 in.)	Buzzer: Sounds continuously Number of bars displayed: 1 (blinking)
*2 Medium-range detection From approx. 250 +- 50 to 375 +- 50 mm (9.84 +- 1.97 to 14.76 +- 1.97 in.)	Buzzer: Sounds intermittently (ON: 75 ms / OFF: 75 ms) Number of bars displayed: 2 (illuminated)
*3 Long-range detection From approx. 375 +- 50 to 500 +- 50 mm (14.76 +- 1.97 to 19.69 +- 1.97 in.)	Buzzer: Sounds intermittently (ON: 150 ms / OFF: 150 ms) Number of bars displayed: 3 (illuminated)

Multi-display (shift lever position R)

Detection Range	During Detection
*1 Close-range detection Within approx. 250 +- 50 mm (9.84 +- 1.97 in.)	Buzzer: Sounds continuously Number of bars displayed: 1 (red illumination)

Detection Range	During Detection
*2 Medium-range detection From approx. 250 +- 50 to 375 +- 50 mm (9.84 +- 1.97 to 14.76 +- 1.97 in.)	Buzzer: Sounds intermittently (ON: 75 ms / OFF: 75 ms) Number of bars displayed: 2 (yellow illumination)
*3 Long-range detection From approx. 375 +- 50 to 500 +- 50 mm (14.76 +- 1.97 to 19.69 +- 1.97 in.)	Buzzer: Sounds intermittently (ON: 150 ms / OFF: 150 ms) Number of bars displayed: 3 (yellow illumination)

with Rear view monitor (shift lever position R)

Detection Range	During Detection
*1 Close-range detection Within approx. 250 +- 50 mm (9.84 +- 1.97 in.)	Buzzer: Sounds continuously *4 : Illumination (red)
*2 Medium-range detection From approx. 250 +- 50 to 375 +- 50 mm (9.84 +- 1.97 to 14.76 +- 1.97 in.)	Buzzer: Sounds intermittently (ON: 75 ms / OFF: 75 ms) *4: Blinking (yellow)
*3 Long-range detection From approx. 375 +- 50 to 500 +- 50 mm (14.76 +- 1.97 to 19.69 +- 1.97 in.)	Buzzer: Sounds intermittently (ON: 150 ms / OFF: 150 ms) *4: Blinking (yellow)

HINT:
- Ultrasonic waves are used to measure the detection range; however, the detection range may vary depending on the ambient temperature.
- Refer to the illustration of the display below.

(2) Check the display according to the illustration below while the buzzer is sounding.

Multi-information Display

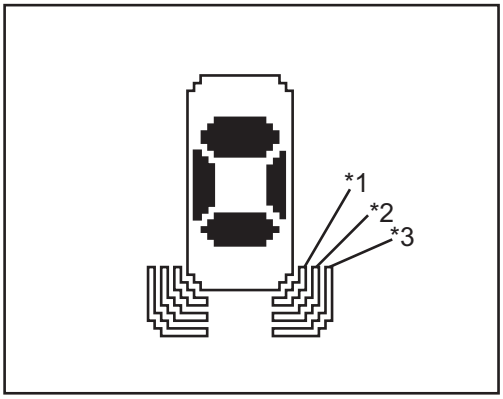

Multi-display

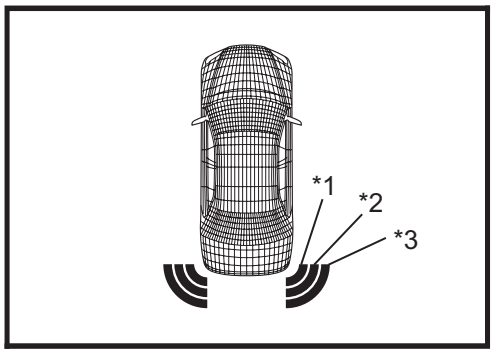

*Multi-display

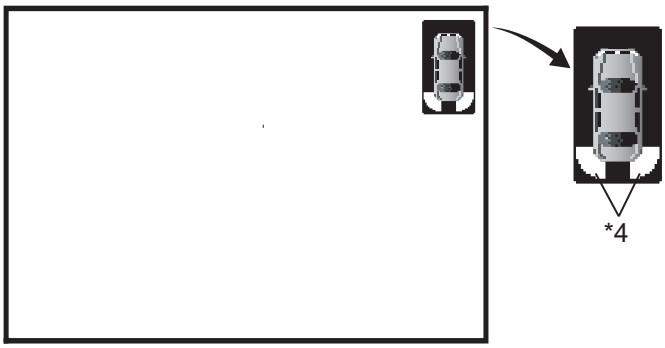

*: with Rear View Monitor System

E124677E02

CUSTOMIZE PARAMETERS

1. CUSTOMIZE PARAMETERS (INTELLIGENT TESTER)

(a) The following items can be customized:

NOTICE:

- **When the customer requests a change in a function, first make sure that the function can be customized.**
- **Be sure to make a note of the current settings before customizing.**
- **When troubleshooting a function, first make sure that the function is set to the default setting.**

Warning

DISPLAY	DEFAULT	CONTENTS	SETTING
RR SENSOR RANGE	WIDE	Function to set buzzer activation range (for rear center sensors)	NARROW / WIDE
KEEP SENSE BUZ	AVAIL	Function to make buzzer sound when distance between vehicle and obstacle does not change for more than 3 seconds	NOT AVAIL / AVAIL
F & R BUZZER VOL	M2	Function to change volume of buzzer	L / M1 / M2 / M3 / H

Sensor:

DISPLAY	DEFAULT	CONTENTS	SETTING
SENSOR COND/N	AVAIL	Function to make sensors available when shift position is N	NOT AVAIL / AVAIL

Display:

DISPLAY	DEFAULT	CONTENTS	SETTING
DISPLAY MODE	ALL	Function to change display mode	ALL / UNDISP

PROBLEM SYMPTOMS TABLE

INTUITIVE PARKING ASSIST SYSTEM:

Symptom	Suspected Area	See page
System does not operate at all (self-check function does not operate)	1. Clearance warning ECU power source circuit	PM-76
	2. Clearance sonar main switch circuit	PM-66
	3. Clearance warning ECU assembly	-
Ultrasonic sensor (clearance sonar) does not operate (self-check function does not operate)	1. Front left sensor (ultrasonic sensor) malfunction	PM-33
	2. Front right sensor (ultrasonic sensor) malfunction	PM-35
	3. Rear left sensor (ultrasonic sensor) malfunction	PM-38
	4. Rear right sensor (ultrasonic sensor) malfunction	PM-49
	5. Clearance warning ECU assembly	-
Ultrasonic sensor (back sensor) does not operate (self-check function does not operate)	1. Rear left center sensor (ultrasonic sensor) malfunction	PM-41
	2. Rear right center sensor (ultrasonic sensor) malfunction	PM-45
	3. Clearance warning ECU assembly	-
Sonar detection operation is normal but buzzer operation is intermittent	1. Clearance warning buzzer circuit	PM-72
	2. Clearance warning ECU assembly	-
Detection operation is normal but sonar displays do not appear on multi-information display	1. Vehicle wire harness or connector (CAN communication)	CA-11
	2. Clearance warning ECU assembly	-
	3. Combination meter assembly	-
Detection operation is normal but sonar displays do not appear on multi-display	1. Vehicle wire harness or connector (CAN communication)	CA-11
	2. Clearance warning ECU assembly	-
	3. Multi-display	-
Open circuit is displayed as a result of self-check	1. Front left sensor (ultrasonic sensor) malfunction	PM-33
	2. Front right sensor (ultrasonic sensor) malfunction	PM-35
	3. Rear left sensor (ultrasonic sensor) malfunction	PM-35
	4. Rear right sensor (ultrasonic sensor) malfunction	PM-49
	5. Rear left center sensor (ultrasonic sensor) malfunction	PM-41
	6. Rear right center sensor (ultrasonic sensor) malfunction	PM-45
Operating indicator does not illuminate	1. Clearance sonar main switch circuit	PM-66
	2. Clearance warning ECU assembly	-
Freeze condition is displayed as a result of self-check	1. Remove ice, mud or snow from the ultrasonic sensor	-
Combination meter operates normally, but detection operates when shift lever position is P, or detection does not operate when shift lever is not in P	1. Vehicle wire harness or connector (CAN communication)	CA-11
	2. Clearance warning ECU assembly	-
Combination meter operates normally but errors occur when vehicle speed exceeds 10 km/h (6 mph)	1. Vehicle wire harness or connector (CAN communication)	CA-11
	2. Clearance warning ECU	-
	3. Combination meter	-
System operates with shift lever not in R, or does not operate with shift lever in R position (rear ultrasonic sensor)	1. Vehicle wire harness or connector (CAN communication)	CA-11
	2. Clearance warning ECU assembly	-

TERMINALS OF ECU

1. CHECK CLEARANCE WARNING ECU

(a) Disconnect the M2 ECU connector.

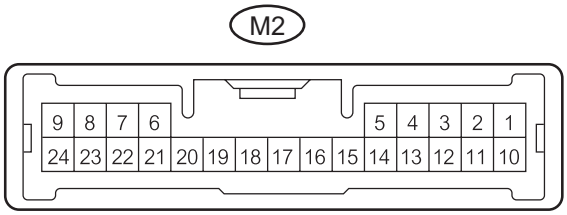

H

E102414E01

(b) Measure the resistance and voltage between each terminal of the wire harness side connector.

Symbols (Terminal No.)	Wiring Color	Terminal Description	Condition	Specified Condition
CLSW (M2-1) - E (M2-21)	Y - W-B	Clearance sonar main switch signal	Engine switch off	Below 1 V
			Engine switch on (IG), clearance sonar main switch ON	10 to 14 V
IG (M2-10) - E (M2-21)	B - W-B	IG signal / IG power source signal	Engine switch off	Below 1 V
			Engine switch on (IG)	10 to 14 V
E (M2-21) - Body ground	W-B - Body ground	ECU ground	Always	Below 1 Ω

If the result is not as specified, there may be a malfunction on the wire harness side.

(c) Reconnect the M2 ECU connector.

(d) Measure the resistance and voltage according to the value(s) in the table below.

Symbols (Terminal No.)	Wiring Color	Terminal Description	Condition	Specified Condition
L1 (M2-2) - E (M2-21)	P - W-B	Clearance sonar main switch indicator signal	Engine switch on (IG), clearance sonar main switch OFF	10 to 14 V
			Engine switch on (IG), clearance sonar main switch ON	Below 1 V
BOR (M2-7) - E (M2-21)	L - W-B	Rear sensor circuit power source	Engine switch off	Below 1 V
			Engine switch on (IG)	7 to 9 V
BOF (M2-9) - E (M2-21)	V - W-B	Front sensor circuit power source	Engine switch off	Below 1 V
			Engine switch on (IG)	7 to 9 V
CBZ (M2-12) - E (M2-21)	W - W-B	Clearance warning buzzer signal	Buzzer not sounding	Below 1 V
			Buzzer sounding	Waveform 1
E2 (M2-22) - E (M2-21)	G - W-B	Rear sensor circuit ground	Always	Below 1 Ω
E1 (M2-24) - E (M2-21)	GR - W-B	Front sensor circuit ground	Always	Below 1 Ω

If the result is not as specified, the ECU may have a malfunction.

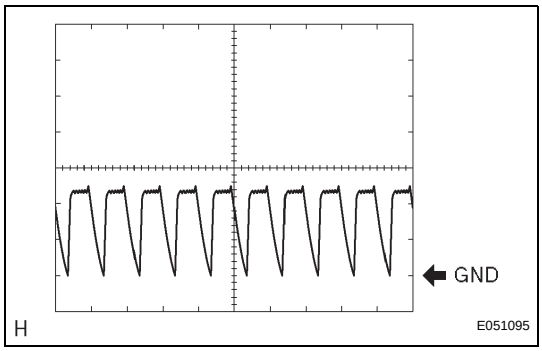

(e) Reference:
(1) Waveform 1

Item	Content
Symbols (Terminal No.)	CBZ (M2-12) - E (M2-21)
Tool Setting	2 V/DIV., 1 msec./DIV.
Condition	Buzzer sounding

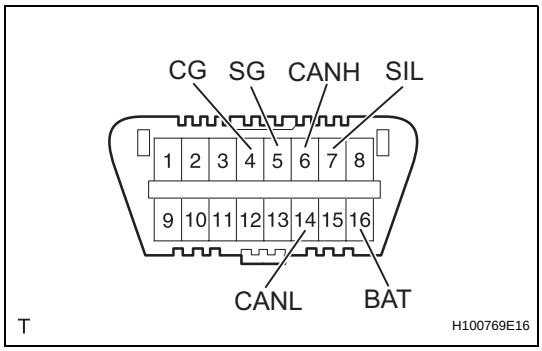

DIAGNOSIS SYSTEM

1. CHECK DLC3

(a) The vehicle's ECU uses ISO 15765-4 for communication protocol. The terminal arrangement of the DLC3 complies with SAE J1962 and matches the ISO 15765-4 format.

Symbols (Terminal No.)	Terminal Description	Condition	Specified Condition
SIL (7) - SG (5)	Bus "+" line	During transmission	Pulse generation
CG (4) - Body ground	Chassis ground	Always	Below 1 Ω
SG (5) - Body ground	Signal ground	Always	Below 1 Ω
BAT (16) - Body ground	Battery positive	Always	10 to 14 V
CANH (6) - CANL (14)	CAN bus line	Engine switch OFF*	54 to 69 Ω
CANH (6) - CG (4)	HIGH-level CAN bus line	Engine switch OFF*	200 Ω or higher
CANL (14) - CG (4)	LOW-level CAN bus line	Engine switch OFF*	200 Ω or higher
CANH (6) - BAT (16)	HIGH-level CAN bus line	Engine switch OFF*	6 kΩ or higher
CANL (14) - BAT (16)	LOW-level CAN bus line	Engine switch OFF*	6 kΩ or higher

NOTICE:
***: Before measuring the resistance, leave the vehicle as is for at least 1 minute and do not operate the engine switch, any other switches or the doors.**
If the result is not as specified, the DLC3 may have a malfunction. Repair or replace the harness and connector.

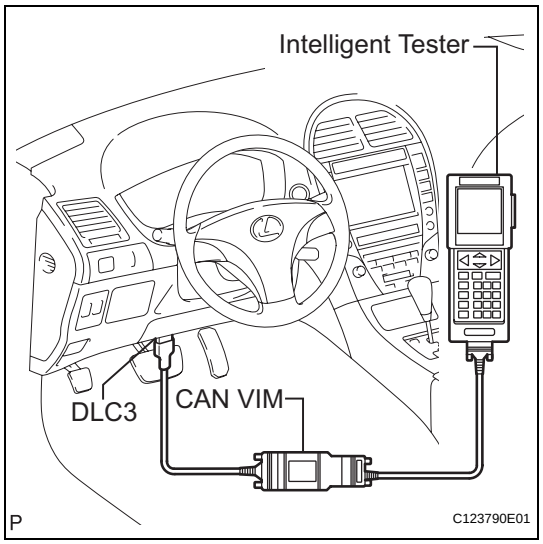

(b) Connect the cable of the intelligent tester (with CAN VIM) to the DLC3, turn the engine switch on (IG) and attempt to use the intelligent tester. If the screen displays a communication error message, a problem exists on the vehicle side or tester side.
HINT:
- If communication is normal when the tool is connected to another vehicle, inspect the DLC3 on the original vehicle.
- If communication is still impossible when the tool is connected to another vehicle, the problem is probably in the tool itself. Consult the Service Department listed in the tool's instruction manual.

DTC CHECK / CLEAR

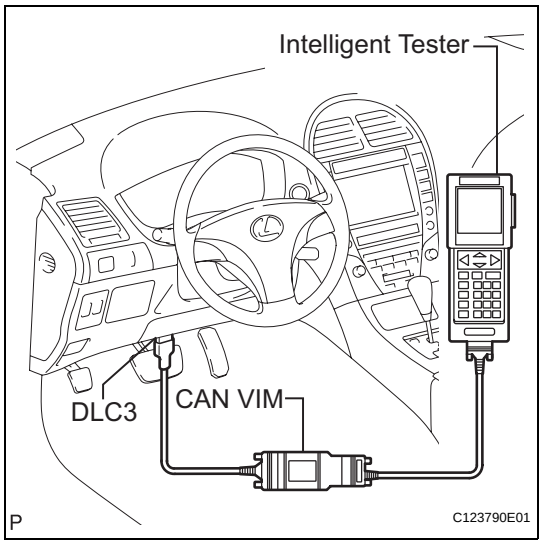

1. CHECK DTC

(a) Connect the intelligent tester to the Controller Area Network Vehicle Interface Module (CAN VIM). Then connect the CAN VIM to the DLC3.
(b) Turn the engine switch on (IG).
(c) Read the DTCs by following the directions on the tester screen.
HINT:
Refer to the intelligent tester operator's manual for further details.

PM

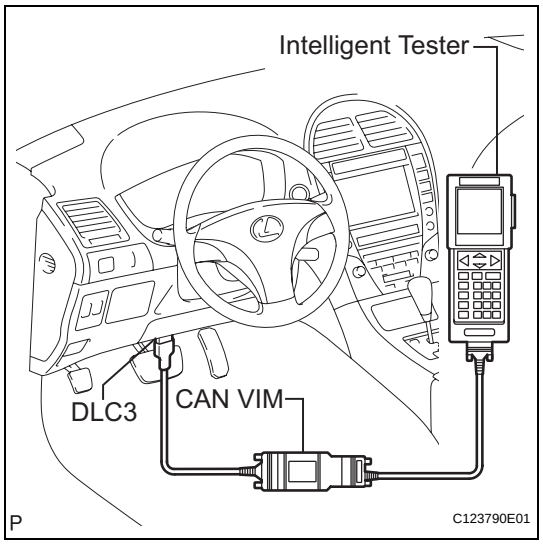

2. CLEAR DTC

(a) Connect the intelligent tester (with CAN VIM) to the DLC3.
(b) Turn the engine switch on (IG).
(c) Erase the DTCs by following the directions on the tester's screen.
HINT:
Refer to the intelligent tester operator's manual for further details.

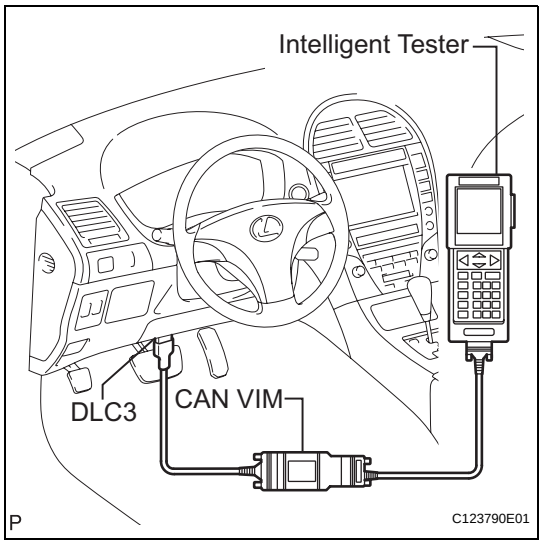

DATA LIST / ACTIVE TEST

1. READ DATA LIST

(a) Connect the intelligent tester to the DLC3.
(b) Turn the engine switch on (IG).
(c) Operate the intelligent tester according to the display and select "Data List".

Clearance warning ECU:

Tester Display	Measurement Item/Range	Normal Condition	Diagnostic Note
MAIN SW	Clearance sonar main switch / OFF or ON	OFF: Clearance sonar main switch OFF ON: Clearance sonar main switch ON	-
ECU TYPE	Type of clearance warning ECU / NORMAL or STEER	NORMAL: Normal clearance sonar type	STEER: Steering sensing type
FL SENS	Front left sensor information / UNDTCT, LONG, M LONG, MIDDLE, CLOSE, FREEZE, OPEN or BLINK	UNDTCT: Not detected LONG: Detected (long-range) M LONG: Detected (mid long-range) MIDDLE: Detected (medium-range) CLOSE: Detected (close-range) OPEN: Open (Open in sensor) FREEZE: Freeze (Sensor is frozen) BLINK: Blink (All displays blinking)	-
FR SENS	Front right sensor information / UNDTCT, LONG, M LONG, MIDDLE, CLOSE, FREEZE, OPEN or BLINK	UNDTCT: Not detected LONG: Detected (long-range) M LONG: Detected (mid long-range) MIDDLE: Detected (medium-range) CLOSE: Detected (close-range) OPEN: Open (Open in sensor) FREEZE: Freeze (Sensor is frozen) BLINK: Blink (All displays blinking)	-
RL SENS	Rear left sensor information / UNDTCT, LONG, MIDDLE, CLOSE, FREEZE, OPEN or BLINK	UNDTCT: Not detected LONG: Detected (long-range) M LONG: Detected (mid long-range) MIDDLE: Detected (medium-range) CLOSE: Detected (close-range) OPEN: Open (Open in sensor) FREEZE: Freeze (Sensor is frozen) BLINK: Blink (All displays blinking)	-

Tester Display	Measurement Item/Range	Normal Condition	Diagnostic Note
RL CENTER SENS	Rear left center sensor information / UNDTCT, LONG, MIDDLE, CLOSE, FREEZE, OPEN or BLINK	UNDTCT: Not detected LONG: Detected (long-range) M LONG: Detected (mid long-range) MIDDLE: Detected (medium-range) CLOSE: Detected (close-range) OPEN: Open (Open in sensor) FREEZE: Freeze (Sensor is frozen) BLINK: Blink (All displays blinking)	-
RR CENTER SENS	Rear right center sensor information / UNDTCT, LONG, MIDDLE, CLOSE, FREEZE, OPEN or BLINK	UNDTCT: Not detected LONG: Detected (long-range) M LONG: Detected (mid long-range) MIDDLE: Detected (medium-range) CLOSE: Detected (close-range) OPEN: Open (Open in sensor) FREEZE: Freeze (Sensor is frozen) BLINK: Blink (All displays blinking)	-
RR SENS	Rear right sensor information / UNDTCT, LONG, MIDDLE, CLOSE, FREEZE, OPEN or BLINK	UNDTCT: Not detected LONG: Detected (long-range) M LONG: Detected (mid long-range) MIDDLE: Detected (medium-range) CLOSE: Detected (close-range) OPEN: Open (Open in sensor) FREEZE: Freeze (Sensor is frozen) BLINK: Blink (All displays blinking)	-
PARKING SIGNAL	Parking signal / OFF or ON	OFF: Except P position ON: Shift lever position is P	-
REVERSE SIGNAL	Reverse signal / OFF or ON	OFF: Except R position ON: Shift lever position is R	-
VEHICLE SPEED	Vehicle speed signal / SN STOP or SN WORK	SN STOP: Vehicle speed is 10 km/h or more SN WORK: Vehicle speed is below 10 km/h	-
SONAR DETECTION	Sonar detection condition / STOP or WORK	STOP: Sonar detection is not operating WORK: Sonar detection is operating	-
# CODE	Number DTCs recorded / Min.: 0 or Max.: 255	-	-

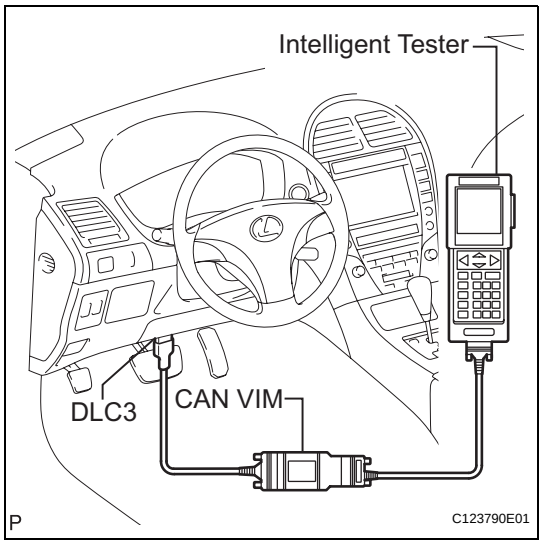

2. PERFORM ACTIVE TEST

(a) Connect the intelligent tester to the DLC3.
(b) Turn the engine switch on (IG).
(c) Following the display on the intelligent tester, perform the "Active Test".

Clearance warning ECU:

Tester Display	Test Part	Control Range	Diagnostic Note
BUZZER	Rear buzzer (Clearance warning buzzer)	STOP or OPERATE	-

DIAGNOSTIC TROUBLE CODE CHART

INTUITIVE PARKING ASSIST SYSTEM

DTC Code	Detection Item	Trouble Area	See page
C1AE1	Front Left Sensor Malfunction	1. No. 1 ultrasonic sensor (Front left sensor) 2. Clearance warning ECU assembly	PM-33
C1AE4	Front Right Sensor Malfunction	1. No. 1 ultrasonic sensor (Front right sensor) 2. Wire harness 3. Clearance warning ECU assembly	PM-35
C1AE6	Rear Left Sensor Malfunction	1. No. 1 ultrasonic sensor (Rear left sensor) 2. Wire harness 3. Clearance warning ECU assembly	PM-38
C1AE7	Rear Left Center Sensor Malfunction	1. No. 1 ultrasonic sensor (Rear left center sensor) 2. Wire harness 3. Clearance warning ECU assembly	PM-41
C1AE8	Rear Right Center Sensor Malfunction	1. No. 1 ultrasonic sensor (Rear right center sensor) 2. Wire harness 3. Clearance warning ECU assembly	PM-45
C1AE9	Rear Right Sensor Malfunction	1. No. 1 ultrasonic sensor (Rear right sensor) 2. Clearance warning ECU assembly	PM-49
C1AEC	Front Sensor Communication Malfunction	1. Front No. 1 ultrasonic sensor circuit 2. Clearance warning ECU assembly	PM-51
C1AED	Rear Sensor Communication Malfunction	1. Rear No. 1 ultrasonic sensor circuit 2. Clearance warning ECU assembly	PM-57

DTC C1AE1 Front Left Sensor Malfunction

DESCRIPTION

The No. 1 ultrasonic sensor (front left sensor) is installed on the front bumper. The clearance warning ECU detects obstacles based on signals received from the front left sensor. If the front left sensor has an open or other malfunction, it will not function normally.

DTC No.	DTC Detection Condition	Trouble Area
B2232	Malfunction of No. 1 ultrasonic sensor (Front left sensor)	• No. 1 ultrasonic sensor (Front left sensor) • Clearance warning ECU assembly

INSPECTION PROCEDURE

1 CHECK DTC OUTPUT

(a) Delete the DTCs (See page PM-28).
(b) Recheck for DTCs (See page PM-28).
Result

Result	Proceed to
DTC C1AE1 is output	A
No DTCs is output	B

B → USE SIMULATION METHOD TO CHECK

PM

A

2 REPLACE NO. 1 ULTRASONIC SENSOR (FRONT LEFT SENSOR)

No. 1 Ultrasonic Sensor:

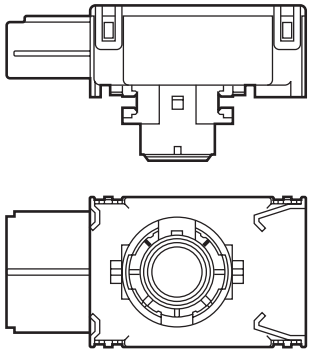

H B139273E01

(a) Replace the ultrasonic sensor (See page PM-99) with a normally functioning sensor.

NEXT

3 CHECK DTC OUTPUT

(a) Delete the DTCs (See page PM-28).
(b) Recheck for DTCs (See page PM-28).

Result

Result	Proceed to
DTC C1AE1 is output	A
No DTCs is output	B

B → **END**

A

REPLACE CLEARANCE WARNING ECU ASSEMBLY (See page PM-93)

DTC	C1AE4	Front Right Sensor Malfunction

DESCRIPTION

The No. 1 ultrasonic sensor (front right sensor) is installed on the front bumper. The clearance warning ECU detects obstacles based on signals received from the front right sensor. If the front right sensor has an open circuit or other malfunction, it will not function normally.

DTC No.	DTC Detection Condition	Trouble Area
B2232	Malfunction of No. 1 ultrasonic sensor (Front right sensor)	• No. 1 ultrasonic sensor (Front right sensor) • Wire harness (Front right sensor - Front left sensor) • Clearance warning ECU assembly

WIRING DIAGRAM

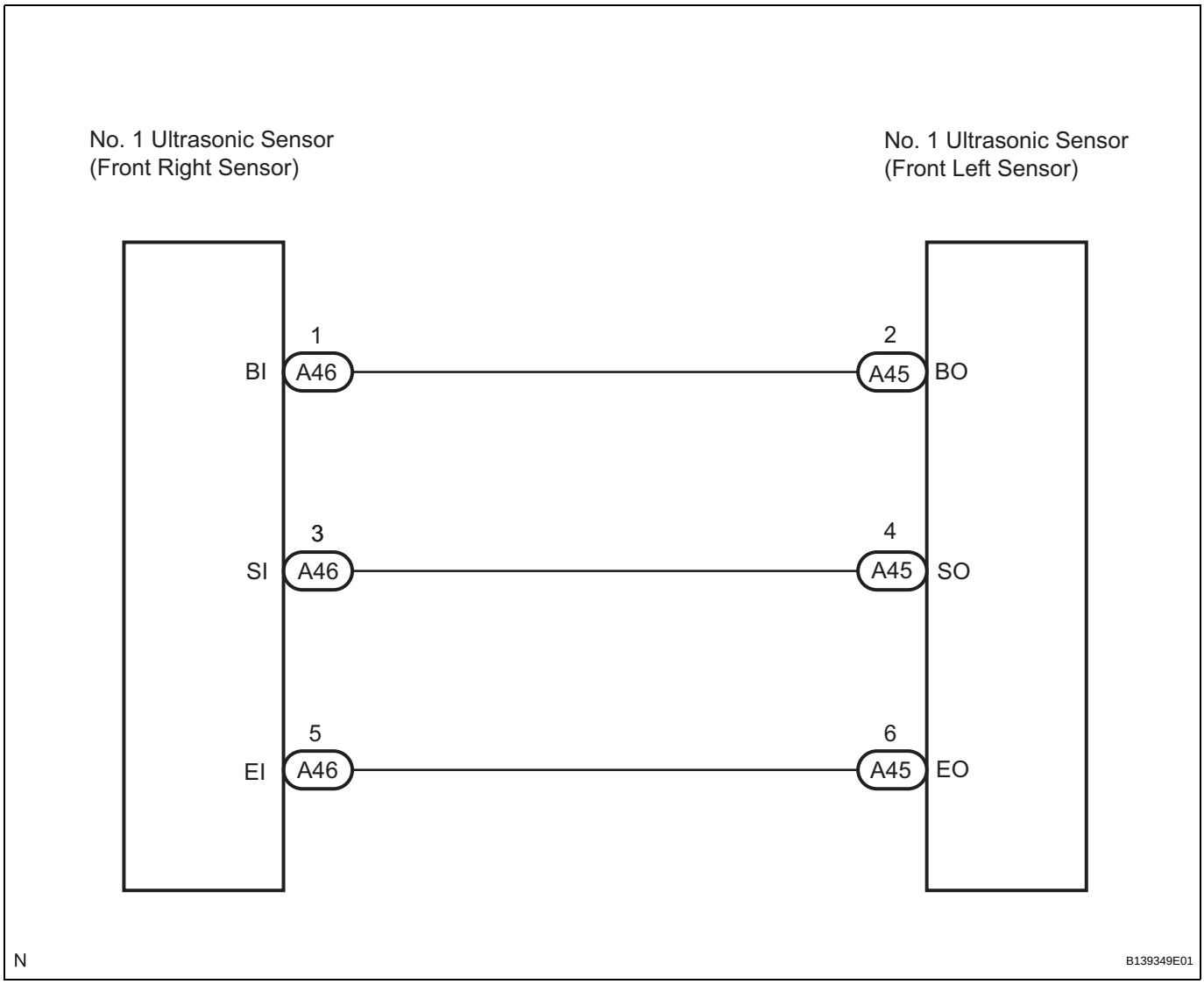

INSPECTION PROCEDURE

1	CHECK DTC OUTPUT

(a) Delete the DTCs (See page PM-28).
(b) Recheck for DTCs (See page PM-28).

Result

Result	Proceed to
DTC C1AE4 is output	A
No DTC is output	B

B → **USE SIMULATION METHOD TO CHECK**

A

2 CHECK HARNESS AND CONNECTOR (FRONT LEFT SENSOR - FRONT RIGHT SENSOR)

Wire Harness Side Connector Front View:

A45
No. 1 Ultrasonic Sensor (Front Left Sensor)

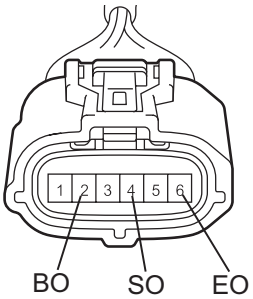

A46
No. 1 Ultrasonic Sensor (Front Right Sensor)

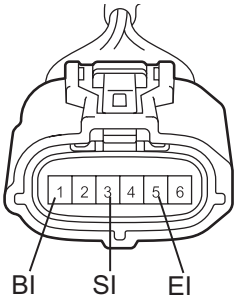

H

B139278E01

(a) Disconnect the A45 and A46 sensor connectors.
(b) Measure the resistance according to the value(s) in the table below.

Standard resistance

Tester Connection	Condition	Specified Condition
A45-2 (BO) - A46-1 (BI)	Always	Below 1 Ω
A45-4 (SO) - A46-3 (SI)		
A45-6 (EO) - A46-5 (EI)		
A45-2 (BO) - Body ground		10 kΩ or higher
A45-4 (SO) - Body ground		
A45-6 (EO) - Body ground		

NG → **REPAIR OR REPLACE HARNESS OR CONNECTOR**

OK

PM

3	REPLACE NO. 1 ULTRASONIC SENSOR (FRONT RIGHT SENSOR)

No. 1 Ultrasonic Sensor:

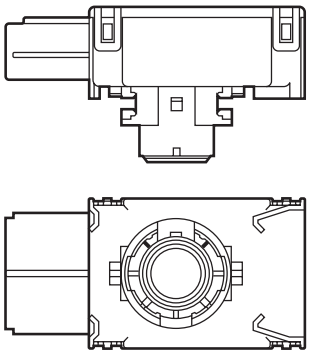

(a) Replace the ultrasonic sensor (See page PM-99) with a normally functioning sensor.

NEXT

4	CHECK DTC OUTPUT

PM

(a) Delete the DTCs (See page PM-28).
(b) Recheck for DTCs (See page PM-28).
Result

Result	Proceed to
DTC C1AE4 is output	A
No DTC is output	B

B → **END**

A

REPLACE CLEARANCE WARNING ECU ASSEMBLY (See page PM-93)

DTC	C1AE6	Rear Left Sensor Malfunction

DESCRIPTION

The No. 1 ultrasonic sensor (rear left sensor) is installed on the front bumper. The clearance warning ECU detects obstacles based on signals received from the rear left sensor. If the rear left sensor has an open circuit or other malfunction, it will not function normally.

DTC No.	DTC Detection Condition	Trouble Area
C1AE6	Malfunction of No. 1 ultrasonic sensor (Rear left sensor)	• No. 1 ultrasonic sensor (Rear left sensor) • Wire harness (Rear left sensor - Rear left center sensor) • Clearance warning ECU assembly

WIRING DIAGRAM

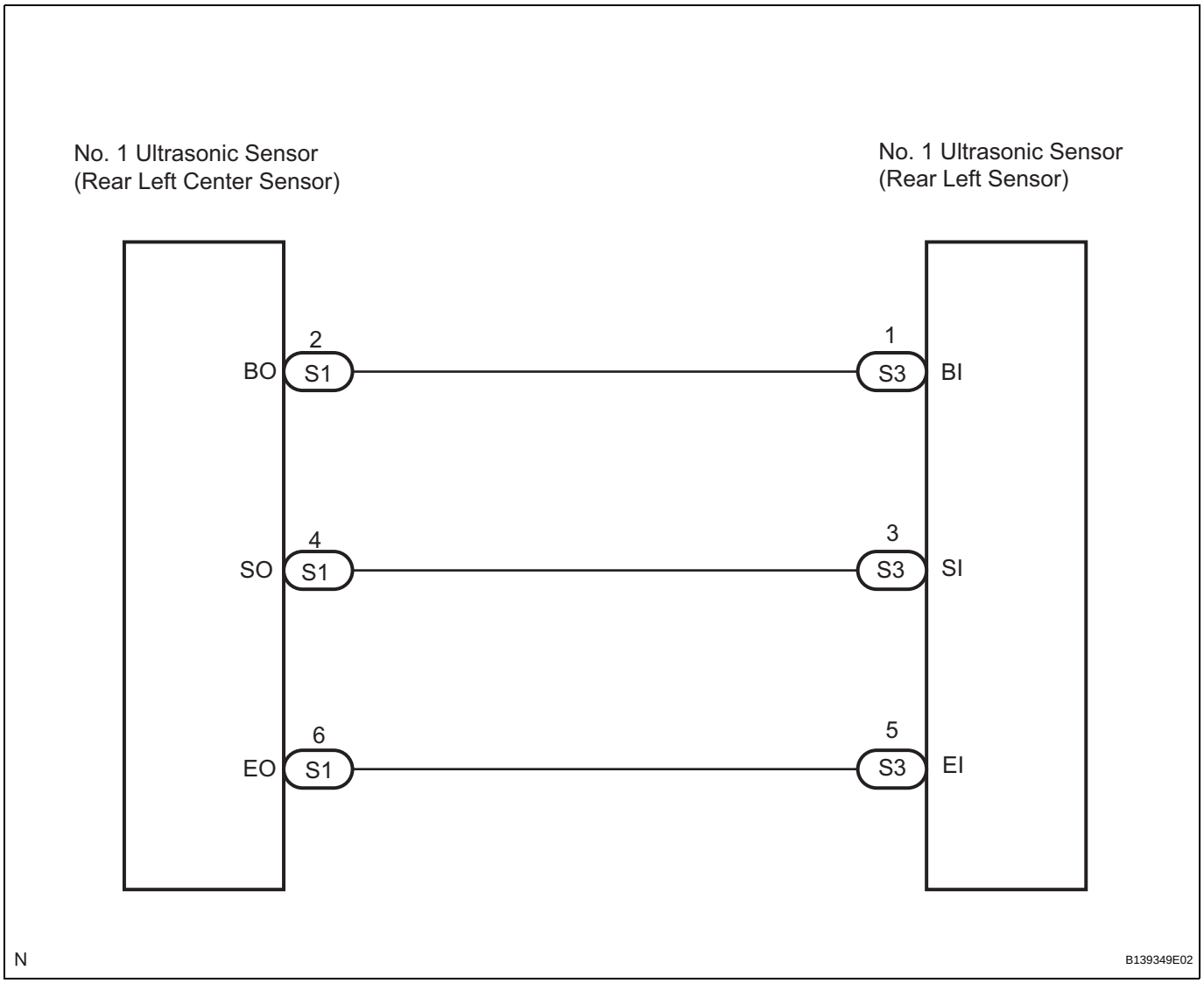

INSPECTION PROCEDURE

1	CHECK DTC OUTPUT

(a) Delete the DTCs (See page PM-28).
(b) Recheck for DTCs (See page PM-28).

PM

Result

Result	Proceed to
DTC C1AE6 is output	A
No DTC is output	B

B → **USE SIMULATION METHOD TO CHECK**

A

2 CHECK HARNESS AND CONNECTOR (REAR LEFT SENSOR - REAR LEFT CENTER SENSOR)

Wire Harness Side Connector Front View:

S1
No. 1 Ultrasonic Sensor
(Rear Left Center Sensor)

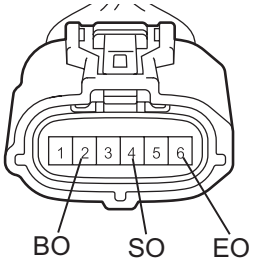

S3
No. 1 Ultrasonic Sensor (Rear Left Sensor)

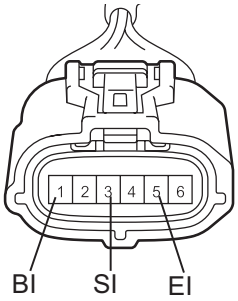

H

B139278E04

(a) Disconnect the S1 and S3 sensor connectors.
(b) Measure the resistance according to the value(s) in the table below.

Standard resistance

Tester Connection	Condition	Specified Condition
S1-2 (BO) - S3-1 (BI)	Always	Below 1 Ω
S1-4 (SO) - S3-3 (SI)		
S1-6 (EO) - S3-5 (EI)		
S1-2 (BO) - Body ground		10 kΩ or higher
S1-4 (SO) - Body ground		
S1-6 (EO) - Body ground		

NG → **REPAIR OR REPLACE HARNESS OR CONNECTOR**

OK

PM

3	REPLACE NO. 1 ULTRASONIC SENSOR (REAR LEFT SENSOR)

No. 1 Ultrasonic Sensor:

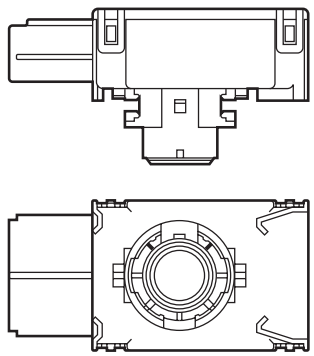

H B139273E01

(a) Replace the ultrasonic sensor (See page PM-99) with a normally functioning sensor.

NEXT

4	CHECK DTC OUTPUT

(a) Delete the DTCs (See page PM-28).
(b) Recheck for DTCs (See page PM-28).

Result

Result	Proceed to
DTC C1AE6 is output	A
No DTC is output	B

B → **END**

A

REPLACE CLEARANCE WARNING ECU ASSEMBLY (See page PM-93)

PM

DTC	C1AE7	Rear Left Center Sensor Malfunction

DESCRIPTION

The No. 1 ultrasonic sensor (rear left center sensor) is installed on the front bumper. The clearance warning ECU detects obstacles based on signals received from the rear left center sensor. If the rear left center sensor has an open circuit or other malfunction, it will not function normally.

DTC Combination Table

DTC NO.	C1AE6	C1AE7	C1AE8	C1AE9	Trouble Area
DTC Detection Condition	○	○	-	-	1. Rear left center senor malfunction 2. Open in wire harness between rear right center sensor and rear left center sensor 3. Clearance warning ECU malfunction
	-	○	-	-	Rear left center senor malfunction

○: DTC is output
-: DTC is not output

DTC No.	DTC Detection Condition	Trouble Area
C1AE7	Malfunction of No. 1 ultrasonic sensor (Rear left center sensor)	• No. 1 ultrasonic sensor (rear left center sensor) • Wire harness (rear left center sensor - rear right center sensor) • Clearance warning ECU assembly

WIRING DIAGRAM

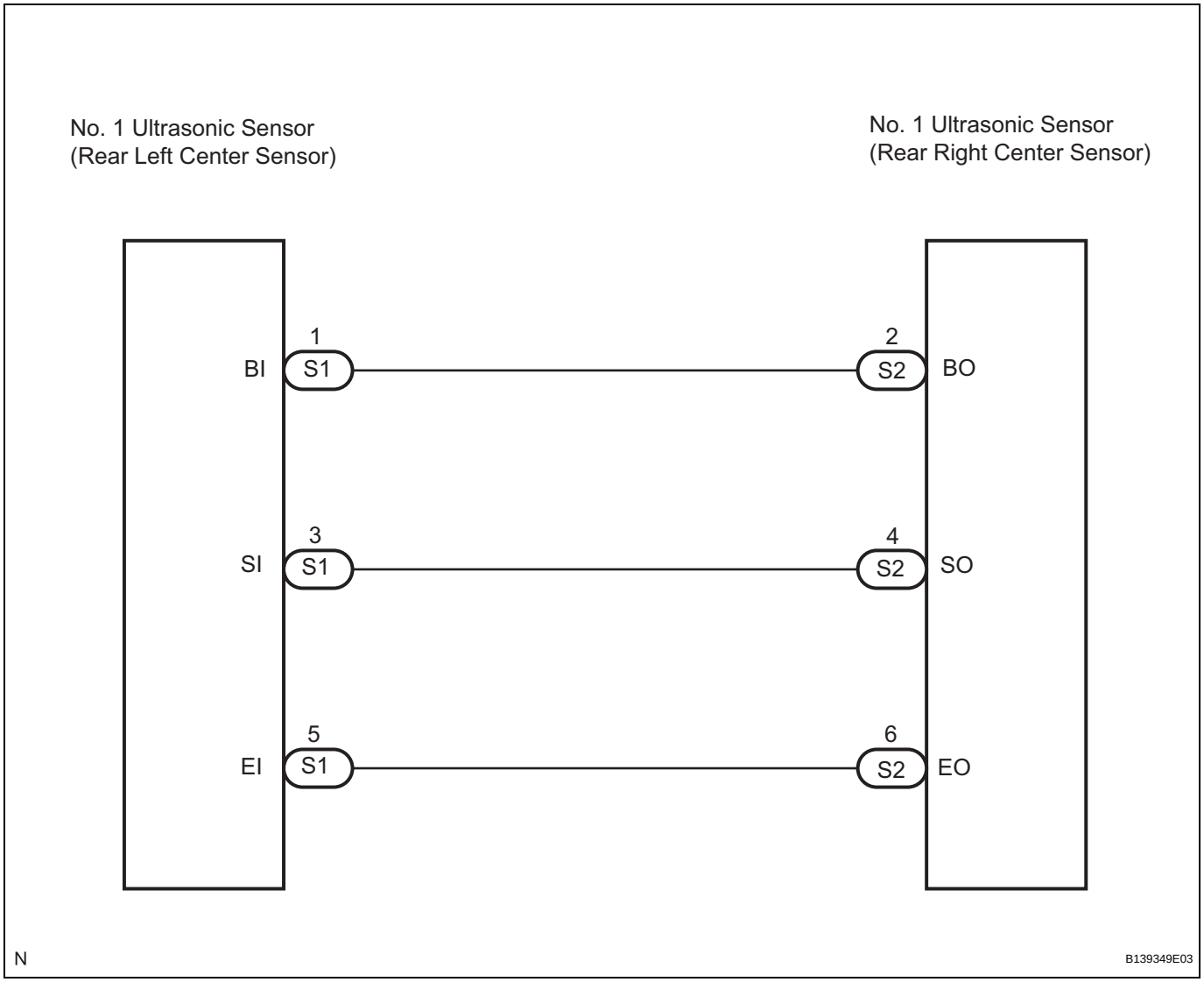

INSPECTION PROCEDURE

1	CHECK DTC OUTPUT

(a) Delete the DTCs (See page PM-28).
(b) Recheck for DTCs (See page PM-28).

Result

Result	Proceed to
DTCs C1AE6 and C1AE7 are output	A
DTC C1AE7 is output	B
No DTC is output	C

B → Go to step 3

C → USE SIMULATION METHOD TO CHECK

A

PM

2 CHECK HARNESS AND CONNECTOR (REAR LEFT CENTER SENSOR - REAR RIGHT CENTER SENSOR)

Wire Harness Side Connector Front View:

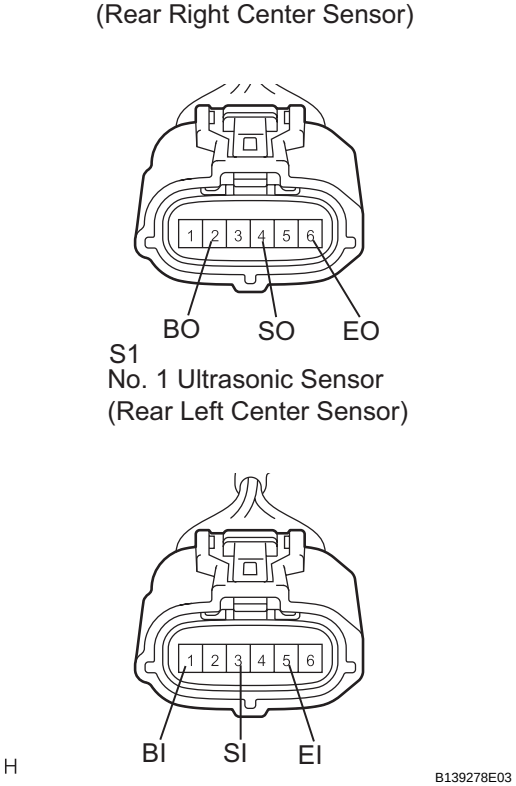

(a) Disconnect the S2 and S1 sensor connectors.
(b) Measure the resistance according to the value(s) in the table below.

Standard resistance

Tester Connection	Condition	Specified Condition
S2-2 (BO) - S1-1 (BI)	Always	Below 1 Ω
S2-4 (SO) - S1-3 (SI)		
S2-6 (EO) - S1-5 (EI)		
S2-2 (BO) - Body ground		10 kΩ or higher
S2-4 (SO) - Body ground		
S2-6 (EO) - Body ground		

NG → **REPAIR OR REPLACE HARNESS OR CONNECTOR**

OK

3 REPLACE NO. 1 ULTRASONIC SENSOR (REAR LEFT CENTER SENSOR)

No. 1 Ultrasonic Sensor:

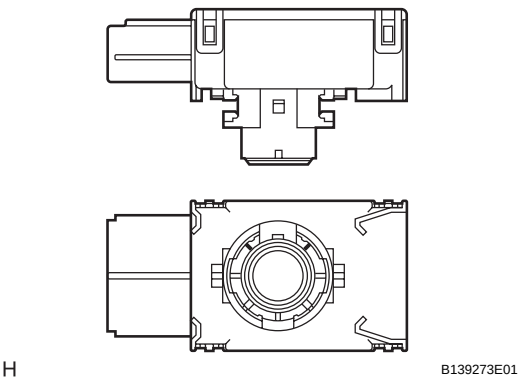

(a) Replace the ultrasonic sensor (See page PM-99) with a normally functioning sensor.

PM

NEXT

4	CHECK DTC OUTPUT

(a) Delete the DTCs (See page PM-28).
(b) Recheck for DTCs (See page PM-28).
Result

Result	Proceed to
DTCs C1AE6 and C1AE7 are output	A
No DTC is output	B

B → END

A

REPLACE CLEARANCE WARNING ECU ASSEMBLY (See page PM-93)

DTC	C1AE8	Rear Right Center Sensor Malfunction

DESCRIPTION

The No. 1 ultrasonic sensor (rear right center sensor) is installed on the front bumper. The clearance warning ECU detects obstacles based on signals received from the rear right center sensor. If the rear right center sensor has an open circuit or other malfunction, it will not function normally.

DTC Combination Table

DTC NO.	C1AE6	C1AE7	C1AE8	C1AE9	Trouble Area
DTC Detection Condition	○	○	○	-	1. Rear right center senor malfunction 2. Open in wire harness between rear right center sensor and rear right sensor 3. Clearance warning ECU malfunction
	-	-	○	-	Rear right center senor malfunction

○: DTC is output
-: DTC is not output

DTC No.	DTC Detection Condition	Trouble Area
C1AE8	Malfunction of No. 1 ultrasonic sensor (Rear right center sensor)	• No. 1 ultrasonic sensor (rear right center sensor) • Wire harness (rear right center sensor - right sensor) • Clearance warning ECU assembly

WIRING DIAGRAM

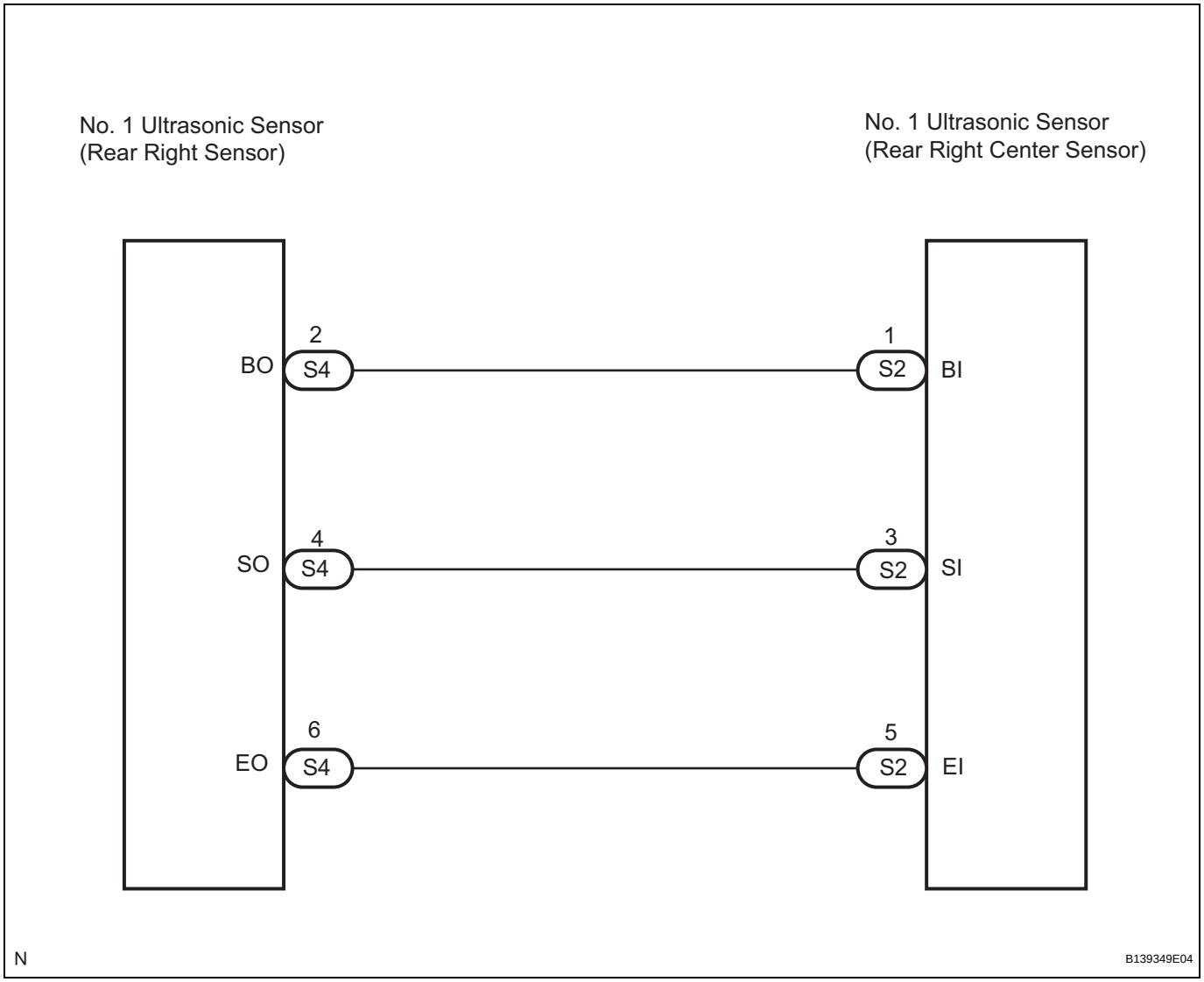

INSPECTION PROCEDURE

1	CHECK DTC OUTPUT

(a) Delete the DTCs (See page PM-28).
(b) Recheck for DTCs (See page PM-28).
Result

Result	Proceed to
DTCs C1AE6, C1AE7 and C1AE8 are output	A
DTC C1AE8 is output	B
No DTC is output	C

B → Go to step 3

C → USE SIMULATION METHOD TO CHECK

A

PM

2 CHECK HARNESS AND CONNECTOR (REAR RIGHT CENTER SENSOR - REAR RIGHT SENSOR)

Wire Harness Side Connector Front View:

S4
No. 1 Ultrasonic Sensor (Rear Right Sensor)

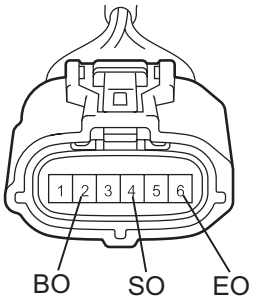

S2
No. 1 Ultrasonic Sensor
(Rear Right Center Sensor)

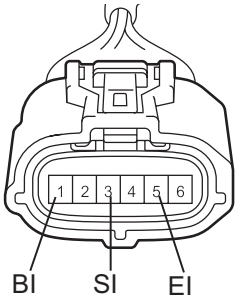

H B139278E02

(a) Disconnect the S4 and S2 sensor connectors.
(b) Measure the resistance according to the value(s) in the table below.

Standard resistance

Tester Connection	Condition	Specified Condition
S4-2 (BO) - S2-1 (BI)	Always	Below 1 Ω
S4-4 (SO) - S2-3 (SI)		
S4-6 (EO) - S2-5 (EI)		
S4-2 (BO) - Body ground		10 kΩ or higher
S4-4 (SO) - Body ground		
S4-6 (EO) - Body ground		

NG → **REPAIR OR REPLACE HARNESS OR CONNECTOR**

OK

3 REPLACE NO. 1 ULTRASONIC SENSOR (REAR RIGHT CENTER SENSOR)

No. 1 Ultrasonic Sensor:

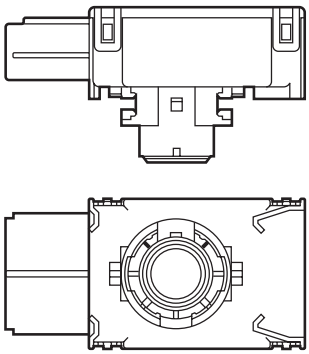

H B139273E01

(a) Replace the ultrasonic sensor (See page PM-99) with a normally functioning sensor.

PM

NEXT

4	CHECK DTC OUTPUT

(a) Delete the DTCs (See page PM-28).
(b) Recheck for DTCs (See page PM-28).
Result

Result	Proceed to
DTCs C1AE6, C1AE7 and C1AE8 are output	A
No DTC is output	B

B → END

A

REPLACE CLEARANCE WARNING ECU ASSEMBLY (See page PM-93)

DTC	C1AE9	Rear Right Sensor Malfunction

DESCRIPTION

The No. 1 ultrasonic sensor (rear right sensor) is installed on the front bumper. The clearance warning ECU detects obstacles based on signals received from the rear right sensor. If the rear right sensor has an open or other malfunction, it will not function normally.

DTC No.	DTC Detection Condition	Trouble Area
C1AE9	Malfunction of No. 1 ultrasonic sensor (rear right sensor)	• No. 1 ultrasonic sensor (rear right sensor) • Clearance warning ECU assembly

INSPECTION PROCEDURE

1 CHECK DTC OUTPUT

(a) Delete the DTCs (See page PM-28).
(b) Recheck for DTCs (See page PM-28).
Result

Result	Proceed to
DTC C1AE9 is output	A
No DTC is output	B

B → USE SIMULATION METHOD TO CHECK

PM

A

2 REPLACE NO. 1 ULTRASONIC SENSOR (REAR RIGHT SENSOR)

No. 1 Ultrasonic Sensor:

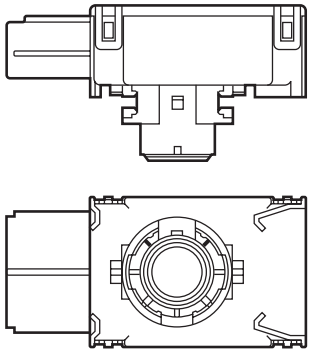

H B139273E01

(a) Replace the ultrasonic sensor (See page PM-99) with a normally functioning sensor.

NEXT

3 CHECK DTC OUTPUT

(a) Delete the DTCs (See page PM-28).
(b) Recheck for DTCs (See page PM-28).

Result

Result	Proceed to
DTC C1AE9 is output	A
No DTC is output	B

B → END

A

REPLACE CLEARANCE WARNING ECU ASSEMBLY (See page PM-93)

DTC	C1AEC	Front Sensor Communication Malfunction

DESCRIPTION

This DTC is stored when there is an open or short circuit in the communication line between the front sensors and the clearance warning ECU, or when there is a malfunction in a front sensor.

DTC Combination Table

DTC NO.	C1AEC	C1AE1	C1AE4	Trouble Area
DTC Detection Condition	○	○	○	1. Front left sensor malfunction 2. Front right sensor malfunction 3. Open or short in wire harness between front left sensor and clearance warning ECU 4. Open or short in wire harness between front left sensor and front right sensor 5. Clearance warning ECU malfunction
	-	○	○	

○: DTC is output
-: DTC is not output

Front No. 1 Ultrasonic Sensor Position:

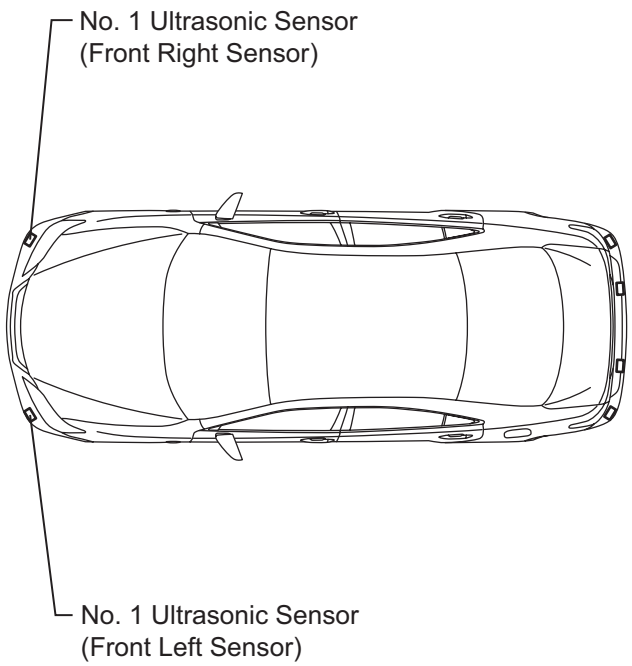

H

B139270E02

DTC No.	DTC Detection Condition	Trouble Area
C1AEC	Malfunctions of all front sensors are detected during initialization mode after the engine switch is turned on (IG)	• Front No. 1 ultrasonic sensor circuit • Clearance warning ECU assembly

PM

WIRING DIAGRAM

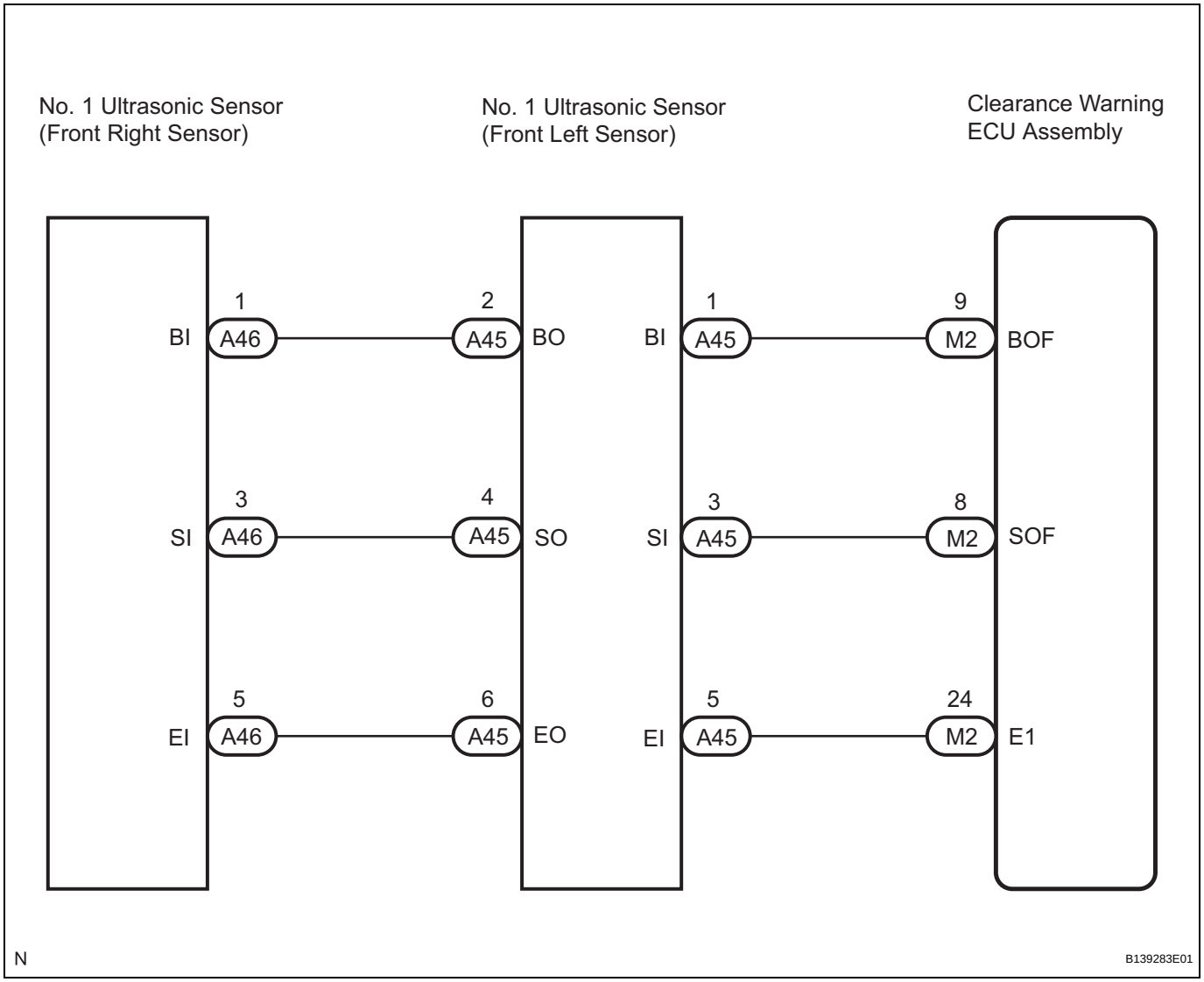

INSPECTION PROCEDURE

1	CHECK DTC OUTPUT

(a) Delete the DTCs (See page PM-28).
(b) Turn the engine switch off.
(c) Turn the engine switch on (IG).
(d) Recheck for DTCs (See page PM-28).

Result

Result	Proceed to
DTCs C1AE1, C1AE4 and C1AEC are output	A
No DTCs are output	B

B → USE SIMULATION METHOD TO CHECK

A

PM

2 CHECK HARNESS AND CONNECTOR (CLEARANCE WARNING ECU - FRONT LEFT SENSOR)

Wire Harness Side Connector Rear View:

M2
Clearance Warning ECU Assembly

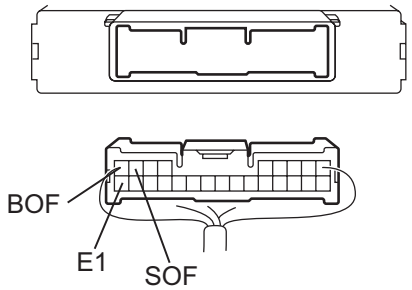

Wire Harness Side Connector Front View:

A45
No. 1 Ultrasonic Sensor (Front Left Sensor)

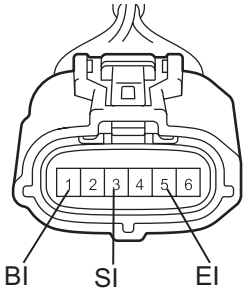

H B139274E01

(a) Disconnect the M2 ECU connector.
(b) Disconnect the A45 sensor connector.
(c) Measure the resistance according to the value(s) in the table below.

Standard resistance

Tester Connection	Condition	Specified Condition
M2-9 (BOF) - A45-1 (BI)	Always	Below 1 Ω
M2-8 (SOF) - A45-3 (SI)		
M2-24 (E1) - A45-5 (EI)		
M2-9 (BOF) - Body ground		10 kΩ or higher
M2-8 (SOF) - Body ground		
M2-24 (E1) - Body ground		

NG → **REPAIR OR REPLACE HARNESS OR CONNECTOR**

OK

3 CHECK CLEARANCE WARNING ECU ASSEMBLY

Wire Harness Side Connector Rear View:

M2
Clearance Warning ECU Assembly

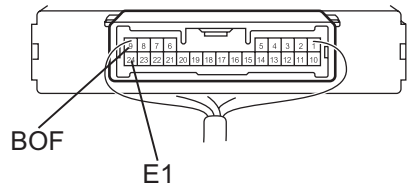

H B139288E01

(a) Reconnect the M2 ECU connector.
(b) Measure the resistance according to the value(s) in the table below.

Standard resistance

Tester Connection	Condition	Specified Condition
M2-24 (E1) - Body ground	Always	Below 1 Ω

(c) Measure the voltage according to the value(s) in the table below.

Standard voltage

Tester Connection	Condition	Specified Condition
M2-9 (BOF) - Body ground	Engine switch on (IG)	7 to 9 V

NG → **REPLACE CLEARANCE WARNING ECU ASSEMBLY (See page PM-93)**

PM

OK

4	REPLACE NO. 1 ULTRASONIC SENSOR (FRONT LEFT SENSOR)

No. 1 Ultrasonic Sensor:

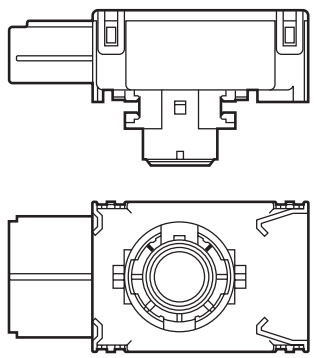

H B139273E01

(a) Replace the ultrasonic sensor (See page PM-99) with a normally functioning sensor.

NEXT

5	CHECK DTC OUTPUT

PM

(a) Delete the DTCs (See page PM-28).
(b) Recheck for DTCs (See page PM-28).
Result

Result	Proceed to
DTCs C1AE1, C1AE4 and C1AEC are output	A
No DTCs are output	B

B → END

A

6 CHECK HARNESS AND CONNECTOR (FRONT LEFT SENSOR - FRONT RIGHT SENSOR)

Wire Harness Side Connector Front View:

A45
No. 1 Ultrasonic Sensor (Front Left Sensor)

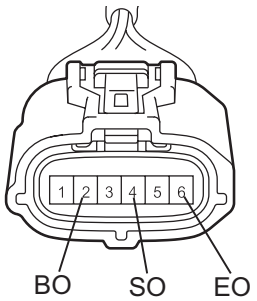

A46
No. 1 Ultrasonic Sensor (Front Right Sensor)

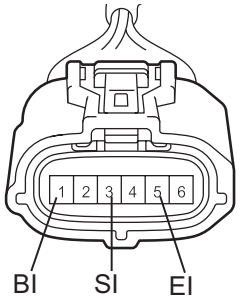

H B139278E01

(a) Disconnect the A45 and A46 sensor connectors.
(b) Measure the resistance according to the value(s) in the table below.

Standard resistance

Tester Connection	Condition	Specified Condition
A45-2 (BO) - A46-1 (BI)	Always	Below 1 Ω
A45-4 (SO) - A46-3 (SI)		
A45-6 (EO) - A46-5 (EI)		
A45-2 (BO) - Body ground		10 kΩ or higher
A45-4 (SO) - Body ground		
A45-6 (EO) - Body ground		

NG → **REPAIR OR REPLACE HARNESS OR CONNECTOR**

OK

7 REPLACE NO. 1 ULTRASONIC SENSOR (FRONT RIGHT SENSOR)

No. 1 Ultrasonic Sensor:

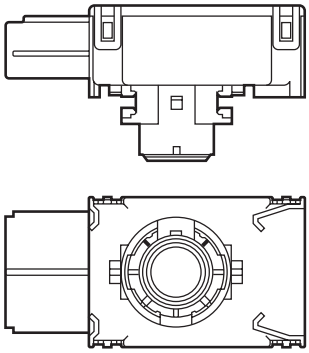

H B139273E01

(a) Replace the ultrasonic sensor (See page PM-99) with a normally functioning sensor.

NEXT

PM

8	CHECK DTC OUTPUT

(a) Delete the DTCs (See page PM-28).
(b) Recheck for DTCs (See page PM-28).
Result

Result	Proceed to
DTCs C1AE1, C1AE4 and C1AEC are output	A
No DTCs are output	B

B → END

A

REPLACE CLEARANCE WARNING ECU ASSEMBLY (See page PM-93)

DTC	C1AED	Rear Sensor Communication Malfunction

DESCRIPTION

This DTC is stored when there is an open or short circuit in the communication line between the rear sensors and the clearance warning ECU, or when there is a malfunction in a rear sensor.

DTC Combination Table

DTC NO.	C1AED	C1AE6	C1AE7	C1AE8	C1AE9	Trouble Area
DTC Detection Condition	○	○	○	○	○	1. Rear right senor malfunction 2. Rear right center senor malfunction 3. Rear left center senor malfunction 4. Rear left senor malfunction 5. Open or short in wire harness between rear right sensor and clearance warning ECU 6. Open or short in wire harness between rear right sensor and rear right center sensor 7. Open or short in wire harness between rear right center sensor and rear left center sensor 8. Open or short in wire harness between rear left center sensor and rear left sensor 9. Clearance warning ECU malfunction
	-	○	○	○	○	

○: DTC is output
-: DTC is not output

PM

Rear No. 1 Ultrasonic Sensor Position:

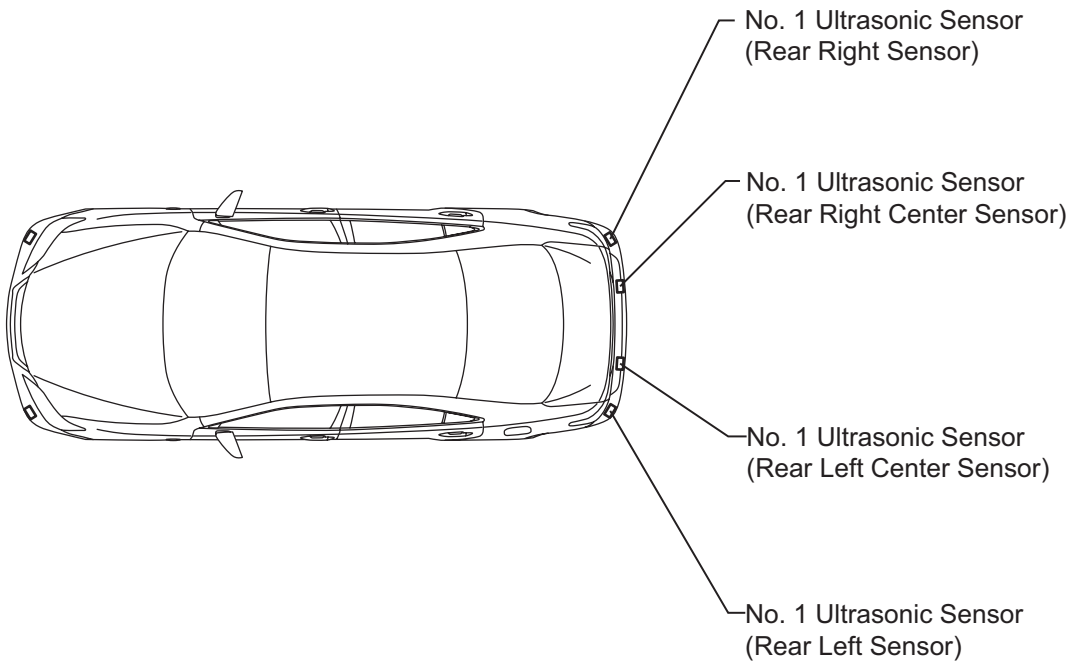

H

B139270E03

DTC No.	DTC Detection Condition	Trouble Area
C1AED	Malfunctions of all rear sensors are detected during initialization mode after the engine switch is turned on (IG)	• Rear No.1 ultrasonic sensor circuit • Clearance warning ECU

WIRING DIAGRAM

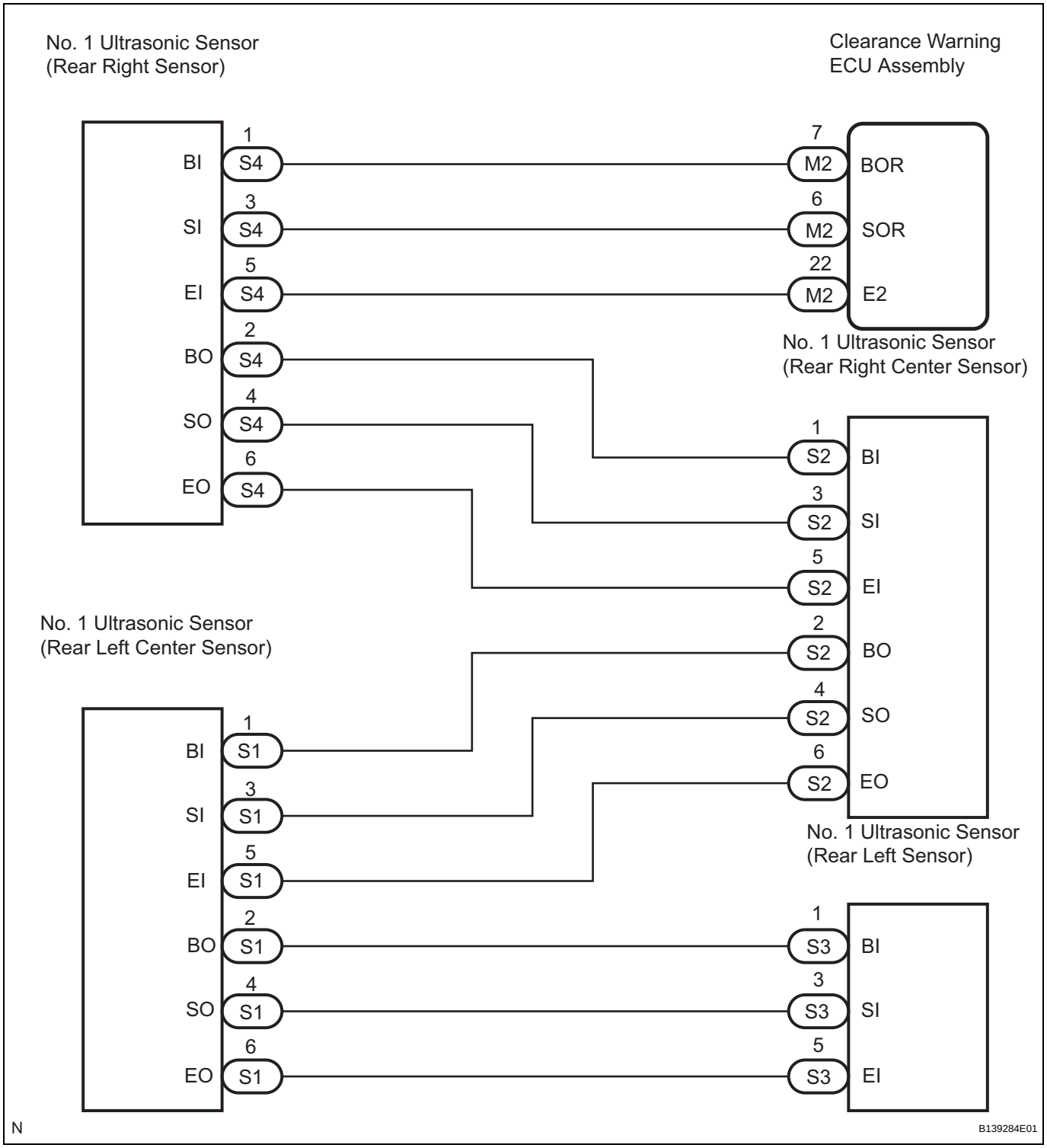

INSPECTION PROCEDURE

1	CHECK DTC OUTPUT

(a) Delete the DTCs (See page PM-28).
(b) Turn the engine switch off.
(c) Turn the engine switch on (IG).

PM

(d) Recheck for DTCs (See page PM-28).
Result

Result	Proceed to
DTCs C1AE6, C1AE7, C1AE8, C1AE9 and C1AED are output	A
No DTCs are output	B

B → **USE SIMULATION METHOD TO CHECK**

A

2 CHECK HARNESS AND CONNECTOR (CLEARANCE WARNING ECU - REAR RIGHT SENSOR)

Wire Harness Side Connector Rear View:

M2
Clearance Warning ECU Assembly

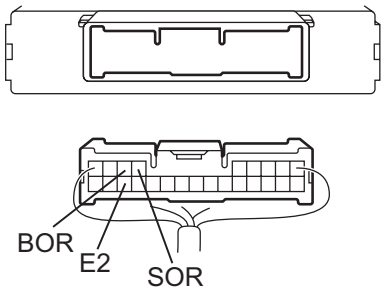

Wire Harness Side Connector Front View:

S4
No. 1 Ultrasonic Sensor (Rear Right Sensor)

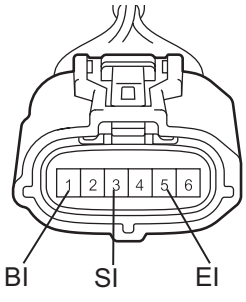

H

B139274E02

(a) Disconnect the M2 ECU connector.
(b) Disconnect the S4 sensor connector.
(c) Measure the resistance according to the value(s) in the table below.
Standard resistance

Tester Connection	Condition	Specified Condition
M2-7 (BOR) - S4-1 (BI)	Always	Below 1 Ω
M2-6 (SOR) - S4-3 (SI)		
M2-22 (E2) - S4-5 (EI)		
M2-7 (BOR) - Body ground		10 kΩ or higher
M2-6 (SOR) - Body ground		
M2-22 (E2) - Body ground		

NG → **REPAIR OR REPLACE HARNESS OR CONNECTOR**

OK

PM

3 CHECK CLEARANCE WARNING ECU ASSEMBLY

Wire Harness Side Connector Rear View:

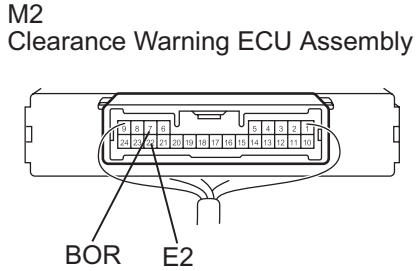

(a) Reconnect the M2 ECU connector.
(b) Measure the resistance according to the value(s) in the table below.
Standard resistance

Tester Connection	Condition	Specified Condition
M2-22 (E2) - Body ground	Always	Below 1 Ω

(c) Measure the voltage according to the value(s) in the table below.
Standard voltage

Tester Connection	Condition	Specified Condition
M2-7 (BOR) - Body ground	Engine switch on (IG)	7 to 9 V

NG → **REPLACE CLEARANCE WARNING ECU ASSEMBLY (See page PM-93)**

OK

4 REPLACE NO. 1 ULTRASONIC SENSOR (REAR RIGHT SENSOR)

PM

No. 1 Ultrasonic Sensor:

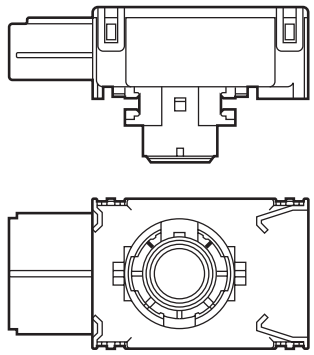

(a) Replace the ultrasonic sensor (See page PM-99) with a normally functioning sensor.

NEXT

5 CHECK DTC OUTPUT

(a) Delete the DTCs (See page PM-28).
(b) Recheck for DTCs (See page PM-28).
Result

Result	Proceed to
DTCs C1AE6, C1AE7, C1AE8, C1AE9 and C1AED are output	A

Result	Proceed to
No DTCs are output	B

B → **END**

A

6 CHECK HARNESS AND CONNECTOR (REAR RIGHT SENSOR - REAR RIGHT CENTER SENSOR)

Wire Harness Side Connector Front View:

S4
No. 1 Ultrasonic Sensor (Rear Right Sensor)

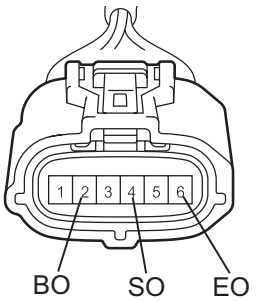

S2
No. 1 Ultrasonic Sensor
(Rear Right Center Sensor)

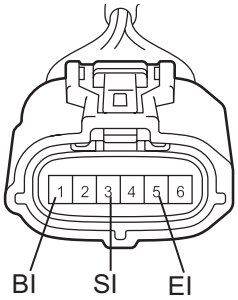

H

B139278E02

(a) Disconnect the S4 and S2 sensor connectors.
(b) Measure the resistance according to the value(s) in the table below.

Standard resistance

Tester Connection	Condition	Specified Condition
S4-2 (BO) - S2-1 (BI)	Always	Below 1 Ω
S4-4 (SO) - S2-3 (SI)		
S4-6 (EO) - S2-5 (EI)		
S4-2 (BO) - Body ground		10 kΩ or higher
S4-4 (SO) - Body ground		
S4-6 (EO) - Body ground		

NG → **REPAIR OR REPLACE HARNESS OR CONNECTOR**

OK

PM

7	REPLACE NO. 1 ULTRASONIC SENSOR (REAR RIGHT CENTER SENSOR)

No. 1 Ultrasonic Sensor:

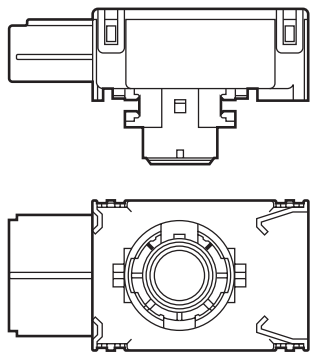

H B139273E01

(a) Replace the ultrasonic sensor (See page PM-99) with a normally functioning sensor.

NEXT

8	CHECK DTC OUTPUT

(a) Delete the DTCs (See page PM-28).
(b) Recheck for DTCs (See page PM-28).

Result

Result	Proceed to
DTCs C1AE6, C1AE7, C1AE8, C1AE9 and C1AED are output	A
No DTCs are output	B

B → END

A

PM

9 CHECK HARNESS AND CONNECTOR (REAR RIGHT CENTER SENSOR - REAR LEFT CENTER SENSOR)

Wire Harness Side Connector Front View:

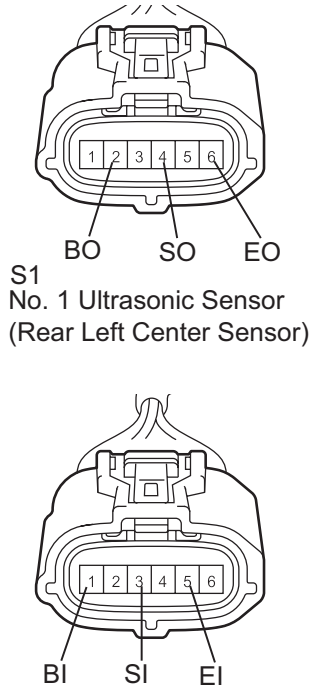

(a) Disconnect the S2 and S1 sensor connectors.
(b) Measure the resistance according to the value(s) in the table below.

Standard resistance

Tester Connection	Condition	Specified Condition
S2-2 (BO) - S1-1 (BI)	Always	Below 1 Ω
S2-4 (SO) - S1-3 (SI)		
S2-6 (EO) - S1-5 (EI)		
S2-2 (BO) - Body ground		10 kΩ or higher
S2-4 (SO) - Body ground		
S2-6 (EO) - Body ground		

NG → **REPAIR OR REPLACE HARNESS OR CONNECTOR**

OK

10 REPLACE NO. 1 ULTRASONIC SENSOR (REAR LEFT CENTER SENSOR)

No. 1 Ultrasonic Sensor:

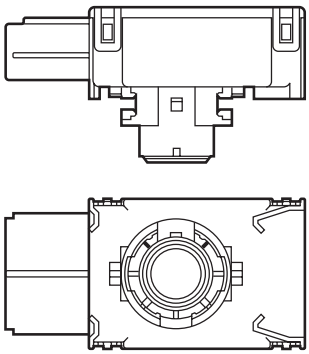

(a) Replace the ultrasonic sensor (See page PM-99) with a normally functioning sensor.

PM

NEXT

11 CHECK DTC OUTPUT

(a) Delete the DTCs (See page PM-28).
(b) Recheck for DTCs (See page PM-28).
Result

Result	Proceed to
DTCs C1AE6, C1AE7, C1AE8, C1AE9 and C1AED are output	A
No DTCs are output	B

B → **END**

A

12 CHECK HARNESS AND CONNECTOR (REAR LEFT CENTER SENSOR - REAR LEFT SENSOR)

Wire Harness Side Connector Front View:

S1
No. 1 Ultrasonic Sensor
(Rear Left Center Sensor)

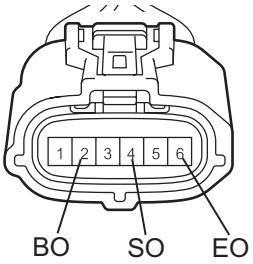

S3
No. 1 Ultrasonic Sensor (Rear Left Sensor)

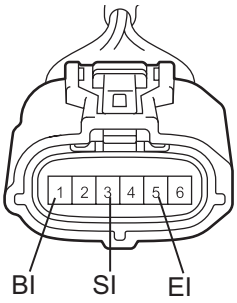

H

B139278E04

(a) Disconnect the S1 and S3 sensor connectors.
(b) Measure the resistance according to the value(s) in the table below.
Standard resistance

Tester Connection	Condition	Specified Condition
S1-2 (BO) - S3-1 (BI)	Always	Below 1 Ω
S1-4 (SO) - S3-3 (SI)		
S1-6 (EO) - S3-5 (EI)		
S1-2 (BO) - Body ground		10 kΩ or higher
S1-4 (SO) - Body ground		
S1-6 (EO) - Body ground		

NG → **REPAIR OR REPLACE HARNESS OR CONNECTOR**

OK

PM

13	REPLACE NO. 1 ULTRASONIC SENSOR (REAR LEFT SENSOR)

No. 1 Ultrasonic Sensor:

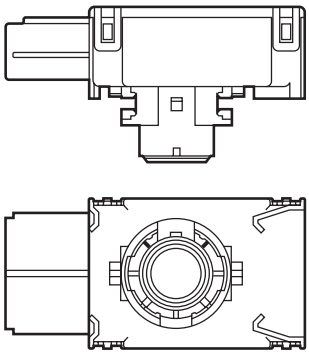

H B139273E01

(a) Replace the ultrasonic sensor (See page PM-99) with a normally functioning sensor.

NEXT

14	CHECK DTC OUTPUT

PM

(a) Delete the DTCs (See page PM-28).
(b) Recheck for DTCs (See page PM-28).
Result

Result	Proceed to
DTCs C1AE6, C1AE7, C1AE8, C1AE9 and C1AED are output	A
No DTCs are output	B

B → **END**

A

REPLACE CLEARANCE WARNING ECU ASSEMBLY (See page PM-93)

Clearance Sonar Main Switch Circuit

DESCRIPTION

When the clearance sonar main switch is turned on, an ON signal is sent to the clearance warning ECU and the indicator on the switch comes on. The intuitive parking assist system starts operating according to this signal.

WIRING DIAGRAM

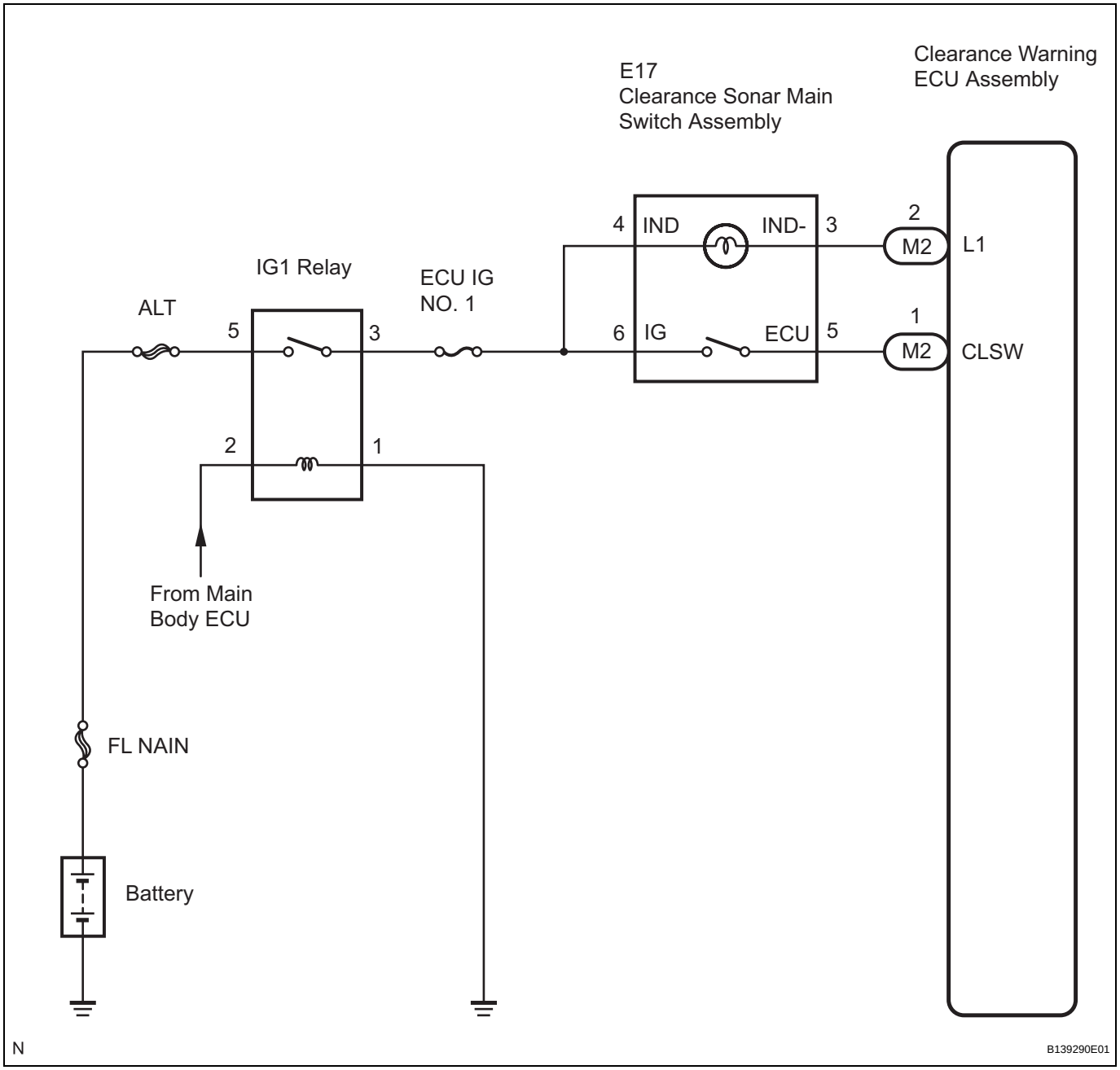

INSPECTION PROCEDURE

1 CHECK INTUITIVE PARKING ASSIST SYSTEM

(a) Check the operation of the intuitive parking assist system (See page PM-11).

Result

Result	Proceed to
Even if the clearance sonar main switch is turned on, the system does not operate.	**A**
The indicator on the switch does not come on even though the system starts operating.	**B**

B → **Go to step 6**

A

2 READ VALUE OF INTELLIGENT TESTER

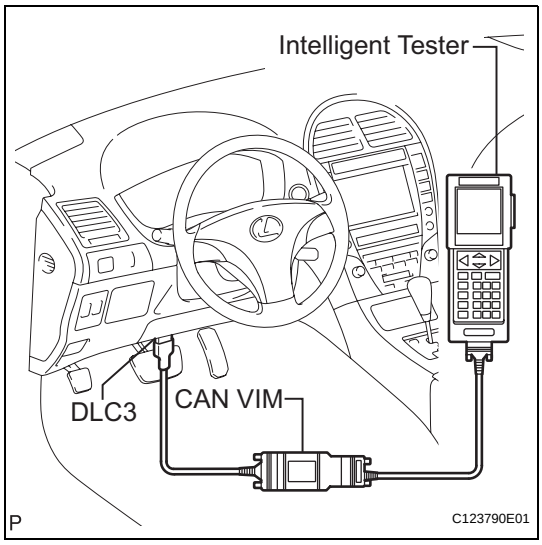

(a) Connect the intelligent tester to the DLC3.
(b) Turn the engine switch on (IG).
(c) Turn the intelligent tester main switch on.
(d) Turn the clearance sonar main switch on.
(e) Select the item below in the Data List, and read its value displayed on the intelligent tester to check the clearance sonar main switch.

Clearance warning ECU:

Tester Display	Measurement Item/ Range	Normal Condition	Diagnostic Note
MAIN SW	Clearance sonar main switch / OFF or ON	OFF: Clearance sonar main switch OFF ON: Clearance sonar main switch ON	-

OK:

ON (Clearance sonar main switch is pressed) appears on the tester.

OK → **PROCEED TO NEXT CIRCUIT INSPECTION SHOWN IN PROBLEM SYMPTOMS TABLE**

NG

PM

3 INSPECT CLEARANCE SONAR MAIN SWITCH ASSEMBLY

Clearance Sonar Main Switch Assembly:

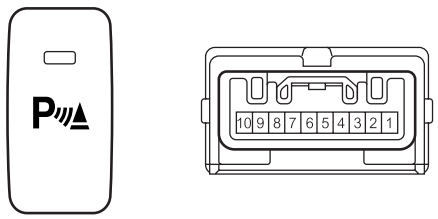

H B139271E01

(a) Remove the clearance sonar main switch assembly.
(b) Measure the resistance according to the value(s) in the table below.

Standard resistance

Tester Connection	Condition	Specified Condition
5 - 6	Switch free (OFF)	10 kΩ or higher
	Switch pushed (ON)	Below 1 Ω

NG → **REPLACE CLEARANCE SONAR MAIN SWITCH ASSEMBLY**

OK

4 CHECK HARNESS AND CONNECTOR (CLEARANCE SONAR MAIN SWITCH - BATTERY)

Wire Harness Side Connector Rear View:

E17
Clearance Sonar Main Switch A ssembly

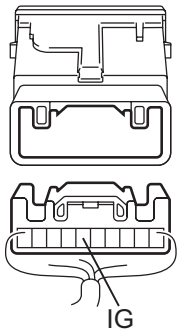

H B139276E01

(a) Measure the voltage according to the value(s) in the table below.

Standard voltage

Tester Connection	Condition	Specified Condition
E17-6 (IG) - Body ground	Engine switch on (IG)	10 to 14 V

NG → **REPAIR OR REPLACE HARNESS OR CONNECTOR**

OK

PM

5	CHECK HARNESS AND CONNECTOR (CLEARANCE WARNING ECU - CLEARANCE SONAR MAIN SWITCH)

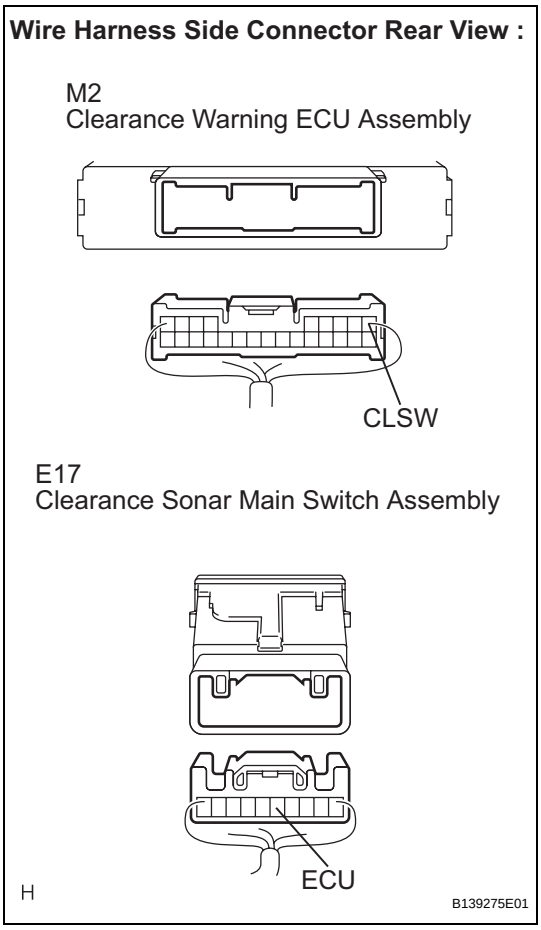

(a) Disconnect the M2 ECU connector.
(b) Measure the resistance according to the value(s) in the table below.

Standard resistance

Tester Connection	Condition	Specified Condition
M2-1 (CLSW) - E17-5 (ECU)	Always	Below 1 Ω
M2-1 (CLSW) - Body ground		10 kΩ or higher

NG → **REPAIR OR REPLACE HARNESS OR CONNECTOR**

OK

PROCEED TO NEXT CIRCUIT INSPECTION SHOWN IN PROBLEM SYMPTOMS TABLE

PM

6 INSPECT CLEARANCE SONAR MAIN SWITCH ASSEMBLY

Clearance Sonar Main Switch Assembly:

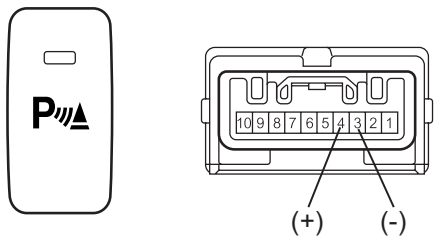

H B139271E02

(a) Remove the clearance sonar main switch.
(b) Apply battery voltage and check operation of the main switch, as shown in the table below.
OK

Measurement Condition	Specified Condition
Battery positive (+) → Terminal 4 Battery negative (-) → Terminal 3	Indicator light comes on

NG → **REPLACE CLEARANCE SONAR MAIN SWITCH ASSEMBLY**

OK

7 CHECK HARNESS AND CONNECTOR (CLEARANCE SONAR MAIN SWITCH - BATTERY)

Wire Harness Side Connector Rear View:

E17
Clearance Sonar Main Switch Assembly

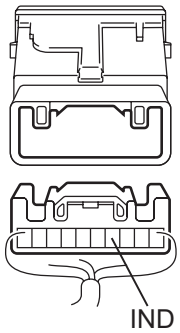

H B139276E03

(a) Measure the voltage according to the value(s) in the table below.
Standard voltage

Tester Connection	Condition	Specified Condition
E17-4 (IND) - Body ground	Engine switch on (IG)	10 to 14 V

NG → **REPAIR OR REPLACE HARNESS OR CONNECTOR**

OK

PM

8	CHECK HARNESS AND CONNECTOR (CLEARANCE WARNING ECU - CLEARANCE SONAR MAIN SWITCH)

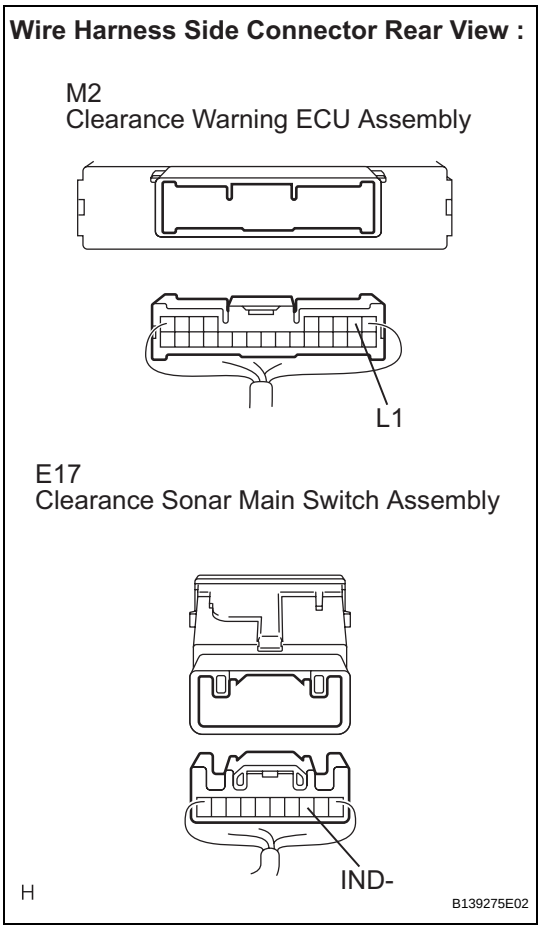

(a) Disconnect the M2 ECU connector.
(b) Measure the resistance according to the value(s) in the table below.

Standard resistance

Tester Connection	Condition	Specified Condition
M2-2 (L1) - E17-3 (IND-)	Always	Below 1 Ω
M2-2 (L1) - Body ground		10 kΩ or higher

NG → **REPAIR OR REPLACE HARNESS OR CONNECTOR**

OK

PROCEED TO NEXT CIRCUIT INSPECTION SHOWN IN PROBLEM SYMPTOMS TABLE

PM

Clearance Warning Buzzer Circuit

DESCRIPTION

The clearance warning buzzer sounds using by pulse signals sent from the clearance warning ECU assembly. The buzzer sounds to alert the driver and the buzzer frequency changes depending on the distance to an obstacle.

WIRING DIAGRAM

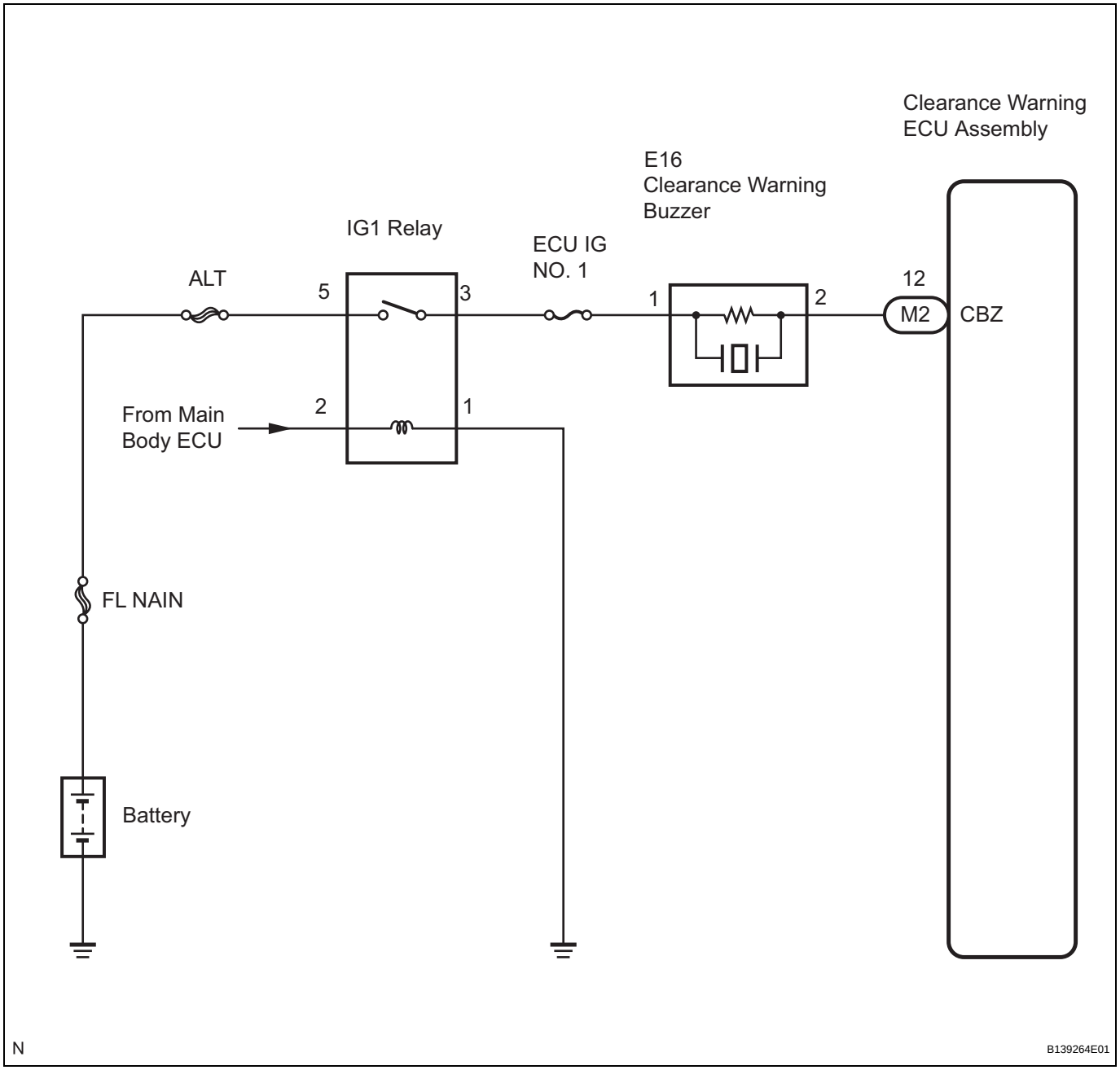

INSPECTION PROCEDURE

1 PERFORM ACTIVE TEST BY INTELLIGENT TESTER

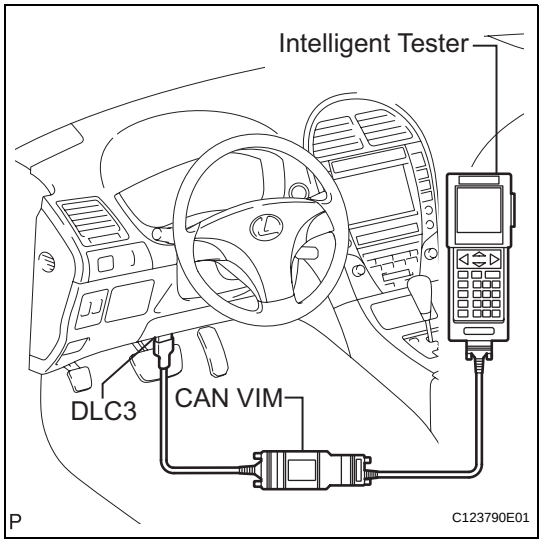

(a) Connect the intelligent tester to the DLC3.
(b) Turn the engine switch on (IG).
(c) Turn the intelligent tester main switch on.
(d) Turn the clearance sonar main switch on.
(e) Select the Active Test, use the intelligent tester to generate a control command, and then check that the buzzer operates.

Clearance warning ECU:

Tester Display	Test Part	Control Range	Diagnostic Note
REAR BUZZER	Rear buzzer (Clearance warning buzzer)	STOP or OPERATE	-

PM

OK:
Clearance warning buzzer sounds.

OK → **PROCEED TO NEXT CIRCUIT INSPECTION SHOWN IN PROBLEM SYMPTOMS TABLE**

NG

2 INSPECT CLEARANCE WARNING BUZZER

Clearance Warning Buzzer:

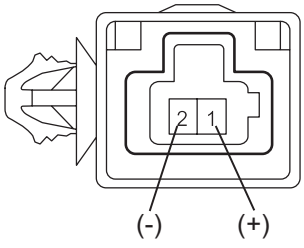

(a) Remove the clearance warning buzzer (See page PM-95).
(b) Apply battery voltage and check operation of the warning buzzer, as shown in the table below.
OK

Measurement Condition	Specified Condition
Battery positive (+) → Terminal 1 **Battery negative (-) → Terminal 2**	**Operating sound occurs**

HINT:
The clearance warning buzzer does not sound when battery voltage is not applied because the buzzer is a separately-excited type.

NG → **REPLACE CLEARANCE WARNING BUZZER (See page PM-95)**

OK

3	CHECK HARNESS AND CONNECTOR (CLEARANCE WARNING BUZZER - BATTERY)

Wire Harness Side Connector Rear View:

E16
Clearance Warning Buzzer

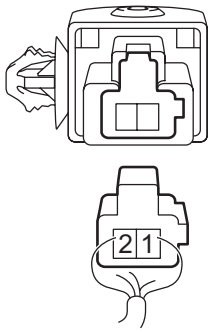

H B139280E01

(a) Measure the voltage according to the value(s) in the table below.

Standard voltage

Tester Connection	Condition	Specified Condition
E16-1 - Body ground	Engine switch on (IG)	10 to 14 V

NG → **REPAIR OR REPLACE HARNESS OR CONNECTOR**

OK

4	CHECK HARNESS AND CONNECTOR (CLEARANCE WARNING ECU - CLEARANCE WARNING BUZZER)

PM

Wire Harness Side Connector Rear View:

M2
Clearance Warning ECU Assembly

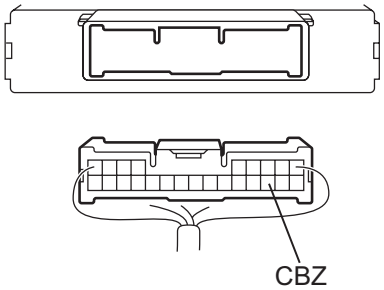

E16
Clearance Warning Buzzer

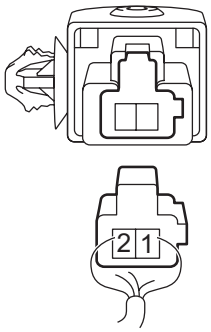

H B139279E04

(a) Disconnect the M2 ECU connector.
(b) Measure the resistance according to the value(s) in the table below.

Standard resistance

Tester Connection	Condition	Specified Condition
M2-12 (CBZ) - E16-2	Always	Below 1 Ω
M2-12 (CBZ) - Body ground		10 kΩ or higher

NG → **REPAIR OR REPLACE HARNESS OR CONNECTOR**

OK

PROCEED TO NEXT CIRCUIT INSPECTION SHOWN IN PROBLEM SYMPTOMS TABLE

Clearance Warning ECU Power Source Circuit

DESCRIPTION

This circuit provides power to operate the clearance warning ECU.

WIRING DIAGRAM

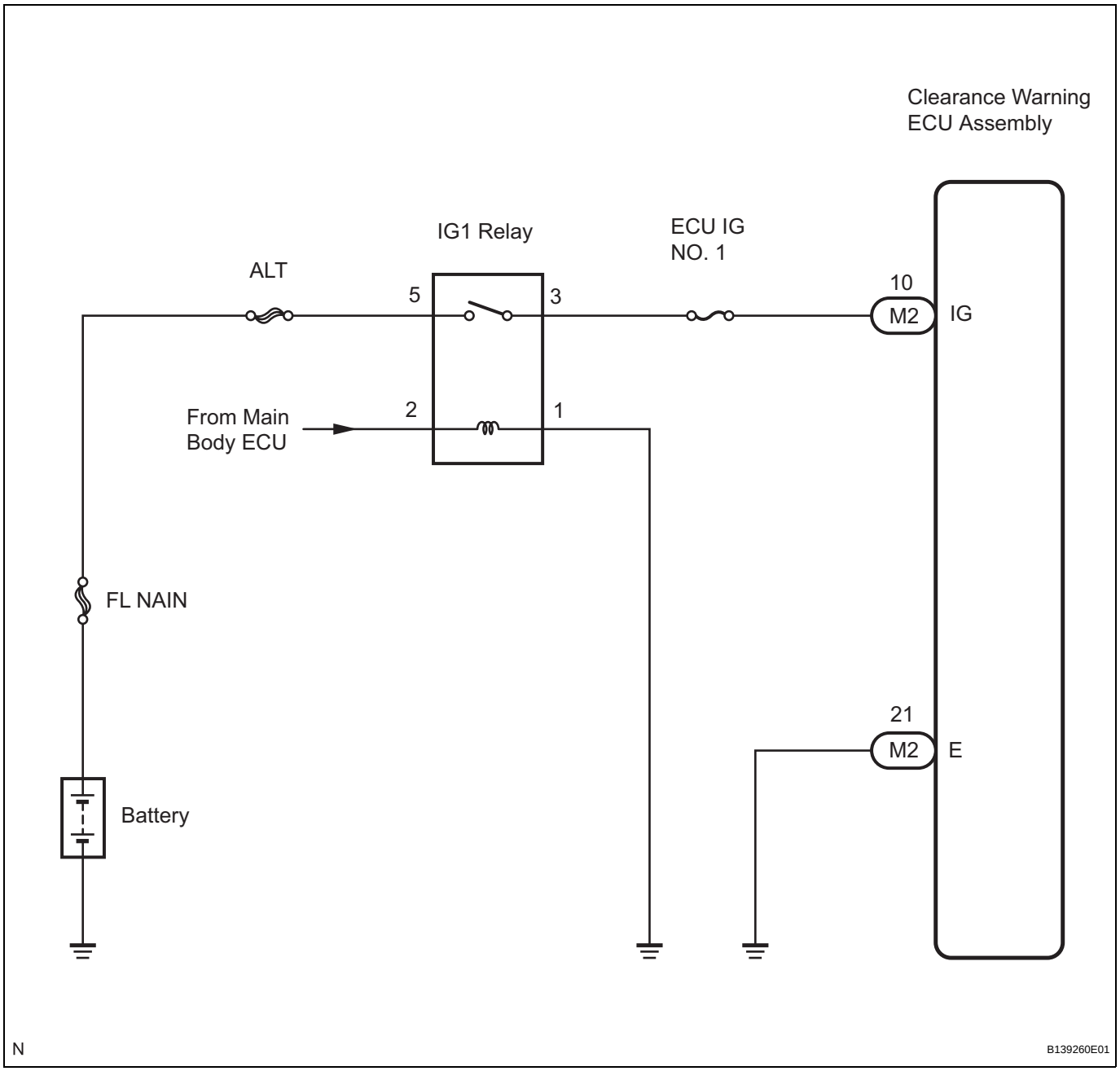

INSPECTION PROCEDURE

1	INSPECT FUSE (ECU IG NO. 1)

(a) Remove the ECU IG No. 1 fuse from the instrument panel junction block.
(b) Measure the resistance of the ECU IG No. 1 fuse.

PM

Standard resistance:
Below 1 Ω

NG → **REPLACE FUSE (ECU IG NO. 1)**

OK

2 CHECK HARNESS AND CONNECTOR (CLEARANCE WARNING ECU - BATTERY)

Wire Harness Side Connector Rear View:

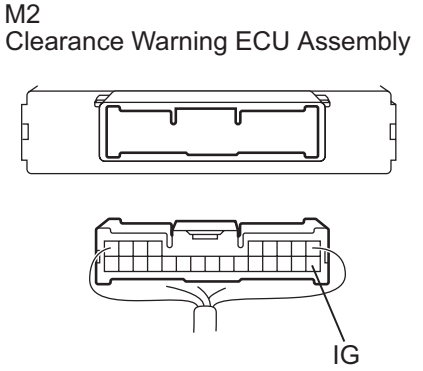

(a) Disconnect the M2 ECU connector.
(b) Measure the voltage according to the value(s) in the table below.
Standard voltage

Tester Connection	Condition	Specified Condition
M2-10 (IG) - Body ground	Engine switch on (IG)	10 to 14 V

NG → **REPAIR OR REPLACE HARNESS OR CONNECTOR**

PM

OK

3 CHECK HARNESS AND CONNECTOR (CLEARANCE WARNING ECU - BODY GROUND)

Wire Harness Side Connector Rear View:

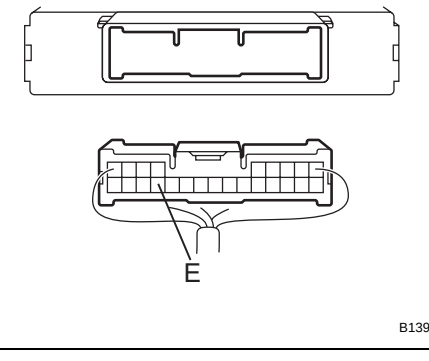

(a) Measure the resistance according to the value(s) in the table below.
Standard resistance

Tester Connection	Condition	Specified Condition
M2-21 (E) - Body ground	Always	Below 1 Ω

NG → **REPAIR OR REPLACE HARNESS OR CONNECTOR**

OK

PROCEED TO NEXT CIRCUIT INSPECTION SHOWN IN PROBLEM SYMPTOMS TABLE

HOW TO PROCEED WITH TROUBLESHOOTING

HINT:
- Use these procedures to troubleshoot the clearance sonar system.
- *: Use the intelligent tester.

1 VEHICLE BROUGHT TO WORKSHOP

NEXT

2 CUSTOMER PROBLEM ANALYSIS

(a) Refer to HOW TO PROCEED WITH TROUBLESHOOTING (See page IN-39).

NEXT

3 CHECK AND CLEAR DTC*

(a) Refer to the DTC check/clear (See page PM-28).

PM

NEXT

4 CHECK INITIAL CHECK FUNCTION

(a) Refer to the operation check (See page PM-11).

Result

Result	Proceed to
Symptom does not occur	A
Symptom occurs	B

B → **Go to step 6**

A

5 SYMPTOM SIMULATION

(a) Refer to HOW TO PROCEED WITH TROUBLESHOOTING (See page IN-39).

NEXT

6 CHECK CAN COMMUNICATION SYSTEM*

(a) Refer to HOW TO PROCEED WITH TROUBLESHOOTING (See page CA-11).

HINT:
The clearance warning ECU is connected to the CAN communication system. Therefore, be sure to check that there are no problems in the CAN communication system before performing troubleshooting.

NEXT

7	DTC CHECK*

(a) Refer to the DTC check/clear (See page PM-28).

Result

Result	Proceed to
DTC is output	A
DTC is not output	B

B → Go to step 9

A

8	DTC CHART

(a) Refer to the diagnostic trouble code chart (See page PM-31).

NEXT

Go to step 10

9	PROBLEM SYMPTOMS TABLE

(a) Refer to the problem symptoms table (See page PM-25).

NEXT

10	CIRCUIT INSPECTION

NEXT

11	IDENTIFICATION OF PROBLEM

NEXT

12	REPAIR OR REPLACE

NEXT

13	CONFIRMATION TEST

NEXT

END

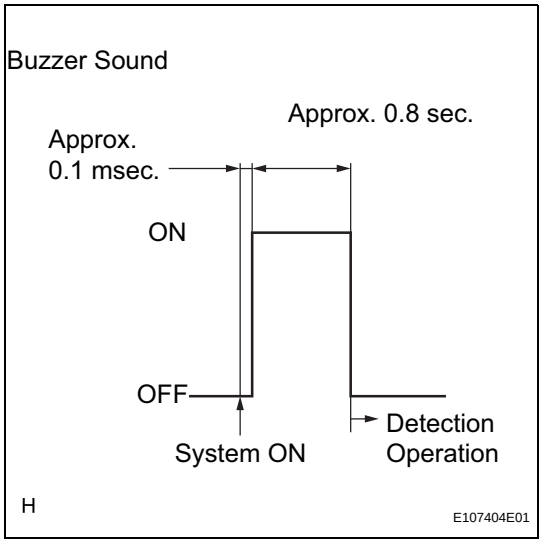

OPERATION CHECK

1. SELF-CHECK FUNCTION INSPECTION

(a) Turn the engine switch on (IG).

(b) When the intuitive parking assist system is turned on, check that the following occurs: 1) after 0.1 milliseconds, the buzzer sounds for approximately 0.8 seconds, and 2) the system starts the obstacle detection operation.

HINT:

- If a sensor has an open circuit or a sensor's detection operation malfunctions because it is wet or frozen, a malfunction display is shown on the multi-information display or multi-display, and the buzzer sounds.
- When the sensor condition returns to normal, the system ends normal clearance sonar mode.
- If the clearance sonar main switch is on and the engine switch is turned on (IG), the buzzer does not sound.

2. MALFUNCTION DISPLAY (MULTI-INFORMATION DISPLAY)

(a) Ultrasonic sensor open circuit

(1) If there is an open circuit between the ultrasonic sensor and the clearance warning ECU or if a sensor is malfunctioning, the malfunction is displayed as shown in the illustration.

Example (Front Left Sensor Disconnection):

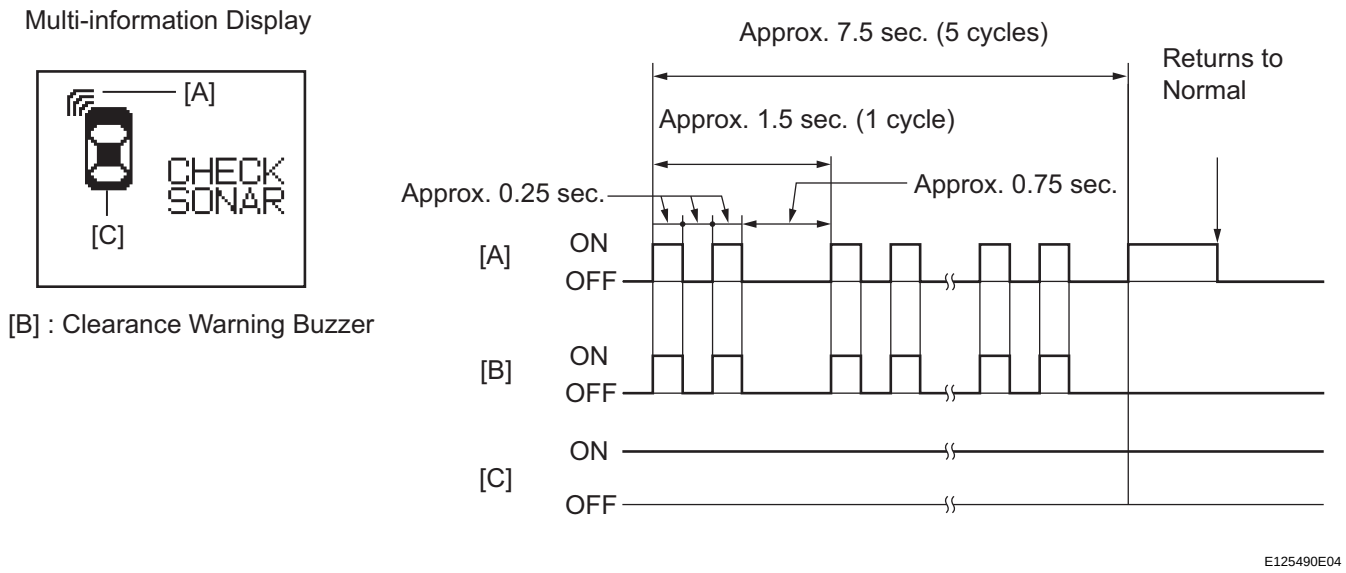

HINT:

- The example shows an open circuit in the ultrasonic sensor (front left sensor).
- If a sensor has an open circuit, refer to "Open circuit is displayed as a result of self-check" in the Problem Symptoms Table to inspect it.

PM

(b) Ultrasonic sensor frozen

(1) If a sensor is covered with foreign matter, such as mud or snow, the affected sensor is displayed as shown in the illustration.

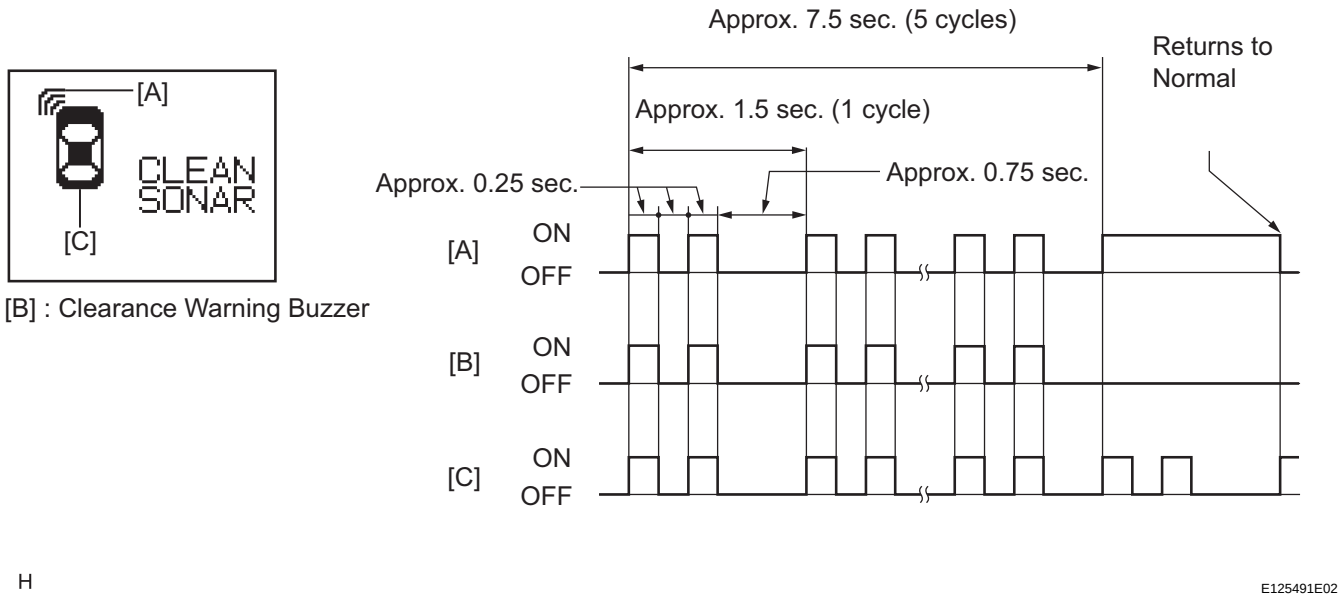

HINT:

- The example shows that the ultrasonic sensor (front left sensor) is covered with foreign matter.
- If "CLEAN SONAR" is displayed, cleaning the foreign matter from the sensor will return the sensor to normal.

3. MALFUNCTION DISPLAY (MULTI-DISPLAY)

(a) Ultrasonic sensor open circuit

(1) If there is an open circuit between the ultrasonic sensor and the clearance warning ECU or if a sensor is malfunctioning, the malfunction is displayed as shown in the illustration.

Ultrasonic Sensor Open Circuit:

Multi-display

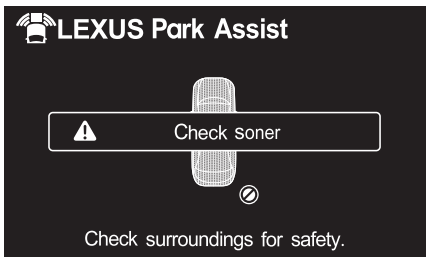

*Multi-display (Shift Lever Position R)

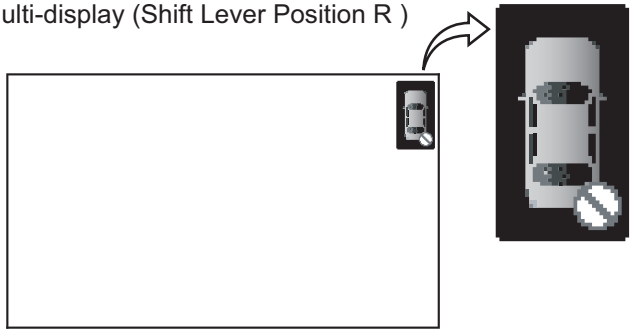

*: with Rear View Monitor System

E123663E03

HINT:

- This example shows an open circuit in the ultrasonic sensor (rear right sensor).
- If a sensor has an open circuit, refer to "Open circuit is displayed as a result of self-check" in the Problem Symptoms Table to inspect it.

(b) Ultrasonic sensor frozen

(1) If a sensor is covered with foreign matter, such as mud or snow, the affected sensor is displayed as shown in the illustration.

Ultrasonic Sensor Frozen:

Multi-display

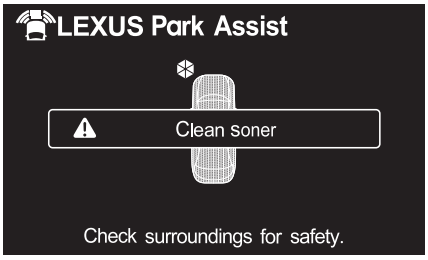

*Multi-display (Shift Lever Position R)

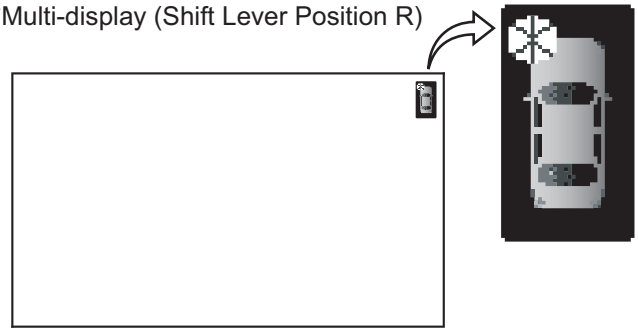

*: with Rear View Monitor System

E123664E02

HINT:

- The example shows that the ultrasonic sensor (front left sensor) is covered with foreign matter.

PM

- If "CLEAN SONAR" is displayed, cleaning the foreign matter from the sensor will return the sensor to normal.

4. DETECTION RANGE MEASUREMENT AND DISPLAY INSPECTION

(a) Detection range measurement

NOTICE:

Make sure the vehicle does not move by applying the parking brake firmly.

(1) Turn the engine switch on (IG).

(2) Move the shift lever to the reverse position to check the ultrasonic sensors (rear sensors).

(b) Turn the clearance sonar main switch on.

(c) Move a ϕ 60 mm (2.36 in.) pole near each sensor to measure its detection range.

(1) Measure the clearance sonar's detection range.

Clearance Sonar:

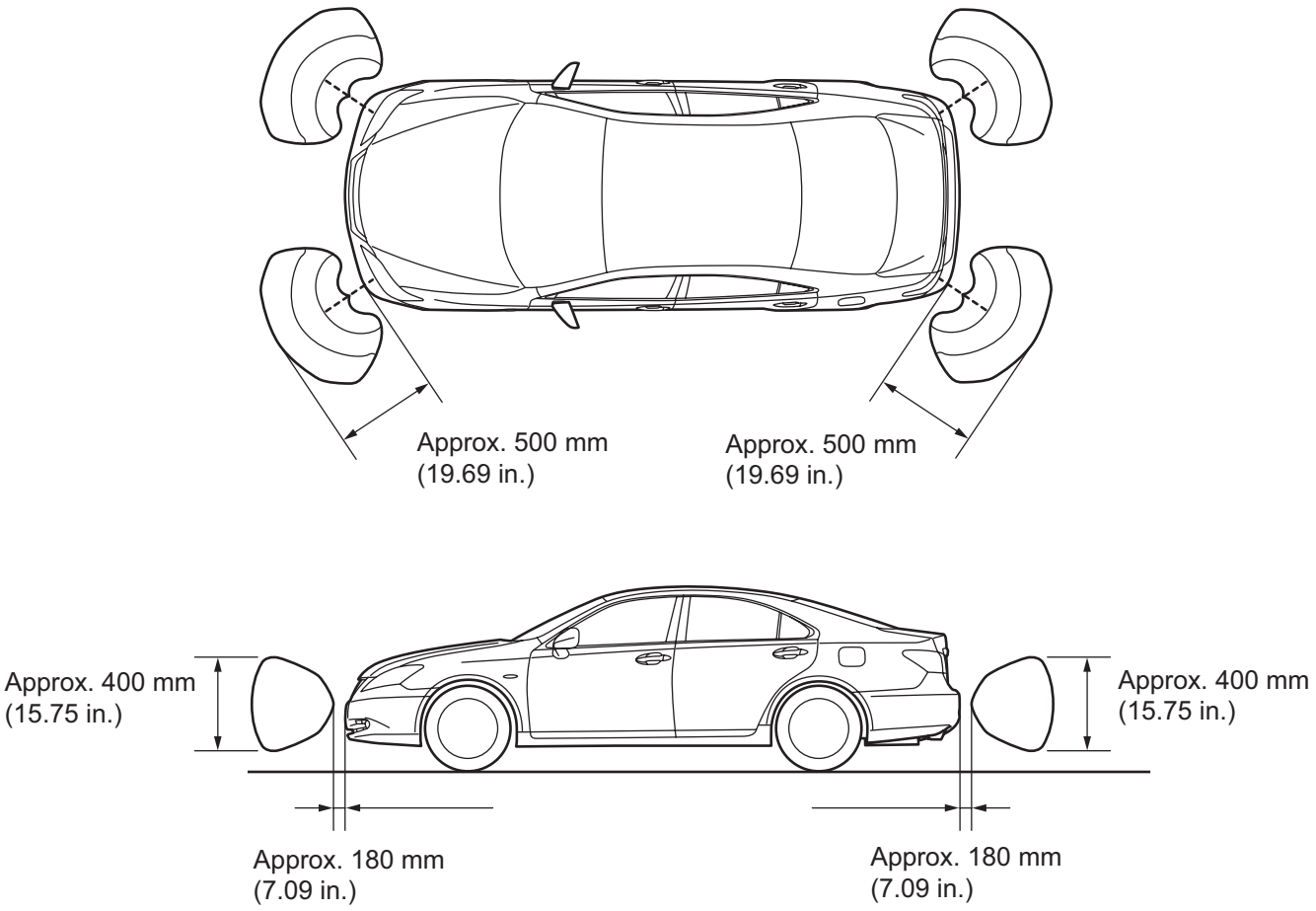

H

B139267E03

NOTICE:
These detection ranges are applicable when positioning the ϕ 60 mm (2.36 in.) pole parallel or perpendicular to the ground. The ranges vary depending on the measuring method and type of obstacle (such as walls).

(2) Measure the back sonar's detection range.

Back Sonar:

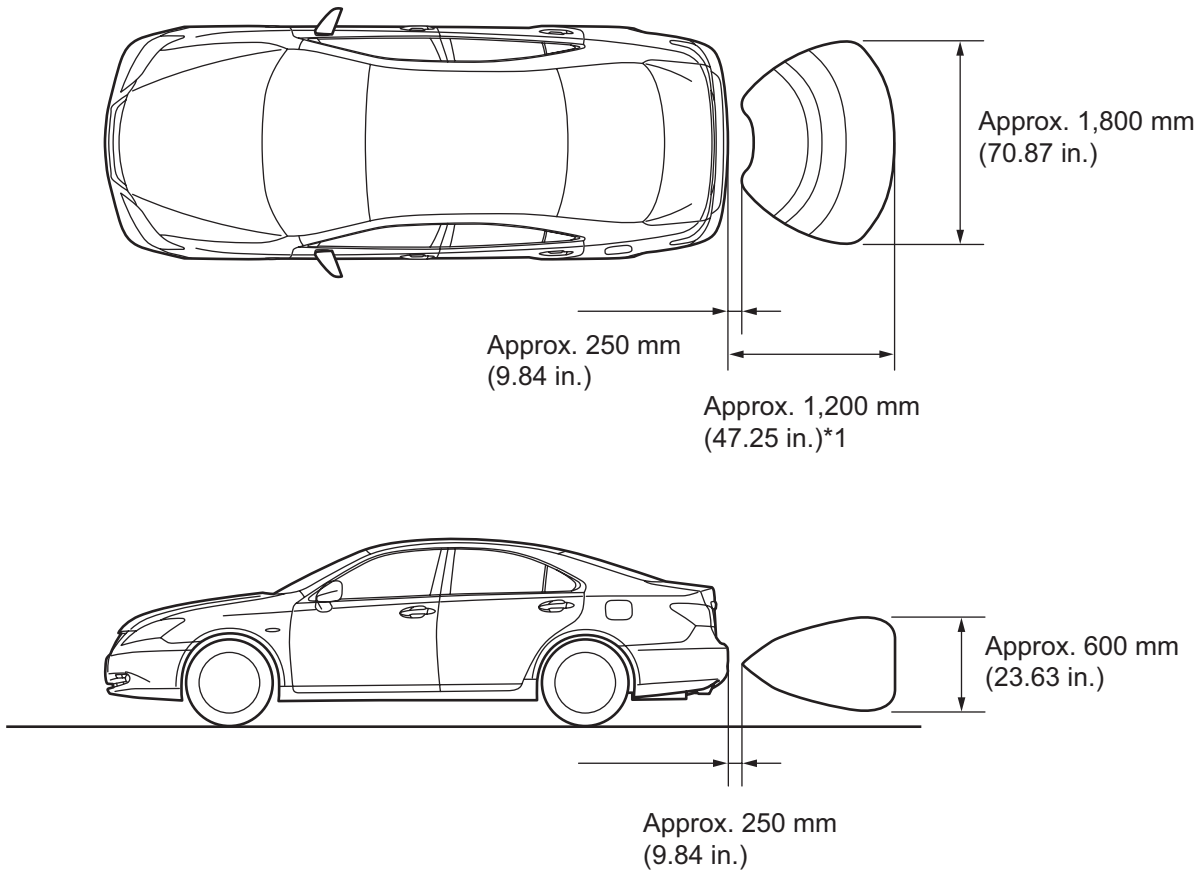

H

B139268E01

NOTICE:

- **These detection ranges are applicable when positioning the ϕ 60 mm (2.36 in.) pole parallel or perpendicular to the ground. The ranges vary depending on the measuring method and type of obstacle (such as walls).**

PM

- ***1: A pole with a diameter of approximately 60 mm (2.36 in.) can be detected within this detection area. If there is a cylinder-shaped object with a diameter of approximately 400 mm (15.74 in.), the detection area expands to approximately 1,500 mm (59.05 in.).**

(d) When the ultrasonic sensors (front clearance sonar) have detected an obstacle, check the display and buzzer sound.

Operation condition:

Engine Switch	Clearance Sonar Main Switch	Shift Lever Position	Vehicle Speed
ON (IG)	ON	In any position except P	10 km/h (6 mph) or less

(1) Check the buzzer sound according to the waveform shown in the illustration.

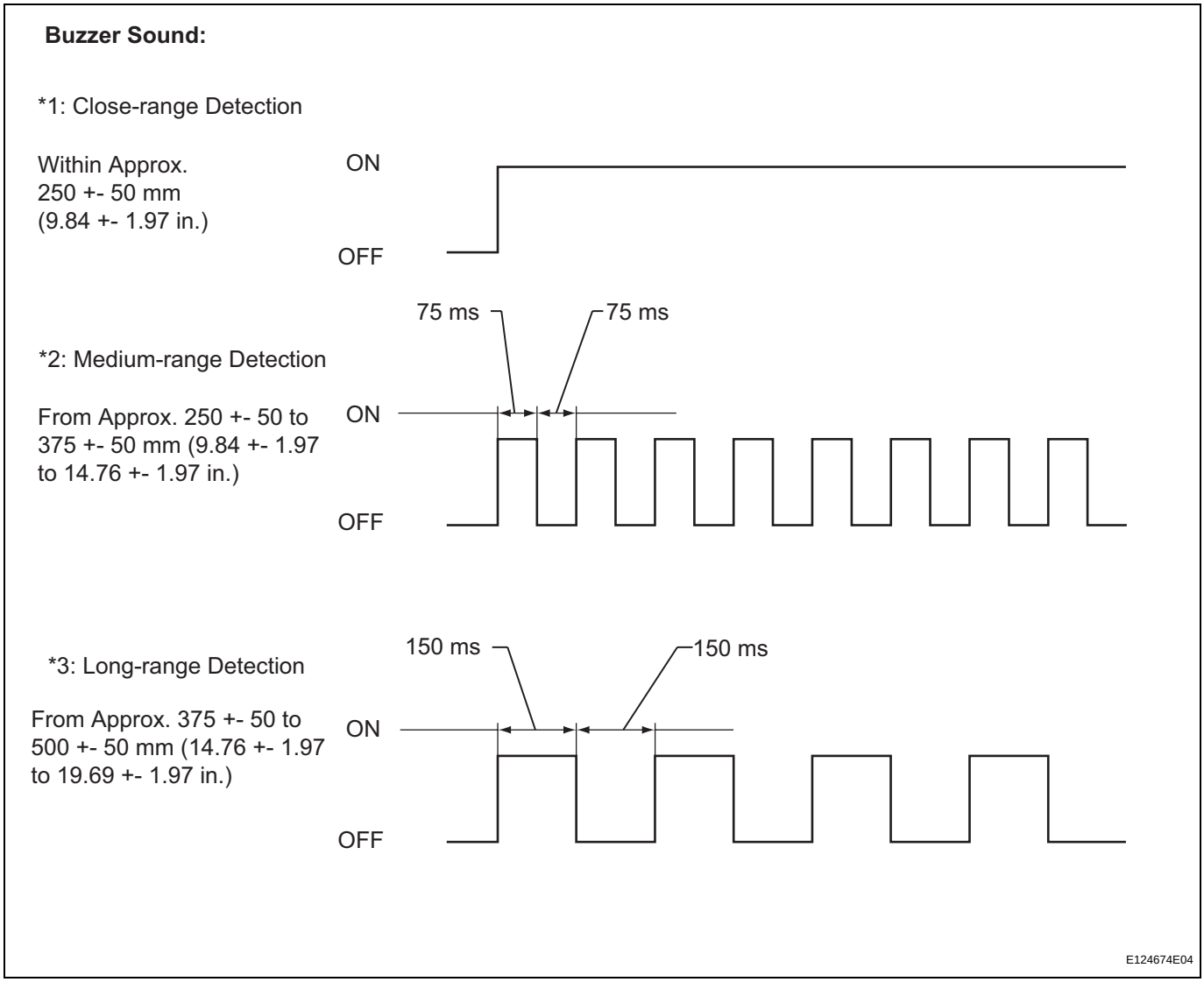

Multi-information display (shift lever position R)

Detection Range	During Detection
*1 Close-range detection Within approx. 250 +- 50 mm (9.84 +- 1.97 in.)	Buzzer: Sounds continuously Number of bars displayed: 1 (Blinking)

PM

Detection Range	During Detection
*2 Medium-range detection From approx. 250 +- 50 to 375 +- 50 mm (9.84 +- 1.97 to 14.76 +- 1.97 in.)	Buzzer: Sounds intermittently (ON: 75 ms / OFF: 75 ms) Number of bars displayed: 2 (illuminated)
*3 Long-range detection From approx. 375 +- 50 to 500 +- 50 mm (14.76 +- 1.97 to 19.69 +- 1.97 in.)	Buzzer: Sounds intermittently (ON: 150 ms / OFF: 150 ms) Number of bars displayed: 3 (illuminated)

Multi-display (shift lever position not in P)

Detection Range	During Detection
*1 Close-range detection Within approx. 250 +- 50 mm (9.84 +- 1.97 in.)	Buzzer: Sounds continuously Number of bars displayed: 1 (red illumination)
*2 Medium-range detection From approx. 250 +- 50 to 375 +- 50 mm (9.84 +- 1.97 to 14.76 +- 1.97 in.)	Buzzer: Sounds intermittently (ON: 75 ms / OFF: 75 ms) Number of bars displayed: 2 (yellow illumination)
*3 Long-range detection From approx. 375 +- 50 to 500 +- 50 mm (14.76 +- 1.97 to 19.69 +- 1.97 in.)	Buzzer: Sounds intermittently (ON: 150 ms / OFF: 150 ms) Number of bars displayed: 3 (yellow illumination)

with Rear view monitor (shift lever position R)

Detection Range	During Detection
*1 Close-range detection Within approx. 250 +- 50 mm (9.84 +- 1.97 in.)	Buzzer: Sounds continuously *4: Illumination (red)
*2 Medium-range detection From approx. 250 +- 50 to 375 +- 50 mm (9.84 +- 1.97 to 14.76 +- 1.97 in.)	Buzzer: Sounds intermittently (ON: 75 ms. / OFF: 75 ms) *4: Blinking (yellow)
*3 Long-range detection From approx. 375 +- 50 to 500 +- 50 mm (14.76 +- 1.97 to 19.69 +- 1.97 in.)	Buzzer: Sounds intermittently (ON: 150 ms / OFF: 150 ms) *4: Blinking (yellow)

HINT:

- Ultrasonic waves are used to measure the detection range; however, the detection range may vary depending on the ambient temperature.
- Refer to the illustration of the display below.

(2) Check the display according to the illustration below while the buzzer is sounding.

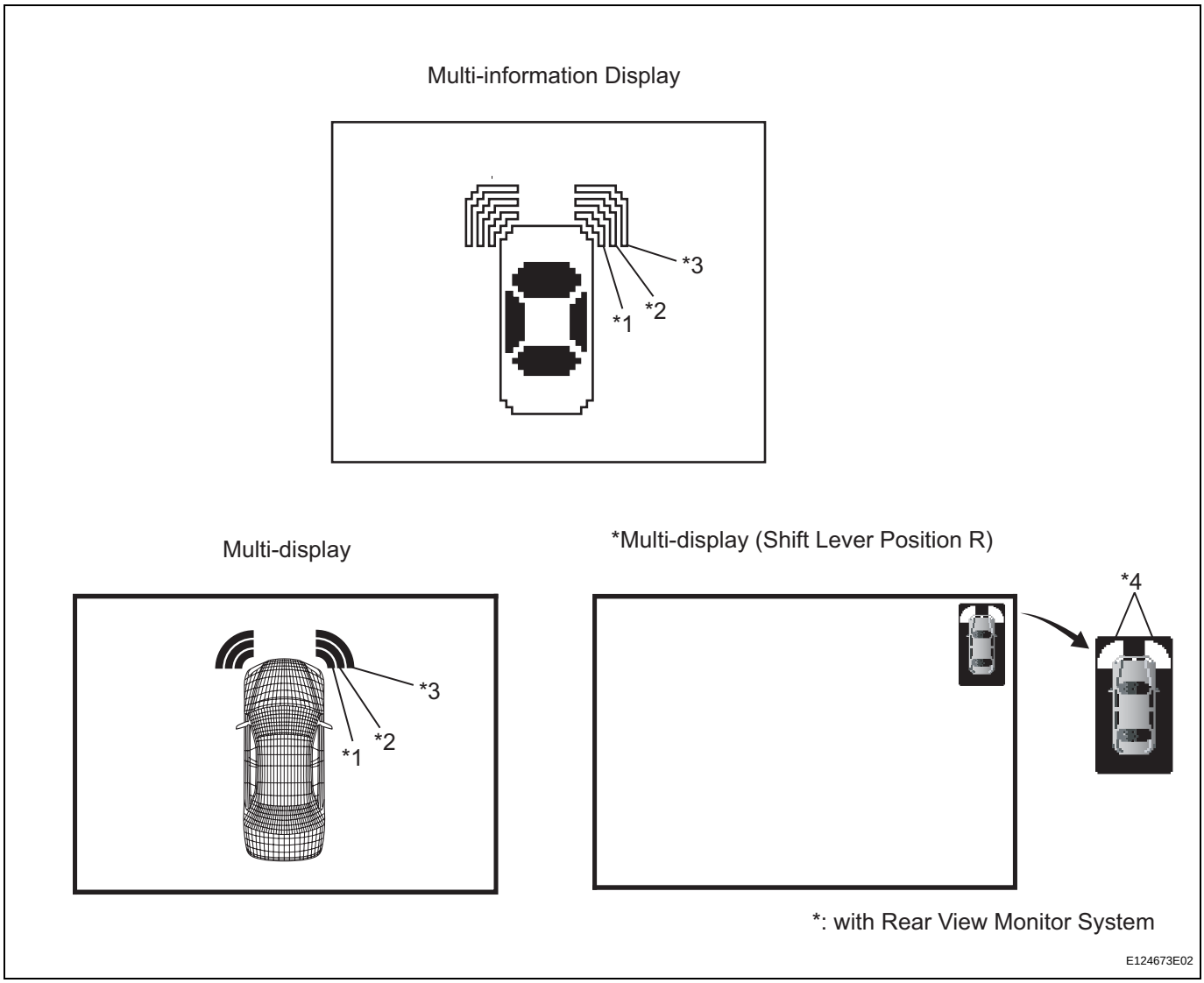

(e) When the ultrasonic sensors (back sonar) have detected an obstacle, check the display and buzzer sound.

Operation condition:

Engine Switch	Clearance Sonar Main Switch	Shift Lever Position
ON (IG)	ON	Reverse Position

(1) Check the buzzer sound according to the waveform shown in the illustration.

Buzzer Sound:

*1: Close-range Detection

Within Approx. 350 +- 50 mm (13.78 +- 1.97 in.)

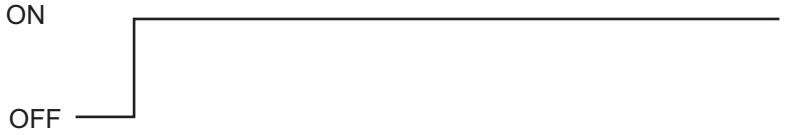

*2: Medium-range Detection

From Approx. 350 +- 50 to 450 +- 50 mm (13.78 +- 1.97 to 17.72 +- 1.97 in.)

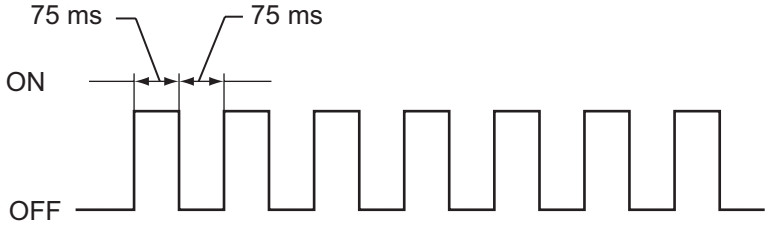

*3: Long-range Detection

From Approx. 450 +- 50 to 600 +- 60 mm (17.72 +- 1.97 to 23.62 +- 2.36 in.)

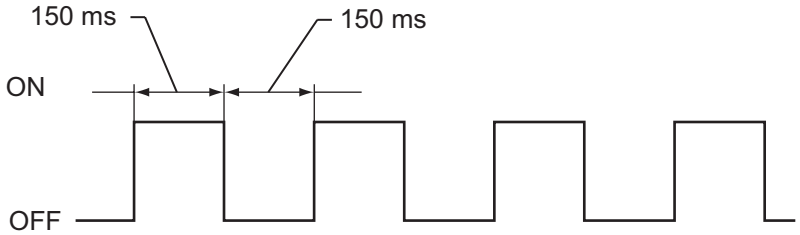

*4: Maximum Long-range Detection

From Approx. 600 +- 60 to 1,500 +- 150 mm (23.62 +- 2.36 to 59.06 +- 5.91 in.)

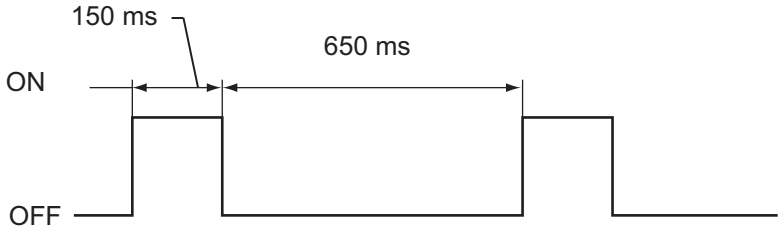

E124676E04

PM

Multi-information display (shift lever position R)

Detection Range	During Detection
*1 Close-range detection Within approx. 350 +- 50 mm (13.78 +- 1.97 in.)	Buzzer: Sounds continuously Number of bars displayed: 1 (blinking)
*2 Medium-range detection From approx. 350 +- 50 to 450 +- 50 mm (13.78 +- 1.97 to 17.72 +- 1.97 in.)	Buzzer: Sounds intermittently (ON: 75 ms / OFF: 75 ms) Number of bars displayed: 2 (illuminated)
*3 Long-range detection From approx. 450 +- 50 to 600 +- 60 mm (17.72 +- 1.97 to 23.62 +- 2.36 in.)	Buzzer: Sounds intermittently (ON: 150 ms / OFF: 150 ms) Number of bars displayed: 3 (illuminated)

Detection Range	During Detection
*4 Maximum long-range detection From approx. 600 +- 60 to 1,500 +-150 mm (23.62 +- 2.36 to 59.06 +- 5.91 in.)	Buzzer: Sounds intermittently (ON: 150 ms / OFF: 650 ms) Number of bars displayed: 4 (illuminated)

Multi-display (shift lever position R)

Detection Range	During Detection
*1 Close-range detection Within approx. 350 +- 50 mm (13.78 +- 1.97 in.)	Buzzer: Sounds continuously Number of bars displayed: 1 (red illumination)
*2 Medium-range detection From approx. 350 +- 50 to 450 +- 50 mm (13.78 +- 1.97 to 17.72 +- 1.97 in.)	Buzzer: Sounds intermittently (ON: 75 ms / OFF: 75 ms) Number of bars displayed: 2 (yellow illumination)
*3 Long-range detection From approx. 450 +- 50 to 600 +- 60 mm (17.72 +- 1.97 to 23.62 +- 2.36 in.)	Buzzer: Sounds intermittently (ON: 150 ms / OFF: 150 ms) Number of bars displayed: 3 (yellow illumination)
*4 Maximum long-range detection From approx. 600 +- 60 to 1,500 +-150 mm (23.62 +- 2.36 to 59.06 +- 5.91 in.)	Buzzer: Sounds intermittently (ON: 150 ms / OFF: 650 ms) Number of bars displayed: 4 (yellow illumination)

with Rear view monitor (shift lever position R)

Detection Range	During Detection
*1 Close-range detection Within approx. 350 +- 50 mm (13.78 +- 1.97 in.)	Buzzer: Sounds continuously *5: Illumination (red)
*2 Medium-range detection From approx. 350 +- 50 to 450 +- 50 mm (13.78 +- 1.97 to 17.72 +- 1.97 in.)	Buzzer: Sounds intermittently (ON: 75 ms / OFF: 75 ms) *5: Blinking (yellow)
*3 Long-range detection From approx. 450 +- 50 to 600 +- 50 mm (17.72 +- 1.97 to 23.62 +- 1.97 in.)	Buzzer: Sounds intermittently (ON: 150 ms / OFF: 150 ms) *5: Blinking (yellow)
*4 Maximum long-range detection From approx. 600 +- 50 to 1,500 mm (23.62 +- 1.97 to 59.06 in.)	Buzzer: Sounds intermittently (ON: 150 ms / OFF: 650 ms) *5: Blinking (yellow)

HINT:
- Ultrasonic waves are used to measure the detection range; however, the detection range may vary depending on the ambient temperature.
- Refer to the illustration of the display below.

(2) Check the display according to the illustration below while the buzzer is sounding.

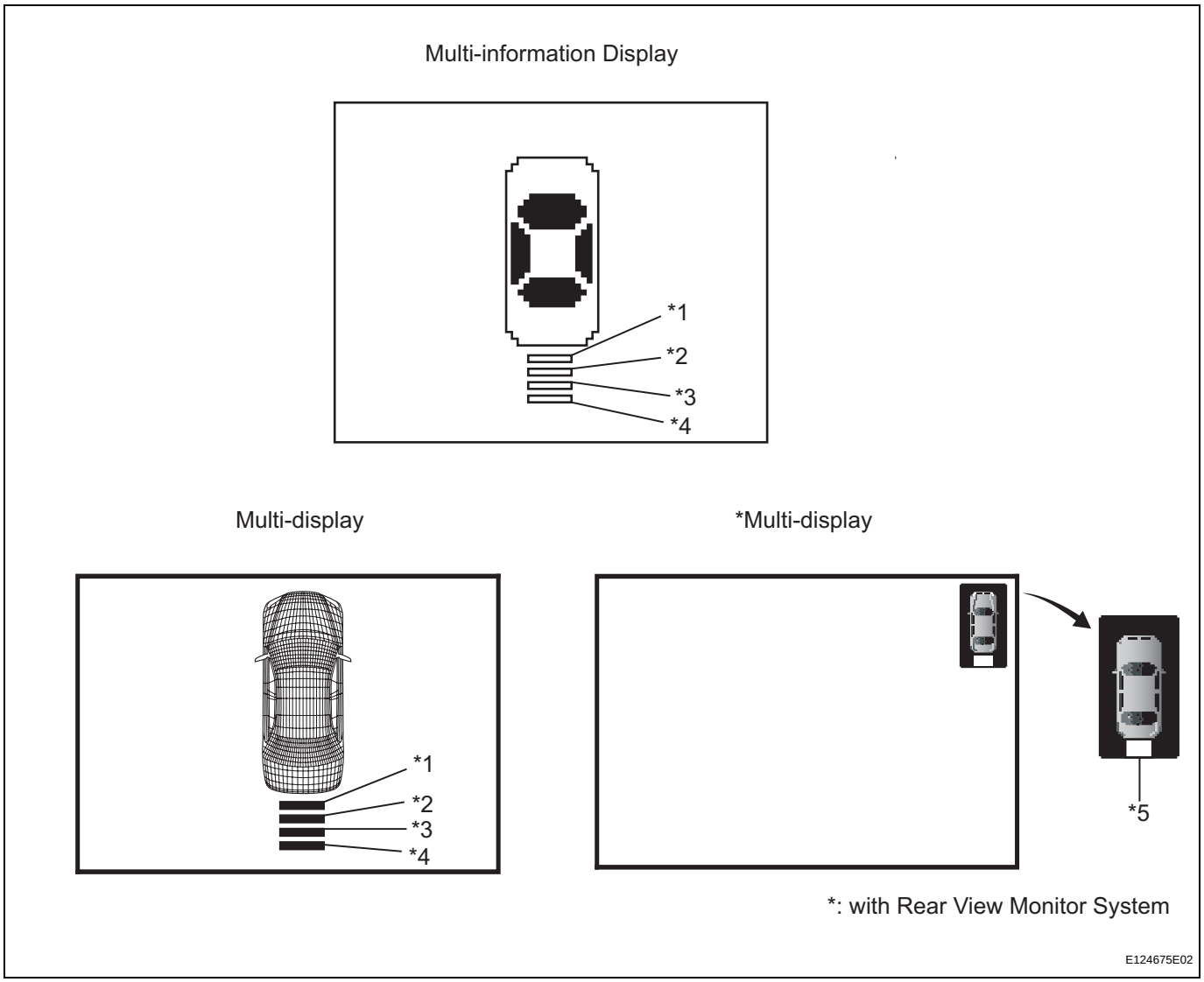

(f) When the ultrasonic sensors (rear clearance sonar) have detected an obstacle, check the display and buzzer sound.

Operation condition:

Engine Switch	Clearance Sonar Main Switch	Shift Lever Position	Vehicle Speed
ON (IG)	ON	Reverse Position	10 km/h (6 mph) or less

PM

(1) Check the buzzer sound according to the waveform shown in the illustration.

Buzzer Sound:

*1: Close-range Detection

Within Approx. 250 +- 50 mm (9.84 +- 1.97 in.)

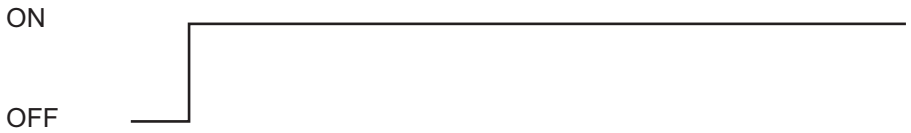

*2: Medium-range Detection

From Approx. 250 +- 50 to 375 +- 50 mm (9.84 +- 1.97 to 14.76 +- 1.97 in.)

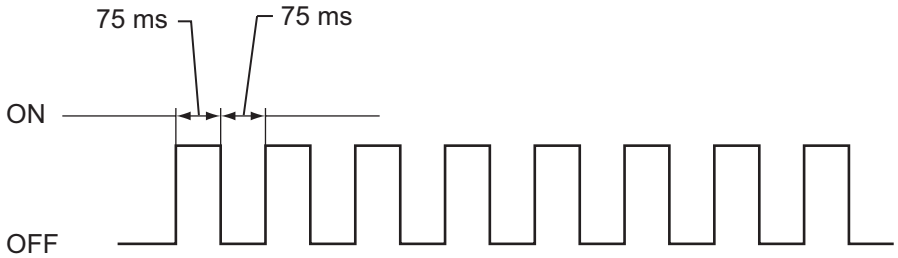

*3: Long-range Detection

From Approx. 375 +- 50 to 500 +- 50 mm (14.76 +- 1.97 to 19.69 +- 1.97 in.)

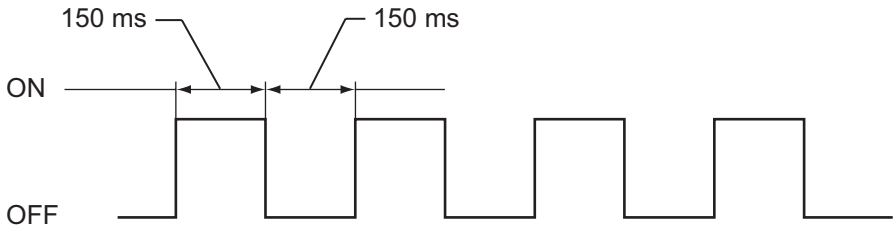

E124678E03

Multi-information display (shift lever position R)

Detection Range	During Detection
*1 Close-range detection Within approx. 250 +- 50 mm (9.84 +- 1.97 in.)	Buzzer: Sounds continuously Number of bars displayed: 1 (blinking)
*2 Medium-range detection From approx. 250 +- 50 to 375 +- 50 mm (9.84 +- 1.97 to 14.76 +- 1.97 in.)	Buzzer: Sounds intermittently (ON: 75 ms / OFF: 75 ms) Number of bars displayed: 2 (illuminated)
*3 Long-range detection From approx. 375 +- 50 to 500 +- 50 mm (14.76 +- 1.97 to 19.69 +- 1.97 in.)	Buzzer: Sounds intermittently (ON: 150 ms / OFF: 150 ms) Number of bars displayed: 3 (illuminated)

Multi-display (shift lever position R)

Detection Range	During Detection
*1 Close-range detection Within approx. 250 +- 50 mm (9.84 +- 1.97 in.)	Buzzer: Sounds continuously Number of bars displayed: 1 (red illumination)

Detection Range	During Detection
*2 Medium-range detection From approx. 250 +- 50 to 375 +- 50 mm (9.84 +- 1.97 to 14.76 +- 1.97 in.)	Buzzer: Sounds intermittently (ON: 75 ms / OFF: 75 ms) Number of bars displayed: 2 (yellow illumination)
*3 Long-range detection From approx. 375 +- 50 to 500 +- 50 mm (14.76 +- 1.97 to 19.69 +- 1.97 in.)	Buzzer: Sounds intermittently (ON: 150 ms / OFF: 150 ms) Number of bars displayed: 3 (yellow illumination)

with Rear view monitor (shift lever position R)

Detection Range	During Detection
*1 Close-range detection Within approx. 250 +- 50 mm (9.84 +- 1.97 in.)	Buzzer: Sounds continuously *4 : Illumination (red)
*2 Medium-range detection From approx. 250 +- 50 to 375 +- 50 mm (9.84 +- 1.97 to 14.76 +- 1.97 in.)	Buzzer: Sounds intermittently (ON: 75 ms / OFF: 75 ms) *4: Blinking (yellow)
*3 Long-range detection From approx. 375 +- 50 to 500 +- 50 mm (14.76 +- 1.97 to 19.69 +- 1.97 in.)	Buzzer: Sounds intermittently (ON: 150 ms / OFF: 150 ms) *4: Blinking (yellow)

HINT:
- Ultrasonic waves are used to measure the detection range; however, the detection range may vary depending on the ambient temperature.
- Refer to the illustration of the display below.

(2) Check the display according to the illustration below while the buzzer is sounding.

Multi-information Display

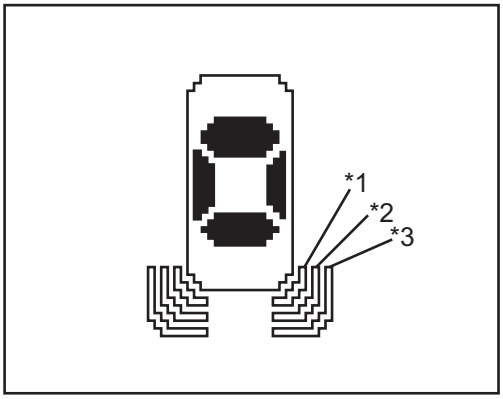

Multi-display

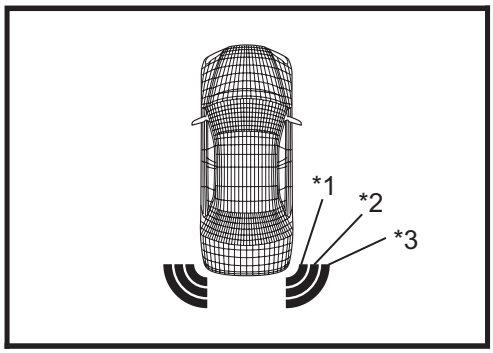

*Multi-display

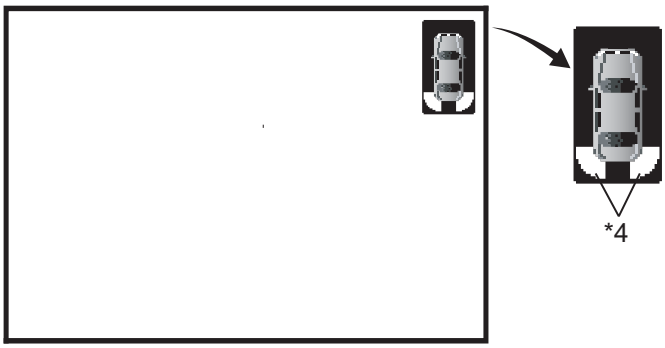

*: with Rear View Monitor System

E124677E02

Reverse Signal Circuit

DESCRIPTION

The multi-display receives a reverse signal from the park/neutral position switch.

WIRING DIAGRAM

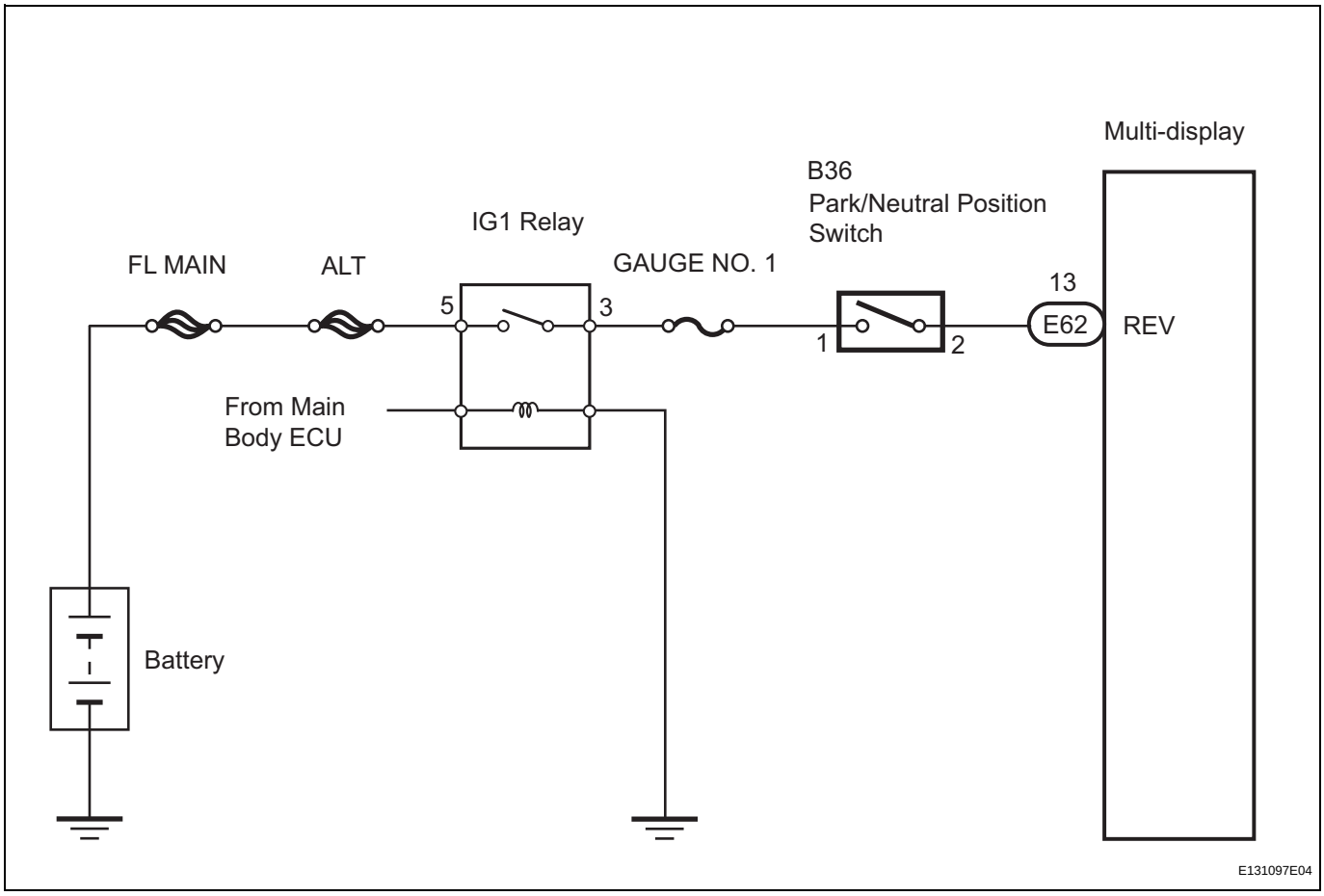

INSPECTION PROCEDURE

1	CHECK BACK-UP LIGHT

(a) Move the shift lever to the R position and check if the back-up light comes on.
OK:
The back-up light comes on.

NG → **GO TO LIGHTING SYSTEM**

OK

2 CHECK VEHICLE SIGNAL (DISPLAY CHECK MODE)

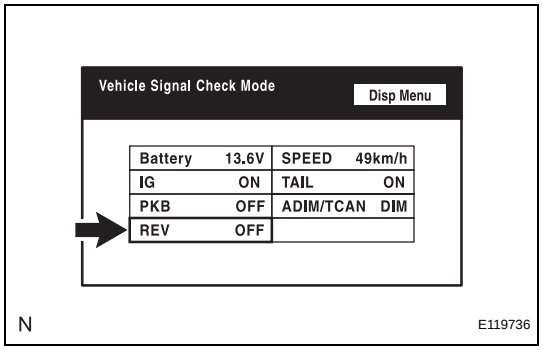

(a) Enter the "Display Check" mode (Vehicle Signal Check Mode) (See page NS-21).

(b) Check that the display changes between ON and OFF according to the shift lever operation (P and R).

OK

Shift Lever Position	Display
R	ON
Except R	OFF

HINT:
This display is updated once per second. As a result, it is normal for the display to lag behind the actual change in the switch.

OK → **PROCEED TO NEXT CIRCUIT INSPECTION SHOWN IN PROBLEM SYMPTOMS TABLE**

NG

3 INSPECT MULTI-DISPLAY

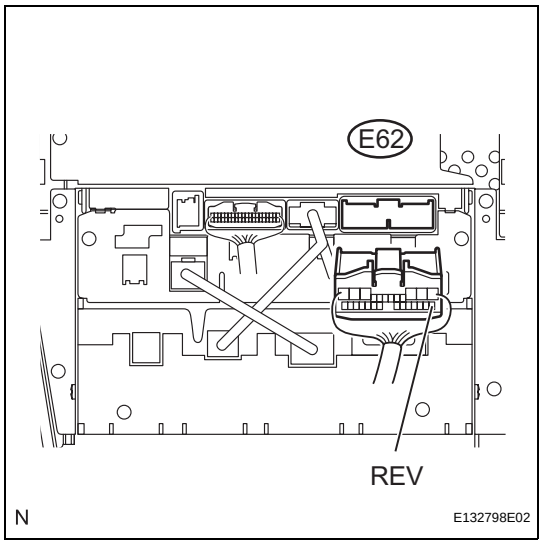

(a) Disconnect the multi-display connector E62.

(b) Measure the voltage according to the value(s) in the table below.

Standard voltage

Tester connection	Condition	Specified condition
REV (E62-13) - Body ground	Engine switch is on (IG). Shift lever is moved to R position.	10 to 14 V
REV (E62-13) - Body ground	Engine switch is on (IG). Shift lever is moved to any position except R.	Below 1 V

OK → **REPLACE MULTI-DISPLAY**

NG

CHECK AND REPLACE HARNESS AND CONNECTOR (MULTI-DISPLAY - PARK/NEUTRAL POSITION SWITCH)

PM

Display Signal Circuit between Multi-display and Television Camera Assembly

DESCRIPTION

This is the display signal circuit of the television camera assembly.

WIRING DIAGRAM

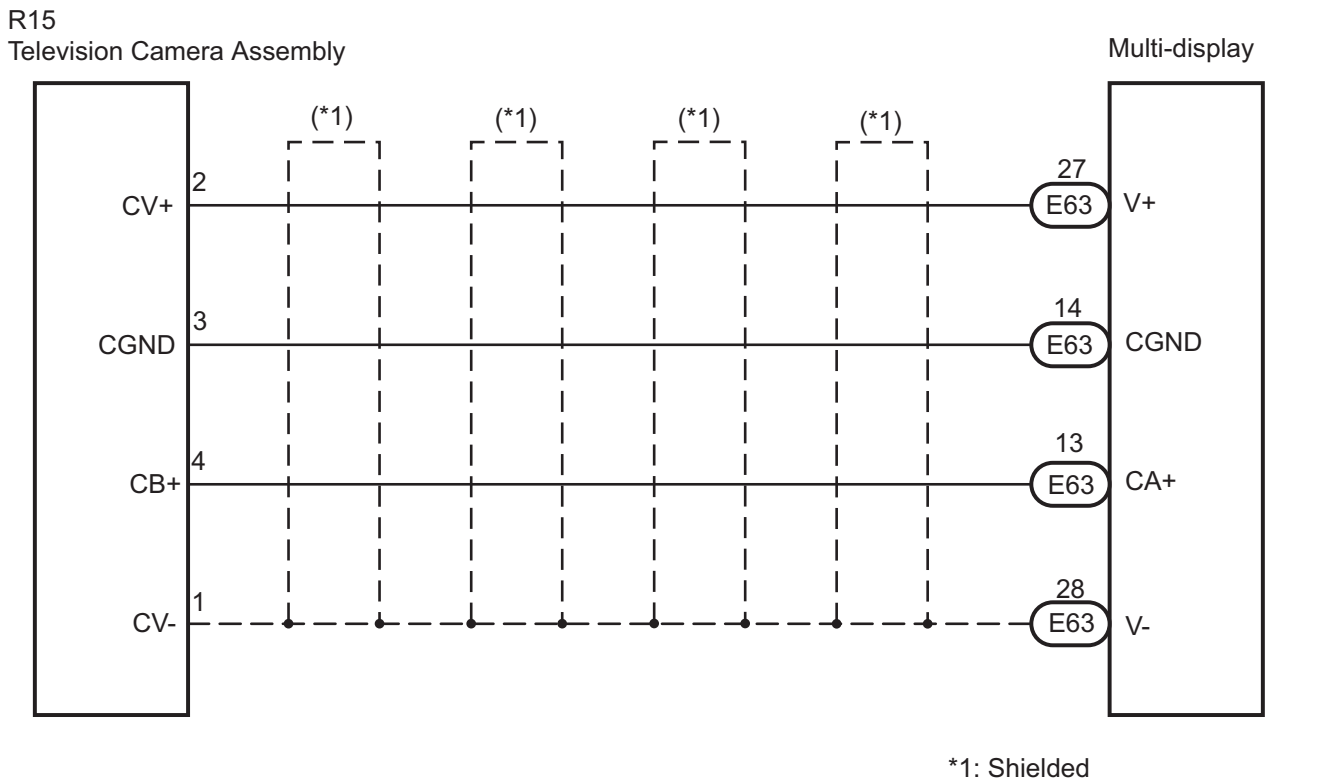

INSPECTION PROCEDURE

1	**CHECK HARNESS AND CONNECTOR (MULTI-DISPLAY - TELEVISION CAMERA ASSEMBLY)**

(a) Disconnect the E63 connector from the multi-display.
(b) Disconnect the R15 connector from the television camera assembly.

PM

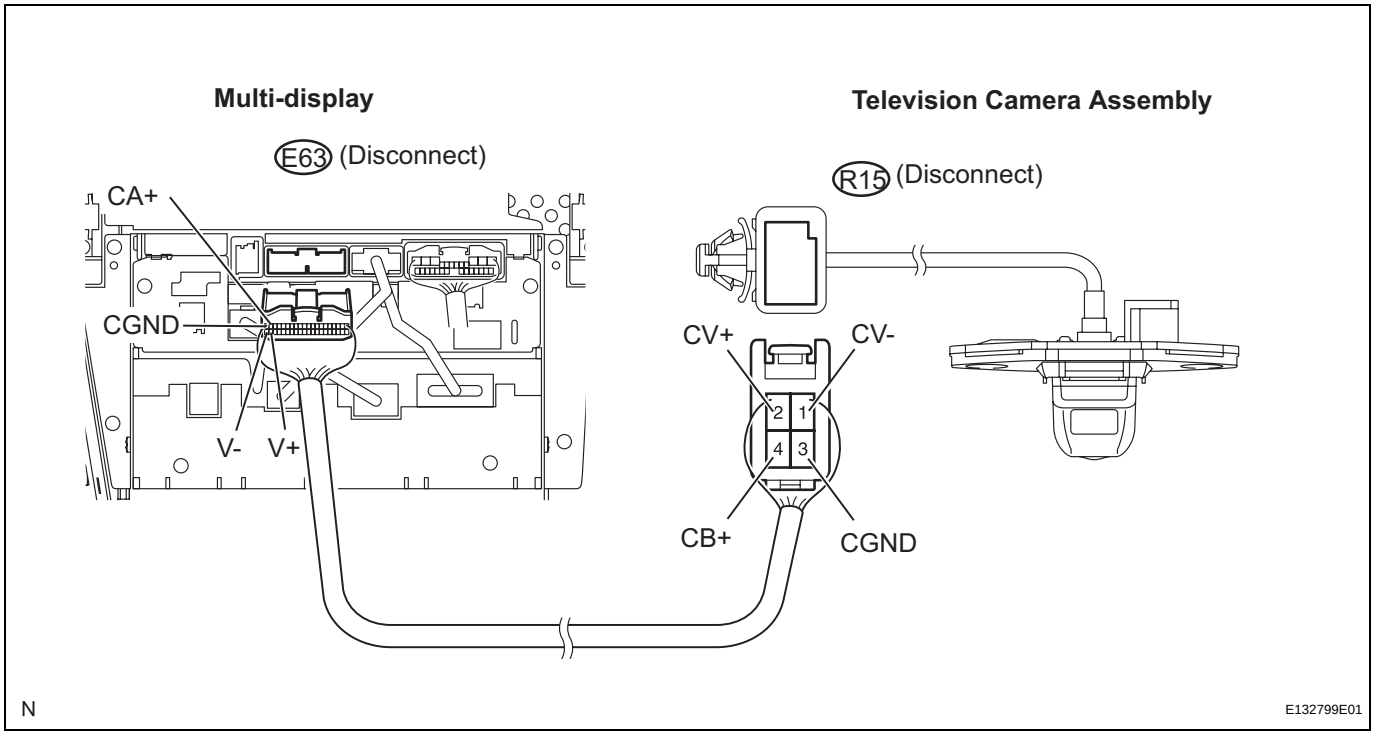

(c) Measure the resistance according to the value(s) in the table below.

Standard resistance

Tester connection (Terminal No.)	Condition	Specified condition
CB+ (R15-4) - CA+ (E63-13)	Always	Below 1 Ω
CGND (R15-3) - CGND (E63-14)	Always	Below 1 Ω
CV+ (R15-2) - V+ (E63-27)	Always	Below 1 Ω
CV- (R15-1) - V- (E63-28)	Always	Below 1 Ω
CB+ (R15-4) - Body ground	Always	10 kΩ or higher
CGND (R15-3) - Body ground	Always	10 kΩ or higher
CV+ (R15-2) - Body ground	Always	10 kΩ or higher
CV- (R15-1) - Body ground	Always	10 kΩ or higher

NG → **REPAIR OR REPLACE HARNESS OR CONNECTOR**

OK

2	INSPECT MULTI-DISPLAY

(a) Reconnect the multi-display E63 connector.

PM

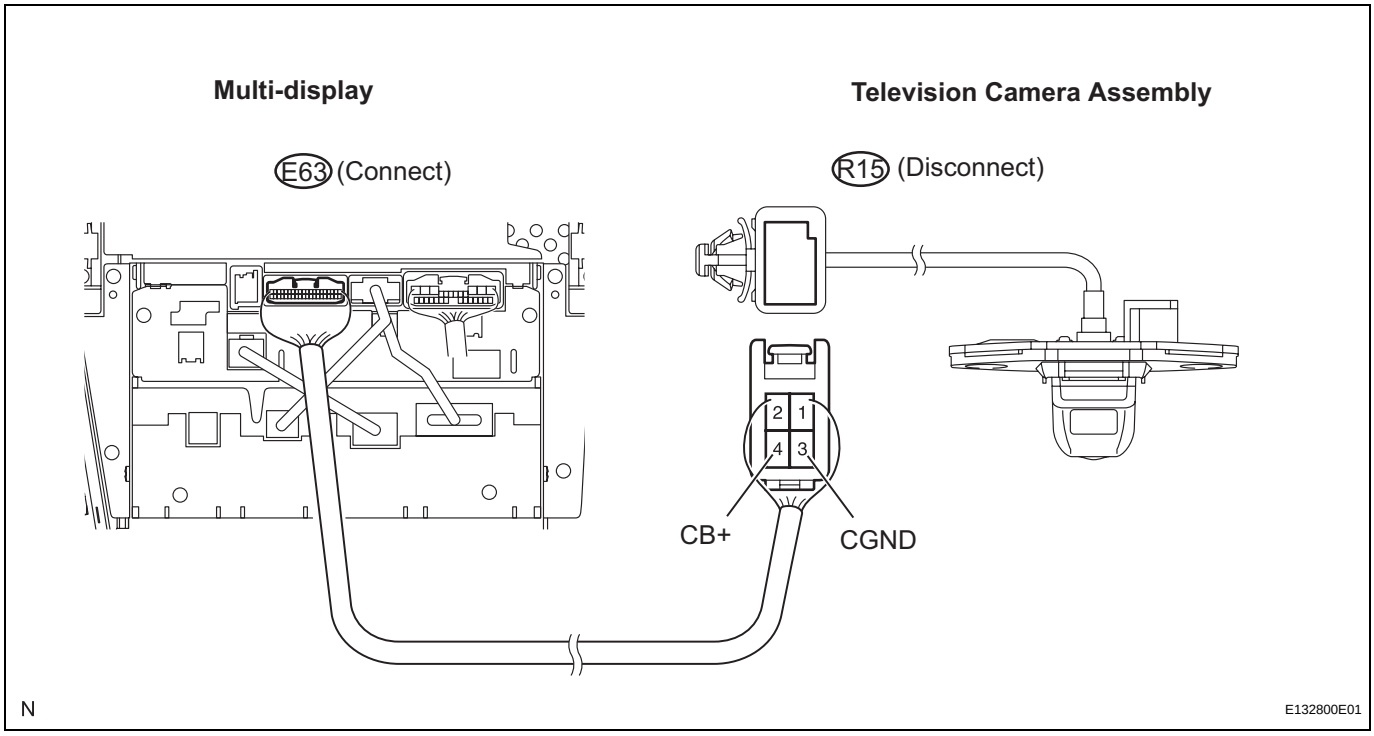

(b) Measure the voltage according to the value(s) in the table below.

Standard voltage

Tester connection	Condition	Specified condition
CB+ (R15-4) - CGND (R15-3)	Engine switch on (IG) Shift lever R position	Approx. 6 V

NG → **REPLACE MULTI-DISPLAY**

OK

3	INSPECT TELEVISION CAMERA ASSEMBLY

(a) Reconnect the television camera assembly R15 connector.

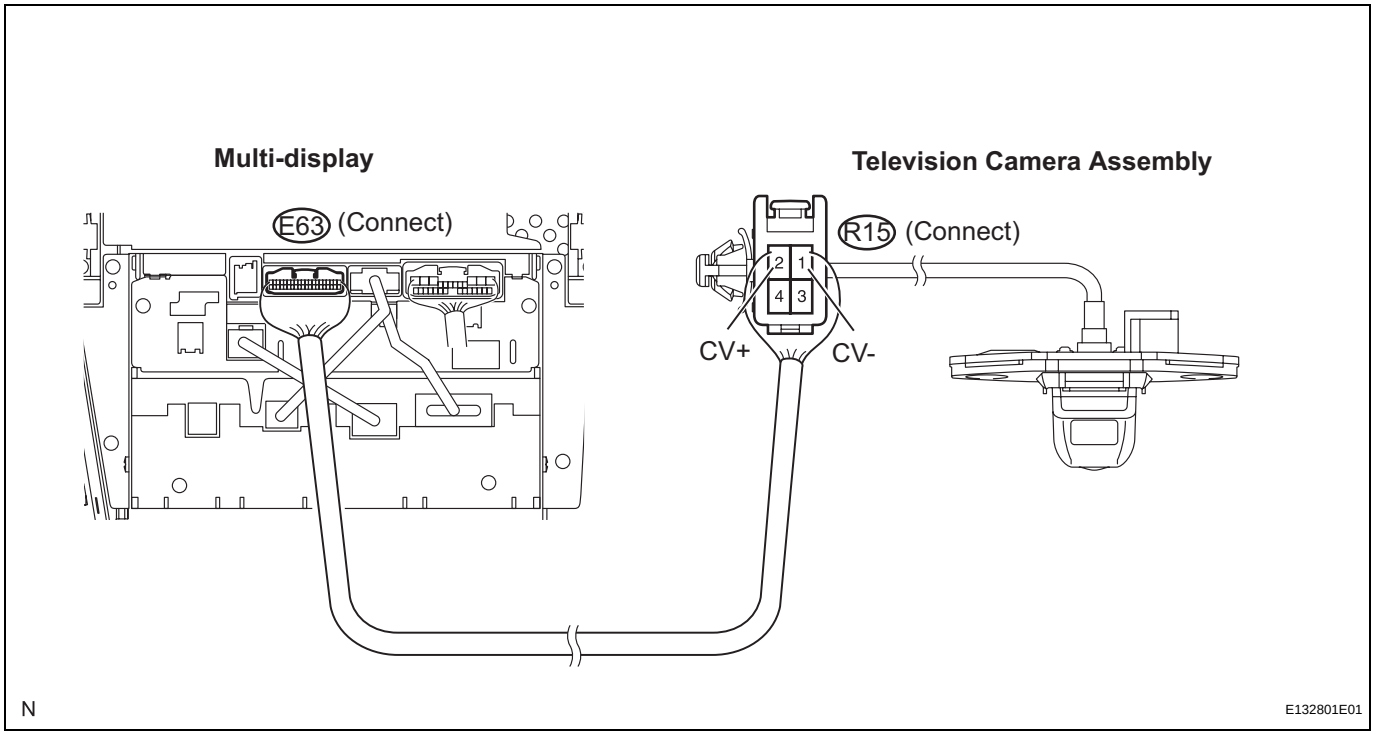

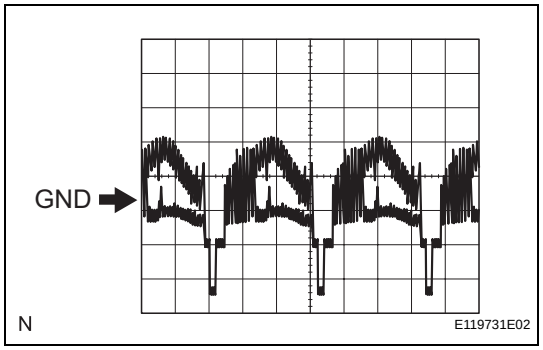

(b) Check the waveform of the television camera assembly using an oscilloscope.

PM

Standard waveform

Tester connection	Condition	Specified condition
CV+ (R15-2) - CV- (R15-1)	Engine switch on (IG) Shift lever R position	Shown in the illustration

NG → **REPLACE TELEVISION CAMERA ASSEMBLY**

OK

PROCEED TO NEXT CIRCUIT INSPECTION SHOWN IN PROBLEM SYMPTOMS TABLE

CUSTOMIZE PARAMETERS

1. CUSTOMIZE PARAMETERS (INTELLIGENT TESTER)

(a) The following items can be customized:

NOTICE:

- **When the customer requests a change in a function, first make sure that the function can be customized.**
- **Be sure to make a note of the current settings before customizing.**
- **When troubleshooting a function, first make sure that the function is set to the default setting.**

Warning

DISPLAY	DEFAULT	CONTENTS	SETTING
RR SENSOR RANGE	WIDE	Function to set buzzer activation range (for rear center sensors)	NARROW / WIDE
KEEP SENSE BUZ	AVAIL	Function to make buzzer sound when distance between vehicle and obstacle does not change for more than 3 seconds	NOT AVAIL / AVAIL
F & R BUZZER VOL	M2	Function to change volume of buzzer	L / M1 / M2 / M3 / H

Sensor:

DISPLAY	DEFAULT	CONTENTS	SETTING
SENSOR COND/N	AVAIL	Function to make sensors available when shift position is N	NOT AVAIL / AVAIL

Display:

DISPLAY	DEFAULT	CONTENTS	SETTING
DISPLAY MODE	ALL	Function to change display mode	ALL / UNDISP

PROBLEM SYMPTOMS TABLE

INTUITIVE PARKING ASSIST SYSTEM:

Symptom	Suspected Area	See page
System does not operate at all (self-check function does not operate)	1. Clearance warning ECU power source circuit	PM-76
	2. Clearance sonar main switch circuit	PM-66
	3. Clearance warning ECU assembly	-
Ultrasonic sensor (clearance sonar) does not operate (self-check function does not operate)	1. Front left sensor (ultrasonic sensor) malfunction	PM-33
	2. Front right sensor (ultrasonic sensor) malfunction	PM-35
	3. Rear left sensor (ultrasonic sensor) malfunction	PM-38
	4. Rear right sensor (ultrasonic sensor) malfunction	PM-49
	5. Clearance warning ECU assembly	-
Ultrasonic sensor (back sensor) does not operate (self-check function does not operate)	1. Rear left center sensor (ultrasonic sensor) malfunction	PM-41
	2. Rear right center sensor (ultrasonic sensor) malfunction	PM-45
	3. Clearance warning ECU assembly	-
Sonar detection operation is normal but buzzer operation is intermittent	1. Clearance warning buzzer circuit	PM-72
	2. Clearance warning ECU assembly	-
Detection operation is normal but sonar displays do not appear on multi-information display	1. Vehicle wire harness or connector (CAN communication)	CA-11
	2. Clearance warning ECU assembly	-
	3. Combination meter assembly	-
Detection operation is normal but sonar displays do not appear on multi-display	1. Vehicle wire harness or connector (CAN communication)	CA-11
	2. Clearance warning ECU assembly	-
	3. Multi-display	-
Open circuit is displayed as a result of self-check	1. Front left sensor (ultrasonic sensor) malfunction	PM-33
	2. Front right sensor (ultrasonic sensor) malfunction	PM-35
	3. Rear left sensor (ultrasonic sensor) malfunction	PM-35
	4. Rear right sensor (ultrasonic sensor) malfunction	PM-49
	5. Rear left center sensor (ultrasonic sensor) malfunction	PM-41
	6. Rear right center sensor (ultrasonic sensor) malfunction	PM-45
Operating indicator does not illuminate	1. Clearance sonar main switch circuit	PM-66
	2. Clearance warning ECU assembly	-
Freeze condition is displayed as a result of self-check	1. Remove ice, mud or snow from the ultrasonic sensor	-
Combination meter operates normally, but detection operates when shift lever position is P, or detection does not operate when shift lever is not in P	1. Vehicle wire harness or connector (CAN communication)	CA-11
	2. Clearance warning ECU assembly	-
Combination meter operates normally but errors occur when vehicle speed exceeds 10 km/h (6 mph)	1. Vehicle wire harness or connector (CAN communication)	CA-11
	2. Clearance warning ECU	-
	3. Combination meter	-
System operates with shift lever not in R, or does not operate with shift lever in R position (rear ultrasonic sensor)	1. Vehicle wire harness or connector (CAN communication)	CA-11
	2. Clearance warning ECU assembly	-

CLEARANCE WARNING ECU

COMPONENTS

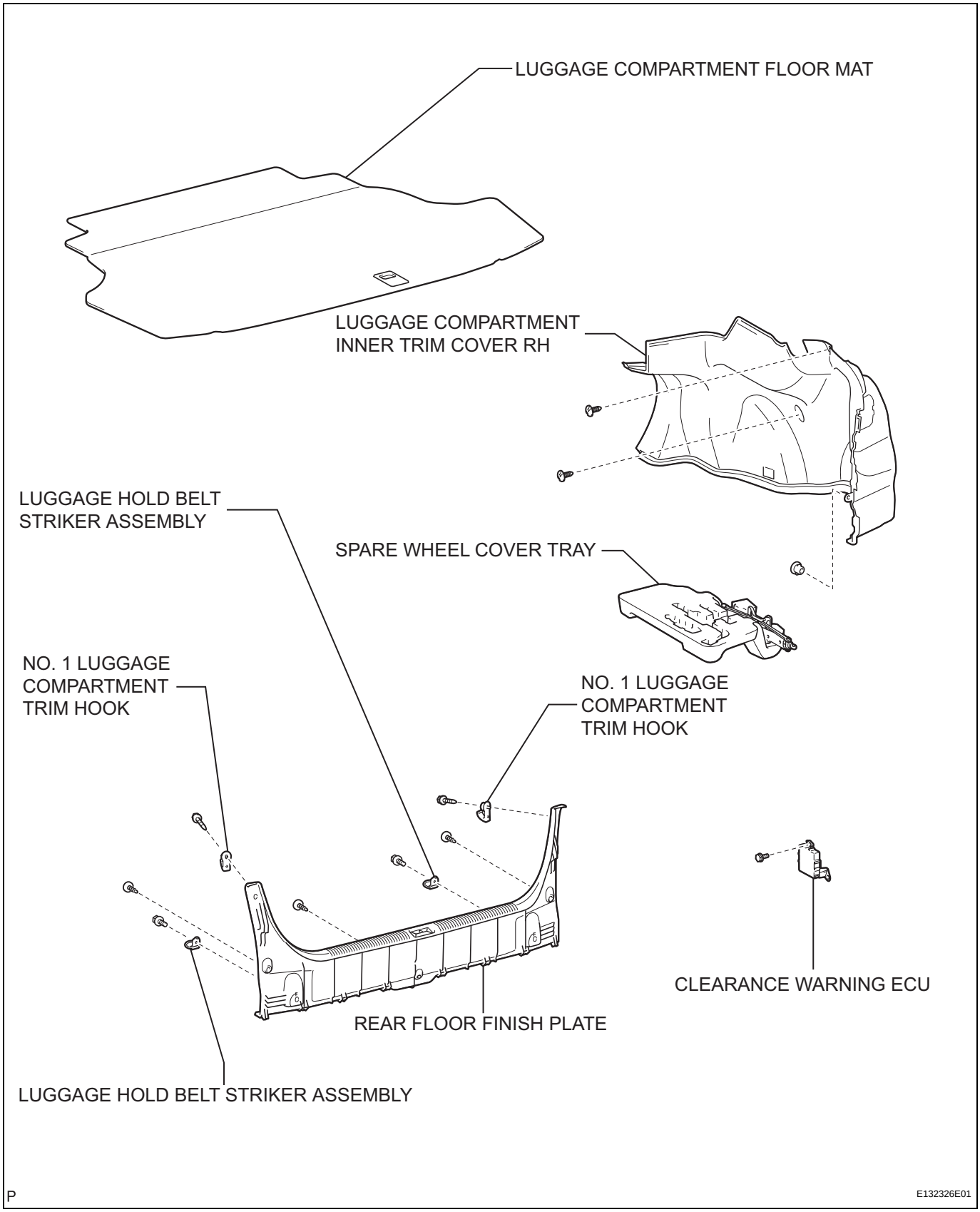

PM

REMOVAL

1. **REMOVE LUGGAGE COMPARTMENT FLOOR MAT**
2. **REMOVE SPARE WHEEL COVER TRAY**
3. **REMOVE LUGGAGE HOLD BELT STRIKER ASSEMBLY (See page ED-82)**
4. **REMOVE NO. 1 LUGGAGE COMPARTMENT TRIM HOOK (See page ED-83)**
5. **REMOVE REAR FLOOR FINISH PLATE (See page ED-83)**
6. **REMOVE LUGGAGE COMPARTMENT INNER TRIM COVER RH (See page ED-83)**
7. **REMOVE CLEARANCE WARNING ECU**
   (a) Disconnect the connector.
   (b) Remove the bolt and clearance warning ECU.

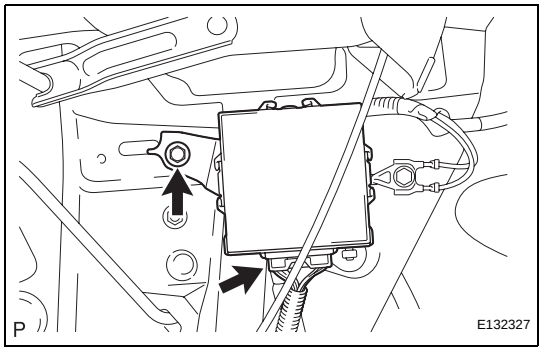

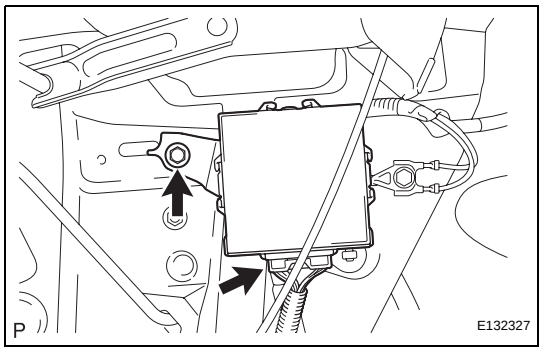

INSTALLATION

1. **INSTALL CLEARANCE WARNING ECU**
   (a) Install the clearance warning ECU with the bolt.
   (b) Connect the connector.
2. **INSTALL LUGGAGE COMPARTMENT INNER TRIM COVER RH (See page ED-88)**
3. **INSTALL REAR FLOOR FINISH PLATE (See page ED-88)**
4. **INSTALL NO. 1 LUGGAGE COMPARTMENT TRIM HOOK (See page ED-89)**
5. **INSTALL LUGGAGE HOLD BELT STRIKER ASSEMBLY (See page ED-89)**
6. **INSTALL SPARE WHEEL COVER TRAY**
7. **INSTALL LUGGAGE COMPARTMENT FLOOR MAT**

TERMINALS OF ECU

1. CHECK CLEARANCE WARNING ECU

(a) Disconnect the M2 ECU connector.

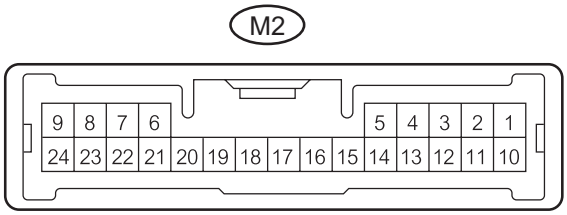

H

E102414E01

(b) Measure the resistance and voltage between each terminal of the wire harness side connector.

Symbols (Terminal No.)	Wiring Color	Terminal Description	Condition	Specified Condition
CLSW (M2-1) - E (M2-21)	Y - W-B	Clearance sonar main switch signal	Engine switch off	Below 1 V
			Engine switch on (IG), clearance sonar main switch ON	10 to 14 V
IG (M2-10) - E (M2-21)	B - W-B	IG signal / IG power source signal	Engine switch off	Below 1 V
			Engine switch on (IG)	10 to 14 V
E (M2-21) - Body ground	W-B - Body ground	ECU ground	Always	Below 1 Ω

If the result is not as specified, there may be a malfunction on the wire harness side.

(c) Reconnect the M2 ECU connector.

(d) Measure the resistance and voltage according to the value(s) in the table below.

Symbols (Terminal No.)	Wiring Color	Terminal Description	Condition	Specified Condition
L1 (M2-2) - E (M2-21)	P - W-B	Clearance sonar main switch indicator signal	Engine switch on (IG), clearance sonar main switch OFF	10 to 14 V
			Engine switch on (IG), clearance sonar main switch ON	Below 1 V
BOR (M2-7) - E (M2-21)	L - W-B	Rear sensor circuit power source	Engine switch off	Below 1 V
			Engine switch on (IG)	7 to 9 V
BOF (M2-9) - E (M2-21)	V - W-B	Front sensor circuit power source	Engine switch off	Below 1 V
			Engine switch on (IG)	7 to 9 V
CBZ (M2-12) - E (M2-21)	W - W-B	Clearance warning buzzer signal	Buzzer not sounding	Below 1 V
			Buzzer sounding	Waveform 1
E2 (M2-22) - E (M2-21)	G - W-B	Rear sensor circuit ground	Always	Below 1 Ω
E1 (M2-24) - E (M2-21)	GR - W-B	Front sensor circuit ground	Always	Below 1 Ω

If the result is not as specified, the ECU may have a malfunction.

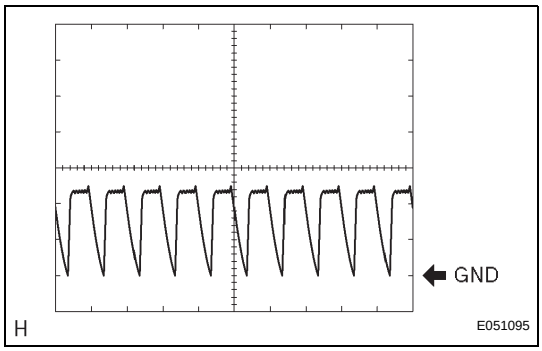

(e) Reference:
(1) Waveform 1

Item	Content
Symbols (Terminal No.)	CBZ (M2-12) - E (M2-21)
Tool Setting	2 V/DIV., 1 msec./DIV.
Condition	Buzzer sounding

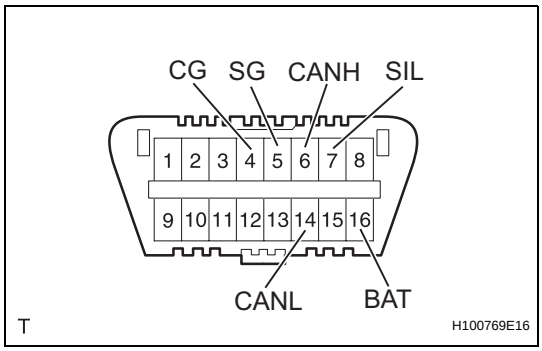

DIAGNOSIS SYSTEM

1. CHECK DLC3

(a) The vehicle's ECU uses ISO 15765-4 for communication protocol. The terminal arrangement of the DLC3 complies with SAE J1962 and matches the ISO 15765-4 format.

Symbols (Terminal No.)	Terminal Description	Condition	Specified Condition
SIL (7) - SG (5)	Bus "+" line	During transmission	Pulse generation
CG (4) - Body ground	Chassis ground	Always	Below 1 Ω
SG (5) - Body ground	Signal ground	Always	Below 1 Ω
BAT (16) - Body ground	Battery positive	Always	10 to 14 V
CANH (6) - CANL (14)	CAN bus line	Engine switch OFF*	54 to 69 Ω
CANH (6) - CG (4)	HIGH-level CAN bus line	Engine switch OFF*	200 Ω or higher
CANL (14) - CG (4)	LOW-level CAN bus line	Engine switch OFF*	200 Ω or higher
CANH (6) - BAT (16)	HIGH-level CAN bus line	Engine switch OFF*	6 kΩ or higher
CANL (14) - BAT (16)	LOW-level CAN bus line	Engine switch OFF*	6 kΩ or higher

NOTICE:
***: Before measuring the resistance, leave the vehicle as is for at least 1 minute and do not operate the engine switch, any other switches or the doors.**
If the result is not as specified, the DLC3 may have a malfunction. Repair or replace the harness and connector.

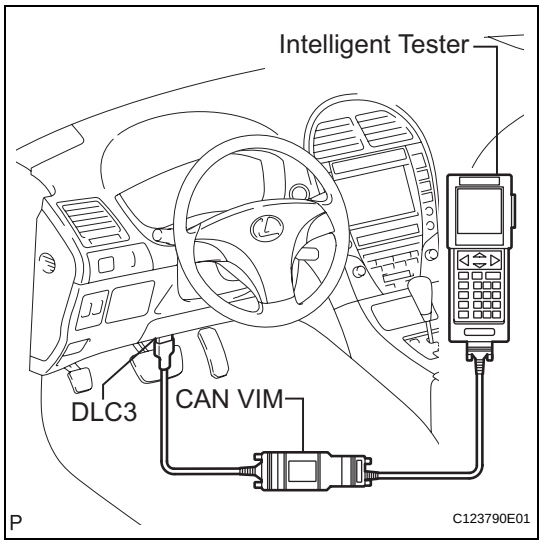

(b) Connect the cable of the intelligent tester (with CAN VIM) to the DLC3, turn the engine switch on (IG) and attempt to use the intelligent tester. If the screen displays a communication error message, a problem exists on the vehicle side or tester side.
HINT:
- If communication is normal when the tool is connected to another vehicle, inspect the DLC3 on the original vehicle.
- If communication is still impossible when the tool is connected to another vehicle, the problem is probably in the tool itself. Consult the Service Department listed in the tool's instruction manual.

DTC CHECK / CLEAR

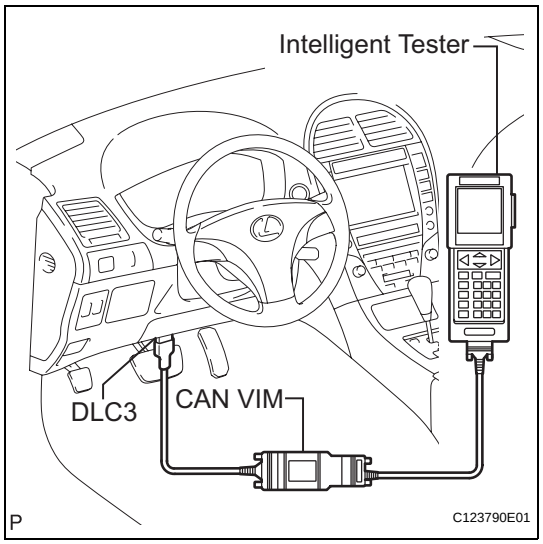

1. CHECK DTC

(a) Connect the intelligent tester to the Controller Area Network Vehicle Interface Module (CAN VIM). Then connect the CAN VIM to the DLC3.
(b) Turn the engine switch on (IG).
(c) Read the DTCs by following the directions on the tester screen.
HINT:
Refer to the intelligent tester operator's manual for further details.

PM

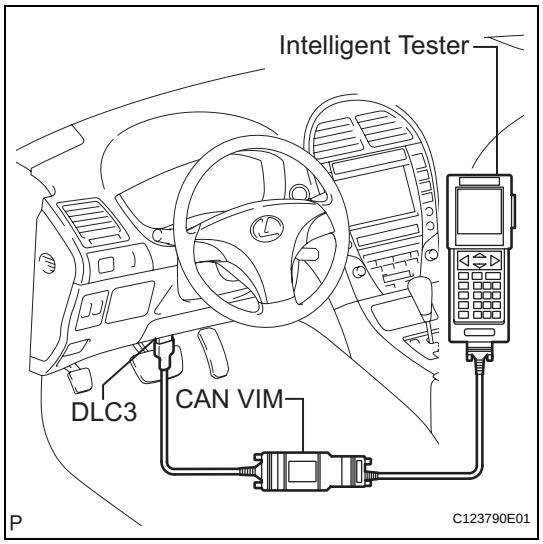

2. CLEAR DTC

(a) Connect the intelligent tester (with CAN VIM) to the DLC3.
(b) Turn the engine switch on (IG).
(c) Erase the DTCs by following the directions on the tester's screen.
HINT:
Refer to the intelligent tester operator's manual for further details.

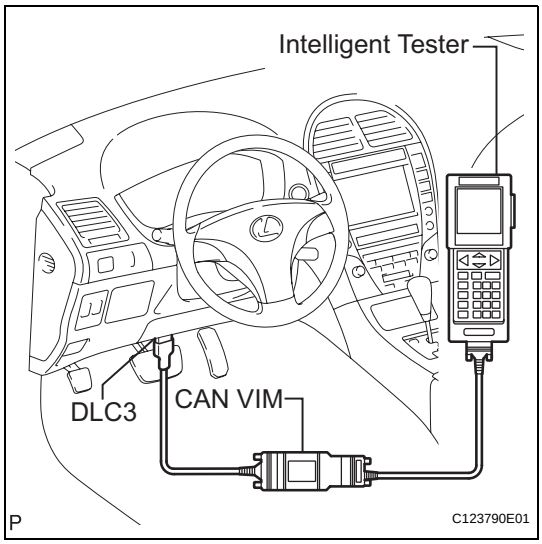

DATA LIST / ACTIVE TEST

1. READ DATA LIST

(a) Connect the intelligent tester to the DLC3.
(b) Turn the engine switch on (IG).
(c) Operate the intelligent tester according to the display and select "Data List".

Clearance warning ECU:

Tester Display	Measurement Item/Range	Normal Condition	Diagnostic Note
MAIN SW	Clearance sonar main switch / OFF or ON	OFF: Clearance sonar main switch OFF ON: Clearance sonar main switch ON	-
ECU TYPE	Type of clearance warning ECU / NORMAL or STEER	NORMAL: Normal clearance sonar type	STEER: Steering sensing type
FL SENS	Front left sensor information / UNDTCT, LONG, M LONG, MIDDLE, CLOSE, FREEZE, OPEN or BLINK	UNDTCT: Not detected LONG: Detected (long-range) M LONG: Detected (mid long-range) MIDDLE: Detected (medium-range) CLOSE: Detected (close-range) OPEN: Open (Open in sensor) FREEZE: Freeze (Sensor is frozen) BLINK: Blink (All displays blinking)	-
FR SENS	Front right sensor information / UNDTCT, LONG, M LONG, MIDDLE, CLOSE, FREEZE, OPEN or BLINK	UNDTCT: Not detected LONG: Detected (long-range) M LONG: Detected (mid long-range) MIDDLE: Detected (medium-range) CLOSE: Detected (close-range) OPEN: Open (Open in sensor) FREEZE: Freeze (Sensor is frozen) BLINK: Blink (All displays blinking)	-
RL SENS	Rear left sensor information / UNDTCT, LONG, MIDDLE, CLOSE, FREEZE, OPEN or BLINK	UNDTCT: Not detected LONG: Detected (long-range) M LONG: Detected (mid long-range) MIDDLE: Detected (medium-range) CLOSE: Detected (close-range) OPEN: Open (Open in sensor) FREEZE: Freeze (Sensor is frozen) BLINK: Blink (All displays blinking)	-

Tester Display	Measurement Item/Range	Normal Condition	Diagnostic Note
RL CENTER SENS	Rear left center sensor information / UNDTCT, LONG, MIDDLE, CLOSE, FREEZE, OPEN or BLINK	UNDTCT: Not detected LONG: Detected (long-range) M LONG: Detected (mid long-range) MIDDLE: Detected (medium-range) CLOSE: Detected (close-range) OPEN: Open (Open in sensor) FREEZE: Freeze (Sensor is frozen) BLINK: Blink (All displays blinking)	-
RR CENTER SENS	Rear right center sensor information / UNDTCT, LONG, MIDDLE, CLOSE, FREEZE, OPEN or BLINK	UNDTCT: Not detected LONG: Detected (long-range) M LONG: Detected (mid long-range) MIDDLE: Detected (medium-range) CLOSE: Detected (close-range) OPEN: Open (Open in sensor) FREEZE: Freeze (Sensor is frozen) BLINK: Blink (All displays blinking)	-
RR SENS	Rear right sensor information / UNDTCT, LONG, MIDDLE, CLOSE, FREEZE, OPEN or BLINK	UNDTCT: Not detected LONG: Detected (long-range) M LONG: Detected (mid long-range) MIDDLE: Detected (medium-range) CLOSE: Detected (close-range) OPEN: Open (Open in sensor) FREEZE: Freeze (Sensor is frozen) BLINK: Blink (All displays blinking)	-
PARKING SIGNAL	Parking signal / OFF or ON	OFF: Except P position ON: Shift lever position is P	-
REVERSE SIGNAL	Reverse signal / OFF or ON	OFF: Except R position ON: Shift lever position is R	-
VEHICLE SPEED	Vehicle speed signal / SN STOP or SN WORK	SN STOP: Vehicle speed is 10 km/h or more SN WORK: Vehicle speed is below 10 km/h	-
SONAR DETECTION	Sonar detection condition / STOP or WORK	STOP: Sonar detection is not operating WORK: Sonar detection is operating	-
# CODE	Number DTCs recorded / Min.: 0 or Max.: 255	-	-

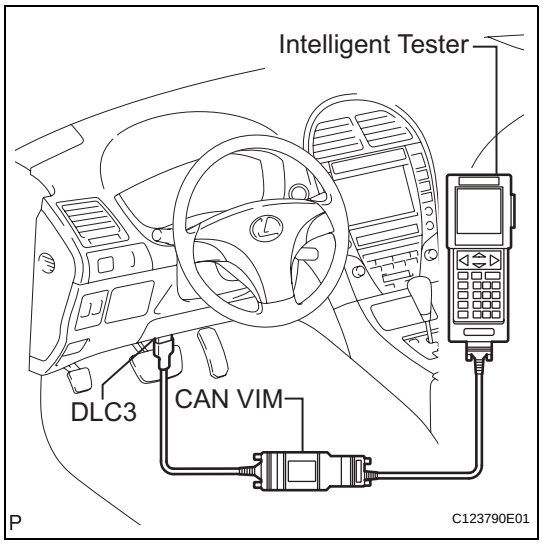

2. PERFORM ACTIVE TEST

(a) Connect the intelligent tester to the DLC3.
(b) Turn the engine switch on (IG).
(c) Following the display on the intelligent tester, perform the "Active Test".

Clearance warning ECU:

Tester Display	Test Part	Control Range	Diagnostic Note
BUZZER	Rear buzzer (Clearance warning buzzer)	STOP or OPERATE	-

CLEARANCE WARNING BUZZER

COMPONENTS

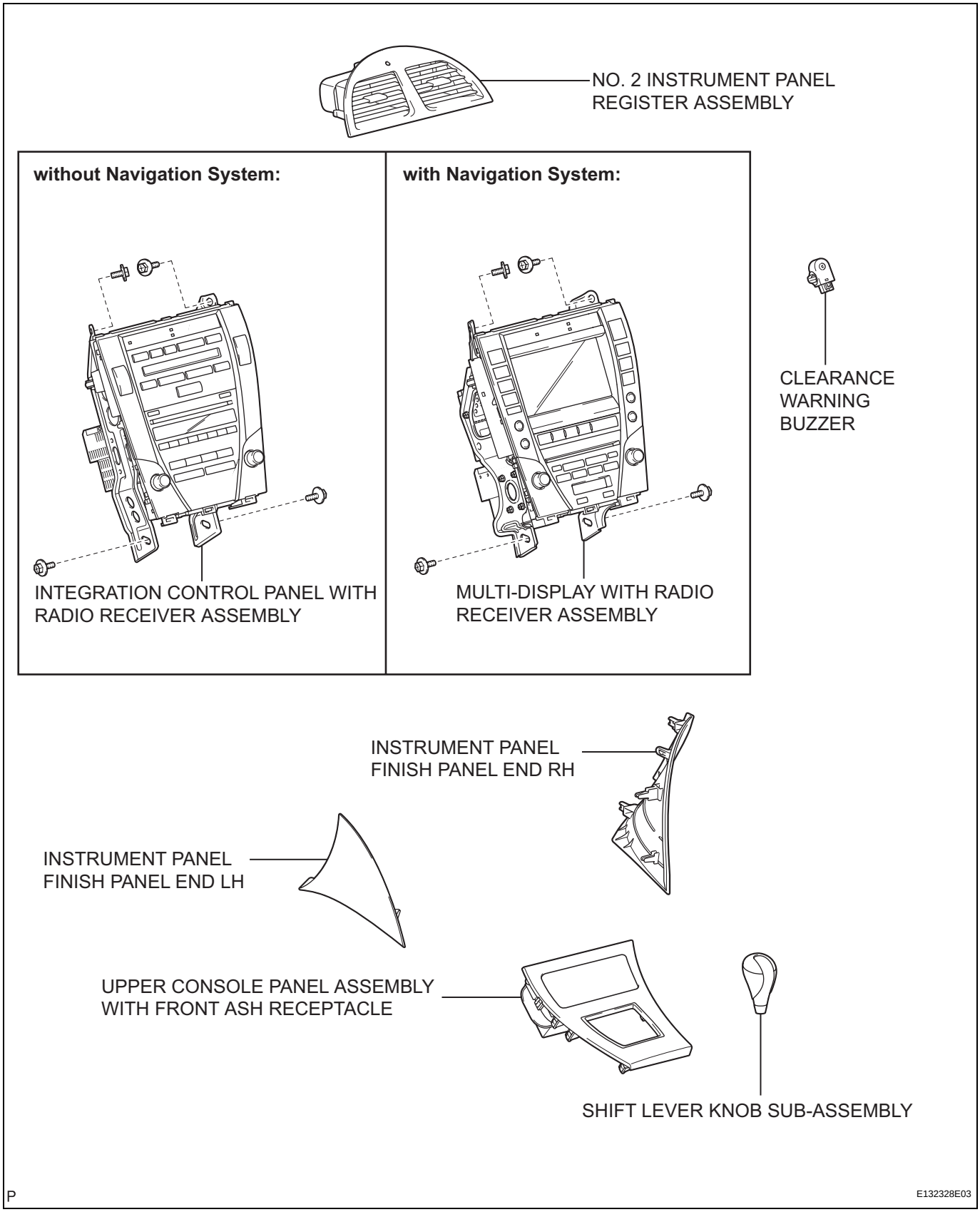

PM

REMOVAL

1. **REMOVE SHIFT LEVER KNOB SUB-ASSEMBLY (See page IP-16)**
2. **REMOVE UPPER CONSOLE PANEL ASSEMBLY WITH FRONT ASH RECEPTACLE (See page IP-16)**
3. **REMOVE INSTRUMENT PANEL FINISH PANEL END LH (See page IP-13)**
4. **REMOVE INSTRUMENT PANEL FINISH PANEL END RH (See page IP-15)**
5. **REMOVE NO. 2 INSTRUMENT PANEL REGISTER ASSEMBLY (See page IP-17)**
6. **REMOVE INTEGRATION CONTROL PANEL WITH RADIO RECEIVER ASSEMBLY (w/o Navigation System) (See page AV-168)**
7. **REMOVE MULTI-DISPLAY WITH RADIO RECEIVER ASSEMBLY (w/ Navigation System) (See page AV-170)**
8. **REMOVE CLEARANCE WARNING BUZZER**
   (a) Disconnect the connector.

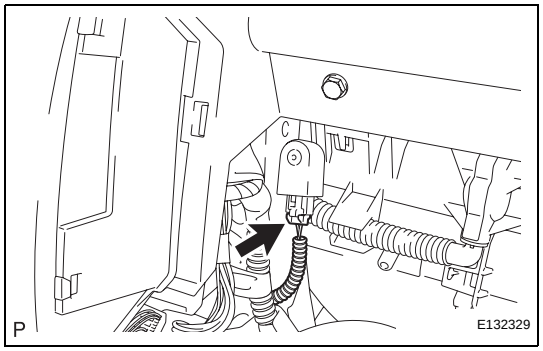

   (b) Disengage the clamp and remove the clearance warning buzzer.

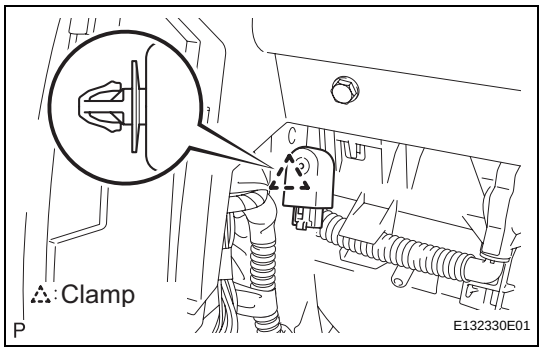

PM

DIAGNOSTIC TROUBLE CODE CHART

INTUITIVE PARKING ASSIST SYSTEM

DTC Code	Detection Item	Trouble Area	See page
C1AE1	Front Left Sensor Malfunction	1. No. 1 ultrasonic sensor (Front left sensor) 2. Clearance warning ECU assembly	PM-33
C1AE4	Front Right Sensor Malfunction	1. No. 1 ultrasonic sensor (Front right sensor) 2. Wire harness 3. Clearance warning ECU assembly	PM-35
C1AE6	Rear Left Sensor Malfunction	1. No. 1 ultrasonic sensor (Rear left sensor) 2. Wire harness 3. Clearance warning ECU assembly	PM-38
C1AE7	Rear Left Center Sensor Malfunction	1. No. 1 ultrasonic sensor (Rear left center sensor) 2. Wire harness 3. Clearance warning ECU assembly	PM-41
C1AE8	Rear Right Center Sensor Malfunction	1. No. 1 ultrasonic sensor (Rear right center sensor) 2. Wire harness 3. Clearance warning ECU assembly	PM-45
C1AE9	Rear Right Sensor Malfunction	1. No. 1 ultrasonic sensor (Rear right sensor) 2. Clearance warning ECU assembly	PM-49
C1AEC	Front Sensor Communication Malfunction	1. Front No. 1 ultrasonic sensor circuit 2. Clearance warning ECU assembly	PM-51
C1AED	Rear Sensor Communication Malfunction	1. Rear No. 1 ultrasonic sensor circuit 2. Clearance warning ECU assembly	PM-57

DTC C1AE1 Front Left Sensor Malfunction

DESCRIPTION

The No. 1 ultrasonic sensor (front left sensor) is installed on the front bumper. The clearance warning ECU detects obstacles based on signals received from the front left sensor. If the front left sensor has an open or other malfunction, it will not function normally.

DTC No.	DTC Detection Condition	Trouble Area
B2232	Malfunction of No. 1 ultrasonic sensor (Front left sensor)	• No. 1 ultrasonic sensor (Front left sensor) • Clearance warning ECU assembly

INSPECTION PROCEDURE

1 CHECK DTC OUTPUT

(a) Delete the DTCs (See page PM-28).
(b) Recheck for DTCs (See page PM-28).
Result

Result	Proceed to
DTC C1AE1 is output	A
No DTCs is output	B

B → USE SIMULATION METHOD TO CHECK

PM

A

2 REPLACE NO. 1 ULTRASONIC SENSOR (FRONT LEFT SENSOR)

No. 1 Ultrasonic Sensor:

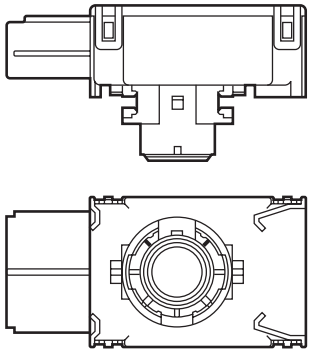

H B139273E01

(a) Replace the ultrasonic sensor (See page PM-99) with a normally functioning sensor.

NEXT

3 CHECK DTC OUTPUT

(a) Delete the DTCs (See page PM-28).
(b) Recheck for DTCs (See page PM-28).

Result

Result	Proceed to
DTC C1AE1 is output	A
No DTCs is output	B

B → **END**

A

REPLACE CLEARANCE WARNING ECU ASSEMBLY (See page PM-93)

REMOVAL

1. **REMOVE COOL AIR INTAKE DUCT SEAL (for Front Side) (See page ET-4)**
2. **REMOVE FRONT BUMPER ASSEMBLY (for Front Side) (See page ET-5)**
3. **REMOVE NO. 1 ULTRASONIC SENSOR (for Front Side)**
   (a) Disconnect the No. 1 ultrasonic sensor connector.
   (b) Remove the No. 2 ultrasonic sensor retainer as shown in the illustration.

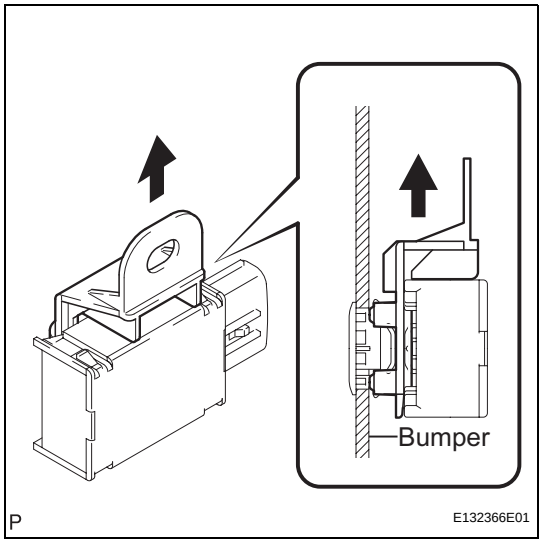

   (c) Remove the No. 1 ultrasonic sensor from the No. 1 ultrasonic sensor retainer.

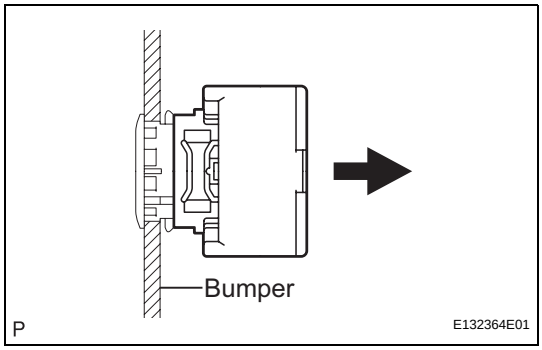

4. **REMOVE NO. 1 ULTRASONIC SENSOR RETAINER (for Front Side)**
   (a) Disengage the 2 claws and remove the No. 1 ultrasonic sensor retainer from the front bumper assembly.

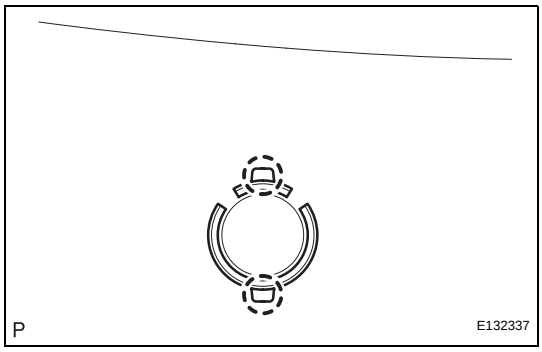

5. **REMOVE LUGGAGE COMPARTMENT FLOOR MAT (for Rear Side)**
6. **REMOVE SPARE WHEEL COVER TRAY (for Rear Side)**
7. **REMOVE LUGGAGE HOLD BELT STRIKER ASSEMBLY (for Rear Side) (See page ED-82)**
8. **REMOVE NO. 1 LUGGAGE COMPARTMENT TRIM HOOK (for Rear Side) (See page ED-83)**
9. **REMOVE REAR FLOOR FINISH PLATE (for Rear Side) (See page ED-83)**

10. REMOVE LUGGAGE COMPARTMENT INNER TRIM COVER RH (for Rear Side) (See page ED-83)

11. REMOVE REAR BUMPER ASSEMBLY (for Rear Side) (See page ET-19)

12. REMOVE NO. 1 ULTRASONIC SENSOR (for Rear Side)

(a) Disconnect the No. 1 ultrasonic sensor connector.

(b) Disengage the clamp.

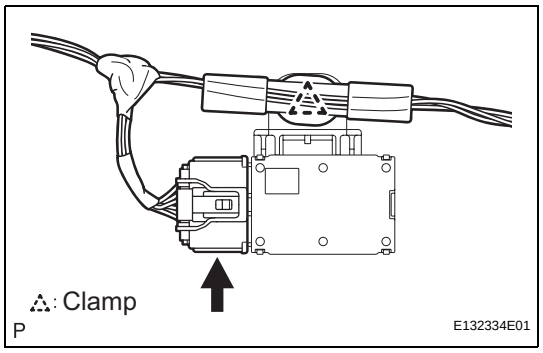

(c) Remove the No. 2 ultrasonic sensor retainer as shown in the illustration.

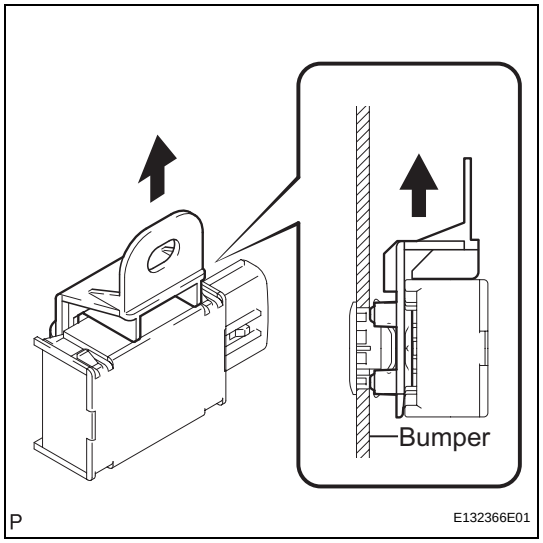

(d) Remove the No. 1 ultrasonic sensor from the No. 1 ultrasonic sensor retainer.

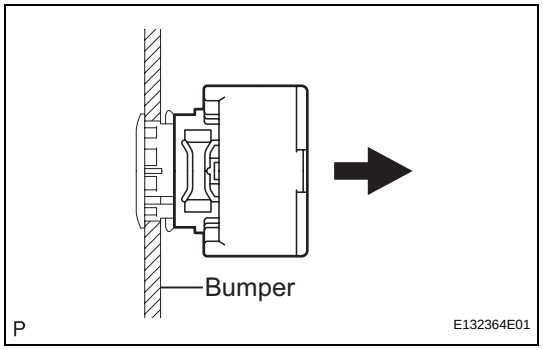

13. REMOVE NO. 1 ULTRASONIC SENSOR RETAINER (for Rear Side)

(a) Disengage the 2 claws and remove the No. 1 ultrasonic sensor retainer from the rear bumper assembly.

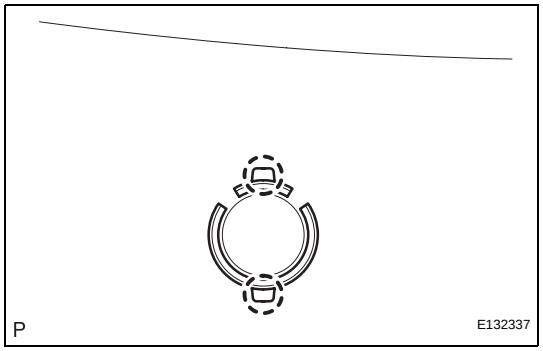

INSTALLATION

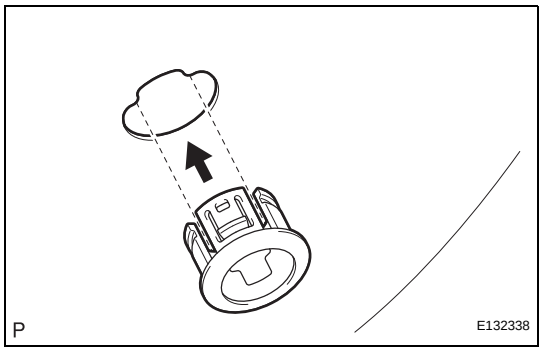

1. INSTALL NO. 1 ULTRASONIC SENSOR RETAINER (for Rear Side)

(a) Install the No. 1 ultrasonic sensor retainer as shown in the illustration.
HINT:
Align the protrusions on the bumper hole with the slits of the No. 1 ultrasonic sensor retainer and install the No. 1 ultrasonic sensor.

2. INSTALL NO. 1 ULTRASONIC SENSOR (for Rear Side)
NOTICE:
Do not apply excessive force to the No. 1 ultrasonic sensor while performing the following procedures.

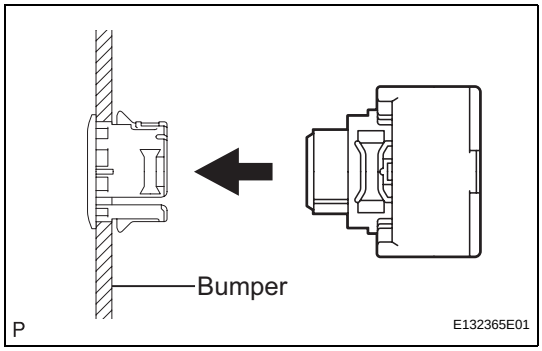

(a) Install the No. 1 ultrasonic sensor to the No. 1 ultrasonic sensor retainer.

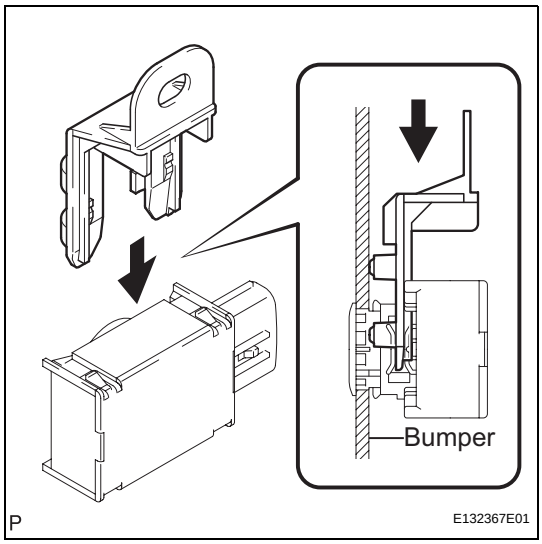

(b) Install the No. 2 ultrasonic sensor retainer as shown in the illustration.

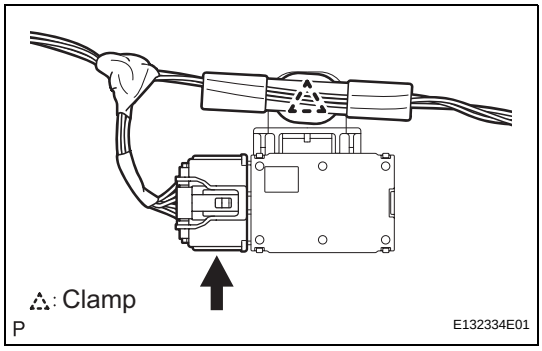

(c) Connect the No. 2 ultrasonic sensor connector and engage the clamp.

3. INSTALL REAR BUMPER ASSEMBLY (for Rear Side) (See page ET-23)

4. INSTALL LUGGAGE COMPARTMENT INNER TRIM COVER RH (for Rear Side) (See page ED-88)

5. INSTALL REAR FLOOR FINISH PLATE (for Rear Side) (See page ED-88)

6. INSTALL NO. 1 LUGGAGE COMPARTMENT TRIM HOOK (for Rear Side) (See page ED-89)

7. **INSTALL LUGGAGE HOLD BELT STRIKER ASSEMBLY (for Rear Side) (See page ED-89)**

8. **INSTALL SPARE WHEEL COVER TRAY (for Rear Side)**

9. **INSTALL LUGGAGE COMPARTMENT FLOOR MAT (for Rear Side)**

10. **INSTALL NO. 1 ULTRASONIC SENSOR RETAINER (for Front Side)**
    (a) Install the No. 1 ultrasonic sensor retainer as shown in the illustration.
    HINT:
    Align the protrusions on the bumper hole with the slits of the No. 1 ultrasonic sensor retainer and install the No. 1 ultrasonic sensor.

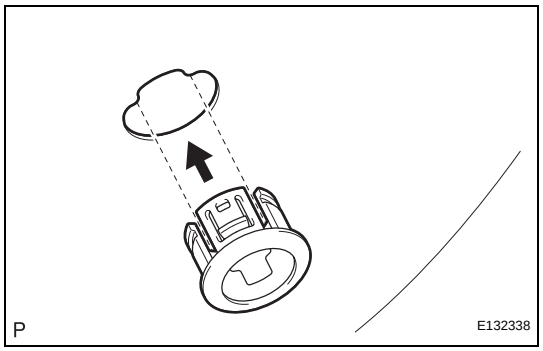

11. **INSTALL NO. 1 ULTRASONIC SENSOR (for Front Side)**
    NOTICE:
    Do not apply excessive force to the No. 1 ultrasonic sensor while performing the following procedures.
    (a) Install the No. 1 ultrasonic sensor to the No. 1 ultrasonic sensor retainer.

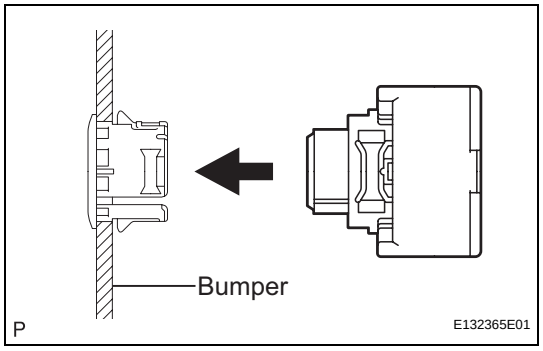

    (b) Install the No. 2 ultrasonic sensor retainer as shown in the illustration.

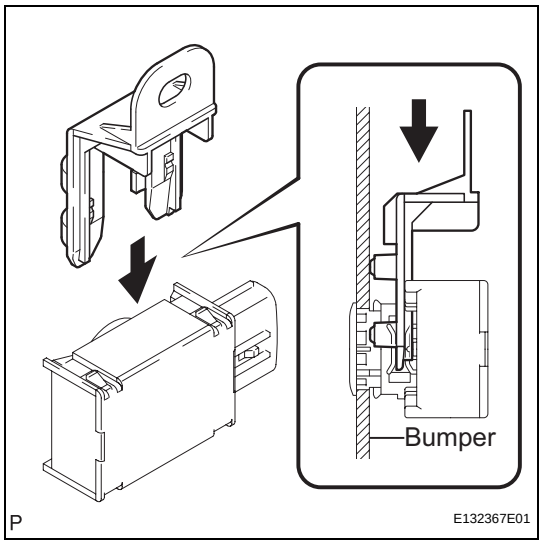

12. **INSTALL FRONT BUMPER ASSEMBLY (for Front Side) (See page ET-14)**

13. **INSTALL COOL AIR INTAKE DUCT SEAL (for Front Side) (See page ET-14)**

14. **VEHICLE PREPARATION FOR FOG LIGHT AIM ADJUSTMENT (See page LI-141)**

15. **PREPARATION FOR FOG LIGHT AIMING (See page LI-142)**

16. **FOG LIGHT AIMING INSPECTION (See page LI-143)**

17. **FOG LIGHT AIMING ADJUSTMENT (See page LI-144)**

DTC	C1AE4	Front Right Sensor Malfunction

DESCRIPTION

The No. 1 ultrasonic sensor (front right sensor) is installed on the front bumper. The clearance warning ECU detects obstacles based on signals received from the front right sensor. If the front right sensor has an open circuit or other malfunction, it will not function normally.

DTC No.	DTC Detection Condition	Trouble Area
B2232	Malfunction of No. 1 ultrasonic sensor (Front right sensor)	• No. 1 ultrasonic sensor (Front right sensor) • Wire harness (Front right sensor - Front left sensor) • Clearance warning ECU assembly

WIRING DIAGRAM

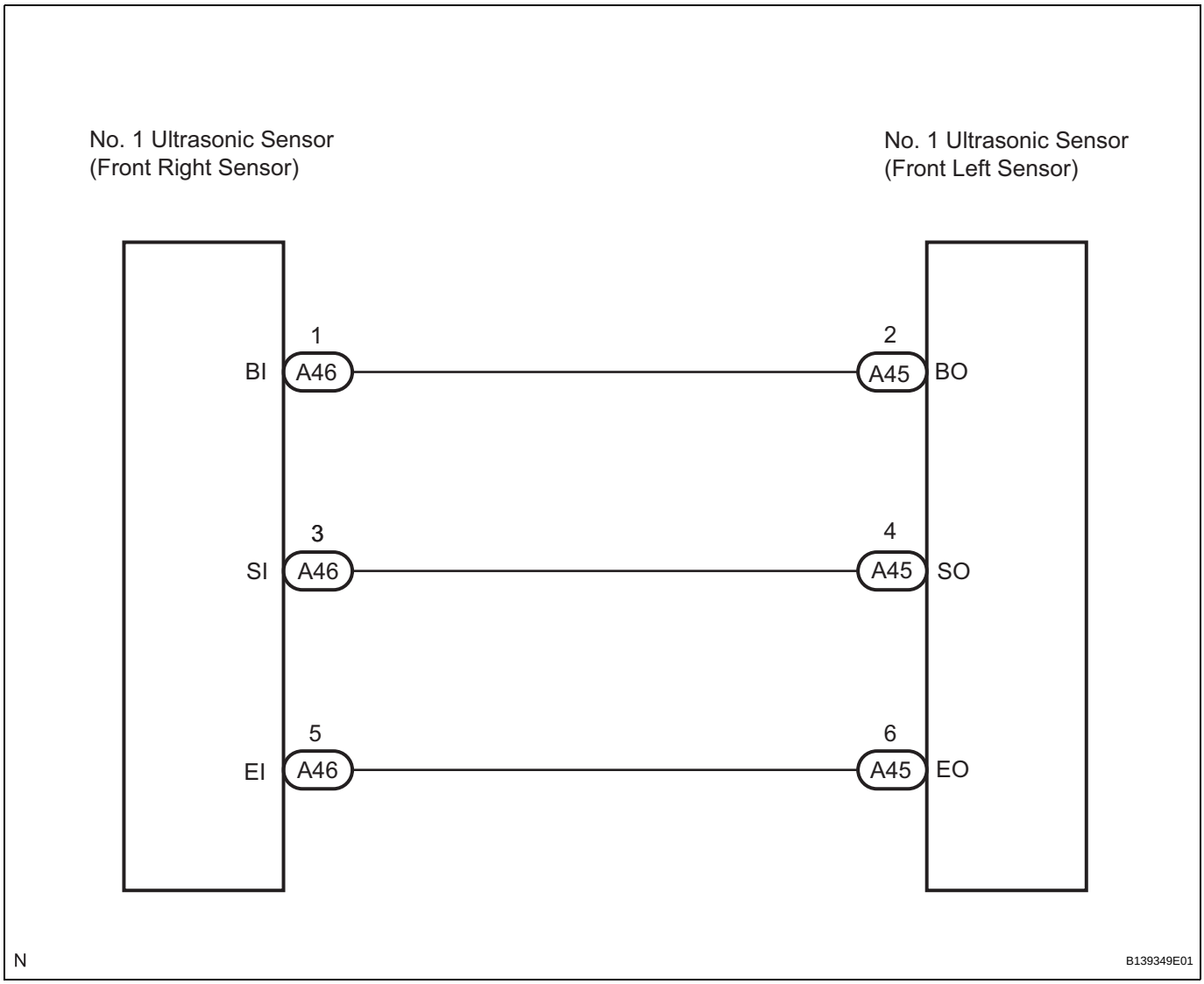

INSPECTION PROCEDURE

1	CHECK DTC OUTPUT

(a) Delete the DTCs (See page PM-28).
(b) Recheck for DTCs (See page PM-28).

Result

Result	Proceed to
DTC C1AE4 is output	A
No DTC is output	B

B → **USE SIMULATION METHOD TO CHECK**

A

2 CHECK HARNESS AND CONNECTOR (FRONT LEFT SENSOR - FRONT RIGHT SENSOR)

Wire Harness Side Connector Front View:

A45
No. 1 Ultrasonic Sensor (Front Left Sensor)

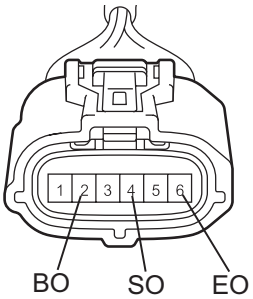

A46
No. 1 Ultrasonic Sensor (Front Right Sensor)

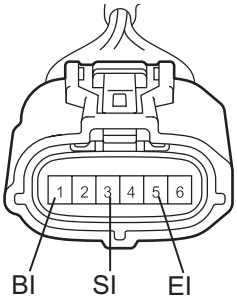

H

B139278E01

(a) Disconnect the A45 and A46 sensor connectors.
(b) Measure the resistance according to the value(s) in the table below.

Standard resistance

Tester Connection	Condition	Specified Condition
A45-2 (BO) - A46-1 (BI)	Always	Below 1 Ω
A45-4 (SO) - A46-3 (SI)		
A45-6 (EO) - A46-5 (EI)		
A45-2 (BO) - Body ground		10 kΩ or higher
A45-4 (SO) - Body ground		
A45-6 (EO) - Body ground		

NG → **REPAIR OR REPLACE HARNESS OR CONNECTOR**

OK

PM

3	REPLACE NO. 1 ULTRASONIC SENSOR (FRONT RIGHT SENSOR)

No. 1 Ultrasonic Sensor:

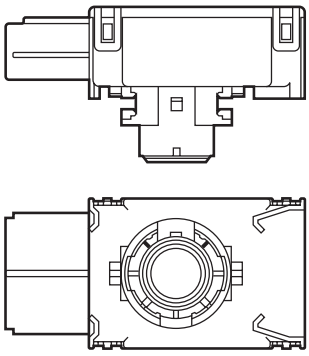

(a) Replace the ultrasonic sensor (See page PM-99) with a normally functioning sensor.

NEXT

4	CHECK DTC OUTPUT

PM

(a) Delete the DTCs (See page PM-28).
(b) Recheck for DTCs (See page PM-28).
Result

Result	Proceed to
DTC C1AE4 is output	A
No DTC is output	B

B → **END**

A

REPLACE CLEARANCE WARNING ECU ASSEMBLY (See page PM-93)

TELEVISION CAMERA

COMPONENTS

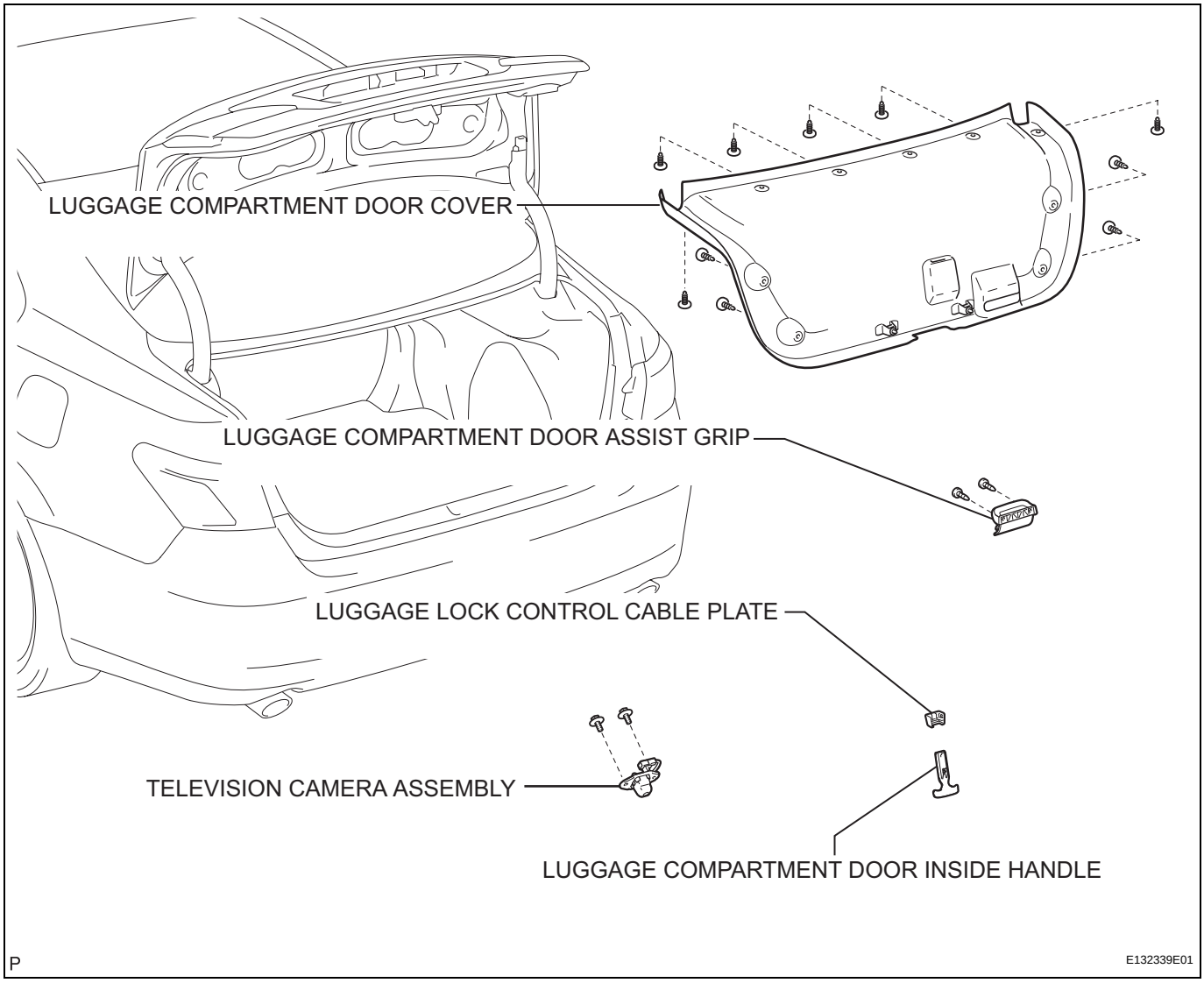

REMOVAL

1. **REMOVE LUGGAGE COMPARTMENT DOOR ASSIST GRIP (See page ET-71)**
2. **REMOVE LUGGAGE LOCK CONTROL CABLE PLATE (See page ET-71)**
3. **REMOVE LUGGAGE COMPARTMENT DOOR INSIDE HANDLE (See page ET-71)**
4. **REMOVE LUGGAGE COMPARTMENT DOOR COVER (See page ET-72)**
5. **REMOVE TELEVISION CAMERA ASSEMBLY**
   (a) Disconnect the television camera connector.
   (b) Remove the 2 bolts.

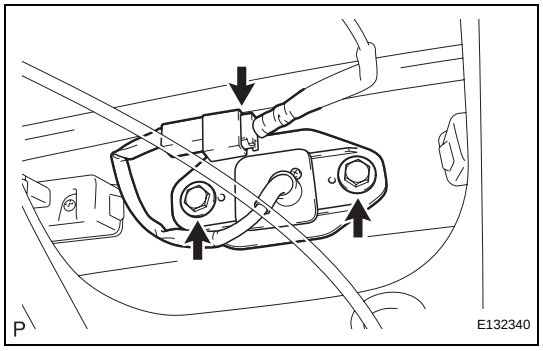

   (c) Disengage the 2 claws and remove the television camera assembly as shown in the illustration.

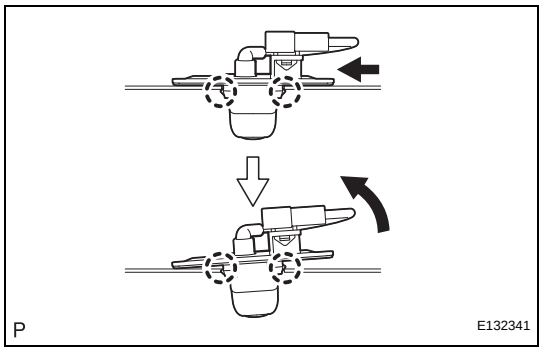

PM

INSTALLATION

1. **INSTALL TELEVISION CAMERA ASSEMBLY**
   (a) Engage the 2 claws and temporarily install the television camera assembly to the luggage compartment as shown in the illustration.

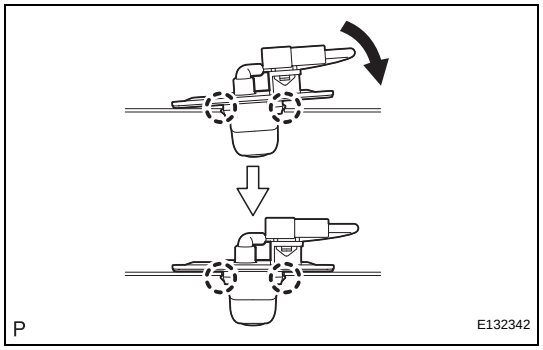

   (b) Install the television camera assembly with the 2 bolts.
   (c) Connect the television camera connector.

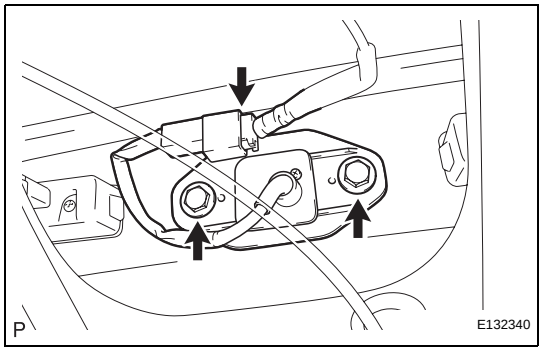

2. **INSTALL LUGGAGE COMPARTMENT DOOR COVER (See page ET-74)**
3. **INSTALL LUGGAGE COMPARTMENT DOOR INSIDE HANDLE (See page ET-74)**
4. **INSTALL LUGGAGE LOCK CONTROL CABLE PLATE (See page ET-75)**

5. **INSTALL LUGGAGE COMPARTMENT DOOR ASSIST GRIP (See page ET-75)**

DTC	C1AE6	Rear Left Sensor Malfunction

DESCRIPTION

The No. 1 ultrasonic sensor (rear left sensor) is installed on the front bumper. The clearance warning ECU detects obstacles based on signals received from the rear left sensor. If the rear left sensor has an open circuit or other malfunction, it will not function normally.

DTC No.	DTC Detection Condition	Trouble Area
C1AE6	Malfunction of No. 1 ultrasonic sensor (Rear left sensor)	• No. 1 ultrasonic sensor (Rear left sensor) • Wire harness (Rear left sensor - Rear left center sensor) • Clearance warning ECU assembly

WIRING DIAGRAM

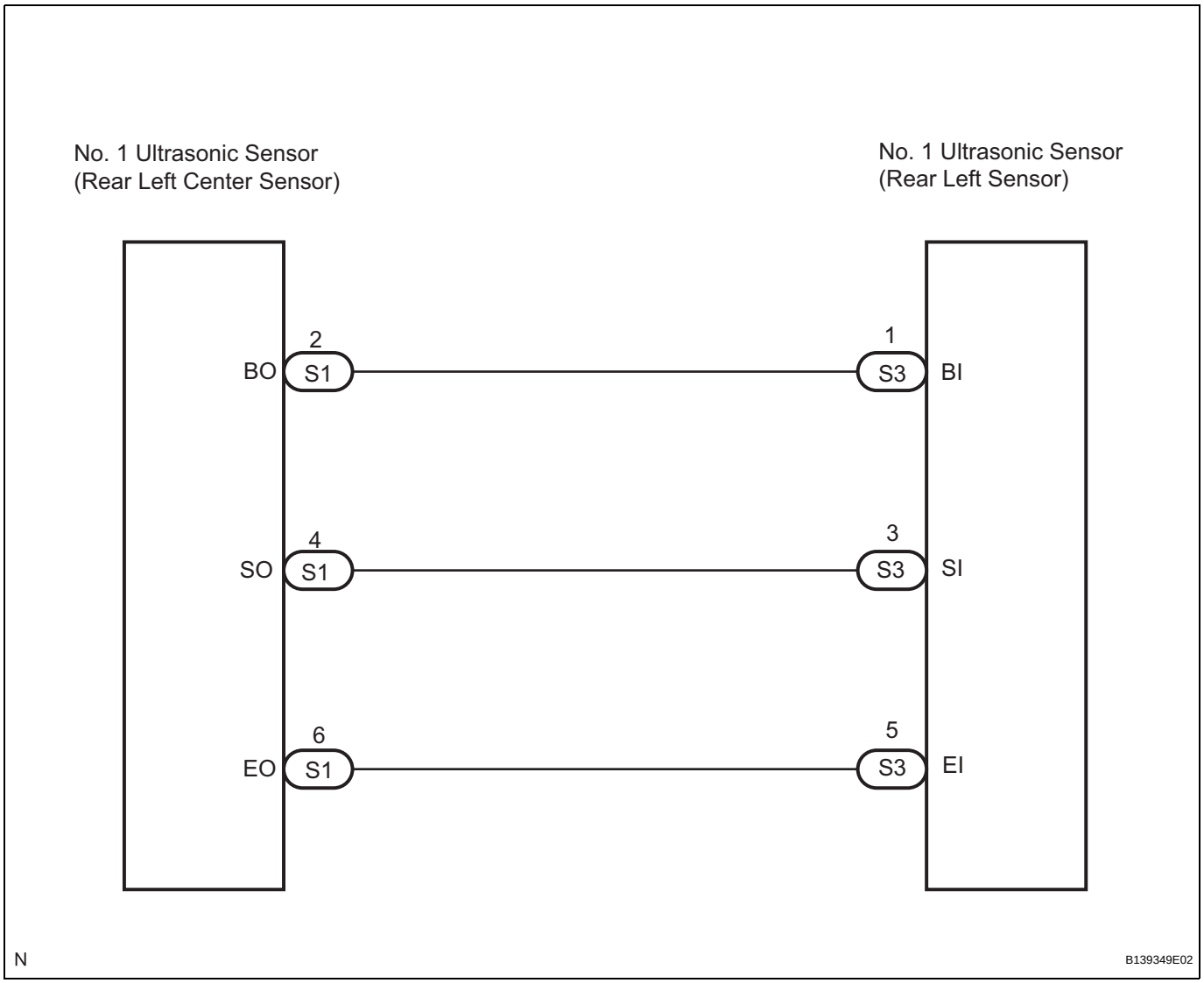

INSPECTION PROCEDURE

1	CHECK DTC OUTPUT

(a) Delete the DTCs (See page PM-28).
(b) Recheck for DTCs (See page PM-28).

PM

Result

Result	Proceed to
DTC C1AE6 is output	A
No DTC is output	B

B → **USE SIMULATION METHOD TO CHECK**

A

2 CHECK HARNESS AND CONNECTOR (REAR LEFT SENSOR - REAR LEFT CENTER SENSOR)

Wire Harness Side Connector Front View:

S1
No. 1 Ultrasonic Sensor
(Rear Left Center Sensor)

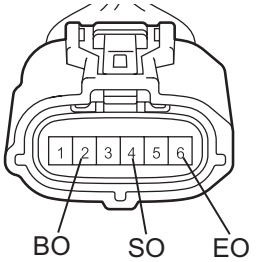

S3
No. 1 Ultrasonic Sensor (Rear Left Sensor)

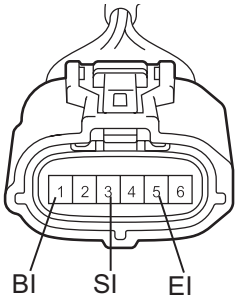

H

B139278E04

(a) Disconnect the S1 and S3 sensor connectors.
(b) Measure the resistance according to the value(s) in the table below.

Standard resistance

Tester Connection	Condition	Specified Condition
S1-2 (BO) - S3-1 (BI)	Always	Below 1 Ω
S1-4 (SO) - S3-3 (SI)		
S1-6 (EO) - S3-5 (EI)		
S1-2 (BO) - Body ground		10 kΩ or higher
S1-4 (SO) - Body ground		
S1-6 (EO) - Body ground		

NG → **REPAIR OR REPLACE HARNESS OR CONNECTOR**

OK

PM

3	REPLACE NO. 1 ULTRASONIC SENSOR (REAR LEFT SENSOR)

No. 1 Ultrasonic Sensor:

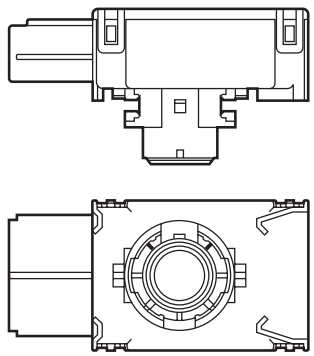

H B139273E01

(a) Replace the ultrasonic sensor (See page PM-99) with a normally functioning sensor.

NEXT

4	CHECK DTC OUTPUT

(a) Delete the DTCs (See page PM-28).
(b) Recheck for DTCs (See page PM-28).

Result

Result	Proceed to
DTC C1AE6 is output	A
No DTC is output	B

B → **END**

A

REPLACE CLEARANCE WARNING ECU ASSEMBLY (See page PM-93)

PM

DTC	C1AE7	Rear Left Center Sensor Malfunction

DESCRIPTION

The No. 1 ultrasonic sensor (rear left center sensor) is installed on the front bumper. The clearance warning ECU detects obstacles based on signals received from the rear left center sensor. If the rear left center sensor has an open circuit or other malfunction, it will not function normally.

DTC Combination Table

DTC NO.	C1AE6	C1AE7	C1AE8	C1AE9	Trouble Area
DTC Detection Condition	○	○	-	-	1. Rear left center senor malfunction 2. Open in wire harness between rear right center sensor and rear left center sensor 3. Clearance warning ECU malfunction
	-	○	-	-	Rear left center senor malfunction

○: DTC is output
-: DTC is not output

DTC No.	DTC Detection Condition	Trouble Area
C1AE7	Malfunction of No. 1 ultrasonic sensor (Rear left center sensor)	• No. 1 ultrasonic sensor (rear left center sensor) • Wire harness (rear left center sensor - rear right center sensor) • Clearance warning ECU assembly

WIRING DIAGRAM

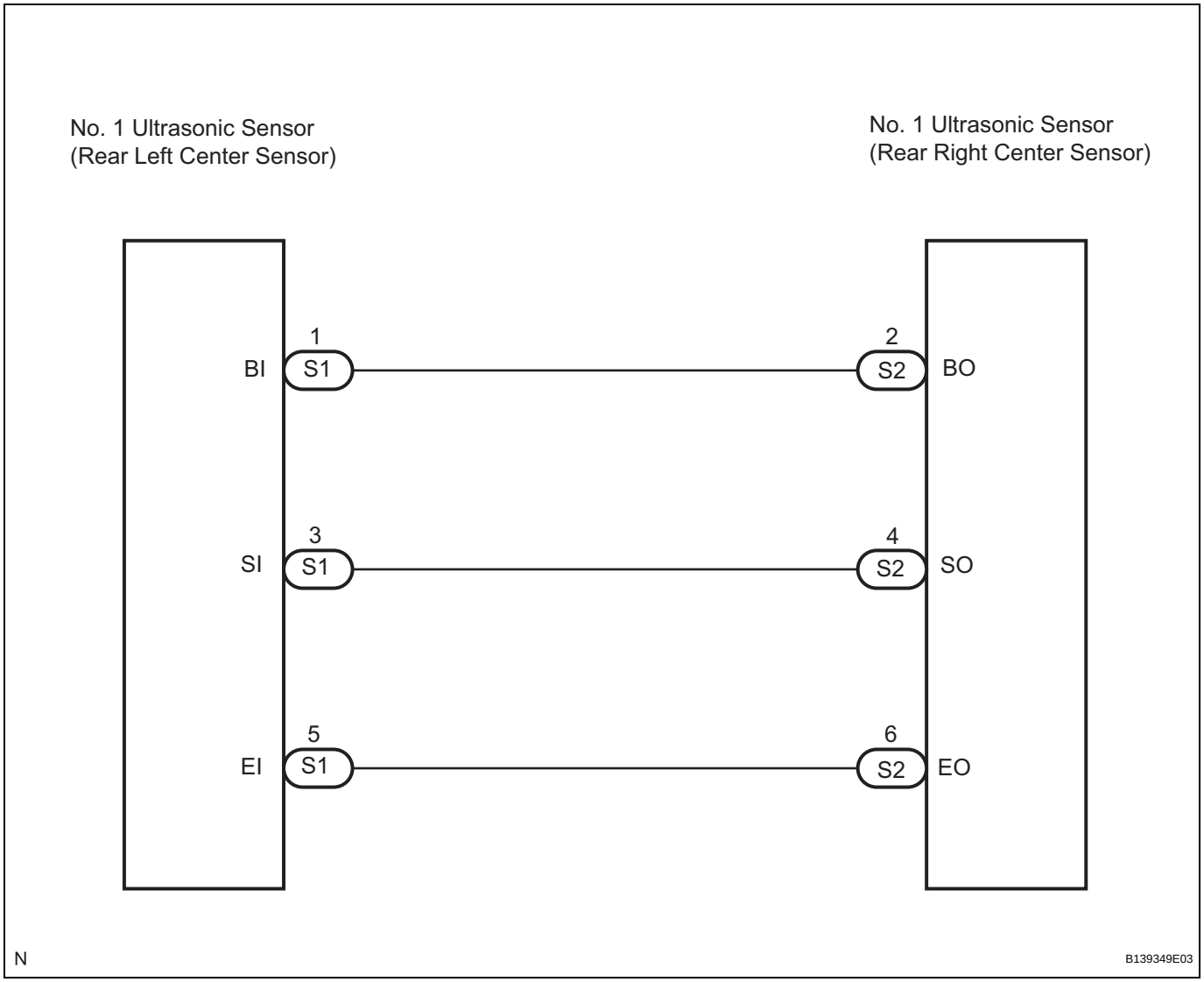

INSPECTION PROCEDURE

1	CHECK DTC OUTPUT

(a) Delete the DTCs (See page PM-28).
(b) Recheck for DTCs (See page PM-28).

Result

Result	Proceed to
DTCs C1AE6 and C1AE7 are output	A
DTC C1AE7 is output	B
No DTC is output	C

B → Go to step 3

C → USE SIMULATION METHOD TO CHECK

A

PM

2 CHECK HARNESS AND CONNECTOR (REAR LEFT CENTER SENSOR - REAR RIGHT CENTER SENSOR)

Wire Harness Side Connector Front View:

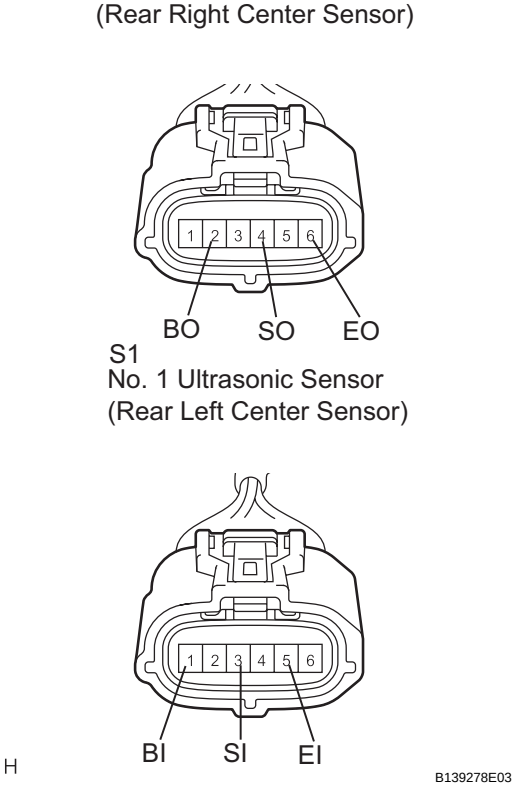

(a) Disconnect the S2 and S1 sensor connectors.
(b) Measure the resistance according to the value(s) in the table below.

Standard resistance

Tester Connection	Condition	Specified Condition
S2-2 (BO) - S1-1 (BI)	Always	Below 1 Ω
S2-4 (SO) - S1-3 (SI)		
S2-6 (EO) - S1-5 (EI)		
S2-2 (BO) - Body ground		10 kΩ or higher
S2-4 (SO) - Body ground		
S2-6 (EO) - Body ground		

NG → **REPAIR OR REPLACE HARNESS OR CONNECTOR**

OK

3 REPLACE NO. 1 ULTRASONIC SENSOR (REAR LEFT CENTER SENSOR)

No. 1 Ultrasonic Sensor:

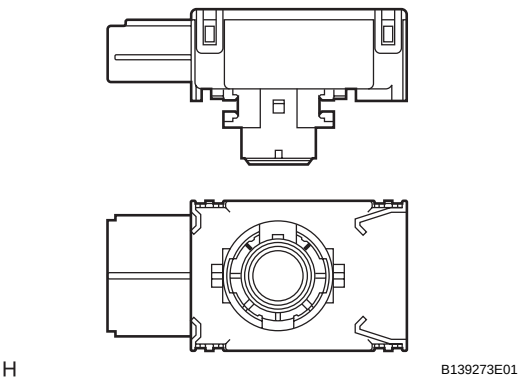

(a) Replace the ultrasonic sensor (See page PM-99) with a normally functioning sensor.

PM

NEXT

4	CHECK DTC OUTPUT

(a) Delete the DTCs (See page PM-28).
(b) Recheck for DTCs (See page PM-28).
Result

Result	Proceed to
DTCs C1AE6 and C1AE7 are output	A
No DTC is output	B

B → END

A

REPLACE CLEARANCE WARNING ECU ASSEMBLY (See page PM-93)

DTC	C1AE8	Rear Right Center Sensor Malfunction

DESCRIPTION

The No. 1 ultrasonic sensor (rear right center sensor) is installed on the front bumper. The clearance warning ECU detects obstacles based on signals received from the rear right center sensor. If the rear right center sensor has an open circuit or other malfunction, it will not function normally.

DTC Combination Table

DTC NO.	C1AE6	C1AE7	C1AE8	C1AE9	Trouble Area
DTC Detection Condition	○	○	○	-	1. Rear right center senor malfunction 2. Open in wire harness between rear right center sensor and rear right sensor 3. Clearance warning ECU malfunction
	-	-	○	-	Rear right center senor malfunction

○: DTC is output
-: DTC is not output

DTC No.	DTC Detection Condition	Trouble Area
C1AE8	Malfunction of No. 1 ultrasonic sensor (Rear right center sensor)	• No. 1 ultrasonic sensor (rear right center sensor) • Wire harness (rear right center sensor - right sensor) • Clearance warning ECU assembly

WIRING DIAGRAM

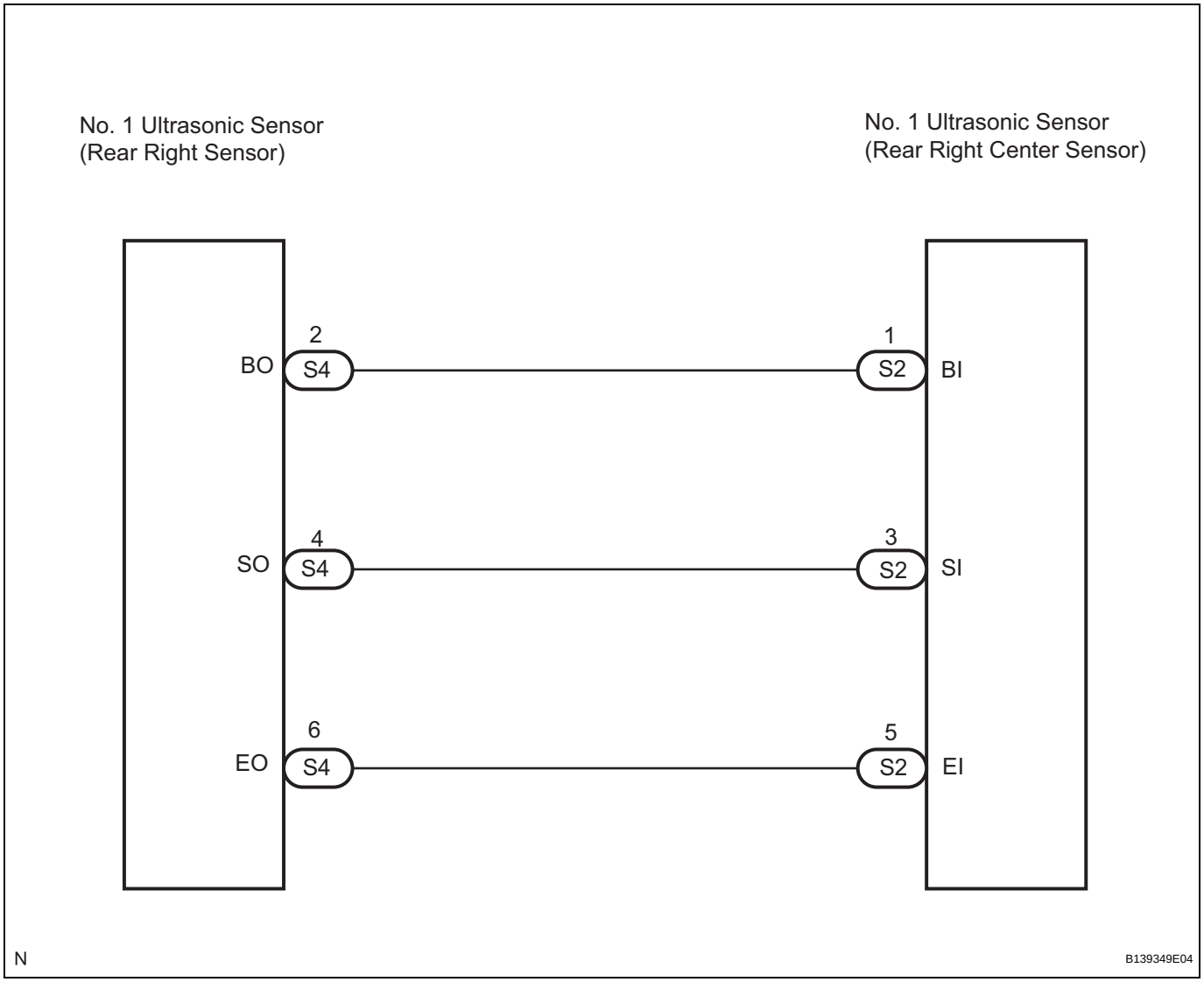

INSPECTION PROCEDURE

1	CHECK DTC OUTPUT

(a) Delete the DTCs (See page PM-28).
(b) Recheck for DTCs (See page PM-28).
Result

Result	Proceed to
DTCs C1AE6, C1AE7 and C1AE8 are output	A
DTC C1AE8 is output	B
No DTC is output	C

B → Go to step 3

C → USE SIMULATION METHOD TO CHECK

A

PM

2 CHECK HARNESS AND CONNECTOR (REAR RIGHT CENTER SENSOR - REAR RIGHT SENSOR)

Wire Harness Side Connector Front View:

S4
No. 1 Ultrasonic Sensor (Rear Right Sensor)

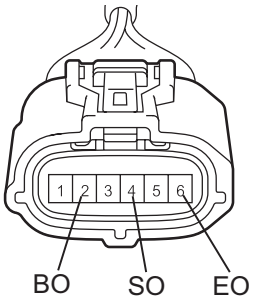

S2
No. 1 Ultrasonic Sensor
(Rear Right Center Sensor)

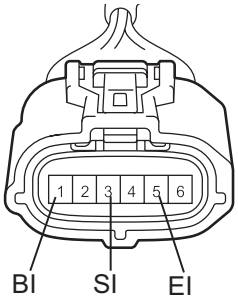

H B139278E02

(a) Disconnect the S4 and S2 sensor connectors.
(b) Measure the resistance according to the value(s) in the table below.

Standard resistance

Tester Connection	Condition	Specified Condition
S4-2 (BO) - S2-1 (BI)	Always	Below 1 Ω
S4-4 (SO) - S2-3 (SI)		
S4-6 (EO) - S2-5 (EI)		
S4-2 (BO) - Body ground		10 kΩ or higher
S4-4 (SO) - Body ground		
S4-6 (EO) - Body ground		

NG → **REPAIR OR REPLACE HARNESS OR CONNECTOR**

OK

3 REPLACE NO. 1 ULTRASONIC SENSOR (REAR RIGHT CENTER SENSOR)

No. 1 Ultrasonic Sensor:

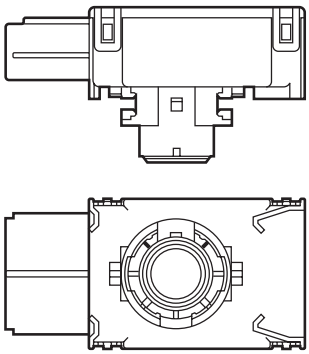

H B139273E01

(a) Replace the ultrasonic sensor (See page PM-99) with a normally functioning sensor.

PM

NEXT

4	CHECK DTC OUTPUT

(a) Delete the DTCs (See page PM-28).
(b) Recheck for DTCs (See page PM-28).
Result

Result	Proceed to
DTCs C1AE6, C1AE7 and C1AE8 are output	A
No DTC is output	B

B → END

A

REPLACE CLEARANCE WARNING ECU ASSEMBLY (See page PM-93)

SYSTEM DIAGRAM

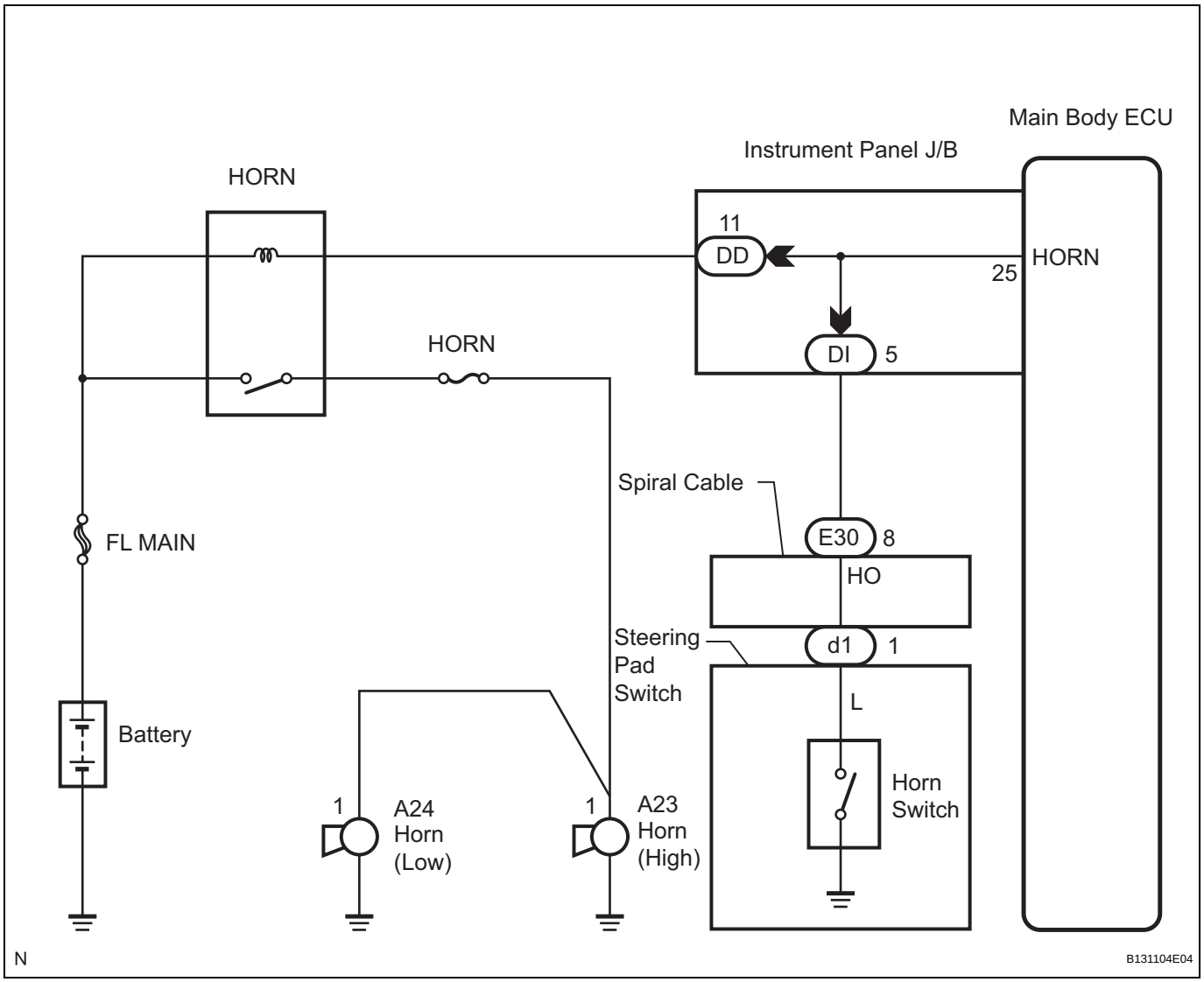

PROBLEM SYMPTOMS TABLE

HORN SYSTEM

Symptom	Suspected Area	See page
Horn does not sound	1. HORN fuse	HO-4
	2. Horn relay	HO-4
	3. Steering pad switch	RS-365
	4. Spiral cable	RS-380
	5. Wire harness	-
Horn blows all the time	1. Horn relay	HO-4
	2. Steering pad switch	RS-365
	3. Wire harness	-
Low pitched horn operates but high pitched horn does not operate	1. High pitched horn	HO-8
	2. Wire harness	-
High pitched horn operates but low pitched horn does not operate	1. Low pitched horn	HO-6
	2. Wire harness	-

HORN RELAY

INSPECTION

1. INSPECT FUSE (HORN)

(a) Check the resistance of the HORN fuse.

Standard:

Below 1 Ω

2. INSPECT HORN RELAY

(a) Remove the engine room R/B and J/B (horn relay).

(b) Measure the resistance according to the value(s) in the table below.

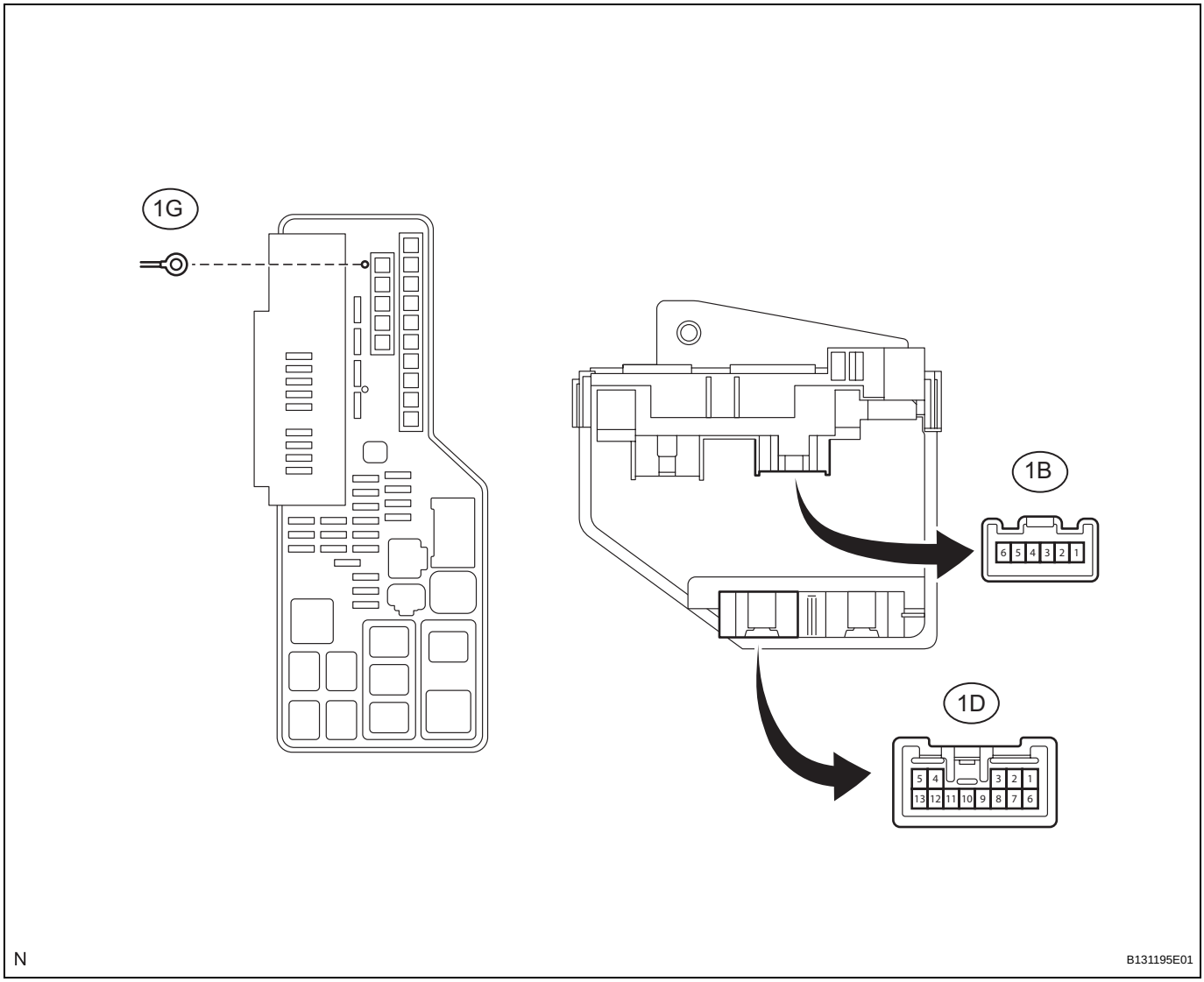

Standard resistance

Tester Connection	Condition	Specified Condition
1G-1 - 1B-6	When battery voltage is not applied to terminals 1G-1 and 1D-10	10 kΩ or higher
1G-1 - 1B-6	When battery voltage is applied to terminals 1G-1 and 1D-10	Below 1 Ω

LOW PITCHED HORN

COMPONENTS

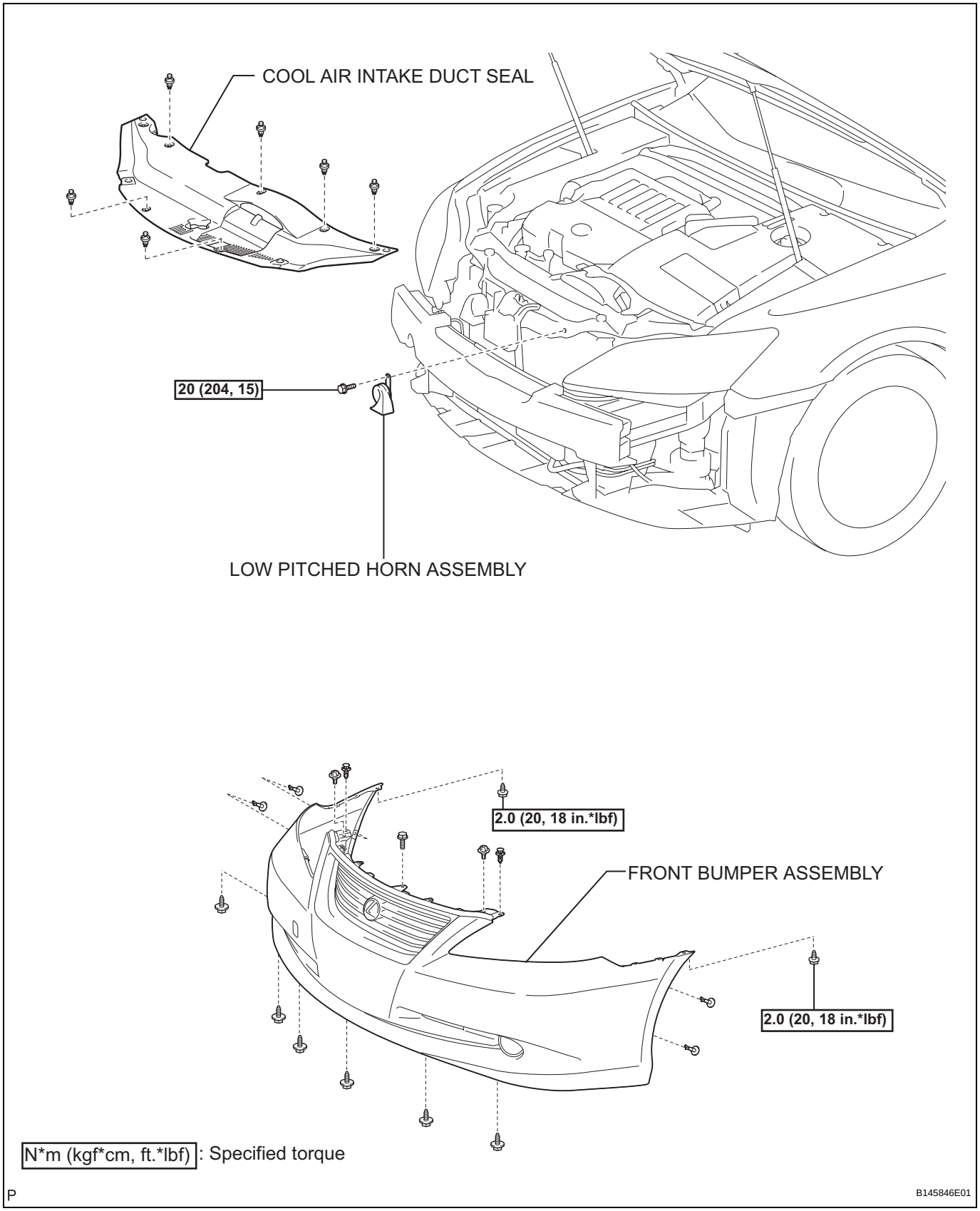

REMOVAL

1. **REMOVE COOL AIR INTAKE DUCT SEAL (See page ET-4)**
2. **REMOVE FRONT BUMPER ASSEMBLY (See page ET-5)**
3. **REMOVE LOW PITCHED HORN ASSEMBLY**
   (a) Disconnect the connector.
   (b) Remove the bolt and the low pitched horn assembly.

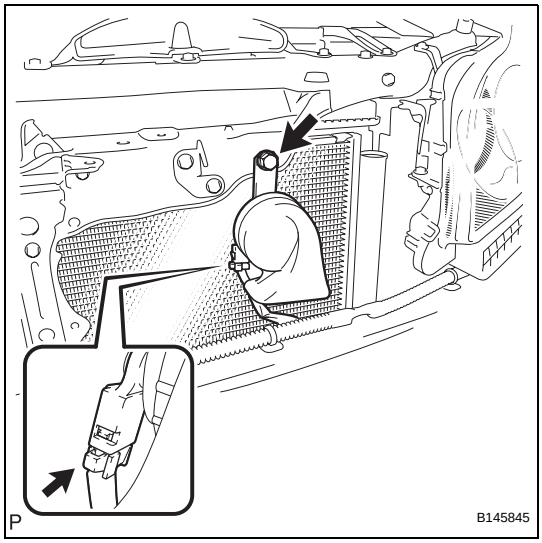

INSPECTION

1. **INSPECT LOW PITCHED HORN**
   (a) Apply battery voltage and check operation of the horn, as shown in the table below.
   Standard

Measurement Condition	Specified Condition
Battery positive (+) → Terminal 1 Battery negative (-) → Body ground	Horn sounds

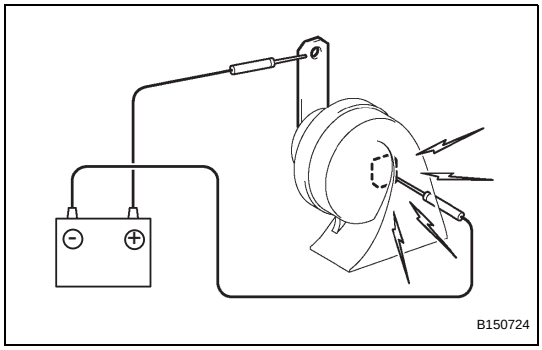

HO

INSTALLATION

1. **INSTALL LOW PITCHED HORN ASSEMBLY**
   (a) Install the low pitched horn assembly with the bolt.
   Torque: 20 N*m (204 kgf*cm, 15 ft.*lbf)
   (b) Connect the connector.
2. **INSTALL FRONT BUMPER ASSEMBLY (See page ET-14)**
3. **INSTALL COOL AIR INTAKE DUCT SEAL (See page ET-14)**
4. **VEHICLE PREPARATION FOR FOG LIGHT AIM ADJUSTMENT (See page LI-141)**
5. **PREPARATION FOR FOG LIGHT AIMING (See page LI-142)**
6. **FOG LIGHT AIMING INSPECTION (See page LI-143)**
7. **FOG LIGHT AIMING ADJUSTMENT (See page LI-144)**

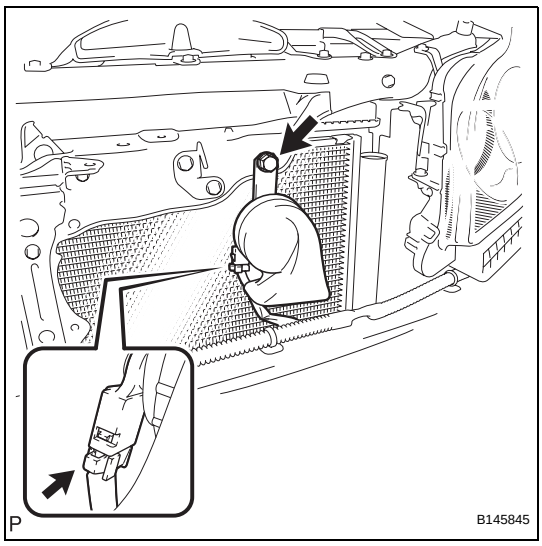

HIGH PITCHED HORN

COMPONENTS

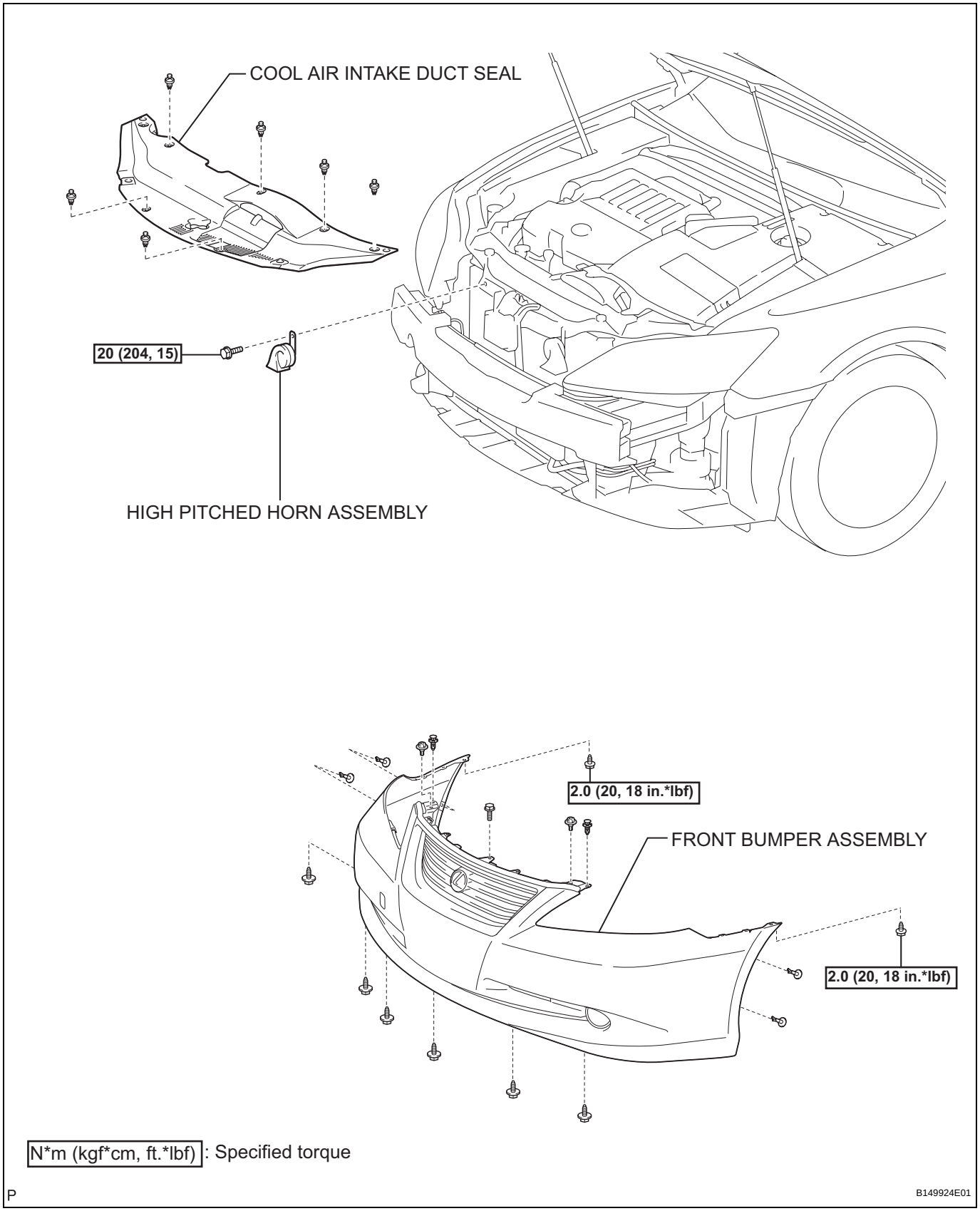

HO

REMOVAL

1. **REMOVE COOL AIR INTAKE DUCT SEAL (See page ET-4)**
2. **REMOVE FRONT BUMPER ASSEMBLY (See page ET-5)**
3. **REMOVE HIGH PITCHED HORN ASSEMBLY**
   (a) Disconnect the connector.
   (b) Remove the bolt and the high pitched horn assembly.

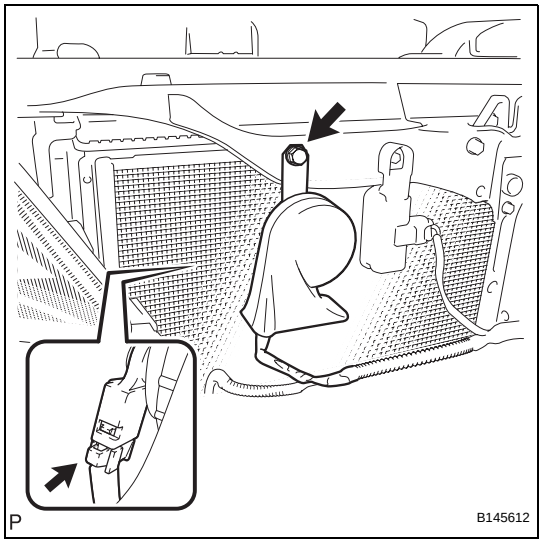

INSPECTION

1. **INSPECT HIGH PITCHED HORN**
   (a) Apply battery voltage and check operation of the horn, as shown in the table below.
   Standard

Measurement Condition	Specified Condition
Battery positive (+) → Terminal 1 Battery negative (-) → Body ground	Horn sounds

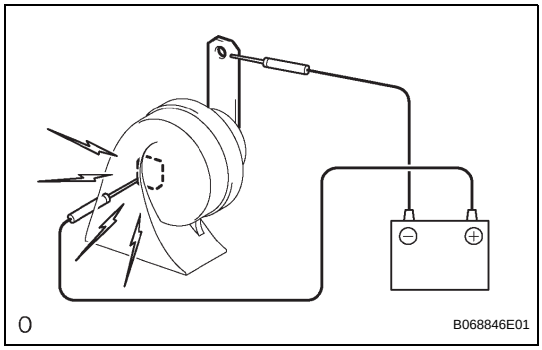

INSTALLATION

1. **INSTALL HIGH PITCHED HORN ASSEMBLY**
   (a) Install the high pitched horn assembly with the bolt.
   Torque: 20 N*m (204 kgf*cm, 15 ft.*lbf)
   (b) Connect the connector.
2. **INSTALL FRONT BUMPER ASSEMBLY (See page ET-14)**
3. **INSTALL COOL AIR INTAKE DUCT SEAL (See page ET-14)**
4. **VEHICLE PREPARATION FOR FOG LIGHT AIM ADJUSTMENT (See page LI-141)**
5. **PREPARATION FOR FOG LIGHT AIMING (See page LI-142)**
6. **FOG LIGHT AIMING INSPECTION (See page LI-143)**
7. **FOG LIGHT AIMING ADJUSTMENT (See page LI-144)**

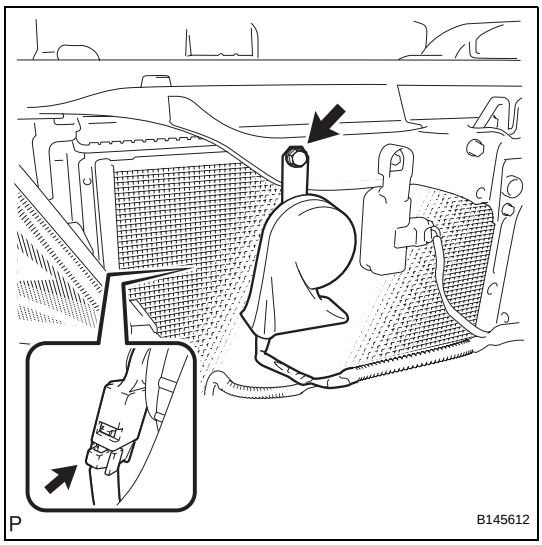

TERMINALS OF ECU

1. CLOCK ASSEMBLY (IN HEATER CONTROL PANEL) (WITHOUT NAVIGATION SYSTEM)

HINT:

- Measure the voltage with the connector still connected.
- The whole heater control panel should be replaced if the clock assembly has a malfunction because this part is not independently supplied.

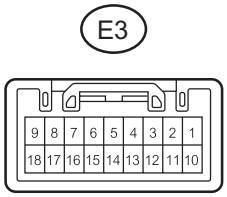

H

E130403E02

Symbols (Terminal No.)	Wiring Color	Terminal Description	Condition	Specified Condition
E3-1 (+B) - Body ground	GR - Body ground	Battery	Always	10 to 14 V
E3-10 (ACC) - Body ground	L - Body ground	Engine switch signal (Accessory)	Engine switch off	Below 1 V
			Engine switch on (ACC)	10 to 14 V
ILL+ (E3-11) - Body ground	G - Body ground	Illumination signal	Engine switch on (IG), light control switch OFF	Below 1 V
			Engine switch on (IG), light control switch TAIL/HEAD	10 to 14 V
TX+ (E3-15) - Body ground	GR - Body ground	LIN communication line (Illumination signal)	Engine switch on (IG), cover the automatic light control sensor by hand, and light control switch TAIL/HEAD	Pulse generation
ILL- (E3-17) - Body ground	BR - Body ground	Illumination signal	Engine switch on (IG)	Pulse generation (See waveform)
E3-18 (GND) - Body ground	W-B - Body ground	Ground	Always	Below 1 V

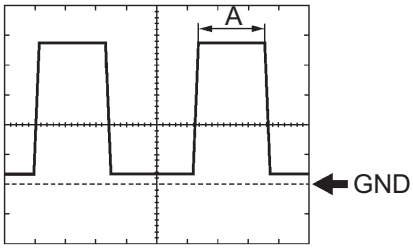

I037750E01

(a) Waveform (Reference): Using oscilloscope:

Item	Condition
Tool setting	2 V/DIV, 1 ms./DIV
Vehicle condition	Turn the engine switch on (IG), light control switch TAIL/HEAD

HINT:
Duty ratio changes as the illumination becomes darker (the period "A" shown in the illustration becomes longer).

2. CLOCK ASSEMBLY (IN MULTI-DISPLAY) (WITH NAVIGATION SYSTEM)

HINT:

- Measure the voltage with the connector still connected.

- The whole multi-display assembly should be replaced if the clock assembly has a malfunction because this part is not independently supplied.

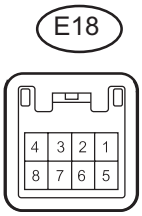

H

E132695E01

Symbols (Terminal No.)	Wiring Color	Terminal Description	Condition	Specified Condition
B (E18-1) - Body ground	R - Body ground	Battery	Always	10 to 14 V
ACC (E18-2) - Body ground	L - Body ground	Engine switch signal (Accessory)	Engine switch off	Below 1 V
			Engine switch on (ACC)	10 to 14 V
LIN (E18-4) - Body ground	GR - Body ground	LIN communication line (Illumination signal)	Engine switch on (IG), cover the automatic light control sensor by hand, and light control switch TAIL/HEAD	Pulse generation
IG+ (E18-5) - Body ground	B - Body ground	Engine switch signal	Engine switch off	Below 1 V
			Engine switch on (IG)	10 to 14 V
ILL+ (E18-6) - Body ground	G - Body ground	Illumination signal	Engine switch on (IG), light control switch OFF	Below 1 V
			Engine switch on (IG), light control switch TAIL/HEAD	10 to 14 V
ILL- (E18-7) - Body ground	BR - Body ground	Illumination signal	Engine switch on (IG)	Pulse generation (See waveform)
E (E18-8) - Body ground	W-B - Body ground	Ground	Always	Below 1 V

OT

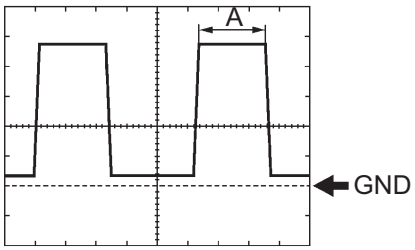

I037750E01

(a) Waveform (Reference): Using oscilloscope:

Item	Condition
Tool setting	2 V/DIV, 1 ms./DIV
Vehicle condition	Turn the engine switch on (IG), light control switch TAIL/HEAD

HINT:
Duty ratio changes as the illumination becomes darker (the period "A" shown in the illustration becomes longer).

Clock Assembly
Wire Harness View:

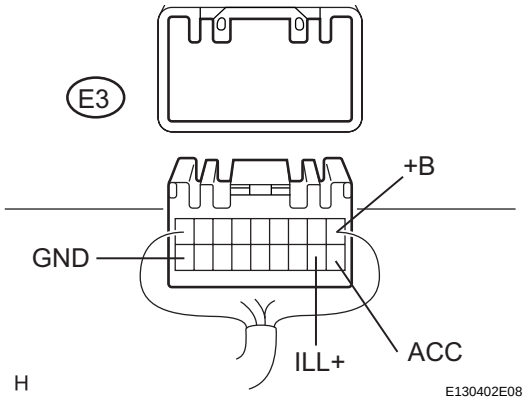

ON-VEHICLE INSPECTION

1. INSPECT CLOCK ASSEMBLY (w/o Navigation System)

(a) Disconnect the E3 connector.

(b) Measure the voltage according to the value(s) in the table below.

Standard voltage

Tester Connection	Condition	Specified Condition
E3-1 (+B) - Body ground	Always	10 to 14 V
E3-10 (ACC) - Body ground	Engine switch off	Below 1 V
	Engine switch on (ACC)	10 to 14 V
E3-11 (ILL+) - Body ground	Engine switch on (IG), light control switch OFF	Below 1 V
	Engine switch on (IG), light control switch TAIL/HEAD	10 to 14 V

HINT:
If the value is not as specified, repair or replace the wire harness or connector.

(c) Measure the resistance according to the value(s) in the table below.

Standard resistance

Tester Connection	Condition	Specified Condition
E3-18 (GND) - Body ground	Always	Below 1 Ω

HINT:
If the value is not as specified, repair or replace the wire harness or connector.

(d) Reconnect the E3 connector.

(e) Check the waveform according to the illustration shown in below.

OK

Tester Connection	Condition	Specified Condition
E3-17 (ILL-) - Body ground	Engine switch on (IG)	Pulse generation (See waveform)

HINT:
If the result is not as specified, replace the heater control panel because the clock assembly does not supplied independently.

Clock Assembly
Wire Harness View:

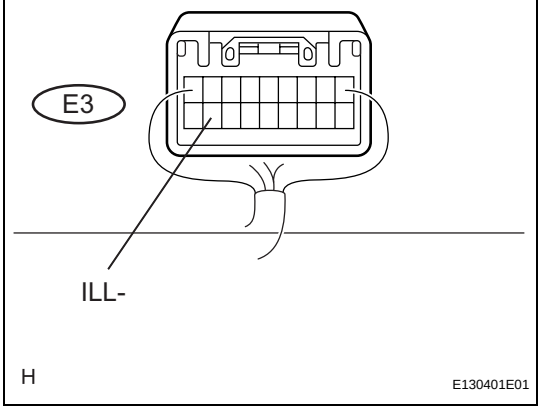

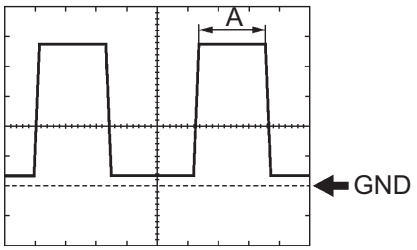

(1) Waveform (Reference): Using oscilloscope:

Item	Condition
Tool setting	2 V/DIV, 1 ms./DIV
Vehicle condition	Turn the engine switch on (IG), light control switch TAIL/HEAD

HINT:
Duty ratio changes as the illumination becomes darker (the period "A" shown in the illustration becomes longer).

Clock Assembly Wire Harness View:

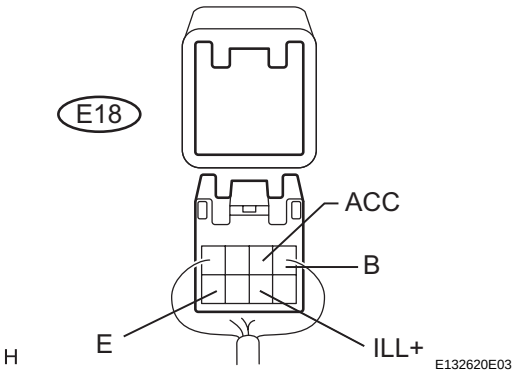

2. INSPECT CLOCK ASSEMBLY (w/ Navigation System)

(a) Disconnect the E18 connector.

(b) Measure the voltage according to the value(s) in the table below.

Standard voltage

Tester Connection	Condition	Specified Condition
E18-1 (B) - Body ground	**Always**	**10 to 14 V**
E18-2 (ACC) - Body ground	**Engine switch off**	**Below 1 V**
	Engine switch on (ACC)	**10 to 14 V**
E18-6 (ILL+) - Body ground	**Engine switch on (IG), light control switch OFF**	**Below 1 V**
	Engine switch on (IG), light control switch TAIL/HEAD	**10 to 14 V**

HINT:
If the value is not as specified, repair or replace the wire harness or connector.

(c) Measure the resistance according to the value(s) in the table below.

Standard resistance

Tester Connection	Condition	Specified Condition
E18-8 (E) - Body ground	**Always**	**Below 1 Ω**

HINT:
If the value is not as specified, repair or replace the wire harness or connector.

(d) Reconnect the E18 connector.

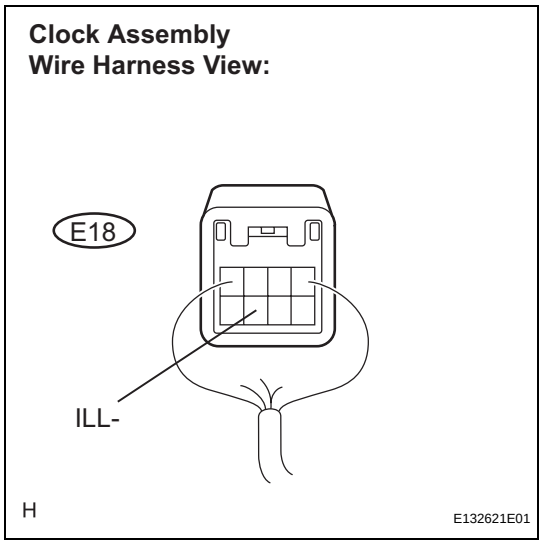

(e) Check the waveform according to the illustration shown in below.
OK

Tester Connection	Condition	Specified Condition
E18-7 (ILL-) - Body ground	**Engine switch on (IG)**	**Pulse generation (See waveform)**

HINT:
Because the clock assembly does not supplied independently, if the result is not as specified, replace the multi-display.
HINT:
If the result is not as specified, replace the multi-display because the clock assembly does not supplied independently.

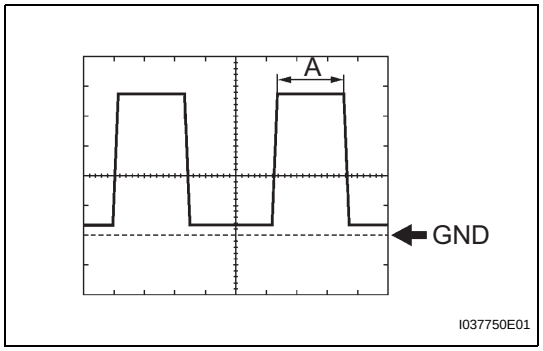

(1) Waveform (Reference): Using oscilloscope:

Item	Condition
Tool setting	2 V/DIV, 1 ms./DIV
Vehicle condition	Turn the engine switch on (IG), light control switch TAIL/HEAD

HINT:
Duty ratio changes as the illumination becomes darker (the period "A" shown in the illustration becomes longer).

REMOVAL

1. **REMOVE INSTRUMENT PANEL FINISH PANEL END LH (See page IP-13)**
2. **REMOVE INSTRUMENT PANEL FINISH PANEL END RH (See page IP-15)**
3. **REMOVE SHIFT LEVER KNOB SUB-ASSEMBLY (See page IP-16)**
4. **REMOVE UPPER CONSOLE PANEL ASSEMBLY WITH FRONT ASH RECEPTACLE (See page IP-16)**
5. **REMOVE NO. 2 INSTRUMENT PANEL REGISTER ASSEMBLY (See page IP-17)**
6. **REMOVE MULTI-DISPLAY WITH RADIO RECEIVER ASSEMBLY (See page AV-170)**
7. **REMOVE NO. 1 RADIO BRACKET (See page AV-170)**
8. **REMOVE NO. 2 RADIO BRACKET (See page AV-170)**
9. **REMOVE CLOCK ASSEMBLY**
   (a) Remove the 2 screws and the clock assembly.

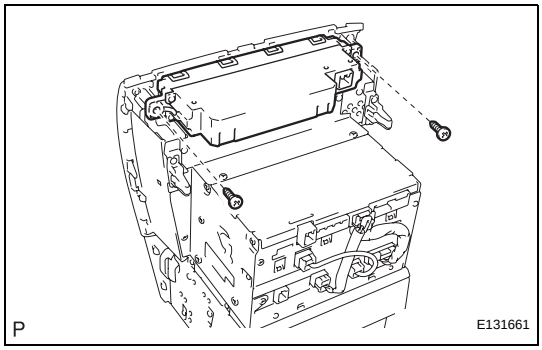

OT

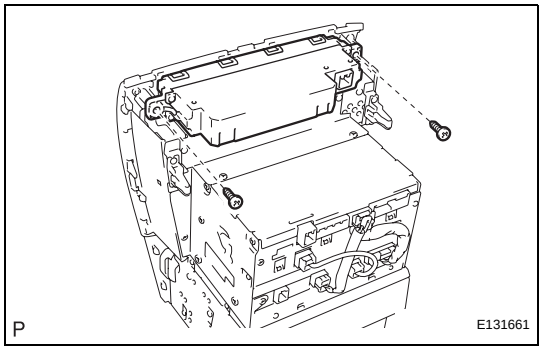

INSTALLATION

1. **INSTALL CLOCK ASSEMBLY**
   (a) Install the clock assembly with the 2 screws.
2. **INSTALL NO. 2 RADIO BRACKET (See page AV-173)**
3. **INSTALL NO. 1 RADIO BRACKET (See page AV-173)**
4. **INSTALL MULTI-DISPLAY WITH RADIO RECEIVER ASSEMBLY (See page AV-173)**
5. **INSTALL NO. 2 INSTRUMENT PANEL REGISTER ASSEMBLY (See page IP-41)**
6. **INSTALL UPPER CONSOLE PANEL ASSEMBLY WITH FRONT ASH RECEPTACLE (See page IP-42)**
7. **INSTALL SHIFT LEVER KNOB SUB-ASSEMBLY (See page IP-42)**
8. **INSTALL INSTRUMENT PANEL FINISH PANEL END RH (See page IP-44)**
9. **INSTALL INSTRUMENT PANEL FINISH PANEL END LH (See page IP-46)**

Clock Display Circuit

DESCRIPTION

The clock assembly uses this circuit to communicate with the A/C amplifier via the direct line. The clock assembly uses this circuit to receive auto dimmer signals. When the clock assembly receives an auto dimmer signal from the main body ECU through the A/C amplifier via the direct line, the clock assembly causes the clock display to be dimmed.
HINT:
If the automatic light control sensor has a malfunction, DTC B1244 is output.

WIRING DIAGRAM

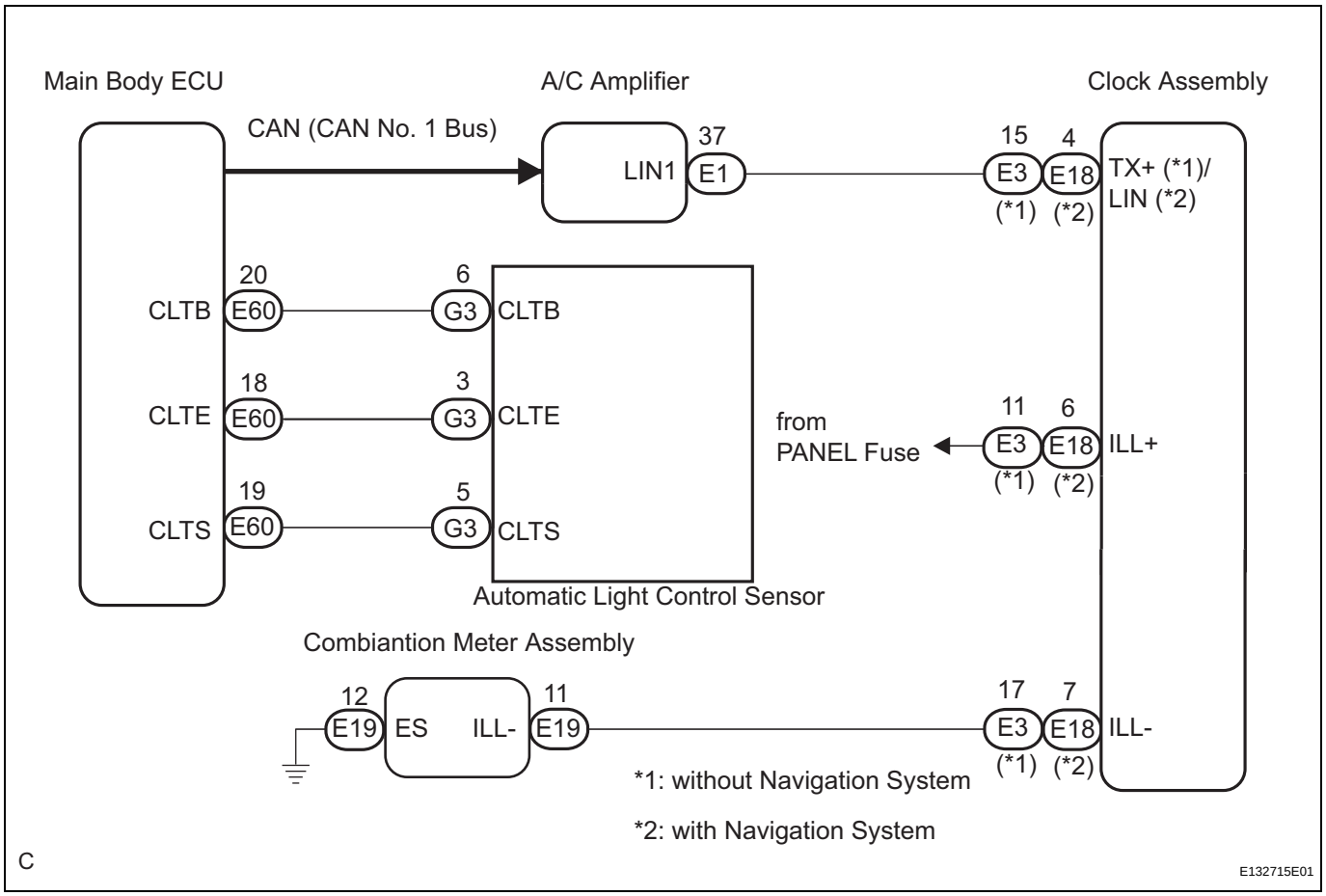

INSPECTION PROCEDURE

1	CHECK CAN COMMUNICATION SYSTEM

(a) Check if CAN communication DTC is output (See page CA-41).

Result

Result	Proceed to
CAN communication DTC is not output	A
CAN communication DTC is output	B

B → GO TO CAN COMMUNICATION SYSTEM

OT

A

2	CHECK AIR CONDITIONING SYSTEM

(a) Check the the heater control panel illumination.

OK:

The heater control panel illumination operates normally.

NG → **GO TO AIR CONDITIONING SYSTEM**

OK

3	PERFORM ACTIVE TEST BY INTELLIGENT TESTER

(a) Connect the intelligent tester to the DLC3.
(b) Engine switch on (IG).
(c) Turn the tester ON.
(d) Light control switch TAIL/HEAD.
(e) Enter the following menus: DIAGNOSIS / BODY / MAIN BODY / ACTIVE TEST.
(f) Check the clock illumination.

MAIN BODY:

Item	Test Details	Diagnostic Note
DIMMER SIG	Auto dimmer signal ON/OFF	-

OK:

The clock illumination is dimmed when the DIMMER SIG is ON.

HINT:

Refer to the sensitivity setting in the customization table of the automatic light control system (See page LI-29).

NG → **Go to step 4**

OK

REPLACE MAIN BODY ECU

4	CHECK HARNESS AND CONNECTOR (ILL+)

Clock Assembly Wire Harness View (without Navigation System):

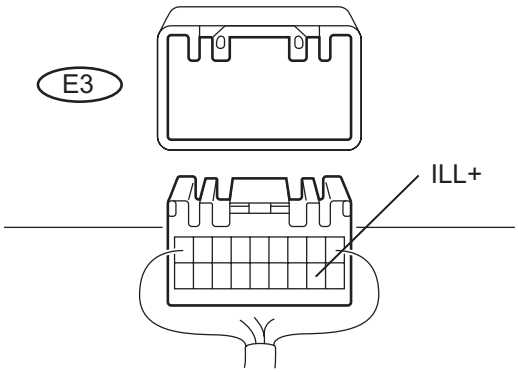

Clock Assembly Wire Harness View (with Navigation System):

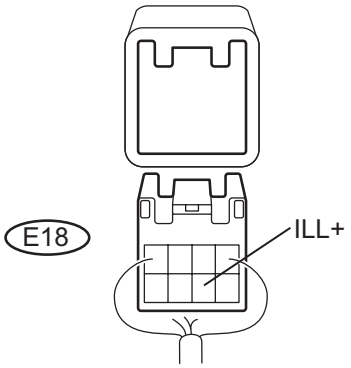

E134455E01

(a) Disconnect the E3 (*1)/E18 (*2) connector.
(b) Measure the voltage according to the value(s) in the table below.

Standard voltage

Tester Connection	Condition	Specified Condition
E3-11 (ILL+) (*1) - Body ground	Engine switch on (IG), light control switch TAIL/HEAD	10 to 14 V
E18-6 (ILL+) (*2) - Body ground	Engine switch on (IG), light control switch TAIL/HEAD	10 to 14 V

*1: without Navigation System
*2: with Navigation System

NG → **REPAIR OR REPLACE HARNESS OR CONNECTOR**

OK

5	CHECK HARNESS AND CONNECTOR (CLOCK ASSEMBLY - COMBINATION METER)

Clock Assembly Wire Harness View (without Navigation System):

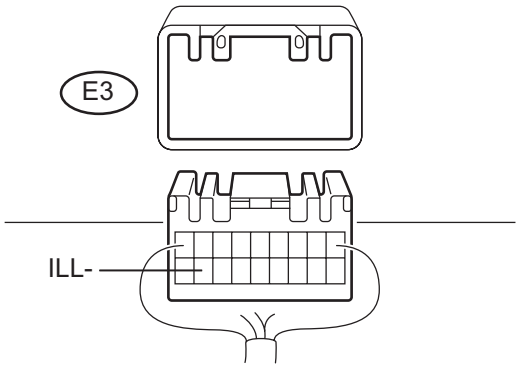

Clock Assembly Wire Harness View (with Navigation System):

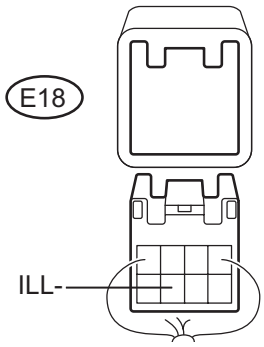

Combination Meter Assembly Wire Harness View:

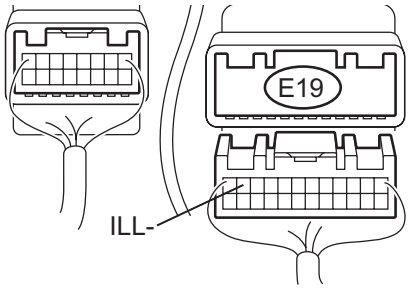

E132717E01

(a) Disconnect the E19 connector.
(b) Measure the resistance according to the value(s) in the table below.

Standard resistance

Tester Connection	Condition	Specified Condition
E3-17 (ILL-) (*1) - E19-11 (ILL-)	Always	Below 1 Ω
E18-7 (ILL-) (*2) - E19-11 (ILL-)	Always	Below 1 Ω
E19-11 (ILL-) - Body ground	Always	10 kΩ or higher

*1: without Navigation System
*2: with Navigation System

NG → **REPAIR OR REPLACE HARNESS OR CONNECTOR**

OK

OT

6 INSPECT CLOCK ASSEMBLY

Combination Meter Assembly Wire Harness View:

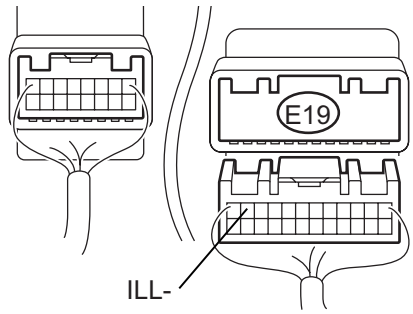

H

E132615E07

(a) Reconnect the E19 connector.
(b) Check the waveform shown in the illustration below.
OK

Tester Connection	Condition	Specified Condition
E19-11 (ILL-) - Body ground	**Turn the engine switch on (IG), light control switch TAIL/HEAD**	**Pulse generation (See waveform)**

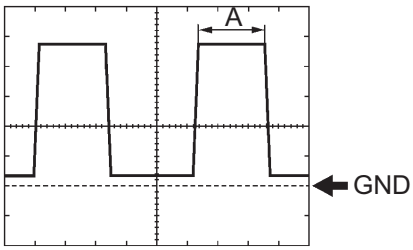

I037750E01

(1) Waveform (Reference): Using oscilloscope:

Item	Condition
Tool setting	2 V/DIV, 1 ms./DIV
Vehicle condition	Turn the engine switch on (IG), light control switch TAIL/HEAD

HINT:
Duty ratio changes as the illumination becomes darker (the period "A" shown in the illustration becomes longer).

Result

Result	Proceed to
NG (without Navigation System)	**A**
NG (with Navigation System)	**B**
OK	**C**

HINT:
The whole heater control panel/multi-display should be replaced if the clock assembly has a malfunction because this part is not independently supplied.

A → **REPLACE HEATER CONTROL PANEL**

B → **REPLACE MULTI-DISPLAY**

C

REPLACE COMBINATION METER ASSEMBLY

OT

REMOVAL

1. **REMOVE INSTRUMENT PANEL FINISH PANEL END LH (See page IP-13)**
2. **REMOVE INSTRUMENT PANEL FINISH PANEL END RH (See page IP-15)**
3. **REMOVE SHIFT LEVER KNOB SUB-ASSEMBLY (See page IP-16)**
4. **REMOVE UPPER CONSOLE PANEL ASSEMBLY WITH FRONT ASH RECEPTACLE (See page IP-16)**
5. **REMOVE NO. 2 INSTRUMENT PANEL REGISTER ASSEMBLY (See page IP-17)**
6. **REMOVE MULTI-DISPLAY WITH RADIO RECEIVER ASSEMBLY (See page AV-170)**
7. **REMOVE NO. 1 RADIO BRACKET (See page AV-170)**
8. **REMOVE NO. 2 RADIO BRACKET (See page AV-170)**
9. **REMOVE CLOCK ASSEMBLY**
   (a) Remove the 2 screws and the clock assembly.

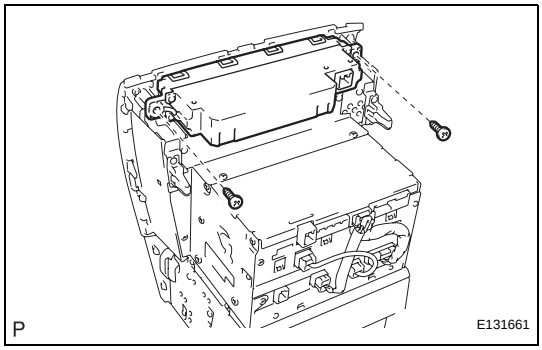

OT

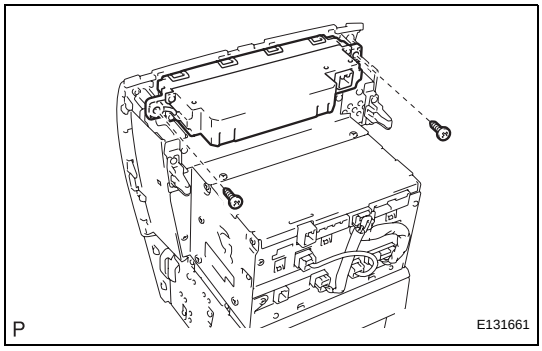

INSTALLATION

1. **INSTALL CLOCK ASSEMBLY**
   (a) Install the clock assembly with the 2 screws.
2. **INSTALL NO. 2 RADIO BRACKET (See page AV-173)**
3. **INSTALL NO. 1 RADIO BRACKET (See page AV-173)**
4. **INSTALL MULTI-DISPLAY WITH RADIO RECEIVER ASSEMBLY (See page AV-173)**
5. **INSTALL NO. 2 INSTRUMENT PANEL REGISTER ASSEMBLY (See page IP-41)**
6. **INSTALL UPPER CONSOLE PANEL ASSEMBLY WITH FRONT ASH RECEPTACLE (See page IP-42)**
7. **INSTALL SHIFT LEVER KNOB SUB-ASSEMBLY (See page IP-42)**
8. **INSTALL INSTRUMENT PANEL FINISH PANEL END RH (See page IP-44)**
9. **INSTALL INSTRUMENT PANEL FINISH PANEL END LH (See page IP-46)**

Clock Display Circuit

DESCRIPTION

The clock assembly uses this circuit to communicate with the A/C amplifier via the direct line. The clock assembly uses this circuit to receive auto dimmer signals. When the clock assembly receives an auto dimmer signal from the main body ECU through the A/C amplifier via the direct line, the clock assembly causes the clock display to be dimmed.
HINT:
If the automatic light control sensor has a malfunction, DTC B1244 is output.

WIRING DIAGRAM

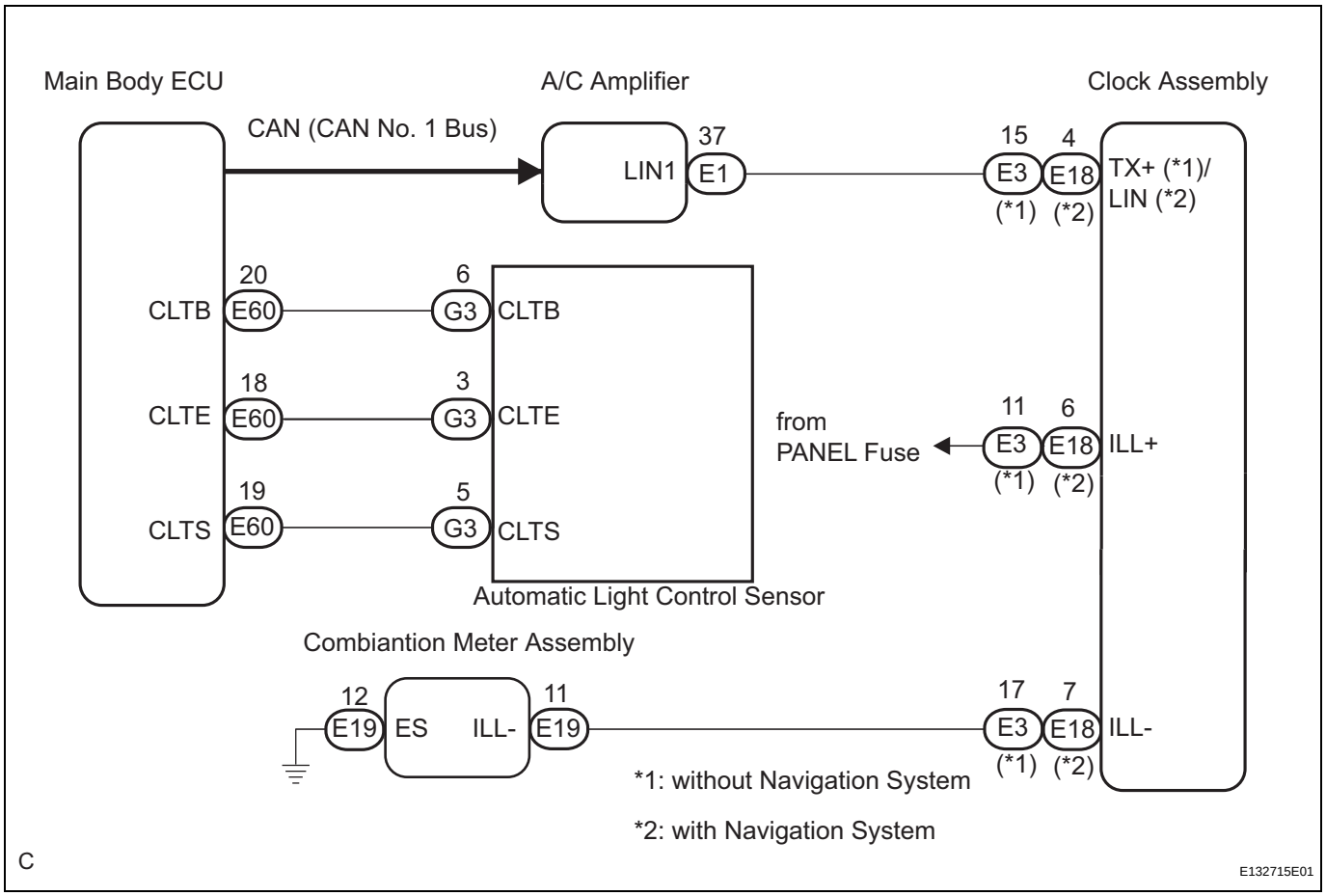

INSPECTION PROCEDURE

1	CHECK CAN COMMUNICATION SYSTEM

(a) Check if CAN communication DTC is output (See page CA-41).

Result

Result	Proceed to
CAN communication DTC is not output	A
CAN communication DTC is output	B

B → GO TO CAN COMMUNICATION SYSTEM

OT

A

2	CHECK AIR CONDITIONING SYSTEM

(a) Check the the heater control panel illumination.

OK:

The heater control panel illumination operates normally.

NG → **GO TO AIR CONDITIONING SYSTEM**

OK

3	PERFORM ACTIVE TEST BY INTELLIGENT TESTER

(a) Connect the intelligent tester to the DLC3.
(b) Engine switch on (IG).
(c) Turn the tester ON.
(d) Light control switch TAIL/HEAD.
(e) Enter the following menus: DIAGNOSIS / BODY / MAIN BODY / ACTIVE TEST.
(f) Check the clock illumination.

MAIN BODY:

Item	Test Details	Diagnostic Note
DIMMER SIG	Auto dimmer signal ON/OFF	-

OK:

The clock illumination is dimmed when the DIMMER SIG is ON.

HINT:

Refer to the sensitivity setting in the customization table of the automatic light control system (See page LI-29).

NG → **Go to step 4**

OK

REPLACE MAIN BODY ECU

4	CHECK HARNESS AND CONNECTOR (ILL+)

Clock Assembly Wire Harness View (without Navigation System):

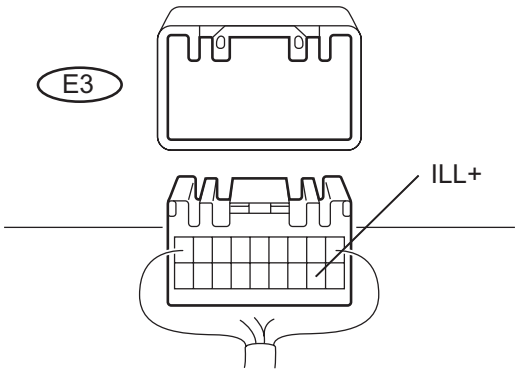

Clock Assembly Wire Harness View (with Navigation System):

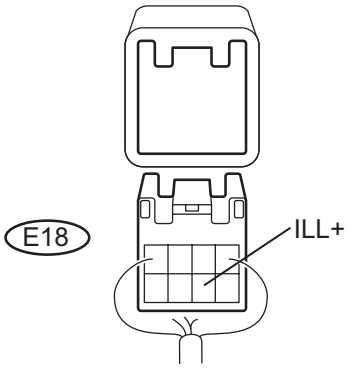

E134455E01

(a) Disconnect the E3 (*1)/E18 (*2) connector.
(b) Measure the voltage according to the value(s) in the table below.

Standard voltage

Tester Connection	Condition	Specified Condition
E3-11 (ILL+) (*1) - Body ground	Engine switch on (IG), light control switch TAIL/HEAD	10 to 14 V
E18-6 (ILL+) (*2) - Body ground	Engine switch on (IG), light control switch TAIL/HEAD	10 to 14 V

*1: without Navigation System
*2: with Navigation System

NG → **REPAIR OR REPLACE HARNESS OR CONNECTOR**

OK

5	CHECK HARNESS AND CONNECTOR (CLOCK ASSEMBLY - COMBINATION METER)

Clock Assembly Wire Harness View (without Navigation System):

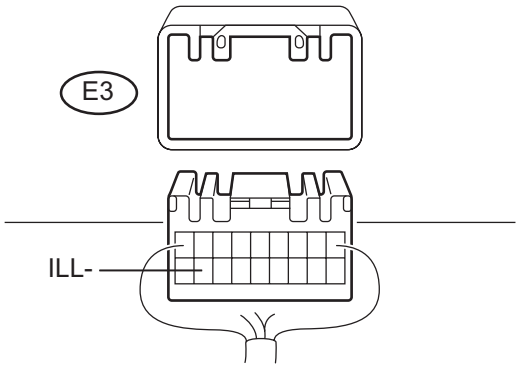

Clock Assembly Wire Harness View (with Navigation System):

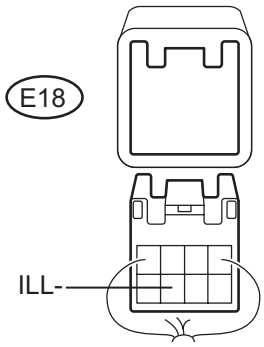

Combination Meter Assembly Wire Harness View:

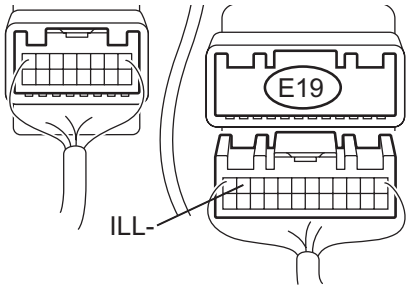

E132717E01

(a) Disconnect the E19 connector.
(b) Measure the resistance according to the value(s) in the table below.

Standard resistance

Tester Connection	Condition	Specified Condition
E3-17 (ILL-) (*1) - E19-11 (ILL-)	Always	Below 1 Ω
E18-7 (ILL-) (*2) - E19-11 (ILL-)	Always	Below 1 Ω
E19-11 (ILL-) - Body ground	Always	10 kΩ or higher

*1: without Navigation System
*2: with Navigation System

NG → **REPAIR OR REPLACE HARNESS OR CONNECTOR**

OK

OT

6 INSPECT CLOCK ASSEMBLY

Combination Meter Assembly Wire Harness View:

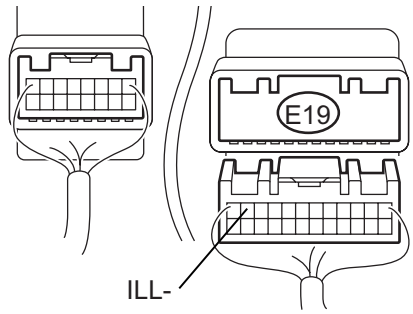

H

E132615E07

(a) Reconnect the E19 connector.
(b) Check the waveform shown in the illustration below.
OK

Tester Connection	Condition	Specified Condition
E19-11 (ILL-) - Body ground	**Turn the engine switch on (IG), light control switch TAIL/HEAD**	**Pulse generation (See waveform)**

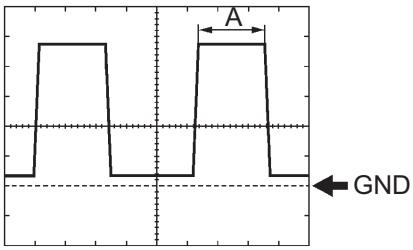

I037750E01

(1) Waveform (Reference): Using oscilloscope:

Item	Condition
Tool setting	2 V/DIV, 1 ms./DIV
Vehicle condition	Turn the engine switch on (IG), light control switch TAIL/HEAD

HINT:
Duty ratio changes as the illumination becomes darker (the period "A" shown in the illustration becomes longer).

Result

Result	Proceed to
NG (without Navigation System)	**A**
NG (with Navigation System)	**B**
OK	**C**

HINT:
The whole heater control panel/multi-display should be replaced if the clock assembly has a malfunction because this part is not independently supplied.

A → **REPLACE HEATER CONTROL PANEL**

B → **REPLACE MULTI-DISPLAY**

C

REPLACE COMBINATION METER ASSEMBLY

OT

Power Source Circuit

DESCRIPTION

This circuit is the power source for the clock assembly. This circuit provides two types of power sources; one is a constant power source mainly used as a backup power source, and the other is a power source mainly used for signal transmission. The constant power source is mainly used as a backup power source of the clock assembly, however, it is also used for communication.
HINT:
If the clock assembly displays "1:00" when the engine switch is turned off, then on (IG) again, the +B (*1)/ B (*2) terminal has a malfunction.
The maximum clock assembly margin of error is -4 to 4 seconds per day when the temperature is between -20°C (-4°F) and 60°C (140°F).

WIRING DIAGRAM

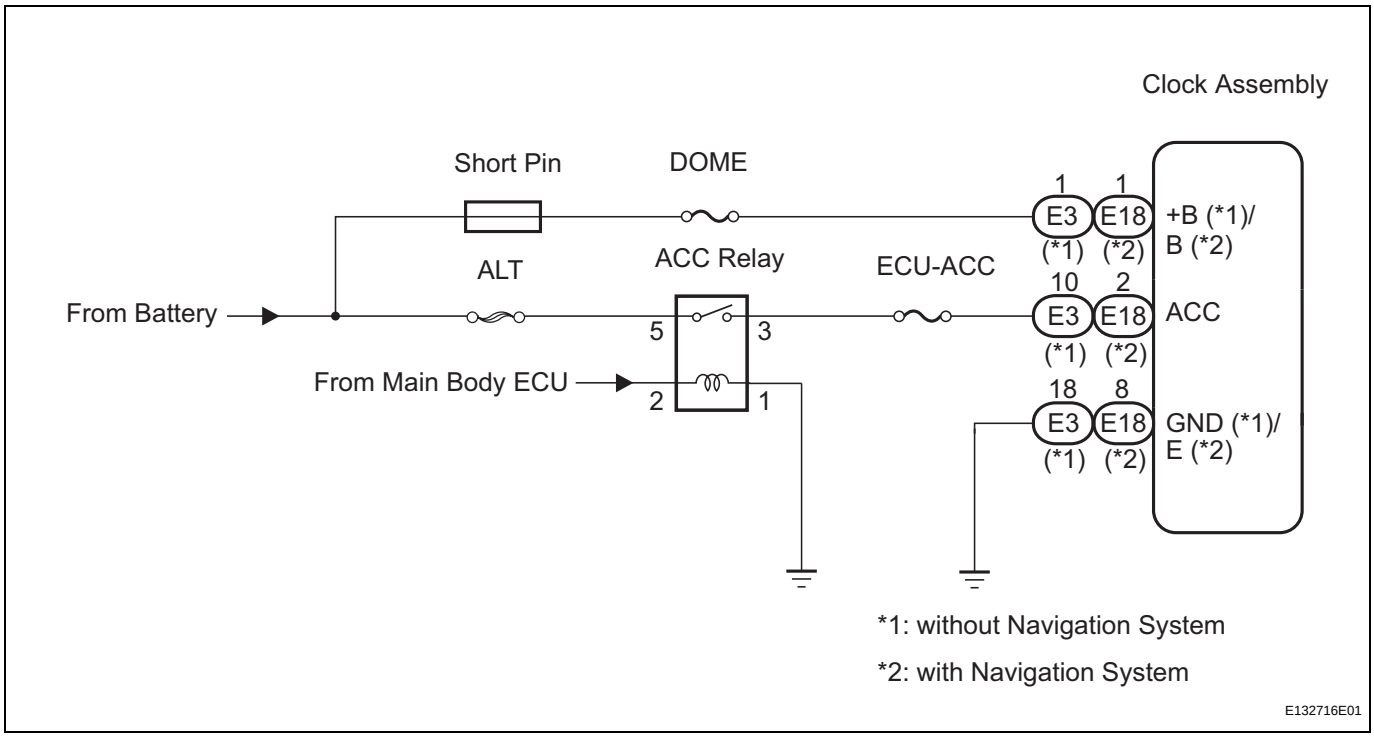

INSPECTION PROCEDURE

1	CHECK HARNESS AND CONNECTOR

Clock Assembly Wire Harness View (without Navigation System):

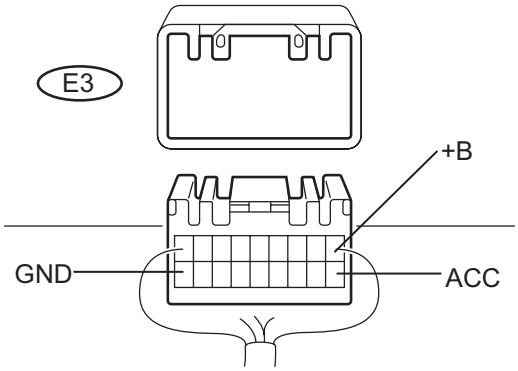

Clock Assembly Wire Harness View (with Navigation System):

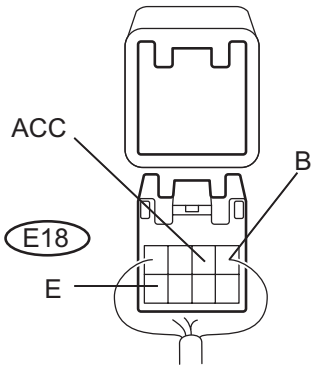

E134455E05

(a) Disconnect the E3 (*1)/E18 (*2) connector.
(b) Measure the voltage according to the value(s) in the table below.

Standard voltage

Tester Connection	Condition	Specified Condition
E3-1 (B) (*1) - Body ground	Always	10 to 14 V
E18-1 (B) (*2) - Body ground	Always	10 to 14 V
E3-10 (ACC) (*1) - Body ground	Engine switch on (ACC)	10 to 14 V
E18-2 (ACC) (*2) - Body ground	Engine switch on (ACC)	10 to 14 V

*1: without Navigation System
*2: with Navigation System

(c) Measure the resistance according to the value(s) in the table below.

Standard resistance

Tester Connection	Condition	Specified Condition
E3-18 (GND) (*1) - Body ground	Always	Below 1 Ω
E18-8 (E) (*2) - Body ground	Always	Below 1 Ω

*1: without Navigation System
*2: with Navigation System

Result

Result	Proceed to
OK (without Navigation System)	A
OK (with Navigation System)	B
NG	C

HINT:
The whole heater control panel (*1)/multi-display should be replaced if the clock assembly has a malfunction because this part is not independently supplied.

B	REPLACE MULTI-DISPLAY
C	REPAIR OR REPLACE HARNESS OR CONNECTOR

A

REPLACE HEATER CONTROL PANEL

POWER OUTLET SOCKET

COMPONENTS

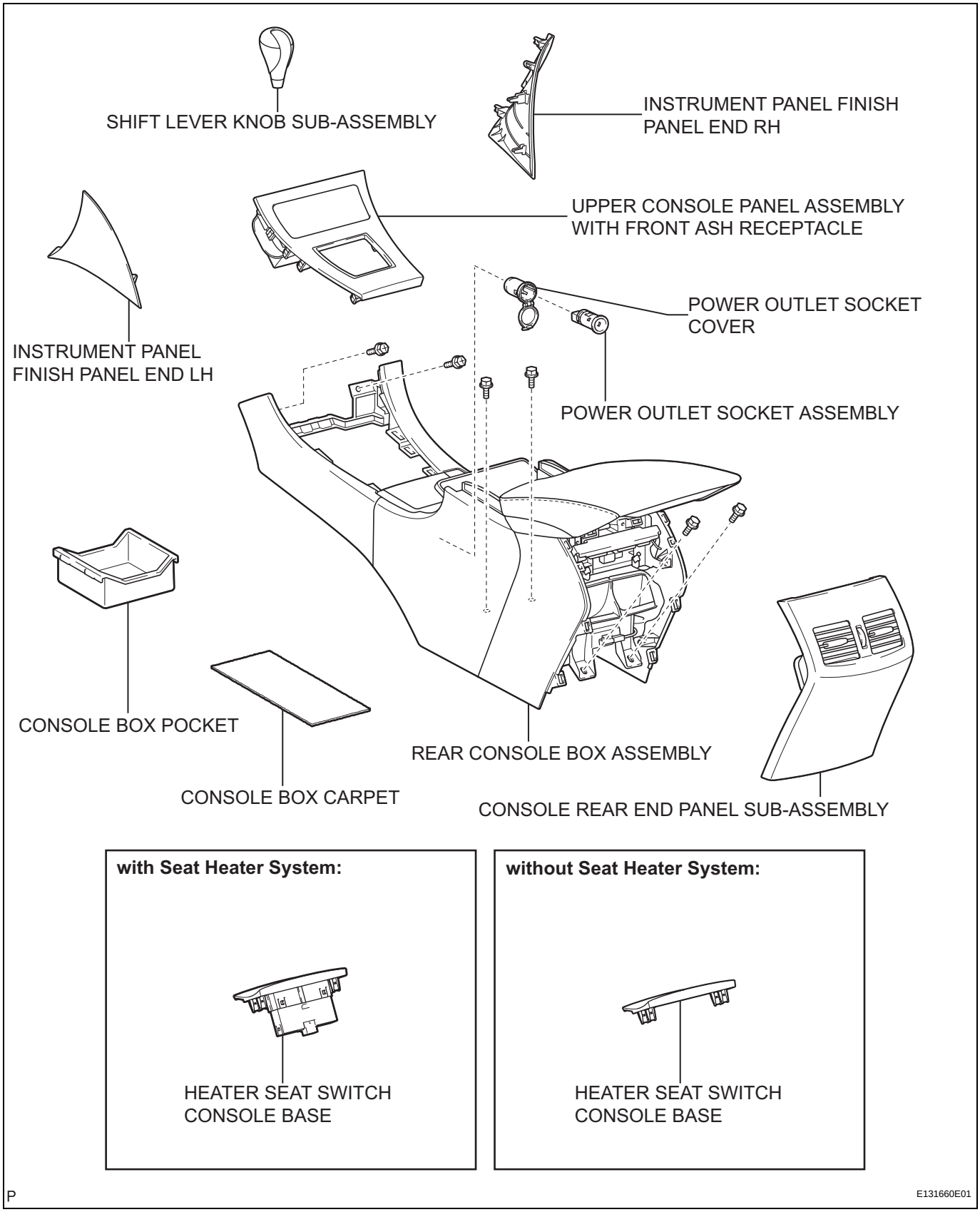

OT

REMOVAL

1. **REMOVE INSTRUMENT PANEL FINISH PANEL END LH (See page IP-13)**
2. **REMOVE INSTRUMENT PANEL FINISH PANEL END RH (See page IP-15)**
3. **REMOVE SHIFT LEVER KNOB SUB-ASSEMBLY (See page IP-16)**
4. **REMOVE UPPER CONSOLE PANEL ASSEMBLY WITH FRONT ASH RECEPTACLE (See page IP-16)**
5. **REMOVE HEATER SEAT SWITCH CONSOLE BASE (w/o Seat Heater System) (See page IP-17)**
6. **REMOVE HEATER SEAT SWITCH CONSOLE BASE (w/ Seat Heater System) (See page IP-18)**
7. **REMOVE CONSOLE BOX POCKET (See page IP-18)**
8. **REMOVE CONSOLE BOX CARPET (See page IP-18)**
9. **REMOVE CONSOLE REAR END PANEL SUB-ASSEMBLY (See page IP-19)**
10. **REMOVE REAR CONSOLE BOX ASSEMBLY (See page IP-19)**
11. **REMOVE POWER OUTLET SOCKET ASSEMBLY**
    (a) Disconnect the connector.
    (b) Disengage the claw and remove the power outlet socket assembly.

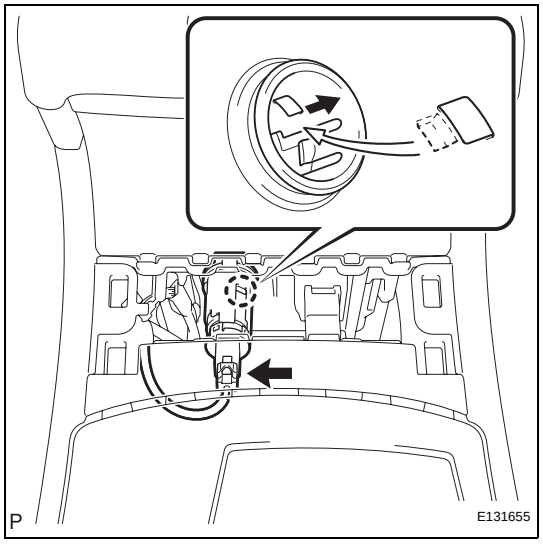

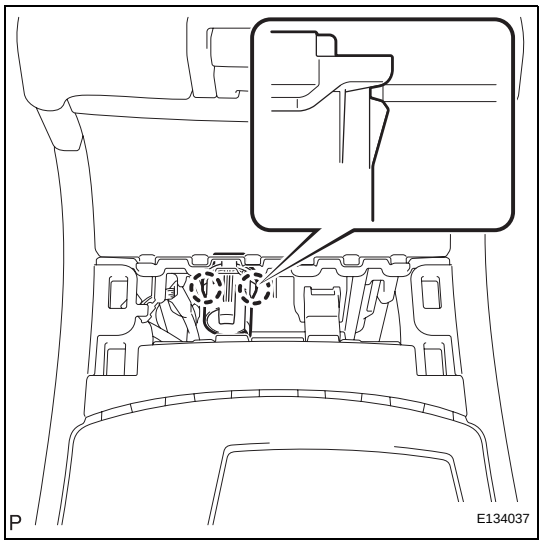

12. REMOVE POWER OUTLET SOCKET COVER

(a) Disengage the 2 claws and remove the power outlet socket cover.

INSTALLATION

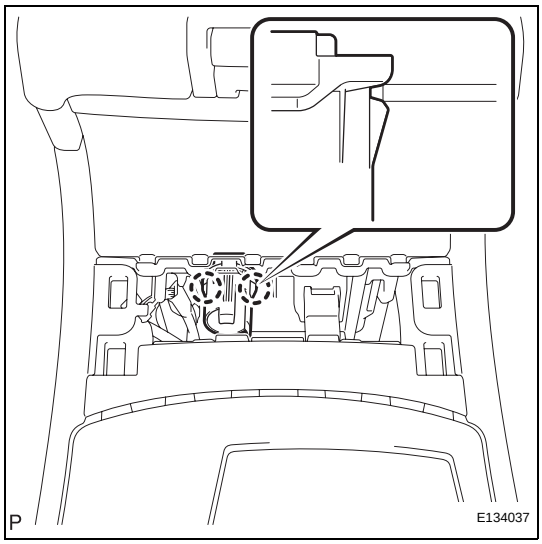

1. INSTALL POWER OUTLET SOCKET COVER

(a) Engage the 2 claws and install the power outlet socket cover.

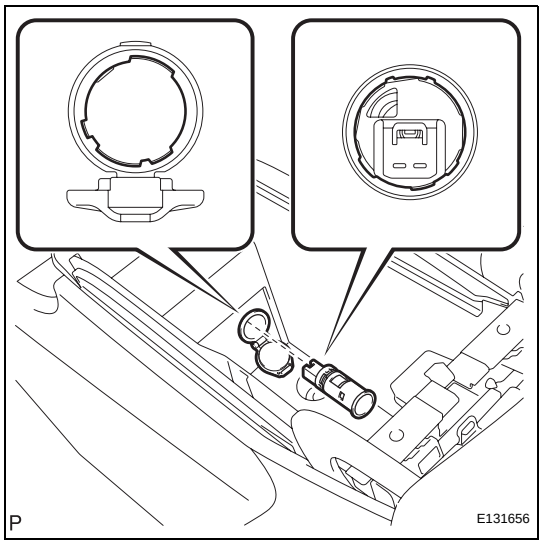

2. INSTALL POWER OUTLET SOCKET ASSEMBLY

(a) Referring to the shape of the parts, align the power outlet socket assembly with the power outlet socket cover and install the power outlet socket assembly.

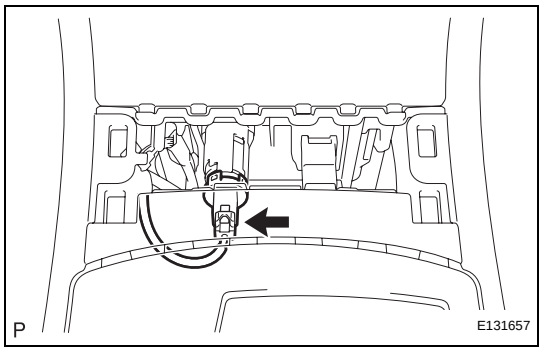

(b) Connect the connector.

3. **INSTALL REAR CONSOLE BOX ASSEMBLY (See page IP-39)**
4. **INSTALL CONSOLE REAR END PANEL SUB-ASSEMBLY (See page IP-40)**
5. **INSTALL CONSOLE BOX CARPET (See page IP-41)**
6. **INSTALL CONSOLE BOX POCKET (See page IP-41)**
7. **INSTALL HEATER SEAT SWITCH CONSOLE BASE (w/ Seat Heater System) (See page IP-41)**
8. **INSTALL HEATER SEAT SWITCH CONSOLE BASE (w/o Seat Heater System) (See page IP-41)**
9. **INSTALL UPPER CONSOLE PANEL ASSEMBLY WITH FRONT ASH RECEPTACLE (See page IP-42)**
10. **INSTALL SHIFT LEVER KNOB SUB-ASSEMBLY (See page IP-42)**
11. **INSTALL INSTRUMENT PANEL FINISH PANEL END RH (See page IP-44)**
12. **INSTALL INSTRUMENT PANEL FINISH PANEL END LH (See page IP-46)**

SYSTEM DESCRIPTION

1. POWER WINDOW CONTROL SYSTEM DESCRIPTION

(a) The power window control system controls the power window operation using the power window regulator motors. The main controls of this system are the power window regulator master switch, which is mounted on the driver side door, and the power window regulator switches, which are mounted on the passenger side door and rear doors. Operating a window switch results in electrical power being transmitted to the corresponding power window regulator motor.

(b) The power window control system has the following functions:

Function	Outline
Manual up-and-down function	Function that causes window to go up while power window switch is being pulled halfway up and to go down while pushed halfway down. Window stops as soon as the switch is released.
All door auto up-and-down function	Function that enables windows of all doors to be fully opened or closed by one press of power window switch.
Jam protection function	Function that automatically stops power window and moves it downward if a foreign object gets jammed in door window during auto-up operation.
Remote control function	Function that allows power window master switch to control MANUAL up-and-down operations of front passenger door window and rear door windows.
Key-off operation function	Function that makes it possible to operate power window for approx. 45 seconds after engine switch is turned on (ACC) or off, if either front door is not opened.
Key-linked up-and-down function	Function that causes window to go up while driver's door key is turned to lock side for more than 1.5 seconds and to go down while turned to unlock side for more than 1.5 seconds. Window stops as soon as the key is returned to original position.
Diagnosis	Function that allows the power window switch to make a diagnosis for failed section when power window switch detects a malfunction in power window system. Power window switch light comes on or blinks to inform driver.
Fail-safe	A fail-safe function to disable a part of power window functions if pulse sensor in power window motor has a malfunction: Driver's door auto up-and-down function and remote control function are disabled.

HOW TO PROCEED WITH TROUBLESHOOTING

HINT:
- Use the following procedure to troubleshoot the power window control system.
- The intelligent tester should be used in steps 3 and 5.

1 VEHICLE BROUGHT TO WORKSHOP

NEXT

2 CUSTOMER PROBLEM ANALYSIS CHECK AND SYMPTOM CHECK

NEXT

3 CHECK COMMUNICATION FUNCTION OF LIN COMMUNICATION SYSTEM

(a) Use the intelligent tester, inspect the LIN communication function to ensure there are no malfunctions in the communication system.
Result

Result	Proceed to
No DTCs output	A
DTCs output	B

B → **GO TO DIAGNOSTIC TROUBLE CODE CHART**

A

4 PROBLEM SYMPTOMS TABLE

HINT:
See page WS-11.

NEXT

5 OVERALL ANALYSIS AND TROUBLESHOOTING

(a) Data list/Active test
HINT:
See page WS-21.
(b) Circuit inspection
(c) Terminal of ECU
HINT:
See page WS-12.

NEXT

6	ADJUST, REPAIR OR REPLACE

NEXT

7	RESET POWER WINDOW MOTOR

HINT:
See page WS-10.

NEXT

END

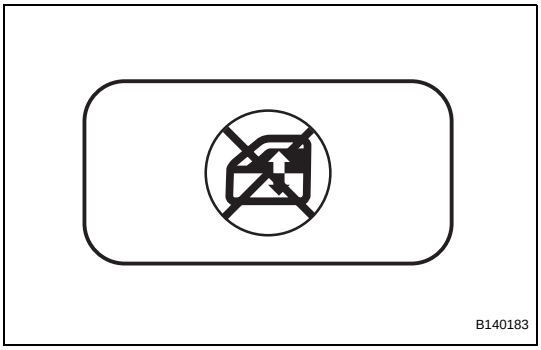

OPERATION CHECK

1. CHECK WINDOW LOCK SWITCH

(a) Check that the front passenger side power window and rear power windows operation are disabled when the window lock switch of the power window master switch is pressed.

Standard:

Front passenger side power window and rear power windows operation are disabled.

(b) Check that the front passenger side power window and rear power windows can be operated when the window lock switch is pressed again.

Standard:

Front passenger side power window and rear power windows can be operated.

WS

2. CHECK MANUAL UP/DOWN FUNCTION

(a) Check that the driver side power window operates as follows:

Standard

Condition	Master Switch	Switch Operation	Power Window
Engine switch on (IG)	Driver side	Pulled halfway up	UP (Closed)
		Pushed halfway down	DOWN (Open)

(b) Check that the power windows except the driver side power window operate as follows:

Standard

Condition	Switch	Switch Operation	Power Window
• Engine switch on (IG) • Window lock switch OFF	Passenger side	Pulled up	UP (Closed)
		Pushed down	DOWN (Open)
	Rear LH	Pulled up	UP (Closed)
		Pushed down	DOWN (Open)
	Rear RH	Pulled up	UP (Closed)
		Pushed down	DOWN (Open)

3. CHECK AUTO UP/DOWN FUNCTION

(a) Check that the driver side power window operates as follows:

Standard

Condition	Master Switch	Switch Operation	Power Window
Engine switch on (IG)	Driver side	Pulled up fully	UP (Closed)
		Pushed down fully	DOWN (Open)

(b) Check that the power windows except the driver side power window operate as follows:

Standard

Condition	Switch	Switch Operation	Power Window
• Engine switch on (IG) • Window lock switch OFF	Passenger side	Pulled up	UP (Closed)
		Pushed down	DOWN (Open)
	Rear LH	Pulled up	UP (Closed)
		Pushed down	DOWN (Open)
	Rear RH	Pulled up	UP (Closed)
		Pushed down	DOWN (Open)

4. CHECK REMOTE MANUAL UP/DOWN FUNCTION

(a) Check that the power windows except the driver side power window operate as follows:

Standard

Condition	Master Switch	Switch Operation	Power Window
• Engine switch on (IG) • Window lock switch OFF	Passenger side	Pulled up	UP (Closed)
		Pushed down	DOWN (Open)
	Rear LH	Pulled up	UP (Closed)
		Pushed down	DOWN (Open)
	Rear RH	Pulled up	UP (Closed)
		Pushed down	DOWN (Open)

5. CHECK REMOTE AUTO UP/DOWN FUNCTION

(a) Check that the power windows except the driver side power window operate as follows:

Standard

Condition	Master Switch	Switch Operation	Power Window
• Engine switch on (IG) • Window lock switch OFF	Passenger side	Pulled up	UP (Closed)
		Pushed down	DOWN (Open)
	Rear LH	Pulled up	UP (Closed)
		Pushed down	DOWN (Open)
	Rear RH	Pulled up	UP (Closed)
		Pushed down	DOWN (Open)

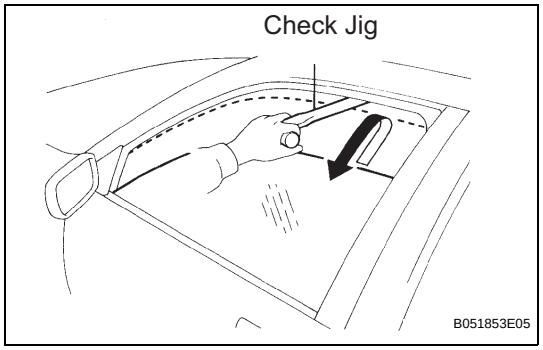

6. CHECK JAM PROTECTION FUNCTION

NOTICE:

- **The jam protection function can activate when either the AUTO UP function or MANUAL UP function is used.**
- **Limbs, fingers or other body parts should not be used to test the jam protection function. Do not allow any body parts to get caught by the moving window or regulator.**

HINT:
The jam protection function can activate when either the AUTO UP function or MANUAL UP function are used with the engine switch on (IG). The jam protection function can also activate as long as the driver's door remains closed, within 45 seconds after the engine switch is turned off.

(a) Check the reversing distance.
  (1) Fully open the door glass.
  (2) Place a check jig measuring 4 to 10 mm (0.16 to 0.40 in.) thick near the window fully closed position.
  (3) When the door glass is closed using AUTO or MANUAL operation, check that the door glass goes down after contacting the check jig. The glass should go 200 to 240 mm (7.90 to 9.44 in.) away from the position where it contacted the check jig.
  (4) While the door glass is going down, verify that the window switch cannot be used to make the glass go up.

(b) Check the reversing distance.
  (1) Fully open the door glass.
  (2) Place a check jig measuring 200 to 250 mm (7.90 to 9.84 in.) thick near the window fully closed position.
  (3) When the door glass is closed using AUTO or MANUAL operation, check that the door glass goes down after contacting the check jig. The door glass should go 80 to 100 mm away from the position where it contacted the check jig.
  (4) While the door glass is going down, verify that the window switch cannot be used to make the glass go up.

INITIALIZATION

1. INITIALIZE POWER WINDOW REGULATOR MOTOR FRONT LH

NOTICE:

- **If the power window motor or power window regulator assembly is replaced, initialization is required (initialization is not necessary when the negative battery terminal is disconnected and reconnected).**
- **No other electrical systems should be operated during initialization. Initialization will be interrupted if a voltage drop occurs in the power being supplied to the power window motor.**
- **Replacing the door glass or door glass run may cause a difference to exist between the current door glass position and the position memorized in the ECU. In this case, the jam protection function may work improperly. Return the system to the pre-initialized condition and reinitialize the system.**

HINT:

- The AUTO UP function will not work unless initialization is completed.
- The indicator on the power window master switch will blink when the engine switch is on (IG), until initialization has been completed. The indicator will remain on after initialization is successfully completed.

(a) Connect the negative battery terminal.

(b) Turn the engine switch on (IG). The indicator on the power window master switch will blink.

(c) Fully close the door glass by operating the power window master switch. After the door glass stops, hold the power window master switch in the AUTO UP position for 1 second or more.

(d) Check that the indicator on the power window master switch remains on.

HINT:

If the indicator does not remain on, this means that initialization has not been completed successfully. In this case, lower the door glass at least 50 mm (1.96 in.) and hold the power window master switch in the AUTO UP position for 1 second after the window closes fully.

2. TO RETURN THE SYSTEM TO THE PRE-INITIALIZED CONDITION

Disconnect the power window regulator motor connector during power window operation. This will return the motor to the pre-initialized condition.

PROBLEM SYMPTOMS TABLE

POWER WINDOW CONTROL SYSTEM

Symptom	Suspected Area	See page
Power window does not operate with power window regulator master switch	1. ECU-B No. 2 fuse	-
	2. Power window master switch	WS-31
	3. Power window regulator motor	WS-49
	4. Power window regulator master switch	WS-40
Front passenger side power window does not operate with power window regulator switch	1. Power window master switch	WS-40
	2. Power window regulator motor	WS-49
	3. Power window regulator switch	WS-42
Rear LH side power window does not operate with power window regulator switch	1. Power window regulator switch	WS-45
	2. Power window regulator motor	WS-50
	3. Power window regulator switch (rear LH side)	WS-34
Rear RH side power window does not operate with power window regulator switch	1. Power window regulator switch	WS-44
	2. Power window regulator motor	WS-50
	3. Power window regulator switch (rear RH side)	WS-36
AUTO UP/DOWN function does not operate on driver side (Only jam protection assistant)	1. Diagnosis check	WS-18
	2. Power window regulator motor reset	WS-10
	3. Power window regulator master switch	WS-40
	4. Wire harness	-
Remote UP/DOWN function does not operate	1. DATA LIST/ACTIVE TEST	WS-21
	2. Power window regulator master switch	WS-40
	3. Wire harness	-
Power window can be operated after engine switch is turned off even if operated conditions are not met	1. Front door courtesy switch	LI-203
	2. Wire harness (LIN communication line)	-
AUTO UP operation does not fully close power window (Jam protection function is activated)	1. Power window regulator motor reset	WS-10
	2. Check & clean glass run	-
	3. Power window regulator master switch	WS-40

INITIALIZATION

1. INITIALIZE POWER WINDOW REGULATOR MOTOR FRONT LH

NOTICE:

- **If the power window motor or power window regulator assembly is replaced, initialization is required (initialization is not necessary when the negative battery terminal is disconnected and reconnected).**
- **No other electrical systems should be operated during initialization. Initialization will be interrupted if a voltage drop occurs in the power being supplied to the power window motor.**
- **Replacing the door glass or door glass run may cause a difference to exist between the current door glass position and the position memorized in the ECU. In this case, the jam protection function may work improperly. Return the system to the pre-initialized condition and reinitialize the system.**

HINT:

- The AUTO UP function will not work unless initialization is completed.
- The indicator on the power window master switch will blink when the engine switch is on (IG), until initialization has been completed. The indicator will remain on after initialization is successfully completed.

(a) Connect the negative battery terminal.

(b) Turn the engine switch on (IG). The indicator on the power window master switch will blink.

(c) Fully close the door glass by operating the power window master switch. After the door glass stops, hold the power window master switch in the AUTO UP position for 1 second or more.

(d) Check that the indicator on the power window master switch remains on.

HINT:

If the indicator does not remain on, this means that initialization has not been completed successfully. In this case, lower the door glass at least 50 mm (1.96 in.) and hold the power window master switch in the AUTO UP position for 1 second after the window closes fully.

2. TO RETURN THE SYSTEM TO THE PRE-INITIALIZED CONDITION

Disconnect the power window regulator motor connector during power window operation. This will return the motor to the pre-initialized condition.

PROBLEM SYMPTOMS TABLE

POWER WINDOW CONTROL SYSTEM

Symptom	Suspected Area	See page
Power window does not operate with power window regulator master switch	1. ECU-B No. 2 fuse	-
	2. Power window master switch	WS-31
	3. Power window regulator motor	WS-49
	4. Power window regulator master switch	WS-40
Front passenger side power window does not operate with power window regulator switch	1. Power window master switch	WS-40
	2. Power window regulator motor	WS-49
	3. Power window regulator switch	WS-42
Rear LH side power window does not operate with power window regulator switch	1. Power window regulator switch	WS-45
	2. Power window regulator motor	WS-50
	3. Power window regulator switch (rear LH side)	WS-34
Rear RH side power window does not operate with power window regulator switch	1. Power window regulator switch	WS-44
	2. Power window regulator motor	WS-50
	3. Power window regulator switch (rear RH side)	WS-36
AUTO UP/DOWN function does not operate on driver side (Only jam protection assistant)	1. Diagnosis check	WS-18
	2. Power window regulator motor reset	WS-10
	3. Power window regulator master switch	WS-40
	4. Wire harness	-
Remote UP/DOWN function does not operate	1. DATA LIST/ACTIVE TEST	WS-21
	2. Power window regulator master switch	WS-40
	3. Wire harness	-
Power window can be operated after engine switch is turned off even if operated conditions are not met	1. Front door courtesy switch	LI-203
	2. Wire harness (LIN communication line)	-
AUTO UP operation does not fully close power window (Jam protection function is activated)	1. Power window regulator motor reset	WS-10
	2. Check & clean glass run	-
	3. Power window regulator master switch	WS-40

TERMINALS OF ECU

1. POWER WINDOW REGULATOR MASTER SWITCH ASSEMBLY

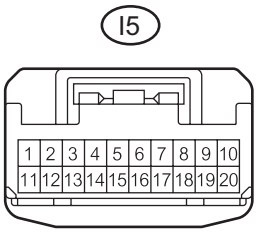

H

B145493E03

(a) Disconnect the I5 switch connector.
(b) Measure the voltage and resistance of each terminal according to the value(s) in the table below.

Standard resistance

Symbols (Terminal No.)	Wiring Color	Terminal Description	Condition	Specified Condition
E (I5-12) - Body ground	W-B - Body ground	Ground	Always	Below 1 Ω

Standard voltage

Symbols (Terminal No.)	Wiring Color	Terminal Description	Condition	Specified Condition
B (I5-11) - E (I5-12)	V - W-B	Power supply	Engine switch on (IG)	10 to 14 V

If the result is not as specified, there may be a malfunction in the wire harness.

(c) Reconnect the I5 switch connector and reset the power window motor.
(d) Measure the voltage according to the value(s) in the table below.

WS

Standard voltage

Symbols (Terminal No.)	Wiring Color	Terminal Description	Condition	Specified Condition
D (I5-15) - E (I5-12)	R - W-B	Power window motor DOWN output	Engine switch on (IG), driver side power window switch OFF → DOWN (Manual operation)	10 to 14 V → 0 V
U (I5-20) - E (I5-12)	G - W-B	Power window motor UP output	Engine switch on (IG), driver side power window switch OFF → UP (Manual operation)	10 to 14 V → 0 V

If the result is not as specified, there may be a malfunction in the wire harness.

2. CHECK POWER WINDOW SWITCH (FRONT PASSENGER SIDE)

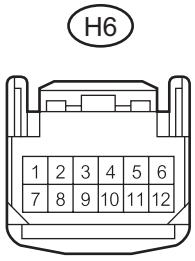

(a) Disconnect the H6 switch connector.
(b) Measure the resistance according to the value(s) in the table below.

Standard resistance

Symbols (Terminal No.)	Wiring Color	Terminal Description	Condition	Specified Condition
E (H6-5) - Body ground	W-B - Body ground	Ground	Always	Below 1 Ω

If the result is not as specified, there may be a malfunction in the wire harness.

(c) Reconnect the H6 switch connector and reset the power window motor.
(d) Measure the voltage according to the value(s) in the table below.

Standard voltage

Symbols (Terminal No.)	Wiring Color	Terminal Description	Condition	Specified Condition
A (H6-4) - E (H6-5)	L - W-B	Power window motor AUTO UP output	Engine switch on (IG), front passenger side power window fully open → UP (AUTO UP position) → fully closed	10 to 14 V → 0 V → 10 to 14 V
		Power window motor AUTO DOWN output	Engine switch on (IG), front passenger side power window fully closed → DOWN (AUTO UP position) → fully open	10 to 14 V → 0 V → 10 to 14 V
D (H6-10) - E (H6-5)	R - W-B	Power window motor DOWN output	Engine switch on (IG), front passenger side power window switch OFF → DOWN (Manual operation)	0 V → 10 to 14 V
U (H6-2) - E (H6-5)	G - W-B	Power window motor UP output	Engine switch on (IG), front passenger side power window switch OFF → UP (Manual operation)	0 V → 10 to 14 V

If the result is not as specified, the power window regulator switch assembly may have a malfunction.

3. CHECK POWER WINDOW SWITCH (REAR LH SIDE)

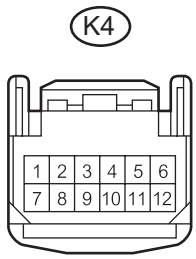

H

B145492E08

(a) Disconnect the K4 switch connector.
(b) Measure the resistance according to the value(s) in the table below.

Standard resistance

Symbols (Terminal No.)	Wiring Color	Terminal Description	Condition	Specified Condition
E (K4-5) - Body ground	W-B - Body ground	Ground	Always	Below 1 Ω

If the result is not as specified, there may be a malfunction in the wire harness.

(c) Reconnect the K4 switch connector and reset the power window motor.
(d) Measure the voltage according to the value(s) in the table below.

Standard voltage

Symbols (Terminal No.)	Wiring Color	Terminal Description	Condition	Specified Condition
A (K4-4) - E (K4-5)	L - W-B	Power window motor AUTO UP output	Engine switch on (IG), rear LH side power window fully open → UP (AUTO UP position) → fully closed	10 to 14 V → 0 V → 10 to 14 V
		Power window motor AUTO DOWN output	Engine switch on (IG), rear LH side power window fully closed → DOWN (AUTO UP position) → fully open	10 to 14 V → 0 V → 10 to 14 V
D (K4-10) - E (K4-5)	R - W-B	Power window motor DOWN output	Engine switch on (IG), rear LH side power window switch OFF → DOWN (Manual operation)	0 V → 10 to 14 V
U (K4-2) - E (K4-5)	G - W-B	Power window motor UP output	Engine switch on (IG), rear LH side power window switch OFF → UP (Manual operation)	0 V → 10 to 14 V

If the result is not as specified, the power window regulator switch assembly may have a malfunction.

4. CHECK POWER WINDOW SWITCH (REAR RH SIDE)

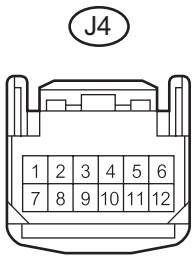

H

B145492E09

(a) Disconnect the J4 switch connector.
(b) Measure the resistance according to the value(s) in the table below.

Standard resistance

Symbols (Terminal No.)	Wiring Color	Terminal Description	Condition	Specified Condition
E (J4-5) - Body ground	W-B - Body ground	Ground	Always	Below 1 Ω

If the result is not as specified, there may be a malfunction in the wire harness.

(c) Reconnect the J4 switch connector and reset the power window motor.
(d) Measure the voltage according to the value(s) in the table below.

Standard voltage

Symbols (Terminal No.)	Wiring Color	Terminal Description	Condition	Specified Condition
A (J4-4) - E (J4-5)	L - W-B	Power window motor AUTO UP output	Engine switch on (IG), rear RH side power window fully open → UP (AUTO UP position) → fully closed	10 to 14 V → 0 V → 10 to 14 V
		Power window motor AUTO DOWN output	Engine switch on (IG), rear RH side power window fully closed → DOWN (AUTO UP position) → fully open	10 to 14 V → 0 V → 10 to 14 V
D (J4-10) - E (J4-5)	R - W-B	Power window motor DOWN output	Engine switch on (IG), rear RH side power window switch OFF → DOWN (Manual operation)	0 V → 10 to 14 V
U (J4-2) - E (J4-5)	G - W-B	Power window motor UP output	Engine switch on (IG), rear RH side power window switch OFF → UP (Manual operation)	0 V → 10 to 14 V

If the result is not as specified, the power window regulator switch assembly may have a malfunction.

5. CHECK POWER WINDOW ECU (DRIVER SIDE)

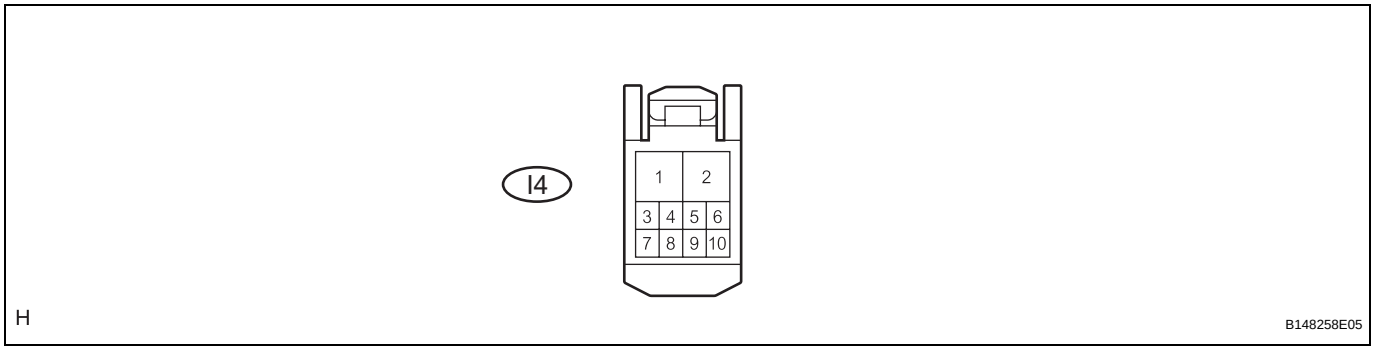

(a) Disconnect the I4 switch connector.
(b) Measure the voltage and resistance according to the value(s) in the table below.

Standard resistance

Symbols (Terminal No.)	Wiring Color	Terminal Description	Condition	Specified Condition
E (I4-1) - Body ground	W-B - Body ground	Ground	Always	Below 1 Ω

Standard voltage

Symbols (Terminal No.)	Wiring Color	Terminal Description	Condition	Specified Condition
B (I4-2) - Body ground	W - Body ground	Power supply	Engine switch on (IG)	10 to 14 V

If the result is not as specified, there may be a malfunction in the wire harness.

6. CHECK POWER WINDOW ECU (FRONT PASSENGER SIDE)

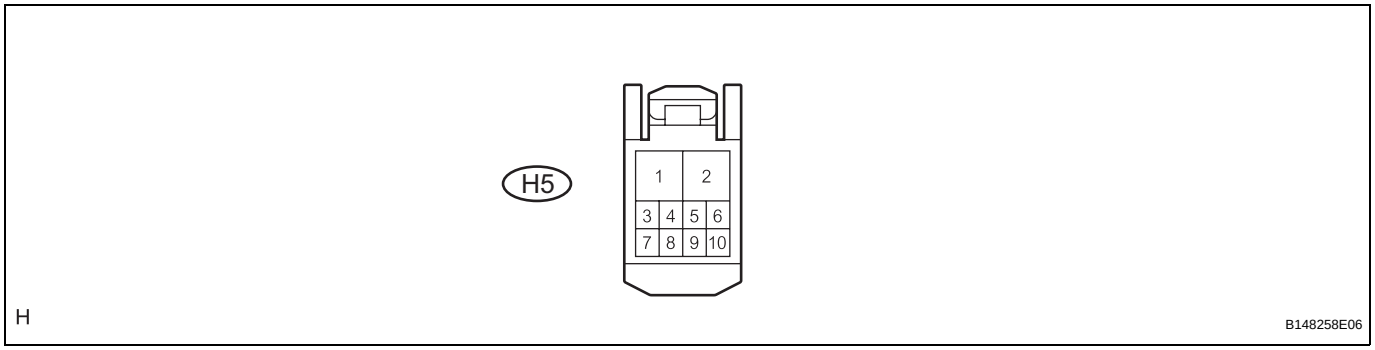

(a) Disconnect the H5 switch connector.
(b) Measure the voltage and resistance according to the value(s) in the table below.

Standard resistance

Symbols (Terminal No.)	Wiring Color	Terminal Description	Condition	Specified Condition
E (H5-1) - Body ground	W-B - Body ground	Ground	Always	Below 1 Ω

Standard voltage

Symbols (Terminal No.)	Wiring Color	Terminal Description	Condition	Specified Condition
B (H5-2) - Body ground	V - Body ground	Power supply	Engine switch on (IG)	10 to 14 V

If the result is not as specified, there may be a malfunction in the wire harness.

7. CHECK POWER WINDOW ECU (REAR LH SIDE)

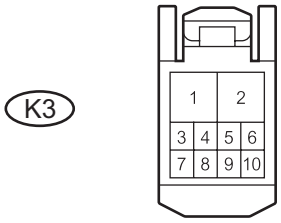

(a) Disconnect the K3 switch connector.
(b) Measure the voltage and resistance according to the value(s) in the table below.

Standard resistance

Symbols (Terminal No.)	Wiring Color	Terminal Description	Condition	Specified Condition
E (K3-1) - Body ground	W-B - Body ground	Ground	Always	Below 1 Ω

Standard voltage

Symbols (Terminal No.)	Wiring Color	Terminal Description	Condition	Specified Condition
B (K3-2) - Body ground	V - Body ground	Power supply	Engine switch on (IG)	10 to 14 V

If the result is not as specified, there may be a malfunction in the wire harness.

8. CHECK POWER WINDOW ECU (REAR RH SIDE)

WS

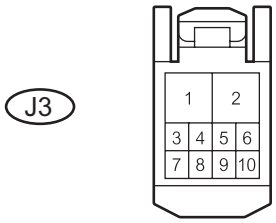

(a) Disconnect the J3 switch connector.
(b) Measure the voltage and resistance according to the value(s) in the table below.

Standard resistance

Symbols (Terminal No.)	Wiring Color	Terminal Description	Condition	Specified Condition
E (J3-1) - Body ground	W-B - Body ground	Ground	Always	Below 1 Ω

Standard voltage

Symbols (Terminal No.)	Wiring Color	Terminal Description	Condition	Specified Condition
B (J3-2) - Body ground	V - Body ground	Power supply	Engine switch on (IG)	10 to 14 V

If the result is not as specified, there may be a malfunction in the wire harness.

DIAGNOSIS SYSTEM

1. DESCRIPTION

(a) The power window control system data can be read from the Data Link Connector 3 (DLC3) of the vehicle. When the system seems to be malfunctioning, use the intelligent tester to check for malfunctions and perform repairs.

2. CHECK DLC3

(a) The ECU uses ISO 15765-4 communication protocol. The terminal arrangement of the DLC3 complies with SAE J1962 and matches the ISO 15765-4 format.

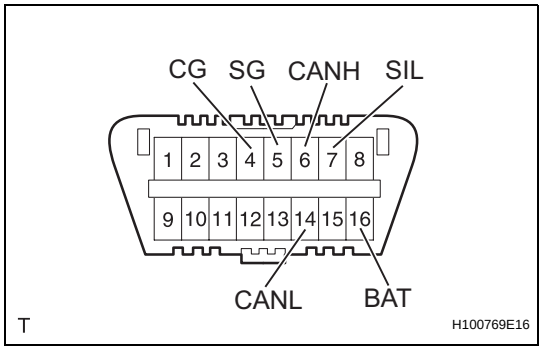

Symbols (Terminal No.)	Terminal Description	Condition	Specified Condition
SIL (7) - SG (5)	Bus "+" line	During transmission	Pulse generation
CG (4) - Body ground	Chassis ground	Always	Below 1 Ω
SG (5) - Body ground	Signal ground	Always	Below 1 Ω
BAT (16) - Body ground	Battery positive	Always	10 to 14 V
CANH (6) - CANL (14)	CAN bus line	Engine switch OFF*	54 to 69 Ω
CANH (6) - CG (4)	HIGH-level CAN bus line	Engine switch OFF*	200 Ω or more
CANL (14) - CG (4)	LOW-level CAN bus line	Engine switch OFF*	200 Ω or more
CANH (6) - BAT (16)	HIGH-level CAN bus line	Engine switch OFF*	6 kΩ or more
CANL (14) - BAT (16)	LOW-level CAN bus line	Engine switch OFF*	6 kΩ or more

WS

NOTICE:

***: Before measuring the resistance, leave the vehicle as is for at least 1 minute and do not operate the ignition switch, any other switches or the door.**

If the result is not as specified, the DLC3 may have a malfunction. Repair or replace the harness and connector.

HINT:

Connect the cable of the intelligent tester to the DLC3, turn the engine switch on (IG) and attempt to use the tester. If the display indicates that a communication error has occurred, there is a problem either with the vehicle or with the tester.

- If communication is normal when the tester is connected to another vehicle, inspect the DLC3 of the original vehicle.
- If communication is still not possible when the tester is connected to another vehicle, the problem may be in the tester itself. Consult the Service Department listed in the tester's instruction manual.

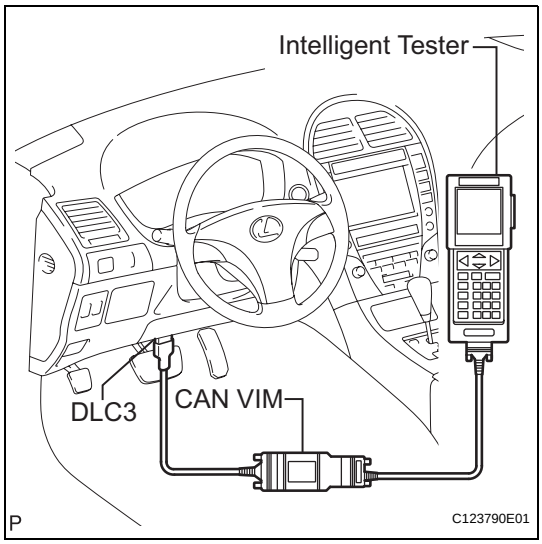

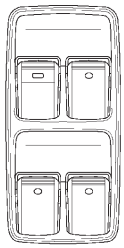

B064900E01

3. CHECK DIAGNOSIS (WITH JAM PROTECTION)

HINT:

If there is a malfunction in the pulse sensor, manually operating the power window switch will cause the power window switch light to blink.

(a) Turn the engine switch on (IG).

(b) Manually operate the power window master switch or power window switch on each door.

(c) Check the blinking pattern of the AUTO light as shown in the illustration.

Brinking Pattern of Light:

(A): LIN communication fail

(B): - Initial fail (Window position)
- Pulse sensor fail

Normal

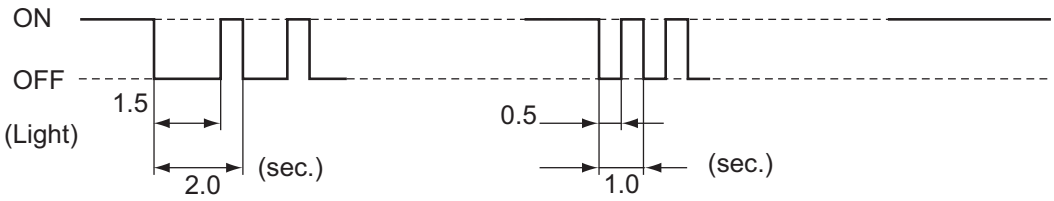

H

B145472E02

(1) If pattern (A) is displayed, check the wire harness or power window ECU.

(2) If pattern (B) is displayed, check the power window regulator motor or power window ECU.

(3) If the normal pattern is displayed, replace the power window regulator master switch.

DATA LIST / ACTIVE TEST

1. USING INTELLIGENT TESTER

(a) Connect the intelligent tester to the DLC3.

(b) Monitor the ECU data by following the prompts on the tester screen.

HINT:

The intelligent tester has a "Snapshot" function which records the monitored data. Refer to the intelligent tester operator's manual for further details.

2. DATA LIST

HINT:

Using the DATA LIST displayed on the intelligent tester, the value of the switches, sensors, actuators, etc. can be read without part removal. Reading the DATA LIST as the first step in troubleshooting is one way to shorten the labor time.

(a) Connect the intelligent tester to the DLC3.

(b) Turn the engine switch on (IG).

(c) Read the DATA LIST according to the display on the tester.

MASTER SW:

Tester Display	Measurement Item/Range	Normal Condition	Diagnostic Note
D P/W AUTO SW	Driver door power window auto switch signal/ON or OFF	ON: Driver door power window auto switch operates OFF: Driver door power window auto switch does not operate	-
P P/W AUTO SW	Front passenger door remote power window auto switch signal/ON or OFF	ON: Front passenger door remote power window auto switch operates OFF: Front passenger door remote power window auto switch does not operate	-
RR P/W AUTO SW	Rear RH door remote power window auto switch signal/ON or OFF	ON: Rear RH door remote power window auto switch operates OFF: Rear RH door remote power window auto switch does not operate	-
RL P/W AUTO SW	Rear LH door remote power window auto switch signal/ON or OFF	ON: Rear LH door remote power window auto switch operates OFF: Rear LH door remote power window auto switch does not operate	-
P P/W UP SW	Front passenger door remote power window manual up switch signal/ON or OFF	ON: Front passenger door remote power window manual up switch operates OFF: Front passenger door remote power window manual up switch does not operate	-
RR P/W UP SW	Rear RH door remote power window manual up switch signal/ON or OFF	ON: Rear RH door remote power window manual up switch operates OFF: Rear RH door remote power window manual up switch does not operate	-

Tester Display	Measurement Item/Range	Normal Condition	Diagnostic Note
RL P/W UP SW	Rear LH door remote power window manual up switch signal/ ON or OFF	ON: Rear LH door remote power window manual up switch operates OFF: Rear LH door remote power window manual up switch does not operate	-
P P/W DOWN SW	Front passenger door remote power window manual down switch signal/ON or OFF	ON: Front passenger door remote power window manual down switch operates OFF: Front passenger door remote power window manual down switch does not operate	-
RR P/W DOWN SW	Rear RH door remote power window manual down switch signal/ON or OFF	ON: Rear RH door remote power window manual down switch operates OFF: Rear RH door remote power window manual down switch does not operate	-
RL P/W DOWN SW	Rear LH door remote power window manual down switch signal/ON or OFF	ON: Rear LH door remote power window manual down switch operates OFF: Rear LH door remote power window manual down switch does not operate	-

Body:

Tester Display	Measurement Item/Range	Normal Condition	Diagnostic Note
COM MASTER SW	Master switch communication signal OK/STOP	OK: Communication is normal STOP: Communication is stopped	-

3. ACTIVE TEST

HINT:

Performing the ACTIVE TEST using the intelligent tester allows you to operate the relay, VSV, actuator, etc. without parts removal. Performing the ACTIVE TEST as the first step in troubleshooting is one way to shorten the labor time. It is possible to display the DATA LIST during the ACTIVE TEST.

(a) Connect the intelligent tester to the DLC3.
(b) Turn the engine switch on (IG).
(c) Perform the ACTIVE TEST according to the display on the tester.

Body:

Tester Display	Measurement Item/Range	Normal Condition
IG OFF P/W	Operates power window ON/OFF (After ignition OFF)	-

DIAGNOSTIC TROUBLE CODE CHART

POWER WINDOW CONTROL SYSTEM

DTC Code	Detection Item	Trouble Area	See page
B2311	Driver Door Motor Malfunction	1. Battery disconnection when the engine switch is on (IG) 2. Power window regulator motor (on driver side) 3. Incorrect installation of power window components 4. Overheated power window regulator motor (on driver side)	WS-24
B2312	Driver Side Door Master Switch Malfunction	1. Power window regulator motor (on driver side) 2. Power window regulator master switch 3. Wire harness 4. Power window regulator master switch is held in same position for more than 20 seconds	WS-26
B2313	Glass Position Initialization Incomplete	1. Power window regulator motor (on driver side) 2. Power window regulator motor (on driver side) not initialized	WS-29

DTC	B2311	Driver Door Motor Malfunction

DESCRIPTION

The portion of the power window control system that is located in the driver door consists of a power window master switch, regulator, and a motor with an integrated ECU. The driver door power window regulator motor is controlled by the ECU when the power window master switch is operated (models with jam protection).
DTC B2311 is set when the ECU for the driver door power window regulator motor assembly malfunctions.

NOTICE:

The power window control system uses a serial communication protocol (LIN) to communicate with the main body ECU. Inspect the communication function by following HOW TO PROCEED WITH TROUBLESHOOTING. Troubleshoot the power window control system after confirming that the communication system is functioning properly.

HINT:

- Initialization is required only when the power window regulator motor is replaced. However, replacing the motor may cause the motor gear to be engaged in a different position. This can cause a difference to exist between the current door glass position and the position memorized in the ECU. In this case, the jam protection function may work improperly. Return the system to the pre-initialized condition and reinitialize the system.
- To return the system to the pre-initialized condition:
  Disconnect the power window regulator motor connector during power window operation. This will return the motor to the pre-initialized condition.

DTC No.	DTC Detection Condition	Trouble Area
B2311	When either condition below is met: • The power window regulator motor (on driver side) malfunctions • When the ECU in the power widow regulator motor (on driver side) determines that the fully closed window position has deviated approximately 20 mm (0.79 in.) or more from the normal position	• Battery disconnection when the engine switch is on (IG) • Power window regulator motor (on driver side) • Incorrect installation of power window components • Overheated power window regulator motor (on driver side)

WS

INSPECTION PROCEDURE

1	INITIALIZE POWER WINDOW CONTROL SYSTEM

(a) Initialize the power window regulator motor assembly (on the driver side) (See page WS-10).

(b) Check that the power window operates normally by opening and closing the window.

OK:

Driver side power window operates normally.

NG → **REPLACE POWER WINDOW REGULATOR MOTOR ASSEMBLY (for Driver Side)**

OK

2	CHECK WHETHER PARTS HAVE BEEN INSTALLED CORRECTLY

(a) Check that the power window components (on the driver side) are installed correctly.

OK:

Power window components (on driver side) are installed correctly.

HINT:

When the power window components are installed correctly, the problem has been caused by battery disconnection while the engine switch is on (IG), improper installation of the power window components or the motor being overheated.

NG → **INSTALL PARTS CORRECTLY**

OK

END

DTC	B2312	Driver Side Door Master Switch Malfunction

DESCRIPTION

The portion of the power window control system that is located in the driver door consists of a power window master switch, regulator, and a motor with an integrated ECU. The driver door power window regulator motor is controlled by the ECU when the power window master switch is operated (models with jam protection).

When the ECU determines that the power window master switch is stuck, DTC B2312 is set.

NOTICE:

The power window control system uses a serial communication protocol (LIN) to communicate with the main body ECU. Inspect the communication function by following HOW TO PROCEED WITH TROUBLESHOOTING. Troubleshoot the power window control system after confirming that the communication system is functioning properly.

DTC No.	DTC Detection Condition	Trouble Area
B2312	The power window regulator master switch is stuck	• Power window regulator motor (on driver side) • Power window regulator master switch • Wire harness • Power window regulator master switch is held in same position for more than 20 seconds

WIRING DIAGRAM

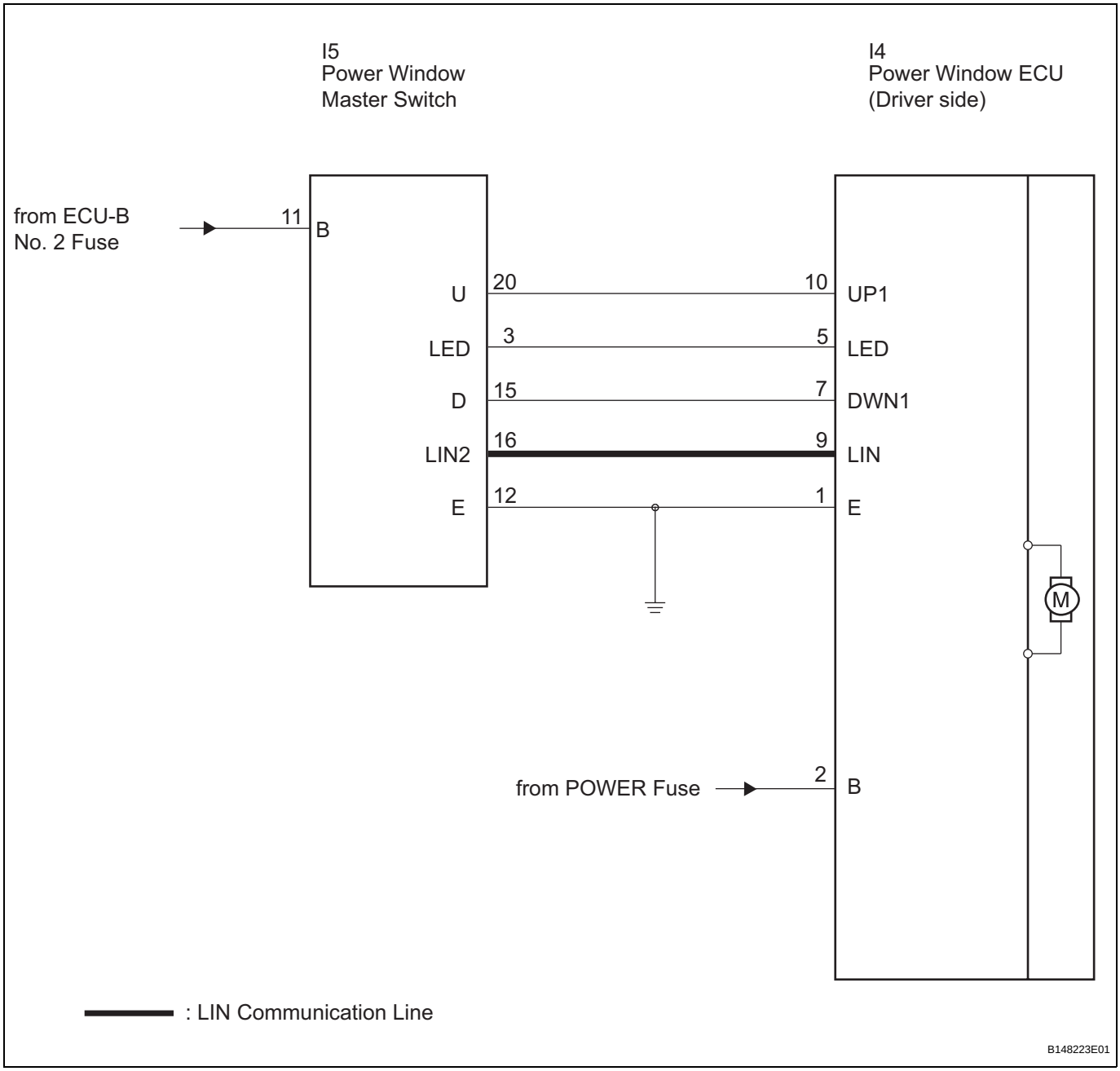

WS

INSPECTION PROCEDURE

1 INSPECT POWER WINDOW REGULATOR MASTER SWITCH ASSEMBLY

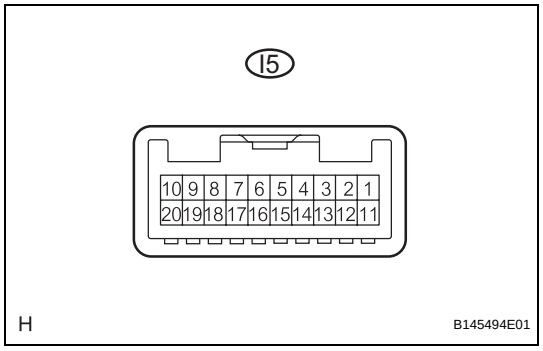

(a) Measure the resistance according to the value(s) in the table below.

Standard resistance

Tester Connection	Condition	Specified Condition
20 (U) - 12 (E)	Manual UP	Below 1 Ω
15 (D) - 12 (E)	Manual DOWN	Below 1 Ω

NG → **REPLACE POWER WINDOW REGULATOR MASTER SWITCH**

OK

2 CHECK WIRE HARNESS (WINDOW REGULATOR MASTER SWITCH - POWER WINDOW ECU)

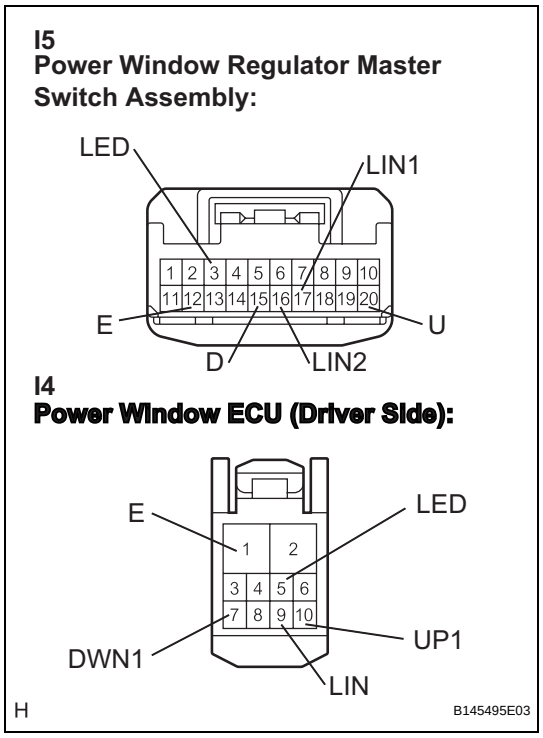

(a) Disconnect the I4 and I5 connectors.

(b) Measure the resistance according to the value(s) in the table below.

Standard resistance

Tester Connection	Condition	Specified Condition
I4-1 (E) - I5-12 (E)	Always	Below 1 Ω
I4-5 (LED) - I5-3 (LED)	Always	Below 1 Ω
I4-7 (DWN1) - I5-15 (D)	Always	Below 1 Ω
I4-9 (LIN) - I5-16 (LIN2)	Always	Below 1 Ω
I4-10 (UP1) - I5-20 (U)	Always	Below 1 Ω
I4-1 (E) - Body ground	Always	10 kΩ or higher
I4-5 (LED) - Body ground	Always	10 kΩ or higher
I4-7 (DWN1) - Body ground	Always	10 kΩ or higher
I4-9 (LIN) - Body ground	Always	10 kΩ or higher
I4-10 (UP1) - Body ground	Always	10 kΩ or higher

NG → **REPAIR OR REPLACE HARNESS OR CONNECTOR**

OK

REPLACE DRIVER SIDE POWER WINDOW REGULATOR MOTOR ASSEMBLY

DTC	B2313	Glass Position Initialization Incomplete

DESCRIPTION

The portion of the power window control system that is located in the driver door consists of a power window master switch, regulator, and a motor with an integrated ECU. The driver door power window regulator motor is controlled by the ECU when the power window master switch is operated (models with jam protection).
When the ECU determines that the driver's door power window regulator motor assembly has not been initialized, DTC B2313 is set.

NOTICE:

The power window control system uses a serial communication protocol (LIN) to communicate with the main body ECU. Inspect the communication function by following HOW TO PROCEED WITH TROUBLESHOOTING. Troubleshoot the power window control system after confirming that the communication system is functioning properly.

HINT:

- Replacing the door glass or door glass run may cause a difference to exist between the current door glass position and the position memorized in the ECU. In this case, the jam protection function may work improperly. Return the system to the pre-initialized condition and reinitialize the system.
- To return the system to the pre-initialized condition:
  Disconnect the power window regulator motor connector during power window operation. This will return the motor to the pre-initialized condition.

DTC No.	DTC Detection Condition	Trouble Area
B2313	• The power window regulator motor (on driver side) is not initialized • The power window regulator motor (on driver side) malfunctions	• Power window regulator motor (on driver side) • Power window regulator motor (on driver side) not initialized

INSPECTION PROCEDURE

NOTICE:

When using the intelligent tester to troubleshoot the LIN communication line: Connect the intelligent tester to the vehicle, and turn the courtesy light switch on and off at 1.5 second intervals until communication between the tester and vehicle begins.

WS

1	CHECK DTC OUTPUT

(a) Turn the engine switch off.
(b) Wait for at least 10 seconds, and then turn the engine switch on (IG).
(c) Check whether the DTC output recurs.
Result

Display (DTC Output)	Proceed to
B2313	A
No output	B

B → END

A

2	INITIALIZE SYSTEM (POWER WINDOW CONTROL SYSTEM)

(a) Turn the engine switch on (IG) and initialize the power window regulator motor (on the driver side) (See page WS-10).
(b) Turn the engine switch off.
(c) Wait for at least 10 seconds, and then turn the engine switch on (IG).
(d) Check whether the DTC output recurs.

Result

Display (DTC Output)	Proceed to
No output	A
B2313	B

B → **REPLACE DRIVER SIDE POWER WINDOW REGULATOR MOTOR ASSEMBLY**

A

END

Power Window Master Switch Power Source Circuit

DESCRIPTION

This circuit supplies to operate the power window master switch.

WIRING DIAGRAM

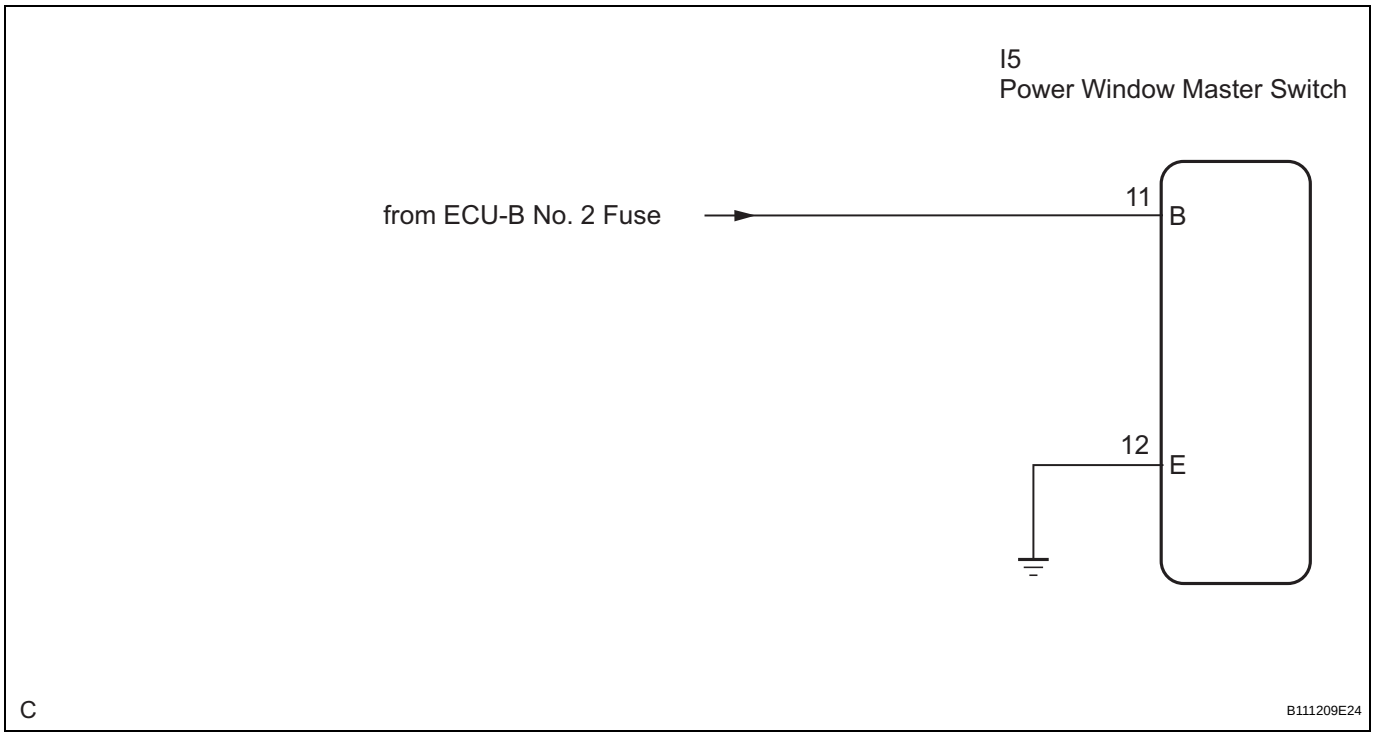

When using intelligent tester:

WS

1	CHECK WIRE HARNESS

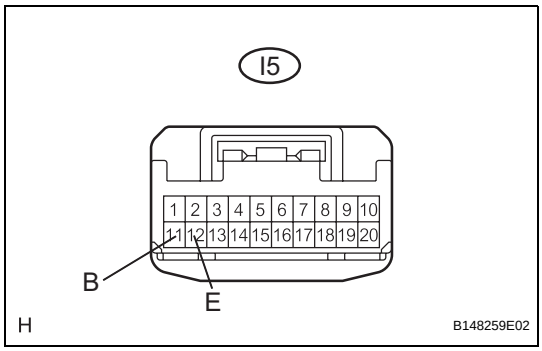

(a) Disconnect the I5 connector.
(b) Measure the voltage and resistance according to the value(s) in the table below.

Standard voltage

Tester Connection	Condition	Specified Condition
I5-11 (B) - Body ground	Engine switch on (IG)	10 to 14 V

Standard resistance

Tester Connection	Condition	Specified Condition
I5-12 (E) - Body ground	Always	Below 1 Ω

NG → **REPAIR OR REPLACE FUSE, HARNESS OR CONNECTOR**

OK

PROCEED TO NEXT CIRCUIT INSPECTION SHOWN IN PROBLEM SYMPTOMS TABLE

Front Passenger Side Power Window Switch Circuit

DESCRIPTION

This circuit supplies power to operate the power window regulator switch assembly (Front passenger side).

WIRING DIAGRAM

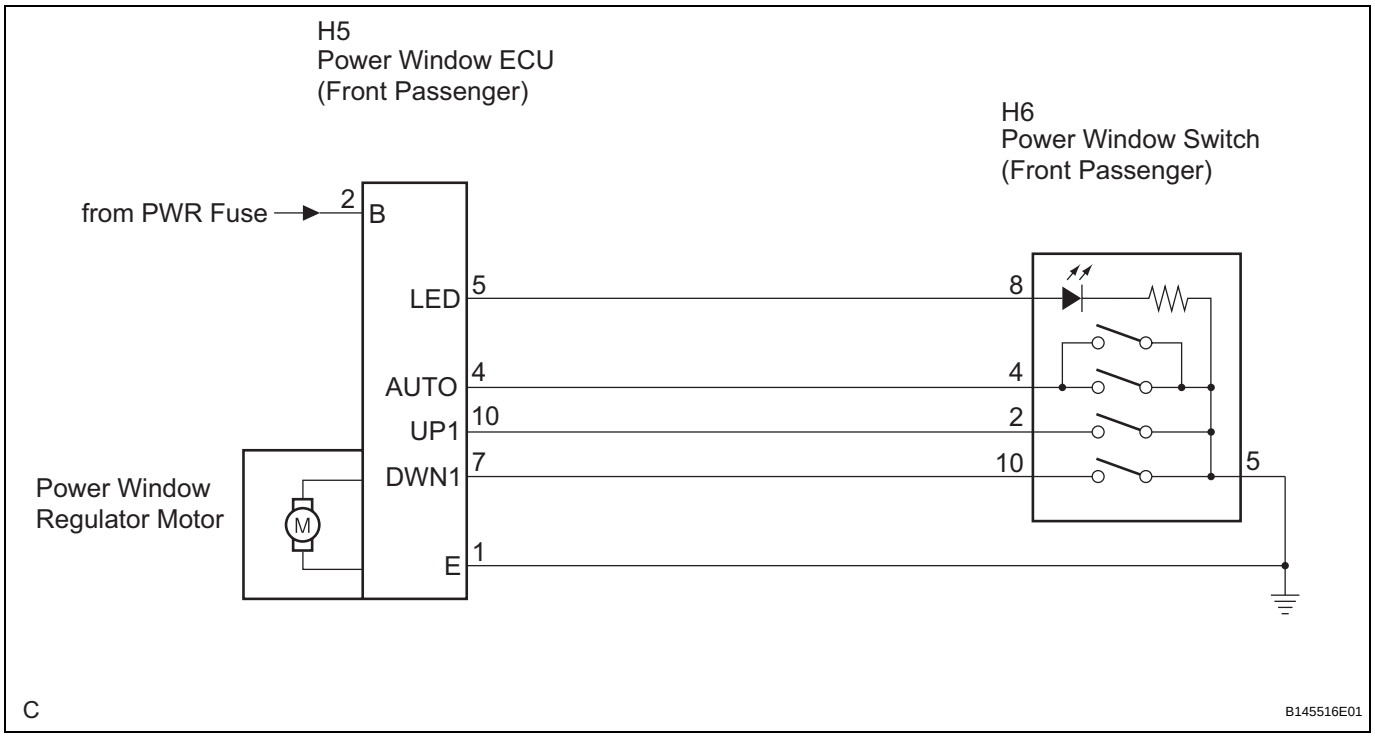

INSPECTION PROCEDURE

WS

1	INSPECT POWER WINDOW REGULATOR SWITCH

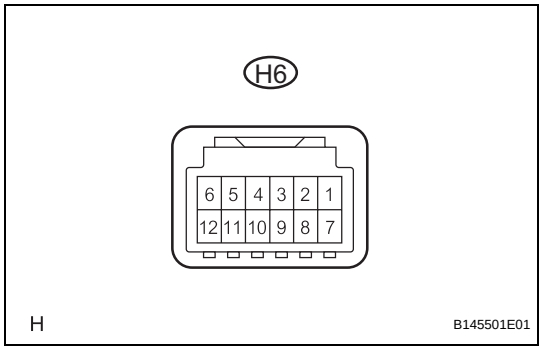

(a) Disconnect the H6 connector.
(b) Measure the resistance according to the value(s) in the table below.

Standard resistance

Tester Connection	Condition	Specified Condition
2 (E) - 4 (A) - 5 (E)	Auto UP	Below 1 Ω
2 (U) - 5 (E)	Manual UP	Below 1 Ω
5 (E) - 10 (D)	Manual DOWN	Below 1 Ω
4 (A) - 10 (D) - 5 (E)	Auto DOWN	Below 1 Ω

NG → **REPAIR OR REPLACE POWER WINDOW REGULATOR SWITCH**

OK

2	REPLACE WIRE HARNESS (POWER WINDOW REGULATOR SWITCH - POWER WINDOW ECU)

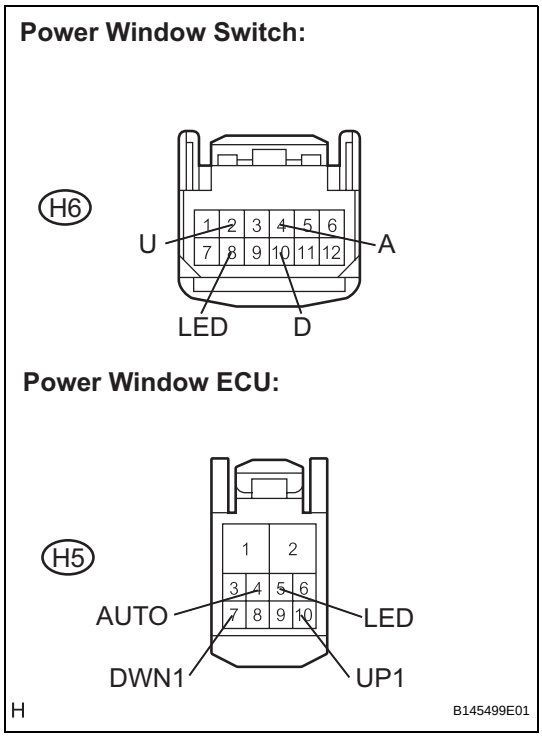

(a) Disconnect the H5 and H6 connectors.
(b) Measure the resistance according to the value(s) in the table below.

Standard resistance

Tester Connection	Condition	Specified Condition
H5-4 (AUTO) - H6-4 (A)	Always	Below 1 Ω
H5-5 (LED) - H6-8 (LED)	Always	Below 1 Ω
H5-7 (DWN1) - H6-2 (U)	Always	Below 1 Ω
H5-10 (UP1) - H6-10 (D)	Always	Below 1 Ω
H5-4 (AUTO) - Body ground	Always	10 kΩ or higher
H5-5 (LED) - Body ground	Always	10 kΩ or higher
H5-7 (DWN1) - Body ground	Always	10 kΩ or higher
H5-10 (UP1) - Body ground	Always	10 kΩ or higher

NG → **REPAIR OR REPLACE HARNESS OR CONNECTOR**

OK

END

Rear Power Window Switch LH Circuit

DESCRIPTION

This circuit supplies power to operate the power window regulator switch assembly (Rear LH).

WIRING DIAGRAM

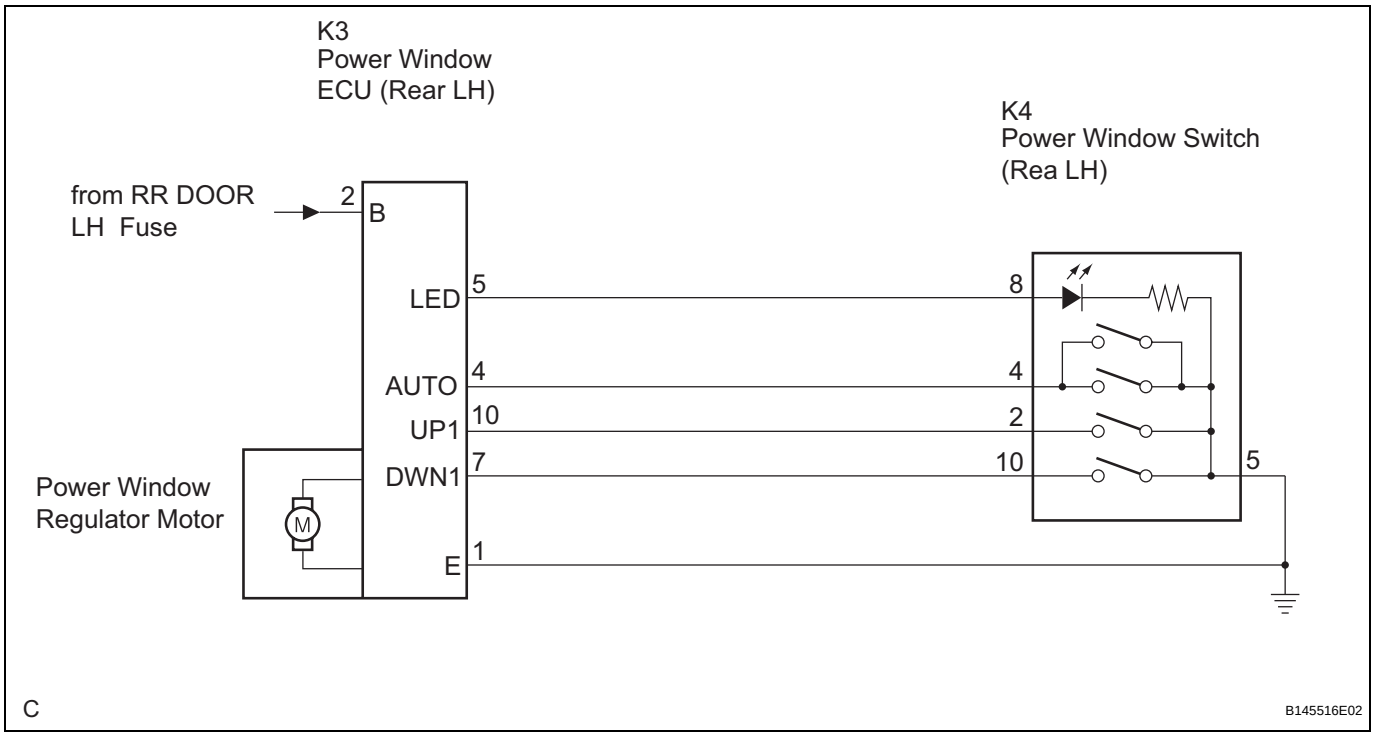

INSPECTION PROCEDURE

WS

1	INSPECT POWER WINDOW REGULATOR SWITCH

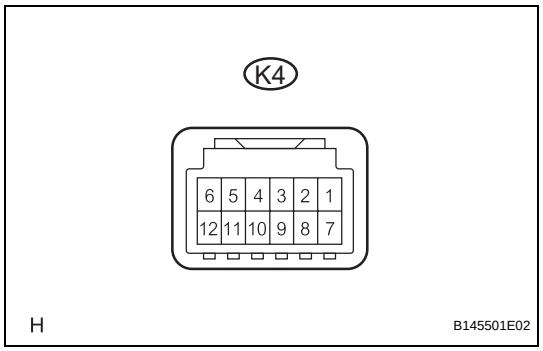

(a) Disconnect the K4 connector.
(b) Measure the resistance according to the value(s) in the table below.

Standard resistance

Tester Connection	Condition	Specified Condition
2 (E) - 4 (A) - 5 (E)	Auto UP	Below 1 Ω
2 (U) - 5 (E)	Manual UP	Below 1 Ω
5 (E) - 10 (D)	Manual DOWN	Below 1 Ω
4 (A) - 10 (D) - 5 (E)	Auto DOWN	Below 1 Ω

NG → **REPLACE POWER WINDOW REGULATOR SWITCH**

OK

2	CHECK WIRE HARNESS (POWER WINDOW REGULATOR SWITCH - POWER WINDOW ECU)

Power Window Switch:

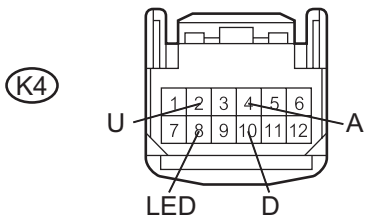

Power Window ECU:

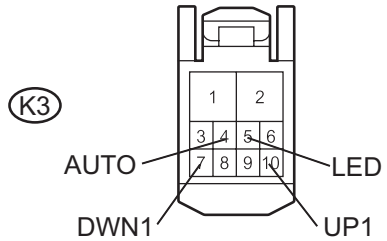

H B145499E02

(a) Disconnect the K3 and K4 connectors.
(b) Measure the resistance according to the value(s) in the table below.

Standard resistance

Tester Connection	Condition	Specified Condition
K3-4 (AUTO) - K4-4 (A)	Always	Below 1 Ω
K3-5 (LED) - K4-8 (LED)	Always	Below 1 Ω
K3-7 (DWN1) - K4-2 (U)	Always	Below 1 Ω
K3-10 (UP1) - K4-10 (D)	Always	Below 1 Ω
K3-4 (AUTO) - Body ground	Always	10 kΩ or higher
K3-5 (LED) - Body ground	Always	10 kΩ or higher
K3-7 (DWN1) - Body ground	Always	10 kΩ or higher
K3-10 (UP1) - Body ground	Always	10 kΩ or higher

NG → **REPAIR OR REPLACE HARNESS OR CONNECTOR**

OK

END

WS

Rear Power Window Switch RH Circuit

DESCRIPTION

This circuit supplies power to operate the power window regulator switch (Rear RH).

WIRING DIAGRAM

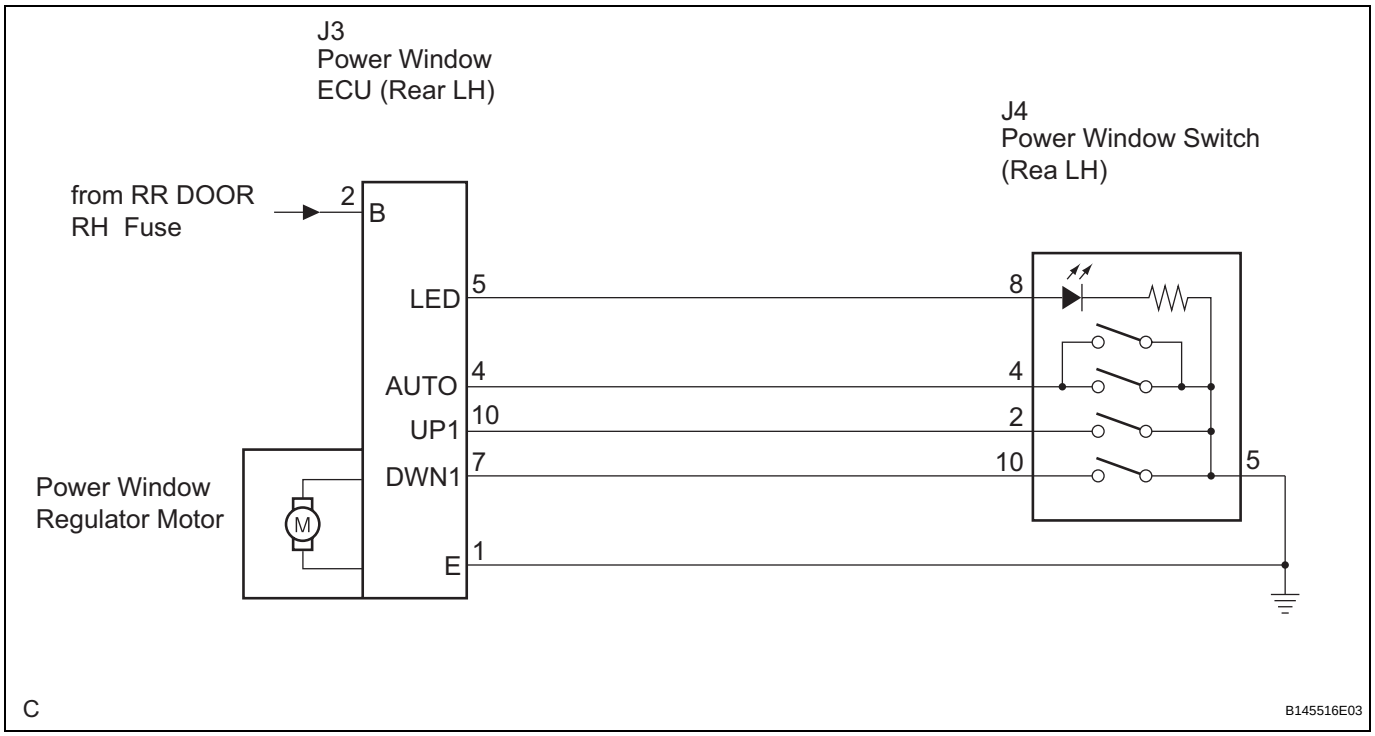

INSPECTION PROCEDURE

WS

1	INSPECT POWER WINDOW REGULATOR SWITCH

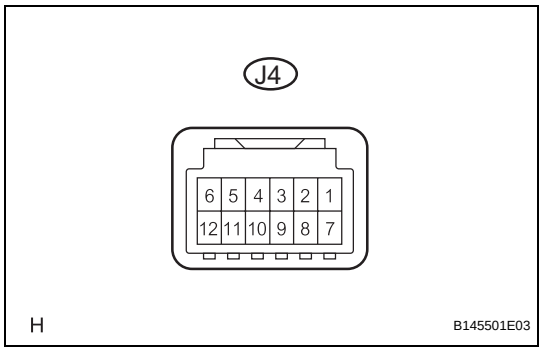

(a) Disconnect the J4 connector.
(b) Measure the resistance according to the value(s) in the table below.

Standard resistance

Tester Connection	Condition	Specified Condition
2 (E) - 4 (A) - 5 (E)	Auto UP	Below 1 Ω
2 (U) - 5 (E)	Manual UP	Below 1 Ω
5 (E) - 10 (D)	Manual DOWN	Below 1 Ω
4 (A) - 10 (D) - 5 (E)	Auto DOWN	Below 1 Ω

NG → **REPLACE POWER WINDOW REGULATOR SWITCH**

OK

2	CHECK WIRE HARNESS (POWER WINDOW REGULATOR SWITCH - POWER WINDOW ECU)

Power Window Switch:

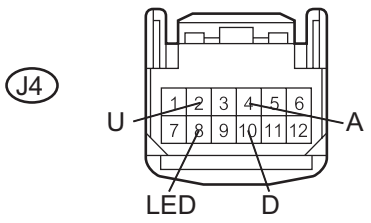

Power Window ECU:

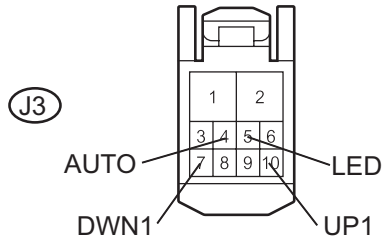

H B145499E03

(a) Disconnect the J3 and J4 connectors.
(b) Measure the resistance according to the value(s) in the table below.

Standard resistance

Tester Connection	Condition	Specified Condition
J3-4 (AUTO) - J4-4 (A)	Always	Below 1 Ω
J3-5 (LED) - J4-8 (LED)	Always	Below 1 Ω
J3-7 (DWN1) - J4-2 (U)	Always	Below 1 Ω
J3-10 (UP1) - J4-10 (D)	Always	Below 1 Ω
J3-4 (AUTO) - Body ground	Always	10 kΩ or higher
J3-5 (LED) - Body ground	Always	10 kΩ or higher
J3-7 (DWN1) - Body ground	Always	10 kΩ or higher
J3-10 (UP1) - Body ground	Always	10 kΩ or higher

NG → **REPAIR OR REPLACE HARNESS OR CONNECTOR**

OK

END

WS

TERMINALS OF ECU

1. POWER WINDOW REGULATOR MASTER SWITCH ASSEMBLY

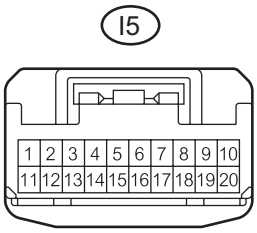

H

B145493E03

(a) Disconnect the I5 switch connector.
(b) Measure the voltage and resistance of each terminal according to the value(s) in the table below.

Standard resistance

Symbols (Terminal No.)	Wiring Color	Terminal Description	Condition	Specified Condition
E (I5-12) - Body ground	W-B - Body ground	Ground	Always	Below 1 Ω

Standard voltage

Symbols (Terminal No.)	Wiring Color	Terminal Description	Condition	Specified Condition
B (I5-11) - E (I5-12)	V - W-B	Power supply	Engine switch on (IG)	10 to 14 V

If the result is not as specified, there may be a malfunction in the wire harness.

(c) Reconnect the I5 switch connector and reset the power window motor.
(d) Measure the voltage according to the value(s) in the table below.

WS

Standard voltage

Symbols (Terminal No.)	Wiring Color	Terminal Description	Condition	Specified Condition
D (I5-15) - E (I5-12)	R - W-B	Power window motor DOWN output	Engine switch on (IG), driver side power window switch OFF → DOWN (Manual operation)	10 to 14 V → 0 V
U (I5-20) - E (I5-12)	G - W-B	Power window motor UP output	Engine switch on (IG), driver side power window switch OFF → UP (Manual operation)	10 to 14 V → 0 V

If the result is not as specified, there may be a malfunction in the wire harness.

2. CHECK POWER WINDOW SWITCH (FRONT PASSENGER SIDE)

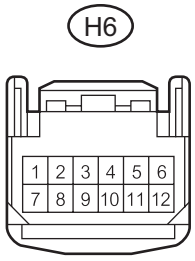

(a) Disconnect the H6 switch connector.
(b) Measure the resistance according to the value(s) in the table below.

Standard resistance

Symbols (Terminal No.)	Wiring Color	Terminal Description	Condition	Specified Condition
E (H6-5) - Body ground	W-B - Body ground	Ground	Always	Below 1 Ω

If the result is not as specified, there may be a malfunction in the wire harness.

(c) Reconnect the H6 switch connector and reset the power window motor.
(d) Measure the voltage according to the value(s) in the table below.

Standard voltage

Symbols (Terminal No.)	Wiring Color	Terminal Description	Condition	Specified Condition
A (H6-4) - E (H6-5)	L - W-B	Power window motor AUTO UP output	Engine switch on (IG), front passenger side power window fully open → UP (AUTO UP position) → fully closed	10 to 14 V → 0 V → 10 to 14 V
		Power window motor AUTO DOWN output	Engine switch on (IG), front passenger side power window fully closed → DOWN (AUTO UP position) → fully open	10 to 14 V → 0 V → 10 to 14 V
D (H6-10) - E (H6-5)	R - W-B	Power window motor DOWN output	Engine switch on (IG), front passenger side power window switch OFF → DOWN (Manual operation)	0 V → 10 to 14 V
U (H6-2) - E (H6-5)	G - W-B	Power window motor UP output	Engine switch on (IG), front passenger side power window switch OFF → UP (Manual operation)	0 V → 10 to 14 V

If the result is not as specified, the power window regulator switch assembly may have a malfunction.

3. CHECK POWER WINDOW SWITCH (REAR LH SIDE)

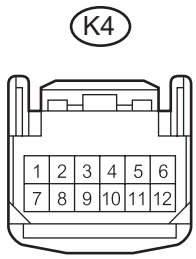

H

B145492E08

(a) Disconnect the K4 switch connector.
(b) Measure the resistance according to the value(s) in the table below.

Standard resistance

Symbols (Terminal No.)	Wiring Color	Terminal Description	Condition	Specified Condition
E (K4-5) - Body ground	W-B - Body ground	Ground	Always	Below 1 Ω

If the result is not as specified, there may be a malfunction in the wire harness.

(c) Reconnect the K4 switch connector and reset the power window motor.
(d) Measure the voltage according to the value(s) in the table below.

Standard voltage

Symbols (Terminal No.)	Wiring Color	Terminal Description	Condition	Specified Condition
A (K4-4) - E (K4-5)	L - W-B	Power window motor AUTO UP output	Engine switch on (IG), rear LH side power window fully open → UP (AUTO UP position) → fully closed	10 to 14 V → 0 V → 10 to 14 V
		Power window motor AUTO DOWN output	Engine switch on (IG), rear LH side power window fully closed → DOWN (AUTO UP position) → fully open	10 to 14 V → 0 V → 10 to 14 V
D (K4-10) - E (K4-5)	R - W-B	Power window motor DOWN output	Engine switch on (IG), rear LH side power window switch OFF → DOWN (Manual operation)	0 V → 10 to 14 V
U (K4-2) - E (K4-5)	G - W-B	Power window motor UP output	Engine switch on (IG), rear LH side power window switch OFF → UP (Manual operation)	0 V → 10 to 14 V

If the result is not as specified, the power window regulator switch assembly may have a malfunction.

4. CHECK POWER WINDOW SWITCH (REAR RH SIDE)

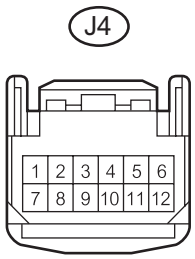

H

B145492E09

(a) Disconnect the J4 switch connector.
(b) Measure the resistance according to the value(s) in the table below.

Standard resistance

Symbols (Terminal No.)	Wiring Color	Terminal Description	Condition	Specified Condition
E (J4-5) - Body ground	W-B - Body ground	Ground	Always	Below 1 Ω

If the result is not as specified, there may be a malfunction in the wire harness.

(c) Reconnect the J4 switch connector and reset the power window motor.
(d) Measure the voltage according to the value(s) in the table below.

Standard voltage

Symbols (Terminal No.)	Wiring Color	Terminal Description	Condition	Specified Condition
A (J4-4) - E (J4-5)	L - W-B	Power window motor AUTO UP output	Engine switch on (IG), rear RH side power window fully open → UP (AUTO UP position) → fully closed	10 to 14 V → 0 V → 10 to 14 V
		Power window motor AUTO DOWN output	Engine switch on (IG), rear RH side power window fully closed → DOWN (AUTO UP position) → fully open	10 to 14 V → 0 V → 10 to 14 V
D (J4-10) - E (J4-5)	R - W-B	Power window motor DOWN output	Engine switch on (IG), rear RH side power window switch OFF → DOWN (Manual operation)	0 V → 10 to 14 V
U (J4-2) - E (J4-5)	G - W-B	Power window motor UP output	Engine switch on (IG), rear RH side power window switch OFF → UP (Manual operation)	0 V → 10 to 14 V

If the result is not as specified, the power window regulator switch assembly may have a malfunction.

5. CHECK POWER WINDOW ECU (DRIVER SIDE)

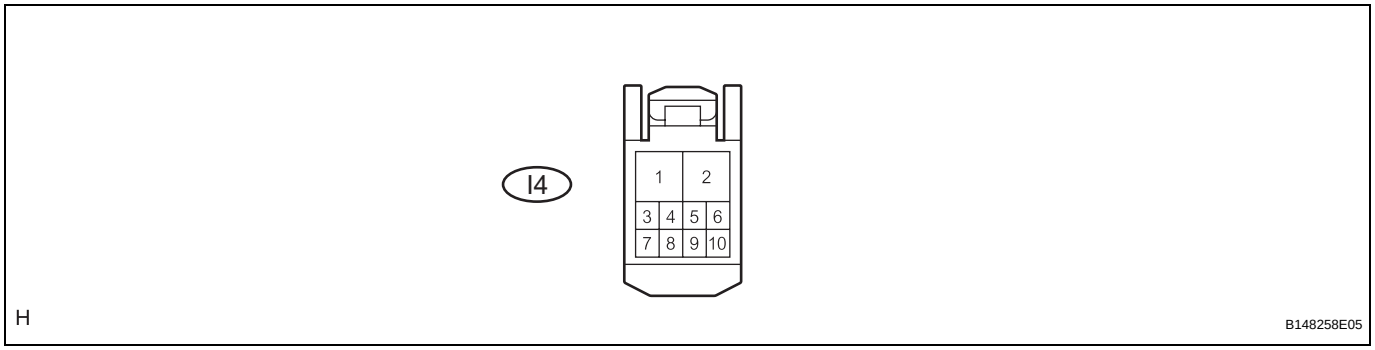

(a) Disconnect the I4 switch connector.
(b) Measure the voltage and resistance according to the value(s) in the table below.

Standard resistance

Symbols (Terminal No.)	Wiring Color	Terminal Description	Condition	Specified Condition
E (I4-1) - Body ground	W-B - Body ground	Ground	Always	Below 1 Ω

Standard voltage

Symbols (Terminal No.)	Wiring Color	Terminal Description	Condition	Specified Condition
B (I4-2) - Body ground	W - Body ground	Power supply	Engine switch on (IG)	10 to 14 V

If the result is not as specified, there may be a malfunction in the wire harness.

6. CHECK POWER WINDOW ECU (FRONT PASSENGER SIDE)

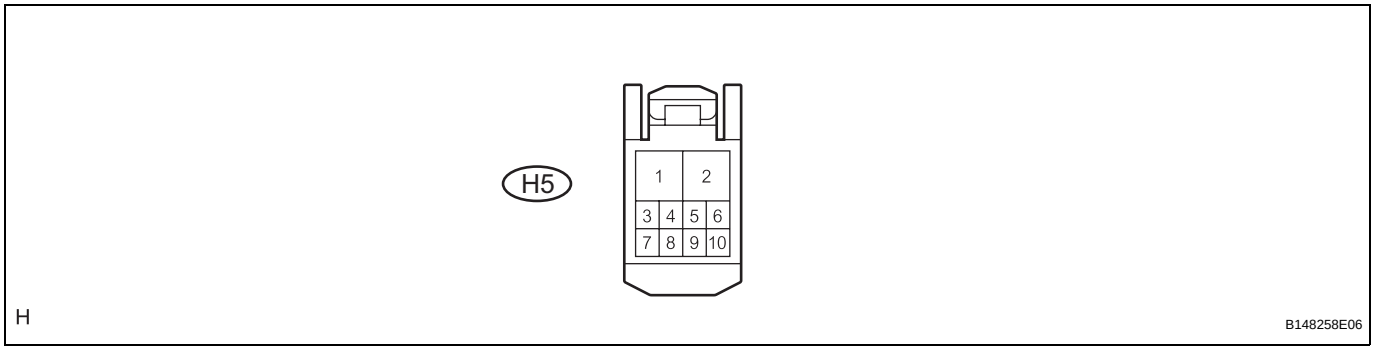

(a) Disconnect the H5 switch connector.
(b) Measure the voltage and resistance according to the value(s) in the table below.

Standard resistance

Symbols (Terminal No.)	Wiring Color	Terminal Description	Condition	Specified Condition
E (H5-1) - Body ground	W-B - Body ground	Ground	Always	Below 1 Ω

Standard voltage

Symbols (Terminal No.)	Wiring Color	Terminal Description	Condition	Specified Condition
B (H5-2) - Body ground	V - Body ground	Power supply	Engine switch on (IG)	10 to 14 V

If the result is not as specified, there may be a malfunction in the wire harness.

7. CHECK POWER WINDOW ECU (REAR LH SIDE)

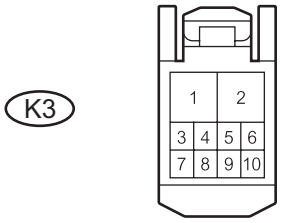

(a) Disconnect the K3 switch connector.
(b) Measure the voltage and resistance according to the value(s) in the table below.

Standard resistance

Symbols (Terminal No.)	Wiring Color	Terminal Description	Condition	Specified Condition
E (K3-1) - Body ground	W-B - Body ground	Ground	Always	Below 1 Ω

Standard voltage

Symbols (Terminal No.)	Wiring Color	Terminal Description	Condition	Specified Condition
B (K3-2) - Body ground	V - Body ground	Power supply	Engine switch on (IG)	10 to 14 V

If the result is not as specified, there may be a malfunction in the wire harness.

8. CHECK POWER WINDOW ECU (REAR RH SIDE)

WS

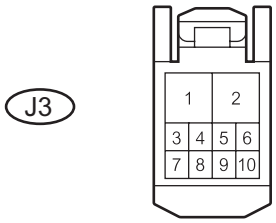

(a) Disconnect the J3 switch connector.
(b) Measure the voltage and resistance according to the value(s) in the table below.

Standard resistance

Symbols (Terminal No.)	Wiring Color	Terminal Description	Condition	Specified Condition
E (J3-1) - Body ground	W-B - Body ground	Ground	Always	Below 1 Ω

Standard voltage

Symbols (Terminal No.)	Wiring Color	Terminal Description	Condition	Specified Condition
B (J3-2) - Body ground	V - Body ground	Power supply	Engine switch on (IG)	10 to 14 V

If the result is not as specified, there may be a malfunction in the wire harness.

POWER WINDOW MASTER SWITCH

COMPONENTS

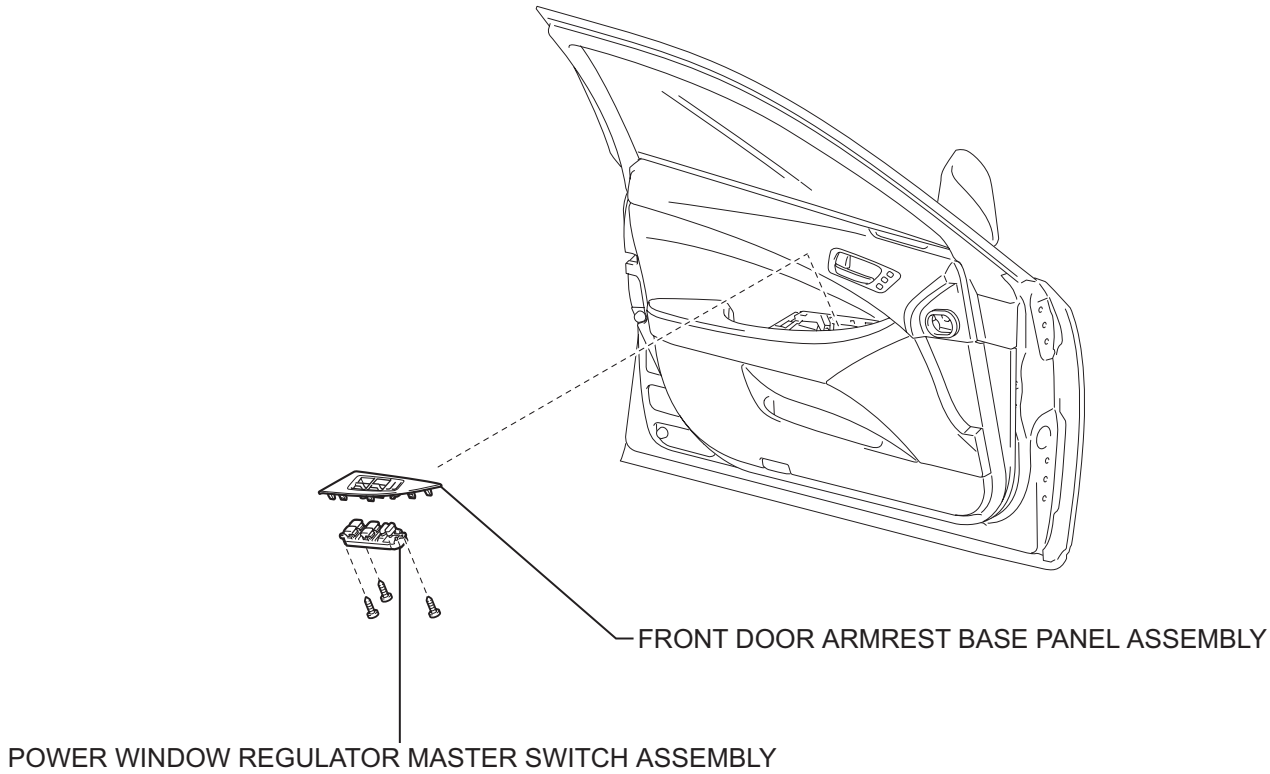

P

B149101E01

REMOVAL

1. **REMOVE FRONT DOOR ARMREST BASE PANEL ASSEMBLY (See page ED-33)**
2. **REMOVE POWER WINDOW REGULATOR MASTER SWITCH ASSEMBLY (See page ED-33)**

INSPECTION

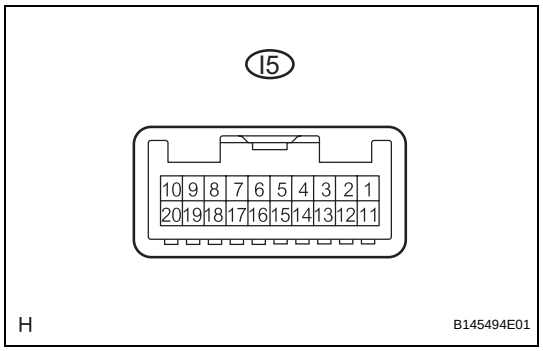

1. **INSPECT POWER WINDOW MASTER SWITCH**
   (a) Measure the resistance when the switch is operated according to the value(s) in the table below.
   Standard resistance

Tester Connection	Switch Condition	Specified Condition
20 (U) - 12 (E)	Manual UP	Below 1 Ω
15 (D) - 12 (E)	Manual DOWN	Below 1 Ω

DIAGNOSIS SYSTEM

1. DESCRIPTION

(a) The power window control system data can be read from the Data Link Connector 3 (DLC3) of the vehicle. When the system seems to be malfunctioning, use the intelligent tester to check for malfunctions and perform repairs.

2. CHECK DLC3

(a) The ECU uses ISO 15765-4 communication protocol. The terminal arrangement of the DLC3 complies with SAE J1962 and matches the ISO 15765-4 format.

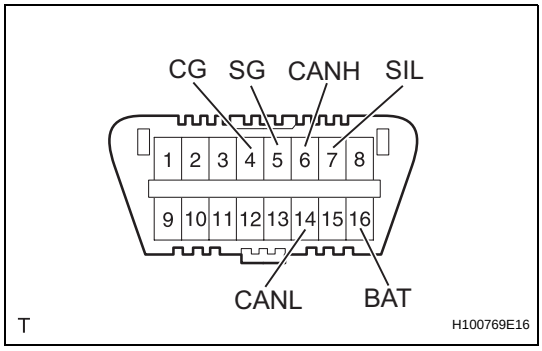

Symbols (Terminal No.)	Terminal Description	Condition	Specified Condition
SIL (7) - SG (5)	Bus "+" line	During transmission	Pulse generation
CG (4) - Body ground	Chassis ground	Always	Below 1 Ω
SG (5) - Body ground	Signal ground	Always	Below 1 Ω
BAT (16) - Body ground	Battery positive	Always	10 to 14 V
CANH (6) - CANL (14)	CAN bus line	Engine switch OFF*	54 to 69 Ω
CANH (6) - CG (4)	HIGH-level CAN bus line	Engine switch OFF*	200 Ω or more
CANL (14) - CG (4)	LOW-level CAN bus line	Engine switch OFF*	200 Ω or more
CANH (6) - BAT (16)	HIGH-level CAN bus line	Engine switch OFF*	6 kΩ or more
CANL (14) - BAT (16)	LOW-level CAN bus line	Engine switch OFF*	6 kΩ or more

WS

NOTICE:

***: Before measuring the resistance, leave the vehicle as is for at least 1 minute and do not operate the ignition switch, any other switches or the door.**

If the result is not as specified, the DLC3 may have a malfunction. Repair or replace the harness and connector.

HINT:

Connect the cable of the intelligent tester to the DLC3, turn the engine switch on (IG) and attempt to use the tester. If the display indicates that a communication error has occurred, there is a problem either with the vehicle or with the tester.

- If communication is normal when the tester is connected to another vehicle, inspect the DLC3 of the original vehicle.
- If communication is still not possible when the tester is connected to another vehicle, the problem may be in the tester itself. Consult the Service Department listed in the tester's instruction manual.

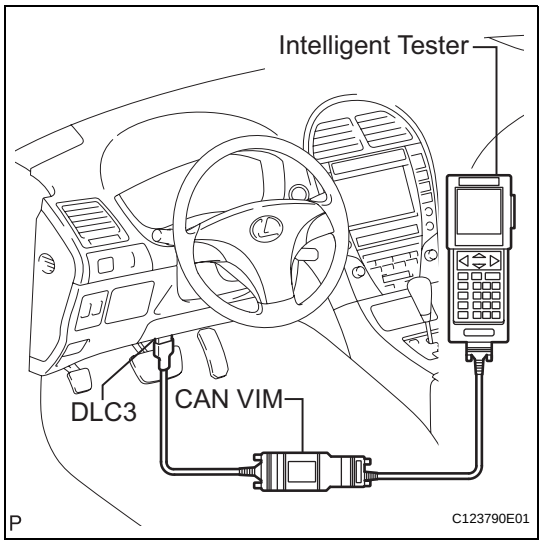

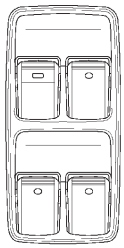

B064900E01

3. CHECK DIAGNOSIS (WITH JAM PROTECTION)

HINT:

If there is a malfunction in the pulse sensor, manually operating the power window switch will cause the power window switch light to blink.

(a) Turn the engine switch on (IG).

(b) Manually operate the power window master switch or power window switch on each door.

(c) Check the blinking pattern of the AUTO light as shown in the illustration.

Brinking Pattern of Light:

(A): LIN communication fail

(B): - Initial fail (Window position)
- Pulse sensor fail

Normal

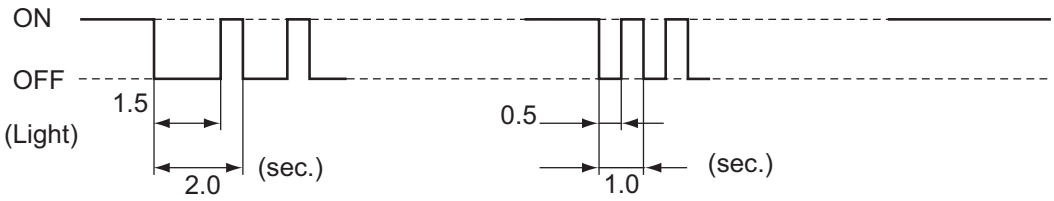

H

B145472E02

(1) If pattern (A) is displayed, check the wire harness or power window ECU.

(2) If pattern (B) is displayed, check the power window regulator motor or power window ECU.

(3) If the normal pattern is displayed, replace the power window regulator master switch.

FRONT PASSENGER SIDE POWER WINDOW SWITCH

COMPONENTS

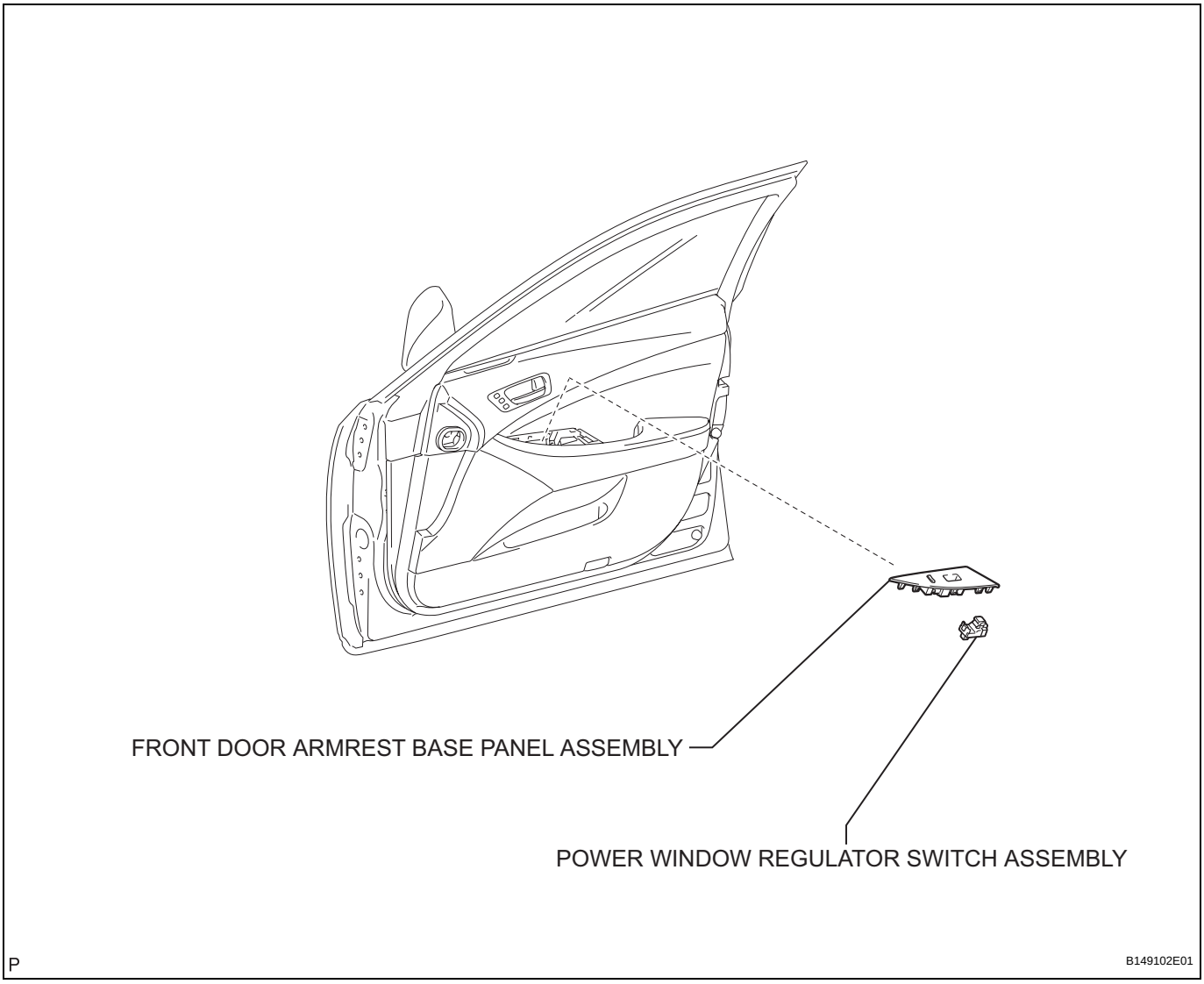

REMOVAL

1. **REMOVE FRONT DOOR ARMREST BASE PANEL ASSEMBLY (See page ED-33)**

2. **REMOVE POWER WINDOW REGULATOR SWITCH ASSEMBLY (See page ED-33)**

INSPECTION

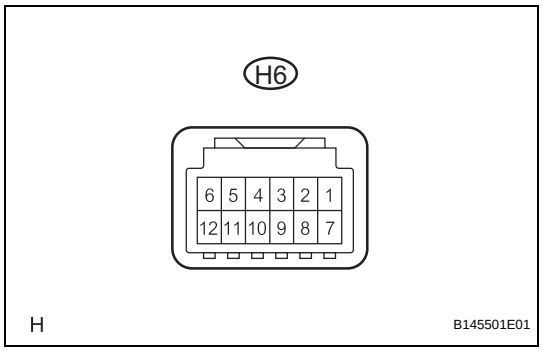

1. **INSPECT POWER WINDOW SWITCH**
   (a) Remove the power window switch.
   (b) Measure the resistance when the switch is operated according to the value(s) in the table below.
   Standard resistance

Tester Connection	Switch Condition	Specified Condition
2 (E) - 4 (A) - 5 (E)	Auto UP	Below 1 Ω
2 (U) - 5 (E)	Manual UP	Below 1 Ω
5 (E) - 10 (D)	Manual DOWN	Below 1 Ω
4 (A) - 10 (D) - 5 (E)	Auto DOWN	Below 1 Ω

DTC CHECK / CLEAR

1. CHECK DTC

(a) Connect the intelligent tester to the DLC3.
(b) Turn the engine switch on (IG).
(c) Check the DTC(s).

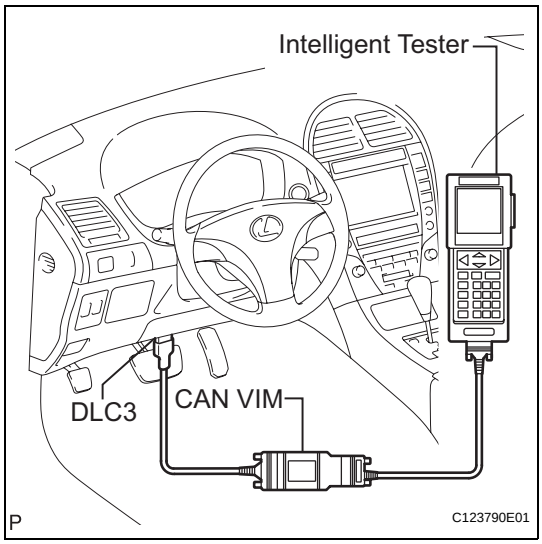

2. CLEAR DTC

(a) Connect the intelligent tester to the DLC3.
(b) Turn the engine switch on (IG) .
(c) Clear the DTCs.
(d) Check that "DTCs are cleared" is displayed.
NOTICE:
If any DTCs are output, troubleshoot those DTCs again.

FAIL-SAFE CHART

1. POWER WINDOW OPERATION IN FAIL-SAFE MODE

HINT:
If the pulse sensor built into the power window regulator motor (on the driver side) malfunctions, the power window control system enters fail-safe mode.

Fail mode	Fail Detection Condition
Pulse direction error	With the door glass going up or down, the pulse that indicates door glass operation in the opposite direction is detected for 400 msec.
Pulse stop error	With the door glass going up or down, no pulse is detected for 350 to 450 msec.

(a) The power window control system prohibits the following power window operation when the pulse sensor for the jam protection function has problems and the window position or the learned value is abnormal.

Power window control system

Power window operation	Engine switch on (IG)	Key-off (Within approx. 45 seconds after engine switch turned off)	Key-off (After approx. 45 seconds elapsed after engine switch turned off)
Manual UP	Operation prohibited	Operation prohibited	Operation prohibited
Manual DOWN	Operative (Jam protection not operative)	Operation prohibited	Operation prohibited
AUTO UP (hold switch at AUTO UP position)	Operative (in MANUAL mode) (Jam protection not operative)	Operation prohibited	Operation prohibited
AUTO UP	Operation prohibited	Operation prohibited	Operation prohibited
AUTO DOWN	Operation prohibited	Operation prohibited	Operation prohibited

HINT:
When the pulse sensor is normal, the AUTO UP/DOWN function can be resumed by deactivating fail-safe mode. To deactivate fail-safe mode, pull up the driver door power window switch to the AUTO UP position and hold it for at least 1 second to fully close the window from the fully open position.

(b) If the LIN communication system malfunctions (communication blackout), the power window control system prohibits the following operations.

LIN communication system

Power window operation	Engine switch on (IG)
MANUAL UP	Operative (Jam protection operative)
MANUAL DOWN	Operative (Jam protection not operative)
AUTO UP (hold switch at AUTO UP position)	Operative (Jam protection operative)
AUTO UP	Operative (Jam protection operative)
AUTO DOWN	Operative (Jam protection not operative)

REAR POWER WINDOW SWITCH

COMPONENTS

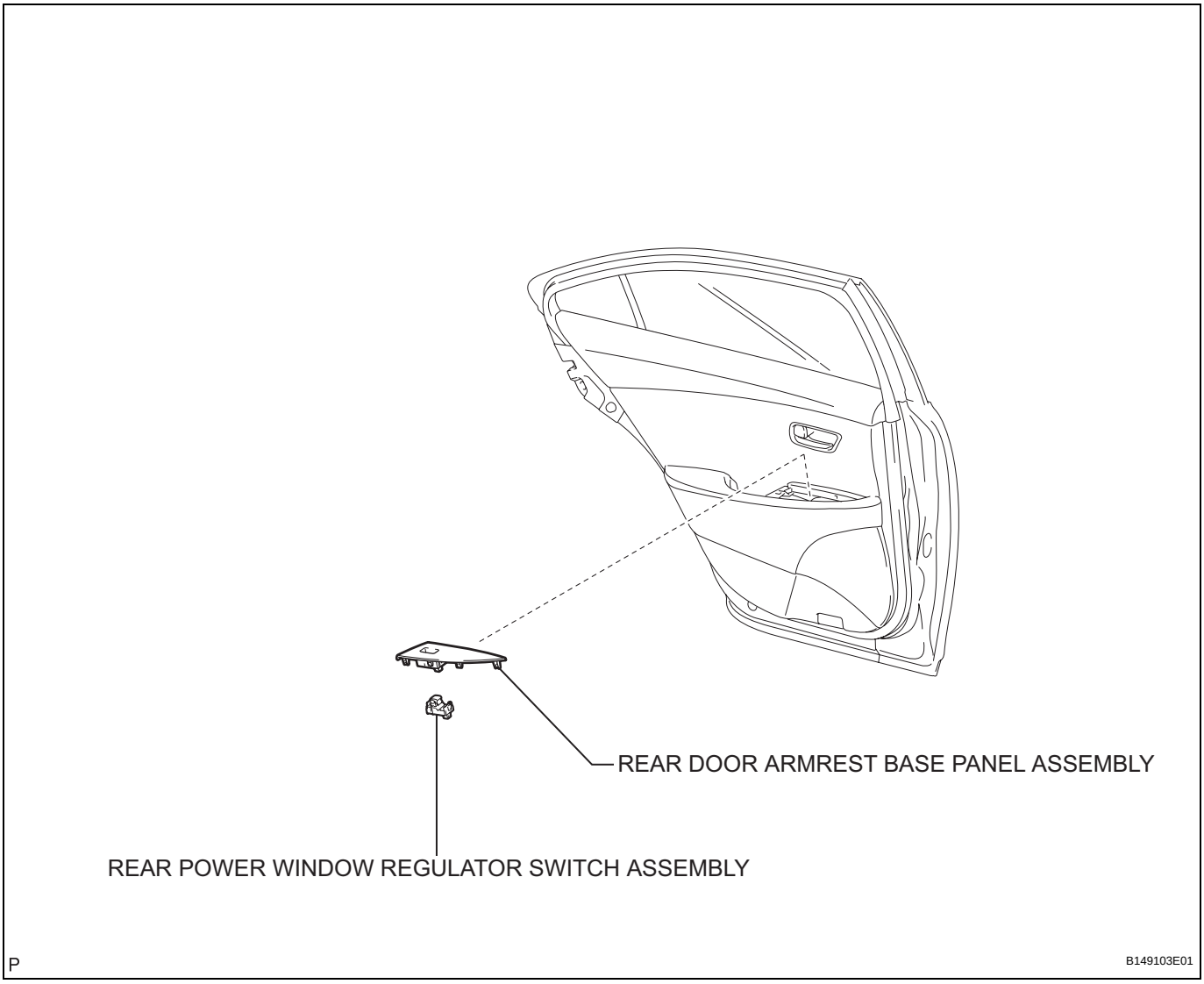

REMOVAL

1. **REMOVE REAR DOOR ARMREST BASE PANEL ASSEMBLY (See page ED-59)**

2. **REMOVE REAR POWER WINDOW REGULATOR SWITCH ASSEMBLY (See page ED-59)**

INSPECTION

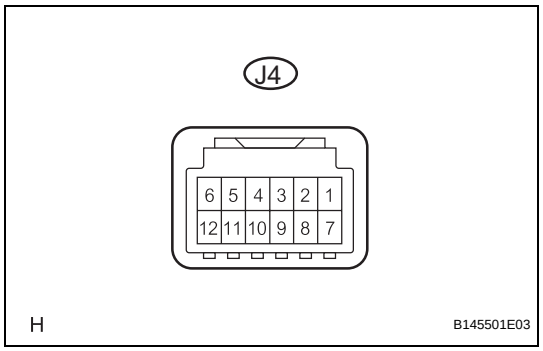

1. **INSPECT POWER WINDOW SWITCH (for Rear RH)**
   (a) Remove the power window switch.
   (b) Measure the resistance when the switch is operated according to the value(s) in the table below.
   Standard resistance

Tester Connection	Switch Condition	Specified Condition
2 (E) - 4 (A) - 5 (E)	Auto UP	Below 1 Ω
2 (U) - 5 (E)	Manual UP	Below 1 Ω
5 (E) - 10 (D)	Manual DOWN	Below 1 Ω
4 (A) - 10 (D) - 5 (E)	Auto DOWN	Below 1 Ω

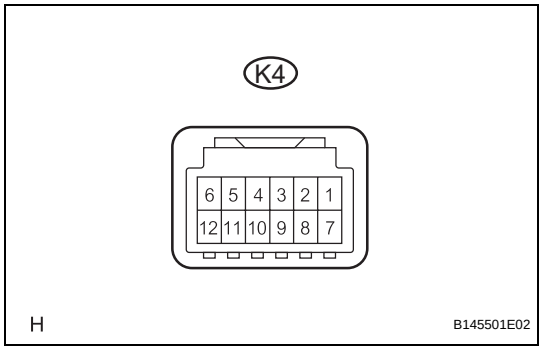

2. **REMOVE POWER WINDOW SWITCH (for Rear LH)**
   (a) Remove the power window switch.
   (b) Measure the resistance when the switch is operated according to the value(s) in the table below.
   Standard resistance

Tester Connection	Switch Condition	Specified Condition
2 (E) - 4 (A) - 5 (E)	Auto UP	Below 1 Ω
2 (U) - 5 (E)	Manual UP	Below 1 Ω
5 (E) - 10 (D)	Manual DOWN	Below 1 Ω
4 (A) - 10 (D) - 5 (E)	Auto DOWN	Below 1 Ω

DATA LIST / ACTIVE TEST

1. USING INTELLIGENT TESTER

(a) Connect the intelligent tester to the DLC3.

(b) Monitor the ECU data by following the prompts on the tester screen.

HINT:

The intelligent tester has a "Snapshot" function which records the monitored data. Refer to the intelligent tester operator's manual for further details.

2. DATA LIST

HINT:

Using the DATA LIST displayed on the intelligent tester, the value of the switches, sensors, actuators, etc. can be read without part removal. Reading the DATA LIST as the first step in troubleshooting is one way to shorten the labor time.

(a) Connect the intelligent tester to the DLC3.

(b) Turn the engine switch on (IG).

(c) Read the DATA LIST according to the display on the tester.

MASTER SW:

Tester Display	Measurement Item/Range	Normal Condition	Diagnostic Note
D P/W AUTO SW	Driver door power window auto switch signal/ON or OFF	ON: Driver door power window auto switch operates OFF: Driver door power window auto switch does not operate	-
P P/W AUTO SW	Front passenger door remote power window auto switch signal/ON or OFF	ON: Front passenger door remote power window auto switch operates OFF: Front passenger door remote power window auto switch does not operate	-
RR P/W AUTO SW	Rear RH door remote power window auto switch signal/ON or OFF	ON: Rear RH door remote power window auto switch operates OFF: Rear RH door remote power window auto switch does not operate	-
RL P/W AUTO SW	Rear LH door remote power window auto switch signal/ON or OFF	ON: Rear LH door remote power window auto switch operates OFF: Rear LH door remote power window auto switch does not operate	-
P P/W UP SW	Front passenger door remote power window manual up switch signal/ON or OFF	ON: Front passenger door remote power window manual up switch operates OFF: Front passenger door remote power window manual up switch does not operate	-
RR P/W UP SW	Rear RH door remote power window manual up switch signal/ON or OFF	ON: Rear RH door remote power window manual up switch operates OFF: Rear RH door remote power window manual up switch does not operate	-

Tester Display	Measurement Item/Range	Normal Condition	Diagnostic Note
RL P/W UP SW	Rear LH door remote power window manual up switch signal/ ON or OFF	ON: Rear LH door remote power window manual up switch operates OFF: Rear LH door remote power window manual up switch does not operate	-
P P/W DOWN SW	Front passenger door remote power window manual down switch signal/ON or OFF	ON: Front passenger door remote power window manual down switch operates OFF: Front passenger door remote power window manual down switch does not operate	-
RR P/W DOWN SW	Rear RH door remote power window manual down switch signal/ON or OFF	ON: Rear RH door remote power window manual down switch operates OFF: Rear RH door remote power window manual down switch does not operate	-
RL P/W DOWN SW	Rear LH door remote power window manual down switch signal/ON or OFF	ON: Rear LH door remote power window manual down switch operates OFF: Rear LH door remote power window manual down switch does not operate	-

Body:

Tester Display	Measurement Item/Range	Normal Condition	Diagnostic Note
COM MASTER SW	Master switch communication signal OK/STOP	OK: Communication is normal STOP: Communication is stopped	-

3. ACTIVE TEST

HINT:

Performing the ACTIVE TEST using the intelligent tester allows you to operate the relay, VSV, actuator, etc. without parts removal. Performing the ACTIVE TEST as the first step in troubleshooting is one way to shorten the labor time. It is possible to display the DATA LIST during the ACTIVE TEST.

(a) Connect the intelligent tester to the DLC3.
(b) Turn the engine switch on (IG).
(c) Perform the ACTIVE TEST according to the display on the tester.

Body:

Tester Display	Measurement Item/Range	Normal Condition
IG OFF P/W	Operates power window ON/OFF (After ignition OFF)	-

REMOVAL

1. **REMOVE FRONT DOOR INSIDE HANDLE BEZEL PLUG (See page ED-32)**
2. **REMOVE FRONT DOOR ARMREST BASE PANEL ASSEMBLY (See page ED-33)**
3. **REMOVE COURTESY LIGHT ASSEMBLY (See page ED-34)**
4. **REMOVE DOOR ARMREST COVER (See page ED-34)**
5. **REMOVE FRONT DOOR TRIM BOARD SUB-ASSEMBLY (See page ED-34)**
6. **REMOVE FRONT DOOR INNER GLASS WEATHERSTRIP (See page ED-35)**
7. **REMOVE DOOR FRAME GARNISH (See page ED-35)**
8. **REMOVE OUTER MIRROR PROTECTOR (See page ED-35)**
9. **REMOVE FRONT NO. 1 SPEAKER ASSEMBLY (See page AV-184)**
10. **REMOVE FRONT NO. 1 DOOR TRIM BRACKET (See page ED-36)**
11. **REMOVE FRONT DOOR SERVICE HOLE COVER (See page ED-36)**
12. **REMOVE FRONT DOOR GLASS SUB-ASSEMBLY (See page ED-36)**
13. **REMOVE FRONT DOOR WINDOW REGULATOR SUB-ASSEMBLY (See page ED-36)**
14. **REMOVE FRONT POWER WINDOW REGULATOR MOTOR ASSEMBLY (See page ED-37)**
15. **REMOVE REAR DOOR INSIDE HANDLE BEZEL PLUG (See page ED-58)**
16. **REMOVE REAR DOOR ARMREST BASE PANEL ASSEMBLY (See page ED-59)**
17. **REMOVE COURTESY LIGHT ASSEMBLY (See page ED-59)**
18. **REMOVE REAR DOOR ARMREST COVER (See page ED-59)**
19. **REMOVE REAR DOOR TRIM BOARD SUB-ASSEMBLY (See page ED-60)**
20. **REMOVE REAR DOOR INNER GLASS WEATHERSTRIP (See page ED-61)**
21. **REMOVE REAR DOOR FRAME GARNISH (See page ED-61)**
22. **REMOVE REAR DOOR SERVICE HOLE COVER (See page ED-61)**

23. **REMOVE REAR DOOR TRIM BRACKET (See page ED-62)**

24. **REMOVE REAR DOOR GLASS RUN (See page ED-63)**

25. **REMOVE REAR DOOR WINDOW DIVISION BAR SUB-ASSEMBLY (See page ED-63)**

26. **REMOVE REAR DOOR QUARTER WINDOW GLASS (See page ED-63)**

27. **REMOVE REAR DOOR GLASS SUB-ASSEMBLY (See page ED-63)**

28. **REMOVE REAR DOOR WINDOW REGULATOR SUB-ASSEMBLY (See page ED-64)**

29. **REMOVE REAR POWER WINDOW REGULATOR MOTOR ASSEMBLY (See page ED-64)**

INSPECTION

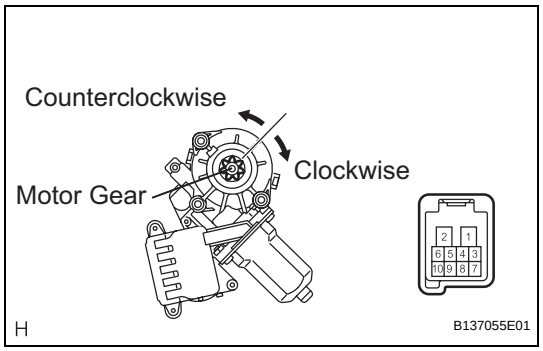

1. **INSPECT POWER WINDOW REGULATOR MOTOR FRONT RH**
   (a) Apply battery voltage to the motor connector according to the table below.
   NOTICE:
   Do not apply battery voltage to any terminals except terminals 1, 2, 4, 7 and 10.
   Standard

Switch Condition	Measurement Condition	Specified Condition
Manual Operation	Battery positive (+) → Terminal 2 (B) Battery negative (-) → Terminal 1 (E), 7 (DWN1)	Motor gear rotates counterclockwise
	Battery positive (+) → Terminal 2 (B) Battery negative (-) → Terminal 1 (E), 10 (UP1)	Motor gear rotates clockwise
Auto Operation	Battery positive (+) → Terminal 2 (B) Battery negative (-) → Terminal 1 (E), 4 (AUTO), 7 (DWN1)	Motor gear rotates counterclockwise
	Battery positive (+) → Terminal 2 (B) Battery negative (-) → Terminal 1 (E), 4 (AUTO) 10 (UP1)	Motor gear rotates clockwise

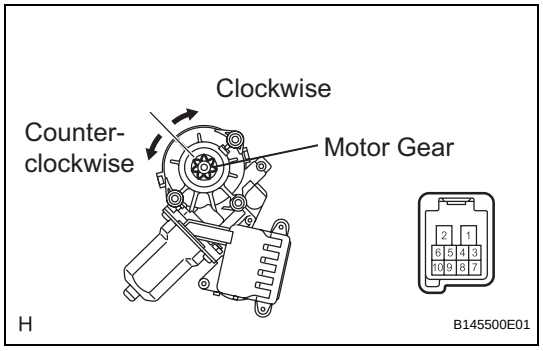

2. **INSPECT POWER WINDOW REGULATOR MOTOR FRONT LH**
   (a) Apply battery voltage to the motor connector according to the table below.
   NOTICE:
   Do not apply battery voltage to any terminals except terminals 1, 2, 4, 7 and 10.

WS

Standard

Switch Condition	Measurement Condition	Specified Condition
Manual Operation	Battery positive (+) → Terminal 2 (B) Battery negative (-) → Terminal 1 (E), 7 (DWN1)	Motor gear rotates counterclockwise
	Battery positive (+) → Terminal 2 (B) Battery negative (-) → Terminal 1 (E), 10 (UP1)	Motor gear rotates clockwise
Auto Operation	Battery positive (+) → Terminal 2 (B) Battery negative (-) → Terminal 1 (E), 4 (AUTO), 7 (DWN1)	Motor gear rotates counterclockwise
	Battery positive (+) → Terminal 2 (B) Battery negative (-) → Terminal 1 (E), 4 (AUTO) 10 (UP1)	Motor gear rotates clockwise

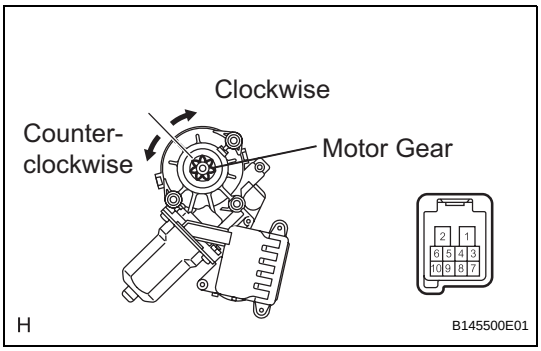

3. INSPECT POWER WINDOW REGULATOR MOTOR REAR RH

(a) Apply battery voltage to the motor connector according to the table below.

NOTICE:

Do not apply battery voltage to any terminals except terminals 1, 2, 4, 7 and 10.

Standard

Switch Condition	Measurement Condition	Specified Condition
Manual Operation	Battery positive (+) → Terminal 2 (B) Battery negative (-) → Terminal 1 (E), 7 (DWN1)	Motor gear rotates counterclockwise
	Battery positive (+) → Terminal 2 (B) Battery negative (-) → Terminal 1 (E), 10 (UP1)	Motor gear rotates clockwise
Auto Operation	Battery positive (+) → Terminal 2 (B) Battery negative (-) → Terminal 1 (E), 4 (AUTO), 7 (DWN1)	Motor gear rotates counterclockwise
	Battery positive (+) → Terminal 2 (B) Battery negative (-) → Terminal 1 (E), 4 (AUTO) 10 (UP1)	Motor gear rotates clockwise

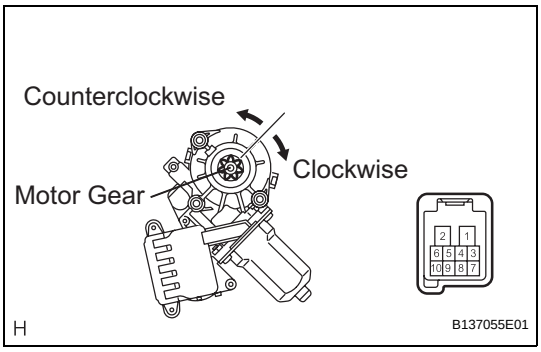

4. INSPECT POWER WINDOW REGULATOR MOTOR REAR LH

(a) Apply battery voltage to the motor connector according to the table below.

NOTICE:

Do not apply battery voltage to any terminals except terminals 1, 2, 4, 7 and 10.

Standard

Switch Condition	Measurement Condition	Specified Condition
Manual Operation	Battery positive (+) → Terminal 2 (B) Battery negative (-) → Terminal 1 (E), 7 (DWN1)	Motor gear rotates counterclockwise
	Battery positive (+) → Terminal 2 (B) Battery negative (-) → Terminal 1 (E), 10 (UP1)	Motor gear rotates clockwise
Auto Operation	Battery positive (+) → Terminal 2 (B) Battery negative (-) → Terminal 1 (E), 4 (AUTO), 7 (DWN1)	Motor gear rotates counterclockwise
	Battery positive (+) → Terminal 2 (B) Battery negative (-) → Terminal 1 (E), 4 (AUTO) 10 (UP1)	Motor gear rotates clockwise

DIAGNOSTIC TROUBLE CODE CHART

POWER WINDOW CONTROL SYSTEM

DTC Code	Detection Item	Trouble Area	See page
B2311	Driver Door Motor Malfunction	1. Battery disconnection when the engine switch is on (IG) 2. Power window regulator motor (on driver side) 3. Incorrect installation of power window components 4. Overheated power window regulator motor (on driver side)	WS-24
B2312	Driver Side Door Master Switch Malfunction	1. Power window regulator motor (on driver side) 2. Power window regulator master switch 3. Wire harness 4. Power window regulator master switch is held in same position for more than 20 seconds	WS-26
B2313	Glass Position Initialization Incomplete	1. Power window regulator motor (on driver side) 2. Power window regulator motor (on driver side) not initialized	WS-29

DTC	B2311	Driver Door Motor Malfunction

DESCRIPTION

The portion of the power window control system that is located in the driver door consists of a power window master switch, regulator, and a motor with an integrated ECU. The driver door power window regulator motor is controlled by the ECU when the power window master switch is operated (models with jam protection).
DTC B2311 is set when the ECU for the driver door power window regulator motor assembly malfunctions.

NOTICE:

The power window control system uses a serial communication protocol (LIN) to communicate with the main body ECU. Inspect the communication function by following HOW TO PROCEED WITH TROUBLESHOOTING. Troubleshoot the power window control system after confirming that the communication system is functioning properly.

HINT:

- Initialization is required only when the power window regulator motor is replaced. However, replacing the motor may cause the motor gear to be engaged in a different position. This can cause a difference to exist between the current door glass position and the position memorized in the ECU. In this case, the jam protection function may work improperly. Return the system to the pre-initialized condition and reinitialize the system.
- To return the system to the pre-initialized condition:
  Disconnect the power window regulator motor connector during power window operation. This will return the motor to the pre-initialized condition.

DTC No.	DTC Detection Condition	Trouble Area
B2311	When either condition below is met: • The power window regulator motor (on driver side) malfunctions • When the ECU in the power widow regulator motor (on driver side) determines that the fully closed window position has deviated approximately 20 mm (0.79 in.) or more from the normal position	• Battery disconnection when the engine switch is on (IG) • Power window regulator motor (on driver side) • Incorrect installation of power window components • Overheated power window regulator motor (on driver side)

WS

INSPECTION PROCEDURE

1	INITIALIZE POWER WINDOW CONTROL SYSTEM

(a) Initialize the power window regulator motor assembly (on the driver side) (See page WS-10).

(b) Check that the power window operates normally by opening and closing the window.

OK:

Driver side power window operates normally.

NG → **REPLACE POWER WINDOW REGULATOR MOTOR ASSEMBLY (for Driver Side)**

OK

2	CHECK WHETHER PARTS HAVE BEEN INSTALLED CORRECTLY

(a) Check that the power window components (on the driver side) are installed correctly.

OK:

Power window components (on driver side) are installed correctly.

HINT:

When the power window components are installed correctly, the problem has been caused by battery disconnection while the engine switch is on (IG), improper installation of the power window components or the motor being overheated.

NG → **INSTALL PARTS CORRECTLY**

OK

END

DTC	B2312	Driver Side Door Master Switch Malfunction

DESCRIPTION

The portion of the power window control system that is located in the driver door consists of a power window master switch, regulator, and a motor with an integrated ECU. The driver door power window regulator motor is controlled by the ECU when the power window master switch is operated (models with jam protection).

When the ECU determines that the power window master switch is stuck, DTC B2312 is set.

NOTICE:

The power window control system uses a serial communication protocol (LIN) to communicate with the main body ECU. Inspect the communication function by following HOW TO PROCEED WITH TROUBLESHOOTING. Troubleshoot the power window control system after confirming that the communication system is functioning properly.

DTC No.	DTC Detection Condition	Trouble Area
B2312	The power window regulator master switch is stuck	• Power window regulator motor (on driver side) • Power window regulator master switch • Wire harness • Power window regulator master switch is held in same position for more than 20 seconds

WIRING DIAGRAM

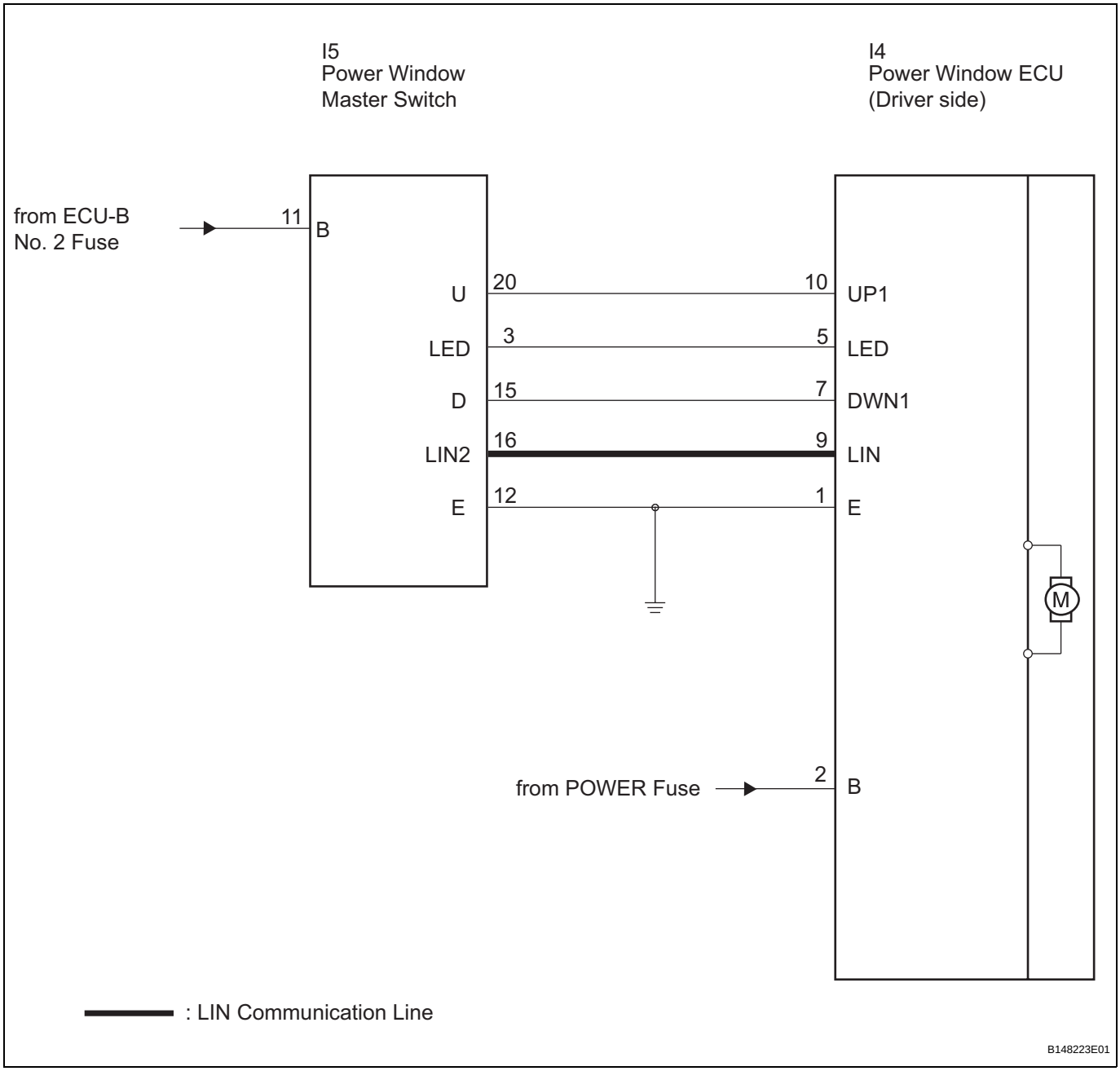

WS

INSPECTION PROCEDURE

1 INSPECT POWER WINDOW REGULATOR MASTER SWITCH ASSEMBLY

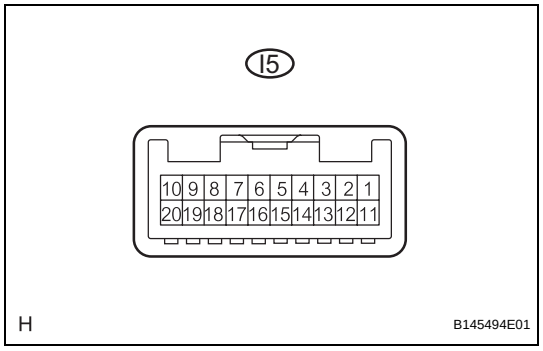

(a) Measure the resistance according to the value(s) in the table below.

Standard resistance

Tester Connection	Condition	Specified Condition
20 (U) - 12 (E)	Manual UP	Below 1 Ω
15 (D) - 12 (E)	Manual DOWN	Below 1 Ω

NG → **REPLACE POWER WINDOW REGULATOR MASTER SWITCH**

OK

2 CHECK WIRE HARNESS (WINDOW REGULATOR MASTER SWITCH - POWER WINDOW ECU)

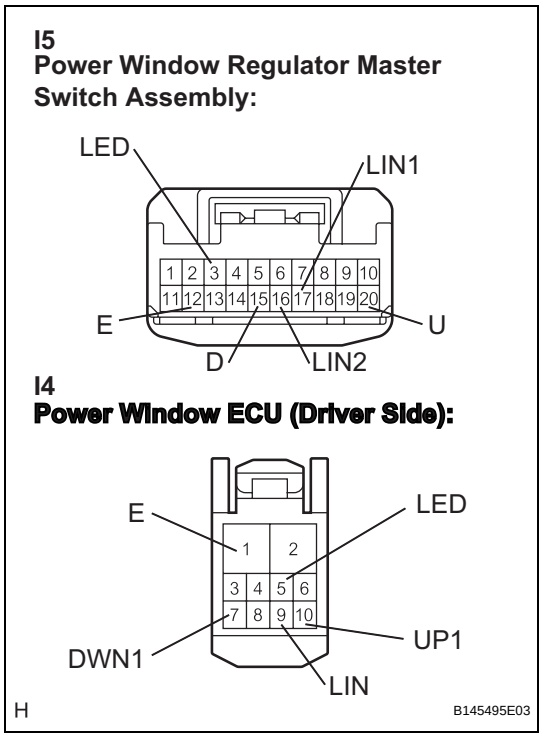

(a) Disconnect the I4 and I5 connectors.

(b) Measure the resistance according to the value(s) in the table below.

Standard resistance

Tester Connection	Condition	Specified Condition
I4-1 (E) - I5-12 (E)	Always	Below 1 Ω
I4-5 (LED) - I5-3 (LED)	Always	Below 1 Ω
I4-7 (DWN1) - I5-15 (D)	Always	Below 1 Ω
I4-9 (LIN) - I5-16 (LIN2)	Always	Below 1 Ω
I4-10 (UP1) - I5-20 (U)	Always	Below 1 Ω
I4-1 (E) - Body ground	Always	10 kΩ or higher
I4-5 (LED) - Body ground	Always	10 kΩ or higher
I4-7 (DWN1) - Body ground	Always	10 kΩ or higher
I4-9 (LIN) - Body ground	Always	10 kΩ or higher
I4-10 (UP1) - Body ground	Always	10 kΩ or higher

NG → **REPAIR OR REPLACE HARNESS OR CONNECTOR**

OK

REPLACE DRIVER SIDE POWER WINDOW REGULATOR MOTOR ASSEMBLY

DTC	B2313	Glass Position Initialization Incomplete

DESCRIPTION

The portion of the power window control system that is located in the driver door consists of a power window master switch, regulator, and a motor with an integrated ECU. The driver door power window regulator motor is controlled by the ECU when the power window master switch is operated (models with jam protection).
When the ECU determines that the driver's door power window regulator motor assembly has not been initialized, DTC B2313 is set.

NOTICE:

The power window control system uses a serial communication protocol (LIN) to communicate with the main body ECU. Inspect the communication function by following HOW TO PROCEED WITH TROUBLESHOOTING. Troubleshoot the power window control system after confirming that the communication system is functioning properly.

HINT:

- Replacing the door glass or door glass run may cause a difference to exist between the current door glass position and the position memorized in the ECU. In this case, the jam protection function may work improperly. Return the system to the pre-initialized condition and reinitialize the system.
- To return the system to the pre-initialized condition:
  Disconnect the power window regulator motor connector during power window operation. This will return the motor to the pre-initialized condition.

DTC No.	DTC Detection Condition	Trouble Area
B2313	• The power window regulator motor (on driver side) is not initialized • The power window regulator motor (on driver side) malfunctions	• Power window regulator motor (on driver side) • Power window regulator motor (on driver side) not initialized

INSPECTION PROCEDURE

NOTICE:

When using the intelligent tester to troubleshoot the LIN communication line: Connect the intelligent tester to the vehicle, and turn the courtesy light switch on and off at 1.5 second intervals until communication between the tester and vehicle begins.

WS

1	CHECK DTC OUTPUT

(a) Turn the engine switch off.
(b) Wait for at least 10 seconds, and then turn the engine switch on (IG).
(c) Check whether the DTC output recurs.
Result

Display (DTC Output)	Proceed to
B2313	A
No output	B

B → END

A

2	INITIALIZE SYSTEM (POWER WINDOW CONTROL SYSTEM)

(a) Turn the engine switch on (IG) and initialize the power window regulator motor (on the driver side) (See page WS-10).
(b) Turn the engine switch off.
(c) Wait for at least 10 seconds, and then turn the engine switch on (IG).
(d) Check whether the DTC output recurs.

Result

Display (DTC Output)	Proceed to
No output	A
B2313	B

B → **REPLACE DRIVER SIDE POWER WINDOW REGULATOR MOTOR ASSEMBLY**

A

END

HOW TO PROCEED WITH TROUBLESHOOTING

HINT:
- Use the following procedure to troubleshoot the defogger system.
- The intelligent tester should be used in step 4.

1	VEHICLE BROUGHT TO WORKSHOP

NEXT

2	INSPECT BATTERY VOLTAGE

Standard voltage:
11 to 14 V
If the voltage is below 11 V, recharge or replace the battery before proceeding to the next step.

NEXT

3	PROBLEM SYMPTOMS TABLE

HINT:
(See page WS-97)

NEXT

4	OVERALL ANALYSIS AND TROUBLESHOOTING

(a) Terminals of ECU (See page WS-97)
(b) Data List/Active Test (See page WS-99)
(c) On-vehicle inspection (See page WS-99)

NEXT

5	REPAIR OR REPLACE

NEXT

6	CONFIRMATION TEST

NEXT

END

PROBLEM SYMPTOMS TABLE

WINDOW DEFOGGER SYSTEM:

Symptom	Suspected Area	See page
Rear window defogger does not operate	1. A/C No. 2 fuse	-
	2. RR DEF fuse	-
	3. RR DEF relay	WS-102
	4. A/C controller assembly	WS-102
	5. A/C amplifier assembly	WS-102
	6. Rear window defogger wire	WS-99
	7. Wire harness	-

TERMINALS OF ECU

1. CHECK A/C AMPLIFIER ASSEMBLY

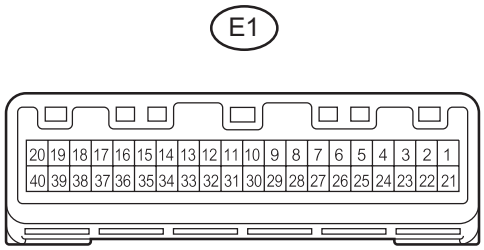

(a) Measure the voltage and resistance of each terminal of the connectors.

Standard voltage

Symbols (Terminal No.)	Wiring Color	Terminal Description	Condition	Specified Condition
RDFG (E1-38) - GND (E1-14)	G - W-B	Rear Defogger Signal	Engine switch on (IG), Rear defogger switch OFF	10 to 14 V

Standard resistance

Symbols (Terminal No.)	Wiring Color	Terminal Description	Condition	Specified Condition
GND (E1-14) - Body ground	W-B - Body ground	Ground	Always	Below 1 Ω

DIAGNOSIS SYSTEM

1. DESCRIPTION

(a) The defogger system data can be read from the Data Link Connector 3 (DLC3) of the vehicle. When the system seems to be malfunctioning, use the intelligent tester to check for malfunctions and perform repairs.

2. CHECK DLC3

(a) The ECU uses ISO 15765-4 communication protocol. The terminal arrangement of the DLC3 complies with SAE J 1962 and matches the ISO 15765-4 format.

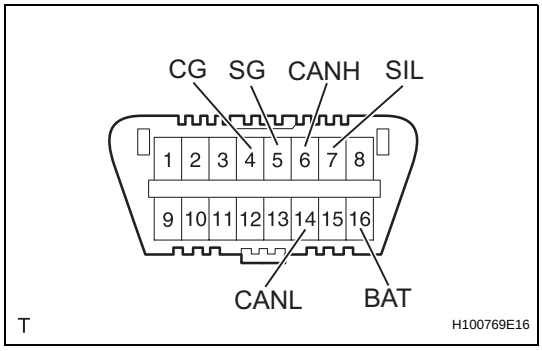

Symbols (Terminal No.)	Terminal Description	Condition	Specified Condition
SIL (7) - SG (5)	Bus "+" line	During transmission	Pulse generation
CG (4) - Body ground	Chassis ground	Always	Below 1 Ω
SG (5) - Body ground	Signal ground	Always	Below 1 Ω
BAT (16) - Body ground	Battery positive	Always	10 to 14 V
CANH (6) - CANL (14)	CAN bus line	Engine switch OFF*	54 to 69 Ω
CANH (6) - CG (4)	HIGH-level CAN bus line	Engine switch OFF*	200 Ω or more
CANL (14) - CG (4)	LOW-level CAN bus line	Engine switch OFF*	200 Ω or more
CANH (6) - BAT (16)	HIGH-level CAN bus line	Engine switch OFF*	6 kΩ or more
CANL (14) - BAT (16)	LOW-level CAN bus line	Engine switch OFF*	6 kΩ or more

WS

NOTICE:

***: Before measuring the resistance, leave the vehicle as is for at least 1 minute and do not operate the engine switch, any other switches or the door.**

If the result is not as specified, the DLC3 may have a malfunction. Repair or replace the harness and connector.

HINT:

Connect the cable of the intelligent tester to the DLC3, turn the engine switch on (IG) and attempt to use the tester. If the display indicates that a communication error has occurred, there is a problem either with the vehicle or with the tester.

- If communication is normal when the tester is connected to another vehicle, inspect the DLC3 of the original vehicle.
- If communication is still not possible when the tester is connected to another vehicle, the problem may be in the tester itself. Consult the Service Department listed in the tester's instruction manual.

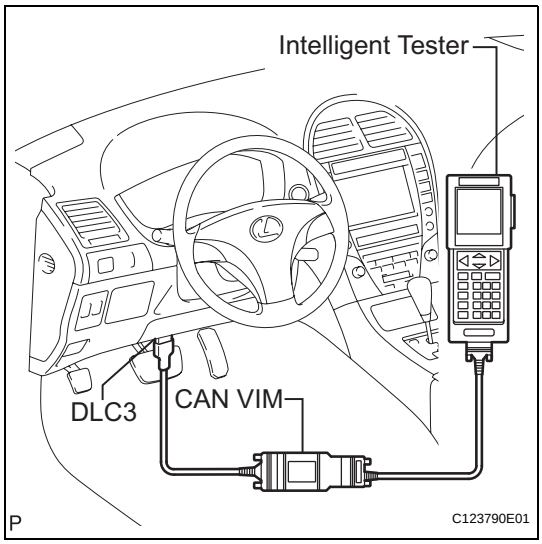

DATA LIST / ACTIVE TEST

1. PERFORM ACTIVE TEST

HINT:
Performing the intelligent tester's ACTIVE TEST allows a relay, VSV, actuator and other items to be operated without removing any parts. Performing the ACTIVE TEST early in troubleshooting is one way to save time. The DATA LIST can be displayed during the ACTIVE TEST.

(a) Connect the intelligent tester (with CAN VIM) to the DLC3.
(b) Turn the engine switch on (IG).
(c) Perform the ACTIVE TEST according to the display on the tester.

Air Conditioner:

Tester Display	Measurement Item/Range	Normal Condition
Defogger Relay (Rear)	Turns rear window defogger OFF/ON	-

ON-VEHICLE INSPECTION

1. CHECK REAR WINDOW DEFOGGER SYSTEM OPERATION

(a) When the engine switch is turned on (IG) and the defogger switch is pressed, check that the rear window defogger operates.
HINT:
After 15 minutes, check that the defogger automatically turns off.

2. INSPECT BACK WINDOW (DEFOGGER WIRE)
NOTICE:

- **When cleaning the glass, wipe the glass along the wire using a soft and dry cloth. Take care not to damage the wires.**
- **Do not use detergents or glass cleaners that have abrasive ingredients.**

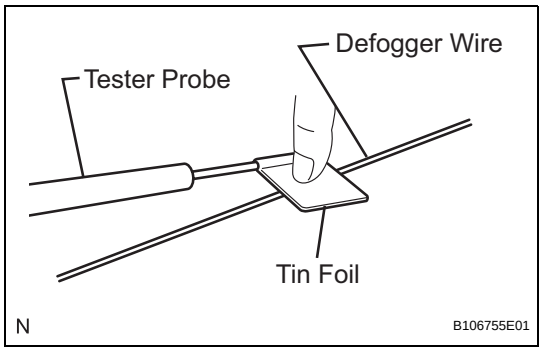

- **When measuring voltage, wrap a piece of tin foil around the tip of the negative tester probe and press the foil against the wire with your finger, as shown in the illustration.**

(a) Turn the engine switch on (IG).
(b) Turn the defogger switch on.

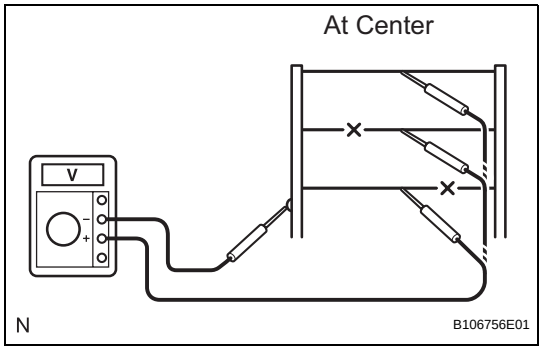

WS

(c) Check the voltage at the center of each defogger wire, as shown in the illustration.
Standard voltage

Voltage	Criteria
Approx. 5 V	Wire is not broken
Approx. 10 or 0 V	Wire is broken

HINT:
If there is approximately 10 V, the wire may be faulty between the center of the wire and the wire end on the battery side. If there is no voltage, the wire may be faulty between the center of the wire and the wire end on the ground side.

(d) Place the voltmeter's positive (+) lead against the defogger wire on the battery side.
(e) Place the voltmeter's negative (-) lead with the foil strip against the wire on the ground side.
(f) Slide the positive (+) lead from the battery side to the ground side.

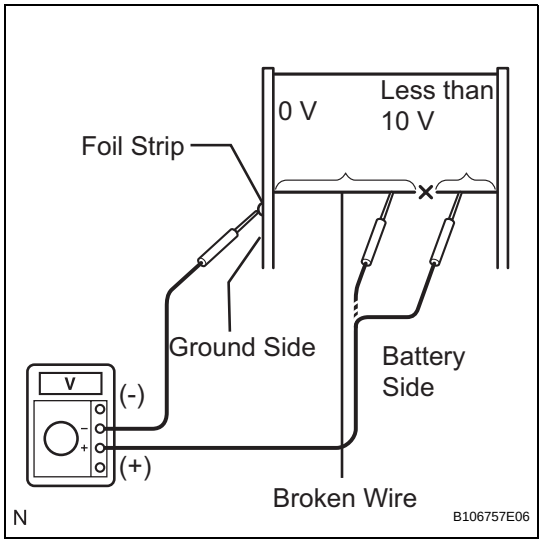

(g) The point where the voltage drops from approximately 10 V to 0 V is the place where the defogger wire is broken.
HINT:
If the defogger wire is not broken, the voltmeter should indicate 0 V at the positive (+) end of the defogger wire but gradually increase to approximately 12 V as the meter probe moves to the other end.

REPAIR

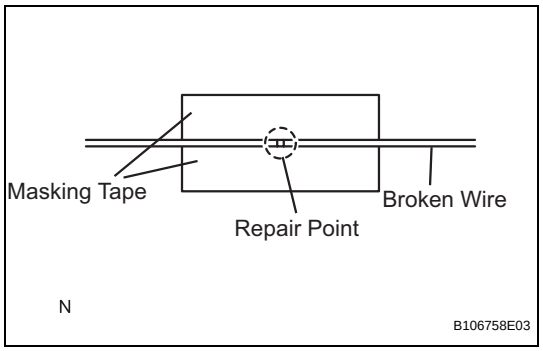

1. REPAIR WINDOW DEFOGGER WIRE

(a) Clean the broken wire tips with a grease, wax and silicone remover.

(b) Place the masking tape along both sides of the wire.

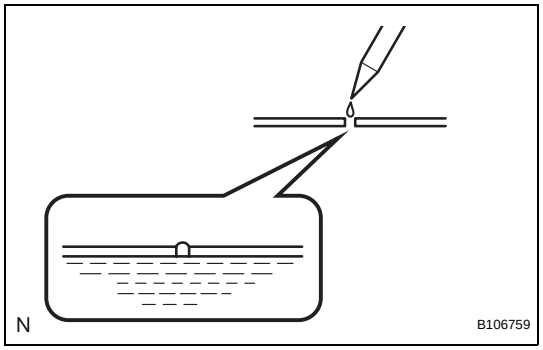

(c) Thoroughly mix the repair agent (Dupont paste No. 4817 or equivalent).

(d) Using a fine tip brush, apply a small amount of the agent to the wire.

(e) After a few minutes, remove the masking tape.
NOTICE:
Do not repair the defogger wire again for at least 24 hours.

Rear Window Defogger System does not Operate

DESCRIPTION

When the rear window defogger switch, which is built into the heater control assembly, is operated, the operation signals are transmitted to the A/C amplifier assembly through LIN. When the A/C amplifier assembly receives the signals, it turns on the RR DEF relay to operate the rear window defogger.

WIRING DIAGRAM

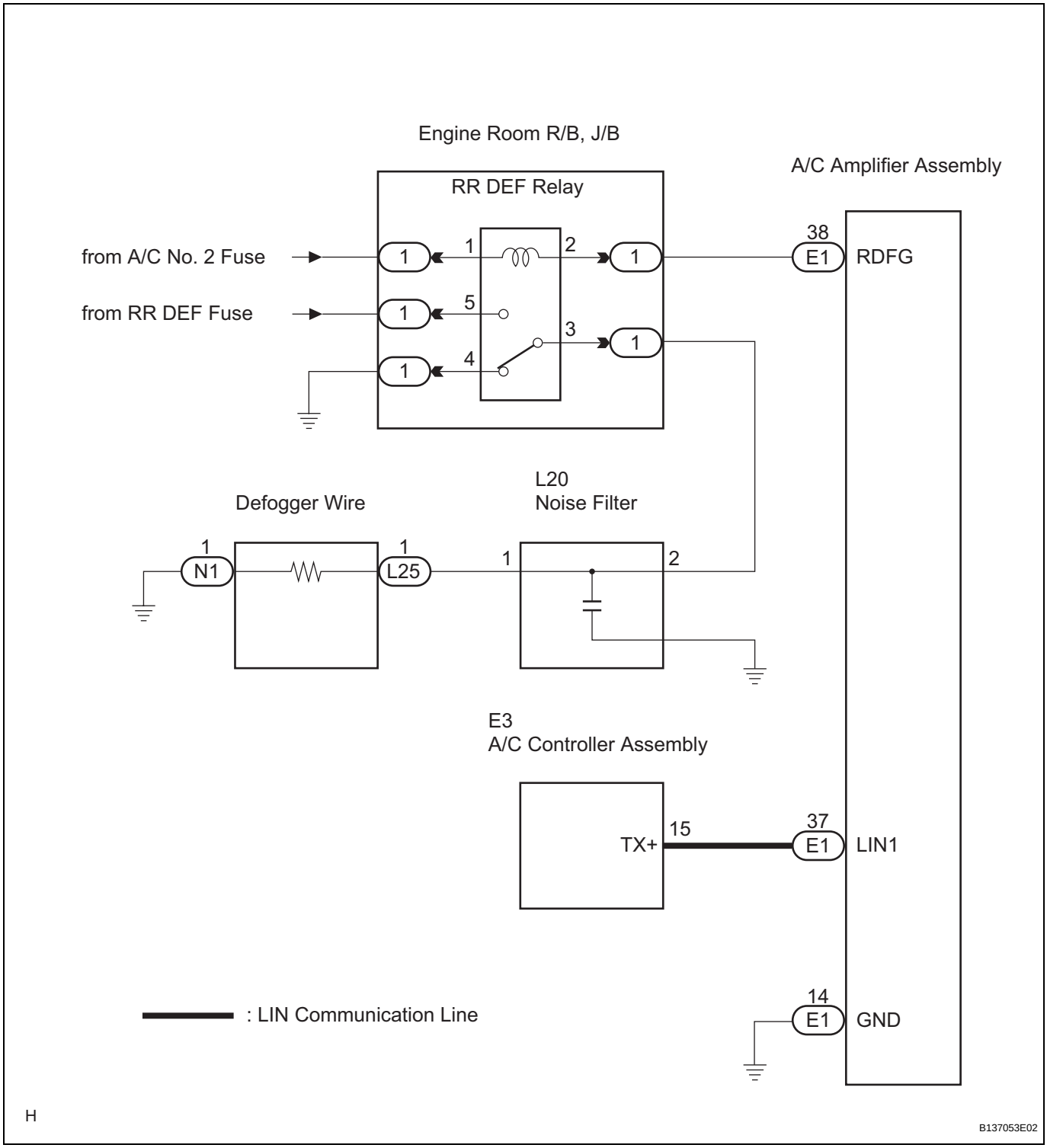

WS

INSPECTION PROCEDURE

1 CHECK FOR DTCs

(a) Select the DTC check on the intelligent tester to check for communication errors.

Result

Result	Proceed to
No DTC is output	A
DTC are output (LIN communication)	B

B → **GO TO MULTIPLEX COMMUNICATION SYSTEM**

A

2 PERFORM ACTIVE TEST BY INTELLIGENT TESTER

(a) Select the ACTIVE TEST, use the intelligent tester to issue a control command, and then check the window defogger operation.

Air Conditioner

Item	Test Details
Defogger Relay (Rear)	Turns rear window defogger OFF/ON

OK → **Go to step 5**

NG

3 REPLACE AIR CONDITIONER CONTROL ASSEMBLY

(a) Replace the air conditioner control assembly.

NEXT

4 CONFIRM REAR WINDOW DEFOGGER OPERATION

(a) Turn the engine switch on (IG), press the defogger switch, and check that the window defogger operates.

NG → **REPLACE A/C AMPLIFIER ASSEMBLY**

OK

END

5 PERFORM ACTIVE TEST BY INTELLIGENT TESTER

(a) Select the ACTIVE TEST, use the intelligent tester to issue a control command, and then check the DEFOG relay operation.
(b) Check that operation sound of the RR DEF relay is heard.

Result	Proceed to
Relay operating sound is heard	OK
Relay operating sound is not heard	NG

OK → **Go to step 9**

NG

6 INSPECT RR DEF RELAY

See page WS-108.

NG → **REPLACE RR DEF RELAY**

OK

7 CHECK WIRE HARNESS (RR DEF RELAY - BATTERY POSITIVE)

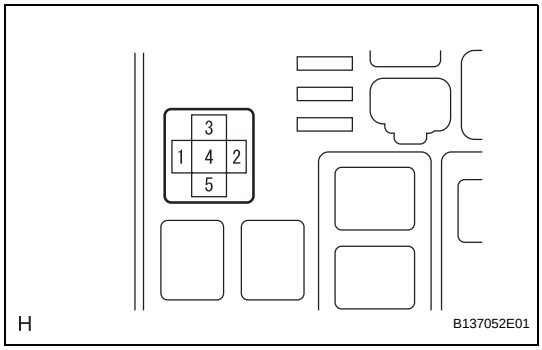

(a) Disconnect the RR DEF relay.
(b) Measure the voltage according to the value(s) in the table below.
Standard voltage:
Engine room R/B, J/B

Tester Connection	Condition	Specified Condition
1 - Body ground	Engine switch on (IG)	10 to 14 V

NG → **REPAIR OR REPLACE A/C NO. 2 FUSE, HARNESS OR CONNECTOR**

OK

WS

8 CHECK WIRE HARNESS (RR DEF RELAY - A/C AMPLIFIER ASSEMBLY)

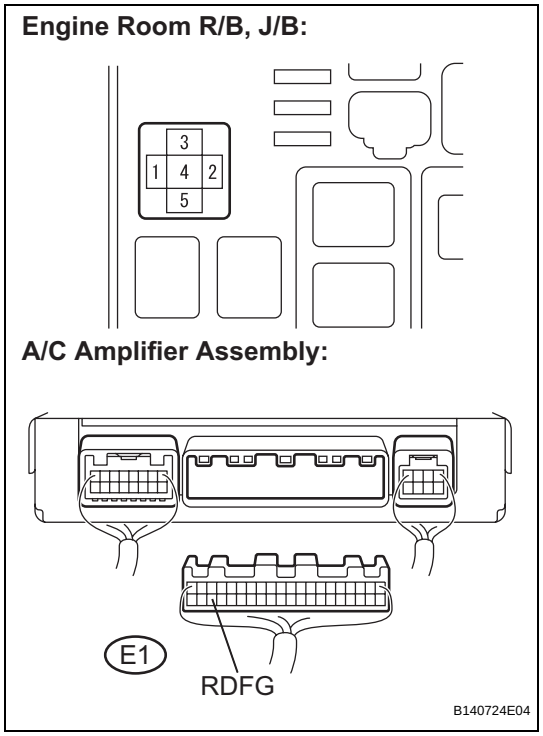

(a) Disconnect the RR DEF relay and A/C amplifier assembly connector.
(b) Measure the resistance according to the value(s) in the table below.

Standard resistance

Tester Connection	Condition	Specified Condition
2 - E1-38	Always	Below 1 Ω
2 - Body ground	Always	10 kΩ or higher

NG → **REPAIR OR REPLACE HARNESS OR CONNECTOR**

OK

REPLACE A/C AMPLIFIER ASSEMBLY

9 INSPECT RR DEF RELAY

WS

See page WS-108.

NG → **REPLACE RR DEF RELAY**

OK

10 CHECK WIRE HARNESS (RR DEF RELAY - BATTERY POSITIVE AND BODY GROUND)

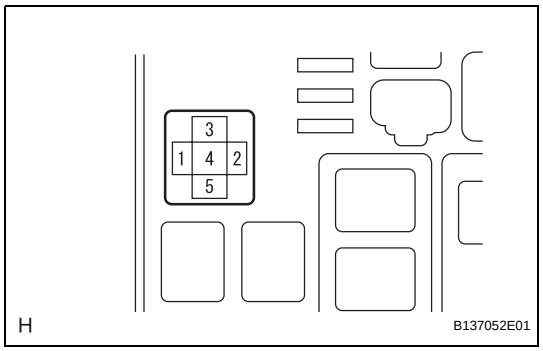

(a) Disconnect the RR DEF relay.
(b) Measure the voltage and resistance according to the value(s) in the table below.

Standard resistance:
Engine room R/B, J/B

Tester Connection	Condition	Specified Condition
4 - Body ground	Always	Below 1 Ω

Standard voltage:
Engine room R/B, J/B

Tester Connection	Condition	Specified Condition
5 - Body ground	Always	10 to 14 V

NG → **REPAIR OR REPLACE RR DEF FUSE, HARNESS OR CONNECTOR**

OK

11 INSPECT NOISE FILTER

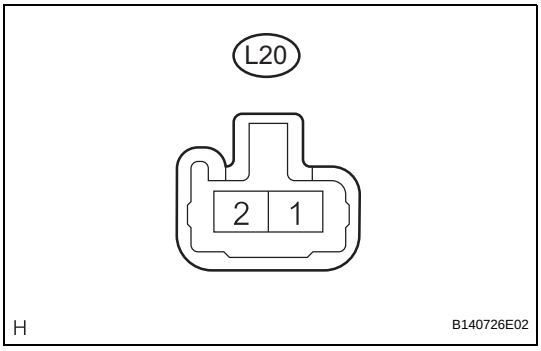

(a) Disconnect the noise filter connector.
(b) Measure the resistance according to the value(s) in the table below.

Standard resistance

Tester Connection	Condition	Specified Condition
L20-1 - L20-2	Always	Below 1 Ω
L20-1 - Body ground	Always	10 kΩ or higher

NG → **REPLACE NOISE FILTER**

OK

12 CHECK WIRE HARNESS (RR DEF RELAY - NOISE FILTER)

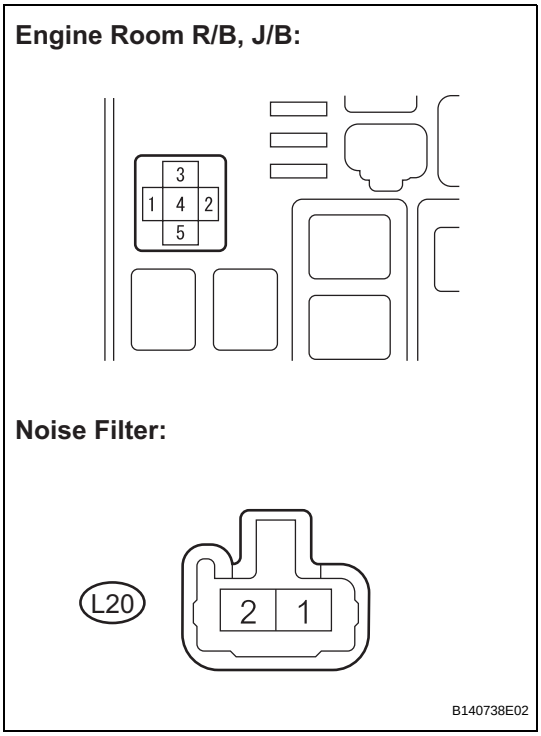

(a) Disconnect the RR DEF relay and defogger wire connectors.
(b) Measure the resistance according to the value(s) in the table below.

Standard resistance

Tester Connection	Condition	Specified Condition
3 - L20-2	Always	Below 1 Ω
3 - Body ground	Always	10 kΩ or higher

NG → **REPAIR OR REPLACE HARNESS OR CONNECTOR**

OK

WS

13 CHECK WIRE HARNESS (NOISE FILTER - DEFOGGER WIRE CONNECTOR)

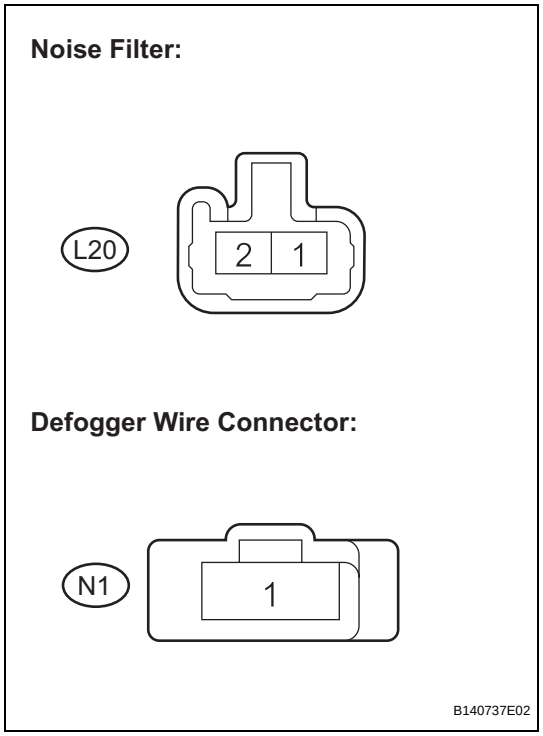

(a) Measure the resistance according to the value(s) in the table below.
Standard resistance

Tester Connection	Condition	Specified Condition
L20-1 - N1-1	Always	Below 1 Ω
L20-1 - Body ground	Always	10 kΩ or higher

NG → **REPAIR OR REPLACE HARNESS OR CONNECTOR**

OK

14 CHECK WIRE HARNESS (DEFOGGER WIRE CONNECTOR - BODY GROUND)

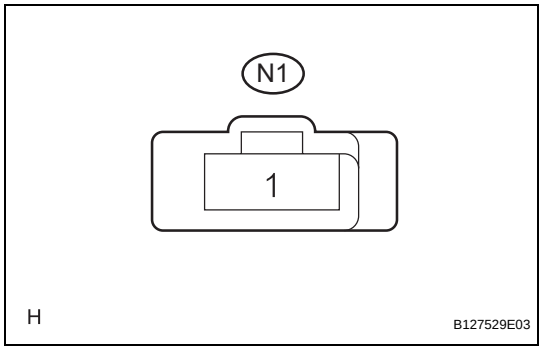

(a) Measure the resistance according to the value(s) in the table below.
Standard resistance

Tester Connection	Condition	Specified Condition
N1-1 - Body ground	Always	Below 1 Ω

NG → **REPAIR OR REPLACE HARNESS OR CONNECTOR**

OK

REPAIR OR REPLACE REAR WINDOW DEFOGGER WIRE

Power Window Master Switch Power Source Circuit

DESCRIPTION

This circuit supplies to operate the power window master switch.

WIRING DIAGRAM

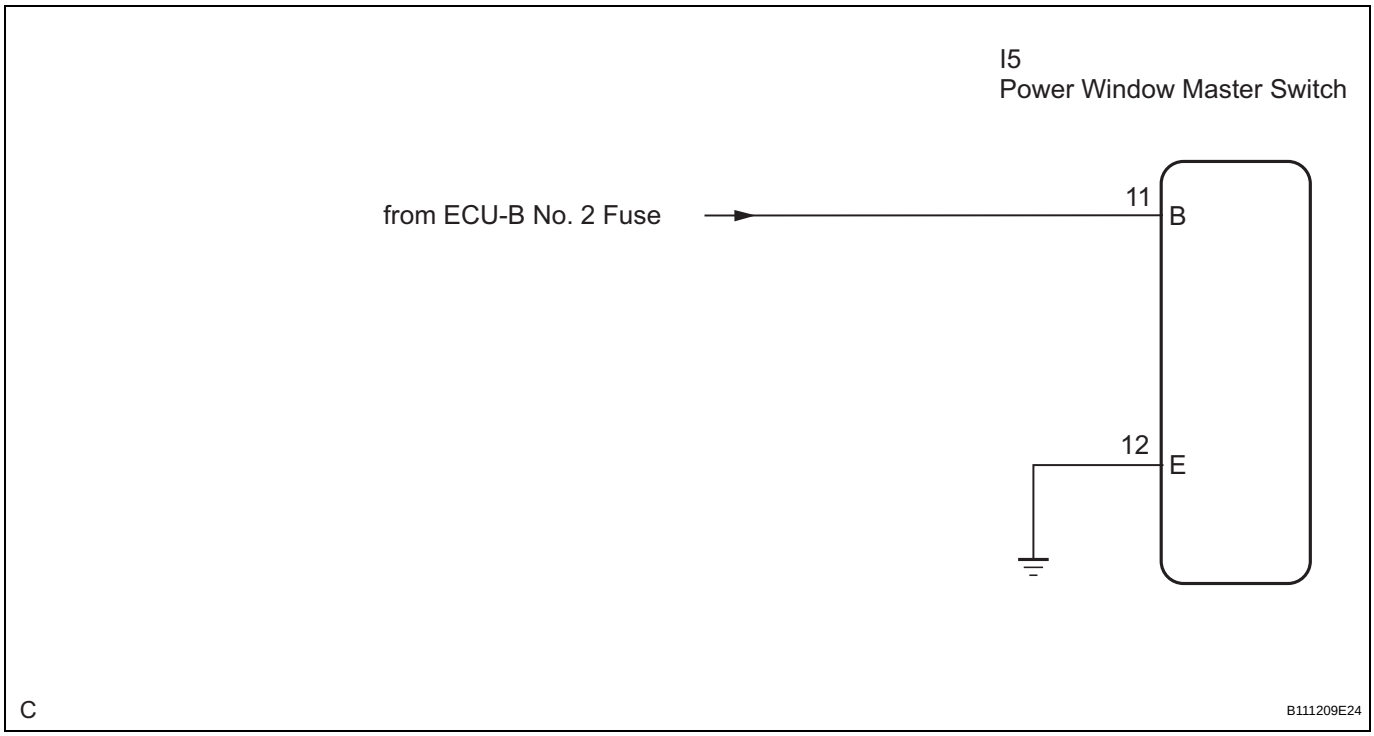

When using intelligent tester:

WS

1	CHECK WIRE HARNESS

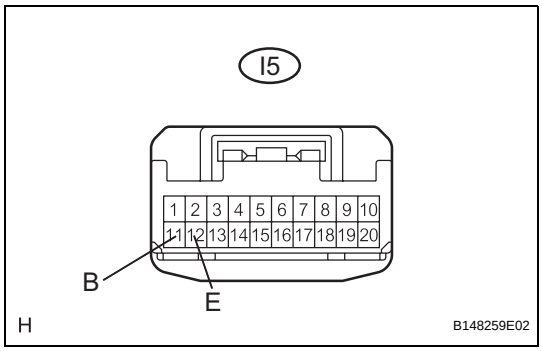

(a) Disconnect the I5 connector.
(b) Measure the voltage and resistance according to the value(s) in the table below.

Standard voltage

Tester Connection	Condition	Specified Condition
I5-11 (B) - Body ground	Engine switch on (IG)	10 to 14 V

Standard resistance

Tester Connection	Condition	Specified Condition
I5-12 (E) - Body ground	Always	Below 1 Ω

NG → **REPAIR OR REPLACE FUSE, HARNESS OR CONNECTOR**

OK

PROCEED TO NEXT CIRCUIT INSPECTION SHOWN IN PROBLEM SYMPTOMS TABLE

Front Passenger Side Power Window Switch Circuit

DESCRIPTION

This circuit supplies power to operate the power window regulator switch assembly (Front passenger side).

WIRING DIAGRAM

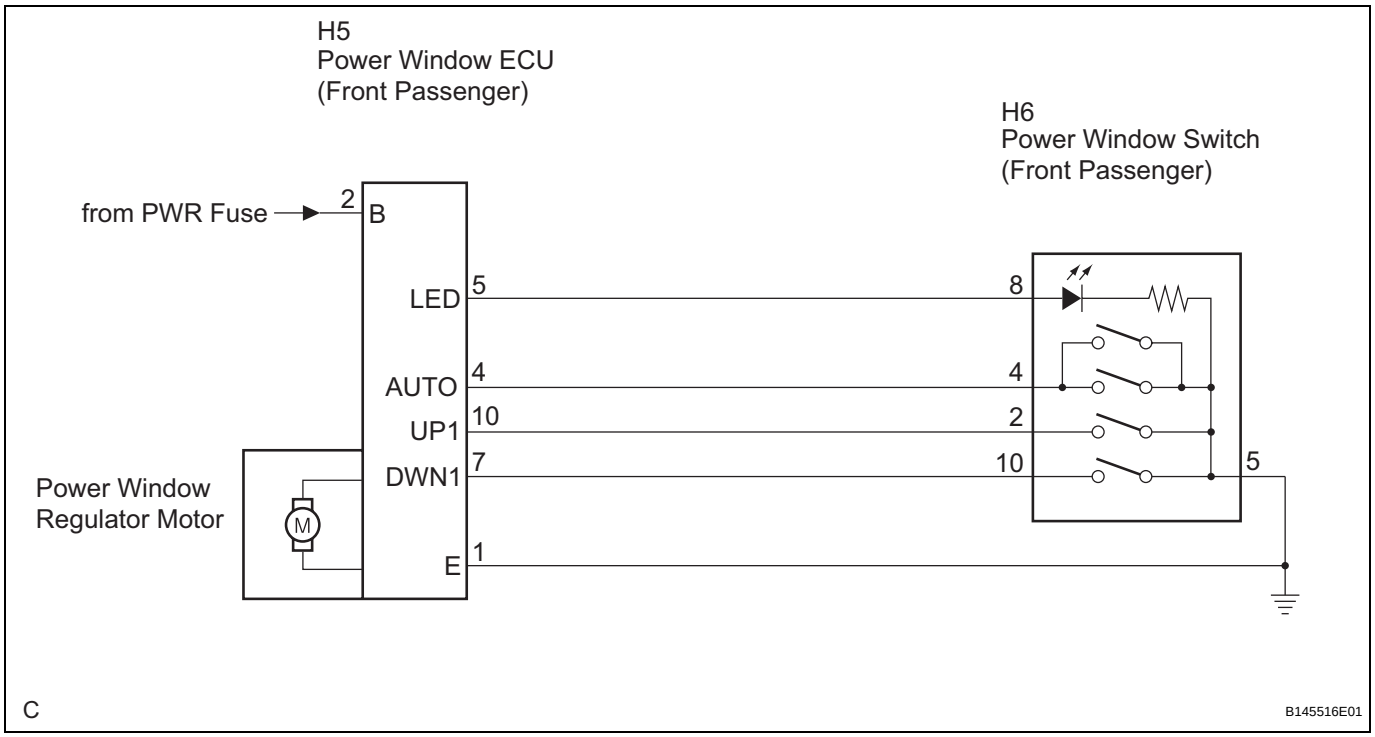

INSPECTION PROCEDURE

WS

1	INSPECT POWER WINDOW REGULATOR SWITCH

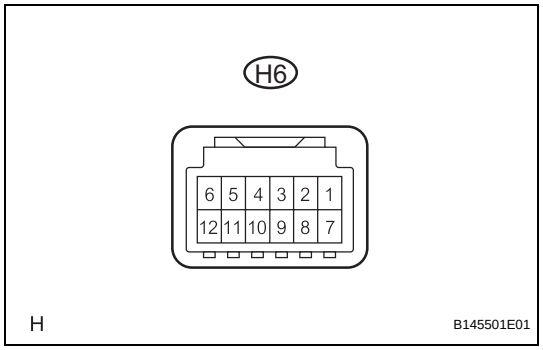

(a) Disconnect the H6 connector.
(b) Measure the resistance according to the value(s) in the table below.

Standard resistance

Tester Connection	Condition	Specified Condition
2 (E) - 4 (A) - 5 (E)	Auto UP	Below 1 Ω
2 (U) - 5 (E)	Manual UP	Below 1 Ω
5 (E) - 10 (D)	Manual DOWN	Below 1 Ω
4 (A) - 10 (D) - 5 (E)	Auto DOWN	Below 1 Ω

NG → **REPAIR OR REPLACE POWER WINDOW REGULATOR SWITCH**

OK

2	REPLACE WIRE HARNESS (POWER WINDOW REGULATOR SWITCH - POWER WINDOW ECU)

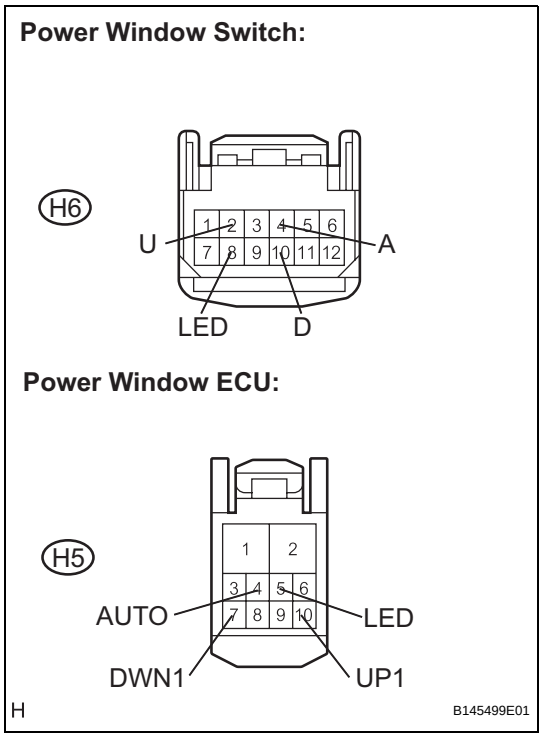

(a) Disconnect the H5 and H6 connectors.
(b) Measure the resistance according to the value(s) in the table below.

Standard resistance

Tester Connection	Condition	Specified Condition
H5-4 (AUTO) - H6-4 (A)	Always	Below 1 Ω
H5-5 (LED) - H6-8 (LED)	Always	Below 1 Ω
H5-7 (DWN1) - H6-2 (U)	Always	Below 1 Ω
H5-10 (UP1) - H6-10 (D)	Always	Below 1 Ω
H5-4 (AUTO) - Body ground	Always	10 kΩ or higher
H5-5 (LED) - Body ground	Always	10 kΩ or higher
H5-7 (DWN1) - Body ground	Always	10 kΩ or higher
H5-10 (UP1) - Body ground	Always	10 kΩ or higher

NG → **REPAIR OR REPLACE HARNESS OR CONNECTOR**

OK

END

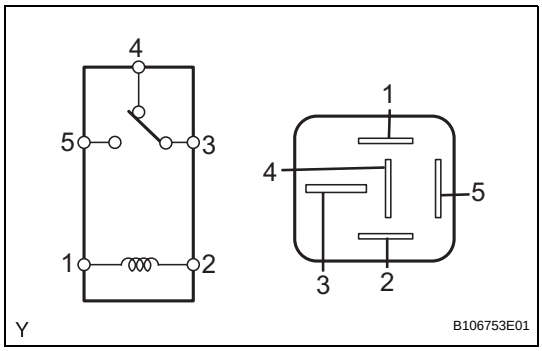

DEFOGGER RELAY

ON-VEHICLE INSPECTION

1. INSPECT DEFOGGER RELAY (Marking: RR DEF)

(a) Measure the resistance according to the value(s) in the table below.

Standard resistance

Tester Condition	Specified Condition
3 - 4	Below 1 Ω (when battery voltage is not applied between terminals)
3 - 5	10 kΩ or higher (when battery voltage is not applied between terminals)
3 - 5	Below 1 Ω (when battery voltage is applied to terminals 1 and 2)

If the result is not as specified, replace the relay.

SYSTEM DESCRIPTION

The memory system can store the driver seat, front passenger seat, outside rear view mirror positions and tilt & telescopic position. Up to 2 memory positions can be stored in the system memory and recalled. 2 positions can be saved for the driver memory switch or front passenger memory switch.

- Each seat ECU stores the seat position (seat slide, front vertical, rear vertical and reclining) in its memory. Each seat ECU is built into the power seat switch.
- The mirror ECU stores the outside rear view mirror position in its memory.
- The tile & telescopic ECU stores the tilt & telescopic position in its memory.
- The seat ECU (Driver) outputs a reproduction signal to ECU.

HOW TO PROCEED WITH TROUBLESHOOTING

HINT:
- Use this procedure to troubleshoot the power mirror control system.
- The intelligent tester should be used in steps 3 and 5.

1	VEHICLE BROUGHT TO WORKSHOP

NEXT

2	CUSTOMER PROBLEM ANALYSIS CHECK AND SYMPTOM CHECK

NEXT

3	CHECK COMMUNICATION FUNCTION OF CAN COMMUNICATION SYSTEM (CAN)

HINT:
See page CA-11

(a) Use the intelligent tester to check for normal function of the CAN communication system.
  (1) (ECU unconnected, communication line malfunctioning) If no codes are output, proceed to A.
  (2) (ECU unconnected, communication line malfunctioning) If any codes are output, proceed to B.

B → **GO TO MULTIPLEX COMMUNICATION SYSTEM**

MI

A

4	PROBLEM SYMPTOMS TABLE

HINT:
See page MI-9

NEXT

5	OVERALL ANALYSIS AND TROUBLESHOOTING

(a) Inspect Data list/Active test.
  HINT:
  See page MI-12
(b) Inspect circuit inspection.
  HINT:
  See page MI-14 to MI-32
(c) Inspect terminals of ECU.

HINT:
See page MI-9

NEXT

6	**ADJUST, REPAIR OR REPLACE**

NEXT

END

CUSTOMIZE PARAMETERS

HINT:
The following items can be customized.

NOTICE:

- **After confirming whether the items requested by the customer are applicable or not for customization, perform customize operations.**
- **Be sure to record the current settings before customizing.**
- **When troubleshooting, make sure that the item in question is not set to "OFF" as a result of customization. (Example: For the symptom "the wireless function does not operate", first check that the wireless function is not set to "OFF", then perform troubleshooting).**

MIRROR

DISPLAY (ITEM)	DEFAULT CONTENTS	CONTENTS	SETTING
Foot Light T	ON (15 seconds)/OFF	Function to set how long the outer foot light stays on.	001 (7.5 seconds) 010 (15 seconds) 011 (30 seconds) 100 (Off)

PROBLEM SYMPTOMS TABLE

Power Mirror Control System

Symptom	Suspected Area	See page
Mirror heater does not operate with rear defogger switch	1. Multi-media module display (with navigation system)	MI-18
	2. Integration control & panel (without navigation system)	MI-18
	3. A/C amplifier assembly	MI-18
	4. MIR HTR relay	MI-18
	5. Outer rear view mirror LH/RH	MI-18
	6. Wire harness	-
Power mirror cannot be adjusted with power mirror switch	1. Power source circuit	MI-32
	2. Outer mirror switch	MI-14
	3. Outer rear view mirror LH/RH	MI-14
	4. Outer mirror control ECU	MI-14
	5. Wire harness	-
Power mirrors do not return to memorized position	1. Seat memory switch	MI-24
	2. Outer mirror control ECU	MI-24
	3. Wire harness	-
Reverse shift-linked function of power mirror do not operate	1. ECM	MI-28
	2. Outer rear view mirror LH/RH	MI-28
	3. Outer mirror control ECU	MI-28
	4. Wire harness	-
EC mirror system does not operate	1. Outer rear view mirror LH/RH	MI-47
	2. Inner rear view mirror	MI-43
	3. Outer mirror control ECU	-
	4. Wire harness	-

CUSTOMIZE PARAMETERS

HINT:
The following items can be customized.

NOTICE:

- **After confirming whether the items requested by the customer are applicable or not for customization, perform customize operations.**
- **Be sure to record the current settings before customizing.**
- **When troubleshooting, make sure that the item in question is not set to "OFF" as a result of customization. (Example: For the symptom "the wireless function does not operate", first check that the wireless function is not set to "OFF", then perform troubleshooting).**

MIRROR

DISPLAY (ITEM)	DEFAULT CONTENTS	CONTENTS	SETTING
Foot Light T	ON (15 seconds)/OFF	Function to set how long the outer foot light stays on.	001 (7.5 seconds) 010 (15 seconds) 011 (30 seconds) 100 (Off)

PROBLEM SYMPTOMS TABLE

Power Mirror Control System

Symptom	Suspected Area	See page
Mirror heater does not operate with rear defogger switch	1. Multi-media module display (with navigation system)	MI-18
	2. Integration control & panel (without navigation system)	MI-18
	3. A/C amplifier assembly	MI-18
	4. MIR HTR relay	MI-18
	5. Outer rear view mirror LH/RH	MI-18
	6. Wire harness	-
Power mirror cannot be adjusted with power mirror switch	1. Power source circuit	MI-32
	2. Outer mirror switch	MI-14
	3. Outer rear view mirror LH/RH	MI-14
	4. Outer mirror control ECU	MI-14
	5. Wire harness	-
Power mirrors do not return to memorized position	1. Seat memory switch	MI-24
	2. Outer mirror control ECU	MI-24
	3. Wire harness	-
Reverse shift-linked function of power mirror do not operate	1. ECM	MI-28
	2. Outer rear view mirror LH/RH	MI-28
	3. Outer mirror control ECU	MI-28
	4. Wire harness	-
EC mirror system does not operate	1. Outer rear view mirror LH/RH	MI-47
	2. Inner rear view mirror	MI-43
	3. Outer mirror control ECU	-
	4. Wire harness	-

TERMINALS OF ECU

1. CHECK OUTER MIRROR CONTROL ECU LH

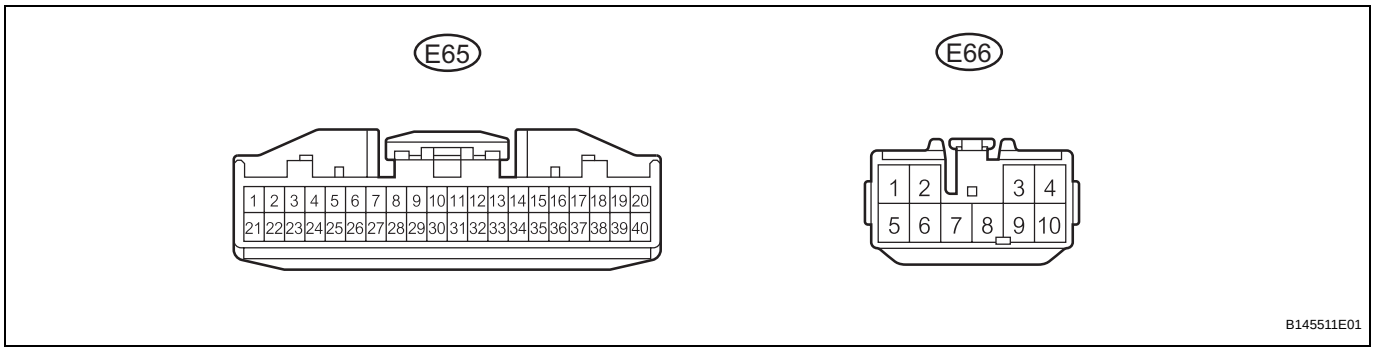

(a) Disconnect the E65 and E66 connectors.
(b) Measure the voltage and resistance according to the value(s) in the table below.

Standard voltage

Symbols (Terminal No.)	Wiring Color	Terminal Description	Condition	Specified Condition
ACC (E66-4) - Body ground	L - Body ground	Ignition power supply	Engine switch off → on (IG)	0 V → 10 to 14 V
B (E66-3) - Body ground	V - Body ground	+B power supply	Always	10 to 14 V

Standard resistance

Symbols (Terminal No.)	Wiring Color	Terminal Description	Condition	Specified Condition
E1 (E65-3) - Body ground	Y - Body ground	Ground	Always	Below 1 Ω

If the result is not as specified, there may be a malfunction on the wire harness side.
(c) Reconnect the E65 and E66 connectors.
(d) Measure the voltage according to the value(s) in the table below.

Standard voltage

MI

Symbols (Terminal No.)	Wiring Color	Terminal Description	Condition	Specified Condition
VC (E65-2) - Body ground	V - Body ground	Power source for mirror position sensor	Engine switch off → on (IG)	0 V → 0 to 5 V
VSR (E65-4) - Body ground	GR - Body ground	Vertical direction position signal	Engine switch on (IG), Left/Right adjustment switch L side, Mirror switch uppermost position → lowermost position	0 V → 1 to 3 V
HSRL (E65-5) - Body ground	P - Body ground	Horizontal direction position signal	Engine switch on (IG), Left/Right adjustment switch L side, Mirror switch innermost position → outermost position	0 V → 1 to 3 V
LP (E65-17) - Body ground	O - Body ground	Foot light signal (LH side)	Foot light OFF → ON	0 V → 10 to 14 V
M+L (E65-18) - Body ground	R - Body ground	Outer mirror switch signal (Right or Down)	Engine switch on (IG), Left/Right adjustment switch L side, Mirror switch OFF → RIGHT or DOWN	0 V → 10 to 14 V

Symbols (Terminal No.)	Wiring Color	Terminal Description	Condition	Specified Condition
MHL (E65-19) - Body ground	B - Body ground	Outer mirror switch signal (Left or Down)	Engine switch on (IG), Left/Right adjustment switch L side, Mirror switch OFF → LEFT or DOWN	0 V → 10 to 14 V
MVL (E65-20) - Body ground	L - Body ground	Outer mirror switch signal (Up or Right)	Engine switch on (IG), Left/Right adjustment switch L side, Mirror switch OFF → UP or Right	0 V → 10 to 14 V
VSRR (E65-24) - Body ground	W - Body ground	Vertical direction position signal	Engine switch on (IG), Left/Right adjustment switch L side, Mirror switch uppermost position → lowermost position	0 V → 1 to 3 V
HSRR (E65-25) - Body ground	B - Body ground	Horizontal direction position signal	Engine switch on (IG), Left/Right adjustment switch L side, Mirror switch innermost position → outermost position	0 V → 1 to 3 V
LP (E65-37) - Body ground	L - Body ground	Foot light signal (RH side)	Foot light OFF → ON	0 V → 10 to 14 V
M+R (E65-38) - Body ground	O - Body ground	Outer mirror switch signal (Right or Down)	Engine switch on (IG), Left/Right adjustment switch L side, Mirror switch OFF → RIGHT or DOWN	0 V → 10 to 14 V
MHR (E65-39) - Body ground	GR - Body ground	Outer mirror switch signal (Left or Down)	Engine switch on (IG), Left/Right adjustment switch L side, Mirror switch OFF → LEFT or DOWN	0 V → 10 to 14 V
MVR (E65-40) - Body ground	P - Body ground	Outer mirror switch signal (Up or Right)	Engine switch on (IG), Left/Right adjustment switch L side, Mirror switch OFF → UP or Right	0 V → 10 to 14 V

DIAGNOSIS SYSTEM

1. DESCRIPTION

(a) Data of the system can be read from the Data Link Connector 3 (DLC3) of the vehicle. Therefore, when the system seems to be malfunctioning, use the intelligent tester to check for a malfunction and repair it.

2. CHECK DLC3

(a) The vehicle's ECM uses ISO 9141-2 communication protocol. The terminal arrangement of the DLC3 complies with SAE J1962 and matches the ISO 9141-2 format.

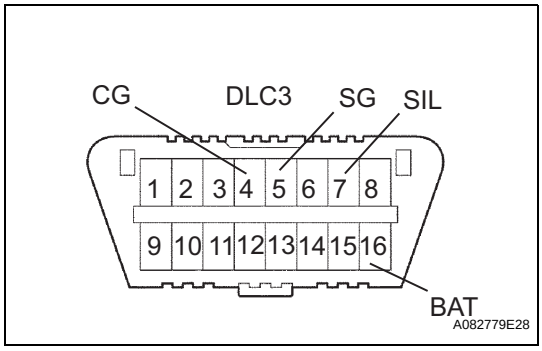

Standard

Tester Connection	Condition	Specified Condition
7 (Bus + line) - 5 (Signal ground)	During communication	Pulse generation
4 (Chassis ground) - Body ground	Constant	Below 1 Ω
5 (Signal ground) - Body ground	Constant	Below 1 Ω
16 (B+) - Body ground	Constant	9 to 14 V

HINT:
If the screen displays a communication error message after you have connected the cable of the intelligent tester to the DLC3, turned the engine switch on (IG) and used the intelligent tester, the problem may be on the vehicle side or tester side.

- If communication is normal when the tester is connected to another vehicle, inspect the DLC3 of the original vehicle.
- If communication is still impossible when the tester is connected to another vehicle, the problem is probably in the tester itself, so consult the Service Department listed in the tester's instruction manual.

DATA LIST / ACTIVE TEST

1. USING INTELLIGENT TESTER

(a) Connect the intelligent tester to the DLC3.

(b) Monitor the ECU data by following the prompts on the tester screen.

HINT:

The intelligent tester has a "Snapshot" function which records the monitored data. Refer to the intelligent tester operator's manual for further details.

2. DATA LIST

HINT:

Using the DATA LIST displayed on the intelligent tester, the value of the switch, sensor, actuator, etc. can be read without part removal. Reading the DATA LIST as the first step of troubleshooting is one way to shorten labor time.

(a) Connect the intelligent tester to the DLC3.

(b) Turn the engine switch on (IG).

(c) Read the DATA LIST according to the display on the tester.

MIRROR-L/MIRROR-R

Tester Display	Measurement Item/Range	Normal Condition
RH MIR POS V	Vertical mirror position/MIN: 0, MAX: 5 V	Within range from 0 to 5 V
RH MIR POS V	Vertical mirror position/MIN: 0, MAX: 5 V	Within range from 0 to 5 V
LH MIR POS H	Horizontal mirror position/MIN: 0, MAX: 5 V	Within range from 0 to 5 V
LH MIR POS H	Horizontal mirror position/MIN: 0, MAX: 5 V	Within range from 0 to 5 V
MIRROR MEM 1	Mirror position memorized in memory switch M1/ON (1) or OFF (0)	1: Memorized 0: Not memorized
MIRROR MEM 2	Mirror position memorized in memory switch M2/ON (1) or OFF (0)	1: Memorized 0: Not memorized
D SET MEMORY	Driving position memorized in seat memory switch MEMORY/ON (1) or OFF (0)	1: Memorized 0: Not memorized
D MEM 1 SW	Driving position memorized in seat memory switch M1/ON (1) or OFF (0)	1: Memorized 0: Not memorized
D MEM 2 SW	Driving position memorized in seat memory switch M2/ON (1) or OFF (0)	1: Memorized 0: Not memorized
FP SET MEMORY	Driving position memorized in seat memory switch MEMORY/ON (1) or OFF (0)	1: Memorized 0: Not memorized
FP MEM 2 SW	Driving position memorized in seat memory switch M2/ON (1) or OFF (0)	1: Memorized 0: Not memorized
FP MEM 2 SW	Driving position memorized in seat memory switch M2/ON (1) or OFF (0)	1: Memorized 0: Not memorized
FOOT LIGHT	Foot light /Not memorized (000) or 30 seconds (011) or 7.5 seconds (001) or Off (100) or 15 seconds (010)	000: Not memorized 011: 30 seconds 001: 7.5 seconds 100: Off 010: 15 seconds

3. ACTIVE TEST

HINT:
Performing the ACTIVE TEST using the intelligent tester allows the relay, VSV, actuator, etc. to be operated without part removal. Performing the ACTIVE TEST as the first step of troubleshooting is one way to shorten labor time. It is possible to display the DATA LIST during the ACTIVE TEST.

(a) Connect the intelligent tester to the DLC3.
(b) Turn the engine switch on (IG).
(c) Perform the ACTIVE TEST according to the display on the tester.

MIRROR-L/MIRROR-R

Tester Display	Test Part	Control Range
RH MIRR UP/DOWN	Mirror vertical operation: UP/DOWN	-
RH MIRR R/L	Mirror horizontal operation: RIGHT/LEFT	-
LH MIRR UP/DOWN	Mirror vertical operation: UP/DOWN	-
LH MIRR R/L	Mirror horizontal operation: RIGHT/LEFT	-
FOOT LIGHT	Foot light operation: ON/OFF	-

ON-VEHICLE INSPECTION

1. CHECK POWER MIRROR SWITCH OPERATION

(a) Remote control
The mirror adjust switch can control the adjustment axis of the mirror surface.

(b) Reverse-linked
This function tilts the mirror surface downward to improve the visibility when driving in reverse, provided that all the conditions given below have been met.
- Engine switch is on (IG).
- Shift lever is moved to "R".

2. CHECK MEMORY SWITCH OPERATION

(a) Memory
Memorizes the positions when all conditions below have been met and the 1or 2 button is pushed while the "SET" button is pushed.
- Engine switch is on (IG).
- Shift position is "P".

When the memory setting is completed, the buzzer will sound for 0.5 seconds.

(b) Recall
If the button 1 or 2 is pressed when all conditions below have been met, it recalls the positions.
- Engine switch is on (IG).
- Shift position is "P".
- Engine switch is on (IG).
- Driver door is opened.

Power Mirror cannot be Adjusted with Power Mirror Switch

DESCRIPTION

- A switch signal of the outer mirror switch is transmitted to the selected outer mirror control ECU by way of the main body ECU. Then, the outer mirror control ECU activates the mirror motor to move the mirror UP, DOWN, RIGHT and LEFT in response to the input.
- Mirror control switch and memorized mirror position signals (from the position control ECU & switch (seat ECU)) are sent to the mirror control ECU. The mirror control ECU moves the selected mirror UP, DOWN, LEFT and RIGHT in response to the input.

HINT:
The power mirror control system is a part of the multiplex communication system. This system features shared communication wiring that reduces the wiring complexity of the communication lines. The first step in any repair is to confirm the proper operation of the communication system. Proceed with troubleshooting after the communication has been verified (See the Multiplex Communication System).

WIRING DIAGRAM

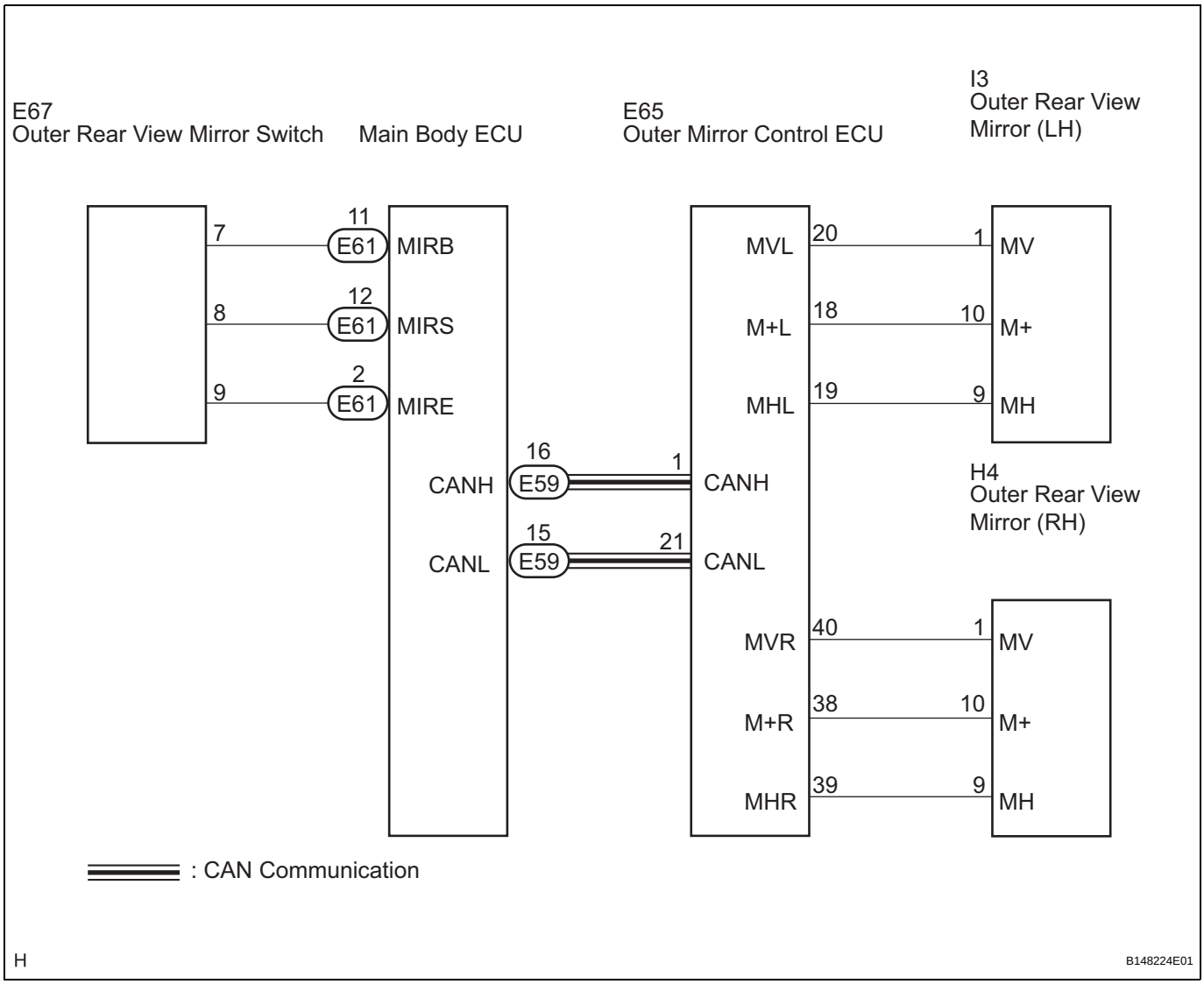

INSPECTION PROCEDURE

1	CHECK DTCs

(a) Select the DTC check on the intelligent tester to check for communication errors.

Result

No DTC is output	A
DTCs are output (CAN communication)	B

B → **GO TO CAN COMMUNICATION SYSTEM (See page CA-49)**

A

2	INSPECT OUTER MIRROR SWITCH

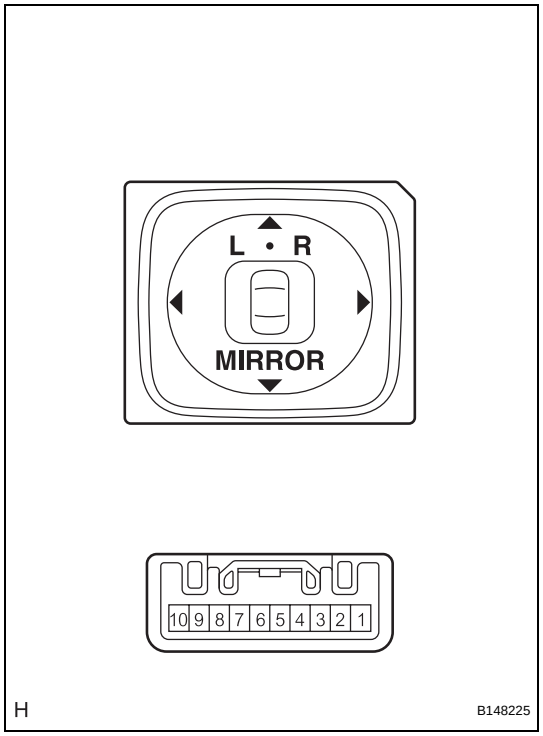

(a) Remove the outer mirror switch.
(b) Measure the resistance according to the value(s) in the table below when the switch is operated.
Standard resistance:
Select "L" on the left/right adjustment switch

Tester Connection	Switch Position	Specified Condition
7 - 9	UP	100 Ω
	DOWN	470 Ω
	LEFT	800 Ω
	RIGHT	250 Ω

Select "R" on the left/right adjustment switch

Tester Connection	Switch Position	Specified Condition
7 - 9	UP	100 Ω
	DOWN	470 Ω
	LEFT	800 Ω
	RIGHT	250 Ω

NG → **REPLACE OUTER MIRROR SWITCH (See page MI-52)**

OK

MI

3 CHECK WIRE HARNESS (OUTER MIRROR SWITCH - MAIN BODY ECU)

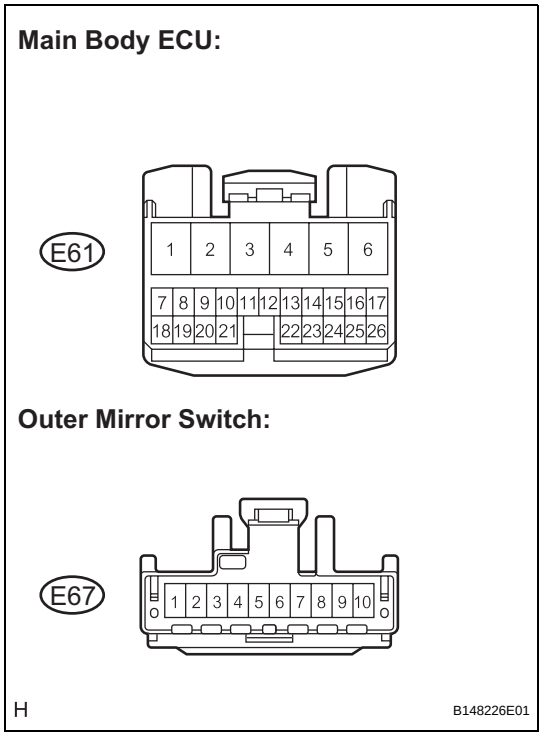

(a) Disconnect the E61 and E67 connectors.
(b) Measure the resistance according to the value(s) in the table below.

Standard resistance

Tester Connection	Condition	Specified Condition
E67-7 - E61-11	Always	Below 1 Ω
E67-8 - E61-12	Always	Below 1 Ω
E67-9 - E61-2	Always	Below 1 Ω
E67-7 - Body ground	Always	10 kΩ or higher
E67-8 - Body ground	Always	10 kΩ or higher
E67-9 - Body ground	Always	10 kΩ or higher

NG → **REPAIR OR REPLACE HARNESS OR CONNECTOR**

OK

4 INSPECT OUTER REAR VIEW MIRROR ASSEMBLY

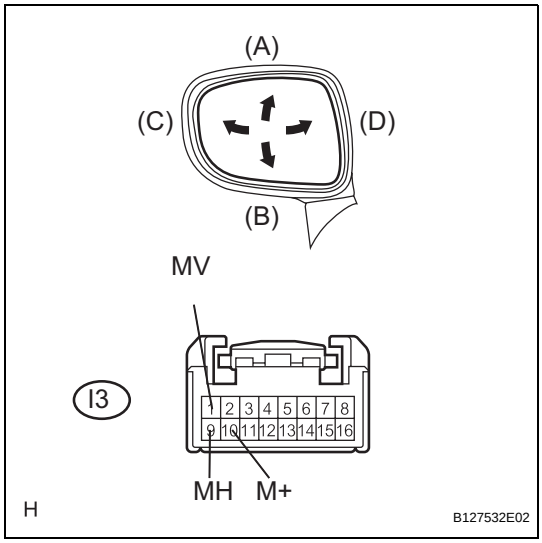

(a) Outer rear view mirror LH:
Disconnect the I3 connector.
(b) Apply battery voltage and check operation of the mirror face.

Standard

Measurement Condition	Mirror Operation
Battery positive (+) → I3-1 (MV) Battery negative (-) → I3-10 (M+)	Turns upward (A)
Battery positive (+) → I3-10 (M+) Battery negative (-) → I3-1 (MV)	Turns downward (B)
Battery positive (+) → I3-9 (MH) Battery negative (-) → I3-10 (M+)	Turns left (C)
Battery positive (+) → I3-10 (M+) Battery negative (-) → I3-9 (MH)	Turns right (D)

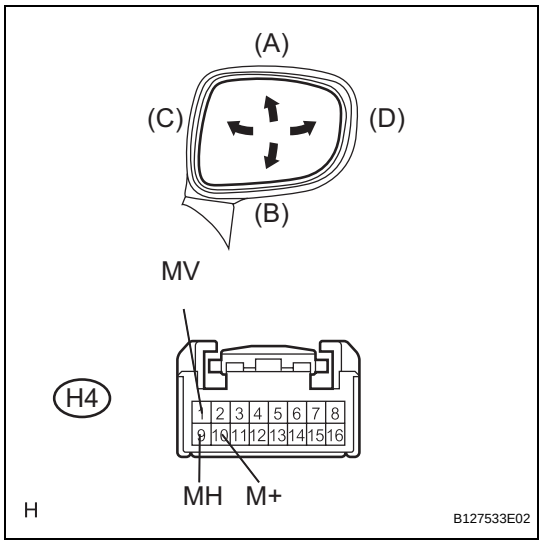

(c) Outer rear view mirror RH:
Disconnect the H4 connector.

(d) Apply battery voltage and check operation of the mirror face.

Standard

Measurement Condition	Mirror Operation
Battery positive (+) → H4-1 (MV) Battery negative (-) → H4-10 (M+)	Turns upward (A)
Battery positive (+) → H4-10 (M+) Battery negative (-) → H4-1 (MV)	Turns downward (B)
Battery positive (+) → H4-9 (MH) Battery negative (-) → H4-10 (M+)	Turns left (C)
Battery positive (+) → H4-10 (M+) Battery negative (-) → H4-9 (MH)	Turns right (D)

NG → **REPLACE OUTER REAR VIEW MIRROR ASSEMBLY (See page MI-46)**

OK

REPLACE OUTER MIRROR CONTROL ECU

Mirror Heater does not Operate with Rear Defogger Switch

DESCRIPTION

When the mirror defogger switch, which is built into the heater control assembly, is operated, operation signals are transmitted to the A/C amplifier assembly through LIN. When the amplifier assembly receives the signals, it turns on the RR DEF relay to operate the mirror defogger.

WIRING DIAGRAM

Mirror Heater Operation:

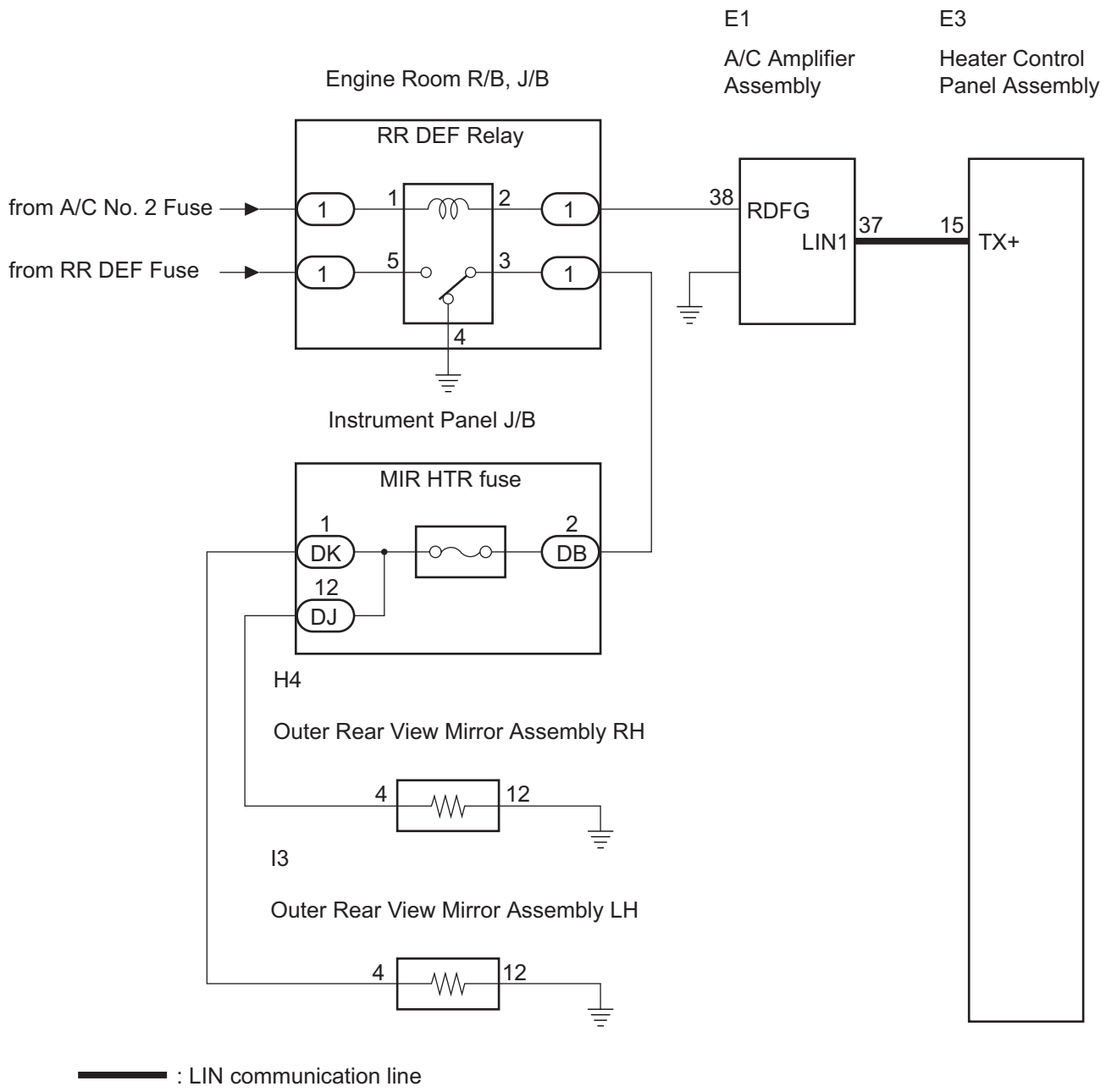

MI

INSPECTION PROCEDURE

1 CHECK LIN COMMUNICATION LINE

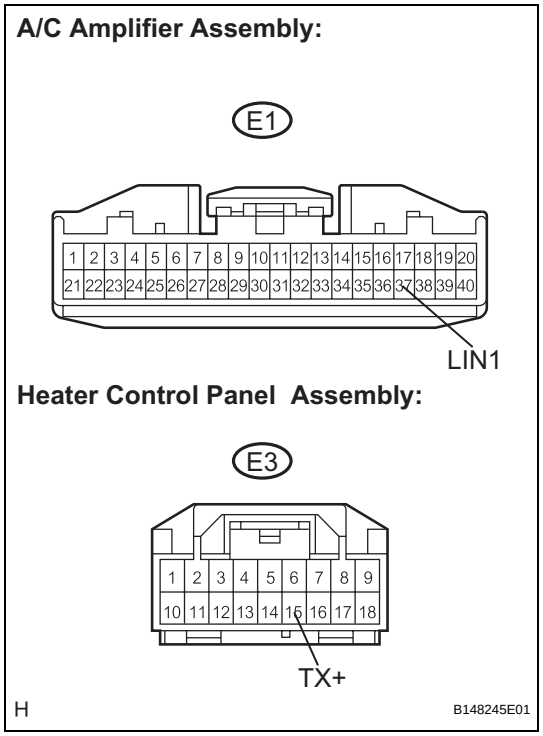

(a) Disconnect the E1 and E3 connectors.
(b) Measure the resistance according to the value(s) in the table below.

Standard resistance

Tester Connection	Condition	Specified Condition
E1-37 (LIN1) - E3-15 (TX+)	Always	Below 1 Ω
E1-37 (LIN1) - Body ground	Always	10 kΩ or higher

NG → **REPAIR OR REPLACE HARNESS OR CONNECTOR**

OK

2 INSPECT AIR CONDITIONING AMPLIFIER ASSEMBLY

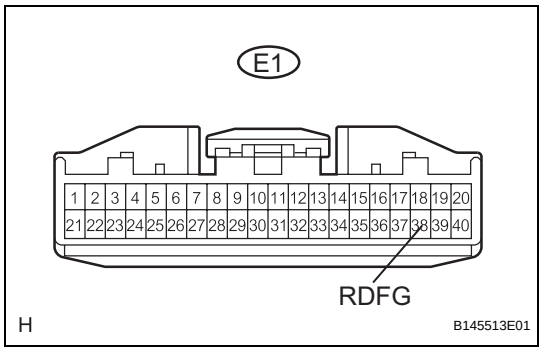

(a) Disconnect the E1 connector.
(b) Measure the voltage according to the value(s) in the table below.

Standard voltage

Tester Connection	Condition	Specified Condition
E1-38 (RDFG) - Body ground	Engine switch on (IG)	10 to 14 V

OK → **Go to step 5**

NG

3 REPLACE AIR CONDITIONING CONTROL ASSEMBLY

(a) Replace the air conditioning control assembly.
HINT:
See page AC-226

NEXT

MI

4 CONFIRMATION DRIVING PATTERN

(a) Turn the engine switch on (IG), press the mirror defogger switch, and check that the mirror defogger operates.

NG → **REPLACE AIR CONDITIONING AMPLIFIER ASSEMBLY**

OK

END

5 CHECK DEFOGGER RELAY

(a) Turn the engine switch on (IG), and press the mirror defogger switch.
(b) Check that operating sound of the RR DEF relay is heard.

Result

Result	Proceed to
Relay operating sound is heard	OK
Relay operating sound is not heard	NG

NG → **Go to step 9**

NG

6 INSPECT DEFOGGER RELAY

NG → **REPLACE DEFOGGER RELAY**

OK

7 CHECK WIRE HARNESS (RR DEF RELAY - BATTERY POSITIVE)

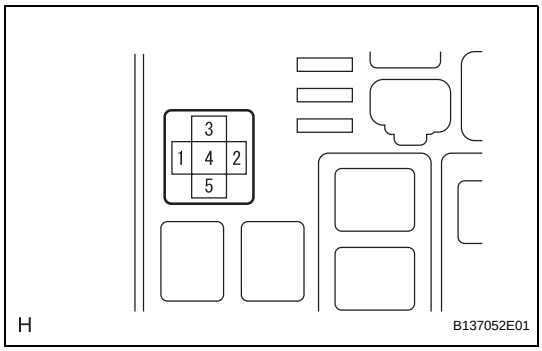

(a) Disconnect the RR DEF relay.
(b) Measure the voltage according to the value(s) in the table below.
Standard voltage:
Engine room R/B, J/B

Tester Connection	Condition	Specified Condition
1 - Body ground	Engine switch on (IG)	10 to 14 V

NG → **REPAIR OR REPLACE A/C NO. 2 FUSE, HARNESS OR CONNECTOR**

OK

MI

8 CHECK WIRE HARNESS (RR DEF RELAY - A/C AMPLIFIER ASSEMBLY)

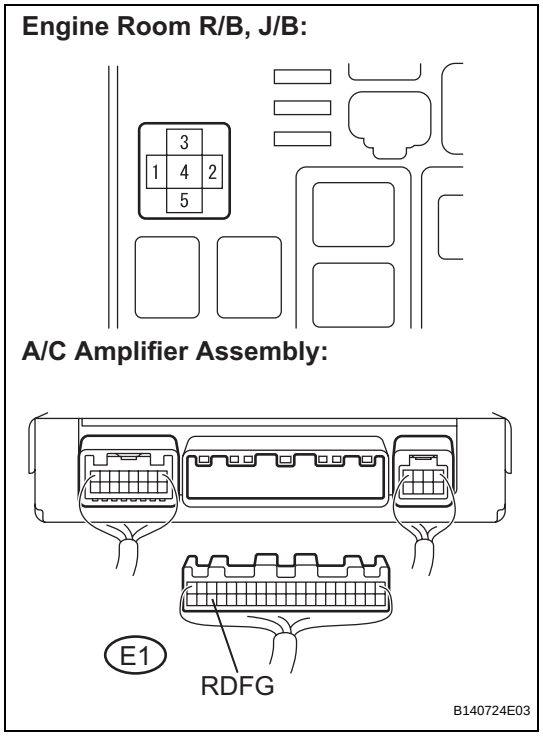

(a) Disconnect the RR DEF relay and A/C amplifier assembly connector.
(b) Measure the resistance according to the value(s) in the table below.
Standard resistance

Tester Connection	Condition	Specified Condition
2 - E1-38	Always	Below 1 Ω
1 - Body ground	Always	10 kΩ or higher

NG → **REPAIR OR REPLACE HARNESS OR CONNECTOR**

OK

REPLACE AIR CONDITIONING AMPLIFIER ASSEMBLY

9 INSPECT DEFOGGER RELAY

NG → **REPLACE DEFOGGER RELAY**

OK

10 CHECK WIRE HARNESS (RR DEF RELAY - BATTERY POSITIVE AND BODY GROUND)

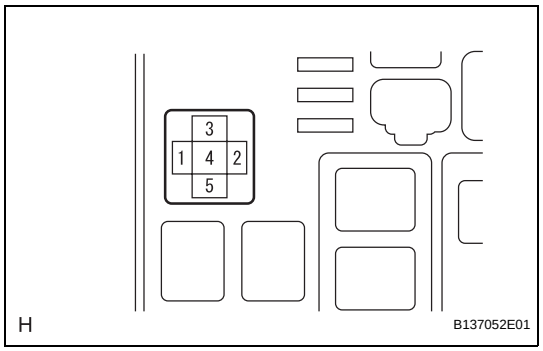

(a) Disconnect the RR DEF relay.
(b) Measure the voltage and resistance according to the value(s) in the table below.
Standard resistance:
Engine room R/B, J/B

Tester Connection	Condition	Specified Condition
4 - Body ground	Always	Below 1 Ω

Standard voltage:
Engine room R/B, J/B

Tester Connection	Condition	Specified Condition
5 - Body ground	Engine switch on (IG)	10 to 14 V

NG → **REPAIR OR REPLACE HARNESS OR CONNECTOR**

OK

11 INSPECT MIR HTR FUSE

(a) Remove the MIR HTR fuse from the instrument panel J/B.
(b) Measure the resistance according to the value(s) in the table below.
Standard resistance

Tester Connection	Condition	Specified Condition
MIR HTR fuse	Always	Below 1 Ω

NG → **REPLACE MIR HTR FUSE**

OK

12 CHECK WIRE HARNESS (ENGINE ROOM R/B, J/B - INSTRUMENT PANEL J/B)

Engine Room R/B, J/B:

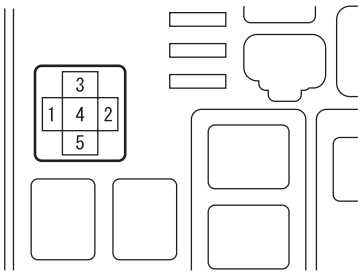

Instrument Panel J/B:

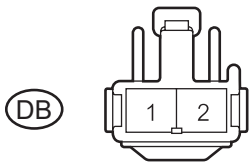

H B145478E01

(a) Disconnect the RR DEF relay and instrument panel J/B connector.
(b) Measure the resistance according to the value(s) in the table below.
Standard resistance

Tester Connection	Condition	Specified Condition
3 - DB-2	Always	Below 1 Ω
3 - Body ground	Always	10 kΩ or higher

NG → **REPAIR OR REPLACE HARNESS OR CONNECTOR**

OK

13 CHECK WIRE HARNESS (INSTRUMENT PANEL J/B - OUTER REAR VIEW MIRROR)

Outer Rear View Mirror:

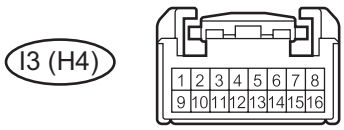

Instrument Panel J/B:

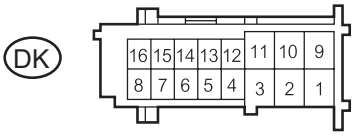

Instrument Panel J/B:

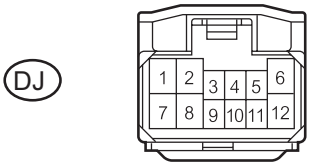

H B145479E01

(a) Disconnect the outer rear view mirror and instrument panel J/B connectors.

(b) Measure the resistance according to the value(s) in the table below.
( ): Outer mirror RH
Standard resistance:
Outer rear view mirror LH

Tester Connection	Condition	Specified Condition
I3-4 - DK-1	Always	Below 1 Ω
DK-1 - Body ground	Always	10 kΩ or higher

Outer rear view mirror RH

Tester Connection	Condition	Specified Condition
H4-4 - DJ-1	Always	Below 1 Ω
DJ-1 - Body ground	Always	10 kΩ or higher

NG → **REPAIR OR REPLACE HARNESS OR CONNECTOR**

OK

END

Power Mirrors do not Return to Memorized Position

DESCRIPTION

When the seat memory switch M1 or M2 is pressed, the seat memory switch transmits a signal of the memorized mirror position to the outer mirror control ECU Then, the outer mirror control ECU drives the mirror motor.

WIRING DIAGRAM

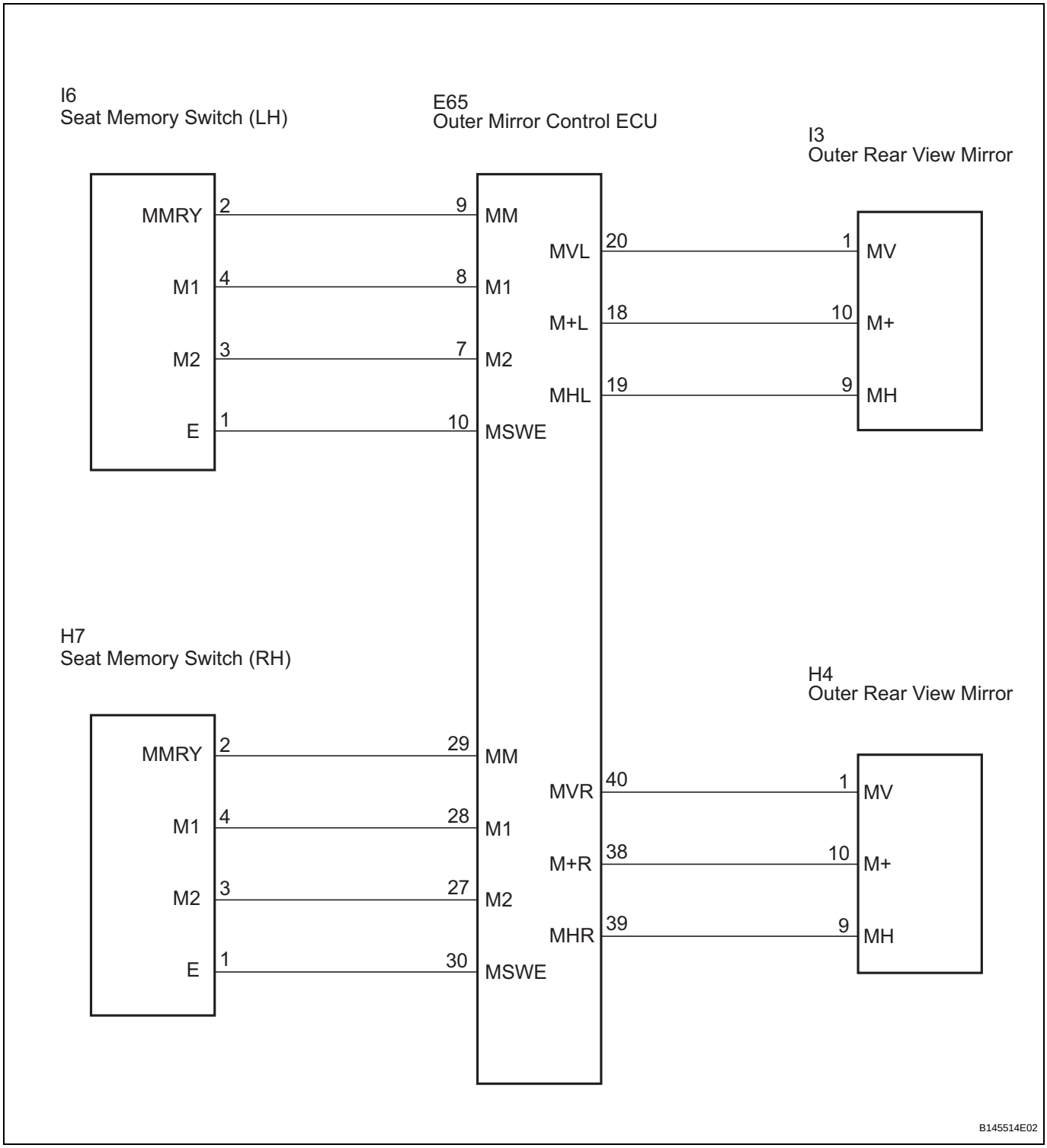

INSPECTION PROCEDURE

1 READ VALUE OF INTELLIGENT TESTER

(a) Check the DATA LIST for proper function of the seat memory switch.

MIRROR-L/MIRROR-L

Item	Switch Position	Specified Condition
D MEM 1SW	Driver side mirror position memorized in seat memory switch M1/ON (1) or OFF (2)	1: Memorized 0: Not memorized
D MEM 2 SW	Driver side mirror position memorized in seat memory switch M2/ON (1) or OFF (2)	
FP-MEM 1 SW	Passenger side mirror position memorized in seat memory switch M1/ON (1) or OFF (2)	
FP MEM 2 SW	Passenger side mirror position memorized in seat memory switch M2/ON (1) or OFF (2)	

OK → **REPLACE OUTER MIRROR CONTROL ECU**

NG

2 CHECK SEAT MEMORY SWITCH

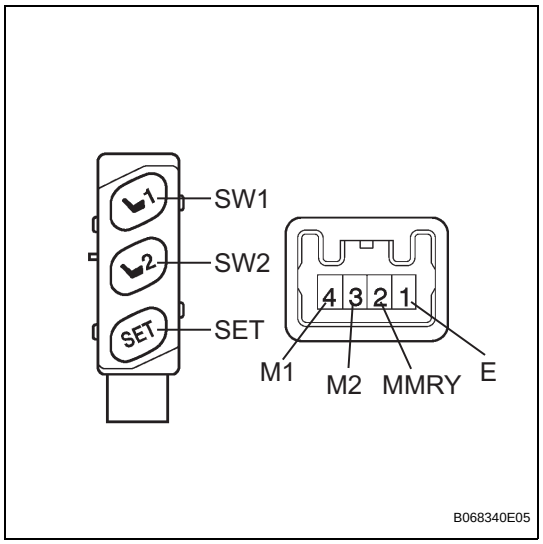

(a) Remove the seat memory switch.

(b) Measure the resistance according to the value(s) in the table below when the switch is operated.

Standard resistance

Tester Connection	Switch Condition	Specified Condition
1 (E) - 2 (MMRY)	"SET" switch ON	Below 1 Ω
	"SET" switch OFF	10 kΩ or higher
1 (E) - 4 (M1)	"1" switch ON	Below 1 Ω
	"SET" switch OFF	10 kΩ or higher
1 (E) - 3 (M2)	"2" switch ON	Below 1 Ω
	"SET" switch OFF	10 kΩ or higher

NG → **REPLACE SEAT MEMORY SWITCH**

OK

MI

3 CHECK WIRE HARNESS (SEAT MEMORY SWITCH - OUTER MIRROR CONTROL ECU)

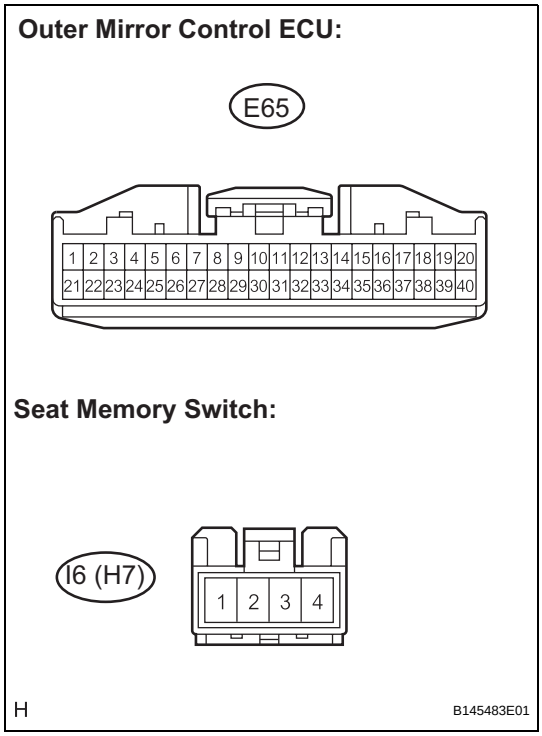

(a) Disconnect the E65 and I6 (H7) switch connectors.
(b) Measure the resistance according to the value(s) in the table below.
( ): RH side
Standard resistance:
LH side

Tester Connection	Condition	Specified Condition
I6-2 (MMRY) - E65-9 (MM)	Always	Below 1 Ω
I6-4 (M1) - E65-8 (M1)	Always	Below 1 Ω
I6-3 (M2) - E65-7 (M2)	Always	Below 1 Ω
E6-1 (E) - E65-10 (MSWE)	Always	Below 1 Ω

LH side

Tester Connection	Condition	Specified Condition
H7-2 (MMRY) - E65-29 (MM)	Always	Below 1 Ω
H7-4 (M1) - E65-28 (M1)	Always	Below 1 Ω
H7-3 (M2) - E65-27 (M2)	Always	Below 1 Ω
H7-1 (E) - E65-30 (MSWE)	Always	Below 1 Ω

NG → **REPAIR OR REPLACE HARNESS OR CONNECTOR**

OK

4 INSPECT OUTER REAR VIEW MIRROR ASSEMBLY

MI

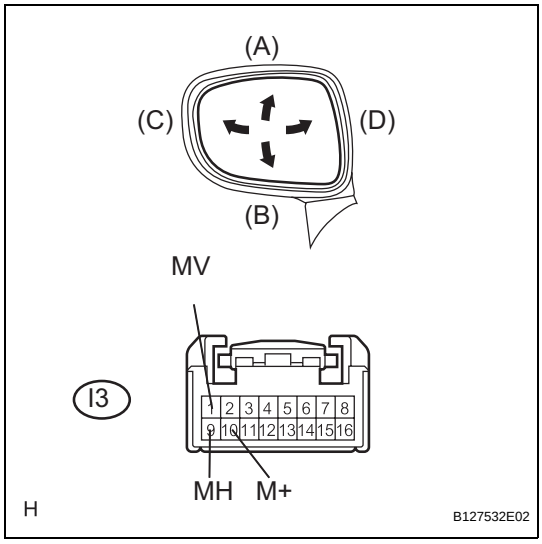

(a) Outer rear view mirror LH:
Disconnect the I3 connector.
(b) Apply battery voltage and check operation of the mirror face.
Standard

Measurement Condition	Mirror Operation
Battery positive (+) → I3-1 (MV) Battery negative (-) → I3-10 (M+)	Turns upward (A)
Battery positive (+) → I3-10 (M+) Battery negative (-) → I3-1 (MV)	Turns downward (B)
Battery positive (+) → I3-9 (MH) Battery negative (-) → I3-10 (M+)	Turns left (C)
Battery positive (+) → I3-10 (M+) Battery negative (-) → I3-9 (MH)	Turns right (D)

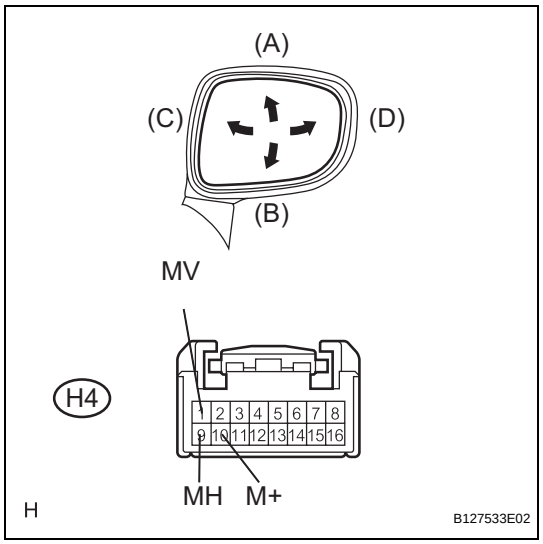

(c) Outer rear view mirror RH:
Disconnect the H4 connector.

(d) Apply battery voltage and check operation of the mirror face.

Standard

Measurement Condition	Mirror Operation
Battery positive (+) → H4-1 (MV) Battery negative (-) → H4-10 (M+)	**Turns upward (A)**
Battery positive (+) → H4-10 (M+) Battery negative (-) → H4-1 (MV)	**Turns downward (B)**
Battery positive (+) → H4-9 (MH) Battery negative (-) → H4-10 (M+)	**Turns left (C)**
Battery positive (+) → H4-10 (M+) Battery negative (-) → H4-9 (MH)	**Turns right (D)**

NG → **REPLACE OUTER REAR VIEW MIRROR ASSEMBLY**

OK

END

Reverse Shift-linked Function of Power Mirrors do not Operate

DESCRIPTION

After the transmission control ECU receives a reverse signal from the park/neutral position switch, transmission control ECU the sends a reverse signal to the outer mirror control ECU via the CAN communication systems. The outer mirror control ECU activates the mirror motor in response to the reverse signal.

WIRING DIAGRAM

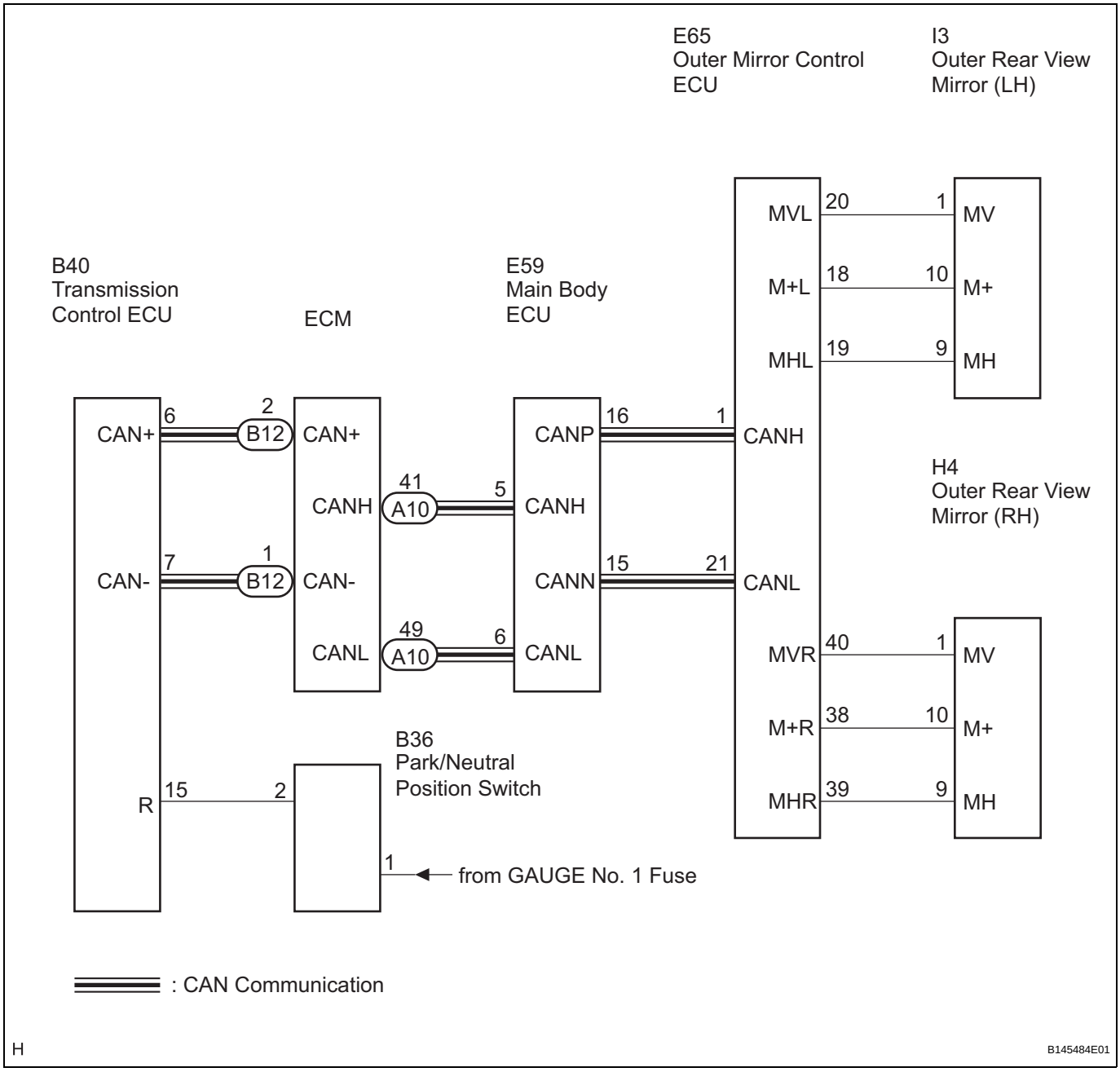

INSPECTION PROCEDURE

1 CHECK DTCs

(a) Select the DTC check on the intelligent tester to check for communication errors.

Result

Not output DTC codes	**A**
Output DTC codes (CAN communication)	**B**

B → **GO TO CAN COMMUNICATION SYSTEM (See page CA-11)**

A

2 READ VALUE OF INTELLIGENT TESTER

(a) Check the DATA LIST for proper function of the reverse signal.

ECT

Item	Measurement item/Display (Range)	Normal Condition	Diagnostic Note
REVERSE	**PNP switch status/ON or OFF**	**Shift lever position/ON (R) or OFF**	**When the shift lever position displayed on the intelligent tester differs from the actual position, adjustment of the PNP switch or the shift cable may be incorrect.**

OK → **Go to step 7**

NG

3 CHECK WIRE HARNESS (BATTERY POSITIVE VOLTAGE)

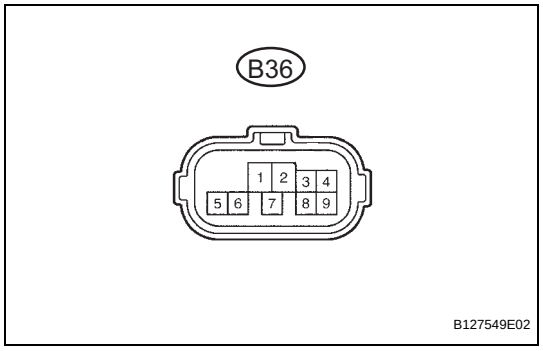

(a) Disconnect the B36 connector.
(b) Measure the voltage according to the value(s) in the table below.

Standard voltage

Tester Connection	Condition	Specified Condition
B36-1 - Body ground	**Engine switch on (IG)**	**10 to 14 V**

NG → **REPAIR OR REPLACE GAUGE NO. 1 FUSE OR HARNESS AND CONNECTOR**

OK

MI

4 CHECK WIRE HARNESS (TRANSMISSION CONTROL ECU - PARK/NEUTRAL POSITION SWITCH)

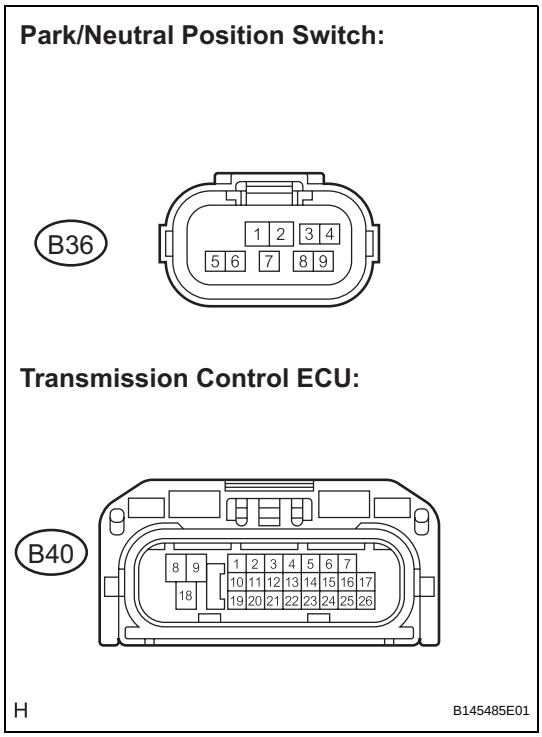

(a) Disconnect the B36 and B40 connectors.
(b) Measure the resistance according to the value(s) in the table below.

Standard resistance

Tester Connection	Condition	Specified Condition
B40-15 - B36-2	Always	Below 1 Ω
B40-15 - Body ground	Always	10 kΩ or higher

NG → **REPAIR OR REPLACE WIRE HARNESS**

OK

5 INSPECT PARK/NEUTRAL POSITION SWITCH ASSEMBLY

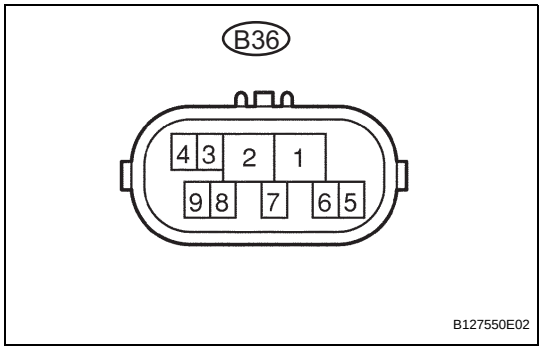

(a) Disconnect the B36 connector.
(b) Measure the resistance according to the value(s) in the table below.

Standard resistance

Shift Position	Tester Connection	Specified Condition
P	1 - 2	Below 1 Ω
Except P	1 - 2	10 kΩ or higher

NG → **REPLACE PARK/NEUTRAL POSITION SWITCH ASSEMBLY (See page AX-184)**

OK

6 CONFIRM MIRROR OPERATION

Turn the engine switch on (IG), and check the mirror operation.

NG → **REPLACE OUTER MIRROR CONTROL ECU**

OK

END

7 INSPECT OUTER REAR VIEW MIRROR ASSEMBLY

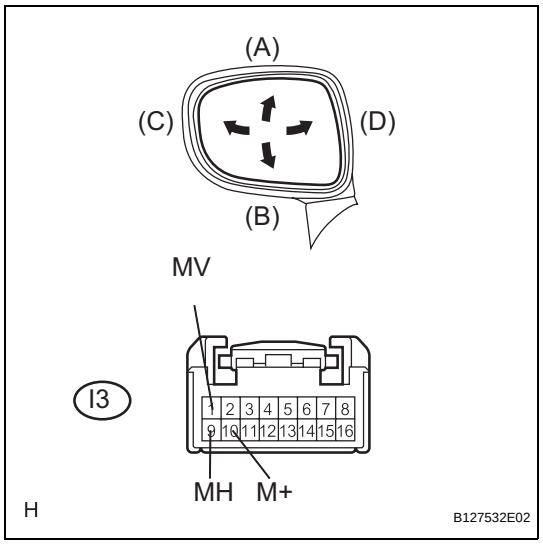

(a) Outer rear view mirror LH:
Disconnect the I3 connector.

(b) Apply battery voltage and check operation of the mirror face.

Standard

Measurement Condition	Mirror Operation
Battery positive (+) → I3-1 (MV) Battery negative (-) → I3-10 (M+)	Turns upward (A)
Battery positive (+) → I3-10 (M+) Battery negative (-) → I3-1 (MV)	Turns downward (B)
Battery positive (+) → I3-9 (MH) Battery negative (-) → I3-10 (M+)	Turns left (C)
Battery positive (+) → I3-10 (M+) Battery negative (-) → I3-9 (MH)	Turns right (D)

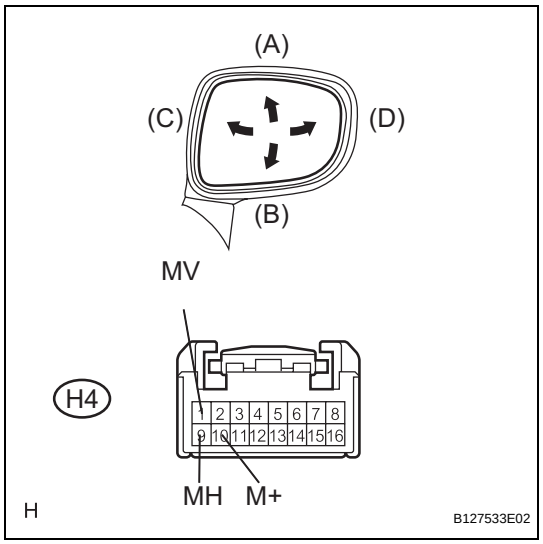

(c) Outer rear view mirror RH:
Disconnect the H4 connector.

(d) Apply battery voltage and check operation of the mirror face.

Standard

Measurement Condition	Mirror Operation
Battery positive (+) → H4-1 (MV) Battery negative (-) → H4-10 (M+)	Turns upward (A)
Battery positive (+) → H4-10 (M+) Battery negative (-) → H4-1 (MV)	Turns downward (B)
Battery positive (+) → H4-9 (MH) Battery negative (-) → H4-10 (M+)	Turns left (C)
Battery positive (+) → H4-10 (M+) Battery negative (-) → H4-9 (MH)	Turns right (D)

NG → **REPLACE OUTER REAR VIEW MIRROR ASSEMBLY (See page MI-46)**

OK

REPLACE OUTER MIRROR CONTROL ECU

Power Source Circuit

DESCRIPTION

This is the power source circuit for the outer mirror control ECU.

WIRING DIAGRAM

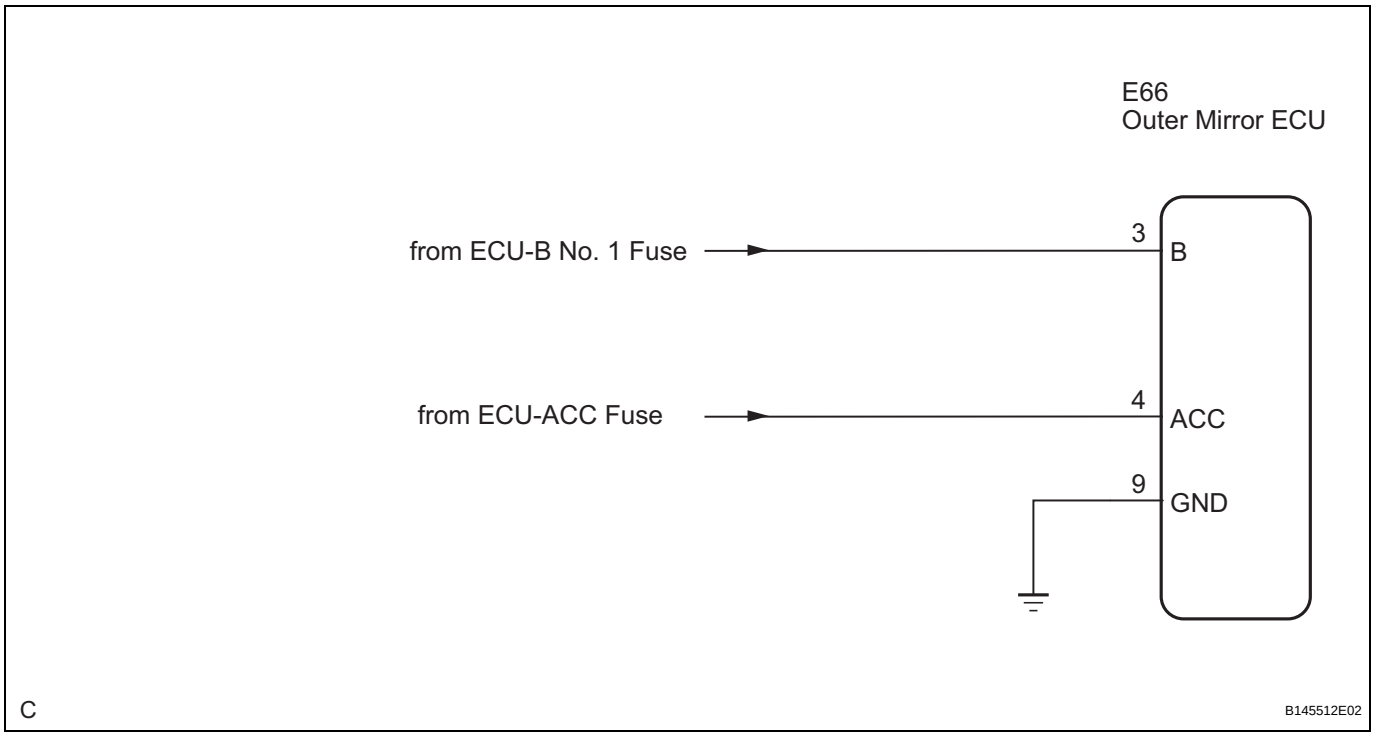

INSPECTION PROCEDURE

MI

1	INSPECT OUTER MIRROR CONTROL ECU (POWER SOURCE)

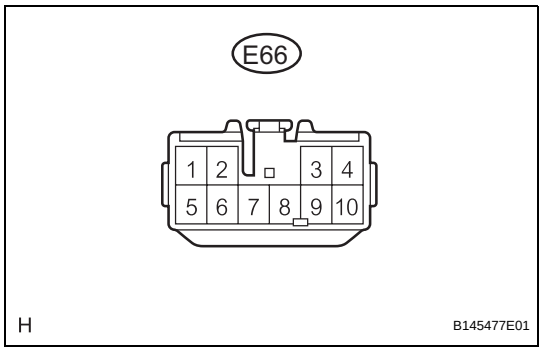

(a) Disconnect the E66 connector.
(b) Measure the voltage and resistance according to the value(s) in the table below.

Standard voltage

Tester Connection	Condition	Specified Condition
E66-3 (B) - Body ground	Always	10 to 14 V
E66-4 (ACC) - Body ground	Engine switch on (ACC)	10 to 14 V

Standard resistance

Tester Connection	Condition	Specified Condition
E66-9 (GND) - Body ground	Always	Below 1 Ω

NG → REPAIR OR REPLACE WIRE HARNESS

OK

PROCEED TO NEXT CIRCUIT INSPECTION SHOWN IN PROBLEM SYMPTOMS TABLE

TERMINALS OF ECU

1. CHECK OUTER MIRROR CONTROL ECU LH

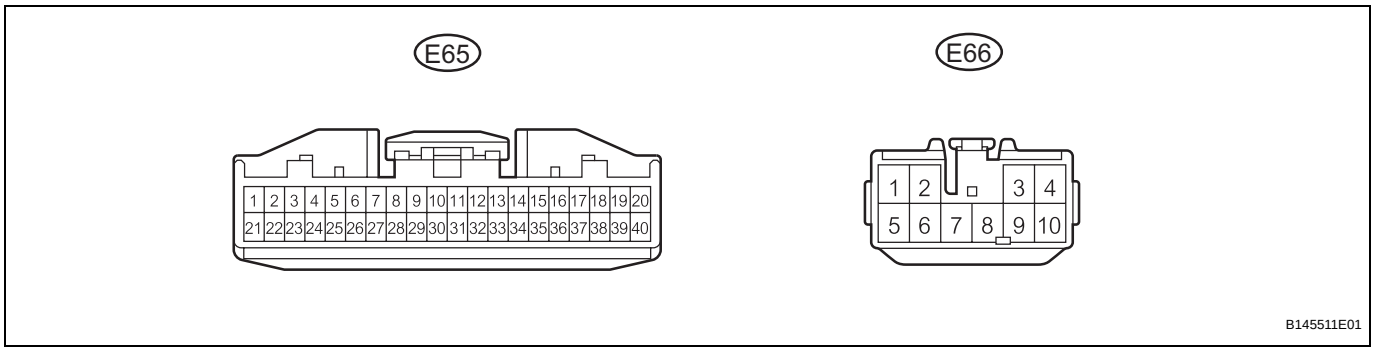

(a) Disconnect the E65 and E66 connectors.
(b) Measure the voltage and resistance according to the value(s) in the table below.

Standard voltage

Symbols (Terminal No.)	Wiring Color	Terminal Description	Condition	Specified Condition
ACC (E66-4) - Body ground	L - Body ground	Ignition power supply	Engine switch off → on (IG)	0 V → 10 to 14 V
B (E66-3) - Body ground	V - Body ground	+B power supply	Always	10 to 14 V

Standard resistance

Symbols (Terminal No.)	Wiring Color	Terminal Description	Condition	Specified Condition
E1 (E65-3) - Body ground	Y - Body ground	Ground	Always	Below 1 Ω

If the result is not as specified, there may be a malfunction on the wire harness side.
(c) Reconnect the E65 and E66 connectors.
(d) Measure the voltage according to the value(s) in the table below.

Standard voltage

MI

Symbols (Terminal No.)	Wiring Color	Terminal Description	Condition	Specified Condition
VC (E65-2) - Body ground	V - Body ground	Power source for mirror position sensor	Engine switch off → on (IG)	0 V → 0 to 5 V
VSR (E65-4) - Body ground	GR - Body ground	Vertical direction position signal	Engine switch on (IG), Left/Right adjustment switch L side, Mirror switch uppermost position → lowermost position	0 V → 1 to 3 V
HSRL (E65-5) - Body ground	P - Body ground	Horizontal direction position signal	Engine switch on (IG), Left/Right adjustment switch L side, Mirror switch innermost position → outermost position	0 V → 1 to 3 V
LP (E65-17) - Body ground	O - Body ground	Foot light signal (LH side)	Foot light OFF → ON	0 V → 10 to 14 V
M+L (E65-18) - Body ground	R - Body ground	Outer mirror switch signal (Right or Down)	Engine switch on (IG), Left/Right adjustment switch L side, Mirror switch OFF → RIGHT or DOWN	0 V → 10 to 14 V

Symbols (Terminal No.)	Wiring Color	Terminal Description	Condition	Specified Condition
MHL (E65-19) - Body ground	B - Body ground	Outer mirror switch signal (Left or Down)	Engine switch on (IG), Left/Right adjustment switch L side, Mirror switch OFF → LEFT or DOWN	0 V → 10 to 14 V
MVL (E65-20) - Body ground	L - Body ground	Outer mirror switch signal (Up or Right)	Engine switch on (IG), Left/Right adjustment switch L side, Mirror switch OFF → UP or Right	0 V → 10 to 14 V
VSRR (E65-24) - Body ground	W - Body ground	Vertical direction position signal	Engine switch on (IG), Left/Right adjustment switch L side, Mirror switch uppermost position → lowermost position	0 V → 1 to 3 V
HSRR (E65-25) - Body ground	B - Body ground	Horizontal direction position signal	Engine switch on (IG), Left/Right adjustment switch L side, Mirror switch innermost position → outermost position	0 V → 1 to 3 V
LP (E65-37) - Body ground	L - Body ground	Foot light signal (RH side)	Foot light OFF → ON	0 V → 10 to 14 V
M+R (E65-38) - Body ground	O - Body ground	Outer mirror switch signal (Right or Down)	Engine switch on (IG), Left/Right adjustment switch L side, Mirror switch OFF → RIGHT or DOWN	0 V → 10 to 14 V
MHR (E65-39) - Body ground	GR - Body ground	Outer mirror switch signal (Left or Down)	Engine switch on (IG), Left/Right adjustment switch L side, Mirror switch OFF → LEFT or DOWN	0 V → 10 to 14 V
MVR (E65-40) - Body ground	P - Body ground	Outer mirror switch signal (Up or Right)	Engine switch on (IG), Left/Right adjustment switch L side, Mirror switch OFF → UP or Right	0 V → 10 to 14 V

DIAGNOSIS SYSTEM

1. DESCRIPTION

(a) Data of the system can be read from the Data Link Connector 3 (DLC3) of the vehicle. Therefore, when the system seems to be malfunctioning, use the intelligent tester to check for a malfunction and repair it.

2. CHECK DLC3

(a) The vehicle's ECM uses ISO 9141-2 communication protocol. The terminal arrangement of the DLC3 complies with SAE J1962 and matches the ISO 9141-2 format.

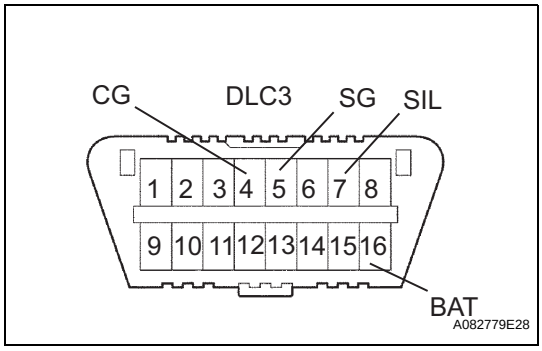

Standard

Tester Connection	Condition	Specified Condition
7 (Bus + line) - 5 (Signal ground)	During communication	Pulse generation
4 (Chassis ground) - Body ground	Constant	Below 1 Ω
5 (Signal ground) - Body ground	Constant	Below 1 Ω
16 (B+) - Body ground	Constant	9 to 14 V

HINT:
If the screen displays a communication error message after you have connected the cable of the intelligent tester to the DLC3, turned the engine switch on (IG) and used the intelligent tester, the problem may be on the vehicle side or tester side.

- If communication is normal when the tester is connected to another vehicle, inspect the DLC3 of the original vehicle.
- If communication is still impossible when the tester is connected to another vehicle, the problem is probably in the tester itself, so consult the Service Department listed in the tester's instruction manual.

DATA LIST / ACTIVE TEST

1. USING INTELLIGENT TESTER

(a) Connect the intelligent tester to the DLC3.

(b) Monitor the ECU data by following the prompts on the tester screen.

HINT:

The intelligent tester has a "Snapshot" function which records the monitored data. Refer to the intelligent tester operator's manual for further details.

2. DATA LIST

HINT:

Using the DATA LIST displayed on the intelligent tester, the value of the switch, sensor, actuator, etc. can be read without part removal. Reading the DATA LIST as the first step of troubleshooting is one way to shorten labor time.

(a) Connect the intelligent tester to the DLC3.

(b) Turn the engine switch on (IG).

(c) Read the DATA LIST according to the display on the tester.

MIRROR-L/MIRROR-R

Tester Display	Measurement Item/Range	Normal Condition
RH MIR POS V	Vertical mirror position/MIN: 0, MAX: 5 V	Within range from 0 to 5 V
RH MIR POS V	Vertical mirror position/MIN: 0, MAX: 5 V	Within range from 0 to 5 V
LH MIR POS H	Horizontal mirror position/MIN: 0, MAX: 5 V	Within range from 0 to 5 V
LH MIR POS H	Horizontal mirror position/MIN: 0, MAX: 5 V	Within range from 0 to 5 V
MIRROR MEM 1	Mirror position memorized in memory switch M1/ON (1) or OFF (0)	1: Memorized 0: Not memorized
MIRROR MEM 2	Mirror position memorized in memory switch M2/ON (1) or OFF (0)	1: Memorized 0: Not memorized
D SET MEMORY	Driving position memorized in seat memory switch MEMORY/ON (1) or OFF (0)	1: Memorized 0: Not memorized
D MEM 1 SW	Driving position memorized in seat memory switch M1/ON (1) or OFF (0)	1: Memorized 0: Not memorized
D MEM 2 SW	Driving position memorized in seat memory switch M2/ON (1) or OFF (0)	1: Memorized 0: Not memorized
FP SET MEMORY	Driving position memorized in seat memory switch MEMORY/ON (1) or OFF (0)	1: Memorized 0: Not memorized
FP MEM 2 SW	Driving position memorized in seat memory switch M2/ON (1) or OFF (0)	1: Memorized 0: Not memorized
FP MEM 2 SW	Driving position memorized in seat memory switch M2/ON (1) or OFF (0)	1: Memorized 0: Not memorized
FOOT LIGHT	Foot light /Not memorized (000) or 30 seconds (011) or 7.5 seconds (001) or Off (100) or 15 seconds (010)	000: Not memorized 011: 30 seconds 001: 7.5 seconds 100: Off 010: 15 seconds

3. ACTIVE TEST

HINT:
Performing the ACTIVE TEST using the intelligent tester allows the relay, VSV, actuator, etc. to be operated without part removal. Performing the ACTIVE TEST as the first step of troubleshooting is one way to shorten labor time. It is possible to display the DATA LIST during the ACTIVE TEST.

(a) Connect the intelligent tester to the DLC3.
(b) Turn the engine switch on (IG).
(c) Perform the ACTIVE TEST according to the display on the tester.

MIRROR-L/MIRROR-R

Tester Display	Test Part	Control Range
RH MIRR UP/DOWN	Mirror vertical operation: UP/DOWN	-
RH MIRR R/L	Mirror horizontal operation: RIGHT/LEFT	-
LH MIRR UP/DOWN	Mirror vertical operation: UP/DOWN	-
LH MIRR R/L	Mirror horizontal operation: RIGHT/LEFT	-
FOOT LIGHT	Foot light operation: ON/OFF	-

PROBLEM SYMPTOMS TABLE

AUTOMATIC GLARE-RESISTANT EC MIRROR

Symptom	Suspected Area	See page
Auto glare-resistant EC mirror does not operate	1. ECU-IG fuse	-
	2. Inner rear view mirror	MI-43
	3. Wire harness	-

REMOVAL

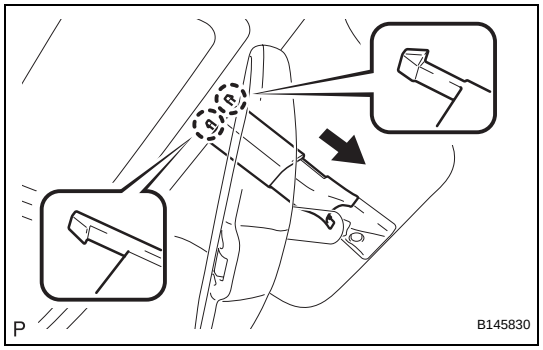

1. REMOVE INNER REAR VIEW MIRROR STAY HOLDER COVER

(a) Disengage the 2 claws and slide the inner rear view mirror stay holder cover as shown in the illustration.

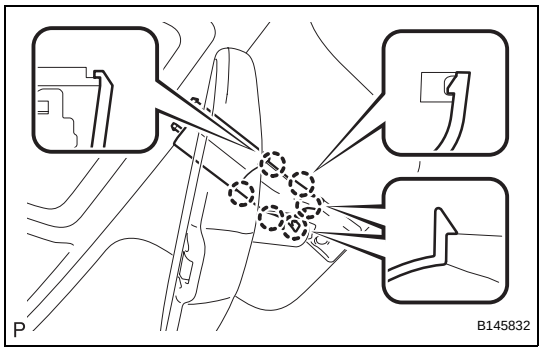

(b) Disengage the 6 claws and remove the inner rear view mirror stay holder cover.

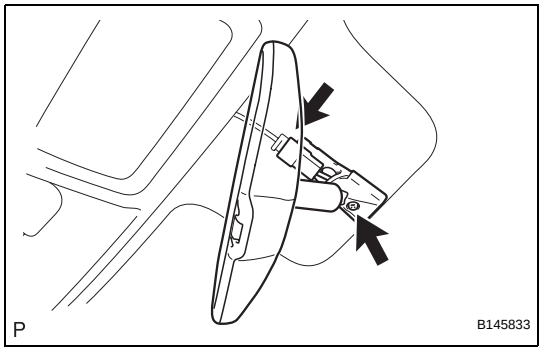

2. REMOVE INNER REAR VIEW MIRROR ASSEMBLY

(a) Disconnect the connector.

(b) Using a "TORX" socket wrench (T20), remove the screw and the inner rear view mirror.

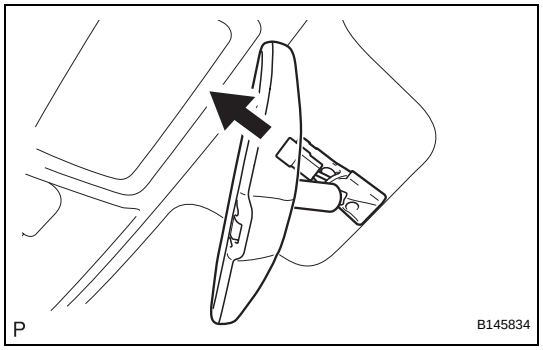

(c) Slide the inner rear view mirror assembly in the direction indicated by the arrow shown in the illustration to remove it.

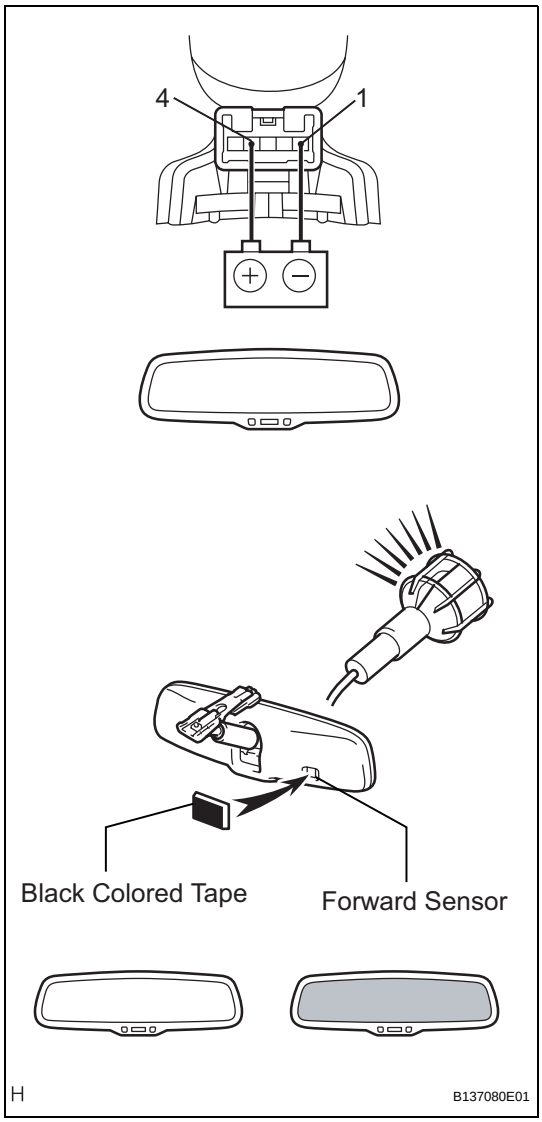

INSPECTION

1. INSPECT INNER REAR VIEW MIRROR ASSEMBLY

(a) Inspect operation of the electrochromic inner mirror.

(1) Connect the positive (+) lead from the battery to terminal 4 and the negative (-) lead to terminal 1.

(2) Attach black colored tape to the forward sensor to prevent it from sensing.

(3) Light up the mirror with an electric light, and check that the mirror surface changes from bright to dark.

Standard:

Mirror surface changes from bright to dark.

If the result is not as specified, replace the mirror assembly.

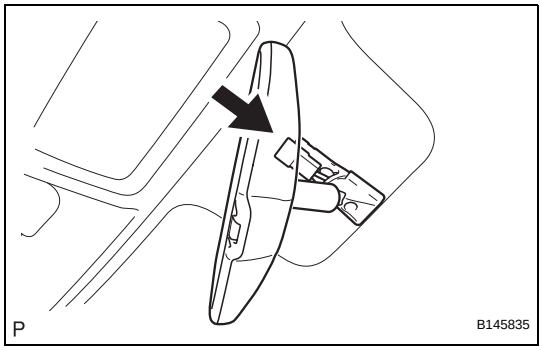

INSTALLATION

1. INSTALL INNER REAR VIEW MIRROR ASSEMBLY

(a) Slide the inner rear view mirror assembly in the direction indicated by the arrow shown in the illustration to install it.

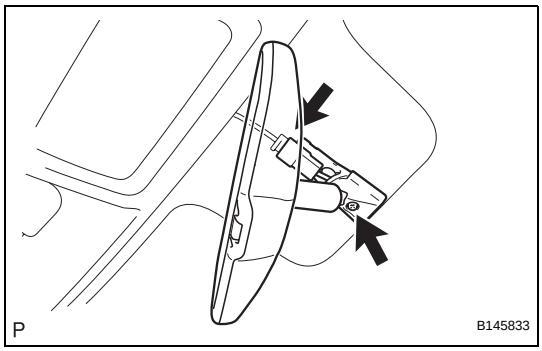

(b) Using a "TORX" socket wrench (T20), install the inner rear view mirror with the screw.

Torque: 1.8 N*m (18 kgf*cm, 16 in.*lbf)

(c) Connect the connector.

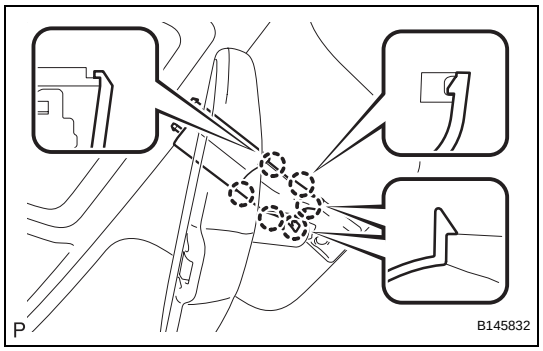

2. INSTALL INNER REAR VIEW MIRROR STAY HOLDER COVER

(a) Engage the 6 claws and install the inner rear view mirror stay holder cover.

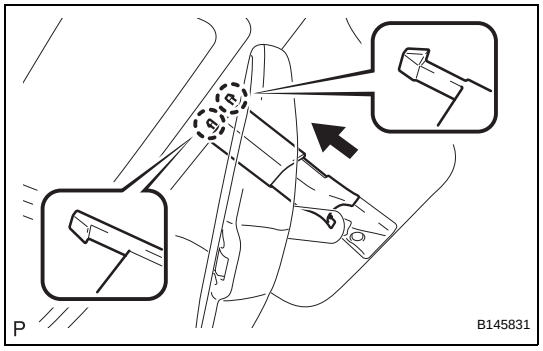

(b) Engage the 2 claws and install the inner rear view mirror stay holder cover as shown in the illustration.

ON-VEHICLE INSPECTION

1. CHECK POWER MIRROR SWITCH OPERATION

(a) Remote control
The mirror adjust switch can control the adjustment axis of the mirror surface.

(b) Reverse-linked
This function tilts the mirror surface downward to improve the visibility when driving in reverse, provided that all the conditions given below have been met.
- Engine switch is on (IG).
- Shift lever is moved to "R".

2. CHECK MEMORY SWITCH OPERATION

(a) Memory
Memorizes the positions when all conditions below have been met and the 1or 2 button is pushed while the "SET" button is pushed.
- Engine switch is on (IG).
- Shift position is "P".

When the memory setting is completed, the buzzer will sound for 0.5 seconds.

(b) Recall
If the button 1 or 2 is pressed when all conditions below have been met, it recalls the positions.
- Engine switch is on (IG).
- Shift position is "P".
- Engine switch is on (IG).
- Driver door is opened.

Power Mirror cannot be Adjusted with Power Mirror Switch

DESCRIPTION

- A switch signal of the outer mirror switch is transmitted to the selected outer mirror control ECU by way of the main body ECU. Then, the outer mirror control ECU activates the mirror motor to move the mirror UP, DOWN, RIGHT and LEFT in response to the input.
- Mirror control switch and memorized mirror position signals (from the position control ECU & switch (seat ECU)) are sent to the mirror control ECU. The mirror control ECU moves the selected mirror UP, DOWN, LEFT and RIGHT in response to the input.

HINT:
The power mirror control system is a part of the multiplex communication system. This system features shared communication wiring that reduces the wiring complexity of the communication lines. The first step in any repair is to confirm the proper operation of the communication system. Proceed with troubleshooting after the communication has been verified (See the Multiplex Communication System).

WIRING DIAGRAM

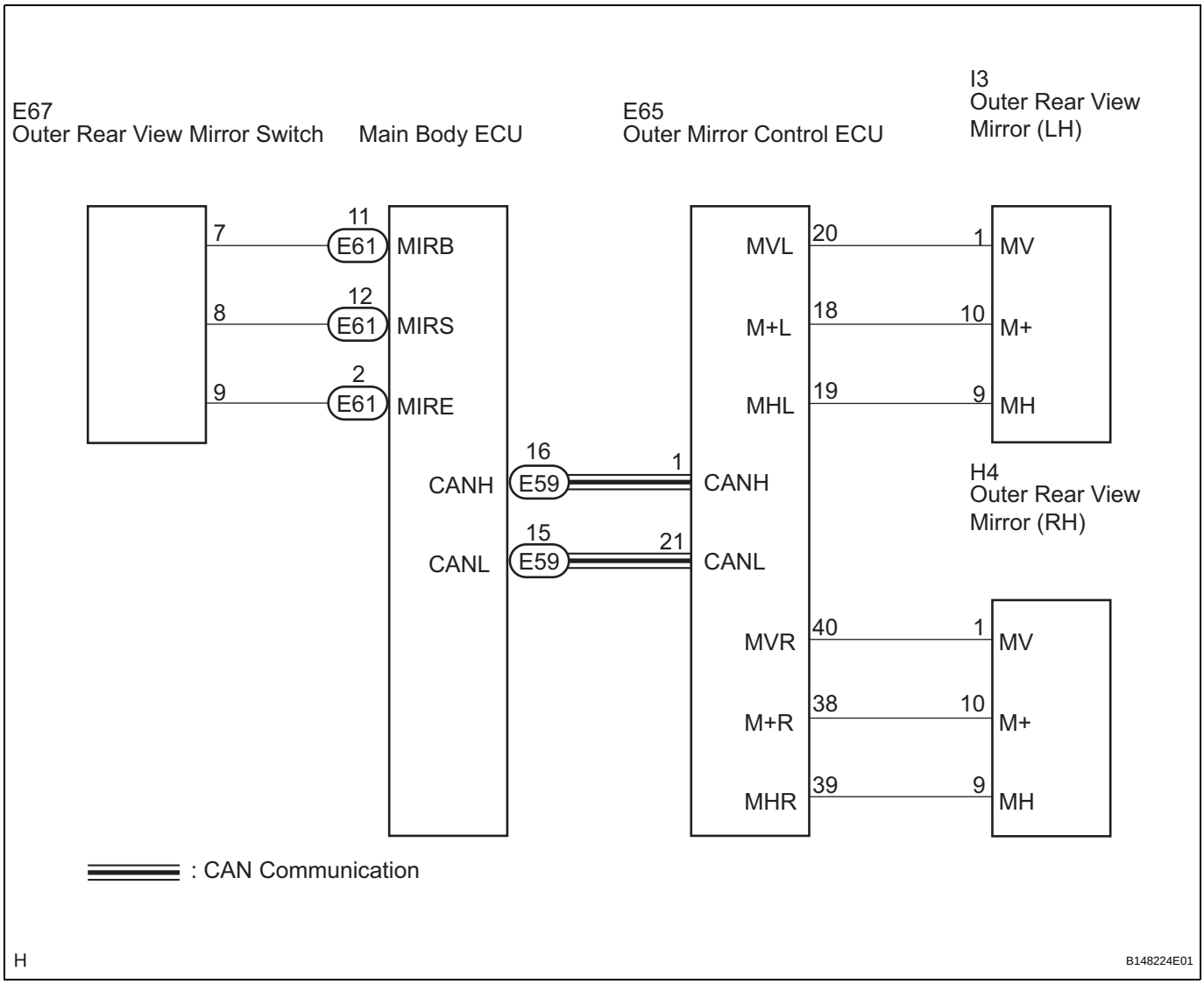

INSPECTION PROCEDURE

1	CHECK DTCs

(a) Select the DTC check on the intelligent tester to check for communication errors.

Result

No DTC is output	A
DTCs are output (CAN communication)	B

B → **GO TO CAN COMMUNICATION SYSTEM (See page CA-49)**

A

2	INSPECT OUTER MIRROR SWITCH

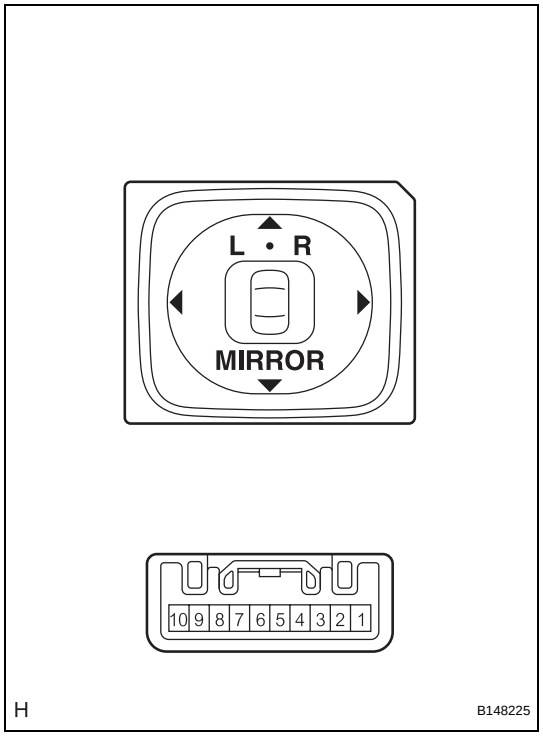

(a) Remove the outer mirror switch.
(b) Measure the resistance according to the value(s) in the table below when the switch is operated.
Standard resistance:
Select "L" on the left/right adjustment switch

Tester Connection	Switch Position	Specified Condition
7 - 9	UP	100 Ω
	DOWN	470 Ω
	LEFT	800 Ω
	RIGHT	250 Ω

Select "R" on the left/right adjustment switch

Tester Connection	Switch Position	Specified Condition
7 - 9	UP	100 Ω
	DOWN	470 Ω
	LEFT	800 Ω
	RIGHT	250 Ω

NG → **REPLACE OUTER MIRROR SWITCH (See page MI-52)**

OK

MI

3 CHECK WIRE HARNESS (OUTER MIRROR SWITCH - MAIN BODY ECU)

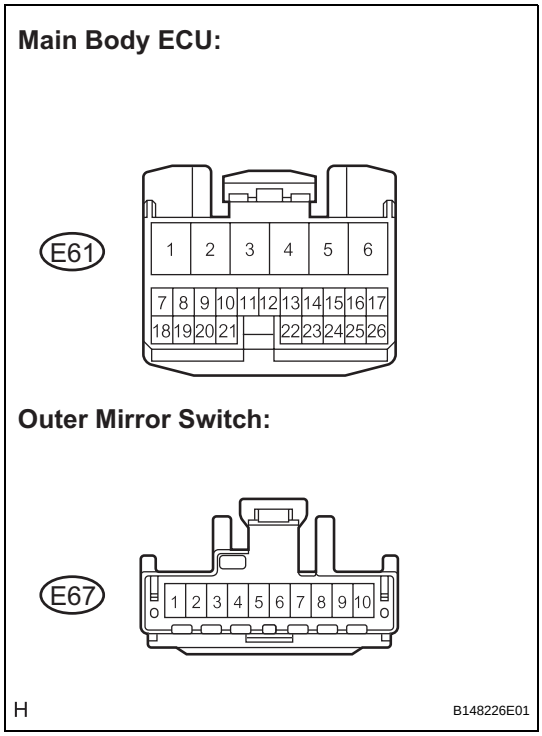

(a) Disconnect the E61 and E67 connectors.
(b) Measure the resistance according to the value(s) in the table below.

Standard resistance

Tester Connection	Condition	Specified Condition
E67-7 - E61-11	Always	Below 1 Ω
E67-8 - E61-12	Always	Below 1 Ω
E67-9 - E61-2	Always	Below 1 Ω
E67-7 - Body ground	Always	10 kΩ or higher
E67-8 - Body ground	Always	10 kΩ or higher
E67-9 - Body ground	Always	10 kΩ or higher

NG → **REPAIR OR REPLACE HARNESS OR CONNECTOR**

OK

4 INSPECT OUTER REAR VIEW MIRROR ASSEMBLY

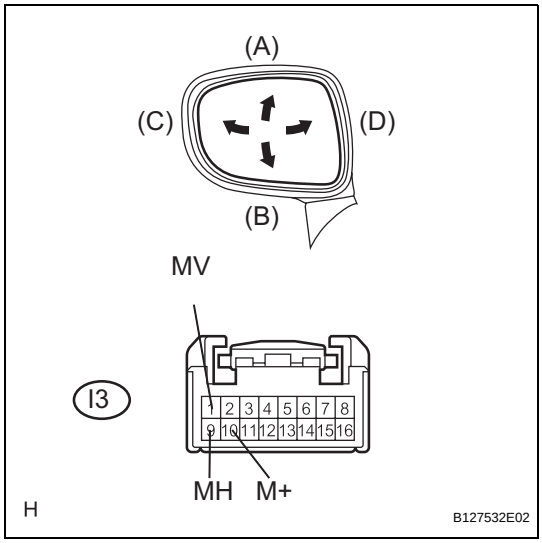

(a) Outer rear view mirror LH:
Disconnect the I3 connector.
(b) Apply battery voltage and check operation of the mirror face.

Standard

Measurement Condition	Mirror Operation
Battery positive (+) → I3-1 (MV) Battery negative (-) → I3-10 (M+)	Turns upward (A)
Battery positive (+) → I3-10 (M+) Battery negative (-) → I3-1 (MV)	Turns downward (B)
Battery positive (+) → I3-9 (MH) Battery negative (-) → I3-10 (M+)	Turns left (C)
Battery positive (+) → I3-10 (M+) Battery negative (-) → I3-9 (MH)	Turns right (D)

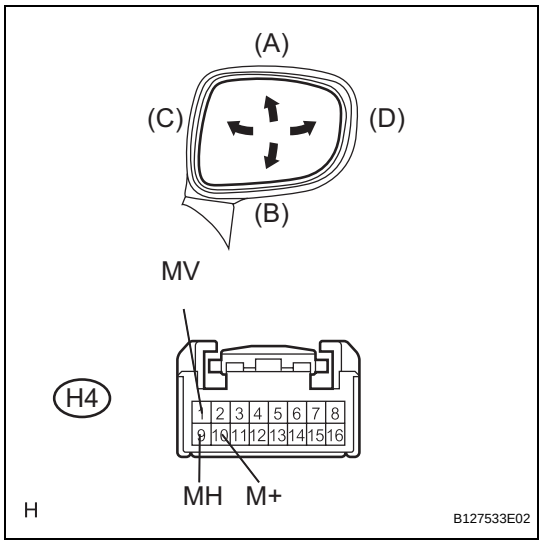

(c) Outer rear view mirror RH:
Disconnect the H4 connector.

(d) Apply battery voltage and check operation of the mirror face.

Standard

Measurement Condition	Mirror Operation
Battery positive (+) → H4-1 (MV) Battery negative (-) → H4-10 (M+)	Turns upward (A)
Battery positive (+) → H4-10 (M+) Battery negative (-) → H4-1 (MV)	Turns downward (B)
Battery positive (+) → H4-9 (MH) Battery negative (-) → H4-10 (M+)	Turns left (C)
Battery positive (+) → H4-10 (M+) Battery negative (-) → H4-9 (MH)	Turns right (D)

NG → **REPLACE OUTER REAR VIEW MIRROR ASSEMBLY (See page MI-46)**

OK

REPLACE OUTER MIRROR CONTROL ECU

OUTER REAR VIEW MIRROR

COMPONENTS

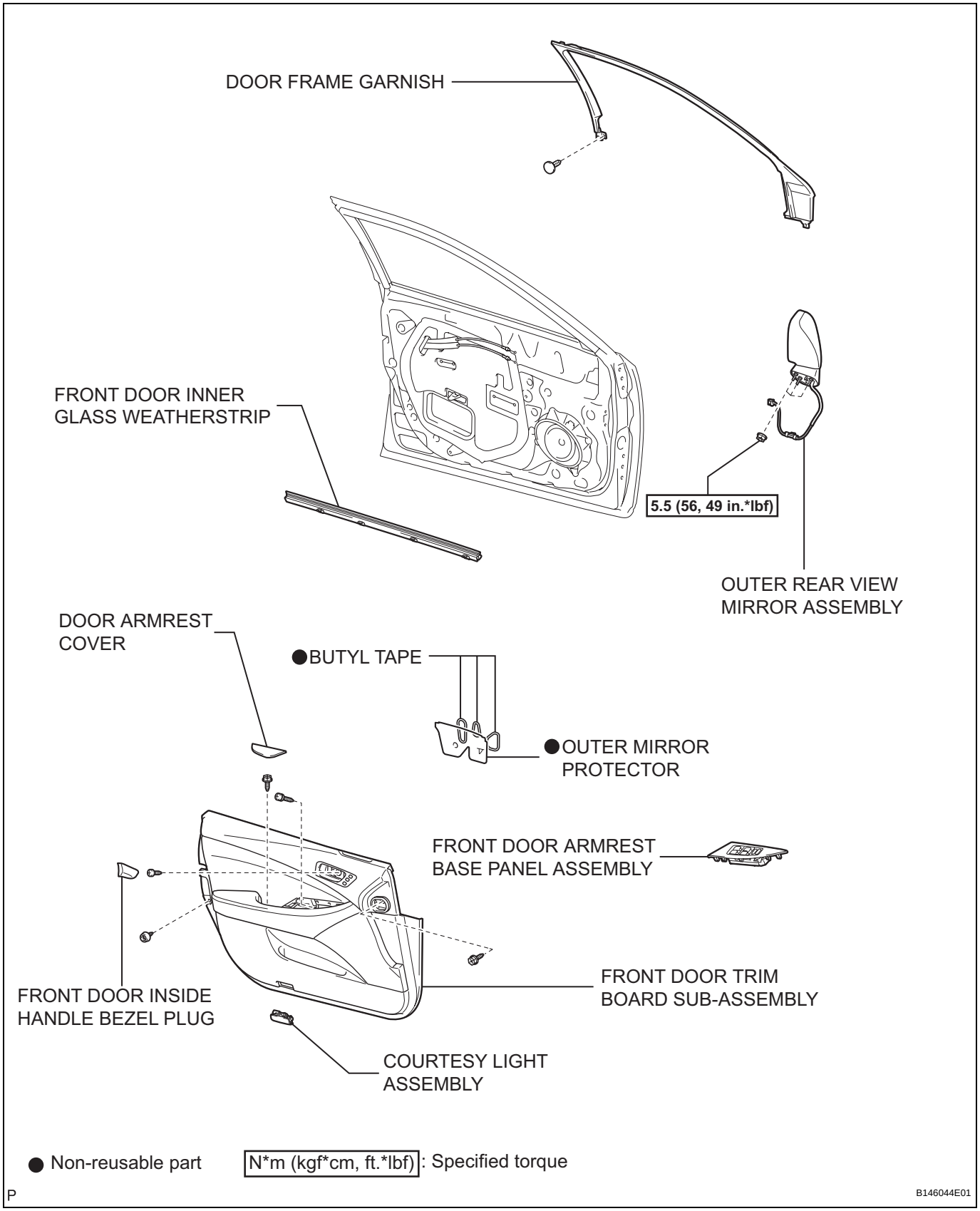

REMOVAL

1. **REMOVE FRONT DOOR INSIDE HANDLE BEZEL PLUG (See page ED-32)**
2. **REMOVE FRONT DOOR ARMREST BASE PANEL ASSEMBLY (See page ED-33)**
3. **REMOVE COURTESY LIGHT ASSEMBLY (See page ED-34)**
4. **REMOVE DOOR ARMREST COVER (See page ED-34)**
5. **REMOVE FRONT DOOR TRIM BOARD SUB-ASSEMBLY (See page ED-34)**
6. **REMOVE FRONT DOOR INNER GLASS WEATHERSTRIP (See page ED-35)**
7. **REMOVE DOOR FRAME GARNISH (See page ED-35)**
8. **REMOVE OUTER MIRROR PROTECTOR (See page ED-35)**
9. **REMOVE OUTER REAR VIEW MIRROR ASSEMBLY**
   (a) Remove the 3 nuts.
   (b) Disconnect the connector.
   (c) Disengage the clamp.

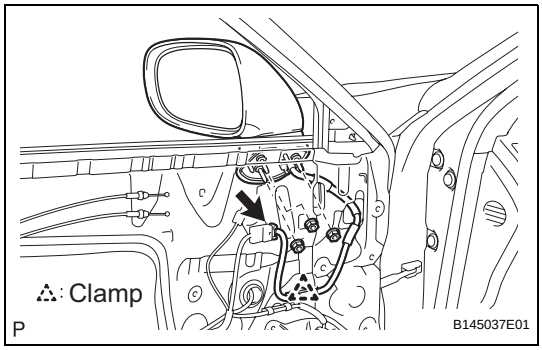

   (d) Disengage the claw and remove the outer rear view mirror assembly.

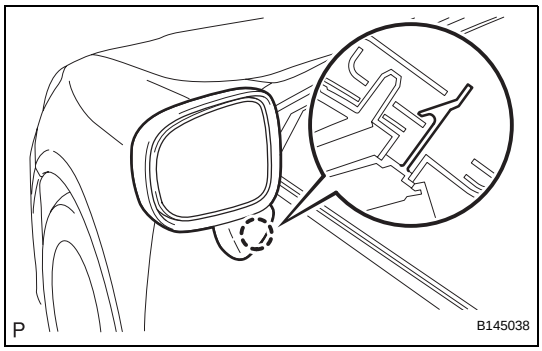

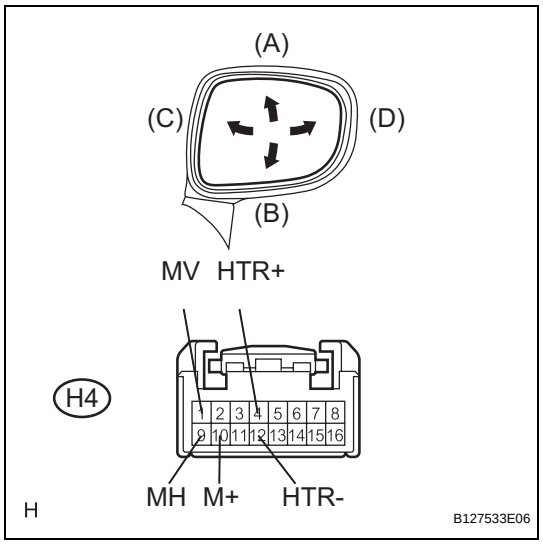

INSPECTION

1. INSPECT OUTER REAR VIEW MIRROR ASSEMBLY RH

(a) Inspect outer mirror motor operation.

(1) Apply battery voltage and check operation of the mirror face, as shown in the table and illustration.

Standard

Measurement Condition	Specified Condition
Battery positive (+) → Terminal 1 (MV) Battery negative (-) → Terminal 10 (M+)	**Turns upward (A)**
Battery positive (+) → Terminal 10 (M+) Battery negative (-) → Terminal 1 (MV)	**Turns downward (B)**
Battery positive (+) → Terminal 9 (MH) Battery negative (-) → Terminal 10 (M+)	**Turns left (C)**
Battery positive (+) → Terminal 10 (M+) Battery negative (-) → Terminal 9 (MH)	**Turns right (D)**

(b) Inspect outer mirror heater operation.

(1) Apply battery voltage and check operation of the mirror face, as shown in the table below.

Standard

Measurement Condition	Specified Condition
Battery positive (+) → Terminal 4 (HTR+) Battery negative (-) → Terminal 12 (HTR-)	**Mirror surface temperature becomes higher**

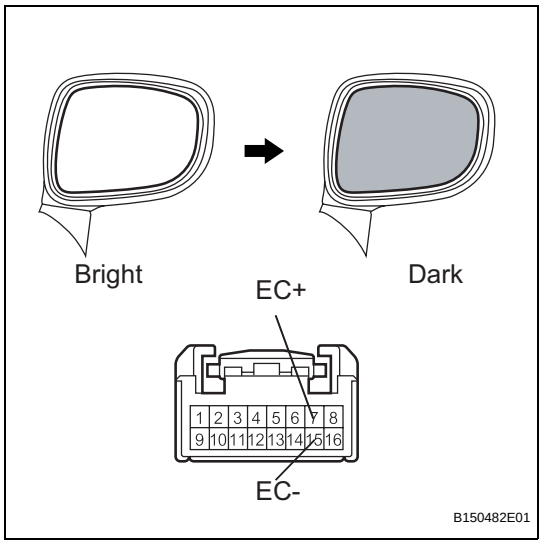

(c) Inspect electrochromic outer mirror operation.

(1) Apply battery voltage and check operation of the mirror face, as shown in the table and illustration.

Standard

Measurement Condition	Specified Condition
Battery positive (+) → Terminal 7 (EC+) Battery negative (-) → Terminal 15 (EC-)	**Mirror surface changes to dark**

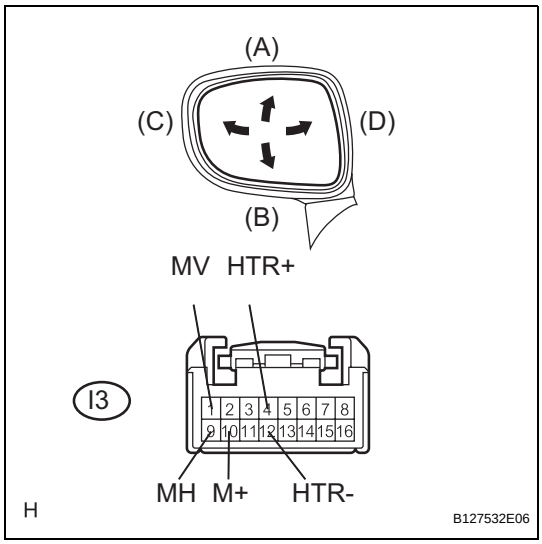

2. INSPECT OUTER REAR VIEW MIRROR ASSEMBLY LH

(a) Inspect outer mirror motor operation.

(1) Remove the outer rear view mirror assembly.

(2) Apply battery voltage and check operation of the mirror face, as shown in the table and illustration.

Standard

Measurement Condition	Specified Condition
Battery positive (+) → Terminal 1 (MV) Battery negative (-) → Terminal 10 (M+)	**Turns upward (A)**
Battery positive (+) → Terminal 10 (M+) Battery negative (-) → Terminal 1 (MV)	**Turns downward (B)**
Battery positive (+) → Terminal 9 (MH) Battery negative (-) → Terminal 10 (M+)	**Turns left (C)**
Battery positive (+) → Terminal 10 (M+) Battery negative (-) → Terminal 9 (MH)	**Turns right (D)**

(b) Inspect outer mirror heater operation.

(1) Apply battery voltage and check operation of the mirror face, as shown in the table below.

Standard

Measurement Condition	Specified Condition
Battery positive (+) → Terminal 4 (HTR+) Battery negative (-) → Terminal 12 (HTR-)	**Mirror surface temperature becomes higher**

(c) Inspect electrochromic outer mirror operation.

(1) Apply battery voltage and check operation of the mirror face, as shown in the table and illustration.

Standard

Measurement Condition	Specified Condition
Battery positive (+) → Terminal 7 (EC+) Battery negative (-) → Terminal 15 (EC-)	**Mirror surface changes to dark**

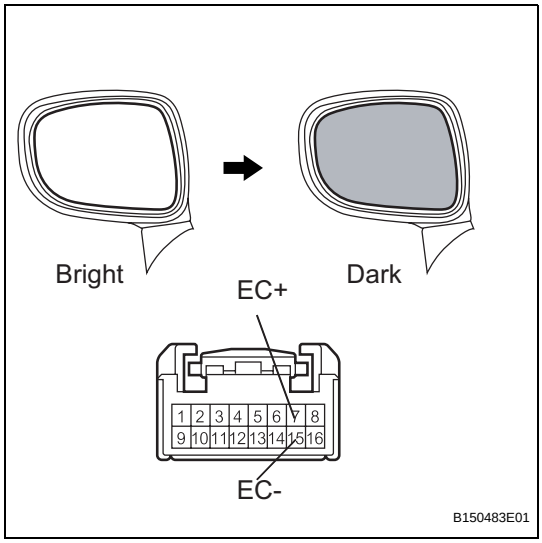

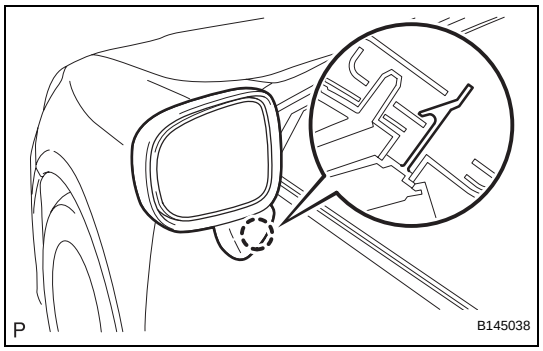

INSTALLATION

1. INSTALL OUTER REAR VIEW MIRROR ASSEMBLY

(a) Engage the claw to install the outer rear view mirror assembly.

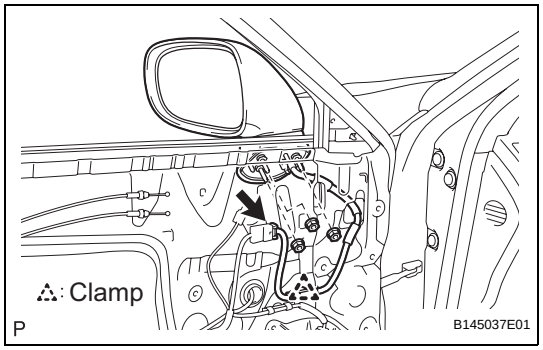

(b) Install the outer rear view mirror assembly with the 3 nuts.
Torque: 5.5 N*m (56 kgf*cm, 49 in.*lbf)

(c) Engage the clamp.

(d) Connect the connector.

2. INSTALL OUTER MIRROR PROTECTOR (See page ED-51)

3. INSTALL DOOR FRAME GARNISH (See page ED-51)

4. INSTALL FRONT DOOR INNER GLASS WEATHERSTRIP (See page ED-52)

5. INSTALL FRONT DOOR TRIM BOARD SUB-ASSEMBLY (See page ED-52)

6. INSTALL DOOR ARMREST COVER (See page ED-53)

7. INSTALL COURTESY LIGHT ASSEMBLY (See page ED-53)

8. INSTALL FRONT DOOR ARMREST BASE PANEL ASSEMBLY (See page ED-53)

9. INSTALL FRONT DOOR INSIDE HANDLE BEZEL PLUG (See page ED-54)

Mirror Heater does not Operate with Rear Defogger Switch

DESCRIPTION

When the mirror defogger switch, which is built into the heater control assembly, is operated, operation signals are transmitted to the A/C amplifier assembly through LIN. When the amplifier assembly receives the signals, it turns on the RR DEF relay to operate the mirror defogger.

WIRING DIAGRAM

Mirror Heater Operation:

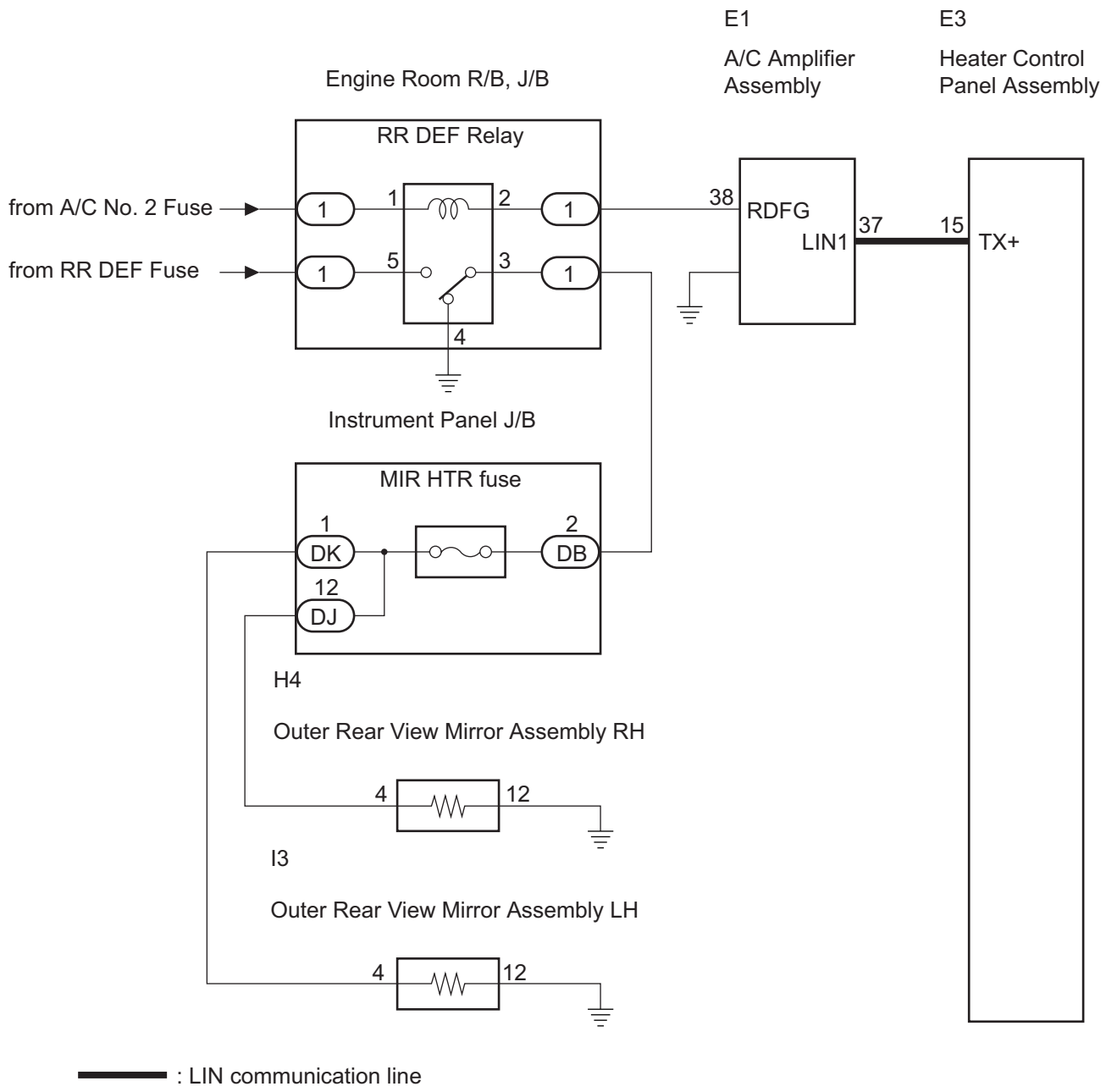

MI

INSPECTION PROCEDURE

1 CHECK LIN COMMUNICATION LINE

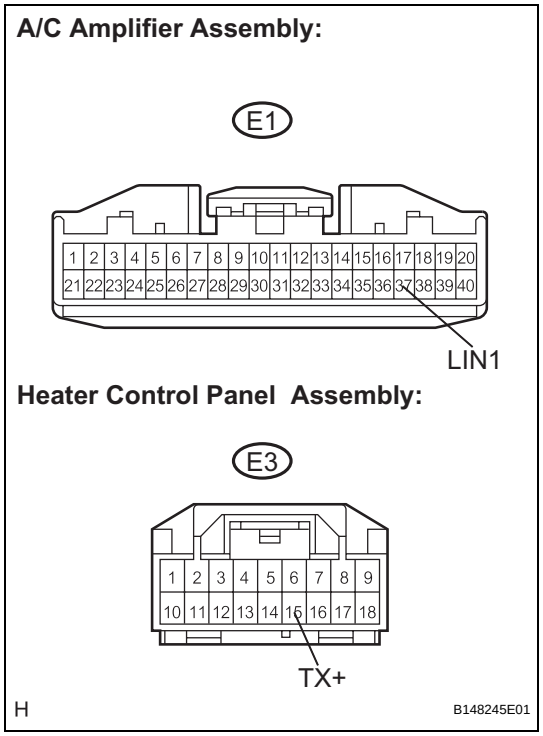

(a) Disconnect the E1 and E3 connectors.
(b) Measure the resistance according to the value(s) in the table below.

Standard resistance

Tester Connection	Condition	Specified Condition
E1-37 (LIN1) - E3-15 (TX+)	Always	Below 1 Ω
E1-37 (LIN1) - Body ground	Always	10 kΩ or higher

NG → **REPAIR OR REPLACE HARNESS OR CONNECTOR**

OK

2 INSPECT AIR CONDITIONING AMPLIFIER ASSEMBLY

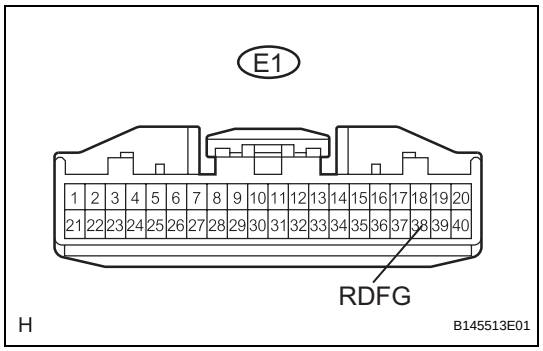

(a) Disconnect the E1 connector.
(b) Measure the voltage according to the value(s) in the table below.

Standard voltage

Tester Connection	Condition	Specified Condition
E1-38 (RDFG) - Body ground	Engine switch on (IG)	10 to 14 V

OK → **Go to step 5**

NG

3 REPLACE AIR CONDITIONING CONTROL ASSEMBLY

(a) Replace the air conditioning control assembly.
HINT:
See page AC-226

NEXT

MI

4 CONFIRMATION DRIVING PATTERN

(a) Turn the engine switch on (IG), press the mirror defogger switch, and check that the mirror defogger operates.

NG → **REPLACE AIR CONDITIONING AMPLIFIER ASSEMBLY**

OK

END

5 CHECK DEFOGGER RELAY

(a) Turn the engine switch on (IG), and press the mirror defogger switch.
(b) Check that operating sound of the RR DEF relay is heard.

Result

Result	Proceed to
Relay operating sound is heard	OK
Relay operating sound is not heard	NG

NG → **Go to step 9**

NG

6 INSPECT DEFOGGER RELAY

NG → **REPLACE DEFOGGER RELAY**

OK

7 CHECK WIRE HARNESS (RR DEF RELAY - BATTERY POSITIVE)

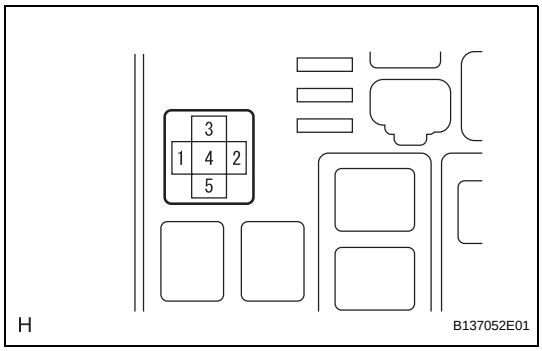

(a) Disconnect the RR DEF relay.
(b) Measure the voltage according to the value(s) in the table below.
Standard voltage:
Engine room R/B, J/B

Tester Connection	Condition	Specified Condition
1 - Body ground	Engine switch on (IG)	10 to 14 V

NG → **REPAIR OR REPLACE A/C NO. 2 FUSE, HARNESS OR CONNECTOR**

OK

MI

8 CHECK WIRE HARNESS (RR DEF RELAY - A/C AMPLIFIER ASSEMBLY)

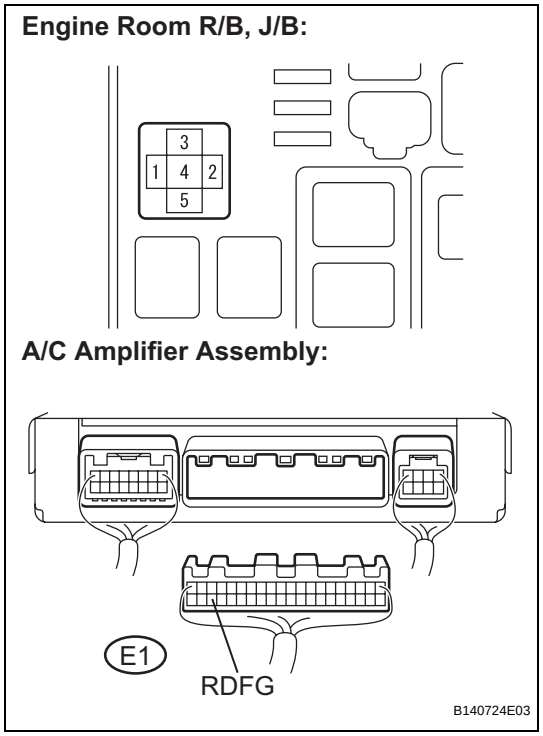

(a) Disconnect the RR DEF relay and A/C amplifier assembly connector.
(b) Measure the resistance according to the value(s) in the table below.
Standard resistance

Tester Connection	Condition	Specified Condition
2 - E1-38	Always	Below 1 Ω
1 - Body ground	Always	10 kΩ or higher

NG → **REPAIR OR REPLACE HARNESS OR CONNECTOR**

OK

REPLACE AIR CONDITIONING AMPLIFIER ASSEMBLY

9 INSPECT DEFOGGER RELAY

NG → **REPLACE DEFOGGER RELAY**

OK

10 CHECK WIRE HARNESS (RR DEF RELAY - BATTERY POSITIVE AND BODY GROUND)

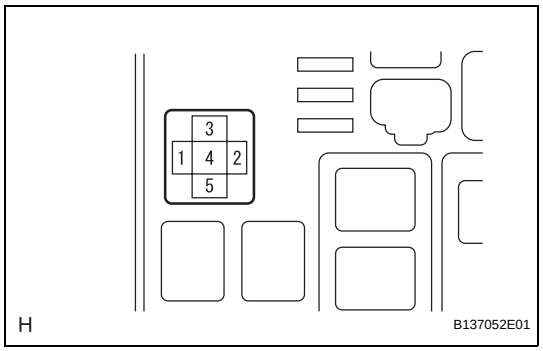

(a) Disconnect the RR DEF relay.
(b) Measure the voltage and resistance according to the value(s) in the table below.
Standard resistance:
Engine room R/B, J/B

Tester Connection	Condition	Specified Condition
4 - Body ground	Always	Below 1 Ω

Standard voltage:
Engine room R/B, J/B

Tester Connection	Condition	Specified Condition
5 - Body ground	Engine switch on (IG)	10 to 14 V

NG → **REPAIR OR REPLACE HARNESS OR CONNECTOR**

OK

11 INSPECT MIR HTR FUSE

(a) Remove the MIR HTR fuse from the instrument panel J/B.
(b) Measure the resistance according to the value(s) in the table below.
Standard resistance

Tester Connection	Condition	Specified Condition
MIR HTR fuse	Always	Below 1 Ω

NG → **REPLACE MIR HTR FUSE**

OK

12 CHECK WIRE HARNESS (ENGINE ROOM R/B, J/B - INSTRUMENT PANEL J/B)

Engine Room R/B, J/B:

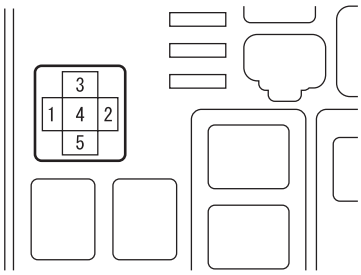

Instrument Panel J/B:

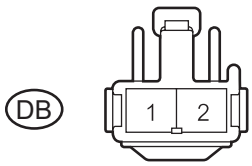

H B145478E01

(a) Disconnect the RR DEF relay and instrument panel J/B connector.
(b) Measure the resistance according to the value(s) in the table below.
Standard resistance

Tester Connection	Condition	Specified Condition
3 - DB-2	Always	Below 1 Ω
3 - Body ground	Always	10 kΩ or higher

NG → **REPAIR OR REPLACE HARNESS OR CONNECTOR**

OK

13 CHECK WIRE HARNESS (INSTRUMENT PANEL J/B - OUTER REAR VIEW MIRROR)

Outer Rear View Mirror:

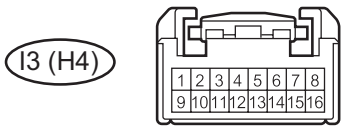

Instrument Panel J/B:

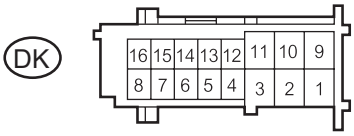

Instrument Panel J/B:

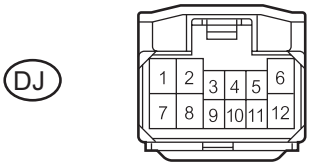

H B145479E01

(a) Disconnect the outer rear view mirror and instrument panel J/B connectors.

(b) Measure the resistance according to the value(s) in the table below.
( ): Outer mirror RH
Standard resistance:
Outer rear view mirror LH

Tester Connection	Condition	Specified Condition
I3-4 - DK-1	Always	Below 1 Ω
DK-1 - Body ground	Always	10 kΩ or higher

Outer rear view mirror RH

Tester Connection	Condition	Specified Condition
H4-4 - DJ-1	Always	Below 1 Ω
DJ-1 - Body ground	Always	10 kΩ or higher

NG → **REPAIR OR REPLACE HARNESS OR CONNECTOR**

OK

END

Power Mirrors do not Return to Memorized Position

DESCRIPTION

When the seat memory switch M1 or M2 is pressed, the seat memory switch transmits a signal of the memorized mirror position to the outer mirror control ECU Then, the outer mirror control ECU drives the mirror motor.

WIRING DIAGRAM

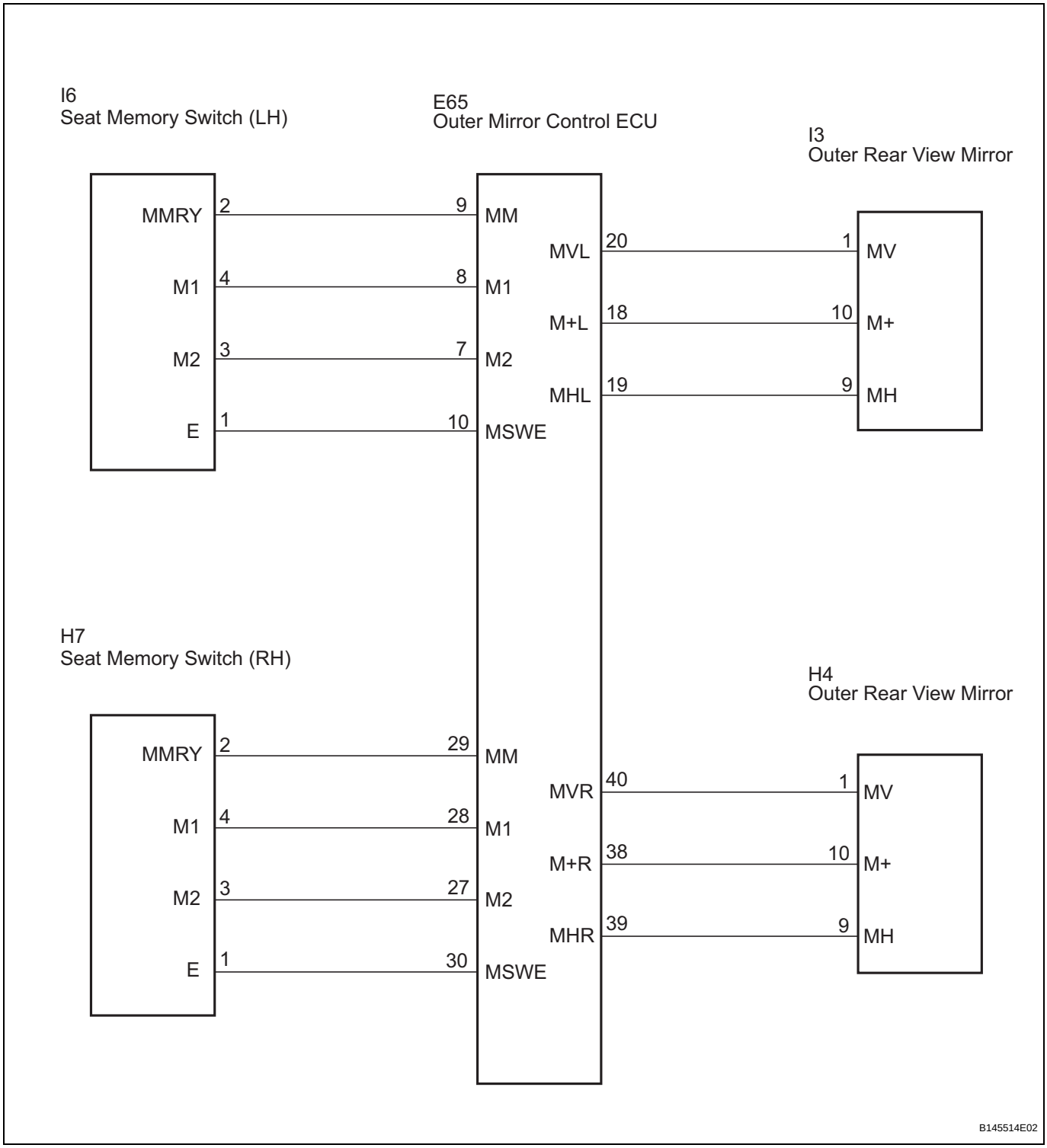

INSPECTION PROCEDURE

1 READ VALUE OF INTELLIGENT TESTER

(a) Check the DATA LIST for proper function of the seat memory switch.

MIRROR-L/MIRROR-L

Item	Switch Position	Specified Condition
D MEM 1SW	Driver side mirror position memorized in seat memory switch M1/ON (1) or OFF (2)	1: Memorized 0: Not memorized
D MEM 2 SW	Driver side mirror position memorized in seat memory switch M2/ON (1) or OFF (2)	
FP-MEM 1 SW	Passenger side mirror position memorized in seat memory switch M1/ON (1) or OFF (2)	
FP MEM 2 SW	Passenger side mirror position memorized in seat memory switch M2/ON (1) or OFF (2)	

OK → **REPLACE OUTER MIRROR CONTROL ECU**

NG

2 CHECK SEAT MEMORY SWITCH

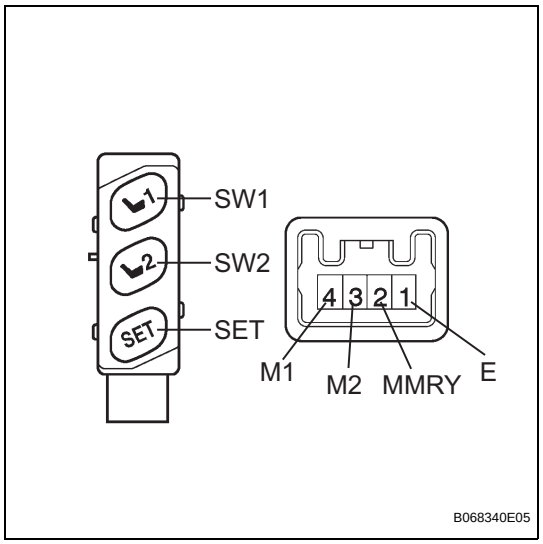

(a) Remove the seat memory switch.

(b) Measure the resistance according to the value(s) in the table below when the switch is operated.

Standard resistance

Tester Connection	Switch Condition	Specified Condition
1 (E) - 2 (MMRY)	"SET" switch ON	Below 1 Ω
	"SET" switch OFF	10 kΩ or higher
1 (E) - 4 (M1)	"1" switch ON	Below 1 Ω
	"SET" switch OFF	10 kΩ or higher
1 (E) - 3 (M2)	"2" switch ON	Below 1 Ω
	"SET" switch OFF	10 kΩ or higher

NG → **REPLACE SEAT MEMORY SWITCH**

OK

MI

3 CHECK WIRE HARNESS (SEAT MEMORY SWITCH - OUTER MIRROR CONTROL ECU)

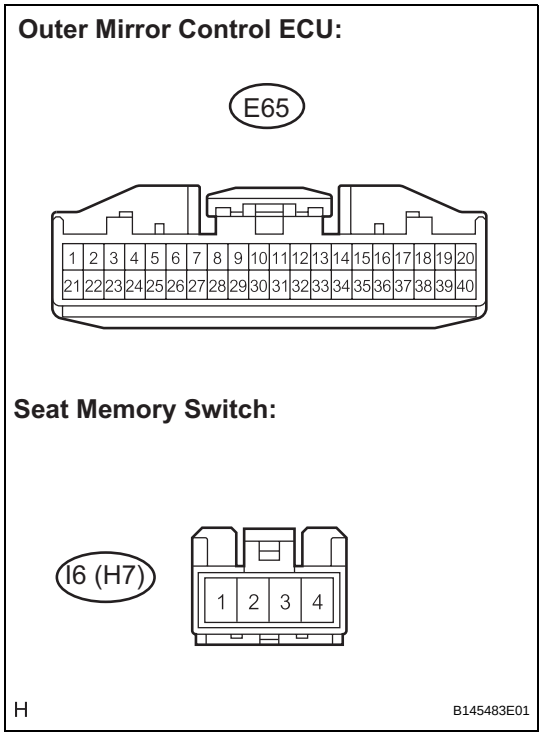

(a) Disconnect the E65 and I6 (H7) switch connectors.
(b) Measure the resistance according to the value(s) in the table below.
( ): RH side
Standard resistance:
LH side

Tester Connection	Condition	Specified Condition
I6-2 (MMRY) - E65-9 (MM)	Always	Below 1 Ω
I6-4 (M1) - E65-8 (M1)	Always	Below 1 Ω
I6-3 (M2) - E65-7 (M2)	Always	Below 1 Ω
E6-1 (E) - E65-10 (MSWE)	Always	Below 1 Ω

LH side

Tester Connection	Condition	Specified Condition
H7-2 (MMRY) - E65-29 (MM)	Always	Below 1 Ω
H7-4 (M1) - E65-28 (M1)	Always	Below 1 Ω
H7-3 (M2) - E65-27 (M2)	Always	Below 1 Ω
H7-1 (E) - E65-30 (MSWE)	Always	Below 1 Ω

NG → **REPAIR OR REPLACE HARNESS OR CONNECTOR**

OK

4 INSPECT OUTER REAR VIEW MIRROR ASSEMBLY

MI

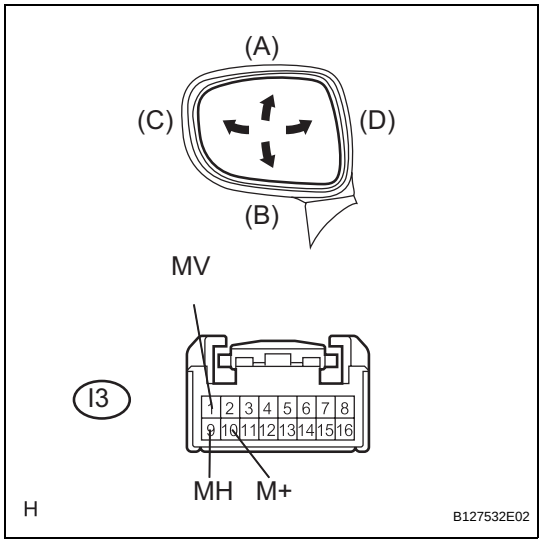

(a) Outer rear view mirror LH:
Disconnect the I3 connector.
(b) Apply battery voltage and check operation of the mirror face.
Standard

Measurement Condition	Mirror Operation
Battery positive (+) → I3-1 (MV) Battery negative (-) → I3-10 (M+)	Turns upward (A)
Battery positive (+) → I3-10 (M+) Battery negative (-) → I3-1 (MV)	Turns downward (B)
Battery positive (+) → I3-9 (MH) Battery negative (-) → I3-10 (M+)	Turns left (C)
Battery positive (+) → I3-10 (M+) Battery negative (-) → I3-9 (MH)	Turns right (D)

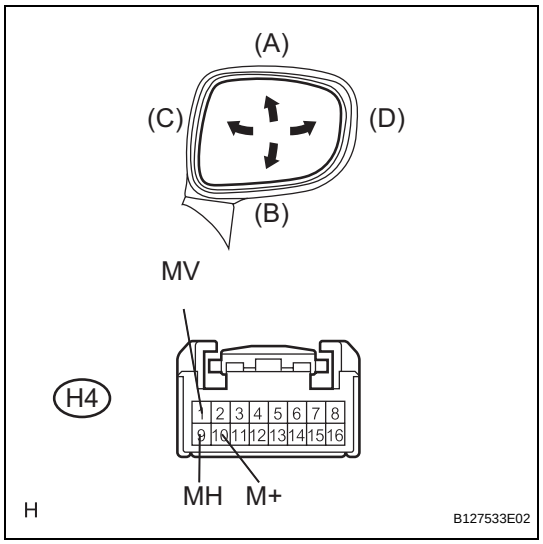

(c) Outer rear view mirror RH:
Disconnect the H4 connector.

(d) Apply battery voltage and check operation of the mirror face.

Standard

Measurement Condition	Mirror Operation
Battery positive (+) → H4-1 (MV) Battery negative (-) → H4-10 (M+)	**Turns upward (A)**
Battery positive (+) → H4-10 (M+) Battery negative (-) → H4-1 (MV)	**Turns downward (B)**
Battery positive (+) → H4-9 (MH) Battery negative (-) → H4-10 (M+)	**Turns left (C)**
Battery positive (+) → H4-10 (M+) Battery negative (-) → H4-9 (MH)	**Turns right (D)**

NG → **REPLACE OUTER REAR VIEW MIRROR ASSEMBLY**

OK

END

OUTER MIRROR SWITCH

COMPONENTS

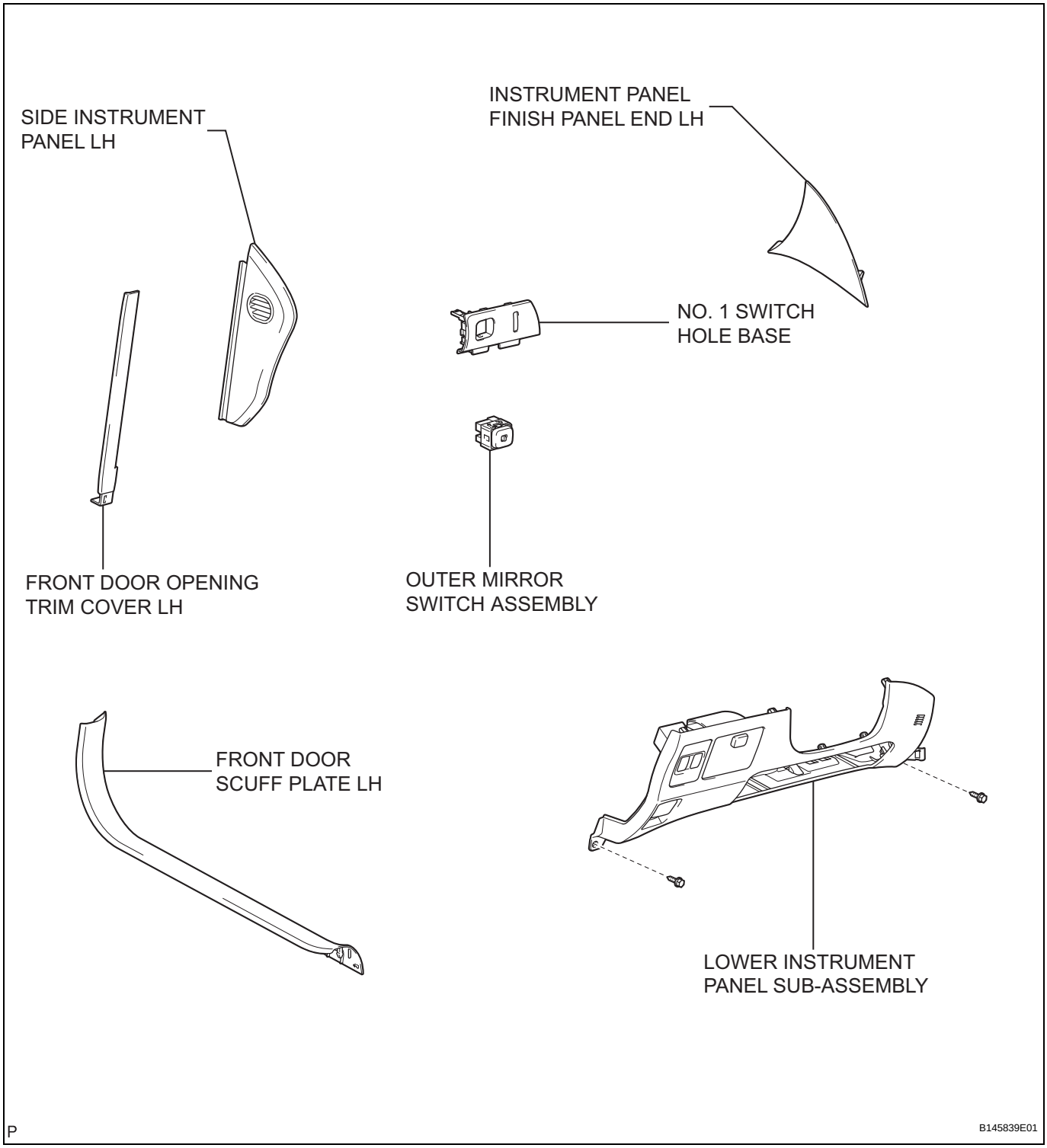

REMOVAL

1. **REMOVE FRONT DOOR SCUFF PLATE LH (See page IR-39)**
2. **REMOVE FRONT DOOR OPENING TRIM COVER LH (See page IR-39)**
3. **REMOVE SIDE INSTRUMENT PANEL LH (See page IP-12)**
4. **REMOVE INSTRUMENT PANEL FINISH PANEL END LH (See page IP-13)**
5. **REMOVE LOWER INSTRUMENT PANEL SUB-ASSEMBLY (See page IP-13)**
6. **REMOVE NO. 1 SWITCH HOLE BASE (See page IP-14)**
7. **REMOVE OUTER MIRROR SWITCH ASSEMBLY**
   (a) Disengage the 3 claws and remove the outer mirror switch assembly.

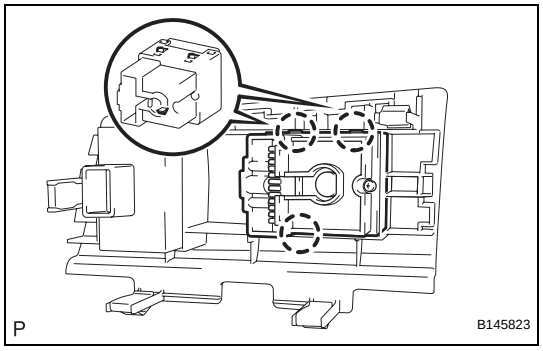

INSPECTION

1. **INSPECT OUTER MIRROR SWITCH**
   (a) Inspect the outer mirror switch.
      (1) Measure the resistance according to the value(s) in the table below when the switch is operated.
      Standard resistance:
      Select "L" on the left/right adjustment switch

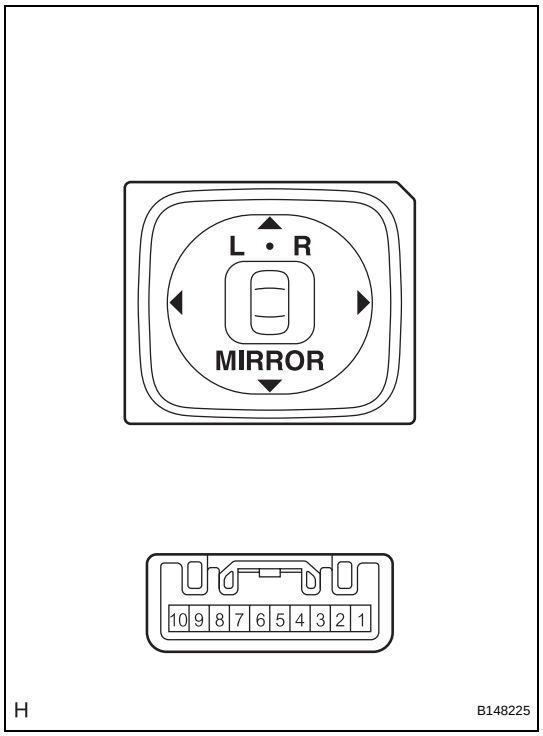

Tester Connection	Switch Position	Specified Condition
7 - 9	UP	100 Ω
	DOWN	470 Ω
	LEFT	800 Ω
	RIGHT	250 Ω

Select "R" on the left/right adjustment switch

Tester Connection	Switch Position	Specified Condition
7 - 9	UP	100 Ω
	DOWN	470 Ω
	LEFT	800 Ω
	RIGHT	250 Ω

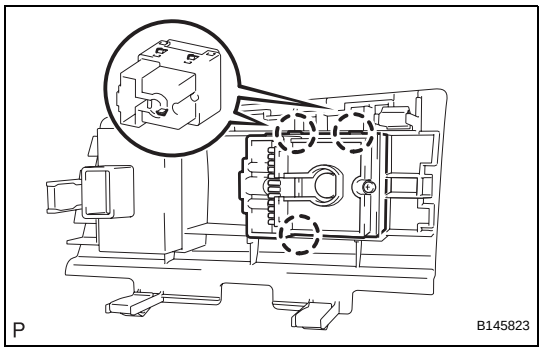

INSTALLATION

1. **INSTALL OUTER MIRROR SWITCH ASSEMBLY**
   (a) Engage the 3 claws and install the outer mirror switch assembly.
2. **INSTALL NO. 1 SWITCH HOLE BASE (See page IP-44)**
3. **INSTALL LOWER INSTRUMENT PANEL SUB-ASSEMBLY (See page IP-46)**
4. **INSTALL INSTRUMENT PANEL FINISH PANEL END LH (See page IP-46)**
5. **INSTALL SIDE INSTRUMENT PANEL LH (See page IP-47)**
6. **INSTALL FRONT DOOR OPENING TRIM COVER LH (See page IR-64)**
7. **INSTALL FRONT DOOR SCUFF PLATE LH (See page IR-65)**

Reverse Shift-linked Function of Power Mirrors do not Operate

DESCRIPTION

After the transmission control ECU receives a reverse signal from the park/neutral position switch, transmission control ECU the sends a reverse signal to the outer mirror control ECU via the CAN communication systems. The outer mirror control ECU activates the mirror motor in response to the reverse signal.

WIRING DIAGRAM

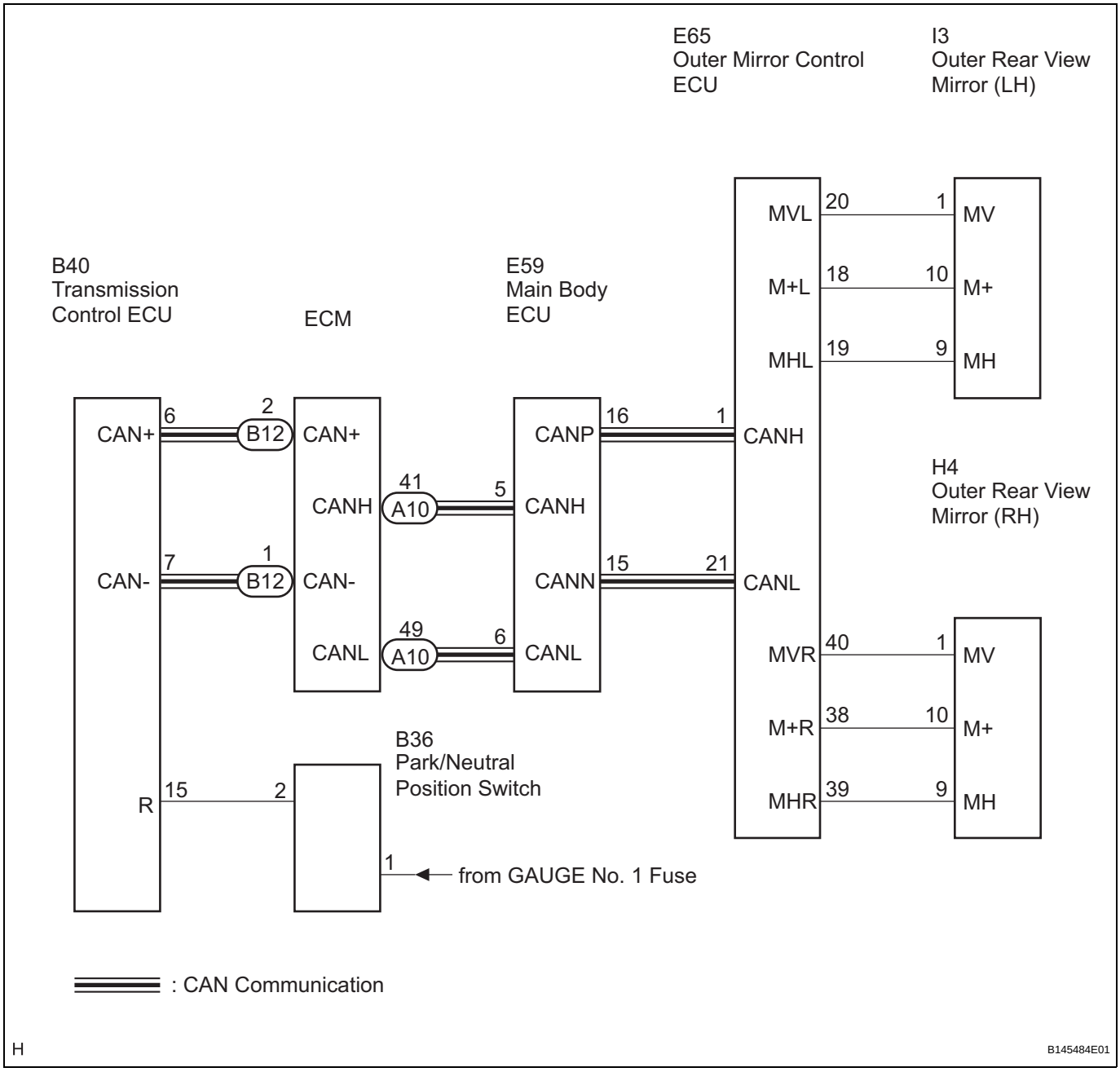

INSPECTION PROCEDURE

1 CHECK DTCs

(a) Select the DTC check on the intelligent tester to check for communication errors.

Result

Not output DTC codes	**A**
Output DTC codes (CAN communication)	**B**

B → **GO TO CAN COMMUNICATION SYSTEM (See page CA-11)**

A

2 READ VALUE OF INTELLIGENT TESTER

(a) Check the DATA LIST for proper function of the reverse signal.

ECT

Item	Measurement item/Display (Range)	Normal Condition	Diagnostic Note
REVERSE	**PNP switch status/ON or OFF**	**Shift lever position/ON (R) or OFF**	**When the shift lever position displayed on the intelligent tester differs from the actual position, adjustment of the PNP switch or the shift cable may be incorrect.**

OK → **Go to step 7**

NG

3 CHECK WIRE HARNESS (BATTERY POSITIVE VOLTAGE)

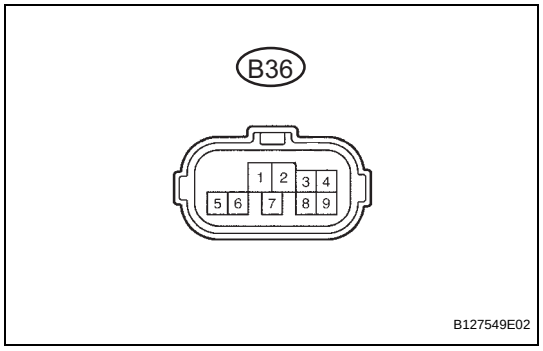

(a) Disconnect the B36 connector.
(b) Measure the voltage according to the value(s) in the table below.

Standard voltage

Tester Connection	Condition	Specified Condition
B36-1 - Body ground	**Engine switch on (IG)**	**10 to 14 V**

NG → **REPAIR OR REPLACE GAUGE NO. 1 FUSE OR HARNESS AND CONNECTOR**

OK

MI

4 CHECK WIRE HARNESS (TRANSMISSION CONTROL ECU - PARK/NEUTRAL POSITION SWITCH)

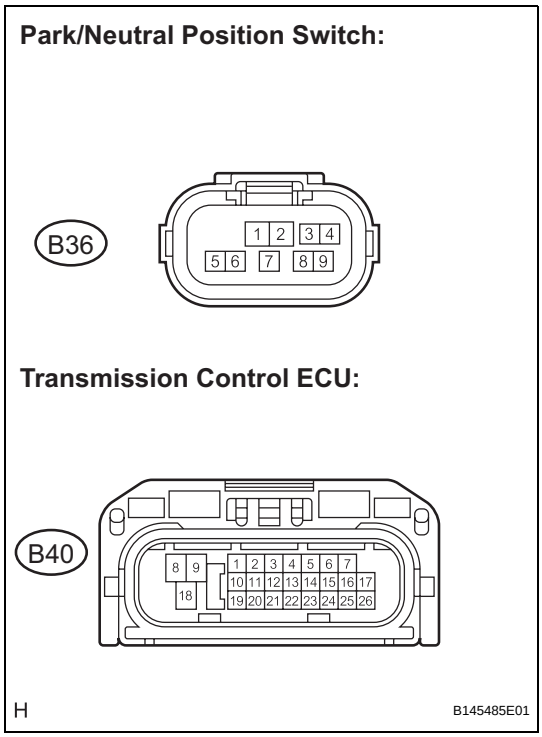

(a) Disconnect the B36 and B40 connectors.
(b) Measure the resistance according to the value(s) in the table below.

Standard resistance

Tester Connection	Condition	Specified Condition
B40-15 - B36-2	Always	Below 1 Ω
B40-15 - Body ground	Always	10 kΩ or higher

NG → **REPAIR OR REPLACE WIRE HARNESS**

OK

5 INSPECT PARK/NEUTRAL POSITION SWITCH ASSEMBLY

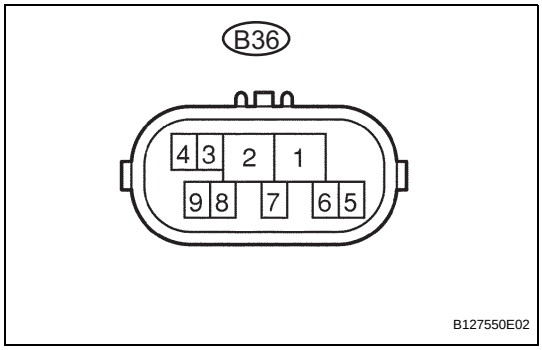

(a) Disconnect the B36 connector.
(b) Measure the resistance according to the value(s) in the table below.

Standard resistance

Shift Position	Tester Connection	Specified Condition
P	1 - 2	Below 1 Ω
Except P	1 - 2	10 kΩ or higher

NG → **REPLACE PARK/NEUTRAL POSITION SWITCH ASSEMBLY (See page AX-184)**

OK

6 CONFIRM MIRROR OPERATION

Turn the engine switch on (IG), and check the mirror operation.

NG → **REPLACE OUTER MIRROR CONTROL ECU**

OK

END

7 INSPECT OUTER REAR VIEW MIRROR ASSEMBLY

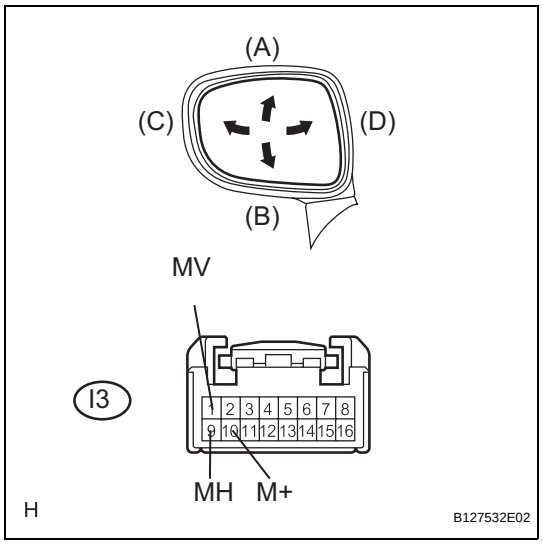

(a) Outer rear view mirror LH:
Disconnect the I3 connector.

(b) Apply battery voltage and check operation of the mirror face.

Standard

Measurement Condition	Mirror Operation
Battery positive (+) → I3-1 (MV) Battery negative (-) → I3-10 (M+)	Turns upward (A)
Battery positive (+) → I3-10 (M+) Battery negative (-) → I3-1 (MV)	Turns downward (B)
Battery positive (+) → I3-9 (MH) Battery negative (-) → I3-10 (M+)	Turns left (C)
Battery positive (+) → I3-10 (M+) Battery negative (-) → I3-9 (MH)	Turns right (D)

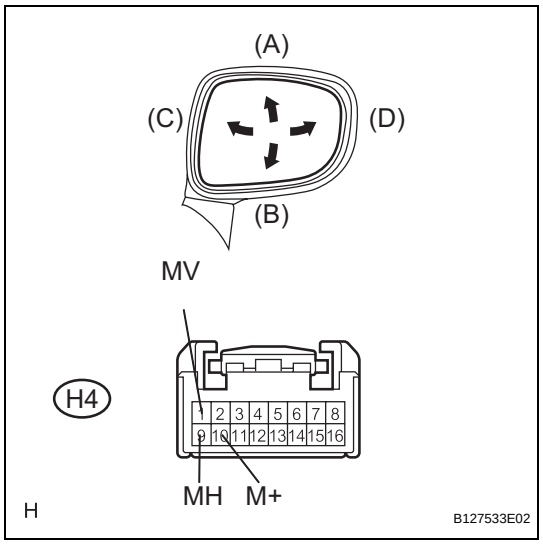

(c) Outer rear view mirror RH:
Disconnect the H4 connector.

(d) Apply battery voltage and check operation of the mirror face.

Standard

Measurement Condition	Mirror Operation
Battery positive (+) → H4-1 (MV) Battery negative (-) → H4-10 (M+)	Turns upward (A)
Battery positive (+) → H4-10 (M+) Battery negative (-) → H4-1 (MV)	Turns downward (B)
Battery positive (+) → H4-9 (MH) Battery negative (-) → H4-10 (M+)	Turns left (C)
Battery positive (+) → H4-10 (M+) Battery negative (-) → H4-9 (MH)	Turns right (D)

NG → **REPLACE OUTER REAR VIEW MIRROR ASSEMBLY (See page MI-46)**

OK

REPLACE OUTER MIRROR CONTROL ECU

Power Source Circuit

DESCRIPTION

This is the power source circuit for the outer mirror control ECU.

WIRING DIAGRAM

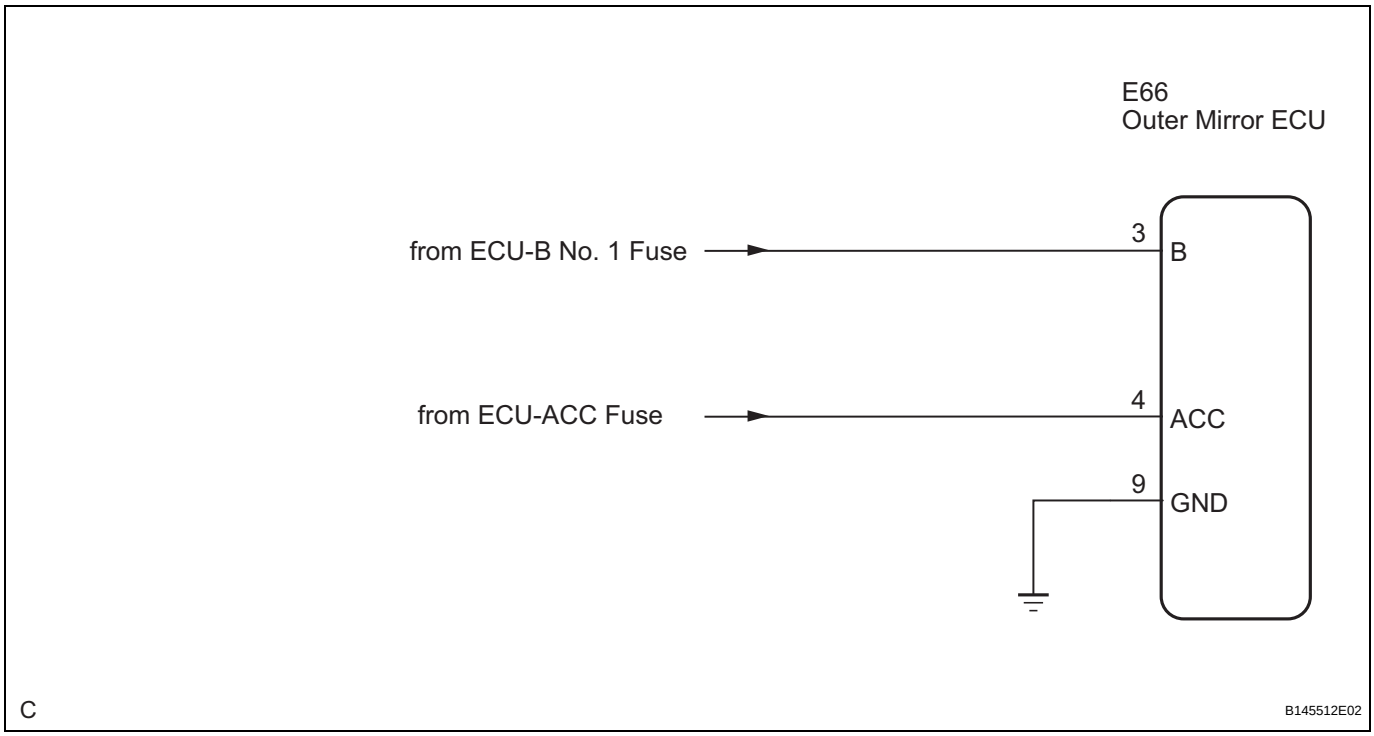

INSPECTION PROCEDURE

MI

1	INSPECT OUTER MIRROR CONTROL ECU (POWER SOURCE)

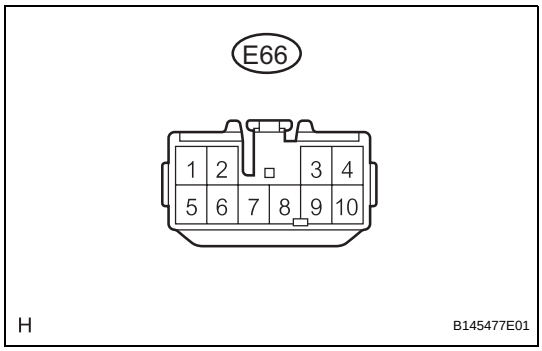

(a) Disconnect the E66 connector.
(b) Measure the voltage and resistance according to the value(s) in the table below.

Standard voltage

Tester Connection	Condition	Specified Condition
E66-3 (B) - Body ground	Always	10 to 14 V
E66-4 (ACC) - Body ground	Engine switch on (ACC)	10 to 14 V

Standard resistance

Tester Connection	Condition	Specified Condition
E66-9 (GND) - Body ground	Always	Below 1 Ω

NG → REPAIR OR REPLACE WIRE HARNESS

OK

PROCEED TO NEXT CIRCUIT INSPECTION SHOWN IN PROBLEM SYMPTOMS TABLE

OUTER MIRROR CONTROL ECU

COMPONENTS

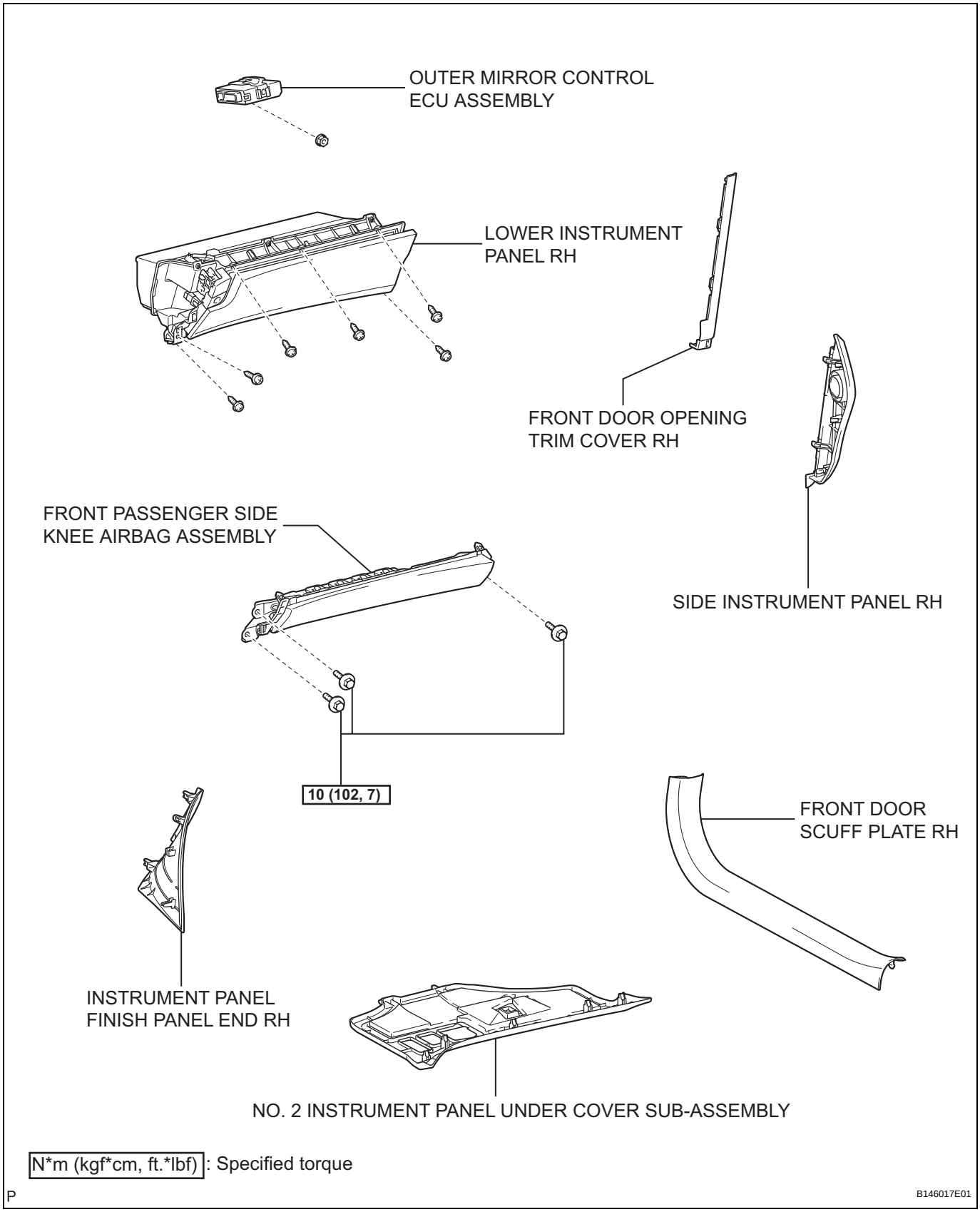

MI

REMOVAL

1. **DISCONNECT CABLE FROM NEGATIVE BATTERY TERMINAL**
   CAUTION:
   Wait for 90 seconds after disconnecting the cable to prevent airbag deployment (See page RS-1).
2. **REMOVE INSTRUMENT PANEL FINISH PANEL END RH (See page IP-15)**
3. **REMOVE FRONT DOOR SCUFF PLATE RH (See page IR-42)**
4. **REMOVE FRONT DOOR OPENING TRIM COVER RH (See page IR-42)**
5. **REMOVE NO. 2 INSTRUMENT PANEL UNDER COVER SUB-ASSEMBLY (See page IP-15)**
6. **REMOVE SIDE INSTRUMENT PANEL RH (See page IP-15)**
7. **REMOVE FRONT PASSENGER SIDE KNEE AIRBAG ASSEMBLY (See page RS-396)**
8. **REMOVE LOWER INSTRUMENT PANEL RH (See page IP-16)**
9. **REMOVE OUTER MIRROR CONTROL ECU ASSEMBLY**
   (a) Disconnect the 2 connectors.
   (b) Remove the nut and the outer mirror control ECU assembly.

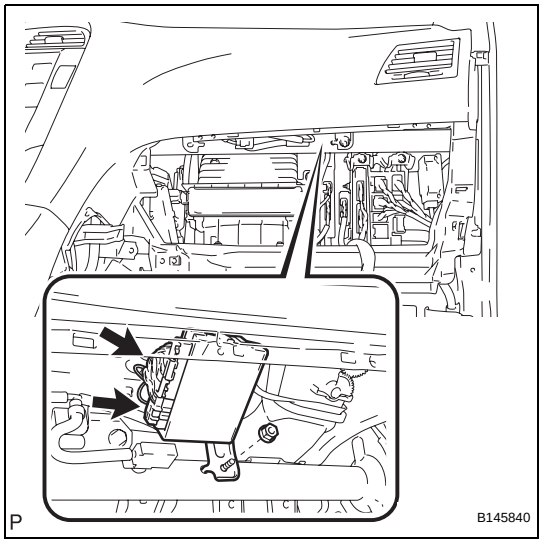

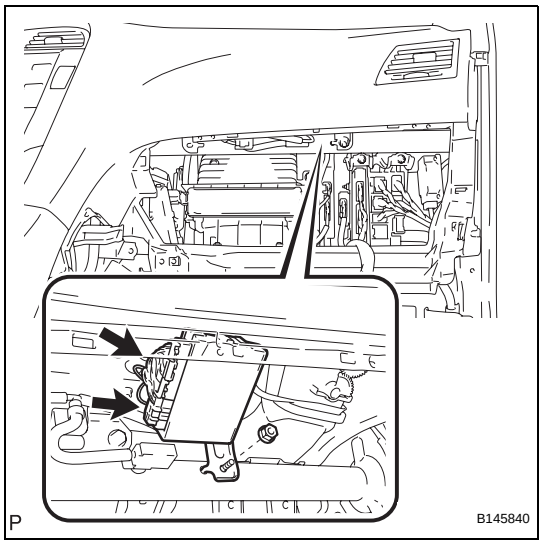

INSTALLATION

1. **INSTALL OUTER MIRROR CONTROL ECU ASSEMBLY**
   (a) Install the outer mirror control ECU assembly with the nut.
   (b) Connect the 2 connectors.
2. **INSTALL LOWER INSTRUMENT PANEL RH (See page IP-42)**
3. **INSTALL FRONT PASSENGER SIDE KNEE AIRBAG ASSEMBLY (See page RS-396)**
4. **INSTALL SIDE INSTRUMENT PANEL RH (See page IP-43)**
5. **INSTALL NO. 2 INSTRUMENT PANEL UNDER COVER SUB-ASSEMBLY (See page IP-44)**
6. **INSTALL FRONT DOOR OPENING TRIM COVER RH (See page IR-65)**
7. **INSTALL FRONT DOOR SCUFF PLATE RH (See page IR-65)**
8. **INSTALL INSTRUMENT PANEL FINISH PANEL END RH (See page IP-44)**
9. **CONNECT CABLE TO NEGATIVE BATTERY TERMINAL**
10. **PERFORM INITIALIZATION**
    NOTICE:
    Some systems need initialization after reconnecting the cable to the negative battery terminal (See page IN-33).
11. **INSPECT SRS WARNING LIGHT**
    (See page RS-37)

PROBLEM SYMPTOMS TABLE

Power Mirror Control System

Symptom	Suspected area	See page
Power mirrors cannot be adjusted manually	1. ECU-ACC, ECU-B No. 1 fuses	-
	2. Outer mirror switch	MI-53
	3. Outer rear view mirror LH/RH	MI-47
	4. Wire harness	-
Auto glare-resistant EC mirror does not operate	1. ECU-IG No. 1 fuse	-
	2. Outer rear view mirror LH/RH	MI-47
	3. Wire harness	-
Mirror heater does not operate	1. Heater control panel assembly	MI-18
	2. A/C amplifier assembly	MI-18
	3. MIR HTR relay	MI-18
	4. Outer rear view mirror LH/RH	MI-18
	5. Wire harness	-

REMOVAL

1. **PRECAUTION**
   (See page IP-1)
2. **ALIGN FRONT WHEELS FACING STRAIGHT AHEAD**
3. **DISCONNECT CABLE FROM NEGATIVE BATTERY TERMINAL**
   CAUTION:
   Wait for 90 seconds after disconnecting the cable to prevent airbag deployment (See page RS-1).
4. **REMOVE LOWER NO. 3 STEERING WHEEL COVER (See page RS-367)**
5. **REMOVE LOWER NO. 2 STEERING WHEEL COVER (See page RS-367)**
6. **REMOVE STEERING PAD (See page RS-367)**
7. **REMOVE STEERING WHEEL ASSEMBLY (See page SR-80)**
8. **REMOVE FRONT DOOR SCUFF PLATE LH (See page IR-39)**
9. **REMOVE FRONT DOOR OPENING TRIM COVER LH (See page IR-39)**
10. **REMOVE SIDE INSTRUMENT PANEL LH**
    (a) Disengage the 3 clips.
    (b) Disengage the 2 guides and remove the side instrument panel LH.

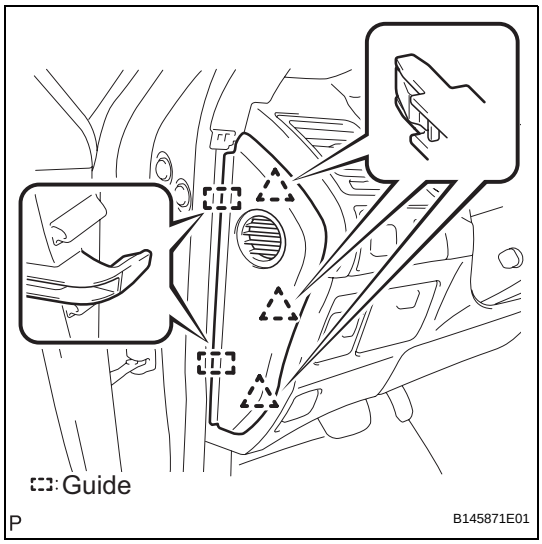

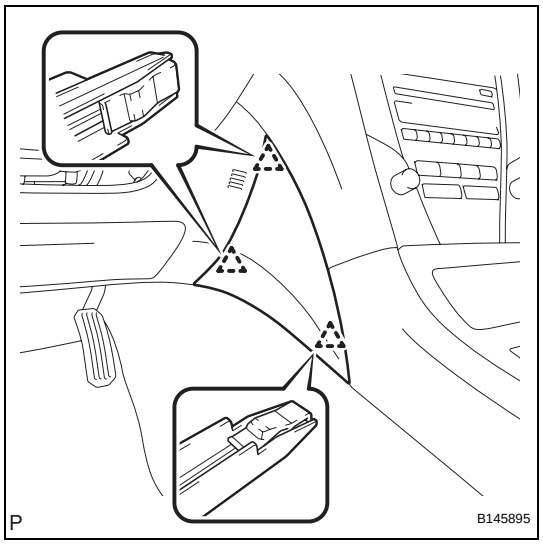

11. REMOVE INSTRUMENT PANEL FINISH PANEL END LH

(a) Disengage the 3 clips and remove the instrument panel finish panel end LH.

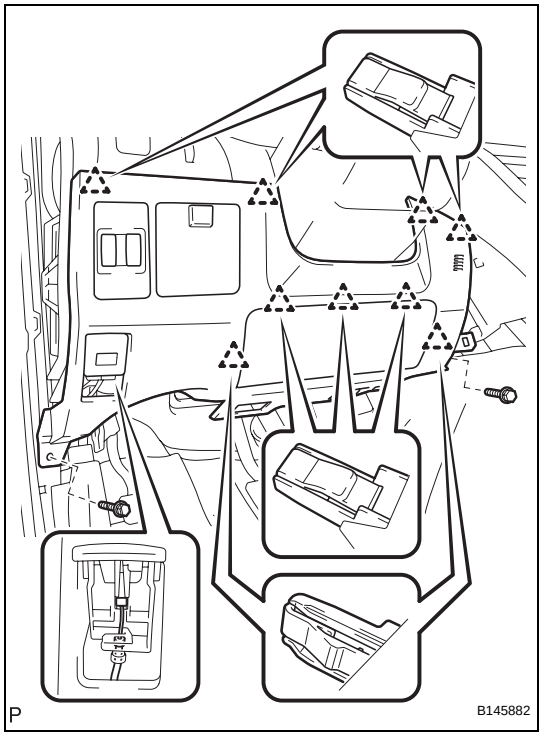

12. REMOVE LOWER INSTRUMENT PANEL SUB-ASSEMBLY

(a) Remove the 2 bolts <A>.
(b) Disconnect the hood lock control cable assembly.
(c) Disengage the 9 clips.
(d) Disconnect each connector and remove the lower instrument panel sub-assembly.

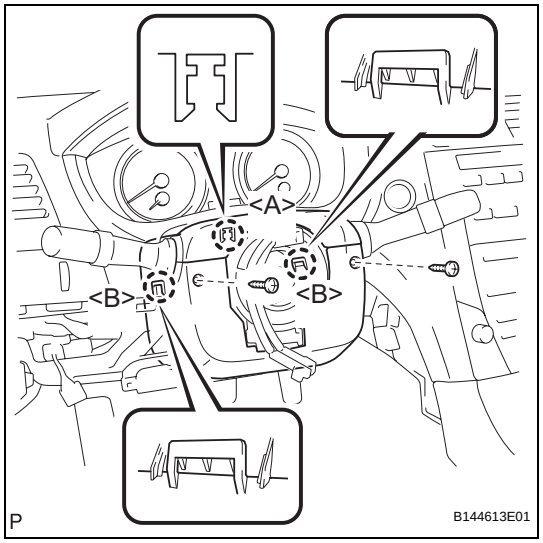

13. REMOVE STEERING COLUMN COVER

(a) Remove the 2 screws <J>.
(b) Disengage the 2 claws <B> and remove the lower steering column cover.
(c) Disengage the claw <A> and remove the upper steering column cover.

14. REMOVE TILT AND TELESCOPIC SWITCH (See page SR-80)

15. REMOVE TURN SIGNAL SWITCH ASSEMBLY WITH SPIRAL CABLE SUB-ASSEMBLY (See page SR-80)

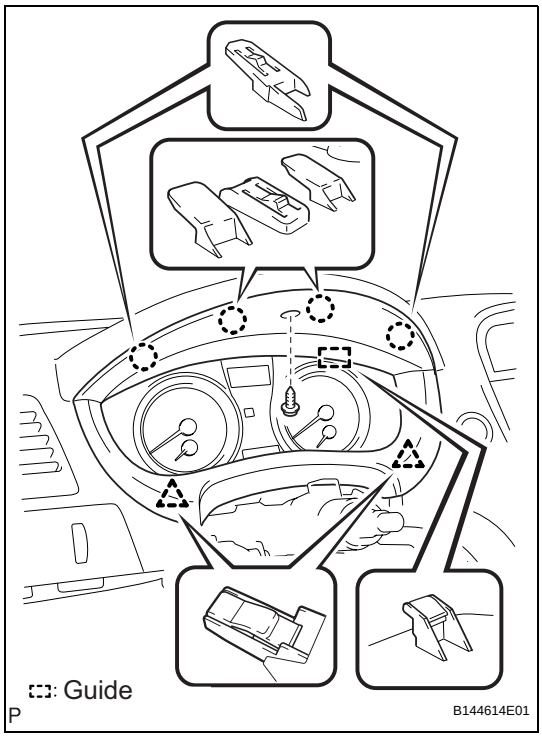

16. REMOVE INSTRUMENT CLUSTER FINISH PANEL SUB-ASSEMBLY

(a) Remove the screw <B>.
(b) Disengage the 2 clips.
(c) Disengage the guide and the 4 claws, and remove the instrument cluster finish panel sub-assembly.

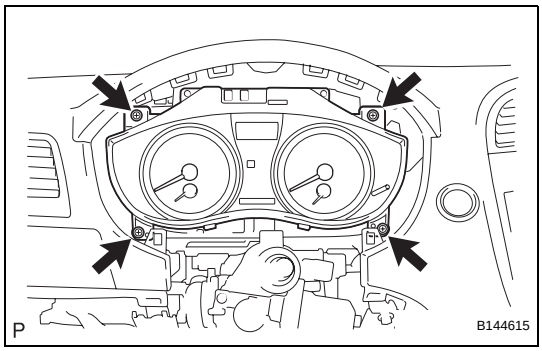

17. REMOVE COMBINATION METER ASSEMBLY

(a) Remove the 4 screws <B> or <C>.
(b) Disconnect each connector and remove the combination meter assembly.

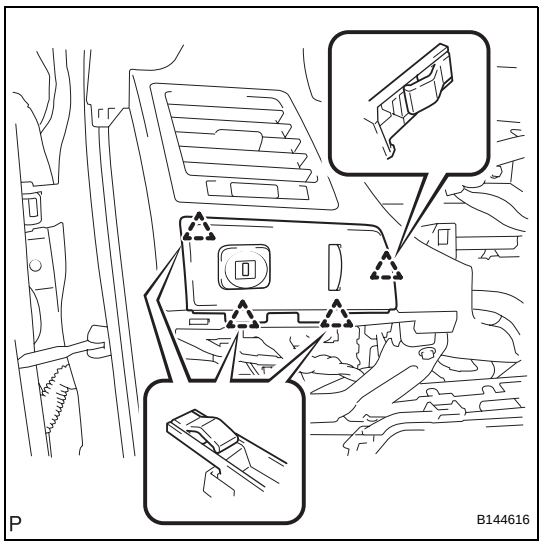

18. REMOVE NO. 1 SWITCH HOLE BASE

(a) Disengage the 4 clips.
(b) Disconnect each connector and remove the No. 1 switch hole base.

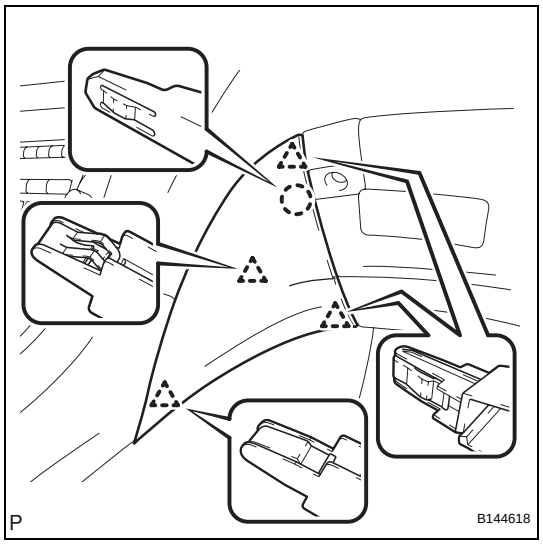

19. REMOVE INSTRUMENT PANEL FINISH PANEL END RH

(a) Disengage the claw and 4 clips, and remove the instrument panel finish panel end RH.

20. REMOVE FRONT DOOR SCUFF PLATE RH (See page IR-42)

21. REMOVE FRONT DOOR OPENING TRIM COVER RH (See page IR-42)

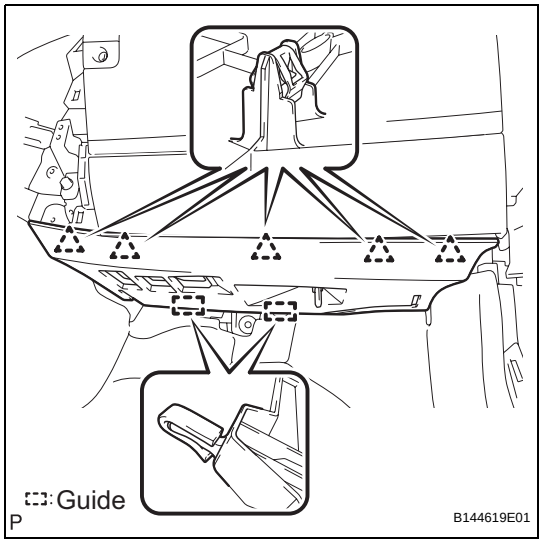

22. REMOVE NO. 2 INSTRUMENT PANEL UNDER COVER SUB-ASSEMBLY

(a) Disengage the 5 clips.

(b) Disengage the 2 guides and remove the No. 2 instrument panel under cover sub-assembly.

(c) Disconnect the connector.

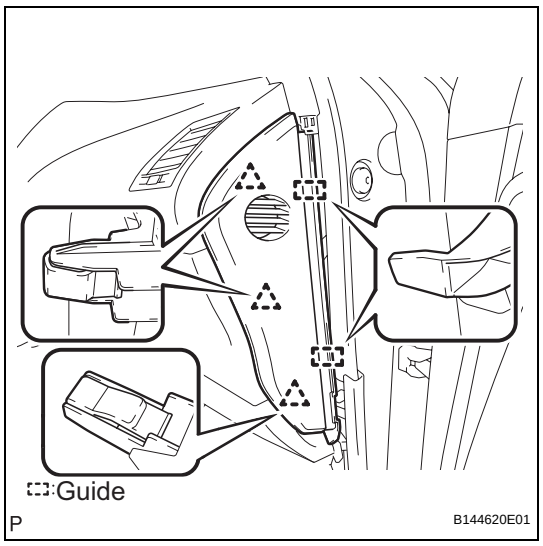

23. REMOVE SIDE INSTRUMENT PANEL RH

(a) Disengage the 3 clips.

(b) Disengage the 2 guides and remove the side instrument panel RH.

24. REMOVE FRONT PASSENGER SIDE KNEE AIRBAG ASSEMBLY (See page RS-396)

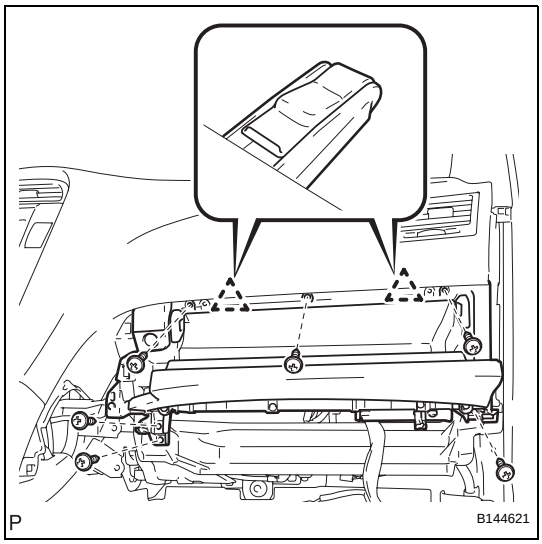

25. REMOVE LOWER INSTRUMENT PANEL RH

(a) Remove the 6 screws <D>.
(b) Disengage the 2 clips.
(c) Disconnect each connector and remove the lower instrument panel RH

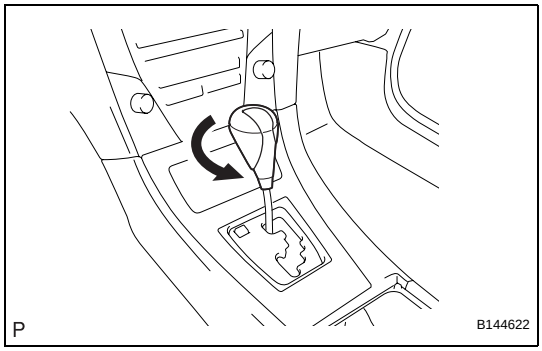

26. REMOVE SHIFT LEVER KNOB SUB-ASSEMBLY

(a) Turn the shift lever knob counterclockwise and remove the shift lever knob sub-assembly.

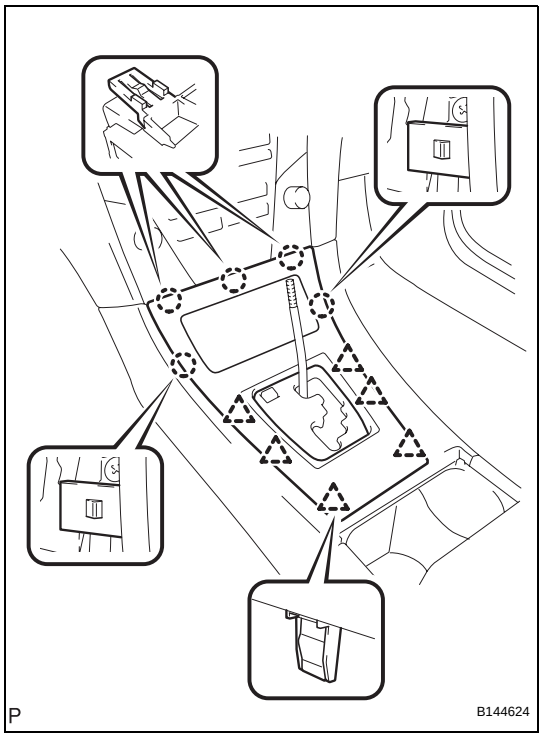

27. REMOVE UPPER CONSOLE PANEL ASSEMBLY WITH FRONT ASH RECEPTACLE

(a) Disengage the 5 claws and 6 clips.
(b) Disconnect the connector and remove the upper console panel assembly with front ash receptacle.

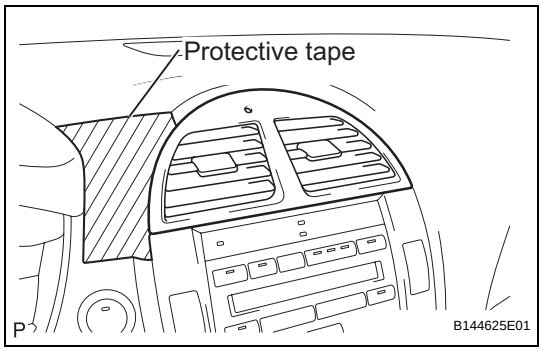

28. REMOVE NO. 2 INSTRUMENT PANEL REGISTER ASSEMBLY

(a) Apply protective tape to the area shown in the illustration.

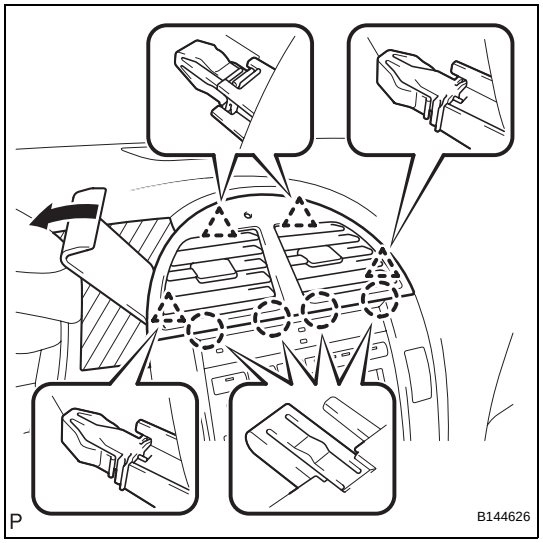

(b) Using a moulding remover, disengage the 4 claws and 4 clips, and remove the No. 2 instrument panel register assembly.

(c) Disconnect the connector.

29. REMOVE INTEGRATION CONTROL PANEL WITH RADIO RECEIVER ASSEMBLY (w/o Navigation System) (See page AV-168)

30. REMOVE MULTI-DISPLAY WITH RADIO RECEIVER ASSEMBLY (w/ Navigation System) (See page AV-170)

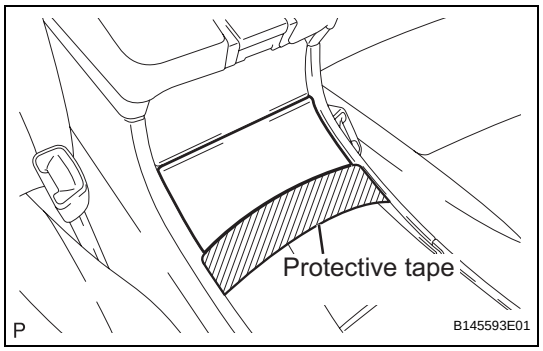

31. REMOVE HEATER SEAT SWITCH CONSOLE BASE (w/o Seat Heater System)

(a) Apply protective tape to the area shown in the illustration.

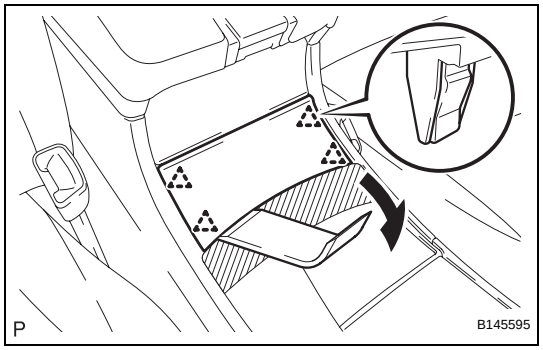

(b) Using a moulding remover, disengage the 4 clips and remove the heater seat switch console base.

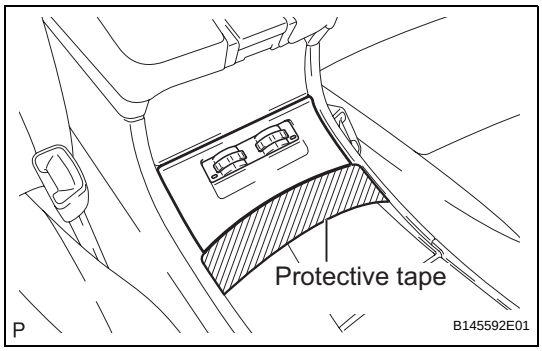

32. REMOVE HEATER SEAT SWITCH CONSOLE BASE (w/ Seat Heater System)

(a) Apply protective tape to the area shown in the illustration.

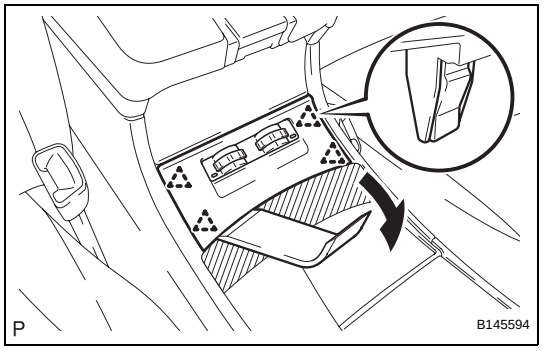

(b) Using a moulding remover, disengage the 4 clips.

(c) Disconnect each connector and remove the heater seat switch console base.

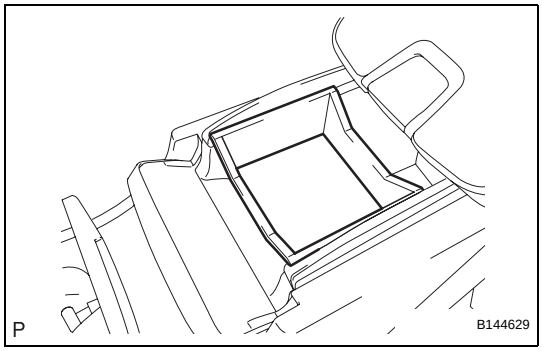

33. REMOVE CONSOLE BOX POCKET

(a) Remove the console box pocket.

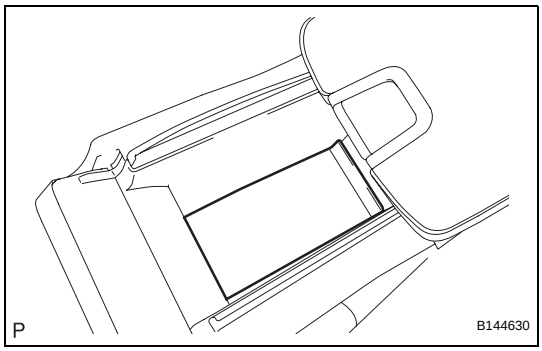

34. REMOVE CONSOLE BOX CARPET

(a) Remove the console box carpet.

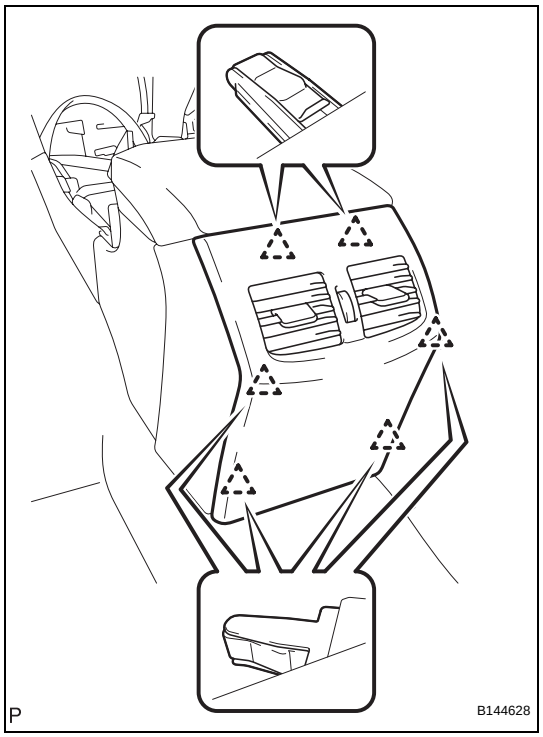

35. REMOVE CONSOLE REAR END PANEL SUB-ASSEMBLY

(a) Disengage the 6 claws and remove the console rear end panel sub-assembly.

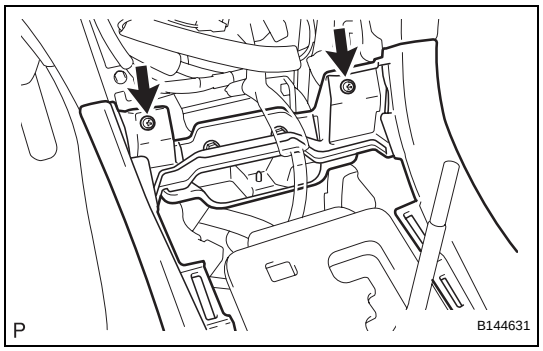

36. REMOVE REAR CONSOLE BOX ASSEMBLY

(a) Remove the 2 screws <F>.

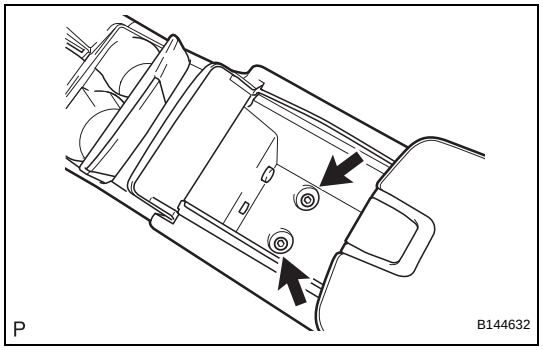

(b) Remove the 2 bolts <E>.

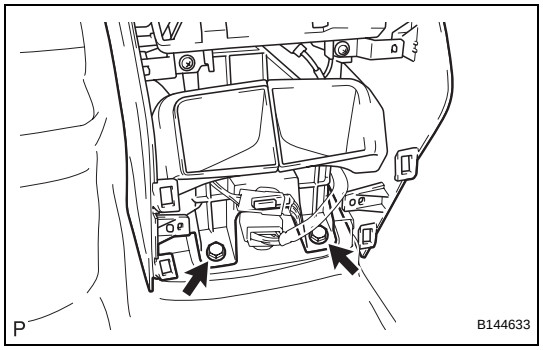

(c) Remove the 2 bolts <E>.

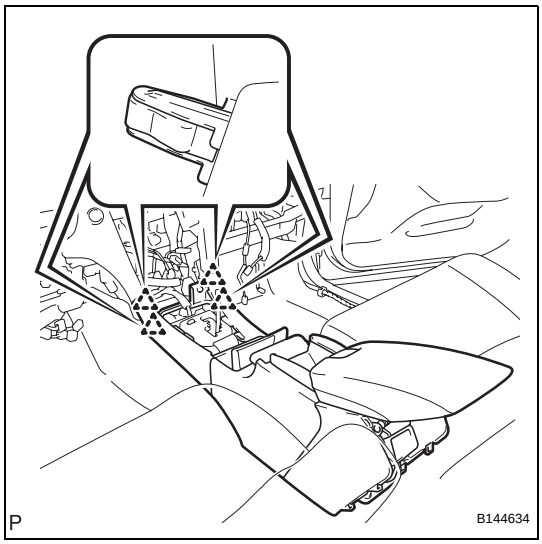

(d) Disengage the 4 clips and remove the rear console box assembly.
(e) Disconnect each connector.

37. REMOVE FRONT PILLAR GARNISH LH (See page IR-39)

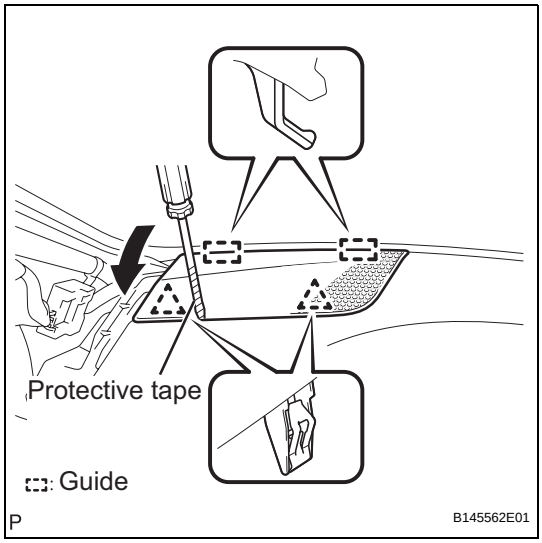

38. REMOVE NO. 1 INSTRUMENT PANEL SPEAKER PANEL SUB-ASSEMBLY
(a) Using a screwdriver, disengage the 2 clips.
HINT:
Tape the screwdriver tip before use.
(b) Disengage the 2 guides and remove the No. 1 instrument panel speaker panel sub-assembly.

39. REMOVE FRONT NO. 2 SPEAKER ASSEMBLY (for LH Side) (See page AV-184)

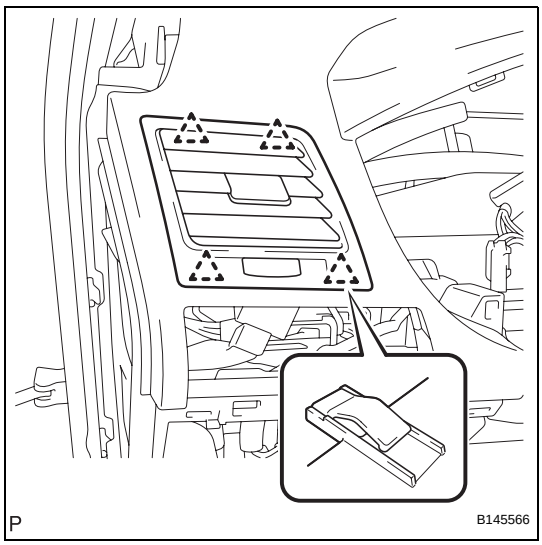

40. REMOVE NO. 1 INSTRUMENT PANEL REGISTER ASSEMBLY
(a) Disengage the 4 clips and remove the No. 1 instrument panel register assembly.

41. REMOVE FRONT PILLAR GARNISH RH (See page IR-42)

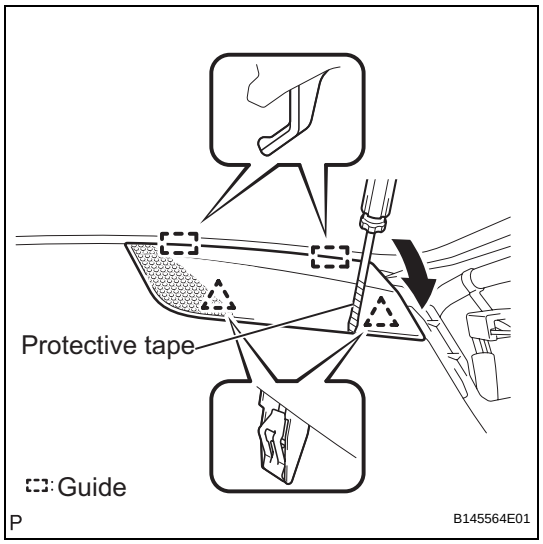

42. REMOVE NO. 2 INSTRUMENT PANEL SPEAKER PANEL SUB-ASSEMBLY

(a) Using a screwdriver, disengage the 2 clips.
HINT:
Tape the screwdriver tip before use.

(b) Disengage the 2 guides and remove the No. 2 instrument panel speaker panel sub-assembly.

43. REMOVE FRONT NO. 2 SPEAKER ASSEMBLY (for RH Side)

HINT:
Use the same procedures described for the LH side (See page AV-184).

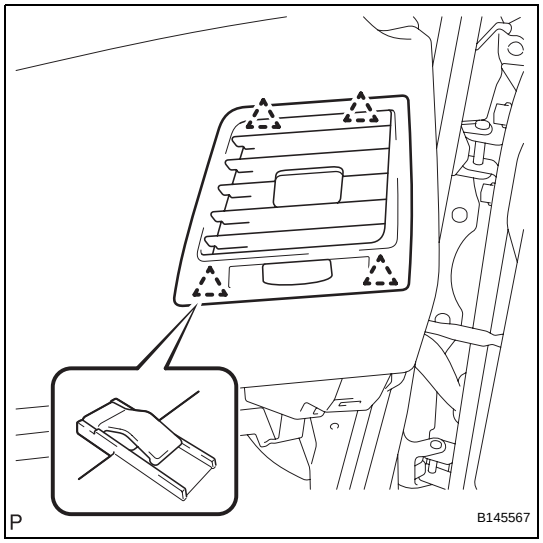

44. REMOVE NO. 3 INSTRUMENT PANEL REGISTER ASSEMBLY

(a) Disengage the 4 clips and remove the No. 3 instrument panel register assembly.

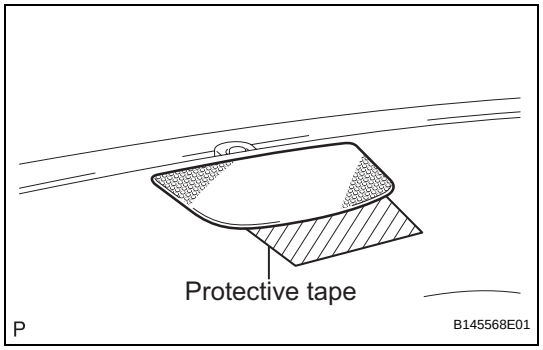

45. REMOVE NO. 1 SPEAKER HOLE COVER

(a) Apply protective tape to the area shown in the illustration.

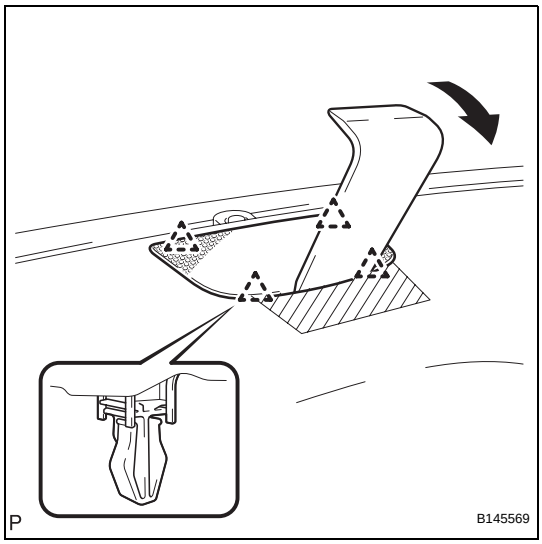

(b) Using a moulding remover, disengage the 4 clips and remove the No. 1 speaker hole cover.

46. REMOVE FRONT STEREO COMPONENT SPEAKER ASSEMBLY (See page AV-188)

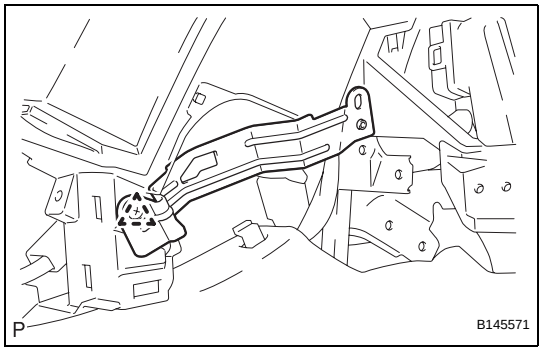

47. REMOVE NO. 1 INSTRUMENT PANEL MOUNTING BRACKET

(a) Remove the clip and the No. 1 instrument panel mounting bracket.

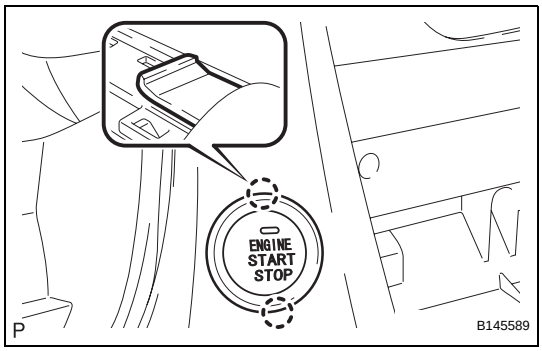

48. REMOVE PUSH START SWITCH

(a) Disengage the 2 claws and remove the push start switch.

(b) Disconnect the connector.

49. DISCONNECT INSTRUMENT PANEL WIRE ASSEMBLY (See page RS-414)

50. REMOVE ROOM TEMPERATURE SENSOR (See page AC-214)

51. REMOVE INSTRUMENT PANEL SAFETY PAD ASSEMBLY (w/o DVD Player)

(a) Disconnect each connector.

(b) Disengage each clamp.

(c) Remove the 2 passenger airbag bolts <K>.

(d) Remove the clip.

(e) Remove the bolt <L>.

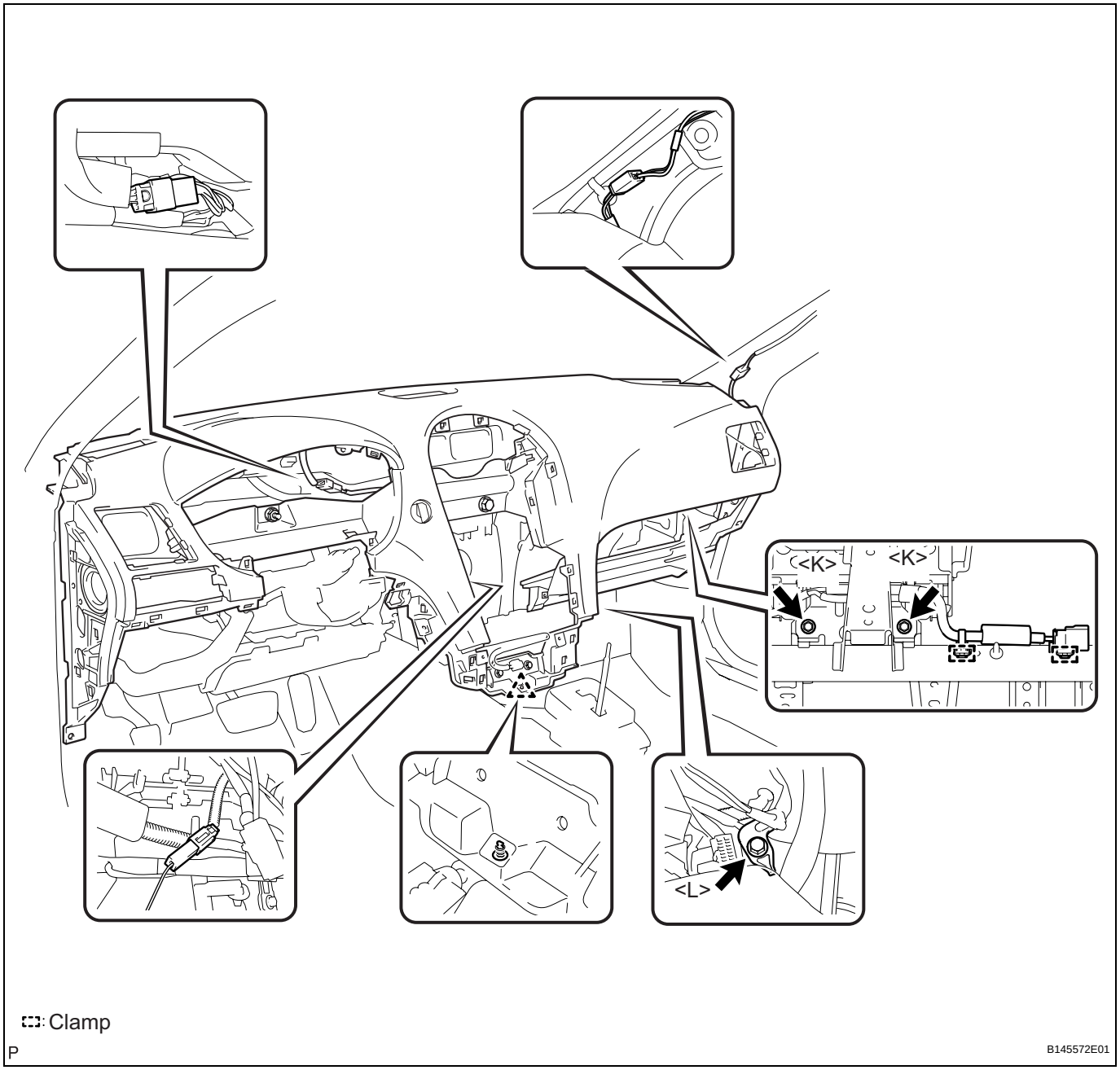

(f) Remove the 5 bolts <G> and nut <H>.
(g) Remove the 4 clips.

(h) Disengage the 5 claws and remove the instrument panel safety pad assembly.

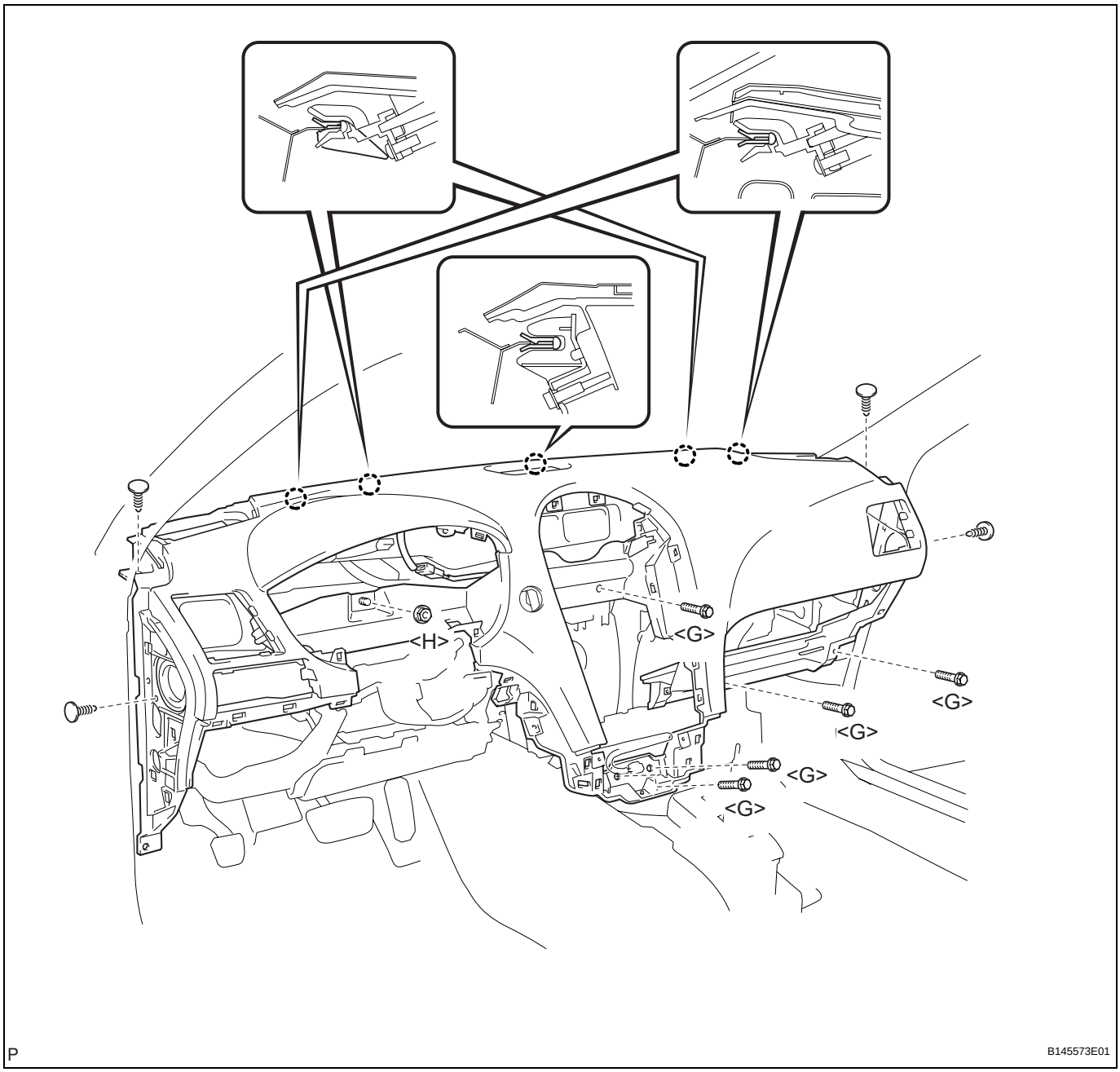

52. REMOVE INSTRUMENT PANEL SAFETY PAD ASSEMBLY (w/ DVD Player)

(a) Disconnect each connector.
(b) Disengage each clamp.
(c) Remove the 2 passenger airbag bolts <K>.
(d) Remove the clip.

(e) Remove the bolt <L>.

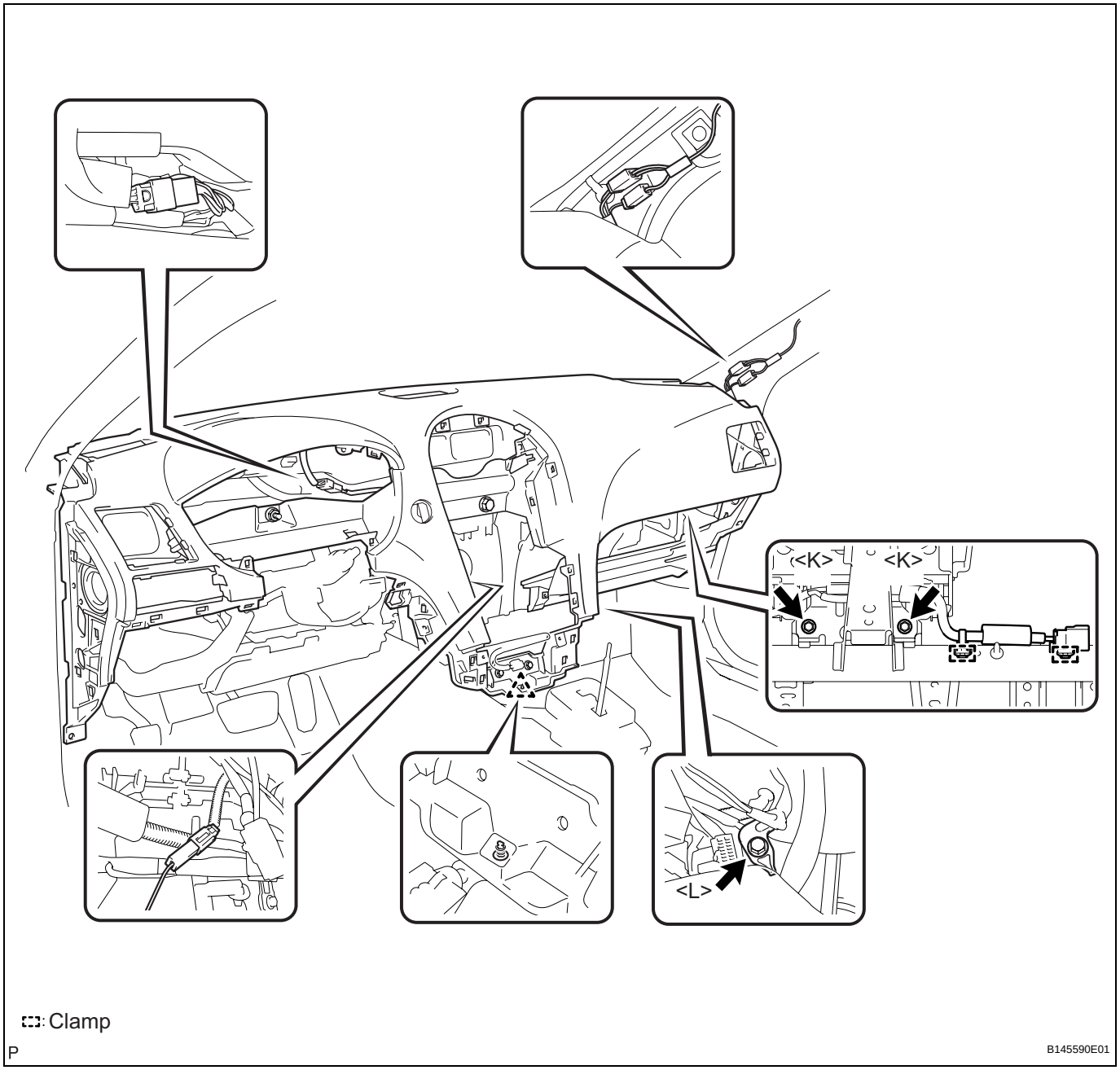

(f) Remove the 5 bolts <G> and nut <H>.
(g) Remove the 4 clips.

(h) Disengage the 5 claws and remove the instrument panel safety pad assembly.

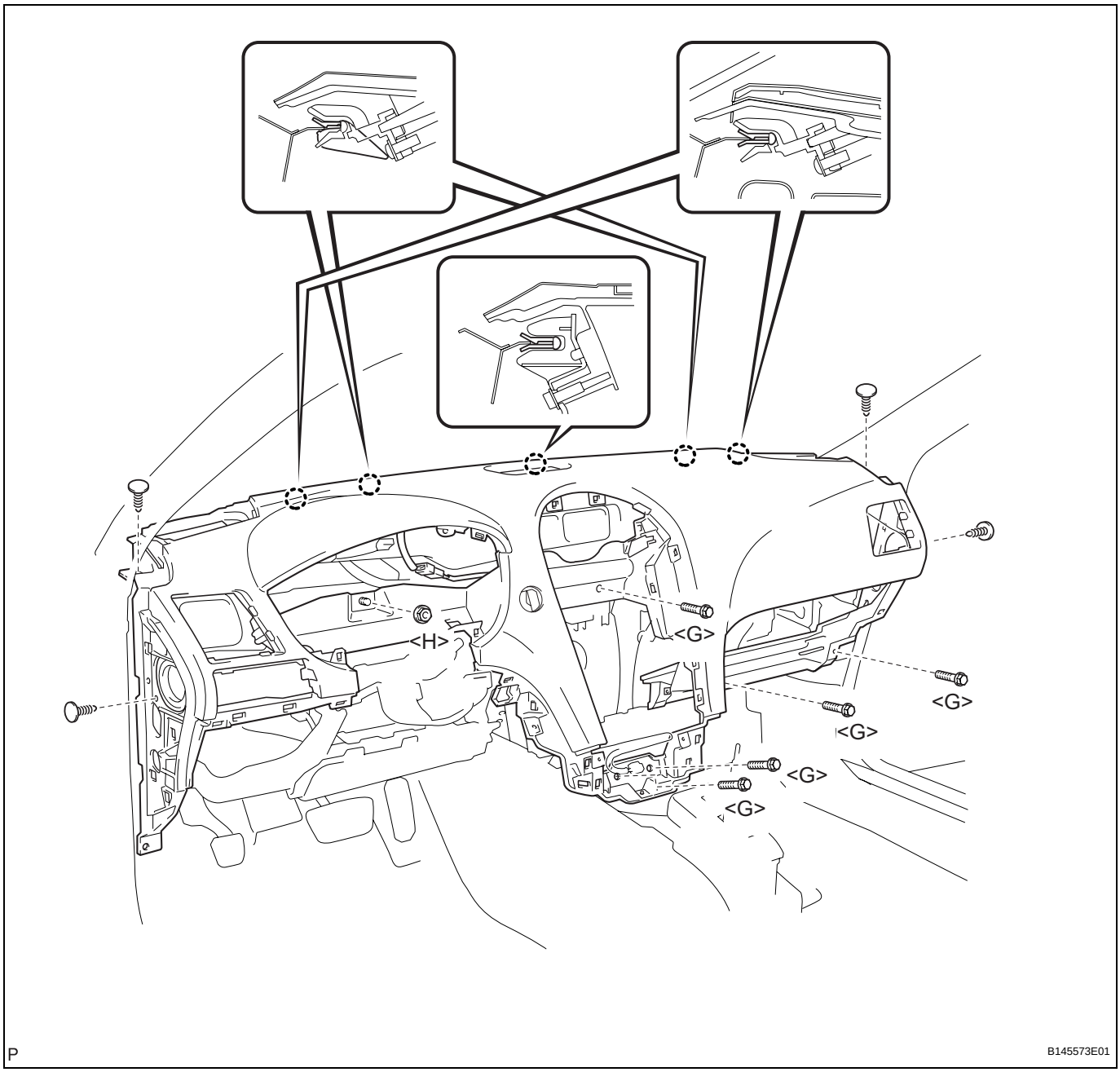

53. REMOVE NO. 1 INSTRUMENT PANEL CLIP

(a) Disengage the 3 claws and remove the 3 No. 1 instrument panel clips.

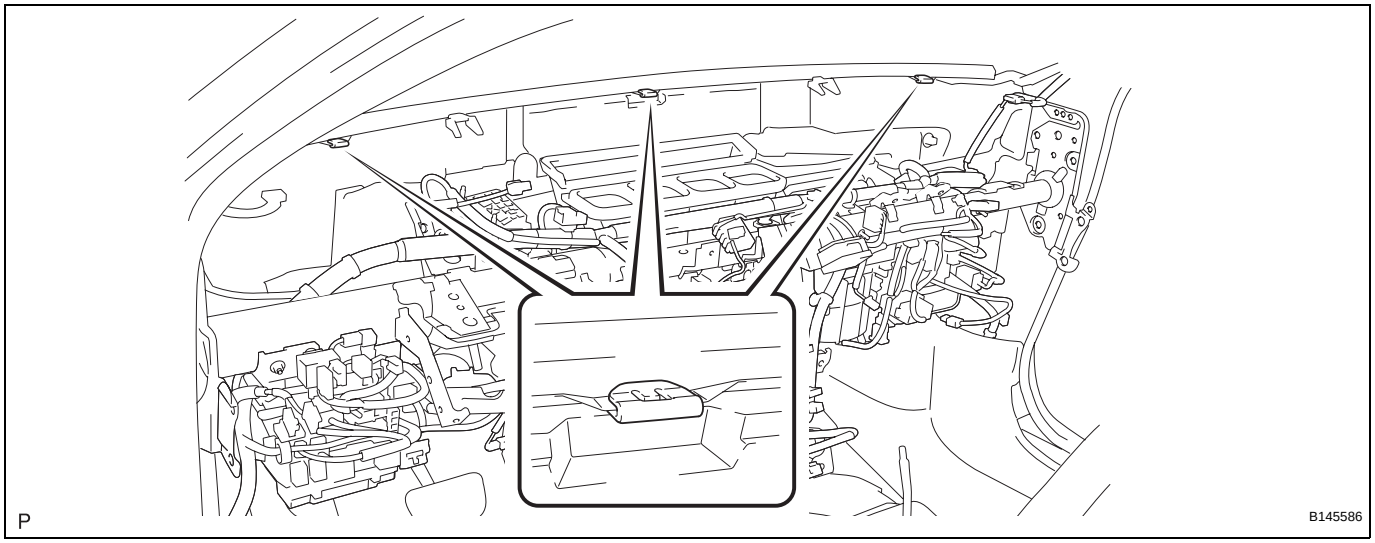

54. REMOVE NO. 3 INSTRUMENT PANEL STAY

(a) Disengage the 2 claws and remove the 2 No. 3 instrument panel stays.

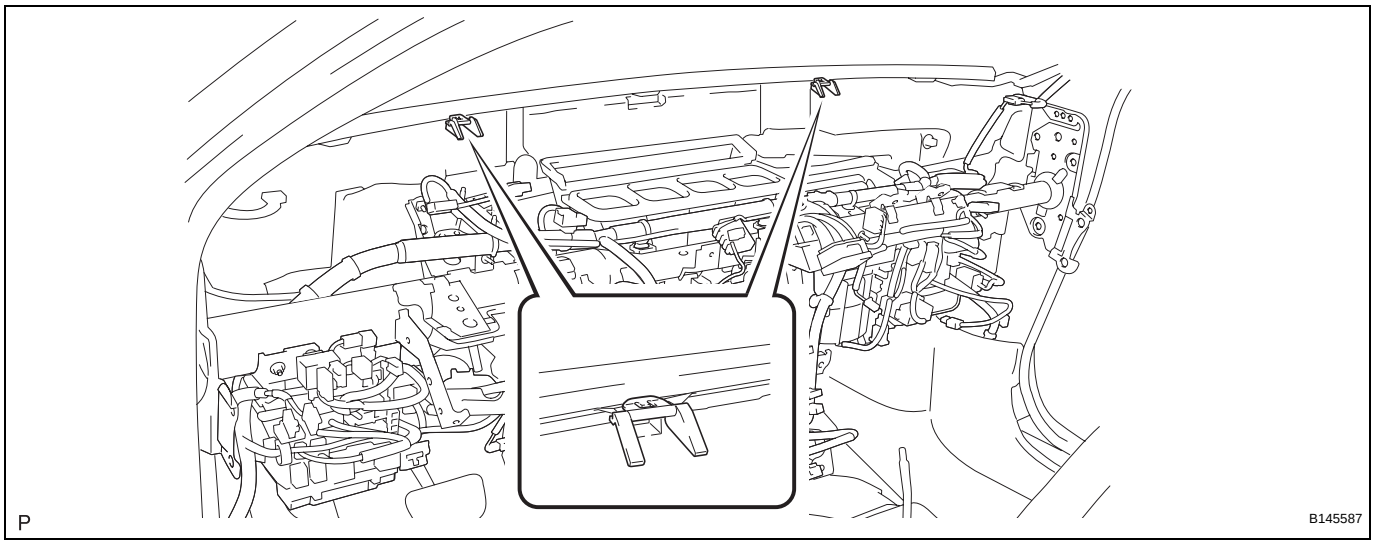

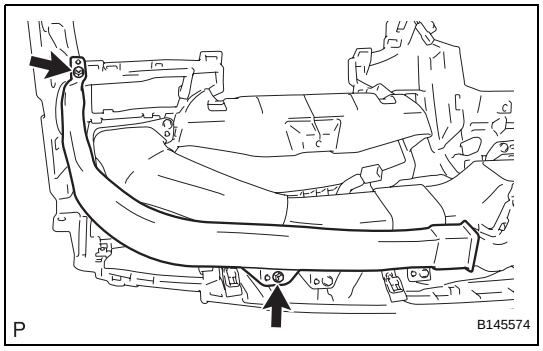

DISASSEMBLY

1. REMOVE SIDE NO. 1 DEFROSTER NOZZLE DUCT

(a) Remove the 2 screws <F> and the side No. 1 defroster nozzle duct.

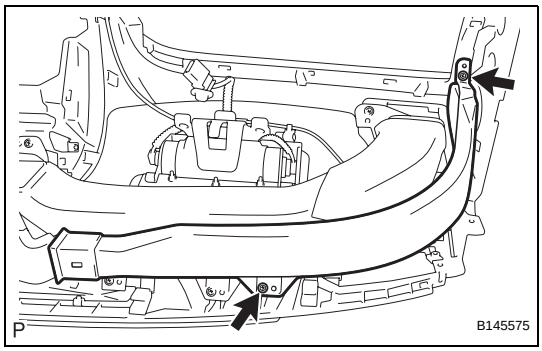

2. REMOVE SIDE NO. 2 DEFROSTER NOZZLE DUCT

(a) Remove the 2 screws <F> and the side No. 2 defroster nozzle duct.

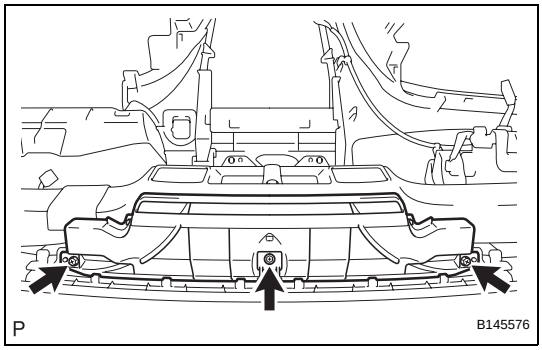

3. REMOVE DEFROSTER NOZZLE ASSEMBLY

(a) Remove the 3 screws <F> and the defroster nozzle assembly.

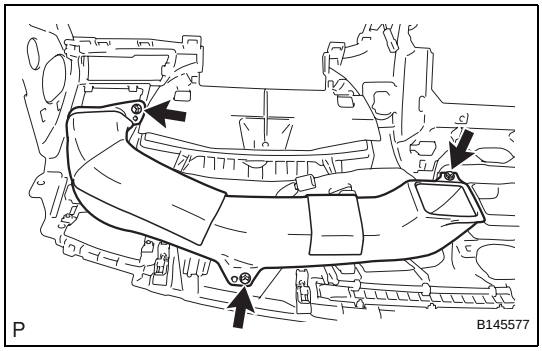

4. REMOVE NO. 1 HEATER TO REGISTER DUCT

(a) Remove the 3 screws <F> and the No. 1 heater to register duct.

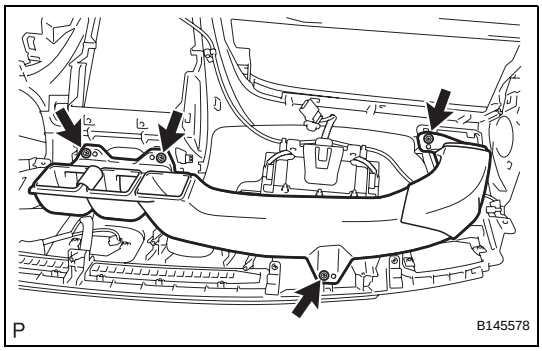

5. REMOVE NO. 2 HEATER TO REGISTER DUCT

(a) Remove the 4 screws <F> and the No. 2 heater to register duct.

6. REMOVE NO. 2 ANTENNA CORD SUB-ASSEMBLY (See page AV-220)

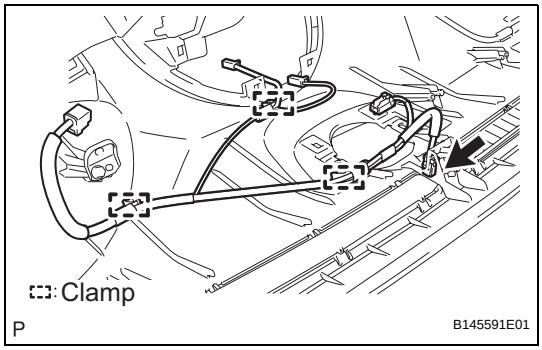

7. REMOVE NO. 3 INSTRUMENT PANEL WIRE

(a) Disconnect the connector.

(b) Disengage the 3 clamps and remove the No. 3 instrument panel wire.

8. REMOVE NAVIGATION ANTENNA ASSEMBLY (See page NS-253)

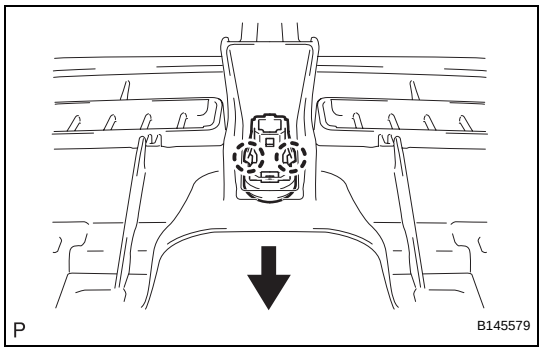

9. REMOVE AUTOMATIC LIGHT CONTROL SENSOR

(a) Disengage the 2 claws and remove the automatic light control sensor.

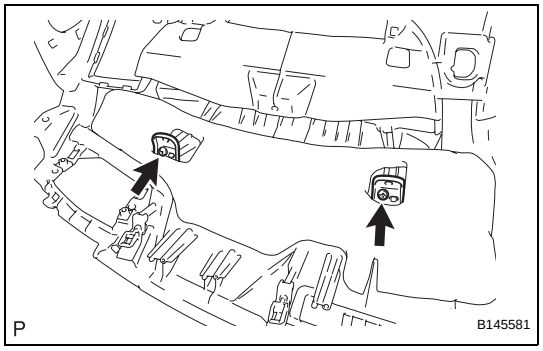

10. REMOVE NO. 1 METER HOOD RETAINER

(a) Remove the 2 screws <I> and the 2 No. 1 meter hood retainer.

11. REMOVE FRONT PASSENGER AIRBAG ASSEMBLY (See page RS-415)

12. REMOVE NO. 1 INSTRUMENT PANEL PIN

(a) Remove the 4 screws <I> and the 4 No. 1 instrument panel pins.

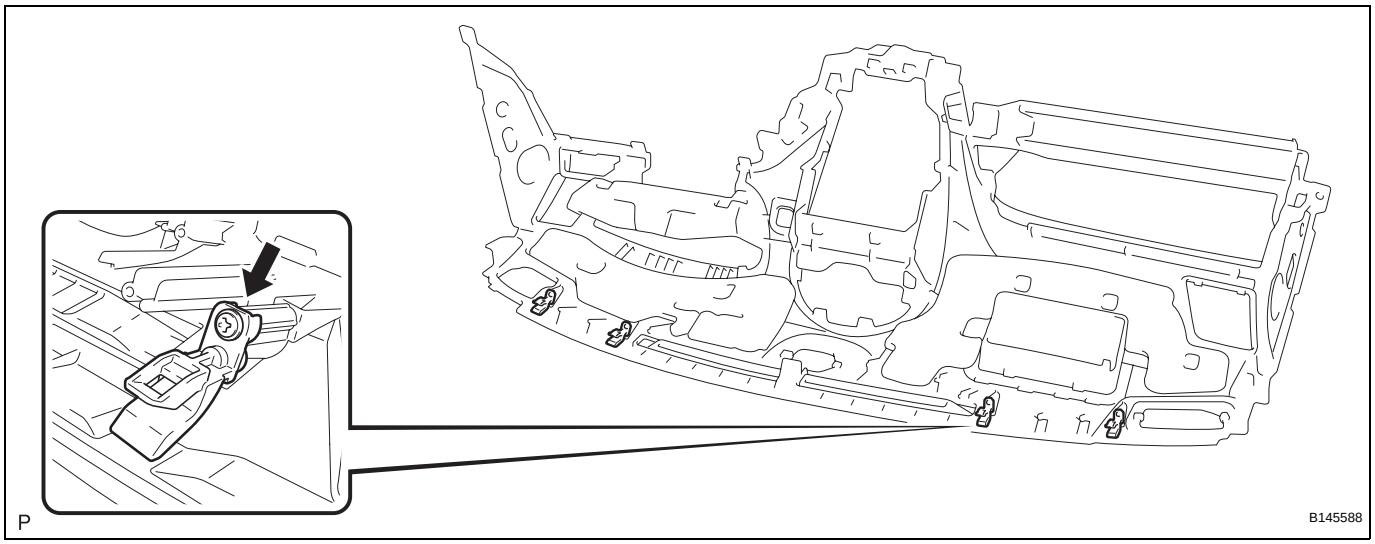

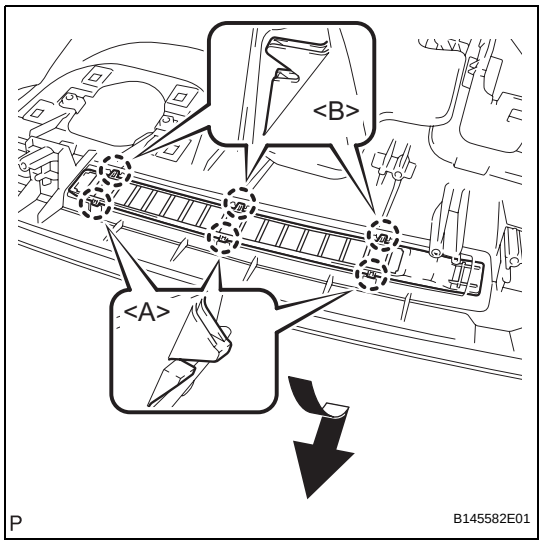

13. REMOVE NO. 1 DEFROSTER NOZZLE GARNISH

(a) Disengage the 3 claws <A>.

(b) Disengage the 3 claws <B > and remove the No. 1 defroster nozzle garnish as shown in the illustration.

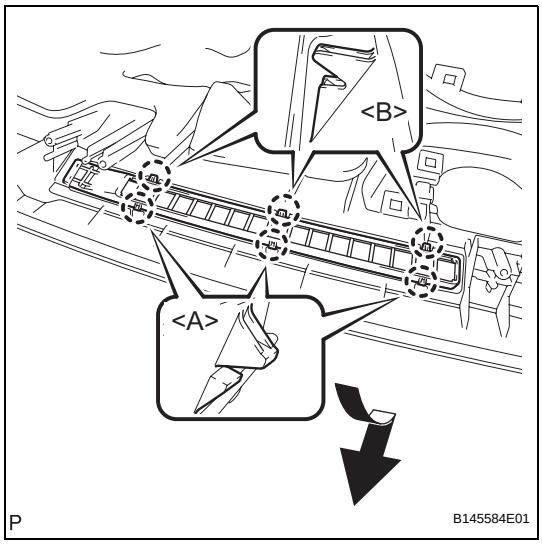

14. REMOVE NO. 2 DEFROSTER NOZZLE GARNISH

(a) Disengage the 3 claws <A>.

(b) Disengage the 3 claws <B > and remove the No. 2 defroster nozzle garnish as shown in the illustration.

REASSEMBLY

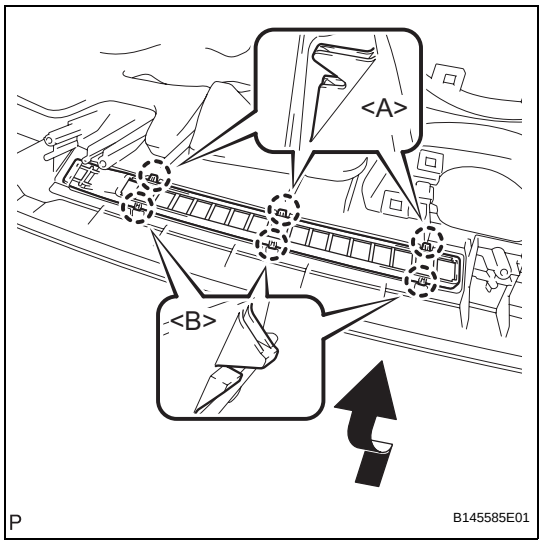

1. INSTALL NO. 2 DEFROSTER NOZZLE GARNISH

(a) Engage the 3 claws <A>.

(b) Engage the 3 claws <B> and install the No. 2 defroster nozzle garnish as shown in the illustration.

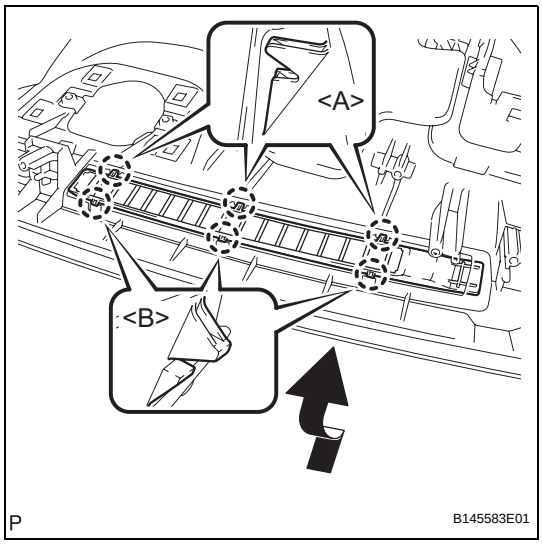

2. INSTALL NO. 1 DEFROSTER NOZZLE GARNISH

(a) Engage the 3 claws <A>.

(b) Engage the 3 claws <B> and install the No. 1 defroster nozzle garnish as shown in the illustration.

3. INSTALL NO. 1 INSTRUMENT PANEL PIN

(a) Install the 4 No. 1 instrument panel pins with the 4 screws <I>.

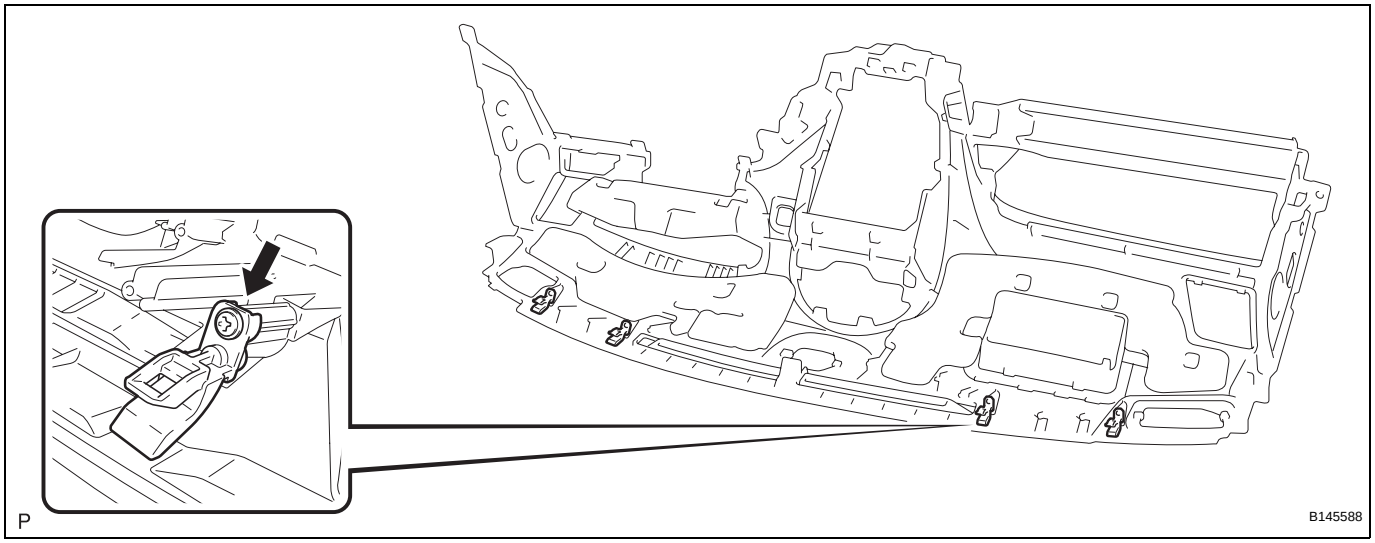

4. INSTALL FRONT PASSENGER AIRBAG ASSEMBLY (See page RS-416)

5. INSTALL NO. 1 METER HOOD RETAINER

(a) Install the 2 No. 1 meter hood retainers with the 2 screws <I>.

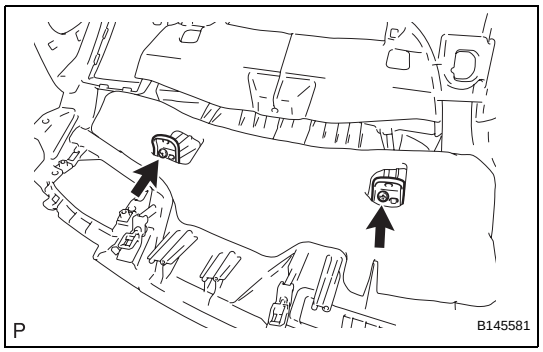

6. INSTALL AUTOMATIC LIGHT CONTROL SENSOR

(a) Engage the 2 claws and install the automatic light control sensor.

7. INSTALL NAVIGATION ANTENNA ASSEMBLY (See page NS-254)

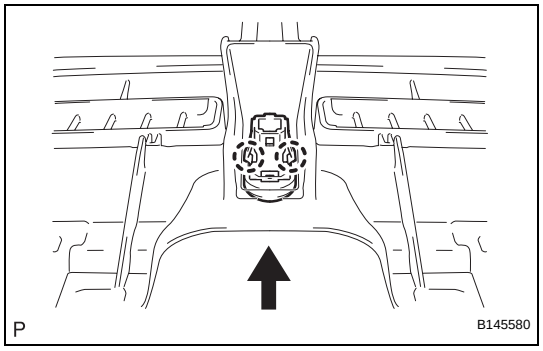

8. INSTALL NO. 3 INSTRUMENT PANEL WIRE

(a) Engage the 3 clamps.

(b) Connect the connector and install the No. 3 instrument panel wire.

9. INSTALL NO. 2 ANTENNA CORD SUB-ASSEMBLY (See page AV-230)

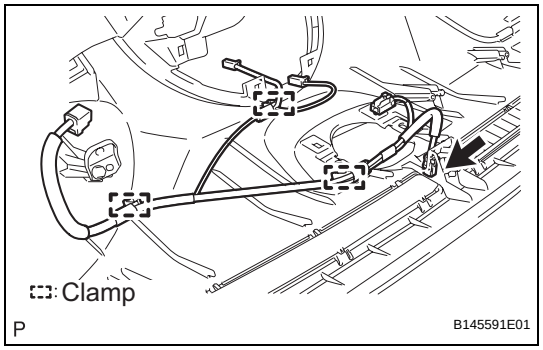

IP

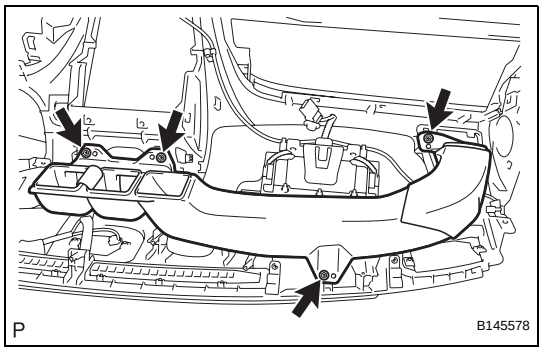

10. INSTALL NO. 2 HEATER TO REGISTER DUCT

(a) Install the No. 2 heater to register duct with the 4 screws <F>.

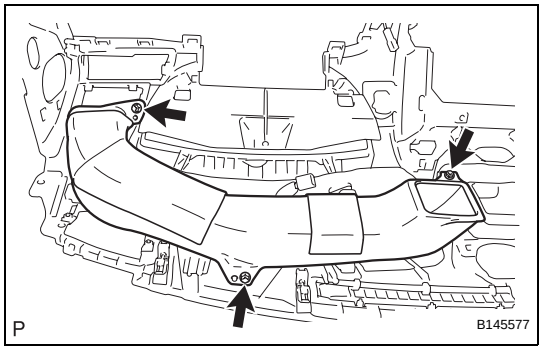

11. INSTALL NO. 1 HEATER TO REGISTER DUCT

(a) Install the No. 1 heater to register duct with the 3 screws <F>.

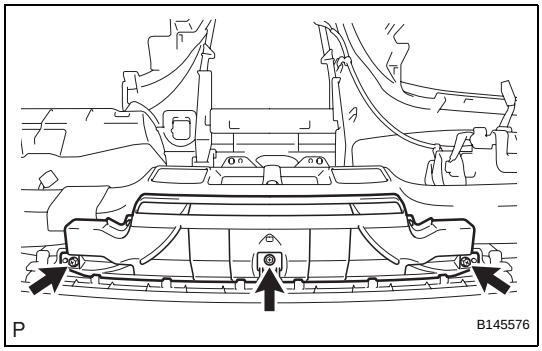

12. INSTALL DEFROSTER NOZZLE ASSEMBLY

(a) Install the defroster nozzle assembly with the 3 screws <F>.

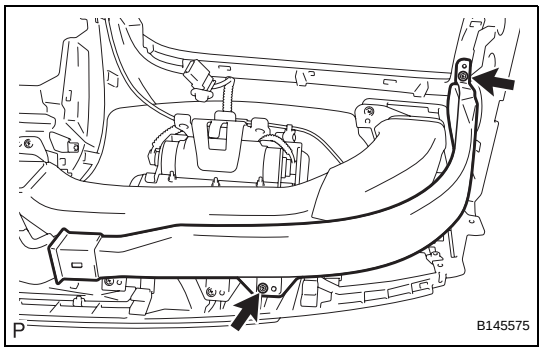

13. INSTALL SIDE NO. 2 DEFROSTER NOZZLE DUCT

(a) Install the side No. 2 defroster nozzle duct with the 2 screws <F>.

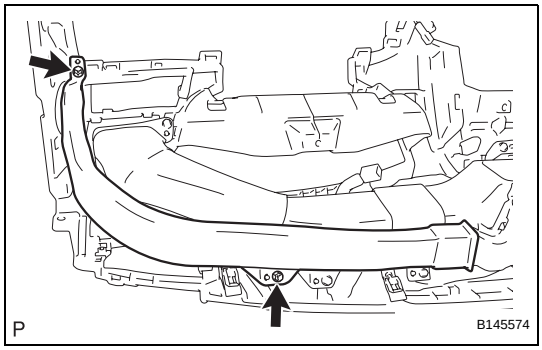

14. INSTALL SIDE NO. 1 DEFROSTER NOZZLE DUCT

(a) Install the side No. 1 defroster nozzle duct with the 2 screws <F>.

INSTALLATION

1. INSTALL NO. 3 INSTRUMENT PANEL STAY

(a) Engage the 2 claws and install the 2 No. 3 instrument panel stays.

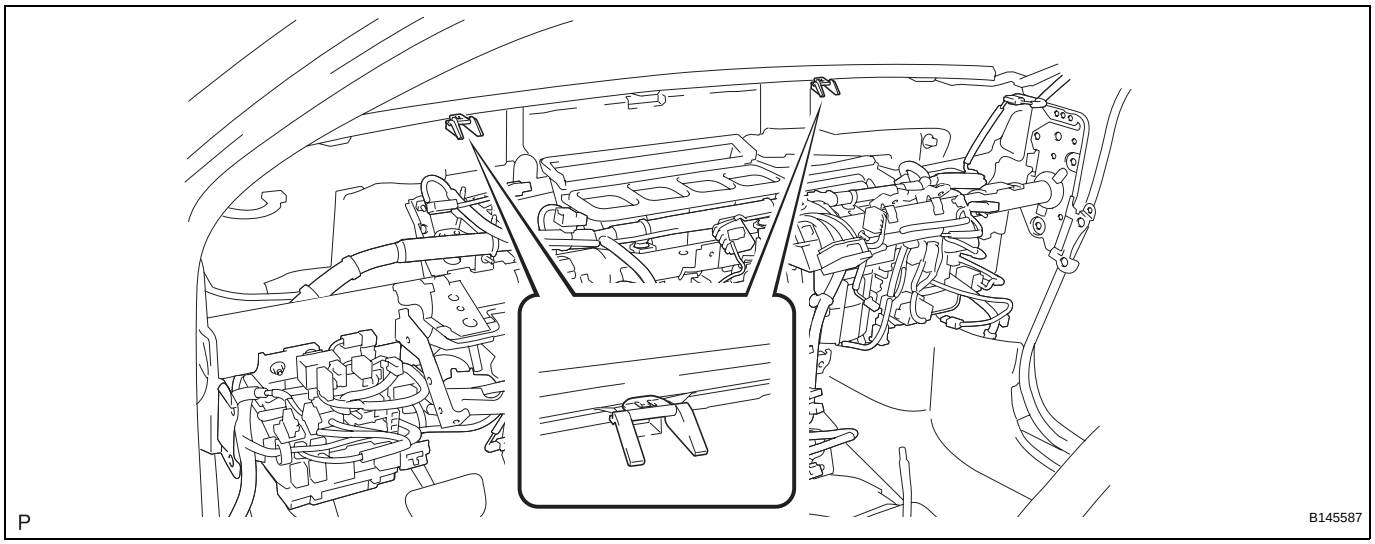

2. INSTALL NO. 1 INSTRUMENT PANEL CLIP

(a) Engage the 3 claws and install the 3 No. 1 instrument panel clips.

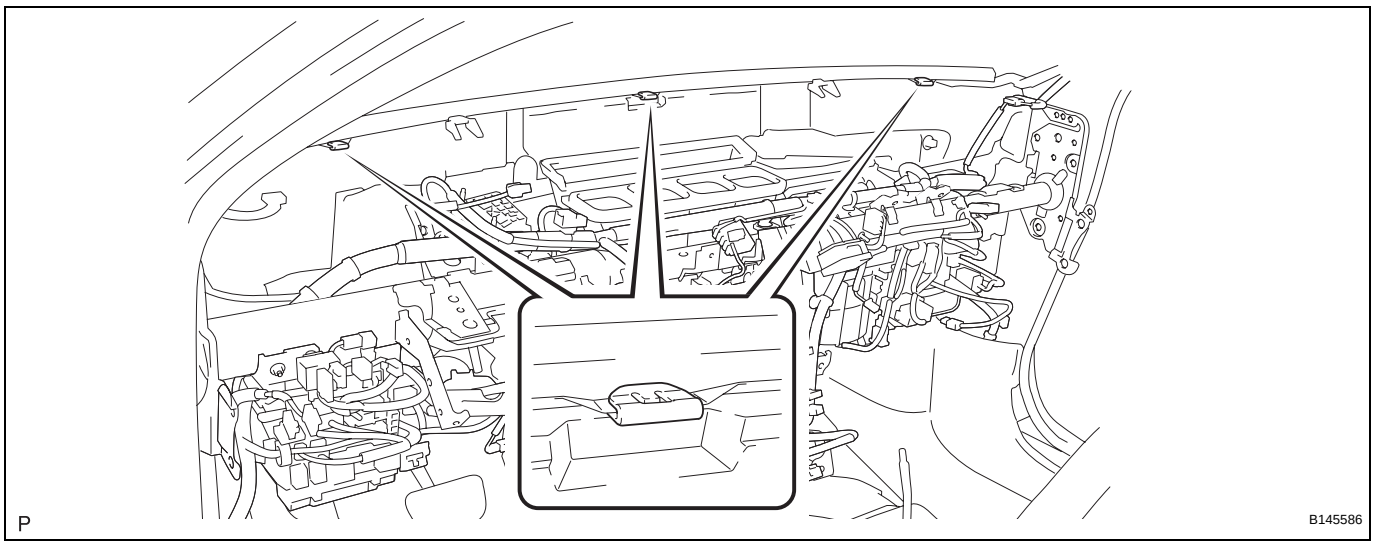

3. INSTALL INSTRUMENT PANEL SAFETY PAD ASSEMBLY (w/o DVD Player)

(a) Engage the 5 claws.

NOTICE:

Do not allow the wire harness to get caught in the claws.

(b) Install the 4 clips.

(c) Install the 5 bolts <G> and nut <H>.

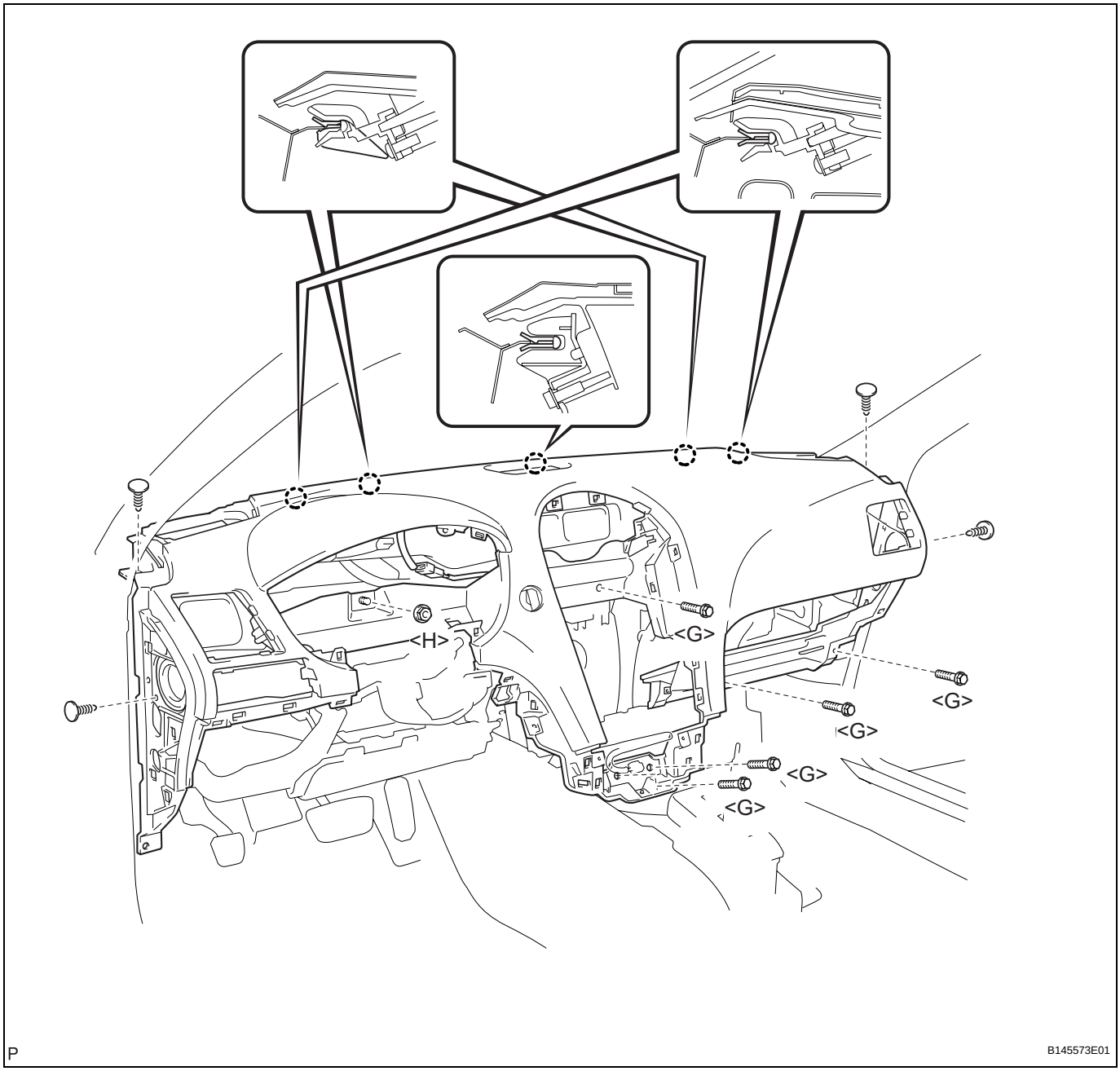

(d) Engage the clip.
(e) Install the bolt <L>.
Torque: 7.0 N*m (71 kgf*cm, 62 in.*lbf)
(f) Engage each clamp.
(g) Install the 2 passenger airbag bolts <K>.
Torque: 20 N*m (204 kgf*cm, 15 ft.*lbf)

(h) Connect each connector and install the instrument panel safety pad assembly.

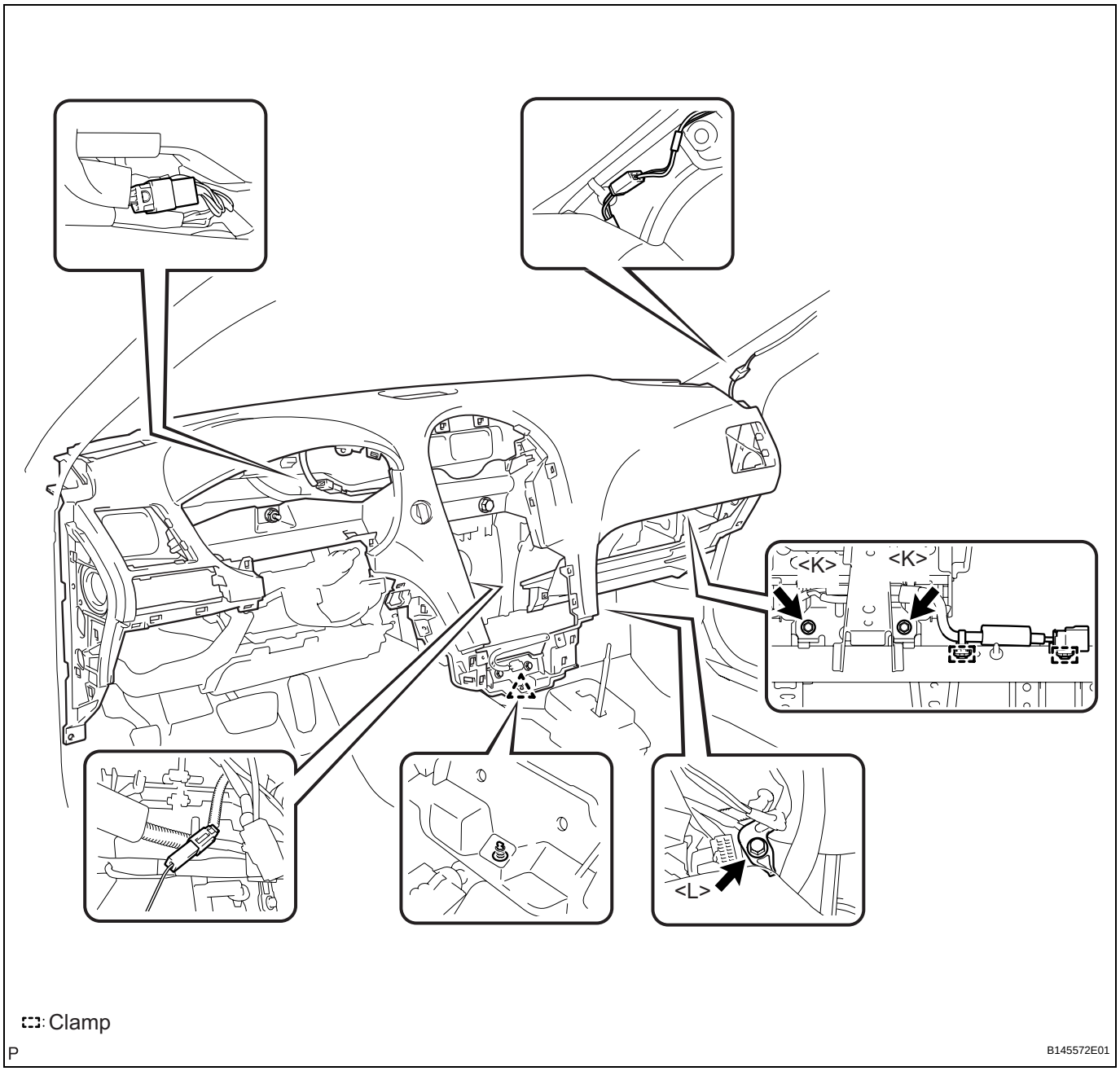

4. INSTALL INSTRUMENT PANEL SAFETY PAD ASSEMBLY (w/ DVD Player)

(a) Engage the 5 claws.

(b) Install the 4 clips.

(c) Install the 5 bolts <G> and nut <H>.

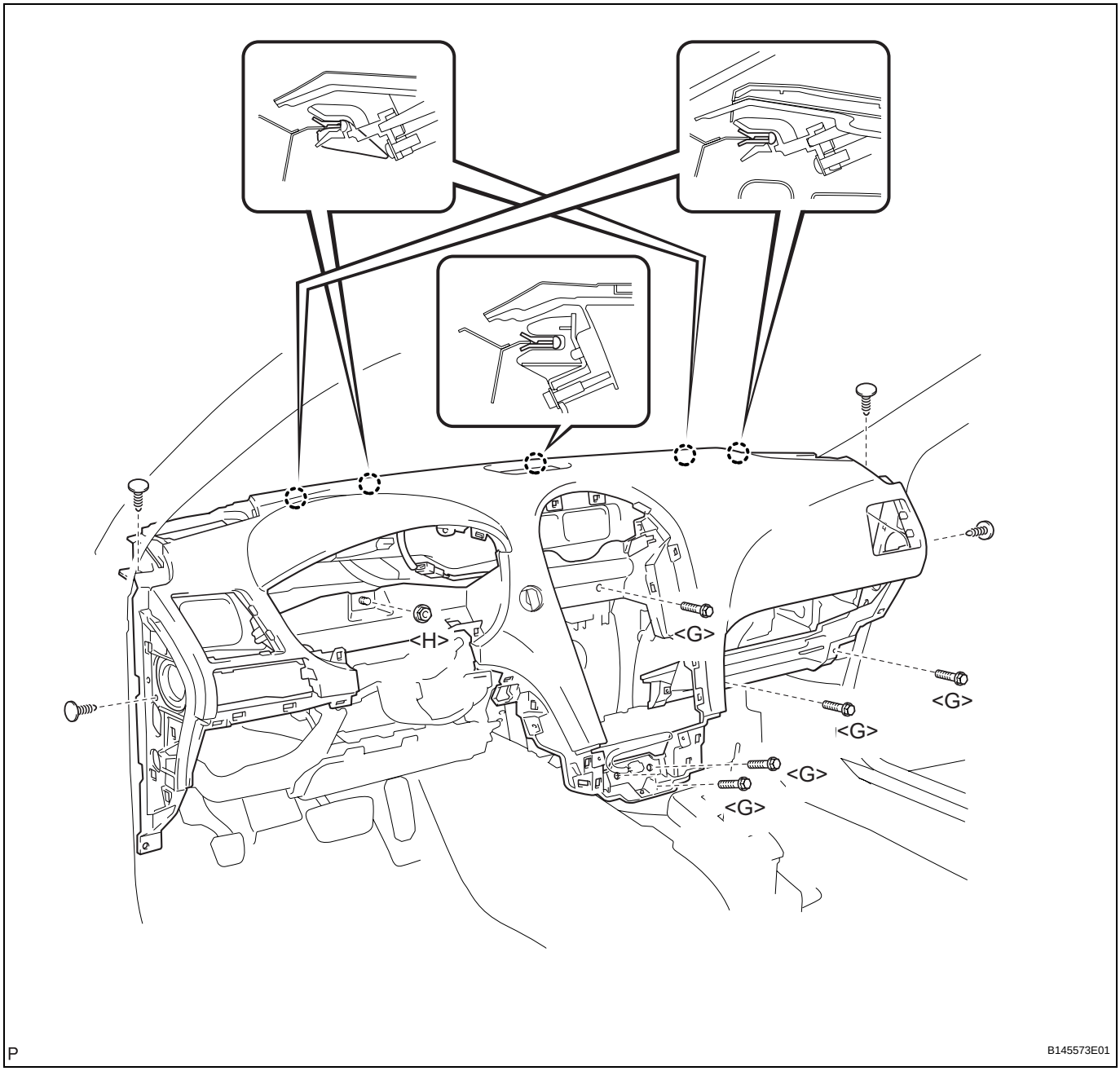

(d) Engage the clip.
(e) Install the bolt <L>.
Torque: 7.0 N*m (71 kgf*cm, 62 in.*lbf)
(f) Engage each clamp.
(g) Install the 2 passenger airbag bolts <K>.
Torque: 20 N*m (204 kgf*cm, 15 ft.*lbf)

(h) Connect each connector and install the instrument panel safety pad assembly.

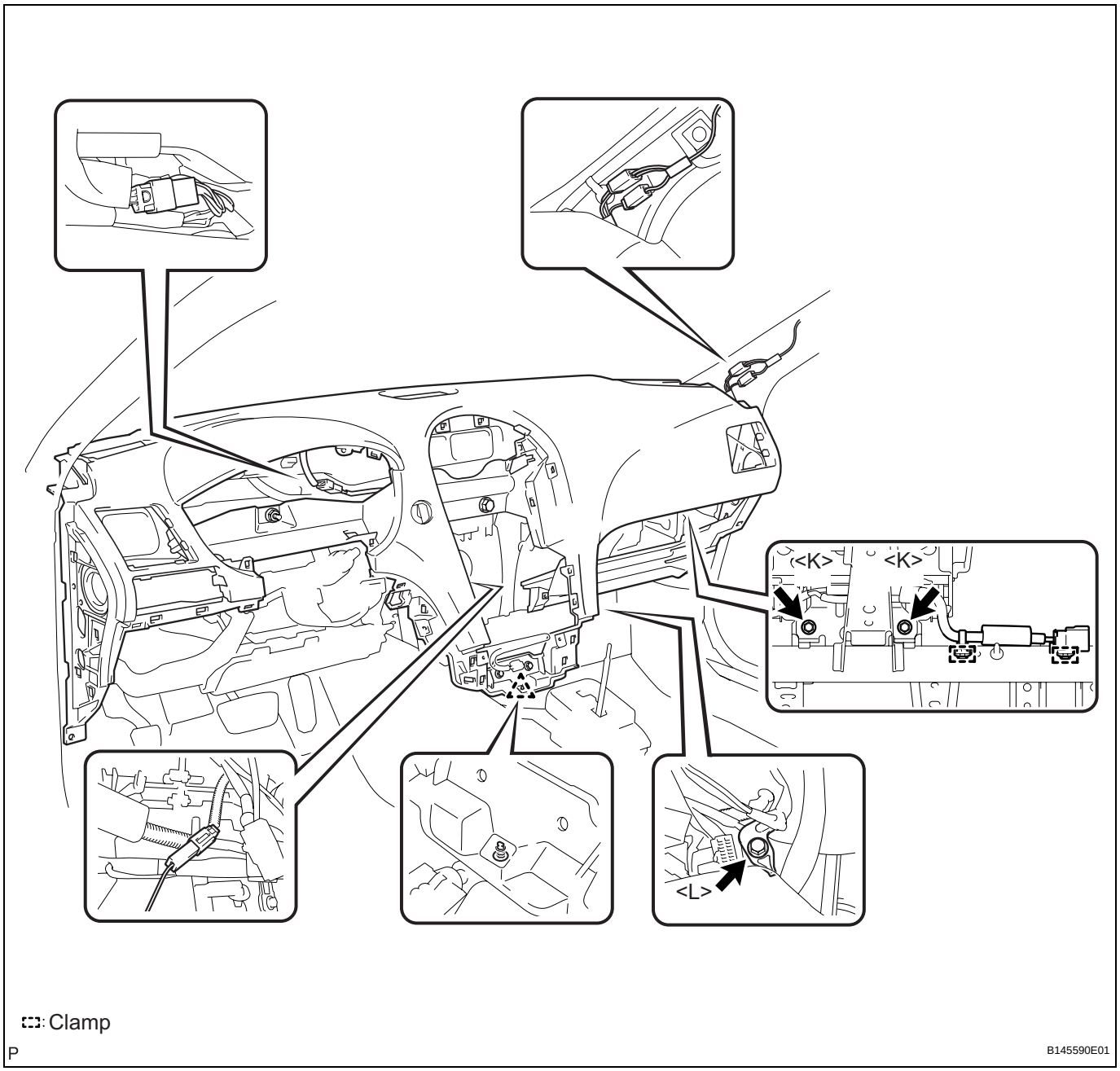

5. **INSTALL ROOM TEMPERATURE SENSOR (See page AC-215)**

6. **CONNECT INSTRUMENT PANEL WIRE ASSEMBLY (See page RS-416)**

7. **INSTALL PUSH START SWITCH**
   (a) Connect the connector.

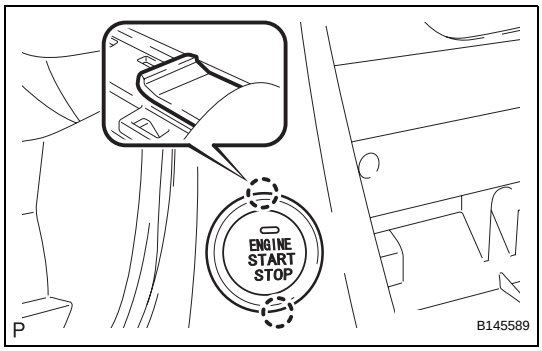

(b) Engage the 2 claws and install the push start switch.

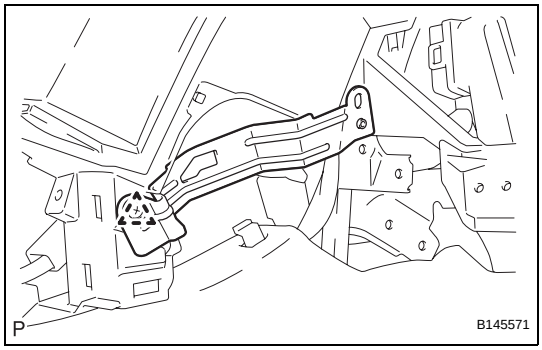

8. INSTALL NO. 1 INSTRUMENT PANEL MOUNTING BRACKET

(a) Install the clip and the No. 1 instrument panel mounting bracket.

9. INSTALL FRONT STEREO COMPONENT SPEAKER ASSEMBLY (See page AV-188)

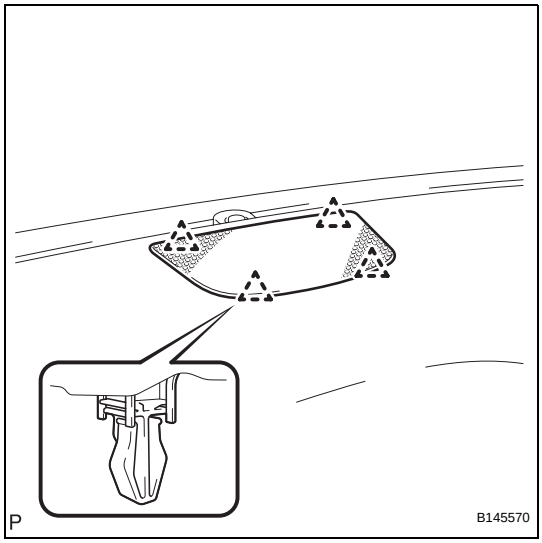

10. INSTALL NO. 1 SPEAKER HOLE COVER

(a) Engage the 4 clips and install the No. 1 speaker hole cover.

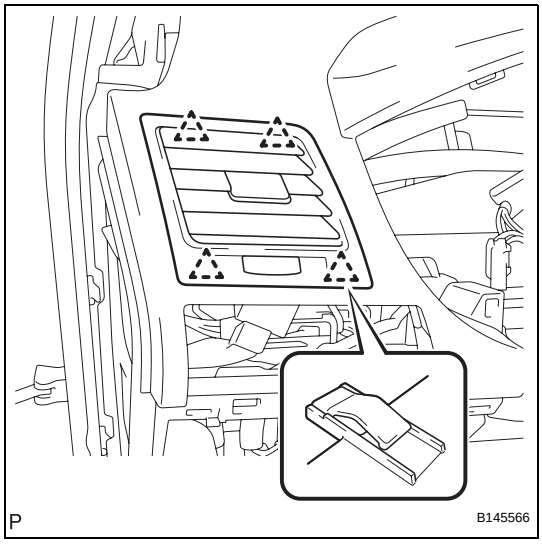

11. INSTALL NO. 1 INSTRUMENT PANEL REGISTER ASSEMBLY

(a) Engage the 4 clips and install the No. 1 instrument panel register assembly.

12. INSTALL FRONT NO. 2 SPEAKER ASSEMBLY (for LH Side) (See page AV-185)

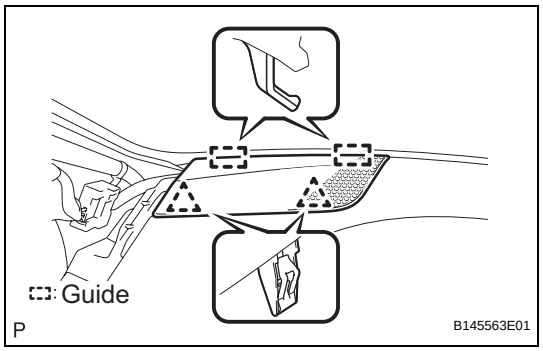

13. INSTALL NO. 1 INSTRUMENT PANEL SPEAKER PANEL SUB-ASSEMBLY
(a) Engage the 2 guides.
(b) Engage the 2 clips and install the No. 1 instrument panel speaker panel sub-assembly.

14. INSTALL FRONT PILLAR GARNISH LH (See page IR-64)

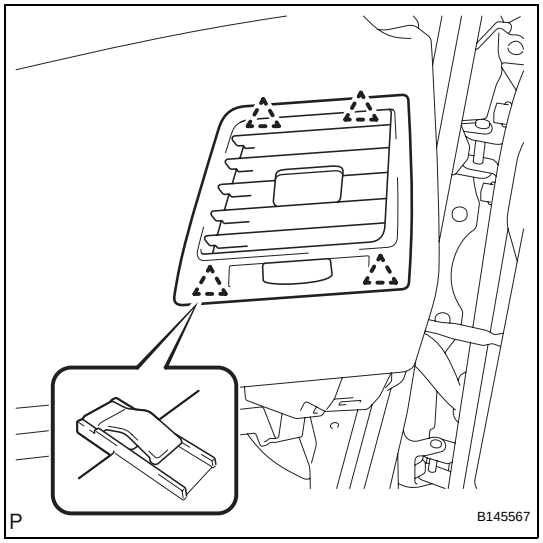

15. INSTALL NO. 3 INSTRUMENT PANEL REGISTER ASSEMBLY
(a) Engage the 4 clips and install the No. 3 instrument panel register assembly.

16. INSTALL FRONT NO. 2 SPEAKER ASSEMBLY (for RH Side)
HINT:
Use the same procedures described for the LH side (See page AV-185).

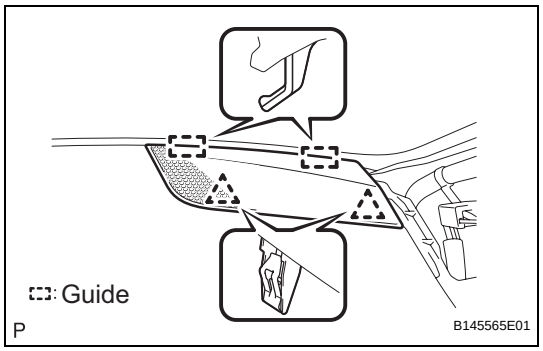

17. INSTALL NO. 2 INSTRUMENT PANEL SPEAKER PANEL SUB-ASSEMBLY
(a) Engage the 2 guides.
(b) Engage the 2 clips and install the No. 2 instrument panel speaker panel sub-assembly.

18. INSTALL FRONT PILLAR GARNISH RH (See page IR-65)

19. INSTALL REAR CONSOLE BOX ASSEMBLY
(a) Connect each connector.

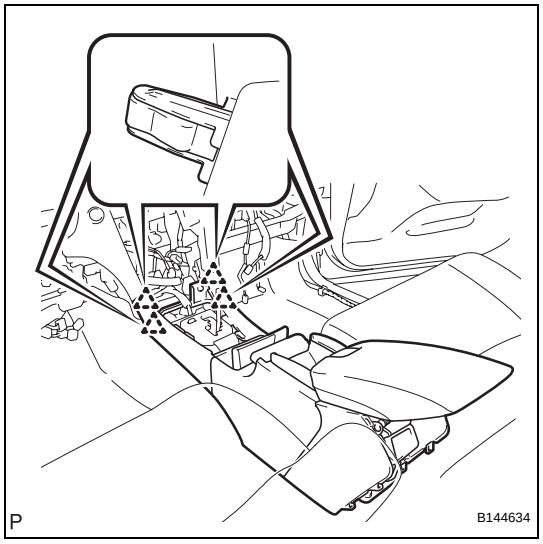

(b) Engage the 4 clips.

IP

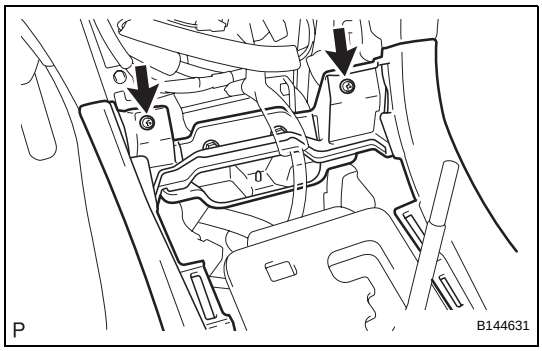

(c) Install the 2 screws <F>.

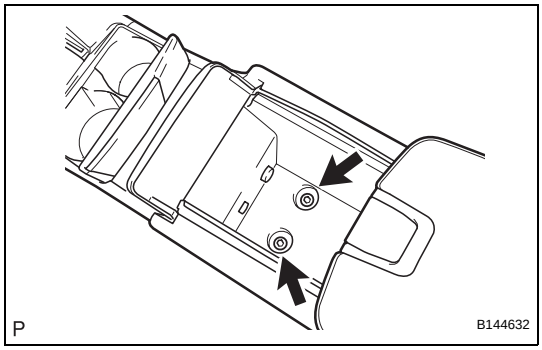

(d) Install the 2 bolts <E>.

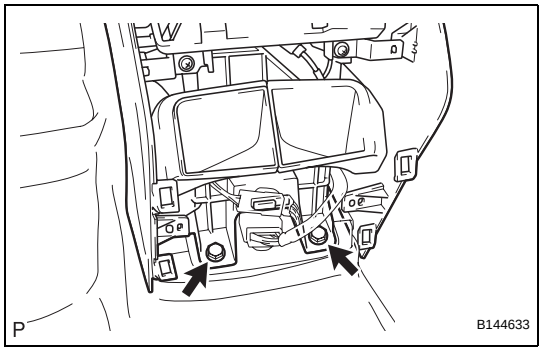

(e) Install the rear console box assembly with the 2 bolts <E>.

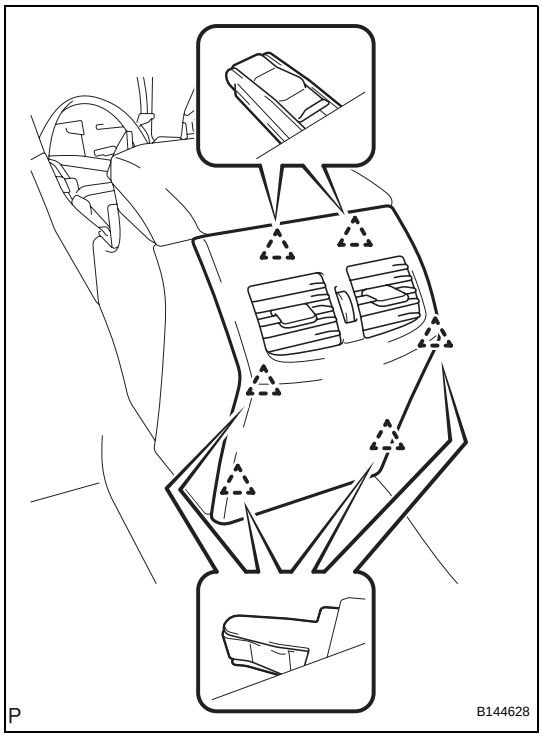

20. INSTALL CONSOLE REAR END PANEL SUB-ASSEMBLY

(a) Engage the 6 clips and install the console rear end panel sub-assembly.

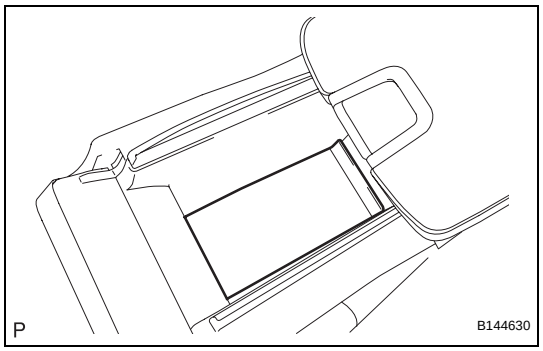

21. INSTALL CONSOLE BOX CARPET

(a) Install the console box carpet.

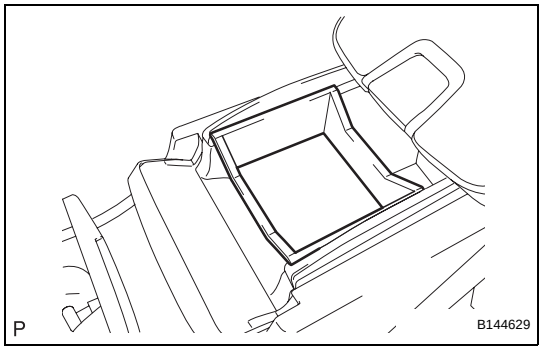

22. INSTALL CONSOLE BOX POCKET

(a) Install the console box pocket.

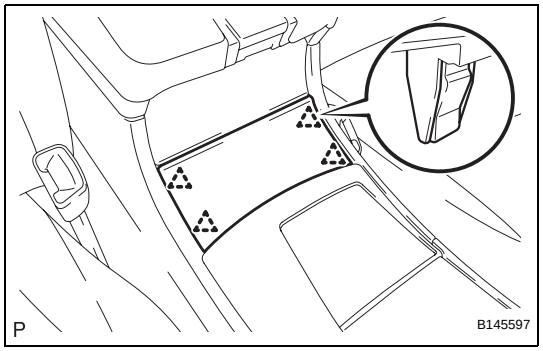

23. INSTALL HEATER SEAT SWITCH CONSOLE BASE (w/o Seat Heater System)

(a) Engage the 4 clips and install the heater seat switch base.

24. INSTALL HEATER SEAT SWITCH CONSOLE BASE (w/ Seat Heater System)

(a) Connect each connector.

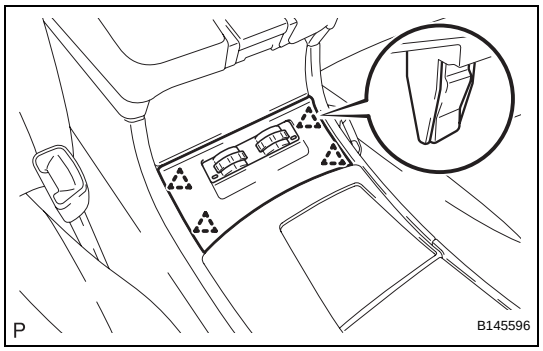

(b) Engage the 4 clips and install the heater seat switch base.

25. INSTALL INTEGRATION CONTROL PANEL WITH RADIO RECEIVER ASSEMBLY (w/o Navigation System) (See page AV-172)

26. INSTALL MULTI-DISPLAY WITH RADIO RECEIVER ASSEMBLY (w/ Navigation System) (See page AV-173)

27. INSTALL NO. 2 INSTRUMENT PANEL REGISTER ASSEMBLY

(a) Connect the connector.

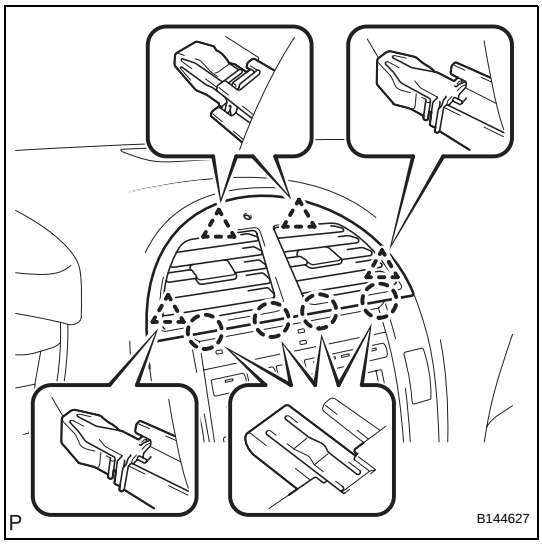

(b) Engage the 4 claws and 4 clips, and install the No. 2 instrument panel register assembly.

28. INSTALL UPPER CONSOLE PANEL ASSEMBLY WITH FRONT ASH RECEPTACLE

(a) Connect the connector.

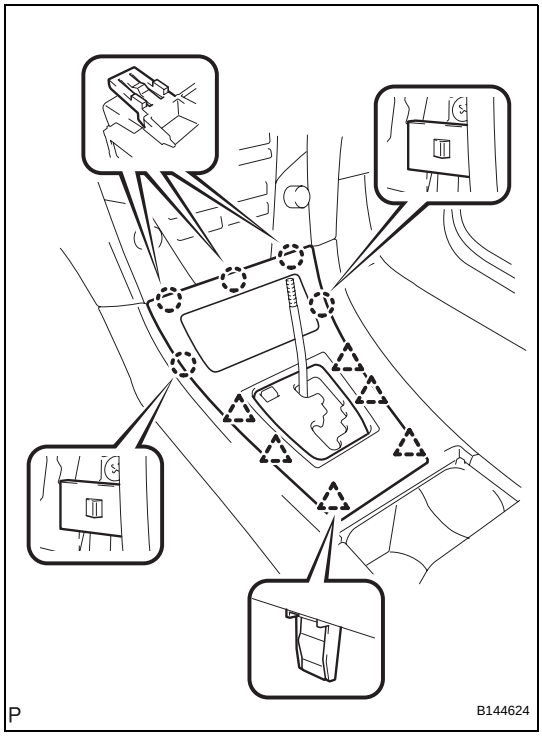

(b) Engage the 5 claws and 6 clips to install the upper console panel assembly with front ash receptacle.

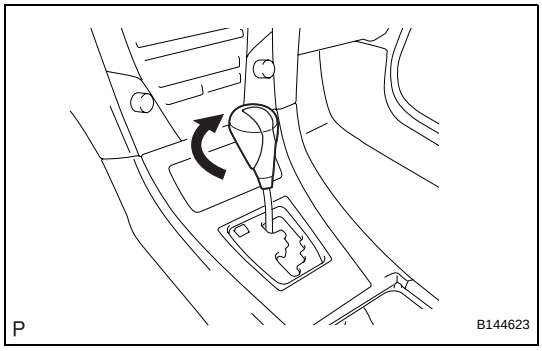

29. INSTALL SHIFT LEVER KNOB SUB-ASSEMBLY

(a) Install the shift lever knob sub-assembly.

30. INSTALL LOWER INSTRUMENT PANEL RH

(a) Connect each connector.

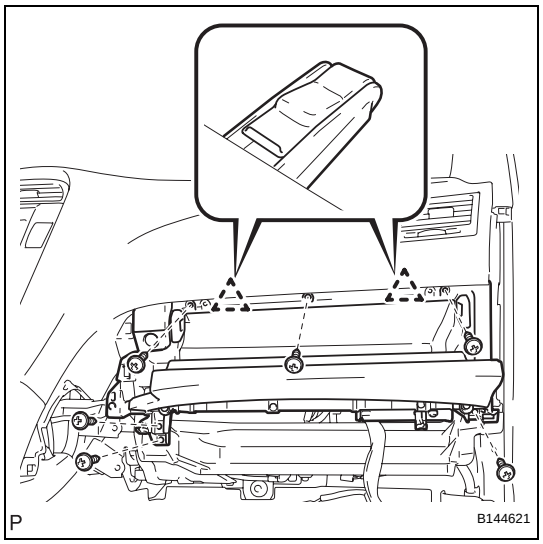

(b) Engage the 2 clips.
(c) Install the lower instrument panel RH with the 6 screws <D>.

31. INSTALL FRONT PASSENGER SIDE KNEE AIRBAG ASSEMBLY (See page RS-396)

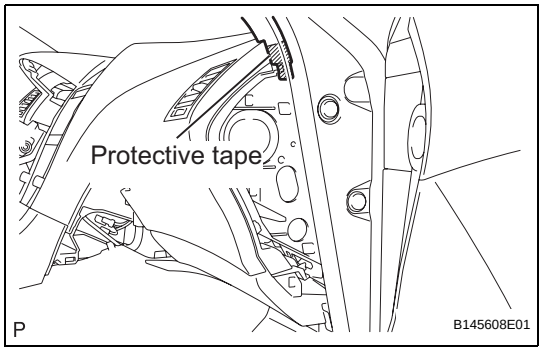

32. INSTALL SIDE INSTRUMENT PANEL RH
(a) Apply protective tape to the area shown in the illustration.
(b) Engage the upper end of the side instrument panel RH with the lower end of the front pillar garnish RH as shown in the illustration.

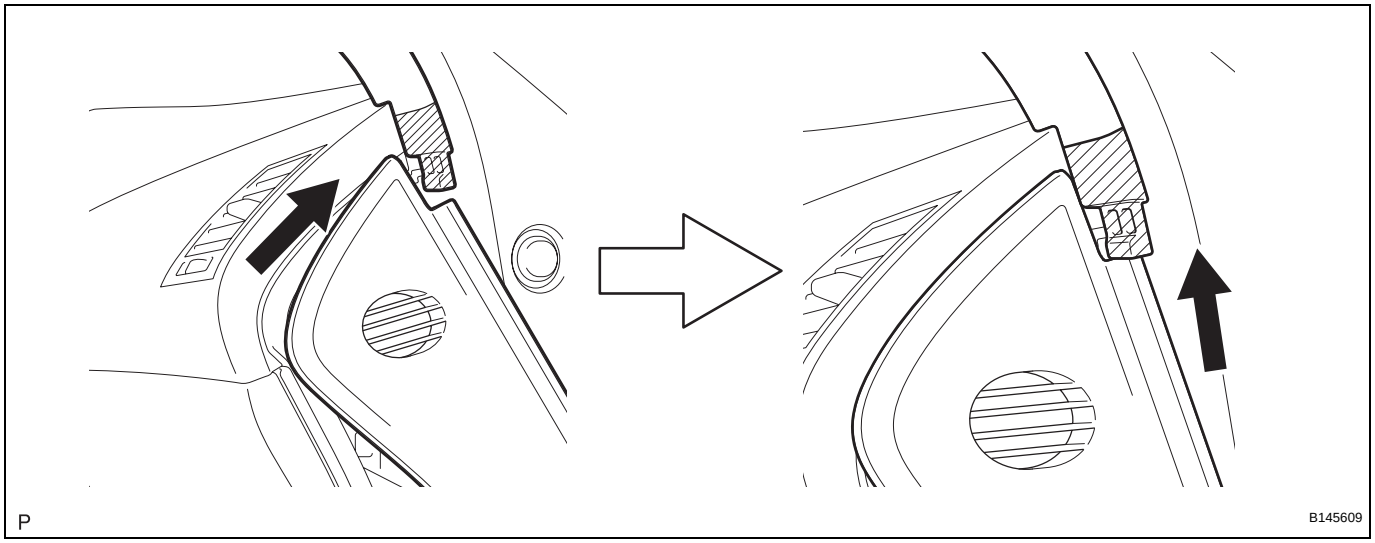

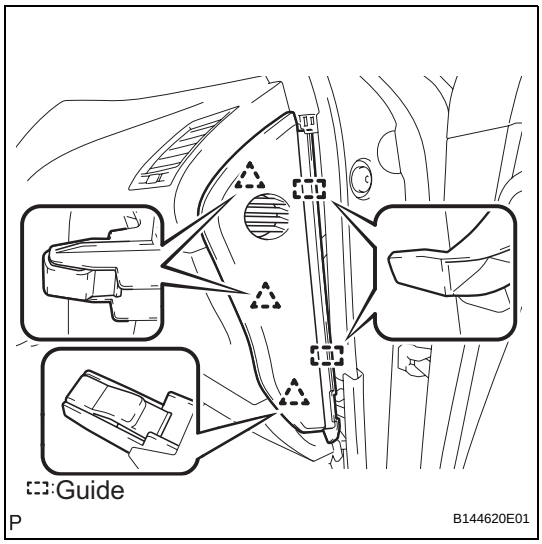

(c) Engage the 2 guides and the 3 clips to install the side instrument panel RH.

33. INSTALL NO. 2 INSTRUMENT PANEL UNDER COVER SUB-ASSEMBLY

(a) Connect the connector.

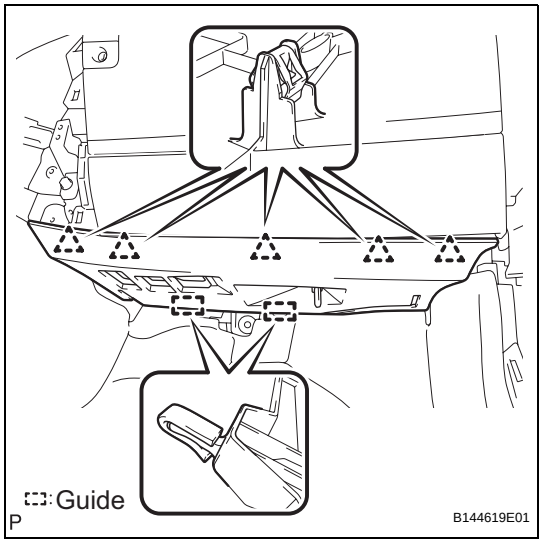

(b) Engage the 2 guides.

(c) Engage the 5 clips and install the No. 2 instrument panel under cover sub-assembly.

34. INSTALL FRONT DOOR OPENING TRIM COVER RH (See page IR-65)

35. INSTALL FRONT DOOR SCUFF PLATE RH (See page IR-65)

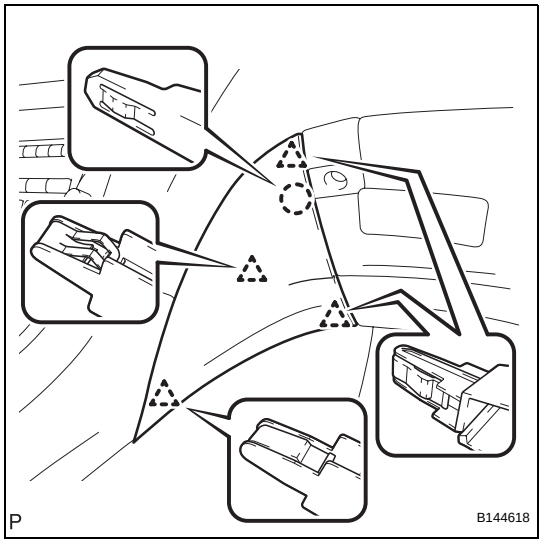

36. INSTALL INSTRUMENT PANEL FINISH PANEL END RH

(a) Engage the claw and 4 clips to install the instrument panel finish panel end RH.

37. INSTALL NO. 1 SWITCH HOLE BASE

(a) Connect each connector.

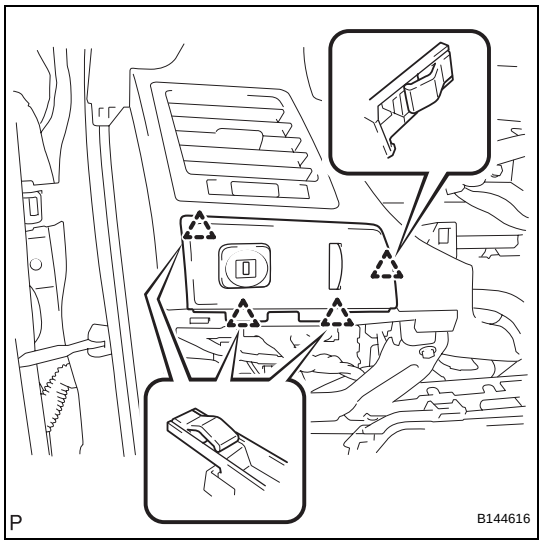

(b) Engage the 4 clips and install the No. 1 switch hole base.

38. INSTALL COMBINATION METER ASSEMBLY

(a) Connect each connector.

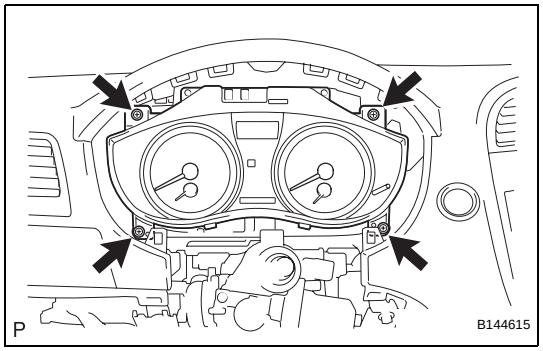

(b) Install the combination meter assembly with the 4 screws <B> or <C>.

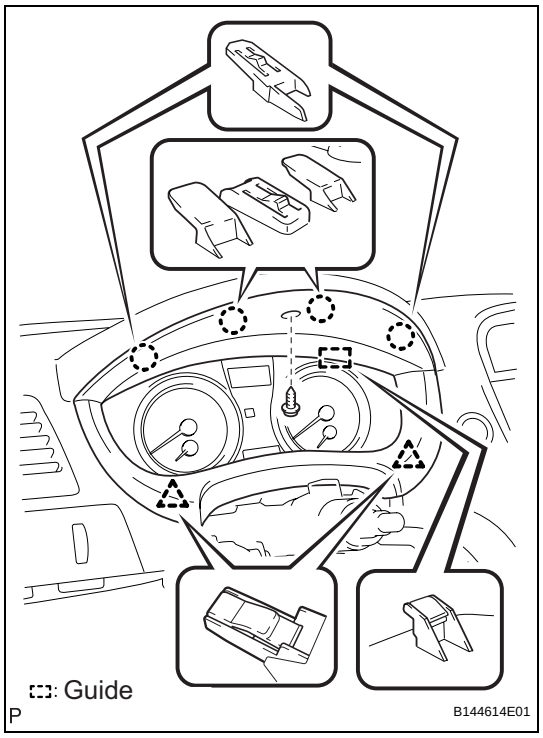

39. INSTALL INSTRUMENT CLUSTER FINISH PANEL SUB-ASSEMBLY

(a) Engage the guide and the 4 claws.

(b) Engage the 2 clips.

(c) Install the instrument cluster finish panel sub-assembly with the screw <B>.

40. INSTALL TURN SIGNAL SWITCH ASSEMBLY WITH SPIRAL CABLE SUB-ASSEMBLY (See page SR-86)

41. INSTALL TILT AND TELESCOPIC SWITCH (See page SR-86)

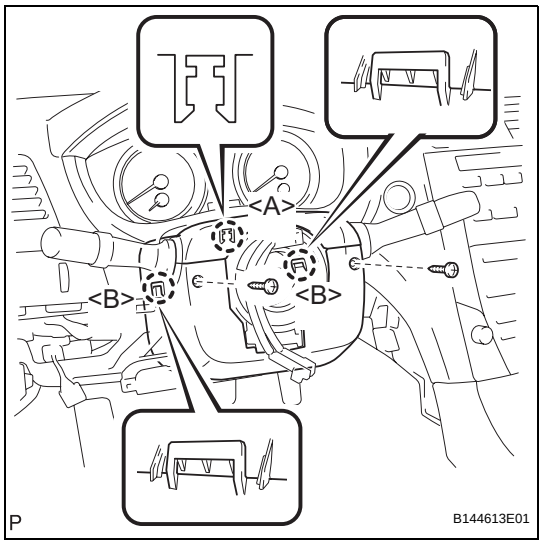

42. INSTALL STEERING COLUMN COVER

(a) Engage the claw <A> and install the upper steering column cover.

(b) Engage the 2 claws <B> and install the lower steering column cover.

(c) Install the 2 screws <J>.
Torque: 2.0 N*m (20 kgf*cm, 18 in.*lbf)

43. ADJUST SPIRAL CABLE SUB-ASSEMBLY (See page RS-382)

44. INSTALL LOWER INSTRUMENT PANEL SUB-ASSEMBLY

(a) Connect each connector.

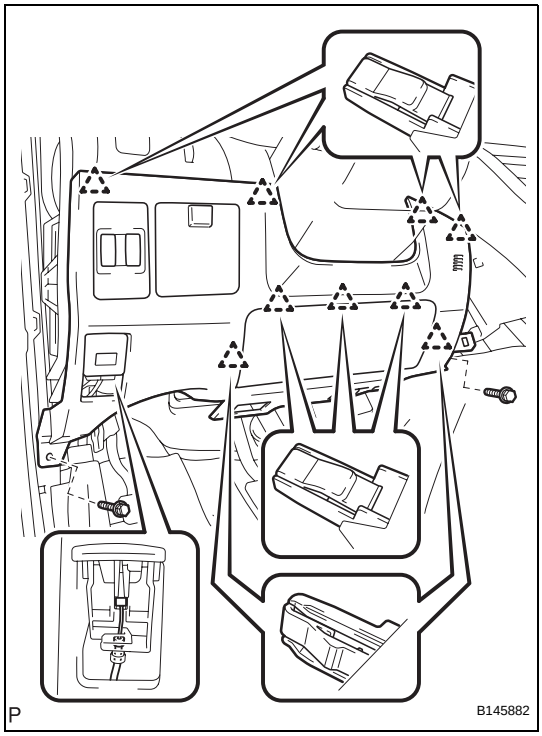

(b) Engage the 9 clips.

(c) Connect the hood lock control cable assembly.

(d) Install the lower instrument panel sub-assembly with the 2 bolts <A>.

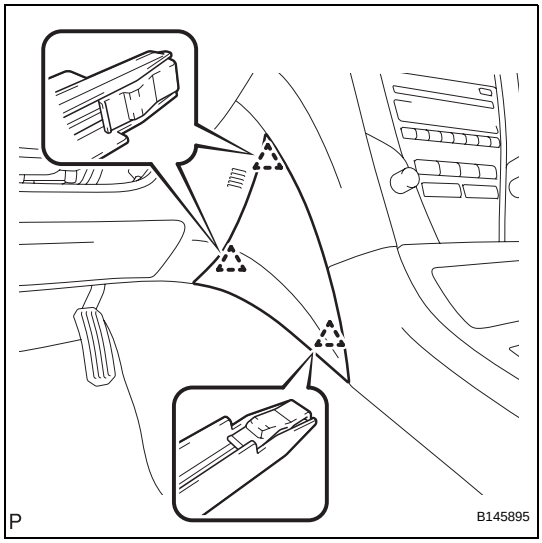

45. INSTALL INSTRUMENT PANEL FINISH PANEL END LH

(a) Engage the 3 clips and install the instrument panel finish panel end LH.

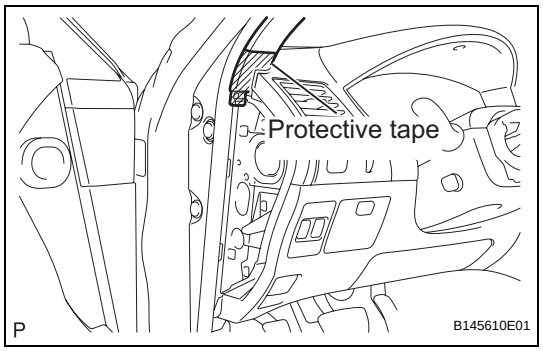

46. INSTALL SIDE INSTRUMENT PANEL LH

(a) Apply protective tape to the area shown in the illustration.

(b) Engage the upper end of the side instrument panel LH with the lower end of the front pillar garnish LH as shown in the illustration.

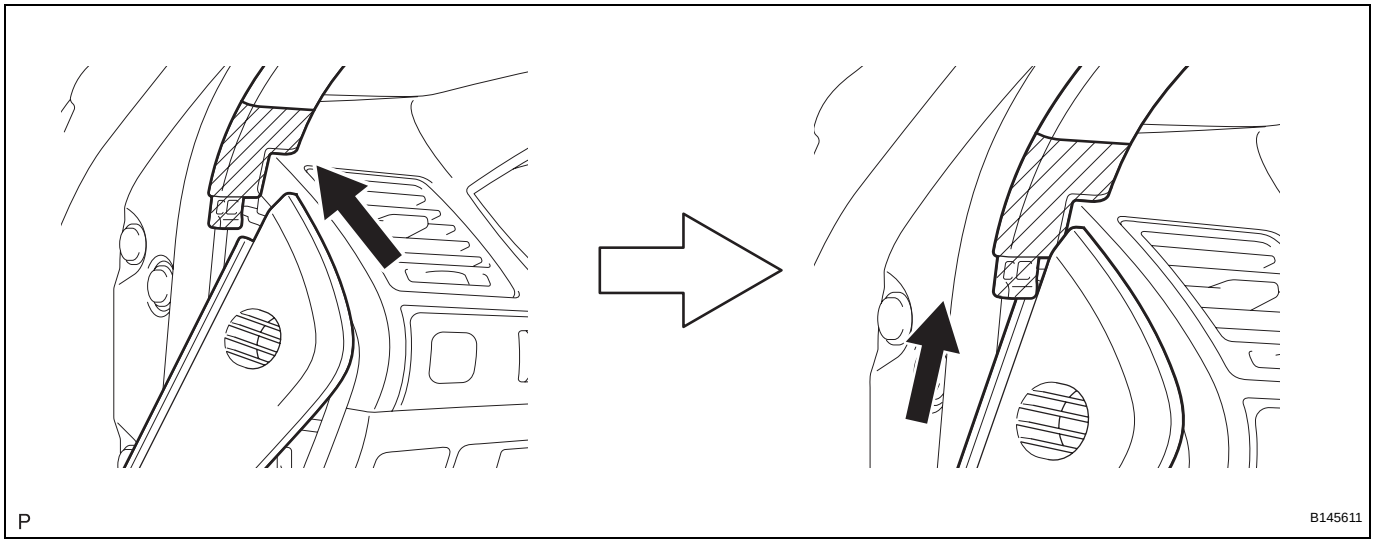

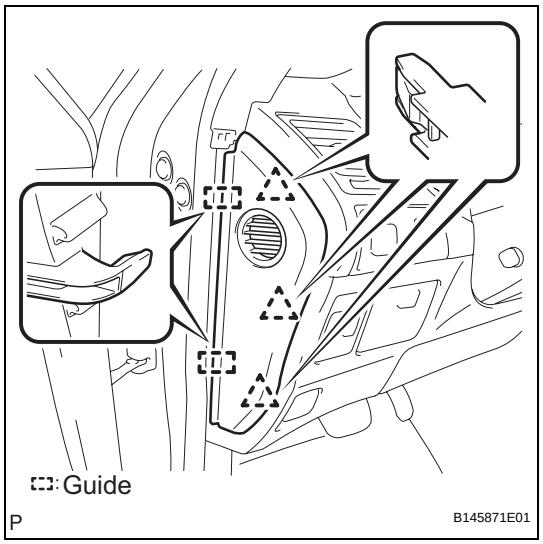

(c) Engage the 2 guides and the 3 clips to install the side instrument panel LH.

47. INSTALL FRONT DOOR OPENING TRIM COVER LH (See page IR-64)

48. INSTALL FRONT DOOR SCUFF PLATE LH (See page IR-65)

49. INSTALL STEERING WHEEL ASSEMBLY (See page SR-87)

50. INSTALL STEERING PAD (See page RS-368)

51. INSTALL LOWER NO. 3 STEERING WHEEL COVER (See page RS-369)

52. INSTALL LOWER NO. 2 STEERING WHEEL COVER (See page RS-369)

53. CONNECT CABLE TO NEGATIVE BATTERY TERMINAL

54. INSPECT STEERING PAD (See page RS-369)

55. INSPECT FRONT PASSENGER SIDE KNEE AIRBAG ASSEMBLY (See page RS-395)

56. INSPECT SRS WARNING LIGHT (See page RS-369)

57. PERFORM INITIALIZATION

NOTICE:

Some systems need initialization after reconnecting the cable to the negative battery terminal (See page IN-33).

INSTRUMENT PANEL SAFETY PAD

PRECAUTION

1. PRECAUTION FOR VEHICLE WITH SRS AIRBAG AND SEAT BELT PRETENSIONER

(a) Some operations in this section may affect the SRS airbags. Prior to performing the corresponding operations, read the SRS airbag NOTICE.

2. TABLE OF BOLT, SCREW AND NUT

Code	Shape	Size	Parts No.
<A>	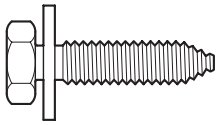	ϕ = 6 mm (0.24 in.) Length = 25 mm (0.98 in.)	91635-60625
<B>	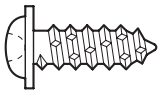	ϕ = 5 mm (0.20 in.) Length = 16 mm (0.63 in.)	93567-55016
<C>		ϕ = 5 mm (0.20 in.) Length = 20 mm (0.79 in.)	93567-55020
<D>	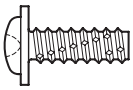	ϕ = 5 mm (0.20 in.) Length = 14 mm (0.55 in.)	93568-55014
<E>	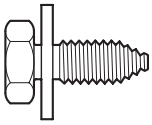	ϕ = 6 mm (0.24 in.) Length = 16 mm (0.63 in.)	91635-40616
<F>	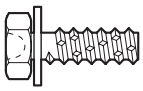	ϕ = 5 mm (0.20 in.) Length = 15 mm (0.59 in.)	90159-50327
<G>	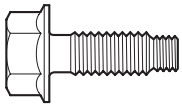	ϕ = 6 mm (0.24 in.) Length = 18 mm (0.71 in.)	91553-80614

Code	Shape	Size	Parts No.
<H>	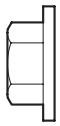	ϕ = 6 mm (0.24 in.)	90179-06307
<I>		ϕ = 5 mm (0.20 in.) Length = 14 mm (0.55 in.)	93568-15014
<J>	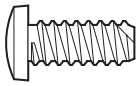	ϕ = 5 mm (0.20 in.) Length = 15 mm (0.59 in.)	90164-50034
<K>	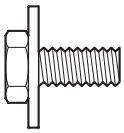	ϕ = 8 mm (0.31 in.) Length = 18 mm (0.71 in.)	91626-60818
<L>	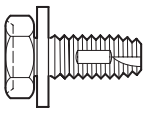	ϕ = 6 mm (0.24 in.) Length = 15 mm (0.59 in.)	90119-06915
<M>	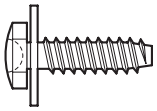	ϕ = 5 mm (0.20 in.) Length = 16 mm (0.63 in.)	90159-50068

REMOVAL

1. **PRECAUTION**
   (See page IP-1)
2. **ALIGN FRONT WHEELS FACING STRAIGHT AHEAD**
3. **DISCONNECT CABLE FROM NEGATIVE BATTERY TERMINAL**
   CAUTION:
   Wait for 90 seconds after disconnecting the cable to prevent airbag deployment (See page RS-1).
4. **REMOVE LOWER NO. 3 STEERING WHEEL COVER (See page RS-367)**
5. **REMOVE LOWER NO. 2 STEERING WHEEL COVER (See page RS-367)**
6. **REMOVE STEERING PAD (See page RS-367)**
7. **REMOVE STEERING WHEEL ASSEMBLY (See page SR-80)**
8. **REMOVE FRONT DOOR SCUFF PLATE LH (See page IR-39)**
9. **REMOVE FRONT DOOR OPENING TRIM COVER LH (See page IR-39)**
10. **REMOVE SIDE INSTRUMENT PANEL LH**
    (a) Disengage the 3 clips.
    (b) Disengage the 2 guides and remove the side instrument panel LH.

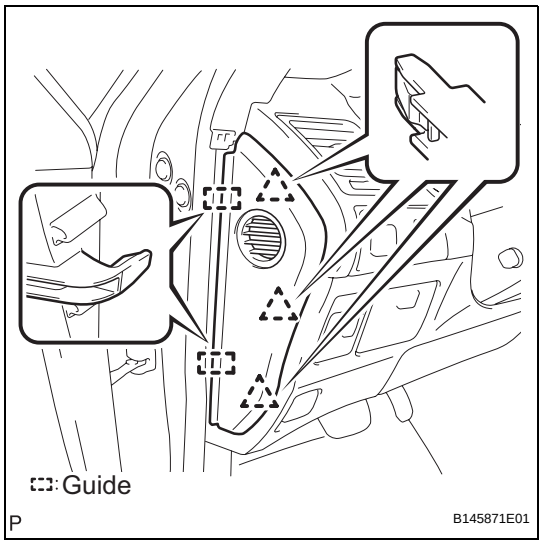

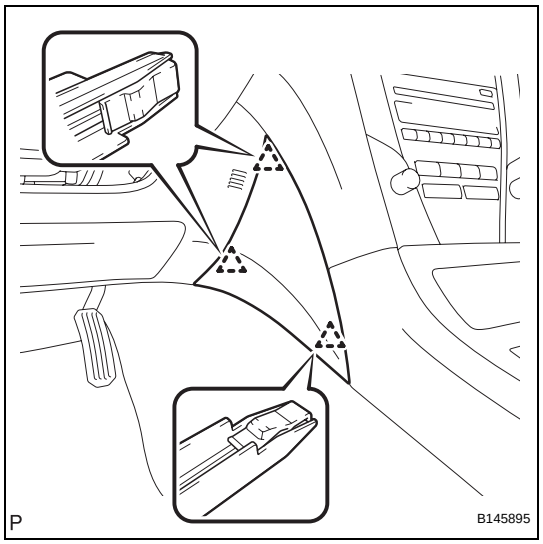

11. REMOVE INSTRUMENT PANEL FINISH PANEL END LH

(a) Disengage the 3 clips and remove the instrument panel finish panel end LH.

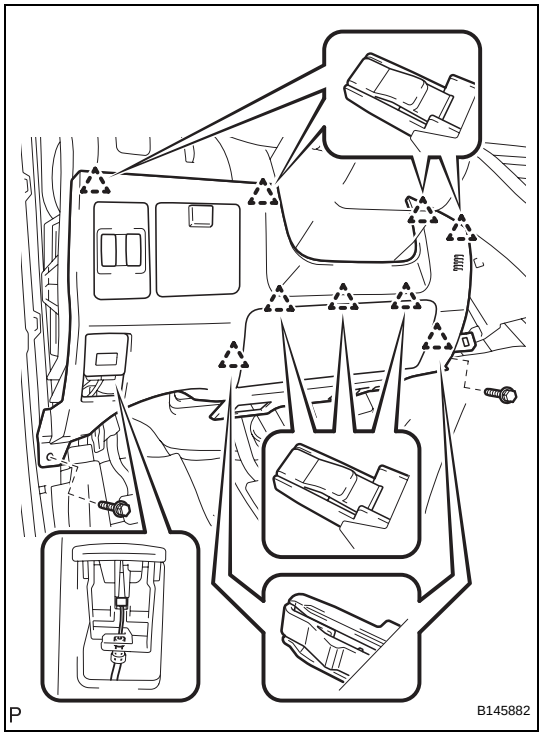

12. REMOVE LOWER INSTRUMENT PANEL SUB-ASSEMBLY

(a) Remove the 2 bolts <A>.
(b) Disconnect the hood lock control cable assembly.
(c) Disengage the 9 clips.
(d) Disconnect each connector and remove the lower instrument panel sub-assembly.

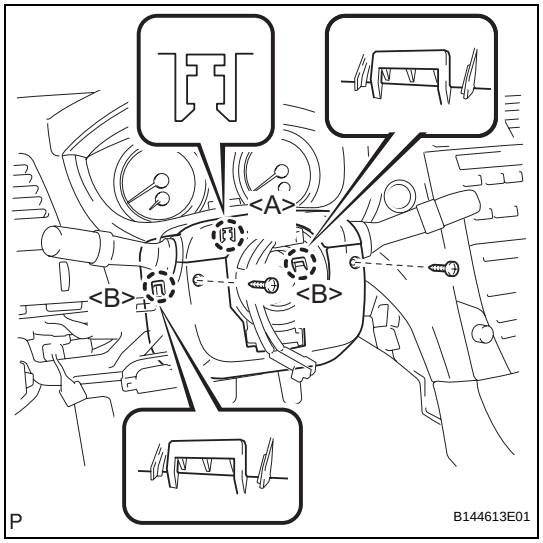

13. REMOVE STEERING COLUMN COVER

(a) Remove the 2 screws <J>.
(b) Disengage the 2 claws <B> and remove the lower steering column cover.
(c) Disengage the claw <A> and remove the upper steering column cover.

14. REMOVE TILT AND TELESCOPIC SWITCH (See page SR-80)

15. REMOVE TURN SIGNAL SWITCH ASSEMBLY WITH SPIRAL CABLE SUB-ASSEMBLY (See page SR-80)

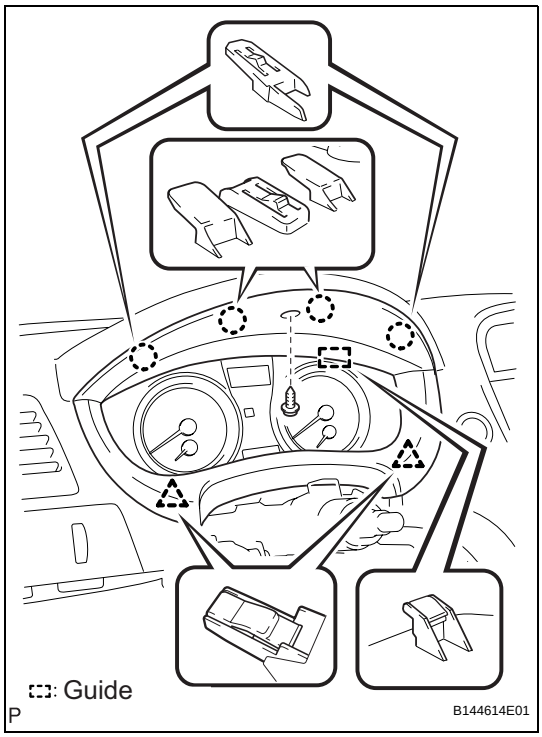

16. REMOVE INSTRUMENT CLUSTER FINISH PANEL SUB-ASSEMBLY

(a) Remove the screw <B>.
(b) Disengage the 2 clips.
(c) Disengage the guide and the 4 claws, and remove the instrument cluster finish panel sub-assembly.

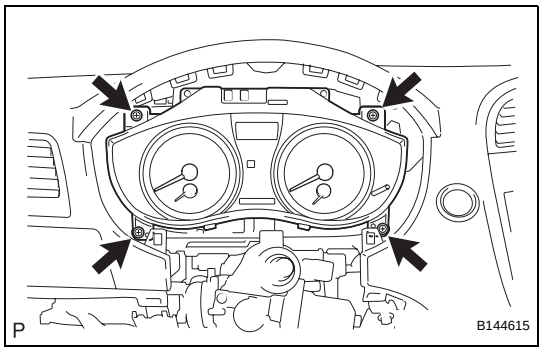

17. REMOVE COMBINATION METER ASSEMBLY

(a) Remove the 4 screws <B> or <C>.
(b) Disconnect each connector and remove the combination meter assembly.

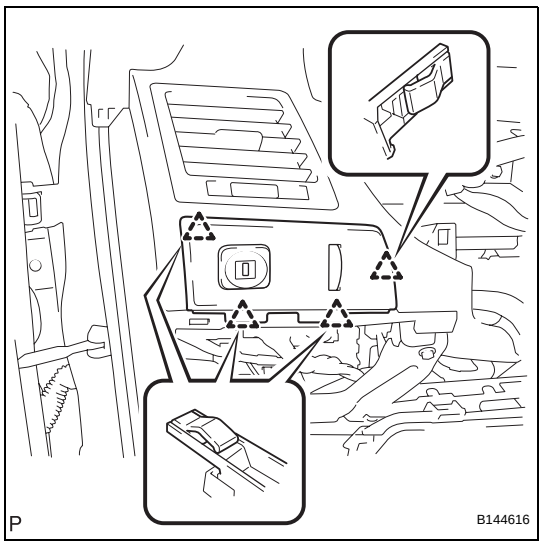

18. REMOVE NO. 1 SWITCH HOLE BASE

(a) Disengage the 4 clips.
(b) Disconnect each connector and remove the No. 1 switch hole base.

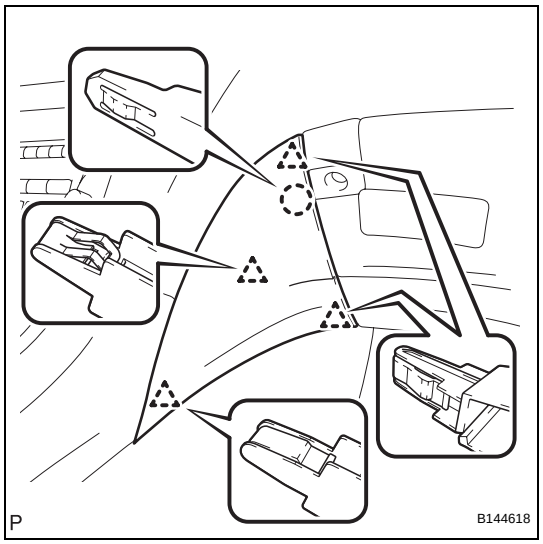

19. REMOVE INSTRUMENT PANEL FINISH PANEL END RH

(a) Disengage the claw and 4 clips, and remove the instrument panel finish panel end RH.

20. REMOVE FRONT DOOR SCUFF PLATE RH (See page IR-42)

21. REMOVE FRONT DOOR OPENING TRIM COVER RH (See page IR-42)

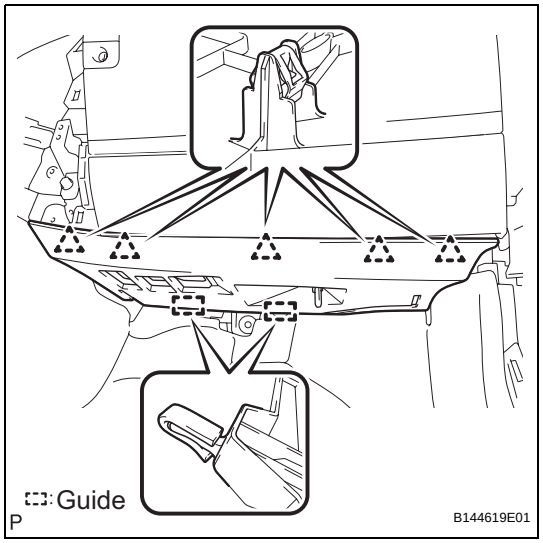

22. REMOVE NO. 2 INSTRUMENT PANEL UNDER COVER SUB-ASSEMBLY

(a) Disengage the 5 clips.

(b) Disengage the 2 guides and remove the No. 2 instrument panel under cover sub-assembly.

(c) Disconnect the connector.

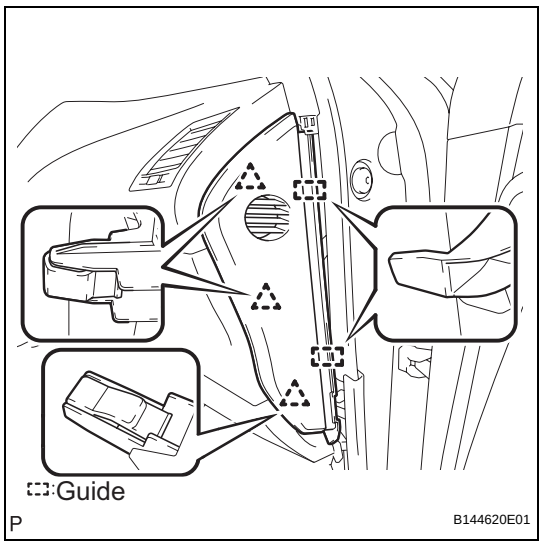

23. REMOVE SIDE INSTRUMENT PANEL RH

(a) Disengage the 3 clips.

(b) Disengage the 2 guides and remove the side instrument panel RH.

24. REMOVE FRONT PASSENGER SIDE KNEE AIRBAG ASSEMBLY (See page RS-396)

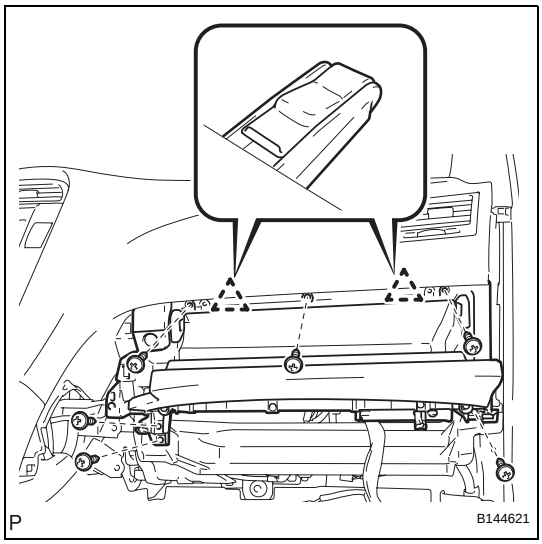

25. REMOVE LOWER INSTRUMENT PANEL RH

(a) Remove the 6 screws <D>.
(b) Disengage the 2 clips.
(c) Disconnect each connector and remove the lower instrument panel RH

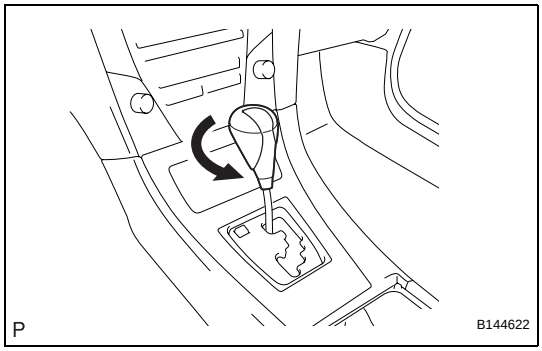

26. REMOVE SHIFT LEVER KNOB SUB-ASSEMBLY

(a) Turn the shift lever knob counterclockwise and remove the shift lever knob sub-assembly.

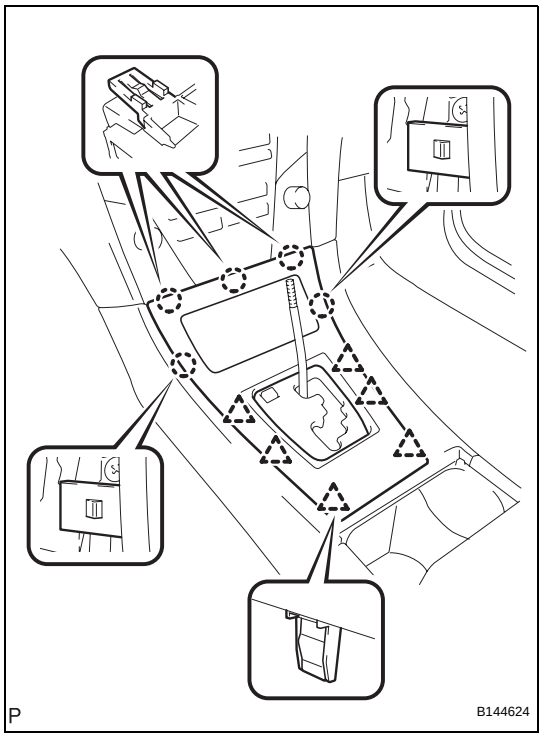

27. REMOVE UPPER CONSOLE PANEL ASSEMBLY WITH FRONT ASH RECEPTACLE

(a) Disengage the 5 claws and 6 clips.
(b) Disconnect the connector and remove the upper console panel assembly with front ash receptacle.

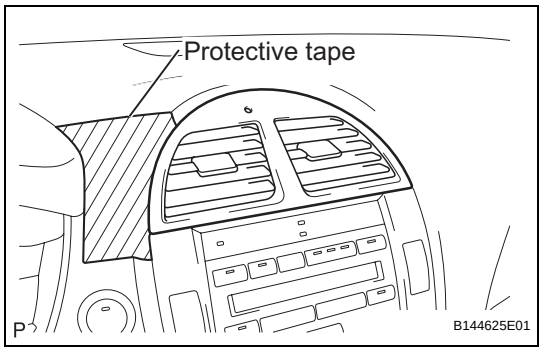

28. REMOVE NO. 2 INSTRUMENT PANEL REGISTER ASSEMBLY

(a) Apply protective tape to the area shown in the illustration.

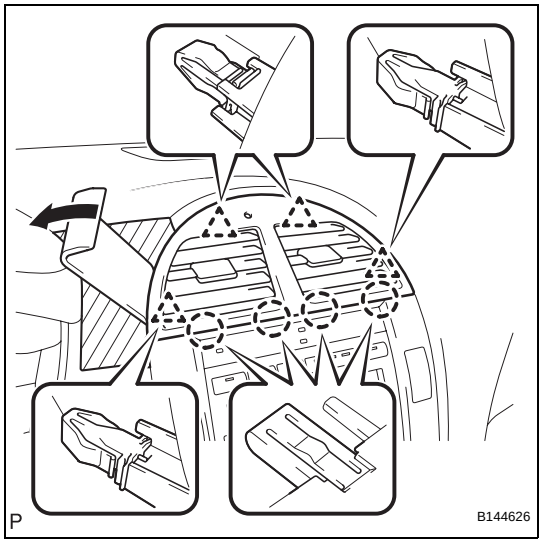

(b) Using a moulding remover, disengage the 4 claws and 4 clips, and remove the No. 2 instrument panel register assembly.

(c) Disconnect the connector.

29. REMOVE INTEGRATION CONTROL PANEL WITH RADIO RECEIVER ASSEMBLY (w/o Navigation System) (See page AV-168)

30. REMOVE MULTI-DISPLAY WITH RADIO RECEIVER ASSEMBLY (w/ Navigation System) (See page AV-170)

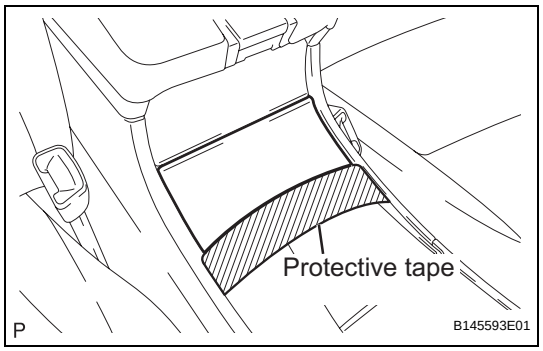

31. REMOVE HEATER SEAT SWITCH CONSOLE BASE (w/o Seat Heater System)

(a) Apply protective tape to the area shown in the illustration.

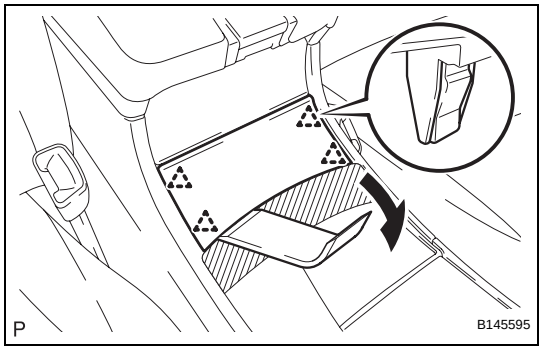

(b) Using a moulding remover, disengage the 4 clips and remove the heater seat switch console base.

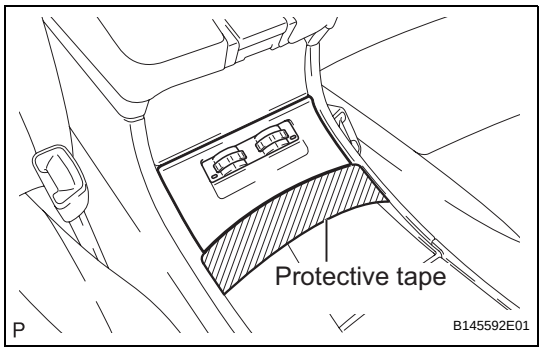

32. REMOVE HEATER SEAT SWITCH CONSOLE BASE (w/ Seat Heater System)

(a) Apply protective tape to the area shown in the illustration.

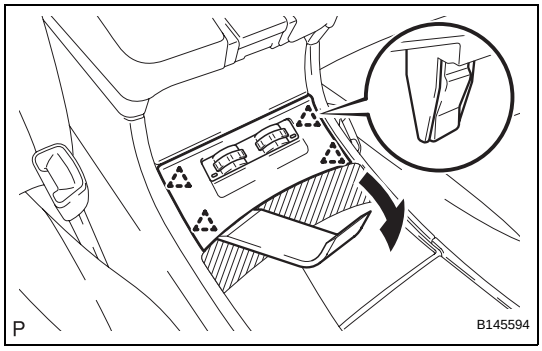

(b) Using a moulding remover, disengage the 4 clips.

(c) Disconnect each connector and remove the heater seat switch console base.

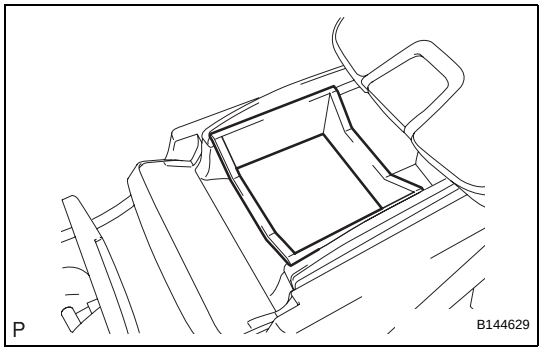

33. REMOVE CONSOLE BOX POCKET

(a) Remove the console box pocket.

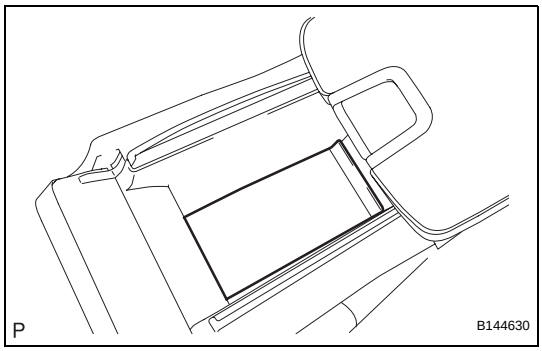

34. REMOVE CONSOLE BOX CARPET

(a) Remove the console box carpet.

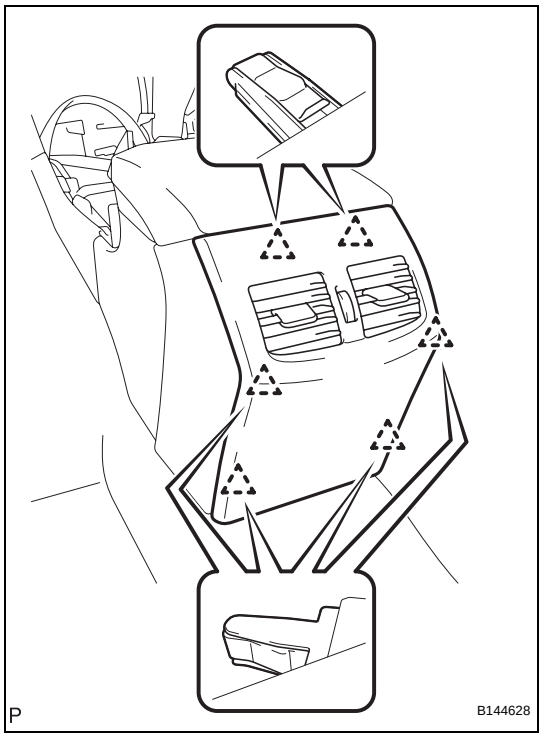

35. REMOVE CONSOLE REAR END PANEL SUB-ASSEMBLY

(a) Disengage the 6 claws and remove the console rear end panel sub-assembly.

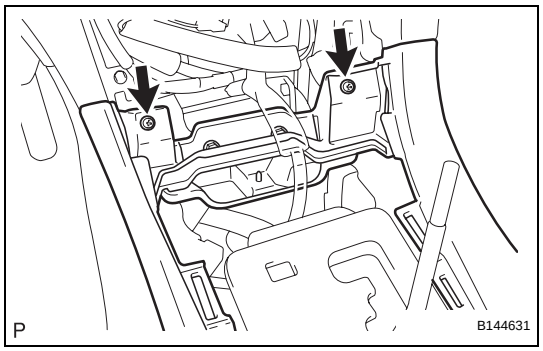

36. REMOVE REAR CONSOLE BOX ASSEMBLY

(a) Remove the 2 screws <F>.

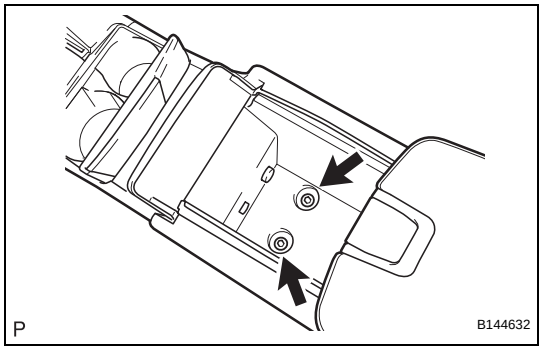

(b) Remove the 2 bolts <E>.

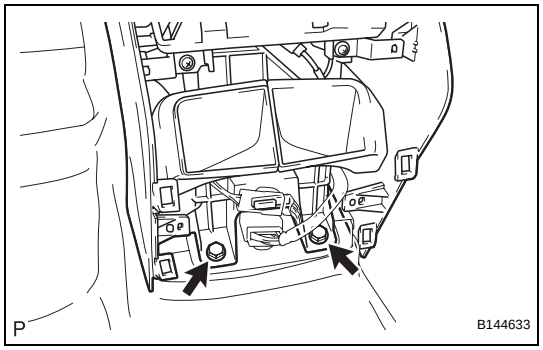

(c) Remove the 2 bolts <E>.

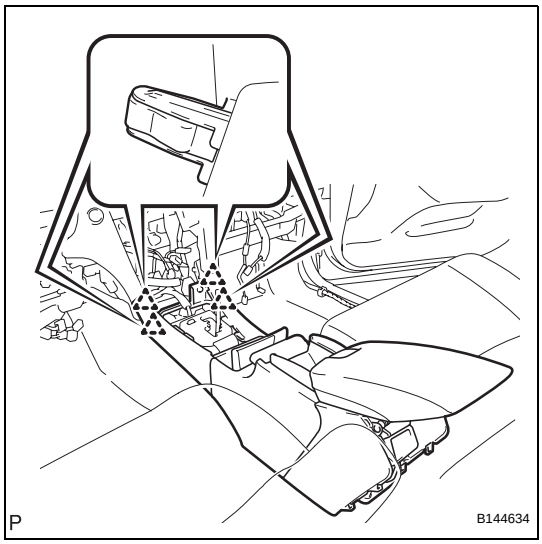

(d) Disengage the 4 clips and remove the rear console box assembly.
(e) Disconnect each connector.

37. REMOVE FRONT PILLAR GARNISH LH (See page IR-39)

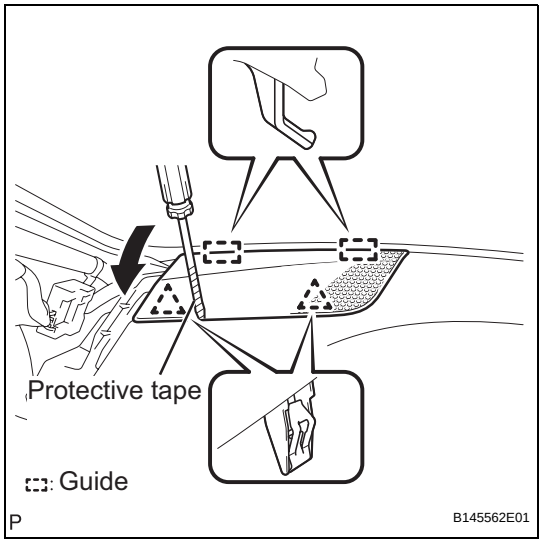

38. REMOVE NO. 1 INSTRUMENT PANEL SPEAKER PANEL SUB-ASSEMBLY
(a) Using a screwdriver, disengage the 2 clips.
HINT:
Tape the screwdriver tip before use.
(b) Disengage the 2 guides and remove the No. 1 instrument panel speaker panel sub-assembly.

39. REMOVE FRONT NO. 2 SPEAKER ASSEMBLY (for LH Side) (See page AV-184)

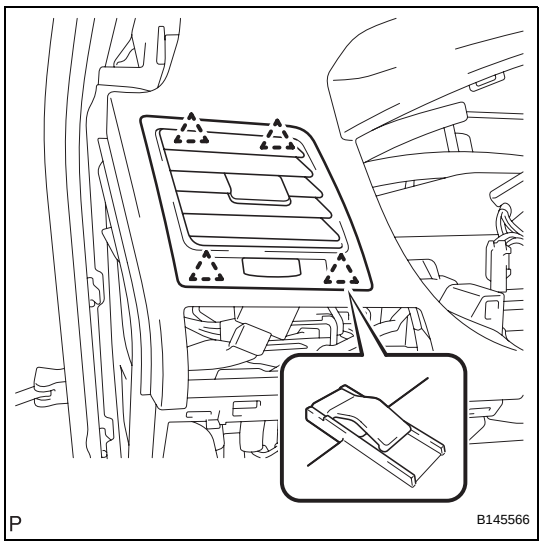

40. REMOVE NO. 1 INSTRUMENT PANEL REGISTER ASSEMBLY
(a) Disengage the 4 clips and remove the No. 1 instrument panel register assembly.

41. REMOVE FRONT PILLAR GARNISH RH (See page IR-42)

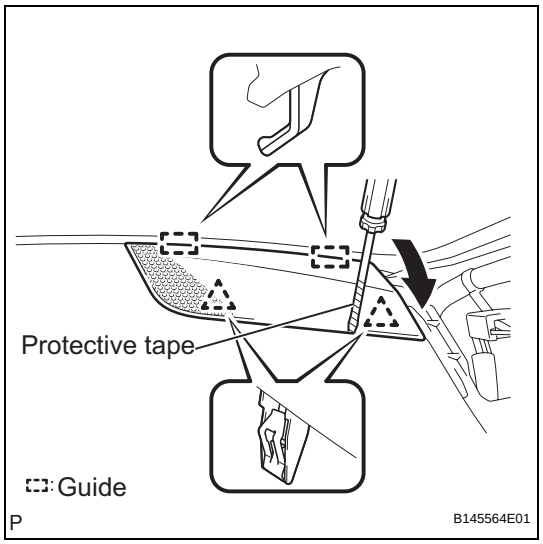

42. REMOVE NO. 2 INSTRUMENT PANEL SPEAKER PANEL SUB-ASSEMBLY

(a) Using a screwdriver, disengage the 2 clips.
HINT:
Tape the screwdriver tip before use.

(b) Disengage the 2 guides and remove the No. 2 instrument panel speaker panel sub-assembly.

43. REMOVE FRONT NO. 2 SPEAKER ASSEMBLY (for RH Side)

HINT:
Use the same procedures described for the LH side (See page AV-184).

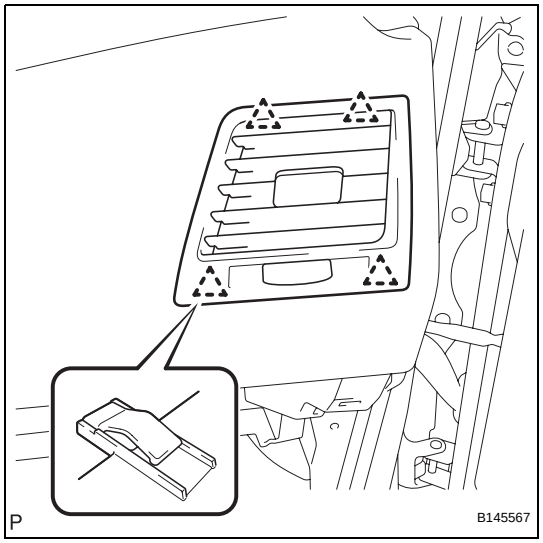

44. REMOVE NO. 3 INSTRUMENT PANEL REGISTER ASSEMBLY

(a) Disengage the 4 clips and remove the No. 3 instrument panel register assembly.

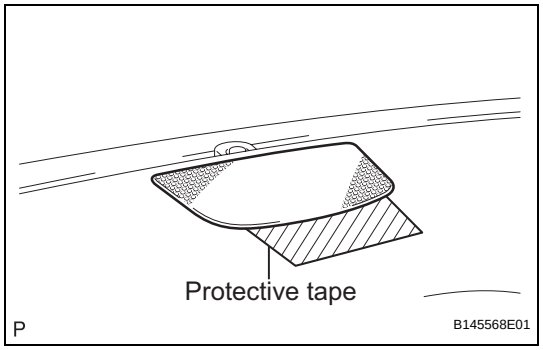

45. REMOVE NO. 1 SPEAKER HOLE COVER

(a) Apply protective tape to the area shown in the illustration.

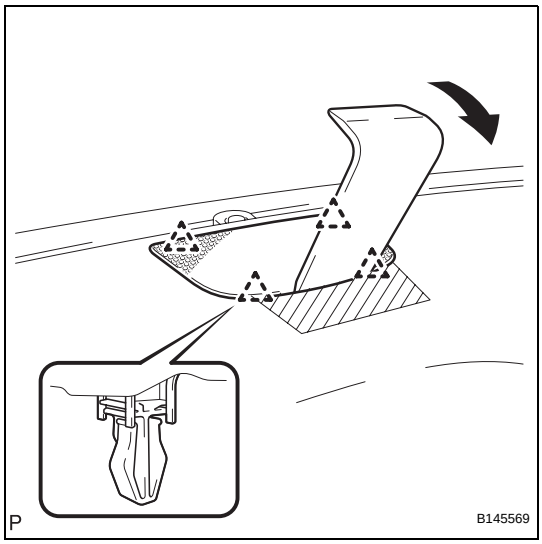

(b) Using a moulding remover, disengage the 4 clips and remove the No. 1 speaker hole cover.

46. REMOVE FRONT STEREO COMPONENT SPEAKER ASSEMBLY (See page AV-188)

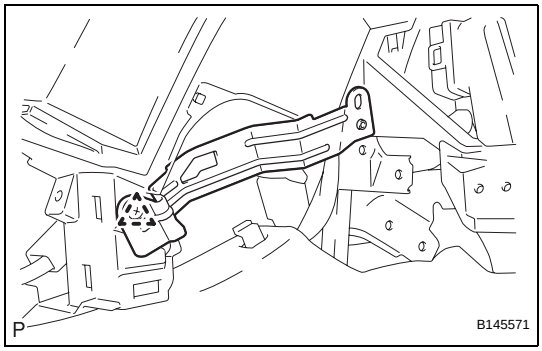

47. REMOVE NO. 1 INSTRUMENT PANEL MOUNTING BRACKET

(a) Remove the clip and the No. 1 instrument panel mounting bracket.

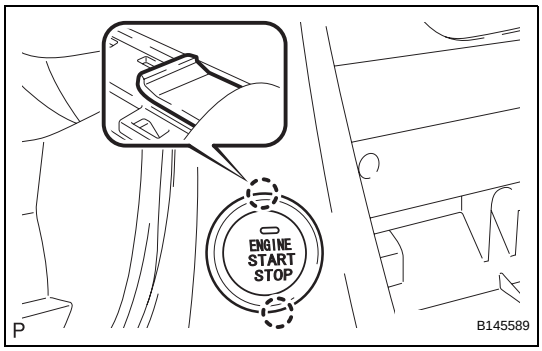

48. REMOVE PUSH START SWITCH

(a) Disengage the 2 claws and remove the push start switch.

(b) Disconnect the connector.

49. DISCONNECT INSTRUMENT PANEL WIRE ASSEMBLY (See page RS-414)

50. REMOVE ROOM TEMPERATURE SENSOR (See page AC-214)

51. REMOVE INSTRUMENT PANEL SAFETY PAD ASSEMBLY (w/o DVD Player)

(a) Disconnect each connector.

(b) Disengage each clamp.

(c) Remove the 2 passenger airbag bolts <K>.

(d) Remove the clip.

(e) Remove the bolt <L>.

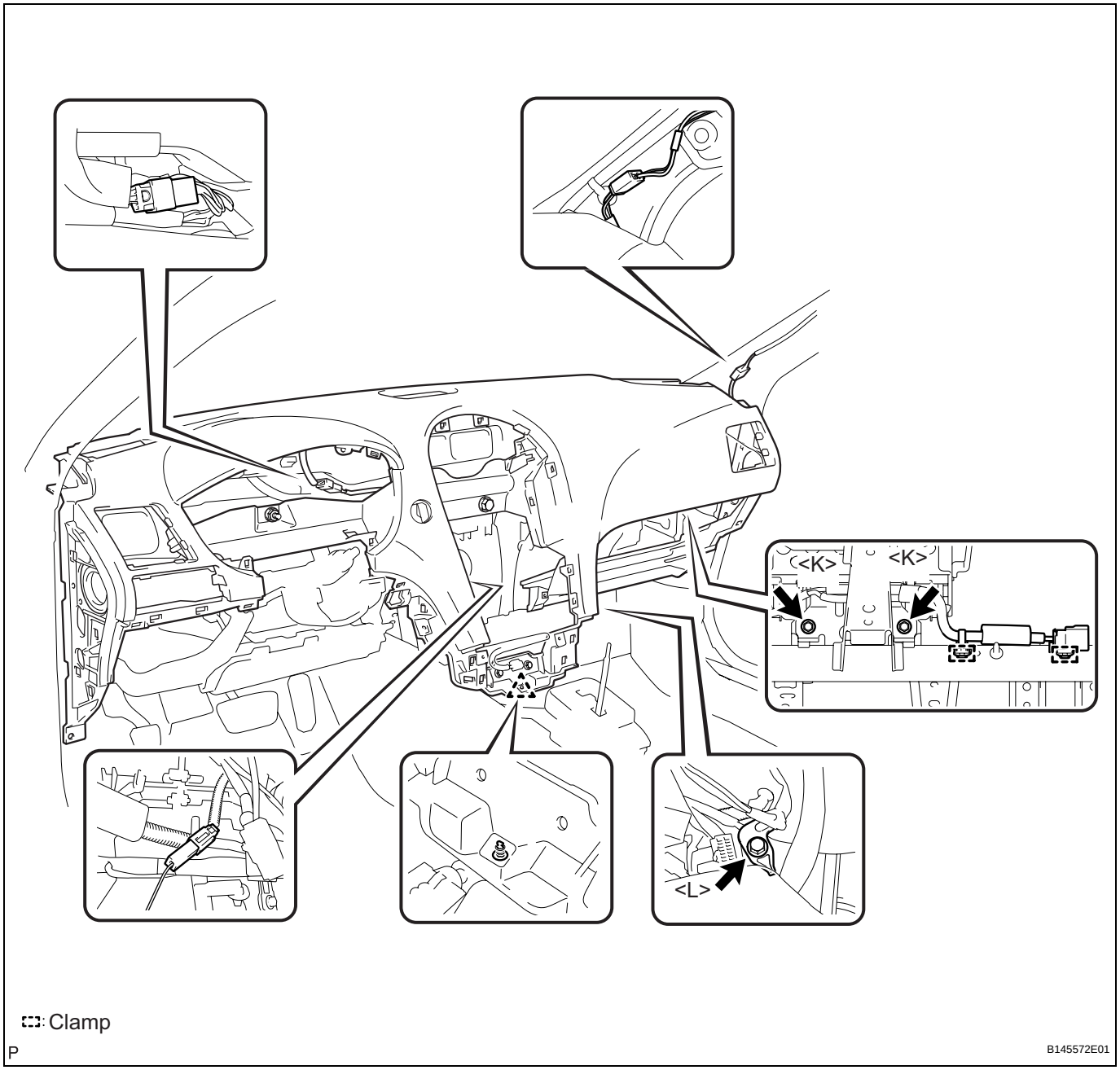

(f) Remove the 5 bolts <G> and nut <H>.
(g) Remove the 4 clips.

(h) Disengage the 5 claws and remove the instrument panel safety pad assembly.

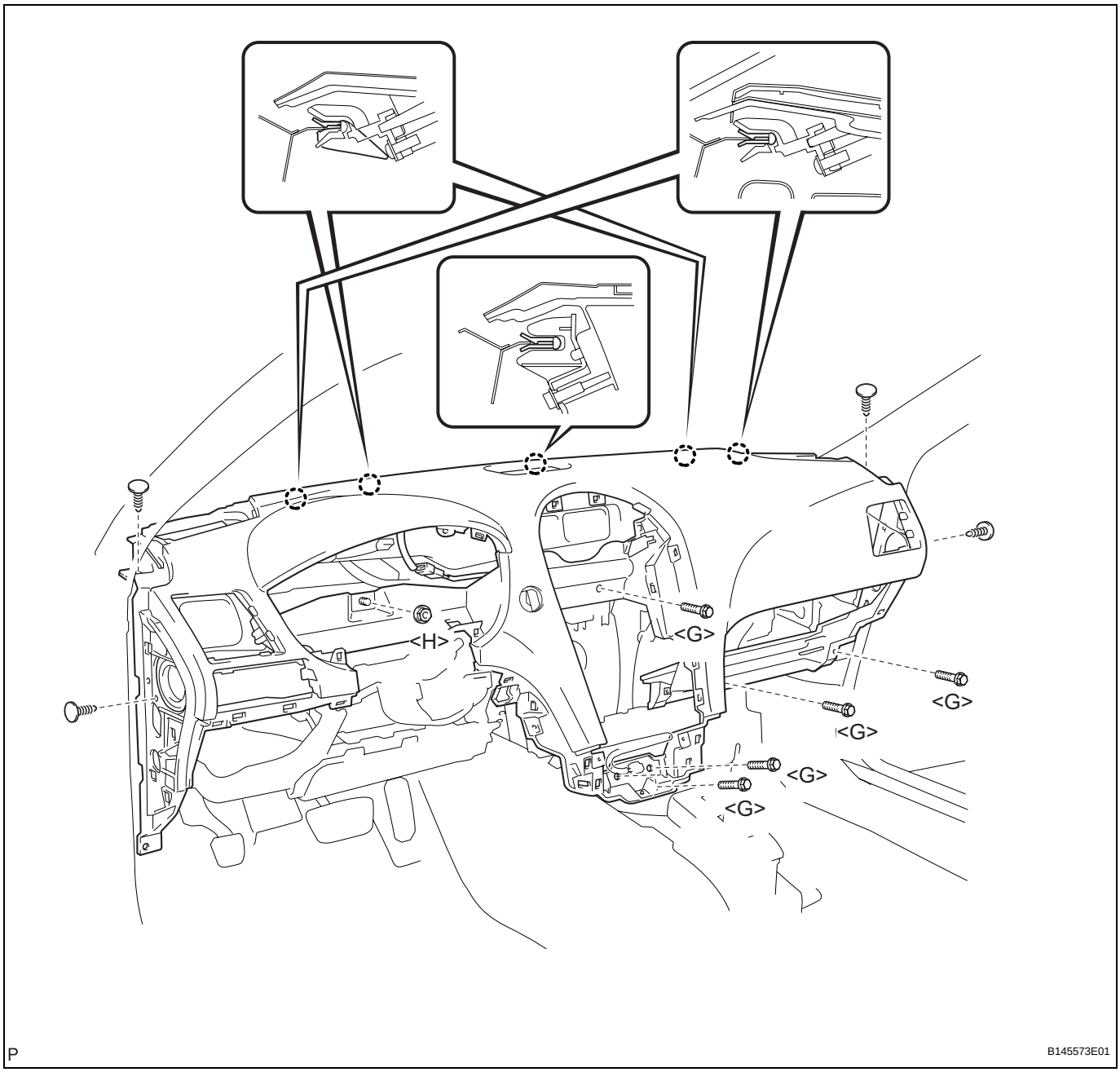

52. REMOVE INSTRUMENT PANEL SAFETY PAD ASSEMBLY (w/ DVD Player)

(a) Disconnect each connector.
(b) Disengage each clamp.
(c) Remove the 2 passenger airbag bolts <K>.
(d) Remove the clip.

(e) Remove the bolt <L>.

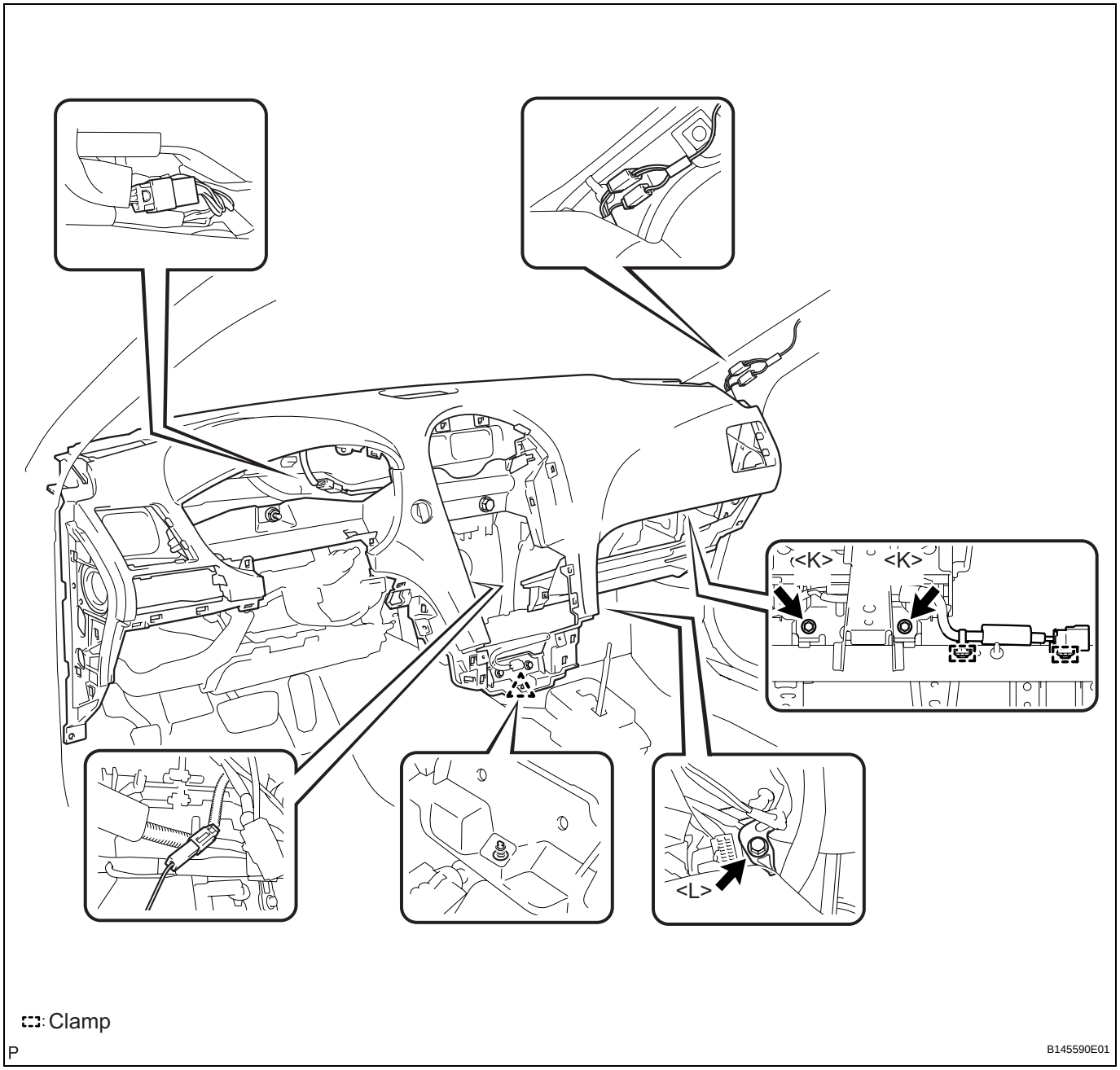

(f) Remove the 5 bolts <G> and nut <H>.
(g) Remove the 4 clips.

(h) Disengage the 5 claws and remove the instrument panel safety pad assembly.

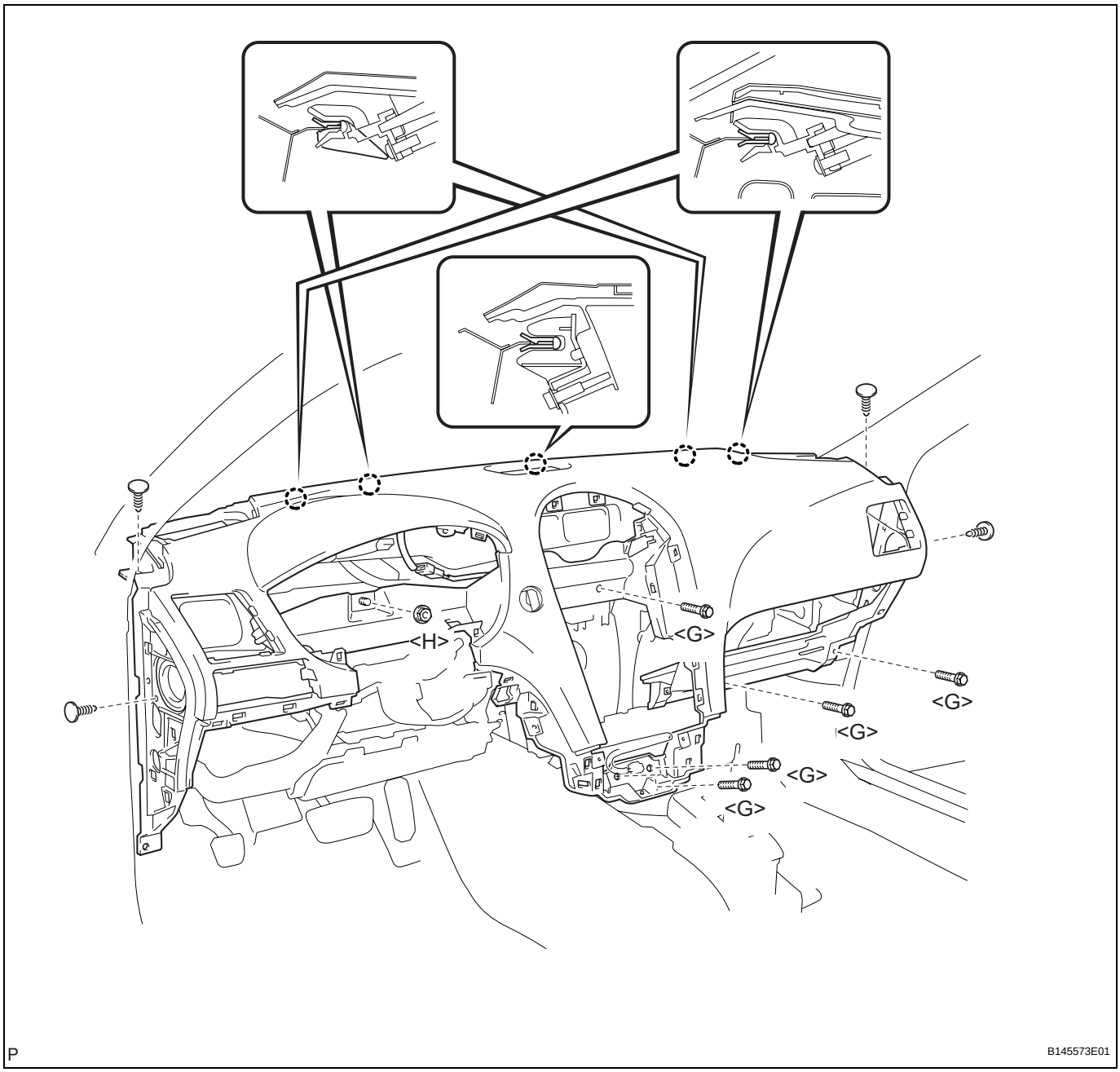

53. REMOVE NO. 1 INSTRUMENT PANEL CLIP

(a) Disengage the 3 claws and remove the 3 No. 1 instrument panel clips.

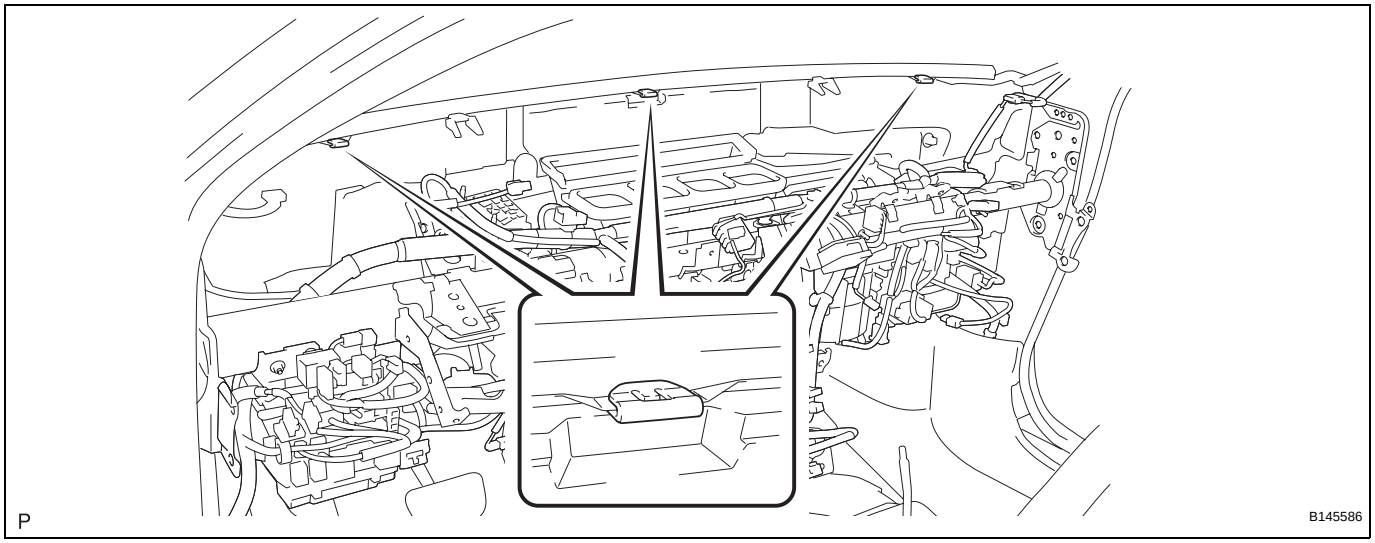

54. REMOVE NO. 3 INSTRUMENT PANEL STAY

(a) Disengage the 2 claws and remove the 2 No. 3 instrument panel stays.

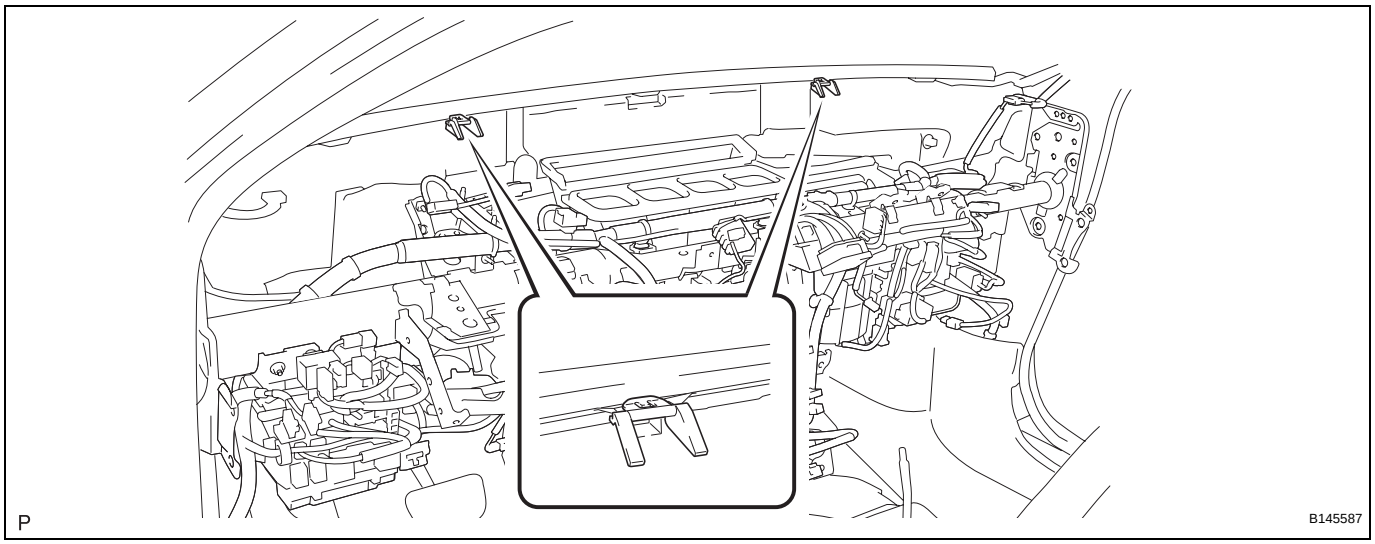

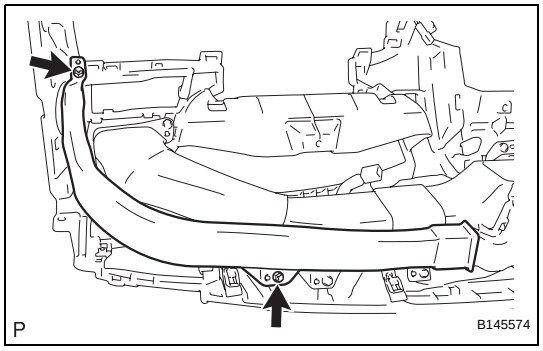

DISASSEMBLY

1. REMOVE SIDE NO. 1 DEFROSTER NOZZLE DUCT

(a) Remove the 2 screws <F> and the side No. 1 defroster nozzle duct.

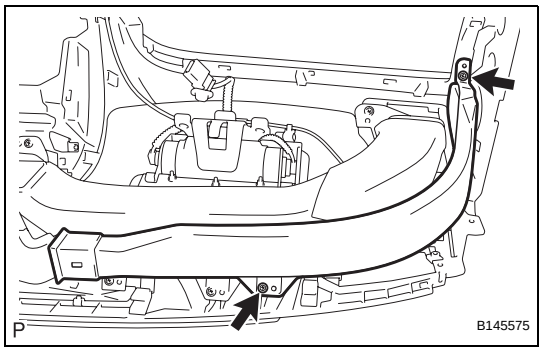

2. REMOVE SIDE NO. 2 DEFROSTER NOZZLE DUCT

(a) Remove the 2 screws <F> and the side No. 2 defroster nozzle duct.

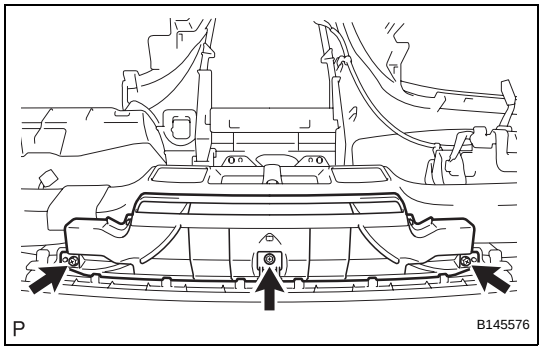

3. REMOVE DEFROSTER NOZZLE ASSEMBLY

(a) Remove the 3 screws <F> and the defroster nozzle assembly.

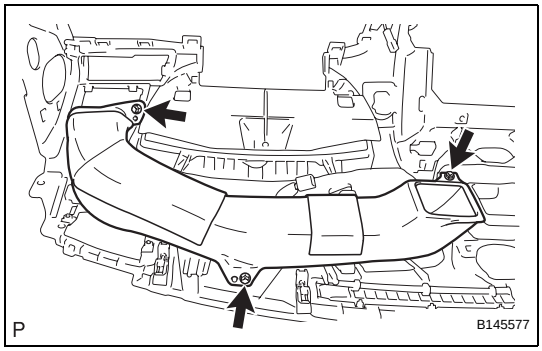

4. REMOVE NO. 1 HEATER TO REGISTER DUCT

(a) Remove the 3 screws <F> and the No. 1 heater to register duct.

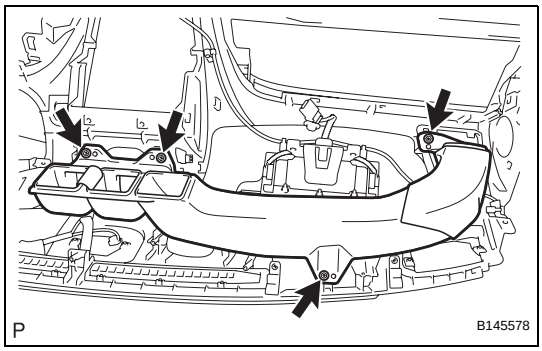

5. REMOVE NO. 2 HEATER TO REGISTER DUCT

(a) Remove the 4 screws <F> and the No. 2 heater to register duct.

6. REMOVE NO. 2 ANTENNA CORD SUB-ASSEMBLY (See page AV-220)

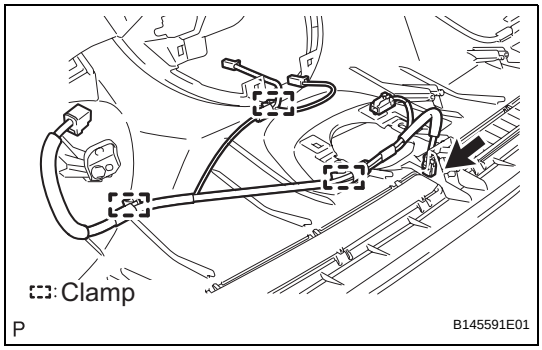

7. REMOVE NO. 3 INSTRUMENT PANEL WIRE

(a) Disconnect the connector.

(b) Disengage the 3 clamps and remove the No. 3 instrument panel wire.

8. REMOVE NAVIGATION ANTENNA ASSEMBLY (See page NS-253)

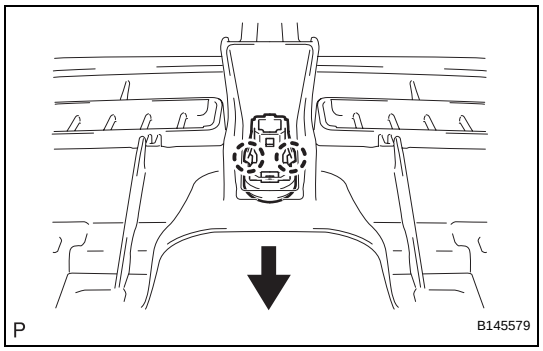

9. REMOVE AUTOMATIC LIGHT CONTROL SENSOR

(a) Disengage the 2 claws and remove the automatic light control sensor.

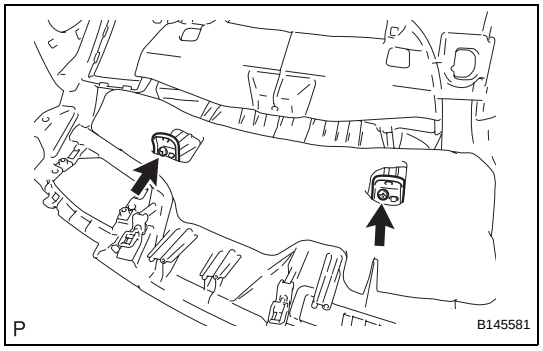

10. REMOVE NO. 1 METER HOOD RETAINER

(a) Remove the 2 screws <I> and the 2 No. 1 meter hood retainer.

11. REMOVE FRONT PASSENGER AIRBAG ASSEMBLY (See page RS-415)

12. REMOVE NO. 1 INSTRUMENT PANEL PIN

(a) Remove the 4 screws <I> and the 4 No. 1 instrument panel pins.

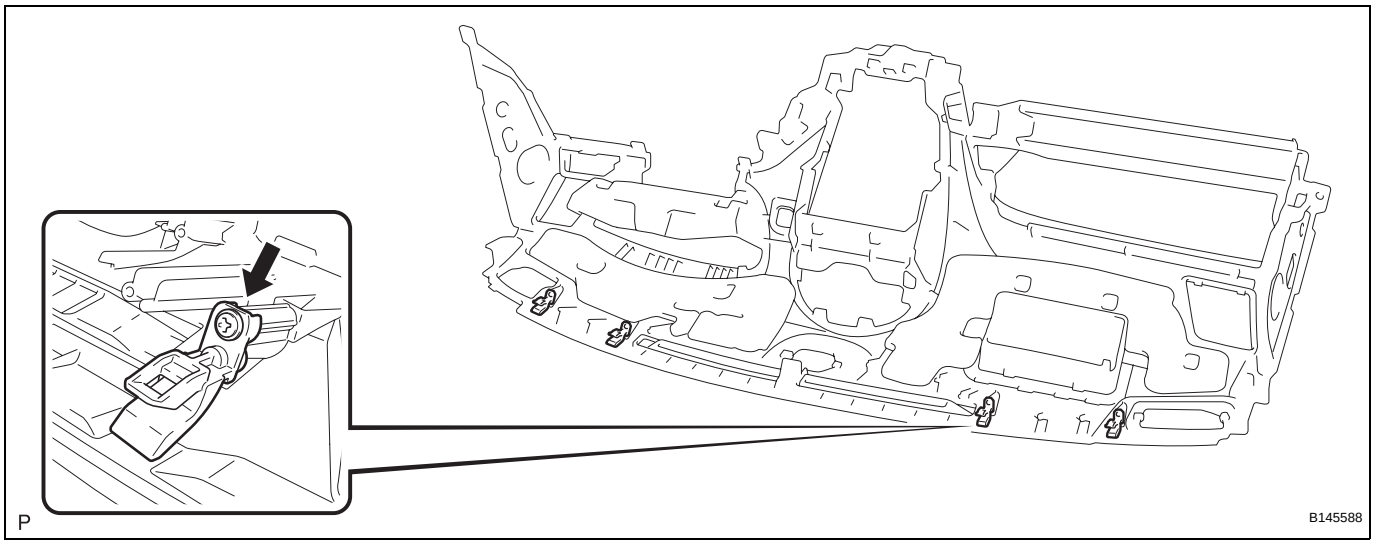

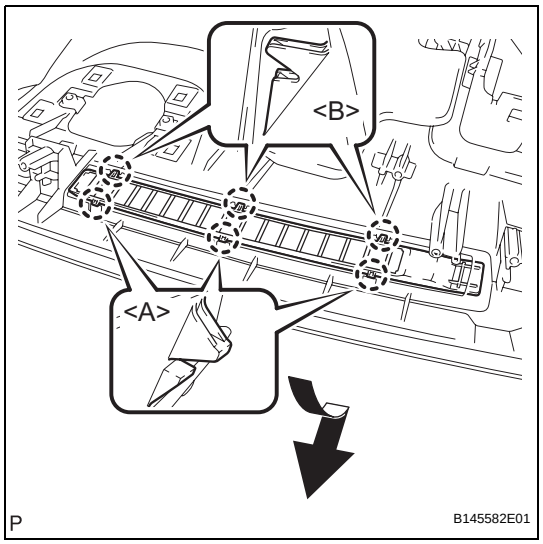

13. REMOVE NO. 1 DEFROSTER NOZZLE GARNISH

(a) Disengage the 3 claws <A>.

(b) Disengage the 3 claws <B > and remove the No. 1 defroster nozzle garnish as shown in the illustration.

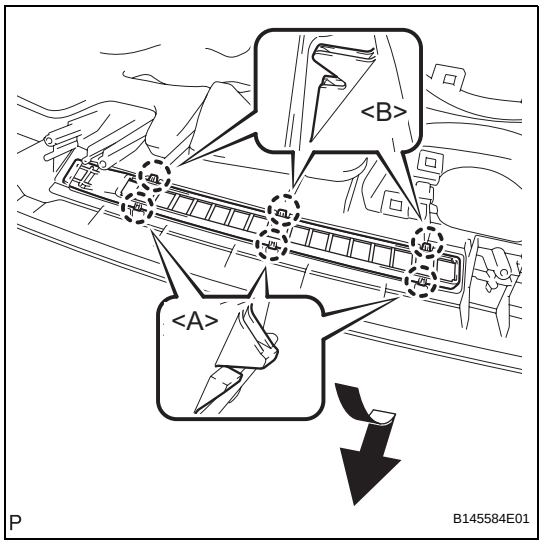

14. REMOVE NO. 2 DEFROSTER NOZZLE GARNISH

(a) Disengage the 3 claws <A>.

(b) Disengage the 3 claws <B > and remove the No. 2 defroster nozzle garnish as shown in the illustration.

REASSEMBLY

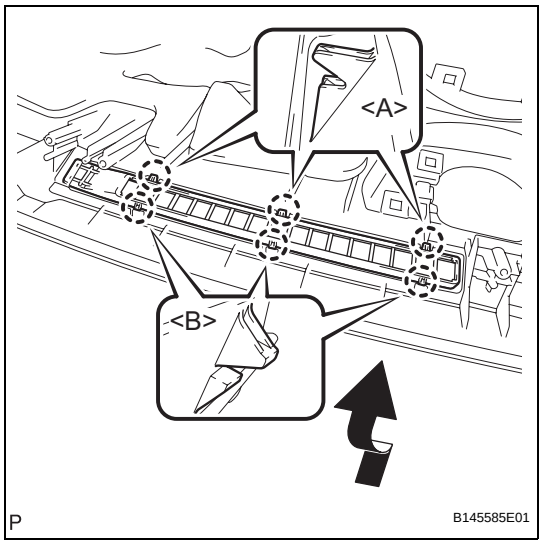

1. INSTALL NO. 2 DEFROSTER NOZZLE GARNISH

(a) Engage the 3 claws <A>.

(b) Engage the 3 claws <B> and install the No. 2 defroster nozzle garnish as shown in the illustration.

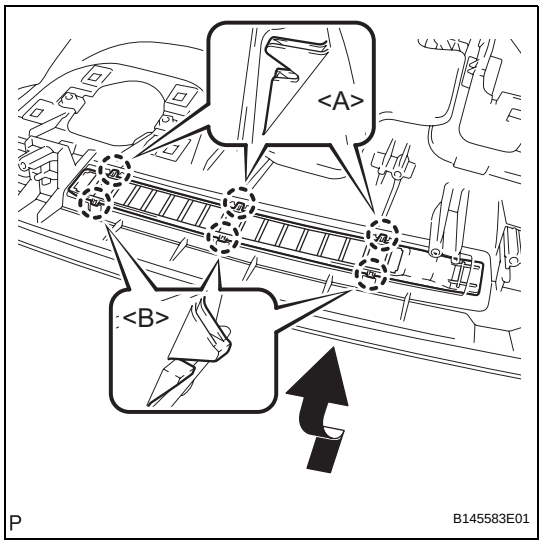

2. INSTALL NO. 1 DEFROSTER NOZZLE GARNISH

(a) Engage the 3 claws <A>.

(b) Engage the 3 claws <B> and install the No. 1 defroster nozzle garnish as shown in the illustration.

3. INSTALL NO. 1 INSTRUMENT PANEL PIN

(a) Install the 4 No. 1 instrument panel pins with the 4 screws <I>.

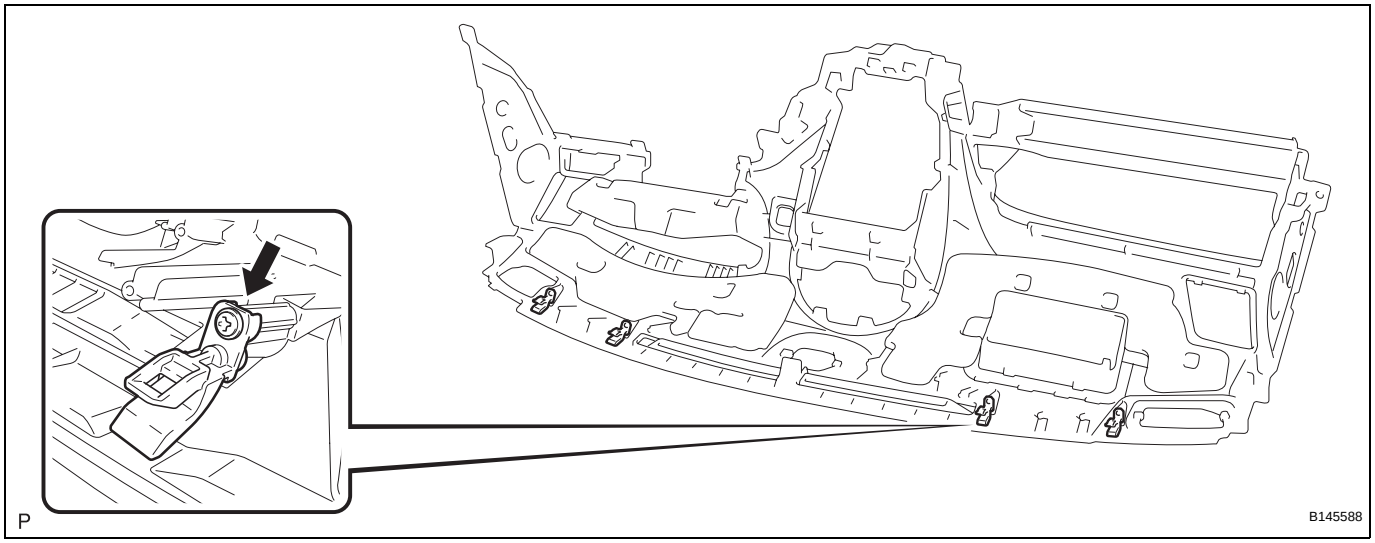

4. INSTALL FRONT PASSENGER AIRBAG ASSEMBLY (See page RS-416)

5. INSTALL NO. 1 METER HOOD RETAINER

(a) Install the 2 No. 1 meter hood retainers with the 2 screws <I>.

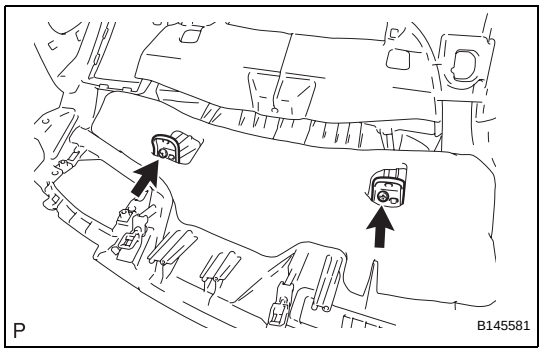

6. INSTALL AUTOMATIC LIGHT CONTROL SENSOR

(a) Engage the 2 claws and install the automatic light control sensor.

7. INSTALL NAVIGATION ANTENNA ASSEMBLY (See page NS-254)

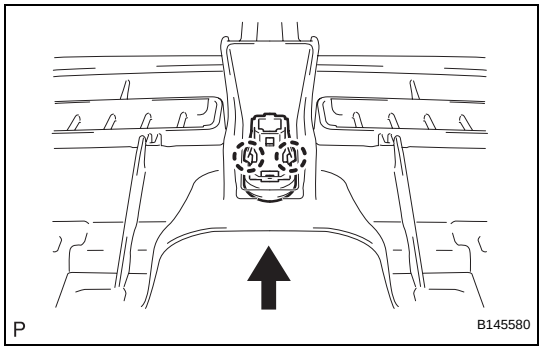

8. INSTALL NO. 3 INSTRUMENT PANEL WIRE

(a) Engage the 3 clamps.

(b) Connect the connector and install the No. 3 instrument panel wire.

9. INSTALL NO. 2 ANTENNA CORD SUB-ASSEMBLY (See page AV-230)

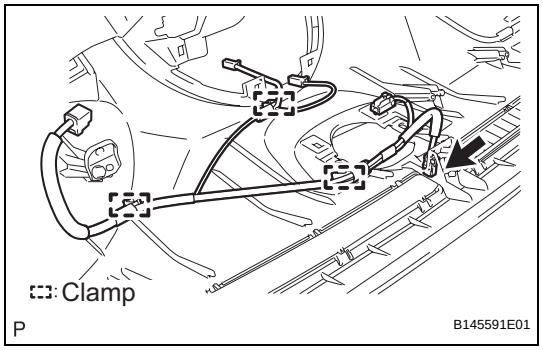

IP

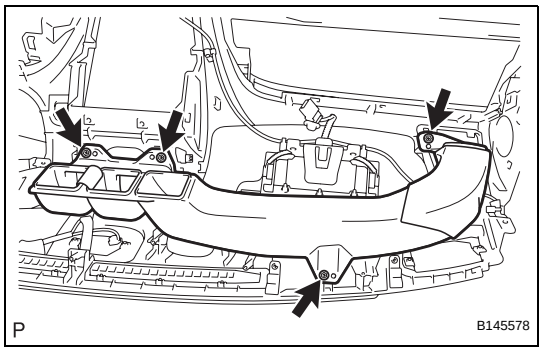

10. INSTALL NO. 2 HEATER TO REGISTER DUCT

(a) Install the No. 2 heater to register duct with the 4 screws <F>.

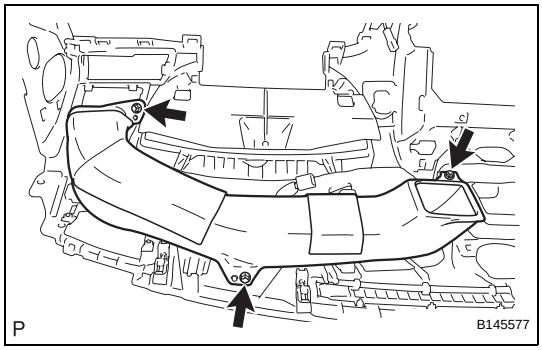

11. INSTALL NO. 1 HEATER TO REGISTER DUCT

(a) Install the No. 1 heater to register duct with the 3 screws <F>.

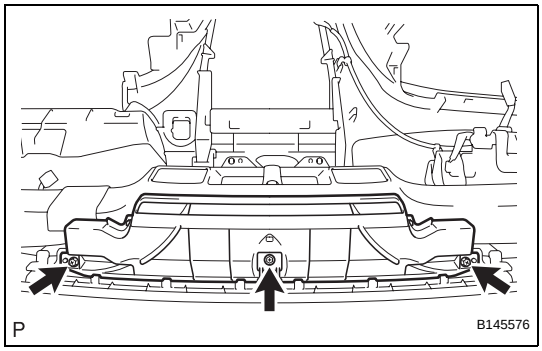

12. INSTALL DEFROSTER NOZZLE ASSEMBLY

(a) Install the defroster nozzle assembly with the 3 screws <F>.

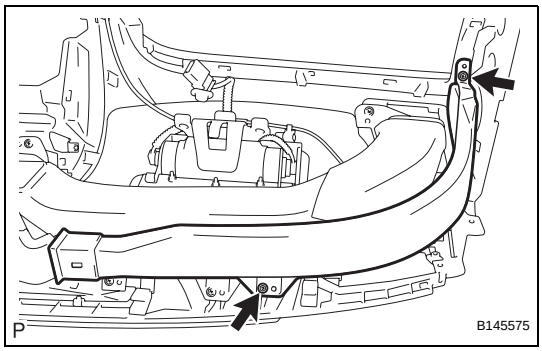

13. INSTALL SIDE NO. 2 DEFROSTER NOZZLE DUCT

(a) Install the side No. 2 defroster nozzle duct with the 2 screws <F>.

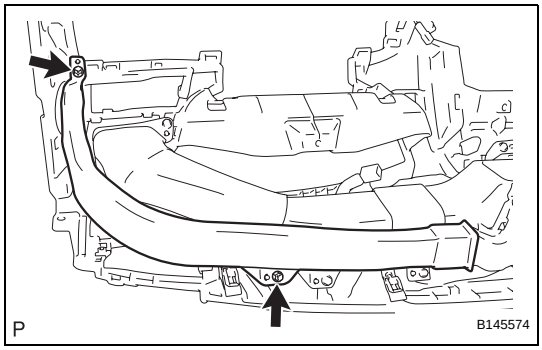

14. INSTALL SIDE NO. 1 DEFROSTER NOZZLE DUCT

(a) Install the side No. 1 defroster nozzle duct with the 2 screws <F>.

INSTALLATION

1. INSTALL NO. 3 INSTRUMENT PANEL STAY

(a) Engage the 2 claws and install the 2 No. 3 instrument panel stays.

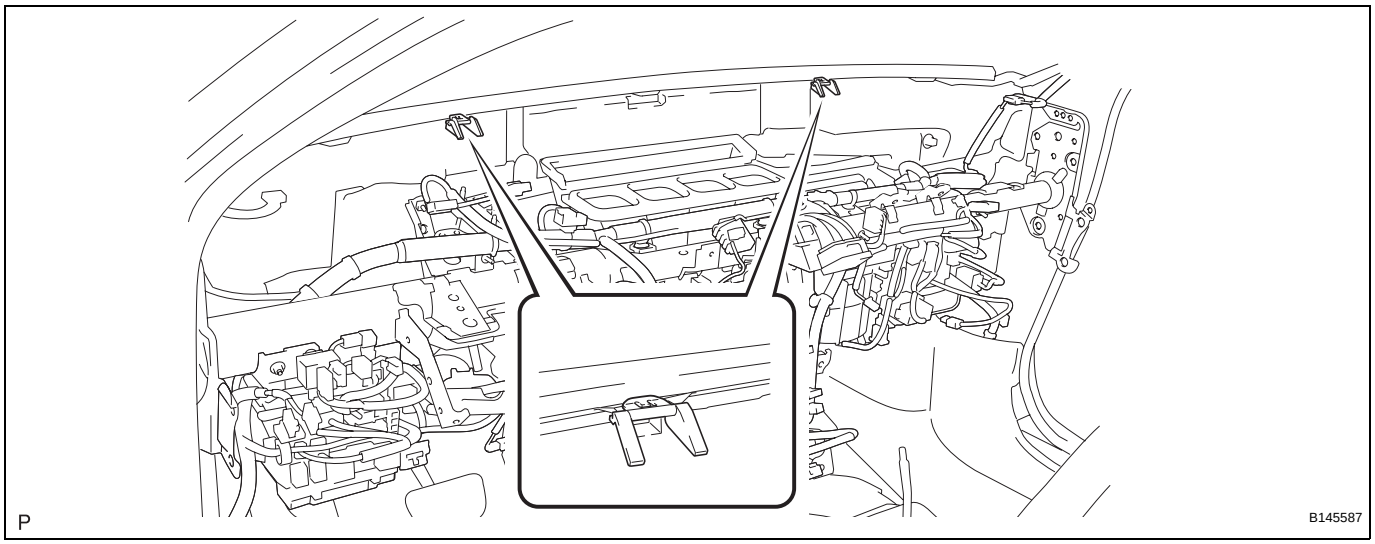

2. INSTALL NO. 1 INSTRUMENT PANEL CLIP

(a) Engage the 3 claws and install the 3 No. 1 instrument panel clips.

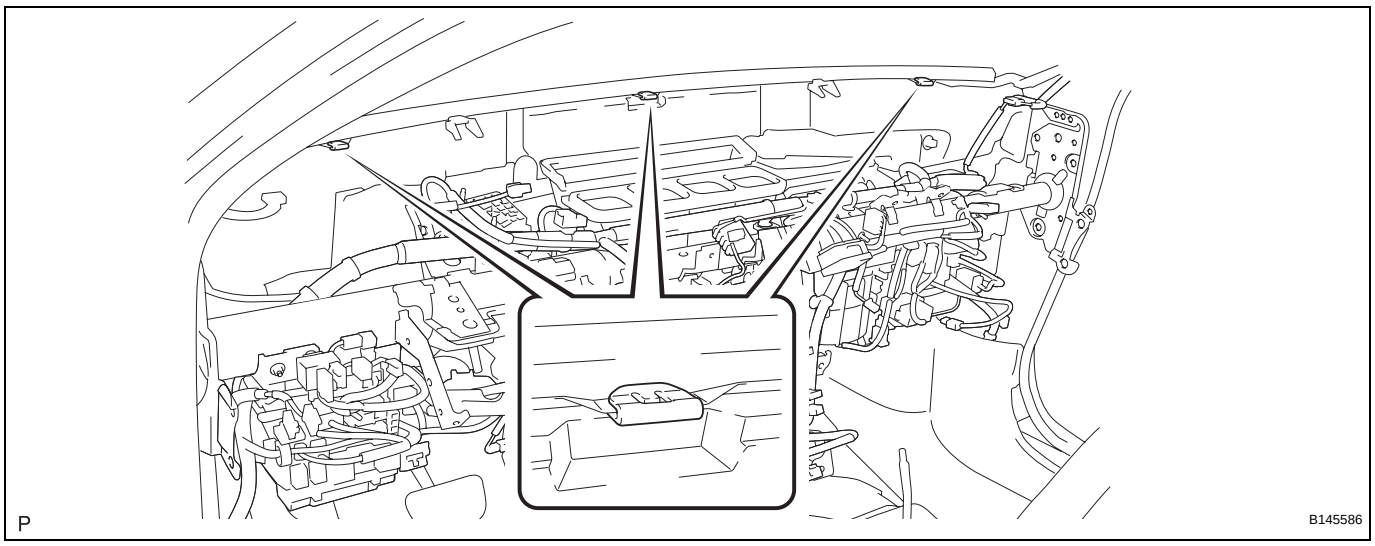

3. INSTALL INSTRUMENT PANEL SAFETY PAD ASSEMBLY (w/o DVD Player)

(a) Engage the 5 claws.

NOTICE:

Do not allow the wire harness to get caught in the claws.

(b) Install the 4 clips.

(c) Install the 5 bolts <G> and nut <H>.

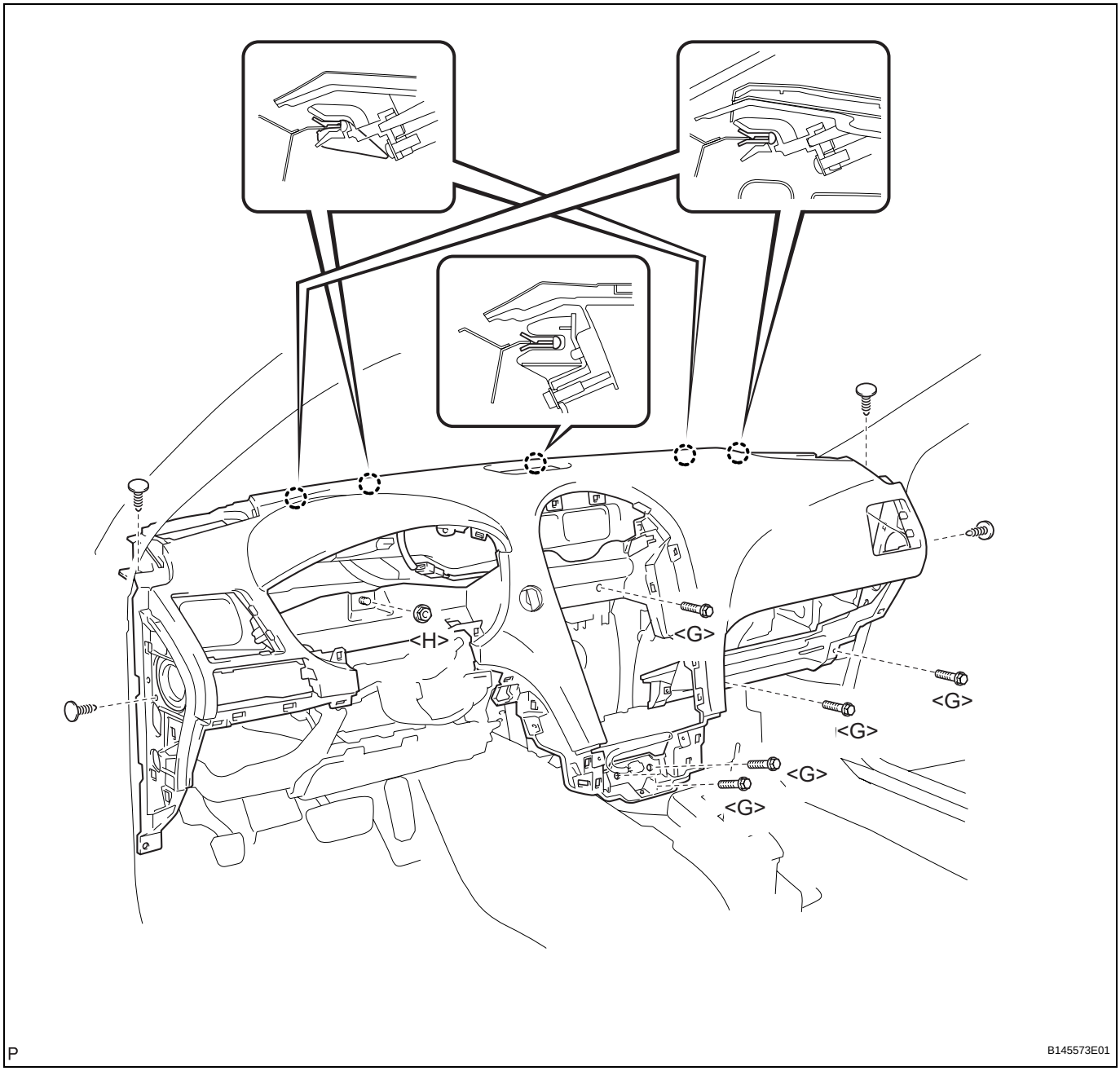

(d) Engage the clip.
(e) Install the bolt <L>.
Torque: 7.0 N*m (71 kgf*cm, 62 in.*lbf)
(f) Engage each clamp.
(g) Install the 2 passenger airbag bolts <K>.
Torque: 20 N*m (204 kgf*cm, 15 ft.*lbf)

(h) Connect each connector and install the instrument panel safety pad assembly.

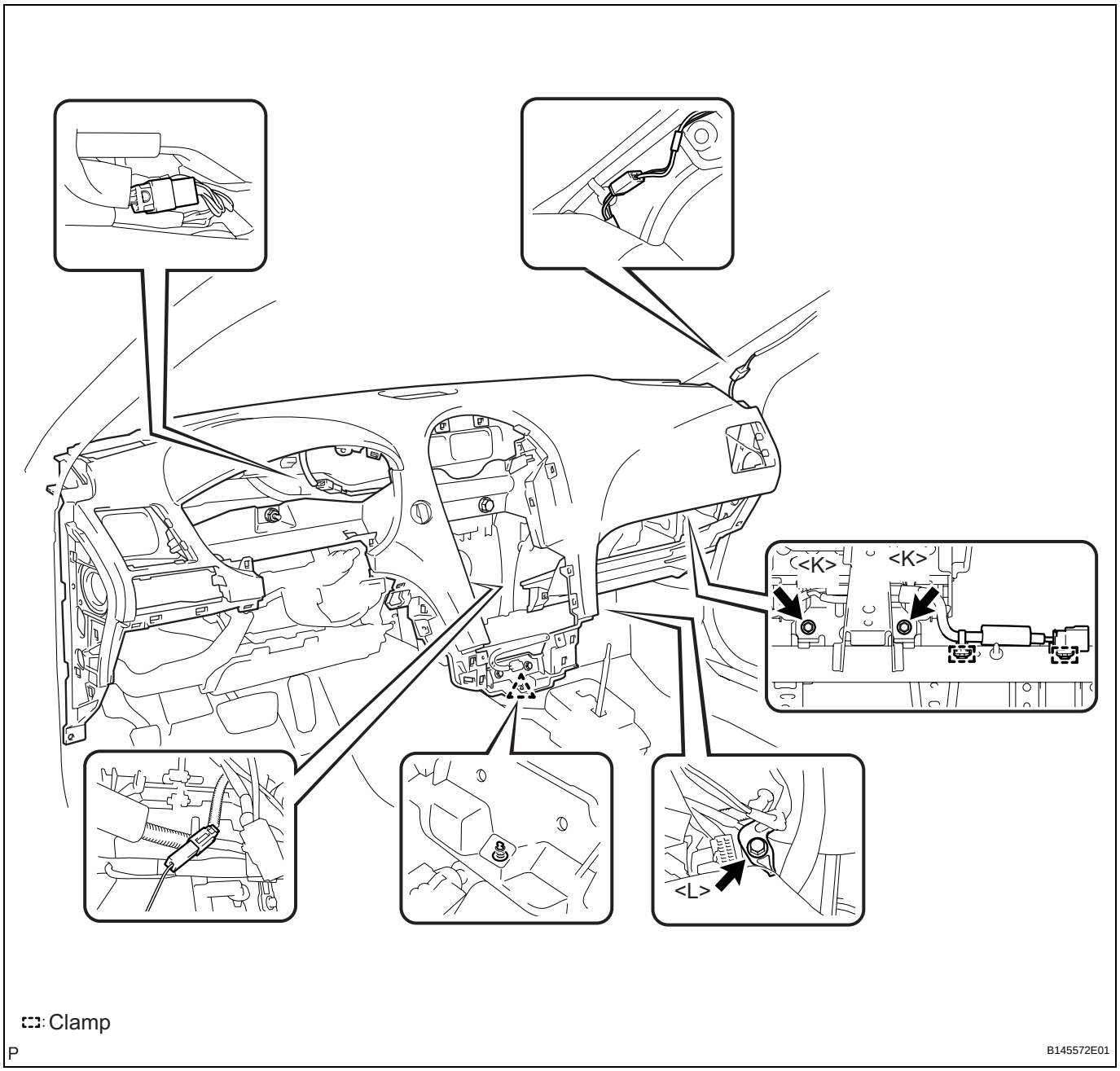

4. INSTALL INSTRUMENT PANEL SAFETY PAD ASSEMBLY (w/ DVD Player)

(a) Engage the 5 claws.

(b) Install the 4 clips.

(c) Install the 5 bolts <G> and nut <H>.

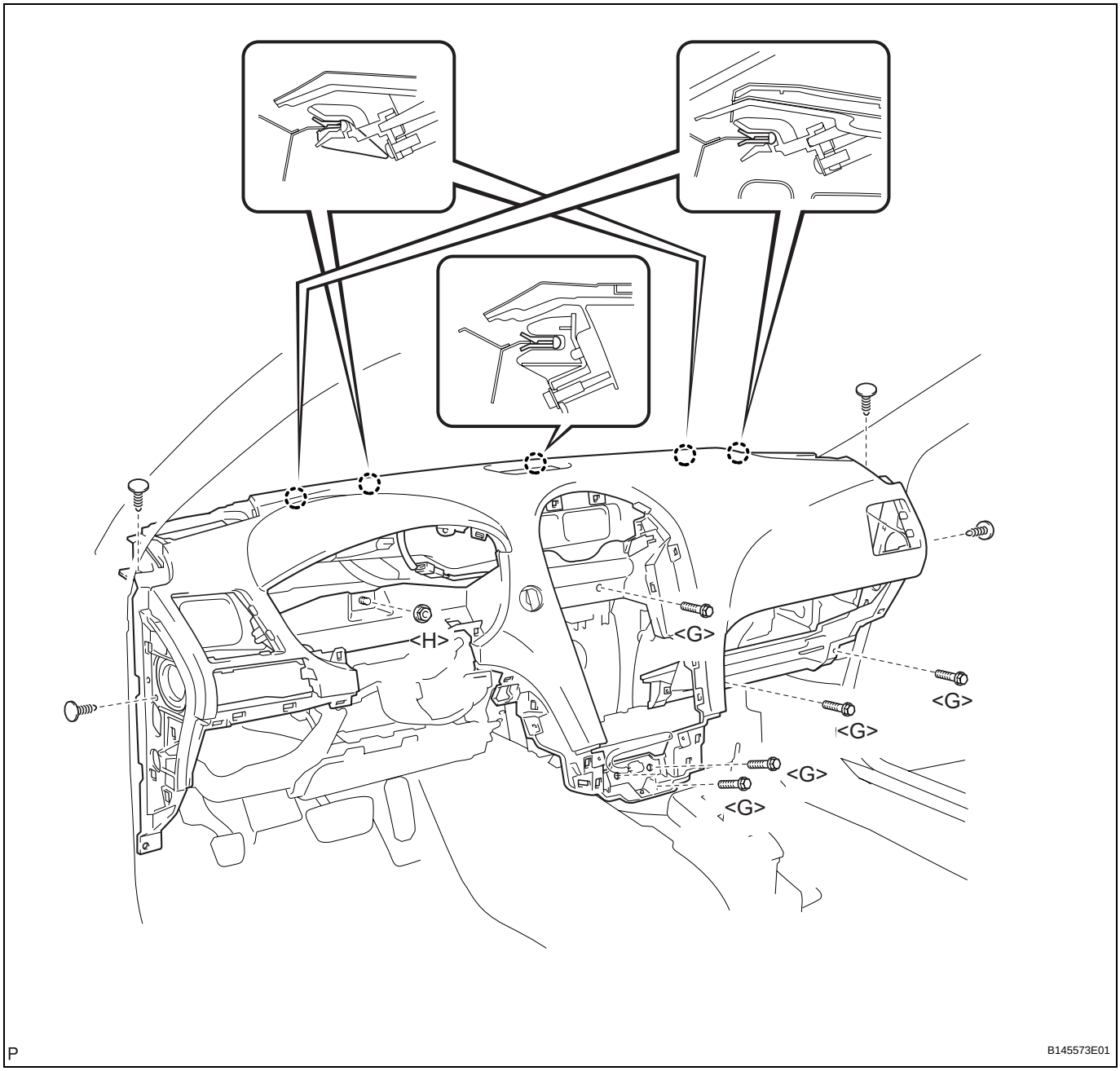

(d) Engage the clip.
(e) Install the bolt <L>.
Torque: 7.0 N*m (71 kgf*cm, 62 in.*lbf)
(f) Engage each clamp.
(g) Install the 2 passenger airbag bolts <K>.
Torque: 20 N*m (204 kgf*cm, 15 ft.*lbf)

(h) Connect each connector and install the instrument panel safety pad assembly.

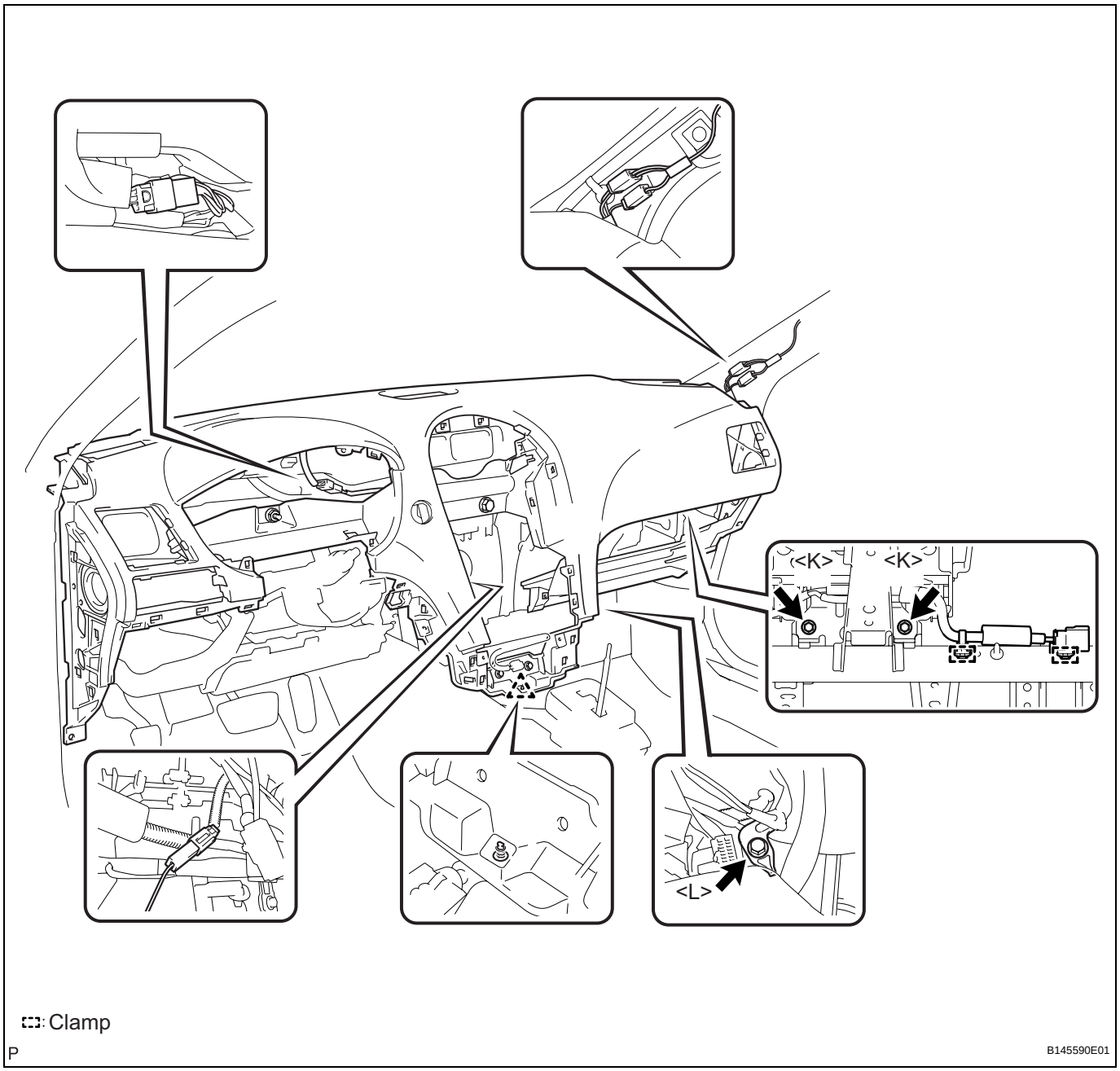

5. **INSTALL ROOM TEMPERATURE SENSOR (See page AC-215)**

6. **CONNECT INSTRUMENT PANEL WIRE ASSEMBLY (See page RS-416)**

7. **INSTALL PUSH START SWITCH**
   (a) Connect the connector.

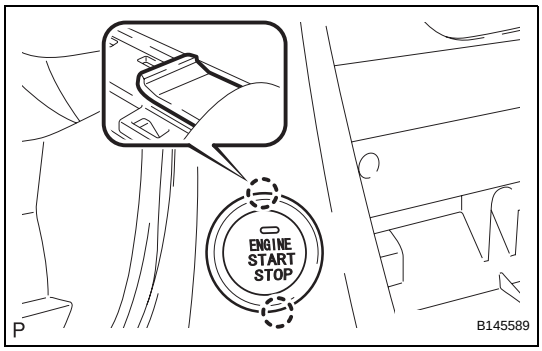

(b) Engage the 2 claws and install the push start switch.

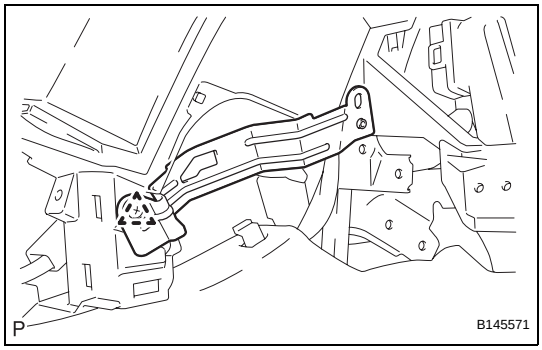

8. INSTALL NO. 1 INSTRUMENT PANEL MOUNTING BRACKET

(a) Install the clip and the No. 1 instrument panel mounting bracket.

9. INSTALL FRONT STEREO COMPONENT SPEAKER ASSEMBLY (See page AV-188)

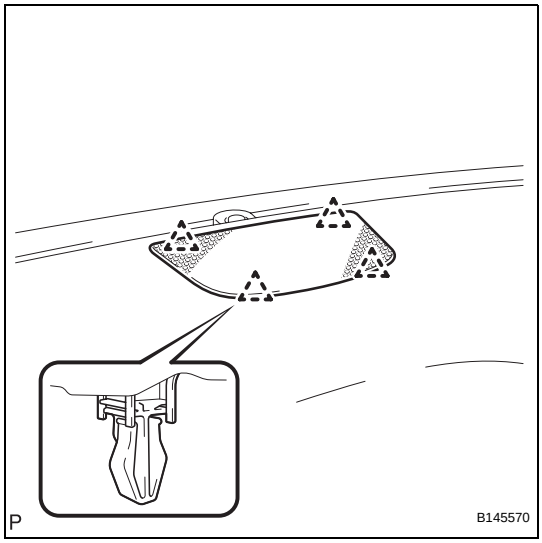

10. INSTALL NO. 1 SPEAKER HOLE COVER

(a) Engage the 4 clips and install the No. 1 speaker hole cover.

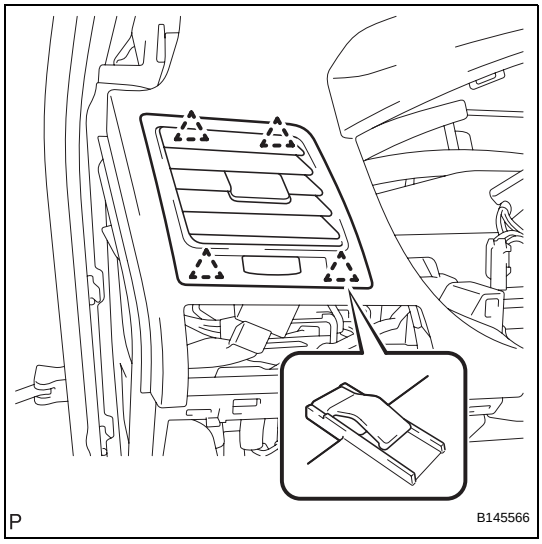

11. INSTALL NO. 1 INSTRUMENT PANEL REGISTER ASSEMBLY

(a) Engage the 4 clips and install the No. 1 instrument panel register assembly.

12. INSTALL FRONT NO. 2 SPEAKER ASSEMBLY (for LH Side) (See page AV-185)

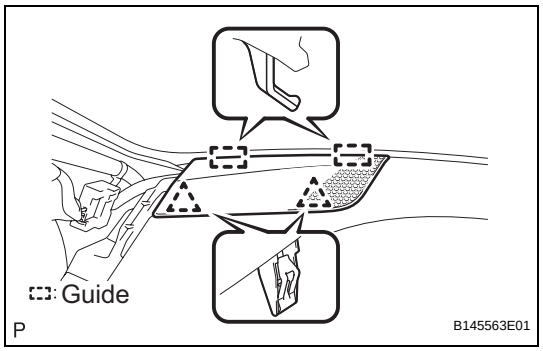

13. INSTALL NO. 1 INSTRUMENT PANEL SPEAKER PANEL SUB-ASSEMBLY
(a) Engage the 2 guides.
(b) Engage the 2 clips and install the No. 1 instrument panel speaker panel sub-assembly.

14. INSTALL FRONT PILLAR GARNISH LH (See page IR-64)

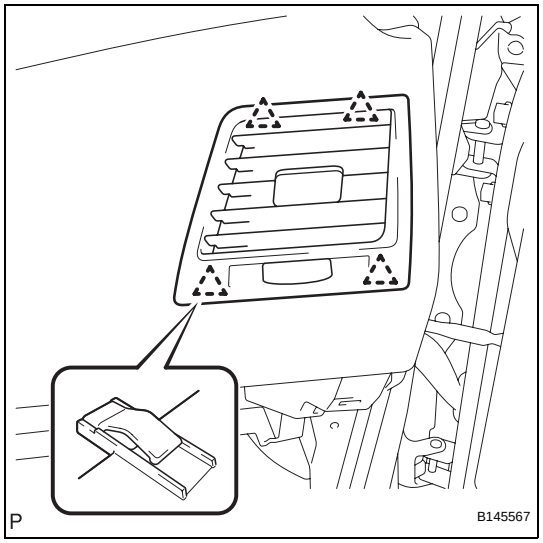

15. INSTALL NO. 3 INSTRUMENT PANEL REGISTER ASSEMBLY
(a) Engage the 4 clips and install the No. 3 instrument panel register assembly.

16. INSTALL FRONT NO. 2 SPEAKER ASSEMBLY (for RH Side)
HINT:
Use the same procedures described for the LH side (See page AV-185).

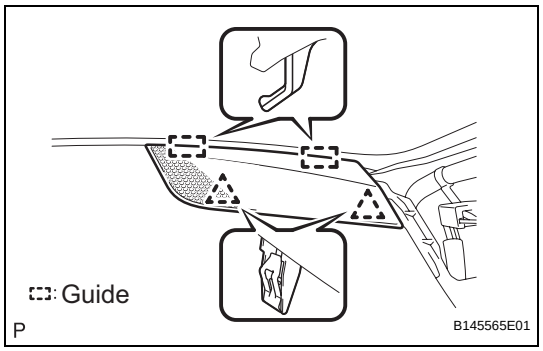

17. INSTALL NO. 2 INSTRUMENT PANEL SPEAKER PANEL SUB-ASSEMBLY
(a) Engage the 2 guides.
(b) Engage the 2 clips and install the No. 2 instrument panel speaker panel sub-assembly.

18. INSTALL FRONT PILLAR GARNISH RH (See page IR-65)

19. INSTALL REAR CONSOLE BOX ASSEMBLY
(a) Connect each connector.

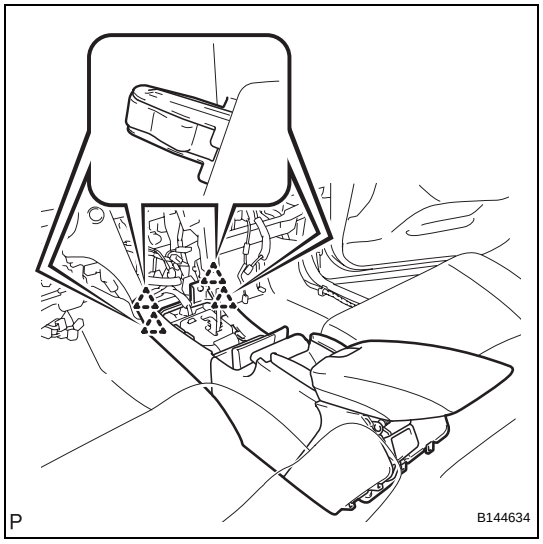

(b) Engage the 4 clips.

IP

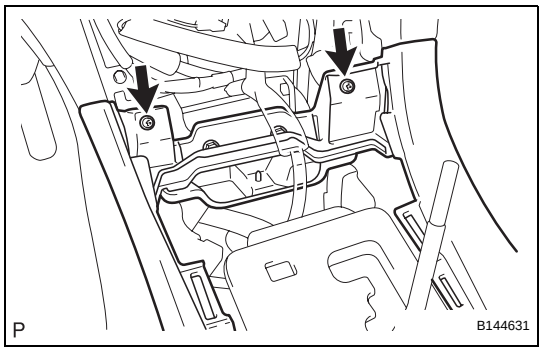

(c) Install the 2 screws <F>.

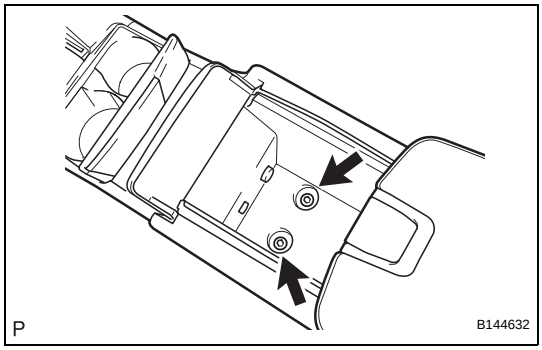

(d) Install the 2 bolts <E>.

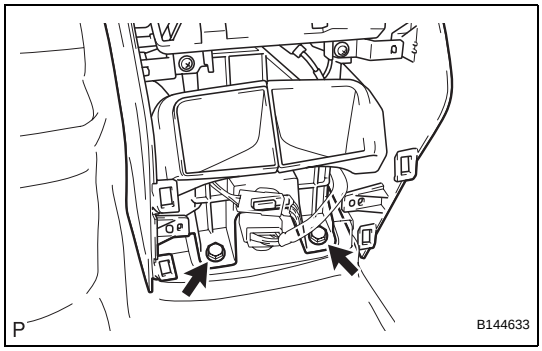

(e) Install the rear console box assembly with the 2 bolts <E>.

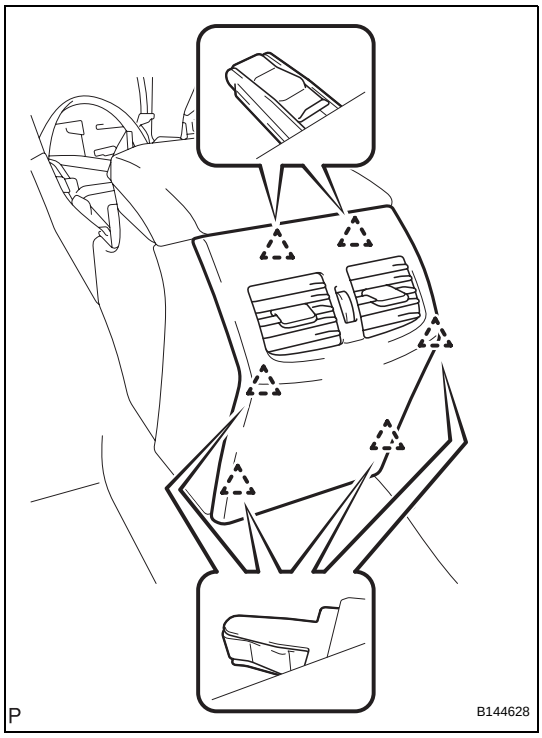

20. INSTALL CONSOLE REAR END PANEL SUB-ASSEMBLY

(a) Engage the 6 clips and install the console rear end panel sub-assembly.

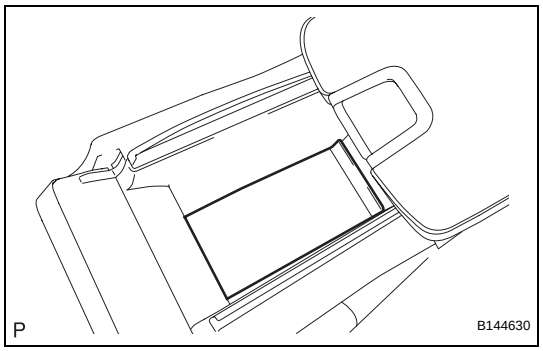

21. INSTALL CONSOLE BOX CARPET

(a) Install the console box carpet.

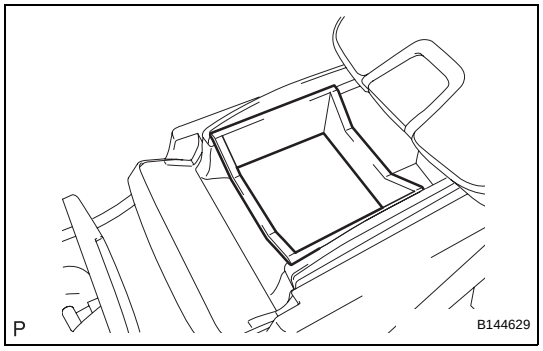

22. INSTALL CONSOLE BOX POCKET

(a) Install the console box pocket.

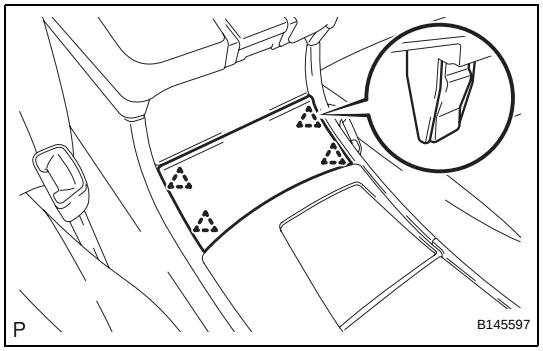

23. INSTALL HEATER SEAT SWITCH CONSOLE BASE (w/o Seat Heater System)

(a) Engage the 4 clips and install the heater seat switch base.

24. INSTALL HEATER SEAT SWITCH CONSOLE BASE (w/ Seat Heater System)

(a) Connect each connector.

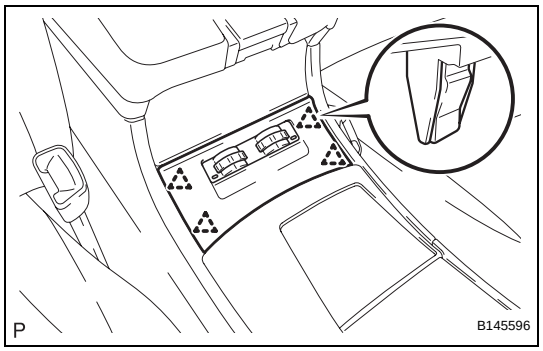

(b) Engage the 4 clips and install the heater seat switch base.

25. INSTALL INTEGRATION CONTROL PANEL WITH RADIO RECEIVER ASSEMBLY (w/o Navigation System) (See page AV-172)

26. INSTALL MULTI-DISPLAY WITH RADIO RECEIVER ASSEMBLY (w/ Navigation System) (See page AV-173)

27. INSTALL NO. 2 INSTRUMENT PANEL REGISTER ASSEMBLY

(a) Connect the connector.

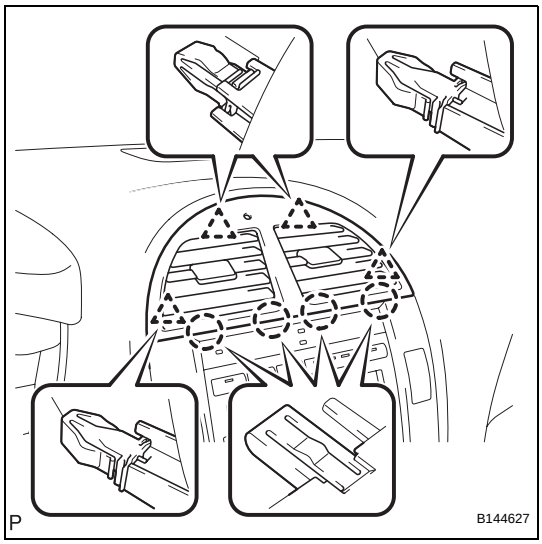

(b) Engage the 4 claws and 4 clips, and install the No. 2 instrument panel register assembly.

28. INSTALL UPPER CONSOLE PANEL ASSEMBLY WITH FRONT ASH RECEPTACLE

(a) Connect the connector.

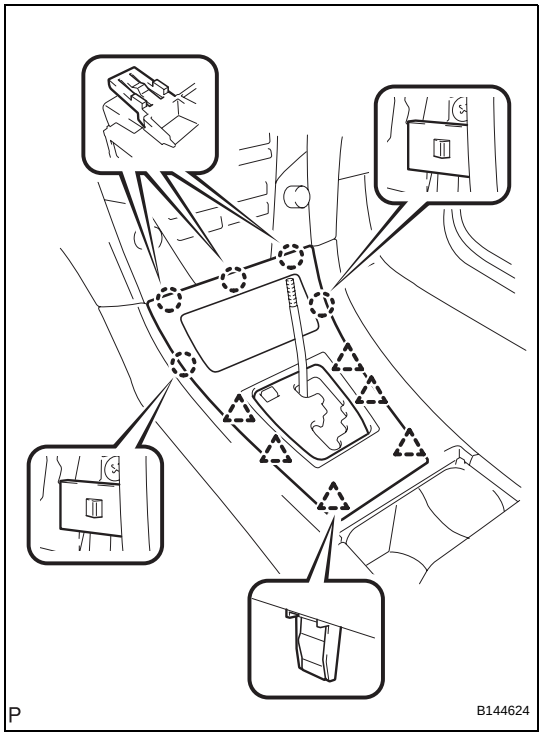

(b) Engage the 5 claws and 6 clips to install the upper console panel assembly with front ash receptacle.

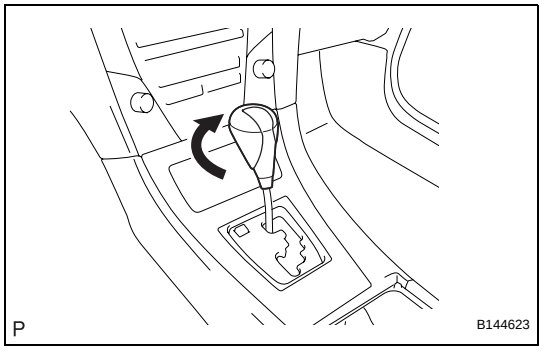

29. INSTALL SHIFT LEVER KNOB SUB-ASSEMBLY

(a) Install the shift lever knob sub-assembly.

30. INSTALL LOWER INSTRUMENT PANEL RH

(a) Connect each connector.

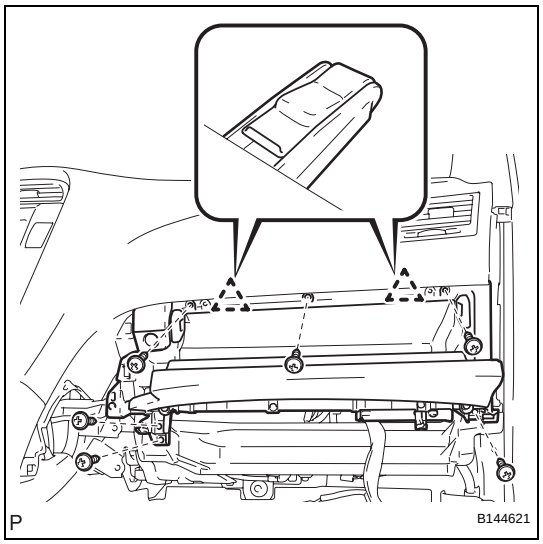

(b) Engage the 2 clips.
(c) Install the lower instrument panel RH with the 6 screws <D>.

31. INSTALL FRONT PASSENGER SIDE KNEE AIRBAG ASSEMBLY (See page RS-396)

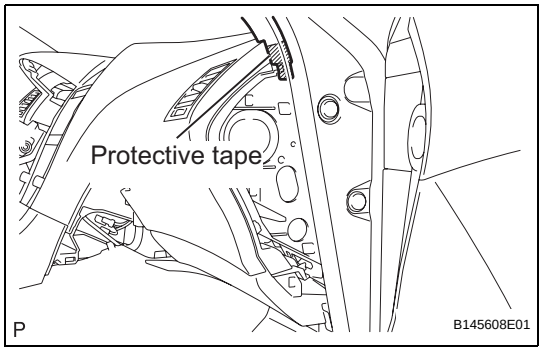

32. INSTALL SIDE INSTRUMENT PANEL RH
(a) Apply protective tape to the area shown in the illustration.
(b) Engage the upper end of the side instrument panel RH with the lower end of the front pillar garnish RH as shown in the illustration.

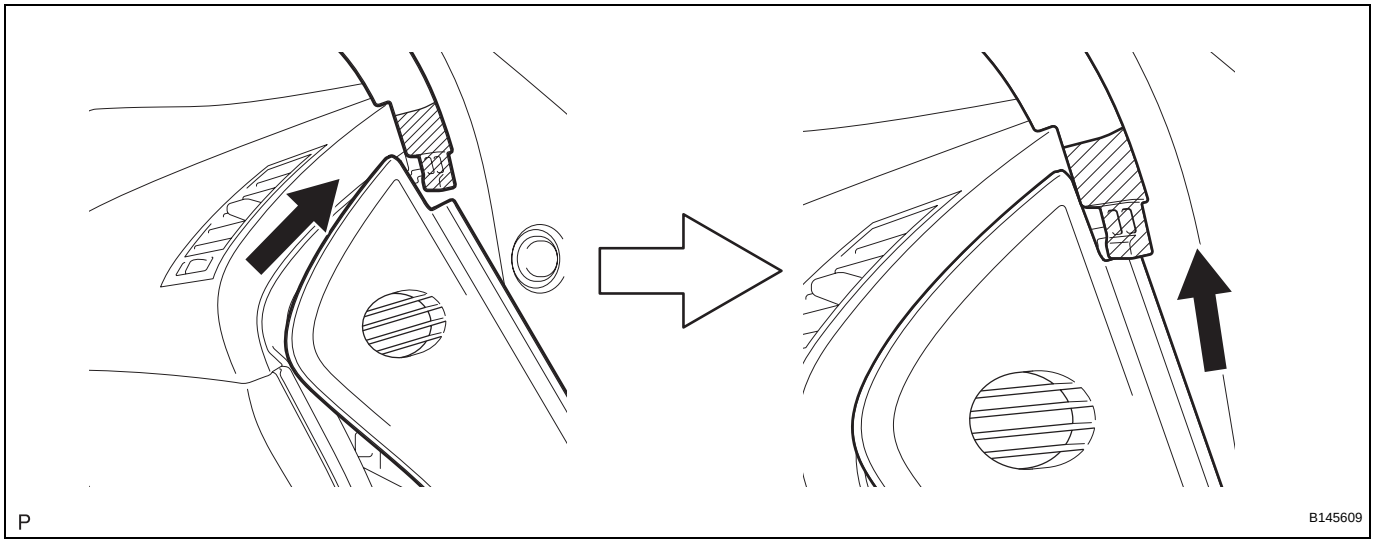

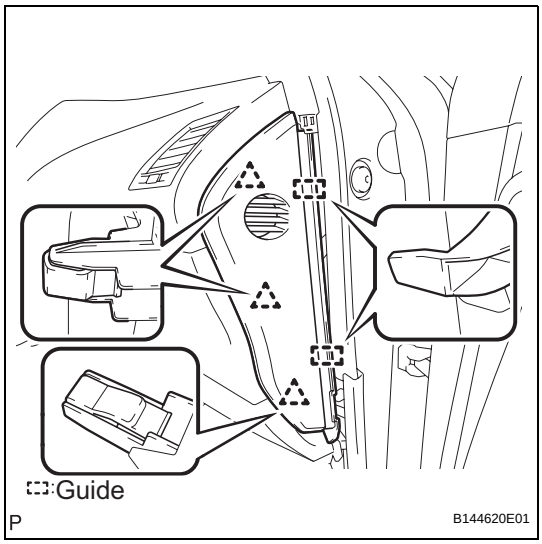

(c) Engage the 2 guides and the 3 clips to install the side instrument panel RH.

33. INSTALL NO. 2 INSTRUMENT PANEL UNDER COVER SUB-ASSEMBLY

(a) Connect the connector.

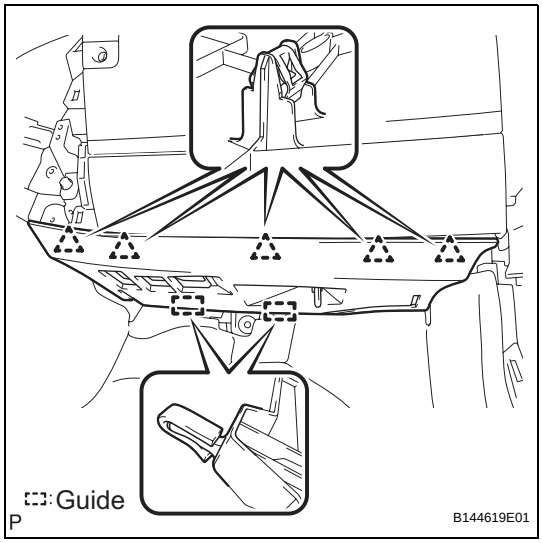

(b) Engage the 2 guides.

(c) Engage the 5 clips and install the No. 2 instrument panel under cover sub-assembly.

34. INSTALL FRONT DOOR OPENING TRIM COVER RH (See page IR-65)

35. INSTALL FRONT DOOR SCUFF PLATE RH (See page IR-65)

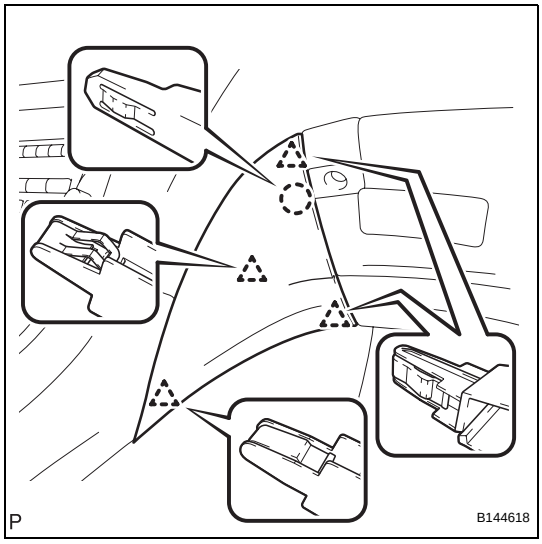

36. INSTALL INSTRUMENT PANEL FINISH PANEL END RH

(a) Engage the claw and 4 clips to install the instrument panel finish panel end RH.

37. INSTALL NO. 1 SWITCH HOLE BASE

(a) Connect each connector.

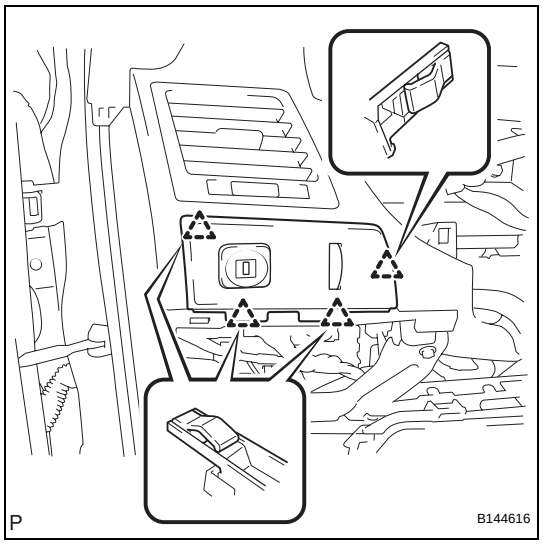

(b) Engage the 4 clips and install the No. 1 switch hole base.

38. INSTALL COMBINATION METER ASSEMBLY

(a) Connect each connector.

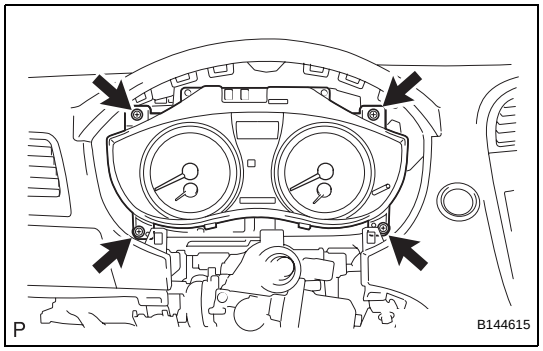

(b) Install the combination meter assembly with the 4 screws <B> or <C>.

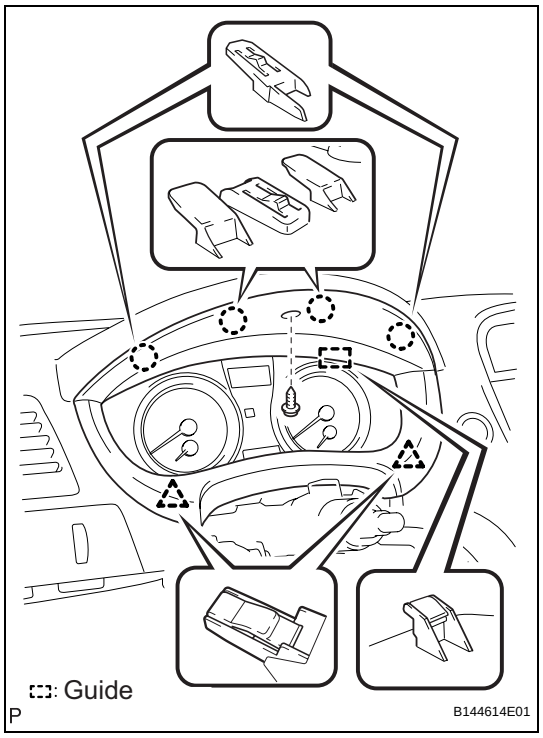

39. INSTALL INSTRUMENT CLUSTER FINISH PANEL SUB-ASSEMBLY

(a) Engage the guide and the 4 claws.

(b) Engage the 2 clips.

(c) Install the instrument cluster finish panel sub-assembly with the screw <B>.

40. INSTALL TURN SIGNAL SWITCH ASSEMBLY WITH SPIRAL CABLE SUB-ASSEMBLY (See page SR-86)

41. INSTALL TILT AND TELESCOPIC SWITCH (See page SR-86)

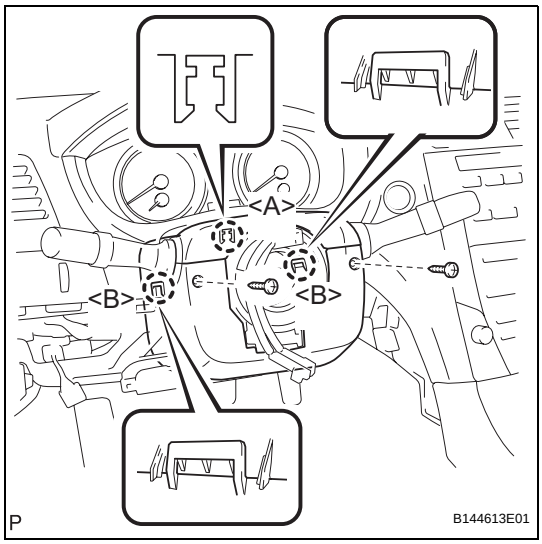

42. INSTALL STEERING COLUMN COVER

(a) Engage the claw <A> and install the upper steering column cover.

(b) Engage the 2 claws <B> and install the lower steering column cover.

(c) Install the 2 screws <J>.
Torque: 2.0 N*m (20 kgf*cm, 18 in.*lbf)

43. ADJUST SPIRAL CABLE SUB-ASSEMBLY (See page RS-382)

44. INSTALL LOWER INSTRUMENT PANEL SUB-ASSEMBLY

(a) Connect each connector.

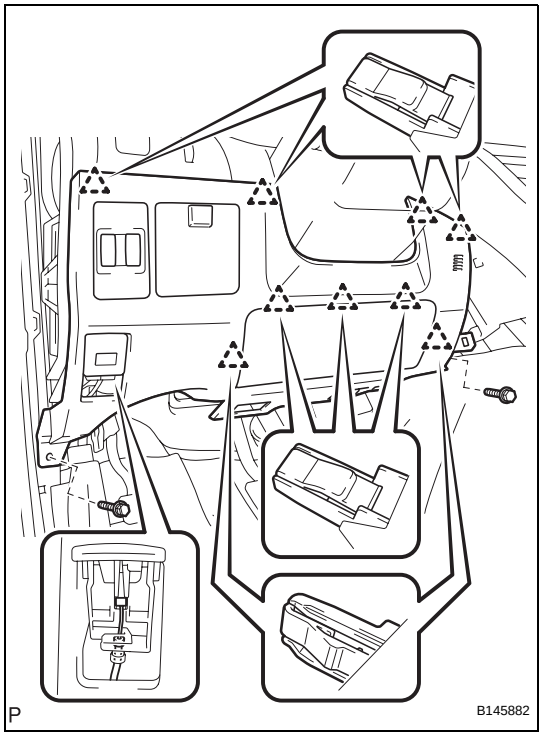

(b) Engage the 9 clips.

(c) Connect the hood lock control cable assembly.

(d) Install the lower instrument panel sub-assembly with the 2 bolts <A>.

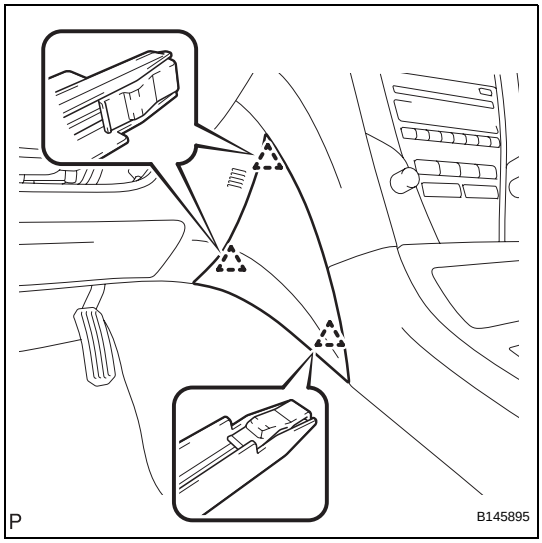

45. INSTALL INSTRUMENT PANEL FINISH PANEL END LH

(a) Engage the 3 clips and install the instrument panel finish panel end LH.

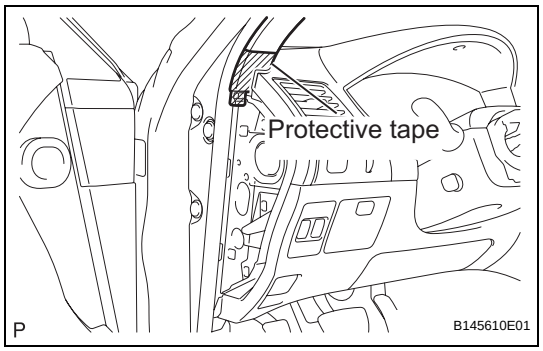

46. INSTALL SIDE INSTRUMENT PANEL LH

(a) Apply protective tape to the area shown in the illustration.

(b) Engage the upper end of the side instrument panel LH with the lower end of the front pillar garnish LH as shown in the illustration.

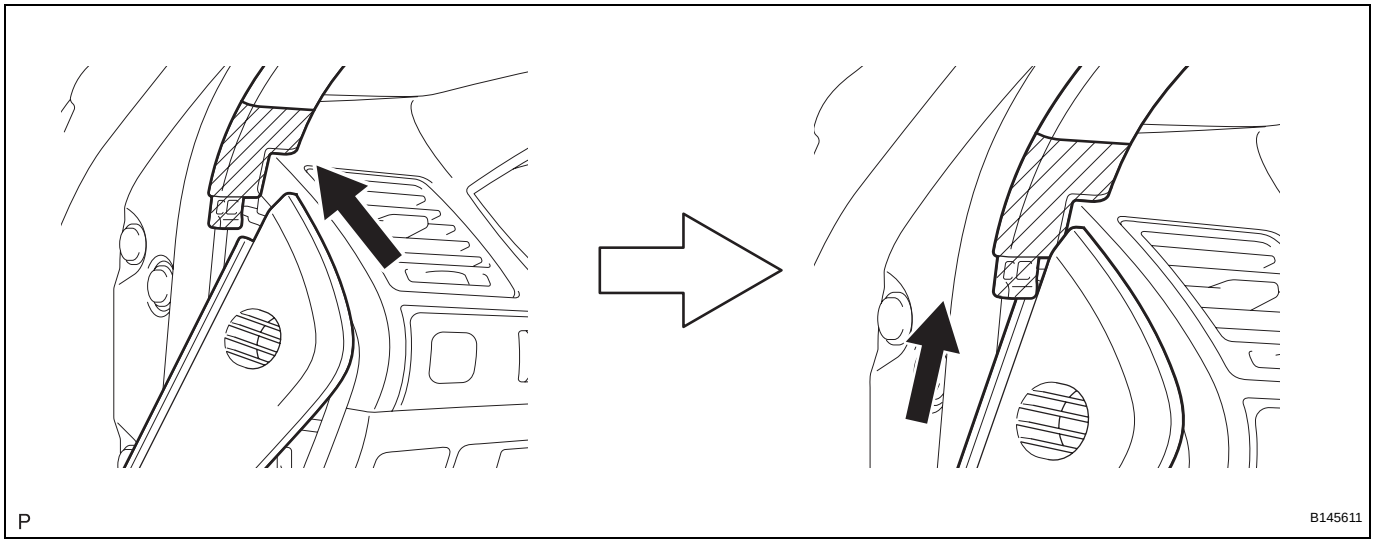

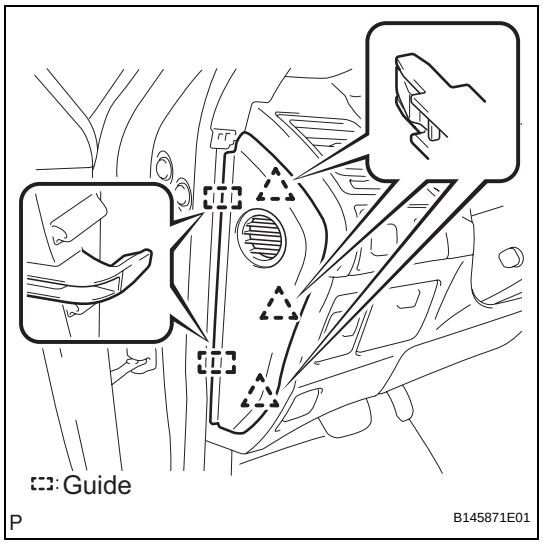

(c) Engage the 2 guides and the 3 clips to install the side instrument panel LH.

47. INSTALL FRONT DOOR OPENING TRIM COVER LH (See page IR-64)

48. INSTALL FRONT DOOR SCUFF PLATE LH (See page IR-65)

49. INSTALL STEERING WHEEL ASSEMBLY (See page SR-87)

50. INSTALL STEERING PAD (See page RS-368)

51. INSTALL LOWER NO. 3 STEERING WHEEL COVER (See page RS-369)

52. INSTALL LOWER NO. 2 STEERING WHEEL COVER (See page RS-369)

53. CONNECT CABLE TO NEGATIVE BATTERY TERMINAL

54. INSPECT STEERING PAD (See page RS-369)

55. INSPECT FRONT PASSENGER SIDE KNEE AIRBAG ASSEMBLY (See page RS-395)

56. INSPECT SRS WARNING LIGHT (See page RS-369)

57. PERFORM INITIALIZATION

NOTICE:

Some systems need initialization after reconnecting the cable to the negative battery terminal (See page IN-33).

REMOVAL

1. **REMOVE INSTRUMENT PANEL FINISH PANEL END LH (See page IP-13)**
2. **REMOVE INSTRUMENT PANEL FINISH PANEL END RH (See page IP-15)**
3. **REMOVE SHIFT LEVER KNOB SUB-ASSEMBLY (See page IP-16)**
4. **REMOVE UPPER CONSOLE PANEL ASSEMBLY WITH FRONT ASH RECEPTACLE (See page IP-16)**
5. **REMOVE HEATER SEAT SWITCH CONSOLE BASE (w/o Seat Heater System) (See page IP-17)**
6. **REMOVE HEATER SEAT SWITCH CONSOLE BASE (w/ Seat Heater System) (See page IP-18)**
7. **REMOVE CONSOLE BOX POCKET**
   (a) Remove the console box pocket.

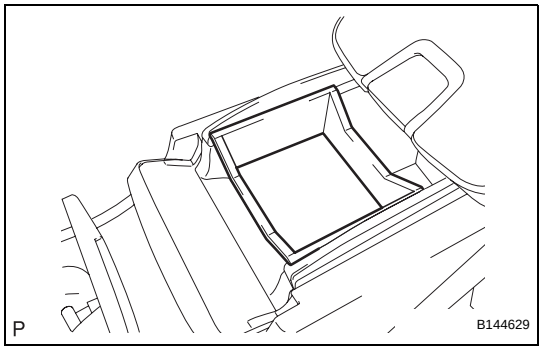

8. **REMOVE CONSOLE BOX CARPET**
   (a) Remove the console box carpet.

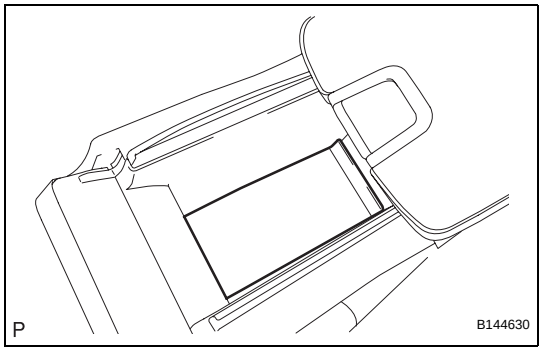

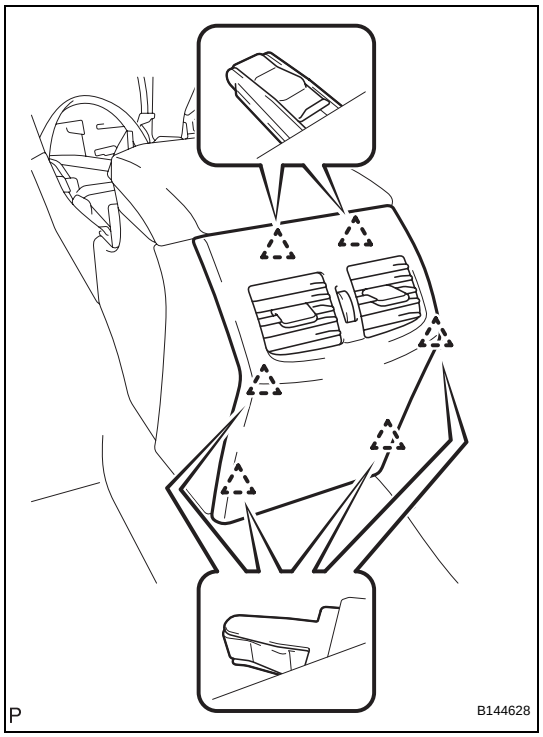

9. REMOVE CONSOLE REAR END PANEL SUB-ASSEMBLY

(a) Disengage the 6 claws and remove the console rear end panel sub-assembly.

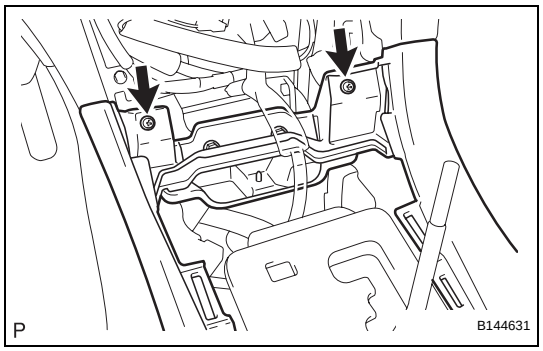

10. REMOVE REAR CONSOLE BOX ASSEMBLY

(a) Remove the 2 screws.

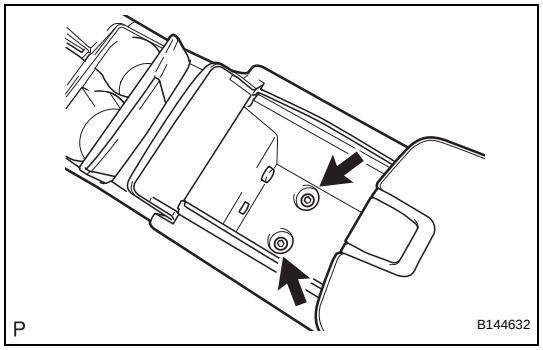

(b) Remove the 2 bolts.

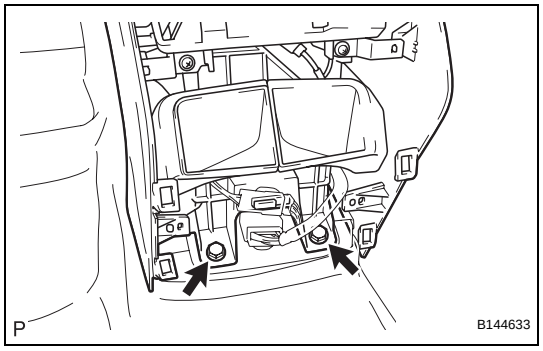

(c) Remove the 2 bolts.

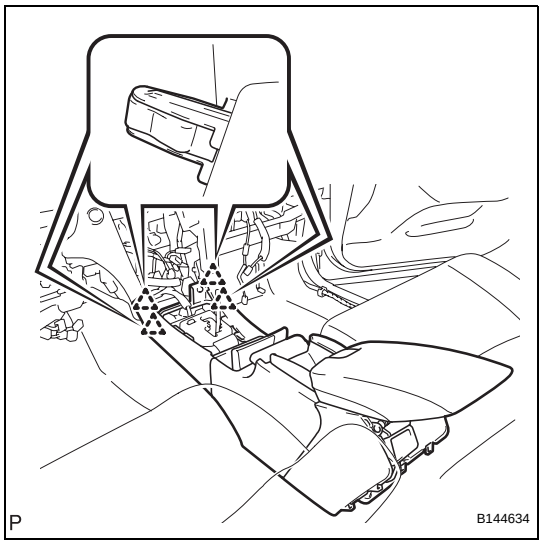

(d) Disengage the 4 clips and remove the rear console box assembly.
(e) Disconnect each connector.

DISASSEMBLY

1. REMOVE NO. 5 CONSOLE BOX RETAINER

(a) Remove the No. 5 console box retainer as shown in the illustration.

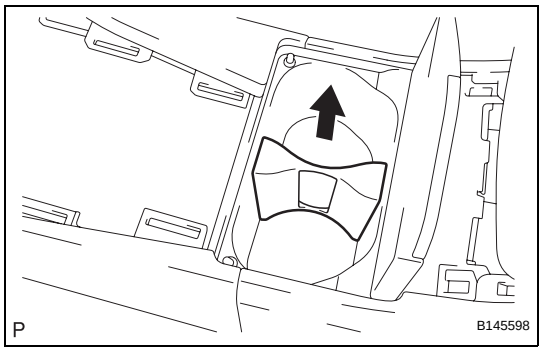

2. REMOVE CONSOLE COMPARTMENT DOOR SUB-ASSEMBLY

(a) Open the console compartment door sub-assembly.

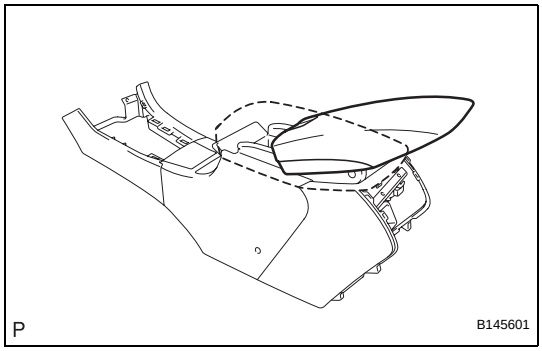

(b) Slightly deform areas <A> and <B> of the console box assembly inward to disengage the 2 claws. Next, raise the console compartment door sub-assembly as shown in the illustration.

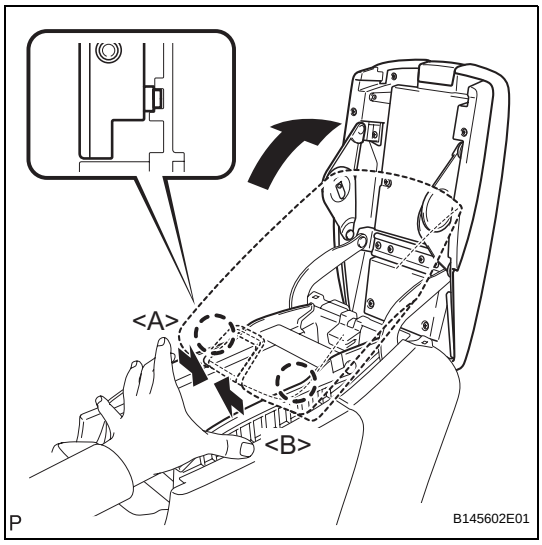

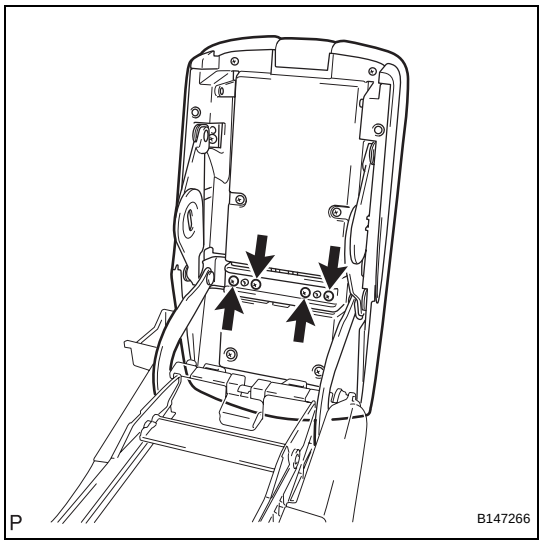

(c) Remove the 4 screws and the console compartment door sub-assembly.

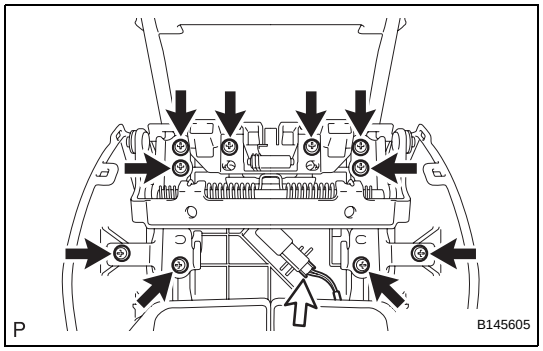

3. REMOVE CONSOLE BOX ILLUMINATION LIGHT ASSEMBLY

(a) Loosen the 10 screws and disconnect the connector.

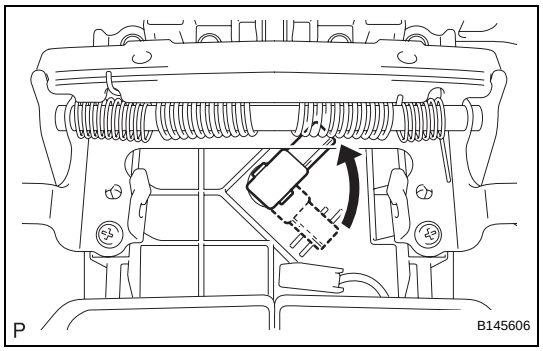

(b) Turn the console box illumination light assembly in the direction indicated by the arrow and remove it.

4. REMOVE POWER OUTLET SOCKET ASSEMBLY (See page OT-21)

5. REMOVE POWER OUTLET SOCKET COVER (See page OT-22)

6. REMOVE AUDIO TERMINAL (See page AV-241)

REMOVAL

1. **REMOVE INSTRUMENT PANEL FINISH PANEL END LH (See page IP-13)**
2. **REMOVE INSTRUMENT PANEL FINISH PANEL END RH (See page IP-15)**
3. **REMOVE SHIFT LEVER KNOB SUB-ASSEMBLY (See page IP-16)**
4. **REMOVE UPPER CONSOLE PANEL ASSEMBLY WITH FRONT ASH RECEPTACLE (See page IP-16)**
5. **REMOVE HEATER SEAT SWITCH CONSOLE BASE (w/o Seat Heater System) (See page IP-17)**
6. **REMOVE HEATER SEAT SWITCH CONSOLE BASE (w/ Seat Heater System) (See page IP-18)**
7. **REMOVE CONSOLE BOX POCKET**
   (a) Remove the console box pocket.

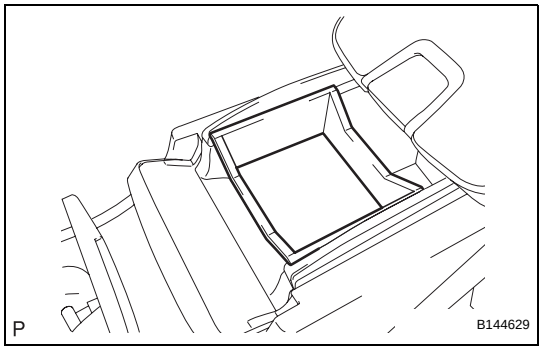

8. **REMOVE CONSOLE BOX CARPET**
   (a) Remove the console box carpet.

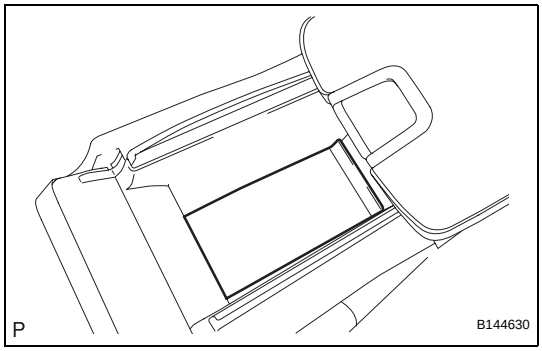

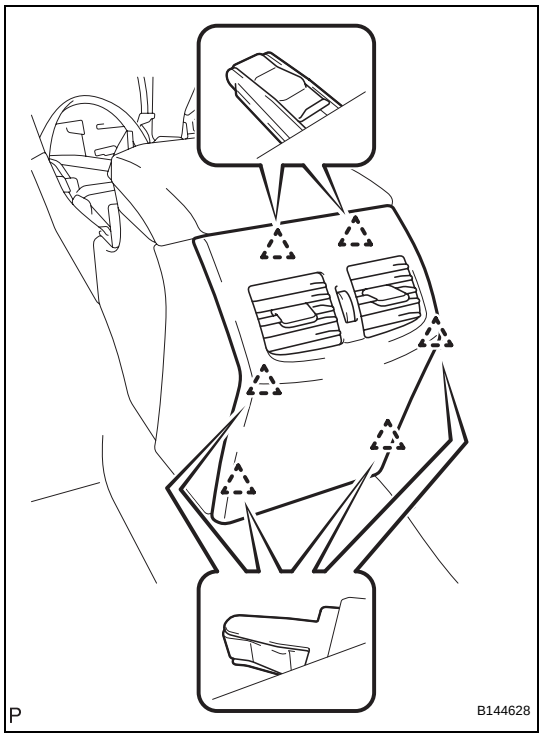

9. REMOVE CONSOLE REAR END PANEL SUB-ASSEMBLY

(a) Disengage the 6 claws and remove the console rear end panel sub-assembly.

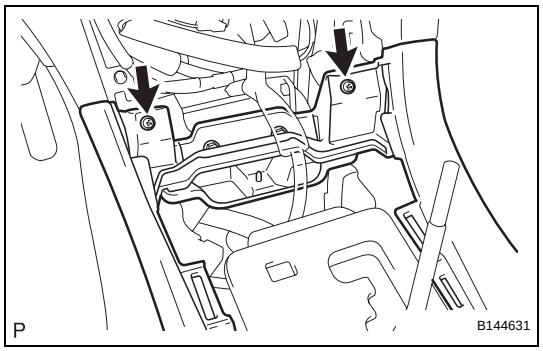

10. REMOVE REAR CONSOLE BOX ASSEMBLY

(a) Remove the 2 screws.

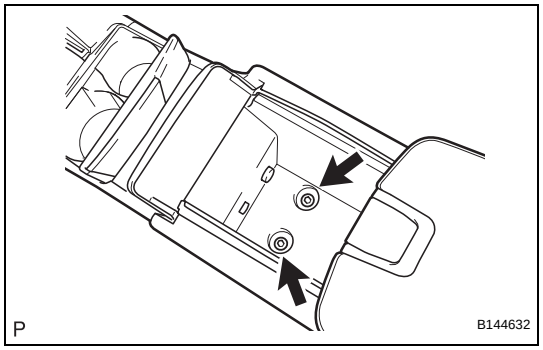

(b) Remove the 2 bolts.

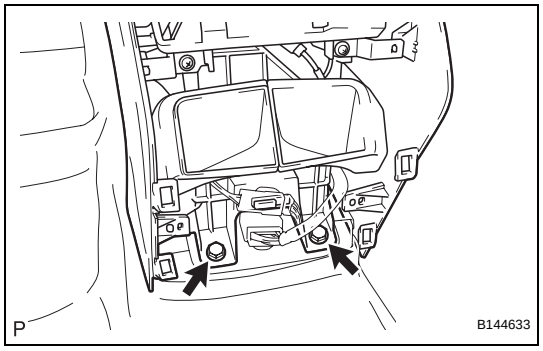

(c) Remove the 2 bolts.

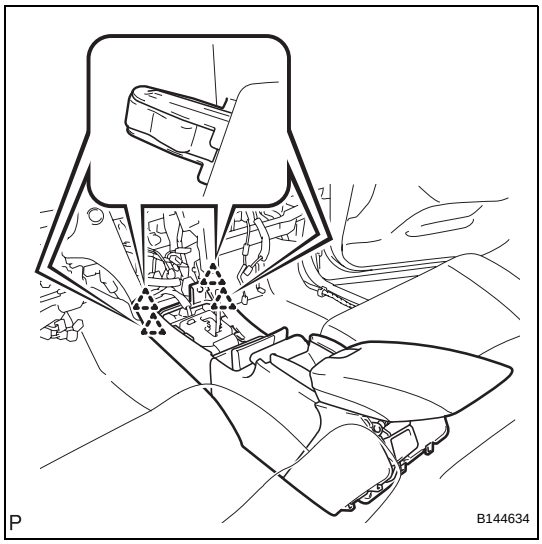

(d) Disengage the 4 clips and remove the rear console box assembly.
(e) Disconnect each connector.

DISASSEMBLY

1. REMOVE NO. 5 CONSOLE BOX RETAINER

(a) Remove the No. 5 console box retainer as shown in the illustration.

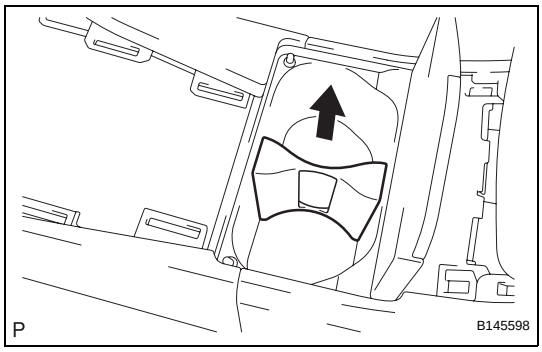

2. REMOVE CONSOLE COMPARTMENT DOOR SUB-ASSEMBLY

(a) Open the console compartment door sub-assembly.

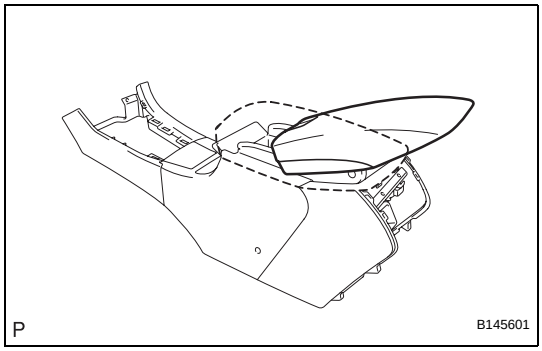

(b) Slightly deform areas <A> and <B> of the console box assembly inward to disengage the 2 claws. Next, raise the console compartment door sub-assembly as shown in the illustration.

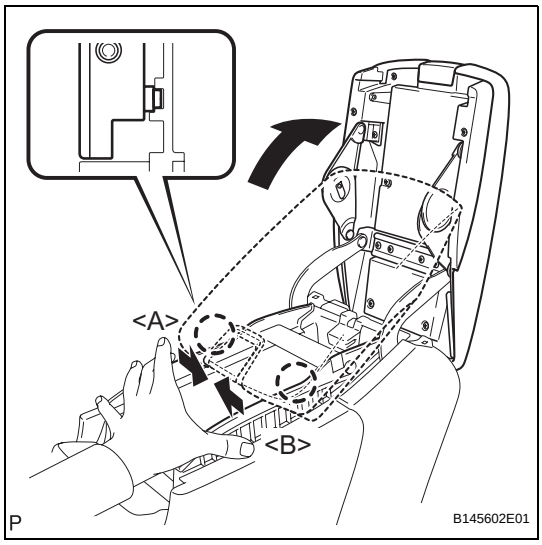

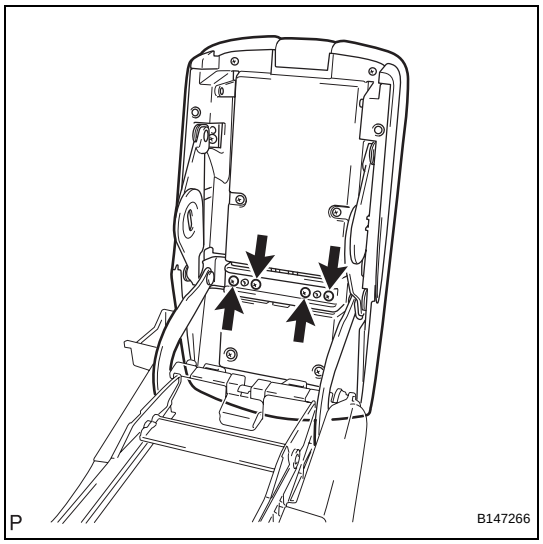

(c) Remove the 4 screws and the console compartment door sub-assembly.

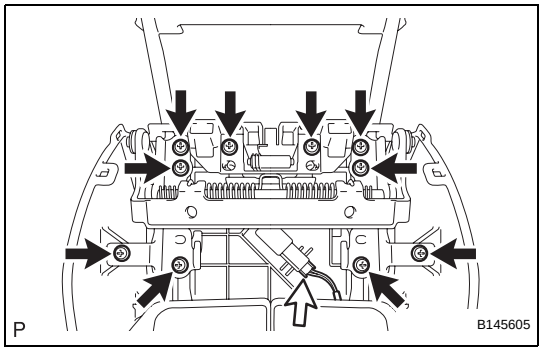

3. REMOVE CONSOLE BOX ILLUMINATION LIGHT ASSEMBLY

(a) Loosen the 10 screws and disconnect the connector.

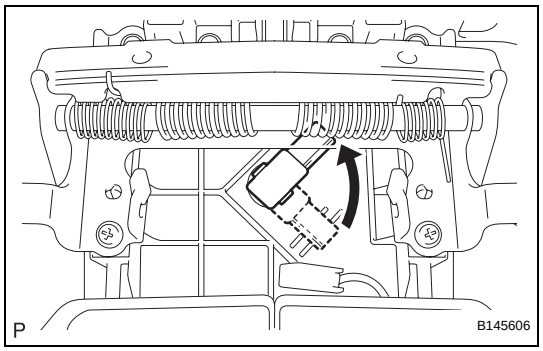

(b) Turn the console box illumination light assembly in the direction indicated by the arrow and remove it.

4. REMOVE POWER OUTLET SOCKET ASSEMBLY (See page OT-21)

5. REMOVE POWER OUTLET SOCKET COVER (See page OT-22)

6. REMOVE AUDIO TERMINAL (See page AV-241)

REASSEMBLY

1. **INSTALL AUDIO TERMINAL (See page AV-241)**
2. **INSTALL POWER OUTLET SOCKET COVER (See page OT-22)**
3. **INSTALL POWER OUTLET SOCKET ASSEMBLY (See page OT-22)**
4. **INSTALL CONSOLE BOX ILLUMINATION LIGHT ASSEMBLY**
   (a) Turn the console box illumination light assembly in the direction indicated by the arrow and install it.

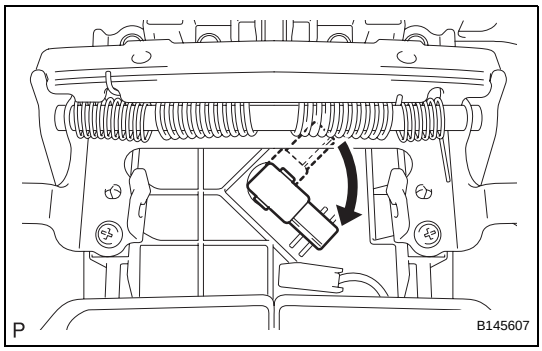

   (b) Tighten the 10 screws and connect the connector.

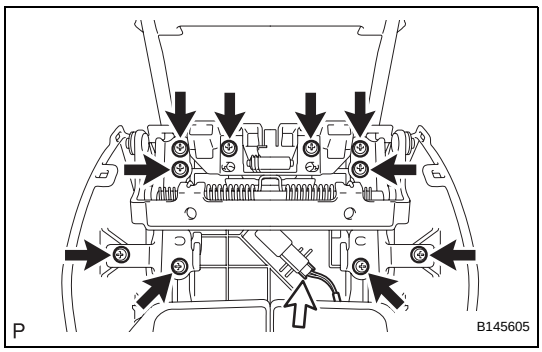

5. **INSTALL CONSOLE COMPARTMENT DOOR SUB-ASSEMBLY**
   (a) Install the console compartment door sub-assembly with the 4 screws.

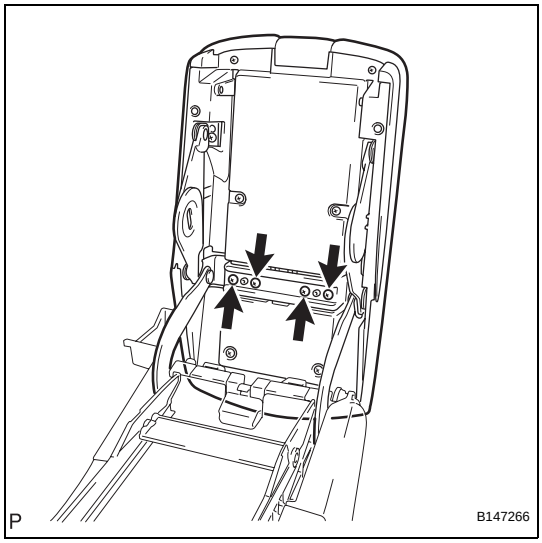

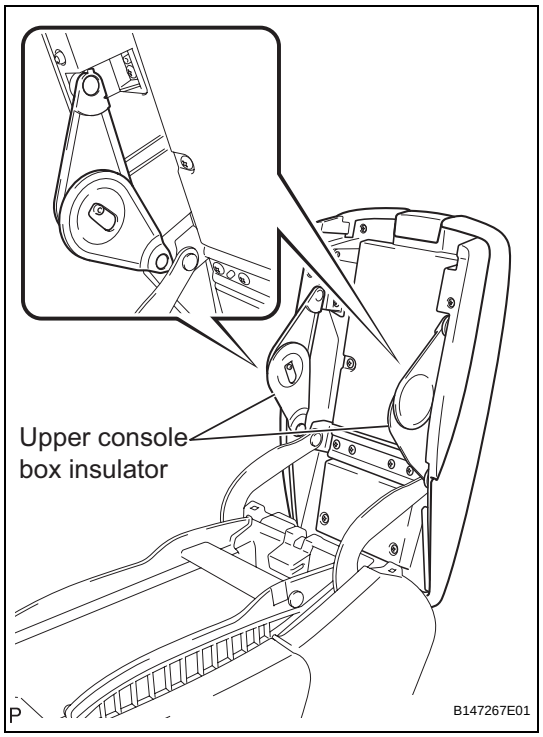

(b) Assemble the 2 upper console box insulators as shown in the illustration.
CAUTION:
Make sure the upper console box insulators are assembled as shown in the illustration. If they are not assembled properly, the console compartment door may not slide smoothly, or injury may result when the console compartment door slides.

(c) Align the 2 claws to the guides and engage the console compartment door sub-assembly to the rail on the console box assembly as shown in the illustration.

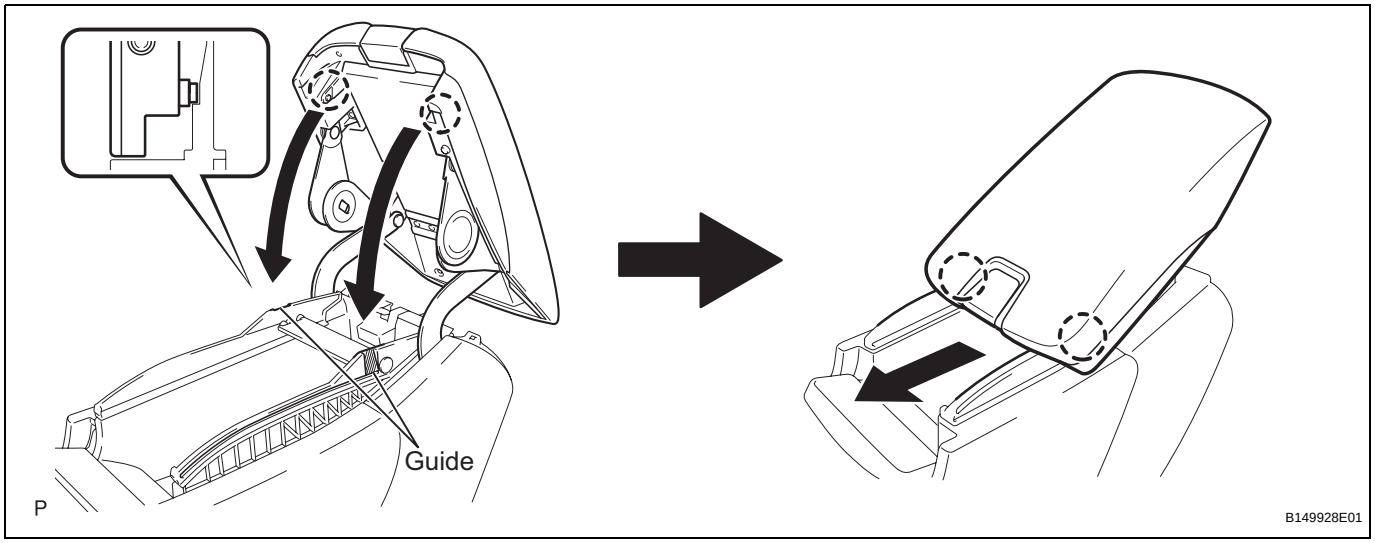

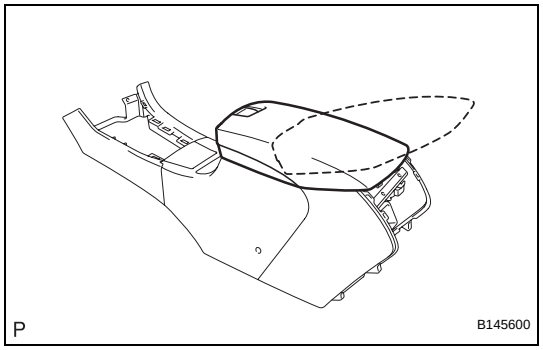

(d) Check the sliding operation of the console compartment door sub-assembly.
   (1) Check if the console compartment door sub-assembly slides smoothly.

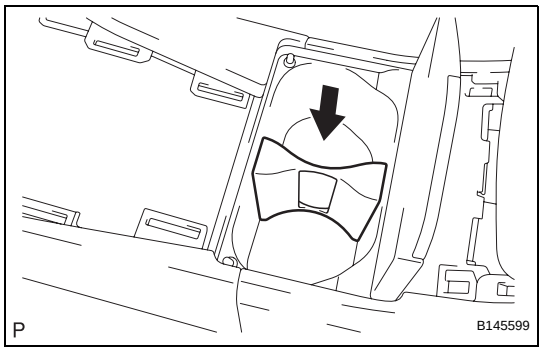

6. INSTALL NO. 5 CONSOLE BOX RETAINER

(a) Install the No. 5 console box retainer.

INSTALLATION

1. INSTALL REAR CONSOLE BOX ASSEMBLY

(a) Connect each connector.

(b) Engage the 4 clips.

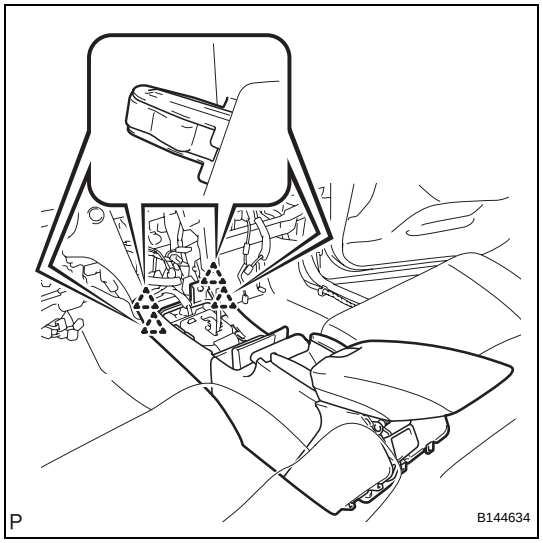

(c) Install the 2 screws.

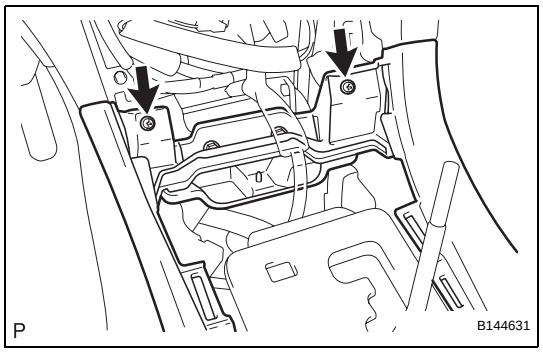

(d) Install the 2 bolts.

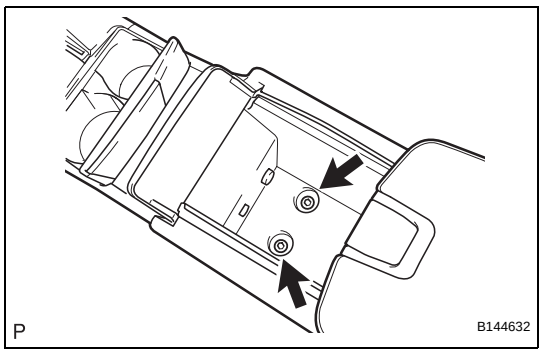

(e) Install the rear console box assembly with the 2 bolts.

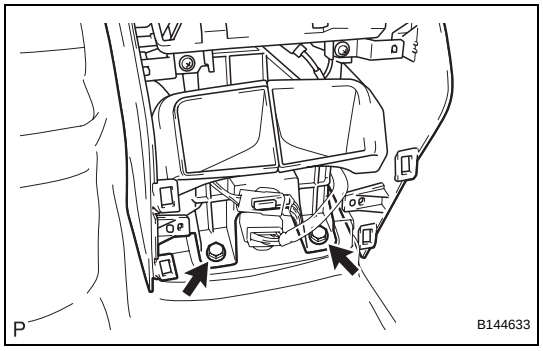

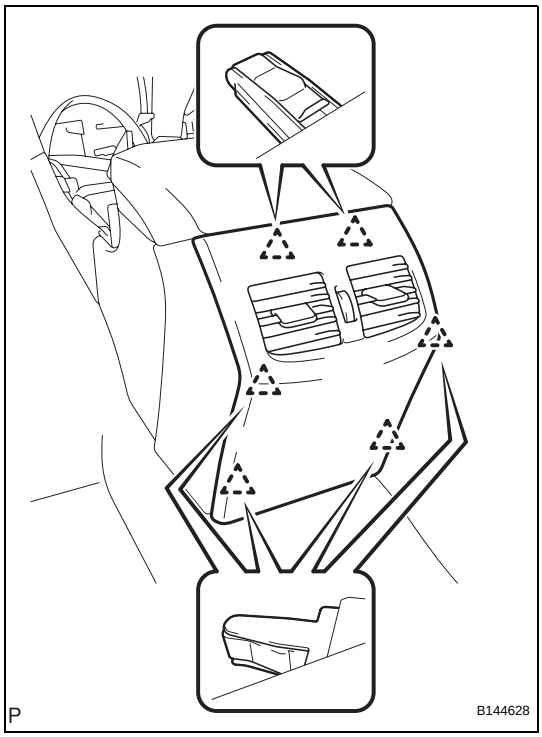

2. INSTALL CONSOLE REAR END PANEL SUB-ASSEMBLY

(a) Engage the 6 clips and install the console rear end panel sub-assembly.

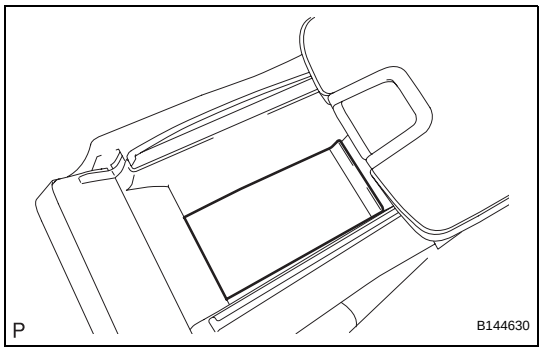

3. INSTALL CONSOLE BOX CARPET

(a) Install the console box carpet.

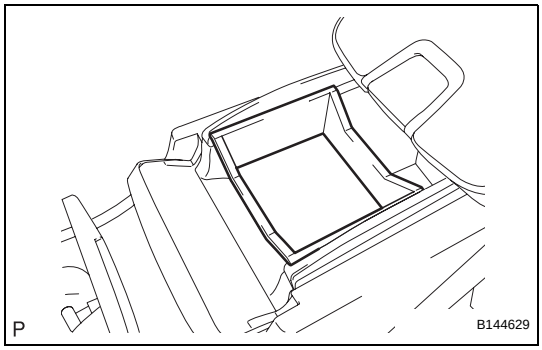

4. INSTALL CONSOLE BOX POCKET

(a) Install the console box pocket.

5. INSTALL HEATER SEAT SWITCH CONSOLE BASE (w/o Seat Heater System) (See page IP-41)

6. INSTALL HEATER SEAT SWITCH CONSOLE BASE (w/ Seat Heater System) (See page IP-41)

7. INSTALL UPPER CONSOLE PANEL ASSEMBLY WITH FRONT ASH RECEPTACLE (See page IP-42)

8. INSTALL SHIFT LEVER KNOB SUB-ASSEMBLY (See page IP-42)

9. INSTALL INSTRUMENT PANEL FINISH PANEL END RH (See page IP-44)

10. INSTALL INSTRUMENT PANEL FINISH PANEL END LH (See page IP-46)

REASSEMBLY

1. **INSTALL AUDIO TERMINAL (See page AV-241)**
2. **INSTALL POWER OUTLET SOCKET COVER (See page OT-22)**
3. **INSTALL POWER OUTLET SOCKET ASSEMBLY (See page OT-22)**
4. **INSTALL CONSOLE BOX ILLUMINATION LIGHT ASSEMBLY**
   (a) Turn the console box illumination light assembly in the direction indicated by the arrow and install it.

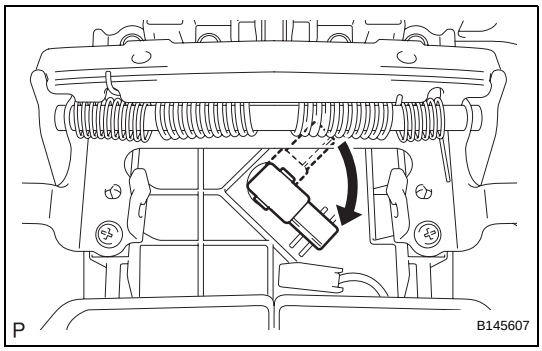

   (b) Tighten the 10 screws and connect the connector.

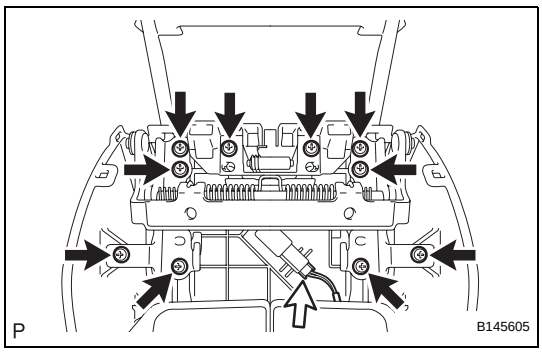

5. **INSTALL CONSOLE COMPARTMENT DOOR SUB-ASSEMBLY**
   (a) Install the console compartment door sub-assembly with the 4 screws.

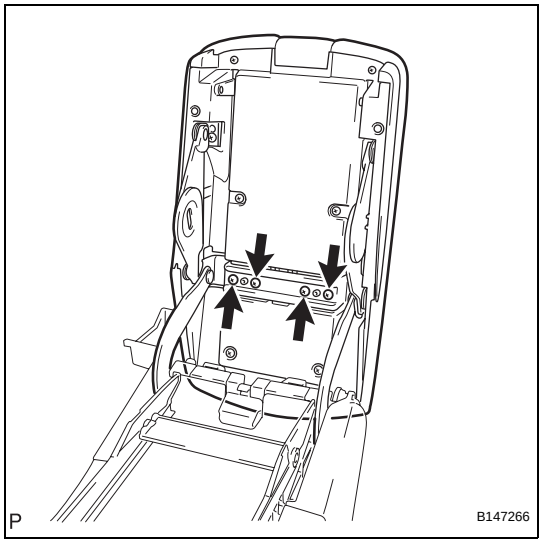

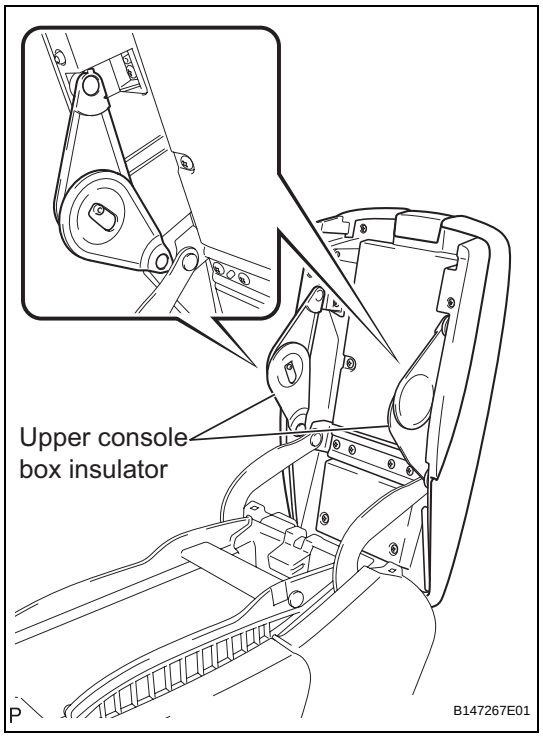

(b) Assemble the 2 upper console box insulators as shown in the illustration.
CAUTION:
Make sure the upper console box insulators are assembled as shown in the illustration. If they are not assembled properly, the console compartment door may not slide smoothly, or injury may result when the console compartment door slides.

(c) Align the 2 claws to the guides and engage the console compartment door sub-assembly to the rail on the console box assembly as shown in the illustration.

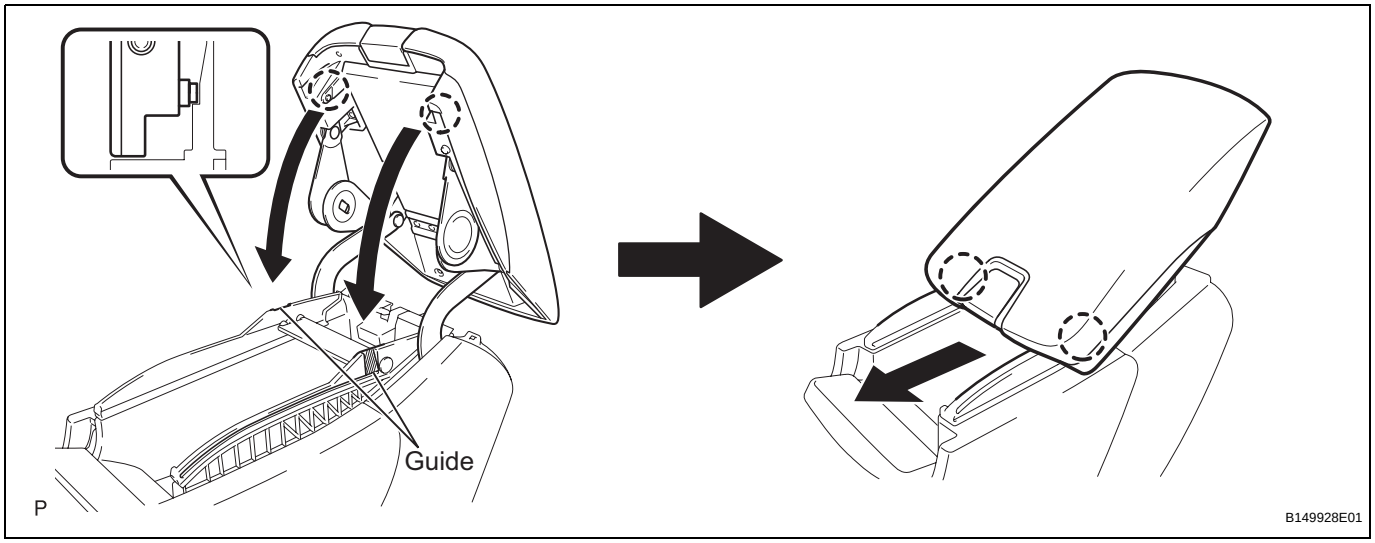

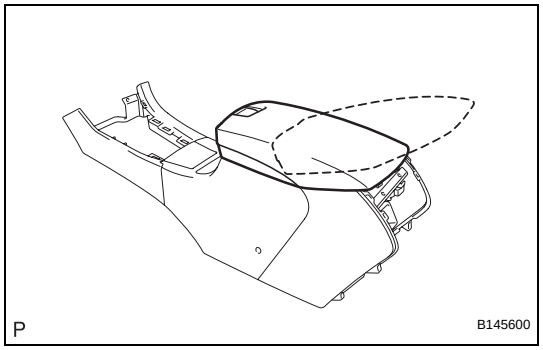

(d) Check the sliding operation of the console compartment door sub-assembly.
   (1) Check if the console compartment door sub-assembly slides smoothly.

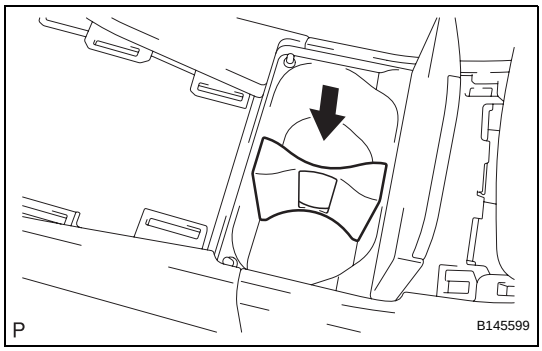

6. INSTALL NO. 5 CONSOLE BOX RETAINER

(a) Install the No. 5 console box retainer.

INSTALLATION

1. INSTALL REAR CONSOLE BOX ASSEMBLY

(a) Connect each connector.

(b) Engage the 4 clips.

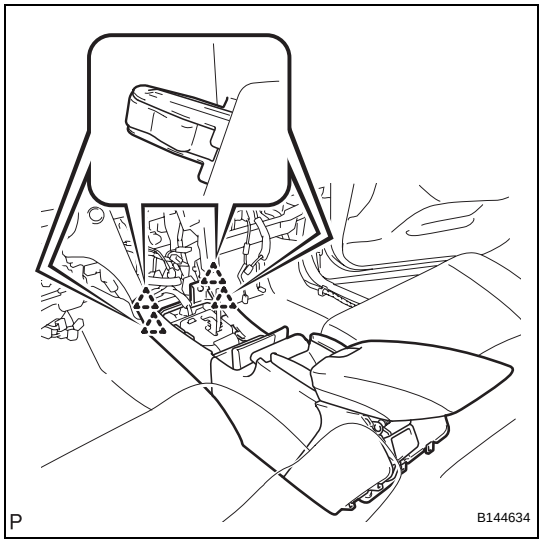

(c) Install the 2 screws.

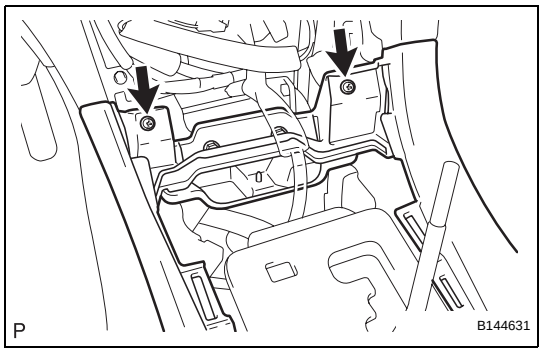

(d) Install the 2 bolts.

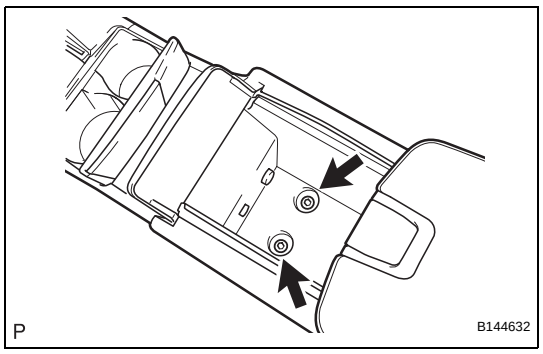

(e) Install the rear console box assembly with the 2 bolts.

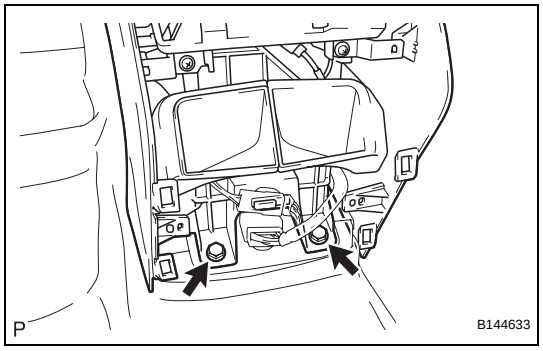

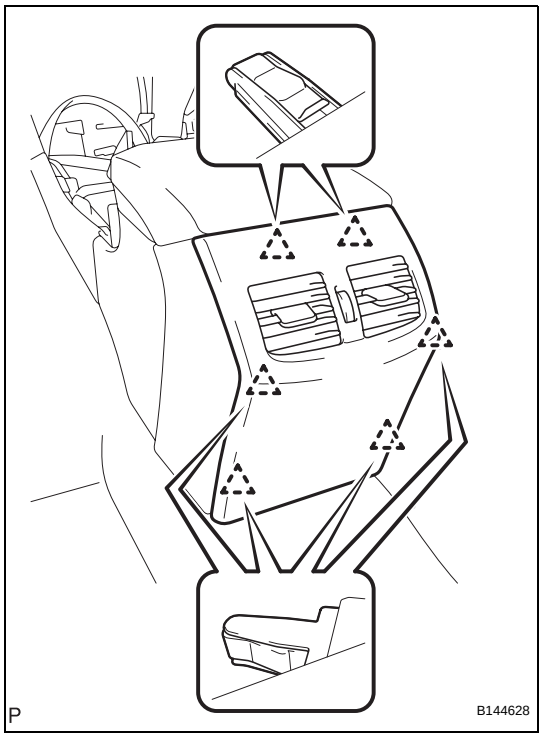

2. INSTALL CONSOLE REAR END PANEL SUB-ASSEMBLY

(a) Engage the 6 clips and install the console rear end panel sub-assembly.

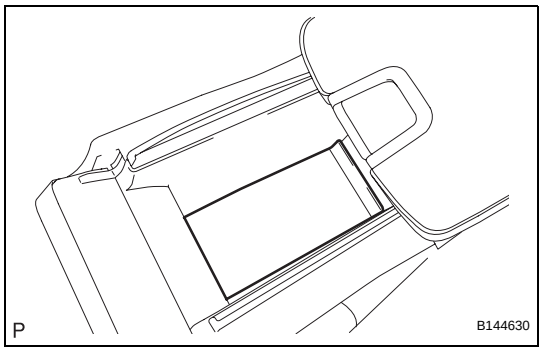

3. INSTALL CONSOLE BOX CARPET

(a) Install the console box carpet.

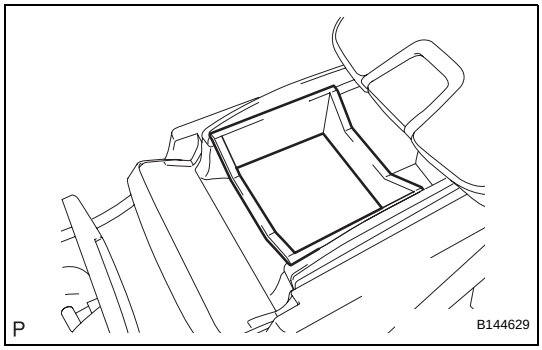

4. INSTALL CONSOLE BOX POCKET

(a) Install the console box pocket.

5. INSTALL HEATER SEAT SWITCH CONSOLE BASE (w/o Seat Heater System) (See page IP-41)

6. INSTALL HEATER SEAT SWITCH CONSOLE BASE (w/ Seat Heater System) (See page IP-41)

7. INSTALL UPPER CONSOLE PANEL ASSEMBLY WITH FRONT ASH RECEPTACLE (See page IP-42)

8. INSTALL SHIFT LEVER KNOB SUB-ASSEMBLY (See page IP-42)

9. INSTALL INSTRUMENT PANEL FINISH PANEL END RH (See page IP-44)

10. INSTALL INSTRUMENT PANEL FINISH PANEL END LH (See page IP-46)

SYSTEM DESCRIPTION

1. FRONT POWER SEAT CONTROL SYSTEM DESCRIPTION

- The driver's seat is equipped with slide, reclining, lifter, front vertical, leg support, and lumbar support adjustment functions.
- The front passenger seat is equipped with slide, reclining, lifter, front vertical, and lumbar support adjustment functions.
- The memory system for the front seats is optional. With the memory function, the front power seat switch (position control ECU) performs the following: 1) controls the slide, reclining, lifter, and front vertical motors; 2) memorizes the seat position; and 3) performs the seat restoring operation.
- The memory call function uses the key ID code of the electrical key to memorize and reproduce the appropriate driving position for each individual who possesses an electrical key.

2. FUNCTION OF MAIN COMPONENT

The following functions are available:

Components	Function
Power seat motor assembly (slide motor)	Activated based on a signal from the position control ECU and slides the seat forward and rearward.
Power seat motor assembly (reclining motor)	Activated based on a signal from the position control ECU and tilts and reclines the seat.
Power seat motor assembly (front vertical motor)	Activated based on a signal from the position control ECU and raises and lowers the seat cushion front vertically.
Power seat motor assembly (lifter motor)	Activated based on a signal from the position control ECU and raises and lowers the seat cushion vertically.
Lumbar support adjuster motor	Activated based on a signal from the lumbar front power seat switch and adjusts the lumbar support.
Leg support motor	Activated based on a signal from the seat variable cushion switch and slides the seat cushion forward and rearward.
Front power seat switch (reclining, lifter, slide, front vertical)	Based on switches operated, the seat adjuster signals are input in the position control ECU and the seat is adjusted accordingly.
Seat variable cushion switch	Based on switches operated, the seat cushion is adjusted accordingly.
Lumbar front power seat switch	Based on switches operated, the seat is adjusted accordingly.
Seat memory switch LH (driver side) (SET switch, memory switch)	When the SET switch and the SW1 or SW2 switch are pressed simultaneously, a signal is input to the outer mirror control ECU and sent to the position control ECU, which records the seat position, steering wheel position (tilt and telescopic), and outer mirror position (RH and LH). When the SW1 or SW2 switch is pressed, a signal is input to the outer mirror control ECU and sent to the position control ECU, which changes the seat position, steering wheel position (tilt and telescopic), and outer mirror position (RH and LH) to each recorded position.
Seat memory switch RH (passenger side) (SET switch, memory switch)	When the SET switch and the SW1 or SW2 switch are pressed simultaneously, a signal is input to the outer mirror control ECU and sent to the position control ECU, which records the seat position. When the SW1 or SW2 switch is pressed, a signal is input to the outer mirror control ECU and sent to the position control ECU, which changes the seat position to the recorded position.

3. SYSTEM OPERATION

The front power seat adjustment and position memory are shown in the table below.

Seat Adjustment Function	Driver's Seat	Passenger Seat
Fore-and-Aft Slide	Power and memory	Power and memory
Reclining	Power and memory	Power and memory
Front Vertical Height	Power and memory	Power and memory
Lifter	Power and memory	Power and memory
Lumbar Support	Power	Power
Leg Support	Power	-

For the driver side memory function, the memory switch operation is first transferred from the outer mirror control ECU to the front power seat switch LH (position control ECU) via the CAN communication line. For the passenger side memory function, memory switch operation is first transferred from the outer mirror control ECU to the front power seat switch (position control ECU) via the CAN communication line. Then, either the seat position is stored in memory or a previously stored seat position is recalled.

HOW TO PROCEED WITH TROUBLESHOOTING

HINT:
- Use the following procedures to troubleshoot the front power seat control system.
- *: Use the intelligent tester.

1 VEHICLE BROUGHT TO WORKSHOP

NEXT

2 INSPECT BATTERY VOLTAGE

Standard voltage:
11 to 14 V

If the voltage is below 11 V, recharge or replace the battery before proceeding to the next step.

NEXT

3 INSPECT COMMUNICATION FUNCTION OF CAN COMMUNICATION SYSTEM*

(a) Use the intelligent tester to check if the CAN communication system is functioning normally.
Result

Result	Proceed to
CAN DTC is not output	A
CAN DTC is output	B

B → **Go to CAN COMMUNICATION SYSTEM**

A

SE

4 PROBLEM SYMPTOMS TABLE

Result

Result	Proceed to
Fault is not listed in problem symptoms table	A
Fault is listed in problem symptoms table	B

B → **Go to step 6**

A

5 OVERALL ANALYSIS AND TROUBLESHOOTING*

(a) DATA LIST / ACTIVE TEST (See page SE-20)
(b) Terminals of ECU (See page SE-16)
(c) Operation Check (See page SE-11)

NEXT

6	**REPAIR OR REPLACE**

NEXT

7	**CONFIRMATION TEST**

NEXT

END

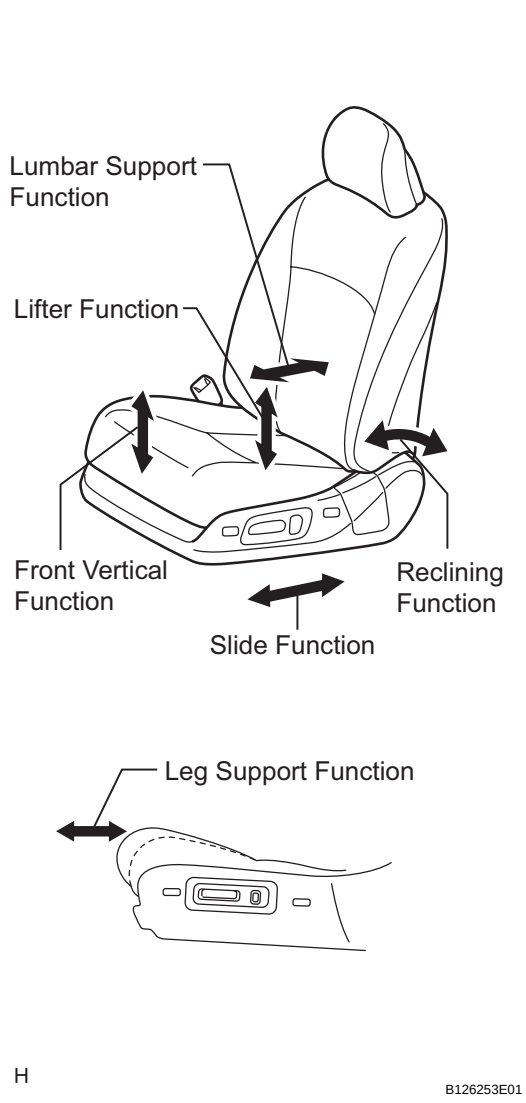

OPERATION CHECK

1. CHECK POWER SEAT FUNCTION (DRIVER AND FRONT PASSENGER)

(a) Check the basic functions.

(1) Operate the power seat switches and check to make sure each seat function works:
- Sliding
- Front vertical
- Lifter
- Reclining
- Lumbar support
- Leg support (Driver's seat only)

2. CHECK POWER SEAT MOTOR ASSEMBLY (DRIVER AND FRONT PASSENGER) (SLIDING, FRONT VERTICAL, LIFTER, AND RECLINING FUNCTIONS)

(a) Check the PTC operation inside the power seat motor.

HINT:

The PTC thermistor's resistance increases when the power seat switch is held down even after the power seat has been moved to the furthest possible position in one direction. If the resistance increases beyond a specified level, the current is shut off to prevent a short circuit.

NOTICE:
- **The inspection should be performed with the seat installed in the vehicle.**
- **Perform the 4 steps below to check the full range of motion for each power seat function.**

(1) Choose a power seat function. Operate the power seat switch and move the seat to the furthest possible position in one direction. Keep the seat in that position for approximately 60 seconds.

SE

(2) Operate the power seat switch again and continue to try to move the seat in the same direction as in the previous step. Measure the time until the current is shut off (motor operation sound will stop).
Standard:
4 to 90 seconds

(3) After the current is shut off, release the power seat switch and wait for approximately 60 seconds.

(4) Operate the same power seat switch and move the seat in the opposite direction. Check that the motor operates.

3. CHECK LUMBAR SUPPORT ADJUSTER ASSEMBLY

(a) Check the PTC operation inside the power seat motor.
NOTICE:
The inspection should be performed with the seat installed in the vehicle.

(1) Operate the lumbar support switch and move the lumbar support to either the foremost or rearmost position. Keep the seat in that position for approximately 60 seconds.

(2) Operate the lumbar support switch again and continue to try to move the lumbar support in the same direction as in the previous step. Measure the time until the current is shut off (motor operation sound will stop).
Standard:
4 to 90 seconds

(3) After the current is shut off, release the lumbar support switch and wait for approximately 60 seconds.

(4) Operate the lumbar support switch and move the seat in the opposite direction. Check that the motor operates.

4. CHECK LEG SUPPORT MOTOR

(a) Check the PTC operation inside the power seat motor.
NOTICE:
The inspection should be performed with the seat installed in the vehicle.

(1) Operate the seat variable cushion switch and move the leg support motor to either the foremost or rearmost position. Keep the seat in that position for approximately 60 seconds.

(2) Operate the seat variable cushion switch again and continue to try to move the leg support motor in the same direction as in the previous step. Measure the time until the current is shut off (motor operation sound will stop).
Standard:
4 to 90 seconds

(3) After the current is shut off, release the seat variable cushion switch and wait for approximately 60 seconds.
(4) Operate the seat variable cushion switch and move the seat in the opposite direction. Check that the motor operates.

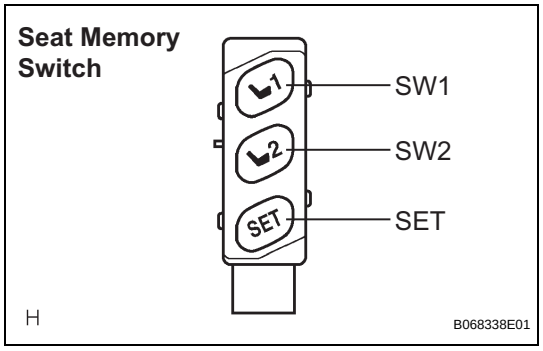

5. CHECK MEMORY AND SEAT RESTORING OPERATION (DRIVER AND FRONT PASSENGER)

(a) Turn the engine switch on (IG) and move the shift lever to P.
(b) Move the seat to the foremost and uppermost position using the seat switch.
(c) Check that the buzzer sounds for 0.5 seconds and the seat position is memorized when the SW1 switch is pressed while the SET switch is being pressed.
(d) Move the seat from the foremost and uppermost position using the seat switch.
(e) Check that the buzzer sounds for 0.5 seconds and the seat position is memorized when the SW2 switch is pressed while the SET switch is being pressed.
(f) Check that the buzzer sounds for 0.1 seconds and the seat automatically moves to the foremost and uppermost position (memorized position) when the SW1 switch of the memory switch is pressed.
(g) Check that the buzzer sounds for 0.1 seconds and the seat automatically moves out of the maximum front and upper position (memorized position) when the SW2 switch of the memory switch is pressed.
(h) After the engine switch is turned off and the driver side door is opened, check that the buzzer sounds for 0.1 seconds and the seat automatically moves to the memorized position when the SW1 or SW2 switch is pressed within 30 seconds.
(i) Check that the following procedures erase the memorized seat positions of the SW1 or SW2 switch: slide the seat fully forward or rearward; hold the SW1 or SW2 switch; disconnect the cable from the negative (-) battery terminal; and wait for 3 minutes.
HINT:
The seat position will not be stored if the SET switch and 2 or more of the memory switches (for example, SW1 and SW2) are pressed simultaneously.

6. CHECK MEMORY CALL FUNCTION (DRIVER SIDE ONLY)

(a) Automatic memory call function check (automatic wireless memory call function)

(1) With a transmitter key recognition code registered:
Perform a wireless door unlock operation and check that opening the driver side door causes: 1) the buzzer to sound for 0.1 seconds, and 2) the front seat and the steering wheel (tilt and telescopic), and outer mirror (RH and LH) automatically to move to each stored position.
HINT:
- The registered transmitter key recognition code is recalled automatically.
- If the front seats are not operated, the buzzer will not sound.

(b) Memory registration (transmitter key recognition code registration)

(1) With the engine switch off and the driver side door closed, press and hold the SW1 or SW2 switch. The front power seat switch (position control ECU) will enter transmitter key recognition code registration mode to allow a key to be linked to seat memory position.
HINT:
If the memory switch is released before entering registration mode, the front power seat switch (position control ECU) will not enter registration mode.

(2) When the transmitter's LOCK or UNLOCK switch is pressed, check that the buzzer of the front power seat switch (position control ECU) sounds once (0.5 seconds).

(c) Memory deletion (transmitter key recognition code memory deletion)

(1) With the engine switch off and the driver side door closed, press and hold the SW1 or SW2 switch. The front power seat switch (position control ECU) will enter transmitter key recognition code deletion mode.
HINT:
If the memory switch is released before entering deletion mode, the front power seat switch (position control ECU) will not enter deletion mode.

(2) When the transmitter's LOCK or UNLOCK switch is pressed, check that the buzzer of the front power seat switch (position control ECU) sounds twice (0.1 seconds each time).

7. MEMORY CALL EMERGENCY STOP FUNCTION (DRIVER SIDE ONLY)

(a) While a memory call function is operating, check that performing one of the following will stop the memory call operation: 1) press the SET, SW1 or SW2 switch, or 2) press the front power seat switch (position control ECU).

HOW TO PROCEED WITH TROUBLESHOOTING

HINT:
- Use the following procedures to troubleshoot the front power seat control system.
- *: Use the intelligent tester.

1 VEHICLE BROUGHT TO WORKSHOP

NEXT

2 INSPECT BATTERY VOLTAGE

Standard voltage:
11 to 14 V

If the voltage is below 11 V, recharge or replace the battery before proceeding to the next step.

NEXT

3 INSPECT COMMUNICATION FUNCTION OF CAN COMMUNICATION SYSTEM*

(a) Use the intelligent tester to check if the CAN communication system is functioning normally.
Result

Result	Proceed to
CAN DTC is not output	A
CAN DTC is output	B

B → **Go to CAN COMMUNICATION SYSTEM**

A

SE

4 PROBLEM SYMPTOMS TABLE

Result

Result	Proceed to
Fault is not listed in problem symptoms table	A
Fault is listed in problem symptoms table	B

B → **Go to step 6**

A

5 OVERALL ANALYSIS AND TROUBLESHOOTING*

(a) DATA LIST / ACTIVE TEST (See page SE-20)
(b) Terminals of ECU (See page SE-16)
(c) Operation Check (See page SE-11)

NEXT

6	**REPAIR OR REPLACE**

NEXT

7	**CONFIRMATION TEST**

NEXT

END

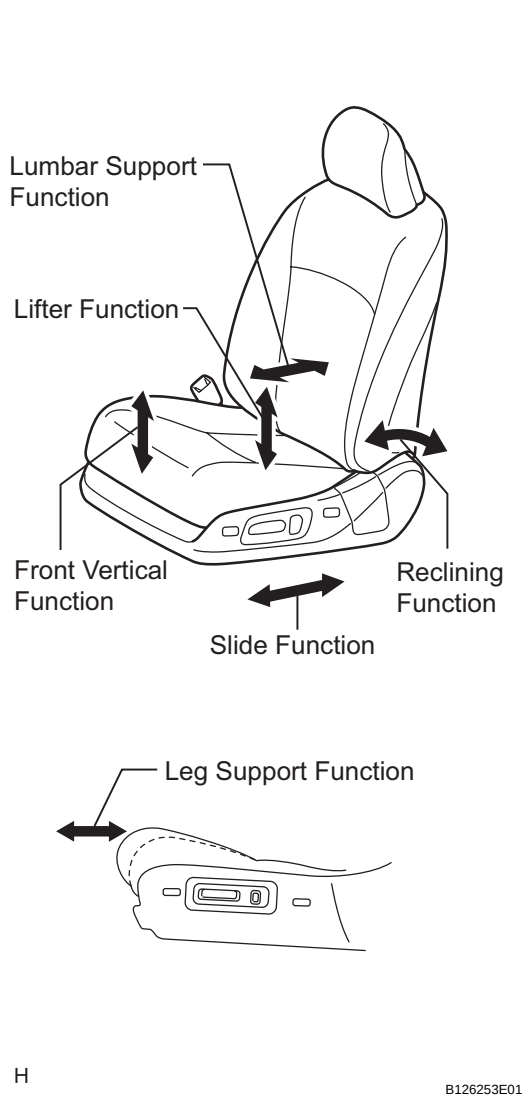

OPERATION CHECK

1. CHECK POWER SEAT FUNCTION (DRIVER AND FRONT PASSENGER)

(a) Check the basic functions.

(1) Operate the power seat switches and check to make sure each seat function works:
- Sliding
- Front vertical
- Lifter
- Reclining
- Lumbar support
- Leg support (Driver's seat only)

2. CHECK POWER SEAT MOTOR ASSEMBLY (DRIVER AND FRONT PASSENGER) (SLIDING, FRONT VERTICAL, LIFTER, AND RECLINING FUNCTIONS)

(a) Check the PTC operation inside the power seat motor.

HINT:

The PTC thermistor's resistance increases when the power seat switch is held down even after the power seat has been moved to the furthest possible position in one direction. If the resistance increases beyond a specified level, the current is shut off to prevent a short circuit.

NOTICE:
- **The inspection should be performed with the seat installed in the vehicle.**
- **Perform the 4 steps below to check the full range of motion for each power seat function.**

(1) Choose a power seat function. Operate the power seat switch and move the seat to the furthest possible position in one direction. Keep the seat in that position for approximately 60 seconds.

SE

(2) Operate the power seat switch again and continue to try to move the seat in the same direction as in the previous step. Measure the time until the current is shut off (motor operation sound will stop).
Standard:
4 to 90 seconds

(3) After the current is shut off, release the power seat switch and wait for approximately 60 seconds.

(4) Operate the same power seat switch and move the seat in the opposite direction. Check that the motor operates.

3. CHECK LUMBAR SUPPORT ADJUSTER ASSEMBLY

(a) Check the PTC operation inside the power seat motor.
NOTICE:
The inspection should be performed with the seat installed in the vehicle.

(1) Operate the lumbar support switch and move the lumbar support to either the foremost or rearmost position. Keep the seat in that position for approximately 60 seconds.

(2) Operate the lumbar support switch again and continue to try to move the lumbar support in the same direction as in the previous step. Measure the time until the current is shut off (motor operation sound will stop).
Standard:
4 to 90 seconds

(3) After the current is shut off, release the lumbar support switch and wait for approximately 60 seconds.

(4) Operate the lumbar support switch and move the seat in the opposite direction. Check that the motor operates.

4. CHECK LEG SUPPORT MOTOR

(a) Check the PTC operation inside the power seat motor.
NOTICE:
The inspection should be performed with the seat installed in the vehicle.

(1) Operate the seat variable cushion switch and move the leg support motor to either the foremost or rearmost position. Keep the seat in that position for approximately 60 seconds.

(2) Operate the seat variable cushion switch again and continue to try to move the leg support motor in the same direction as in the previous step. Measure the time until the current is shut off (motor operation sound will stop).
Standard:
4 to 90 seconds

(3) After the current is shut off, release the seat variable cushion switch and wait for approximately 60 seconds.
(4) Operate the seat variable cushion switch and move the seat in the opposite direction. Check that the motor operates.

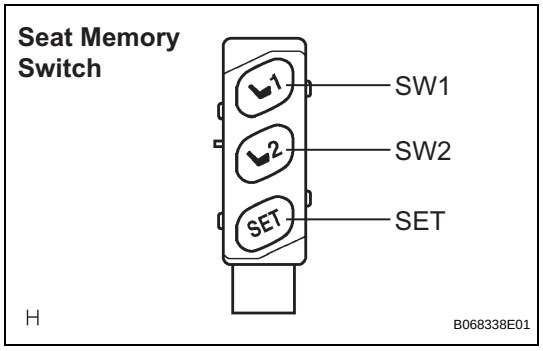

5. CHECK MEMORY AND SEAT RESTORING OPERATION (DRIVER AND FRONT PASSENGER)

(a) Turn the engine switch on (IG) and move the shift lever to P.
(b) Move the seat to the foremost and uppermost position using the seat switch.
(c) Check that the buzzer sounds for 0.5 seconds and the seat position is memorized when the SW1 switch is pressed while the SET switch is being pressed.
(d) Move the seat from the foremost and uppermost position using the seat switch.
(e) Check that the buzzer sounds for 0.5 seconds and the seat position is memorized when the SW2 switch is pressed while the SET switch is being pressed.
(f) Check that the buzzer sounds for 0.1 seconds and the seat automatically moves to the foremost and uppermost position (memorized position) when the SW1 switch of the memory switch is pressed.
(g) Check that the buzzer sounds for 0.1 seconds and the seat automatically moves out of the maximum front and upper position (memorized position) when the SW2 switch of the memory switch is pressed.
(h) After the engine switch is turned off and the driver side door is opened, check that the buzzer sounds for 0.1 seconds and the seat automatically moves to the memorized position when the SW1 or SW2 switch is pressed within 30 seconds.
(i) Check that the following procedures erase the memorized seat positions of the SW1 or SW2 switch: slide the seat fully forward or rearward; hold the SW1 or SW2 switch; disconnect the cable from the negative (-) battery terminal; and wait for 3 minutes.
HINT:
The seat position will not be stored if the SET switch and 2 or more of the memory switches (for example, SW1 and SW2) are pressed simultaneously.

6. CHECK MEMORY CALL FUNCTION (DRIVER SIDE ONLY)

(a) Automatic memory call function check (automatic wireless memory call function)

(1) With a transmitter key recognition code registered:
Perform a wireless door unlock operation and check that opening the driver side door causes: 1) the buzzer to sound for 0.1 seconds, and 2) the front seat and the steering wheel (tilt and telescopic), and outer mirror (RH and LH) automatically to move to each stored position.
HINT:
- The registered transmitter key recognition code is recalled automatically.
- If the front seats are not operated, the buzzer will not sound.

(b) Memory registration (transmitter key recognition code registration)

(1) With the engine switch off and the driver side door closed, press and hold the SW1 or SW2 switch. The front power seat switch (position control ECU) will enter transmitter key recognition code registration mode to allow a key to be linked to seat memory position.
HINT:
If the memory switch is released before entering registration mode, the front power seat switch (position control ECU) will not enter registration mode.

(2) When the transmitter's LOCK or UNLOCK switch is pressed, check that the buzzer of the front power seat switch (position control ECU) sounds once (0.5 seconds).

(c) Memory deletion (transmitter key recognition code memory deletion)

(1) With the engine switch off and the driver side door closed, press and hold the SW1 or SW2 switch. The front power seat switch (position control ECU) will enter transmitter key recognition code deletion mode.
HINT:
If the memory switch is released before entering deletion mode, the front power seat switch (position control ECU) will not enter deletion mode.

(2) When the transmitter's LOCK or UNLOCK switch is pressed, check that the buzzer of the front power seat switch (position control ECU) sounds twice (0.1 seconds each time).

7. MEMORY CALL EMERGENCY STOP FUNCTION (DRIVER SIDE ONLY)

(a) While a memory call function is operating, check that performing one of the following will stop the memory call operation: 1) press the SET, SW1 or SW2 switch, or 2) press the front power seat switch (position control ECU).

TERMINALS OF ECU

1. FRONT POWER SEAT SWITCH LH (POSITION CONTROL ECU)

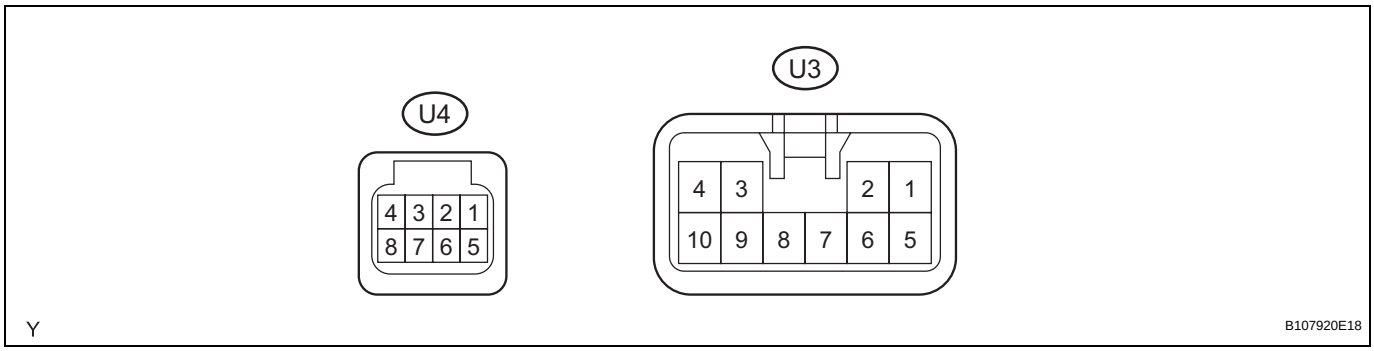

(a) Disconnect the U3 and U4 ECU connectors.
(b) Measure the voltage and resistance according to the value(s) in the table below.

Symbols (Terminal No.)	Wiring Color	Terminal Description	Condition	Specified Condition
GND (U3-1) - Body ground	W-B - Body ground	Ground	Always	Below 1 Ω
+B (U3-5) - GND (U3-1)	G - W-B	Power source	Always	10 to 14 V
IG (U4-4) - GND (U3-1)	B - W-B	Engine switch signal	Engine switch off	Below 1 V
			Engine switch on (IG)	10 to 14 V
CANH (U4-5) - CANL (U4-1)	LG - L	CAN communication line	Always	Pulse generation
SYSB (U4-8) - GND (U3-1)	V - W-B	System power source	Always	10 to 14 V

If the result is not as specified, there may be a malfunction on the wire harness side.
(c) Reconnect the U3 and U4 ECU connectors.
(d) Measure the voltage according to the value(s) in the table below.

Symbols (Terminal No.)	Wiring Color	Terminal Description	Condition	Specified Condition
SLD+ (U3-2) - GND (U3-1)	L - W-B	Sliding motor signal (forward)	Slide switch OFF	Below 1 V
			Slide switch FRONT ON	10 to 14 V
SLD- (U3-3) - GND (U3-1)	Y - W-B	Sliding motor signal (rearward)	Slide switch OFF	Below 1 V
			Slide switch REAR ON	10 to 14 V
FRV+ (U3-6) - GND (U3-1)	G - W-B	Front vertical motor signal (upward)	Front vertical switch OFF	Below 1 V
			Front vertical switch UP ON	10 to 14 V
FRV- (U3-4) - GND (U3-1)	B - W-B	Front vertical motor signal (downward)	Front vertical switch OFF	Below 1 V
			Front vertical switch DOWN ON	10 to 14 V
LFT+ (U3-7) - GND (U3-1)	W - W-B	Lifter motor signal (upward)	Lifter switch OFF	Below 1 V
			Lifter switch UP ON	10 to 14 V
LFT- (U3-9) - GND (U3-1)	SB - W-B	Lifter motor signal (downward)	Lifter switch OFF	Below 1 V
			Lifter switch DOWN ON	10 to 14 V
RCL+ (U3-8) - GND (U3-1)	P - W-B	Reclining motor signal (forward)	Reclining switch OFF	Below 1 V
			Reclining switch FRONT ON	10 to 14 V
RCL- (U3-10) - GND (U3-1)	BR - W-B	Reclining motor signal (rearward)	Reclining switch OFF	Below 1 V
			Reclining switch REAR ON	10 to 14 V

If the result is not as specified, the front power seat switch LH (position control ECU) may have a malfunction.

2. FRONT POWER SEAT SWITCH RH (POSITION CONTROL ECU)

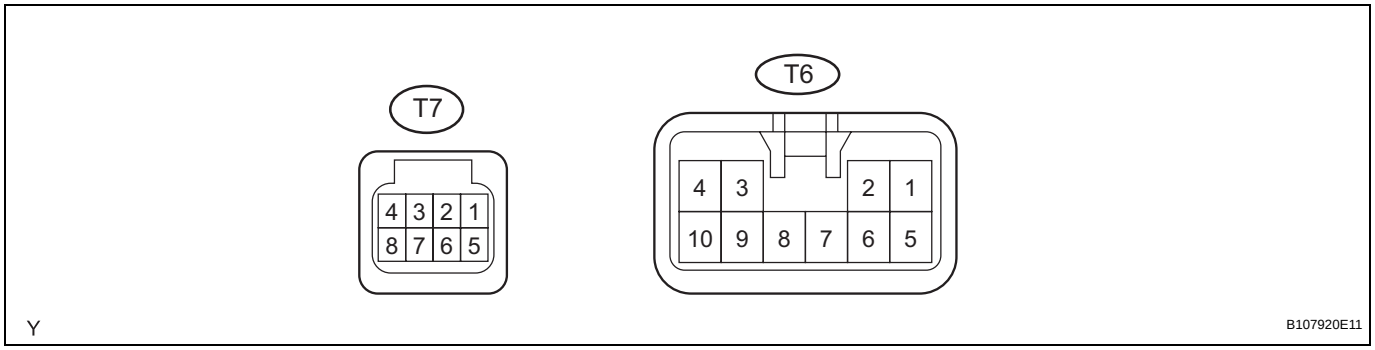

(a) Disconnect the T6 and T7 ECU connectors.
(b) Measure the voltage and resistance according to the value(s) in the table below.

Symbols (Terminal No.)	Wiring Color	Terminal Description	Condition	Specified Condition
GND (T6-1) - Body ground	W-B - Body ground	Ground	Always	Below 1 Ω
+B (T6-5) - GND (T6-1)	G - W-B	Power source	Always	10 to 14 V
IG (T7-4) - GND (T6-1)	B - W-B	Engine switch signal	Engine switch off	Below 1 V
			Engine switch (IG)	10 to 14 V
CANH (T7-5) - CANL (T7-1)	V - P	CAN communication line	Always	Pulse generation
SYSB (T7-8) - GND (T6-1)	V - W-B	System power source	Always	10 to 14 V

If the result is not as specified, there may be a malfunction on the wire harness side.
(c) Reconnect the T6 and T7 ECU connectors.
(d) Measure the voltage according to the value(s) in the table below.

Symbols (Terminal No.)	Wiring Color	Terminal Description	Condition	Specified Condition
SLD+ (T6-2) - GND (T6-1)	L - W-B	Sliding motor signal (forward)	Slide switch OFF	Below 1 V
			Slide switch FRONT ON	10 to 14 V
SLD- (T6-3) - GND (T6-1)	Y - W-B	Sliding motor signal (rearward)	Slide switch OFF	Below 1 V
			Slide switch REAR ON	10 to 14 V
FRV+ (T6-6) - GND (T6-1)	G - W-B	Front vertical motor signal (upward)	Front vertical switch OFF	Below 1 V
			Front vertical switch UP ON	10 to 14 V
FRV- (T6-4) - GND (T6-1)	B - W-B	Front vertical motor signal (downward)	Front vertical switch OFF	Below 1 V
			Front vertical switch DOWN ON	10 to 14 V
LFT+ (T6-7) - GND (T6-1)	W - W-B	Lifter motor signal (upward)	Lifter switch OFF	Below 1 V
			Lifter switch UP ON	10 to 14 V
LFT- (T6-9) - GND (T6-1)	SB - W-B	Lifter motor signal (downward)	Lifter switch OFF	Below 1 V
			Lifter switch DOWN ON	10 to 14 V
RCL+ (T6-8) - GND (T6-1)	P - W-B	Reclining motor signal (forward)	Reclining switch OFF	Below 1 V
			Reclining switch FRONT ON	10 to 14 V

Symbols (Terminal No.)	Wiring Color	Terminal Description	Condition	Specified Condition
RCL- (T6-10) - GND (T6-1)	BR - W-B	Reclining motor signal (rearward)	Reclining switch OFF	Below 1 V
			Reclining switch REAR ON	10 to 14 V

If the result is not as specified, the front power seat switch RH (position control ECU) may have a malfunction.

3. OUTER MIRROR CONTROL ECU

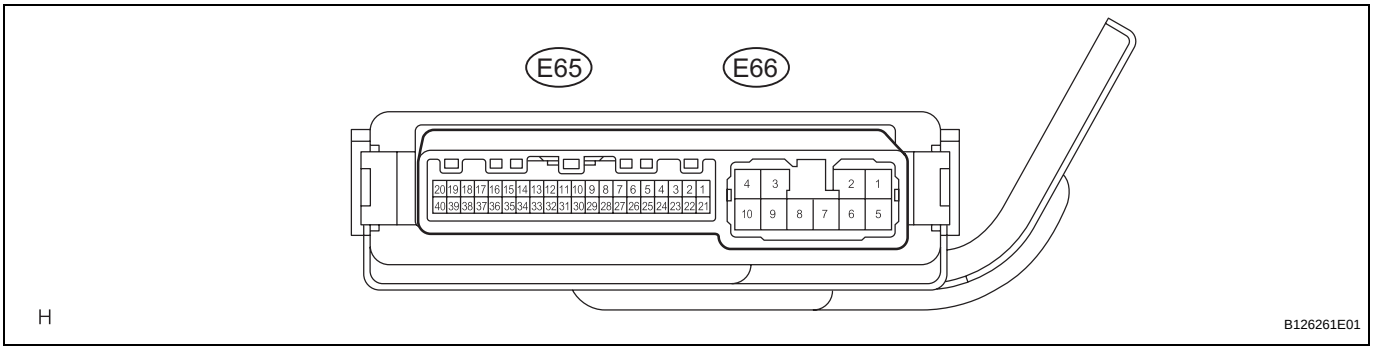

(a) Disconnect the E65 and E66 ECU connectors.
(b) Measure the voltage and resistance according to the value(s) in the table below.

Symbols (Terminal No.)	Wiring Color	Terminal Description	Condition	Specified Condition
CANH (E65-1) - CANL (E65-21)	O - P	CAN communication line	Always	Pulse generation
MSWE (E65-10) - GND (E66-9)	B - W-B	Ground for seat memory switch LH	Always	Below 1 Ω
MSWE (E65-30) - GND (E66-9)	LG - W-B	Ground for seat memory switch RH	Always	Below 1 Ω
GND (E66-9) - Body ground	W-B - Body ground	Ground	Always	Below 1 Ω
B (E66-3) - GND (E66-9)	V - W-B	Battery (ECU power source)	Always	10 to 14 V
ACC (E66-4) - GND (E66-9)	L - W-B	Engine switch (ACC) power source supply	Engine switch off	Below 1 V
			Engine switch on (ACC)	10 to 14 V

If the result is not as specified, there may be a malfunction on the wire harness side.

(c) Reconnect the E65 and E66 ECU connectors.
(d) Measure the voltage according to the value(s) in the table below.

Symbols (Terminal No.)	Wiring Color	Terminal Description	Condition	Specified Condition
M2 (E65-7) - MSWE (E65-10)	G - B	M2 switch signal for seat memory switch LH	M2 switch ON	10 to 14 V
			M2 switch OFF	Below 1 V
M1 (E65-8) - MSWE (E65-10)	L - B	M1 switch signal for seat memory switch LH	M1 switch ON	10 to 14 V
			M1 switch OFF	Below 1 V
MM (E65-9) - MSWE (E65-10)	W - B	SET switch signal for seat memory switch LH	SET switch ON	10 to 14 V
			SET switch OFF	Below 1 V
M2 (E65-27) - MSWE (E65-10)	Y - B	M2 switch signal for seat memory switch RH	M2 switch ON	10 to 14 V
			M2 switch OFF	Below 1 V
M1 (E65-28) - MSWE (E65-10)	R - B	M1 switch signal for seat memory switch RH	M1 switch ON	10 to 14 V
			M1 switch OFF	Below 1 V

Symbols (Terminal No.)	Wiring Color	Terminal Description	Condition	Specified Condition
MM (E65-29) - MSWE (E65-10)	V - B	SET switch signal for seat memory switch RH	SET switch ON	10 to 14 V
			SET switch OFF	Below 1 V

If the result is not as specified, the outer mirror control ECU may have a malfunction.

DATA LIST / ACTIVE TEST

1. READ DATA LIST

HINT:
Using the intelligent tester's DATA LIST allows switch, sensor, actuator and other item values to be read without removing any parts. Reading the DATA LIST early in troubleshooting is one way to save time.

(a) Connect the intelligent tester to the DLC3.
(b) Turn the engine switch on (IG).
(c) Read the DATA LIST.

MIRROR:

Tester Display	Measurement Item/Range	Normal Condition	Diagnostic Note
D SET MEMORY	Driver side SET memory switch / ON or OFF	ON: Driver side SET memory switch is ON OFF: Driver side SET memory switch is OFF	-
D MEM 1 SW	Driver side memory switch 1 / ON or OFF	ON: Driver side M1 memory switch is ON OFF: Driver side M1 memory switch is OFF	-
D MEM 2 SW	Driver side memory switch 2 / ON or OFF	ON: Driver side M2 memory switch is ON OFF: Driver side M2 memory switch is OFF	-
FP SET MEMORY	Front passenger side SET memory switch / ON or OFF	ON: Driver side SET memory switch is ON OFF: Driver side SET memory switch is OFF	-
FP MEM 1 SW	Front passenger side memory switch 1 / ON or OFF	ON: Driver side M1 memory switch is ON OFF: Driver side M1 memory switch is OFF	-
FP MEM 2 SW	Front passenger side memory switch 2 / ON or OFF	ON: Driver side M2 memory switch is ON OFF: Driver side M2 memory switch is OFF	-

D-SEAT:

Tester Display	Measurement Item/Range	Normal Condition	Diagnostic Note
SEAT MEM M1	Driving position memorized with M1 switch / MEM or NOT MEM	MEM: Memorized NOT MEM: Not memorized	-
SEAT MEM M2	Driving position memorized with M2 switch / MEM or NOT MEM	MEM: Memorized NOT MEM: Not memorized	-
SEAT MEM M3	Driving position memorized with M3 switch / MEM or NOT MEM	MEM: Memorized NOT MEM: Not memorized	-
IG (MPX)	Communication state of engine switch signal / ON or OFF	ON: Engine switch on (IG) signal is received OFF: Engine switch on (IG) signal is not received	-
KEY UNLOCK SW	Engine switch status (IG) / ON or OFF	ON: Engine switch on (IG) OFF: Engine switch off	-
KEY CORD CONF	Recognition code is registered / ON or OFF	ON: One or more recognition codes are registered OFF: No recognition code is registered	-
D-DOOR WARN SW	Door courtesy switch signal / ON or OFF	ON: Driver side door is open OFF: Driver side door is closed	-
P SW	Shift lever position P signal / ON or OFF	ON: Shift lever in P position OFF: Shift lever in any position other than P	-

Tester Display	Measurement Item/Range	Normal Condition	Diagnostic Note
N SW	Shift lever position N signal / ON or OFF	ON: Shift lever in N position OFF: Shift lever in any position other than N	-
PKBS SW	Parking brake switch status / ON or OFF	ON: Parking brake is operated OFF: Parking brake is released	-
M3 SW	M3 switch signal / ON or OFF	ON: M3 switch is ON OFF: M3 switch is OFF	-
M2 SW	M2 switch signal / ON or OFF	ON: M2 switch is ON OFF: M2 switch is OFF	-
M1 SW	M1 switch signal / ON or OFF	ON: M1 switch is ON OFF: M1 switch is OFF	-
SET SW	SET switch signal / ON or OFF	ON: SET switch is ON OFF: SET switch is OFF	-
VEHICLE SPD	Vehicle speed data / MIN.: 0 km/h (0 mph), MAX.: 255 km/h (158 mph)	Actual vehicle speed	-
RECLIN SW REAR	Reclining switch signal (Rearward) / ON or OFF	ON: Reclining switch (Rearward) is ON OFF: Reclining switch (Rearward) is OFF	-
RECLIN SW FRONT	Reclining switch signal (Forward) / ON or OFF	ON: Reclining switch (Forward) is ON OFF: Reclining switch (Forward) is OFF	-
F VTCL SW DOWN	Front vertical switch signal (Downward) / ON or OFF	ON: Front vertical switch (Downward) is ON OFF: Front vertical switch (Downward) is OFF	-
F VTCL SW UP	Front vertical switch signal (Upward) / ON or OFF	ON: Front vertical switch (Upward) is ON OFF: Front vertical switch (Upward) is OFF	-
LIFTER SW DOWN	Lifter switch (Downward) / ON or OFF	ON: Lifter switch (Downward) is ON OFF: Lifter switch (Downward) is OFF	-
LIFTER SW UP	Lifter switch (Upward) / ON or OFF	ON: Lifter switch (Upward) is ON OFF: Lifter switch (Upward) is OFF	-
SLIDE SW REAR	Sliding switch signal (Rearward) / ON or OFF	ON: Sliding switch (Rearward) is ON OFF: Sliding switch (Rearward) is OFF	-
SLIDE SW FRONT	Sliding switch signal (Forward) / ON or OFF	ON: Sliding switch (Forward) is ON OFF: Sliding switch (Forward) is OFF	-
POWER VOLTAGE	Power supply for front power seat switch (position control ECU) / MIN.: 0 V, MAX.: 19.89 V	Within range from 11 to 14 V	-
SLIDE POS	Seat sliding position / MIN.: -4096, MAX.: 4096	Within range from -4096 to 4096	-
RECLIN POS	Seatback position / MIN.: -4096, MAX.: 4096	Within range from -4096 to 4096	-
F VTCL POS	Seat front vertical position / MIN.: -4096, MAX.: 4096	Within range from -4096 to 4096	-
LIFTER POS	Seat lifter position / MIN.: -4096, MAX.: 4096	Within range from -4096 to 4096	-
SLIDE MEM POS 1	Seat sliding position memorized with M1 switch / MIN.: -4096, MAX.: 4096	Within range from -4096 to 4096	-

Tester Display	Measurement Item/Range	Normal Condition	Diagnostic Note
RECLN MEM POS 1	Seatback position memorized with M1 switch / MIN.: -4096, MAX.: 4096	Within range from -4096 to 4096	-
F VTCL MEM POS 1	Seat front vertical position memorized with M1 switch / MIN.: -4096, MAX.: 4096	Within range from -4096 to 4096	-
LIFTER MEM POS 1	Seat lifter position memorized with M1 switch / MIN.: -4096, MAX.: 4096	Within range from -4096 to 4096	-
SLIDE MEM POS 3	Seat sliding position memorized with M3 switch / MIN.: -4096, MAX.: 4096	Within range from -4096 to 4096	-
RECLN MEM POS 3	Seatback position memorized with M3 switch / MIN.: -4096, MAX.: 4096	Within range from -4096 to 4096	-
F VTCL MEM POS 3	Seat front vertical position memorized with M3 switch / MIN.: -4096, MAX.: 4096	Within range from -4096 to 4096	-
LIFTER MEM POS 3	Seat lifter position memorized with M3 switch / MIN.: -4096, MAX.: 4096	Within range from -4096 to 4096	-

P-SEAT:

Tester Display	Measurement Item/Range	Normal Condition	Diagnostic Note
SEAT MEM M1	Driving position memorized with M1 switch / MEM or NOT MEM	MEM: Memorized NOT MEM: Not memorized	-
SEAT MEM M2	Driving position memorized with M2 switch / MEM or NOT MEM	MEM: Memorized NOT MEM: Not memorized	-
SEAT MEM M3	Driving position memorized with M3 switch / MEM or NOT MEM	MEM: Memorized NOT MEM: Not memorized	-
IG (MPX)	Communication state of engine switch signal / ON or OFF	ON: Engine switch on (IG) signal is received OFF: Engine switch on (IG) signal is not received	-
KEY UNLOCK SW	Engine switch status (IG) / ON or OFF	ON: Engine switch on (IG) OFF: Engine switch off	-
KEY CORD CONF	Recognition code is registered / ON or OFF	ON: One or more recognition codes are registered OFF: No recognition code is registered	-
DOOR WARN SW	Door courtesy switch signal / ON or OFF	ON: Front passenger side door is open OFF: Front passenger side door is closed	-
P SW	Shift lever position P signal / ON or OFF	ON: Shift lever in P position OFF: Shift lever in any position other than P	-
N SW	Shift lever position N signal / ON or OFF	ON: Shift lever in N position OFF: Shift lever in any position other than N	-
PKBS SW	Parking brake switch status / ON or OFF	ON: Parking brake is operated OFF: Parking brake is released	-
M3 SW	M3 switch signal / ON or OFF	ON: M3 switch is ON OFF: M3 switch is OFF	-
M2 SW	M2 switch signal / ON or OFF	ON: M2 switch is ON OFF: M2 switch is OFF	-
M1 SW	M1 switch signal / ON or OFF	ON: M1 switch is ON OFF: M1 switch is OFF	-
SET SW	SET switch signal / ON or OFF	ON: SET switch is ON OFF: SET switch is OFF	-

Tester Display	Measurement Item/Range	Normal Condition	Diagnostic Note
VEHICLE SPD	Vehicle speed data / MIN.: 0 km/h (0 mph), MAX.: 255 km/h (158 mph)	Actual vehicle speed	-
RECLIN SW REAR	Reclining switch signal (Rearward) / ON or OFF	ON: Reclining switch (Rearward) is ON OFF: Reclining switch (Rearward) is OFF	-
RECLIN SW FRONT	Reclining switch signal (Forward) / ON or OFF	ON: Reclining switch (Forward) is ON OFF: Reclining switch (Forward) is OFF	-
F VTCL SW DOWN	Front vertical switch signal (Downward) / ON or OFF	ON: Front vertical switch (Downward) is ON OFF: Front vertical switch (Downward) is OFF	-
F VTCL SW UP	Front vertical switch signal (Upward) / ON or OFF	ON: Front vertical switch (Upward) is ON OFF: Front vertical switch (Upward) is OFF	-
LIFTER SW DOWN	Lifter switch (Downward) / ON or OFF	ON: Lifter switch (Downward) is ON OFF: Lifter switch (Downward) is OFF	-
LIFTER SW UP	Lifter switch (Upward) / ON or OFF	ON: Lifter switch (Upward) is ON OFF: Lifter switch (Upward) is OFF	-
SLIDE SW REAR	Sliding switch signal (Rearward) / ON or OFF	ON: Sliding switch (Rearward) is ON OFF: Sliding switch (Rearward) is OFF	-
SLIDE SW FRONT	Sliding switch signal (Forward) / ON or OFF	ON: Sliding switch (Forward) is ON OFF: Sliding switch (Forward) is OFF	-
POWER VOLTAGE	Power supply for front power seat switch (position control ECU) / MIN.: 0 V, MAX.: 19.89 V	Within range from 11 to 14 V	-
SLIDE POS	Seat sliding position / MIN.: -4096, MAX.: 4096	Within range from -4096 to 4096	-
RECLIN POS	Seatback position / MIN.: -4096, MAX.: 4096	Within range from -4096 to 4096	-
F VTCL POS	Seat front vertical position / MIN.: -4096, MAX.: 4096	Within range from -4096 to 4096	-
LIFTER POS	Seat lifter position / MIN.: -4096, MAX.: 4096	Within range from -4096 to 4096	-
SLIDE MEM POS 1	Seat sliding position memorized with M1 switch / MIN.: -4096, MAX.: 4096	Within range from -4096 to 4096	-
RECLN MEM POS 1	Seatback position memorized with M1 switch / MIN.: -4096, MAX.: 4096	Within range from -4096 to 4096	-
F VTCL MEM POS 1	Seat front vertical position memorized with M1 switch / MIN.: -4096, MAX.: 4096	Within range from -4096 to 4096	-
LIFTER MEM POS 1	Seat lifter position memorized with M1 switch / MIN.: -4096, MAX.: 4096	Within range from -4096 to 4096	-
SLIDE MEM POS 3	Seat sliding position memorized with M3 switch / MIN.: -4096, MAX.: 4096	Within range from -4096 to 4096	-

Tester Display	Measurement Item/Range	Normal Condition	Diagnostic Note
RECLN MEM POS 3	Seatback position memorized with M3 switch / MIN.: -4096, MAX.: 4096	Within range from -4096 to 4096	-
F VTCL MEM POS 3	Seat front vertical position memorized with M3 switch / MIN.: -4096, MAX.: 4096	Within range from -4096 to 4096	-
LIFTER MEM POS 3	Seat lifter position memorized with M3 switch / MIN.: -4096, MAX.: 4096	Within range from -4096 to 4096	-

2. PERFORM ACTIVE TEST

HINT:

Performing the intelligent tester's ACTIVE TEST allows a relay, VSV, actuator, and other items to be operated without removing any parts. Performing the ACTIVE TEST early in troubleshooting is one way to save time. The DATA LIST can be displayed during the ACTIVE TEST.

(a) Connect the intelligent tester to the DLC3.
(b) Turn the engine switch on (IG).
(c) Perform the ACTIVE TEST.

D-SEAT:

Tester Display	Test Part	Control Range	Diagnostic Note
SLIDE	Seat sliding operation	FRONT / REAR	-
F VERTICAL	Seat front vertical operation	UP / DOWN	-
LIFTER	Seat lifter operation	UP / DOWN	-
RECLINING	Seat reclining operation	FRONT / REAR	-
BUZZER	Buzzer operation	ON / OFF	-

P-SEAT:

Tester Display	Test Part	Control Range	Diagnostic Note
SLIDE	Seat sliding operation	FRONT / REAR	-
F VERTICAL	Seat front vertical operation	UP / DOWN	-
LIFTER	Seat lifter operation	UP / DOWN	-
RECLINING	Seat reclining operation	FRONT / REAR	-
BUZZER	Buzzer operation	ON / OFF	-

Driver Side Power Seat Motor Circuit

DESCRIPTION

When the power seat control switch is operated, a command signal is sent to the front power seat switch LH (position control ECU). The front power seat switch LH (position control ECU) then controls the appropriate seat motor as needed. This memory system does not use a seat position sensor. The seat position is detected by counting pulses that are output when the motor turns. If there is no pulse output from the motor, the motor will stop operating. The front power seat switch LH (position control ECU) is designed so that any malfunction of the seat memory system will not interfere with manual seat control. If the front power seat switch LH (position control ECU) detects a low motor speed, abnormal activity, or sudden motor current fluctuation, the system will stop the motor. If the motor operates continuously for 120 seconds or more, the system will stop the motor until the switch is turned on again.

WIRING DIAGRAM

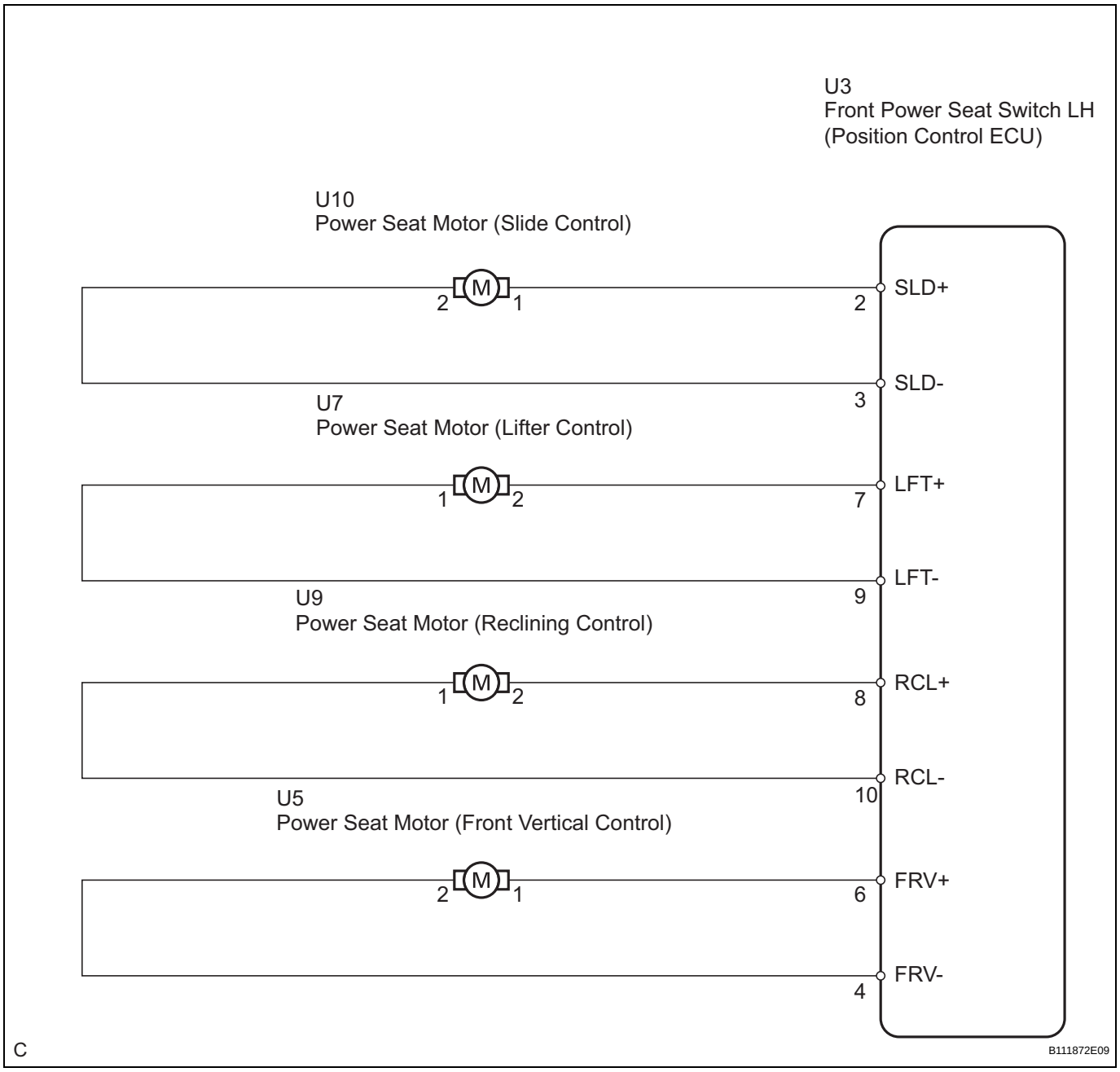

SE

INSPECTION PROCEDURE

1	PERFORM ACTIVE TEST BY INTELLIGENT TESTER (FRONT POWER SEAT SWITCH LH (POSITION CONTROL ECU))

(a) Connect the intelligent tester (with CAN VIM) to the DLC3.
(b) Turn the engine switch on (IG).
(c) Perform the ACTIVE TEST by following the directions on the tester screen.

D-SEAT:

Tester Display	Test Part	Control Range	Diagnostic Note
SLIDE	Seat sliding operation	FRONT / REAR	-
F VERTICAL	Seat front vertical operation	UP / DOWN	-
LIFTER	Seat lifer operation	UP / DOWN	-
RECLINING	Seat reclining operation	FRONT / REAR	-

OK:
Each power seat motor operates.

NG → **Go to step 2**

OK

PROCEED TO NEXT CIRCUIT INSPECTION SHOWN IN PROBLEM SYMPTOMS TABLE

2	INSPECT FRONT SEAT ADJUSTER SUB-ASSEMBLY (POWER SEAT MOTOR)

(a) Inspect the power seat motor (See page SE-95).
OK:
The power seat motor operates.

NG → **REPLACE FRONT SEAT ADJUSTER SUB-ASSEMBLY (POWER SEAT MOTOR)**

OK

3 CHECK WIRE HARNESS (FRONT POWER SEAT SWITCH LH - POWER SEAT MOTOR)

Front Power Seat Switch LH (Position Control ECU) Connector:

Wire Harness Rear View:

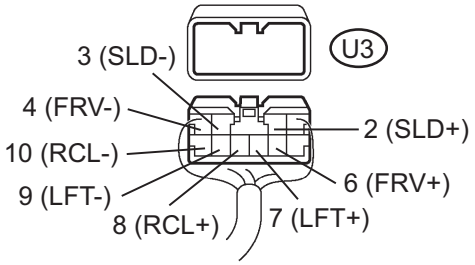

Power Seat Motor Connector:

Wire Harness Front View:

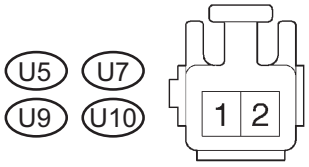

B128715E07

(a) Disconnect the front power seat switch LH (position control ECU) connector and power seat motor connectors.

(b) Measure the resistance according to the value(s) in the table below.

Standard resistance

Tester Connection	Condition	Specified Condition
U3-2 (SLD+) - U10-1	Always	Below 1 Ω
U3-3 (SLD-) - U10-2	Always	Below 1 Ω
U3-4 (FRV-) - U5-2	Always	Below 1 Ω
U3-6 (FRV+) - U5-1	Always	Below 1 Ω
U3-7 (LFT+) - U7-2	Always	Below 1 Ω
U3-9 (LFT-) - U7-1	Always	Below 1 Ω
U3-8 (RCL+) - U9-2	Always	Below 1 Ω
U3-10 (RCL-) - U9-1	Always	Below 1 Ω
U3-2 (SLD+) - Body ground	Always	10 kΩ or higher
U3-3 (SLD-) - Body ground	Always	10 kΩ or higher
U3-4 (FRV-) - Body ground	Always	10 kΩ or higher
U3-6 (FRV+) - Body ground	Always	10 kΩ or higher
U3-7 (LFT+) - Body ground	Always	10 kΩ or higher
U3-9 (LFT-) - Body ground	Always	10 kΩ or higher
U3-8 (RCL+) - Body ground	Always	10 kΩ or higher
U3-10 (RCL-) - Body ground	Always	10 kΩ or higher

NG → **REPAIR OR REPLACE HARNESS OR CONNECTOR**

OK

PROCEED TO NEXT CIRCUIT INSPECTION SHOWN IN PROBLEM SYMPTOMS TABLE

Front Passenger Side Power Seat Motor Circuit

DESCRIPTION

When the power seat control switch is operated, a command signal is sent to the front power seat switch RH (position control ECU). The front power seat switch RH (position control ECU) then controls the appropriate seat motor as needed. This memory system does not use a seat position sensor. The seat position is detected by counting pulses that are output when the motor turns. If there is no pulse output from the motor, the motor will stop operating. The front power seat switch RH (position control ECU) is designed so that any malfunction of the seat memory system will not interfere with manual seat control. If the front power seat switch RH (position control ECU) detects a low motor speed, abnormal activity, or sudden motor current fluctuation, the system will stop the motor. If the motor operates continuously for 120 seconds or more, the system will stop the motor until the switch is turned on again.

WIRING DIAGRAM

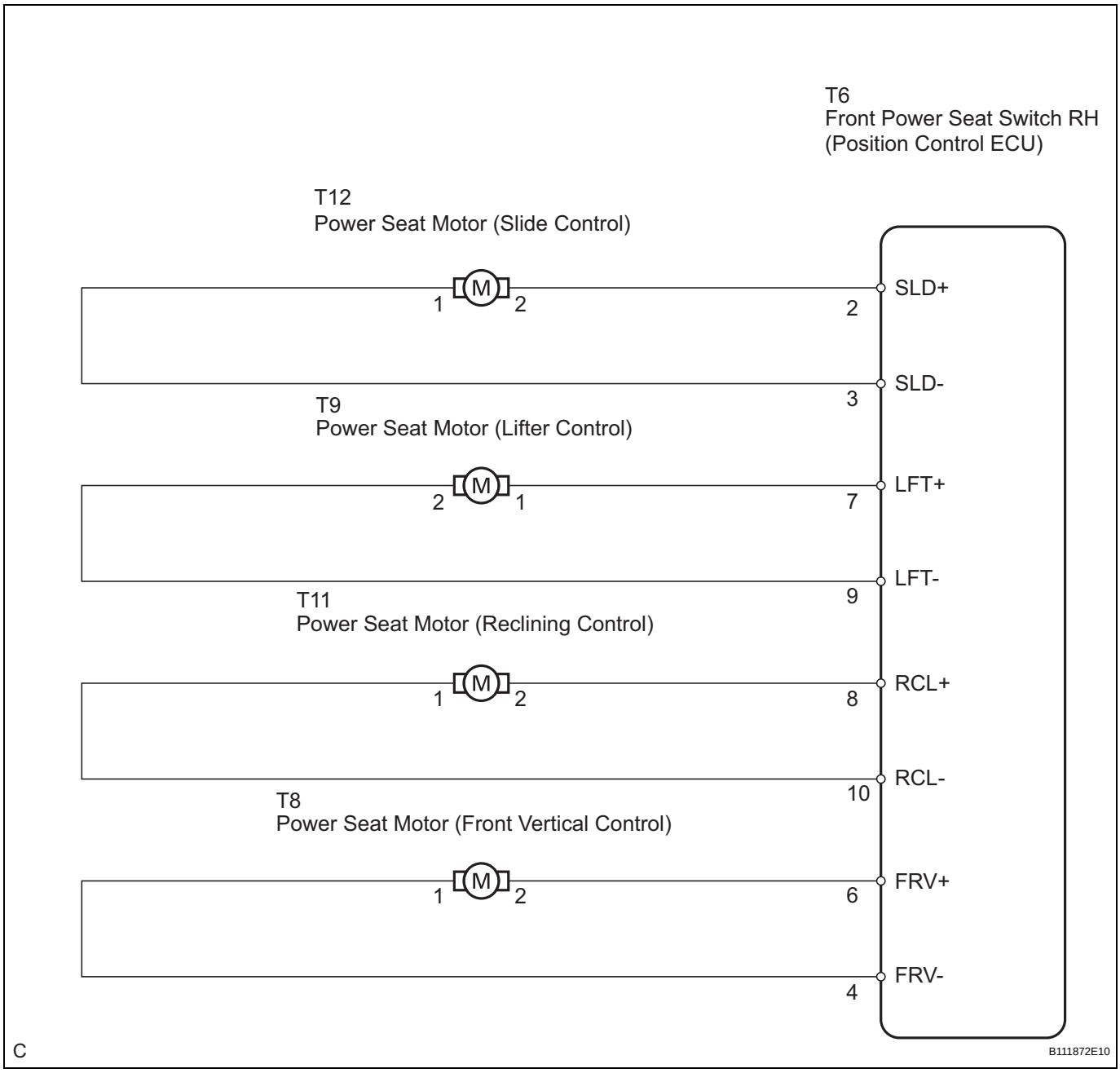

SE

INSPECTION PROCEDURE

1	PERFORM ACTIVE TEST BY INTELLIGENT TESTER (FRONT POWER SEAT SWITCH RH (POSITION CONTROL ECU))

(a) Connect the intelligent tester (with CAN VIM) to the DLC3.
(b) Turn the engine switch on (IG).
(c) Perform the ACTIVE TEST by following the directions on the tester screen.

P-SEAT:

Tester Display	Test Part	Control Range	Diagnostic Note
SLIDE	Seat sliding operation	FRONT / REAR	-
F VERTICAL	Seat front vertical operation	UP / DOWN	-
LIFTER	Seat lifter operation	UP / DOWN	-
RECLINING	Seat reclining operation	FRONT / REAR	-

OK:
Each power seat motor operates.

NG → **Go to step 2**

OK

PROCEED TO NEXT CIRCUIT INSPECTION SHOWN IN PROBLEM SYMPTOMS TABLE

2	INSPECT FRONT SEAT ADJUSTER SUB-ASSEMBLY (POWER SEAT MOTOR)

(a) Inspect the power seat motor (See page SE-96).
OK:
The power seat motor operates.

NG → **REPLACE FRONT SEAT ADJUSTER SUB-ASSEMBLY (POWER SEAT MOTOR)**

OK

3	CHECK HARNESS AND CONNECTOR (FRONT POWER SEAT SWITCH RH - POWER SEAT MOTOR)

Front Power Seat Switch RH (Position Control ECU) Connector:

Wire Harness Rear View:

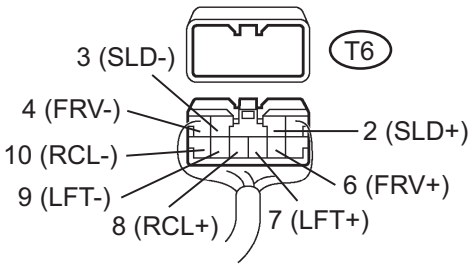

Power Seat Motor Connector:

Wire Harness Front View:

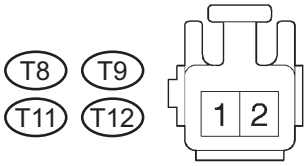

B128715E08

(a) Disconnect the front power seat switch RH (position control ECU) connector and power seat motor connectors.

(b) Measure the resistance according to the value(s) in the table below.

Standard resistance

Tester Connection	Condition	Specified Condition
T6-2 (SLD+) - T12-2	Always	Below 1 Ω
T6-3 (SLD-) - T12-1	Always	Below 1 Ω
T6-4 (FRV-) - T8-1	Always	Below 1 Ω
T6-6 (FRV+) - T8-2	Always	Below 1 Ω
T6-7 (LFT+) - T9-1	Always	Below 1 Ω
T6-9 (LFT-) - T9-2	Always	Below 1 Ω
T6-8 (RCL+) - T11-2	Always	Below 1 Ω
T6-10 (RCL-) - T11-1	Always	Below 1 Ω
T6-2 (SLD+) - Body ground	Always	10 kΩ or higher
T6-3 (SLD-) - Body ground	Always	10 kΩ or higher
T6-4 (FRV-) - Body ground	Always	10 kΩ or higher
T6-6 (FRV+) - Body ground	Always	10 kΩ or higher
T6-7 (LFT+) - Body ground	Always	10 kΩ or higher
T6-9 (LFT-) - Body ground	Always	10 kΩ or higher
T6-8 (RCL+) - Body ground	Always	10 kΩ or higher
T6-10 (RCL-) - Body ground	Always	10 kΩ or higher

NG → **REPAIR OR REPLACE HARNESS OR CONNECTOR**

OK

PROCEED TO NEXT CIRCUIT INSPECTION SHOWN IN PROBLEM SYMPTOMS TABLE

Driver Side Seat Memory Switch Circuit

DESCRIPTION

The seat memory switch LH sends signals to the outer mirror control ECU via the CAN communication system to memorize a given seat position. This memory system does not use a position sensor. The seat position is detected by counting pulses that are output when the motor turns. If there is no pulse output from the motor, the motor will stop operating. The seat memory switch LH is later used to send signals to the front power seat switch LH (position control ECU) to return the seat to one of the memorized positions. The power seat memory switch LH operation can be performed only when the engine switch is on (IG) and the shift lever is in the P position.

WIRING DIAGRAM

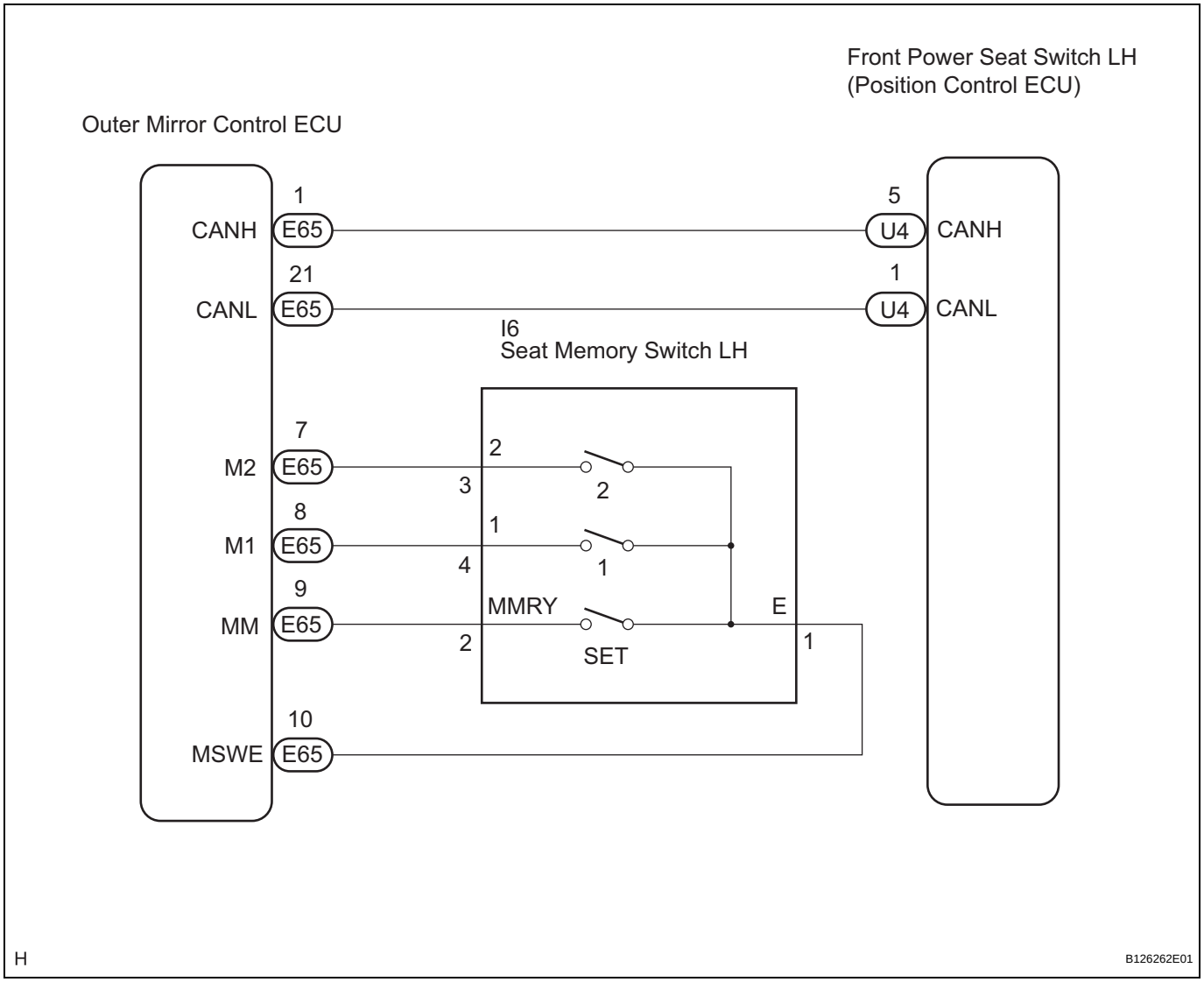

INSPECTION PROCEDURE

1	CHECK FOR DTC (CAN COMMUNICATION SYSTEM)

(a) Check for DTCs in the CAN communication system (See page CA-11).

SE

Result

Result	Proceed to
DTC is not output	A
DTC is output	B

B → **REPAIR CIRCUITS INDICATED BY OUTPUT DTCS**

A

2 READ VALUE OF INTELLIGENT TESTER (SEAT MEMORY SWITCH LH)

(a) Connect the intelligent tester (with CAN VIM) to the DLC3.
(b) Turn the engine switch on (IG).
(c) Read the DATA LIST.

MIRROR:

Tester Display	Measurement Item/Range	Normal Condition	Diagnostic Note
D SET MEMORY	Driver side SET memory switch / ON or OFF	ON: Driver side SET memory switch is ON OFF: Driver side SET memory switch is OFF	-
D MEM 1 SW	Driver side memory switch 1 / ON or OFF	ON: Driver side M1 memory switch is ON OFF: Driver side M1 memory switch is OFF	-
D MEM 2 SW	Driver side memory switch 2 / ON or OFF	ON: Driver side M2 memory switch is ON OFF: Driver side M2 memory switch is OFF	-

OK:
On the tester screen, each item changes between ON and OFF according to the above chart.

NG → **Go to step 3**

OK

SE

PROCEED TO NEXT CIRCUIT INSPECTION SHOWN IN PROBLEM SYMPTOMS TABLE

3 INSPECT SEAT MEMORY SWITCH LH

(a) Remove the seat memory switch LH (See page SE-124).

Seat Memory Switch LH:

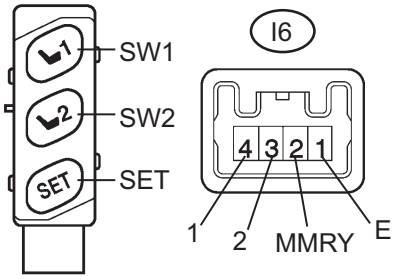

B149663E02

(b) Measure the resistance according to the value(s) in the table below.

Standard resistance

Tester Connection	Switch Position	Specified Condition
I6-1 (E) - I6-2 (MMRY)	SET switch is pressed	Below 1 Ω
	SET switch is not pressed	10 kΩ or higher
I6-1 (E) - I6-3 (2)	M2 switch is pressed	Below 1 Ω
	M2 switch is not pressed	10 kΩ or higher
I6-1 (E) - I6-4 (1)	M1 switch is pressed	Below 1 Ω
	M1 switch is not pressed	10 kΩ or higher

NG → **REPLACE SEAT MEMORY SWITCH LH**

OK

4 CHECK HARNESS AND CONNECTOR (SEAT MEMORY SWITCH LH CIRCUIT)

Wire Harness Rear View:

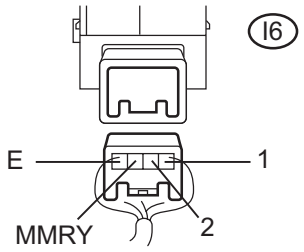

B111886E05

(a) Measure the resistance according to the value(s) in the table below.

Standard resistance

Tester Connection	Condition	Specified Condition
I6-1 (E) - Body ground	Always	Below 1 Ω
I6-1 (E) - I6-2 (MMRY)	Always	10 kΩ or higher
I6-1 (E) - I6-3 (2)	Always	10 kΩ or higher
I6-1 (E) - I6-4 (1)	Always	10 kΩ or higher

NG → **Go to step 5**

OK

PROCEED TO NEXT CIRCUIT INSPECTION SHOWN IN PROBLEM SYMPTOMS TABLE

5	CHECK HARNESS AND CONNECTOR (OUTER MIRROR CONTROL ECU - SEAT MEMORY SWITCH, BODY GROUND)

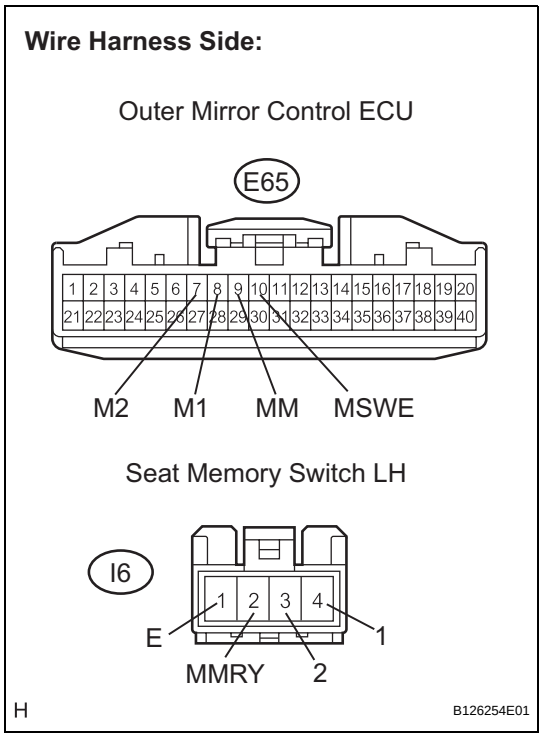

(a) Disconnect the outer mirror control ECU connector.
(b) Measure the resistance according to the value(s) in the table below.

Standard resistance

Tester Connection	Condition	Specified Condition
E65-7 (M2) - I6-3 (2)	Always	Below 1 Ω
E65-8 (M1) - I6-4 (1)	Always	Below 1 Ω
E65-9 (MM) - I6-2 (MMRY)	Always	Below 1 Ω
E65-10 (MSWE) - I6-1 (E)	Always	Below 1 Ω
E65-10 (MSWE) - Body ground	Always	Below 1 Ω
I6-1 (E) - Body ground	Always	Below 1 Ω

NG → **REPAIR OR REPLACE HARNESS OR CONNECTOR**

OK

REPLACE OUTER MIRROR CONTROL ECU

Front Passenger Side Seat Memory Switch Circuit

DESCRIPTION

The seat memory switch RH sends signals to the outer mirror control ECU via the CAN communication system to memorize a given seat position. This memory system does not use a position sensor. The seat position is detected by counting pulses that are output when the motor turns. If there is no pulse output from the motor, the motor will stop operating. The seat memory switch RH is later used to send signals to the front power seat switch RH (position control ECU) to return the seat to one of the memorized positions.

The power seat memory RH operation can be performed only when the engine switch is on (IG) and the shift lever is in the P position.

WIRING DIAGRAM

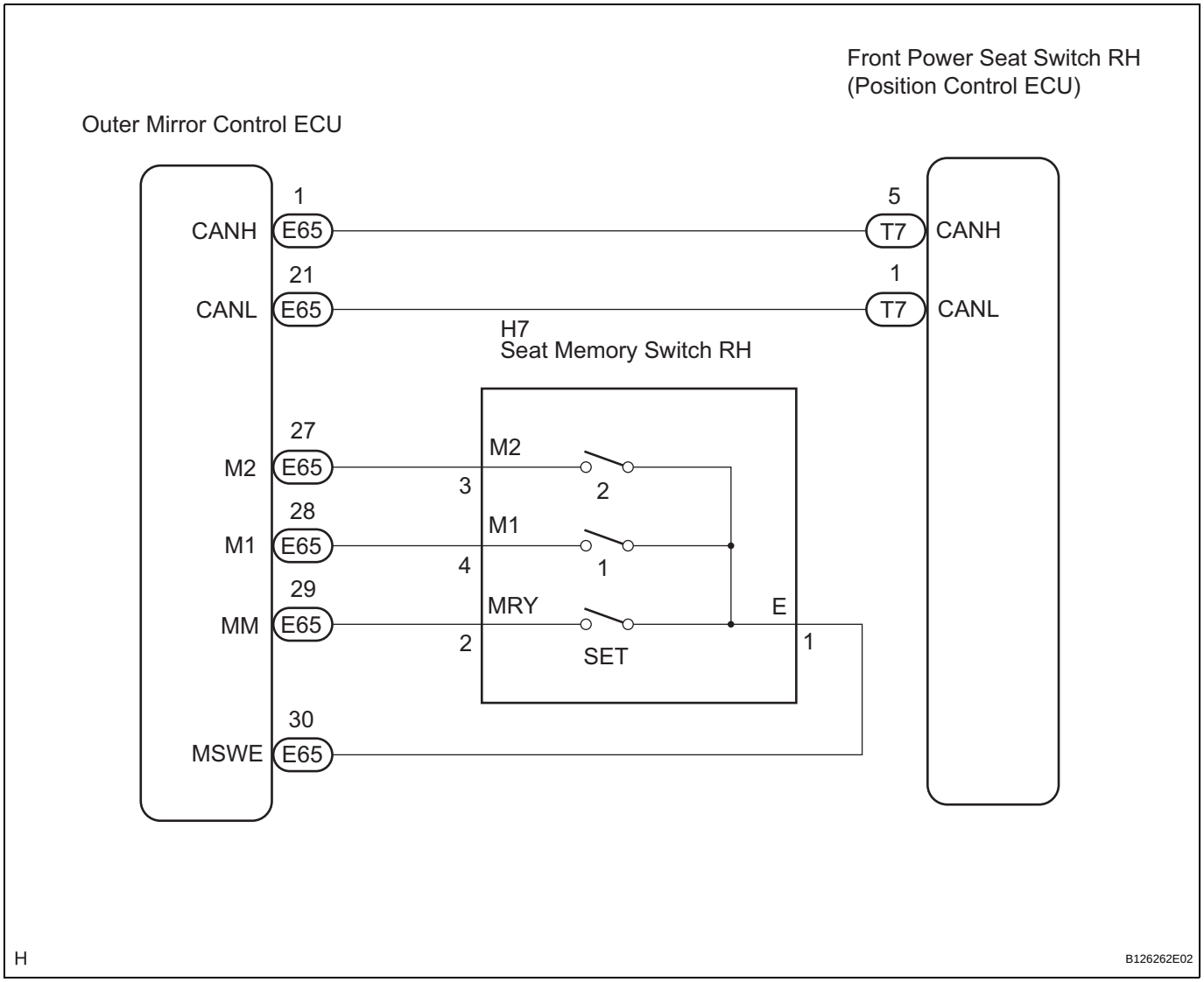

SE

INSPECTION PROCEDURE

1 CHECK FOR DTC (CAN COMMUNICATION SYSTEM)

(a) Check for DTCs in the CAN communication system (See page CA-11).

Result

Result	Proceed to
DTC is not output	A
DTC is output	B

B → **REPAIR CIRCUITS INDICATED BY OUTPUT DTCS**

A

2 READ VALUE OF INTELLIGENT TESTER (SEAT MEMORY SWITCH RH)

(a) Connect the intelligent tester (with CAN VIM) to the DLC3.
(b) Turn the engine switch on (IG).
(c) Read the DATA LIST.

MIRROR:

Tester Display	Measurement Item/Range	Normal Condition	Diagnostic Note
FP SET MEMORY	Front passenger side SET memory switch / ON or OFF	ON: Front passenger side SET memory switch is ON OFF: Front passenger side SET memory switch is OFF	-
FP MEM 1 SW	Front passenger side memory switch 1 / ON or OFF	ON: Front passenger side M1 memory switch is ON OFF: Front passenger side M1 memory switch is OFF	-
FP MEM 2 SW	Front passenger side memory switch 2 / ON or OFF	ON: Front passenger side M2 memory switch is ON OFF: Front passenger side M2 memory switch is OFF	-

SE

OK:

On the tester screen, each item changes between ON and OFF according to the above chart.

NG → **Go to step 3**

OK

PROCEED TO NEXT CIRCUIT INSPECTION SHOWN IN PROBLEM SYMPTOMS TABLE

3 INSPECT SEAT MEMORY SWITCH RH

(a) Remove the seat memory switch RH (See page SE-124).

Seat Memory Switch RH:

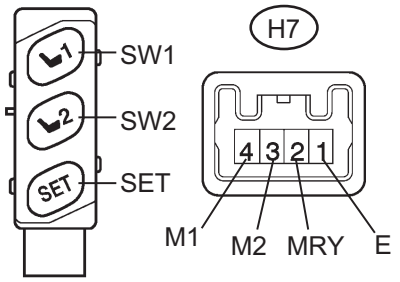

B149663E03

(b) Measure the resistance according to the value(s) in the table below.

Standard resistance

Tester Connection	Switch Position	Specified Condition
H7-1 (E) - H7-2 (MRY)	SET switch is pressed	Below 1 Ω
	SET switch is not pressed	10 kΩ or higher
H7-1 (E) - H7-3 (M2)	M2 switch is pressed	Below 1 Ω
	M2 switch is not pressed	10 kΩ or higher
H7-1 (E) - H7-4 (M1)	M1 switch is pressed	Below 1 Ω
	M1 switch is not pressed	10 kΩ or higher

NG → **REPLACE SEAT MEMORY SWITCH RH**

OK

4 CHECK HARNESS AND CONNECTOR (SEAT MEMORY SWITCH RH CIRCUIT)

Wire Harness Rear View:

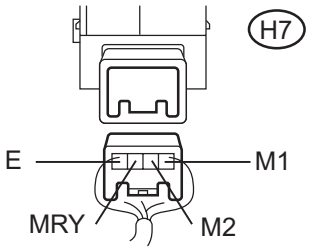

B111886E06

(a) Measure the resistance according to the value(s) in the table below.

Standard resistance

Tester Connection	Condition	Specified Condition
H7-1 (E) - Body ground	Always	Below 1 Ω
H7-1 (E) - H7-2 (MRY)	Always	10 kΩ or higher
H7-1 (E) - H7-3 (M2)	Always	10 kΩ or higher
H7-1 (E) - H7-4 (M1)	Always	10 kΩ or higher

NG → **Go to step 5**

OK

PROCEED TO NEXT CIRCUIT INSPECTION SHOWN IN PROBLEM SYMPTOMS TABLE

5	CHECK HARNESS AND CONNECTOR (OUTER MIRROR CONTROL ECU - SEAT MEMORY SWITCH, BODY GROUND)

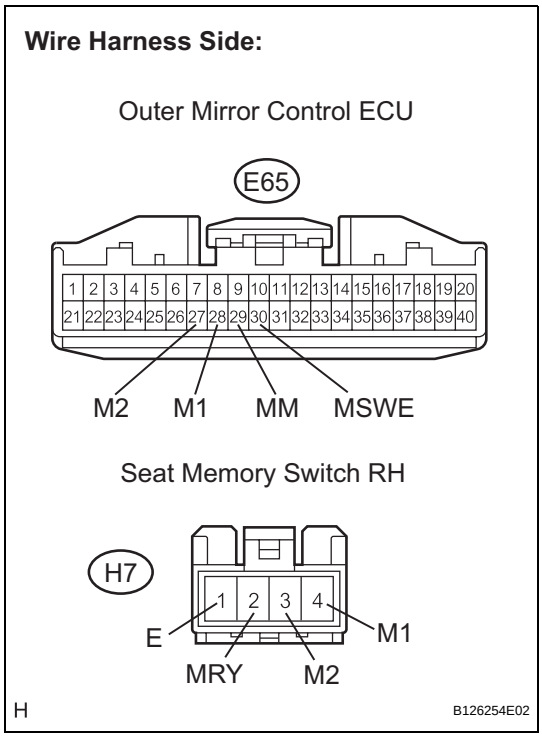

(a) Disconnect the outer mirror control ECU RH connector.
(b) Measure the resistance according to the value(s) in the table below.

Standard resistance

Tester Connection	Condition	Specified Condition
E65-27 (M2) - H7-3 (M2)	Always	Below 1 Ω
E65-28 (M1) - H7-4 (M1)	Always	Below 1 Ω
E65-29 (MM) - H7-2 (MRY)	Always	Below 1 Ω
E65-30 (MSWE) - H7-1 (E)	Always	Below 1 Ω
E65-30 (MSWE) - Body ground	Always	Below 1 Ω
H7-1 (E) - Body ground	Always	Below 1 Ω

NG → **REPAIR OR REPLACE HARNESS OR CONNECTOR**

OK

REPLACE OUTER MIRROR CONTROL ECU

Driver Side ECU Power Source Circuit

DESCRIPTION

The driver side position control ECU is contained in the front power seat switch LH.
During manual operation, only one switch signal is accepted. If signals are input from 2 or more switches simultaneously, all of them are ignored, except when signals are input from the front vertical switch and lifter switch simultaneously. In this case, the signal from the lifter switch will be accepted.
During automatic operation, a manual switch input will override any other operations, i.e. automatic operations will stop and the manual input operation only will be performed. For example, if a manual switch input is activated during a seat store/restore operation, the previous operation will cease and manual operation will be performed. After the manual operation is performed, the previous automatic operation will not resume.
The power mirror store/restore operation is not affected by manual switch inputs.
The front power seat switch does not allow the restore operation of the power seat when the system detects that the voltage of terminal SYSB is less than 8.0 +- 0.5 V for 3 sec. or more than 10 +- 0.5 V for 3 sec.
This circuit is the power source circuit for the front power seat switch LH (position control ECU).
HINT:

- Manual adjustment of the slide, reclining, or lumbar can be performed even when the front power seat switch LH is not functional if current is allowed to flow into terminals +B and SYSB.
- Lumbar support operation and leg support operation can be performed at all times.

WIRING DIAGRAM

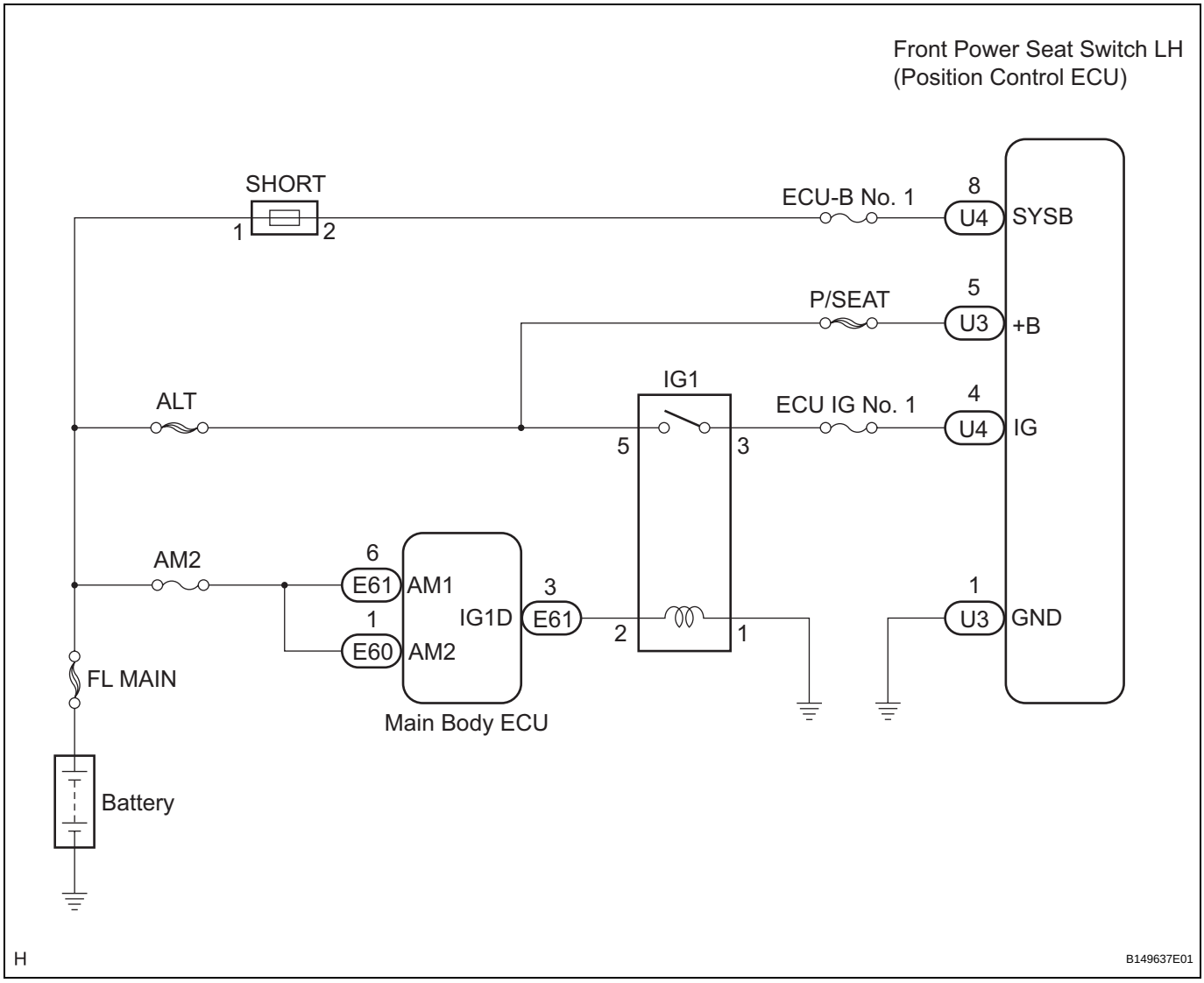

INSPECTION PROCEDURE

1	**INSPECT FRONT POWER SEAT SWITCH LH (POSITION CONTROL ECU POWER SOURCE CIRCUIT)**

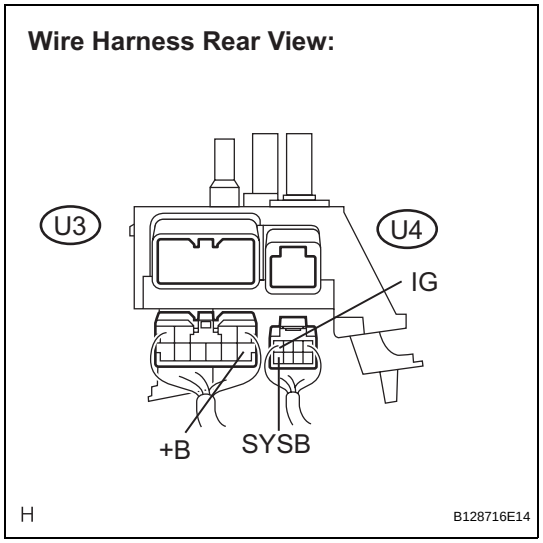

(a) Disconnect the front power seat switch LH (position control ECU) connectors.

(b) Measure the voltage according to the value(s) in the table below.

Standard voltage

Tester Connection	Condition	Specified Condition
U3-5 (+B) - Body ground	Always	10 to 14 V
U4-4 (IG) - Body ground	Engine switch on (IG)	10 to 14 V
U4-8 (SYSB) - Body ground	Always	10 to 14 V

NG → **REPAIR OR REPLACE HARNESS OR CONNECTOR (POWER SOURCE CIRCUIT)**

OK

2	**INSPECT FRONT POWER SEAT SWITCH LH (POSITION CONTROL ECU GROUND CIRCUIT)**

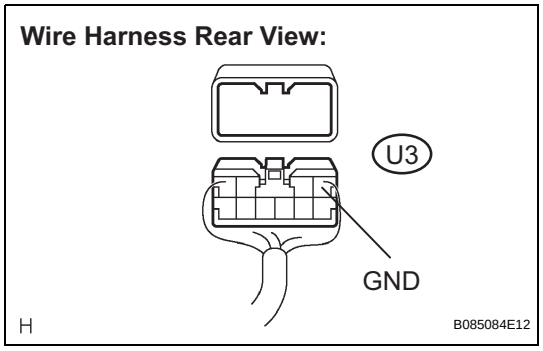

(a) Measure the resistance according to the value(s) in the table below.

Standard resistance

Tester Connection	Condition	Specified Condition
U3-1 (GND) - Body ground	Always	Below 1 Ω

NG → **REPAIR OR REPLACE HARNESS OR CONNECTOR (GROUND CIRCUIT)**

OK

PROCEED TO NEXT CIRCUIT INSPECTION SHOWN IN PROBLEM SYMPTOMS TABLE

Front Passenger Side ECU Power Source Circuit

DESCRIPTION

The front passenger side position control ECU is contained in the front power seat switch RH.
During manual operation, only one switch signal is accepted. If signals are input from 2 or more switches simultaneously, all of them are ignored, except when signals are input from the front vertical switch and lifter switch simultaneously. In this case, the signal from the lifter switch will be accepted.
During automatic operation, a manual switch input will override any other operations, i.e. automatic operations will stop and the manual input operation only will be performed. For example, if a manual switch input is activated during a seat store/restore operation, the previous operation will cease and manual operation will be performed. After the manual operation is performed, the previous automatic operation will not resume.
The power mirror store/restore operation is not affected by manual switch inputs.
The front power seat switch RH does not allow the restore operation of the power seat when the system detects that the voltage of terminal SYSB is less than 8.0 +- 0.5 V for 3 sec. or more than 10 +- 0.5 V for 3 sec.
This circuit is the power source circuit for the front power seat switch RH (position control ECU).
HINT:

- Manual adjustment of the slide, reclining, or lumbar can be performed even when the front power seat switch RH is not functional if current is allowed to flow into terminals +B and SYSB.
- Lumbar support operation can be performed at all times.

WIRING DIAGRAM

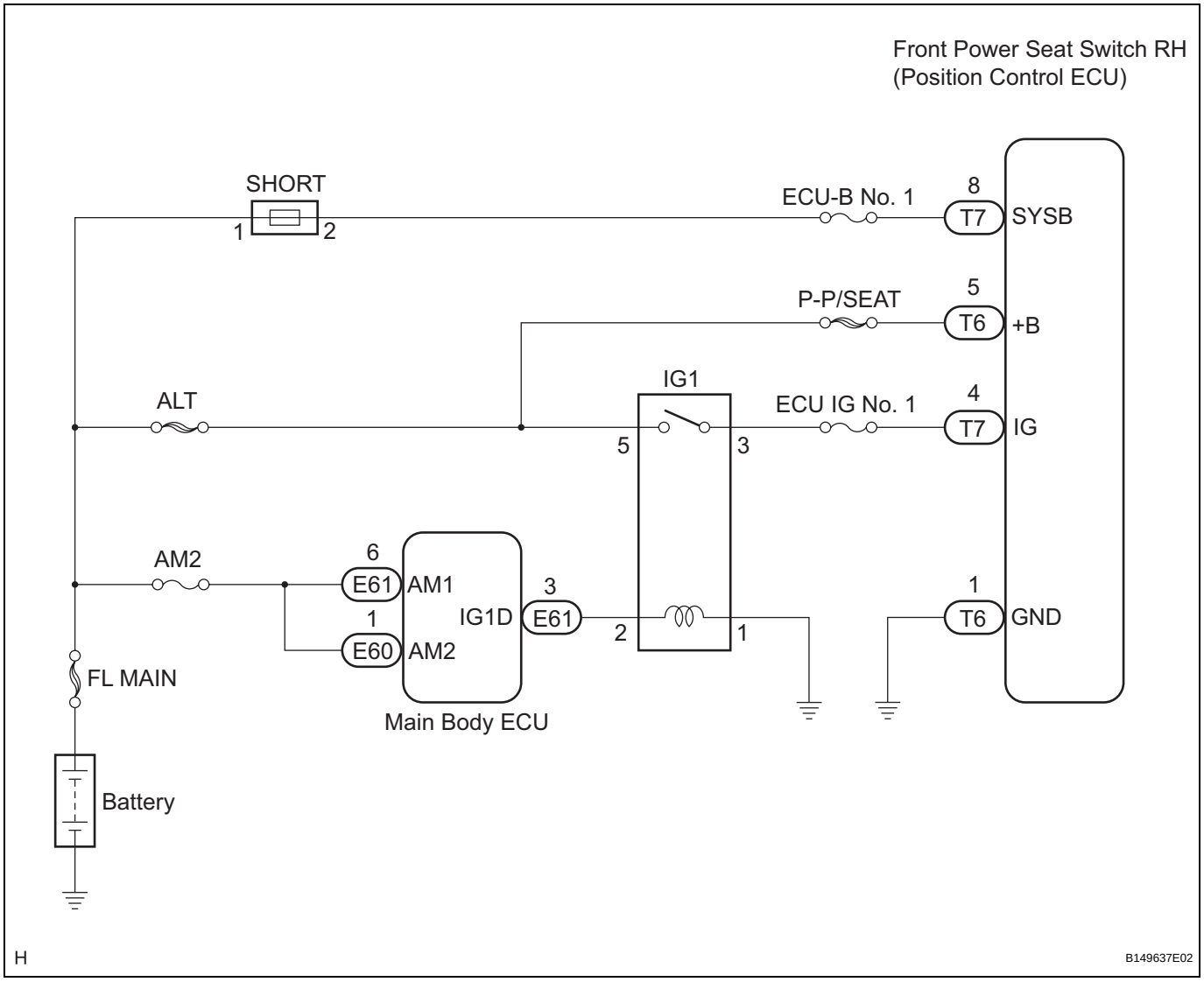

SE

INSPECTION PROCEDURE

1	INSPECT FRONT POWER SEAT SWITCH RH (POSITION CONTROL ECU POWER SOURCE CIRCUIT)

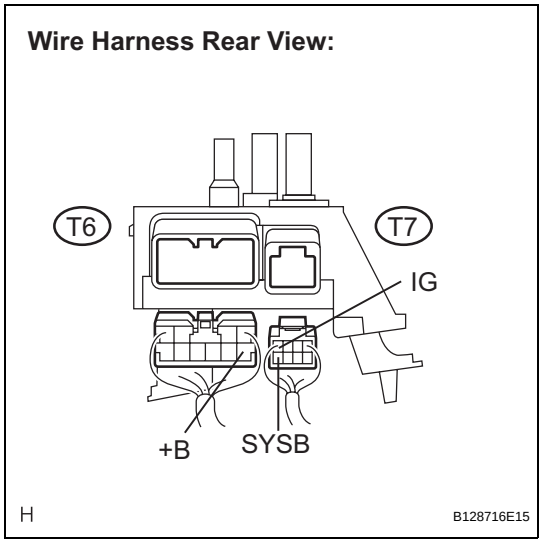

(a) Disconnect the front power seat switch RH (position control ECU) connectors.

(b) Measure the voltage according to the value(s) in the table below.

Standard voltage

Tester Connection	Condition	Specified Condition
T6-5 (+B) - Body ground	Always	10 to 14 V
T7-4 (IG) - Body ground	Engine switch on (IG)	10 to 14 V
T7-8 (SYSB) - Body ground	Always	10 to 14 V

NG → **REPAIR OR REPLACE HARNESS OR CONNECTOR (POWER SOURCE CIRCUIT)**

OK

2	INSPECT FRONT POWER SEAT SWITCH RH (POSITION CONTROL ECU GROUND CIRCUIT)

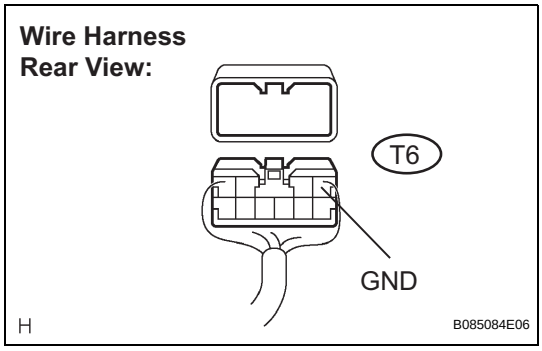

(a) Measure the resistance according to the value(s) in the table below.

Standard resistance

Tester Connection	Condition	Specified Condition
T6-1 (GND) - Body ground	Always	Below 1 Ω

NG → **REPAIR OR REPLACE HARNESS OR CONNECTOR (GROUND CIRCUIT)**

OK

PROCEED TO NEXT CIRCUIT INSPECTION SHOWN IN PROBLEM SYMPTOMS TABLE

PROBLEM SYMPTOMS TABLE

HINT:

- Use the table below to help determine the cause of the problem symptom. The potential causes of the symptoms are listed in order of probability in the "Suspected Area" column of the table. Check each symptom by checking the suspected areas in the order they are listed. Replace parts as necessary.
- Inspect the fuses and relays related to the system before inspecting the suspected areas below.

Front power seat control system (Driver's seat):

Symptom	Suspected Area	See page
Power seat does not operate (manual or memorized position).	1. Driver side ECU power source circuit	SE-40
	2. Front power seat switch LH (Position control ECU)	SE-128
One of the power seat functions does not operate (manual or memorized position).	1. Driver side power seat motor circuit	SE-26
	2. Front power seat switch LH (Position control ECU)	SE-128
One or all manual seat functions do not operate (memorized positions OK).	Front power seat switch LH (Position control ECU)	SE-128
Memory function does not operate.	1. Driver side seat memory switch circuit	SE-32
	2. CAN communication system	CA-15
	3. Front power seat switch LH (Position control ECU)	SE-128
No memory functions operate or all memory functions operate briefly and then stop (manual functions OK).	1. Driver side ECU power source circuit	SE-40
	2. Front power seat switch LH (Position control ECU)	SE-128
One memory function does not operate or operates briefly and then stops (manual functions OK).	1. Front seat frame with adjuster LH (Power seat motor)	SE-95
	2. Front power seat switch LH (Position control ECU)	SE-128
Wireless transmitter memory function does not operate.	1. Perform the operation check.	SE-11
	2. Check the wireless door lock operation.	DL-67
	3. Driver side seat memory switch circuit	SE-32
	4. CAN communication system	CA-15
	5. Front power seat switch LH (Position control ECU)	SE-128
Wireless-linked return function does not operate.	1. Perform the operation check.	SE-11
	2. Check the wireless door lock operation.	DL-67
	3. Driver side seat memory switch circuit	SE-32
	4. Drive side power seat motor circuit	SE-26
	5. CAN communication system	CA-15
	6. Front power seat switch LH (Position control ECU)	SE-128
Lumbar support operation function only does not operate.	1. Front power seat lumbar switch LH	SE-138
	2. Lumbar support adjuster assembly LH	SE-144
	3. Wire harness or connector	-
Seat cushion slide operation function only does not operate.	1. Seat variable cushion switch LH	SE-148
	2. Front seat frame with adjuster LH (Leg support motor)	SE-95
	3. Wire harness or connector	-

Front power seat control system (Front passenger seat):

Symptom	Suspected Area	See page
Power seat does not operate (manual or memorized position).	1. Front passenger side ECU power source circuit	SE-43
	2. Front power seat switch RH (Position control ECU)	SE-132
One of the power seat functions does not operate (manual or memorized position).	1. Front passenger side power seat motor circuit	SE-29
	2. Front power seat switch RH (Position control ECU)	SE-132
One or all manual seat functions do not operate (memorized positions OK).	Front power seat switch RH (Position control ECU)	SE-132

Symptom	Suspected Area	See page
Memory function does not operate.	1. Front passenger side seat memory switch circuit	SE-36
	2. CAN communication system	CA-15
	3. Front power seat switch RH (Position control ECU)	SE-132
No memory functions operate or all memory functions operate briefly and then stop (manual functions OK).	1. Front passenger side ECU power source circuit	SE-43
	2. Front power seat switch RH (Position control ECU)	SE-132
One memory function does not operate briefly and then stops (manual functions OK).	Front seat frame with adjuster RH (Power seat motor)	SE-96
Lumbar support operation function only does not operate.	1. Front power seat lumbar switch RH	SE-139
	2. Lumbar support adjuster assembly RH	SE-144
	3. Wire harness connector	-

TERMINALS OF ECU

1. FRONT POWER SEAT SWITCH LH (POSITION CONTROL ECU)

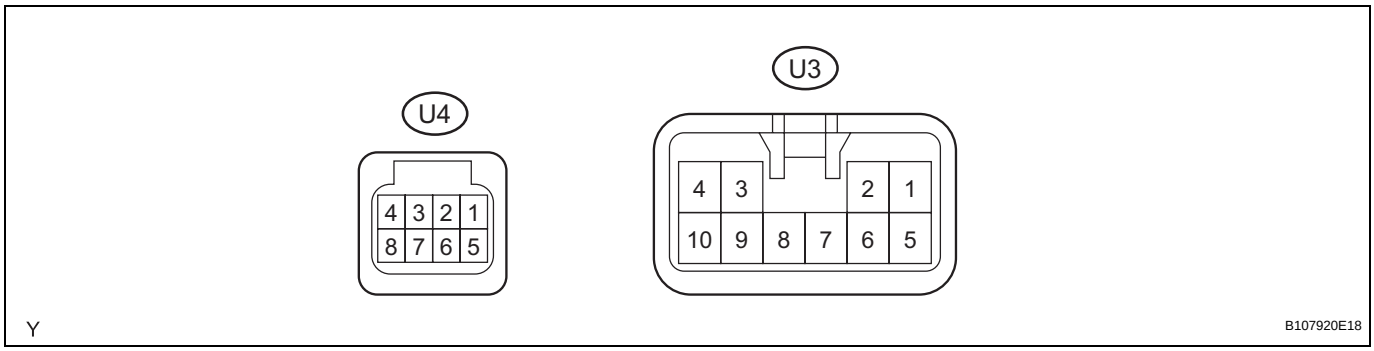

(a) Disconnect the U3 and U4 ECU connectors.
(b) Measure the voltage and resistance according to the value(s) in the table below.

Symbols (Terminal No.)	Wiring Color	Terminal Description	Condition	Specified Condition
GND (U3-1) - Body ground	W-B - Body ground	Ground	Always	Below 1 Ω
+B (U3-5) - GND (U3-1)	G - W-B	Power source	Always	10 to 14 V
IG (U4-4) - GND (U3-1)	B - W-B	Engine switch signal	Engine switch off	Below 1 V
			Engine switch on (IG)	10 to 14 V
CANH (U4-5) - CANL (U4-1)	LG - L	CAN communication line	Always	Pulse generation
SYSB (U4-8) - GND (U3-1)	V - W-B	System power source	Always	10 to 14 V

If the result is not as specified, there may be a malfunction on the wire harness side.
(c) Reconnect the U3 and U4 ECU connectors.
(d) Measure the voltage according to the value(s) in the table below.

Symbols (Terminal No.)	Wiring Color	Terminal Description	Condition	Specified Condition
SLD+ (U3-2) - GND (U3-1)	L - W-B	Sliding motor signal (forward)	Slide switch OFF	Below 1 V
			Slide switch FRONT ON	10 to 14 V
SLD- (U3-3) - GND (U3-1)	Y - W-B	Sliding motor signal (rearward)	Slide switch OFF	Below 1 V
			Slide switch REAR ON	10 to 14 V
FRV+ (U3-6) - GND (U3-1)	G - W-B	Front vertical motor signal (upward)	Front vertical switch OFF	Below 1 V
			Front vertical switch UP ON	10 to 14 V
FRV- (U3-4) - GND (U3-1)	B - W-B	Front vertical motor signal (downward)	Front vertical switch OFF	Below 1 V
			Front vertical switch DOWN ON	10 to 14 V
LFT+ (U3-7) - GND (U3-1)	W - W-B	Lifter motor signal (upward)	Lifter switch OFF	Below 1 V
			Lifter switch UP ON	10 to 14 V
LFT- (U3-9) - GND (U3-1)	SB - W-B	Lifter motor signal (downward)	Lifter switch OFF	Below 1 V
			Lifter switch DOWN ON	10 to 14 V
RCL+ (U3-8) - GND (U3-1)	P - W-B	Reclining motor signal (forward)	Reclining switch OFF	Below 1 V
			Reclining switch FRONT ON	10 to 14 V
RCL- (U3-10) - GND (U3-1)	BR - W-B	Reclining motor signal (rearward)	Reclining switch OFF	Below 1 V
			Reclining switch REAR ON	10 to 14 V

If the result is not as specified, the front power seat switch LH (position control ECU) may have a malfunction.

2. FRONT POWER SEAT SWITCH RH (POSITION CONTROL ECU)

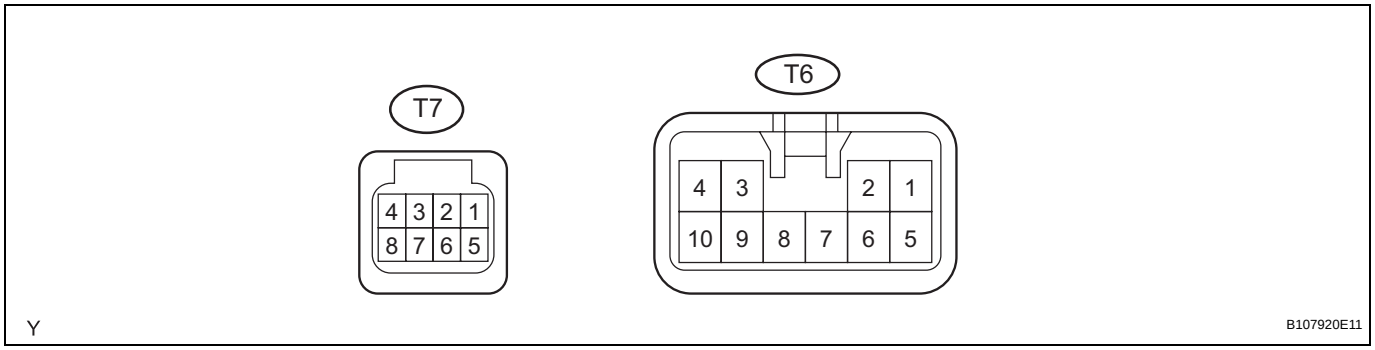

(a) Disconnect the T6 and T7 ECU connectors.
(b) Measure the voltage and resistance according to the value(s) in the table below.

Symbols (Terminal No.)	Wiring Color	Terminal Description	Condition	Specified Condition
GND (T6-1) - Body ground	W-B - Body ground	Ground	Always	Below 1 Ω
+B (T6-5) - GND (T6-1)	G - W-B	Power source	Always	10 to 14 V
IG (T7-4) - GND (T6-1)	B - W-B	Engine switch signal	Engine switch off	Below 1 V
			Engine switch (IG)	10 to 14 V
CANH (T7-5) - CANL (T7-1)	V - P	CAN communication line	Always	Pulse generation
SYSB (T7-8) - GND (T6-1)	V - W-B	System power source	Always	10 to 14 V

If the result is not as specified, there may be a malfunction on the wire harness side.
(c) Reconnect the T6 and T7 ECU connectors.
(d) Measure the voltage according to the value(s) in the table below.

Symbols (Terminal No.)	Wiring Color	Terminal Description	Condition	Specified Condition
SLD+ (T6-2) - GND (T6-1)	L - W-B	Sliding motor signal (forward)	Slide switch OFF	Below 1 V
			Slide switch FRONT ON	10 to 14 V
SLD- (T6-3) - GND (T6-1)	Y - W-B	Sliding motor signal (rearward)	Slide switch OFF	Below 1 V
			Slide switch REAR ON	10 to 14 V
FRV+ (T6-6) - GND (T6-1)	G - W-B	Front vertical motor signal (upward)	Front vertical switch OFF	Below 1 V
			Front vertical switch UP ON	10 to 14 V
FRV- (T6-4) - GND (T6-1)	B - W-B	Front vertical motor signal (downward)	Front vertical switch OFF	Below 1 V
			Front vertical switch DOWN ON	10 to 14 V
LFT+ (T6-7) - GND (T6-1)	W - W-B	Lifter motor signal (upward)	Lifter switch OFF	Below 1 V
			Lifter switch UP ON	10 to 14 V
LFT- (T6-9) - GND (T6-1)	SB - W-B	Lifter motor signal (downward)	Lifter switch OFF	Below 1 V
			Lifter switch DOWN ON	10 to 14 V
RCL+ (T6-8) - GND (T6-1)	P - W-B	Reclining motor signal (forward)	Reclining switch OFF	Below 1 V
			Reclining switch FRONT ON	10 to 14 V

Symbols (Terminal No.)	Wiring Color	Terminal Description	Condition	Specified Condition
RCL- (T6-10) - GND (T6-1)	BR - W-B	Reclining motor signal (rearward)	Reclining switch OFF	Below 1 V
			Reclining switch REAR ON	10 to 14 V

If the result is not as specified, the front power seat switch RH (position control ECU) may have a malfunction.

3. OUTER MIRROR CONTROL ECU

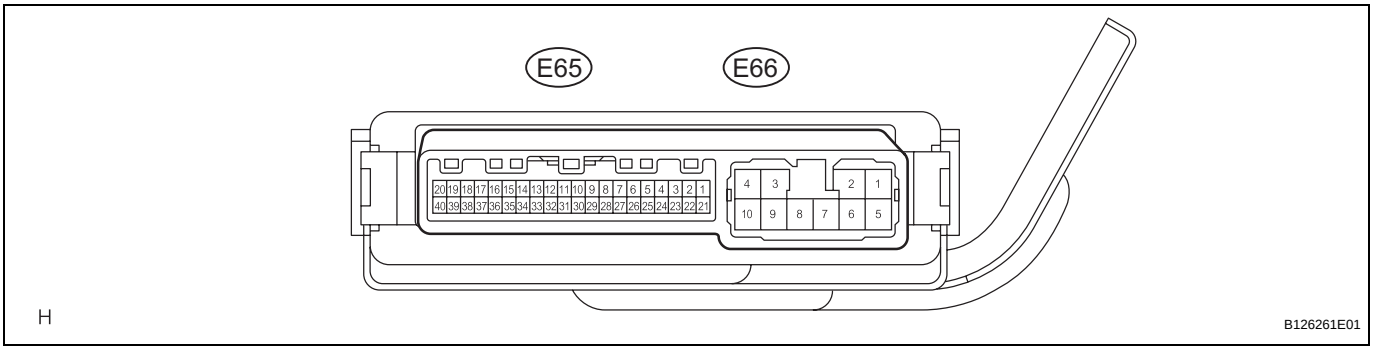

(a) Disconnect the E65 and E66 ECU connectors.
(b) Measure the voltage and resistance according to the value(s) in the table below.

Symbols (Terminal No.)	Wiring Color	Terminal Description	Condition	Specified Condition
CANH (E65-1) - CANL (E65-21)	O - P	CAN communication line	Always	Pulse generation
MSWE (E65-10) - GND (E66-9)	B - W-B	Ground for seat memory switch LH	Always	Below 1 Ω
MSWE (E65-30) - GND (E66-9)	LG - W-B	Ground for seat memory switch RH	Always	Below 1 Ω
GND (E66-9) - Body ground	W-B - Body ground	Ground	Always	Below 1 Ω
B (E66-3) - GND (E66-9)	V - W-B	Battery (ECU power source)	Always	10 to 14 V
ACC (E66-4) - GND (E66-9)	L - W-B	Engine switch (ACC) power source supply	Engine switch off	Below 1 V
			Engine switch on (ACC)	10 to 14 V

If the result is not as specified, there may be a malfunction on the wire harness side.

(c) Reconnect the E65 and E66 ECU connectors.
(d) Measure the voltage according to the value(s) in the table below.

Symbols (Terminal No.)	Wiring Color	Terminal Description	Condition	Specified Condition
M2 (E65-7) - MSWE (E65-10)	G - B	M2 switch signal for seat memory switch LH	M2 switch ON	10 to 14 V
			M2 switch OFF	Below 1 V
M1 (E65-8) - MSWE (E65-10)	L - B	M1 switch signal for seat memory switch LH	M1 switch ON	10 to 14 V
			M1 switch OFF	Below 1 V
MM (E65-9) - MSWE (E65-10)	W - B	SET switch signal for seat memory switch LH	SET switch ON	10 to 14 V
			SET switch OFF	Below 1 V
M2 (E65-27) - MSWE (E65-10)	Y - B	M2 switch signal for seat memory switch RH	M2 switch ON	10 to 14 V
			M2 switch OFF	Below 1 V
M1 (E65-28) - MSWE (E65-10)	R - B	M1 switch signal for seat memory switch RH	M1 switch ON	10 to 14 V
			M1 switch OFF	Below 1 V

Symbols (Terminal No.)	Wiring Color	Terminal Description	Condition	Specified Condition
MM (E65-29) - MSWE (E65-10)	V - B	SET switch signal for seat memory switch RH	SET switch ON	10 to 14 V
			SET switch OFF	Below 1 V

If the result is not as specified, the outer mirror control ECU may have a malfunction.

DIAGNOSIS SYSTEM

1. DESCRIPTION

(a) Front power seat control system data and Diagnostic Trouble Codes (DTCs) can be read through the Data Link Connector 3 (DLC3) of the vehicle. When the system seems to be malfunctioning, use the intelligent tester to check for malfunctions and perform repairs.

2. CHECK DLC3

(a) The ECU uses ISO 15765-4 for communication. The terminal arrangement of the DLC3 complies with SAE J1962 and matches the ISO 15765-4 format.

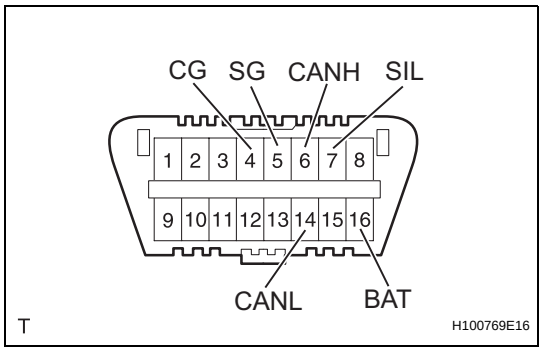

Symbols (Terminal No.)	Terminal Description	Condition	Specified Condition
SIL (7) - SG (5)	Bus "+" line	During transmission	Pulse generation
CG (4) - Body ground	Chassis ground	Always	Below 1 Ω
SG (5) - Body ground	Signal ground	Always	Below 1 Ω
BAT (16) - Body ground	Battery positive	Always	11 to 14 V
CANH (6) - CANL (14)	CAN bus line	Engine switch off*	54 to 69 Ω
CANH (6) - CG (4)	HIGH-level CAN bus line	Engine switch off*	200 Ω or higher
CANL (14) - CG (4)	LOW-level CAN bus line	Engine switch off*	200 Ω or higher
CANH (6) - BAT (16)	HIGH-level CAN bus line	Engine switch off*	6 kΩ or higher
CANL (14) - BAT (16)	LOW-level CAN bus line	Engine switch off*	6 kΩ or higher

NOTICE:

***: Before measuring the resistance, leave the vehicle as is for at least 1 minute and do not operate the engine switch, any other switches or the doors.**

If the result is not as specified, the DLC3 may have a malfunction. Repair or replace the harness and connector.

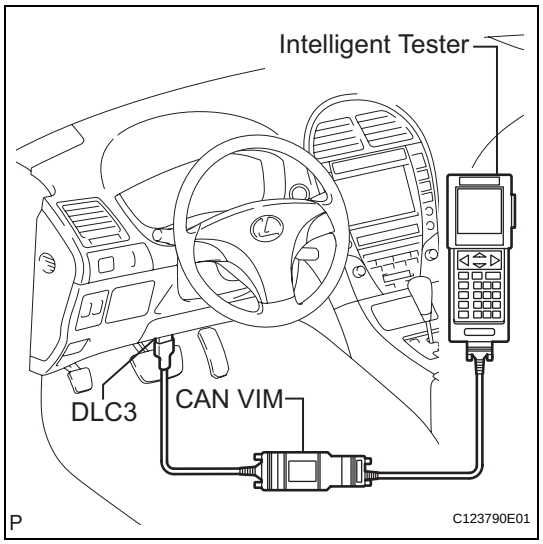

(b) Connect the cable of the intelligent tester to the DLC3, turn the engine switch on (IG) and attempt to use the tester. If the display indicates that a communication error has occurred, there is a problem either with the vehicle or with the tester.
- If communication is normal when the tester is connected to another vehicle, inspect the DLC3 of the original vehicle.
- If communication is still not possible when the tester is connected to another vehicle, the problem may be in the tester itself. Consult the Service Department listed in the tester's instruction manual.

3. INSPECT BATTERY VOLTAGE

Standard voltage:

11 to 14 V

If the voltage is below 11 V, recharge or replace the battery before proceeding to the next step.

HOW TO PROCEED WITH TROUBLESHOOTING

HINT:
- Use the following procedure to troubleshoot the climate control seat system.
- The intelligent tester should be used in step 4.

1	VEHICLE BROUGHT TO WORKSHOP

NEXT

2	CUSTOMER PROBLEM ANALYSIS CHECK AND SYMPTOM CHECK

NEXT

3	PROBLEM SYMPTOMS TABLE

HINT:
See page SE-61.

NEXT

4	OVERALL ANALYSIS AND TROUBLESHOOTING

(a) Circuit inspection
(b) Terminal of ECU
HINT:
See page SE-62.

NEXT

5	ADJUST, REPAIR OR REPLACE

NEXT

END

PROBLEM SYMPTOMS TABLE

CLIMATE CONTROL SYSTEM

Symptom	Suspected Area	See page
Climate control seat system does not operate.	1. ECU IG No. 1 fuse	SE-64
	2. S-HTR fuse	SE-64
	3. Seat heater switch	SE-64
	4. Seat climate blower	SE-64
	5. Seatback blower	SE-64
	6. A/C amplifier assembly	-

TERMINALS OF ECU

1. A/C AMPLIFIER ASSEMBLY

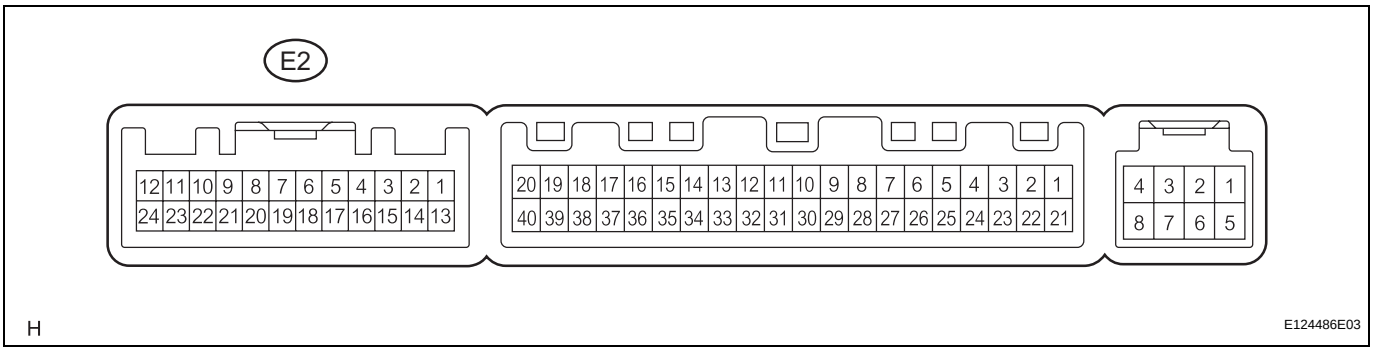

(a) Measure the voltage according to the value(s) in the table below.

Standard voltage

Symbols (Terminal No.)	Wiring Color	Terminal Description	Condition	Specified Condition
SG-5 (E2-6) - Body ground	R - Body ground	GND	Engine switch on (IG)	4 to 6 V
S5-2 (E2-8) - Body ground	Y - Body ground	Power supply	Always	10 to 14 V
SVDS (E2-15) - Body ground	L - Body ground	Input climate control signal (Driver side)	Always	10 to 14 V
SVPS (E2-16) - Body ground	G - Body ground	Input climate control signal (Front passenger side)	Always	10 to 14 V

Standard

Symbols (Terminal No.)	Wiring Color	Terminal Description	Condition	Specified Condition
SVDB (E2-9) - Body ground	LG - Body ground	Output climate control signal (Driver side)	Engine switch on (IG)	Pulse generation
SVPB (E2-10) - Body ground	O - Body ground	Output climate control signal (Front passenger side)	Engine switch on (IG)	Pulse generation

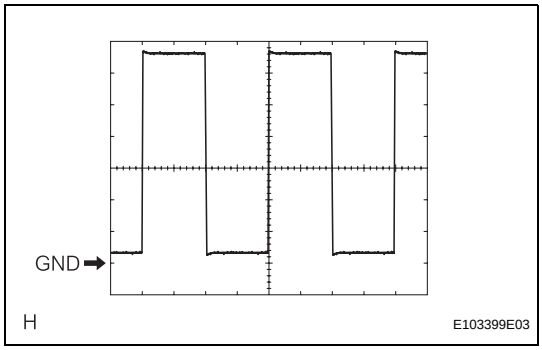

(1) Waveform (Reference): Using an oscilloscope:

Item	Condition
Tool setting	2 V/DIV., 500 μsec/DIV.
Vehicle condition	Engine switch on (IG)

SE

ON-VEHICLE INSPECTION

1. CHECK FRONT SEATBACK CLIMATE CONTROL BLOWER LH

(a) Turn the engine switch on (IG).
(b) Set the seat heater switch blower side volume to level 3 (maximum).
(c) Check that the fan motor turns smoothly.

2. CHECK FRONT SEAT CUSHION CLIMATE CONTROL BLOWER LH

(a) Turn the engine switch on (IG).
(b) Set the seat heater switch blower side volume to level 3 (maximum).
(c) Check that the fan motor turns smoothly.

3. CHECK FRONT SEATBACK CLIMATE CONTROL BLOWER RH

(a) Turn the engine switch on (IG).
(b) Set the seat heater switch blower side volume to level 3 (maximum).
(c) Check that the fan motor turns smoothly.

4. CHECK FRONT SEAT CUSHION CLIMATE CONTROL BLOWER RH

(a) Turn the engine switch on (IG).
(b) Set the seat heater switch blower side volume to level 3 (maximum).
(c) Check that the fan motor turns smoothly.

Climate Control Seat System does not Operate

DESCRIPTION

The A/C amplifier assembly receives seat position signals when the engine switch is on (IG), and then transmits airflow amount signals to each seat climate blower.

WIRING DIAGRAM

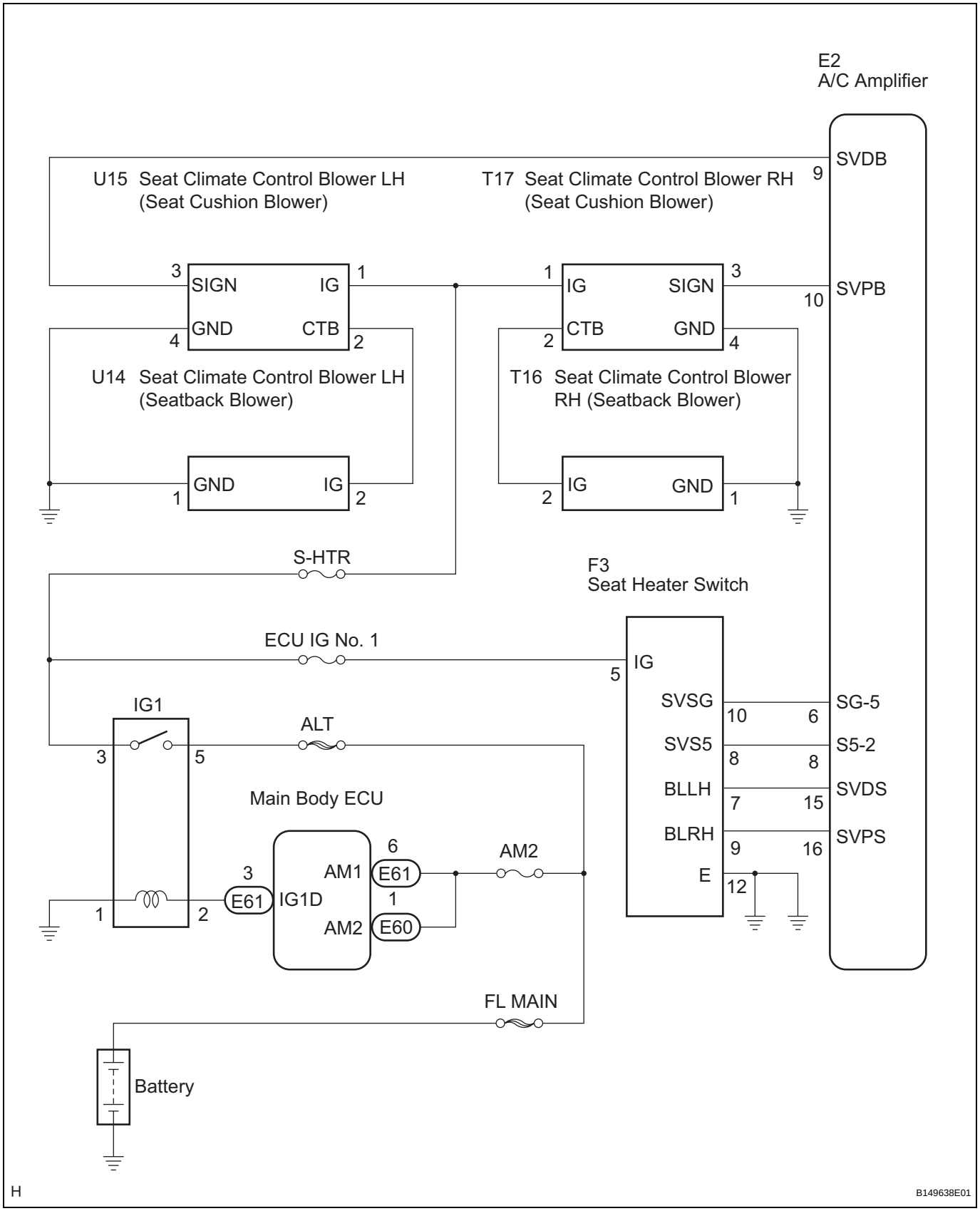

SE

INSPECTION PROCEDURE

1 SYSTEM CHECK

(a) Check if the climate control seat system operates normally.
Result

Result	Proceed to
Climate control does not operate on driver side	A
Climate control does not operate on front passenger side	B
Climate control does not operate on both driver and front passenger sides	C

B → **Go to step 8**

C → **Go to step 14**

A

2 CHECK WIRE HARNESS

Seat Cushion Blower:

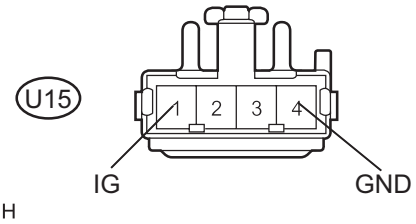

(a) Disconnect the U15 connector.
(b) Measure the voltage and resistance according to the value(s) in the table below.
Standard resistance

Tester Connection	Condition	Specified Condition
U15-4 (GND) - Body ground	Always	Below 1 Ω

Standard voltage

Tester Connection	Condition	Specified Condition
U15-1 (IG) - Body ground	Engine switch on (IG)	10 to 14 V

(c) Reconnect the U15 connector.
(d) Disconnect the U14 connector.
(e) Measure the voltage and resistance according to the value(s) in the table below.
Standard resistance

Tester Connection	Condition	Specified Condition
U14-1 (GND) - Body ground	Always	Below 1 Ω

Standard voltage

Tester Connection	Condition	Specified Condition
U14-2 (IG) - Body ground	Engine switch on (IG)	10 to 14 V

SE

Seatback Blower:

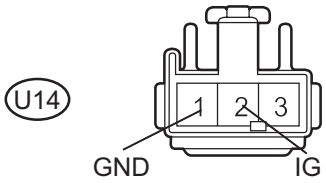

NG → **REPAIR OR REPLACE WIRE HARNESS**

OK

3 INSPECT SEAT CLIMATE CONTROL BLOWER

Seat Cushion Blower:

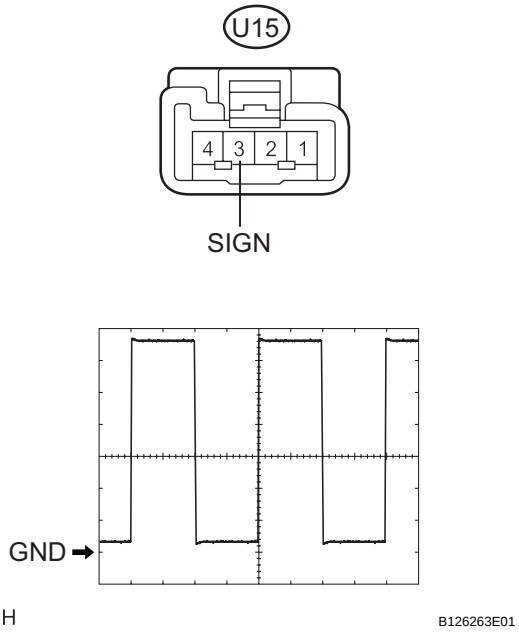

(a) Check the input signal waveform.
  (1) Connect an oscilloscope to terminal U15-3 (SIGN) and body ground with the climate control blower connector still connected.
  (2) Check the signal waveform according to the condition(s) in the table below.

Item	Condition
Tool setting	2 V/DIV., 500 μsec/DIV.
Vehicle condition	Engine switch on (IG), seat heater switch ON

OK:
The waveform is displayed as shown in the illustration.

Result

Result	Proceed to
NG	A
OK (Seat cushion blower side)	B
OK (Seatback blower side)	C

B → **REPLACE SEAT CUSHION BLOWER**

C → **REPLACE SEATBACK BLOWER**

A

4 CHECK WIRE HARNESS (A/C AMPLIFIER ASSEMBLY - SEAT CLIMATE CONTROL BLOWER)

A/C Amplifier Assembly:

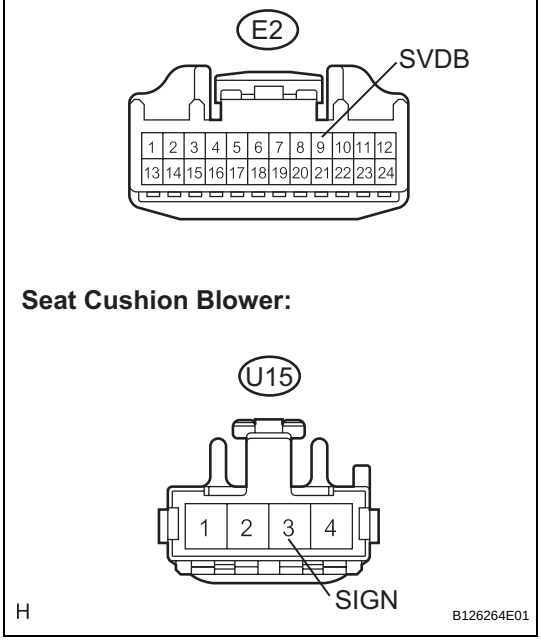

(a) Disconnect the E2 and U15 connectors.
(b) Measure the resistance according to the value(s) in the table below.

Standard resistance

Tester Connection	Condition	Specified Condition
E2-9 (SVDB) - U15-3 (SIGN)	Always	Below 1 Ω
E2-9 (SVDB) - Body ground	Always	10 kΩ or higher

NG → **REPAIR OR REPLACE WIRE HARNESS**

SE

OK

5 CHECK WIRE HARNESS (SEAT HEATER SWITCH)

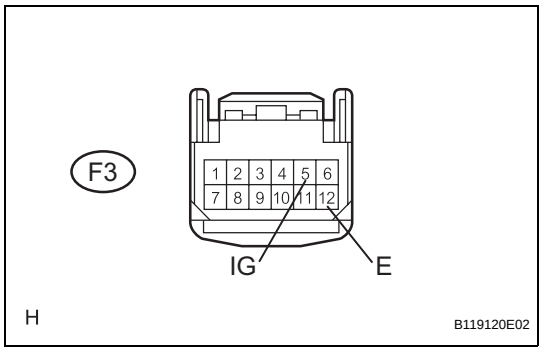

(a) Disconnect the F3 connector.
(b) Measure the voltage and resistance according to the value(s) in the table below.

Standard resistance

Tester Connection	Condition	Specified Condition
F3-12 (E) - Body ground	Always	Below 1 Ω

Standard voltage

Tester Connection	Condition	Specified Condition
F3-5 (IG) - Body ground	Engine switch on (IG)	10 to 14 V

NG → **REPAIR OR REPLACE WIRE HARNESS**

OK

6 INSPECT SEAT HEATER SWITCH

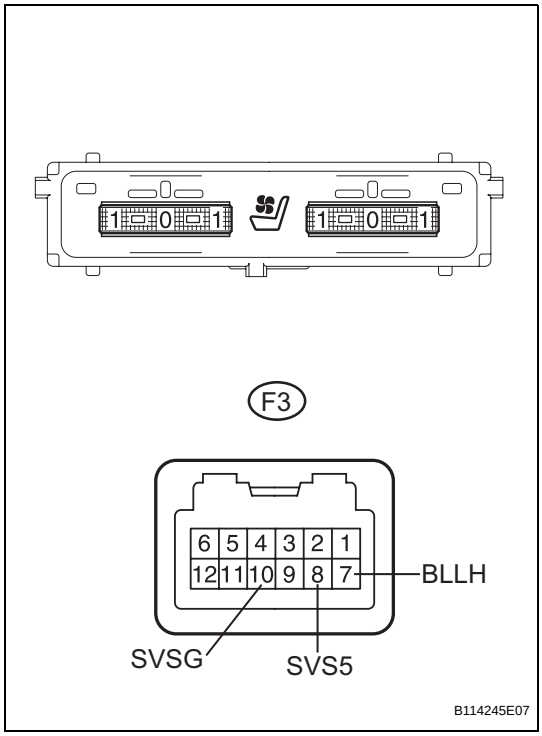

(a) Measure the resistance according to the value(s) in the table below.

Standard resistance

Tester Connection	Condition	Specified Condition
F3-7 (BLLH) - F3-10 (SVSG)	Blower switch OFF	Below 1.1 kΩ
	Blower switch ON (Vol: 3)	Below 111 Ω
F3-8 (SVS5) - F3-10 (SVSG)	Always	Below 1 kΩ

NG → **REPLACE SEAT HEATER SWITCH**

OK

7 CHECK WIRE HARNESS (SEAT HEATER SWITCH - A/C AMPLIFIER ASSEMBLY)

Seat Heater Switch:

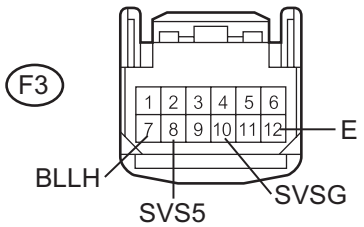

A/C Amplifier Assembly:

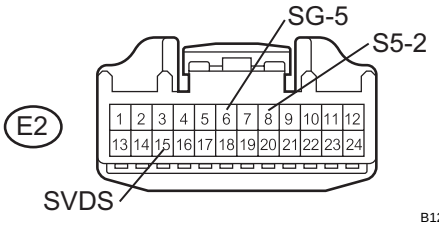

(a) Measure the resistance according to the value(s) in the table below.

Standard resistance

Tester Connection	Condition	Specified Condition
F3-7 (BLLH) - E2-15 (SVDS)	Always	Below 1 Ω
F3-8 (SVS5) - E2-6 (SG-5)	Always	Below 1 Ω
F3-10 (SVSG) - E2-8 (S5-2)	Always	Below 1 Ω
F3-12 (E) - Body ground	Always	Below 1 Ω
F3-7 (BLLH) - Body ground	Always	10 kΩ or higher
F3-8 (SVS5) - Body ground	Always	10 kΩ or higher
F3-10 (SVSG) - Body ground	Always	10 kΩ or higher

NG → **REPAIR OR REPLACE WIRE HARNESS**

OK

REPLACE A/C AMPLIFIER ASSEMBLY

8 CHECK WIRE HARNESS

Seat Cushion Blower:

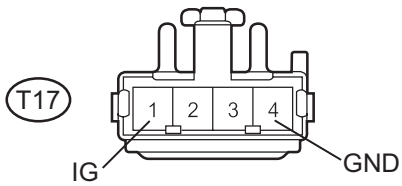

(a) Disconnect the T17 connector.

(b) Measure the voltage and resistance according to the value(s) in the table below.

Standard resistance

Tester Connection	Condition	Specified Condition
T17-4 (GND) - Body ground	Always	Below 1 Ω

Standard voltage

Tester Connection	Condition	Specified Condition
T17-1 (IG) - Body ground	Engine switch on (IG)	10 to 14 V

(c) Reconnect the T17 connector.

SE

Seatback Blower:

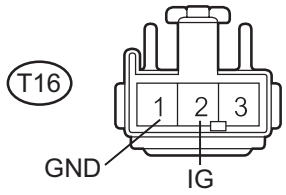

B118674E05

(d) Disconnect the T16 connector.
(e) Measure the voltage and resistance according to the value(s) in the table below.

Standard resistance

Tester Connection	Condition	Specified Condition
T16-1 (GND) - Body ground	Always	Below 1 Ω

Standard voltage

Tester Connection	Condition	Specified Condition
T16-2 (IG) - Body ground	Engine switch on (IG)	10 to 14 V

NG → **REPAIR OR REPLACE WIRE HARNESS**

OK

9 INSPECT SEAT CLIMATE CONTROL BLOWER

Seat Cushion Blower:

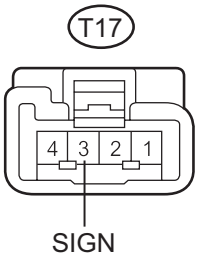

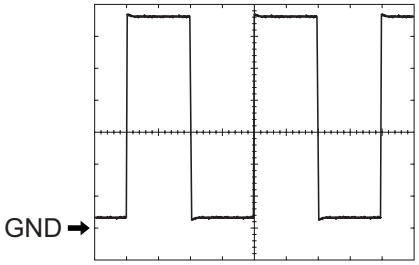

B126263E02

(a) Check the input signal waveform.
  (1) Connect an oscilloscope to terminal T17-3 (SIGN) and body ground with the climate control blower connector still connected.
  (2) Check the signal waveform according to the condition(s) in the table below.

Item	Condition
Tool setting	2 V/DIV., 500 μsec/DIV.
Vehicle condition	Engine switch on (IG), seat heater switch ON

OK:
The waveform is displayed as shown in the illustration.

Result

Result	Proceed to
NG	A
OK (Seat cushion blower side)	B
OK (Seatback blower side)	C

B → **REPLACE SEAT CUSHION BLOWER**

C → **REPLACE SEATBACK BLOWER**

A

SE

10 CHECK WIRE HARNESS (A/C AMPLIFIER ASSEMBLY - SEAT CLIMATE CONTROL BLOWER)

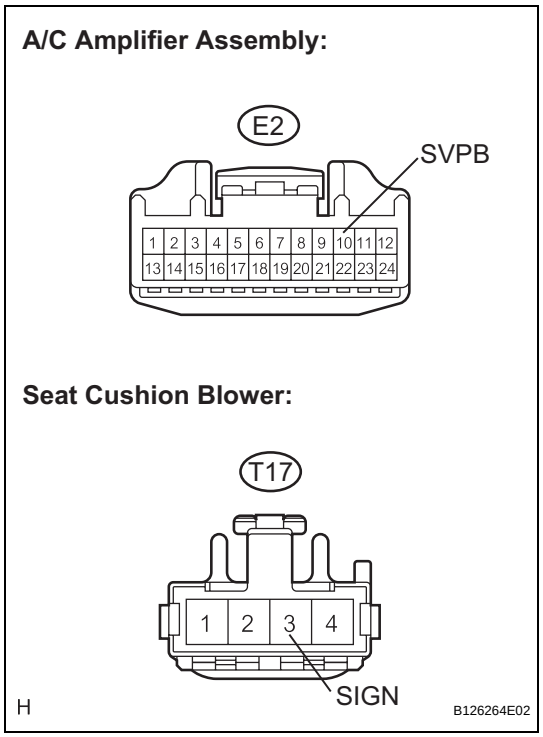

(a) Disconnect the E2 and T17 connectors.
(b) Measure the resistance according to the value(s) in the table below.

Standard resistance

Tester Connection	Condition	Specified Condition
E2-10 (SVPB) - T17-3 (SIGN)	Always	Below 1 Ω
E2-10 (SVPB) - Body ground	Always	10 kΩ or higher

NG → **REPAIR OR REPLACE WIRE HARNESS**

OK

11 CHECK WIRE HARNESS (SEAT HEATER SWITCH)

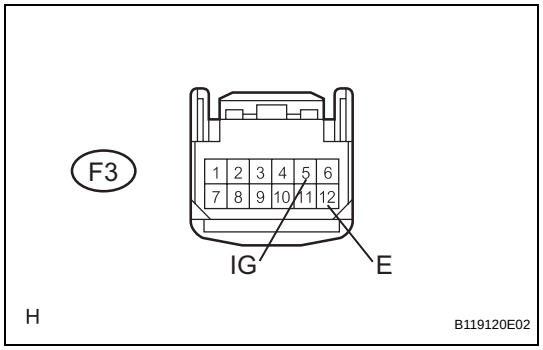

(a) Disconnect the F3 connector.
(b) Measure the voltage and resistance according to the value(s) in the table below.

Standard resistance

Tester Connection	Condition	Specified Condition
F3-12 (E) - Body ground	Always	Below 1 Ω

Standard voltage

Tester Connection	Condition	Specified Condition
F3-5 (IG) - Body ground	Engine switch on (IG)	10 to 14 V

NG → **REPAIR OR REPLACE WIRE HARNESS**

OK

SE

12 INSPECT SEAT HEATER SWITCH

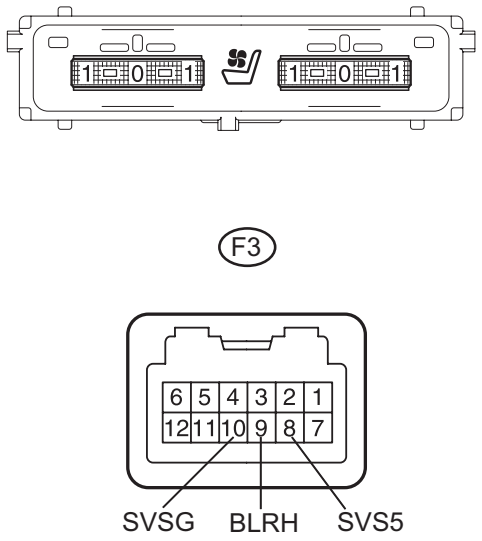

(a) Measure the resistance according to the value(s) in the table below.
Standard resistance

Tester Connection	Condition	Specified Condition
F3-8 (SVS5) - F3-9 (BLRH)	Blower switch OFF	Below 1.1 kΩ
	Blower switch ON (Vol: 3)	Below 111 Ω
F3-8 (SVS5) - F3-10 (SVSG)	Always	Below 1 kΩ

NG → **REPLACE SEAT HEATER SWITCH**

OK

13 CHECK WIRE HARNESS (SEAT HEATER SWITCH - A/C AMPLIFIER ASSEMBLY)

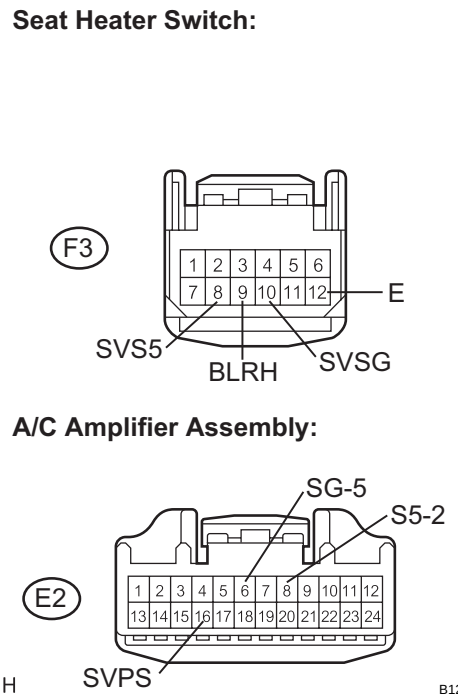

(a) Measure the resistance according to the value(s) in the table below.
Standard resistance

Tester Connection	Condition	Specified Condition
F3-8 (SVS5) - E2-6 (SG-5)	Always	Below 1 Ω
F3-9 (BLRH) - E2-16 (SVPS)	Always	Below 1 Ω
F3-10 (SVSG) - E2-8 (S5-2)	Always	Below 1 Ω
F3-12 (E) - Body ground	Always	Below 1 Ω
F3-8 (SVS5) - Body ground	Always	10 kΩ or higher
F3-9 (BLRH) - Body ground	Always	10 kΩ or higher
F3-10 (SVSG) - Body ground	Always	10 kΩ or higher

NG → **REPAIR OR REPLACE WIRE HARNESS**

OK

REPLACE A/C AMPLIFIER ASSEMBLY

14 CHECK WIRE HARNESS

Seat Cushion Blower:

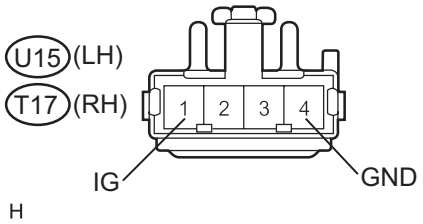

(a) Disconnect the U15 and T17 connectors.
(b) Measure the voltage and resistance according to the value(s) in the table below.

Standard resistance:
Front LH

Tester Connection	Condition	Specified Condition
U15-4 (GND) - Body ground	Always	Below 1 Ω

Front RH

Tester Connection	Condition	Specified Condition
T17-4 (GND) - Body ground	Always	Below 1 Ω

Standard voltage:
Front LH

Tester Connection	Condition	Specified Condition
U15-1 (IG) - Body ground	Engine switch on (IG)	10 to 14 V

Front RH

Tester Connection	Condition	Specified Condition
T17-1 (IG) - Body ground	Engine switch on (IG)	10 to 14 V

Seatback Blower:

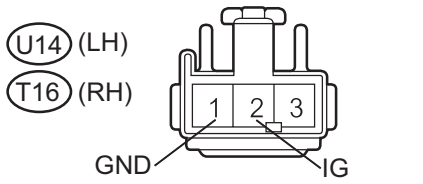

(c) Reconnect the U15 and T17 connectors.
(d) Disconnect the U14 and T16 connectors.
(e) Measure the voltage and resistance according to the value(s) in the table below.

Standard resistance:
Front LH

Tester Connection	Condition	Specified Condition
U14-1 (GND) - Body ground	Always	Below 1 Ω

Front RH

Tester Connection	Condition	Specified Condition
T16-1 (GND) - Body ground	Always	Below 1 Ω

Standard voltage:
Front LH

Tester Connection	Condition	Specified Condition
U14-2 (IG) - Body ground	Engine switch on (IG)	10 to 14 V

Front RH

Tester Connection	Condition	Specified Condition
U16-2 (IG) - Body ground	Engine switch on (IG)	10 to 14 V

NG → **REPAIR OR REPLACE WIRE HARNESS**

OK

15 INSPECT SEAT CLIMATE CONTROL BLOWER

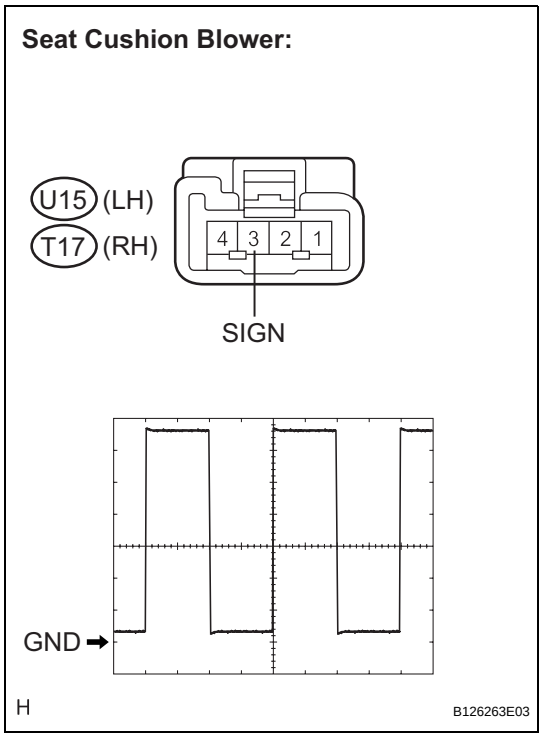

(a) Check the input signal waveform.
  (1) Connect an oscilloscope to terminal 3 and body ground with the climate control blower connector still connected.
  (2) Check the signal waveform according to the condition(s) in the table below.

Item	Condition
Tool setting	2 V/DIV., 500 μsec/DIV.
Vehicle condition	Engine switch on (IG), seat heater switch ON

OK:
The waveform is displayed as shown in the illustration.

Result

Result	Proceed to
NG	A
OK (Seat cushion blower side)	B
OK (Seatback blower side)	C

B → **REPLACE SEAT CUSHION BLOWER**

C → **REPLACE SEATBACK BLOWER**

A

16 CHECK WIRE HARNESS (A/C AMPLIFIER ASSEMBLY - SEAT CLIMATE CONTROL BLOWER)

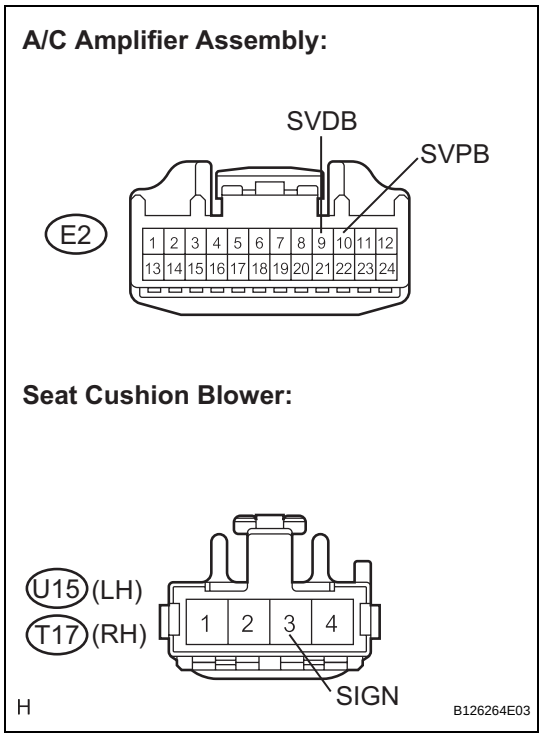

(a) Disconnect the E2, U15 and T17 connectors.
(b) Measure the resistance according to the value(s) in the table below.

Standard resistance:

Front LH

Tester Connection	Condition	Specified Condition
E2-9 (SVDB) - U15-3 (SIGN)	Always	Below 1 Ω
E2-9 (SVDB) - Body ground	Always	10 kΩ or higher

Front RH

Tester Connection	Condition	Specified Condition
E2-10 (SVPB) - T17-3 (SIGN)	Always	Below 1 Ω
E2-10 (SVPB) - Body ground	Always	10 kΩ or higher

NG → **REPAIR OR REPLACE WIRE HARNESS**

OK

17 CHECK WIRE HARNESS (SEAT HEATER SWITCH)

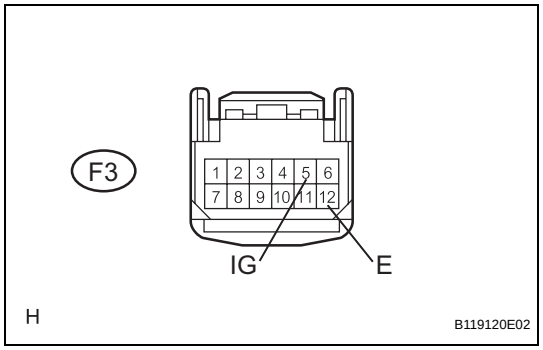

(a) Disconnect the F3 connector.
(b) Measure the voltage and resistance according to the value(s) in the table below.

Standard resistance

Tester Connection	Condition	Specified Condition
F3-12 (E) - Body ground	Always	Below 1 Ω

Standard voltage

Tester Connection	Condition	Specified Condition
F3-5 (IG) - Body ground	Engine switch on (IG)	10 to 14 V

NG → **REPAIR OR REPLACE WIRE HARNESS**

OK

SE

18 INSPECT SEAT HEATER SWITCH

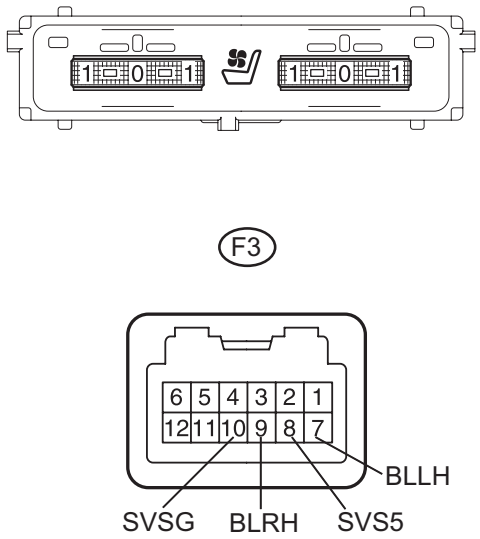

(a) Measure the resistance according to the value(s) in the table below.

Standard resistance:

Front LH

Tester Connection	Condition	Specified Condition
F3-7 (BLLH) - F3-10 (SVSG)	Blower switch OFF	Below 1.1 kΩ
	Blower switch ON (Vol: 3)	Below 111 Ω
F3-8 (SVS5) - F3-10 (SVSG)	Always	Below 1 kΩ

Front RH

Tester Connection	Condition	Specified Condition
F3-8 (SVS5) - F3-9 (BLRH)	Blower switch OFF	Below 1.1 kΩ
	Blower switch ON (Vol: 3)	Below 111 Ω
F3-8 (SVS5) - F3-10 (SVSG)	Always	Below 1 kΩ

NG → **REPLACE SEAT HEATER SWITCH**

OK

19 CHECK WIRE HARNESS (SEAT HEATER SWITCH - A/C AMPLIFIER ASSEMBLY)

Seat Heater Switch:

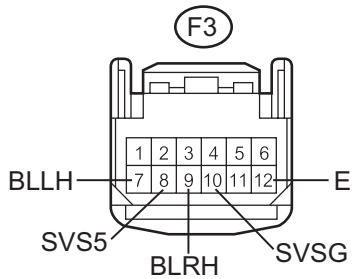

A/C Amplifier Assembly:

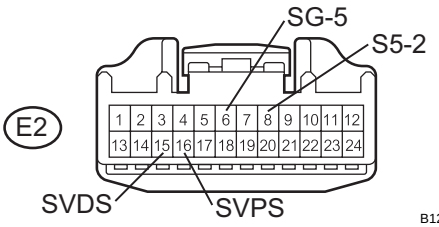

(a) Measure the resistance according to the value(s) in the table below.

Standard resistance:

Front LH

Tester Connection	Condition	Specified Condition
F3-7 (BLLH) - E2-15 (SVDS)	Always	Below 1 Ω
F3-8 (SVS5) - E2-8 (S5-2)	Always	Below 1 Ω
F3-10 (SVSG) - E2-6 (SG-5)	Always	Below 1 Ω
F3-12 (E) - Body ground	Always	Below 1 Ω
F3-7 (BLLH) - Body ground	Always	10 kΩ or higher
F3-8 (SVS5) - Body ground	Always	10 kΩ or higher
F3-10 (SVSG) - Body ground	Always	10 kΩ or higher

Front RH

Tester Connection	Condition	Specified Condition
F3-8 (SVS5) - E2-8 (S5-2)	Always	Below 1 Ω
F3-9 (BLRH) - E2-16 (SVPS)	Always	Below 1 Ω

SE

Tester Connection	Condition	Specified Condition
F3-10 (SVSG) - E2-6 (SG-5)	Always	Below 1 Ω
F3-12 (E) - Body ground	Always	Below 1 Ω
F3-8 (SVS5) - Body ground	Always	10 kΩ or higher
F3-9 (BLRH) - Body ground	Always	10 kΩ or higher
F3-10 (SVSG) - Body ground	Always	10 kΩ or higher

NG → **REPAIR OR REPLACE WIRE HARNESS**

OK

REPLACE A/C AMPLIFIER ASSEMBLY

DATA LIST / ACTIVE TEST

1. READ DATA LIST

HINT:
Using the intelligent tester's DATA LIST allows switch, sensor, actuator and other item values to be read without removing any parts. Reading the DATA LIST early in troubleshooting is one way to save time.

(a) Connect the intelligent tester to the DLC3.
(b) Turn the engine switch on (IG).
(c) Read the DATA LIST.

MIRROR:

Tester Display	Measurement Item/Range	Normal Condition	Diagnostic Note
D SET MEMORY	Driver side SET memory switch / ON or OFF	ON: Driver side SET memory switch is ON OFF: Driver side SET memory switch is OFF	-
D MEM 1 SW	Driver side memory switch 1 / ON or OFF	ON: Driver side M1 memory switch is ON OFF: Driver side M1 memory switch is OFF	-
D MEM 2 SW	Driver side memory switch 2 / ON or OFF	ON: Driver side M2 memory switch is ON OFF: Driver side M2 memory switch is OFF	-
FP SET MEMORY	Front passenger side SET memory switch / ON or OFF	ON: Driver side SET memory switch is ON OFF: Driver side SET memory switch is OFF	-
FP MEM 1 SW	Front passenger side memory switch 1 / ON or OFF	ON: Driver side M1 memory switch is ON OFF: Driver side M1 memory switch is OFF	-
FP MEM 2 SW	Front passenger side memory switch 2 / ON or OFF	ON: Driver side M2 memory switch is ON OFF: Driver side M2 memory switch is OFF	-

D-SEAT:

Tester Display	Measurement Item/Range	Normal Condition	Diagnostic Note
SEAT MEM M1	Driving position memorized with M1 switch / MEM or NOT MEM	MEM: Memorized NOT MEM: Not memorized	-
SEAT MEM M2	Driving position memorized with M2 switch / MEM or NOT MEM	MEM: Memorized NOT MEM: Not memorized	-
SEAT MEM M3	Driving position memorized with M3 switch / MEM or NOT MEM	MEM: Memorized NOT MEM: Not memorized	-
IG (MPX)	Communication state of engine switch signal / ON or OFF	ON: Engine switch on (IG) signal is received OFF: Engine switch on (IG) signal is not received	-
KEY UNLOCK SW	Engine switch status (IG) / ON or OFF	ON: Engine switch on (IG) OFF: Engine switch off	-
KEY CORD CONF	Recognition code is registered / ON or OFF	ON: One or more recognition codes are registered OFF: No recognition code is registered	-
D-DOOR WARN SW	Door courtesy switch signal / ON or OFF	ON: Driver side door is open OFF: Driver side door is closed	-
P SW	Shift lever position P signal / ON or OFF	ON: Shift lever in P position OFF: Shift lever in any position other than P	-

Tester Display	Measurement Item/Range	Normal Condition	Diagnostic Note
N SW	Shift lever position N signal / ON or OFF	ON: Shift lever in N position OFF: Shift lever in any position other than N	-
PKBS SW	Parking brake switch status / ON or OFF	ON: Parking brake is operated OFF: Parking brake is released	-
M3 SW	M3 switch signal / ON or OFF	ON: M3 switch is ON OFF: M3 switch is OFF	-
M2 SW	M2 switch signal / ON or OFF	ON: M2 switch is ON OFF: M2 switch is OFF	-
M1 SW	M1 switch signal / ON or OFF	ON: M1 switch is ON OFF: M1 switch is OFF	-
SET SW	SET switch signal / ON or OFF	ON: SET switch is ON OFF: SET switch is OFF	-
VEHICLE SPD	Vehicle speed data / MIN.: 0 km/h (0 mph), MAX.: 255 km/h (158 mph)	Actual vehicle speed	-
RECLIN SW REAR	Reclining switch signal (Rearward) / ON or OFF	ON: Reclining switch (Rearward) is ON OFF: Reclining switch (Rearward) is OFF	-
RECLIN SW FRONT	Reclining switch signal (Forward) / ON or OFF	ON: Reclining switch (Forward) is ON OFF: Reclining switch (Forward) is OFF	-
F VTCL SW DOWN	Front vertical switch signal (Downward) / ON or OFF	ON: Front vertical switch (Downward) is ON OFF: Front vertical switch (Downward) is OFF	-
F VTCL SW UP	Front vertical switch signal (Upward) / ON or OFF	ON: Front vertical switch (Upward) is ON OFF: Front vertical switch (Upward) is OFF	-
LIFTER SW DOWN	Lifter switch (Downward) / ON or OFF	ON: Lifter switch (Downward) is ON OFF: Lifter switch (Downward) is OFF	-
LIFTER SW UP	Lifter switch (Upward) / ON or OFF	ON: Lifter switch (Upward) is ON OFF: Lifter switch (Upward) is OFF	-
SLIDE SW REAR	Sliding switch signal (Rearward) / ON or OFF	ON: Sliding switch (Rearward) is ON OFF: Sliding switch (Rearward) is OFF	-
SLIDE SW FRONT	Sliding switch signal (Forward) / ON or OFF	ON: Sliding switch (Forward) is ON OFF: Sliding switch (Forward) is OFF	-
POWER VOLTAGE	Power supply for front power seat switch (position control ECU) / MIN.: 0 V, MAX.: 19.89 V	Within range from 11 to 14 V	-
SLIDE POS	Seat sliding position / MIN.: -4096, MAX.: 4096	Within range from -4096 to 4096	-
RECLIN POS	Seatback position / MIN.: -4096, MAX.: 4096	Within range from -4096 to 4096	-
F VTCL POS	Seat front vertical position / MIN.: -4096, MAX.: 4096	Within range from -4096 to 4096	-
LIFTER POS	Seat lifter position / MIN.: -4096, MAX.: 4096	Within range from -4096 to 4096	-
SLIDE MEM POS 1	Seat sliding position memorized with M1 switch / MIN.: -4096, MAX.: 4096	Within range from -4096 to 4096	-

Tester Display	Measurement Item/Range	Normal Condition	Diagnostic Note
RECLN MEM POS 1	Seatback position memorized with M1 switch / MIN.: -4096, MAX.: 4096	Within range from -4096 to 4096	-
F VTCL MEM POS 1	Seat front vertical position memorized with M1 switch / MIN.: -4096, MAX.: 4096	Within range from -4096 to 4096	-
LIFTER MEM POS 1	Seat lifter position memorized with M1 switch / MIN.: -4096, MAX.: 4096	Within range from -4096 to 4096	-
SLIDE MEM POS 3	Seat sliding position memorized with M3 switch / MIN.: -4096, MAX.: 4096	Within range from -4096 to 4096	-
RECLN MEM POS 3	Seatback position memorized with M3 switch / MIN.: -4096, MAX.: 4096	Within range from -4096 to 4096	-
F VTCL MEM POS 3	Seat front vertical position memorized with M3 switch / MIN.: -4096, MAX.: 4096	Within range from -4096 to 4096	-
LIFTER MEM POS 3	Seat lifter position memorized with M3 switch / MIN.: -4096, MAX.: 4096	Within range from -4096 to 4096	-

P-SEAT:

Tester Display	Measurement Item/Range	Normal Condition	Diagnostic Note
SEAT MEM M1	Driving position memorized with M1 switch / MEM or NOT MEM	MEM: Memorized NOT MEM: Not memorized	-
SEAT MEM M2	Driving position memorized with M2 switch / MEM or NOT MEM	MEM: Memorized NOT MEM: Not memorized	-
SEAT MEM M3	Driving position memorized with M3 switch / MEM or NOT MEM	MEM: Memorized NOT MEM: Not memorized	-
IG (MPX)	Communication state of engine switch signal / ON or OFF	ON: Engine switch on (IG) signal is received OFF: Engine switch on (IG) signal is not received	-
KEY UNLOCK SW	Engine switch status (IG) / ON or OFF	ON: Engine switch on (IG) OFF: Engine switch off	-
KEY CORD CONF	Recognition code is registered / ON or OFF	ON: One or more recognition codes are registered OFF: No recognition code is registered	-
DOOR WARN SW	Door courtesy switch signal / ON or OFF	ON: Front passenger side door is open OFF: Front passenger side door is closed	-
P SW	Shift lever position P signal / ON or OFF	ON: Shift lever in P position OFF: Shift lever in any position other than P	-
N SW	Shift lever position N signal / ON or OFF	ON: Shift lever in N position OFF: Shift lever in any position other than N	-
PKBS SW	Parking brake switch status / ON or OFF	ON: Parking brake is operated OFF: Parking brake is released	-
M3 SW	M3 switch signal / ON or OFF	ON: M3 switch is ON OFF: M3 switch is OFF	-
M2 SW	M2 switch signal / ON or OFF	ON: M2 switch is ON OFF: M2 switch is OFF	-
M1 SW	M1 switch signal / ON or OFF	ON: M1 switch is ON OFF: M1 switch is OFF	-
SET SW	SET switch signal / ON or OFF	ON: SET switch is ON OFF: SET switch is OFF	-

Tester Display	Measurement Item/Range	Normal Condition	Diagnostic Note
VEHICLE SPD	Vehicle speed data / MIN.: 0 km/h (0 mph), MAX.: 255 km/h (158 mph)	Actual vehicle speed	-
RECLIN SW REAR	Reclining switch signal (Rearward) / ON or OFF	ON: Reclining switch (Rearward) is ON OFF: Reclining switch (Rearward) is OFF	-
RECLIN SW FRONT	Reclining switch signal (Forward) / ON or OFF	ON: Reclining switch (Forward) is ON OFF: Reclining switch (Forward) is OFF	-
F VTCL SW DOWN	Front vertical switch signal (Downward) / ON or OFF	ON: Front vertical switch (Downward) is ON OFF: Front vertical switch (Downward) is OFF	-
F VTCL SW UP	Front vertical switch signal (Upward) / ON or OFF	ON: Front vertical switch (Upward) is ON OFF: Front vertical switch (Upward) is OFF	-
LIFTER SW DOWN	Lifter switch (Downward) / ON or OFF	ON: Lifter switch (Downward) is ON OFF: Lifter switch (Downward) is OFF	-
LIFTER SW UP	Lifter switch (Upward) / ON or OFF	ON: Lifter switch (Upward) is ON OFF: Lifter switch (Upward) is OFF	-
SLIDE SW REAR	Sliding switch signal (Rearward) / ON or OFF	ON: Sliding switch (Rearward) is ON OFF: Sliding switch (Rearward) is OFF	-
SLIDE SW FRONT	Sliding switch signal (Forward) / ON or OFF	ON: Sliding switch (Forward) is ON OFF: Sliding switch (Forward) is OFF	-
POWER VOLTAGE	Power supply for front power seat switch (position control ECU) / MIN.: 0 V, MAX.: 19.89 V	Within range from 11 to 14 V	-
SLIDE POS	Seat sliding position / MIN.: -4096, MAX.: 4096	Within range from -4096 to 4096	-
RECLIN POS	Seatback position / MIN.: -4096, MAX.: 4096	Within range from -4096 to 4096	-
F VTCL POS	Seat front vertical position / MIN.: -4096, MAX.: 4096	Within range from -4096 to 4096	-
LIFTER POS	Seat lifter position / MIN.: -4096, MAX.: 4096	Within range from -4096 to 4096	-
SLIDE MEM POS 1	Seat sliding position memorized with M1 switch / MIN.: -4096, MAX.: 4096	Within range from -4096 to 4096	-
RECLN MEM POS 1	Seatback position memorized with M1 switch / MIN.: -4096, MAX.: 4096	Within range from -4096 to 4096	-
F VTCL MEM POS 1	Seat front vertical position memorized with M1 switch / MIN.: -4096, MAX.: 4096	Within range from -4096 to 4096	-
LIFTER MEM POS 1	Seat lifter position memorized with M1 switch / MIN.: -4096, MAX.: 4096	Within range from -4096 to 4096	-
SLIDE MEM POS 3	Seat sliding position memorized with M3 switch / MIN.: -4096, MAX.: 4096	Within range from -4096 to 4096	-

Tester Display	Measurement Item/Range	Normal Condition	Diagnostic Note
RECLN MEM POS 3	Seatback position memorized with M3 switch / MIN.: -4096, MAX.: 4096	Within range from -4096 to 4096	-
F VTCL MEM POS 3	Seat front vertical position memorized with M3 switch / MIN.: -4096, MAX.: 4096	Within range from -4096 to 4096	-
LIFTER MEM POS 3	Seat lifter position memorized with M3 switch / MIN.: -4096, MAX.: 4096	Within range from -4096 to 4096	-

2. PERFORM ACTIVE TEST

HINT:

Performing the intelligent tester's ACTIVE TEST allows a relay, VSV, actuator, and other items to be operated without removing any parts. Performing the ACTIVE TEST early in troubleshooting is one way to save time. The DATA LIST can be displayed during the ACTIVE TEST.

(a) Connect the intelligent tester to the DLC3.
(b) Turn the engine switch on (IG).
(c) Perform the ACTIVE TEST.

D-SEAT:

Tester Display	Test Part	Control Range	Diagnostic Note
SLIDE	Seat sliding operation	FRONT / REAR	-
F VERTICAL	Seat front vertical operation	UP / DOWN	-
LIFTER	Seat lifter operation	UP / DOWN	-
RECLINING	Seat reclining operation	FRONT / REAR	-
BUZZER	Buzzer operation	ON / OFF	-

P-SEAT:

Tester Display	Test Part	Control Range	Diagnostic Note
SLIDE	Seat sliding operation	FRONT / REAR	-
F VERTICAL	Seat front vertical operation	UP / DOWN	-
LIFTER	Seat lifter operation	UP / DOWN	-
RECLINING	Seat reclining operation	FRONT / REAR	-
BUZZER	Buzzer operation	ON / OFF	-

REMOVAL

1. REMOVE SEAT BELT ANCHOR COVER CAP (See page SB-22)

2. DISCONNECT FRONT SEAT OUTER BELT ASSEMBLY (See page SB-22)

3. REMOVE FRONT SEAT HEADREST ASSEMBLY

4. REMOVE FRONT SEAT OUTER TRACK BRACKET COVER

(a) Move the front seat assembly to the rearmost position by operating the slide and vertical power seat switch knob.

(b) Using a screwdriver, disengage the 2 claws and remove the front seat outer track bracket cover.
HINT:
Tape the screwdriver tip before use.

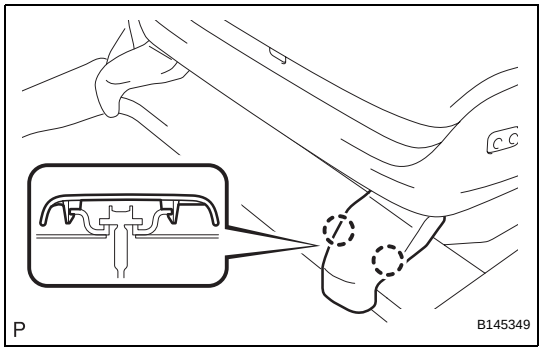

5. REMOVE FRONT SEAT INNER TRACK BRACKET COVER

(a) Using a screwdriver, disengage the 2 claws and remove the front seat inner track bracket cover.
HINT:
Tape the screwdriver tip before use.

6. REMOVE FRONT SEAT REAR OUTER TRACK BRACKET COVER

(a) Move the front seat assembly fully forward by operating the slide and vertical power seat switch knob.

(b) Using a screwdriver, disengage the 4 claws and remove the front seat rear outer track bracket cover.
HINT:
Tape the screwdriver tip before use.

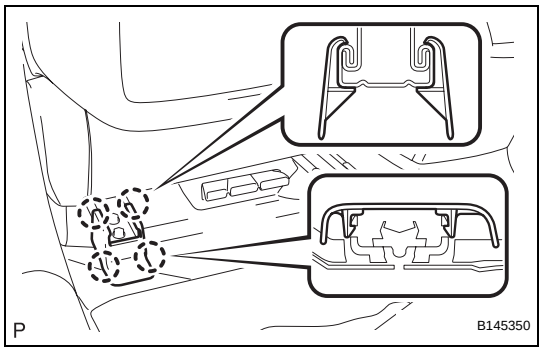

7. REMOVE FRONT SEAT REAR INNER TRACK BRACKET COVER

(a) Using a screwdriver, disengage the 4 claws and remove the front seat rear inner track bracket cover.
HINT:
Tape the screwdriver tip before use.

8. REMOVE FRONT SEAT ASSEMBLY

(a) Operate the power seat switch knob and move the seat to its rearmost position.

(b) Remove the 2 bolts on the front seat track bracket.

(c) Operate the power seat switch knob and move the seat to the position farthest forward.

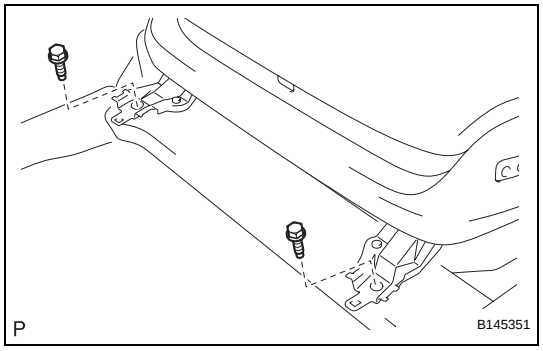

SE

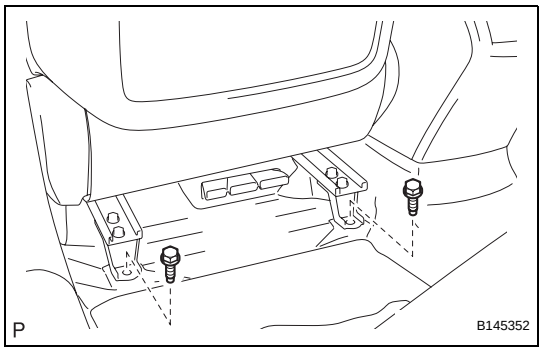

(d) Remove the 2 bolts on the rear seat track bracket.

(e) Disconnect the negative (-) battery terminal.
CAUTION:
Wait at least 90 seconds after disconnecting the negative (-) battery terminal to prevent the airbag and seat belt pretensioner from deploying (See page RS-1).

(f) Disconnect the connectors under the seat. Then remove the front seat assembly.

DISASSEMBLY

1. **REMOVE FRONT SEAT INNER BELT ASSEMBLY (See page SB-23)**

2. **REMOVE OCCUPANT DETECTION ECU (See page RS-502)**

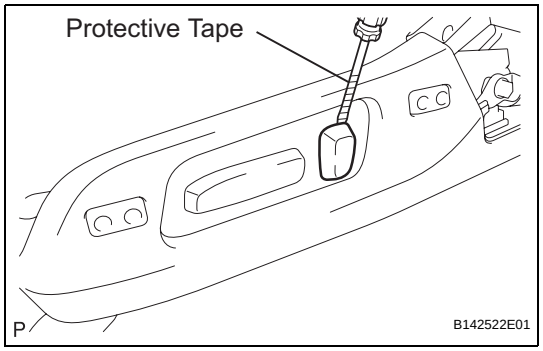

3. **REMOVE RECLINING POWER SEAT SWITCH KNOB**
   (a) Using a screwdriver, remove the reclining power seat switch knob.
   HINT:
   Tape the screwdriver tip before use.

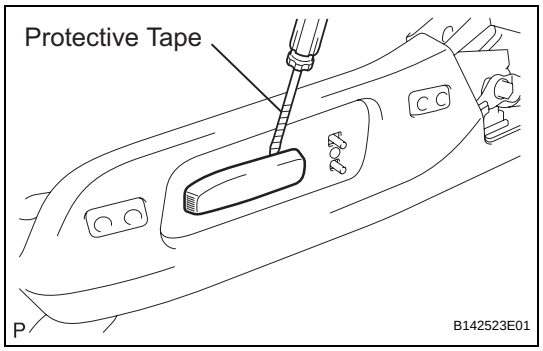

4. **REMOVE SLIDE AND VERTICAL POWER SEAT SWITCH KNOB**
   (a) Using a screwdriver, remove the slide and vertical power seat switch knob.
   HINT:
   Tape the screwdriver tip before use.

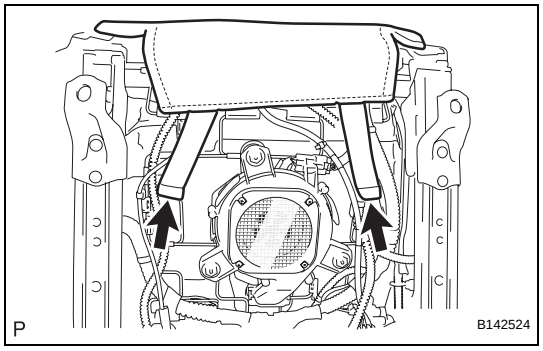

5. **REMOVE FRONT SEAT CUSHION SHIELD ASSEMBLY**
   (a) Release the 2 rubber bands on the backside of the front seatback board sub-assembly.

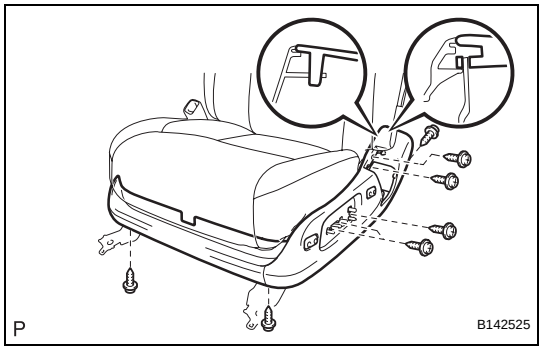

   (b) Remove the 8 screws.
   (c) Disengage the 2 claws and separate the front seat cushion shield assembly.

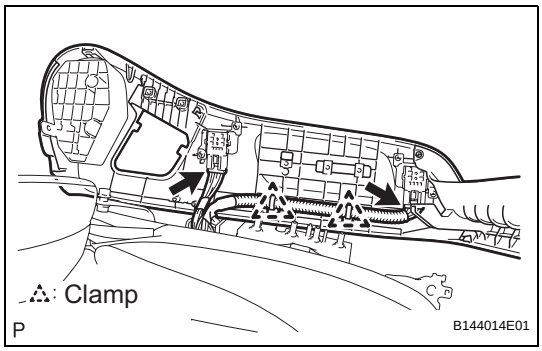

(d) Disconnect the 2 clamps and 2 connectors, and then remove the front seat cushion shield assembly.

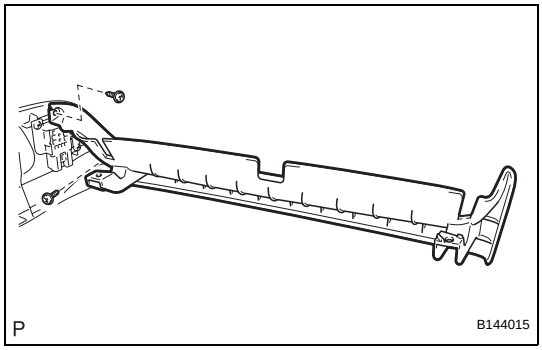

6. REMOVE FRONT INNER NO. 1 SEAT CUSHION SHIELD

(a) Remove the 2 screws and front inner No. 1 seat cushion shield.

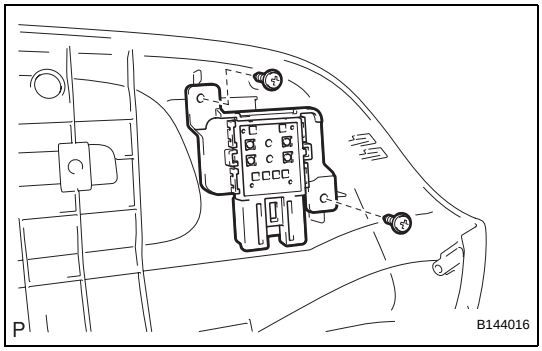

7. REMOVE SEAT VARIABLE CUSHION SWITCH (w/ Seat Cushion Front Edge Adjustment Function)

(a) Remove the 2 screws and seat variable cushion switch.

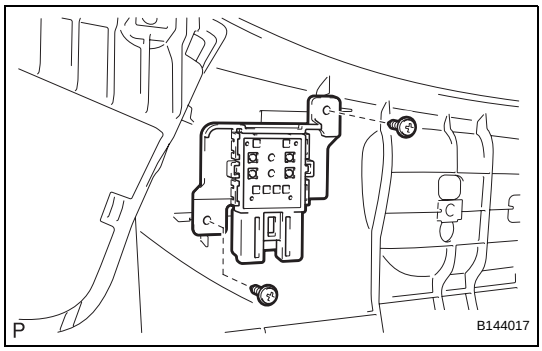

8. REMOVE FRONT POWER SEAT LUMBAR SWITCH

(a) Remove the 2 screws and front power seat lumbar switch.

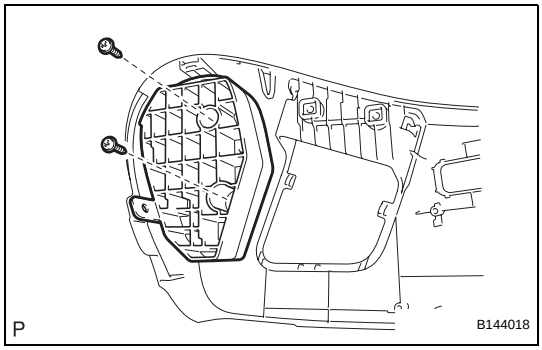

9. REMOVE LOWER NO. 3 SEAT TRACK SPACER

(a) Remove the 2 screws and lower No. 3 seat track spacer.

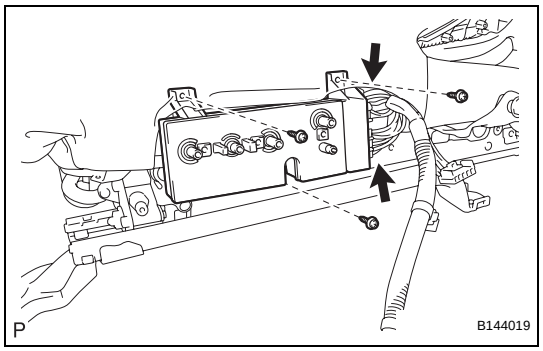

10. REMOVE FRONT POWER SEAT SWITCH (w/ Seat Position Memory System)
(a) Disconnect the 2 connectors.
(b) Remove the 3 screws and front power seat switch.

11. REMOVE FRONT POWER SEAT SWITCH (w/o Seat Position Memory System)
(a) Disconnect the connector.
(b) Remove the 3 screws and power seat switch.

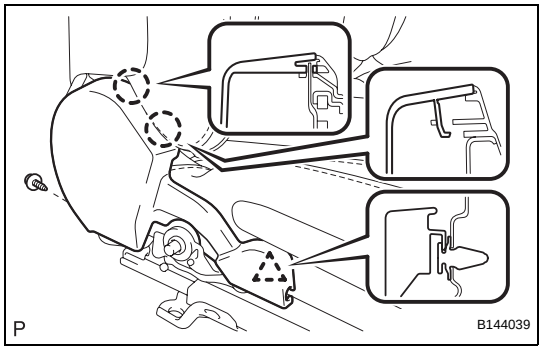

12. REMOVE FRONT SEAT INNER CUSHION SHIELD
(a) Remove the screw.
(b) Disengage the 2 claws and clip, and then remove the front seat inner cushion shield.

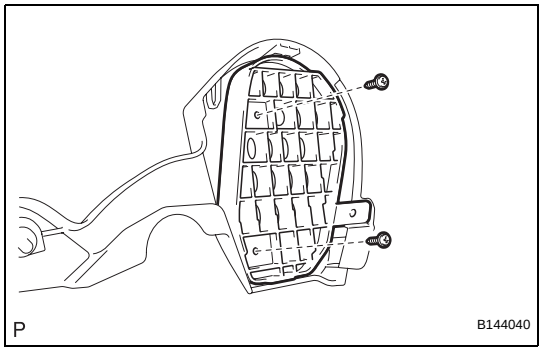

13. REMOVE LOWER NO. 4 SEAT TRACK SPACER
(a) Remove the 2 screws and lower No. 4 seat track spacer.

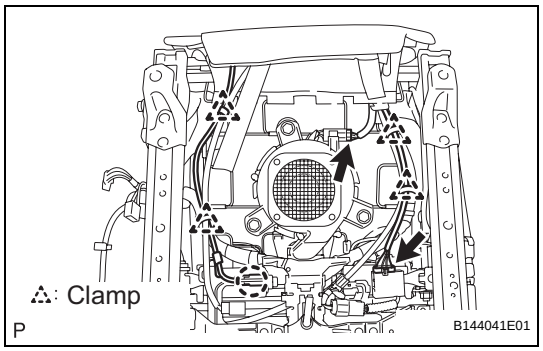

14. REMOVE FRONT SEPARATE TYPE SEAT CUSHION COVER WITH PAD (w/o Seat Cushion Front Edge Adjustment Function)
(a) Disconnect the 2 connectors.
(b) Disengage the 4 clamps and claw.

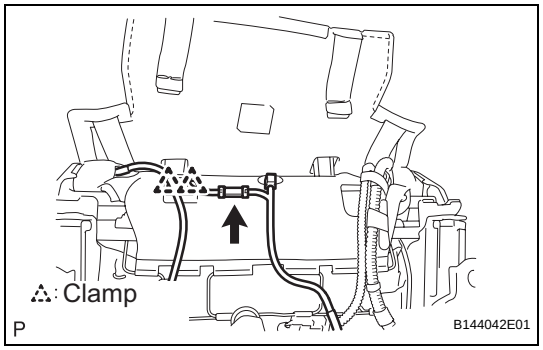

(c) Disconnect the connector and detach the 2 clamps.

SE

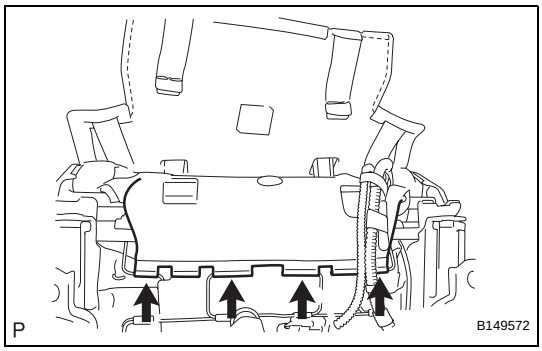

(d) Disengage the 4 clamps.

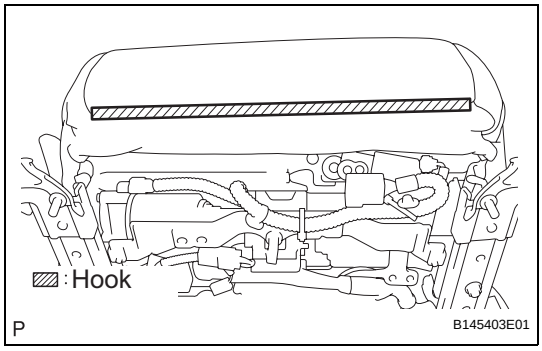

(e) Using a screwdriver, detach the hook.

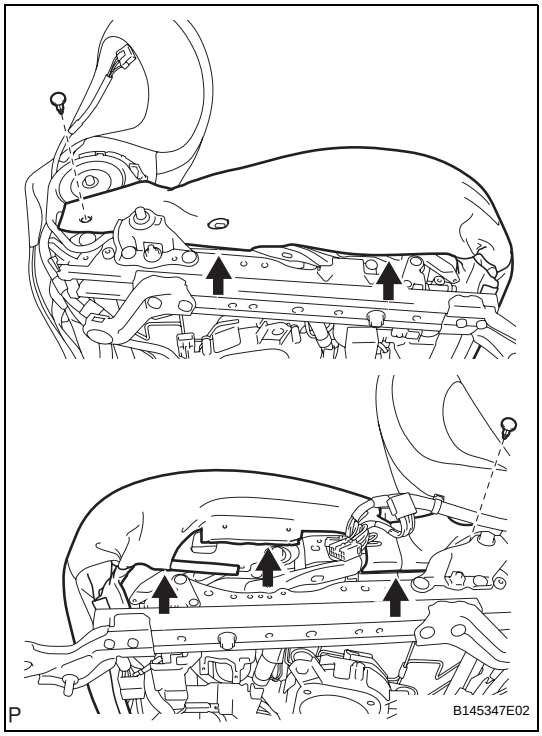

(f) Remove the 2 clips.
(g) Disengage the hooks and remove the front separate type seat cushion cover with pad.

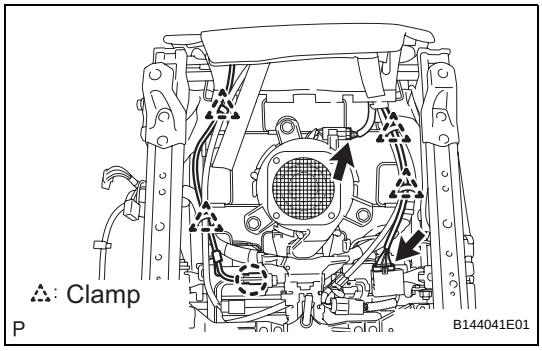

15. REMOVE FRONT SEPARATE TYPE SEAT CUSHION COVER WITH PAD (w/ Seat Cushion Front Edge Adjustment Function)

(a) Disconnect the 2 connectors.
(b) Disengage the 4 clamps and claw.

SE

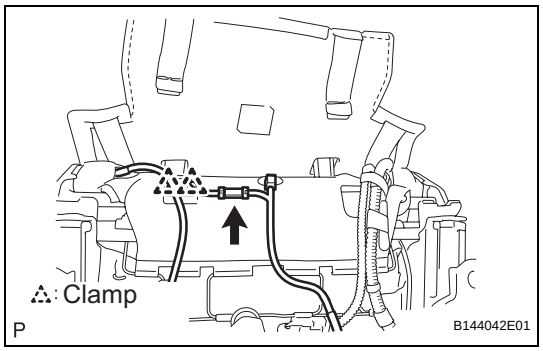

(c) Disconnect the connector and detach the 2 clamps.

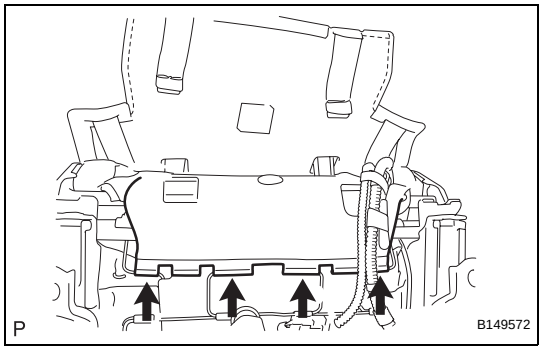

(d) Disengage the 4 clamps.

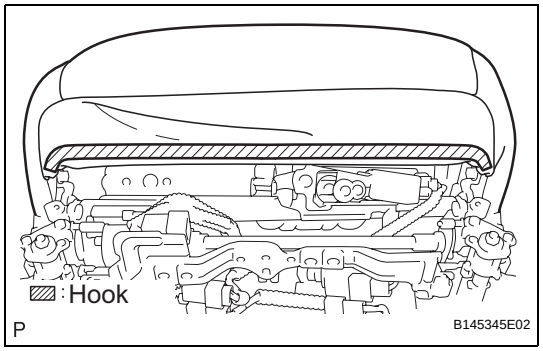

(e) Using a screwdriver, detach the hook.

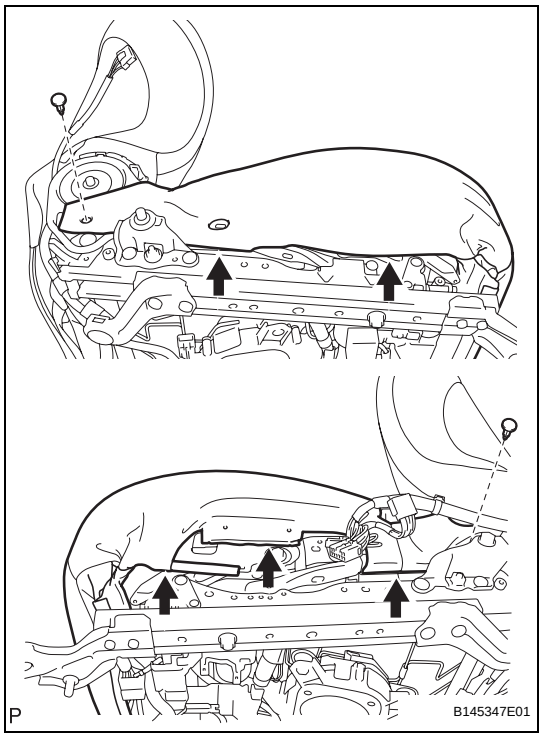

(f) Remove the 2 clips.
(g) Disengage the hooks and clamp.

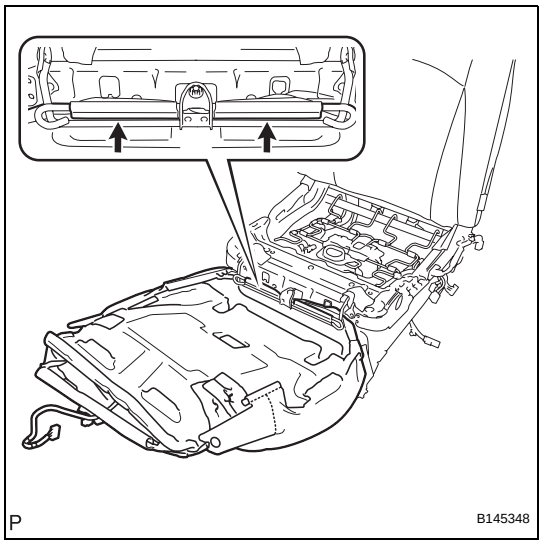

(h) Disengage the 2 hooks and remove the front separate type seat cushion cover with pad.

16. REMOVE FRONT SEAT CUSHION ASSEMBLY (See page RS-494)

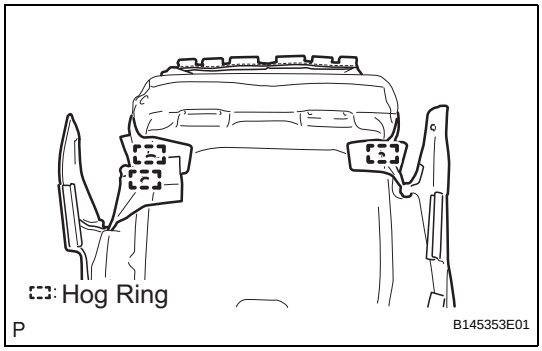

17. REMOVE FRONT SEPARATE TYPE SEAT CUSHION COVER (w/o Seat Cushion Front Edge Adjustment Function)

(a) Remove the 3 hog rings.

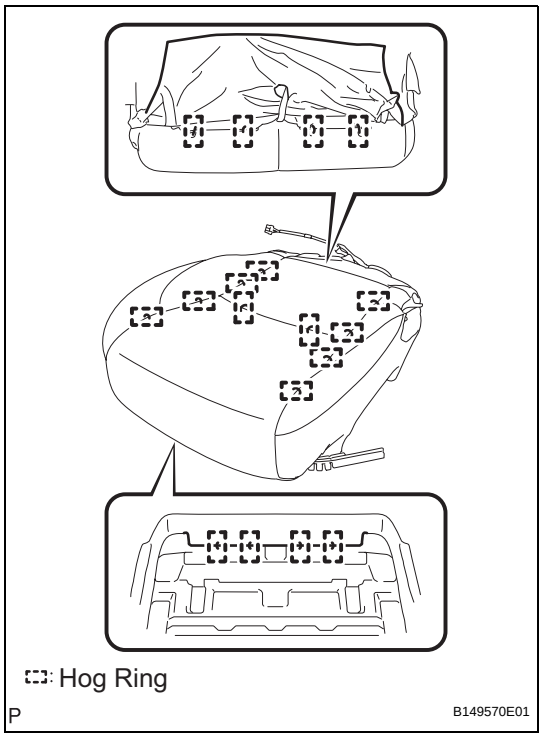

(b) Remove the 18 hog rings and front separate type front seat cushion cover.

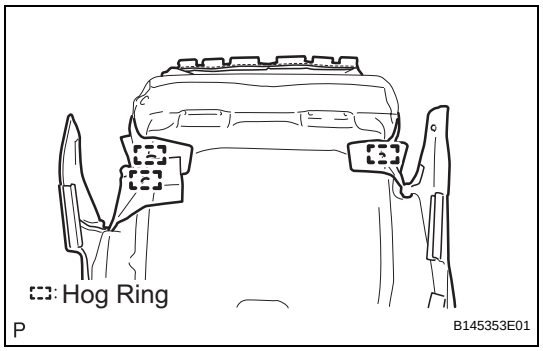

18. REMOVE FRONT SEPARATE TYPE SEAT CUSHION COVER (w/ Seat Cushion Front Edge Adjustment Function)

(a) Remove the 3 hog rings.

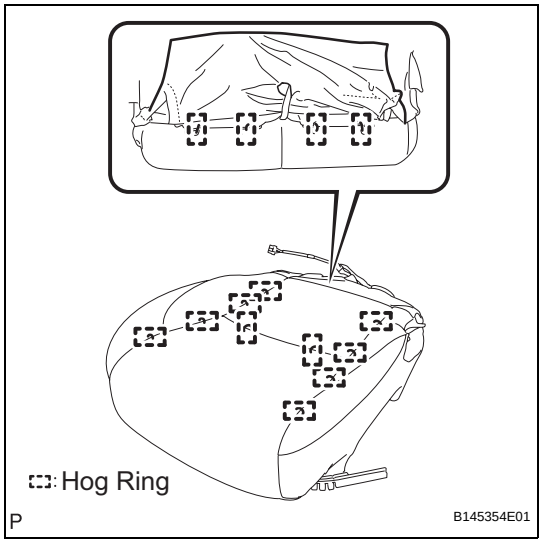

(b) Remove the 14 hog rings and front separate type front seat cushion cover.

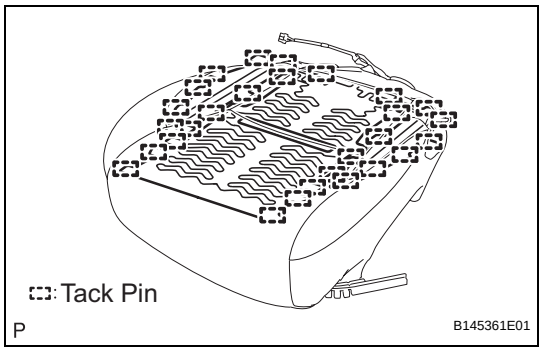

19. REMOVE FRONT SEAT CUSHION HEATER ASSEMBLY (w/ Climate Control Seat System)

(a) Cut off the tack pins that fasten the seat heater, and then remove the front seat cushion heater from the front separate type seat cushion cover.

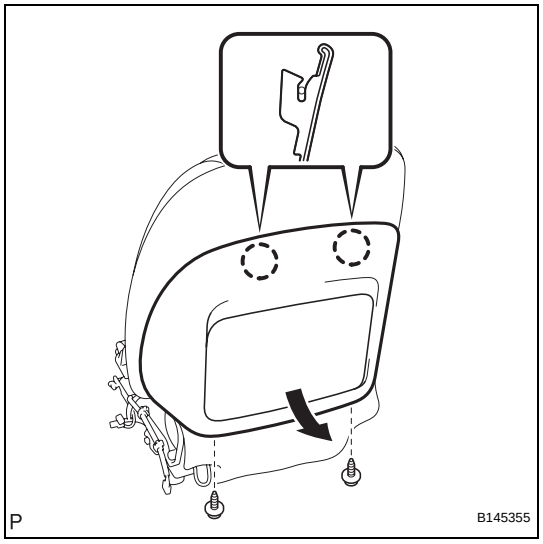

20. REMOVE FRONT SEATBACK BOARD SUB-ASSEMBLY

(a) Open the front seatback board cover sub-assembly of the front seatback board sub-assembly. Then remove the 2 screws.

(b) Pull the seatback board in the direction indicated by the arrow in the illustration to disengage the 2 claws. Then remove the front seatback board sub-assembly.

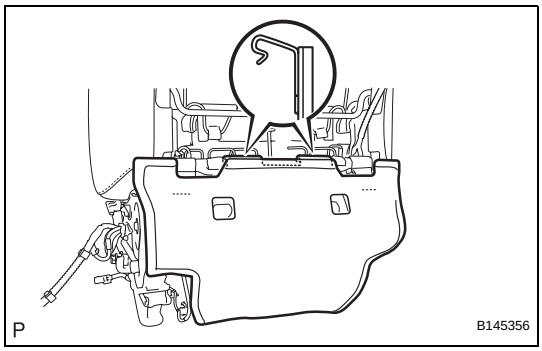

21. REMOVE FRONT SEATBACK BOARD COVER SUB-ASSEMBLY

(a) Disengage the hooks and front seatback board cover sub-assembly.

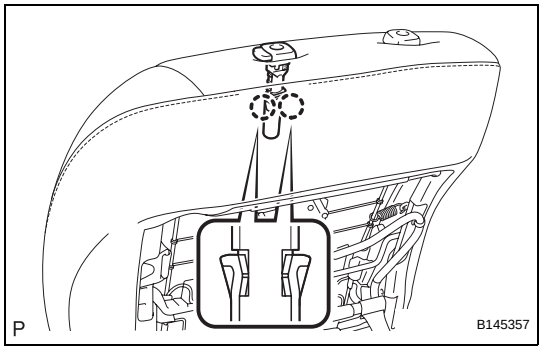

22. REMOVE FRONT SEAT HEADREST SUPPORT

(a) Disengage the 2 claws to remove the front seat headrest support.

23. REMOVE FRONT SEAT HEADREST SUPPORT

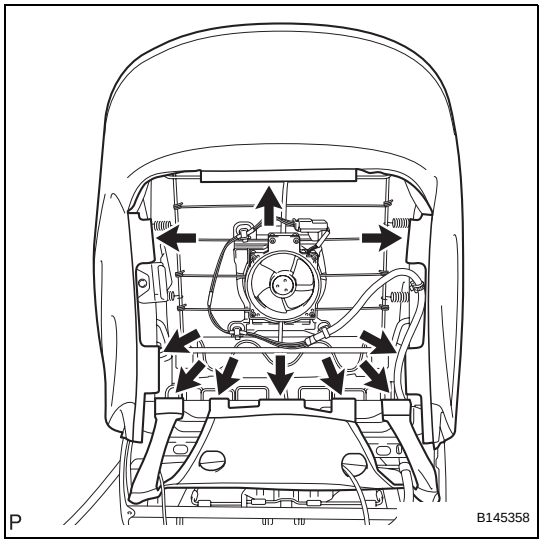

24. REMOVE FRONT SEPARATE TYPE SEATBACK COVER WITH PAD

(a) Disengage the hooks.

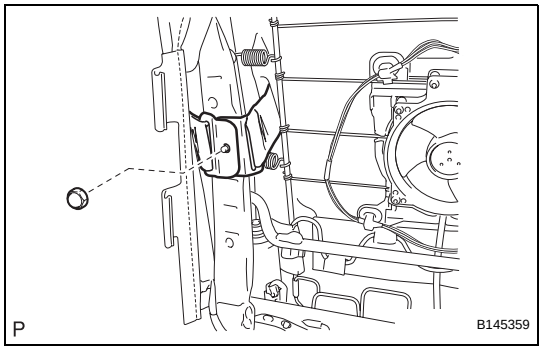

(b) Remove the nut and separate the bracket.

(c) Remove the front separate type seatback cover with pad.

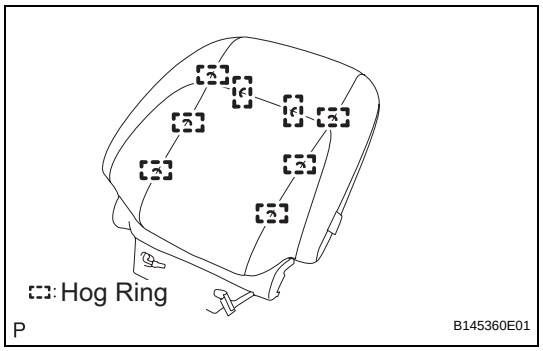

25. REMOVE FRONT SEPARATE TYPE SEATBACK COVER

(a) Remove the 8 hog rings and the front separate type seatback cover.

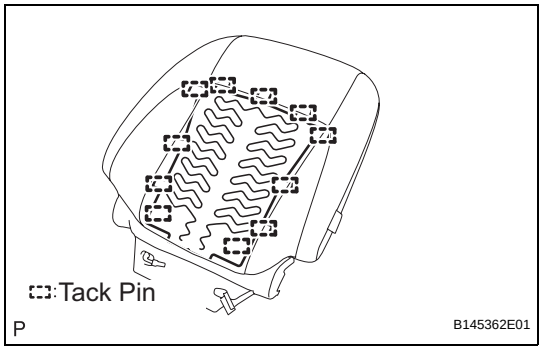

26. REMOVE FRONT SEATBACK HEATER ASSEMBLY (w/ Climate Control Seat System)

(a) Cut off the tack pins that fasten the seat heater, and then remove the front seatback heater assembly from the separate type front seatback cover.

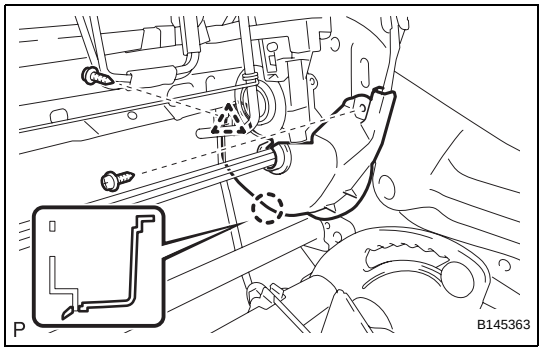

27. REMOVE SEAT RECLINING ADJUSTER INSIDE COVER LH

(a) Remove the 2 screws.
(b) Disengage the clamp.
(c) Disengage the claw and remove the seat reclining adjuster inside cover LH.

28. REMOVE SEAT RECLINING ADJUSTER INSIDE COVER RH

HINT:
Use the same procedure for the RH side and the LH side.

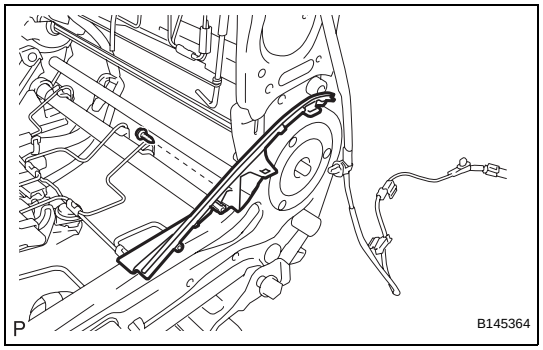

29. REMOVE RECLINING ADJUSTER INSIDE COVER LH

(a) Remove the screw.
(b) Remove the reclining adjuster inside cover LH.

30. REMOVE RECLINING ADJUSTER INSIDE COVER RH

HINT:
Use the same procedure for the RH side and the LH side.

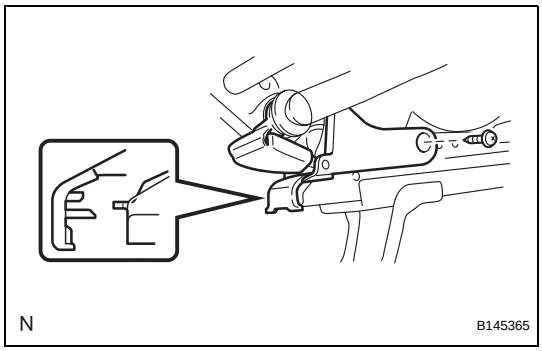

31. REMOVE FRONT SEAT LOWER CUSHION SHIELD LH

(a) Remove the screw.

(b) Disengage the hook to remove the front seat lower cushion shield LH as shown in the illustration.

32. REMOVE FRONT SEAT LOWER CUSHION SHIELD RH

HINT:

Use the same procedure for the RH side and the LH side.

33. REMOVE SEAT POSITION SENSOR (for Driver Side) (See page RS-485)

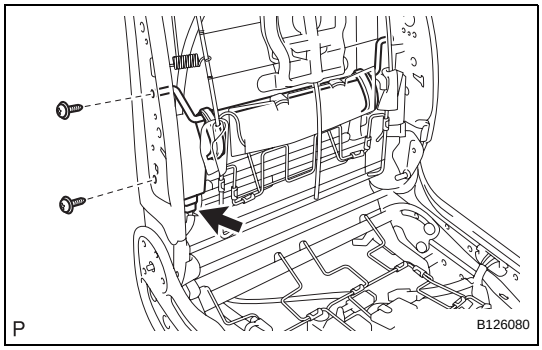

34. REMOVE LUMBAR SUPPORT ADJUSTER ASSEMBLY

(a) Disconnect the connector.

(b) Remove the 2 screws and lumbar support adjuster assembly.

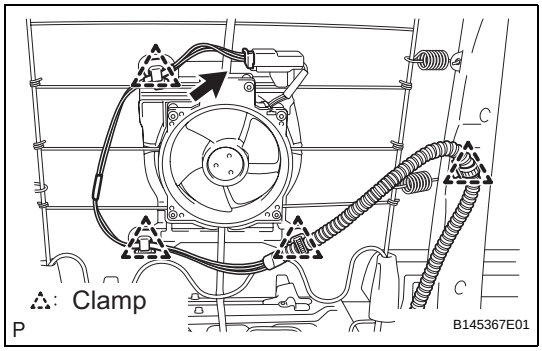

35. REMOVE SEATBACK CLIMATE CONTROL BLOWER (w/ Climate Control Seat System)

(a) Disconnect the connector and detach the 4 clamps.

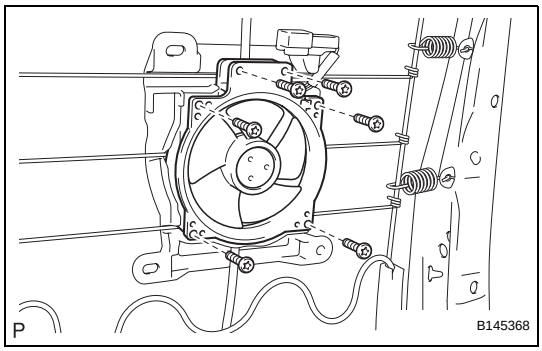

(b) Using a T30 "TORX" socket, remove the 6 "TORX" bolts and remove the seatback climate control blower.

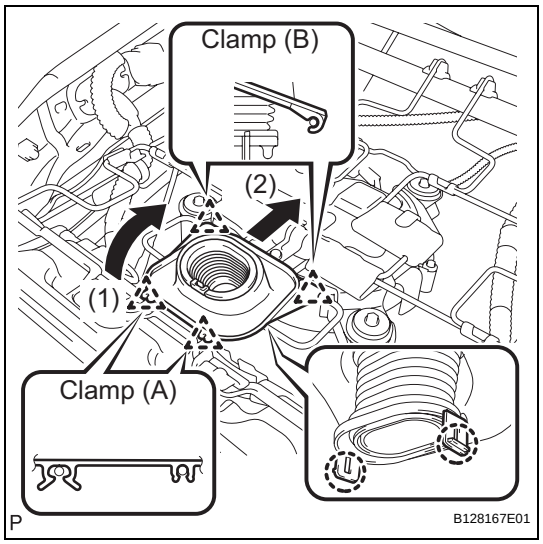

36. REMOVE SEAT CUSHION CLIMATE CONTROL DUCT (w/ Climate Control Seat System)

(a) Separate the 2 clamps (A) in the direction indicated by the arrow (1).

(b) Separate the 2 clamps (B) in the direction indicated by the arrow (2).

(c) Disengage the 2 claws, and remove the seat cushion climate control duct.

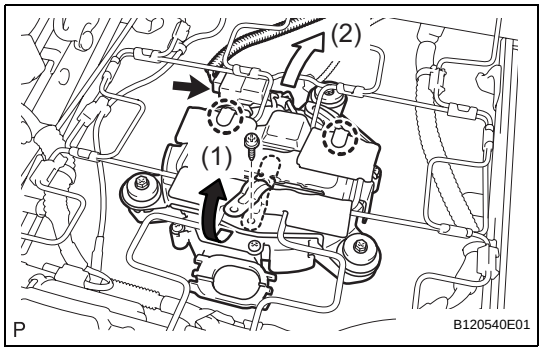

37. REMOVE SEAT CUSHION CLIMATE CONTROL BLOWER (w/ Climate Control Seat System)

(a) Disconnect the connector.

(b) Remove the screw, detach the claw and remove the seat cushion climate control blower.

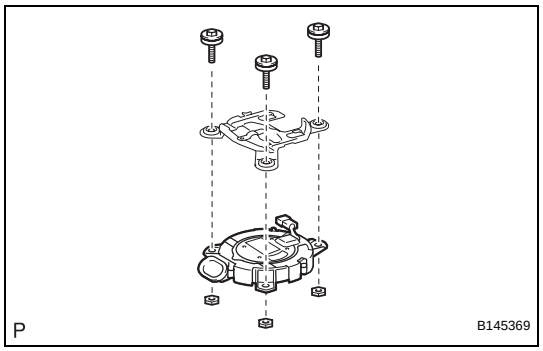

38. REMOVE SEAT CLIMATE CONTROL BLOWER

(a) Remove the 3 bolts, 3 nuts, bracket, and seat climate control blower.

39. REMOVE SEAT HEATER CONTROL (See page SE-174)

40. REMOVE FRONT SEAT WIRE

(a) Disengage the clamps.

(b) Disconnect the connectors and remove the front seat wire.

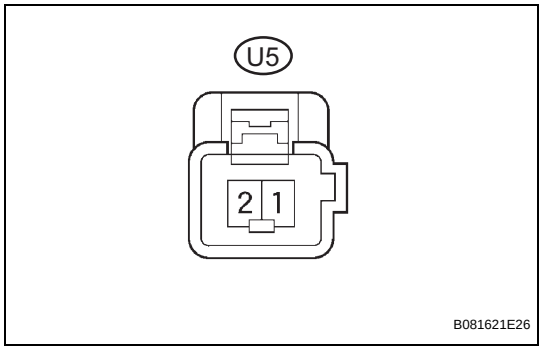

INSPECTION

1. INSPECT FRONT SEAT FRAME WITH ADJUSTER LH

(a) Check operation of the front vertical motor.

(1) Check if the seat frame moves smoothly when the battery is connected to the front vertical motor connector terminals.

OK

Measurement Condition	Operational Direction
Battery positive (+) → U5-1 Battery negative (-) → U5-2	**Upward**
Battery positive (+) → U5-2 Battery negative (-) → U5-1	**Downward**

SE

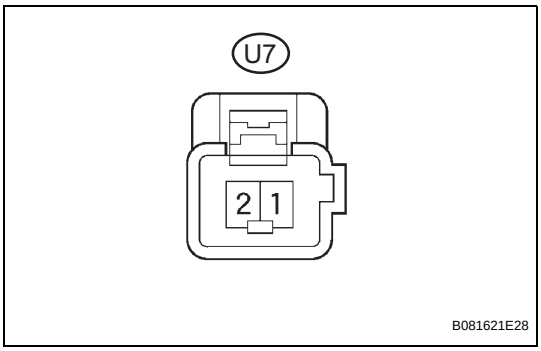

(b) Check operation of the reclining motor.
(1) Check if the seat frame moves smoothly when the battery is connected to the reclining motor connector terminals.
OK

Measurement Condition	Operational Direction
Battery positive (+) → U7-2 Battery negative (-) → U7-1	**Forward**
Battery positive (+) → U7-1 Battery negative (-) → U7-2	**Backward**

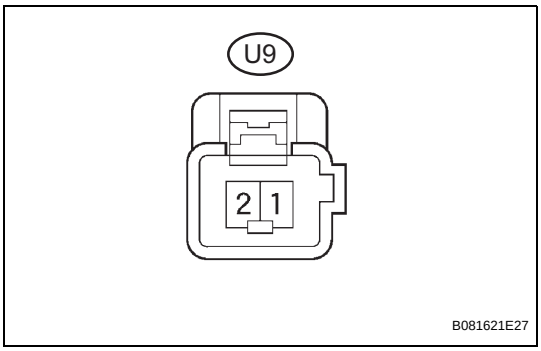

(c) Check operation of the lifter motor.
(1) Check if the seat frame moves smoothly when the battery is connected to the lifter motor connector terminals.
OK

Measurement Condition	Operational Direction
Battery positive (+) → U9-2 Battery negative (-) → U9-1	**Upward**
Battery positive (+) → U9-1 Battery negative (-) → U9-2	**Downward**

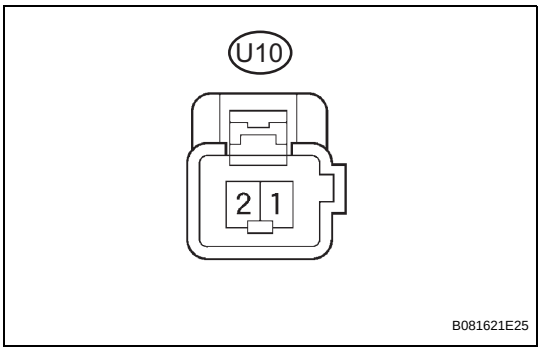

(d) Check operation of the slide motor.
(1) Check if the seat frame moves smoothly when the battery is connected to the slide motor connector terminals.
OK

Measurement Condition	Operational Direction
Battery positive (+) → U10-1 Battery negative (-) → U10-2	**Forward**
Battery positive (+) → U10-2 Battery negative (-) → U10-1	**Backward**

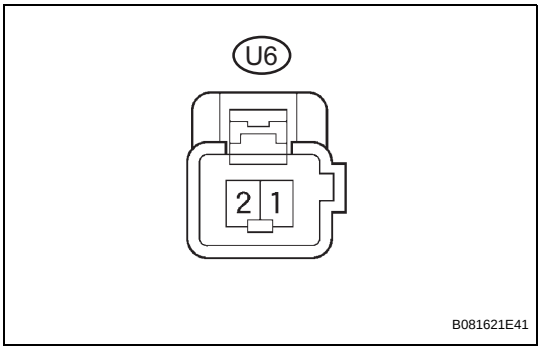

(e) Check operation of the leg support motor (with Seat Position Memory System).
(1) Check if the seat frame moves smoothly when the battery is connected to the leg support motor connector terminals.
OK

Measurement Condition	Operational Direction
Battery positive (+) → U6-1 Battery negative (-) → U6-2	**Forward**
Battery positive (+) → U6-2 Battery negative (-) → U6-1	**Backward**

If the result is not as specified, replace the seat frame with adjuster LH.

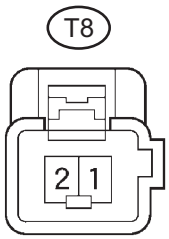

B081621E30

2. INSPECT FRONT SEAT FRAME WITH ADJUSTER RH

(a) Check operation of the front vertical motor.

(1) Check if the seat frame moves smoothly when the battery is connected to the front vertical motor connector terminals.

OK

Measurement Condition	Operational Direction
Battery positive (+) → T8-2 Battery negative (-) → T8-1	**Upward**
Battery positive (+) → T8-1 Battery negative (-) → T8-2	**Downward**

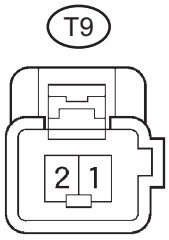

B081621E31

(b) Check operation of the lifter motor.

(1) Check if the seat frame moves smoothly when the battery is connected to the lifter motor connector terminals.

OK

Measurement Condition	Operational Direction
Battery positive (+) → T9-1 Battery negative (-) → T9-2	**Upward**
Battery positive (+) → T9-2 Battery negative (-) → T9-1	**Downward**

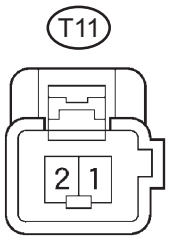

B081621E32

(c) Check operation of the reclining motor.

(1) Check if the seat frame moves smoothly when the battery is connected to the reclining motor connector terminals.

OK

Measurement Condition	Operational Direction
Battery positive (+) → T11-2 Battery negative (-) → T11-1	**Forward**
Battery positive (+) → T11-1 Battery negative (-) → T11-2	**Backward**

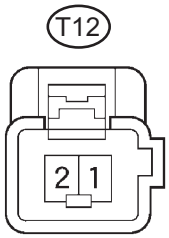

B081621E29

(d) Check operation of the slide motor.

(1) Check if the seat frame moves smoothly when the battery is connected to the slide motor connector terminals.

OK

Measurement Condition	Operational Direction
Battery positive (+) → T12-2 Battery negative (-) → T12-1	**Forward**
Battery positive (+) → T12-1 Battery negative (-) → T12-2	**Backward**

If the result is not as specified, replace the seat frame with adjuster RH.

REASSEMBLY

1. INSTALL FRONT SEAT WIRE
(a) Connect the connectors.
(b) Engage the clamps to install the front seat wire.

2. INSTALL SEAT HEATER CONTROL (See page SE-175)

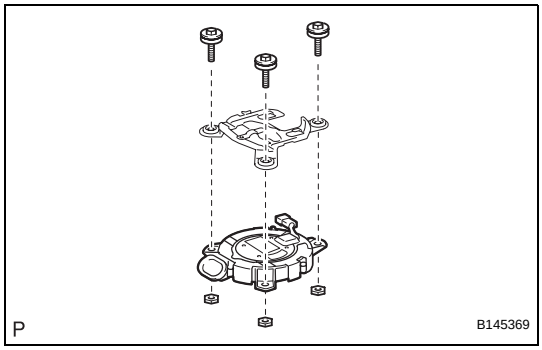

3. INSTALL SEAT CLIMATE CONTROL BLOWER (w/ Climate Control Seat System)
(a) Install the seat climate control blower and bracket with the 3 bolts and 3 nuts.

4. INSTALL SEAT CUSHION CLIMATE CONTROL BLOWER (w/ Climate Control Seat System)
(a) Engage the 2 claws to install the seat cushion climate control blower.

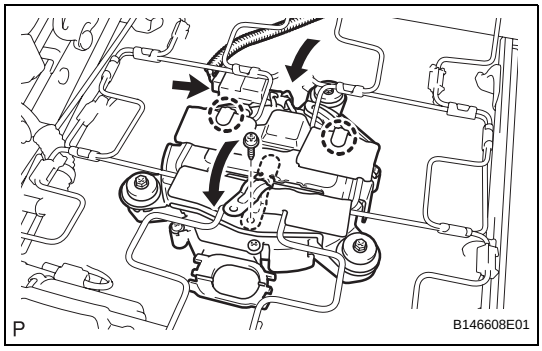

(b) Install the seat cushion climate control blower with the screw.
Torque: 2.6 N*m (27 kgf*cm, 23 in.*lbf)
(c) Connect the connector.

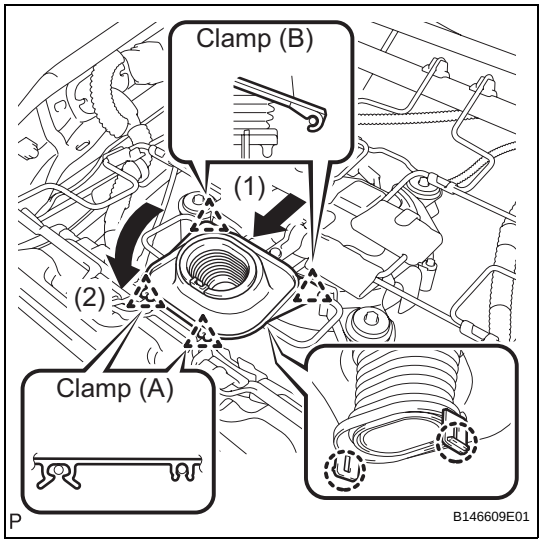

5. INSTALL SEAT CUSHION CLIMATE CONTROL DUCT (w/ Climate Control Seat System)
(a) Engage the 2 claws to install the seat cushion climate control duct.
(b) Engage the 2 clamps (B).
(c) Engage the 2 clamps (A).

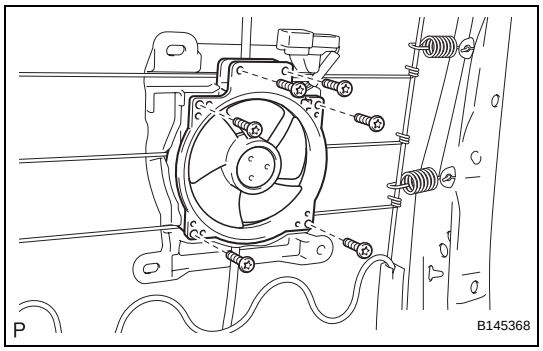

6. INSTALL SEATBACK CLIMATE CONTROL BLOWER (w/ Climate Control Seat System)

(a) Using a T30 "TORX" socket, install the seatback climate control blower with the 6 "TORX" bolts.

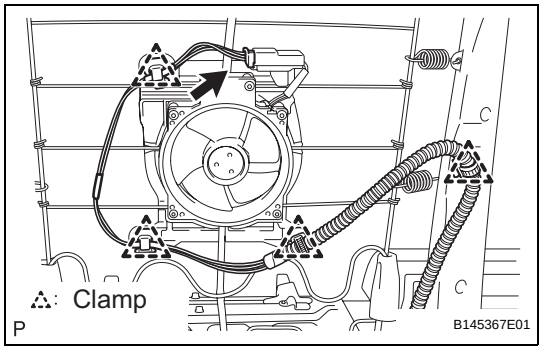

(b) Connect the 4 clamps and connector.

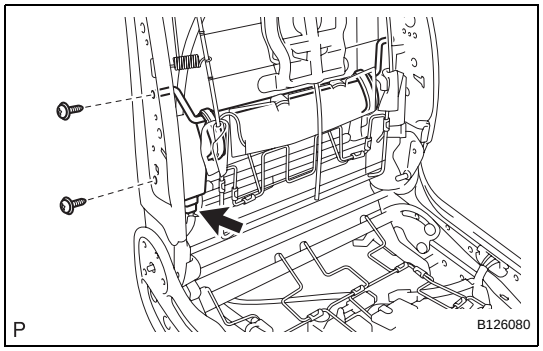

7. INSTALL LUMBAR SUPPORT ADJUSTER ASSEMBLY

(a) Install the lumbar support adjuster with the 2 screws.

(b) Connect the connector.

8. INSTALL SEAT POSITION SENSOR (for Driver Side) (See page RS-485)

9. INSTALL SEAT SLIDE POSITION SENSOR PROTECTOR

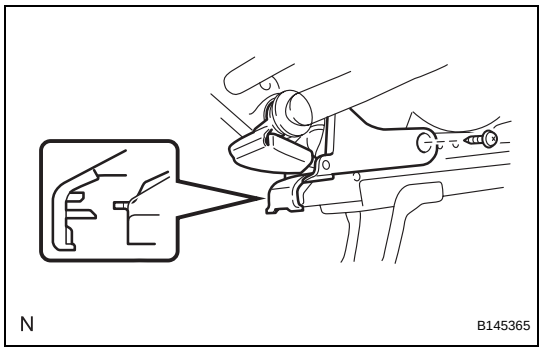

10. INSTALL FRONT SEAT LOWER CUSHION SHIELD LH

(a) Engage the hook.

(b) Install the front seat lower cushion shield LH with the screw.

11. INSTALL FRONT SEAT LOWER CUSHION SHIELD RH

HINT:

Use the same procedure for the RH side and the LH side.

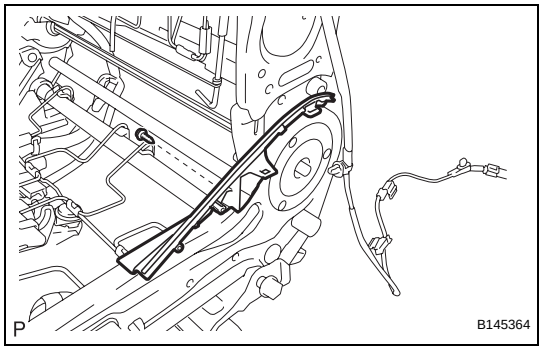

12. INSTALL RECLINING ADJUSTER INSIDE COVER LH

(a) Install the reclining adjuster inside cover LH with the screw.

13. INSTALL RECLINING ADJUSTER INSIDE COVER RH

HINT:

Use the same procedure for the RH side and the LH side.

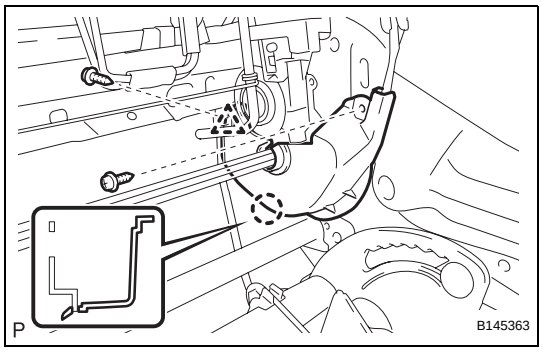

14. INSTALL SEAT RECLINING ADJUSTER INSIDE COVER LH

(a) Engage the claw and clamp.

(b) Install the reclining adjuster inside cover LH with the 2 screws.

15. INSTALL SEAT RECLINING ADJUSTER INSIDE COVER RH

HINT:

Use the same procedure for the RH side and the LH side.

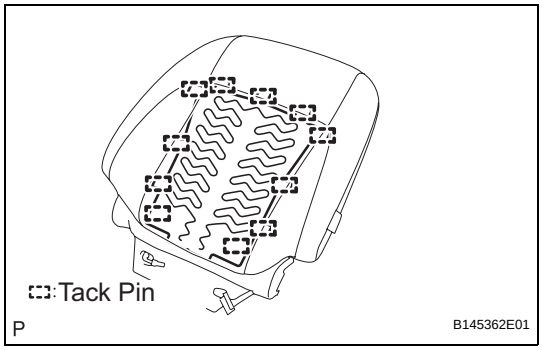

16. INSTALL FRONT SEATBACK HEATER ASSEMBLY (w/ Climate Control Seat System)

(a) Using a tracker, install the front seatback heater to the end of the seat cover with the 11 new tack pins.

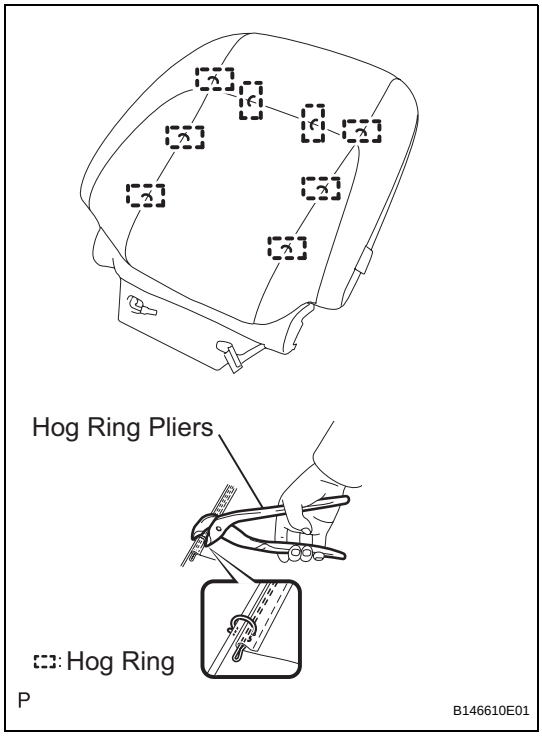

17. INSTALL FRONT SEPARATE TYPE SEATBACK COVER

(a) Using hog ring pliers, install the front separate type seatback cover with 8 new hog rings.

NOTICE:

- **Be careful not to damage the cover.**
- **When installing the hog rings, take care to minimize wrinkles as much as possible.**

18. INSTALL FRONT SEPARATE TYPE SEATBACK COVER WITH PAD

(a) Install the front separate type seatback cover with pad to the front seatback spring assembly.

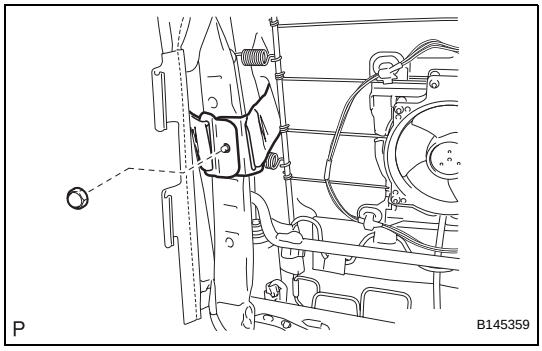

(b) Install the front seatback cover bracket with the nut.

Torque: 5.0 N*m (51 kgf*cm, 44 in.*lbf)

NOTICE:

- **For vehicles with side airbags, the side airbags may not be activated normally unless the front seatback cover is securely installed.**
- **Check that the strap is not twisted after installing the bracket.**
- **Install the bracket securely.**

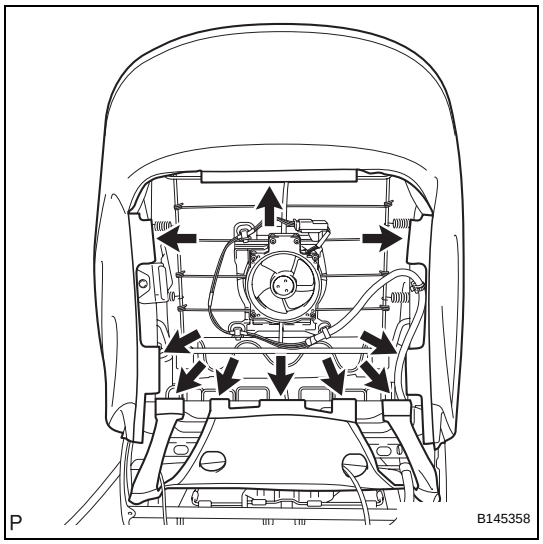

(c) Engage the hooks.

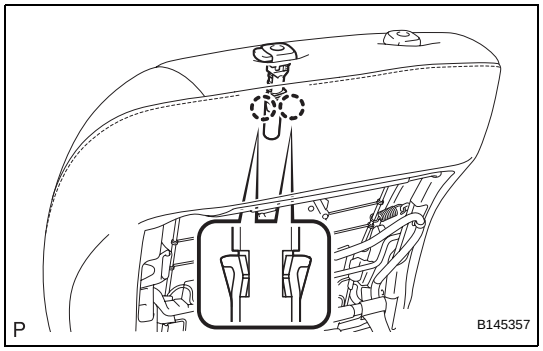

19. INSTALL FRONT SEAT HEADREST SUPPORT

(a) Engage the 2 claws to install the front seat headrest support.

20. INSTALL FRONT SEAT HEADREST SUPPORT

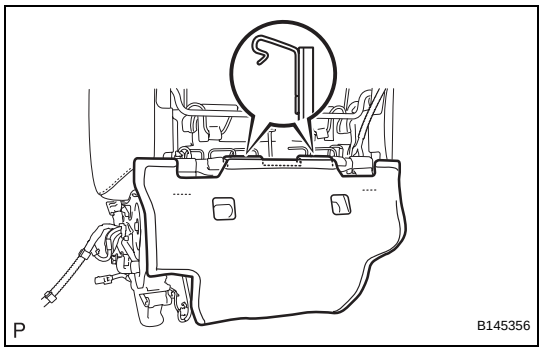

21. INSTALL FRONT SEATBACK BOARD COVER SUB-ASSEMBLY

(a) Engage the 2 hooks and install the front seatback board cover sub-assembly.

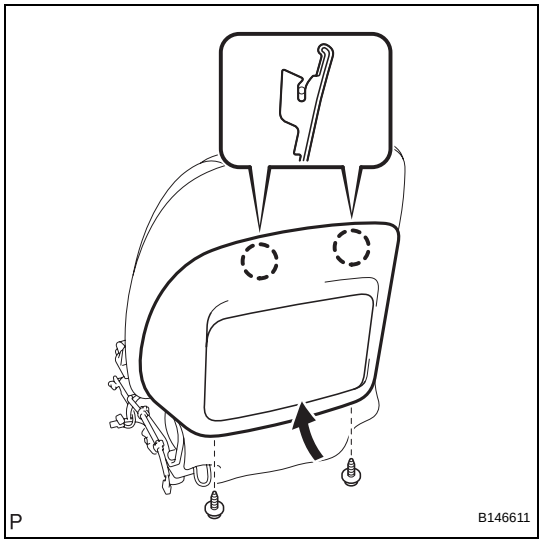

22. INSTALL FRONT SEATBACK BOARD SUB-ASSEMBLY

(a) Engage the 2 claws.

(b) Install the front seatback board sub-assembly with the 2 screws.

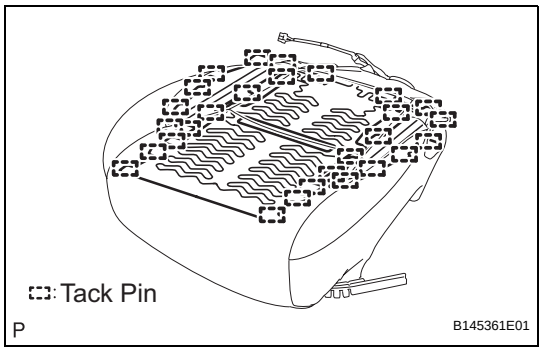

23. INSTALL FRONT SEAT CUSHION HEATER ASSEMBLY (w/ Climate Control Seat System)

(a) Using a tacker, install the front seat cushion heater to the end of the seat cover with the 28 new tack pins.

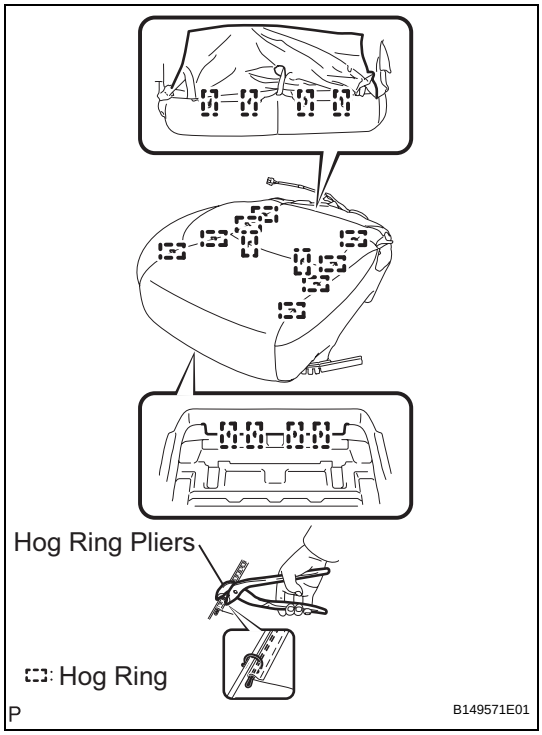

24. INSTALL FRONT SEPARATE TYPE SEAT CUSHION COVER (w/o Seat Cushion Front Edge Adjustment Function)

(a) Using hog ring pliers, install 18 new hog rings.
NOTICE:
- **Be careful not to damage the cover.**
- **When installing the hog rings, take care to minimize wrinkles as much as possible.**

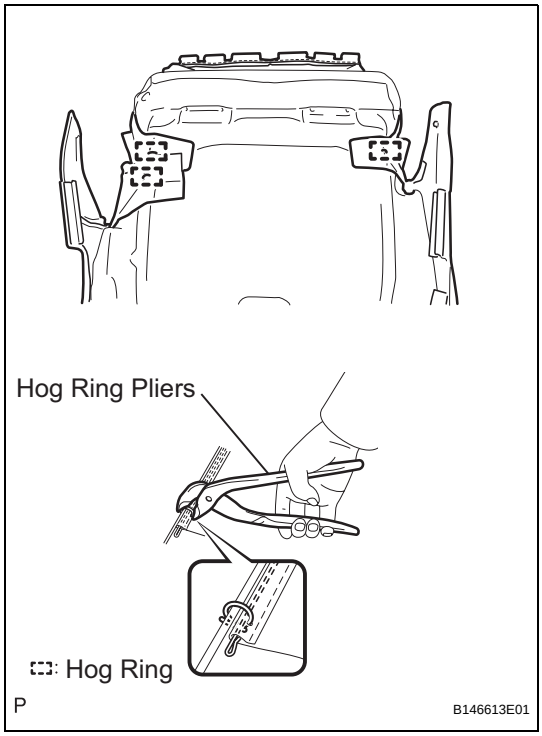

(b) Using hog ring pliers, install 3 new hog rings.
NOTICE:
- **Be careful not to damage the cover.**
- **When installing the hog rings, take care to minimize wrinkles as much as possible.**

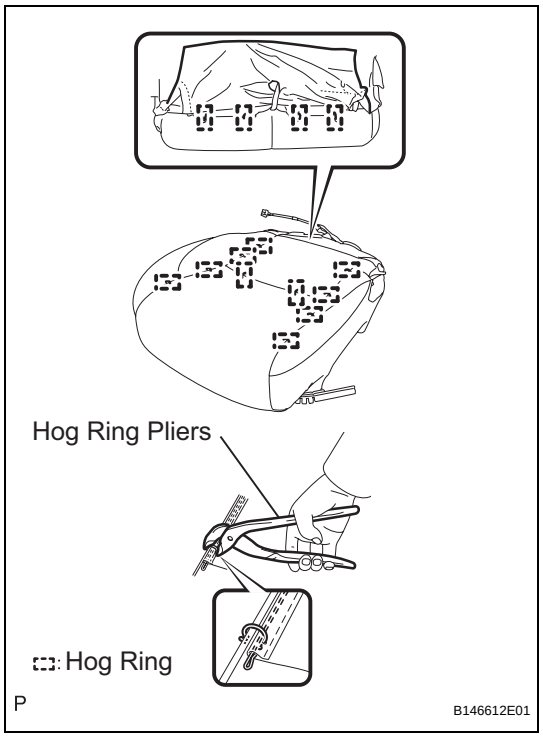

25. INSTALL FRONT SEPARATE TYPE SEAT CUSHION COVER (w/ Seat Cushion Front Edge Adjustment Function)

(a) Using hog ring pliers, install 14 new hog rings.
NOTICE:
- **Be careful not to damage the cover.**
- **When installing the hog rings, take care to minimize wrinkles as much as possible.**

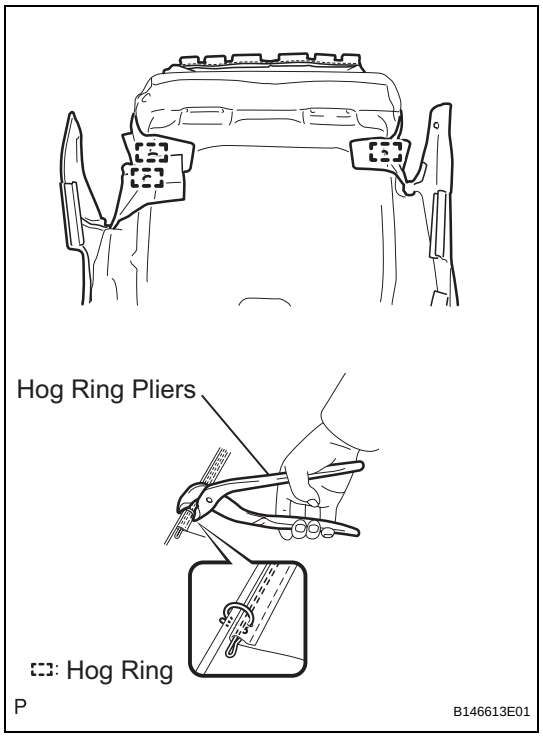

(b) Using hog ring pliers, install 3 new hog rings.
NOTICE:
- **Be careful not to damage the cover.**
- **When installing the hog rings, take care to minimize wrinkles as much as possible.**

26. INSTALL FRONT SEAT CUSHION ASSEMBLY (See page RS-495)

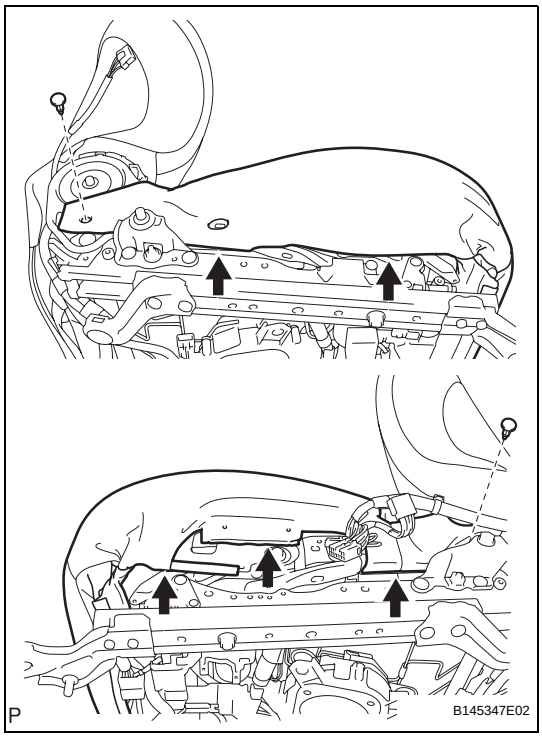

27. INSTALL FRONT SEPARATE TYPE SEAT CUSHION COVER WITH PAD (w/o Seat Cushion Front Edge Adjustment Function)

(a) Engage the hooks.

(b) Install the 2 clips.

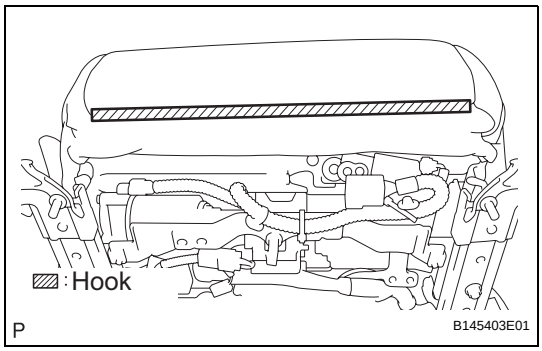

(c) Engage the hook.

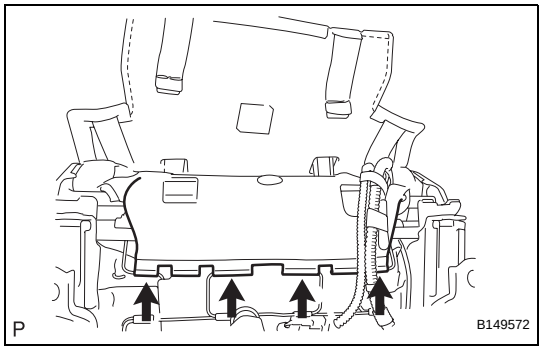

(d) Engage the 4 clamps.

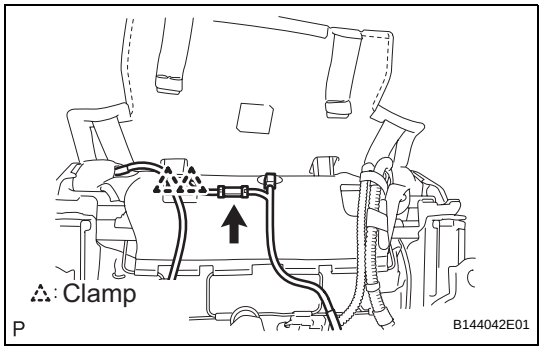

(e) Connect the connector and engage the 2 clamps.

SE

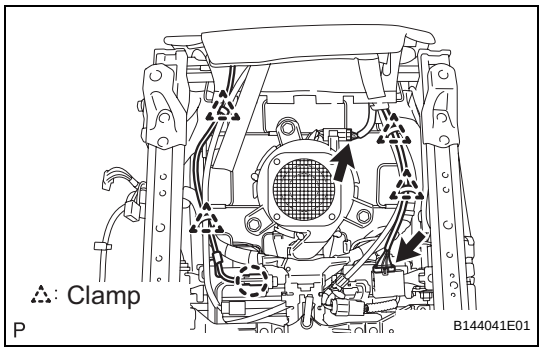

(f) Engage the 4 clamps and claw.
(g) Connect the 2 connectors.

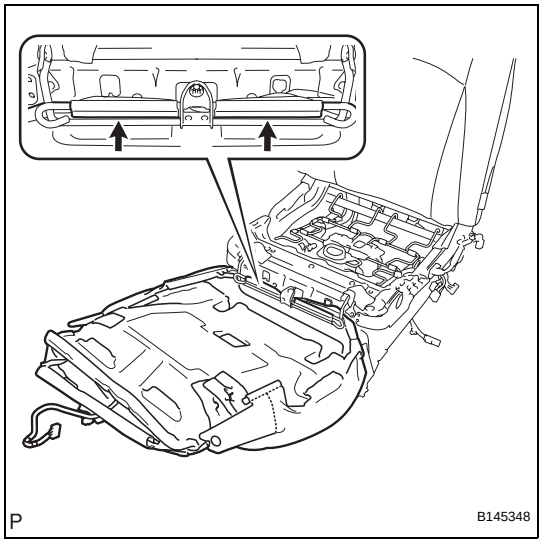

28. INSTALL FRONT SEPARATE TYPE SEAT CUSHION COVER WITH PAD (w/ Seat Cushion Front Edge Adjustment Function)

(a) Engage the 2 hooks to install the front separate type seat cushion cover with pad.
NOTICE:
- **Be careful not to damage the cover.**
- **When installing the hog rings, take care to minimize wrinkles as much as possible.**

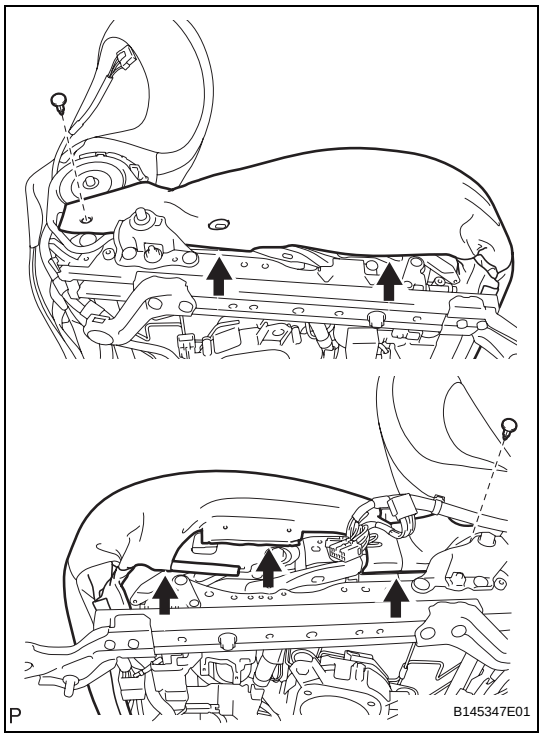

(b) Engage the hooks.
(c) Install the 2 clips.

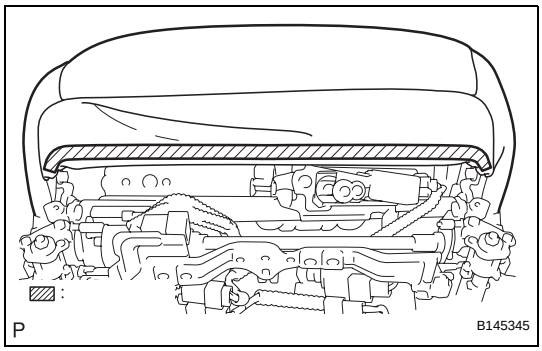

(d) Engage the hook.

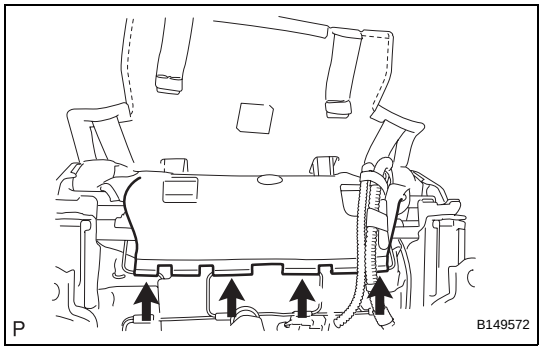

(e) Engage the 4 clamps.

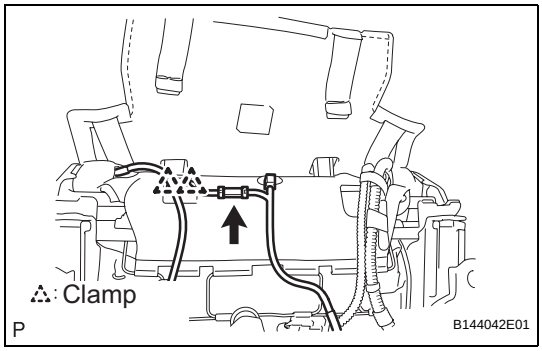

(f) Connect the connector and engage the 2 clamps.

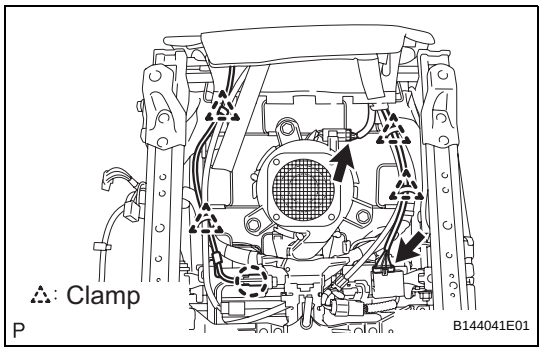

(g) Engage the 4 clamps and claw.
(h) Connect the 2 connectors.

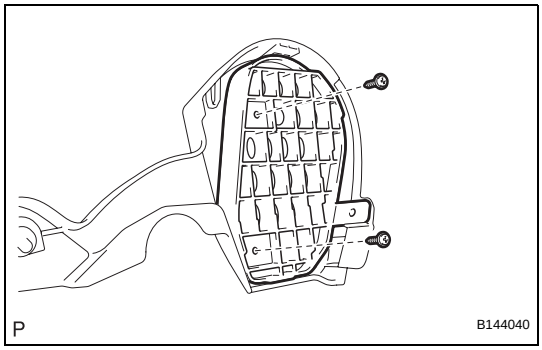

29. INSTALL LOWER NO. 4 SEAT TRACK SPACER

(a) Install the lower No. 4 seat track spacer with the 2 screws.

SE

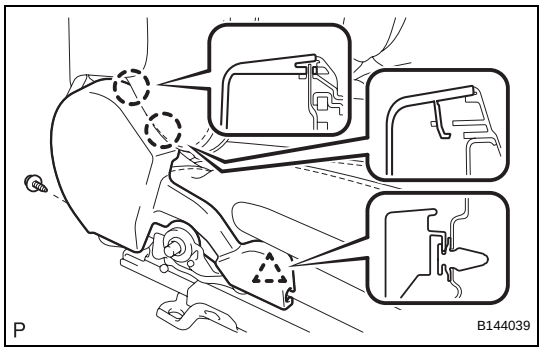

30. INSTALL FRONT SEAT INNER CUSHION SHIELD
(a) Engage the 2 claws and clip.
(b) Install the front seat inner cushion shield with the screw.

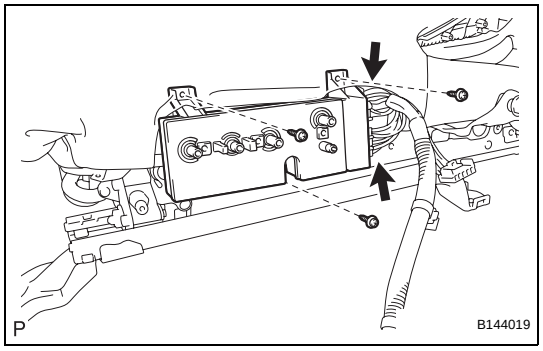

31. INSTALL FRONT POWER SEAT SWITCH (w/ Seat Position Memory System)
(a) Install the power seat switch with the 3 screws.
(b) Connect the 2 connectors.

32. INSTALL FRONT POWER SEAT SWITCH (w/o Seat Position Memory System)
(a) Install the power seat switch with the 3 screws.
(b) Connect the connector.

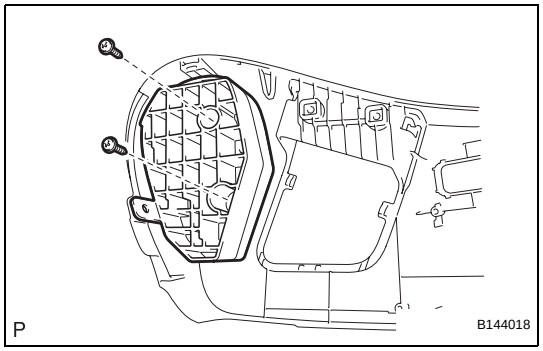

33. INSTALL LOWER NO. 3 SEAT TRACK SPACER
(a) Install the lower No. 3 seat track spacer with the 2 screws.

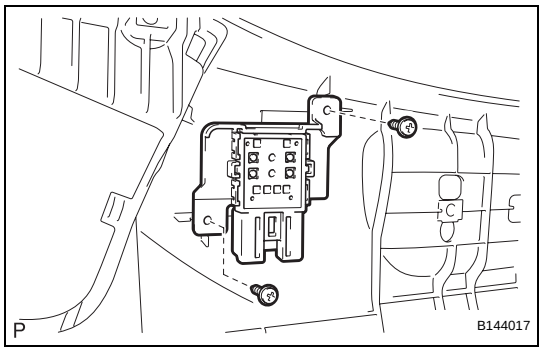

34. INSTALL FRONT POWER SEAT LUMBAR SWITCH
(a) Install the front power seat lumbar switch with the 2 screws.

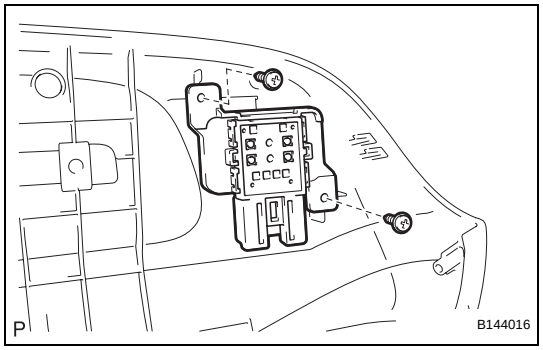

35. INSTALL SEAT VARIABLE CUSHION SWITCH (w/ Seat Cushion Front Edge Adjustment Function)
(a) Install the seat variable cushion switch with the 2 screws.

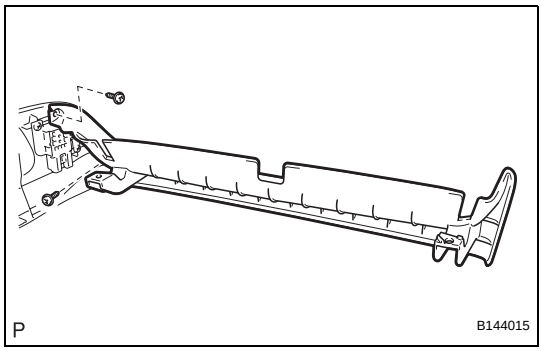

36. INSTALL FRONT INNER NO. 1 SEAT CUSHION SHIELD

(a) Install the front inner No. 1 seat cushion shield with the 2 screws.

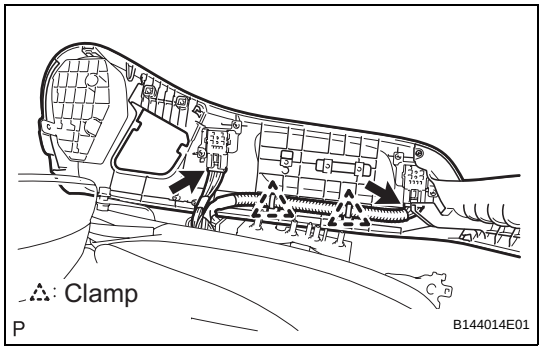

37. INSTALL FRONT SEAT CUSHION SHIELD ASSEMBLY

(a) Connect the 2 clamps and 2 connectors.

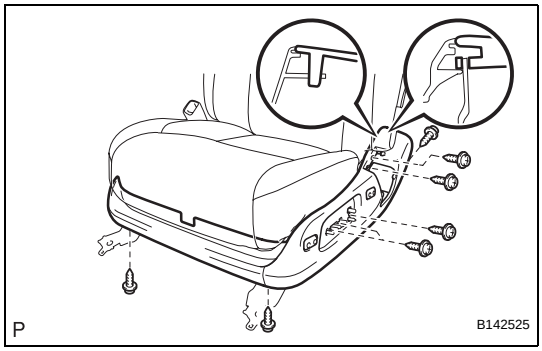

(b) Engage the 2 claws.

(c) Install the front seat cushion shield assembly with the 8 screws.

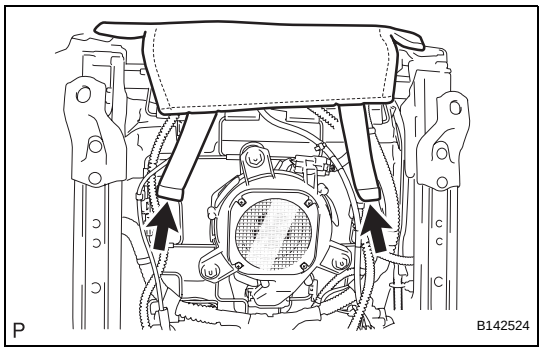

(d) Install the 2 rubber bands on the backside of the front seatback board sub-assembly.

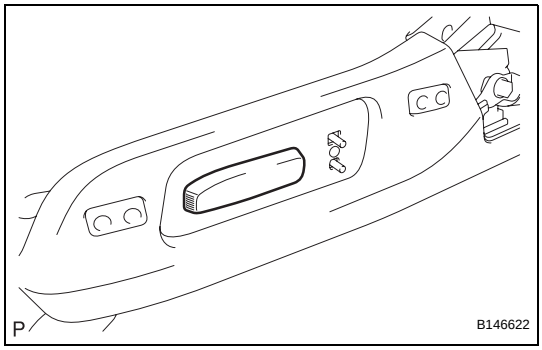

38. INSTALL SLIDE AND VERTICAL POWER SEAT SWITCH KNOB

(a) Install the slide and vertical power seat switch knob.

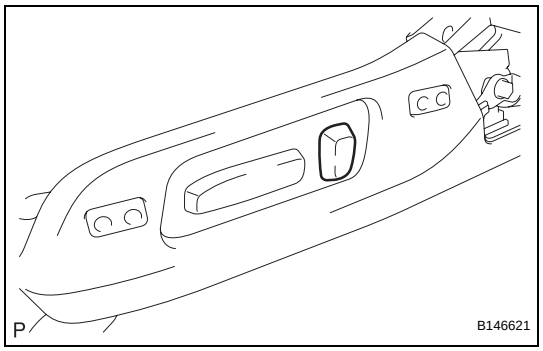

39. INSTALL RECLINING POWER SEAT SWITCH KNOB

(a) Install the reclining power seat switch knob.

40. INSTALL OCCUPANT DETECTION ECU (See page RS-502)

41. INSTALL FRONT SEAT INNER BELT ASSEMBLY (See page SB-24)

INSTALLATION

1. INSTALL FRONT SEAT ASSEMBLY

(a) Place the seat in the cabin.
(b) Connect the connectors under the seat.
(c) Connect the negative (-) battery terminal.
(d) Move the front seat assembly fully forward by operating the slide and vertical power seat switch knob.
NOTICE:
Check that the seat is locked.

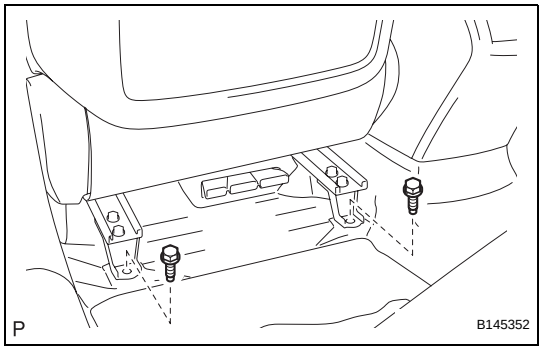

(e) Temporarily install the front side of the front seat assembly with the 2 bolts.
(f) Move the front seat assembly fully forward by operating the slide and vertical power seat switch knob.
NOTICE:
Check that the seat is locked.

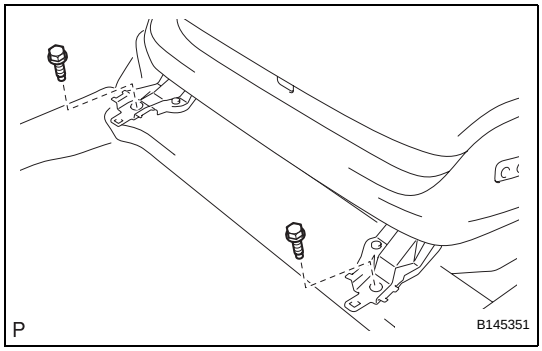

(g) Temporarily install the rear side of the front seat assembly with the 2 bolts.
(h) Move the front seat assembly to the rearmost position by operating the slide and vertical power seat switch knob.
NOTICE:
Check that the seat is locked.
(i) Fully tighten the 2 bolts on the front side of the front seat assembly in the order of the inner side bolt and then the outer side bolt.
Torque: 37 N*m (377 kgf*cm, 27 ft.*lbf)
(j) Move the front seat assembly fully forward by operating the slide and vertical power seat switch knob.
NOTICE:
Check that the seat is locked.
(k) Fully tighten the 2 bolts on the rear side of the front seat assembly in the order of the inner side bolt and then the outer side bolt.
Torque: 37 N*m (377 kgf*cm, 27 ft.*lbf)

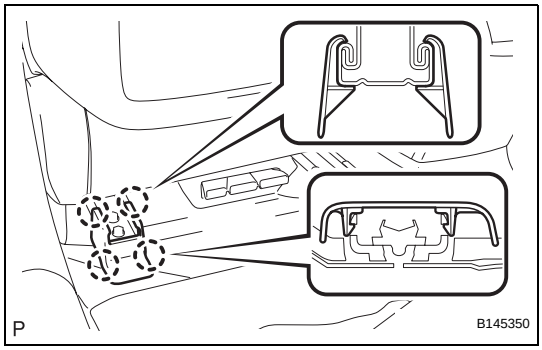

2. INSTALL FRONT SEAT REAR OUTER TRACK BRACKET COVER

(a) Engage the 4 claws and install the front seat rear outer track cover.

3. INSTALL FRONT SEAT REAR INNER TRACK BRACKET COVER

(a) Engage the 4 claws and install the inner seat track bracket cover.

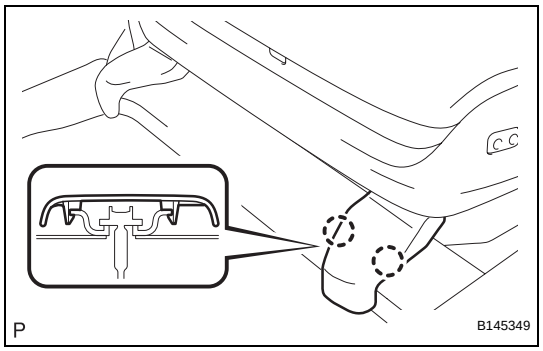

4. INSTALL FRONT SEAT OUTER TRACK BRACKET COVER

(a) Move the front seat assembly to the rearmost position by operating the slide and vertical power seat switch knob.

(b) Engage the 2 claws and install the front seat outer track bracket cover.

5. INSTALL FRONT SEAT INNER TRACK BRACKET COVER

(a) Engage the 2 claws and install the front seat inner track bracket cover.

6. INSTALL FRONT SEAT HEADREST ASSEMBLY

7. CONNECT FRONT SEAT OUTER BELT ASSEMBLY (See page SB-31)

8. INSTALL SEAT BELT ANCHOR COVER CAP (See page SB-31)

9. PERFORM INITIALIZATION

NOTICE:

Some systems need initialization after reconnecting the negative battery cable (See page IN-33).

10. INSPECT FRONT SEAT ASSEMBLY

(a) Check the power seat operation.

(b) Check the seat heater operation (with seat heater system).

(1) Turn the engine switch on (IG).

(2) Turn the seat heater switch ON.

(3) Wait 5 minutes or more and confirm that the seat surface becomes warm.

11. INSPECT SRS WARNING LIGHT

(See page RS-37)

Driver Side Power Seat Motor Circuit

DESCRIPTION

When the power seat control switch is operated, a command signal is sent to the front power seat switch LH (position control ECU). The front power seat switch LH (position control ECU) then controls the appropriate seat motor as needed. This memory system does not use a seat position sensor. The seat position is detected by counting pulses that are output when the motor turns. If there is no pulse output from the motor, the motor will stop operating. The front power seat switch LH (position control ECU) is designed so that any malfunction of the seat memory system will not interfere with manual seat control. If the front power seat switch LH (position control ECU) detects a low motor speed, abnormal activity, or sudden motor current fluctuation, the system will stop the motor. If the motor operates continuously for 120 seconds or more, the system will stop the motor until the switch is turned on again.

WIRING DIAGRAM

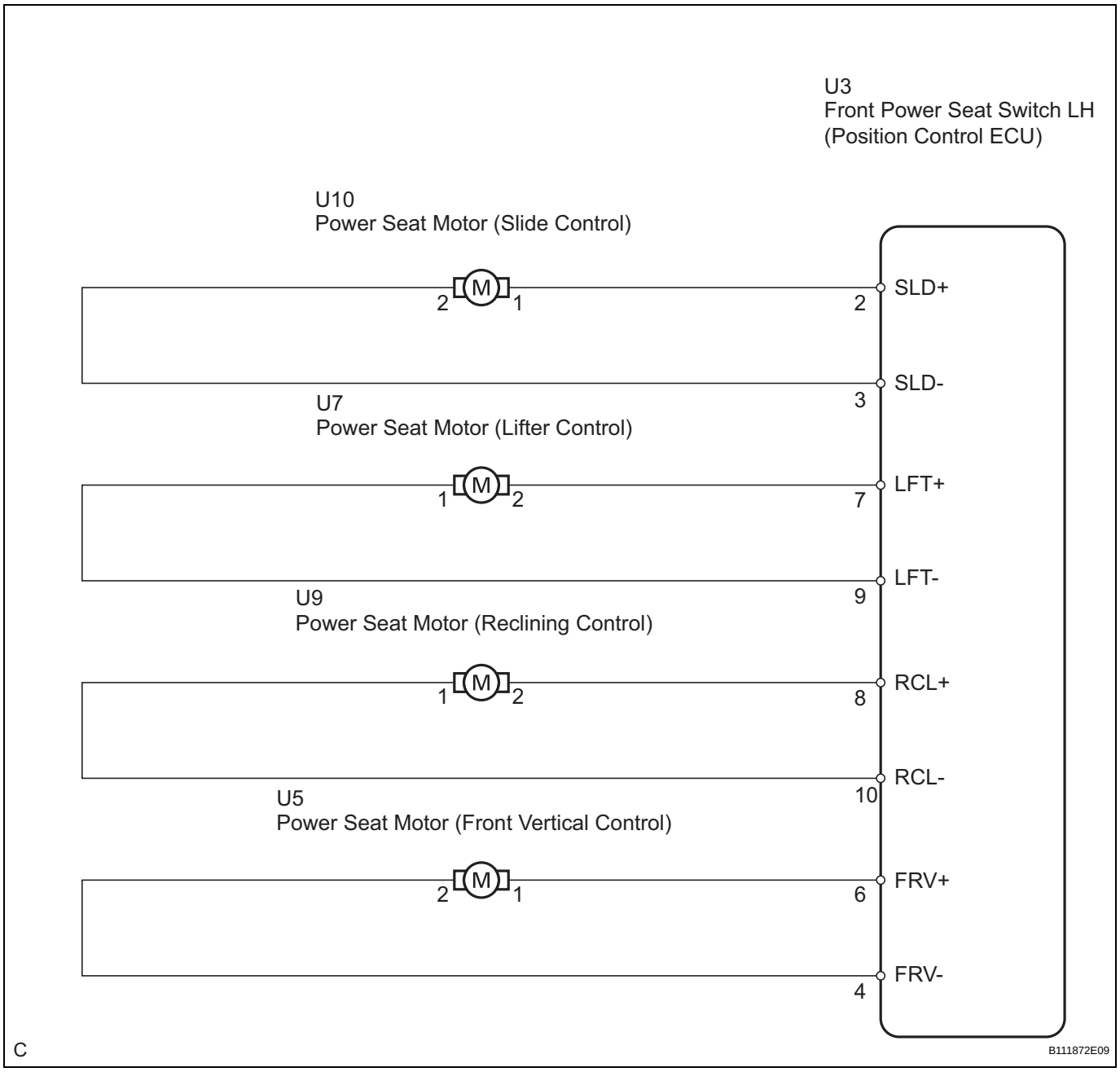

SE

INSPECTION PROCEDURE

1	PERFORM ACTIVE TEST BY INTELLIGENT TESTER (FRONT POWER SEAT SWITCH LH (POSITION CONTROL ECU))

(a) Connect the intelligent tester (with CAN VIM) to the DLC3.
(b) Turn the engine switch on (IG).
(c) Perform the ACTIVE TEST by following the directions on the tester screen.

D-SEAT:

Tester Display	Test Part	Control Range	Diagnostic Note
SLIDE	Seat sliding operation	FRONT / REAR	-
F VERTICAL	Seat front vertical operation	UP / DOWN	-
LIFTER	Seat lifer operation	UP / DOWN	-
RECLINING	Seat reclining operation	FRONT / REAR	-

OK:
Each power seat motor operates.

NG → **Go to step 2**

OK

PROCEED TO NEXT CIRCUIT INSPECTION SHOWN IN PROBLEM SYMPTOMS TABLE

2	INSPECT FRONT SEAT ADJUSTER SUB-ASSEMBLY (POWER SEAT MOTOR)

(a) Inspect the power seat motor (See page SE-95).
OK:
The power seat motor operates.

NG → **REPLACE FRONT SEAT ADJUSTER SUB-ASSEMBLY (POWER SEAT MOTOR)**

OK

3 CHECK WIRE HARNESS (FRONT POWER SEAT SWITCH LH - POWER SEAT MOTOR)

Front Power Seat Switch LH (Position Control ECU) Connector:

Wire Harness Rear View:

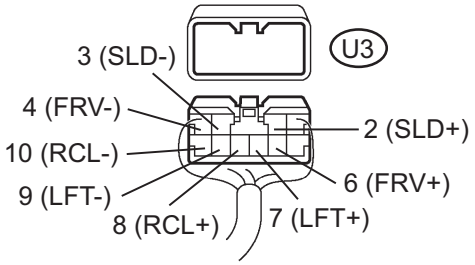

Power Seat Motor Connector:

Wire Harness Front View:

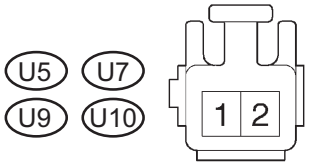

B128715E07

(a) Disconnect the front power seat switch LH (position control ECU) connector and power seat motor connectors.

(b) Measure the resistance according to the value(s) in the table below.

Standard resistance

Tester Connection	Condition	Specified Condition
U3-2 (SLD+) - U10-1	Always	Below 1 Ω
U3-3 (SLD-) - U10-2	Always	Below 1 Ω
U3-4 (FRV-) - U5-2	Always	Below 1 Ω
U3-6 (FRV+) - U5-1	Always	Below 1 Ω
U3-7 (LFT+) - U7-2	Always	Below 1 Ω
U3-9 (LFT-) - U7-1	Always	Below 1 Ω
U3-8 (RCL+) - U9-2	Always	Below 1 Ω
U3-10 (RCL-) - U9-1	Always	Below 1 Ω
U3-2 (SLD+) - Body ground	Always	10 kΩ or higher
U3-3 (SLD-) - Body ground	Always	10 kΩ or higher
U3-4 (FRV-) - Body ground	Always	10 kΩ or higher
U3-6 (FRV+) - Body ground	Always	10 kΩ or higher
U3-7 (LFT+) - Body ground	Always	10 kΩ or higher
U3-9 (LFT-) - Body ground	Always	10 kΩ or higher
U3-8 (RCL+) - Body ground	Always	10 kΩ or higher
U3-10 (RCL-) - Body ground	Always	10 kΩ or higher

NG → **REPAIR OR REPLACE HARNESS OR CONNECTOR**

OK

PROCEED TO NEXT CIRCUIT INSPECTION SHOWN IN PROBLEM SYMPTOMS TABLE

REAR SEAT ASSEMBLY

COMPONENTS

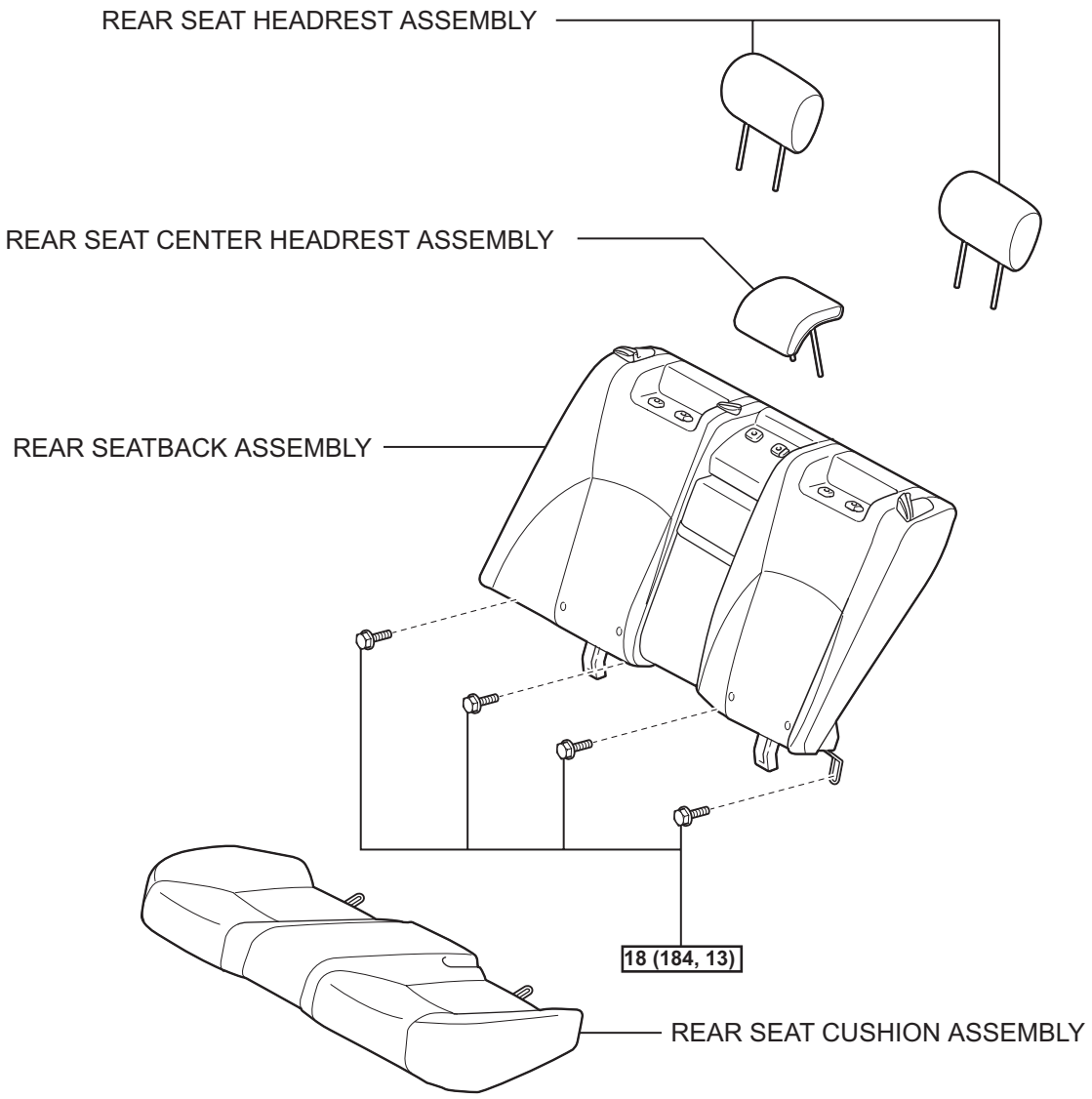

N*m (kgf*cm, ft.*lbf) : Specified torque

P

B145388E03

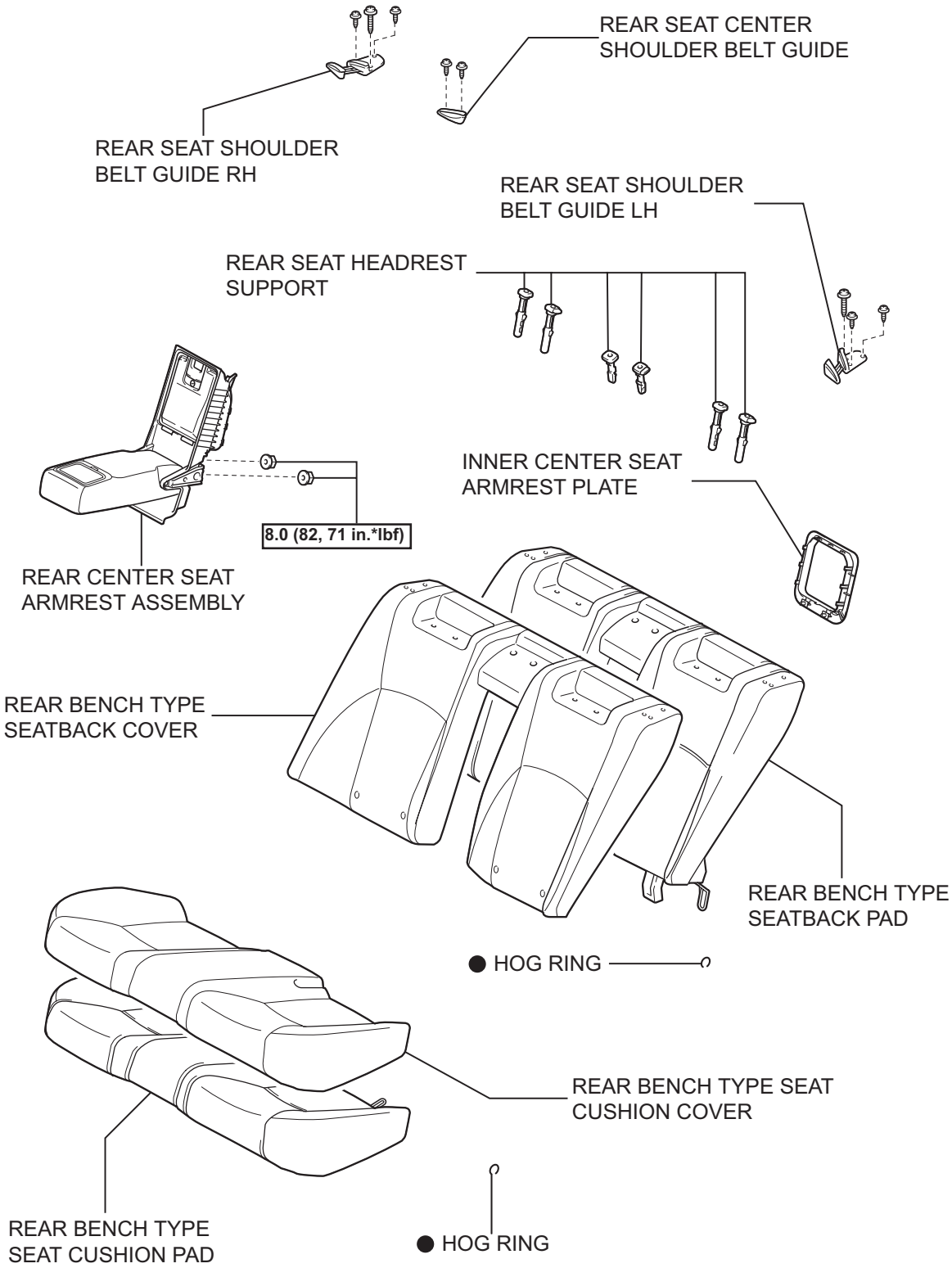

● Non-reusable part N*m (kgf*cm, ft.*lbf) : Specified torque

P B145389E01

SE

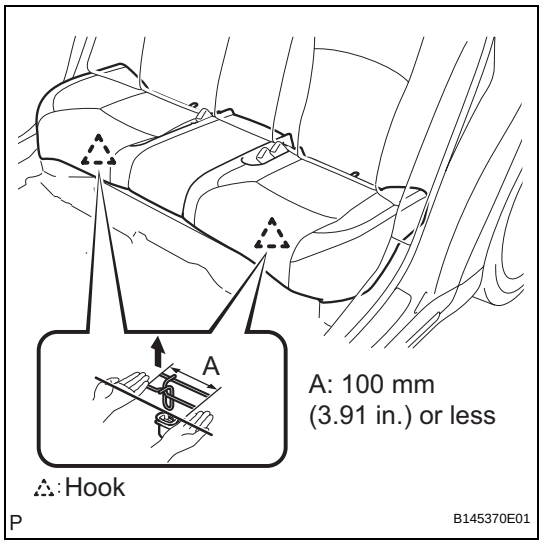

REMOVAL

1. REMOVE REAR SEAT CUSHION ASSEMBLY

(a) Detach the 2 front hooks of the rear seat cushion assembly from the vehicle body.

NOTICE:

Follow the instructions below carefully as the cushion frame deforms easily.

(1) Choose a hook to detach first. Place your hands near the hook as shown in the illustration. Then lift the seat cushion to detach the hook.

(2) Repeat for the other hook.

(b) Detach the 2 rear hooks of the seat cushion from the seatback.

(c) Remove the seat cushion.

2. REMOVE REAR SEAT HEADREST ASSEMBLY

3. REMOVE REAR SEAT CENTER HEADREST ASSEMBLY

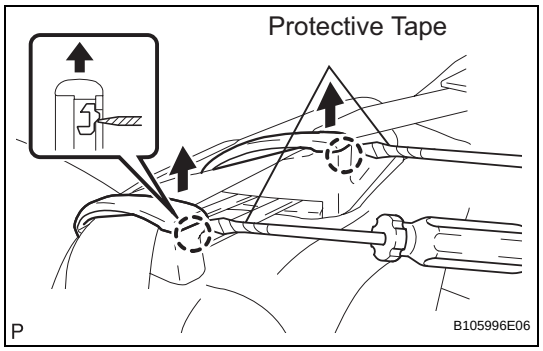

4. REMOVE REAR SEATBACK ASSEMBLY

(a) Using a screwdriver, detach the claws to open the caps of the rear seat shoulder belt guide RH.

(b) Remove the 3 screws and rear seat shoulder belt guide RH.

HINT:

- Tape the screwdriver tip before use.
- Use the same procedure for the LH side and RH side

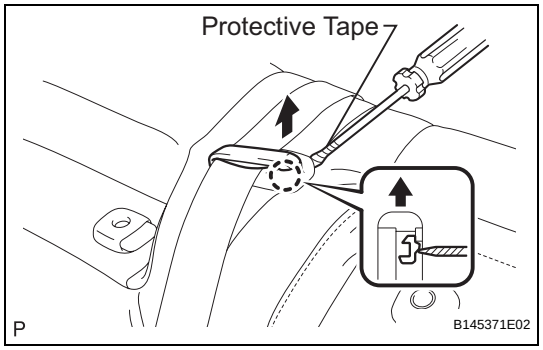

(c) Using a screwdriver, detach the claw to open the cap of the rear seat shoulder belt guide.

HINT:

Tape the screwdriver tip before use.

(d) Remove the 2 screws and rear seat shoulder belt guide.

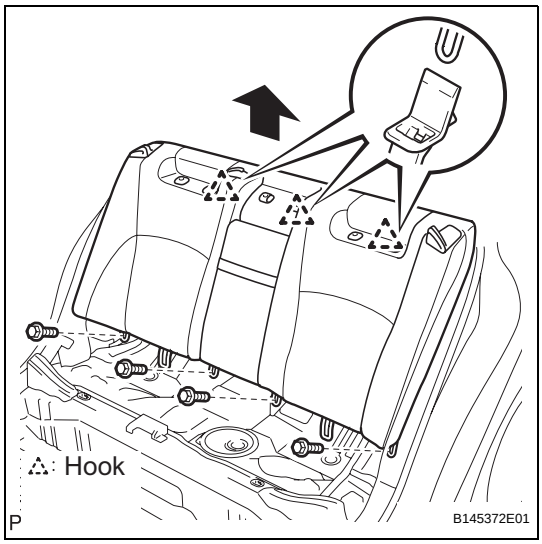

(e) Remove the 4 bolts and rear seatback assembly.
(f) Detach the 3 upper hooks of the rear seatback assembly from the vehicle body.

(b) Using hog ring pliers, install the rear bench type seat cushion cover to the seat cushion frame (with pad) with 33 new hog rings.

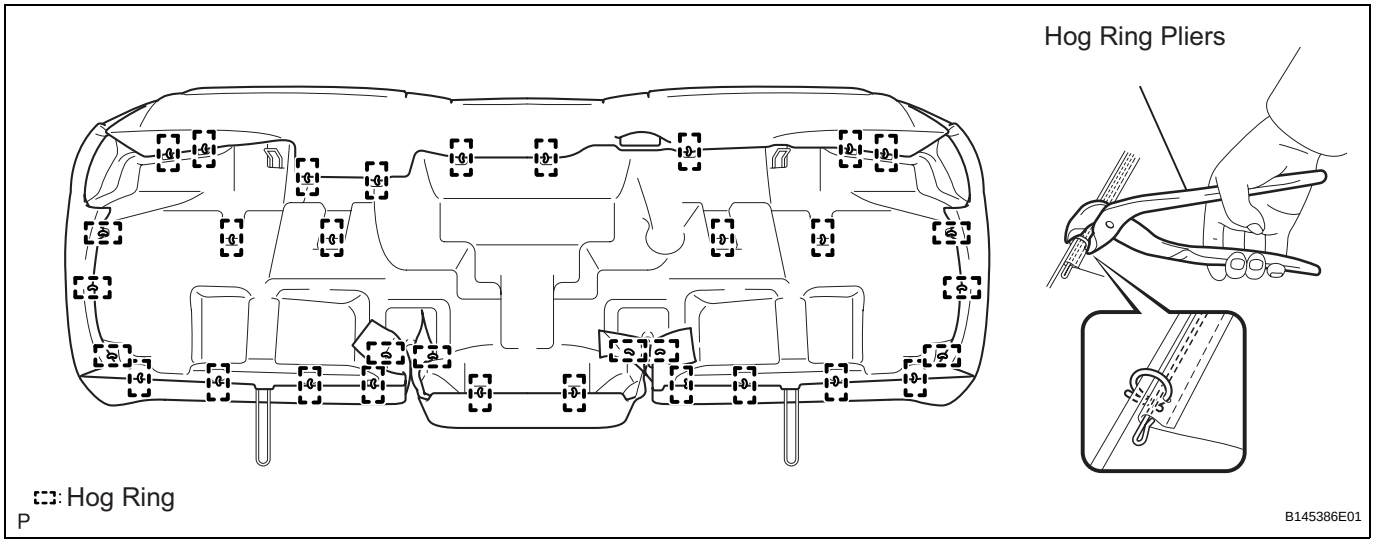

NOTICE:
- **Be careful not to damage the cover.**
- **When installing the hog rings, avoid wrinkling the cover.**

INSTALLATION

1. INSTALL REAR SEATBACK ASSEMBLY

(a) Place the rear seatback assembly in the cabin.
NOTICE:
Be careful not to damage the vehicle body.

(b) Install the rear seatback assembly with the 4 bolts.
Torque: 18 N*m (184 kgf*cm, 13 ft.*lbf)

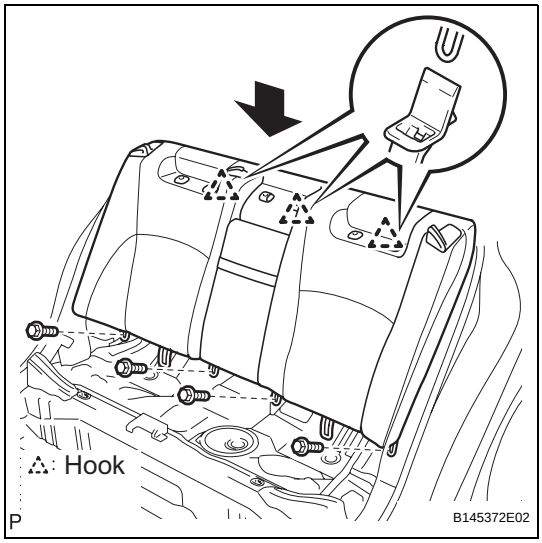

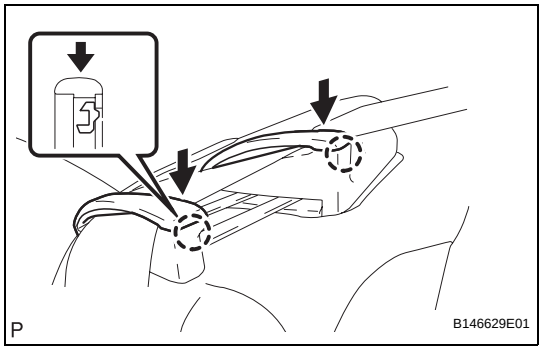

(c) Install the rear seat shoulder belt guide RH with the 3 screws.

(d) Pass the seat belt through and close the caps of the rear seat shoulder belt guide RH.
HINT:
Use the same procedure for the LH side and RH side.

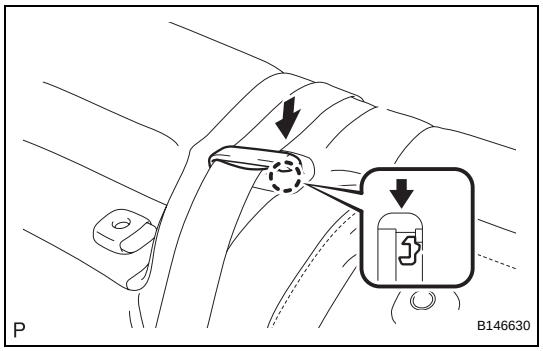

(e) Install the rear seat center shoulder belt guide with the 2 screws.
(f) Pass the seat belt through and close the cap of the rear seat center shoulder belt guide.

2. INSTALL REAR SEAT CENTER HEADREST ASSEMBLY

3. INSTALL REAR SEAT HEADREST ASSEMBLY

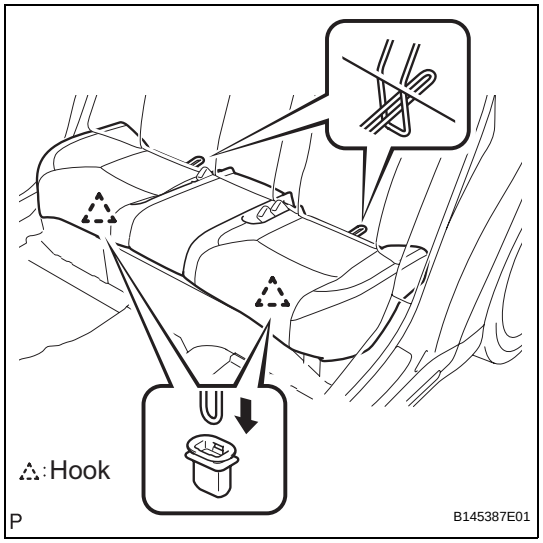

4. INSTALL REAR SEAT CUSHION ASSEMBLY

(a) Attach the 2 rear hooks of the seat cushion to the seatback.
(b) Attach the 2 front hooks of the seat cushion to the vehicle body.
(c) Confirm that the seat cushion is firmly installed.
NOTICE:
When installing the seat cushion, make sure the seat belt buckle is not under the seat cushion.
HINT:
After installing the seat cushion, vertically (up and down) rock the area around the rear seat cushion lock hooks. Make sure that there is no abnormal noise. If abnormal noise is heard, replace the rear seat cushion lock hooks with new ones.

Front Passenger Side Power Seat Motor Circuit

DESCRIPTION

When the power seat control switch is operated, a command signal is sent to the front power seat switch RH (position control ECU). The front power seat switch RH (position control ECU) then controls the appropriate seat motor as needed. This memory system does not use a seat position sensor. The seat position is detected by counting pulses that are output when the motor turns. If there is no pulse output from the motor, the motor will stop operating. The front power seat switch RH (position control ECU) is designed so that any malfunction of the seat memory system will not interfere with manual seat control. If the front power seat switch RH (position control ECU) detects a low motor speed, abnormal activity, or sudden motor current fluctuation, the system will stop the motor. If the motor operates continuously for 120 seconds or more, the system will stop the motor until the switch is turned on again.

WIRING DIAGRAM

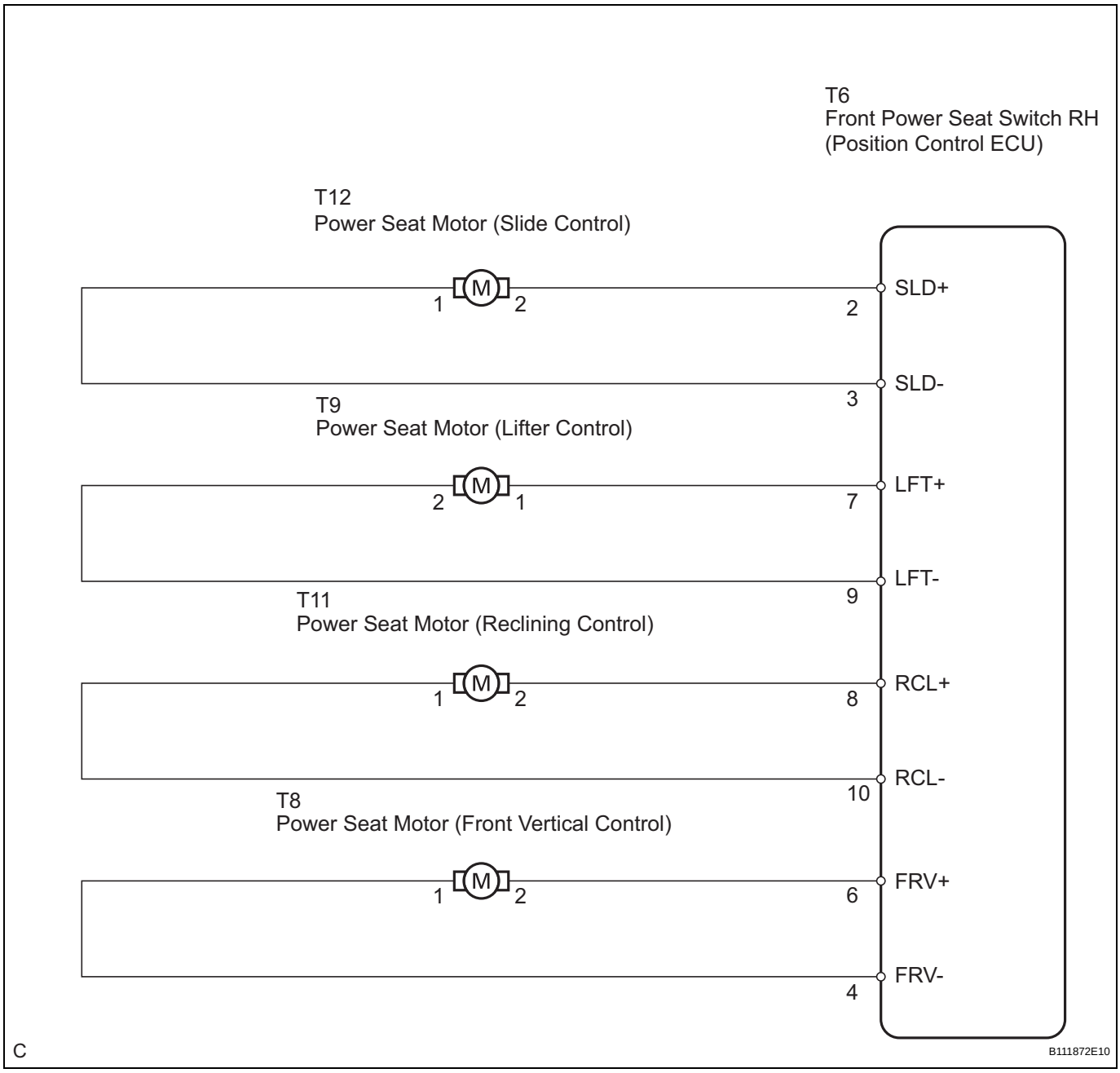

SE

INSPECTION PROCEDURE

1	PERFORM ACTIVE TEST BY INTELLIGENT TESTER (FRONT POWER SEAT SWITCH RH (POSITION CONTROL ECU))

(a) Connect the intelligent tester (with CAN VIM) to the DLC3.
(b) Turn the engine switch on (IG).
(c) Perform the ACTIVE TEST by following the directions on the tester screen.

P-SEAT:

Tester Display	Test Part	Control Range	Diagnostic Note
SLIDE	Seat sliding operation	FRONT / REAR	-
F VERTICAL	Seat front vertical operation	UP / DOWN	-
LIFTER	Seat lifter operation	UP / DOWN	-
RECLINING	Seat reclining operation	FRONT / REAR	-

OK:
Each power seat motor operates.

NG → **Go to step 2**

OK

PROCEED TO NEXT CIRCUIT INSPECTION SHOWN IN PROBLEM SYMPTOMS TABLE

2	INSPECT FRONT SEAT ADJUSTER SUB-ASSEMBLY (POWER SEAT MOTOR)

(a) Inspect the power seat motor (See page SE-96).
OK:
The power seat motor operates.

NG → **REPLACE FRONT SEAT ADJUSTER SUB-ASSEMBLY (POWER SEAT MOTOR)**

OK

3	CHECK HARNESS AND CONNECTOR (FRONT POWER SEAT SWITCH RH - POWER SEAT MOTOR)

Front Power Seat Switch RH (Position Control ECU) Connector:

Wire Harness Rear View:

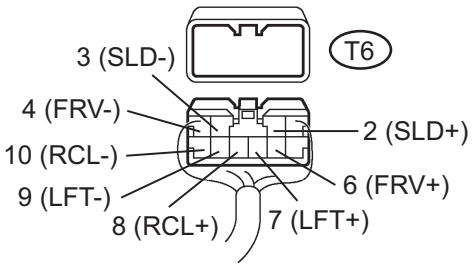

Power Seat Motor Connector:

Wire Harness Front View:

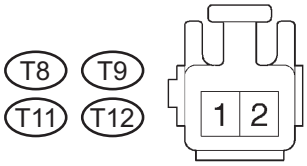

B128715E08

(a) Disconnect the front power seat switch RH (position control ECU) connector and power seat motor connectors.

(b) Measure the resistance according to the value(s) in the table below.

Standard resistance

Tester Connection	Condition	Specified Condition
T6-2 (SLD+) - T12-2	Always	Below 1 Ω
T6-3 (SLD-) - T12-1	Always	Below 1 Ω
T6-4 (FRV-) - T8-1	Always	Below 1 Ω
T6-6 (FRV+) - T8-2	Always	Below 1 Ω
T6-7 (LFT+) - T9-1	Always	Below 1 Ω
T6-9 (LFT-) - T9-2	Always	Below 1 Ω
T6-8 (RCL+) - T11-2	Always	Below 1 Ω
T6-10 (RCL-) - T11-1	Always	Below 1 Ω
T6-2 (SLD+) - Body ground	Always	10 kΩ or higher
T6-3 (SLD-) - Body ground	Always	10 kΩ or higher
T6-4 (FRV-) - Body ground	Always	10 kΩ or higher
T6-6 (FRV+) - Body ground	Always	10 kΩ or higher
T6-7 (LFT+) - Body ground	Always	10 kΩ or higher
T6-9 (LFT-) - Body ground	Always	10 kΩ or higher
T6-8 (RCL+) - Body ground	Always	10 kΩ or higher
T6-10 (RCL-) - Body ground	Always	10 kΩ or higher

NG → **REPAIR OR REPLACE HARNESS OR CONNECTOR**

OK

PROCEED TO NEXT CIRCUIT INSPECTION SHOWN IN PROBLEM SYMPTOMS TABLE

SEAT MEMORY SWITCH

COMPONENTS

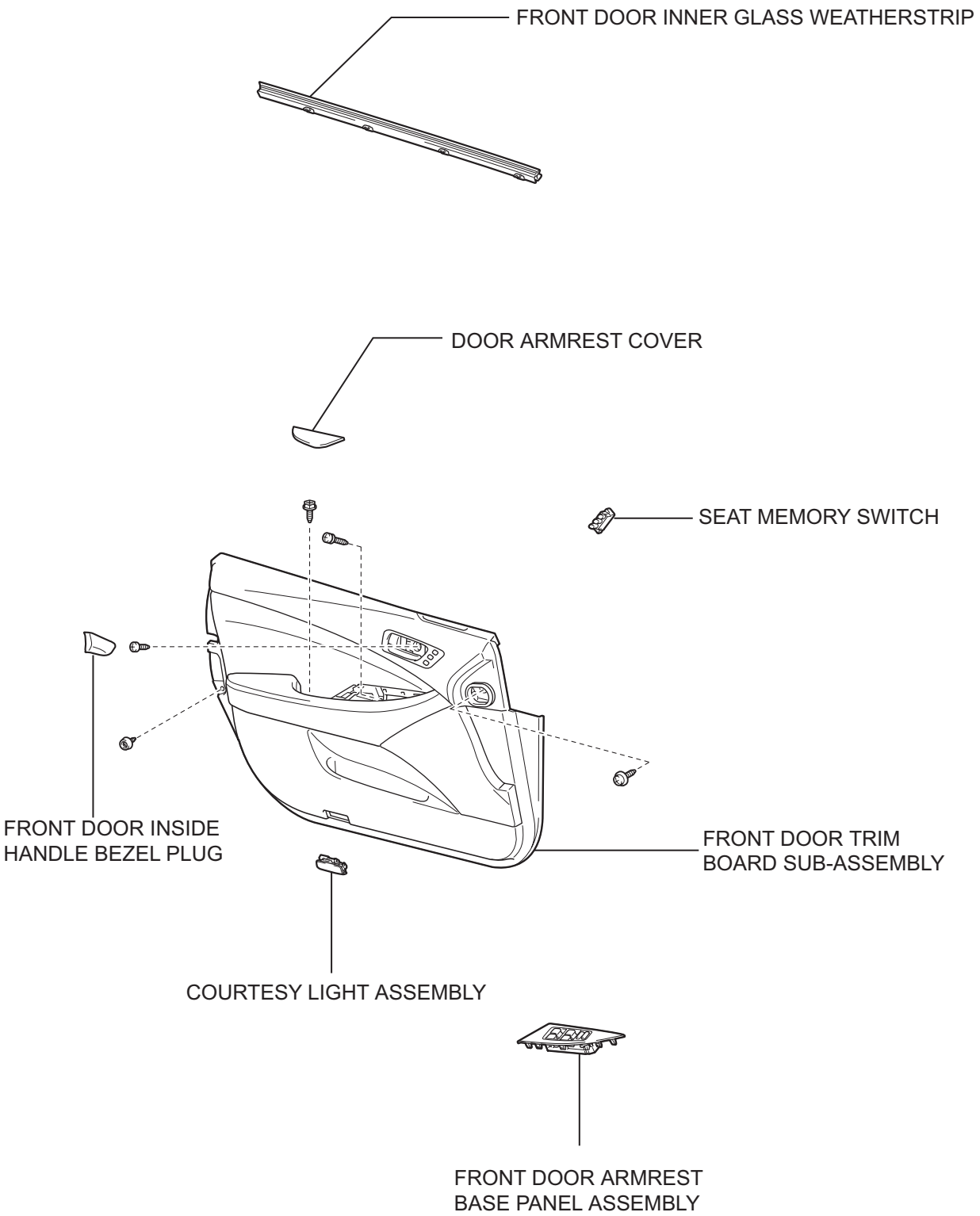

P

B146632E01

REMOVAL

1. **REMOVE FRONT DOOR INSIDE HANDLE BEZEL PLUG (See page ED-32)**
2. **REMOVE FRONT DOOR ARMREST BASE PANEL ASSEMBLY (See page ED-33)**
3. **REMOVE COURTESY LIGHT ASSEMBLY (See page ED-34)**
4. **REMOVE DOOR ARMREST COVER (See page ED-34)**
5. **REMOVE FRONT DOOR TRIM BOARD SUB-ASSEMBLY (See page ED-34)**
6. **REMOVE FRONT DOOR INNER GLASS WEATHERSTRIP (See page ED-35)**
7. **REMOVE SEAT MEMORY SWITCH**
   (a) Remove the 2 screws.
   (b) Disengage the 4 claws of the inside handle.
   HINT:
   The inside handle cannot be removed from the trim board sub-assembly.

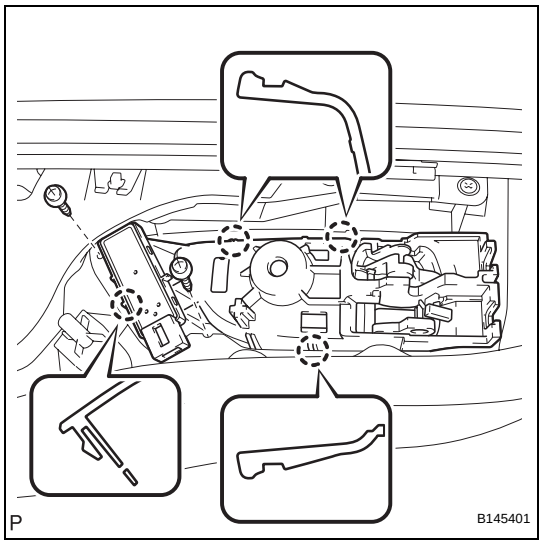

   (c) Disengage the 4 claws, and remove the seat memory switch.

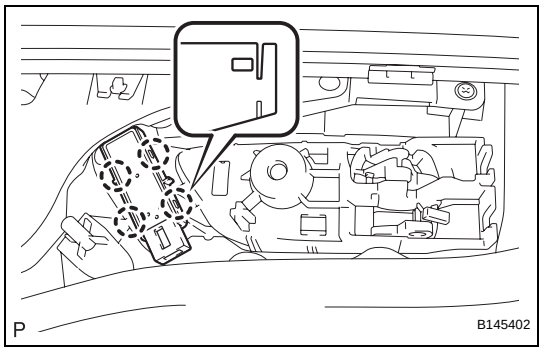

Seat Memory Switch LH:

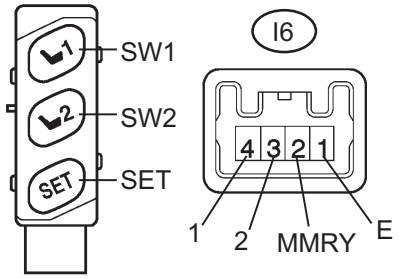

B149663E02

INSPECTION

1. INSPECT SEAT MEMORY SWITCH LH

(a) Measure the resistance according to the value(s) in the table below.

Standard resistance

Tester Connection	Switch Position	Specified Condition
I6-1 (E) - I6-2 (MMRY)	SET switch is pressed	Below 1 Ω
	SET switch is not pressed	10 kΩ or higher
I6-1 (E) - I6-3 (2)	M2 switch is pressed	Below 1 Ω
	M2 switch is not pressed	10 kΩ or higher
I6-1 (E) - I6-4 (1)	M1 switch is pressed	Below 1 Ω
	M1 switch is not pressed	10 kΩ or higher

If the result is not as specified, replace the switch.

Seat Memory Switch RH:

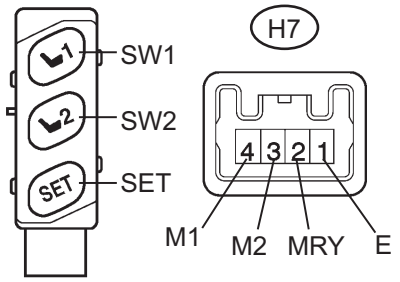

B149663E03

2. INSPECT SEAT MEMORY SWITCH RH

(a) Measure the resistance according to the value(s) in the table below.

Standard resistance

Tester Connection	Switch Position	Specified Condition
H7-1 (E) - H7-2 (MRY)	SET switch is pressed	Below 1 Ω
	SET switch is not pressed	10 kΩ or higher
H7-1 (E) - H7-3 (M2)	M2 switch is pressed	Below 1 Ω
	M2 switch is not pressed	10 kΩ or higher
H7-1 (E) - H7-4 (M1)	M1 switch is pressed	Below 1 Ω
	M1 switch is not pressed	10 kΩ or higher

If the result is not as specified, replace the switch.

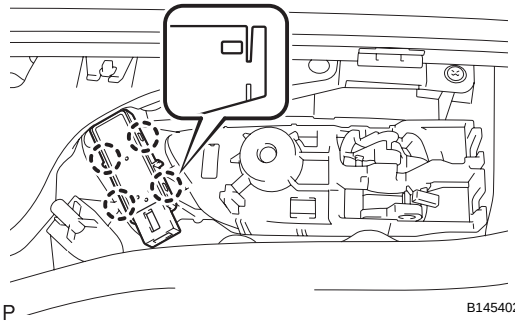

B145402

INSTALLATION

1. INSTALL SEAT MEMORY SWITCH

(a) Install the seat memory switch to the inside handle.

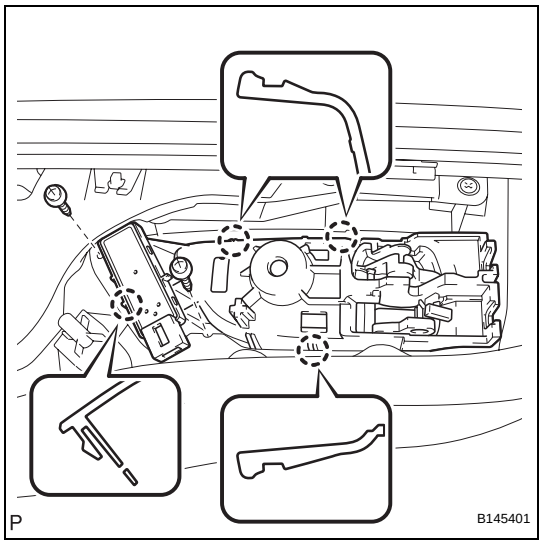

(b) Engage the 4 claws and install the inside handle.
(c) Install the 2 screws.

2. **INSTALL FRONT DOOR INNER GLASS WEATHERSTRIP (See page ED-52)**
3. **INSTALL FRONT DOOR TRIM BOARD SUB-ASSEMBLY (See page ED-52)**
4. **INSTALL DOOR ARMREST COVER (See page ED-53)**
5. **INSTALL COURTESY LIGHT ASSEMBLY (See page ED-53)**
6. **INSTALL FRONT DOOR ARMREST BASE PANEL ASSEMBLY (See page ED-53)**
7. **INSTALL FRONT DOOR INSIDE HANDLE BEZEL PLUG (See page ED-54)**

Driver Side Seat Memory Switch Circuit

DESCRIPTION

The seat memory switch LH sends signals to the outer mirror control ECU via the CAN communication system to memorize a given seat position. This memory system does not use a position sensor. The seat position is detected by counting pulses that are output when the motor turns. If there is no pulse output from the motor, the motor will stop operating. The seat memory switch LH is later used to send signals to the front power seat switch LH (position control ECU) to return the seat to one of the memorized positions. The power seat memory switch LH operation can be performed only when the engine switch is on (IG) and the shift lever is in the P position.

WIRING DIAGRAM

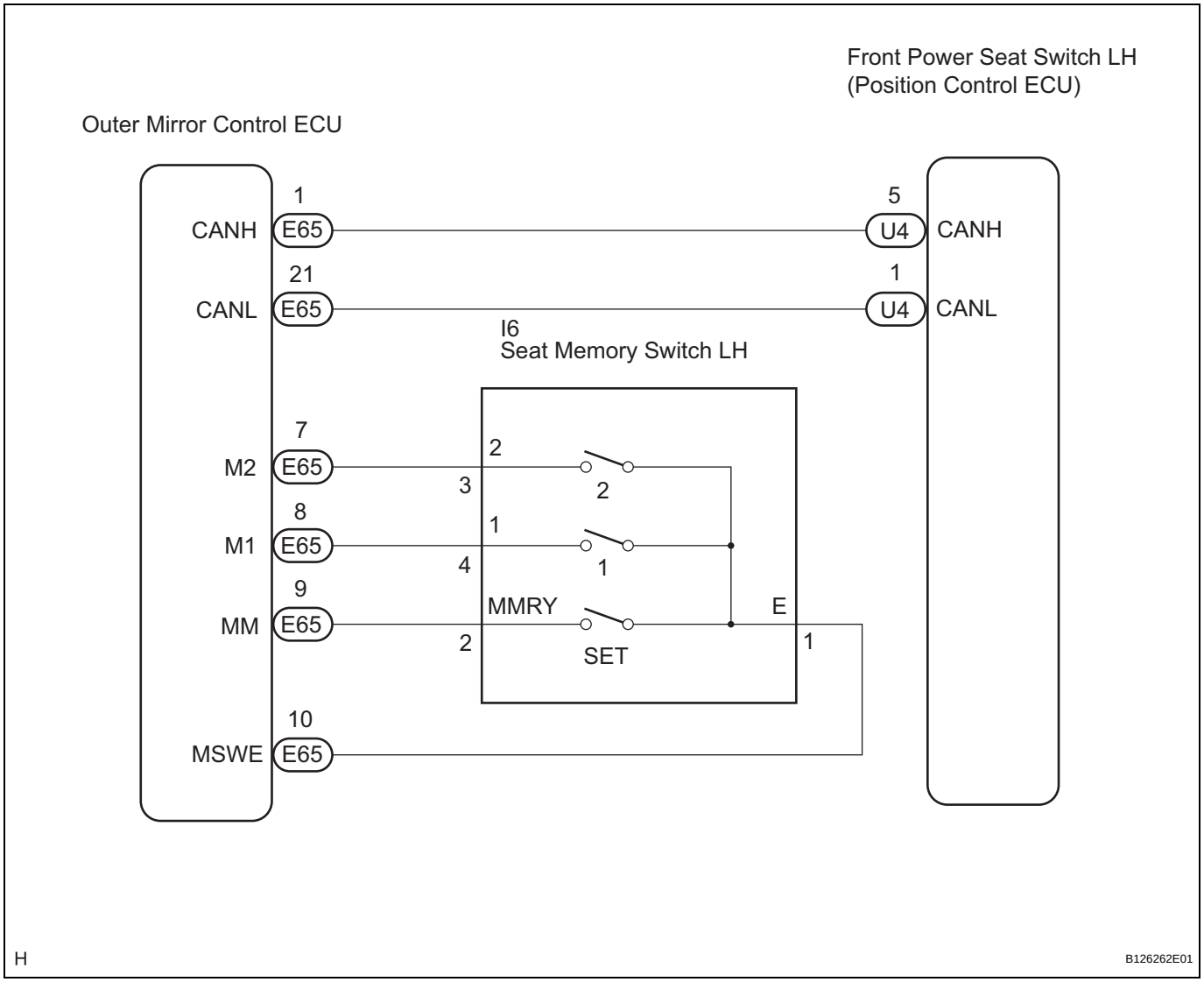

INSPECTION PROCEDURE

1	CHECK FOR DTC (CAN COMMUNICATION SYSTEM)

(a) Check for DTCs in the CAN communication system (See page CA-11).

SE

Result

Result	Proceed to
DTC is not output	A
DTC is output	B

B → **REPAIR CIRCUITS INDICATED BY OUTPUT DTCS**

A

2 READ VALUE OF INTELLIGENT TESTER (SEAT MEMORY SWITCH LH)

(a) Connect the intelligent tester (with CAN VIM) to the DLC3.
(b) Turn the engine switch on (IG).
(c) Read the DATA LIST.

MIRROR:

Tester Display	Measurement Item/Range	Normal Condition	Diagnostic Note
D SET MEMORY	Driver side SET memory switch / ON or OFF	ON: Driver side SET memory switch is ON OFF: Driver side SET memory switch is OFF	-
D MEM 1 SW	Driver side memory switch 1 / ON or OFF	ON: Driver side M1 memory switch is ON OFF: Driver side M1 memory switch is OFF	-
D MEM 2 SW	Driver side memory switch 2 / ON or OFF	ON: Driver side M2 memory switch is ON OFF: Driver side M2 memory switch is OFF	-

OK:
On the tester screen, each item changes between ON and OFF according to the above chart.

NG → **Go to step 3**

OK

SE

PROCEED TO NEXT CIRCUIT INSPECTION SHOWN IN PROBLEM SYMPTOMS TABLE

3 INSPECT SEAT MEMORY SWITCH LH

(a) Remove the seat memory switch LH (See page SE-124).

Seat Memory Switch LH:

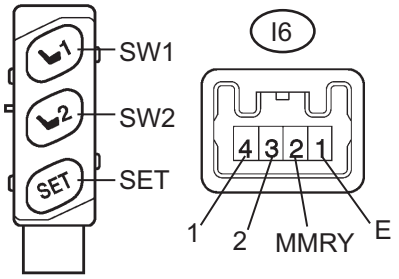

B149663E02

(b) Measure the resistance according to the value(s) in the table below.

Standard resistance

Tester Connection	Switch Position	Specified Condition
I6-1 (E) - I6-2 (MMRY)	SET switch is pressed	Below 1 Ω
	SET switch is not pressed	10 kΩ or higher
I6-1 (E) - I6-3 (2)	M2 switch is pressed	Below 1 Ω
	M2 switch is not pressed	10 kΩ or higher
I6-1 (E) - I6-4 (1)	M1 switch is pressed	Below 1 Ω
	M1 switch is not pressed	10 kΩ or higher

NG → **REPLACE SEAT MEMORY SWITCH LH**

OK

4 CHECK HARNESS AND CONNECTOR (SEAT MEMORY SWITCH LH CIRCUIT)

Wire Harness Rear View:

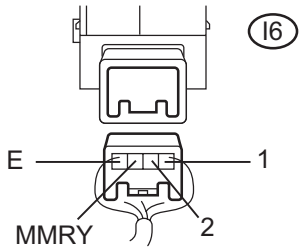

B111886E05

(a) Measure the resistance according to the value(s) in the table below.

Standard resistance

Tester Connection	Condition	Specified Condition
I6-1 (E) - Body ground	Always	Below 1 Ω
I6-1 (E) - I6-2 (MMRY)	Always	10 kΩ or higher
I6-1 (E) - I6-3 (2)	Always	10 kΩ or higher
I6-1 (E) - I6-4 (1)	Always	10 kΩ or higher

NG → **Go to step 5**

OK

PROCEED TO NEXT CIRCUIT INSPECTION SHOWN IN PROBLEM SYMPTOMS TABLE

5	CHECK HARNESS AND CONNECTOR (OUTER MIRROR CONTROL ECU - SEAT MEMORY SWITCH, BODY GROUND)

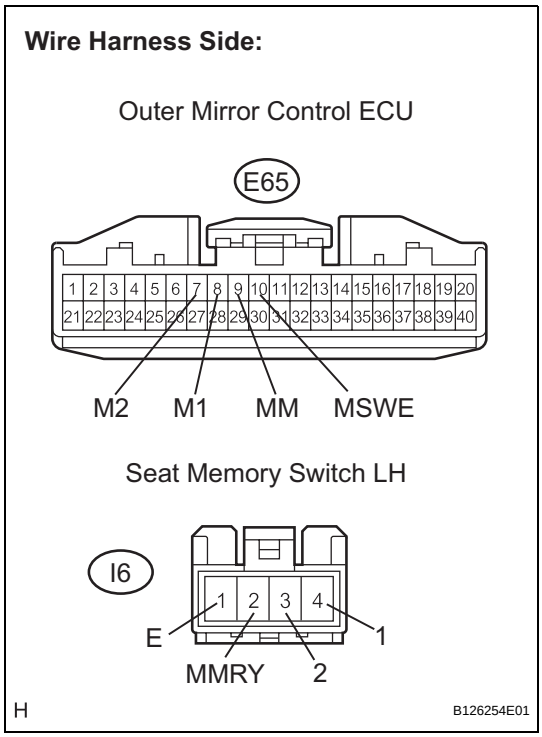

(a) Disconnect the outer mirror control ECU connector.
(b) Measure the resistance according to the value(s) in the table below.

Standard resistance

Tester Connection	Condition	Specified Condition
E65-7 (M2) - I6-3 (2)	Always	Below 1 Ω
E65-8 (M1) - I6-4 (1)	Always	Below 1 Ω
E65-9 (MM) - I6-2 (MMRY)	Always	Below 1 Ω
E65-10 (MSWE) - I6-1 (E)	Always	Below 1 Ω
E65-10 (MSWE) - Body ground	Always	Below 1 Ω
I6-1 (E) - Body ground	Always	Below 1 Ω

NG → **REPAIR OR REPLACE HARNESS OR CONNECTOR**

OK

REPLACE OUTER MIRROR CONTROL ECU

REMOVAL

1. **REMOVE SEAT BELT ANCHOR COVER CAP (See page SB-22)**
2. **DISCONNECT FRONT SEAT OUTER BELT ASSEMBLY (See page SB-22)**
3. **REMOVE FRONT SEAT HEADREST ASSEMBLY**
4. **REMOVE FRONT SEAT OUTER TRACK BRACKET COVER (See page SE-83)**
5. **REMOVE FRONT SEAT INNER TRACK BRACKET COVER (See page SE-83)**
6. **REMOVE FRONT SEAT REAR OUTER TRACK BRACKET COVER (See page SE-83)**
7. **REMOVE FRONT SEAT REAR INNER TRACK BRACKET COVER (See page SE-83)**
8. **REMOVE FRONT SEAT ASSEMBLY (See page SE-83)**
9. **REMOVE RECLINING POWER SEAT SWITCH KNOB (See page SE-84)**
10. **REMOVE SLIDE AND VERTICAL POWER SEAT SWITCH KNOB (See page SE-84)**
11. **REMOVE FRONT SEAT CUSHION SHIELD ASSEMBLY (See page SE-84)**
12. **REMOVE FRONT POWER SEAT SWITCH (w/ Seat Position Memory System)**
    (a) Disconnect the 2 connectors.
    (b) Remove the 3 screws and front power seat switch.
13. **REMOVE FRONT POWER SEAT SWITCH (w/o Seat Position Memory System)**
    (a) Disconnect the connector.
    (b) Remove the 3 screws and power seat switch.

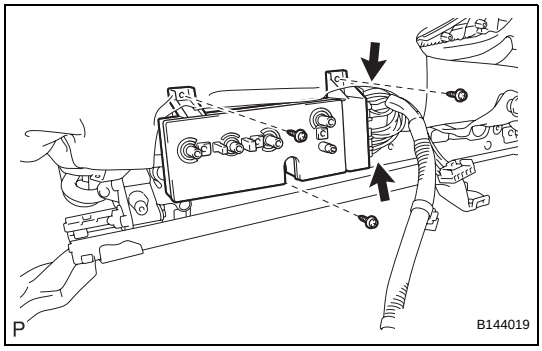

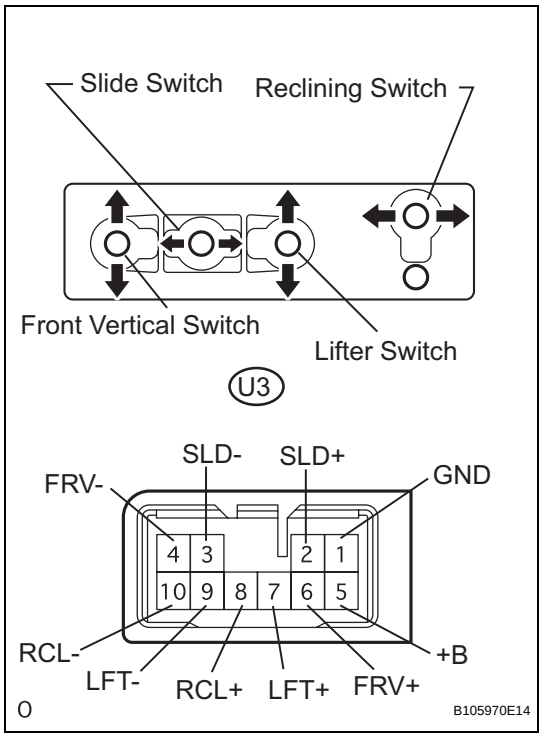

INSPECTION

1. INSPECT FRONT POWER SEAT SWITCH LH (w/ Seat Position Memory System)

(a) Measure the resistance between the specified terminals when each switch is operated.

Standard resistance (Slide switch)

Tester Connection	Switch Condition	Specified Condition
U3-5 (+B) - U3-2 (SLD+)	FRONT	Below 1 Ω
U3-1 (GND) - U3-3 (SLD-)	FRONT	Below 1 Ω
U3-5 (+B) - U3-3 (SLD-)	FRONT	10 kΩ or higher
U3-1 (GND) - U3-2 (SLD+)	FRONT	10 kΩ or higher
U3-1 (GND) - U3-2 (SLD+)	OFF	Below 1 Ω
U3-1 (GND) - U3-3 (SLD-)	OFF	Below 1 Ω
U3-5 (+B) - U3-2 (SLD+)	OFF	10 kΩ or higher
U3-5 (+B) - U3-3 (SLD-)	OFF	10 kΩ or higher
U3-5 (+B) - U3-3 (SLD-)	REAR	Below 1 Ω
U3-1 (GND) - U3-2 (SLD+)	REAR	Below 1 Ω
U3-5 (+B) - U3-2 (SLD+)	REAR	10 kΩ or higher
U3-1 (GND) - U3-3 (SLD-)	REAR	10 kΩ or higher

Standard resistance (Front vertical switch)

Tester Connection	Switch Condition	Specified Condition
U3-5 (+B) - U3-6 (FRV+)	UP	Below 1 Ω
U3-1 (GND) - U3-4 (FRV-)	UP	Below 1 Ω
U3-5 (+B) - U3-4 (FRV-)	UP	10 kΩ or higher
U3-1 (GND) - U3-6 (FRV+)	UP	10 kΩ or higher
U3-1 (GND) - U3-6 (FRV+)	OFF	Below 1 Ω
U3-1 (GND) - U3-4 (FRV-)	OFF	Below 1 Ω
U3-5 (+B) - U3-6 (FRV+)	OFF	10 kΩ or higher
U3-5 (+B) - U3-4 (FRV-)	OFF	10 kΩ or higher
U3-5 (+B) - U3-4 (FRV-)	DOWN	Below 1 Ω
U3-1 (GND) - U3-6 (FRV+)	DOWN	Below 1 Ω
U3-5 (+B) - U3-6 (FRV+)	DOWN	10 kΩ or higher
U3-1 (GND) - U3-4 (FRV-)	DOWN	10 kΩ or higher

Standard resistance (Lifter switch)

Tester Connection	Switch Condition	Specified Condition
U3-5 (+B) - U3-7 (LFT+)	UP	Below 1 Ω
U3-1 (GND) - U3-9 (LFT-)	UP	Below 1 Ω
U3-5 (+B) - U3-9 (LFT-)	UP	10 kΩ or higher
U3-1 (GND) - U3-7 (LFT+)	UP	10 kΩ or higher

Tester Connection	Switch Condition	Specified Condition
U3-1 (GND) - U3-7 (LFT+)	OFF	Below 1 Ω
U3-1 (GND) - U3-9 (LFT-)	OFF	Below 1 Ω
U3-5 (+B) - U3-7 (LFT+)	OFF	10 kΩ or higher
U3-5 (+B) - U3-9 (LFT-)	OFF	10 kΩ or higher
U3-5 (+B) - U3-9 (LFT-)	DOWN	Below 1 Ω
U3-1 (GND) - U3-7 (LFT+)	DOWN	Below 1 Ω
U3-5 (+B) - U3-7 (LFT+)	DOWN	10 kΩ or higher
U3-1 (GND) - U3-9 (LFT-)	DOWN	10 kΩ or higher

Standard resistance (Reclining switch)

Tester Connection	Switch Condition	Specified Condition
U3-5 (+B) - U3-8 (RCL+)	FRONT	Below 1 Ω
U3-1 (GND) - U3-10 (RCL-)	FRONT	Below 1 Ω
U3-5 (+B) - U3-10 (RCL-)	FRONT	10 kΩ or higher
U3-1 (GND) - U3-8 (RCL+)	FRONT	10 kΩ or higher
U3-1 (GND) - U3-8 (RCL+)	OFF	Below 1 Ω
U3-1 (GND) - U3-10 (RCL-)	OFF	Below 1 Ω
U3-5 (+B) - U3-8 (RCL+)	OFF	10 kΩ or higher
U3-5 (+B) - U3-10 (RCL-)	OFF	10 kΩ or higher
U3-5 (+B) - U3-10 (RCL-)	REAR	Below 1 Ω
U3-1 (GND) - U3-8 (RCL+)	REAR	Below 1 Ω
U3-5 (+B) - U3-8 (RCL+)	REAR	10 kΩ or higher
U3-1 (GND) - U3-10 (RCL-)	REAR	10 kΩ or higher

If the result is not as specified, replace the front power seat switch LH.

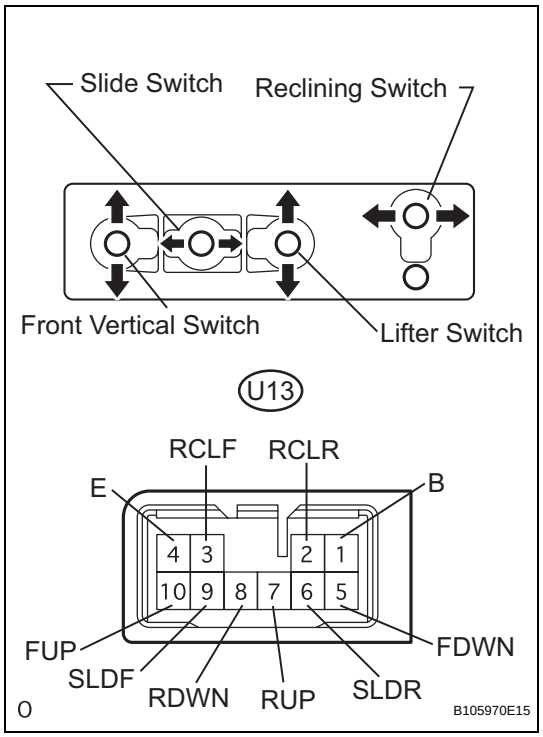

2. INSPECT FRONT POWER SEAT SWITCH LH (w/o Seat Position Memory System)

(a) Measure the resistance between the specified terminals when each switch is operated.

Standard resistance (Slide switch)

Tester Connection	Switch Condition	Specified Condition
U13-1 (B) - U13-9 (SLDF)	FRONT	Below 1 Ω
U13-4 (E) - U13-6 (SLDR)	FRONT	Below 1 Ω
U13-1 (B) - U13-6 (SLDR)	FRONT	10 kΩ or higher
U13-4 (E) - U13-9 (SLDF)	FRONT	10 kΩ or higher
U13-4 (E) - U13-6 (SLDR)	OFF	Below 1 Ω
U13-4 (E) - U13-9 (SLDF)	OFF	Below 1 Ω
U13-1 (B) - U13-6 (SLDR)	OFF	10 kΩ or higher
U13-1 (B) - U13-9 (SLDF)	OFF	10 kΩ or higher
U13-1 (B) - U13-6 (SLDR)	REAR	Below 1 Ω
U13-4 (E) - U13-9 (SLDF)	REAR	Below 1 Ω
U13-1 (B) - U13-9 (SLDF)	REAR	10 kΩ or higher
U13-4 (E) - U13-6 (SLDR)	REAR	10 kΩ or higher

Standard resistance (Front vertical switch)

Tester Connection	Switch Condition	Specified Condition
U13-1 (B) - U13-10 (FUP)	UP	Below 1 Ω
U13-4 (E) - U13-5 (FDWN)	UP	Below 1 Ω
U13-1 (B) - U13-5 (FDWN)	UP	10 kΩ or higher
U13-4 (E) - U13-10 (FUP)	UP	10 kΩ or higher
U13-4 (E) - U13-5 (FDWN)	OFF	Below 1 Ω
U13-4 (E) - U13-10 (FUP)	OFF	Below 1 Ω
U13-1 (B) - U13-5 (FDWN)	OFF	10 kΩ or higher
U13-1 (B) - U13-10 (FUP)	OFF	10 kΩ or higher
U13-1 (B) - U13-5 (FDWN)	DOWN	Below 1 Ω
U13-4 (E) - U13-10 (FUP)	DOWN	Below 1 Ω
U13-1 (B) - U13-10 (FUP)	DOWN	10 kΩ or higher
U13-4 (E) - U13-5 (FDWN)	DOWN	10 kΩ or higher

Standard resistance (Lifter switch)

Tester Connection	Switch Condition	Specified Condition
U13-1 (B) - U13-7 (RUP)	UP	Below 1 Ω
U13-4 (E) - U13-8 (RDWN)	UP	Below 1 Ω
U13-1 (B) - U13-8 (RDWN)	UP	10 kΩ or higher

Tester Connection	Switch Condition	Specified Condition
U13-4 (E) - U13-7 (RUP)	UP	10 kΩ or higher
U13-4 (E) - U13-7 (RUP)	OFF	Below 1 Ω
U13-4 (E) - U13-8 (RDWN)	OFF	Below 1 Ω
U13-1 (B) - U13-7 (RUP)	OFF	10 kΩ or higher
U13-1 (B) - U13-8 (RDWN)	OFF	10 kΩ or higher
U13-1 (B) - U13-8 (RDWN)	DOWN	Below 1 Ω
U13-4 (E) - U13-7 (RUP)	DOWN	Below 1 Ω
U13-1 (B) - U13-7 (RUP)	DOWN	10 kΩ or higher
U13-4 (E) - U13-8 (RDWN)	DOWN	10 kΩ or higher

Standard resistance (Reclining switch)

Tester Connection	Switch Condition	Specified Condition
U13-1 (B) - U13-3 (RCLF)	FRONT	Below 1 Ω
U13-4 (E) - U13-2 (RCLR)	FRONT	Below 1 Ω
U13-1 (B) - U13-2 (RCLR)	FRONT	10 kΩ or higher
U13-4 (E) - U13-3 (RCLF)	FRONT	10 kΩ or higher
U13-4 (E) - U13-2 (RCLR)	OFF	Below 1 Ω
U13-4 (E) - U13-3 (RCLF)	OFF	Below 1 Ω
U13-1 (B) - U13-3 (RCLF)	OFF	10 kΩ or higher
U13-1 (B) - U13-2 (RCLR)	OFF	10 kΩ or higher
U13-1 (B) - U13-2 (RCLR)	REAR	Below 1 Ω
U13-4 (E) - U13-3 (RCLF)	REAR	Below 1 Ω
U13-1 (B) - U13-3 (RCLF)	REAR	10 kΩ or higher
U13-4 (E) - U13-2 (RCLR)	REAR	10 kΩ or higher

If the result is not as specified, replace the front power seat switch LH.

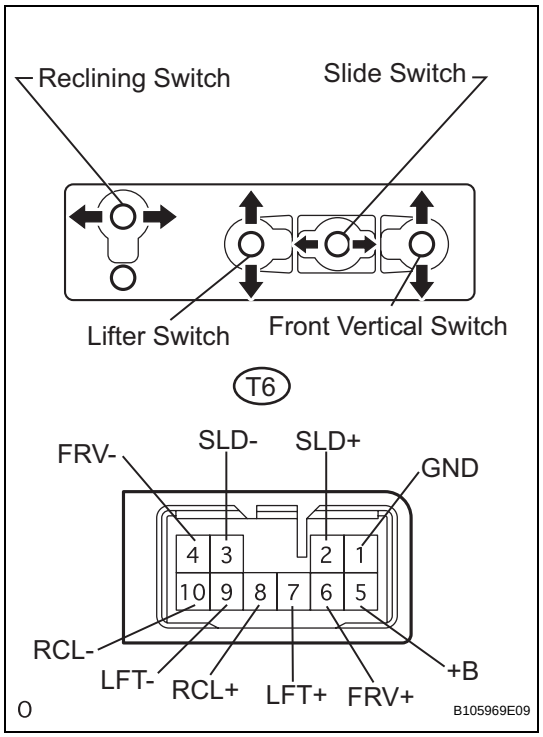

3. INSPECT FRONT POWER SEAT SWITCH RH (w/ Seat Position Memory System)

(a) Measure the resistance between the specified terminals when each switch is operated.

Standard resistance (Slide switch)

Tester Connection	Switch Condition	Specified Condition
T6-5 (+B) - T6-2 (SLD+)	FRONT	Below 1 Ω
T6-1 (GND) - T6-3 (SLD-)	FRONT	Below 1 Ω
T6-5 (+B) - T6-3 (SLD-)	FRONT	10 kΩ or higher
T6-1 (GND) - T6-2 (SLD+)	FRONT	10 kΩ or higher
T6-1 (GND) - T6-2 (SLD+)	OFF	Below 1 Ω
T6-1 (GND) - T6-3 (SLD-)	OFF	Below 1 Ω
T6-5 (+B) - T6-2 (SLD+)	OFF	10 kΩ or higher
T6-5 (+B) - T6-3 (SLD-)	OFF	10 kΩ or higher
T6-5 (+B) - T6-3 (SLD-)	REAR	Below 1 Ω
T6-1 (GND) - T6-2 (SLD+)	REAR	Below 1 Ω
T6-5 (+B) - T6-2 (SLD+)	REAR	10 kΩ or higher
T6-1 (GND) - T6-3 (SLD-)	REAR	10 kΩ or higher

Standard resistance (Front vertical switch)

Tester Connection	Switch Condition	Specified Condition
T6-5 (+B) - T6-6 (FRV+)	UP	Below 1 Ω
T6-1 (GND) - T6-4 (FRV-)	UP	Below 1 Ω
T6-5 (+B) - T6-4 (FRV-)	UP	10 kΩ or higher
T6-1 (GND) - T6-6 (FRV+)	UP	10 kΩ or higher
T6-1 (GND) - T6-6 (FRV+)	OFF	Below 1 Ω
T6-1 (GND) - T6-4 (FRV-)	OFF	Below 1 Ω
T6-5 (+B) - T6-6 (FRV+)	OFF	10 kΩ or higher
T6-5 (+B) - T6-4 (FRV-)	OFF	10 kΩ or higher
T6-5 (+B) - T6-4 (FRV-)	DOWN	Below 1 Ω
T6-1 (GND) - T6-6 (FRV+)	DOWN	Below 1 Ω
T6-5 (+B) - T6-6 (FRV+)	DOWN	10 kΩ or higher
T6-1 (GND) - T6-4 (FRV-)	DOWN	10 kΩ or higher

Standard resistance (Lifter switch)

Tester Connection	Switch Condition	Specified Condition
T6-5 (+B) - T6-7 (LFT+)	UP	Below 1 Ω
T6-1 (GND) - T6-9 (LFT-)	UP	Below 1 Ω
T6-5 (+B) - T6-9 (LFT-)	UP	10 kΩ or higher
T6-1 (GND) - T6-7 (LFT+)	UP	10 kΩ or higher
T6-1 (GND) - T6-7 (LFT+)	OFF	Below 1 Ω
T6-1 (GND) - T6-9 (LFT-)	OFF	Below 1 Ω
T6-5 (+B) - T6-7 (LFT+)	OFF	10 kΩ or higher
T6-5 (+B) - T6-9 (LFT-)	OFF	10 kΩ or higher
T6-5 (+B) - T6-9 (LFT-)	DOWN	Below 1 Ω
T6-1 (GND) - T6-7 (LFT+)	DOWN	Below 1 Ω
T6-5 (+B) - T6-7 (LFT+)	DOWN	10 kΩ or higher

Tester Connection	Switch Condition	Specified Condition
T6-1 (GND) - T6-9 (LFT-)	DOWN	10 kΩ or higher

Standard resistance (Reclining switch)

Tester Connection	Switch Condition	Specified Condition
T6-5 (+B) - T6-8 (RCL+)	FRONT	Below 1 Ω
T6-1 (GND) - T6-10 (RCL-)	FRONT	Below 1 Ω
T6-5 (+B) - T6-10 (RCL-)	FRONT	10 kΩ or higher
T6-1 (GND) - T6-8 (RCL+)	FRONT	10 kΩ or higher
T6-1 (GND) - T6-8 (RCL+)	OFF	Below 1 Ω
T6-1 (GND) - T6-10 (RCL-)	OFF	Below 1 Ω
T6-5 (+B) - T6-8 (RCL+)	OFF	10 kΩ or higher
T6-5 (+B) - T6-10 (RCL-)	OFF	10 kΩ or higher
T6-5 (+B) - T6-10 (RCL-)	REAR	Below 1 Ω
T6-1 (GND) - T6-8 (RCL+)	REAR	Below 1 Ω
T6-5 (+B) - T6-8 (RCL+)	REAR	10 kΩ or higher
T6-1 (GND) - T6-10 (RCL-)	REAR	10 kΩ or higher

If the result is not as specified, replace the front power seat switch RH.

4. INSPECT FRONT POWER SEAT SWITCH RH (w/o Seat Position Memory System)

(a) Measure the resistance between the specified terminals when each switch is operated.

Standard resistance (Slide switch)

Tester Connection	Switch Condition	Specified Condition
T14-1 (B) - T14-9 (SLDF)	FRONT	Below 1 Ω
T14-4 (E) - T14-6 (SLDR)	FRONT	Below 1 Ω
T14-1 (B) - T14-6 (SLDR)	FRONT	10 kΩ or higher
T14-4 (E) - T14-9 (SLDF)	FRONT	10 kΩ or higher
T14-4 (E) - T14-6 (SLDR)	OFF	Below 1 Ω
T14-4 (E) - T14-9 (SLDF)	OFF	Below 1 Ω
T14-1 (B) - T14-6 (SLDR)	OFF	10 kΩ or higher
T14-1 (B) - T14-9 (SLDF)	OFF	10 kΩ or higher
T14-1 (B) - T14-6 (SLDR)	REAR	Below 1 Ω
T14-4 (E) - T14-9 (SLDF)	REAR	Below 1 Ω
T14-1 (B) - T14-9 (SLDF)	REAR	10 kΩ or higher
T14-4 (E) - T14-6 (SLDR)	REAR	10 kΩ or higher

Standard resistance (Front vertical switch)

Tester Connection	Switch Condition	Specified Condition
T14-1 (B) - T14-5 (FUP)	UP	Below 1 Ω
T14-4 (E) - T14-10 (FDWN)	UP	Below 1 Ω
T14-1 (B) - T14-10 (FDWN)	UP	10 kΩ or higher
T14-4 (E) - T14-5 (FUP)	UP	10 kΩ or higher

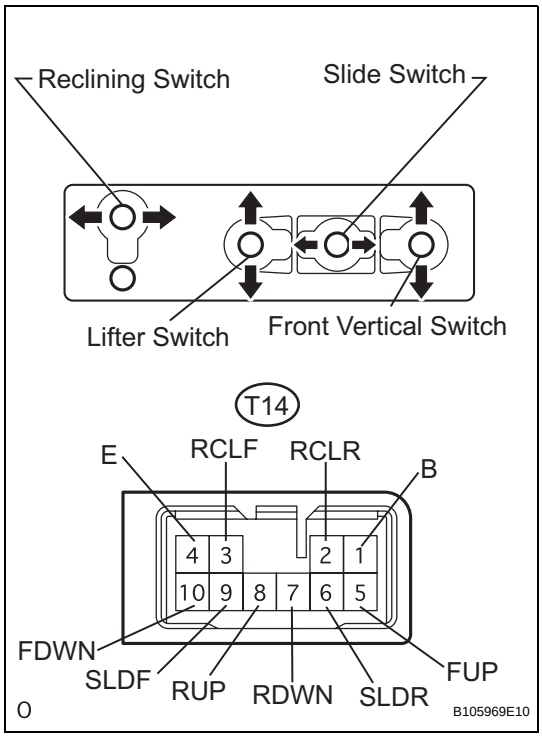

SE

Tester Connection	Switch Condition	Specified Condition
T14-4 (E) - T14-10 (FDWN)	OFF	Below 1 Ω
T14-4 (E) - T14-5 (FUP)	OFF	Below 1 Ω
T14-1 (B) - T14-10 (FDWN)	OFF	10 kΩ or higher
T14-1 (B) - T14-5 (FUP)	OFF	10 kΩ or higher
T14-1 (B) - T14-10 (FDWN)	DOWN	Below 1 Ω
T14-4 (E) - T14-5 (FUP)	DOWN	Below 1 Ω
T14-1 (B) - T14-5 (FUP)	DOWN	10 kΩ or higher
T14-4 (E) - T14-10 (FDWN)	DOWN	10 kΩ or higher

Standard resistance (Lifter switch)

Tester Connection	Switch Condition	Specified Condition
T14-1 (B) - T14-8 (RUP)	UP	Below 1 Ω
T14-4 (E) - T14-7 (RDWN)	UP	Below 1 Ω
T14-1 (B) - T14-7 (RDWN)	UP	10 kΩ or higher
T14-4 (E) - T14-8 (RUP)	UP	10 kΩ or higher
T14-4 (E) - T14-8 (RUP)	OFF	Below 1 Ω
T14-4 (E) - T14-7 (RDWN)	OFF	Below 1 Ω
T14-1 (B) - T14-8 (RUP)	OFF	10 kΩ or higher
T14-1 (B) - T14-7 (RDWN)	OFF	10 kΩ or higher
T14-1 (B) - T14-7 (RDWN)	DOWN	Below 1 Ω
T14-4 (E) - T14-8 (RUP)	DOWN	Below 1 Ω
T14-1 (B) - T14-8 (RUP)	DOWN	10 kΩ or higher
T14-4 (E) - T14-7 (RDWN)	DOWN	10 kΩ or higher

Standard resistance (Reclining switch)

Tester Connection	Switch Condition	Specified Condition
T14-1 (B) - T14-3 (RCLF)	FRONT	Below 1 Ω
T14-4 (E) - T14-2 (RCLR)	FRONT	Below 1 Ω
T14-1 (B) - T14-2 (RCLR)	FRONT	10 kΩ or higher
T14-4 (E) - T14-3 (RCLF)	FRONT	10 kΩ or higher
T14-4 (E) - T14-2 (RCLR)	OFF	Below 1 Ω
T14-4 (E) - T14-3 (RCLF)	OFF	Below 1 Ω
T14-1 (B) - T14-3 (RCLF)	OFF	10 kΩ or higher
T14-1 (B) - T14-2 (RCLR)	OFF	10 kΩ or higher
T14-1 (B) - T14-2 (RCLR)	REAR	Below 1 Ω
T14-4 (E) - T14-3 (RCLF)	REAR	Below 1 Ω
T14-1 (B) - T14-3 (RCLF)	REAR	10 kΩ or higher
T14-4 (E) - T14-2 (RCLR)	REAR	10 kΩ or higher

If the result is not as specified, replace the front power seat switch RH.

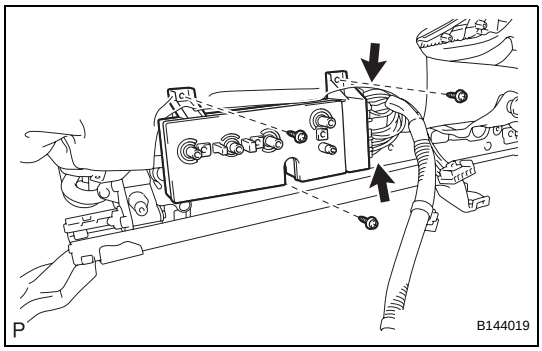

INSTALLATION

1. **INSTALL FRONT POWER SEAT SWITCH (w/ Seat Position Memory System)**
   (a) Install the power seat switch with the 3 screws.
   (b) Connect the 2 connectors.
2. **INSTALL FRONT POWER SEAT SWITCH (w/o Seat Position Memory System)**
   (a) Install the power seat switch with the 3 screws.
   (b) Connect the connector.
3. **INSTALL FRONT SEAT CUSHION SHIELD ASSEMBLY (See page SE-108)**
4. **INSTALL SLIDE AND VERTICAL POWER SEAT SWITCH KNOB (See page SE-108)**
5. **INSTALL RECLINING POWER SEAT SWITCH KNOB (See page SE-109)**
6. **INSTALL FRONT SEAT ASSEMBLY (See page SE-109)**
7. **INSTALL FRONT SEAT REAR OUTER TRACK BRACKET COVER (See page SE-110)**
8. **INSTALL FRONT SEAT REAR INNER TRACK BRACKET COVER (See page SE-110)**
9. **INSTALL FRONT SEAT OUTER TRACK BRACKET COVER (See page SE-110)**
10. **INSTALL FRONT SEAT INNER TRACK BRACKET COVER (See page SE-110)**
11. **INSTALL FRONT SEAT HEADREST ASSEMBLY**
12. **CONNECT FRONT SEAT OUTER BELT ASSEMBLY (See page SB-31)**
13. **INSTALL SEAT BELT ANCHOR COVER CAP (See page SB-31)**
14. **PERFORM INITIALIZATION**
    NOTICE:
    Some systems need initialization after reconnecting the negative battery cable (See Page IN-33)
15. **INSPECT FRONT SEAT ASSEMBLY (See page SE-110)**
16. **INSPECT SRS WARNING LIGHT**
    Check the SRS warning light. (See Page RS-37)

Front Passenger Side Seat Memory Switch Circuit

DESCRIPTION

The seat memory switch RH sends signals to the outer mirror control ECU via the CAN communication system to memorize a given seat position. This memory system does not use a position sensor. The seat position is detected by counting pulses that are output when the motor turns. If there is no pulse output from the motor, the motor will stop operating. The seat memory switch RH is later used to send signals to the front power seat switch RH (position control ECU) to return the seat to one of the memorized positions.

The power seat memory RH operation can be performed only when the engine switch is on (IG) and the shift lever is in the P position.

WIRING DIAGRAM

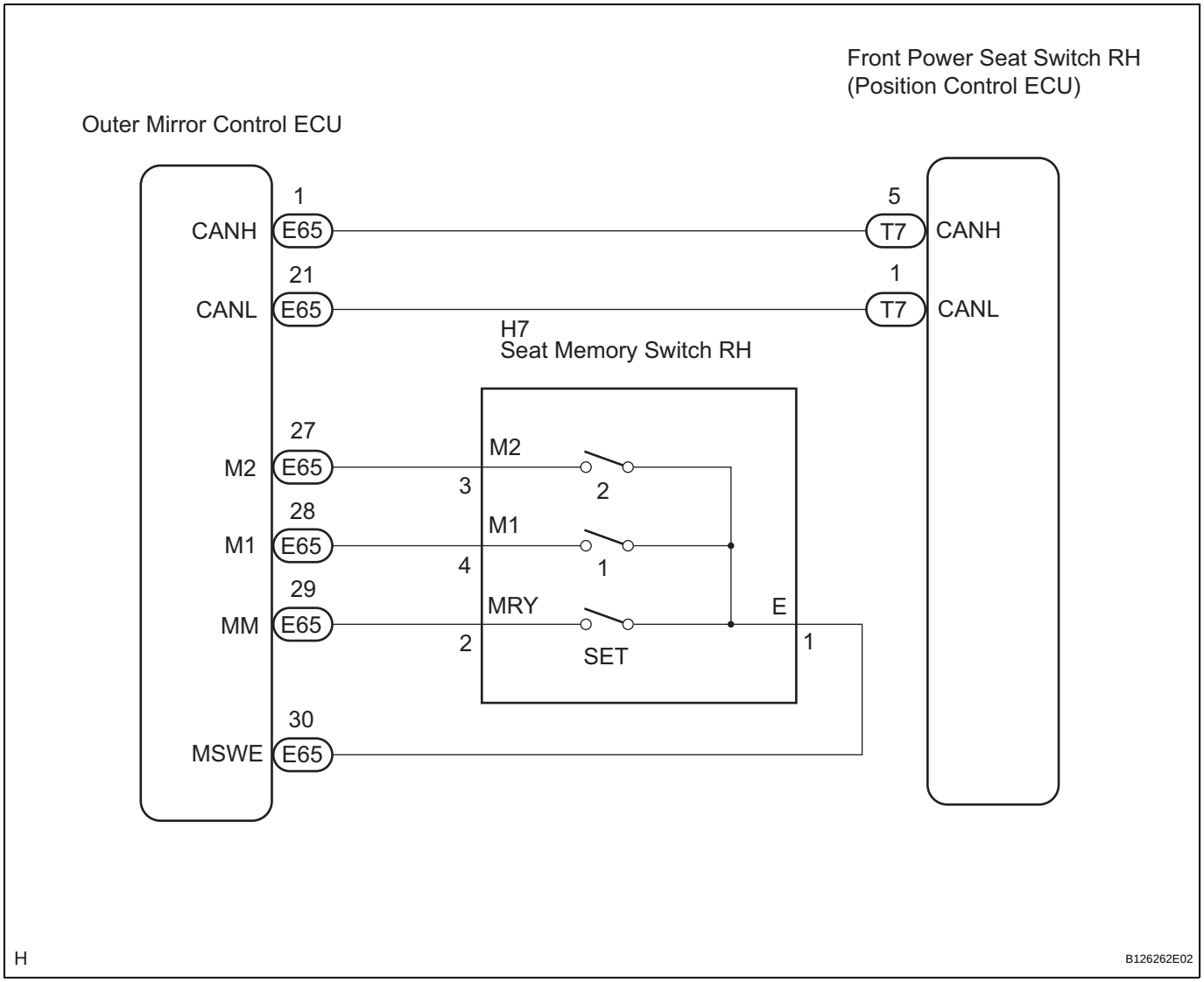

SE

INSPECTION PROCEDURE

1 CHECK FOR DTC (CAN COMMUNICATION SYSTEM)

(a) Check for DTCs in the CAN communication system (See page CA-11).

Result

Result	Proceed to
DTC is not output	A
DTC is output	B

B → **REPAIR CIRCUITS INDICATED BY OUTPUT DTCS**

A

2 READ VALUE OF INTELLIGENT TESTER (SEAT MEMORY SWITCH RH)

(a) Connect the intelligent tester (with CAN VIM) to the DLC3.
(b) Turn the engine switch on (IG).
(c) Read the DATA LIST.

MIRROR:

Tester Display	Measurement Item/Range	Normal Condition	Diagnostic Note
FP SET MEMORY	Front passenger side SET memory switch / ON or OFF	ON: Front passenger side SET memory switch is ON OFF: Front passenger side SET memory switch is OFF	-
FP MEM 1 SW	Front passenger side memory switch 1 / ON or OFF	ON: Front passenger side M1 memory switch is ON OFF: Front passenger side M1 memory switch is OFF	-
FP MEM 2 SW	Front passenger side memory switch 2 / ON or OFF	ON: Front passenger side M2 memory switch is ON OFF: Front passenger side M2 memory switch is OFF	-

SE

OK:

On the tester screen, each item changes between ON and OFF according to the above chart.

NG → **Go to step 3**

OK

PROCEED TO NEXT CIRCUIT INSPECTION SHOWN IN PROBLEM SYMPTOMS TABLE

3 INSPECT SEAT MEMORY SWITCH RH

(a) Remove the seat memory switch RH (See page SE-124).

Seat Memory Switch RH:

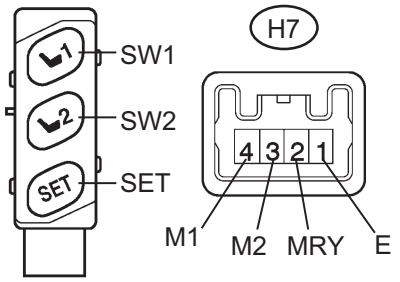

B149663E03

(b) Measure the resistance according to the value(s) in the table below.

Standard resistance

Tester Connection	Switch Position	Specified Condition
H7-1 (E) - H7-2 (MRY)	SET switch is pressed	Below 1 Ω
	SET switch is not pressed	10 kΩ or higher
H7-1 (E) - H7-3 (M2)	M2 switch is pressed	Below 1 Ω
	M2 switch is not pressed	10 kΩ or higher
H7-1 (E) - H7-4 (M1)	M1 switch is pressed	Below 1 Ω
	M1 switch is not pressed	10 kΩ or higher

NG → **REPLACE SEAT MEMORY SWITCH RH**

OK

4 CHECK HARNESS AND CONNECTOR (SEAT MEMORY SWITCH RH CIRCUIT)

Wire Harness Rear View:

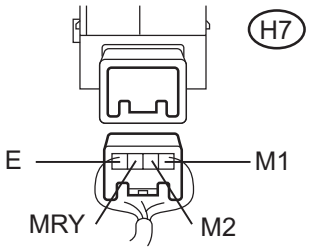

B111886E06

(a) Measure the resistance according to the value(s) in the table below.

Standard resistance

Tester Connection	Condition	Specified Condition
H7-1 (E) - Body ground	Always	Below 1 Ω
H7-1 (E) - H7-2 (MRY)	Always	10 kΩ or higher
H7-1 (E) - H7-3 (M2)	Always	10 kΩ or higher
H7-1 (E) - H7-4 (M1)	Always	10 kΩ or higher

NG → **Go to step 5**

OK

PROCEED TO NEXT CIRCUIT INSPECTION SHOWN IN PROBLEM SYMPTOMS TABLE

5	CHECK HARNESS AND CONNECTOR (OUTER MIRROR CONTROL ECU - SEAT MEMORY SWITCH, BODY GROUND)

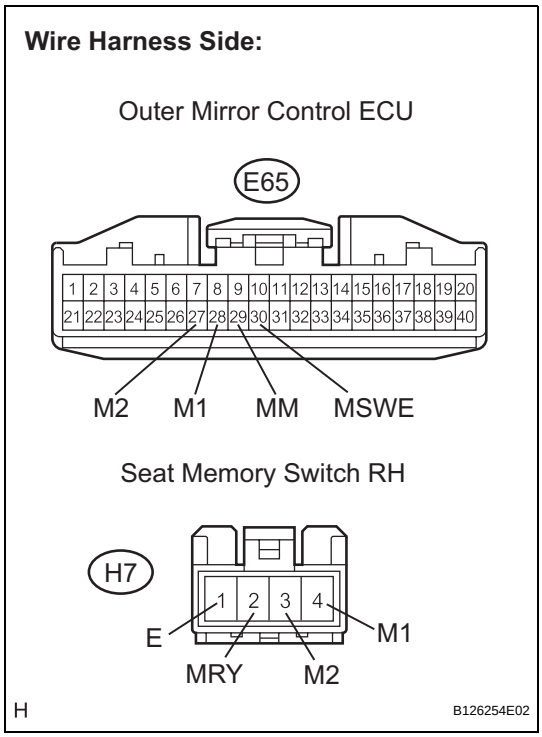

(a) Disconnect the outer mirror control ECU RH connector.
(b) Measure the resistance according to the value(s) in the table below.

Standard resistance

Tester Connection	Condition	Specified Condition
E65-27 (M2) - H7-3 (M2)	Always	Below 1 Ω
E65-28 (M1) - H7-4 (M1)	Always	Below 1 Ω
E65-29 (MM) - H7-2 (MRY)	Always	Below 1 Ω
E65-30 (MSWE) - H7-1 (E)	Always	Below 1 Ω
E65-30 (MSWE) - Body ground	Always	Below 1 Ω
H7-1 (E) - Body ground	Always	Below 1 Ω

NG → **REPAIR OR REPLACE HARNESS OR CONNECTOR**

OK

REPLACE OUTER MIRROR CONTROL ECU

REMOVAL

1. **REMOVE SEAT BELT ANCHOR COVER CAP (See page SB-22)**
2. **DISCONNECT FRONT SEAT OUTER BELT ASSEMBLY (See page SB-22)**
3. **REMOVE FRONT SEAT HEADREST ASSEMBLY**
4. **REMOVE FRONT SEAT OUTER TRACK BRACKET COVER (See page SE-83)**
5. **REMOVE FRONT SEAT INNER TRACK BRACKET COVER (See page SE-83)**
6. **REMOVE FRONT SEAT REAR OUTER TRACK BRACKET COVER (See page SE-83)**
7. **REMOVE FRONT SEAT REAR INNER TRACK BRACKET COVER (See page SE-83)**
8. **REMOVE FRONT SEAT ASSEMBLY (See page SE-83)**
9. **REMOVE RECLINING POWER SEAT SWITCH KNOB (See page SE-84)**
10. **REMOVE SLIDE AND VERTICAL POWER SEAT SWITCH KNOB (See page SE-84)**
11. **REMOVE FRONT SEAT CUSHION SHIELD ASSEMBLY (See page SE-84)**
12. **REMOVE FRONT POWER SEAT LUMBAR SWITCH**
    (a) Remove the 2 screws and front power seat lumbar switch.

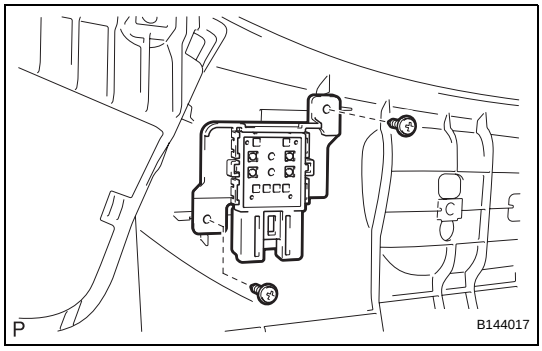

SE

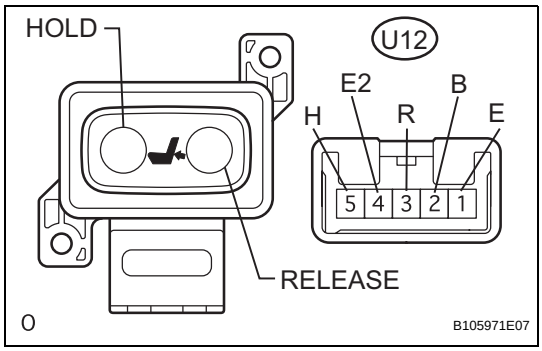

INSPECTION

1. **INSPECT FRONT POWER SEAT LUMBAR SWITCH LH**
   (a) Measure the resistance between the terminals when the switch is operated.
   Standard resistance

Tester Connection	Switch Condition	Specified Condition
U12-4 (E2) - U12-3 (R)	HOLD	Below 1 Ω
U12-2 (B) - U12-5 (H)	HOLD	Below 1 Ω
U12-4 (E2) - U12-5 (H)	HOLD	10 Ω or higher
U12-2 (B) - U12-3 (R)	HOLD	10 Ω or higher
U12-4 (E2) - U12-3 (R)	OFF	Below 1 Ω
U12-5 (H) - U12-1 (E)	OFF	Below 1 Ω
U12-4 (E2) - U12-1 (E)	OFF	10 Ω or higher
U12-5 (H) - U12-3 (R)	OFF	10 Ω or higher
U12-2 (B) - U12-3 (R)	RELEASE	Below 1 Ω

Tester Connection	Switch Condition	Specified Condition
U12-5 (H) - U12-1 (E)	RELEASE	Below 1 Ω
U12-2 (B) - U12-1 (E)	RELEASE	10 Ω or higher
U12-5 (H) - U12-3 (R)	RELEASE	10 Ω or higher

If the result is not as specified, replace the switch.

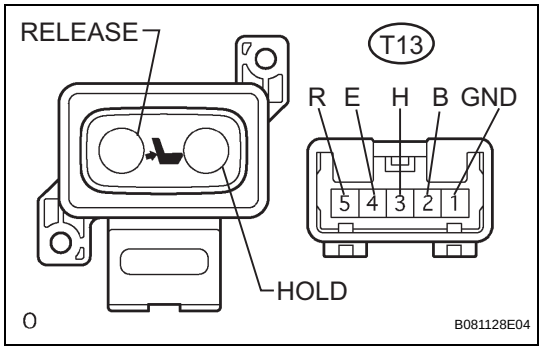

2. INSPECT FRONT POWER SEAT LUMBAR SWITCH RH

(a) Measure the resistance between the terminals when the switch is operated.

Standard resistance

Tester Connection	Switch Condition	Specified Condition
T13-1 (GND) - T13-5 (R)	HOLD	Below 1 Ω
T13-2 (B) - T13-3 (H)	HOLD	Below 1 Ω
T13-1 (GND) - T13-3 (H)	HOLD	10 Ω or higher
T13-2 (B) - T13-5 (R)	HOLD	10 Ω or higher
T13-1 (GND) - T13-5 (R)	OFF	Below 1 Ω
T13-3 (H) - T13-4 (E)	OFF	Below 1 Ω
T13-1 (GND) - T13-4 (E)	OFF	10 Ω or higher
T13-3 (H) - T13-5 (R)	OFF	10 Ω or higher
T13-2 (B) - T13-5 (R)	RELEASE	Below 1 Ω
T13-3 (H) - T13-4 (E)	RELEASE	Below 1 Ω
T13-2 (B) - T13-4 (E)	RELEASE	10 Ω or higher
T13-3 (H) - T13-5 (R)	RELEASE	10 Ω or higher

If the result is not as specified, replace the switch.

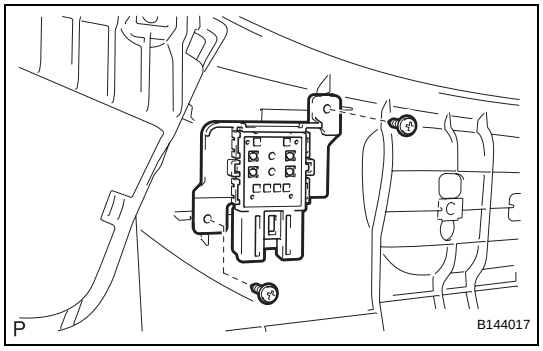

INSTALLATION

1. INSTALL FRONT POWER SEAT LUMBAR SWITCH

(a) Install the front power seat lumbar switch with the 2 screws.

2. INSTALL FRONT SEAT CUSHION SHIELD ASSEMBLY (See page SE-108)

3. INSTALL SLIDE AND VERTICAL POWER SEAT SWITCH KNOB (See page SE-108)

4. INSTALL RECLINING POWER SEAT SWITCH KNOB (See page SE-109)

5. INSTALL FRONT SEAT ASSEMBLY (See page SE-109)

6. INSTALL FRONT SEAT REAR OUTER TRACK BRACKET COVER (See page SE-110)

7. INSTALL FRONT SEAT REAR INNER TRACK BRACKET COVER (See page SE-110)

8. INSTALL FRONT SEAT OUTER TRACK BRACKET COVER (See page SE-110)

9. INSTALL FRONT SEAT INNER TRACK BRACKET COVER (See page SE-110)

10. INSTALL FRONT SEAT HEADREST ASSEMBLY

11. **CONNECT FRONT SEAT OUTER BELT ASSEMBLY (See page SB-31)**
12. **INSTALL SEAT BELT ANCHOR COVER CAP (See page SB-31)**
13. **PERFORM INITIALIZATION**
    NOTICE:
    Some systems need initialization after reconnecting the negative battery cable (See Page IN-33)
14. **INSTALL FRONT SEAT ASSEMBLY (See page SE-110)**
15. **INSPECT SRS WARNING LIGHT**
    Check the SRS warning light. (See Page RS-37)

REMOVAL

1. **REMOVE SEAT BELT ANCHOR COVER CAP (See page SB-22)**
2. **DISCONNECT FRONT SEAT OUTER BELT ASSEMBLY (See page SB-22)**
3. **REMOVE FRONT SEAT HEADREST ASSEMBLY**
4. **REMOVE FRONT SEAT OUTER TRACK BRACKET COVER (See page SE-83)**
5. **REMOVE FRONT SEAT INNER TRACK BRACKET COVER (See page SE-83)**
6. **REMOVE FRONT SEAT REAR OUTER TRACK BRACKET COVER (See page SE-83)**
7. **REMOVE FRONT SEAT REAR INNER TRACK BRACKET COVER (See page SE-83)**
8. **REMOVE FRONT SEAT ASSEMBLY (See page SE-83)**
9. **REMOVE RECLINING POWER SEAT SWITCH KNOB (See page SE-84)**
10. **REMOVE SLIDE AND VERTICAL POWER SEAT SWITCH KNOB (See page SE-84)**
11. **REMOVE FRONT SEAT CUSHION SHIELD ASSEMBLY (See page SE-84)**
12. **REMOVE SEAT VARIABLE CUSHION SWITCH**
    (a) Remove the 2 screws and seat variable cushion switch.

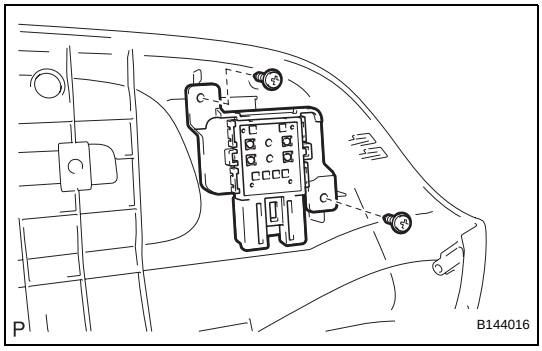

SE

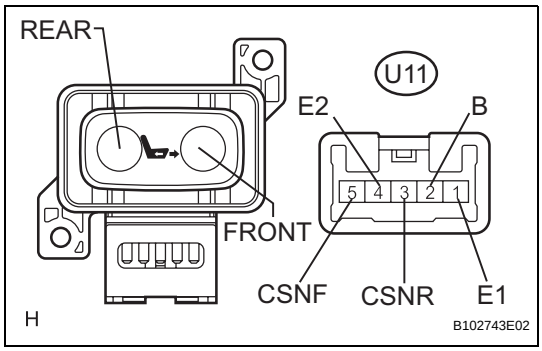

INSPECTION

1. **INSPECT SEAT VARIABLE CUSHION SWITCH (w/ Seat Position Memory System)**
   (a) Inspect the seat variable cushion switch.
      (1) Measure the resistance between the terminals when the switch is operated.
      Standard resistance

Tester Connection	Switch Condition	Specified Condition
U11-4 (E2) - U11-5 (CSNF)	FRONT	Below 1 Ω
U11-2 (B) - U11-3 (CSNR)	FRONT	Below 1 Ω
U11-4 (E2) - U11-3 (CSNR)	FRONT	10 kΩ or higher
U11-2 (B) - U11-5 (CSNF)	FRONT	10 kΩ or higher

Tester Connection	Switch Condition	Specified Condition
U11-4 (E2) - U11-5 (CSNF)	OFF	Below 1 Ω
U11-1 (E1) - U11-3 (CSNR)	OFF	Below 1 Ω
U11-4 (E2) - U11-3 (CSNR)	OFF	10 kΩ or higher
U11-1 (E1) - U11-5 (CSNF)	OFF	10 kΩ or higher
U11-1 (E1) - U11-3 (CSNR)	REAR	Below 1 Ω
U11-2 (B) - U11-5 (CSNF)	REAR	Below 1 Ω
U11-1 (E1) - U11-5 (CSNF)	REAR	10 kΩ or higher
U11-2 (B) - U11-3 (CSNR)	REAR	10 kΩ or higher

If the result is not as specified, replace the seat variable cushion switch.

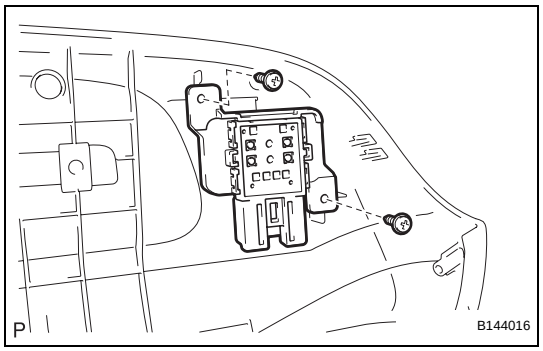

INSTALLATION

1. **INSTALL SEAT VARIABLE CUSHION SWITCH**
   (a) Install the seat variable cushion switch with the 2 screws.
2. **INSTALL FRONT SEAT CUSHION SHIELD ASSEMBLY (See page SE-108)**
3. **INSTALL SLIDE AND VERTICAL POWER SEAT SWITCH KNOB (See page SE-108)**
4. **INSTALL RECLINING POWER SEAT SWITCH KNOB (See page SE-109)**
5. **INSTALL FRONT SEAT ASSEMBLY (See page SE-109)**
6. **INSTALL FRONT SEAT REAR OUTER TRACK BRACKET COVER (See page SE-110)**
7. **INSTALL FRONT SEAT REAR INNER TRACK BRACKET COVER (See page SE-110)**
8. **INSTALL FRONT SEAT OUTER TRACK BRACKET COVER (See page SE-110)**
9. **INSTALL FRONT SEAT INNER TRACK BRACKET COVER (See page SE-110)**
10. **INSTALL FRONT SEAT HEADREST ASSEMBLY**
11. **CONNECT FRONT SEAT OUTER BELT ASSEMBLY (See page SB-31)**
12. **INSTALL SEAT BELT ANCHOR COVER CAP (See page SB-31)**
13. **PERFORM INITIALIZATION**
    NOTICE:
    Some systems need initialization after reconnecting the negative battery cable (See Page IN-33)

14. **INSPECT FRONT SEAT ASSEMBLY (See page SE-110)**

15. **INSPECT SRS WARNING LIGHT**
    Check the SRS warning light. (See Page RS-37)

REMOVAL

1. **REMOVE SEAT BELT ANCHOR COVER CAP (See page SB-22)**
2. **DISCONNECT FRONT SEAT OUTER BELT ASSEMBLY (See page SB-22)**
3. **REMOVE FRONT SEAT HEADREST ASSEMBLY**
4. **REMOVE FRONT SEAT OUTER TRACK BRACKET COVER (See page SE-83)**
5. **REMOVE FRONT SEAT INNER TRACK BRACKET COVER (See page SE-83)**
6. **REMOVE FRONT SEAT REAR OUTER TRACK BRACKET COVER (See page SE-83)**
7. **REMOVE FRONT SEAT REAR INNER TRACK BRACKET COVER (See page SE-83)**
8. **REMOVE FRONT SEAT ASSEMBLY (See page SE-83)**
9. **REMOVE FRONT SEAT INNER BELT ASSEMBLY (See page SB-23)**
10. **REMOVE RECLINING POWER SEAT SWITCH KNOB (See page SE-84)**
11. **REMOVE SLIDE AND VERTICAL POWER SEAT SWITCH KNOB (See page SE-84)**
12. **REMOVE FRONT SEAT CUSHION SHIELD ASSEMBLY (See page SE-84)**
13. **REMOVE FRONT SEAT INNER CUSHION SHIELD (See page SE-86)**
14. **REMOVE FRONT SEATBACK BOARD SUB-ASSEMBLY (See page SE-91)**
15. **REMOVE FRONT SEATBACK BOARD COVER SUB-ASSEMBLY (See page SE-91)**
16. **REMOVE FRONT SEAT HEADREST SUPPORT (See page SE-91)**
17. **REMOVE FRONT SEAT HEADREST SUPPORT**
18. **REMOVE FRONT SEPARATE TYPE SEATBACK COVER WITH PAD (See page SE-92)**
19. **REMOVE LUMBAR SUPPORT ADJUSTER ASSEMBLY**
    (a) Disconnect the connector.
    (b) Remove the 2 screws and lumbar support adjuster assembly.

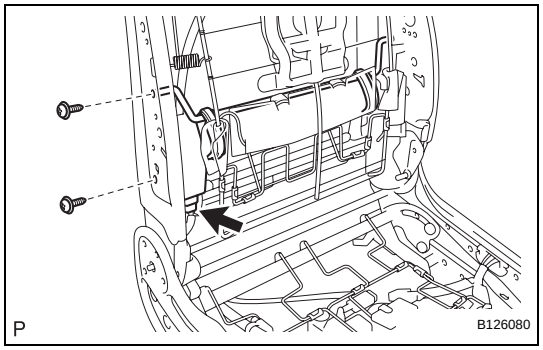

SE

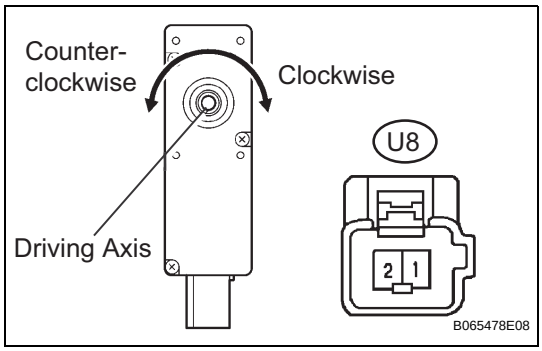

INSPECTION

1. INSPECT LUMBAR SUPPORT ADJUSTER ASSEMBLY LH

(a) Check operation of the lumbar support adjuster.

(1) Check if the lumbar support adjuster moves smoothly when the battery is connected to the lumbar support adjuster motor connector terminals.

OK

Measurement Condition	Operation Direction
Battery positive (+) → U8-2 Battery negative (-) → U8-1	Clockwise
Battery positive (+) → U8-1 Battery negative (-) → U8-2	Counterclockwise

If the result is not as specified, replace the lumbar support adjuster LH.

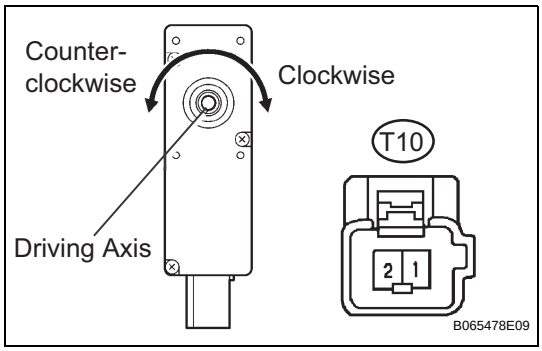

2. INSPECT LUMBAR SUPPORT ADJUSTER ASSEMBLY RH

(a) Check operation of the lumbar support adjuster.

(1) Check if the lumbar support adjuster moves smoothly when the battery is connected to the lumbar support adjuster motor connector terminals.

OK

Measurement Condition	Operation Direction
Battery positive (+) → T10-1 Battery negative (-) → T10-2	Clockwise
Battery positive (+) → T10-2 Battery negative (-) → T10-1	Counterclockwise

If the result is not as specified, replace the lumbar support adjuster RH.

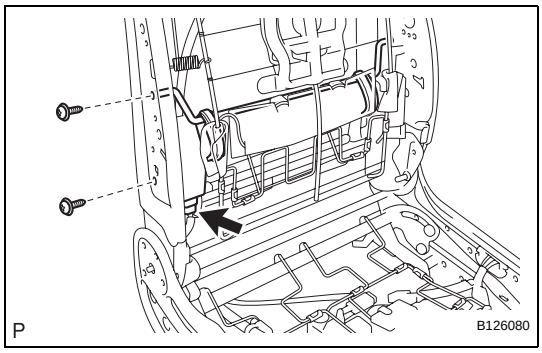

INSTALLATION

1. INSTALL LUMBAR SUPPORT ADJUSTER ASSEMBLY

(a) Install the lumber support adjuster assembly with the 2 screws.

(b) Connect the connector.

2. INSTALL FRONT SEPARATE TYPE SEATBACK COVER WITH PAD (See page SE-100)

3. INSTALL FRONT SEAT HEADREST SUPPORT (See page SE-101)

4. INSTALL FRONT SEAT HEADREST SUPPORT

5. INSTALL FRONT SEATBACK BOARD COVER SUB-ASSEMBLY (See page SE-101)

6. INSTALL FRONT SEATBACK BOARD SUB-ASSEMBLY (See page SE-101)

7. INSTALL FRONT SEAT INNER CUSHION SHIELD (See page SE-107)

8. **INSTALL FRONT SEAT CUSHION SHIELD ASSEMBLY (See page SE-108)**
9. **INSTALL SLIDE AND VERTICAL POWER SEAT SWITCH KNOB (See page SE-108)**
10. **INSTALL RECLINING POWER SEAT SWITCH KNOB (See page SE-109)**
11. **INSTALL FRONT SEAT INNER BELT ASSEMBLY (See page SB-24)**
12. **INSTALL FRONT SEAT ASSEMBLY (See page SE-109)**
13. **INSTALL FRONT SEAT REAR OUTER TRACK BRACKET COVER (See page SE-110)**
14. **INSTALL FRONT SEAT REAR INNER TRACK BRACKET COVER (See page SE-110)**
15. **INSTALL FRONT SEAT OUTER TRACK BRACKET COVER (See page SE-110)**
16. **INSTALL FRONT SEAT INNER TRACK BRACKET COVER (See page SE-110)**
17. **INSTALL FRONT SEAT HEADREST ASSEMBLY**
18. **CONNECT FRONT SEAT OUTER BELT ASSEMBLY (See page SB-31)**
19. **INSTALL SEAT BELT ANCHOR COVER CAP (See page SB-31)**
20. **PERFORM INITIALIZATION**
    NOTICE:
    Some systems need initialization after reconnecting the negative battery cable (See Page IN-33)
21. **INSPECT FRONT SEAT ASSEMBLY (See page SE-110)**
22. **INSPECT SRS WARNING LIGHT**
    Check the SRS warning light. (See Page RS-37)

REMOVAL

1. **REMOVE SEAT BELT ANCHOR COVER CAP (See page SB-22)**
2. **DISCONNECT FRONT SEAT OUTER BELT ASSEMBLY (See page SB-22)**
3. **REMOVE FRONT SEAT HEADREST ASSEMBLY**
4. **REMOVE FRONT SEAT OUTER TRACK BRACKET COVER (See page SE-83)**
5. **REMOVE FRONT SEAT INNER TRACK BRACKET COVER (See page SE-83)**
6. **REMOVE FRONT SEAT REAR OUTER TRACK BRACKET COVER (See page SE-83)**
7. **REMOVE FRONT SEAT REAR INNER TRACK BRACKET COVER (See page SE-83)**
8. **REMOVE FRONT SEAT ASSEMBLY (See page SE-83)**
9. **REMOVE FRONT SEAT INNER BELT ASSEMBLY (See page SB-23)**
10. **REMOVE RECLINING POWER SEAT SWITCH KNOB (See page SE-84)**
11. **REMOVE SLIDE AND VERTICAL POWER SEAT SWITCH KNOB (See page SE-84)**
12. **REMOVE FRONT SEAT CUSHION SHIELD ASSEMBLY (See page SE-84)**
13. **REMOVE FRONT SEAT INNER CUSHION SHIELD (See page SE-86)**
14. **REMOVE FRONT SEATBACK BOARD SUB-ASSEMBLY (See page SE-91)**
15. **REMOVE FRONT SEATBACK BOARD COVER SUB-ASSEMBLY (See page SE-91)**
16. **REMOVE FRONT SEAT HEADREST SUPPORT (See page SE-91)**
17. **REMOVE FRONT SEAT HEADREST SUPPORT**
18. **REMOVE FRONT SEPARATE TYPE SEATBACK COVER WITH PAD (See page SE-92)**
19. **REMOVE SEATBACK CLIMATE CONTROL BLOWER**
    (a) Disconnect the connector and detach the 4 clamps.

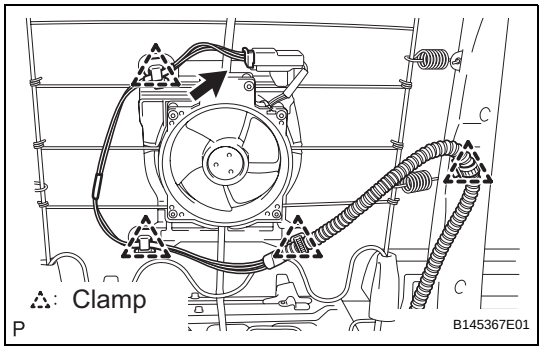

SE

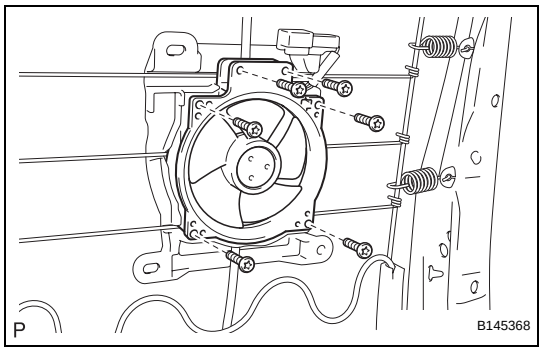

(b) Using a T30 "TORX" socket, remove the 6 "TORX" bolts and remove the seatback climate control blower.

INSPECTION

1. INSPECT SEAT CLIMATE CONTROL BLOWER LH (FRONT SEATBACK BLOWER LH)

(a) Connect the battery positive (+) lead to terminal U14-2 (IG), and the negative (-) lead to terminal U14-1 (GND). Check that the blower fan motor operates smoothly.
If the result is not as specified, replace the blower.

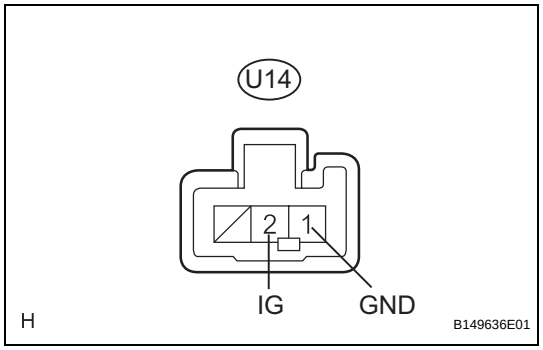

2. INSPECT SEAT CLIMATE CONTROL BLOWER RH (FRONT SEATBACK BLOWER RH)

(a) Connect the battery positive (+) lead to terminal T16-2 (IG), and the negative (-) lead to terminal T16-1 (GND). Check that the blower fan motor operates smoothly.
If the result is not as specified, replace the blower.

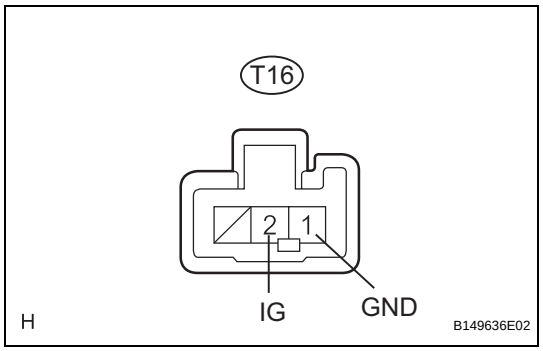

INSTALLATION

1. INSTALL SEATBACK CLIMATE CONTROL BLOWER

(a) Using T30 "TORX" socket, install the seatback climate control blower with the 6 "TORX" bolts.

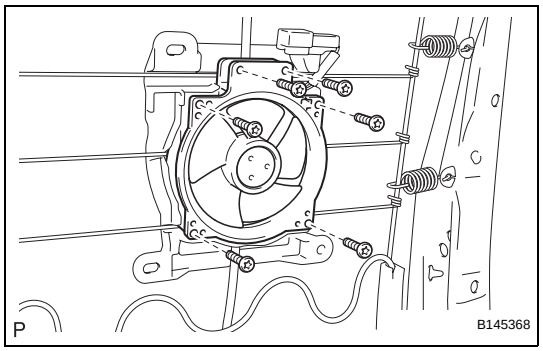

(b) Connect the 4 clamps and connector.

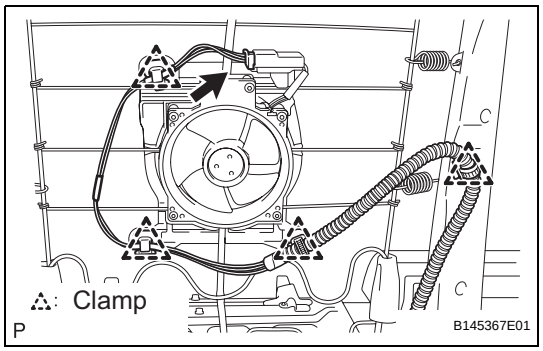

2. INSTALL FRONT SEPARATE TYPE SEATBACK COVER WITH PAD (See page SE-100)

3. INSTALL FRONT SEAT HEADREST SUPPORT (See page SE-101)

4. INSTALL FRONT SEAT HEADREST SUPPORT

5. INSTALL FRONT SEATBACK BOARD COVER SUB-ASSEMBLY (See page SE-101)

6. **INSTALL FRONT SEATBACK BOARD SUB-ASSEMBLY (See page SE-101)**
7. **INSTALL FRONT SEAT INNER CUSHION SHIELD (See page SE-107)**
8. **INSTALL FRONT SEAT CUSHION SHIELD ASSEMBLY (See page SE-108)**
9. **INSTALL SLIDE AND VERTICAL POWER SEAT SWITCH KNOB (See page SE-108)**
10. **INSTALL RECLINING POWER SEAT SWITCH KNOB (See page SE-109)**
11. **INSTALL FRONT SEAT INNER BELT ASSEMBLY (See page SB-24)**
12. **INSTALL FRONT SEAT ASSEMBLY (See page SE-109)**
13. **INSTALL FRONT SEAT REAR OUTER TRACK BRACKET COVER (See page SE-110)**
14. **INSTALL FRONT SEAT REAR INNER TRACK BRACKET COVER (See page SE-110)**
15. **INSTALL FRONT SEAT OUTER TRACK BRACKET COVER (See page SE-110)**
16. **INSTALL FRONT SEAT INNER TRACK BRACKET COVER (See page SE-110)**
17. **INSTALL FRONT SEAT HEADREST ASSEMBLY**
18. **CONNECT FRONT SEAT OUTER BELT ASSEMBLY (See page SB-31)**
19. **INSTALL SEAT BELT ANCHOR COVER CAP (See page SB-31)**
20. **PERFORM INITIALIZATION**
    NOTICE:
    Some systems need initialization after reconnecting the negative battery cable (See Page IN-33)
21. **INSPECT FRONT SEAT ASSEMBLY (See page SE-110)**
22. **INSPECT SRS WARNING LIGHT**
    Check the SRS warning light. (See Page RS-37)

REMOVAL

1. **REMOVE SEAT BELT ANCHOR COVER CAP (See page SB-22)**
2. **DISCONNECT FRONT SEAT OUTER BELT ASSEMBLY (See page SB-22)**
3. **REMOVE FRONT SEAT HEADREST ASSEMBLY**
4. **REMOVE FRONT SEAT OUTER TRACK BRACKET COVER (See page SE-83)**
5. **REMOVE FRONT SEAT INNER TRACK BRACKET COVER (See page SE-83)**
6. **REMOVE FRONT SEAT REAR OUTER TRACK BRACKET COVER (See page SE-83)**
7. **REMOVE FRONT SEAT REAR INNER TRACK BRACKET COVER (See page SE-83)**
8. **REMOVE FRONT SEAT ASSEMBLY (See page SE-83)**
9. **REMOVE RECLINING POWER SEAT SWITCH KNOB (See page SE-84)**
10. **REMOVE SLIDE AND VERTICAL POWER SEAT SWITCH KNOB (See page SE-84)**
11. **REMOVE FRONT SEAT CUSHION SHIELD ASSEMBLY (See page SE-84)**
12. **REMOVE SEAT VARIABLE CUSHION SWITCH**
    (a) Remove the 2 screws and seat variable cushion switch.

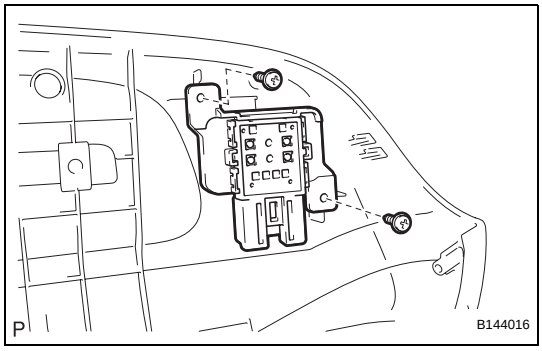

SE

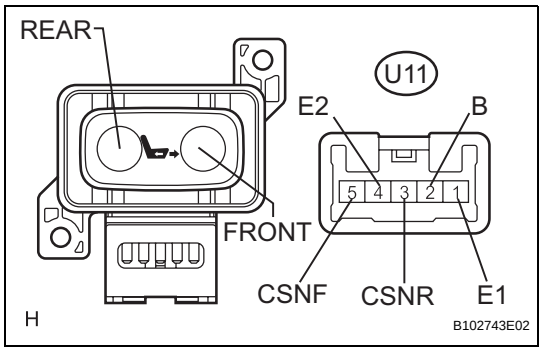

INSPECTION

1. **INSPECT SEAT VARIABLE CUSHION SWITCH (w/ Seat Position Memory System)**
   (a) Inspect the seat variable cushion switch.
      (1) Measure the resistance between the terminals when the switch is operated.
      Standard resistance

Tester Connection	Switch Condition	Specified Condition
U11-4 (E2) - U11-5 (CSNF)	FRONT	Below 1 Ω
U11-2 (B) - U11-3 (CSNR)	FRONT	Below 1 Ω
U11-4 (E2) - U11-3 (CSNR)	FRONT	10 kΩ or higher
U11-2 (B) - U11-5 (CSNF)	FRONT	10 kΩ or higher

Tester Connection	Switch Condition	Specified Condition
U11-4 (E2) - U11-5 (CSNF)	OFF	Below 1 Ω
U11-1 (E1) - U11-3 (CSNR)	OFF	Below 1 Ω
U11-4 (E2) - U11-3 (CSNR)	OFF	10 kΩ or higher
U11-1 (E1) - U11-5 (CSNF)	OFF	10 kΩ or higher
U11-1 (E1) - U11-3 (CSNR)	REAR	Below 1 Ω
U11-2 (B) - U11-5 (CSNF)	REAR	Below 1 Ω
U11-1 (E1) - U11-5 (CSNF)	REAR	10 kΩ or higher
U11-2 (B) - U11-3 (CSNR)	REAR	10 kΩ or higher

If the result is not as specified, replace the seat variable cushion switch.

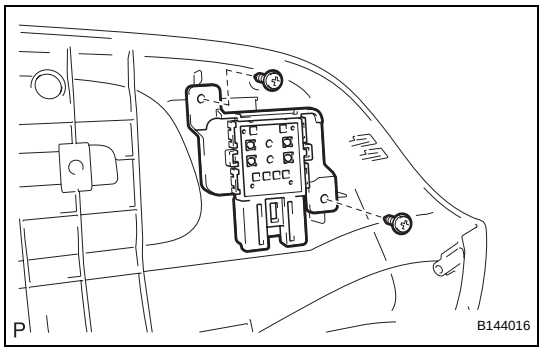

INSTALLATION

1. **INSTALL SEAT VARIABLE CUSHION SWITCH**
   (a) Install the seat variable cushion switch with the 2 screws.
2. **INSTALL FRONT SEAT CUSHION SHIELD ASSEMBLY (See page SE-108)**
3. **INSTALL SLIDE AND VERTICAL POWER SEAT SWITCH KNOB (See page SE-108)**
4. **INSTALL RECLINING POWER SEAT SWITCH KNOB (See page SE-109)**
5. **INSTALL FRONT SEAT ASSEMBLY (See page SE-109)**
6. **INSTALL FRONT SEAT REAR OUTER TRACK BRACKET COVER (See page SE-110)**
7. **INSTALL FRONT SEAT REAR INNER TRACK BRACKET COVER (See page SE-110)**
8. **INSTALL FRONT SEAT OUTER TRACK BRACKET COVER (See page SE-110)**
9. **INSTALL FRONT SEAT INNER TRACK BRACKET COVER (See page SE-110)**
10. **INSTALL FRONT SEAT HEADREST ASSEMBLY**
11. **CONNECT FRONT SEAT OUTER BELT ASSEMBLY (See page SB-31)**
12. **INSTALL SEAT BELT ANCHOR COVER CAP (See page SB-31)**
13. **PERFORM INITIALIZATION**
    NOTICE:
    Some systems need initialization after reconnecting the negative battery cable (See Page IN-33)

14. **INSPECT FRONT SEAT ASSEMBLY (See page SE-110)**

15. **INSPECT SRS WARNING LIGHT**
    Check the SRS warning light. (See Page RS-37)

REMOVAL

1. **REMOVE SEAT BELT ANCHOR COVER CAP (See page SB-22)**
2. **DISCONNECT FRONT SEAT OUTER BELT ASSEMBLY (See page SB-22)**
3. **REMOVE FRONT SEAT HEADREST ASSEMBLY**
4. **REMOVE FRONT SEAT OUTER TRACK BRACKET COVER (See page SE-83)**
5. **REMOVE FRONT SEAT INNER TRACK BRACKET COVER (See page SE-83)**
6. **REMOVE FRONT SEAT REAR OUTER TRACK BRACKET COVER (See page SE-83)**
7. **REMOVE FRONT SEAT REAR INNER TRACK BRACKET COVER (See page SE-83)**
8. **REMOVE FRONT SEAT ASSEMBLY (See page SE-83)**
9. **REMOVE FRONT SEAT INNER BELT ASSEMBLY (See page SB-23)**
10. **REMOVE RECLINING POWER SEAT SWITCH KNOB (See page SE-84)**
11. **REMOVE SLIDE AND VERTICAL POWER SEAT SWITCH KNOB (See page SE-84)**
12. **REMOVE FRONT SEAT CUSHION SHIELD ASSEMBLY (See page SE-84)**
13. **REMOVE FRONT SEAT INNER CUSHION SHIELD (See page SE-86)**
14. **REMOVE FRONT SEPARATE TYPE SEAT CUSHION COVER WITH PAD (w/o Variable Cushion) (See page SE-86)**
15. **REMOVE FRONT SEPARATE TYPE SEAT CUSHION COVER WITH PAD (w/ Variable Cushion) (See page SE-90)**
16. **REMOVE SEAT CUSHION CLIMATE CONTROL DUCT (See page SE-94)**
17. **REMOVE SEAT CUSHION CLIMATE CONTROL BLOWER**
    (a) Disconnect the connector.
    (b) Remove the screw, detach the claw and remove the seat cushion climate control blower.

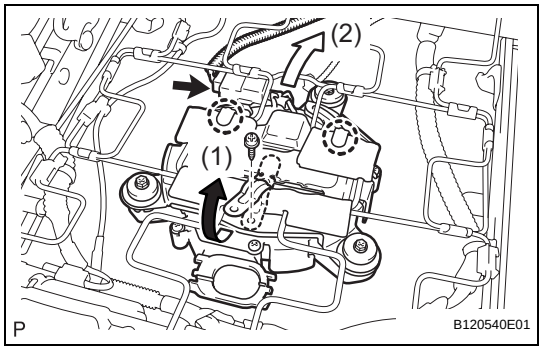

SE

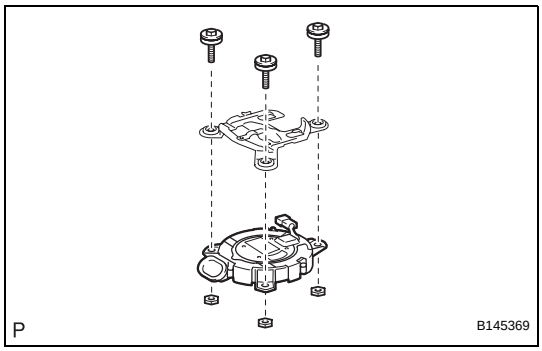

18. REMOVE SEAT CLIMATE CONTROL BLOWER

(a) Remove the 3 bolts, 3 nuts, bracket, and seat climate control blower.

INSPECTION

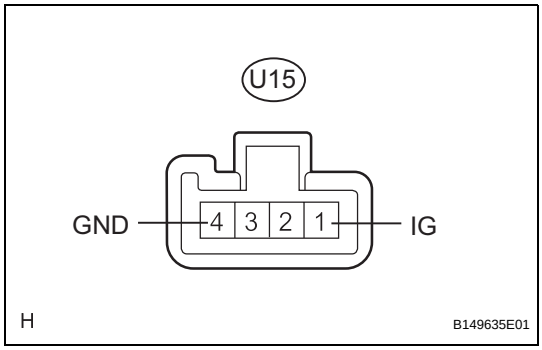

1. INSPECT SEAT CLIMATE CONTROL BLOWER LH (FRONT SEAT CUSHION BLOWER LH)

(a) Connect the battery positive (+) lead to terminal U15-1 (IG), and the negative (-) lead to terminal U15-4 (GND). Check that the blower fan motor operates smoothly.
If the result is not as specified, replace the blower.

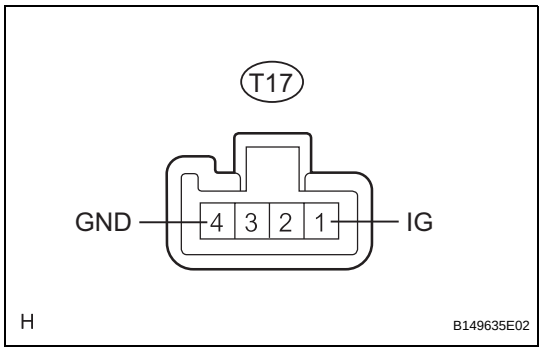

2. INSPECT SEAT CLIMATE CONTROL BLOWER RH (FRONT SEAT CUSHION BLOWER RH)

(a) Connect the battery positive (+) lead to terminal T17-1 (IG), and the negative (-) lead to terminal T17-4 (GND). Check that the blower fan motor operates smoothly.
If the result is not as specified, replace the blower.

INSTALLATION

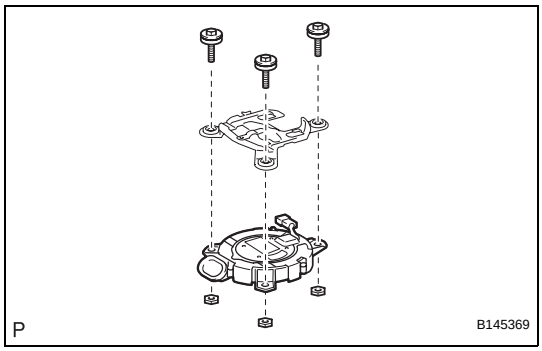

1. INSTALL SEAT CLIMATE CONTROL BLOWER

(a) Install the seat climate control blower and bracket with the 3 bolts and 3 nuts.

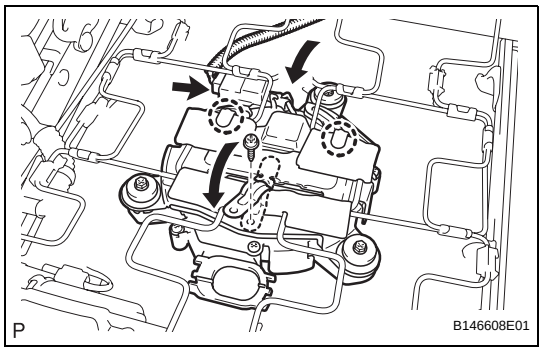

2. INSTALL SEAT CUSHION CLIMATE CONTROL BLOWER

(a) Engage the 2 claws to install the seat cushion climate control blower.

(b) Install the seat cushion climate control blower with the screw.
Torque: 2.6 N*m (27 kgf*cm, 23 in.*lbf)

(c) Connect the connector.

3. INSTALL SEAT CUSHION CLIMATE CONTROL DUCT (See page SE-98)

SE

4. **INSTALL FRONT SEPARATE TYPE SEAT CUSHION COVER WITH PAD (w/o Variable Cushion) (See page SE-104)**
5. **INSTALL FRONT SEPARATE TYPE SEAT CUSHION COVER WITH PAD (w/ Variable Cushion) (See page SE-105)**
6. **INSTALL FRONT SEAT INNER CUSHION SHIELD (See page SE-107)**
7. **INSTALL FRONT SEAT CUSHION SHIELD ASSEMBLY (See page SE-108)**
8. **INSTALL SLIDE AND VERTICAL POWER SEAT SWITCH KNOB (See page SE-108)**
9. **INSTALL RECLINING POWER SEAT SWITCH KNOB (See page SE-109)**
10. **INSTALL FRONT SEAT INNER BELT ASSEMBLY (See page SB-24)**
11. **INSTALL FRONT SEAT ASSEMBLY (See page SE-109)**
12. **INSTALL FRONT SEAT REAR OUTER TRACK BRACKET COVER (See page SE-110)**
13. **INSTALL FRONT SEAT REAR INNER TRACK BRACKET COVER (See page SE-110)**
14. **INSTALL FRONT SEAT OUTER TRACK BRACKET COVER (See page SE-110)**
15. **INSTALL FRONT SEAT INNER TRACK BRACKET COVER (See page SE-110)**
16. **INSTALL FRONT SEAT HEADREST ASSEMBLY**
17. **CONNECT FRONT SEAT OUTER BELT ASSEMBLY (See page SB-31)**
18. **INSTALL SEAT BELT ANCHOR COVER CAP (See page SB-31)**
19. **PERFORM INITIALIZATION**
    NOTICE:
    Some systems need initialization after reconnecting the negative battery cable (See Page IN-33)
20. **INSPECT FRONT SEAT ASSEMBLY (See page SE-110)**
21. **INSPECT SRS WARNING LIGHT**
    Check the SRS warning light. (See Page RS-37)

(c) Inspect seat heater switch illumination.
(1) Apply battery voltage and check operation of the switch, as shown in the table below.
OK

Measurement Condition	Specified Condition
Battery positive (+) → Terminal F3-4 (ILL+) Battery negative (-) → Terminal F3-3 (ILL-)	Illumination comes on

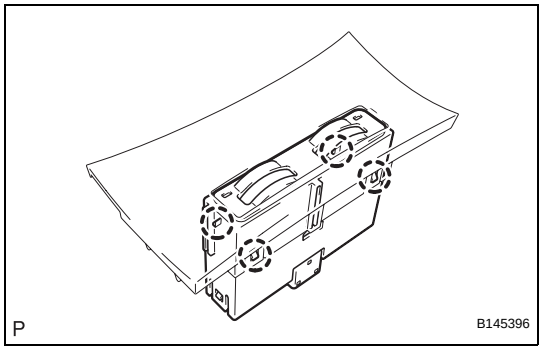

INSTALLATION

1. INSTALL SEAT HEATER SWITCH
(a) Engage the 4 claws and install the seat heater switch.

2. INSTALL HEATER SEAT SWITCH CONSOLE BASE
(See page IP-41)

REMOVAL

1. **REMOVE SEAT BELT ANCHOR COVER CAP (See page SB-22)**
2. **DISCONNECT FRONT SEAT OUTER BELT ASSEMBLY (See page SB-22)**
3. **REMOVE FRONT SEAT HEADREST ASSEMBLY**
4. **REMOVE FRONT SEAT OUTER TRACK BRACKET COVER (See page SE-83)**
5. **REMOVE FRONT SEAT INNER TRACK BRACKET COVER (See page SE-83)**
6. **REMOVE FRONT SEAT REAR OUTER TRACK BRACKET COVER (See page SE-83)**
7. **REMOVE FRONT SEAT REAR INNER TRACK BRACKET COVER (See page SE-83)**
8. **REMOVE FRONT SEAT ASSEMBLY (See page SE-83)**
9. **REMOVE FRONT SEAT INNER BELT ASSEMBLY (See page SB-23)**
10. **REMOVE RECLINING POWER SEAT SWITCH KNOB (See page SE-84)**
11. **REMOVE SLIDE AND VERTICAL POWER SEAT SWITCH KNOB (See page SE-84)**
12. **REMOVE FRONT SEAT CUSHION SHIELD ASSEMBLY (See page SE-84)**
13. **REMOVE FRONT SEAT INNER CUSHION SHIELD (See page SE-86)**
14. **REMOVE FRONT SEATBACK BOARD SUB-ASSEMBLY (See page SE-91)**
15. **REMOVE FRONT SEATBACK BOARD COVER SUB-ASSEMBLY (See page SE-91)**
16. **REMOVE FRONT SEAT HEADREST SUPPORT (See page SE-91)**
17. **REMOVE FRONT SEAT HEADREST SUPPORT**
18. **REMOVE FRONT SEPARATE TYPE SEATBACK COVER WITH PAD (See page SE-92)**
19. **REMOVE FRONT SEPARATE TYPE SEATBACK COVER (See page SE-92)**

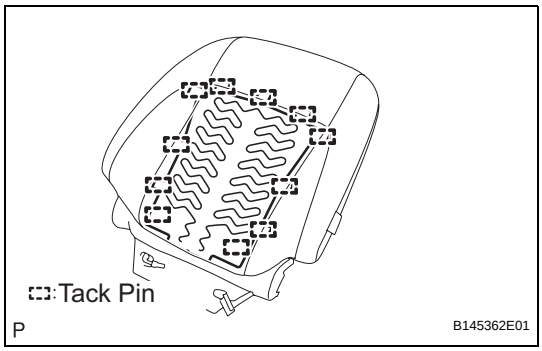

20. REMOVE FRONT SEATBACK HEATER

(a) Cut off the tack pins that fasten the seat heater, and then remove the front seatback heater from the front separate type seatback cover.

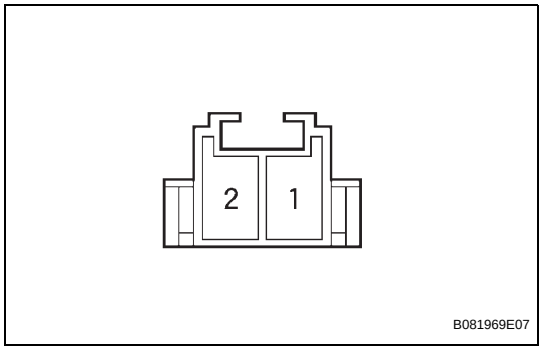

INSPECTION

1. INSPECT FRONT SEATBACK HEATER

(a) Measure the resistance according to the value(s) in the table below.

Standard resistance

Tester Connection	Condition	Specified Condition
1 - 2	Always	Below 1 Ω

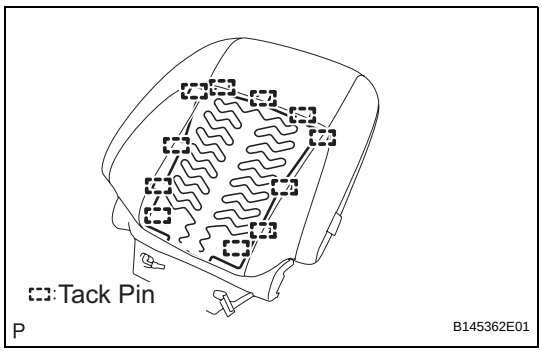

INSTALLATION

1. INSTALL FRONT SEATBACK HEATER

(a) Using a tacker, install the front seatback heater to the end of the seat cover with the 11 new tack pins.

2. INSTALL FRONT SEPARATE TYPE SEATBACK COVER (See page SE-100)

3. INSTALL FRONT SEPARATE TYPE SEATBACK COVER WITH PAD (See page SE-100)

4. INSTALL FRONT SEAT HEADREST SUPPORT (See page SE-101)

5. INSTALL FRONT SEAT HEADREST SUPPORT

6. INSTALL FRONT SEATBACK BOARD COVER SUB-ASSEMBLY (See page SE-101)

7. INSTALL FRONT SEATBACK BOARD SUB-ASSEMBLY (See page SE-101)

8. INSTALL FRONT SEAT INNER CUSHION SHIELD (See page SE-107)

9. INSTALL FRONT SEAT CUSHION SHIELD ASSEMBLY (See page SE-108)

10. INSTALL SLIDE AND VERTICAL POWER SEAT SWITCH KNOB (See page SE-108)

11. INSTALL RECLINING POWER SEAT SWITCH KNOB (See page SE-109)

12. INSTALL FRONT SEAT INNER BELT ASSEMBLY (See page SB-24)

13. INSTALL FRONT SEAT ASSEMBLY (See page SE-109)

14. **INSTALL FRONT SEAT REAR OUTER TRACK BRACKET COVER (See page SE-110)**
15. **INSTALL FRONT SEAT REAR INNER TRACK BRACKET COVER (See page SE-110)**
16. **INSTALL FRONT SEAT OUTER TRACK BRACKET COVER (See page SE-110)**
17. **INSTALL FRONT SEAT INNER TRACK BRACKET COVER (See page SE-110)**
18. **INSTALL FRONT SEAT HEADREST ASSEMBLY**
19. **CONNECT FRONT SEAT OUTER BELT ASSEMBLY (See page SB-31)**
20. **INSTALL SEAT BELT ANCHOR COVER CAP (See page SB-31)**
21. **PERFORM INITIALIZATION**
    NOTICE:
    Some systems need initialization after reconnecting the negative battery cable (See Page IN-33)
22. **INSPECT FRONT SEAT ASSEMBLY (See page SE-110)**
23. **INSPECT SRS WARNING LIGHT**
    Check the SRS warning light. (See Page RS-37)

SEAT HEATER SWITCH

COMPONENTS

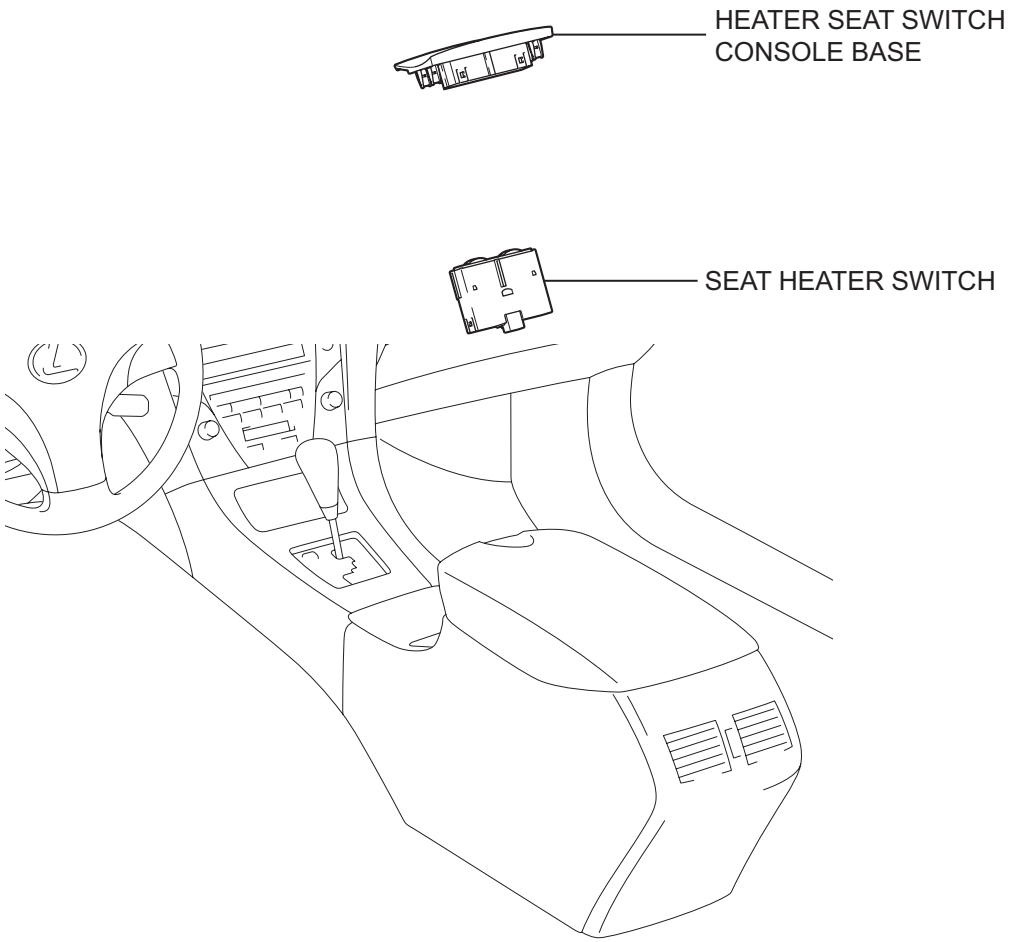

P

B145397E01

REMOVAL

1. REMOVE HEATER SEAT SWITCH CONSOLE BASE (See page IP-18)

2. REMOVE SEAT HEATER SWITCH

(a) Disengage the 4 claws and remove the seat heater switch.

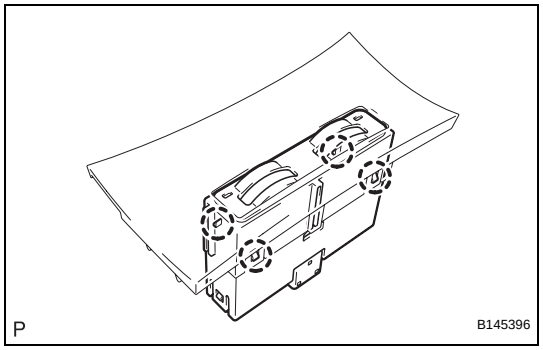

INSPECTION

1. INSPECT SEAT HEATER SWITCH

(a) Inspect seat heater switch operation.

(1) Measure the resistance according to the value(s) in the table below.

Standard resistance

Tester Connection	Switch Position	Specified Condition
F3-1 (RV) - F3-6 (SW)	OFF: Front RH Vol: 0	Below 2.5 kΩ
	OFF: Front RH Vol: 3	Below 376 Ω
F3-2 (REL1) - F3-11 (SW)	OFF: Front LH Vol: 0	Below 2.5 kΩ
	OFF: Front LH Vol: 3	Below 376 Ω
F3-7 (BLLH) - F3-10 (SVSG)	OFF: Front RH Vol: 0	Below 1.1 kΩ
	OFF: Front RH Vol: 3	Below 111 Ω
F3-8 (SVS5) - F3-10 (SVSG)	Always	Below 770 Ω to 1.43 kΩ
F3-9 (BLRH) - F3-10 (SVSG)	OFF: Front LH Vol: 0	Below 1.1 kΩ
	OFF: Front LH Vol: 3	Below 111 Ω

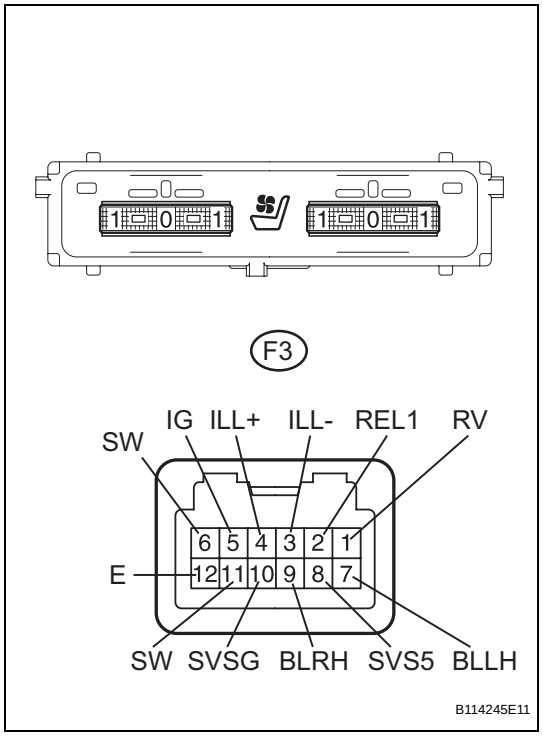

(b) Inspect seat heater switch indicator operation.

(1) Apply battery voltage and check operation of the switch, as shown in the table below.

OK

Measurement Condition	Condition	Specified Condition
Battery positive (+) → Terminal F3-5 (IG) Battery negative (-) → Terminal F3-12 (E)	Seat heater switch ON	Indicator comes on

SE

REMOVAL

1. **REMOVE SEAT BELT ANCHOR COVER CAP (See page SB-22)**
2. **DISCONNECT FRONT SEAT OUTER BELT ASSEMBLY (See page SB-22)**
3. **REMOVE FRONT SEAT HEADREST ASSEMBLY**
4. **REMOVE FRONT SEAT OUTER TRACK BRACKET COVER (See page SE-83)**
5. **REMOVE FRONT SEAT INNER TRACK BRACKET COVER (See page SE-83)**
6. **REMOVE FRONT SEAT REAR OUTER TRACK BRACKET COVER (See page SE-83)**
7. **REMOVE FRONT SEAT REAR INNER TRACK BRACKET COVER (See page SE-83)**
8. **REMOVE FRONT SEAT ASSEMBLY (See page SE-83)**
9. **REMOVE FRONT SEAT INNER BELT ASSEMBLY (See page SB-23)**
10. **REMOVE RECLINING POWER SEAT SWITCH KNOB (See page SE-84)**
11. **REMOVE SLIDE AND VERTICAL POWER SEAT SWITCH KNOB (See page SE-84)**
12. **REMOVE FRONT SEAT CUSHION SHIELD ASSEMBLY (See page SE-84)**
13. **REMOVE FRONT SEAT INNER CUSHION SHIELD (See page SE-86)**
14. **REMOVE FRONT SEPARATE TYPE SEAT CUSHION COVER WITH PAD (w/o Variable Cushion) (See page SE-86)**
15. **REMOVE FRONT SEPARATE TYPE SEAT CUSHION COVER WITH PAD (w/ Variable Cushion) (See page SE-88)**
16. **REMOVE FRONT SEPARATE TYPE SEAT CUSHION COVER (W/o variable cushion) (See page SE-89)**
17. **REMOVE FRONT SEPARATE TYPE SEAT CUSHION COVER (W/ variable cushion) (See page SE-90)**
18. **REMOVE FRONT SEAT CUSHION HEATER**
    (a) Cut off the tack pins that fasten the seat heater, and then remove the front seat cushion heater assembly from the separate type front seat cushion cover.

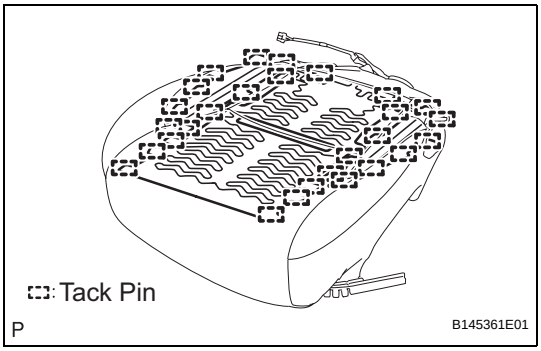

SE

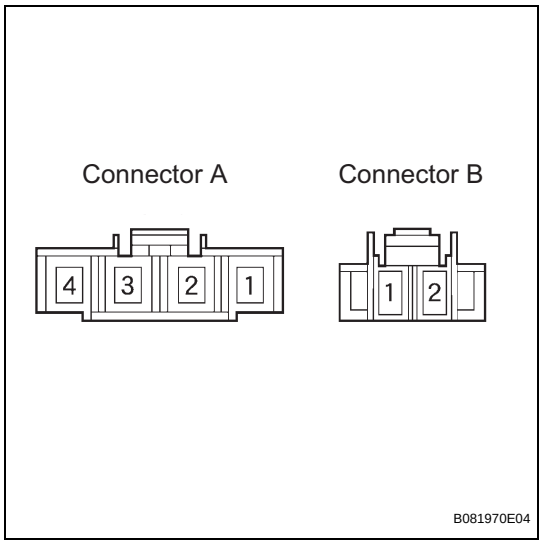

INSPECTION

1. **INSPECT FRONT SEAT CUSHION HEATER**
   (a) Measure the resistance according to the value(s) in the table below.
   Standard resistance

Tester Connection	Condition	Specified Condition
A-1 - B-1	Below 25°C (77°F)	3.05 to 3.65 Ω
A-4 - B-2		
A-1 - A-4		
B-1 - B-2		
A-2 - A-3	35°C (95°F)	8 to 12 kΩ

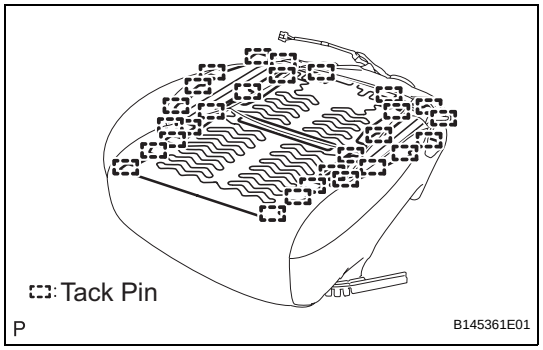

INSTALLATION

1. **INSTALL FRONT SEAT CUSHION HEATER**
   (a) Using a tacker, install the front seat cushion heater to the end of the seat cover with the tack pins.
2. **INSTALL FRONT SEPARATE TYPE SEAT CUSHION COVER (w/o variable cushion) (See page SE-102)**
3. **REMOVE FRONT SEPARATE TYPE SEAT CUSHION COVER (w/ variable cushion) (See page SE-103)**
4. **INSTALL FRONT SEPARATE TYPE SEAT CUSHION COVER WITH PAD (w/o Variable Cushion) (See page SE-104)**
5. **INSTALL FRONT SEPARATE TYPE SEAT CUSHION COVER WITH PAD (w/ Variable Cushion) (See page SE-105)**
6. **INSTALL FRONT SEAT INNER CUSHION SHIELD (See page SE-107)**
7. **INSTALL FRONT SEAT CUSHION SHIELD ASSEMBLY (See page SE-108)**
8. **INSTALL SLIDE AND VERTICAL POWER SEAT SWITCH KNOB (See page SE-108)**
9. **INSTALL RECLINING POWER SEAT SWITCH KNOB (See page SE-109)**
10. **INSTALL FRONT SEAT INNER BELT ASSEMBLY (See page SB-24)**
11. **INSTALL FRONT SEAT ASSEMBLY (See page SE-109)**
12. **INSTALL FRONT SEAT REAR OUTER TRACK BRACKET COVER (See page SE-110)**
13. **INSTALL FRONT SEAT REAR INNER TRACK BRACKET COVER (See page SE-110)**

14. **INSTALL FRONT SEAT OUTER TRACK BRACKET COVER (See page SE-110)**
15. **INSTALL FRONT SEAT INNER TRACK BRACKET COVER (See page SE-110)**
16. **INSTALL FRONT SEAT HEADREST ASSEMBLY**
17. **CONNECT FRONT SEAT OUTER BELT ASSEMBLY (See page SB-31)**
18. **INSTALL SEAT BELT ANCHOR COVER CAP (See page SB-31)**
19. **PERFORM INITIALIZATION**
    NOTICE:
    Some systems need initialization after reconnecting the negative battery cable (See Page IN-33)
20. **INSPECT AND ADJUST FRONT SEAT ASSEMBLY (See page SE-110)**
21. **INSPECT SRS WARNING LIGHT**
    Check the SRS warning light. (See Page RS-37)

REMOVAL

1. **REMOVE SEAT BELT ANCHOR COVER CAP (See page SB-22)**
2. **DISCONNECT FRONT SEAT OUTER BELT ASSEMBLY (See page SB-22)**
3. **REMOVE FRONT SEAT HEADREST ASSEMBLY**
4. **REMOVE FRONT SEAT OUTER TRACK BRACKET COVER (See page SE-83)**
5. **REMOVE FRONT SEAT INNER TRACK BRACKET COVER (See page SE-83)**
6. **REMOVE FRONT SEAT REAR OUTER TRACK BRACKET COVER (See page SE-83)**
7. **REMOVE FRONT SEAT REAR INNER TRACK BRACKET COVER (See page SE-83)**
8. **REMOVE FRONT SEAT ASSEMBLY (See page SE-83)**
9. **REMOVE FRONT SEAT INNER BELT ASSEMBLY (See page SB-23)**
10. **REMOVE RECLINING POWER SEAT SWITCH KNOB (See page SE-84)**
11. **REMOVE SLIDE AND VERTICAL POWER SEAT SWITCH KNOB (See page SE-84)**
12. **REMOVE FRONT SEAT CUSHION SHIELD ASSEMBLY (See page SE-84)**
13. **REMOVE FRONT SEAT INNER CUSHION SHIELD (See page SE-86)**
14. **REMOVE FRONT SEATBACK BOARD SUB-ASSEMBLY (See page SE-91)**
15. **REMOVE FRONT SEATBACK BOARD COVER SUB-ASSEMBLY (See page SE-91)**
16. **REMOVE FRONT SEAT HEADREST SUPPORT (See page SE-91)**
17. **REMOVE FRONT SEAT HEADREST SUPPORT**
18. **REMOVE FRONT SEPARATE TYPE SEATBACK COVER WITH PAD (See page SE-92)**
19. **REMOVE FRONT SEPARATE TYPE SEATBACK COVER (See page SE-92)**

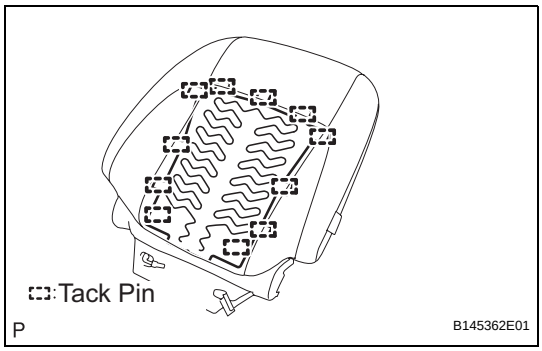

20. REMOVE FRONT SEATBACK HEATER

(a) Cut off the tack pins that fasten the seat heater, and then remove the front seatback heater from the front separate type seatback cover.

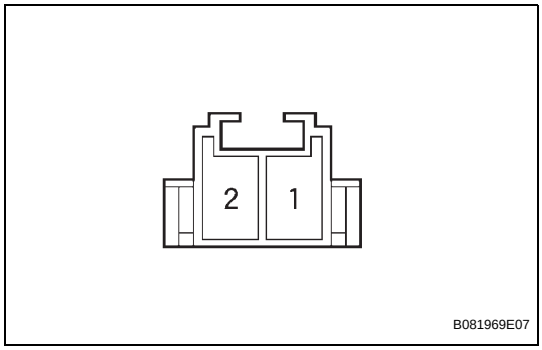

INSPECTION

1. INSPECT FRONT SEATBACK HEATER

(a) Measure the resistance according to the value(s) in the table below.

Standard resistance

Tester Connection	Condition	Specified Condition
1 - 2	Always	Below 1 Ω

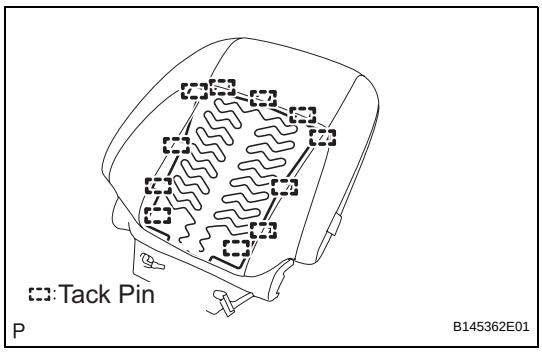

INSTALLATION

1. INSTALL FRONT SEATBACK HEATER

(a) Using a tacker, install the front seatback heater to the end of the seat cover with the 11 new tack pins.

2. INSTALL FRONT SEPARATE TYPE SEATBACK COVER (See page SE-100)

3. INSTALL FRONT SEPARATE TYPE SEATBACK COVER WITH PAD (See page SE-100)

4. INSTALL FRONT SEAT HEADREST SUPPORT (See page SE-101)

5. INSTALL FRONT SEAT HEADREST SUPPORT

6. INSTALL FRONT SEATBACK BOARD COVER SUB-ASSEMBLY (See page SE-101)

7. INSTALL FRONT SEATBACK BOARD SUB-ASSEMBLY (See page SE-101)

8. INSTALL FRONT SEAT INNER CUSHION SHIELD (See page SE-107)

9. INSTALL FRONT SEAT CUSHION SHIELD ASSEMBLY (See page SE-108)

10. INSTALL SLIDE AND VERTICAL POWER SEAT SWITCH KNOB (See page SE-108)

11. INSTALL RECLINING POWER SEAT SWITCH KNOB (See page SE-109)

12. INSTALL FRONT SEAT INNER BELT ASSEMBLY (See page SB-24)

13. INSTALL FRONT SEAT ASSEMBLY (See page SE-109)

14. **INSTALL FRONT SEAT REAR OUTER TRACK BRACKET COVER (See page SE-110)**
15. **INSTALL FRONT SEAT REAR INNER TRACK BRACKET COVER (See page SE-110)**
16. **INSTALL FRONT SEAT OUTER TRACK BRACKET COVER (See page SE-110)**
17. **INSTALL FRONT SEAT INNER TRACK BRACKET COVER (See page SE-110)**
18. **INSTALL FRONT SEAT HEADREST ASSEMBLY**
19. **CONNECT FRONT SEAT OUTER BELT ASSEMBLY (See page SB-31)**
20. **INSTALL SEAT BELT ANCHOR COVER CAP (See page SB-31)**
21. **PERFORM INITIALIZATION**
    NOTICE:
    Some systems need initialization after reconnecting the negative battery cable (See Page IN-33)
22. **INSPECT FRONT SEAT ASSEMBLY (See page SE-110)**
23. **INSPECT SRS WARNING LIGHT**
    Check the SRS warning light. (See Page RS-37)

INSPECTION

1. INSPECT FRONT SEAT HEATER CONTROL LH

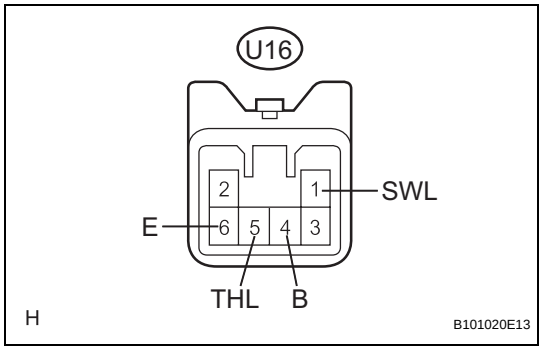

(a) Disconnect the seat heater control LH connector.

(b) Measure the voltage and resistance according to the value(s) in the table below.

Standard resistance

Tester Connection	Condition	Specified Condition
U16-6 (E) - Body ground	Always	Below 1 Ω

Standard voltage

Tester Connection	Condition	Specified Condition
U16-1 (SWL) - U16-6 (E)	Engine switch on (IG), seat heater switch OFF → ON	0 V → 10 to 14 V
U16-4 (B) - U16-6 (E)	Engine switch off → on (IG)	0 V → 10 to 14 V

(c) Reconnect the seat heater control LH connector.

(d) Measure the voltage according to the value(s) in the table below.

Standard voltage

Tester Connection	Condition	Specified Condition
U16-5 (THL) - U16-6 (E)	Engine switch on (IG), seat heater switch volume 1 → 3	Gradual increase 0 V → 10 to 14 V

2. INSPECT FRONT SEAT HEATER CONTROL RH

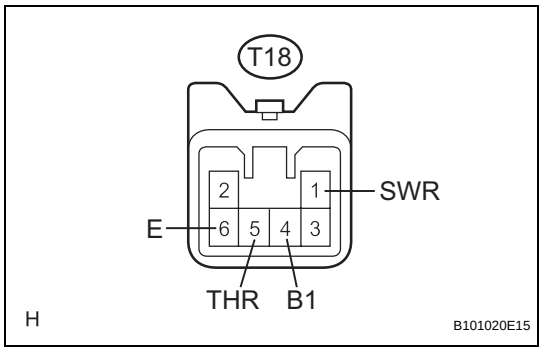

(a) Disconnect the seat heater control RH connector.

(b) Measure the voltage and resistance according to the value(s) in the table below.

Standard resistance

Tester Connection	Condition	Specified Condition
T18-6 (E) - Body ground	Always	Below 1 Ω

Standard voltage

Tester Connection	Condition	Specified Condition
T18-1 (SWR) - T18-6 (E)	Engine switch on (IG), seat heater switch OFF → ON	0 V → 10 to 14 V
T18-4 (B1) - T18-6 (E)	Engine switch off → on (IG)	0 V → 10 to 14 V

(c) Reconnect the seat heater control RH connector.

(d) Measure the voltage according to the value(s) in the table below.

Standard voltage

Tester Connection	Condition	Specified Condition
T18-5 (THR) - T18-6 (E)	Engine switch on (IG), seat heater switch volume 1 → 3	Gradual increase 0 V → 10 to 14 V

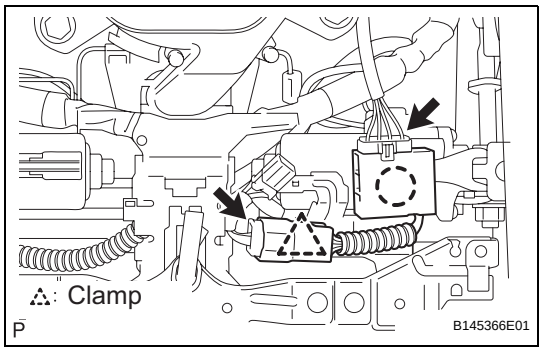

INSTALLATION

1. **INSTALL SEAT HEATER CONTROL**
   (a) Install the seat heater control with the clamp and claw.
   (b) Connect the 2 connectors.
2. **INSTALL FRONT SEAT ASSEMBLY (See page SE-109)**
3. **INSTALL FRONT SEAT REAR OUTER TRACK BRACKET COVER (See page SE-110)**
4. **INSTALL FRONT SEAT REAR INNER TRACK BRACKET COVER (See page SE-110)**
5. **INSTALL FRONT SEAT OUTER TRACK BRACKET COVER (See page SE-110)**
6. **INSTALL FRONT SEAT INNER TRACK BRACKET COVER (See page SE-110)**
7. **INSTALL FRONT SEAT HEADREST ASSEMBLY**
8. **CONNECT FRONT SEAT OUTER BELT ASSEMBLY (See page SB-31)**
9. **INSTALL SEAT BELT ANCHOR COVER CAP (See page SB-31)**
10. **REMOVE PERFORM INITIALIZATION**
    NOTICE:
    Some systems need initialization after reconnecting the negative battery cable (See Page IN-33)
11. **INSPECT FRONT SEAT ASSEMBLY (See page SE-110)**
12. **INSPECT SRS WARNING LIGHT**
    Check the SRS warning light. (See Page RS-37)

REMOVAL

1. **REMOVE SEAT BELT ANCHOR COVER CAP (See page SB-22)**
2. **DISCONNECT FRONT SEAT OUTER BELT ASSEMBLY (See page SB-22)**
3. **REMOVE FRONT SEAT HEADREST ASSEMBLY**
4. **REMOVE FRONT SEAT OUTER TRACK BRACKET COVER (See page SE-83)**
5. **REMOVE FRONT SEAT INNER TRACK BRACKET COVER (See page SE-83)**
6. **REMOVE FRONT SEAT REAR OUTER TRACK BRACKET COVER (See page SE-83)**
7. **REMOVE FRONT SEAT REAR INNER TRACK BRACKET COVER (See page SE-83)**
8. **REMOVE FRONT SEAT ASSEMBLY (See page SE-83)**
9. **REMOVE FRONT SEAT INNER BELT ASSEMBLY (See page SB-23)**
10. **REMOVE RECLINING POWER SEAT SWITCH KNOB (See page SE-84)**
11. **REMOVE SLIDE AND VERTICAL POWER SEAT SWITCH KNOB (See page SE-84)**
12. **REMOVE FRONT SEAT CUSHION SHIELD ASSEMBLY (See page SE-84)**
13. **REMOVE FRONT SEAT INNER CUSHION SHIELD (See page SE-86)**
14. **REMOVE FRONT SEPARATE TYPE SEAT CUSHION COVER WITH PAD (w/o Variable Cushion) (See page SE-86)**
15. **REMOVE FRONT SEPARATE TYPE SEAT CUSHION COVER WITH PAD (w/ Variable Cushion) (See page SE-88)**
16. **REMOVE FRONT SEPARATE TYPE SEAT CUSHION COVER (W/o variable cushion) (See page SE-89)**
17. **REMOVE FRONT SEPARATE TYPE SEAT CUSHION COVER (W/ variable cushion) (See page SE-90)**
18. **REMOVE FRONT SEAT CUSHION HEATER**
    (a) Cut off the tack pins that fasten the seat heater, and then remove the front seat cushion heater assembly from the separate type front seat cushion cover.

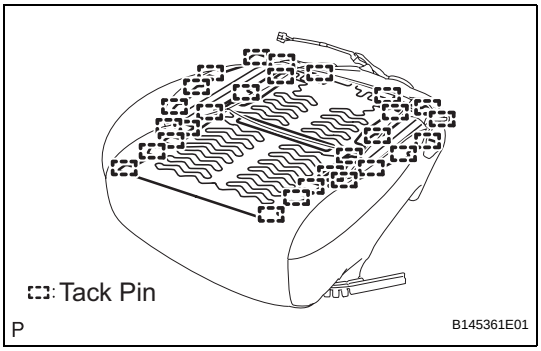

SE

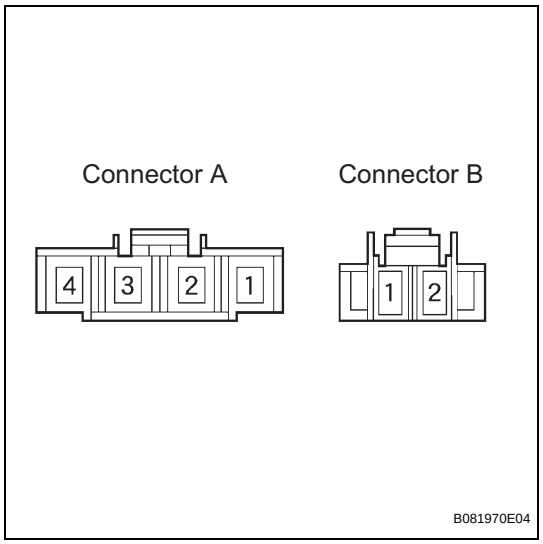

INSPECTION

1. **INSPECT FRONT SEAT CUSHION HEATER**
   (a) Measure the resistance according to the value(s) in the table below.
   Standard resistance

Tester Connection	Condition	Specified Condition
A-1 - B-1	Below 25°C (77°F)	3.05 to 3.65 Ω
A-4 - B-2		
A-1 - A-4		
B-1 - B-2		
A-2 - A-3	35°C (95°F)	8 to 12 kΩ

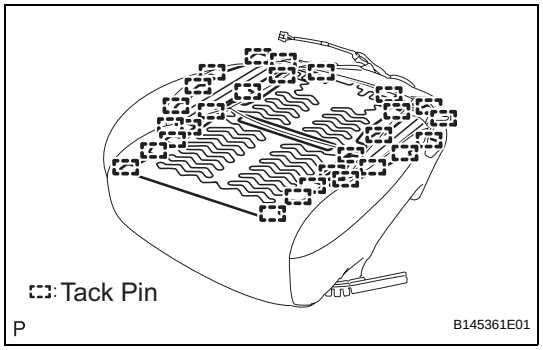

INSTALLATION

1. **INSTALL FRONT SEAT CUSHION HEATER**
   (a) Using a tacker, install the front seat cushion heater to the end of the seat cover with the tack pins.
2. **INSTALL FRONT SEPARATE TYPE SEAT CUSHION COVER (w/o variable cushion) (See page SE-102)**
3. **REMOVE FRONT SEPARATE TYPE SEAT CUSHION COVER (w/ variable cushion) (See page SE-103)**
4. **INSTALL FRONT SEPARATE TYPE SEAT CUSHION COVER WITH PAD (w/o Variable Cushion) (See page SE-104)**
5. **INSTALL FRONT SEPARATE TYPE SEAT CUSHION COVER WITH PAD (w/ Variable Cushion) (See page SE-105)**
6. **INSTALL FRONT SEAT INNER CUSHION SHIELD (See page SE-107)**
7. **INSTALL FRONT SEAT CUSHION SHIELD ASSEMBLY (See page SE-108)**
8. **INSTALL SLIDE AND VERTICAL POWER SEAT SWITCH KNOB (See page SE-108)**
9. **INSTALL RECLINING POWER SEAT SWITCH KNOB (See page SE-109)**
10. **INSTALL FRONT SEAT INNER BELT ASSEMBLY (See page SB-24)**
11. **INSTALL FRONT SEAT ASSEMBLY (See page SE-109)**
12. **INSTALL FRONT SEAT REAR OUTER TRACK BRACKET COVER (See page SE-110)**
13. **INSTALL FRONT SEAT REAR INNER TRACK BRACKET COVER (See page SE-110)**

14. **INSTALL FRONT SEAT OUTER TRACK BRACKET COVER (See page SE-110)**
15. **INSTALL FRONT SEAT INNER TRACK BRACKET COVER (See page SE-110)**
16. **INSTALL FRONT SEAT HEADREST ASSEMBLY**
17. **CONNECT FRONT SEAT OUTER BELT ASSEMBLY (See page SB-31)**
18. **INSTALL SEAT BELT ANCHOR COVER CAP (See page SB-31)**
19. **PERFORM INITIALIZATION**
    NOTICE:
    Some systems need initialization after reconnecting the negative battery cable (See Page IN-33)
20. **INSPECT AND ADJUST FRONT SEAT ASSEMBLY (See page SE-110)**
21. **INSPECT SRS WARNING LIGHT**
    Check the SRS warning light. (See Page RS-37)

SEAT HEATER CONTROL

COMPONENTS

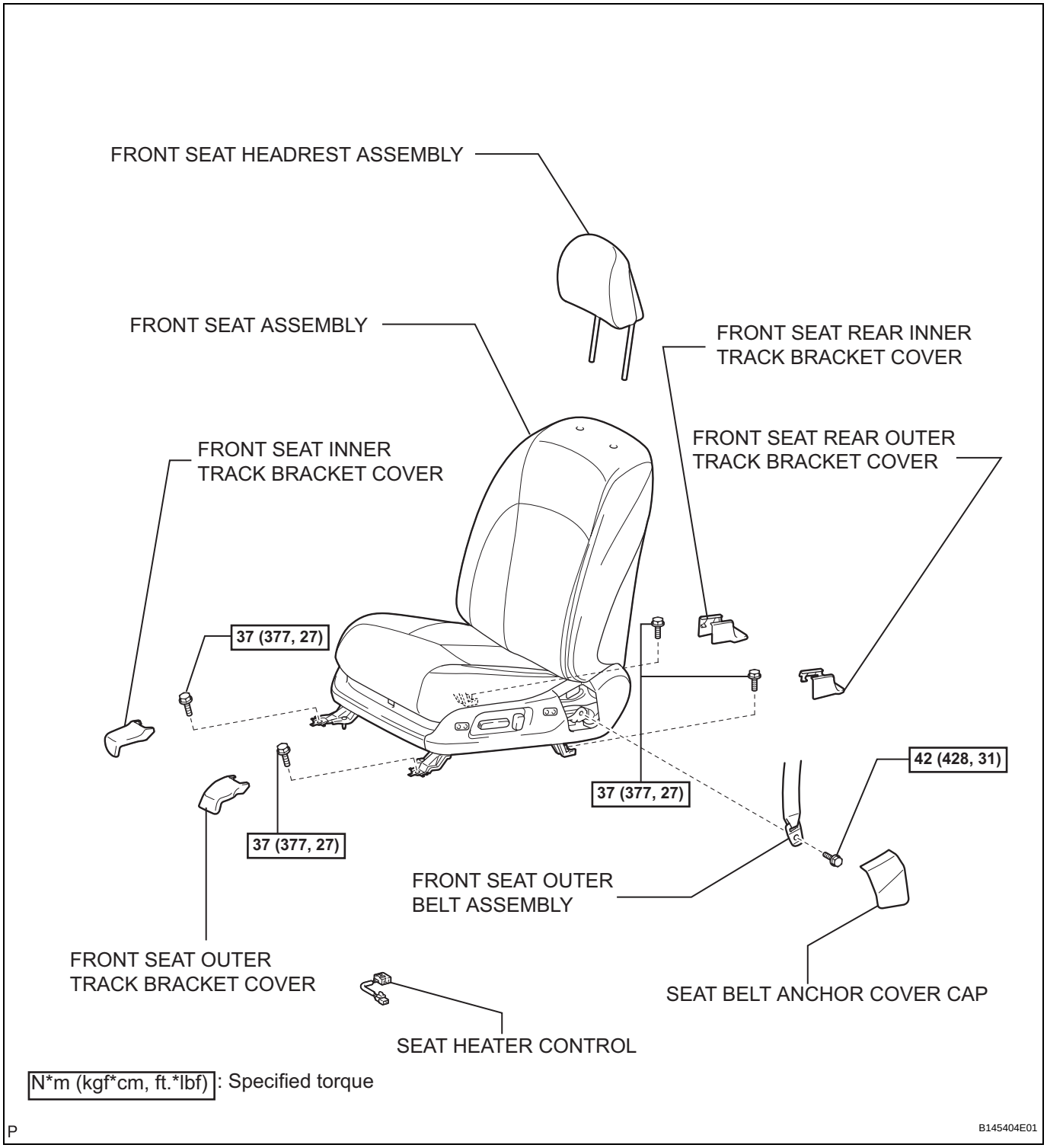

SE

REMOVAL

1. **REMOVE SEAT BELT ANCHOR COVER CAP (See page SB-22)**
2. **DISCONNECT FRONT SEAT OUTER BELT ASSEMBLY (See page SB-22)**
3. **REMOVE FRONT SEAT HEADREST ASSEMBLY**
4. **REMOVE FRONT SEAT OUTER TRACK BRACKET COVER (See page SE-83)**
5. **REMOVE FRONT SEAT INNER TRACK BRACKET COVER (See page SE-83)**
6. **REMOVE FRONT SEAT REAR OUTER TRACK BRACKET COVER (See page SE-83)**
7. **REMOVE FRONT SEAT REAR INNER TRACK BRACKET COVER (See page SE-83)**
8. **REMOVE FRONT SEAT ASSEMBLY (See page SE-83)**
9. **REMOVE SEAT HEATER CONTROL**
   (a) Disconnect the 2 connectors.
   (b) Disconnect the clamp and claw, and remove the seat heater control sub-assembly.

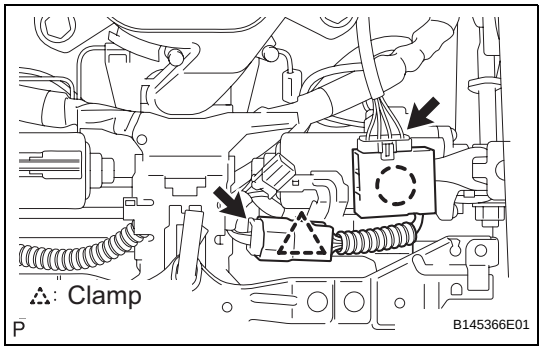

INSPECTION

1. INSPECT FRONT SEAT HEATER CONTROL LH

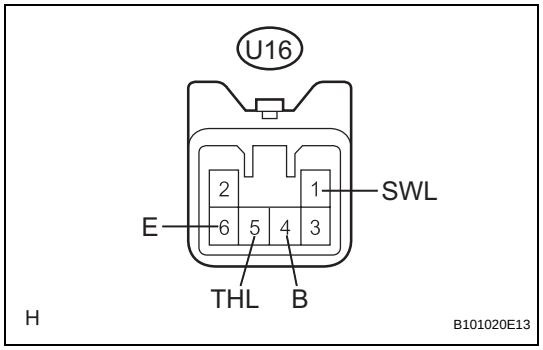

(a) Disconnect the seat heater control LH connector.

(b) Measure the voltage and resistance according to the value(s) in the table below.

Standard resistance

Tester Connection	Condition	Specified Condition
U16-6 (E) - Body ground	Always	Below 1 Ω

Standard voltage

Tester Connection	Condition	Specified Condition
U16-1 (SWL) - U16-6 (E)	Engine switch on (IG), seat heater switch OFF → ON	0 V → 10 to 14 V
U16-4 (B) - U16-6 (E)	Engine switch off → on (IG)	0 V → 10 to 14 V

(c) Reconnect the seat heater control LH connector.

(d) Measure the voltage according to the value(s) in the table below.

Standard voltage

Tester Connection	Condition	Specified Condition
U16-5 (THL) - U16-6 (E)	Engine switch on (IG), seat heater switch volume 1 → 3	Gradual increase 0 V → 10 to 14 V

2. INSPECT FRONT SEAT HEATER CONTROL RH

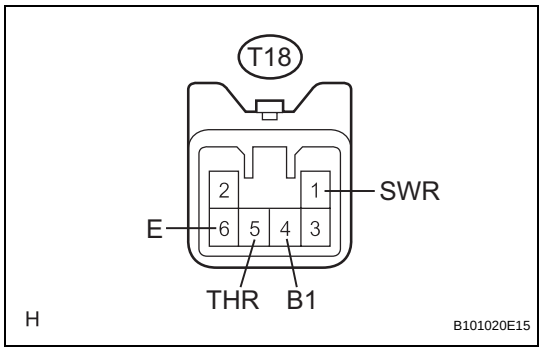

(a) Disconnect the seat heater control RH connector.

(b) Measure the voltage and resistance according to the value(s) in the table below.

Standard resistance

Tester Connection	Condition	Specified Condition
T18-6 (E) - Body ground	Always	Below 1 Ω

Standard voltage

Tester Connection	Condition	Specified Condition
T18-1 (SWR) - T18-6 (E)	Engine switch on (IG), seat heater switch OFF → ON	0 V → 10 to 14 V
T18-4 (B1) - T18-6 (E)	Engine switch off → on (IG)	0 V → 10 to 14 V

(c) Reconnect the seat heater control RH connector.

(d) Measure the voltage according to the value(s) in the table below.

Standard voltage

Tester Connection	Condition	Specified Condition
T18-5 (THR) - T18-6 (E)	Engine switch on (IG), seat heater switch volume 1 → 3	Gradual increase 0 V → 10 to 14 V

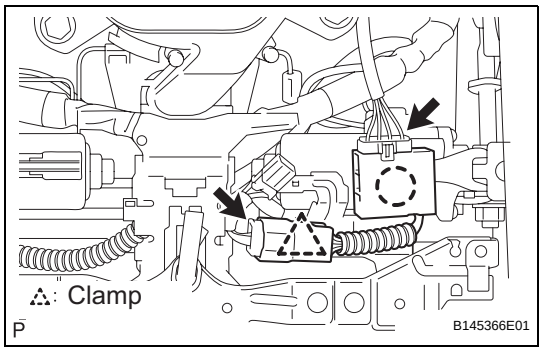

INSTALLATION

1. **INSTALL SEAT HEATER CONTROL**
   (a) Install the seat heater control with the clamp and claw.
   (b) Connect the 2 connectors.
2. **INSTALL FRONT SEAT ASSEMBLY (See page SE-109)**
3. **INSTALL FRONT SEAT REAR OUTER TRACK BRACKET COVER (See page SE-110)**
4. **INSTALL FRONT SEAT REAR INNER TRACK BRACKET COVER (See page SE-110)**
5. **INSTALL FRONT SEAT OUTER TRACK BRACKET COVER (See page SE-110)**
6. **INSTALL FRONT SEAT INNER TRACK BRACKET COVER (See page SE-110)**
7. **INSTALL FRONT SEAT HEADREST ASSEMBLY**
8. **CONNECT FRONT SEAT OUTER BELT ASSEMBLY (See page SB-31)**
9. **INSTALL SEAT BELT ANCHOR COVER CAP (See page SB-31)**
10. **REMOVE PERFORM INITIALIZATION**
    NOTICE:
    Some systems need initialization after reconnecting the negative battery cable (See Page IN-33)
11. **INSPECT FRONT SEAT ASSEMBLY (See page SE-110)**
12. **INSPECT SRS WARNING LIGHT**
    Check the SRS warning light. (See Page RS-37)

PROBLEM SYMPTOMS TABLE

LUGGAGE COMPARTMENT DOOR OPENER SYSTEM

Symptom	Suspected Area	See page
Luggage compartment door opener does not operate	Luggage compartment door opener circuit	ED-8

TERMINALS OF ECU

1. CHECK MAIN BODY ECU

(a) Disconnect the DA and DF junction block connectors.

(b) Disconnect the E59 main body ECU connector.

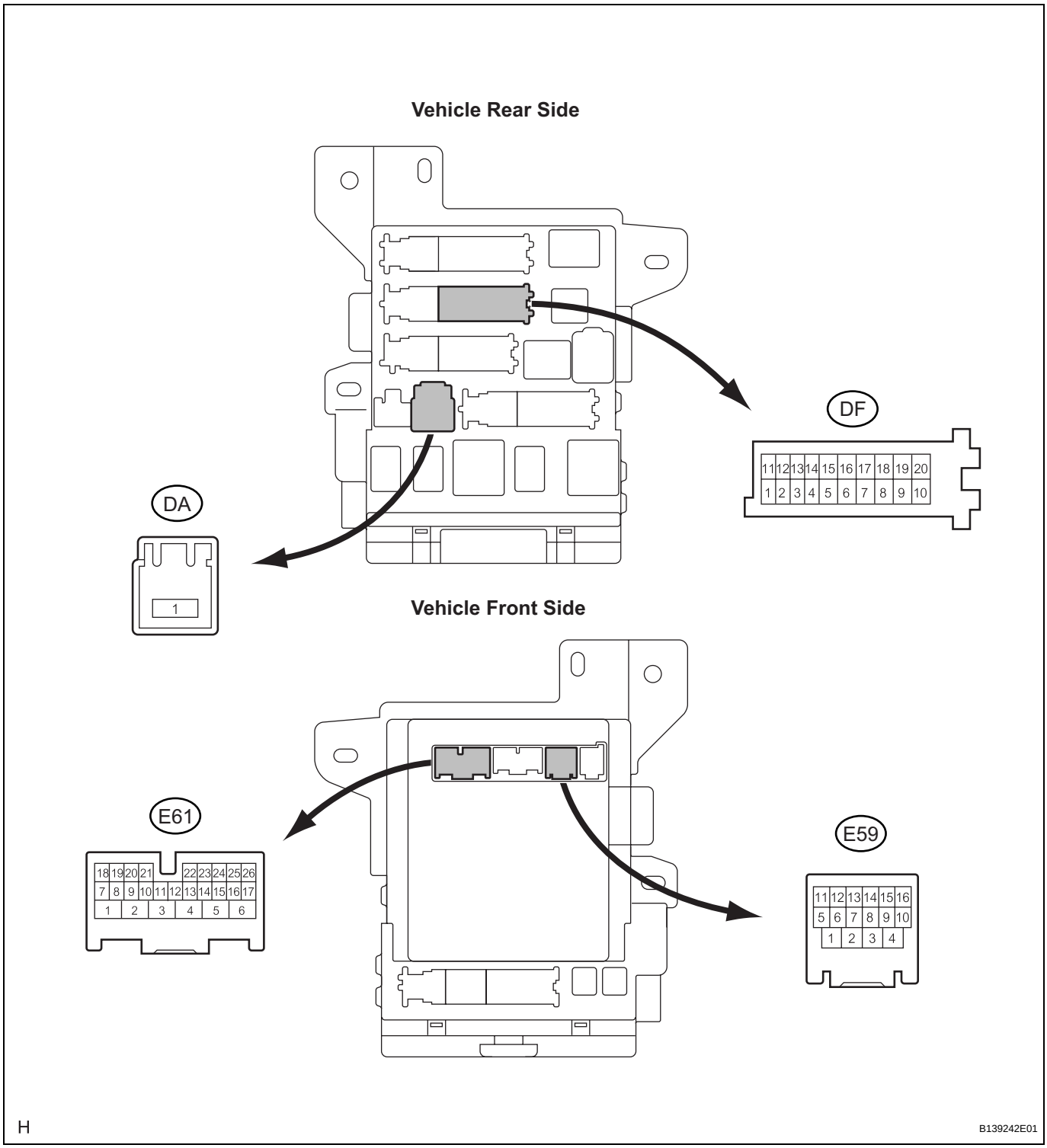

(c) Measure the resistance and voltage according to the value(s) in the table below.

Symbols (Terminal No.)	Wiring Color	Terminal Description	Condition	Specified Condition
BATB (DA-1) - Body ground	W - Body ground	Battery (power supply)	Always	10 to 14 V
GND1 (DF-10) - Body ground	W-B - Body ground	Ground	Always	Below 1 Ω
GND3 (E59-1) - Body ground	W-B - Body ground	Ground	Always	Below 1 Ω

If the result is not as specified, there may be a malfunction on the wire harness side.

(d) Reconnect the DF and DA junction block connectors.

(e) Reconnect the E59 main body ECU connector.

(f) Measure the voltage according to the value(s) in the table below.

Symbols (Terminal No.)	Wiring Color	Terminal Description	Condition	Specified Condition
TSW (E61-26) - Body ground	V - Body ground	Luggage compartment door opener inner switch signal input	Luggage compartment door inner opener switch OFF	10 to 14 V
			Luggage compartment door inner opener switch ON	Below 1 V
TMSW (E59-3) - Body ground	P - Body ground	Luggage compartment door opener main switch signal input	Luggage compartment door opener main switch OFF	10 to 14 V
			Luggage compartment door opener main switch ON	Below 1 V

If the result is not as specified, the ECU or the switch may have a malfunction.

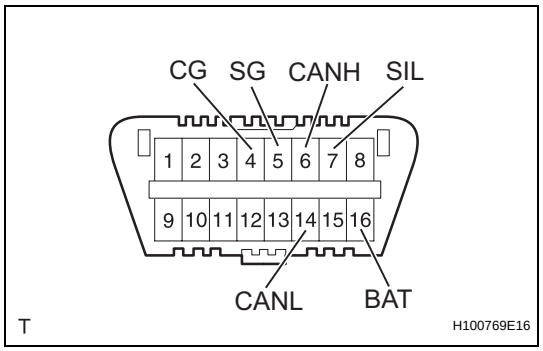

DIAGNOSIS SYSTEM

1. CHECK DLC3

(a) The vehicle's ECU uses ISO 15765-4 for communication protocol. The terminal arrangement of the DLC3 complies with SAE J1962 and matches the ISO 15765-4 format.

ED

Symbols (Terminal No.)	Terminal Description	Condition	Specified Condition
SIL (7) - SG (5)	Bus "+" line	During transmission	Pulse generation
CG (4) - Body ground	Chassis ground	Always	Below 1 Ω
SG (5) - Body ground	Signal ground	Always	Below 1 Ω
BAT (16) - Body ground	Battery positive	Always	10 to 14 V
CANH (6) - CANL (14)	CAN bus line	Engine switch off*	54 to 69 Ω
CANH (6) - CG (4)	HIGH-level CAN bus line	Engine switch off*	200 Ω or higher
CANL (14) - CG (4)	LOW-level CAN bus line	Engine switch off*	200 Ω or higher
CANH (6) - BAT (16)	HIGH-level CAN bus line	Engine switch off*	6 kΩ or higher
CANL (14) - BAT (16)	LOW-level CAN bus line	Engine switch off*	6 kΩ or higher

NOTICE:
***: Before measuring the resistance, leave the vehicle as is for at least 1 minute and do not operate the engine switch, any other switches or the doors.**
If the result is not as specified, the DLC3 may have a malfunction. Repair or replace the harness and connector.

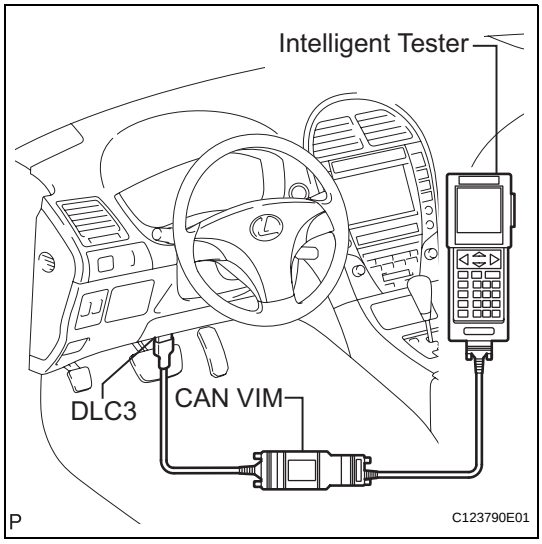

(b) Connect the cable of the intelligent tester (with CAN VIM) to the DLC3, turn the engine switch on (IG) and attempt to use the intelligent tester. If the screen displays a communication error message, a problem exists in the vehicle side or tester side.
HINT:
- If communication is normal when the tool is connected to another vehicle, inspect the DLC3 on the original vehicle.
- If communication is still impossible when the tool is connected to another vehicle, the problem is probably in the tool itself. Consult the Service Department listed in the tool's instruction manual.

DATA LIST / ACTIVE TEST

1. READ DATA LIST

HINT:
Using the intelligent tester to read the DATA LIST allows the values or states of switches, sensors, actuators and other items to be read without removing any parts. This non-intrusive inspection can be very useful as intermittent conditions or signals may be discovered before parts or wiring are disturbed. Reading the DATA LIST information early in troubleshooting is one way to save diagnostic time.

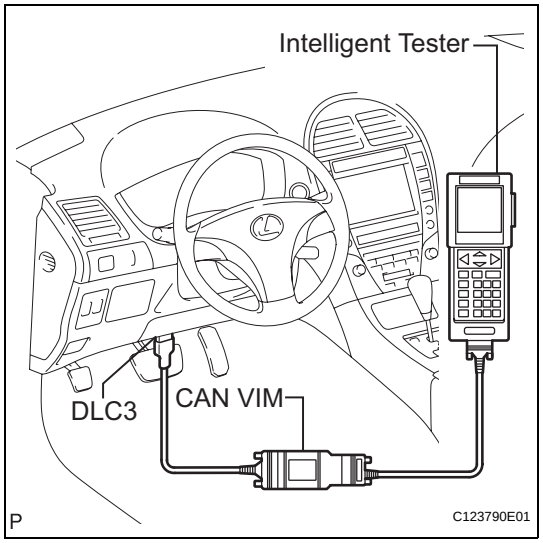

(a) Connect the intelligent tester (with CAN VIM) to the DLC3.
(b) Turn the engine switch on (IG).
(c) Read the DATA LIST on the tester's screen.

MAIN BODY:

Tester Display	Measurement Item/Range	Normal Condition	Diagnostic Note
TRNK/BDR OPN SW	Luggage door opener inner switch signal/ON or OFF	ON: Luggage compartment door opener inner switch is pushed OFF: Luggage compartment door opener inner switch is not pushed	-
TRNK MAIN SW	Luggage door opener main switch signal/ON or OFF	ON: Luggage compartment door opener main switch is pushed OFF: Luggage compartment door opener main switch is not pushed	-

2. PERFORM ACTIVE TEST

HINT:
Using the intelligent tester to perform ACTIVE TEST allows relays, VSVs, actuators and other items to be tested without removing any parts. This non-intrusive inspection can be very useful as intermittent conditions or signals may be discovered before parts or wiring are disturbed. Using the ACTIVE TEST early in troubleshooting is one way to save diagnostic time. It is possible to view Data List information on the intelligent tester while performing ACTIVE TEST.

(a) Connect the intelligent tester (with CAN VIM) to the DLC3.
(b) Turn the engine switch on (IG).

(c) Perform the ACTIVE TEST according to the display on the tester.

MAIN BODY:

Tester Display	Test Part	Control Range	Diagnostic Note
TRUNK/BDR OPEN	Operate luggage compartment door lock motor	ON/OFF	-

PROBLEM SYMPTOMS TABLE

LUGGAGE COMPARTMENT DOOR OPENER SYSTEM

Symptom	Suspected Area	See page
Luggage compartment door opener does not operate	Luggage compartment door opener circuit	ED-8

TERMINALS OF ECU

1. CHECK MAIN BODY ECU

(a) Disconnect the DA and DF junction block connectors.

(b) Disconnect the E59 main body ECU connector.

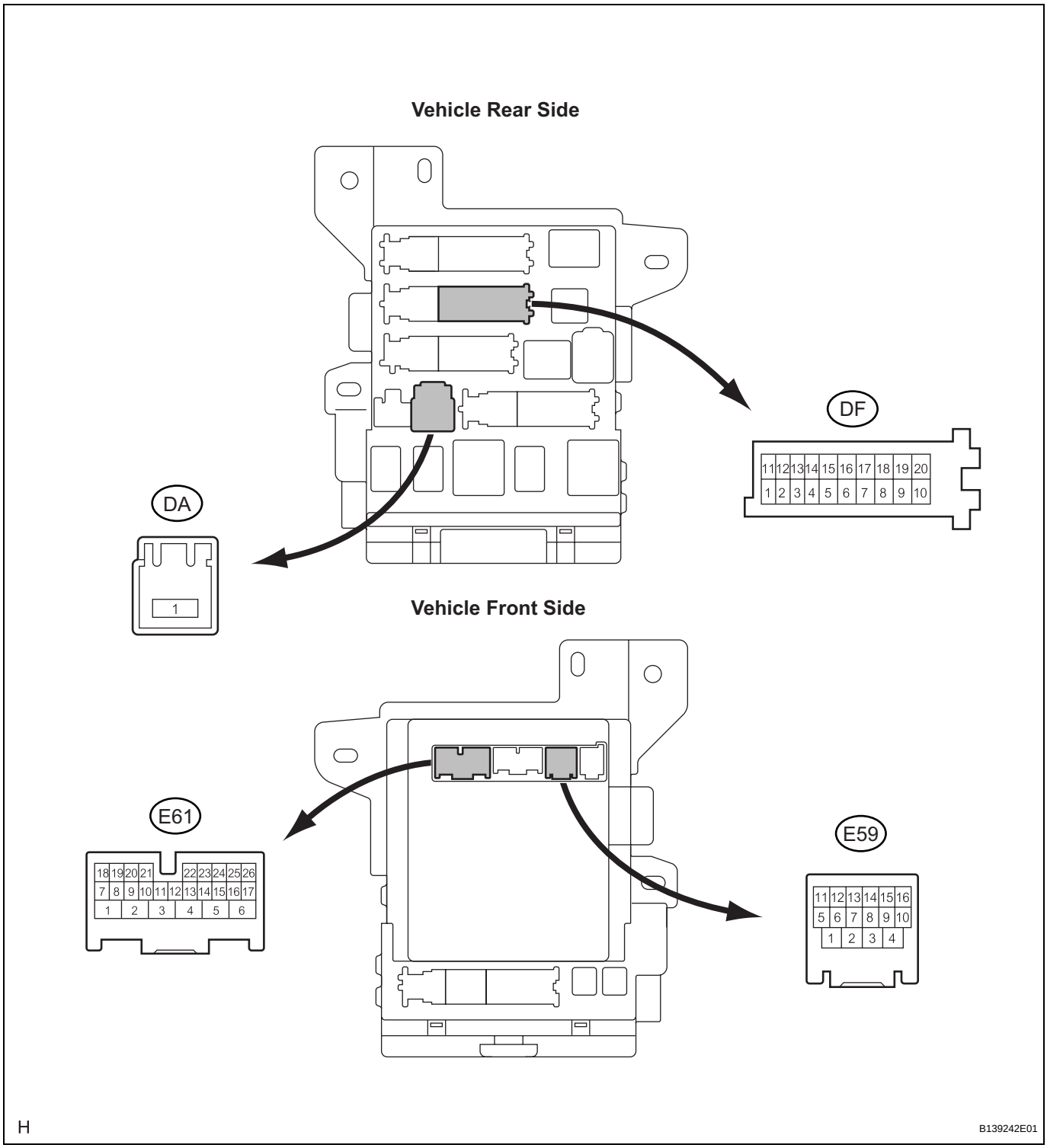

(c) Measure the resistance and voltage according to the value(s) in the table below.

Symbols (Terminal No.)	Wiring Color	Terminal Description	Condition	Specified Condition
BATB (DA-1) - Body ground	W - Body ground	Battery (power supply)	Always	10 to 14 V
GND1 (DF-10) - Body ground	W-B - Body ground	Ground	Always	Below 1 Ω
GND3 (E59-1) - Body ground	W-B - Body ground	Ground	Always	Below 1 Ω

If the result is not as specified, there may be a malfunction on the wire harness side.

(d) Reconnect the DF and DA junction block connectors.

(e) Reconnect the E59 main body ECU connector.

(f) Measure the voltage according to the value(s) in the table below.

Symbols (Terminal No.)	Wiring Color	Terminal Description	Condition	Specified Condition
TSW (E61-26) - Body ground	V - Body ground	Luggage compartment door opener inner switch signal input	Luggage compartment door inner opener switch OFF	10 to 14 V
			Luggage compartment door inner opener switch ON	Below 1 V
TMSW (E59-3) - Body ground	P - Body ground	Luggage compartment door opener main switch signal input	Luggage compartment door opener main switch OFF	10 to 14 V
			Luggage compartment door opener main switch ON	Below 1 V

If the result is not as specified, the ECU or the switch may have a malfunction.

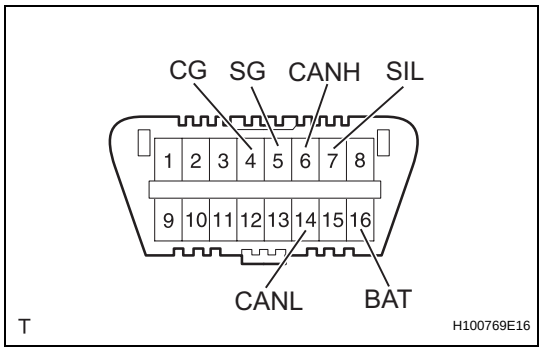

DIAGNOSIS SYSTEM

1. CHECK DLC3

(a) The vehicle's ECU uses ISO 15765-4 for communication protocol. The terminal arrangement of the DLC3 complies with SAE J1962 and matches the ISO 15765-4 format.

ED

Symbols (Terminal No.)	Terminal Description	Condition	Specified Condition
SIL (7) - SG (5)	Bus "+" line	During transmission	Pulse generation
CG (4) - Body ground	Chassis ground	Always	Below 1 Ω
SG (5) - Body ground	Signal ground	Always	Below 1 Ω
BAT (16) - Body ground	Battery positive	Always	10 to 14 V
CANH (6) - CANL (14)	CAN bus line	Engine switch off*	54 to 69 Ω
CANH (6) - CG (4)	HIGH-level CAN bus line	Engine switch off*	200 Ω or higher
CANL (14) - CG (4)	LOW-level CAN bus line	Engine switch off*	200 Ω or higher
CANH (6) - BAT (16)	HIGH-level CAN bus line	Engine switch off*	6 kΩ or higher
CANL (14) - BAT (16)	LOW-level CAN bus line	Engine switch off*	6 kΩ or higher

NOTICE:
***: Before measuring the resistance, leave the vehicle as is for at least 1 minute and do not operate the engine switch, any other switches or the doors.**
If the result is not as specified, the DLC3 may have a malfunction. Repair or replace the harness and connector.

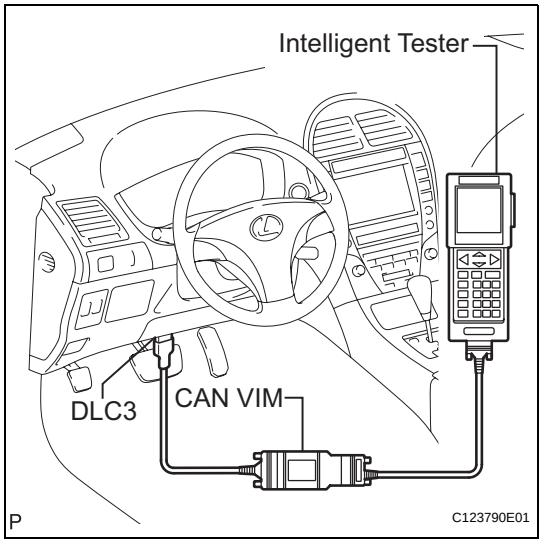

(b) Connect the cable of the intelligent tester (with CAN VIM) to the DLC3, turn the engine switch on (IG) and attempt to use the intelligent tester. If the screen displays a communication error message, a problem exists in the vehicle side or tester side.
HINT:
- If communication is normal when the tool is connected to another vehicle, inspect the DLC3 on the original vehicle.
- If communication is still impossible when the tool is connected to another vehicle, the problem is probably in the tool itself. Consult the Service Department listed in the tool's instruction manual.

DATA LIST / ACTIVE TEST

1. READ DATA LIST

HINT:
Using the intelligent tester to read the DATA LIST allows the values or states of switches, sensors, actuators and other items to be read without removing any parts. This non-intrusive inspection can be very useful as intermittent conditions or signals may be discovered before parts or wiring are disturbed. Reading the DATA LIST information early in troubleshooting is one way to save diagnostic time.

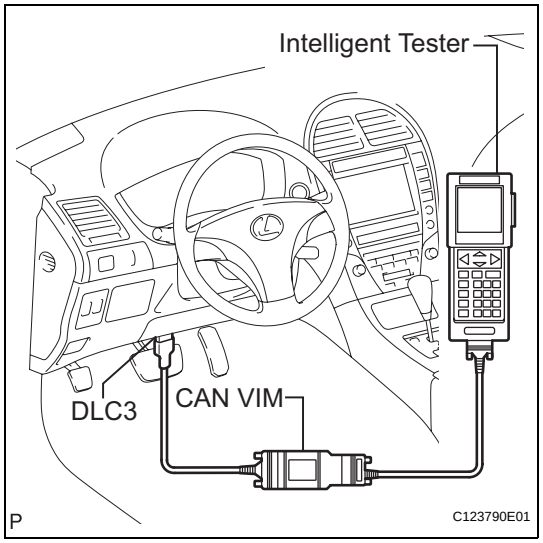

(a) Connect the intelligent tester (with CAN VIM) to the DLC3.
(b) Turn the engine switch on (IG).
(c) Read the DATA LIST on the tester's screen.

MAIN BODY:

Tester Display	Measurement Item/Range	Normal Condition	Diagnostic Note
TRNK/BDR OPN SW	Luggage door opener inner switch signal/ON or OFF	ON: Luggage compartment door opener inner switch is pushed OFF: Luggage compartment door opener inner switch is not pushed	-
TRNK MAIN SW	Luggage door opener main switch signal/ON or OFF	ON: Luggage compartment door opener main switch is pushed OFF: Luggage compartment door opener main switch is not pushed	-

2. PERFORM ACTIVE TEST

HINT:
Using the intelligent tester to perform ACTIVE TEST allows relays, VSVs, actuators and other items to be tested without removing any parts. This non-intrusive inspection can be very useful as intermittent conditions or signals may be discovered before parts or wiring are disturbed. Using the ACTIVE TEST early in troubleshooting is one way to save diagnostic time. It is possible to view Data List information on the intelligent tester while performing ACTIVE TEST.

(a) Connect the intelligent tester (with CAN VIM) to the DLC3.
(b) Turn the engine switch on (IG).

(c) Perform the ACTIVE TEST according to the display on the tester.

MAIN BODY:

Tester Display	Test Part	Control Range	Diagnostic Note
TRUNK/BDR OPEN	Operate luggage compartment door lock motor	ON/OFF	-

Luggage Compartment Door Opener Circuit

DESCRIPTION

While the main body ECU has received the OFF signal from the luggage compartment opener main switch, the main body ECU activates the luggage compartment door lock motor when the ON signal from the luggage compartment door opener inner switch is received.

WIRING DIAGRAM

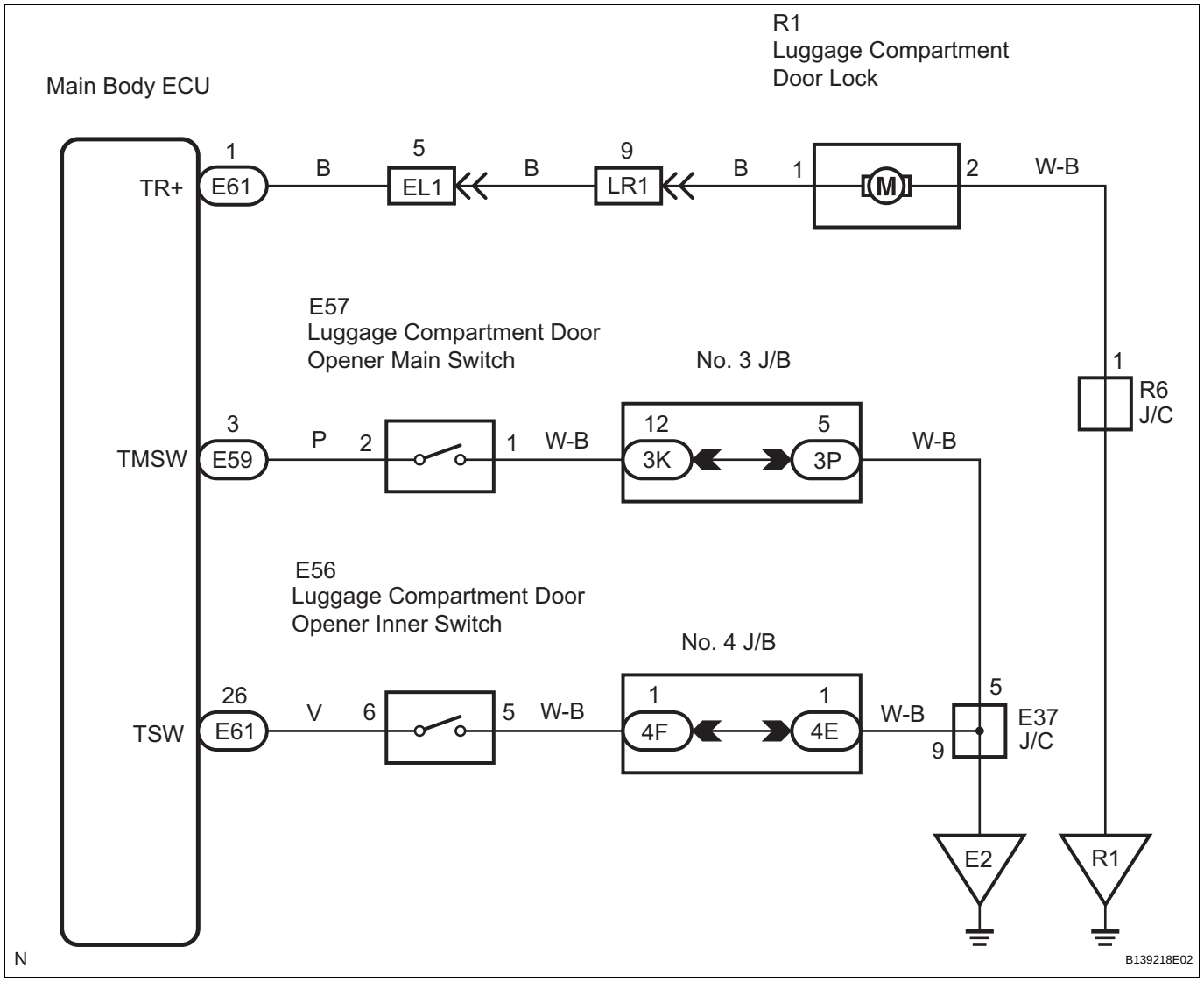

INSPECTION PROCEDURE

1	PERFORM ACTIVE TEST BY LUGGAGE COMPARTMENT DOOR LOCK

(a) Select the ACTIVE TEST, use the intelligent tester (with CAN VIM) to generate a control command, and check that the luggage compartment door lock motor operates.

Tester Display	Test Part	Control Range	Diagnostic Note
TRUNK/BDOR OPEN	Operate luggage compartment door lock motor	ON/OFF	-

ED

OK:
Luggage compartment door lock motor operates.

OK → **Go to step 4**

NG

2 INSPECT LUGGAGE COMPARTMENT DOOR LOCK

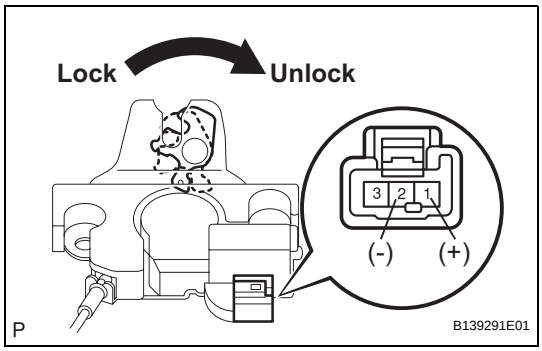

(a) Remove the luggage compartment door lock (See page ED-90).
(b) Move the door lock to the lock position.
(c) Apply battery voltage to the door lock motor and check operation of the door lock motor.
OK

Measurement Condition	Specified Condition
Battery positive (+) → Terminal 1 Battery negative (-) → Terminal 2	Luggage compartment door lock motor unlock

NG → **REPLACE LUGGAGE COMPARTMENT DOOR LOCK (See page ED-90)**

OK

3 CHECK HARNESS AND CONNECTOR (LUGGAGE COMPARTMENT DOOR LOCK - MAIN BODY ECU)

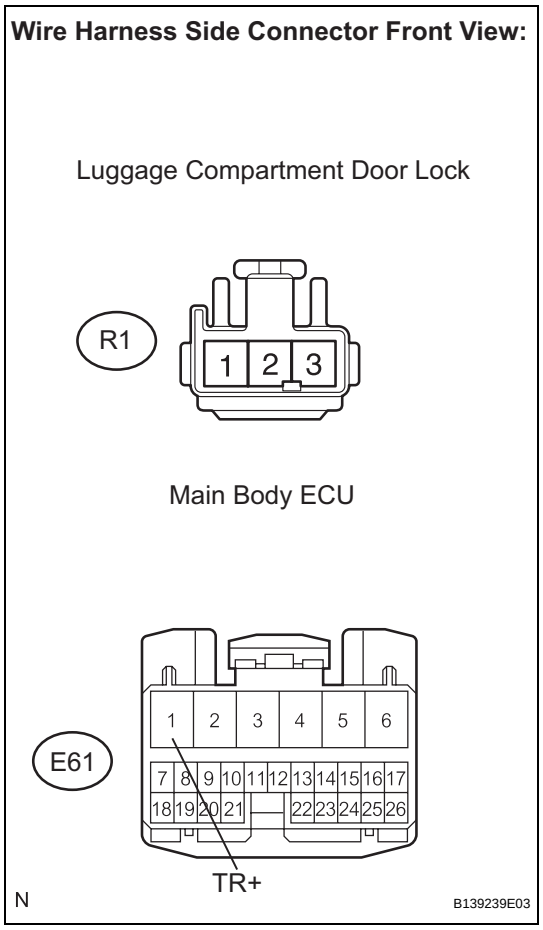

(a) Disconnect the R1 lock and E61 ECU connectors.
(b) Measure the resistance according to the value(s) in the table below.

Standard resistance

Tester Connection	Condition	Specified Condition
R1-1 - E61-1 (TR+)	Always	Below 1 Ω
R1-1 - Body ground	Always	10 kΩ or higher
R1-2 - Body ground	Always	Below 1 Ω

NG → **REPAIR OR REPLACE HARNESS OR CONNECTOR**

OK

4 READ VALUE OF INTELLIGENT TESTER

(a) Connect the intelligent tester (with CAN VIM) to the DLC3.
(b) Turn the engine switch on (IG) and turn the intelligent tester main switch on.
(c) Select TRNK/BDR OPN SW and TRNK MAIN SW in the DATA LIST and read the value displayed on the intelligent tester.

Tester Display	Measurement Item/Range	Normal Condition	Diagnostic Note
TRNK/BDR OPN SW	Luggage door opening inner switch/ON or OFF	ON: Luggage compartment door opener inner switch is pressed OFF: Luggage compartment door opener inner switch is not pressed	-
TRNK MAIN SW	Luggage door opener main switch signal/ON or OFF	ON: Luggage compartment door opener main switch is pushed ON: Luggage compartment door opener main switch is not pushed	-

OK:
ON (luggage compartment door opener inner switch is pressed) appears on the tester.
OK:
ON (luggage compartment door opener main switch is pressed) appears on the tester.
Result

Result	Proceed to
NG (Luggage compartment door opener main switch)	A
NG (Luggage compartment door opener inner switch)	B
OK (Luggage compartment door opener main switch and Luggage compartment door opener inner switch)	C

B → **Go to step 7**

C → **REPLACE INSTRUMENT PANEL JUNCTION BLOCK (MAIN BODY ECU)**

A

5 INSPECT LUGGAGE COMPARTMENT DOOR OPENER MAIN SWITCH

Luggage Compartment Door Opener Main Switch:

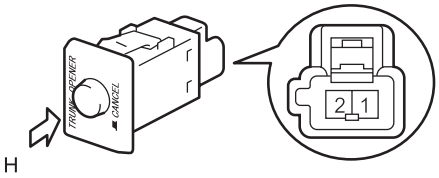

B139226E01

(a) Remove the luggage compartment door opener main switch (See page ED-102).
(b) Measure the resistance according to the value(s) in the table below.
Standard resistance

Tester Connection	Condition	Specified Condition
1 - 2	Switch free (OFF)	10 kΩ or higher
	Switch pushed (ON)	Below 1 Ω

NG → **REPLACE LUGGAGE COMPARTMENT DOOR MAIN OPENER SWITCH (See page ED-102)**

OK

6 CHECK HARNESS AND CONNECTOR (LUGGAGE COMPARTMENT DOOR OPENER MAIN SW - MAIN BODY ECU)

(a) Install the luggage compartment door opener main switch (See page ED-103).

ED

Wire Harness Side Connector Front View:

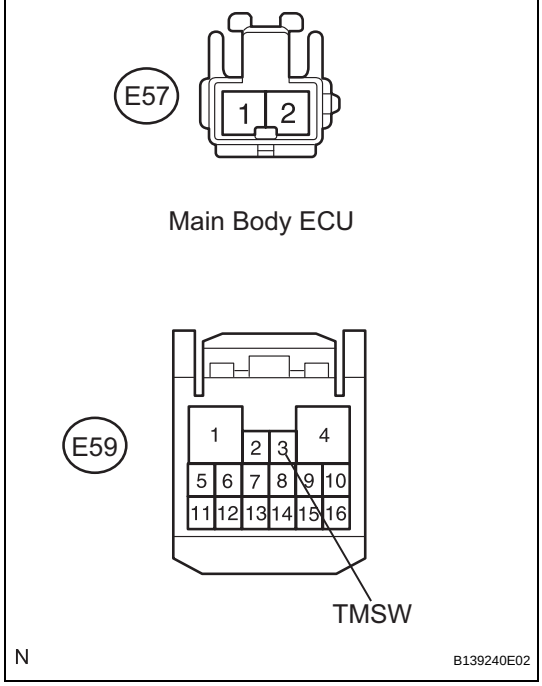

(b) Disconnect the E57 switch and E59 ECU connectors.
(c) Measure the resistance according to the value(s) in the table below.

Standard resistance

Tester Connection	Condition	Specified Condition
E57-2 - E59-3 (TMSW)	Always	Below 1 Ω
E57-2 - Body ground	Always	10 kΩ or higher
E57-1 - Body ground	Always	Below 1 Ω

NG → **REPAIR OR REPLACE HARNESS OR CONNECTOR**

OK

REPLACE INSTRUMENT PANEL JUNCTION BLOCK (MAIN BODY ECU)

7 INSPECT LUGGAGE COMPARTMENT DOOR OPENER INNER SWITCH

Luggage Compartment Door Opener Inner Switch:

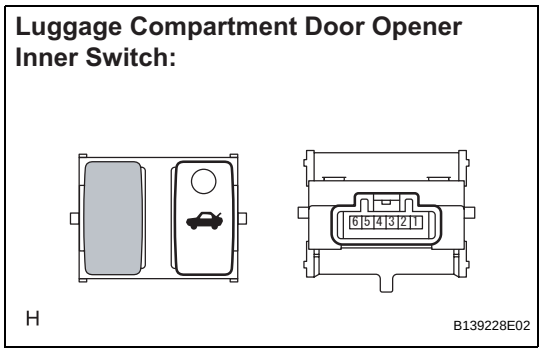

(a) Remove the luggage compartment door opener inner switch (See page ED-99).
(b) Measure the resistance according to the value(s) in the table below.

Standard resistance

Tester Connection	Condition	Specified Condition
5 - 6	Switch free (OFF)	10 kΩ or higher
	Switch pushed (ON)	Below 1 Ω

NG → **REPLACE LUGGAGE COMPARTMENT DOOR OPENER INNER SWITCH (See page ED-99)**

OK

ED

8	CHECK HARNESS AND CONNECTOR (LUGGAGE COMPARTMENT DOOR OPENER INNER SW - MAIN BODY ECU)

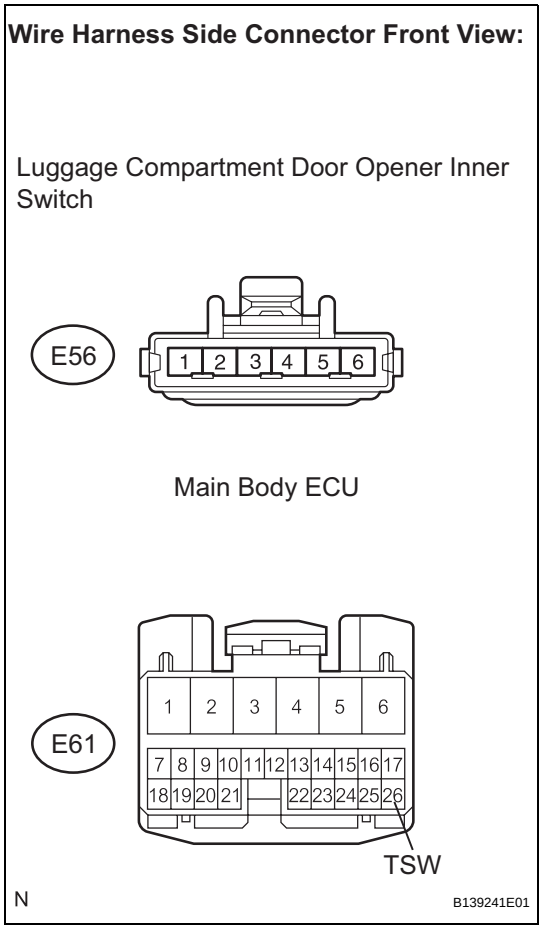

(a) Install the luggage compartment door opener inner switch (See page ED-100).
(b) Disconnect the E56 switch and E61 ECU connectors.
(c) Measure the resistance according to the value(s) in the table below.

Standard resistance

Tester Connection	Condition	Specified Condition
E56-6 - E61-26 (TSW)	Always	Below 1 Ω
E56-6 - Body ground	Always	10 kΩ or higher
E56-5 - Body ground	Always	Below 1 Ω

NG → **REPAIR OR REPLACE HARNESS OR CONNECTOR**

OK

REPLACE INSTRUMENT PANEL JUNCTION BLOCK (MAIN BODY ECU)

Luggage Compartment Door Opener Circuit

DESCRIPTION

While the main body ECU has received the OFF signal from the luggage compartment opener main switch, the main body ECU activates the luggage compartment door lock motor when the ON signal from the luggage compartment door opener inner switch is received.

WIRING DIAGRAM

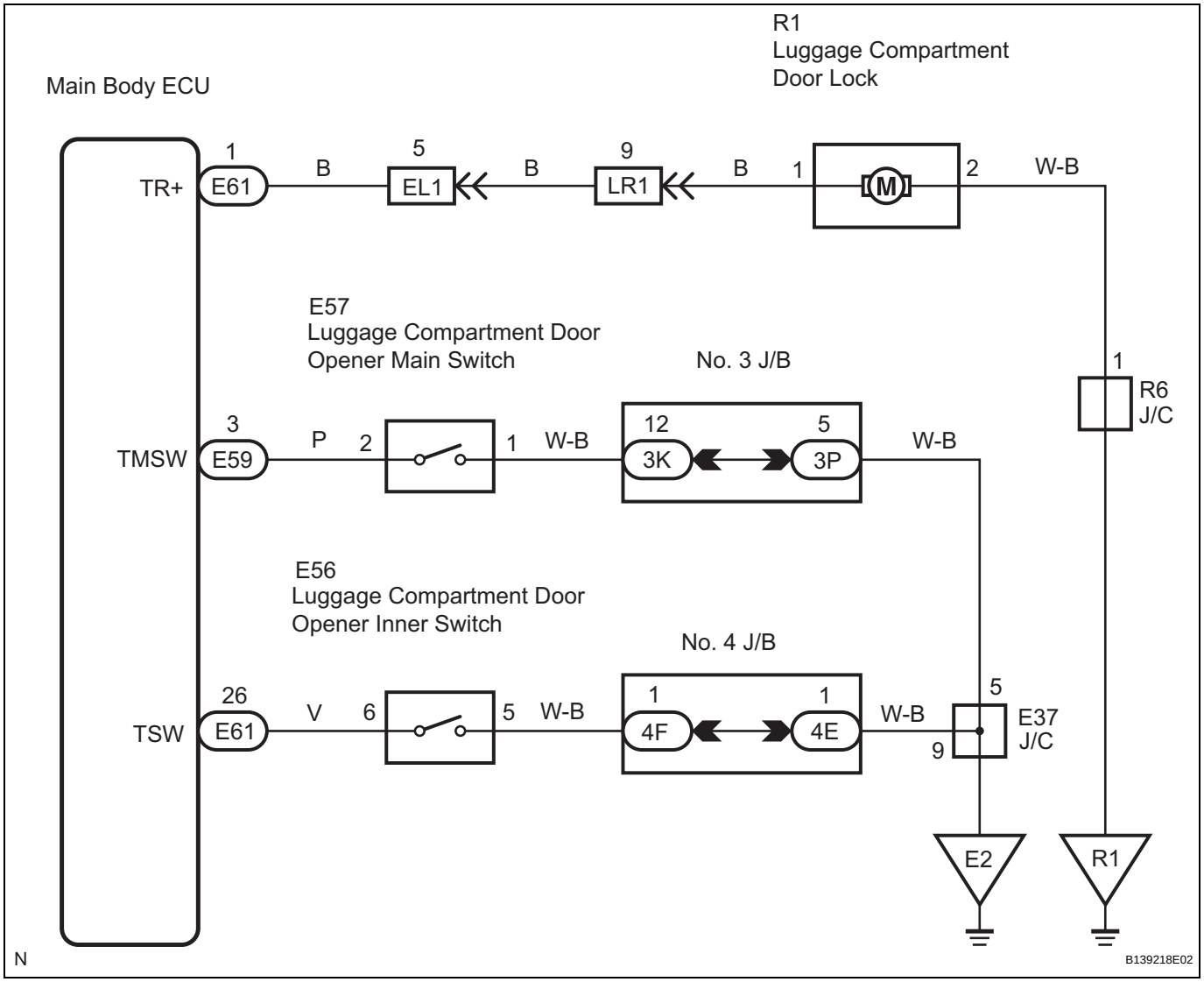

INSPECTION PROCEDURE

1	PERFORM ACTIVE TEST BY LUGGAGE COMPARTMENT DOOR LOCK

(a) Select the ACTIVE TEST, use the intelligent tester (with CAN VIM) to generate a control command, and check that the luggage compartment door lock motor operates.

Tester Display	Test Part	Control Range	Diagnostic Note
TRUNK/BDOR OPEN	Operate luggage compartment door lock motor	ON/OFF	-

ED

OK:
Luggage compartment door lock motor operates.

OK → **Go to step 4**

NG

2 INSPECT LUGGAGE COMPARTMENT DOOR LOCK

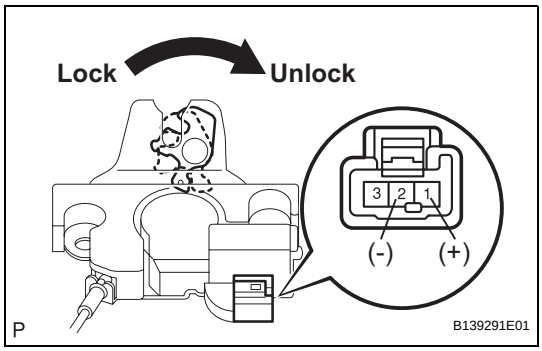

(a) Remove the luggage compartment door lock (See page ED-90).
(b) Move the door lock to the lock position.
(c) Apply battery voltage to the door lock motor and check operation of the door lock motor.
OK

Measurement Condition	Specified Condition
Battery positive (+) → Terminal 1 Battery negative (-) → Terminal 2	Luggage compartment door lock motor unlock

NG → **REPLACE LUGGAGE COMPARTMENT DOOR LOCK (See page ED-90)**

OK

3 CHECK HARNESS AND CONNECTOR (LUGGAGE COMPARTMENT DOOR LOCK - MAIN BODY ECU)

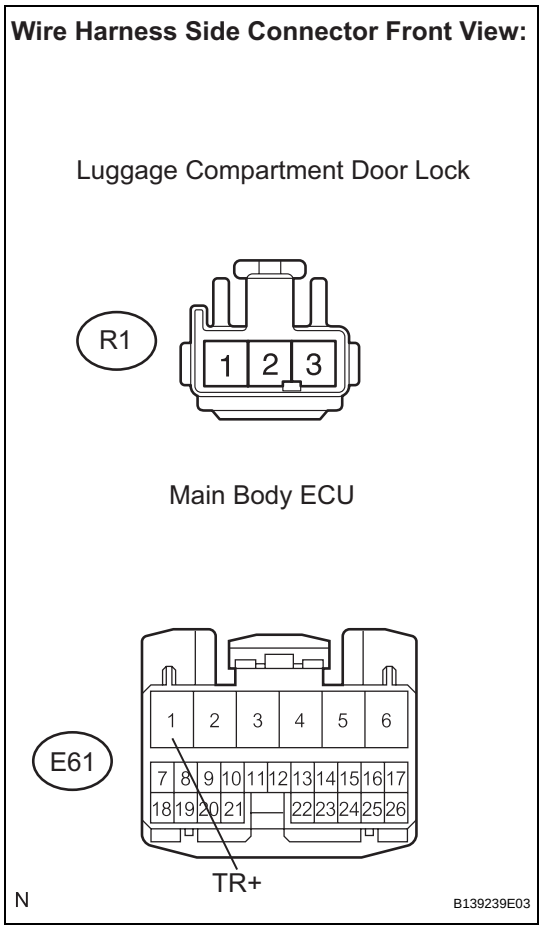

(a) Disconnect the R1 lock and E61 ECU connectors.
(b) Measure the resistance according to the value(s) in the table below.

Standard resistance

Tester Connection	Condition	Specified Condition
R1-1 - E61-1 (TR+)	Always	Below 1 Ω
R1-1 - Body ground	Always	10 kΩ or higher
R1-2 - Body ground	Always	Below 1 Ω

NG → **REPAIR OR REPLACE HARNESS OR CONNECTOR**

OK

4 READ VALUE OF INTELLIGENT TESTER

(a) Connect the intelligent tester (with CAN VIM) to the DLC3.
(b) Turn the engine switch on (IG) and turn the intelligent tester main switch on.
(c) Select TRNK/BDR OPN SW and TRNK MAIN SW in the DATA LIST and read the value displayed on the intelligent tester.

Tester Display	Measurement Item/Range	Normal Condition	Diagnostic Note
TRNK/BDR OPN SW	Luggage door opening inner switch/ON or OFF	ON: Luggage compartment door opener inner switch is pressed OFF: Luggage compartment door opener inner switch is not pressed	-
TRNK MAIN SW	Luggage door opener main switch signal/ON or OFF	ON: Luggage compartment door opener main switch is pushed ON: Luggage compartment door opener main switch is not pushed	-

OK:
ON (luggage compartment door opener inner switch is pressed) appears on the tester.
OK:
ON (luggage compartment door opener main switch is pressed) appears on the tester.
Result

Result	Proceed to
NG (Luggage compartment door opener main switch)	A
NG (Luggage compartment door opener inner switch)	B
OK (Luggage compartment door opener main switch and Luggage compartment door opener inner switch)	C

B → **Go to step 7**

C → **REPLACE INSTRUMENT PANEL JUNCTION BLOCK (MAIN BODY ECU)**

A

5 INSPECT LUGGAGE COMPARTMENT DOOR OPENER MAIN SWITCH

Luggage Compartment Door Opener Main Switch:

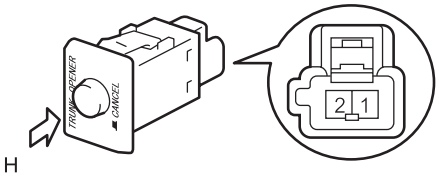

B139226E01

(a) Remove the luggage compartment door opener main switch (See page ED-102).
(b) Measure the resistance according to the value(s) in the table below.
Standard resistance

Tester Connection	Condition	Specified Condition
1 - 2	Switch free (OFF)	10 kΩ or higher
	Switch pushed (ON)	Below 1 Ω

NG → **REPLACE LUGGAGE COMPARTMENT DOOR MAIN OPENER SWITCH (See page ED-102)**

OK

6 CHECK HARNESS AND CONNECTOR (LUGGAGE COMPARTMENT DOOR OPENER MAIN SW - MAIN BODY ECU)

(a) Install the luggage compartment door opener main switch (See page ED-103).

ED

Wire Harness Side Connector Front View:

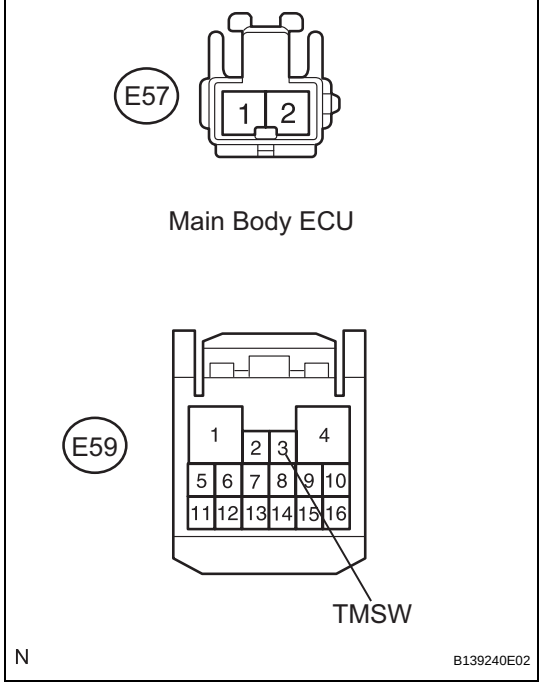

(b) Disconnect the E57 switch and E59 ECU connectors.
(c) Measure the resistance according to the value(s) in the table below.

Standard resistance

Tester Connection	Condition	Specified Condition
E57-2 - E59-3 (TMSW)	Always	Below 1 Ω
E57-2 - Body ground	Always	10 kΩ or higher
E57-1 - Body ground	Always	Below 1 Ω

NG → **REPAIR OR REPLACE HARNESS OR CONNECTOR**

OK

REPLACE INSTRUMENT PANEL JUNCTION BLOCK (MAIN BODY ECU)

7 INSPECT LUGGAGE COMPARTMENT DOOR OPENER INNER SWITCH

Luggage Compartment Door Opener Inner Switch:

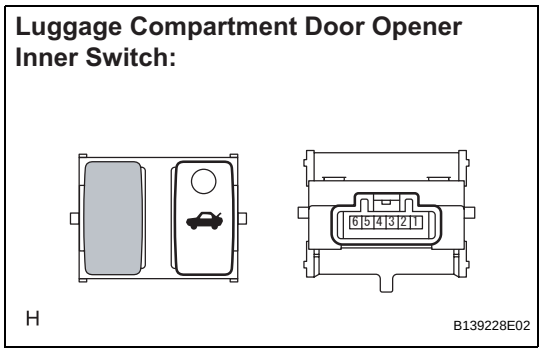

(a) Remove the luggage compartment door opener inner switch (See page ED-99).
(b) Measure the resistance according to the value(s) in the table below.

Standard resistance

Tester Connection	Condition	Specified Condition
5 - 6	Switch free (OFF)	10 kΩ or higher
	Switch pushed (ON)	Below 1 Ω

NG → **REPLACE LUGGAGE COMPARTMENT DOOR OPENER INNER SWITCH (See page ED-99)**

OK

ED

8	CHECK HARNESS AND CONNECTOR (LUGGAGE COMPARTMENT DOOR OPENER INNER SW - MAIN BODY ECU)

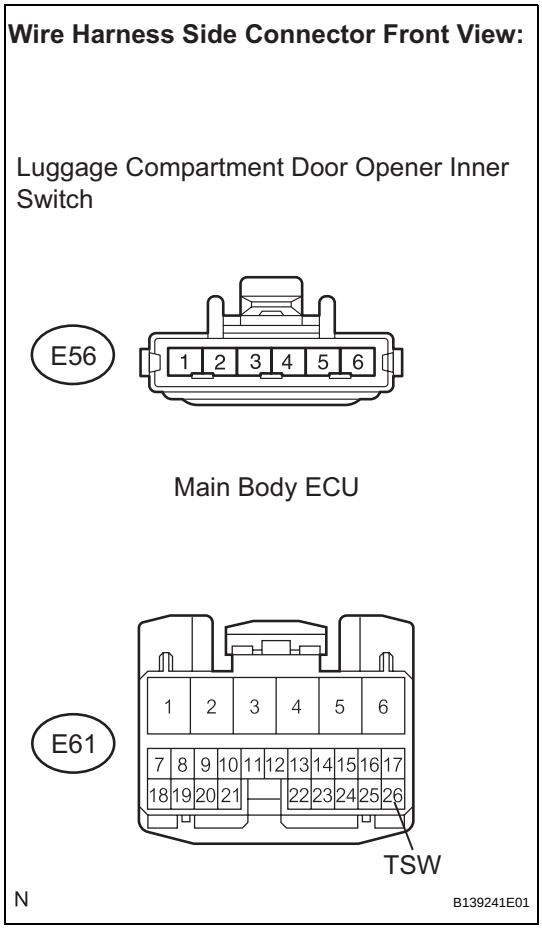

(a) Install the luggage compartment door opener inner switch (See page ED-100).
(b) Disconnect the E56 switch and E61 ECU connectors.
(c) Measure the resistance according to the value(s) in the table below.

Standard resistance

Tester Connection	Condition	Specified Condition
E56-6 - E61-26 (TSW)	Always	Below 1 Ω
E56-6 - Body ground	Always	10 kΩ or higher
E56-5 - Body ground	Always	Below 1 Ω

NG → **REPAIR OR REPLACE HARNESS OR CONNECTOR**

OK

REPLACE INSTRUMENT PANEL JUNCTION BLOCK (MAIN BODY ECU)

FUEL LID OPENER SYSTEM

PRECAUTION

NOTICE:
Some systems need to be initialized after reconnecting the negative (-) battery terminal (See page IN-33).

PARTS LOCATION

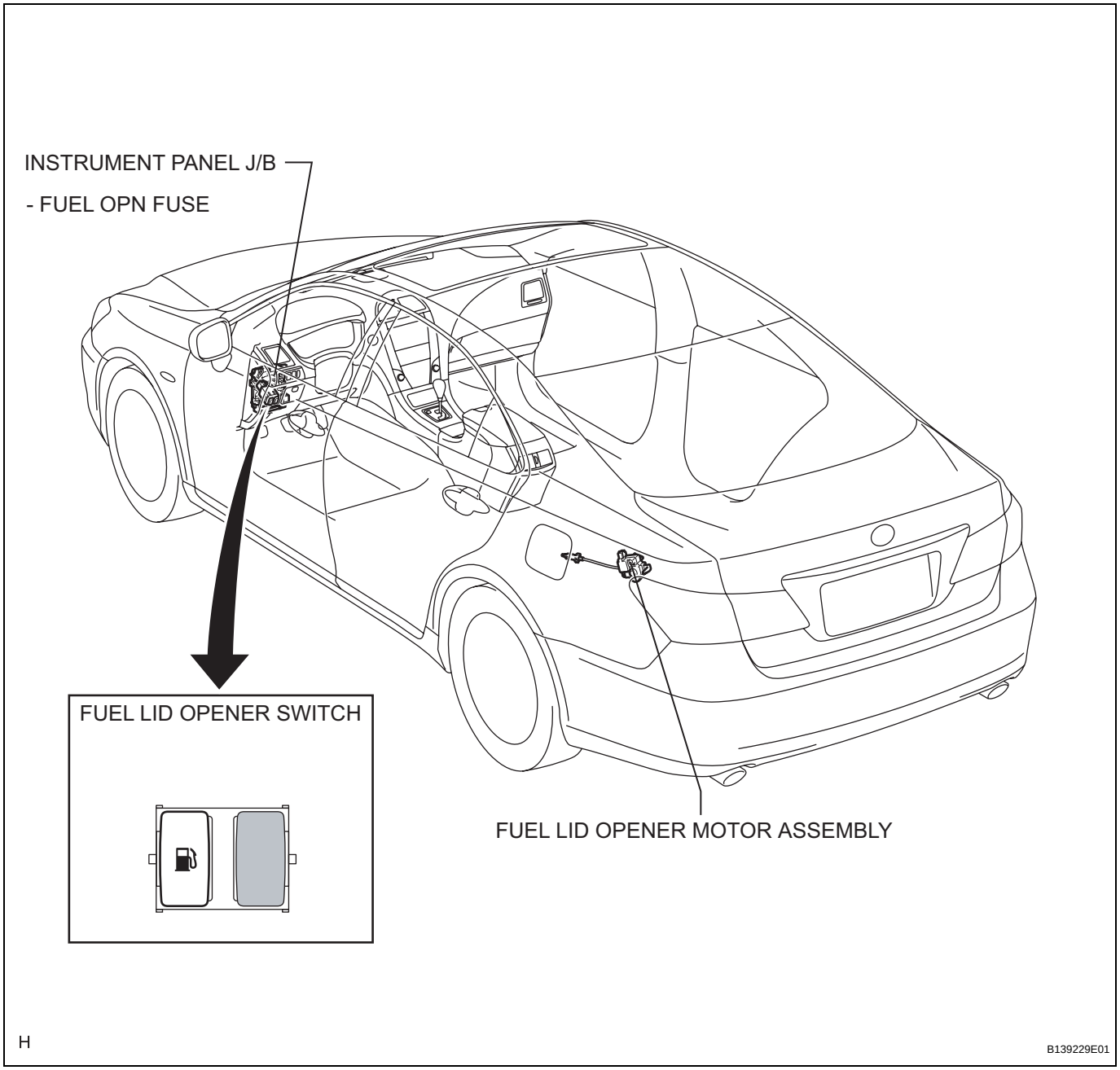

SYSTEM DIAGRAM

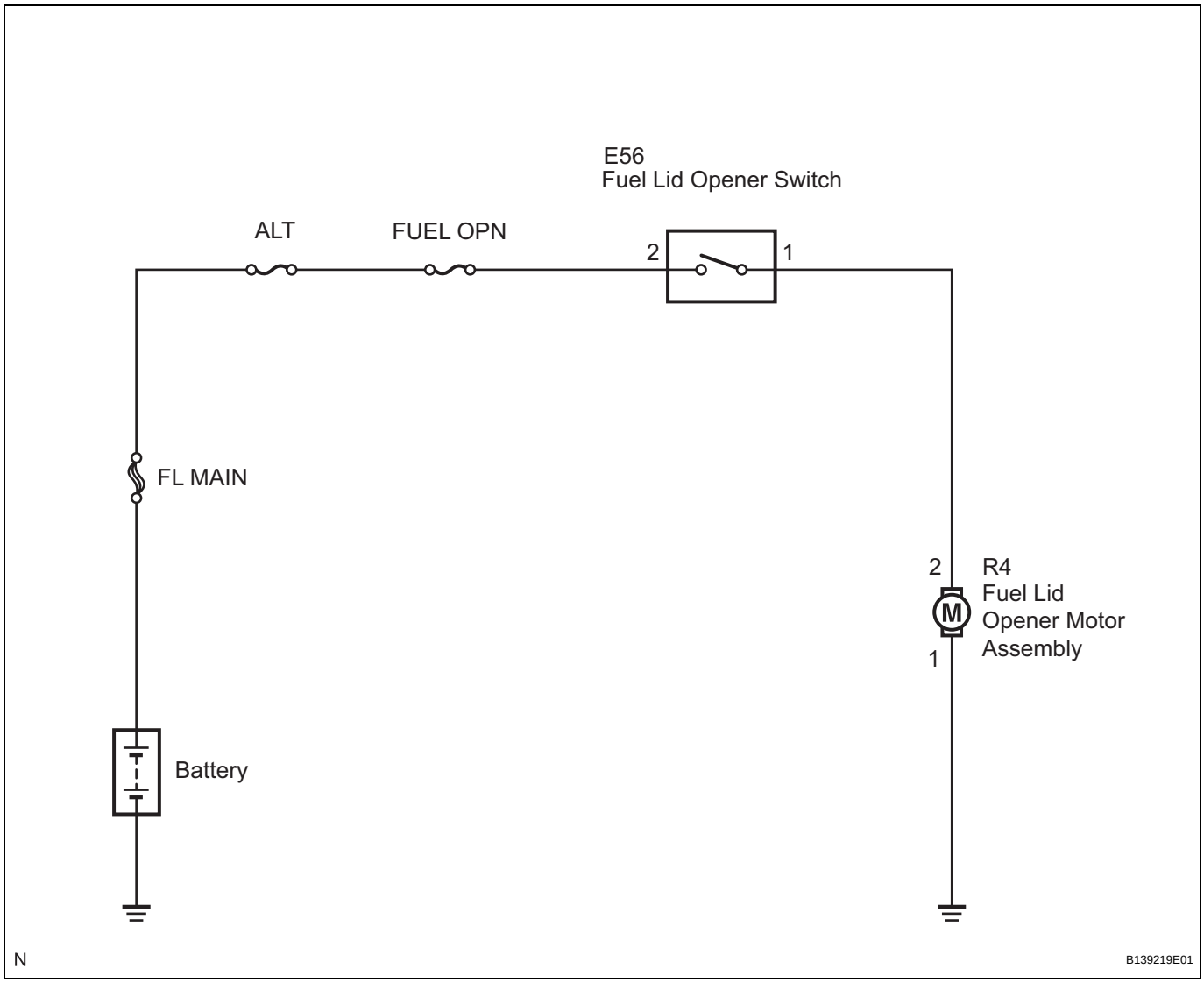

SYSTEM DESCRIPTION

The fuel lid opener is an electric type.

SYSTEM DIAGRAM

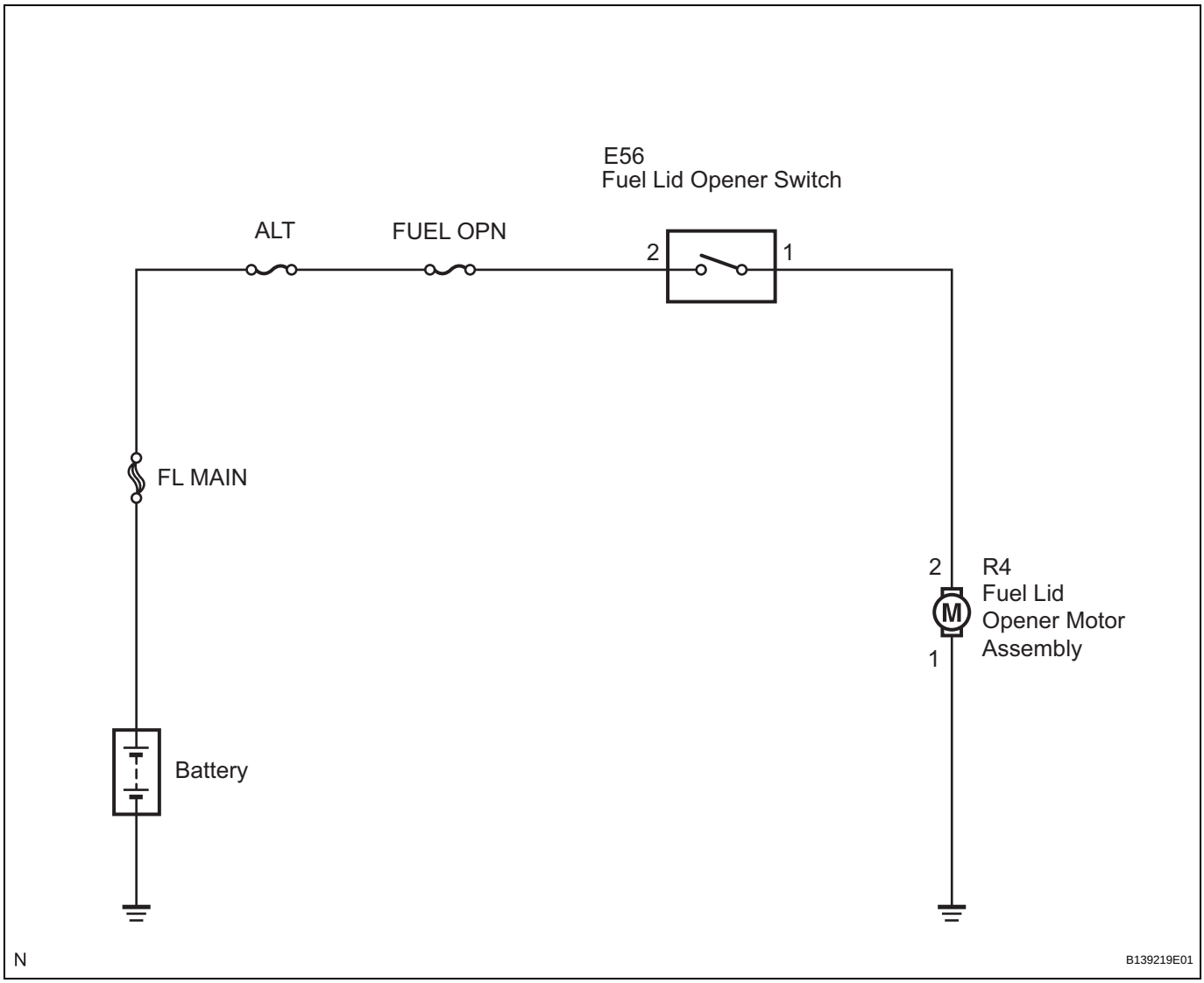

SYSTEM DESCRIPTION

The fuel lid opener is an electric type.

HOOD

ON-VEHICLE INSPECTION

1. INSPECT HOOD SUB-ASSEMBLY

(a) Check that the clearance measurements of areas A through D are within each standard range.

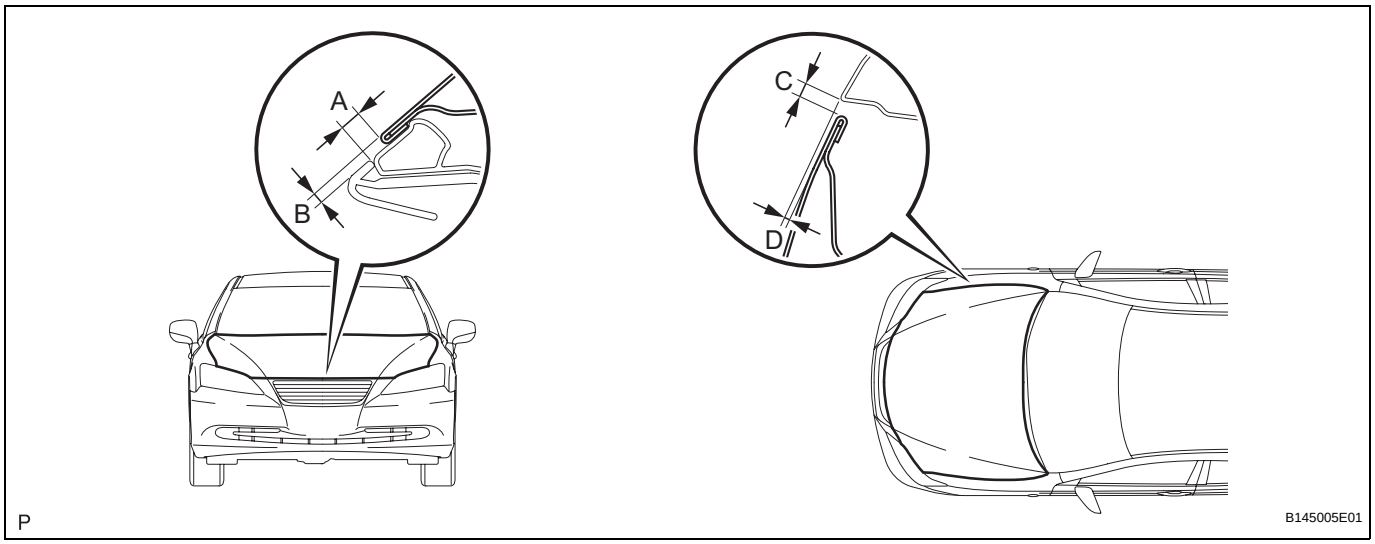

Standard clearance

Area	Measurement	Area	Measurement
A	2.8 to 5.8 mm (0.110 to 0.228 in.)	C	2.0 to 5.0 mm (0.079 to 0.197 in.)
B	0.8 to 3.8 mm (0.032 to 0.150 in.)	D	-1.3 to 1.7 mm (-0.051 to 0.067 in.)

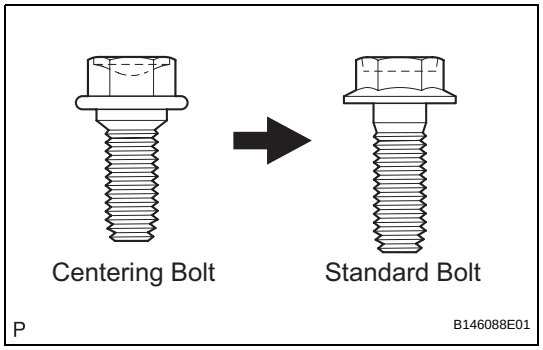

ADJUSTMENT

HINT:

- Centering bolts are used to mount the hood hinge and hood lock. The hood and hood lock cannot be adjusted with the centering bolts on. Substitute the centering bolts with standard bolts (with washers) when making adjustments.
- A bolt without a torque specification is shown in the standard bolt chart (See page SS-2).

1. REMOVE COOL AIR INTAKE DUCT SEAL (See page EM-22)

2. REMOVE FRONT BUMPER ASSEMBLY (See page ET-5)

3. REMOVE MILLIMETER WAVE RADAR SENSOR ASSEMBLY (w/ Dynamic Radar Cruise Control System) (See page CC-122)

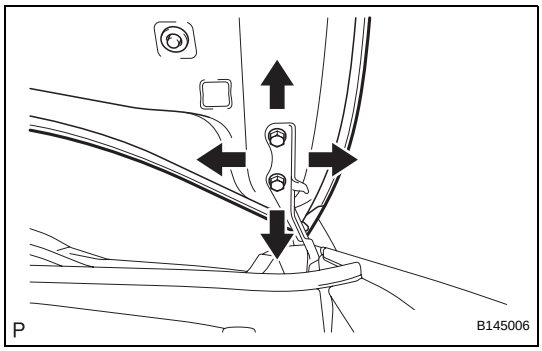

4. ADJUST HOOD SUB-ASSEMBLY

(a) Horizontally and vertically adjust the hood.
  (1) Loosen the 4 hinge bolts of the hood.
  (2) Adjust the clearance between the hood and front fender by moving the hood.
  (3) Tighten the 4 hinge bolts after the adjustment.
  Torque: 13 N*m (133 kgf*cm, 10 ft.*lbf)

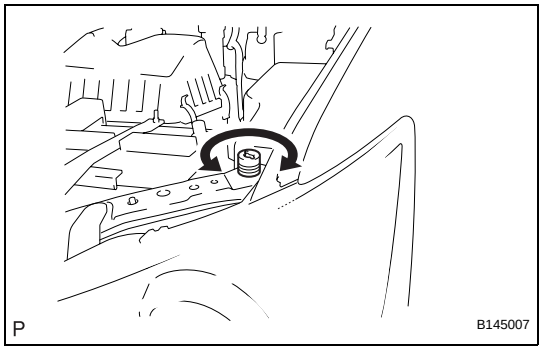

(b) Adjust the height of the front end of the hood using the cushion rubber.
  (1) Adjust the cushion rubber so that the height of the hood and fender are aligned.
  HINT:
  Raise or lower the front end of the hood by turning the cushion rubber.

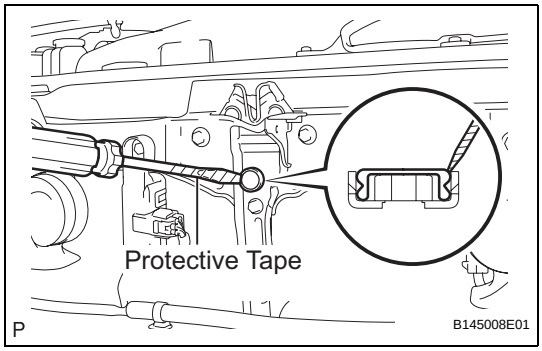

(c) Adjust the hood lock.
  (1) Using a screwdriver, remove the hood lock nut cap as shown in the illustration.
  HINT:
  Tape the screwdriver tip before use.

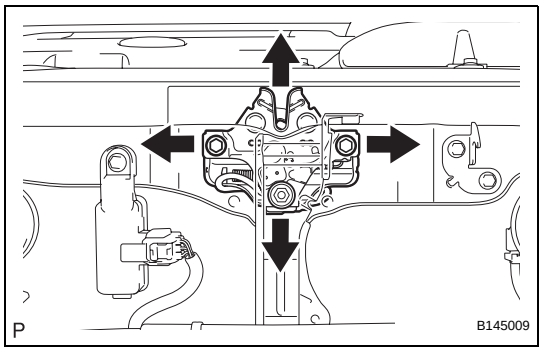

  (2) Loosen the 2 bolts and hood lock nut.
  (3) Tighten the bolts and nut after the adjustment.
  Torque: 8.0 N*m (82 kgf*cm, 71 in.*lbf)
  (4) Check that the striker can engage with the hood lock smoothly.
  (5) Install a new cap.

5. INSTALL MILLIMETER WAVE RADAR SENSOR ASSEMBLY (w/ Dynamic Radar Cruise Control System) (See page CC-128)

6. INSTALL FRONT BUMPER ASSEMBLY

7. INSTALL COOL AIR INTAKE DUCT SEAL (See page EM-50)

8. ADJUST MILLIMETER WAVE RADAR SENSOR ASSEMBLY (w/ Dynamic Radar Cruise Control System) (See page CC-122)

9. VEHICLE PREPARATION FOR FOG LIGHT AIM (See page LI-141)

10. PREPARATION FOR FOG LIGHT AIMING (See page LI-142)

11. **FOG LIGHT AIMING INSPECTION (See page LI-143)**
12. **FOG LIGHT AIMING ADJUSTMENT (See page LI-144)**

HOW TO PROCEED WITH TROUBLESHOOTING

1	VEHICLE BROUGHT TO WORKSHOP

NEXT

2	PROBLEM SYMPTOMS TABLE

NEXT

3	REPAIR OR REPLACE

NEXT

4	CONFIRMATION TEST

NEXT

END

PROBLEM SYMPTOMS TABLE

FUEL LID OPENER SYSTEM

Symptom	Suspected Area	See page
Fuel lid does not open	1. FUEL OPN fuse	ED-14
	2. Fuel lid opener switch	ED-108
	3. Fuel lid opener motor assembly	ED-105
	4. Wire harness	ED-15

INSTALLATION

NOTICE:

- **Avoid touching the stroke portions of the rod as much as possible to prevent foreign matter from attaching to the stroke portions. Be sure to hold the cylinders while servicing the vehicle.**
- **Do not wear cotton gloves or other similar materials when handling the rod. Fibers may attach to the rod and result in gas leaks.**
- **Do not apply any load to the cylinders in the horizontal direction in order to prevent the rod from being deformed.**

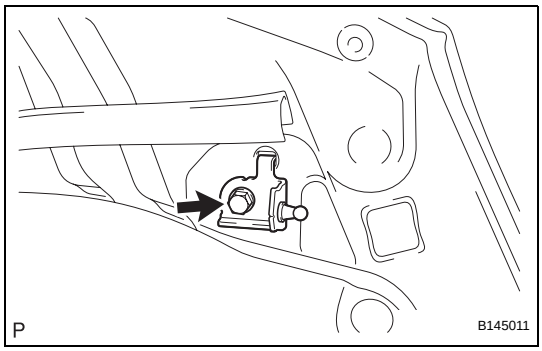

1. **INSTALL HOOD STAY BRACKET**
   (a) Install the hood stay bracket with the bolt.
   Torque: 22 N*m (224 kgf*cm, 16 ft.*lbf)

2. **INSTALL HOOD SUPPORT ASSEMBLY**
   (a) Install the hood support assembly.
   NOTICE:
   - **Install the hood support assembly while supporting the hood by hand.**
   - **Check that the hood support assembly is engaged in the ball joint and that the hood support assembly cannot be pulled out.**

3. **INSTALL ENGINE ROOM SIDE COVER (See page WW-47)**

4. **INSTALL HOOD HINGE COVER (See page WW-47)**

5. **INSTALL COOL AIR INTAKE DUCT SEAL (See page EM-50)**

DISPOSAL

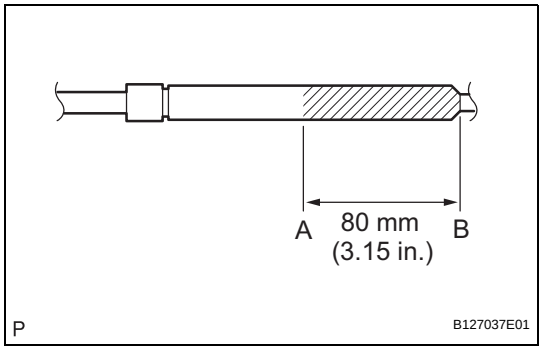

1. **DISPOSE OF HOOD SUPPORT ASSEMBLY**
   (a) Secure the hood support horizontally in a vise with the piston-rod pulled out.
   (b) Wear safety glasses. Use a metal saw to slowly cut a groove between A and B shown in the illustration to release the gas.
   NOTICE:
   Although the gas inside the hood support is colorless, odorless, and harmless, metal debris may scatter. Therefore, cover the hood support with a piece of cloth or other material.

HOOD LOCK CONTROL CABLE ASSEMBLY

COMPONENTS

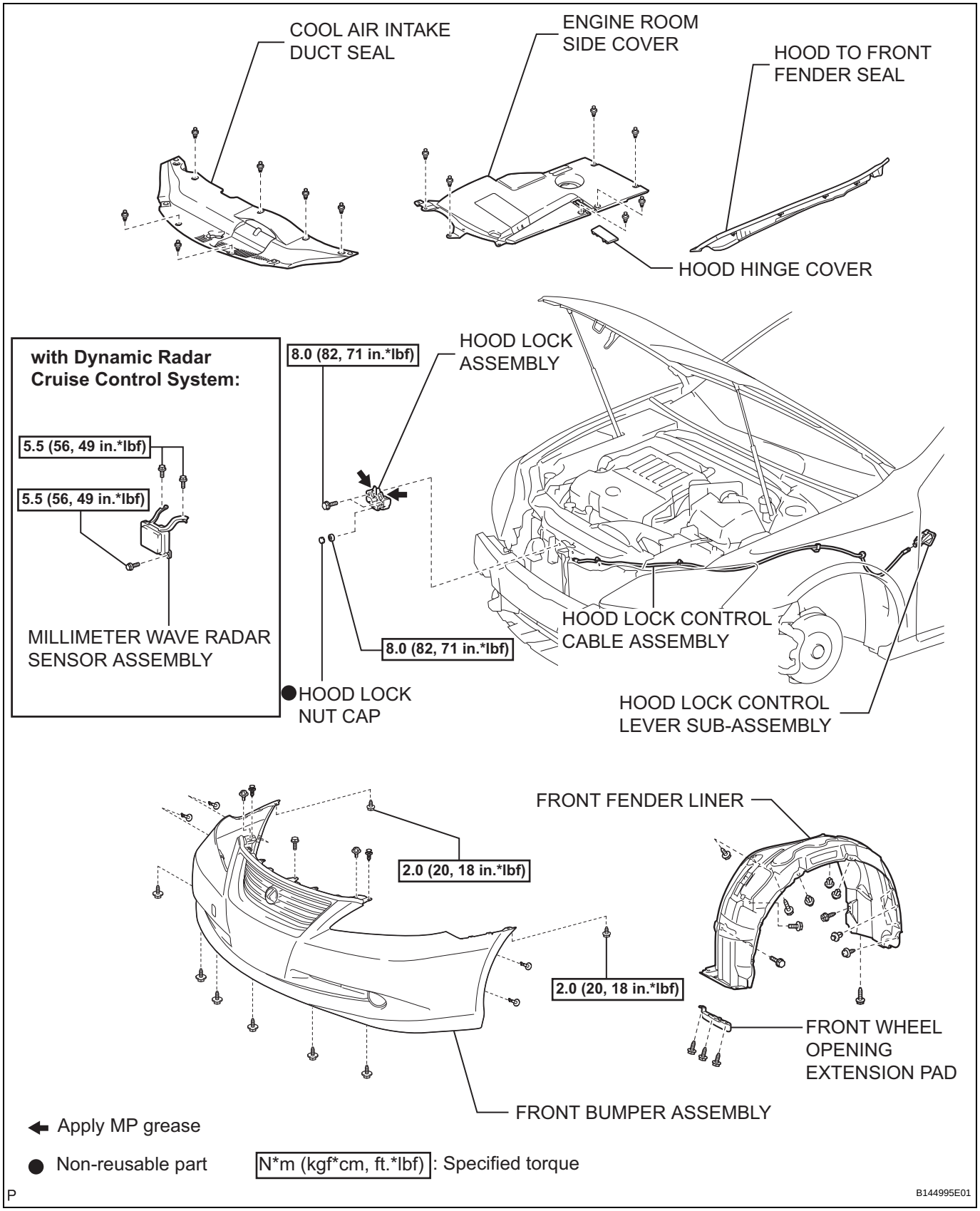

ED

REMOVAL

1. **REMOVE COOL AIR INTAKE DUCT SEAL (See page EM-22)**
2. **REMOVE HOOD HINGE COVER (See page WW-38)**
3. **REMOVE ENGINE ROOM SIDE COVER (See page WW-39)**
4. **REMOVE HOOD TO FRONT FENDER SEAL**
5. **REMOVE FRONT WHEEL**
6. **REMOVE FRONT WHEEL OPENING EXTENSION PAD**
   (a) Remove the 3 screws and the front wheel opening extension pad.
7. **REMOVE FRONT BUMPER ASSEMBLY (See page ET-5)**

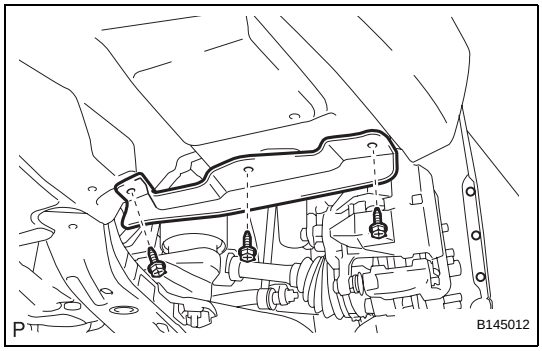

8. **REMOVE FRONT FENDER LINER**
   (a) Remove the 6 clips and 5 screws.
   (b) Remove the 2 bolts and the front fender liner.
9. **REMOVE MILLIMETER WAVE RADAR SENSOR ASSEMBLY (w/ Dynamic Radar Cruise Control System) (See page CC-122)**

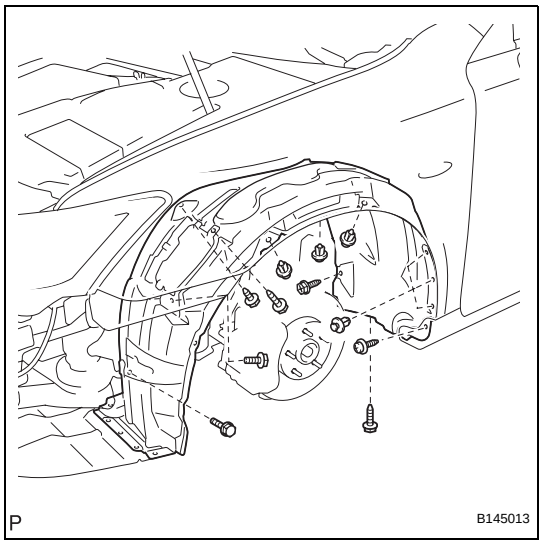

10. **REMOVE HOOD LOCK ASSEMBLY**
    (a) Using a screwdriver, remove the hood lock nut cap as shown in the illustration.
    HINT:
    Tape the screwdriver tip before use.

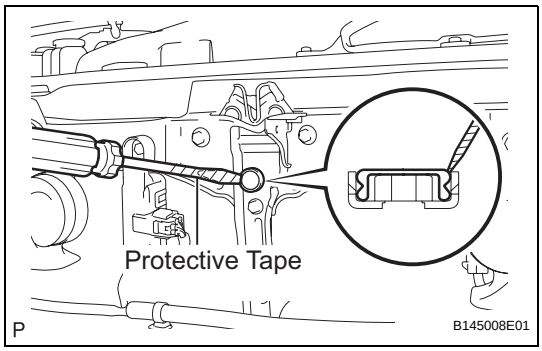

ED

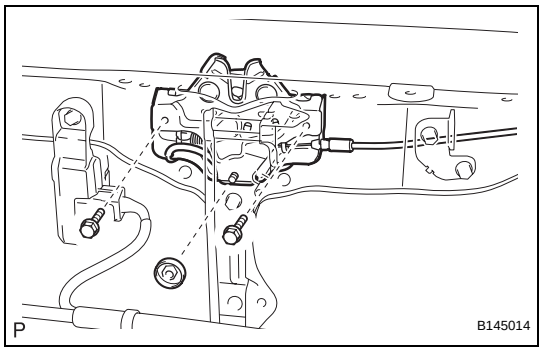

(b) Remove the 2 bolts and nut.

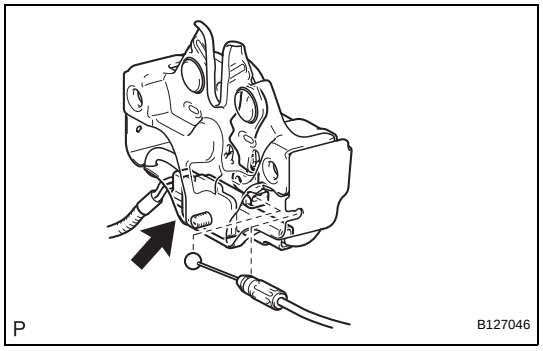

(c) Disconnect the hood lock control cable and connector.
(d) Remove the hood lock assembly.

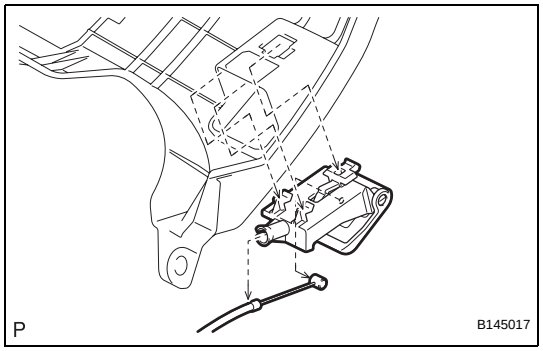

11. REMOVE HOOD LOCK CONTROL LEVER SUB-ASSEMBLY
(a) Detach the 3 claws.
(b) Disconnect the hood lock control cable and remove the hood lock control lever.

12. REMOVE HOOD LOCK CONTROL CABLE ASSEMBLY
(a) Using a screwdriver, disconnect the clamps shown in the illustration.

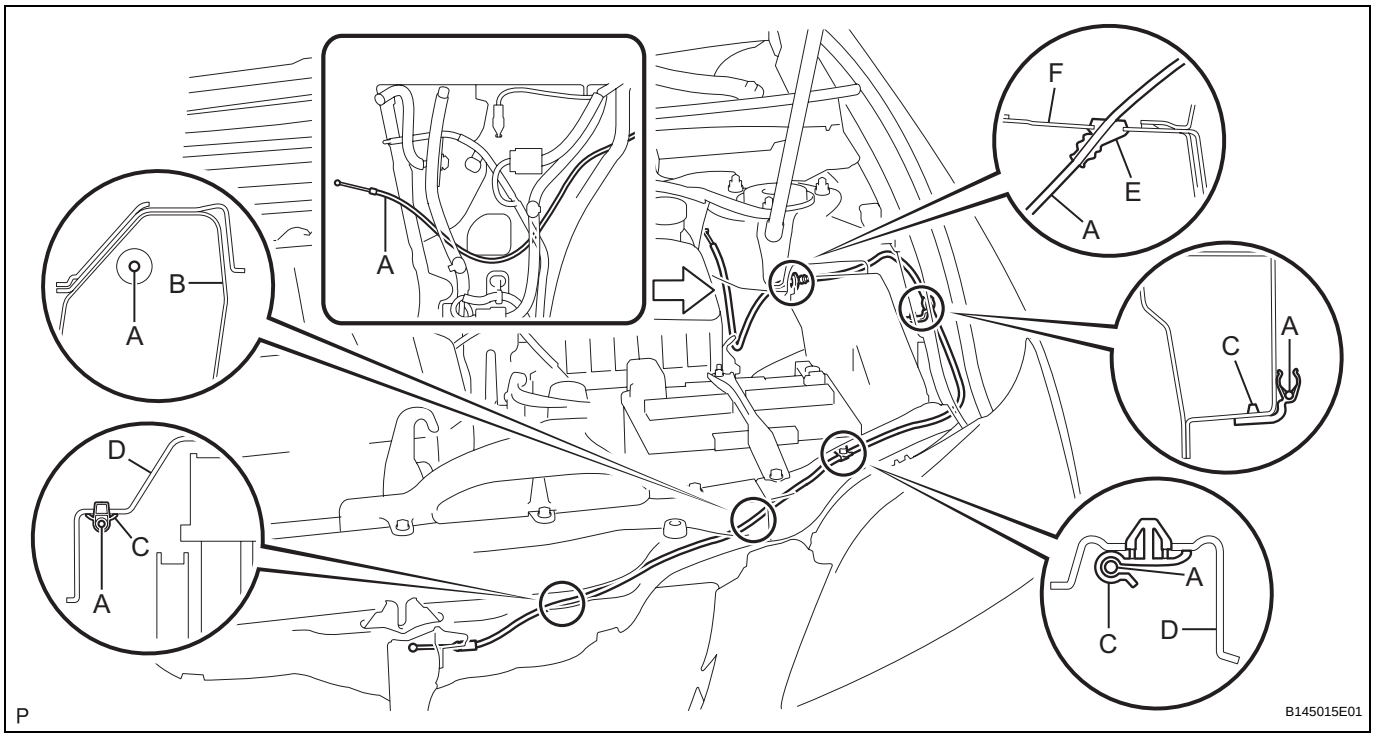

ED

Area	Part Name	Area	Part Name
A	Hood lock control cable	D	Radiator support upper
B	Radiator support brace	E	Grommet
C	Clamp	F	Side member outer panel

HINT:
Tape the screwdriver tip before use.

(b) Pull the cable from the engine compartment and remove it.

INSTALLATION

1. INSTALL HOOD LOCK CONTROL CABLE ASSEMBLY

(a) Pass the cable into the engine compartment.

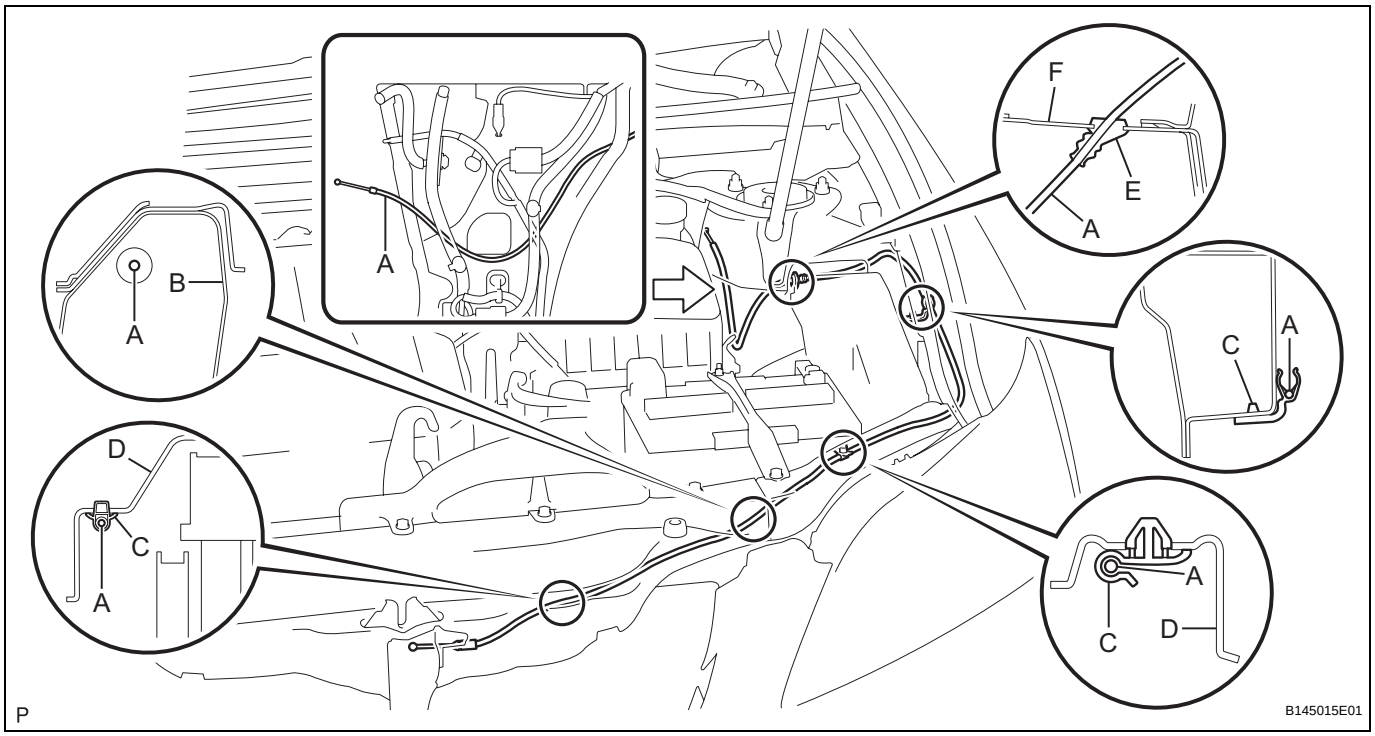

Area	Part Name	Area	Part Name
A	Hood lock control cable	D	Radiator support upper
B	Radiator support brace	E	Grommet
C	Clamp	F	Side member outer panel

(b) Pass the cable rear side through the grommet until the cable stopper is attached to the grommet.

(c) Pass the cable front side through the upper radiator support.

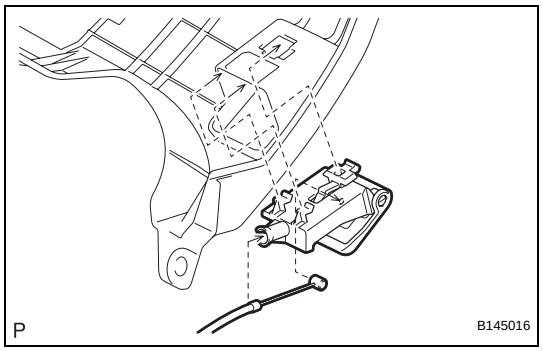

2. INSTALL HOOD LOCK CONTROL LEVER SUB-ASSEMBLY

(a) Install the hood lock control lever and connect the hood lock control cable.

(b) Attach the 3 claws.

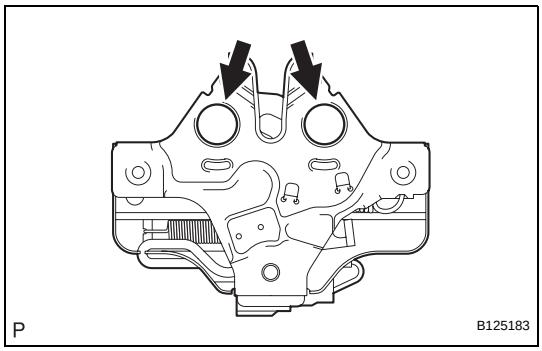

3. INSTALL HOOD LOCK ASSEMBLY

(a) Apply MP grease to the sliding areas of the lock.

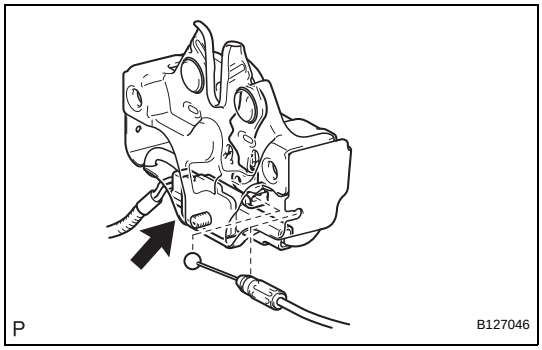

(b) Connect the hood lock control cable and connector.

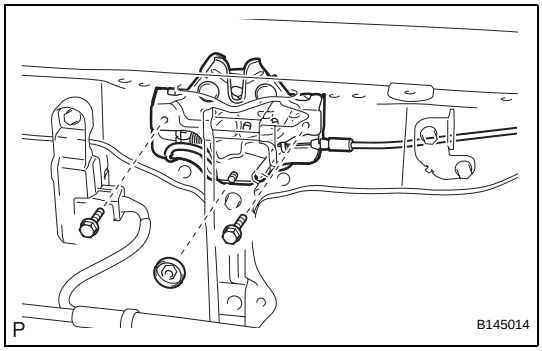

(c) Install the hood lock assembly with the 2 bolts and nut.
Torque: 8.0 N*m (82 kgf*cm, 71 in.*lbf)

(d) Install a new hood lock nut cap.

4. INSPECT HOOD SUB-ASSEMBLY (See page ED-17)

5. ADJUST HOOD SUB-ASSEMBLY (See page ED-18)

6. INSTALL MILLIMETER WAVE RADAR SENSOR ASSEMBLY (w/ Dynamic Radar Cruise Control System) (See page CC-128)

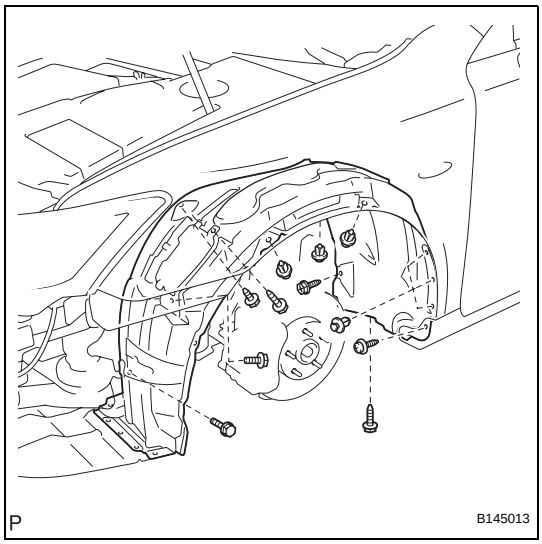

7. INSTALL FRONT FENDER LINER

(a) Install the front fender liner with the 2 bolts.

(b) Install the 5 screws and 6 clips.

8. INSTALL FRONT BUMPER ASSEMBLY (See page ET-14)

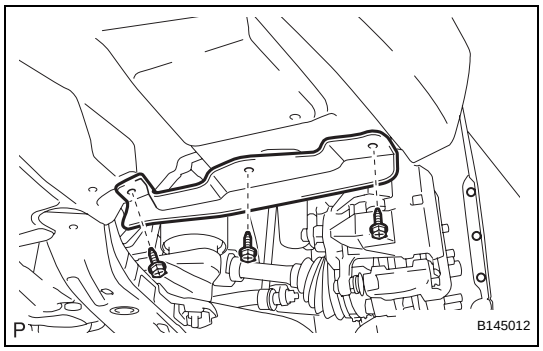

9. INSTALL FRONT WHEEL OPENING EXTENSION PAD
(a) Install the front wheel opening extension pad with the 3 screws.

10. INSTALL FRONT WHEEL (See page SP-20)

11. INSTALL HOOD TO FRONT FENDER SEAL

12. INSTALL ENGINE ROOM SIDE COVER (See page WW-47)

13. INSTALL HOOD HINGE COVER (See page WW-47)

14. INSTALL COOL AIR INTAKE DUCT SEAL (See page EM-50)

15. ADJUST MILLIMETER WAVE RADAR SENSOR ASSEMBLY (w/ Dynamic Radar Cruise Control System) (See page CC-122)

16. VEHICLE PREPARATION FOR FOG LIGHT AIM (See page LI-141)

17. PREPARATION FOR FOG LIGHT AIMING (See page LI-142)

18. FOG LIGHT AIMING INSPECTION (See page LI-143)

19. FOG LIGHT AIMING ADJUSTMENT (See page LI-144)

INSTALLATION

1. INSTALL HOOD LOCK CONTROL CABLE ASSEMBLY

(a) Pass the cable into the engine compartment.

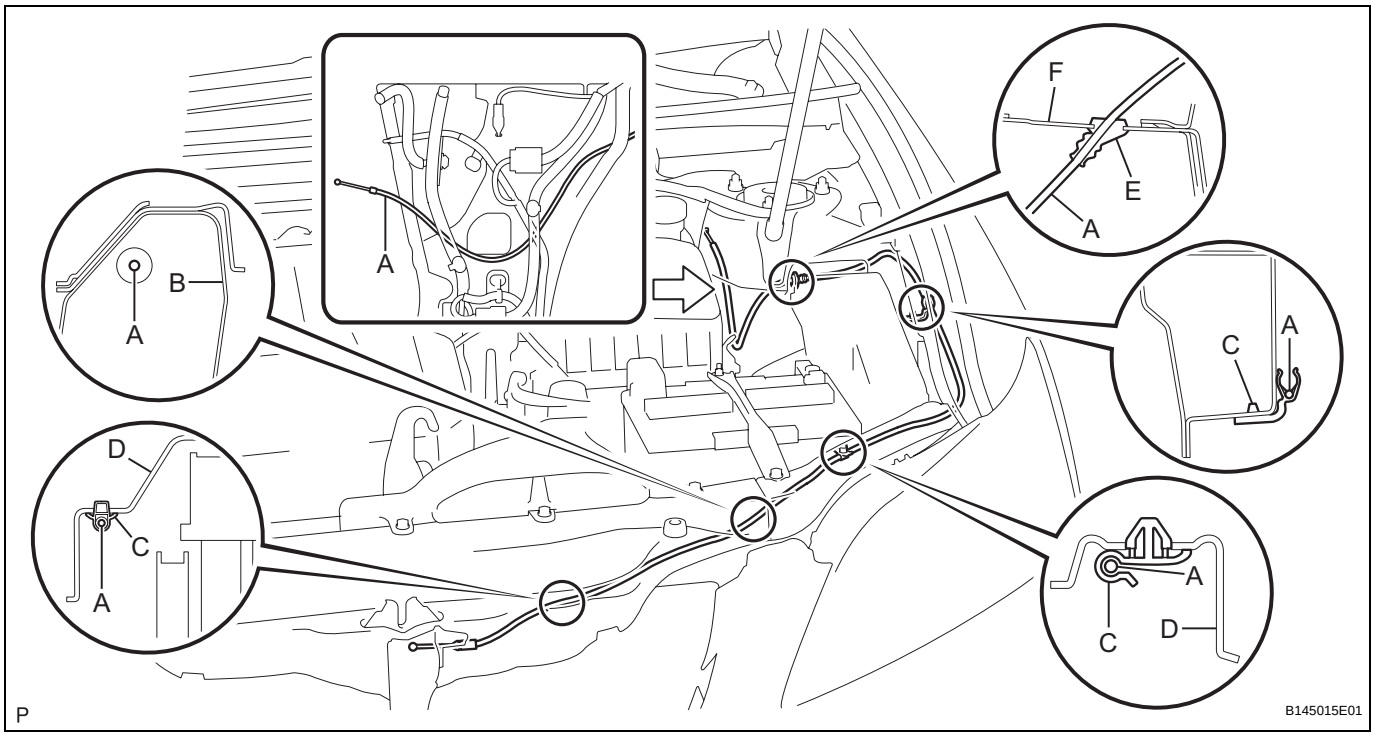

Area	Part Name	Area	Part Name
A	Hood lock control cable	D	Radiator support upper
B	Radiator support brace	E	Grommet
C	Clamp	F	Side member outer panel

(b) Pass the cable rear side through the grommet until the cable stopper is attached to the grommet.

(c) Pass the cable front side through the upper radiator support.

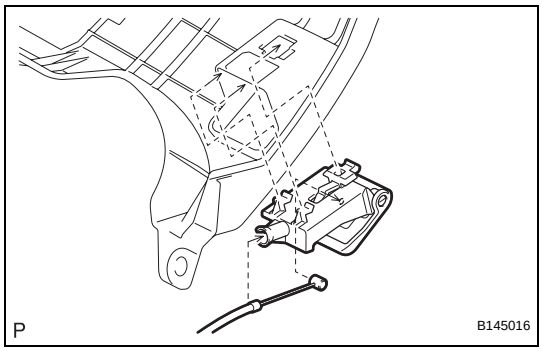

2. INSTALL HOOD LOCK CONTROL LEVER SUB-ASSEMBLY

(a) Install the hood lock control lever and connect the hood lock control cable.

(b) Attach the 3 claws.

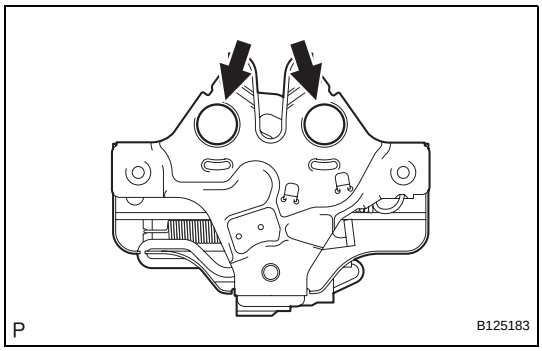

3. INSTALL HOOD LOCK ASSEMBLY

(a) Apply MP grease to the sliding areas of the lock.

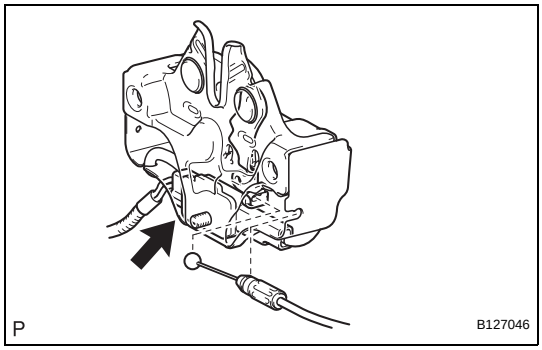

(b) Connect the hood lock control cable and connector.

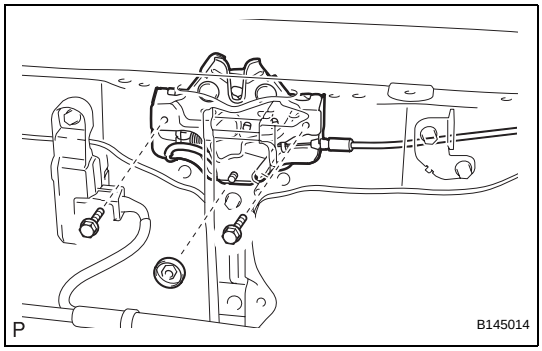

(c) Install the hood lock assembly with the 2 bolts and nut.
Torque: 8.0 N*m (82 kgf*cm, 71 in.*lbf)

(d) Install a new hood lock nut cap.

4. INSPECT HOOD SUB-ASSEMBLY (See page ED-17)

5. ADJUST HOOD SUB-ASSEMBLY (See page ED-18)

6. INSTALL MILLIMETER WAVE RADAR SENSOR ASSEMBLY (w/ Dynamic Radar Cruise Control System) (See page CC-128)

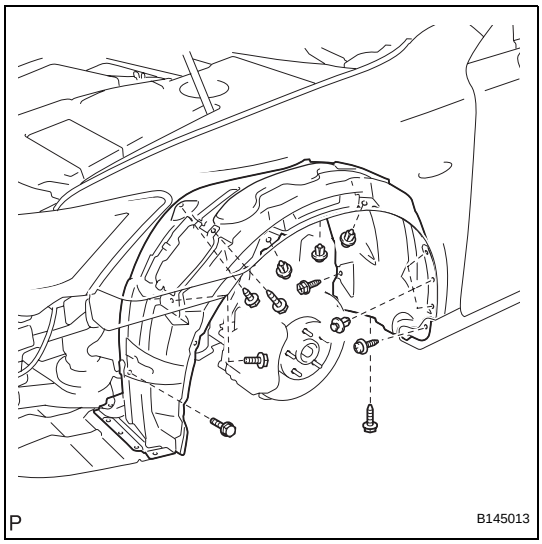

7. INSTALL FRONT FENDER LINER

(a) Install the front fender liner with the 2 bolts.

(b) Install the 5 screws and 6 clips.

8. INSTALL FRONT BUMPER ASSEMBLY (See page ET-14)

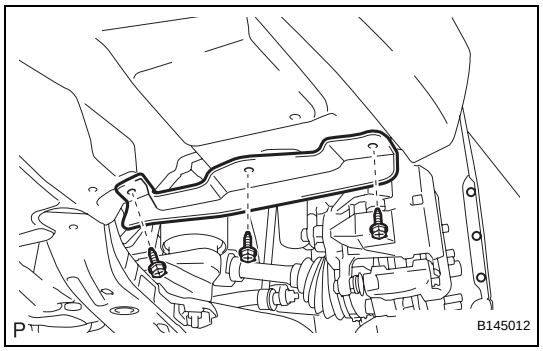

9. INSTALL FRONT WHEEL OPENING EXTENSION PAD
(a) Install the front wheel opening extension pad with the 3 screws.

10. INSTALL FRONT WHEEL (See page SP-20)

11. INSTALL HOOD TO FRONT FENDER SEAL

12. INSTALL ENGINE ROOM SIDE COVER (See page WW-47)

13. INSTALL HOOD HINGE COVER (See page WW-47)

14. INSTALL COOL AIR INTAKE DUCT SEAL (See page EM-50)

15. ADJUST MILLIMETER WAVE RADAR SENSOR ASSEMBLY (w/ Dynamic Radar Cruise Control System) (See page CC-122)

16. VEHICLE PREPARATION FOR FOG LIGHT AIM (See page LI-141)

17. PREPARATION FOR FOG LIGHT AIMING (See page LI-142)

18. FOG LIGHT AIMING INSPECTION (See page LI-143)

19. FOG LIGHT AIMING ADJUSTMENT (See page LI-144)

ON-VEHICLE INSPECTION

1. INSPECT FRONT DOOR PANEL SUB-ASSEMBLY

(a) Check that the clearance measurements of areas A through L are within each standard range.

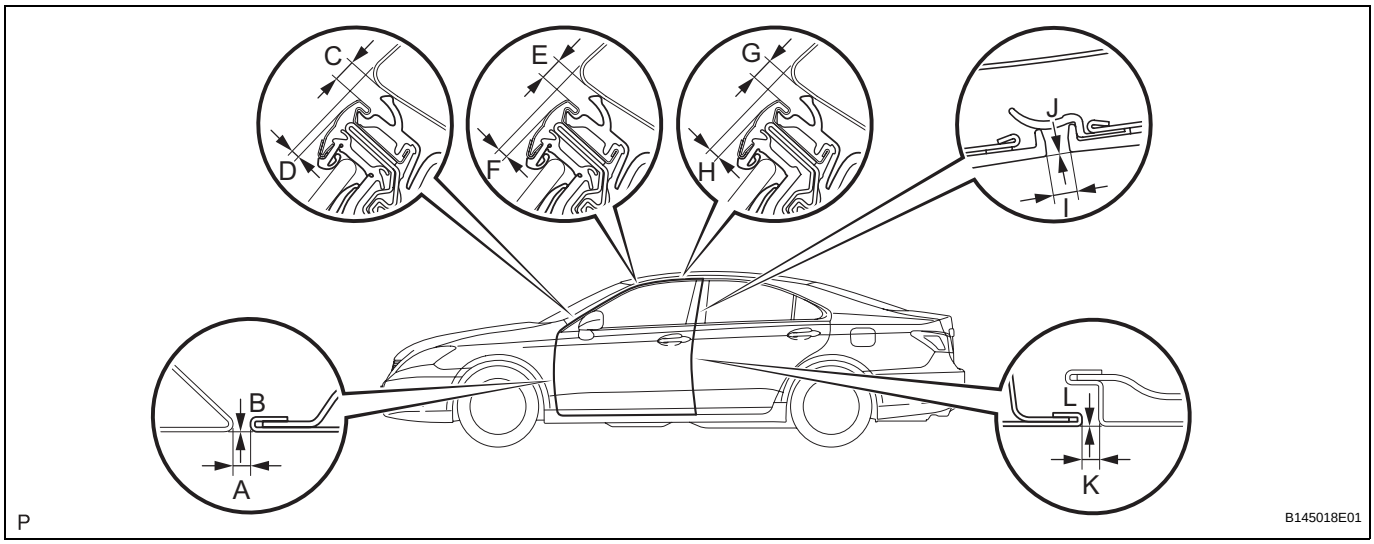

Standard clearance

Area	Measurement	Area	Measurement
A	2.5 to 5.5 mm (0.098 to 0.217 in.)	G	3.3 to 6.3 mm (0.130 to 0.248 in.)
B	-1.5 to 1.5 mm (-0.059 to 0.059 in.)	H	0.3 to 3.3 mm (0.012 to 0.130 in.)
C	3.3 to 6.3 mm (0.130 to 0.248 in.)	I	3.0 to 6.0 mm (0.118 to 0.236 in.)
D	1.8 to 4.8 mm (0.071 to 0.189 in.)	J	-1.5 to 1.5 mm (-0.059 to 0.059 in.)
E	3.3 to 6.3 mm (0.130 to 0.248 in.)	K	2.5 to 5.5 mm (0.098 to 0.217 in.)
F	0.2 to 3.2 mm (0.008 to 0.126 in.)	L	-1.5 to 1.5 mm (-0.059 to 0.059 in.)

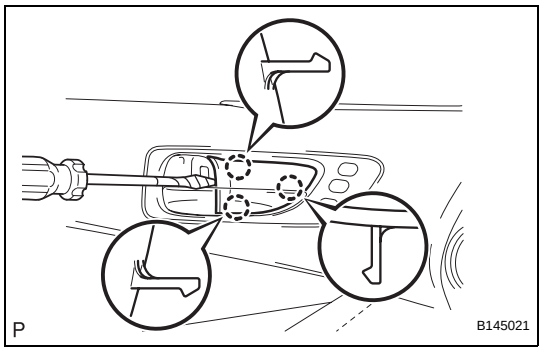

DISASSEMBLY

1. REMOVE FRONT DOOR INSIDE HANDLE BEZEL PLUG

(a) Using a screwdriver with the tip wrapped with protective tape, disengage the 3 claws, and remove the front door inside handle bezel plug.

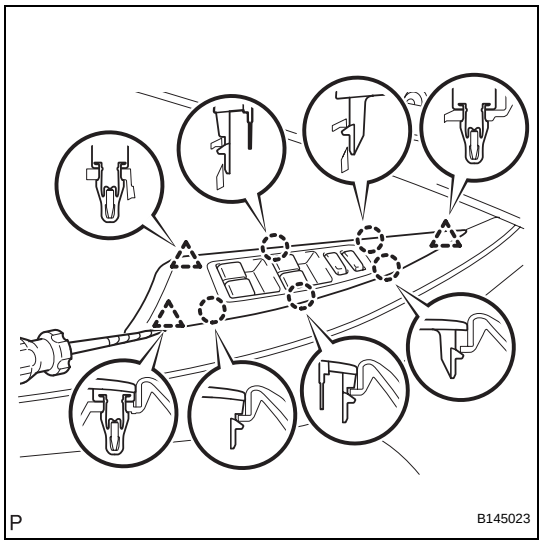

2. REMOVE FRONT DOOR ARMREST BASE PANEL ASSEMBLY

(a) Using a screwdriver with the tip wrapped with protective tape, disengage the 5 claws and 3 clips, and remove the front door armrest base panel assembly.

(b) Disconnect the connector.

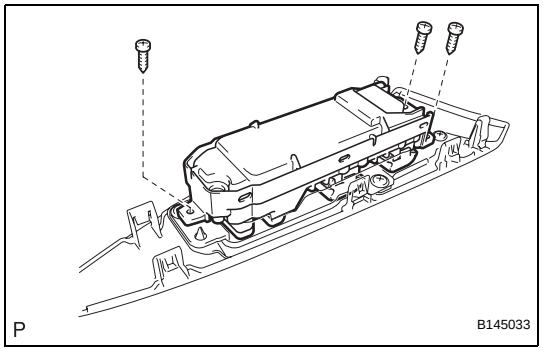

3. REMOVE POWER WINDOW REGULATOR MASTER SWITCH ASSEMBLY (for Driver Side)

(a) Remove the 3 screws and the power window regulator master switch assembly.

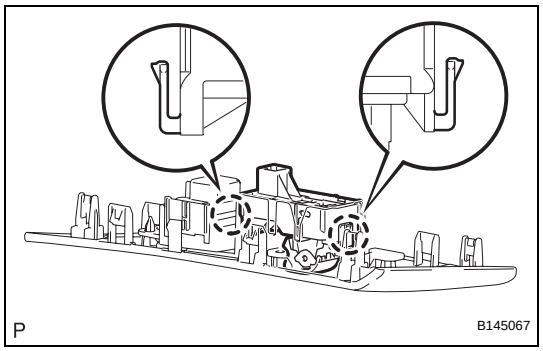

4. REMOVE POWER WINDOW REGULATOR SWITCH ASSEMBLY (for Front Passenger Side)

(a) Disengage the 2 claws and remove the power window regulator switch assembly.

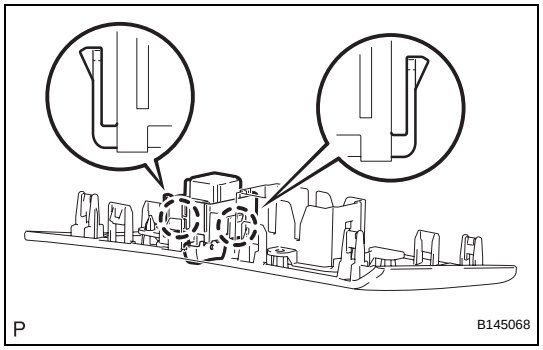

5. REMOVE DOOR CONTROL SWITCH ASSEMBLY (for Front Passenger Side)

(a) Disengage the 2 claws and remove the door control switch assembly.

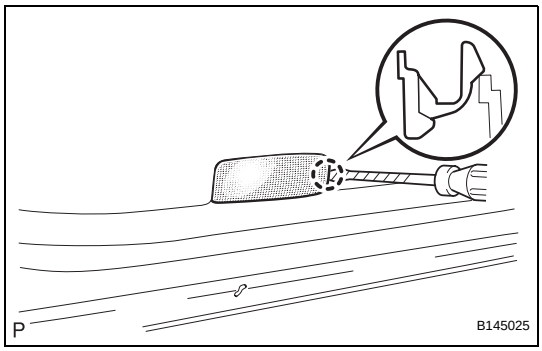

6. REMOVE COURTESY LIGHT ASSEMBLY

(a) Using a screwdriver with the tip wrapped with protective tape, disengage the claw and remove the courtesy light assembly.

(b) Disconnect the connector.

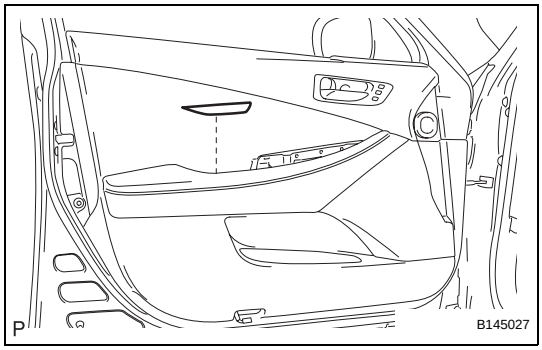

7. REMOVE DOOR ARMREST COVER

(a) Remove the door armrest cover.

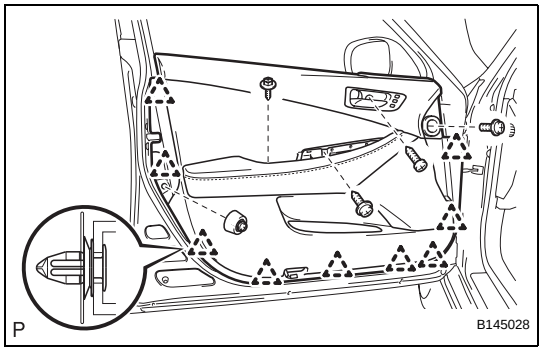

8. REMOVE FRONT DOOR TRIM BOARD SUB-ASSEMBLY

(a) Remove the 5 screws.

(b) Using a clip remover, disengage the 9 clips.

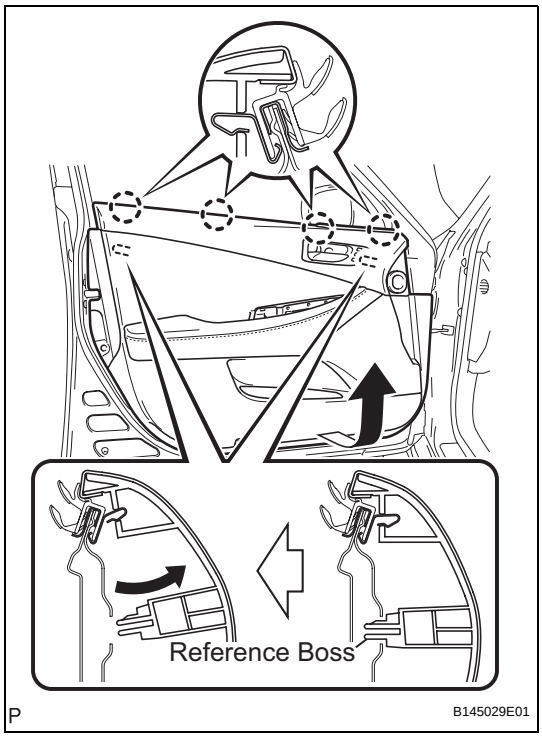

(c) Pull up the front door trim board in the direction indicated by the arrow.

(d) Disengage the reference bosses from the front door panel.

(e) Raise the front door trim board to disengage the 4 claws and remove the front door trim board together with the front door inner glass weatherstrip.

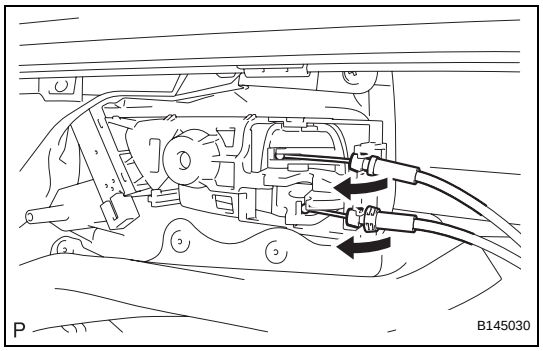

(f) Disconnect the cables and each connector from the back side of the inside handle and remove the front door trim board sub-assembly.

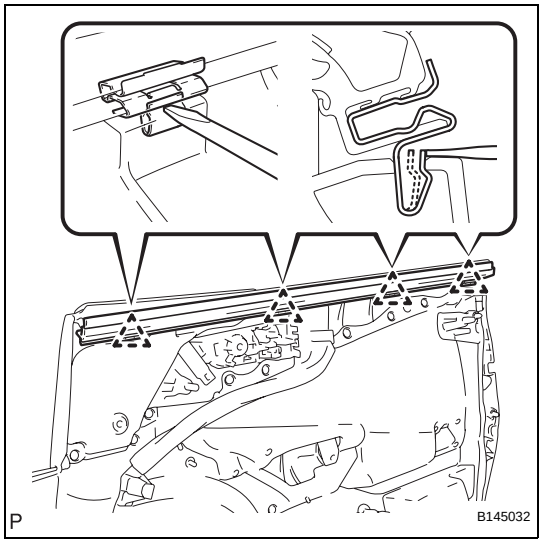

9. REMOVE FRONT DOOR INNER GLASS WEATHERSTRIP

(a) Disengage the 4 clips as shown in the illustration and remove the front door inner glass weatherstrip from the front door trim board.

10. REMOVE SEAT MEMORY SWITCH (w/ Seat Position Memory System) (See page SE-123)

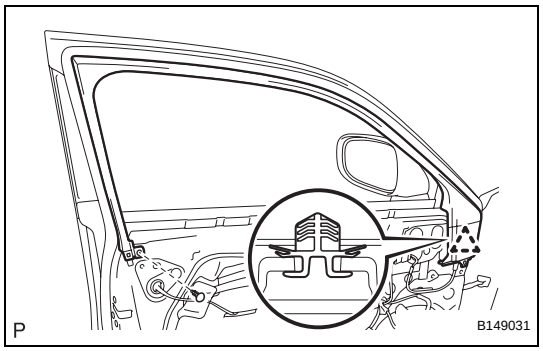

11. REMOVE DOOR FRAME GARNISH

(a) Using a clip remover, remove the clip.

(b) Disengage the clip and remove the door frame garnish.

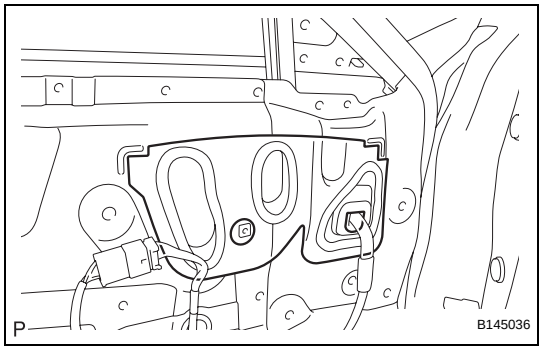

12. REMOVE OUTER MIRROR PROTECTOR

(a) Remove the outer mirror protector.

HINT:

Remove the remaining butyl tape on the door side.

13. REMOVE OUTER REAR VIEW MIRROR ASSEMBLY (See page MI-46)

14. REMOVE FRONT NO. 1 SPEAKER ASSEMBLY (See page AV-184)

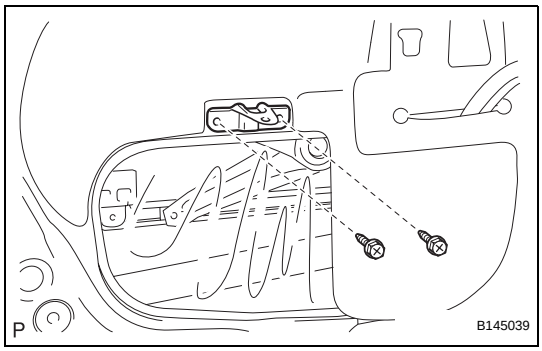

15. REMOVE FRONT NO. 1 DOOR TRIM BRACKET

(a) Remove the 2 screws and the front No. 1 door trim bracket.

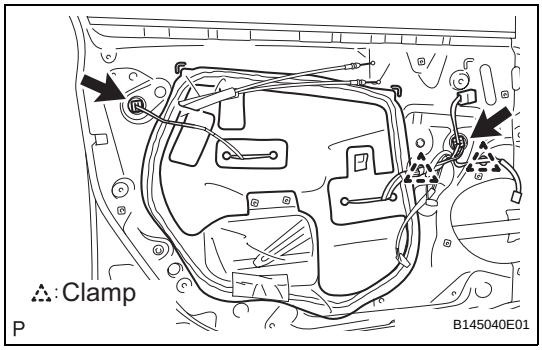

16. REMOVE FRONT DOOR SERVICE HOLE COVER

(a) Disconnect each connector and each clamp, and remove the front door service hole cover.
HINT:
Remove the remaining butyl tape on the door side.

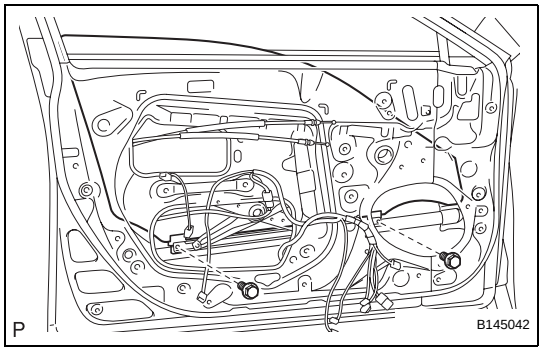

17. REMOVE FRONT DOOR GLASS SUB-ASSEMBLY

(a) Remove the 2 bolts.
NOTICE:
After the bolts are removed, the door glass may fall, causing damage.

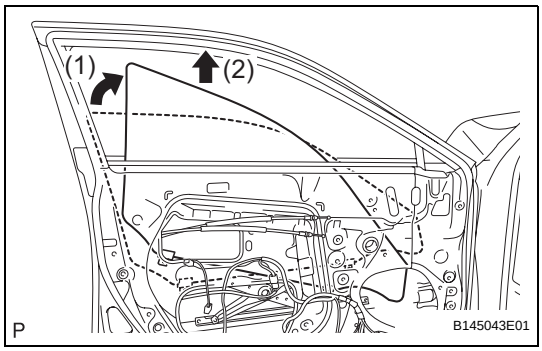

(b) Remove the front door glass sub-assembly as shown in the illustration.
NOTICE:
Do not damage the door glass.

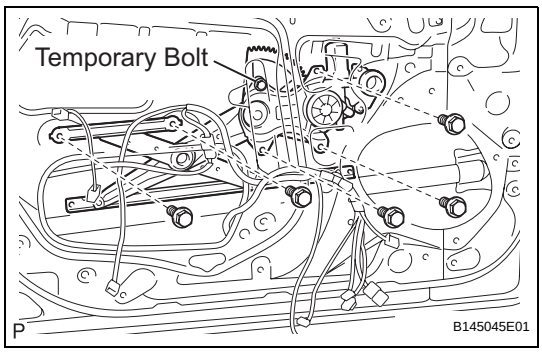

18. REMOVE FRONT DOOR WINDOW REGULATOR SUB-ASSEMBLY

(a) Loosen the temporary bolt.
NOTICE:
Do not remove the temporary bolt. If the temporary bolt is removed, the front door window regulator may fall, causing damage.

(b) Remove the 5 bolts.

(c) Remove the front door window regulator sub-assembly and the front power window regulator motor assembly as a unit.

(d) Remove the temporary bolt from the front door window regulator sub-assembly.

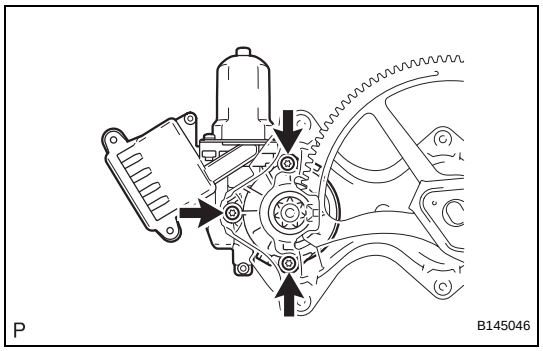

19. REMOVE FRONT POWER WINDOW REGULATOR MOTOR ASSEMBLY

(a) Using a "TORX" driver (T25), remove the 3 screws and the front power window regulator motor assembly.

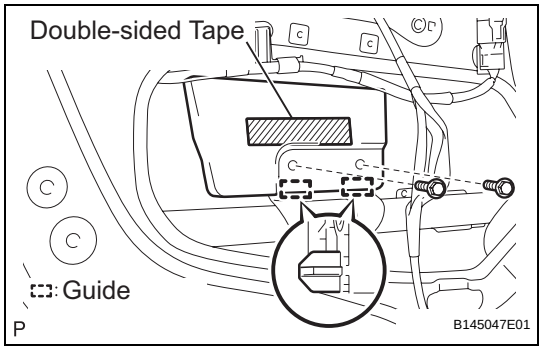

20. REMOVE FRONT NO. 1 DOOR STIFFENER CUSHION

(a) Remove the 2 bolts.

(b) Remove the double-sided tape and the front No. 1 door stiffener cushion.

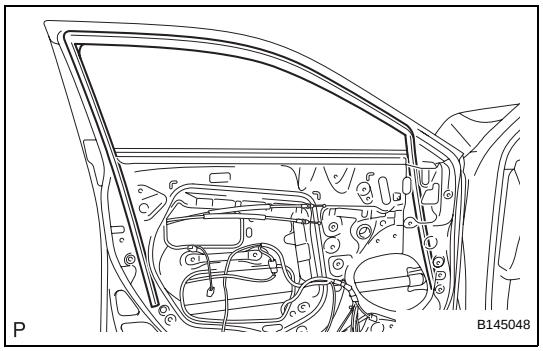

21. REMOVE FRONT DOOR GLASS RUN

(a) Remove the front door glass run.

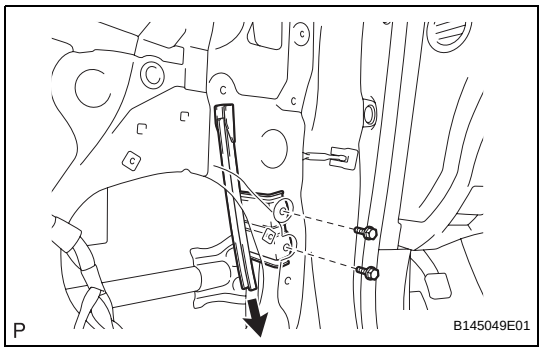

22. REMOVE FRONT DOOR FRONT LOWER FRAME SUB-ASSEMBLY

(a) Remove the 2 bolts and the front door front lower frame sub-assembly as shown in the illustration.

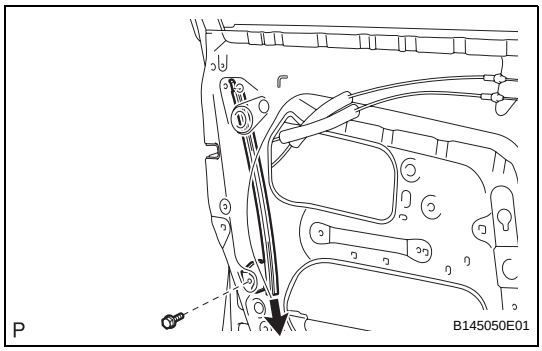

23. REMOVE FRONT DOOR REAR LOWER FRAME SUB-ASSEMBLY

(a) Remove the bolt and the front door rear lower frame sub-assembly as shown in the illustration.

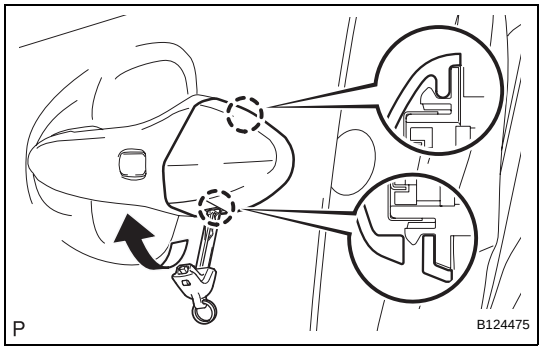

24. REMOVE FRONT DOOR OUTSIDE HANDLE COVER (for Driver Side)

(a) Using an emergency key, disengage the 2 claws and remove the front door outside handle cover.

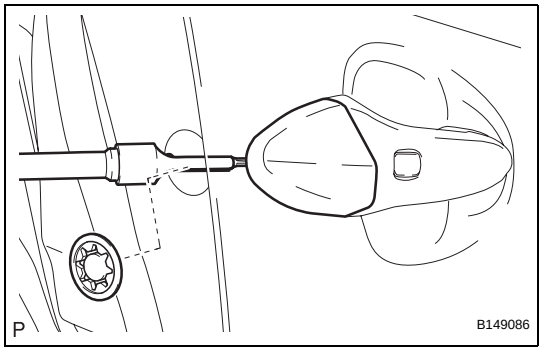

25. REMOVE FRONT DOOR OUTSIDE HANDLE COVER (for Front Passenger Side)

(a) Remove the hole plug.

(b) Using a "TORX" socket wrench (T30), loosen the screw and remove the front door outside handle cover.

HINT:

The screw cannot be removed because it is integrated into the front door outside handle frame sub-assembly.

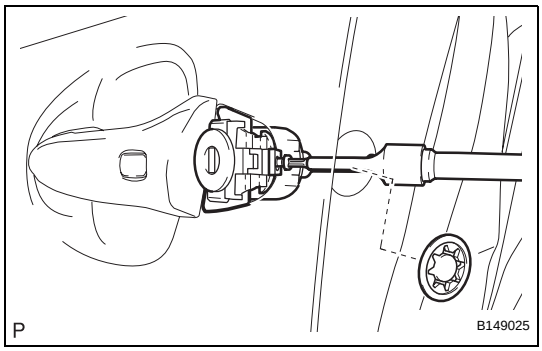

26. REMOVE FRONT DOOR OUTSIDE HANDLE ASSEMBLY

(a) Remove the hole plug.

(b) Using a "TORX" socket wrench (T30), loosen the screw and remove the front door outside handle cover and the door lock key cylinder as a unit.

HINT:

The screw cannot be removed because it is integrated into the front door outside handle frame sub-assembly.

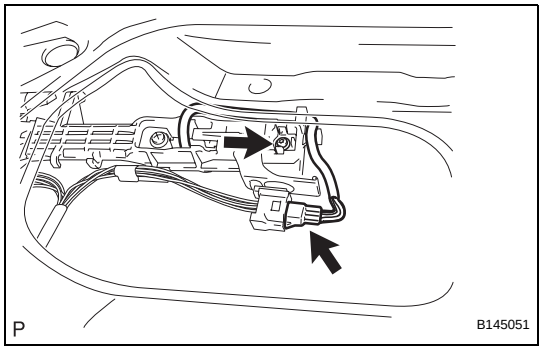

(c) Disconnect the connector.

(d) Using a "TORX" socket wrench (T30), loosen the screw.

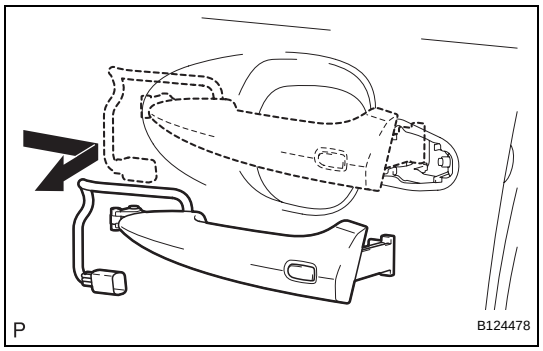

(e) Remove the front door outside handle assembly as shown in the illustration.

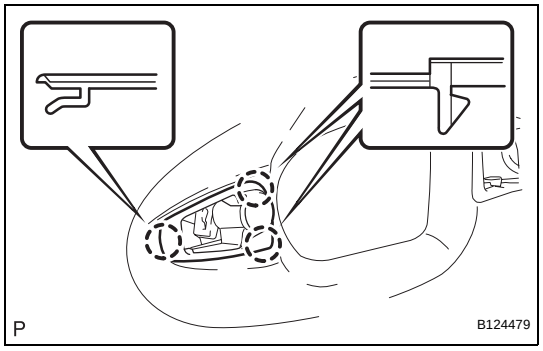

27. REMOVE FRONT DOOR FRONT OUTSIDE HANDLE PAD

(a) Disengage the 3 claws and remove the front door front outside handle pad.

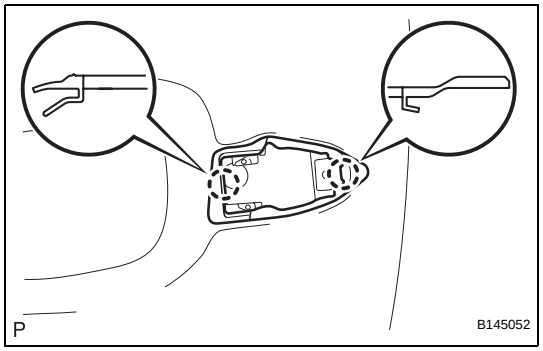

28. REMOVE FRONT DOOR REAR OUTSIDE HANDLE PAD

(a) Disengage the 2 claws and remove the front door rear outside handle pad.

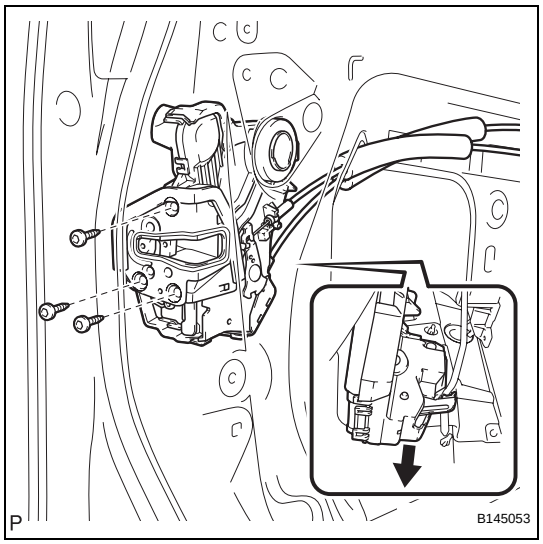

29. REMOVE FRONT DOOR LOCK ASSEMBLY

(a) Using a "TORX" socket wrench (T30), remove the 3 screws.

(b) Slide the front door lock assembly downward, pull out the front door lock open rod from the outside handle frame, and remove the front door lock assembly and cables as a unit.

(c) Remove the front door lock open rod from the front door lock assembly.

(d) Remove the door lock wiring harness seal from the front door lock assembly.

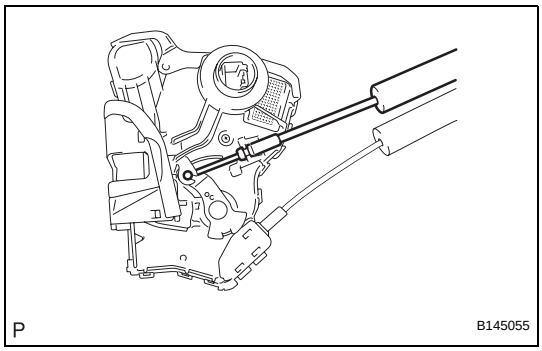

30. REMOVE FRONT DOOR LOCK REMOTE CONTROL CABLE ASSEMBLY

(a) Remove the front door lock remote control cable assembly.

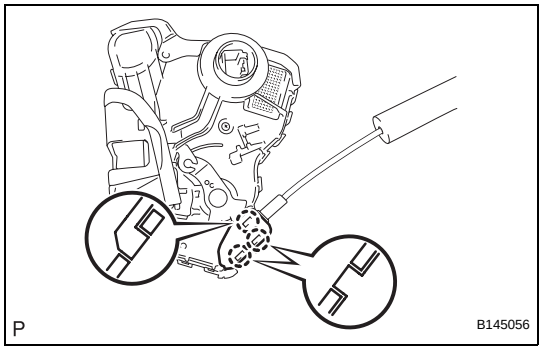

31. REMOVE FRONT DOOR INSIDE LOCKING CABLE ASSEMBLY

(a) Using a screwdriver, disengage the 3 claws.
HINT:
Tape the screwdriver tip before use.

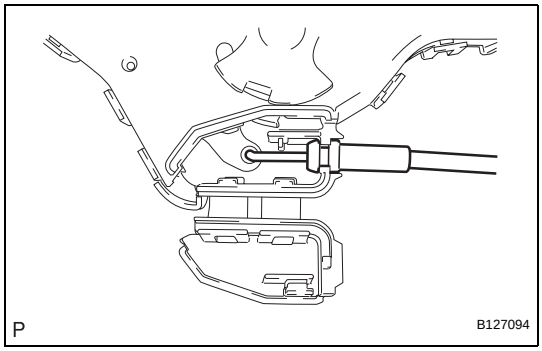

(b) Remove the front door inside locking cable assembly.

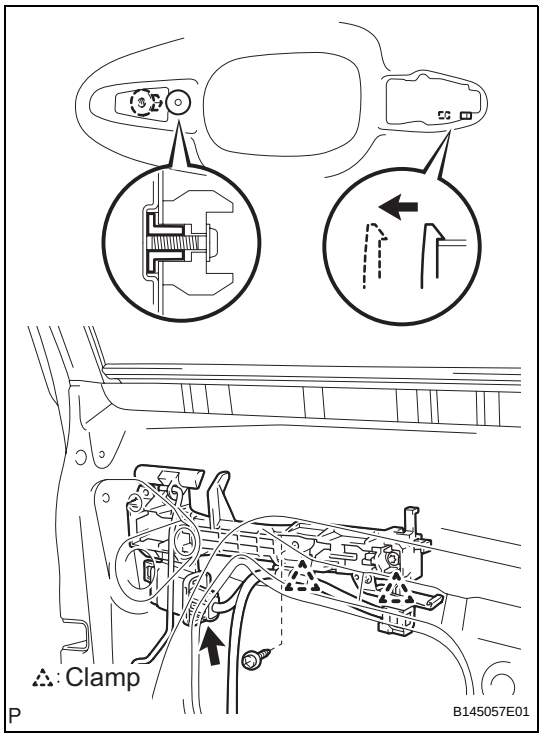

32. REMOVE FRONT DOOR OUTSIDE HANDLE FRAME SUB-ASSEMBLY

(a) Using a "TORX" socket wrench (T30), loosen the screw.
HINT:
The screw cannot be removed because it is integrated into the front door outside handle frame sub-assembly.
(b) Disconnect the connector.
(c) Disengage the 2 clamps.
(d) Disengage the claw and remove the front door outside handle frame sub-assembly.

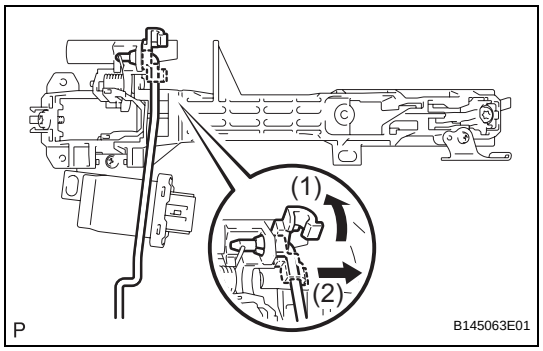

33. REMOVE FRONT DOOR LOCK OPEN ROD

(a) Remove the front door lock open rod as shown in the illustration.

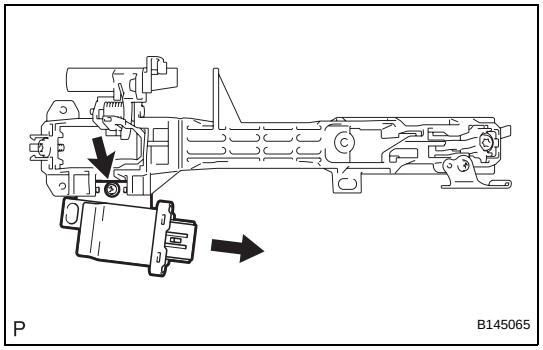

34. REMOVE DOOR ELECTRICAL KEY OSCILLATOR

(a) Remove the screw and door electrical key oscillator.

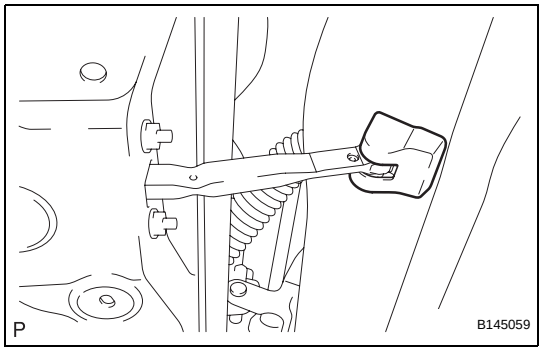

35. REMOVE FRONT DOOR CHECK COVER

(a) Remove the front door check cover.

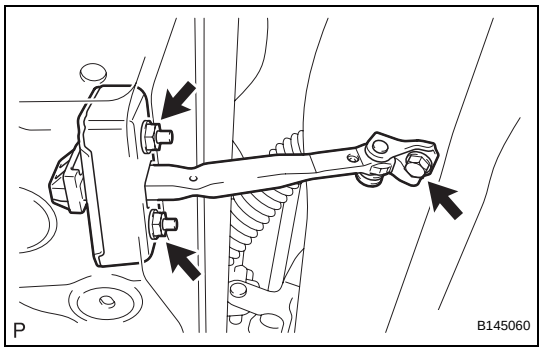

36. REMOVE FRONT DOOR CHECK ASSEMBLY

(a) Remove the bolt, 2 nuts, and front door check assembly.

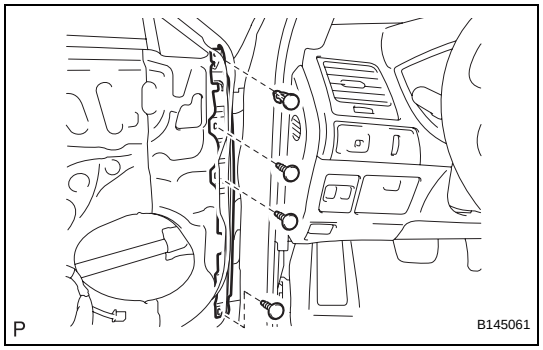

37. REMOVE FRONT NO. 3 DOOR WEATHERSTRIP

(a) Using a clip remover, disengage the 4 clips and remove the front No. 3 door weatherstrip.

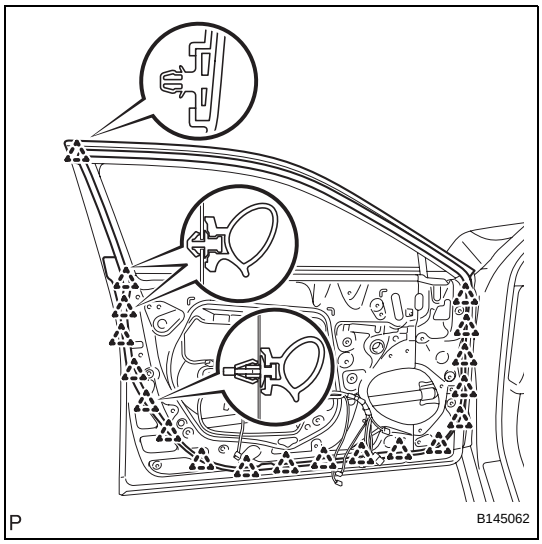

38. REMOVE FRONT DOOR WEATHERSTRIP

(a) Using a clip remover, disengage the 19 clips and remove the front door weatherstrip.

39. REMOVE FRONT DOOR BELT MOULDING ASSEMBLY (See page ET-31)

40. REMOVE FRONT DOOR REAR WINDOW FRAME MOULDING (See page ET-55)

41. REMOVE FRONT DOOR FRONT LOWER FRAME UPPER COVER (See page ET-56)

42. REMOVE FRONT DOOR OUTSIDE MOULDING SUB-ASSEMBLY (See page ET-57)

43. REMOVE FRONT DOOR LOWER OUTSIDE MOULDING (See page ET-41)

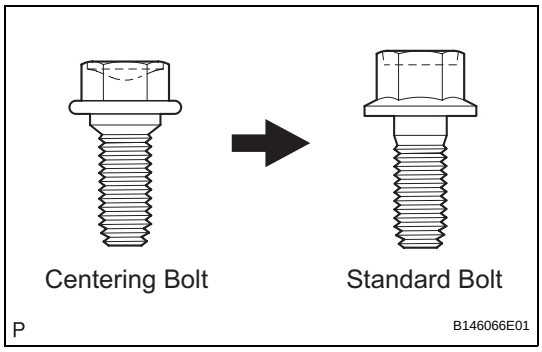

ADJUSTMENT

HINT:

- Before adjusting the door positions of vehicles equipped with side airbags and curtain shield airbags, be sure to disconnect the battery. After adjustment, inspect the SRS warning light, the side airbag system, and the curtain shield airbag system for normal operation. Then initialize both airbag systems.
- Use the same procedures for the RH side and LH side.
- The procedures listed below are for the LH side.
- Centering bolts are used to mount the door hinge to the vehicle body and door. The door cannot be adjusted with the centering bolts installed on it. Substitute the centering bolts with standard bolts (with washers) when making adjustments.
- A bolt without a torque specification is shown in the standard bolt chart (See page SS-2).

1. DISCONNECT NEGATIVE BATTERY TERMINAL

CAUTION:
Wait for 90 seconds after disconnecting the terminal to prevent airbag deployment (See page RS-1).

2. ADJUST FRONT DOOR

(a) Using a clip remover, disengage the 4 clips and remove the front fender side panel protector.

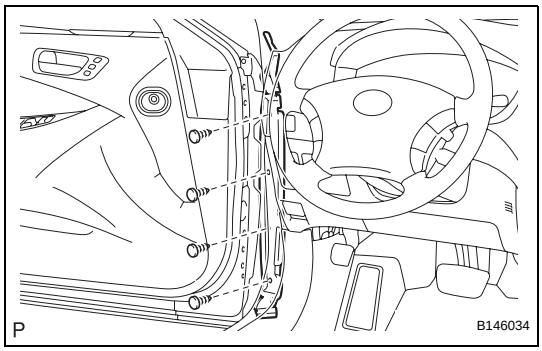

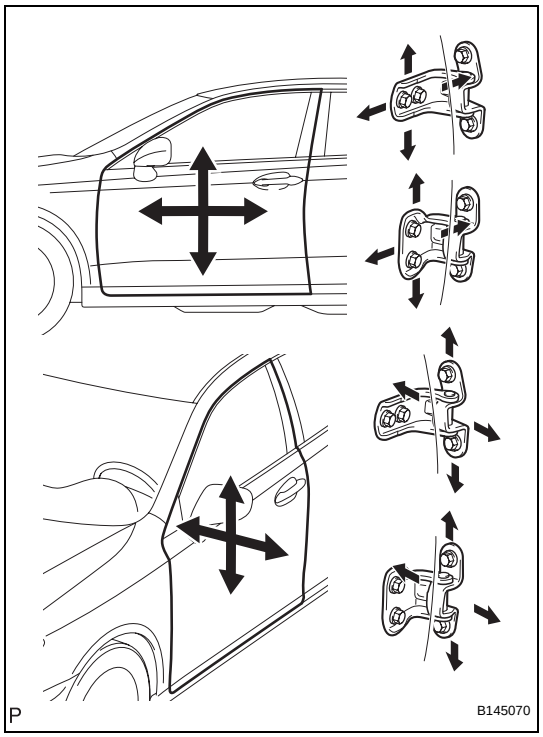

(b) Using SST, loosen the hinge bolts on the vehicle body and adjust the door position.
SST 09812-00010

(c) Tighten the hinge bolts on the vehicle body after the adjustment.
Torque: 26 N*m (265 kgf*cm, 19 ft.*lbf)

(d) Loosen the hinge bolts on the door and adjust the door position.

(e) Tighten the hinge bolts on the door after the adjustment.
Torque: 43 N*m (439 kgf*cm, 32 ft.*lbf)

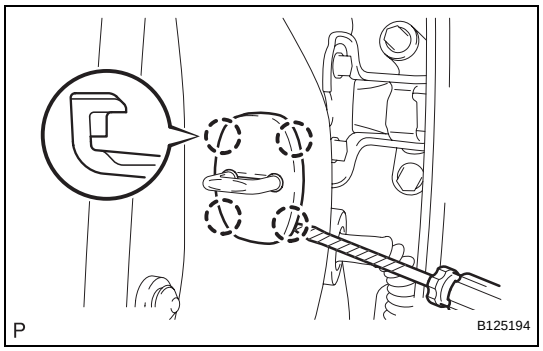

(f) Using a screwdriver, detach the 4 claws and remove the cover.
HINT:
Tape the screwdriver tip before use.

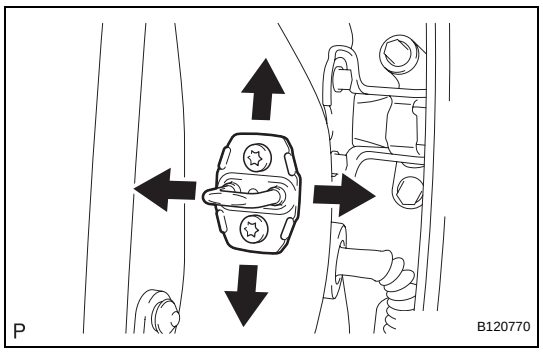

(g) Adjust the striker position by slightly loosening the striker mounting screws with a "TORX" socket wrench (T40) and hitting the striker with a plastic hammer.

(h) Using a "TORX" socket wrench (T40), tighten the striker mounting screws after the adjustment.
Torque: 23 N*m (235 kgf*cm, 17 ft.*lbf)

3. CONNECT NEGATIVE BATTERY TERMINAL

4. PERFORM INITIALIZATION
NOTICE:
Some systems need initialization after reconnecting the cable to the negative battery terminal (See page IN-33).

5. INSPECT SRS WARNING LIGHT
(See page RS-37)

REASSEMBLY

1. **INSTALL FRONT DOOR LOWER OUTSIDE MOULDING (See page ET-42)**
2. **INSTALL FRONT DOOR OUTSIDE MOULDING SUB-ASSEMBLY (See page ET-57)**
3. **INSTALL FRONT DOOR FRONT LOWER FRAME UPPER COVER (See page ET-58)**
4. **INSTALL FRONT DOOR REAR WINDOW FRAME MOULDING (See page ET-59)**
5. **INSTALL FRONT DOOR BELT MOULDING ASSEMBLY (See page ET-31)**
6. **INSTALL FRONT DOOR WEATHERSTRIP**
   (a) Engage the 19 clips and install the front door weatherstrip.

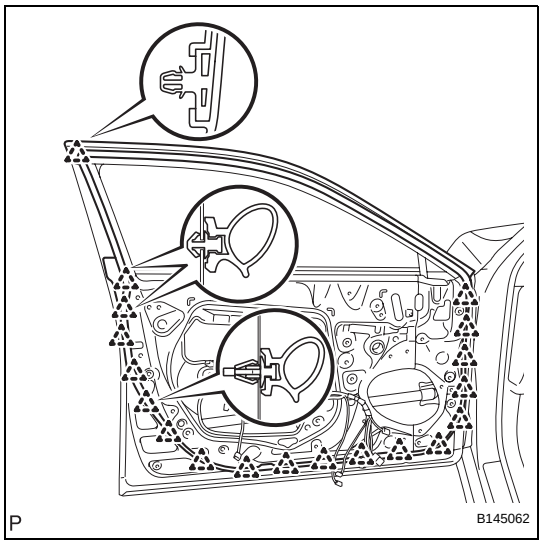

7. **INSTALL FRONT NO. 3 DOOR WEATHERSTRIP**
   (a) Install the front No. 3 door weatherstrip with the 4 clips.

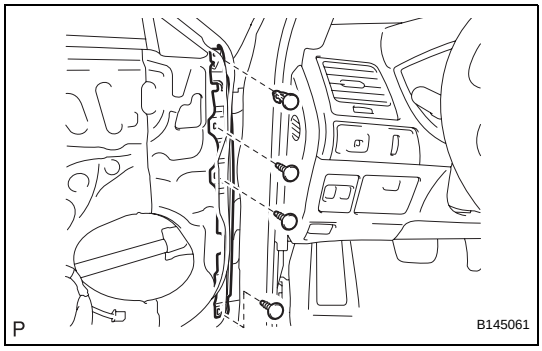

8. **INSTALL FRONT DOOR CHECK ASSEMBLY**
   (a) Install the front door check assembly with the bolt and the 2 nuts.
   Torque: Bolt
   27 N*m (275 kgf*cm, 20 ft.*lbf)
   Nut
   8.0 N*m (82 kgf*cm, 71 in.*lbf)

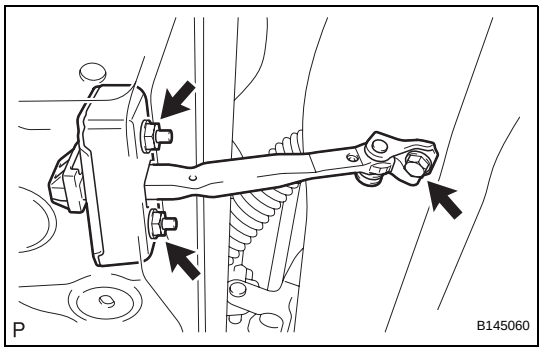

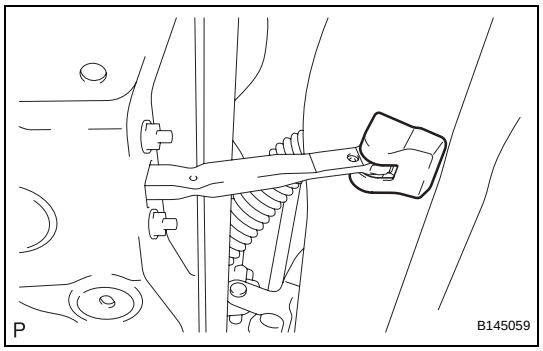

9. INSTALL FRONT DOOR CHECK COVER

(a) Install the front door check cover.

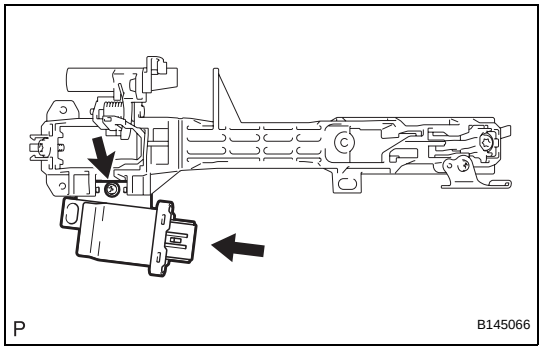

10. INSTALL DOOR ELECTRICAL KEY OSCILLATOR

(a) Install the door electrical key oscillator with the screw.

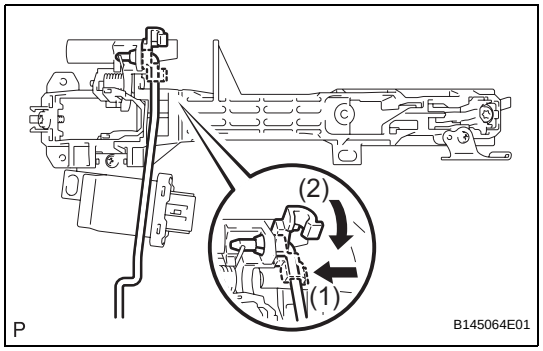

11. INSTALL FRONT DOOR LOCK OPEN ROD

(a) Install the front door lock open rod as shown in the illustration.

12. INSTALL FRONT DOOR OUTSIDE HANDLE FRAME SUB-ASSEMBLY

(a) Apply MP grease to the sliding parts of the front door outside handle frame sub-assembly.

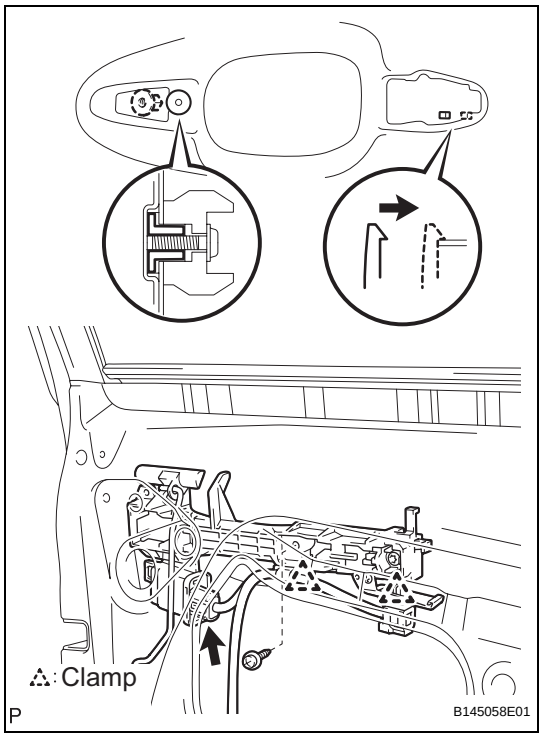

(b) Engage the claw to install the front door outside handle frame sub-assembly.

(c) Using a "TORX" socket wrench (T30), install the front door outside handle frame sub-assembly with the screw.
Torque: 4.0 N*m (41 kgf*cm, 35 in.*lbf)

(d) Engage the 2 clamps.

(e) Connect the connector.

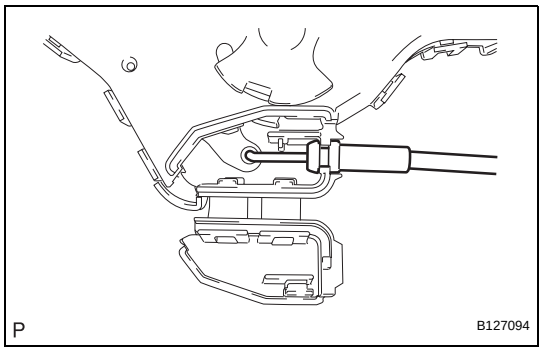

13. INSTALL FRONT DOOR INSIDE LOCKING CABLE ASSEMBLY

(a) Install the front door inside locking cable assembly.

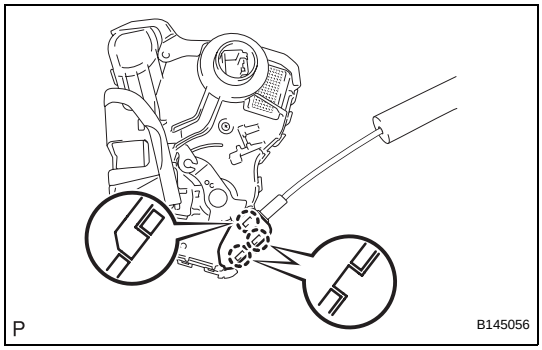

(b) Engage the 3 claws.

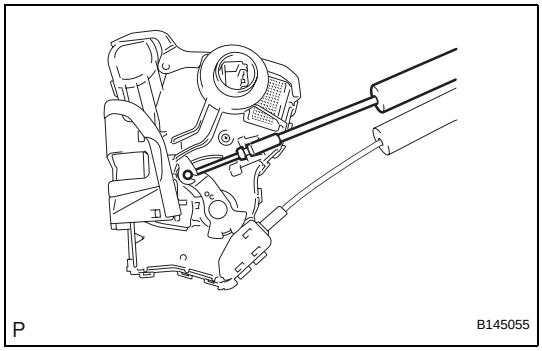

14. INSTALL FRONT DOOR LOCK REMOTE CONTROL CABLE ASSEMBLY

(a) Install the front door lock remote control cable assembly.

15. INSTALL FRONT DOOR LOCK ASSEMBLY

NOTICE:

- **When reusing the removed front door lock assembly, replace the door lock wiring harness seal on the connector with a new one.**
- **Do not allow grease or dust to adhere to the door lock wiring harness seal surface of the connector.**
- **Reusing the door lock wiring harness seal or using a damaged door lock wiring harness seal may cause water intrusion to the connection. This may result in a malfunction of the front door lock assembly.**

(a) Apply MP grease to the sliding parts of the front door lock assembly.

(b) Install a new door lock wiring harness seal to the front door lock assembly.

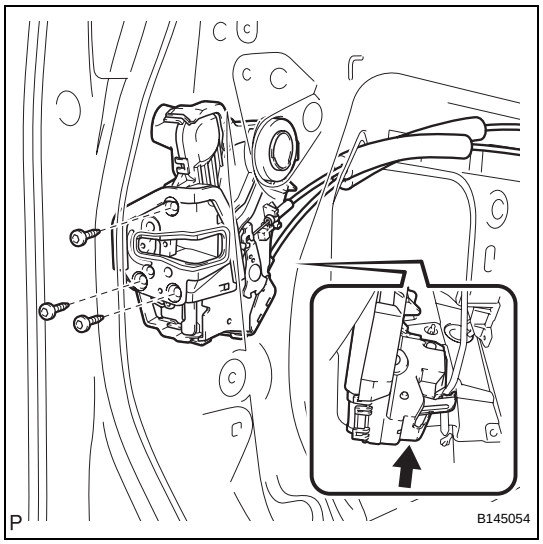

(c) Insert the front door lock open rod to the front door lock assembly, and set it to the front door outside handle frame.
(d) Make sure that the front door lock open rod is securely connected to the front door lock assembly.
(e) Using a "TORX" socket wrench (T30), install the front door lock assembly with the 3 screws.
Torque: 5.5 N*m (56 kgf*cm, 49 in.*lbf)
(f) Connect the connector.

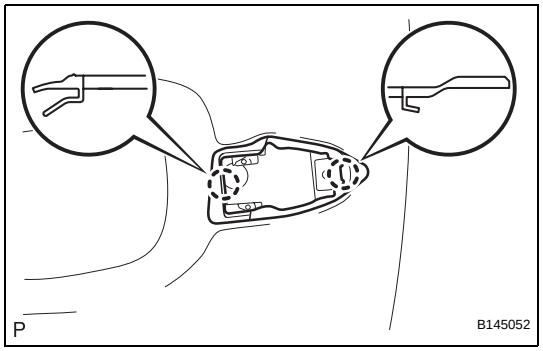

16. INSTALL FRONT DOOR REAR OUTSIDE HANDLE PAD
(a) Engage the 2 claws to install the front door rear outside handle pad.

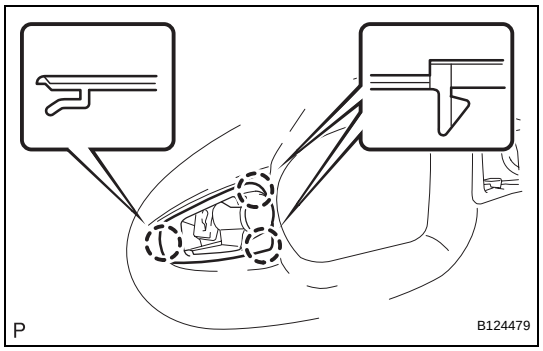

17. INSTALL FRONT DOOR FRONT OUTSIDE HANDLE PAD
(a) Engage the 3 claws to install the front door front outside handle pad.

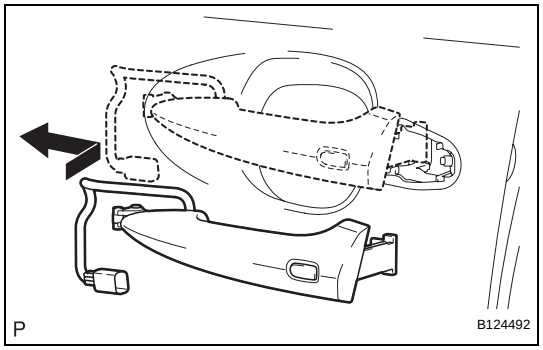

18. INSTALL FRONT DOOR OUTSIDE HANDLE ASSEMBLY
(a) Insert the front end of the front door outside handle assembly into the front door outside handle frame.
(b) Insert the rear end of the front door outside handle assembly into the front door outside handle frame. Next, slide the front door outside handle assembly toward the front of the vehicle to install it.

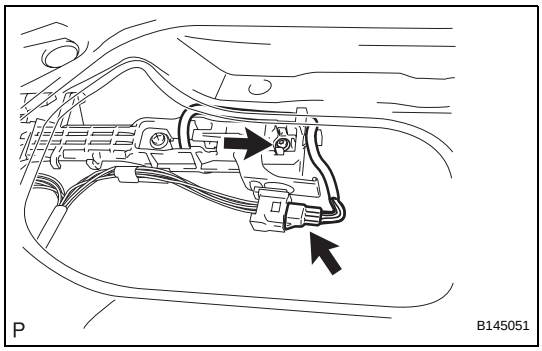

(c) Using a "TORX" socket wrench (T30), install the front door outside handle assembly with the screw.
Torque: 4.0 N*m (41 kgf*cm, 35 in.*lbf)
(d) Connect the connector.

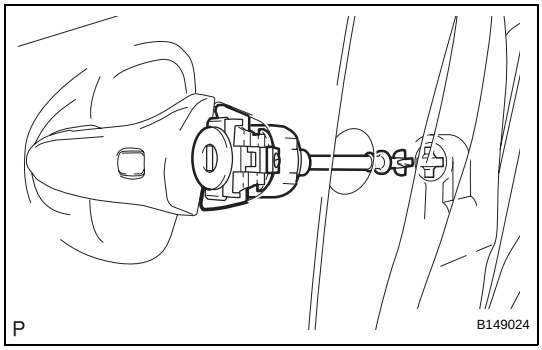

19. INSTALL FRONT DOOR OUTSIDE HANDLE COVER (for Driver Side)
(a) Install the front door lock cylinder.
HINT:
Make sure that the front door lock cylinder rod is inserted into the front door lock assembly.

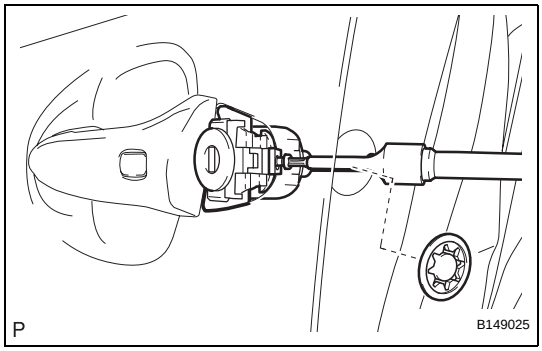

(b) Using a "TORX" socket wrench (T30), install the front door lock cylinder with the screw.
Torque: 4.0 N*m (41 kgf*cm, 35 in.*lbf)
(c) Install the hole plug.

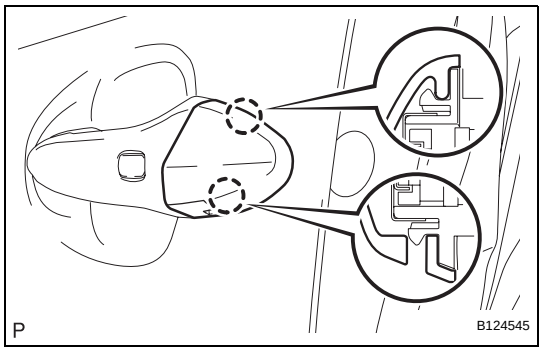

(d) Engage the 2 claws to install the front door outside handle cover to the front door lock cylinder.

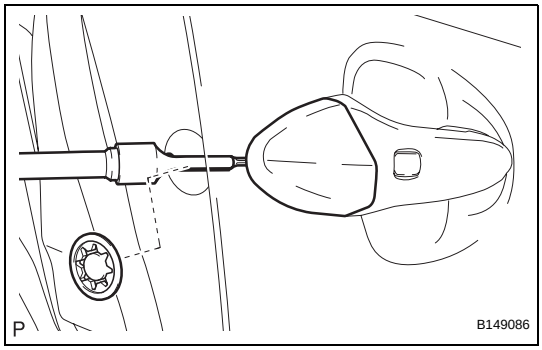

20. INSTALL FRONT DOOR OUTSIDE HANDLE COVER (for Front Passenger Side)
(a) Using a "TORX" socket wrench (T30), install the front door outside handle cover with the screw.
Torque: 4.0 N*m (41 kgf*cm, 35 in.*lbf)
(b) Install the hole plug.

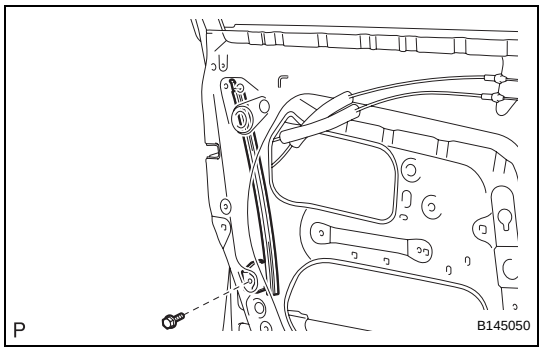

21. INSTALL FRONT DOOR REAR LOWER FRAME SUB-ASSEMBLY

(a) Install the front door rear lower frame sub-assembly with the bolt.

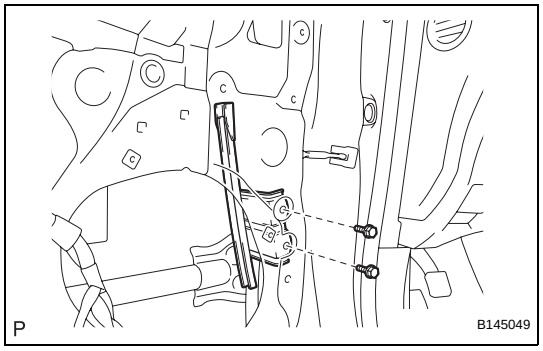

22. INSTALL FRONT DOOR FRONT LOWER FRAME SUB-ASSEMBLY

(a) Install the front door front lower frame sub-assembly with the 2 bolts.

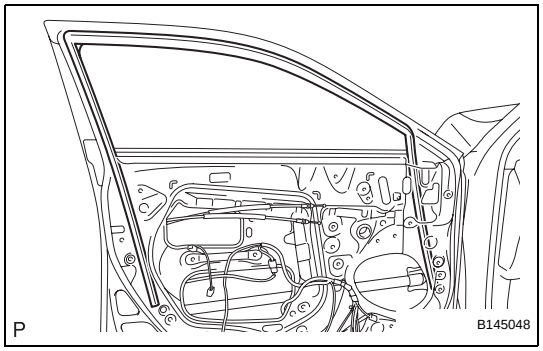

23. INSTALL FRONT DOOR GLASS RUN

(a) Install the front door glass run.

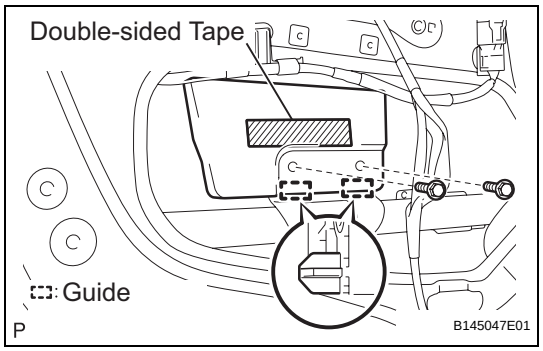

24. INSTALL FRONT NO. 1 DOOR STIFFENER CUSHION

(a) Install a new front No. 1 door stiffener cushion with the 2 bolts and double-sided tape.

25. INSTALL FRONT POWER WINDOW REGULATOR MOTOR ASSEMBLY

NOTICE:

The regulator arm must be below the intermediate position when installing the power window regulator motor.

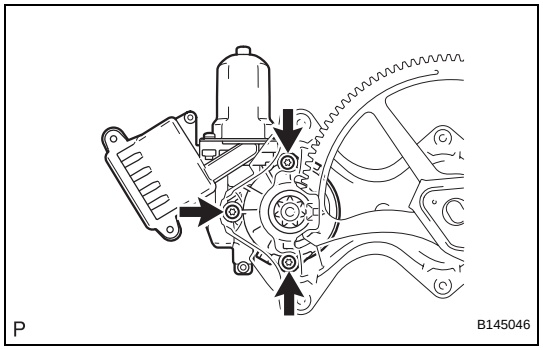

(a) Using a "TORX" driver (T25), install the front power window regulator motor sub-assembly with the 3 screws.

Torque: 5.4 N*m (55 kgf*cm, 48 in.*lbf)

HINT:

A new front window regulator adopts a self-tapping method. The installation position of the regulator will be threaded when the self-tapping screw is inserted.

26. INSTALL FRONT DOOR WINDOW REGULATOR SUB-ASSEMBLY

(a) Apply MP grease to the sliding parts of the front door window regulator sub-assembly.

(b) Install the temporary bolt to the front door window regulator sub-assembly.
NOTICE:
Align the claw on the regulator bracket with the panel hole on the front side.

(c) Temporarily install the window regulator.

(d) Tighten the 6 bolts in the order shown in the illustration to install the front window regulator.
Torque: 11 N*m (112 kgf*cm, 8.1 ft.*lbf)

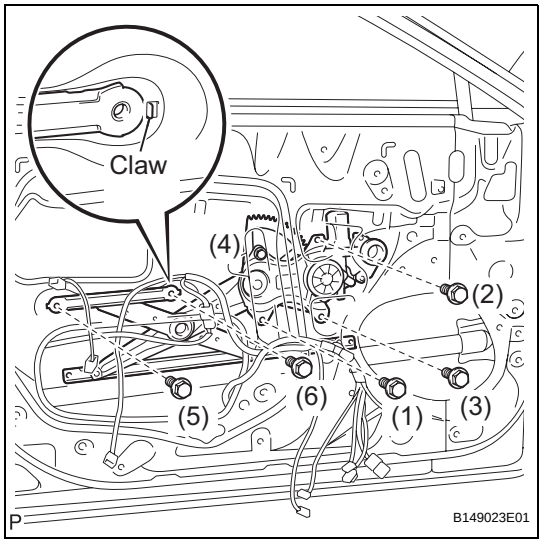

27. INSTALL FRONT DOOR GLASS SUB-ASSEMBLY

(a) Insert the front door glass sub-assembly into the front door panel along the front door glass run as indicated in the order of the arrows in the illustration.

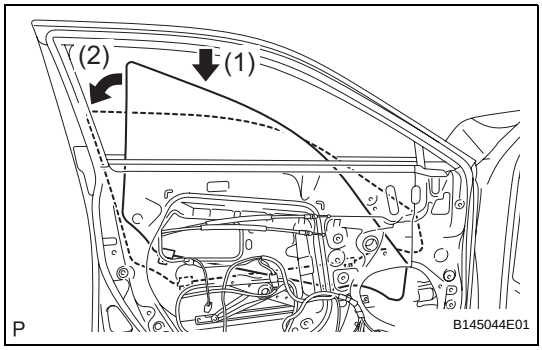

(b) Install the front door glass sub-assembly with the 2 bolts.
Torque: 5.5 N*m (56 kgf*cm, 49 in.*lbf)

28. INSTALL FRONT DOOR SERVICE HOLE COVER

(a) Apply butyl tape to the front door panel.

(b) Pass the front door lock remote control cable and rear door inside locking cable through a new front door service hole cover.

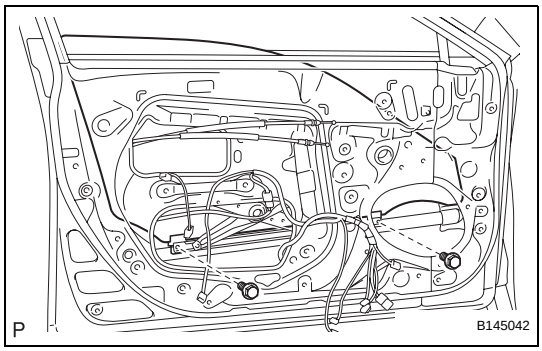

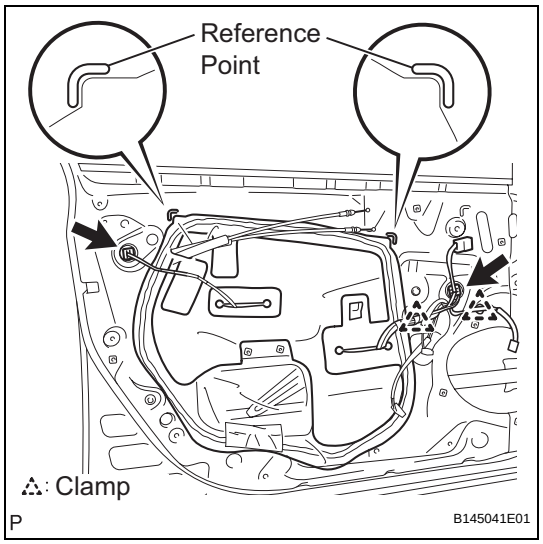

(c) Install the new service hole cover.
NOTICE:
Securely install the front door service hole cover avoiding wrinkles and air bubbles.

(d) Connect each connector and each clamp.

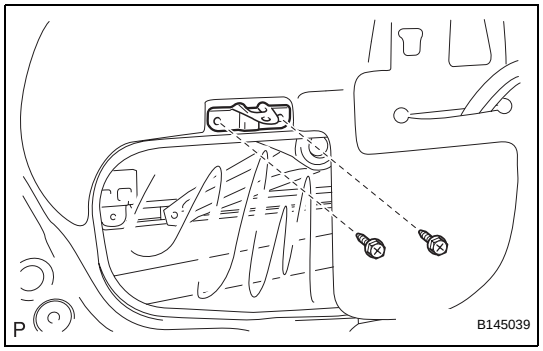

29. INSTALL FRONT NO. 1 DOOR TRIM BRACKET

(a) Install the front No. 1 door trim bracket with the 2 screws.

30. INSTALL FRONT NO. 1 SPEAKER ASSEMBLY (See page AV-184)

31. INSTALL OUTER REAR VIEW MIRROR ASSEMBLY (See page MI-49)

32. INSTALL OUTER MIRROR PROTECTOR

(a) Apply butyl tape to the front door panel.

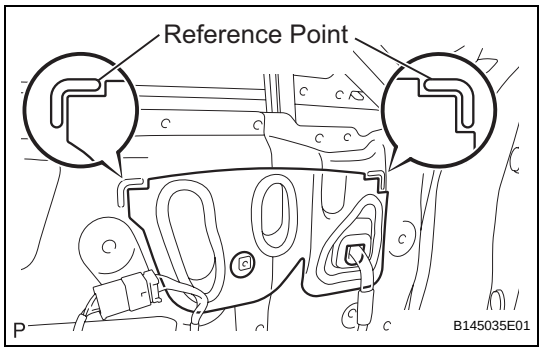

(b) Install a new outer mirror protector.
NOTICE:
Securely install the outer mirror protector avoiding wrinkles and air bubbles.

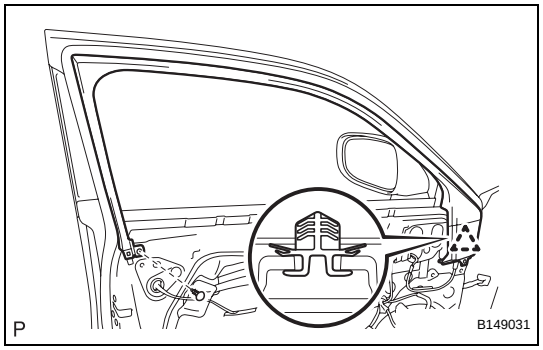

33. INSTALL DOOR FRAME GARNISH

(a) Engage the clip and install the door frame garnish.

(b) Install the clip.

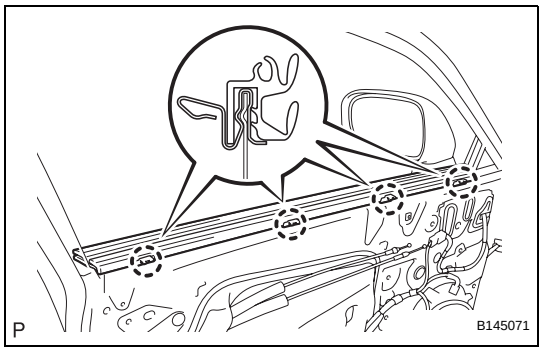

34. INSTALL FRONT DOOR INNER GLASS WEATHERSTRIP

(a) Engage the 4 claws and install the front door inner glass weatherstrip.

35. INSTALL SEAT MEMORY SWITCH (w/ Seat Position Memory System) (See page SE-124)

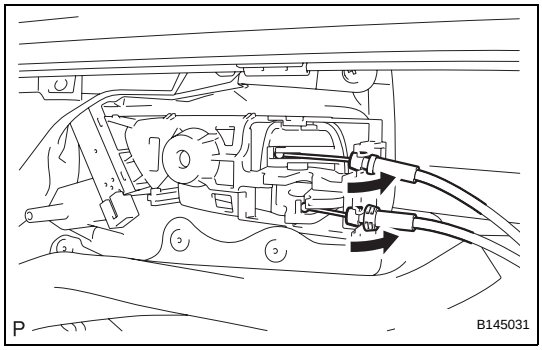

36. INSTALL FRONT DOOR TRIM BOARD SUB-ASSEMBLY

(a) Connect the front door lock remote control cable and front door inside locking cable to the front inside handle.

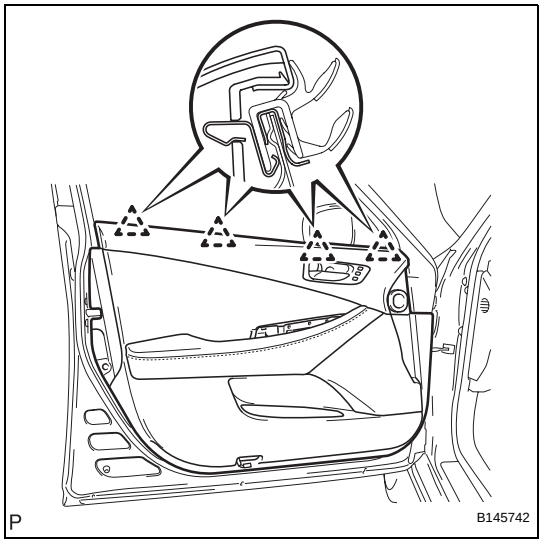

(b) Engage the front door trim board with the 4 clips of the front door inner glass weatherstrip.

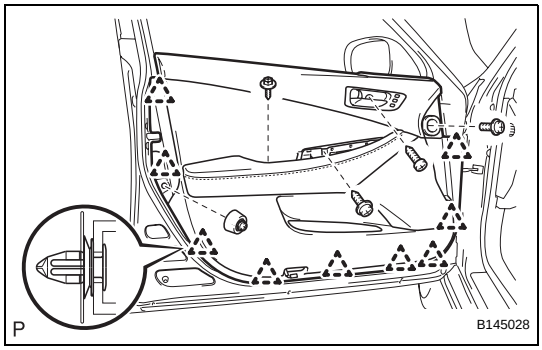

(c) Engage the 9 clips and install the front door trim board to the front door panel.

NOTICE:

Only when installing the front door trim RH, be careful not to allow the wire harness for the courtesy light to get caught between the trim board and the door panel.

(d) Install the 5 screws.

ED

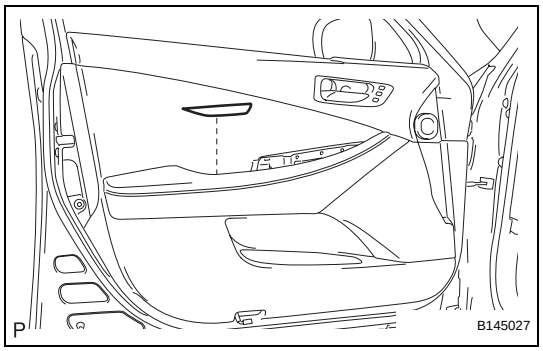

37. INSTALL DOOR ARMREST COVER

(a) Install the door armrest cover.

38. INSTALL COURTESY LIGHT ASSEMBLY

(a) Connect the connector.

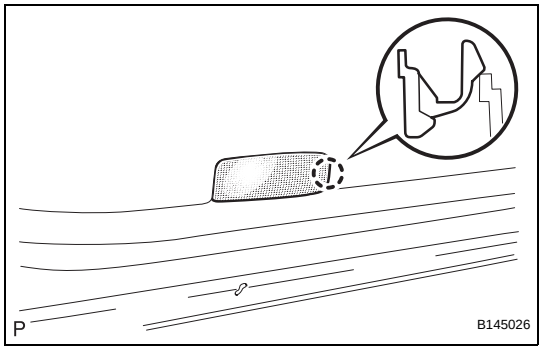

(b) Engage the claw and install the courtesy light assembly.

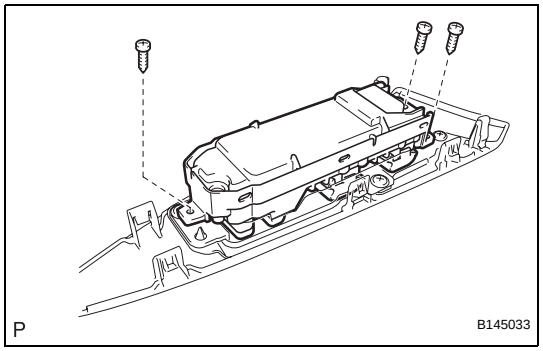

39. INSTALL POWER WINDOW REGULATOR MASTER SWITCH ASSEMBLY (for Driver Side)

(a) Install the power window regulator master switch assembly with the 3 screws.

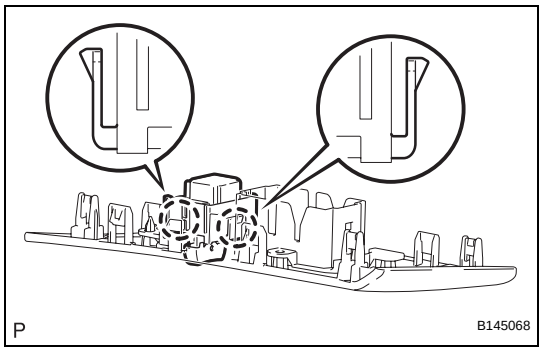

40. INSTALL DOOR CONTROL SWITCH ASSEMBLY (for Front Passenger Side)

(a) Engage the 2 claws and install the door control switch assembly.

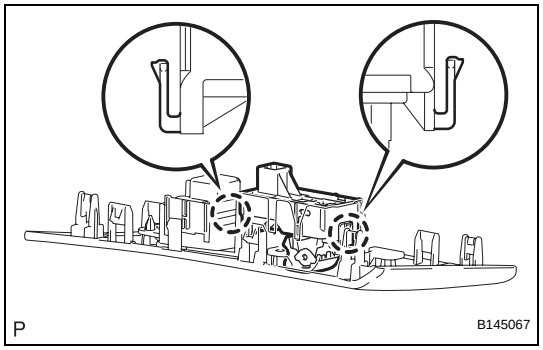

41. INSTALL POWER WINDOW REGULATOR SWITCH ASSEMBLY (for Front Passenger Side)

(a) Engage the 2 claws and install the power window regulator switch assembly.

42. INSTALL FRONT DOOR ARMREST BASE PANEL ASSEMBLY

(a) Connect the connector.

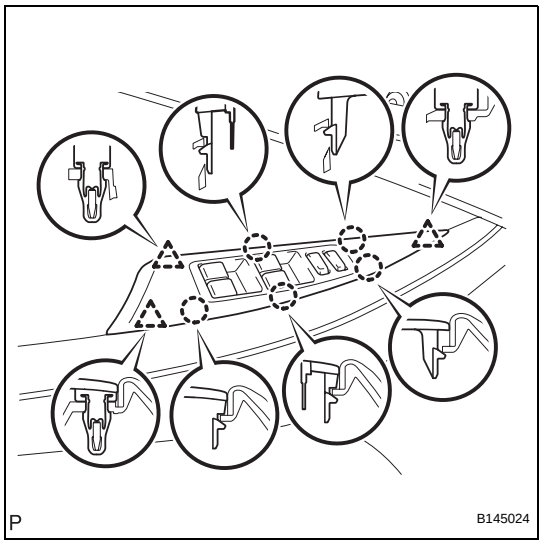

(b) Engage the 5 claws and 3 clips, and install the front door armrest base panel assembly.

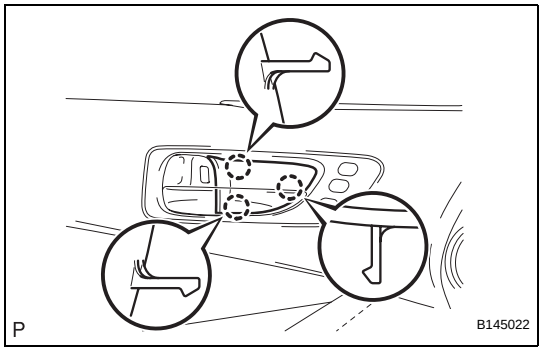

43. INSTALL FRONT DOOR INSIDE HANDLE BEZEL PLUG

(a) Engage the 3 claws and install the front door inside handle bezel plug.

44. INITIALIZE POWER WINDOW CONTROL SYSTEM

(See page WS-10)

ON-VEHICLE INSPECTION

1. INSPECT FRONT DOOR PANEL SUB-ASSEMBLY

(a) Check that the clearance measurements of areas A through L are within each standard range.

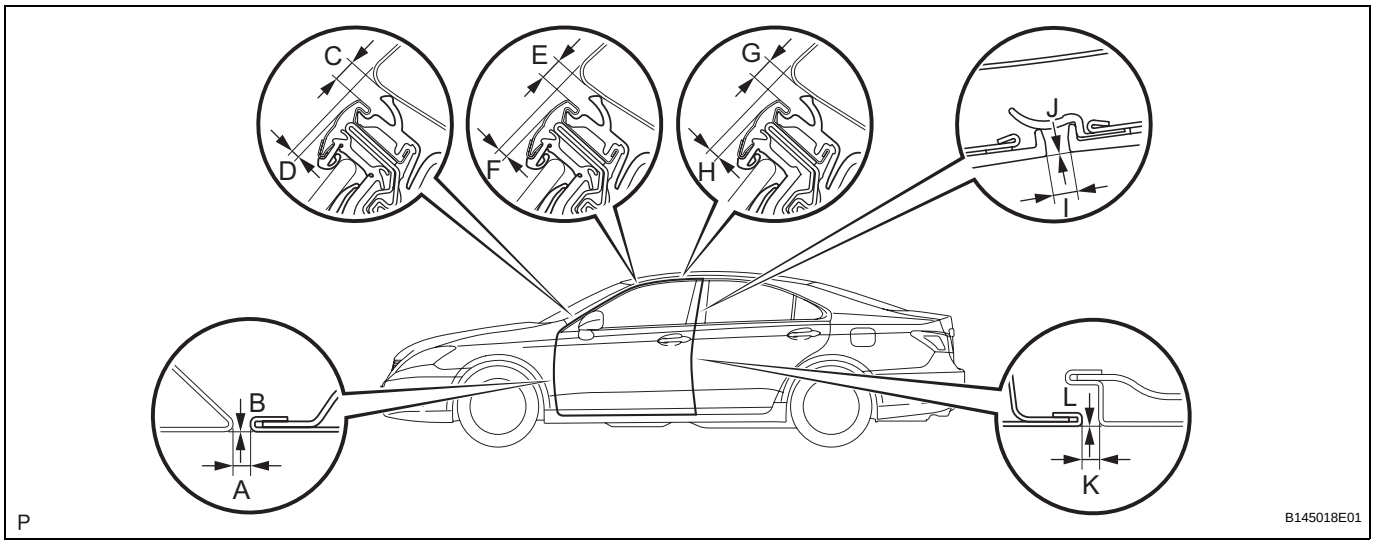

Standard clearance

Area	Measurement	Area	Measurement
A	2.5 to 5.5 mm (0.098 to 0.217 in.)	G	3.3 to 6.3 mm (0.130 to 0.248 in.)
B	-1.5 to 1.5 mm (-0.059 to 0.059 in.)	H	0.3 to 3.3 mm (0.012 to 0.130 in.)
C	3.3 to 6.3 mm (0.130 to 0.248 in.)	I	3.0 to 6.0 mm (0.118 to 0.236 in.)
D	1.8 to 4.8 mm (0.071 to 0.189 in.)	J	-1.5 to 1.5 mm (-0.059 to 0.059 in.)
E	3.3 to 6.3 mm (0.130 to 0.248 in.)	K	2.5 to 5.5 mm (0.098 to 0.217 in.)
F	0.2 to 3.2 mm (0.008 to 0.126 in.)	L	-1.5 to 1.5 mm (-0.059 to 0.059 in.)

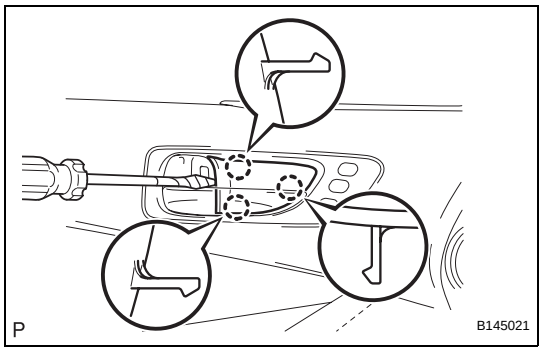

DISASSEMBLY

1. REMOVE FRONT DOOR INSIDE HANDLE BEZEL PLUG

(a) Using a screwdriver with the tip wrapped with protective tape, disengage the 3 claws, and remove the front door inside handle bezel plug.

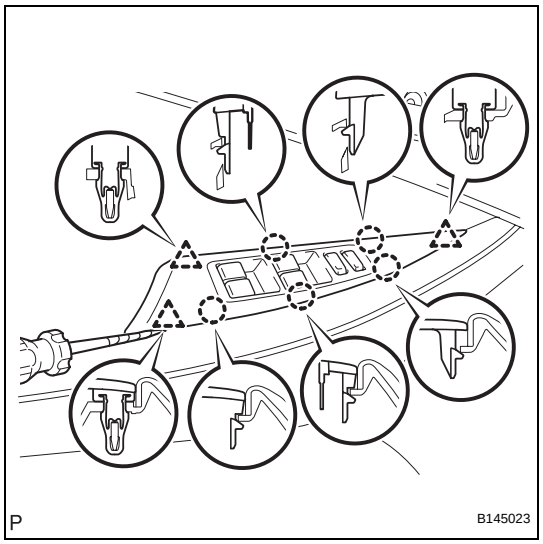

2. REMOVE FRONT DOOR ARMREST BASE PANEL ASSEMBLY

(a) Using a screwdriver with the tip wrapped with protective tape, disengage the 5 claws and 3 clips, and remove the front door armrest base panel assembly.

(b) Disconnect the connector.

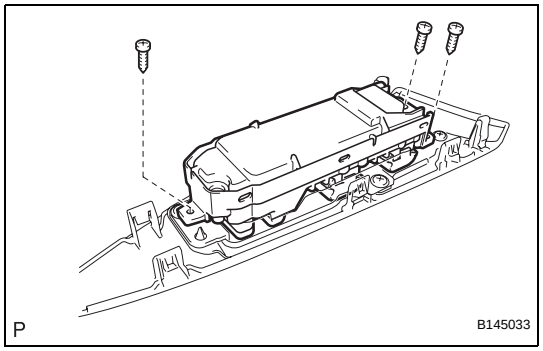

3. REMOVE POWER WINDOW REGULATOR MASTER SWITCH ASSEMBLY (for Driver Side)

(a) Remove the 3 screws and the power window regulator master switch assembly.

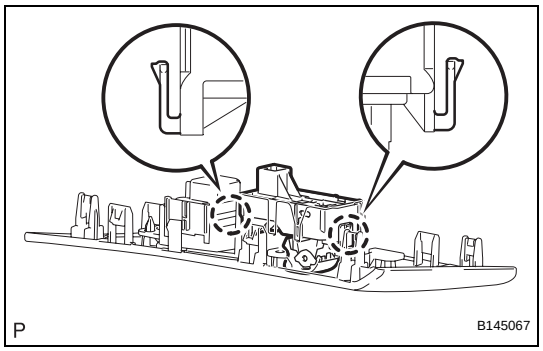

4. REMOVE POWER WINDOW REGULATOR SWITCH ASSEMBLY (for Front Passenger Side)

(a) Disengage the 2 claws and remove the power window regulator switch assembly.

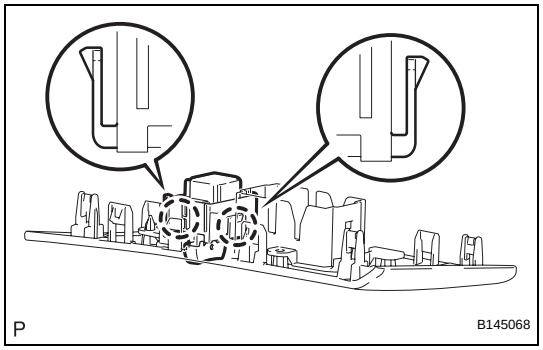

5. REMOVE DOOR CONTROL SWITCH ASSEMBLY (for Front Passenger Side)

(a) Disengage the 2 claws and remove the door control switch assembly.

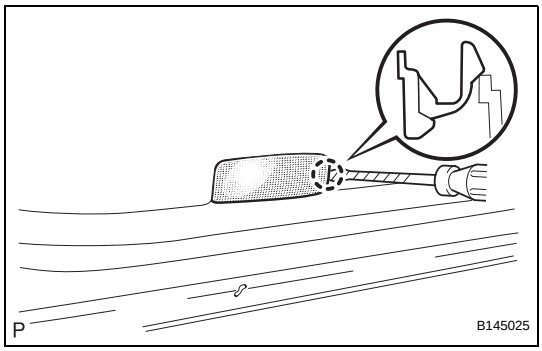

6. REMOVE COURTESY LIGHT ASSEMBLY

(a) Using a screwdriver with the tip wrapped with protective tape, disengage the claw and remove the courtesy light assembly.

(b) Disconnect the connector.

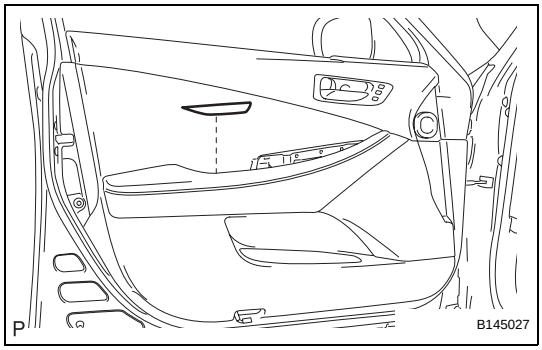

7. REMOVE DOOR ARMREST COVER

(a) Remove the door armrest cover.

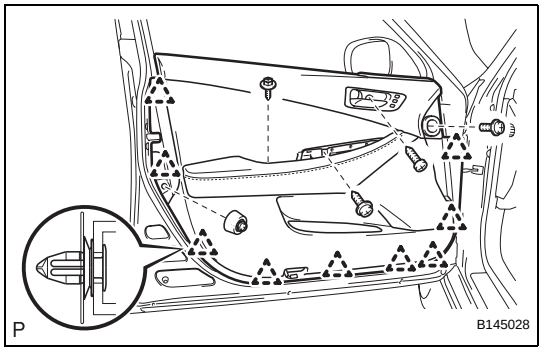

8. REMOVE FRONT DOOR TRIM BOARD SUB-ASSEMBLY

(a) Remove the 5 screws.

(b) Using a clip remover, disengage the 9 clips.

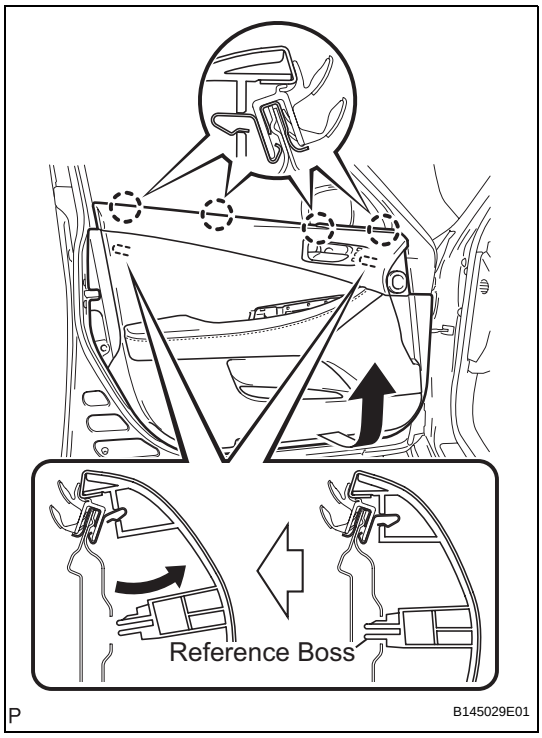

(c) Pull up the front door trim board in the direction indicated by the arrow.

(d) Disengage the reference bosses from the front door panel.

(e) Raise the front door trim board to disengage the 4 claws and remove the front door trim board together with the front door inner glass weatherstrip.

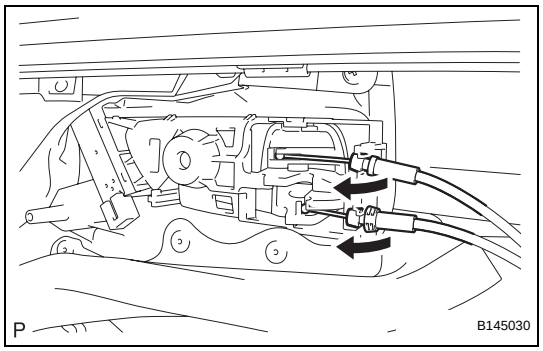

(f) Disconnect the cables and each connector from the back side of the inside handle and remove the front door trim board sub-assembly.

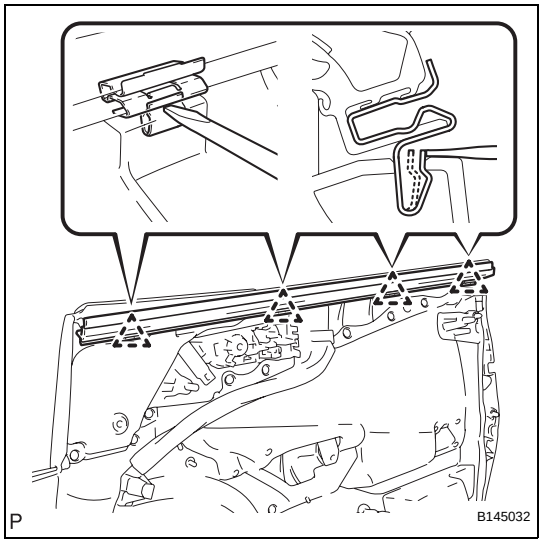

9. REMOVE FRONT DOOR INNER GLASS WEATHERSTRIP

(a) Disengage the 4 clips as shown in the illustration and remove the front door inner glass weatherstrip from the front door trim board.

10. REMOVE SEAT MEMORY SWITCH (w/ Seat Position Memory System) (See page SE-123)

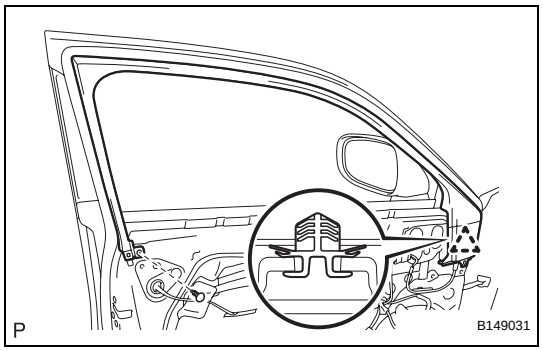

11. REMOVE DOOR FRAME GARNISH

(a) Using a clip remover, remove the clip.

(b) Disengage the clip and remove the door frame garnish.

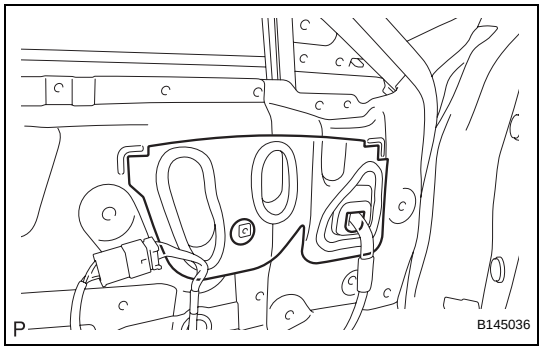

12. REMOVE OUTER MIRROR PROTECTOR

(a) Remove the outer mirror protector.

HINT:

Remove the remaining butyl tape on the door side.

13. REMOVE OUTER REAR VIEW MIRROR ASSEMBLY (See page MI-46)

14. REMOVE FRONT NO. 1 SPEAKER ASSEMBLY (See page AV-184)

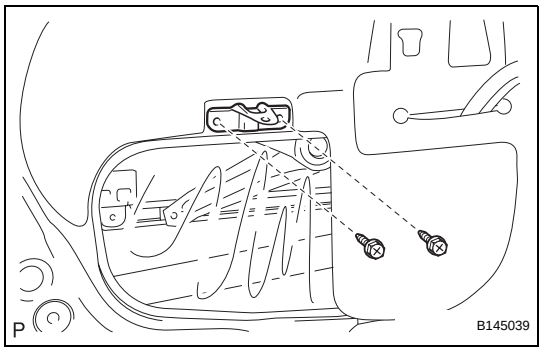

15. REMOVE FRONT NO. 1 DOOR TRIM BRACKET

(a) Remove the 2 screws and the front No. 1 door trim bracket.

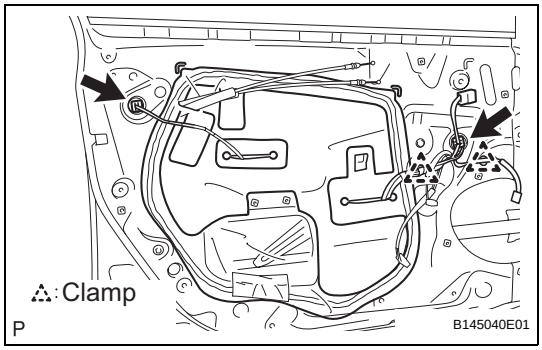

16. REMOVE FRONT DOOR SERVICE HOLE COVER

(a) Disconnect each connector and each clamp, and remove the front door service hole cover.
HINT:
Remove the remaining butyl tape on the door side.

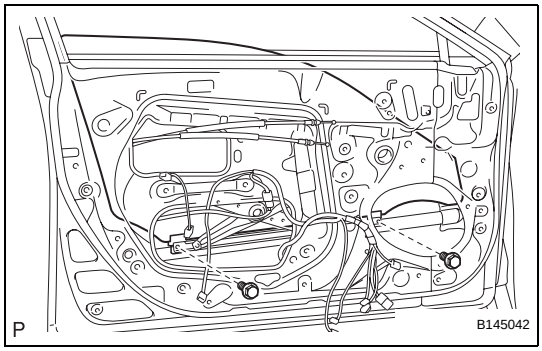

17. REMOVE FRONT DOOR GLASS SUB-ASSEMBLY

(a) Remove the 2 bolts.
NOTICE:
After the bolts are removed, the door glass may fall, causing damage.

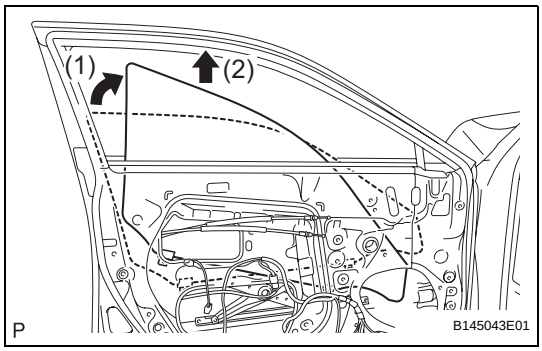

(b) Remove the front door glass sub-assembly as shown in the illustration.
NOTICE:
Do not damage the door glass.

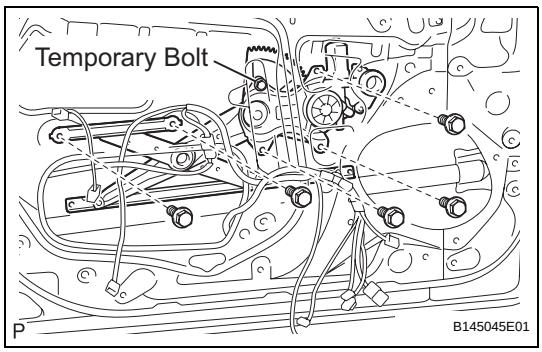

18. REMOVE FRONT DOOR WINDOW REGULATOR SUB-ASSEMBLY

(a) Loosen the temporary bolt.
NOTICE:
Do not remove the temporary bolt. If the temporary bolt is removed, the front door window regulator may fall, causing damage.

(b) Remove the 5 bolts.

(c) Remove the front door window regulator sub-assembly and the front power window regulator motor assembly as a unit.

(d) Remove the temporary bolt from the front door window regulator sub-assembly.

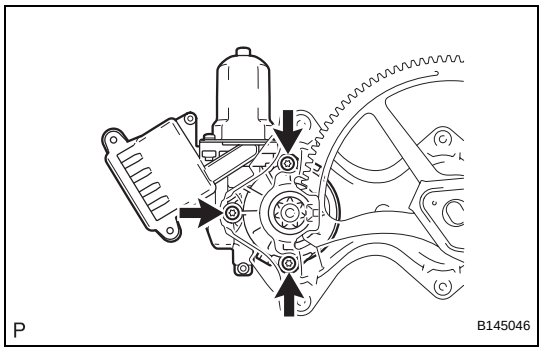

19. REMOVE FRONT POWER WINDOW REGULATOR MOTOR ASSEMBLY

(a) Using a "TORX" driver (T25), remove the 3 screws and the front power window regulator motor assembly.

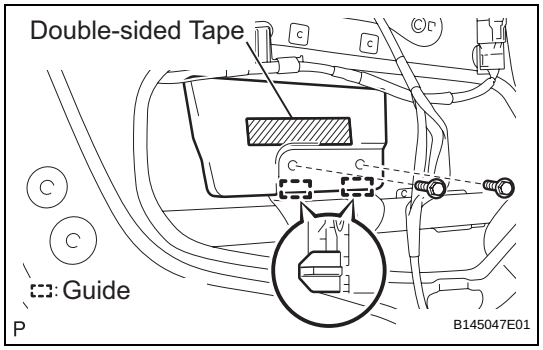

20. REMOVE FRONT NO. 1 DOOR STIFFENER CUSHION

(a) Remove the 2 bolts.

(b) Remove the double-sided tape and the front No. 1 door stiffener cushion.

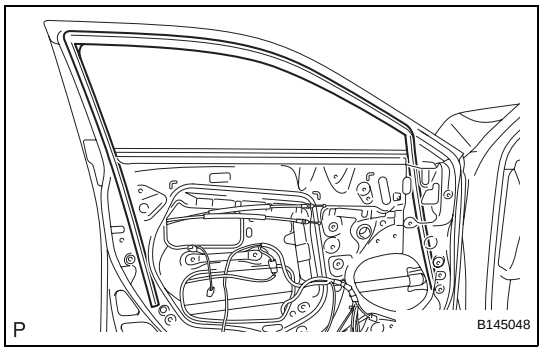

21. REMOVE FRONT DOOR GLASS RUN

(a) Remove the front door glass run.

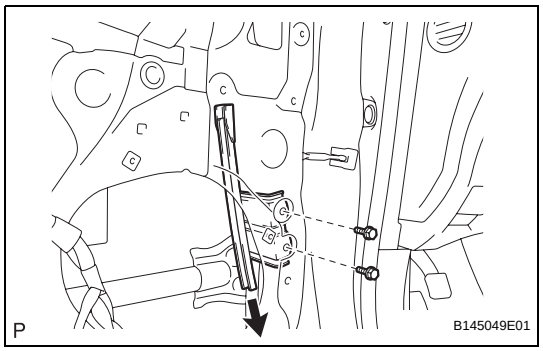

22. REMOVE FRONT DOOR FRONT LOWER FRAME SUB-ASSEMBLY

(a) Remove the 2 bolts and the front door front lower frame sub-assembly as shown in the illustration.

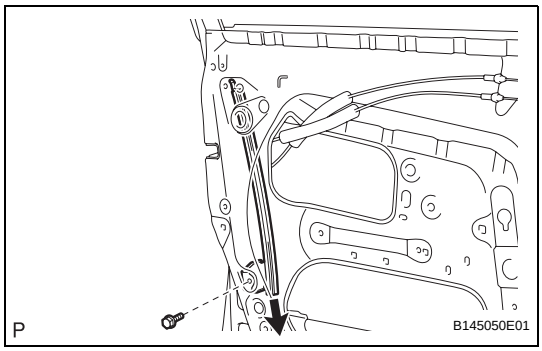

23. REMOVE FRONT DOOR REAR LOWER FRAME SUB-ASSEMBLY

(a) Remove the bolt and the front door rear lower frame sub-assembly as shown in the illustration.

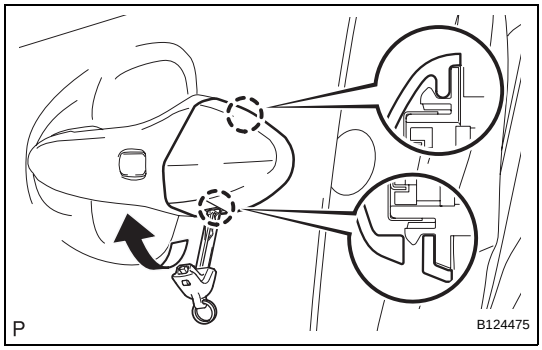

24. REMOVE FRONT DOOR OUTSIDE HANDLE COVER (for Driver Side)

(a) Using an emergency key, disengage the 2 claws and remove the front door outside handle cover.

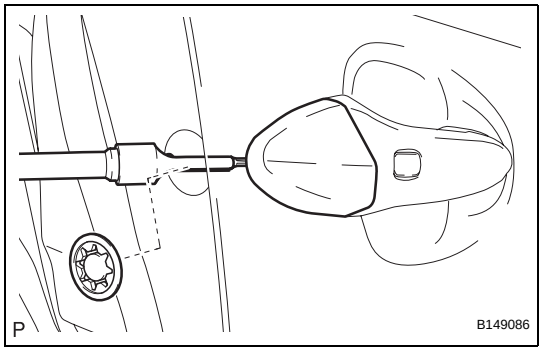

25. REMOVE FRONT DOOR OUTSIDE HANDLE COVER (for Front Passenger Side)

(a) Remove the hole plug.

(b) Using a "TORX" socket wrench (T30), loosen the screw and remove the front door outside handle cover.

HINT:

The screw cannot be removed because it is integrated into the front door outside handle frame sub-assembly.

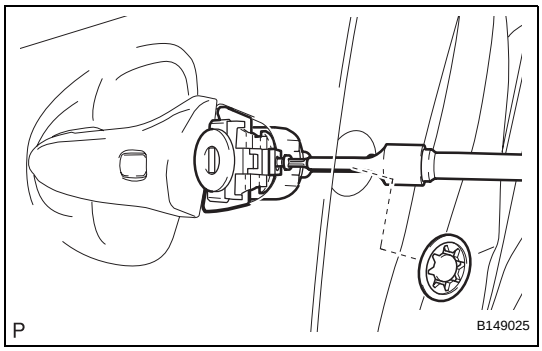

26. REMOVE FRONT DOOR OUTSIDE HANDLE ASSEMBLY

(a) Remove the hole plug.

(b) Using a "TORX" socket wrench (T30), loosen the screw and remove the front door outside handle cover and the door lock key cylinder as a unit.

HINT:

The screw cannot be removed because it is integrated into the front door outside handle frame sub-assembly.

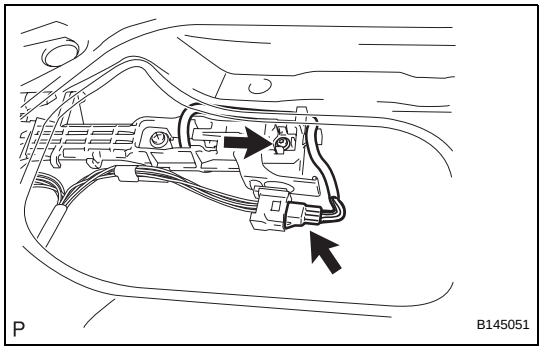

(c) Disconnect the connector.

(d) Using a "TORX" socket wrench (T30), loosen the screw.

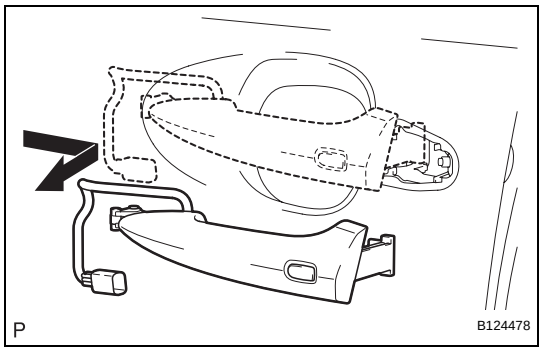

(e) Remove the front door outside handle assembly as shown in the illustration.

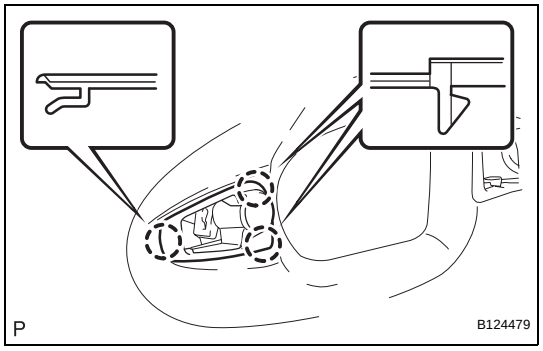

27. REMOVE FRONT DOOR FRONT OUTSIDE HANDLE PAD

(a) Disengage the 3 claws and remove the front door front outside handle pad.

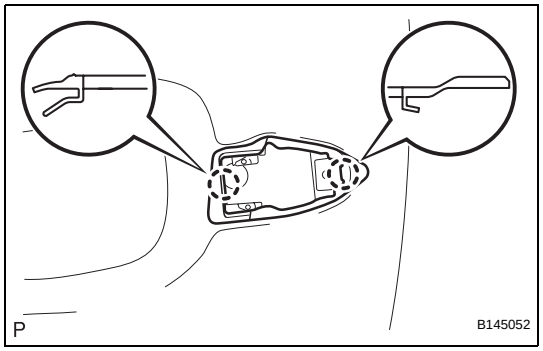

28. REMOVE FRONT DOOR REAR OUTSIDE HANDLE PAD

(a) Disengage the 2 claws and remove the front door rear outside handle pad.

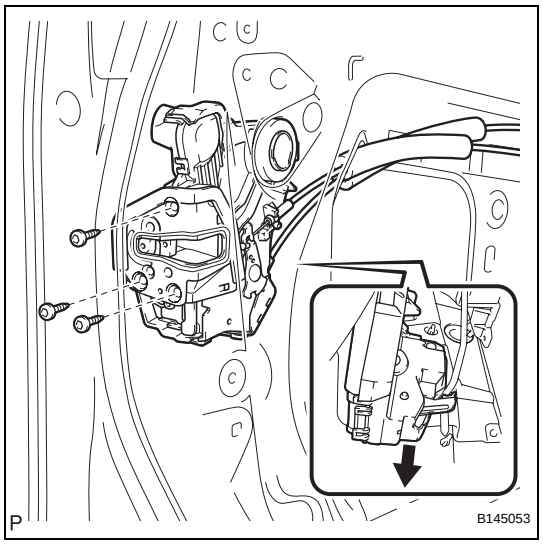

29. REMOVE FRONT DOOR LOCK ASSEMBLY

(a) Using a "TORX" socket wrench (T30), remove the 3 screws.

(b) Slide the front door lock assembly downward, pull out the front door lock open rod from the outside handle frame, and remove the front door lock assembly and cables as a unit.

(c) Remove the front door lock open rod from the front door lock assembly.

(d) Remove the door lock wiring harness seal from the front door lock assembly.

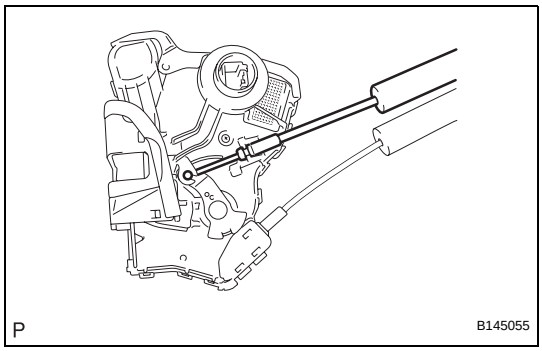

30. REMOVE FRONT DOOR LOCK REMOTE CONTROL CABLE ASSEMBLY

(a) Remove the front door lock remote control cable assembly.

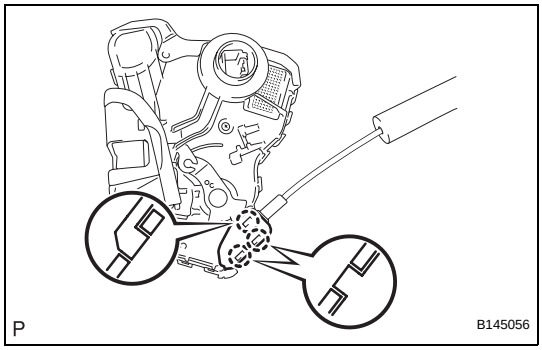

31. REMOVE FRONT DOOR INSIDE LOCKING CABLE ASSEMBLY

(a) Using a screwdriver, disengage the 3 claws.
HINT:
Tape the screwdriver tip before use.

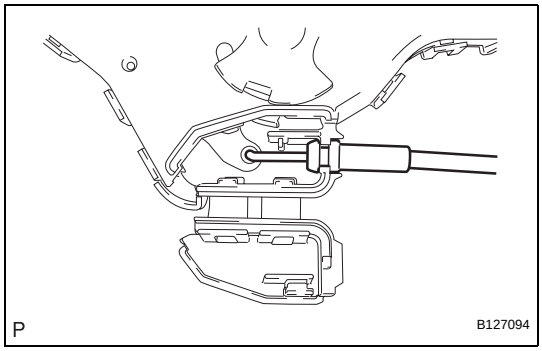

(b) Remove the front door inside locking cable assembly.

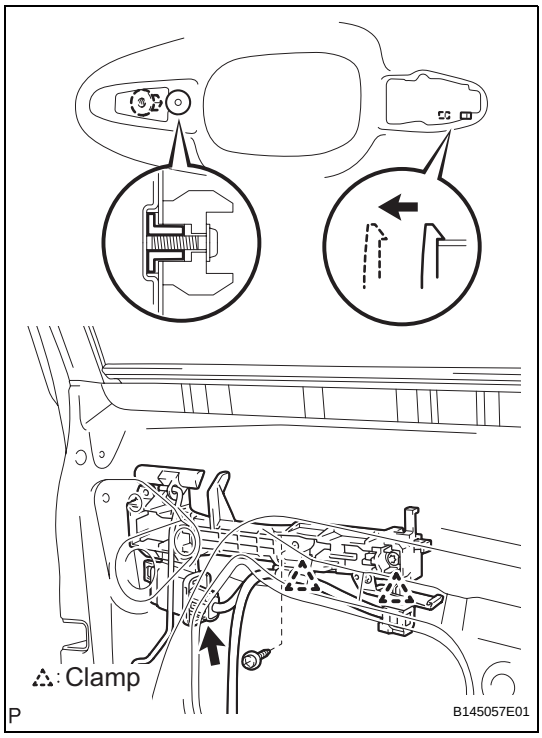

32. REMOVE FRONT DOOR OUTSIDE HANDLE FRAME SUB-ASSEMBLY

(a) Using a "TORX" socket wrench (T30), loosen the screw.
HINT:
The screw cannot be removed because it is integrated into the front door outside handle frame sub-assembly.
(b) Disconnect the connector.
(c) Disengage the 2 clamps.
(d) Disengage the claw and remove the front door outside handle frame sub-assembly.

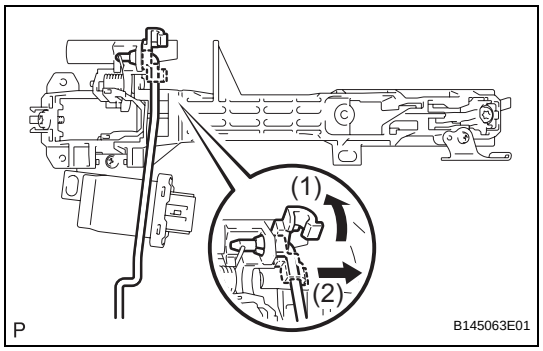

33. REMOVE FRONT DOOR LOCK OPEN ROD

(a) Remove the front door lock open rod as shown in the illustration.

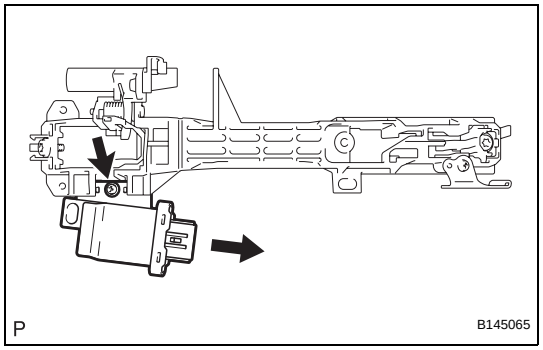

34. REMOVE DOOR ELECTRICAL KEY OSCILLATOR

(a) Remove the screw and door electrical key oscillator.

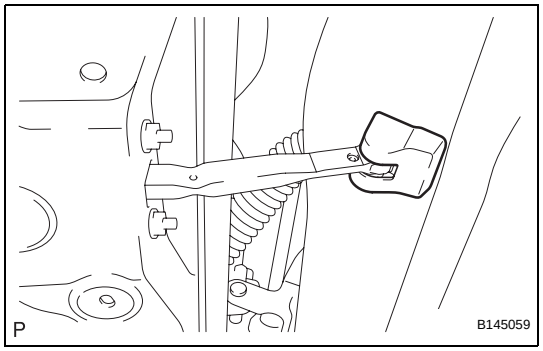

35. REMOVE FRONT DOOR CHECK COVER

(a) Remove the front door check cover.

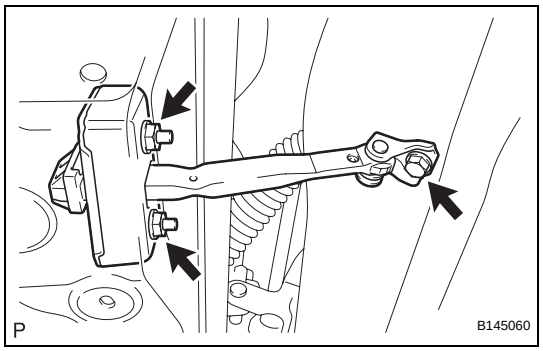

36. REMOVE FRONT DOOR CHECK ASSEMBLY

(a) Remove the bolt, 2 nuts, and front door check assembly.

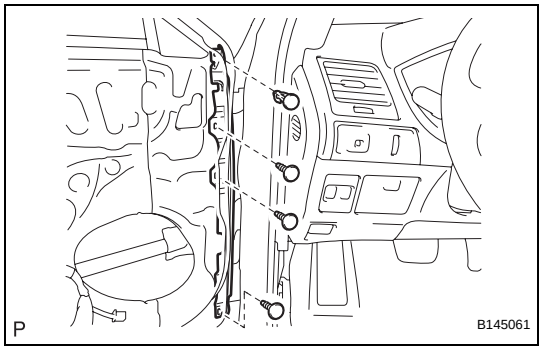

37. REMOVE FRONT NO. 3 DOOR WEATHERSTRIP

(a) Using a clip remover, disengage the 4 clips and remove the front No. 3 door weatherstrip.

ON-VEHICLE INSPECTION

1. INSPECT REAR DOOR PANEL SUB-ASSEMBLY

(a) Check that the clearance measurements of areas A through L are within each standard range.

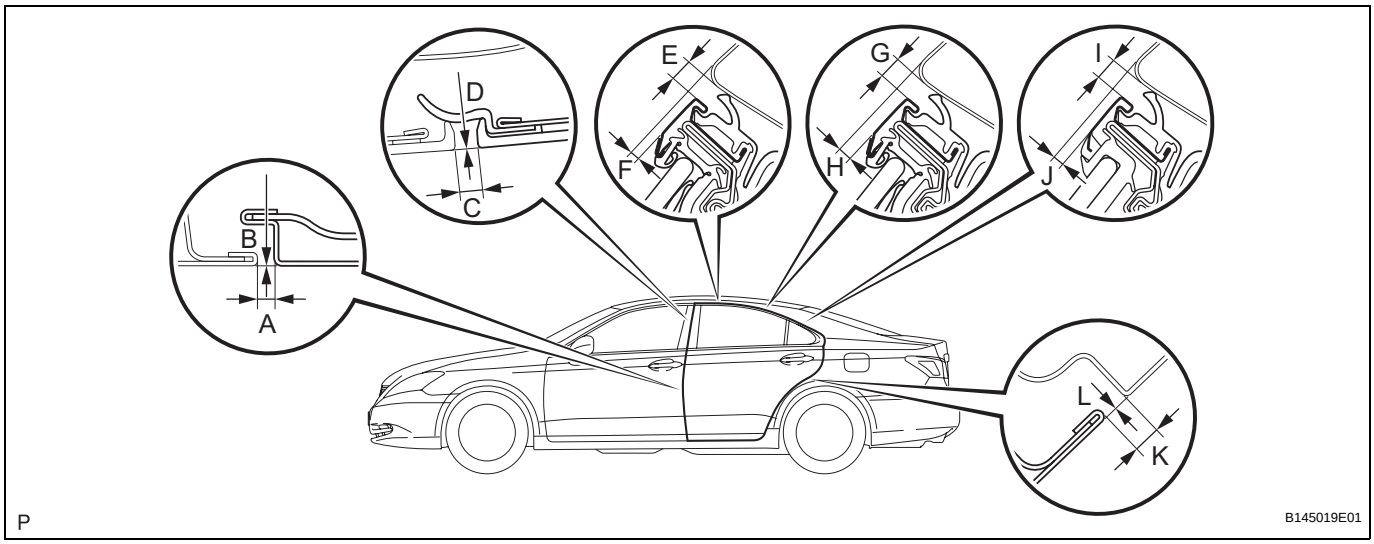

Standard clearance

Area	Measurement	Area	Measurement
A	2.5 to 5.5 mm (0.098 to 0.217 in.)	G	3.4 to 6.4 mm (0.134 to 0.252 in.)
B	-1.5 to 1.5 mm (-0.059 to 0.059 in.)	H	-0.4 to 2.6 mm (-0.016 to 0.102 in.)
C	2.9 to 5.9 mm (0.114 to 0.232 in.)	I	3.4 to 6.4 mm (0.134 to 0.252 in.)
D	-1.5 to 1.5 mm (-0.059 to 0.059 in.)	J	0 to 3.0 mm (0 to 0.118 in.)
E	3.3 to 6.3 mm (0.130 to 0.248 in.)	K	2.5 to 5.5 mm (0.098 to 0.217 in.)
F	0.3 to 3.3 mm (0.012 to 0.130 in.)	L	-1.5 to 1.5 mm (-0.059 to 0.059 in.)

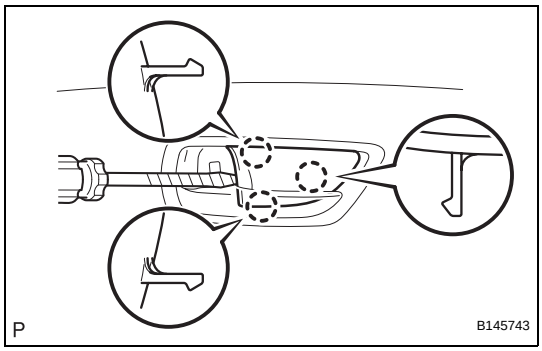

DISASSEMBLY

1. REMOVE REAR DOOR INSIDE HANDLE BEZEL PLUG

(a) Using a screwdriver with the tip wrapped with protective tape, disengage the 3 claws and remove the rear door inside handle bezel plug.

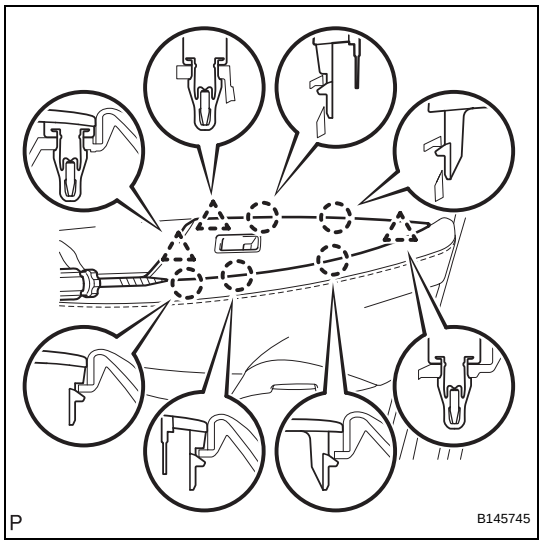

2. REMOVE REAR DOOR ARMREST BASE PANEL ASSEMBLY

(a) Using a screwdriver with the tip wrapped with protective tape, disengage the 5 claws and 3 clips, and remove the rear door armrest base panel assembly.

(b) Disconnect the connector.

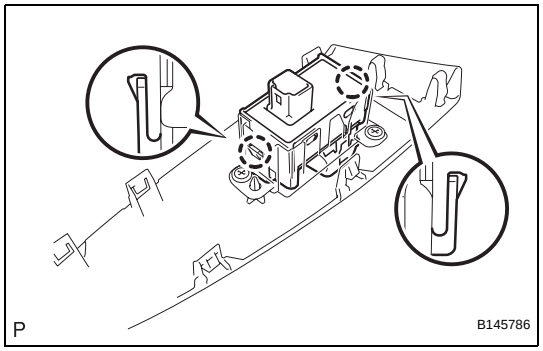

3. REMOVE REAR POWER WINDOW REGULATOR SWITCH ASSEMBLY

(a) Disengage the 2 claws and remove the rear power window regulator switch assembly.

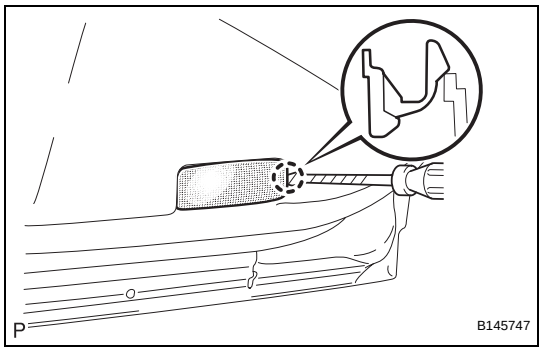

4. REMOVE COURTESY LIGHT ASSEMBLY

(a) Using a screwdriver with the tip wrapped with protective tape, disengage the claw and remove the courtesy light assembly.

(b) Disconnect the connector.

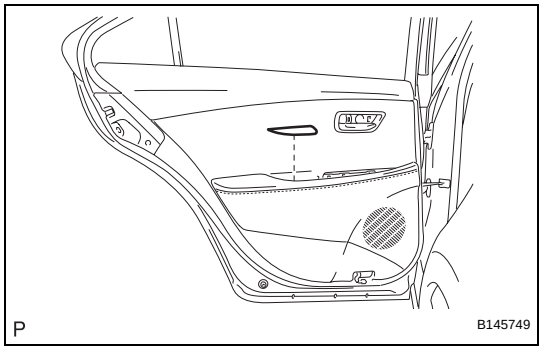

5. REMOVE REAR DOOR ARMREST COVER

(a) Remove the rear door armrest cover.

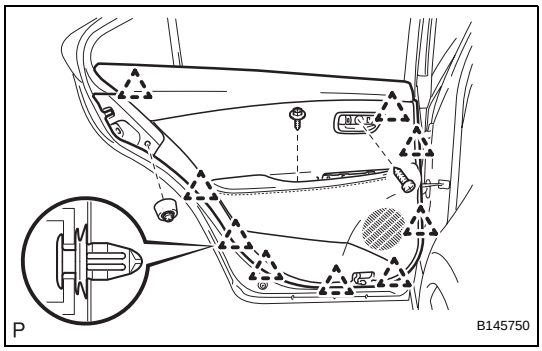

6. REMOVE REAR DOOR TRIM BOARD SUB-ASSEMBLY

(a) Remove the 3 screws.

(b) Using a clip remover, disengage the 9 clips.

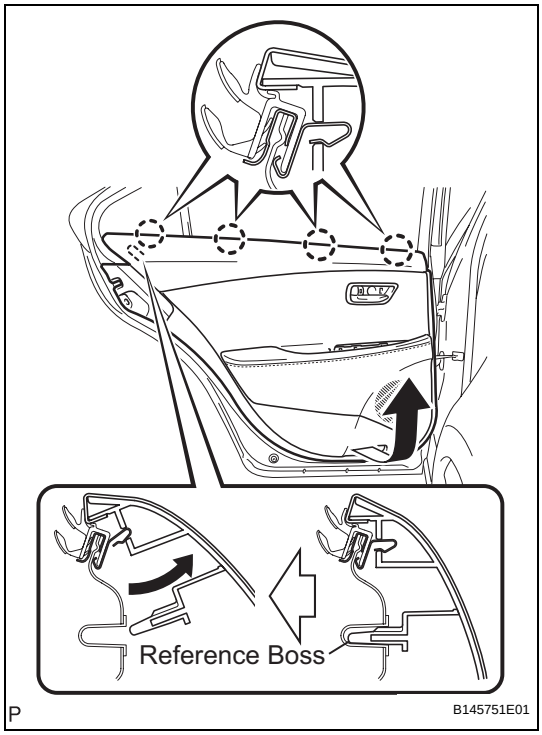

(c) Pull up the rear door trim board in the direction indicated by the arrow.

(d) Disengage the reference bosses from the rear door panel.

(e) Raise the rear door trim board to disengage the 4 claws and remove the rear door trim board together with the rear door inner glass weatherstrip.

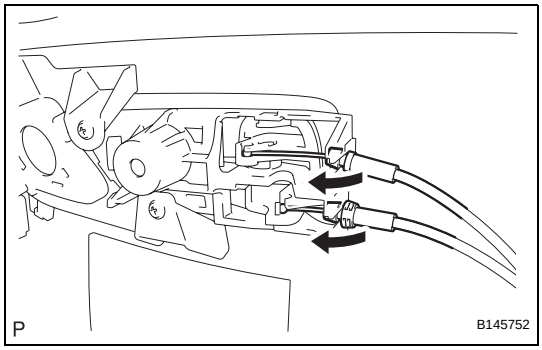

(f) Disconnect the cables and each connector from the back side of the inside handle and the rear door trim board sub-assembly, and remove the rear door trim board sub-assembly.

7. REMOVE REAR NO. 2 SPEAKER ASSEMBLY (w/ Rear Header Speaker) (See page AV-191)

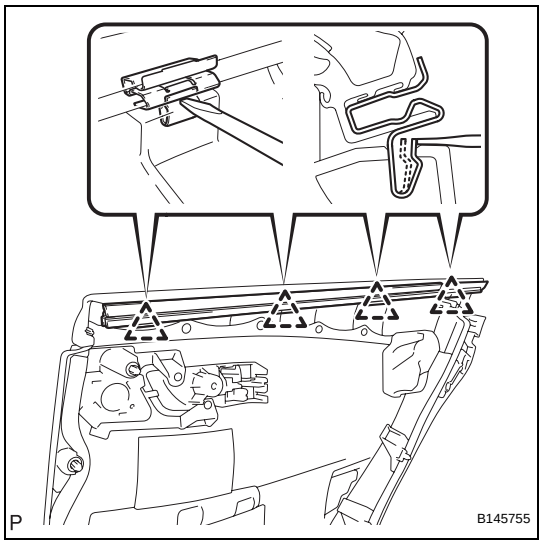

8. REMOVE REAR DOOR INNER GLASS WEATHERSTRIP

(a) Disengage the 4 clips as shown in the illustration and remove the rear door inner glass weatherstrip from the rear door trim board.

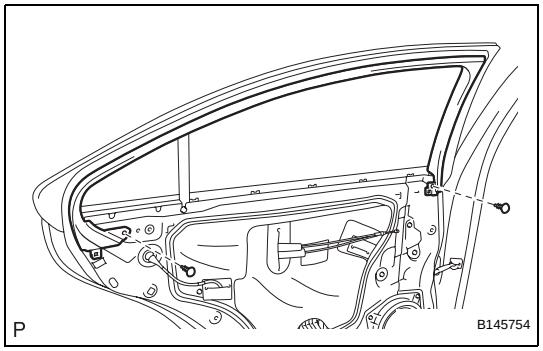

9. REMOVE REAR DOOR FRAME GARNISH

(a) Using a clip remover, remove the 2 clips and rear door frame garnish.

10. REMOVE REAR SPEAKER ASSEMBLY (See page AV-191)

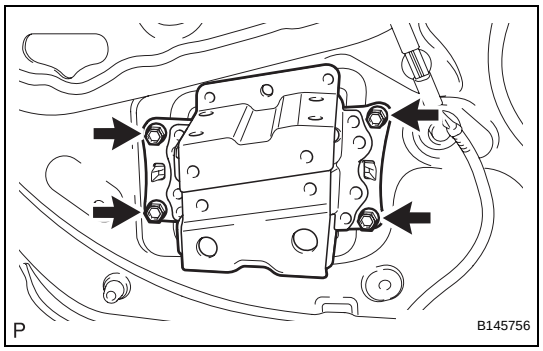

11. REMOVE REAR DOOR INSIDE PANEL REINFORCE

(a) Remove the 4 screws and the rear door inside panel reinforce.

(b) Remove the 4 grommets.

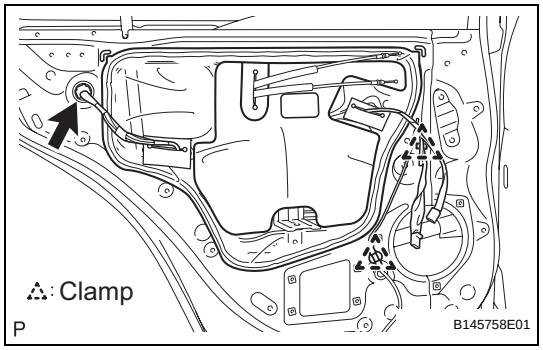

12. REMOVE REAR DOOR SERVICE HOLE COVER

(a) Disconnect the connector and 2 clamps.

(b) Remove the rear door service hole cover.

HINT:

Remove the remaining tape on the door side.

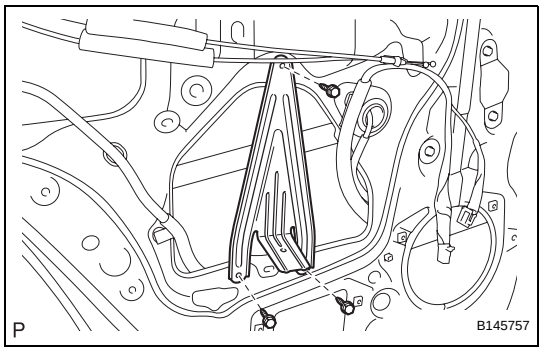

13. REMOVE REAR DOOR TRIM BRACKET

(a) Remove the 3 screws and the rear door trim bracket.

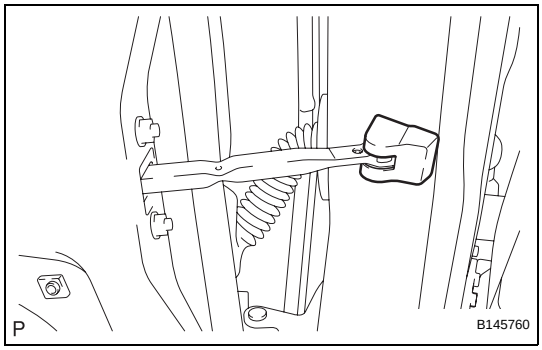

14. REMOVE REAR DOOR CHECK COVER

(a) Remove the rear door check cover.

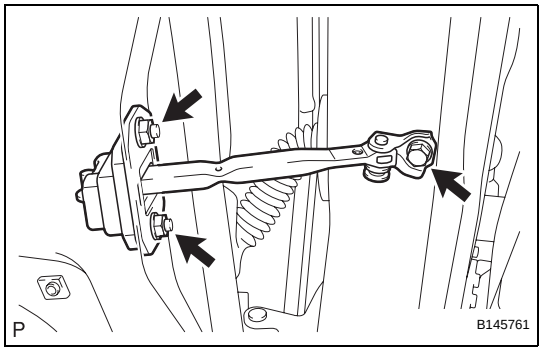

15. REMOVE REAR DOOR CHECK ASSEMBLY

(a) Remove the bolt, 2 nuts, and the rear door check assembly.

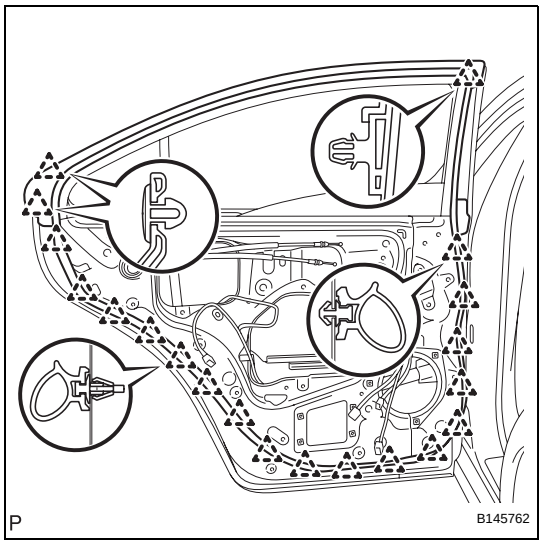

16. REMOVE REAR DOOR WEATHERSTRIP

(a) Using a clip remover, disengage the 20 clips and remove the rear door weatherstrip.

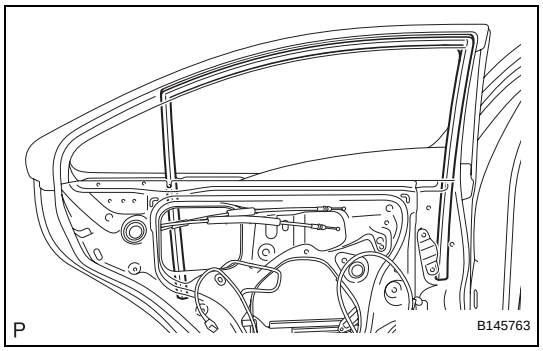

17. REMOVE REAR DOOR GLASS RUN

(a) Remove the rear door glass run.

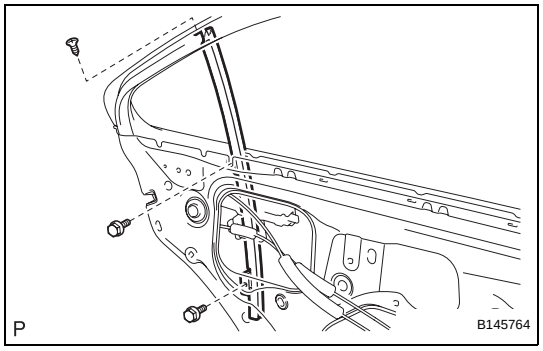

18. REMOVE REAR DOOR WINDOW DIVISION BAR SUB-ASSEMBLY

(a) Remove the 2 bolts, the screw, and the rear door window division bar sub-assembly.

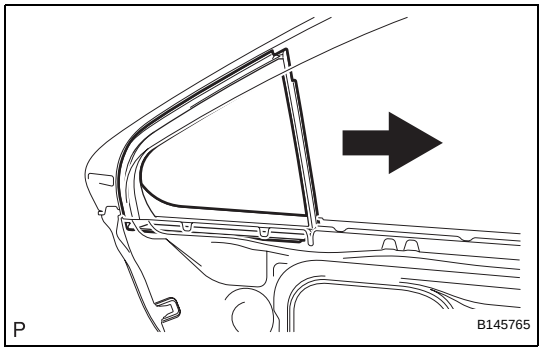

19. REMOVE REAR DOOR QUARTER WINDOW GLASS

(a) Remove the rear door quarter window glass and the rear door quarter window weatherstrip as a unit as shown in the illustration.

(b) Remove the rear door quarter window glass from the rear door quarter window weatherstrip.

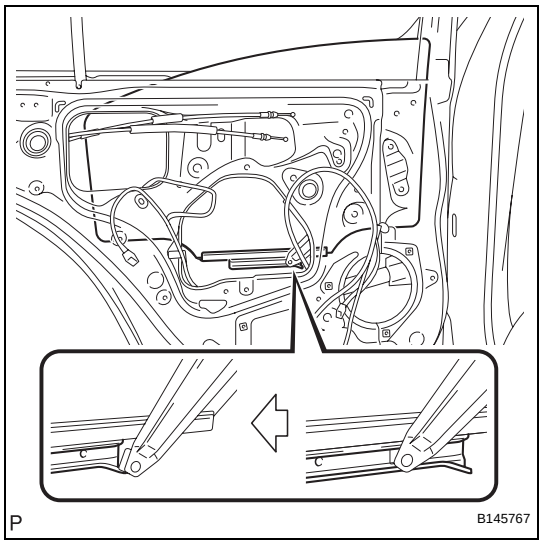

20. REMOVE REAR DOOR GLASS SUB-ASSEMBLY

(a) Remove the rear door glass sub-assembly from the rear door window regulator sub-assembly as shown in the illustration.

NOTICE:

Do not damage the door glass.

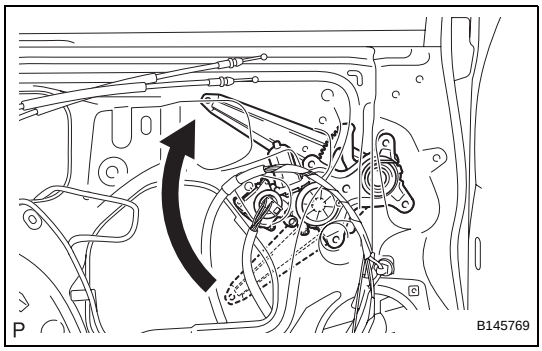

21. REMOVE REAR DOOR WINDOW REGULATOR SUB-ASSEMBLY

(a) Connect the rear power window regulator switch assembly and move the lift arm to the position shown in the illustration.

(b) Remove the rear power window regulator switch assembly.

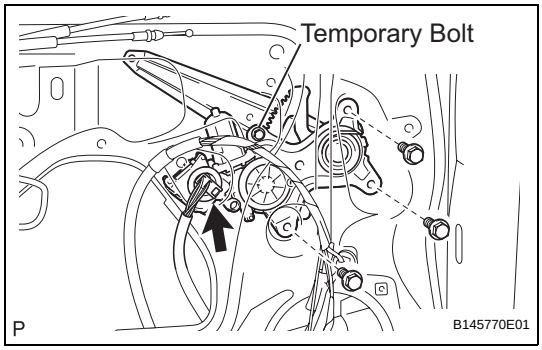

(c) Disconnect the connector.

(d) Loosen the temporary bolt.

NOTICE:

Do not remove the temporary bolt. If the temporary bolt is removed, the rear door window regulator may fall, causing damage.

(e) Remove the 3 bolts.

(f) Remove the rear door window regulator sub-assembly and the rear power window regulator motor assembly as a unit.

(g) Remove the temporary bolt from the rear door window regulator.

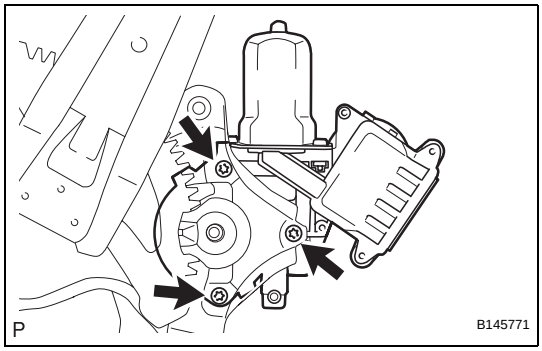

22. REMOVE REAR POWER WINDOW REGULATOR MOTOR ASSEMBLY

(a) Using a "TORX" driver (T25), remove the 3 screws and the rear power window regulator motor assembly.

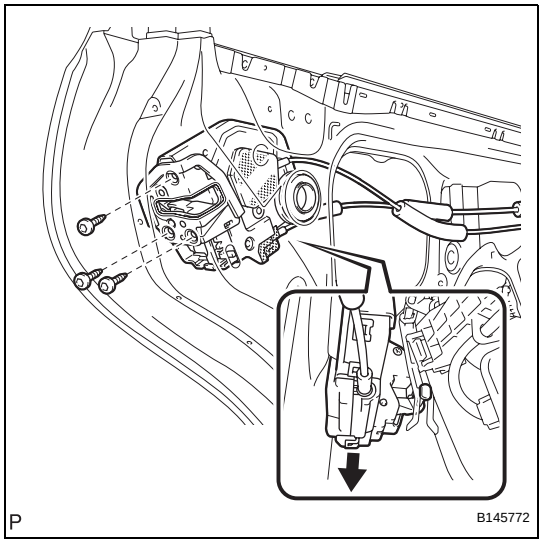

23. REMOVE REAR DOOR LOCK ASSEMBLY

(a) Using a "TORX" socket wrench (T30), remove the 3 screws.

(b) Move the rear door lock assembly downward and pull the release plate out of the rear door outside handle frame.

(c) Remove the door lock wiring harness seal from the rear door lock assembly.

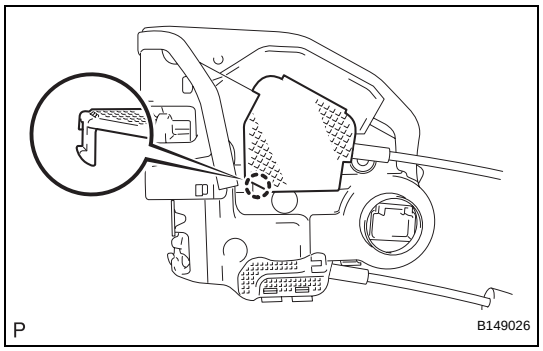

24. REMOVE REAR DOOR LOCK REMOTE CONTROL CABLE ASSEMBLY

(a) Using a screwdriver, disengage the claw.
HINT:
Tape the screwdriver tip before use.

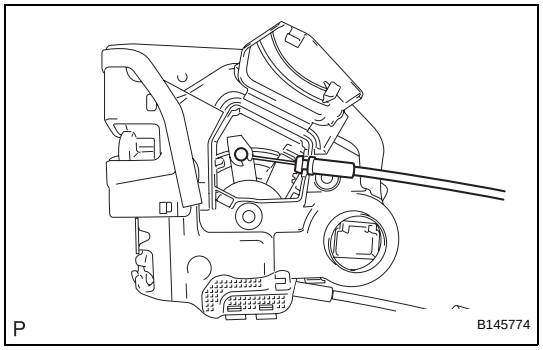

(b) Remove the rear door lock remote control cable assembly.

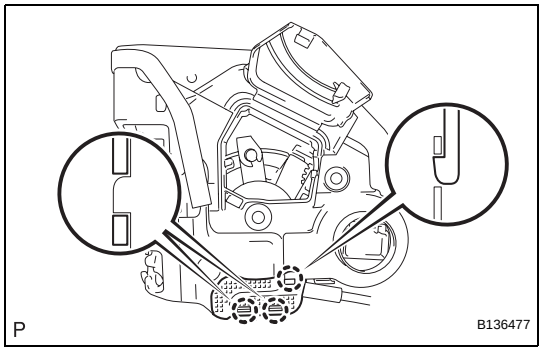

25. REMOVE REAR DOOR INSIDE LOCKING CABLE ASSEMBLY

(a) Using a screwdriver, disengage the 3 claws.
HINT:
Tape the screwdriver tip before use.

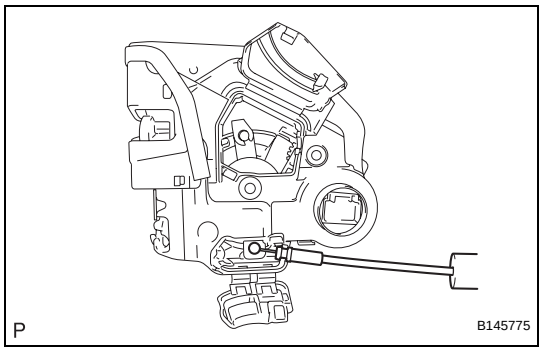

(b) Remove the rear door inside locking cable assembly.

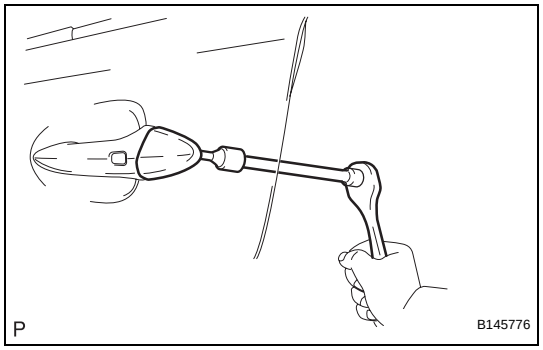

26. REMOVE REAR DOOR OUTSIDE HANDLE COVER

(a) Using a "TORX" socket wrench (T30), loosen the screw.
HINT:
The screw cannot be removed because it is integrated into the rear door outside handle frame sub-assembly.

(b) Remove the rear door outside handle cover.

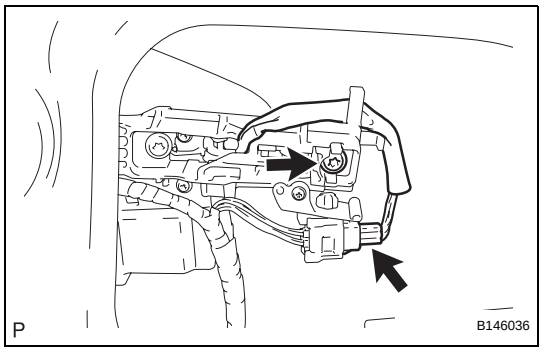

27. REMOVE REAR DOOR OUTSIDE HANDLE ASSEMBLY

(a) Disconnect the connector.

(b) Using a "TORX" socket wrench (T30), loosen the screw.

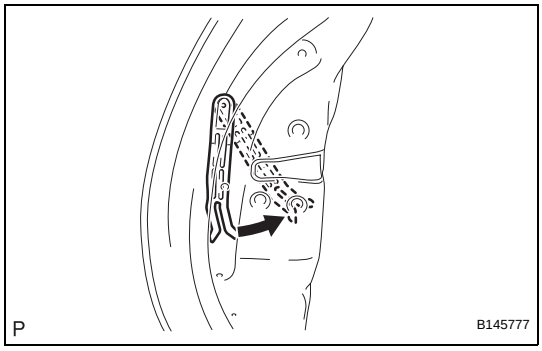

(c) Pull and hold the release plate of the outside handle frame as shown in the illustration.

NOTICE:

The release plate may interfere with the outside handle and may be damaged when removing the handle, unless the release plate of the outside handle frame is pulled and held.

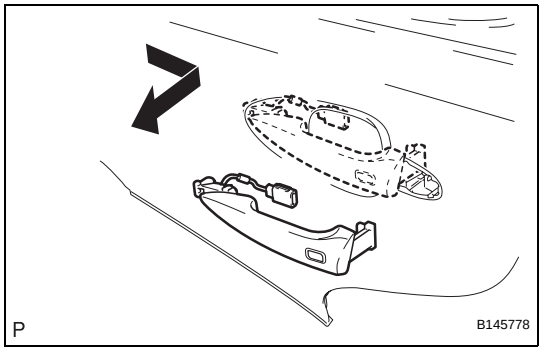

(d) Remove the rear door outside handle assembly as shown in the illustration.

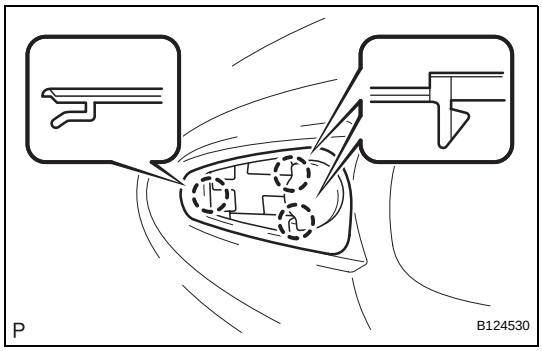

28. REMOVE REAR DOOR FRONT OUTSIDE HANDLE PAD

(a) Disengage the 3 claws and remove the rear door front outside handle pad.

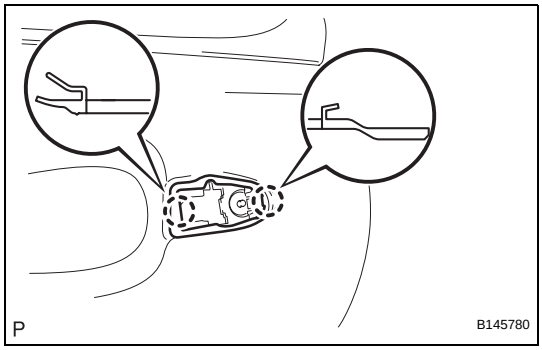

29. REMOVE REAR DOOR REAR OUTSIDE HANDLE PAD

(a) Disengage the 2 claws and remove the rear door rear outside handle pad.

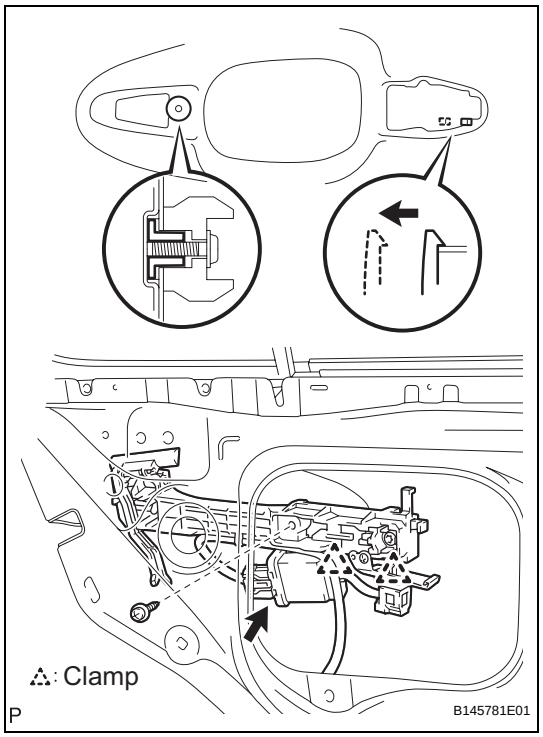

30. REMOVE REAR DOOR OUTSIDE HANDLE FRAME SUB-ASSEMBLY

(a) Using a "TORX" socket wrench (T30), loosen the screw.
HINT:
The screw cannot be removed because it is integrated into the rear door outside handle frame sub-assembly.

(b) Disconnect the connector.

(c) Disengage the 2 clamps.

(d) Disengage the claw and remove the rear door outside handle frame sub-assembly.

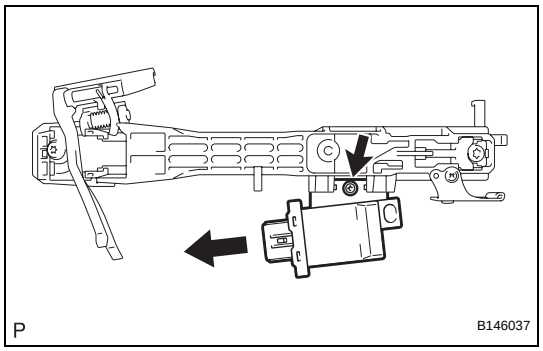

31. REMOVE DOOR ELECTRICAL KEY OSCILLATOR

(a) Remove the screw and the door electrical key oscillator.

32. REMOVE REAR DOOR BELT MOULDING ASSEMBLY (See page ET-34)

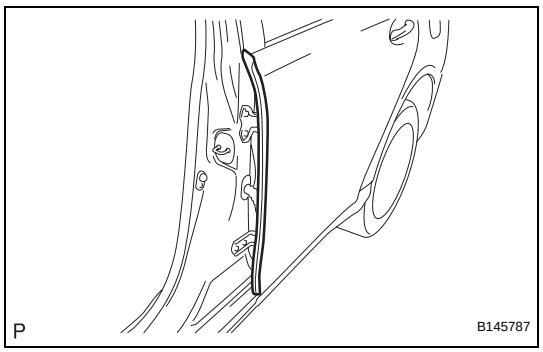

33. REMOVE REAR NO. 3 DOOR WEATHERSTRIP

(a) Remove the rear No. 3 door weatherstrip.

34. REMOVE REAR DOOR FRONT WINDOW FRAME MOULDING (See page ET-64)

35. REMOVE REAR DOOR WINDOW FRAME MOULDING SUB-ASSEMBLY (See page ET-65)

36. REMOVE REAR DOOR LOWER OUTSIDE MOULDING (See page ET-42)

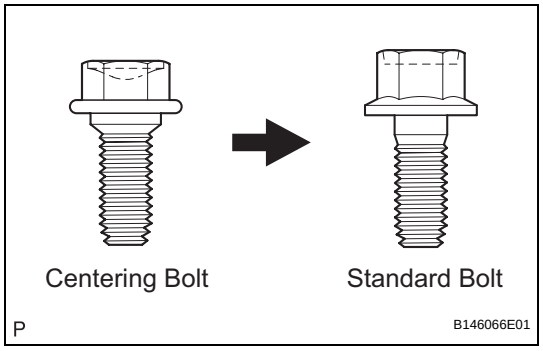

ADJUSTMENT

HINT:

- Before adjusting the door positions of vehicles equipped with side airbags and curtain shield airbags, be sure to disconnect the battery. After adjustment, inspect the SRS warning light, the side airbag system, and the curtain shield airbag system for normal operation. Then initialize both airbag systems.
- Use the same procedures for the RH side and LH side.
- The procedures listed below are for the LH side.

- Centering bolts are used to mount the door hinge to the vehicle body and door. The door cannot be adjusted with the centering bolts installed on it. Substitute the centering bolts with standard bolts (with washers) when making adjustments.
- A bolt without a torque specification is shown in the standard bolt chart (See page SS-2).

1. DISCONNECT NEGATIVE BATTERY TERMINAL
CAUTION:
Wait for 90 seconds after disconnecting the terminal to prevent airbag deployment (See page RS-1).

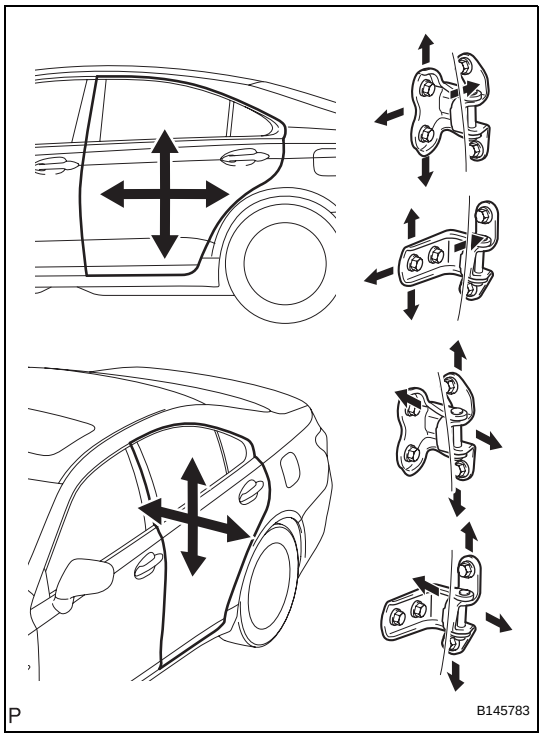

2. ADJUST REAR DOOR

(a) Loosen the hinge bolts on the vehicle body and adjust the door position.
SST 09812-00010

(b) Tighten the hinge bolts on the vehicle body after the adjustment.
Torque: 26 N*m (265 kgf*cm, 19 ft.*lbf)

(c) Loosen the hinge bolts on the door and adjust the door position.

(d) Tighten the hinge bolts on the door after the adjustment.
Torque: 43 N*m (439 kgf*cm, 32 ft.*lbf)

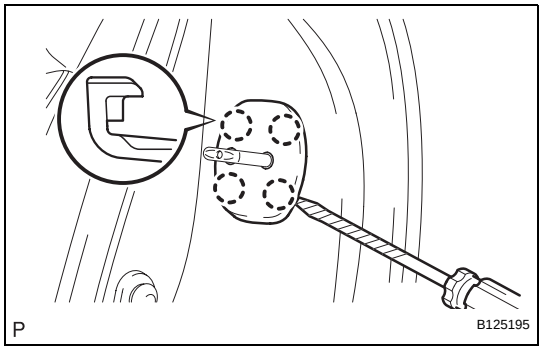

(e) Using a screwdriver, detach the 4 claws and remove the cover.
HINT:
Tape the screwdriver tip before use.

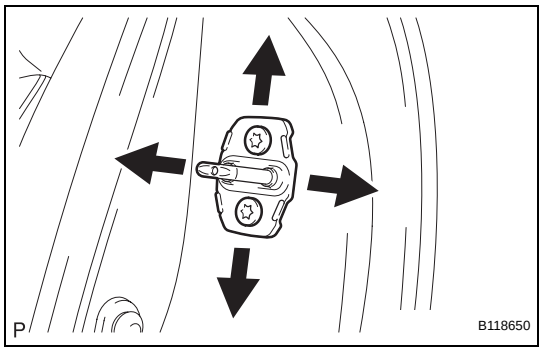

(f) Adjust the striker position by slightly loosening the striker mounting screws with a "TORX" socket wrench (T40) and hitting the striker with a plastic hammer.

(g) Using a "TORX" socket wrench (T40), tighten the striker mounting screws after the adjustment.
Torque: 23 N*m (235 kgf*cm, 17 ft.*lbf)

3. CONNECT NEGATIVE BATTERY TERMINAL

4. PERFORM INITIALIZATION
NOTICE:
Some systems need initialization after reconnecting the cable to the negative battery terminal (See page IN-33).

5. INSPECT SRS WARNING LIGHT
(See page RS-37)

REASSEMBLY

1. **INSTALL REAR DOOR LOWER OUTSIDE MOULDING (See page ET-43)**
2. **INSTALL REAR DOOR WINDOW FRAME MOULDING SUB-ASSEMBLY (See page ET-66)**
3. **INSTALL REAR DOOR FRONT WINDOW FRAME MOULDING (See page ET-67)**
4. **INSTALL REAR NO. 3 DOOR WEATHERSTRIP**
   (a) Install a new rear No. 3 door weatherstrip with double-sided tape.
5. **INSTALL REAR DOOR BELT MOULDING ASSEMBLY (See page ET-34)**

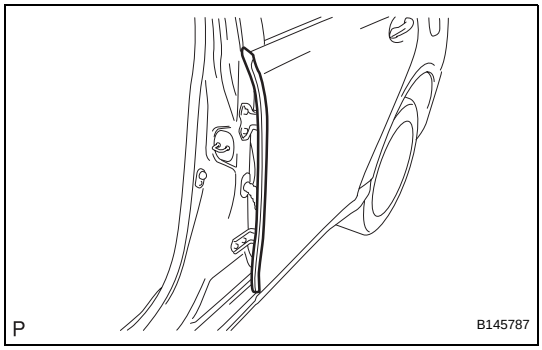

6. **INSTALL DOOR ELECTRICAL KEY OSCILLATOR**
   (a) Install the door electrical key oscillator with the screw.
7. **INSTALL REAR DOOR OUTSIDE HANDLE FRAME SUB-ASSEMBLY**
   (a) Apply MP grease to the sliding parts of the rear door outside handle frame sub-assembly.

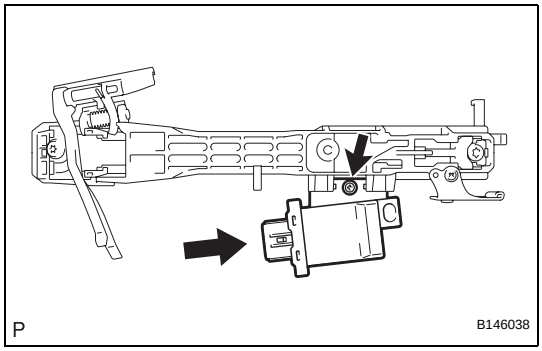

   (b) Engage the claw to install the rear door outside handle frame sub-assembly.
   (c) Using a "TORX" socket wrench (T30), install the rear door outside handle frame sub-assembly with the screw.
   Torque: 4.0 N*m (41 kgf*cm, 35 in.*lbf)
   (d) Engage the 2 clamps.
   (e) Connect the connector.

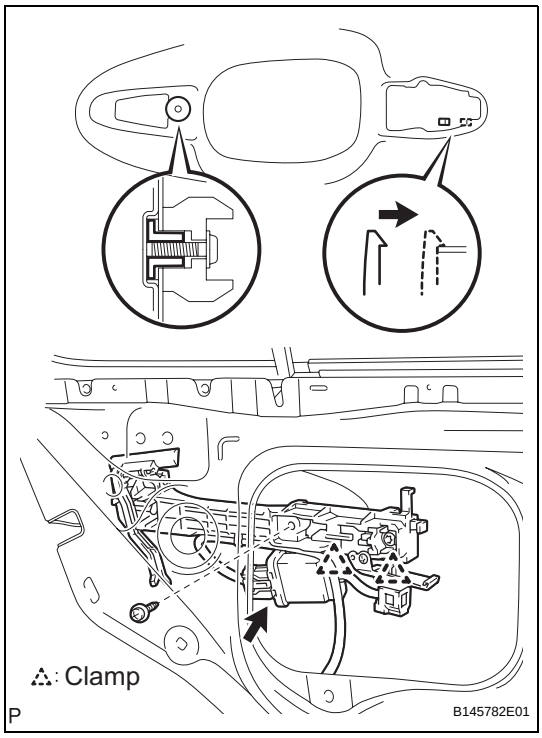

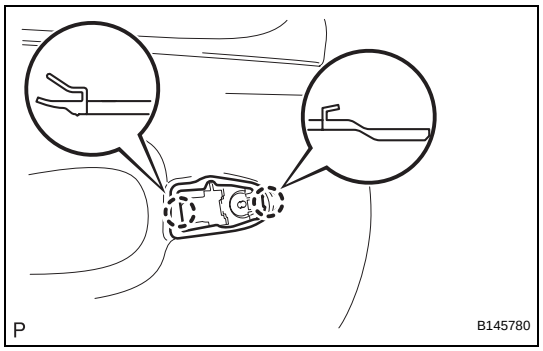

8. INSTALL REAR DOOR REAR OUTSIDE HANDLE PAD

(a) Engage the 2 claws to install the rear door rear outside handle pad.

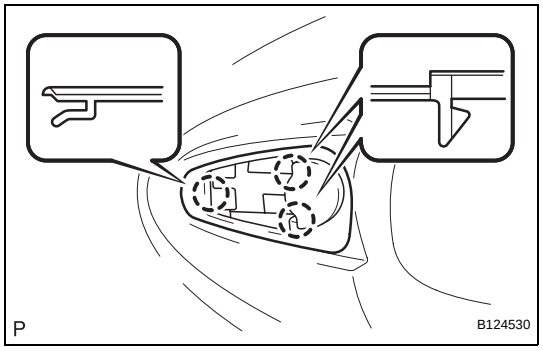

9. INSTALL REAR DOOR FRONT OUTSIDE HANDLE PAD

(a) Engage the 3 claws to install the rear door front outside handle pad.

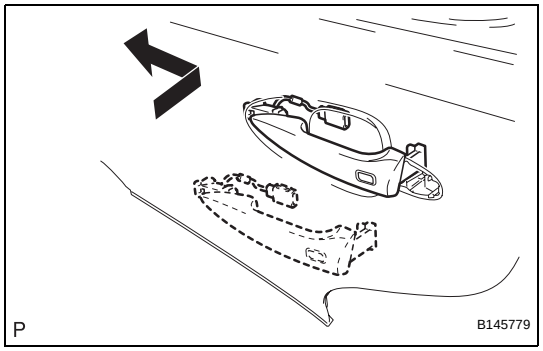

10. INSTALL REAR DOOR OUTSIDE HANDLE ASSEMBLY

(a) Insert the front end of the rear door outside handle assembly into the rear door outside handle frame.
NOTICE:
If the bellcrank lever is not pulled and held when installing the outside handle, the bellcrank lever will interfere with the outside handle and the release plate will be damaged.

(b) Insert the rear end of the rear door outside handle assembly into the rear door outside handle frame. Next, slide the rear door outside handle assembly toward the front of the vehicle to install it.

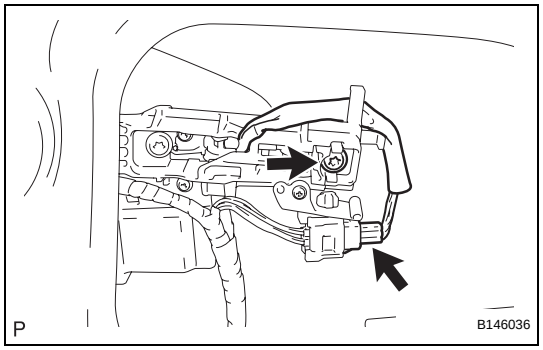

(c) Using a "TORX" socket wrench (T30), install the rear door outside handle assembly with the screw.
Torque: 4.0 N*m (41 kgf*cm, 35 in.*lbf)

(d) Connect the connector.

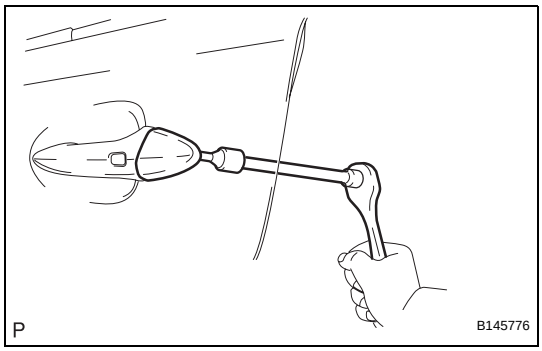

11. INSTALL REAR DOOR OUTSIDE HANDLE COVER

(a) Using a "TORX" socket wrench (T30), install the rear door outside handle cover with the screw.
Torque: 4.0 N*m (41 kgf*cm, 35 in.*lbf)

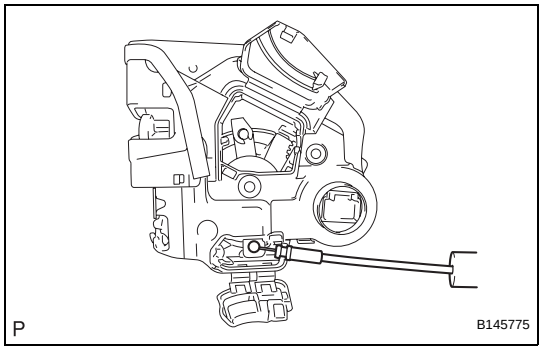

12. INSTALL REAR DOOR INSIDE LOCKING CABLE ASSEMBLY

(a) Install the rear door inside locking cable assembly.

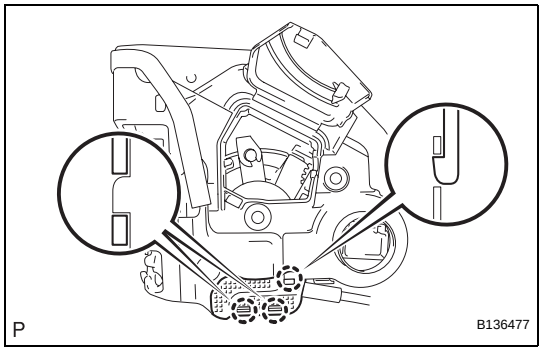

(b) Engage the 3 claws.

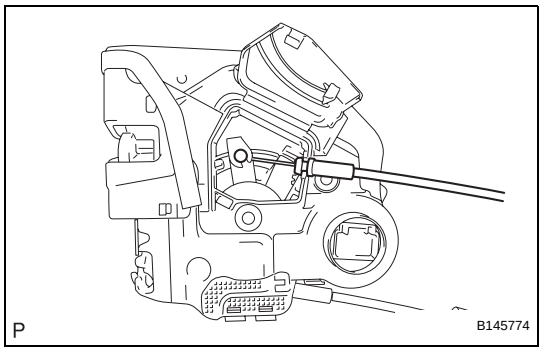

13. INSTALL REAR DOOR LOCK REMOTE CONTROL CABLE ASSEMBLY

(a) Install the rear door lock remote control cable assembly.

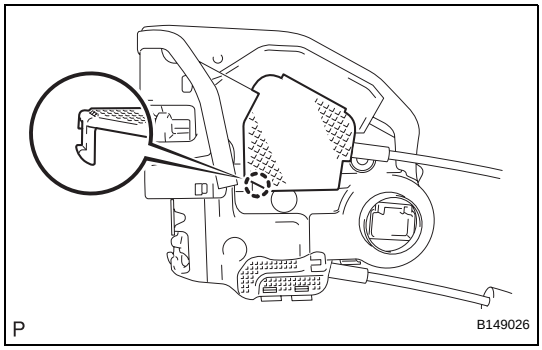

(b) Engage the claw.

14. INSTALL REAR DOOR LOCK ASSEMBLY

NOTICE:

- **When reusing the removed rear door lock assembly, replace the door lock wiring harness seal on the connector with a new one.**
- **Do not allow grease or dust to adhere to the door lock wiring harness seal surface of the connector.**

- **Reusing the door lock wiring harness seal or using a damaged door lock wiring harness seal may cause water intrusion to the connection. This may result in a malfunction of the rear door lock assembly.**

(a) Apply MP grease to the sliding parts of the rear door lock assembly.
(b) Install a new door lock wiring harness seal to the rear door lock assembly.
(c) Insert the rear door lock assembly to the rear door outside handle release plate, and set it to the rear door panel.
(d) Make sure that the rear door outside handle frame release plate is securely connected to the rear door lock assembly.
(e) Using a "TORX" socket wrench (T30), install the rear door lock assembly with the 3 screws.
Torque: 5.5 N*m (56 kgf*cm, 49 in.*lbf)
(f) Connect the connector.

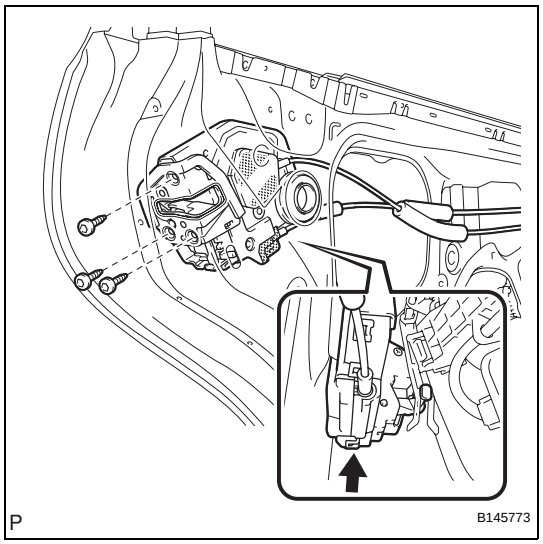

15. INSTALL REAR POWER WINDOW REGULATOR MOTOR ASSEMBLY
NOTICE:
The regulator arm must be below the intermediate position when installing the power window regulator motor.

(a) Using a "TORX" driver (T25), install the power window regulator motor assembly with the 3 screws.
Torque: 5.4 N*m (55 kgf*cm, 48 in.*lbf)
HINT:
The new rear window regulator adopts a self-tapping method. The installation position of the regulator will be threaded when the self-tapping screw is inserted.

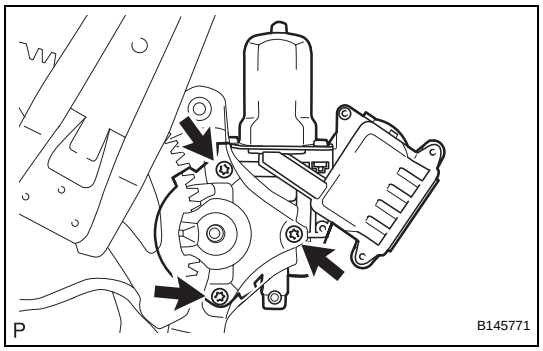

16. INSTALL REAR DOOR WINDOW REGULATOR SUB-ASSEMBLY
(a) Apply MP grease to the sliding parts of the rear door window regulator sub-assembly.
(b) Install the temporary bolt to the rear door window regulator sub-assembly.
(c) Temporarily install the window regulator.
(d) Tighten the 4 bolts in the order shown in the illustration to install the rear door window regulator.
Torque: 11 N*m (112 kgf*cm, 8.1 ft.*lbf)
(e) Connect the connector.

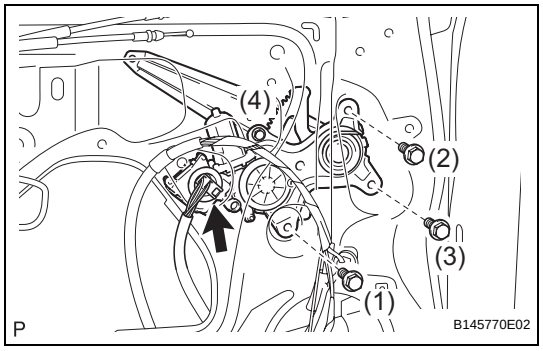

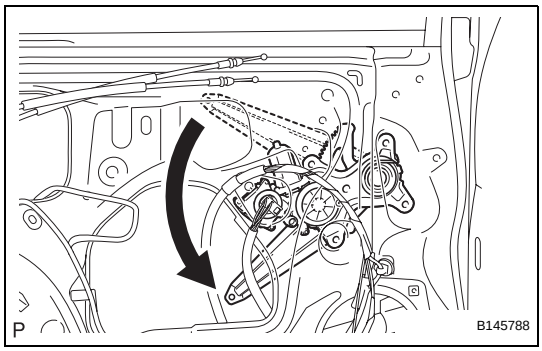

(f) Connect the rear power window regulator switch assembly and move the lift arm to the position shown in the illustration.
(g) Remove the rear power window regulator switch assembly.

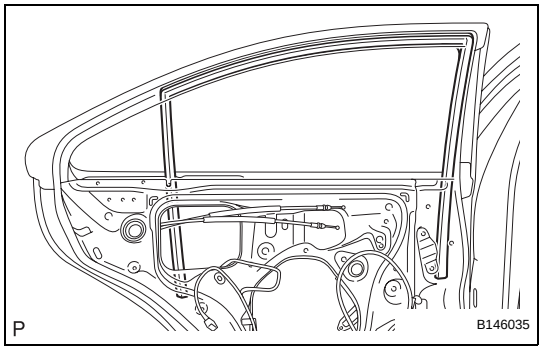

17. INSTALL REAR DOOR GLASS RUN
(a) Install the rear door glass run.

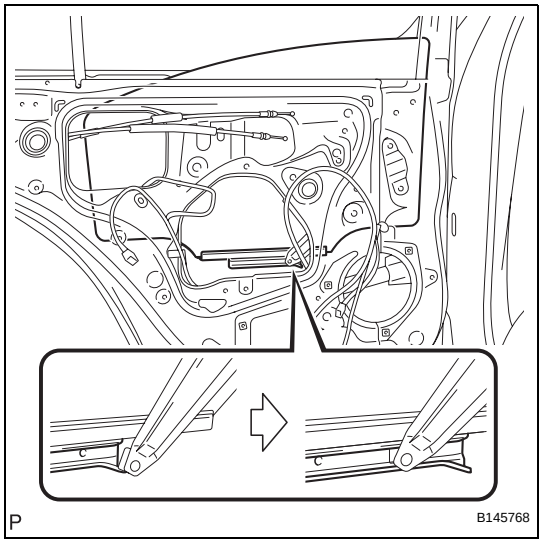

18. INSTALL REAR DOOR GLASS SUB-ASSEMBLY
(a) Slide the rear door glass sub-assembly to install it as shown in the illustration.

19. INSTALL REAR DOOR QUARTER WINDOW GLASS
(a) Install the rear door quarter window glass to the rear door quarter window weatherstrip.

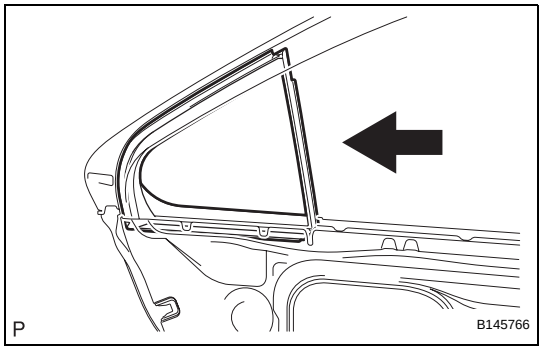

(b) Install the rear door quarter window glass together with the rear door quarter window weatherstrip in the direction indicated by the arrow in the illustration.

20. INSTALL REAR DOOR WINDOW DIVISION BAR SUB-ASSEMBLY
(a) Insert the rear door window division bar sub-assembly from above.
(b) Install the rear door glass run to the rear door window division bar sub-assembly.

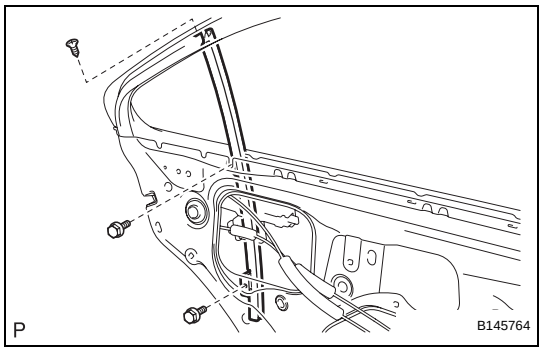

(c) Install the rear door window division bar sub-assembly with the 2 bolts and screw.

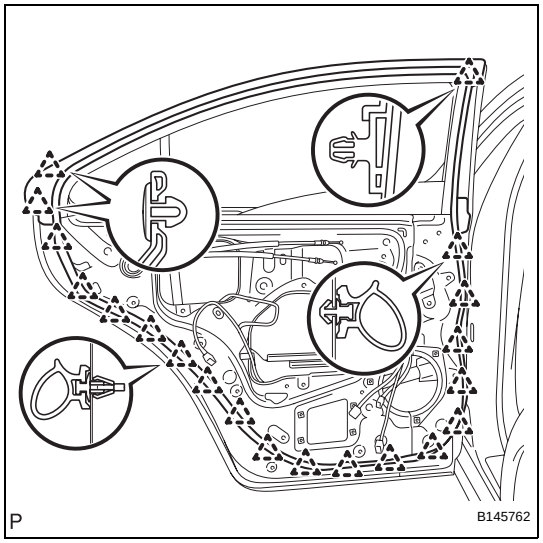

21. INSTALL REAR DOOR WEATHERSTRIP

(a) Engage the 20 clips and install a new rear door weatherstrip.

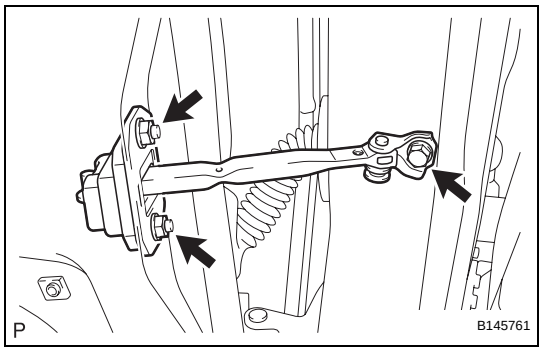

22. INSTALL REAR DOOR CHECK ASSEMBLY

(a) Install the rear door check assembly with the bolt and the 2 nuts.

Torque: Bolt
27 N*m (275 kgf*cm, 20 ft.*lbf)
Nut
5.0 N*m (51 kgf*cm, 44 in.*lbf)

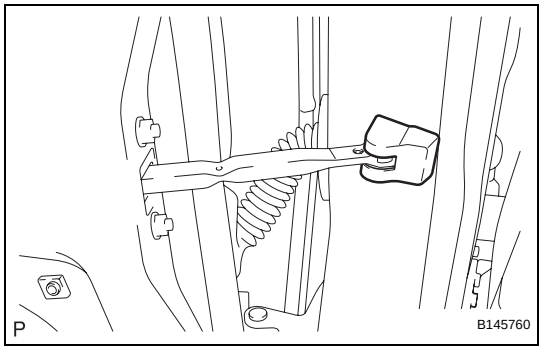

23. INSTALL REAR DOOR CHECK COVER

(a) Install the rear door check cover.

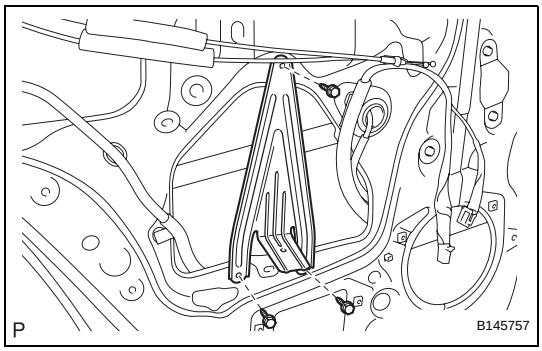

24. INSTALL REAR DOOR TRIM BRACKET

(a) Install the rear door trim bracket with the 3 screws.

25. INSTALL REAR DOOR SERVICE HOLE COVER

(a) Apply butyl tape to the rear door panel.

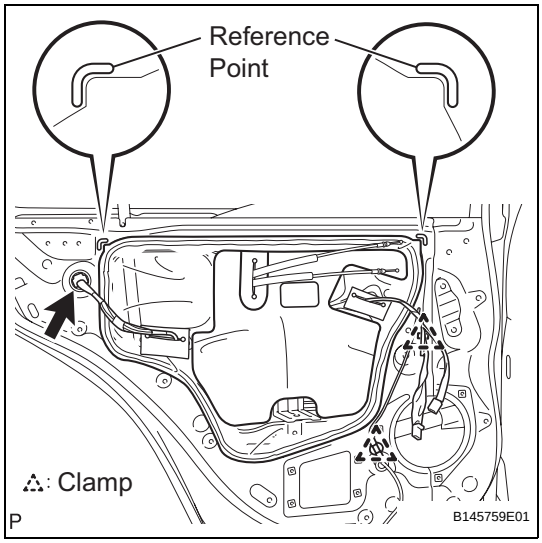

(b) Pass the rear door lock remote control cable, rear door inside locking cable and each connector through a new rear door service hole cover.

(c) Install the new rear door service hole cover.

NOTICE:

Securely install the rear door service hole cover avoiding wrinkles and air bubbles.

(d) Connect the connector and 2 clamps.

26. INSTALL REAR DOOR INSIDE PANEL REINFORCE

(a) Install 4 new grommets.

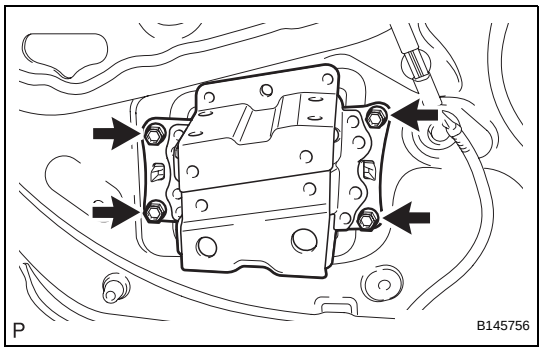

(b) Install a new rear door inside panel reinforce with the 4 screws.

27. INSTALL REAR SPEAKER ASSEMBLY (See page AV-192)

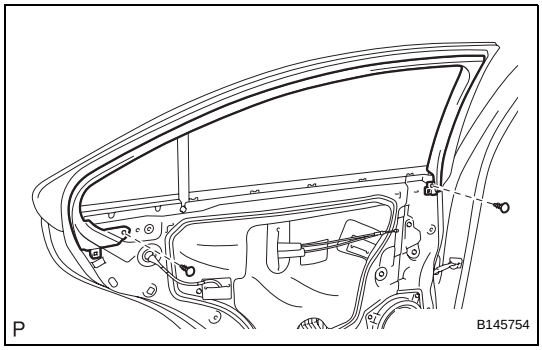

28. INSTALL REAR DOOR FRAME GARNISH

(a) Install the door frame garnish with the 2 clips.

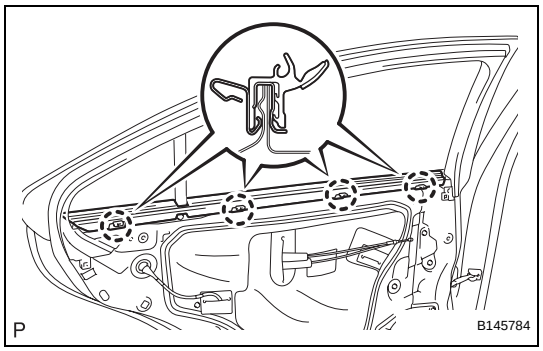

29. INSTALL REAR DOOR INNER GLASS WEATHERSTRIP

(a) Engage the 4 claws to install the rear door inner glass weatherstrip.

30. INSTALL REAR NO. 2 SPEAKER ASSEMBLY (w/ Rear Header Speaker) (See page AV-192)

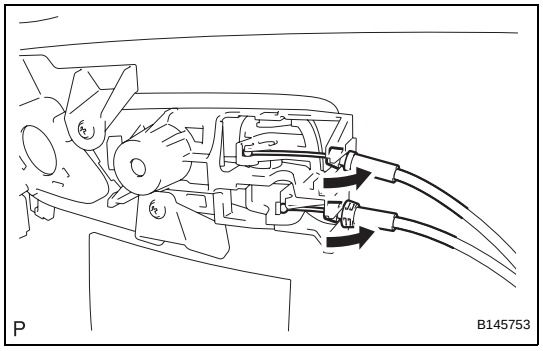

31. INSTALL REAR DOOR TRIM BOARD SUB-ASSEMBLY

(a) Connect the rear door lock remote control cable and rear door inside locking cable to the rear inside handle.

(b) Connect each connector.

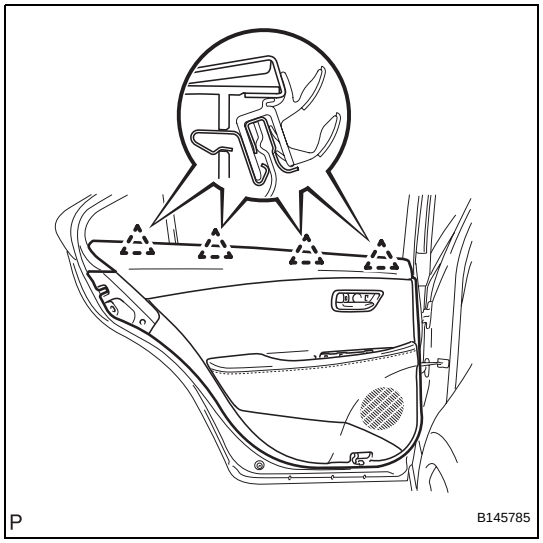

(c) Engage the rear door trim board with the 4 clips of the rear door inner glass weatherstrip.

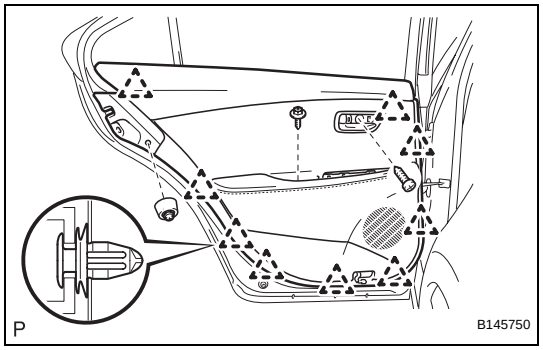

(d) Engage the 9 clips to install the rear door trim board to the rear door panel.

NOTICE:

Only when installing the rear door trim LH, be careful not to allow the wire harness for the courtesy light to get caught between the trim board and the door panel.

(e) Install the 3 screws.

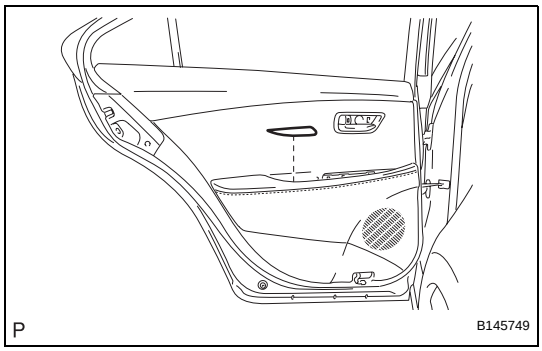

32. INSTALL REAR DOOR ARMREST COVER

(a) Install the rear door armrest cover.

33. INSTALL COURTESY LIGHT ASSEMBLY

(a) Connect the connector.

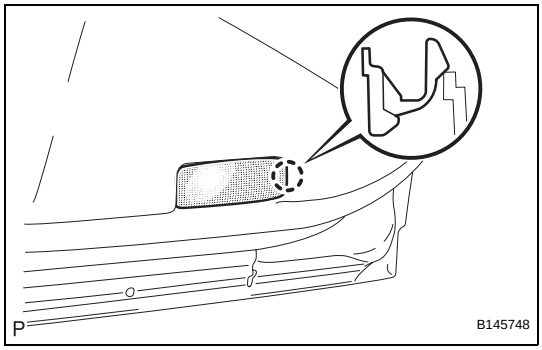

(b) Engage the claw and install the courtesy light assembly.

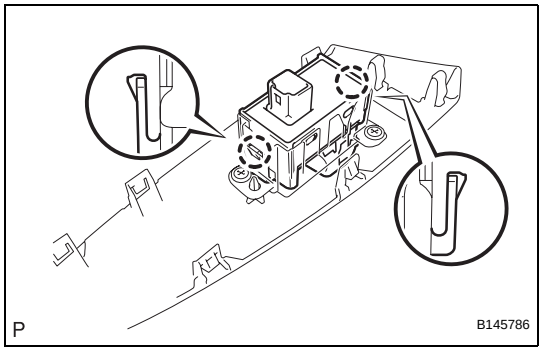

34. INSTALL REAR POWER WINDOW REGULATOR SWITCH ASSEMBLY

(a) Engage the 2 claws and install the rear power window regulator switch assembly.

35. INSTALL REAR DOOR ARMREST BASE PANEL ASSEMBLY

(a) Connect the connector.

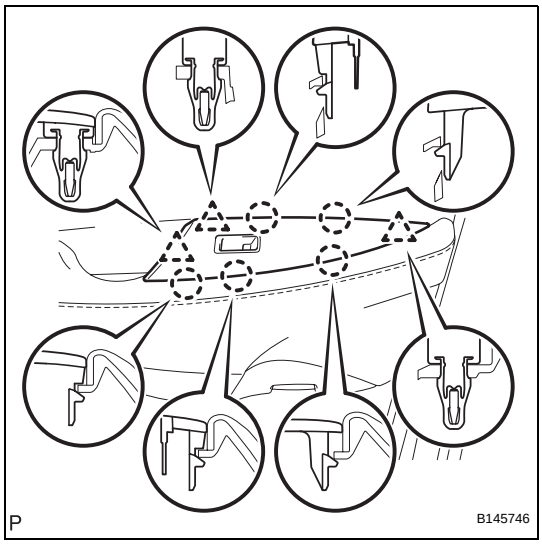

(b) Engage the 5 claws and 3 clips, and install the rear power window regulator switch assembly with rear door armrest base panel.

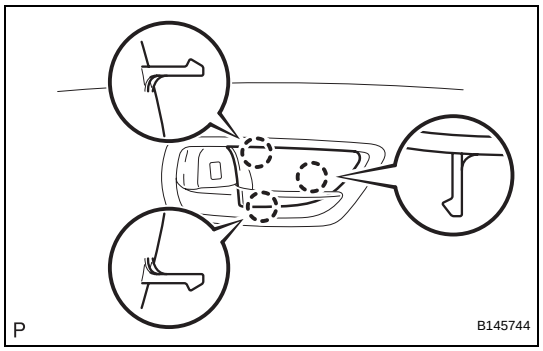

36. INSTALL REAR DOOR INSIDE HANDLE BEZEL PLUG

(a) Engage the 3 claws to install the rear door inside handle bezel plug.

37. INITIALIZE POWER WINDOW CONTROL SYSTEM

(See page WS-10)

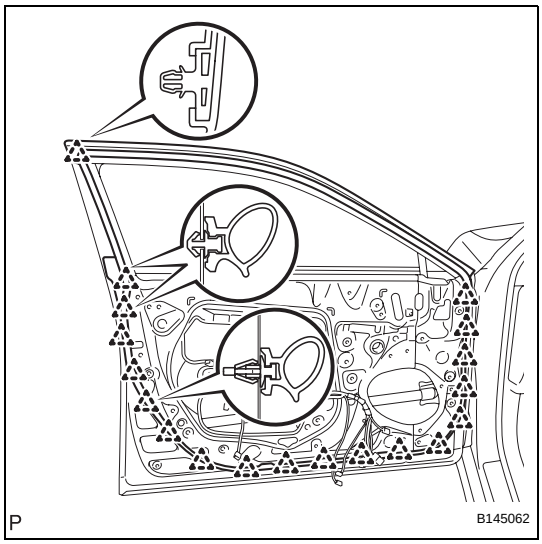

38. REMOVE FRONT DOOR WEATHERSTRIP

(a) Using a clip remover, disengage the 19 clips and remove the front door weatherstrip.

39. REMOVE FRONT DOOR BELT MOULDING ASSEMBLY (See page ET-31)

40. REMOVE FRONT DOOR REAR WINDOW FRAME MOULDING (See page ET-55)

41. REMOVE FRONT DOOR FRONT LOWER FRAME UPPER COVER (See page ET-56)

42. REMOVE FRONT DOOR OUTSIDE MOULDING SUB-ASSEMBLY (See page ET-57)

43. REMOVE FRONT DOOR LOWER OUTSIDE MOULDING (See page ET-41)

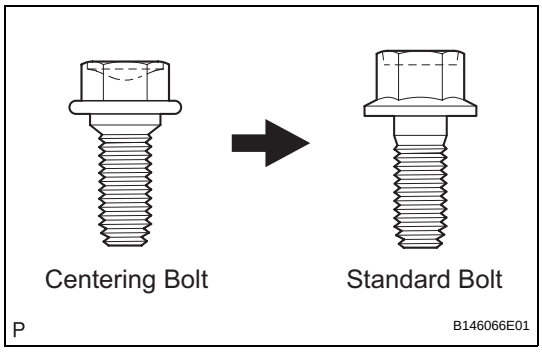

ADJUSTMENT

HINT:

- Before adjusting the door positions of vehicles equipped with side airbags and curtain shield airbags, be sure to disconnect the battery. After adjustment, inspect the SRS warning light, the side airbag system, and the curtain shield airbag system for normal operation. Then initialize both airbag systems.
- Use the same procedures for the RH side and LH side.
- The procedures listed below are for the LH side.
- Centering bolts are used to mount the door hinge to the vehicle body and door. The door cannot be adjusted with the centering bolts installed on it. Substitute the centering bolts with standard bolts (with washers) when making adjustments.
- A bolt without a torque specification is shown in the standard bolt chart (See page SS-2).

1. DISCONNECT NEGATIVE BATTERY TERMINAL

CAUTION:
Wait for 90 seconds after disconnecting the terminal to prevent airbag deployment (See page RS-1).

2. ADJUST FRONT DOOR

(a) Using a clip remover, disengage the 4 clips and remove the front fender side panel protector.

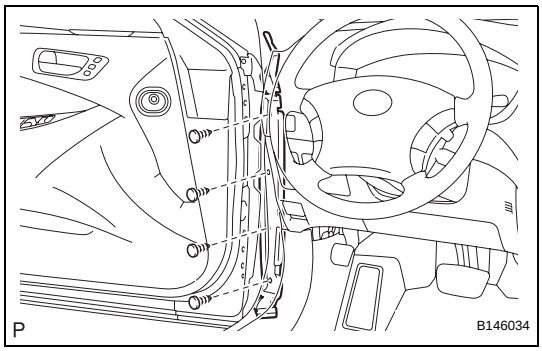

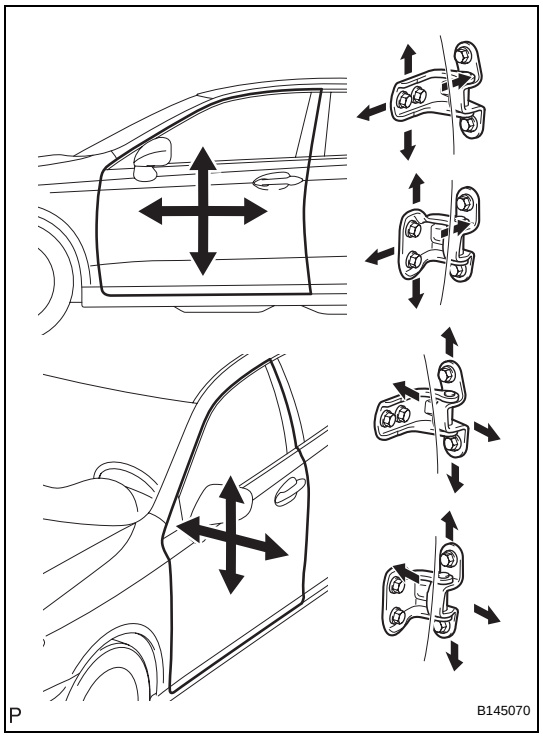

(b) Using SST, loosen the hinge bolts on the vehicle body and adjust the door position.
SST 09812-00010

(c) Tighten the hinge bolts on the vehicle body after the adjustment.
Torque: 26 N*m (265 kgf*cm, 19 ft.*lbf)

(d) Loosen the hinge bolts on the door and adjust the door position.

(e) Tighten the hinge bolts on the door after the adjustment.
Torque: 43 N*m (439 kgf*cm, 32 ft.*lbf)

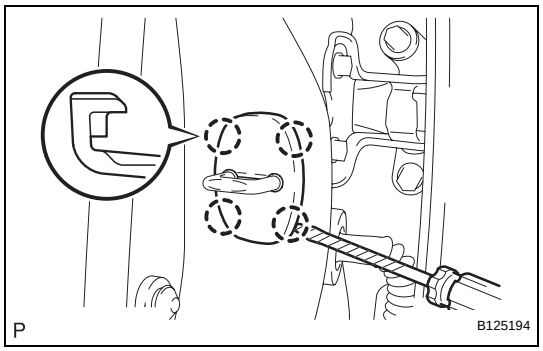

(f) Using a screwdriver, detach the 4 claws and remove the cover.
HINT:
Tape the screwdriver tip before use.

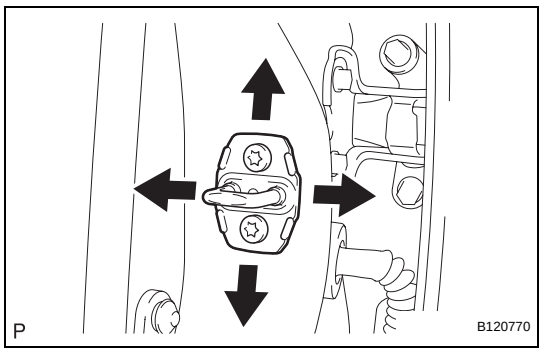

(g) Adjust the striker position by slightly loosening the striker mounting screws with a "TORX" socket wrench (T40) and hitting the striker with a plastic hammer.

(h) Using a "TORX" socket wrench (T40), tighten the striker mounting screws after the adjustment.
Torque: 23 N*m (235 kgf*cm, 17 ft.*lbf)

3. CONNECT NEGATIVE BATTERY TERMINAL

4. PERFORM INITIALIZATION
NOTICE:
Some systems need initialization after reconnecting the cable to the negative battery terminal (See page IN-33).

5. INSPECT SRS WARNING LIGHT
(See page RS-37)

ON-VEHICLE INSPECTION

1. INSPECT LUGGAGE COMPARTMENT DOOR PANEL SUB-ASSEMBLY

(a) Check that the clearance measurements of areas A through E are within each standard range.

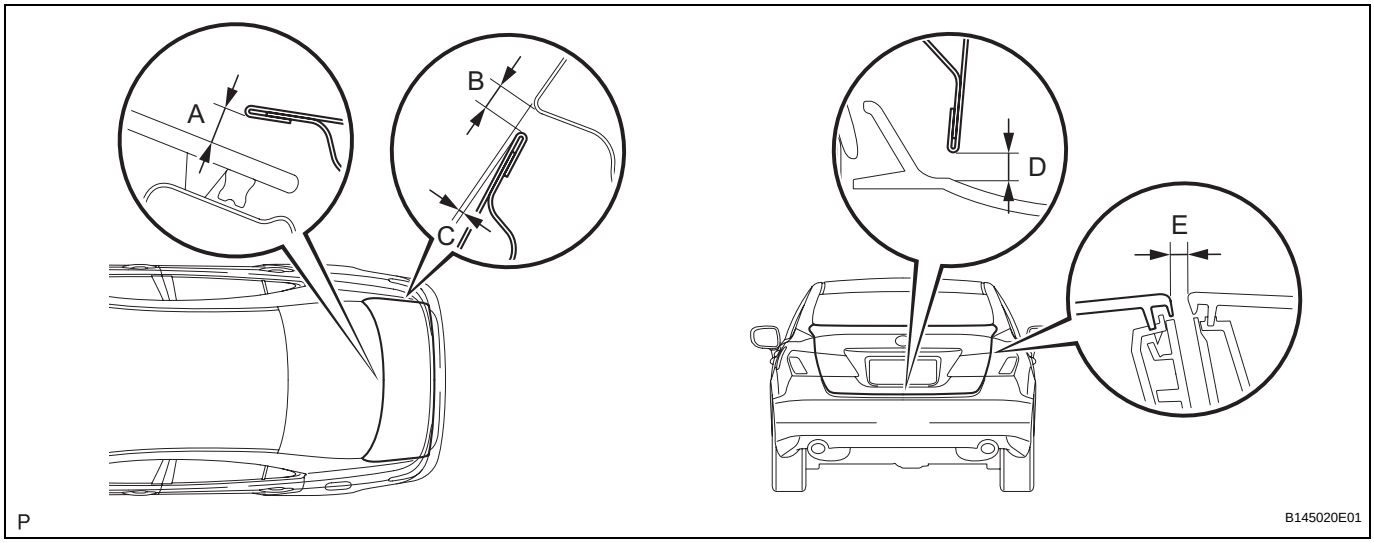

Standard clearance

Area	Measurement	Area	Measurement
A	5.1 to 7.9 mm (0.201 to 0.311 in.)	D	4.3 to 7.3 mm (0.169 to 0.287 in.)
B	2.0 to 5.0 mm (0.079 to 0.197 in.)	E	2.5 to 5.5 mm (0.098 to 0.217 in.)
C	-1.3 to 1.7 mm (-0.051 to 0.067 in.)	-	-

DISASSEMBLY

1. REMOVE LUGGAGE COMPARTMENT FLOOR MAT

2. REMOVE NO. 2 SPARE WHEEL COVER

3. REMOVE SPARE WHEEL COVER TRAY

4. REMOVE LUGGAGE HOLD BELT STRIKER ASSEMBLY

(a) Remove the 2 bolts and the 2 luggage hold belt striker assemblies.

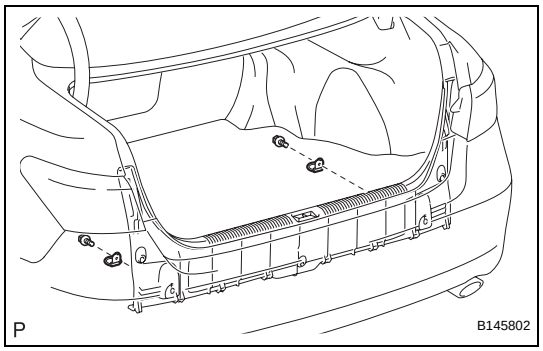

5. REMOVE NO. 1 LUGGAGE COMPARTMENT TRIM HOOK

(a) Remove the 2 screws and the 2 No. 1 luggage compartment trim hooks.

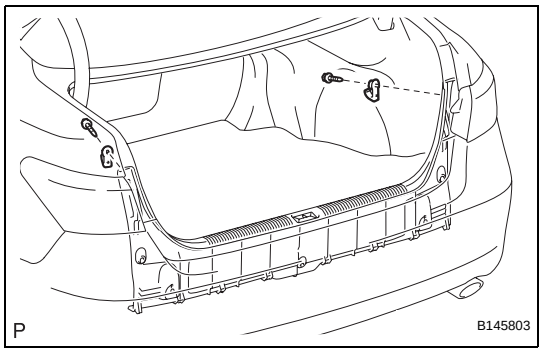

6. REMOVE REAR FLOOR FINISH PLATE

(a) Remove the 3 clips.

(b) Disengage the 4 clips and remove the rear floor finish plate.

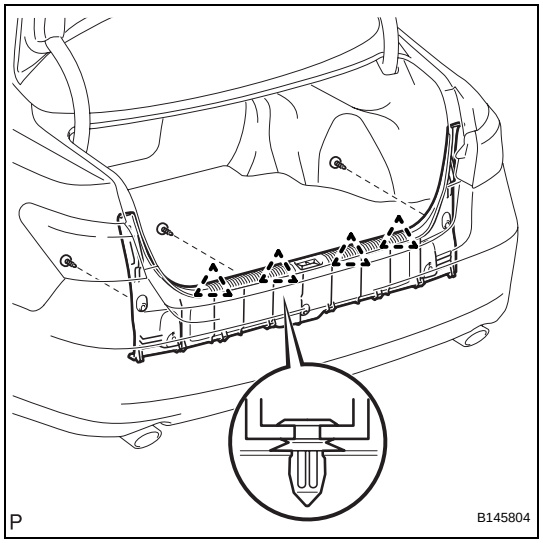

7. REMOVE LUGGAGE COMPARTMENT INNER TRIM COVER LH

(a) Remove the 3 clips and the luggage compartment inner trim cover LH.

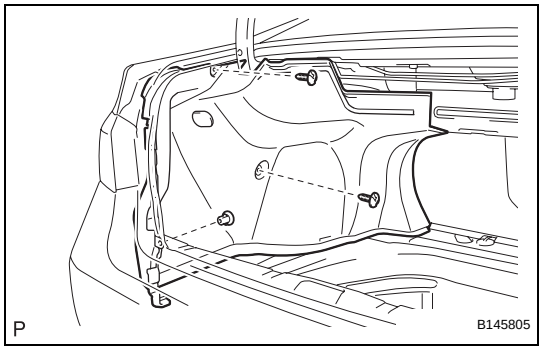

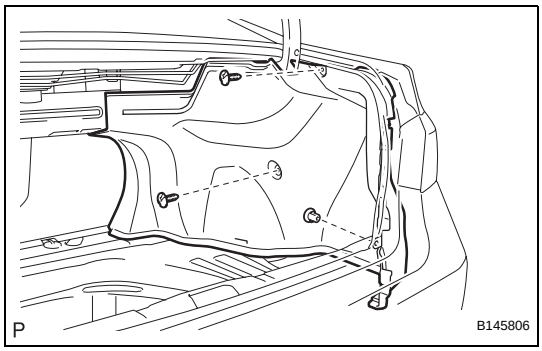

8. REMOVE LUGGAGE COMPARTMENT INNER TRIM COVER RH

(a) Remove the 3 clips and the luggage compartment inner trim cover RH.

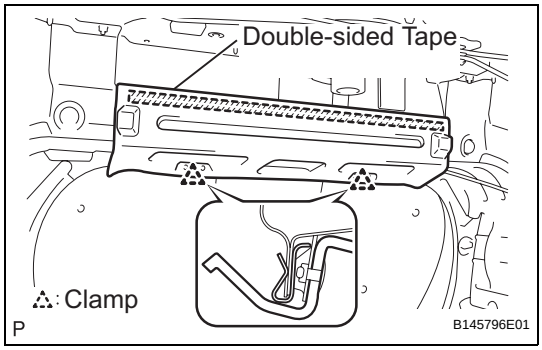

9. REMOVE LUGGAGE COMPARTMENT FRONT TRIM COVER

(a) Disengage the 2 clamps.

(b) Remove the double-sided tape and the luggage compartment front trim cover.

10. REMOVE LUGGAGE COMPARTMENT DOOR ASSIST GRIP (See page ET-71)

11. REMOVE LUGGAGE LOCK CONTROL CABLE PLATE (See page ET-71)

12. REMOVE LUGGAGE COMPARTMENT DOOR INSIDE HANDLE (See page ET-71)

13. REMOVE LUGGAGE COMPARTMENT DOOR COVER (See page ET-72)

14. REMOVE LUGGAGE COMPARTMENT DOOR LOCK ASSEMBLY (See page ED-91)

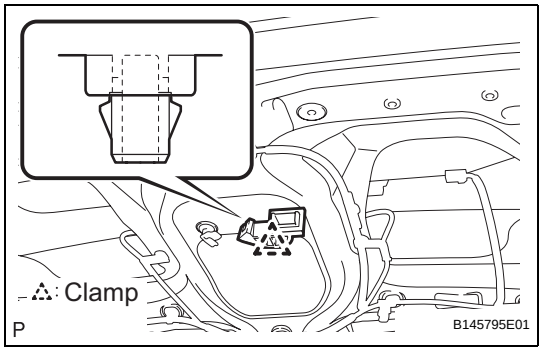

15. REMOVE LUGGAGE LOCK CONTROL CABLE CLAMP

(a) Disengage the clamp and remove the luggage lock control cable clamp.

ED

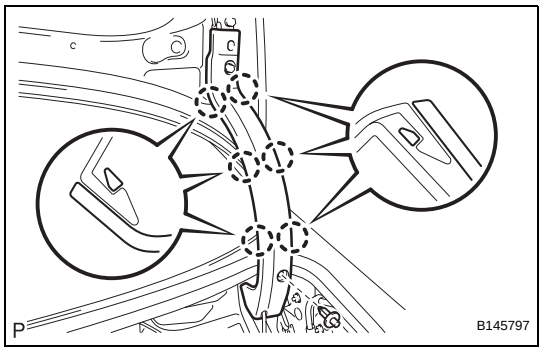

16. REMOVE LUGGAGE COMPARTMENT DOOR HINGE COVER RH

(a) Remove the clip.

(b) Disengage the 6 claws and remove the luggage compartment door hinge cover RH.

17. REMOVE LUGGAGE DOOR HINGE ARM PLATE RH

REASSEMBLY

1. **INSTALL LICENSE PLATE LIGHT ASSEMBLY LH (See page LI-157)**
2. **INSTALL LICENSE PLATE LIGHT ASSEMBLY RH**
3. **INSTALL LUGGAGE COMPARTMENT OUTSIDE DOOR GARNISH SUB-ASSEMBLY (w/o Rear View Monitor System) (See page ET-73)**
4. **INSTALL LUGGAGE COMPARTMENT OUTSIDE DOOR GARNISH SUB-ASSEMBLY (w/ Rear View Monitor System) (See page ET-74)**
5. **INSTALL TELEVISION CAMERA ASSEMBLY (w/ Rear View Monitor System) (See page PM-105)**
6. **INSTALL LUGGAGE DOOR OPENING SWITCH ASSEMBLY (See page DL-203)**
7. **INSTALL REAR LIGHT ASSEMBLY LH (See page LI-154)**
8. **INSTALL REAR LIGHT ASSEMBLY RH**
9. **INSTALL LUGGAGE DOOR LOCK CONTROL CABLE SUB-ASSEMBLY**
   (a) Engage the clamp and guide, and connect the holder.
   (b) Engage the 6 clamps and install the luggage door lock control cable sub-assembly.
10. **INSTALL LUGGAGE DOOR HINGE ARM PLATE RH**

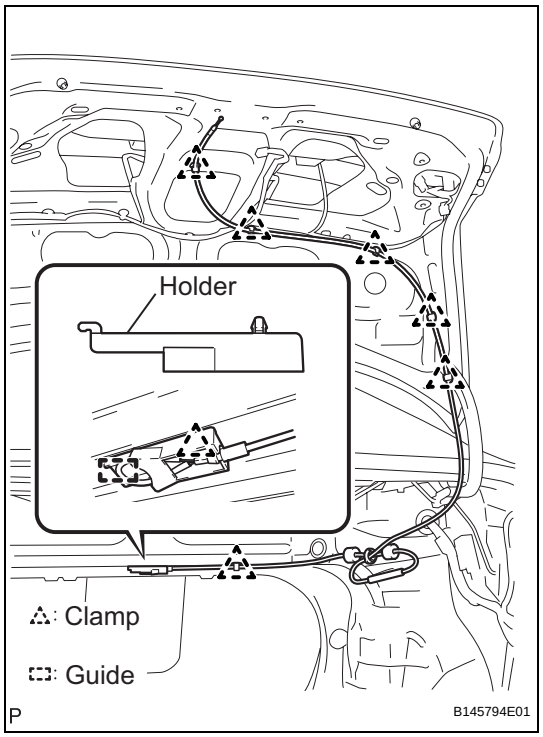

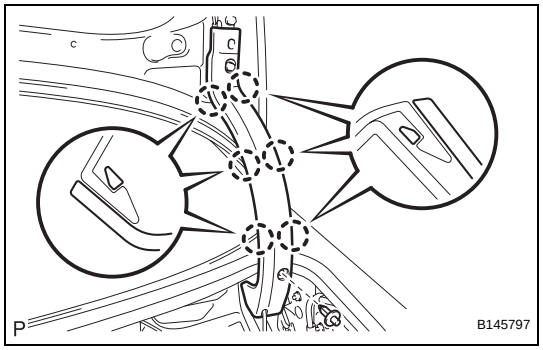

11. **INSTALL LUGGAGE COMPARTMENT DOOR HINGE COVER RH**
    (a) Engage the 6 claws and install the luggage compartment door hinge cover RH.
    (b) Install the clip.

ED

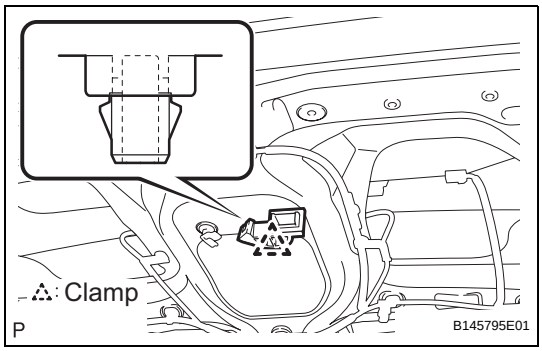

12. INSTALL LUGGAGE LOCK CONTROL CABLE CLAMP

(a) Engage the clamp and install the luggage lock control cable clamp.

13. INSTALL LUGGAGE COMPARTMENT DOOR LOCK ASSEMBLY (See page ED-91)

14. INSTALL LUGGAGE COMPARTMENT DOOR COVER (See page ET-74)

15. INSTALL LUGGAGE COMPARTMENT DOOR INSIDE HANDLE (See page ET-74)

16. INSTALL LUGGAGE LOCK CONTROL CABLE PLATE (See page ET-75)

17. INSTALL LUGGAGE COMPARTMENT DOOR ASSIST GRIP (See page ET-75)

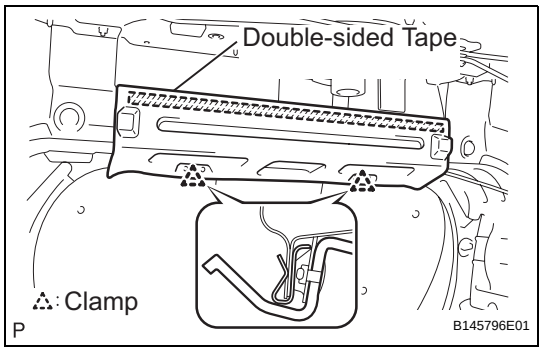

18. INSTALL LUGGAGE COMPARTMENT FRONT TRIM COVER

(a) Engage the 2 clamps.

(b) Install the luggage compartment front trim cover with double-sided tape.

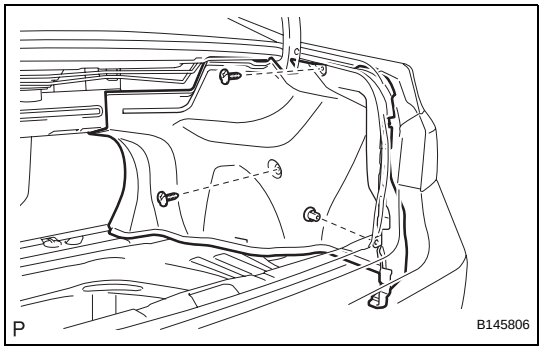

19. INSTALL LUGGAGE COMPARTMENT INNER TRIM COVER RH

(a) Install the luggage compartment inner trim cover RH with the 3 clips.

ED

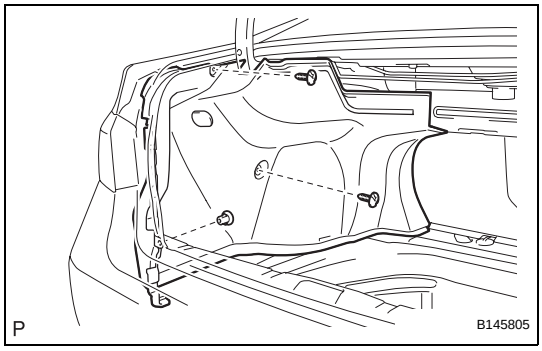

20. INSTALL LUGGAGE COMPARTMENT INNER TRIM COVER LH

(a) Install the luggage compartment inner trim cover LH with the 3 clips.

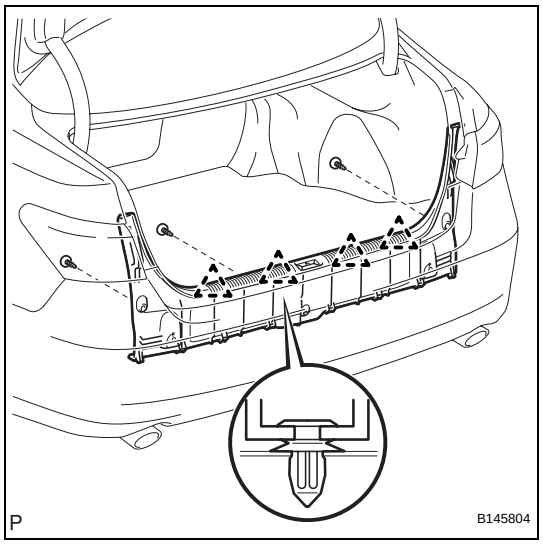

21. INSTALL REAR FLOOR FINISH PLATE

(a) Engage the 4 clips and install the rear floor finish plate.

(b) Install the 3 clips.

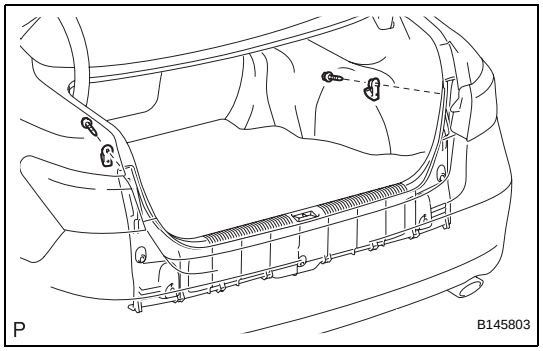

22. INSTALL NO. 1 LUGGAGE COMPARTMENT TRIM HOOK

(a) Install the 2 No. 1 luggage compartment trim hooks with the 2 screws.

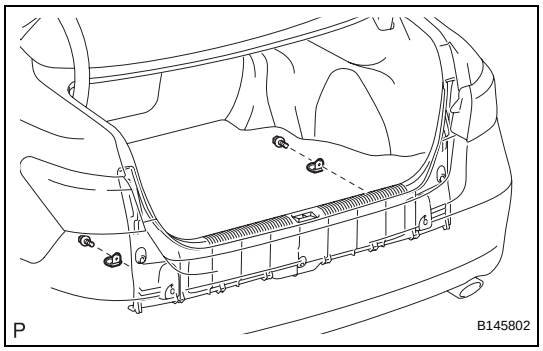

23. INSTALL LUGGAGE HOLD BELT STRIKER ASSEMBLY

(a) Install the 2 luggage hold belt striker assemblies with the 2 bolts.

24. INSTALL SPARE WHEEL COVER TRAY

25. INSTALL NO. 2 SPARE WHEEL COVER

26. INSTALL LUGGAGE COMPARTMENT FLOOR MAT

REASSEMBLY

1. **INSTALL FRONT DOOR LOWER OUTSIDE MOULDING (See page ET-42)**
2. **INSTALL FRONT DOOR OUTSIDE MOULDING SUB-ASSEMBLY (See page ET-57)**
3. **INSTALL FRONT DOOR FRONT LOWER FRAME UPPER COVER (See page ET-58)**
4. **INSTALL FRONT DOOR REAR WINDOW FRAME MOULDING (See page ET-59)**
5. **INSTALL FRONT DOOR BELT MOULDING ASSEMBLY (See page ET-31)**
6. **INSTALL FRONT DOOR WEATHERSTRIP**
   (a) Engage the 19 clips and install the front door weatherstrip.

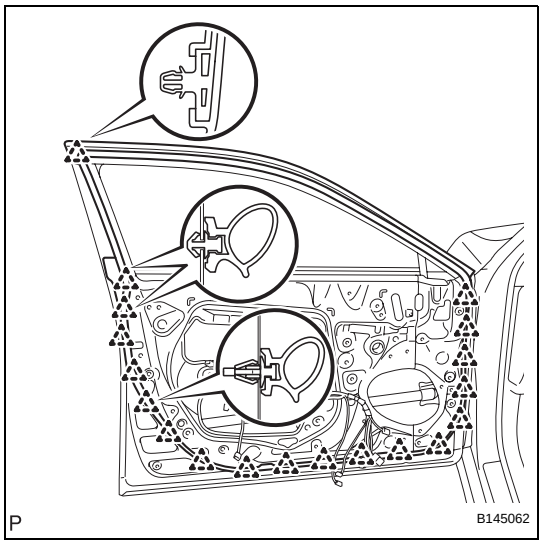

7. **INSTALL FRONT NO. 3 DOOR WEATHERSTRIP**
   (a) Install the front No. 3 door weatherstrip with the 4 clips.

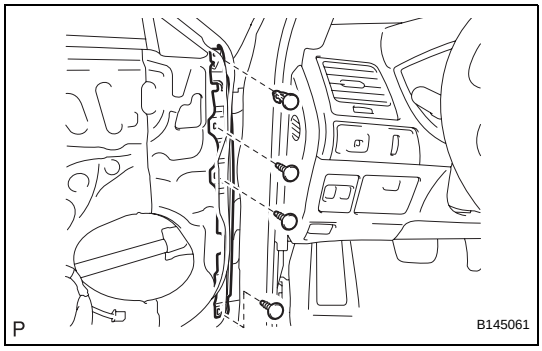

8. **INSTALL FRONT DOOR CHECK ASSEMBLY**
   (a) Install the front door check assembly with the bolt and the 2 nuts.
   Torque: Bolt
   27 N*m (275 kgf*cm, 20 ft.*lbf)
   Nut
   8.0 N*m (82 kgf*cm, 71 in.*lbf)

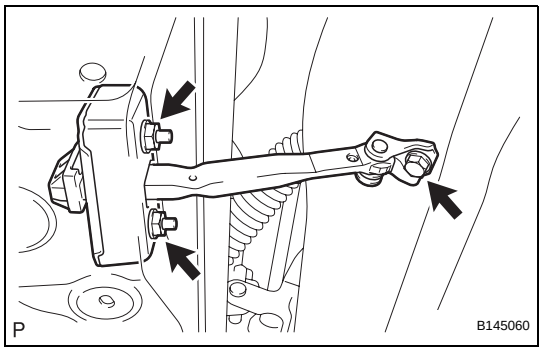

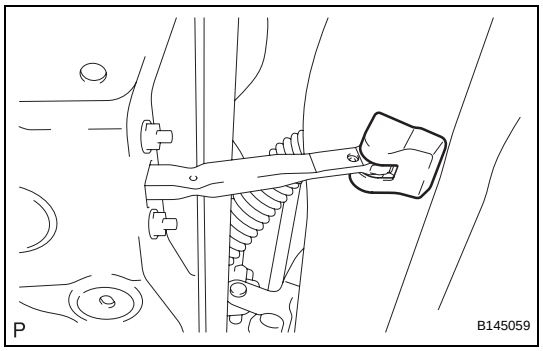

9. INSTALL FRONT DOOR CHECK COVER

(a) Install the front door check cover.

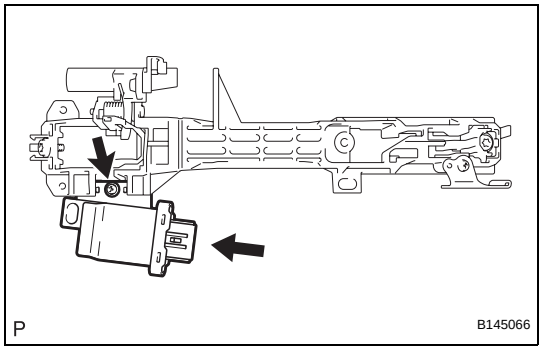

10. INSTALL DOOR ELECTRICAL KEY OSCILLATOR

(a) Install the door electrical key oscillator with the screw.

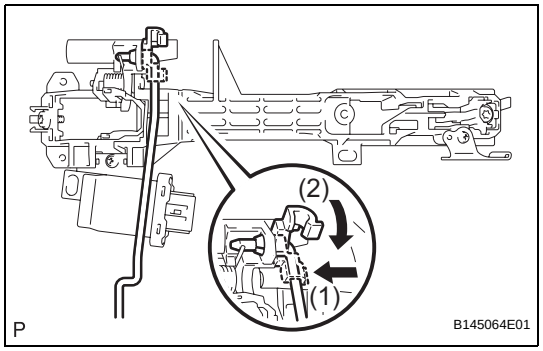

11. INSTALL FRONT DOOR LOCK OPEN ROD

(a) Install the front door lock open rod as shown in the illustration.

12. INSTALL FRONT DOOR OUTSIDE HANDLE FRAME SUB-ASSEMBLY

(a) Apply MP grease to the sliding parts of the front door outside handle frame sub-assembly.

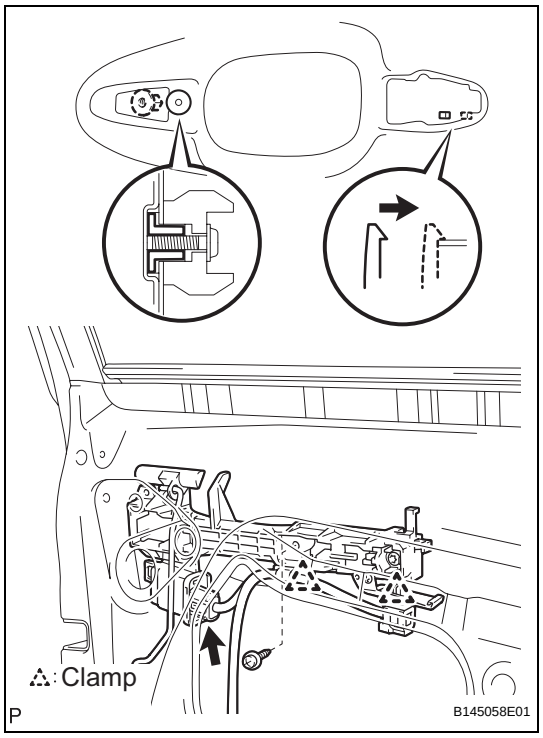

(b) Engage the claw to install the front door outside handle frame sub-assembly.

(c) Using a "TORX" socket wrench (T30), install the front door outside handle frame sub-assembly with the screw.
Torque: 4.0 N*m (41 kgf*cm, 35 in.*lbf)

(d) Engage the 2 clamps.

(e) Connect the connector.

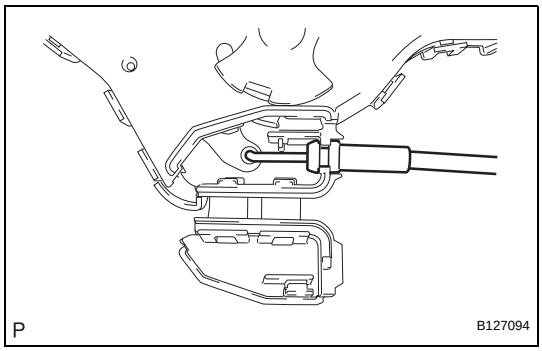

13. INSTALL FRONT DOOR INSIDE LOCKING CABLE ASSEMBLY

(a) Install the front door inside locking cable assembly.

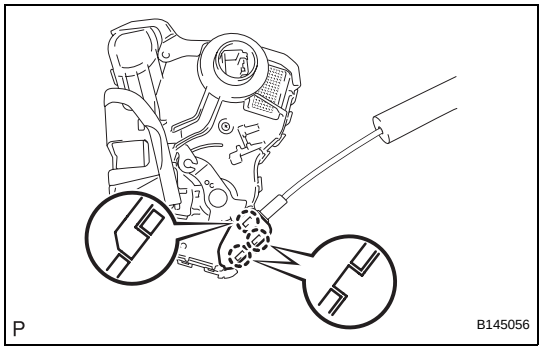

(b) Engage the 3 claws.

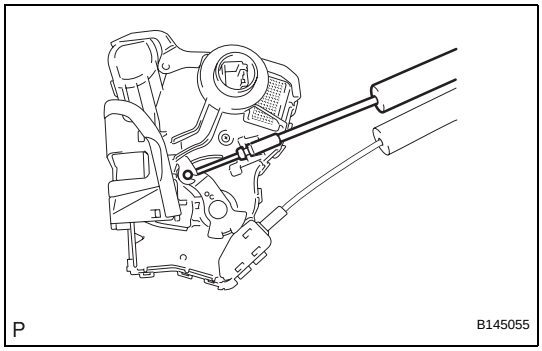

14. INSTALL FRONT DOOR LOCK REMOTE CONTROL CABLE ASSEMBLY

(a) Install the front door lock remote control cable assembly.

15. INSTALL FRONT DOOR LOCK ASSEMBLY

NOTICE:

- **When reusing the removed front door lock assembly, replace the door lock wiring harness seal on the connector with a new one.**
- **Do not allow grease or dust to adhere to the door lock wiring harness seal surface of the connector.**
- **Reusing the door lock wiring harness seal or using a damaged door lock wiring harness seal may cause water intrusion to the connection. This may result in a malfunction of the front door lock assembly.**

(a) Apply MP grease to the sliding parts of the front door lock assembly.

(b) Install a new door lock wiring harness seal to the front door lock assembly.

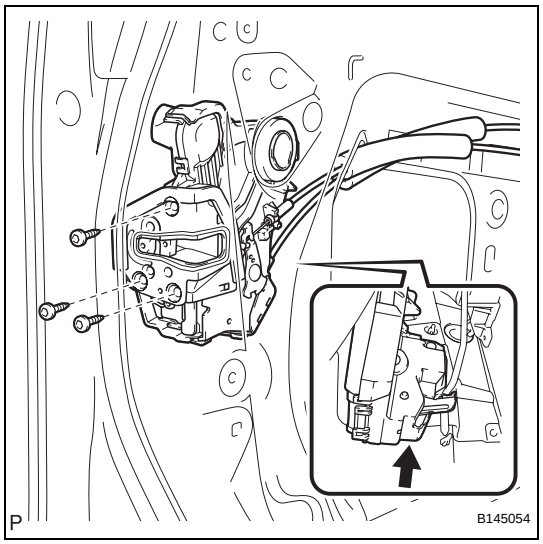

(c) Insert the front door lock open rod to the front door lock assembly, and set it to the front door outside handle frame.
(d) Make sure that the front door lock open rod is securely connected to the front door lock assembly.
(e) Using a "TORX" socket wrench (T30), install the front door lock assembly with the 3 screws.
Torque: 5.5 N*m (56 kgf*cm, 49 in.*lbf)
(f) Connect the connector.

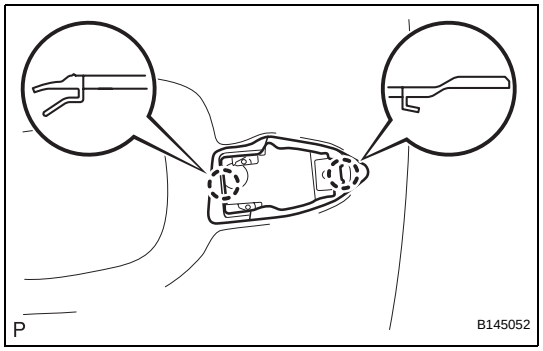

16. INSTALL FRONT DOOR REAR OUTSIDE HANDLE PAD
(a) Engage the 2 claws to install the front door rear outside handle pad.

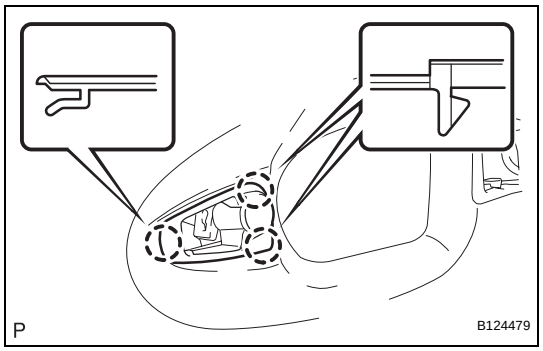

17. INSTALL FRONT DOOR FRONT OUTSIDE HANDLE PAD
(a) Engage the 3 claws to install the front door front outside handle pad.

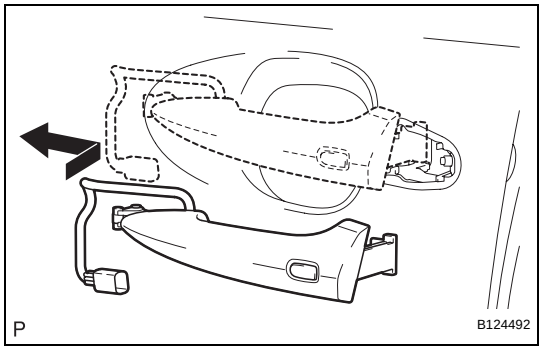

18. INSTALL FRONT DOOR OUTSIDE HANDLE ASSEMBLY
(a) Insert the front end of the front door outside handle assembly into the front door outside handle frame.
(b) Insert the rear end of the front door outside handle assembly into the front door outside handle frame. Next, slide the front door outside handle assembly toward the front of the vehicle to install it.

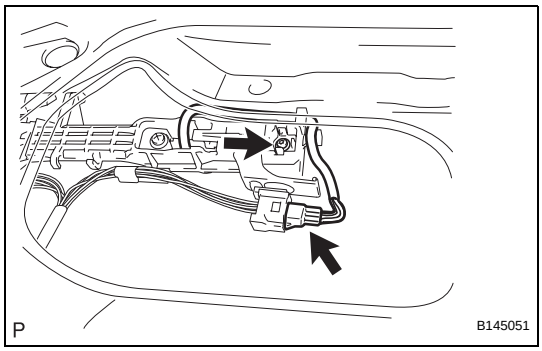

(c) Using a "TORX" socket wrench (T30), install the front door outside handle assembly with the screw.
Torque: 4.0 N*m (41 kgf*cm, 35 in.*lbf)
(d) Connect the connector.

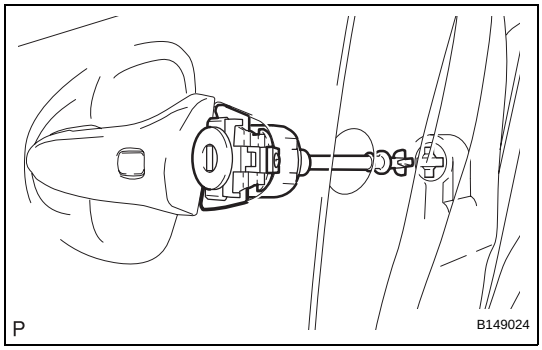

19. INSTALL FRONT DOOR OUTSIDE HANDLE COVER (for Driver Side)
(a) Install the front door lock cylinder.
HINT:
Make sure that the front door lock cylinder rod is inserted into the front door lock assembly.

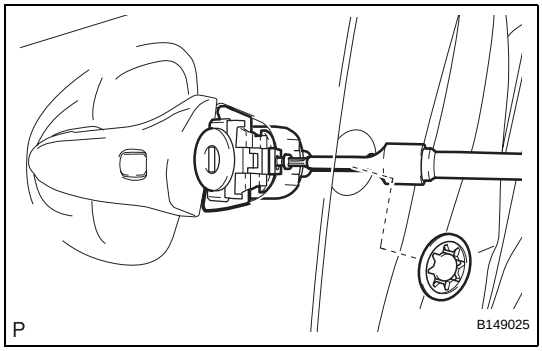

(b) Using a "TORX" socket wrench (T30), install the front door lock cylinder with the screw.
Torque: 4.0 N*m (41 kgf*cm, 35 in.*lbf)
(c) Install the hole plug.

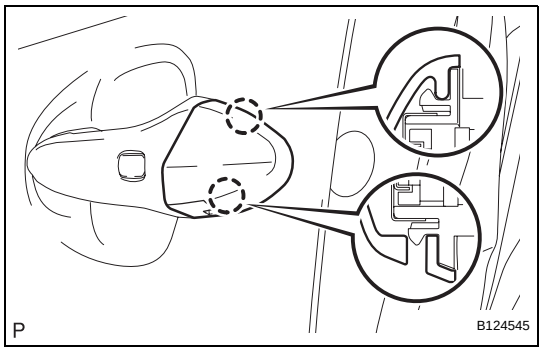

(d) Engage the 2 claws to install the front door outside handle cover to the front door lock cylinder.

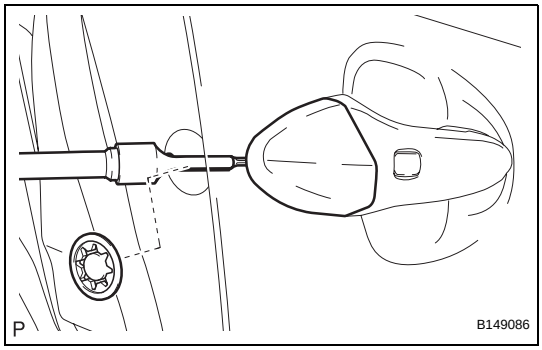

20. INSTALL FRONT DOOR OUTSIDE HANDLE COVER (for Front Passenger Side)
(a) Using a "TORX" socket wrench (T30), install the front door outside handle cover with the screw.
Torque: 4.0 N*m (41 kgf*cm, 35 in.*lbf)
(b) Install the hole plug.

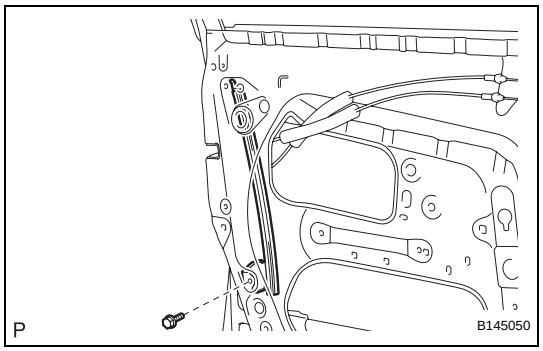

21. INSTALL FRONT DOOR REAR LOWER FRAME SUB-ASSEMBLY

(a) Install the front door rear lower frame sub-assembly with the bolt.

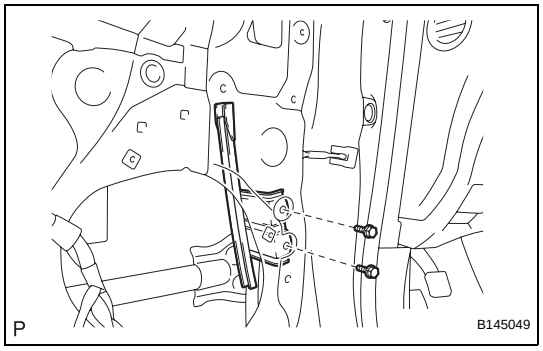

22. INSTALL FRONT DOOR FRONT LOWER FRAME SUB-ASSEMBLY

(a) Install the front door front lower frame sub-assembly with the 2 bolts.

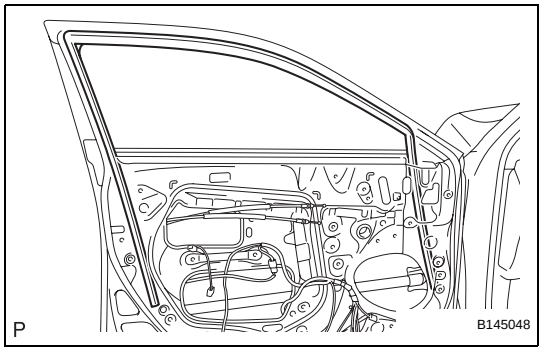

23. INSTALL FRONT DOOR GLASS RUN

(a) Install the front door glass run.

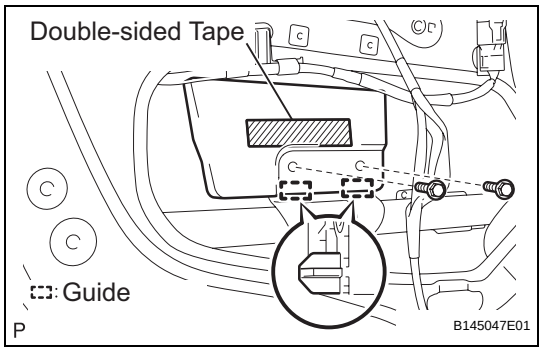

24. INSTALL FRONT NO. 1 DOOR STIFFENER CUSHION

(a) Install a new front No. 1 door stiffener cushion with the 2 bolts and double-sided tape.

25. INSTALL FRONT POWER WINDOW REGULATOR MOTOR ASSEMBLY

NOTICE:

The regulator arm must be below the intermediate position when installing the power window regulator motor.

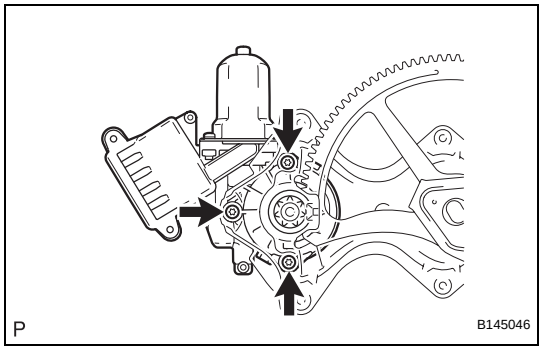

(a) Using a "TORX" driver (T25), install the front power window regulator motor sub-assembly with the 3 screws.

Torque: 5.4 N*m (55 kgf*cm, 48 in.*lbf)

HINT:

A new front window regulator adopts a self-tapping method. The installation position of the regulator will be threaded when the self-tapping screw is inserted.

26. INSTALL FRONT DOOR WINDOW REGULATOR SUB-ASSEMBLY

(a) Apply MP grease to the sliding parts of the front door window regulator sub-assembly.

(b) Install the temporary bolt to the front door window regulator sub-assembly.
NOTICE:
Align the claw on the regulator bracket with the panel hole on the front side.

(c) Temporarily install the window regulator.

(d) Tighten the 6 bolts in the order shown in the illustration to install the front window regulator.
Torque: 11 N*m (112 kgf*cm, 8.1 ft.*lbf)

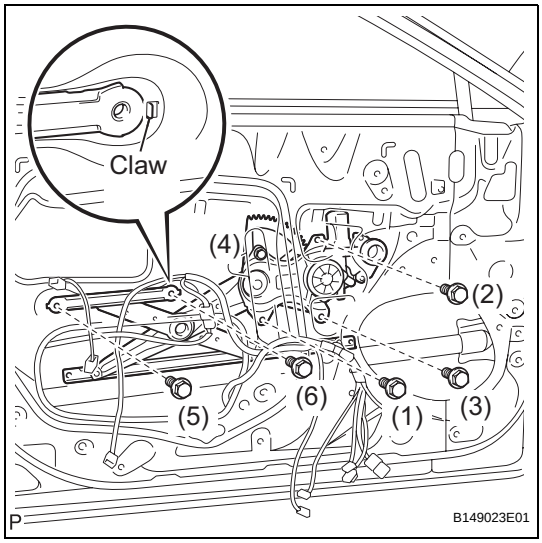

27. INSTALL FRONT DOOR GLASS SUB-ASSEMBLY

(a) Insert the front door glass sub-assembly into the front door panel along the front door glass run as indicated in the order of the arrows in the illustration.

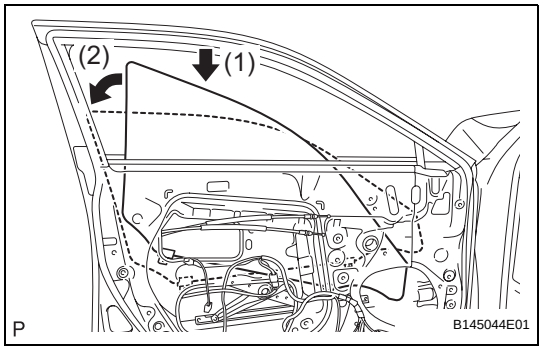

(b) Install the front door glass sub-assembly with the 2 bolts.
Torque: 5.5 N*m (56 kgf*cm, 49 in.*lbf)

28. INSTALL FRONT DOOR SERVICE HOLE COVER

(a) Apply butyl tape to the front door panel.

(b) Pass the front door lock remote control cable and rear door inside locking cable through a new front door service hole cover.

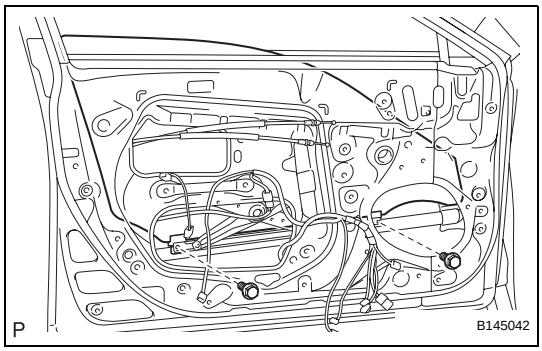

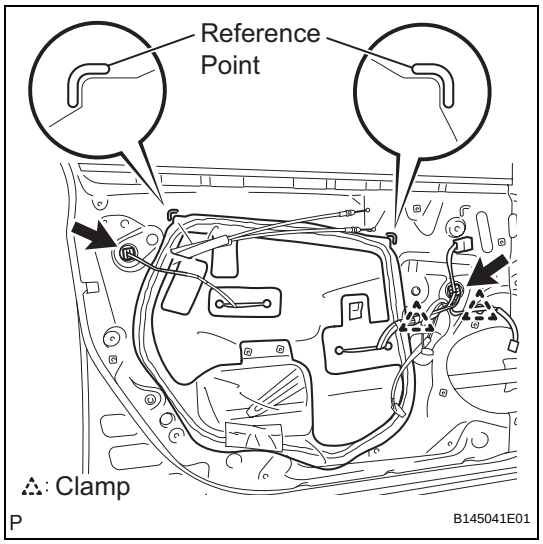

(c) Install the new service hole cover.
NOTICE:
Securely install the front door service hole cover avoiding wrinkles and air bubbles.

(d) Connect each connector and each clamp.

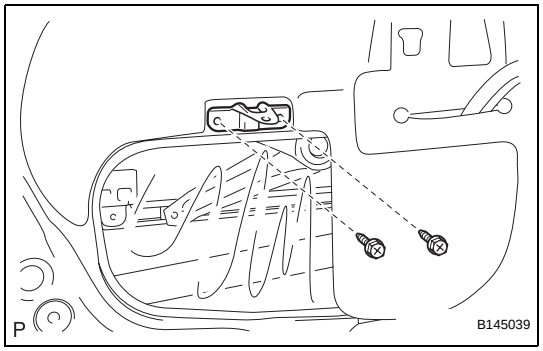

29. INSTALL FRONT NO. 1 DOOR TRIM BRACKET

(a) Install the front No. 1 door trim bracket with the 2 screws.

30. INSTALL FRONT NO. 1 SPEAKER ASSEMBLY (See page AV-184)

31. INSTALL OUTER REAR VIEW MIRROR ASSEMBLY (See page MI-49)

32. INSTALL OUTER MIRROR PROTECTOR

(a) Apply butyl tape to the front door panel.

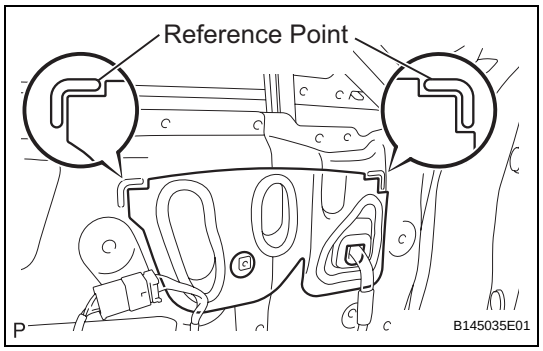

(b) Install a new outer mirror protector.
NOTICE:
Securely install the outer mirror protector avoiding wrinkles and air bubbles.

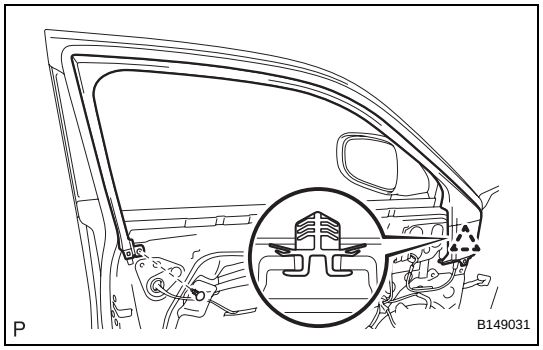

33. INSTALL DOOR FRAME GARNISH

(a) Engage the clip and install the door frame garnish.

(b) Install the clip.

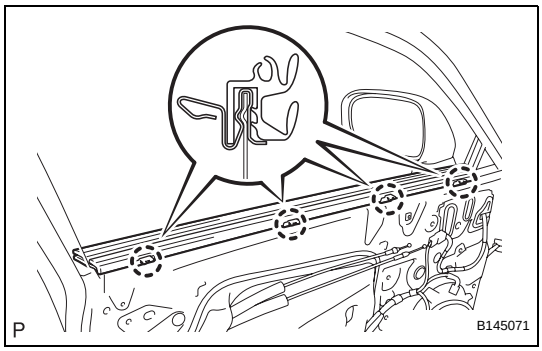

34. INSTALL FRONT DOOR INNER GLASS WEATHERSTRIP

(a) Engage the 4 claws and install the front door inner glass weatherstrip.

35. INSTALL SEAT MEMORY SWITCH (w/ Seat Position Memory System) (See page SE-124)

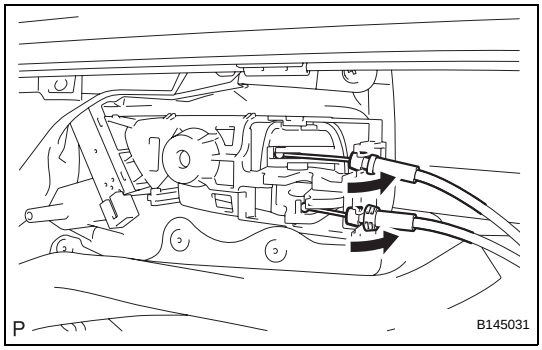

36. INSTALL FRONT DOOR TRIM BOARD SUB-ASSEMBLY

(a) Connect the front door lock remote control cable and front door inside locking cable to the front inside handle.

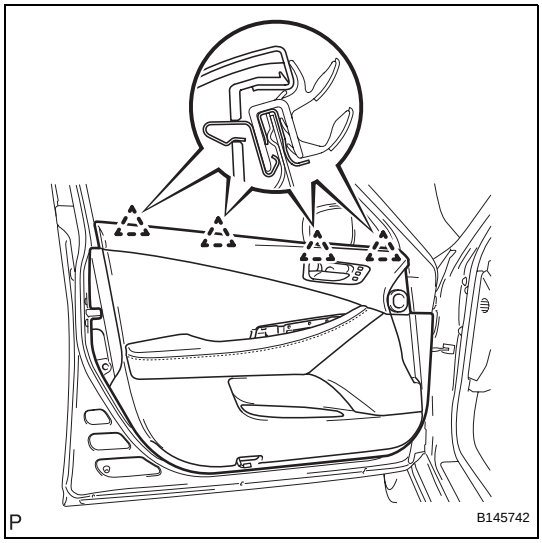

(b) Engage the front door trim board with the 4 clips of the front door inner glass weatherstrip.

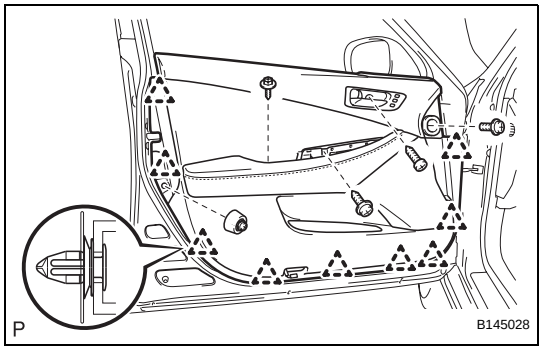

(c) Engage the 9 clips and install the front door trim board to the front door panel.

NOTICE:

Only when installing the front door trim RH, be careful not to allow the wire harness for the courtesy light to get caught between the trim board and the door panel.

(d) Install the 5 screws.

ED

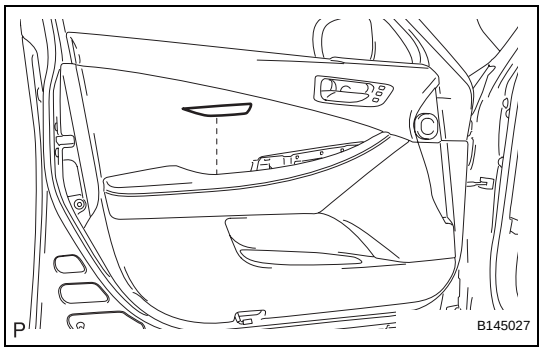

37. INSTALL DOOR ARMREST COVER

(a) Install the door armrest cover.

38. INSTALL COURTESY LIGHT ASSEMBLY

(a) Connect the connector.

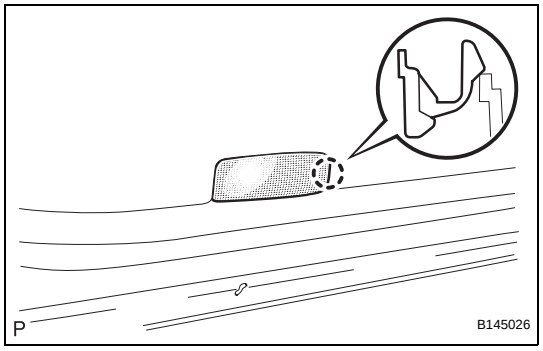

(b) Engage the claw and install the courtesy light assembly.

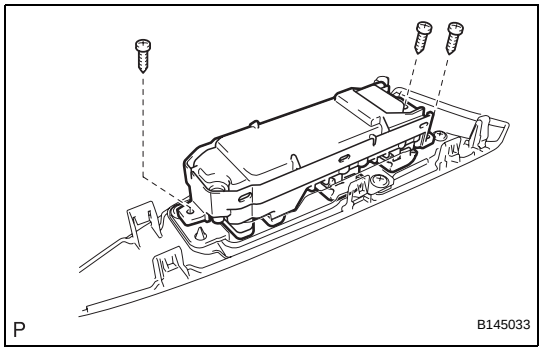

39. INSTALL POWER WINDOW REGULATOR MASTER SWITCH ASSEMBLY (for Driver Side)

(a) Install the power window regulator master switch assembly with the 3 screws.

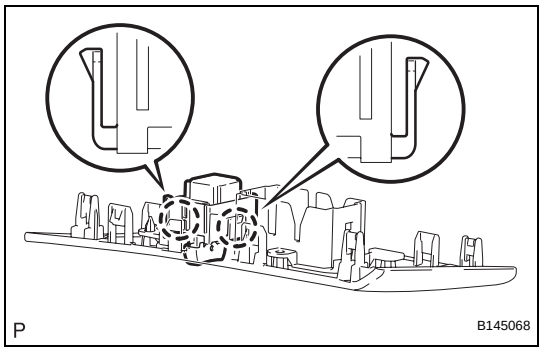

40. INSTALL DOOR CONTROL SWITCH ASSEMBLY (for Front Passenger Side)

(a) Engage the 2 claws and install the door control switch assembly.

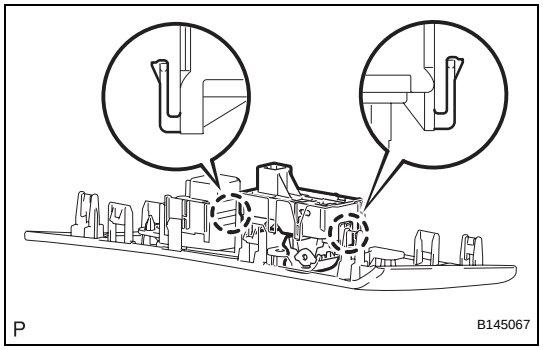

41. INSTALL POWER WINDOW REGULATOR SWITCH ASSEMBLY (for Front Passenger Side)

(a) Engage the 2 claws and install the power window regulator switch assembly.

42. INSTALL FRONT DOOR ARMREST BASE PANEL ASSEMBLY

(a) Connect the connector.

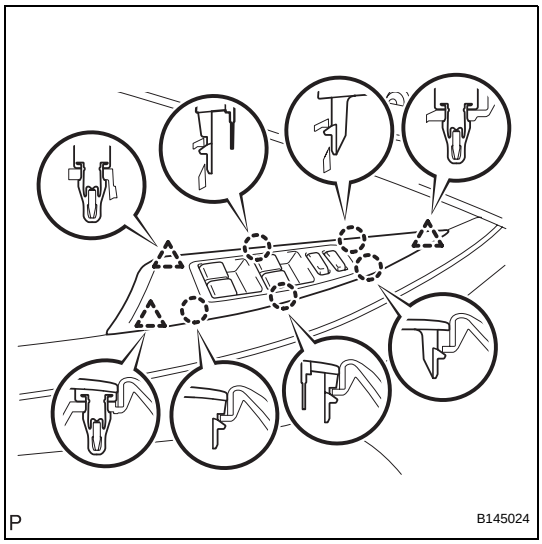

(b) Engage the 5 claws and 3 clips, and install the front door armrest base panel assembly.

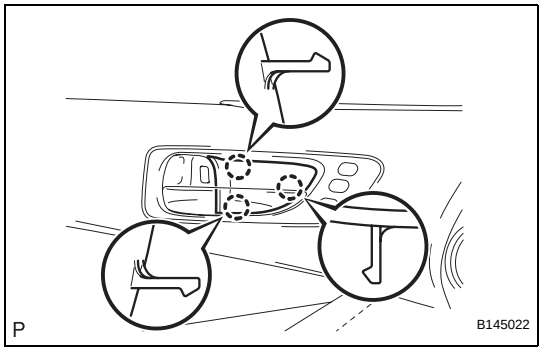

43. INSTALL FRONT DOOR INSIDE HANDLE BEZEL PLUG

(a) Engage the 3 claws and install the front door inside handle bezel plug.

44. INITIALIZE POWER WINDOW CONTROL SYSTEM

(See page WS-10)

LUGGAGE COMPARTMENT DOOR LOCK

COMPONENTS

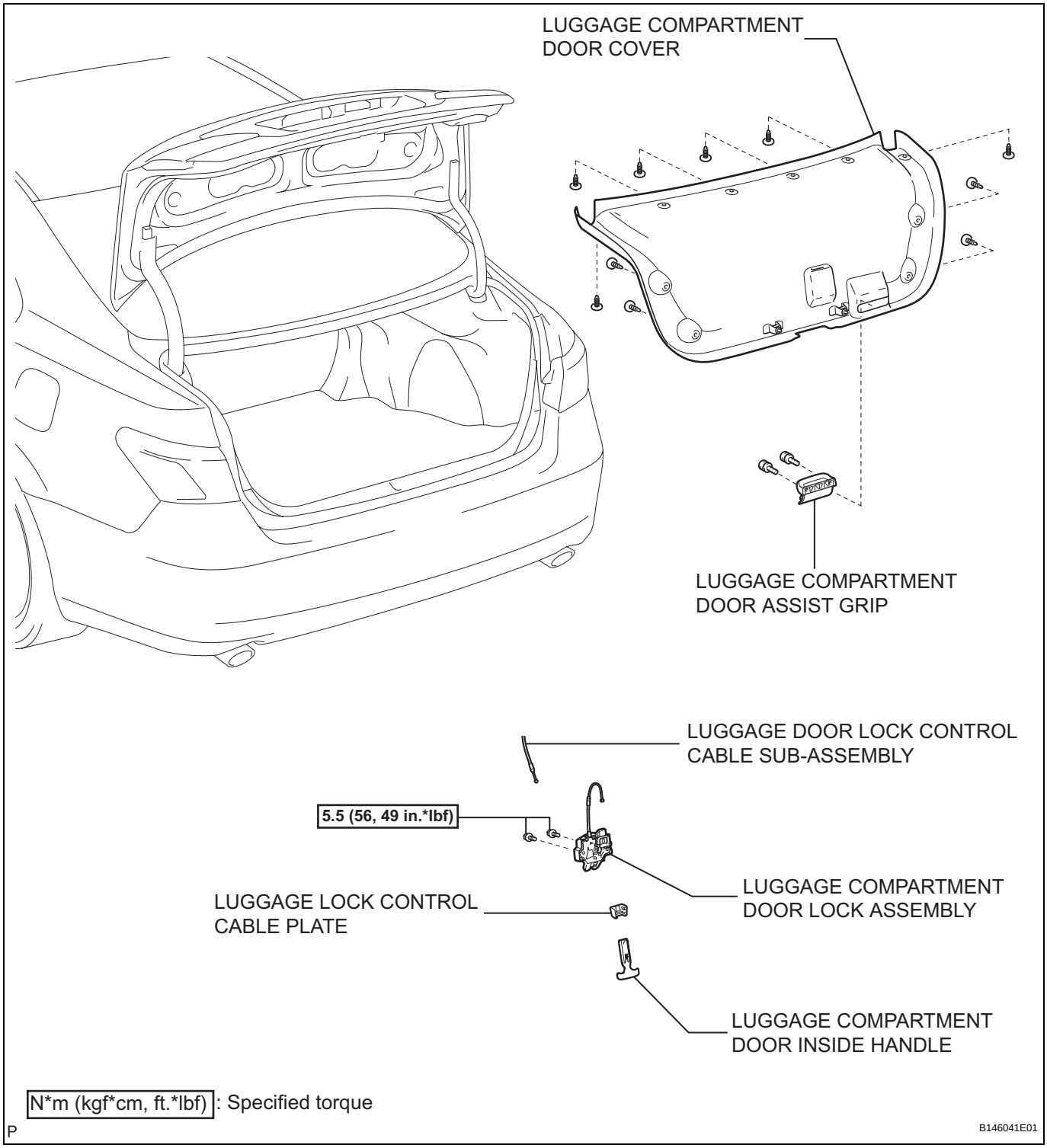

REMOVAL

1. **REMOVE LUGGAGE COMPARTMENT DOOR ASSIST GRIP (See page ET-71)**
2. **REMOVE LUGGAGE LOCK CONTROL CABLE PLATE (See page ET-71)**
3. **REMOVE LUGGAGE COMPARTMENT DOOR INSIDE HANDLE (See page ET-71)**
4. **REMOVE LUGGAGE COMPARTMENT DOOR COVER (See page ET-72)**
5. **REMOVE LUGGAGE COMPARTMENT DOOR LOCK ASSEMBLY**
   (a) Raise the cover of the luggage compartment door lock as shown in the illustration.
   (b) Separate the luggage door lock control cable sub-assembly.
   (c) Return the cover of the luggage compartment door lock to its original position.

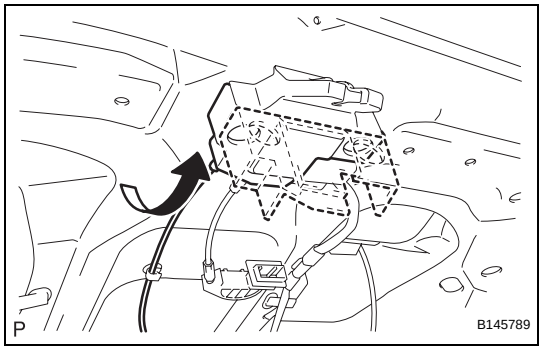

   (d) Disconnect the connector and cable.
   (e) Remove the 2 bolts and luggage compartment door lock assembly.

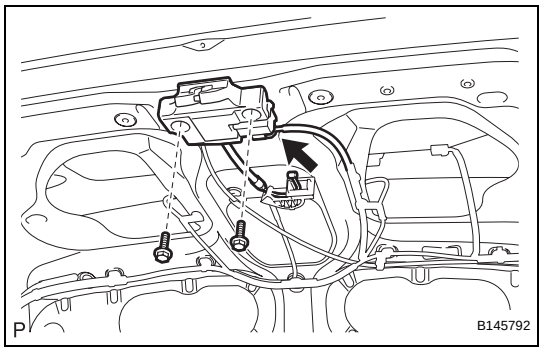

INSPECTION

1. **INSPECT LUGGAGE COMPARTMENT DOOR LOCK**
   (a) Move the door lock to the lock position.
   (b) Apply battery voltage to the door lock motor and check operation of the door lock motor.
   OK

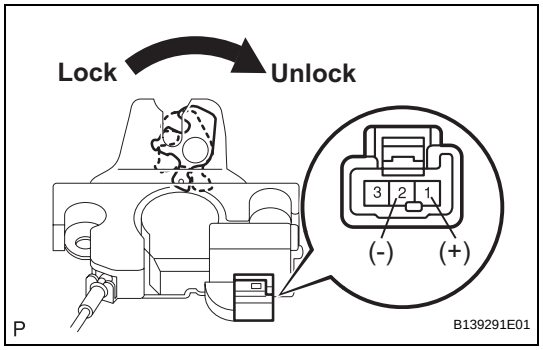

Measurement Condition	Specified Condition
Battery positive (+) → Terminal 1 Battery negative (-) → Terminal 2	Luggage compartment door lock motor unlock

If the result is not as specified, replace the door lock assembly.

ED

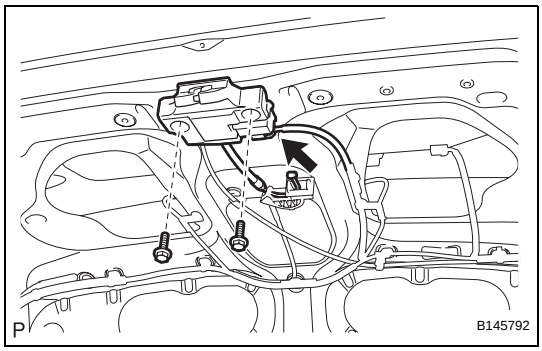

INSTALLATION

1. **INSTALL LUGGAGE COMPARTMENT DOOR LOCK ASSEMBLY**
   (a) Install the luggage compartment door lock assembly with the 2 bolts.
   Torque: 5.5 N*m (56 kgf*cm, 49 in.*lbf)
   (b) Connect the connector and cable.

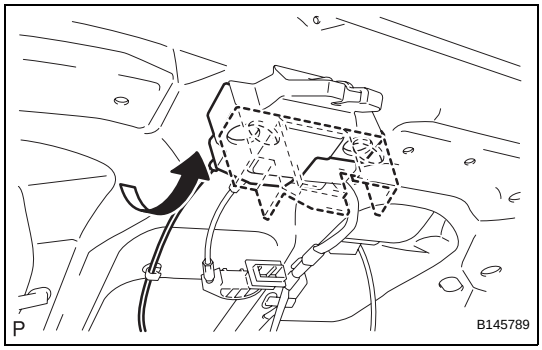

   (c) Raise the cover of the luggage compartment door lock as shown in the illustration.
   (d) Connect the luggage door lock control cable sub-assembly.
   (e) Return the cover of the luggage compartment door lock to its original position.
2. **INSTALL LUGGAGE COMPARTMENT DOOR COVER (See page ET-74)**
3. **INSTALL LUGGAGE COMPARTMENT DOOR INSIDE HANDLE (See page ET-74)**
4. **INSTALL LUGGAGE LOCK CONTROL CABLE PLATE (See page ET-75)**
5. **INSTALL LUGGAGE COMPARTMENT DOOR ASSIST GRIP (See page ET-75)**

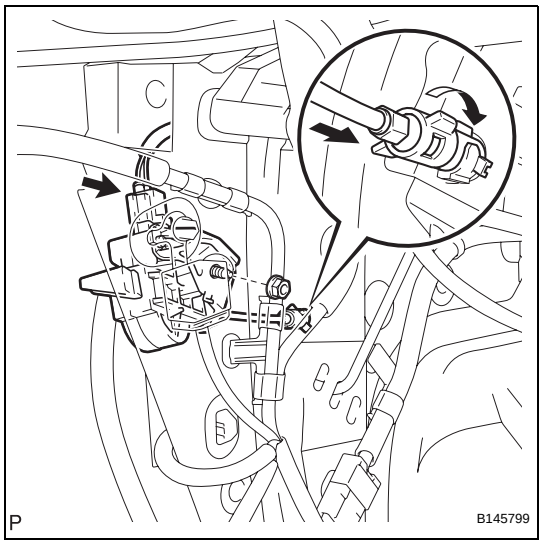

INSTALLATION

1. **INSTALL FUEL LID OPENER MOTOR ASSEMBLY**
   (a) Install the lock and nut as shown in the illustration.
   Torque: 5.5 N*m (56 kgf*cm, 49 in.*lbf)
   (b) Connect the connector.
2. **INSTALL LUGGAGE COMPARTMENT INNER TRIM COVER LH (See page ED-88)**
3. **INSTALL REAR FLOOR FINISH PLATE (See page ED-88)**
4. **INSTALL NO. 1 LUGGAGE COMPARTMENT TRIM HOOK (See page ED-89)**
5. **INSTALL LUGGAGE HOLD BELT STRIKER ASSEMBLY (See page ED-89)**
6. **INSTALL SPARE WHEEL COVER TRAY**
7. **INSTALL NO. 2 SPARE WHEEL COVER**
8. **INSTALL LUGGAGE COMPARTMENT FLOOR MAT**

LUGGAGE COMPARTMENT DOOR OPENER INNER SWITCH

COMPONENTS

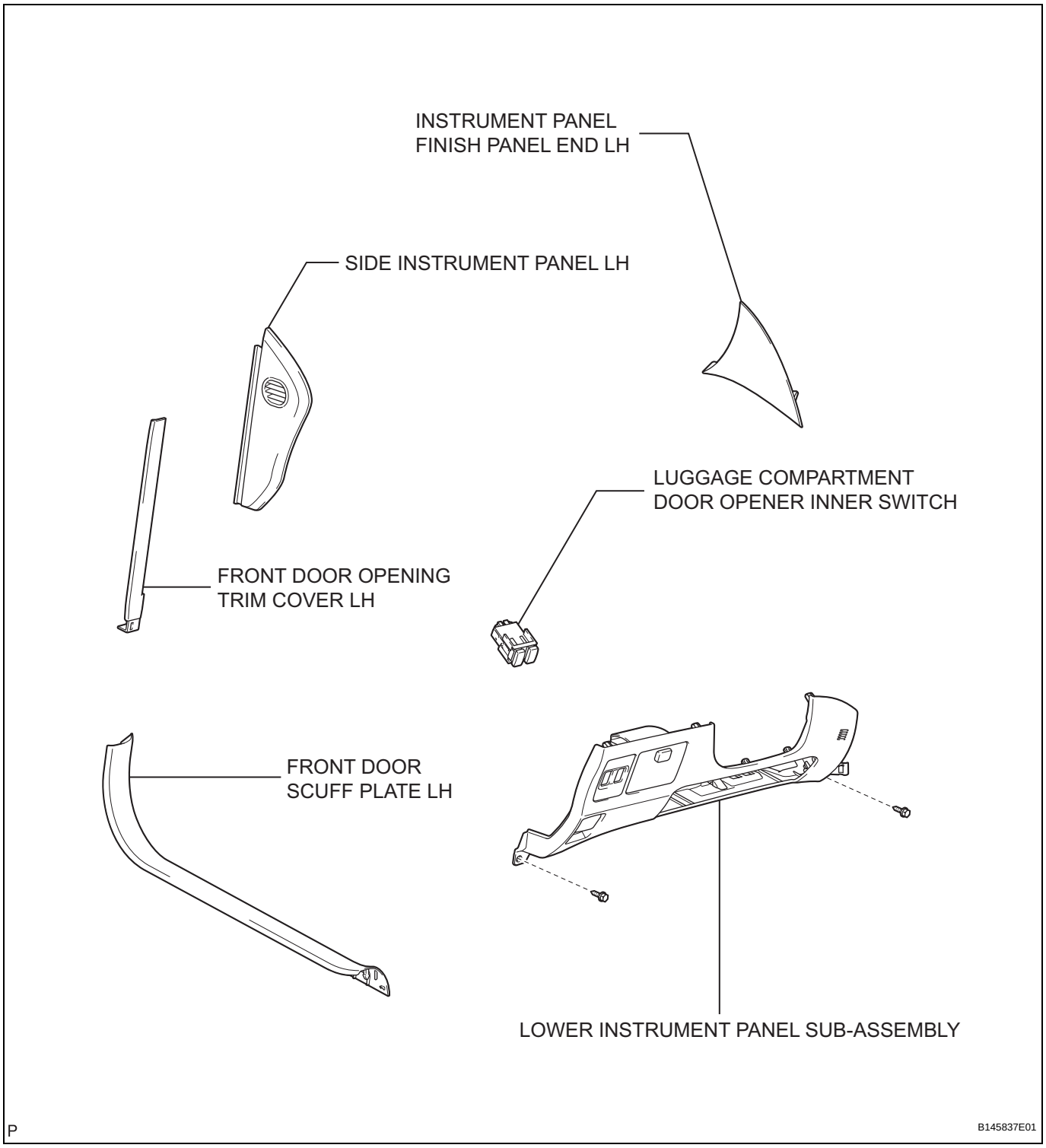

REMOVAL

1. **REMOVE FRONT DOOR SCUFF PLATE LH (See page IR-39)**
2. **REMOVE FRONT DOOR OPENING TRIM COVER LH (See page IR-39)**
3. **REMOVE SIDE INSTRUMENT PANEL LH (See page IP-12)**
4. **REMOVE INSTRUMENT PANEL FINISH PANEL END LH (See page IP-13)**
5. **REMOVE LOWER INSTRUMENT PANEL SUB-ASSEMBLY (See page IP-13)**
6. **REMOVE LUGGAGE COMPARTMENT DOOR OPENER INNER SWITCH**
   (a) Disengage the 2 claws and remove the luggage compartment door opener inner switch.

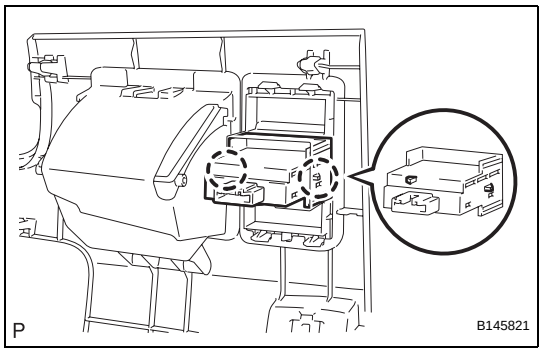

INSPECTION

1. **INSPECT LUGGAGE COMPARTMENT DOOR OPENER INNER SWITCH**
   (a) Measure the resistance according to the value(s) in the table below.
   Standard resistance

Tester Connection	Switch Condition	Specified Condition
5 - 6	Switch pushed (ON)	Below 1 Ω
	Switch free (OFF)	10 kΩ or higher

If the result is not as specified, replace the switch assembly.

Luggage Compartment Door Opener Inner Switch:

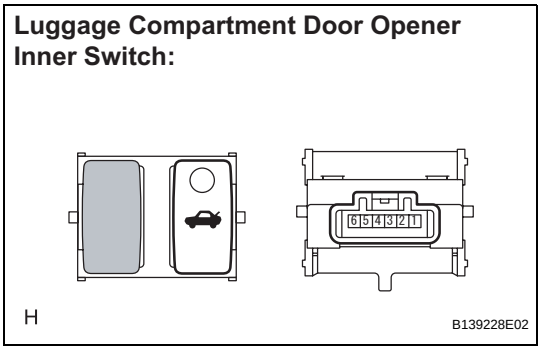

INSTALLATION

1. **INSTALL LUGGAGE COMPARTMENT DOOR OPENER INNER SWITCH**
   (a) Engage the 2 claws and install the luggage compartment door opener inner switch.
2. **INSTALL LOWER INSTRUMENT PANEL SUB-ASSEMBLY (See page IP-46)**
3. **INSTALL INSTRUMENT PANEL FINISH PANEL END LH (See page IP-46)**
4. **INSTALL SIDE INSTRUMENT PANEL LH (See page IP-47)**
5. **INSTALL FRONT DOOR OPENING TRIM COVER LH (See page IR-64)**

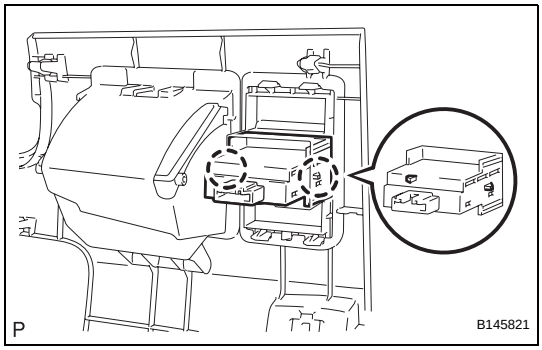

6. **INSTALL FRONT DOOR SCUFF PLATE LH (See page IR-65)**

LUGGAGE COMPARTMENT DOOR OPENER MAIN SWITCH

COMPONENTS

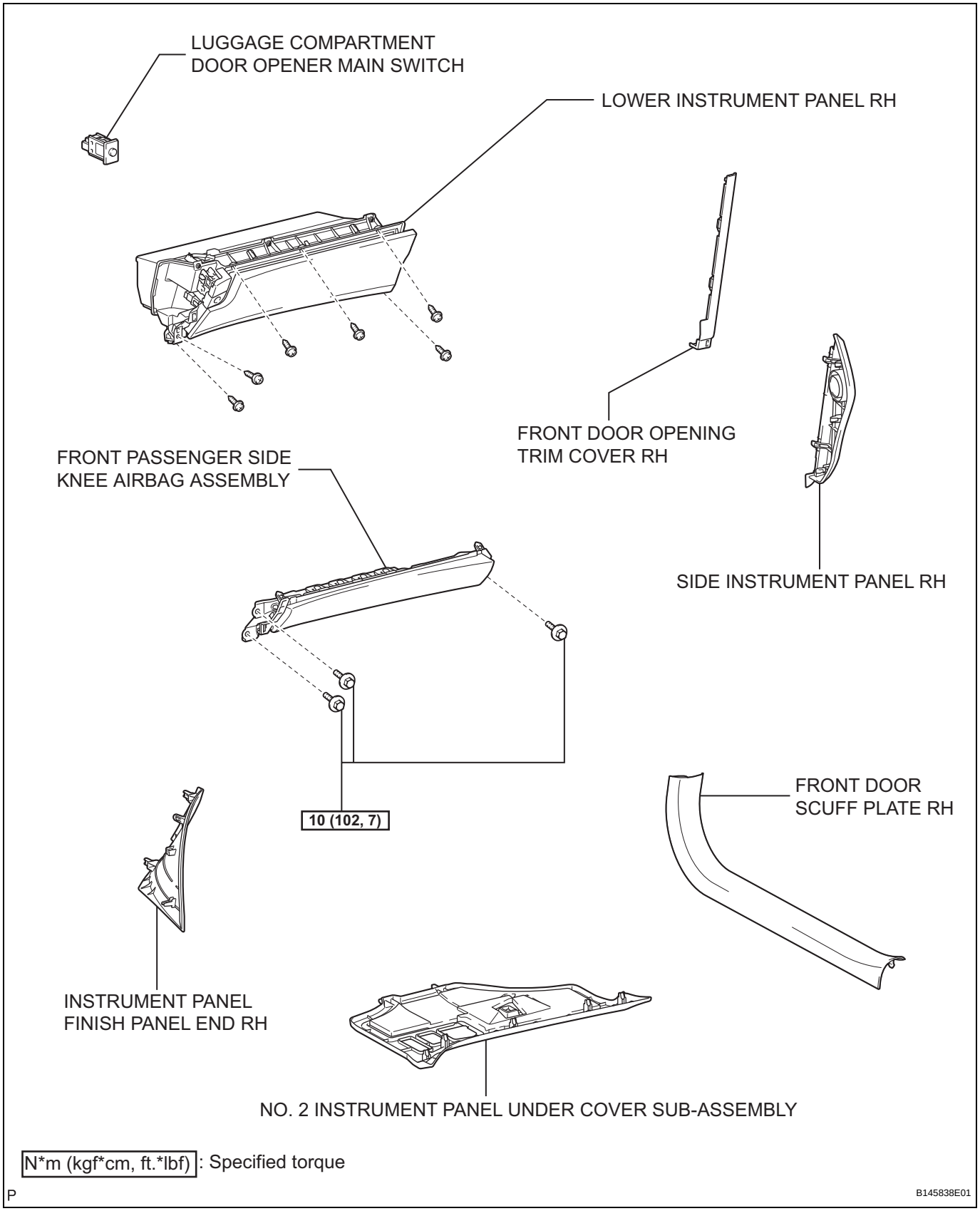

ED

REMOVAL

1. **DISCONNECT CABLE FROM NEGATIVE BATTERY TERMINAL**
   CAUTION:
   Wait for 90 seconds after disconnecting the cable to prevent airbag deployment (See page RS-1).
2. **REMOVE INSTRUMENT PANEL FINISH PANEL END RH (See page IP-15)**
3. **REMOVE FRONT DOOR SCUFF PLATE RH (See page IR-42)**
4. **REMOVE FRONT DOOR OPENING TRIM COVER RH (See page IR-42)**
5. **REMOVE NO. 2 INSTRUMENT PANEL UNDER COVER SUB-ASSEMBLY (See page IP-15)**
6. **REMOVE SIDE INSTRUMENT PANEL RH (See page IP-15)**
7. **REMOVE FRONT PASSENGER SIDE KNEE AIRBAG ASSEMBLY (See page RS-396)**
8. **REMOVE LOWER INSTRUMENT PANEL RH (See page IP-16)**
9. **REMOVE LUGGAGE COMPARTMENT DOOR OPENER MAIN SWITCH**
   (a) Disengage the 2 claws and remove the luggage compartment door opener main switch.

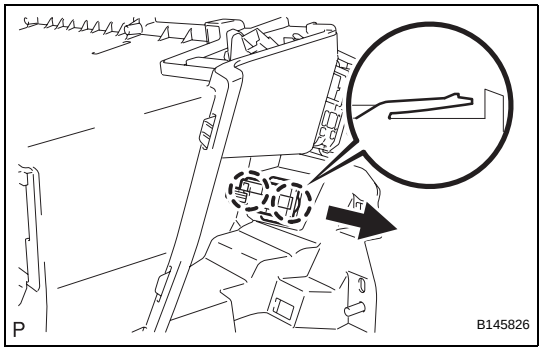

INSPECTION

1. **INSPECT LUGGAGE COMPARTMENT DOOR OPENER MAIN SWITCH**
   (a) Measure the resistance according to the value(s) in the table below.
   Standard resistance

Tester Connection	Switch Condition	Specified Condition
1 - 2	Switch pushed (ON)	Below 1 Ω
	Switch free (OFF)	10 kΩ or higher

If the result is not as specified, replace the switch assembly.

Luggage Compartment Door Opener Main Switch:

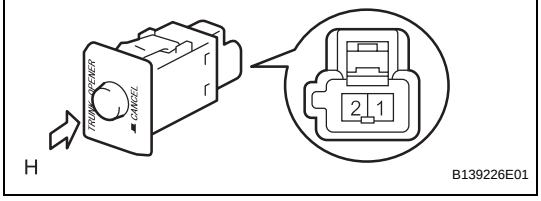

ED

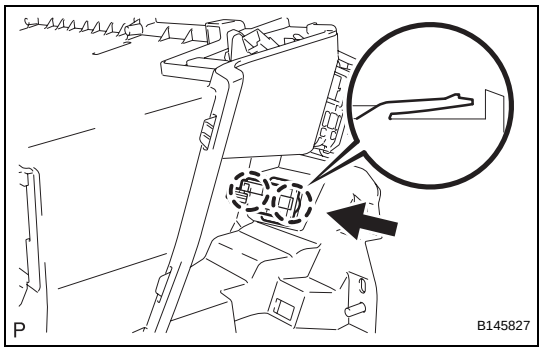

INSTALLATION

1. **INSTALL LUGGAGE COMPARTMENT DOOR OPENER MAIN SWITCH**
   (a) Engage the 2 claws and install the luggage compartment door opener main switch.
2. **INSTALL LOWER INSTRUMENT PANEL RH (See page IP-42)**
3. **INSTALL FRONT PASSENGER SIDE KNEE AIRBAG ASSEMBLY (See page RS-396)**
4. **INSTALL SIDE INSTRUMENT PANEL RH (See page IP-43)**
5. **INSTALL NO. 2 INSTRUMENT PANEL UNDER COVER SUB-ASSEMBLY (See page IP-44)**
6. **INSTALL FRONT DOOR OPENING TRIM COVER RH (See page IR-65)**
7. **INSTALL FRONT DOOR SCUFF PLATE RH (See page IR-65)**
8. **INSTALL INSTRUMENT PANEL FINISH PANEL END RH (See page IP-44)**
9. **CONNECT CABLE TO NEGATIVE BATTERY TERMINAL**
10. **PERFORM INITIALIZATION**
    NOTICE:
    Some systems need initialization after reconnecting the cable to the negative battery terminal (See page IN-33).
11. **INSPECT SRS WARNING LIGHT**
    (See page RS-37)

FUEL LID OPENER MOTOR ASSEMBLY

COMPONENTS

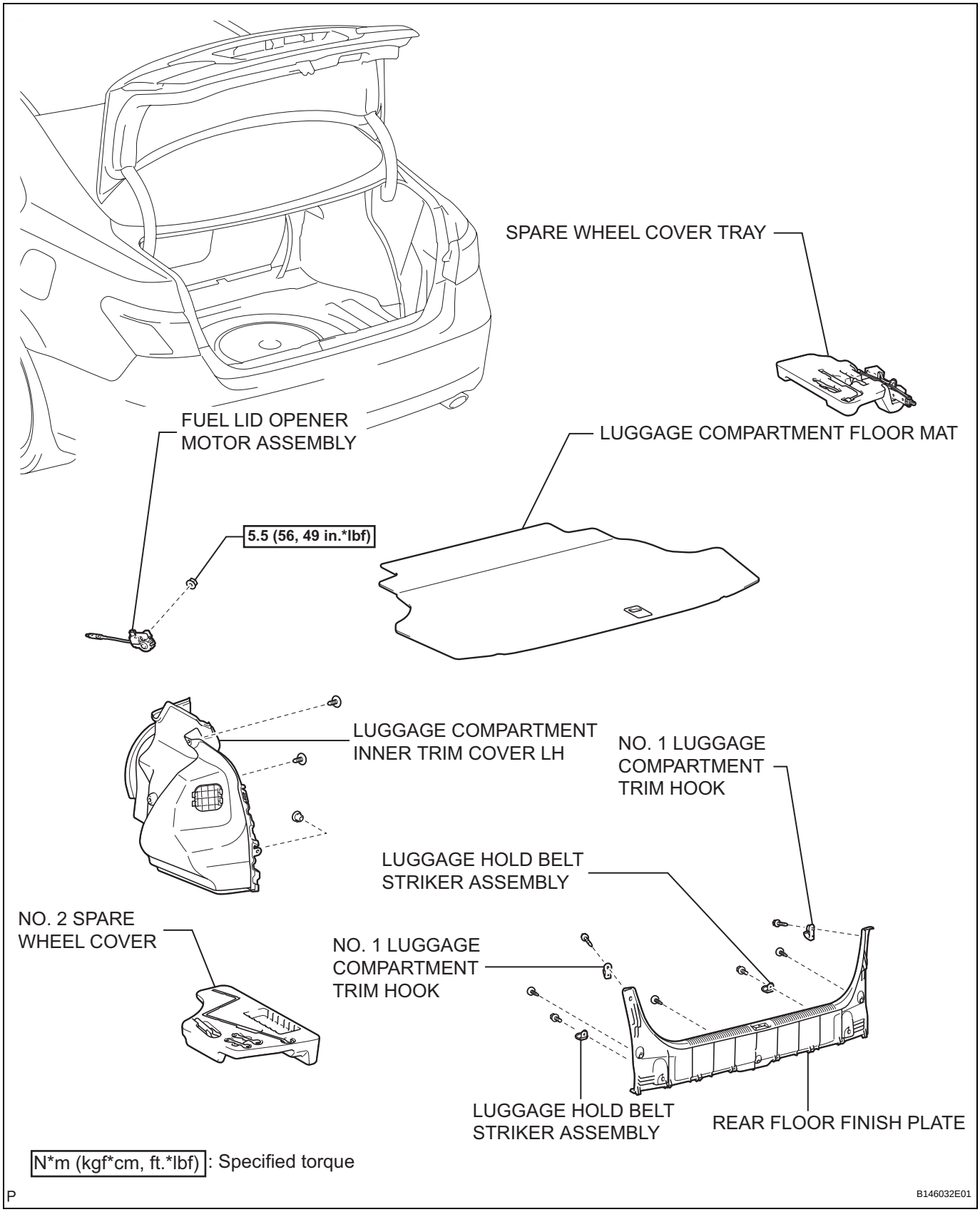

ED

REMOVAL

1. **REMOVE LUGGAGE COMPARTMENT FLOOR MAT**
2. **REMOVE NO. 2 SPARE WHEEL COVER**
3. **REMOVE SPARE WHEEL COVER TRAY**
4. **REMOVE LUGGAGE HOLD BELT STRIKER ASSEMBLY (See page ED-82)**
5. **REMOVE NO. 1 LUGGAGE COMPARTMENT TRIM HOOK (See page ED-83)**
6. **REMOVE REAR FLOOR FINISH PLATE (See page ED-83)**
7. **REMOVE LUGGAGE COMPARTMENT INNER TRIM COVER LH (See page ED-83)**
8. **REMOVE FUEL LID OPENER MOTOR ASSEMBLY**
   (a) Disconnect the connector.
   (b) Remove the lock and nut as shown in the illustration.
   (c) Remove the fuel lid with motor lock assembly.

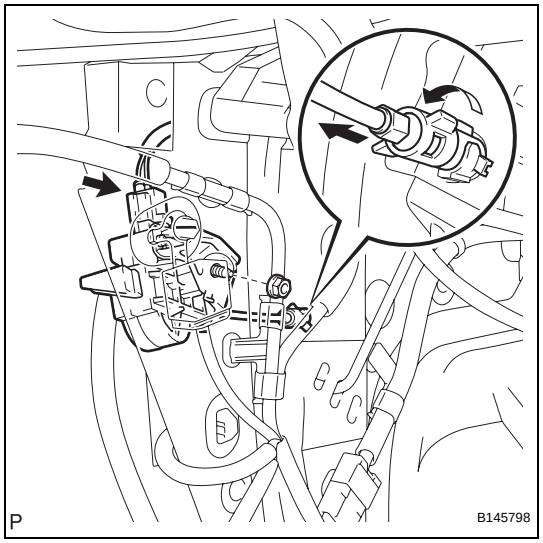

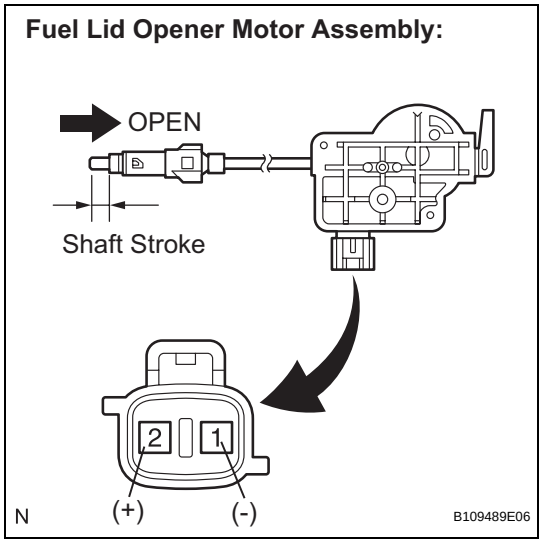

INSPECTION

1. **INSPECT FUEL LID OPENER MOTOR ASSEMBLY**
   (a) Apply battery voltage to the lock terminals and check that the motor operates and the shaft moves in the open direction.
   OK

Measurement Condition	Specified Condition
Battery positive (+) → Terminal 2 Battery negative (-) → Terminal 1	Motor operates and shaft moves in open direction

   (b) Measure the shaft stroke.
   Standard:
   10.3 mm (0.406 in.) or more
   If the result is not as specified, replace the motor assembly.

ED

FUEL LID OPENER SWITCH

COMPONENTS

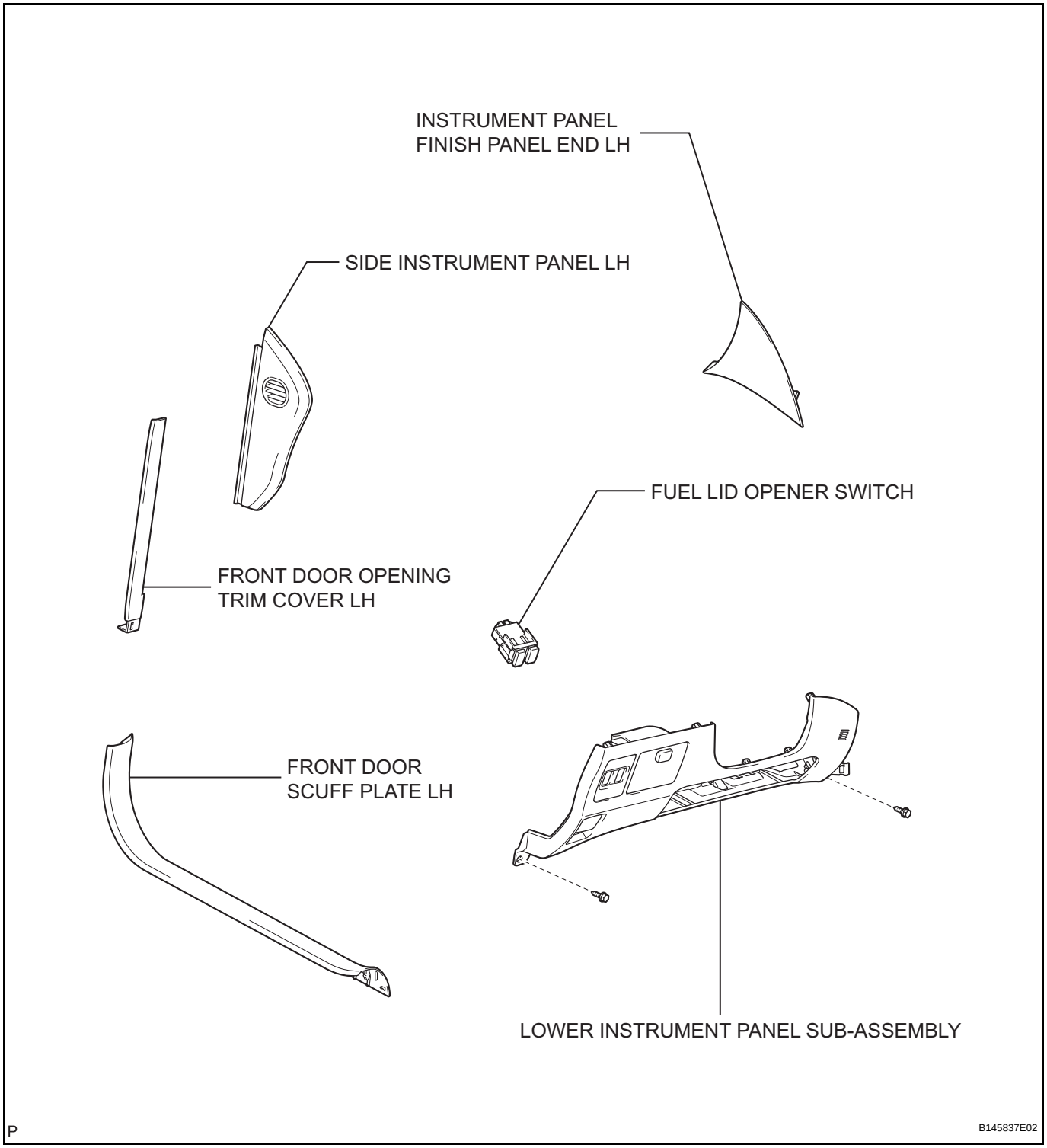

REMOVAL

1. **REMOVE FRONT DOOR SCUFF PLATE LH (See page IR-39)**
2. **REMOVE FRONT DOOR OPENING TRIM COVER LH (See page IR-39)**
3. **REMOVE SIDE INSTRUMENT PANEL LH (See page IP-12)**
4. **REMOVE INSTRUMENT PANEL FINISH PANEL END LH (See page IP-13)**
5. **REMOVE LOWER INSTRUMENT PANEL SUB-ASSEMBLY (See page IP-13)**
6. **REMOVE FUEL LID OPENER SWITCH**
   (a) Disengage the 2 claws and remove the fuel lid opener switch.

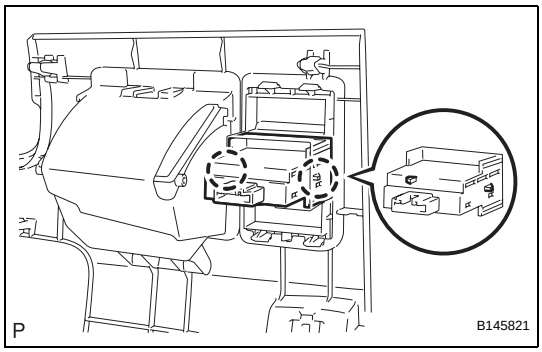

INSPECTION

1. **INSPECT FUEL LID OPENER SWITCH**
   (a) Measure the resistance according to the value(s) in the table below.
   Standard resistance

Tester Connection	Switch Condition	Specified Condition
1 - 2	Switch pushed (ON)	Below 1 Ω
	Switch free (OFF)	10 kΩ or higher

If the result is not as specified, replace the switch.

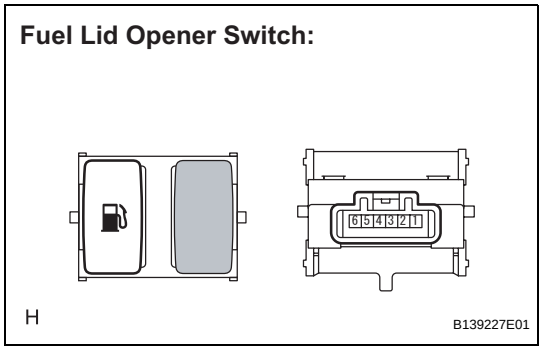

INSTALLATION

1. **INSTALL FUEL LID OPENER SWITCH**
   (a) Engage the 2 claws and install the fuel lid opener switch.
2. **INSTALL LOWER INSTRUMENT PANEL SUB-ASSEMBLY (See page IP-46)**
3. **INSTALL INSTRUMENT PANEL FINISH PANEL END LH (See page IP-46)**
4. **INSTALL SIDE INSTRUMENT PANEL LH (See page IP-47)**
5. **INSTALL FRONT DOOR OPENING TRIM COVER LH (See page IR-64)**
6. **INSTALL FRONT DOOR SCUFF PLATE LH (See page IR-65)**

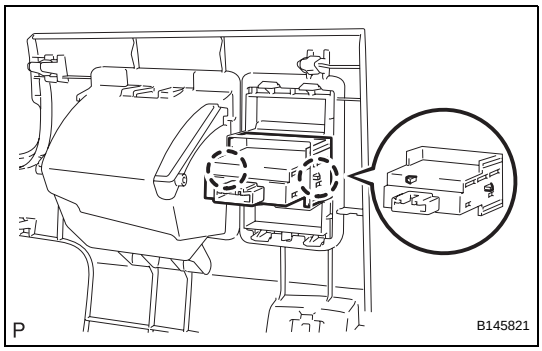

DISASSEMBLY

1. **REMOVE NO. 1 ULTRASONIC SENSOR (w/ Intuitive Parking Assist System) (See page PM-100)**

2. **REMOVE NO. 1 ULTRASONIC SENSOR RETAINER (w/ Intuitive Parking Assist System) (See page PM-100)**

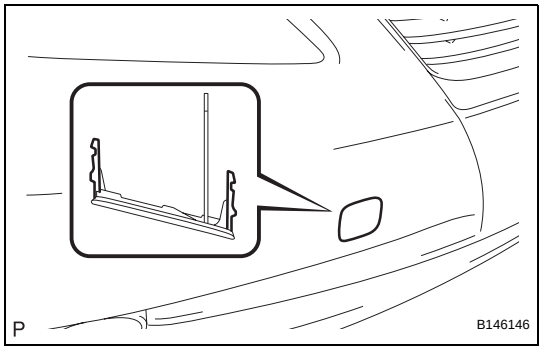

3. **REMOVE FRONT BUMPER HOLE COVER**
   (a) Disengage the 2 claws and remove the front bumper hole cover.

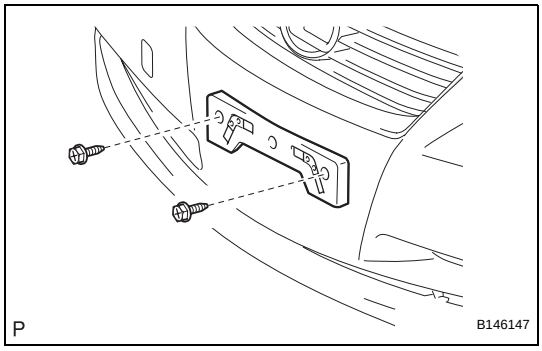

4. **REMOVE FRONT BUMPER EXTENSION MOUNTING BRACKET**
   (a) Remove the 2 screws and front bumper extension mounting bracket.

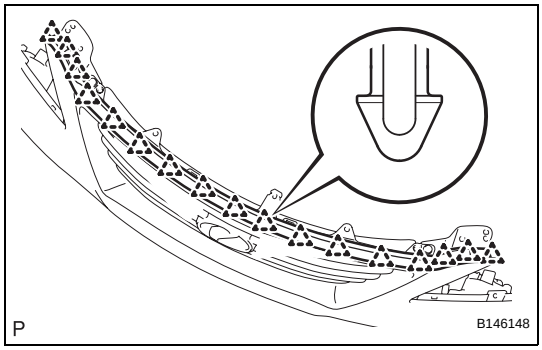

5. **REMOVE RADIATOR GRILLE SEAL**
   (a) Disengage the 17 clips and remove the radiator grille seal.

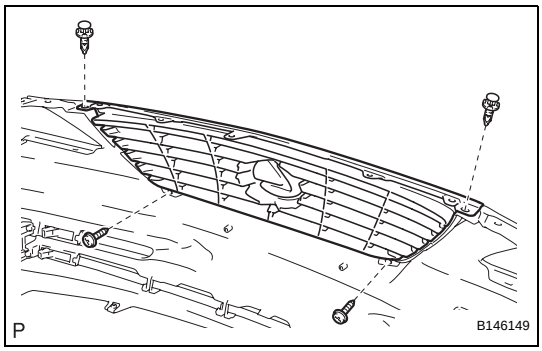

6. **REMOVE RADIATOR GRILLE**
   (a) Remove the 2 screws and 2 clips.

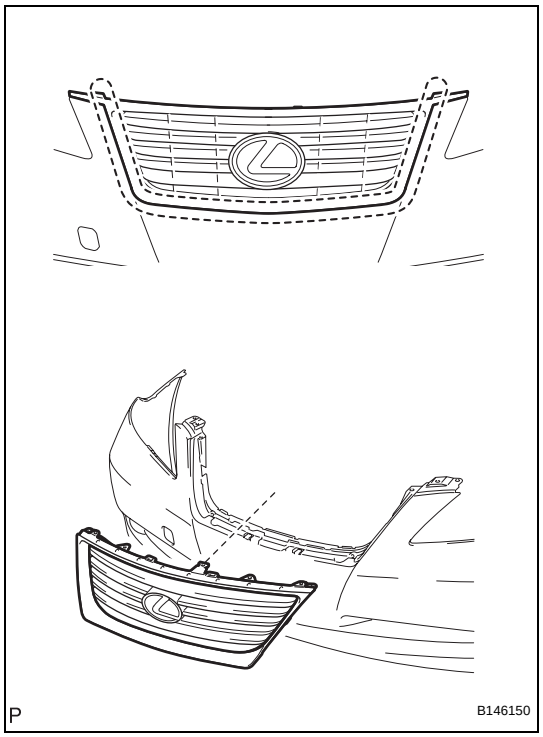

(b) Disengage each claw and remove the radiator grille and radiator grille moulding.

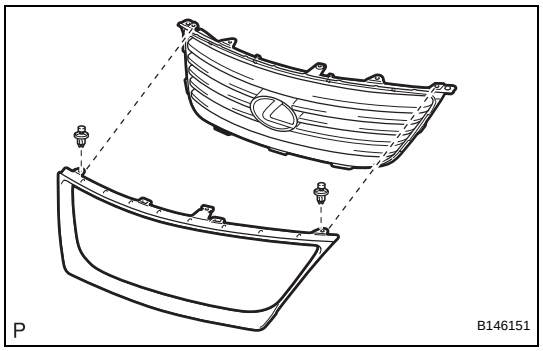

7. REMOVE RADIATOR GRILLE MOULDING

(a) Remove the 2 clips.

(b) Disengage each claw and remove the radiator grille moulding.

8. REMOVE RADIATOR GRILLE EMBLEM (w/o Dynamic Radar Cruise Control System)

HINT:

When removing the emblem, heat the radiator grille and emblem using a heat light.

Heating temperature

Item	Temperature
Radiator Grille	**40 to 60°C (104 to 140°F)**
Emblem	**20 to 30°C (68 to 86°F)**

NOTICE:

Do not heat the radiator grille and emblem excessively.

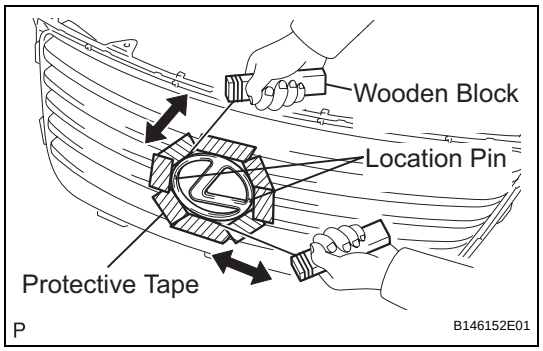

(a) Put protective tape around the radiator grille emblem.

(b) Insert a piano wire between the radiator grille and radiator grille emblem.

(c) Tie objects that can serve as handles (for example, wooden blocks) to both wire ends.

(d) Pull the piano wire and scrape off the double-sided tape that holds the moulding to the radiator grille.

NOTICE:

- **If reusing the radiator grille emblem, take care not to damage the radiator grille emblem.**
- **Be careful not to damage the radiator grille.**

(e) Remove the radiator grille emblem.

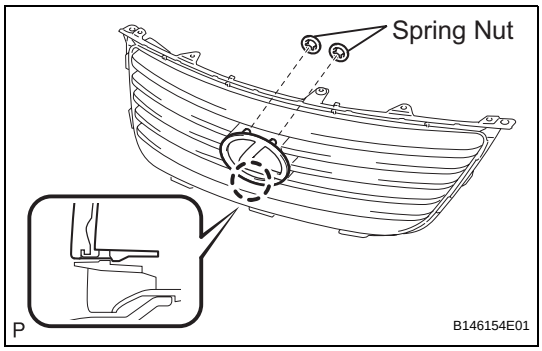

9. REMOVE RADIATOR GRILLE EMBLEM (w/ Dynamic Radar Cruise Control System)
(a) Remove the 2 spring nuts.
(b) Disengage the claw and remove the radiator grille emblem.

10. REMOVE FOG LIGHT ASSEMBLY LH (See page LI-141)

11. REMOVE FOG LIGHT ASSEMBLY RH

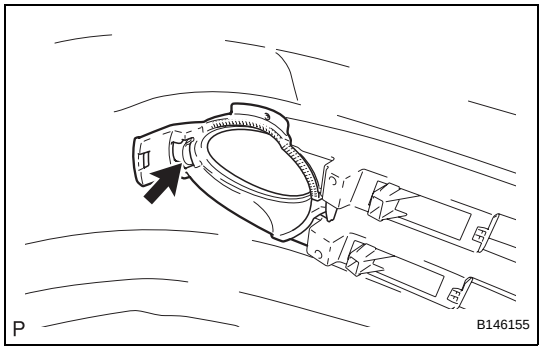

12. REMOVE FOG LIGHT BRACKET LH
(a) Disengage the claw and remove the fog light bracket LH.

13. REMOVE FOG LIGHT BRACKET RH

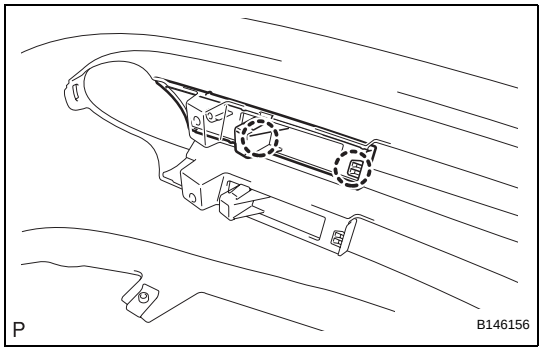

14. REMOVE RADIATOR GRILLE GARNISH
(a) Disengage the 2 claws and radiator grille garnish.
HINT:
Use the same procedures for the RH side and LH side.

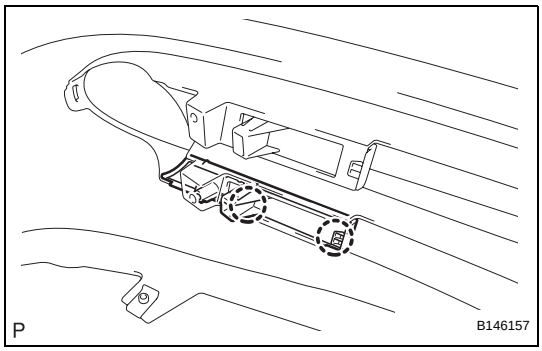

15. REMOVE NO. 2 RADIATOR GRILLE GARNISH
(a) Disengage the 2 claws and No. 2 radiator grille garnish.
HINT:
Use the same procedures for the RH side and LH side.

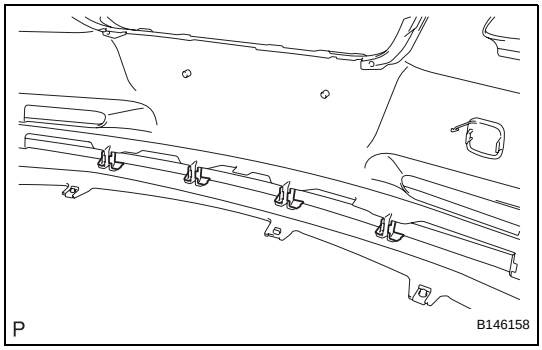

16. REMOVE NO. 3 RADIATOR GRILLE GARNISH
(a) Remove the 4 No. 3 radiator grille garnishes.

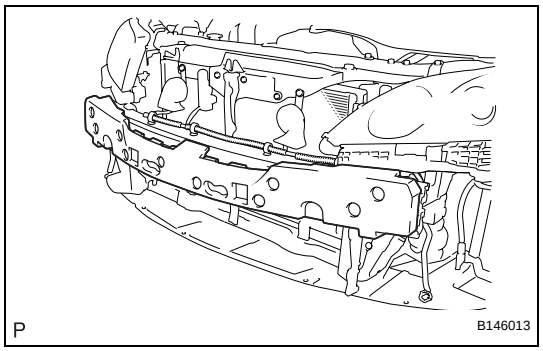

17. REMOVE FRONT BUMPER ENERGY ABSORBER

(a) Remove the front bumper energy absorber from the front bumper reinforcement.

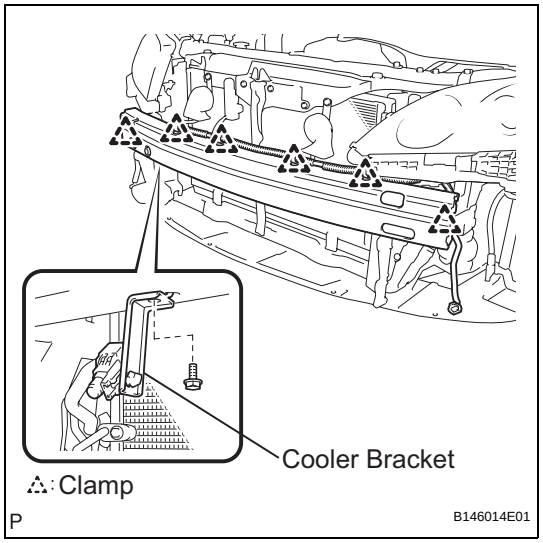

18. REMOVE FRONT BUMPER REINFORCEMENT

(a) Disengage each clamp.

(b) Remove the bolt and separate the cooler bracket.

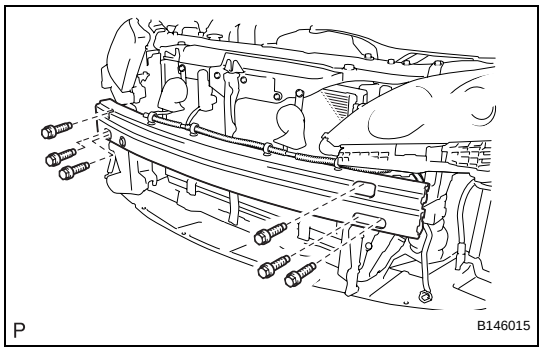

(c) Remove the 6 bolts and front bumper reinforcement.

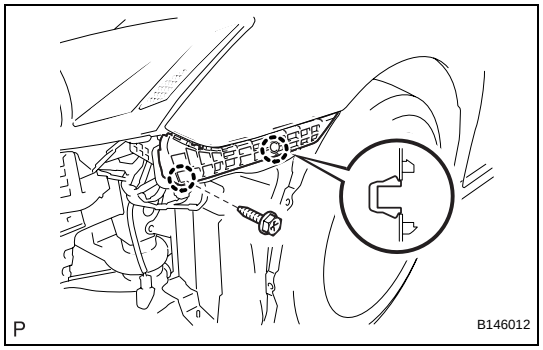

19. REMOVE FRONT BUMPER STAY LH

(a) Remove the screw.

(b) Disengage the 2 claws and remove the front bumper stay LH.

20. REMOVE FRONT BUMPER STAY RH

REASSEMBLY

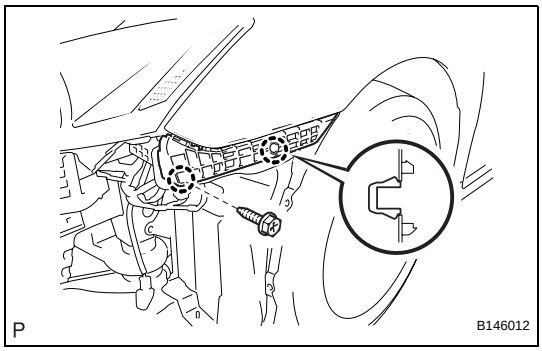

1. INSTALL FRONT BUMPER STAY LH

(a) Engage the 2 claws and install the front bumper stay LH.

(b) Install the screw.

2. INSTALL FRONT BUMPER STAY RH

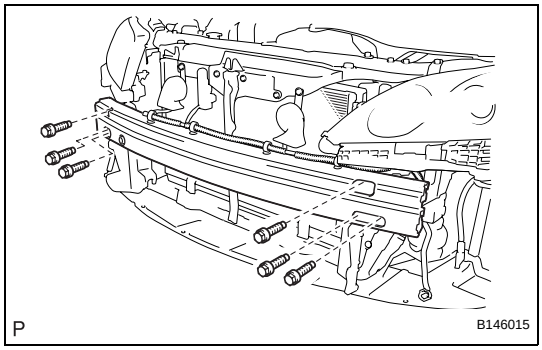

3. INSTALL FRONT BUMPER REINFORCEMENT

(a) Install the front bumper reinforcement with the 6 bolts.
Torque: 72 N*m (734 kgf*cm, 53 ft.*lbf)

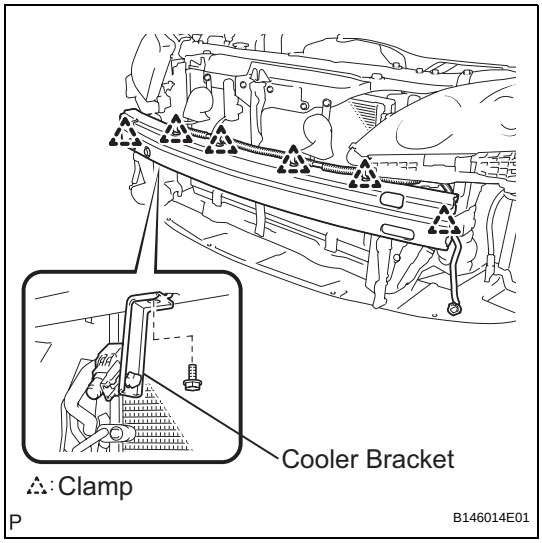

(b) Install the cooler bracket with the bolt.

(c) Engage each clamp.

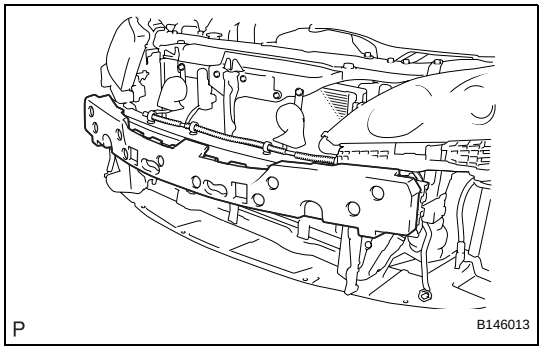

4. INSTALL FRONT BUMPER ENERGY ABSORBER

(a) Install the front bumper energy absorber to the front bumper reinforcement.

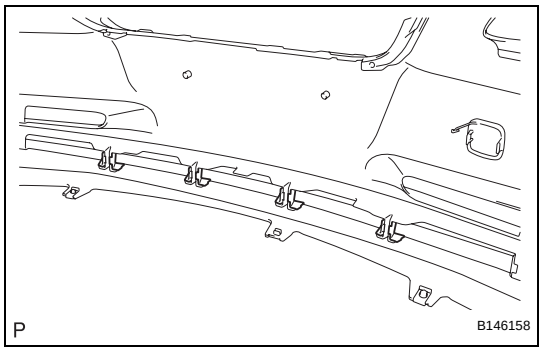

5. INSTALL NO. 3 RADIATOR GRILLE GARNISH

(a) Install the 4 No. 3 radiator grille garnishes.

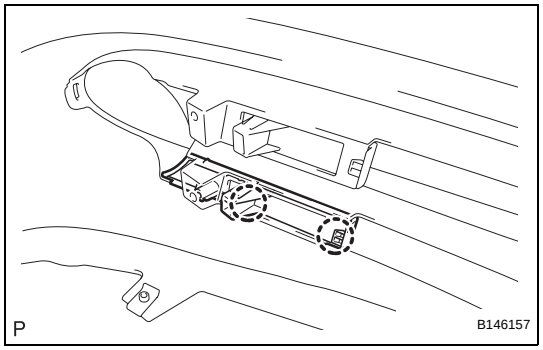

6. INSTALL NO. 2 RADIATOR GRILLE GARNISH

(a) Engage the 2 claws and install the No. 2 radiator grille garnish.
HINT:
Use the same procedures for the RH side and LH side.

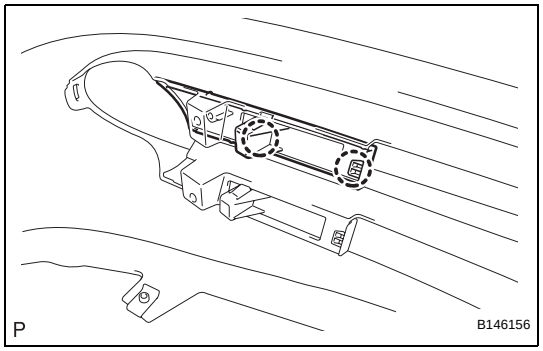

7. INSTALL RADIATOR GRILLE GARNISH

(a) Engage the 2 claws and install the radiator grille garnish.
HINT:
Use the same procedures for the RH side and LH side.

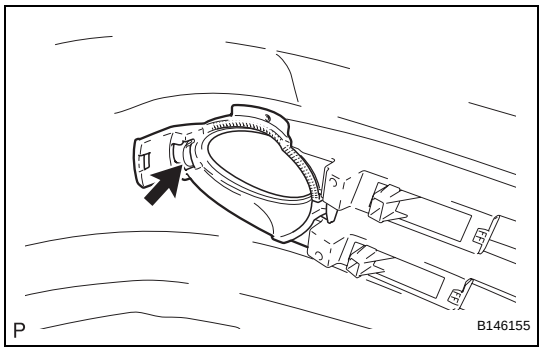

8. INSTALL FOG LIGHT BRACKET LH

(a) Engage the claw and install the fog light bracket LH.

9. INSTALL FOG LIGHT BRACKET RH

10. INSTALL FOG LIGHT ASSEMBLY LH (See page LI-144)

11. INSTALL FOG LIGHT ASSEMBLY RH

12. INSTALL RADIATOR GRILLE EMBLEM (w/o Dynamic Radar Cruise Control System)

HINT:
When installing the emblem, heat the radiator grille and emblem using a heat light.

Heating temperature

Item	Temperature
Radiator grille	**40 to 60°C (104 to 140°F)**
Emblem	**20 to 30°C (68 to 86°F)**

NOTICE:
Do not heat the radiator grille and emblem excessively.

(a) Clean the radiator grille surface.
  (1) Using a heat light, heat the radiator grille surface.
  (2) Remove the double-sided tape from the radiator grille.
  (3) Wipe off any tape adhesive residue with cleaner.
(b) Clean the radiator grille emblem. (If reusing the radiator grille emblem)
  (1) Using a heat light, heat the radiator grille emblem.
  (2) Remove the double-sided tape from the radiator grille emblem.
  (3) Wipe off any tape adhesive residue with cleaner.
  (4) Apply new double-sided tape to the radiator grille emblem.

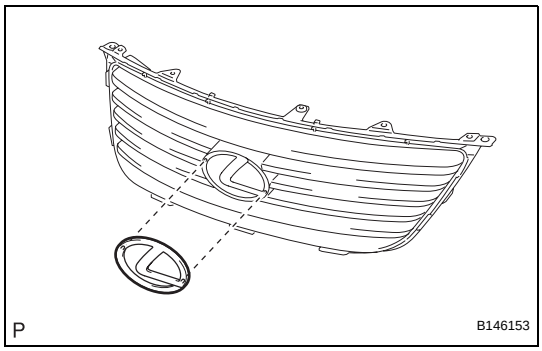

(c) Install the radiator grille emblem.
  (1) Using a heat light, heat the radiator grille and radiator grille emblem.
  (2) Remove the release paper from the radiator grille emblem.
  HINT:
  After removing the release paper, keep the exposed adhesive free from foreign matter.
  (3) Install the radiator grille emblem.

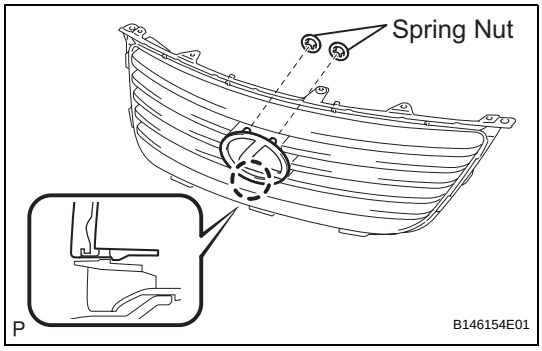

13. INSTALL RADIATOR GRILLE EMBLEM (w/ Dynamic Radar Cruise Control System)
(a) Engage the claw and install the radiator grille emblem.
(b) Install the 2 spring nuts.

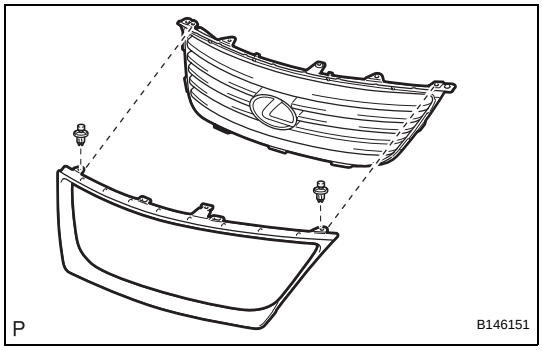

14. INSTALL RADIATOR GRILLE MOULDING
(a) Engage each claw and install the radiator grille moulding.
(b) Install the 2 clips.

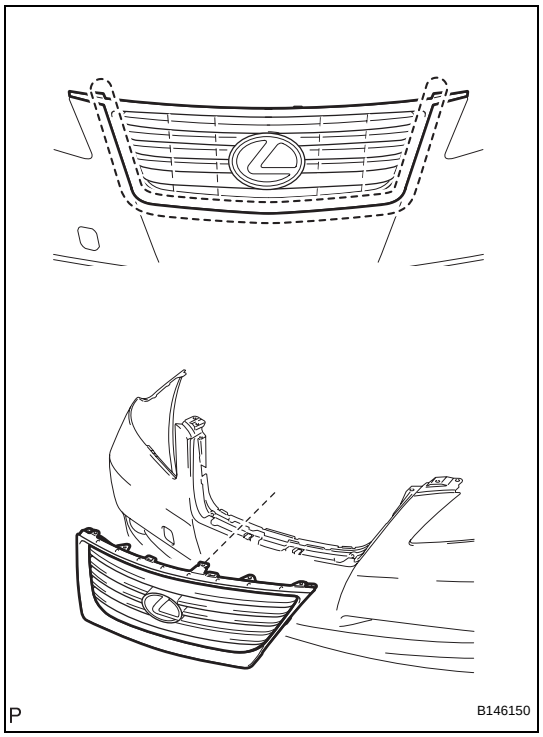

15. INSTALL RADIATOR GRILLE

(a) Engage each claw and install the radiator grille and radiator grille moulding.

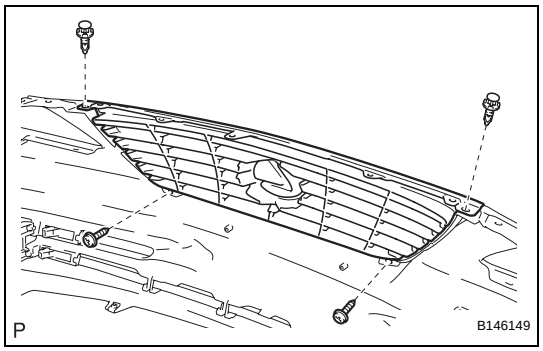

(b) Install the 2 screws and 2 clips.

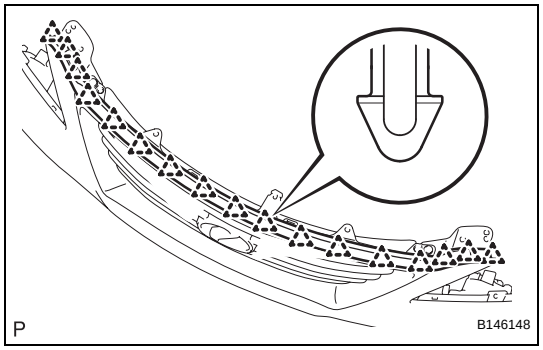

16. INSTALL RADIATOR GRILLE SEAL

(a) Engage the 17 clips and install the radiator grille seal.

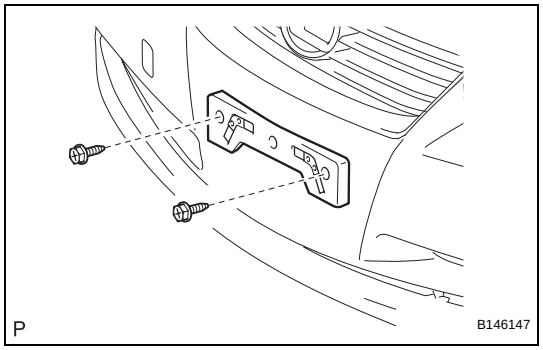

17. INSTALL FRONT BUMPER EXTENSION MOUNTING BRACKET

(a) Install the front bumper extension mounting bracket with the 2 screws.

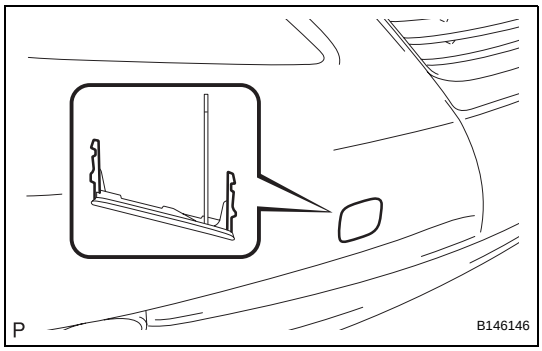

18. INSTALL FRONT BUMPER HOLE COVER
(a) Engage the 2 claws and remove the front bumper hole cover.

19. INSTALL NO. 1 ULTRASONIC SENSOR RETAINER (w/ Intuitive Parking Assist System) (See page PM-103)

20. INSTALL NO. 1 ULTRASONIC SENSOR (w/ Intuitive Parking Assist System) (See page PM-103)

INSTALLATION

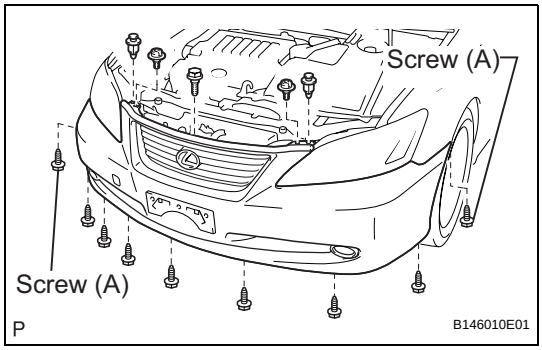

1. INSTALL FRONT BUMPER ASSEMBLY
(a) Connect each connector.
(b) Engage each claw.
(c) Install the front bumper assembly with the 9 screws, 2 clips, 2 radiator grille protectors and bolt.
Torque: Screw (A)
2.0 N*m (20 kgf*cm, 18 in.*lbf)

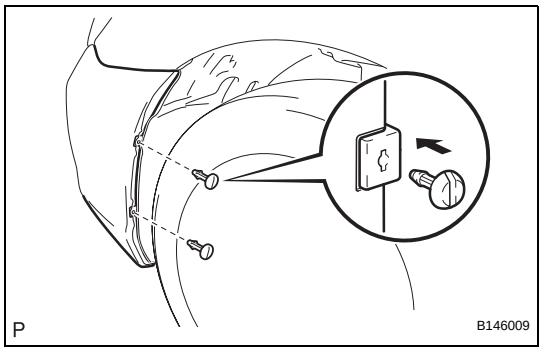

(d) Install the 2 pin hold clips.
HINT:
Use the same procedures for the RH side and LH side.

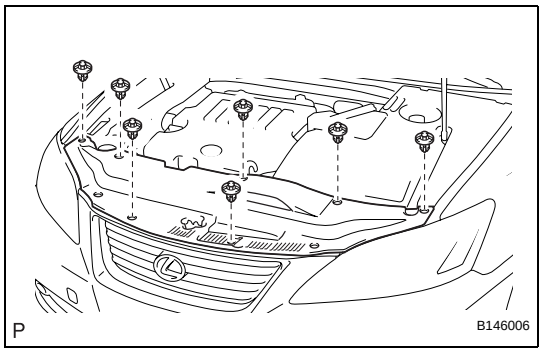

2. INSTALL COOL AIR INTAKE DUCT SEAL
(a) Install the cool air intake duct seal with the 7 clips.

3. VEHICLE PREPARATION FOR FOG LIGHT AIMING (See page LI-141)

4. PREPARATION FOR FOG LIGHT AIMING (See page LI-142)

5. INSPECT FOG LIGHT AIMING (See page LI-143)

6. ADJUST FOG LIGHT AIMING (See page LI-144)

REMOVAL

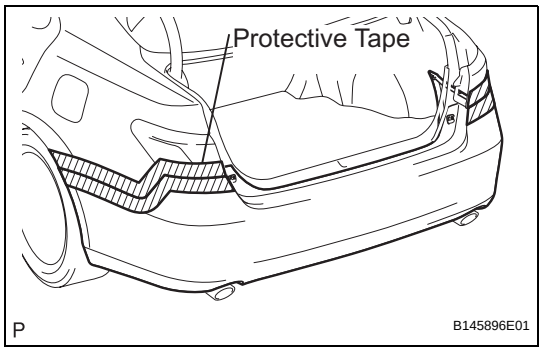

1. REMOVE REAR BUMPER ASSEMBLY (w/o Intuitive Parking Assist System)

(a) Put protective tape around the rear bumper assembly.

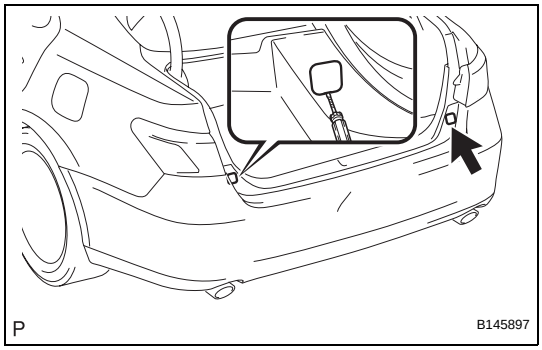

(b) Using a screwdriver, open the 2 rear bumper plates.
HINT:
Tape the screwdriver tip before use.

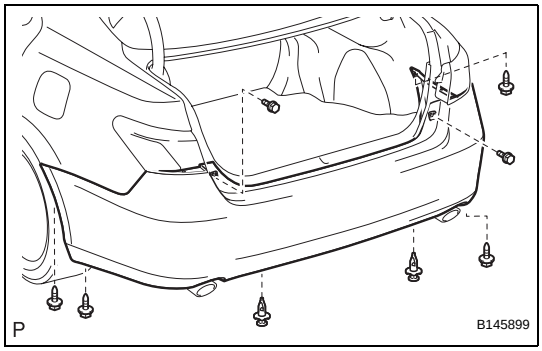

(c) Remove the 2 clips, 4 screws and 2 bolts.

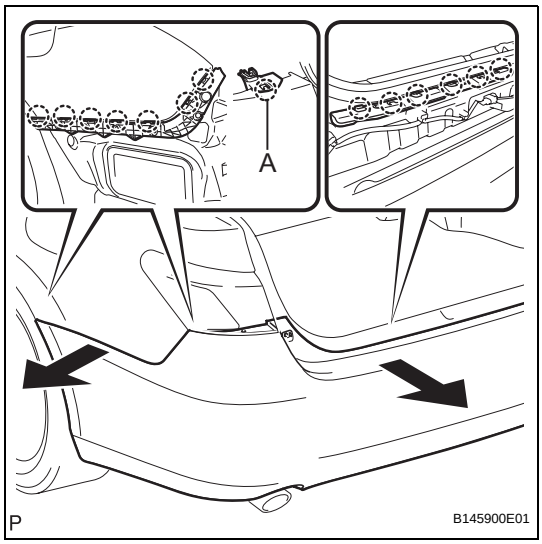

(d) Disengage the 14 claws and disconnect the rear bumper assembly as shown in the illustration.
HINT:
- When disengaging claw A, slide the rear bumper toward the center of the vehicle.
- Use the same procedures for the RH side and LH side.

(e) Remove the rear bumper assembly.

2. REMOVE LUGGAGE COMPARTMENT FLOOR MAT (w/ Intuitive Parking Assist System)

3. REMOVE SPARE WHEEL COVER TRAY (w/ Intuitive Parking Assist System)

4. REMOVE LUGGAGE HOLD BELT STRIKER ASSEMBLY (w/ Intuitive Parking Assist System) (See page ED-82)

5. REMOVE NO. 1 LUGGAGE COMPARTMENT TRIM HOOK (w/ Intuitive Parking Assist System) (See page ED-83)

6. **REMOVE REAR FLOOR FINISH PLATE (w/ Intuitive Parking Assist System) (See page ED-83)**

7. **REMOVE LUGGAGE COMPARTMENT INNER TRIM COVER RH (w/ Intuitive Parking Assist System) (See page ED-83)**

8. **REMOVE REAR BUMPER ASSEMBLY (w/ Intuitive Parking Assist System)**
   (a) Disconnect the connector.
   (b) Disengage the grommet.

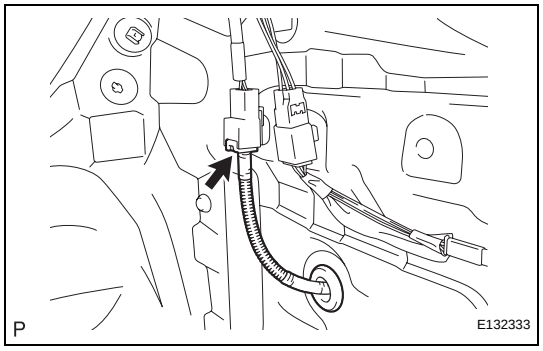

   (c) Put protective tape around the rear bumper assembly.

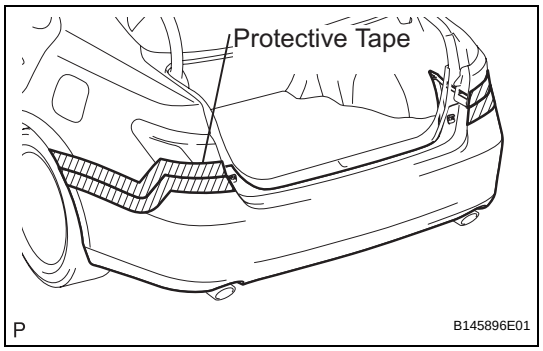

   (d) Using a screwdriver, open the 2 rear bumper plates.
   HINT:
   Tape the screwdriver tip before use.

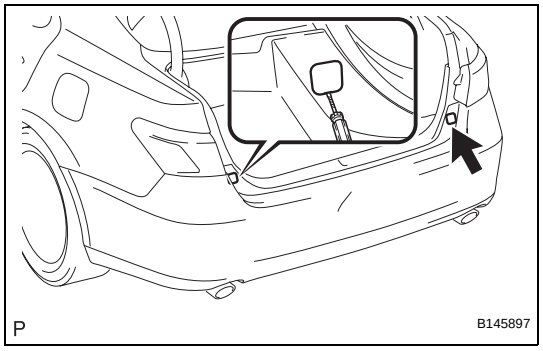

   (e) Remove the 2 clips, 4 screws and 2 bolts.

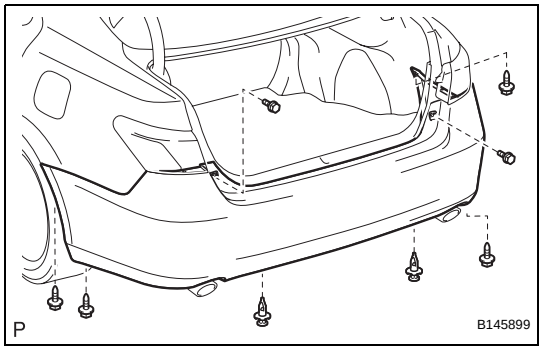

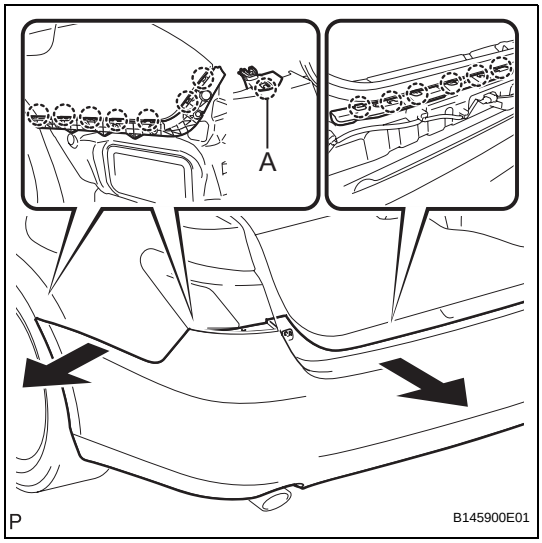

(f) Disengage the 14 claws and disconnect the rear bumper assembly as shown in the illustration.
HINT:
- When disengaging claw A, slide the rear bumper toward the center of the vehicle.
- Use the same procedures for the RH side and LH side.

(g) Remove the rear bumper assembly.

FRONT BUMPER STAY RH

72 (734, 53)

FRONT BUMPER REINFORCEMENT

72 (734, 53)

FRONT BUMPER ENERGY ABSORBER

FRONT BUMPER STAY LH

N*m (kgf*cm, ft.*lbf): Specified torque

P

B146200E01

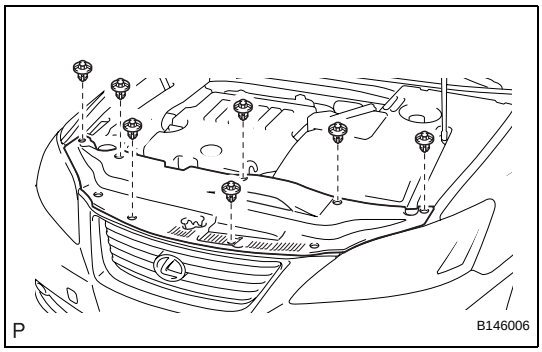

P

B146006

REMOVAL

1. REMOVE COOL AIR INTAKE DUCT SEAL

(a) Remove the 7 clips and cool air intake duct seal.

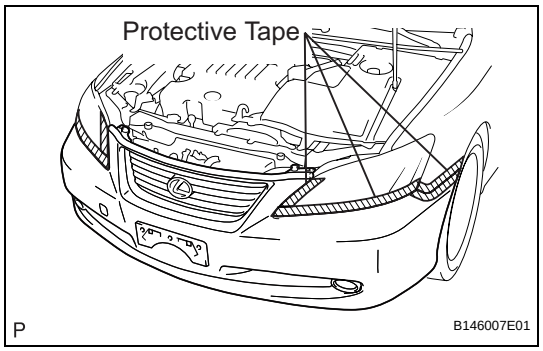

2. REMOVE FRONT BUMPER ASSEMBLY

(a) Put protective tape around the front bumper assembly.

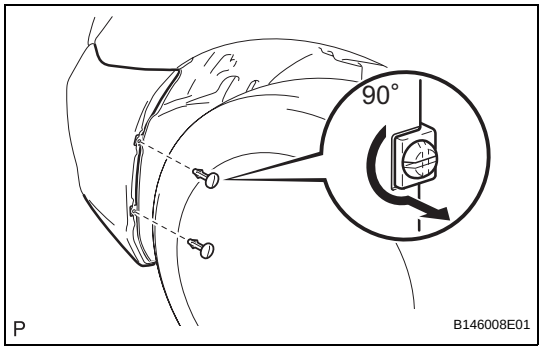

(b) Using a screwdriver, turn the pin 90 degrees and remove the 2 pin hold clips.
HINT:
Use the same procedures for the RH side and LH side.

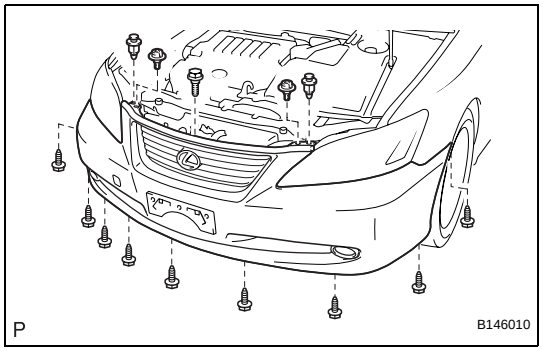

(c) Remove the 9 screws, 2 clips, 2 radiator grille protectors and bolt.

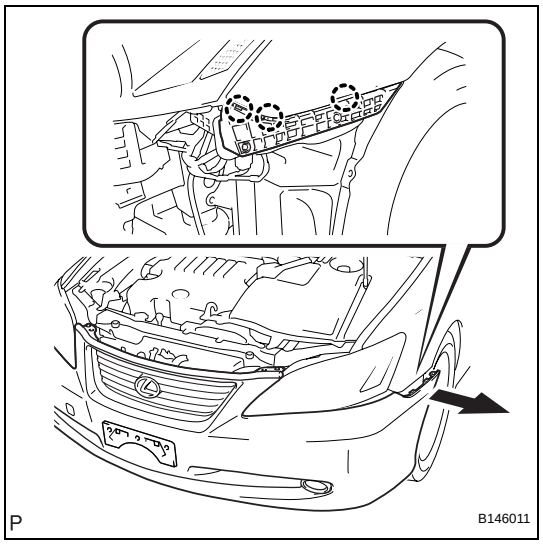

(d) Disengage the 3 claws and disconnect the front bumper assembly as shown in the illustration.
HINT:
Use the same procedures for the RH side and LH side.

(e) Disconnect each connector, and then remove the front bumper assembly.

DISASSEMBLY

1. **REMOVE NO. 1 ULTRASONIC SENSOR (w/ Intuitive Parking Assist System) (See page PM-100)**

2. **REMOVE NO. 1 ULTRASONIC SENSOR RETAINER (w/ Intuitive Parking Assist System) (See page PM-100)**

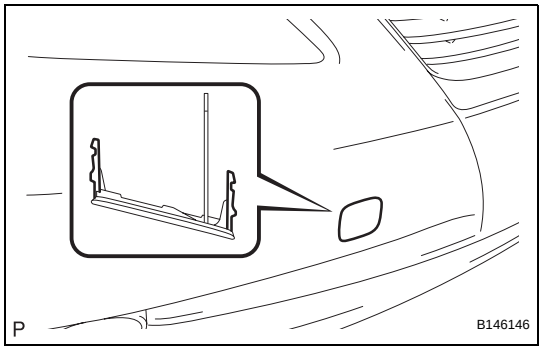

3. **REMOVE FRONT BUMPER HOLE COVER**
   (a) Disengage the 2 claws and remove the front bumper hole cover.

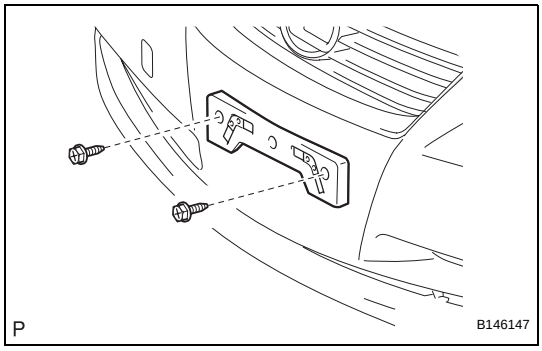

4. **REMOVE FRONT BUMPER EXTENSION MOUNTING BRACKET**
   (a) Remove the 2 screws and front bumper extension mounting bracket.

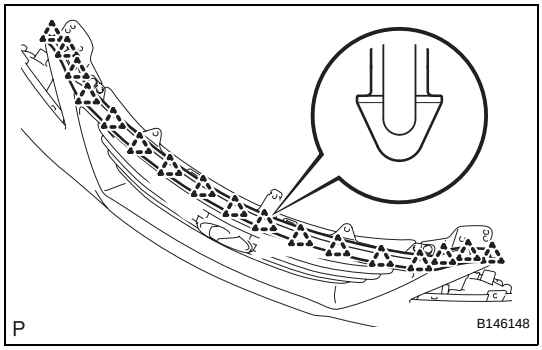

5. **REMOVE RADIATOR GRILLE SEAL**
   (a) Disengage the 17 clips and remove the radiator grille seal.

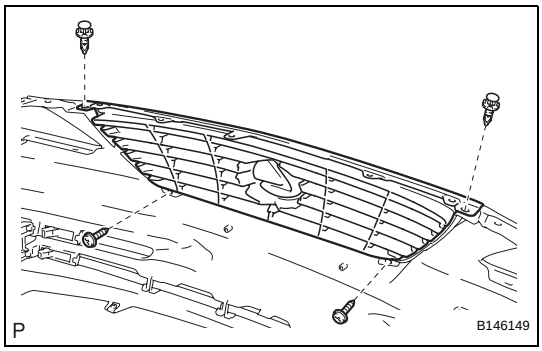

6. **REMOVE RADIATOR GRILLE**
   (a) Remove the 2 screws and 2 clips.

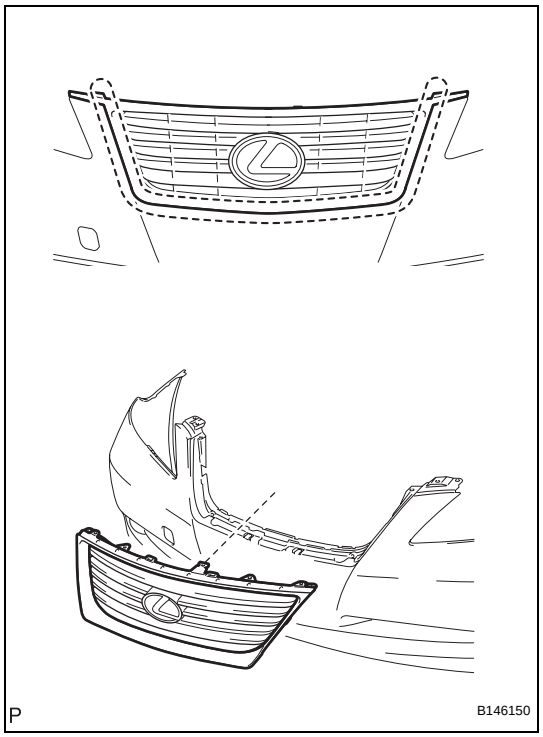

(b) Disengage each claw and remove the radiator grille and radiator grille moulding.

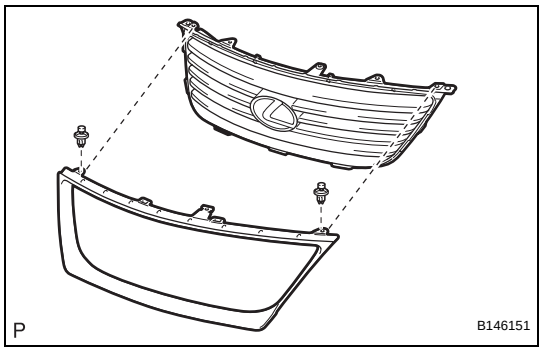

7. REMOVE RADIATOR GRILLE MOULDING

(a) Remove the 2 clips.

(b) Disengage each claw and remove the radiator grille moulding.

8. REMOVE RADIATOR GRILLE EMBLEM (w/o Dynamic Radar Cruise Control System)

HINT:

When removing the emblem, heat the radiator grille and emblem using a heat light.

Heating temperature

Item	Temperature
Radiator Grille	**40 to 60°C (104 to 140°F)**
Emblem	**20 to 30°C (68 to 86°F)**

NOTICE:

Do not heat the radiator grille and emblem excessively.

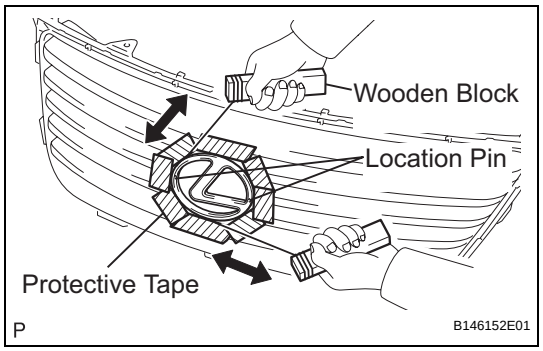

(a) Put protective tape around the radiator grille emblem.

(b) Insert a piano wire between the radiator grille and radiator grille emblem.

(c) Tie objects that can serve as handles (for example, wooden blocks) to both wire ends.

(d) Pull the piano wire and scrape off the double-sided tape that holds the moulding to the radiator grille.

NOTICE:

- **If reusing the radiator grille emblem, take care not to damage the radiator grille emblem.**
- **Be careful not to damage the radiator grille.**

(e) Remove the radiator grille emblem.

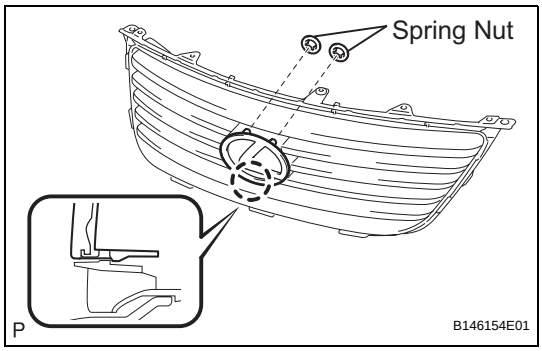

9. REMOVE RADIATOR GRILLE EMBLEM (w/ Dynamic Radar Cruise Control System)
(a) Remove the 2 spring nuts.
(b) Disengage the claw and remove the radiator grille emblem.

10. REMOVE FOG LIGHT ASSEMBLY LH (See page LI-141)

11. REMOVE FOG LIGHT ASSEMBLY RH

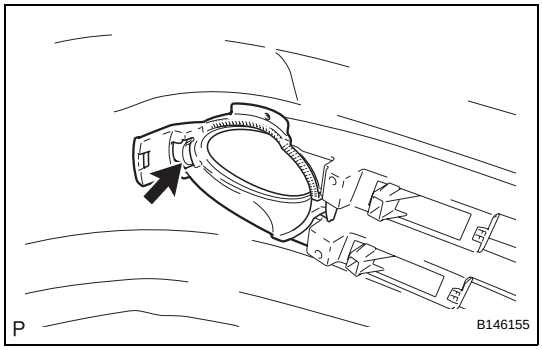

12. REMOVE FOG LIGHT BRACKET LH
(a) Disengage the claw and remove the fog light bracket LH.

13. REMOVE FOG LIGHT BRACKET RH

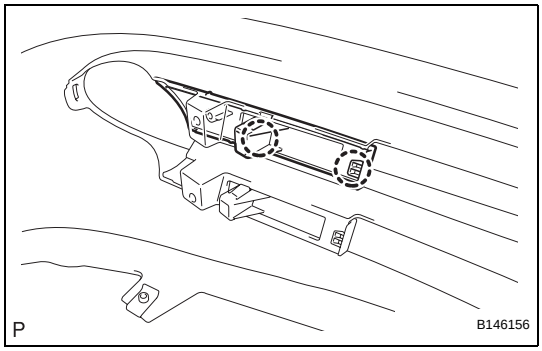

14. REMOVE RADIATOR GRILLE GARNISH
(a) Disengage the 2 claws and radiator grille garnish.
HINT:
Use the same procedures for the RH side and LH side.

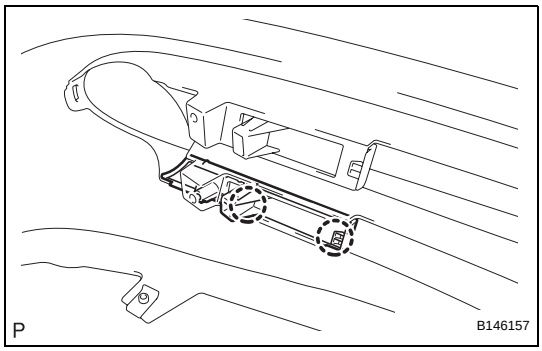

15. REMOVE NO. 2 RADIATOR GRILLE GARNISH
(a) Disengage the 2 claws and No. 2 radiator grille garnish.
HINT:
Use the same procedures for the RH side and LH side.

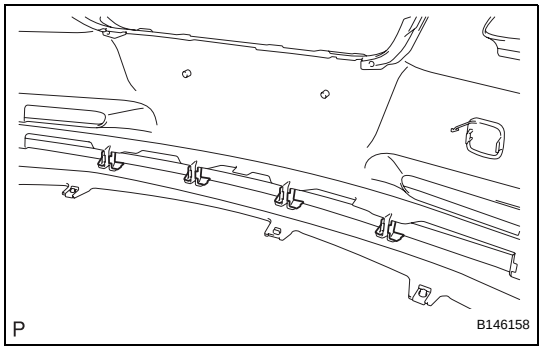

16. REMOVE NO. 3 RADIATOR GRILLE GARNISH
(a) Remove the 4 No. 3 radiator grille garnishes.

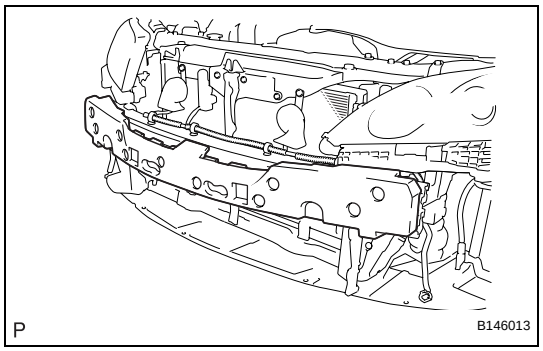

17. REMOVE FRONT BUMPER ENERGY ABSORBER

(a) Remove the front bumper energy absorber from the front bumper reinforcement.

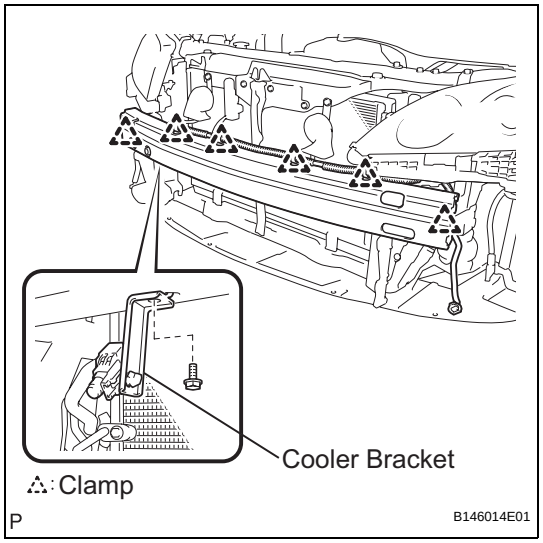

18. REMOVE FRONT BUMPER REINFORCEMENT

(a) Disengage each clamp.

(b) Remove the bolt and separate the cooler bracket.

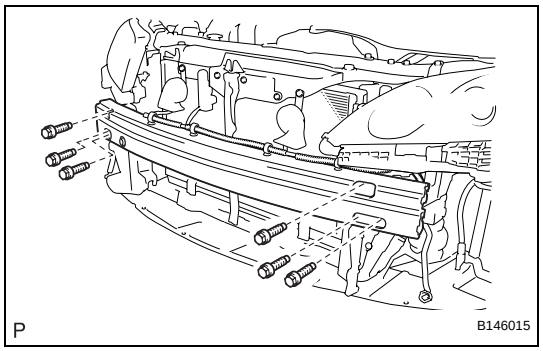

(c) Remove the 6 bolts and front bumper reinforcement.

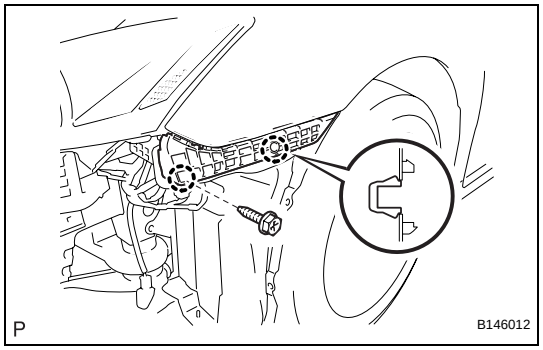

19. REMOVE FRONT BUMPER STAY LH

(a) Remove the screw.

(b) Disengage the 2 claws and remove the front bumper stay LH.

20. REMOVE FRONT BUMPER STAY RH

REASSEMBLY

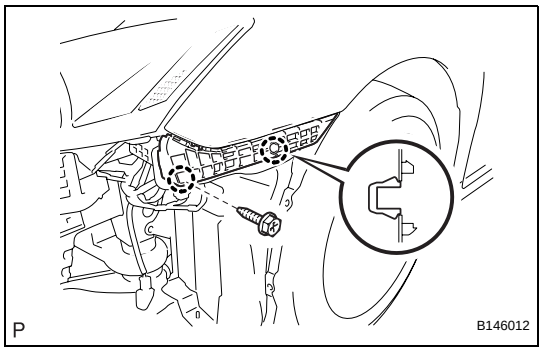

1. INSTALL FRONT BUMPER STAY LH

(a) Engage the 2 claws and install the front bumper stay LH.

(b) Install the screw.

2. INSTALL FRONT BUMPER STAY RH

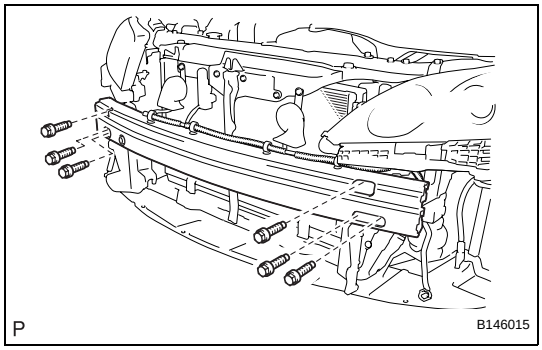

3. INSTALL FRONT BUMPER REINFORCEMENT

(a) Install the front bumper reinforcement with the 6 bolts.
Torque: 72 N*m (734 kgf*cm, 53 ft.*lbf)

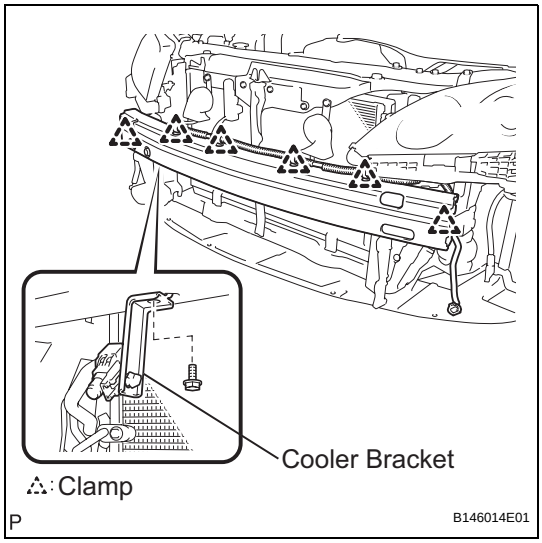

(b) Install the cooler bracket with the bolt.

(c) Engage each clamp.

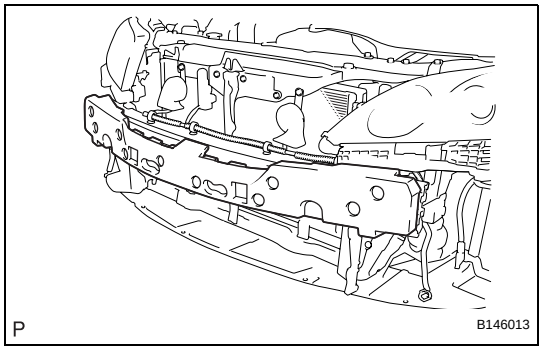

4. INSTALL FRONT BUMPER ENERGY ABSORBER

(a) Install the front bumper energy absorber to the front bumper reinforcement.

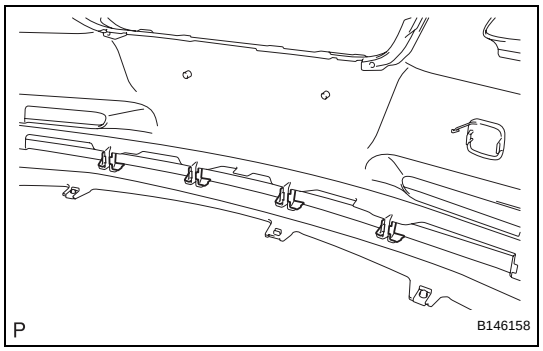

5. INSTALL NO. 3 RADIATOR GRILLE GARNISH

(a) Install the 4 No. 3 radiator grille garnishes.

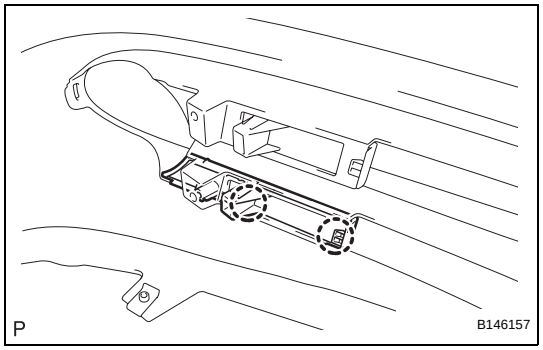

6. INSTALL NO. 2 RADIATOR GRILLE GARNISH

(a) Engage the 2 claws and install the No. 2 radiator grille garnish.
HINT:
Use the same procedures for the RH side and LH side.

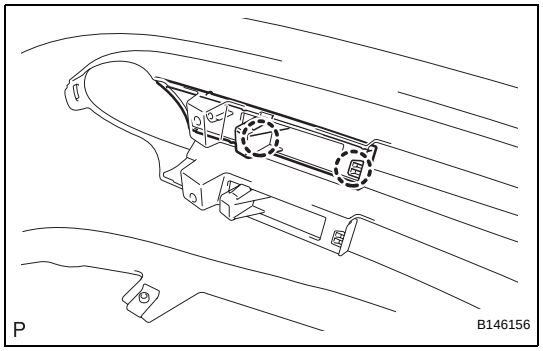

7. INSTALL RADIATOR GRILLE GARNISH

(a) Engage the 2 claws and install the radiator grille garnish.
HINT:
Use the same procedures for the RH side and LH side.

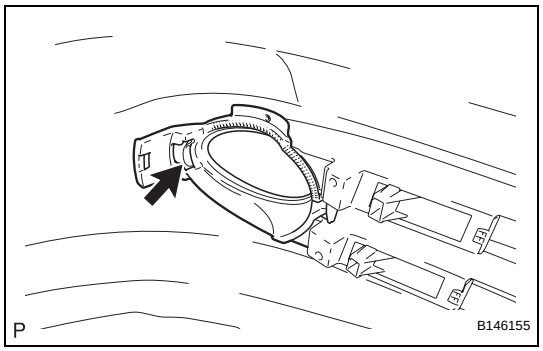

8. INSTALL FOG LIGHT BRACKET LH

(a) Engage the claw and install the fog light bracket LH.

9. INSTALL FOG LIGHT BRACKET RH

10. INSTALL FOG LIGHT ASSEMBLY LH (See page LI-144)

11. INSTALL FOG LIGHT ASSEMBLY RH

12. INSTALL RADIATOR GRILLE EMBLEM (w/o Dynamic Radar Cruise Control System)

HINT:
When installing the emblem, heat the radiator grille and emblem using a heat light.

Heating temperature

Item	Temperature
Radiator grille	**40 to 60°C (104 to 140°F)**
Emblem	**20 to 30°C (68 to 86°F)**

NOTICE:
Do not heat the radiator grille and emblem excessively.

(a) Clean the radiator grille surface.
  (1) Using a heat light, heat the radiator grille surface.
  (2) Remove the double-sided tape from the radiator grille.
  (3) Wipe off any tape adhesive residue with cleaner.
(b) Clean the radiator grille emblem. (If reusing the radiator grille emblem)
  (1) Using a heat light, heat the radiator grille emblem.
  (2) Remove the double-sided tape from the radiator grille emblem.
  (3) Wipe off any tape adhesive residue with cleaner.
  (4) Apply new double-sided tape to the radiator grille emblem.

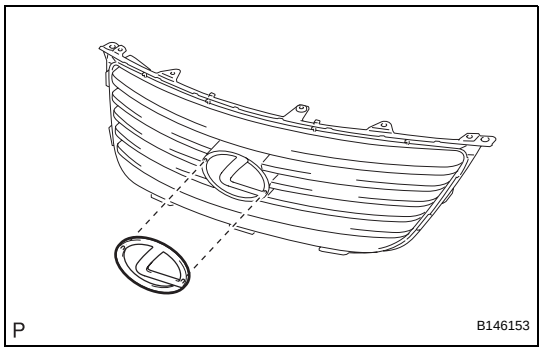

(c) Install the radiator grille emblem.
  (1) Using a heat light, heat the radiator grille and radiator grille emblem.
  (2) Remove the release paper from the radiator grille emblem.
  HINT:
  After removing the release paper, keep the exposed adhesive free from foreign matter.
  (3) Install the radiator grille emblem.

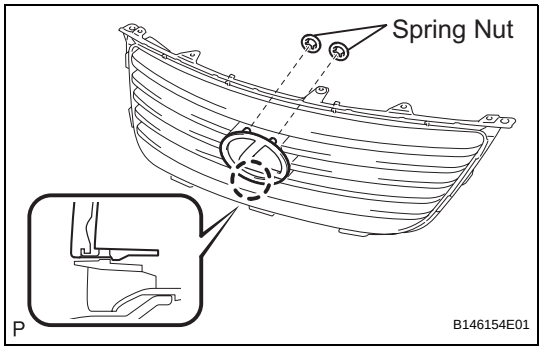

13. INSTALL RADIATOR GRILLE EMBLEM (w/ Dynamic Radar Cruise Control System)
(a) Engage the claw and install the radiator grille emblem.
(b) Install the 2 spring nuts.

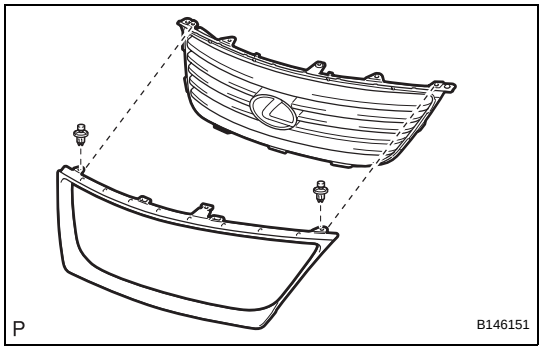

14. INSTALL RADIATOR GRILLE MOULDING
(a) Engage each claw and install the radiator grille moulding.
(b) Install the 2 clips.

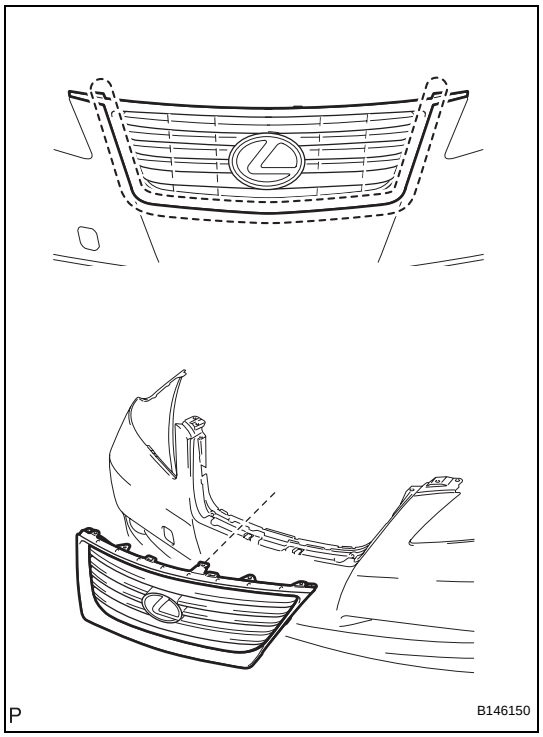

15. INSTALL RADIATOR GRILLE

(a) Engage each claw and install the radiator grille and radiator grille moulding.

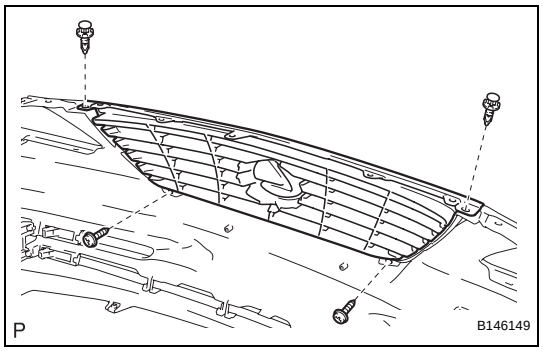

(b) Install the 2 screws and 2 clips.

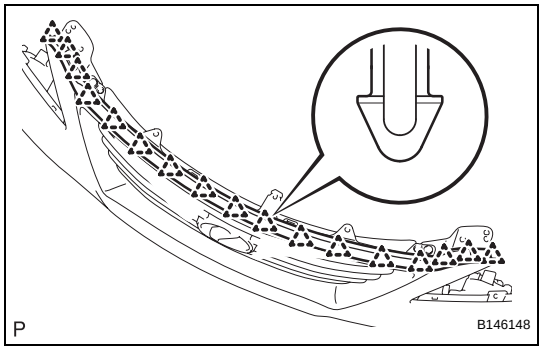

16. INSTALL RADIATOR GRILLE SEAL

(a) Engage the 17 clips and install the radiator grille seal.

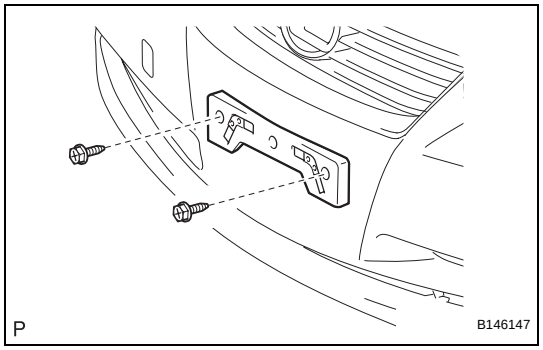

17. INSTALL FRONT BUMPER EXTENSION MOUNTING BRACKET

(a) Install the front bumper extension mounting bracket with the 2 screws.

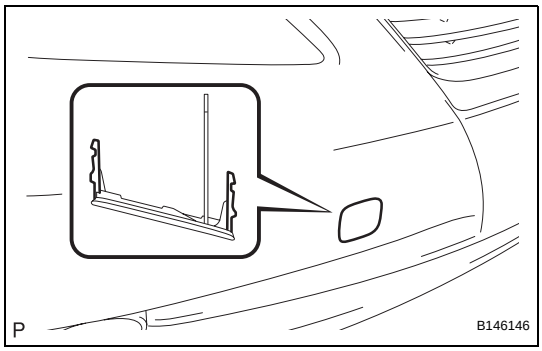

18. INSTALL FRONT BUMPER HOLE COVER
(a) Engage the 2 claws and remove the front bumper hole cover.

19. INSTALL NO. 1 ULTRASONIC SENSOR RETAINER (w/ Intuitive Parking Assist System) (See page PM-103)

20. INSTALL NO. 1 ULTRASONIC SENSOR (w/ Intuitive Parking Assist System) (See page PM-103)

INSTALLATION

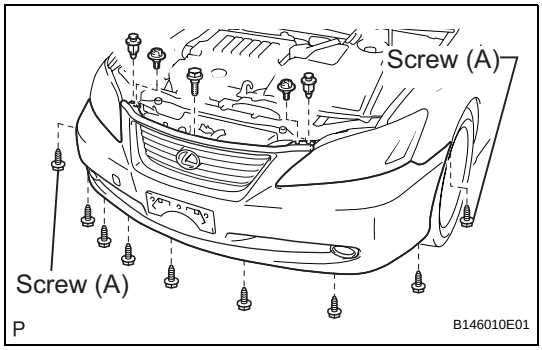

1. INSTALL FRONT BUMPER ASSEMBLY
(a) Connect each connector.
(b) Engage each claw.
(c) Install the front bumper assembly with the 9 screws, 2 clips, 2 radiator grille protectors and bolt.
Torque: Screw (A)
2.0 N*m (20 kgf*cm, 18 in.*lbf)

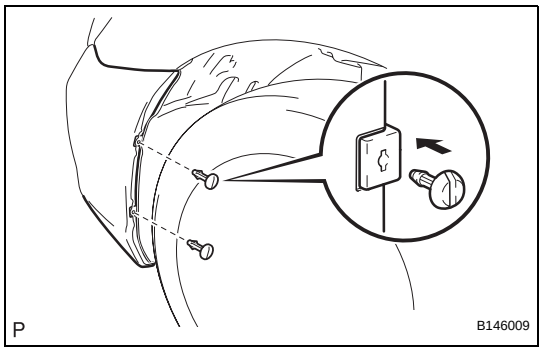

(d) Install the 2 pin hold clips.
HINT:
Use the same procedures for the RH side and LH side.

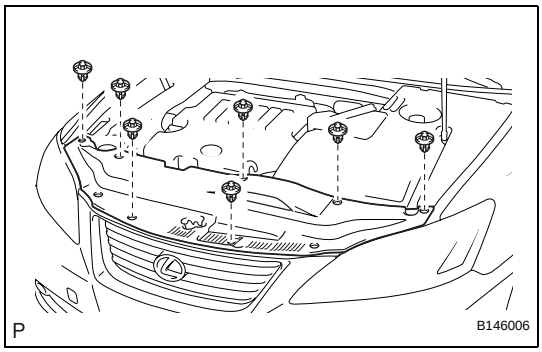

2. INSTALL COOL AIR INTAKE DUCT SEAL
(a) Install the cool air intake duct seal with the 7 clips.

3. VEHICLE PREPARATION FOR FOG LIGHT AIMING (See page LI-141)

4. PREPARATION FOR FOG LIGHT AIMING (See page LI-142)

5. INSPECT FOG LIGHT AIMING (See page LI-143)

6. ADJUST FOG LIGHT AIMING (See page LI-144)

DISASSEMBLY

1. **REMOVE NO. 1 ULTRASONIC SENSOR (w/ Intuitive Parking Assist System) (See page PM-101)**
2. **REMOVE NO. 1 ULTRASONIC SENSOR RETAINER (w/ Intuitive Parking Assist System) (See page PM-101)**
3. **REMOVE LUGGAGE ROOM WIRE (w/ Intuitive Parking Assist System)**
4. **REMOVE REAR BUMPER PLATE**
5. **REMOVE REAR BUMPER ENERGY ABSORBER**
   (a) Remove the rear bumper energy absorber.

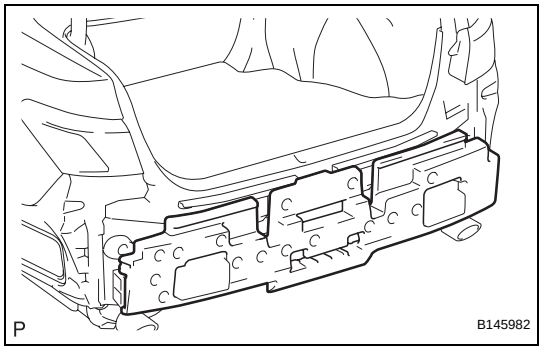

6. **REMOVE REAR BUMPER BAR**
   (a) Remove the rear bumper bar.

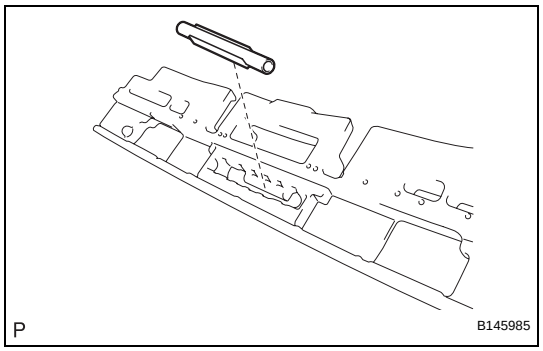

7. **REMOVE REAR BUMPER ARM LH**
   (a) Disengage the 4 claws and remove the rear bumper arm LH.
8. **REMOVE REAR BUMPER ARM RH**

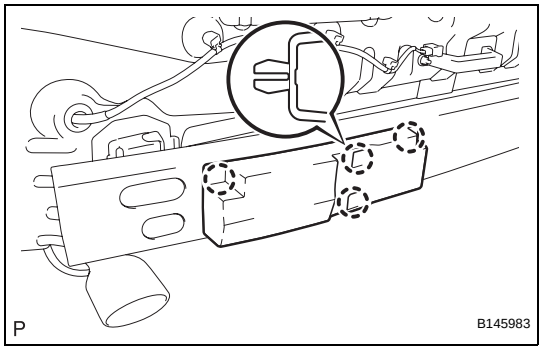

9. **REMOVE REAR BUMPER REINFORCEMENT**
   (a) Remove the 6 nuts and rear bumper reinforcement.

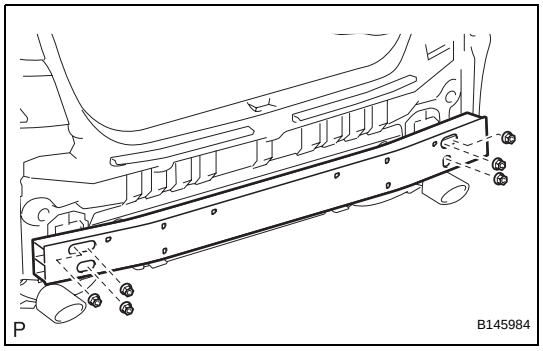

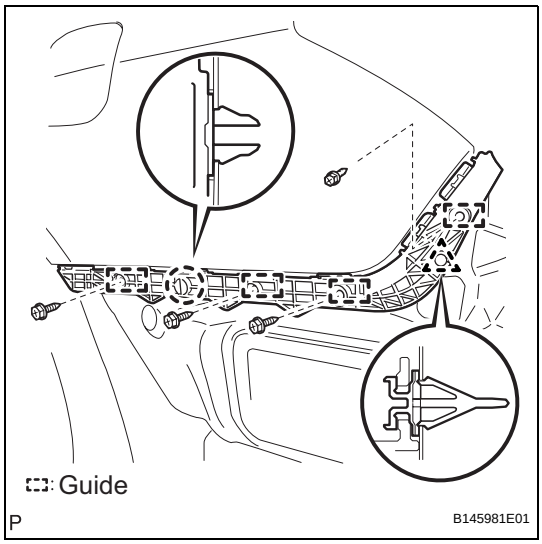

10. REMOVE REAR BUMPER SIDE SUPPORT LH
(a) Remove the 4 screws.
(b) Disengage the clip, claw and 4 guides, and remove the rear bumper side support LH.

11. REMOVE REAR BUMPER SIDE SUPPORT RH

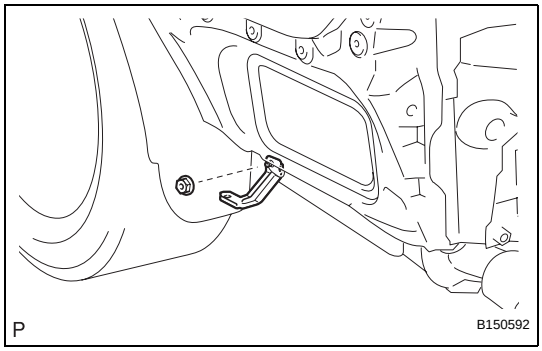

12. REMOVE WHEEL HOUSE REINFORCEMENT LH
(a) Remove the nut and wheel house reinforcement LH.

13. REMOVE WHEEL HOUSE REINFORCEMENT RH

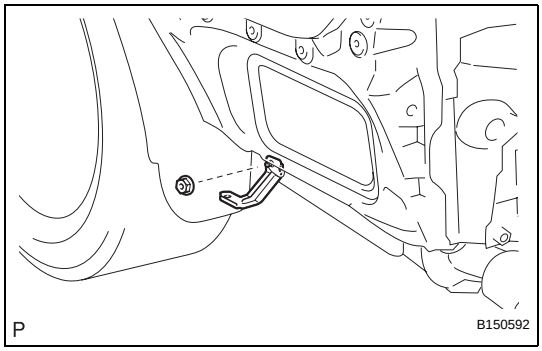

REASSEMBLY

1. INSTALL WHEEL HOUSE REINFORCEMENT LH
(a) Install the wheel house reinforcement LH with the nut.

2. INSTALL WHEEL HOUSE REINFORCEMENT RH

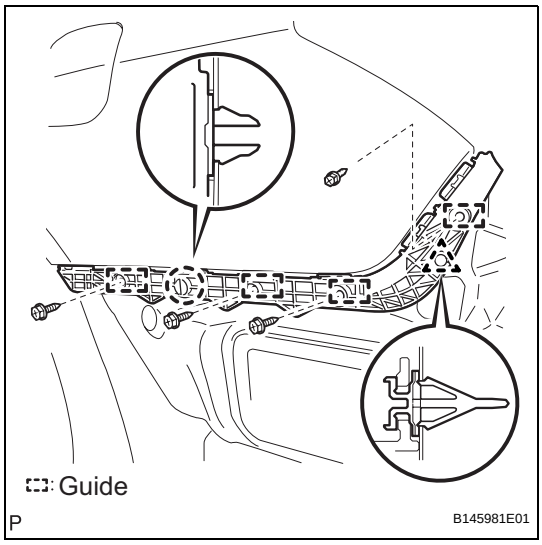

3. INSTALL REAR BUMPER SIDE SUPPORT LH
(a) Engage the clip, claw and 4 guides, and install the rear bumper side support LH.
Torque: 2.0 N*m (20 kgf*cm, 18 in.*lbf)
(b) Install the 4 screws.

4. INSTALL REAR BUMPER SIDE SUPPORT RH

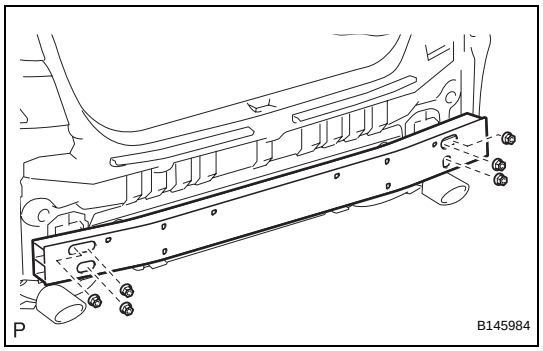

5. INSTALL REAR BUMPER REINFORCEMENT

(a) Install the rear bumper reinforcement with the 6 nuts.
Torque: 68 N*m (693 kgf*cm, 50 ft.*lbf)

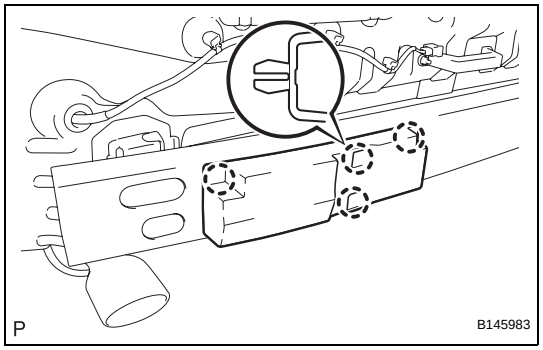

6. INSTALL REAR BUMPER ARM LH

(a) Engage the 4 claws and install the rear bumper arm LH.

7. INSTALL REAR BUMPER ARM RH

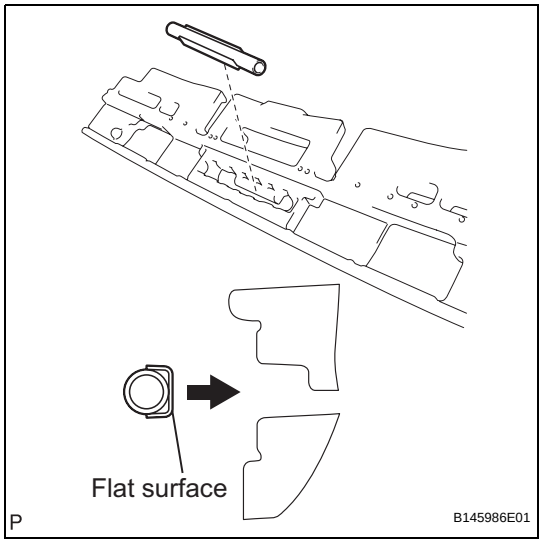

8. INSTALL REAR BUMPER BAR

(a) Install the rear bumper bar as shown in the illustration.

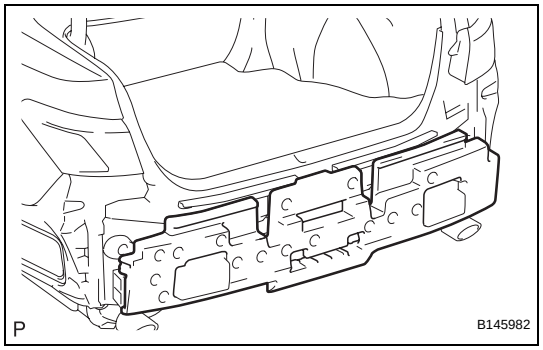

9. INSTALL REAR BUMPER ENERGY ABSORBER

(a) Install the rear bumper energy absorber.

10. INSTALL REAR BUMPER PLATE

11. INSTALL LUGGAGE ROOM WIRE (w/ Intuitive Parking Assist System)

12. INSTALL NO. 1 ULTRASONIC SENSOR RETAINER (w/ Intuitive Parking Assist System) (See page PM-102)

13. INSTALL NO. 1 ULTRASONIC SENSOR (w/ Intuitive Parking Assist System) (See page PM-102)

INSTALLATION

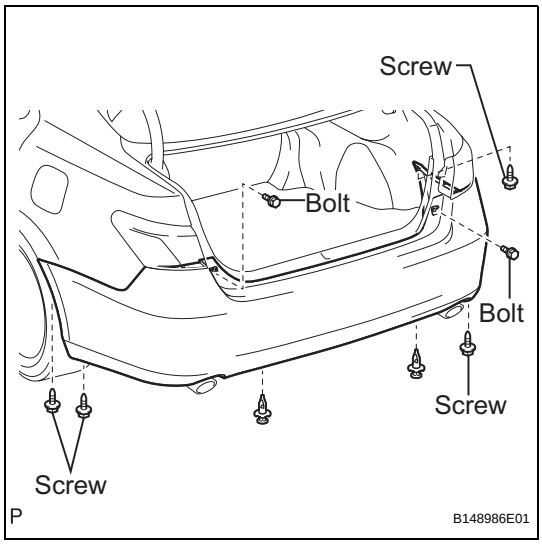

1. INSTALL REAR BUMPER ASSEMBLY (w/o Intuitive Parking Assist System)

(a) Engage each claw.

(b) Install the rear bumper assembly with the 2 clips, 4 screws and 2 bolts.

Torque: Bolt
5.5 N*m (56 kgf*cm, 49 in.*lbf)
Screw
2.0 N*m (20 kgf*cm, 18 in.*lbf)

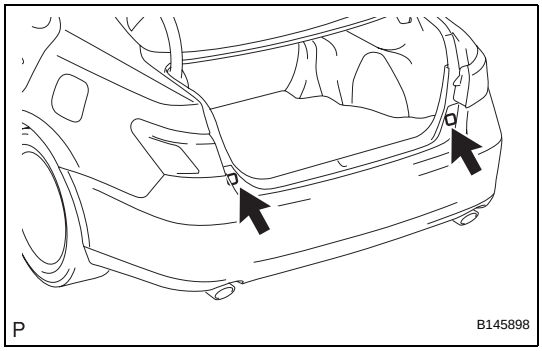

(c) Install the 2 rear bumper plates.

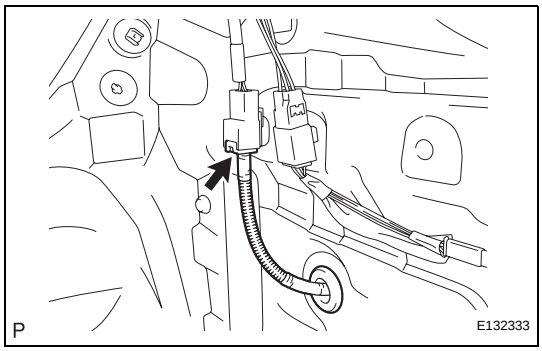

2. INSTALL REAR BUMPER ASSEMBLY (w/ Intuitive Parking Assist System)

(a) Install the grommet.

(b) Connect the connector.

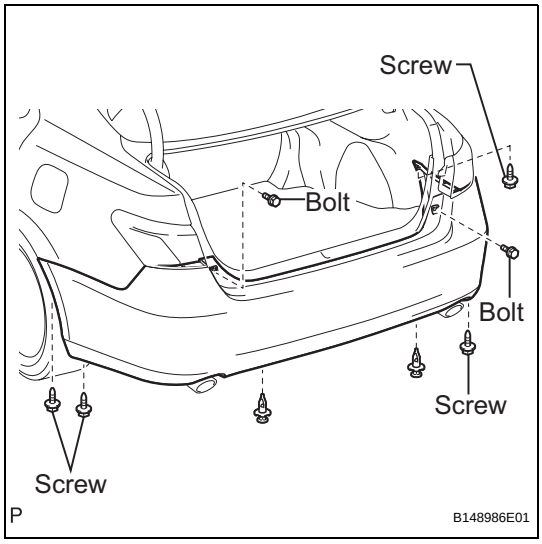

(c) Engage each claw.

(d) Install the rear bumper assembly with the 2 clips, 4 screws and 2 bolts.

Torque: Bolt
5.5 N*m (56 kgf*cm, 49 in.*lbf)
Screw
2.0 N*m (20 kgf*cm, 18 in.*lbf)

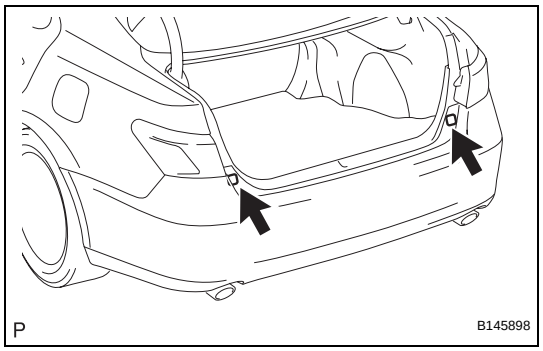

(e) Install the 2 rear bumper plates.

3. **INSTALL LUGGAGE COMPARTMENT INNER TRIM COVER RH (w/ Intuitive Parking Assist System) (See page ED-88)**
4. **INSTALL REAR FLOOR FINISH PLATE (w/ Intuitive Parking Assist System) (See page ED-88)**
5. **INSTALL NO. 1 LUGGAGE COMPARTMENT TRIM HOOK (w/ Intuitive Parking Assist System) (See page ED-89)**
6. **INSTALL LUGGAGE HOLD BELT STRIKER ASSEMBLY (w/ Intuitive Parking Assist System) (See page ED-89)**
7. **INSTALL SPARE WHEEL COVER TRAY (w/ Intuitive Parking Assist System)**
8. **INSTALL LUGGAGE COMPARTMENT FLOOR MAT (w/ Intuitive Parking Assist System)**

REMOVAL

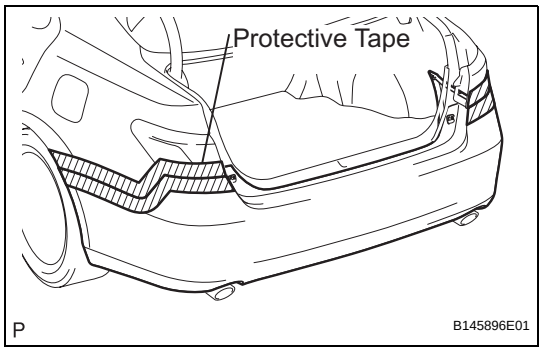

1. REMOVE REAR BUMPER ASSEMBLY (w/o Intuitive Parking Assist System)

(a) Put protective tape around the rear bumper assembly.

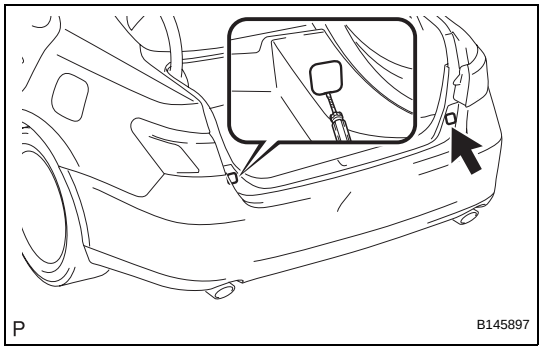

(b) Using a screwdriver, open the 2 rear bumper plates.
HINT:
Tape the screwdriver tip before use.

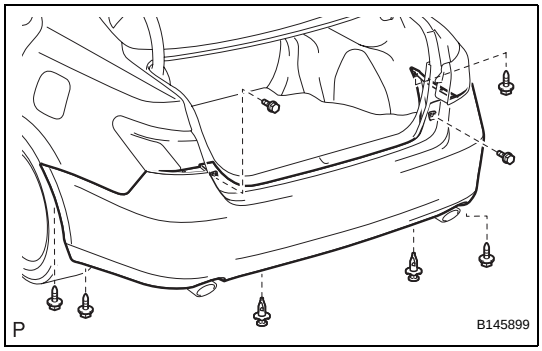

(c) Remove the 2 clips, 4 screws and 2 bolts.

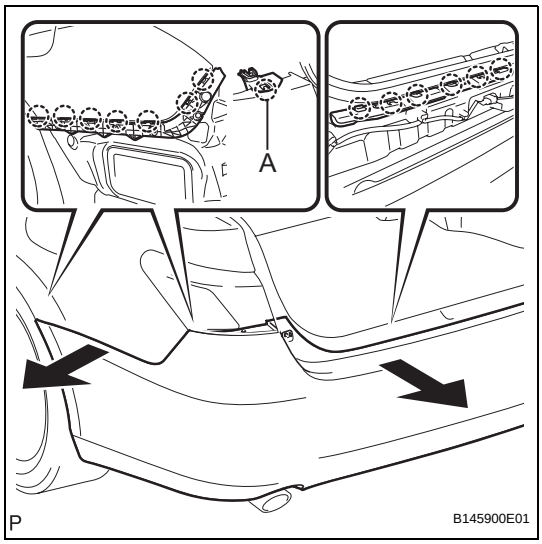

(d) Disengage the 14 claws and disconnect the rear bumper assembly as shown in the illustration.
HINT:
- When disengaging claw A, slide the rear bumper toward the center of the vehicle.
- Use the same procedures for the RH side and LH side.

(e) Remove the rear bumper assembly.

2. REMOVE LUGGAGE COMPARTMENT FLOOR MAT (w/ Intuitive Parking Assist System)

3. REMOVE SPARE WHEEL COVER TRAY (w/ Intuitive Parking Assist System)

4. REMOVE LUGGAGE HOLD BELT STRIKER ASSEMBLY (w/ Intuitive Parking Assist System) (See page ED-82)

5. REMOVE NO. 1 LUGGAGE COMPARTMENT TRIM HOOK (w/ Intuitive Parking Assist System) (See page ED-83)

6. **REMOVE REAR FLOOR FINISH PLATE (w/ Intuitive Parking Assist System) (See page ED-83)**

7. **REMOVE LUGGAGE COMPARTMENT INNER TRIM COVER RH (w/ Intuitive Parking Assist System) (See page ED-83)**

8. **REMOVE REAR BUMPER ASSEMBLY (w/ Intuitive Parking Assist System)**
   (a) Disconnect the connector.
   (b) Disengage the grommet.

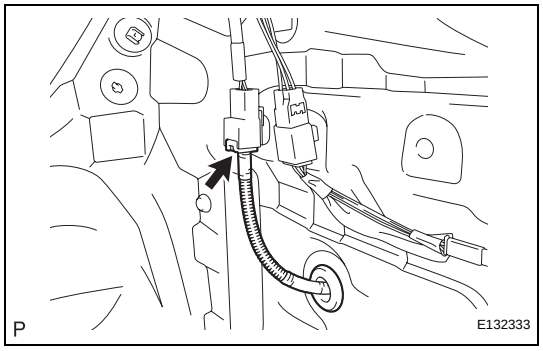

   (c) Put protective tape around the rear bumper assembly.

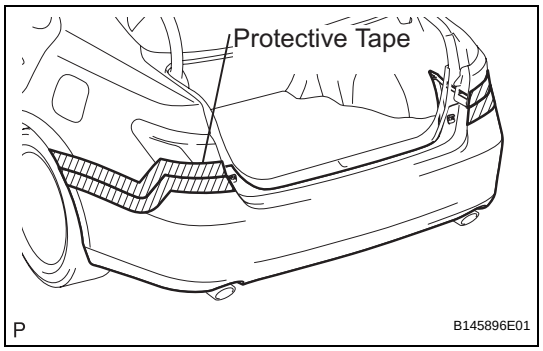

   (d) Using a screwdriver, open the 2 rear bumper plates.
   HINT:
   Tape the screwdriver tip before use.

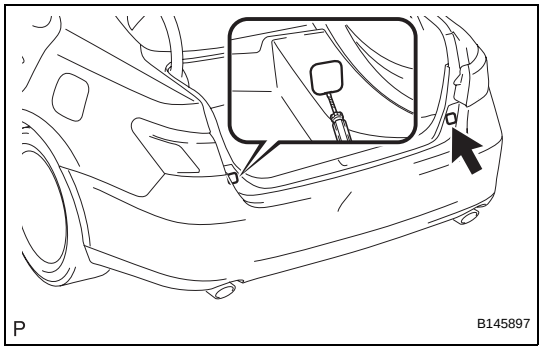

   (e) Remove the 2 clips, 4 screws and 2 bolts.

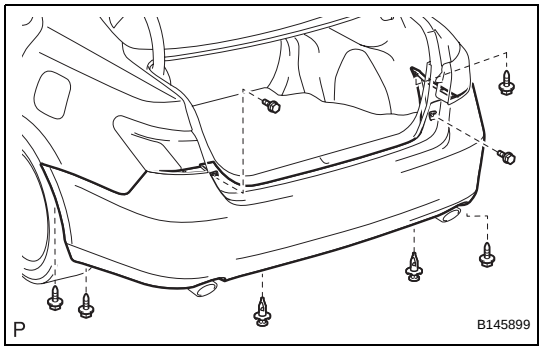

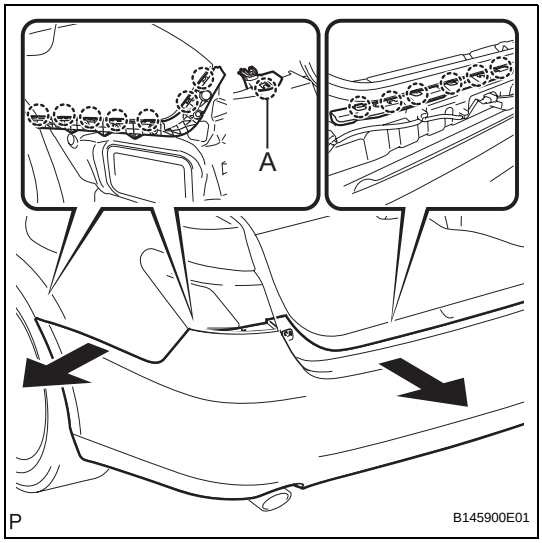

(f) Disengage the 14 claws and disconnect the rear bumper assembly as shown in the illustration.
HINT:
- When disengaging claw A, slide the rear bumper toward the center of the vehicle.
- Use the same procedures for the RH side and LH side.

(g) Remove the rear bumper assembly.

DISASSEMBLY

1. **REMOVE NO. 1 ULTRASONIC SENSOR (w/ Intuitive Parking Assist System) (See page PM-101)**
2. **REMOVE NO. 1 ULTRASONIC SENSOR RETAINER (w/ Intuitive Parking Assist System) (See page PM-101)**
3. **REMOVE LUGGAGE ROOM WIRE (w/ Intuitive Parking Assist System)**
4. **REMOVE REAR BUMPER PLATE**
5. **REMOVE REAR BUMPER ENERGY ABSORBER**
   (a) Remove the rear bumper energy absorber.

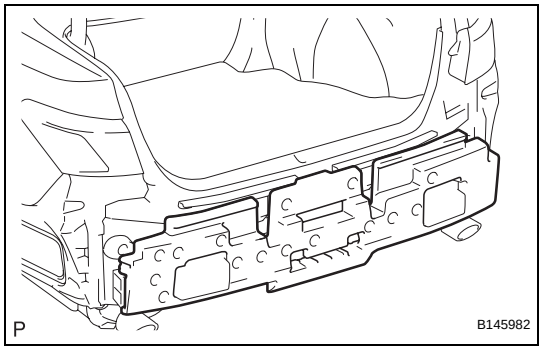

6. **REMOVE REAR BUMPER BAR**
   (a) Remove the rear bumper bar.

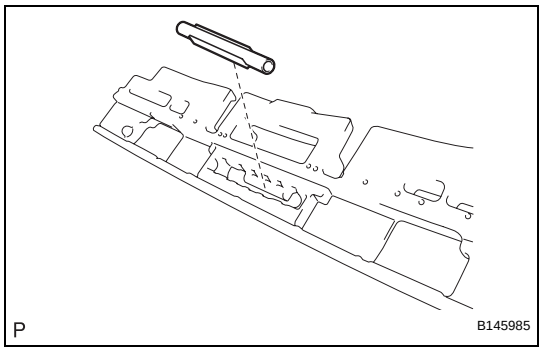

7. **REMOVE REAR BUMPER ARM LH**
   (a) Disengage the 4 claws and remove the rear bumper arm LH.
8. **REMOVE REAR BUMPER ARM RH**

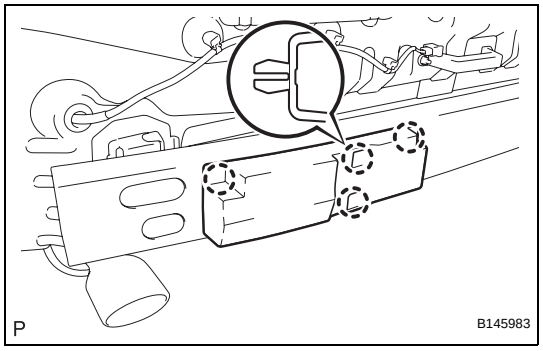

9. **REMOVE REAR BUMPER REINFORCEMENT**
   (a) Remove the 6 nuts and rear bumper reinforcement.

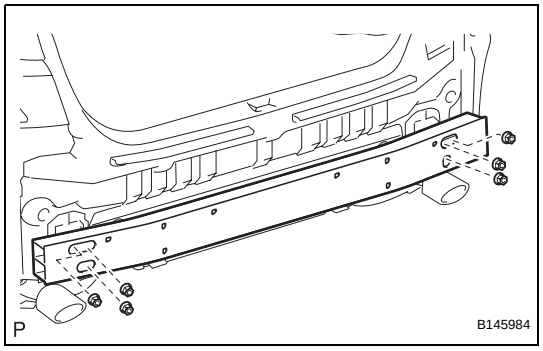

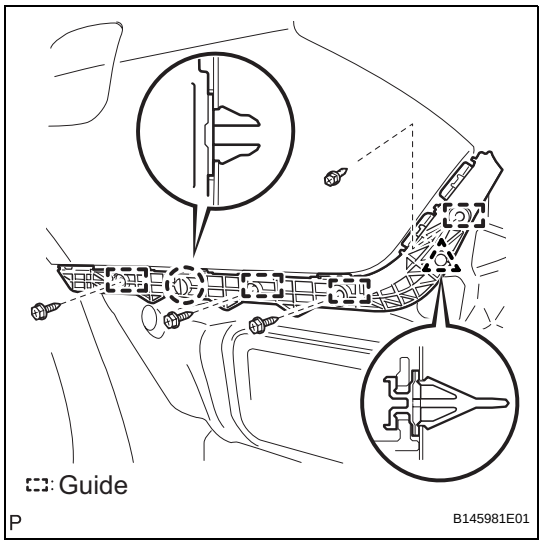

10. REMOVE REAR BUMPER SIDE SUPPORT LH
(a) Remove the 4 screws.
(b) Disengage the clip, claw and 4 guides, and remove the rear bumper side support LH.

11. REMOVE REAR BUMPER SIDE SUPPORT RH

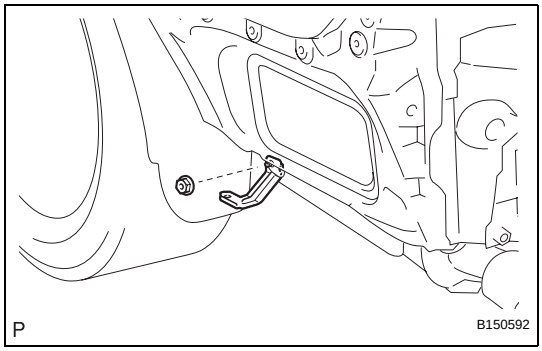

12. REMOVE WHEEL HOUSE REINFORCEMENT LH
(a) Remove the nut and wheel house reinforcement LH.

13. REMOVE WHEEL HOUSE REINFORCEMENT RH

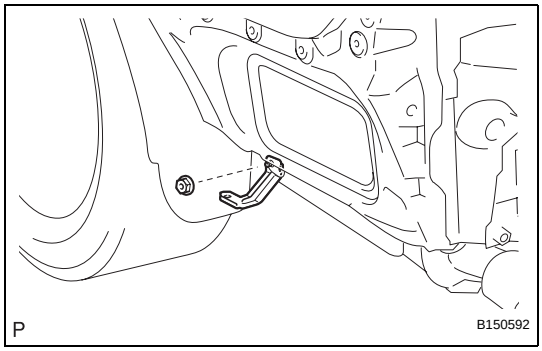

REASSEMBLY

1. INSTALL WHEEL HOUSE REINFORCEMENT LH
(a) Install the wheel house reinforcement LH with the nut.

2. INSTALL WHEEL HOUSE REINFORCEMENT RH

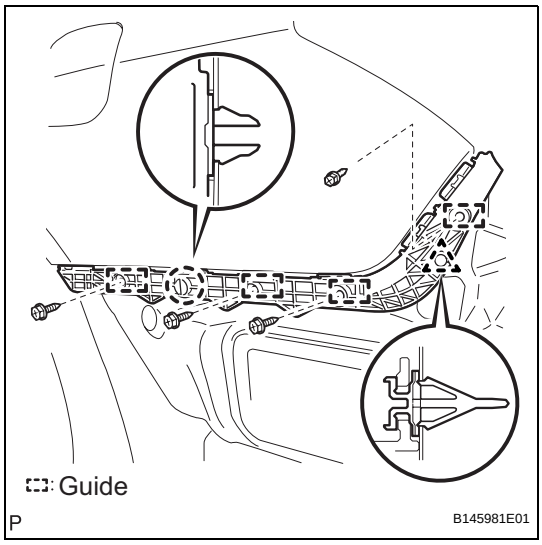

3. INSTALL REAR BUMPER SIDE SUPPORT LH
(a) Engage the clip, claw and 4 guides, and install the rear bumper side support LH.
Torque: 2.0 N*m (20 kgf*cm, 18 in.*lbf)
(b) Install the 4 screws.

4. INSTALL REAR BUMPER SIDE SUPPORT RH

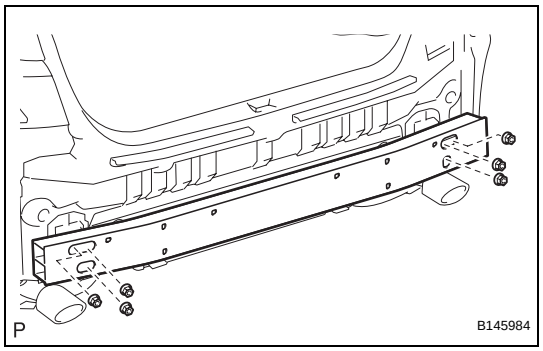

5. INSTALL REAR BUMPER REINFORCEMENT

(a) Install the rear bumper reinforcement with the 6 nuts.
Torque: 68 N*m (693 kgf*cm, 50 ft.*lbf)

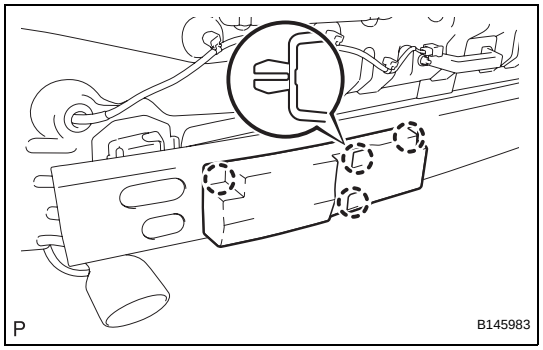

6. INSTALL REAR BUMPER ARM LH

(a) Engage the 4 claws and install the rear bumper arm LH.

7. INSTALL REAR BUMPER ARM RH

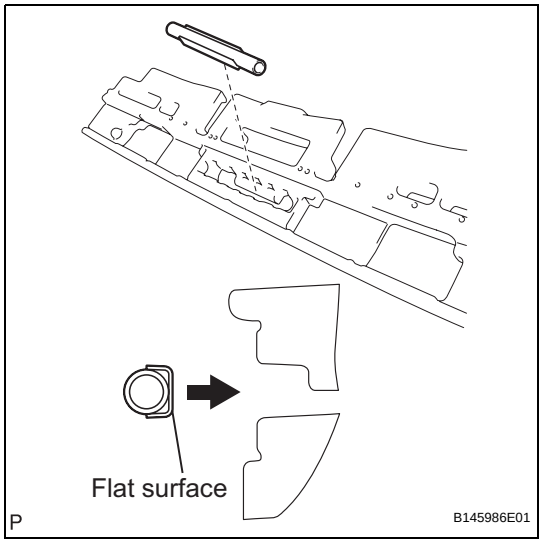

8. INSTALL REAR BUMPER BAR

(a) Install the rear bumper bar as shown in the illustration.

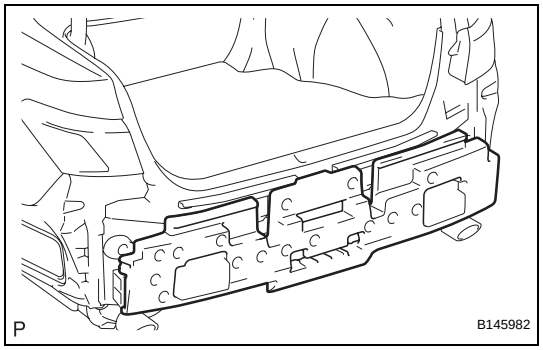

9. INSTALL REAR BUMPER ENERGY ABSORBER

(a) Install the rear bumper energy absorber.

10. INSTALL REAR BUMPER PLATE

11. INSTALL LUGGAGE ROOM WIRE (w/ Intuitive Parking Assist System)

12. INSTALL NO. 1 ULTRASONIC SENSOR RETAINER (w/ Intuitive Parking Assist System) (See page PM-102)

13. INSTALL NO. 1 ULTRASONIC SENSOR (w/ Intuitive Parking Assist System) (See page PM-102)

INSTALLATION

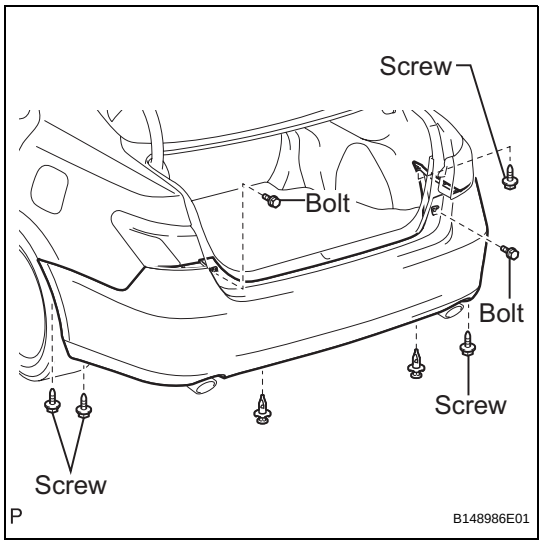

1. INSTALL REAR BUMPER ASSEMBLY (w/o Intuitive Parking Assist System)

(a) Engage each claw.

(b) Install the rear bumper assembly with the 2 clips, 4 screws and 2 bolts.

Torque: Bolt
5.5 N*m (56 kgf*cm, 49 in.*lbf)
Screw
2.0 N*m (20 kgf*cm, 18 in.*lbf)

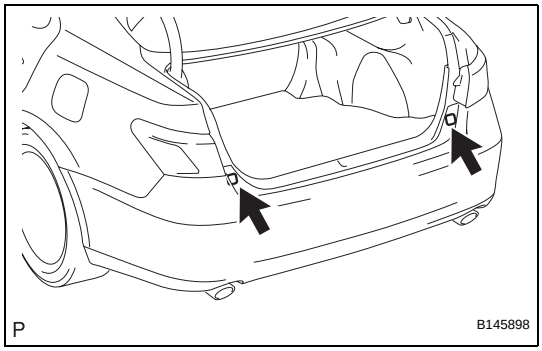

(c) Install the 2 rear bumper plates.

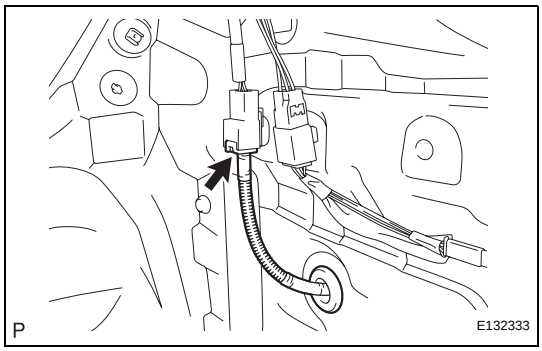

2. INSTALL REAR BUMPER ASSEMBLY (w/ Intuitive Parking Assist System)

(a) Install the grommet.

(b) Connect the connector.

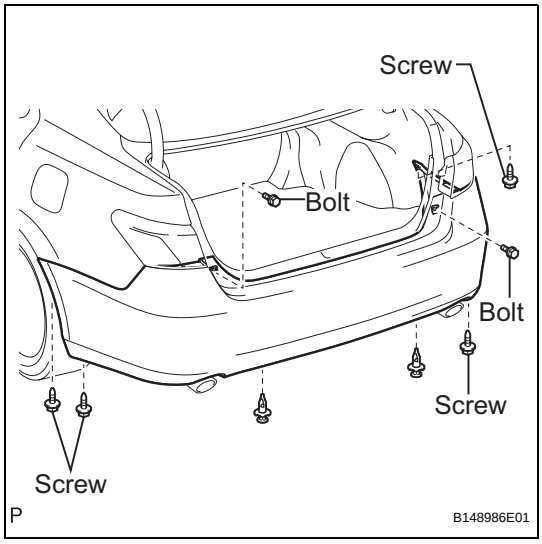

(c) Engage each claw.

(d) Install the rear bumper assembly with the 2 clips, 4 screws and 2 bolts.

Torque: Bolt
5.5 N*m (56 kgf*cm, 49 in.*lbf)
Screw
2.0 N*m (20 kgf*cm, 18 in.*lbf)

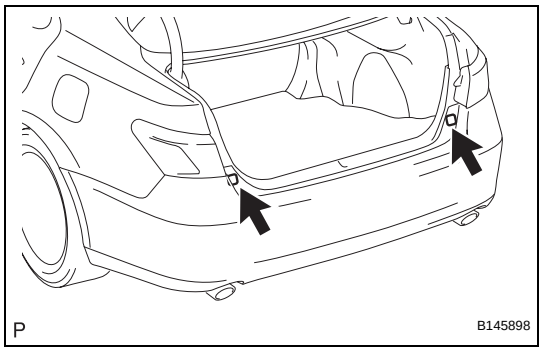

(e) Install the 2 rear bumper plates.

3. **INSTALL LUGGAGE COMPARTMENT INNER TRIM COVER RH (w/ Intuitive Parking Assist System) (See page ED-88)**
4. **INSTALL REAR FLOOR FINISH PLATE (w/ Intuitive Parking Assist System) (See page ED-88)**
5. **INSTALL NO. 1 LUGGAGE COMPARTMENT TRIM HOOK (w/ Intuitive Parking Assist System) (See page ED-89)**
6. **INSTALL LUGGAGE HOLD BELT STRIKER ASSEMBLY (w/ Intuitive Parking Assist System) (See page ED-89)**
7. **INSTALL SPARE WHEEL COVER TRAY (w/ Intuitive Parking Assist System)**
8. **INSTALL LUGGAGE COMPARTMENT FLOOR MAT (w/ Intuitive Parking Assist System)**

INSTALLATION

HINT:
When installing the symbol emblem or name plate, heat the vehicle body and symbol emblem or name plate using a heat light.

Heating temperature

Item	Temperature
Vehicle Body	**40 to 60°C (104 to 140°F)**
Symbol Emblem	**20 to 30°C (68 to 86°F)**
Name Plate	**20 to 30°C (68 to 86°F)**

NOTICE:
Do not heat the vehicle body and name plate excessively.

1. INSTALL SYMBOL EMBLEM

(a) Clean the vehicle body surface.
  (1) Using a heat light, heat the vehicle body surface.
  (2) Remove the double-sided tape from the vehicle body.
  (3) Wipe off any tape adhesive residue with cleaner.

(b) Clean the symbol emblem. (If reusing the symbol emblem)
  (1) Using a heat light, heat the symbol emblem.
  (2) Remove the double-sided tape from the symbol emblem.
  (3) Wipe off any tape adhesive residue with cleaner.
  (4) Apply new double-sided tape to the symbol emblem.

(c) Install the symbol emblem.

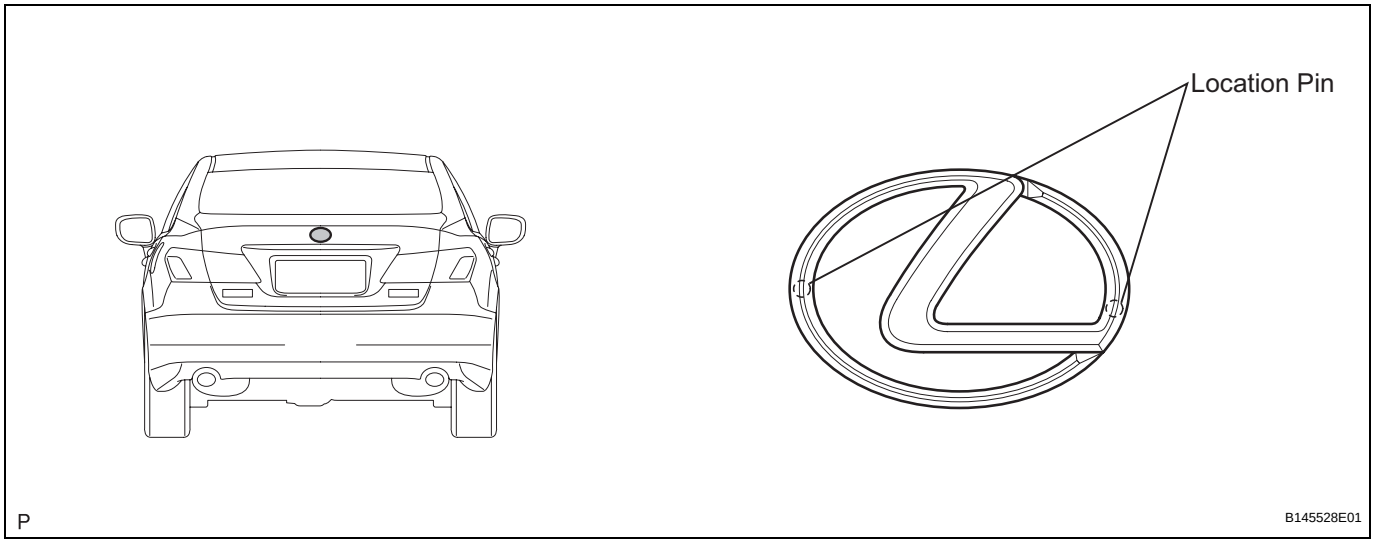

  (1) Using a heat light, heat the vehicle body and symbol emblem.

(2) Remove the release paper from the symbol emblem.
HINT:
After removing the release paper, keep the exposed adhesive free from foreign matter.
(3) Install the symbol emblem.

2. INSTALL NO. 7 LUGGAGE COMPARTMENT DOOR NAME PLATE

(a) Clean the vehicle body surface.
(1) Using a heat light, heat the vehicle body surface.
(2) Remove the double-sided tape from the vehicle body.
(3) Wipe off any tape adhesive residue with cleaner.
(b) Clean the name plate. (If reusing the name plate)
(1) Using a heat light, heat the name plate.
(2) Remove the double-sided tape from the name plate.
(3) Wipe off any tape adhesive residue with cleaner.
(4) Apply new double-sided tape to the name plate.
(c) Install the name plate.

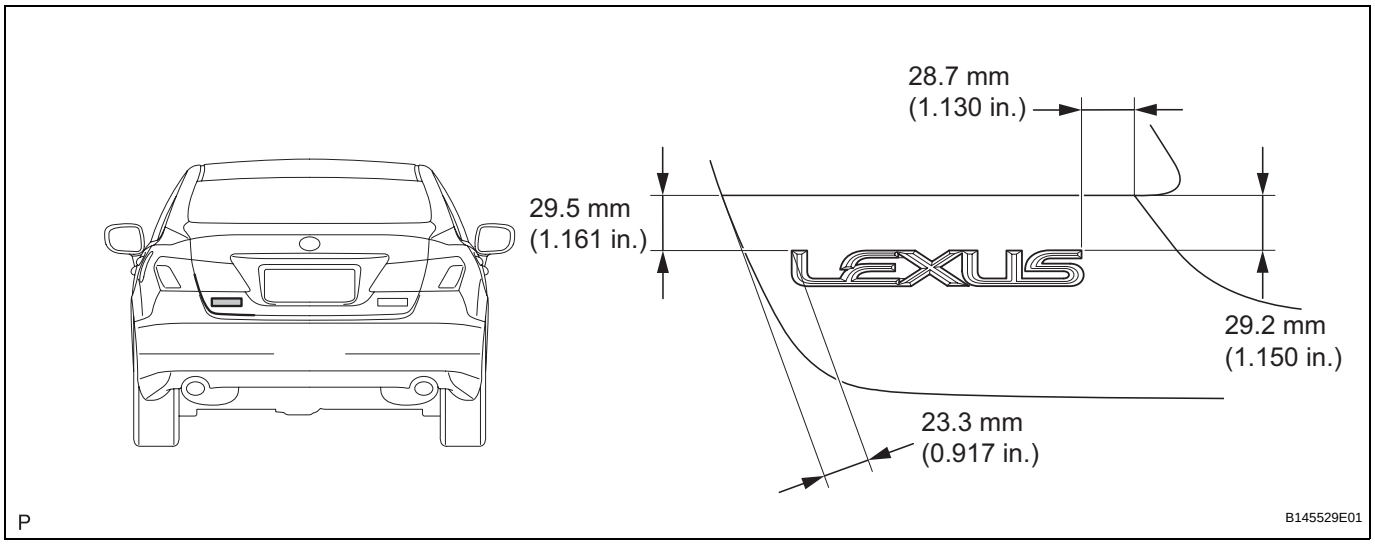

(1) Using a heat light, heat the vehicle body and name plate.
(2) Remove the release paper from the name plate.
HINT:
After removing the release paper, keep the exposed adhesive free from foreign matter.
(3) Install the name plate.

3. INSTALL NO. 2 LUGGAGE COMPARTMENT DOOR NAME PLATE

(a) Clean the vehicle body surface.
(1) Using a heat light, heat the vehicle body surface.

(2) Remove the double-sided tape from the vehicle body.
(3) Wipe off any tape adhesive residue with cleaner.

(b) Clean the name plate. (If reusing the name plate)
(1) Using a heat light, heat the name plate.
(2) Remove the double-sided tape from the name plate.
(3) Wipe off any tape adhesive residue with cleaner.
(4) Apply new double-sided tape to the name plate.

(c) Install the name plate.

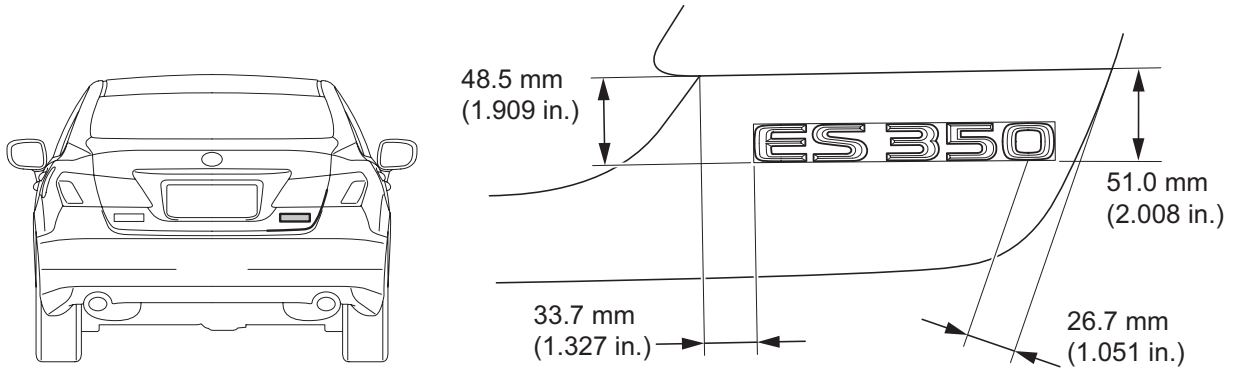

P B145530E01

(1) Using a heat light, heat the vehicle body and name plate.
(2) Remove the release paper from the name plate.
HINT:
After removing the release paper, keep the exposed adhesive free from foreign matter.
(3) Install the name plate.

INSTALLATION

1. INSTALL ROOF DRIP SIDE FINISH MOULDING CLIP

NOTICE:

If installing new clips, remove the double-sided tape remaining where the clips will be installed on the body and clean the body with a non-residue type solvent.

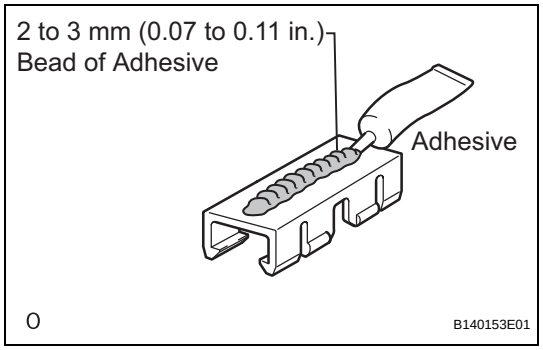

(a) Apply a 2 to 3 mm (0.07 to 0.11 in.) bead of adhesive (3M DP-105 or equivalent) to new roof drip side finish moulding clips.
HINT:
Adhesive strength (tensile strength): 13.7 MPa (140 kgf/cm^2) or more (when the temperature is 23°C)

(b) Install the roof drip side finish moulding clips to the positions on the roof panel shown in the illustration. Determine the locations and firmly press and install the roof drip side finish moulding clips after lightly rubbing up adhesive (3M DP-105 or equivalent).

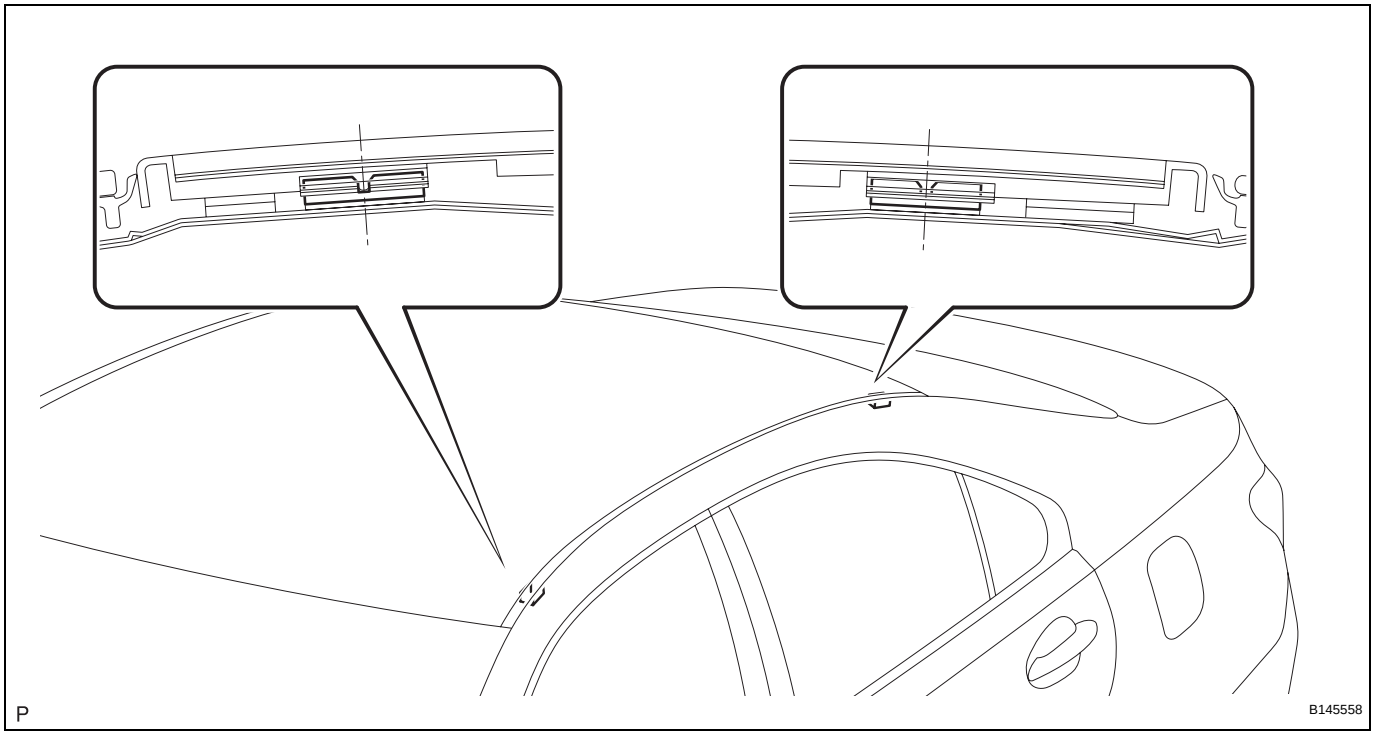

HINT:
- Initial hardening time: 20 minutes
- Complete hardening time: 48 hours

2. INSTALL ROOF DRIP SIDE FINISH MOULDING CENTER

HINT:
When installing the roof drip side finish moulding center, heat the vehicle body and roof drip side finish moulding center using a heat light.

Heating temperature

Item	Temperature
Vehicle Body	**40 to 60°C (104 to 140°F)**

Item	Temperature
Moulding	**20 to 30°C (68 to 86°F)**

NOTICE:
Do not heat the vehicle body and roof drip side finish moulding center excessively.

(a) Clean the vehicle body surface.
  (1) Using a heat light, heat the vehicle body surface.
  (2) Remove the double-sided tape from the vehicle body.
  (3) Wipe off any tape adhesive residue with cleaner.

(b) Clean the roof drip side finish moulding center. (If reusing the roof drip side finish moulding center)

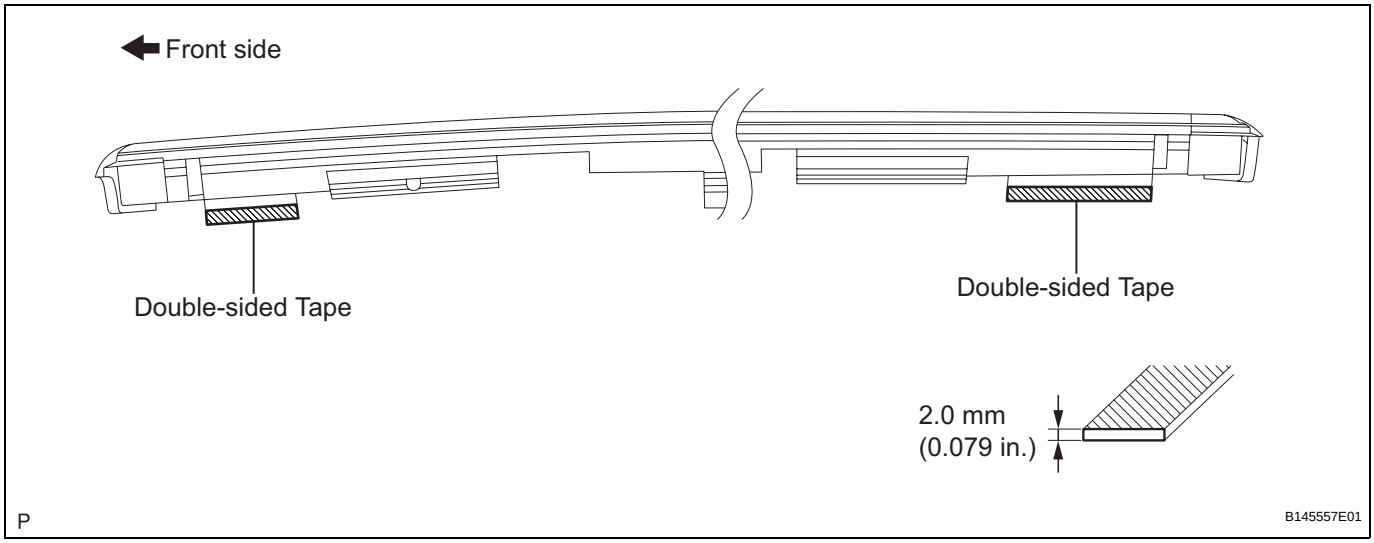

  (1) Using a heat light, heat the roof drip side finish moulding center.
  (2) Remove the double-sided tape from the roof drip side finish moulding center.
  (3) Wipe off any tape adhesive residue with cleaner.
  (4) Apply new double-sided tape to the roof drip side finish moulding center.

(c) Install the roof drip side finish moulding center.

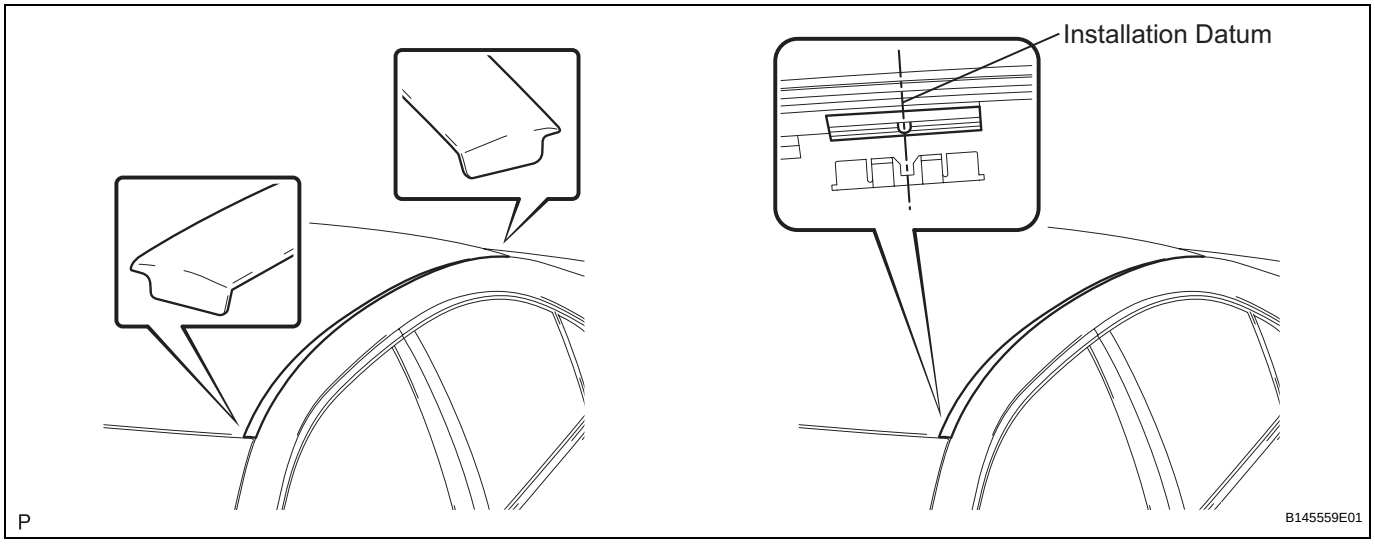

(1) Using a heat light, heat the vehicle body and roof drip side finish moulding center.

(2) Remove the release paper from the roof drip side finish moulding center.
HINT:
After removing the release paper, keep the exposed adhesive free from foreign matter.

(3) Install the roof drip side finish moulding center when 20 minutes or more have elapsed after pressing and installing the roof drip side finish moulding clips.
NOTICE:
- **Install the roof drip side finish moulding center in the proper direction.**
- **Set the front clip to the installation datum. Make sure that the front clip and roof drip side finish moulding center are fit each other.**

FRONT DOOR BELT MOULDING

COMPONENTS

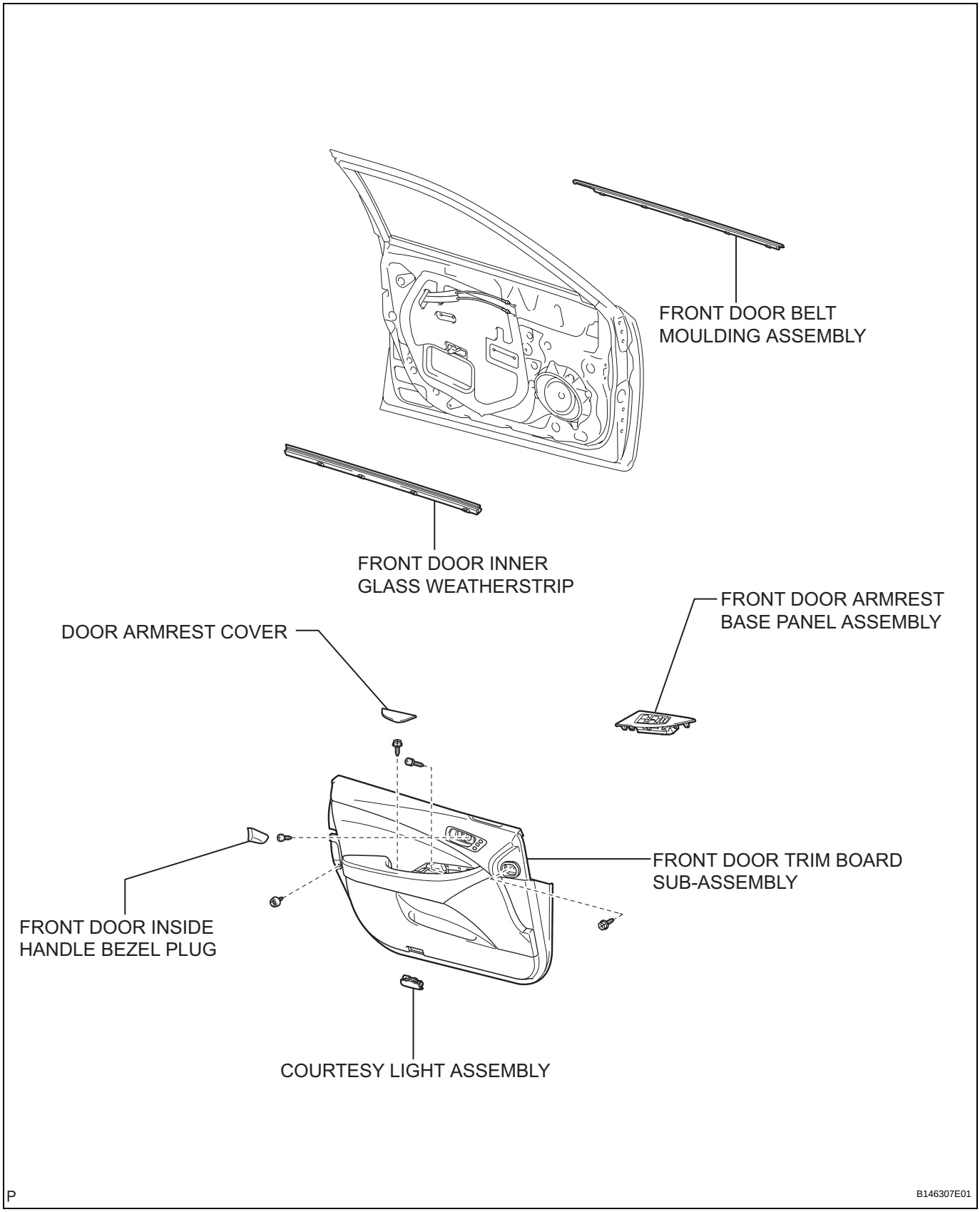

REMOVAL

1. **REMOVE FRONT DOOR INSIDE HANDLE BEZEL PLUG (See page ED-32)**
2. **REMOVE FRONT DOOR ARMREST BASE PANEL ASSEMBLY (See page ED-33)**
3. **REMOVE COURTESY LIGHT ASSEMBLY (See page ED-34)**
4. **REMOVE DOOR ARMREST COVER (See page ED-34)**
5. **REMOVE FRONT DOOR TRIM BOARD SUB-ASSEMBLY (See page ED-34)**
6. **REMOVE FRONT DOOR INNER GLASS WEATHERSTRIP (See page ED-35)**
7. **REMOVE FRONT DOOR BELT MOULDING ASSEMBLY**
   (a) Fully open the front door glass.
   (b) Put protective tape around the front door belt moulding assembly.

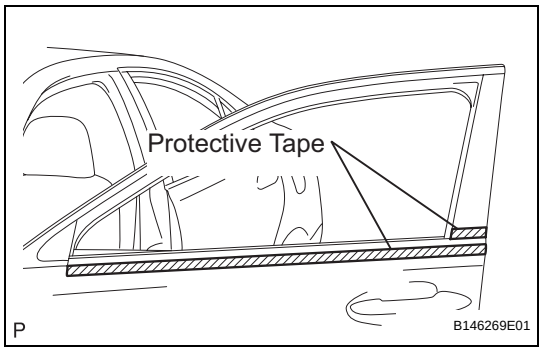

   (c) Using a moulding remover, disengage the 5 clips and remove the front door belt moulding assembly.
   HINT:
   Tape the remover tip before use.

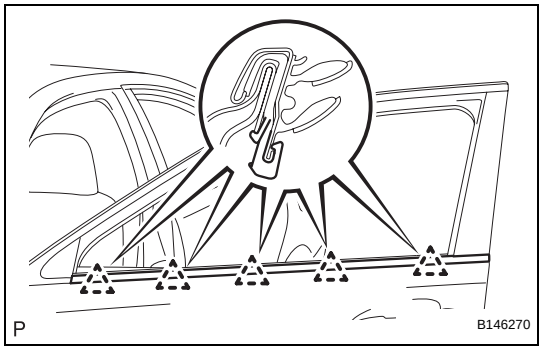

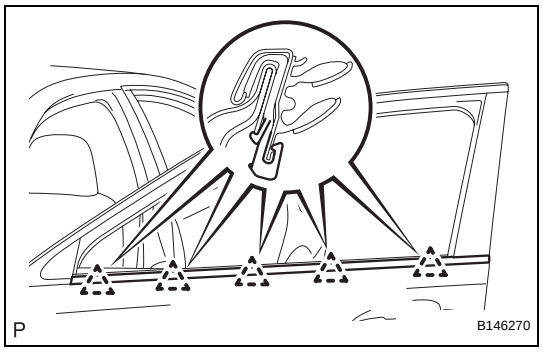

INSTALLATION

1. **INSTALL FRONT DOOR BELT MOULDING ASSEMBLY**
   (a) Engage the 5 clips and install the front door belt moulding assembly.
2. **INSTALL FRONT DOOR INNER GLASS WEATHERSTRIP (See page ED-52)**
3. **INSTALL FRONT DOOR TRIM BOARD SUB-ASSEMBLY (See page ED-52)**
4. **INSTALL DOOR ARMREST COVER (See page ED-53)**
5. **INSTALL COURTESY LIGHT ASSEMBLY (See page ED-53)**
6. **INSTALL FRONT DOOR ARMREST BASE PANEL ASSEMBLY (See page ED-53)**

7. **INSTALL FRONT DOOR INSIDE HANDLE BEZEL PLUG (See page ED-54)**

INSTALLATION

1. INSTALL FRONT DOOR LOWER OUTSIDE MOULDING

HINT:
When installing the front door lower outside moulding, heat the vehicle body and front door lower outside moulding using a heat light.

Heating temperature

Item	Temperature
Vehicle Body	**40 to 60°C (104 to 140°F)**
Moulding	**20 to 30°C (68 to 86°F)**

NOTICE:
Do not heat the vehicle body and front door lower outside moulding excessively.

(a) Clean the vehicle body surface.
  (1) Using a heat light, heat the vehicle body surface.
  (2) Remove the double-sided tape from the vehicle body.
  (3) Wipe off any tape adhesive residue with cleaner.

(b) Clean the front door lower outside moulding. (If reusing the front door lower outside moulding)

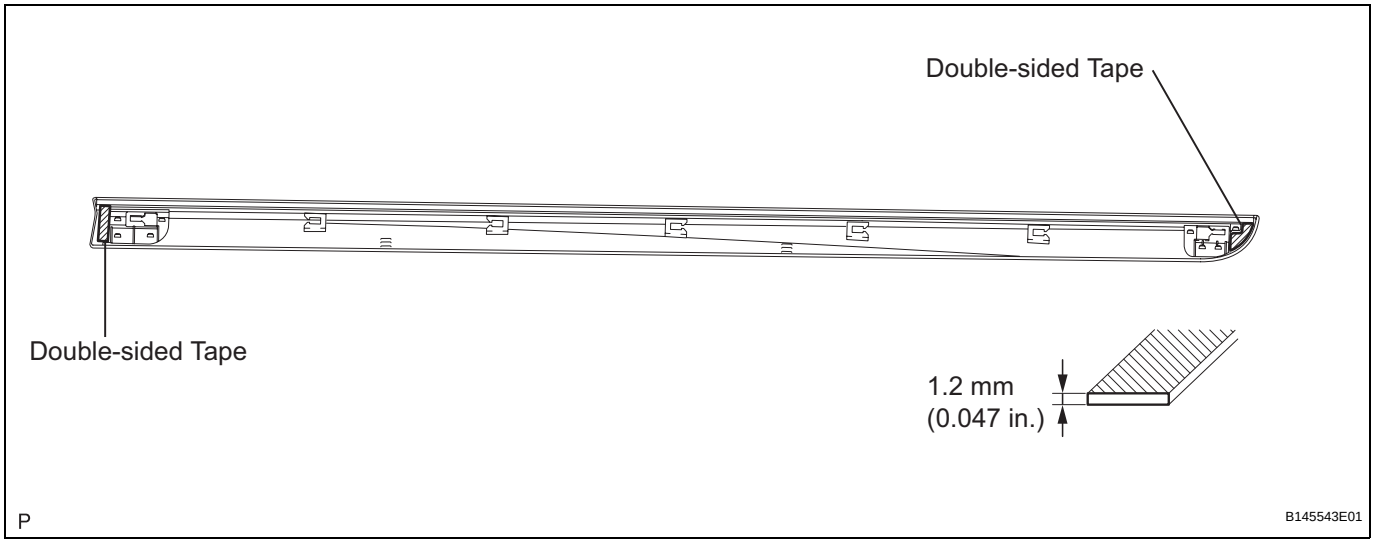

  (1) Using a heat light, heat the front door lower outside moulding.
  (2) Remove the double-sided tape from the front door lower outside moulding.
  (3) Wipe off any tape adhesive residue with cleaner.
  (4) Apply new double-sided tape to the front door lower outside moulding.

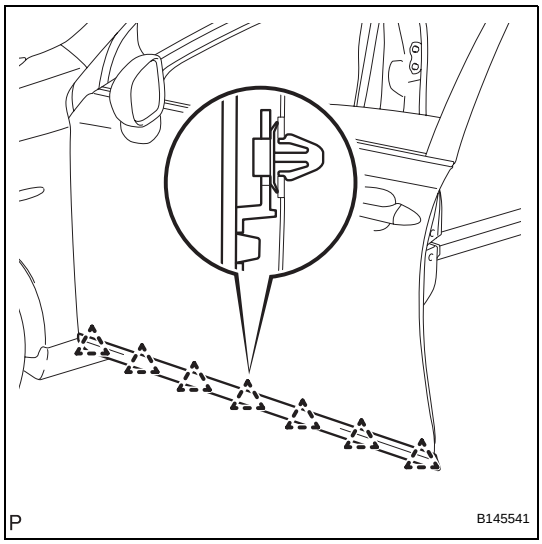

(c) Install the front door lower outside moulding.
  (1) Using a heat light, heat the vehicle body and front door lower outside moulding.
  (2) Remove the release paper from the front door lower outside moulding.
  HINT:
  After removing the release paper, keep the exposed adhesive free from foreign matter.
  (3) Engage the 7 clips and install the front door lower outside moulding.

2. INSTALL REAR DOOR LOWER OUTSIDE MOULDING

HINT:
When installing the rear door lower outside moulding, heat the vehicle body and rear door lower outside moulding using a heat light.

Heating temperature

Item	Temperature
Vehicle Body	**40 to 60°C (104 to 140°F)**
Moulding	**20 to 30°C (68 to 86°F)**

NOTICE:
Do not heat the vehicle body and rear door lower outside moulding excessively.

(a) Clean the vehicle body surface.
  (1) Using a heat light, heat the vehicle body surface.
  (2) Remove the double-sided tape from the vehicle body.
  (3) Wipe off any tape adhesive residue with cleaner.
(b) Clean the rear door lower outside moulding. (If reusing the rear door lower outside moulding)

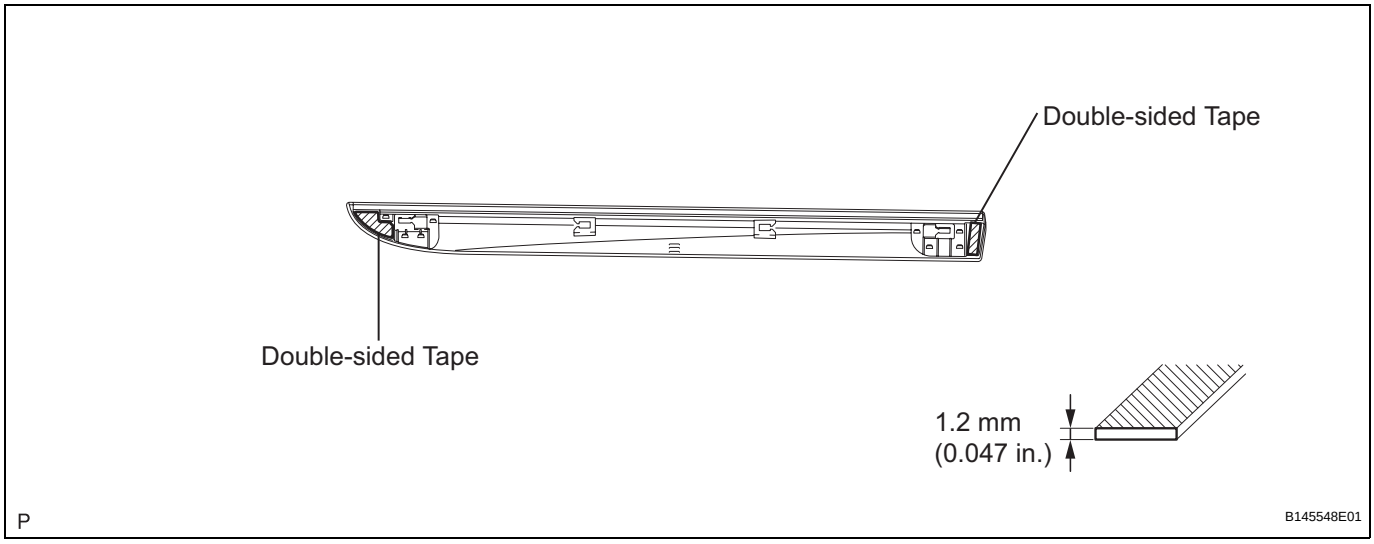

  (1) Using a heat light, heat the rear door lower outside moulding.
  (2) Remove the double-sided tape from the rear door lower outside moulding.
  (3) Wipe off any tape adhesive residue with cleaner.

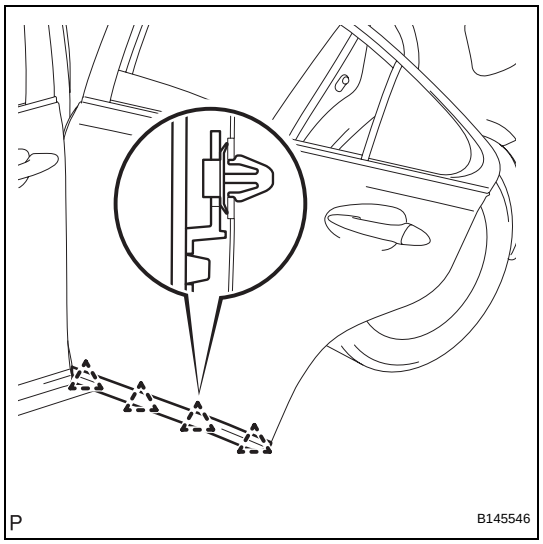

(4) Apply new double-sided tape to the rear door lower outside moulding.

(c) Install the rear door lower outside moulding.
(1) Using a heat light, heat the vehicle body and rear door lower outside moulding.
(2) Remove the release paper from the rear door lower outside moulding.
HINT:
After removing the release paper, keep the exposed adhesive free from foreign matter.
(3) Engage the 4 clips and install the rear door lower outside moulding.

REAR DOOR BELT MOULDING

COMPONENTS

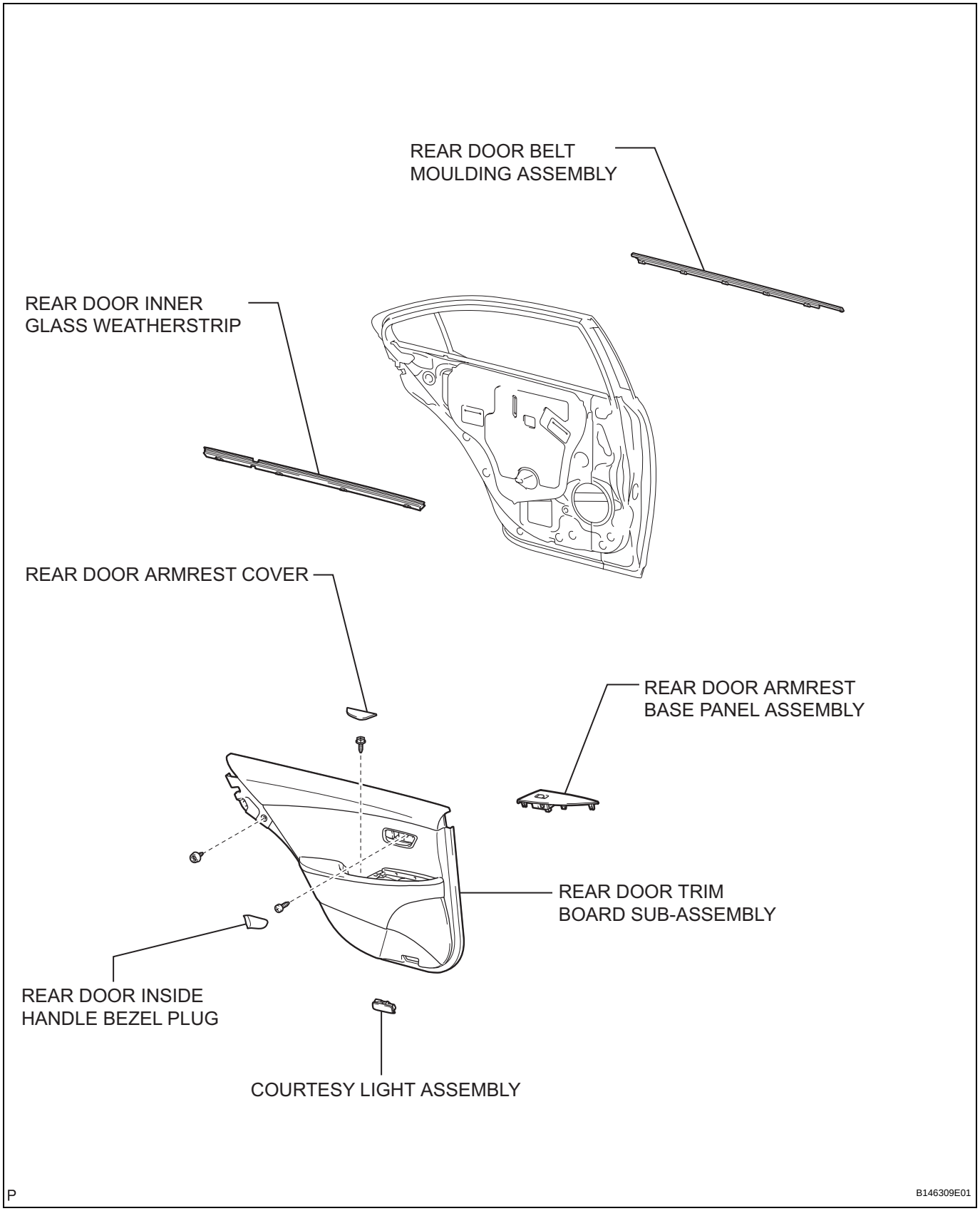

REMOVAL

1. **REMOVE REAR DOOR INSIDE HANDLE BEZEL PLUG (See page ED-58)**
2. **REMOVE REAR DOOR ARMREST BASE PANEL ASSEMBLY (See page ED-59)**
3. **REMOVE COURTESY LIGHT ASSEMBLY (See page ED-59)**
4. **REMOVE REAR DOOR ARMREST COVER (See page ED-59)**
5. **REMOVE REAR DOOR TRIM BOARD SUB-ASSEMBLY (See page ED-60)**
6. **REMOVE REAR DOOR INNER GLASS WEATHERSTRIP (See page ED-61)**
7. **REMOVE REAR DOOR BELT MOULDING ASSEMBLY**
   (a) Fully open the rear door glass.
   (b) Put protective tape around the rear door belt moulding assembly.

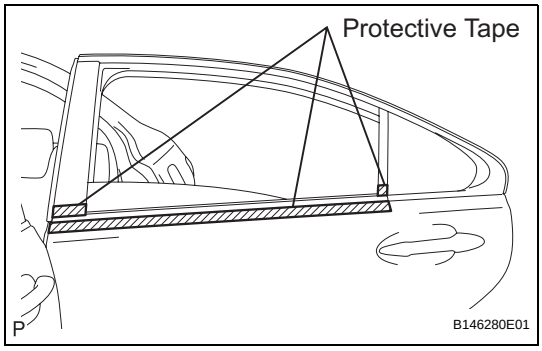

   (c) Using a moulding remover, disengage the 5 clips and remove the rear door belt moulding assembly.
   HINT:
   Tape the remover tip before use.

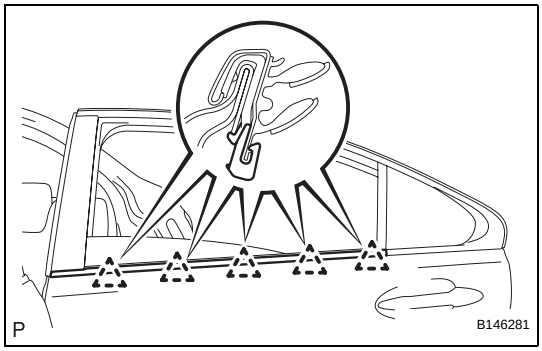

INSTALLATION

1. **INSTALL REAR DOOR BELT MOULDING ASSEMBLY**
   (a) Engage the 5 clips and install the rear door belt moulding assembly.
2. **INSTALL REAR DOOR INNER GLASS WEATHERSTRIP (See page ED-76)**
3. **INSTALL REAR DOOR TRIM BOARD SUB-ASSEMBLY (See page ED-76)**
4. **INSTALL REAR DOOR ARMREST COVER (See page ED-77)**
5. **INSTALL COURTESY LIGHT ASSEMBLY (See page ED-77)**
6. **INSTALL REAR DOOR ARMREST BASE PANEL ASSEMBLY (See page ED-78)**

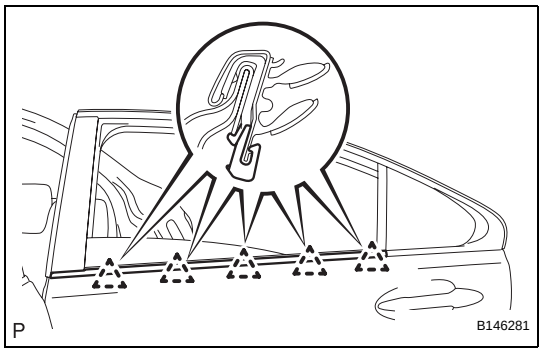

7. **INSTALL REAR DOOR INSIDE HANDLE BEZEL PLUG (See page ED-78)**

INSTALLATION

1. INSTALL ROCKER PANEL MOULDING

(a) Check if the 2 clip installation portions are folded down and attached securely with the double-sided tape as shown in the illustration.

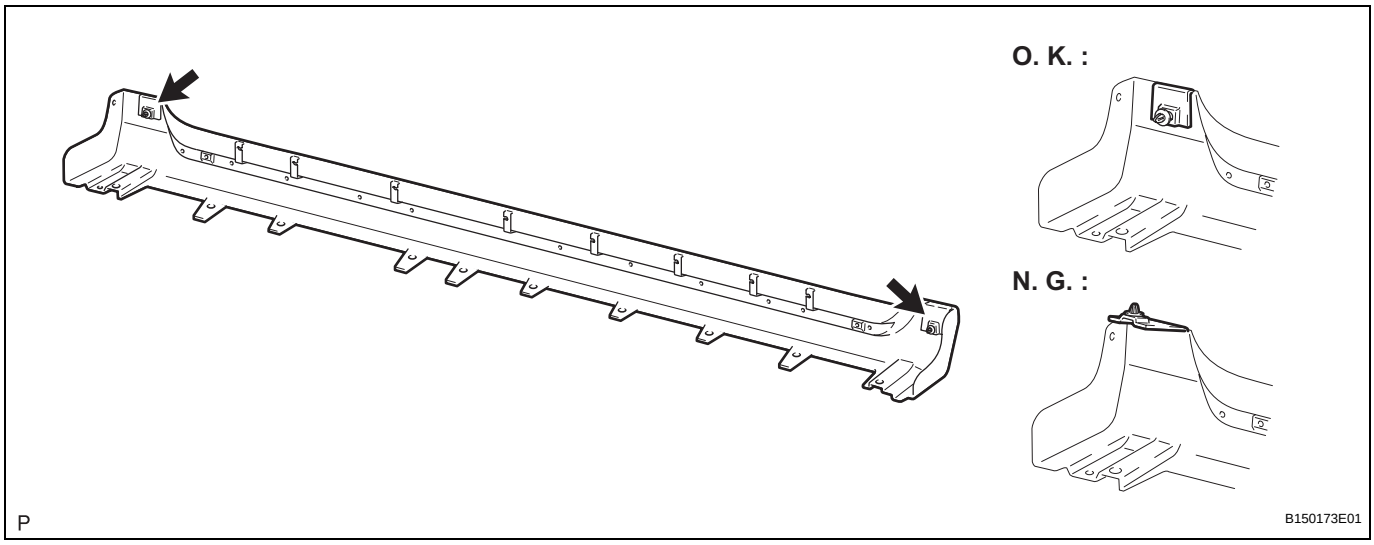

If any of the clip installation portions are not attached securely, replace the double-sided tape by following the procedures below:

(1) Remove the double-sided tape from the rocker panel moulding.

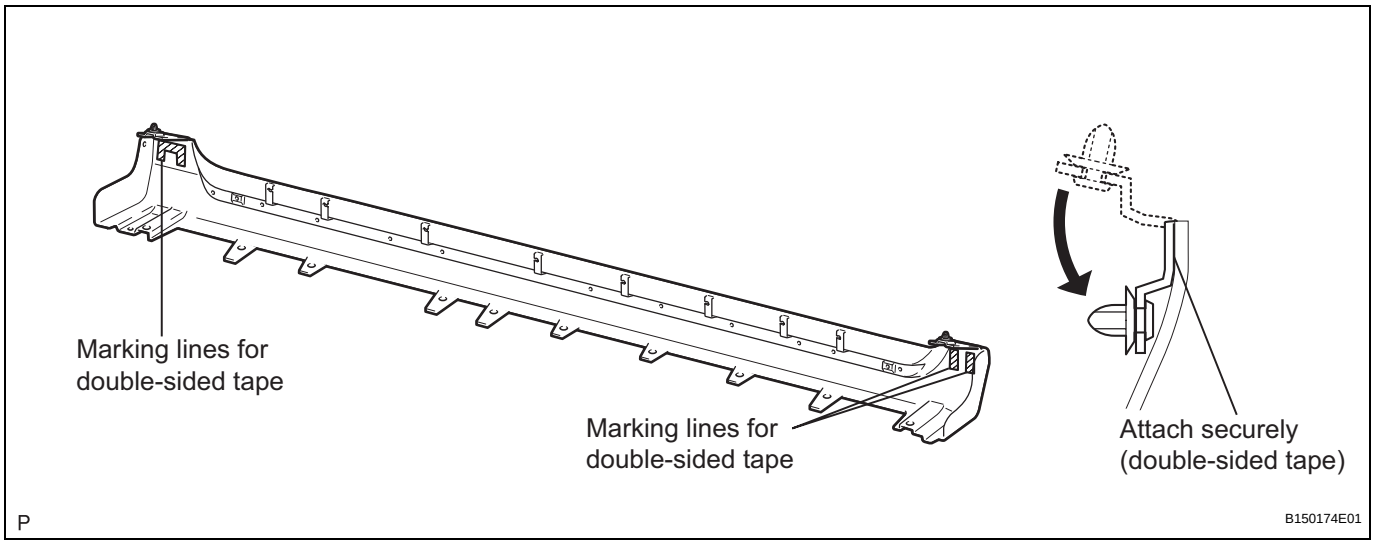

(2) Wipe off any tape adhesive residue with cleaner.

(3) Align new double-sided tape to the marking lines on the rocker panel moulding and attach it.

(4) Fold down the clip installation portions and attach them securely.

2. INSTALL LOWER ROCKER PANEL MOULDING

(a) Engage the 5 guides and install the lower rocker panel moulding.

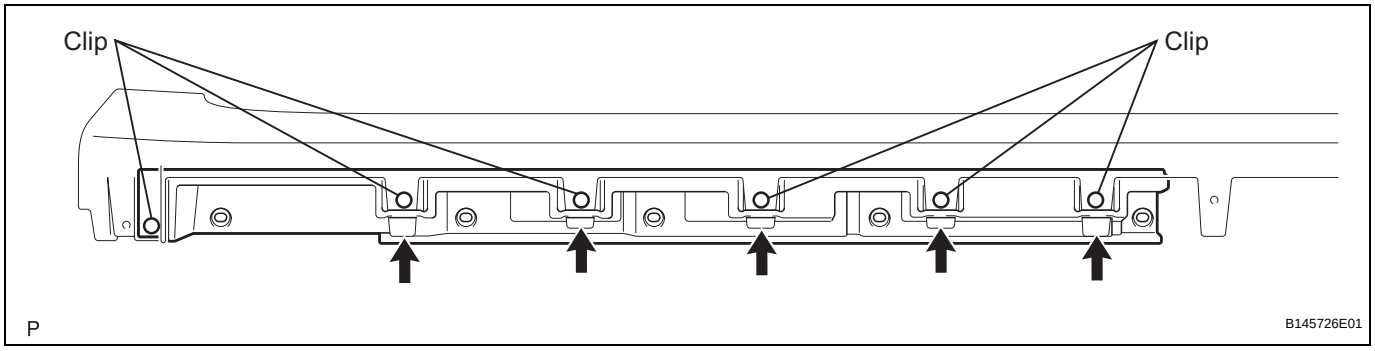

(b) Install the 6 clips.

3. INSTALL REAR ROCKER PANEL MOULDING

(a) Engage the 3 guides and install the rear rocker panel moulding.

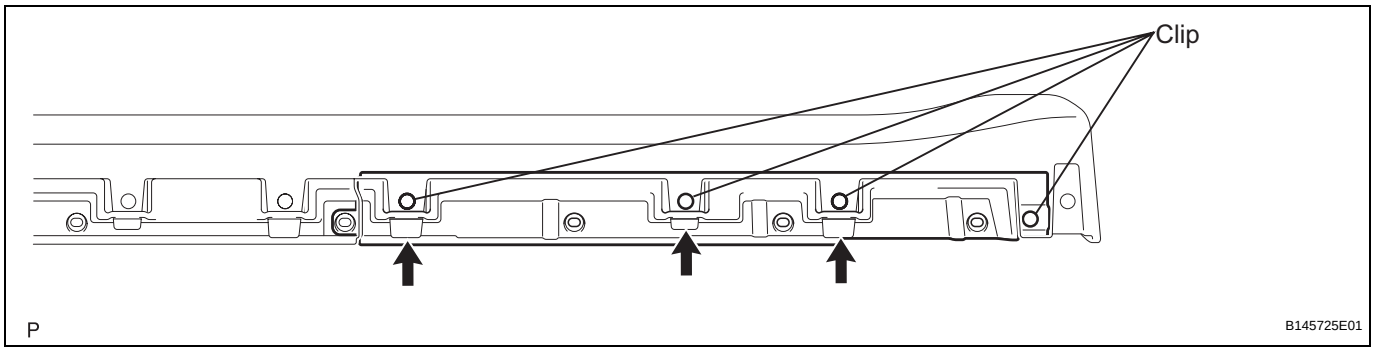

(b) Install the 4 clips.

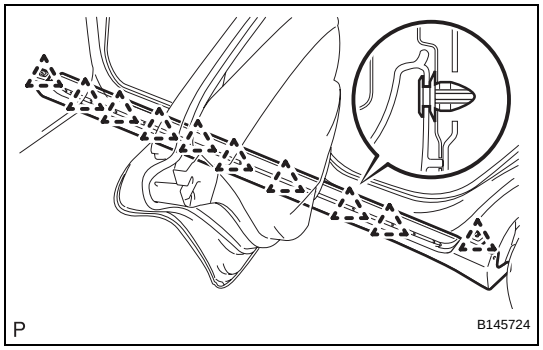

4. INSTALL ROCKER PANEL MOULDING SUB-ASSEMBLY

(a) Engage the 10 clips and install the rocker panel moulding sub-assembly.

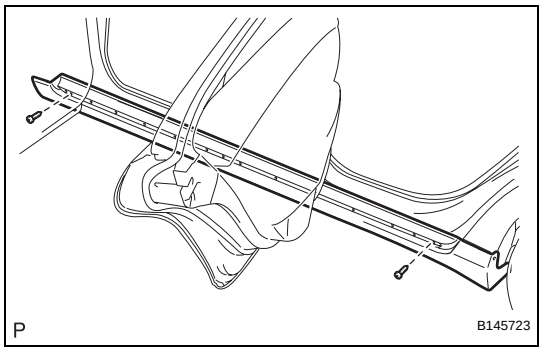

(b) Install the 2 screws.

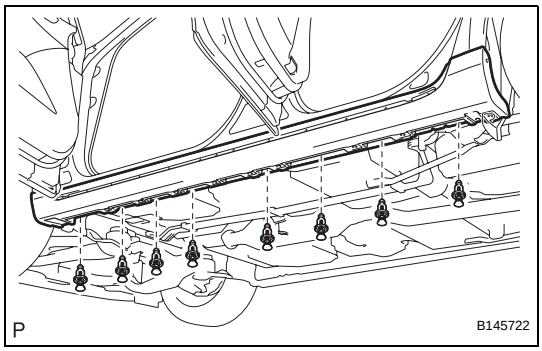

(c) Install the 8 clips.

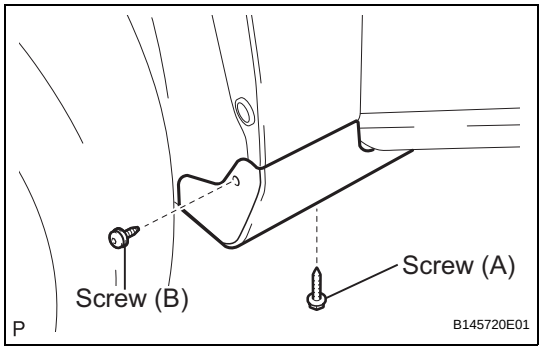

(d) Install the screw (A).
(e) Using a 4 mm hexagon wrench, install the screw (B).

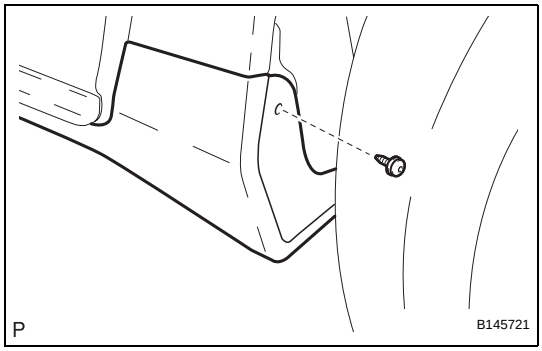

(f) Using a 4 mm hexagon wrench, install the screw.

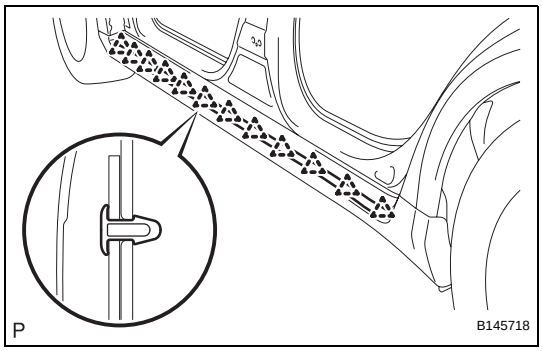

5. INSTALL FRONT DOOR WEATHERSTRIP

(a) Engage the 12 claws and install the front door weatherstrip.

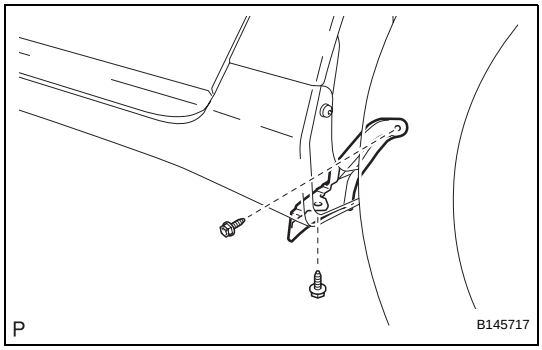

6. INSTALL ROCKER PANEL MOULDING PROTECTOR

(a) Install the rocker panel moulding protector with the 2 screws.

REMOVAL

1. **REMOVE FRONT DOOR INSIDE HANDLE BEZEL PLUG (See page ED-32)**
2. **REMOVE FRONT DOOR ARMREST BASE PANEL ASSEMBLY (See page ED-33)**
3. **REMOVE COURTESY LIGHT ASSEMBLY (See page ED-34)**
4. **REMOVE DOOR ARMREST COVER (See page ED-34)**
5. **REMOVE FRONT DOOR TRIM BOARD SUB-ASSEMBLY (See page ED-34)**
6. **REMOVE FRONT DOOR INNER GLASS WEATHERSTRIP (See page ED-35)**
7. **REMOVE DOOR FRAME GARNISH (See page ED-35)**
8. **REMOVE FRONT NO. 1 SPEAKER ASSEMBLY (See page AV-184)**
9. **REMOVE FRONT NO. 1 DOOR TRIM BRACKET (See page ED-36)**
10. **REMOVE FRONT DOOR SERVICE HOLE COVER (See page ED-36)**
11. **REMOVE FRONT DOOR GLASS SUB-ASSEMBLY (See page ED-36)**
12. **REMOVE FRONT DOOR GLASS RUN (See page ED-37)**
13. **REMOVE FRONT DOOR BELT MOULDING ASSEMBLY (See page ET-31)**
14. **REMOVE FRONT DOOR WEATHERSTRIP (See page ED-42)**
15. **REMOVE FRONT DOOR REAR WINDOW FRAME MOULDING**

    HINT:
    When removing the front door rear window frame moulding, heat the vehicle body and front door rear window frame moulding using a heat light.

    Heating temperature

Item	Temperature
Vehicle Body	40 to 60°C (104 to 140°F)
Moulding	20 to 30°C (68 to 86°F)

NOTICE:
Do not heat the vehicle body and moulding excessively.

(a) Using a heat light, heat the front door rear window frame moulding.

ET

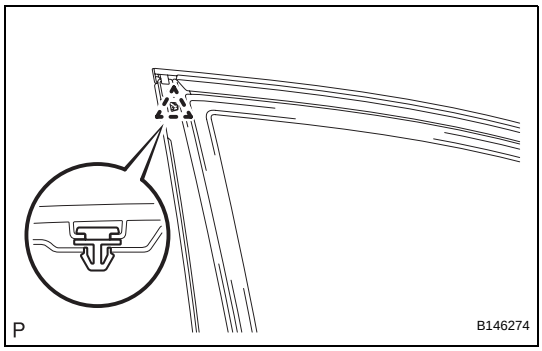

(b) Disengage the clip.

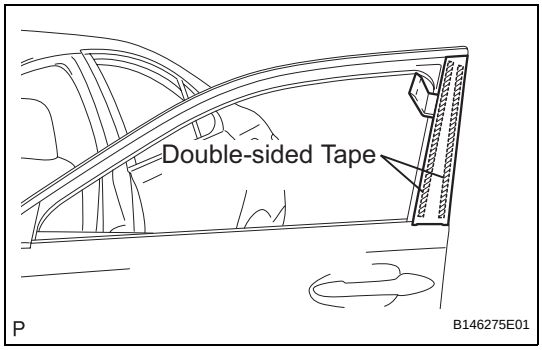

(c) Using a moulding remover, peel off the double-sided tape and remove the front door rear window frame moulding.

16. REMOVE FRONT DOOR FRONT LOWER FRAME UPPER COVER

HINT:
When removing the front door front lower frame upper cover, heat the vehicle body and front door front lower frame upper cover using a heat light.

Heating temperature

Item	Temperature
Vehicle Body	**40 to 60°C (104 to 140°F)**
Cover	**20 to 30°C (68 to 86°F)**

NOTICE:
Do not heat the vehicle body and cover excessively.

(a) Using a heat light, heat the front door front lower frame upper cover.

(b) Using a moulding remover, peel off the double-sided tape.

(c) Using a moulding remover, disengage the clip and remove the front door front lower frame upper cover.

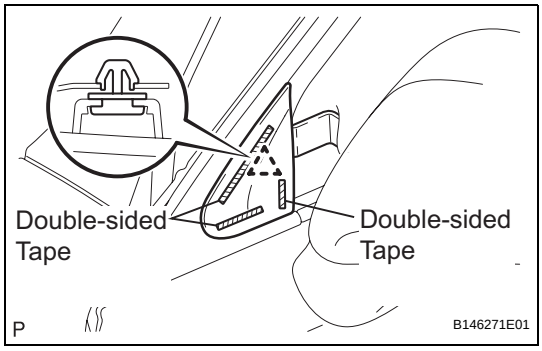

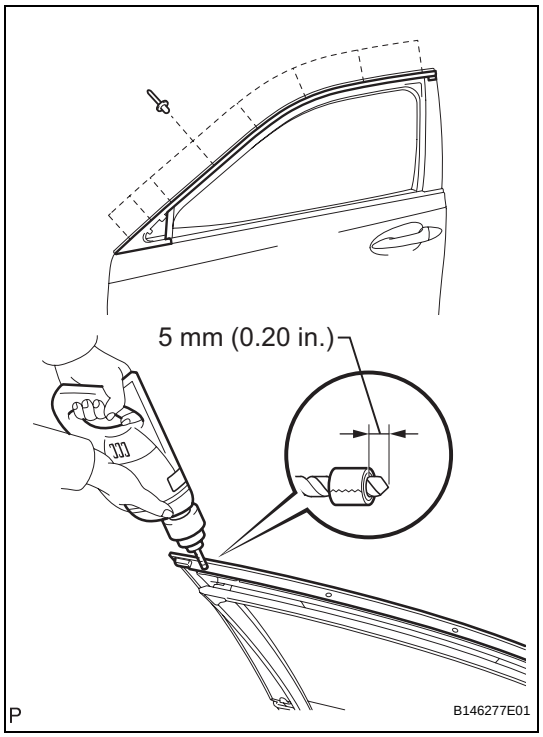

17. REMOVE FRONT DOOR OUTSIDE MOULDING SUB-ASSEMBLY

(a) Put a 4 mm (0.16 in.) drill bit into a drill.

(b) Tape the drill bit without the portion of 5 mm (0.20 in.) from the tip covered.
HINT:
Tape the drill bit to prevent the drill bit from going too deep.

(c) Lightly press the drill against the rivets, drill off the flanges of the rivets, and remove the 8 rivets.
NOTICE:
- **Pressing the drill too firmly will cause the rivet to turn and result in the rivet not being drilled through.**
- **Do not pry the rivets with the drill, because this may cause damage to the installation holes of the rivets or the drill bit.**
- **Be careful when touching the drilled rivets as they may become hot.**

(d) Using a vacuum cleaner, remove the rivet fragments and shavings from the drilled areas.

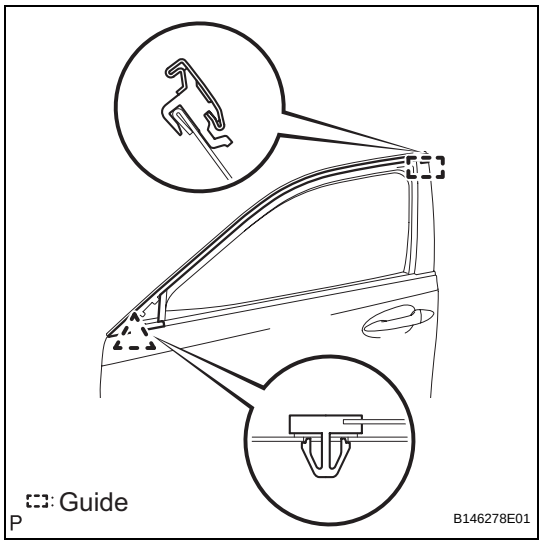

(e) Disengage the clip and guide, and remove the front door outside moulding sub-assembly from the door frame.

INSTALLATION

1. INSTALL FRONT DOOR OUTSIDE MOULDING SUB-ASSEMBLY

(a) Engage the guide.

(b) Engage the clip and install the front door outside moulding sub-assembly to the door frame.

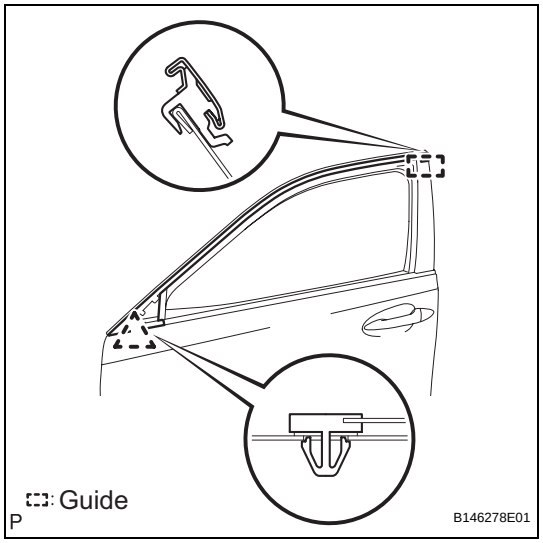

(c) Using an air riveter or hand riveter with a nose piece, install the 8 new rivets in the order shown in the illustration to install the front door upper window frame moulding sub-assembly.

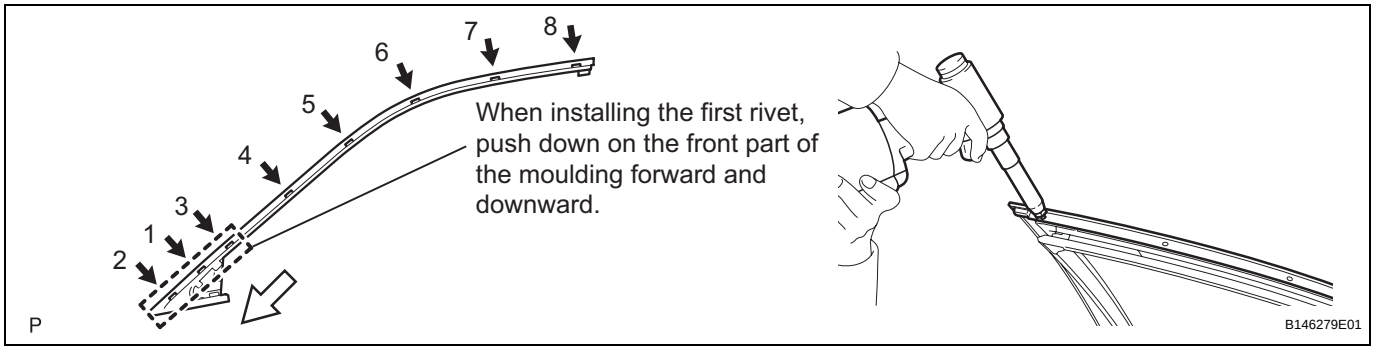

HINT:
If the rivet cannot be cut, pull it once and cut it.

NOTICE:

- **Do not pry the rivet with the riveter, as this will cause damage to the riveter and mandrel.**

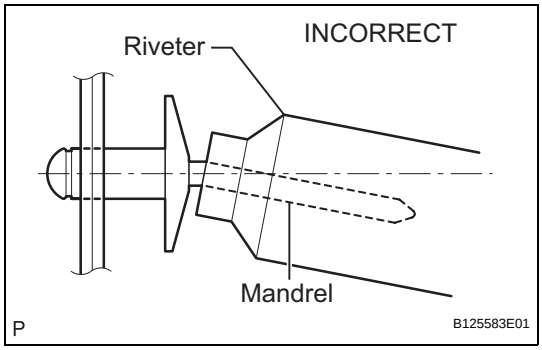

- **Confirm that the rivets are seated properly against the moulding. Do not tilt the riveter when installing the rivet to the moulding. Do not leave any space between the rivet head and moulding.**

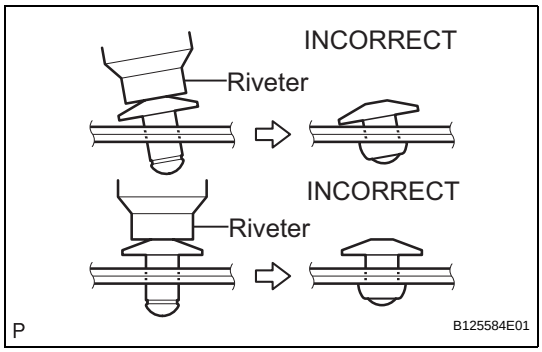

- **Do not leave any space between the moulding and door frame. Firmly hold together the 2 items while installing the rivet.**

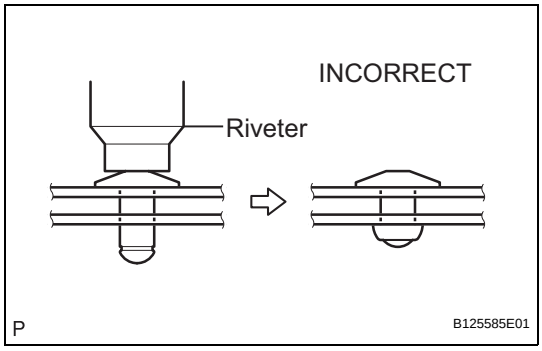

ET

2. INSTALL FRONT DOOR FRONT LOWER FRAME UPPER COVER

HINT:
When installing the front door front lower frame upper cover, heat the vehicle body and front door front lower frame upper cover using a heat light.

Heating temperature

Item	Temperature
Vehicle Body	**40 to 60°C (104 to 140°F)**
Cover	**20 to 30°C (68 to 86°F)**

NOTICE:
Do not heat the vehicle body and front door front lower frame upper cover excessively.

(a) Clean the vehicle body surface.
  (1) Using a heat light, heat the vehicle body surface.
  (2) Remove the double-sided tape from the vehicle body.
  (3) Wipe off any tape adhesive residue with cleaner.

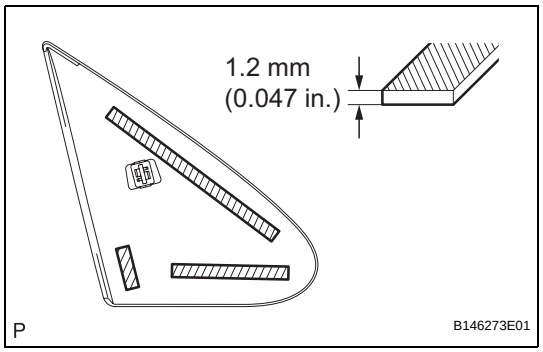

(b) Clean the front door front lower frame upper cover. (If reusing the front door front lower frame upper cover)
  (1) Using a heat light, heat the front door front lower frame upper cover.
  (2) Remove the double-sided tape from the front door front lower frame upper cover.
  (3) Wipe off any tape adhesive residue with cleaner.
  (4) Apply new double-sided tape to the front door front lower frame upper cover.

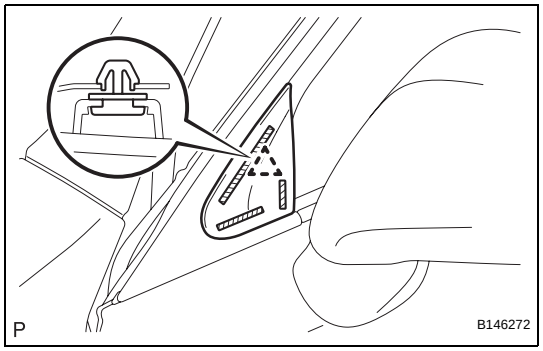

(c) Install the front door front lower frame upper cover.
  (1) Using a heat light, heat the vehicle body and front door front lower frame upper cover.
  (2) Remove the release paper from the front door front lower frame upper cover.
  HINT:
  After removing the release paper, keep the exposed adhesive free from foreign matter.
  (3) Engage the clip and install the front door front lower frame upper cover.

3. INSTALL FRONT DOOR REAR WINDOW FRAME MOULDING

HINT:
When installing the front door rear window frame moulding, heat the vehicle body and front door rear window frame moulding using a heat light.

Heating temperature

Item	Temperature
Vehicle Body	**40 to 60°C (104 to 140°F)**
Moulding	**20 to 30°C (68 to 86°F)**

NOTICE:
Do not heat the vehicle body and front door window frame moulding excessively.

(a) Clean the vehicle body surface.
  (1) Using a heat light, heat the vehicle body surface.
  (2) Remove the double-sided tape from the vehicle body.
  (3) Wipe off any tape adhesive residue with cleaner.

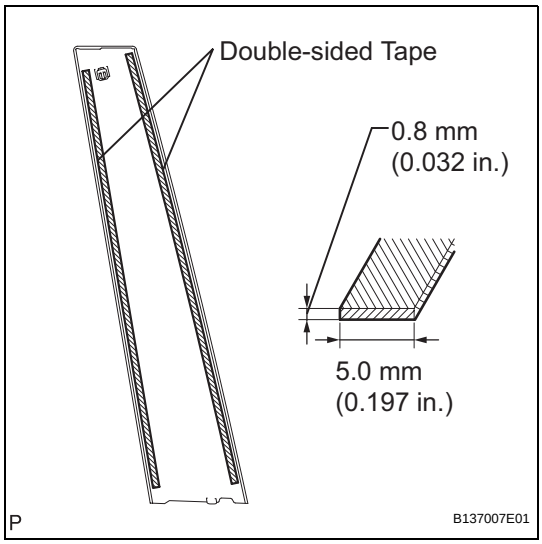

(b) Clean the front door rear window frame moulding. (If reusing the front door rear window frame moulding)
  (1) Using a heat light, heat the front door rear window frame moulding.
  (2) Remove the double-sided tape from the front door rear window frame moulding.
  (3) Wipe off any tape adhesive residue with cleaner.
  (4) Apply new double-sided tape to the front door rear window frame moulding.

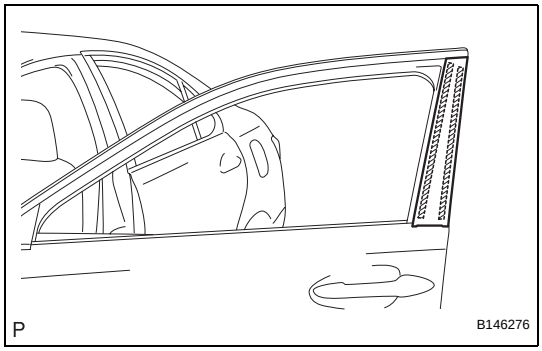

(c) Install the front door rear window frame moulding.
  (1) Using a heat light, heat the vehicle body and front door rear window frame moulding.
  (2) Remove the release paper from the front door rear window frame moulding.
  HINT:
  After removing the release paper, keep the exposed adhesive free from foreign matter.

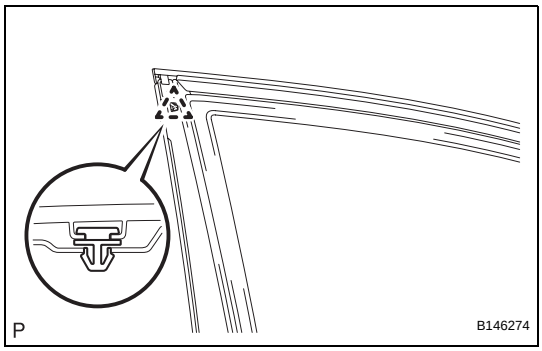

  (3) Engage the clip and install the front door rear window frame moulding.

4. **INSTALL FRONT DOOR WEATHERSTRIP (See page ED-44)**
5. **INSTALL FRONT DOOR BELT MOULDING ASSEMBLY (See page ET-31)**
6. **INSTALL FRONT DOOR GLASS RUN (See page ED-49)**
7. **INSTALL FRONT DOOR GLASS SUB-ASSEMBLY (See page ED-50)**
8. **INSTALL FRONT DOOR SERVICE HOLE COVER (See page ED-50)**
9. **INSTALL FRONT NO. 1 DOOR TRIM BRACKET (See page ED-51)**
10. **INSTALL FRONT NO. 1 SPEAKER ASSEMBLY (See page AV-184)**
11. **INSTALL DOOR FRAME GARNISH (See page ED-51)**
12. **INSTALL FRONT DOOR INNER GLASS WEATHERSTRIP (See page ED-52)**
13. **INSTALL FRONT DOOR TRIM BOARD SUB-ASSEMBLY (See page ED-52)**
14. **INSTALL DOOR ARMREST COVER (See page ED-53)**

15. **INSTALL COURTESY LIGHT ASSEMBLY (See page ED-53)**
16. **INSTALL FRONT DOOR ARMREST BASE PANEL ASSEMBLY (See page ED-53)**
17. **INSTALL FRONT DOOR INSIDE HANDLE BEZEL PLUG (See page ED-54)**

OUTSIDE MOULDING

COMPONENTS

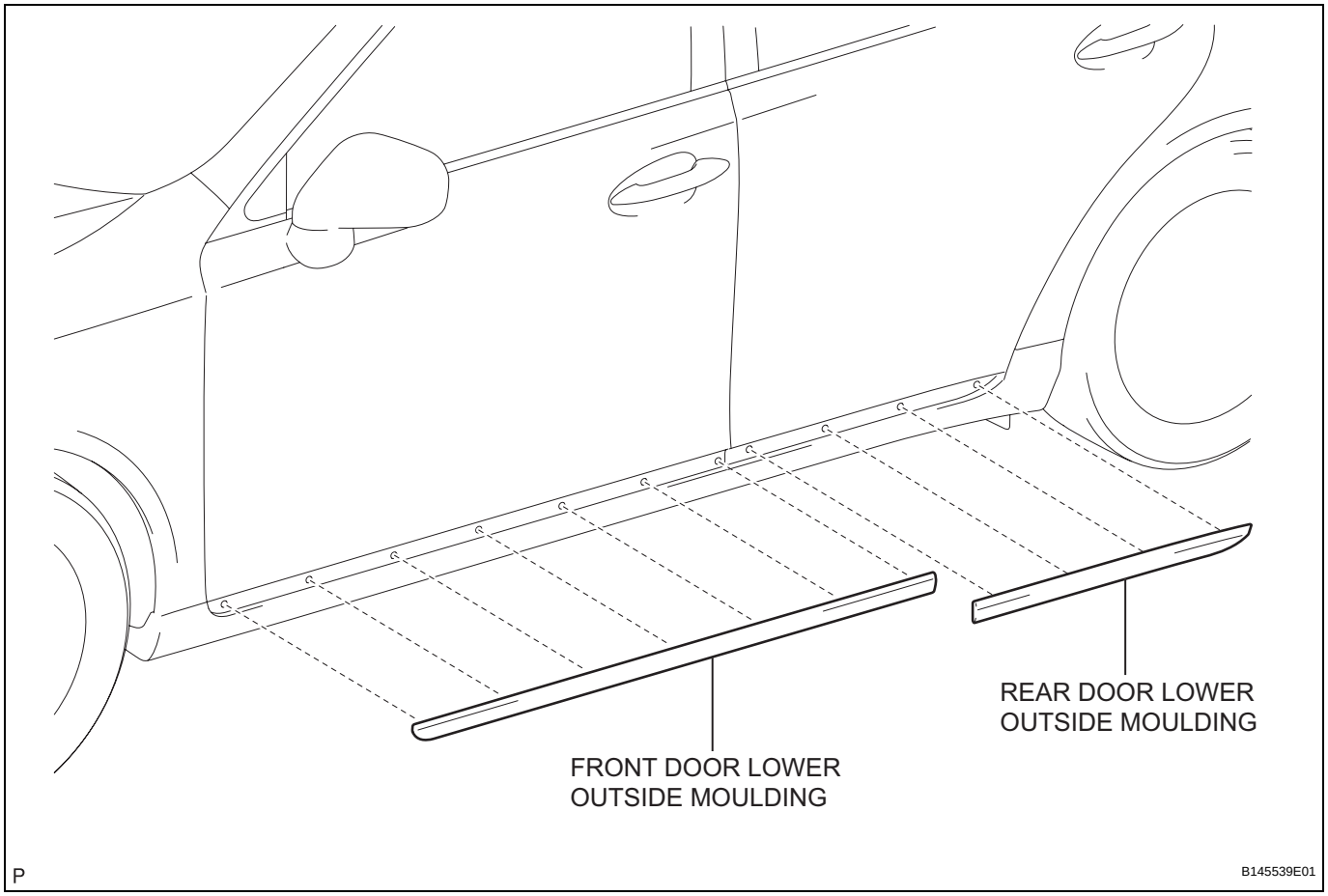

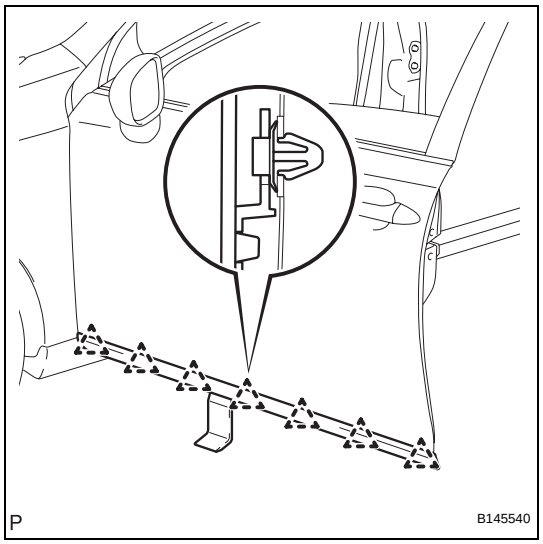

REMOVAL

1. REMOVE FRONT DOOR LOWER OUTSIDE MOULDING

(a) Using a moulding remover, disengage the 7 clips.

(b) Peel off the double-sided tape and remove the front door lower outside moulding.

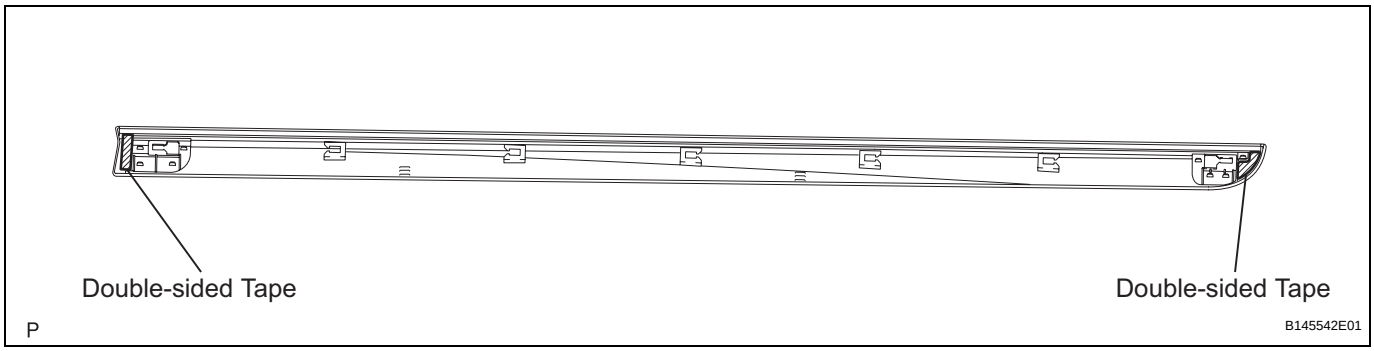

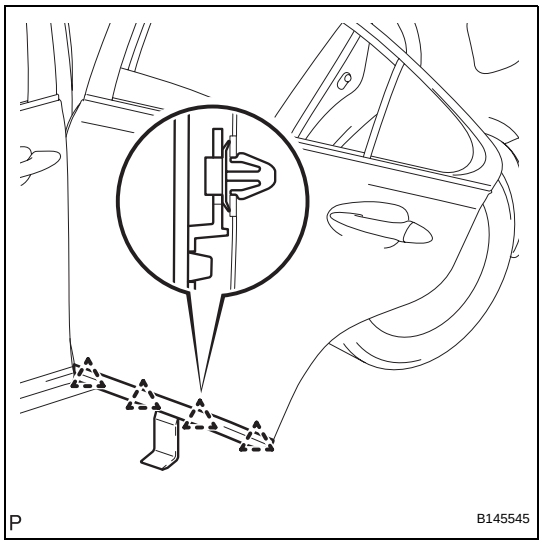

2. REMOVE REAR DOOR LOWER OUTSIDE MOULDING

(a) Using a moulding remover, disengage the 4 clips.

(b) Peel off the double-sided tape and remove the rear door lower outside moulding.

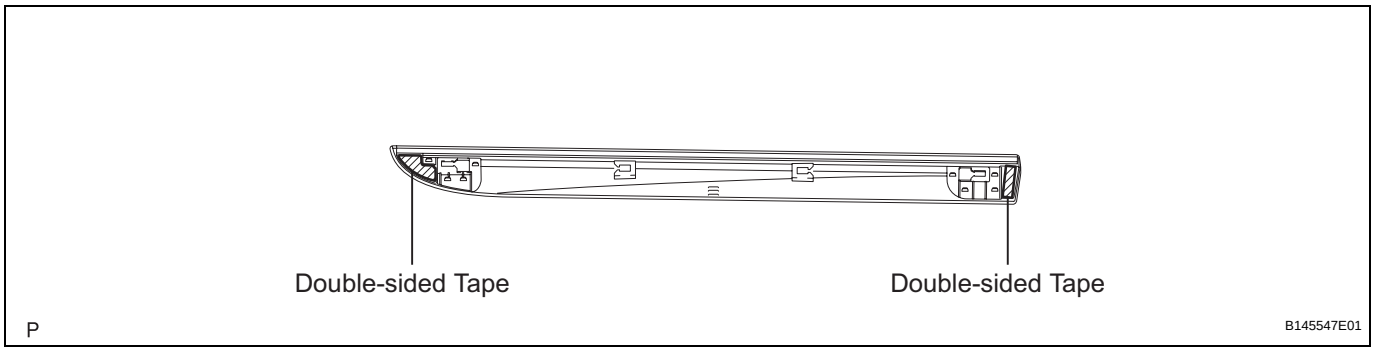

INSTALLATION

1. INSTALL FRONT DOOR LOWER OUTSIDE MOULDING

HINT:
When installing the front door lower outside moulding, heat the vehicle body and front door lower outside moulding using a heat light.

Heating temperature

Item	Temperature
Vehicle Body	**40 to 60°C (104 to 140°F)**
Moulding	**20 to 30°C (68 to 86°F)**

NOTICE:
Do not heat the vehicle body and front door lower outside moulding excessively.

(a) Clean the vehicle body surface.
  (1) Using a heat light, heat the vehicle body surface.
  (2) Remove the double-sided tape from the vehicle body.
  (3) Wipe off any tape adhesive residue with cleaner.

(b) Clean the front door lower outside moulding. (If reusing the front door lower outside moulding)

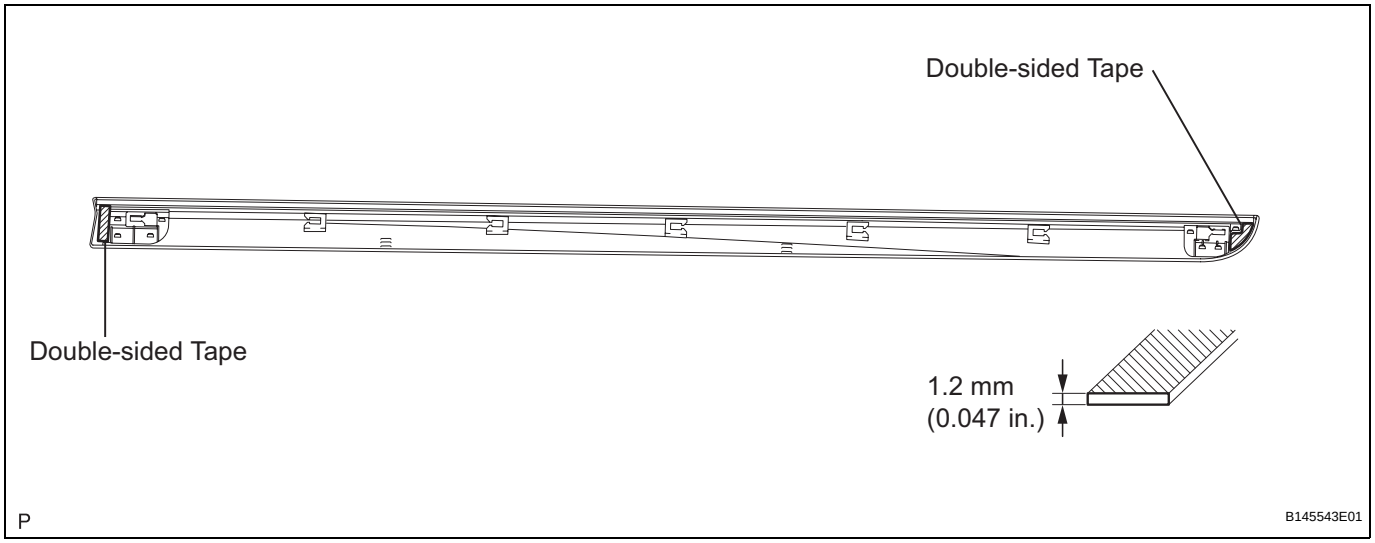

  (1) Using a heat light, heat the front door lower outside moulding.
  (2) Remove the double-sided tape from the front door lower outside moulding.
  (3) Wipe off any tape adhesive residue with cleaner.
  (4) Apply new double-sided tape to the front door lower outside moulding.

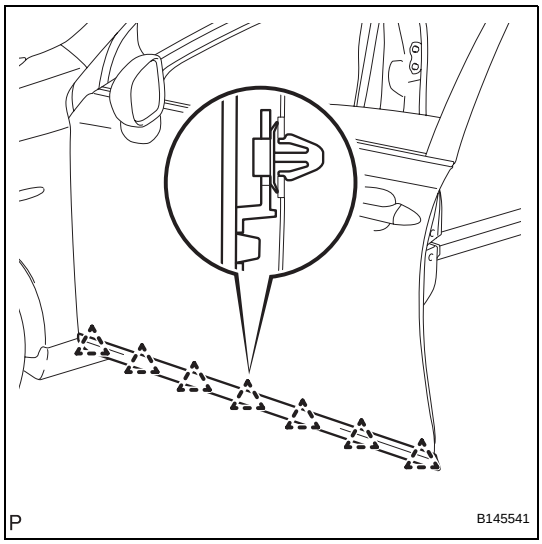

(c) Install the front door lower outside moulding.
  (1) Using a heat light, heat the vehicle body and front door lower outside moulding.
  (2) Remove the release paper from the front door lower outside moulding.
  HINT:
  After removing the release paper, keep the exposed adhesive free from foreign matter.
  (3) Engage the 7 clips and install the front door lower outside moulding.

2. INSTALL REAR DOOR LOWER OUTSIDE MOULDING

HINT:
When installing the rear door lower outside moulding, heat the vehicle body and rear door lower outside moulding using a heat light.

Heating temperature

Item	Temperature
Vehicle Body	**40 to 60°C (104 to 140°F)**
Moulding	**20 to 30°C (68 to 86°F)**

NOTICE:
Do not heat the vehicle body and rear door lower outside moulding excessively.

(a) Clean the vehicle body surface.
  (1) Using a heat light, heat the vehicle body surface.
  (2) Remove the double-sided tape from the vehicle body.
  (3) Wipe off any tape adhesive residue with cleaner.
(b) Clean the rear door lower outside moulding. (If reusing the rear door lower outside moulding)

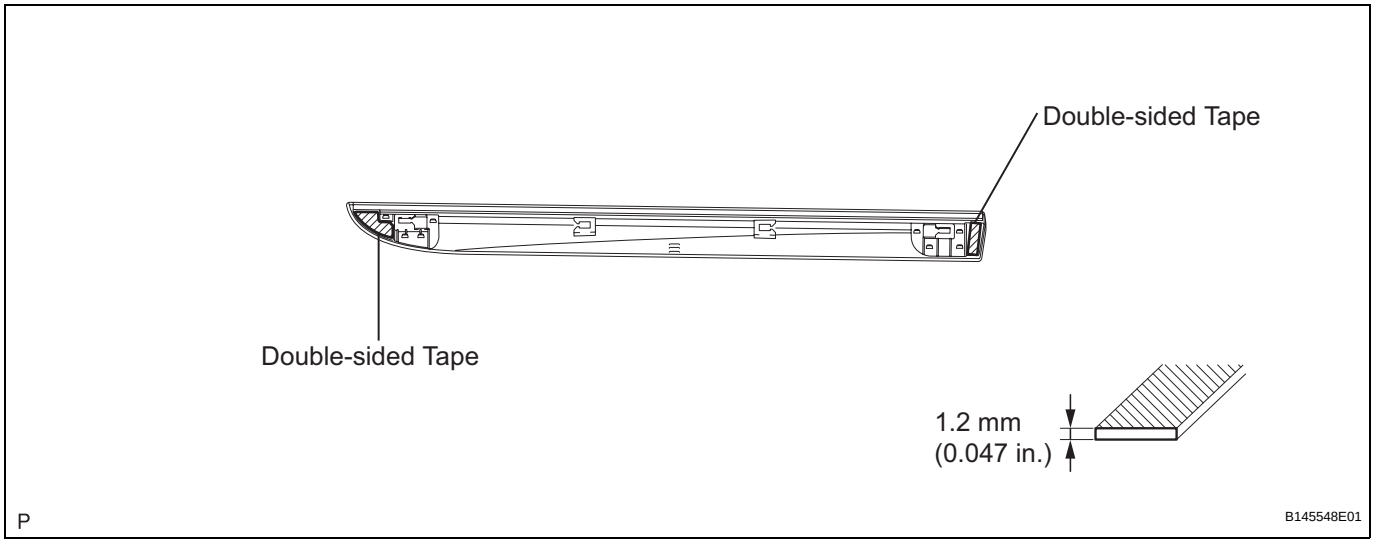

  (1) Using a heat light, heat the rear door lower outside moulding.
  (2) Remove the double-sided tape from the rear door lower outside moulding.
  (3) Wipe off any tape adhesive residue with cleaner.

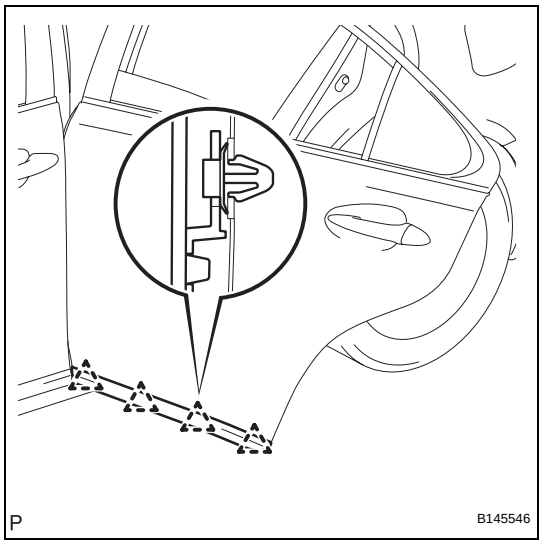

(4) Apply new double-sided tape to the rear door lower outside moulding.

(c) Install the rear door lower outside moulding.
(1) Using a heat light, heat the vehicle body and rear door lower outside moulding.
(2) Remove the release paper from the rear door lower outside moulding.
HINT:
After removing the release paper, keep the exposed adhesive free from foreign matter.
(3) Engage the 4 clips and install the rear door lower outside moulding.

REMOVAL

1. **REMOVE FRONT DOOR INSIDE HANDLE BEZEL PLUG (See page ED-32)**
2. **REMOVE FRONT DOOR ARMREST BASE PANEL ASSEMBLY (See page ED-33)**
3. **REMOVE COURTESY LIGHT ASSEMBLY (See page ED-34)**
4. **REMOVE DOOR ARMREST COVER (See page ED-34)**
5. **REMOVE FRONT DOOR TRIM BOARD SUB-ASSEMBLY (See page ED-34)**
6. **REMOVE FRONT DOOR INNER GLASS WEATHERSTRIP (See page ED-35)**
7. **REMOVE DOOR FRAME GARNISH (See page ED-35)**
8. **REMOVE FRONT NO. 1 SPEAKER ASSEMBLY (See page AV-184)**
9. **REMOVE FRONT NO. 1 DOOR TRIM BRACKET (See page ED-36)**
10. **REMOVE FRONT DOOR SERVICE HOLE COVER (See page ED-36)**
11. **REMOVE FRONT DOOR GLASS SUB-ASSEMBLY (See page ED-36)**
12. **REMOVE FRONT DOOR GLASS RUN (See page ED-37)**
13. **REMOVE FRONT DOOR BELT MOULDING ASSEMBLY (See page ET-31)**
14. **REMOVE FRONT DOOR WEATHERSTRIP (See page ED-42)**
15. **REMOVE FRONT DOOR REAR WINDOW FRAME MOULDING**

    HINT:
    When removing the front door rear window frame moulding, heat the vehicle body and front door rear window frame moulding using a heat light.

    Heating temperature

Item	Temperature
Vehicle Body	40 to 60°C (104 to 140°F)
Moulding	20 to 30°C (68 to 86°F)

NOTICE:
Do not heat the vehicle body and moulding excessively.

(a) Using a heat light, heat the front door rear window frame moulding.

ET

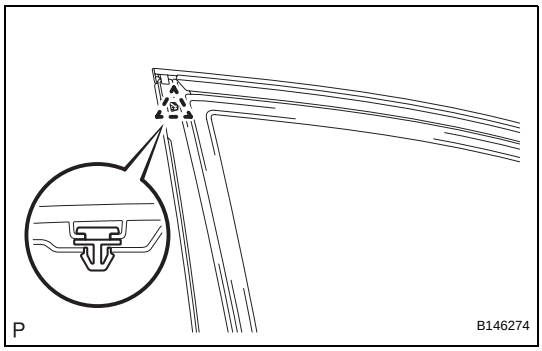

(b) Disengage the clip.

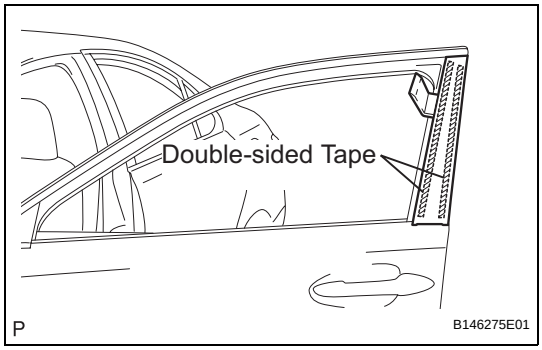

(c) Using a moulding remover, peel off the double-sided tape and remove the front door rear window frame moulding.

16. REMOVE FRONT DOOR FRONT LOWER FRAME UPPER COVER

HINT:
When removing the front door front lower frame upper cover, heat the vehicle body and front door front lower frame upper cover using a heat light.

Heating temperature

Item	Temperature
Vehicle Body	**40 to 60°C (104 to 140°F)**
Cover	**20 to 30°C (68 to 86°F)**

NOTICE:
Do not heat the vehicle body and cover excessively.

(a) Using a heat light, heat the front door front lower frame upper cover.

(b) Using a moulding remover, peel off the double-sided tape.

(c) Using a moulding remover, disengage the clip and remove the front door front lower frame upper cover.

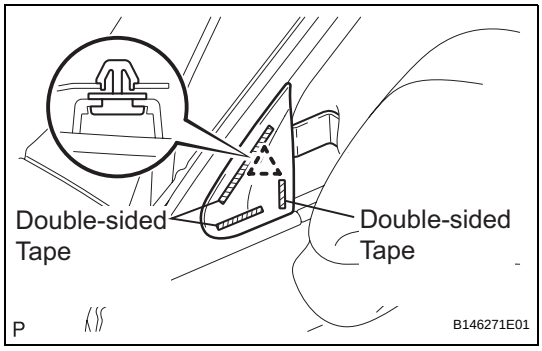

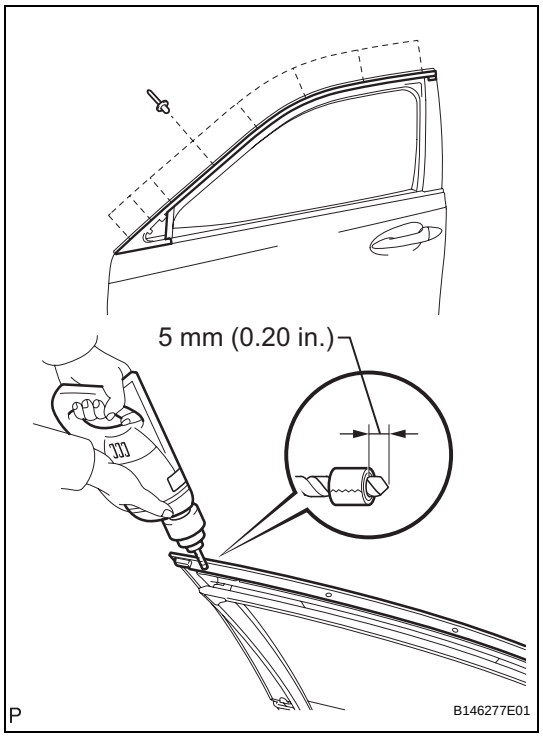

17. REMOVE FRONT DOOR OUTSIDE MOULDING SUB-ASSEMBLY

(a) Put a 4 mm (0.16 in.) drill bit into a drill.

(b) Tape the drill bit without the portion of 5 mm (0.20 in.) from the tip covered.
HINT:
Tape the drill bit to prevent the drill bit from going too deep.

(c) Lightly press the drill against the rivets, drill off the flanges of the rivets, and remove the 8 rivets.
NOTICE:
- **Pressing the drill too firmly will cause the rivet to turn and result in the rivet not being drilled through.**
- **Do not pry the rivets with the drill, because this may cause damage to the installation holes of the rivets or the drill bit.**
- **Be careful when touching the drilled rivets as they may become hot.**

(d) Using a vacuum cleaner, remove the rivet fragments and shavings from the drilled areas.

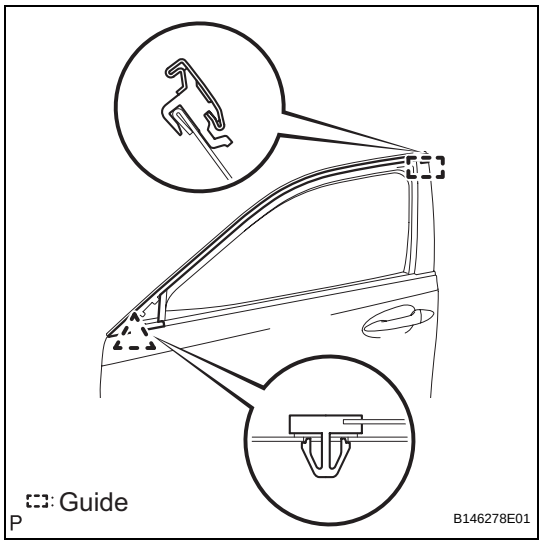

(e) Disengage the clip and guide, and remove the front door outside moulding sub-assembly from the door frame.

INSTALLATION

1. INSTALL FRONT DOOR OUTSIDE MOULDING SUB-ASSEMBLY

(a) Engage the guide.

(b) Engage the clip and install the front door outside moulding sub-assembly to the door frame.

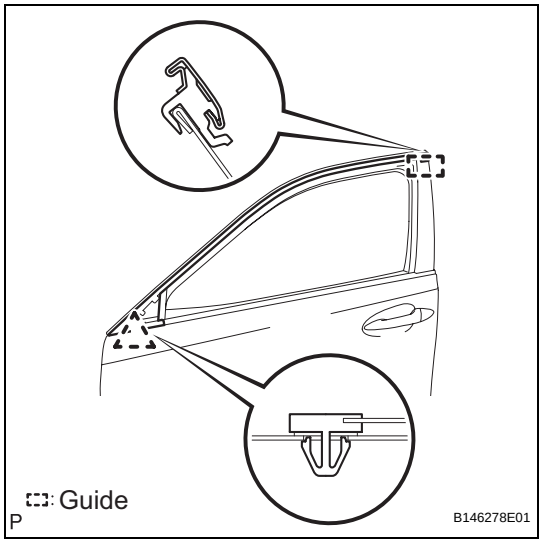

(c) Using an air riveter or hand riveter with a nose piece, install the 8 new rivets in the order shown in the illustration to install the front door upper window frame moulding sub-assembly.

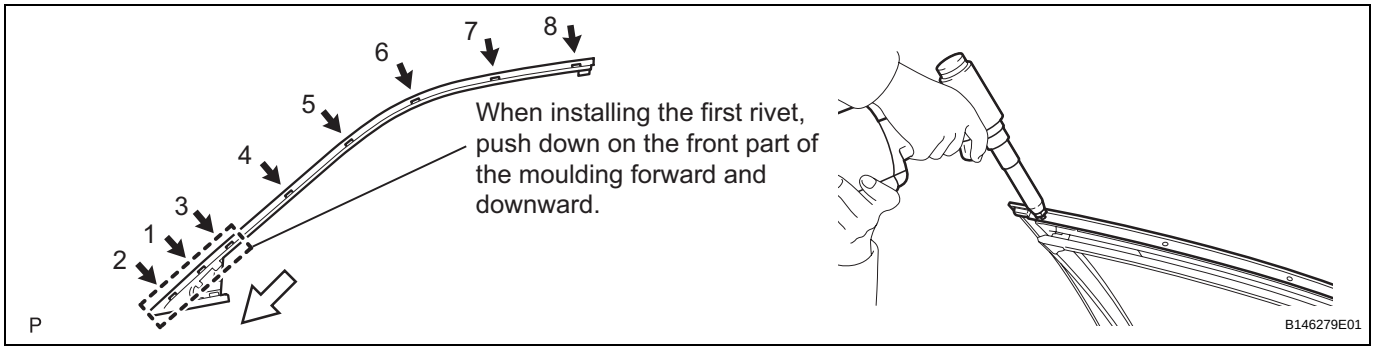

HINT:
If the rivet cannot be cut, pull it once and cut it.

NOTICE:

- **Do not pry the rivet with the riveter, as this will cause damage to the riveter and mandrel.**

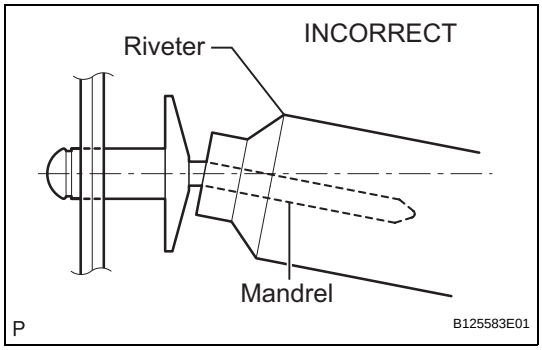

- **Confirm that the rivets are seated properly against the moulding. Do not tilt the riveter when installing the rivet to the moulding. Do not leave any space between the rivet head and moulding.**

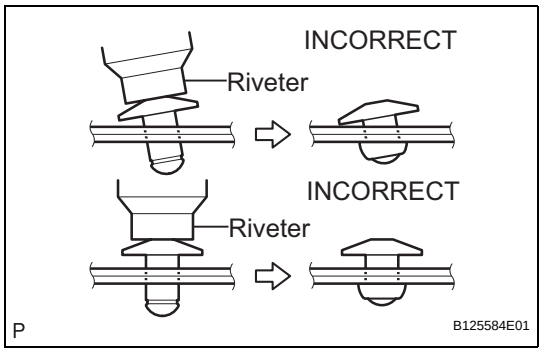

- **Do not leave any space between the moulding and door frame. Firmly hold together the 2 items while installing the rivet.**

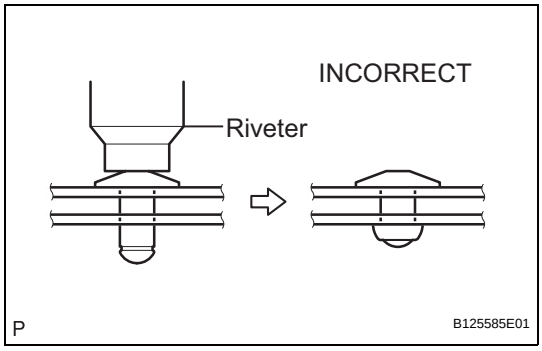

ET

2. INSTALL FRONT DOOR FRONT LOWER FRAME UPPER COVER

HINT:
When installing the front door front lower frame upper cover, heat the vehicle body and front door front lower frame upper cover using a heat light.

Heating temperature

Item	Temperature
Vehicle Body	**40 to 60°C (104 to 140°F)**
Cover	**20 to 30°C (68 to 86°F)**

NOTICE:
Do not heat the vehicle body and front door front lower frame upper cover excessively.

(a) Clean the vehicle body surface.
  (1) Using a heat light, heat the vehicle body surface.
  (2) Remove the double-sided tape from the vehicle body.
  (3) Wipe off any tape adhesive residue with cleaner.

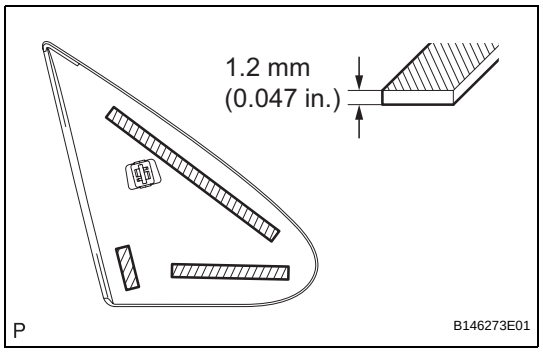

(b) Clean the front door front lower frame upper cover. (If reusing the front door front lower frame upper cover)
  (1) Using a heat light, heat the front door front lower frame upper cover.
  (2) Remove the double-sided tape from the front door front lower frame upper cover.
  (3) Wipe off any tape adhesive residue with cleaner.
  (4) Apply new double-sided tape to the front door front lower frame upper cover.

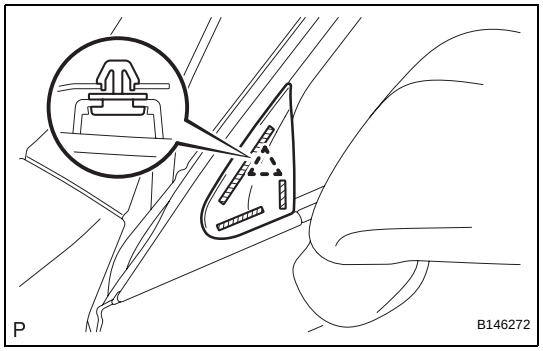

(c) Install the front door front lower frame upper cover.
  (1) Using a heat light, heat the vehicle body and front door front lower frame upper cover.
  (2) Remove the release paper from the front door front lower frame upper cover.
  HINT:
  After removing the release paper, keep the exposed adhesive free from foreign matter.
  (3) Engage the clip and install the front door front lower frame upper cover.

3. INSTALL FRONT DOOR REAR WINDOW FRAME MOULDING

HINT:
When installing the front door rear window frame moulding, heat the vehicle body and front door rear window frame moulding using a heat light.

Heating temperature

Item	Temperature
Vehicle Body	**40 to 60°C (104 to 140°F)**
Moulding	**20 to 30°C (68 to 86°F)**

NOTICE:
Do not heat the vehicle body and front door window frame moulding excessively.

(a) Clean the vehicle body surface.
  (1) Using a heat light, heat the vehicle body surface.
  (2) Remove the double-sided tape from the vehicle body.
  (3) Wipe off any tape adhesive residue with cleaner.

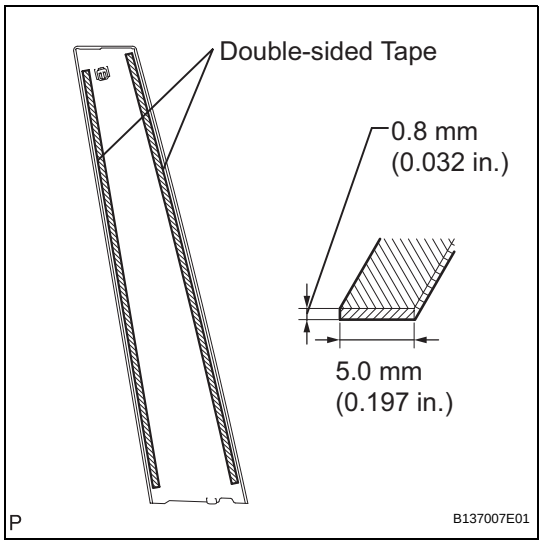

(b) Clean the front door rear window frame moulding. (If reusing the front door rear window frame moulding)
  (1) Using a heat light, heat the front door rear window frame moulding.
  (2) Remove the double-sided tape from the front door rear window frame moulding.
  (3) Wipe off any tape adhesive residue with cleaner.
  (4) Apply new double-sided tape to the front door rear window frame moulding.

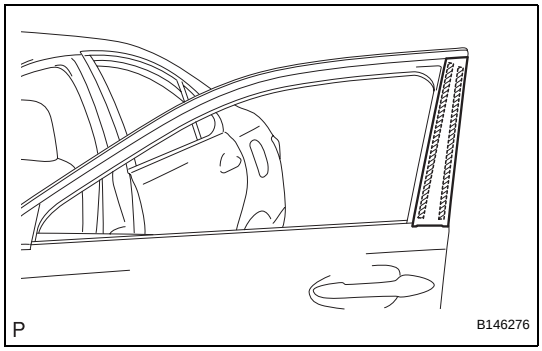

(c) Install the front door rear window frame moulding.
  (1) Using a heat light, heat the vehicle body and front door rear window frame moulding.
  (2) Remove the release paper from the front door rear window frame moulding.
  HINT:
  After removing the release paper, keep the exposed adhesive free from foreign matter.

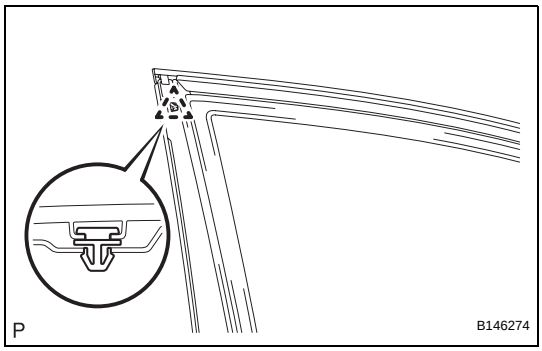

  (3) Engage the clip and install the front door rear window frame moulding.

4. **INSTALL FRONT DOOR WEATHERSTRIP (See page ED-44)**
5. **INSTALL FRONT DOOR BELT MOULDING ASSEMBLY (See page ET-31)**
6. **INSTALL FRONT DOOR GLASS RUN (See page ED-49)**
7. **INSTALL FRONT DOOR GLASS SUB-ASSEMBLY (See page ED-50)**
8. **INSTALL FRONT DOOR SERVICE HOLE COVER (See page ED-50)**
9. **INSTALL FRONT NO. 1 DOOR TRIM BRACKET (See page ED-51)**
10. **INSTALL FRONT NO. 1 SPEAKER ASSEMBLY (See page AV-184)**
11. **INSTALL DOOR FRAME GARNISH (See page ED-51)**
12. **INSTALL FRONT DOOR INNER GLASS WEATHERSTRIP (See page ED-52)**
13. **INSTALL FRONT DOOR TRIM BOARD SUB-ASSEMBLY (See page ED-52)**
14. **INSTALL DOOR ARMREST COVER (See page ED-53)**

15. **INSTALL COURTESY LIGHT ASSEMBLY (See page ED-53)**
16. **INSTALL FRONT DOOR ARMREST BASE PANEL ASSEMBLY (See page ED-53)**
17. **INSTALL FRONT DOOR INSIDE HANDLE BEZEL PLUG (See page ED-54)**

REMOVAL

1. **REMOVE REAR DOOR INSIDE HANDLE BEZEL PLUG (See page ED-58)**
2. **REMOVE REAR DOOR ARMREST BASE PANEL ASSEMBLY (See page ED-59)**
3. **REMOVE COURTESY LIGHT ASSEMBLY (See page ED-59)**
4. **REMOVE REAR DOOR ARMREST COVER (See page ED-59)**
5. **REMOVE REAR DOOR TRIM BOARD SUB-ASSEMBLY (See page ED-60)**
6. **REMOVE REAR DOOR INNER GLASS WEATHERSTRIP (See page ED-61)**
7. **REMOVE REAR DOOR BELT MOULDING ASSEMBLY (See page ET-34)**
8. **REMOVE REAR DOOR FRAME GARNISH (See page ED-61)**
9. **REMOVE REAR DOOR SERVICE HOLE COVER (See page ED-61)**
10. **REMOVE REAR DOOR TRIM BRACKET (See page ED-62)**
11. **REMOVE REAR DOOR WEATHERSTRIP (See page ED-62)**
12. **REMOVE REAR DOOR GLASS RUN (See page ED-63)**
13. **REMOVE REAR DOOR WINDOW DIVISION BAR SUB-ASSEMBLY (See page ED-63)**
14. **REMOVE REAR DOOR QUARTER WINDOW GLASS (See page ED-63)**
15. **REMOVE REAR DOOR GLASS SUB-ASSEMBLY (See page ED-63)**
16. **REMOVE REAR DOOR WINDOW REGULATOR SUB-ASSEMBLY (See page ED-64)**
17. **REMOVE REAR DOOR FRONT WINDOW FRAME MOULDING**
    HINT:
    When removing the rear door front window frame moulding, heat the vehicle body and rear door front window frame moulding using a heat light.
    Heating temperature

Item	Temperature
Vehicle Body	40 to 60°C (104 to 140°F)
Moulding	20 to 30°C (68 to 86°F)

NOTICE:
Do not heat the vehicle body and moulding excessively.

(a) Using a heat light, heat the rear door front window frame moulding.

(b) Disengage the clip.

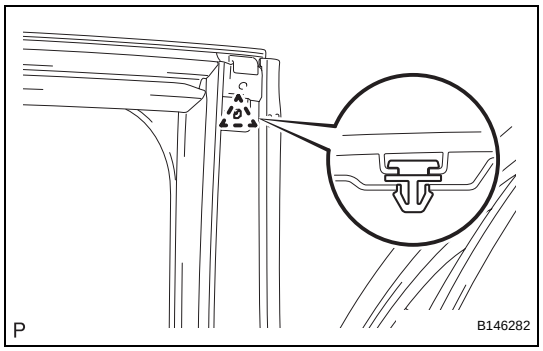

(c) Using a moulding remover, peel off the double-sided tape and remove the rear door front window frame moulding.

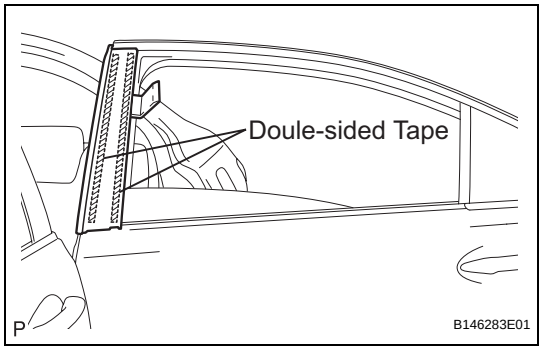

18. REMOVE REAR DOOR WINDOW FRAME MOULDING SUB-ASSEMBLY

(a) Put a 4 mm (0.16 in.) drill bit into a drill.

(b) Tape the drill bit without the portion of 5 mm (0.20 in.) from the tip covered.
HINT:
Tape the drill bit to prevent the drill bit from going too deep.

(c) Lightly press the drill bit against the rivets, drill off the flanges of the rivets, and remove the 7 rivets.
NOTICE:
- **Pressing the drill too firmly will cause the rivet to turn and result in the rivet not being drilled through.**
- **Do not pry the rivets with the drill, as this may cause damage to the installation holes of the rivets or the drill bit.**
- **Be careful when touching the drilled rivets, as they may become hot.**

(d) Using a vacuum cleaner, remove the rivet fragments and shavings from the drilled areas.

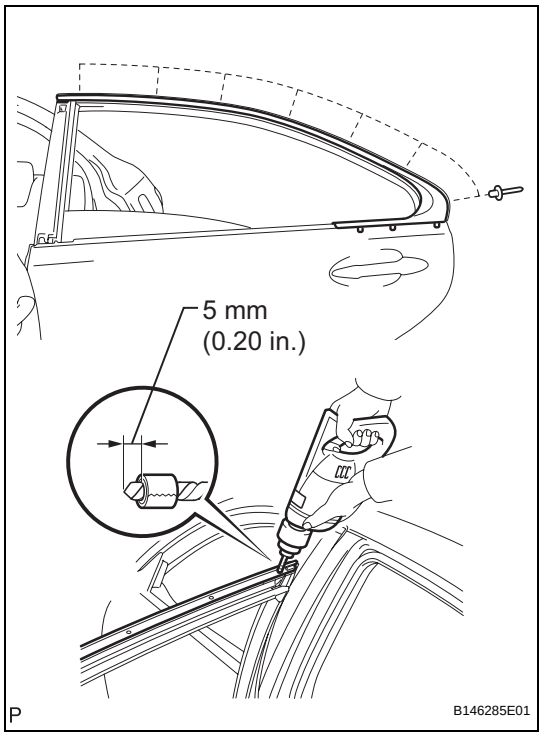

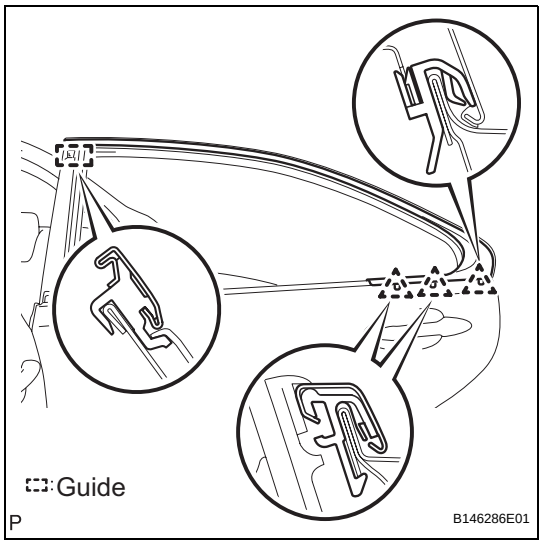

(e) Disengage the 3 clips and guide, and remove the rear door window frame moulding sub-assembly from the door frame.

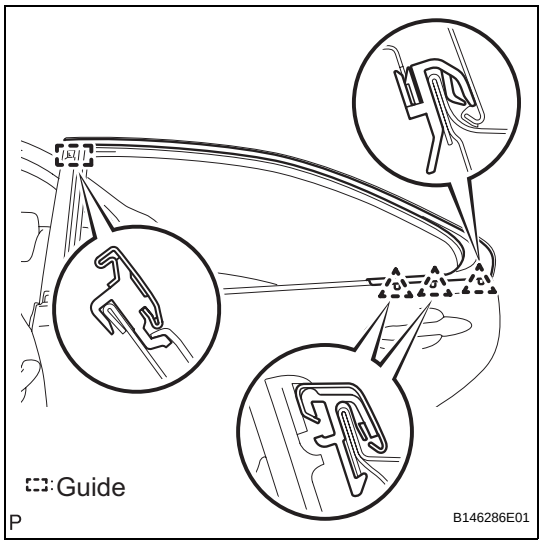

INSTALLATION

1. INSTALL REAR DOOR WINDOW FRAME MOULDING SUB-ASSEMBLY

(a) Engage the guide and 3 clips, and install the rear door window frame moulding sub-assembly to the door frame.

(b) Using an air riveter or hand riveter with a nose piece, install the 7 new rivets in the order shown in the illustration to install the rear door window frame moulding sub-assembly.

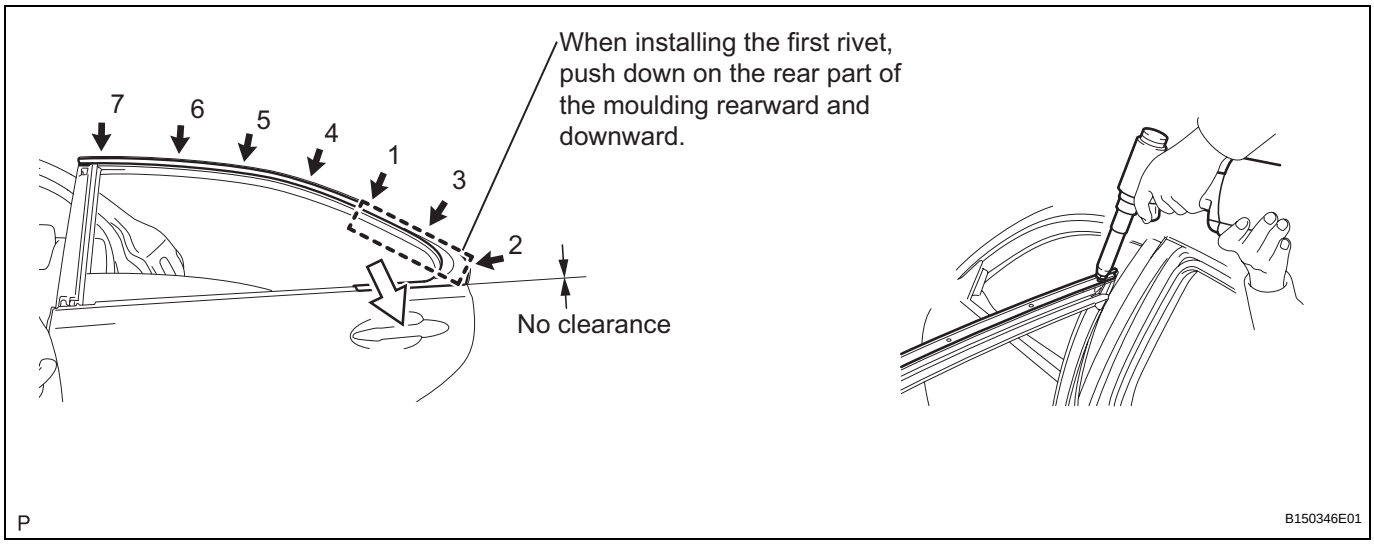

HINT:

- Make sure that there is no clearance between the rear door window frame moulding sub-assembly and the rear door panel.
- If the rivet cannot be cut, pull it once and cut it.

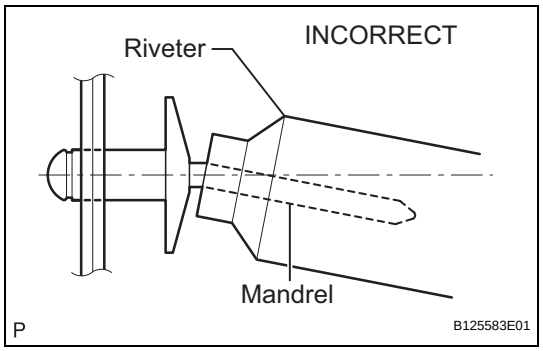

NOTICE:

- **Do not pry the rivet with the riveter, as this will cause damage to the riveter and mandrel.**

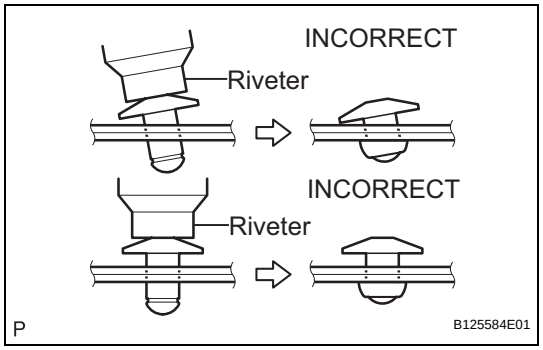

- **Confirm that the rivets are seated properly against the moulding. Do not tilt the riveter when installing the rivet to the moulding. Do not leave any space between the rivet head and moulding.**

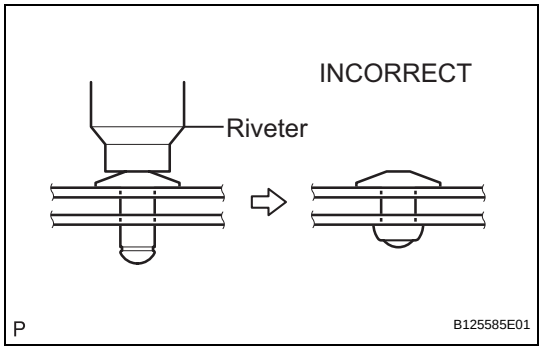

- **Do not leave any space between the moulding and door frame. Firmly hold together the 2 items while installing the rivet.**

2. INSTALL REAR DOOR FRONT WINDOW FRAME MOULDING

HINT:
When installing the rear door front window frame moulding, heat the vehicle body and rear door front window frame using a heat light.

Heating temperature

Item	Temperature
Vehicle Body	**40 to 60°C (104 to 140°F)**
Moulding	**20 to 30°C (68 to 86°F)**

NOTICE:
Do not heat the vehicle body and rear door window frame moulding excessively.

(a) Clean the vehicle body surface.
  (1) Using a heat light, heat the vehicle body surface.
  (2) Remove the double-sided tape from the vehicle body.
  (3) Wipe off any tape adhesive residue with cleaner.

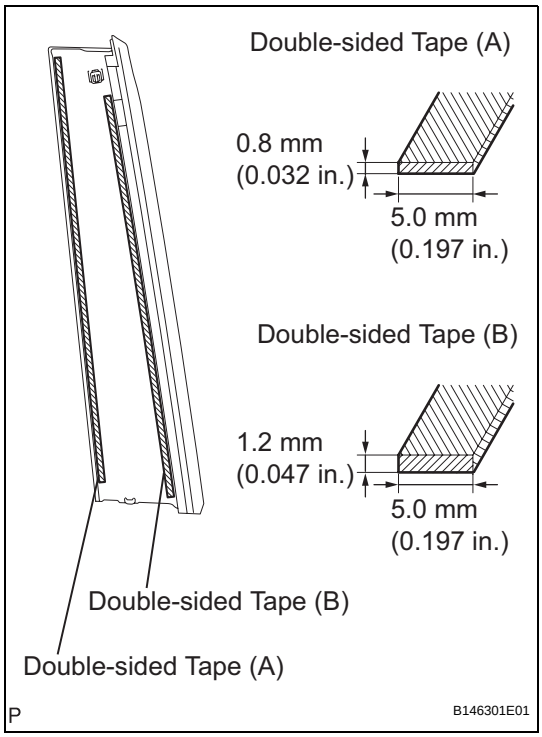

(b) Clean the rear door front window frame moulding. (If reusing the rear door front window frame moulding)
  (1) Using a heat light, heat the rear door front window frame moulding.
  (2) Remove the double-sided tape from the rear door front window frame moulding.
  (3) Wipe off any tape adhesive residue with cleaner.
  (4) Apply new double-sided tape to the rear door front window frame moulding.

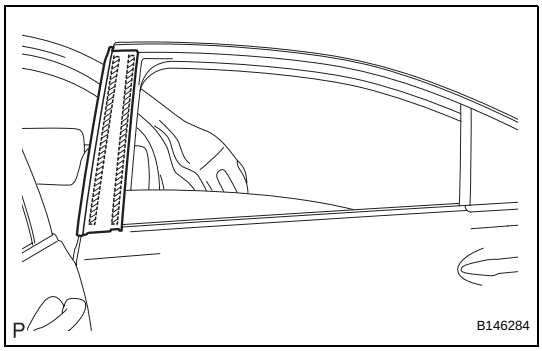

(c) Install the rear door front window frame moulding.
  (1) Using a heat light, heat the vehicle body and rear door front window frame moulding.
  (2) Remove the release paper from the rear door front window frame moulding.
  HINT:
  After removing the release paper, keep the exposed adhesive free from foreign matter.

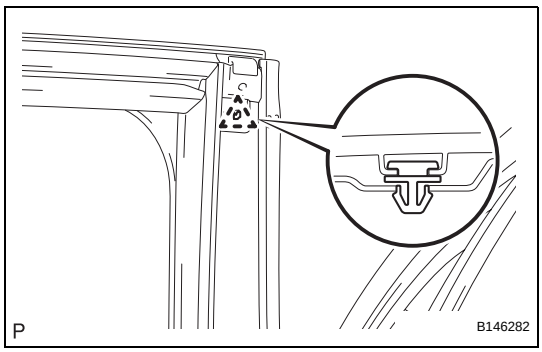

  (3) Engage the clip and install the rear door front window frame moulding.

3. **INSTALL REAR DOOR WINDOW REGULATOR SUB-ASSEMBLY (See page ED-73)**
4. **INSTALL REAR DOOR GLASS RUN (See page ED-73)**
5. **INSTALL REAR DOOR GLASS SUB-ASSEMBLY (See page ED-74)**
6. **INSTALL REAR DOOR QUARTER WINDOW GLASS (See page ED-74)**
7. **INSTALL REAR DOOR WINDOW DIVISION BAR SUB-ASSEMBLY (See page ED-74)**
8. **INSTALL REAR DOOR WEATHERSTRIP (See page ED-74)**
9. **INSTALL REAR DOOR TRIM BRACKET (See page ED-75)**
10. **INSTALL REAR DOOR SERVICE HOLE COVER (See page ED-75)**

11. **INSTALL REAR DOOR FRAME GARNISH (See page ED-76)**
12. **INSTALL REAR DOOR BELT MOULDING ASSEMBLY (See page ET-34)**
13. **INSTALL REAR DOOR INNER GLASS WEATHERSTRIP (See page ED-76)**
14. **INSTALL REAR DOOR TRIM BOARD SUB-ASSEMBLY (See page ED-76)**
15. **INSTALL REAR DOOR ARMREST COVER (See page ED-77)**
16. **INSTALL COURTESY LIGHT ASSEMBLY (See page ED-77)**
17. **INSTALL REAR DOOR ARMREST BASE PANEL ASSEMBLY (See page ED-78)**
18. **INSTALL REAR DOOR INSIDE HANDLE BEZEL PLUG (See page ED-78)**

LUGGAGE COMPARTMENT DOOR GARNISH

COMPONENTS

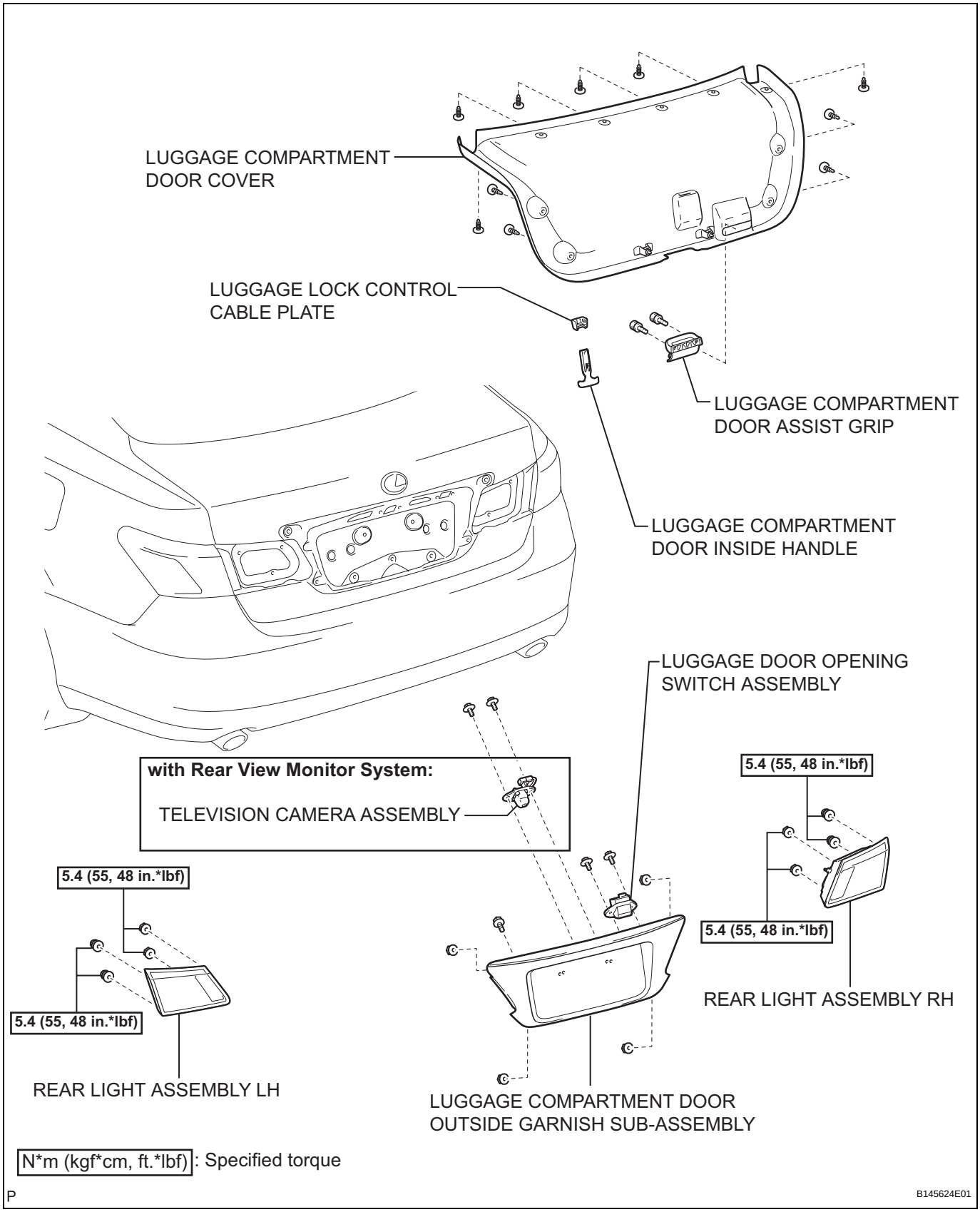

ET

REMOVAL

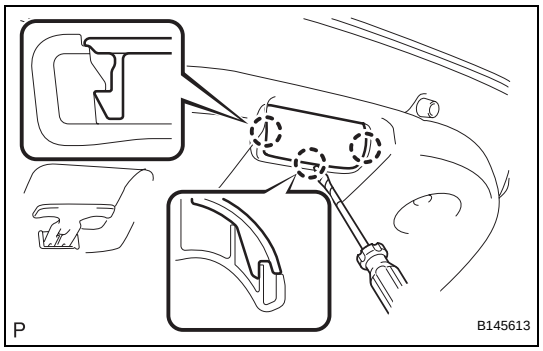

1. REMOVE LUGGAGE COMPARTMENT DOOR ASSIST GRIP

(a) Using a screwdriver, disengage the 3 claws and open the assist grip cover.
HINT:
Tape the screwdriver tip before use.

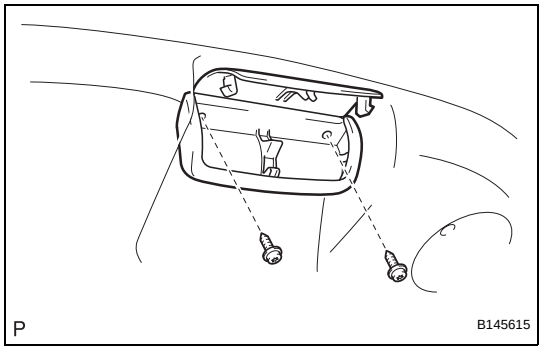

(b) Remove the 2 screws and luggage compartment door assist grip.

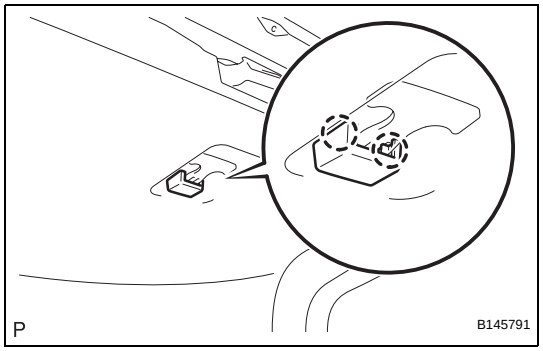

2. REMOVE LUGGAGE LOCK CONTROL CABLE PLATE

(a) Disengage the 2 claws and remove the luggage lock control cable plate.

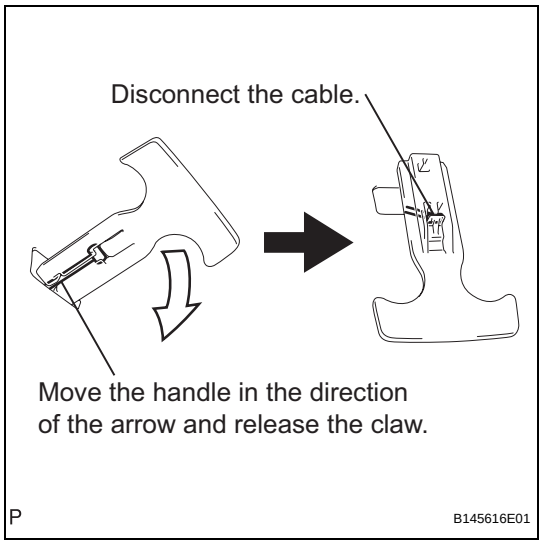

3. REMOVE LUGGAGE COMPARTMENT DOOR INSIDE HANDLE

(a) Disconnect the cable as shown in the illustration, then remove the luggage compartment door inside handle.

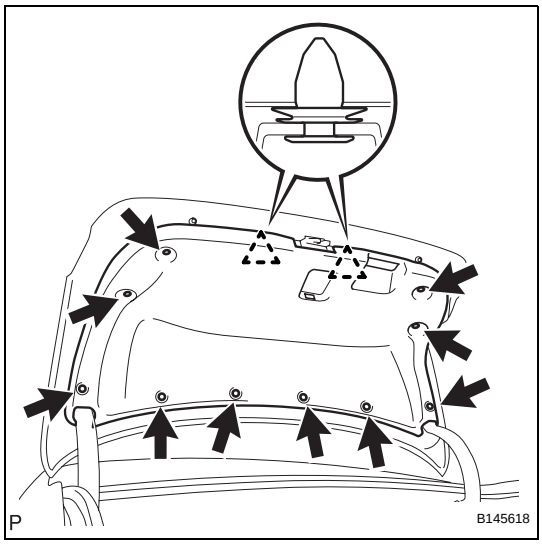

4. REMOVE LUGGAGE COMPARTMENT DOOR COVER
(a) Using a clip remover, remove the 10 clips.
(b) Disengage the 2 clips and luggage compartment door cover.

5. REMOVE REAR LIGHT ASSEMBLY LH (See page LI-149)

6. REMOVE REAR LIGHT ASSEMBLY RH

7. REMOVE LUGGAGE DOOR OPENING SWITCH ASSEMBLY (See page DL-203)

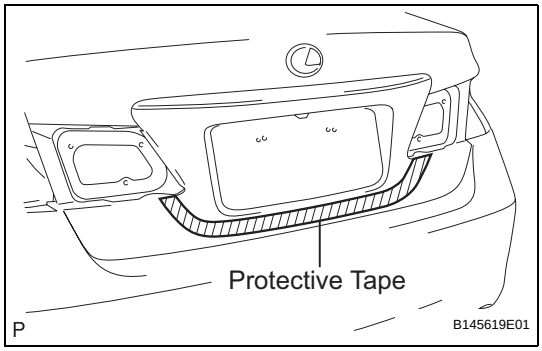

8. REMOVE LUGGAGE COMPARTMENT DOOR OUTSIDE GARNISH SUB-ASSEMBLY (w/o Rear View Monitor System)
(a) Put protective tape around the luggage compartment door outside garnish sub-assembly.

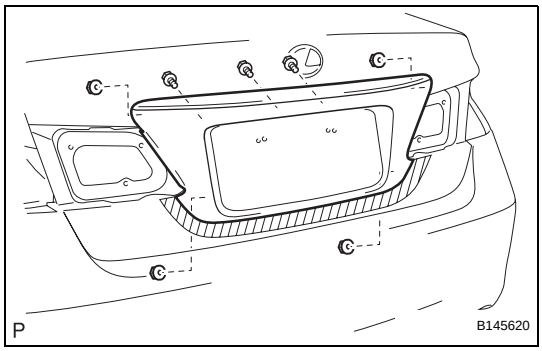

(b) Remove the 3 bolts and 4 nuts.

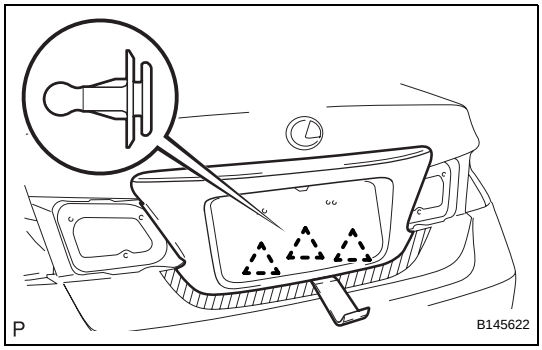

(c) Using a moulding remover, disengage the 3 clips and remove the luggage compartment door outside garnish sub-assembly.

9. REMOVE TELEVISION CAMERA ASSEMBLY (w/ Rear View Monitor System) (See page PM-105)

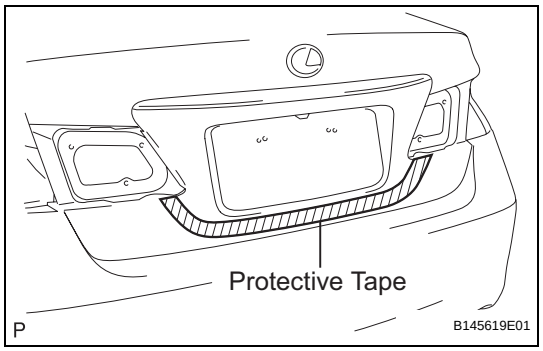

10. REMOVE LUGGAGE COMPARTMENT DOOR OUTSIDE GARNISH SUB-ASSEMBLY (w/ Rear View Monitor System)

(a) Put protective tape around the luggage compartment door outside garnish sub-assembly.

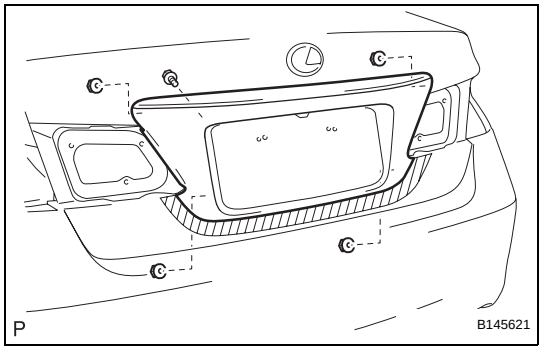

(b) Remove the bolt and 4 nuts.

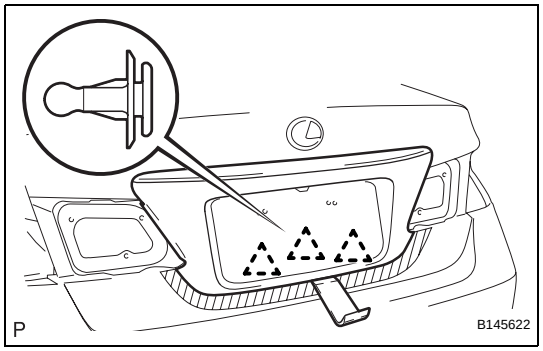

(c) Using a moulding remover, disengage the 3 clips and remove the luggage compartment door outside garnish sub-assembly.

INSTALLATION

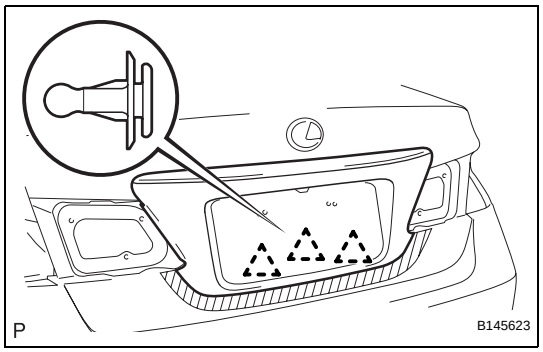

1. INSTALL LUGGAGE COMPARTMENT DOOR OUTSIDE GARNISH SUB-ASSEMBLY (w/o Rear View Monitor System)

(a) Engage the 3 clips and install the luggage compartment door outside garnish sub-assembly.

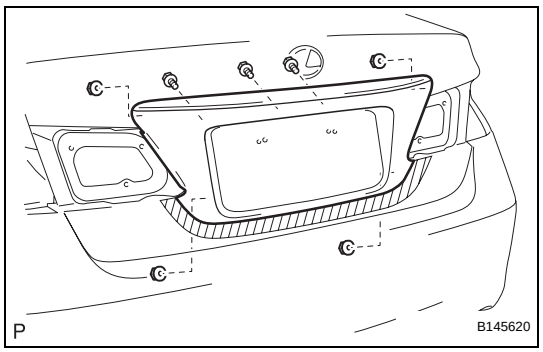

(b) Install the 3 bolts and 4 nuts.

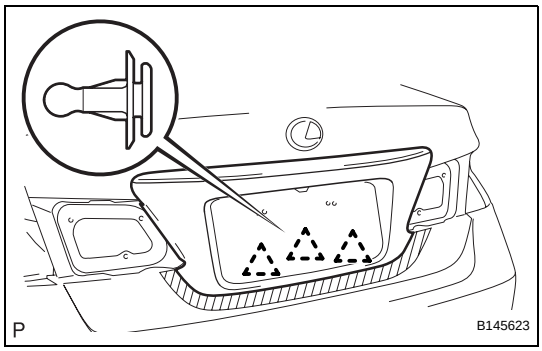

2. INSTALL LUGGAGE COMPARTMENT DOOR OUTSIDE GARNISH SUB-ASSEMBLY (w/ Rear View Monitor System)

(a) Engage the 3 clips and install the luggage compartment door outside garnish sub-assembly.

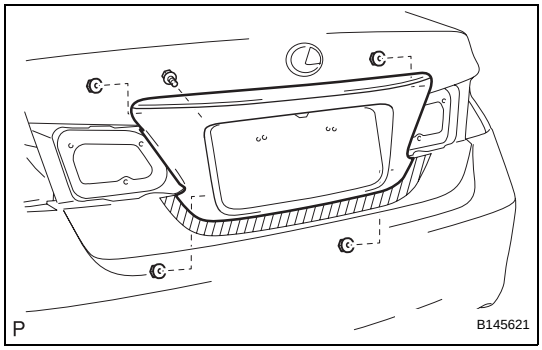

(b) Install the bolt and 4 nuts.

3. INSTALL TELEVISION CAMERA ASSEMBLY (w/ Rear View Monitor System) (See page PM-105)

4. INSTALL LUGGAGE DOOR OPENING SWITCH ASSEMBLY (See page DL-203)

5. INSTALL REAR LIGHT ASSEMBLY LH (See page LI-154)

6. INSTALL REAR LIGHT ASSEMBLY RH

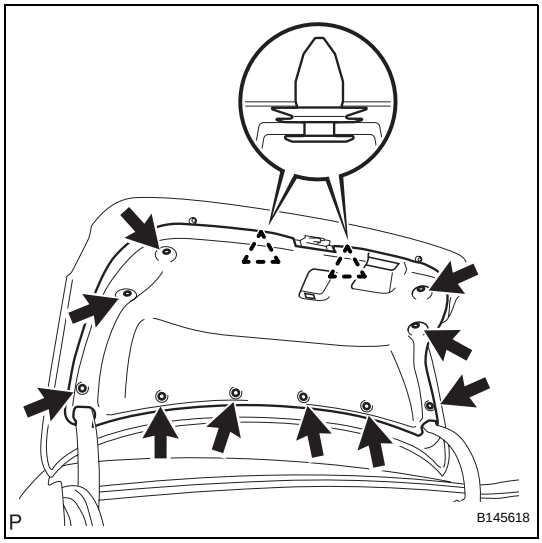

7. INSTALL LUGGAGE COMPARTMENT DOOR COVER

(a) Engage the 2 clips and install the luggage compartment door cover.

(b) Install the 10 clips.

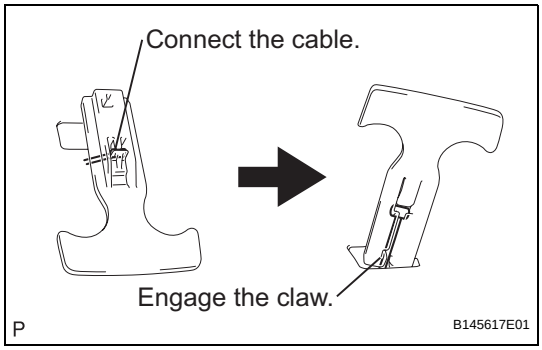

8. INSTALL LUGGAGE COMPARTMENT DOOR INSIDE HANDLE

(a) Connect the cable as shown in the illustration, then install the luggage compartment door inside handle.

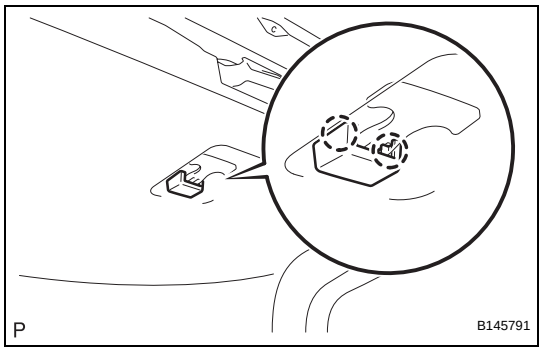

9. INSTALL LUGGAGE LOCK CONTROL CABLE PLATE

(a) Engage the 2 claws and install the luggage lock control cable plate.

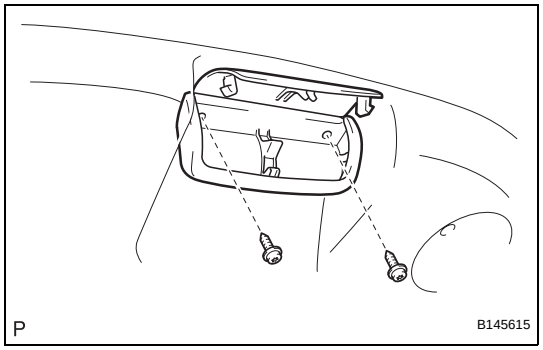

10. INSTALL LUGGAGE COMPARTMENT DOOR ASSIST GRIP

(a) Install the luggage compartment door assist grip with the 2 screws.

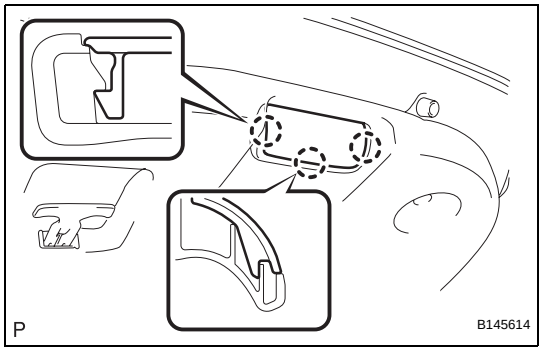

(b) Engage the 3 claws and close the assist grip cover.

HOW TO PROCEED WITH TROUBLESHOOTING

Use these procedures to troubleshoot the rear sunshade system.

1 VEHICLE BROUGHT TO WORKSHOP

NEXT

2 INSPECT BATTERY VOLTAGE

Standard voltage:
11 to 14 V
If the voltage is below 11 V, recharge or replace the battery before proceeding.

NEXT

3 INSPECT COMMUNICATION FUNCTION OF CAN COMMUNICATION SYSTEM

(a) Use the intelligent tester to check if the CAN communication system is functioning normally.
Result

Result	Proceed to
CAN DTC is not output	A
CAN DTC is output	B

B → **Go to CAN COMMUNICATION SYSTEM**

A

4 PROBLEM SYMPTOMS TABLE

(a) Refer to the problem symptoms table (See page IR-6).

Result

Result	Proceed to
Fault not listed in problem symptoms table	A
Fault listed in problem symptoms table	B

B → **Go to step 6**

A

5 OVERALL ANALYSIS AND TROUBLESHOOTING

(a) Terminals of ECU (See page IR-6)
(b) Circuit Inspection (See page IR-9, IR-13)

NEXT

6	**REPAIR OR REPLACE**

NEXT

7	**CONFIRMATION TEST**

NEXT

END

CUSTOMIZE PARAMETERS

1. CUSTOMIZING FUNCTION WITH INTELLIGENT TESTER (REFERENCE)

HINT:

The following items can be customized.

NOTICE:

- **When the customer requests a change in a function, first make sure that the function can be customized.**
- **Be sure to make a note of the current settings before customizing.**
- **When troubleshooting a function, first make sure that the function is set to the default setting.**

OTHERS

System	Default	Contents	Selection
R OUTPUT TIME	0.7 sec.	Function to change the time before reverse-linked sunshade lowering function is activated	0 / 0.7 / 0.9 / 1.2
R-SHADE REVERSE	AVAIL	NOT AVL/AVAIL of the rear sunshade reverse function	NOT AVL / AVAIL

PROBLEM SYMPTOMS TABLE

HINT:
Use the table below to help determine the cause of the problem symptoms. The potential causes of the symptoms are listed in order of probability in the "Suspected Area" column of the table. Check each symptom by checking the suspected areas in the order they are listed. Replace parts as necessary.

Rear sunshade system

Symptom	Suspected Area	See page
Rear sunshade does not operate by manual operation	Rear sunshade switch	IR-9
	Fuse (GAUGE NO. 1)	IR-9
	Wire harness	IR-9
	Rear sunshade relay	IR-9
Rear sunshade shift-linked function does not operate when shift lever is moved to R position	CAN communication line	IR-13
	Park/Neutral position switch	AX-185
	Rear sunshade relay	IR-13
	Wire harness	IR-13

CUSTOMIZE PARAMETERS

1. CUSTOMIZING FUNCTION WITH INTELLIGENT TESTER (REFERENCE)

HINT:

The following items can be customized.

NOTICE:

- **When the customer requests a change in a function, first make sure that the function can be customized.**
- **Be sure to make a note of the current settings before customizing.**
- **When troubleshooting a function, first make sure that the function is set to the default setting.**

OTHERS

System	Default	Contents	Selection
R OUTPUT TIME	0.7 sec.	Function to change the time before reverse-linked sunshade lowering function is activated	0 / 0.7 / 0.9 / 1.2
R-SHADE REVERSE	AVAIL	NOT AVL/AVAIL of the rear sunshade reverse function	NOT AVL / AVAIL

PROBLEM SYMPTOMS TABLE

HINT:
Use the table below to help determine the cause of the problem symptoms. The potential causes of the symptoms are listed in order of probability in the "Suspected Area" column of the table. Check each symptom by checking the suspected areas in the order they are listed. Replace parts as necessary.

Rear sunshade system

Symptom	Suspected Area	See page
Rear sunshade does not operate by manual operation	Rear sunshade switch	IR-9
	Fuse (GAUGE NO. 1)	IR-9
	Wire harness	IR-9
	Rear sunshade relay	IR-9
Rear sunshade shift-linked function does not operate when shift lever is moved to R position	CAN communication line	IR-13
	Park/Neutral position switch	AX-185
	Rear sunshade relay	IR-13
	Wire harness	IR-13

TERMINALS OF ECU

1. CHECK REAR SUNSHADE RELAY

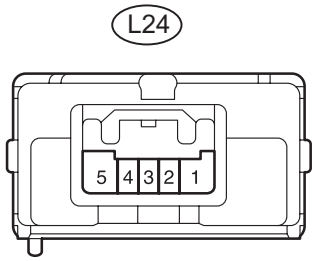

N

B131189E01

(a) Disconnect the L24 relay connector.
(b) Measure the voltage and resistance of the wire harness side connector.

Symbols (Terminal No.)	Wiring Color	Terminal Description	Condition	Specified Condition
IG (L24-1) - E (L24-5)	R - W-B	Power source (IG)	Engine switch off	Below 1 V
IG (L24-1) - E (L24-5)	R - W-B	Power source (IG)	Engine switch on (IG)	10 to 14 V
SW (L24-3) - E (L24-5)	SB - W-B	Rear sunshade switch signal	Engine switch on (IG), rear sunshade switch OFF	10 kΩ or higher
SW (L24-3) - E (L24-5)	SB - W-B	Rear sunshade switch signal	Engine switch on (IG), rear sunshade switch ON	Below 1 Ω
E (L24-5) - Body ground	W-B - Body ground	Ground	Always	Below 1 Ω

If the result is not as specified, there may be a malfunction in the wire harness side connector.

(c) Connect the L24 relay connector.
(d) Measure the voltage of the wire harness side connector.

Symbols (Terminal No.)	Wiring Color	Terminal Description	Condition	Specified Condition
REV (L24-2) - Body ground	P - W-B	Reverse signal	Engine switch on (IG), shift lever not in R	Below 1 V
REV (L24-2) - Body ground	P - W-B	Reverse signal	Engine switch on (IG), shift lever in R	10 to 14 V
SW (L24-3) - Body ground	SB - W-B	Rear sunshade switch signal	Engine switch on (IG), rear sunshade switch not pushed	10 to 14 V
SW (L24-3) - Body ground	SB - W-B	Rear sunshade switch signal	Engine switch on (IG), rear sunshade switch pushed	Below 1.5 V

If the result is not as specified, there may be a malfunction in the wire harness side connector.

DIAGNOSIS SYSTEM

1. DESCRIPTION

Rear sunshade system data can be read through the vehicle's Data Link Connector 3 (DLC3). When the system seems to be malfunctioning, use the intelligent tester to check and perform repairs.

2. CHECK DLC3

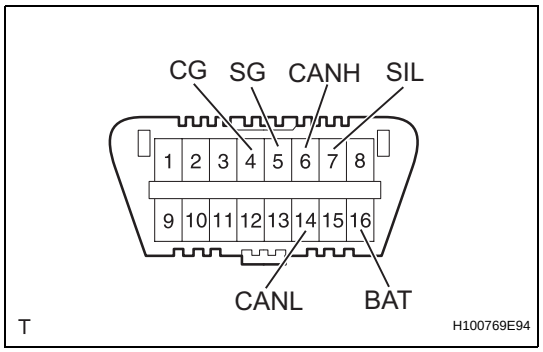

HINT:

The ECU uses ISO 15765-4 for communication. The terminal arrangement of the DLC3 complies with SAE J1962 and matches the ISO 15765-4 format. If the result is not as specified, the DLC3 may have a malfunction. Repair or replace the harness and connector.

Symbols (Terminals No.)	Terminal Description	Condition	Specified Condition
SIL (7) - SG (5)	Bus "+" line	During transmission	Pulse generation
CG (4) - Body ground	Chassis ground	Always	Below 1 Ω
SG (5) - Body ground	Signal ground	Always	Below 1 Ω
BAT (16) - Body ground	Battery positive	Always	11 to 14 V
CANH (6) - CANL (14)	CAN bus line	Engine switch off*	54 to 69 Ω
CANH (6) - CG (4)	HIGH-level CAN bus line	Engine switch off*	200 Ω or higher
CANL (14) - CG (4)	Low-level CAN bus line	Engine switch off*	200 Ω or higher
CANH (6) - BAT (16)	HIGH-level CAN bus line	Engine switch off*	6 kΩ or higher
CANL (14) - BAT (16)	Low-level CAN bus line	Engine switch off*	6 kΩ or higher

NOTICE:

***: Before measuring the resistance, leave the vehicle as is for at least 1 minute and do not operate the engine switch, any other switches or the doors.**

If the result is not as specified, the DLC3 may have a malfunction. Repair or replace the harness and connector.

HINT:

Connect the cable of the intelligent tester to the DLC3, turn the engine switch on (IG) and attempt to use the tester. If the display indicates that a communication error has occurred, there is a problem either with the vehicle or with the tester.

- If communication is normal when the tester is connected to another vehicle, inspect the DLC3 of the original vehicle.
- If communication is still not possible when the tester is connected to another vehicle, the problem may be in the tester itself. Consult the Service Department listed in the tester's instruction manual.

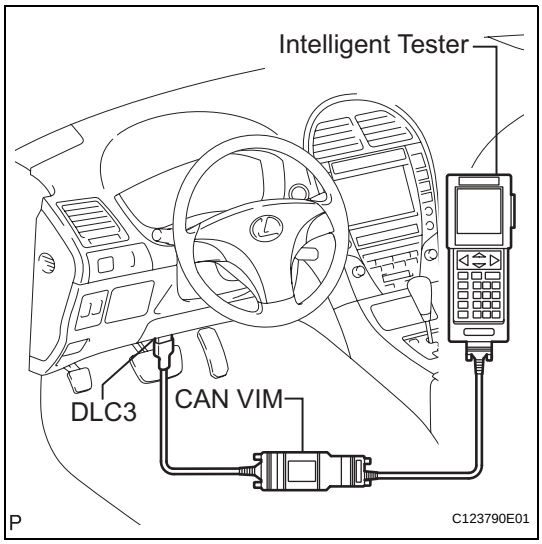
Intelligent Tester
DLC3
CAN VIM
P
C123790E01

Rear Sunshade does not Operate with Rear Sunshade Switch

SYSTEM DESCRIPTION

When the rear sunshade switch is pressed, a signal is sent directly to the rear sunshade relay.

WIRING DIAGRAM

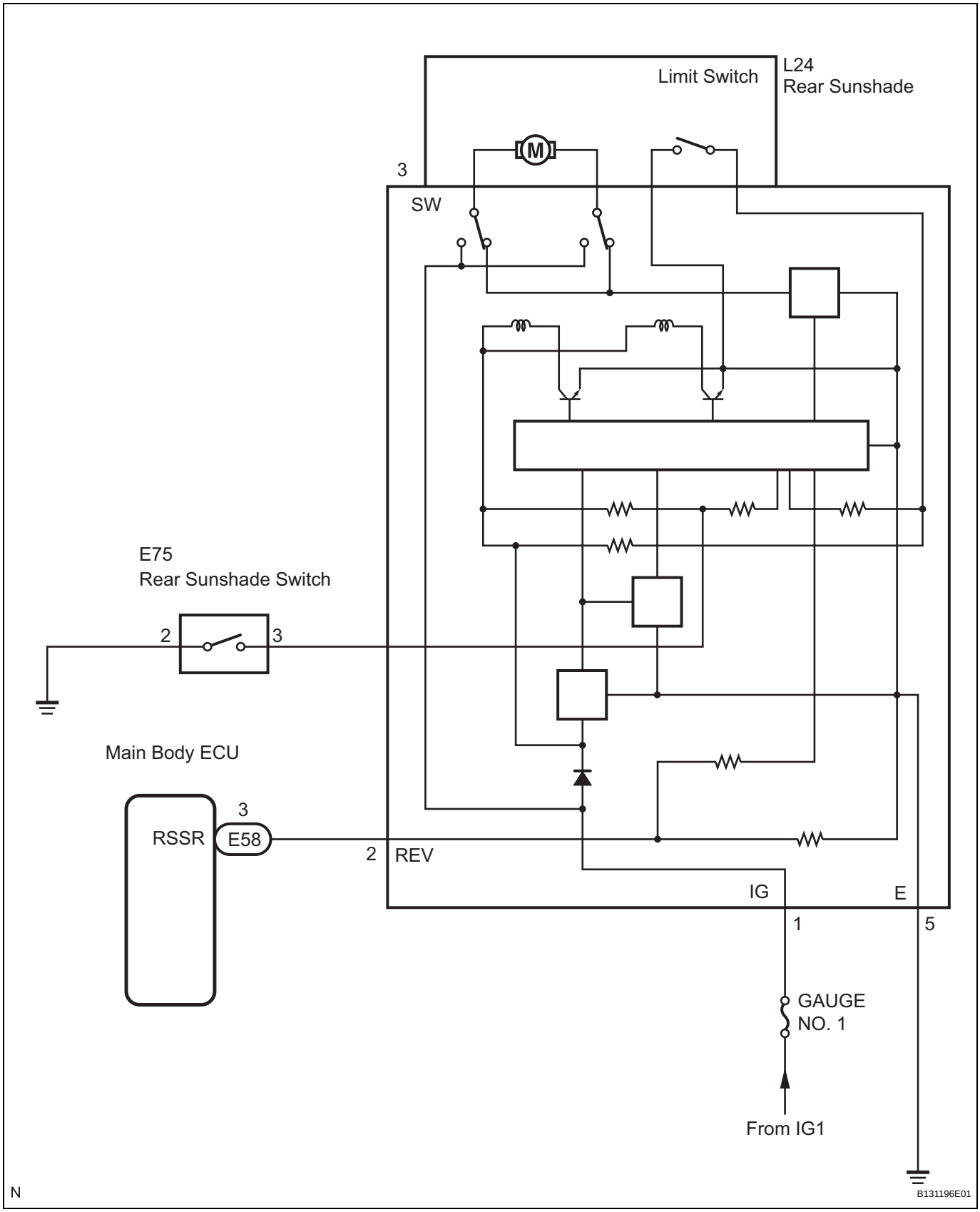

INSPECTION PROCEDURE

1	INSPECT FUSE (GAUGE NO. 1)

(a) Remove the GAUGE NO. 1 fuse from the instrument panel J/B.
(b) Measure the resistance of the fuse.
Standard resistance:
Below 1 Ω

NG → **REPLACE FUSE**

OK

2	CHECK WIRE HARNESS (COWL SIDE JUNCTION BLOCK LH - RELAY, BATTERY AND BODY GROUND)

Rear Sunshade Relay Connector Front View:

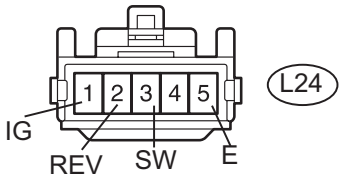

Main Body ECU Connector Front View:

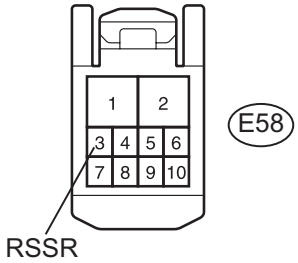

Rear Sunshade Switch Connector Front View:

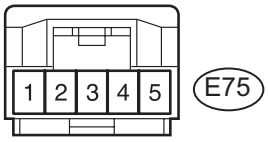

N B131190E01

(a) Disconnect the L24 relay connector.
(b) Disconnect the E58 main body ECU connector.
(c) Disconnect the E75 rear sunshade switch connector.
(d) Measure the resistance of the wire harness side connectors.
Standard resistance

Tester connection	Specified condition
REV (L24-2) - RSSR (E58-3)	Below 1 Ω
SW (L24-3) - E75-3	Below 1 Ω
E (L24-5) - Body ground	Below 1 Ω
REV (L24-2) - E (L24-5)	10 kΩ or higher
SW (L24-3) - E (L24-5)	10 kΩ or higher

(e) Turn the engine switch on (IG).
(f) Measure the voltage of the wire harness side connector.
Standard voltage

Tester connection	Specified condition
IG (L24-1) - Body ground	10 to 14 V

NG → **REPAIR OR REPLACE HARNESS OR CONNECTOR**

OK

3 INSPECT REAR SUNSHADE SWITCH

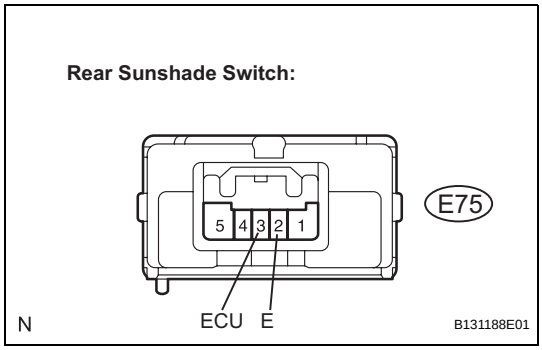

(a) Disconnect the connector from the rear sunshade switch.

(b) Measure the resistance between the terminals according to the value(s) in the table below.

Standard resistance

Tester connection	Condition	Specified condition
E75-3 (ECU) - E75-2 (E)	Rear sunshade switch is pressed	Below 1 Ω
E75-3 (ECU) - E75-2 (E)	Rear sunshade switch is not pressed	10 kΩ or higher

NG → **REPLACE REAR SUNSHADE SWITCH**

OK

REPLACE REAR SUNSHADE RELAY

Rear Sunshade Shift-linked Function does not Operate when Shift Lever is Moved to R Position

SYSTEM DESCRIPTION

When the engine switch is on (IG) and the rear sunshade is raised, moving the shift lever to the R position causes the park/neutral position switch to send a reverse-linked signal to the main body ECU through the ECM (the ECM and main body ECU communicate via CAN). Then the main body ECU sends the signal to the rear sunshade relay. The relay then lowers the rear sunshade.

WIRING DIAGRAM

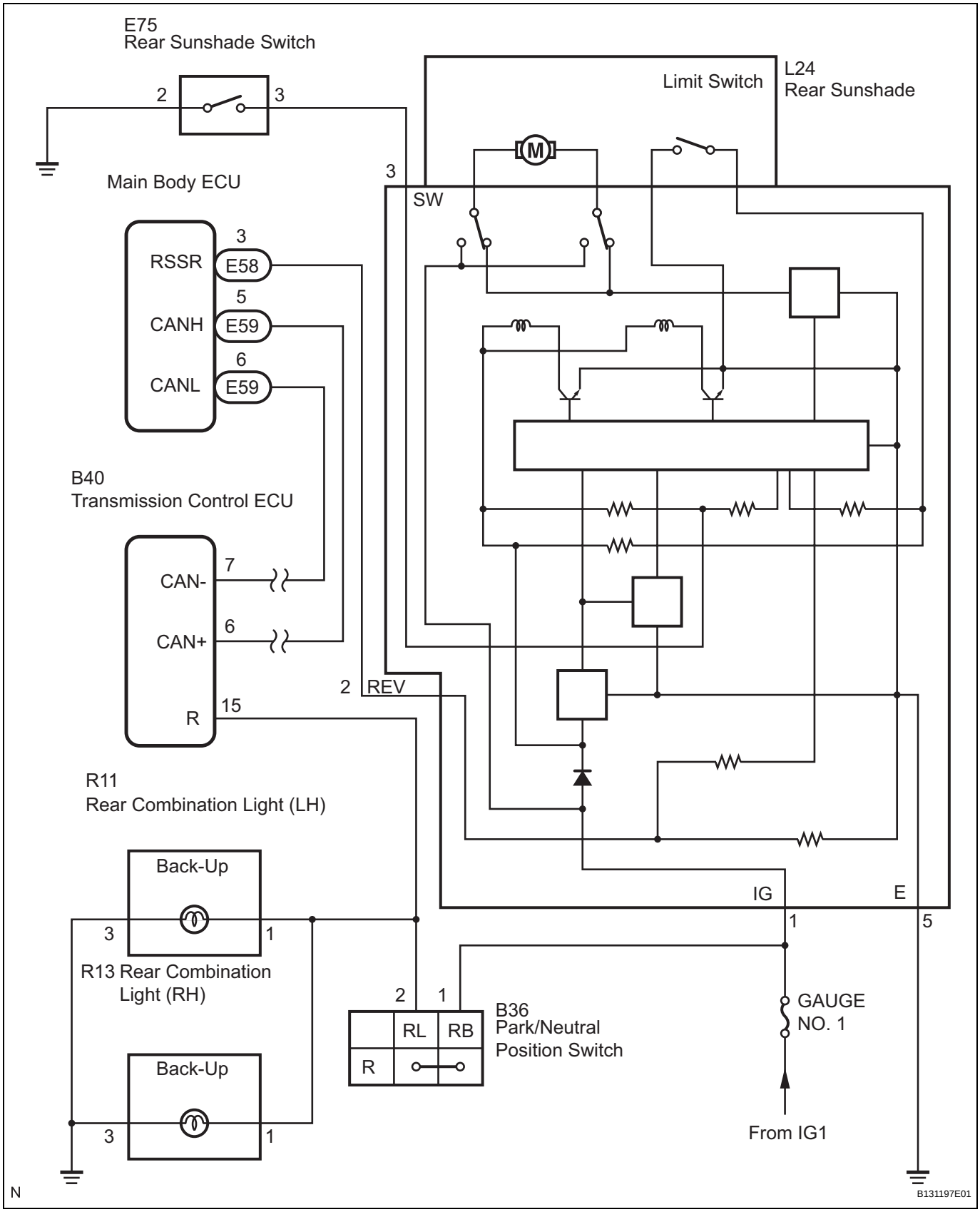

INSPECTION PROCEDURE

1 CHECK OPERATION

(a) Check that the back-up light comes on when the shift lever is moved to the R position.
OK:
Back-up light comes on when shift lever is moved to R position.

NG → **GO TO LIGHTING SYSTEM**

OK

2 CHECK REAR SUNSHADE RELAY

Rear Sunshade Relay Connector Front View:

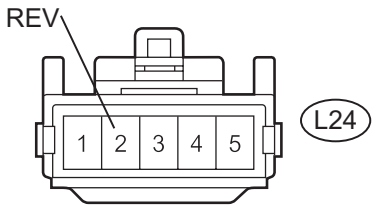

H B131040E05

(a) Disconnect the L24 rear sunshade relay connector.
(b) Measure the voltage of the wire harness side connector.
Standard voltage

Tester connection	Condition	Specified condition
REV (L24-2) - Body ground	Engine switch on (IG), shift lever not in R	Below 1 V
REV (L24-2) - Body ground	Engine switch on (IG), shift lever in R	10 to 14 V

NG → **Go to step 3**

OK

REPLACE REAR SUNSHADE RELAY

3 CHECK WIRE HARNESS (MAIN BODY ECU - PARK/NEUTRAL POSITION SWITCH)

Main Body ECU Connector Front View:

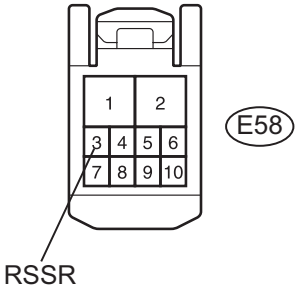

N B131191E01

(a) Disconnect the E58 main body ECU connector.
(b) Measure the voltage of the wire harness side connector.
Standard voltage

Tester connection	Condition	Specified condition
RSSR (E58-3) - Body ground	Engine switch on (IG), shift lever not in R	Below 1 V
RSSR (E58-3) - Body ground	Engine switch on (IG), shift lever in R	10 to 14 V

NG → **REPAIR OR REPLACE HARNESS OR CONNECTOR**

OK

4 CHECK WIRE HARNESS (REAR SUNSHADE RELAY - MAIN BODY ECU)

Rear Sunshade Relay Connector Front View:

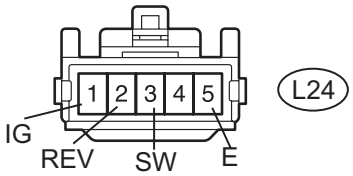

Main Body ECU Connector Front View:

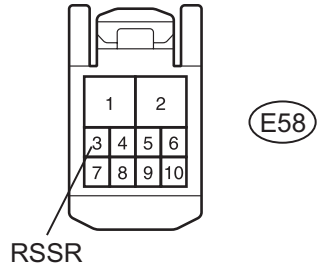

N B131193E04

(a) Disconnect the L24 relay connector.
(b) Disconnect the E58 main body ECU connector.
(c) Measure the resistance of the wire harness side connectors.
Standard resistance

Tester connection	Condition	Specified condition
REV (L24-2) - RSSR (E58-3)	Always	Below 1 Ω

NG → **REPAIR OR REPLACE HARNESS OR CONNECTOR**

OK

REPLACE MAIN BODY ECU

TERMINALS OF ECU

1. CHECK REAR SUNSHADE RELAY

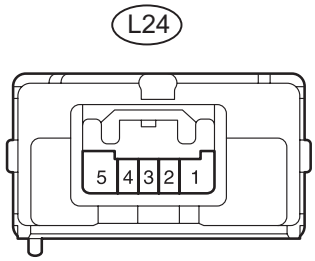

N

B131189E01

(a) Disconnect the L24 relay connector.
(b) Measure the voltage and resistance of the wire harness side connector.

Symbols (Terminal No.)	Wiring Color	Terminal Description	Condition	Specified Condition
IG (L24-1) - E (L24-5)	R - W-B	Power source (IG)	Engine switch off	Below 1 V
IG (L24-1) - E (L24-5)	R - W-B	Power source (IG)	Engine switch on (IG)	10 to 14 V
SW (L24-3) - E (L24-5)	SB - W-B	Rear sunshade switch signal	Engine switch on (IG), rear sunshade switch OFF	10 kΩ or higher
SW (L24-3) - E (L24-5)	SB - W-B	Rear sunshade switch signal	Engine switch on (IG), rear sunshade switch ON	Below 1 Ω
E (L24-5) - Body ground	W-B - Body ground	Ground	Always	Below 1 Ω

If the result is not as specified, there may be a malfunction in the wire harness side connector.

(c) Connect the L24 relay connector.
(d) Measure the voltage of the wire harness side connector.

Symbols (Terminal No.)	Wiring Color	Terminal Description	Condition	Specified Condition
REV (L24-2) - Body ground	P - W-B	Reverse signal	Engine switch on (IG), shift lever not in R	Below 1 V
REV (L24-2) - Body ground	P - W-B	Reverse signal	Engine switch on (IG), shift lever in R	10 to 14 V
SW (L24-3) - Body ground	SB - W-B	Rear sunshade switch signal	Engine switch on (IG), rear sunshade switch not pushed	10 to 14 V
SW (L24-3) - Body ground	SB - W-B	Rear sunshade switch signal	Engine switch on (IG), rear sunshade switch pushed	Below 1.5 V

If the result is not as specified, there may be a malfunction in the wire harness side connector.

DIAGNOSIS SYSTEM

1. DESCRIPTION

Rear sunshade system data can be read through the vehicle's Data Link Connector 3 (DLC3). When the system seems to be malfunctioning, use the intelligent tester to check and perform repairs.

2. CHECK DLC3

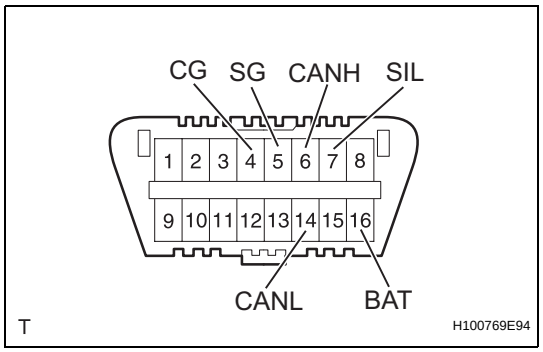

HINT:

The ECU uses ISO 15765-4 for communication. The terminal arrangement of the DLC3 complies with SAE J1962 and matches the ISO 15765-4 format. If the result is not as specified, the DLC3 may have a malfunction. Repair or replace the harness and connector.

Symbols (Terminals No.)	Terminal Description	Condition	Specified Condition
SIL (7) - SG (5)	Bus "+" line	During transmission	Pulse generation
CG (4) - Body ground	Chassis ground	Always	Below 1 Ω
SG (5) - Body ground	Signal ground	Always	Below 1 Ω
BAT (16) - Body ground	Battery positive	Always	11 to 14 V
CANH (6) - CANL (14)	CAN bus line	Engine switch off*	54 to 69 Ω
CANH (6) - CG (4)	HIGH-level CAN bus line	Engine switch off*	200 Ω or higher
CANL (14) - CG (4)	Low-level CAN bus line	Engine switch off*	200 Ω or higher
CANH (6) - BAT (16)	HIGH-level CAN bus line	Engine switch off*	6 kΩ or higher
CANL (14) - BAT (16)	Low-level CAN bus line	Engine switch off*	6 kΩ or higher

NOTICE:

***: Before measuring the resistance, leave the vehicle as is for at least 1 minute and do not operate the engine switch, any other switches or the doors.**

If the result is not as specified, the DLC3 may have a malfunction. Repair or replace the harness and connector.

HINT:

Connect the cable of the intelligent tester to the DLC3, turn the engine switch on (IG) and attempt to use the tester. If the display indicates that a communication error has occurred, there is a problem either with the vehicle or with the tester.

- If communication is normal when the tester is connected to another vehicle, inspect the DLC3 of the original vehicle.
- If communication is still not possible when the tester is connected to another vehicle, the problem may be in the tester itself. Consult the Service Department listed in the tester's instruction manual.

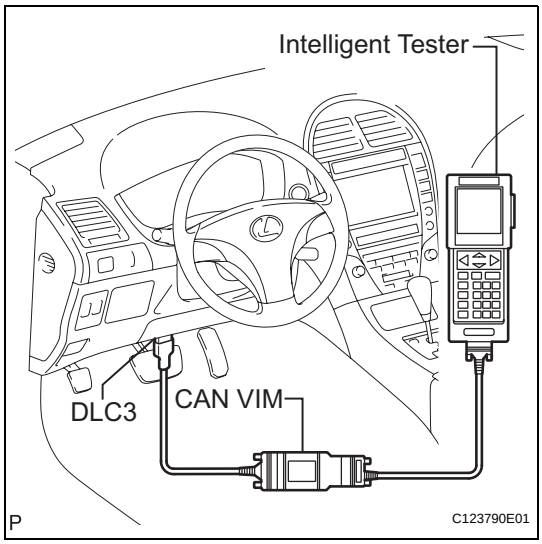
Intelligent Tester
DLC3
CAN VIM
P
C123790E01

REMOVAL

1. **DISCONNECT CABLE FROM NEGATIVE BATTERY TERMINAL (w/ Rear Seat Side Airbag)**
   CAUTION:
   Wait for 90 seconds after disconnecting the cable to prevent airbag deployment (See page RS-1).
2. **REMOVE REAR SEAT CUSHION ASSEMBLY (See page SE-113)**
3. **REMOVE REAR SEAT HEADREST ASSEMBLY**
4. **REMOVE REAR CENTER SEAT HEADREST ASSEMBLY**
5. **REMOVE REAR SEATBACK ASSEMBLY (See page SE-113)**
6. **REMOVE REAR DOOR SCUFF PLATE LH (See page IR-40)**
7. **REMOVE REAR DOOR SCUFF PLATE RH (See page IR-42)**
8. **REMOVE REAR SEAT SIDE AIRBAG ASSEMBLY LH (w/ Rear Seat Side Airbag) (See page RS-460)**
9. **REMOVE REAR SEAT SIDE GARNISH LH (w/o Rear Seat Side Airbag) (See page IR-41)**
10. **REMOVE REAR SEAT SIDE AIRBAG ASSEMBLY RH (w/ Rear Seat Side Airbag)**
    HINT:
    Use the same procedure for the LH side and RH side.
11. **REMOVE REAR SEAT SIDE GARNISH RH (w/o Rear Seat Side Airbag) (See page IR-43)**
12. **REMOVE ROOF SIDE INNER GARNISH ASSEMBLY LH (See page IR-42)**
13. **REMOVE ROOF SIDE INNER GARNISH ASSEMBLY RH (See page IR-43)**
14. **DISCONNECT REAR SEAT 3 POINT TYPE BELT ASSEMBLY LH (See page SB-40)**
15. **DISCONNECT REAR SEAT 3 POINT TYPE BELT ASSEMBLY RH (See page SB-40)**
16. **DISCONNECT REAR SEAT INNER WITH CENTER BELT ASSEMBLY RH (See page SB-40)**
17. **REMOVE REAR SEAT SHOULDER BELT HOLE COVER (See page SB-41)**
18. **REMOVE PACKAGE TRAY TRIM PANEL ASSEMBLY**
    (a) Disengage the 2 clips and raise the front portion of the package tray trim panel assembly.

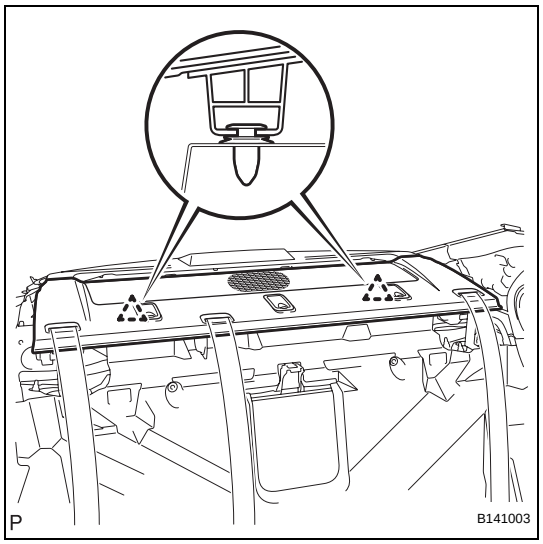

(b) Pass the 3 rear seat belt floor anchors through the holes in the package tray trim panel assembly.
(c) Remove the package tray trim panel assembly.

19. REMOVE CENTER STOP LIGHT SET (See page LI-159)

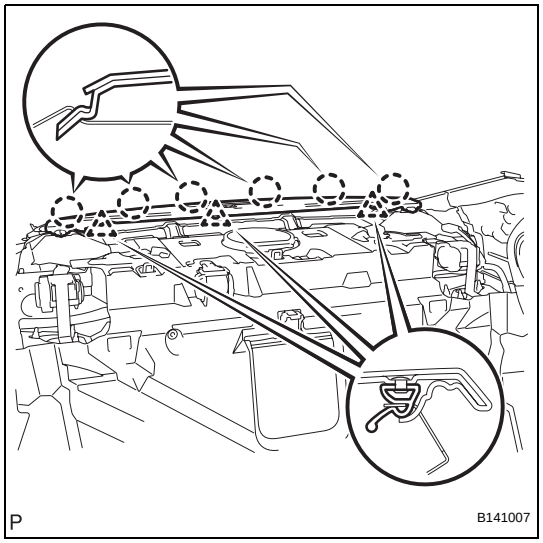

20. REMOVE NO. 2 PACKAGE TRAY TRIM PANEL ASSEMBLY
(a) Disengage the 3 clips and 6 claws, and remove the No. 2 package tray trim panel assembly.

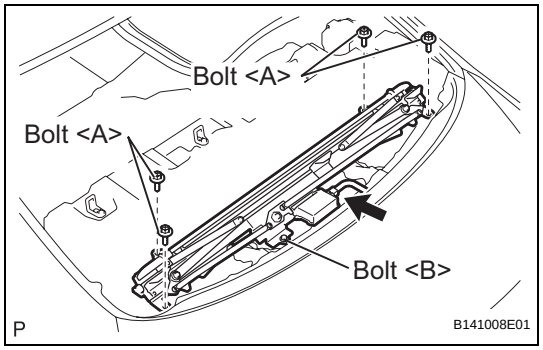

21. REMOVE REAR WINDOW SHADE ASSEMBLY
(a) Disconnect the connector.
(b) Remove the 4 bolts <A>.
(c) Loosen bolt <B> and remove the rear window shade assembly.
NOTICE:
Bolt <B> cannot be removed from the rear window shade assembly.

22. REMOVE REAR SUNSHADE RELAY
NOTICE:
When disassembling the rear sunshade assembly, eliminate static electricity by touching the vehicle body to prevent the components from being damaged.

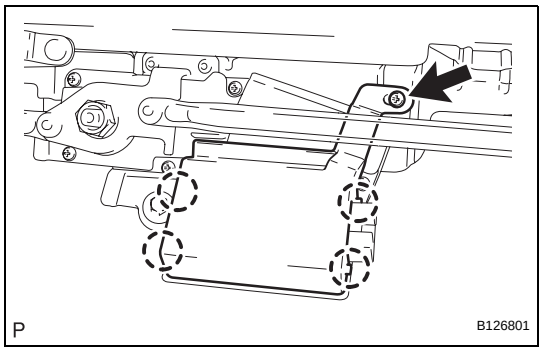

(a) Remove the screw.
(b) Disengage the 4 claws and remove the rear sunshade relay cover.

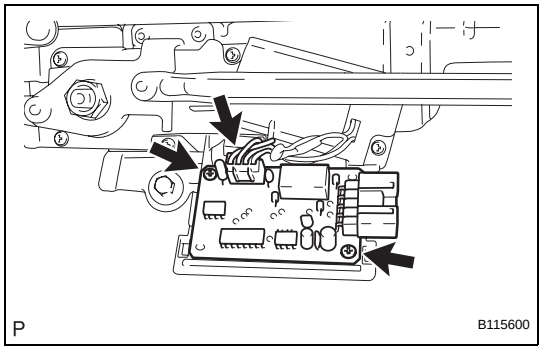

(c) Disconnect the connector.
(d) Remove the 2 screws and the rear sunshade relay.

INSTALLATION

1. INSTALL REAR SUNSHADE RELAY

NOTICE:

When reassembling the rear sunshade assembly, eliminate static electricity by touching the vehicle body to prevent the components from being damaged.

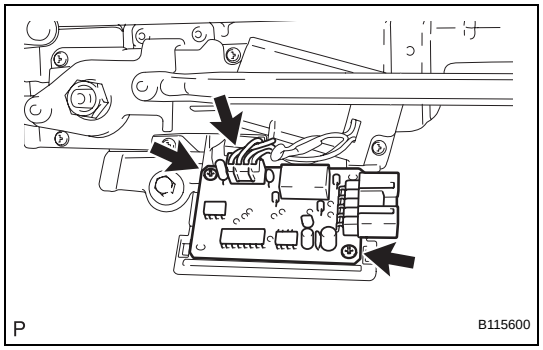

(a) Install the rear sunshade relay with the 2 screws.
(b) Connect the connector.

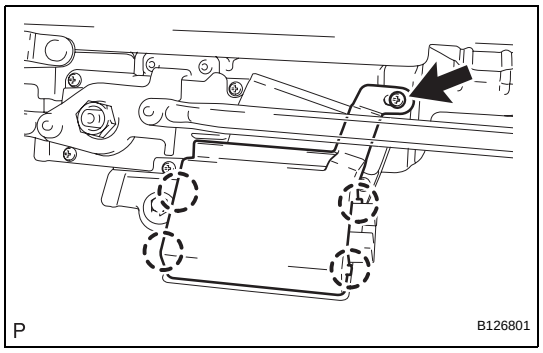

(c) Engage the 4 claws and install the rear sunshade relay cover.
(d) Install the screw.

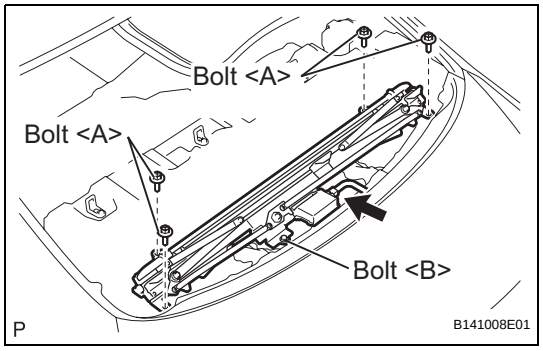

2. INSTALL REAR WINDOW SHADE ASSEMBLY

(a) Install the rear window shade assembly, and temporarily tighten the 4 bolts <A> and bolt <B>.
(b) Fully tighten the 5 bolts.
(c) Connect the connector.

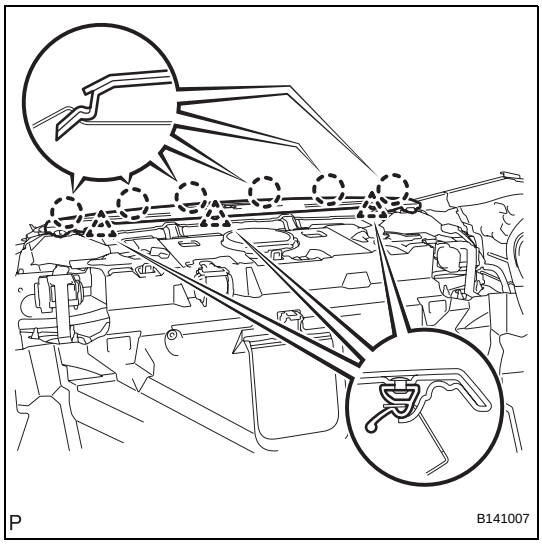

3. **INSTALL NO. 2 PACKAGE TRAY TRIM PANEL ASSEMBLY**
   (a) Engage the 6 claws and 3 clips, and install the No. 2 package tray trim panel assembly.

4. **INSTALL CENTER STOP LIGHT SET (See page LI-159)**

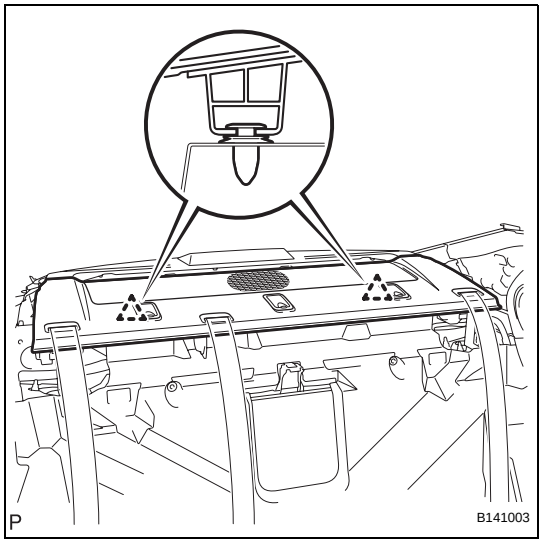

5. **INSTALL PACKAGE TRAY TRIM PANEL ASSEMBLY**
   (a) Thread the 3 rear seat belt floor anchors into the package tray trim panel assembly.
   (b) Insert the rear end of the package tray trim panel assembly into the rear window shade assembly.
   (c) Engage the 2 clips and install the package tray trim panel assembly.

6. **INSTALL REAR SEAT SHOULDER BELT HOLE COVER (See page SB-42)**

7. **CONNECT REAR SEAT INNER WITH CENTER BELT ASSEMBLY RH (See page SB-42)**

8. **CONNECT REAR SEAT 3 POINT TYPE BELT ASSEMBLY LH (See page SB-42)**

9. **CONNECT REAR SEAT 3 POINT TYPE BELT ASSEMBLY RH (See page SB-43)**

10. **INSTALL ROOF SIDE INNER GARNISH ASSEMBLY LH (See page IR-62)**

11. **INSTALL ROOF SIDE INNER GARNISH ASSEMBLY RH (See page IR-65)**

12. **INSTALL REAR SEAT SIDE GARNISH LH (w/o Rear Seat Side Airbag) (See page IR-62)**

13. **INSTALL REAR SEAT SIDE AIRBAG ASSEMBLY LH (w/ Rear Seat Side Airbag) (See page RS-460)**

14. **INSTALL REAR SEAT SIDE GARNISH RH (w/o Rear Seat Side Airbag) (See page IR-65)**

15. **INSTALL REAR SEAT SIDE AIRBAG ASSEMBLY RH (w/ Rear Seat Side Airbag)**
    HINT:
    Use the same procedure for the LH side and RH side.

16. **INSTALL REAR DOOR SCUFF PLATE LH (See page IR-63)**

17. **INSTALL REAR DOOR SCUFF PLATE RH (See page IR-65)**
18. **INSTALL REAR SEATBACK ASSEMBLY (See page SE-121)**
19. **INSTALL REAR CENTER SEAT HEADREST ASSEMBLY**
20. **INSTALL REAR SEAT HEADREST ASSEMBLY**
21. **INSTALL REAR SEAT CUSHION ASSEMBLY (See page SE-121)**
22. **CONNECT CABLE TO NEGATIVE BATTERY TERMINAL (w/ Rear Seat Side Airbag)**
23. **PERFORM INITIALIZATION (w/ Rear Seat Side Airbag)**
    NOTICE:
    Some systems need initialization after reconnecting the cable to the negative battery terminal (See page IN-33).
24. **INSPECT SRS WARNING LIGHT (w/ Rear Seat Side Airbag)**
    (See page RS-37)

Rear Sunshade does not Operate with Rear Sunshade Switch

SYSTEM DESCRIPTION

When the rear sunshade switch is pressed, a signal is sent directly to the rear sunshade relay.

WIRING DIAGRAM

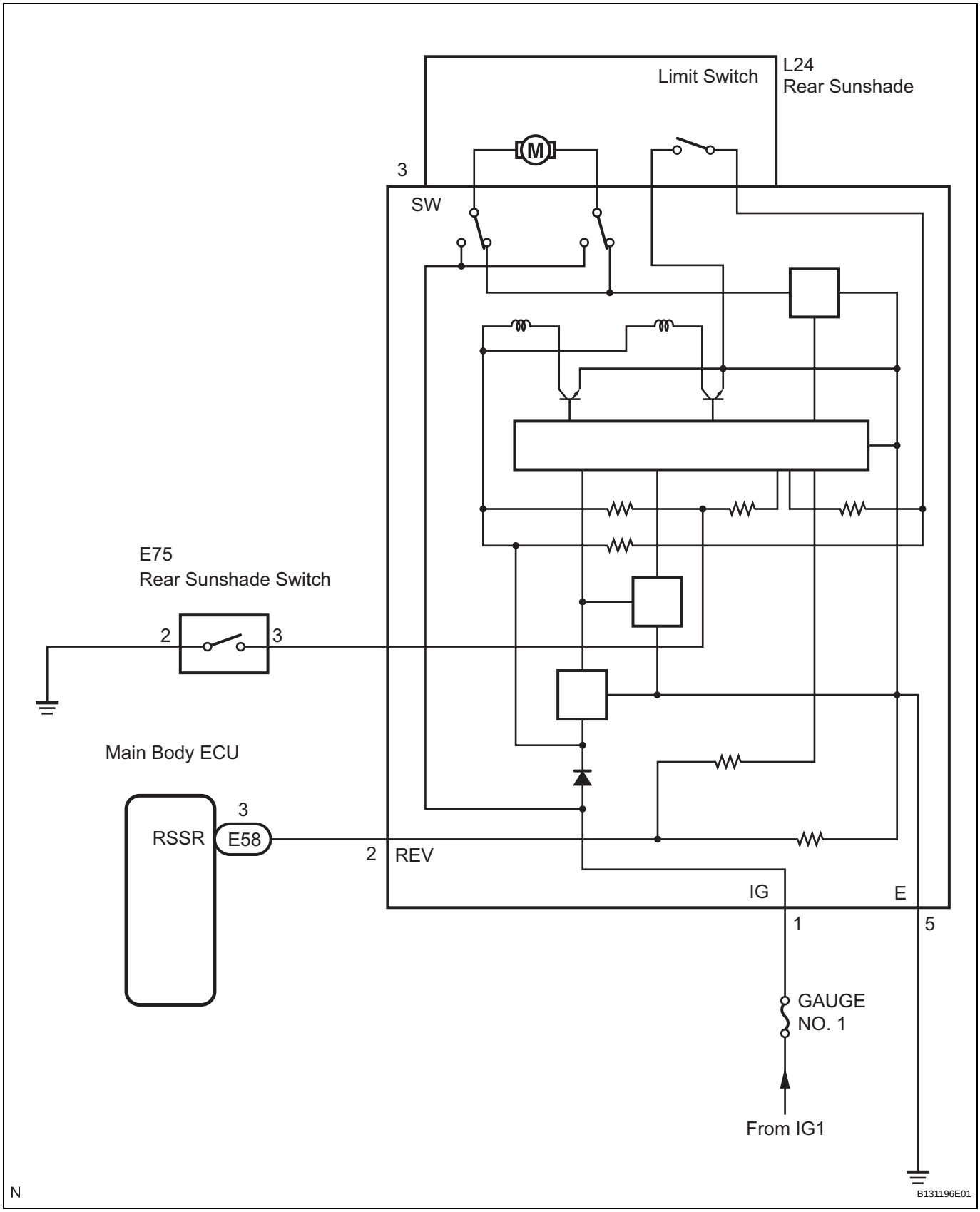

INSPECTION PROCEDURE

1	INSPECT FUSE (GAUGE NO. 1)

(a) Remove the GAUGE NO. 1 fuse from the instrument panel J/B.
(b) Measure the resistance of the fuse.
Standard resistance:
Below 1 Ω

NG → **REPLACE FUSE**

OK

2	CHECK WIRE HARNESS (COWL SIDE JUNCTION BLOCK LH - RELAY, BATTERY AND BODY GROUND)

Rear Sunshade Relay Connector Front View:

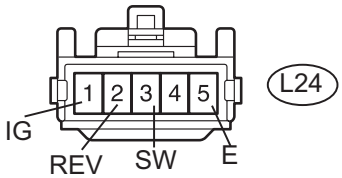

Main Body ECU Connector Front View:

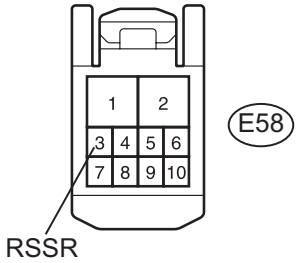

Rear Sunshade Switch Connector Front View:

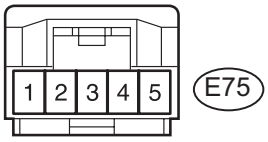

N B131190E01

(a) Disconnect the L24 relay connector.
(b) Disconnect the E58 main body ECU connector.
(c) Disconnect the E75 rear sunshade switch connector.
(d) Measure the resistance of the wire harness side connectors.
Standard resistance

Tester connection	Specified condition
REV (L24-2) - RSSR (E58-3)	Below 1 Ω
SW (L24-3) - E75-3	Below 1 Ω
E (L24-5) - Body ground	Below 1 Ω
REV (L24-2) - E (L24-5)	10 kΩ or higher
SW (L24-3) - E (L24-5)	10 kΩ or higher

(e) Turn the engine switch on (IG).
(f) Measure the voltage of the wire harness side connector.
Standard voltage

Tester connection	Specified condition
IG (L24-1) - Body ground	10 to 14 V

NG → **REPAIR OR REPLACE HARNESS OR CONNECTOR**

OK

3 INSPECT REAR SUNSHADE SWITCH

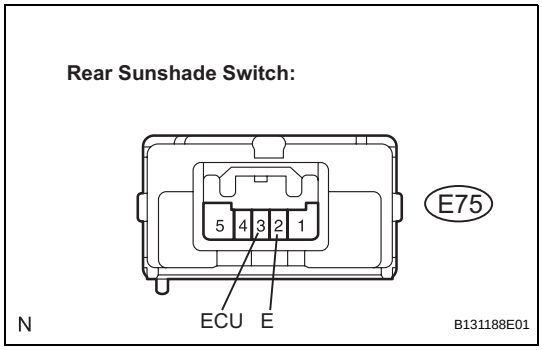

(a) Disconnect the connector from the rear sunshade switch.

(b) Measure the resistance between the terminals according to the value(s) in the table below.

Standard resistance

Tester connection	Condition	Specified condition
E75-3 (ECU) - E75-2 (E)	Rear sunshade switch is pressed	Below 1 Ω
E75-3 (ECU) - E75-2 (E)	Rear sunshade switch is not pressed	10 kΩ or higher

NG → **REPLACE REAR SUNSHADE SWITCH**

OK

REPLACE REAR SUNSHADE RELAY

REMOVAL

1. **REMOVE REAR SEAT CUSHION ASSEMBLY (See page SE-113)**
2. **REMOVE REAR SEAT HEADREST ASSEMBLY**
3. **REMOVE REAR CENTER SEAT HEADREST ASSEMBLY**
4. **REMOVE REAR SEATBACK ASSEMBLY (See page SE-113)**
5. **REMOVE SEAT BELT ANCHOR COVER CAP LH (See page SB-22)**
6. **DISCONNECT FRONT SEAT OUTER BELT ASSEMBLY LH (See page SB-22)**
7. **REMOVE FRONT SEAT HEADREST ASSEMBLY (for Driver Seat)**
8. **REMOVE FRONT SEAT OUTER TRACK BRACKET COVER LH (See page SE-83)**
9. **REMOVE FRONT SEAT INNER TRACK BRACKET COVER LH (See page SE-83)**
10. **REMOVE FRONT SEAT REAR OUTER TRACK BRACKET COVER LH (See page SE-83)**
11. **REMOVE FRONT SEAT REAR INNER TRACK BRACKET COVER LH (See page SE-83)**
12. **REMOVE FRONT SEAT ASSEMBLY LH (See page SE-83)**
13. **REMOVE SEAT BELT ANCHOR COVER CAP RH (See page RS-490)**
14. **DISCONNECT FRONT SEAT OUTER BELT ASSEMBLY RH (See page RS-490)**
15. **REMOVE FRONT SEAT HEADREST ASSEMBLY (for Front Passenger Seat)**
16. **REMOVE FRONT SEAT OUTER TRACK BRACKET COVER RH (See page RS-490)**
17. **REMOVE FRONT SEAT INNER TRACK BRACKET COVER RH (See page RS-490)**
18. **REMOVE FRONT SEAT REAR OUTER TRACK BRACKET COVER RH (See page RS-490)**
19. **REMOVE FRONT SEAT REAR INNER TRACK BRACKET COVER RH (See page RS-490)**
20. **REMOVE FRONT SEAT ASSEMBLY RH (See page RS-491)**

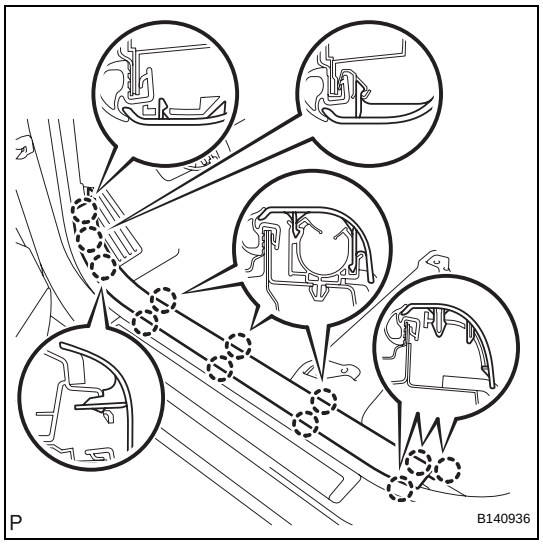

21. REMOVE FRONT DOOR SCUFF PLATE LH

(a) Disengage the 12 claws and remove the front door scuff plate LH.

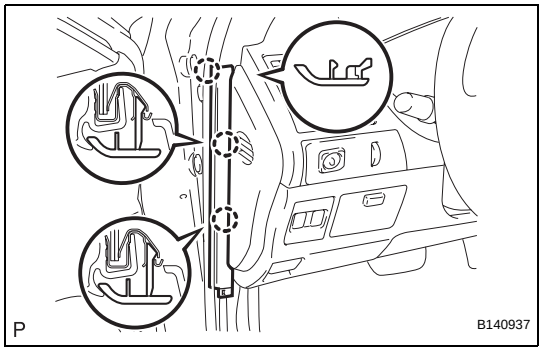

22. REMOVE FRONT DOOR OPENING TRIM COVER LH

(a) Disengage the 3 claws and remove the front door opening trim cover LH.

23. REMOVE SIDE INSTRUMENT PANEL LH (See page IP-12)

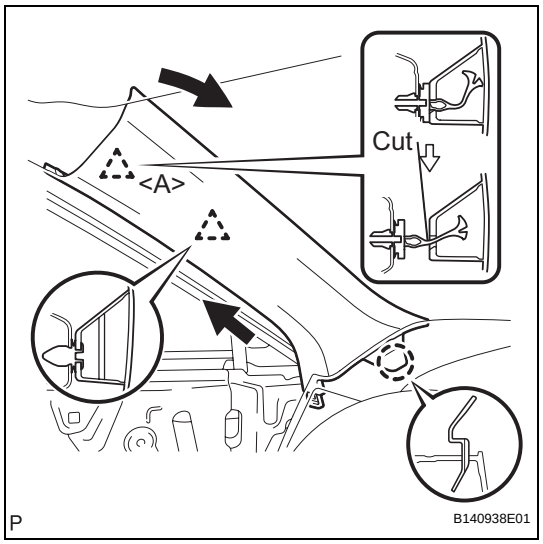

24. REMOVE FRONT PILLAR GARNISH LH

(a) Pull the upper portion of the garnish towards the inside of the cabin and disengage the 2 clips.
(b) Cut off clip <A>.
(c) Disengage the claw and remove the front pillar garnish LH.
(d) Remove clip <A> from the vehicle body.

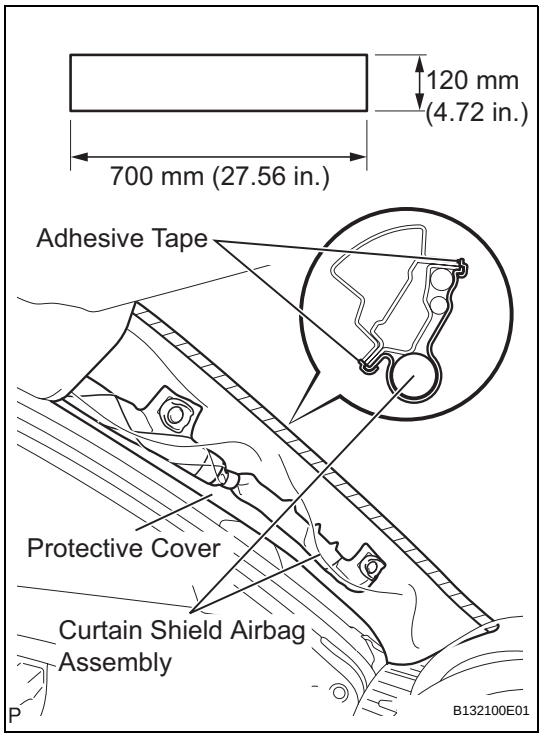

(e) Protect the curtain shield airbag assembly.
  (1) Thoroughly cover the airbag with a cloth or nylon sheet and fix the ends of the cover with adhesive tape, as shown in the illustration.
  NOTICE:
  Cover the curtain shield airbag with a protective cover as soon as the front pillar garnish is removed.

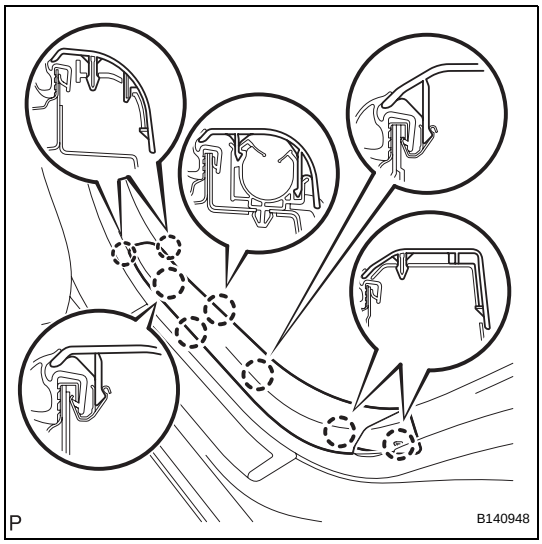

25. REMOVE REAR DOOR SCUFF PLATE LH

(a) Disengage the 8 claws and remove the rear door scuff plate LH.

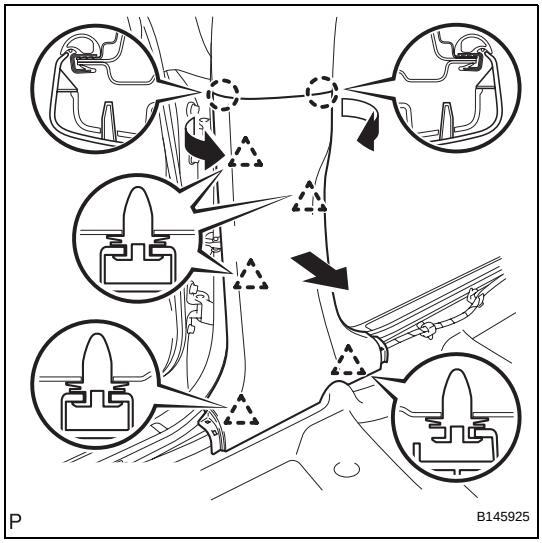

26. REMOVE LOWER CENTER PILLAR GARNISH LH

(a) Disengage the 2 claws and 5 clips, and remove the lower center pillar garnish LH.

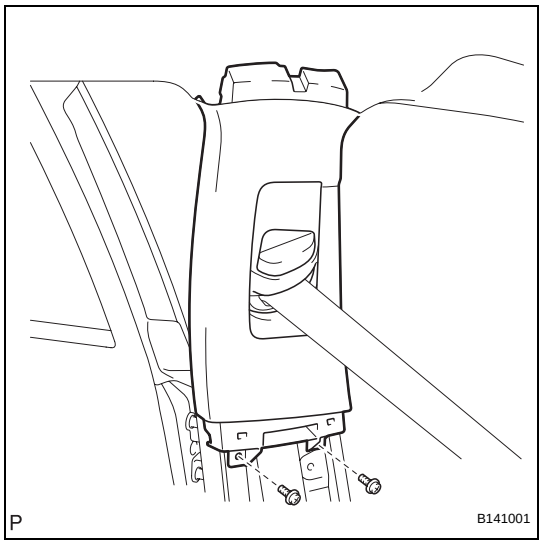

27. REMOVE UPPER CENTER PILLAR GARNISH LH

(a) Remove the 2 screws.

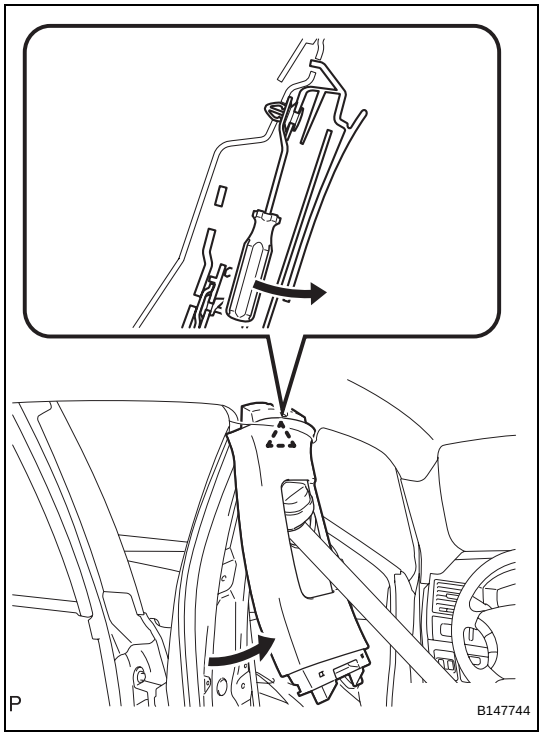

(b) Pull the lower part of the pillar garnish toward the inside of the vehicle.

(c) Using a clip remover, disengage the clip and remove the upper center pillar garnish LH.

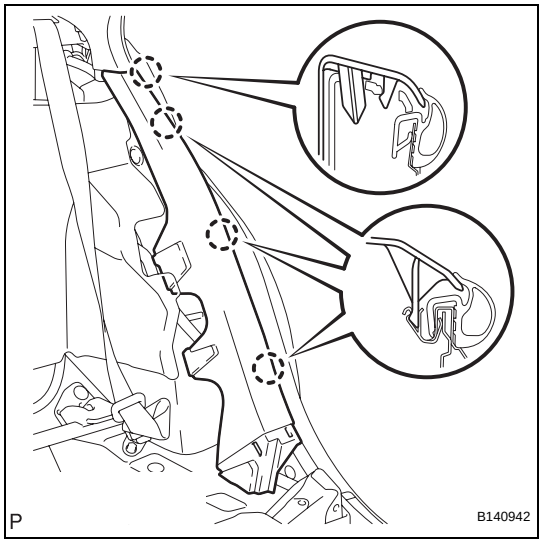

28. REMOVE REAR SEAT SIDE GARNISH LH (w/o Rear Seat Side Airbag)

(a) Disengage the 4 claws and rear seat side garnish LH.

29. REMOVE REAR SEAT SIDE AIRBAG ASSEMBLY LH (w/ Rear Seat Side Airbag) (See page RS-460)

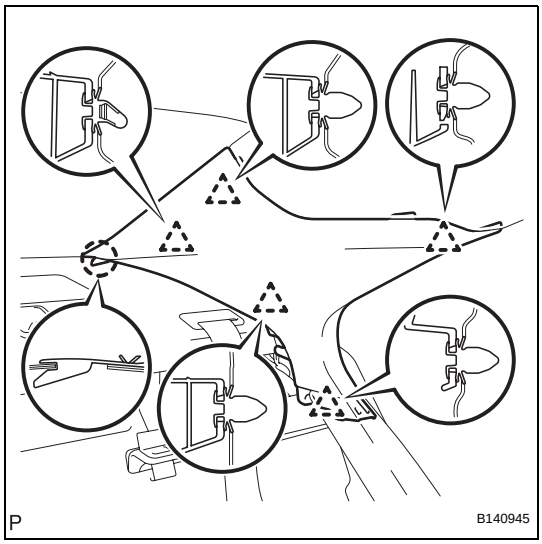

30. REMOVE ROOF SIDE INNER GARNISH ASSEMBLY LH

(a) Disengage the 5 clips and claw, and remove the roof side inner garnish assembly LH.

31. REMOVE FRONT DOOR SCUFF PLATE RH

HINT:
Use the same procedure for the RH side and the LH side.

32. REMOVE FRONT DOOR OPENING TRIM COVER RH

HINT:
Use the same procedure for the RH side and the LH side.

33. REMOVE SIDE INSTRUMENT PANEL RH (See page IP-15)

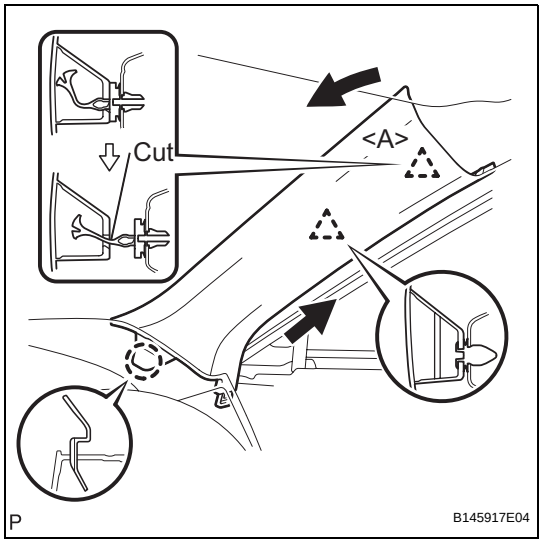

34. REMOVE FRONT PILLAR GARNISH RH

(a) Pull the upper portion of the garnish towards the inside of the cabin and disengage the 2 clips.
(b) Cut off clip <A>.
(c) Disengage the claw and remove the front pillar garnish RH.
(d) Remove the clip <A> from the vehicle body.

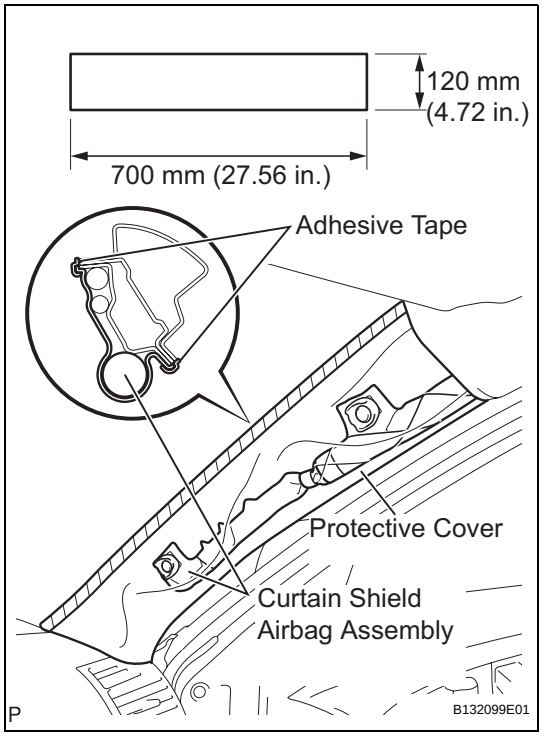

(e) Protect the curtain shield airbag assembly.
  (1) Thoroughly cover the airbag with a cloth or nylon sheet and fix the ends of the cover with adhesive tape, as shown in the illustration.
  NOTICE:
  Cover the curtain shield airbag with a protective cover as soon as the front pillar garnish is removed.

35. REMOVE REAR DOOR SCUFF PLATE RH

HINT:
Use the same procedure for the RH side and the LH side.

36. REMOVE LOWER CENTER PILLAR GARNISH RH

HINT:
Use the same procedure for the RH side and the LH side.

37. REMOVE UPPER CENTER PILLAR GARNISH RH

HINT:
Use the same procedure for the RH side and the LH side.

38. **REMOVE REAR SEAT SIDE GARNISH RH (w/o Rear Seat Side Airbag)**
    HINT:
    Use the same procedure for the RH side and the LH side.

39. **REMOVE REAR SEAT SIDE AIRBAG ASSEMBLY RH (w/ Rear Seat Side Airbag)**
    HINT:
    Use the same procedure for the RH side and the LH side.

40. **REMOVE ROOF SIDE INNER GARNISH ASSEMBLY RH**
    HINT:
    Use the same procedure for the RH side and the LH side.

41. **REMOVE INSTRUMENT PANEL FINISH PANEL END LH (See page IP-13)**

42. **REMOVE INSTRUMENT PANEL FINISH PANEL END RH (See page IP-15)**

43. **REMOVE SHIFT LEVER KNOB SUB-ASSEMBLY (See page IP-16)**

44. **REMOVE UPPER CONSOLE PANEL ASSEMBLY WITH FRONT ASH RECEPTACLE (See page IP-16)**

45. **REMOVE HEATER SEAT SWITCH CONSOLE BASE (w/o Seat Heater System) (See page IP-17)**

46. **REMOVE HEATER SEAT SWITCH CONSOLE BASE (w/ Seat Heater System) (See page IP-18)**

47. **REMOVE CONSOLE BOX POCKET (See page IP-52)**

48. **REMOVE CONSOLE BOX CARPET (See page IP-52)**

49. **REMOVE CONSOLE REAR END PANEL SUB-ASSEMBLY (See page IP-53)**

50. **REMOVE REAR CONSOLE BOX ASSEMBLY (See page IP-53)**

51. **REMOVE NO. 2 CONSOLE BOX DUCT (See page AC-149)**

52. **REMOVE NO. 3 CONSOLE BOX DUCT (See page AC-149)**

53. **DISCONNECT TRANSMISSION CONTROL CABLE ASSEMBLY (See page AX-232)**

54. **REMOVE SHIFT LEVER ASSEMBLY (See page AX-233)**

55. **REMOVE FLOOR CARPET BRACKET LH (See page AC-148)**

56. **REMOVE FLOOR CARPET BRACKET RH (See page AC-148)**

57. REMOVE LUGGAGE COMPARTMENT FLOOR MAT (w/ DVD Player)

58. REMOVE SPARE WHEEL COVER TRAY (w/ DVD Player)

59. REMOVE LUGGAGE HOLD BELT STRIKER ASSEMBLY (w/ DVD Player) (See page ED-82)

60. REMOVE NO. 1 LUGGAGE COMPARTMENT TRIM HOOK (w/ DVD Player) (See page ED-83)

61. REMOVE REAR FLOOR FINISH PLATE (w/ DVD Player) (See page ED-83)

62. REMOVE LUGGAGE COMPARTMENT INNER TRIM COVER RH (w/ DVD Player) (See page ED-83)

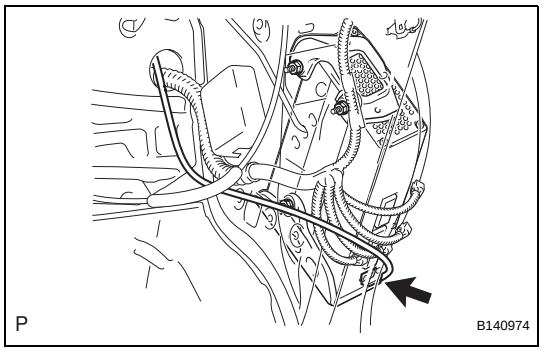

63. DISCONNECT STEREO COMPONENT AMPLIFIER ASSEMBLY CONNECTOR (w/ DVD Player)

(a) Disconnect the stereo component amplifier assembly connector.

64. REMOVE INNER REAR VIEW MIRROR STAY HOLDER COVER (See page MI-42)

65. REMOVE RAIN SENSOR COVER (w/ Rain Sensor) (See page WW-63)

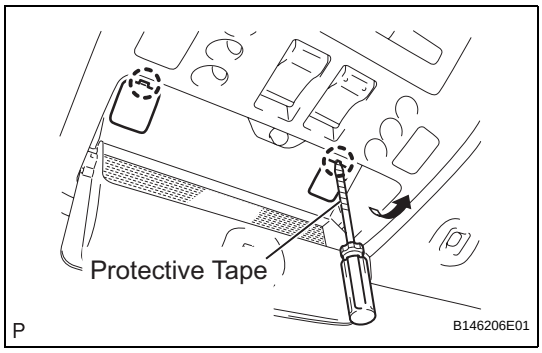

66. REMOVE ROOF CONSOLE BOX ASSEMBLY

(a) Using a screwdriver, disengage the 2 claws and open the 2 covers.
HINT:
Tape the screwdriver tip before use.

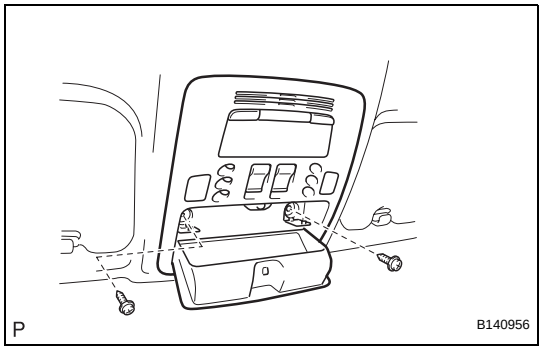

(b) Remove the 2 screws.

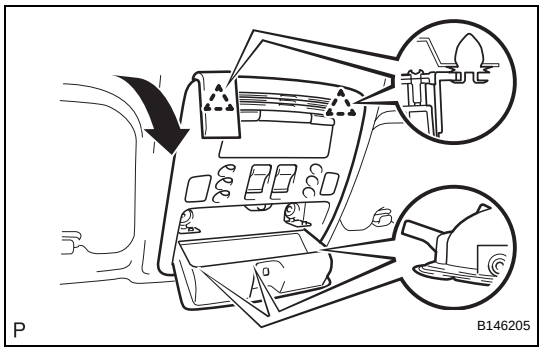

(c) Using a moulding remover, disengage the 2 clips.
(d) Disconnect the connectors and remove the roof console box assembly.

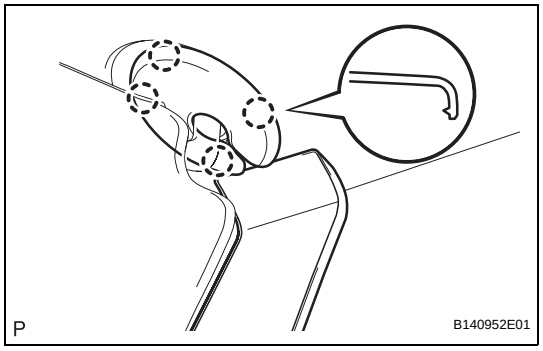

67. REMOVE VISOR BRACKET COVER

(a) Using a moulding remover, disengage the 4 claws and remove the visor bracket cover.
HINT:
Use the same procedure to remove the cover on the other side.

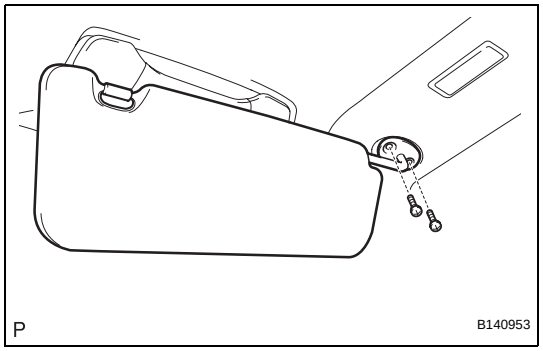

68. REMOVE VISOR ASSEMBLY LH

(a) Remove the 2 screws and visor assembly LH.

69. REMOVE VISOR ASSEMBLY RH

HINT:
Use the same procedure for the RH side and the LH side.

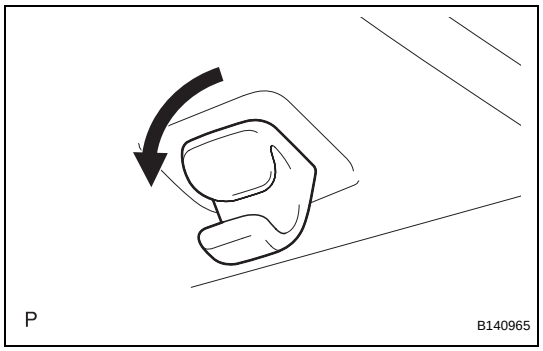

70. REMOVE VISOR HOLDER

(a) Remove the visor holder by turning it counterclockwise.
HINT:
Use the same procedure to remove the hook on the other side.

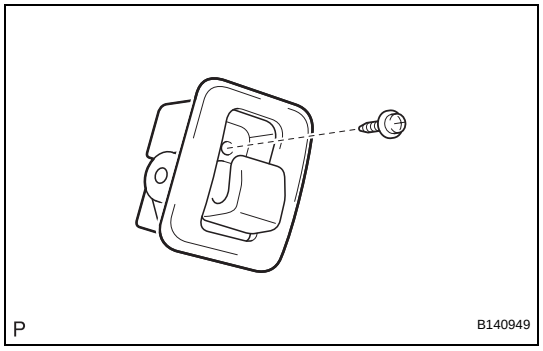

71. REMOVE COAT HOOK

(a) Remove the screw and coat hook.
HINT:
Use the same procedure to remove the coat hook on the other side.

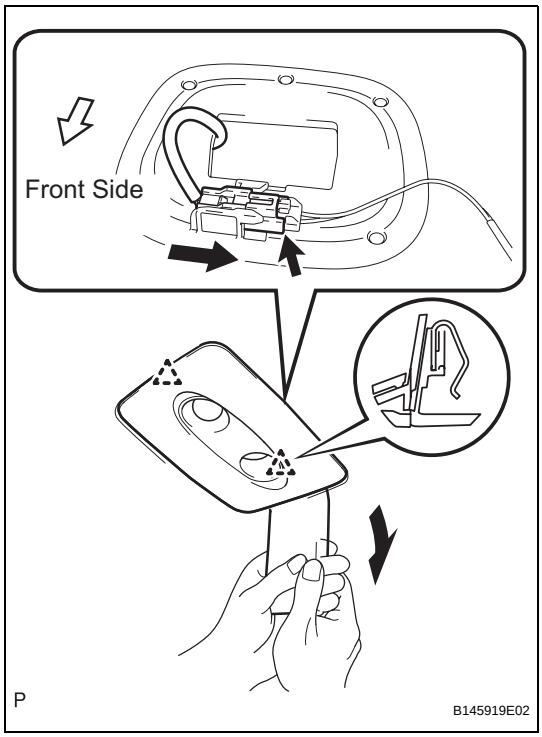

72. REMOVE SPOT LIGHT ASSEMBLY (for Standard)

(a) Using a moulding remover, disengage the 2 clips.

(b) Disconnect the connector and remove the spot light assembly.

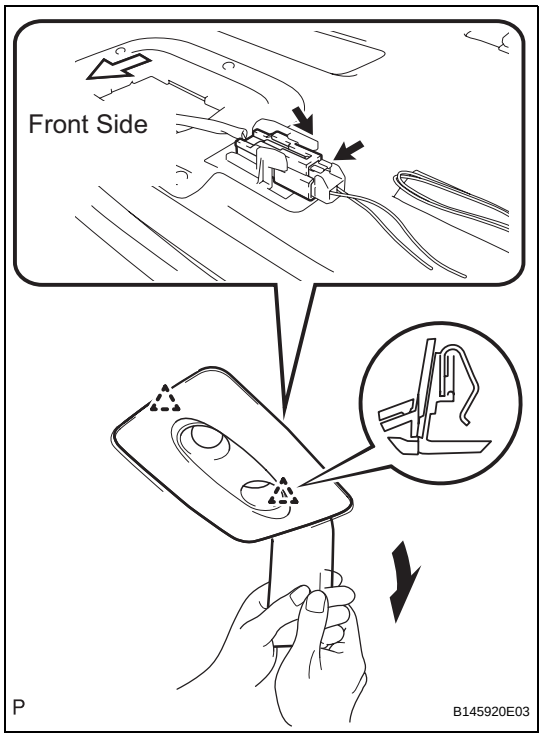

73. REMOVE SPOT LIGHT ASSEMBLY (for Glass Roof)

(a) Using a moulding remover, disengage the 2 clips.

(b) Disconnect the connector and remove the spot light assembly.

74. REMOVE ASSIST GRIP SUB-ASSEMBLY

(a) Using a screwdriver, disengage the 4 claws and remove the 2 assist grip covers.

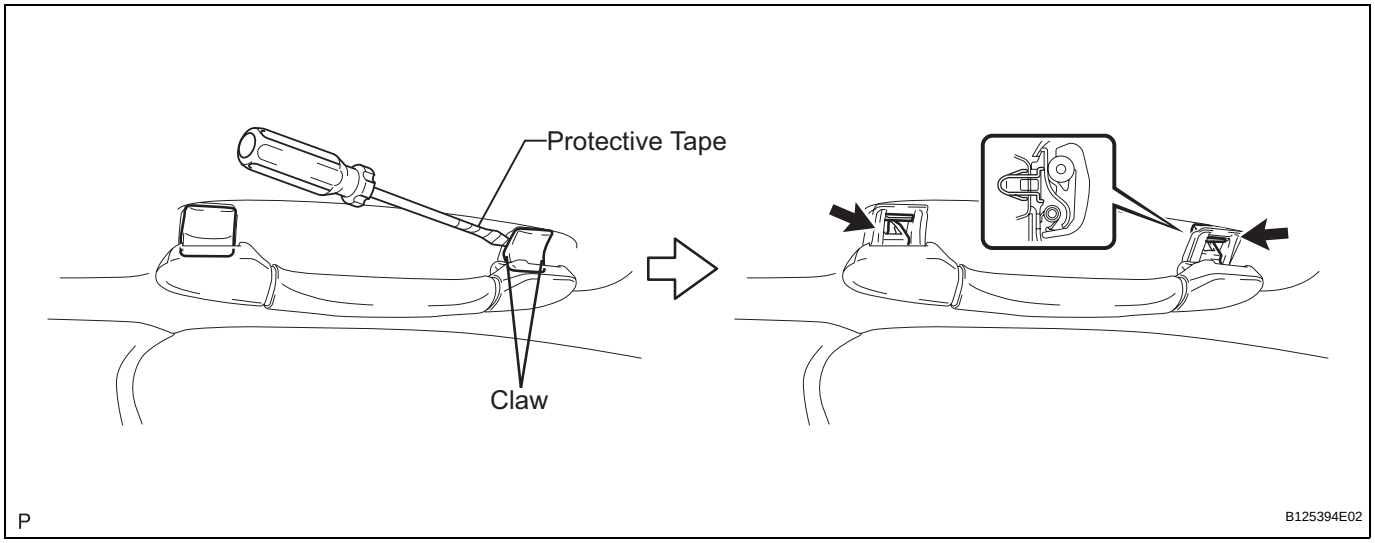

HINT:
Tape the screwdriver tip before use.

(b) Disengage the 2 clips and remove the assist grip sub-assembly.
HINT:
Use the same procedure for the other 3 assist grips.

75. REMOVE ROOF HEADLINING ASSEMBLY (for Standard)

(a) Disconnect the No. 1 roof wire connector and disengage each clamp from the front pillar LH.

(b) Disconnect the antenna cord sub-assembly connector and disengage each clamp from the front pillar RH.

(c) Disconnect the antenna cord sub-assembly connector and disengage the clamp from the rear pillar RH.

(d) Disengage the 12 claws, 4 clips, and 11 fasteners.

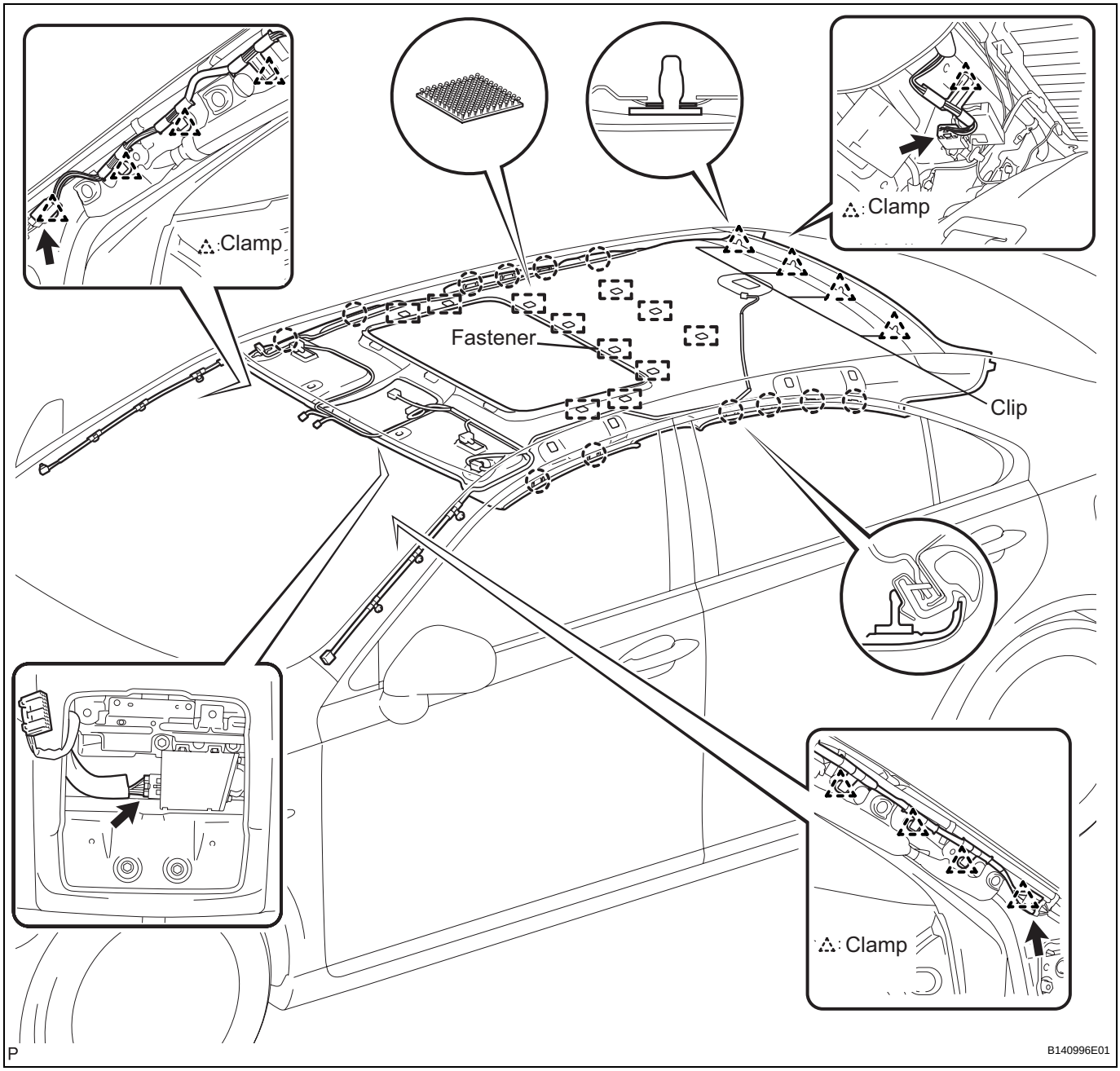

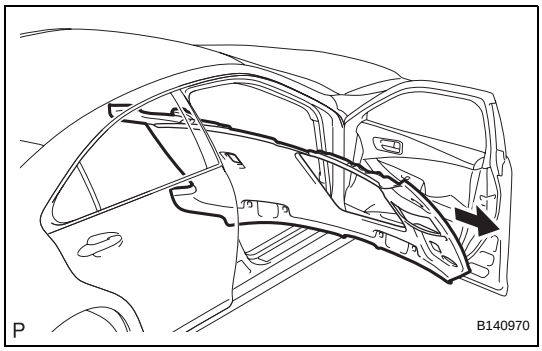

(e) Remove the roof headlining assembly from the vehicle through the front right door.

76. REMOVE ROOF HEADLINING ASSEMBLY (for Glass Roof)

(a) Disconnect the No. 1 roof wire connector and disengage each clamp from the front pillar LH.

(b) Disconnect the antenna cord sub-assembly connector and disengage the clamp from the rear pillar RH.

(c) Disengage the 12 claws, 4 clips, and 21 fasteners.

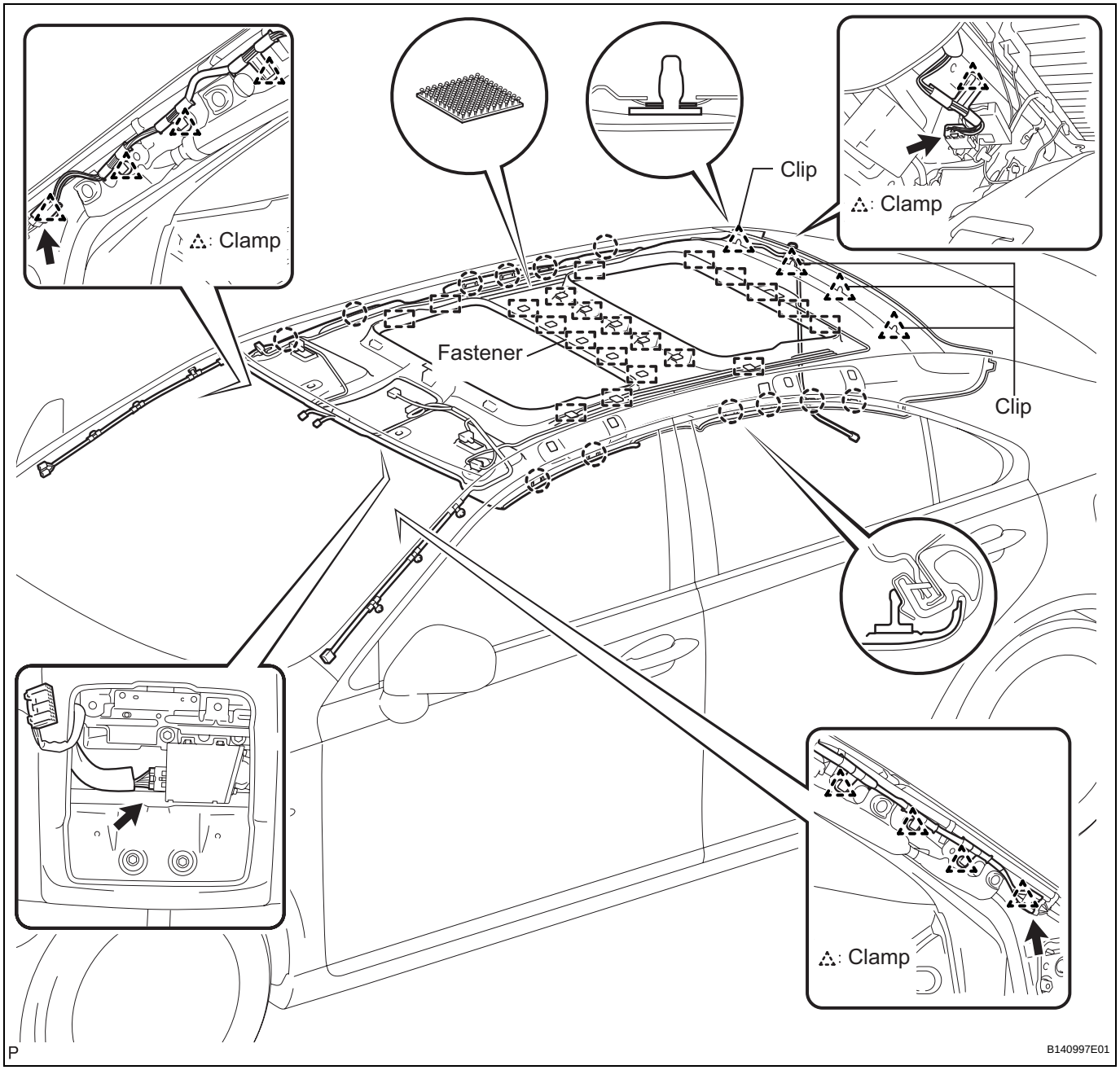

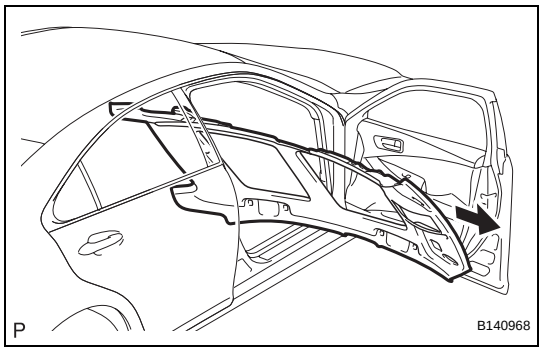

(d) Remove the roof headlining assembly from the vehicle through the front right door.

77. REMOVE ANTENNA CORD SUB-ASSEMBLY (See page AV-222)

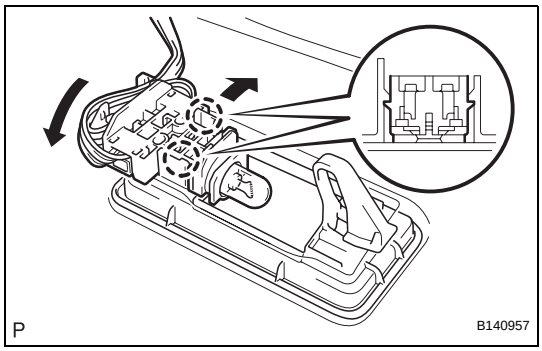

78. REMOVE VANITY LIGHT ASSEMBLY

(a) Disengage the 2 claws and separate the bulb holder from the vanity light assembly as shown in the illustration.

(b) Disengage the claw and remove the vanity light assembly.
HINT:
Use the same procedure to remove the light on the other side.

79. REMOVE NO. 1 ROOF WIRE (for Standard)

(a) Turn the visor connectors clockwise approximately 90° and separate the connectors from the roof headlining assembly.

(b) Remove the adhesive tape from the roof headlining assembly.

(c) Remove the No. 1 roof wire from the roof headlining assembly.

(d) Remove the double-sided tape from the roof headlining assembly.

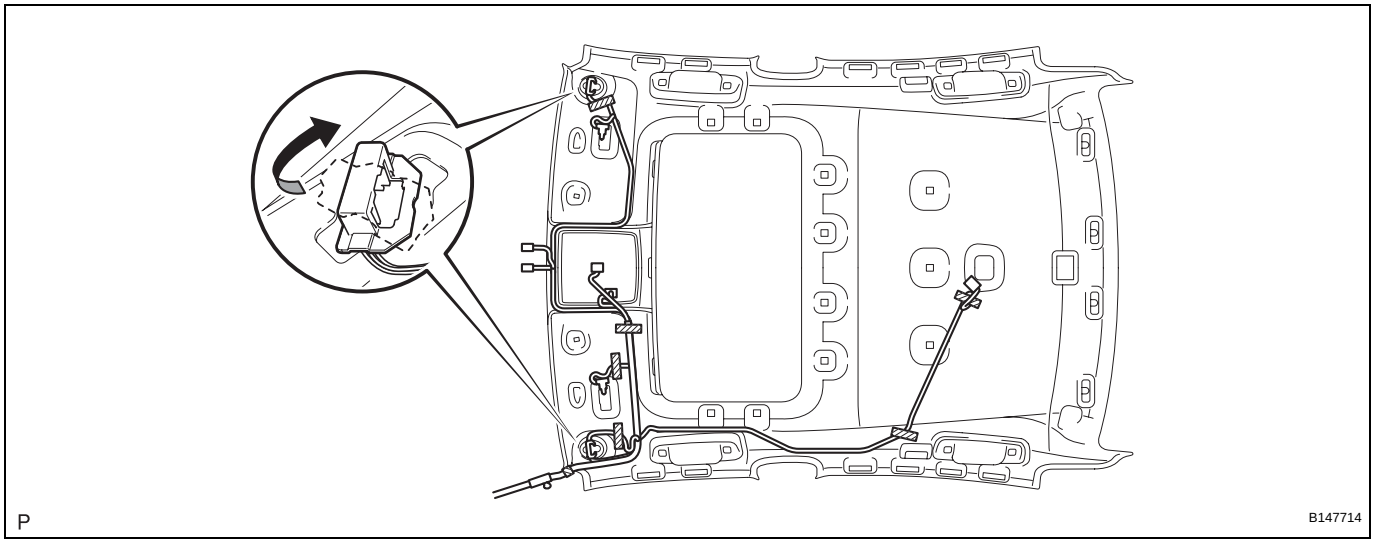

80. REMOVE NO. 1 ROOF WIRE (for Glass Roof)

(a) Turn the visor connectors clockwise approximately 90° and separate the connectors from the roof headlining assembly.

(b) Remove the adhesive tape from the roof headlining assembly.

(c) Remove the No. 1 roof wire from the roof headlining assembly.

(d) Remove the double-sided tape from the roof headlining assembly.

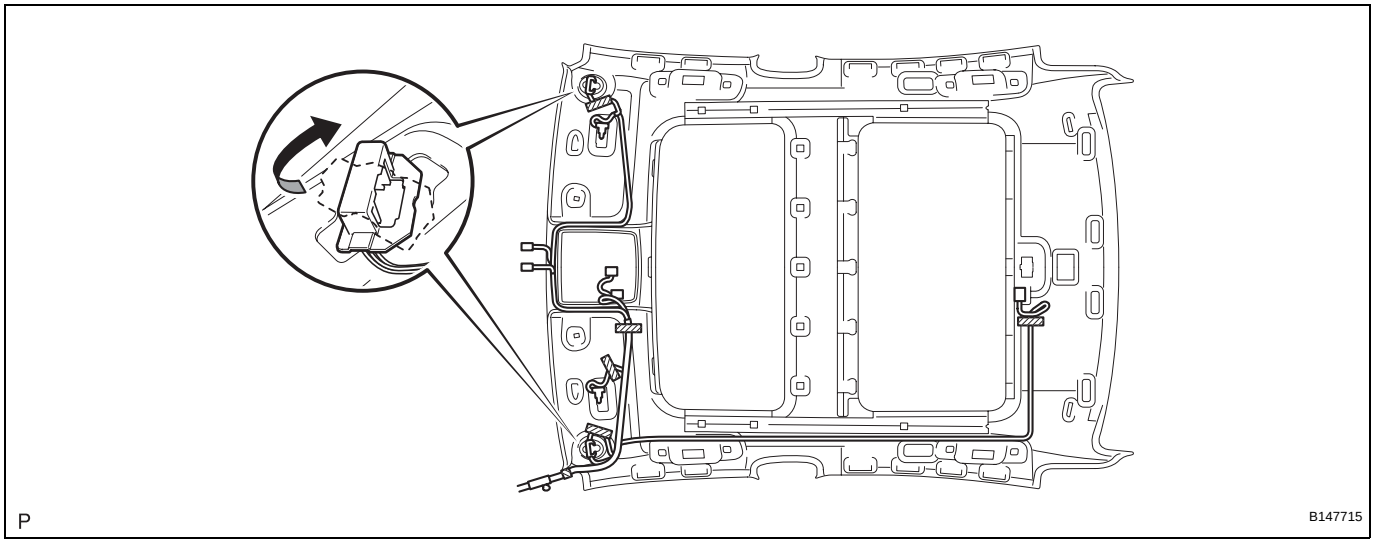
P
B147715

INSTALLATION

1. INSTALL NO. 1 ROOF WIRE (for Standard)

(a) Apply new double-sided tape to the locations shown in the illustration while aligning the tape with the markings on the roof headlining.

Reference: Tape Attachment Locations

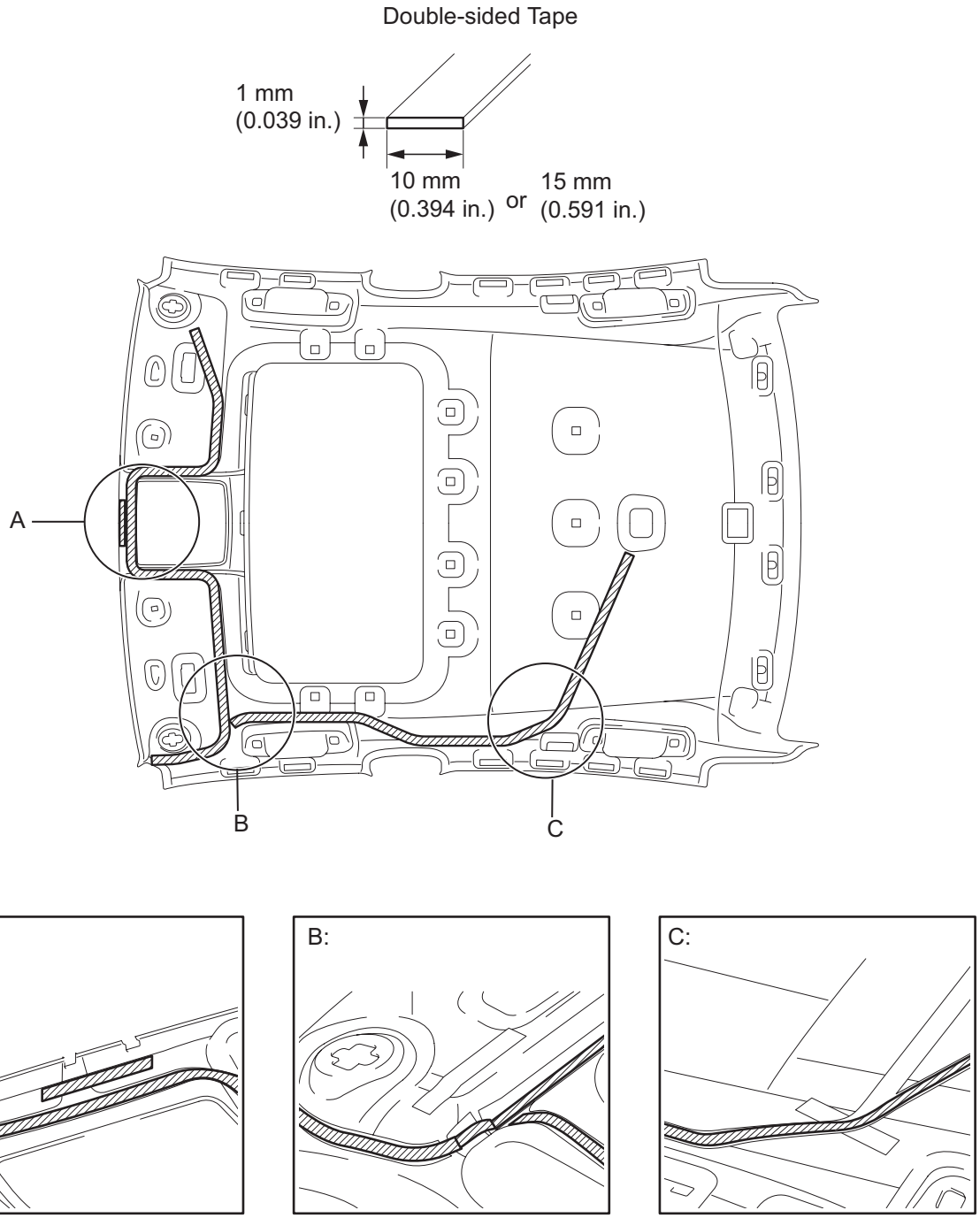

P

B147716E01

NOTICE:
Securely apply the double-sided tape to prevent the tape from being out of alignment and peeling off.

(b) Peel off the release paper from the double-sided tape.

(c) Attach the No. 1 roof wire along the double-sided tape so that the marking surface of the wire harness faces downward.

NOTICE:

- **Securely attach the No. 1 roof wire.**
- **Failure to do so may cause abnormal noise.**

(d) Turn the visor connectors clockwise approximately 90° to the connectors of the roof headlining.

(e) Apply adhesive tape to the locations shown in the illustration.

Reference: Tape Attachment Locations

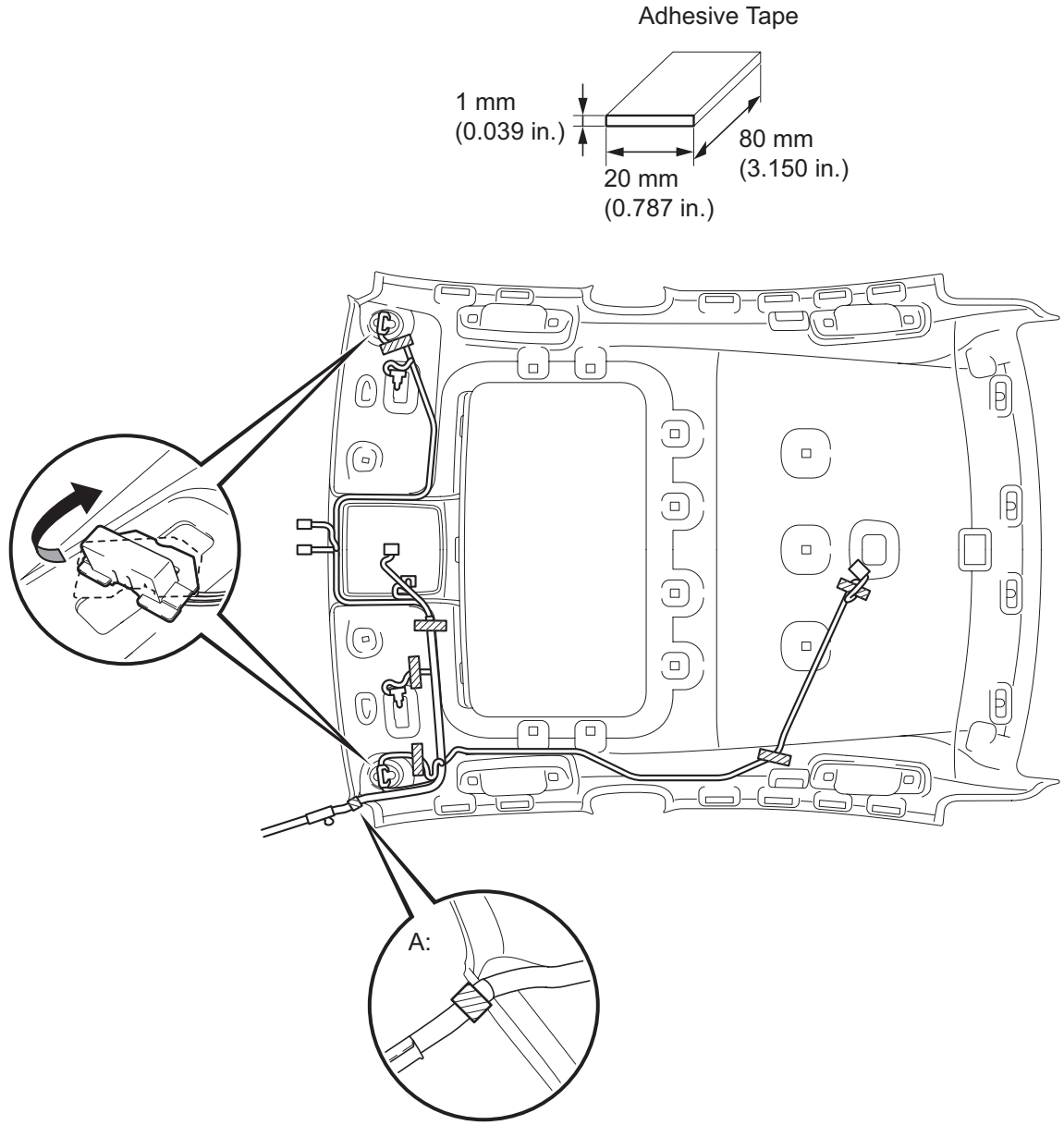

HINT:
As shown at point A in the illustration, line up and secure the reference tape of the wire harness to the tip of the roof headlining assembly.

2. INSTALL NO. 1 ROOF WIRE (for Glass Roof)

(a) Apply new double-sided tape to the locations shown in the illustration while aligning the tape with the markings on the roof headlining.

Reference: Tape Attachment Locations

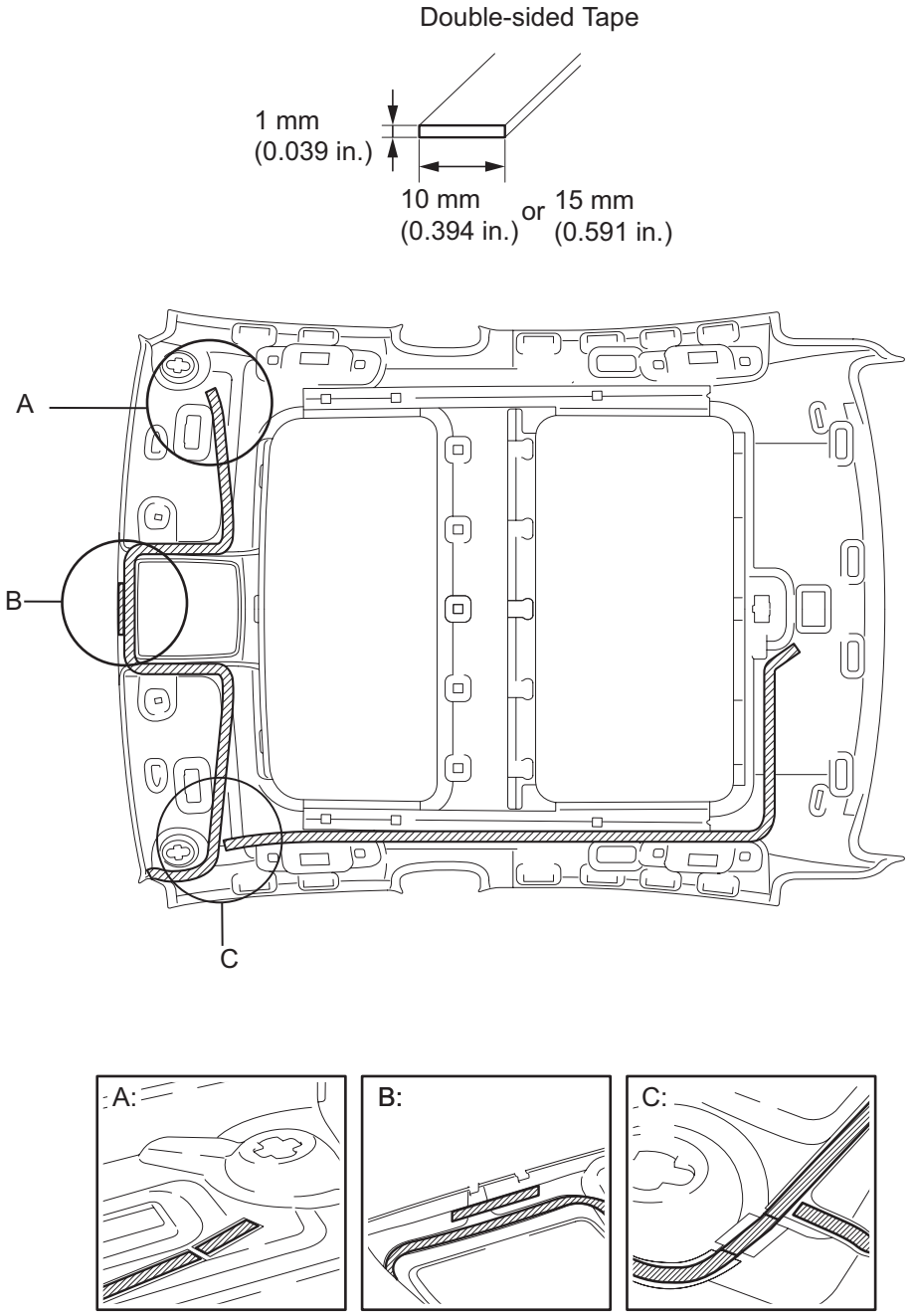

P

B147718E01

NOTICE:
Securely apply the double-sided tape to prevent the tape from being out of alignment and peeling off.

(b) Peel off the release paper from the double-sided tape.

(c) Attach the No. 1 roof wire along the double-sided tape so that the marking surface of the wire harness faces downward.
NOTICE:
- **Securely attach the No. 1 roof wire.**
- **Failure to do so may cause abnormal noise.**

(d) Turn the visor connectors clockwise approximately 90° to the connectors of the roof headlining.

(e) Apply adhesive tape to the locations shown in the illustration.

Reference: Tape Attachment Locations

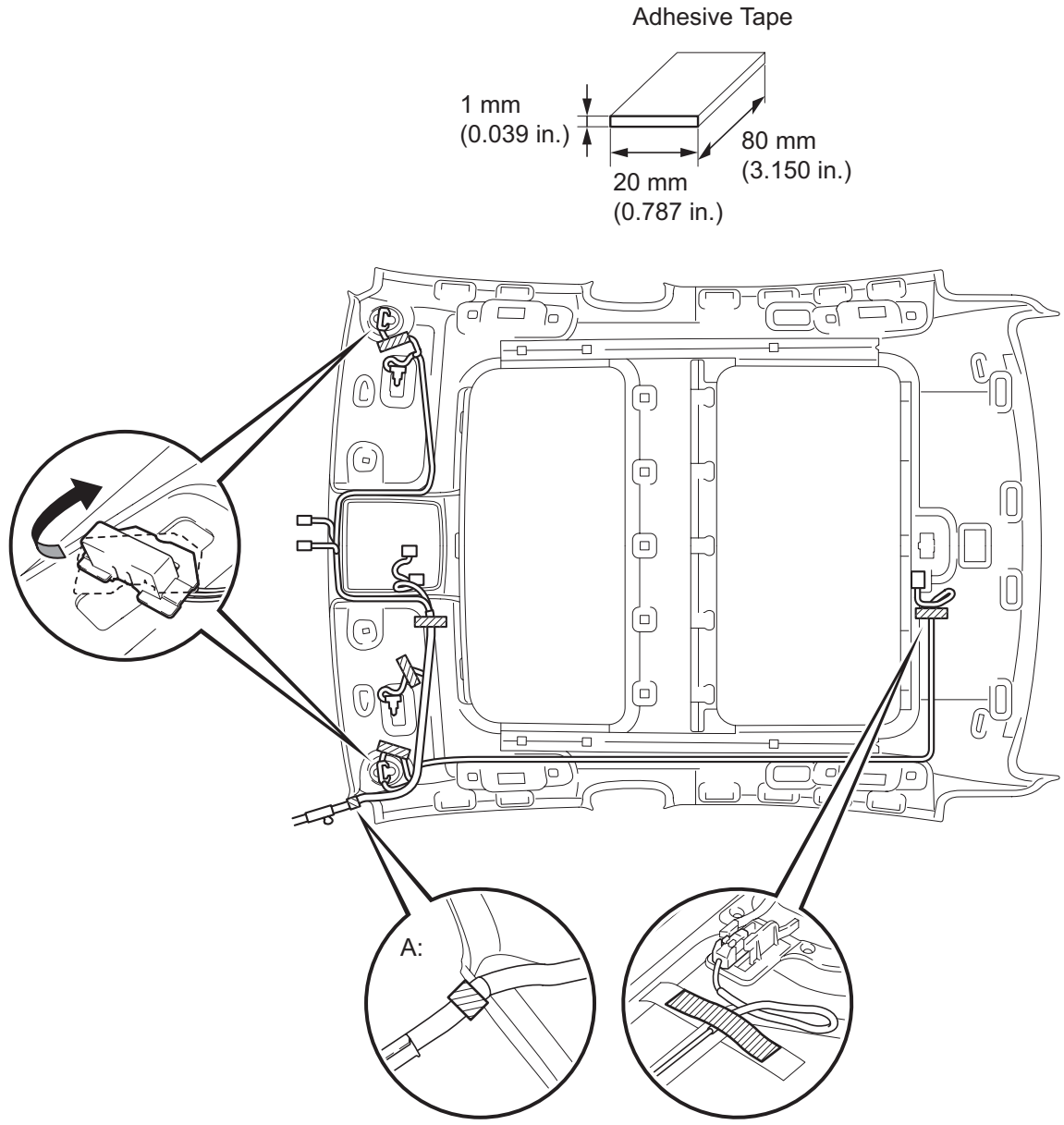

HINT:
As shown at point A in the illustration, line up and secure the reference tape of the wire harness to the tip of the roof headlining assembly.

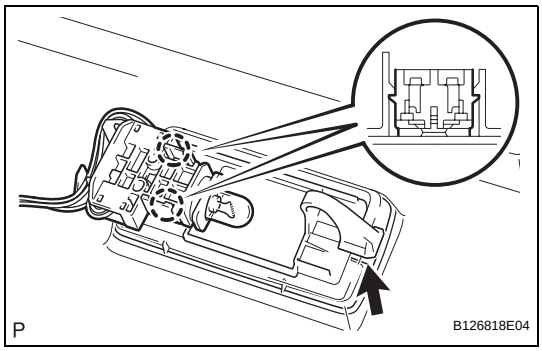

3. INSTALL VANITY LIGHT ASSEMBLY

(a) Install the vanity light to the roof headlining.

(b) Connect the 2 claws to install the bulb holder.
HINT:
Use the same procedure to install the light on the other side.

4. INSTALL ANTENNA CORD SUB-ASSEMBLY (See page AV-224)

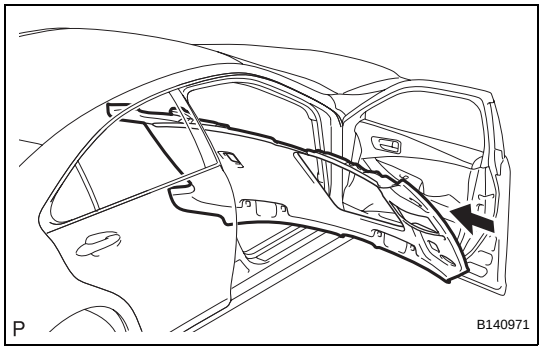

5. INSTALL ROOF HEADLINING ASSEMBLY (for Standard)

(a) Pull the roof headlining assembly into the vehicle through the front right door.

(b) Engage the 12 claws, 4 clips, and 11 fasteners.

(c) Connect the antenna cord sub-assembly connector and engage the clamp to the rear pillar RH.

(d) Connect the antenna cord sub-assembly connector and engage each clamp to the front pillar RH.

(e) Connect the No. 1 wire connector and engage each clamp to the front pillar LH.

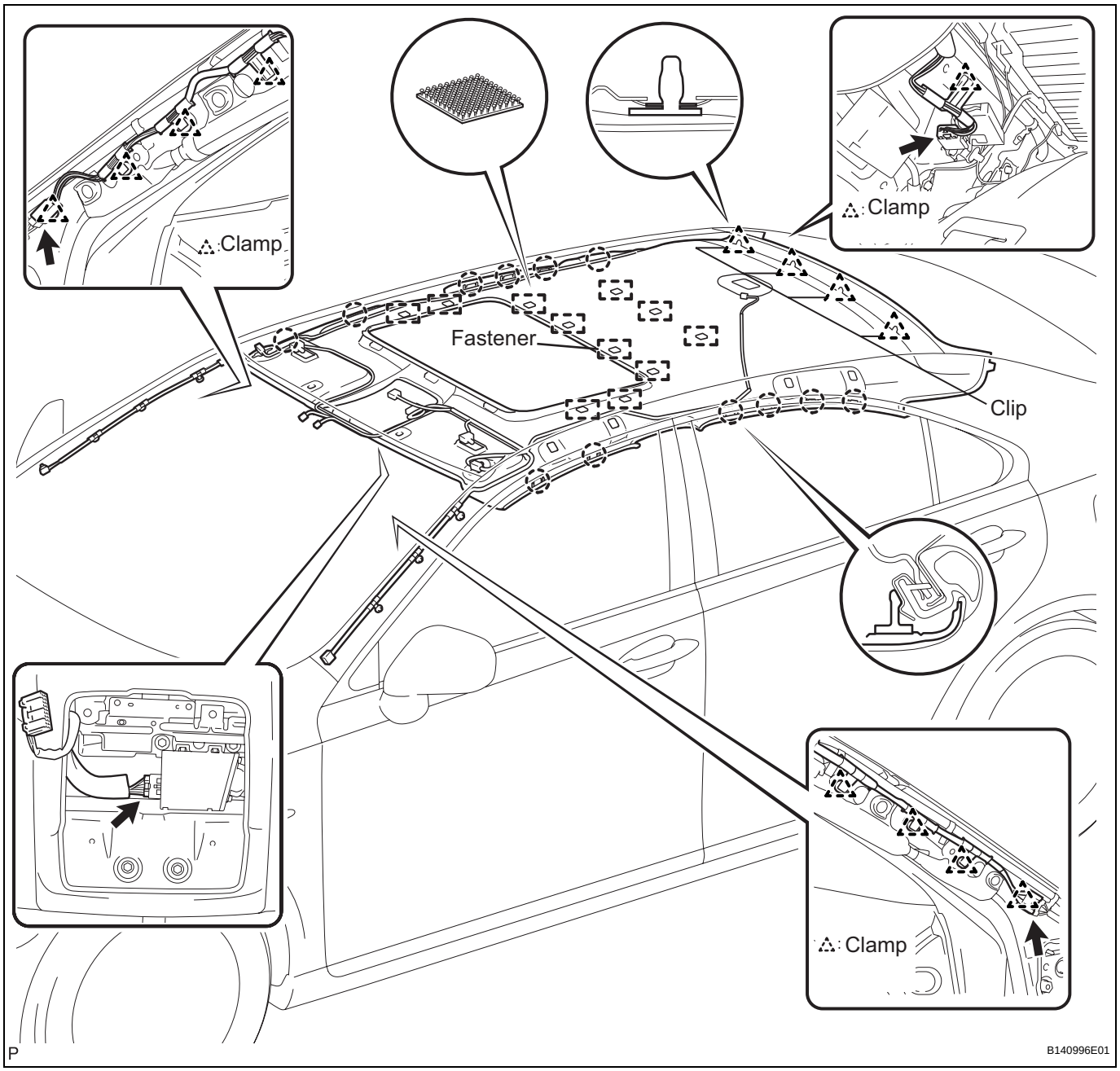

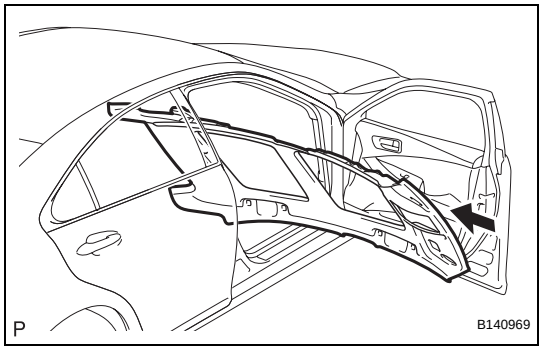

6. INSTALL ROOF HEADLINING ASSEMBLY (for Glass Roof)

(a) Pull the roof headlining assembly into the vehicle through the front right door.

(b) Engage the 12 claws, 4 clips, and 21 fasteners.

(c) Connect the antenna cord sub-assembly connector and engage the clamp to the rear pillar RH.

(d) Connect the antenna cord sub-assembly connector and engage each clamp to the front pillar RH.

(e) Connect the No. 1 wire connector and engage each clamp to the front pillar LH.

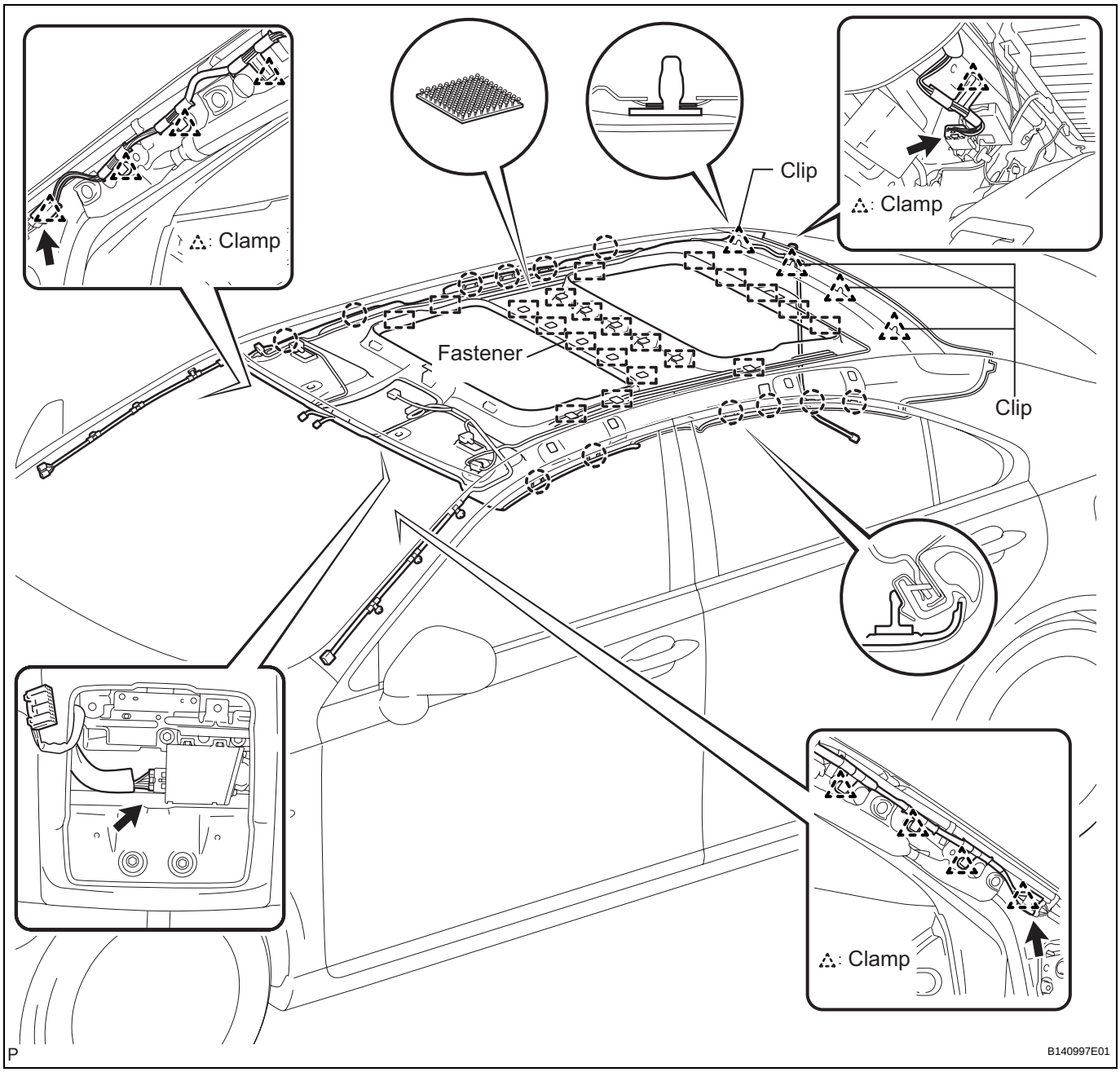

7. INSTALL ASSIST GRIP SUB-ASSEMBLY

(a) Engage the 2 clips to an assist grip sub-assembly as shown in the illustration.

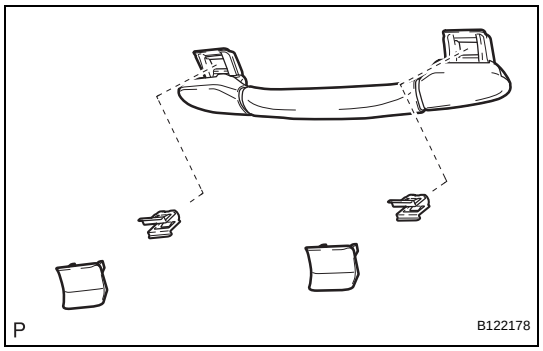

(b) Install the assist grip sub-assembly.
(c) Install the 2 assist grip covers to the assist grip sub-assembly.
HINT:
Use the same procedure for the other 3 assist grips.

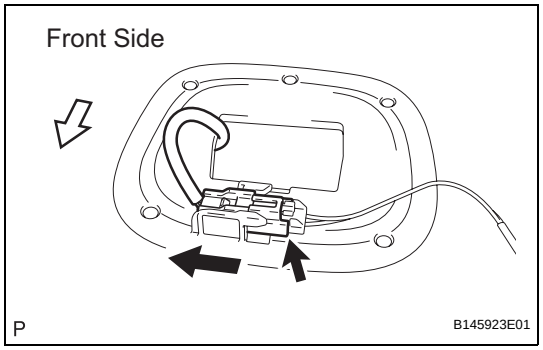

8. INSTALL SPOT LIGHT ASSEMBLY (for Standard)
(a) Connect the connector.

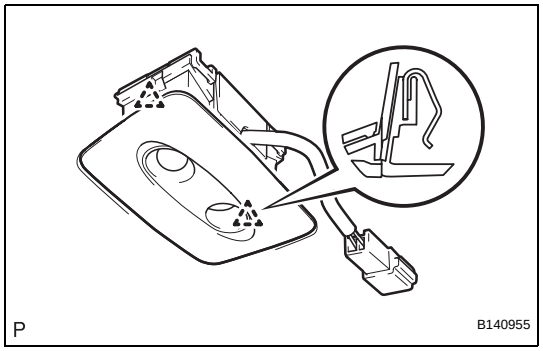

(b) Engage the 2 clips and install the spot light assembly.

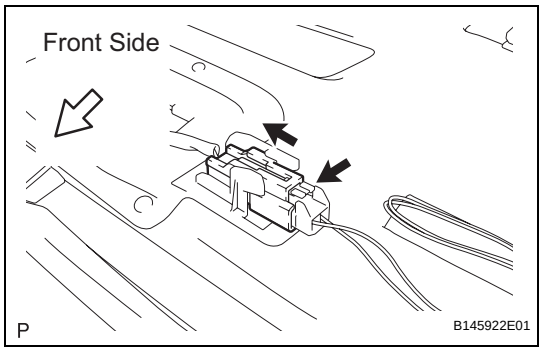

9. INSTALL SPOT LIGHT ASSEMBLY (for Glass Roof)
(a) Connect the connector.

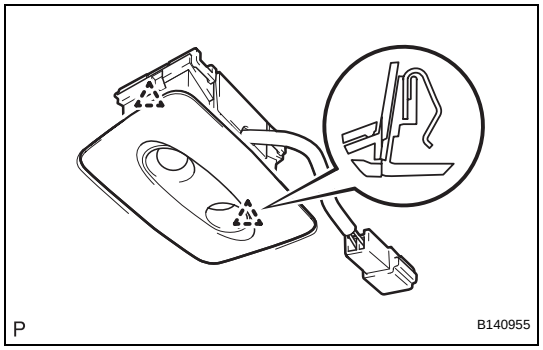

(b) Engage the 2 clips and install the spot light assembly.

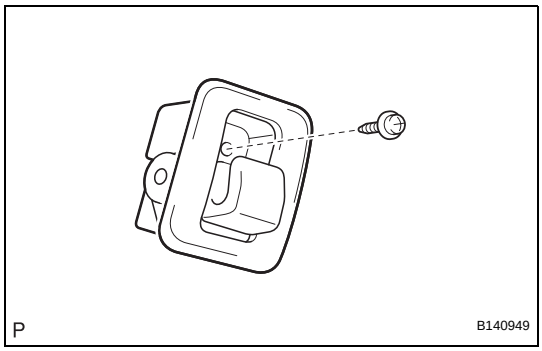

10. INSTALL COAT HOOK

(a) Install the coat hook with the screw.
HINT:
Use the same procedure to install the hook on the other side.

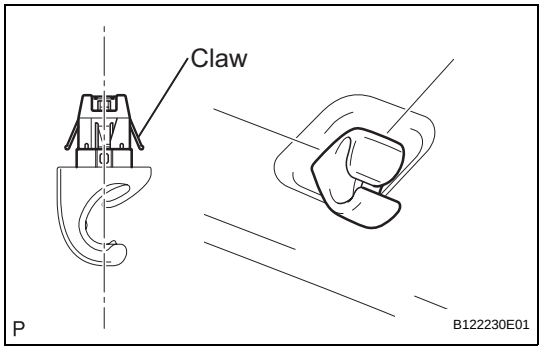

11. INSTALL VISOR HOLDER

(a) Set the claws of the visor holder as shown in the illustration.
(b) Engage the claws and install the visor holder.
HINT:
Use the same procedure to install the holder on the other side.

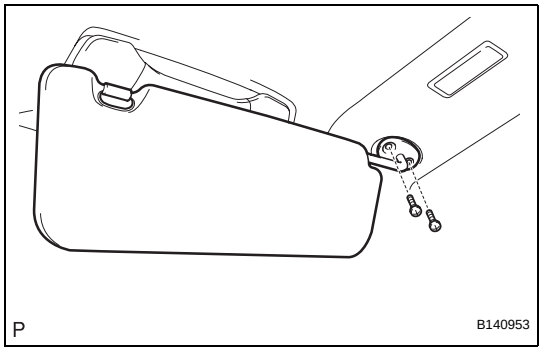

12. INSTALL VISOR ASSEMBLY LH

(a) Install the visor assembly LH with the 2 screws.

13. INSTALL VISOR ASSEMBLY RH

HINT:
Use the same procedure for the RH side and the LH side.

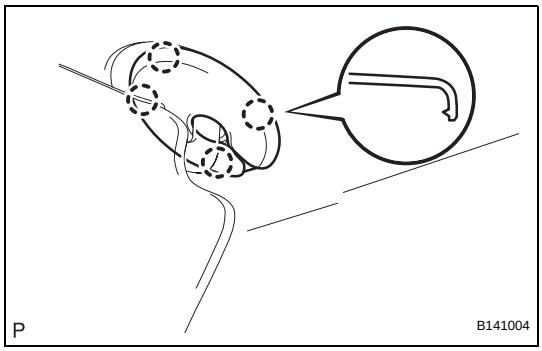

14. INSTALL VISOR BRACKET COVER

(a) Engage the 4 claws and install the visor bracket cover.
HINT:
Use the same procedure to install the cover on the other side.

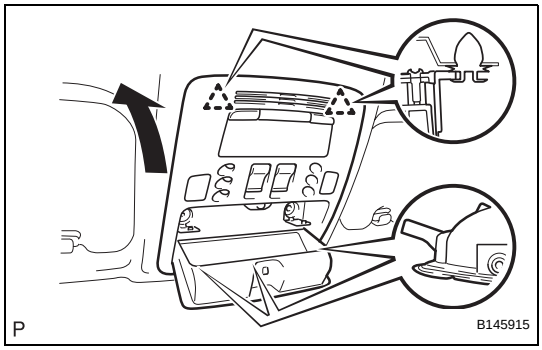

15. INSTALL ROOF CONSOLE BOX ASSEMBLY

(a) Connect the connector.
(b) Engage the 2 clips.

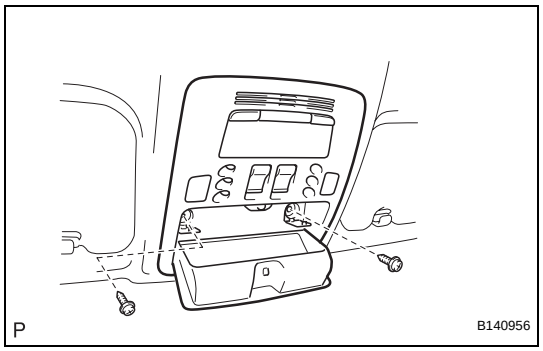

(c) Install the roof console box assembly with the 2 screws.

16. INSTALL RAIN SENSOR COVER (w/ Rain Sensor) (See page WW-65)

17. INSTALL INNER REAR VIEW MIRROR STAY HOLDER COVER (See page MI-44)

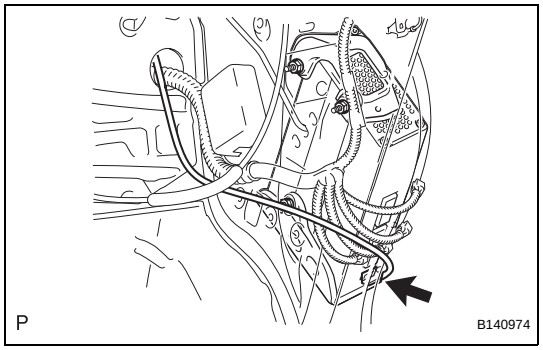

18. CONNECT STEREO COMPONENT AMPLIFIER ASSEMBLY CONNECTOR (w/ DVD Player)

(a) Connect the stereo component amplifier assembly connector.

19. INSTALL LUGGAGE COMPARTMENT INNER TRIM COVER RH (w/ DVD Player) (See page ED-88)

20. INSTALL REAR FLOOR FINISH PLATE (w/ DVD Player) (See page ED-88)

21. INSTALL NO. 1 LUGGAGE COMPARTMENT TRIM HOOK (w/ DVD Player) (See page ED-89)

22. INSTALL LUGGAGE HOLD BELT STRIKER ASSEMBLY (w/ DVD Player) (See page ED-89)

23. INSTALL SPARE WHEEL COVER TRAY (w/ DVD Player)

24. INSTALL LUGGAGE COMPARTMENT FLOOR MAT (w/ DVD Player)

25. INSTALL FLOOR CARPET BRACKET LH

26. INSTALL FLOOR CARPET BRACKET RH

27. INSTALL SHIFT LEVER ASSEMBLY (See page AX-240)

28. CONNECT TRANSMISSION CONTROL CABLE ASSEMBLY (See page AX-241)

29. INSTALL NO. 2 CONSOLE BOX DUCT (See page AC-163)

30. INSTALL NO. 3 CONSOLE BOX DUCT (See page AC-163)

31. INSTALL REAR CONSOLE BOX ASSEMBLY (See page IP-39)

32. INSTALL CONSOLE REAR END PANEL SUB-ASSEMBLY (See page IP-40)

33. INSTALL CONSOLE BOX CARPET (See page IP-41)

34. INSTALL CONSOLE BOX POCKET (See page IP-41)

35. INSTALL HEATER SEAT SWITCH CONSOLE BASE (w/o Seat Heater System) (See page IP-41)

36. INSTALL HEATER SEAT SWITCH CONSOLE BASE (w/ Seat Heater System) (See page IP-41)

37. INSTALL UPPER CONSOLE PANEL ASSEMBLY WITH FRONT ASH RECEPTACLE (See page IP-42)

38. INSTALL SHIFT LEVER KNOB SUB-ASSEMBLY (See page IP-42)

39. INSTALL INSTRUMENT PANEL FINISH PANEL END LH (See page IP-46)

40. INSTALL INSTRUMENT PANEL FINISH PANEL END RH (See page IP-44)

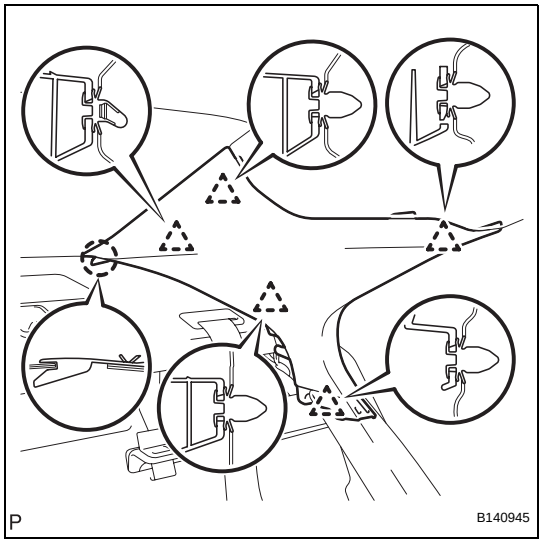

41. INSTALL ROOF SIDE INNER GARNISH ASSEMBLY LH

(a) Engage the claw and 5 clips, and install the roof side inner garnish assembly LH.

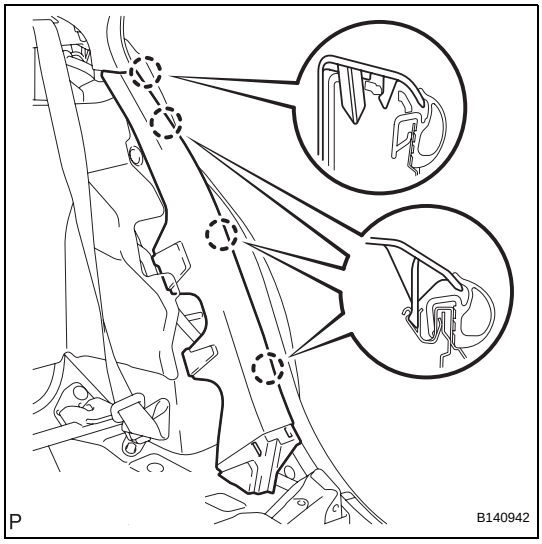

42. INSTALL REAR SEAT SIDE GARNISH LH (w/o Rear Seat Side Airbag)

(a) Install the 4 claws and install the rear seat side garnish LH.

43. INSTALL REAR SEAT SIDE AIRBAG ASSEMBLY LH (w/ Rear Seat Side Airbag) (See page RS-460)

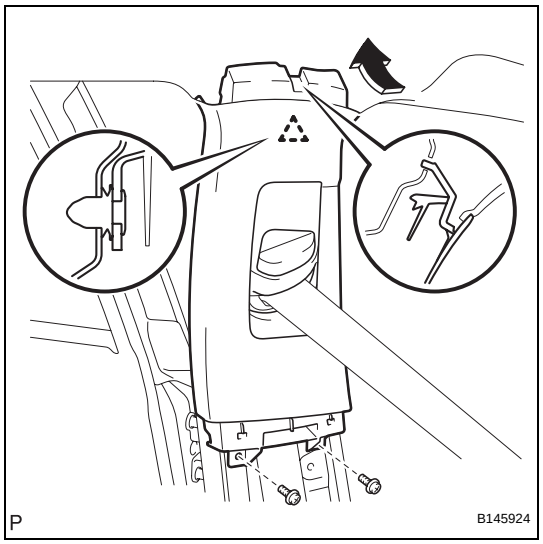

44. INSTALL UPPER CENTER PILLAR GARNISH LH

(a) Engage the clip.

(b) Install the upper center pillar garnish LH with the 2 screws.

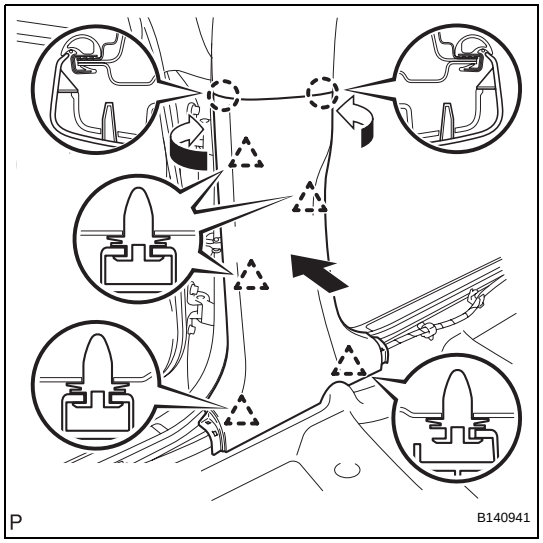

45. INSTALL LOWER CENTER PILLAR GARNISH LH

(a) Engage the 5 clips and 2 claws, and install the lower center pillar garnish LH.

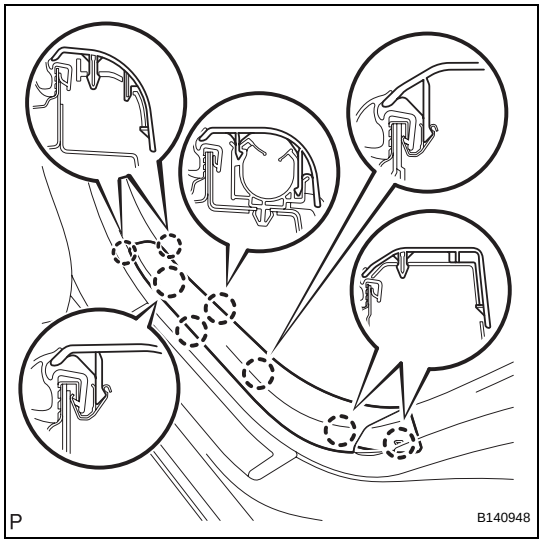

46. INSTALL REAR DOOR SCUFF PLATE LH

(a) Engage the 8 claws, then install the rear door scuff plate LH.

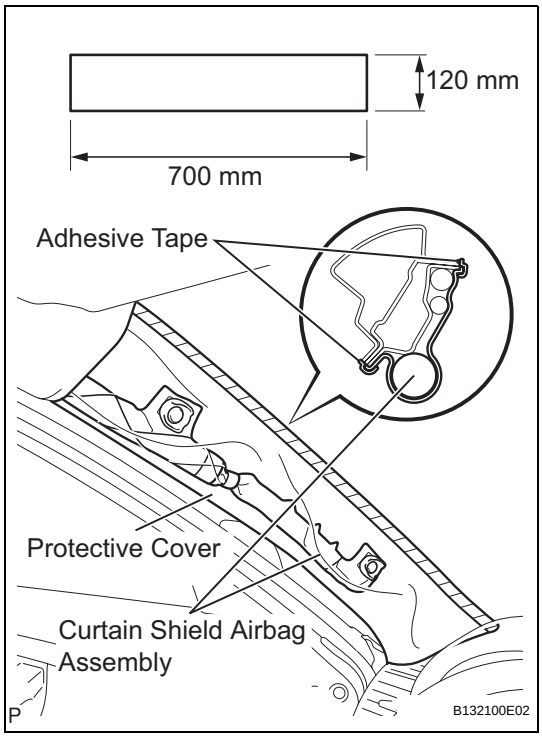

47. INSTALL FRONT PILLAR GARNISH LH

(a) Remove the protective cover.

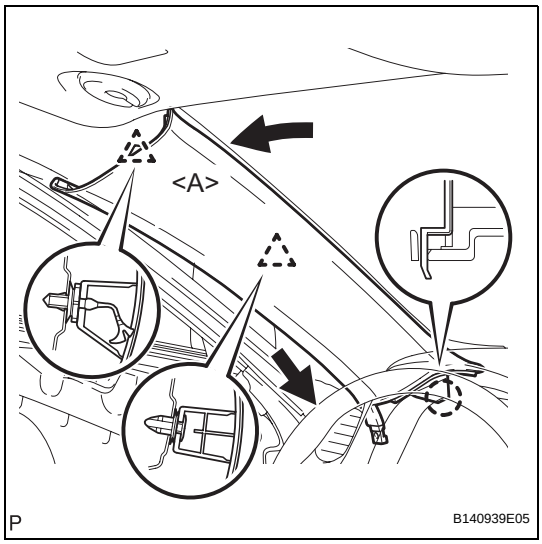

(b) Install a new clip <A> on the front pillar garnish LH.

(c) Engage the claw and 2 clips, then install the front pillar garnish LH.

48. INSTALL SIDE INSTRUMENT PANEL LH (See page IP-47)

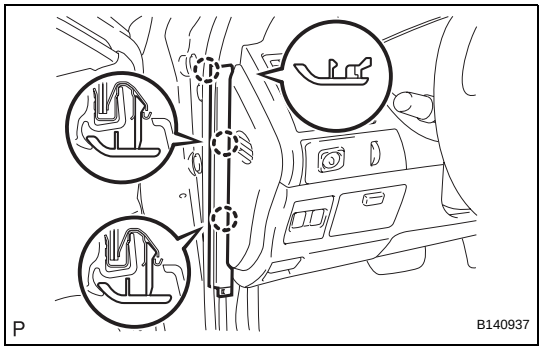

49. INSTALL FRONT DOOR OPENING TRIM COVER LH

(a) Engage the 3 claws and install the front door opening trim cover LH.

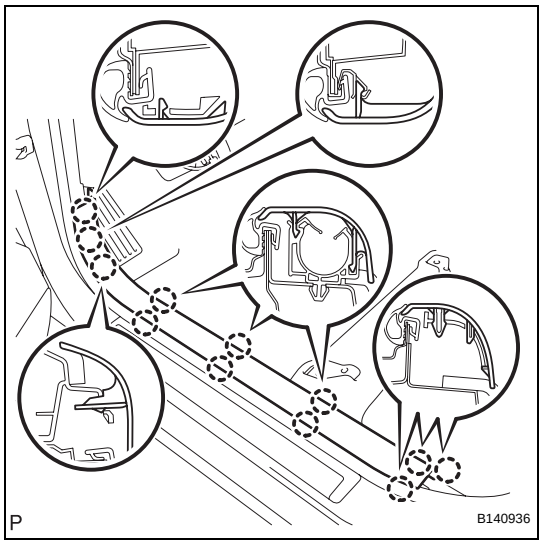

50. INSTALL FRONT DOOR SCUFF PLATE LH

(a) Engage the 12 claws, and install the front door scuff plate LH.

51. INSTALL ROOF SIDE INNER GARNISH ASSEMBLY RH

HINT:
Use the same procedure for the RH side and the LH side.

52. INSTALL REAR SEAT SIDE GARNISH RH (w/o Rear Seat Side Airbag)

HINT:
Use the same procedure for the RH side and the LH side.

53. INSTALL REAR SEAT SIDE AIRBAG ASSEMBLY RH (w/ Rear Seat Side Airbag)

HINT:
Use the same procedure for the RH side and the LH side.

54. INSTALL UPPER CENTER PILLAR GARNISH RH

HINT:
Use the same procedure for the RH side and the LH side.

55. INSTALL LOWER CENTER PILLAR GARNISH RH

HINT:
Use the same procedure for the RH side and the LH side.

56. INSTALL REAR DOOR SCUFF PLATE RH

HINT:
Use the same procedure for the RH side and the LH side.

57. INSTALL FRONT PILLAR GARNISH RH

HINT:
Use the same procedure for the RH side and the LH side.

58. INSTALL SIDE INSTRUMENT PANEL RH (See page IP-43)

59. INSTALL FRONT DOOR OPENING TRIM COVER RH

HINT:
Use the same procedure for the RH side and the LH side.

60. INSTALL FRONT DOOR SCUFF PLATE RH

HINT:
Use the same procedure for the RH side and the LH side.

61. INSTALL FRONT SEAT ASSEMBLY LH (See page SE-109)

62. INSTALL FRONT SEAT REAR OUTER TRACK BRACKET COVER LH (See page SE-110)

63. **INSTALL FRONT SEAT REAR INNER TRACK BRACKET COVER LH (See page SE-110)**
64. **INSTALL FRONT SEAT OUTER TRACK BRACKET COVER LH (See page SE-110)**
65. **INSTALL FRONT SEAT INNER TRACK BRACKET COVER LH (See page SE-110)**
66. **CONNECT FRONT SEAT OUTER BELT ASSEMBLY LH (See page SB-25)**
67. **INSTALL SEAT BELT ANCHOR COVER CAP LH (See page SB-25)**
68. **INSTALL FRONT SEAT HEADREST ASSEMBLY (for Driver Seat)**
69. **INSTALL FRONT SEAT ASSEMBLY RH (See page RS-497)**
70. **INSTALL FRONT SEAT REAR OUTER TRACK BRACKET COVER RH (See page RS-498)**
71. **INSTALL FRONT SEAT REAR INNER TRACK BRACKET COVER RH (See page RS-498)**
72. **INSTALL FRONT SEAT OUTER TRACK BRACKET COVER RH (See page RS-498)**
73. **INSTALL FRONT SEAT INNER TRACK BRACKET COVER RH (See page RS-498)**
74. **CONNECT FRONT SEAT OUTER BELT ASSEMBLY RH (See page RS-499)**
75. **INSTALL SEAT BELT ANCHOR COVER CAP RH (See page RS-499)**
76. **INSTALL FRONT SEAT HEADREST ASSEMBLY (for Front Passenger Seat)**
77. **INSTALL REAR SEATBACK ASSEMBLY (See page SE-121)**
78. **INSTALL REAR CENTER SEAT HEADREST ASSEMBLY**
79. **INSTALL REAR SEAT HEADREST ASSEMBLY**
80. **INSTALL REAR SEAT CUSHION ASSEMBLY (See page SE-121)**
81. **PERFORM INITIALIZATION**
    NOTICE:
    Some systems need initialization after reconnecting the cable to the negative battery terminal (See page IN-33).
82. **INSPECT SHIFT LEVER POSITION (See page AX-200)**
83. **ADJUST SHIFT LEVER POSITION (See page AX-200)**
84. **INSPECT FRONT SEAT ASSEMBLY (See page SE-110)**

85. INSPECT SRS WARNING LIGHT
(See page RS-37)

Rear Sunshade Shift-linked Function does not Operate when Shift Lever is Moved to R Position

SYSTEM DESCRIPTION

When the engine switch is on (IG) and the rear sunshade is raised, moving the shift lever to the R position causes the park/neutral position switch to send a reverse-linked signal to the main body ECU through the ECM (the ECM and main body ECU communicate via CAN). Then the main body ECU sends the signal to the rear sunshade relay. The relay then lowers the rear sunshade.

WIRING DIAGRAM

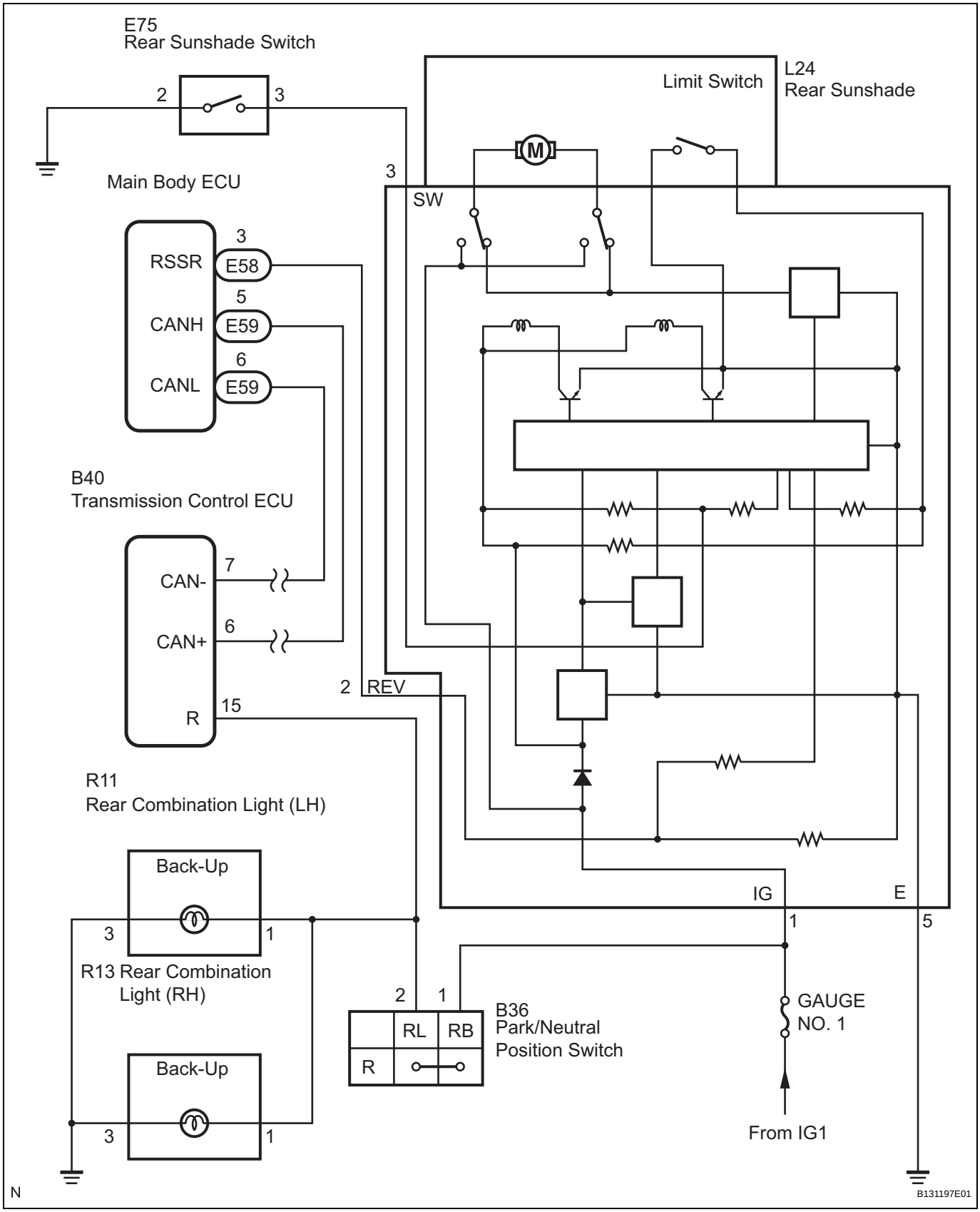

INSPECTION PROCEDURE

1 CHECK OPERATION

(a) Check that the back-up light comes on when the shift lever is moved to the R position.
OK:
Back-up light comes on when shift lever is moved to R position.

NG → **GO TO LIGHTING SYSTEM**

OK

2 CHECK REAR SUNSHADE RELAY

Rear Sunshade Relay Connector Front View:

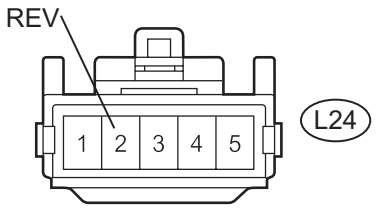

H B131040E05

(a) Disconnect the L24 rear sunshade relay connector.
(b) Measure the voltage of the wire harness side connector.
Standard voltage

Tester connection	Condition	Specified condition
REV (L24-2) - Body ground	Engine switch on (IG), shift lever not in R	Below 1 V
REV (L24-2) - Body ground	Engine switch on (IG), shift lever in R	10 to 14 V

NG → **Go to step 3**

OK

REPLACE REAR SUNSHADE RELAY

3 CHECK WIRE HARNESS (MAIN BODY ECU - PARK/NEUTRAL POSITION SWITCH)

Main Body ECU Connector Front View:

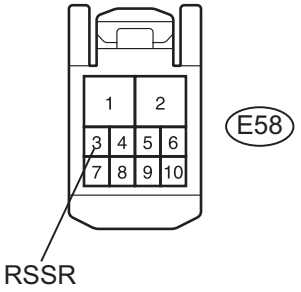

N B131191E01

(a) Disconnect the E58 main body ECU connector.
(b) Measure the voltage of the wire harness side connector.
Standard voltage

Tester connection	Condition	Specified condition
RSSR (E58-3) - Body ground	Engine switch on (IG), shift lever not in R	Below 1 V
RSSR (E58-3) - Body ground	Engine switch on (IG), shift lever in R	10 to 14 V

NG → **REPAIR OR REPLACE HARNESS OR CONNECTOR**

OK

4 CHECK WIRE HARNESS (REAR SUNSHADE RELAY - MAIN BODY ECU)

Rear Sunshade Relay Connector Front View:

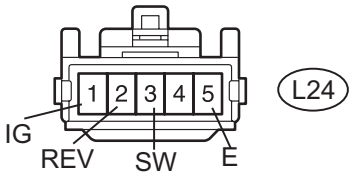

Main Body ECU Connector Front View:

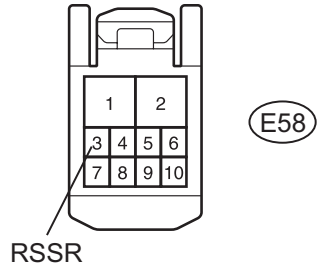

N B131193E04

(a) Disconnect the L24 relay connector.
(b) Disconnect the E58 main body ECU connector.
(c) Measure the resistance of the wire harness side connectors.
Standard resistance

Tester connection	Condition	Specified condition
REV (L24-2) - RSSR (E58-3)	Always	Below 1 Ω

NG → **REPAIR OR REPLACE HARNESS OR CONNECTOR**

OK

REPLACE MAIN BODY ECU

REMOVAL

1. **DISCONNECT CABLE FROM NEGATIVE BATTERY TERMINAL (w/ Rear Seat Side Airbag)**
   CAUTION:
   Wait for 90 seconds after disconnecting the cable to prevent airbag deployment (See page RS-1).
2. **REMOVE REAR SEAT CUSHION ASSEMBLY (See page SE-113)**
3. **REMOVE REAR SEAT HEADREST ASSEMBLY**
4. **REMOVE REAR CENTER SEAT HEADREST ASSEMBLY**
5. **REMOVE REAR SEATBACK ASSEMBLY (See page SE-113)**
6. **REMOVE REAR DOOR SCUFF PLATE LH (See page IR-40)**
7. **REMOVE REAR DOOR SCUFF PLATE RH (See page IR-42)**
8. **REMOVE REAR SEAT SIDE AIRBAG ASSEMBLY LH (w/ Rear Seat Side Airbag) (See page RS-460)**
9. **REMOVE REAR SEAT SIDE GARNISH LH (w/o Rear Seat Side Airbag) (See page IR-41)**
10. **REMOVE REAR SEAT SIDE AIRBAG ASSEMBLY RH (w/ Rear Seat Side Airbag)**
    HINT:
    Use the same procedure for the LH side and RH side.
11. **REMOVE REAR SEAT SIDE GARNISH RH (w/o Rear Seat Side Airbag) (See page IR-43)**
12. **REMOVE ROOF SIDE INNER GARNISH ASSEMBLY LH (See page IR-42)**
13. **REMOVE ROOF SIDE INNER GARNISH ASSEMBLY RH (See page IR-43)**
14. **DISCONNECT REAR SEAT 3 POINT TYPE BELT ASSEMBLY LH (See page SB-40)**
15. **DISCONNECT REAR SEAT 3 POINT TYPE BELT ASSEMBLY RH (See page SB-40)**
16. **DISCONNECT REAR SEAT INNER WITH CENTER BELT ASSEMBLY RH (See page SB-40)**
17. **REMOVE REAR SEAT SHOULDER BELT HOLE COVER (See page SB-41)**
18. **REMOVE PACKAGE TRAY TRIM PANEL ASSEMBLY**
    (a) Disengage the 2 clips and raise the front portion of the package tray trim panel assembly.

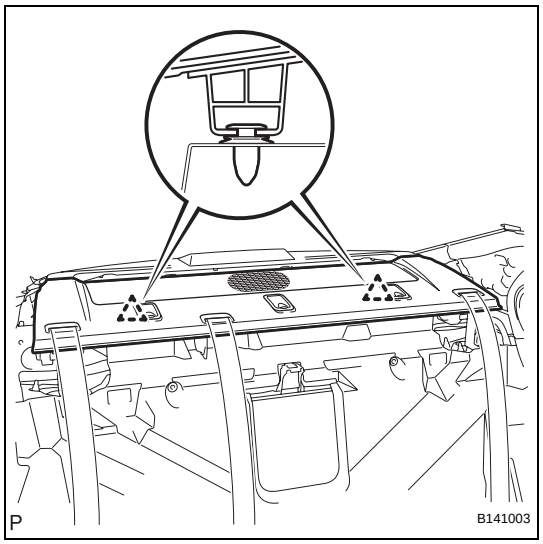

(b) Pass the 3 rear seat belt floor anchors through the holes in the package tray trim panel assembly.
(c) Remove the package tray trim panel assembly.

19. REMOVE CENTER STOP LIGHT SET (See page LI-159)

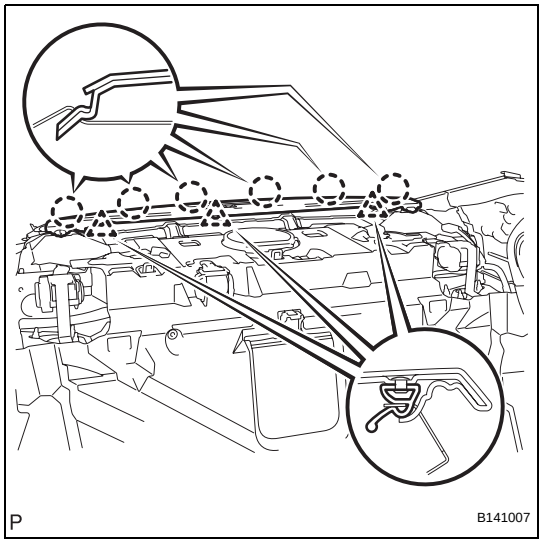

20. REMOVE NO. 2 PACKAGE TRAY TRIM PANEL ASSEMBLY
(a) Disengage the 3 clips and 6 claws, and remove the No. 2 package tray trim panel assembly.

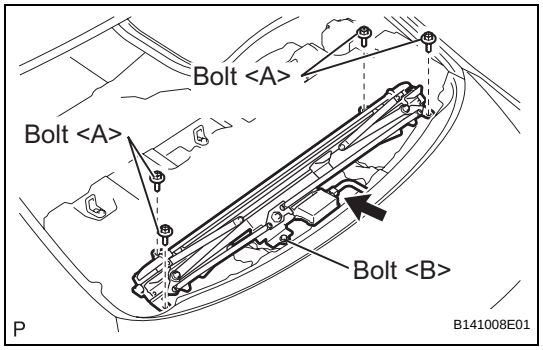

21. REMOVE REAR WINDOW SHADE ASSEMBLY
(a) Disconnect the connector.
(b) Remove the 4 bolts <A>.
(c) Loosen bolt <B> and remove the rear window shade assembly.
NOTICE:
Bolt <B> cannot be removed from the rear window shade assembly.

22. REMOVE REAR SUNSHADE RELAY
NOTICE:
When disassembling the rear sunshade assembly, eliminate static electricity by touching the vehicle body to prevent the components from being damaged.

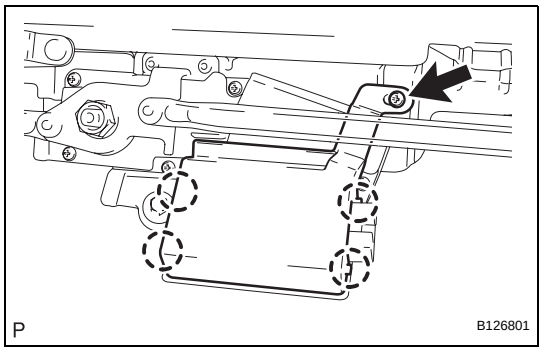

(a) Remove the screw.
(b) Disengage the 4 claws and remove the rear sunshade relay cover.

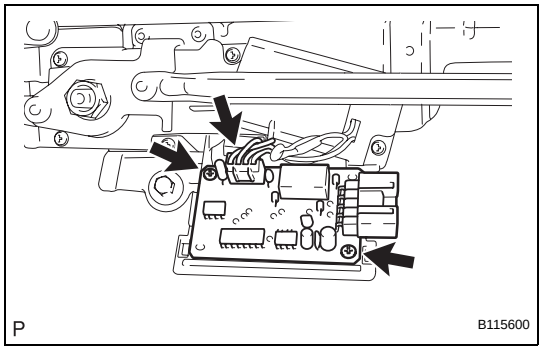

(c) Disconnect the connector.
(d) Remove the 2 screws and the rear sunshade relay.

INSTALLATION

1. INSTALL REAR SUNSHADE RELAY

NOTICE:

When reassembling the rear sunshade assembly, eliminate static electricity by touching the vehicle body to prevent the components from being damaged.

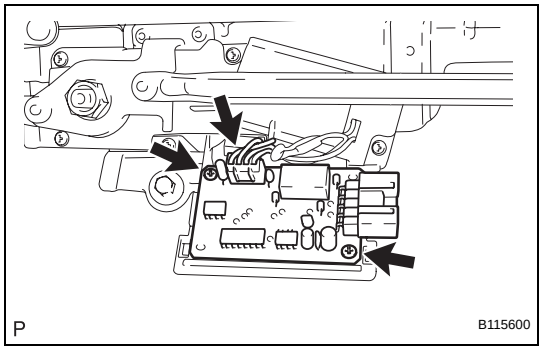

(a) Install the rear sunshade relay with the 2 screws.
(b) Connect the connector.

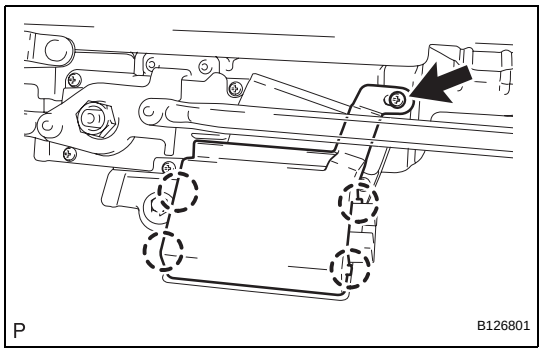

(c) Engage the 4 claws and install the rear sunshade relay cover.
(d) Install the screw.

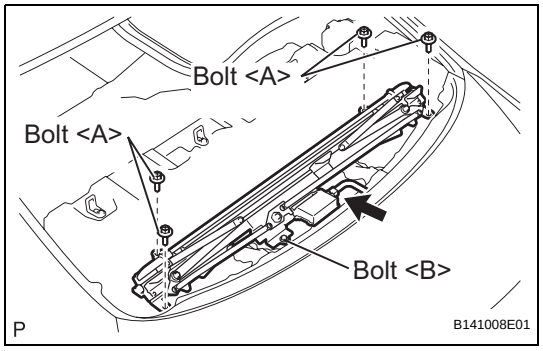

2. INSTALL REAR WINDOW SHADE ASSEMBLY

(a) Install the rear window shade assembly, and temporarily tighten the 4 bolts <A> and bolt <B>.
(b) Fully tighten the 5 bolts.
(c) Connect the connector.

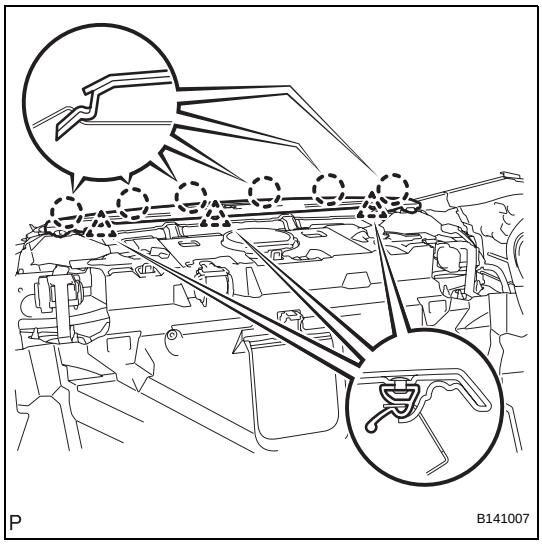

3. **INSTALL NO. 2 PACKAGE TRAY TRIM PANEL ASSEMBLY**
   (a) Engage the 6 claws and 3 clips, and install the No. 2 package tray trim panel assembly.

4. **INSTALL CENTER STOP LIGHT SET (See page LI-159)**

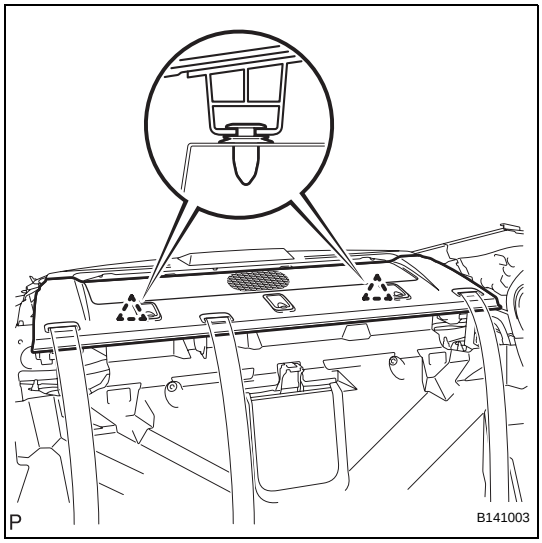

5. **INSTALL PACKAGE TRAY TRIM PANEL ASSEMBLY**
   (a) Thread the 3 rear seat belt floor anchors into the package tray trim panel assembly.
   (b) Insert the rear end of the package tray trim panel assembly into the rear window shade assembly.
   (c) Engage the 2 clips and install the package tray trim panel assembly.

6. **INSTALL REAR SEAT SHOULDER BELT HOLE COVER (See page SB-42)**

7. **CONNECT REAR SEAT INNER WITH CENTER BELT ASSEMBLY RH (See page SB-42)**

8. **CONNECT REAR SEAT 3 POINT TYPE BELT ASSEMBLY LH (See page SB-42)**

9. **CONNECT REAR SEAT 3 POINT TYPE BELT ASSEMBLY RH (See page SB-43)**

10. **INSTALL ROOF SIDE INNER GARNISH ASSEMBLY LH (See page IR-62)**

11. **INSTALL ROOF SIDE INNER GARNISH ASSEMBLY RH (See page IR-65)**

12. **INSTALL REAR SEAT SIDE GARNISH LH (w/o Rear Seat Side Airbag) (See page IR-62)**

13. **INSTALL REAR SEAT SIDE AIRBAG ASSEMBLY LH (w/ Rear Seat Side Airbag) (See page RS-460)**

14. **INSTALL REAR SEAT SIDE GARNISH RH (w/o Rear Seat Side Airbag) (See page IR-65)**

15. **INSTALL REAR SEAT SIDE AIRBAG ASSEMBLY RH (w/ Rear Seat Side Airbag)**
    HINT:
    Use the same procedure for the LH side and RH side.

16. **INSTALL REAR DOOR SCUFF PLATE LH (See page IR-63)**

17. **INSTALL REAR DOOR SCUFF PLATE RH (See page IR-65)**
18. **INSTALL REAR SEATBACK ASSEMBLY (See page SE-121)**
19. **INSTALL REAR CENTER SEAT HEADREST ASSEMBLY**
20. **INSTALL REAR SEAT HEADREST ASSEMBLY**
21. **INSTALL REAR SEAT CUSHION ASSEMBLY (See page SE-121)**
22. **CONNECT CABLE TO NEGATIVE BATTERY TERMINAL (w/ Rear Seat Side Airbag)**
23. **PERFORM INITIALIZATION (w/ Rear Seat Side Airbag)**
    NOTICE:
    Some systems need initialization after reconnecting the cable to the negative battery terminal (See page IN-33).
24. **INSPECT SRS WARNING LIGHT (w/ Rear Seat Side Airbag)**
    (See page RS-37)

REMOVAL

1. **REMOVE REAR SEAT CUSHION ASSEMBLY (See page SE-113)**
2. **REMOVE REAR SEAT HEADREST ASSEMBLY**
3. **REMOVE REAR CENTER SEAT HEADREST ASSEMBLY**
4. **REMOVE REAR SEATBACK ASSEMBLY (See page SE-113)**
5. **REMOVE SEAT BELT ANCHOR COVER CAP LH (See page SB-22)**
6. **DISCONNECT FRONT SEAT OUTER BELT ASSEMBLY LH (See page SB-22)**
7. **REMOVE FRONT SEAT HEADREST ASSEMBLY (for Driver Seat)**
8. **REMOVE FRONT SEAT OUTER TRACK BRACKET COVER LH (See page SE-83)**
9. **REMOVE FRONT SEAT INNER TRACK BRACKET COVER LH (See page SE-83)**
10. **REMOVE FRONT SEAT REAR OUTER TRACK BRACKET COVER LH (See page SE-83)**
11. **REMOVE FRONT SEAT REAR INNER TRACK BRACKET COVER LH (See page SE-83)**
12. **REMOVE FRONT SEAT ASSEMBLY LH (See page SE-83)**
13. **REMOVE SEAT BELT ANCHOR COVER CAP RH (See page RS-490)**
14. **DISCONNECT FRONT SEAT OUTER BELT ASSEMBLY RH (See page RS-490)**
15. **REMOVE FRONT SEAT HEADREST ASSEMBLY (for Front Passenger Seat)**
16. **REMOVE FRONT SEAT OUTER TRACK BRACKET COVER RH (See page RS-490)**
17. **REMOVE FRONT SEAT INNER TRACK BRACKET COVER RH (See page RS-490)**
18. **REMOVE FRONT SEAT REAR OUTER TRACK BRACKET COVER RH (See page RS-490)**
19. **REMOVE FRONT SEAT REAR INNER TRACK BRACKET COVER RH (See page RS-490)**
20. **REMOVE FRONT SEAT ASSEMBLY RH (See page RS-491)**

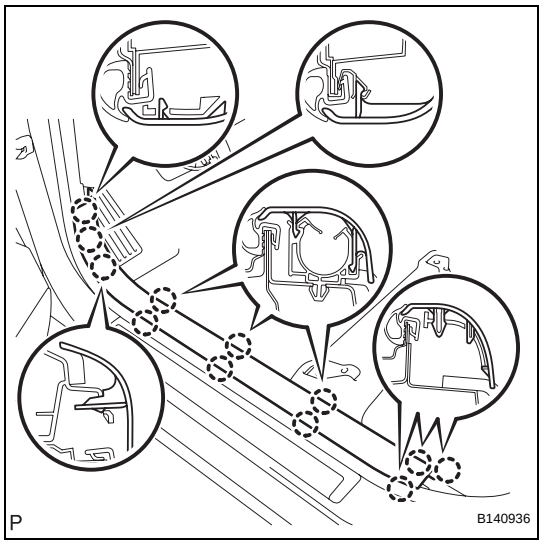

21. REMOVE FRONT DOOR SCUFF PLATE LH

(a) Disengage the 12 claws and remove the front door scuff plate LH.

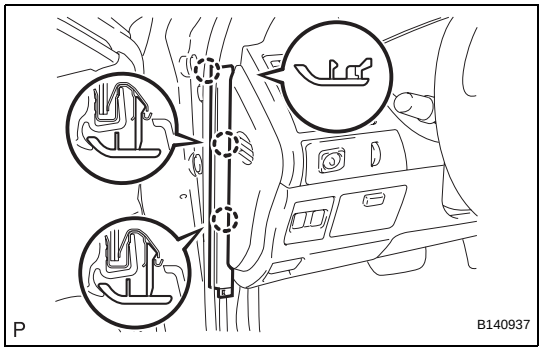

22. REMOVE FRONT DOOR OPENING TRIM COVER LH

(a) Disengage the 3 claws and remove the front door opening trim cover LH.

23. REMOVE SIDE INSTRUMENT PANEL LH (See page IP-12)

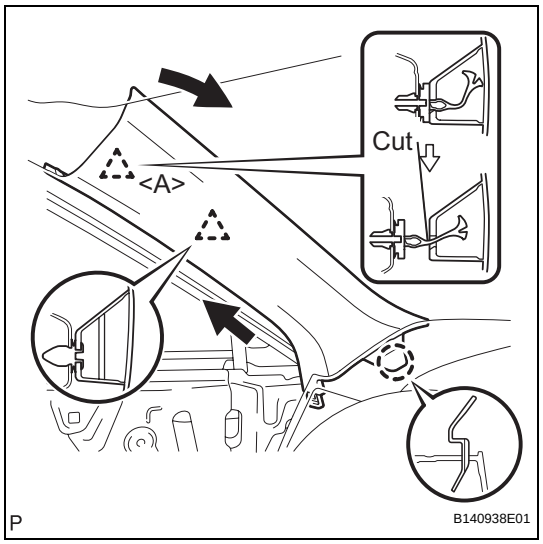

24. REMOVE FRONT PILLAR GARNISH LH

(a) Pull the upper portion of the garnish towards the inside of the cabin and disengage the 2 clips.
(b) Cut off clip <A>.
(c) Disengage the claw and remove the front pillar garnish LH.
(d) Remove clip <A> from the vehicle body.

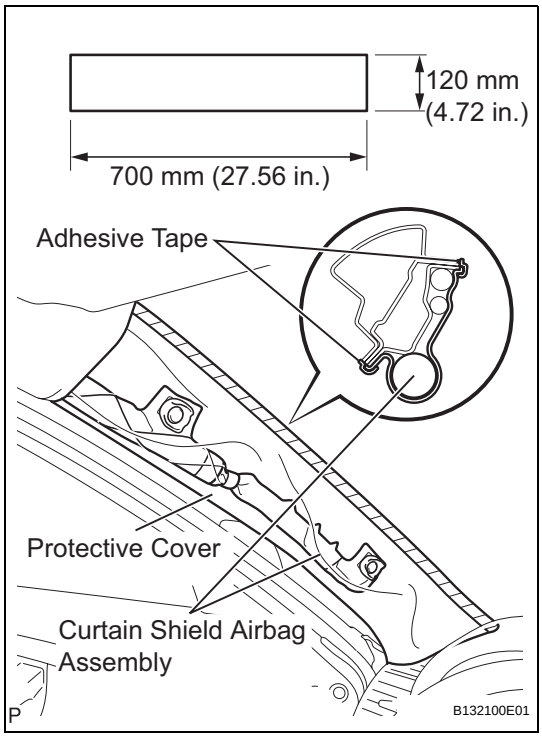

(e) Protect the curtain shield airbag assembly.
  (1) Thoroughly cover the airbag with a cloth or nylon sheet and fix the ends of the cover with adhesive tape, as shown in the illustration.
  NOTICE:
  Cover the curtain shield airbag with a protective cover as soon as the front pillar garnish is removed.

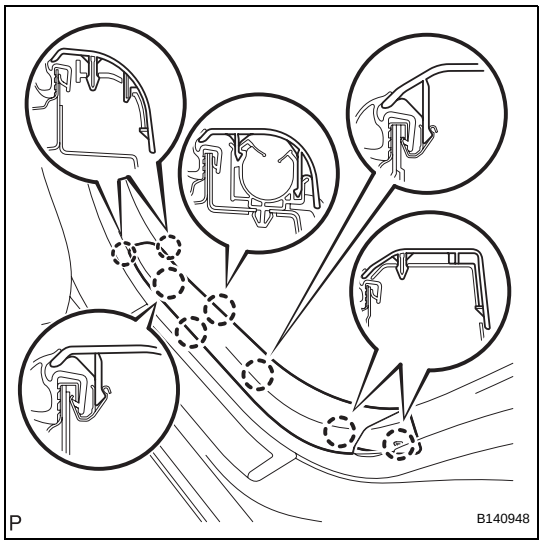

25. REMOVE REAR DOOR SCUFF PLATE LH

(a) Disengage the 8 claws and remove the rear door scuff plate LH.

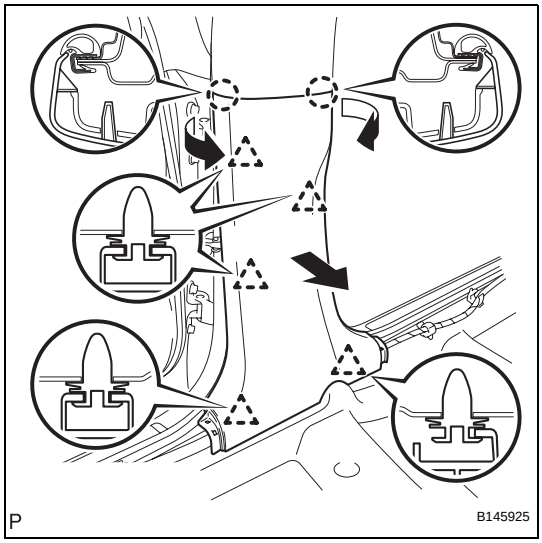

26. REMOVE LOWER CENTER PILLAR GARNISH LH

(a) Disengage the 2 claws and 5 clips, and remove the lower center pillar garnish LH.

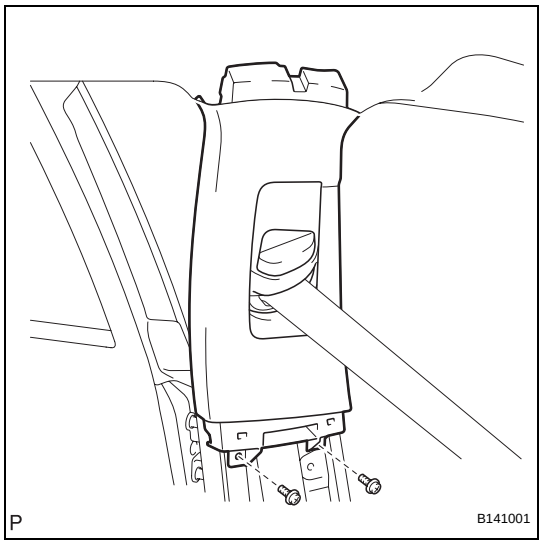

27. REMOVE UPPER CENTER PILLAR GARNISH LH

(a) Remove the 2 screws.

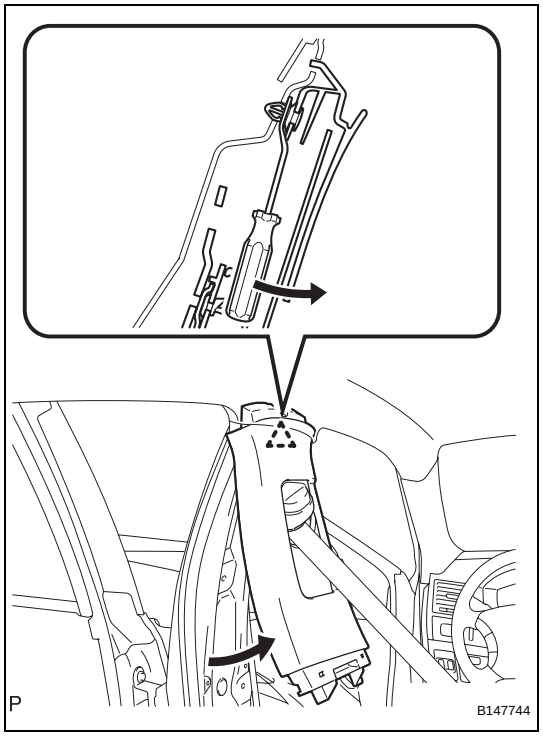

(b) Pull the lower part of the pillar garnish toward the inside of the vehicle.

(c) Using a clip remover, disengage the clip and remove the upper center pillar garnish LH.

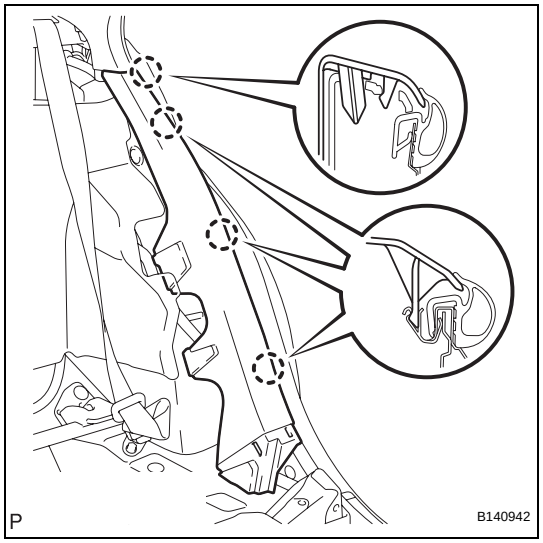

28. REMOVE REAR SEAT SIDE GARNISH LH (w/o Rear Seat Side Airbag)

(a) Disengage the 4 claws and rear seat side garnish LH.

29. REMOVE REAR SEAT SIDE AIRBAG ASSEMBLY LH (w/ Rear Seat Side Airbag) (See page RS-460)

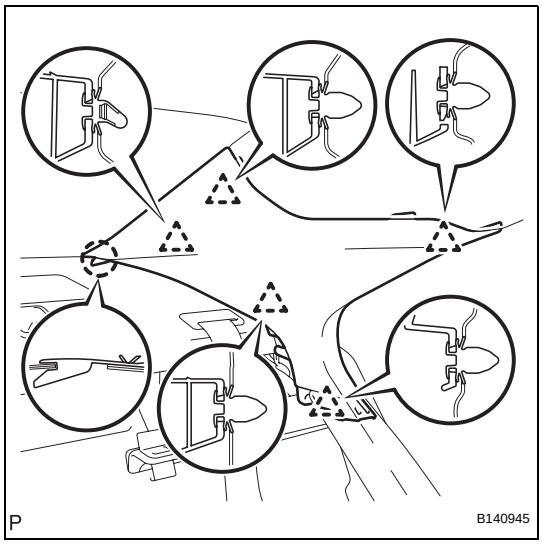

30. REMOVE ROOF SIDE INNER GARNISH ASSEMBLY LH

(a) Disengage the 5 clips and claw, and remove the roof side inner garnish assembly LH.

31. REMOVE FRONT DOOR SCUFF PLATE RH

HINT:
Use the same procedure for the RH side and the LH side.

32. REMOVE FRONT DOOR OPENING TRIM COVER RH

HINT:
Use the same procedure for the RH side and the LH side.

33. REMOVE SIDE INSTRUMENT PANEL RH (See page IP-15)

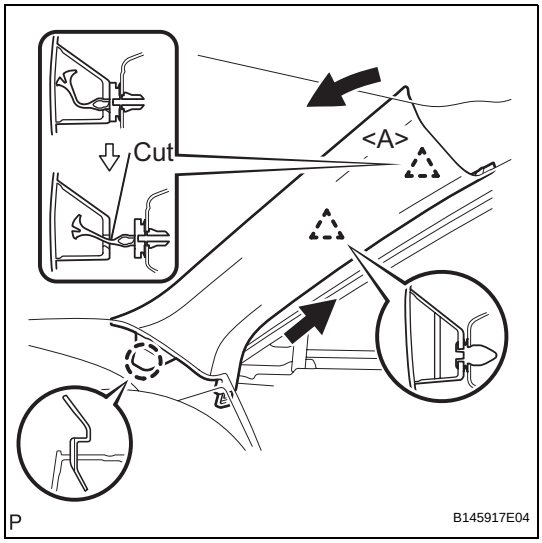

34. REMOVE FRONT PILLAR GARNISH RH

(a) Pull the upper portion of the garnish towards the inside of the cabin and disengage the 2 clips.
(b) Cut off clip <A>.
(c) Disengage the claw and remove the front pillar garnish RH.
(d) Remove the clip <A> from the vehicle body.

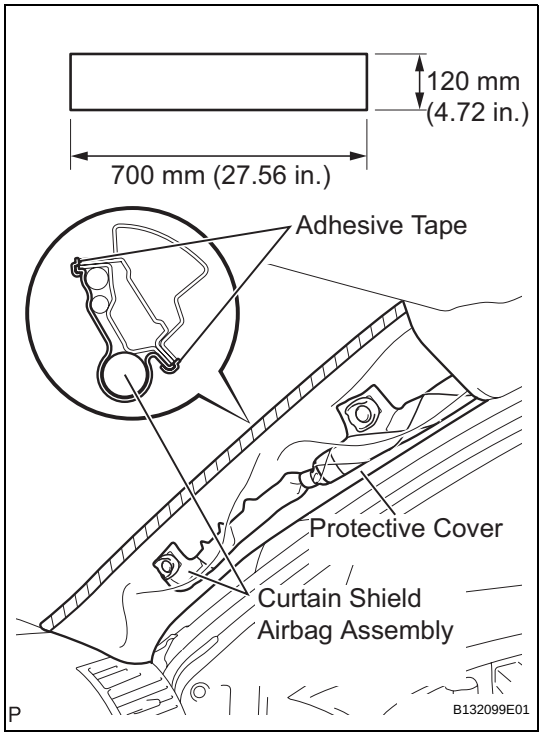

(e) Protect the curtain shield airbag assembly.
  (1) Thoroughly cover the airbag with a cloth or nylon sheet and fix the ends of the cover with adhesive tape, as shown in the illustration.
  NOTICE:
  Cover the curtain shield airbag with a protective cover as soon as the front pillar garnish is removed.

35. REMOVE REAR DOOR SCUFF PLATE RH

HINT:
Use the same procedure for the RH side and the LH side.

36. REMOVE LOWER CENTER PILLAR GARNISH RH

HINT:
Use the same procedure for the RH side and the LH side.

37. REMOVE UPPER CENTER PILLAR GARNISH RH

HINT:
Use the same procedure for the RH side and the LH side.

38. **REMOVE REAR SEAT SIDE GARNISH RH (w/o Rear Seat Side Airbag)**
    HINT:
    Use the same procedure for the RH side and the LH side.

39. **REMOVE REAR SEAT SIDE AIRBAG ASSEMBLY RH (w/ Rear Seat Side Airbag)**
    HINT:
    Use the same procedure for the RH side and the LH side.

40. **REMOVE ROOF SIDE INNER GARNISH ASSEMBLY RH**
    HINT:
    Use the same procedure for the RH side and the LH side.

41. **REMOVE INSTRUMENT PANEL FINISH PANEL END LH (See page IP-13)**

42. **REMOVE INSTRUMENT PANEL FINISH PANEL END RH (See page IP-15)**

43. **REMOVE SHIFT LEVER KNOB SUB-ASSEMBLY (See page IP-16)**

44. **REMOVE UPPER CONSOLE PANEL ASSEMBLY WITH FRONT ASH RECEPTACLE (See page IP-16)**

45. **REMOVE HEATER SEAT SWITCH CONSOLE BASE (w/o Seat Heater System) (See page IP-17)**

46. **REMOVE HEATER SEAT SWITCH CONSOLE BASE (w/ Seat Heater System) (See page IP-18)**

47. **REMOVE CONSOLE BOX POCKET (See page IP-52)**

48. **REMOVE CONSOLE BOX CARPET (See page IP-52)**

49. **REMOVE CONSOLE REAR END PANEL SUB-ASSEMBLY (See page IP-53)**

50. **REMOVE REAR CONSOLE BOX ASSEMBLY (See page IP-53)**

51. **REMOVE NO. 2 CONSOLE BOX DUCT (See page AC-149)**

52. **REMOVE NO. 3 CONSOLE BOX DUCT (See page AC-149)**

53. **DISCONNECT TRANSMISSION CONTROL CABLE ASSEMBLY (See page AX-232)**

54. **REMOVE SHIFT LEVER ASSEMBLY (See page AX-233)**

55. **REMOVE FLOOR CARPET BRACKET LH (See page AC-148)**

56. **REMOVE FLOOR CARPET BRACKET RH (See page AC-148)**

57. REMOVE LUGGAGE COMPARTMENT FLOOR MAT (w/ DVD Player)

58. REMOVE SPARE WHEEL COVER TRAY (w/ DVD Player)

59. REMOVE LUGGAGE HOLD BELT STRIKER ASSEMBLY (w/ DVD Player) (See page ED-82)

60. REMOVE NO. 1 LUGGAGE COMPARTMENT TRIM HOOK (w/ DVD Player) (See page ED-83)

61. REMOVE REAR FLOOR FINISH PLATE (w/ DVD Player) (See page ED-83)

62. REMOVE LUGGAGE COMPARTMENT INNER TRIM COVER RH (w/ DVD Player) (See page ED-83)

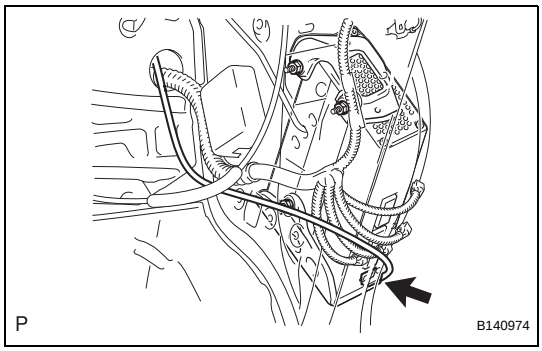

63. DISCONNECT STEREO COMPONENT AMPLIFIER ASSEMBLY CONNECTOR (w/ DVD Player)

(a) Disconnect the stereo component amplifier assembly connector.

64. REMOVE INNER REAR VIEW MIRROR STAY HOLDER COVER (See page MI-42)

65. REMOVE RAIN SENSOR COVER (w/ Rain Sensor) (See page WW-63)

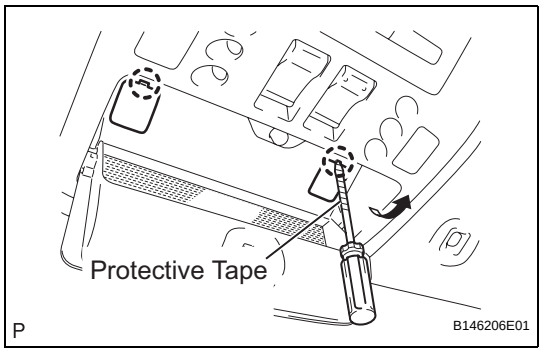

66. REMOVE ROOF CONSOLE BOX ASSEMBLY

(a) Using a screwdriver, disengage the 2 claws and open the 2 covers.
HINT:
Tape the screwdriver tip before use.

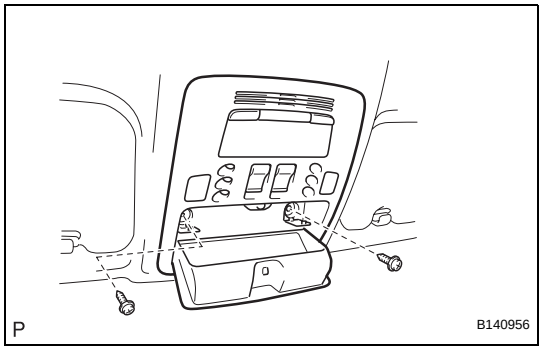

(b) Remove the 2 screws.

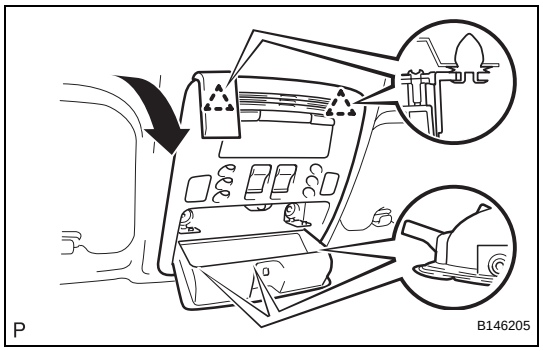

(c) Using a moulding remover, disengage the 2 clips.
(d) Disconnect the connectors and remove the roof console box assembly.

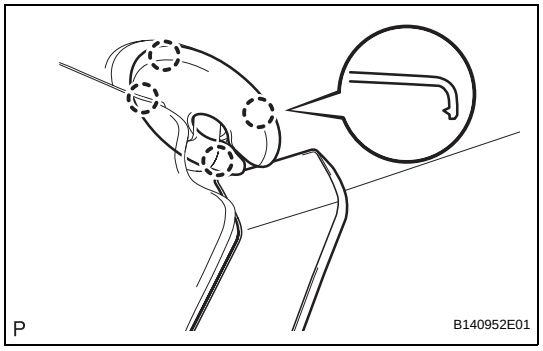

67. REMOVE VISOR BRACKET COVER

(a) Using a moulding remover, disengage the 4 claws and remove the visor bracket cover.
HINT:
Use the same procedure to remove the cover on the other side.

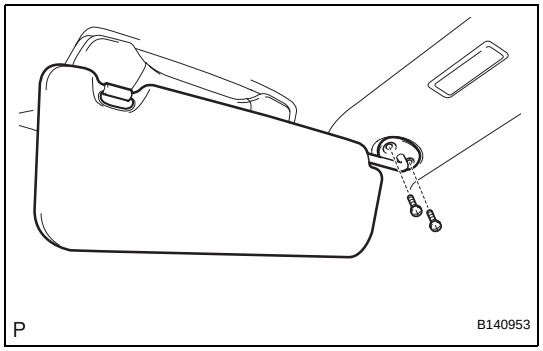

68. REMOVE VISOR ASSEMBLY LH

(a) Remove the 2 screws and visor assembly LH.

69. REMOVE VISOR ASSEMBLY RH

HINT:
Use the same procedure for the RH side and the LH side.

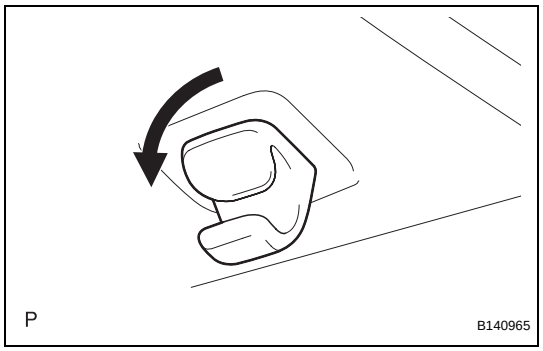

70. REMOVE VISOR HOLDER

(a) Remove the visor holder by turning it counterclockwise.
HINT:
Use the same procedure to remove the hook on the other side.

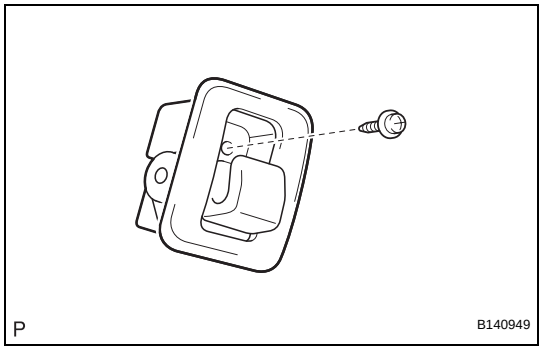

71. REMOVE COAT HOOK

(a) Remove the screw and coat hook.
HINT:
Use the same procedure to remove the coat hook on the other side.

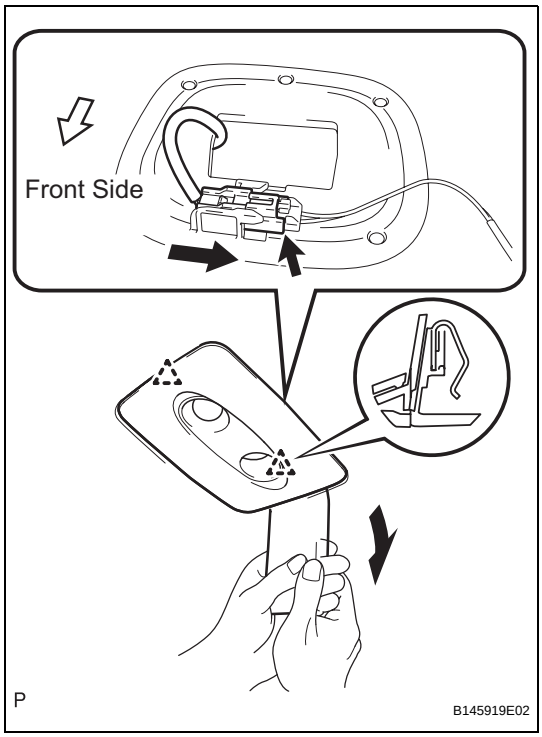

72. REMOVE SPOT LIGHT ASSEMBLY (for Standard)

(a) Using a moulding remover, disengage the 2 clips.

(b) Disconnect the connector and remove the spot light assembly.

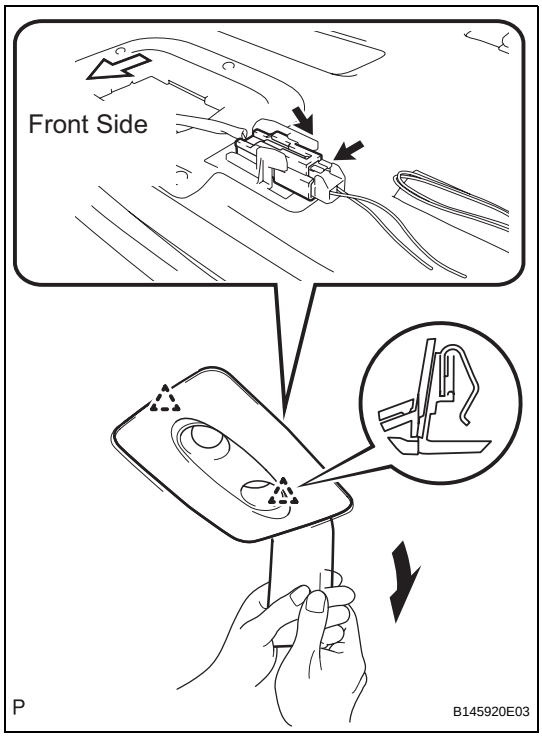

73. REMOVE SPOT LIGHT ASSEMBLY (for Glass Roof)

(a) Using a moulding remover, disengage the 2 clips.

(b) Disconnect the connector and remove the spot light assembly.

74. REMOVE ASSIST GRIP SUB-ASSEMBLY

(a) Using a screwdriver, disengage the 4 claws and remove the 2 assist grip covers.

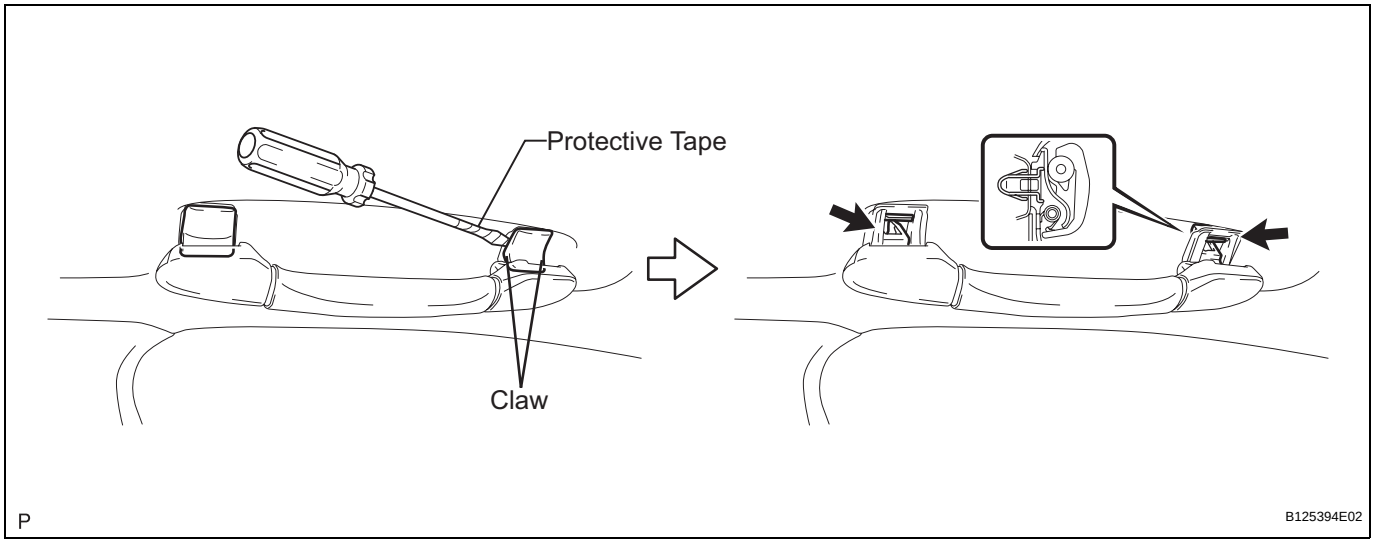

HINT:
Tape the screwdriver tip before use.

(b) Disengage the 2 clips and remove the assist grip sub-assembly.
HINT:
Use the same procedure for the other 3 assist grips.

75. REMOVE ROOF HEADLINING ASSEMBLY (for Standard)

(a) Disconnect the No. 1 roof wire connector and disengage each clamp from the front pillar LH.

(b) Disconnect the antenna cord sub-assembly connector and disengage each clamp from the front pillar RH.

(c) Disconnect the antenna cord sub-assembly connector and disengage the clamp from the rear pillar RH.

(d) Disengage the 12 claws, 4 clips, and 11 fasteners.

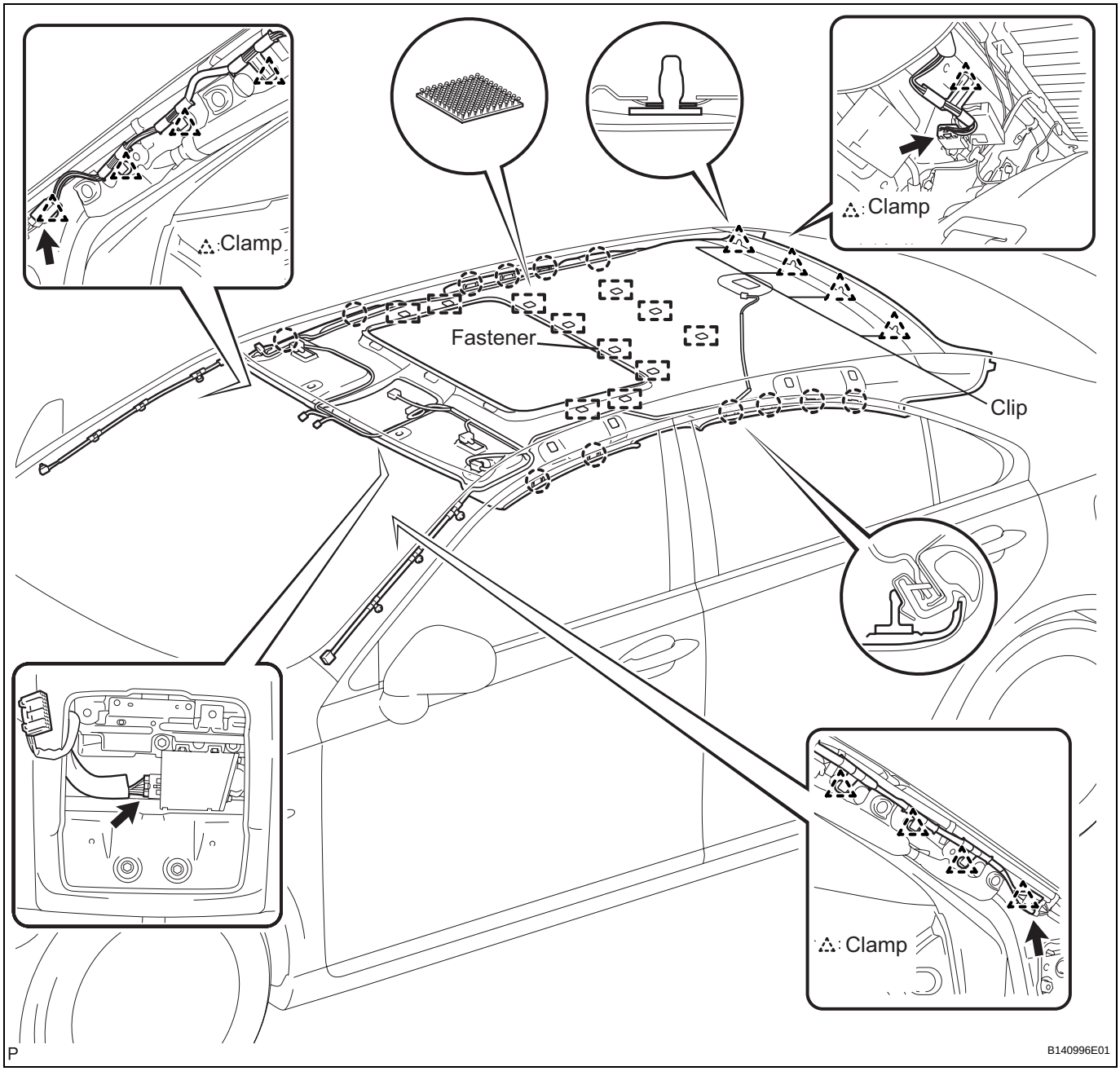

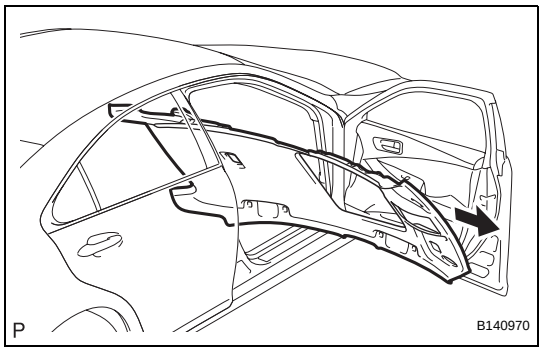

(e) Remove the roof headlining assembly from the vehicle through the front right door.

76. REMOVE ROOF HEADLINING ASSEMBLY (for Glass Roof)

(a) Disconnect the No. 1 roof wire connector and disengage each clamp from the front pillar LH.

(b) Disconnect the antenna cord sub-assembly connector and disengage the clamp from the rear pillar RH.

(c) Disengage the 12 claws, 4 clips, and 21 fasteners.

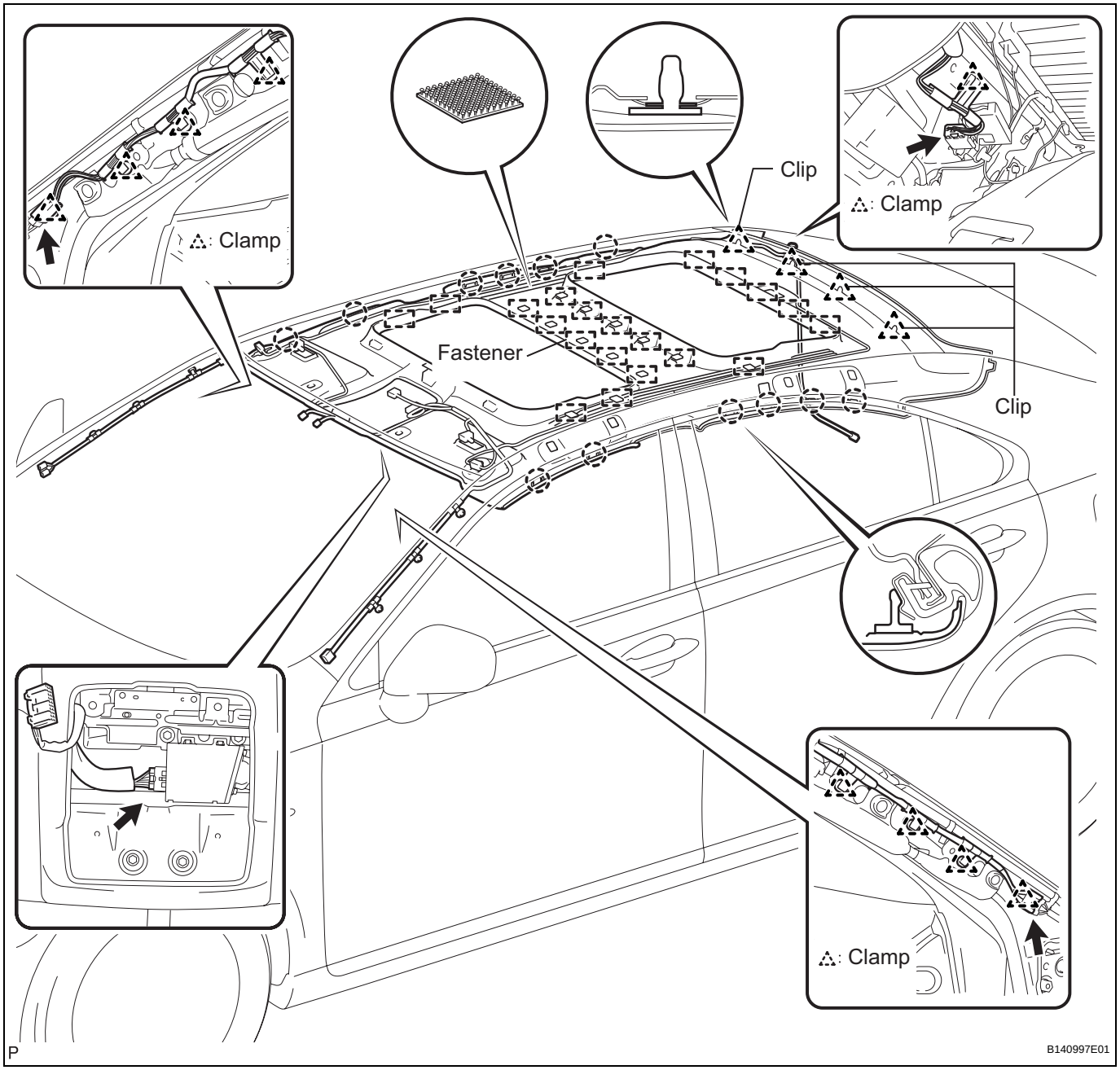

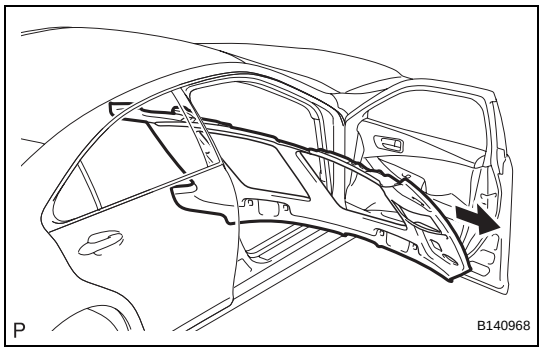

(d) Remove the roof headlining assembly from the vehicle through the front right door.

77. REMOVE ANTENNA CORD SUB-ASSEMBLY (See page AV-222)

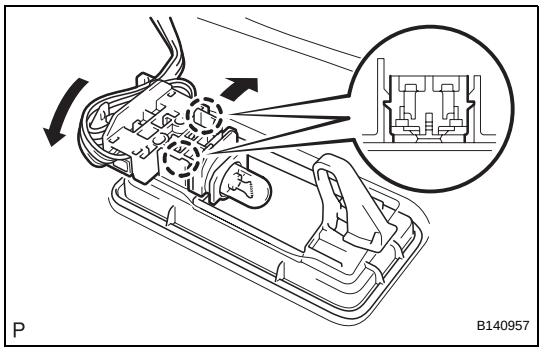

78. REMOVE VANITY LIGHT ASSEMBLY

(a) Disengage the 2 claws and separate the bulb holder from the vanity light assembly as shown in the illustration.

(b) Disengage the claw and remove the vanity light assembly.
HINT:
Use the same procedure to remove the light on the other side.

79. REMOVE NO. 1 ROOF WIRE (for Standard)

(a) Turn the visor connectors clockwise approximately 90° and separate the connectors from the roof headlining assembly.

(b) Remove the adhesive tape from the roof headlining assembly.

(c) Remove the No. 1 roof wire from the roof headlining assembly.

(d) Remove the double-sided tape from the roof headlining assembly.

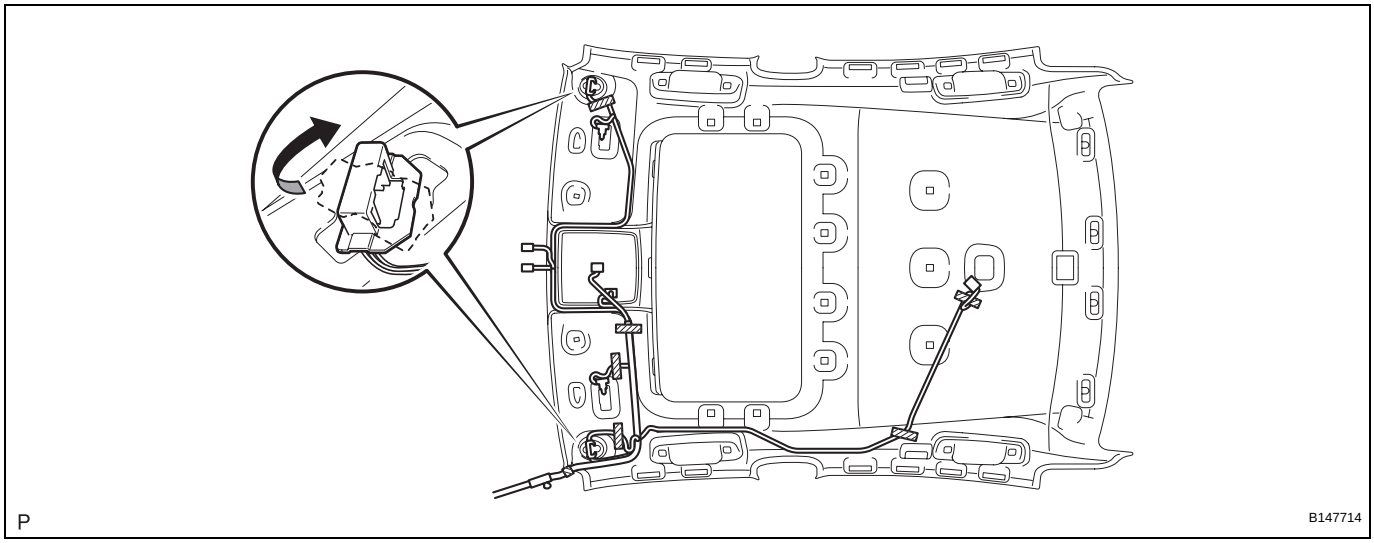

80. REMOVE NO. 1 ROOF WIRE (for Glass Roof)

(a) Turn the visor connectors clockwise approximately 90° and separate the connectors from the roof headlining assembly.

(b) Remove the adhesive tape from the roof headlining assembly.

(c) Remove the No. 1 roof wire from the roof headlining assembly.

(d) Remove the double-sided tape from the roof headlining assembly.

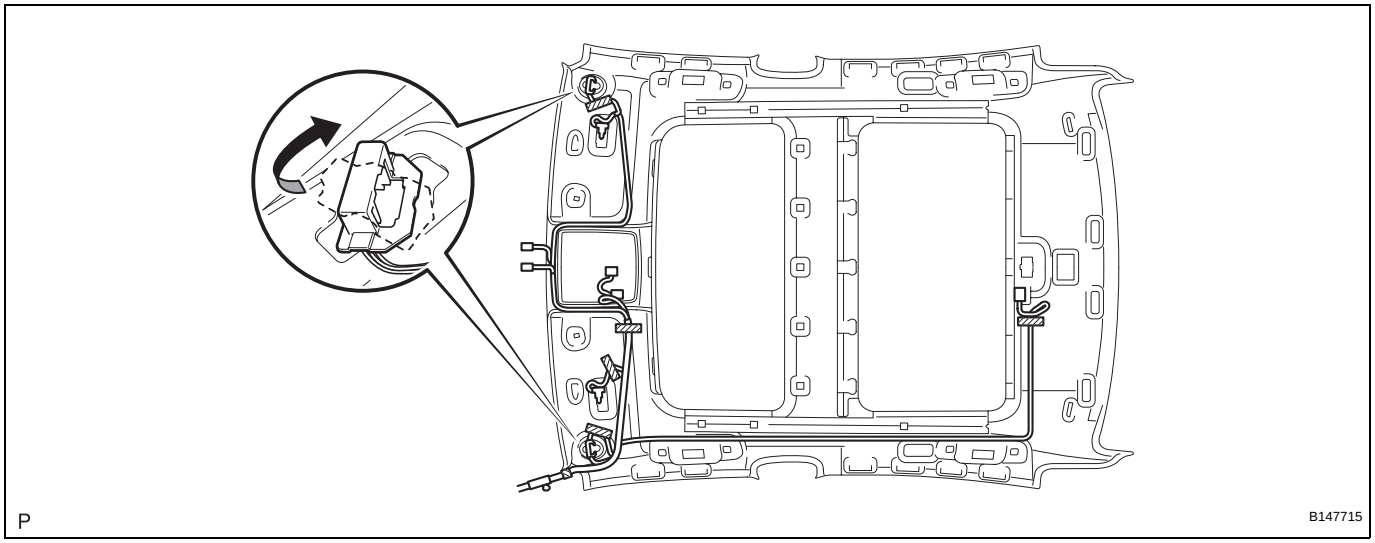
P
B147715

INSTALLATION

1. INSTALL NO. 1 ROOF WIRE (for Standard)

(a) Apply new double-sided tape to the locations shown in the illustration while aligning the tape with the markings on the roof headlining.

Reference: Tape Attachment Locations

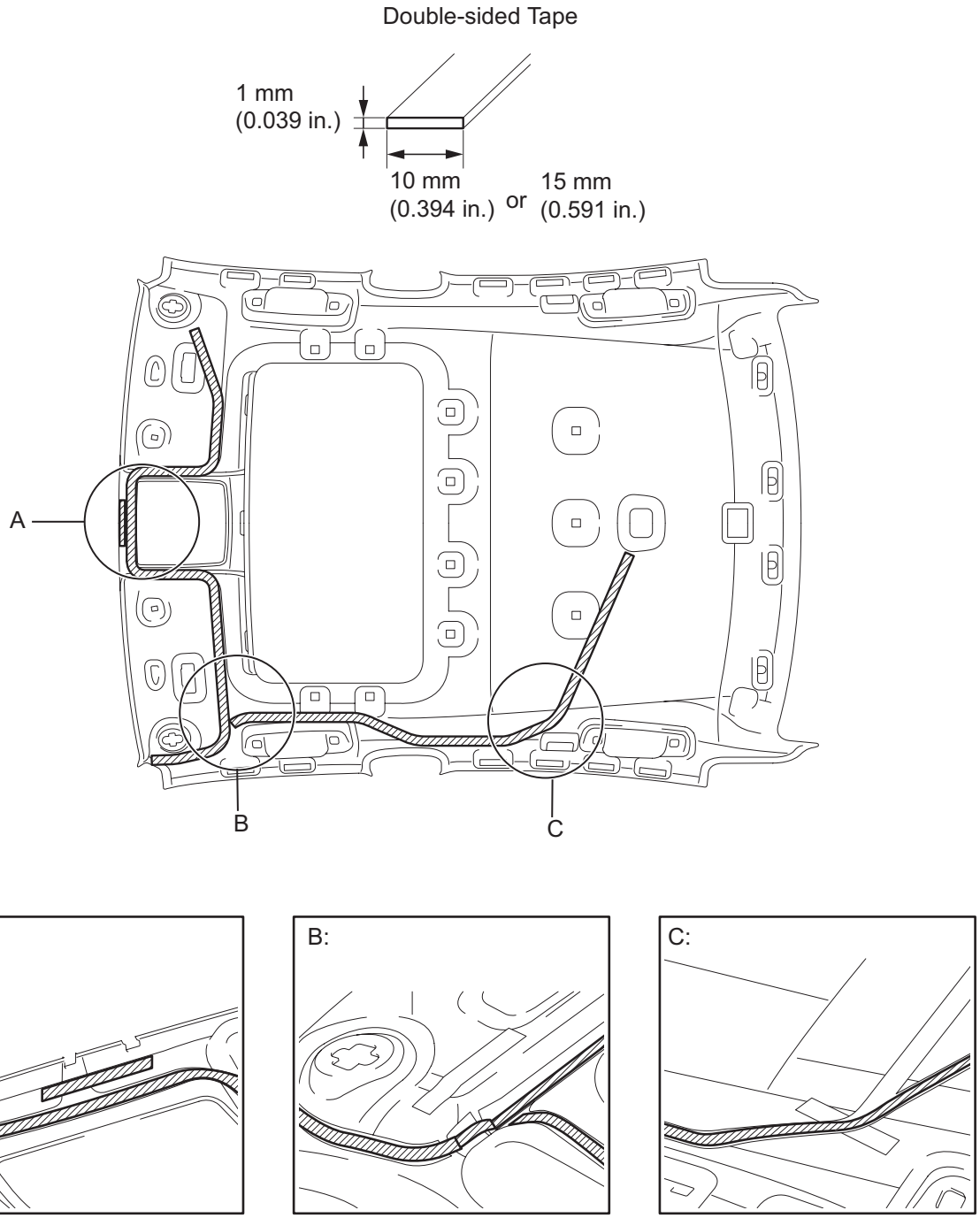

P

B147716E01

NOTICE:
Securely apply the double-sided tape to prevent the tape from being out of alignment and peeling off.

(b) Peel off the release paper from the double-sided tape.

(c) Attach the No. 1 roof wire along the double-sided tape so that the marking surface of the wire harness faces downward.

NOTICE:

- **Securely attach the No. 1 roof wire.**
- **Failure to do so may cause abnormal noise.**

(d) Turn the visor connectors clockwise approximately 90° to the connectors of the roof headlining.

(e) Apply adhesive tape to the locations shown in the illustration.

Reference: Tape Attachment Locations

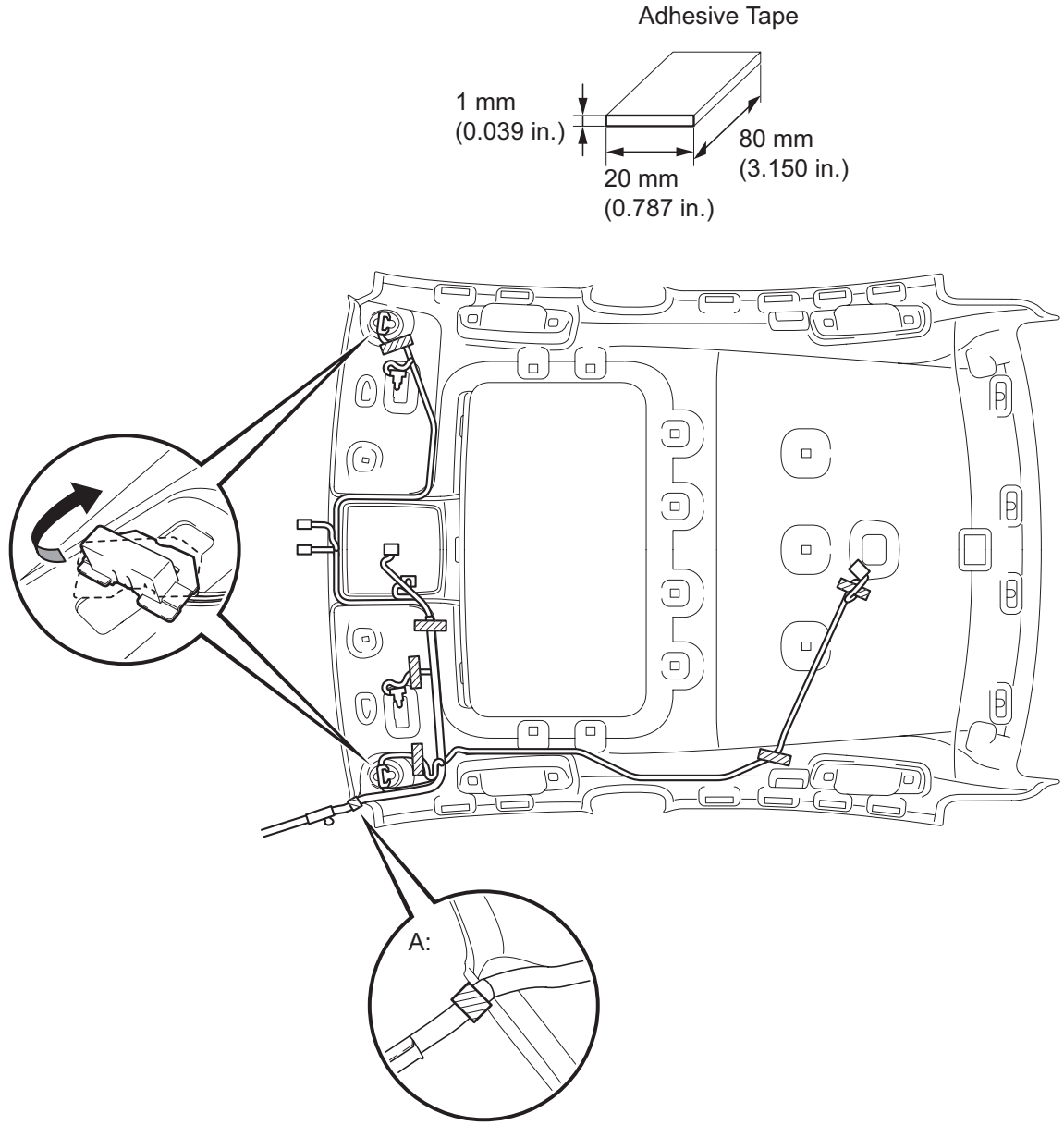

HINT:
As shown at point A in the illustration, line up and secure the reference tape of the wire harness to the tip of the roof headlining assembly.

2. INSTALL NO. 1 ROOF WIRE (for Glass Roof)

(a) Apply new double-sided tape to the locations shown in the illustration while aligning the tape with the markings on the roof headlining.

Reference: Tape Attachment Locations

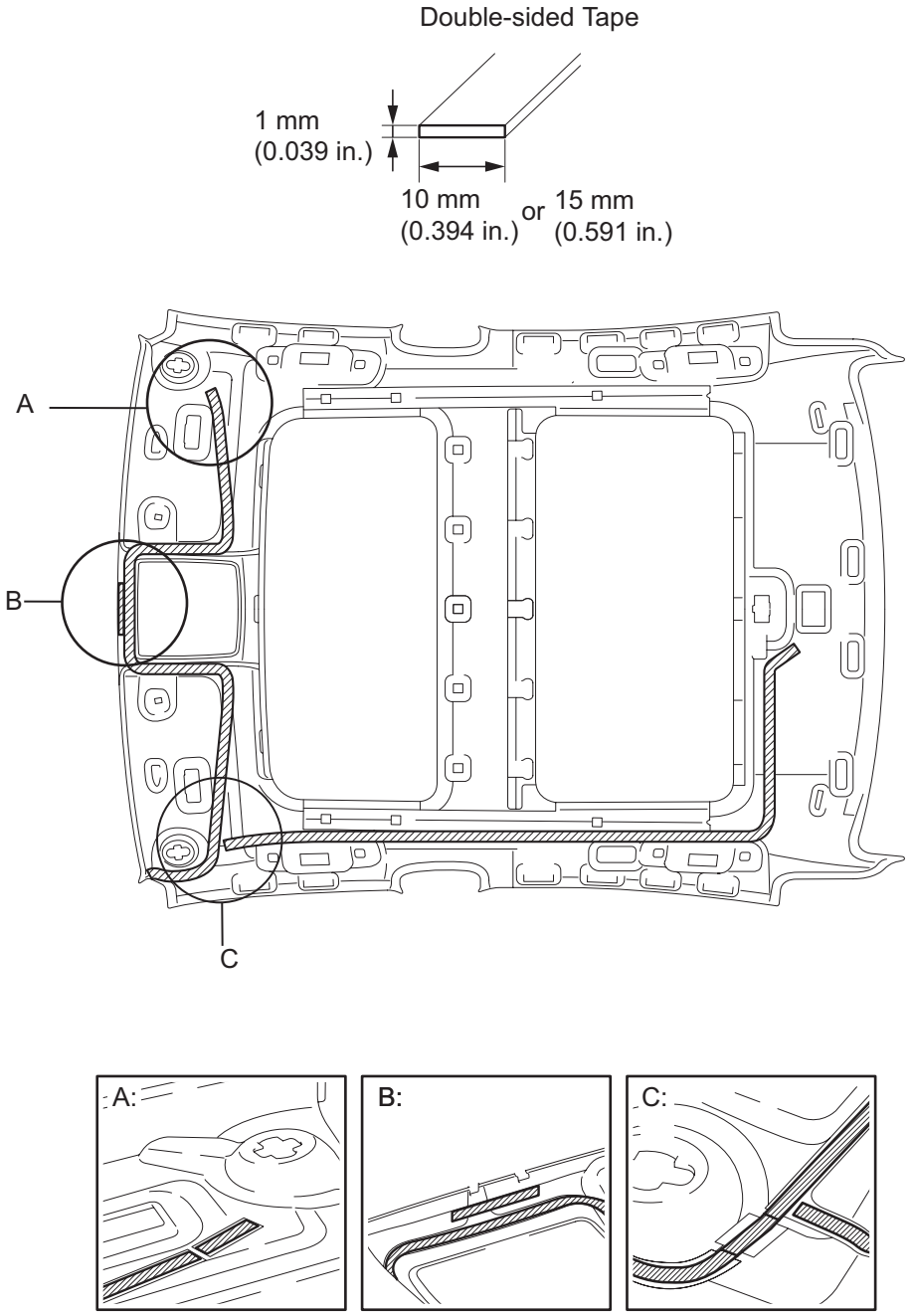

P

B147718E01

NOTICE:
Securely apply the double-sided tape to prevent the tape from being out of alignment and peeling off.

(b) Peel off the release paper from the double-sided tape.

(c) Attach the No. 1 roof wire along the double-sided tape so that the marking surface of the wire harness faces downward.
NOTICE:
- **Securely attach the No. 1 roof wire.**
- **Failure to do so may cause abnormal noise.**

(d) Turn the visor connectors clockwise approximately 90° to the connectors of the roof headlining.

(e) Apply adhesive tape to the locations shown in the illustration.

Reference: Tape Attachment Locations

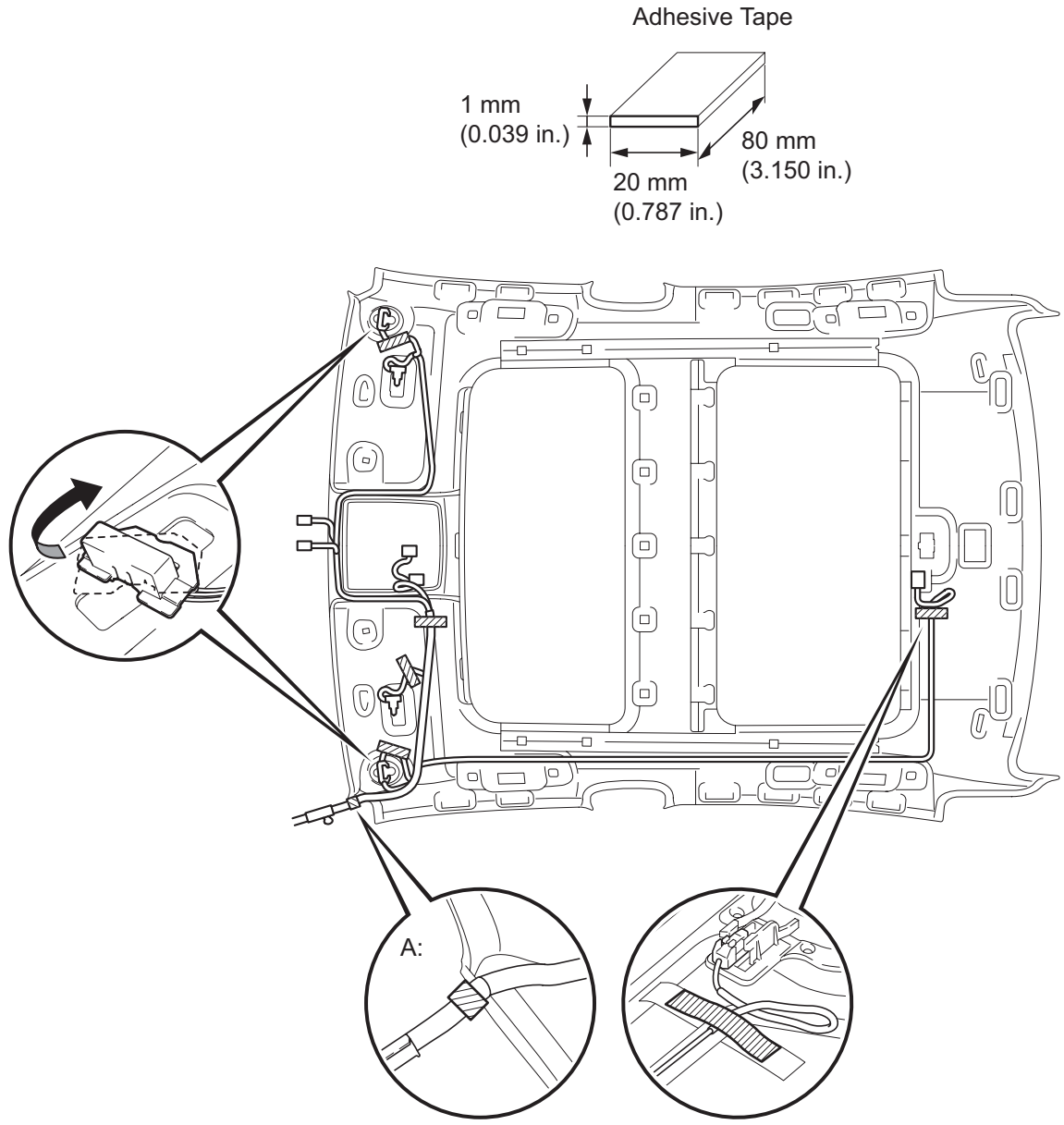

HINT:
As shown at point A in the illustration, line up and secure the reference tape of the wire harness to the tip of the roof headlining assembly.

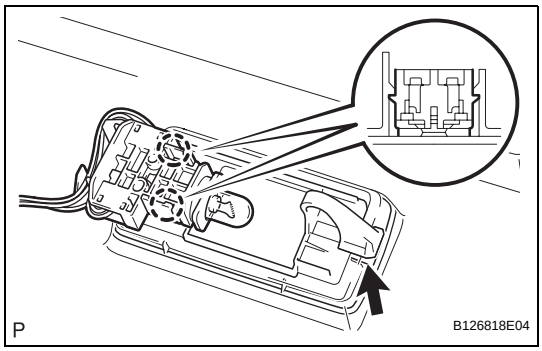

3. INSTALL VANITY LIGHT ASSEMBLY

(a) Install the vanity light to the roof headlining.

(b) Connect the 2 claws to install the bulb holder.
HINT:
Use the same procedure to install the light on the other side.

4. INSTALL ANTENNA CORD SUB-ASSEMBLY (See page AV-224)

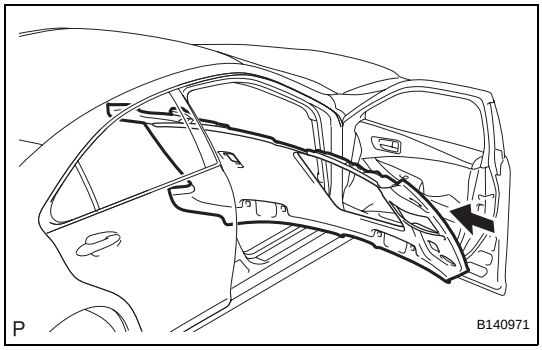

5. INSTALL ROOF HEADLINING ASSEMBLY (for Standard)

(a) Pull the roof headlining assembly into the vehicle through the front right door.

(b) Engage the 12 claws, 4 clips, and 11 fasteners.

(c) Connect the antenna cord sub-assembly connector and engage the clamp to the rear pillar RH.

(d) Connect the antenna cord sub-assembly connector and engage each clamp to the front pillar RH.

(e) Connect the No. 1 wire connector and engage each clamp to the front pillar LH.

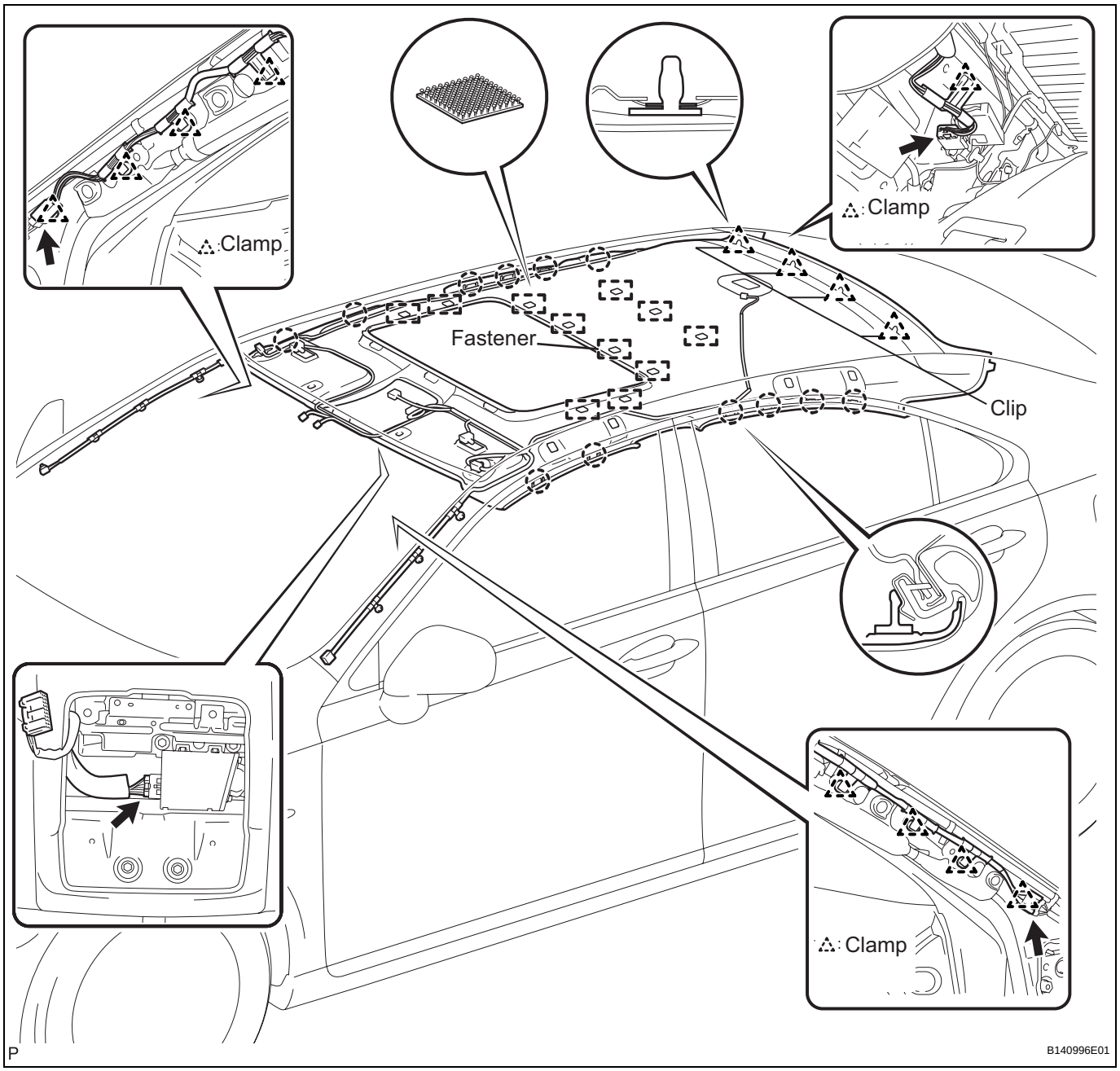

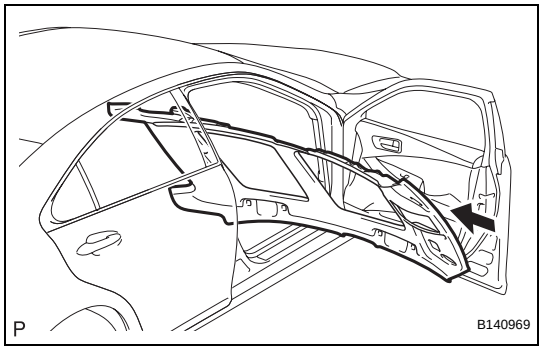

6. INSTALL ROOF HEADLINING ASSEMBLY (for Glass Roof)

(a) Pull the roof headlining assembly into the vehicle through the front right door.

(b) Engage the 12 claws, 4 clips, and 21 fasteners.

(c) Connect the antenna cord sub-assembly connector and engage the clamp to the rear pillar RH.

(d) Connect the antenna cord sub-assembly connector and engage each clamp to the front pillar RH.

(e) Connect the No. 1 wire connector and engage each clamp to the front pillar LH.

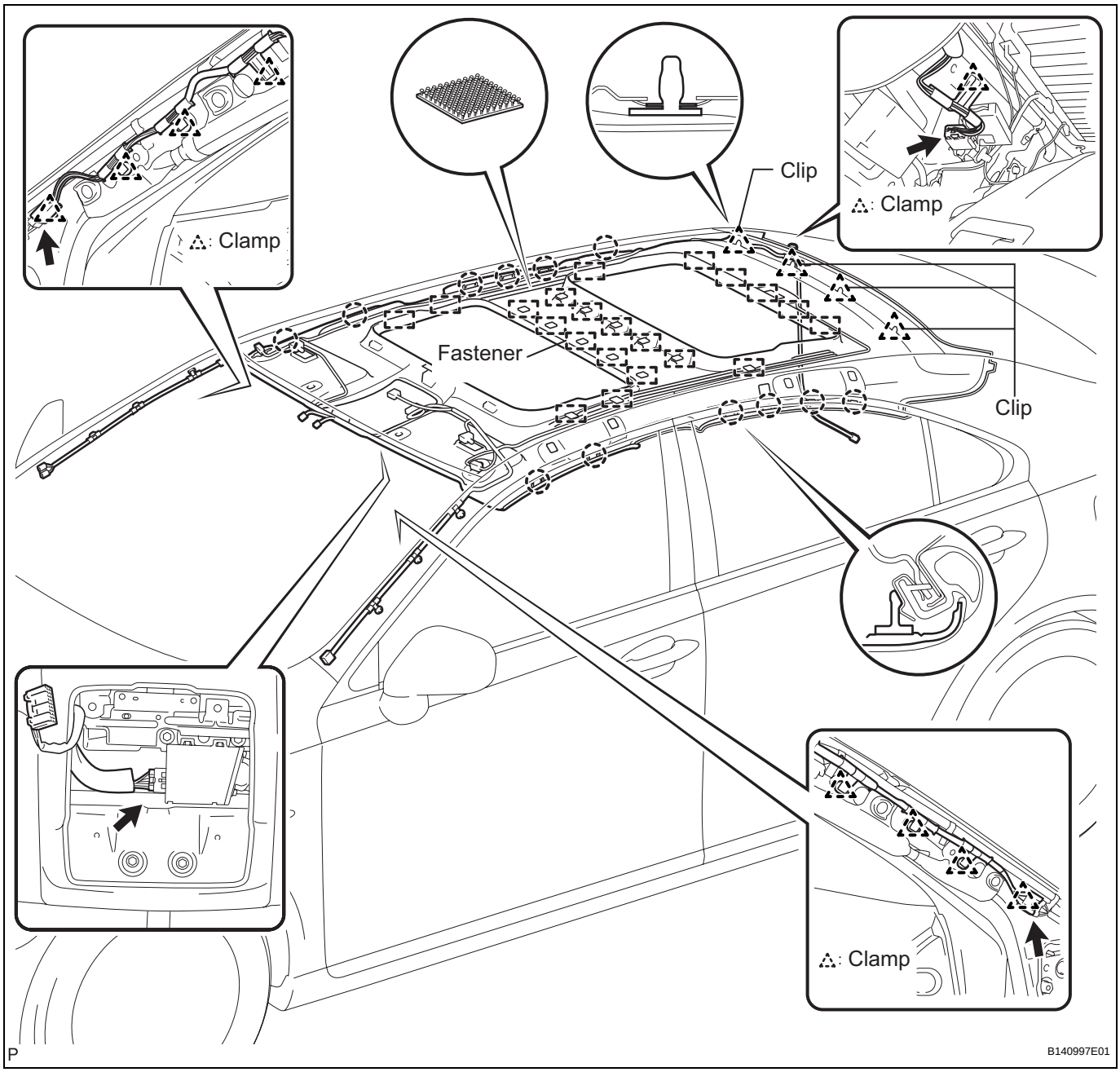

7. INSTALL ASSIST GRIP SUB-ASSEMBLY

(a) Engage the 2 clips to an assist grip sub-assembly as shown in the illustration.

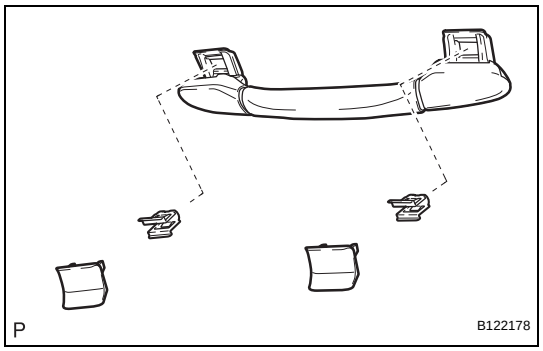

(b) Install the assist grip sub-assembly.
(c) Install the 2 assist grip covers to the assist grip sub-assembly.
HINT:
Use the same procedure for the other 3 assist grips.

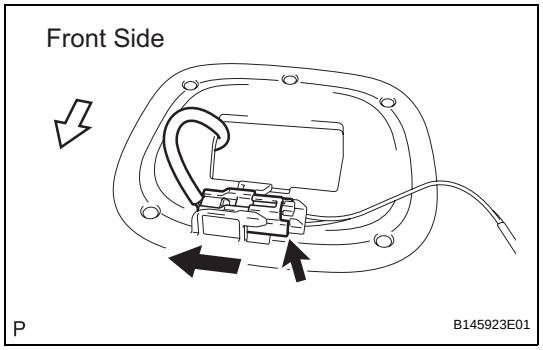

8. INSTALL SPOT LIGHT ASSEMBLY (for Standard)
(a) Connect the connector.

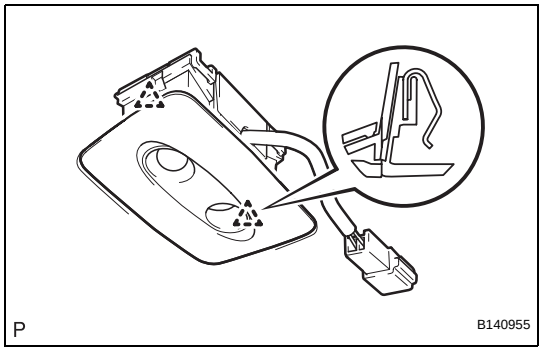

(b) Engage the 2 clips and install the spot light assembly.

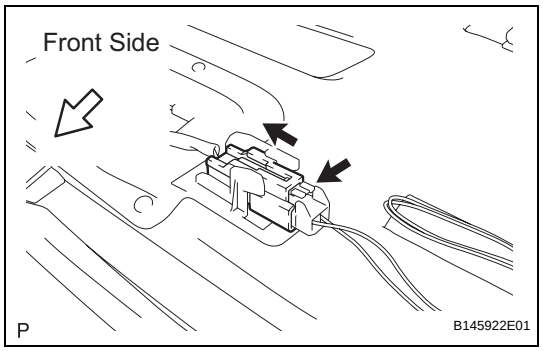

9. INSTALL SPOT LIGHT ASSEMBLY (for Glass Roof)
(a) Connect the connector.

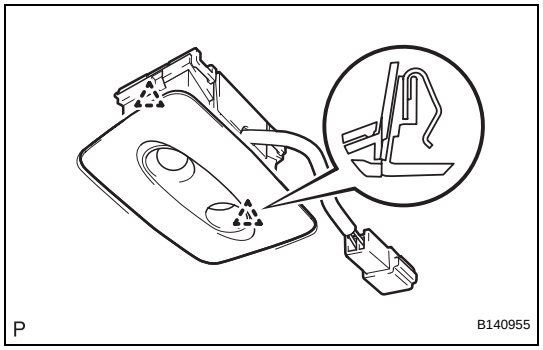

(b) Engage the 2 clips and install the spot light assembly.

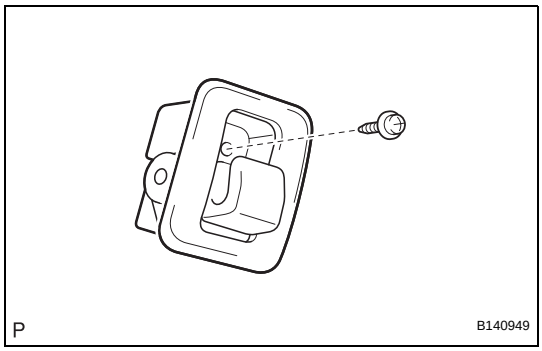

10. INSTALL COAT HOOK

(a) Install the coat hook with the screw.
HINT:
Use the same procedure to install the hook on the other side.

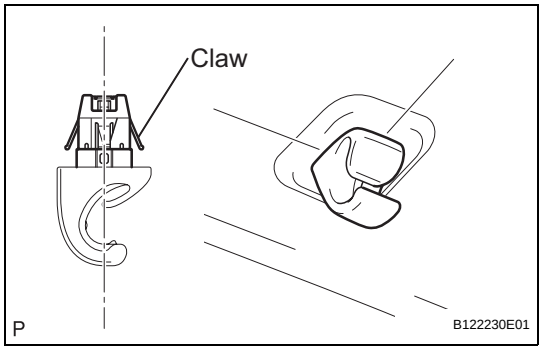

11. INSTALL VISOR HOLDER

(a) Set the claws of the visor holder as shown in the illustration.
(b) Engage the claws and install the visor holder.
HINT:
Use the same procedure to install the holder on the other side.

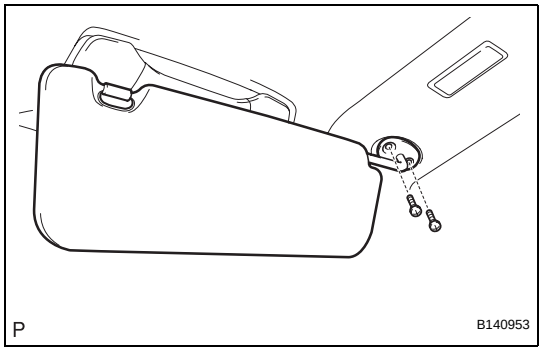

12. INSTALL VISOR ASSEMBLY LH

(a) Install the visor assembly LH with the 2 screws.

13. INSTALL VISOR ASSEMBLY RH

HINT:
Use the same procedure for the RH side and the LH side.

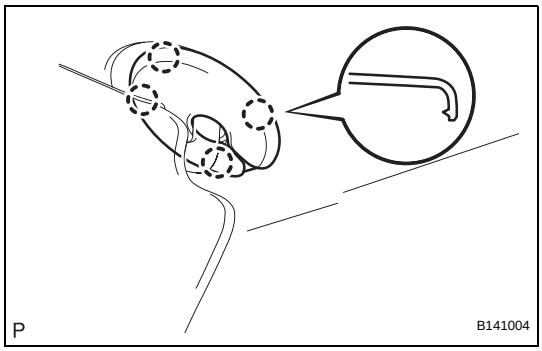

14. INSTALL VISOR BRACKET COVER

(a) Engage the 4 claws and install the visor bracket cover.
HINT:
Use the same procedure to install the cover on the other side.

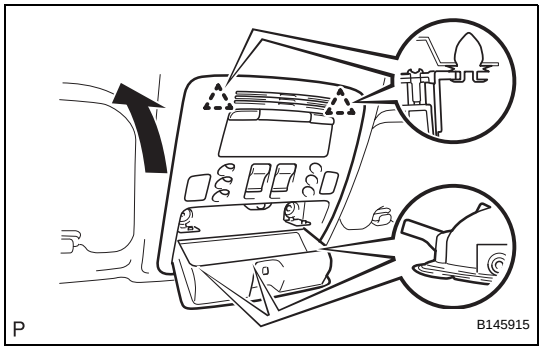

15. INSTALL ROOF CONSOLE BOX ASSEMBLY

(a) Connect the connector.
(b) Engage the 2 clips.

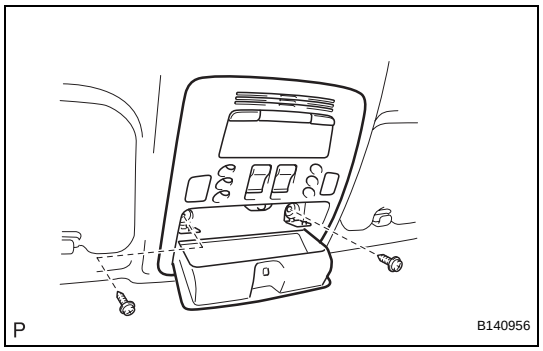

(c) Install the roof console box assembly with the 2 screws.

16. INSTALL RAIN SENSOR COVER (w/ Rain Sensor) (See page WW-65)

17. INSTALL INNER REAR VIEW MIRROR STAY HOLDER COVER (See page MI-44)

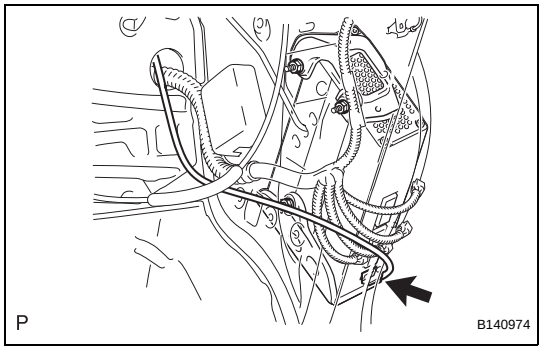

18. CONNECT STEREO COMPONENT AMPLIFIER ASSEMBLY CONNECTOR (w/ DVD Player)

(a) Connect the stereo component amplifier assembly connector.

19. INSTALL LUGGAGE COMPARTMENT INNER TRIM COVER RH (w/ DVD Player) (See page ED-88)

20. INSTALL REAR FLOOR FINISH PLATE (w/ DVD Player) (See page ED-88)

21. INSTALL NO. 1 LUGGAGE COMPARTMENT TRIM HOOK (w/ DVD Player) (See page ED-89)

22. INSTALL LUGGAGE HOLD BELT STRIKER ASSEMBLY (w/ DVD Player) (See page ED-89)

23. INSTALL SPARE WHEEL COVER TRAY (w/ DVD Player)

24. INSTALL LUGGAGE COMPARTMENT FLOOR MAT (w/ DVD Player)

25. INSTALL FLOOR CARPET BRACKET LH

26. INSTALL FLOOR CARPET BRACKET RH

27. INSTALL SHIFT LEVER ASSEMBLY (See page AX-240)

28. CONNECT TRANSMISSION CONTROL CABLE ASSEMBLY (See page AX-241)

29. INSTALL NO. 2 CONSOLE BOX DUCT (See page AC-163)

30. INSTALL NO. 3 CONSOLE BOX DUCT (See page AC-163)

31. INSTALL REAR CONSOLE BOX ASSEMBLY (See page IP-39)

32. INSTALL CONSOLE REAR END PANEL SUB-ASSEMBLY (See page IP-40)

33. INSTALL CONSOLE BOX CARPET (See page IP-41)

34. INSTALL CONSOLE BOX POCKET (See page IP-41)

35. INSTALL HEATER SEAT SWITCH CONSOLE BASE (w/o Seat Heater System) (See page IP-41)

36. INSTALL HEATER SEAT SWITCH CONSOLE BASE (w/ Seat Heater System) (See page IP-41)

37. INSTALL UPPER CONSOLE PANEL ASSEMBLY WITH FRONT ASH RECEPTACLE (See page IP-42)

38. INSTALL SHIFT LEVER KNOB SUB-ASSEMBLY (See page IP-42)

39. INSTALL INSTRUMENT PANEL FINISH PANEL END LH (See page IP-46)

40. INSTALL INSTRUMENT PANEL FINISH PANEL END RH (See page IP-44)

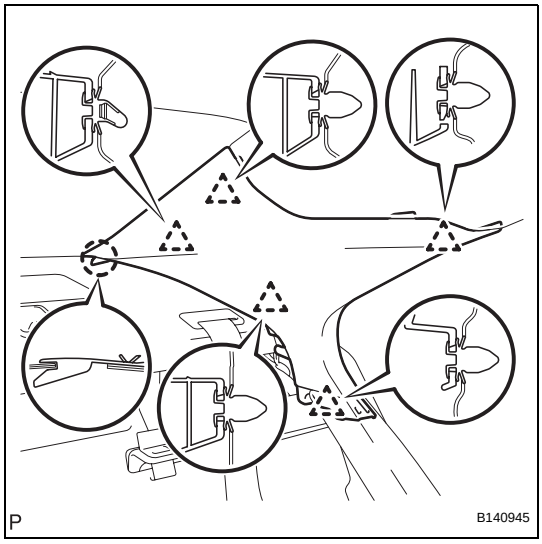

41. INSTALL ROOF SIDE INNER GARNISH ASSEMBLY LH

(a) Engage the claw and 5 clips, and install the roof side inner garnish assembly LH.

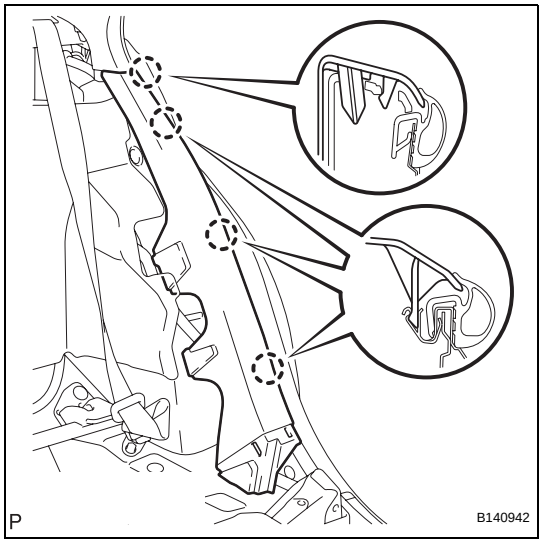

42. INSTALL REAR SEAT SIDE GARNISH LH (w/o Rear Seat Side Airbag)

(a) Install the 4 claws and install the rear seat side garnish LH.

43. INSTALL REAR SEAT SIDE AIRBAG ASSEMBLY LH (w/ Rear Seat Side Airbag) (See page RS-460)

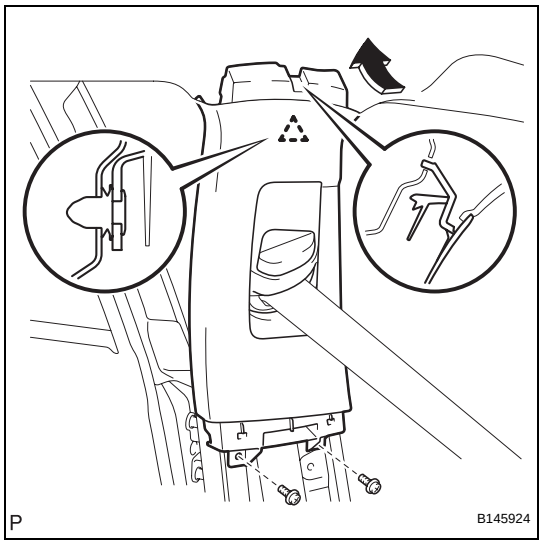

44. INSTALL UPPER CENTER PILLAR GARNISH LH

(a) Engage the clip.

(b) Install the upper center pillar garnish LH with the 2 screws.

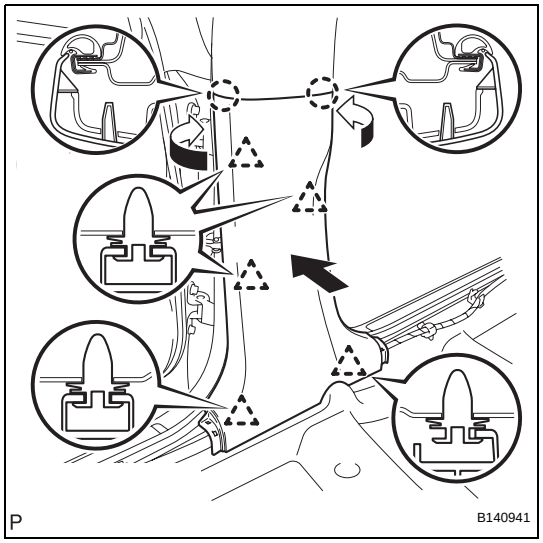

45. INSTALL LOWER CENTER PILLAR GARNISH LH

(a) Engage the 5 clips and 2 claws, and install the lower center pillar garnish LH.

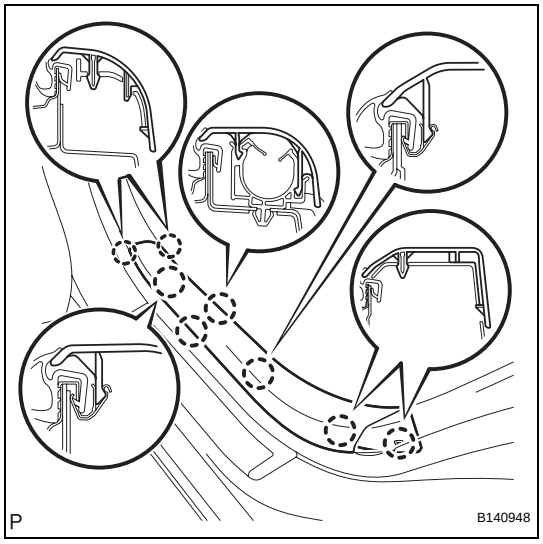

46. INSTALL REAR DOOR SCUFF PLATE LH

(a) Engage the 8 claws, then install the rear door scuff plate LH.

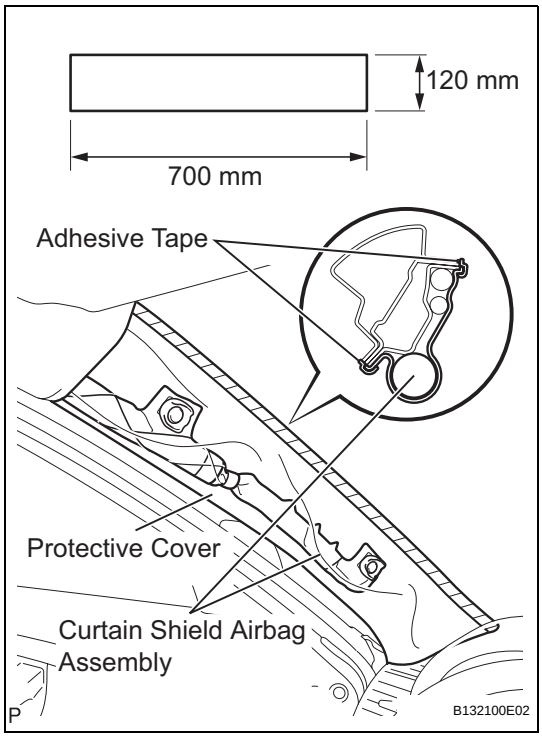

47. INSTALL FRONT PILLAR GARNISH LH

(a) Remove the protective cover.

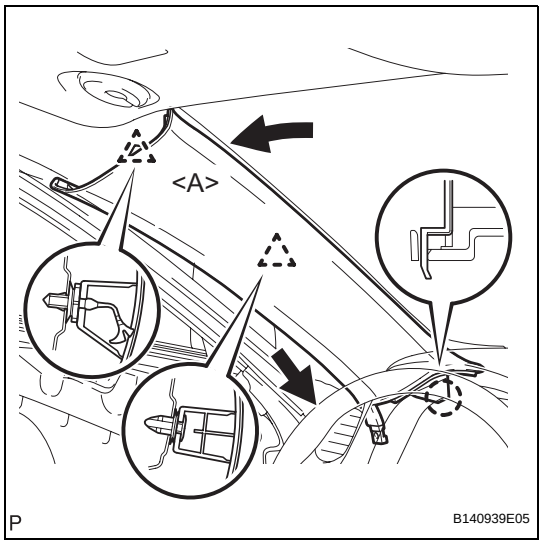

(b) Install a new clip <A> on the front pillar garnish LH.

(c) Engage the claw and 2 clips, then install the front pillar garnish LH.

48. INSTALL SIDE INSTRUMENT PANEL LH (See page IP-47)

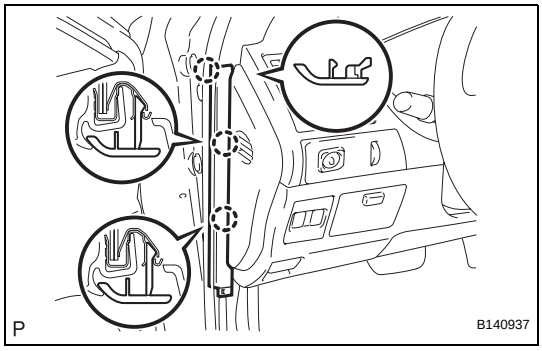

49. INSTALL FRONT DOOR OPENING TRIM COVER LH

(a) Engage the 3 claws and install the front door opening trim cover LH.

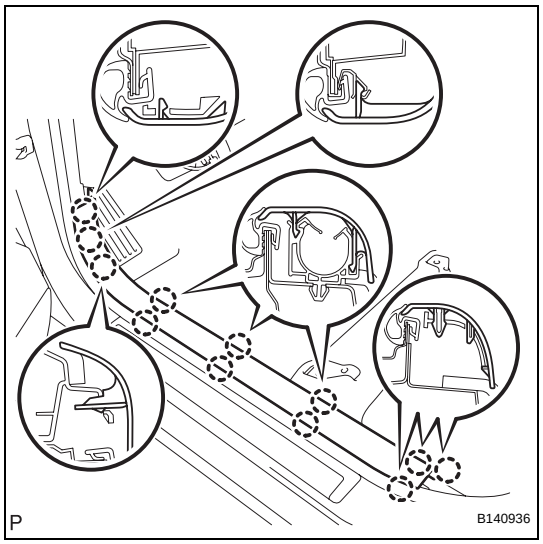

50. INSTALL FRONT DOOR SCUFF PLATE LH

(a) Engage the 12 claws, and install the front door scuff plate LH.

51. INSTALL ROOF SIDE INNER GARNISH ASSEMBLY RH

HINT:
Use the same procedure for the RH side and the LH side.

52. INSTALL REAR SEAT SIDE GARNISH RH (w/o Rear Seat Side Airbag)

HINT:
Use the same procedure for the RH side and the LH side.

53. INSTALL REAR SEAT SIDE AIRBAG ASSEMBLY RH (w/ Rear Seat Side Airbag)

HINT:
Use the same procedure for the RH side and the LH side.

54. INSTALL UPPER CENTER PILLAR GARNISH RH

HINT:
Use the same procedure for the RH side and the LH side.

55. INSTALL LOWER CENTER PILLAR GARNISH RH

HINT:
Use the same procedure for the RH side and the LH side.

56. INSTALL REAR DOOR SCUFF PLATE RH

HINT:
Use the same procedure for the RH side and the LH side.

57. INSTALL FRONT PILLAR GARNISH RH

HINT:
Use the same procedure for the RH side and the LH side.

58. INSTALL SIDE INSTRUMENT PANEL RH (See page IP-43)

59. INSTALL FRONT DOOR OPENING TRIM COVER RH

HINT:
Use the same procedure for the RH side and the LH side.

60. INSTALL FRONT DOOR SCUFF PLATE RH

HINT:
Use the same procedure for the RH side and the LH side.

61. INSTALL FRONT SEAT ASSEMBLY LH (See page SE-109)

62. INSTALL FRONT SEAT REAR OUTER TRACK BRACKET COVER LH (See page SE-110)

63. **INSTALL FRONT SEAT REAR INNER TRACK BRACKET COVER LH (See page SE-110)**
64. **INSTALL FRONT SEAT OUTER TRACK BRACKET COVER LH (See page SE-110)**
65. **INSTALL FRONT SEAT INNER TRACK BRACKET COVER LH (See page SE-110)**
66. **CONNECT FRONT SEAT OUTER BELT ASSEMBLY LH (See page SB-25)**
67. **INSTALL SEAT BELT ANCHOR COVER CAP LH (See page SB-25)**
68. **INSTALL FRONT SEAT HEADREST ASSEMBLY (for Driver Seat)**
69. **INSTALL FRONT SEAT ASSEMBLY RH (See page RS-497)**
70. **INSTALL FRONT SEAT REAR OUTER TRACK BRACKET COVER RH (See page RS-498)**
71. **INSTALL FRONT SEAT REAR INNER TRACK BRACKET COVER RH (See page RS-498)**
72. **INSTALL FRONT SEAT OUTER TRACK BRACKET COVER RH (See page RS-498)**
73. **INSTALL FRONT SEAT INNER TRACK BRACKET COVER RH (See page RS-498)**
74. **CONNECT FRONT SEAT OUTER BELT ASSEMBLY RH (See page RS-499)**
75. **INSTALL SEAT BELT ANCHOR COVER CAP RH (See page RS-499)**
76. **INSTALL FRONT SEAT HEADREST ASSEMBLY (for Front Passenger Seat)**
77. **INSTALL REAR SEATBACK ASSEMBLY (See page SE-121)**
78. **INSTALL REAR CENTER SEAT HEADREST ASSEMBLY**
79. **INSTALL REAR SEAT HEADREST ASSEMBLY**
80. **INSTALL REAR SEAT CUSHION ASSEMBLY (See page SE-121)**
81. **PERFORM INITIALIZATION**
    NOTICE:
    Some systems need initialization after reconnecting the cable to the negative battery terminal (See page IN-33).
82. **INSPECT SHIFT LEVER POSITION (See page AX-200)**
83. **ADJUST SHIFT LEVER POSITION (See page AX-200)**
84. **INSPECT FRONT SEAT ASSEMBLY (See page SE-110)**

85. INSPECT SRS WARNING LIGHT
(See page RS-37)

HOW TO PROCEED WITH TROUBLESHOOTING

HINT:
- Use the following procedures to troubleshoot the sliding roof system.
- *: Use the intelligent tester.

1 VEHICLE BROUGHT TO WORKSHOP

NEXT

2 INSPECT BATTERY VOLTAGE

Standard voltage:
11 to 14 V

If the voltage is below 11 V, recharge or replace the battery before proceeding to the next step.

NEXT

3 INSPECT COMMUNICATION FUNCTION OF CAN COMMUNICATION SYSTEM*

(a) Using the intelligent tester, check if the CAN communication system is functioning normally.

Result

Result	Proceed to
DTC is not output	A
DTC is output	B

B → **Go to CAN COMMUNICATION SYSTEM**

A

4 PROBLEM SYMPTOMS TABLE

Result

Result	Proceed to
Fault is not listed in problem symptoms table	A
Fault is listed in problem symptoms table	B

B → **Go to step 6**

A

5 OVERALL ANALYSIS AND TROUBLESHOOTING*

1. Data List / Active Test (See page RF-10)
2. Terminals of ECU (See page RF-7)
3. On-vehicle Inspection (See page RF-12)

RF

NEXT

6	**ADJUST, REPAIR OR REPLACE**

NEXT

7	**CONFIRMATION TEST**

NEXT

END

CUSTOMIZE PARAMETERS

CUSTOMIZING FUNCTION WITH INTELLIGENT TESTER (REFERENCE)

HINT:
The following items can be customized.

NOTICE:

- **When the customer requests a change in a function, first make sure that the function can be customized.**
- **Be sure to make a note of the current settings before customizing.**
- **When troubleshooting a function, first make sure that the function is set to the default setting.**

Sliding roof ECU

Display (Item)	Default	Contents	Setting
OPEN/DOOR KEY (Door key related OPEN)	ON	Function to manually open sliding roof linked with power window if holding driver's side and passenger's side door key for 1.5 seconds or more to unlock position when engine switch is off	ON/OFF
CLOSE/DOOR KEY (Door key related CLOSE)	ON	Function to manually close sliding roof linked with power window if holding driver's side and passenger's side door key for 1.5 seconds or more to lock position when engine switch is off	ON/OFF
OPEN/WIRELESS (Wireless key related OPEN)	ON	Function to manually open sliding roof linked with power window if pressing transmitter UNLOCK switch for 2.4 seconds or more when engine switch is off	ON/OFF
DOOR HANDLE BTN (Door Handle Lock Button)	ON	Function to close the sliding roof manually linking the power window if holding the door handle button for 1.5 seconds or more to the lock side when the engine switch is off.	ON/OFF
DOOR KEY OPER (Door key related operation)	SLIDE	Function to select tilt up or slide open of manual sliding roof operation linked with power window Activated by holding driver's side door key for 1.5 seconds or more to unlock position when engine switch is off	TILT/SLIDE
WIRELESS OPER (Wireless key related operation)	SLIDE	Function to select tilt up or slide open of manual sliding roof operation linked with power window Activated by pressing on transmitter UNLOCK switch for 2.4 seconds or more when engine switch is off	TILT/SLIDE

INITIALIZATION

1. INITIALIZE SLIDING ROOF DRIVE GEAR SUB-ASSEMBLY

NOTICE:

If the sliding roof drive gear is replaced or if the battery is removed during sliding roof operation, the sliding roof drive gear will require initialization. If initialization is not performed, the following functions will not operate: auto operation and key off operation.

(a) Turn the engine switch on (IG).

(b) Make sure that the sliding roof is fully closed.

(c) Push and hold the CLOSE switch or the UP switch until the following movement finishes: Tilt up → approximately 1 second → tilt down → slide open → slide closed.

(d) Check that the sliding roof stops at the fully closed position.

(e) Finish the initialization.

(f) Check that the AUTO operation works normally.

NOTICE:

If the following conditions occur during initialization procedure, initialization will fail.

- **Engine switch is turned off.**
- **Sliding roof control switch is released while sliding roof is operating.**
- **Vehicle speed is 5 km/h (3 mph) or more.**
- **Communication is cut off.**
- **Another switch is turned on during initialization.**
- **The vehicle experiences a strong vibration during initialization, such as the slamming of a door.**

HINT:

- If the sliding roof cannot be fully closed or its position has become misaligned, perform initialization again.
- If the roof glass stops moving or starts moving in the opposite direction while the CLOSE or UP switch is held down, continue to hold the switch for another 10 seconds or more to return the sliding roof control ECU to an uninitialized condition. Then perform the initialization procedure again.
- If the AUTO operation function and jam protection function do not operate after the drive gear has been reset, replace the sliding roof drive gear (sliding roof ECU).

CUSTOMIZE PARAMETERS

CUSTOMIZING FUNCTION WITH INTELLIGENT TESTER (REFERENCE)

HINT:
The following items can be customized.

NOTICE:

- **When the customer requests a change in a function, first make sure that the function can be customized.**
- **Be sure to make a note of the current settings before customizing.**
- **When troubleshooting a function, first make sure that the function is set to the default setting.**

Sliding roof ECU

Display (Item)	Default	Contents	Setting
OPEN/DOOR KEY (Door key related OPEN)	ON	Function to manually open sliding roof linked with power window if holding driver's side and passenger's side door key for 1.5 seconds or more to unlock position when engine switch is off	ON/OFF
CLOSE/DOOR KEY (Door key related CLOSE)	ON	Function to manually close sliding roof linked with power window if holding driver's side and passenger's side door key for 1.5 seconds or more to lock position when engine switch is off	ON/OFF
OPEN/WIRELESS (Wireless key related OPEN)	ON	Function to manually open sliding roof linked with power window if pressing transmitter UNLOCK switch for 2.4 seconds or more when engine switch is off	ON/OFF
DOOR HANDLE BTN (Door Handle Lock Button)	ON	Function to close the sliding roof manually linking the power window if holding the door handle button for 1.5 seconds or more to the lock side when the engine switch is off.	ON/OFF
DOOR KEY OPER (Door key related operation)	SLIDE	Function to select tilt up or slide open of manual sliding roof operation linked with power window Activated by holding driver's side door key for 1.5 seconds or more to unlock position when engine switch is off	TILT/SLIDE
WIRELESS OPER (Wireless key related operation)	SLIDE	Function to select tilt up or slide open of manual sliding roof operation linked with power window Activated by pressing on transmitter UNLOCK switch for 2.4 seconds or more when engine switch is off	TILT/SLIDE

INITIALIZATION

1. INITIALIZE SLIDING ROOF DRIVE GEAR SUB-ASSEMBLY

NOTICE:

If the sliding roof drive gear is replaced or if the battery is removed during sliding roof operation, the sliding roof drive gear will require initialization. If initialization is not performed, the following functions will not operate: auto operation and key off operation.

(a) Turn the engine switch on (IG).

(b) Make sure that the sliding roof is fully closed.

(c) Push and hold the CLOSE switch or the UP switch until the following movement finishes: Tilt up → approximately 1 second → tilt down → slide open → slide closed.

(d) Check that the sliding roof stops at the fully closed position.

(e) Finish the initialization.

(f) Check that the AUTO operation works normally.

NOTICE:

If the following conditions occur during initialization procedure, initialization will fail.

- **Engine switch is turned off.**
- **Sliding roof control switch is released while sliding roof is operating.**
- **Vehicle speed is 5 km/h (3 mph) or more.**
- **Communication is cut off.**
- **Another switch is turned on during initialization.**
- **The vehicle experiences a strong vibration during initialization, such as the slamming of a door.**

HINT:

- If the sliding roof cannot be fully closed or its position has become misaligned, perform initialization again.
- If the roof glass stops moving or starts moving in the opposite direction while the CLOSE or UP switch is held down, continue to hold the switch for another 10 seconds or more to return the sliding roof control ECU to an uninitialized condition. Then perform the initialization procedure again.
- If the AUTO operation function and jam protection function do not operate after the drive gear has been reset, replace the sliding roof drive gear (sliding roof ECU).

PROBLEM SYMPTOMS TABLE

HINT:
Use the table below to help determine the cause of the problem symptom. The potential causes of the symptoms are listed in order of probability in the "Suspected Area" column in the table. Check each symptom by checking the suspected areas in the order they are listed. Replace parts as necessary.
Inspect the fuses and relays related to this system before inspecting the suspected areas below.

Sliding Roof System

Symptom	Suspected Area	See page
Sliding function and tilt function do not operate	Sliding roof ECU power source circuit	RF-29
Either sliding function or tilt function does not operate	Sliding roof control switch circuit	RF-27

TERMINALS OF ECU

1. CHECK SLIDING ROOF DRIVE GEAR SUB-ASSEMBLY (SLIDING ROOF CONTROL ECU)

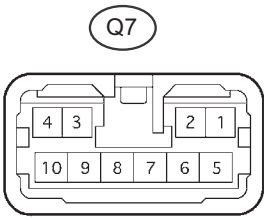

B050671E37

(a) Disconnect the Q7 ECU connector.
(b) Measure the resistance and voltage according to the value(s) in the table below.

Symbols (Terminal No.)	Wiring Color	Terminal Description	Condition	Specified Condition
B (Q7-1) - E (Q7-2)	R - W-B	+B power supply	Always	10 to 14 V
IG (Q7-5) - E (Q7-2)	B - W-B	Engine switch power supply	Engine switch off	Below 1 V
IG (Q7-5) - E (Q7-2)	B - W-B	Engine switch power supply	Engine switch on (IG)	10 to 14 V
OPN (Q7-7) - E (Q7-2)	R - W-B	Sliding roof motor open	OPEN switch OFF	10 kΩ or higher
OPN (Q7-7) - E (Q7-2)	R - W-B	Sliding roof motor open	OPEN switch ON	Below 1 Ω
CLS (Q7-9) - E (Q7-2)	B - W-B	Sliding roof motor closed	CLOSE switch OFF	10 kΩ or higher
CLS (Q7-9) - E (Q7-2)	B - W-B	Sliding roof motor closed	CLOSE switch ON	Below 1 Ω
UP (Q7-10) - E (Q7-2)	W - W-B	Sliding roof motor up	UP switch OFF	10 kΩ or higher
UP (Q7-10) - E (Q7-2)	W - W-B	Sliding roof motor up	UP switch ON	Below 1 Ω
DWN (Q7-8) - E (Q7-2)	LG - W-B	Sliding roof motor down	DOWN switch OFF	10 kΩ or higher
DWN (Q7-8) - E (Q7-2)	LG - W-B	Sliding roof motor down	DOWN switch ON	Below 1 Ω
E (Q7-2) - Body ground	W-B - Body ground	Ground	Always	Below 1 Ω

If the result is not as specified, there may be a malfunction on the wire harness side.

(c) Reconnect the Q7 ECU connector.
(d) Measure the voltage according to the value(s) in the table below.

Symbols (Terminal No.)	Wiring Color	Terminal Description	Condition	Specified Condition
OPN (Q7-7) - E (Q7-2)	R - W-B	Sliding roof motor open	Engine switch on (IG), sliding roof closed, OPEN switch OFF	Below 1 V
OPN (Q7-7) - E (Q7-2)	R - W-B	Sliding roof motor open	Engine switch on (IG), sliding roof closed, OPEN switch ON	10 to 14 V
CLS (Q7-9) - E (Q7-2)	B - W-B	Sliding roof motor closed	Engine switch on (IG), sliding roof open, CLOSE switch OFF	Below 1 V
CLS (Q7-9) - E (Q7-2)	B - W-B	Sliding roof motor closed	Engine switch on (IG), sliding roof open, CLOSE switch ON	10 to 14 V
UP (Q7-10) - E (Q7-2)	W - W-B	Sliding roof motor up	Engine switch on (IG), sliding roof tilted downward, UP switch OFF	Below 1 V

Symbols (Terminal No.)	Wiring Color	Terminal Description	Condition	Specified Condition
UP (Q7-10) - E (Q7-2)	W - W-B	Sliding roof motor up	Engine switch on (IG), sliding roof tilted downward, UP switch ON	10 to 14 V
DWN (Q7-8) - E (Q7-2)	LG - W-B	Sliding roof motor down	Engine switch on (IG), sliding roof tilted upward, DOWN switch OFF	Below 1 V
DWN (Q7-8) - E (Q7-2)	LG - W-B	Sliding roof motor down	Engine switch on (IG), sliding roof tilted upward, DOWN switch ON	10 to 14 V

If the result is not as specified, the ECU may have a malfunction.

DIAGNOSIS SYSTEM

1. DESCRIPTION

(a) Sliding roof system data and Diagnostic Trouble Codes (DTCs) can be read through the vehicle's Data Link Connector 3 (DLC3). When the system seems to be malfunctioning, use the intelligent tester to check for malfunctions and perform repairs.

2. CHECK DLC3

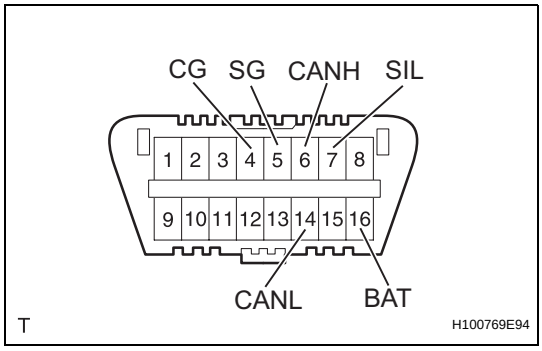

HINT:
The ECU uses ISO 15765-4 for communication. The terminal arrangement of the DLC3 complies with SAE J1962 and matches the ISO 15765-4 format. If the result is not as specified, the DLC3 may have a malfunction. Repair or replace the harness and connector.

Symbols (Terminals No.)	Terminal Description	Condition	Specified Condition
SIL (7) - SG (5)	Bus "+" line	During transmission	Pulse generation
CG (4) - Body ground	Chassis ground	Always	Below 1 Ω
SG (5) - Body ground	Signal ground	Always	Below 1 Ω
BAT (16) - Body ground	Battery positive	Always	11 to 14 V
CANH (6) - CANL (14)	CAN bus line	Engine switch off*	54 to 69 Ω
CANH (6) - CG (4)	CAN bus line	Engine switch off*	200 Ω or higher
CANL (14) - CG (4)	CAN bus line	Engine switch off*	200 Ω or higher
CANH (6) - BAT (16)	CAN bus line	Engine switch off*	6 kΩ or higher
CANL (14) - BAT (16)	CAN bus line	Engine switch off*	6 kΩ or higer

NOTICE:
***: Before measuring the resistance, leave the vehicle as is for at least 1 minute and do not operate the engine switch, any other switches or the doors.**
If the result is not as specified, the DLC3 may have a malfunction. Repair or replace the harness and connector.
HINT:
Connect the cable of the intelligent tester to the DLC3, turn the engine switch on (IG) and attempt to use the tester. If the display indicates that a communication error has occurred, there is a problem either with the vehicle or with the tester.

- If communication is normal when the tester is connected to another vehicle, inspect the DLC3 of the original vehicle.
- If communication is still not possible when the tester is connected to another vehicle, the problem may be in the tester itself. Consult the Service Department listed in the tester's instruction manual.

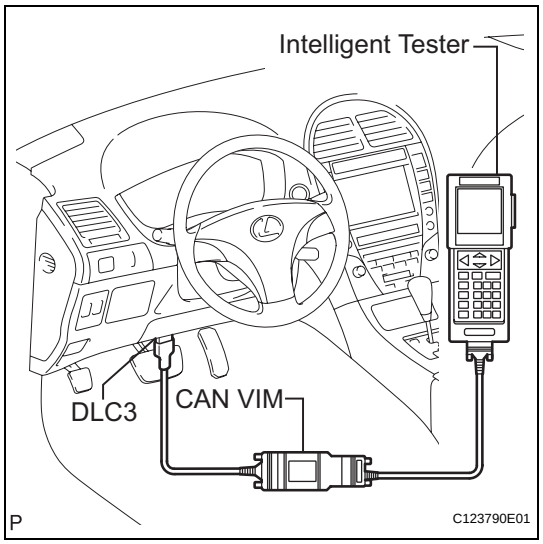

3. INSPECT BATTERY VOLTAGE

Standard voltage:

11 to 14 V

If the voltage is below 11 V, recharge or replace the battery before proceeding to the next step.

DATA LIST / ACTIVE TEST

1. READ DATA LIST

HINT:
Using the intelligent tester's Data List allows switch, sensor, actuator and other item values to be read without removing any parts. Reading the Data List early in troubleshooting is one way to save time.

(a) Connect the intelligent tester to the DLC3.
(b) Turn the engine switch on (IG).
(c) Read the Data List according to the display on the tester.

SLIDE ROOF:

Tester Display	Measurement Item/Range	Normal Condition	Diagnostic Note
OPEN SW	Slide switch open signal/ON or OFF	ON: OPEN switch is pressed. OFF: OPEN switch is not pressed.	-
CLOSE SW	Slide switch close signal/ON or OFF	ON: CLOSE switch is pressed. OFF: CLOSE switch is not pressed.	-
UP SW	Tilt switch up signal/ON or OFF	ON: UP switch is pressed. OFF: UP switch is not pressed.	-
DOWN SW	Tilt switch down signal/ON or OFF	ON: DOWN switch is pressed. OFF: DOWN switch is not pressed.	-
HALL IC1 STATUS	Sliding roof operation signal/ NORMAL or LOCK	NORMAL: Sliding roof motor is operating. LOCK: Sliding roof motor is not operating.	-
HALL IC1 PULSE	Sliding roof operation signal/LO or HI	LO: Sliding roof motor is not operating. HI: Sliding roof motor is operating.	-
HALL IC2 STATUS	Sliding roof operation signal/ NORMAL or LOCK	NORMAL: Sliding roof motor is operating. LOCK: Sliding roof motor is not operating.	-
HALL IC2 PULSE	Sliding roof operation signal/LO or HI	LO: Sliding roof motor is not operating. HI: Sliding roof motor is operating.	-
D-DOOR WARN SW	Driver's door courtesy light switch signal/ON or OFF	ON: Driver's door is open. OFF: Driver's door is closed.	-
IG (MPX)	Engine switch signal (MPX signal)/ON or OFF	ON: Engine switch on (IG) OFF: Engine switch off	-
IG (DIRCT SIG)	Engine switch signal/ON or OFF	ON: Engine switch on (IG) OFF: Engine switch off	-
KEY OFF PERMS	Key-OFF sliding roof operation permit signal/ON or OFF	ON: Driver's side door is not closed within 45 sec. after engine switch is turned off. OFF: Any status except "ON" status	-
WIRELESS OPER (*1)	Wireless sliding roof operating direction signal/Tilt or Slide	TILT: Slide close direction → Tilt up direction SLIDE: Slide open direction → Tilt down direction	-
DOOR KEY OPER (*1)	Key-linked sliding roof operating direction signal/Tilt or Slide	TILT: Slide close direction → Tilt up direction SLIDE: Slide open direction → Tilt down direction	-

Tester Display	Measurement Item/Range	Normal Condition	Diagnostic Note
DOOR HANDLE BTN (*1)	Door handle button close signal/ Available or Not Available	Available: Door handle button close. Not Available: Any status except "Available" status.	-
OPEN /WIRELESS (*1)	Wireless sliding roof open permit signal/Available or Not Available	Available: No key is in vehicle and all doors are closed. Not Available: Any status except "Available" status.	-
CLOSE /DOOR KEY (*1)	Key-linked sliding roof close permit signal/Available or Not Available	Available: Driver's side door is not closed within 45 sec. after engine switch is turned off. Not Available: Any status except "Available" status.	-
OPEN /DOOR KEY (*1)	Key-linked sliding roof open permit signal/Available or Not Available	Available: Driver's side door is not closed within 45 sec. after engine switch is turned off. Not Available: Any status except "Available" status.	-
CURRENT DOWN SW	Down switch failure signal (Current)/Fail or Not Fail	Fail: Sliding roof tilt down signal failure (Current) Not Fail: Sliding roof tilt down signal not fail (Current)	-
CURRENT UP SW	Up switch failure signal (Current)/ Fail or Not Fail	Fail: Sliding roof tilt up signal failure (Current) Not Fail: Sliding roof tilt up signal not fail (Current)	-
CURRENT CLS SW	Close switch failure signal (Current)/Fail or Not Fail	Fail: Sliding roof close signal failure (Current) Not Fail: Sliding roof close signal not fail (Current)	-
CURRENT OPN SW	Open switch failure signal (Current)/Fail or Not Fail	Fail: Sliding roof open signal failure (Current) Not Fail: Sliding roof open signal not fail (Current)	-
PAST DOWN SW	Down switch failure signal (Past)/ Fail or Not Fail	Fail: Sliding roof tilt down signal failure (Past) Not Fail: Sliding roof tilt down signal not fail (Past)	-
PAST UP SW	Up switch failure signal (Past)/ Fail or Not Fail	Fail: Sliding roof tilt up signal failure (Past) Not Fail: Sliding roof tilt up signal not fail (Past)	-
PAST CLS SW	Close switch failure signal (Past)/ Fail or Not Fail	Fail: Sliding roof close signal failure (Past) Not Fail: Sliding roof close signal not fail (Past)	-
PAST OPN SW	Open switch failure signal (Past)/ Fail or Not Fail	Fail: Sliding roof open signal failure (Past) Not Fail: Sliding roof open signal not fail (Past)	-
#CODE	Number of trouble code	Number of trouble code	-

HINT:
*1: Except multi-panel moon roof

2. PERFORM ACTIVE TEST

HINT:
Performing the intelligent tester's Active Test allows relay, VSV, actuator and other items to be operated without removing any parts. Performing the Active Test early in troubleshooting is one way to save time. The Data List can be displayed during the Active Test.

(a) Connect the intelligent tester to the DLC3.
(b) Turn the engine switch on (IG).
(c) Perform the Active Test according to the display on the tester.

SLIDE ROOF:

Tester Display	Test Part	Control Range	Diagnostic Note
SLIDE ROOF	Operate sliding roof SLIDE CLOSE/TILT UP	CLOS/UP: Sliding roof SLIDE CLOSE or TILT UP operation occurs OFF: Sliding roof is not operating	-
SLIDE ROOF	Operate sliding roof SLIDE OPEN/TILT DOWN	OPN/DWN: Sliding roof SLIDE OPEN or TILT DOWN operation occurs OFF: Sliding roof is not operating	-

DIAGNOSTIC TROUBLE CODE CHART

If any trouble code is displayed during DTC check, check the circuit corresponding to the code in the table below. Proceed to the page given for the circuit.

Sliding Roof System

DTC Code	Detection Item	Trouble Area	See page
B2341	Sensor (Motor) Failure	1. Sliding roof drive gear sub-assembly (Sliding roof control ECU) 2. Roof console box assembly (Sliding roof control switch) 3. Wire harness	RF-15
B2342	Switch Failure	1. Sliding roof drive gear sub-assembly (Sliding roof control ECU) 2. Roof console box assembly (Sliding roof control switch) 3. Wire harness	RF-20
B2343	Position Initialization Incomplete	1. Sliding roof drive gear sub-assembly (Sliding roof control ECU) 2. Roof console box assembly (Sliding roof control switch) 3. Wire harness	RF-24
B2344	Position Failure	1. Sliding roof drive gear sub-assembly (Sliding roof control ECU) 2. Roof console box assembly (Sliding roof control switch) 3. Wire harness	RF-15

ON-VEHICLE INSPECTION

1. CHECK AUTO OPERATION

(a) Turn the engine switch on (IG).

(b) When the roof glass is fully closed, press the OPEN switch for 0.3 seconds or more. Check that the roof glass automatically slides until it is fully opened.

(c) When the roof glass is fully open, press the CLOSE switch for 0.3 seconds or more. Check that the roof glass automatically slides until it is fully closed.

(d) When the roof glass is fully closed, press the UP switch for 0.3 seconds or more. Check that the roof glass automatically tilts until it is fully tilted upward.

(e) When the roof glass is fully open, press the DOWN switch for 0.3 seconds or more. Check that the roof glass automatically tilts until it is fully tilted downward.

(f) When the auto operation is operating, check that pressing any personal light switch stops the roof glass operation.
HINT:
When pressing the switch for 0.3 seconds or less, the roof glass moves but auto operation does not operate.

2. CHECK SLIDING ROOF OPERATION AFTER ENGINE SWITCH IS TURNED OFF

(a) Turn the engine switch from on (IG) to off, and check that the sliding roof operates. Then open and close the driver's side door once, and check that the sliding roof does not operate.

(b) Turn the engine switch from on (IG) to off and wait for approximately 43 seconds. Check that the sliding roof does not operate.

(c) Operate the auto (SLIDE OPEN/CLOSE or TILT UP/DOWN) operation. While the roof glass is in motion, turn the engine switch from on (IG) to off. Check that the auto operation continues until the roof glass opens or closes fully.

3. CHECK JAM PROTECTION FUNCTION

CAUTION:

- **Do not use a part of your body, for example, your hand, to check the jam protection.**
- **Do not allow anything to become caught in the sliding roof by accident in this procedure.**
- **Perform the inspection from the inside of the vehicle.**

NOTICE:

- **Do not use hard objects such as a hammer, to avoid damage to the roof.**
- **If the jam protection does not operate, reset the sliding roof drive gear (motor).**

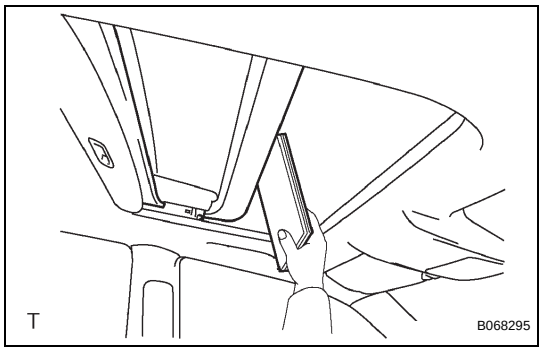

(a) When the sliding roof auto operation is operating and an object is caught between the vehicle body and glass, check that the roof glass opens 218 mm (8.58 in.) from the point of contact with the object, or opens fully if there is not an opening distance of 218 mm (8.58 in.).

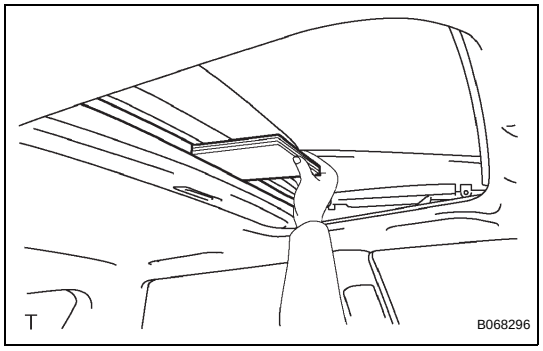

(b) When the TILT UP/DOWN function is operating, and an object is caught between the vehicle body and the roof glass, check that the sliding roof tilts up fully.

DTC	B2341	Sensor (Motor) Failure

DTC	B2344	Position Failure

DESCRIPTION

When the sliding roof drive gear sub-assembly (sliding roof control ECU) detects malfunctions in the motor, and the sliding roof operation is stopped, DTC B2341 is output. When the sliding roof drive gear sub-assembly (sliding roof control ECU) detects malfunctions in the gear, and the sliding roof operation is stopped, DTC B2344 is output.

DTC No.	DTC Detection Condition	Trouble Area
B2341	Sensor (motor) Failure	• Sliding roof drive gear sub-assembly (sliding roof control ECU) • Roof console box assembly (sliding roof control switch) • Wire harness
B2344	Position Failure	• Sliding roof drive gear sub-assembly (sliding roof control ECU) • Roof console box assembly (sliding roof control switch) • Wire harness

WIRING DIAGRAM

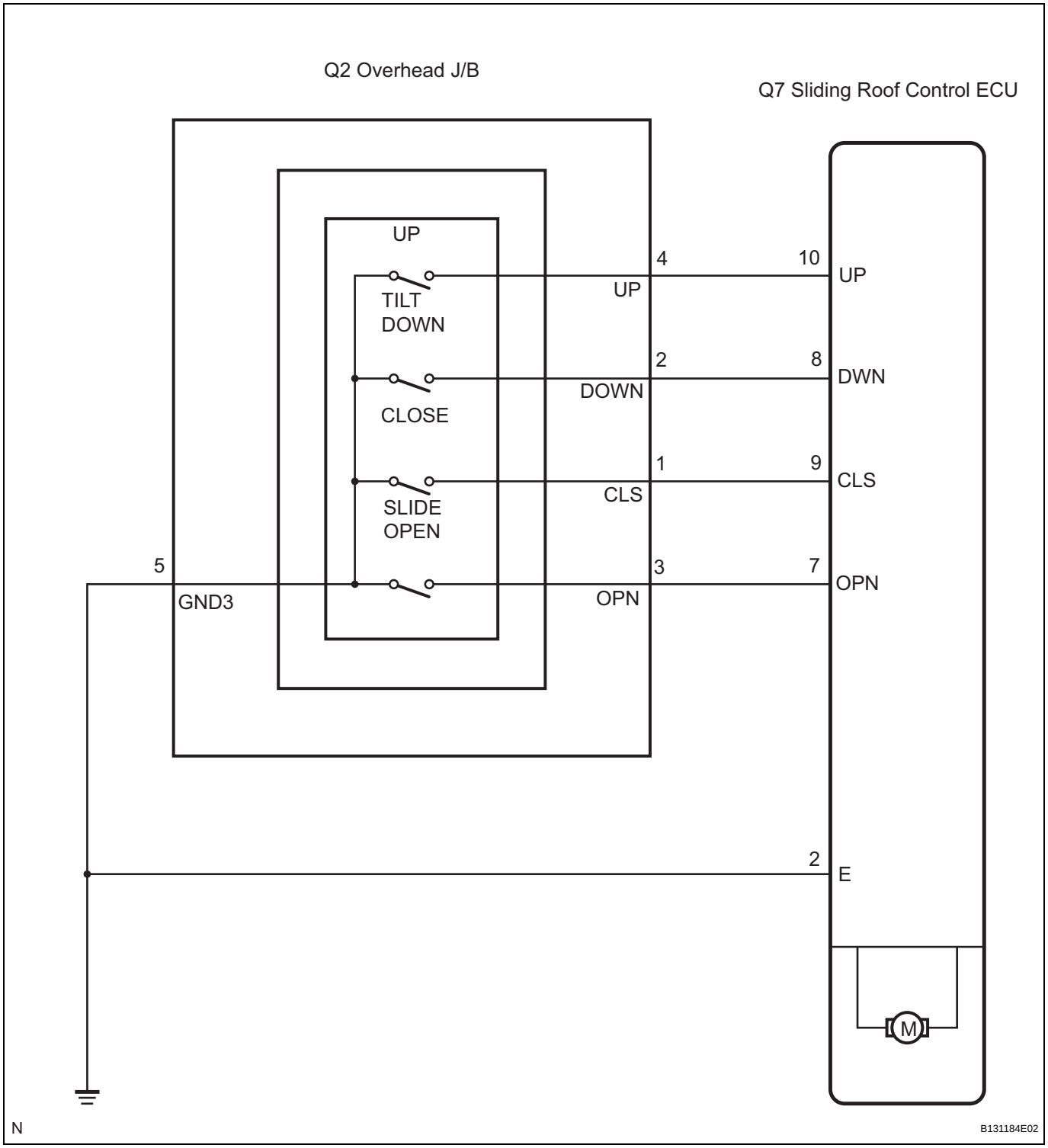

INSPECTION PROCEDURE

1	**CHECK SLIDING ROOF FUNCTION**

(a) Check the auto operation with the OPEN, DOWN, CLOSE and UP switches (See page RF-12).

RF

OK:
Auto operation operates normally with OPEN, DOWN, CLOSE and UP switches.

NG → **Go to step 3**

OK

2	DELETE DTC

(a) Delete the DTCs (See page RF-9).

NEXT

END

3	INITIALIZE SLIDING ROOF DRIVE GEAR SUB-ASSEMBLY (SLIDING ROOF CONTROL ECU)

(a) Check that the sliding roof drive gear sub-assembly can be initialized (See page RF-6).
OK:
Sliding roof drive gear sub-assembly can be initialized.

NG → **Go to step 6**

OK

4	CHECK SLIDING ROOF FUNCTION

(a) Check the auto operation with the OPEN, DOWN, CLOSE and UP switches (See page RF-12).
OK:
Auto operation operates normally with OPEN, DOWN, CLOSE and UP switches.

NG → **REPLACE SLIDING ROOF DRIVE GEAR SUB-ASSEMBLY (SLIDING ROOF CONTROL ECU)**

OK

RF

5	DELETE DTC

(a) Delete the DTCs (See page RF-9).

NEXT

END

6	**CHECK WIRE HARNESS (SLIDING ROOF CONTROL ECU - ROOF CONSOLE BOX ASSEMBLY)**

Sliding Roof Control ECU Connector:

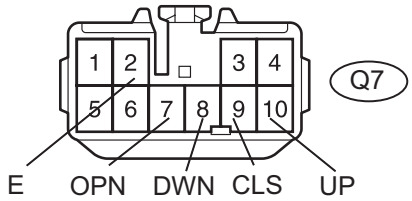

Roof Console Box Assembly Connector:

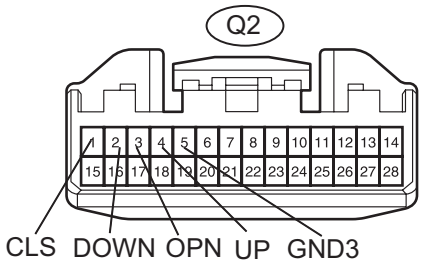

N B131186E02

(a) Disconnect the Q7 and Q2 connectors.
(b) Measure the resistance according to the value(s) in the table below.

Standard resistance

Tester Connection	Condition	Specified Condition
Q7-2 (E) - Q2-5 (GND3)	Always	Below 1 Ω
Q7-7 (OPN) - Q2-3 (OPN)	Always	Below 1 Ω
Q7-8 (DWN) - Q2-2 (DOWN)	Always	Below 1 Ω
Q7-9 (CLS) - Q2-1 (CLS)	Always	Below 1 Ω
Q7-10 (UP) - Q2-4 (UP)	Always	Below 1 Ω
Q2-1 (CLS) - Body ground	Always	10 kΩ or higher
Q2-2 (DOWN) - Body ground	Always	10 kΩ or higher
Q2-3 (OPN) - Body ground	Always	10 kΩ or higher
Q2-4 (UP) - Body ground	Always	10 kΩ or higher
Q2-5 (GND3) - Body ground	Always	Below 1 Ω

NG → **REPAIR OR REPLACE HARNESS OR CONNECTOR**

OK

7 INSPECT ROOF CONSOLE BOX ASSEMBLY (SLIDING ROOF CONTROL SWITCH)

Roof Console Box Assembly Connector:

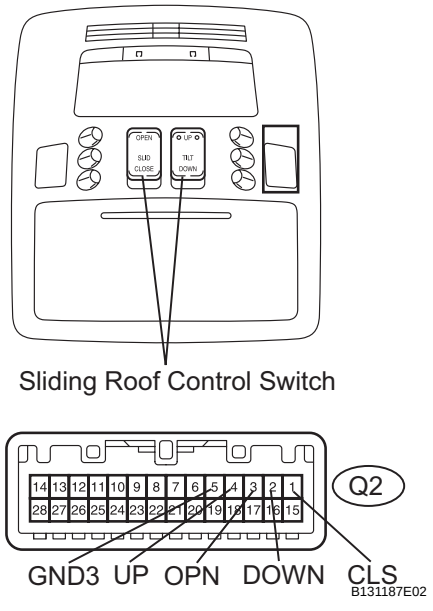

(a) Remove the roof console box assembly.

(b) Measure the resistance according to the value(s) in the table below.

Standard resistance

Tester Connection	Switch Position	Specified Condition
Q2-1 (CLS) - Q2-5 (GND3)	CLOSE	Below 100 Ω
Q2-2 (DOWN) - Q2-5 (GND3)	DOWN	Below 100 Ω
Q2-3 (OPN) - Q2-5 (GND3)	OPEN	Below 100 Ω
Q2-4 (UP) - Q2-5 (GND3)	UP	Below 100 Ω
Q2-1 (CLS) - Q2-5 (GND3)	OPEN	1 kΩ or higher
Q2-2 (DOWN) - Q2-5 (GND3)	CLOSE	1 kΩ or higher
Q2-3 (OPN) - Q2-5 (GND3)	UP	1 kΩ or higher
Q2-4 (UP) - Q2-5 (GND3)	DOWN	1 kΩ or higher

NG → **REPLACE ROOF CONSOLE BOX ASSEMBLY (SLIDING ROOF CONTROL SWITCH)**

OK

REPLACE SLIDING ROOF DRIVE GEAR SUB-ASSEMBLY (SLIDING ROOF CONTROL ECU)

DTC	B2342	Switch Failure

DESCRIPTION

This DTC is output when the sliding roof drive gear sub-assembly (sliding roof control ECU) detects that the OPEN, CLOSE, UP or DOWN switch in the roof console box assembly (sliding roof control switch) is stuck for 30 seconds or more.

DTC No.	DTC Detection Condition	Trouble Area
B2342	Sliding roof drive gear sub-assembly (sliding roof control ECU) detects OPEN, CLOSE, UP or DOWN switch in overhead junction block is stuck for 30 seconds or more	• Sliding roof drive gear sub-assembly (sliding roof control ECU) • Roof console box assembly (sliding roof control switch) • Wire harness

WIRING DIAGRAM

Refer to DTC B2341 (See page RF-16).

INSPECTION PROCEDURE

1 READ VALUE OF INTELLIGENT TESTER (SLIDE OPEN AND TILT UP SWITCH)

(a) Use the DATA LIST to check if the sliding roof switch is functioning properly.

Sliding roof ECU

Item	Measurement Item/Range (Display)	Normal Condition	Diagnostic Note
OPEN SW	**Slide switch open signal/ON or OFF**	**ON: OPEN switch is pressed. OFF: OPEN switch is not pressed.**	**-**
CLOSE SW	**Slide switch close signal/ON or OFF**	**ON: CLOSE switch is pressed. OFF: CLOSE switch is not pressed.**	**-**
UP SW	**Tilt switch up signal/ON or OFF**	**ON: UP switch is pressed. OFF: UP switch is not pressed.**	**-**
DOWN SW	**Tilt switch down signal/ON or OFF**	**ON: DOWN switch is pressed. OFF: DOWN switch is not pressed.**	**-**

OK:

The intelligent tester displays as shown in the table according to the operation of each switch.

NG → **Go to step 4**

OK

2 CHECK SLIDING ROOF FUNCTION

(a) Check the auto operation with the OPEN, CLOSE, UP and DOWN switches (See page RF-12).

OK:

Auto operation operates normally with OPEN, CLOSE, UP and DOWN switches.

NG → **Go to step 7**

RF

OK

3	DELETE DTC

(a) Delete the DTCs (See page RF-9).

NEXT

END

4	INSPECT ROOF CONSOLE BOX ASSEMBLY (SLIDING ROOF CONTROL SWITCH)

Roof Console Box Assembly Connector:

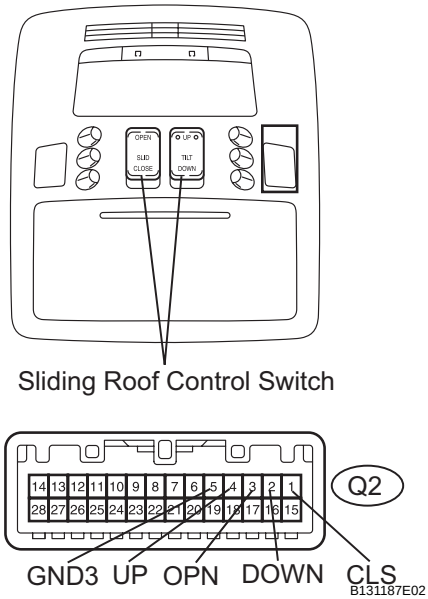

(a) Remove the roof console box assembly.
(b) Measure the resistance according to the value(s) in the table below.

Standard resistance

Tester Connection	Switch Position	Specified Condition
Q2-1 (CLS) - Q2-5 (GND3)	CLOSE	Below 100 Ω
Q2-2 (DOWN) - Q2-5 (GND3)	DOWN	Below 100 Ω
Q2-3 (OPN) - Q2-5 (GND3)	OPEN	Below 100 Ω
Q2-4 (UP) - Q2-5 (GND3)	UP	Below 100 Ω
Q2-1 (CLS) - Q2-5 (GND3)	OPEN	1 kΩ or higher
Q2-2 (DOWN) - Q2-5 (GND3)	CLOSE	1 kΩ or higher
Q2-3 (OPN) - Q2-5 (GND3)	UP	1 kΩ or higher
Q2-4 (UP) - Q2-5 (GND3)	DOWN	1 kΩ or higher

OK → **Go to step 10**

NG

5	REPLACE ROOF CONSOLE BOX ASSEMBLY (SLIDING ROOF CONTROL SWITCH)

(a) Temporarily replace the roof console box assembly (sliding roof control switch) with a new one or normally functioning one (See page LI-160).

RF

NEXT

6	DELETE DTC

(a) Delete the DTCs (See page RF-9).

NEXT

END

7	**INITIALIZE SLIDING ROOF DRIVE GEAR SUB-ASSEMBLY (SLIDING ROOF CONTROL ECU)**

(a) Check that the sliding roof drive gear sub-assembly can be initialized (See page RF-6).
OK:
Sliding roof drive gear sub-assembly can be initialized.

NG → **Go to step 10**

OK

8	**CHECK SLIDING ROOF FUNCTION**

(a) Check the auto operation with the OPEN, CLOSE, UP and DOWN switches (See page RF-12).
OK:
Auto operation operates normally with OPEN, CLOSE, UP and DOWN switches.

NG → **REPLACE SLIDING ROOF DRIVE GEAR SUB-ASSEMBLY (SLIDING ROOF CONTROL ECU)**

OK

9	**DELETE DTC**

(a) Delete the DTCs (See page RF-9).

NEXT

END

10	CHECK WIRE HARNESS (SLIDING ROOF CONTROL ECU - ROOF CONSOLE BOX ASSEMBLY)

Sliding Roof Control ECU Connector:

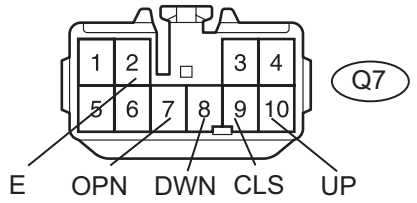

Roof Console Box Assembly Connector:

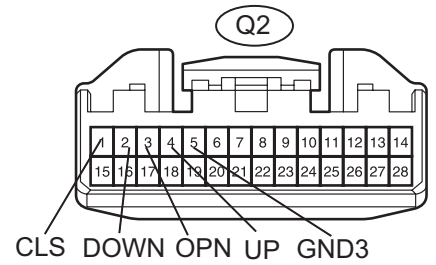

N B131186E02

(a) Disconnect the Q7 and Q2 connectors.
(b) Measure the resistance according to the value(s) in the table below.

Standard resistance

Tester Connection	Condition	Specified Condition
Q7-2 (E) - Q2-5 (GND3)	Always	Below 1 Ω
Q7-7 (OPN) - Q2-3 (OPN)	Always	Below 1 Ω
Q7-8 (DWN) - Q2-2 (DOWN)	Always	Below 1 Ω
Q7-9 (CLS) - Q2-1 (CLS)	Always	Below 1 Ω
Q7-10 (UP) - Q2-4 (UP)	Always	Below 1 Ω
Q2-1 (CLS) - Body ground	Always	10 kΩ or higher
Q2-2 (DOWN) - Body ground	Always	10 kΩ or higher
Q2-3 (OPN) - Body ground	Always	10 kΩ or higher
Q2-4 (UP) - Body ground	Always	10 kΩ or higher
Q2-5 (GND3) - Body ground	Always	Below 1 Ω

NG → **REPAIR OR REPLACE HARNESS OR CONNECTOR**

OK

REPLACE SLIDING ROOF DRIVE GEAR SUB-ASSEMBLY (SLIDING ROOF CONTROL ECU)

DTC	B2343	Position Initialization Incomplete

DESCRIPTION

This DTC is output when the sliding roof drive gear sub-assembly (sliding roof control ECU) has not been initialized.

DTC No.	DTC Detection Condition	Trouble Area
B2343	Sliding roof drive gear sub-assembly (sliding roof control ECU) has not been initialized	• Sliding roof drive gear sub-assembly (sliding roof control ECU) • Roof console box assembly (sliding roof control switch) • Wire harness

WIRING DIAGRAM

Refer to DTC B2341 (See page RF-16).

INSPECTION PROCEDURE

1 INITIALIZE SLIDING ROOF DRIVE GEAR SUB-ASSEMBLY (SLIDING ROOF CONTROL ECU)

(a) Check that the sliding roof drive gear sub-assembly can be initialized (See page RF-6).

OK:

Sliding roof drive gear sub-assembly can be initialized.

NG → **Go to step 3**

OK

2 CHECK SLIDING ROOF FUNCTION

(a) Check the auto operation with the OPEN, CLOSE, UP and DOWN switches (See page RF-12).

OK:

Auto operation operates normally with OPEN, CLOSE, UP and DOWN switches.

NG → **REPLACE SLIDING ROOF DRIVE GEAR SUB-ASSEMBLY (SLIDING ROOF CONTROL ECU)**

OK

END

3 CHECK WIRE HARNESS (SLIDING ROOF DRIVE GEAR - OVERHEAD JUNCTION BLOCK)

Sliding Roof Control ECU Connector:

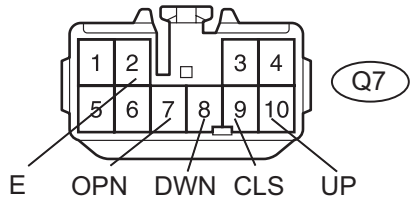

Roof Console Box Assembly Connector:

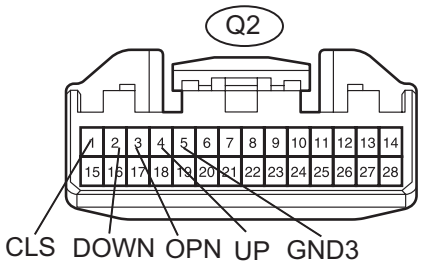

N B131186E02

(a) Disconnect the Q7 and Q2 connectors.

(b) Measure the resistance according to the value(s) in the table below.

Standard resistance

Tester Connection	Condition	Specified Condition
Q7-2 (E) - Q2-5 (GND3)	Always	Below 1 Ω
Q7-7 (OPN) - Q2-3 (OPN)	Always	Below 1 Ω
Q7-8 (DWN) - Q2-2 (DOWN)	Always	Below 1 Ω
Q7-9 (CLS) - Q2-1 (CLS)	Always	Below 1 Ω
Q7-10 (UP) - Q2-4 (UP)	Always	Below 1 Ω
Q2-1 (CLS) - Body ground	Always	10 kΩ or higher
Q2-2 (DOWN) - Body ground	Always	10 kΩ or higher
Q2-3 (OPN) - Body ground	Always	10 kΩ or higher
Q2-4 (UP) - Body ground	Always	10 kΩ or higher
Q2-5 (GND3) - Body ground	Always	Below 1 Ω

NG → **REPAIR OR REPLACE HARNESS OR CONNECTOR**

OK

4 INSPECT ROOF CONSOLE BOX ASSEMBLY (SLIDING ROOF CONTROL SWITCH)

Roof Console Box Assembly Connector:

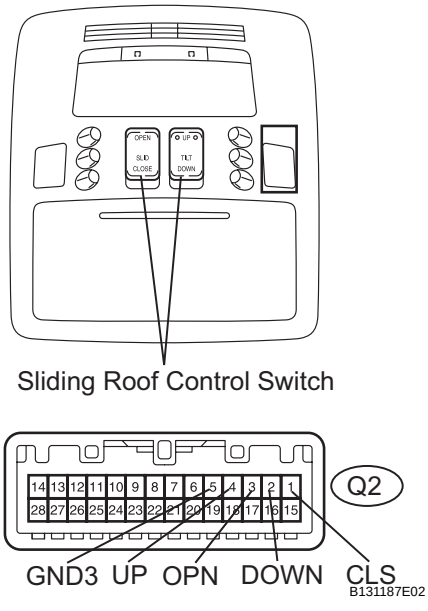

(a) Remove the roof console box assembly.

(b) Measure the resistance according to the value(s) in the table below.

Standard resistance

Tester Connection	Switch Position	Specified Condition
Q2-1 (CLS) - Q2-5 (GND3)	CLOSE	Below 100 Ω
Q2-2 (DOWN) - Q2-5 (GND3)	DOWN	Below 100 Ω
Q2-3 (OPN) - Q2-5 (GND3)	OPEN	Below 100 Ω
Q2-4 (UP) - Q2-5 (GND3)	UP	Below 100 Ω
Q2-1 (CLS) - Q2-5 (GND3)	OPEN	1 kΩ or higher
Q2-2 (DOWN) - Q2-5 (GND3)	CLOSE	1 kΩ or higher
Q2-3 (OPN) - Q2-5 (GND3)	UP	1 kΩ or higher
Q2-4 (UP) - Q2-5 (GND3)	DOWN	1 kΩ or higher

NG → **REPLACE ROOF CONSOLE BOX ASSEMBLY (SLIDING ROOF CONTROL SWITCH)**

OK

REPLACE SLIDING ROOF DRIVE GEAR SUB-ASSEMBLY (SLIDING ROOF CONTROL ECU)

Sliding Roof Control Switch Circuit

DESCRIPTION

The sliding roof drive gear sub-assembly (sliding roof control ECU) receives slide switch and tilt switch signals and drives its built-in motor.

WIRING DIAGRAM

Refer to DTC B2341 (See page RF-16).

INSPECTION PROCEDURE

1	PERFORM ACTIVE TEST BY INTELLIGENT TESTER (SLIDING ROOF OPERATION)

(a) Select the ACTIVE TEST, use the intelligent tester to generate a control command, and then check that the sliding roof slides open/close and tilts up/down.

SLIDE ROOF

Tester Display	Test Part	Control Range	Diagnostic Note
SLIDE ROOF	Operate sliding roof SLIDE CLOSE/TILT UP	CLOS/UP: Sliding roof SLIDE CLOSE or TILT UP operation occurs OFF: Sliding roof is not operating	-
SLIDE ROOF	Operate sliding roof SLIDE OPEN/TILT DOWN	OPN/DWN: Sliding roof SLIDE OPEN or TILT DOWN operation occurs OFF: Sliding roof is not operating	-

OK:
Sliding roof operates normally.

NG → **REPLACE SLIDING ROOF DRIVE GEAR SUB-ASSEMBLY (SLIDING ROOF CONTROL ECU)**

OK

2	READ VALUE OF INTELLIGENT TESTER (SLIDING ROOF SWITCH)

(a) Use the DATA LIST to check if the sliding roof switch is functioning properly.

SLIDE ROOF

Tester Display	Measurement Item/Range	Normal Condition	Diagnostic Note
OPEN SW	Slide switch open signal/ON or OFF	ON: OPEN switch is pressed. OFF: OPEN switch is not pressed.	-
CLOSE SW	Slide switch close signal/ON or OFF	ON: CLOSE switch is pressed. OFF: CLOSE switch is not pressed.	-
UP SW	Tilt switch up signal/ON or OFF	ON: UP switch is pressed. OFF: UP switch is not pressed.	-
DOWN SW	Tilt switch down signal/ON or OFF	ON: DOWN switch is pressed. OFF: DOWN switch is not pressed.	-

OK:
The intelligent tester displays as shown in the table according to the operation of each switch.

OK → **REPLACE SLIDING ROOF DRIVE GEAR SUB-ASSEMBLY (SLIDING ROOF CONTROL ECU)**

NG

3 CHECK WIRE HARNESS (SLIDING ROOF CONTROL ECU - ROOF CONSOLE BOX ASSEMBLY)

Sliding Roof Control ECU Connector:

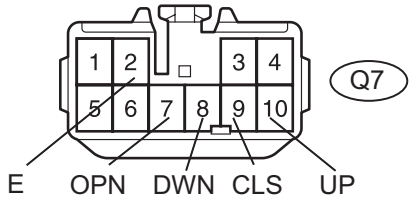

Roof Console Box Assembly Connector:

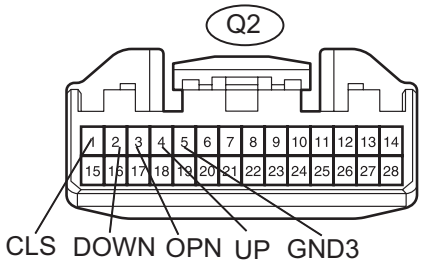

N B131186E02

(a) Disconnect the Q7 and Q2 connectors.
(b) Measure the resistance according to the value(s) in the table below.

Standard resistance

Tester Connection	Condition	Specified Condition
Q7-2 (E) - Q2-5 (GND3)	Always	Below 1 Ω
Q7-7 (OPN) - Q2-3 (OPN)	Always	Below 1 Ω
Q7-8 (DWN) - Q2-2 (DOWN)	Always	Below 1 Ω
Q7-9 (CLS) - Q2-1 (CLS)	Always	Below 1 Ω
Q7-10 (UP) - Q2-4 (UP)	Always	Below 1 Ω
Q2-1 (CLS) - Body ground	Always	10 kΩ or higher
Q2-2 (DOWN) - Body ground	Always	10 kΩ or higher
Q2-3 (OPN) - Body ground	Always	10 kΩ or higher
Q2-4 (UP) - Body ground	Always	10 kΩ or higher
Q2-5 (GND3) - Body ground	Always	Below 1 Ω

NG → **REPAIR OR REPLACE HARNESS OR CONNECTOR**

OK

REPLACE ROOF CONSOLE BOX ASSEMBLY (SLIDING ROOF CONTROL SWITCH)

Sliding Roof ECU Power Source Circuit

DESCRIPTION

The sliding roof drive gear sub-assembly (sliding roof control ECU) receives signals from the sliding roof switch and activates the sliding roof. However, malfunctions in the fuse, wire harness or sliding roof drive gear sub-assembly (sliding roof control ECU) may cause the sliding roof system to stop operating.

WIRING DIAGRAM

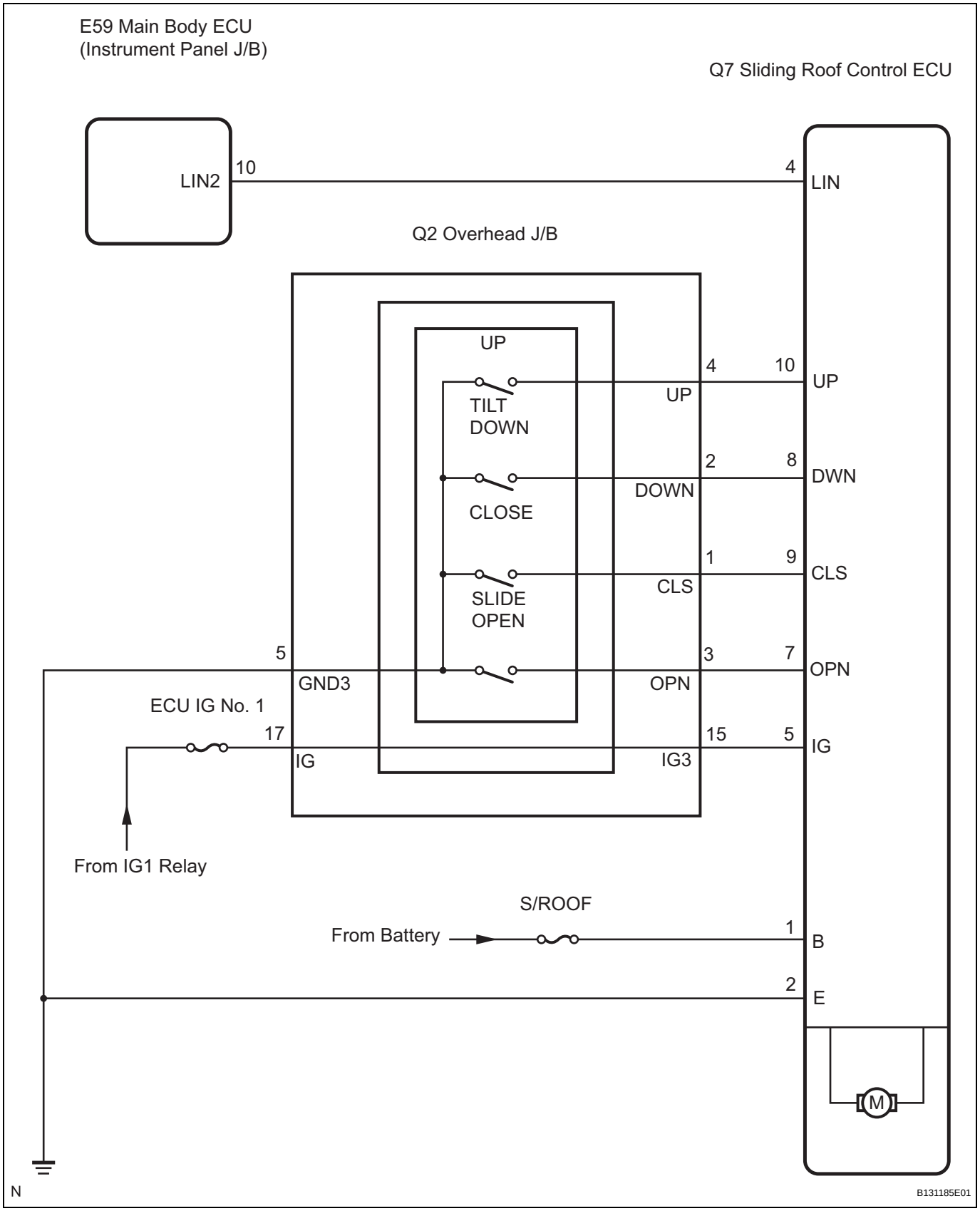

RF

INSPECTION PROCEDURE

1	PERFORM ACTIVE TEST BY INTELLIGENT TESTER (SLIDING ROOF OPERATION)

(a) Select the ACTIVE TEST, use the intelligent tester to generate a control command, and then check that the sliding roof slides open/close and tilts up/down.

SLIDE ROOF

Tester Display	Test Part	Control Range	Diagnostic Note
SLIDE ROOF	Operate sliding roof SLIDE CLOSE/TILT UP	CLOS/UP: Sliding roof SLIDE CLOSE or TILT UP operation occurs OFF: Sliding roof is not operating	-
SLIDE ROOF	Operate sliding roof SLIDE OPEN/TILT DOWN	OPN/DWN: Sliding roof SLIDE OPEN or TILT DOWN operation occurs OFF: Sliding roof is not operating	-

OK:
Sliding roof operates normally.

NG → **Go to step 2**

OK

REPLACE SLIDING ROOF DRIVE GEAR SUB-ASSEMBLY (SLIDING ROOF CONTROL ECU)

2	INSPECT FUSE (S/ROOF, ECU IG NO. 1)

(a) Remove the S/ROOF and ECU IG No. 1 fuses from the instrument panel J/B.
(b) Measure the resistance of the fuses.
Standard resistance:
Below 1 Ω

NG → **REPLACE FUSE**

OK

3	CHECK WIRE HARNESS (SLIDING ROOF CONTROL ECU - BATTERY AND BODY GROUND)

Sliding Roof Control ECU Connector:

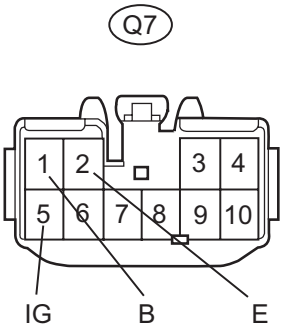

B130117E06

(a) Disconnect the Q7 connector.
(b) Measure the voltage and resistance according to the value(s) in the table below.

Standard voltage

Tester Connection	Condition	Specified Condition
B (Q7-1) - Body ground	Always	10 to 14 V
IG (Q7-5) - Body ground	Engine switch on (IG)	10 to 14 V
IG (Q7-5) - Body ground	Engine switch off	Below 1 V

Standard resistance

Tester Connection	Specified Condition
E (Q7-2) - Body ground	Below 1 Ω

NG → **REPAIR OR REPLACE HARNESS OR CONNECTOR**

OK

REPLACE SLIDING ROOF DRIVE GEAR SUB-ASSEMBLY (SLIDING ROOF CONTROL ECU)

PROBLEM SYMPTOMS TABLE

HINT:
Use the table below to help determine the cause of the problem symptom. The potential causes of the symptoms are listed in order of probability in the "Suspected Area" column in the table. Check each symptom by checking the suspected areas in the order they are listed. Replace parts as necessary.
Inspect the fuses and relays related to this system before inspecting the suspected areas below.

Sliding Roof System

Symptom	Suspected Area	See page
Sliding function and tilt function do not operate	Sliding roof ECU power source circuit	RF-29
Either sliding function or tilt function does not operate	Sliding roof control switch circuit	RF-27

TERMINALS OF ECU

1. CHECK SLIDING ROOF DRIVE GEAR SUB-ASSEMBLY (SLIDING ROOF CONTROL ECU)

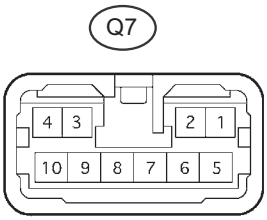

B050671E37

(a) Disconnect the Q7 ECU connector.
(b) Measure the resistance and voltage according to the value(s) in the table below.

Symbols (Terminal No.)	Wiring Color	Terminal Description	Condition	Specified Condition
B (Q7-1) - E (Q7-2)	R - W-B	+B power supply	Always	10 to 14 V
IG (Q7-5) - E (Q7-2)	B - W-B	Engine switch power supply	Engine switch off	Below 1 V
IG (Q7-5) - E (Q7-2)	B - W-B	Engine switch power supply	Engine switch on (IG)	10 to 14 V
OPN (Q7-7) - E (Q7-2)	R - W-B	Sliding roof motor open	OPEN switch OFF	10 kΩ or higher
OPN (Q7-7) - E (Q7-2)	R - W-B	Sliding roof motor open	OPEN switch ON	Below 1 Ω
CLS (Q7-9) - E (Q7-2)	B - W-B	Sliding roof motor closed	CLOSE switch OFF	10 kΩ or higher
CLS (Q7-9) - E (Q7-2)	B - W-B	Sliding roof motor closed	CLOSE switch ON	Below 1 Ω
UP (Q7-10) - E (Q7-2)	W - W-B	Sliding roof motor up	UP switch OFF	10 kΩ or higher
UP (Q7-10) - E (Q7-2)	W - W-B	Sliding roof motor up	UP switch ON	Below 1 Ω
DWN (Q7-8) - E (Q7-2)	LG - W-B	Sliding roof motor down	DOWN switch OFF	10 kΩ or higher
DWN (Q7-8) - E (Q7-2)	LG - W-B	Sliding roof motor down	DOWN switch ON	Below 1 Ω
E (Q7-2) - Body ground	W-B - Body ground	Ground	Always	Below 1 Ω

If the result is not as specified, there may be a malfunction on the wire harness side.

(c) Reconnect the Q7 ECU connector.
(d) Measure the voltage according to the value(s) in the table below.

Symbols (Terminal No.)	Wiring Color	Terminal Description	Condition	Specified Condition
OPN (Q7-7) - E (Q7-2)	R - W-B	Sliding roof motor open	Engine switch on (IG), sliding roof closed, OPEN switch OFF	Below 1 V
OPN (Q7-7) - E (Q7-2)	R - W-B	Sliding roof motor open	Engine switch on (IG), sliding roof closed, OPEN switch ON	10 to 14 V
CLS (Q7-9) - E (Q7-2)	B - W-B	Sliding roof motor closed	Engine switch on (IG), sliding roof open, CLOSE switch OFF	Below 1 V
CLS (Q7-9) - E (Q7-2)	B - W-B	Sliding roof motor closed	Engine switch on (IG), sliding roof open, CLOSE switch ON	10 to 14 V
UP (Q7-10) - E (Q7-2)	W - W-B	Sliding roof motor up	Engine switch on (IG), sliding roof tilted downward, UP switch OFF	Below 1 V

Symbols (Terminal No.)	Wiring Color	Terminal Description	Condition	Specified Condition
UP (Q7-10) - E (Q7-2)	W - W-B	Sliding roof motor up	Engine switch on (IG), sliding roof tilted downward, UP switch ON	10 to 14 V
DWN (Q7-8) - E (Q7-2)	LG - W-B	Sliding roof motor down	Engine switch on (IG), sliding roof tilted upward, DOWN switch OFF	Below 1 V
DWN (Q7-8) - E (Q7-2)	LG - W-B	Sliding roof motor down	Engine switch on (IG), sliding roof tilted upward, DOWN switch ON	10 to 14 V

If the result is not as specified, the ECU may have a malfunction.

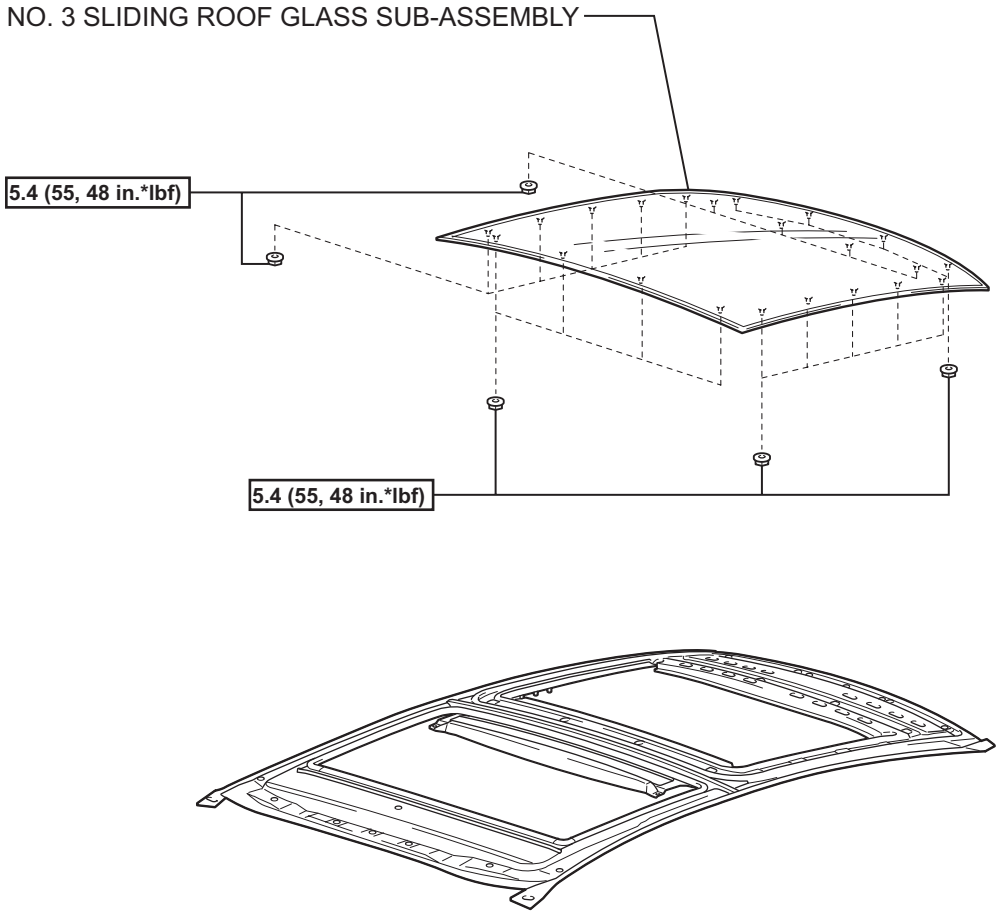

N*m (kgf*cm, ft.*lbf) : Specified torque

P B142804E01

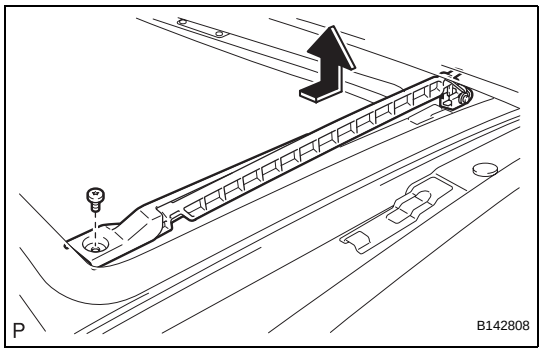

REMOVAL

1. REMOVE SLIDING ROOF SIDE GARNISH LH

(a) Fully open the No. 2 sliding roof glass sub-assembly.

(b) Using a T25 "TORX" driver, remove the screw and sliding roof side garnish LH as shown in the illustration.

2. REMOVE SLIDING ROOF SIDE GARNISH RH

HINT:
Use the same procedure for the RH side and the LH side.

RF

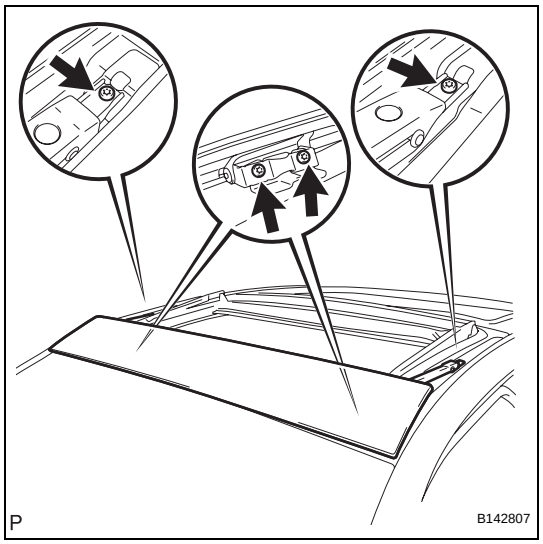

3. REMOVE NO. 1 SLIDING ROOF GLASS SUB-ASSEMBLY

(a) Using a T20 "TORX" driver, remove the 6 screws and No. 1 sliding roof glass sub-assembly.

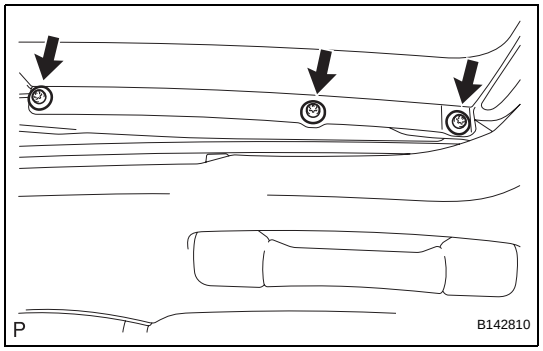

4. REMOVE NO. 2 SLIDING ROOF GLASS SUB-ASSEMBLY

(a) Fully close the No. 2 sliding roof glass sub-assembly.

(b) Using a T25 "TORX" driver, remove the 3 screws.
HINT:
Use the same procedure for the RH side and the LH side.

(c) Remove the No. 2 sliding roof glass sub-assembly.

5. REMOVE REAR SEAT CUSHION ASSEMBLY (See page SE-113)

6. REMOVE REAR SEAT HEADREST ASSEMBLY

7. REMOVE REAR CENTER SEAT HEADREST ASSEMBLY

8. REMOVE REAR SEATBACK ASSEMBLY (See page SE-113)

9. REMOVE SEAT BELT ANCHOR COVER CAP LH (See page SB-22)

10. DISCONNECT FRONT SEAT OUTER BELT ASSEMBLY LH (See page SB-22)

11. REMOVE FRONT SEAT HEADREST ASSEMBLY (for Driver Seat)

12. REMOVE FRONT SEAT OUTER TRACK BRACKET COVER LH (See page SE-83)

13. REMOVE FRONT SEAT INNER TRACK BRACKET COVER LH (See page SE-83)

14. REMOVE FRONT SEAT REAR OUTER TRACK BRACKET COVER LH (See page SE-83)

15. REMOVE FRONT SEAT REAR INNER TRACK BRACKET COVER LH (See page SE-83)

16. REMOVE FRONT SEAT ASSEMBLY LH (See page SE-83)

17. **REMOVE SEAT BELT ANCHOR COVER CAP RH (See page RS-490)**
18. **DISCONNECT FRONT SEAT OUTER BELT ASSEMBLY RH (See page RS-490)**
19. **REMOVE FRONT SEAT HEADREST ASSEMBLY (for Front Passenger Seat)**
20. **REMOVE FRONT SEAT OUTER TRACK BRACKET COVER RH (See page RS-490)**
21. **REMOVE FRONT SEAT INNER TRACK BRACKET COVER RH (See page RS-490)**
22. **REMOVE FRONT SEAT REAR OUTER TRACK BRACKET COVER RH (See page RS-490)**
23. **REMOVE FRONT SEAT REAR INNER TRACK BRACKET COVER RH (See page RS-490)**
24. **REMOVE FRONT SEAT ASSEMBLY RH (See page RS-491)**
25. **REMOVE FRONT DOOR SCUFF PLATE LH (See page IR-39)**
26. **REMOVE FRONT DOOR OPENING TRIM COVER LH (See page IR-39)**
27. **REMOVE SIDE INSTRUMENT PANEL LH (See page IP-12)**
28. **REMOVE FRONT PILLAR GARNISH LH (See page IR-39)**
29. **REMOVE REAR DOOR SCUFF PLATE LH (See page IR-40)**
30. **REMOVE LOWER CENTER PILLAR GARNISH LH (See page IR-40)**
31. **REMOVE UPPER CENTER PILLAR GARNISH LH (See page IR-41)**
32. **REMOVE REAR SEAT SIDE GARNISH LH (w/o Rear Seat Side Airbag) (See page IR-41)**
33. **REMOVE REAR SEAT SIDE AIRBAG ASSEMBLY LH (w/ Rear Seat Side Airbag) (See page RS-460)**
34. **REMOVE ROOF SIDE INNER GARNISH ASSEMBLY LH (See page IR-42)**
35. **REMOVE FRONT DOOR SCUFF PLATE RH (See page IR-42)**
36. **REMOVE FRONT DOOR OPENING TRIM COVER RH (See page IR-42)**
37. **REMOVE SIDE INSTRUMENT PANEL RH (See page IP-15)**
38. **REMOVE FRONT PILLAR GARNISH RH (See page IR-42)**

39. **REMOVE REAR DOOR SCUFF PLATE RH (See page IR-42)**
40. **REMOVE LOWER CENTER PILLAR GARNISH RH (See page IR-42)**
41. **REMOVE UPPER CENTER PILLAR GARNISH RH (See page IR-42)**
42. **REMOVE REAR SEAT SIDE GARNISH RH (w/o Rear Seat Side Airbag) (See page IR-43)**
43. **REMOVE REAR SEAT SIDE AIRBAG ASSEMBLY RH (w/ Rear Seat Side Airbag) (See page IR-43)**
44. **REMOVE ROOF SIDE INNER GARNISH ASSEMBLY RH (See page IR-43)**
45. **REMOVE INSTRUMENT PANEL FINISH PANEL END LH (See page IP-13)**
46. **REMOVE INSTRUMENT PANEL FINISH PANEL END RH (See page IP-15)**
47. **REMOVE SHIFT LEVER KNOB SUB-ASSEMBLY (See page IP-16)**
48. **REMOVE UPPER CONSOLE PANEL ASSEMBLY WITH FRONT ASH RECEPTACLE (See page IP-16)**
49. **REMOVE HEATER SEAT SWITCH CONSOLE BASE (w/o Seat Heater System) (See page IP-17)**
50. **REMOVE HEATER SEAT SWITCH CONSOLE BASE (w/ Seat Heater System) (See page IP-18)**
51. **REMOVE CONSOLE BOX POCKET (See page IP-52)**
52. **REMOVE CONSOLE BOX CARPET (See page IP-52)**
53. **REMOVE CONSOLE REAR END PANEL SUB-ASSEMBLY (See page IP-53)**
54. **REMOVE REAR CONSOLE BOX ASSEMBLY (See page IP-53)**
55. **REMOVE NO. 2 CONSOLE BOX DUCT (See page AC-149)**
56. **REMOVE NO. 3 CONSOLE BOX DUCT (See page AC-149)**
57. **DISCONNECT TRANSMISSION CONTROL CABLE ASSEMBLY (See page AX-232)**
58. **REMOVE SHIFT LEVER ASSEMBLY (See page AX-233)**
59. **REMOVE FLOOR CARPET BRACKET LH (See page AC-148)**
60. **REMOVE FLOOR CARPET BRACKET RH (See page AC-148)**
61. **REMOVE LUGGAGE COMPARTMENT FLOOR MAT (w/ DVD Player)**

62. REMOVE SPARE WHEEL COVER TRAY (w/ DVD Player)

63. REMOVE LUGGAGE HOLD BELT STRIKER ASSEMBLY (w/ DVD Player) (See page ED-82)

64. REMOVE NO. 1 LUGGAGE COMPARTMENT TRIM HOOK (w/ DVD Player) (See page ED-83)

65. REMOVE REAR FLOOR FINISH PLATE (w/ DVD Player) (See page ED-83)

66. REMOVE LUGGAGE COMPARTMENT INNER TRIM COVER RH (w/ DVD Player) (See page ED-83)

67. DISCONNECT STEREO COMPONENT AMPLIFIER ASSEMBLY CONNECTOR (w/ DVD Player) (See page IR-44)

68. REMOVE INNER REAR VIEW MIRROR STAY HOLDER COVER (See page MI-42)

69. REMOVE RAIN SENSOR COVER (See page WW-63)

70. REMOVE ROOF CONSOLE BOX ASSEMBLY (See page IR-44)

71. REMOVE VISOR BRACKET COVER (See page IR-45)

72. REMOVE VISOR ASSEMBLY LH (See page IR-45)

73. REMOVE VISOR ASSEMBLY RH (See page IR-45)

74. REMOVE VISOR HOLDER (See page IR-45)

75. REMOVE COAT HOOK (See page IR-45)

76. REMOVE SPOT LIGHT ASSEMBLY (See page IR-46)

77. REMOVE ASSIST GRIP SUB-ASSEMBLY (See page IR-47)

78. REMOVE ROOF HEADLINING ASSEMBLY (See page IR-48)

79. REMOVE CURTAIN SHIELD AIRBAG ASSEMBLY LH (See page RS-439)

80. REMOVE CURTAIN SHIELD AIRBAG ASSEMBLY RH
HINT:
Use the same procedure for the RH side and the LH side.

81. REMOVE SLIDING ROOF DRIVE GEAR SUB-ASSEMBLY
(a) Remove the 2 bolts, nut, sliding roof drive gear sub-assembly, and room light bracket.

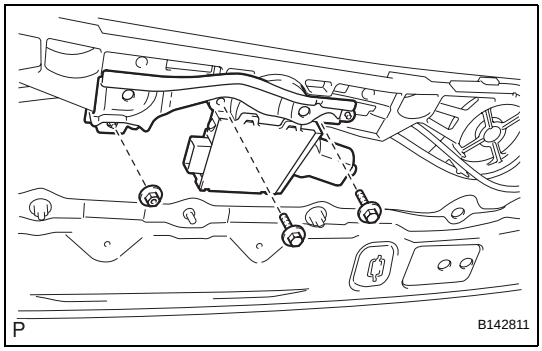

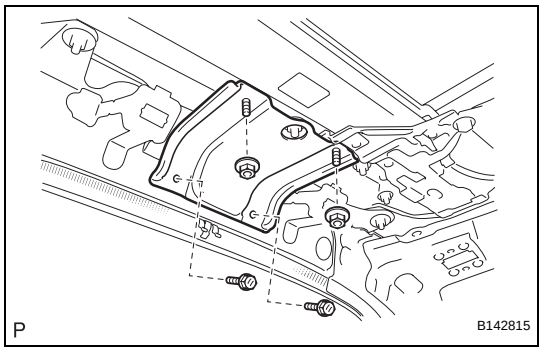

82. REMOVE FRONT SLIDING ROOF HOUSING MOUNTING BRACKET LH

(a) Remove the 2 bolts, 2 nuts, and front sliding roof housing mounting bracket LH.

83. REMOVE FRONT SLIDING ROOF HOUSING MOUNTING BRACKET RH

HINT:
Use the same procedure for the RH side and the LH side.

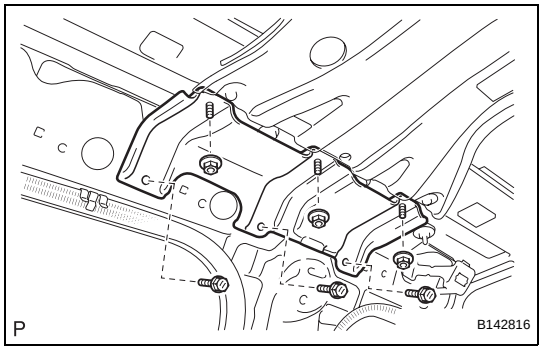

84. REMOVE CENTER SLIDING ROOF HOUSING MOUNTING BRACKET LH

(a) Remove the 3 bolts, 3 nuts, and center sliding roof housing mounting bracket LH.

85. REMOVE CENTER SLIDING ROOF HOUSING MOUNTING BRACKET RH

HINT:
Use the same procedure for the RH side and the LH side.

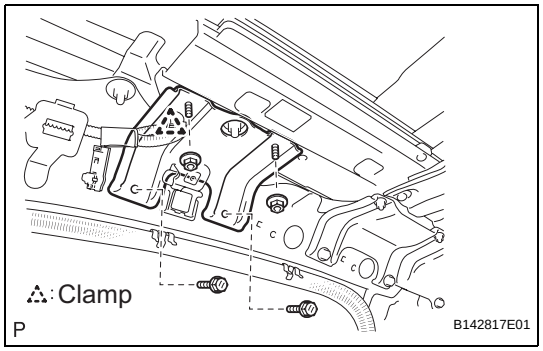

86. REMOVE REAR SLIDING ROOF HOUSING MOUNTING BRACKET LH

(a) Disengage the clamp.
(b) Remove the 2 bolts, 2 nuts, and rear sliding roof housing mounting bracket LH.

87. REMOVE REAR SLIDING ROOF HOUSING MOUNTING BRACKET RH

HINT:
Use the same procedure for the RH side and the LH side.

88. REMOVE SLIDING ROOF HOUSING ASSEMBLY

(a) Using a T25 "TORX" driver, remove the 4 screws.

(b) Remove the 16 nuts and sliding roof housing assembly.

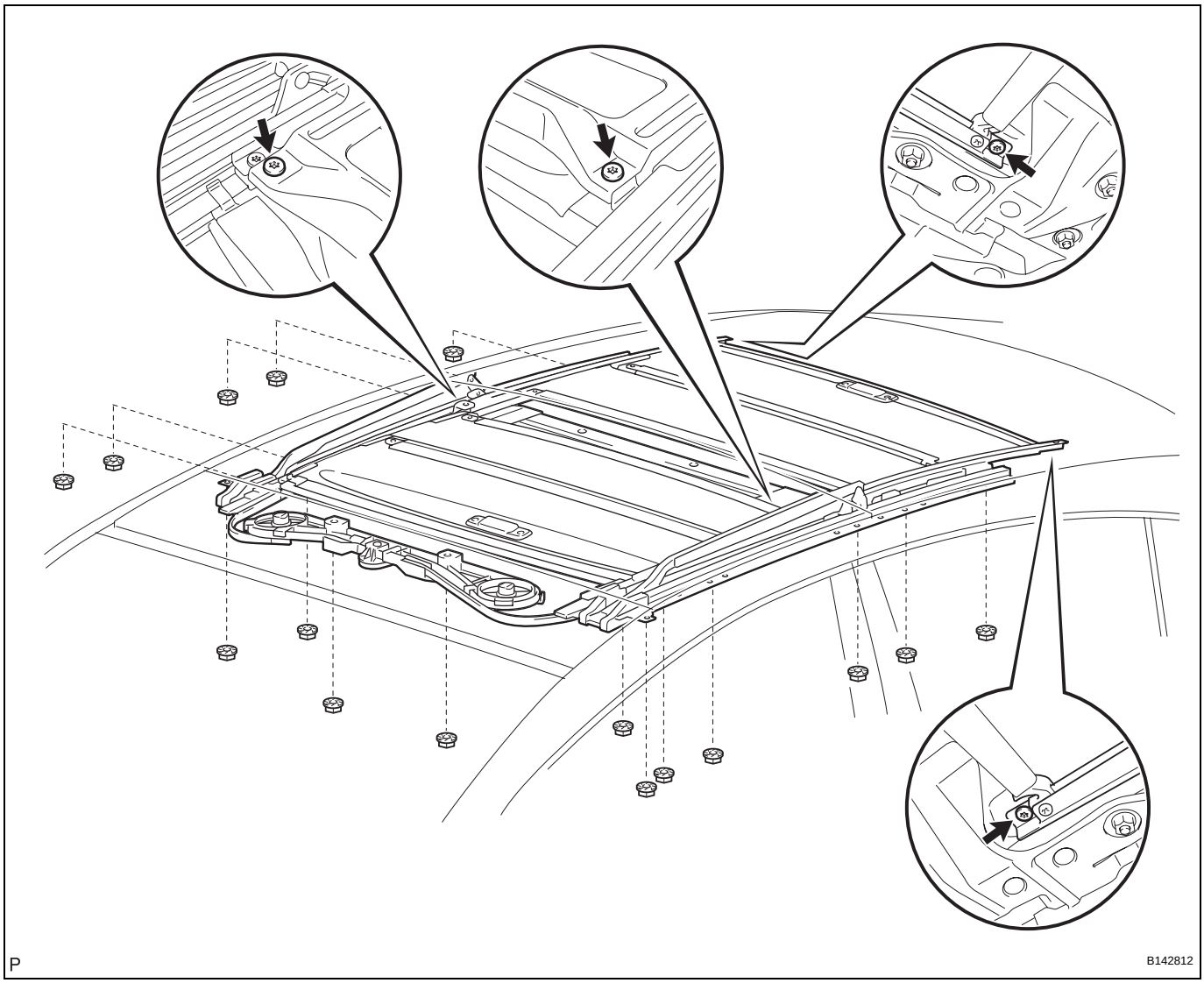

INSTALLATION

1. TEMPORARILY TIGHTEN SLIDING ROOF HOUSING PANEL

(a) Temporarily install the sliding roof housing panel with the 20 nuts.

NOTICE:

- **When installing the panel to the vehicle, first install the panel center front and center rear alignment bolts to the vehicle front and rear alignment bolt installation points, as shown in the illustration.**
- **Align the end of weatherstrip with the vehicle body and position the weatherstrip so that its front edge comes to the location.**
- **When installing the panel, be careful not to damage the vehicle.**
- **Perform this step with 2 or more technicians.**

(b) Check that the alignment bolts are firmly installed.

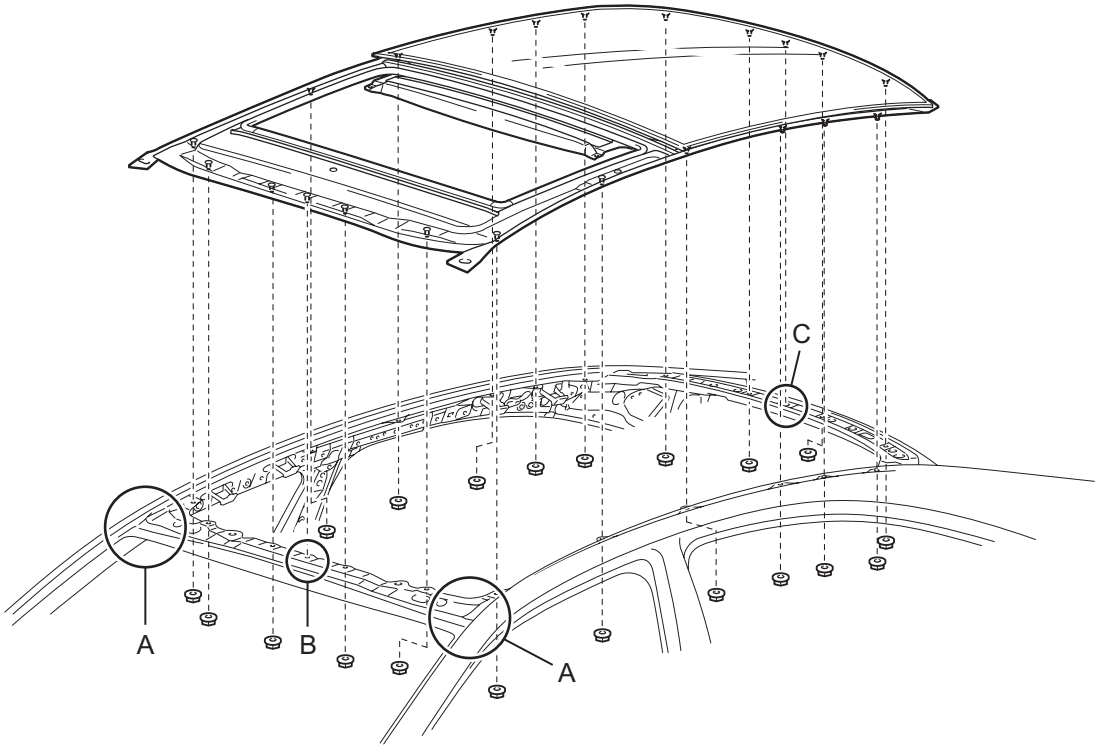

Align the end of the weatherstrip with the vehicle body and position the weatherstrip so that its front edge comes to the location

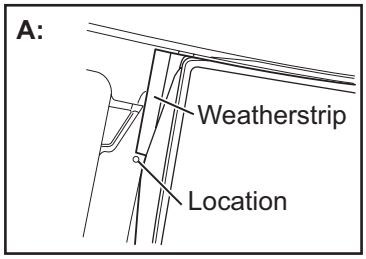

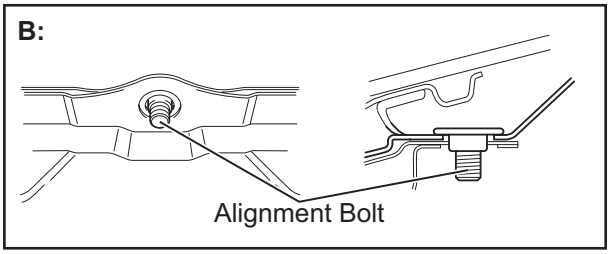

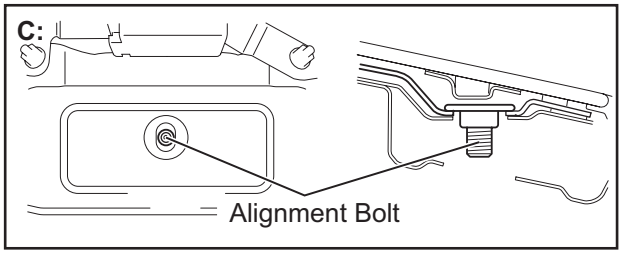

P

B142814E01

RF

NOTICE:
When the bolts are not firmly installed, water leaks and malfunctions will occur.

2. ADJUST SLIDING ROOF HOUSING PANEL

(a) The sliding roof glass does not have adjusting screws. Instead, change the position of the No. 3 sliding roof glass sub-assembly so that the measurements are within the standard values shown in the illustration.

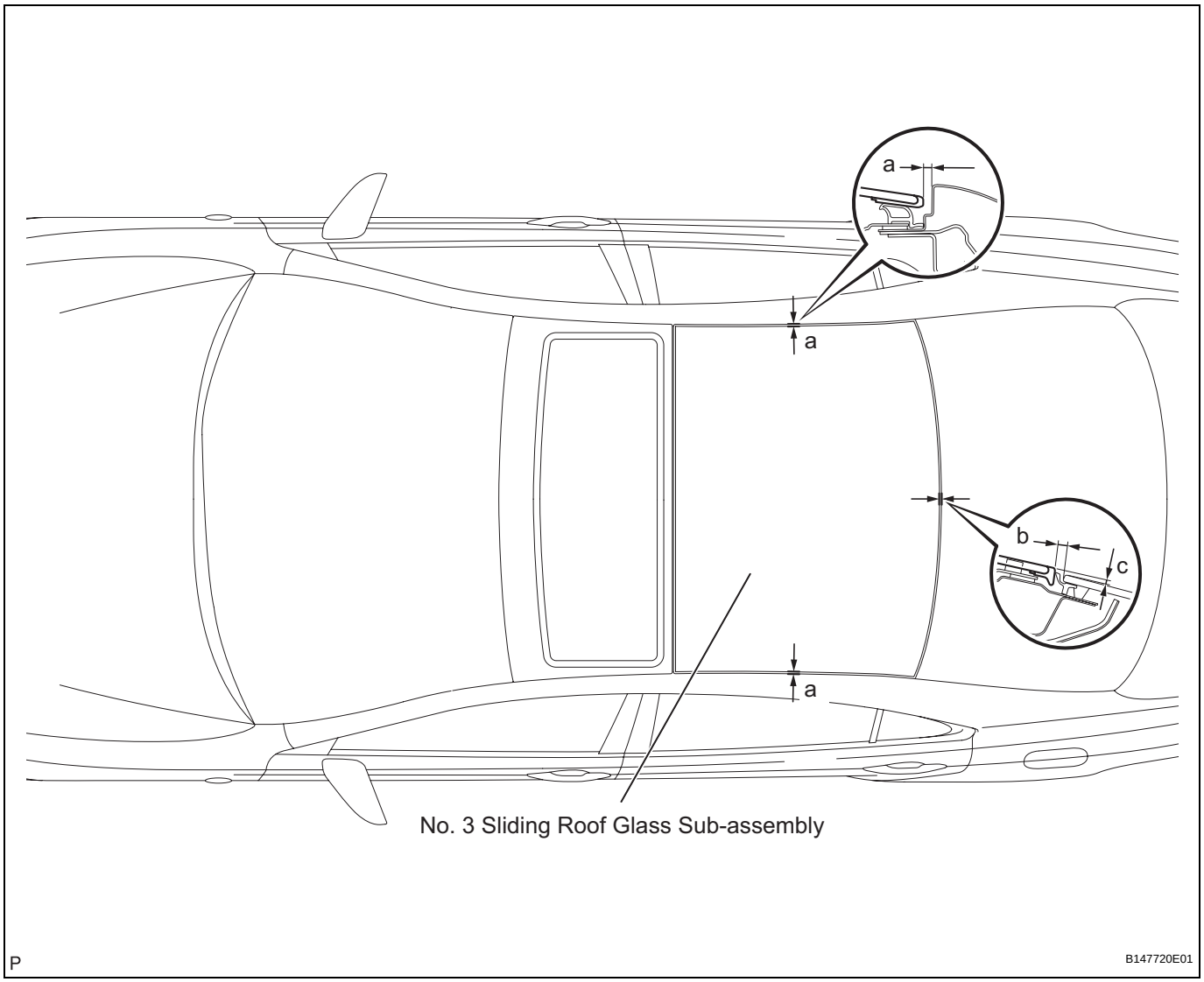

Standard

Area	Measurement
a	4.0 mm + 2.0 mm (0.158 in. + 0.079 in.) 4.0 mm - 2.0 mm (0.158 in. - 0.079 in.)
b	4.5 mm + 1.5 mm (0.177 in. + 0.059 in.) 4.5 mm - 1.5 mm (0.177 in. - 0.059 in.)
c	2.0 mm + 1.5 mm (0.079 in. + 0.059 in.) 2.0 mm - 1.5 mm (0.079 in. - 0.059 in.)

HINT:
"+" represents the condition that the glass is above the panel level. "-" represents the condition that the glass is below the panel level.

(b) After adjusting the No. 3 sliding roof glass sub-assembly, fully tighten the 20 nuts to install the sliding roof housing panel.
Torque: 5.5 N*m (56 kgf*cm, 49 in.*lbf)

3. INSTALL SLIDING ROOF HOUSING ASSEMBLY

(a) Install the sliding roof housing assembly with the 16 nuts.

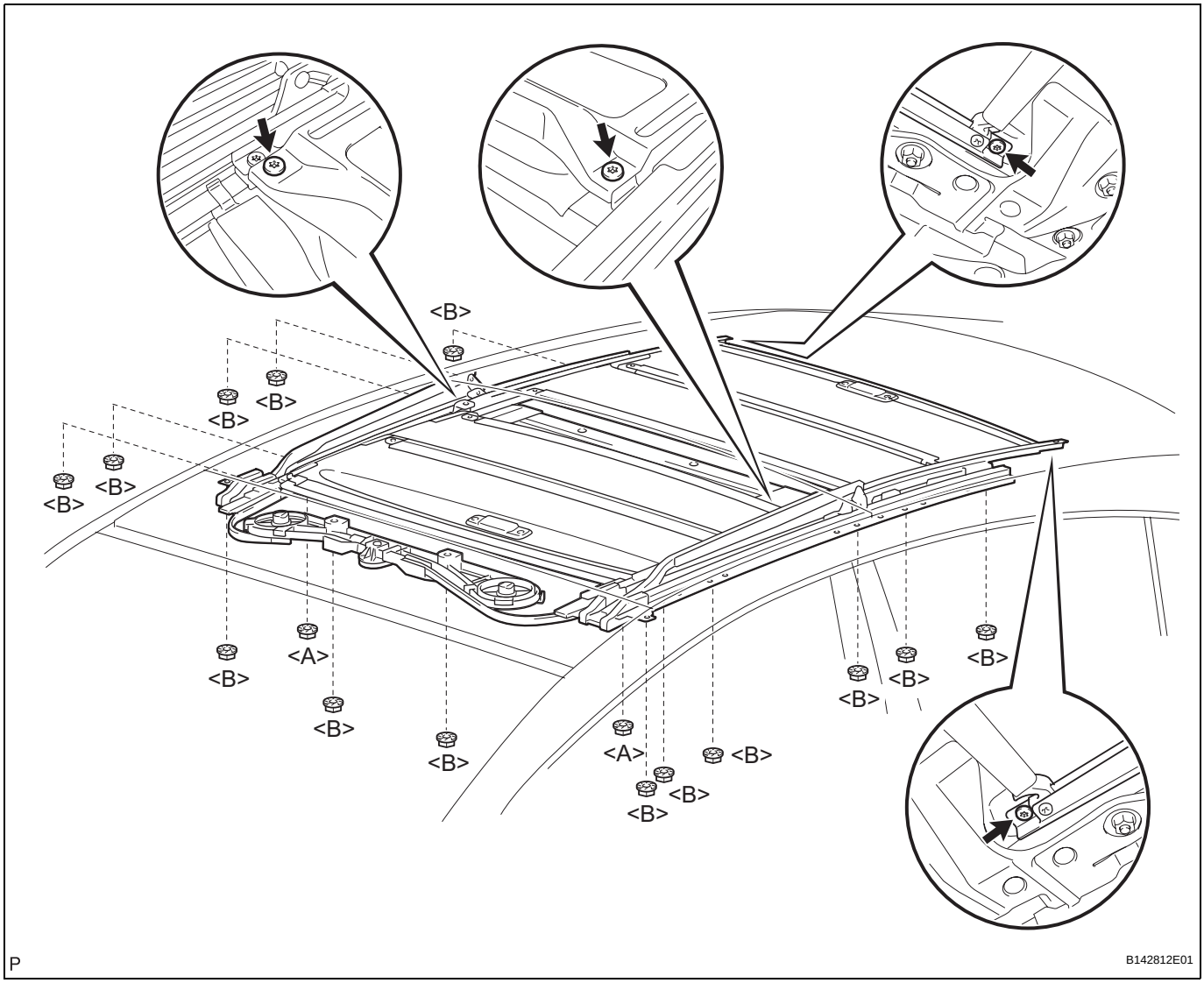

Torque: Nut <A>
7.0 N*m (71 kgf*cm, 62 in.*lbf)
Nut <B>
5.4 N*m (55 kgf*cm, 48 in.*lbf)

(b) Using a T25 "TORX" driver, install the 4 screws.
Torque: 4.0 N*m (41 kgf*cm, 35 in.*lbf)

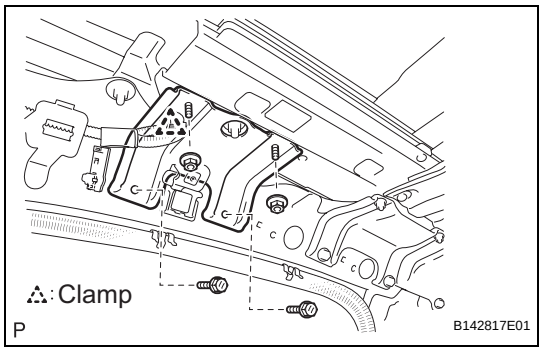

4. INSTALL REAR SLIDING ROOF HOUSING MOUNTING BRACKET LH

(a) Install the rear sliding roof housing mounting bracket LH with the 2 bolts and 2 nuts.

Torque: Bolt
8.0 N*m (82 kgf*cm, 71 in.*lbf)
Nut
5.5 N*m (56 kgf*cm, 49 in.*lbf)

(b) Engage the clamp.

5. INSTALL REAR SLIDING ROOF HOUSING MOUNTING BRACKET RH

HINT:
Use the same procedure for the RH side and the LH side.

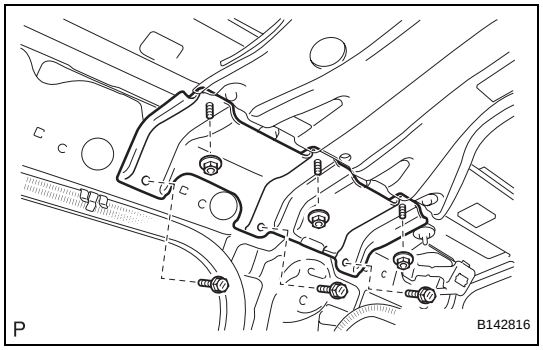

6. INSTALL CENTER SLIDING ROOF HOUSING MOUNTING BRACKET LH

(a) Install the center sliding roof housing mounting bracket LH with the 3 bolts and 3 nuts.

Torque: Bolt
8.0 N*m (82 kgf*cm, 71 in.*lbf)
Nut
5.5 N*m (56 kgf*cm, 49 in.*lbf)

7. INSTALL CENTER SLIDING ROOF HOUSING MOUNTING BRACKET RH

HINT:
Use the same procedure for the RH side and the LH side.

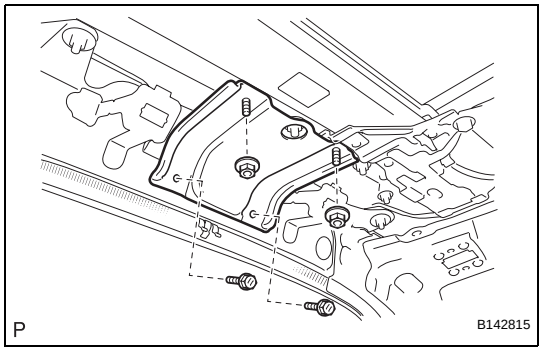

8. INSTALL FRONT SLIDING ROOF HOUSING MOUNTING BRACKET LH

(a) Install the front sliding roof housing mounting bracket LH with the 2 bolts and 2 nuts.

Torque: Bolt
8.0 N*m (82 kgf*cm, 71 in.*lbf)
Nut
5.5 N*m (56 kgf*cm, 49 in.*lbf)

9. INSTALL FRONT SLIDING ROOF HOUSING MOUNTING BRACKET RH

HINT:
Use the same procedure for the RH side and the LH side.

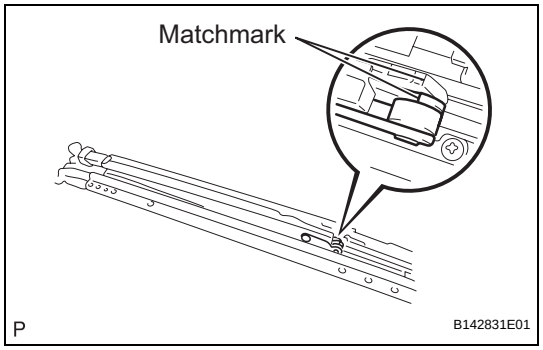

10. ADJUST FULLY CLOSED POSITION

(a) Using a screwdriver, slide the sliding roof drive cable to align the matchmarks.
HINT:
Tape the screwdriver tip before use.

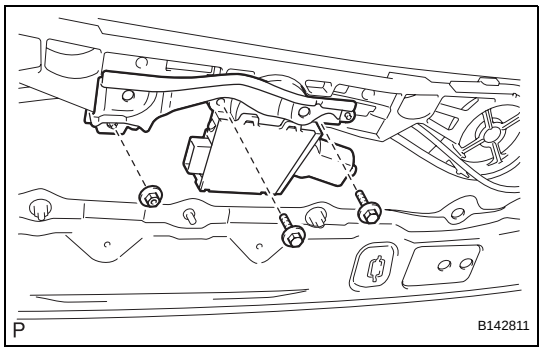

11. INSTALL SLIDING ROOF DRIVE GEAR SUB-ASSEMBLY

(a) Install the sliding roof drive gear sub-assembly and room light bracket with the 2 bolts and nut.
Torque: 5.4 N*m (55 kgf*cm, 48 in.*lbf)

12. INSTALL CURTAIN SHIELD AIRBAG ASSEMBLY LH (See page RS-441)

13. INSTALL CURTAIN SHIELD AIRBAG ASSEMBLY RH

HINT:
Use the same procedure for the RH side and the LH side.

14. INSTALL ROOF HEADLINING ASSEMBLY (See page IR-57)

15. INSTALL ASSIST GRIP SUB-ASSEMBLY (See page IR-58)

16. INSTALL SPOT LIGHT ASSEMBLY (See page IR-59)

17. INSTALL COAT HOOK (See page IR-60)

18. INSTALL VISOR HOLDER (See page IR-60)

19. INSTALL VISOR ASSEMBLY LH (See page IR-60)

20. INSTALL VISOR ASSEMBLY RH (See page IR-60)

21. INSTALL VISOR BRACKET COVER (See page IR-60)

22. INSTALL ROOF CONSOLE BOX ASSEMBLY (See page IR-60)

23. INSTALL RAIN SENSOR COVER (See page WW-65)

24. INSTALL INNER REAR VIEW MIRROR STAY HOLDER COVER (See page MI-44)

25. CONNECT STEREO COMPONENT AMPLIFIER ASSEMBLY CONNECTOR (w/ DVD Player) (See page IR-61)

26. INSTALL LUGGAGE COMPARTMENT INNER TRIM COVER RH (w/ DVD Player) (See page ED-88)

27. INSTALL REAR FLOOR FINISH PLATE (w/ DVD Player) (See page ED-88)

28. INSTALL NO. 1 LUGGAGE COMPARTMENT TRIM HOOK (w/ DVD Player) (See page ED-89)

29. INSTALL LUGGAGE HOLD BELT STRIKER ASSEMBLY (w/ DVD Player) (See page ED-89)

30. INSTALL SPARE WHEEL COVER TRAY (w/ DVD Player)

31. INSTALL LUGGAGE COMPARTMENT FLOOR MAT (w/ DVD Player)

32. INSTALL FLOOR CARPET BRACKET LH

33. INSTALL FLOOR CARPET BRACKET RH

34. **INSTALL SHIFT LEVER ASSEMBLY (See page AX-240)**
35. **CONNECT TRANSMISSION CONTROL CABLE ASSEMBLY (See page AX-241)**
36. **INSTALL NO. 2 CONSOLE BOX DUCT (See page AC-163)**
37. **INSTALL NO. 3 CONSOLE BOX DUCT (See page AC-163)**
38. **INSTALL REAR CONSOLE BOX ASSEMBLY (See page IP-39)**
39. **INSTALL CONSOLE REAR END PANEL SUB-ASSEMBLY (See page IP-40)**
40. **INSTALL CONSOLE BOX CARPET (See page IP-41)**
41. **INSTALL CONSOLE BOX POCKET (See page IP-41)**
42. **INSTALL HEATER SEAT SWITCH CONSOLE BASE (w/o Seat Heater System) (See page IP-41)**
43. **INSTALL HEATER SEAT SWITCH CONSOLE BASE (w/ Seat Heater System) (See page IP-41)**
44. **INSTALL UPPER CONSOLE PANEL ASSEMBLY WITH FRONT ASH RECEPTACLE (See page IP-42)**
45. **INSTALL SHIFT LEVER KNOB SUB-ASSEMBLY (See page IP-42)**
46. **INSTALL INSTRUMENT PANEL FINISH PANEL END LH (See page IP-46)**
47. **INSTALL INSTRUMENT PANEL FINISH PANEL END RH (See page IP-44)**
48. **INSTALL ROOF SIDE INNER GARNISH ASSEMBLY LH (See page IR-62)**
49. **INSTALL REAR SEAT SIDE GARNISH LH (w/o Rear Seat Side Airbag) (See page IR-62)**
50. **INSTALL REAR SEAT SIDE AIRBAG ASSEMBLY LH (w/ Rear Seat Side Airbag) (See page RS-460)**
51. **INSTALL UPPER CENTER PILLAR GARNISH LH (See page IR-63)**
52. **INSTALL LOWER CENTER PILLAR GARNISH LH (See page IR-63)**
53. **INSTALL REAR DOOR SCUFF PLATE LH (See page IR-63)**
54. **INSTALL FRONT PILLAR GARNISH LH (See page IR-64)**
55. **INSTALL SIDE INSTRUMENT PANEL LH (See page IP-47)**
56. **INSTALL FRONT DOOR OPENING TRIM COVER LH (See page IR-64)**

57. **INSTALL FRONT DOOR SCUFF PLATE LH (See page IR-65)**
58. **INSTALL ROOF SIDE INNER GARNISH ASSEMBLY RH (See page IR-65)**
59. **INSTALL REAR SEAT SIDE GARNISH RH (w/o Rear Seat Side Airbag) (See page IR-65)**
60. **INSTALL REAR SEAT SIDE AIRBAG ASSEMBLY RH (w/ Rear Seat Side Airbag) (See page IR-65)**
61. **INSTALL UPPER CENTER PILLAR GARNISH RH (See page IR-65)**
62. **INSTALL LOWER CENTER PILLAR GARNISH RH (See page IR-65)**
63. **INSTALL REAR DOOR SCUFF PLATE RH (See page IR-65)**
64. **INSTALL FRONT PILLAR GARNISH RH (See page IR-65)**
65. **INSTALL SIDE INSTRUMENT PANEL RH (See page IP-43)**
66. **INSTALL FRONT DOOR OPENING TRIM COVER RH (See page IR-65)**
67. **INSTALL FRONT DOOR SCUFF PLATE RH (See page IR-65)**
68. **INSTALL FRONT SEAT ASSEMBLY LH (See page SE-109)**
69. **INSTALL FRONT SEAT REAR OUTER TRACK BRACKET COVER LH (See page SE-110)**
70. **INSTALL FRONT SEAT REAR INNER TRACK BRACKET COVER LH (See page SE-110)**
71. **INSTALL FRONT SEAT OUTER TRACK BRACKET COVER LH (See page SE-110)**
72. **INSTALL FRONT SEAT INNER TRACK BRACKET COVER LH (See page SE-110)**
73. **CONNECT FRONT SEAT OUTER BELT ASSEMBLY LH (See page SB-25)**
74. **INSTALL SEAT BELT ANCHOR COVER CAP LH (See page SB-25)**
75. **INSTALL FRONT SEAT HEADREST ASSEMBLY (for Driver Seat)**
76. **INSTALL FRONT SEAT ASSEMBLY RH (See page RS-497)**
77. **INSTALL FRONT SEAT REAR OUTER TRACK BRACKET COVER RH (See page RS-498)**
78. **INSTALL FRONT SEAT REAR INNER TRACK BRACKET COVER RH (See page RS-498)**

79. INSTALL FRONT SEAT OUTER TRACK BRACKET COVER RH (See page RS-498)

80. INSTALL FRONT SEAT INNER TRACK BRACKET COVER RH (See page RS-498)

81. CONNECT FRONT SEAT OUTER BELT ASSEMBLY RH (See page RS-499)

82. INSTALL SEAT BELT ANCHOR COVER CAP RH (See page RS-499)

83. INSTALL FRONT SEAT HEADREST ASSEMBLY (for Front Passenger Seat)

84. INSTALL REAR SEATBACK ASSEMBLY (See page SE-121)

85. INSTALL REAR CENTER SEAT HEADREST ASSEMBLY

86. INSTALL REAR SEAT HEADREST ASSEMBLY

87. INSTALL REAR SEAT CUSHION ASSEMBLY (See page SE-121)

88. TEMPORARILY TIGHTEN NO. 2 SLIDING ROOF GLASS SUB-ASSEMBLY

(a) Fully close the No. 2 sliding roof glass sub-assembly.

(b) Using a T25 "TORX" driver, install the 3 screws.
HINT:
Use the same procedure for the RH side and the LH side.

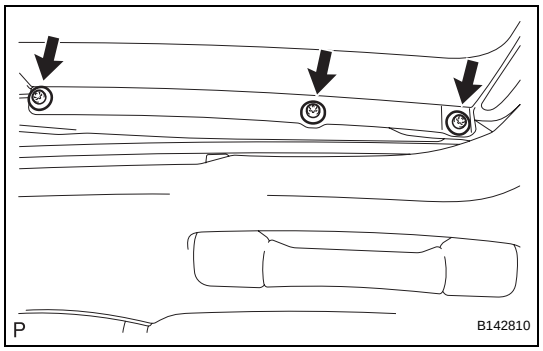

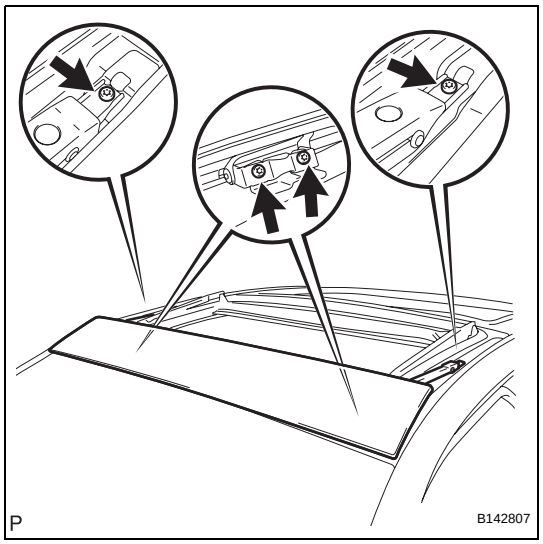

89. TEMPORARILY TIGHTEN NO. 1 SLIDING ROOF GLASS SUB-ASSEMBLY

(a) Fully open the No. 2 sliding roof glass sub-assembly.

(b) Using a T20 "TORX" driver, install the No. 1 sliding roof glass sub-assembly with the 6 screws.

90. ADJUST SLIDING ROOF GLASS SUB-ASSEMBLY (NO. 1, NO. 2)

(a) Adjust the No. 2 sliding roof glass sub-assembly:

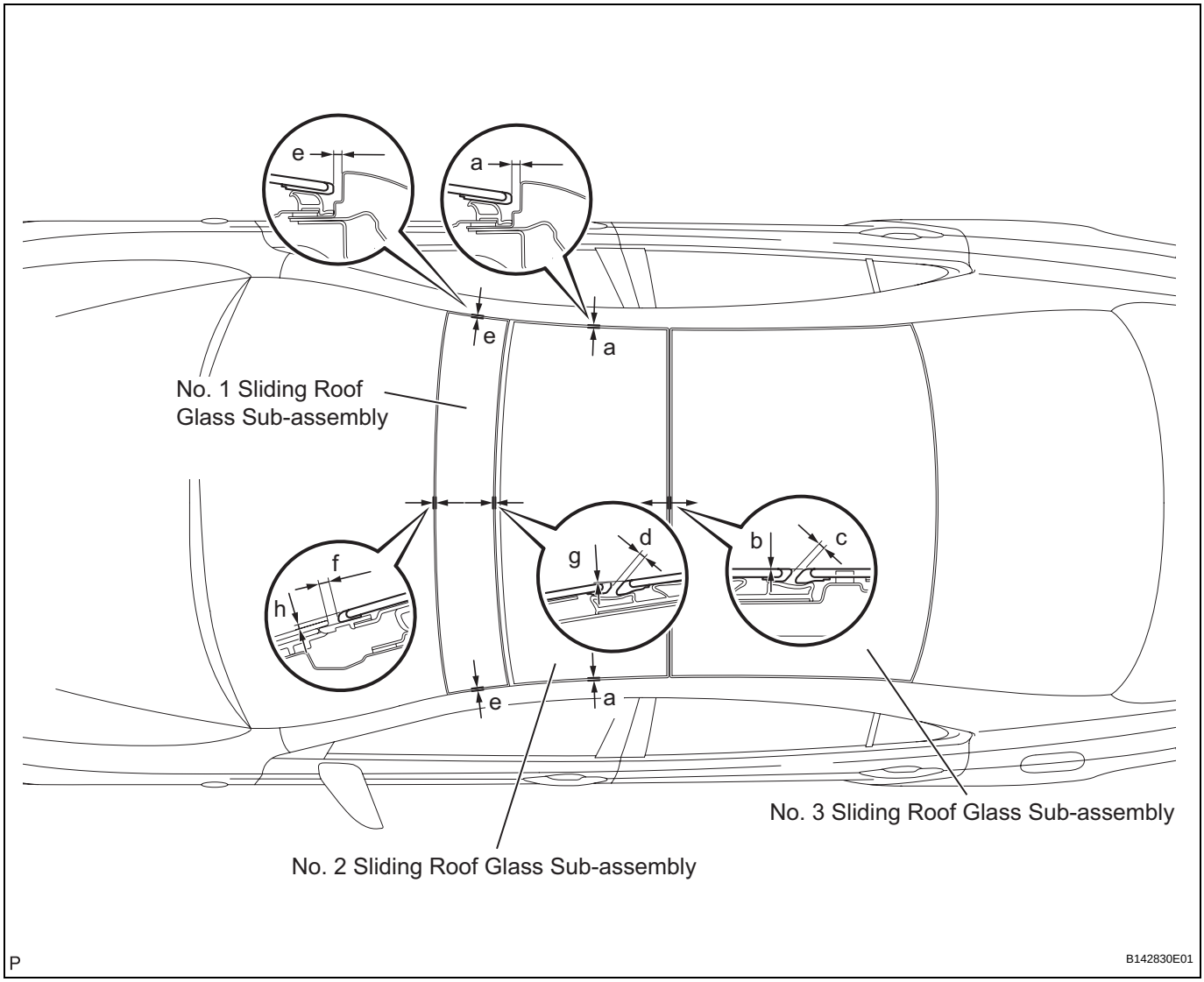

(1) Adjust the position of the No. 2 sliding roof glass sub-assembly so that the measurements are within the standard values shown in the illustration.

Standard

Area	Measurement
a	4.0 mm + 2.0 mm (0.158 in. + 0.079 in.) 4.0 mm - 2.0 mm (0.158 in. - 0.079 in.)
b	0 + 1.5 mm (0 + 0.059 in.) 0 - 0.5 mm (0 - 0.020 in.)
c	3.0 mm
d	3.0 mm

HINT:
"+" represents the condition that the glass is above the panel level. "-" represents the condition that the glass is below the panel level.

(2) After adjusting the No. 2 sliding roof glass sub-assembly, using a T25 "TORX" driver, fully tighten the 6 screws to install the No. 2 sliding roof glass sub-assembly.
Torque: 4.0 N*m (41 kgf*cm, 35 in.*lbf)

(b) Adjust the No. 1 sliding roof glass sub-assembly:

(1) Adjust the position of the No. 1 sliding roof glass sub-assembly so that the measurements are within the standard values shown in the illustration.
Standard

Area	Measurement
e	4.0 mm + 2.0 mm (0.158 in. + 0.079 in.) 4.0 mm - 2.0 mm (0.158 in. - 0.079 in.)
f	5.1 mm + 1.7 mm (0.201 in. + 0.067 in.) 5.1 mm - 1.7 mm (0.201 in. - 0.067 in.)
g	0 + 1.5 mm (0 + 0.059 in.) 0 - 0.5 mm (0 - 0.020 in.)
h	2.0 mm

HINT:
"+" represents the condition that the glass is above the panel level. "-" represents the condition that the glass is below the panel level.

(2) After adjusting the No. 1 sliding roof glass sub-assembly, using a T20 "TORX" driver, fully tighten the 6 screws to install the No. 1 sliding roof glass sub-assembly.
Torque: 2.0 N*m (20 kgf*cm, 18 in.*lbf)

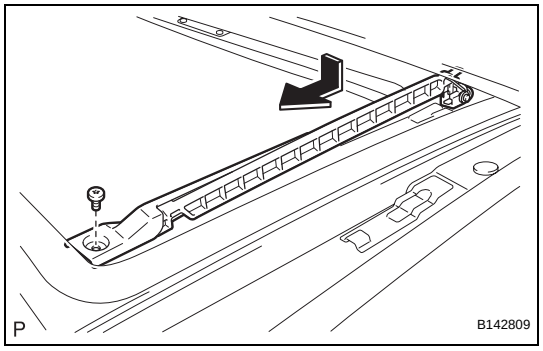

91. INSTALL SLIDING ROOF SIDE GARNISH LH

(a) Temporarily install the sliding roof side garnish LH as shown in the illustration.

(b) Using a T20 "TORX" driver, install the sliding roof side garnish LH with the screw.
Torque: 4.0 N*m (41 kgf*cm, 35 in.*lbf)

92. INSTALL SLIDING ROOF SIDE GARNISH RH

HINT:
Use the same procedure for the RH side and the LH side.

93. INSPECT FOR WATER LEAKS

(a) After adjusting the sliding roof glass sub-assembly, inspect for water leaks.

(b) If there are any leaks, readjust the sliding roof glass sub-assembly.

94. PERFORM INITIALIZATION

NOTICE:
Some systems need initialization after reconnecting the cable to the negative battery terminal (See page IN-33).

95. RESET SLIDING ROOF DRIVE GEAR SUB-ASSEMBLY

(See page RF-6)

96. **INSPECT SLIDING ROOF SYSTEM**
(See page RF-12)

97. **INSPECT SHIFT LEVER POSITION (See page AX-200)**

98. **ADJUST SHIFT LEVER POSITION (See page AX-200)**

99. **INSPECT FRONT SEAT ASSEMBLY (See page SE-110)**

100. **INSPECT SRS WARNING LIGHT**
(See page RS-37)

DIAGNOSIS SYSTEM

1. DESCRIPTION

(a) Sliding roof system data and Diagnostic Trouble Codes (DTCs) can be read through the vehicle's Data Link Connector 3 (DLC3). When the system seems to be malfunctioning, use the intelligent tester to check for malfunctions and perform repairs.

2. CHECK DLC3

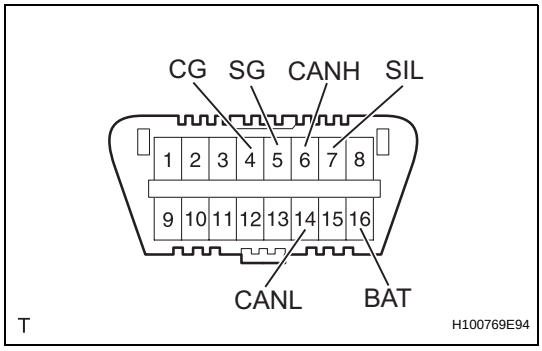

HINT:
The ECU uses ISO 15765-4 for communication. The terminal arrangement of the DLC3 complies with SAE J1962 and matches the ISO 15765-4 format. If the result is not as specified, the DLC3 may have a malfunction. Repair or replace the harness and connector.

Symbols (Terminals No.)	Terminal Description	Condition	Specified Condition
SIL (7) - SG (5)	Bus "+" line	During transmission	Pulse generation
CG (4) - Body ground	Chassis ground	Always	Below 1 Ω
SG (5) - Body ground	Signal ground	Always	Below 1 Ω
BAT (16) - Body ground	Battery positive	Always	11 to 14 V
CANH (6) - CANL (14)	CAN bus line	Engine switch off*	54 to 69 Ω
CANH (6) - CG (4)	CAN bus line	Engine switch off*	200 Ω or higher
CANL (14) - CG (4)	CAN bus line	Engine switch off*	200 Ω or higher
CANH (6) - BAT (16)	CAN bus line	Engine switch off*	6 kΩ or higher
CANL (14) - BAT (16)	CAN bus line	Engine switch off*	6 kΩ or higer

NOTICE:
***: Before measuring the resistance, leave the vehicle as is for at least 1 minute and do not operate the engine switch, any other switches or the doors.**
If the result is not as specified, the DLC3 may have a malfunction. Repair or replace the harness and connector.
HINT:
Connect the cable of the intelligent tester to the DLC3, turn the engine switch on (IG) and attempt to use the tester. If the display indicates that a communication error has occurred, there is a problem either with the vehicle or with the tester.

- If communication is normal when the tester is connected to another vehicle, inspect the DLC3 of the original vehicle.
- If communication is still not possible when the tester is connected to another vehicle, the problem may be in the tester itself. Consult the Service Department listed in the tester's instruction manual.

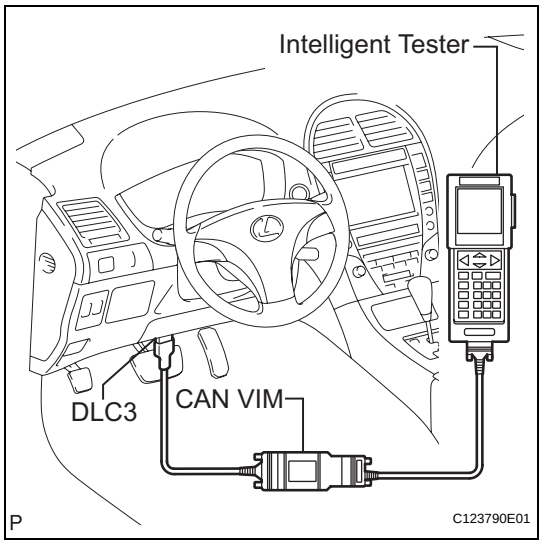

3. INSPECT BATTERY VOLTAGE

Standard voltage:

11 to 14 V

If the voltage is below 11 V, recharge or replace the battery before proceeding to the next step.

DATA LIST / ACTIVE TEST

1. READ DATA LIST

HINT:
Using the intelligent tester's Data List allows switch, sensor, actuator and other item values to be read without removing any parts. Reading the Data List early in troubleshooting is one way to save time.

(a) Connect the intelligent tester to the DLC3.
(b) Turn the engine switch on (IG).
(c) Read the Data List according to the display on the tester.

SLIDE ROOF:

Tester Display	Measurement Item/Range	Normal Condition	Diagnostic Note
OPEN SW	Slide switch open signal/ON or OFF	ON: OPEN switch is pressed. OFF: OPEN switch is not pressed.	-
CLOSE SW	Slide switch close signal/ON or OFF	ON: CLOSE switch is pressed. OFF: CLOSE switch is not pressed.	-
UP SW	Tilt switch up signal/ON or OFF	ON: UP switch is pressed. OFF: UP switch is not pressed.	-
DOWN SW	Tilt switch down signal/ON or OFF	ON: DOWN switch is pressed. OFF: DOWN switch is not pressed.	-
HALL IC1 STATUS	Sliding roof operation signal/ NORMAL or LOCK	NORMAL: Sliding roof motor is operating. LOCK: Sliding roof motor is not operating.	-
HALL IC1 PULSE	Sliding roof operation signal/LO or HI	LO: Sliding roof motor is not operating. HI: Sliding roof motor is operating.	-
HALL IC2 STATUS	Sliding roof operation signal/ NORMAL or LOCK	NORMAL: Sliding roof motor is operating. LOCK: Sliding roof motor is not operating.	-
HALL IC2 PULSE	Sliding roof operation signal/LO or HI	LO: Sliding roof motor is not operating. HI: Sliding roof motor is operating.	-
D-DOOR WARN SW	Driver's door courtesy light switch signal/ON or OFF	ON: Driver's door is open. OFF: Driver's door is closed.	-
IG (MPX)	Engine switch signal (MPX signal)/ON or OFF	ON: Engine switch on (IG) OFF: Engine switch off	-
IG (DIRCT SIG)	Engine switch signal/ON or OFF	ON: Engine switch on (IG) OFF: Engine switch off	-
KEY OFF PERMS	Key-OFF sliding roof operation permit signal/ON or OFF	ON: Driver's side door is not closed within 45 sec. after engine switch is turned off. OFF: Any status except "ON" status	-
WIRELESS OPER (*1)	Wireless sliding roof operating direction signal/Tilt or Slide	TILT: Slide close direction → Tilt up direction SLIDE: Slide open direction → Tilt down direction	-
DOOR KEY OPER (*1)	Key-linked sliding roof operating direction signal/Tilt or Slide	TILT: Slide close direction → Tilt up direction SLIDE: Slide open direction → Tilt down direction	-

Tester Display	Measurement Item/Range	Normal Condition	Diagnostic Note
DOOR HANDLE BTN (*1)	Door handle button close signal/ Available or Not Available	Available: Door handle button close. Not Available: Any status except "Available" status.	-
OPEN /WIRELESS (*1)	Wireless sliding roof open permit signal/Available or Not Available	Available: No key is in vehicle and all doors are closed. Not Available: Any status except "Available" status.	-
CLOSE /DOOR KEY (*1)	Key-linked sliding roof close permit signal/Available or Not Available	Available: Driver's side door is not closed within 45 sec. after engine switch is turned off. Not Available: Any status except "Available" status.	-
OPEN /DOOR KEY (*1)	Key-linked sliding roof open permit signal/Available or Not Available	Available: Driver's side door is not closed within 45 sec. after engine switch is turned off. Not Available: Any status except "Available" status.	-
CURRENT DOWN SW	Down switch failure signal (Current)/Fail or Not Fail	Fail: Sliding roof tilt down signal failure (Current) Not Fail: Sliding roof tilt down signal not fail (Current)	-
CURRENT UP SW	Up switch failure signal (Current)/ Fail or Not Fail	Fail: Sliding roof tilt up signal failure (Current) Not Fail: Sliding roof tilt up signal not fail (Current)	-
CURRENT CLS SW	Close switch failure signal (Current)/Fail or Not Fail	Fail: Sliding roof close signal failure (Current) Not Fail: Sliding roof close signal not fail (Current)	-
CURRENT OPN SW	Open switch failure signal (Current)/Fail or Not Fail	Fail: Sliding roof open signal failure (Current) Not Fail: Sliding roof open signal not fail (Current)	-
PAST DOWN SW	Down switch failure signal (Past)/ Fail or Not Fail	Fail: Sliding roof tilt down signal failure (Past) Not Fail: Sliding roof tilt down signal not fail (Past)	-
PAST UP SW	Up switch failure signal (Past)/ Fail or Not Fail	Fail: Sliding roof tilt up signal failure (Past) Not Fail: Sliding roof tilt up signal not fail (Past)	-
PAST CLS SW	Close switch failure signal (Past)/ Fail or Not Fail	Fail: Sliding roof close signal failure (Past) Not Fail: Sliding roof close signal not fail (Past)	-
PAST OPN SW	Open switch failure signal (Past)/ Fail or Not Fail	Fail: Sliding roof open signal failure (Past) Not Fail: Sliding roof open signal not fail (Past)	-
#CODE	Number of trouble code	Number of trouble code	-

HINT:
*1: Except multi-panel moon roof

2. PERFORM ACTIVE TEST

HINT:
Performing the intelligent tester's Active Test allows relay, VSV, actuator and other items to be operated without removing any parts. Performing the Active Test early in troubleshooting is one way to save time. The Data List can be displayed during the Active Test.

(a) Connect the intelligent tester to the DLC3.
(b) Turn the engine switch on (IG).
(c) Perform the Active Test according to the display on the tester.

SLIDE ROOF:

Tester Display	Test Part	Control Range	Diagnostic Note
SLIDE ROOF	Operate sliding roof SLIDE CLOSE/TILT UP	CLOS/UP: Sliding roof SLIDE CLOSE or TILT UP operation occurs OFF: Sliding roof is not operating	-
SLIDE ROOF	Operate sliding roof SLIDE OPEN/TILT DOWN	OPN/DWN: Sliding roof SLIDE OPEN or TILT DOWN operation occurs OFF: Sliding roof is not operating	-

DIAGNOSTIC TROUBLE CODE CHART

If any trouble code is displayed during DTC check, check the circuit corresponding to the code in the table below. Proceed to the page given for the circuit.

Sliding Roof System

DTC Code	Detection Item	Trouble Area	See page
B2341	Sensor (Motor) Failure	1. Sliding roof drive gear sub-assembly (Sliding roof control ECU) 2. Roof console box assembly (Sliding roof control switch) 3. Wire harness	RF-15
B2342	Switch Failure	1. Sliding roof drive gear sub-assembly (Sliding roof control ECU) 2. Roof console box assembly (Sliding roof control switch) 3. Wire harness	RF-20
B2343	Position Initialization Incomplete	1. Sliding roof drive gear sub-assembly (Sliding roof control ECU) 2. Roof console box assembly (Sliding roof control switch) 3. Wire harness	RF-24
B2344	Position Failure	1. Sliding roof drive gear sub-assembly (Sliding roof control ECU) 2. Roof console box assembly (Sliding roof control switch) 3. Wire harness	RF-15

ON-VEHICLE INSPECTION

1. CHECK AUTO OPERATION

(a) Turn the engine switch on (IG).

(b) When the roof glass is fully closed, press the OPEN switch for 0.3 seconds or more. Check that the roof glass automatically slides until it is fully opened.

(c) When the roof glass is fully open, press the CLOSE switch for 0.3 seconds or more. Check that the roof glass automatically slides until it is fully closed.

(d) When the roof glass is fully closed, press the UP switch for 0.3 seconds or more. Check that the roof glass automatically tilts until it is fully tilted upward.

(e) When the roof glass is fully open, press the DOWN switch for 0.3 seconds or more. Check that the roof glass automatically tilts until it is fully tilted downward.

(f) When the auto operation is operating, check that pressing any personal light switch stops the roof glass operation.
HINT:
When pressing the switch for 0.3 seconds or less, the roof glass moves but auto operation does not operate.

2. CHECK SLIDING ROOF OPERATION AFTER ENGINE SWITCH IS TURNED OFF

(a) Turn the engine switch from on (IG) to off, and check that the sliding roof operates. Then open and close the driver's side door once, and check that the sliding roof does not operate.

(b) Turn the engine switch from on (IG) to off and wait for approximately 43 seconds. Check that the sliding roof does not operate.

(c) Operate the auto (SLIDE OPEN/CLOSE or TILT UP/DOWN) operation. While the roof glass is in motion, turn the engine switch from on (IG) to off. Check that the auto operation continues until the roof glass opens or closes fully.

3. CHECK JAM PROTECTION FUNCTION

CAUTION:

- **Do not use a part of your body, for example, your hand, to check the jam protection.**
- **Do not allow anything to become caught in the sliding roof by accident in this procedure.**
- **Perform the inspection from the inside of the vehicle.**

NOTICE:

- **Do not use hard objects such as a hammer, to avoid damage to the roof.**
- **If the jam protection does not operate, reset the sliding roof drive gear (motor).**

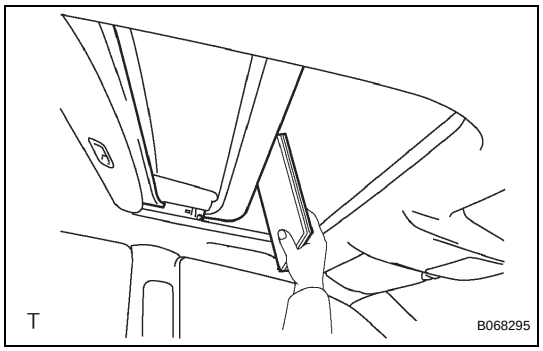

(a) When the sliding roof auto operation is operating and an object is caught between the vehicle body and glass, check that the roof glass opens 218 mm (8.58 in.) from the point of contact with the object, or opens fully if there is not an opening distance of 218 mm (8.58 in.).

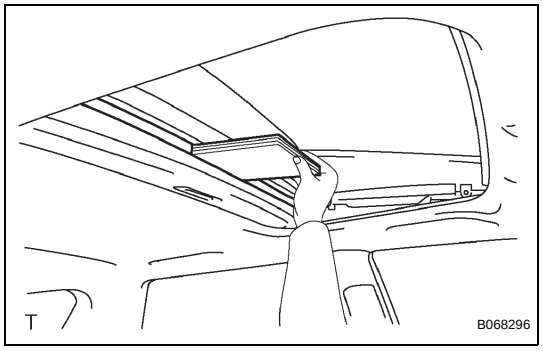

(b) When the TILT UP/DOWN function is operating, and an object is caught between the vehicle body and the roof glass, check that the sliding roof tilts up fully.

DTC	B2341	Sensor (Motor) Failure

DTC	B2344	Position Failure

DESCRIPTION

When the sliding roof drive gear sub-assembly (sliding roof control ECU) detects malfunctions in the motor, and the sliding roof operation is stopped, DTC B2341 is output. When the sliding roof drive gear sub-assembly (sliding roof control ECU) detects malfunctions in the gear, and the sliding roof operation is stopped, DTC B2344 is output.

DTC No.	DTC Detection Condition	Trouble Area
B2341	Sensor (motor) Failure	• Sliding roof drive gear sub-assembly (sliding roof control ECU) • Roof console box assembly (sliding roof control switch) • Wire harness
B2344	Position Failure	• Sliding roof drive gear sub-assembly (sliding roof control ECU) • Roof console box assembly (sliding roof control switch) • Wire harness

WIRING DIAGRAM

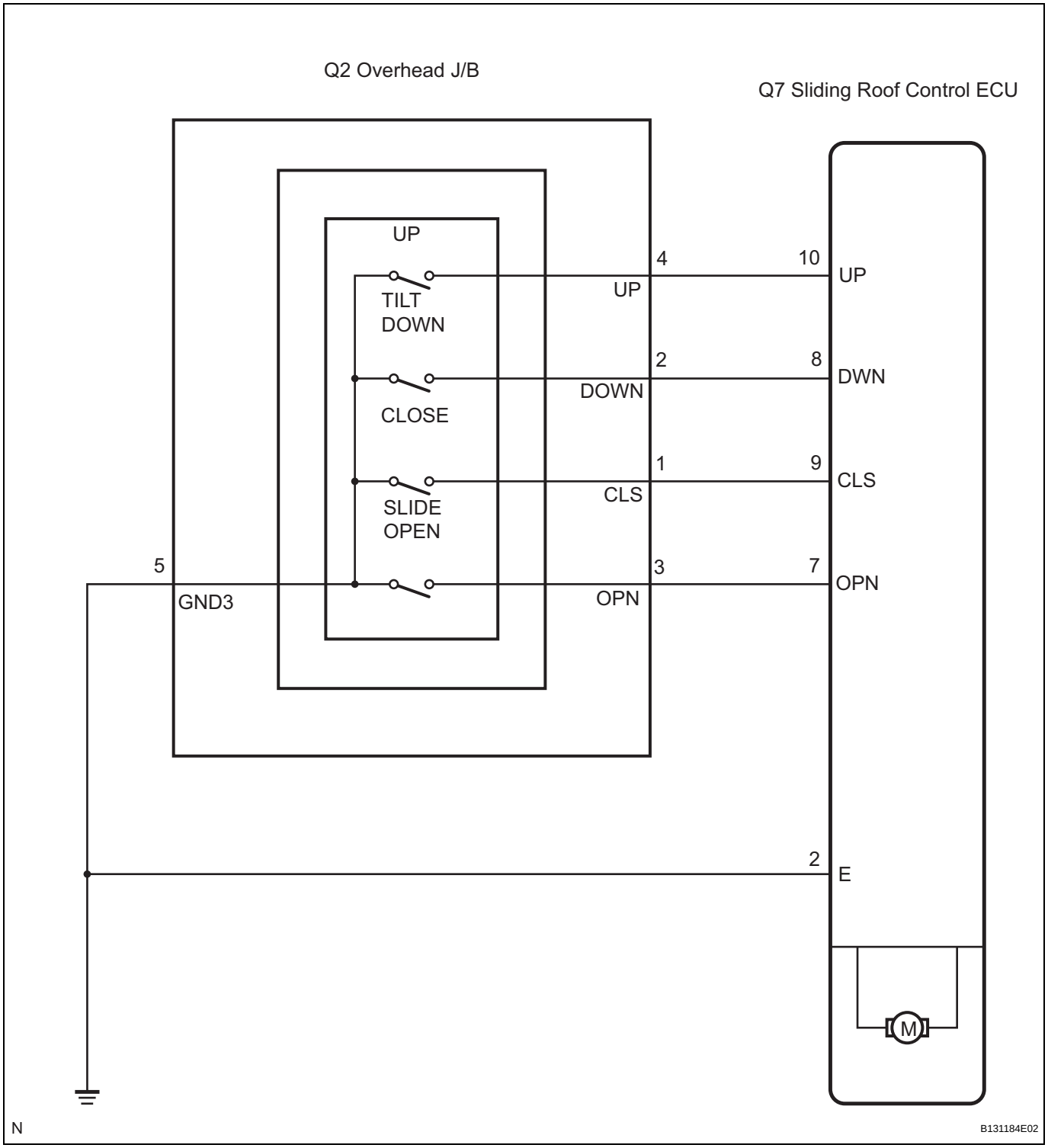

INSPECTION PROCEDURE

1	**CHECK SLIDING ROOF FUNCTION**

(a) Check the auto operation with the OPEN, DOWN, CLOSE and UP switches (See page RF-12).

RF

OK:
Auto operation operates normally with OPEN, DOWN, CLOSE and UP switches.

NG → **Go to step 3**

OK

2	DELETE DTC

(a) Delete the DTCs (See page RF-9).

NEXT

END

3	INITIALIZE SLIDING ROOF DRIVE GEAR SUB-ASSEMBLY (SLIDING ROOF CONTROL ECU)

(a) Check that the sliding roof drive gear sub-assembly can be initialized (See page RF-6).
OK:
Sliding roof drive gear sub-assembly can be initialized.

NG → **Go to step 6**

OK

4	CHECK SLIDING ROOF FUNCTION

(a) Check the auto operation with the OPEN, DOWN, CLOSE and UP switches (See page RF-12).
OK:
Auto operation operates normally with OPEN, DOWN, CLOSE and UP switches.

NG → **REPLACE SLIDING ROOF DRIVE GEAR SUB-ASSEMBLY (SLIDING ROOF CONTROL ECU)**

OK

RF

5	DELETE DTC

(a) Delete the DTCs (See page RF-9).

NEXT

END

6	**CHECK WIRE HARNESS (SLIDING ROOF CONTROL ECU - ROOF CONSOLE BOX ASSEMBLY)**

Sliding Roof Control ECU Connector:

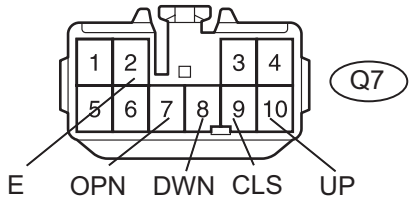

Roof Console Box Assembly Connector:

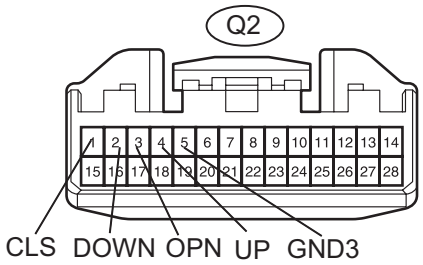

N B131186E02

(a) Disconnect the Q7 and Q2 connectors.
(b) Measure the resistance according to the value(s) in the table below.

Standard resistance

Tester Connection	Condition	Specified Condition
Q7-2 (E) - Q2-5 (GND3)	Always	Below 1 Ω
Q7-7 (OPN) - Q2-3 (OPN)	Always	Below 1 Ω
Q7-8 (DWN) - Q2-2 (DOWN)	Always	Below 1 Ω
Q7-9 (CLS) - Q2-1 (CLS)	Always	Below 1 Ω
Q7-10 (UP) - Q2-4 (UP)	Always	Below 1 Ω
Q2-1 (CLS) - Body ground	Always	10 kΩ or higher
Q2-2 (DOWN) - Body ground	Always	10 kΩ or higher
Q2-3 (OPN) - Body ground	Always	10 kΩ or higher
Q2-4 (UP) - Body ground	Always	10 kΩ or higher
Q2-5 (GND3) - Body ground	Always	Below 1 Ω

NG → **REPAIR OR REPLACE HARNESS OR CONNECTOR**

OK

7 INSPECT ROOF CONSOLE BOX ASSEMBLY (SLIDING ROOF CONTROL SWITCH)

Roof Console Box Assembly Connector:

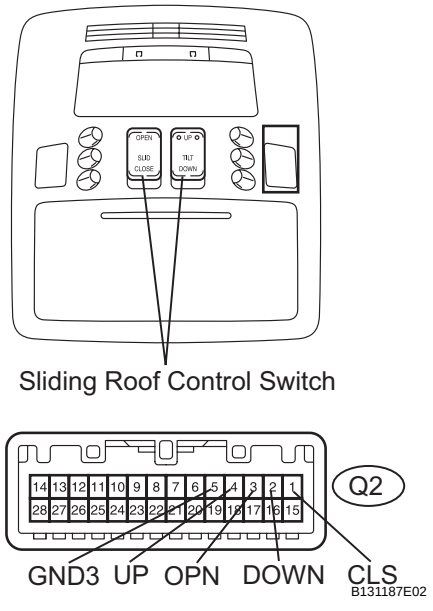

(a) Remove the roof console box assembly.

(b) Measure the resistance according to the value(s) in the table below.

Standard resistance

Tester Connection	Switch Position	Specified Condition
Q2-1 (CLS) - Q2-5 (GND3)	CLOSE	Below 100 Ω
Q2-2 (DOWN) - Q2-5 (GND3)	DOWN	Below 100 Ω
Q2-3 (OPN) - Q2-5 (GND3)	OPEN	Below 100 Ω
Q2-4 (UP) - Q2-5 (GND3)	UP	Below 100 Ω
Q2-1 (CLS) - Q2-5 (GND3)	OPEN	1 kΩ or higher
Q2-2 (DOWN) - Q2-5 (GND3)	CLOSE	1 kΩ or higher
Q2-3 (OPN) - Q2-5 (GND3)	UP	1 kΩ or higher
Q2-4 (UP) - Q2-5 (GND3)	DOWN	1 kΩ or higher

NG → **REPLACE ROOF CONSOLE BOX ASSEMBLY (SLIDING ROOF CONTROL SWITCH)**

OK

REPLACE SLIDING ROOF DRIVE GEAR SUB-ASSEMBLY (SLIDING ROOF CONTROL ECU)

DTC	B2342	Switch Failure

DESCRIPTION

This DTC is output when the sliding roof drive gear sub-assembly (sliding roof control ECU) detects that the OPEN, CLOSE, UP or DOWN switch in the roof console box assembly (sliding roof control switch) is stuck for 30 seconds or more.

DTC No.	DTC Detection Condition	Trouble Area
B2342	Sliding roof drive gear sub-assembly (sliding roof control ECU) detects OPEN, CLOSE, UP or DOWN switch in overhead junction block is stuck for 30 seconds or more	• Sliding roof drive gear sub-assembly (sliding roof control ECU) • Roof console box assembly (sliding roof control switch) • Wire harness

WIRING DIAGRAM

Refer to DTC B2341 (See page RF-16).

INSPECTION PROCEDURE

1 READ VALUE OF INTELLIGENT TESTER (SLIDE OPEN AND TILT UP SWITCH)

(a) Use the DATA LIST to check if the sliding roof switch is functioning properly.

Sliding roof ECU

Item	Measurement Item/Range (Display)	Normal Condition	Diagnostic Note
OPEN SW	**Slide switch open signal/ON or OFF**	**ON: OPEN switch is pressed. OFF: OPEN switch is not pressed.**	**-**
CLOSE SW	**Slide switch close signal/ON or OFF**	**ON: CLOSE switch is pressed. OFF: CLOSE switch is not pressed.**	**-**
UP SW	**Tilt switch up signal/ON or OFF**	**ON: UP switch is pressed. OFF: UP switch is not pressed.**	**-**
DOWN SW	**Tilt switch down signal/ON or OFF**	**ON: DOWN switch is pressed. OFF: DOWN switch is not pressed.**	**-**

OK:

The intelligent tester displays as shown in the table according to the operation of each switch.

NG → **Go to step 4**

OK

2 CHECK SLIDING ROOF FUNCTION

(a) Check the auto operation with the OPEN, CLOSE, UP and DOWN switches (See page RF-12).

OK:

Auto operation operates normally with OPEN, CLOSE, UP and DOWN switches.

NG → **Go to step 7**

RF

OK

3	DELETE DTC

(a) Delete the DTCs (See page RF-9).

NEXT

END

4	INSPECT ROOF CONSOLE BOX ASSEMBLY (SLIDING ROOF CONTROL SWITCH)

Roof Console Box Assembly Connector:

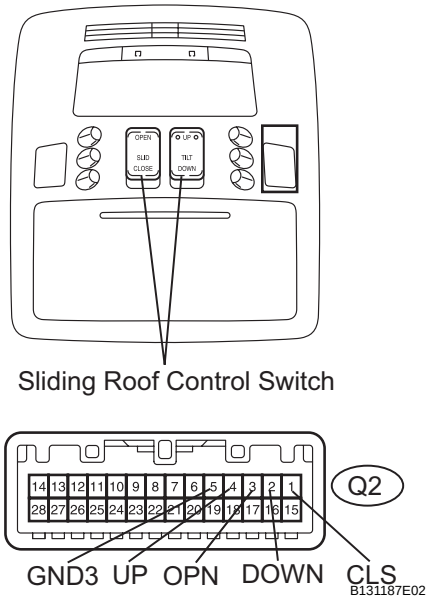

(a) Remove the roof console box assembly.
(b) Measure the resistance according to the value(s) in the table below.

Standard resistance

Tester Connection	Switch Position	Specified Condition
Q2-1 (CLS) - Q2-5 (GND3)	CLOSE	Below 100 Ω
Q2-2 (DOWN) - Q2-5 (GND3)	DOWN	Below 100 Ω
Q2-3 (OPN) - Q2-5 (GND3)	OPEN	Below 100 Ω
Q2-4 (UP) - Q2-5 (GND3)	UP	Below 100 Ω
Q2-1 (CLS) - Q2-5 (GND3)	OPEN	1 kΩ or higher
Q2-2 (DOWN) - Q2-5 (GND3)	CLOSE	1 kΩ or higher
Q2-3 (OPN) - Q2-5 (GND3)	UP	1 kΩ or higher
Q2-4 (UP) - Q2-5 (GND3)	DOWN	1 kΩ or higher

OK → **Go to step 10**

NG

5	REPLACE ROOF CONSOLE BOX ASSEMBLY (SLIDING ROOF CONTROL SWITCH)

(a) Temporarily replace the roof console box assembly (sliding roof control switch) with a new one or normally functioning one (See page LI-160).

RF

NEXT

6	DELETE DTC

(a) Delete the DTCs (See page RF-9).

NEXT

END

7	**INITIALIZE SLIDING ROOF DRIVE GEAR SUB-ASSEMBLY (SLIDING ROOF CONTROL ECU)**

(a) Check that the sliding roof drive gear sub-assembly can be initialized (See page RF-6).
OK:
Sliding roof drive gear sub-assembly can be initialized.

NG → **Go to step 10**

OK

8	**CHECK SLIDING ROOF FUNCTION**

(a) Check the auto operation with the OPEN, CLOSE, UP and DOWN switches (See page RF-12).
OK:
Auto operation operates normally with OPEN, CLOSE, UP and DOWN switches.

NG → **REPLACE SLIDING ROOF DRIVE GEAR SUB-ASSEMBLY (SLIDING ROOF CONTROL ECU)**

OK

9	**DELETE DTC**

(a) Delete the DTCs (See page RF-9).

NEXT

END

10	CHECK WIRE HARNESS (SLIDING ROOF CONTROL ECU - ROOF CONSOLE BOX ASSEMBLY)

Sliding Roof Control ECU Connector:

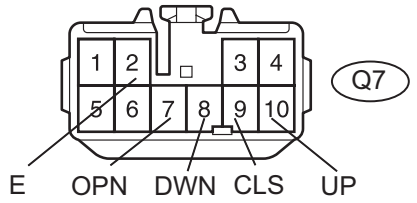

Roof Console Box Assembly Connector:

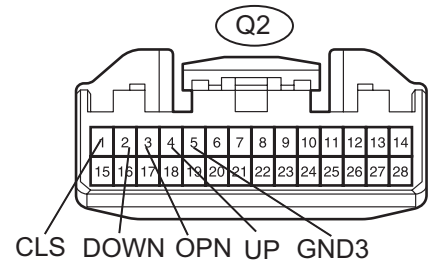

N B131186E02

(a) Disconnect the Q7 and Q2 connectors.
(b) Measure the resistance according to the value(s) in the table below.

Standard resistance

Tester Connection	Condition	Specified Condition
Q7-2 (E) - Q2-5 (GND3)	Always	Below 1 Ω
Q7-7 (OPN) - Q2-3 (OPN)	Always	Below 1 Ω
Q7-8 (DWN) - Q2-2 (DOWN)	Always	Below 1 Ω
Q7-9 (CLS) - Q2-1 (CLS)	Always	Below 1 Ω
Q7-10 (UP) - Q2-4 (UP)	Always	Below 1 Ω
Q2-1 (CLS) - Body ground	Always	10 kΩ or higher
Q2-2 (DOWN) - Body ground	Always	10 kΩ or higher
Q2-3 (OPN) - Body ground	Always	10 kΩ or higher
Q2-4 (UP) - Body ground	Always	10 kΩ or higher
Q2-5 (GND3) - Body ground	Always	Below 1 Ω

NG → **REPAIR OR REPLACE HARNESS OR CONNECTOR**

OK

REPLACE SLIDING ROOF DRIVE GEAR SUB-ASSEMBLY (SLIDING ROOF CONTROL ECU)

DTC	B2343	Position Initialization Incomplete

DESCRIPTION

This DTC is output when the sliding roof drive gear sub-assembly (sliding roof control ECU) has not been initialized.

DTC No.	DTC Detection Condition	Trouble Area
B2343	Sliding roof drive gear sub-assembly (sliding roof control ECU) has not been initialized	• Sliding roof drive gear sub-assembly (sliding roof control ECU) • Roof console box assembly (sliding roof control switch) • Wire harness

WIRING DIAGRAM

Refer to DTC B2341 (See page RF-16).

INSPECTION PROCEDURE

1 INITIALIZE SLIDING ROOF DRIVE GEAR SUB-ASSEMBLY (SLIDING ROOF CONTROL ECU)

(a) Check that the sliding roof drive gear sub-assembly can be initialized (See page RF-6).

OK:

Sliding roof drive gear sub-assembly can be initialized.

NG → **Go to step 3**

OK

2 CHECK SLIDING ROOF FUNCTION

(a) Check the auto operation with the OPEN, CLOSE, UP and DOWN switches (See page RF-12).

OK:

Auto operation operates normally with OPEN, CLOSE, UP and DOWN switches.

NG → **REPLACE SLIDING ROOF DRIVE GEAR SUB-ASSEMBLY (SLIDING ROOF CONTROL ECU)**

OK

END

3 CHECK WIRE HARNESS (SLIDING ROOF DRIVE GEAR - OVERHEAD JUNCTION BLOCK)

Sliding Roof Control ECU Connector:

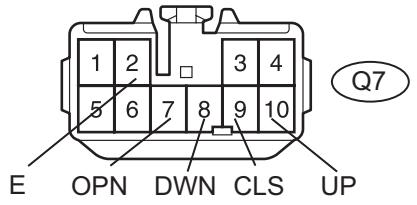

Roof Console Box Assembly Connector:

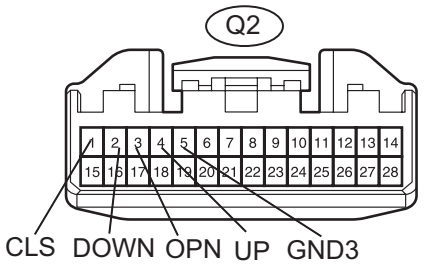

N B131186E02

(a) Disconnect the Q7 and Q2 connectors.

(b) Measure the resistance according to the value(s) in the table below.

Standard resistance

Tester Connection	Condition	Specified Condition
Q7-2 (E) - Q2-5 (GND3)	Always	Below 1 Ω
Q7-7 (OPN) - Q2-3 (OPN)	Always	Below 1 Ω
Q7-8 (DWN) - Q2-2 (DOWN)	Always	Below 1 Ω
Q7-9 (CLS) - Q2-1 (CLS)	Always	Below 1 Ω
Q7-10 (UP) - Q2-4 (UP)	Always	Below 1 Ω
Q2-1 (CLS) - Body ground	Always	10 kΩ or higher
Q2-2 (DOWN) - Body ground	Always	10 kΩ or higher
Q2-3 (OPN) - Body ground	Always	10 kΩ or higher
Q2-4 (UP) - Body ground	Always	10 kΩ or higher
Q2-5 (GND3) - Body ground	Always	Below 1 Ω

NG → **REPAIR OR REPLACE HARNESS OR CONNECTOR**

OK

4 INSPECT ROOF CONSOLE BOX ASSEMBLY (SLIDING ROOF CONTROL SWITCH)

Roof Console Box Assembly Connector:

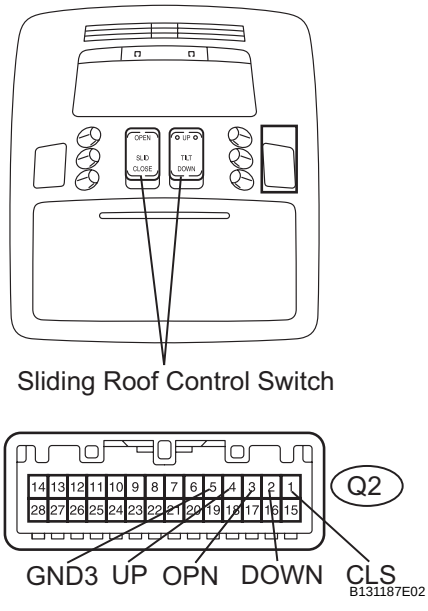

(a) Remove the roof console box assembly.

(b) Measure the resistance according to the value(s) in the table below.

Standard resistance

Tester Connection	Switch Position	Specified Condition
Q2-1 (CLS) - Q2-5 (GND3)	CLOSE	Below 100 Ω
Q2-2 (DOWN) - Q2-5 (GND3)	DOWN	Below 100 Ω
Q2-3 (OPN) - Q2-5 (GND3)	OPEN	Below 100 Ω
Q2-4 (UP) - Q2-5 (GND3)	UP	Below 100 Ω
Q2-1 (CLS) - Q2-5 (GND3)	OPEN	1 kΩ or higher
Q2-2 (DOWN) - Q2-5 (GND3)	CLOSE	1 kΩ or higher
Q2-3 (OPN) - Q2-5 (GND3)	UP	1 kΩ or higher
Q2-4 (UP) - Q2-5 (GND3)	DOWN	1 kΩ or higher

NG → **REPLACE ROOF CONSOLE BOX ASSEMBLY (SLIDING ROOF CONTROL SWITCH)**

OK

REPLACE SLIDING ROOF DRIVE GEAR SUB-ASSEMBLY (SLIDING ROOF CONTROL ECU)

Sliding Roof Control Switch Circuit

DESCRIPTION

The sliding roof drive gear sub-assembly (sliding roof control ECU) receives slide switch and tilt switch signals and drives its built-in motor.

WIRING DIAGRAM

Refer to DTC B2341 (See page RF-16).

INSPECTION PROCEDURE

1	PERFORM ACTIVE TEST BY INTELLIGENT TESTER (SLIDING ROOF OPERATION)

(a) Select the ACTIVE TEST, use the intelligent tester to generate a control command, and then check that the sliding roof slides open/close and tilts up/down.

SLIDE ROOF

Tester Display	Test Part	Control Range	Diagnostic Note
SLIDE ROOF	Operate sliding roof SLIDE CLOSE/TILT UP	CLOS/UP: Sliding roof SLIDE CLOSE or TILT UP operation occurs OFF: Sliding roof is not operating	-
SLIDE ROOF	Operate sliding roof SLIDE OPEN/TILT DOWN	OPN/DWN: Sliding roof SLIDE OPEN or TILT DOWN operation occurs OFF: Sliding roof is not operating	-

OK:
Sliding roof operates normally.

NG → **REPLACE SLIDING ROOF DRIVE GEAR SUB-ASSEMBLY (SLIDING ROOF CONTROL ECU)**

OK

2	READ VALUE OF INTELLIGENT TESTER (SLIDING ROOF SWITCH)

(a) Use the DATA LIST to check if the sliding roof switch is functioning properly.

SLIDE ROOF

Tester Display	Measurement Item/Range	Normal Condition	Diagnostic Note
OPEN SW	Slide switch open signal/ON or OFF	ON: OPEN switch is pressed. OFF: OPEN switch is not pressed.	-
CLOSE SW	Slide switch close signal/ON or OFF	ON: CLOSE switch is pressed. OFF: CLOSE switch is not pressed.	-
UP SW	Tilt switch up signal/ON or OFF	ON: UP switch is pressed. OFF: UP switch is not pressed.	-
DOWN SW	Tilt switch down signal/ON or OFF	ON: DOWN switch is pressed. OFF: DOWN switch is not pressed.	-

OK:
The intelligent tester displays as shown in the table according to the operation of each switch.

OK → **REPLACE SLIDING ROOF DRIVE GEAR SUB-ASSEMBLY (SLIDING ROOF CONTROL ECU)**

NG

3 CHECK WIRE HARNESS (SLIDING ROOF CONTROL ECU - ROOF CONSOLE BOX ASSEMBLY)

Sliding Roof Control ECU Connector:

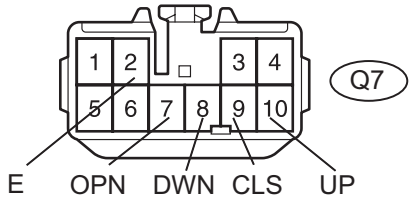

Roof Console Box Assembly Connector:

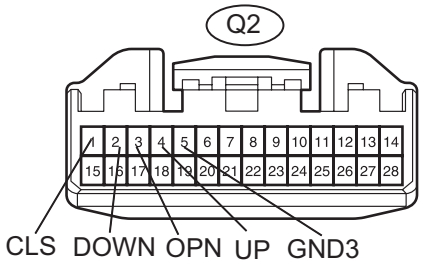

N B131186E02

(a) Disconnect the Q7 and Q2 connectors.
(b) Measure the resistance according to the value(s) in the table below.

Standard resistance

Tester Connection	Condition	Specified Condition
Q7-2 (E) - Q2-5 (GND3)	Always	Below 1 Ω
Q7-7 (OPN) - Q2-3 (OPN)	Always	Below 1 Ω
Q7-8 (DWN) - Q2-2 (DOWN)	Always	Below 1 Ω
Q7-9 (CLS) - Q2-1 (CLS)	Always	Below 1 Ω
Q7-10 (UP) - Q2-4 (UP)	Always	Below 1 Ω
Q2-1 (CLS) - Body ground	Always	10 kΩ or higher
Q2-2 (DOWN) - Body ground	Always	10 kΩ or higher
Q2-3 (OPN) - Body ground	Always	10 kΩ or higher
Q2-4 (UP) - Body ground	Always	10 kΩ or higher
Q2-5 (GND3) - Body ground	Always	Below 1 Ω

NG → **REPAIR OR REPLACE HARNESS OR CONNECTOR**

OK

REPLACE ROOF CONSOLE BOX ASSEMBLY (SLIDING ROOF CONTROL SWITCH)

CHECK MODE PROCEDURE

HINT:
Intelligent tester only:
Compared to the normal mode, check mode is more sensitive to malfunctions. Therefore, check mode can detect the malfunctions that cannot be detected in normal mode.

NOTICE:
All the stored DTCs and freeze frame data are erased if: 1) the ECM is changed from normal mode to check mode or vice versa; or 2) the engine switch is turned from on (IG) to on (ACC) or off while in check mode. Before changing modes, always check and note any DTCs and freeze frame data.

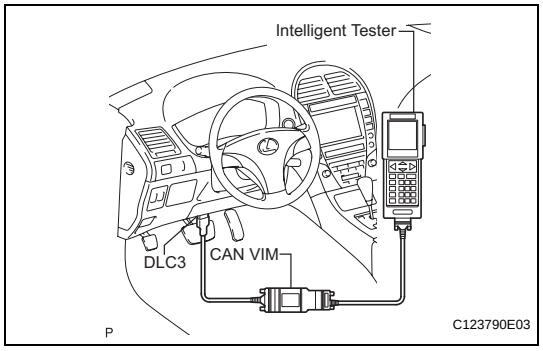

1. CHECK MODE PROCEDURE (Using an intelligent tester)

(a) Check and ensure the following conditions:
  (1) Battery positive voltage 11 V or more.
  (2) Throttle valve fully closed.
  (3) Transmission in the P or N position.
  (4) A/C switch OFF.
(b) Turn the engine switch off.
(c) Connect the intelligent tester to the DLC3.
(d) Turn the engine switch on (IG).
(e) Turn the tester on.
(f) Enter the following menus: DIAGNOSIS / ENHANCED OBD II / CHECK MODE.
(g) Switch the ECM from normal mode to check mode.

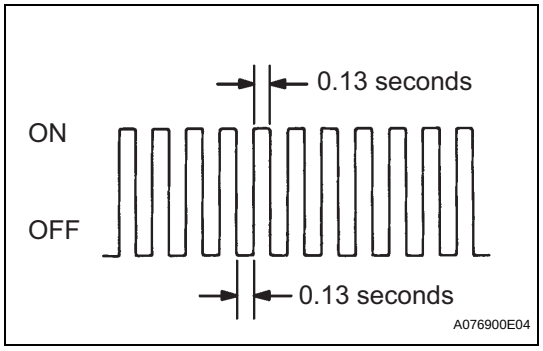

(h) Make sure that the MIL flashes as shown in the illustration.
(i) Start the engine.
(j) Make sure that the MIL turns off.
(k) Simulate the conditions of the malfunction described by the customer.
(l) Check for DTCs and freeze frame data using the tester.

ES

FAIL-SAFE CHART

If any of the following DTCs are set, the ECM enters fail-safe mode to allow the vehicle to be driven temporarily.

DTCs	Components	Fail-Safe Operations	Fail-Safe Deactivation Conditions
P0031, P0032, P0051 and P0052	Air-Fuel Ratio (A/F) Sensor Heater	ECM turns off A/F sensor heater	Engine switch off
P0037, P0038, P0057 and P0058	Heated Oxygen (HO2) Sensor Heater	ECM turns off HO2 sensor heater	Engine switch off
P0100, P0102 and P0103	Mass Air Flow (MAF) Meter	ECM calculates ignition timing according to engine speed and throttle valve position	Pass condition detected
P0110, P0112 and P0113	Intake Air Temperature (IAT) Sensor	ECM estimates IAT to be 20°C (68°F)	Pass condition detected
P0115, P0117 and P0118	Engine Coolant Temperature (ECT) Sensor	ECM estimates ECT to be 80°C (176°F)	Pass condition detected
P0120, P0121, P0122, P0123, P0220, P0222, P0223, P0604, P0606, P0607, P0657, P2102, P2103, P2111, P2112, P2118, P2119 and P2135	Electronic Throttle Control System (ETCS)	ECM cuts off throttle actuator current and throttle valve returned to 6.5° throttle position by return spring ECM then adjusts engine output by controlling fuel injection (intermittent fuel-cut) and ignition timing in accordance with accelerator pedal opening angle, to allow vehicle to continue at minimal speed*	Pass condition detected and then engine switch turned off
P0327, P0328, P0332 and P0333	Knock Sensor	ECM sets ignition timing to maximum retard	Engine switch off
P0351 to P0356	Igniter	ECM cuts fuel	Pass condition detected
P2120, P2121, P2122, P2123, P2125, P2127, P2128 and P2138	Accelerator Pedal Position (APP) Sensor	APP sensor has 2 sensor circuits: Main and Sub If either of circuits malfunctions, ECM controls engine using the other circuit If both of circuits malfunction, ECM regards accelerator pedal as being released. As a result, throttle valve is closed and engine idles	Pass condition detected and then engine switch turned off

NOTE:

*: The vehicle can be driven slowly when the accelerator pedal is depressed slowly. If the accelerator pedal is depressed quickly, the vehicle may speed up and slow down erratically.

DATA LIST / ACTIVE TEST

1. DATA LIST

HINT:
By reading the DATA LIST displayed on an intelligent tester, you can check values, including those of the switches, sensors, and actuators, without removing any parts. Reading the DATA LIST as the first step in troubleshooting is one method of shortening diagnostic time.

NOTICE:
In the table below, the values listed under Normal Condition are reference only. Do not depend solely on these values when determining whether or not a part is faulty.

(a) Warm up the engine.
(b) Turn the engine switch off.
(c) Connect the intelligent tester to the DLC3.
(d) Turn the engine switch on (IG).
(e) Turn the tester on.
(f) Enter the following menus: DIAGNOSIS / ENHANCED OBD II / DATA LIST.
(g) Check the values by referring to the table below.

Tester Display	Measurement Item/Range	Normal Condition	Diagnostic Note
INJECTOR	Injection period of No. 1 cylinder: Min.: 0 ms, Max.: 32.64 ms	1.2 to 2.4 ms: Idling	-
IGN ADVANCE	Ignition timing advance for No. 1 cylinder: Min.: -64 deg, Max.: 63.5 deg	BTDC 7 to 24 deg: Idling	-
CALC LOAD	Load calculated by ECM: Min.: 0%, Max.: 100%	• 10 to 20%: Idling • 10 to 20%: Running without load at 2,500 rpm	Load value
VEHICLE LOAD	Vehicle load: Min.: 0%, Max.: 25,700%	Actual vehicle load	Load percentage in terms of maximum intake air flow amount
MAF	Air flow rate from MAF meter: Min.: 0 g/sec., Max.: 655.35 g/sec.	2 to 5 g/sec.: Idling 8 to 19 g/sec.: Running without load at 2,500 rpm	If value is approximately 0.0 g/sec.: • Mass air flow meter power source circuit open • VG circuit open or shorted If value is 160.0 g/sec. or more: • E2G circuit open
ENGINE SPD	Engine speed: Min.: 0 rpm, Max.: 16,383.75 rpm	600 to 700 rpm: Idling	-
VEHICLE SPD	Vehicle speed: Min.: 0 km/h, Max.: 255 km/h	Actual vehicle speed	Speed indicated on speedometer
COOLANT TEMP	Engine coolant temperature: Min.: -40°C, Max.: 140°C	80 to 100°C (176 to 212°F): After warming up	• If value is -40°C (-40°F): sensor circuit open • If value is 140°C (284°F) or more: sensor circuit shorted
INTAKE AIR	Intake air temperature: Min.: -40°C, Max.: 140°C	Equivalent to ambient air temperature	• If value is -40°C (-40°F): sensor circuit open • If value is 140°C (284°F) or more: sensor circuit shorted
AIR-FUEL RATIO	Ratio compared to stoichiometric level: Min.: 0, Max.: 1.999	0.8 to 1.2: Idling	-
PURGE DENSITY	Learning value of purge density: Min.: -50, Max.: 350	-40 to 0: Idling	Service data

Tester Display	Measurement Item/Range	Normal Condition	Diagnostic Note
EVAP PURGE FLOW	Ratio of evaporative purge flow to intake air volume: Min.: 0%, Max.: 102.4%	0 to 8%: Idling	-
EVAP PURGE VSV	EVAP (PURGE) VSV control duty: Min.: 0%, Max.: 100%	0 to 100%: Idling	Command signal from ECM
VAPOR PRES PUMP	Vapor pressure: Min.: 33.853 kPa, Max.: 125.596 kPa	0 kPa: Fuel tank cap removed	EVAP system pressure monitored by canister pressure sensor
VAPOR PRES CALC	Vapor pressure (calculated): Min.: -5.632 kPa, Max.: 715.264 kPa	0 kPa: Fuel tank cap removed	EVAP system pressure monitored by canister pressure sensor
KNOCK CRRT VAL	Correction learning value of knocking: Min: -64°CA, Max.: 1,984°CA	0 to 22°CA: Driving at 70 km/h (44 mph)	Service data
KNOCK FB VAL	Feedback value of knocking: Min: -64°CA, Max.: 1,984°CA	-22 to 0°CA: Driving at 70 km/h (44 mph)	Service data
ACCEL POS #1	Absolute Accelerator Pedal Position (APP) No. 1: Min.: 0%, Max.: 100%	10 to 22%: Accelerator pedal released 54 to 86%: Accelerator pedal fully depressed	Read value with ignition switch ON (Do not start engine)
ACCEL POS #2	Absolute APP No. 2: Min.: 0%, Max.: 100%	12 to 42%: Accelerator pedal released 66 to 98%: Accelerator pedal fully depressed	Read value with ignition switch ON (Do not start engine)
ACCEL POS #1	APP sensor No. 1 voltage: Min.: 0 V, Max.: 4.98 V	-	ETCS freeze frame data
ACCEL POS #2	APP sensor No. 2 voltage: Min.: 0 V, Max.: 4.98 V	-	ETCS freeze frame data
ACCEL POS #1	APP sensor No. 1 voltage: Min.: 0 V, Max.: 5 V	0.5 to 1.1 V: Accelerator pedal released 2.6 to 4.5 V: Accelerator pedal fully depressed	Read value with ignition switch ON (Do not start engine)
ACCEL POS #2	APP sensor No. 2 voltage: Min.: 0 V, Max.: 5 V	1.2 to 2.0 V: Accelerator pedal released 3.4 to 5.0 V: Accelerator pedal fully depressed	Read value with ignition switch ON (Do not start engine)
ACCEL IDL POS	Whether or not accelerator pedal position sensor detecting idle: ON or OFF	ON: Idling	-
THRTL LEARN VAL	Throttle valve fully closed (learned value): Min.: 0 V, Max.: 5 V	0.4 to 0.8 V	-
ACCEL SSR #1 AD	Accelerator fully closed value No. 1 (AD): Min.: 0 V, Max.: 4.98 V	-	ETCS service data
ACCEL LRN VAL#1	Accelerator fully closed learning value No. 1: Min.: 0 deg, Max.: 124.512 deg	-	ETCS service data
ACCEL LRN VAL#2	Accelerator fully closed learning value No. 2: Min.: 0 deg, Max.: 124.512 deg	-	ETCS service data
FAIL #1	Whether or not fail safe function executed: ON or OFF	ON: ETCS has failed	-
FAIL #2	Whether or not fail safe function executed: ON or OFF	ON: ETCS has failed	-
ST1	Starter signal: ON or OFF	ON: Cranking	-
SYS GUARD JUDGE	System guard: ON or OFF	-	ETCS service data

Tester Display	Measurement Item/Range	Normal Condition	Diagnostic Note
OPN MALFUNCTION	Open side malfunction: ON or OFF	-	ETCS service data
THROTTLE POS	Absolute throttle position sensor: Min.: 0%, Max.: 100%	• 10 to 24%: Throttle fully closed • 64 to 96%: Throttle fully open	• Calculated value based on VTA1 • Read value with ignition switch ON (Do not start engine)
THROTTL IDL POS	Whether or not throttle position sensor detecting idle: ON or OFF	ON: Idling	-
THRTL REQ POS	Throttle requirement position: Min.: 0 V, Max.: 5 V	0.5 to 1.0 V: Idling	-
THROTTLE POS	Throttle position: Min.: 0%, Max.: 100%	0 to 18%: Idling	Calculated value based on VTA1
THROTTLE POS #2	Absolute throttle position sensor No. 2: Min.: 0%, Max.: 100%	-	Calculated value based on VTA2
THROTTLE POS #1	Throttle position sensor No. 1 output voltage: Min.: 0 V, Max.: 4.98 V	-	ETCS freeze frame data
THROTTLE POS #2	Throttle position sensor No. 2 output voltage: Min.: 0 V, Max.: 4.98 V	-	ETCS freeze frame data
THROTTLE POS #1	Throttle position sensor No. 1 output voltage: Min.: 0 V, Max.: 5 V	• 0.5 to 1.2 V: Throttle fully closed • 3.2 to 4.8 V: Throttle fully open	-
THROTTLE POS #2	Throttle position sensor No. 2 output voltage: Min.: 0 V, Max.: 5 V	• 2.0 to 2.9 V: Throttle fully closed • 4.6 to 5.0 V: Throttle fully open	Read value with ignition switch ON (Do not start engine)
THRTL COMND VAL	Throttle position command value: Min.: 0 V, Max.: 4.9804 V	0.5 to 4.8 V	Read value with ignition switch ON (Do not start engine)
THROTTLE SSR #1	Throttle sensor opener position No. 1: Min.: 0 V, Max.: 4.9804 V	0.6 to 0.9 V	ETCS service data
THROTTLE SSR #2	Throttle sensor opener position No. 2: Min.: 0 V, Max.: 4.9804 V	2.2 to 2.6 V	ETCS service data
THRTL SSR #1 AD	Throttle position sensor No. 1 output voltage (AD): Min.: 0 V, Max.: 4.9804 V	0.6 to 0.9 V	ETCS service data
THROTTLE MOT	Whether or not throttle actuator control permitted: ON or OFF	ON: Idling	Read value with ignition switch ON (Do not start engine)
THROTTLE MOT	Throttle actuator current: Min.: 0 A, Max.: 80 A	0 to 3.0 A: Idling	-
THROTTLE MOT	Throttle actuator: Min.: 0%, Max.: 100%	0.5 to 40%: Idling	-
THROTTLE MOT	Throttle actuator current: Min.: 0 A, Max.: 19.92 A	0 to 3.0 A: Idling	-
THROTL OPN DUTY	Throttle actuator opening duty ratio: Min.: 0%, Max.: 100%	0 to 40%: Idling	• When accelerator pedal is depressed, duty ratio increaseds • Read value with ignition switch ON (Do not start engine)
THROTL CLS DUTY	Throttle actuator closed duty ratio: Min.: 0%, Max.: 100%	0 to 40%: Idling	• When accelerator pedal is increaseds quickly, duty ratio increaseds • Read value with ignition switch ON (Do not start engine)

Tester Display	Measurement Item/Range	Normal Condition	Diagnostic Note
THRTL MOT (OPN)	Throttle actuator duty ratio (open): Min.: 0%, Max.: 100%	-	ETCS service data
THRTL MOT (CLS)	Throttle actuator duty ratio (closed): Min.: 0%, Max.: 100%	-	ETCS service data
O2S B1 S2	Heated oxygen sensor output voltage for bank 1 sensor 2: Min.: 0 V Max.: 1.275 V	0.1 to 0.9 V: Driving at 70 km/h (44 mph)	Performing INJ VOL or A/F CONTROL function of ACTIVE TEST enables technician to check output voltage of sensor
O2S B2 S2	Heated oxygen sensor output voltage for bank 2 sensor 2: Min.: 0 V Max.: 1.275 V	0.1 to 0.9 V: Driving at 70 km/h (44 mph)	Performing INJ VOL or A/F CONTROL function of ACTIVE TEST enables technician to check output voltage of sensor
AFS B1 S1	A/F sensor output voltage for bank 1 sensor 1: Min.: 0 V Max.: 7.999 V	2.8 to 3.8 V: Idling	Performing INJ VOL or A/F CONTROL function of ACTIVE TEST enables technician to check output voltage of sensor
AFS B2 S1	A/F sensor output voltage for bank 2 sensor 1: Min.: 0 V Max.: 7.999 V	2.8 to 3.8 V: Idling	Performing INJ VOL or A/F CONTROL function of ACTIVE TEST enables technician to check output voltage of sensor
AFS B2 S1	A/F sensor current: Min.: -128 mA, Max.: 127.99 mA	-	-
TOTAL FT #1	Total fuel trim of bank 1 Average value for fuel system of bank 1: Min.: -0.5, Max.: 0.496	-0.2 to 0.2: Idling	-
TOTAL FT #2	Total fuel trim of bank 2 Average value for fuel system of bank 2: Min.: -0.5, Max.: 0.496	-0.2 to 0.2: Idling	-
SHORT FT #1	Short-term fuel trim of bank 1: Min.: -100%, Max.: 99.2%	-20 to 20%	Short-term fuel compensation used to maintain air-fuel ratio at stoichiometric air-fuel ratio
SHORT FT #2	Short-term fuel trim of bank 2: Min.: -100%, Max.: 99.2%	-20 to 20%	Short-term fuel compensation used to maintain air-fuel ratio at stoichiometric air-fuel ratio
LONG FT #1	Long-term fuel trim of bank 1: Min.: -100%, Max.: 99.2%	-20 to 20%	Overall fuel compensation carried out in long-term to compensate for continual deviation of short-term fuel trim from central value
LONG FT #2	Long-term fuel trim of bank 2: Min.: -100%, Max.: 99.2%	-20 to 20%	Overall fuel compensation carried out in long-term to compensate for continual deviation of short-term fuel trim from central value
FUEL SYS #1	Fuel system status (Bank 1): OL or CL or OL DRIVE or OL FAULT or CL FAULT	CL: Idling after warming up	• OL (Open Loop): Has not yet satisfied conditions to go closed loop • CL (Closed Loop): Using A/F sensor as feedback for fuel control • OL DRIVE: Open loop due to driving conditions (fuel enrichment) • OL FAULT: Open loop due to detected system fault • CL FAULT: Closed loop but A/F sensor, which used for fuel control malfunctioning

Tester Display	Measurement Item/Range	Normal Condition	Diagnostic Note
FUEL SYS #2	Fuel system status (Bank 2): OL or CL or OL DRIVE or OL FAULT or CL FAULT	CL: Idling after warming up	• OL (Open Loop): Has not yet satisfied conditions to go closed loop • CL (Closed Loop): Using A/F sensor as feedback for fuel control • OL DRIVE: Open loop due to driving conditions (fuel enrichment) • OL FAULT: Open loop due to detected system fault • CL FAULT: Closed loop but A/F sensor, which used for fuel control, malfunctioning
O2FT B1 S2	Short-term fuel trim associated with bank 1 sensor 2: Min.: -100%, Max.: 99.2%	-20 to 20%	Same as SHORT FT #1
O2FT B2 S2	Short-term fuel trim associated with bank 2 sensor 2: Min.: -100%, Max.: 99.2%	-20 to 20%	Same as SHORT FT #2
AF FT B1 S1	Short-term fuel trim associated with bank 1 sensor 1: Min.: 0, Max.: 1.999	• Value less than 1 (0.000 to 0.999) = Lean • Stoichiometric air-fuel ratio = 1 • Value greater than 1 (1.001 to 1.999) = Rich	-
AF FT B2 S1	Short-term fuel trim associated with bank 2 sensor 1: Min.: 0, Max.: 1.999	• Value less than 1 (0.000 to 0.999) = Lean • Stoichiometric air-fuel ratio = 1 • Value greater than 1 (1.001 to 1.999) = Rich	-
AFS B1 S1	A/F sensor current: Min.: -128 mA, Max.: 127.99 mA	-	-
CAT TEMP B1S1	Estimated catalyst temperature (bank 1 sensor 1): Min.: -40°C, Max.: 6,513.5°C	-	-
CAT TEMP B1S2	Estimated catalyst temperature (bank 1 sensor 2): Min.: -40°C, Max.: 6,513.5°C	-	-
CAT TEMP B2S1	Estimated catalyst temperature (bank 2 sensor 1): Min.: -40°C, Max.: 6,513.5°C	-	-
CAT TEMP B2S2	Estimated catalyst temperature (bank 2 sensor 2): Min.: -40°C, Max.: 6,513.5°C	-	-
S O2S B1S2	Sub heated oxygen sensor impedance (bank 1 sensor 2): Min.: 0 Ω, Max.: 21,247.68 Ω	-	-
S O2S B2S2	Sub heated oxygen sensor impedance (bank 2 sensor 2): Min.: 0 Ω, Max.: 21,247.68 Ω	-	-
INI COOL TEMP	Engine coolant temperature at engine start: Min.: -40°C, Max.: 120°C	Close to ambient air temperature	-
INI INTAKE TEMP	Intake air temperature at engine start: Min.: -40°C, Max.: 120°C	Close to ambient air temperature	-
INJ VOL	Injection volume (cylinder 1): Min.: 0 ml, Max.: 2.048 ml	Max.: 0.5 ml	Fuel volume injected over 10 injections
ACC RELAY	ACC relay/ON or OFF	ON: Cranking	-
STARTER RELAY	Starter relay/ON or OFF	ON: Cranking	-

Tester Display	Measurement Item/Range	Normal Condition	Diagnostic Note
STARTER SIG	Starter signal: ON or OFF	ON: Cranking	-
STARTER CONTROL	Starter switch signal: ON or OFF	-	-
PS SW	Power steering signal: ON or OFF	ON: Power steering operation	-
PS SIGNAL	Power steering signal (history): ON or OFF	ON: When steering wheel is first turned after battery terminals connected	Signal status usually ON until battery terminals disconnected
CTP SW	Closed throttle position switch: ON or OFF	• ON: Throttle fully closed • OFF: Throttle open	-
A/C SIGNAL	A/C signal: ON or OFF	ON: A/C ON	-
PNP SW [NSW]	PNP switch status: ON or OFF	ON: P or N position	-
ELECT LOAD SIG	Electrical load signal: ON or OFF	ON: Headlights or defogger turned ON	-
STOP LIGHT SW	Stop light switch: ON or OFF	ON: Brake pedal depressed	-
+BM	Whether or not electric throttle control system power input: ON or OFF	ON: Idling	-
+BM VOLTAGE	+BM voltage: Min.: 0, Max.: 19.922	10 to 15 V: Idling	ETCS service data
BATTERY VOLTAGE	Battery voltage: Min.: 0 V, Max.: 65.535 V	9 to 14 V: Idling	-
ACTUATOR POWER	Actuator power supply: ON or OFF	ON: Idling	ETCS service data
ATM PRESSURE	Atmospheric pressure: Min.: 0 kPa, Max.: 255 kPa	Equivalent to atmospheric pressure (absolute pressure)	-
ACIS VSV	VSV for Acoustic Control Induction System Status: ON or OFF	-	ON: Open OFF: Closed
VVT CTRL B2	VVT control (bank 2) status: ON or OFF	-	Active Test support data
EVAP (Purge) VSV	Purge VSV status: ON or OFF	-	Active Test support data
FUEL PUMP / SPD	Fuel pump status: ON or OFF	-	Active Test support data
VVT CTRL B1	VVT control (bank 1) status: ON or OFF	-	Active Test support data
VACUUM PUMP	Key-off EVAP system leak detection pump status: ON or OFF	-	Active Test support data
EVAP VENT VAL	Key-off EVAP system vent valve status: ON or OFF	-	Active Test support data
FAN MOTOR	Electric fan motor: ON or OFF	ON: Electric fan motor operating	Active Test support data
AICV VSV	VSV for Air Intake Control System Status: ON or OFF	-	-
TC/TE1	TC and CG (TE1) terminal of DLC3: ON or OFF	-	Active Test support data
ENG SPEED #1	Engine Speed of Cylinder #1 of Injection Stopped	-	-
ENG SPEED #2	Engine Speed of Cylinder #21 of Injection Stopped	-	-

Tester Display	Measurement Item/Range	Normal Condition	Diagnostic Note
ENG SPEED #3	Engine Speed of Cylinder #3 of Injection Stopped	-	-
ENG SPEED #4	Engine Speed of Cylinder #4 of Injection Stopped	-	-
ENG SPEED #5	Engine Speed of Cylinder #5 of Injection Stopped	-	-
ENG SPEED #6	Engine Speed of Cylinder #6 of Injection Stopped	-	-
ENG SPEED #ALL	Avg Eng Spd, All Cylinder of Injection Stopped	-	-
VVTL AIM ANGL#1*	VVT aim angle (bank 1 Intake side): Min.: 0%, Max.: 100%	-	-
VVT CHNG ANGL#1*	VVT change angle (bank 1 Intake side): Min.: 0°FR, Max.: 60°FR	0 to 5°FR: Idling	Displacement angle during intrusive operation
VVT OCV DUTY B1*	VVT OCV operation duty (bank 1 Intake side): Min.: 0%, Max.: 100%	0 to 100%	Requested duty value for intrusive operation
VVT EX HOLD B1*	VVT exhaust hold duty ratio learning value (bank 1 Exhaust side): Min.: 0%, Max.: 100%	10 to 50%: Idling	Requested duty value for intrusive operation
VVT EX CHG ANG1*	VVT change angle (bank 1 Exhaust side): Min.: 0° FR, Max.: 60° FR	0 to 5° FR: Idling	Displacement angle during intrusive operation
VVT EX OCV D B1*	VVT OCV operation duty (bank 1 Exhaust side): Min.: 0%, Max.: 100%	0 to 100%	Requested duty value for intrusive operation
VVTL AIM ANGL #2*	VVT aim angle (bank 2 Intake side): Min.: 0%, Max.: 100%	-	-
VVT CHNG ANGL #2*	VVT change angle (bank 2 Intake side): Min.: 0° FR, Max.: 60° FR	0 to 5° FR: Idling	Displacement angle during intrusive operation
VVT OCV DUTY B2*	VVT OCV operation duty (bank 2 Intake side): Min.: 0%, Max.: 100%	0 to 100%	Requested duty value for intrusive operation
VVT EX HOLD B2*	VVT exhaust hold duty ratio learning value (bank 2 Exhaust side): Min.: 0%, Max.: 100%	10 to 50%: Idling	Requested duty value for intrusive operation
VVT EX CHG ANG2*	VVT change angle (bank 2 Exhaust side): Min.: 0° FR, Max.: 60° FR	0 to 5° FR: Idling	Displacement angle during intrusive operation
VVT EX OCV D B2*	VVT exhaust operation duty (bank 2 Exhaust side): Min.: 0%, Max.: 100%	0 to 100%	Requested duty value for intrusive operation
FC IDL	Fuel cut idle: ON or OFF	ON: Fuel cut operation	FC IDL = "ON" when throttle valve fully closed and engine speed over 2,800 rpm
FC TAU	Fuel cut TAU (Fuel cut with very light load): ON or OFF	ON: Fuel cut operating	Fuel cut being performed with very light load to prevent incomplete engine combustion
IGNITION	Ignition counter: Min.: 0, Max.: 800	0 to 800	-
CYL #1	Misfire ratio of cylinder 1: Min.: 0, Max.: 255	0	This item displayed only during idling
CYL #2	Misfire ratio of cylinder 2: Min.: 0, Max.: 255	0	This item displayed only during idling

Tester Display	Measurement Item/Range	Normal Condition	Diagnostic Note
CYL #3	Misfire ratio of cylinder 3: Min.: 0, Max.: 255	0	This item displayed only during idling
CYL #4	Misfire ratio of cylinder 4: Min.: 0, Max.: 255	0	This item displayed only during idling
CYL #5	Misfire ratio of cylinder 5: Min.: 0, Max.: 255	0	This item displayed only during idling
CYL #6	Misfire ratio of cylinder 6: Min.: 0, Max.: 255	0	This item displayed only during idling
CYL ALL	All cylinders misfire rate: Min.: 0, Max.: 255	0 to 35	-
MISFIRE RPM	Engine RPM for first misfire range: Min.: 0 rpm, Max.: 6,375 rpm	0 rpm: Misfire 0	-
MISFIRE LOAD	Engine load for first misfire range: Min.: 0 g/rev, Max.: 3.98 g/rev	0 g/rev: Misfire 0	-
MISFIRE MARGIN	Misfire monitoring: Min.: -100%, Max.: 99.22%	-100 to 99.22%	Misfire detecting margin
#CODES	#Codes: Min.: 0, Max.: 255	-	Number of detected DTCs
CHECK MODE	Check mode: ON or OFF	ON: Check mode ON	(See page ES-45)
SPD TEST	Check mode result for vehicle speed sensor: COMPL or INCMPL	-	-
MISFIRE TEST	Check mode result for misfire monitor: COMPL or INCMPL	-	-
OXS2 TEST	Check mode result for HO2 sensor (bank 2): COMPL or INCMPL	-	-
OXS1 TEST	Check mode result for HO2 sensor (bank 1): COMPL or INCMPL	-	-
A/F SSR TEST B1	Check mode result for air-fuel ratio sensor (bank 1): COMPL or INCMPL	-	-
A/F SSR TEST B2	Check mode result for air-fuel ratio sensor (bank 2): COMPL or INCMPL	-	-
MIL	MIL status: ON or OFF	ON: MIL ON	-
MIL ON RUN DIST	MIL ON run distance: Min.: 0 mile, Max.: 105,465 mile	Distance driven after DTC detected	-
MIL ON RUN TIME	Running time from MIL ON: Min.: 0 minutes, Max.: 65,535 minutes	Running time after MIL ON	-
ENG RUN TIME	Engine run time: Min.: 0 seconds, Max.: 65,535 seconds	Time after engine start	-
TIME DTC CLEAR	Time after DTC cleared: Min.: 0 minutes, Max.: 65,535 minutes	Time after DTCs erased	-
DIST DTC CLEAR	Distance after DTC cleared: Min.: 0 mile, Max.: 105,465 mile	Distance driven after DTCs erased	-
WU CYC DTC CLEAR	Warm-up cycle after DTC cleared: Min.: 0, Max.: 255	-	Number of warm-up cycles after DTC cleared
OBD CERT	OBD requirement	OBD2	-
#CARB CODES	Number of emission related DTCs	-	-

Tester Display	Measurement Item/Range	Normal Condition	Diagnostic Note
COMP MON	Comprehensive component monitor: NOT AVL or AVAIL	-	-
FUEL MON	Fuel system monitor: NOT AVL or AVAIL	-	-
MISFIRE MON	Misfire monitor: NOT AVL or AVAIL	-	-
EGR MON	EGR monitor: NOT AVL or AVAIL	-	-
EGR MON	EGR monitor: COMPL or INCMPL	-	-
O2S (A/FS) HTR	O2S (A/FS) heater monitor: NOT AVL or AVAIL	-	-
O2S (A/FS) HTR	O2S (A/FS) heater monitor: COMPL or INCMPL	-	-
O2S (A/FS) MON	O2S (A/FS) monitor: NOT AVL or AVAIL	-	-
O2S (A/FS) MON	O2S (A/FS) monitor: COMPL or INCMPL	-	-
A/C MON	A/C monitor: NOT AVL or AVAIL	-	-
A/C MON	A/C monitor: COMPL or INCMPL	-	-
2nd AIR MON	Secondary Air monitor: NOT AVL or AVAIL	-	-
2nd AIR MON	Secondary Air monitor: COMPL or INCMPL	-	-
EVAP MON	EVAP monitor: NOT AVL or AVAIL	-	-
EVAP MON	EVAP monitor: COMPL or INCMPL	-	-
HTD CAT MON	Heated catalyst monitor: NOT AVL or AVAIL	-	-
HTD CAT MON	Heated catalyst monitor: COMPL or INCMPL	-	-
CAT MON	Catalyst monitor: NOT AVL or AVAIL	-	-
CAT MON	Catalyst monitor: COMPL or INCMPL	-	-
CCM ENA	Comprehensive component monitor: UNABLE or ENABLE	-	-
CCM CMPL	Comprehensive component monitor: COMPL or INCMPL	-	-
FUEL ENA	Fuel system monitor: UNABLE or ENABLE	-	-
FUEL CMPL	Fuel system monitor: COMPL or INCMPL	-	-
MISFIRE ENA	Misfire monitor: UNABLE or ENABLE	-	-
MISFIRE CMPL	Misfire monitor: COMPL or INCMPL	-	-
EGR ENA	EGR monitor: UNABLE or ENABLE	-	-
EGR CMPL	EGR monitor: COMPL or INCMPL	-	-

Tester Display	Measurement Item/Range	Normal Condition	Diagnostic Note
HTR ENA	O2S (A/FS) heater monitor: UNABLE or ENABLE	-	-
HTR CMPL	O2S (A/FS) heater monitor: COMPL or INCMPL	-	-
O2S (A/FS) ENA	O2S (A/FS) monitor: UNABLE or ENABLE	-	-
O2S (A/FS) CMPL	O2S (A/FS) monitor: COMPL or INCMPL	-	-
ACRF ENA	A/C monitor: UNABLE or ENABLE	-	-
ACRF CMPL	A/C monitor: COMPL or INCMPL	-	-
AIR ENA	2nd Air monitor: UNABLE or ENABLE	-	-
AIR CMPL	2nd Air monitor: COMPL or INCMPL	-	-
EVAP ENA	EVAP monitor: UNABLE or ENABLE	-	-
EVAP CMPL	EVAP monitor: COMPL or INCMPL	-	-
HCAT ENA	Heated catalyst monitor: UNABLE or ENABLE	-	-
HCAT CMPL	Heated catalyst monitor: COMPL or INCMPL	-	-
CAT ENA	Catalyst monitor: UNABLE or ENABLE	-	-
CAT CMPL	Catalyst monitor: COMPL or INCMPL	-	-
MODEL CODE	Model code information	-	Identifying model code: GSV40#
ENGINE TYPE	Engine type information	-	Identifying engine type: 2GRFE
CYLINDER NUMBER	Cylinder number: Min.: 0, Max.: 255	-	Identifying cylinder number: 6
TRANSMISSION	Transmission type information	-	Identifying transmission type: 6AT
DESTINATION	Destination information	-	Identifying destination: A (America)
MODEL YEAR	Model year: Min.: 1900, Max.: 2155	-	Identifying model year: 2007MY
SYSTEM	Engine system information	-	Identifying engine system: GASLIN (gasoline engine)

HINT:

- *: DATA LIST values are displayed only when performing the following ACTIVE TESTs: VVT B1, VVT B2, VVT EX B1 and VVT EX B2. For other ACTIVE TESTs, the DATA LIST value will be 0.
- Normal Condition: If no idling conditions are specified, the transmission gear selector lever should be in the N or P position, and the A/C switch and all accessory switches should be OFF.

2. ACTIVE TEST

HINT:

Performing an ACTIVE TEST enables components including the relays, VSV (Vacuum Switching Valve) and actuators, to be operated without removing any parts. The ACTIVE TEST can be performed with an intelligent tester. Performing an ACTIVE TEST as the first step in troubleshooting is one method of shortening diagnostic time.

DATA LIST can be displayed during ACTIVE TEST.

(a) Connect the intelligent tester to the DLC3.
(b) Turn the engine switch on (IG).
(c) Turn the tester on.
(d) Enter the following menus: DIAGNOSIS / ENHANCED OBD II / ACTIVE TEST.
(e) Perform the ACTIVE TEST by referring to the table below.

Tester Display	Test Part	Control Range	Diagnostic Note
INJ VOL	Change injection volume	Between -12.5 and 24.8 %	• All injectors tested at the same time • Perform test at less than 3,000 rpm • Injection volume can be changed in 1 % graduations within control range
A/F CONTROL	Change injection volume	Lower by 12.5 % or increase by 24.8 %	• Perform test at less than 3,000 rpm • A/F CONTROL enables to check and to graph A/F (Air Fuel Ratio) sensor and Heated Oxygen (HO2) sensor voltage outputs • To conduct test, select following menu items: ACTIVE TEST / A/F CONTROL / USER DATA / AFS B1S1 and O2S B1S2, and press YES and ENTER followed by F4
INTAKE CTL VSV1	Activate VSV for intake control	ON/OFF	• ON: ACIS VSV ON • OFF: ACIS VSV OFF
EVAP VSV (ALONE)	Activate EVAP VSV control	ON/OFF	-
FUEL PUMP / SPD	Activate fuel pump (C/OPN Relay)	ON/OFF	-
TC/TE1	Turn on and off TC and TE1 connection	ON/OFF	• ON: TC and TE1 connected • OFF: TC and TE1 disconnected
FC IDL PROHBT	Prohibit idling fuel cut control	ON/OFF	-
COOLING FAN	Control Electric Cooling Fan	ON/OFF	Test is possible when following conditions are met: • Ignition switch is on (IG) • Ignition is stopped
STARTER	Starter	ON/OFF	-
ACC CUT	Active ACC cut relay	ON/OFF	Test is possible when following conditions are met: • Ignition switch is on (IG) • Ignition is stopped

Tester Display	Test Part	Control Range	Diagnostic Note
ETCS OPEN SLOW	Throttle actuator	ON: Throttle valve opens slowly	Test is possible when following conditions are met: • Ignition switch is on (IG) • Ignition is stopped • Accelerator pedal is fully depressed (APP: 58 degrees or more)
ETCS CLOSE SLOW	Throttle actuator	ON: Throttle valve closes slowly	Same as above
ETCS OPEN FAST	Throttle actuator	ON: Throttle valve opens fast	Same as above
ETCS CLOSE FAST	Throttle actuator	ON: Throttle valve closes fast	Same as above
VVT B1	Control VVT (bank 1)	-128 to 127 % This valve added to present OCV control duty 100 %: Maximum advance -100 %: Maximum retard	Engine stalls or roughly idles when VVT actuator is operated by 100 %. Test is possible during idling.
VVT CTRL B1	Turn on and off OCV (Oil Control Valve)	ON/OFF	• Engine stalls or idles roughly when OCV turned ON • Normal engine running or idling when OCV OFF
VVT B2	Control VVT (bank 2)	Between -128 and 127%	Engine stalls or roughly idles when VVT actuator is operated by 100 %. Test is possible during idling.
VVT CTRL B2	Turn on and off OCV (Oil Control Valve)	ON/OFF	• Engine stalls or idles roughly when OCV turned ON • Normal engine running or idling when OCV OFF
VVT EX B1	Control VVT (bank 1)	-128 to 127 % This valve added to present OCV control duty 100 %: Maximum advance -100 %: Maximum retard	-
VVT EX B2	Control VVT (bank 2)	Between -128 and 127 %	-
VACUUM PUMP	Vacuum pump	ON/OFF	-
VENT VALVE	Vent valve	ON/OFF	-
AICV VSV	AICV VSV	ON/OFF	-
FUEL CUT #1	Cylinder #1 injector fuel cut	ON/OFF	Test is possible during vehicle stopping and engine idling.
FUEL CUT #2	Cylinder #2 injector fuel cut	ON/OFF	Same as above
FUEL CUT #3	Cylinder #3 injector fuel cut	ON/OFF	Same as above
FUEL CUT #4	Cylinder #4 injector fuel cut	ON/OFF	Same as above
FUEL CUT #5	Cylinder #5 injector fuel cut	ON/OFF	Same as above
FUEL CUT #6	Cylinder #6 injector fuel cut	ON/OFF	Same as above
FUEL CUT ALL	Control the all cylinder fuel cut	ON/OFF	Same as above
COMPRESS CHECK	Check the cylinder compression pressure	ON/OFF	Fuel injection and ignition stop in all cylinders.

3. SYSTEM CHECK

HINT:

Performing a SYSTEM CHECK enables the system, which consists of multiple actuators, to be operated without removing any parts. In addition, it can show whether or not any DTCs are set, and can detect potential malfunctions in the system. The SYSTEM CHECK can be performed with an intelligent tester.

(a) Connect the intelligent tester to the DLC3.

(b) Turn the engine switch on (IG).

(c) Turn the tester on.

(d) Enter the following menus: DIAGNOSIS / ENHANCED OBD II / SYSTEM CHECK.

(e) Perform the SYSTEM CHECK by referring to the table below.

ECM:

Tester Display	Test Part	Control Range	Diagnostic Note
OS2/RPM CHECK	Graphs HO2S voltage	-	-
FUEL CONSUMPTION	Long: Indicates fuel consumption for maximum 60 sec. Short: Indicates fuel consumption for maximum 20 sec.	-	While driving (vehicle speed 3.1 mph (5 km/h) or more)
EVAP SYS CHECK (AUTO OPERATION)	Perform 5 steps in order to operate EVAP key-off monitor automatically	-	35°C (95°F) or less
EVAP SYS CHECK (MANUAL OPERATION)	Perform 5 steps in order to operate EVAP key-off monitor manually	-	35°C (95°F) or less

DIAGNOSTIC TROUBLE CODE CHART

HINT:
The parameters listed in the chart may not conform exactly to those read during the DTC check due to the type of instrument or other factors.
If a trouble code is displayed during the DTC check in the check mode, check the circuit for the code listed in the table below. For details of each code, refer to the "See page" column in the DTC chart.

ES

SFI SYSTEM:

DTC Code	Detection Item	Suspected Trouble Area	MIL	Memory	See page
P0010	Camshaft Position "A" Actuator Circuit (Bank 1)	1. Open or short in Oil Control Valve (OCV) for intake camshaft circuit 2. OCV for intake camshaft (bank 1) 3. ECM	Comes on	DTC stored	ES-75
P0011	Camshaft Position "A" - Timing Over-Advanced or System Performance (Bank 1)	1. Valve timing 2. OCV for intake camshaft 3. OCV filter 4. Intake camshaft timing gear assembly 5. ECM	Comes on	DTC stored	ES-80
P0012	Camshaft Position "A" - Timing Over-Retarded (Bank 1)	Same as DTC P0011	Comes on	DTC stored	ES-80
P0013	Camshaft Position "B" Actuator Circuit / Open (Bank 1)	1. Open or short in Oil Control Valve (OCV) for exhaust camshaft circuit 2. OCV for exhaust camshaft (bank 1) 3. ECM	Comes on	DTC stored	ES-87
P0014	Camshaft Position "B" - Timing Over-Advanced or System Performance (Bank 1)	1. Valve timing 2. OCV for exhaust camshaft 3. OCV filter 4. Exhaust camshaft 5. ECM	Comes on	DTC stored	ES-92
P0015	Camshaft Position "B" - Timing Over-Retarded (Bank 1)	Same as DTC P0014	Comes on	DTC stored	ES-92
P0016	Crankshaft Position - Camshaft Position Correlation (Bank 1 Sensor A)	1. Mechanical system (Timing chain has jumped teeth or chain is stretched) 2. ECM	Comes on	DTC stored	ES-100
P0017	Crankshaft Position - Camshaft Position Correlation (Bank 1 Sensor B)	Same as DTC P0016	Comes on	DTC stored	ES-100
P0018	Crankshaft Position - Camshaft Position Correlation (Bank 2 Sensor A)	Same as DTC P0016	Comes on	DTC stored	ES-100
P0019	Crankshaft Position - Camshaft Position Correlation (Bank 2 Sensor B)	Same as DTC P0016	Comes on	DTC stored	ES-100

DTC Code	Detection Item	Suspected Trouble Area	MIL	Memory	See page
P0020	Camshaft Position "A" Actuator Circuit (Bank 2)	1. Open or short in Oil Control Valve (OCV) for intake camshaft circuit 2. OCV for intake camshaft (bank 2) 3. ECM	Comes on	DTC stored	ES-75
P0021	Camshaft Position "A" - Timing Over-Advanced or System Performance (Bank 2)	Same as DTC P0011	Comes on	DTC stored	ES-80
P0022	Camshaft Position "A" - Timing Over-Retarded (Bank 2)	Same as DTC P0011	Comes on	DTC stored	ES-80
P0023	Camshaft Position "B" Actuator Circuit / Open (Bank 2)	1. Open or short in Oil Control Valve (OCV) for exhaust camshaft circuit 2. OCV for exhaust camshaft (bank 2) 3. ECM	Comes on	DTC stored	ES-87
P0024	Camshaft Position "B" - Timing Over-Advanced or System Performance (Bank 2)	Same as DTC P0014	Comes on	DTC stored	ES-92
P0025	Camshaft Position "B" - Timing Over-Retarded (Bank 2)	Same as DTC P0014	Comes on	DTC stored	ES-92
P0031	Oxygen (A/F) Sensor Heater Control Circuit Low (Bank 1 Sensor 1)	1. Open in Air-Fuel Ratio (A/F) sensor heater circuit 2. A/F sensor heater (bank 1 sensor 1) 3. A/F sensor heater relay 4. ECM	Comes on	DTC stored	ES-103
P0032	Oxygen (A/F) Sensor Heater Control Circuit High (Bank 1 Sensor 1)	1. Short in A/F sensor heater circuit 2. A/F sensor heater (bank 1 sensor 1) 3. A/F sensor heater relay 4. ECM	Comes on	DTC stored	ES-103
P0037	Oxygen Sensor Heater Control Circuit Low (Bank 1 Sensor 2)	1. Open in Heated Oxygen (HO2) sensor heater circuit 2. HO2 sensor heater (bank 1 sensor 2) 3. Engine room junction block (EFI relay) 4. ECM	Comes on	DTC stored	ES-111
P0038	Oxygen Sensor Heater Control Circuit High (Bank 1 Sensor 2)	1. Short in HO2 sensor heater circuit 2. HO2 sensor heater (bank 1 sensor 2) 3. Engine room junction block (EFI relay) 4. ECM	Comes on	DTC stored	ES-111

DTC Code	Detection Item	Suspected Trouble Area	MIL	Memory	See page
P0051	Oxygen (A/F) Sensor Heater Control Circuit Low (Bank 2 Sensor 1)	1. Open in A/F sensor heater circuit 2. A/F sensor heater (bank 2 sensor 1) 3. A/F sensor heater relay 4. ECM	Comes on	DTC stored	ES-103
P0052	Oxygen (A/F) Sensor Heater Control Circuit High (Bank 2 Sensor 1)	1. Short in A/F sensor heater circuit 2. A/F sensor heater (bank 2 sensor 1) 3. A/F sensor heater relay 4. ECM	Comes on	DTC stored	ES-103
P0057	Oxygen Sensor Heater Control Circuit Low (Bank 2 Sensor 2)	1. Open in HO2 sensor heater circuit 2. HO2 sensor heater (bank 2 sensor 2) 3. Engine room junction block (EFI relay) 4. ECM	Comes on	DTC stored	ES-111
P0058	Oxygen Sensor Heater Control Circuit High (Bank 2 Sensor 2)	1. Short in HO2 sensor heater circuit 2. HO2 sensor heater (bank 2 sensor 2) 3. Engine room junction block (EFI relay) 4. ECM	Comes on	DTC stored	ES-111
P0100	Mass or Volume Air Flow Circuit	1. Open or short in Mass Air Flow (MAF) meter circuit 2. MAF meter 3. ECM	Comes on	DTC stored	ES-121
P0101	Mass Air Flow Circuit Range / Performance Problem	MAF meter	Comes on	DTC stored	ES-129
P0102	Mass or Volume Air Flow Circuit Low Input	1. Open in MAF meter circuit 2. Short in MAF meter circuit 3. MAF meter 4. ECM	Comes on	DTC stored	ES-121
P0103	Mass or Volume Air Flow Circuit High Input	1. Short in MAF meter circuit (+B circuit) 2. MAF meter 3. ECM	Comes on	DTC stored	ES-121
P0110	Intake Air Temperature Circuit Malfunction	1. Open or short in Intake Air Temperature (IAT) sensor circuit 2. IAT sensor (built into Mass Air Flow [MAF] meter) 3. ECM	Comes on	DTC stored	ES-132
P0111	Intake Air Temperature Sensor Gradient Too High	MAF meter	Comes on	DTC stored	ES-138

DTC Code	Detection Item	Suspected Trouble Area	MIL	Memory	See page
P0112	Intake Air Temperature Circuit Low Input	1. Short in IAT sensor circuit 2. IAT sensor (built into MAF meter) 3. ECM	Comes on	DTC stored	ES-132
P0113	Intake Air Temperature Circuit High Input	1. Open in IAT sensor circuit 2. IAT sensor (built into MAF meter) 3. ECM	Comes on	DTC stored	ES-132
P0115	Engine Coolant Temperature Circuit Malfunction	1. Open or short in Engine Coolant Temperature (ECT) sensor circuit 2. ECT sensor 3. ECM	Comes on	DTC stored	ES-141
P0116	Engine Coolant Temperature Circuit Range / Performance Problem	1. Thermostat 2. ECT sensor	Comes on	DTC stored	ES-147
P0117	Engine Coolant Temperature Circuit Low Input	1. Short in ECT sensor circuit 2. ECT sensor 3. ECM	Comes on	DTC stored	ES-141
P0118	Engine Coolant Temperature Circuit High Input	1. Open in ECT sensor circuit 2. ECT sensor 3. ECM	Comes on	DTC stored	ES-141
P0120	Throttle / Pedal Position Sensor / Switch "A" Circuit Malfunction	1. Throttle Position (TP) sensor (built into throttle body) 2. ECM	Comes on	DTC stored	ES-150
P0121	Throttle / Pedal Position Sensor / Switch "A" Circuit Range / Performance Problem	TP sensor (built into throttle body)	Comes on	DTC stored	ES-157
P0122	Throttle / Pedal Position Sensor / Switch "A" Circuit Low Input	1. TP sensor (built into throttle body) 2. Short in VTA1 circuit 3. Open in VC circuit 4. ECM	Comes on	DTC stored	ES-150
P0123	Throttle / Pedal Position Sensor / Switch "A" Circuit High Input	1. TP sensor (built into throttle body) 2. Open in VTA1 circuit 3. Open in E2 circuit 4. Short between VC and VTA1 circuits 5. ECM	Comes on	DTC stored	ES-150
P0125	Insufficient Coolant Temperature for Closed Loop Fuel Control	1. Cooling system 2. ECT sensor 3. Thermostat	Comes on	DTC stored	ES-161
P0128	Coolant Thermostat (Coolant Temperature Below Thermostat Regulating Temperature)	1. Thermostat 2. Cooling system 3. ECT sensor 4. ECM	Comes on	DTC stored	ES-164

DTC Code	Detection Item	Suspected Trouble Area	MIL	Memory	See page
P0136	Oxygen Sensor Circuit Malfunction (Bank 1 Sensor 2)	1. Open or short in HO2 sensor (bank 1 sensor 2) circuit 2. HO2 sensor (bank 1 sensor 2) 3. HO2 sensor heater (bank 1 sensor 2) 4. A/F sensor (bank 1 sensor 1) 5. Engine room junction block (EFI relay) 6. Gas leakage from exhaust system	Comes on	DTC stored	ES-167
P0137	Oxygen Sensor Circuit Low Voltage (Bank 1 Sensor 2)	1. Open in HO2 sensor (bank 1 sensor 2) circuit 2. HO2 sensor (bank 1 sensor 2) 3. HO2 sensor heater (bank 1 sensor 2) 4. Engine room junction block (EFI relay) 5. Gas leakage from exhaust system	Comes on	DTC stored	ES-167
P0138	Oxygen Sensor Circuit High Voltage (Bank 1 Sensor 2)	1. Short in HO2 sensor (bank 1 sensor 2) circuit 2. HO2 sensor (bank 1 sensor 2) 3. ECM internal circuit malfunction	Comes on	DTC stored	ES-167
P0141	Oxygen Sensor Heater Circuit Malfunction (Bank 1 Sensor 2)	1. HO2 sensor 2. ECM	Comes on	DTC stored	ES-111
P0156	Oxygen Sensor Circuit Malfunction (Bank 2 Sensor 2)	1. Open or short in HO2 sensor (bank 2 sensor 2) circuit 2. HO2 sensor (bank 2 sensor 2) 3. HO2 sensor heater (bank 2 sensor 2) 4. A/F sensor (bank 2 sensor 1) 5. Engine room junction block (EFI relay) 6. Gas leakage from exhaust system	Comes on	DTC stored	ES-167
P0157	Oxygen Sensor Circuit Low Voltage (Bank 2 Sensor 2)	1. Open in HO2 sensor (bank 2 sensor 2) circuit 2. HO2 sensor (bank 2 sensor 2) 3. HO2 sensor heater (bank 2 sensor 2) 4. Engine room junction block (EFI relay) 5. Gas leakage from exhaust system	Comes on	DTC stored	ES-167

DTC Code	Detection Item	Suspected Trouble Area	MIL	Memory	See page
P0158	Oxygen Sensor Circuit High Voltage (Bank 2 Sensor 2)	1. Short in HO2 sensor (bank 2 sensor 2) circuit 2. HO2 sensor (bank 2 sensor 2) 3. ECM internal circuit malfunction	Comes on	DTC stored	ES-167
P0161	Oxygen Sensor Heater Circuit Malfunction (Bank 2 Sensor 2)	1. HO2 sensor 2. ECM	Comes on	DTC stored	ES-111
P0171	System Too Lean (Bank 1)	1. Air induction system 2. Injector blockage 3. MAF meter 4. ECT sensor 5. Fuel pressure 6. Gas leakage from exhaust system 7. Open or short in A/F sensor (bank 1 sensor 1) circuit 8. A/F sensor (bank 1 sensor 1) 9. A/F sensor heater (bank 1 sensor 1) 10. A/F sensor heater relay 11. A/F sensor heater and A/F sensor heater relay circuits 12. PCV hose connections 13. PCV valve and hose 14. ECM	Comes on	DTC stored	ES-187
P0172	System Too Rich (Bank 1)	1. Injector leakage or blockage 2. MAF meter 3. ECT sensor 4. Ignition system 5. Fuel pressure 6. Gas leakage from exhaust system 7. Open or short in A/F sensor (bank 1 sensor 1) circuit 8. A/F sensor (bank 1 sensor 1) 9. A/F sensor heater (bank 1 sensor 1) 10. A/F sensor heater relay 11. A/F sensor heater and A/F sensor heater relay circuits 12. ECM	Comes on	DTC stored	ES-187

DTC Code	Detection Item	Suspected Trouble Area	MIL	Memory	See page
P0174	System Too Lean (Bank 2)	1. Air induction system 2. Injector blockage 3. MAF meter 4. ECT sensor 5. Fuel pressure 6. Gas leakage from exhaust system 7. Open or short in A/F sensor (bank 2 sensor 1) circuit 8. A/F sensor (bank 2 sensor 1) 9. A/F sensor heater (bank 2 sensor 1) 10. A/F sensor heater relay 11. A/F sensor heater and A/F sensor heater relay circuits 12. PCV hose connections 13. PCV valve and hose 14. ECM	Comes on	DTC stored	ES-187
P0175	System Too Rich (Bank 2)	1. Injector leakage or blockage 2. MAF meter 3. ECT sensor 4. Ignition system 5. Fuel pressure 6. Gas leakage from exhaust system 7. Open or short in A/F sensor (bank 2 sensor 1) circuit 8. A/F sensor (bank 2 sensor 1) 9. A/F sensor heater (bank 2 sensor 1) 10. A/F sensor heater relay 11. A/F sensor heater and A/F sensor heater relay circuits 12. ECM	Comes on	DTC stored	ES-187
P0220	Throttle / Pedal Position Sensor / Switch "B" Circuit	1. TP sensor (built into throttle body) 2. ECM	Comes on	DTC stored	ES-150
P0222	Throttle / Pedal Position Sensor / Switch "B" Circuit Low Input	1. TP sensor (built into throttle body) 2. Short in VTA2 circuit 3. Open in VC circuit 4. ECM	Comes on	DTC stored	ES-150
P0223	Throttle / Pedal Position Sensor / Switch "B" Circuit High Input	1. TP sensor (built into throttle body) 2. Open in VTA2 circuit 3. Open in E2 circuit 4. Short between VC and VTA2 circuits 5. ECM	Comes on	DTC stored	ES-150

DTC Code	Detection Item	Suspected Trouble Area	MIL	Memory	See page
P0300	Random / Multiple Cylinder Misfire Detected	1. Open or short in engine wire harness 2. Connector connections 3. Vacuum hose connection 4. Ignition system 5. Injector 6. Fuel pressure 7. Mass Air Flow (MAF) meter 8. Engine Coolant Temperature (ECT) sensor 9. Compression pressure 10. Valve clearance 11. Valve timing 12. PCV valve and hose 13. PCV hose connections 14. Air induction system 15. ECM	Comes on or flashes	DTC stored	ES-200
P0301	Cylinder 1 Misfire Detected	Same as DTC P0300	Comes on or flashes	DTC stored	ES-200
P0302	Cylinder 2 Misfire Detected	Same as DTC P0300	Comes on or flashes	DTC stored	ES-200
P0303	Cylinder 3 Misfire Detected	Same as DTC P0300	Comes on or flashes	DTC stored	ES-200
P0304	Cylinder 4 Misfire Detected	Same as DTC P0300	Comes on or flashes	DTC stored	ES-200
P0305	Cylinder 5 Misfire Detected	Same as DTC P0300	Comes on or flashes	DTC stored	ES-200
P0306	Cylinder 6 Misfire Detected	Same as DTC P0300	Comes on or flashes	DTC stored	ES-200
P0327	Knock Sensor 1 Circuit Low Input (Bank 1 or Single Sensor)	1. Short in knock sensor 1 circuit 2. Knock sensor 1 3. ECM	Comes on	DTC stored	ES-212
P0328	Knock Sensor 1 Circuit High Input (Bank 1 or Single Sensor)	1. Open in knock sensor 1 circuit 2. Knock sensor 1 3. ECM	Comes on	DTC stored	ES-212
P0332	Knock Sensor 2 Circuit Low Input (Bank 2)	1. Short in knock sensor 2 circuit 2. Knock sensor 2 3. ECM	Comes on	DTC stored	ES-212
P0333	Knock Sensor 2 Circuit High Input (Bank 2)	1. Open in knock sensor 2 circuit 2. Knock sensor 2 3. ECM	Comes on	DTC stored	ES-212
P0335	Crankshaft Position Sensor "A" Circuit	1. Open or short in Crankshaft Position Sensor (CKP) circuit 2. CKP sensor 3. Sensor plate (CKP sensor plate) 4. ECM	Comes on	DTC stored	ES-218
P0339	Crankshaft Position Sensor "A" Circuit Intermittent	Same as DTC P0335	Does not come on	DTC stored	ES-218

DTC Code	Detection Item	Suspected Trouble Area	MIL	Memory	See page
P0340	Camshaft Position Sensor Circuit Malfunction	1. Open or short in VVT sensor for intake camshaft circuit 2. VVT sensor for intake camshaft 3. Camshaft timing gear for intake camshaft 4. Jumped tooth of timing chain for intake camshaft 5. ECM	Comes on	DTC stored	ES-224
P0342	Camshaft Position Sensor "A" Circuit Low Input (Bank 1 or Single Sensor)	Same as DTC P0340	Comes on	DTC stored	ES-224
P0343	Camshaft Position Sensor "A" Circuit High Input (Bank 1 or Single Sensor)	Same as DTC P0340	Comes on	DTC stored	ES-224
P0345	Camshaft Position Sensor "A" Circuit (Bank 2)	Same as DTC P0340	Comes on	DTC stored	ES-224
P0347	Camshaft Position Sensor "A" Circuit Low Input (Bank 2)	Same as DTC P0340	Comes on	DTC stored	ES-224
P0348	Camshaft Position Sensor "A" Circuit High Input (Bank 2)	Same as DTC P0340	Comes on	DTC stored	ES-224
P0351	Ignition Coil "A" Primary / Secondary Circuit	1. Ignition system 2. Open or short in IGF1 or IGT circuit (1 to 6) between ignition coil and ECM 3. No. 1 to No. 6 ignition coils 4. ECM	Comes on	DTC stored	ES-230
P0352	Ignition Coil "B" Primary / Secondary Circuit	Same as DTC P0351	Comes on	DTC stored	ES-230
P0353	Ignition Coil "C" Primary / Secondary Circuit	Same as DTC P0351	Comes on	DTC stored	ES-230
P0354	Ignition Coil "D" Primary / Secondary Circuit	Same as DTC P0351	Comes on	DTC stored	ES-230
P0355	Ignition Coil "E" Primary / Secondary Circuit	Same as DTC P0351	Comes on	DTC stored	ES-230
P0356	Ignition Coil "F" Primary / Secondary Circuit	Same as DTC P0351	Comes on	DTC stored	ES-230
P0365	Camshaft Position Sensor "B" Circuit (Bank 1)	1. Open or short in VVT sensor for exhaust camshaft circuit 2. VVT sensor for exhaust camshaft 3. Exhaust camshaft 4. Jumped tooth of timing chain 5. ECM	Comes on	DTC stored	ES-239

DTC Code	Detection Item	Suspected Trouble Area	MIL	Memory	See page
P0367	Camshaft Position Sensor "B" Circuit Low Input (Bank 1)	1. Open or short in VVT sensor for exhaust camshaft circuit 2. VVT sensor for exhaust camshaft 3. Exhaust camshaft 4. Jumped tooth of timing chain 5. ECM	Comes on	DTC stored	ES-239
P0368	Camshaft Position Sensor "B" Circuit High Input (Bank 1)	1. Open or short in VVT sensor for exhaust camshaft circuit 2. VVT sensor for exhaust camshaft 3. Exhaust camshaft 4. Jumped tooth of timing chain 5. ECM	Comes on	DTC stored	ES-239
P0390	Camshaft Position Sensor "B" Circuit (Bank 2)	1. Open or short in VVT sensor for exhaust camshaft circuit 2. VVT sensor for exhaust camshaft 3. Exhaust camshaft 4. Jumped tooth of timing chain 5. ECM	Comes on	DTC stored	ES-239
P0392	Camshaft Position Sensor "B" Circuit Low Input (Bank 2)	1. Open or short in VVT sensor for exhaust camshaft circuit 2. VVT sensor for exhaust camshaft 3. Exhaust camshaft 4. Jumped tooth of timing chain 5. ECM	Comes on	DTC stored	ES-239
P0393	Camshaft Position Sensor "B" Circuit High Input (Bank 2)	1. Open or short in VVT sensor for exhaust camshaft circuit 2. VVT sensor for exhaust camshaft 3. Exhaust camshaft 4. Jumped tooth of timing chain 5. ECM	Comes on	DTC stored	ES-239
P0420	Catalyst System Efficiency Below Threshold (Bank 1)	1. Gas leakage from exhaust system 2. A/F sensor (bank 1 sensor 1) 3. HO2 sensor (bank 1 sensor 2) 4. Exhaust manifold (Three-Way Catalytic Converter [TWC])	Comes on	DTC stored	ES-245

DTC Code	Detection Item	Suspected Trouble Area	MIL	Memory	See page
P0430	Catalyst System Efficiency Below Threshold (Bank 2)	1. Gas leakage from exhaust system 2. A/F sensor (bank 2 sensor 1) 3. HO2 sensor (bank 2 sensor 2) 4. Exhaust manifold (Three-Way Catalytic Converter [TWC])	Comes on	DTC stored	ES-245
P043E	Evaporative Emission System Reference Orifice Clog Up	1. Pump module 2. Connector / wire harness (Pump module - ECM) 3. ECM	Comes on	DTC stored	ES-251
P043F	Evaporative Emission System Reference Orifice High Flow	1. Pump module 2. Connector / wire harness (Pump module - ECM) 3. ECM	Comes on	DTC stored	ES-251
P0441	Evaporative Emission Control System Incorrect Purge Flow	1. EVAP VSV 2. Connector / wire harness (EVAP VSV - ECM) 3. ECM 4. Pump module 5. Leakage from EVAP system 6. Leakage from EVAP line (EVAP VSV - Intake manifold)	Comes on	DTC stored	ES-256
P0450	Evaporative Emission Control System Pressure Sensor / Switch	1. Pump module (including pressure sensor) 2. ECM	Comes on	DTC stored	ES-263
P0451	Evaporative Emission Control System Pressure Sensor Range / Performance	1. Pump module (including pressure sensor) 2. Connector / wire harness (between pump module and ECM) 3. ECM	Comes on	DTC stored	ES-263
P0452	Evaporative Emission Control System Pressure Sensor / Switch Low Input	1. Pump module (including pressure sensor) 2. Connector / wire harness (between pump module and ECM) 3. ECM	Comes on	DTC stored	ES-263
P0453	Evaporative Emission Control System Pressure Sensor / Switch High Input	1. Pump module (include pressure sensor) 2. Connector / wire harness (between pump module and ECM) 3. ECM	Comes on	DTC stored	ES-263

DTC Code	Detection Item	Suspected Trouble Area	MIL	Memory	See page
P0455	Evaporative Emission Control System Leak Detected (Gross Leak)	1. Fuel tank cap (loose) 2. Leakage from EVAP line (Canister - Fuel tank) 3. Leakage from EVAP line (EVAP VSV - Canister) 4. Pump module 5. Leakage from fuel tank 6. Leakage from canister	Comes on	DTC stored	ES-270
P0456	Evaporative Emission Control System Leak Detected (Very Small Leak)	Same as DTC P0455	Comes on	DTC stored	ES-270
P0500	Vehicle Speed Sensor "A"	1. Vehicle speed sensor 2. Vehicle speed sensor signal circuit 3. Combination meter 4. ECM 5. Skid control ECU	Comes on	DTC stored	ES-275
P0504	Brake Switch "A" / "B" Correlation	1. Short in stop light switch signal circuit 2. Stop light switch 3. ECM	Does not come on	DTC stored	ES-280
P0505	Idle Control System Malfunction	1. ETCS (Electronic Throttle Control System) 2. Air induction system 3. PCV hose connection 4. ECM	Comes on	DTC stored	ES-284
P050A	Cold Start Idle Air Control System Performance	1. Throttle body assembly 2. MAF meter 3. Air induction system 4. PCV hose connections 5. VVT system 6. Air cleaner filter element 7. ECM	Comes on	DTC stored	ES-287
P050B	Cold Start Ignition Timing Performance	Same as DTC P050A	Comes on	DTC stored	ES-287
P0560	System Voltage	1. Open in back-up power source circuit 2. ECM	Comes on	DTC stored	ES-293
P0604	Internal Control Module Random Access Memory (RAM) Error	ECM	Comes on	DTC stored	ES-298
P0606	ECM / PCM Processor	1. Exhaust gas leak 2. Heated oxygen sensor 3. ECM	Comes on (except when there is a malfunction in the ECM internal circuit)	DTC stored	ES-300

DTC Code	Detection Item	Suspected Trouble Area	MIL	Memory	See page
P0607	Control Module Performance	ECM	Comes on (except when there is a malfunction in the cruise control switch circuit)	DTC stored	ES-303
P0617	Starter Relay Circuit High	1. Park/Neutral Position (PNP) switch 2. Starter relay circuit 3. Cranking holding function circuit 4. Engine switch 5. ECM	Comes on	DTC stored	ES-305
P0630	VIN not Programmed or Mismatch - ECM / PCM	ECM	Comes on	DTC stored	ES-309
P0657	Actuator Supply Voltage Circuit / Open	ECM	Comes on	DTC stored	ES-311
P0705	Transmission Range Sensor Circuit Malfunction (PRNDL Input)	1. Short in park/ neutral position switch circuit 2. Park/neutral position switch 3. ECM	Comes on	DTC stored	ES-313
P0724	Brake Switch "B" Circuit High	1. Short in stop light switch signal circuit 2. Stop light switch 3. ECM	Comes on	DTC stored	ES-280
P2102	Throttle Actuator Control Motor Circuit Low	1. Open in throttle actuator circuit 2. Throttle actuator 3. ECM	Comes on	DTC stored	ES-323
P2103	Throttle Actuator Control Motor Circuit High	1. Short in throttle actuator circuit 2. Throttle actuator 3. Throttle valve 4. Throttle body assembly 5. ECM	Comes on	DTC stored	ES-323
P2111	Throttle Actuator Control System - Stuck Open	1. Throttle actuator 2. Throttle body 3. Throttle valve	Comes on	DTC stored	ES-327
P2112	Throttle Actuator Control System - Stuck Closed	Same as DTC P2111	Comes on	DTC stored	ES-327
P2118	Throttle Actuator Control Motor Current Range / Performance	1. Open in ETCS power source circuit 2. ETCS fuse 3. ECM	Comes on	DTC stored	ES-330
P2119	Throttle Actuator Control Throttle Body Range / Performance	1. ETCS 2. ECM	Comes on	DTC stored	ES-334
P2120	Throttle / Pedal Position Sensor / Switch "D" Circuit	1. Accelerator Pedal Position (APP) sensor 2. ECM	Comes on	DTC stored	ES-337
P2121	Throttle / Pedal Position Sensor / Switch "D" Circuit Range / Performance	1. Accelerator Pedal Position (APP) sensor 2. ECM	Comes on	DTC stored	ES-344

DTC Code	Detection Item	Suspected Trouble Area	MIL	Memory	See page
P2122	Throttle / Pedal Position Sensor / Switch "D" Circuit Low Input	1. Accelerator Pedal Position (APP) sensor 2. Open in VCP1 circuit 3. Open or ground short in VPA circuit 4. ECM	Comes on	DTC stored	ES-337
P2123	Throttle / Pedal Position Sensor / Switch "D" Circuit High Input	1. Accelerator Pedal Position (APP) sensor 2. Open in EPA circuit 3. ECM	Comes on	DTC stored	ES-337
P2125	Throttle / Pedal Position Sensor / Switch "E" Circuit	1. Accelerator Pedal Position (APP) sensor 2. ECM	Comes on	DTC stored	ES-337
P2127	Throttle / Pedal Position Sensor / Switch "E" Circuit Low Input	1. Accelerator Pedal Position (APP) sensor 2. Open in VCP2 circuit 3. Open or ground short in VPA2 circuit 4. ECM	Comes on	DTC stored	ES-337
P2128	Throttle / Pedal Position Sensor / Switch "E" Circuit High Input	1. Accelerator Pedal Position (APP) sensor 2. Open in EPA2 circuit 3. ECM	Comes on	DTC stored	ES-337
P2135	Throttle / Pedal Position Sensor / Switch "A" / "B" Voltage Correlation	1. Short between VTA1 and VTA2 circuits 2. TP sensor (built into throttle body) 3. ECM	Comes on	DTC stored	ES-150
P2138	Throttle / Pedal Position Sensor / Switch "D" / "E" Voltage Correlation	1. Short between VPA and VPA2 circuits 2. APP sensor 3. ECM	Comes on	DTC stored	ES-337
P2195	Oxygen (A/F) Sensor Signal Stuck Lean (Bank 1 Sensor 1)	1. Open or short in A/F sensor (bank 1 sensor 1) circuit 2. A/F sensor (bank 1 sensor 1) 3. A/F sensor heater (bank 1 sensor 1) 4. A/F sensor heater relay 5. A/F sensor heater and relay circuits 6. Air induction system 7. Fuel pressure 8. Injector 9. ECM	Comes on	DTC stored	ES-348
P2196	Oxygen (A/F) Sensor Signal Stuck Rich (Bank 1 Sensor 1)	Same as DTC P2195	Comes on	DTC stored	ES-348

DTC Code	Detection Item	Suspected Trouble Area	MIL	Memory	See page
P2197	Oxygen (A/F) Sensor Signal Stuck Lean (Bank 2 Sensor 1)	1. Open or short in A/F sensor (bank 2 sensor 1) circuit 2. A/F sensor (bank 2 sensor 1) 3. A/F sensor heater (bank 2 sensor 1) 4. A/F sensor heater relay 5. A/F sensor heater and relay circuits 6. Air induction system 7. Fuel pressure 8. Injector 9. ECM	Comes on	DTC stored	ES-348
P2198	Oxygen (A/F) Sensor Signal Stuck Rich (Bank 2 Sensor 1)	Same as DTC P2197	Comes on	DTC stored	ES-348
P2238	Oxygen (A/F) Sensor Pumping Current Circuit Low (Bank 1 Sensor 1)	1. Open or short in A/F sensor (bank 1 sensor 1) circuit 2. A/F sensor (bank 1 sensor 1) 3. A/F sensor heater (bank 1 sensor 1) 4. A/F sensor heater relay 5. A/F sensor heater and relay circuits 6. ECM	Comes on	DTC stored	ES-366
P2239	Oxygen (A/F) Sensor Pumping Current Circuit High (Bank 1 Sensor 1)	Same as DTC P2238	Comes on	DTC stored	ES-366
P2241	Oxygen (A/F) Sensor Pumping Current Circuit Low (Bank 2 Sensor 1)	1. Open or short in A/F sensor (bank 2 sensor 1) circuit 2. A/F sensor (bank 2 sensor 1) 3. A/F sensor heater (bank 2 sensor 1) 4. A/F sensor heater relay 5. A/F sensor heater and relay circuits 6. ECM	Comes on	DTC stored	ES-366
P2242	Oxygen (A/F) Sensor Pumping Current Circuit High (Bank 2 Sensor 1)	Same as DTC P2241	Comes on	DTC stored	ES-366
P2252	Oxygen (A/F) Sensor Reference Ground Circuit Low (Bank 1 Sensor 1)	Same as DTC P2238	Comes on	DTC stored	ES-366
P2253	Oxygen (A/F) Sensor Reference Ground Circuit High (Bank 1 Sensor 1)	Same as DTC P2238	Comes on	DTC stored	ES-366
P2255	Oxygen (A/F) Sensor Reference Ground Circuit Low (Bank 2 Sensor 1)	Same as DTC P2241	Comes on	DTC stored	ES-366

DTC Code	Detection Item	Suspected Trouble Area	MIL	Memory	See page
P2256	Oxygen (A/F) Sensor Reference Ground Circuit High (Bank 2 Sensor 1)	Same as DTC P2241	Comes on	DTC stored	ES-366
P2401	Evaporative Emission System Leak Detection Pump Control Circuit Low	1. Pump module 2. Connector / wire harness (Pump module - ECM) 3. ECM	Comes on	DTC stored	ES-251
P2402	Evaporative Emission System Leak Detection Pump Control Circuit High	1. Pump module 2. Connector / wire harness (Pump module - ECM) 3. ECM	Comes on	DTC stored	ES-251
P2419	Evaporative Emission System Switching Valve Control Circuit Low	1. Pump module 2. Connector / wire harness (Pump module - ECM) 3. ECM	Comes on	DTC stored	ES-251
P2420	Evaporative Emission System Switching Valve Control Circuit High	1. Pump module (0.02 inch orifice, vacuum pump, vent valve) 2. Connector / wire harness (Pump module - ECM) 3. ECM	Comes on	DTC stored	ES-375
P2610	ECM / PCM Internal Engine Off Timer Performance	ECM	Comes on	DTC stored	ES-379
P2A00	A/F Sensor Circuit Slow Response (Bank 1 Sensor 1)	1. Open or short in A/F sensor (bank 1 sensor 1) circuit 2. A/F sensor (bank1 sensor 1) 3. ECM	Comes on	DTC stored	ES-382
P2A03	A/F Sensor Circuit Slow Response (Bank 2 Sensor 1)	1. Open or short in A/F sensor (bank 2 sensor 1) circuit 2. A/F sensor (bank 2 sensor 1) 3. ECM	Comes on	DTC stored	ES-382
U0101	Lost Communication with TCM	1. Open or short in TCM and ECM circuit 2. TCM 3. ECM	Comes on	DTC stored	ES-391

DTC	P0010	Camshaft Position "A" Actuator Circuit (Bank 1)

DTC	P0020	Camshaft Position "A" Actuator Circuit (Bank 2)

DESCRIPTION

The Variable Valve Timing (VVT) system includes the ECM, Oil Control Valve (OCV) and VVT controller. The ECM sends a target duty-cycle control signal to the OCV. This control signal regulates the oil pressure supplied to the VVT controller. Camshaft timing control is performed according to engine operating conditions such as intake air volume, throttle valve position and engine coolant temperature. The ECM controls the OCV, based on the signals transmitted by several sensors. The VVT controller regulates the intake camshaft angle using oil pressure through the OCV. As a result, the relative positions of the camshaft and crankshaft are optimized, the engine torque and fuel economy improve, and the exhaust emissions decrease under overall driving conditions. The ECM detects the actual intake valve timing using signals from the camshaft and crankshaft position sensors, and performs feedback control. This is how the target intake valve timing is verified by the ECM.

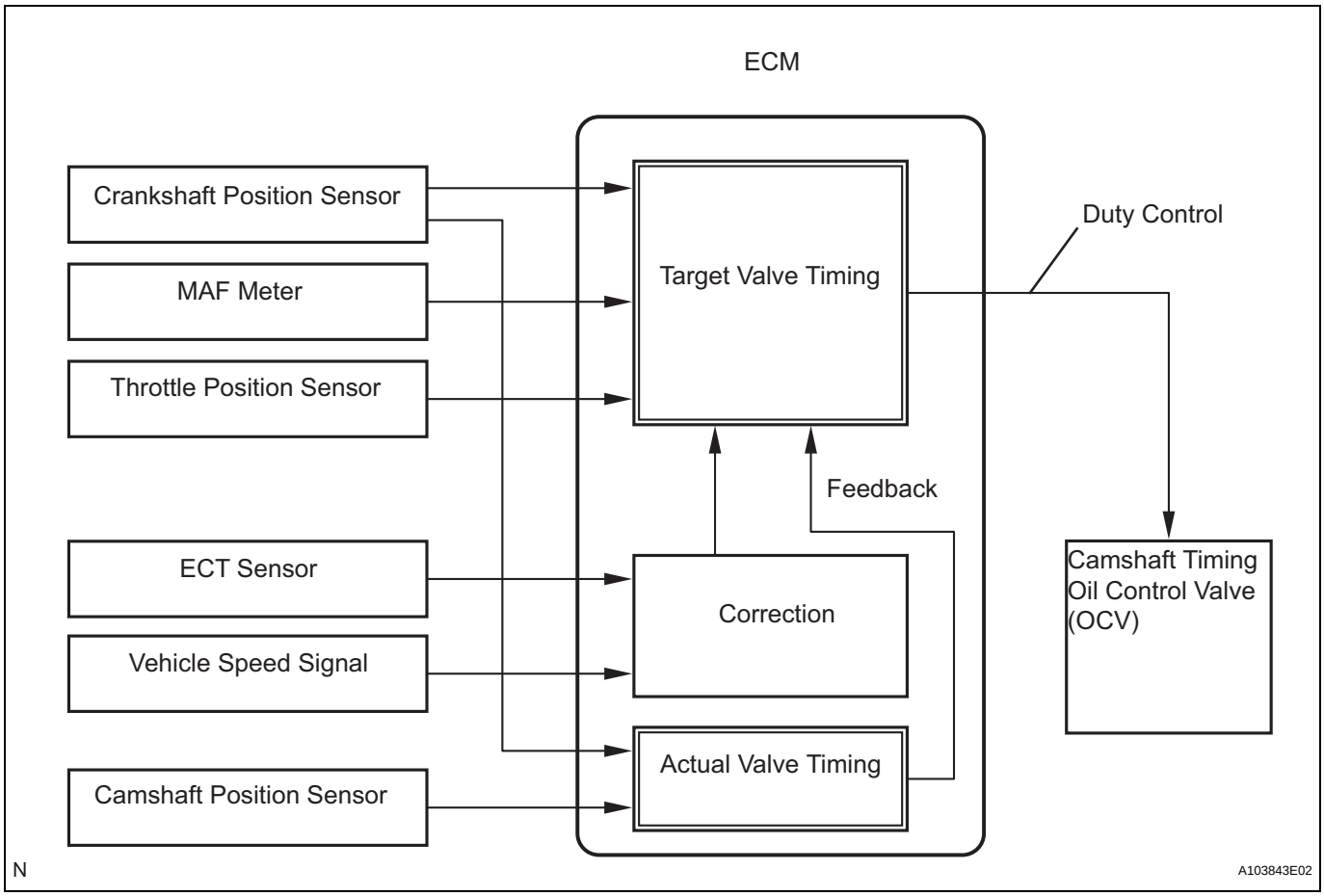

DTC No.	DTC Detection Condition	Trouble Area
P0010	Open or short in OCV for intake camshaft (bank 1) circuit (1 trip detection logic)	• Open or short in OCV for intake camshaft (bank 1) circuit • OCV for intake camshaft (bank 1) • ECM
P0020	Open or short in OCV for intake camshaft (bank 2) circuit (1 trip detection logic)	• Open or short in OCV for intake camshaft (bank 2) circuit • OCV for intake camshaft (bank 2) • ECM

MONITOR DESCRIPTION

After the ECM sends the "target" duty-cycle signal to the OCV, the ECM monitors the OCV current to establish an "actual" duty-cycle. The ECM detects a malfunction and sets a DTC when the actual duty-cycle ratio varies from the target duty-cycle ratio.

MONITOR STRATEGY

Related DTCs	P0010: VVT OCV (bank 1) open/short P0020: VVT OCV (bank 2) open/short
Required sensors/components (Main)	VVT OCV (Variable Valve Timing oil control valve)
Required sensors/components (Sub)	-
Frequency of operation	Continuous
Duration	1 second
MIL operation	Immediately
Sequence of operation	None

TYPICAL ENABLING CONDITIONS

Monitor will run whenever these DTCs are not present	None
All of the following conditions are met:	-
Starter	OFF
Engine switch	ON
Time after turning engine switch off to on (IG)	0.5 seconds or more

TYPICAL MALFUNCTION THRESHOLDS

One of the following conditions is met:	Condition A, B or C
A. All of the following conditions are met:	-
Battery voltage	11 to 13 V
Target duty ratio	Less than 70 %
Output signal duty ratio	100 %
B. All of the following conditions are met:	-
Battery voltage	13 V or more
Target duty ratio	Less than 80 %
Output signal duty ratio	100 %
C. All of the following conditions are met:	-
Current cut status	Not cut
Output signal duty ratio	3 % or less

COMPONENT OPERATING RANGE

VVT OCV duty ratio	More than 3 %, and Less than 100 %

WIRING DIAGRAM

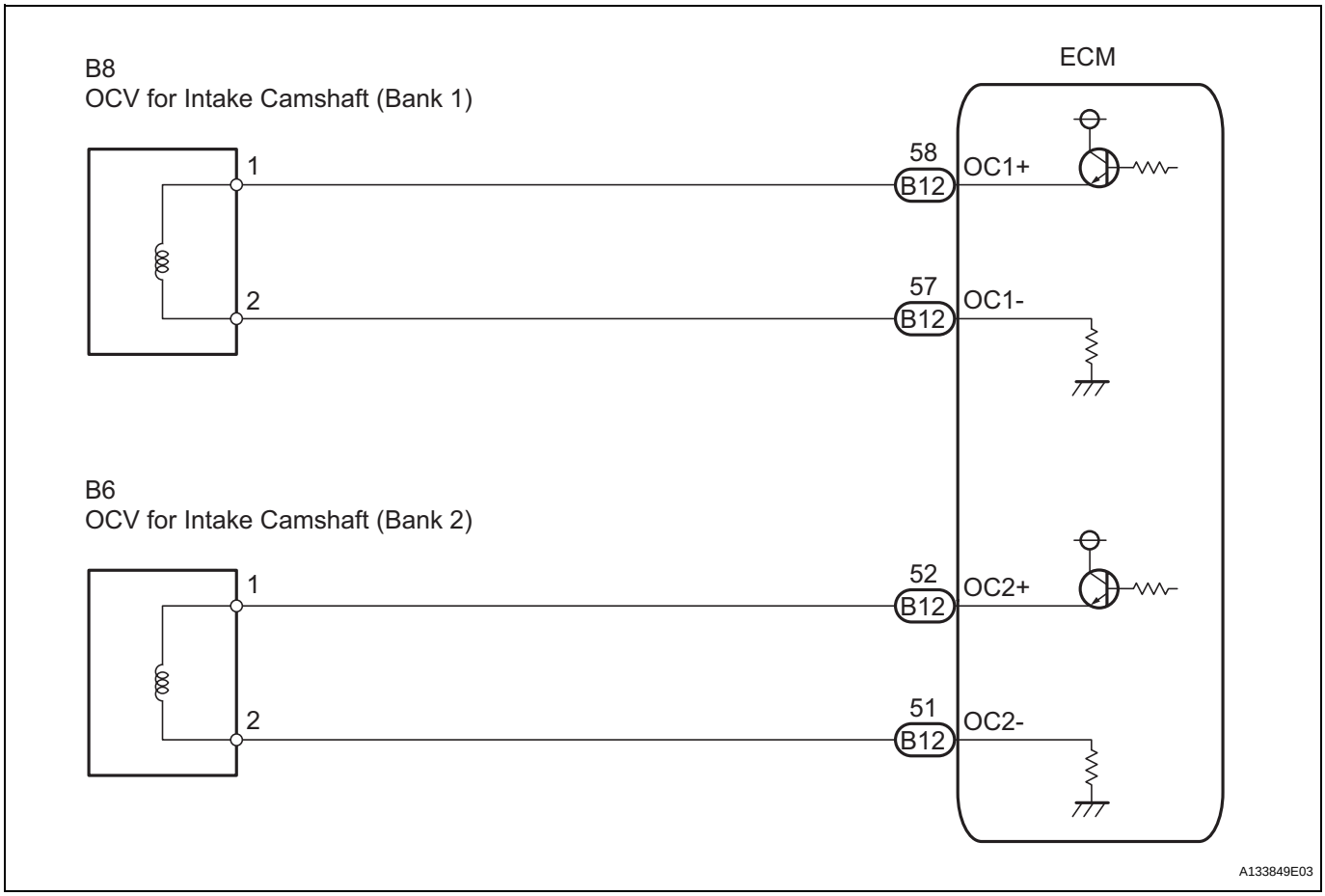

INSPECTION PROCEDURE

HINT:

- If DTC P0010 is displayed, check the intake camshaft circuit for the right bank VVT system.
- Bank 1 refers to the bank that includes cylinder No. 1.
- If DTC P0020 is displayed, check the intake camshaft circuit for the left bank VVT system.
- Bank 2 refers to the bank that does not include cylinder No. 1.
- Read freeze frame data using the intelligent tester. The ECM records vehicle and driving condition information as freeze frame data the moment a DTC is stored. When troubleshooting, freeze frame data can be helpful in determining whether the vehicle was running or stopped, whether the engine was warmed up or not, whether the air-fuel ratio was lean or rich, as well as other data recorded at the time of a malfunction (See page ES-41).

1	**PERFORM ACTIVE TEST BY CAMSHAFT TIMING OIL CONTROL VALVE ASSEMBLY (OCV)**

(a) Connect the intelligent tester to the DLC3.
(b) Start the engine and turn the tester on.
(c) Warm up the engine.
(d) On the tester, enter the following menus: DIAGNOSIS / ENHANCED OBD II / ACTIVE TEST / VVT CTRL B1 or VVT CTRL B2.
(e) Check the engine speed while operating the Oil Control Valve (OCV) using the tester.

OK

Tester Operation	Specified Condition
OCV OFF	Normal engine speed
OCV ON	Engine idles roughly or stalls (soon after OCV switched from OFF to ON)

OK → **CHECK FOR INTERMITTENT PROBLEMS (See page ES-28)**

NG

2 INSPECT CAMSHAFT TIMING OIL CONTROL VALVE ASSEMBLY

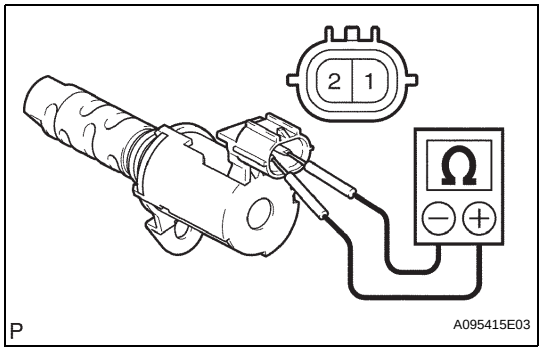

(a) Disconnect the B8 or B6 OCV connector.
(b) Measure the resistance between the terminals of the OCV.
Standard resistance

Tester Connection	Condition	Specified Condition
1 - 2	20°C (68°F)	6.9 to 7.9 Ω

(c) Reconnect the OCV connector.

OK → **REPLACE CAMSHAFT TIMING OIL CONTROL VALVE ASSEMBLY (See page ES-500)**

NG

3 CHECK HARNESS AND CONNECTOR (OCV - ECM)

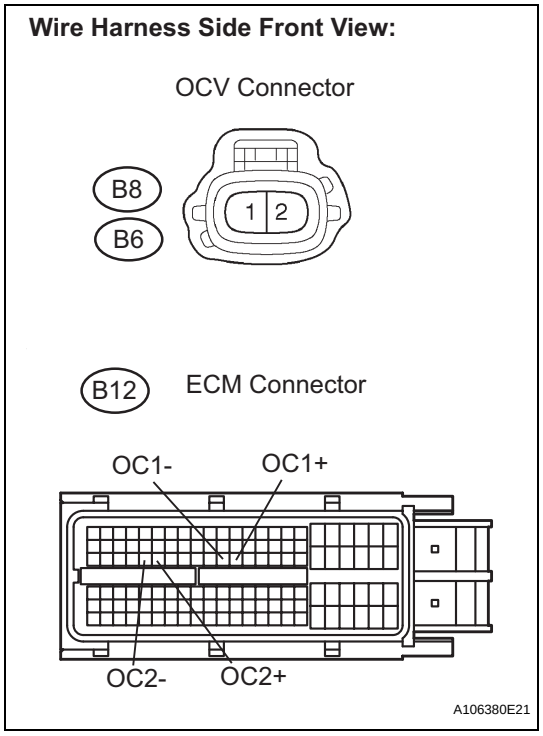

(a) Disconnect the B8 or B6 OCV connector.
(b) Disconnect the B12 ECM connector.
(c) Measure the resistance between the terminals.
Standard resistance (Check for open)

Tester Connection	Specified Condition
OC1+ (B12-58) - B8-1	Below 1 Ω
OC1- (B12-57) - B8-2	Below 1 Ω
OC2+ (B12-52) - B6-1	Below 1 Ω
OC2- (B12-51) - B6-2	Below 1 Ω

Standard resistance (Check for short)

Tester Connection	Specified Condition
OC1+ (B12-58) or B8-1 - Body ground	10 kΩ or higher
OC1- (B12-57) or B8-2 - Body ground	10 kΩ or higher
OC2+ (B12-52) or B6-1 - Body ground	10 kΩ or higher
OC2- (B12-51) or B6-2 - Body ground	10 kΩ or higher

(d) Reconnect the OCV connector.
(e) Reconnect the ECM connector.

NG → **REPAIR OR REPLACE HARNESS OR CONNECTOR**

ES

OK

REPLACE ECM (See page ES-543)

DTC	P0011	Camshaft Position "A" - Timing Over-Advanced or System Performance (Bank 1)

DTC	P0012	Camshaft Position "A" - Timing Over-Retarded (Bank 1)

DTC	P0021	Camshaft Position "A" - Timing Over-Advanced or System Performance (Bank 2)

DTC	P0022	Camshaft Position "A" - Timing Over-Retarded (Bank 2)

DESCRIPTION

The Variable Valve Timing (VVT) system includes the ECM, Oil Control Valve (OCV) and VVT controller. The ECM sends a target duty-cycle control signal to the OCV. This control signal regulates the oil pressure supplied to the VVT controller. Camshaft timing control is performed according to engine operating conditions such as intake air volume, throttle valve position and engine coolant temperature. The ECM controls the OCV, based on the signals transmitted by several sensors. The VVT controller regulates the intake camshaft angle using oil pressure through the OCV. As a result, the relative positions of the camshaft and crankshaft are optimized, the engine torque and fuel economy improve, and the exhaust emissions decrease under overall driving conditions. The ECM detects the actual intake valve timing using signals from the camshaft and crankshaft position sensors, and performs feedback control. This is how the target intake valve timing is verified by the ECM.

DTC No.	DTC Detection Condition	Trouble Area
P0011 P0021	Advanced cam timing: With warmed-up engine and engine speed of between 500 rpm and 4,000 rpm, all conditions (1), (2) and (3) are met (1 trip detection logic): 1. Difference between target and actual intake valve timing is more than 5°CA (Crankshaft Angle) for 4.5 seconds 2. Current intake valve timing is fixed (timing changes less than 5°CA in 5 seconds) 3. Variations in VVT controller timing is more than 19°CA of maximum delayed timing (advance)	• Valve timing • Oil Control valve (OCV) for intake camshaft (bank 1) • OCV filter (bank 1) • Intake camshaft (bank 1) timing gear assembly • ECM
P0012 P0022	Retarded cam timing: With warmed-up engine and engine speed of between 500 rpm and 4,000 rpm, all conditions (1), (2) and (3) are met (2 trip detection logic): 1. Difference between target and actual intake valve timing is more than 5°CA (Crankshaft Angle) for 4.5 seconds 2. Current intake valve timing is fixed (timing changes less than 5°CA in 5 seconds) 3. Variations in VVT controller timing is 19°CA or less of maximum delayed timing (retarded)	• Valve timing • OCV for intake camshaft (bank 2) • OCV filter (bank 2) • Intake camshaft (bank 2) timing gear assembly • ECM

MONITOR DESCRIPTION

1. The ECM optimizes the intake valve timing using the VVT (Variable Valve Timing) system to control the intake camshaft. The VVT system includes the ECM, the Oil Control Valve (OCV) and the VVT controller.

2. The ECM sends a target duty-cycle control signal to the OCV. This control signal regulates the oil pressure supplied to the VVT controller. The VVT controller can advance or retard the intake camshaft. If the difference between the target and actual intake valve timing is large, and changes in the actual intake valve timing are small, the ECM interprets this as the VVT controller stuck malfunction and sets a DTC.
   Example:
   A DTC will be set when the following conditions 1), 2) and 3) are met:
      1) The difference between the target and actual intake valve timings is more than 5°CA (Crankshaft Angle) and the condition continues for more than 4.5 seconds.
      2) It takes 5 seconds or more to change the valve timing by 5°CA.
      3) After above conditions 1) and 2) are met, the OCV is forcibly activated 63 times or more.
3. DTCs P0011 and P0021 (Advanced Cam Timing) are detected with 1 trip detection logic.
4. DTCs P0012 and P0022 (Retarded Cam Timing) are detected with 2 trip detection logic.
   These DTCs indicate that the VVT controller cannot operate properly due to OCV malfunctions or the presence of foreign objects in the OCV.
5. The monitor will not run unless the following conditions are met:
   (a) The engine is warm (the engine coolant temperature is 75°C (167°F) or more).
   (b) The vehicle has been driven at more than 40 mph (64 km/h) for 3 minutes.
   (c) The engine has idled for 3 minutes.

MONITOR STRATEGY

Related DTCs	P0011: Advanced camshaft timing (bank 1) P0012: Retard camshaft timing (bank 1) P0021: Advanced camshaft timing (bank 2) P0022: Retard camshaft timing (bank 2)
Required sensors/components (Main)	VVT OCV and VVT Actuator
Required sensors/components (Sub)	Crankshaft position sensor, camshaft position sensor and Engine coolant temperature sensor
Frequency of operation	Once per drive cycle
Duration	Within 10 seconds
MIL operation	Advanced camshaft timing (bank 1): Immediately Advanced camshaft timing (bank 2): Immediately Retard camshaft timing (bank 1): 2 driving cycles Retard camshaft timing (bank 2): 2 driving cycles
Sequence of operation	None

TYPICAL ENABLING CONDITIONS

Monitor runs whenever following DTCs are not present	P0100 - P0103 (MAF sensor) P0115 - P0118 (ECT sensor) P0125 (Insufficient ECT for closed loop) P0335 (CKP sensor) P0340, P0341 (CMP sensor) P0351 - P0358 (ignitor)
Battery voltage	11 V or more
Engine	500 to 4,000 rpm
ECT	75 to 100°C (167 to 212°F)

TYPICAL MALFUNCTION THRESHOLDS

Advanced camshaft timing:

Difference between actual valve timing and target valve timing	More than 5°CA
Valve timing	No change in advanced valve timing

Retard camshaft timing:

Difference between actual valve timing and target valve timing	More than 5°CA

Valve timing	No change in retarded valve timing

WIRING DIAGRAM

Refer to DTC P0010 (See page ES-77).

INSPECTION PROCEDURE

HINT:

Abnormal bank	Advanced timing over (Valve timing is out of specified range)	Retarded timing over (Valve timing is out of specified range)
Bank 1	P0011	P0012
Bank 2	P0021	P0022

- If DTC P0011 or P0012 is displayed, check the right bank VVT system for intake camshaft circuit (bank 1).
- Bank 1 refers to the bank that includes cylinder No. 1.
- If DTC P0021 or P0022 is displayed, check the intake camshaft circuit for the left bank VVT system (bank 2).
- Bank 2 refers to the bank that does not include cylinder No. 1.
- Read freeze frame data using an intelligent tester. The ECM records vehicle and driving condition information as freeze frame data the moment a DTC is stored. When troubleshooting, freeze frame data can be helpful in determining whether the vehicle was running or stopped, whether the engine was warmed up or not, whether the air-fuel ratio was lean or rich, as well as other data recorded at the time of a malfunction (See page ES-41).

ES

1	CHECK ANY OTHER DTCS OUTPUT (IN ADDITION TO DTC P0011, P0012, P0021 OR P0022)

(a) Connect the intelligent tester to the DLC3.
(b) Turn the engine switch on (IG) and turn the tester on.
(c) Enter the following menus: DIAGNOSIS / ENHANCED OBD II / DTC INFO / CURRENT CODES.
(d) Read the DTCs.

Result

Display (DTC Output)	Proceed to
P0011, P0012, P0021 or P0022	A
P0011, P0012, P0021 or P0022 and other DTCs	B

HINT:
If any DTCs other than P0011, P0012, P0021 or P0022 are output, troubleshoot those DTCs first.

B → **GO TO DTC CHART (See page ES-59)**

A

2	PERFORM ACTIVE TEST BY INTELLIGENT TESTER (OPERATE OCV)

(a) Connect the intelligent tester to the DLC3.
(b) Start the engine and turn the tester on.
(c) Warm up the engine.
(d) Enter the following menus: DIAGNOSIS / ENHANCED OBD II / ACTIVE TEST / VVT CTRL B1 or VVT CTRL B2.

(e) Check the engine speed while operating the Oil Control Valve (OCV) using the tester.

OK

Tester Operation	Specified Condition
OCV OFF	Normal engine speed
OCV ON	Engine idles roughly or stalls (soon after OCV switched from OFF to ON)

NG → **Go to step 4**

OK

ES

3	CHECK WHETHER DTC OUTPUT RECURS (DTC P0011, P0012, P0021 OR P0022)

(a) Connect the intelligent tester to the DLC3.
(b) Turn the engine switch on (IG) and turn the tester on.
(c) Clear the DTCs.
(d) Start the engine and warm it up.
(e) Switch the ECM from normal mode to check mode using the tester.
(f) Drive the vehicle for more than 10 minutes.
(g) Read the DTCs using the tester.
OK:
No DTC output.

NG → **Go to step 4**

OK

END

4	CHECK VALVE TIMING (CHECK FOR LOOSE AND JUMPED TEETH ON TIMING CHAIN)

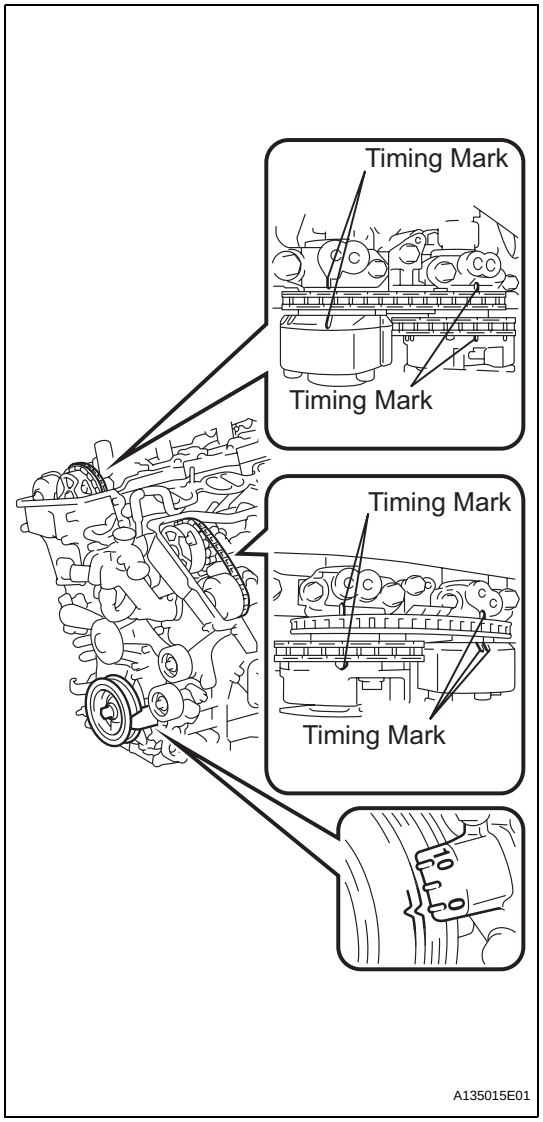

(a) Remove the cylinder head covers RH and LH.
(b) Turn the crankshaft pulley, and align its groove with the timing mark "0" of the timing chain cover.
(c) Check that the timing marks of the camshaft timing gears are aligned with the timing marks of the bearing cap as shown in the illustration.
If not, turn the crankshaft 1 revolution (360°), then align the marks as above.
OK:
The timing marks on the camshaft timing gears are aligned as shown in the illustration.
(d) Reinstall the cylinder head covers.

NG → **ADJUST VALVE TIMING**

OK

5	INSPECT CAMSHAFT TIMING OIL CONTROL VALVE ASSEMBLY (OCV)

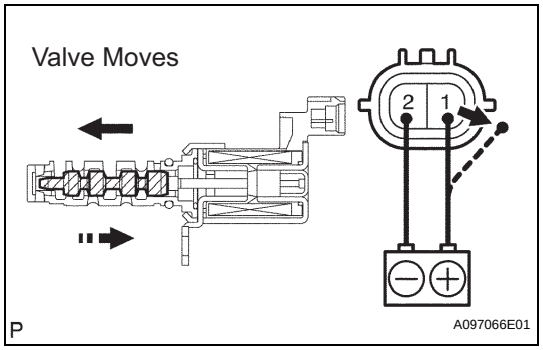

(a) Remove the OCV.
(b) Measure the resistance between the terminals of the OCV.
Standard resistance

Tester Connection	Condition	Specified Condition
1 - 2	20°C (68°F)	6.9 to 7.9 Ω

(c) Apply positive battery voltage to terminal 1 and negative battery voltage to terminal 2. Check the valve operation.
OK:
Valve moves quickly.
(d) Reinstall the OCV.

ES

NG → **REPLACE CAMSHAFT TIMING OIL CONTROL VALVE ASSEMBLY (See page ES-500)**

OK

6	INSPECT OIL CONTROL VALVE FILTER AND PIPE

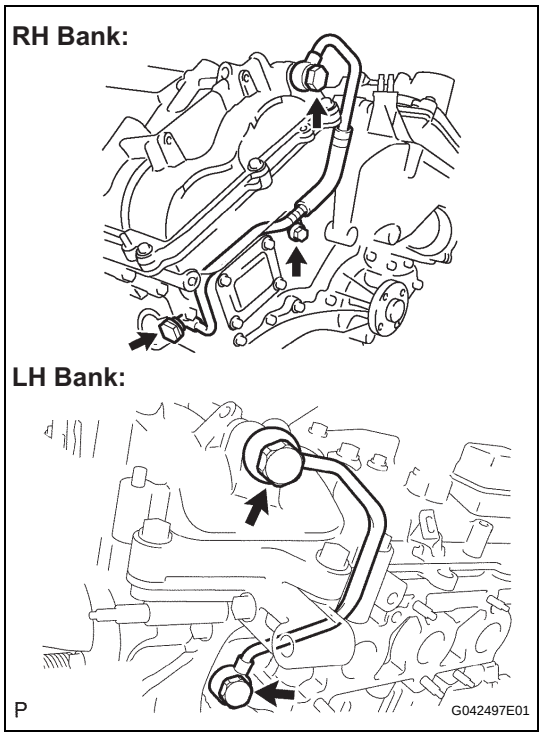

(a) Remove the oil pipe No. 1 or No. 2.
(b) Remove the oil control valve filter.
(c) Check that the filter and pipe are not clogged.
OK:
The filter and pipe are not clogged.

NG → **CLEAN OIL CONTROL VALVE FILTER AND PIPE**

OK

7	REPLACE CAMSHAFT TIMING GEAR ASSEMBLY

NEXT

8	CHECK WHETHER DTC OUTPUT RECURS

(a) Connect the intelligent tester to the DLC3.
(b) Turn the engine switch on (IG) and turn the tester on.
(c) Clear the DTCs.
(d) Start the engine and warm it up.
(e) Switch the ECM from normal mode to check mode using the tester.
(f) Drive the vehicle for more than 10 minutes.
(g) Read the output DTCs using the intelligent tester.
OK:
No DTC output.

HINT:
DTC P0011, P0012, P0021 or P0022 is output when foreign objects in engine oil are caught in some parts of the system. These codes will stay output even if the system returns to normal after a short time. These foreign objects are then captured by the oil filter, thus eliminating the source of the problem.

OK → **SYSTEM IS OK**

NG

REPLACE ECM (See page ES-543)

DTC	P0013	Camshaft Position "B" Actuator Circuit / Open (Bank 1)

DTC	P0023	Camshaft Position "B" Actuator Circuit / Open (Bank 2)

DESCRIPTION

The Variable Valve Timing (VVT) system includes the ECM, OCV and VVT controller. The ECM sends a target duty-cycle control signal to the OCV. This control signal regulates the oil pressure supplied to the VVT controller. Camshaft timing control is performed according to engine operating conditions such as the intake air volume, throttle valve position and engine coolant temperature. The ECM controls the OCV, based on the signals transmitted by several sensors. The VVT controller regulates the exhaust camshaft angle using oil pressure through the OCV. As a result, the relative positions of the camshaft and crankshaft are optimized, the engine torque and fuel economy improve, and the exhaust emissions decrease under overall driving conditions. The ECM detects the actual exhaust valve timing using signals from the camshaft and crankshaft position sensors, and performs feedback control. This is how the target intake valve timing is verified by the ECM.

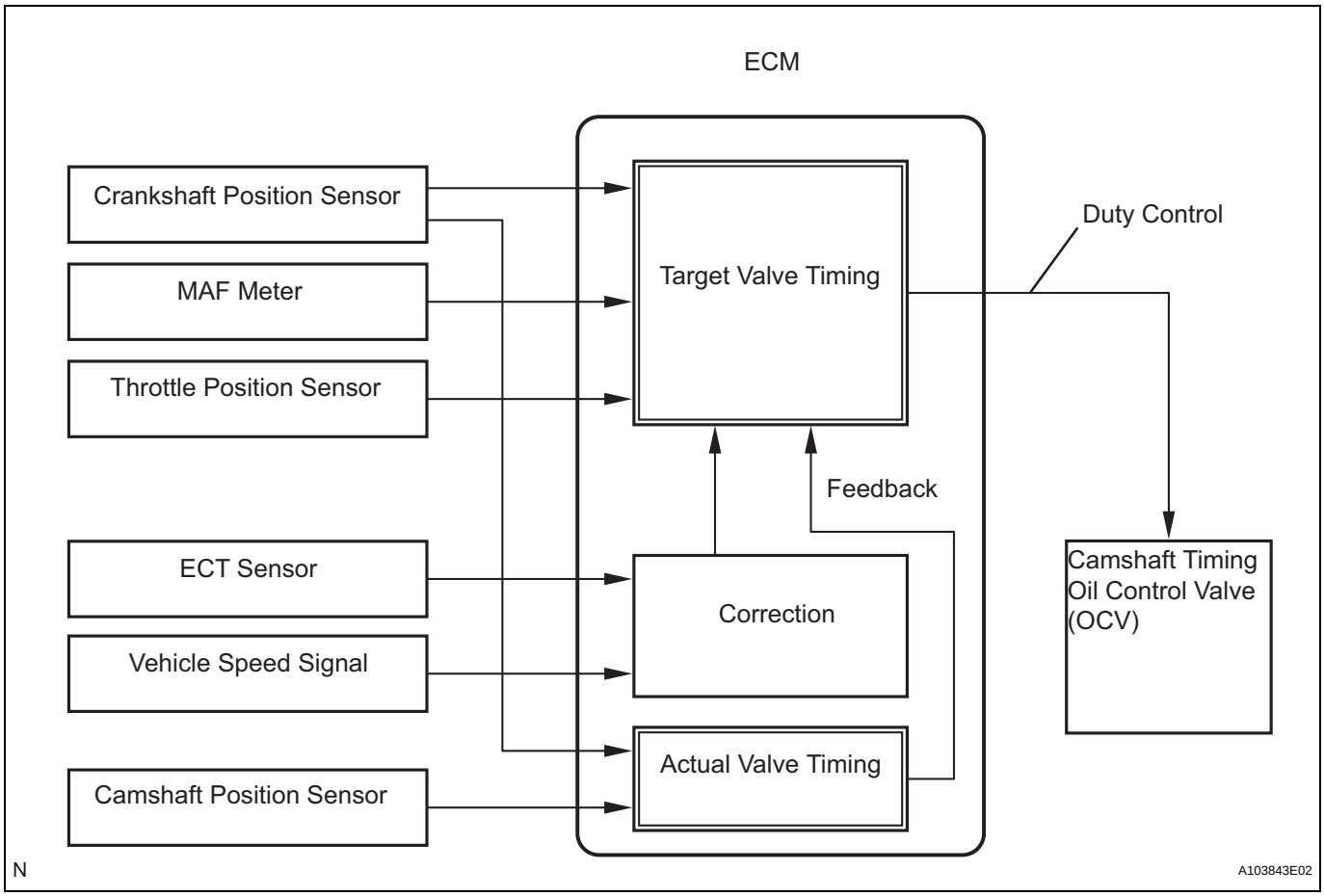

DTC No.	DTC Detection Condition	Trouble Area
P0013	Open or short in OCV for exhaust camshaft (bank 1) circuit (1 trip detection logic)	• Open or short in OCV for exhaust camshaft (bank 1) circuit • OCV for exhaust camshaft (bank 1) • ECM
P0023	Open or short in OCV for exhaust camshaft (bank 2) circuit (1 trip detection logic)	• Open or short in OCV for exhaust camshaft (bank 2) circuit • OCV for exhaust camshaft (bank 2) • ECM

MONITOR DESCRIPTION

The ECM optimizes the valve timing using the VVT system to control the exhaust camshaft. The VVT system includes the ECM, the OCV and the VVT controller. The ECM sends a target duty-cycle control signal to the OCV. This control signal regulates the oil pressure supplied to the VVT controller. The VVT controller can advance or retard the exhaust camshaft.
After the ECM sends the target duty-cycle signal to the OCV, the ECM monitors the OCV current to establish an actual duty-cycle. The ECM determines the existence of a malfunction and sets the DTC when the actual duty-cycle ratio varies from the target duty-cycle ratio.

MONITOR STRATEGY

Related DTCs	P0013: VVT OCV (bank 1) open/short P0023: VVT OCV (bank 2) open/short
Required sensors/components (Main)	VVT OCV (Variable Valve Timing oil control valve)
Required sensors/components (Sub)	-
Frequency of operation	Continuous
Duration	1 second
MIL operation	Immediate
Sequence of operation	None

TYPICAL ENABLING CONDITIONS

Monitor runs whenever following DTCs are not present	None
All of the following conditions are met:	-
Starter	OFF
Engine switch	ON
Time after turning engine switch off to on (IG)	0.5 seconds or more

TYPICAL MALFUNCTION THRESHOLDS

One of the following conditions is met:	Condition A, B or C
A. All of the following conditions are met:	-
Battery voltage	11 to 13 V
Target duty ratio	Less than 70%
Output signal duty ratio	100 %
B. All of the following conditions are met:	-
Battery voltage	13 V or more
Target duty ratio	Less than 80%
Output duty ratio	100 %
C. All of the following conditions are met:	-
Current cut status	Not cut
Output signal duty ratio	3% or less

COMPONENT OPERATING RANGE

VVT duty ratio	More than 3, and less than 100 %

WIRING DIAGRAM

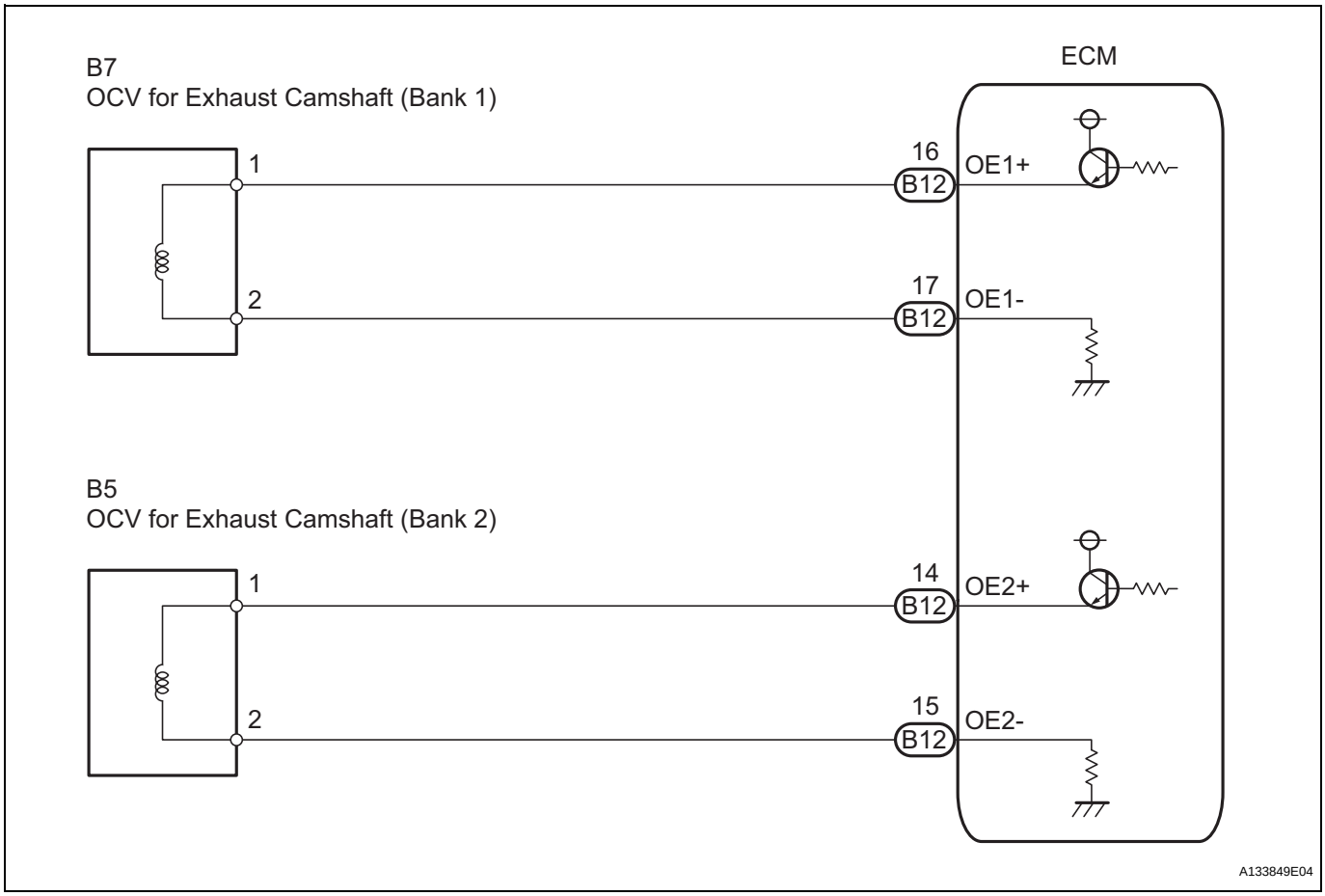

INSPECTION PROCEDURE

HINT:

- If DTC P0013 is displayed, check the exhaust camshaft circuit for the bank 1 VVT system.
- Bank 1 refers to the bank that includes cylinder No. 1.
- If DTC P0023 is displayed, check the exhaust camshaft circuit for the bank 2 VVT system.
- Bank 2 refers to the bank that does not include cylinder No. 1.
- Read freeze frame data using an intelligent tester. The ECM records vehicle and driving condition information as freeze frame data the moment a DTC is stored. When troubleshooting, freeze frame data can be helpful in determining whether the vehicle was running or stopped, whether the engine was warmed up or not, whether the air-fuel ratio was lean or rich, as well as other data recorded at the time of a malfunction (See page ES-41).

1	PERFORM ACTIVE TEST BY INTELLIGENT TESTER (OPERATE OCV)

(a) Connect the intelligent tester to the DLC3.
(b) Start the engine and turn the tester on.
(c) Warm up the engine.
(d) Enter the following menus: DIAGNOSIS / ENHANCED OBD II / ACTIVE TEST / VVT CTRL B1 or VVT CTRL B2.
(e) Check the engine speed while operating the Oil Control Valve (OCV) using the tester.

OK

Tester Operation	Specified Condition
OCV OFF	Normal engine speed
OCV ON	Engine idles roughly or stalls (soon after OCV switched from OFF to ON)

NG → **Go to step 2**

OK

CHECK FOR INTERMITTENT PROBLEMS

ES

2 INSPECT CAMSHAFT TIMING OIL CONTROL VALVE ASSEMBLY

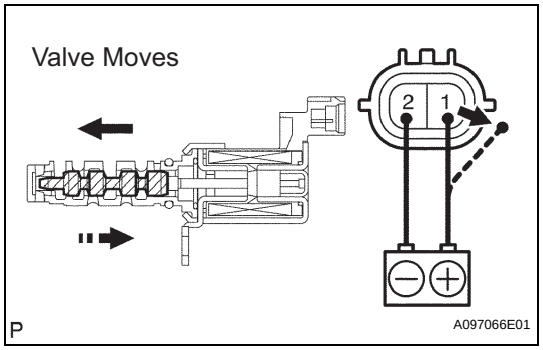

(a) Disconnect the B7 or B5 OCV connector.
(b) Measure the resistance between the terminals of the OCV.
Standard resistance

Tester Connection	Condition	Specified Condition
1 - 2	20°C (68°F)	6.9 to 7.9 Ω

(c) Reconnect the OCV connector.

NG → **Go to step 3**

OK

REPLACE CAMSHAFT TIMING OIL CONTROL VALVE ASSEMBLY (See page ES-500)

3	CHECK HARNESS AND CONNECTOR (OCV - ECM)

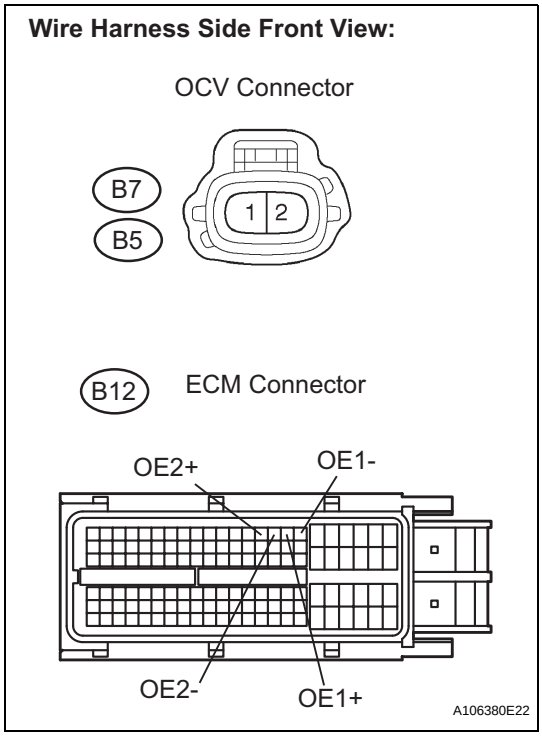

(a) Disconnect the B7 or B5 OCV connector.
(b) Disconnect the B12 ECM connector.
(c) Measure the resistance according to the value(s) in the table below.

Standard resistance (Check for open)

Tester Connection	Specified Condition
OE1+ (B12-16) - B7-1	Below 1 Ω
OE1- (B12-17) - B7-2	Below 1 Ω
OE2+ (B12-14) - B5-1	Below 1 Ω
OE2- (B12-15) - B5-2	Below 1 Ω

Standard resistance (Check for short)

Tester Connection	Specified Condition
OE1+ (B12-16) or B7-1 - Body ground	10 kΩ or higher
OE1- (B12-17) or B7-2 - Body ground	10 kΩ or higher
OE2+ (B12-14) or B5-1 - Body ground	10 kΩ or higher
OE2- (B12-15) or B5-2 - Body ground	10 kΩ or higher

(d) Reconnect the ECM connector.
(e) Reconnect the OCV connector.

NG → **REPAIR OR REPLACE HARNESS OR CONNECTOR**

OK

REPLACE ECM (See page ES-543)

ES

DTC	**P0014**	**Camshaft Position "B" - Timing Over-Advanced or System Performance (Bank 1)**

DTC	**P0015**	**Camshaft Position "B" - Timing Over-Retarded (Bank 1)**

DTC	**P0024**	**Camshaft Position "B" - Timing Over-Advanced or System Performance (Bank 2)**

DTC	**P0025**	**Camshaft Position "B" - Timing Over-Retarded (Bank 2)**

DESCRIPTION

HINT:
If DTC P0014, P0015, P0024 or P0025 is present, check the VVT (Variable Valve Timing) system.
The Variable Valve Timing (VVT) system includes the ECM, OCV and VVT controller. The ECM sends a target duty-cycle control signal to the OCV. This control signal regulates the oil pressure supplied to the VVT controller. Camshaft timing control is performed according to engine operating conditions such as the intake air volume, throttle valve position and engine coolant temperature. The ECM controls the OCV, based on the signals transmitted by several sensors. The VVT controller regulates the exhaust camshaft angle using oil pressure through the OCV. As a result, the relative positions of the camshaft and crankshaft are optimized, the engine torque and fuel economy improve, and the exhaust emissions decrease under overall driving conditions. The ECM detects the actual exhaust valve timing using signals from the camshaft and crankshaft position sensors, and performs feedback control. This is how the target intake valve timing is verified by the ECM.

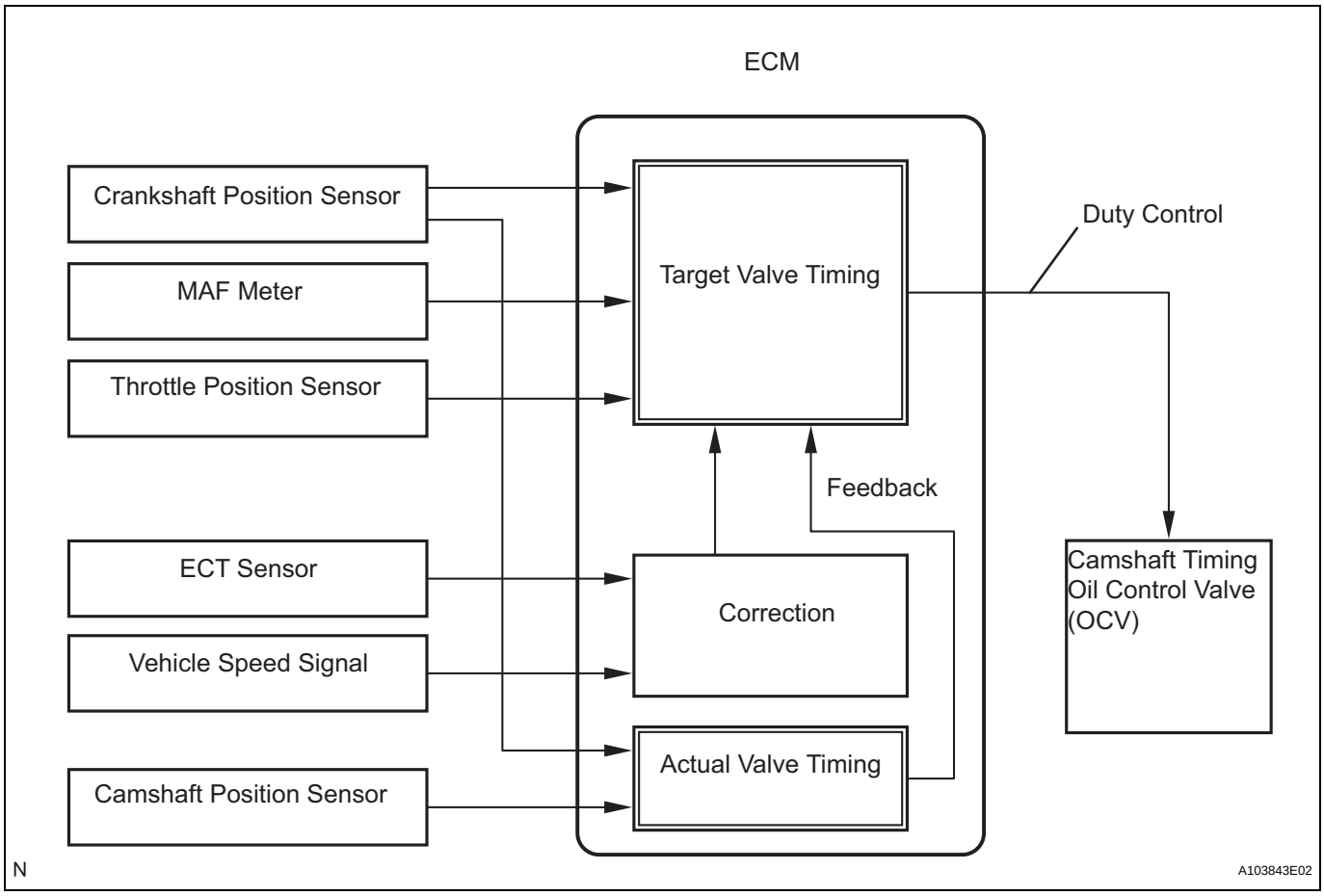

DTC No.	DTC Detection Condition	Trouble Area
P0014 P0024	Advanced cam timing: With warmed-up engine and engine speed of between 500 rpm and 4,000 rpm, all conditions (a), (b) and (c) are met (2 trip detection logic): (a) Difference between target and actual exhaust valve timing is more than 5°CA (Crankshaft Angle) for 4.5 seconds (b) Current exhaust valve timing is fixed (timing changes less than 5°CA in 5 seconds) (c) Variations in VVT controller timing are more than 19°CA of maximum delayed timing (advanced)	• Valve timing • Oil control valve (OCV) for exhaust camshaft (bank 1) • OCV filter (bank 1) • Exhaust camshaft • ECM
P0015 P0025	Retarded cam timing: With warmed-up engine and engine speed of between 500 rpm and 4,000 rpm, all conditions (a), (b) and (c) are met (1 trip detection logic): (a) Difference between target and actual exhaust valve timing is more than 5°CA (Crankshaft Angle) for 4.5 seconds (b) Current exhaust valve timing is fixed (timing changes less than 5°CA in 5 seconds) (c) Variations in VVT controller timing are more than 19°CA or less of maximum delayed timing (retarded)	• Valve timing • OCV for exhaust camshaft (bank 2) • OCV filter (bank 2) • Exhaust camshaft • ECM

MONITOR DESCRIPTION

1. The ECM optimizes the exhaust valve timing using the VVT (Variable Valve Timing) system to control the exhaust camshaft. The VVT system includes the ECM, the Oil Control Valve (OCV) and the VVT controller.

2. The ECM sends a target duty-cycle control signal to the OCV. This control signal regulates the oil pressure supplied to the VVT controller. The VVT controller can advance or retard the exhaust camshaft.
   If the difference between the target and actual exhaust valve timings is large, and changes in actual exhaust valve timing are small, the ECM interprets this as the VVT controller stuck malfunction and sets a DTC.
   Example:
   A DTC is set when the following conditions A, B and C are met:
   (1) The difference between the target and actual exhaust valve timings is more than 5°CA (Crankshaft Angle) and the condition continues for more than 4.5 seconds (Procedure "A").
   (2) It takes 5 seconds or more to change the valve timing by 5°CA (Procedure "B").
   (3) After above procedures "A" and "B" are met, the OCV is forcibly activated 63 times or more (Procedure "C").
3. DTCs P0014 and P0024 (Advanced Cam Timing) are detected with 1 trip detection logic.
4. DTCs P0015 and P0025 (Retarded Cam Timing) are detected with 2 trip detection logic.
   These DTCs indicate that the VVT controller cannot operate properly due to OCV malfunctions or the presence of foreign objects in the OCV.
5. The monitor will not run unless the following conditions are met:
   (a) The engine is warm (the engine coolant temperature is 75°C [167°F] or more).
   (b) The vehicle has been driven at more than 40 mph (64 km/h) for 3 minutes.
   (c) The engine has idled for 3 minutes.

MONITOR STRATEGY

Related DTCs	P0014: Advanced camshaft timing (bank 1) P0015: Retarded camshaft timing (bank 1) P0024: Advanced camshaft timing (bank 2) P0025: Retarded camshaft timing (bank 2)
Required sensors/components (Main)	VVT OCV and VVT Actuator
Required sensors/components (Related)	Crankshaft position sensor, Camshaft position sensor and Engine coolant temperature sensor
Frequency of operation	Once per driving cycle
Duration	Within 10 seconds
MIL operation	Advanced camshaft timing (bank 1): Immediate Advanced camshaft timing (bank 2): Immediate Retarded camshaft timing (bank 1): 2 driving cycles Retarded camshaft timing (bank 2): 2 driving cycles
Sequence of operation	None

TYPICAL ENABLING CONDITIONS

Monitor runs whenever following DTCs are not present	P0100 - P0103 (MAF sensor) P0115 - P0118 (ECT sensor) P0125 (insufficient ECT for closed loop) P0335 (CKP sensor) P0340, P0341 (CMP sensor) P0351 - P0358 (ignitor)
Battery voltage	11 V or more
Engine RPM	500 to 4,000 rpm
Engine coolant temperature	75 to 100°C (167 to 212°F)

TYPICAL MALFUNCTION THRESHOLDS

Advanced camshaft timing:

Valve timing	No change
Valve timing	Advanced position

Retarded camshaft timing:

Valve timing	No change
Valve timing	Retard position

WIRING DIAGRAM

Refer to DTC P0013 (See page ES-89).

INSPECTION PROCEDURE

HINT:

Abnormal bank	Advanced timing over (Valve timing is out of specified range)	Retarded timing over (Valve timing is out of specified range)
Bank 1	P0014	P0015
Bank 2	P0024	P0025

ES

- If DTC P0014 or P0015 is displayed, check the exhaust camshaft circuit for the bank 1 VVT system.
- Bank 1 refers to the bank that includes cylinder No. 1.
- If DTC P0024 or P0025 is displayed, check the exhaust camshaft circuit for the bank 2 VVT system.
- Bank 2 refers to the bank that does not include cylinder No. 1.
- Read freeze frame data using the intelligent tester. The ECM records vehicle and driving condition information as freeze frame data the moment a DTC is stored. When troubleshooting, freeze frame data can be helpful in determining whether the vehicle was running or stopped, whether the engine was warmed up or not, whether the air-fuel ratio was lean or rich, as well as other data recorded at the time of a malfunction (See page ES-41).

1 CHECK ANY OTHER DTCS OUTPUT (IN ADDITION TO DTC P0014, P0015, P0024 OR P0025)

(a) Connect the intelligent tester to the DLC3.
(b) Turn the engine switch on (IG) and turn the tester on.
(c) Enter the following menus: DIAGNOSIS / ENHANCED OBD II / DTC INFO / CURRENT CODES.
(d) Read the DTCs.

Result

Display (DTC output)	Proceed to
P0014, P0015, P0024 or P0025	A
P0014, P0015, P0024 or P0025 and other DTCs	B

HINT:
If any DTCs other than P0014, P0015, P0024 or P0025 are output, troubleshoot those DTCs first.

B → **GO TO DTC CHART (See page ES-59)**

A

2 PERFORM ACTIVE TEST BY INTELLIGENT TESTER (OPERATE OCV)

(a) Connect the intelligent tester to the DLC3.
(b) Start the engine and turn the tester on.
(c) Warm up the engine.
(d) Enter the following menus: DIAGNOSIS / ENHANCED OBD II / ACTIVE TEST / VVT CTRL B1.

(e) Check the engine speed while operating the Oil Control Valve (OCV) using the tester.

OK

Tester Operation	Specified Condition
OCV OFF	Normal engine speed
OCV ON	Engine idles roughly or stalls (soon after OCV switched from OFF to ON)

NG → **Go to step 4**

OK

3 CHECK WHETHER DTC OUTPUT RECURS (DTC P0014, P0015, P0024 OR P0025)

ES

(a) Connect the intelligent tester to the DLC3.
(b) Turn the engine switch on (IG) and turn the tester on.
(c) Clear the DTCs (See page ES-41).
(d) Start the engine and warm it up.
(e) Switch the ECM from normal mode to check mode using the tester (See page ES-45).
(f) Drive the vehicle for more than 10 minutes.
(g) Read the DTCs using the tester.
OK:
No DTC output.

NG → **Go to step 4**

OK

END

ES

4	CHECK VALVE TIMING (CHECK FOR LOOSE AND JUMPED TEETH ON TIMING CHAIN)

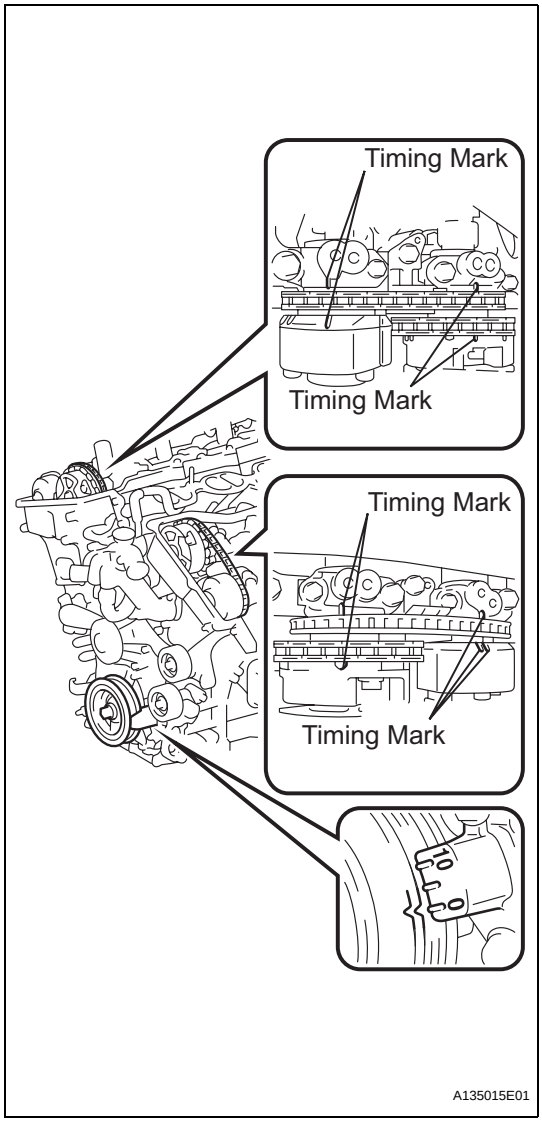

(a) Remove the cylinder head covers RH and LH.
(b) Turn the crankshaft pulley, and align its groove with the timing mark "0" of the timing chain cover.
(c) Check that the timing marks of the camshaft timing gears are aligned with the timing marks of the bearing cap as shown in the illustration.
If not, turn the crankshaft 1 revolution (360°), then align the marks as above.
OK:
The timing marks on the crankshaft timing gears are aligned as shown in the illustration.
(d) Reinstall the cylinder head covers.

NG → **ADJUST VALVE TIMING**

OK

5	INSPECT CAMSHAFT TIMING OIL CONTROL VALVE ASSEMBLY (OCV FOR EXHAUST CAMSHAFT)

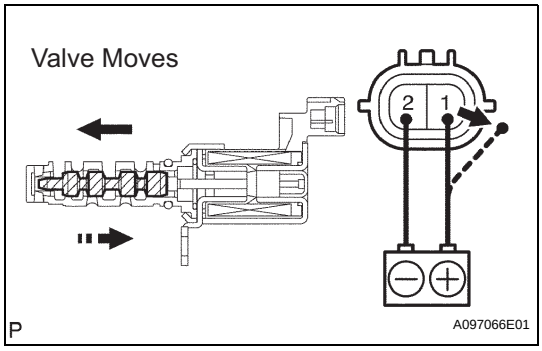

(a) Remove the OCV.
(b) Measure the resistance between the terminals of the OCV.
Standard resistance

Tester Connection	Condition	Specified Condition
1 - 2	20°C (68°F)	6.9 to 7.9 Ω

(c) Apply positive battery voltage to terminal 1 and negative battery voltage to terminal 2. Check the valve operation.
OK:
Valve moves quickly.
(d) Reinstall the OCV.

NG → **REPLACE CAMSHAFT TIMING OIL CONTROL VALVE ASSEMBLY (See page ES-500)**

OK

6	INSPECT OIL CONTROL VALVE FILTER AND PIPE

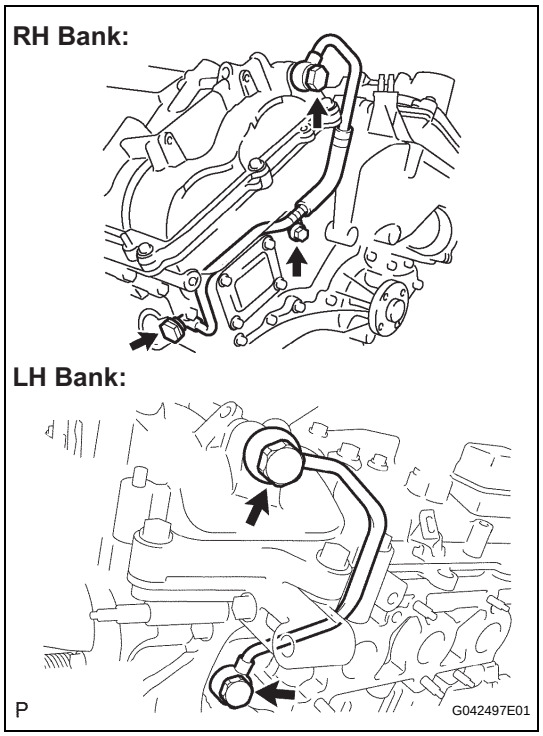

(a) Remove the oil pipe No. 1 or No. 2.
(b) Remove the oil control valve filter.
(c) Check that the filter and pipe are not clogged.
OK:
Filter is not clogged.

NG → **CLEAN OIL CONTROL VALVE FILTER AND PIPE**

ES

OK

7	REPLACE EXHAUST CAMSHAFT

NEXT

8	CHECK WHETHER DTC OUTPUT RECURS

(a) Clear the DTCs.
  (1) Operate the intelligent tester, or disconnect the EFI and ETCS fuses more than 60 seconds to erase the codes.
(b) Start the engine and warm up the engine.
(c) Switch the ECM from normal mode to check mode using the intelligent tester (See page ES-45).
(d) Drive the vehicle for more than 10 minutes or more.
(e) Read the output DTCs using the intelligent tester.
OK:
No DTC output.

HINT:
DTC P0014, P0015, P0024 or P0025 is output when foreign objects in engine oil are caught in some parts of the system. These codes will stay output even if the system returns to normal after a short time. These foreign objects are then captured by the oil, thus eliminating the source of the problem.

OK → **SYSTEM IS OK**

NG

REPLACE ECM (See page ES-543)

DTC	P0016	Crankshaft Position - Camshaft Position Correlation (Bank 1 Sensor A)

DTC	P0017	Crankshaft Position - Camshaft Position Correlation (Bank 1 Sensor B)

DTC	P0018	Crankshaft Position - Camshaft Position Correlation (Bank 2 Sensor A)

DTC	P0019	Crankshaft Position - Camshaft Position Correlation (Bank 2 Sensor B)

DESCRIPTION

In the VVT system, the appropriate intake and exhaust valve open and close timings are controlled by the ECM. The ECM performs intake and exhaust valve control by performing the following: 1) controlling the camshaft and camshaft oil control valve, and operating the camshaft timing gear; and 2) changing the relative positions of the gaps between the camshaft and crankshaft.

DTC No.	DTC Detection Condition	Trouble Area
P0016	Deviation in crankshaft position sensor signal and VVT sensor 1 (for intake camshaft (bank 1)) signal (2 trip detection logic)	• Mechanical system (Timing chain has jumped teeth or chain is stretched) • ECM
P0017	Deviation in crankshaft position sensor signal and VVT sensor 1 (for exhaust camshaft (bank 1)) signal (2 trip detection logic)	• Mechanical system (Timing chain has jumped teeth or chain stretched) • ECM
P0018	Deviation in crankshaft position sensor signal and VVT sensor 2 (for intake camshaft (bank 2)) signal (2 trip detection logic)	• Mechanical system (Timing chain has jumped teeth or chain stretched) • ECM
P0019	Deviation in crankshaft position sensor signal and VVT sensor 2 (for exhaust camshaft (bank 2)) signal (2 trip detection logic)	• Mechanical system (Timing chain has jumped teeth or chain stretched) • ECM

MONITOR DESCRIPTION

To monitor the correlation of the intake camshaft position and crankshaft position, the ECM checks the VVT learning value while the engine is idling. The VVT learning value is calibrated based on the camshaft position and crankshaft position. The intake valve timing is set to the most retarded angle while the engine is idling. If the VVT learning value is out of the specified range in consecutive driving cycles, the ECM illuminates the MIL and sets DTC P0016 (Bank 1) or P0018 (Bank 2).
To monitor the correlation of the exhaust camshaft position and crankshaft position, the ECM checks the VVT learning value while the engine is idling. The VVT learning value is calibrated based on the camshaft position and crankshaft position. The exhaust valve timing is set to the most advanced angle while the engine is idling. If the VVT learning value is out of the specified range in consecutive driving cycles, the ECM illuminates the MIL and sets DTC P0017 (Bank 1) or P0019 (Bank 2).

MONITOR STRATEGY

Related DTCs	P0016: Camshaft timing misalignment at idle (intake camshaft bank 1) P0017: Camshaft timing misalignment at idle (exhaust camshaft bank 1) P0018: Camshaft timing misalignment at idle (intake camshaft bank 2) P0019: Camshaft timing misalignment at idle (exhaust camshaft bank 2)
Required sensors/components (Main)	VVT actuator

Required sensors/components (Sub)	Camshaft position sensor, Crankshaft position sensor
Frequency of operation	Once per drive cycle
Duration	Within 1 minute
MIL operation	2 driving cycles
Sequence of operation	None

TYPICAL ENABLING CONDITIONS

All:

Monitor runs whenever following DTCs are not present	P0011 (VVT system 1 - advance) P0012 (VVT system 1 - retard) P0021 (VVT system 2 - advance) P0115 - P0118 (ECT sensor)

Intake side:

Engine speed	500 to 1,000 rpm

Exhaust side:

VVT feedback mode	Executing
VVT	Maximum advanced position
Engine speed	500 to 1,000 rpm

TYPICAL MALFUNCTION THRESHOLDS

Intake side:

One of the following conditions is met:	Condition 1 or 2
1. VVT leaning value at maximum retarded valve timing	Less than 18.5°CA
2. VVT leaning valve at maximum retarded valve timing	More than 43.5°CA

Exhaust side:

One of the following conditions is met:	Condition 1 or 2
1. VVT leaning value	Less than 77°CA
2. VVT leaning value	More than 102°CA

WIRING DIAGRAM

Refer to DTC P0335 (See page ES-220).

INSPECTION PROCEDURE

HINT:

Read freeze frame data using the intelligent tester. The ECM records vehicle and driving condition information as freeze frame data the moment a DTC is stored. When troubleshooting, freeze frame data can be helpful in determining whether the vehicle was running or stopped, whether the engine was warmed up or not, whether the air-fuel ratio was lean or rich, as well as other data recorded at the time of a malfunction (See page ES-41).

1	CHECK VALVE TIMING (CHECK FOR LOOSE AND A JUMPED TOOTH OF TIMING CHAIN)

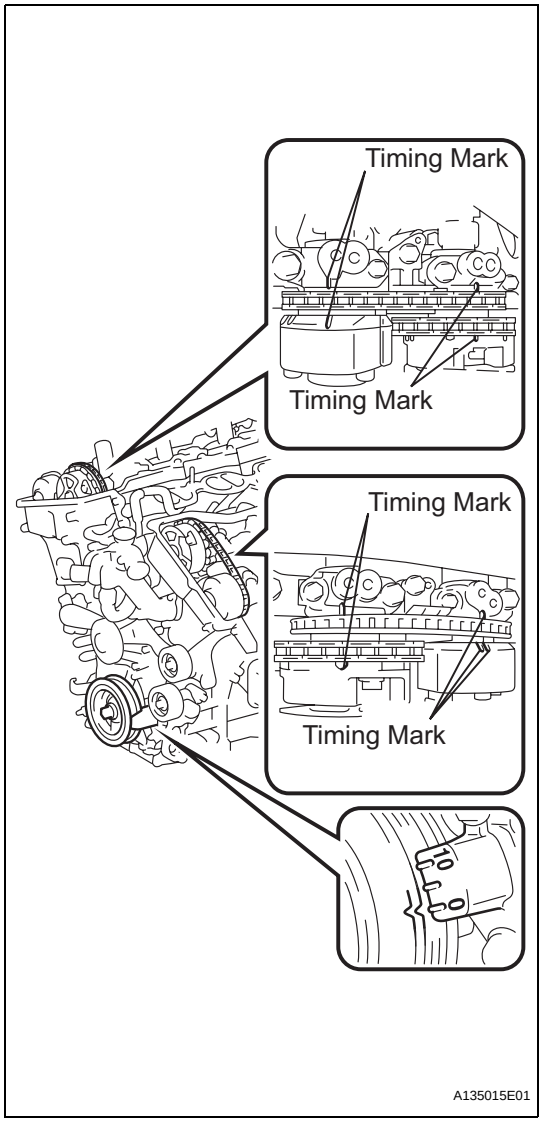

(a) Remove the cylinder head covers RH and LH.
(b) Turn the crankshaft pulley, and align its groove with the timing mark "0" of the timing chain cover.
(c) Check that the timing marks of the camshaft timing gears are aligned with the timing marks of the bearing cap as shown in the illustration.
If not, turn the crankshaft 1 revolution (360°), then align the marks as above.
OK:
The timing marks on the camshaft timing gears are aligned as shown in the illustration.
(d) Reinstall the cylinder head covers.

NG → **ADJUST VALVE TIMING (REPAIR OR REPLACE TIMING CHAIN)**

ES

OK

REPLACE ECM (See page ES-543)

DTC	**P0031**	**Oxygen (A/F) Sensor Heater Control Circuit Low (Bank 1 Sensor 1)**

DTC	**P0032**	**Oxygen (A/F) Sensor Heater Control Circuit High (Bank 1 Sensor 1)**

DTC	**P0051**	**Oxygen (A/F) Sensor Heater Control Circuit Low (Bank 2 Sensor 1)**

DTC	**P0052**	**Oxygen (A/F) Sensor Heater Control Circuit High (Bank 2 Sensor 1)**

DESCRIPTION

HINT:

- Although the DTC titles include oxygen sensor, these DTCs relate to the Air-Fuel Ratio (A/F) sensor.
- Sensor 1 refers to the sensor mounted in front of the Three-Way Catalytic Converter (TWC) and located near the engine assembly.

The A/F sensor generates voltage* that corresponds to the actual air-fuel ratio. This sensor voltage is used to provide the ECM with feedback so that it can control the air-fuel ratio. The ECM determines the deviation from the stoichiometric air-fuel ratio level, and regulates the fuel injection time. If the A/F sensor malfunctions, the ECM is unable to control the air-fuel ratio accurately.

The A/F sensor is the planar type and is integrated with the heater, which heats the solid electrolyte (zirconia element). This heater is controlled by the ECM. When the intake air volume is low (the exhaust gas temperature is low), a current flows into the heater to heat the sensor, in order to facilitate accurate oxygen concentration detection. In addition, the sensor and heater portions are narrower than the conventional type. The heat generated by the heater is conducted to the solid electrolyte through the alumina, therefore the sensor activation is accelerated.

A three-way catalytic converter (TWC) is used in order to convert the carbon monoxide (CO), hydrocarbon (HC), and nitrogen oxide (NOx) into less harmful substances. To allow the TWC to function effectively, it is necessary to keep the air-fuel ratio of the engine near the stoichiometric air-fuel ratio.

*: Value changes inside the ECM. Since the A/F sensor is the current output element, a current is converted to a voltage inside the ECM. Any measurements taken at the A/F sensor or ECM connectors will show a constant voltage.

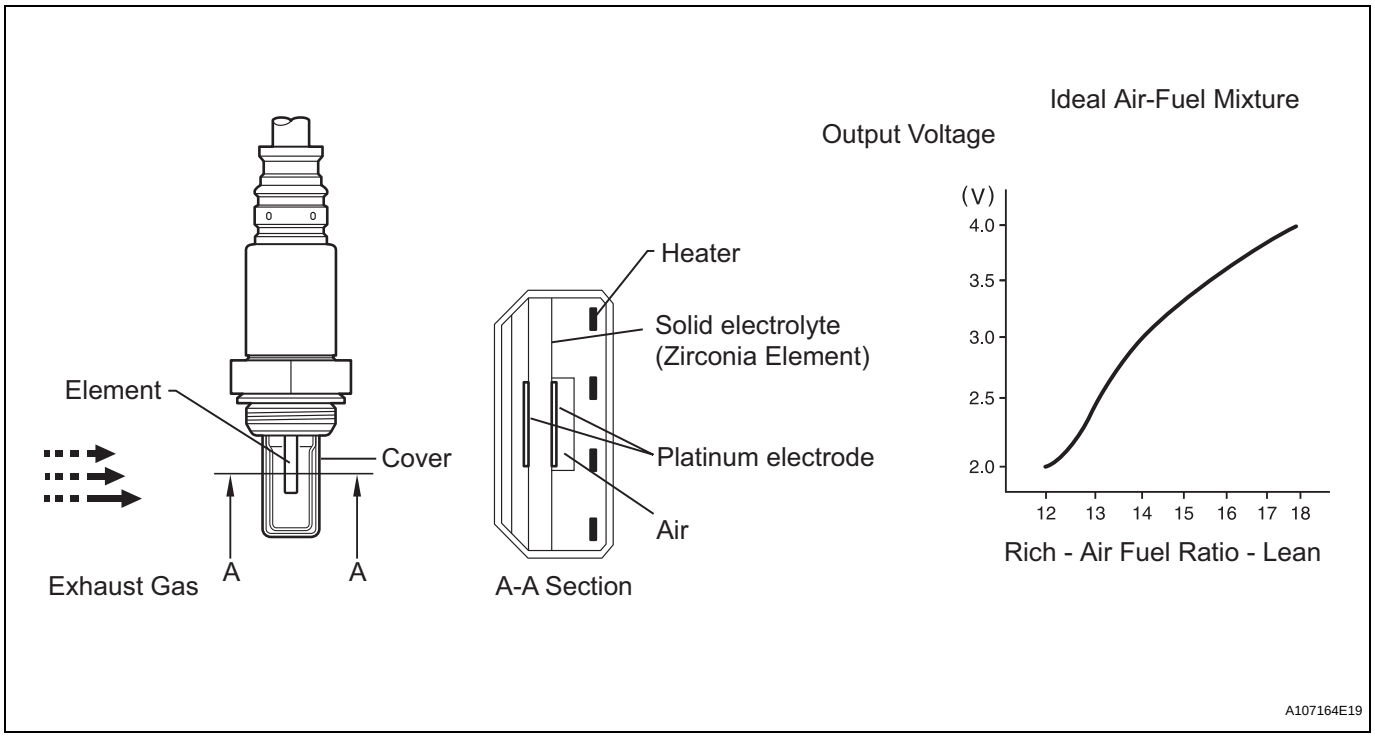

HINT:

- When any of these DTCs are set, the ECM enters fail-safe mode. The ECM turns off the A/F sensor heater in fail-safe mode. Fail-safe mode continues until the engine switch is turned off.
- The ECM provides a pulse width modulated control circuit to adjust the current through the heater. The A/F sensor heater circuit uses a relay on the B+ side of the circuit.

Reference (System Diagram of Bank 1 Sensor 1):

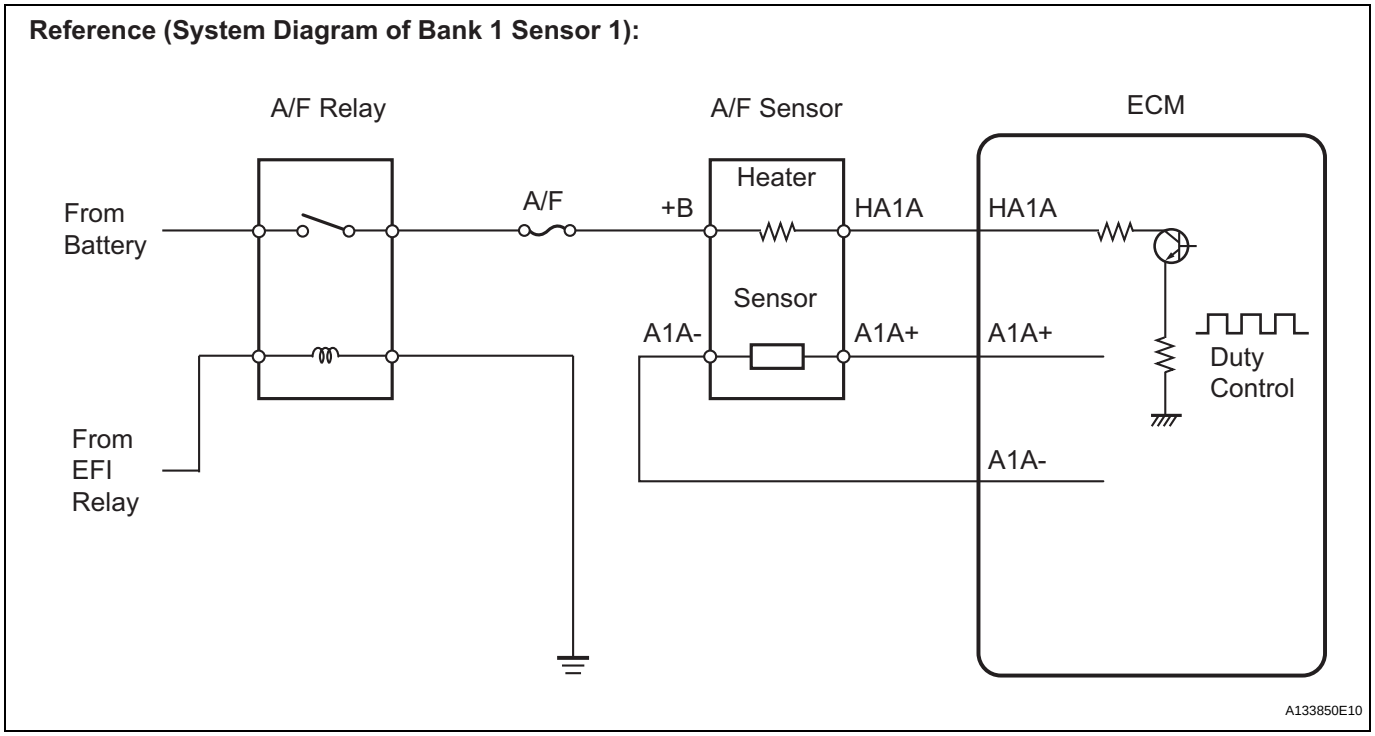

DTC No.	DTC Detection Condition	Trouble Area
P0031 P0051	Air-Fuel Ratio (A/F) sensor heater (bank 1, 2, sensor 1) current is less than 0.8 A (1 trip detection logic)	• Open in A/F sensor heater (bank 1, 2, sensor 1) circuit • A/F sensor heater (bank 1, 2, sensor 1) • A/F HTR relay • ECM

ES

DTC No.	DTC Detection Condition	Trouble Area
P0032 P0052	Air-Fuel Ratio (A/F) sensor heater (bank 1, 2, sensor 1) current is more than 10 A (1 trip detection logic)	• Short in A/F sensor heater (bank 1, 2, sensor 1) circuit • A/F sensor heater (sensor 1) • A/F HTR relay • ECM

HINT:
- Bank 1 refers to the bank that includes cylinder No. 1.
- Bank 2 refers to the bank that does not include cylinder No. 1.
- Sensor 1 refers to the sensor closest to the engine assembly.
- Sensor 2 refers to the sensor farthest away from the engine assembly.

MONITOR DESCRIPTION

1. The ECM uses information from the Air-Fuel Ratio (A/F) sensor to regulate the air-fuel ratio and keep it close to the stoichiometric level. This maximizes the ability of the Three-Way Catalytic Converter (TWC) to purify the exhaust gases.
2. The A/F sensor detects oxygen levels in the exhaust gas and transmits the information to the ECM. The inner surface of the sensor element is exposed to the outside air. The outer surface of the sensor element is exposed to the exhaust gas. The sensor element is made of platinum coated zirconia and includes an integrated heating element.
3. The zirconia element generates a small voltage when there is a large difference in the oxygen concentrations between the exhaust gas and outside air. The platinum coating amplifies this voltage generation.
4. The A/F sensor is more efficient when heated. When the exhaust gas temperature is low, the sensor cannot generate useful voltage signals without supplementary heating. The ECM regulates the supplementary heating using a duty-cycle approach to adjust the average current in the sensor heater element. If the heater current is outside the normal range, the signal transmitted by the A/F sensor will be inaccurate, as a result, the ECM will be unable to regulate air-fuel ratio properly.
5. When the current in the A/F sensor heater is outside the normal operating range, the ECM interprets this as a malfunction in the sensor heater and sets a DTC.

   Example:

   The ECM sets DTC P0032 or P0052 when the current in the A/F sensor heater is more than 10 A. Conversely, when the heater current is less than 0.8 A, DTC P0031 or P0051 is set.

MONITOR STRATEGY

Related DTCs	P0031: A/F sensor heater (bank 1) open/short (Low electrical current) P0032: A/F sensor heater (bank 1) open/short (High electrical current) P0051: A/F sensor heater (bank 2) open/short (Low electrical current) P0052: A/F sensor heater (bank 2) open/short (High electrical current)
Required sensors/components (Main)	A/F sensor heater (bank 1 and 2)
Required sensors/components (Sub)	-
Frequency of operation	Continuous
Duration	10 seconds
MIL operation	Immediate
Sequence of operation	None

TYPICAL ENABLING CONDITIONS

All:

Monitor runs whenever following DTCs are not present	P0300 - P0306 (misfire)

P0031 and P0051:

Battery voltage	10.5 V or more
Heater output duty	50 % or more

Time after engine start	10 seconds or more

P0032 and P0052:

Battery voltage	Less than 20 V
Engine	Running
Heater output duty	More than 0 %

TYPICAL MALFUNCTION THRESHOLDS

P0031 and P0051:

A/F sensor heater current	Less than 0.8 A

P0032 and P0052:

Hybrid IC high current limiter port	Fail

COMPONENT OPERATING RANGE

P0031 and P0051:

A/F sensor heater current	1.8 to 3.4 A at 20°C (68°F)

WIRING DIAGRAM

Refer to DTC P2195 (See page ES-353).

INSPECTION PROCEDURE

HINT:

Read freeze frame data using the intelligent tester. The ECM records vehicle and driving condition information as freeze frame data the moment a DTC is stored. When troubleshooting, freeze frame data can be helpful in determining whether the vehicle was running or stopped, whether the engine was warmed up or not, whether the air-fuel ratio was lean or rich, as well as other data recorded at the time of a malfunction (See page ES-41).

ES

1 INSPECT AIR FUEL RATIO SENSOR (HEATER RESISTANCE)

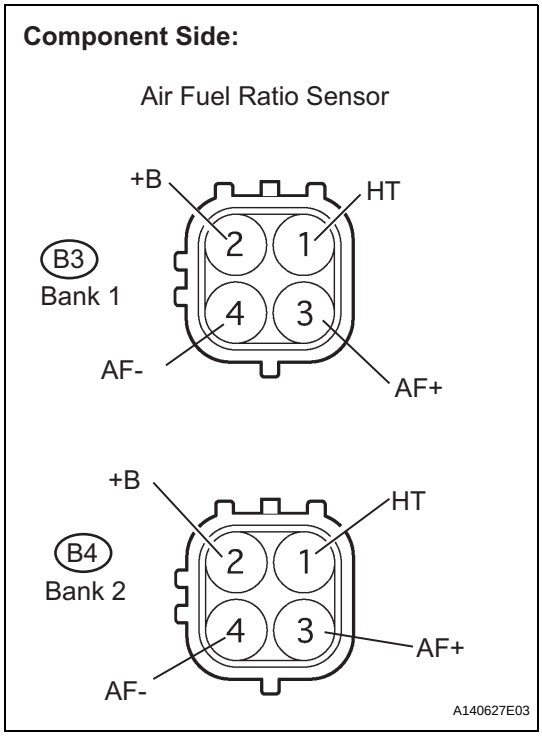

(a) Disconnect the B3 or B4 A/F sensor connector.
(b) Measure the resistance according to the value(s) in the table below.

Standard resistance (Bank 1 sensor 1)

Tester Connection	Condition	Specified Condition
HT (1) - +B (2)	20°C (68°F)	1.8 to 3.4 Ω
HT (1) - AF- (4)	-	10 kΩ or higher

Standard resistance (Bank 2 sensor 1)

Tester Connection	Condition	Specified Condition
HT (1) - +B (2)	20°C (68°F)	1.8 to 3.4 Ω
HT (1) - AF- (4)	-	10 kΩ or higher

(c) Reconnect the A/F sensor connector.

NG → **REPLACE AIR FUEL RATIO SENSOR (See page EC-19)**

OK

2 CHECK TERMINAL VOLTAGE (+B OF A/F SENSOR)

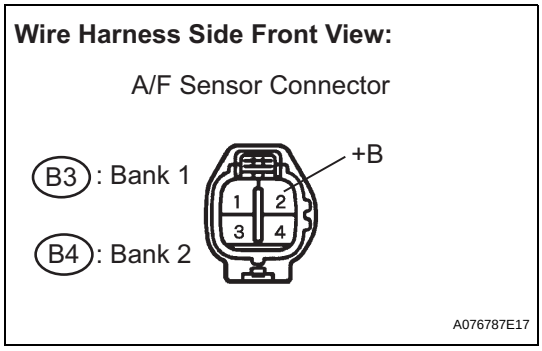

(a) Disconnect the B3 or B4 A/F sensor connector.
(b) Turn the engine switch on (IG).
(c) Measure the voltage between the terminals of the A/F sensor connector and body ground.

Standard voltage

Tester Connection	Specified Condition
+B (B3-2) - Body ground	9 to 14 V
+B (B4-2) - Body ground	9 to 14 V

OK → **Go to step 7**

NG

3 INSPECT FUSE (A/F)

(a) Remove the A/F sensor fuse from the engine room junction block.
(b) Measure the A/F sensor fuse resistance.

Standard resistance:
Below 1 Ω

(c) Reinstall the A/F fuse.

NG → **REPLACE A/F FUSE**

OK

4 INSPECT ENGINE ROOM JUNCTION BLOCK (EFI RELAY, A/F RELAY)

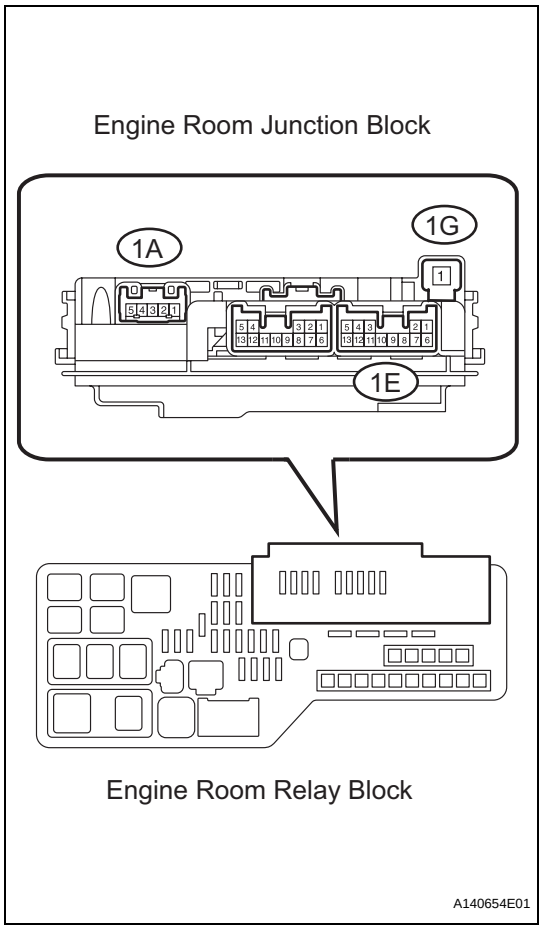

(a) Remove the engine room junction block from the engine room R/B.

(b) Inspect the EFI relay.

(1) Measure the EFI relay resistance.

Standard resistance

Tester Connection	Specified Condition
1E-12 - 1E-6	10 kΩ or higher
1E-12 - 1E-6	Below 1 Ω (Apply battery voltage between terminals 1E-9 and 1E-10)

(c) Inspect the A/F relay.

(1) Measure the A/F relay resistance.

Standard resistance

Tester Connection	Specified Condition
1G-1 - 1A-4	10 kΩ or higher
1G-1 - 1A-4	Below 1 Ω (Apply battery voltage between terminals 1E-9 and 1E-10)

NG → **REPLACE ENGINE ROOM JUNCTION BLOCK**

OK

5 INSPECT FUSE (EFI MAIN)

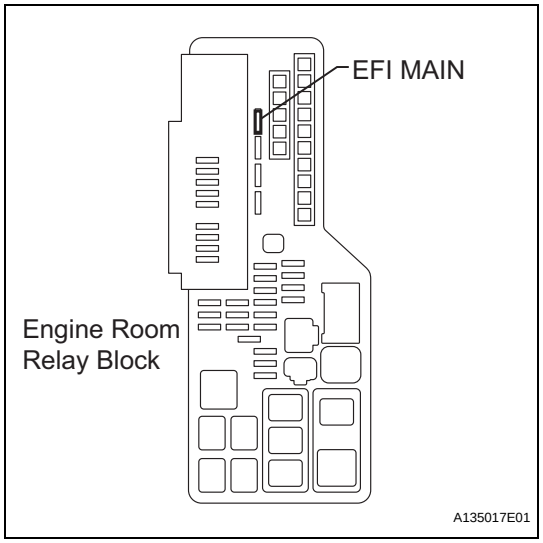

(a) Remove the EFI MAIN fuse from the engine room R/B.

(b) Measure the EFI MAIN fuse resistance.

Standard resistance:

Below 1 Ω

(c) Reinstall the EFI MAIN fuse.

NG → **REPLACE EFI MAIN FUSE**

ES

OK

6	CHECK HARNESS AND CONNECTOR (A/F SENSOR - A/F RELAY)

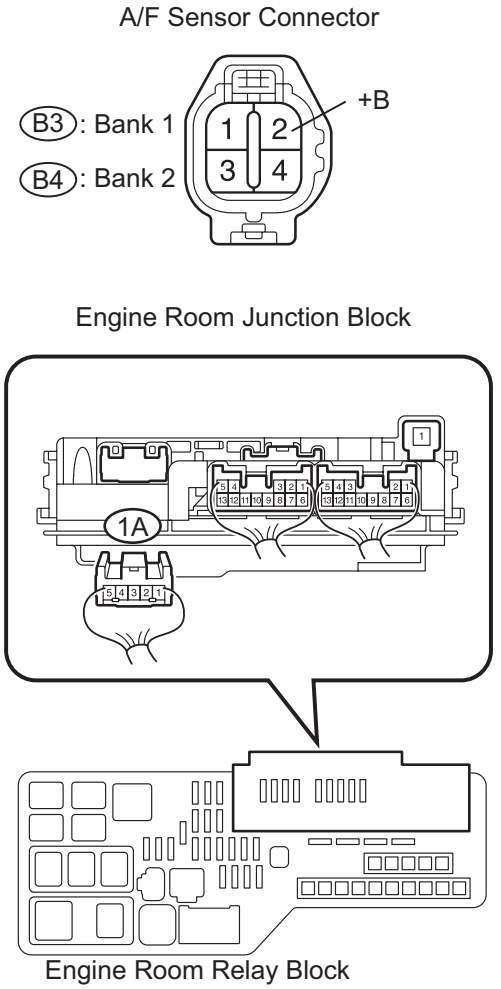

(a) Disconnect the B3 or B4 A/F sensor connector.
(b) Remove the engine room junction block from the engine room R/B.
(c) Measure the resistance between the terminals.

Standard resistance (Check for open)

Tester Connection	Specified Condition
+B (B3-2) - 1A-4 (Engine room R/B)	Below 1 Ω
+B (B4-2) - 1A-4 (Engine room R/B)	Below 1 Ω

Standard resistance (Check for short)

Tester Connection	Specified Condition
+B (B3-2) or 1A-4 (Engine room R/B) - Body ground	10 kΩ or higher
+B (B4-2) or 1A-4 (Engine room R/B) - Body ground	10 kΩ or higher

(d) Reinstall the engine room junction block.
(e) Reconnect the A/F sensor connector.

NG → **REPAIR OR REPLACE HARNESS OR CONNECTOR**

OK

CHECK ECM POWER SOURCE CIRCUIT (See page ES-427)

7 CHECK HARNESS AND CONNECTOR

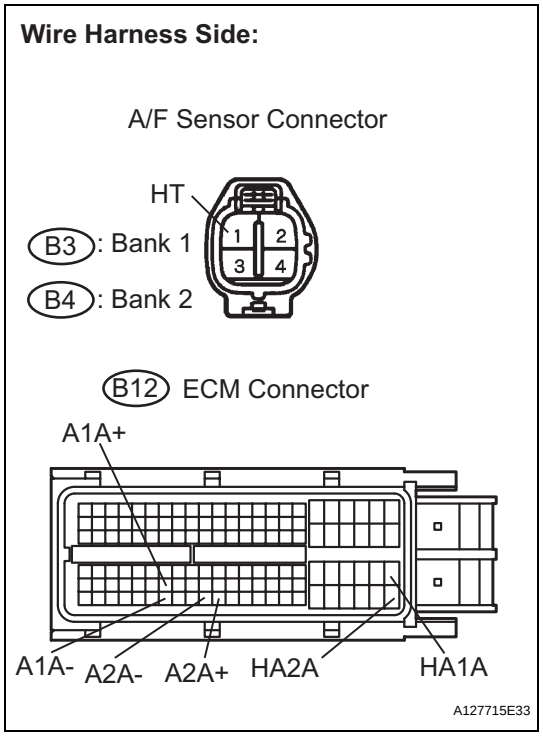

(a) Disconnect the B3 or B4 A/F sensor connector.
(b) Disconnect the B12 ECM connector.
(c) Measure the resistance between the terminals.

Standard resistance (Check for open)

Tester Connection	Specified Condition
HA1A (B12-86) - HT (B3-1)	Below 1 Ω
HA2A (B12-109) - HT (B4-1)	Below 1 Ω

Standard resistance (Check for short)

Tester Connection	Specified Condition
HA1A (B12-86) or HT (B3-1) - Body ground	10 kΩ or higher
HA2A (B12-109) or HT (B4-1) - Body ground	10 kΩ or higher

(d) Reconnect the ECM connector.
(e) Reconnect the A/F sensor connectors.

NG → **REPAIR OR REPLACE HARNESS OR CONNECTOR**

OK

8 CHECK WHETHER DTC OUTPUT RECURS

(a) Connect the intelligent tester to the DLC3.
(b) Turn the engine switch on (IG).
(c) Turn the intelligent tester on.
(d) Clear the DTCs (See page ES-41).
(e) Start the engine.
(f) Allow the engine to idle for 1 minute or more.
(g) Select the following menu items: DIAGNOSIS / ENHANCED OBD II / DTC INFO / CURRENT CODES.
(h) Read the DTCs.

Result

Display (DTC Output)	Proceed to
No output	A
P0031, P0032, P0051 and/or P0052	B

B → **REPLACE ECM (See page ES-543)**

A

CHECK FOR INTERMITTENT PROBLEMS

ES

DTC	P0037	Oxygen Sensor Heater Control Circuit Low (Bank 1 Sensor 2)

DTC	P0038	Oxygen Sensor Heater Control Circuit High (Bank 1 Sensor 2)

DTC	P0057	Oxygen Sensor Heater Control Circuit Low (Bank 2 Sensor 2)

DTC	P0058	Oxygen Sensor Heater Control Circuit High (Bank 2 Sensor 2)

DTC	P0141	Oxygen Sensor Heater Circuit Malfunction (Bank 1 Sensor 2)

DTC	P0161	Oxygen Sensor Heater Circuit Malfunction (Bank 2 Sensor 2)

DESCRIPTION

A three-way catalytic converter (TWC) is used in order to convert the carbon monoxide (CO), hydrocarbon (HC), and nitrogen oxide (NOx) into less harmful substances. To allow the TWC to function effectively, it is necessary to keep the air-fuel ratio of the engine near the stoichiometric air-fuel ratio. For the purpose of helping the ECM to deliver accurate air-fuel ratio control, a Heated Oxygen (HO2) sensor is used.
The HO2 sensor is located behind the TWC, and detects the oxygen concentration in the exhaust gas. Since the sensor is integrated with the heater that heats the sensing portion, it is possible to detect the oxygen concentration even when the intake air volume is low (the exhaust gas temperature is low).
When the air-fuel ratio becomes lean, the oxygen concentration in the exhaust gas becomes rich. The HO2 sensor informs the ECM that the post-TWC air-fuel ratio is lean (low voltage, i.e. less than 0.45 V). Conversely, when the air-fuel ratio is richer than the stoichiometric air-fuel level, the oxygen concentration in the exhaust gas becomes lean. The HO2 sensor informs the ECM that the post-TWC air-fuel ratio is rich (high voltage, i.e. more than 0.45 V). The HO2 sensor has the property of changing its output voltage drastically when the air-fuel ratio is close to the stoichiometric level.
The ECM uses the supplementary information from the HO2 sensor to determine whether the air-fuel ratio after the TWC is rich or lean, and adjusts the fuel injection time accordingly. Thus, if the HO2 sensor is working improperly due to internal malfunctions, the ECM is unable to compensate for deviations in the primary air-fuel ratio control.

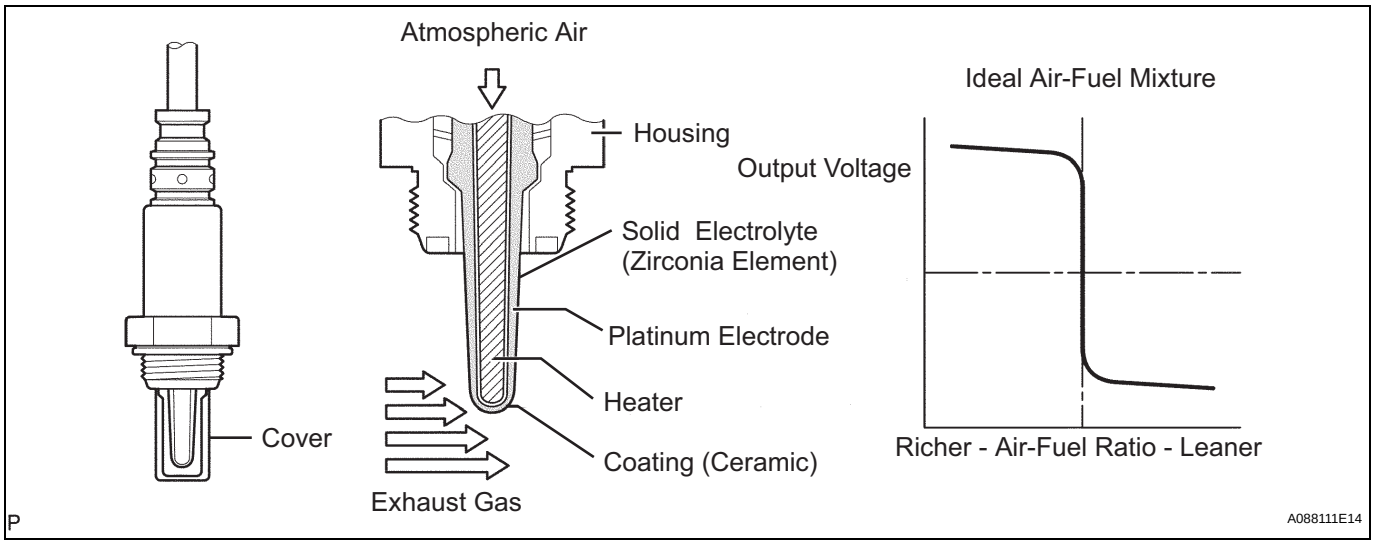

HINT:

- Sensor 2 refers to the sensor mounted behind the Three-Way Catalytic Converter (TWC) and located far from the engine assembly.
- When any of these DTCs are set, the ECM enters fail-safe mode. The ECM turns off the Heated Oxygen (HO2) Sensor heater in fail-safe mode. Fail-safe mode continues until the engine switch is turned off.
- The ECM provides a pulse width modulated control circuit to adjust the current through the heater. The HO2 sensor heater circuit uses a relay on the B+ side of the circuit.

Reference (System Diagram of Bank 1 Sensor 2):

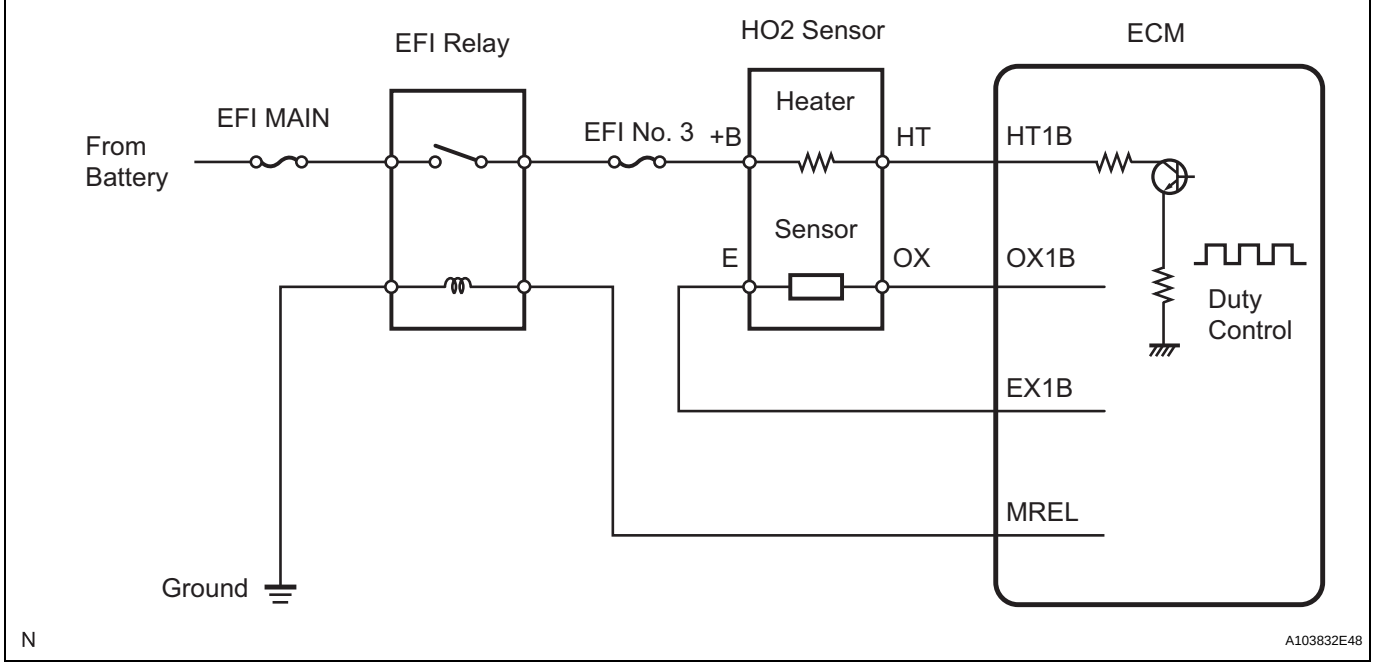

DTC No.	DTC Detection Condition	Trouble Area
P0037 P0057	Heated Oxygen (HO2) sensor heater current is less than 0.3 A (1 trip detection logic)	• Open in HO2 sensor heater circuit • HO2 sensor heater • Engine room junction block (EFI relay) • ECM
P0038 P0058	Heated Oxygen (HO2) sensor heater current is more than 3.5 A (1 trip detection logic)	• Short in HO2 sensor heater circuit • HO2 sensor heater • Engine room junction block (EFI relay) • ECM

ES

DTC No.	DTC Detection Condition	Trouble Area
P0141 P0161	Cumulative heater resistance correction value exceeds the acceptable threshold. (2 trip detection logic)	• HO2 sensor heater • ECM

HINT:
- Bank 1 refers to the bank that includes cylinder No. 1.
- Bank 2 refers to the bank that does not include cylinder No. 1.
- Sensor 1 refers to the sensor closest to the engine assembly.
- Sensor 2 refers to the sensor farthest away from the engine assembly.

MONITOR DESCRIPTION

The sensing position of the Heated Oxygen (HO2) sensor has a zirconia element which is used to detect the oxygen concentration in the exhaust gas. If the zirconia element is at the appropriate temperature, and the difference between the oxygen concentrations surrounding the inside and outside surfaces of the sensor is large, the zirconia element generates voltage signals. In order to increase the oxygen concentration detecting capacity of the zirconia element, the ECM supplements the heat from the exhaust with heat from a heating element inside the sensor.

Heated oxygen sensor heater range check (P0037,P0038, P0057 and P0058):

The ECM monitors the current applied to the O2 sensor heater to check the heater for malfunctions. If the current is below the threshold value, the ECM will determine that there is an open circuit in the heater. If the current is above the threshold value, the ECM will determine that there is a short circuit in the heater.

Example:

The ECM sets DTC P0038 or P0058 when the current in the HO2 sensor heater is more than 2 A. Conversely, when the heater current is less than 0.3 A, DTC P0037 or P0057 is set.

Heated oxygen sensor heater performance (P0141 and P0161):

After the accumulated heater ON time exceeds 100 seconds, the ECM calculates the heater resistance using the battery voltage and the current applied to the heater. If the resistance is above the threshold value, the ECM will determine that there is a malfunction in the HO2S heater and set DTC P0141 and P0161.

MONITOR STRATEGY

Related DTCs	P0037: Heated oxygen sensor heater (bank 1 sensor 2) open/short (Low electrical current) P0038: Heated oxygen sensor heater (bank 1 sensor 2) open/short (High electrical current) P0057: Heated oxygen sensor heater (bank 2 sensor 2) open/short (Low electrical current) P0058: Heated oxygen sensor heater (bank 2 sensor 2) open/short (High electrical current) P0141: Heated oxygen sensor heater performance (bank 1 sensor 2) P0161: Heated oxygen sensor heater performance (bank 2 sensor 2)
Required sensors/components (Main)	Heated oxygen sensor heater (bank 1 sensor 2) Heated oxygen sensor heater (bank 2 sensor 2)
Required sensors/components (Sub)	Vehicle speed sensor
Frequency of operation	Continuous
Duration	1 second: P0037, P0038, P0057 and P0058 10 seconds: P0141 and P0161
MIL operation	Immediate: P0037, P0038, P0057 and P0058 2 driving cycles: P0141 and P0161
Sequence of operation	None

TYPICAL ENABLING CONDITIONS

All:

Monitor runs whenever following DTCs are not present	None

P0037 and P0057:

Battery voltage	10.5 to 20 V

P0038 and P0058 (Case 1):

Battery voltage	10.5 V or more
Engine	Running
Starter	OFF

P0038 and P0058 (Case 2):

Battery voltage	10.5 to 20 V

P0141 and P0161:

One of the following conditions is met:	Condition A or B
A. All of the following conditions are met:	Conditions 1, 2, 3, 4 and 5
1. Battery voltage	10.5 V or more
2. Fuel cut	OFF
3. Time after fuel cut ON to OFF	30 seconds or more
4. Accumulated heater ON time	100 seconds or more
5. Learned heater OFF current operation	Completed
B. Duration that rear heated oxygen sensor impedance is less than 15 kΩ	2 seconds or more

TYPICAL MALFUNCTION THRESHOLDS

P0037 and P0057:

Heater current	Less than 0.3 A

P0038 and P0058:

One of the following conditions is met:	Condition A or B
A. Learned heater OFF current	More than 2 A
B. Heater current	2 A or more

P0141 and P0161 (Heater performance monitor check):

Accumulated heater resistance	Varies with sensor element temperature (Example: More than 23 ohm)

COMPONENT OPERATING RANGE

Heated Oxygen (HO2) sensor heater current	0.4 to 1 A (when engine idles, HO2 sensor warmed up and battery voltage 11 to 14 V)

MONITOR RESULT

Refer to CHECKING MONITOR STATUS (See page ES-20).

WIRING DIAGRAM

Refer to DTC P0136 (See page ES-174).

INSPECTION PROCEDURE

HINT:

Read freeze frame data using the intelligent tester. The ECM records vehicle and driving condition information as freeze frame data the moment a DTC is stored. When troubleshooting, freeze frame data can be helpful in determining whether the vehicle was running or stopped, whether the engine was warmed up or not, whether the air-fuel ratio was lean or rich, as well as other data recorded at the time of a malfunction (See page ES-41).

ES

1 INSPECT HEATED OXYGEN SENSOR (HEATER RESISTANCE)

Component Side:

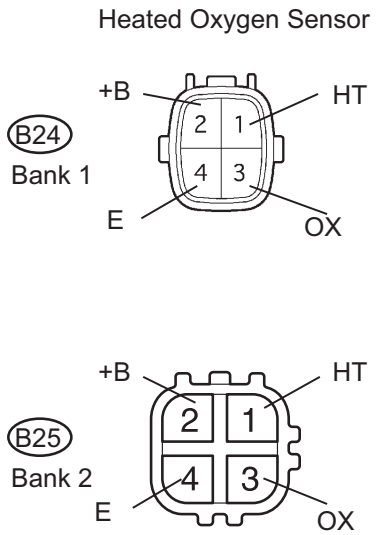

A137614E12

(a) Disconnect the B24 heated oxygen sensor connector (Bank 1 Sensor 2) or B25 heated oxygen sensor connector (Bank 2 Sensor 2).

(b) Measure the resistance according to the value(s) in the table below.

Standard resistance (Bank 1 sensor 2)

Tester Connection	Condition	Specified Condition
HT (1) - +B (2)	20°C (68°F)	11 to 16 Ω
HT (1) - E (4)	Always	10 kΩ or higher

Standard resistance (Bank 2 sensor 2)

Tester Connection	Condition	Specified Condition
HT (1) - +B (2)	20°C (68°F)	11 to 16 Ω
HT (1) - E (4)	Always	10 kΩ or higher

(c) Reconnect the HO2 sensor connector.

NG → **REPLACE HEATED OXYGEN SENSOR (See page EC-21)**

OK

2 CHECK TERMINAL VOLTAGE (+B OF HO2 SENSOR)

Wire Harness Side:

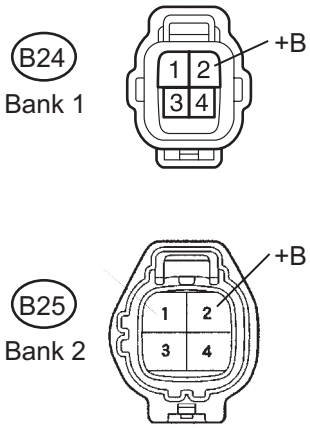

A137619E03

(a) Disconnect the B24 heated oxygen sensor connector (Bank 1 Sensor 2) or B25 heated oxygen sensor connector (Bank 2 Sensor 2).

(b) Turn the engine switch on (IG).

(c) Measure the voltage between the terminals.

Standard voltage

Tester Connection	Specified Condition
+B (B24-2) - Body ground	9 to 11 V
+B (B25-2) - Body ground	9 to 11 V

(d) Reconnect the HO2 sensor connector.

OK → **Go to step 7**

NG

3 INSPECT FUSE (EFI NO. 3)

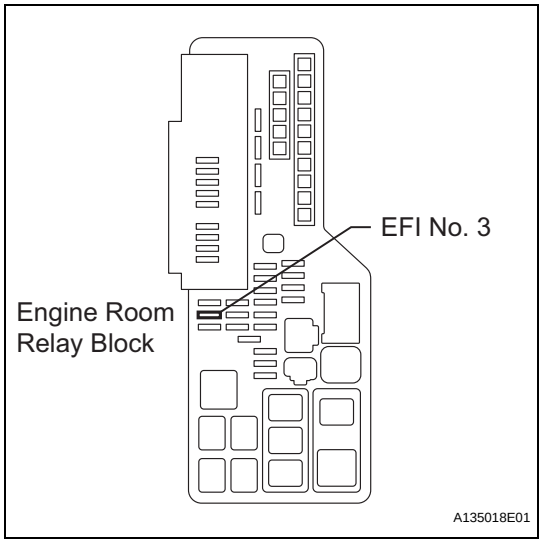

(a) Remove the EFI No. 3 fuse from the engine room R/B.
(b) Measure the EFI No. 3 fuse resistance.
Standard resistance:
Below 1 Ω
(c) Reinstall the EFI No. 3 fuse.

NG → **REPLACE EFI NO. 3 FUSE**

OK

4 INSPECT ENGINE ROOM JUNCTION BLOCK

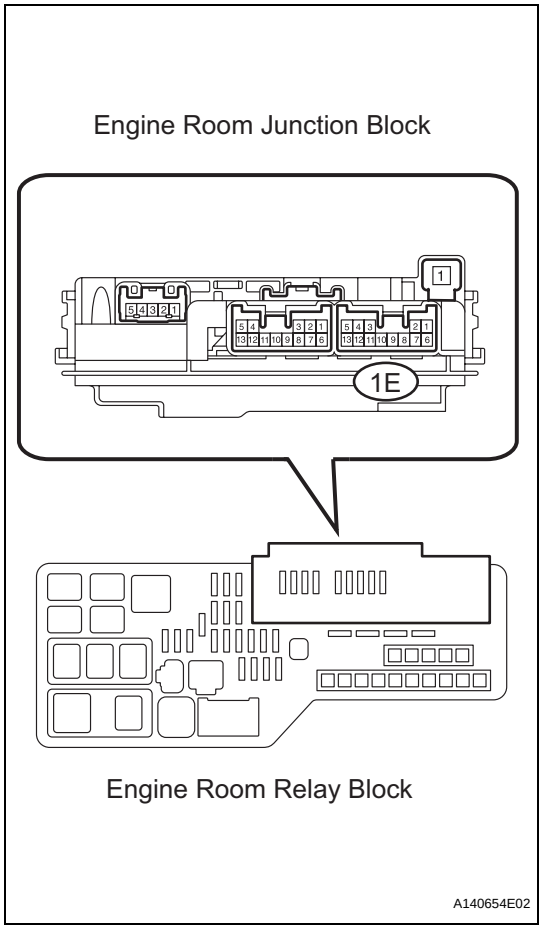

(a) Remove the engine room junction block from the engine room R/B.
(b) Inspect the EFI relay.
(1) Measure the EFI relay resistance.
Standard resistance

Tester Connection	Specified Condition
1E-12 - 1E-6	10 kΩ or higher
1E-12 - 1E-6	Below 1 Ω (Apply battery voltage between terminals 1E-9 and 1E-10)

(c) Reinstall the engine room junction block.

NG → **REPLACE ENGINE ROOM JUNCTION BLOCK**

OK

ES

5	INSPECT FUSE (EFI MAIN)

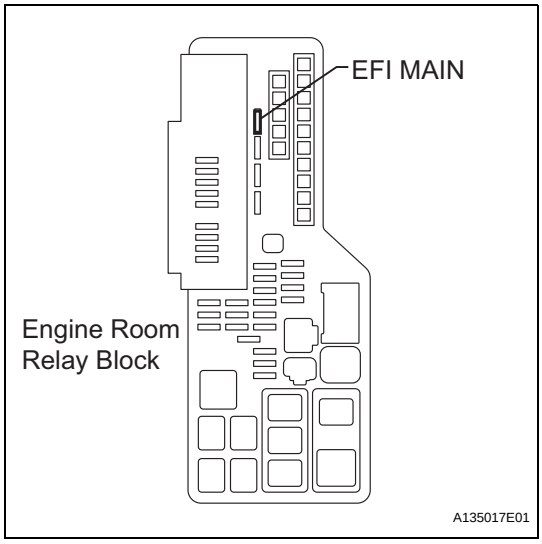

(a) Remove the EFI MAIN fuse from the engine room R/B.
(b) Measure the EFI MAIN fuse.
Standard resistance:
Below 1 Ω
(c) Reinstall the EFI MAIN fuse.

NG → **REPLACE EFI MAIN FUSE**

OK

6	CHECK HARNESS AND CONNECTOR (HO2 SENSOR - EFI RELAY)

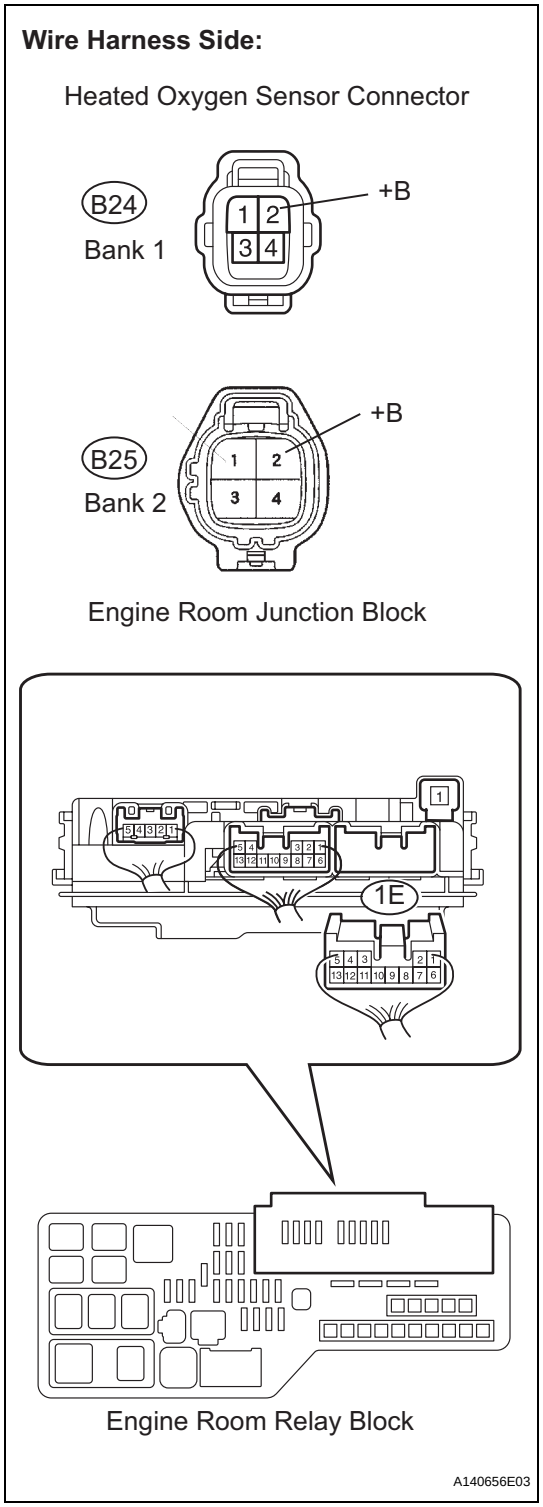

(a) Disconnect the B24 or B25 HO2 sensor connector.
(b) Remove the engine room junction block from the engine room R/B.
(c) Measure the resistance between the terminals.

Standard resistance (Check for open)

Tester Connection	Specified Condition
+B (B24-2) - 1E-6 (Engine room R/B)	Below 1 Ω
+B (B25-2) - 1E-6 (Engine room R/B)	Below 1 Ω

Standard resistance (Check for short)

Tester Connection	Specified Condition
+B (B24-2) or 1E-6 (Engine room R/B) - Body ground	10 kΩ or higher
+B (B25-2) or 1E-6 (Engine room R/B) - Body ground	10 kΩ or higher

(d) Reinstall the engine room junction block.
(e) Reconnect the HO2 sensor connector.

NG → **REPAIR OR REPLACE HARNESS OR CONNECTOR**

OK

CHECK ECM POWER SOURCE CIRCUIT

ES

ES

7 CHECK HARNESS AND CONNECTOR (HO2 SENSOR - ECM)

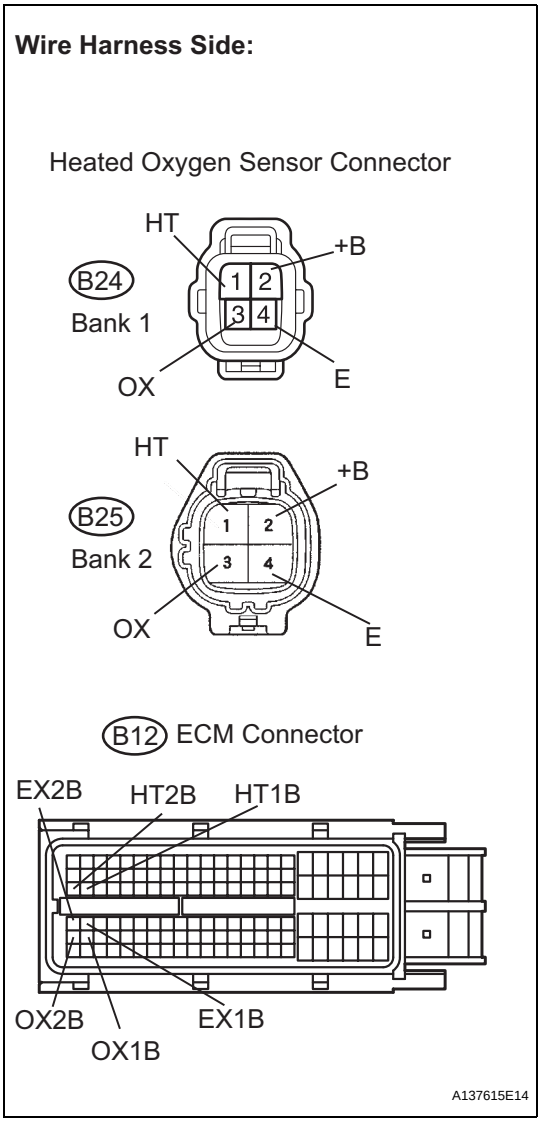

(a) Disconnect the B24 heated oxygen sensor connector (Bank 1 Sensor 2) or B25 heated oxygen sensor connector (Bank 2 Sensor 2).
(b) Turn the engine switch on (IG).
(c) Measure the voltage according to the value(s) in the table below.

Standard voltage

Terminal Connection	Specified Condition
+B (B24-2) - Body ground	9 to 14 V
+B (B25-2) - Body ground	9 to 14 V

(d) Turn the engine switch off.
(e) Disconnect the B12 ECM connector.
(f) Measure the resistance according to the value(s) in the table below.

Standard resistance (Check for open)

Terminal Connection	Specified Condition
HT (B24-1) - HT1B (B12-48)	Below 1 Ω
OX (B24-3) - OX1B (B12-88)	Below 1 Ω
E (B24-4) - EX1B (B12-65)	Below 1 Ω
HT (B25-1) - HT2B (B12-47)	Below 1 Ω
OX (B25-3) - OX2B (B12-87)	Below 1 Ω
E (B25-4) - EX2B (B12-64)	Below 1 Ω

Standard resistance (Check for short)

Terminal Connection	Specified Condition
HT (B24-1) or HT1B (B12-48) - Body ground	10 kΩ or higher
OX (B24-3) or OX1B (B12-88) - Body ground	10 kΩ or higher
E (B24-4) or EX1B (B12-65) - Body ground	10 kΩ or higher
HT (B25-1) or HT2B (B12-47) - Body ground	10 kΩ or higher
OX (B25-3) or OX2B (B12-87) - Body ground	10 kΩ or higher
E (B25-4) or EX2B (B12-64) - Body ground	10 kΩ or higher

(g) Reconnect the HO2 sensor connector.
(h) Reconnect the ECM connector.

NG → **REPAIR OR REPLACE HARNESS OR CONNECTOR**

OK

8 CHECK WHETHER DTC OUTPUT RECURS

(a) Connect the intelligent tester to the DLC3.
(b) Turn the engine switch on (IG).
(c) Turn the intelligent tester on.
(d) Clear the DTCs (See page ES-41).
(e) Start the engine.
(f) Allow the engine to idle for 2 minutes.

(g) Select the following menu items: DIAGNOSIS / ENHANCED OBD II / DTC INFO / CURRENT CODES.
(h) Read the DTCs.

Result

Display (DTC Output)	Proceed to
No output	A
P0037, P0038, P0057 and/or P0058	B

B → **REPLACE ECM (See page ES-543)**

A

CHECK FOR INTERMITTENT PROBLEMS (See page ES-28)

DTC	P0100	Mass or Volume Air Flow Circuit

DTC	P0102	Mass or Volume Air Flow Circuit Low Input

DTC	P0103	Mass or Volume Air Flow Circuit High Input

DESCRIPTION

The Mass Air Flow (MAF) meter is a sensor that measures the amount of air flowing through the valve. The ECM uses this information to determine the fuel injection time and to prove appropriate air-fuel ratio. Inside the MAF meter, there is a heated platinum wire which is exposed to the flow of intake air.

ES

By applying a specific electrical current to the wire, the ECM heats it to a given temperature. The flow of incoming air cools both the wire and an internal thermistor, affecting their resistance. To maintain a constant current value, the ECM varies the voltage applied to these components in the MAF meter. The voltage level is proportional to the airflow through the sensor, and the ECM uses it to calculate the intake air volume.

The circuit is constructed so that the platinum hot wire and the temperature sensor provide a bridge circuit, and the power transistor is controlled so that the potentials of A and B remain equal to maintain the predetermined temperature.

HINT:

When any of these DTCs are set, the ECM enters fail-safe mode. During fail-safe mode, the ignition timing is calculated by the ECM, according to the engine RPM and throttle valve position. Fail-safe mode continues until a pass condition is detected.

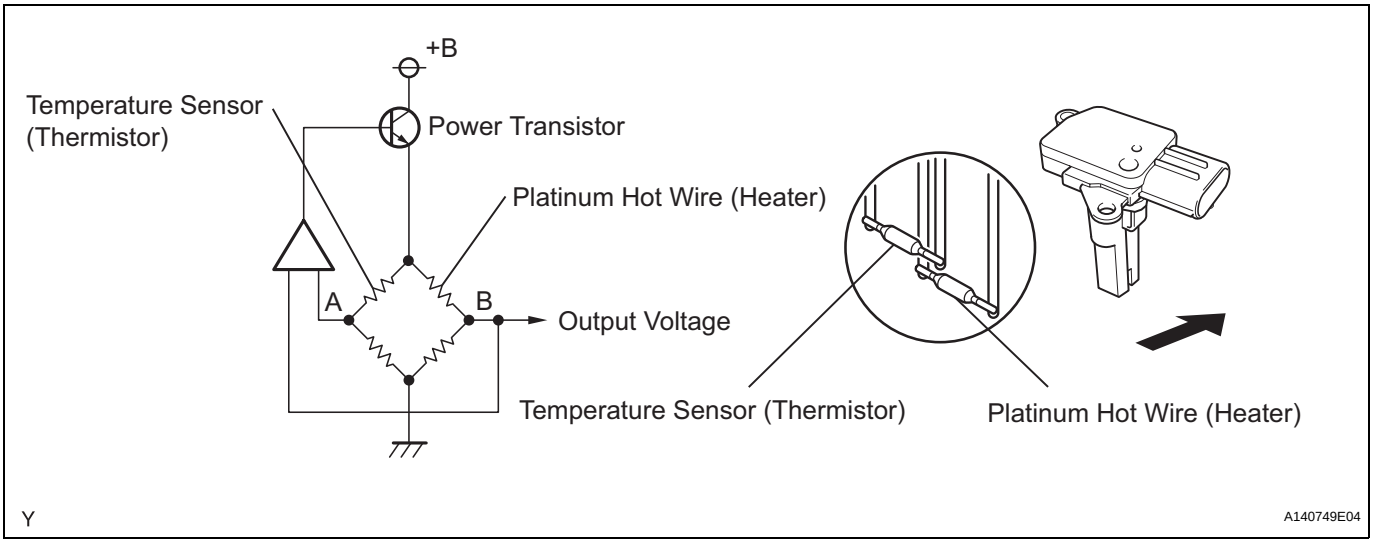

DTC No.	DTC Detection Condition	Trouble Area
P0100	Open or short in Mass Air Flow (MAF) meter circuit for 3 seconds	• Open or short in MAF meter circuit • MAF meter • ECM
P0102	Open in Mass Air Flow (MAF) meter circuit for 3 seconds	• Open in MAF meter circuit • Short in MAF meter circuit • MAF meter • ECM
P0103	Short in Mass Air Flow (MAF) meter circuit for 3 seconds	• Short in MAF meter circuit (+B circuit) • MAF meter • ECM

HINT:
When any of these DTCs are set, check the air-flow rate by entering the following menus on the intelligent tester: DIAGNOSIS / ENHANCED OBD II / DATA LIST / PRIMARY / MAF.

Mass Air Flow Rate (gm/s)	Malfunctions
Approximately 0.0	• Open in Mass Air Flow (MAF) meter power source circuit • Open or short in VG circuit
271.0 or more	Open in ELG circuit

MONITOR DESCRIPTION

If there is a defect in the MAF meter or an open or short circuit, the voltage level deviates from the normal operating range. The ECM interprets this deviation as a malfunction in the MAF meter and sets a DTC.
Example:
When the sensor output voltage remains less than 0.2 V, or more than 4.9 V, for more than 3 seconds, the ECM sets a DTC.
If the malfunction is not repaired successfully, a DTC is set 3 seconds after the engine is next started.

MONITOR STRATEGY

Related DTCs	P0100: Mass air flow meter range check (Fluctuating) P0102: Mass air flow meter range check (Low voltage) P0103: Mass air flow meter range check (High voltage)
Required Sensors/Components (Main)	MAF meter
Required Sensors/Components (Sub)	Crankshaft position sensor
Frequency of Operation	Continuous
Duration	3 seconds
MIL Operation	Immediate: Engine RPM less than 4,000 rpm 2 driving cycles: Engine RPM 4,000 rpm or more
Sequence of Operation	None

TYPICAL ENABLING CONDITIONS

Monitor runs whenever following DTCs are not present	None

TYPICAL MALFUNCTION THRESHOLDS

P0100:

Mass air flow meter voltage	Less than 0.2 V, or more than 4.9 V

P0102:

Mass air flow meter voltage	Less than 0.2 V

P0103:

Mass air flow meter voltage	More than 4.9 V

COMPONENT OPERATING RANGE

Mass air flow meter voltage	Between 0.4 V and 2.2 V

WIRING DIAGRAM

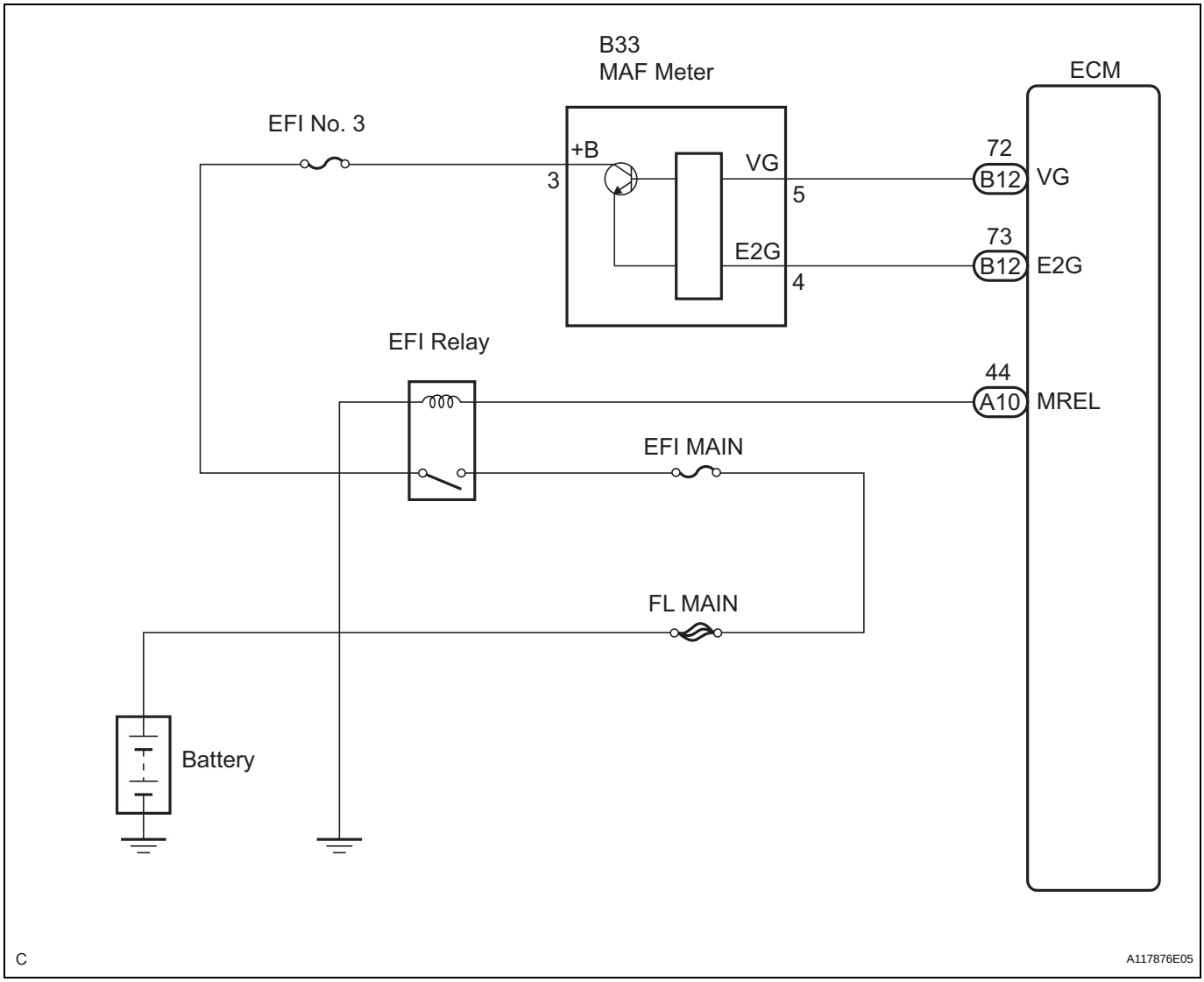

INSPECTION PROCEDURE

HINT:
Read freeze frame data using the intelligent tester. The ECM records vehicle and driving condition information as freeze frame data the moment a DTC is stored. When troubleshooting, freeze frame data can be helpful in determining whether the vehicle was running or stopped, whether the engine was warmed up or not, whether the air-fuel ratio was lean or rich, as well as other data recorded at the time of a malfunction (See page ES-41).

1	READ VALUE OF MASS AIR FLOW METER (MAF)

(a) Connect the intelligent tester to the DLC3.
(b) Start the engine.
(c) Turn the tester on.
(d) Enter the following menus: DIAGNOSIS / ENHANCED OBD II / DATA LIST / PRIMARY / MAF.
(e) Read the values displayed on the tester.

Result

Mass Air Flow Rate (gm/s)	Proceed to
0.0	A
271.0 or more	B
Between 1.0 and 270.0 (*1)	C

*1: The value must be changed when the throttle valve is open or closed.

B → **Go to step 8**

C → **CHECK FOR INTERMITTENT PROBLEMS (See page ES-28)**

A

2 INSPECT MASS AIR FLOW METER (POWER SOURCE VOLTAGE)

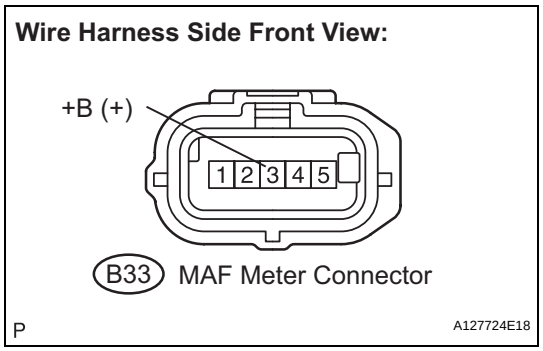

(a) Disconnect the B33 mass air flow (MAF) meter connector.
(b) Turn the engine switch on (IG).
(c) Measure the voltage according to the value(s) in the table below.
Standard voltage

Tester Connection	Specified Condition
+B (B33-3) - Body ground	9 to 14 V

(d) Reconnect the MAF meter connector.

NG → **Go to step 5**

OK

3 INSPECT MASS AIR FLOW METER (VG VOLTAGE)

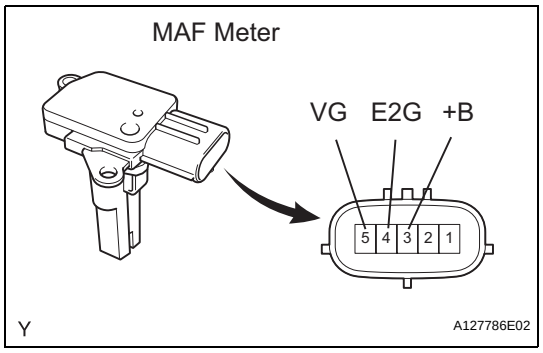

(a) Inspect the output voltage.
(1) Apply battery voltage across terminals +B and E2G.
(2) Connect the positive (+) tester probe to terminal VG, and negative (-) tester probe to terminal E2G.
(3) Measure the voltage between the terminals.
Standard voltage

Tester Connection	Specified Condition
5 (VG) - 4 (E2G)	0.2 to 4.9 V

NG → **REPLACE MASS AIR FLOW METER**

OK

ES

4 CHECK HARNESS AND CONNECTOR (MASS AIR FLOW METER - ECM)

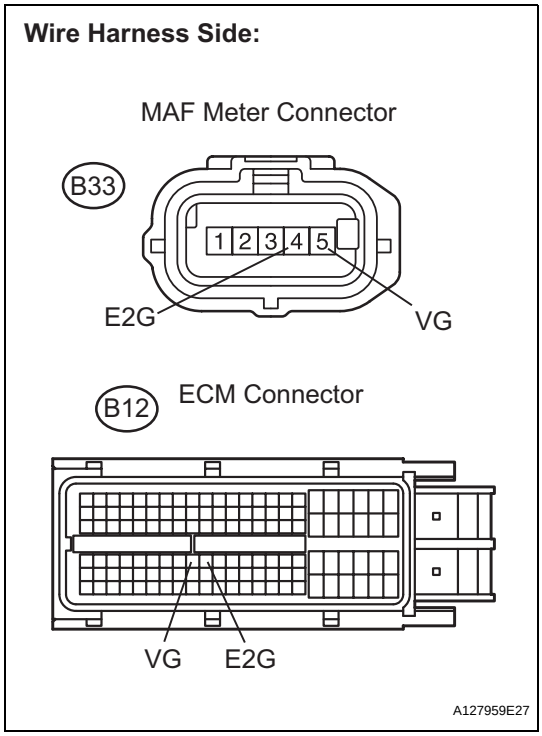

(a) Disconnect the B33 MAF meter connector.
(b) Disconnect the B12 ECM connector.
(c) Measure the resistance between the terminals.

Standard resistance (Check for open)

Tester Connection	Specified Condition
VG (B12-72) - VG (B33-5)	Below 1 Ω
E2G (B12-73) - E2G (B33-4)	Below 1 Ω

Standard resistance (Check for short)

Tester Connection	Specified Condition
VG (B12-72) or VG (B33-5) - Body ground	10 kΩ or higher
E2G (B12-73) or E2G (B33-4) - Body ground	10 kΩ or higher

(d) Reconnect the MAF meter connector.
(e) Reconnect the ECM connector.

NG → **REPAIR OR REPLACE HARNESS OR CONNECTOR**

OK

REPLACE ECM

5 INSPECT FUSE (EFI NO. 3)

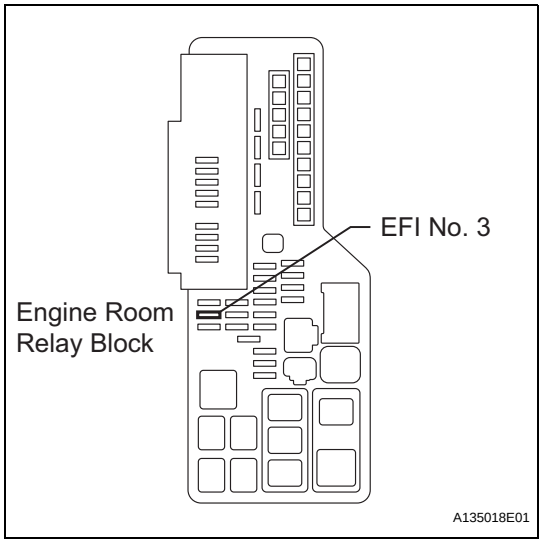

(a) Remove the EFI No. 3 fuse from the engine room R/B.
(b) Measure the EFI No. 3 fuse resistance.

Standard resistance:
Below 1 Ω

(c) Reinstall the EFI No. 3 fuse.

NG → **REPLACE EFI NO. 3 FUSE**

OK

6	CHECK HARNESS AND CONNECTOR (MASS AIR FLOW METER - ENGINE ROOM JUNCTION BLOCK)

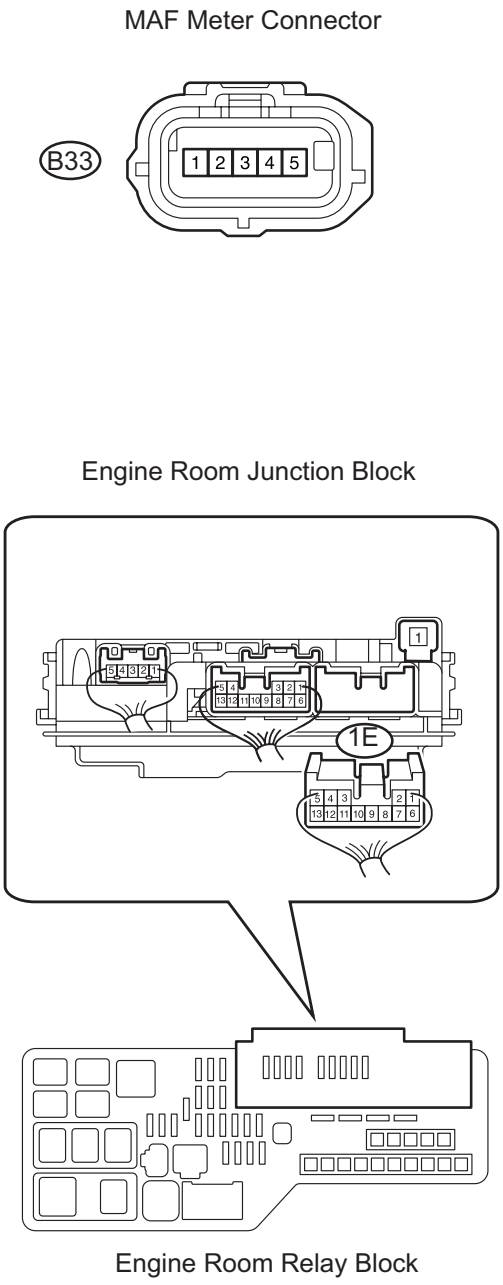

(a) Disconnect the B33 MAF meter connector.
(b) Remove the engine room junction block from the engine room R/B.
(c) Measure the resistance between the terminals.

Standard resistance (Check for open)

Tester Connection	Specified Condition
+B (B33-3) - 1E-6 (Engine room R/B)	Below 1 Ω

Standard resistance (Check for short)

Tester Connection	Specified Condition
+B (B33-3) or 1E-6 (Engine room R/B) - Body ground	10 kΩ or higher

(d) Reinstall the engine room junction block.
(e) Reconnect the B33 MAF meter connector.

NG → **REPAIR OR REPLACE HARNESS OR CONNECTOR**

OK

ES

ES

7 INSPECT ENGINE ROOM JUNCTION BLOCK (EFI RELAY)

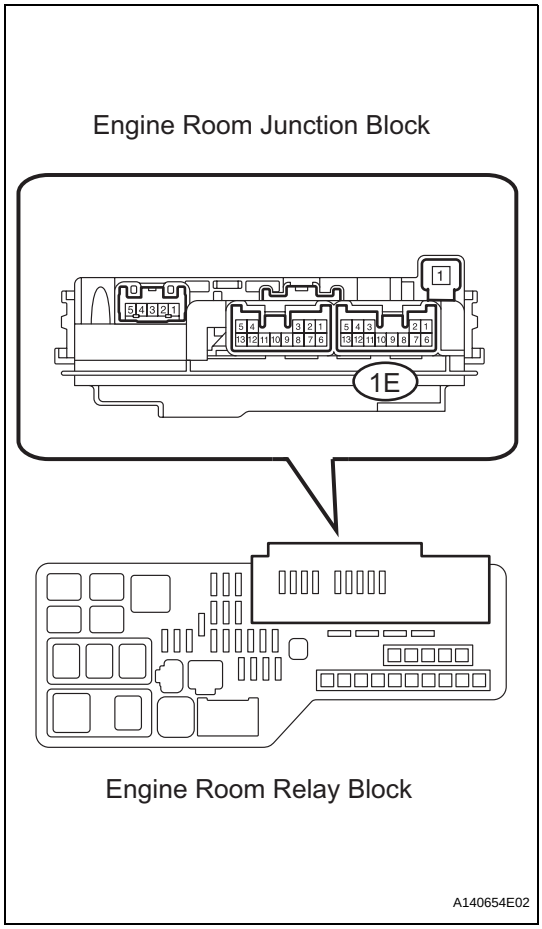

(a) Remove the engine room junction block from the engine room R/B.

(b) Inspect the EFI relay.

(1) Measure the EFI relay resistance.

Standard resistance

Tester Connection	Specified Condition
1E-12 - 1E-6	10 kΩ or higher
1E-12 - 1E-6	Bellow 1 Ω (Apply battery voltage between terminals 1E-9 and 1E-10)

(c) Reinstall the engine room junction block.

NG → **REPLACE ENGINE ROOM JUNCTION BLOCK**

OK

CHECK ECM POWER SOURCE CIRCUIT (See page ES-427)

8 CHECK HARNESS AND CONNECTOR (SENSOR GROUND)

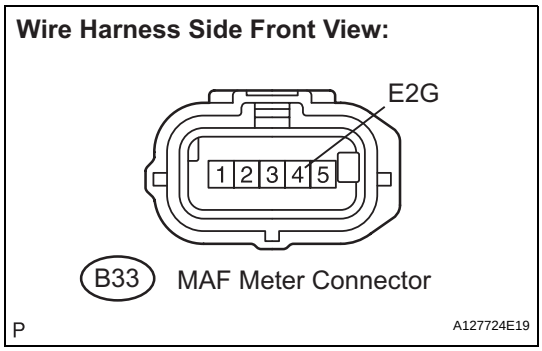

(a) Disconnect the B33 MAF meter connector.

(b) Measure the resistance between the terminals.

Standard resistance

Tester Connection	Specified Condition
E2G (B33-4) - Body ground	Below 1 Ω

(c) Reconnect the MAF meter connector.

OK → **REPLACE MASS AIR FLOW METER (See page ES-497)**

NG

9	CHECK HARNESS AND CONNECTOR (MASS AIR FLOW METER - ECM)

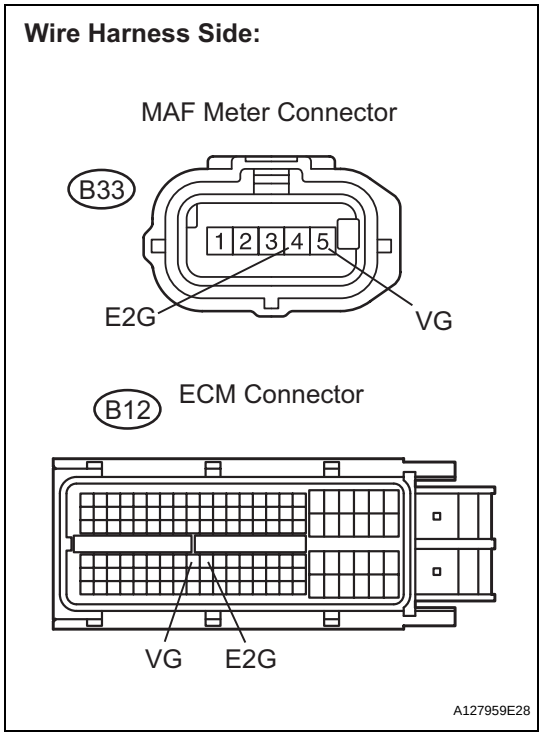

(a) Disconnect the B33 MAF meter connector.
(b) Disconnect the B12 ECM connector.
(c) Measure the resistance between the terminals.

Standard resistance (Check for open)

Tester Connection	Specified Condition
VG (B12-72) - VG (B33-5)	Below 1 Ω
E2G (B12-73) - E2G (B33-4)	Below 1 Ω

Standard resistance (Check for short)

Tester Connection	Specified Condition
VG (B12-72) or VG (B33-5) - Body ground	10 kΩ or higher
E2G (B12-73) or E2G (B33-4) - Body ground	10 kΩ or higher

(d) Reconnect the MAF meter connector.
(e) Reconnect the ECM connector.

NG → **REPAIR OR REPLACE HARNESS OR CONNECTOR**

OK

REPLACE ECM (See page ES-543)

ES

DTC	P0101	Mass Air Flow Circuit Range / Performance Problem

DESCRIPTION

The Mass Air Flow (MAF) meter is a sensor that measures the amount of air flowing through the valve. The ECM uses this information to determine the fuel injection time and to prove appropriate air-fuel ratio. Inside the MAF meter, there is a heated platinum wire which is exposed to the flow of intake air.
By applying a specific electrical current to the wire, the ECM heats it to a given temperature. The flow of incoming air cools both the wire and an internal thermistor, affecting their resistance. To maintain a constant current value, the ECM varies the voltage applied to these components in the MAF meter. The voltage level is proportional to the airflow through the sensor, and the ECM uses it to calculate the intake air volume.

ES

The circuit is constructed so that the platinum hot wire and the temperature sensor provide a bridge circuit, and the power transistor is controlled so that the potentials of A and B remain equal to maintain the predetermined temperature.
HINT:
When any of these DTCs are set, the ECM enters fail-safe mode. During fail-safe mode, the ignition timing is calculated by the ECM, according to the engine RPM and throttle valve position. Fail-safe mode continues until a pass condition is detected.

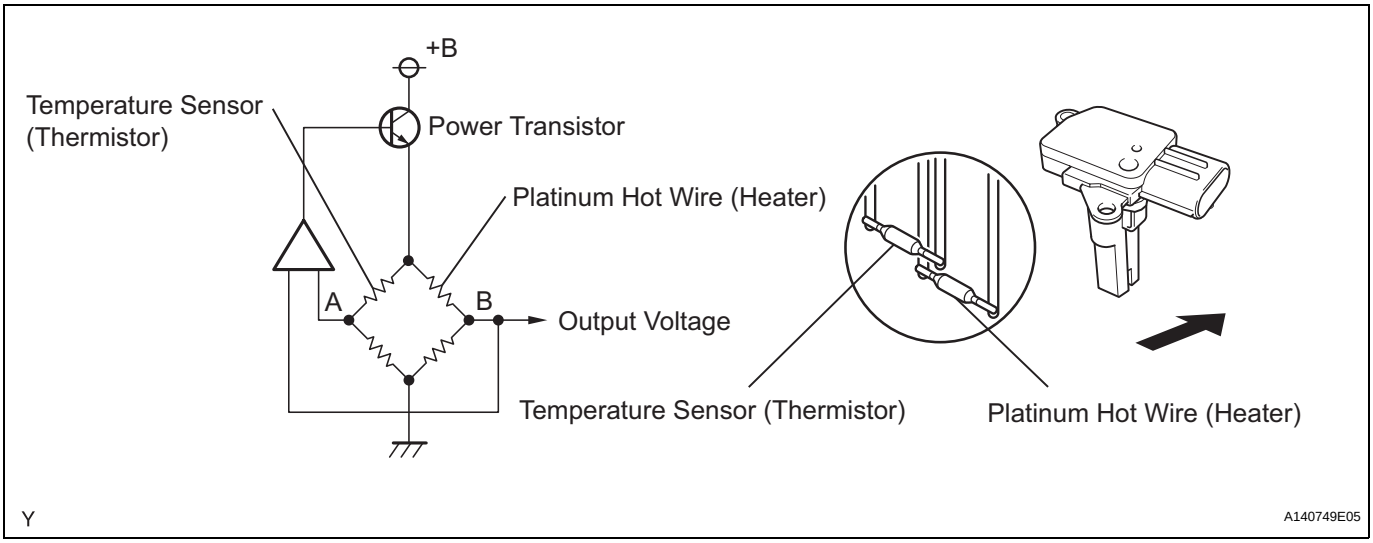

DTC No.	DTC Detection Condition	Trouble Area
P0101	Test value calculated with engine load and fuel trim are out of specified threshold under the following conditions (2 trip detection logic): – Engine load is 30 % or more and constant – Engine coolant temperature is 70°C (158°F) or higher	MAF meter

MONITOR DESCRIPTION

The MAF meter is a sensor that measures the amount of air flowing through the throttle valve. The ECM uses this information to determine the fuel injection time and to provide an appropriate air-fuel ratio. Inside the MAF meter, there is a heated platinum wire which is exposed to the flow of intake air. By applying a specific electrical current to the wire, the ECM heats it to a specific temperature. The flow of incoming air cools both the wire and an internal thermistor, affecting their resistance. To maintain a constant current value, the ECM varies the voltage applied to these components of the MAF meter. The voltage level is proportional to the airflow through the sensor, and the ECM uses it to calculate the intake air volume. If there is a defect in the sensor, or an open or short in the circuit, the voltage level deviates from the normal operating range. The ECM interprets this deviation as a malfunction in the MAF meter and sets the DTC.

Example:

If the voltage is more than 2.2 V, or less than 1.48 V while idling, the ECM determines that there is a malfunction in the MAF meter and sets the DTC.

MONITOR STRATEGY

Related DTCs	P0101: Mass air flow meter rationality
Required Sensors/Components (Main)	Mass air flow meter
Required Sensors/Components (Sub)	Crankshaft position sensor, engine coolant temperature sensor and throttle position sensor
Frequency of Operation	Continuos
Duration	10 seconds
MIL Operation	2 driving cycles
Sequence of Operation	None

TYPICAL ENABLING CONDITIONS

Monitor runs whenever following DTCs are not present	P0115 - P0118 (ECT sensor) P0120 - P0223, P2135 (TP sensor) P0125 (Insufficient ECT for closed loop) P0335 (CKP sensor) P0340, P0341 (CMP sensor)
TP (Throttle position) sensor voltage	0.24 V or more
Engine	Running
Battery voltage	10.5 V or more
ECT	70°C (158°F) or more
IAT sensor circuit	OK
ECT sensor circuit	OK
CKP sensor circuit	OK
TP sensor circuit	OK
FTP sensor circuit	OK
EVAP leak detection pump	OK
EVAP vent valve	OK

TYPICAL MALFUNCTION THRESHOLDS

Average engine load	Less than 0.838 %, or more than 1.287 %

WIRING DIAGRAM

Refer to DTC P0100 (See page ES-123).

INSPECTION PROCEDURE

HINT:
Read freeze frame data using the intelligent tester. The ECM records vehicle and driving condition information as freeze frame data the moment a DTC is stored. When troubleshooting, freeze frame data can be helpful in determining whether the vehicle was running or stopped, whether the engine was warmed up or not, whether the air-fuel ratio was lean or rich, as well as other data recorded at the time of a malfunction (See page ES-41).

1	CHECK ANY OTHER DTCS OUTPUT (IN ADDITION TO DTC P0101)

ES

(a) Connect the intelligent tester to the DLC3.
(b) Turn the engine switch on (IG).
(c) Turn the tester on.
(d) Enter the following menus: DIAGNOSIS / ENHANCED OBD II / DTC INFO / CURRENT CODES.

Result

Display (DTC Output)	Proceed to
P0101 and other DTCs	A
P0101	B

(e) Read the DTCs.
HINT:
If any DTCs other than P0101 are output, troubleshoot those DTCs first.

B → **REPLACE MASS AIR FLOW METER (See page ES-497)**

A

GO TO DTC CHART (See page ES-59)

DTC	P0110	Intake Air Temperature Circuit Malfunction

DTC	P0112	Intake Air Temperature Circuit Low Input

DTC	P0113	Intake Air Temperature Circuit High Input

DESCRIPTION

Fig. 1

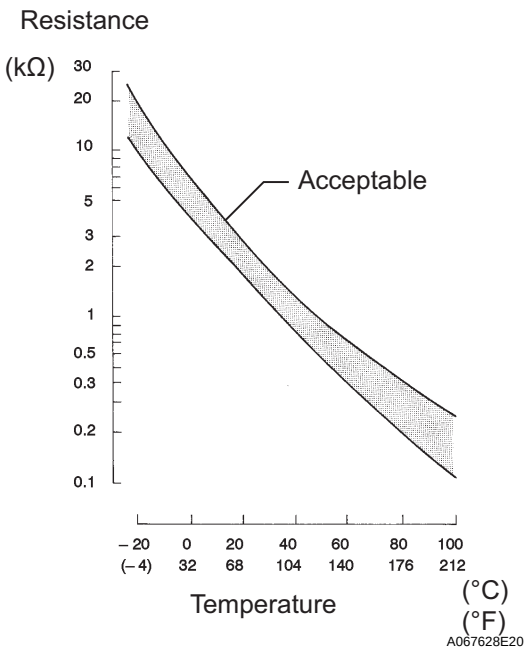

The Intake Air Temperature (IAT) sensor, mounted on the Mass Air Flow (MAF) meter, monitors the IAT. The IAT sensor has a built-in thermistor with a resistance that varies according to the temperature of the intake air. When the IAT drops, the resistance of the thermistor increases. When the temperature rises, the resistance drops. These variations in resistance are transmitted to the ECM as voltage changes (See Fig. 1).

The IAT sensor is powered by a 5 V supply from the THA terminal of the ECM, via resistor R.

Resistor R and the IAT sensor are connected in series. When the resistance value of the IAT sensor changes, according to changes in the IAT, the voltage at terminal THA also varies. Based on this signal, the ECM increases the fuel injection volume when the engine is cold to improve driveability.

HINT:

When any of DTCs P0110, P0112 and P0113 are set, the ECM enters fail-safe mode. During fail-safe mode, the IAT is estimated to be 20°C (68°F) by the ECM. Fail-safe mode continues until a pass condition is detected.

DTC No.	Proceed to	DTC Detection Condition	Trouble Area
P0110	Step 1	Open or short in Intake Air Temperature (IAT) sensor circuit for 0.5 seconds (1 trip detection logic)	• Open or short in IAT sensor circuit • IAT sensor (built into MAF meter) • ECM
P0112	Step 4	Short in Intake Air Temperature (IAT) sensor circuit for 0.5 seconds (1 trip detection logic)	• Short in IAT sensor circuit • IAT sensor (built into MAF meter) • ECM
P0113	Step 2	Open in Intake Air Temperature (IAT) sensor circuit for 0.5 seconds (1 trip detection logic)	• Open in IAT sensor circuit • IAT sensor (built into MAF meter) • ECM

HINT:
When any of these DTCs are set, check the IAT by entering the following menus on the intelligent tester: DIAGNOSIS / ENHANCED OBD II / DATA LIST / PRIMARY / INTAKE AIR.

Temperature Displayed	Malfunction
-40°C (-40°F)	Open circuit
140°C (284°F) or higher	Short circuit

MONITOR DESCRIPTION

The ECM monitors the sensor voltage and uses this value to calculate the Intake Air Temperature (IAT). When the sensor output voltage deviates from the normal operating range, the ECM interprets this as a malfunction in the IAT sensor and sets a DTC.

Example:

If the sensor output voltage is -40°C (-40°F) for 0.5 seconds or more, the ECM determines that there is an open in the IAT sensor circuit, and sets DTC P0113. Conversely, if the output voltage is more than 140°C (284°F) for 0.5 seconds or more, the ECM determines that there is a short in the sensor circuit, and sets DTC P0112.

If the malfunction is not repaired successfully, a DTC is set 0.5 seconds after the engine is next started.

MONITOR STRATEGY

Related DTCs	P0110: Intake air temperature sensor open/short (Fluctuating) P0112: Intake air temperature sensor short (Low electrical resistance) P0113: Intake air temperature sensor open (High electrical resistance)
Required Sensors/Components (Main)	Intake Air Temperature (IAT) sensor
Required Sensors/Components (Sub)	-
Frequency of Operation	Continuous
Duration	0.5 seconds
MIL Operation	Immediate
Sequence of Operation	None

TYPICAL ENABLING CONDITIONS

Monitor runs whenever following DTCs are not present	None

TYPICAL MALFUNCTION THRESHOLDS

P0110:

Intake air temperature sensor voltage	Less than 0.18 V, or more than 4.91 V

P0112:

Intake air temperature sensor voltage	Less than 0.18 V

P0113:

Intake air temperature sensor voltage	More than 4.91 V

COMPONENT OPERATING RANGE

Intake air temperature sensor resistance	98.5 Ω to 156 kΩ [-40 to 140°C (-40 to 284°F)]

WIRING DIAGRAM

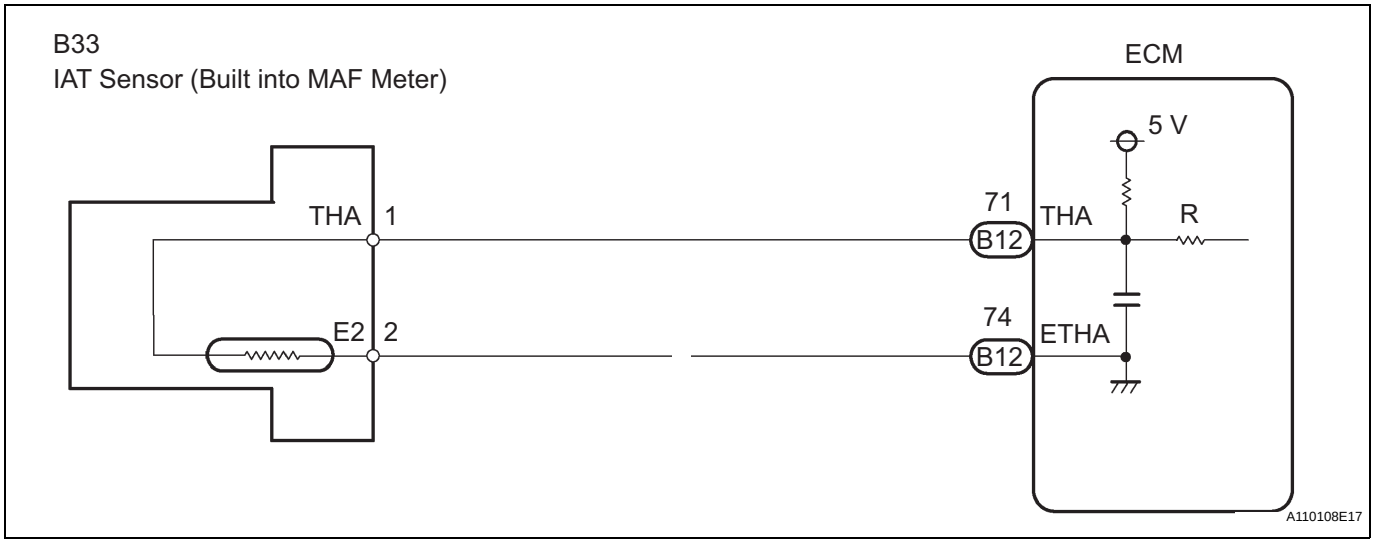

INSPECTION PROCEDURE

HINT:
Read freeze frame data using the intelligent tester. The ECM records vehicle and driving condition information as freeze frame data the moment a DTC is stored. When troubleshooting, freeze frame data can be helpful in determining whether the vehicle was running or stopped, whether the engine was warmed up or not, whether the air-fuel ratio was lean or rich, as well as other data recorded at the time of a malfunction (See page ES-41).

1	CHECK DTC OUTPUT

(a) Connect the intelligent tester to the DLC3.
(b) Turn the engine switch on (IG).
(c) Turn the intelligent tester on.
(d) Select the following menu items: DIAGNOSIS / ENHANCED OBD II / DTC INFO / CURRENT CODES.
(e) Read the DTCs.

Result

Display (DTC output)	Proceed to
P0110	A
P0112	B
P0113	C

B → **Go to step 6**

C → **Go to step 4**

A

2	READ VALUE OF INTAKE AIR TEMPERATURE SENSOR (INTAKE AIR)

(a) Connect the intelligent tester to the DLC3.
(b) Turn the engine switch on (IG).
(c) Turn the tester on.

ES

(d) Enter the following menus: DIAGNOSIS / ENHANCED OBD II / DATA LIST / PRIMARY / INTAKE AIR.
(e) Read the value displayed on the tester.
Standard:
Same as actual Intake Air Temperature (IAT).

Result

Temperature Displayed	Proceed to
-40°C (-40°F)	A
140°C (284°F) or higher	B
Same as actual IAT	C

HINT:
- If there is an open circuit, the intelligent tester indicates -40°C (-40°F).
- If there is a short circuit, the intelligent tester indicates 140°C (284°F) or higher.

B → **Go to step 5**

C → **CHECK FOR INTERMITTENT PROBLEMS (See page ES-28)**

A

3 CHECK MASS AIR FLOW METER (CHECK FOR OPEN IN SENSOR)

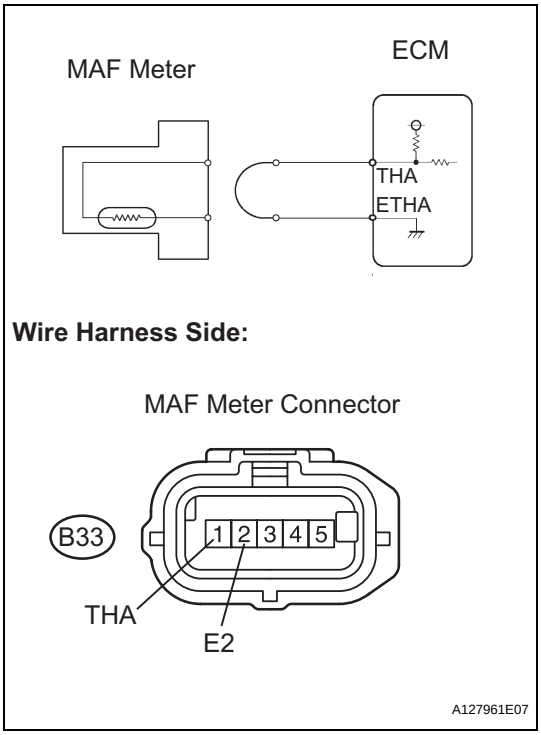

(a) Confirm good connection of the Mass Air Flow (MAF) meter.
(b) Disconnect the B33 MAF meter connector.
(c) Connect terminals THA and E2 of the MAF meter wire harness side connector.
(d) Connect the intelligent tester to the DLC3.
(e) Turn the engine switch on (IG).
(f) Turn the tester on.
(g) Enter the following menus: DIAGNOSIS / ENHANCED OBD II / DATA LIST / PRIMARY / INTAKE AIR.
(h) Read the value displayed on the tester.
Standard:
140°C (284°F) or higher
(i) Reconnect the MAF meter connector.

OK → **REPLACE MASS AIR FLOW METER (See page ES-497)**

NG

4 CHECK HARNESS AND CONNECTOR (MASS AIR FLOW METER - ECM)

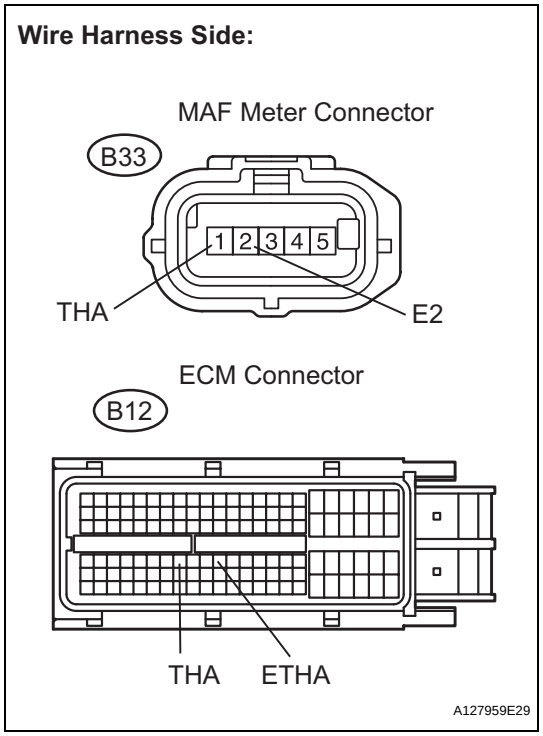

(a) Disconnect the B33 MAF meter connector.
(b) Disconnect the B12 ECM connector.
(c) Measure the resistance according to the value(s) in the table below.

Standard resistance (Check for open)

Tester Connection	Specified Condition
THA (B12-71) - THA (B33-1)	Below 1 Ω
ETHA (B12-74) - E2 (B33-2)	Below 1 Ω

Standard resistance (Check for short)

Tester Connection	Specified Condition
THA (B12-71) or THA (B33-1) - Body ground	10 kΩ or higher
ETHA (B12-74) or E2 (B33-2) - Body ground	10 kΩ or higher

(d) Reconnect the MAF meter connector.
(e) Reconnect the ECM connector.

NG → **REPAIR OR REPLACE HARNESS OR CONNECTOR**

OK

REPLACE ECM (See page ES-543)

5 CHECK MASS AIR FLOW METER (CHECK FOR SHORT IN SENSOR)

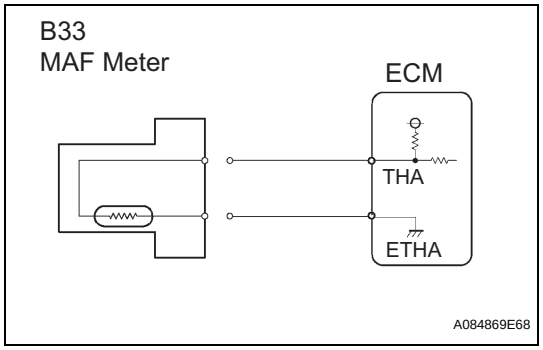

(a) Disconnect the B33 MAF meter connector.
(b) Connect the intelligent tester to the DLC3.
(c) Turn the engine switch on (IG).
(d) Turn the tester on.
(e) Enter the following menus: DIAGNOSIS / ENHANCED OBD II / DATA LIST / PRIMARY / INTAKE AIR.
(f) Read the value displayed on the tester.
Standard:
-40°C (-40°F) or higher
(g) Reconnect the MAF meter connector.

OK → **REPLACE MASS AIR FLOW METER (See page ES-497)**

NG

ES

6	CHECK HARNESS AND CONNECTOR (MASS AIR FLOW METER- ECM)

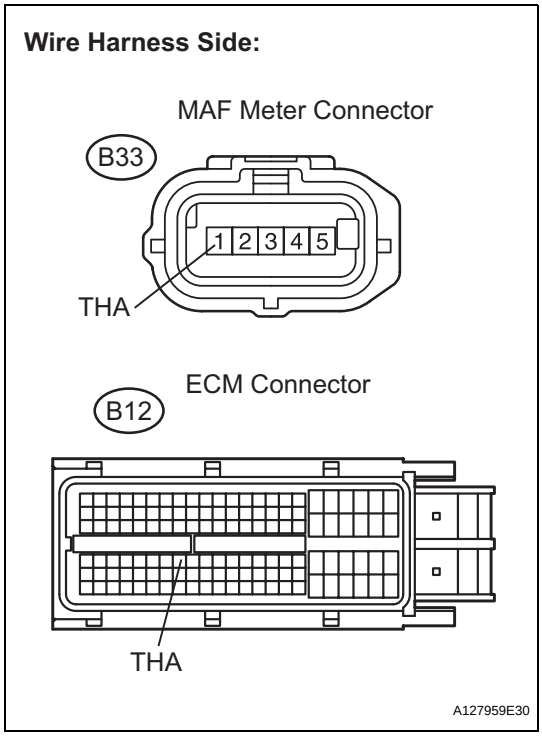

(a) Disconnect the B33 MAF meter connector.
(b) Disconnect the B12 ECM connector.
(c) Measure the resistance according to the value(s) in the table below.

Standard resistance

Tester Connection	Specified Condition
THA (B12-71) or THA (B33-1) - Body ground	10 kΩ or higher

(d) Reconnect the MAF meter connector.
(e) Reconnect the ECM connector.

NG → **REPAIR OR REPLACE HARNESS OR CONNECTOR**

OK

REPLACE ECM (See page ES-543)

DTC	P0111	Intake Air Temperature Sensor Gradient Too High

DESCRIPTION

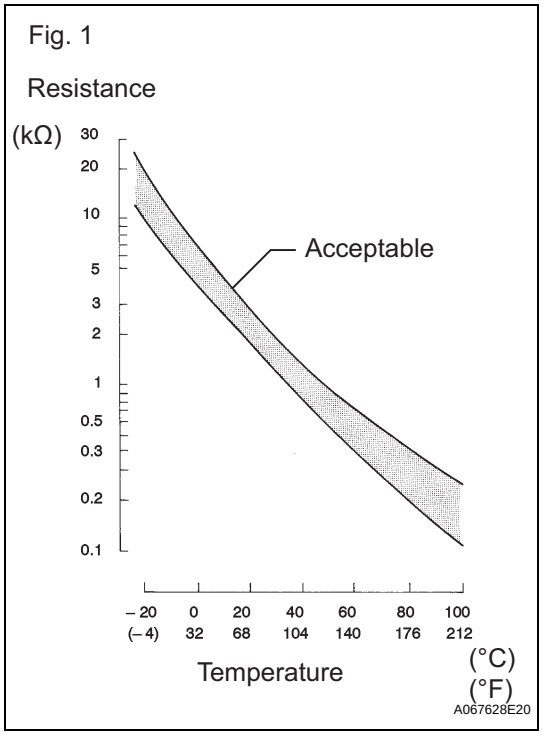

The Intake Air Temperature (IAT) sensor, mounted on the Mass Air Flow (MAF) meter, monitors the IAT. The IAT sensor has a built-in thermistor with a resistance that varies according to the temperature of the intake air. When the IAT drops, the resistance of the thermistor increases. When the temperature rises, the resistance drops. These variations in resistance are transmitted to the ECM as voltage changes (See Fig. 1).
The IAT sensor is powered by a 5 V supply from the THA terminal of the ECM, via resistor R.
Resistor R and the IAT sensor are connected in series. When the resistance value of the IAT sensor changes, according to changes in the IAT, the voltage at terminal THA also varies. Based on this signal, the ECM increases the fuel injection volume when the engine is cold to improve driveability.

DTC No.	DTC Detection Condition	Trouble Area
P0111	1. The intake air temperature rise is large, from the previous trip warm-up to the following trip. (2 trip detection logic) 2. When change in the intake air temperature after engine start is less than the threshold value.	Mass air flow meter

MONITOR DESCRIPTION

The ECM performs OBD II monitoring based on the values from the intake air temperature sensor. If there is no change in the sensor value within the normal range, the ECM will not be able to perform OBD II monitoring or will misdiagnose that there is a malfunction in the sensor. The ECM detects the stuck intake air temperature sensor value by performing monitoring after the engine switch is turned off or the engine is started (short soak or long soak).

MONITOR STRATEGY

Related DTCs	P0111: Intake air temperature sensor rationality (After engine stop) P0111: Intake air temperature sensor rationality (After cold engine start)

ES

Required Sensors/Components (Main)	Intake Air Temperature (IAT) sensor
Required Sensors/Components (Sub)	-
Frequency of Operation	Once per driving cycle
Duration	5 hours
MIL Operation	2 driving cycles
Sequence of Operation	None

TYPICAL ENABLING CONDITIONS

All:

Monitor runs whenever following DTCs are not present	None

ES

After engine stop:

Time after engine start	10 seconds or more
Battery voltage	10.5 V or more
ECT sensor circuit	OK
ECT change since engine stopped	Less than 180°C (356°F)
ECT before engine stop	70°C (158°F) or more
Time that MAF is low before engine stop	70 minutes
Accumulated MAF amount before engine stop	3,800 g or more
Key-off duration	30 minutes

After cold engine start:

Key-off duration	5 hours
Time after engine start	10 seconds or more
ECT sensor circuit	OK
ECT	70°C (158°F) or more
Accumulated MAF amount	6,300 g or more
Either following condition 1 or 2 is met:	-
1. Duration while engine load is low	129 seconds or more
2. Duration while engine load is high	10 seconds or more

TYPICAL MALFUNCTION THRESHOLDS

After engine stop:

IAT change	Less than 1°C (2°F)

After cold engine start:

IAT change	Less than 1°C (2°F)

WIRING DIAGRAM

Refer to DTC P0110 (See page ES-134).

INSPECTION PROCEDURE

1	CHECK ANY OTHER DTCS OUTPUT (IN ADDITION TO DTC P0111)

(a) Connect the intelligent tester to the DLC3.
(b) Turn the engine switch on (IG).
(c) Turn the tester on.
(d) Enter the following menus: DIAGNOSIS / ENHANCED OBD II / DTC INFO / CURRENT CODES.

(e) Read the DTCs.

Result

Display (DTC Output)	Proceed to
P0111 and other DTCs	A
P0111	B

HINT:
If any DTCs other than P0111 are output, troubleshoot those DTCs first.

B → **REPLACE MASS AIR FLOW METER (See page ES-497)**

A

GO TO DTC CHART (See page ES-59)

DTC	P0115	Engine Coolant Temperature Circuit Malfunction

DTC	P0117	Engine Coolant Temperature Circuit Low Input

DTC	P0118	Engine Coolant Temperature Circuit High Input

DESCRIPTION

A thermistor is built into the Engine Coolant Temperature (ECT) sensor, of which the resistance value varies according to the ECT.

ES

The structure of the sensor and its connection to the ECM are the same as those of the Intake Air Temperature (IAT) sensor.

HINT:

When any of DTCs P0115, P0117 and P0118 are set, the ECM enters fail-safe mode. During fail-safe mode, the ECT is estimated to be 80°C (176°F) by the ECM. Fail-safe mode continues until a pass condition is detected.

DTC No.	Proceed to	DTC Detection Condition	Trouble Area
P0115	Step 1	Open or short in Engine Coolant Temperature (ECT) sensor circuit for 0.5 seconds (1 trip detection logic)	• Open or short in ECT sensor circuit • ECT sensor • ECM
P0117	Step 4	Short in Engine Coolant Temperature (ECT) sensor circuit for 0.5 seconds (1 trip detection logic)	• Short in ECT sensor circuit • ECT sensor • ECM
P0118	Step 2	Open in Engine Coolant Temperature (ECT) sensor circuit for 0.5 seconds (1 trip detection logic)	• Open in ECT sensor circuit • ECT sensor • ECM

HINT:

When any of these DTCs are set, check the ECT by entering the following menus on the intelligent tester: DIAGNOSIS / ENHANCED OBD II / DATA LIST / PRIMARY / COOLANT TEMP.

Temperature Displayed	Malfunction
-40°C (-40°F)	Open circuit
140°C (284°F) or higher	Short circuit

MONITOR DESCRIPTION

The Engine Coolant Temperature (ECT) sensor is used to monitor the ECT. The ECT sensor has a thermistor with a resistance that varies according to the temperature of the engine coolant. When the coolant temperature drops, the resistance in the thermistor increases. When the temperature rises, the resistance drops. These variations in resistance are reflected in the output voltage from the sensor. The ECM monitors the sensor voltage and uses this value to calculate the ECT. When the sensor output voltage deviates from the normal operating range, the ECM interprets this as a fault in the ECT sensor and sets a DTC.

Example:

If the sensor output voltage is -40°C (-40°F) for 0.5 seconds or more, the ECM determines that there is an open in the ECT sensor circuit, and sets DTC P0118. Conversely, if the voltage output is more than 140°C (284°F) for 0.5 seconds or more, the ECM determines that there is a short in the sensor circuit, and sets DTC P0117.

If the malfunction is not repaired successfully, a DTC is set 0.5 seconds after the engine is next started.

MONITOR STRATEGY

Related DTCs	P0115: Engine coolant temperature sensor open/short (Fluctuating) P0117: Engine coolant temperature sensor short (Low electrical resistance) P0118: Engine coolant temperature sensor open (High electrical resistance)
Required Sensors/Components (Main)	Engine coolant temperature sensor
Required Sensors/Components (Sub)	-
Frequency of Operation	Continuous
Duration	0.5 seconds
MIL Operation	Immediate
Sequence of Operation	None

TYPICAL ENABLING CONDITIONS

Monitor runs whenever following DTCs are not present	None

TYPICAL MALFUNCTION THRESHOLDS

P0115:

Engine coolant temperature sensor voltage	Less than 0.14 V, or more than 4.91 V

P0117:

Engine coolant temperature sensor voltage	Less than 0.14 V

P0118:

Engine coolant temperature sensor voltage	More than 4.91 V

COMPONENT OPERATING RANGE

Engine coolant temperature sensor resistance	79 Ω to 156 kΩ [-40 to 140°C (-40 to 284°F)]

WIRING DIAGRAM

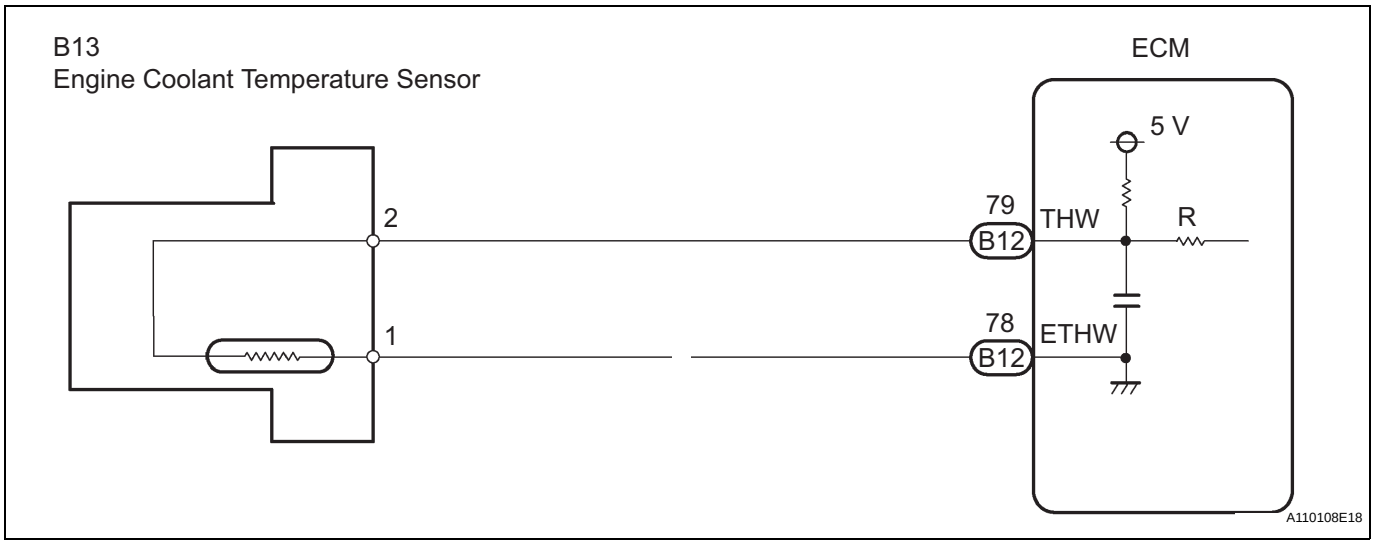

INSPECTION PROCEDURE

HINT:
Read freeze frame data using the intelligent tester. The ECM records vehicle and driving condition information as freeze frame data the moment a DTC is stored. When troubleshooting, freeze frame data can be helpful in determining whether the vehicle was running or stopped, whether the engine was warmed up or not, whether the air-fuel ratio was lean or rich, as well as other data recorded at the time of a malfunction (See page ES-41).

ES

1 CHECK DTC OUTPUT

(a) Connect the intelligent tester to the DLC3.
(b) Turn the engine switch on (IG).
(c) Select the following menu items: DIAGNOSIS / ENHANCED OBD II / DTC INFO / CURRENT CODES.
(d) Read the DTCs.
Result

Display (DTC Output)	Proceed to
P0115	A
P0117	B
P0118	C

B → **Go to step 6**

C → **Go to step 4**

A

2 READ VALUE OF ENGINE COOLANT TEMPERATURE SENSOR (COOLANT TEMP)

(a) Connect the intelligent tester to the DLC3.
(b) Turn the engine switch on (IG).
(c) Turn the tester on.
(d) Enter the following menus: DIAGNOSIS / ENHANCED OBD II / DATA LIST / PRIMARY / COOLANT TEMP.
(e) Read the value displayed on the tester.
Standard:
Between 80°C and 97°C (176°F and 207°F) with warm engine.

Result

Temperature Displayed	Proceed to
-40°C (-40°F)	A
140°C (284°F) or higher	B
Between 80°C and 97°C (176°F and 207°F)	C

HINT:
- If there is an open circuit, the intelligent tester indicates -40°C (-40°F).
- If there is a short circuit, the intelligent tester indicates 140°C (284°F) or higher.

B → **Go to step 5**

C → CHECK FOR INTERMITTENT PROBLEMS

A

3 CHECK ENGINE COOLANT TEMPERATURE SENSOR (CHECK FOR OPEN IN SENSOR)

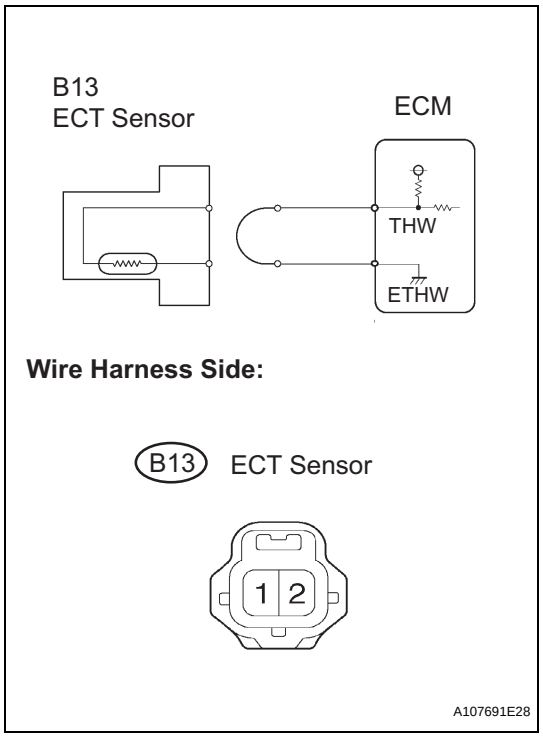

(a) Confirm good connection of the sensor.
(b) Disconnect the B13 engine coolant temperature (ECT) sensor connector.
(c) Connect terminals 1 and 2 of the ECT sensor connector on the wire harness side.
(d) Connect the intelligent tester to the DLC3.
(e) Turn the engine switch on (IG).
(f) Turn the tester on.
(g) Enter the following menus: DIAGNOSIS / ENHANCED OBD II / DATA LIST / PRIMARY / COOLANT TEMP.
(h) Read the value displayed on the tester.
Standard:
140°C (284°F) or higher.
(i) Reconnect the ECT sensor connector.

OK → **REPLACE ENGINE COOLANT TEMPERATURE SENSOR (See page ES-516)**

NG

ES

ES

4 CHECK HARNESS AND CONNECTOR (ENGINE COOLANT TEMPERATURE SENSOR - ECM)

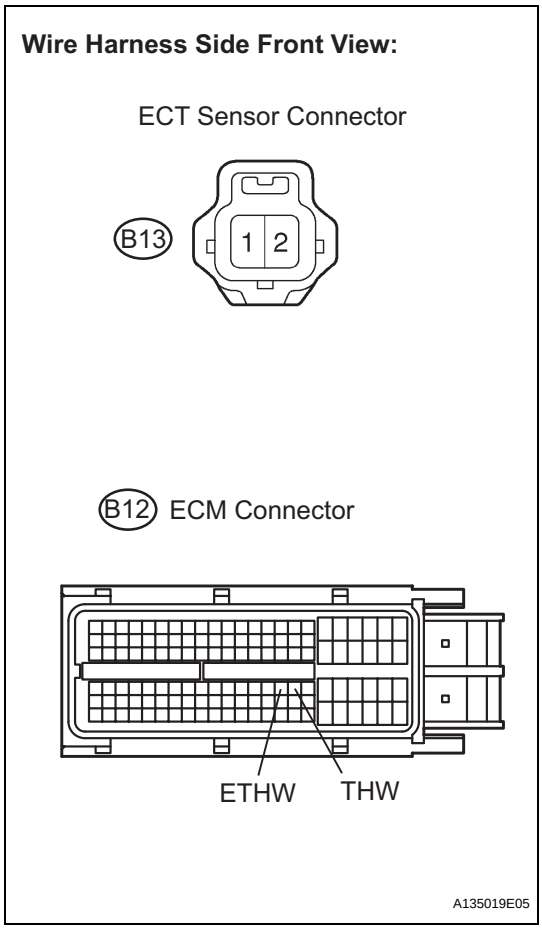

(a) Disconnect the B13 ECT sensor connector.
(b) Disconnect the B12 ECM connector.
(c) Measure the resistance between the terminals.
Standard resistance

Tester Connection	Specified Condition
THW (B12-79) - B13-2	Below 1 Ω
ETHW (B12-78) - B13-1	Below 1 Ω

(d) Reconnect the ECM connector.
(e) Reconnect the ECT connector.

NG → **REPAIR OR REPLACE HARNESS OR CONNECTOR**

OK

REPLACE ECM (See page ES-543)

5 CHECK ENGINE COOLANT TEMPERATURE SENSOR (CHECK FOR SHORT IN SENSOR)

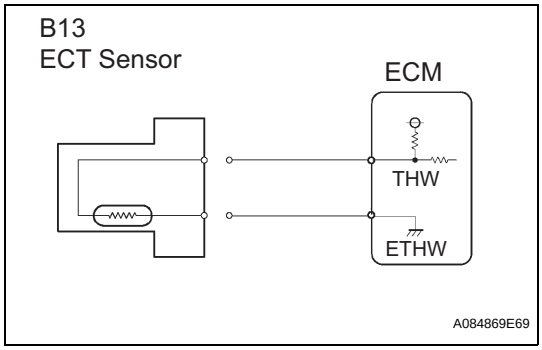

(a) Disconnect the B13 ECT sensor connector.
(b) Connect the intelligent tester to the DLC3.
(c) Turn the engine switch on (IG).
(d) Turn the tester on.
(e) Enter the following menus: DIAGNOSIS / ENHANCED OBD II / DATA LIST / PRIMARY / COOLANT TEMP.
(f) Read the value displayed on the tester.
Standard:
-40°C (-40°F)
(g) Reconnect the ECT sensor connector.

OK → **REPLACE ENGINE COOLANT TEMPERATURE SENSOR (See page ES-516)**

NG

6	CHECK HARNESS AND CONNECTOR (ENGINE COOLANT TEMPERATURE SENSOR - ECM)

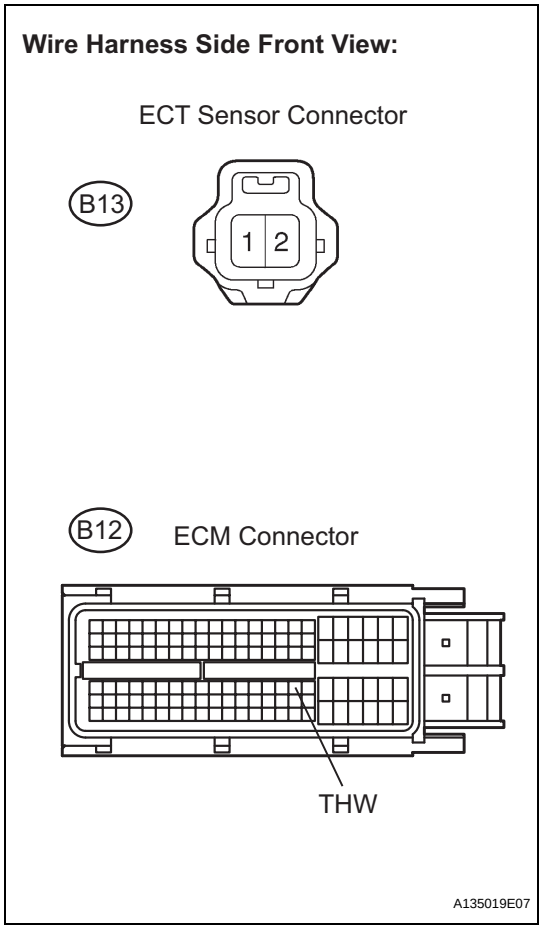

(a) Disconnect the B13 ECT sensor connector.
(b) Disconnect the B12 ECM connector.
(c) Measure the resistance according to the value(s) in the table below.

Standard resistance

Tester Connection	Specified Condition
THW (B12-79) or B13-2 - Body ground	10 kΩ or higher

(d) Reconnect the ECT sensor connector.
(e) Reconnect the ECM connector.

NG → **REPAIR OR REPLACE HARNESS OR CONNECTOR**

ES

OK

REPLACE ECM (See page ES-543)

DTC	P0116	Engine Coolant Temperature Circuit Range / Performance Problem

DESCRIPTION

A thermistor is built into the Engine Coolant Temperature (ECT) sensor, of which the resistance value varies according to the ECT.
The structure of the sensor and its connection to the ECM are the same as those of the Intake Air Temperature (IAT) sensor.

DTC No.	DTC Detection Condition	Trouble Area
P0116	ECTs as listed below are nearly same (2 trip detection logic): – ECT when engine is started at lower than 60°C (140°F) of ECT – ECT when engine is warmed up	• Thermostat • ECT sensor
	ECTs as listed below are nearly same when engine is started at higher than 60°C (140°F) of ECT (2 trip detection logic) – ECT when engine is stopped after driving – ECT when engine is started at lower than 60°C (140°F) of ECT	

ES

MONITOR DESCRIPTION

The ECT sensor is used to monitor the ECT. The ECT sensor has a built-in thermistor with a resistance that varies according to the temperature of the engine coolant. When the ECT drops, the resistance of the thermistor increases. When the temperature rises, the resistance drops. These variations in the resistance are reflected in the output voltage from the ECT sensor.
The ECM monitors the sensor voltage and uses this value to calculate the ECT. If the sensor output voltage deviates from the normal operating range, the ECM interprets this deviation as a malfunction in the ECT sensor and sets the DTC.

Examples:

(1) Upon starting the engine, the ECT is between 35°C and 60°C (95°F and 140°F). If, after driving for 250 seconds, the ECT remains within 3°C (5.4°F) of the starting temperature, the DTC is set (2 trip detection logic).

(2) Upon starting the engine, the ECT is over 60°C (140°F). If, after driving for 250 seconds, the ECM remains within 1°C (1.8°F) of the starting temperature, the DTC is set (2 trip detection logic).

MONITOR STRATEGY

Related DTCs	P0116: Engine coolant temperature sensor rationality (ECT sensor cold start monitor) P0116: Engine coolant temperature sensor rationality (ECT sensor soak monitor)
Required Sensors/Components (Main)	Engine coolant temperature (ECT) sensor
Required Sensors/Components (Sub)	-
Frequency of Operation	Once per driving cycle
Duration	10
MIL Operation	2 driving cycles
Sequence of Operation	None

TYPICAL ENABLING CONDITIONS

All:

Monitor runs whenever following DTCs are not present	P0100 - P0103 (MAF sensor)

ECT sensor cold start monitor:

Battery voltage	10.5 V or more
Time after engine start	1 second or more
ECT at engine start	Less than 60°C (140°F)
IAT sensor circuit	OK
Soak time	5 hours
Accumulated MAF	1,056.06 g or more
Engine	Running
Fuel cut	OFF
Difference between ECT at engine start and IAT	Less than 40°C (104°F)

ECT sensor soak monitor:

Battery voltage	10.5 V or more
Engine	Running
Soak time	5 hours or more
ECT at engine start	60°C (140°F) or more
Accumulated MAF	2,101.98 times or more

TYPICAL MALFUNCTION THRESHOLDS

ECT sensor cold start monitor:

ECT sensor value change	Less than 5°C (9°F)

ECT sensor soak monitor:

Difference between current ECT sensor value and previous ECT sensor value when engine stopped	Less than 5°C (9°F)

COMPONENT OPERATING RANGE

Engine coolant temperature	Varies with actual engine coolant temperature

INSPECTION PROCEDURE

HINT:

- If any of DTCs P0115, P0117, P0118 or P0125 are set simultaneously with DTC P0116, the ECT sensor may have an open or a short circuit. Troubleshoot those DTCs first.
- Read freeze frame data using the intelligent tester. The ECM records vehicle and driving condition information as freeze frame data the moment a DTC is stored. When troubleshooting, freeze frame data can be helpful in determining whether the vehicle was running or stopped, whether the engine was warmed up or not, whether the air-fuel ratio was lean or rich, as well as other data recorded at the time of a malfunction (See page ES-41).

1	CHECK OTHER DTC OUTPUT (IN ADDITION TO DTC P0116)

(a) Connect the intelligent tester to the DLC3.
(b) Turn the engine switch on (IG).
(c) Turn the tester on.
(d) Enter the following menus: DIAGNOSIS / ENHANCED II / DTC INFO / CURRENT CODES.
(e) Read the DTCs.

Result

Display (DTC output)	Proceed to
P0116	A

Display (DTC output)	Proceed to
P0116 and other DTCs	B

B → **GO TO DTC CHART (See page ES-59)**

A

2 INSPECT THERMOSTAT

(a) Remove the thermostat (See page CO-13).
(b) Check the valve opening temperature of the thermostat.
Standard:
80 to 84°C (176 to 183°F)
HINT:
In addition to the above check, confirm that the valve is completely closed when the temperature is below the standard.
(c) Reinstall the thermostat (See page CO-14).

NG → **REPLACE THERMOSTAT (See page CO-13)**

OK

REPLACE ENGINE COOLANT TEMPERATURE SENSOR (See page ES-516)

DTC	P0120	Throttle / Pedal Position Sensor / Switch "A" Circuit Malfunction
DTC	P0122	Throttle / Pedal Position Sensor / Switch "A" Circuit Low Input
DTC	P0123	Throttle / Pedal Position Sensor / Switch "A" Circuit High Input
DTC	P0220	Throttle / Pedal Position Sensor / Switch "B" Circuit
DTC	P0222	Throttle / Pedal Position Sensor / Switch "B" Circuit Low Input
DTC	P0223	Throttle / Pedal Position Sensor / Switch "B" Circuit High Input
DTC	P2135	Throttle / Pedal Position Sensor / Switch "A" / "B" Voltage Correlation

DESCRIPTION

HINT:
This ETCS (Electrical Throttle Control System) does not use a throttle cable.
The Throttle Position (TP) sensor is mounted on the throttle body, and detects the opening angle of the throttle valve. This sensor is a non-contact type, and uses Hall-effect elements, in order to yield accurate signals, even in extreme driving conditions, such as at high speeds as well as very low speeds.
The TP sensor has two sensor circuits which each transmits a signal, VTA1 and VTA2. VTA1 is used to detect the throttle valve angle and VTA2 is used to detect malfunctions in VTA1. The sensor signal voltages vary between 0 V and 5 V in proportion to the throttle valve opening angle, and are transmitted to the VTA terminals of the ECM.
As the valve closes, the sensor output voltage decreases and as the valve opens, the sensor output voltage increases. The ECM calculates the throttle valve opening angle according to these signals and controls the throttle actuator in response to driver inputs. These signals are also used in calculations such as air-fuel ratio correction, power increase correction and fuel-cut control.

ES

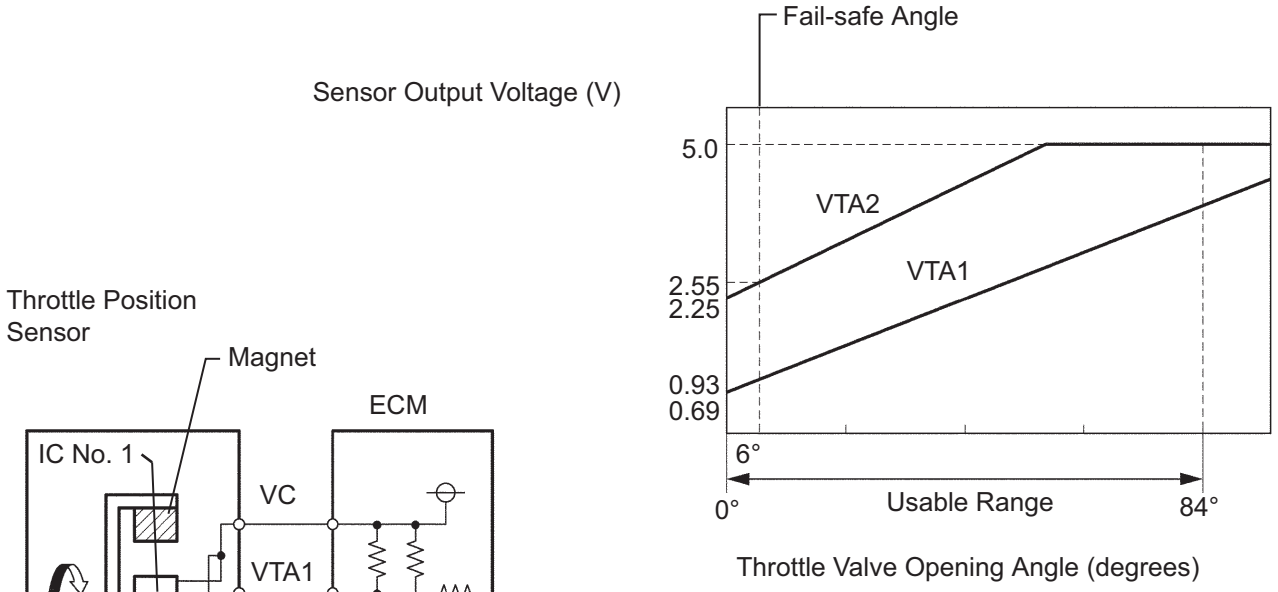

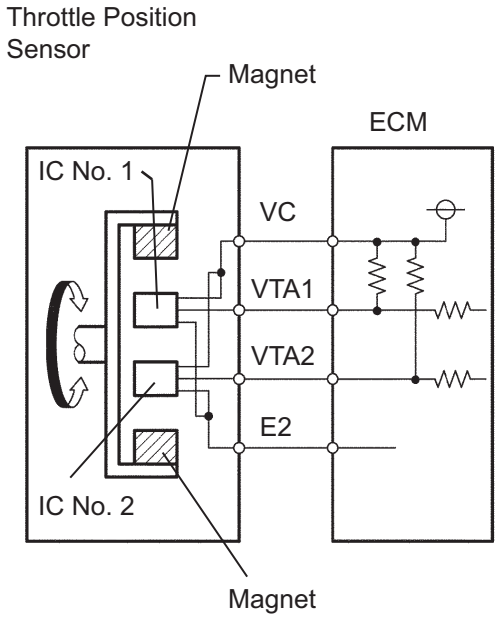

Note:

The throttle valve opening angle detected by the sensor terminal VTA1 is expressed as percentages.

Between 10 % and 24 %: Throttle valve fully closed

Between 64 % and 96 %: Throttle valve fully open

Approximately 19 %: Fail-safe angle (6°)

A019802E59

DTC No.	DTC Detection Condition	Trouble Area
P0120	Output voltage of VTA1 quickly fluctuates beyond lower and upper malfunction thresholds for 2 seconds (1 trip detection logic)	• Throttle Position (TP) sensor (built into throttle body) • ECM
P0122	Output voltage of VTA1 is 0.2 V or less for 2 seconds (1 trip detection logic)	• TP sensor (built into throttle body) • Short in VTA1 circuit • Open in VC circuit • ECM
P0123	Output voltage of VTA1 is 4.535 V or more for 2 seconds (1 trip detection logic)	• TP sensor (built into throttle body) • Open in VTA1 circuit • Open in E2 circuit • Short between VC and VTA1 circuits • ECM
P0220	Output voltage of VTA2 quickly fluctuates beyond lower and upper malfunction thresholds for 2 seconds (1 trip detection logic)	• TP sensor (built into throttle body) • ECM

DTC No.	DTC Detection Condition	Trouble Area
P0222	Output voltage of VTA2 is 1.75 V or less for 2 seconds (1 trip detection logic)	• TP sensor (built into throttle body) • Short in VTA2 circuit • Open in VC circuit • ECM
P0223	Output voltage of VTA2 is 4.8 V or more, and VTA1 is between 0.2 V and 2.02 V, for 2 seconds (1 trip detection logic)	• TP sensor (built into throttle body) • Open in VTA2 circuit • Open in E2 circuit • Short between VC and VTA2 circuits • ECM
P2135	Either condition (a) or (b) is met (1 trip detection logic): (a) Difference between output voltages of VTA1 and VTA2 is 0.02 V or less for 0.5 seconds or more (b) Output voltage of VTA1 is 0.2 V or less, and VTA2 is 1.75 V or less, for 0.4 seconds or more	• Short between VTA1 and VTA2 circuits • TP sensor (built into throttle body) • ECM

HINT:
- When any of these DTCs are set, check the throttle valve opening angle by entering the following menus on an intelligent tester: DIAGNOSIS / ENHANCED OBD II / DATA LIST / ETCS / THROTTLE POS AND THROTTLE POS #2.
- THROTTLE POS denotes the VTA1 signal (expressed in percentages), and THROTTLE POS #2 denotes the VTA2 signal (expressed in voltages).

Reference (Normal Condition):

Tester Display	Accelerator Pedal Fully Released	Accelerator Pedal Fully Depressed
THROTTLE POS	10 to 24 %	64 to 96 %
THROTTLE POS #2	2.1 to 3.1 V	4.5 to 5.0 V

MONITOR DESCRIPTION

The ECM uses the Throttle Position (TP) sensor to monitor the throttle valve opening angle. There are several checks that the ECM performs to confirm the proper operation of the TP sensor.
- A specific voltage difference is expected between the sensor terminals, VTA1 and VTA2, for each throttle valve opening angle. If the difference between VTA1 and VTA2 is incorrect, the ECM interprets this as a malfunction in the sensor, and sets a DTC.
- VTA1 and VTA2 each has a specific voltage range. If VTA1 or VTA2 is outside the normal operating range, the ECM interprets this as a malfunction in the sensor, and sets a DTC.
- VTA1 and VTA2 should never be close to the same voltage level. If VTA1 is within 0.02 V of VTA2, the ECM determines that there is a short circuit in the sensor, and sets a DTC.

MONITOR STRATEGY

Related DTCs	P0120: Throttle position sensor 1 range check (Fluctuating) P0122: Throttle position sensor 1 range check (Low voltage) P0123: Throttle position sensor 1 range check (High voltage) P0220: Throttle position sensor 2 range check (Fluctuating) P0222: Throttle position sensor 2 range check (Low voltage) P0223: Throttle position sensor 2 range check (High voltage) P2135: Throttle position sensor range check (Correlation)
Required Sensors/Components (Main)	Throttle position sensor
Required Sensors/Components (Sub)	-
Frequency of Operation	Continuous

ES

Duration	Throttle position sensor 1 range check (Fluctuating): 2 seconds (Accelerator pedal ON) Throttle position sensor 1 range check (Low voltage): 2 seconds (Accelerator pedal ON) Throttle position sensor 1 range check (High voltage): 2 seconds (Accelerator pedal ON) Throttle position sensor 2 range check (Fluctuating): 2 seconds (Accelerator pedal ON) Throttle position sensor 2 range check (Low voltage): 2 seconds (Accelerator pedal ON) Throttle position sensor 2 range check (High voltage): 2 seconds (Accelerator pedal ON) Throttle position sensor 1 range check (Fluctuating): 10 seconds (Accelerator pedal OFF) Throttle position sensor 1 range check (Low voltage): 10 seconds (Accelerator pedal OFF) Throttle position sensor 1 range check (High voltage): 10 seconds (Accelerator pedal OFF) Throttle position sensor 2 range check (Fluctuating): 10 seconds (Accelerator pedal OFF) Throttle position sensor 2 range check (Low voltage): 10 seconds (Accelerator pedal OFF) Throttle position sensor 2 range check (High voltage): 10 seconds (Accelerator pedal OFF) Throttle position sensor range check (Correlation): Within 0.5 seconds
MIL Operation	Immediate
Sequence of Operation	None

TYPICAL ENABLING CONDITIONS

Monitor runs whenever following DTCs are not present	None

TYPICAL MALFUNCTION THRESHOLDS

P0120:

VTA1 voltage	0.2 V or less, or 4.535 V or more

P0122:

VTA1 voltage	0.2 V or less

P0123:

VTA1 voltage	4.535 V or more

P0220:

VTA2 voltage	1.75 V or less, or 4.8 V or more

P0222:

VTA2 voltage	1.75 V or less

P0223:

VTA2 voltage when VTA1 is 0.2 to 2.02 V	4.8 V or more

P2135:

Either following condition A or B is met:	-
Condition A	-
Difference between VTA1 and VTA2 voltages	0.02 V or less
Condition B	-
VTA1 voltage	0.2 V or less
VTA2 voltage	1.75 V or less

COMPONENT OPERATING RANGE

VTA1 voltage	0.69 to 4.05 V
VTA2 voltage	2.25 to 4.8 V

FAIL-SAFE

When any of these DTCs, as well as other DTCs relating to ETCS (Electronic Throttle Control System) malfunctions, are set, the ECM enters fail-safe mode. During fail-safe mode, the ECM cuts the current to the throttle actuator off, and the throttle valve is returned to a 6° throttle angle by the return spring. The ECM then adjusts the engine output by controlling the fuel injection (intermittent fuel-cut) and ignition timing, in accordance with the accelerator pedal opening angle, to allow the vehicle to continue at a minimal speed. If the accelerator pedal is depressed gently, the vehicle can be driven slowly.

WIRING DIAGRAM

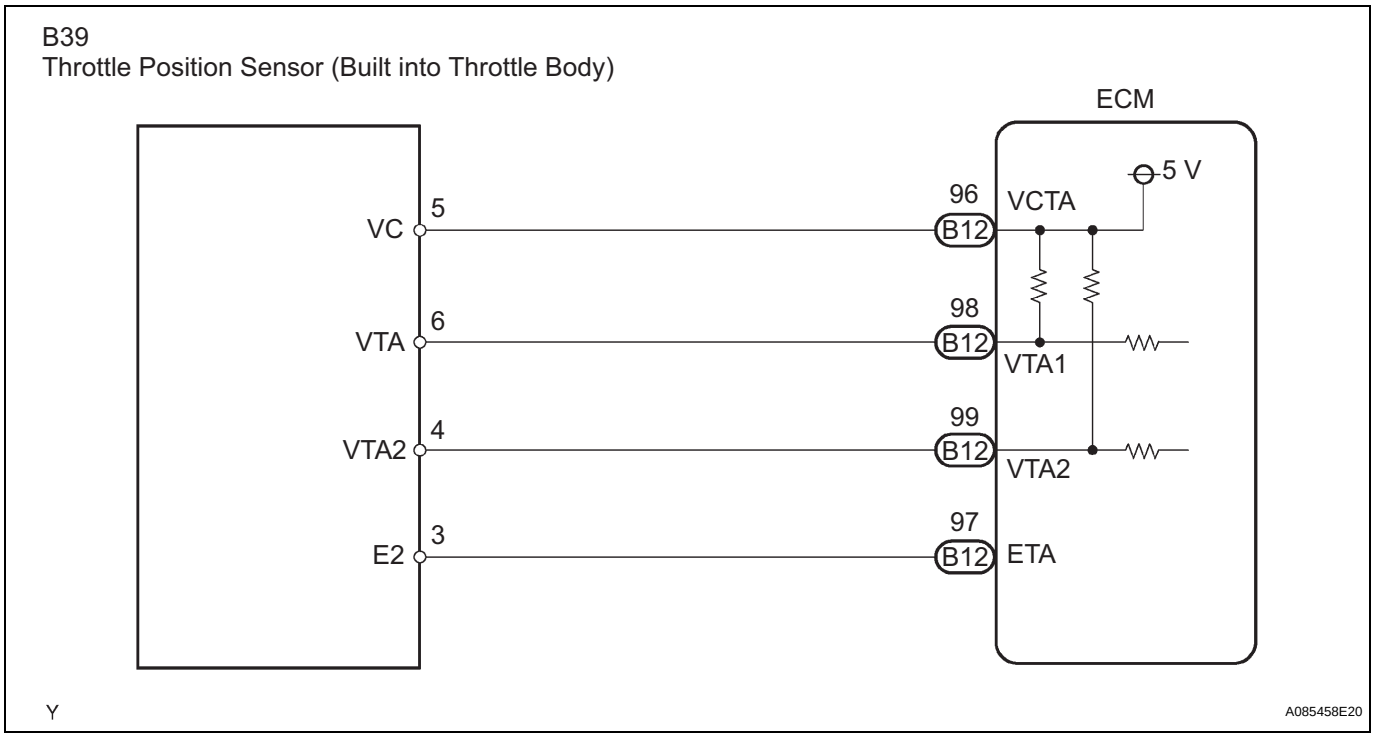

INSPECTION PROCEDURE

HINT:
Read freeze frame data using the intelligent tester. The ECM records vehicle and driving condition information as freeze frame data the moment a DTC is stored. When troubleshooting, freeze frame data can be helpful in determining whether the vehicle was running or stopped, whether the engine was warmed up or not, whether the air-fuel ratio was lean or rich, as well as other data recorded at the time of a malfunction (See page ES-41).

1	READ VALUE OF THROTTLE POSITION SENSOR (THROTTLE POS AND THROTTLE POS #2)

(a) Connect the intelligent tester to the DLC3.
(b) Turn the engine switch on (IG) and turn the intelligent tester on.

(c) Enter the following menus: DIAGNOSIS / ENHANCED OBD II / DATA LIST / ETCS / THROTTLE POS and THROTTLE POS #2.
(d) Check the values displayed on the tester.

Result

TP#1 (VTA1) When AP Released	TP#2 (VTA2) When AP Released	TP#1 (VTA1) When AP Depressed	TP#2 (VTA2) When AP Depressed	Trouble Area	Proceed to
0 %	Between 0 V and 0.2 V	0 %	Between 0 V and 0.2 V	VC circuit open	A
100 %	Between 4.5 V and 5.0 V	100 %	Between 4.5 V and 5.0 V	E2 circuit open	A
0 % or 100 %	Between 2.1 V and 3.1 V (Fail-safe)	0 % or 100 %	Between 2.1 V and 3.1 V (Fail-safe)	VTA1 circuit open or ground short	A
Approx. 19 % (Fail-safe)	Between 0 V and 0.2 V, or 4.5 V and 5.0 V	Between 10 % and 24 % (Fail-safe)	Between 0 V and 0.2 V, or 4.5 V and 5.0 V	VTA2 circuit open or ground short	A
Between 10 % and 24 %	Between 2.1 V and 3.1 V	Between 64 % and 96 % (Not fail-safe)	Between 4.5 V and 5.0 V (Not fail-safe)	TP sensor circuit normal	B

HINT:
- TP#1 denotes THROTTLE POS, and TP#2 denotes THROTTLE POS#2.
- AP denotes Accelerator Pedal.
- VTA1 is expressed as percentages, and VTA2 is expressed as voltages.

B → **Go to step 5**

A

2 CHECK HARNESS AND CONNECTOR (THROTTLE POSITION SENSOR - ECM)

Wire Harness Side Front View:

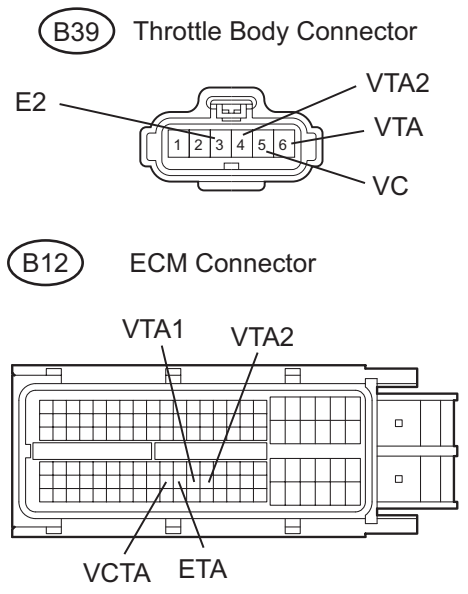

(a) Disconnect the B39 throttle body connector.
(b) Disconnect the B12 ECM connector.
(c) Measure the resistance according to the value(s) in the table below.

Standard resistance (Check for open)

Tester Connection	Specified Condition
VC (B39-5) - VCTA (B12-96)	Below 1 Ω
VTA (B39-6) - VTA1 (B12-98)	Below 1 Ω
VTA2 (B39-4) - VTA2 (B12-99)	Below 1 Ω
E2 (B39-3) - ETA (B12-97)	Below 1 Ω

Standard resistance (Check for short)

Tester Connection	Specified Condition
VC (B39-5) or VCTA (B12-96) - Body ground	10 kΩ or higher
VTA (B39-6) or VTA1 (B12-98) - Body ground	10 kΩ or higher
VTA2 (B39-4) or VTA2 (B12-99) - Body ground	10 kΩ or higher

(d) Reconnect the throttle body connector.
(e) Reconnect the ECM connector.

NG → **REPAIR OR REPLACE HARNESS OR CONNECTOR**

OK

3 INSPECT ECM (VC VOLTAGE)

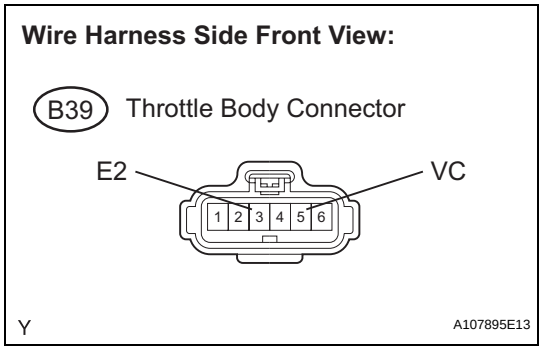

(a) Disconnect the B39 throttle body connector.
(b) Turn the engine switch on (IG).
(c) Measure the voltage according to the value(s) in the table below.

Standard voltage

Tester Connection	Specified Condition
VC (B39-5) - E2 (B39-3)	4.5 to 5.0 V

(d) Reconnect the throttle body connector.

NG → **REPLACE ECM (See page ES-543)**

OK

4 REPLACE THROTTLE BODY

(a) Replace the throttle body assembly (See page ES-519).

NEXT

5 CHECK WHETHER DTC OUTPUT RECURS (THROTTLE POSITION SENSOR DTCS)

(a) Connect the intelligent tester to the DLC3.
(b) Turn the engine switch on (IG) and turn the tester on.
(c) Clear the DTCs (See page ES-41).
(d) Start the engine.
(e) Allow the engine to idle for 15 seconds or more.
(f) Enter the following menus: DIAGNOSIS / ENHANCED OBD II / DTC INFO / CURRENT CODES.
(g) Read the DTCs.

Result

Display (DTC Output)	Proceed to
P0120, P0122, P0123, P0220, P0223, and/or P2135	A
No output	B

B → **SYSTEM IS OK**

A

REPLACE ECM (See page ES-543)

ES

DTC	P0121	Throttle / Pedal Position Sensor / Switch "A" Circuit Range / Performance Problem

DESCRIPTION

HINT:
This ETC (Electrical Throttle Control System) does not use a throttle cable.
The Throttle Position (TP) sensor is mounted on the throttle body, and detects the opening angle of the throttle valve. This sensor is a non-contact type, and uses Hall-effect elements, in order to yield accurate signals, even in extreme driving conditions, such as at high speeds as well as very low speeds.
The TP sensor has two sensor circuits which each transmits a signal, VTA1 and VTA2. VTA1 is used to detect the throttle valve angle and VTA2 is used to detect malfunctions in VTA1. The sensor signal voltages vary between 0 V and 5 V in proportion to the throttle valve opening angle, and are transmitted to the VTA terminals of the ECM.
As the valve closes, the sensor output voltage decreases and as the valve opens, the sensor output voltage increases. The ECM calculates the throttle valve opening angle according to these signals and controls the throttle actuator in response to driver inputs. These signals are also used in calculations such as air-fuel ratio correction, power increase correction and fuel-cut control.

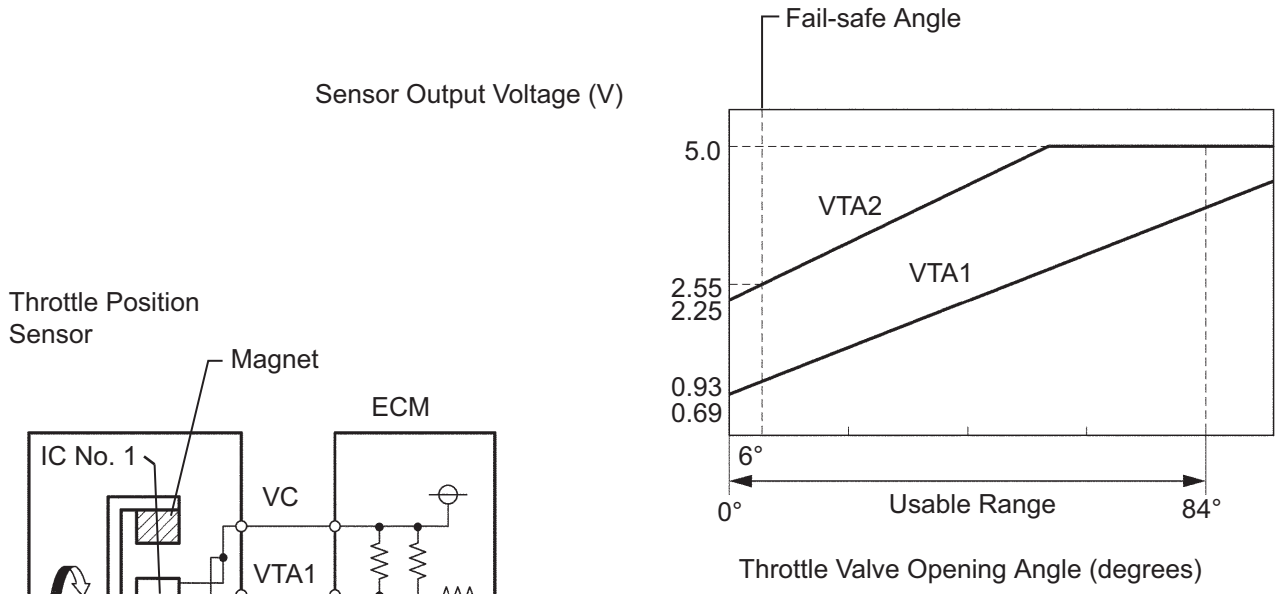

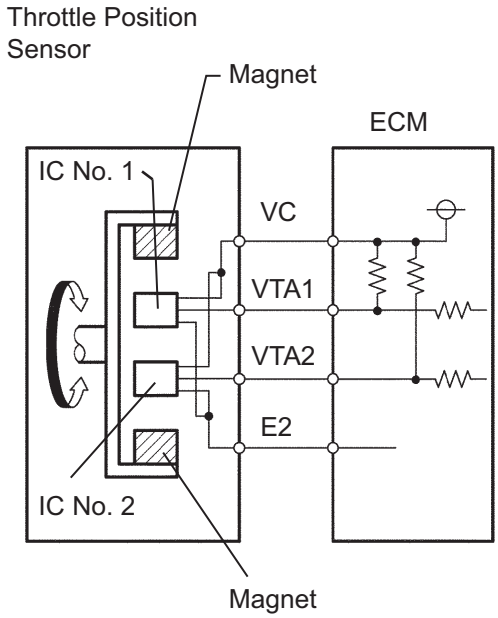

Note:

The throttle valve opening angle detected by the sensor terminal VTA1 is expressed as percentages.

Between 10 % and 24 %: Throttle valve fully closed

Between 64 % and 96 %: Throttle valve fully open

Approximately 19 %: Fail-safe angle (6°)

A019802E59

HINT:
This DTC relates to the Throttle Position (TP) sensor.

DTC No.	DTC Detection Condition	Trouble Area
P0121	Difference between VTA1 and VTA2 voltages is less than 0.8 V, or more than 1.6 V for 2 seconds (1 trip detection logic)	TP sensor (built into throttle body)

MONITOR DESCRIPTION

The ECM uses the TP sensor to monitor the throttle valve opening angle.
This sensor transmits two signals: VTA1 and VTA2. VTA1 is used to detect the throttle opening angle and VTA2 is used to detect malfunctions in VTA1. The ECM performs several checks to confirm the proper operation of the TP sensor and VTA1.

For each throttle opening angle, a specific voltage difference is expected between the outputs of VTA1 and VTA2. If the output voltage difference between the two signals deviates from the normal operating range, the ECM interprets this as a malfunction of the TP sensor. The ECM illuminates the MIL and sets the DTC.
If the malfunction is not repaired successfully, the DTC is set 2 seconds after the engine is next started.

MONITOR STRATEGY

Related DTCs	P0121: TP sensor rationality
Required Sensors/Components (Main)	TP sensor
Required Sensors/Components (Sub)	-
Frequency of Operation	Continuous
Duration	Within 2 seconds
MIL Operation	Immediate
Sequence of Operation	None

TYPICAL ENABLING CONDITIONS

Monitor runs whenever following DTCs are not present	P0120, P0122, P0123, P0220, P0222, P0223, P2135 (TP sensor)
Either following condition A or B is met:	-
A. Engine switch	ON
B. Electric throttle motor power	ON
TP sensor malfunction (P0120, P0122, P0123, P0220, P0222, P0223, P2135)	Not detected

TYPICAL MALFUNCTION THRESHOLDS

Difference in voltage between VAT1 and VTA2 TP sensor 1 - [TP sensor 2 x 0.8 (corrected by learning value)]	Less than 0.8 V or more than 1.6 V

FAIL-SAFE

When this DTC, as well as other DTCs relating to ETCS (Electronic Throttle Control System) malfunctions, is set, the ECM enters fail-safe mode. During fail-safe mode, the ECM cuts the current to the throttle actuator off, and the throttle valve is returned to a 6° throttle angle by the return spring. The ECM then adjusts the engine output by controlling the fuel injection (intermittent fuel-cut) and ignition timing, in accordance with the accelerator pedal opening angle, to allow the vehicle to continue at a minimal speed. If the accelerator pedal is depressed gently, the vehicle can be driven slowly.
Fail-safe mode continues until a pass condition is detected, and the engine switch is then turned off.

INSPECTION PROCEDURE

HINT:
Read freeze frame data using the intelligent tester. The ECM records vehicle and driving condition information as freeze frame data the moment a DTC is stored. When troubleshooting, freeze frame data can be helpful in determining whether the vehicle was running or stopped, whether the engine was warmed up or not, whether the air-fuel ratio was lean or rich, as well as other data recorded at the time of a malfunction (See page ES-41).

1	CHECK OTHER DTC OUTPUT (IN ADDITION TO DTC P0121)

(a) Connect the intelligent tester to the DLC3.
(b) Turn the engine switch on (IG).
(c) Turn the tester on.

(d) Enter the following menus: DIAGNOSIS / ENHANCED II / DTC INFO / CURRENT CODES.

(e) Read the DTC.

Result

Display (DTC output)	Proceed to
P0121	A
P0121 and other DTCs	B

B → **GO TO DTC CHART (See page ES-59)**

A

REPLACE THROTTLE BODY (See page ES-519)

DTC	P0125	Insufficient Coolant Temperature for Closed Loop Fuel Control

DESCRIPTION

A thermistor is built into the Engine Coolant Temperature (ECT) sensor, and its resistance value varies according to the ECT.
The structure of the sensor and its connection to the ECM are the same as those of the Intake Air Temperature (IAT) sensor.

DTC No.	DTC Detection Condition	Trouble Area
P0125	Engine coolant temperature (ECT) does not reach closed-loop enabling temperature for 20 minutes (this period varies with ECT when engine start)	• Engine coolant temperature sensor • Cooling system • Thermostat

MONITOR DESCRIPTION

The resistance of the ECT varies in proportion to the actual ECT. The ECT supplies a constant voltage to the sensor and monitors the signal output voltage of the sensor. The signal voltage output varies according to the changing resistance of the sensor. After the engine is started, the ECT is monitored through this signal. If the ECT sensor indicates that the engine is not yet warm enough for closed-loop fuel control, despite a specified period of time having elapsed since the engine was started, the ECM interprets this as a malfunction in the sensor or cooling system and sets the DTC.
Example:

The ECT is 0°C (32°F) at engine start. After 5 minutes running time, the ECT sensor still indicates that the engine is not warm enough to begin closed-loop fuel (air-fuel ratio feedback) control. The ECM interprets this as a malfunction in the sensor or cooling system and sets the DTC.

MONITOR STRATEGY

Related DTCs	P0125: Insufficient engine coolant temperature for closed-loop fuel control
Required Sensors/Components (Main)	Thermostat, cooling system
Required Sensors/Components (Related)	Engine coolant temperature sensor and mass air flow meter
Frequency of Operation	Once per driving cycle
Duration	64 seconds: Closed-loop enabling temperature -8.34°C (15°F) or more 111.2 seconds: Closed-loop enabling temperature -19.45 to 8.34°C (35 to 15°F) 1,200 seconds: Less than closed-loop enabling temperature -19.45°C (35°F)
MIL Operation	2 driving cycles
Sequence of Operation	None

TYPICAL ENABLING CONDITIONS

Monitor runs whenever following DTCs are not present	P0100 - P0103 (MAF sensor) P0110 - P0113 (IAT sensor) P0115 - P0118 (ECT sensor)
MAF sensor circuit fail	Not detected
IAT sensor circuit fail	Not detected
ECT sensor circuit fail	Not detected
Thermostat fail	Not detected

TYPICAL MALFUNCTION THRESHOLDS

Time until actual engine coolant temperature reaches closed-loop fuel control enabling temperature	64 seconds or more: Engine coolant temperature at engine start is -8.34°C (15°F) or more 111.2 seconds or more: Engine coolant temperature at engine start is -19.45 to -8.34°C (35 to 15°F) 1,200 seconds or more: Engine coolant temperature at engine start is less than -19.4°C (35°F)

WIRING DIAGRAM

Refer to DTC P0115 (See page ES-142).

INSPECTION PROCEDURE

HINT:

- If any of DTCs P0115, P0116, P0117 or P0118 are set simultaneously with DTC P0125, the Engine Coolant Temperature (ECT) sensor may have an open or a short circuit. Troubleshoot those DTCs first.
- Read freeze frame data using the intelligent tester. The ECM records vehicle and driving condition information as freeze frame data the moment a DTC is stored. When troubleshooting, freeze frame data can be helpful in determining whether the vehicle was running or stopped, whether the engine was warmed up or not, whether the air-fuel ratio was lean or rich, as well as other data recorded at the time of a malfunction (See page ES-41).

ES

1 CHECK ANY OTHER DTCS OUTPUT (IN ADDITION TO DTC P0125)

(a) Connect an intelligent tester to the DLC3.
(b) Turn the engine switch on (IG).
(c) Turn the tester on.
(d) Enter the following menus: DIAGNOSIS / ENHANCED OBD II / DTC INFO / CURRENT CODES.
(e) Read the DTCs.

Result

Display (DTC Output)	Proceed to
P0125	A
P0125 and other DTCs	B

HINT:
If any DTCs other than P0125 are output, troubleshoot those DTCs first.

B → **GO TO DTC CHART (See page ES-59)**

A

2 INSPECT THERMOSTAT

(a) Remove the thermostat (See page CO-13).
(b) Check the valve opening temperature of the thermostat.
Standard:
80 to 84°C (176 to 183°F)
HINT:
In addition to the above check, confirm that the valve is completely closed when the temperature is below the standard.
(c) Reinstall the thermostat (See page CO-14).

NG → **REPLACE THERMOSTAT (See page CO-13)**

OK

3	CHECK COOLING SYSTEM

(a) Check for defects in the cooling system that might cause the system to be too cold, such as abnormal radiator fan operation or any modifications.

NG → **REPAIR OR REPLACE COOLING SYSTEM**

ES

OK

REPLACE ENGINE COOLANT TEMPERATURE SENSOR (See page ES-516)

DTC	P0128	Coolant Thermostat (Coolant Temperature Below Thermostat Regulating Temperature)

DESCRIPTION

This DTC is set when the Engine Coolant Temperature (ECT) does not reach 75°C (167°F) despite sufficient engine warm-up time.

DTC No.	DTC Detection Condition	Trouble Area
P0128	Conditions (a), (b) and (c) are met for 5 seconds (2 rip detection logic): (a) Cold start (b) Engine warmed up (c) ECT less than 75°C (167°F)	• Thermostat • Cooling system • ECT sensor • ECM

ES

MONITOR DESCRIPTION

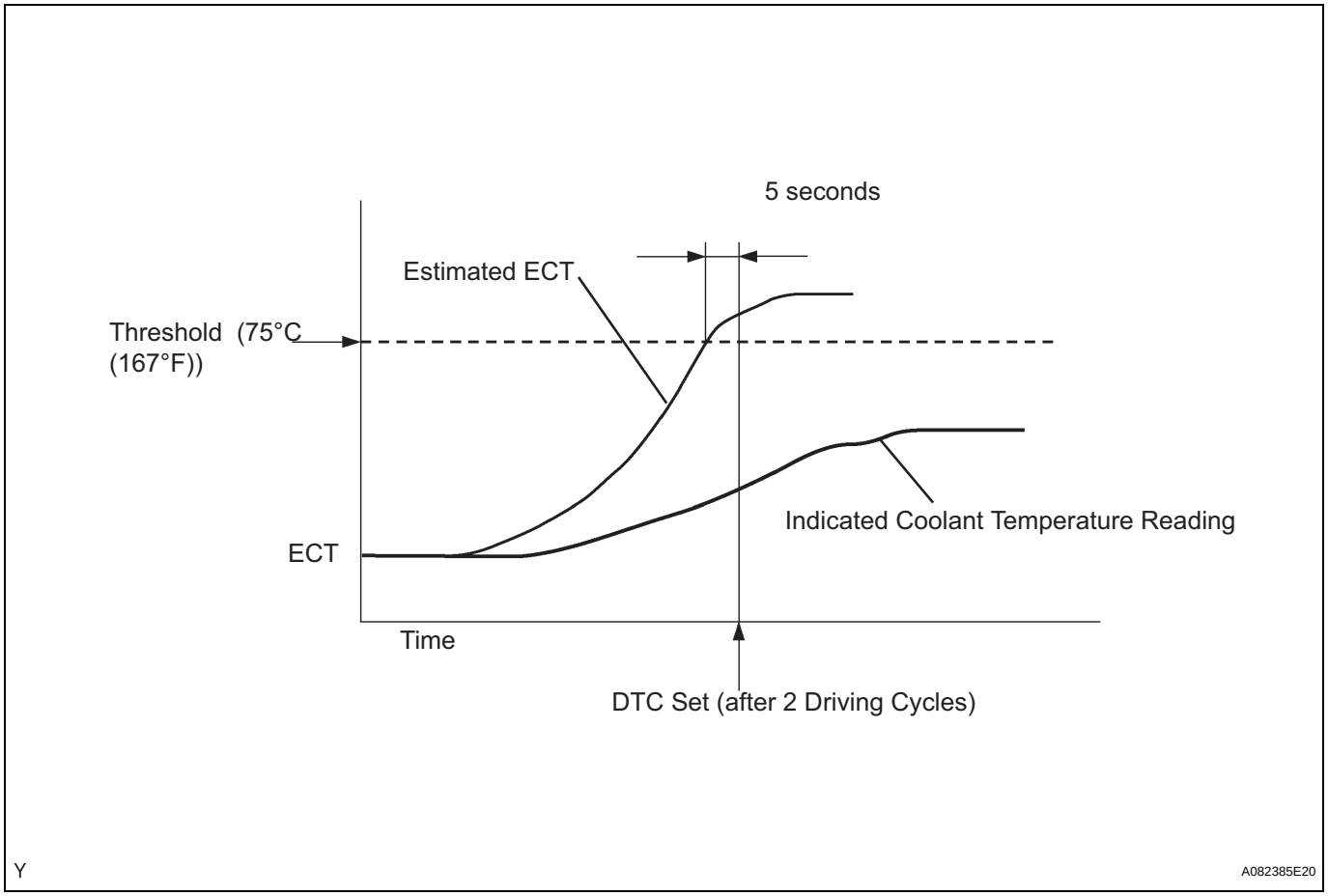

The ECM estimates the ECT based on the starting temperature, engine loads, and engine speeds. The ECM then compares the estimated temperature with the actual ECT. When the estimated ECT reaches 75°C (167°F), the ECM checks the actual ECT. If the actual ECT is less than 75°C (167°F), the ECM interprets this as a malfunction in the thermostat or the engine cooling system and sets the DTC.

MONITOR STRATEGY

Related DTCs	P0128: Coolant Thermostat
Required Sensors/Components (Main)	Thermostat
Required Sensors/Components (Sub)	Engine Coolant Temperature (ECT) sensor, Intake Air Temperature (IAT) sensor, Vehicle speed sensor
Frequency of Operation	Once per driving cycle

Duration	900 seconds
MIL Operation	2 driving cycles
Sequence of Operation	None

TYPICAL ENABLING CONDITIONS

Monitor will run whenever this DTC is not present	P0010, P0020 (VVT OCV Bank 1, 2) P0011 (VVT System 1 - Advance) P0012 (VVT System 1 - Retard) P0021 (VVT System 2 - Advance) P0022 (VVT System 2 - Retard) P0031, P0032, P0051, P0052 (A/F sensor heater - Sensor 1) P0100 - P0103 (MAF meter) P0110 - P0113 (IAT sensor) P0115 - P0118 (ECT sensor) P0125 (Insufficient ECT for Closed Loop) P0171, P0172 (Fuel system) P0300 - P0308 (Misfire) P0335 (CKP sensor) P0340, P0341 (CMP sensor) P0351 - P0356 (Ignitor) P0500 (VSS) P2196, P2198 (A/F sensor - rationality) P2A00, P2A03 (A/F sensor - slow response)
Battery voltage	11 V or more
Either following condition 1 or 2 is met:	-
1. All of following conditions are met:	-
• ECT at engine start - IAT at engine start	-15 to 7°C (-27 to 12.6°F)
• ECT at engine start	-10 to 56°C (14 to 133°F)
• IAT at engine start	-10 to 56°C (14 to 133°F)
2. All of following conditions are met:	-
• ECT at engine start - IAT at engine start	More than 7°C (12.6°F)
• ECT at engine start	56°C (132.8°F) or less
• IAT at engine start	-10°C (14°F) or more
Accumulated time with 80 mph (128 km/h) or more of vehicle speed	Less than 20 seconds

TYPICAL MALFUNCTION THRESHOLDS

Duration that both of the following conditions 1 and 2 are met:	5 seconds or more
1. Estimated ECT	75°C (167°F) or more
2. ECT sensor output	Less than 75°C (167°F)

INSPECTION PROCEDURE

HINT:
Read freeze frame data using the intelligent tester. The ECM records vehicle and driving condition information as freeze frame data the moment a DTC is stored. When troubleshooting, freeze frame data can be helpful in determining whether the vehicle was running or stopped, whether the engine was warmed up or not, whether the air-fuel ratio was lean or rich, as well as other data recorded at the time of a malfunction (See page ES-41).

1	CHECK OTHER DTC OUTPUT (IN ADDITION TO DTC P0128)

(a) Connect the intelligent tester to the DLC3.
(b) Turn the engine switch on (IG).
(c) Turn the tester on.

(d) Enter the following menus: DIAGNOSIS / ENHANCED II / DTC INFO / CURRENT CODES.
(e) Read the DTC.

Result

Display (DTC Output)	Proceed to
P0128	A
P0128 and other DTCs	B

HINT:
If any DTC other than P0128 are output, troubleshoot those DTCs first.

B → **GO TO DTC CHART (See page ES-59)**

A

2 CHECK COOLING SYSTEM

(a) Check for defects in the cooling system that might cause the system to be too cold, such as abnormal radiator fan operation or any modifications.

NG → **REPAIR OR REPLACE COOLING SYSTEM**

OK

3 INSPECT THERMOSTAT

(a) Remove the thermostat (See page CO-13).
(b) Check the valve opening temperature of the thermostat.
Standard:
80 to 84°C (176 to 183°F)
HINT:
In addition to the above check, confirm that the valve is completely closed when the temperature is below the standard.
(c) Reinstall the thermostat (See page CO-14).

NG → **REPLACE THERMOSTAT (See page CO-13)**

OK

REPLACE ECM (See page ES-543)

DTC	P0136	Oxygen Sensor Circuit Malfunction (Bank 1 Sensor 2)
DTC	P0137	Oxygen Sensor Circuit Low Voltage (Bank 1 Sensor 2)
DTC	P0138	Oxygen Sensor Circuit High Voltage (Bank 1 Sensor 2)
DTC	P0156	Oxygen Sensor Circuit Malfunction (Bank 2 Sensor 2)
DTC	P0157	Oxygen Sensor Circuit Low Voltage (Bank 2 Sensor 2)
DTC	P0158	Oxygen Sensor Circuit High Voltage (Bank 2 Sensor 2)

DESCRIPTION

A three-way catalytic converter (TWC) is used in order to convert the carbon monoxide (CO), hydrocarbon (HC), and nitrogen oxide (NOx) into less harmful substances. To allow the TWC to function effectively, it is necessary to keep the air-fuel ratio of the engine near the stoichiometric air-fuel ratio. For the purpose of helping the ECM to deliver accurate air-fuel ratio control, the Heated Oxygen (HO2) sensor is used.
The HO2 sensor is located behind the TWC, and detects the oxygen concentration in the exhaust gas. Since the sensor is integrated with the heater that heats the sensing portion, it is possible to detect the oxygen concentration even when the intake air volume is low (the exhaust gas temperature is low).
When the air-fuel ratio becomes lean, the oxygen concentration in the exhaust gas becomes rich. The HO2 sensor informs the ECM that the post-TWC air-fuel ratio is lean (low voltage, i.e. less than 0.45 V). Conversely, when the air-fuel ratio is richer than the stoichiometric air-fuel level, the oxygen concentration in the exhaust gas becomes lean. The HO2 sensor informs the ECM that the post-TWC air-fuel ratio is rich (high voltage, i.e. more than 0.45 V). The HO2 sensor has the property of changing its output voltage drastically when the air-fuel ratio is close to the stoichiometric level.
The ECM uses the supplementary information from the HO2 sensor to determine whether the air-fuel ratio after the TWC is rich or lean, and adjusts the fuel injection time accordingly. Thus, if the HO2 sensor is working improperly due to internal malfunctions, the ECM is unable to compensate for deviations in the primary air-fuel ratio control.

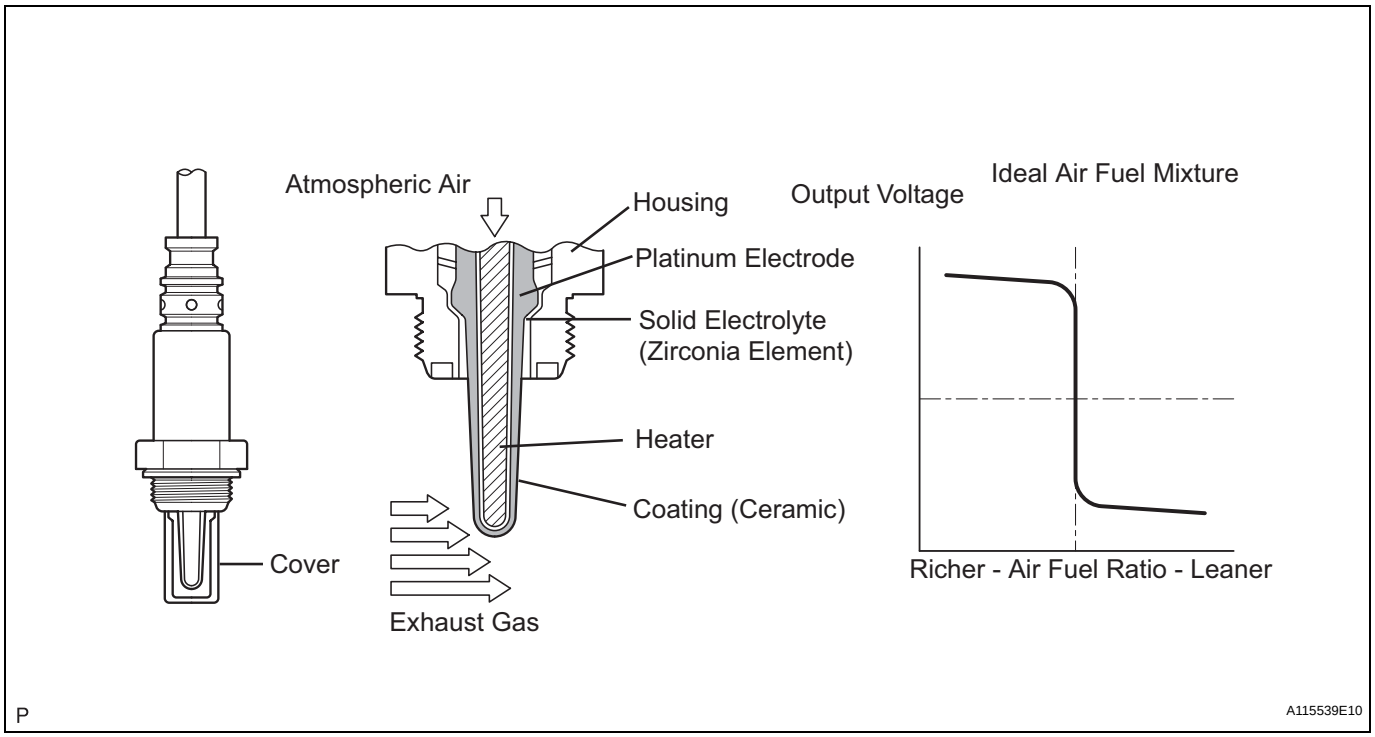

DTC No.	DTC Detection Condition	Trouble Area
P0136 P0156	• Abnormal voltage output: During active air-fuel ratio control, following conditions (a) and (b) are met for a certain period of time (2 trip detection logic) (a) Heated Oxygen (HO2) sensor voltage does not decrease to less than 0.2 V (b) HO2 sensor voltage does not increase to more than 0.6 V • Low impedance: Sensor impedance is less than 5 Ω for more than 30 seconds when ECM presumes sensor to being warmed up and operating normally (2 trip detection logic)	• Open or short in HO2 sensor (bank 1, 2 sensor 2) circuit • HO2 sensor (bank 1, 2 sensor 2) • HO2 sensor heater (bank 1, 2 sensor 2) • Air-Fuel Ratio (A/F) sensor (bank 1, 2 sensor 1) • Engine room junction block (EFI relay) • Gas leakage from exhaust system
P0137 P0157	• Low voltage (open): During active air-fuel ratio control, following conditions (a) and (b) are met for a certain period of time (2 trip detection logic) (a) HO2 sensor voltage output less than 0.21 V (b) Target air-fuel ratio rich • High impedance: Sensor impedance is 15 kΩ or more for more than 90 seconds when ECM presumes sensor to being warmed up and operating normally (2 trip detection logic)	• Open in HO2 sensor (bank 1, 2 sensor 2) circuit • HO2 sensor (bank 1, 2 sensor 2) • HO2 sensor heater (bank 1, 2 sensor 2) • Engine room junction block (EFI relay) • Gas leakage from exhaust system
P0138 P0158	• High voltage (short): During active air-fuel ratio control, following conditions (a) and (b) are met for a certain period of time (2 trip detection logic) (a) HO2 sensor voltage output 0.59 V or more (b) Target air-fuel ratio lean • Extremely high voltage (short): HO2 sensor voltage output exceeds 1.2 V for more than 30 seconds (2 trip detection logic)	• Short in HO2 sensor (bank 1, 2 sensor 2) circuit • HO2 sensor (bank 1, 2 sensor 2) • ECM internal circuit malfunction

ES

MONITOR DESCRIPTION

1. Active Air-Fuel Ratio Control

The ECM usually performs air-fuel ratio feedback control so that the Air-Fuel Ratio (A/F) sensor output indicates a near stoichiometric air-fuel level. This vehicle includes active air-fuel ratio control in addition to regular air-fuel ratio control. The ECM performs active air-fuel ratio control to detect any deterioration in the Three-Way Catalytic Converter (TWC) and Heated Oxygen (HO2) sensor malfunctions (refer to the diagram below).

Active air-fuel ratio control is performed for approximately 15 to 20 seconds while driving with a warm engine. During active air-fuel ratio control, the air-fuel ratio is forcibly regulated to become lean or rich by the ECM. If the ECM detects a malfunction, one of the following DTCs is set: DTC P0136 or P0156 (abnormal voltage output), P0137 or P0157 (open circuit) or P0138 or P0158 (short circuit).

2. Abnormal Voltage Output of HO2 Sensor (DTCs P0136 and P0156)

ES

While the ECM is performing active air-fuel ratio control, the air-fuel ratio is forcibly regulated to become rich or lean. If the sensor is not functioning properly, the voltage output variation is small. For example, when the HO2 sensor voltage does not decrease to less than 0.21 V and does not increase to more than 0.59 V during active air-fuel ratio control, the ECM determines that the sensor voltage output is abnormal and sets DTCs P0136 and P0156.

HO2 SENSOR CIRCUIT MALFUNCTION (P0136 and P0156: ABNORMAL VOLTAGE):

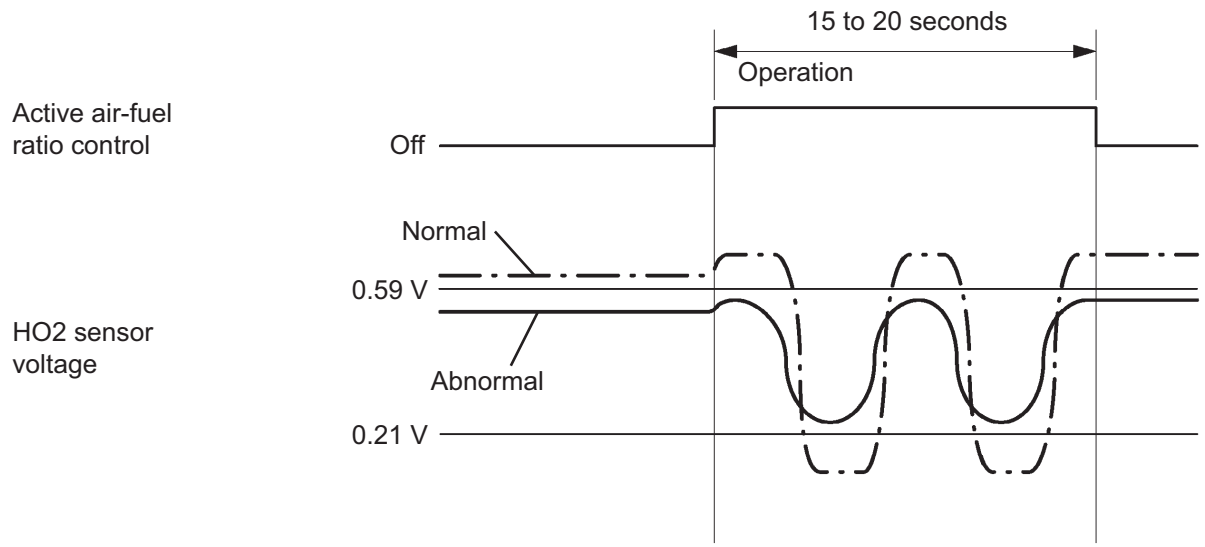

Y A076837E10

3. Open or Short in Heated Oxygen (HO2) Sensor Circuit (DTCs P0137 and P0157 or P0138 and P0158)

During active air-fuel ratio control, the ECM calculates the Oxygen Storage Capacity (OSC)* of the Three- Way Catalytic Converter (TWC) by forcibly regulating the air-fuel ratio to become rich or lean. If the HO2 sensor has an open or short circuit, or the voltage output of the sensor noticeably decreases, the OSC indicates an extraordinarily high value. Even if the ECM attempts to continue regulating the air-fuel ratio to become rich or lean, the HO2 sensor output does not change.

While performing active air-fuel ratio control, when the target air-fuel ratio is rich and the HO2 sensor voltage output is 0.21 V or less (lean), the ECM interprets this as an abnormally low sensor output voltage and sets DTC P0137 or P0157. When the target air-fuel ratio is lean and the voltage output is 0.59 V or more (rich) during active air-fuel ratio control, the ECM determines that the sensor voltage output is abnormally high, and sets DTC P0138 or P0158.

HINT:

DTC P0138 or P0158 is also set if the HO2 sensor voltage output is more than 1.2 V for 30 seconds or more.

*: The TWC has the capability to store oxygen. The OSC and the emission purification capacity of the TWC are mutually related. The ECM determines whether the catalyst has deteriorated, based on the calculated OSC value (See page ES-245).

HO2 SENSOR CIRCUIT LOW VOLTAGE (P0137 and P0157: OPEN):

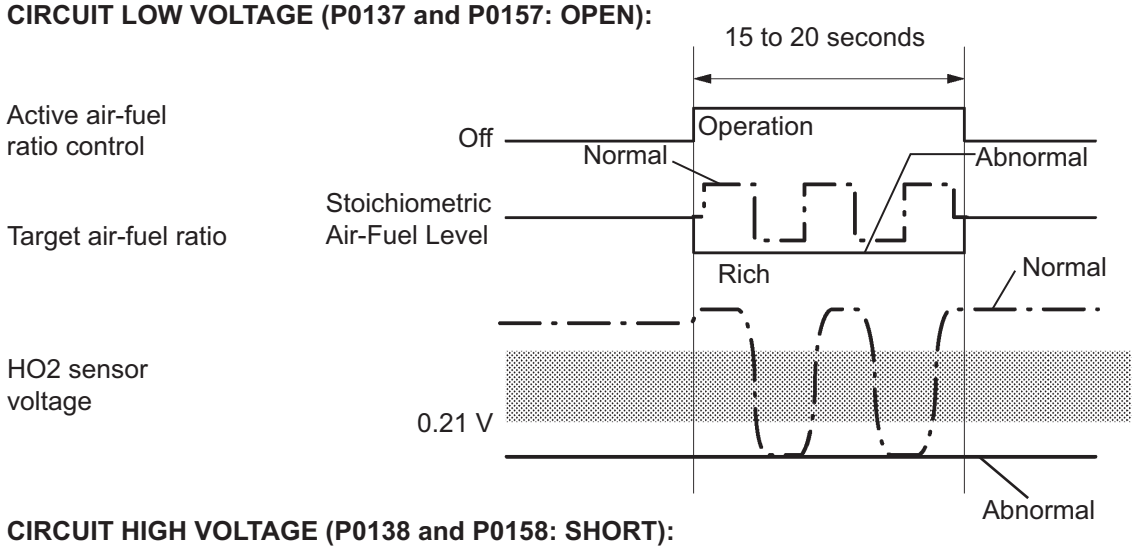

HO2 SENSOR CIRCUIT HIGH VOLTAGE (P0138 and P0158: SHORT):

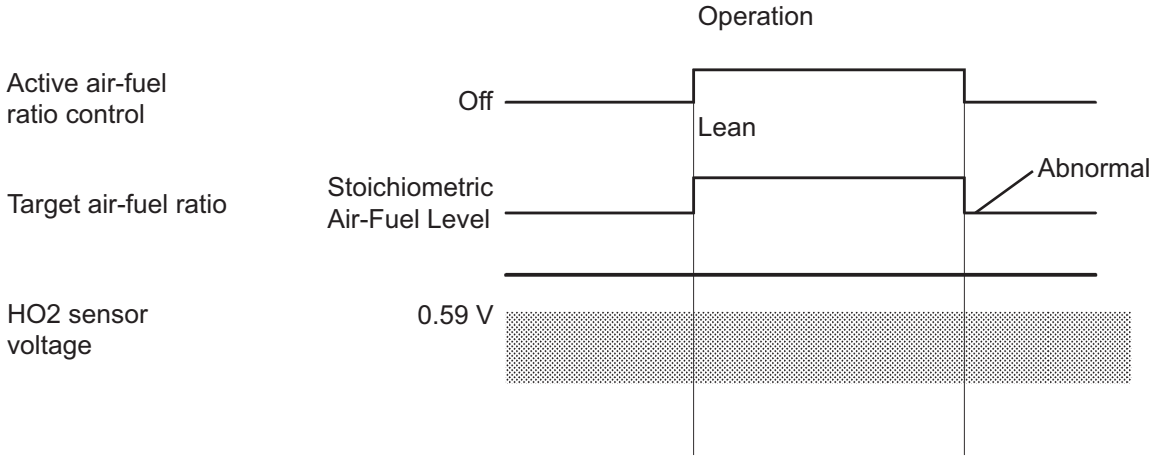

Y A080024E12

Interrelation between temperature of element and impedance:

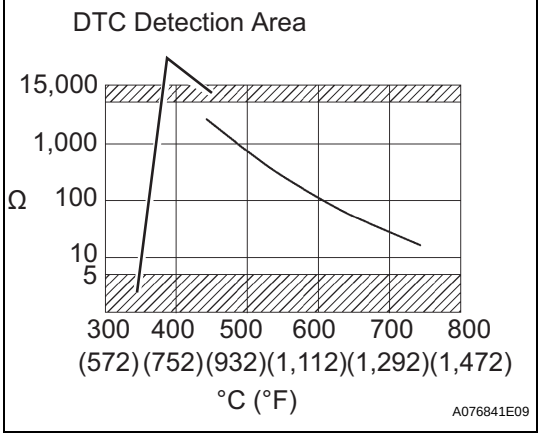

A076841E09

4. High or Low Impedance of Heated Oxygen (HO2) Sensor (DTCs P0136 and P0156 or P0137 and P0157)

During normal air-fuel ratio feedback control, there are small variations in the exhaust gas oxygen concentration. In order to continuously monitor the slight variation of the HO2 sensor signal while the engine is running, the impedance* of the sensor is measured by the ECM. The ECM determines that there is a malfunction in the sensor when the measured impedance deviates from the standard range.

*: The effective resistance in an alternating current electrical circuit.

HINT:

- The impedance cannot be measured using an ohmmeter.

ES

- DTCs P0136 and P0156 indicate the deterioration of the HO2 sensor. The ECM sets the DTCs by calculating the impedance of the sensor when the typical enabling conditions are satisfied (1 driving cycle).
- DTCs P0137 and P0157 indicate an open or short circuit in the HO2 sensor (1 driving cycle). The ECM sets the DTCs when the impedance of the sensor exceeds the threshold of 15 kΩ.

MONITOR STRATEGY

Related DTCs	P0136: HO2S voltage (Bank 1) P0136: HO2S low impedance (Bank 1) P0137: HO2S high impedance (Bank 1) P0137: HO2S low voltage (Bank 1) P0138: HO2S high voltage (Bank 1) P0138: HO2S high voltage (Extremely high) (Bank 1) P0156: HO2S voltage (Bank 2) P0156: HO2S low impedance (Bank 2) P0157: HO2S high impedance (Bank 2) P0157: HO2S low voltage (Bank 2) P0158: HO2S high voltage (Bank 2) P0158: HO2S high voltage (Extremely high) (Bank 2)
Required Sensors/Components (Main)	HO2S
Required Sensors/Components (Sub)	Crankshaft position sensor, Engine coolant temperature sensor, Mass air flow meter, Throttle position sensor
Frequency of Operation	Once per driving cycle
Duration	20 seconds: HO2S voltage (P0136, P0156), HO2S low voltage (P0137, P0157), HO2S high voltage (P0138, P0158) 30 seconds: HO2S low impedance (P0136, P0156) 90 seconds: HO2S high impedance (P0137, P0157) 10 seconds: HO2S high voltage (P0138, P0158)
MIL Operation	2 driving cycles
Sequence of Operation	None

TYPICAL ENABLING CONDITIONS

All:

Monitor runs whenever following DTCs are not present	P0031, P0032, P0051, P0052 (A/F sensor heater - Sensor 1) P0037, P0038, P0057, P0058 (O2 sensor heater - Sensor 2) P0100 - P0103 (MAF meter) P0110 - P0113 (IAT sensor) P0115 - P0118 (ECT sensor) P0120 - P0223, P2135 (TP sensor) P0125 (Insufficient ECT for Closed Loop) P0171, P0172 (Fuel system) P0300 - P0308 (Misfire) P0335 (CKP sensor) P0340, P0341 (CMP sensor) P0442 - P0456 (EVAP system) P0500 (VSS) P2196, P2198 (A/F sensor - rationality) P2A00, P2A03 (A/F sensor - slow response)

HO2S voltage (P0136, P0156), HO2S low voltage (P0137, P0157), HO2S high voltage (P0138, P0158):

Active A/F control	Performing
Battery voltage	11 V or more
ECT	75°C (167°F) or more
Idle	OFF

Engine rpm	Less than 3,200 rpm
A/F sensor status	Activated
Fuel system status	Closed loop
Fuel-cut	OFF
Engine load	10 to 70%
Shift position	4th or more

HO2S low impedance (P0136, P0156):

Battery voltage	11 V or more
Estimated rear HO2S temperature	Less than 700°C (1,292°F)
ECM monitor	Completed
P0606	Not set

HO2S high impedance (P0137, P0157):

Battery voltage	11 V or more
Estimated rear HO2S temperature	450°C (842°F) or more
P0606	Not preset

HO2S high voltage (Extremely high) (P0138, P0158):

Battery voltage	11 V or more
Time after engine start	2 seconds or more

TYPICAL MALFUNCTION THRESHOLDS

HO2S voltage (P0136, P0156):

Either the following condition 1 or 2 is met:	-
1. All of the following conditions (a), (b) and (c) are met:	-
(a) Commanded air-fuel ratio	14.3 or less
(b) Rear HO2S voltage	0.21 to 0.59 V
(c) OSC (Oxygen capacity of catalyst)	2 g or more
2. All of the following conditions (d), (e) and (f) are met:	-
(d) Commanded air-fuel ratio	14.9 or more
(e) Rear HO2S voltage	0.21 to 0.59 V
(f) OSC (Oxygen capacity of catalyst)	2 g or more

HO2S low impedance (P0136, P0156):

Duration that following condition is met:	30 seconds or more
Rear HO2S impedance	Less than 5 Ω

HO2S high impedance (P0137, P0157):

Duration that following condition is met:	90 seconds or more
Rear HO2S impedance	15 kΩ or more

HO2S low voltage (P0137, P0157):

All of the following conditions 1, 2 and 3 are met:	-
1. Commanded air-fuel ratio	14.3 or less
2. Rear HO2S voltage	Less than 0.21 V
3. OSC (Oxygen capacity of catalyst)	2 g or more

HO2S high voltage (P0138, P0158):

All of the following conditions 1, 2 and 3 are met:	-
1. Commanded air-fuel ratio	14.9 or more
2. Rear HO2S voltage	More than 0.59 V
3. OSC (Oxygen capacity of catalyst)	2 g or more

HO2S high voltage (Extremely high) (P0138, P0158):

Duration that following condition is met:	10 seconds or more
Rear HO2S voltage	1.2 V or more

COMPONENT OPERATING RANGE

Duration that following condition is met:	30 seconds or more
Heated oxygen sensor voltage	Varies between 0.1 and 0.9 V

MONITOR RESULT

Refer to CHECKING MONITOR STATUS (See page ES-20).

WIRING DIAGRAM

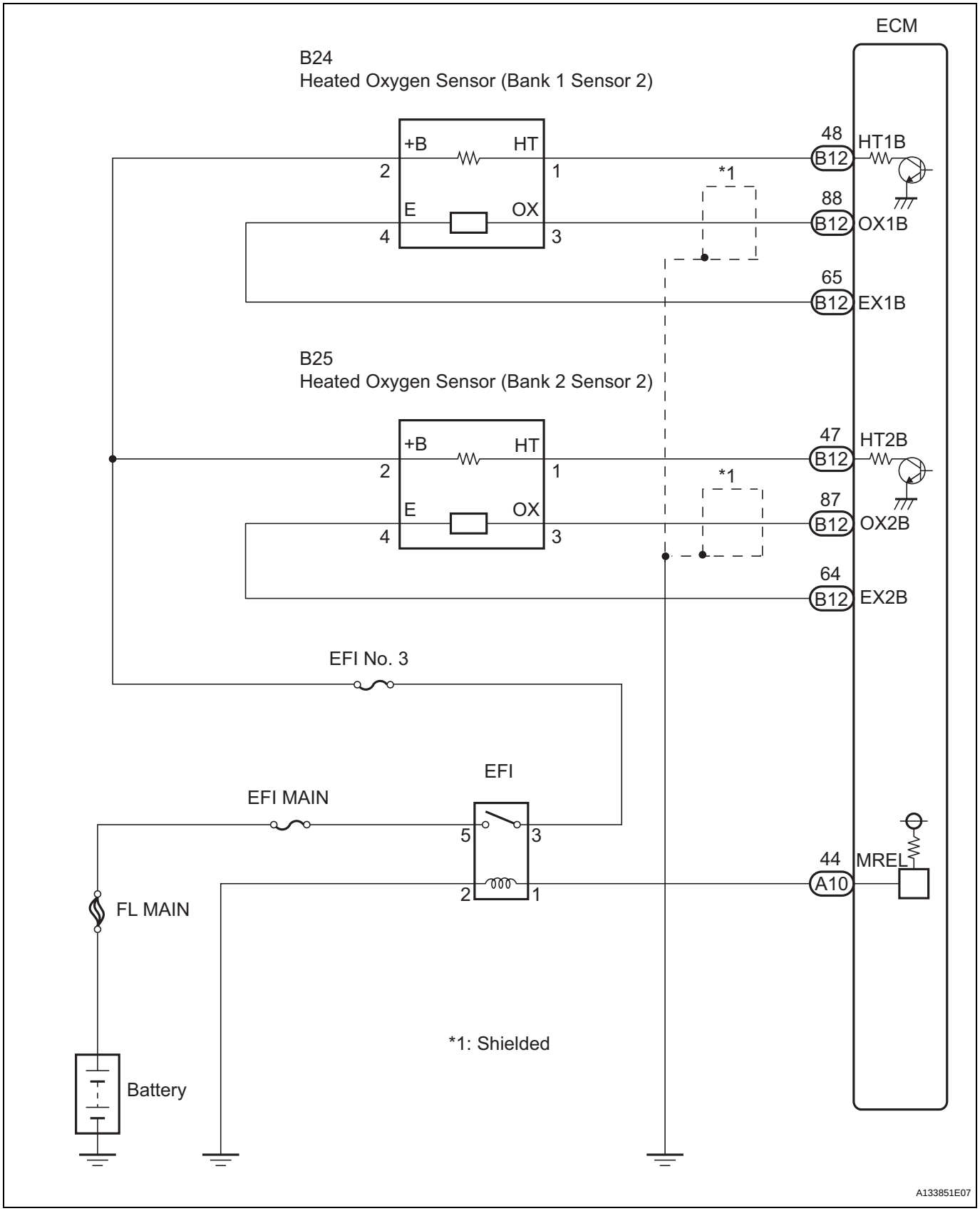

ES

ES

CONFIRMATION DRIVING PATTERN

HINT:

- This confirmation driving pattern is used in steps 5, 8 and 11 of the following diagnostic troubleshooting procedure when using an intelligent tester.
- Performing this confirmation driving pattern will activate the Heated Oxygen (HO2) sensor monitor. (The catalyst monitor is performed simultaneously.) This is very useful for verifying the completion of a repair.

NOTICE:

This test will not be completed if the vehicle is driven under absolutely constant speed conditions such as with cruise control activated.

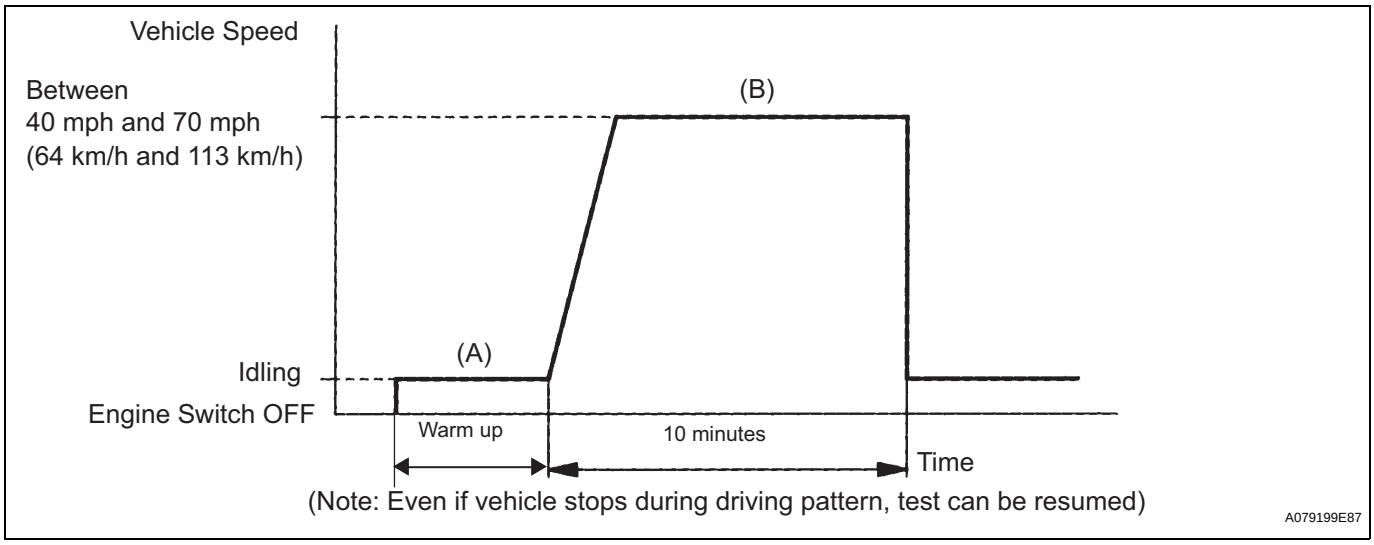

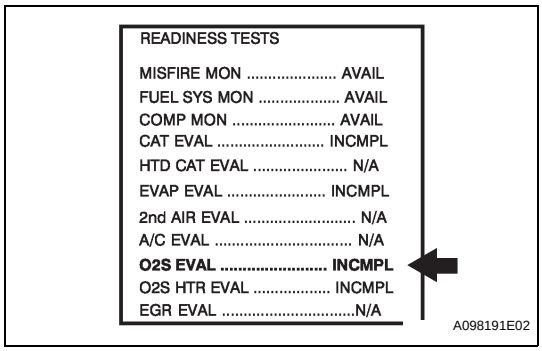

1. Connect an intelligent tester to the DLC3.
2. Turn the engine switch on (IG).
3. Turn the tester on.
4. Clear the DTCs (where set) (See page ES-41).
5. Select the following menu items: DIAGNOSIS / CARB OBD II / READINESS TESTS.
6. Check that O2S EVAL is INCMPL (incomplete).
7. Start the engine and warm it up (Procedure "A").
8. Drive the vehicle at between 40 mph and 70 mph (64 km/h and 113 km/h) for at least 10 minutes (Procedure "B").
9. Note the state of the Readiness Tests items. Those items will change to COMPL (complete) as O2S EVAL monitor operates.
10. On the tester, select the following menu items: DIAGNOSIS / ENHANCED OBD II / DTC INFO / PENDING CODES and check if any DTCs (any pending DTCs) are set.

HINT:

If O2S EVAL does not change to COMPL, and any pending DTCs fail to set, extend the driving time.

INSPECTION PROCEDURE

HINT:
Intelligent tester only:
Malfunctioning areas can be identified by performing the A/F CONTROL function provided in the ACTIVE TEST. The A/F CONTROL function can help determine whether the Air-Fuel Ratio (A/F) sensor, Heated Oxygen (HO2) sensor and other potential trouble areas are malfunctioning.
The following instructions describe how to conduct the A/F CONTROL operation using an intelligent tester.

1. Connect the intelligent tester to the DLC3.
2. Start the engine and turn the tester on.
3. Warm up the engine at an engine speed of 2,500 rpm for approximately 90 seconds.
4. On the tester, enter the following menus: DIAGNOSIS / ENHANCED OBD II / ACTIVE TEST / A/F CONTROL.
5. Perform the A/F CONTROL operation with the engine in an idling condition (press the RIGHT or LEFT button to change the fuel injection volume).
6. Monitor the voltage outputs of the A/F and HO2 sensors (AFS B1S1 and O2S B1S2 or AFS B2S1 and O2S B2S2) displayed on the tester.

HINT:
- The A/F CONTROL operation lowers the fuel injection volume by 12.5 % or increases the injection volume by 25 %.
- Each sensor reacts in accordance with increases in the fuel injection volume.

Tester Display (Sensor)	Injection Volume	Status	Voltage
AFS B1S1 or AFS B2S1 (A/F)	+25 %	Rich	Less than 3.0 V
AFS B1S1 or AFS B2S1 (A/F)	-12.5 %	Lean	More than 3.35 V
O2S B1S2 or O2S B2S2 (HO2)	+25 %	Rich	More than 0.55 V
O2S B1S2 or O2S B2S2 (HO2)	-12.5 %	Lean	Less than 0.4 V

NOTICE:
The Air-Fuel Ratio (A/F) sensor has an output delay of a few seconds and the Heated Oxygen (HO2) sensor has a maximum output delay of approximately 20 seconds.

Case	A/F Sensor (Sensor 1) Output Voltage		HO2 Sensor (Sensor 2) Output Voltage		Main Suspected Trouble Area
1	Injection Volume +25 % -12.5 %		Injection Volume +25 % -12.5 %		-
	Output Voltage More than 3.35 V Less than 3.0 V		Output Voltage More than 0.55 V Less than 0.4 V		
2	Injection Volume +25 % -12.5 %		Injection Volume +25 % -12.5 %		• A/F sensor • A/F sensor heater • A/F sensor circuit
	Output Voltage Almost no reaction	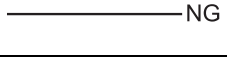	Output Voltage More than 0.55 V Less than 0.4 V		

ES

Case	A/F Sensor (Sensor 1) Output Voltage		HO2 Sensor (Sensor 2) Output Voltage		Main Suspected Trouble Area
3	Injection Volume +25 % -12.5 %		Injection Volume +25 % -12.5 %		• HO2 sensor • HO2 sensor heater • HO2 sensor circuit
	Output Voltage More than 3.35 V Less than 3.0 V	OK	Output Voltage Almost no reaction	NG	
4	Injection Volume +25 % -12.5 %		Injection Volume +25 % -12.5 %		• Fuel pressure • Gas leakage from exhaust system (Air-fuel ratio extremely lean or rich)
	Output Voltage Almost no reaction	NG	Output Voltage Almost no reaction	NG	

- Following the A/F CONTROL procedure enables technicians to check and graph the voltage outputs of both the A/F and HO2 sensors.
- To display the graph, enter the following menus: DIAGNOSIS / ENHANCED OBD II / ACTIVE TEST / A/F CONTROL / USER DATA / AFS B1S1 and O2S B1S2 or AFS B2S1 and O2S B2S2, and press the YES button and then the ENTER button followed by the F4 button.

HINT:

- Read freeze frame data using the intelligent tester. The ECM records vehicle and driving condition information as freeze frame data the moment a DTC is stored. When troubleshooting, freeze frame data can be helpful in determining whether the vehicle was running or stopped, whether the engine was warmed up or not, whether the air-fuel ratio was lean or rich, as well as other data recorded at the time of a malfunction (See page ES-41).
- If the OX1B wire from the ECM connector is short-circuited to the +B wire, DTC P0136 will be set.
- If the OX2B wire from the ECM connector is short-circuited to the +B wire, DTC P0156 will be set.

1 READ DTC OUTPUT

(a) Connect the intelligent tester to the DLC3.
(b) Turn the engine switch on (IG) and turn the tester on.
(c) Enter the following menus: DIAGNOSIS / ENHANCED OBD II / DTC INFO / CURRENT CODES.
(d) Read the DTCs.

Result

Display (DTC Output)	Proceed to
P0138 or P0158	A
P0137 or P0157	B
P0136 or P0156	C

B → **Go to step 14**

C → **Go to step 7**

A

2 READ VALUE OF OXYGEN SENSOR (OUTPUT VOLTAGE)

(a) Connect the intelligent tester to the DLC3.
(b) Turn the engine switch on (IG) and turn the tester on.

(c) Enter the following menus: DIAGNOSIS / ENHANCED OBD II / DATA LIST / PRIMARY / O2S B1S2 or O2S B2S2.
(d) Allow the engine to idle.
(e) Read the Heated Oxygen (HO2) sensor output voltage while idling.

Result

HO2 Sensor Output Voltage	Proceed to
More than 1.2 V	A
Less than 1.0 V	B

B → **Go to step 5**

A

3 CHECK HARNESS AND CONNECTOR (CHECK FOR SHORT)

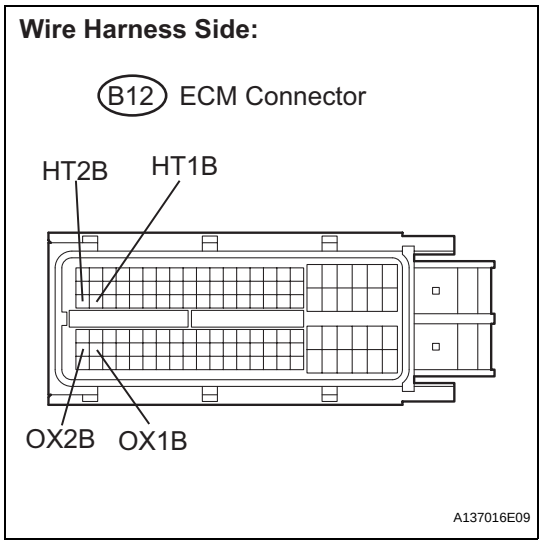

(a) Turn the engine switch off and wait for 5 minutes.
(b) Disconnect the B12 ECM connector.
(c) Measure the resistance according to the value(s) in the table below.

Standard resistance

Tester Connection	Specified Condition
HT1B (B12-48) - OX1B (B12-88)	10 kΩ or higher
HT2B (B12-47) - OX2B (B12-87)	10 kΩ or higher

(d) Reconnect the ECM connector.

NG → **Go to step 4**

OK

REPLACE ECM (See page ES-543)

ES

4 INSPECT HEATED OXYGEN SENSOR (CHECK FOR SHORT)

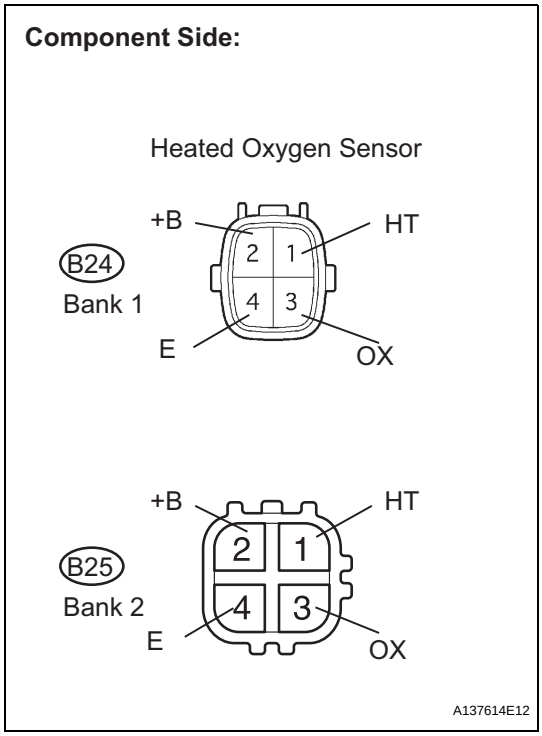

(a) Disconnect the B24 oxygen sensor connector (Bank 1 Sensor 2) or B25 oxygen sensor connector (Bank 2 sensor 2).

(b) Measure the resistance according to the value(s) in the table below.

Standard resistance (Bank 1 sensor 2)

Tester Connection	Specified Condition
+B (2) - E (4)	10 kΩ or higher
+B (2) - OX (3)	10 kΩ or higher

Standard resistance (Bank 2 sensor 2)

Tester Connection	Specified Condition
+B (2) - E (4)	10 kΩ or higher
+B (2) - OX (3)	10 kΩ or higher

NG → **REPLACE HEATED OXYGEN SENSOR (See page EC-21)**

OK

REPAIR OR REPLACE HARNESS OR CONNECTOR

5 PERFORM CONFIRMATION DRIVING PATTERN

NEXT

6 CHECK WHETHER DTC OUTPUT RECURS (DTC P0138 or P0158)

(a) On the intelligent tester, enter the following menus: DIAGNOSIS / ENHANCED OBD II / DTC INFO / CURRENT CODES.

(b) Read the DTCs.

Result

Display (DTC Output)	Proceed to
P0138 or P0158	A
No output	B

B → **CHECK FOR INTERMITTENT PROBLEMS**

A

REPLACE HEATED OXYGEN SENSOR (See page EC-21)

7	READ VALUE OF OXYGEN SENSOR (OUTPUT VOLTAGE)

(a) Connect the intelligent tester to the DLC3.
(b) Turn the engine switch on (IG) and turn the tester on.
(c) Start the engine.
(d) Enter the following menus: DIAGNOSIS / ENHANCED OBD II / DATA LIST / ALL / O2S B1S2 or O2S B1S2.
(e) After warming up the engine, run the engine at an engine speed of 2,500 rpm for 3 minutes.
(f) Read the output voltage of the HO2 sensor when the engine rpm is suddenly increased.
HINT:
Quickly accelerate the engine to 4,000 rpm 3 times using the accelerator pedal.
Standard voltage:
Fluctuates between 0.4 V or less and 0.5 V or more.

ES

NG → **Go to step 14**

OK

8	PERFORM CONFIRMATION DRIVING PATTERN

NEXT

9	CHECK WHETHER DTC OUTPUT RECURS (DTC P0136 or P0156)

(a) On the intelligent tester, enter the following menus: DIAGNOSIS / ENHANCED OBD II / DTC INFO / CURRENT CODES.
(b) Read the DTCs.

Result

Display (DTC Output)	Proceed to
P0136 or P0156	A
No output	B

B → **CHECK FOR INTERMITTENT PROBLEMS**

A

10	REPLACE HEATED OXYGEN SENSOR

(a) Replace the hated oxygen sensor (See page EC-21).

NEXT

11	PERFORM CONFIRMATION DRIVING PATTERN

NEXT

12	CHECK WHETHER DTC OUTPUT RECURS (DTC P0136 or P0156)

(a) On the intelligent tester, enter the following menus: DIAGNOSIS / ENHANCED OBD II / DTC INFO / CURRENT CODES.
(b) Read the DTCs.

ES

Result

Display (DTC Output)	Proceed to
P0136 or P0156	A
No output	B

B → END

A

13	PERFORM ACTIVE TEST BY INTELLIGENT TESTER (INJECTION VOLUME)

(a) Connect the intelligent tester to the DLC3.
(b) Start the engine and turn the tester on.
(c) Warm up the engine.
(d) Enter the following menus: DIAGNOSIS / ENHANCED OBD II /ACTIVE TEST / INJ VOL.
(e) Change the fuel injection volume using the tester, while monitoring the output voltage of Air-Fuel Ratio (A/F) and HO2 sensor displayed on the tester.

HINT:
- Change the fuel injection volume within the range of -12 % and +12 %. The injection volume can be changed in 1 % graduations within the range.
- The A/F sensor is displayed as AFS B1S1 or AFS B2S1, and the HO2 sensor is displayed as O2S B1S2 or O2S B2S2, on the intelligent tester.

Result

Tester Display (Sensor)	Voltage Variation	Proceed to
AFS B1S1 (A/F) AFS B2S1 (A/F)	Alternates between more and less than 3.3 V	OK
AFS B1S1 (A/F) AFS B2S1 (A/F)	Remains more than 3.3 V	NG
AFS B1S1 (A/F) AFS B2S1 (A/F)	Remains less than 3.3 V	NG

HINT:
A normal HO2 sensor voltage (O2S B1S2 or O2S B2S2) reacts in accordance with increases and decreases in fuel injection volumes. When the A/F sensor voltage remains either less or more than 3.3 V despite the HO2 sensor indicating a normal reaction, the A/F sensor is malfunctioning.

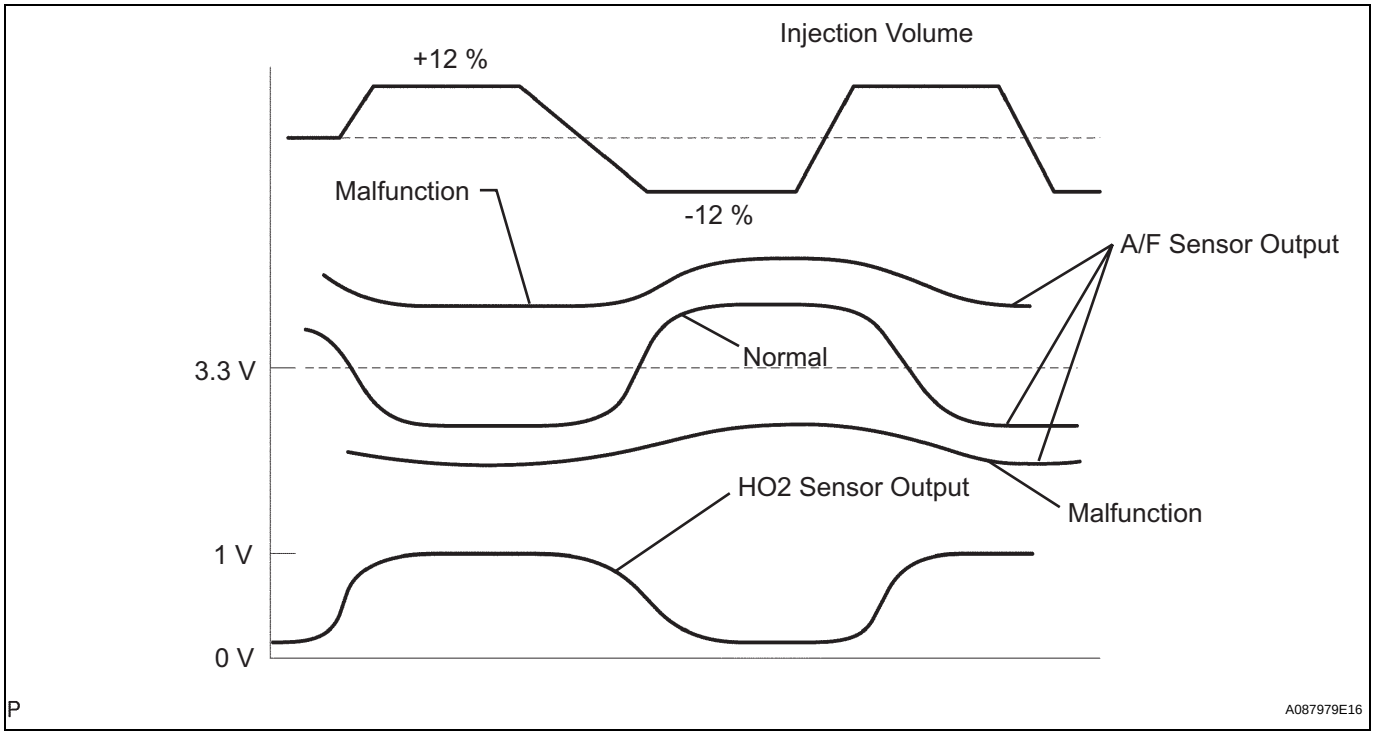

NG → **REPLACE AIR FUEL RATIO SENSOR (See page EC-19)**

OK

CHECK AND REPAIR EXTREMELY RICH OR LEAN ACTUAL AIR FUEL RATIO (INJECTOR, FUEL PRESSURE, GAS LEAKAGE FROM EXHAUST SYSTEM)

14	CHECK FOR EXHAUST GAS LEAKS

OK:
No gas leakage.

NG → **REPAIR OR REPLACE EXHAUST GAS LEAKAGE POINT**

OK

ES

ES

15 INSPECT HEATED OXYGEN SENSOR (HEATER RESISTANCE)

Component Side:

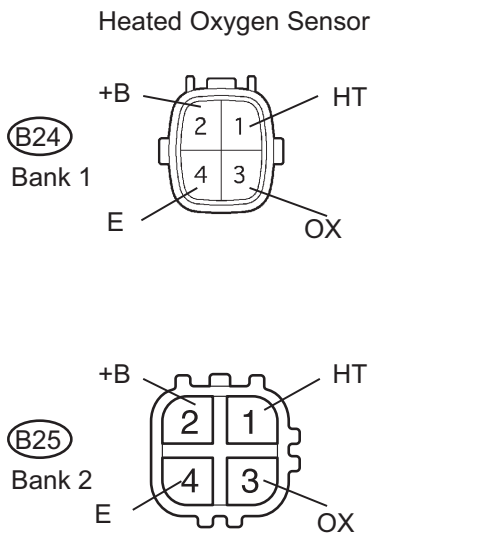

A137614E12

(a) Disconnect the B24 oxygen sensor connector (Bank 1 Sensor 2) or B25 oxygen sensor connector (Bank 2 sensor 2).

(b) Measure the resistance according to the value(s) in the table below.

Standard resistance (Bank 1 sensor 2)

Tester Connection	Condition	Specified Condition
HT (1) - +B (2)	20°C (68°F)	11 to 16 Ω
HT (1) - E (4)	Always	10 kΩ or higher

Standard resistance (Bank 2 sensor 2)

Tester Connection	Condition	Specified Condition
HT (1) - +B (2)	20°C (68°F)	11 to 16 Ω
HT (1) - E (4)	Always	10 kΩ or higher

NG → **REPLACE HEATED OXYGEN SENSOR (See page EC-21)**

OK

16	INSPECT ENGINE ROOM JUNCTION BLOCK (EFI RELAY)

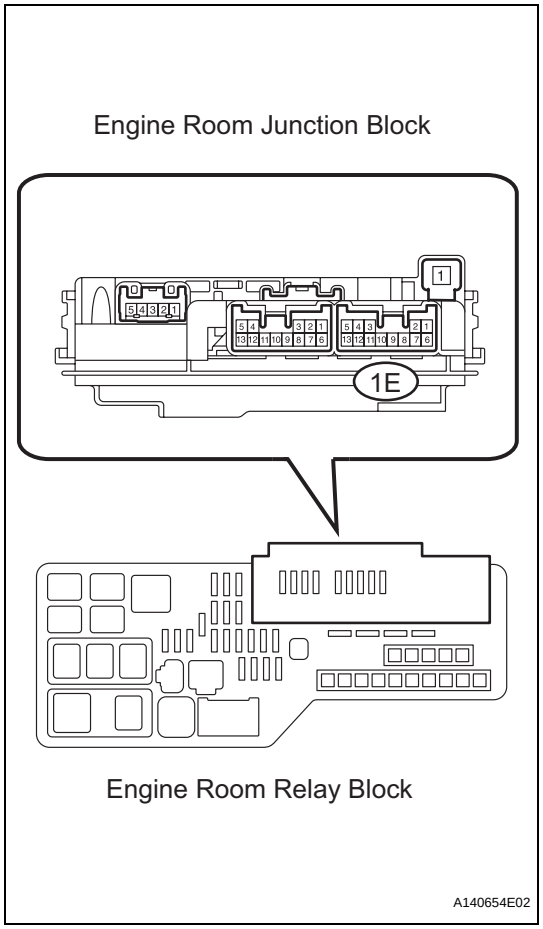

(a) Remove the engine room junction block from the engine room R/B.

(b) Measure the resistance according to the value(s) in the table below.

Standard resistance

Terminal Connection	Specified Condition
1E-12 - 1E-6	10 kΩ or higher
1E-12 - 1E-6	Below 1 Ω (when battery voltage applied to terminals 1E-9 and 1E-10)

(c) Reinstall the engine room junction block.

NG → **REPLACE ENGINE ROOM JUNCTION BLOCK**

OK

ES

ES

17 CHECK HARNESS AND CONNECTOR (HEATED OXYGEN SENSOR - ECM)

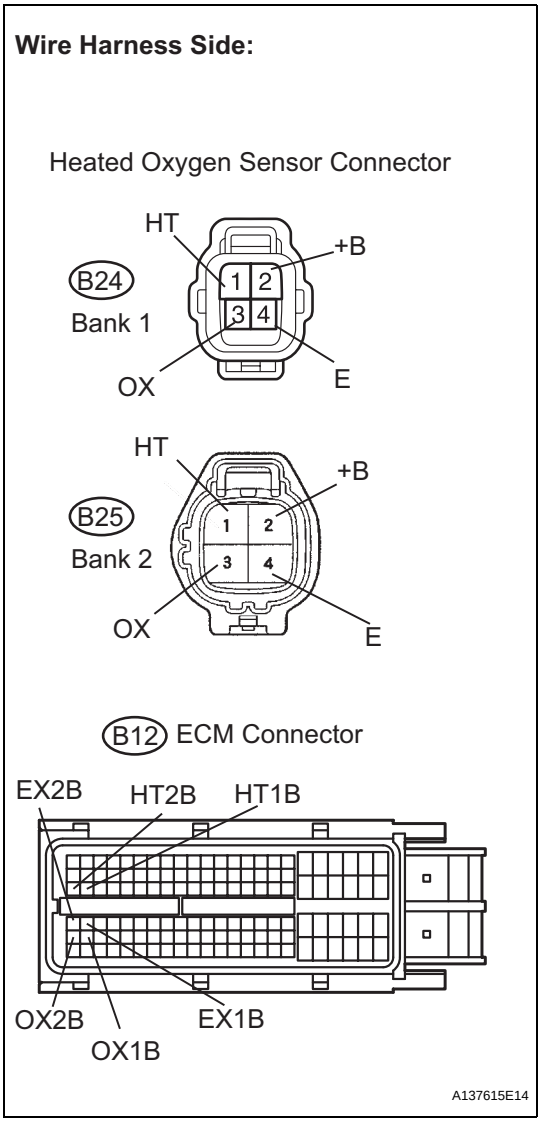

(a) Disconnect the B24 oxygen sensor connector (Bank 1 Sensor 2) or B25 oxygen sensor connector (Bank 2 sensor 2).
(b) Turn the engine switch on (IG).
(c) Measure the voltage according to the value(s) in the table below.

Standard voltage

Terminal Connection	Specified Condition
+B (B24-2) - Body ground	9 to 14 V
+B (B25-2) - Body ground	9 to 14 V

(d) Turn the engine switch off.
(e) Disconnect the B12 ECM connector.
(f) Measure the resistance according to the value(s) in the table below.

Standard resistance (Check for open)

Terminal Connection	Specified Condition
HT (B24-1) - HT1B (B12-48)	Below 1 Ω
OX (B24-3) - OX1B (B12-88)	Below 1 Ω
E (B24-4) - EX1B (B12-65)	Below 1 Ω
HT (B25-1) - HT2B (B12-47)	Below 1 Ω
OX (B25-3) - OX2B (B12-87)	Below 1 Ω
E (B25-4) - EX2B (B12-64)	Below 1 Ω

Standard resistance (Check for short)

Terminal Connection	Specified Condition
HT (B24-1) or HT1B (B12-48) - Body ground	10 kΩ or higher
OX (B24-3) or OX1B (B12-88) - Body ground	10 kΩ or higher
E (B24-4) or EX1B (B12-65) - Body ground	10 kΩ or higher
HT (B25-1) or HT2B (B12-47) - Body ground	10 kΩ or higher
OX (B25-3) or OX2B (B12-87) - Body ground	10 kΩ or higher
E (B25-4) or EX2B (B12-64) - Body ground	10 kΩ or higher

(g) Reconnect the HO2 sensor connector.
(h) Reconnect the ECM connector.

Reference (System Diagram of Bank 1 Sensor 2):

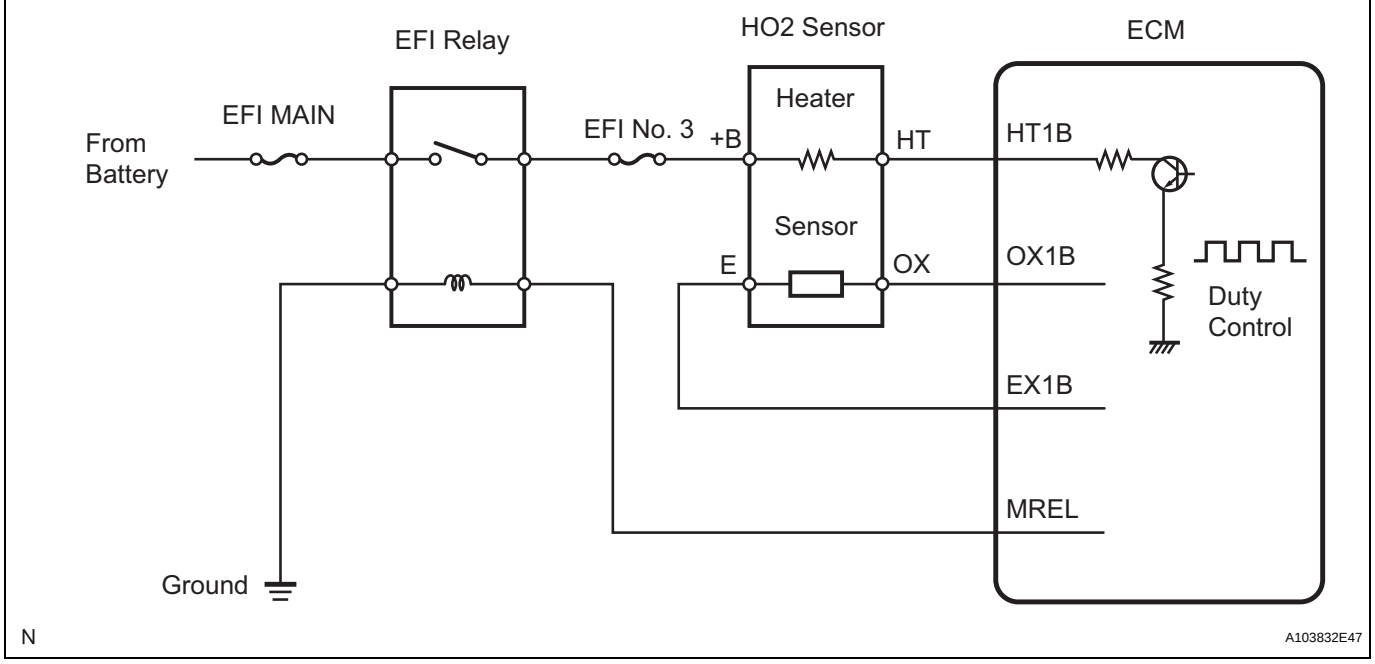

NG → **REPAIR OR REPLACE HARNESS OR CONNECTOR**

OK

REPLACE HEATED OXYGEN SENSOR (See page EC-21)

ES

DTC	P0171	System Too Lean (Bank 1)

DTC	P0172	System Too Rich (Bank 1)

DTC	P0174	System Too Lean (Bank 2)

DTC	P0175	System Too Rich (Bank 2)

DESCRIPTION

ES

The fuel trim is related to the feedback compensation value, not to the basic injection time. The fuel trim consists of both the short-term and long-term fuel trims.
The short-term fuel trim is fuel compensation that is used to constantly maintain the air-fuel ratio at stoichiometric levels. The signal from the Air-Fuel Ratio (A/F) sensor indicates whether the air-fuel ratio is rich or lean compared to the stoichiometric ratio. This triggers a reduction in the fuel injection volume if the air-fuel ratio is rich and an increase in the fuel injection volume if it is lean.
Factors such as individual engine differences, wear over time and changes in operating environment cause short-term fuel trim to vary from the central value. The long-term fuel trim, which controls overall fuel compensation, compensates for long-term deviations in the fuel trim from the central value caused by the short-term fuel trim compensation.
If both the short-term and long-term fuel trims are lean or rich beyond predetermined values, it is interpreted as a malfunction, and the ECM illuminates the MIL and sets a DTC.

DTC No.	DTC Detection Conditions	Trouble Areas
P0171 P0174	With warm engine and stable air-fuel ratio feedback, fuel trim considerably in error to lean side (2 trip detection logic)	• Air induction system • Injector blockage • Mass Air Flow (MAF) meter • Engine Coolant Temperature (ECT) sensor • Fuel pressure • Gas leakage from exhaust system • Open or short in A/F sensor (bank 1, 2 sensor 1) circuit • A/F sensor (bank 1, 2 sensor 1) • A/F sensor heater (bank 1, 2 sensor 1) • A/F sensor heater relay • A/F sensor heater and A/F sensor heater relay circuits • PCV valve and hose • PCV hose connections • ECM
P0172 P0175	With warm engine and stable air-fuel ratio feedback, fuel trim considerably in error to rich side (2 trip detection logic)	• Injector leakage or blockage • MAF meter • ECT sensor • Ignition system • Fuel pressure • Gas leakage from exhaust system • Open or short in A/F sensor (bank 1, 2 sensor 1) circuit • A/F sensor (bank 1, 2 sensor 1) • A/F sensor heater (bank 1, 2 sensor 1) • A/F sensor heater relay • A/F sensor heater and A/F sensor heater relay circuits • ECM

HINT:
- When DTC P0171 or P0174 is set, the actual air-fuel ratio is on the lean side. When DTC P0172 or P0175 is set, the actual air-fuel ratio is on the rich side.
- If the vehicle runs out of fuel, the air-fuel ratio is lean and DTC P0171 or P0174 may be set. The MIL is then illuminated.

- When the total of the short-term and long-term fuel trim values is within the malfunction threshold (and the engine coolant temperature is more than 75°C [167°F]), the system is functioning normally.

MONITOR DESCRIPTION

Under closed-loop fuel control, fuel injection volumes that deviate from those estimated by the ECM cause changes in the long-term fuel trim compensation value. The long-term fuel trim is adjusted when there are persistent deviations in the short-term fuel trim values. Deviations from the ECM's estimated fuel injection volumes also affect the average fuel trim learning value, which is a combination of the average short-term fuel trim (fuel feedback compensation value) and the average long-term fuel trim (learning value of the air-fuel ratio). If the average fuel trim learning value exceeds the malfunction thresholds, the ECM interprets this as a fault in the fuel system and sets a DTC.

Example:

The average fuel trim learning value is more than +35% or less than -35%, the ECM interprets this as a fuel system malfunction.

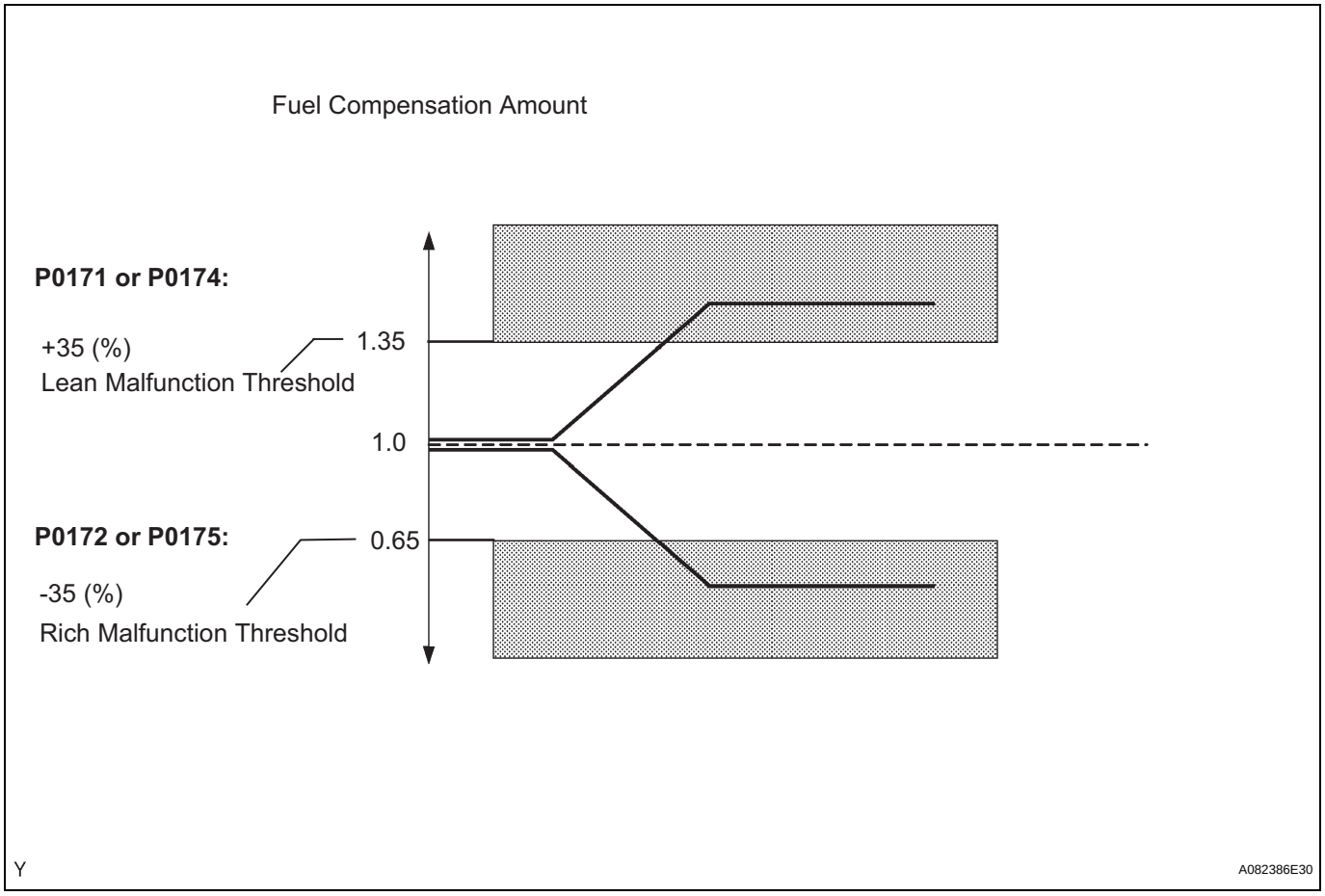

MONITOR STRATEGY

Related DTCs	P0171: Fuel trim Lean (Bank 1) P0172: Fuel trim Rich (Bank 1) P0174: Fuel trim Lean (Bank 2) P0175: Fuel trim Rich (Bank 2)
Required Sensors/Components (Main)	Fuel system
Required Sensors/Components (Related)	A/F sensor, Mass air flow meter, Crankshaft position sensor
Frequency of Operation	Continuous
Duration	Less than 10 seconds
MIL Operation	2 driving cycles
Sequence of Operation	None

TYPICAL ENABLING CONDITIONS

Fuel trim:

The monitor will run whenever these DTCs are not present	P0010, P0020 (VVT VSV1, 2), P0011, P0012 (VVT System-Advance, Retard), P0021, P0022(VVT System2-Adavance, Retard), P0031, P0031, P0032, P0051, P0052 (A/F Sensor heater Sensor 1), P0100, P0101, P0102, P0103 (MAF Sensor), P0115, P0116, P0117, P0118 (ECT Sensor), P0120, P0121, P0122, P0123, P0220, P0222, P0223 , P2135 (TP Sensor), P0125 (Insufficient ECT for Closed Loop), P0335 (CKP Sensor), P0340, P0342, P0343, P0345 (VVT Sensor 1, 2), P0351, P0352, P0353, P0354, P0356 (Ignitor), P0500 (VSS),
Fuel system status	Closed-loop
Battery voltage	11 V or more
Either following condition is met	Condition 1 or 2
1. Engine RPM	Less than 1,100 rpm
2. Intake air amount per revolution	0.22 g/rev or more

TYPICAL MALFUNCTION THRESHOLDS

Fuel trim:

EVAP purge-cut	Executing
Either following condition is met	Condition 1 or 2
1. Average between short-term fuel trim and long-term fuel trim	35% or more at 80°C (176°F) of ECT
2. Average between short-term fuel trim and long-term fuel trim	-35% or less at 80°C (176°F) of ECT

WIRING DIAGRAM

Refer to DTC P2195 (See page ES-353).

INSPECTION PROCEDURE

HINT:
For use of the intelligent tester only:
Malfunctioning areas can be identified by performing the A/F CONTROL function provided in the ACTIVE TEST. The A/F CONTROL function can help to determine whether the Air-Fuel Ratio (A/F) sensor, Heated Oxygen (HO2) sensor and other potential trouble areas are malfunctioning.
The following instructions describe how to conduct the A/F CONTROL operation using the intelligent tester.

1. Connect the intelligent tester to the DLC3.
2. Start the engine and turn the tester on.
3. Warm up the engine at an engine speed of 2,500 rpm for approximately 90 seconds.
4. Select the following menu items on the tester: DIAGNOSIS / ENHANCEDOBD II / ACTIVE TEST / A/F CONTROL.
5. Perform the A/F CONTROL operation with the engine in an idling condition (press the RIGHT or LEFT button to change the fuel injection volume).
6. Monitor the voltage outputs of the A/F and HO2 sensors (AFS B1S1 and O2S B1S2 or AFS B2S1 and O2S B2S2) displayed on the tester.
   HINT:
   - The A/F CONTROL operation lowers the fuel injection volume by 12.5% or increases the injection volume by 25%.
   - Each sensor reacts in accordance with increases and decreases in the fuel injection volume.

Standard voltage

Tester Display (Sensor)	Injection Volumes	Status	Voltages
AFS B1S1 or AFS B2S1 (A/F)	**+25%**	**Rich**	**Less than 3.0**
AFS B1S1 or AFS B2S1 (A/F)	**-12.5%**	**Lean**	**More than 3.35**

Tester Display (Sensor)	Injection Volumes	Status	Voltages
O2S B1S2 or O2S B2S2 (HO2)	+25%	Rich	More than 0.55
O2S B1S2 or O2S B2S2 (HO2)	-12.5%	Lean	Less than 0.4

NOTICE:
The Air-Fuel Ratio (A/F) sensor has an output delay of a few seconds and the Heated Oxygen (HO2) sensor has a maximum output delay of approximately 20 seconds.

Case	A/F Sensor (Sensor 1) Output Voltage		HO2 Sensor (Sensor 2) Output Voltage		Main Suspected Trouble Area
1	Injection Volume +25% -12.5%		Injection Volume +25% -12.5%		-
	Output Voltage More than 3.35 V Less than 3.0 V	OK	Output Voltage More than 0.55 V Less than 0.4 V	OK	
2	Injection Volume +25% -12.5%		Injection Volume +25% -12.5%		• A/F sensor • A/F sensor heater • A/F sensor circuit
	Output Voltage Almost no reaction	NG	Output Voltage More than 0.55 V Less than 0.4 V	OK	
3	Injection Volume +25% -12.5%		Injection Volume +25% -12.5%		• HO2 sensor • HO2 sensor heater • HO2 sensor circuit
	Output Voltage More than 3.35 V Less than 3.0 V	OK	Output Voltage Almost no reaction	NG	
4	Injection Volume +25% -12.5%		Injection Volume +25% -12.5%		• Injector • Fuel pressure • Gas leakage from exhaust system (Air-fuel ratio extremely lean or rich)
	Output Voltage Almost no reaction	NG	Output Voltage Almost no reaction	NG	

– Following the A/F CONTROL procedure enables technicians to check and graph the voltage outputs of both the A/F and HO2 sensors.
– To display the graph, select the following menu items on the tester: DIAGNOSIS / ENHANCED OBD II / ACTIVE TEST / A/F CONTROL / USER DATA / AFS B1S1 and O2S B1S2 or AFS B2S1 and O2S B2S2. Press the YES button and then the ENTER button. Then press the F4 button.
HINT:
- Read freeze frame data using the intelligent tester. The ECM records vehicle and driving condition information as freeze frame data the moment a DTC is stored. When troubleshooting, freeze frame data can be helpful in determining whether the vehicle was running or stopped, whether the engine was warmed up or not, whether the air-fuel ratio was lean or rich, as well as other data recorded at the time of a malfunction.
- A low A/F sensor voltage could be caused by a rich air-fuel mixture. Check for conditions that would cause the engine to run rich.
- A high A/F sensor voltage could be caused by a lean air-fuel mixture. Check for conditions that would cause the engine to run lean.

1	CHECK ANY OTHER DTCS OUTPUT (IN ADDITION TO DTC P0171, P0172, P0174 OR P0175)

(a) Connect the intelligent tester to the DLC3.
(b) Turn the engine switch on (IG) and turn the tester on.
(c) Select the following menu items: DIAGNOSIS / ENHANCED OBD II / DTC INFO / CURRENT CODES.
(d) Read the DTCs.

Result

Display (DTC Output)	Proceed to
P0171, P0172, P0174 or P0175	A
P0171, P0172, P0174 or P0175 and other DTCs	B

ES

HINT:
If any DTCs other than P0171, P0172, P0174 or P0175 are output, troubleshoot those DTCs first.

B → **GO TO DTC CHART (See page ES-59)**

A

2	CHECK PCV HOSE CONNECTIONS

OK:
PCV hose is connected correctly and is not damaged.

NG → **REPAIR OR REPLACE PCV HOSE**

OK

3	CHECK AIR INDUCTION SYSTEM

(a) Check the air induction system for vacuum leakage.
OK:
No leakage from the air induction system.

NG → **REPAIR OR REPLACE AIR INDUCTION SYSTEM**

OK

4	PERFORM ACTIVE TEST BY INTELLIGENT TESTER (A/F CONTROL)

(a) Connect the intelligent tester to the DLC3.
(b) Start the engine and turn the tester on.
(c) Warm up the engine at an engine speed of 2,500 rpm for approximately 90 seconds.
(d) Select the following menu items on the tester: DIAGNOSIS / ENHANCED OBD II / ACTIVE TEST / A/F CONTROL.
(e) Perform the A/F CONTROL operation with the engine in an idling condition (press the RIGHT or LEFT button to change the fuel injection volume).

(f) Monitor the voltage outputs of the A/F and HO2 sensors (AFS B1S1 and O2S B1S2 or AFS B2S1 and O2S B2S2) displayed on the tester.
HINT:
- The A/F CONTROL operation lowers the fuel injection volume by 12.5% or increases the injection volume by 25%.
- Each sensor reacts in accordance with increases and decreases in the fuel injection volume.

Standard voltage

Tester Display (Sensor)	Injection Volumes	Status	Voltages
AFS B1S1 or AFS B2S1 (A/F)	+25%	Rich	Less than 3.0
AFS B1S1 or AFS B2S1 (A/F)	-12.5%	Lean	More than 3.35
O2S B1S2 or O2S B2S2 (HO2)	+25%	Rich	More than 0.55
O2S B1S2 or O2S B2S2 (HO2)	-12.5%	Lean	Less than 0.4

ES

Result

Status AFS B1S1 or AFS B2S1	Status O2S B1S2 or O2S B2S2	A/F Condition and A/F Sensor Condition	Misfires	Suspected Trouble Areas	Proceed to
Lean/Rich	Lean/Rich	Normal	-	-	C
Lean	Lean	Actual air-fuel ratio lean	May occur	• PCV valve and hose • PCV hose connections • Injector blockage • Gas leakage from exhaust system • Air induction system • Fuel pressure • Mass Air Flow (MAF) meter • Engine Coolant Temperature (ECT) sensor	A
Rich	Rich	Actual air-fuel ratio rich	-	• Injector leakage or blockage • Gas leakage from exhaust system • Ignition system • Fuel pressure • MAF meter • ECT sensor	A
Lean	Lean/Rich	A/F sensor malfunction	-	A/F sensor	B
Rich	Lean/Rich	A/F sensor malfunction	-	A/F sensor	B

Lean: During A/F CONTROL, the A/F sensor output voltage (AFS) is consistently more than 3.35 V, and the HO2 sensor output voltage (O2S) is consistently less than 0.4 V.
Rich: During A/F CONTROL, the AFS is consistently less than 3.0 V, and the O2S is consistently more than 0.55 V.
Lean/Rich: During A/F CONTROL of the ACTIVE TEST, the output voltage of the heated oxygen sensor alternates correctly.

B → **Go to step 11**

C → **Go to step 15**

A

5	READ VALUE OF INTELLIGENT TESTER (COOLANT TEMP)

(a) Connect the intelligent tester to the DLC3.
(b) Turn the engine switch on (IG) and turn the tester on.
(c) Select the following menu items: DIAGNOSIS / ENHANCED OBD II / DATA LIST / PRIMARY / COOLANT TEMP.
(d) Read COOLANT TEMP twice, when the engine is both cold and warmed up.
Standard:
With cold engine:
Same as ambient air temperature.
With warm engine:
Between 75°C and 95°C (167°F and 203°F)

NG → **REPLACE ENGINE COOLANT TEMPERATURE SENSOR (See page ES-516)**

OK

6	READ VALUE OF INTELLIGENT TESTER (MAF)

(a) Connect the intelligent tester to the DLC3.
(b) Turn the engine switch on (IG) and turn the tester on.
(c) Select the following menu items: DIAGNOSIS / ENHANCED OBD II / DATA LIST / PRIMARY / MAF and COOLANT TEMP.
(d) Allow the engine to idle until COOLANT TEMP reaches 75°C (167°F) or more.
(e) Read MAF with the engine in an idling condition and at an engine speed of 2,500 rpm.
Standard:
MAF while engine is idling:
Between 3.2 g/s and 4.7 g/s (shift position: N, A/C: OFF).
MAF at engine speed of 2,500 rpm:
Between 13.1 g/s and 18.9 g/s (shift position: N, A/C: OFF).

NG → **REPLACE MASS AIR FLOW METER (See page ES-497)**

OK

7	CHECK FUEL PRESSURE

(a) Check the fuel pressure (See page FU-7).

NG → **REPAIR OR REPLACE FUEL SYSTEM**

ES

OK

8	CHECK FOR EXHAUST GAS LEAKS

OK:
No gas leakage.

NG → **REPAIR OR REPLACE EXHAUST SYSTEM**

OK

9	CHECK FOR SPARKS AND IGNITION

ES

(a) Check for sparks and ignition (See page ES-214).
HINT:
If the spark plugs or ignition system malfunctions, engine misfire may occur. The misfire count can be read using the intelligent tester. Select the following menu items: DIAGNOSIS / ENHANCED OBD II / DATA LIST / PRIMARY / CYL #1 (to CYL #6).

NG → **REPAIR OR REPLACE IGNITION SYSTEM**

OK

10	INSPECT FUEL INJECTOR ASSEMBLY (INJECTION AND VOLUME)

(a) Inspect the fuel injector assembly (See page FU-14).
HINT:
If the injectors malfunction, engine misfire may occur. The misfire count can be read using the intelligent tester. Select the following menu items: DIAGNOSIS / ENHANCED OBD II / DATA LIST / PRIMARY / CYL #1 (to CYL #6).

NG → **REPLACE FUEL INJECTOR ASSEMBLY (See page FU-12)**

OK

11	INSPECT AIR FUEL RATIO SENSOR (HEATER RESISTANCE)

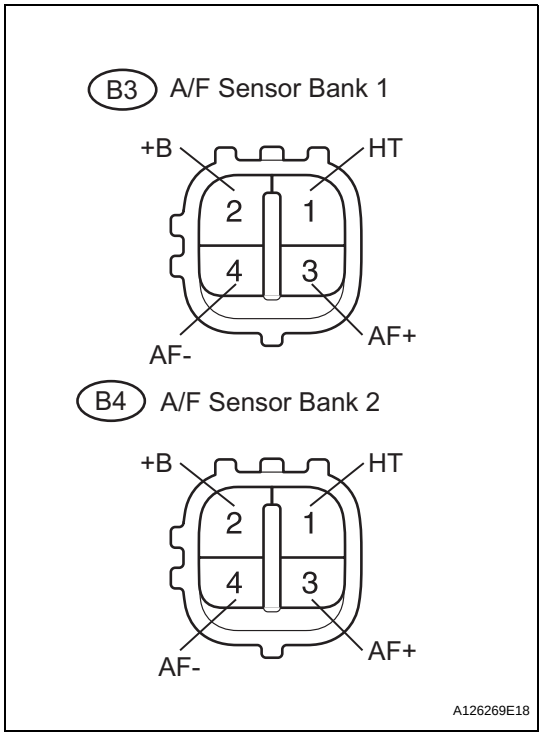

(a) Disconnect the B3 or B4 A/F sensor connector.

(b) Measure the resistance between the terminals of the A/F sensor connector.

Standard resistance:

Bank 1

Tester Connections	Specified Conditions
HT (1) - +B (2)	1.8 to 3.4 Ω at 20°C (68°F)
HT (1) - AF- (4)	10 kΩ or higher

Bank 2

Tester Connections	Specified Conditions
HT (1) - +B (2)	1.8 to 3.4 Ω at 20°C (68°F)
HT (1) - AF- (4)	10 kΩ or higher

(c) Reconnect the A/F sensor connector.

NG → **REPLACE AIR FUEL RATIO SENSOR (See page EC-19)**

OK

ES

12 INSPECT ENGINE ROOM JUNCTION BLOCK (A/F SENSOR HEATER RELAY)

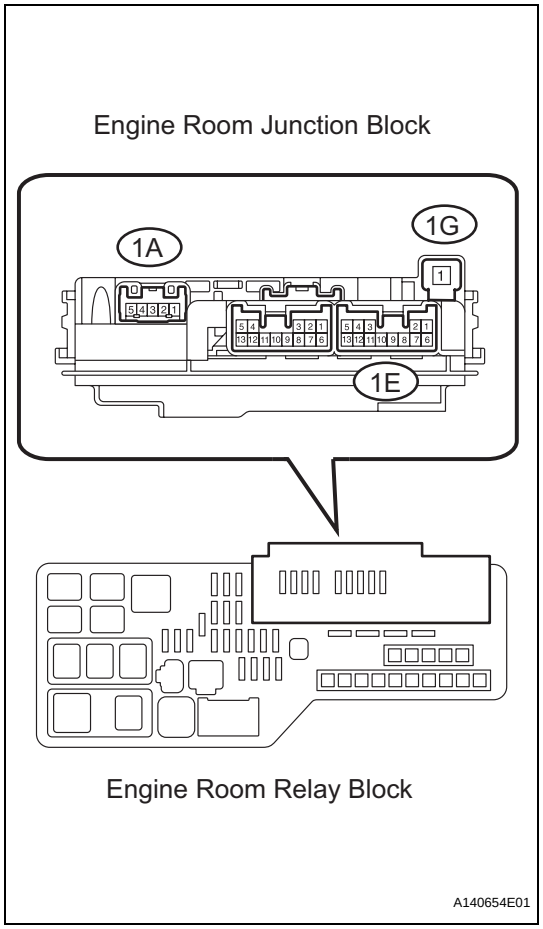

(a) Remove the engine room junction block from the engine room R/B.

(b) Measure the A/F relay resistance.

Standard resistance

Tester Connections	Specified Conditions
1G-1 - 1A-4	10 kΩ or higher
1G-1 - 1A-4	Below 1 Ω (when battery voltage applied to terminals 1E-6 and 1E-10)

(c) Reinstall the engine room junction block.

NG → **REPLACE ENGINE ROOM JUNCTION BLOCK**

OK

ES

13	CHECK HARNESS AND CONNECTOR (A/F SENSOR - ECM)

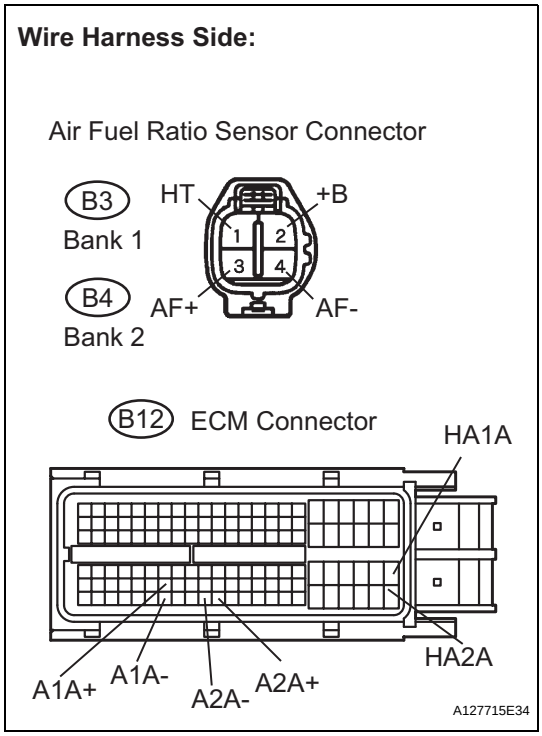

(a) Disconnect the B3 or B4 A/F sensor connector.
(b) Turn the engine switch on (IG).
(c) Measure the voltage between the +B terminal of the A/F sensor connector and body ground.

Standard voltage

Tester Connections	Specified Conditions
+B (B3-2) - Body ground	9 to 14 V
+B (B4-2) - Body ground	9 to 14 V

(d) Turn the engine switch off.
(e) Disconnect the B12 ECM connector.
(f) Measure the resistance.

Standard resistance (Check for open)

Tester Connections	Specified Conditions
HT (B3-1) - HA1A (B12-86)	Below 1 Ω
AF+ (B3-3) - A1A+ (B12-93)	Below 1 Ω
AF- (B3-4) - A1A- (B12-116)	Below 1 Ω
HT (B4-1) - HA2A (B12-109)	Below 1 Ω
AF+ (B4-3) - A2A+ (B12-120)	Below 1 Ω
AF- (B4-4) - A2A- (B12-119)	Below 1 Ω

Standard resistance (Check for short)

Tester Connections	Specified Conditions
HT (B3-1) or HA1A (B12-86) - Body ground	10 kΩ or higher
AF+ (B3-3) or A1A+ (B12-93) - Body ground	10 kΩ or higher
AF- (B3-4) or A1A- (B12-116) - Body ground	10 kΩ or higher
HT (B4-1) or HA2A (B12-109) - Body ground	10 kΩ or higher
AF+ (B4-3) or A2A+ (B12-120) - Body ground	10 kΩ or higher
AF- (B4-4) or A2A- (B12-119) - Body ground	10 kΩ or higher

(g) Reconnect the ECM connector.
(h) Reconnect the A/F sensor connector.

ES

Reference (System Diagram of Bank 1 Sensor 1):

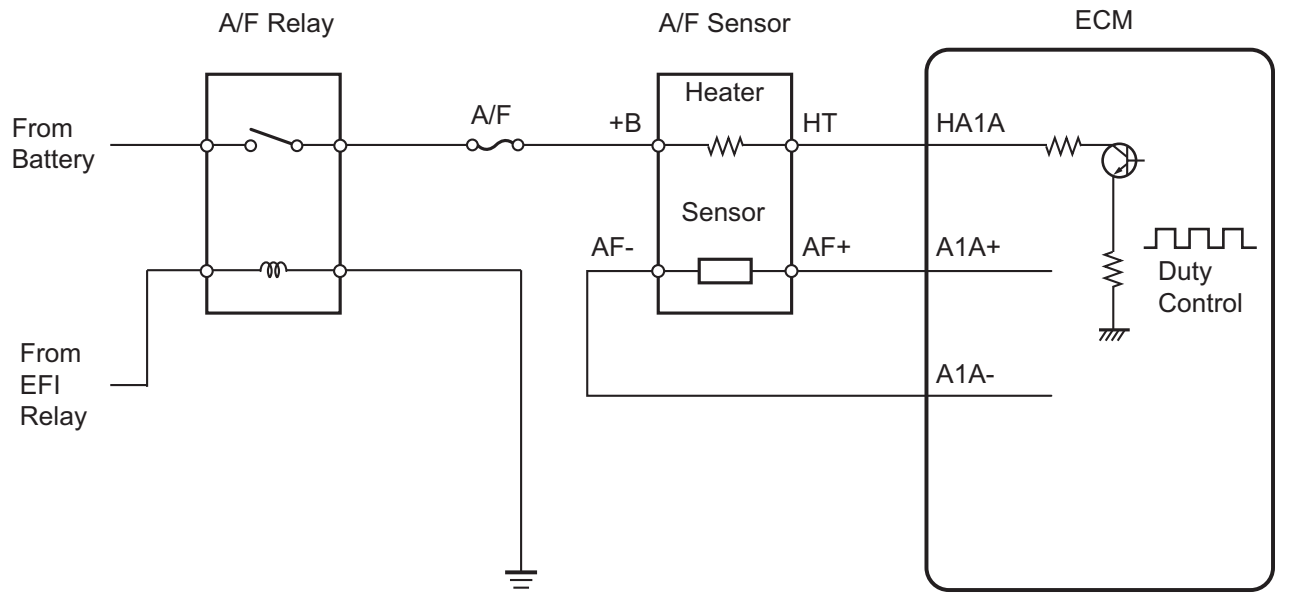

NG → **REPAIR OR REPLACE HARNESS OR CONNECTOR**

OK

14	REPLACE AIR FUEL RATIO SENSOR

(a) Replace the air fuel ratio sensor (See page EC-19).

NEXT

15	PERFORM CONFIRMATION DRIVING PATTERN

(a) Connect the intelligent tester to the DLC3 (Procedure A).
(b) Turn the engine switch on (IG) and turn the tester on (Procedure B).
(c) Clear the DTCs (See page ES-41) (Procedure C).
(d) Select the check mode using the tester (See page ES-45) (Procedure D).
(e) Start the engine and warm it up with all the accessories switched off (Procedure E).
(f) Drive the vehicle at between 38 mph and 75 mph (60 km/h and 120 km/h) and at an engine speed of between 1,400 rpm and 3,200 rpm for 3 to 5 minutes (Procedure F).

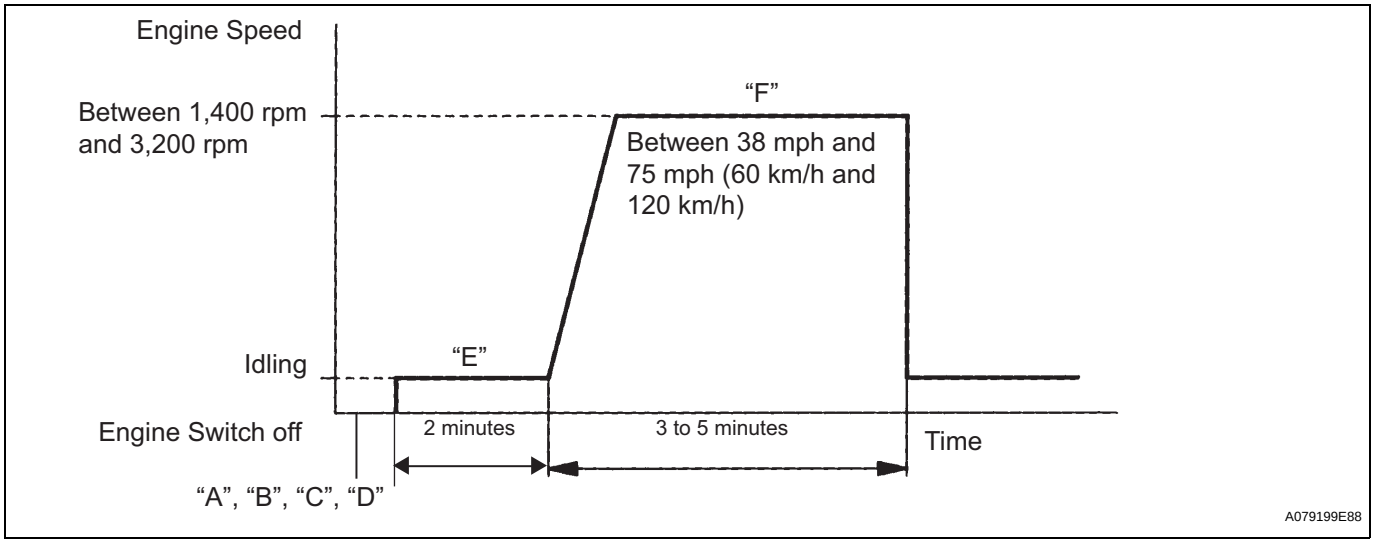

HINT:
If the system is still malfunctioning, the MIL will be illuminated during procedure "F".
NOTICE:
If the conditions in this test are not strictly followed, no malfunction will be detected.

NEXT

16	CHECK WHETHER DTC OUTPUT RECURS (DTC P0171, P0172, P0174 OR P0175)

(a) Select the following menu items: DIAGNOSIS / ENHANCED OBD II / DTC INFO / PENDING CODES.
(b) Read the DTCs.

Result

Display (DTC Output)	Proceed to
No output	A
P0171, P0172, P0174 or P0175	B

B → **Go to step 5**

A

END

DTC	P0300	Random / Multiple Cylinder Misfire Detected

DTC	P0301	Cylinder 1 Misfire Detected

DTC	P0302	Cylinder 2 Misfire Detected

DTC	P0303	Cylinder 3 Misfire Detected

DTC	P0304	Cylinder 4 Misfire Detected

DTC	P0305	Cylinder 5 Misfire Detected

DTC	P0306	Cylinder 6 Misfire Detected

DESCRIPTION

When the engine misfires, high concentrations of hydrocarbons (HC) enter the exhaust gas. Extremely high HC concentration levels can cause an increase in exhaust emission levels. High concentrations of HC can also cause increases in the Three-Way Catalytic Converter (TWC) temperature, which may cause damage to the TWC. To prevent this increase in emissions and to limit the possibility of thermal damage, the ECM monitors the misfire rate. When the temperature of the TWC reaches the point of thermal degradation, the ECM blinks the MIL. To monitor misfires, the ECM uses both the Camshaft Position (CMP) sensor and the Crankshaft Position (CKP) sensor. The CMP sensor is used to identify any misfiring cylinders and the CKP sensor is used to measure variations in the crankshaft rotation speed. Misfires are counted when the crankshaft rotation speed variations exceed predetermined thresholds. If the misfire exceeds the threshold levels and may cause emission deterioration, the ECM illuminates the MIL and sets a DTC.

DTC No.	DTC Detection Condition	Trouble Area
P0300	Simultaneous misfiring of several cylinder detected (2 trip detection logic)	• Open or short in engine wire harness • Connector connection • Vacuum hose connections • Ignition system • Injector • Fuel pressure • Mass Air Flow (MAF) meter • Engine Coolant Temperature (ECT) sensor • Compression pressure • Valve clearance • Valve timing • PCV valve and hose • PCV hose connections • Air induction system • ECM

DTC No.	DTC Detection Condition	Trouble Area
P0301 P0302 P0303 P0304 P0305 P0306	Misfiring of specific cylinder detected (2 trip detection logic)	• Open or short in engine wire harness • Connector connection • Vacuum hose connections • Ignition system • Injector • Fuel pressure • Mass Air Flow (MAF) meter • Engine Coolant Temperature (ECT) sensor • Compression pressure • Valve clearance • Valve timing • PCV valve and hose • PCV hose connections • Air induction system • ECM

If DTCs that indicate misfires are set for different cylinders, but DTC P0300 is not set, it indicates that misfires have been detected in different cylinders at different times. DTC P0300 is only set when several misfiring cylinders are detected at the same time.

MONITOR DESCRIPTION

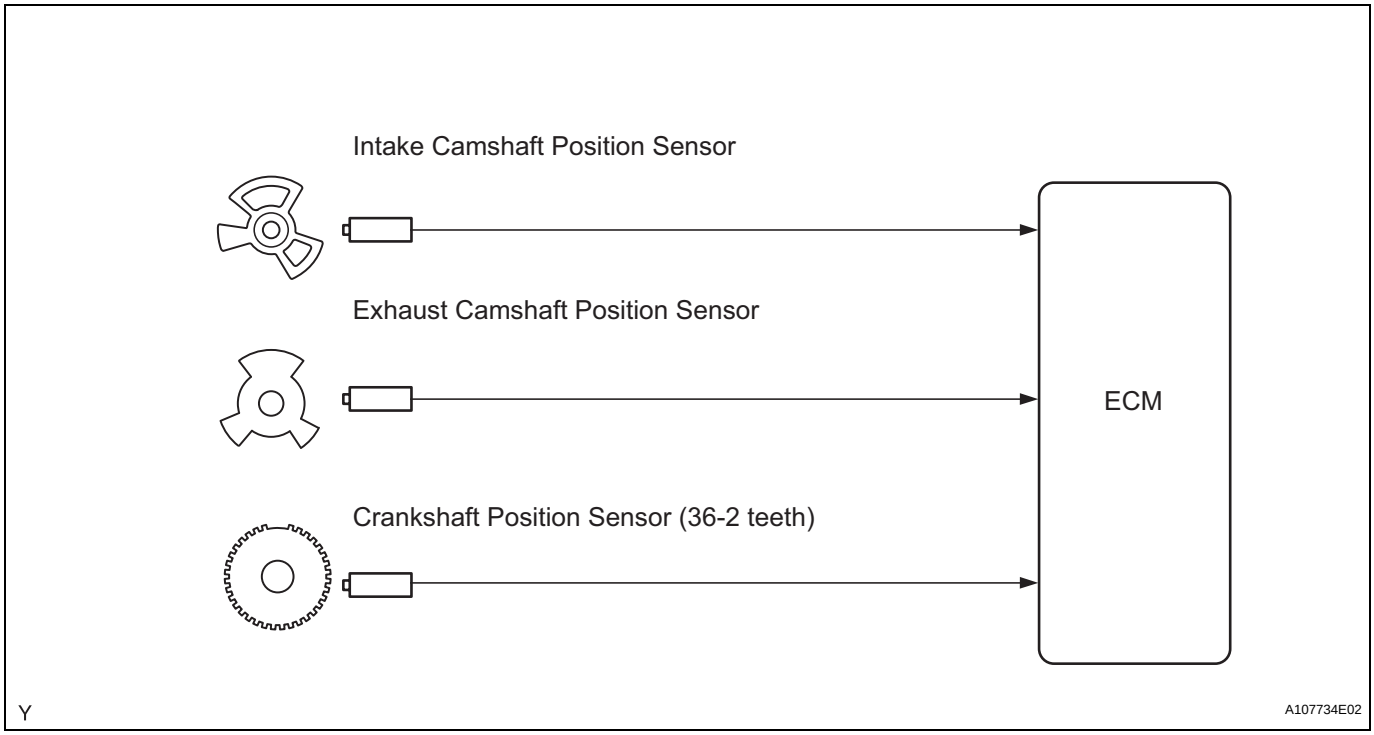

The ECM illuminates the MIL and sets a DTC when either one of the following conditions, which could cause emission deterioration, is detected (2 trip detection logic):

- Within the first 1,000 crankshaft revolutions of the engine starting, an excessive misfiring rate (approximately 20 to 50 misfires per 1, 000 crankshaft revolutions) occurs once.
- After the first 1,000 crankshaft revolutions, an excessive misfiring rate (approximately 20 to 60 misfires per 1, 000 crankshaft revolutions) occurs 4 times in sequential crankshaft revolutions.

The ECM flashes the MIL and sets a DTC when either one of the following conditions, which could cause the Three-Way Catalytic Converter (TWC) damage, is detected (2 trip detection logic):

- In every 200 crankshaft revolutions at a high engine rpm, the threshold misfiring percentage is recorded once.
- In every 200 crankshaft revolutions at a normal engine rpm, the threshold misfiring percentage is recorded 3 times.

MONITOR STRATEGY

Related DTCs	P0300: Multiple cylinder misfire P0301: Cylinder 1 misfire P0302: Cylinder 2 misfire P0303: Cylinder 3 misfire P0304: Cylinder 4 misfire P0305: Cylinder 5 misfire P0306: Cylinder 6 misfire
Required Sensors/Components (Main)	Injector, Ignition coil, Spark plug
Required Sensors/Components (Related)	Crankshaft, Camshaft, Engine coolant temperature and intake air temperature sensors and mass air flow meter
Frequency of Operation	Continuous
Duration	1,000 to 4,000 crankshaft revolutions: Emission related misfire 200 to 600 crankshaft revolutions: Catalyst damaged misfire
MIL Operation	2 driving cycles: Emission related misfire MIL flashes immediately: Catalyst damaged misfire
Sequence of Operation	None

TYPICAL ENABLING CONDITIONS

Misfire:

Monitor runs whenever following DTCs are not present	P0100 - P0103 (MAF meter) P0110 - P0113 (IAT sensor) P0115 - P0118 (ECT sensor) P0120 - P0223, P2135 (TP sensor) P0125 (Insufficient ECT for Closed Loop) P0327 - P0333 (Knock sensor) P0335 (CKP sensor) P0340, P0341 (CMP sensor) P0500 (VSS)
Battery voltage	8 V or more
VVT system	Not operated by scan tool
Engine RPM	450 to 6,500 rpm
Either following condition (a) or (b) is met:	-
(a) ECT at engine start	More than -7°C (19°F)
(b) ECT	More than 20°C (68°F)
Fuel cut	OFF

Monitor period of emission-related-misfire:

First 1,000 revolutions after engine start, or check mode	Crankshaft 1,000 revolutions
Except above	Crankshaft 1,000 revolutions x 4

Monitor period of catalyst-damaged-misfire (MIL blinks):

All of following conditions 1, 2 and 3 are met:	Crankshaft 200 revolutions
1. Driving cycles	1st
2. Check mode	OFF
3. Engine RPM	Less than 2,500 rpm
Except above	Crankshaft 200 revolutions x 3

TYPICAL MALFUNCTION THRESHOLDS

Monitor period of emission-related-misfire:

Misfire rate	1 % or more

Monitor period of catalyst-damage-misfire (MIL blinks):

Number of misfire per 200 revolutions	94 or more (varies with intake air amount and RPM)
Paired cylinders misfire (MIL blinks immediately)	Detected

ES

MONITOR RESULT

Refer to CHECKING MONITOR STATUS (See page ES-20).

WIRING DIAGRAM

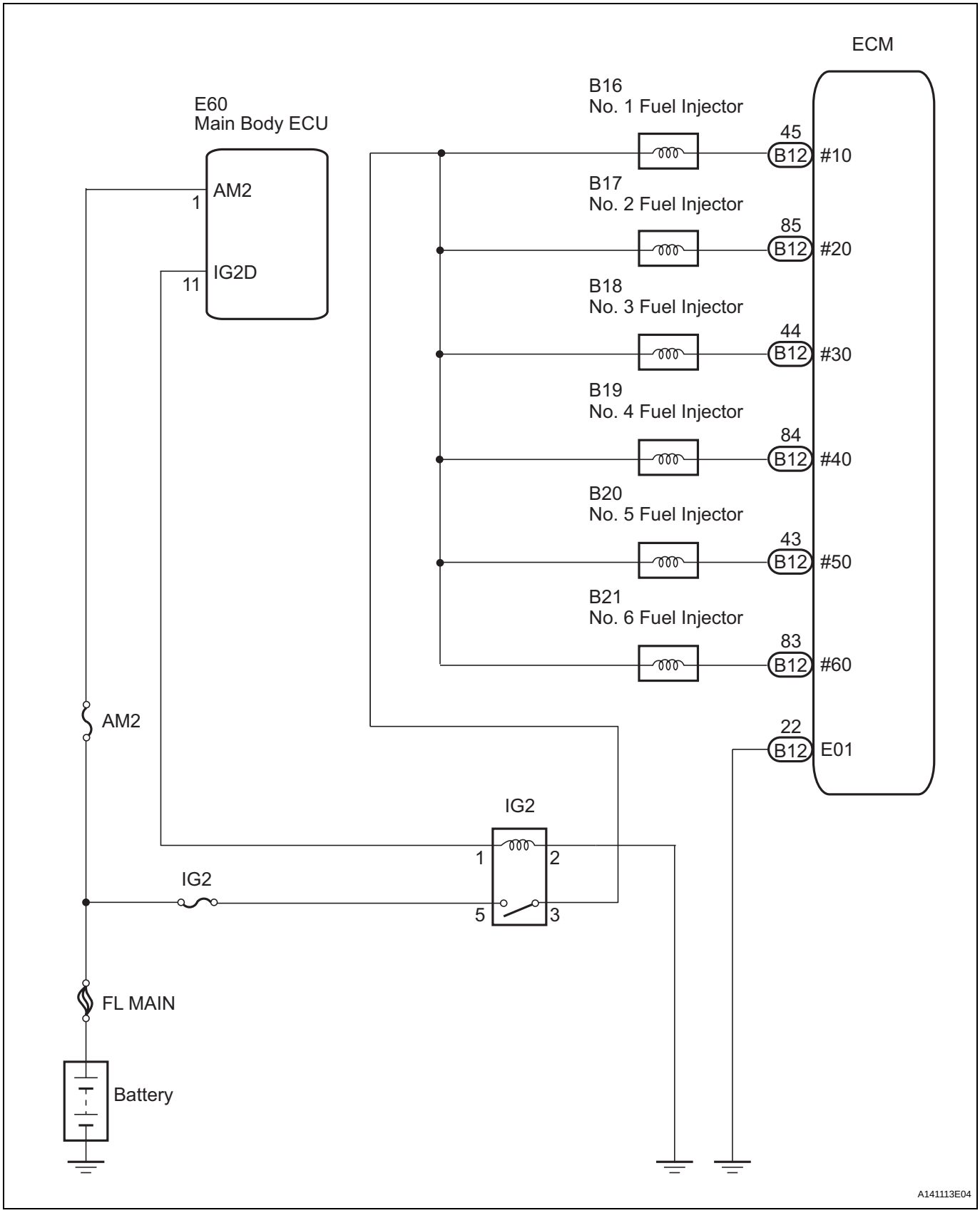

CONFIRMATION DRIVING PATTERN

1. Connect the intelligent tester to the DLC3.
2. Turn the engine switch on (IG).
3. Turn the tester on.
4. Record the DTC(s) and freeze frame data.
5. Using the tester, switch the ECM from normal mode to check mode (See page ES-45).
6. Read the misfire counts of each cylinder (CYL #10 to #60) with the engine in an idling condition. If any misfire count is displayed, skip the following confirmation driving pattern.
7. Drive the vehicle several times with the conditions, such as engine rpm and engine load, shown in MISFIRE RPM and MISFIRE LOAD in the DATA LIST.
   HINT:
   In order to store misfire DTCs, it is necessary to operate the vehicle for the period of time shown in the table below, using the MISFIRE RPM and MISFIRE LOAD in the DATA LIST.

Engine RPM	Duration
Idling	3.5 minutes or more
1,000	3 minutes or more
2,000	1.5 minutes or more
3,000	1 minute or more

8. Check whether misfires have occurred by checking DTCs and freeze frame data.
   HINT:
   Do not turn the engine switch off until the stored DTC(s) and freeze frame data have been recorded. When the ECM returns to normal mode (default), the stored DTC(s), freeze frame data and other data will be erased.
9. Record the DTC(s), freeze frame data and misfire counts.
10. Turn the engine switch off and wait for at least 5 seconds.

INSPECTION PROCEDURE

HINT:

- If any DTCs other than misfire DTCs are output, troubleshoot those DTCs first.
- Read freeze frame data using the intelligent tester. The ECM records vehicle and driving condition information as freeze frame data the moment a DTC is stored. When troubleshooting, freeze frame data can be helpful in determining whether the vehicle was running or stopped, whether the engine was warmed up or not, whether the air-fuel ratio was lean or rich, as well as other data recorded at the time of a malfunction (See page ES-41).
- If the misfire does not recur when the vehicle is brought to the workshop, reproduce the conditions stored in the ECM as freeze frame data.
- If the misfire still cannot be reproduced even though the conditions stored in the ECM as freeze frame data have been reproduced, one of the following factors is considered to be a possible cause of the problem:
  (a) There was insufficient fuel in the tank.
  (b) Improper fuel is used.
  (c) The spark plugs have been contaminated.
  (d) The problem requires further diagnosis.
- After finishing repairs, check the misfire counts of the cylinders (CYL #1, #2, #3, #4, #5 and #6).
- Be sure to confirm that no misfiring cylinder DTCs are set again by conducting the confirmation driving pattern after finishing repairs.
- For 6 and 8 cylinder engines, the ECM intentionally does not set the specific misfiring cylinder DTCs at a high engine RPM. If misfires occur only in high engine RPM areas, only DTC P0300 is set.
  In the event of DTC P0300 being present, perform the following operations:
  (a) Clear the DTC (See page ES-41).
  (b) Start the engine and conduct the confirmation driving pattern.
  (c) Read the misfiring rates of each cylinder or DTC(s) using the tester.

(d) Repair the cylinder(s) that has a high misfiring rate or is indicated by the DTC.
(e) After finishing repairs, conduct the confirmation driving pattern again, in order to verify that DTC P0300 is not set.

- When one of SHORT FT #1, LONG FT #1, SHORT FT #2 or LONG FT #2 in the freeze frame data is outside the range of +-20 %, the air-fuel ratio may be RICH (-20 % or less) or LEAN (+20 % or more).
- When COOLANT TEMP in the freeze frame data is less than 75°C (167°F), misfires have occurred only while warming up the engine.

1 CHECK ANY OTHER DTC OUTPUT (IN ADDITION TO MISFIRE DTCS)

(a) Connect the intelligent tester to the DLC3.
(b) Turn the engine switch on (IG).
(c) Turn the tester on.
(d) Enter the following menus: DIAGNOSIS / ENHANCED OBD II / DTC INFO / CURRENT CODES.
(e) Read the DTCs.

Result

Display (DTC output)	Proceed to
P0300, P0301, P0302, P0303, P0304, P0305 and/or P0306	A
P0300, P0301, P0302, P0303, P0304, P0305 and/or P0306 and other DTCs	B

HINT:
If any DTCs other than P0300, P0301, P0302, P0303, P0304, P0305 and P0306 are output, troubleshoot those DTCs first.

B → **GO TO DTC CHART (See page ES-59)**

A

2 READ VALUE OF INTELLIGENT TESTER (MISFIRE RPM AND MISFIRE LOAD)

(a) Connect the intelligent tester to the DLC3.
(b) Turn the engine switch on (IG) and turn the tester on.
(c) Enter the following menus: DIAGNOSIS / ENHANCED OBD II / DATA LIST / MISFIRE / MISFIRE RPM and MISFIRE LOAD.
(d) Read and note the MISFIRE RPM and MISFIRE LOAD (engine load) values.
HINT:
The MISFIRE RPM and MISFIRE LOAD values indicate the vehicle conditions under which the misfire occurred.

NEXT

3 CHECK PCV HOSE (HOSE CONNECTIONS)

OK:
PCV hose is connected correctly and is not damaged.

NG → **REPAIR OR REPLACE PCV HOSE**

OK

4	CHECK MISFIRE COUNT (CYL #1, #2, #3, #4, #5 AND #6)

(a) Connect the intelligent tester to the DLC3.
(b) Turn the engine switch on (IG).
(c) Turn the tester on.
(d) Clear the DTCs.
(e) Enter the following menus: DIAGNOSIS / ENHANCED OBD II / DATA LIST / MISFIRE / CYL #1, #2, #3, #4, #5 and #6 (Step "A").
(f) Allow the engine to idle (Step "B").
(g) Read the value of CYL #1 to #6 displayed on the tester. If no misfire counts occur in any cylinders, perform the following operations (Step "C"):
  (1) Shift the gear selector lever to the D position.
  (2) Repeat steps "A" to "C" above.
  (3) Check the CYL #1 to #6.
  (4) If misfire counts are still not displayed, perform steps "D" and "E" and then check the misfire counts again.
(h) Drive the vehicle with MISFIRE RPM and MISFIRE LOAD noted in step 2 (Step "D").
(i) Read CYL #1 to #6 or DTCs displayed on the tester (Step "E").

ES

Result

Misfire count	Proceed to
1 or 2 cylinders have misfire counts	A
3 cylinders or more have misfire counts	B

B → **Go to step 13**

A

5	CHECK SPARK PLUG

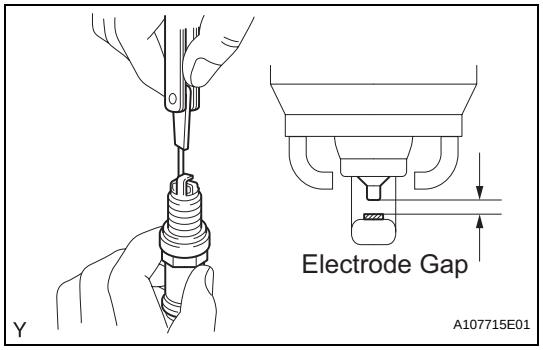

(a) Remove the ignition coil and the spark plug of the misfiring cylinder.
(b) Measure the spark plug electrode gap.
Standard:
Between 1.0 mm and 1.4 mm (0.039 in. and 0.055 in.)
(c) Check the electrode for carbon deposits.
Recommended spark plug:

Manufacturer	Product
DENSO	FK20HR11

NOTICE:
If the electrode gap is larger than standard, replace the spark plug. Do not adjust the electrode gap.

NG → **REPLACE SPARK PLUG**

OK

6	CHECK FOR SPARKS AND IGNITION

(a) Disconnect the injector connectors, in order to prevent the engine from starting.
(b) Install the spark plug to the ignition coil.
(c) Attach the spark plug assembly to the cylinder head cover.
(d) Crank the engine for less than 2 seconds and check the sparks.
OK:
Sparks jump across the electrode gap.
(e) Reconnect the injector connectors.

NG → **Go to step 8**

ES

OK

7	CHECK CYLINDER COMPRESSION PRESSURE (MALFUNCTION CYLINDER)

(a) Measure the cylinder compression pressure of the misfiring cylinder.

OK → **Go to step 9**

NG

REPAIR OR REPLACE ENGINE TO DETERMINE CAUSE OF LOW COMPRESSION

8	CHANGE SPARK PLUG WITH NORMAL ONE AND CHECK FOR SPARKS OF MISFIRING CYLINDER

(a) Change the installed spark plug with a spark plug that functions normally.
(b) Perform a spark test.
CAUTION:
Always disconnect each injector connector.
NOTICE:
Do not crank the engine for more than 2 seconds.
(1) Install the spark plug to the ignition coil and connect the ignition coil connector.
(2) Disconnect the injector connector.
(3) Ground the spark plug.
(4) Check if sparks occur while the engine is being cranked.
OK:
Sparks jump across the electrode gap.

NG → **REPLACE IGNITION COIL ASSEMBLY (See page IG-8)**

OK

REPLACE SPARK PLUG

9 INSPECT ECM (#10, #20, #30, #40, #50 AND/OR #60 VOLTAGE))

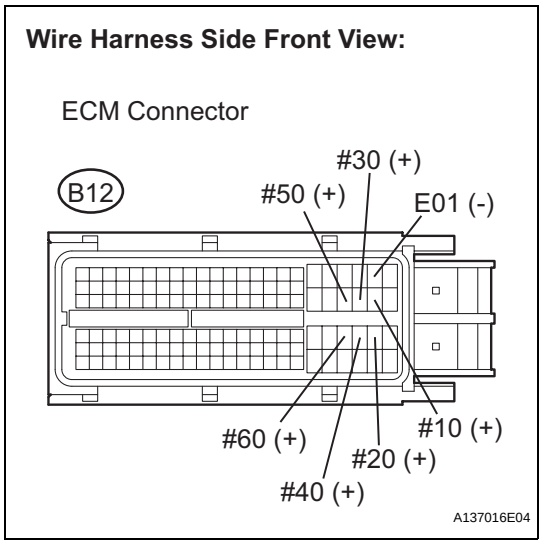

(a) Disconnect the B12 ECM connector.
(b) Turn the engine switch on (IG).
(c) Measure the voltage between the terminals.
Standard voltage

Tester Connection	Specified Condition
#10 (B12-45) - E01 (B12-22)	9 to 14 V
#20 (B12-85) - E01 (B12-22)	9 to 14 V
#30 (B12-44) - E01 (B12-22)	9 to 14 V
#40 (B12-84) - E01 (B12-22)	9 to 14 V
#50 (B12-43) - E01 (B12-22)	9 to 14 V
#60 (B12-83) - E01 (B12-22)	9 to 14 V

(d) Reconnect the ECM connector.

OK → **Go to step 12**

NG

10 CHECK HARNESS AND CONNECTOR (INJECTOR - ECM)

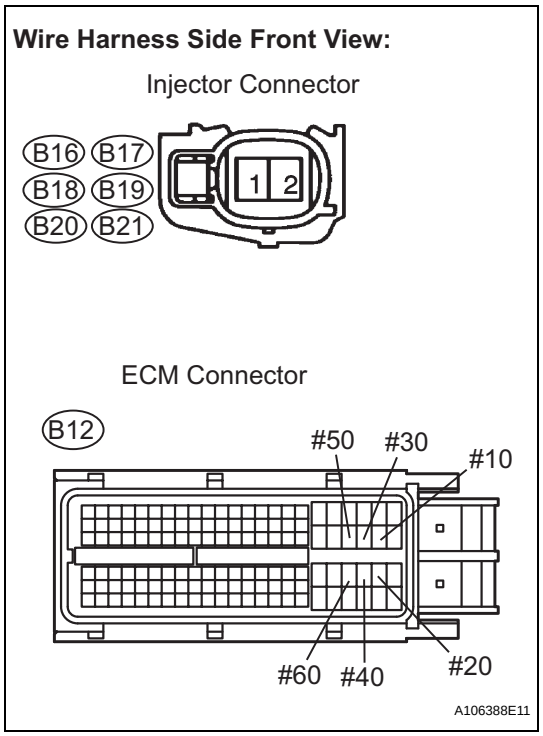

(a) Disconnect the injector connector (misfire cylinder).
(b) Disconnect the B12 ECM connector.
(c) Measure the resistance according to the value(s) in the table below.
Standard resistance

Tester Connection	Specified Condition
#10 (B12-45) - B16-1	Below 1 Ω
#20 (B12-85) - B17-1	Below 1 Ω
#30 (B12-44) - B18-1	Below 1 Ω
#40 (B12-84) - B19-1	Below 1 Ω
#50 (B12-43) - B20-1	Below 1 Ω
#60 (B12-83) - B21-1	Below 1 Ω
#10 (B12-45) or B16-1 - Body ground	10 kΩ or higher
#20 (B12-85) or B17-1 - Body ground	10 kΩ or higher
#30 (B12-44) or B18-1 - Body ground	10 kΩ or higher
#40 (B12-84) or B19-1 - Body ground	10 kΩ or higher
#50 (B12-43) or B20-1 - Body ground	10 kΩ or higher
#60 (B12-83) or B21-1 - Body ground	10 kΩ or higher

(d) Reconnect the injector connector.
(e) Reconnect the ECM connector.

NG → **REPAIR OR REPLACE HARNESS OR CONNECTOR**

ES

OK

11	CHECK FUEL INJECTOR ASSEMBLY (MISFIRING CYLINDER)

(a) Check the injector injection (whether fuel volume high or low, and whether injection pattern is poor).

NG → **REPLACE FUEL INJECTOR ASSEMBLY (See page FU-12)**

OK

ES

12	CHECK VALVE CLEARANCE (MISFIRING CYLINDER)

NG → **ADJUST VALVE CLEARANCE**

OK

13	CHECK AIR INDUCTION SYSTEM

(a) Check the air induction system for vacuum leakage.
OK:
No leakage from air induction system.

NG → **REPAIR OR REPLACE AIR INDUCTION SYSTEM**

OK

14 CHECK VALVE TIMING

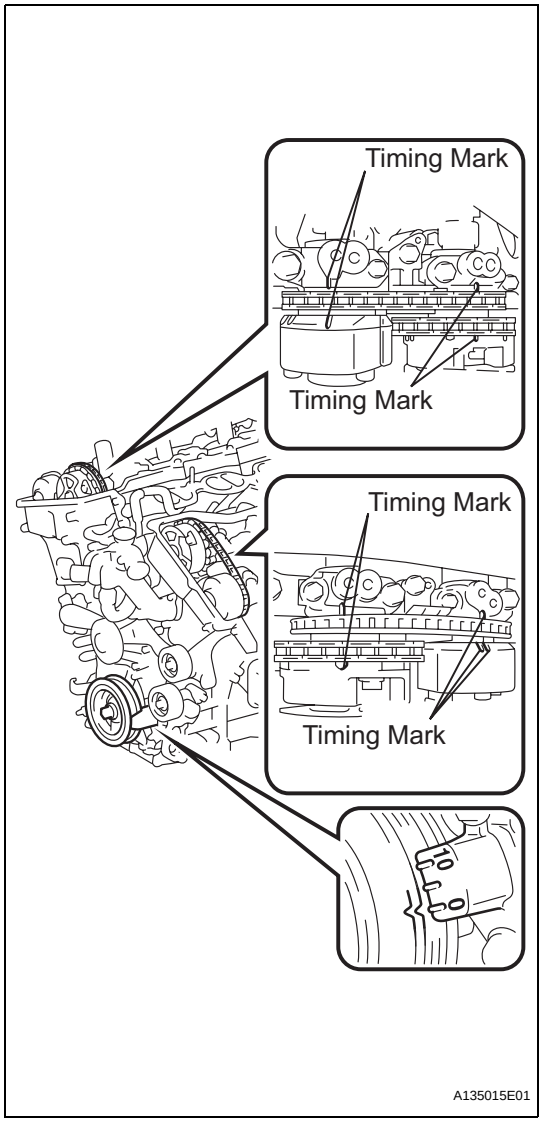

(a) Remove the cylinder head covers.
(b) Turn the crankshaft pulley, and align its groove with the timing mark "0" of the timing chain cover.
(c) Check that the timing marks of the camshaft timing gears are aligned with the timing marks of the bearing cap as shown in the illustration.
If not, turn the crankshaft 1 revolution (360°) and align the marks as above.
OK:
The timing marks on the camshaft timing gears are aligned as shown in the illustration.
(d) Reinstall the cylinder head covers.

NG → **ADJUST VALVE TIMING**

ES

OK

15 CHECK FUEL PRESSURE

(a) Check the fuel pressure (high or low pressure).
Standard

Item	Standard Condition
Fuel pressure	147 kPa (1.5 kgf/cm^2, 21 psi)

NG → **CHECK AND REPLACE FUEL SYSTEM**

OK

16 READ VALUE ON INTELLIGENT TESTER (COOLANT TEMP)

(a) Connect the intelligent tester to the DLC3.

(b) Turn the engine switch on (IG).
(c) Turn the tester on.
(d) Enter the following menus: DIAGNOSIS / ENHANCED OBD II / DATA LIST / PRIMARY / COOLANT TEMP.
(e) Read COOLANT TEMP twice, when the engine is both cold and warmed up.
Standard:
With cold engine:
Same as ambient air temperature.
With warm engine:
Between 75°C and 95°C (167°F and 203°F).

NG → **REPLACE ENGINE COOLANT TEMPERATURE SENSOR (See page ES-516)**

ES

OK

17	READ VALUE OF INTELLIGENT TESTER (MAF)

(a) Connect the intelligent tester to the DLC3.
(b) Turn the engine switch on (IG).
(c) Turn the tester on.
(d) Enter the following menus: DIAGNOSIS / ENHANCED OBD II / DATA LIST / PRIMARY / MAF and COOLANT TEMP.
(e) Allow the engine to idle until COOLANT TEMP reaches 75°C (167°F) or more.
(f) Read the MAF with the engine in an idling condition and at an engine speed of 2,500 rpm.
Standard:
MAF while engine is idling:
Between 2.1 g/sec and 3.1 g/sec (shift position: N, A/C: OFF).
MAF at an engine speed of 2,500 rpm:
Between 7.8 g/sec and 11.4 g/sec (shift position: N, A/C: OFF).

NG → **REPLACE MASS AIR FLOW METER (See page ES-497)**

OK

18	CHECK MISFIRE COUNT (CYL #1, #2, #3, #4, #5 AND #6)

HINT:
- If the result of step 4 is "1 or 2 cylinders", proceed to A.
- If the result of step 4 is "more than 3 cylinders", proceed to B.

B → **Go to step 5**

A

CHECK FOR INTERMITTENT PROBLEMS

DTC	P0327	Knock Sensor 1 Circuit Low Input (Bank 1 or Single Sensor)

DTC	P0328	Knock Sensor 1 Circuit High Input (Bank 1 or Single Sensor)

DTC	P0332	Knock Sensor 2 Circuit Low Input (Bank 2)

DTC	P0333	Knock Sensor 2 Circuit High Input (Bank 2)

DESCRIPTION

A flat type knock sensor (non-resonant type) has a structure that can detect vibrations over a wide band of frequencies: between approximately 6 kHz and 15 kHz.
Knock sensors are fitted onto the engine block to detect engine knocking.
The knock sensor contains a piezoelectric element which generates a voltage when it becomes deformed. The voltage is generated when the engine block vibrates due to knocking. Any occurrence of engine knocking can be suppressed by delaying the ignition timing.

DTC No.	DTC Detection Condition	Trouble Area
P0327 P0332	Output voltage of knock sensor 1 or 2 is 0.5 V or less (1 trip detection logic)	• Short in knock sensor 1 or 2 circuit • Knock sensor 1 or 2 • ECM
P0328 P0333	Output voltage of knock sensor 1 or 2 is 4.5 V or more (1 trip detection logic)	• Open in knock sensor 1 or 2 circuit • Knock sensor 1 or 2 • ECM

HINT:
When any of DTCs P0327, P0328, P0332 and P0333 are set, the ECM enters fail-safe mode. During fail-safe mode, the ignition timing is delayed to its maximum retardation. Fail-safe mode continues until the engine switch is turned off.
Reference: Inspection using an oscilloscope

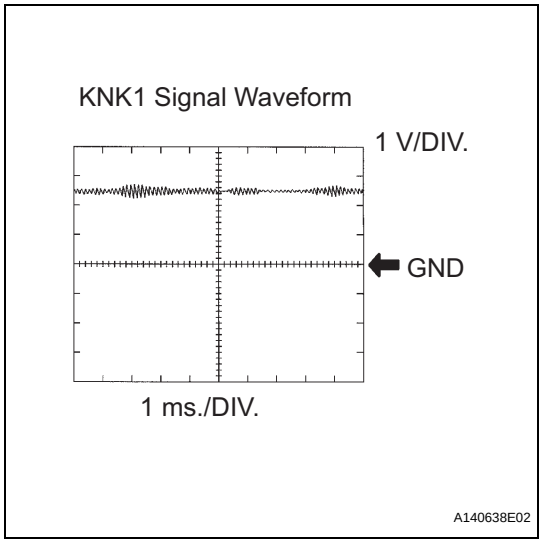

The correct waveform is as shown.

Item	Content
Terminals	KNK1 - EKNK or KNK2 -EKN2

Item	Content
Equipment Settings	0.01 to 10 V/DIV. 0.01 to 10 ms./DIV.
Conditions	Keep engine speed at 4,000 rpm with warm engine

MONITOR DESCRIPTION

The knock sensor, located on the cylinder block, detects spark knock. When spark knock occurs, the piezoelectric element of the sensor vibrates. When the ECM detects a voltage in this frequency range, it retards the ignition timing to suppress spark knock.
The ECM also senses background engine noise with the knock sensor and uses this noise to check for faults in the sensor. If the knock sensor signal level is too low for more than 10 seconds, or if the knock sensor output voltage is outside the normal range, the ECM interprets this as a fault in the knock sensor and sets a DTC.

MONITOR STRATEGY

Related DTCs	P0327: Knock sensor (Bank 1) open/short (Low voltage) P0328: Knock sensor (Bank 1) open/short (High voltage) P0332: Knock sensor (Bank 2) open/short (Low voltage) P0333: Knock sensor (Bank 2) open/short (High voltage)
Required Sensors/Components (Main)	Knock sensor (Bank 1 and 2)
Required Sensors/Components (Related)	-
Frequency of Operation	Continuous
Duration	1 second
MIL Operation	Immediate
Sequence of Operation	None

TYPICAL ENABLING CONDITIONS

Monitor runs whenever following DTCs are not present	None
Battery voltage	10.5 V or more
Time after engine start	5 seconds or more
Engine switch	ON
Starter	OFF

TYPICAL MALFUNCTION THRESHOLDS

Knock Sensor Range Check (Low voltage) P0327 and P0332:

Knock sensor voltage	Less than 0.5 V

Knock Sensor Range Check (High voltage) P0328 and P0333:

Knock sensor voltage	More than 4.5 V

WIRING DIAGRAM

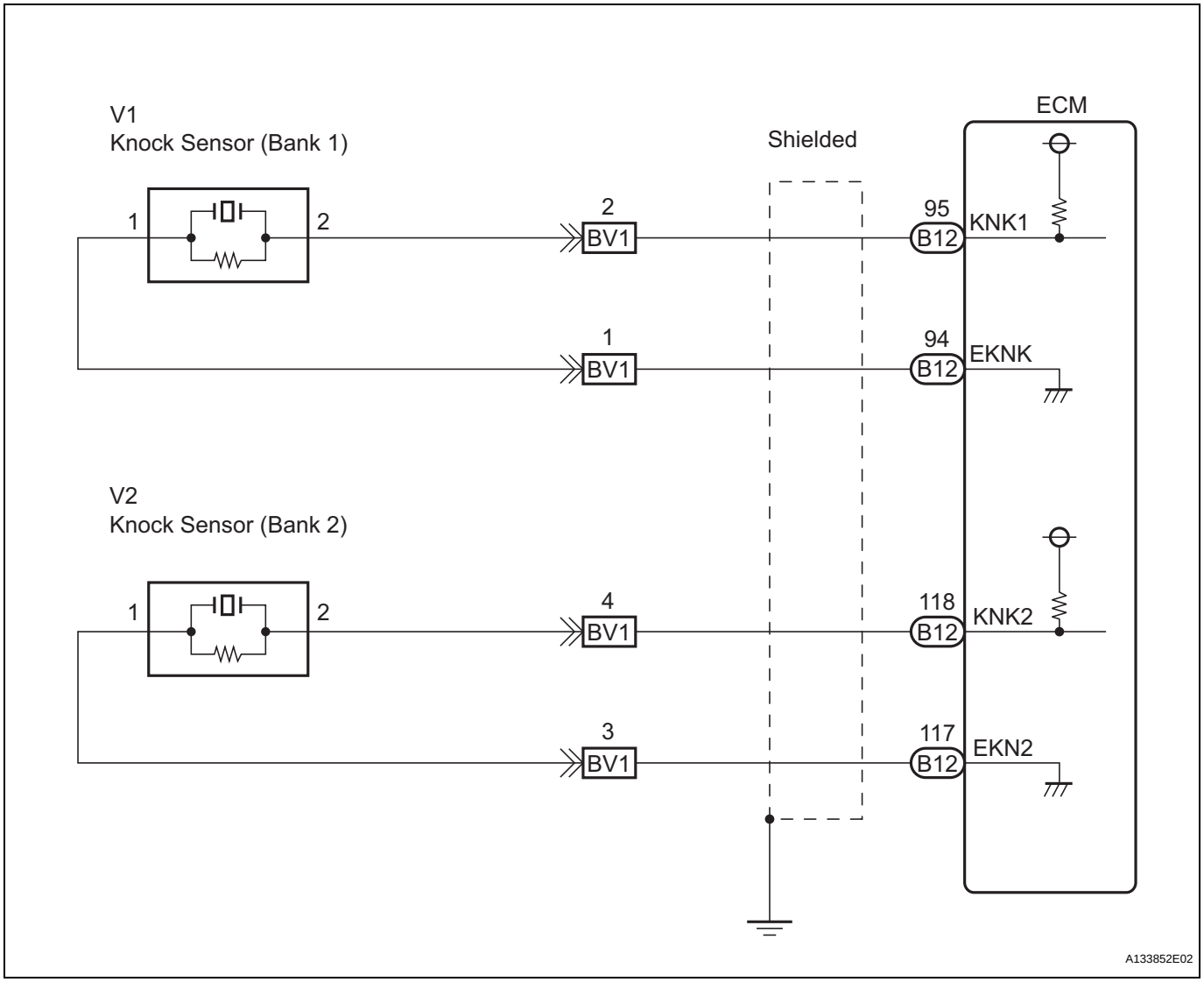

INSPECTION PROCEDURE

HINT:

- DTCs P0327 and P0328 are for the bank 1 knock sensor circuit.
- DTCs P0332 and P0333 are for the bank 2 knock sensor circuit.
- Read freeze frame data using the intelligent tester. The ECM records vehicle and driving condition information as freeze frame data the moment a DTC is stored. When troubleshooting, freeze frame data can be helpful in determining whether the vehicle was running or stopped, whether the engine was warmed up or not, whether the air-fuel ratio was lean or rich, as well as other data recorded at the time of a malfunction (See page ES-41).

ES

1	READ OUTPUT DTC (CHECK KNOCK SENSOR CIRCUIT)

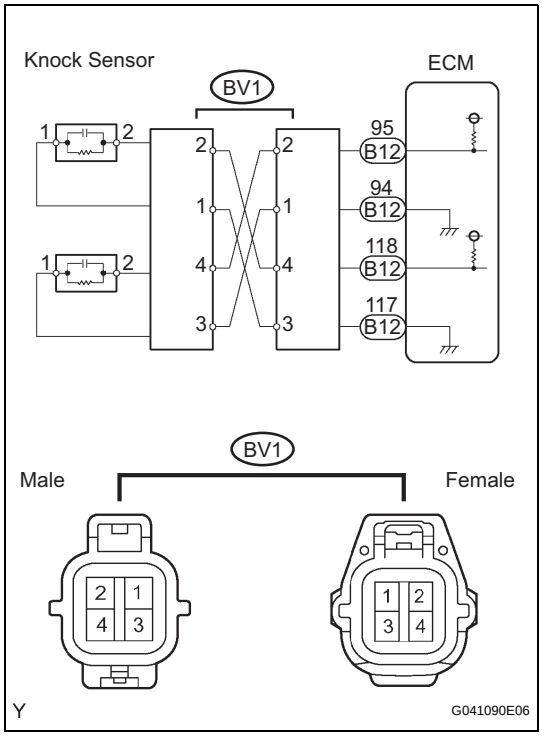

(a) Disconnect the BV1 connector.
(b) Using lead wires, connect the connectors as follows:

Male Connector - Female Connector
Terminal 2 - Terminal 4
Terminal 1 - Terminal 3
Terminal 4 - Terminal 2
Terminal 3 - Terminal 1

(c) Warm up the engine.
(d) Run the engine at 3,000 rpm for 10 seconds or more.
(e) Connect the intelligent tester to the DLC3.
(f) Turn the engine switch on (IG) and turn the intelligent tester on.
(g) Enter the following menus: DIAGNOSIS / ENHANCED OBD II / DTC INFO / CURRENT CODES.
(h) Read the DTCs.

Result

Display	Proceed to
DTCs same as when vehicle brought in: P0327, P0328 → P0327, P0328 or P0332, P0333 → P0332, P0333	**A**
DTCs different from when vehicle brought in: P0327, P0328 → P0332, P0333 or P0332, P0333 → P0327, P0328	**B**

(i) Reconnect the BV1 connector.

B → **Go to step 4**

A

ES

2 CHECK WIRE HARNESS AND CONNECTOR (CONNECTOR - ECM)

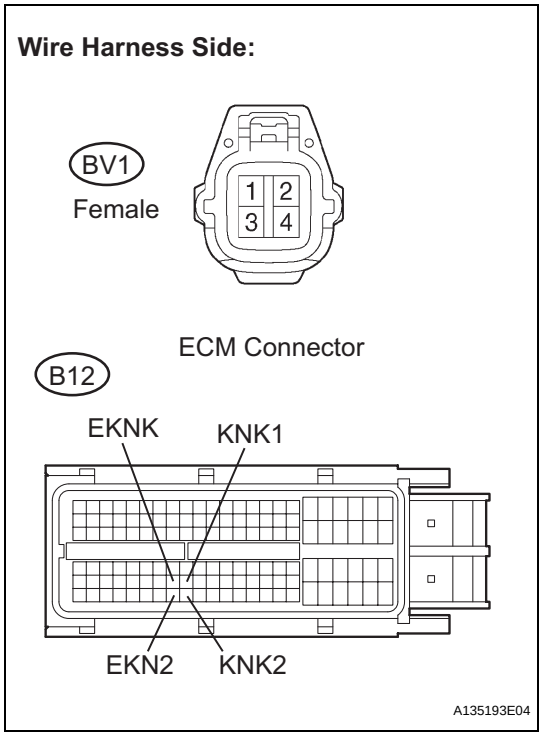

(a) Disconnect the BV1 connector.
(b) Disconnect the B12 ECM connector.
(c) Measure the resistance according to the value(s) in the table below.

Standard resistance (Check for open)

Tester Connection	Specified Condition
BV1 female connector 2 - KNK1 (B12-95)	Below 1 Ω
BV1 female connector 1 - EKNK (B12-94)	Below 1 Ω
BV1 female connector 4 - KNK2 (B12-118)	Below 1 Ω
BV1 female connector 3 - EKN2 (B12-117)	Below 1 Ω

Standard resistance (Check for short)

Tester Connection	Specified Condition
BV1 female connector 2 or KNK1 (B12-95) - Body ground	10 kΩ or higher
BV1 female connector 1 or EKNK (B12-94) - Body ground	10 kΩ or higher
BV1 female connector 4 or KNK2 (B12-118) - Body ground	10 kΩ or higher
BV1 female connector 3 or EKN2 (B12-117) - Body ground	10 kΩ or higher

(d) Reconnect the BV1 connector.
(e) Reconnect the ECM connector.

NG → **REPAIR OR REPLACE HARNESS OR CONNECTOR**

OK

3 INSPECT ECM

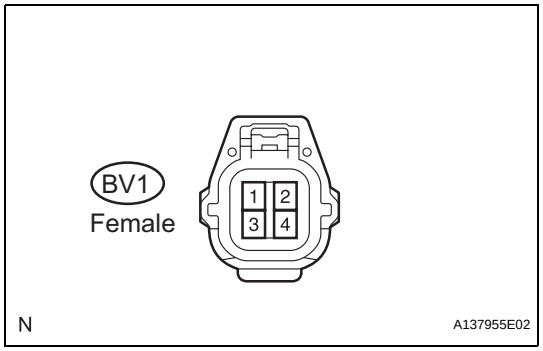

(a) Disconnect the BV1 connector.
(b) Turn the engine switch on (IG).
(c) Measure the voltage according to the value(s) in the table below.

Standard voltage

Tester Connection	Specified Condition
BV1 female connector 2 - 1	4.5 to 5.5 V
BV1 female connector 4 - 3	4.5 to 5.5 V

(d) Reconnect the ECM connector.

NG → **REPLACE ECM (See page ES-543)**

OK

CHECK FOR INTERMITTENT PROBLEMS

ES

ES

4 INSPECT KNOCK SENSOR

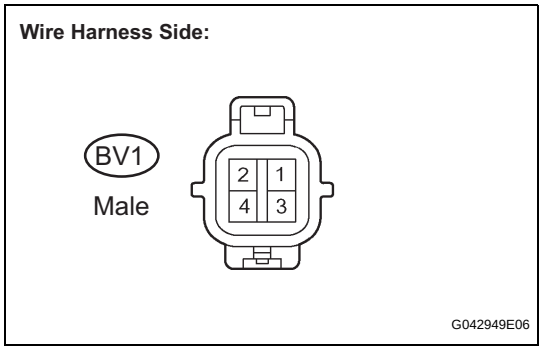

(a) Disconnect the BV1 connector.
(b) Measure the resistance according to the value(s) in the table below.

Standard resistance

Tester Connection	Specified Condition
BV1 male connector 1 - 2	120 to 280 kΩ
BV1 male connector 3- 4	120 to 280 kΩ

(c) Reconnect the BV1 connector.

OK → **CHECK FOR INTERMITTENT PROBLEMS**

NG

5 CHECK HARNESS AND CONNECTOR (CONNECTOR - KNOCK SENSOR)

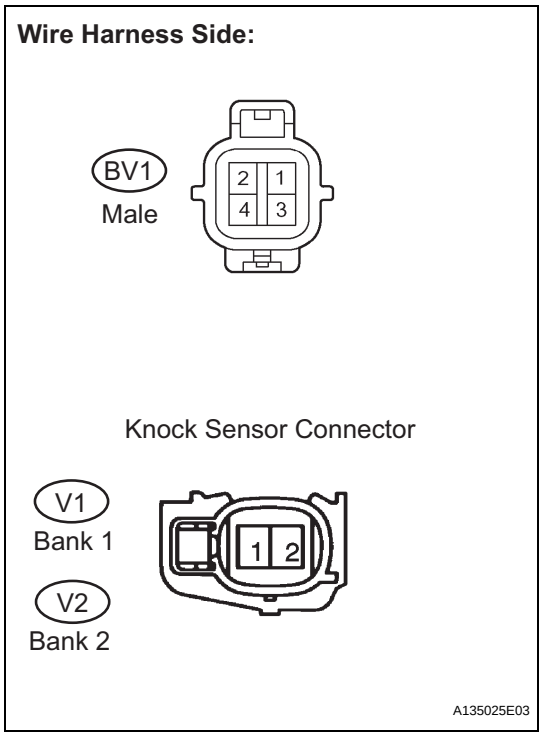

HINT:
- If DTC P0327 or P0328 has changed to P0332 or P0333, check the knock sensor circuit on the right bank side.
- If DTC P0332 or P0333 has changed to P0327 or P0328, check the knock sensor circuit on the left bank side.

(a) Disconnect the BV1 connector.
(b) Disconnect the V1 and V2 knock sensor connectors.
(c) Measure the resistance according to the value(s) in the table below.

Standard resistance (Check for open)

Tester Connection	Specified Condition
BV1 male connector 2 - V1-2	Below 1 Ω
BV1 male connector 1 - V1-1	Below 1 Ω
BV1 male connector 4 - V2-2	Below 1 Ω
BV1 male connector 3 - V2-1	Below 1 Ω

Standard resistance (Check for short)

Tester Connection	Specified Condition
BV1 male connector 2 or V1-2 - Body ground	10 kΩ or higher
BV1 male connector 1 or V1-1 - Body ground	10 kΩ or higher
BV1 male connector 4 or V2-2 - Body ground	10 kΩ or higher
BV1 male connector 3 or V2-1 - Body ground	10 kΩ or higher

(d) Reconnect the BV1 connector.
(e) Reconnect the knock sensor connectors.

NG → **REPAIR OR REPLACE HARNESS OR CONNECTOR**

OK

REPLACE KNOCK SENSOR (See page ES-525)

DTC	P0335	Crankshaft Position Sensor "A" Circuit

DTC	P0339	Crankshaft Position Sensor "A" Circuit Intermittent

DESCRIPTION

The crankshaft position (CKP) sensor system consists of a crankshaft position sensor plate and a magnetic coil.

The sensor plate has 34 teeth and is installed on the crankshaft. The pickup coil is made of windings, an iron core and magnet. The sensor plate rotates and as each tooth passes through the pickup coil, a pulse signal is created. The pickup coil generates 34 signals for each engine revolution. Based on these signals, the ECM calculates the crankshaft position and engine RPM. Using these calculations, the fuel injection time and ignition time are controlled.

DTC No.	DTC Detection Condition	Trouble Area
P0335	• No CKP sensor signal to ECM while cranking (1 trip detection logic) • No CKP sensor signal to ECM at engine speed of 600 rpm or more (1 trip detection logic)	• Open or short in CKP sensor circuit • CKP sensor • CKP sensor plate • ECM
P0339	Under conditions (a), (b) and (c), no CKP sensor signal to ECM for 0.05 seconds or more (1 trip detection logic): (a) Engine speed 1,000 rpm or more (b) Starter signal OFF (c) 3 seconds or more have elapsed since starter signal switched from ON to OFF	• Open or short in CKP sensor circuit • CKP sensor • CKP sensor plate • ECM

Reference: Inspection using an oscilloscope.

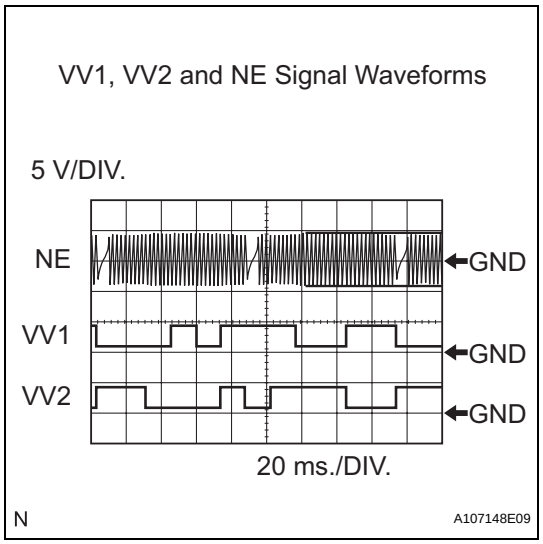

HINT:
- The correct waveform is as shown.
- VV1+ and VV2+ stand for the VVT sensor signal, and NE+ stands for the CKP sensor signal.

Item	Content
Terminals	VV1+ - VV1- VV2+ - VV2- NE+ - NE-
Equipment Settings	5 V/DIV. 20 ms./DIV.
Conditions	Cranking or idling

MONITOR DESCRIPTION

If there is no signal from the crankshaft position sensor despite the engine revolving, the ECM interprets this as a malfunction of the sensor.
If the malfunction is not repaired successfully, these DTCs are set 10 seconds after the engine is next started.

MONITOR STRATEGY

Related DTCs	P0335: CKP sensor signal check when starter ON P0335: CKP sensor signal check when starter OFF P0335: Sensor pulse check
Required Sensors/Components (Main)	Crankshaft Position (CKP) sensor
Required Sensors/Components (Sub)	-
Frequency of Operation	Continuous
Duration	Within 5 seconds and 3 times
MIL Operation	Immediate
Sequence of Operation	None

TYPICAL ENABLING CONDITIONS

All:

Monitor will run whenever these DTCs are not present	-

CKP sensor signal check when starter OFF:

Engine rpm	600 rpm or more
Time after starter ON to OFF	3 seconds or more

CKP sensor pulse check:

Battery voltage	7 V or higher
Starter	ON
Number of VVT sensor signal pulse	6 times
CMP sensor circuit fail	Not detected
Engine switch	ON

TYPICAL MALFUNCTION THRESHOLDS

CKP sensor signal check when starter OFF:

Sensor signal	No signal

CKP sensor pulse check:

Number of sensor pulse	132 or less, or 174 or more

COMPONENT OPERATING RANGE

CKP sensor	• CKP sensor output voltage fluctuates while crankshaft is revolving • 34 CKP sensor signals per crankshaft revolution

WIRING DIAGRAM

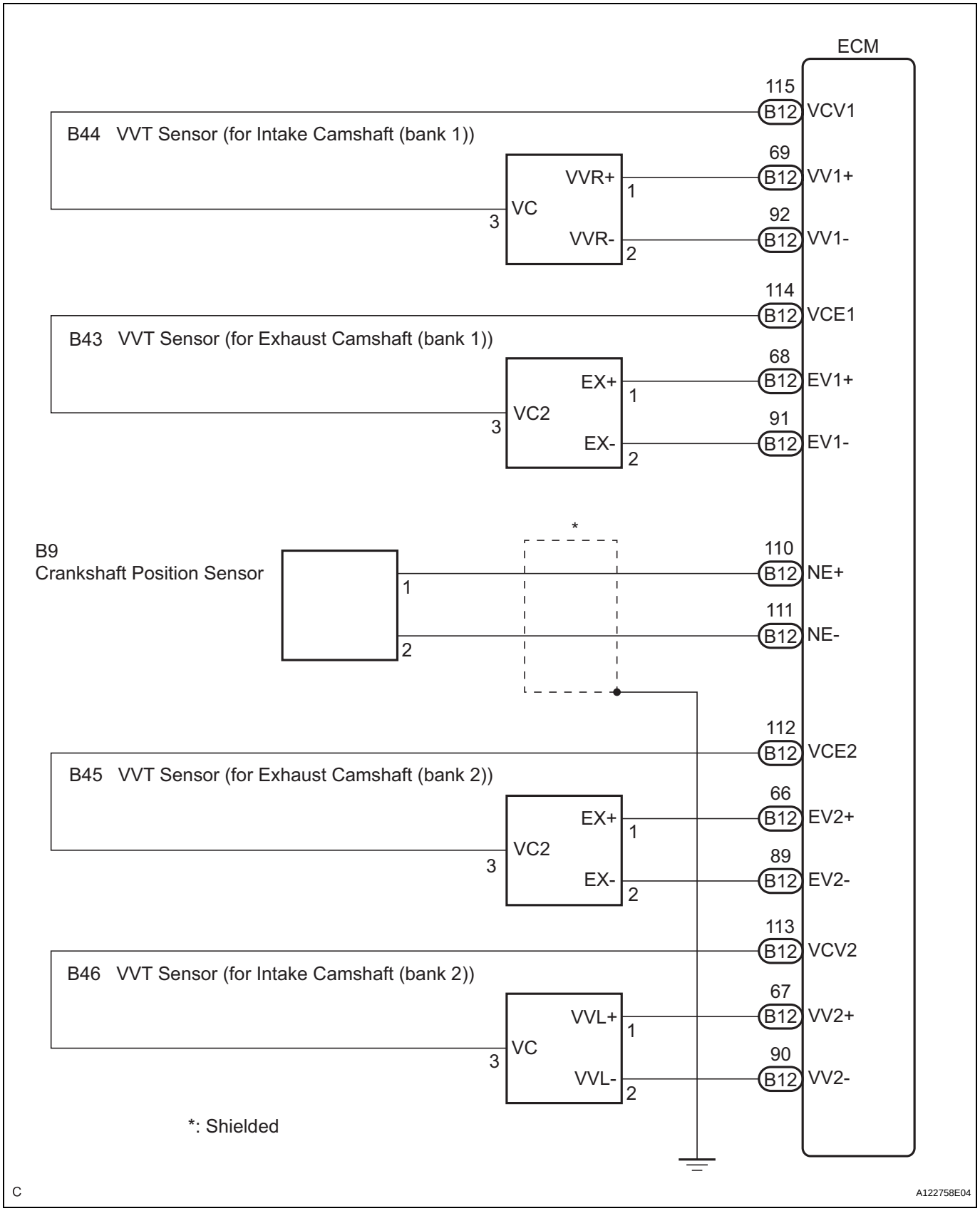

ES

INSPECTION PROCEDURE

HINT:

- If no problem is found by this diagnostic troubleshooting procedure, troubleshoot the engine mechanical system.
- Check the engine speed. The engine speed can be checked by using the intelligent tester. To check, follow the procedure below:
  (a) Connect the intelligent tester to the DLC3.
  (b) Start the engine.
  (c) Turn the tester on.
  (d) Enter the following menus: DIAGNOSIS / ENHANCED OBD II / DATA LIST / PRIMARY / ENGINE SPD.
  The engine speed may be indicated as zero despite the engine revolving normally. This is caused by a lack of NE signals from the crankshaft position (CKP) sensor. Alternatively, the engine speed may be indicated as lower than the actual engine speed, if the CKP sensor output voltage is insufficient.
- Read freeze frame data using the intelligent tester. The ECM records vehicle and driving condition information as freeze frame data the moment a DTC is stored. When troubleshooting, freeze frame data can be helpful in determining whether the vehicle was running or stopped, whether the engine was warmed up or not, whether the air-fuel ratio was lean or rich, as well as other data recorded at the time of a malfunction (See page ES-41).

ES

1 INSPECT CRANKSHAFT POSITION SENSOR

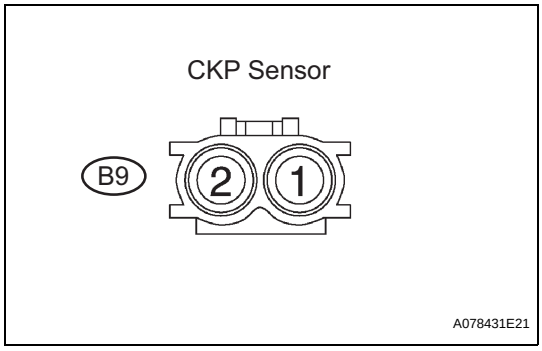

(a) Disconnect the B9 crankshaft position (CKP) sensor connector.

(b) Measure the resistance according to the value(s) in the table below.

Standard resistance

Tester Connection	Condition	Specified Condition
1 - 2	Cold	1,630 to 2,740 Ω
1 - 2	Hot	2,065 to 3,225 Ω

HINT:
Terms "cold" and "hot" refer to the temperature of the coils. "Cold" means approximately -10 to 50°C (14 to 122°F). "Hot" means approximately 50 to 100°C (122 to 212°F).

(c) Reconnect the CKP sensor connector.

NG → **REPLACE CRANKSHAFT POSITION SENSOR (See page ES-513)**

OK

2 CHECK HARNESS AND CONNECTOR (CRANKSHAFT POSITION SENSOR - ECM)

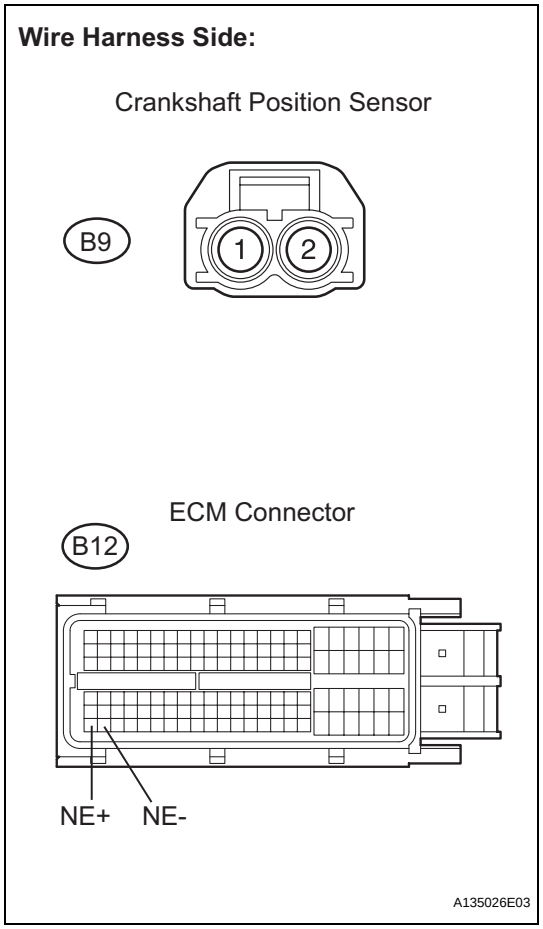

(a) Disconnect the B9 CKP sensor connector.
(b) Disconnect the B12 ECM connector.
(c) Measure the resistance according to the value(s) in the table below.

Standard resistance (Check for open)

Tester Connection	Specified Condition
B9-1 - NE+ (B12-110)	Below 1 Ω
B9-2 - NE- (B12-111)	Below 1 Ω

Standard resistance (Check for short)

Tester Connection	Specified Condition
B9-1 or NE+ (B12-110) - Body ground	10 kΩ or higher
B9-2 or NE- (B12-111) - Body ground	10 kΩ or higher

(d) Reconnect the ECM connector.
(e) Reconnect the CKP sensor connector.

NG → **REPAIR OR REPLACE HARNESS OR CONNECTOR**

OK

3 CHECK CRANK POSITION SENSOR (SENSOR INSTALLATION)

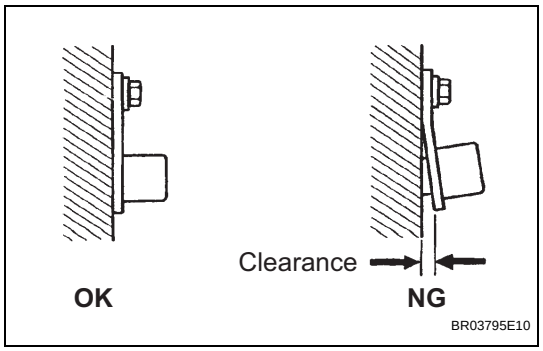

(a) Check the CKP sensor installation condition.
OK:
Sensor is installed correctly.

NG → **REPAIR OR REPLACE CRANK POSITION SENSOR**

OK

4 CHECK CRANKSHAFT POSITION SENSOR PLATE (TEETH OF SENSOR PLATE)

(a) Check the teeth of the sensor plate.

ES

OK:
Sensor plate does not have any cracks or deformation.

NG → **REPLACE CRANKSHAFT POSITION SENSOR PLATE**

OK

REPLACE ECM (See page ES-543)

DTC	P0340	Camshaft Position Sensor Circuit Malfunction

DTC	P0342	Camshaft Position Sensor "A" Circuit Low Input (Bank 1 or Single Sensor)

DTC	P0343	Camshaft Position Sensor "A" Circuit High Input (Bank 1 or Single Sensor)

DTC	P0345	Camshaft Position Sensor "A" Circuit (Bank 2)

DTC	P0347	Camshaft Position Sensor "A" Circuit Low Input (Bank 2)

DTC	P0348	Camshaft Position Sensor "A" Circuit High Input (Bank 2)

DESCRIPTION

The intake camshaft's Variable Valve Timing (VVT) sensor (G signal) consists of a magnet and MRE (Magnet Resistance Element).
The VVT camshaft drive gear has a sensor plate with 3 teeth on its outer circumference. When the gear rotates, changes occur in the air gaps between the sensor plate and MRE, which affects the magnetic field. As a result, the resistance of the MRE material fluctuates. The VVT sensor converts the gear rotation data to pulse signals, uses the pulse signals to determine the camshaft angle, and sends it to the ECM.
The crankshaft angle sensor plate has 34 teeth. The pickup coil generates 34 signals for each engine revolution. Based on combination of the G signal and NE signal, the ECM detects the crankshaft angle. Then the ECM uses this data to control fuel injection time and injection timing. Also, based on the NE signal, the ECM detects the engine speed.

DTC No.	DTC Detection Condition	Trouble Area
P0340 P0345	• Input voltage to ECM remains 0.3 V or less, or 4.7 V or higher for more than 5 seconds, when 2 or more seconds have elapsed after turning engine switch on (IG) (1 trip detection logic) • No VVT sensor signal to ECM during cranking (1 trip detection logic)	• Open or short in VVT sensor for intake camshaft circuit • VVT sensor for intake camshaft • Camshaft timing gear for intake camshaft • Jumped tooth of timing chain for intake camshaft • ECM
P0342 P0347	Output voltage of VVT sensor is 0.3 V or less for 5 seconds (1 trip detection logic)	• Open or short in VVT sensor for intake camshaft circuit • VVT sensor for intake camshaft • Camshaft timing gear for intake camshaft • Jumped tooth of timing chain for intake camshaft • ECM
P0343 P0348	Output voltage of VVT sensor is 4.7 V or more for 5 seconds (1 trip detection logic)	• Open or short in VVT sensor for intake camshaft circuit • VVT sensor for intake camshaft • Camshaft timing gear for intake camshaft • Jumped tooth of timing chain for intake camshaft • ECM

Reference: Inspection using an oscilloscope

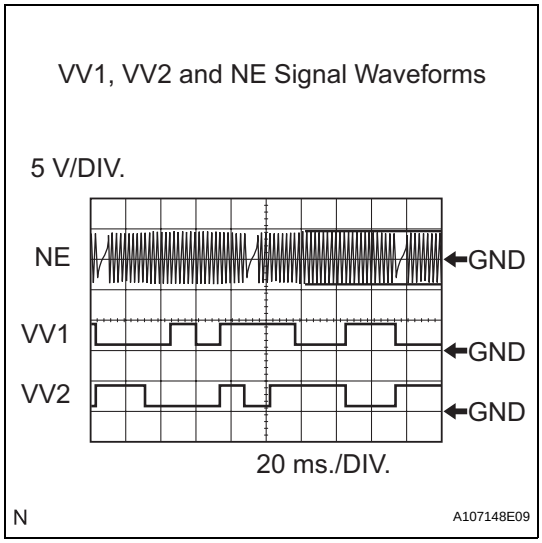

HINT:
- The correct waveform is as shown.
- VV1+ and VV2+ stand for the VVT sensor signal, and NE+ stands for the CKP sensor signal.

Item	Content
Terminals	NE+ - NE- VV1+ - VV1- VV2+ - VV2-
Equipment Settings	5 V/DIV. 20 ms./DIV.
Conditions	Cranking or idling

MONITOR DESCRIPTION

If no signal is transmitted by the VVT sensor despite the engine revolving, or the rotations of the camshaft and the crankshaft are not synchronized, the ECM interprets this as a malfunction of the sensor.

MONITOR STRATEGY

Related DTCs	P0340: VVT sensor (Bank 1) open/short P0340: VVT position/Crankshaft position misalignment (Bank 1) P0342: VVT position sensor (Bank 1) range check (low voltage) P0343: VVT position sensor (Bank 1) range check (high voltage) P0345: VVT sensor (Bank 2) open/short P0345: VVT position/Crankshaft position misalignment (Bank 2) P0347: VVT position sensor (Bank 2) range check (low voltage) P0348: VVT position sensor (Bank 2) range check (high voltage)
Required Sensors/Components (Main)	VVT position sensor (Bank 1 and 2)
Required Sensors/Components (Sub)	Crankshaft position sensor
Frequency of Operation	Continuous
Duration	5 seconds
MIL Operation	2 driving cycles: P0340 (cranking), P0345 (cranking) Immediate: Others
Sequence of Operation	None

TYPICAL ENABLING CONDITIONS

All:

Monitor runs whenever following DTCs are not present	None

P0340 (Engine running):

Engine speed	600 rpm or more
Starter	OFF

P0345 (Engine running):

Engine speed	600 rpm or more
Battery voltage	8 V or more
Starter	OFF
Engine switch	ON

P0340 (Cranking):

Starter	ON
Minimum battery voltage	Less than 11 V
CPU initial	Not initial

P0345 (Cranking):

Starter	ON
Battery voltage while starter is ON at least once	Less than 11 V

P0340, P0342, P0343 (Chattering, Low voltage, High voltage):

Starter	OFF
Engine switch	ON
Time after engine switch off to on	2 seconds or more

P0345, P0347, P0348 (Chattering, Low voltage, High voltage):

Starter	OFF
Engine switch	ON
Time after engine switch off to on	2 seconds or more
Battery Voltage	8 V or more

TYPICAL MALFUNCTION THRESHOLDS

P0340 (Engine running):

Camshaft position and crankshaft position phase	Misaligned
Camshaft position signal	No signal

P0340 (Cranking):

Camshaft position signal	No signal

P0340 (Chattering):

Camshaft position sensor voltage	Less than 0.3 V, or more than 4.7 V

P0342 (Low voltage):

Camshaft position sensor voltage	Less than 0.3 V

P0343 (High voltage):

Camshaft position sensor voltage	More than 4.7 V

P0345 (Engine running, cranking):

VVT sensor signal	No signal

P0345 (Chattering):

VVT sensor voltage	Less than 0.3 V, or more than 4.7 V

P0347 (Low voltage):

VVT sensor voltage	Less than 0.3 V

P0348 (High voltage):

VVT sensor voltage	More than 4.7 V

COMPONENT OPERATING RANGE

VVT sensor voltage	0.3 to 4.7 V

WIRING DIAGRAM

Refer to DTC P0335 (See page ES-220).

INSPECTION PROCEDURE

ES

HINT:

Read freeze frame data using the intelligent tester. The ECM records vehicle and driving condition information as freeze frame data the moment a DTC is stored. When troubleshooting, freeze frame data can be helpful in determining whether the vehicle was running or stopped, whether the engine was warmed up or not, whether the air-fuel ratio was lean or rich, as well as other data recorded at the time of a malfunction (See page ES-41).

1	CHECK HARNESS AND CONNECTOR (SENSOR POWER SOURCE)

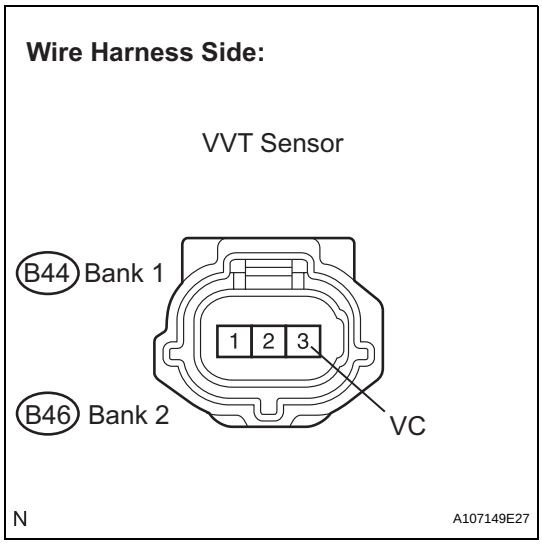

(a) Disconnect the B44 or B46 VVT sensor connector.

(b) Measure the voltage according to the value(s) in the table below.

Standard voltage

Tester Connection	Specified Condition
VC (B44-3) - Body ground	4.5 to 5.0 V
VC (B46-3) - Body ground	4.5 to 5.0 V

(c) Reconnect the VVT sensor connector.

NG → **REPAIR OR REPLACE HARNESS OR CONNECTOR**

OK

2 CHECK HARNESS AND CONNECTOR (VVT SENSOR FOR INTAKE CAMSHAFT - ECM)

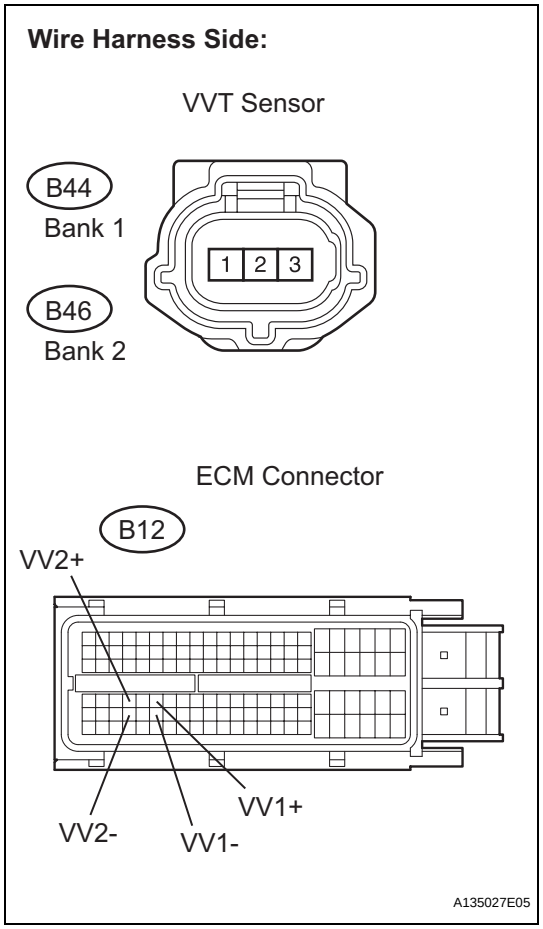

(a) Disconnect the B44 or B46 VVT sensor connector.
(b) Disconnect the B12 ECM connector.
(c) Measure the resistance according to the value(s) in the table below.

Standard resistance (Check for open)

Tester Connection	Specified Condition
VVR+ (B44-1) - VV1+ (B12-69)	Below 1 Ω
VVR- (B44-2) - VV1- (B12-92)	Below 1 Ω
VVL+ (B46-1) - VV2+ (B12-67)	Below 1 Ω
VVL- (B46-2) - VV2- (B12-90)	Below 1 Ω

Standard resistance (Check for short)

Tester Connection	Specified Condition
VVR+ (B44-1) or VV1+ (B12-69) - Body ground	10 kΩ or higher
VVR- (B44-2) or VV1- (B12-92) - Body ground	10 kΩ or higher
VVL+ (B46-1) or VV2+ (B12-67) - Body ground	10 kΩ or higher
VVL- (B46-2) or VV2- (B12-90) - Body ground	10 kΩ or higher

(d) Reconnect the VVT sensor connector.
(e) Reconnect the ECM connector.

NG → **REPAIR OR REPLACE HARNESS OR CONNECTOR**

OK

3 CHECK VVT SENSOR FOR INTAKE CAMSHAFT (SENSOR INSTALLATION)

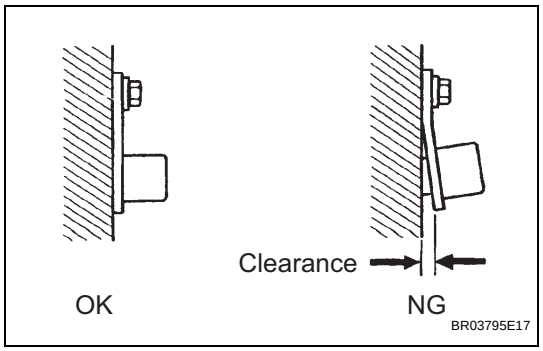

(a) Check the CKP sensor installation condition.
OK:
Sensor is installed correctly.

NG → **REPAIR OR REPLACE VVT SENSOR**

OK

4 CHECK CAMSHAFT TIMING GEAR ASSEMBLY (TEETH OF PLATE)

(a) Check the teeth of the signal plate.

ES

OK:
Sensor plate teeth do not have any cracks or deformation.

NG → **REPLACE CAMSHAFT TIMING GEAR ASSEMBLY**

OK

5	REPLACE VVT SENSOR

NEXT

ES

6	CHECK WHETHER DTC OUTPUT RECURS

(a) Connect the intelligent tester to the DLC3.
(b) Turn the engine switch on (IG).
(c) Turn the intelligent tester on.
(d) Clear the DTCs (See page ES-41).
(e) Select the following menu items: DIAGNOSIS / ENHANCED OBD II / DTC INFO / PENDING CODES.
(f) Read the DTCs.

Result

Display (DTC Output)	Proceed to
No output	A
P0340, P0342, P0343, P0345, P0347 or P0348	B

HINT:
If the engine does not start, replace the ECM.

B → **REPLACE ECM (See page ES-543)**

A

END

DTC	**P0351**	**Ignition Coil "A" Primary / Secondary Circuit**
DTC	**P0352**	**Ignition Coil "B" Primary / Secondary Circuit**
DTC	**P0353**	**Ignition Coil "C" Primary / Secondary Circuit**
DTC	**P0354**	**Ignition Coil "D" Primary / Secondary Circuit**
DTC	**P0355**	**Ignition Coil "E" Primary / Secondary Circuit**
DTC	**P0356**	**Ignition Coil "F" Primary / Secondary Circuit**

DESCRIPTION

HINT:

- These DTCs indicate malfunctions relating to the primary circuit.
- If DTC P0351 is set, check the No. 1 ignition coil circuit.
- If DTC P0352 is set, check the No. 2 ignition coil circuit.
- If DTC P0353 is set, check the No. 3 ignition coil circuit.
- If DTC P0354 is set, check the No. 4 ignition coil circuit.
- If DTC P0355 is set, check the No. 5 ignition coil circuit.
- If DTC P0356 is set, check the No. 6 ignition coil circuit.

A Direct Ignition System (DIS) is used on this vehicle.

The DIS is a 1-cylinder ignition system in which each cylinder is ignited by one ignition coil and spark plug is connected to the end of each secondary wiring. A powerful voltage, generated in the secondary wiring, is applied directly to each spark plug. Sparks of the spark plugs pass from the center electrode to the ground electrodes.

The ECM determines the ignition timing and transmits the ignition signals (IGT) to each cylinder. Using the IGT signal, the ECM turns the power transistor inside the igniter on and off. The power transistor, in turn, switches on and off the current to the primary coil. When the current to the primary coil is cut off, a powerful voltage is generated in the secondary coil. This voltage is applied to the spark plugs, causing them to spark inside the cylinders. As the ECM cuts the current to the primary coil off, the igniter sends back an ignition confirmation signal (IGF) to the ECM, for each cylinder ignition.

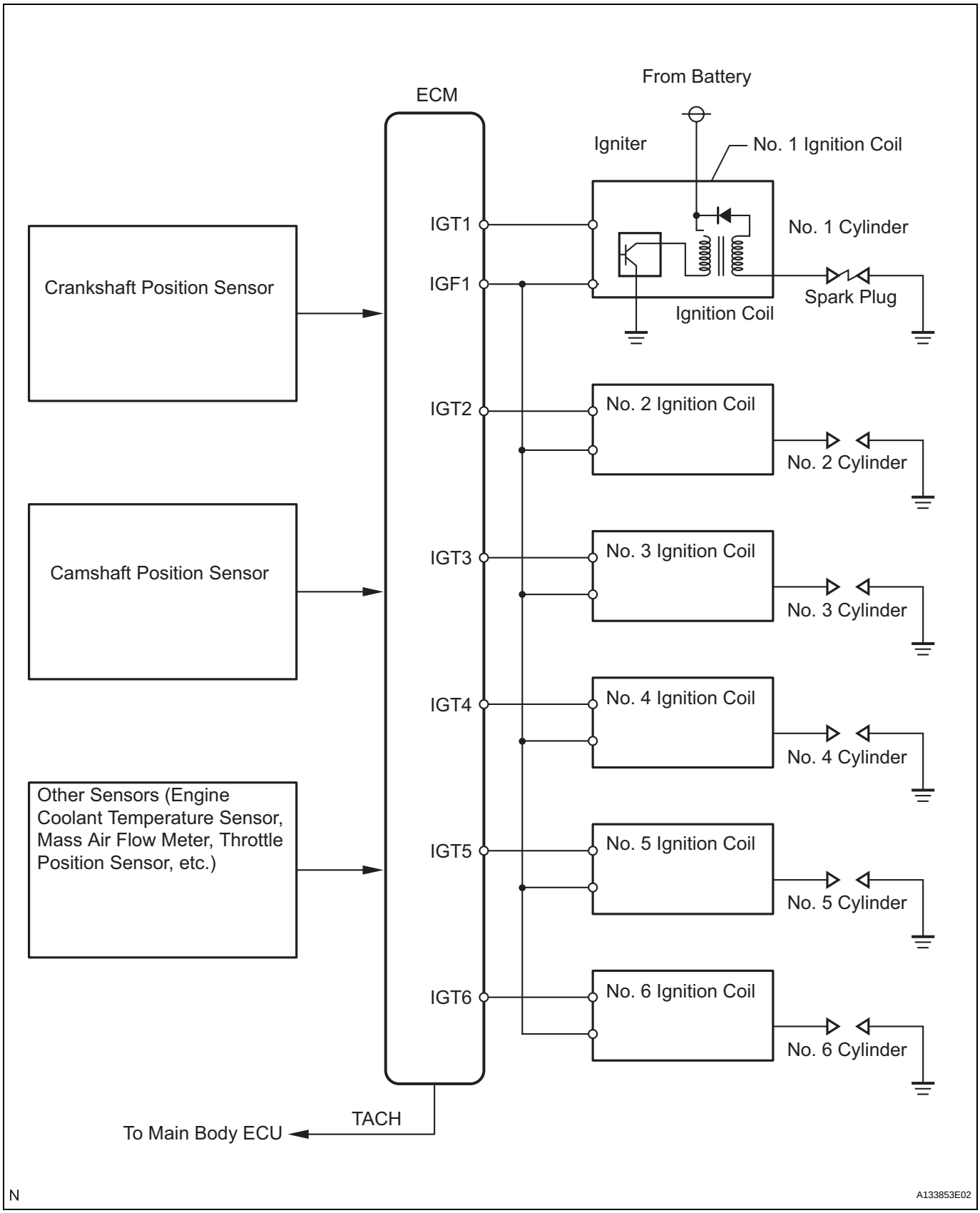
From Battery
ECM
Igniter
No. 1 Ignition Coil
IGT1
IGF1
No. 1 Cylinder
Spark Plug
Ignition Coil
Crankshaft Position Sensor
IGT2
No. 2 Ignition Coil
No. 2 Cylinder
Camshaft Position Sensor
IGT3
No. 3 Ignition Coil
No. 3 Cylinder
IGT4
No. 4 Ignition Coil
No. 4 Cylinder
Other Sensors (Engine Coolant Temperature Sensor, Mass Air Flow Meter, Throttle Position Sensor, etc.)
IGT5
No. 5 Ignition Coil
No. 5 Cylinder
IGT6
No. 6 Ignition Coil
No. 6 Cylinder
TACH
To Main Body ECU
N
A133853E02

DTC No.	DTC Detection Condition	Trouble Area
P0351 P0352 P0353 P0354 P0355 P0356	No IGF signal to ECM while engine is running (1 trip detection logic)	• Ignition system • Open or short in IGF1 or IGT circuit (1 to 6) between ignition coil and ECM • No. 1 to No. 6 ignition coils • ECM

Reference: Inspection using an oscilloscope.

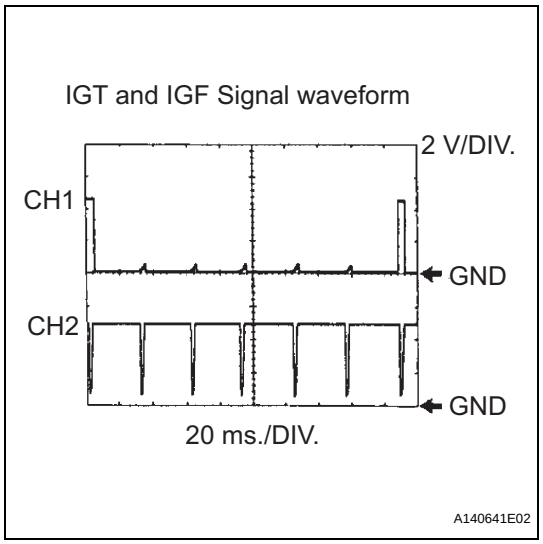

While cranking or idling the engine, check the waveform between terminals IGT (1 to 6) and E1, IGF1 and E1 of the ECM connector.

Item	Content
Terminals	CH1: IGT1, IGT2, IGT3, IGT4, IGT5, IGT6 - E1 CH2: IGF1 - E1
Equipment Settings	2 V/DIV. 20 ms./DIV.
Conditions	Cranking or idling

MONITOR DESCRIPTION

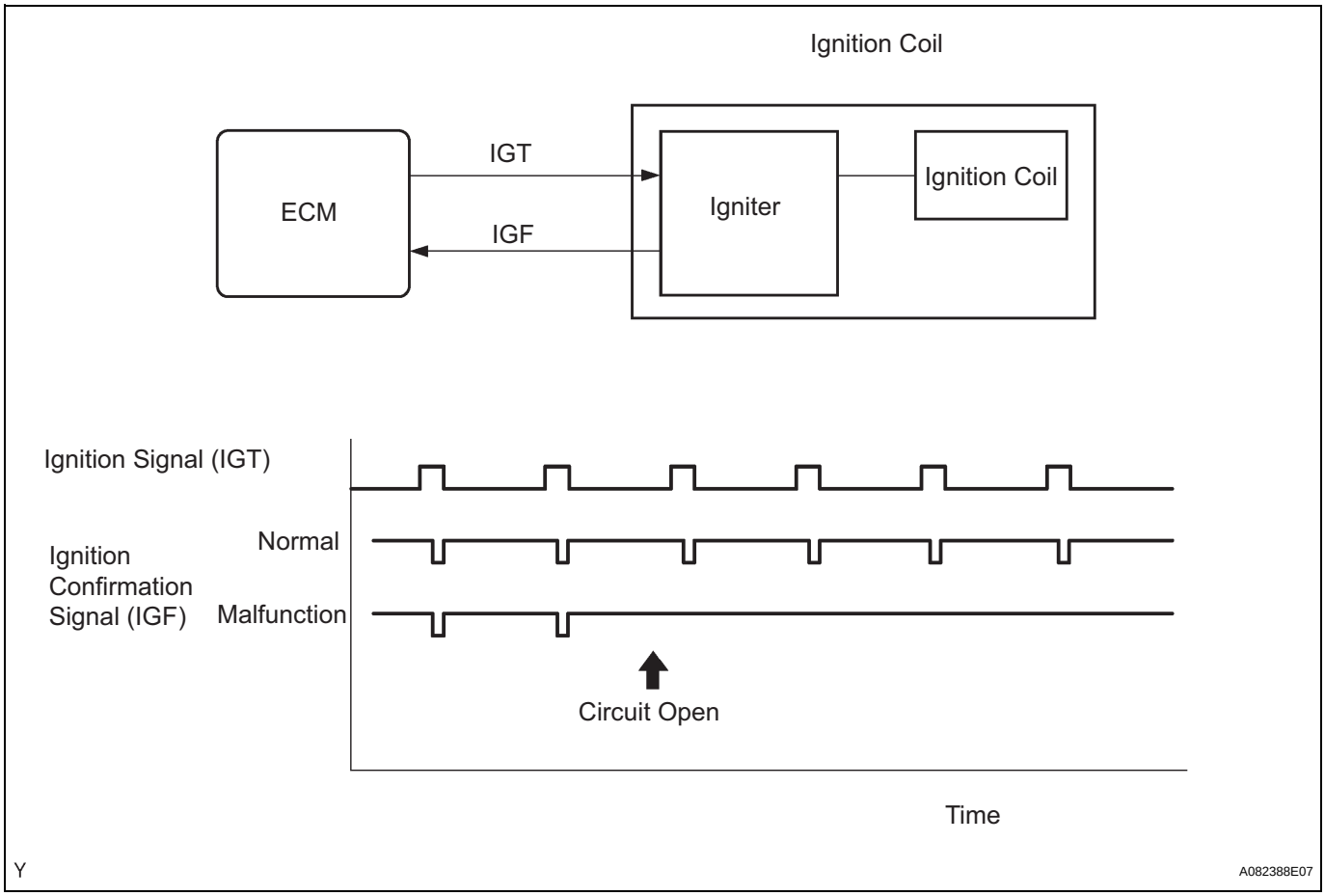

If the ECM does not receive any IGF signals despite transmitting the IGT signal, it interprets this as a fault in the igniter and sets a DTC.
If the malfunction is not repaired successfully, a DTC is set 1 second after the engine is next started.

MONITOR STRATEGY

Related DTCs	P0351: Igniter (cylinder 1) malfunction P0352: Igniter (cylinder 2) malfunction P0353: Igniter (cylinder 3) malfunction P0354: Igniter (cylinder 4) malfunction P0355: Igniter (cylinder 5) malfunction P0356: Igniter (cylinder 6) malfunction
Required Sensors/Components (Main)	Igniter (Cylinder 1 to 6)
Required Sensors/Components (Sub)	Crankshaft position sensor
Frequency of Operation	Continuous
Duration	0.256 seconds and 4 sparks
MIL Operation	Immediate
Sequence of Operation	None

TYPICAL ENABLING CONDITIONS

Monitor runs whenever the following DTCs are not present	None
Either following condition A or B is met:	-
A. Engine RPM	1,500 rpm or less
B. Starter	OFF
Either following condition C or D is met:	-

C. Both of the following conditions are met:	-
(a) Engine speed	500 rpm or less
(b) Battery voltage	6 V or more
D. All of the following conditions are met:	-
(a) Engine speed	More than 500 rpm
(b) Battery voltage	10 V or more
(c) Number of sparks after CPU reset	5 sparks or more

TYPICAL MALFUNCTION THRESHOLDS

Ignition signal fail count	More than 2 times
Ignition signal fail count	No ignition confirmation signal from igniter

COMPONENT OPERATING RANGE

IGF signal	Igniter transmits IGF signal when it receives IGT signal from ECM

WIRING DIAGRAM

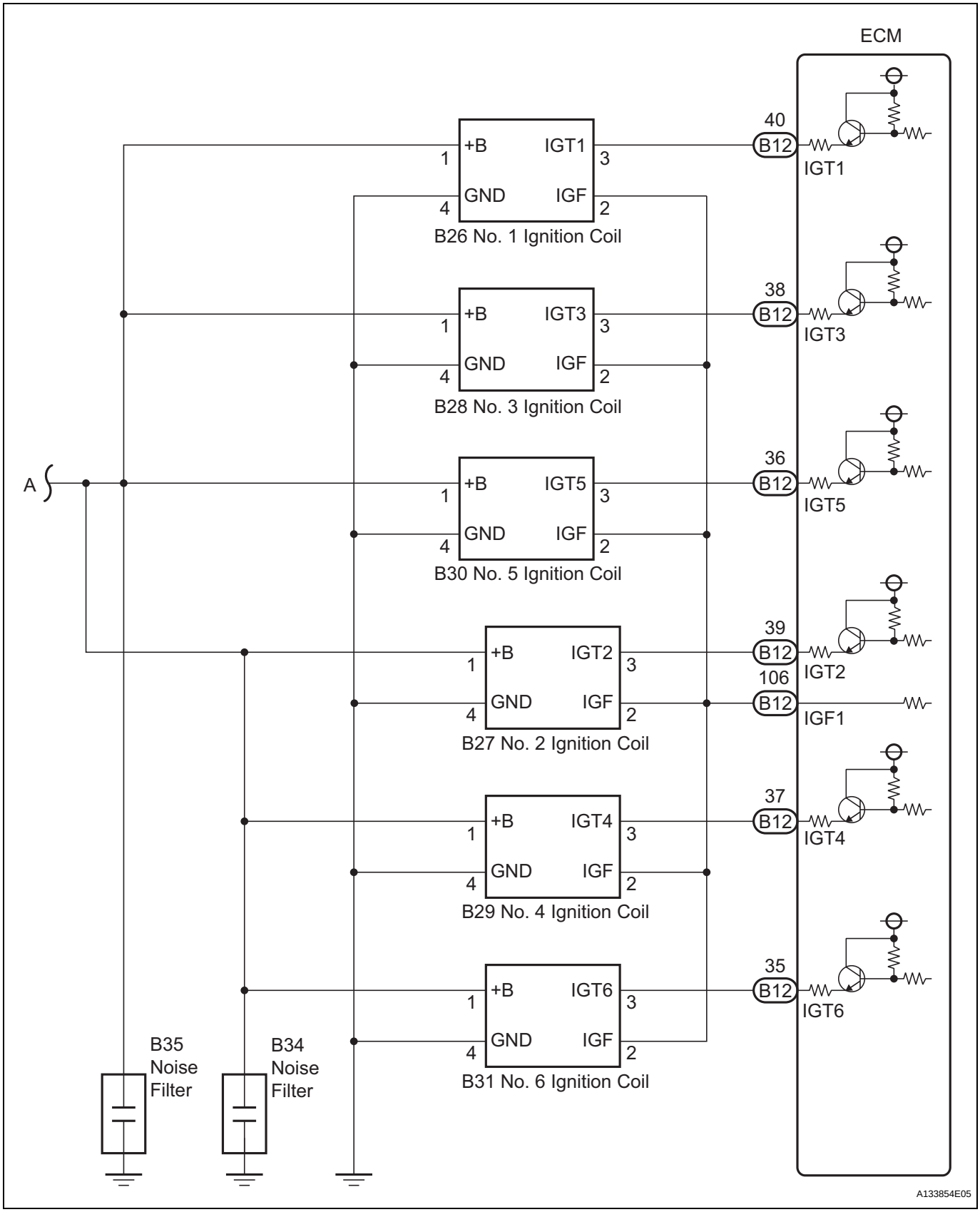

ES

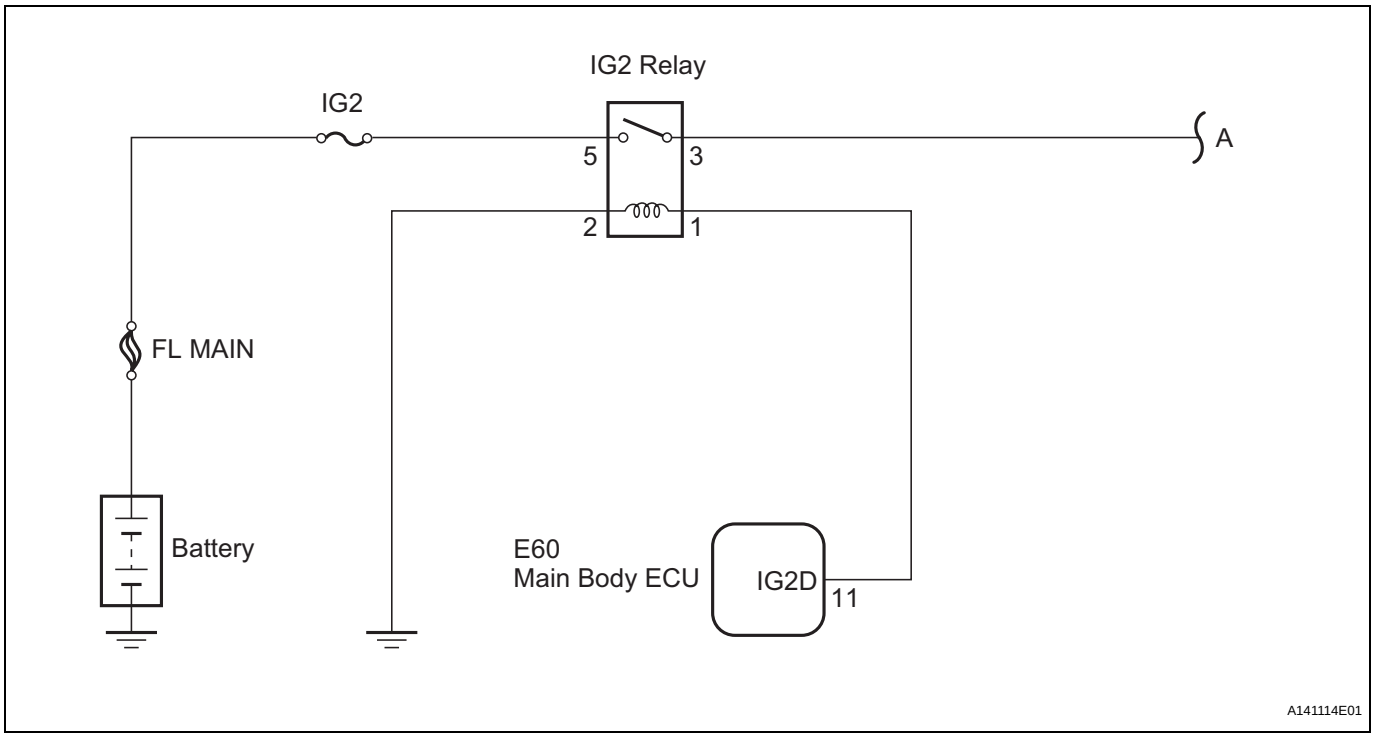

INSPECTION PROCEDURE

HINT:
Read freeze frame data using the intelligent tester. The ECM records vehicle and driving condition information as freeze frame data the moment a DTC is stored. When troubleshooting, freeze frame data can be helpful in determining whether the vehicle was running or stopped, whether the engine was warmed up or not, whether the air-fuel ratio was lean or rich, as well as other data recorded at the time of a malfunction (See page ES-41).

1	INSPECT IGNITION COIL ASSEMBLY (POWER SOURCE)

Wire Harness Side:

Ignition Coil Connector

(a) Disconnect the B26, B27, B28, B29, B30 or B31 ignition coil connector.
(b) Turn the engine switch on (IG).
(c) Measure the voltage according to the value(s) in the table below.

Standard voltage

Tester Connection	Specified Condition
B26-1 - Body ground	9 to 14 V
B27-1 - Body ground	9 to 14 V
B28-1 - Body ground	9 to 14 V
B29-1 - Body ground	9 to 14 V
B30-1 - Body ground	9 to 14 V
B31-1 - Body ground	9 to 14 V

(d) Measure the resistance according to the value(s) in the table below.

Standard resistance

Tester Connection	Specified Condition
B26-4 - Body ground	Below 1 Ω
B27-4 - Body ground	Below 1 Ω

Tester Connection	Specified Condition
B28-4 - Body ground	Below 1 Ω
B29-4 - Body ground	Below 1 Ω
B30-4 - Body ground	Below 1 Ω
B31-4 - Body ground	Below 1 Ω

NG → **REPAIR OR REPLACE HARNESS OR CONNECTOR**

OK

ES

2 CHECK HARNESS AND CONNECTOR (IGNITION COIL ASSEMBLY - ECM (IGT SIGNAL TERMINAL))

Wire Harness Side Front View:

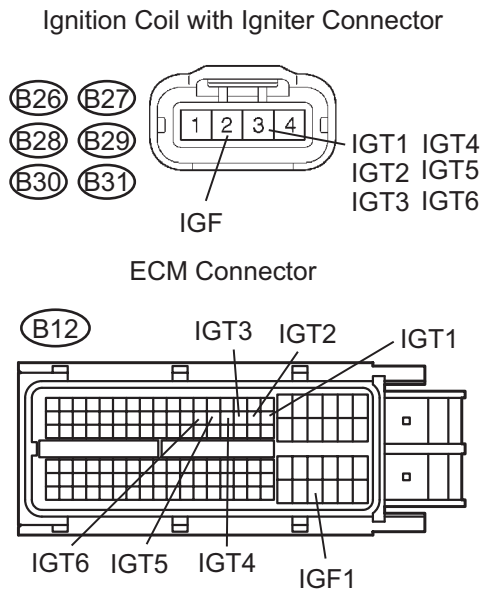

(a) Disconnect the B26, B27, B28, B29, B30 or B31 ignition coil connector.
(b) Disconnect the ECM B12 connectors.
(c) Measure the resistance according to the value(s) in the table below.

Standard resistance (Check for open)

Tester Connection	Specified Condition
IGT1 (B26-3) - IGT1 (B12-40)	Below 1 Ω
IGT2 (B27-3) - IGT2 (B12-39)	Below 1 Ω
IGT3 (B28-3) - IGT3 (B12-38)	Below 1 Ω
IGT4 (B29-3) - IGT4 (B12-37)	Below 1 Ω
IGT5 (B30-3) - IGT5 (B12-36)	Below 1 Ω
IGT6 (B31-3) - IGT6 (B12-35)	Below 1 Ω

Standard resistance (Check for short)

Tester Connection	Specified Condition
IGT1 (B26-3) or IGT1 (B12-40) - Body ground	10 kΩ or higher
IGT2 (B27-3) or IGT2 (B12-39) - Body ground	10 kΩ or higher
IGT3 (B28-3) or IGT3 (B12-38) - Body ground	10 kΩ or higher
IGT4 (B29-3) or IGT4 (B12-37) - Body ground	10 kΩ or higher
IGT5 (B30-3) or IGT5 (B12-36) - Body ground	10 kΩ or higher
IGT6 (B31-3) or IGT6 (B12-35) - Body ground	10 kΩ or higher

Standard resistance (Check for open)

Tester Connection	Specified Condition
IGF (B26-2) - IGF1 (B12-106)	Below 1 Ω
IGF (B27-2) - IGF1 (B12-106)	Below 1 Ω
IGF (B28-2) - IGF1 (B12-106)	Below 1 Ω
IGF (B29-2) - IGF1 (B12-106)	Below 1 Ω
IGF (B30-2) - IGF1 (B12-106)	Below 1 Ω
IGF (B31-2) - IGF1 (B12-106)	Below 1 Ω

Standard resistance (Check for short)

Tester Connection	Specified Condition
IGF (B26-2) or IGF1 (B12-106) - Body ground	10 kΩ or higher
IGF (B27-2) or IGF1 (B12-106) - Body ground	10 kΩ or higher
IGF (B28-2) or IGF1 (B12-106)- Body ground	10 kΩ or higher
IGF (B29-2) or IGF1 (B12-106) - Body ground	10 kΩ or higher

Tester Connection	Specified Condition
IGF (B30-2) or IGF1 (B12-106) - Body ground	10 kΩ or higher
IGF (B31-2) or IGF1 (B12-106) - Body ground	10 kΩ or higher

NG → **REPAIR OR REPLACE HARNESS OR CONNECTOR**

OK

3 PERFORM SIMULATION TEST

(a) Clear the DTC(s) (See page ES-41).
(b) Change the arrangement of the ignition coils (with igniters).
NOTICE:
Do not change the location of the connectors.
(c) Perform a simulation test.

Result

Display (DTC Output)	Proceed to
Same DTCs (that have been erased)	A
Other DTCs	B

B → **REPLACE IGNITION COIL ASSEMBLY**

A

REPLACE ECM (See page ES-543)

DTC	P0365	Camshaft Position Sensor "B" Circuit (Bank 1)

DTC	P0367	Camshaft Position Sensor "B" Circuit Low Input (Bank 1)

DTC	P0368	Camshaft Position Sensor "B" Circuit High Input (Bank 1)

DTC	P0390	Camshaft Position Sensor "B" Circuit (Bank 2)

DTC	P0392	Camshaft Position Sensor "B" Circuit Low Input (Bank 2)

DTC	P0393	Camshaft Position Sensor "B" Circuit High Input (Bank 2)

DESCRIPTION

The exhaust camshaft's Variable Valve Timing (VVT) sensor consists of a magnet and MRE (Magnet Resistance Element).
The exhaust camshaft has a sensor plate with 3 teeth on its outer circumference.
When the exhaust camshaft rotates, changes occur in the air gaps between the 3 teeth and MRE, which affects the magnet. As a result, the resistance of the MRE material fluctuates. The VVT sensor converts the exhaust camshaft rotation data to pulse signals, uses the pulse signals to determine the camshaft angle, and sends it to the ECM.

DTC No.	DTC Detection Condition	Trouble Area
P0365 P0390	• Input voltage to ECM remains 0.3 V or less, or 4.7 V or higher for more than 5 seconds, when 2 or more seconds have elapsed after turning engine switch on (IG) (1 trip detection logic) • No VVT sensor signal to ECM during cranking (1 trip detection logic)	• Open or short in VVT sensor for exhaust camshaft circuit • VVT sensor for exhaust camshaft • Exhaust camshaft • Jumped tooth of timing chain • ECM
P0367 P0392	Output voltage of VVT sensor is 0.3 V or less for 5 seconds (1 trip detection logic)	• Open or short in VVT sensor for exhaust camshaft circuit • VVT sensor for exhaust camshaft • Exhaust camshaft • Jumped tooth of timing chain • ECM
P0368 P0393	Output voltage of VVT sensor is 4.7 V or more for 5 seconds (1 trip detection logic)	• Open or short in VVT sensor for exhaust camshaft circuit • VVT sensor for exhaust camshaft • Exhaust camshaft • Jumped tooth of timing chain • ECM

Reference: Inspection using an oscilloscope

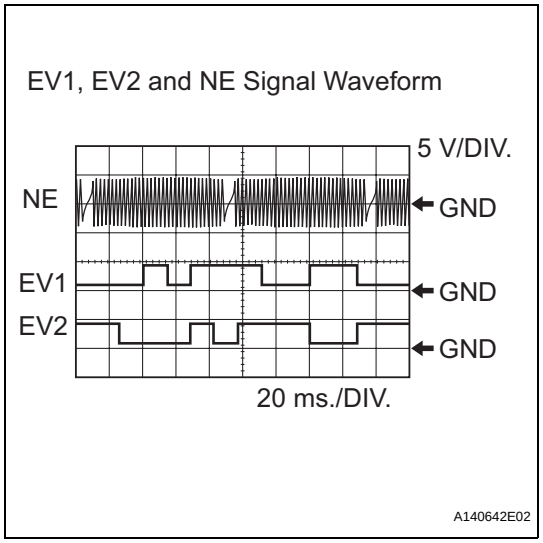

HINT:
- The correct waveform is as shown.
- EV1+ and EV2+ stand for the VVT sensor signal, and NE+ stands for the CKP sensor signal.

Item	Content
Terminal	NE+ - NE- EV1+ - EV1- EV2+ - EV2-
Equipment Setting	5 V/DIV. 20 ms./DIV.
Condition	Cranking or idling

MONITOR DESCRIPTION

If no signal is transmitted by the VVT sensor despite the engine revolving, or the rotations of the camshaft and the crankshaft are not synchronized, the ECM interprets this as a malfunction of the sensor.

MONITOR STRATEGY

Related DTCs	P0365: VVT sensor (Bank 1) open/short P0365: VVT position/Crankshaft position misalignment (Bank 1) P0367: VVT position sensor (Bank 1) range check (low voltage) P0368: VVT position sensor (Bank 1) range check (high voltage) P0390: VVT sensor (Bank 2) open/short P0390: VVT position/Crankshaft position misalignment (Bank 2) P0392: VVT position sensor (Bank 2) range check (low voltage) P0393: VVT position sensor (Bank 2) range check (high voltage)
Required Sensors/Components (Main)	VVT position sensor (Bank 1 and 2)
Required Sensors/Components (Sub)	Crankshaft position sensor
Frequency of Operation	Continuous
Duration	5 seconds
MIL Operation	2 driving cycles: P0365, P0390 (cranking) Immediate: Others
Sequence of Operation	None

TYPICAL ENABLING CONDITIONS

All:

Monitor runs whenever following DTCs are not present	None

ES

Chattering, Low voltage, High voltage:

Starter	OFF
Engine switch	ON
Time after turning engine switch off to on (IG)	2 seconds or more
Battery voltage	8 V or more

P0365, P0390 (Engine running):

Engine speed	600 rpm or more
Battery voltage	8 V or more
Starter	OFF
Engine switch	ON

P0365, P0390 (Cranking):

Starter	ON
Minimum battery voltage	Less than 11 V

TYPICAL MALFUNCTION THRESHOLDS

P0365, P0390 (Chattering):

Exhaust camshaft position sensor voltage	Less than 0.3 V, or more than 4.7 V

P0367, P0392 (Low voltage):

Exhaust camshaft position sensor voltage	Less than 0.3 V

P0368, P0393 (High voltage):

Exhaust camshaft position sensor voltage	More than 4.7 V

P0365, P0390 (Engine running, Cranking):

Exhaust camshaft position signal	No signal

COMPONENT OPERATING RANGE

VVT sensor voltage	0.3 to 4.7 V

WIRING DIAGRAM

Refer to DTC P0335 (See page ES-220).

INSPECTION PROCEDURE

Read freeze frame data using the intelligent tester. The ECM records vehicle and driving condition information as freeze frame data the moment a DTC is stored. When troubleshooting, freeze frame data can be helpful in determining whether the vehicle was running or stopped, whether the engine was warmed up or not, whether the air-fuel ratio was lean or rich, as well as other data recorded at the time of a malfunction (See page ES-41).

1 CHECK HARNESS AND CONNECTOR (SENSOR POWER SOURCE)

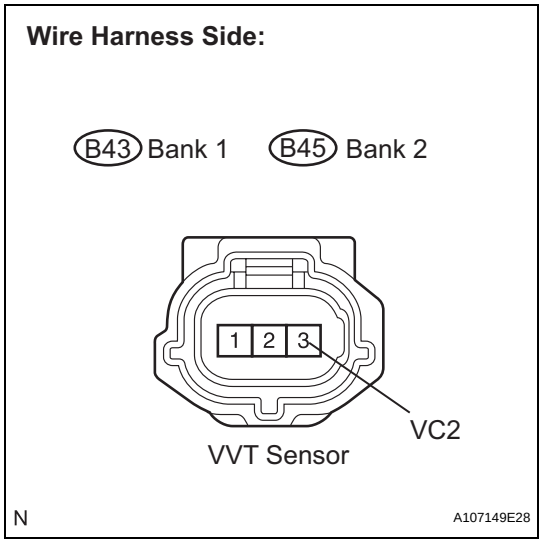

(a) Disconnect the B43 or B45 VVT sensor connector.
(b) Measure the voltage according to the value(s) in the table below.

Standard voltage

Tester Connection	Specified Condition
VC2 (B43-3) - Body ground	4.5 to 5.0 V
VC2 (B45-3) - Body ground	4.5 to 5.0 V

(c) Reconnect the VVT sensor connector.

NG → **REPAIR OR REPLACE HARNESS OR CONNECTOR**

OK

2 CHECK HARNESS AND CONNECTOR (VVT SENSOR - ECM)

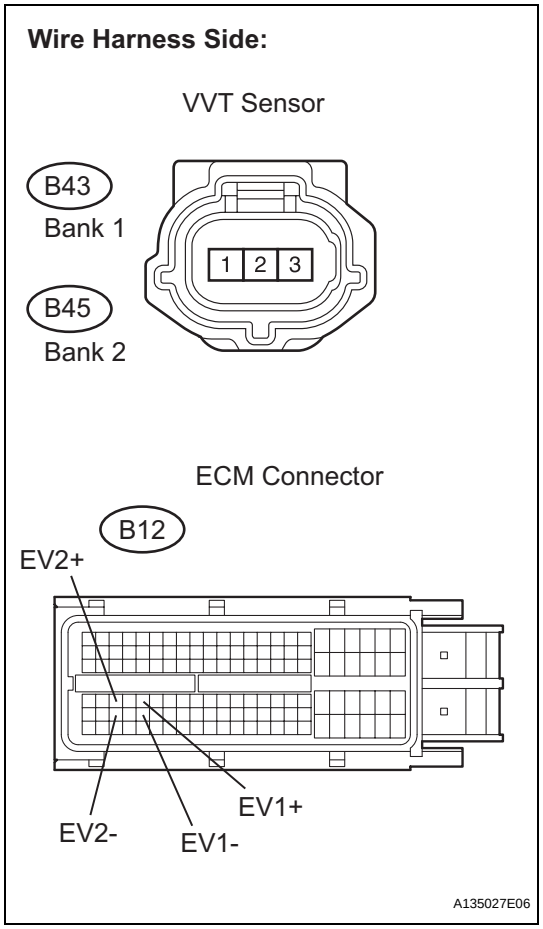

(a) Disconnect the B43 or B45 VVT sensor connector.
(b) Disconnect the B12 ECM connector.
(c) Measure the resistance according to the value(s) in the table below.

Standard resistance (Check for open)

Tester Connection	Specified Condition
EX+ (B43-1) - EV1+ (B12-68)	Below 1 Ω
EX- (B43-2) - EV1- (B12-91)	Below 1 Ω
EX+ (B45-1) - EV2+ (B12-66)	Below 1 Ω
EX- (B45-2) - EV2- (B12-89)	Below 1 Ω

Standard resistance (Check for short)

Tester Connection	Specified Condition
EX+ (B43-1) or EV1+ (B12-68) - Body ground	10 kΩ or higher
EX- (B43-2) or EV1- (B12-91) - Body ground	10 kΩ or higher
EX+ (B45-1) or EV2+ (B12-66) - Body ground	10 kΩ or higher
EX- (B45-2) or EV2- (B12-89) - Body ground	10 kΩ or higher

(d) Reconnect the VVT sensor connector.
(e) Reconnect the ECM connector.

NG → **REPAIR OR REPLACE HARNESS OR CONNECTOR**

OK

ES

ES

3	CHECK VVT SENSOR FOR EXHAUST CAMSHAFT (SENSOR INSTALLATION)

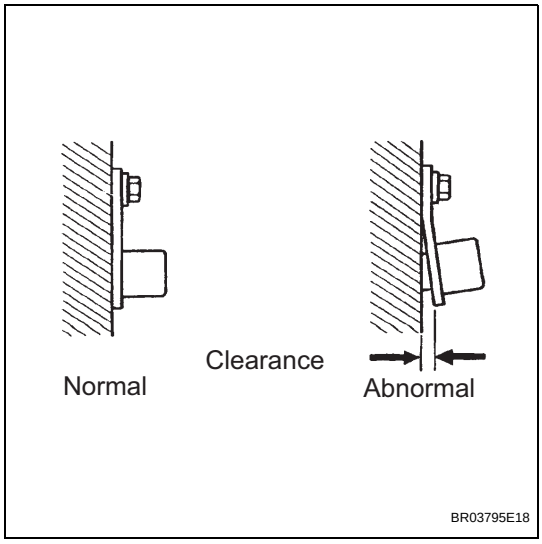

(a) Check the VVT sensor installation condition.
OK:
Sensor is installed correctly.

NG → **REPAIR OR REPLACE VVT SENSOR**

OK

4	CHECK EXHAUST CAMSHAFT

(a) Check the teeth of the camshaft.

NG → **REPLACE EXHAUST CAMSHAFT**

OK

5	REPLACE VVT SENSOR

NEXT

6	CHECK WHETHER DTC OUTPUT RECURS

(a) Connect the intelligent tester to the DLC3.
(b) Turn the engine switch on (IG).
(c) Turn the intelligent tester on.
(d) Clear the DTCs (See page ES-41).
(e) Select the following menu items: DIAGNOSIS / ENHANCED OBD II / DTC INFO / PENDING CODES.
(f) Read the DTCs.

Result

Display (DTC Output)	Proceed to
No output	A
P0365, P0352, P0353, P0354, P0355 or P0356	B

HINT:
If the engine does not start, replace the ECM.

B → **REPLACE ECM (See page ES-543)**

A

END

DTC	P0420	Catalyst System Efficiency Below Threshold (Bank 1)

DTC	P0430	Catalyst System Efficiency Below Threshold (Bank 2)

MONITOR DESCRIPTION

The ECM uses the sensors mounted in front of and behind the Three-Way Catalytic Converter (TWC) to monitor its efficiency.
The first sensor, the Air-Fuel Ratio (A/F) sensor, sends pre-catalyst information to the ECM. The second sensor, the Heated Oxygen (HO2) sensor, sends post-catalyst information to the ECM.
In order to detect any deterioration in the TWC, the ECM calculates the Oxygen Storage Capacity (OSC) of the TWC. This calculation is based on the voltage output of the HO2 sensor while performing active air-fuel ratio control, rather than the conventional detecting method, which uses the locus ratio.
The OSC value is an indication of the oxygen storage capacity of the TWC. When the vehicle is being driven with a warm engine, active air-fuel ratio control is performed for approximately 15 to 20 seconds. When it is performed, the ECM deliberately sets the air-fuel ratio to lean or rich levels. If a rich-lean cycle of the HO2 sensor is long, the OSC becomes greater. There is a direct correlation between the OSCs of the HO2 sensor and the TWC.
The ECM uses the OSC value to determine the state of the TWC. If any deterioration has occurred, it illuminates the MIL and sets a DTC.

DTC No.	DTC Detection Condition	Trouble Area
P0420	OSC value is smaller than standard value under active air-fuel ratio control (2 trip detection logic)	• Gas leakage from exhaust system • A/F sensor (bank 1 sensor 1) • HO2 sensor (bank 1 sensor 2) • Exhaust manifold (TWC)
P0430	OSC value is smaller than standard value under active air-fuel ratio control (2 trip detection logic)	• Gas leakage from exhaust system • A/F sensor (bank 2 sensor 1) • HO2 sensor (bank 2 sensor 2) • Exhaust manifold (TWC)

HINT:
- Bank 1 refers to the bank that includes cylinder No. 1.
- Bank 2 refers to the bank that does not include cylinder No. 1.
- Sensor 1 refers to the sensor closest to the engine assembly.
- Sensor 2 refers to the sensor farthest away from the engine assembly.

MONITOR STRATEGY

Related DTCs	P0420: Catalyst Deterioration P0420: Catalyst Deterioration
Required Sensors/Components (Main)	TWC
Required Sensors/Components (Sub)	A/F sensor, heated oxygen sensor, intake air temperature sensor, mass air flow meter, crankshaft position sensor and engine coolant temperature sensor
Frequency of Operation	Once per driving cycle
Duration	Approximately 30 seconds
MIL Operation	2 driving cycles
Sequence of Operation	None

TYPICAL ENABLING CONDITIONS

Monitor runs whenever following DTCs are not present	P0011, 14 (VVT System 1 - Advance) P0012, 15 (VVT System 1 - Retard) P0031, 32, 51, 52 (A/F Sensor heater - Sensor 1) P0037, 38, 58, 59 (O2 Sensor heater - Sensor 2) P0100 - P0103 (MAF meter) P0115 - P0118 (ECT sensor) P0120 - P0223, P2135 (TP sensor) P0125 (Insufficient ECT for Closed Loop) P0136, P0156(O2 Sensor - Sensor 2) P0171, P0172, P0174, P0175 (Fuel system) P0300 - P0304 (Misfire) P0335 (CKP sensor) P0340 (CMP sensor) P0351 - P0354 (Igniter) P0500 (VSS) P2196, P2198 (A/F Sensor - rationality) P2A00, P2A03 (A/F Sensor - slow response)
Battery voltage	11 V or more
IAT	-10°C (14°F) or more
ECT	70 kPa (525 mmHg) or more
Atmospheric pressure	-
Idle	OFF
Engine RPM	Less than 3,200 rpm
A/F sensor	Activated
Fuel system status	Closed loop
Engine load	10 to 70 %
All of the following conditions 1, 2 and 3 are met:	-
1. MAF	5 to 25 g/sec.
2. Front catalyst temperature (estimated)	600 to 750°C (1,112 to 1,382°F)
3. Rear catalyst temperature (estimated)	100 to 900°C (212 to 1,652°F)
EVAP system monitor	The monitor has not run yet or the vacuum introduction has been completed.
A/F sensor monitor	Completed
Rear HO2S monitor	Completed
Shift position	4th or higher

TYPICAL MALFUNCTION THRESHOLDS

OSC (Oxygen Storage Capacity) of Catalyst	Less than 0.046 g

MONITOR RESULT

Refer to CHECKING MONITOR STATUS (See page ES-20).

CONDITIONING FOR SENSOR TESTING

Perform the operation with the engine speeds and time durations described below prior to checking the waveforms of the A/F and HO2 sensors. This is performed in order to heat the sensors sufficiently to obtain the appropriate inspection results.

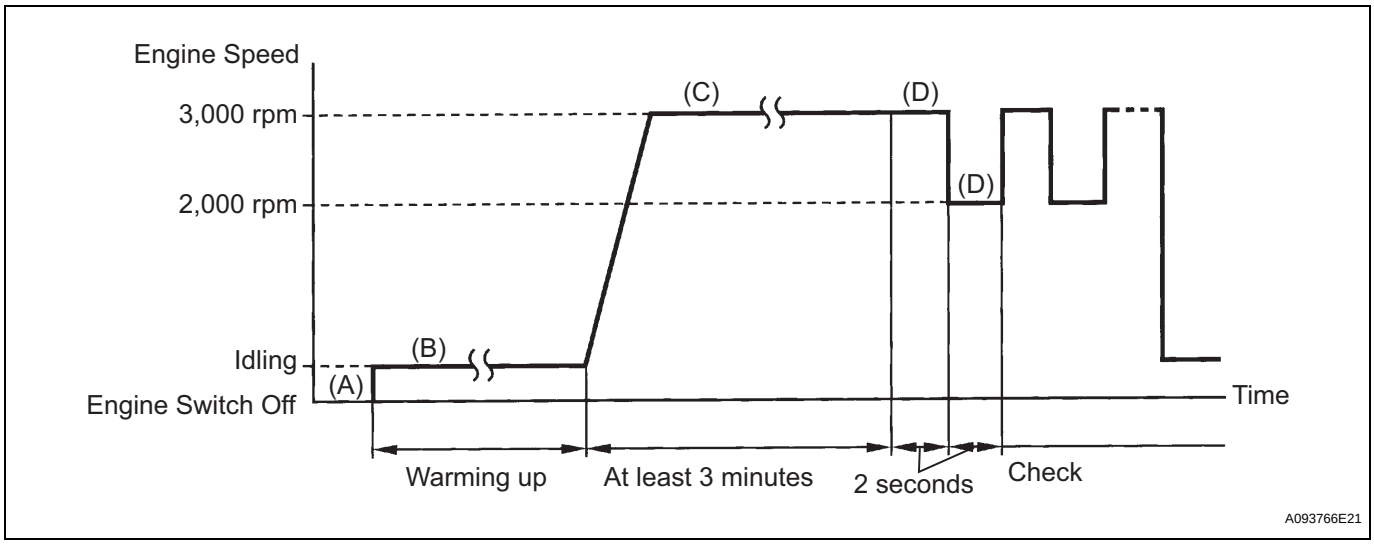

1. Connect the intelligent tester to the DLC3 (Procedure "A").
2. Start the engine and warm it up with all the accessories switched off, until the engine coolant temperature stabilizes (Procedure "B").
3. Run the engine at an engine speed of between 2,500 rpm and 3,000 rpm for at least 3 minutes (Procedure "C").
4. While running the engine at 3,000 rpm for 2 seconds and 2,000 rpm for 2 seconds, check the waveforms of the A/F and HO2 sensors using the tester or scan tool (Procedure "D").

NOTICE:

The Air-Fuel Ratio (A/F) sensor has an output delay of a few seconds and the Heated Oxygen (HO2) sensor has a maximum output delay of approximately 20 seconds.

Case	A/F Sensor (Sensor 1) Output Voltage		HO2 Sensor (Sensor 2) Output Voltage		Main Suspected Trouble Area
1	Injection Volume +25 % -12.5 %		Injection Volume +25 % -12.5 %		-
	Output Voltage More than 3.35 V Less than 3.0 V	OK	Output Voltage More than 0.55 V Less than 0.4 V	OK	
2	Injection Volume +25 % -12.5 %		Injection Volume +25 % -12.5 %		• A/F sensor • A/F sensor heater • A/F sensor circuit
	Output Voltage Almost no reaction	NG	Output Voltage More than 0.55 V Less than 0.4 V	OK	
3	Injection Volume +25 % -12.5 %		Injection Volume +25 % -12.5 %		• HO2 sensor • HO2 sensor heater • HO2 sensor circuit
	Output Voltage More than 3.35 V Less than 3.0 V	OK	Output Voltage Almost no reaction	NG	
4	Injection Volume +25 % -12.5 %		Injection Volume +25 % -12.5 %		• Fuel pressure • Gas leakage from exhaust system (Air-fuel ratio extremely lean or rich)
	Output Voltage Almost no reaction	NG	Output Voltage Almost no reaction	NG	

- Following the A/F CONTROL procedure enables technicians to check and graph the output voltages of both the A/F and HO2 sensors.
- To display the graph, enter the following menus on the tester: DIAGNOSIS / ENHANCED OBD II / ACTIVE TEST / A/F CONTROL / USER DATA / AFS B1 S1 and O2S B1 S2 or AFS B2 S1 and O2S B2 S2, and press the YES button and then the ENTER button followed by the F4 button.

INSPECTION PROCEDURE

HINT:
Read freeze frame data using the intelligent tester. The ECM records vehicle and driving condition information as freeze frame data the moment a DTC is stored. When troubleshooting, freeze frame data can be helpful in determining whether the vehicle was running or stopped, whether the engine was warmed up or not, whether the air-fuel ratio was lean or rich, as well as other data recorded at the time of a malfunction (See page ES-41).

1	CHECK ANY OTHER DTCS OUTPUT (IN ADDITION TO DTC P0420 AND/OR P0430)

(a) Connect the intelligent tester to the DLC3.
(b) Turn the engine switch on (IG) and turn the tester on.
(c) Enter the following menus: DIAGNOSIS / ENHANCED OBD II / DTC INFO / CURRENT CODES.
(d) Read the DTCs.

Result

Display (DTC output)	Proceed to
P0420 and/or P0430	A
P0420 and/or P0430 and other DTCs	B

HINT:
If any DTCs other than P0420 or P0430 are output, troubleshoot those DTCs first.

B → **GO TO DTC CHART (See page ES-59)**

A

2	PERFORM ACTIVE TEST BY INTELLIGENT TESTER (A/F CONTROL)

(a) Connect the intelligent tester to the DLC3.
(b) Start the engine and turn the tester on.
(c) Warm up the engine at an engine speed of 2,500 rpm for approximately 90 seconds.
(d) On the tester, enter the following menus: DIAGNOSIS / ENHANCED OBD II / ACTIVE TEST / A/F CONTROL.
(e) Perform the A/F CONTROL operation with the engine in an idling condition (press the RIGHT or LEFT button to change the fuel injection volume.)
(f) Monitor the output voltages of the A/F and HO2 sensors (AFS B1 S1 and O2S B1 S2 or AFS B2 S1 and O2S B2 S2) displayed on the tester.
HINT:
- The A/F CONTROL operation lowers the fuel injection volume by 12.5 % or increases the injection volume by 25 %.

- Each sensor reacts in accordance with increases and decreases in the fuel injection volume.

Tester Display (Sensor)	Injection Volume	Status	Voltage
AFS B1 S1 or AFS B2 S1 (A/F)	+25 %	Rich	Less than 3.0 V
AFS B1 S1 or AFS B2 S1 (A/F)	-12.5 %	Lean	More than 3.35 V
O2S B1 S2 or O2S B2 S2 (HO2)	+25 %	Rich	More than 0.55 V
O2S B1 S2 or O2S B2 S2 (HO2)	-12.5 %	Lean	Less than 0.4 V

ES

Result

Status AFS B1 S1 or AFS B2 S1	Status O2S B1 S2 or O2S B2 S2	A/F Condition and A/F and HO2 Sensor Conditions	Misfire	Main Suspected Trouble Areas	Proceed to
Lean/Rich	**Lean/Rich**	**Normal**	**-**	• **Three-Way Catalytic Converter (TWC)** • **Gas leakage from exhaust system**	**A**
Lean	**Lean/Rich**	**A/F sensor malfunction**	**-**	• **A/F sensor**	**B**
Rich	**Lean/Rich**	**A/F sensor malfunction**	**May occur**	• **A/F sensor**	**B**
Lean/Rich	**Lean**	**HO2 sensor malfunction**	**-**	• **HO2 sensor** • **Gas leakage from exhaust system**	**C**
Lean/Rich	**Rich**	**HO2 sensor malfunction**	**-**	• **HO2 sensor** • **Gas leakage from exhaust system**	**C**
Lean	**Lean**	**Actual air-fuel ratio lean**	**May occur**	• **Extremely rich or lean actual air-fuel ratio** • **Gas leakage from exhaust system**	**A**
Rich	**Rich**	**Actual air-fuel ratio lean**	**-**	• **Extremely rich or lean actual air-fuel ratio** • **Gas leakage from exhaust system**	**A**

Lean:
During A/F CONTROL, the A/F sensor (AFS) output voltage is consistently more than 3.35 V, and the HO2 sensor output voltage (O2S) is consistently less than 0.4 V.

Rich:
During A/F CONTROL, the AFS is consistently less than 3.0 V, and the O2S is consistently more than 0.55 V.

Lean/Rich:
During A/F CONTROL of the ACTIVE TEST, the output voltage of the HO2 sensor alternates correctly.

B → **CHECK AND REPLACE AIR FUEL RATIO SENSOR**

C → CHECK AND REPLACE HEATED OXYGEN SENSOR, AND CHECK AND REPAIR EXHAUST GAS LEAKAGE

A

3	CHECK FOR EXHAUST GAS LEAK

OK:
No gas leakage.

NG → REPAIR OR REPLACE EXHAUST GAS LEAKAGE POINT

OK

REPLACE THREE-WAY CATALYTIC CONVERTER

DTC	P043E	Evaporative Emission System Reference Orifice Clog Up

DTC	P043F	Evaporative Emission System Reference Orifice High Flow

DTC	P2401	Evaporative Emission System Leak Detection Pump Control Circuit Low

ES

DTC	P2402	Evaporative Emission System Leak Detection Pump Control Circuit High

DTC	P2419	Evaporative Emission System Switching Valve Control Circuit Low

DTC SUMMARY

DTCs	Monitoring Items	Malfunction Detection Conditions	Trouble Areas	Detection Timings	Detection Logic
P043E	0.02 inch orifice clogged	P043E, P043F, P2401, P2402, P2419 are present when one of the following conditions is met during key-off EVAP monitor • Reference orifice clogged • Reference orifice high-flow • Leak detection pump OFF malfunction • Leak detection pump ON malfunction • Vent valve ON (close) malfunction	• Pump module • Connector/wire harness (Pump module - ECM) • ECM	While engine switch OFF	2 trip
P043F	0.02 inch orifice high-flow				
P2401	Vacuum pump stuck OFF				
P2402	Vacuum pump stuck ON				
P2419	Vent valve stuck open (vent)				

HINT:
The 0.02 inch orifice is located inside the pump module.

DESCRIPTION

The circuit description can be found in the EVAP (Evaporative Emission) System (See page ES-395).

INSPECTION PROCEDURE

Refer to the EVAP System (See page ES-395).

MONITOR DESCRIPTION

5 hours*1 after the engine switch is turned off, the electric vacuum pump creates negative pressure (vacuum) in the EVAP (Evaporative Emission) system. The ECM monitors for leaks and actuator malfunctions based on the EVAP pressure.
HINT:
*1: If the engine coolant temperature is not below 35°C (95°F) 5 hours after the engine switch is turned off, the monitor check starts 2 hours later. If it is still not below 35°C (95°F) 7 hours after the engine switch is turned off, the monitor check starts 2.5 hours later.

Sequence	Operations	Descriptions	Duration
-	ECM activation	Activated by soak timer, 5 hours (7 or 9.5 hours) after engine switch is turned off.	-

Sequence	Operations	Descriptions	Duration
A	Atmospheric pressure measurement	Vent valve turned OFF (vent) and EVAP system pressure measured by ECM in order to register atmospheric pressure. If pressure in EVAP system is not between 70 kPa and 110 kPa (525 mmHg and 825 mmHg), ECM cancels EVAP system monitor.	10 seconds
B	First 0.02 inch leak pressure measurement	In order to determine 0.02 inch leak pressure standard, vacuum pump creates negative pressure (vacuum) through 0.02 inch orifice and then ECM checks if vacuum pump and vent valve operate normally.	60 seconds
C	EVAP system pressure measurement	Vent valve turned ON (closed) to shut EVAP system. Negative pressure (vacuum) is created in EVAP system, and EVAP system pressure then measured. Write down measured value as it will be used in leak check. If EVAP pressure does not stabilize within 15 minutes, ECM cancels EVAP system monitor.	15 minutes*2
D	Purge VSV monitor	Purge VSV is opened and then EVAP system pressure is measured by ECM. Large increase indicates normal.	10 seconds
E	Second 0.02 inch leak pressure measurement	After second 0.02 inch leak pressure measurement, leak check is performed by comparing first and second 0.02 inch leak pressure standards. If stabilized system pressure is higher than second 0.02 inch leak pressure standard, ECM determines that EVAP system is leaking.	60 seconds
F	Final check	Atmospheric pressure is measured and then monitoring result is recorded by ECM.	-

*2: If there is only a small amount of fuel in the fuel tank, stabilizing the EVAP pressure takes longer than usual.

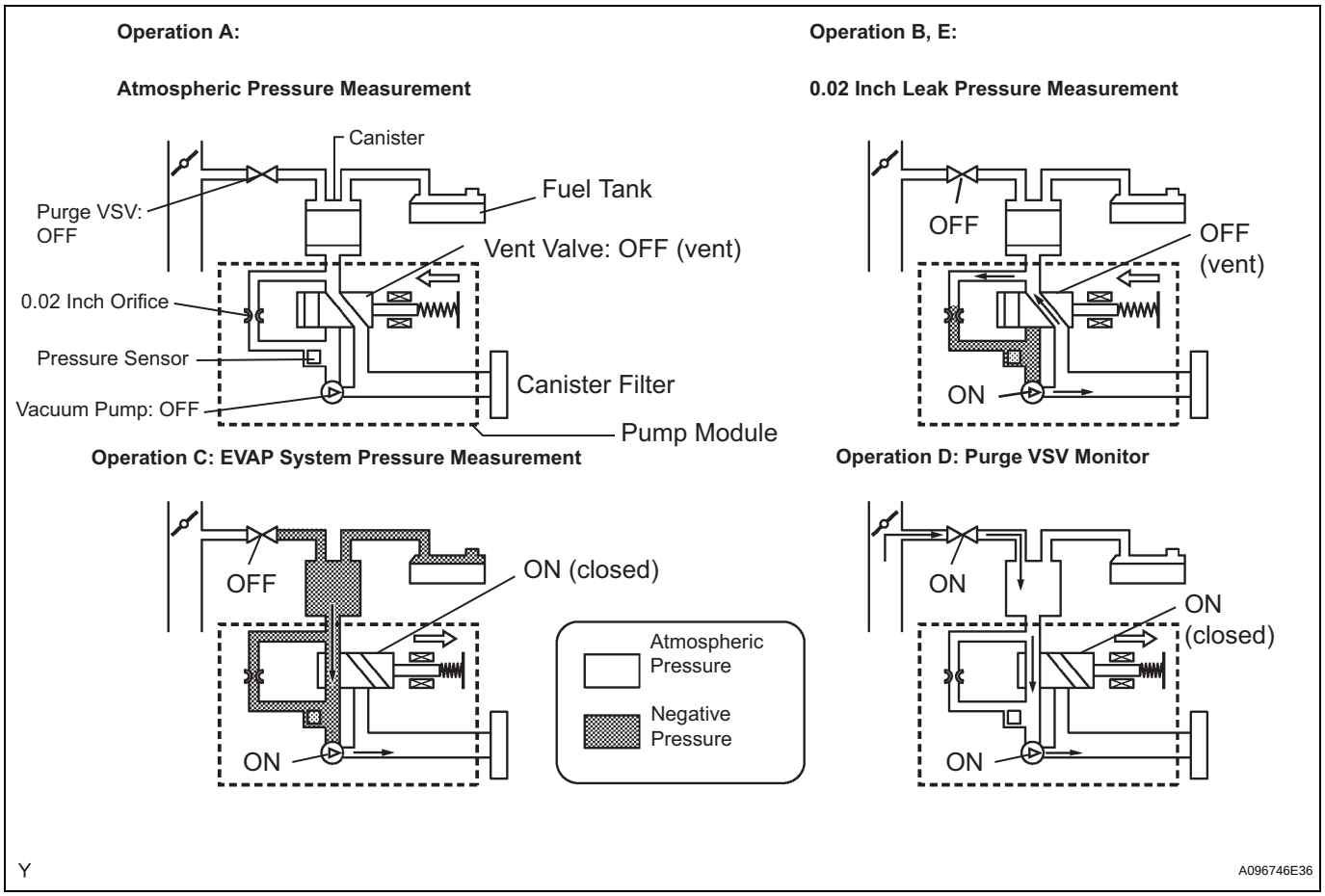

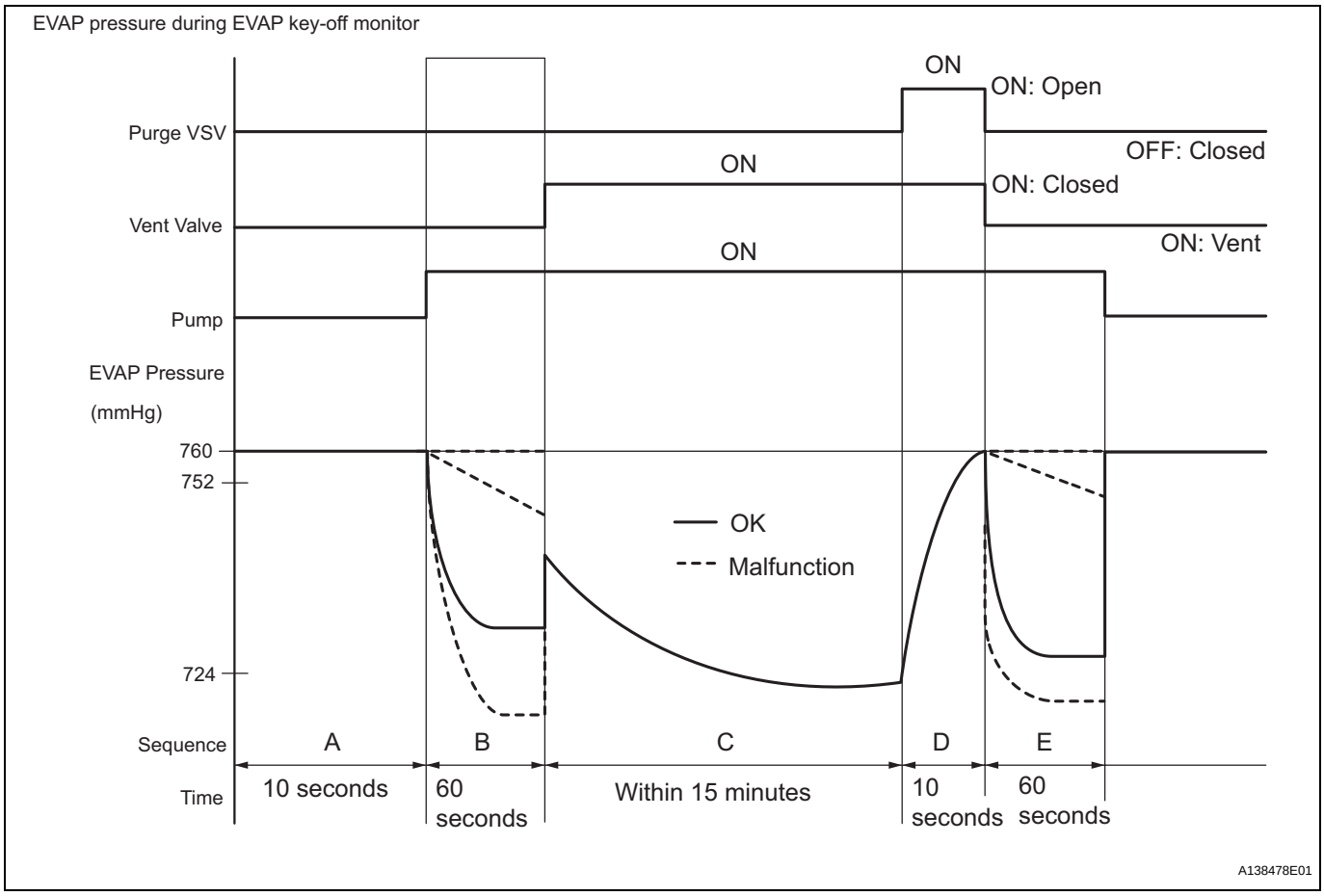

The leak detection pump creates negative pressure through the reference orifice. When the system is normal, the EVAP pressure is within 724 to 752 mmHg* and saturated within a minute.
If not, the ECM interprets this as a malfunction. The ECM will illuminate the MIL and set DTC if this malfunction is detected in a consecutive drive cycle.
*: Typical valve

MONITOR STRATEGY

Related DTCs	P043E: 0.02 inch orifice clog (built-in pump module) P043F: 0.02 inch orifice high-flow (built-in pump module) P2401: Vacuum pump stuck OFF P2402: Vacuum pump stuck ON P2419: Vent valve stuck open (vent)
Required Sensors/Components	Pump module
Frequency of Operation	Once per driving cycle
Duration	Within 2 minutes
MIL Operation	2 driving cycles
Sequence of Operation	None

TYPICAL ENABLING CONDITIONS

The monitor will run whenever these DTCs are not present	None
EVAP key-off monitor is run when all of the following conditions are met	-
Atmospheric pressure	70 to 110 kPa (525 to 825 mmHg)
Battery voltage	10.5 V or more
Vehicle speed	Below 2.5 mph (4 km/h)

Engine switch	OFF
Time after key-off	5 or 7 or 9.5 hours
EVAP pressure sensor malfunction (P0450, P0451, P0452, P0453)	Not detected
EVAP canister purge valve	Not operated by scan tool
EVAP canister vent valve	Not operated by scan tool
EVAP leak detection pump	Not operated by scan tool
Both of the following conditions 1 and 2 are met before key-off	Conditions 1 and 2
1. Duration that vehicle is driven	5 minutes or more
2. EVAP purge operation	Performed
ECT	4.4 to 35°C (40 to 95°F)
IAT	4.4 to 35°C (40 to 95°F)

Key-off monitor sequence 1 to 8

1. Atmospheric pressure measurement

Next sequence is run if the following condition is met:	-
Atmospheric pressure measurement	Less than 0.3 kPa (2.25 mmHg) in 1 second

2. First reference pressure measurement

Next sequence is run if all of the following conditions are met:	Conditions 1, 2 and 3
1. EVAP pressure just after reference pressure measurement	-1 kPa (-7.5 mmHg) or less
2. Reference pressure	-4.85 to -1.057 kPa (-36.384 to -7.929 mmHg)
3. Reference pressure	Saturated within 1 minute

3. EVAP canister vent valve close stuck check

Next sequence is run if the following condition is met:	-
EVAP pressure change after vent valve is ON	0.3 kPa (2.25 mmHg) or more

4. Vacuum introduction

Next sequence is run if the following condition is met:	-
Vacuum introduction time	Saturated within 15 minutes

5. EVAP canister purge valve close stuck check

Next sequence is run if the following condition is met:	-
EVAP pressure change after purge valve is open	0.3 kPa (2.25 mmHg) or more

6. Second reference pressure measurement

Next sequence is run if all of the following conditions are met:	Conditions 1, 2, 3 and 4
1. EVAP pressure just after reference pressure	-1 kPa (-7.5 mmHg) or less
2. Reference pressure	-4.85 to -1.057 kPa (-36.384 to -7.929 mmHg)
3. Reference pressure	Saturated
4. Difference between first reference pressure and second reference pressure	Less than 0.7 kPa (5.25 mmHg)

7. Leak check

Next sequence is run if the following condition is met	-
EVAP pressure when vacuum introduction was complete	Lower than second reference pressure

8. Atmospheric pressure measurement

EVAP monitor is complete if the following condition is met:	-

Atmospheric pressure difference between sequence 1 and 8	Within 0.3 kPa (2.25 mmHg)

TYPICAL MALFUNCTION THRESHOLDS

One of following conditions is met	-
EVAP pressure just after reference pressure measurement start	More than -1 kPa (-7.5 mmHg)
Reference pressure	Less than -4.85 kPa (-36.384 mmHg)
Reference pressure	-1.057 kPa (-7.929 mmHg) or more
Reference pressure	Not saturated
Difference between first reference pressure and second reference pressure	0.7 kPa (5.25 mmHg) or more

MONITOR RESULT

Refer to CHECKING MONITOR STATUS (See page ES-20).

DTC	P0441	Evaporative Emission Control System Incorrect Purge Flow

DTC SUMMARY

DTC No.	Monitoring Item	DTC Detection Condition	Trouble Area	Detection Timing	Detection Logic
P0441	EVAP VSV (Vacuum Switching Valve) stuck open	Vacuum pump creates negative pressure (vacuum) in EVAP system and EVAP system pressure is measured. 0.02 inch leak pressure standard is measured at start and at end of leak check. If stabilized pressure is higher than [second 0.02 inch leak pressure standard x 0.2], ECM determines that EVAP VSV is stuck open	• EVAP VSV • Connector/wire harness (EVAP VSV - ECM) • ECM • Pump module • Leakage from EVAP system	While engine switch off	2 trip
P0441	EVAP VSV stuck closed	After EVAP leak check is performed, EVAP VSV is turned ON (open), and atmospheric air is introduced into EVAP system. 0.02 inch leak pressure standard is measured at start and at end of the check. If pressure does not return to near atmospheric pressure, ECM determines that purge valve is stuck closed	• EVAP VSV • Connector/wire harness (EVAP VSV - ECM) • ECM • Pump module • Leakage from EVAP system	While engine switch off	2 trip
P0441	Purge flow	While engine is running, following conditions are successively met: • Negative pressure is not created in EVAP system when EVAP VSV is turned ON (open) • EVAP system pressure change is less than 0.5 kPa (3.75 mmHg) when vent valve is turned ON (closed) • Atmospheric pressure change before and after purge flow monitor is less than 0.1 kPa (0.75 mmHg)	• EVAP VSV • Connector/wire harness (EVAP VSV - ECM) • Leakage from EVAP line (EVAP VSV - Intake manifold) • ECM	While engine running	2 trip

ES

DESCRIPTION

The circuit description can be found in the EVAP (Evaporative Emission) system (See page ES-395).

INSPECTION PROCEDURE

Refer to the EVAP system (See page ES-395).

MONITOR DESCRIPTION

The two monitors, Key-off and Purge Flow, are used to detect malfunctions relating to DTC P0441. The key-off monitor is initiated by the ECM internal timer, known as the soak timer, 5 hours* after the engine switch is turned off. The purge flow monitor runs while the engine is running.

1. KEY-OFF MONITOR

5 hours* after the engine switch is turned off, the electric vacuum pump creates negative pressure (vacuum) in the EVAP (Evaporative Emission) system. The ECM monitors for leaks and actuator malfunctions based on the EVAP pressure.

HINT:

*: If the engine coolant temperature is not below 35°C (95°F) 5 hours after the engine switch is turned off, the monitor check starts 2 hours later. If it is still not below 35°C (95°F) 7 hours after the engine switch is turned off, the monitor check starts 2.5 hours later.

Sequence	Operation	Description	Duration
-	ECM activation	Activated by soak timer, 5 hours (7 or 9.5 hours) after engine switch turned is off.	-
A	Atmospheric pressure measurement	Vent valve is turned OFF (vent) and EVAP system pressure is measured by ECM in order to register atmospheric pressure. If pressure in EVAP system is not between 70 kPa and 110 kPa (525 mmHg and 825 mmHg), ECM cancels EVAP system monitor.	10 seconds
B	First 0.02 inch leak pressure measurement	In order to determine 0.02 inch leak pressure standard, vacuum pump creates negative pressure (vacuum) through 0.02 inch orifice and then ECM checks if vacuum pump and vent valve operate normally.	60 seconds
C	EVAP system pressure measurement	Vent valve is turned ON (closed) to shut EVAP system. Negative pressure (vacuum) is created in EVAP system, and EVAP system pressure is then measured. Write down measured value as they will be used in leak check. If EVAP pressure does not stabilize within 15 minutes, ECM cancels EVAP system monitor.	15 seconds*
D	EVAP VSV monitor	EVAP VSV is opened and then EVAP system pressure is measured by ECM. Large increase indicates normal.	10 seconds
E	Second 0.02 inch leak pressure measurement	After second 0.02 inch leak pressure measurement, leak check is performed by comparing first and second 0.02 inch leak pressure standards. If stabilized system pressure is higher than second 0.02 inch leak pressure standard, ECM determines that there is a leak in EVAP system.	60 seconds
F	Final check	Atmospheric pressure is measured and then monitoring result is recorded by ECM.	-

HINT:

*: If only a small amount of fuel is in the fuel tank, it takes longer for the EVAP pressure to stabilize.

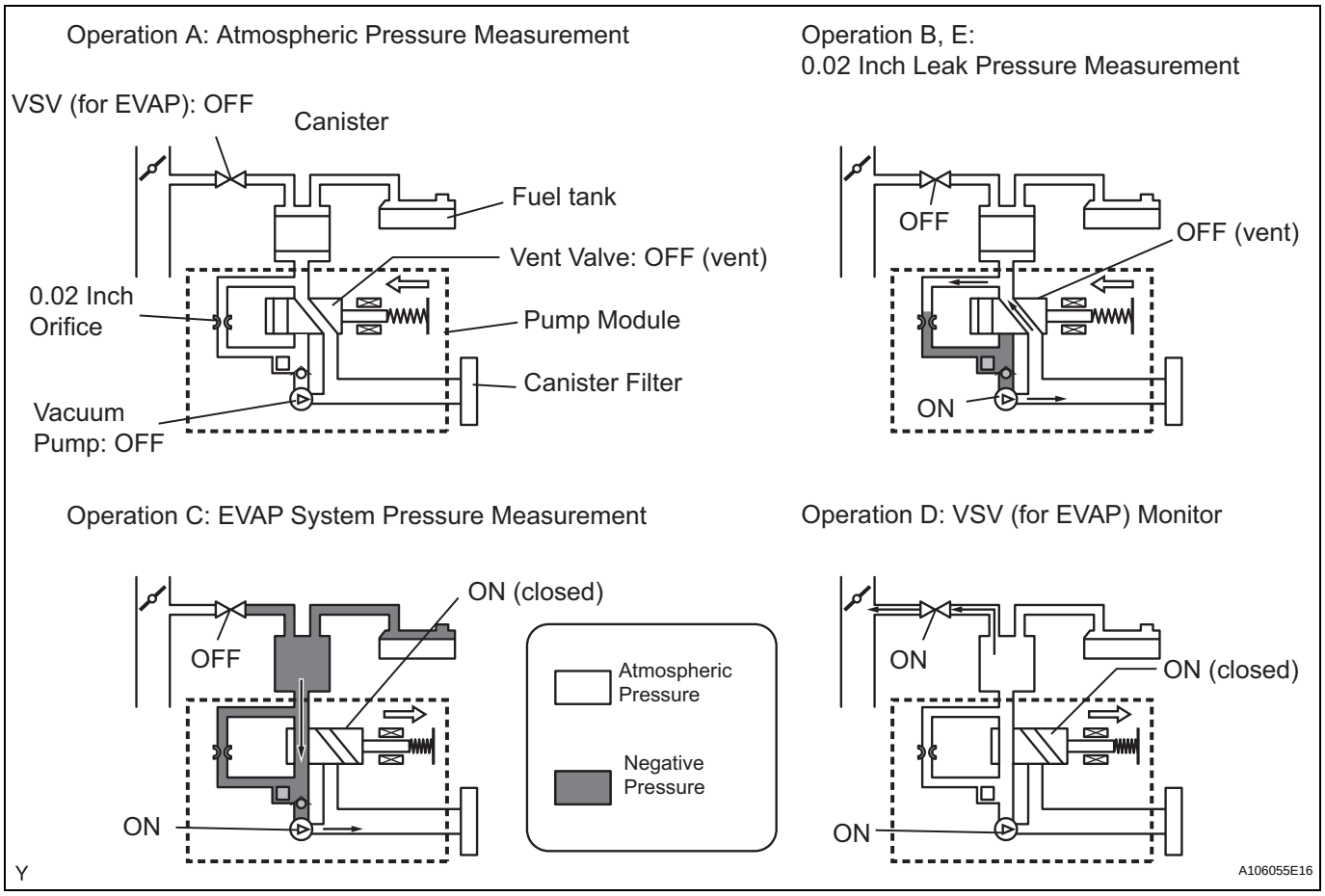
Operation A: Atmospheric Pressure Measurement
VSV (for EVAP): OFF
Canister
Fuel tank
Vent Valve: OFF (vent)
0.02 Inch Orifice
Pump Module
Canister Filter
Vacuum Pump: OFF
Operation B, E: 0.02 Inch Leak Pressure Measurement
OFF
OFF (vent)
ON
Operation C: EVAP System Pressure Measurement
ON (closed)
OFF
ON
Atmospheric Pressure
Negative Pressure
Operation D: VSV (for EVAP) Monitor
ON
ON (closed)
ON
Y
A106055E16

ES

(a) EVAP VSV stuck open
In operation C, the vacuum pump creates negative pressure (vacuum) in the EVAP (Evaporative Emission) system. The EVAP system pressure is then measured by the ECM using the pressure sensor. If the stabilized system pressure is higher than [second 0.02 inch leak pressure standard x 0.2], the ECM interprets this as the EVAP VSV (Vacuum Switching Valve) being stuck open. The ECM illuminates the MIL and sets the DTC (2 trip detection logic).

EVAP Pressure when VSV (for EVAP) Stuck Open:

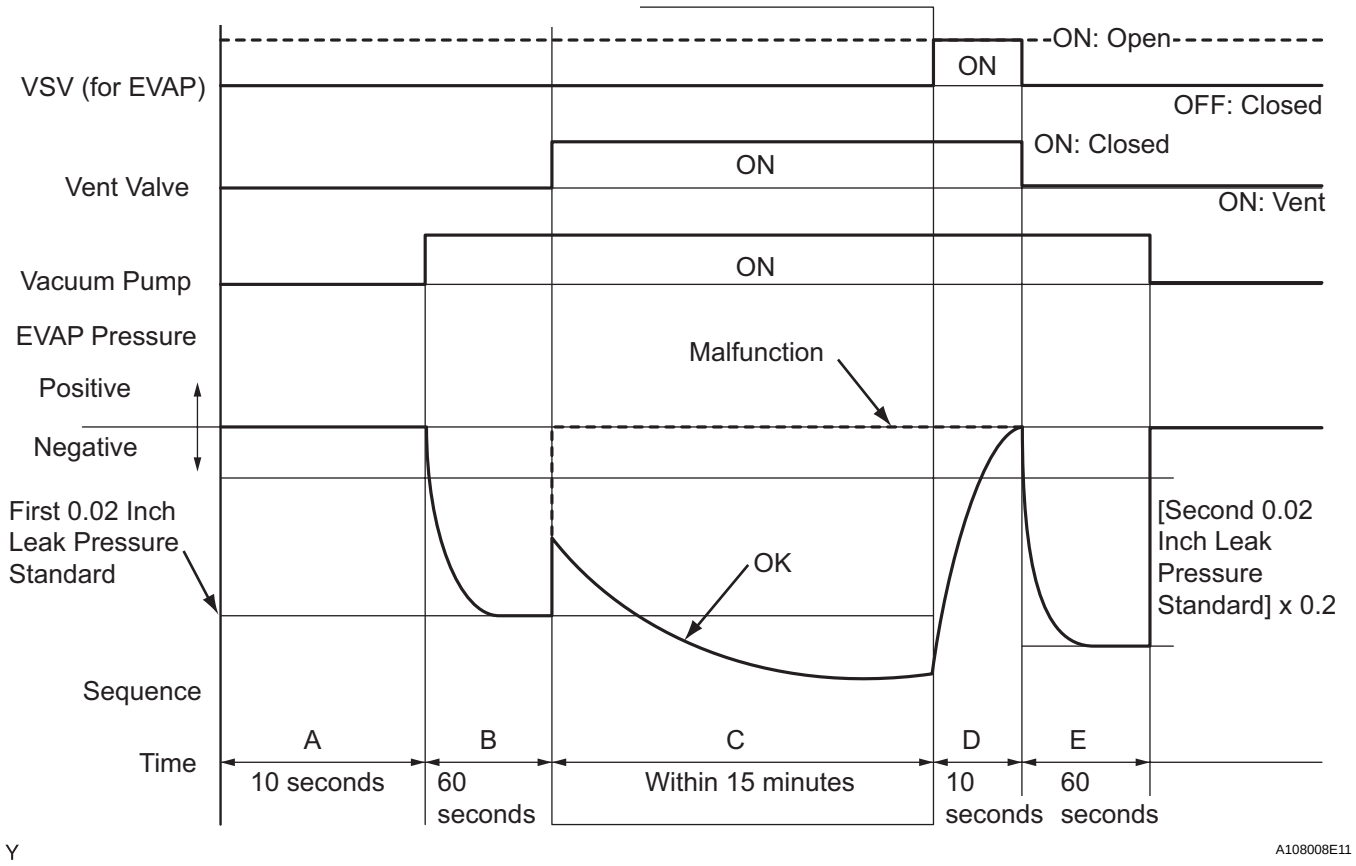

ES

(b) EVAP VSV stuck closed
In operation D, the pressure sensor measures the EVAP (Evaporative Emission) system pressure. The pressure measurement for EVAP VSV monitor is begun when the EVAP VSV is turned ON (open) after the EVAP leak check. When the measured pressure indicates an increase of 0.3 kPa (2.25 mmHg) or more, the EVAP VSV is functioning normally. If the pressure does not increase, the ECM interprets this as the EVAP VSV being stuck closed. The ECM illuminates the MIL and sets the DTC (2 trip detection logic).

EVAP Pressure when VSV (for EVAP) Stuck Closed:

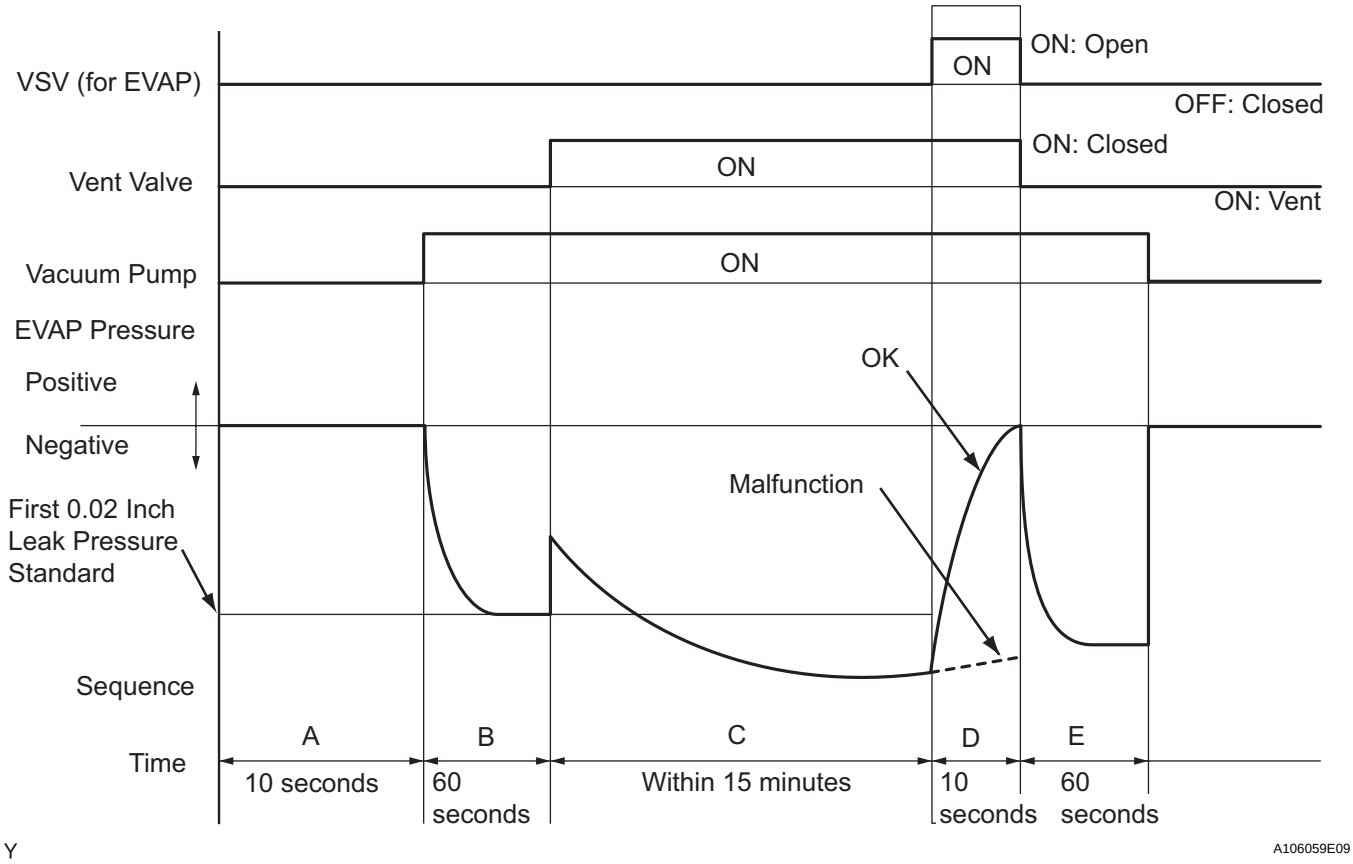

EVAP Pressure During Purge Flow Monitor:

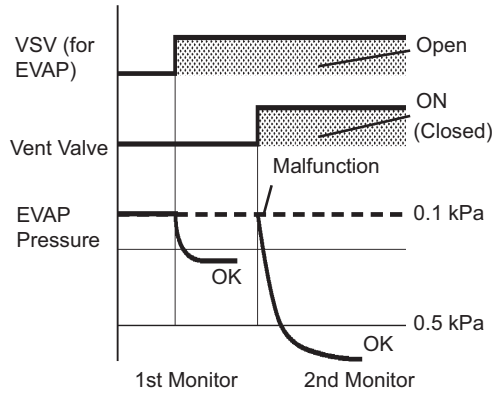

2. PURGE FLOW MONITOR

The purge flow monitor consists of the two step monitors. The 1st monitor is conducted every time and the 2nd monitor is activated if necessary.

- The 1st monitor
  While the engine is running and the EVAP VSV (Vacuum Switching Valve) is ON (open), the ECM monitors the purge flow by measuring the EVAP pressure change. If negative pressure is not created, the ECM begins the 2nd monitor.
- The 2nd monitor
  The vent valve is turned ON (closed) and the EVAP pressure is then measured. If the variation in the pressure is less than 0.5 kPa (3.75 mmHg), the ECM interprets this as the EVAP VSV being stuck closed, and illuminates the MIL and sets DTC P0441 (2 trip detection logic).

Atmospheric pressure check:

In order to ensure reliable malfunction detection, the variation between the atmospheric pressure, before and after conduction of the purge flow monitor, is measured by the ECM.

OBD II MONITOR SPECIFICATIONS

1. Key-off Monitor

Monitor Strategy:

Required Sensors/Components	EVAP VSV and pump module
Frequency of Operation	Once per driving cycle
Duration	Within 15 minutes
MIL Operation	2 driving cycles
Sequence of Operation	None

Typical Enabling Conditions:

EVAP key-off monitor runs when all of following conditions are met:	-
Atmospheric pressure	70 to 110 kPa (525 to 825 mmHg)
Battery voltage	10.5 V or more
Vehicle speed	Below 2.5 mph (4 km/h)
Engine switch	OFF
Time after key off	5, 7 or 9.5 hours
EVAP pressure sensor malfunction (P0450, P0451, P0452 and/or P0453)	Not detected
EVAP VSV	Not operated by scan tool
Vent valve	Not operated by scan tool
Leak detection pump	Not operated by scan tool
Both of following conditions are met before key off:	Conditions 1 and 2
1. Duration that vehicle is being driven	5 minutes or more
2. EVAP purge operation	Performed
ECT	4.4 to 35°C (40 to 95°F)
IAT	4.4 to 35°C (40 to 95°F)

(a) Key-off monitor sequence 1 to 8

1. Atmospheric pressure

Next sequence is run if following condition is met:	-
Atmospheric pressure change	Less than 0.3 kPa (2.25 mmHg) for 1 second

2. First reference pressure

Next sequence is run if all of following conditions are met:	Conditions 1, 2 and 3
1. EVAP pressure 4 seconds after reference pressure measurement	-1 kPa (-7.5 mmHg) or less
2. Reference pressure	-4.85 to -1.05 kPa (-36.38 to -7.87 mmHg)
3. Reference pressure	Saturated within 1 minute

3. Vent valve stuck closed check

Next sequence is run if following condition is met:	-
EVAP pressure change after vent valve is turned ON	0.3 kPa (2.25 mmHg) or more

4. Vacuum introduction and leak

Next sequence is run if both of following condition is met:	-
Vacuum introduction time	15 minutes or less

5. EVAP VSV stuck closed check

Next sequence is run if following condition is met:	-
EVAP pressure change after purge VSV is turned ON	0.3 kPa (2.25 mmHg) or more

6. Second reference pressure measurement

Next sequence is run if all of following conditions are met:	Conditions 1, 2, 3 and 4
1. EVAP pressure just after reference pressure measurement	-1 kPa (-7.5 mmHg) or less
2. Reference pressure	-4.85 to -1.05 kPa (-36.38 to -7.87 mmHg)
3. Reference pressure	Saturated within 1 minute
4. Reference pressure difference between first and second	Less than 0.7 kPa (5.25 mmHg)

7. Leak check

Next sequence is run if following condition is met:	-
EVAP pressure when vacuum introduction was complete	Less than second reference pressure

8. Atmospheric pressure

Monitor is complete	-
Atmospheric pressure difference between sequence 1 and 8	0.3 kPa (2.25 mmHg) or less

ES

Typical Malfunction Thresholds:

One of the following conditions is met:	-
(a) EVAP VSV stuck open	-
EVAP pressure when vacuum introduction is complete	Higher than reference pressure x 0.2
(b) EVAP VSV stuck closed	-
EVAP pressure change after EVAP canister purge valve is opened	Less than 0.3 kPa (2.25 mmHg)

2. Purge Flow Monitor

Monitor Strategy:

Required Sensors/Components	EVAP VSV and pump module
Frequency of Operation	Once per driving cycle
Duration	Within 10 minutes
MIL Operation	2 driving cycles
Sequence of Operation	None

Typical Enabling Conditions:

Monitor runs whenever these DTCs are not present	-
Engine	Running
ECT	4.4°C (40°F) or more
IAT	4.4°C (40°F) or more
EVAP pressure sensor malfunction	Not detected
EVAP VSV	Not operated by scan tool
EVAP system check	Not detected by scan tool
Battery voltage	10 V or more
Purge duty cycle	8 % or more

Typical Malfunction Thresholds:

Both of following conditions are met:	Condition 1 or 2
1. EVAP pressure change when purge operation is started	Less than 0.1 kPa (0.75 mmHg)
2. EVAP pressure change during purge operation when vent valve is closed	Less than 0.5 kPa (3.75 mmHg)

MONITOR RESULT

Refer to CHECKING MONITOR STATUS (See page ES-20).

DTC	P0450	Evaporative Emission Control System Pressure Sensor / Switch

DTC	P0451	Evaporative Emission Control System Pressure Sensor Range / Performance

DTC	P0452	Evaporative Emission Control System Pressure Sensor / Switch Low Input

ES

DTC	P0453	Evaporative Emission Control System Pressure Sensor / Switch High Input

DTC SUMMARY

DTC No.	Monitoring Item	Malfunction Detection Condition	Trouble Area	Detection Timing	Detection logic
P0450	Pressure sensor voltage abnormal fluctuation	Sensor output voltage rapidly fluctuates beyond upper and lower malfunction thresholds for 0.5 seconds.	• Pump module • ECM	• EVAP monitoring (engine switch off) • Engine switch on	1 trip
P0451	Pressure sensor noising	Sensor output voltage fluctuates frequently in a certain time period.	• Pump module • Connector/wire harness (Pump module - ECM) • ECM	• EVAP monitoring (engine switch off) • Engine running	2 trip
P0451	Pressure sensor stuck	Sensor output voltage does not vary in a certain time period.	• Pump module • Connector/wire harness (Pump module - ECM) • ECM	• EVAP monitoring (engine switch off)	2 trip
P0452	Pressure sensor voltage low	Sensor output voltage is less than 0.45 V for 0.5 seconds.	• Pump module • Connector/wire harness (Pump module - ECM) • ECM	• EVAP monitoring (engine switch off) • Engine switch on	1 trip
P0453	Pressure sensor voltage high	Sensor output voltage is more than 4.9 V for 0.5 seconds.	• Pump module • Connector/wire harness (Pump module - ECM) • ECM	• EVAP monitoring (engine switch off) • Engine switch on	1 trip

HINT:
The pressure sensor is built into the pump module.

DESCRIPTION

The circuit description can be found in the EVAP (Evaporative Emission) system (See page ES-395).

MONITOR DESCRIPTION

1. DTC P0450: Pressure sensor voltage abnormal fluctuation
   If the pressure sensor output voltage rapidly fluctuates between less than 0.45 V and more than 4.9 V, the ECM interprets this as an open or short circuit in the pressure sensor or its circuit, and stops the EVAP (Evaporative Emission) system monitor. The ECM then illuminates the MIL and sets the DTC (1 trip detection logic).

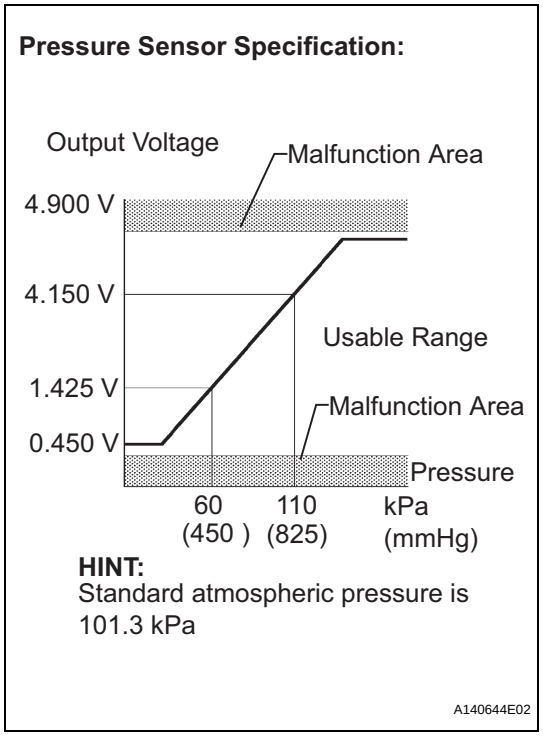

2. DTC P0451: Pressure sensor noising or stuck
   If the pressure sensor output voltage fluctuates rapidly for 10 seconds, the ECM stops the EVAP system monitor. The ECM interprets this as noise from the pressure sensor, and stops the EVAP system monitor. The ECM then illuminates the MIL and sets the DTC.
   Alternatively, if the sensor output voltage does not change for 10 seconds, the ECM interprets this as the sensor being stuck, and stops the monitor. The ECM then illuminates the MIL and sets the DTC. (Both the malfunctions are detected by 2 trip detection logic).
3. DTC P0452: Pressure sensor voltage low
   If the pressure sensor output voltage is below 0.45 V, the ECM interprets this as an open or short circuit in the pressure sensor or its circuit, and stops the EVAP system monitor. The ECM then illuminates the MIL and sets the DTC (1 trip detection logic).
4. DTC P0453: Pressure sensor voltage high
   If the pressure sensor voltage output is 4.9 V or more, the ECM interprets this as an open or short circuit in the pressure sensor or its circuit, and stops the EVAP system monitor. The ECM then illuminates the MIL and sets the DTC (1 trip detection logic).

MONITOR STRATEGY

Related DTCs	P0450: Pressure sensor chattering P0451: Pressure sensor noise P0451: Pressure sensor stuck P0452: Pressure sensor low voltage P0453: Pressure sensor high voltage
Required Sensors/Components	Pump module
Frequency of Operation	Once per driving cycle: P0451 sensor stuck Continuous: P0451 sensor noising, P0450, P0452 and P0453
Duration	0.5 seconds: P0450, P0452, P0453 Within 15 seconds: P0451

MIL Operation	Immediate: P0450, P0452, P0453 2 driving cycles: P0451
Sequence of Operation	None

TYPICAL ENABLING CONDITIONS

P0450, P0452 and P0453 (Pressure sensor chattering, low voltage, high voltage):

Monitor runs whenever following DTCs are not present:	None
Battery voltage	8 V or more
Starter	OFF
Engine switch	ON

P0451 (Pressure sensor noise):

Atmospheric pressure	70 kPa (525 mmHg) to 110 kPa (825 mmHg)
Battery voltage	10.5 V or more
Intake air temperature	4.4 to 35°C (40 to 95°F)
EVAP pressure sensor malfunction (P0450, P0452, P0453)	Not detected
Either of following conditions is met:	1 or 2
1. Engine	Running
2. Time after key off	5, 7 or 9.5 hours

P0451 (Pressure sensor stuck):

Atmospheric pressure	Less than 70 kPa (525 mmHg), or 110 kPa (825 mmHg) or more
Battery voltage	10.5 V or more
Intake air temperature	4.4 to 35°C (40 to 95°F)
EVAP pressure sensor malfunction (P0450, P0452, P0453)	Not detected
Time after key off	5, 7 or 9.5 hours

TYPICAL MALFUNCTION THRESHOLDS

P0450: Pressure sensor chattering

EVAP pressure	Less than 42.11 kPa (315.82 mmHg), or more than 123.761 kPa (928.207 mmHg)

P0451: Pressure sensor noise

Frequency that EVAP pressure change is 0.3 kPa or more	10 times or more in 10 seconds

P0451: Pressure sensor stuck

EVAP pressure change during reference pressure	Less than 0.65 kPa (4.87 mmHg)

P0452: Pressure sensor low voltage

EVAP pressure	Less than 42.11 kPa (315.82 mmHg)

P0453: Pressure sensor high voltage

EVAP pressure	More than 123.761 kPa (928.207 mmHg)

WIRING DIAGRAM

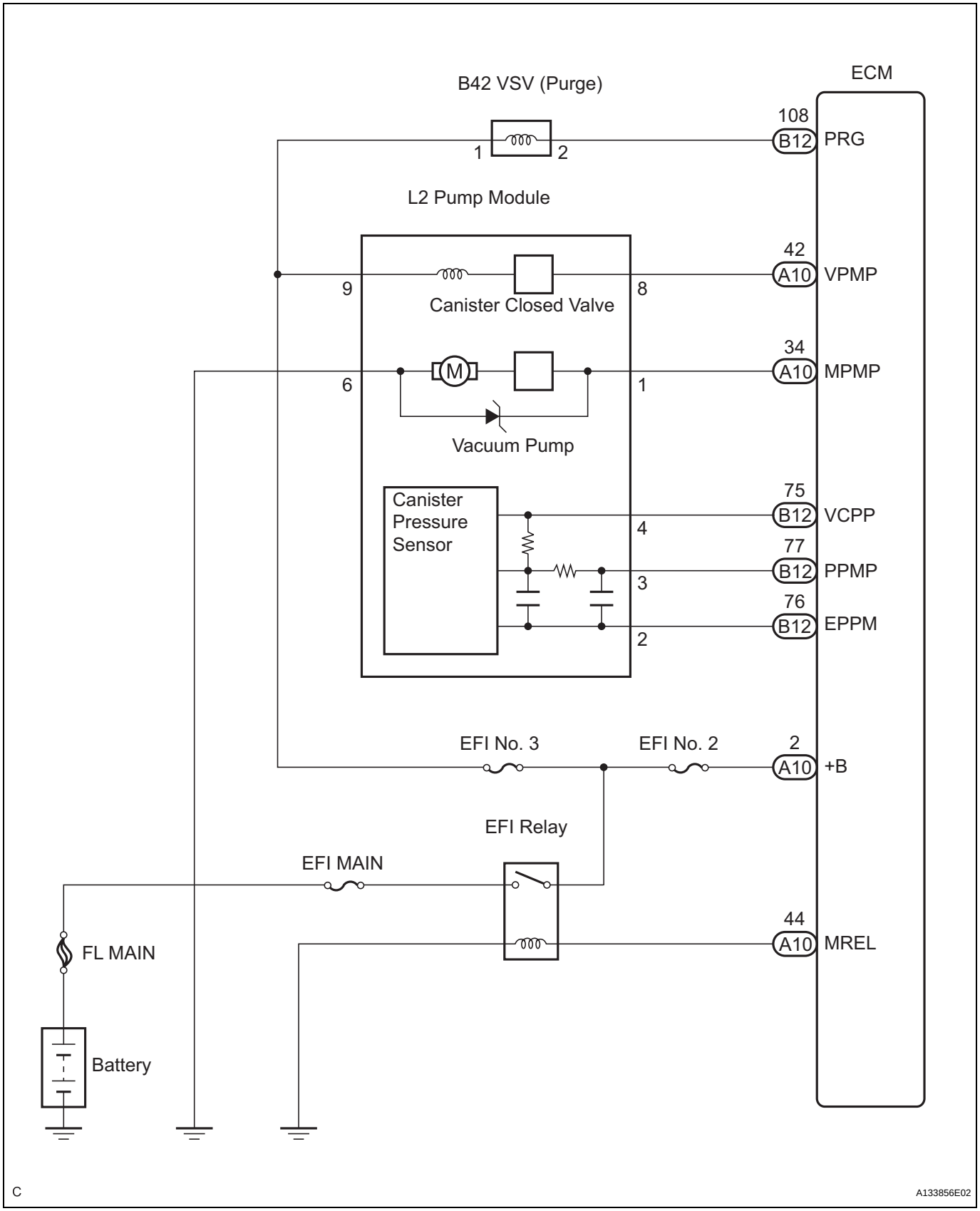

ES

INSPECTION PROCEDURE

NOTICE:

- **When a vehicle is brought into a workshop, leave it as it is. Do not change the vehicle condition. For example, do not tighten the fuel tank cap.**
- **Do not disassemble the pump module.**
- **The intelligent tester is required to conduct the following diagnostic troubleshooting procedure.**

ES

1 CHECK HARNESS AND CONNECTOR (PUMP MODULE - ECM)

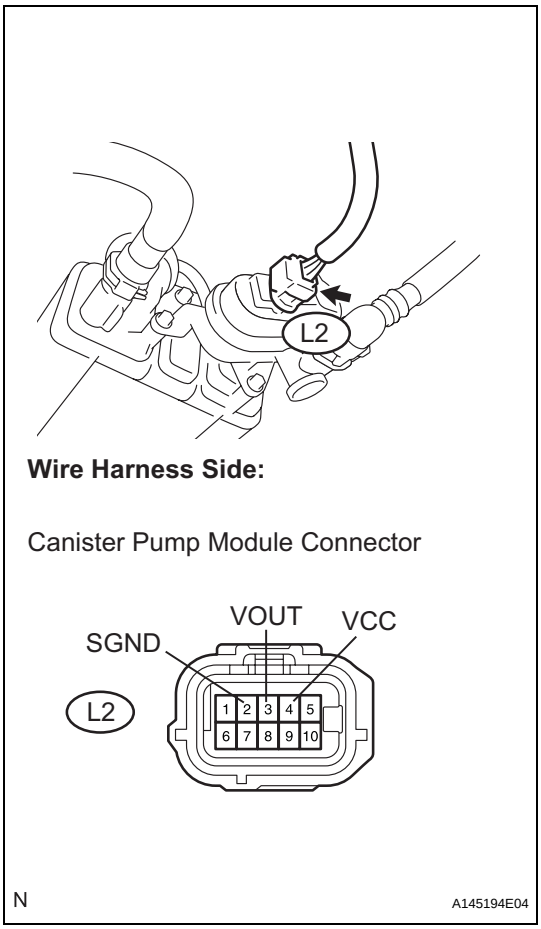

(a) Disconnect the L2 canister connector.
(b) Turn the engine switch on (IG).
(c) Measure the voltage and resistance according to the value(s) in the table below.

Standard

Tester Connection	Specified Condition
L2-4 - Body ground	4.5 to 5.0 V
L2-3 - Body ground	4.5 to 5.0 V
L2-2 - Body ground	100 Ω or less

Result

Test Result	Suspected Trouble Area	Proceed to
Voltage and resistance within standard ranges	Open in pressure sensor circuit	A
Voltage and resistance outside standard ranges	Open in wire harness/ connector (ECM - pressure sensor)	B

(d) Reconnect the canister connector.

B → **Go to step 3**

A

2 REPLACE CHARCOAL CANISTER ASSEMBLY

(a) Replace the canister assembly (See page EC-9).
NOTICE:
When replacing the canister, check the canister pump module interior and related pipes for water, fuel and other liquids. If liquids are present, check for disconnections and/or cracks in the following: 1) the pipe from the air inlet pipe to the canister pump module; 2) the canister filter; and 3) the fuel tank vent hose.

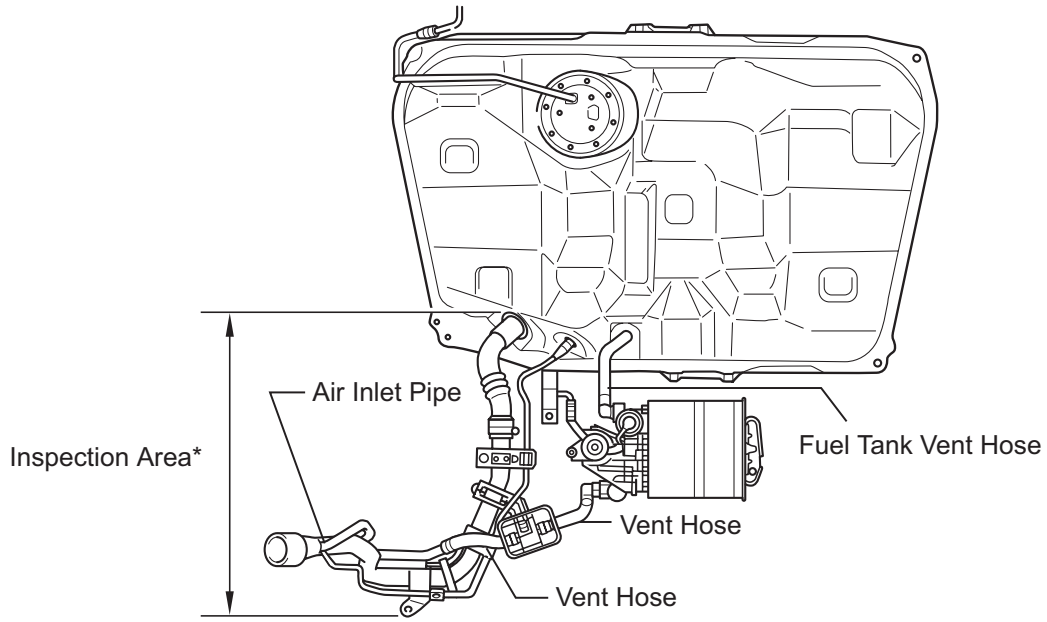

*: Check for disconnection and/or crack

N

A132283E05

NEXT → **Go to step 5**

3 CHECK HARNESS AND CONNECTOR

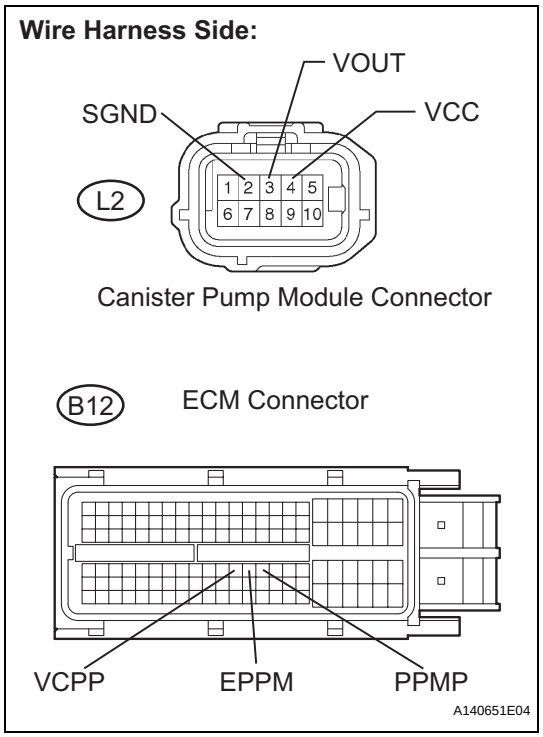

(a) Disconnect the L2 canister pump module connector.
(b) Disconnect the B12 ECM connector.
(c) Measure the resistance according to the value(s) in the table below.

Standard resistance (Check for open)

Tester Connection	Specified Condition
L2-4 (VCC) - B12-75 (VCPP)	Below 1 Ω
L2-3 (VOUT) - B12-77 (PPMP)	Below 1 Ω
L2-2 (SGND) - B12-76 (EPPM)	Below 1 Ω

Standard resistance (Check for short)

Tester Connection	Specified Condition
L2-4 (VCC) or B12-75 (VCPP) - Body ground	10 kΩ or higher
L2-3 (VOUT) or B12-77 (PPMP) - Body ground	10 kΩ or higher
L2-2 (SGND) or B12-76 (EPPM) - Body ground	10 kΩ or higher

(d) Reconnect the canister pump module connector.
(e) Reconnect the ECM connector.

NG → **REPAIR OR REPLACE HARNESS OR CONNECTOR**

ES

OK

4	REPLACE ECM

(a) Replace the ECM (See page ES-543).

NEXT

5	CHECK WHETHER DTC OUTPUT RECURS (AFTER REPAIR)

ES

(a) Connect the intelligent tester to the DLC3.
(b) Turn the engine switch on (IG) (do not start the engine).
(c) Turn the tester on.
(d) Wait for at least 60 seconds.
(e) Enter the following menus: DIAGNOSIS / ENHANCED OBD II / DTC INFO / PENDING CODES.
HINT:
If no pending DTCs are displayed on the tester, the repair has been successfully completed.

NEXT

COMPLETED

DTC	P0455	Evaporative Emission Control System Leak Detected (Gross Leak)

DTC	P0456	Evaporative Emission Control System Leak Detected (Very Small Leak)

DTC SUMMARY

DTC No.	Monitoring Item	Malfunction Detection Condition	Trouble Area	Detection Timing	Detection logic
P0455	EVAP gross leak	Vacuum pump creates negative pressure (vacuum) in EVAP system and EVAP system pressure measured. 0.02 inch leak pressure standard measured at start and at end of leak check. If stabilized pressure higher than [second 0.02 inch leak pressure standard x 0.2], ECM determines that EVAP system has a large leak	• Fuel tank cap (loose) • Leakage from EVAP line (Canister - Fuel tank) • Leakage from EVAP line (EVAP VSV - Canister) • Pump module • Leakage from fuel tank • Leakage from canister	While engine switch off	2 trip
P0456	EVAP small leak	Vacuum pump creates negative pressure (vacuum) in EVAP system and EVAP system pressure measured. 0.02 inch leak pressure standard measured at start and at end of leak check. If stabilized pressure higher than second 0.02 inch leak pressure standard, ECM determines that EVAP system has a small leak	Same as above	While engine switch off	2 trip

ES

DESCRIPTION

The circuit description can be found in the EVAP (Evaporative Emission) system (See page ES-395).

INSPECTION PROCEDURE

Refer to the EVAP system (See page ES-395).

MONITOR DESCRIPTION

5 hours* after the engine switch is turned off, the electric vacuum pump creates negative pressure (vacuum) in the EVAP (Evaporative Emission) system. The ECM monitors for leaks and actuator malfunctions based on the EVAP pressure.

HINT:

*: If the engine coolant temperature is not below 35°C (95°F) 5 hours after the engine switch is turned off, the monitor check starts 2 hours later. If it is still not below 35°C (95°F) 7 hours after the engine switch is turned off, the monitor check starts 2.5 hours later.

Sequence	Operation	Description	Duration
-	ECM activation	Activated by soak timer, 5 hours (7 or 9.5 hours) after engine switch is turned off.	-
A	Atmospheric pressure measurement	Vent valve is turned OFF (vent) and EVAP system pressure is measured by ECM in order to register atmospheric pressure. If pressure in EVAP system is not between 70 kPa and 110 kPa (525 mmHg and 825 mmHg), ECM cancels EVAP system monitor.	10 seconds

Sequence	Operation	Description	Duration
B	First 0.02 inch leak pressure measurement	In order to determine 0.02 inch leak pressure standard, vacuum pump creates negative pressure (vacuum) through 0.02 inch orifice and then ECM checks if vacuum pump and vent valve operate normally.	60 seconds
C	EVAP system pressure measurement	Vent valve is turned ON (closed) to shut EVAP system. Negative pressure (vacuum) is created in EVAP system, and EVAP system pressure is then measured. Write down measured value as they will be used in leak check. If EVAP pressure does not stabilize within 15 minutes, ECM cancels EVAP system monitor.	15 minutes*
D	EVAP VSV monitor	EVAP VSV is opened and then EVAP system pressure is measured by ECM. Large increase indicates normal.	10 seconds
E	Second 0.02 inch leak pressure measurement	After second 0.02 inch leak pressure measurement, leak check is performed by comparing first and second 0.02 inch leak pressure standards. If stabilized system pressure is higher than second 0.02 inch leak pressure standard, ECM determines that there is a leak in EVAP system.	60 seconds
F	Final check	Atmospheric pressure is measured and then monitoring result is recorded by ECM.	-

HINT:
*: If only a small amount of fuel is in the fuel tank, it takes longer for the EVAP pressure to stabilize.

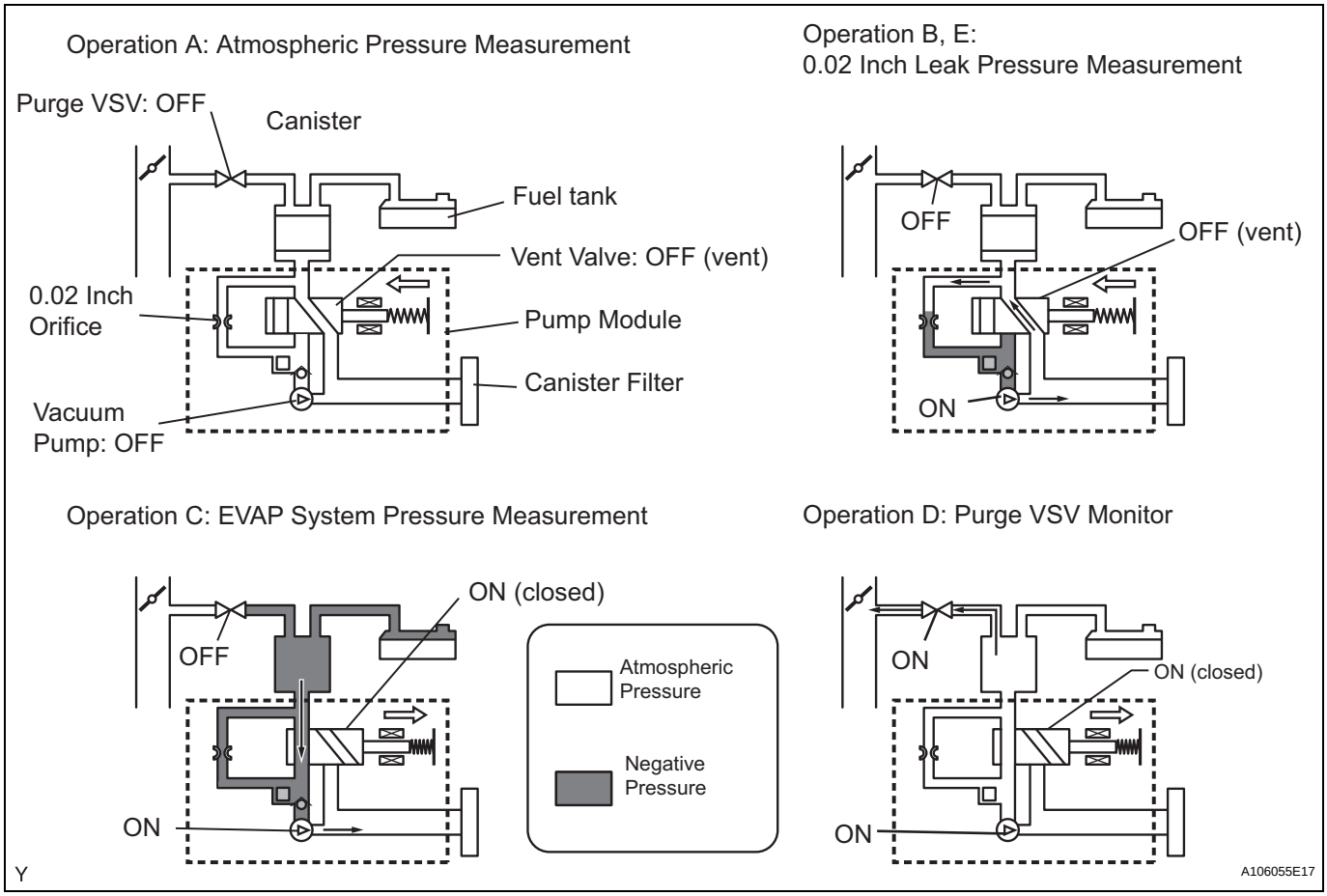

1. P0455: EVAP (Evaporative Emission) gross leak
   In operation C, the vacuum pump creates negative pressure (vacuum) in the EVAP system and the EVAP system pressure is measured. If the stabilized system pressure is higher than [second 0.02 inch leak pressure standard x 0.2] (near atmospheric pressure), the ECM determines that the EVAP system has a large leak, illuminates the MIL and sets the DTC (2 trip detection logic).

2. P0456: EVAP very small leak
   In operation C, the vacuum pump creates negative pressure (vacuum) in the EVAP system and the EVAP system pressure is measured. If the stabilized system pressure is higher than the second 0.02 inch leak pressure standard, the ECM determines that the EVAP system has a small leak, illuminates the MIL and sets the DTC (2 trip detection logic).

EVAP Pressure when EVAP System Leaks:

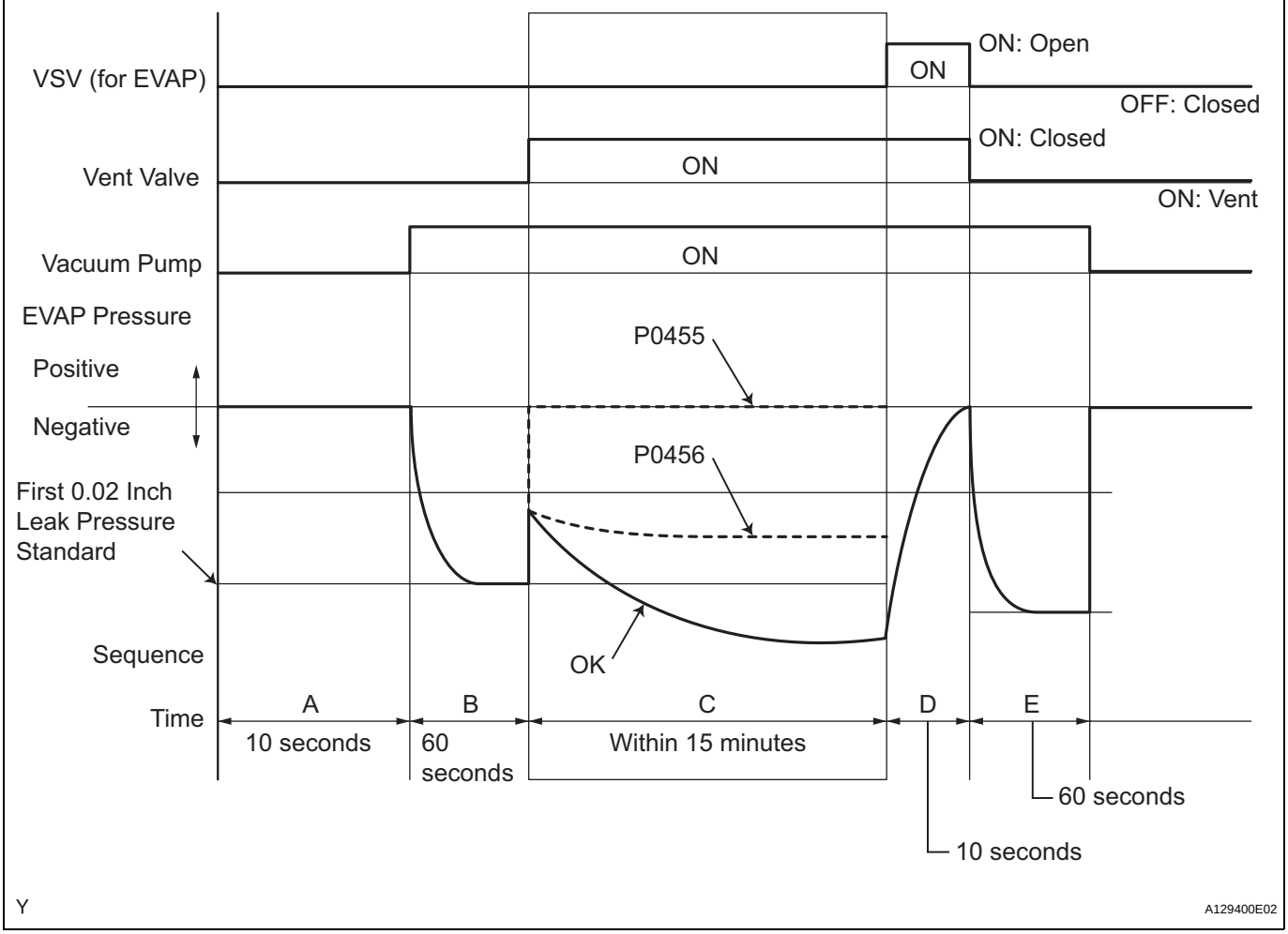

MONITOR STRATEGY

Required Sensors/Components	EVAP VSV and pump module
Frequency of Operation	Once per driving cycle
Duration	Within 15 minutes (varies with amount of fuel in tank)
MIL Operation	2 driving cycles
Sequence of Operation	None

TYPICAL ENABLING CONDITIONS

EVAP key-off monitor runs when all of following conditions are met:	-
Atmospheric pressure	70 to 110 kPa (525 to 825 mmHg)
Battery voltage	10.5 V or more
Vehicle speed	Below 2.5 mph (4 km/h)
Engine switch	OFF

Time after key off	5, 7 or 9.5 hours
EVAP pressure sensor malfunction (P0450, P0451, P0452 and P0453)	Not detected
EVAP VSV	Not operated by scan tool
Vent valve	Not operated by scan tool
Leak detection pump	Not operated by scan tool
Both of following conditions are met before key OFF:	Conditions 1 and 2
1. Duration that vehicle is being driven	5 minutes or more
2. EVAP purge operation	Performed
ECT	4.4 to 35°C (40 to 95°F)
IAT	4.4 to 35°C (40 to 95°F)

1. Key-off monitor sequence 1 to 8

1. Atmospheric pressure

Next sequence is run if following condition is met:	-
Atmospheric pressure change	Less than 0.3 kPa (2.25 mmHg) for 1 second

2. First reference pressure

Next sequence is run if all of following conditions are met:	Conditions 1, 2 and 3
1. EVAP pressure 4 seconds after reference pressure measurement	-1 kPa (-7.5 mmHg) or less
2. Reference pressure	-4.85 to -1.05 kPa (-36.38 to -7.87 mmHg)
3. Reference pressure	Saturated within 1 minute

3. Vent valve stuck closed check

Next sequence is run if following condition is met:	-
EVAP pressure change after vent valve is turned ON	0.3 kPa (2.25 mmHg) or more

4. Vacuum introduction and leak

Next sequence is run if following condition is met:	-
Vacuum introduction time	15 minutes or less

5. EVAP VSV stuck closed check

Next sequence is run if following condition is met:	-
EVAP pressure change after purge VSV is turned ON	0.3 kPa (2.25 mmHg) or more

6. Second reference pressure measurement

Next sequence is run if all of following conditions are met:	Conditions 1, 2, 3 and 4
1. EVAP pressure just after reference pressure measurement	-1 kPa (-7.5 mmHg) or less
2. Reference pressure	-4.85 to -1.05 kPa (-36.38 to -7.87 mmHg)
3. Reference pressure	Saturated within 1 minute
4. Reference pressure difference between first and second	Less than 0.7 kPa (5.25 mmHg)

7. Leak check

Next sequence is run if following condition is met:	-
EVAP pressure when vacuum introduction was complete	Less than second reference pressure

8. Atmospheric pressure

Monitor is complete	-
Atmospheric pressure difference between sequence 1 and 8	0.3 kPa (2.25 mmHg) or less

TYPICAL MALFUNCTION THRESHOLDS

"Saturated" indicates that the EVAP pressure change is less than 0.1 kPa (0.75 mmHg) in 30 seconds.

P0455: EVAP gross leak

EVAP pressure when vacuum introduction is complete	Higher than reference pressure x 0.2

P0456: EVAP small leak

EVAP pressure when vacuum introduction is complete	Between reference pressure and reference pressure x 0.2

MONITOR RESULT

Refer to CHECKING MONITOR STATUS (See page ES-20).

DTC	P0500	Vehicle Speed Sensor "A"

DESCRIPTION

The speed sensor detects the wheel speed and sends the appropriate signals to the skid control ECU. The skid control ECU converts these wheel speed signals into a 4-pulse signal and outputs it to the ECM via the combination meter. The ECM determines the vehicle speed based on the frequency of these pulse signals.

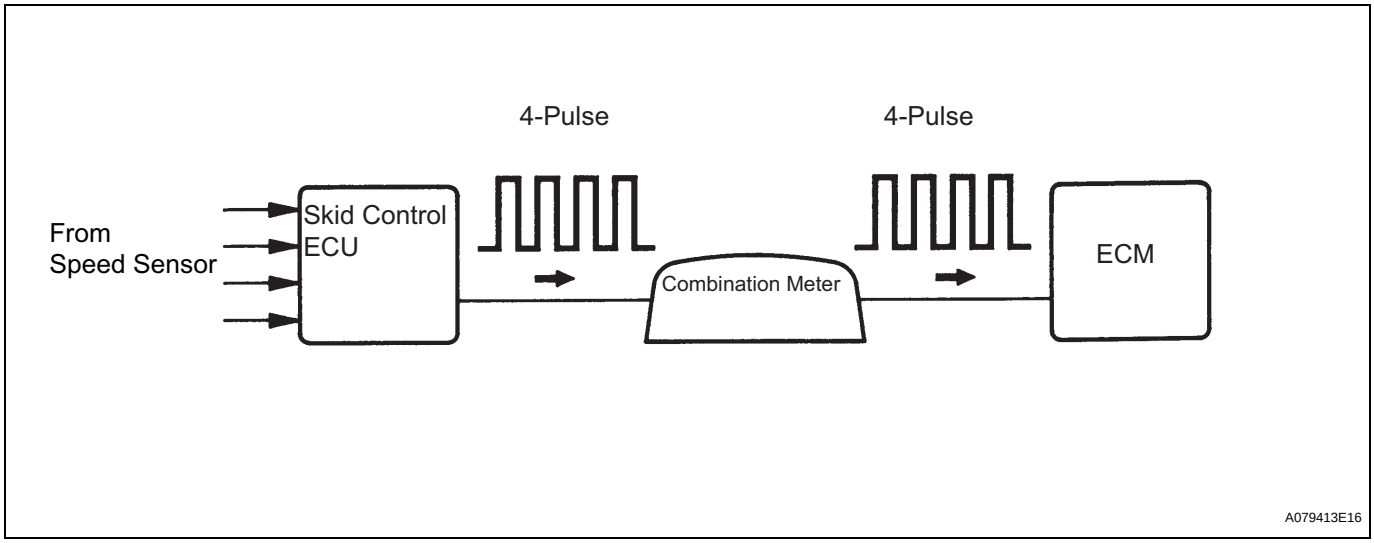

DTC No.	DTC Detection Condition	Trouble Area
P0500	Vehicle speed signal from vehicle speed sensor is cut for 0.14 sec. or more while cruise control is in operation	• Vehicle speed sensor • Vehicle speed sensor signal circuit • Combination meter • ECM • Skid control ECU

MONITOR DESCRIPTION

The ECM assumes that the vehicle is being driven when the transmission counter gear indicates more than 300 rpm and over 30 seconds have passed since the park/neutral position switch was turned OFF. If there is no signal from the vehicle speed sensor with these conditions satisfied, the ECM concludes that the vehicle speed sensor is malfunctioning. The ECM will turn on the MIL and a DTC will be set.

MONITOR STRATEGY

Related DTCs	P0500: Vehicle Speed Sensor Circuit
Required sensors/components (Main)	Vehicle speed sensor, Combination meter, ABS ECU
Required sensors/components (Sub)	Counter gear Speed (CS) sensor, ECT sensor
Frequency of operation	Continuous
Duration	8 seconds
MIL operation	2 driving cycles
Sequence of operation	None

TYPICAL ENABLING CONDITIONS

The monitor will run whenever these DTCs are not present	P0100 - P0103 (MAF sensor) P0105 - P0108 (MAP sensor) P0115 - P0118 (ECT sensor) P0120 - P02238 (TP sensor) P0125 (VSS/ECT1 sensor, non-ECT)
Engine coolant temperature	70°C (158°F) or more

Engine speed	2,000 to 5,000 rpm
Engine load	30.37 % or more
Fuel cut high engine speed	Not executing
Battery voltage	8 V or more
Engine switch	ON
ETC sensor circuit fail	Not detected
MAF sensor circuit fail	Not detected
Starter	OFF

TYPICAL MALFUNCTION THRESHOLDS

Vehicle speed sensor signal	No pulse input

WIRING DIAGRAM

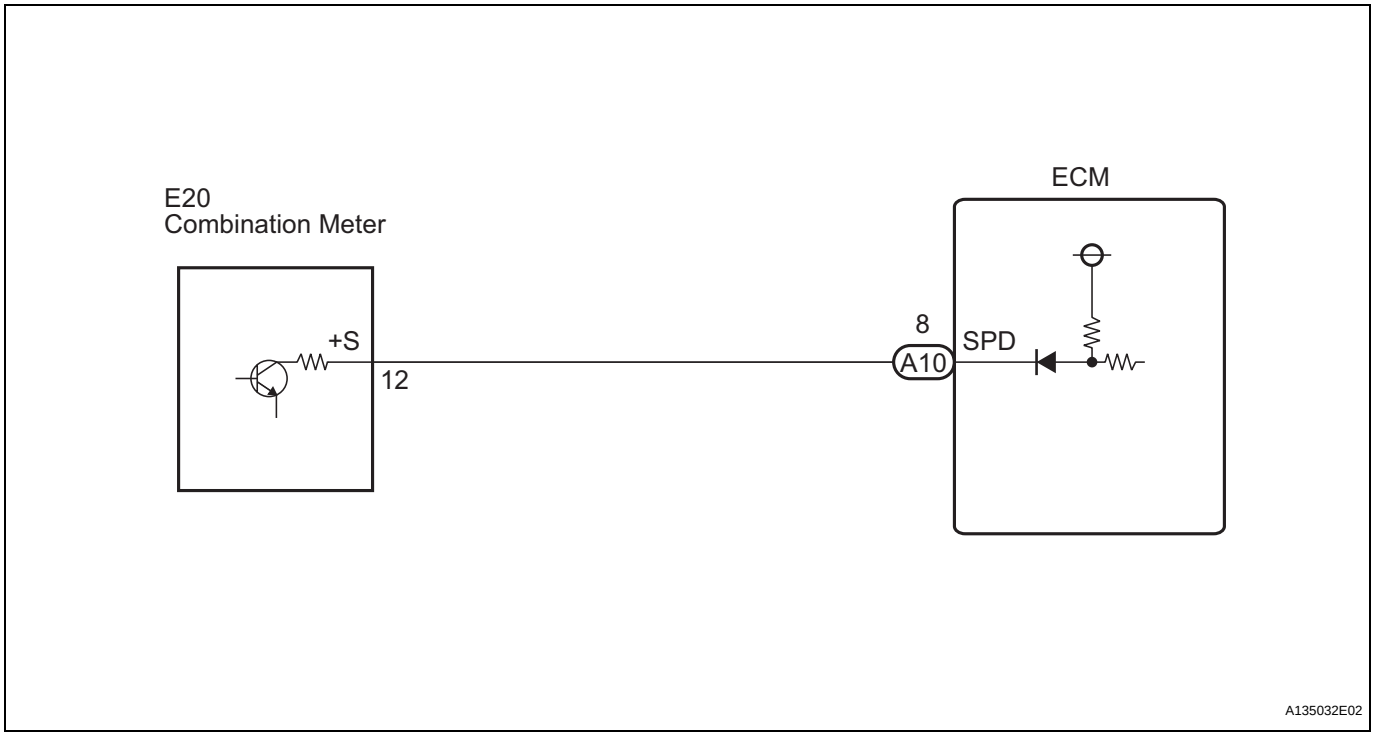

INSPECTION PROCEDURE

HINT:
Read freeze frame data using the intelligent tester. The ECM records vehicle and driving condition information as freeze frame data the moment a DTC is stored. When troubleshooting, freeze frame data can be helpful in determining whether the vehicle was running or stopped, whether the engine was warmed up or not, whether the air-fuel ratio was lean or rich, as well as other data recorded at the time of a malfunction (See page ES-41).

1	CHECK SPEEDOMETER

(a) Drive the vehicle and check whether the operation of the speedometer in the combination meter is normal.
HINT:
- The vehicle speed sensor is operating normally if the speedometer reading is normal.

- If the speedometer does not operate, check it by following the procedure described in speedometer circuit.

NG → **GO TO SPEEDOMETER CIRCUIT**

OK

2 READ VALUE OF INTELLIGENT TESTER (VEHICLE SPEED)

(a) Connect the intelligent tester to the DLC3.
(b) Turn the engine switch on (IG).
(c) Turn the tester on.
(d) Select the following menu items: DIAGNOSIS / ENHANCED OBD II / DATA LIST / PRIMARY / VEHICLE SPD.
(e) Drive the vehicle.
(f) Read the value displayed on the tester.
OK:
Vehicle speeds displayed on tester and speedometer display are equal.

NG → **CHECK INTERMITTENT PROBLEMS**

OK

3 CHECK COMBINATION METER ASSEMBLY (+S VOLTAGE)

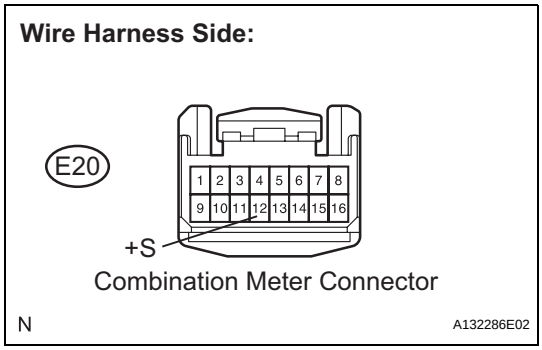

(a) Disconnect the E20 combination meter connector.
(b) Turn the engine switch on (IG).
(c) Measure the voltage between the specified terminal of the combination meter and body ground.
Standard voltage

Tester Connection	Specified Condition
E20-12 (+S) - Body ground	4.5 to 5.5 V

(d) Reconnect the combination meter connector.

NG → **Go to step 5**

OK

4 CHECK COMBINATION METER ASSEMBLY (SPD SIGNAL WAVEFORM)

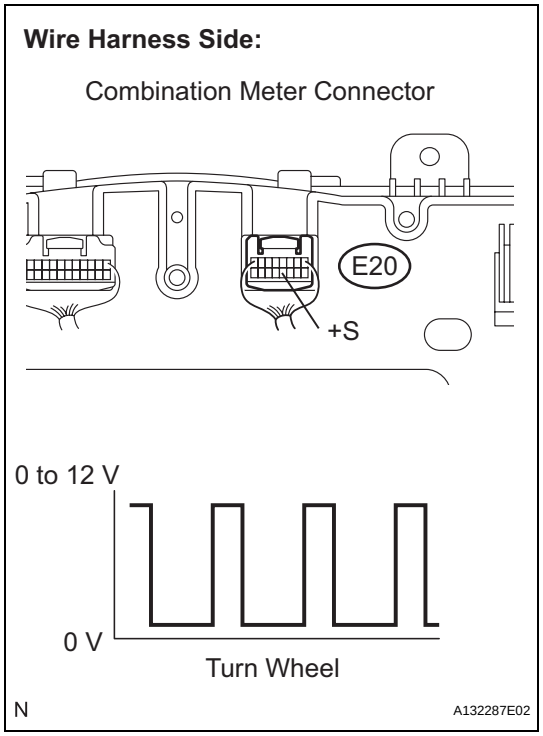

(a) Shift the transmission gear selector lever to the neutral position.
(b) Jack up the vehicle.
(c) Turn the engine switch on (IG).
(d) Measure the voltage between the specified terminal of the combination meter and body ground while the wheel is turned slowly.

Standard voltage

Tester Connection	Specified Condition
E20-12 (+S) - Body ground	Voltage generated intermittently

HINT:
The output voltage should fluctuate up and down, similarly to the diagram, when the wheel is turned slowly.

NG → **REPLACE COMBINATION METER ASSEMBLY (See page ME-67)**

OK

5 CHECK HARNESS AND CONNECTOR (COMBINATION METER ASSEMBLY - ECM)

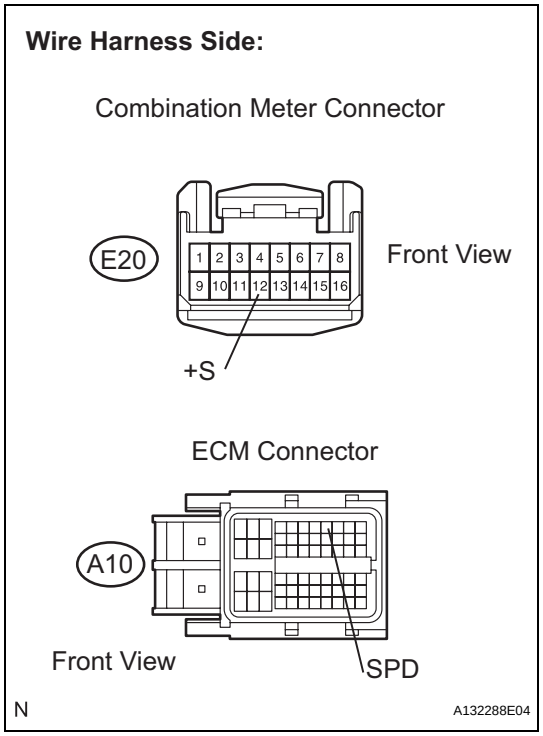

(a) Disconnect the E20 combination meter connector.
(b) Disconnect the A10 ECM connector.
(c) Measure the resistance.

Standard resistance (Check for open)

Tester Connection	Specified Condition
+S (E20-12) - SPD (A10-8)	Below 1 Ω

Standard resistance (Check for short)

Tester Connection	Specified Condition
+S (E20-12) or SPD (A10-8) - Body ground	10 kΩ or higher

(d) Reconnect the combination meter connector.
(e) Reconnect the ECM connector.

NG → **REPAIR OR REPLACE HARNESS OR CONNECTOR**

ES

OK

REPLACE ECM (See page ES-543)

DTC	P0504	Brake Switch "A" / "B" Correlation

DTC	P0724	Brake Switch "B" Circuit High

DESCRIPTION

The stop light switch is a duplex system that transmits two signals: STP and ST1-. These two signals are used by the ECM to monitor whether or not the brake system is working properly. If the signals, which indicate the brake pedal is being depressed and released, are detected simultaneously, the ECM interprets this as a malfunction in the stop light switch and sets the DTC.
HINT:
The normal conditions are as shown in the table below. The signals can be read using an intelligent tester.

ES

Signal	Brake Pedal Released	In Transition	Brake Pedal Depressed
STP	OFF	ON	ON
ST1-	ON	ON	OFF

DTC No.	DTC Detection Condition	Trouble Area
P0504	Conditions (a), (b) and (c) continue for 0.5 seconds or more (1 trip detection logic): (a) Engine switch on (IG) (b) Brake pedal released (c) STP signal OFF when ST1- signal OFF	• Short in stop light switch signal circuit • Stop light switch • ECM
P0724	The stop light switch remains ON even when the vehicle is driven in a STOP (less than 2 mph (3 km/h)) and GO (19 mph (30 km/h) or more) fashion 5 times. (2 trip detection logic)	• Short in stop light switch signal circuit • Stop light switch • ECM

MONITOR DESCRIPTION

This DTC indicates that the stop light switch remains on. When the stop light switch remains ON during "stop and go" driving, the ECM interprets this as a fault in the stop light switch and the MIL comes on and the ECM stores the DTC. The vehicle must stop (less than 2 mph (3 km/h)) and go (19 mph (30 km/h) or more) 5 times in two driving cycles in order to detect a malfunction.

MONITOR STRATEGY

Related DTCs	P0724: Stop light switch/Rationality
Required sensors/Components	Stop light switch, Vehicle speed sensor
Frequency of operation	Continuous
Duration	GO and STOP 5 times
MIL operation	2 driving cycles
Sequence of operation	None

TYPICAL ENABLING CONDITIONS

The monitor will run whenever these DTCs are not present	None
Engine switch	ON
Starter	OFF
Battery voltage	8 V or more
GO (Vehicle speed is 18.65 mph (30 km/h) or more)	Once
STOP (Vehicle speed is less than 1.86 mph (3 km/h))	Once

TYPICAL MALFUNCTION THRESHOLDS

Brake switch	Remain ON during GO and STOP 5 times

WIRING DIAGRAM

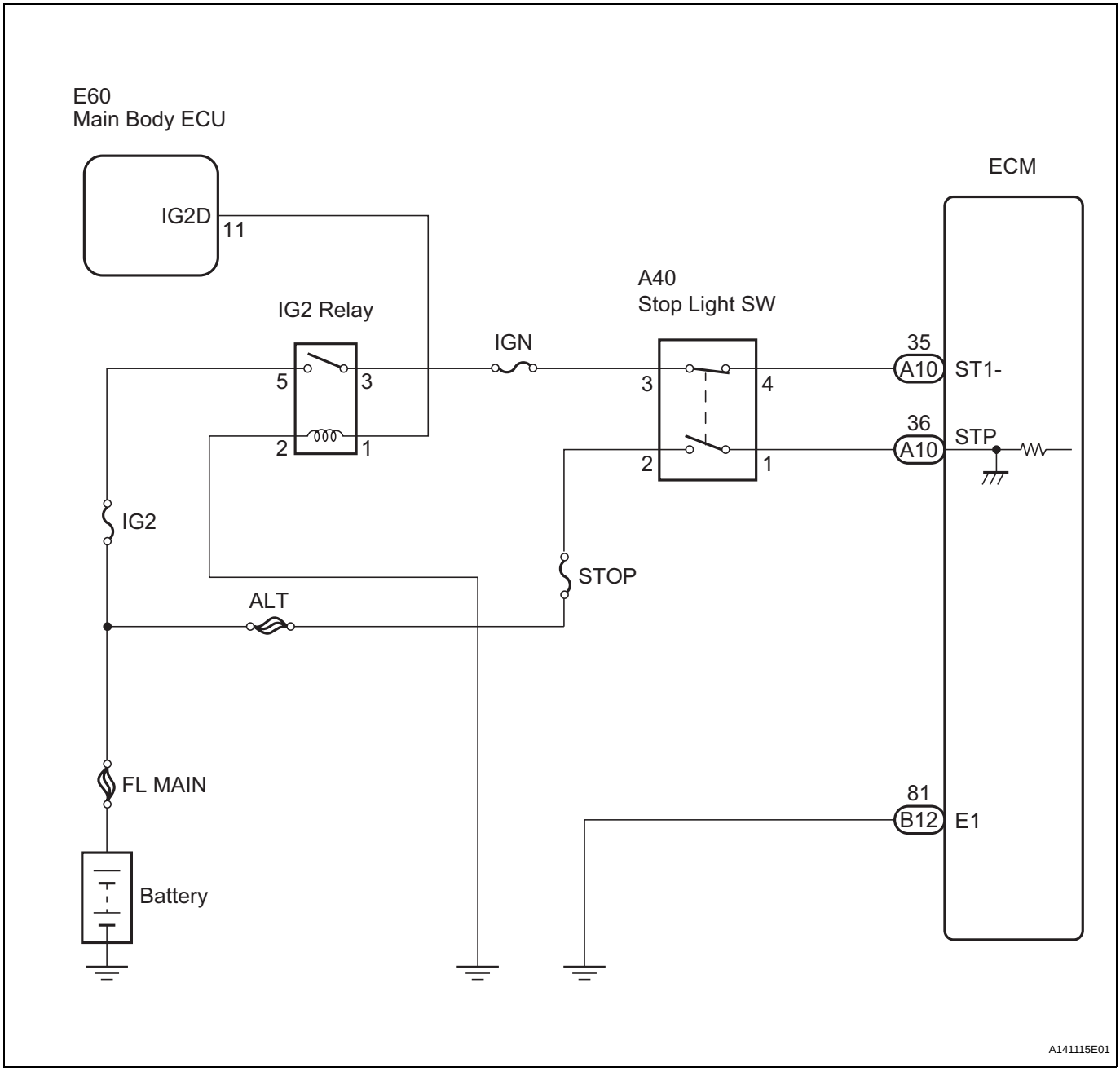

INSPECTION PROCEDURE

HINT:

Read freeze frame data using the intelligent tester. The ECM records vehicle and driving condition information as freeze frame data the moment a DTC is stored. When troubleshooting, freeze frame data can be helpful in determining whether the vehicle was running or stopped, whether the engine was warmed up or not, whether the air-fuel ratio was lean or rich, as well as other data recorded at the time of a malfunction (See page ES-41).

1 CHECK STOP LIGHT (OPERATION OF STOP LIGHT)

(a) Check whether the stop lights turn on and off normally when the brake pedal is depressed and released.
OK:
Stop lights turn ON when brake pedal is depressed.

NG → **REPAIR OR REPLACE STOP LIGHT SWITCH CIRCUIT**

OK

2 READ VALUE OF INTELLIGENT TESTER (STP SIGNAL AND ST1 - VOLTAGE)

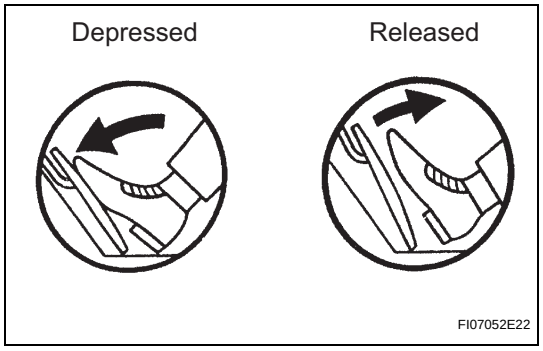

(a) Connect the intelligent tester to the DLC3.
(b) Turn the engine switch on (IG) and turn the tester on.
(c) Enter the following menus: DIAGNOSIS / ENHANCED OBD II / DATA LIST / PRIMARY / STOP LIGHT SW.
(d) Check the STP signal when the brake pedal is depressed and released.
OK

Brake Pedal Condition	Specified Condition
Depressed	STP signal ON
Released	STP signal OFF

(e) Enter the following menus: DIAGNOSIS / ENHANCED OBD II / DATA LIST / PRIMARY / ST1.
(f) Check the ST1 signal when the brake pedal is depressed and released.
OK

Brake Pedal Condition	Specified Condition
Depressed	ST1 signal OFF
Released	ST1 signal ON

OK → **CHECK FOR INTERMITTENT PROBLEMS**

NG

3 INSPECT STOP LIGHT SWITCH ASSEMBLY

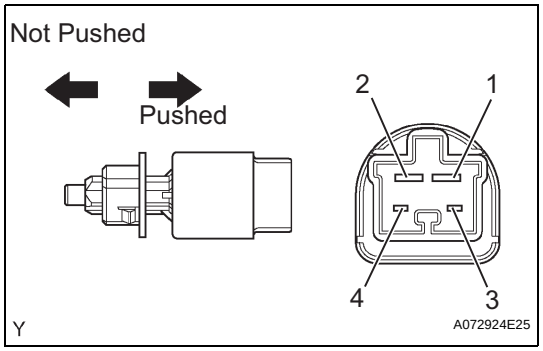

(a) Remove the stop light switch assembly.
(b) Measure the resistance according to the value(s) in the table below.
Standard resistance

Switch Position	Tester Connection	Specified Condition
Switch pin free	1 - 2	Below 1 Ω
Switch pin free	3 - 4	10 kΩ or higher
Switch pin pushed in	1 - 2	10 kΩ or higher
Switch pin pushed in	3 - 4	Below 1 Ω

(c) Reinstall the stop light switch assembly.

NG → **REPLACE STOP LIGHT SWITCH ASSEMBLY (See page LI-200)**

OK

4 CHECK ECM (STP, ST1 - VOLTAGE)

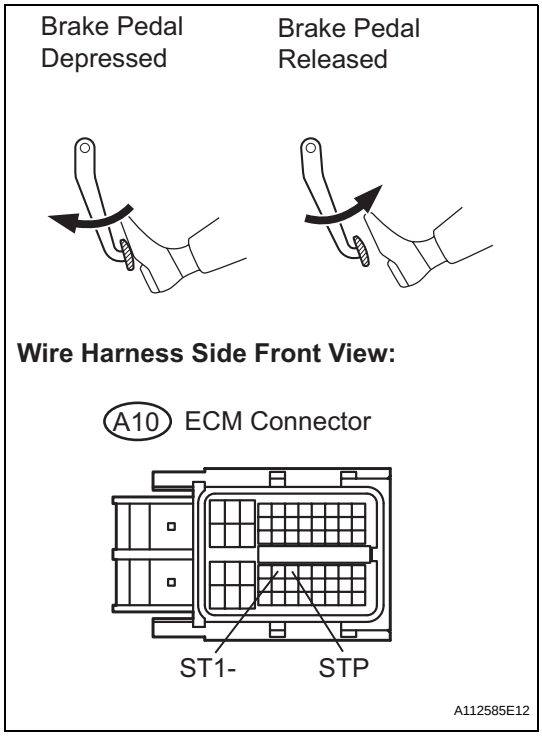

(a) Disconnect the A10 ECM connector.
(b) Measure the voltage according to the value(s) in the table below.

Standard voltage

Tester Connection	Brake Pedal Condition	Specified Condition
STP (A10-36) - Body ground	Depressed	9 to 14 V
STP (A10-36) - Body ground	Released	0 to 3 V
ST1- (A10-35) - Body ground	Depressed	0 to 3 V
ST1- (A10-35) - Body ground	Released	9 to 14 V

NG → **REPAIR OR REPLACE HARNESS OR CONNECTOR**

OK

REPLACE ECM (See page ES-543)

DTC	P0505	Idle Control System Malfunction

DESCRIPTION

The idle speed is controlled by the Electronic Throttle Control System (ETCS). The ETCS is comprised of: 1) one valve type throttle body; 2) the throttle actuator, which operates the throttle valve; 3) the throttle position sensor, which detects the opening angle of the throttle valve; 4) the accelerator pedal position sensor, which detects the accelerator pedal position; 5) the ECM, which controls the ETCS. Based on the target idle speed, the ECM controls the throttle actuator to provide the proper throttle valve opening angle.

DTC No.	DTC Detection Condition	Trouble Area
P0505	Idle speed continues to vary greatly from target speed (2 trip detection logic)	• ETCS • Air induction system • PCV hose connection • ECM

MONITOR DESCRIPTION

The ECM monitors the idling speed and idling air flow volume to conduct Idle Speed Control (ISC). The ECM determines that the ISC system is malfunctioning if the following conditions are met:

- The learned idling air flow volume remains at the maximum or minimum 5 times or more during a driving cycle
- While driving at 6 mph (10 km/h) or more, the actual engine idling speed varies from the target idling speed by between 100 rpm and 200 rpm, 5 times or more during a driving cycle.

Example:

If the actual idling speed varies from the target idling speed by more than 200 rpm* 5 times during a driving cycle, the ECM illuminates the MIL and sets the DTC.

HINT:

*: Threshold idling speed varies with engine load.

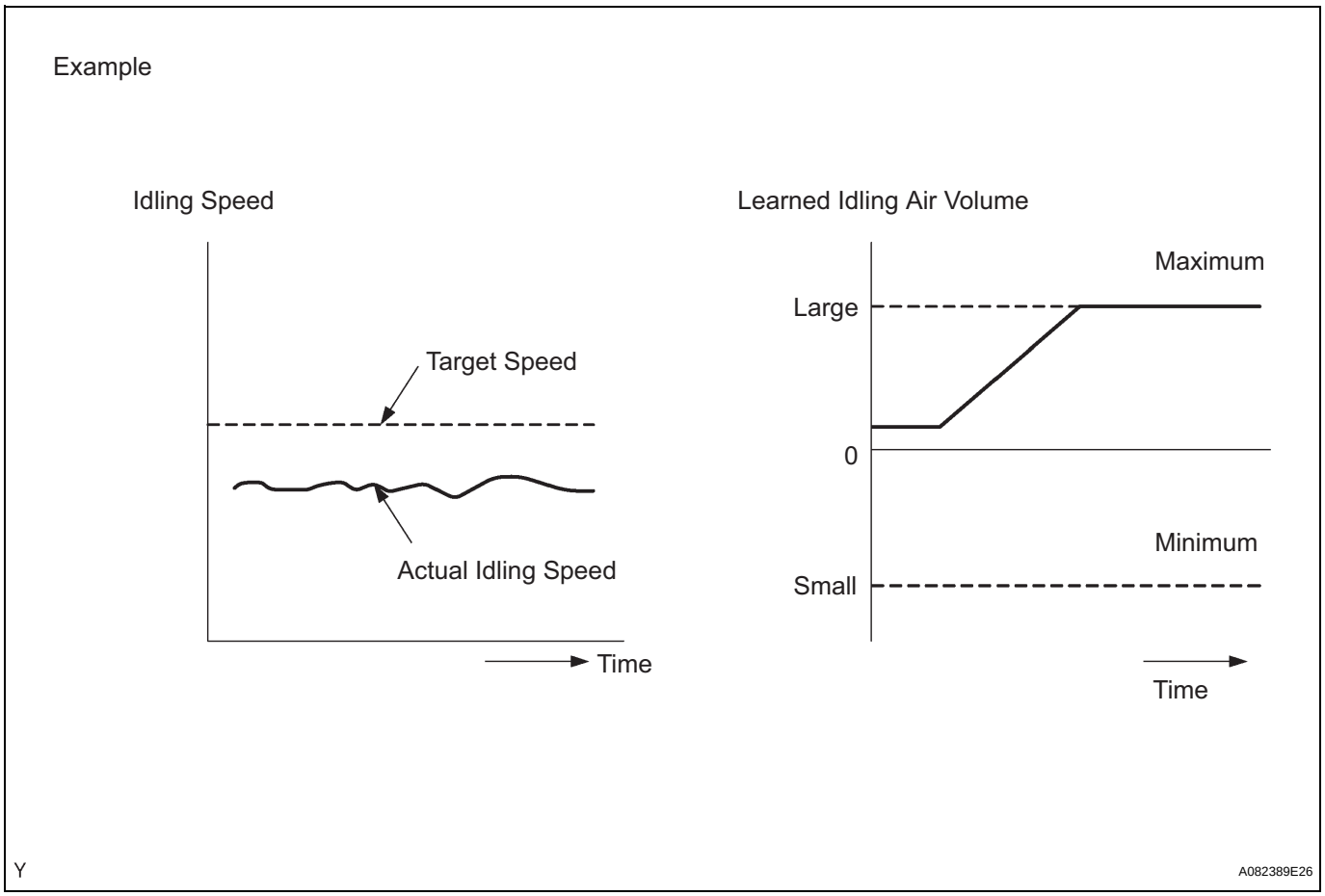

MONITOR STRATEGY

Related DTCs	P0505: ISC function
Required Sensors/Components (Main)	ETCS
Required Sensors/Components (Sub)	Crankshaft position sensor, Engine coolant temperature sensor, and Vehicle speed sensor
Frequency of Operation	Continuous
Duration	10 minutes
MIL Operation	2 driving cycles
Sequence of Operation	None

TYPICAL ENABLING CONDITIONS

Functional check:

Monitor will run whenever these DTCs are not present	None
Engine	Running

TYPICAL MALFUNCTION THRESHOLDS

Functional check:

Either the following condition 1 or 2 is met:	-
1. Frequency that following conditions (a) and (b) are met:	5 time or more
(a) Engine RPM - target engine RPM	Below -100 rpm, or 200 rpm or more
(b) Vehicle condition	Stop after vehicle was driven by 6.25 mph (10 km/h) or more
2. Frequency that following conditions (a) and (b) are met:	Once
(a) Engine RPM - target engine RPM	Below -100 rpm, or 200 rpm or more
(b) ISC flow rate learning value	1.3 L/sec. or less. or 8.5 L/sec. or more

INSPECTION PROCEDURE

HINT:

- The following condition may also cause DTC P0505 to be set:
  (a) The throttle valve is not fully closed. (e.g. The accelerator pedal is slightly depressed by something such as a floor carpet overlapping the accelerator pedal.)
- Read freeze frame data using the intelligent tester. The ECM records vehicle and driving condition information as freeze frame data the moment a DTC is stored. When troubleshooting, freeze frame data can be helpful in determining whether the vehicle was running or stopped, whether the engine was warmed up or not, whether the air-fuel ratio was lean or rich, as well as other data recorded at the time of a malfunction (See page ES-41).

1	CHECK ANY OTHER DTCS OUTPUT (IN ADDITION TO DTC P0505)

(a) Connect the intelligent tester to the DLC3.
(b) Turn the engine switch on (IG).
(c) Turn the tester on.
(d) Enter the following the menus: DIAGNOSIS / ENHANCED OBD II / DTC INFO / CURRENT CODES.
(e) Read the DTCs.

Result

Display (DTC output)	Proceed to
P0505	A
P0505 and other DTCs	B

HINT:
If any DTCs other than P0505 are output, troubleshoot those DTCs first.

B → **GO TO DTC CHART (See page ES-59)**

A

2	CHECK PCV HOSE (HOSE CONNECTIONS)

OK:
PCV hose is connected correctly and is not damaged.

NG → **REPAIR OR REPLACE PCV HOSE**

ES

OK

3	CHECK AIR INDUCTION SYSTEM

(a) Check the air induction system for vacuum leakage.
OK:
No leakage from air induction system.

NG → **REPAIR OR REPLACE AIR INDUCTION SYSTEM**

OK

4	CHECK THROTTLE BODY (VISUALLY CHECK THROTTLE VALVE)

(a) Check for contamination between the throttle valve and the housing. If necessary, clean the throttle body. And check that the throttle valve moves smoothly.
OK:
Throttle valve is not contamainated with foreign objects and moves smoothly.

NG → **REPLACE THROTTLE BODY (See page ES-519)**

OK

REPLACE ECM (See page ES-543)

DTC	P050A	Cold Start Idle Air Control System Performance

DTC	P050B	Cold Start Ignition Timing Performance

DESCRIPTION

The Electronic Throttle Control System (ETCS) controls the engine idling speed. The ETCS operates the throttle actuator to open and close the throttle valve, and adjusts the intake air amount to achieve the target idling speed.
In addition, the ECM retards the ignition timing and the ETCS increases the intake air amount to quickly increase the catalyst temperature at cold start to reduce emissions.

ES

DTC No.	DTC Detection Conditions	Trouble Areas
P050A	Accumulated intake air amount during 10 seconds of idling after cold start is less than threshold (2 trip detection logic)	• Throttle body assembly • Mass air flow meter • Air induction system • PCV hose connections • VVT system • Air cleaner filter element • ECM
P050B	Ignition timing retard value is insufficient for 5 seconds or more during 10 seconds of P050A monitoring at cold start (2 trip detection logic)	• Throttle body assembly • Mass air flow meter • Air induction system • PCV hose connections • VVT system • Air cleaner filter element • ECM

MONITOR DESCRIPTION

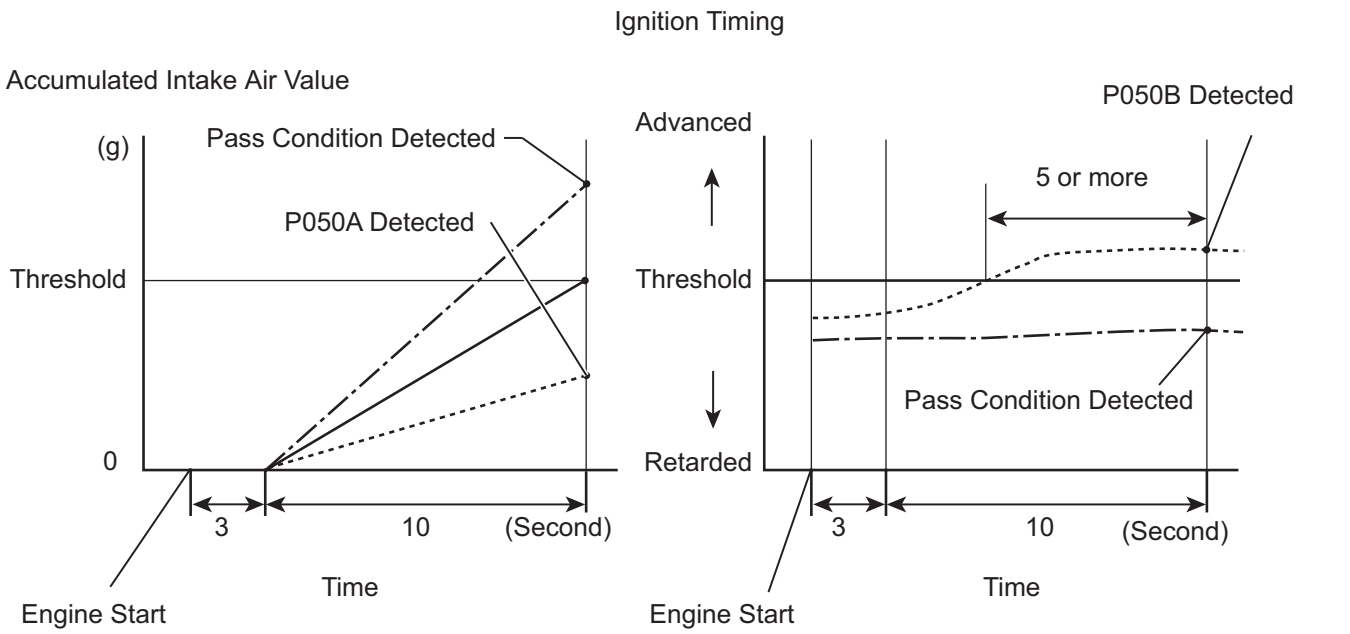

The ECM monitors the intake air amount during idling and the ignition timing.
When the Engine Coolant Temperature (ECT) is between -10°C and 50°C (14°F and 122°F), the ECM calculates the idling intake air amount for 10 seconds, beginning 3 seconds after the engine starts.
When the accumulated value is below the threshold, the ECM interprets this as a malfunction in the Idle Speed Control (ISC) system at cold start.
The ECM also monitors the ignition timing at cold start, and judges it to be incorrect when it is advanced to the same value for a warm engine for 5 seconds or more of the 10 second monitoring period.
Example:
P050A is detected when all conditions below are met (2 trip detection logic).
1. The ECT is between -10°C and 50°C (14°F and 122°F) when the engine starts.
2. The engine idles for 13 seconds after engine start.
3. The accumulated intake air amount is below the threshold.

The ECM sets the DTC and illuminates the MIL 13 seconds after the engine is next started.

NOTICE:
When the negative battery terminal is disconnected during inspection or repairs, the ISC learning values are cleared. The ISC learning must be performed by warming up the engine and idling for 5 minutes with the ECT at 75°C (167°F) or more because DTCs cannot be detected with the ISC learning values cleared.

MONITOR STRATEGY

Related DTCs	P050A: Idle speed control problem at cold P050B: Idle ignition timing problem at cold
Required Sensors/Components (Main)	Mass air flow meter
Required Sensors/Components (Related)	Engine Coolant Temperature (ECT) sensor, Throttle position sensor, Vehicle speed sensor
Frequency of Operation	Once per driving cycle
Duration	10 seconds
MIL Operation	2 driving cycles
Sequence of Operation	None

TYPICAL ENABLING CONDITIONS

P050A:

Battery voltage	8 V or more
Time after engine start	3 seconds or more
Starter	OFF
ECT at engine start	-10°C (14°F) or more
ECT	-10°C to 50°C (14°F to 122°F)
Engine idling time	3 seconds or more
Fuel-cut	OFF
Vehicle speed	Less than 1.875 mph (3 km/h)
Time after shift position changed	1 second or more
Atmospheric pressure	76 kPa (570 mmHg) or more

P050B:

Battery voltage	8 V or more
Time after engine start	3 seconds or more
Starter	OFF
ECT at engine start	-10°C (14°F) or more
ECT	-10°C to 50°C (14°F to 122°F)
Engine idling time	3 seconds or more
Fuel-cut	OFF
Vehicle speed	Less than 1.875 mph (3 km/h)

TYPICAL MALFUNCTION THRESHOLDS

P050A:

Accumulated mass air flow	Varies with ECT (Example: Less than 42.5 g)

P050B:

Accumulated time when ignition timing retard is cut off	5 seconds or more

INSPECTION PROCEDURE

HINT:
Read freeze frame data using an intelligent tester. The ECM records vehicle and driving condition information as freeze frame data the moment a DTC is stored. When troubleshooting, freeze frame data can be helpful in determining whether the vehicle was running or stopped, whether the engine was warmed up or not, whether the air-fuel ratio was lean or rich, as well as other data recorded at the time of a malfunction (See page ES-41).

ES

1	CHECK ANY OTHER DTCS OUTPUT (IN ADDITION TO DTC P050A AND/OR P050B)

(a) Connect an intelligent tester to the DLC3.
(b) Turn the engine switch on (IG).
(c) Turn the tester on.
(d) Select the following menu items: DIAGNOSIS / ENHANCED OBD II / DTC INFO / CURRENT CODES.
(e) Read the DTCs.

Result

Display (DTC Output)	Proceed to
P050A and/or P050B	A
P050A and/or P050B and other DTCs	B

HINT:
If any DTCs other than P050A and P050B are output, troubleshoot those DTCs first.

B → **GO TO DTC CHART (See page ES-59)**

A

2	READ VALUE USING INTELLIGENT TESTER (FUEL TRIM)

HINT:
Calculate the total fuel trim values to check the characteristic deviation of the mass air flow meter.
(a) Connect the intelligent tester to the DLC3.
(b) Turn the engine switch on (IG).
(c) Turn the tester on.
(d) Select the following menu items: DIAGNOSIS / ENHANCED OBD II / DATA LIST / PRIMARY / SHORT FT #1 and LONG FT #1.
(e) Read the values displayed on the tester.
(f) Add together the SHORT FT #1 and LONG FT #1 values to obtain the total FUEL TRIM.

OK:
Total of SHORT FT #1 and LONG FT #1 values is between -20 % and 20 %.

OK → **Go to step 12**

NG

3 PERFORM ACTIVE TEST USING INTELLIGENT TESTER (OPERATE OCV)

(a) Connect the intelligent tester to the DLC3.
(b) Start the engine and turn the tester ON.
(c) Warm up the engine.
(d) Select the following menu items: DIAGNOSIS / ENHANCED OBD II / ACTIVE TEST / VVT CTRL B1.
(e) Check the engine speed while operating the Oil Control Valve (OCV) using the tester.

OK

Tester Operation	Specified Condition
OCV OFF	Normal engine speed
OCV ON	Engine idles roughly or stalls (soon after OCV switched from OFF to ON)

NG → **Go to step 8**

OK

4 CHECK PCV HOSE CONNECTIONS

OK:
PCV hose is connected correctly and is not damaged.

NG → **Go to step 9**

OK

5 CHECK AIR INDUCTION SYSTEM

(a) Check the air induction system for vacuum leakage.
OK:
No leakage from air induction system.

NG → **Go to step 10**

OK

6 CHECK AIR CLEANER FILTER ELEMENT SUB-ASSEMBLY

(a) Visually check that the air cleaner filter element is not excessively contaminated with dirt or oil.
OK:
Air cleaner filter element is not excessively contaminated with dirt or oil.

ES

NG → Go to step 11

OK

7	REPLACE MASS AIR FLOW METER

(a) Replace the mass air flow meter (See page ES-497).

NEXT → Go to step 15

8	CHECK AND REPAIR VVT SYSTEM

NEXT → Go to step 15

9	REPAIR OR REPLACE PCV HOSE

NEXT → Go to step 15

10	REPAIR OR REPLACE AIR INDUCTION SYSTEM

NEXT → Go to step 15

11	REPLACE AIR CLEANER FILTER ELEMENT SUB-ASSEMBLY

NEXT → Go to step 15

12	CHECK THROTTLE VALVE

(a) Check for deposits around the throttle valve and throttle valve condition.
OK:
No deposits around throttle valve and throttle valve moves smoothly.

NG → Go to step 14

OK

13	REPLACE ECM

(a) Replace the ECM (See page ES-543).

NEXT → Go to step 15

14	REPAIR OR REPLACE THROTTLE BODY ASSEMBLY

NEXT → Go to step 15

15	CHECK WHETHER DTC OUTPUT RECURS (DTC P050A AND/OR P050B)

NOTICE:
In this operation, the engine must be cold (the same level as the engine coolant temperature recorded in the freeze frame data).

(a) Connect the intelligent tester to the DLC3.
(b) Turn the engine switch on (IG).
(c) Turn the tester on.
(d) Clear the DTCs (See page ES-41).
(e) Switch the ECM from normal mode to check mode using the tester (See page ES-45).
(f) Start the engine to idle for a minute.
OK:
Stable fast idling.
(g) Read the DTCs.
OK:
No DTC output.

NEXT

END

DTC	P0560	System Voltage

DESCRIPTION

The battery supplies electricity to the ECM even when the engine switch is off. This power allows the ECM to store data such as DTC history, freeze frame data and fuel trim values. If the battery voltage falls below a minimum level, these memories are cleared and the ECM determines that there is a malfunction in the power supply circuit. When the engine is next started, the ECM illuminates the MIL and sets the DTC.

DTC No.	DTC Detection Condition	Trouble Area
P0560	Open in ECM back-up power source circuit (1 trip detection logic)	• Open in back-up power source circuit • ECM

HINT:
If DTC P0560 is set, the ECM does not store other DTCs.

MONITOR STRATEGY

Related DTCs	P0560: ECM system voltage
Required Sensors/Components (Main)	ECM
Required Sensors/Components (Sub)	-
Frequency of Operation	Continuous
Duration	3 seconds
MIL Operation	Immediate (MIL illuminated after next engine start)
Sequence of Operation	None

TYPICAL ENABLING CONDITIONS

Monitor runs whenever following DTCs are not present:	None
Stand-by RAM	Initialized

TYPICAL MALFUNCTION THRESHOLDS

ECM power source	Less than 3.5 V

WIRING DIAGRAM

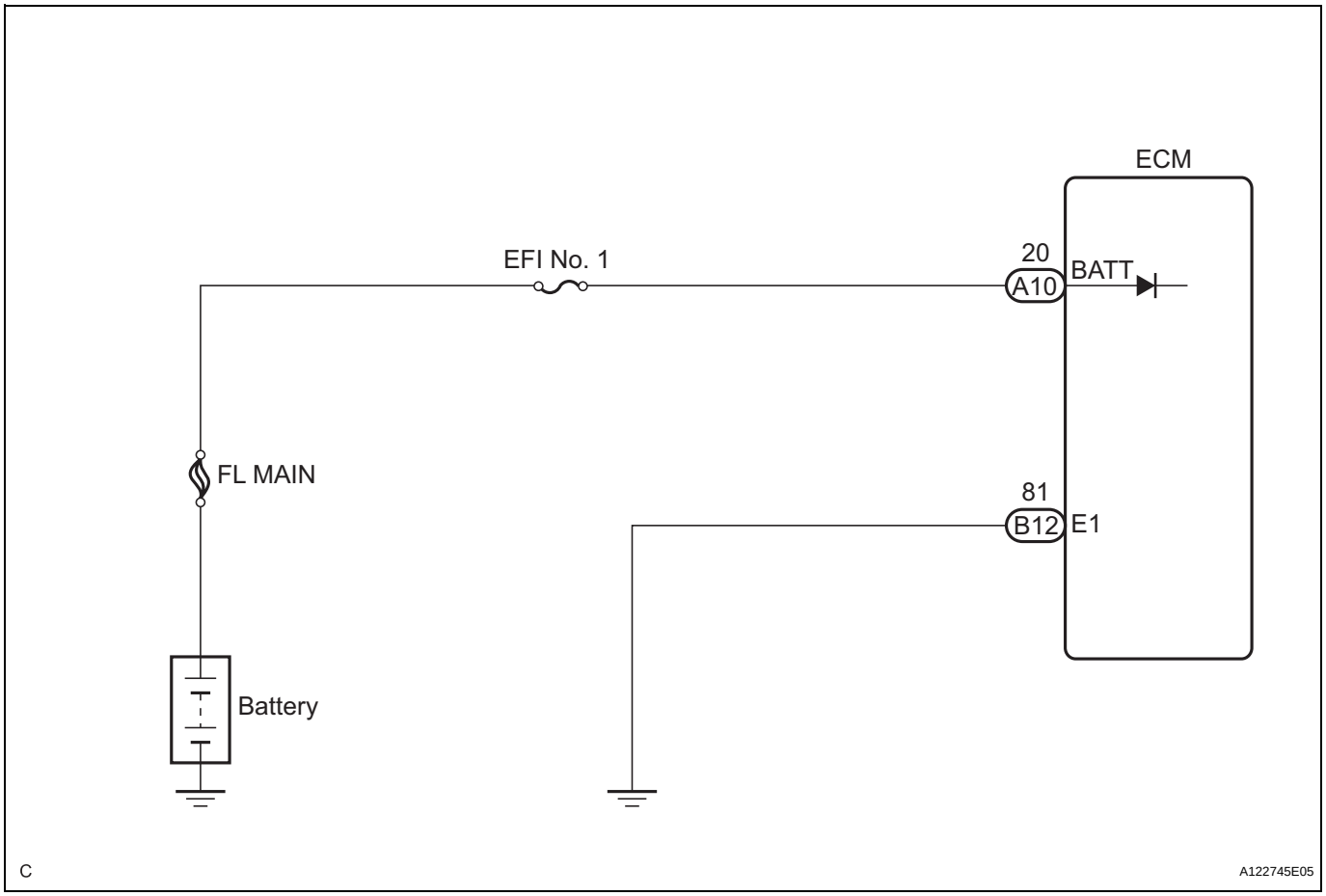

INSPECTION PROCEDURE

HINT:

Read freeze frame data using the intelligent tester. The ECM records vehicle and driving condition information as freeze frame data the moment a DTC is stored. When troubleshooting, freeze frame data can be helpful in determining whether the vehicle was running or stopped, whether the engine was warmed up or not, whether the air-fuel ratio was lean or rich, as well as other data recorded at the time of a malfunction (See page ES-41).

1	INSPECT FUSE (EFI NO. 1)

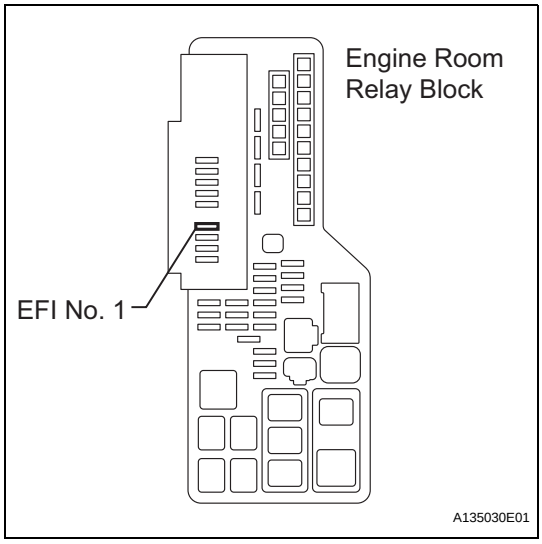

(a) Remove the EFI No. 1 fuse from the engine room R/B.
(b) Measure the EFI No. 1 fuse resistance.
Standard resistance:
Below 1 Ω
(c) Reinstall the EFI No. 1 fuse.

NG → **REPLACE EFI NO. 1 FUSE**

OK

2 CHECK HARNESS AND CONNECTOR

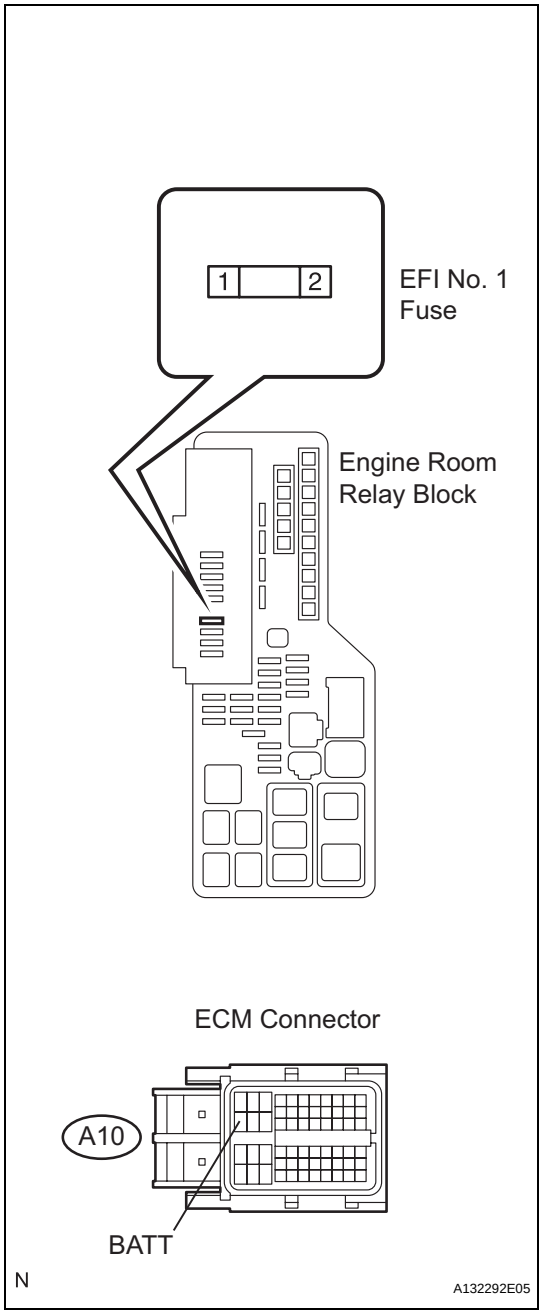

(a) Check the harness and connector between the EFI No. 1 fuse and ECM.
  (1) Remove the EFI No. 1 fuse from the engine room R/B.
  (2) Disconnect the A10 ECM connector.
  (3) Measure the resistance according to the value(s) in the table below.

Standard resistance (Check for open)

Tester Connection	Specified Condition
Engine room R/B EFI No. 1 fuse terminal 2 - BATT (A10-20)	Below 1 Ω

Standard resistance (Check for short)

Tester Connection	Specified Condition
Engine room R/B EFI No. 1 fuse terminal 2 or BATT (A10-20) - Body ground	10 kΩ or higher

  (4) Reinstall the ECM connector.

(b) Check the harness and the connector between the EFI No. 1 fuse and battery.
  (1) Disconnect the negative battery terminal.
  (2) Disconnect the positive battery terminal.
  (3) Measure the resistance according to the value(s) in the table below.

Standard resistance (Check for open)

Tester Connection	Specified Condition
Battery positive terminal - Engine room R/B EFI No. 1 fuse terminal 1	Below 1 Ω

Standard resistance (Check for short)

Tester Connection	Specified Condition
Battery positive terminal or Engine room R/B EFI No. 1 fuse terminal 1 - Body ground	10 kΩ or higher

  (4) Reconnect the positive battery terminal.
  (5) Reconnect the negative battery terminal.
  (6) Reinstall the EFI No. 1 fuse.

NG → **REPAIR OR REPLACE HARNESS OR CONNECTOR**

OK

3 INSPECT BATTERY

(a) Check that the battery is not depleted.
OK:
Battery is not depleted.

NG → **REPLACE BATTERY**

ES

OK

4	CHECK BATTERY TERMINAL

(a) Check that the battery terminals are not loose or corroded.
OK:
Battery terminals are not loose or corroded.

NG → **REPAIR OR REPLACE BATTERY TERMINAL**

OK

ES

5	CHECK WHETHER DTC OUTPUT RECURS

(a) Connect the intelligent tester to the DLC3.
(b) Turn the engine switch on (IG).
(c) Turn the intelligent tester on.
(d) Clear the DTCs (See page ES-41).
(e) Turn the intelligent tester off.
(f) Start the engine and turn the intelligent tester on.
(g) Select the following menu items: DIAGNOSIS / ENHANCED OBD II / DTC INFO / CURRENT CODES.
(h) Read the DTCs.

Result

Display (DTC Output)	Proceed to
P0560	A
No output	B

B → **CHECK FOR INTERMITTENT PROBLEMS**

A

REPLACE ECM (See page ES-543)

DTC	P0604	Internal Control Module Random Access Memory (RAM) Error

DESCRIPTION

The ECM continuously monitors its internal memory status. This self-check ensures that the ECM is functioning properly. It is diagnosed by internal "mirroring" of the main CPU and sub CPU to detect the Random Access Memory (RAM) errors. If outputs from these CPUs are different and deviate from the standards, the ECM will illuminate the MIL and set a DTC immediately.

DTC	DTC Setting Condition	Trouble Area
P0604	ECM RAM errors	ECM

MONITOR STRATEGY

Related DTC	P0604: ECM RAM error
Required sensors/Components	ECM
Frequency of Operation	Continuous
Duration	16 seconds
MIL Operation	Immediate
Sequence of Operation	None

TYPICAL ENABLING CONDITIONS

Monitor will run whenever this DTC is not present	None

TYPICAL MALFUNCTION THRESHOLDS

Main CPU and sub CPU mirroring	Fail

INSPECTION PROCEDURE

1	CHECK OTHER DTC OUTPUT (IN ADDITION TO DTC P0604)

(a) Connect the intelligent tester to the DLC3.
(b) Turn the engine switch on (IG).
(c) Turn the tester on.
(d) Clear the DTC.
(e) Turn the engine switch off.
(f) Disconnect the battery negative terminal and wait for 1 minute.
(g) Connect the battery negative terminal.
(h) Turn the engine switch on (IG).
(i) Enter the following menus: DIAGNOSIS / ENHANCED II / DTC INFO / CURRENT CODES.
(j) Read the DTCs.

Result

Display (DTC output)	Proceed to
P0604	**A**
No output DTC	**B**

B → **CHECK FOR INTERMITTENT PROBLEMS**

A

REPLACE ECM (See page ES-543)

DTC	P0606	ECM / PCM Processor

DESCRIPTION

The ECM continuously monitors its internal processors (CPUs), A/F sensor transistors and heated oxygen sensor (HO2S) transistors. This self-check ensures that the ECM is functioning properly. These are diagnosed by internal "mirroring" of the main and sub CPUs to detect the processors error. If outputs from the processors deviate from the standards, the ECM will illuminate the MIL and set a DTC immediately.

DTC	DTC Setting Condition	Trouble Area
P0606	• ECM CPUs malfunction • A/F sensor transistors malfunction • HO2S transistors malfunction	• Exhaust gas leak • HO2 Sensor • ECM

MONITOR STRATEGY

Related DTC	P0606: ECM range check
Required sensors/Components (main)	ECM
Required sensors/Components (sub)	APP sensor, TP sensor, Brake switch, Cruise control, A/F sensor HO2S
Frequency of Operation	Continuous
Duration	60 seconds
MIL Operation	Immediate
Sequence of Operation	None

TYPICAL ENABLING CONDITIONS

Monitor will run whenever this DTC is not present	None
Engine	Running
Estimated A/F sensor temperature	450 to 800°C (842 to 1,472°F)
Estimated HO2S temperature	450 to 800°C (842 to 1,472°F)

TYPICAL MALFUNCTION THRESHOLDS

Difference of main APP and sub APP	0.3 V or more
Difference of main TP and sub TP	0.3 V or more
Difference of main brake switch signal and sub brake switch signal	Different
Cruise control	Fail
A/F sensor transistors	Fail
HO2S transistors	Fail

INSPECTION PROCEDURE

1	CHECK FOR EXHAUST GAS LEAK

(a) Allow the engine to idle.
(b) Check for exhaust gas leak around the heated oxygen sensor.
OK:
No leak from the heated oxygen sensor.

NG → **REPAIR OR REPLACE EXHAUST GAS LEAKAGE POINT**

OK

2 CHECK HEATED OXYGEN SENSOR

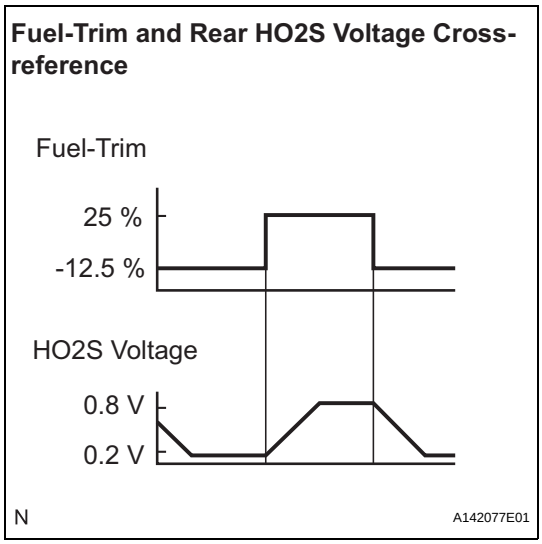

(a) Connect the intelligent tester to the DLC3.
(b) Start the engine and turn the tester on.
(c) Warm up the engine at an engine speed of 2,500rpm for approximately 90 seconds.
(d) Enter the following menus: DIAGNOSIS / ENHANCED II / ACTIVE TEST / A/F CONTROL.
(e) Perform the A/F CONTROL operation with the engine in an idling condition (press the RIGHT or LEFT button to change the fuel injection volume).
(f) Monitor the voltage outputs of the HO2 sensors (O2S B1S2 or O2S B2S2) displayed on the tester.
HINT:
- The A/F CONTROL operation lowers the fuel injection volume by 12.5 % or increases the injection volume by 25 %.
- Each sensor reacts in accordance with increases in the fuel injection volume.

Standard voltage

Tester Display (Sensor)	Injection Volume	Voltage
O2S B1S2 or O2S B2S2	-12.5 %	Less than 0.2 V
	+25 %	More than 0.8 V

NG → **REPLACE HEATED OXYGEN SENSOR (See page EC-21)**

OK

3 CHECK WHETHER DTC OUTPUT RECURS (IN ADDITION TO DTC P0606)

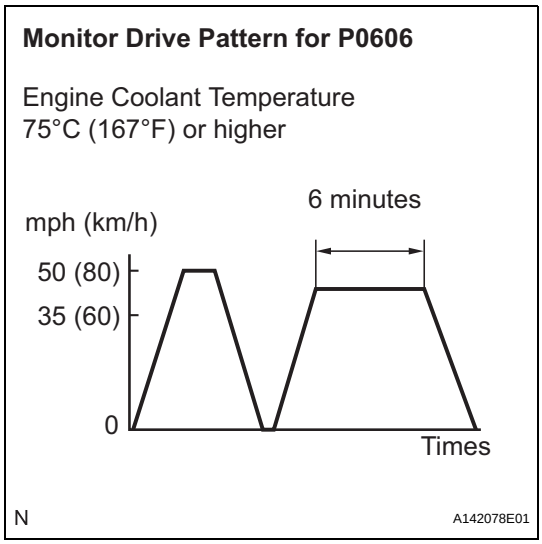

(a) Connect the intelligent tester to the DLC3.
(b) Turn the engine switch on (IG).
(c) Turn the tester on.
(d) Clear the DTC.
(e) Turn the engine switch off.
(f) Disconnect the battery negative terminal and wait for 1 minute.
(g) Connect the battery negative terminal.
(h) Start the engine.
(i) Perform the drive pattern.
  (1) Warm up the engine.
  (2) Accelerate the vehicle to 50 mph (80 km/h) and stop the vehicle.
  (3) Drive the vehicle at 35 to 50 mph (60 to 80 km/h) for 5 minutes or more.
(j) Enter the following menus: DIAGNOSIS / ENHANCED II / DTC INFO / CURRENT CODES.
(k) Read the DTCs.

Result

Display (DTC output)	Proceed to
P0606	A
No output DTC	B

B → **CHECK FOR INTERMITTENT PROBLEMS**

A

REPLACE ECM (See page ES-543)

DTC	P0607	Control Module Performance

DESCRIPTION

The ECM continuously monitors its main and sub CPUs. This self-check ensures that the ECM is functioning properly. If outputs from the CPUs are different and deviate from the standards, the ECM will illuminate the MIL and set a DTC immediately.
The ECM also monitors the cruise control cancel circuit. If this circuit malfunctions, the ECM will set a DTC immediately (MIL is not illuminated).

DTC No.	DTC Detection Condition	Trouble Area
P0607	• ECM main CPU error • ECM sub CPU error • Cruise control cancel circuit malfunction	ECM

NOTICE:
First check for an exhaust gas leak around the HO2S if P0606 is present. An exhaust gas leak generates noise in the HO2S output. The ECM may interpret this as an HO2S transistor malfunction.

MONITOR STRATEGY

Related DTC	P0607: ECM CPU malfunction
Required sensors/Components	ECM
Frequency of Operation	Continuous
Duration	Within 1 second
MIL Operation	Immediate
Sequence of Operation	None

TYPICAL ENABLING CONDITIONS

Monitor will run whenever this DTC is not present	None

TYPICAL MALFUNCTION THRESHOLDS

Either of the following conditions is met:	Condition A or B
A. All of the following conditions are met:	Conditions (a), (b) and (c)
(a) CPU reset	1 time or more
(b) Leaned TP - learned APP	0.4 V or more
Throttle actuator	OFF
B. CPU reset	2 times or more

INSPECTION PROCEDURE

1	CHECK WHETHER DTC OUTPUT RECURS (IN ADDITION TO DTC P0607)

(a) Connect the intelligent tester to the DLC3.
(b) Turn the engine switch on (IG).
(c) Turn the tester on.
(d) Clear the DTC.
(e) Turn the engine switch off.
(f) Disconnect the battery negative terminal and wait for 1 minute.
(g) Connect the battery negative terminal.

(h) Turn the engine switch on (IG).
(i) Enter the following menus: DIAGNOSIS / ENHANCED II / DTC INFO / CURRENT CODES.
(j) Read the DTCs.

Result

Display (DTC output)	Proceed to
P0607	A
No output DTC	B

B → **CHECK FOR INTERMITTENT PROBLEMS**

A

REPLACE ECM (See page ES-543)

DTC	P0617	Starter Relay Circuit High

DESCRIPTION

While the engine is being cranked, the positive battery voltage is applied to terminal STA of the ECM. If the ECM detects the Starter Control (STA) signal while the vehicle is being driven, it determines that there is a malfunction in the STA circuit. The ECM then illuminates the MIL and sets the DTC.
This monitor runs when the vehicle is driven at 12.4 mph (20 km/h) for over 20 seconds.

DTC No.	DTC Detection Condition	Trouble Area
P0617	When conditions (a), (b) and (c) are met, positive (+B) battery voltage of 10.5 V or more is applied to ECM for 20 seconds (1 trip detection logic): (a) Vehicle speed more than 12.4 mph (20 km/h) (b) Engine speed more than 1,000 rpm (c) STA signal ON	• Park/Neutral Position (PNP) switch • Starter relay circuit • Cranking holding function circuit • Engine switch • ECM

ES

MONITOR STRATEGY

Related DTCs	P0617: Starter signal
Required Sensors/Components (Main)	STARTER relay, PMP switch, Engine switch
Required Sensors/Components (Sub)	Vehicle speed sensor (VSS), Crankshaft Position (CKP) sensor
Frequency of Operation	Continuous
Duration	20 seconds
MIL Operation	Immediate
Sequence of Operation	None

TYPICAL ENABLING CONDITIONS

Monitor runs whenever this DTC is not present:	None
Battery voltage	10.5 V or more
Vehicle speed	12.43 mph (20 km/h) or more
Engine speed	1,000 rpm or more

TYPICAL MALFUNCTION THRESHOLDS

Starter signal	ON

WIRING DIAGRAM

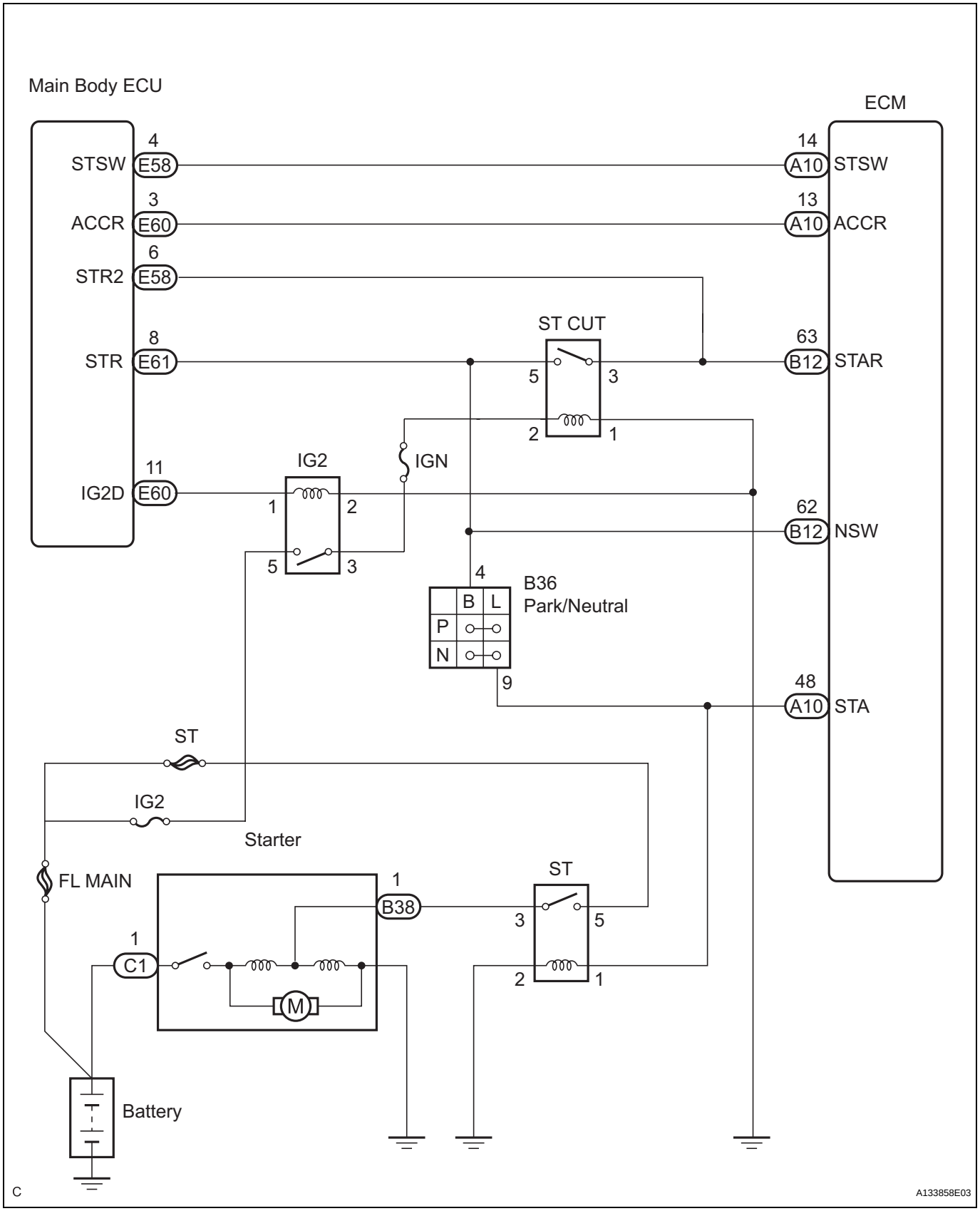

ES

INSPECTION PROCEDURE

HINT:

- The following troubleshooting flowchart is based on the premise that the engine is cranked normally. If the engine does not crank, proceed to the problem symptoms table (See page ES-28).
- Read freeze frame data using the intelligent tester. The ECM records vehicle and driving condition information as freeze frame data the moment a DTC is stored. When troubleshooting, freeze frame data can be helpful in determining whether the vehicle was running or stopped, whether the engine was warmed up or not, whether the air-fuel ratio was lean or rich, as well as other data recorded at the time of a malfunction (See page ES-41).

1 READ VALUE OF INTELLIGENT TESTER (STARTER SIGNAL)

(a) Connect the intelligent tester to the DLC3.
(b) Turn the engine switch on (IG) and turn the tester on.
(c) Enter the following menus: DIAGNOSIS / ENHANCED OBD II / DATA LIST / ALL / STARTER SIG.
(d) Check the value displayed on the tester when the engine switch is turned on (IG) and the engine is started.

OK

Condition	Engine switch on (IG)	Engine start
STARTER SIG	OFF	ON

OK → **REPLACE ECM (See page ES-543)**

NG

2 INSPECT PARK/NEUTRAL POSITION SWITCH ASSEMBLY

Component Side:

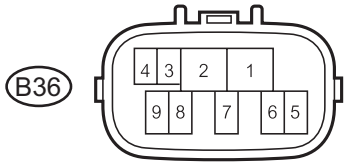

Park/Neutral Position Switch

A107908E07

(a) Inspect the Park/Neutral Position (PNP) switch.
  (1) Disconnect the B36 switch connector.
  (2) Measure the resistance according to the value(s) in the table below.

Standard resistance

Gear Selector Lever Position	Tester Connection	Specified Condition
P	4 - 5	Below 1 Ω
N	4 - 5	Below 1 Ω

  (3) Reconnect the PNP switch connector.

Result

Result	Proceed to
OK	A
NG	B

B → **REPLACE PARK/NEUTRAL POSITION SWITCH (THEN CHECK CRANKING HOLDING FUNCTION CIRCUIT) (See page AX-184)**

A

CHECK CRANKING HOLDING FUNCTION CIRCUIT (See page ES-449)

DTC	P0630	VIN not Programmed or Mismatch - ECM / PCM

DESCRIPTION

DTC P0630 is set when the Vehicle Identification Number (VIN) is not stored in the Engine Control Module (ECM) or the input VIN is not accurate. Input the VIN with the intelligent tester.

DTC No.	DTC Detection Condition	Trouble Area
P0630	• VIN not stored in ECM • Input VIN in ECM not accurate	ECM

MONITOR STRATEGY

ES

Related DTCs	P0630: VIN not programmed
Required Sensors/Components (Main)	ECM
Required Sensors/Components (Sub)	-
Frequency of Operation	Continuous
Duration	0.325 seconds
MIL Operation	Immediate
Sequence of Operation	None

TYPICAL ENABLING CONDITIONS

Battery voltage	8 V or more
Engine switch	ON
Starter	OFF

TYPICAL MALFUNCTION THRESHOLDS

VIN code	Not programmed

COMPONENT OPERATING RANGE

VIN code	Programmed

INSPECTION PROCEDURE

1	READ DTC OUTPUT

(a) Connect the intelligent tester to the DLC3.
(b) Turn the engine switch on (IG) and turn the tester on.
(c) Enter the following menus: DIAGNOSIS / ENHANCED OBD II / DTC INFO / CURRENT CODES.
(d) Read the DTCs.

Result

Display (DTC Output)	Proceed to
P0630	**A**
P0630 and other DTCs	**B**

If any DTCs other than P0630 are output, troubleshoot those DTCs first.

NOTICE:
If P0630 is set, the VIN must be input to the ECM using the intelligent tester. However, all DTCs are cleared automatically by the tester when inputting the VIN. If DTCs other than P0630 are set, check them first.

B → **GO TO DTC CHART (See page ES-59)**

A

2	**INPUT VIN WITH INTELLIGENT TESTER**

NEXT

END

DTC	P0657	Actuator Supply Voltage Circuit / Open

DESCRIPTION

The ECM monitors the output voltage to the throttle actuator. This self-check ensures that the ECM is functioning properly. The output voltage usually is 0 V when the engine switch is turned off. If the output voltage is higher than 7 volts when the engine switch is turned off, the ECM will illuminate the MIL and set a DTC when the engine switch is turned on.

DTC	DTC Setting Condition	Trouble Area
P0657	Throttle actuator power supply error	ECM

ES

MONITOR STRATEGY

Related DTC	P0657: ETCS power supply
Required sensors/Components (main)	ECM
Required sensors/Components (sub)	Throttle actuator
Frequency of Operation	Once per driving cycle
Duration	Within 1 second
MIL Operation	Immediate
Sequence of Operation	None

TYPICAL ENABLING CONDITIONS

Monitor will run whenever this DTC is not present	None
Engine switch	From ON to OFF

TYPICAL MALFUNCTION THRESHOLDS

Throttle actuator power supply	7 V or more

INSPECTION PROCEDURE

1	CHECK WHETHER DTC OUTPUT RECURS (IN ADDITION TO DTC P0657)

(a) Connect the intelligent tester to the DLC3.
(b) Turn the engine switch on (IG).
(c) Turn the tester on.
(d) Clear the DTC.
(e) Turn the engine switch off.
(f) Disconnect the battery negative terminal and wait for 1 minute.
(g) Connect the battery negative terminal.
(h) Turn the engine switch on (IG) for 10 seconds.
(i) Turn the engine switch off.
(j) Turn the engine switch on (IG).
(k) Enter the following menus: DIAGNOSIS / ENHANCED II / DTC INFO / CURRENT CODES.
(l) Read the DTCs.

Result

Display (DTC output)	Proceed to
P0657	**A**

Display (DTC output)	Proceed to
No output DTC	B

B → **CHECK FOR INTERMITTENT PROBLEMS**

A

REPLACE ECM (See page ES-543)

DTC	P0705	Transmission Range Sensor Circuit Malfunction (PRNDL Input)

DESCRIPTION

The park/neutral position switch detects the shift lever position and sends signals to the ECM.

DTC No.	DTC Detection Condition	Trouble Area
P0705	(A) Any 2 or more signals of the following are ON simultaneously (2-trip detection logic): • P input signal is ON. • N input signal is ON. • R input signal is ON. • D input signal is ON. (B) Any 2 or more signals of the following are ON simultaneously (2-trip detection logic): • NSW input signal is ON. • R input signal is ON. • D input signal is ON. (C) Any of following conditions is met for 2.0 sec. or more in the S position (2-trip detection logic): • NSW input signal is ON. • P input signal is ON. • N input signal is ON. • R input signal is ON. (D) All switches are OFF simultaneously for NSW, P, R, N and D.	• Short in park/neutral position switch circuit • Park/neutral position switch • ECM

ES

MONITOR DESCRIPTION

These DTCs indicate a problem with the park/neutral position switch and the wire harness in the park/neutral position switch circuit.
The park/neutral position switch detects the shift lever position and sends a signal to the ECM.
For security, the park/neutral position switch detects the shift lever position so that the engine can be started only when the shift lever is in the P or N position.
The park/neutral position switch sends a signal to the ECM according to the shift position (P, R, N or D).
The ECM determines that there is a problem with the switch or related parts if it receives more than 1 position signal simultaneously. The ECM will turn on the MIL and store the DTC.

MONITOR STRATEGY

Related DTCs	P0705: Park/neutral position switch/Verify switch input
Required sensors/Components	Park/neutral position switch
Frequency of operation	Continuous
Duration	2 sec.
MIL operation	2 driving cycles
Sequence of operation	None

TYPICAL ENABLING CONDITIONS

All:

The monitor will run whenever this DTC is not present.	None
Engine switch	ON
Battery voltage	10.5 V or more

Condition (C):

One of the following conditions is met:	Condition (a), (b), (c) or (d)
(a) Park Neutral position switch	ON
(b) Park position switch	ON

(c) Neutral position switch	ON
(d) R range position switch	ON

TYPICAL MALFUNCTION THRESHOLDS

1. One of the following conditions is met: Conditions (A), (B) and (C)

Condition (A):

Number of the following signal input at the same time	2 or more
Park position switch	ON
Neutral position switch	ON
R range position switch	ON
D range position switch	ON

Condition (B):

Number of the following signal input at the same time	2 or more
Park neutral position switch	ON
R range switch	ON
D range switch	ON

Condition (C):

"M" switch	ON

Condition (D):

Park position switch	OFF
Neutral position switch	OFF
Park neutral position switch	OFF
R range switch	OFF
D range switch	OFF

COMPONENT OPERATING RANGE

Park/neutral Position switch	The park/neutral position switch sends only one signal to the ECM.

WIRING DIAGRAM

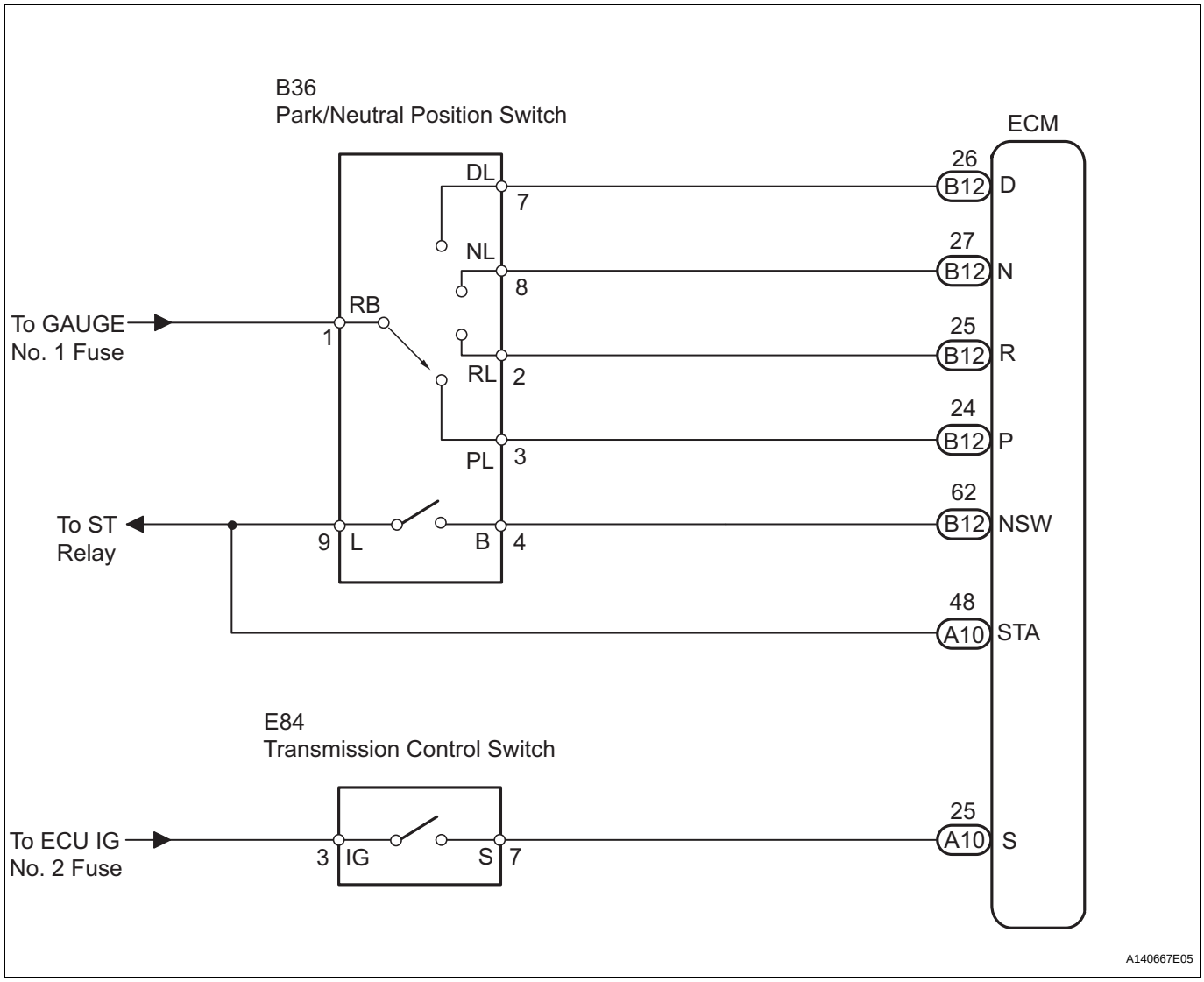

INSPECTION PROCEDURE

HINT:

According to the DATA LIST displayed by the intelligent tester, you can read the value of the switch, sensor, actuator and so on without parts removal. Reading the DATA LIST as the first step of troubleshooting is one method to shorten labor time.

NOTICE:

In the table below, the values listed under "Normal Condition" are reference values. Do not depend solely on these reference values when deciding whether a part is faulty or not.

1. READ DATA LIST

(a) Turn the engine switch off.

(b) Connect the intelligent tester together with the CAN VIM (controller area network vehicle interface module) to the DLC3.

(c) Turn the engine switch on (IG).

(d) Turn on the tester.

(e) Select the item "DIAGNOSIS / ENHANCED OBD II / DATA LIST".

(f) According to the display on the tester, read the "DATA LIST".

Item	Measurement Item / Range (Display)	Normal Condition	Diagnostic Note
PNP SW [NSW]	PNP SW Status / ON or OFF	Shift lever position is; P and N: ON Except P or N: OFF	When the shift lever position displayed on the intelligent tester differs from the actual position, adjustment of the PNP switch or the shift cable may be incorrect.
REVERSE	PNP SW Status / ON or OFF	Shift lever position is; R: ON Except R: OFF	↑
DRIVE	PNP SW Status / ON or OFF	Shift lever position is; D and S: ON Except D or S: OFF	↑

1 CHECK HARNESS AND CONNECTOR (BATTERY - PARK/NEUTRAL POSITION SWITCH)

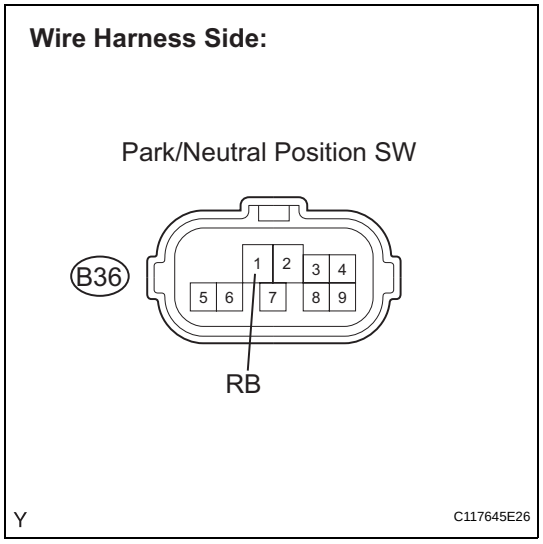

(a) Disconnect the park/neutral position switch connector.
(b) Turn the engine switch on (IG).
(c) Measure the voltage according to the value(s) in the table below.

Standard voltage

Tester Connection	Specified Condition
RB (B36-1) - Body ground	10 to 14 V

NG → **REPAIR OR REPLACE HARNESS OR CONNECTOR**

OK

2 CHECK ECM (OUTPUT SIGNAL)

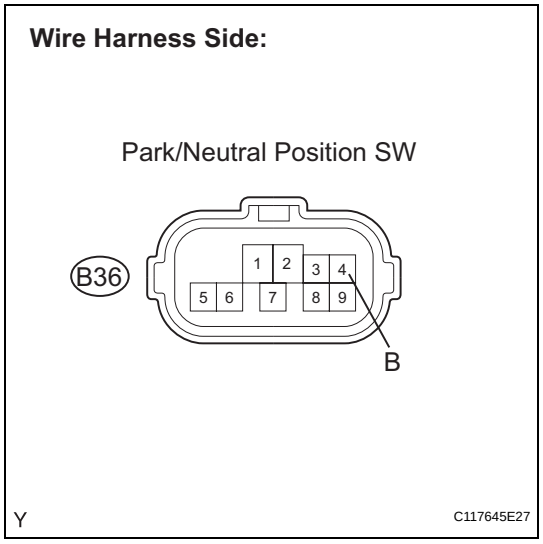

(a) Turn the engine switch on (IG).
(b) Measure the voltage according to the value(s) in the table below.

Standard voltage

Tester Connection	Specified Condition
RB (B36-4) - Body ground	Below 3 V

NG → **Go to step 11**

OK

3	CHECK HARNESS AND CONNECTOR (PARK/NEUTRAL POSITION SWITCH - ST RELAY)

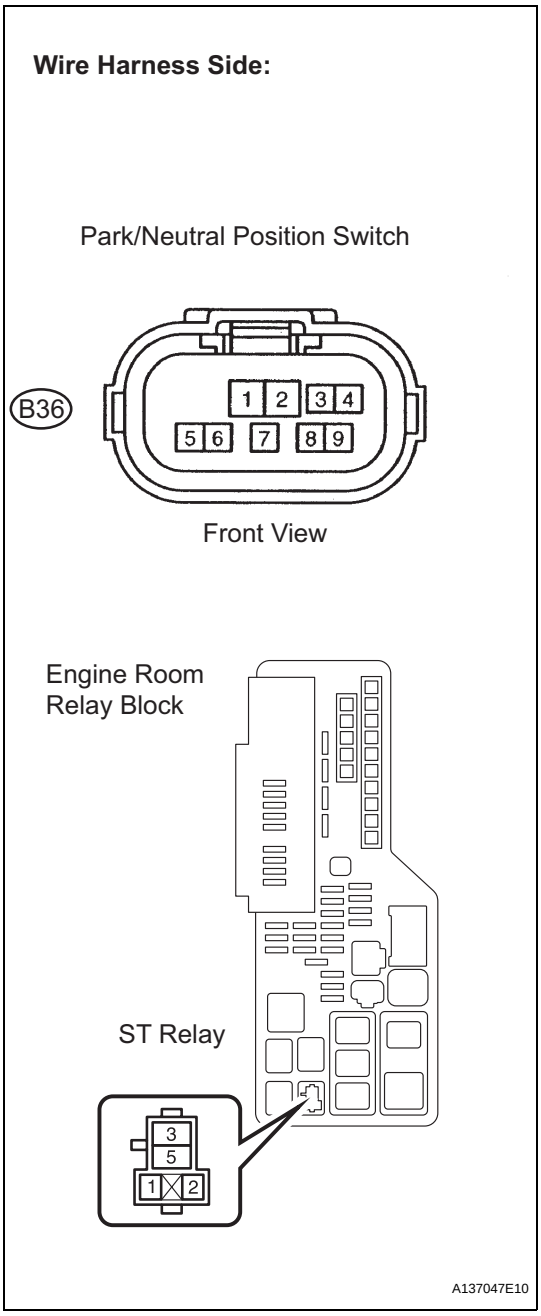

(a) Disconnect the B36 park/neutral position switch connector.
(b) Remove the ST relay from the engine room relay block.
(c) Measure the resistance according to the value(s) in the table below.

Standard resistance (check for open)

Tester Connection	Specified Condition
L (B36-9) - ST relay terminal 1	Below 1 Ω

Standard resistance (check for open)

Tester Connection	Specified Condition
L (B36-9) or ST relay terminal 1 - Body ground	10 kΩ or higher

(d) Reinstall the ST relay.
(e) Reconnect the park/neutral position switch connector.

NG → **REPAIR OR REPLACE HARNESS OR CONNECTOR**

OK

4 INSPECT ST RELAY

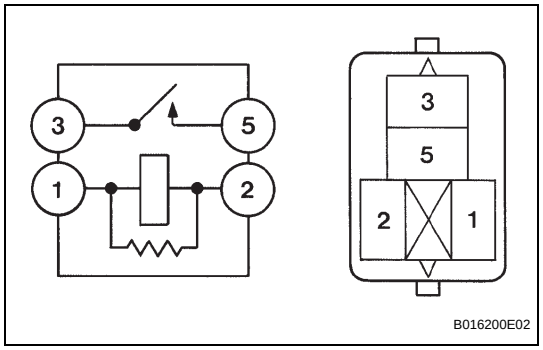

(a) Remove the ST relay from the engine room relay block.
(b) Measure the resistance between the terminals.
Standard resistance

Tester Connection	Specified Condition
3 - 5	10 kΩ or higher
3 - 5	Below 1Ω Apply battery voltage between terminals 1 and 2

(c) Reinstall the ST relay.

NG → **REPLACE ST RELAY**

OK

5 CHECK HARNESS AND CONNECTOR (ST RELAY - BODY GROUND)

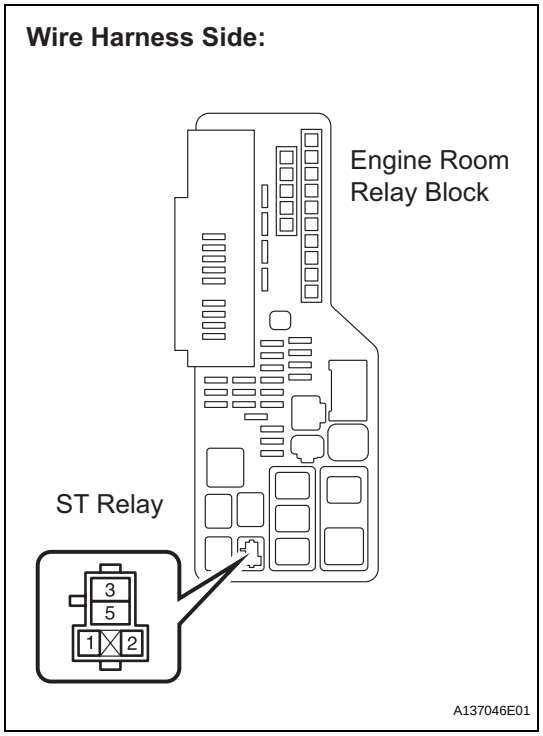

(a) Remove the ST relay from the engine room relay block.
(b) Measure the resistance between the terminals.
Standard resistance

Tester connection	Specified Condition
ST relay terminal 2 - Body ground	Below 1 Ω

NG → **REPAIR OR REPLACE HARNESS OR CONNECTOR**

OK

ES

ES

6 INSPECT PARK/NEUTRAL POSITION SWITCH ASSEMBLY

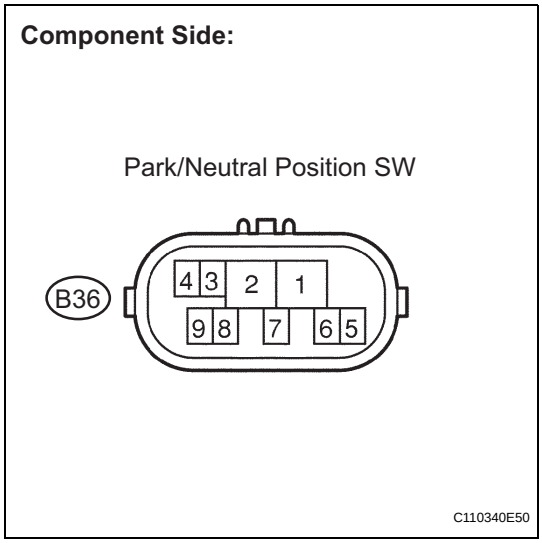

(a) Disconnect the B36 park/neutral position switch connector.

(b) Measure the resistance according to the value(s) in the table below when the shift lever is moved to each position.

Standard resistance

Shift Position	Tester Connection	Specified Condition
P	1 - 3 and 4 - 9	Below 1 Ω
Except P		10 kΩ or higher
R	1 - 2	Below 1 Ω
Except R		10 kΩ or higher
N	1 - 8 and 4 - 9	Below 1 Ω
Except N		10 kΩ or higher
D, S, "+" and "-"	1 - 7	Below 1 Ω
Except D, S, "+" and "-"		10 kΩ or higher

(c) Reconnect the park/neutral position switch connector.

NG → **REPLACE PARK/NEUTRAL POSITION SWITCH ASSEMBLY (See page AX-184)**

OK

7 CHECK HARNESS AND CONNECTOR

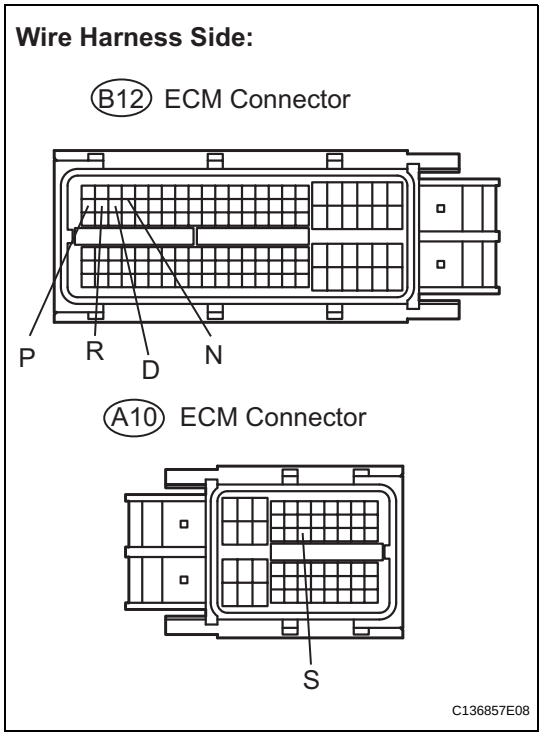

(a) Disconnect the ECM connectors.

(b) Turn the engine switch on (IG), and measure the voltage according to the value(s) in the table below when the shift lever is moved to each position.

Standard voltage

Shift Position	Tester Connection	Specified Condition
P	B12-24 (P) - Body ground	10 to 14 V
Except P		Below 1 V
N	B12-27 (N) - Body ground	10 to 14 V
Except N		Below 1 V
R	B12-25 (R) - Body ground	10 to 14 V*
Except R		Below 1 V
D and S	B12-26 (D) - Body ground	10 to 14 V
Except D and S		Below 1 V
S, "+" and "-"	A10-25 (S) - Body ground	10 to 14 V
Except S, "+" and "-"		Below 1 V

ES

HINT:

*: The voltage will drop slightly due to lighting up of the back up light.

(c) Reconnect the ECM connectors.

NG → **REPAIR OR REPLACE HARNESS OR CONNECTOR**

OK

8 CHECK HARNESS AND CONNECTOR

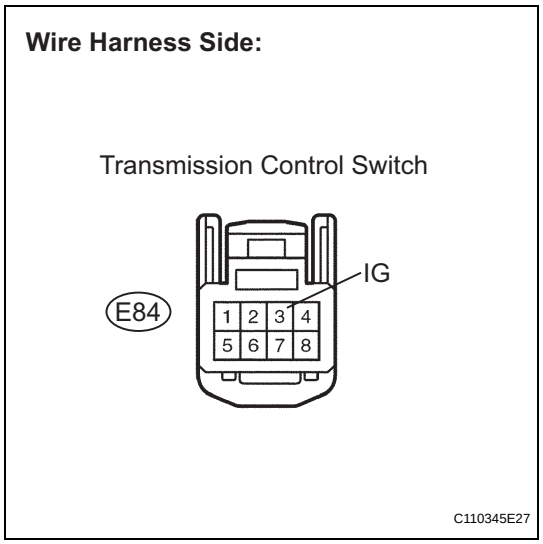

(a) Disconnect the transmission control switch connector from the shift lock control unit assembly.

(b) Turn the engine switch on (IG).

(c) Measure the voltage according to the value(s) in the table below.

Standard voltage

Tester Connection	Specified Condition
IG (E84-3) - Body ground	10 to 14 V

(d) Reconnect the transmission control switch connector.

NG → **REPAIR OR REPLACE HARNESS OR CONNECTOR**

OK

ES

9 INSPECT TRANSMISSION CONTROL SWITCH

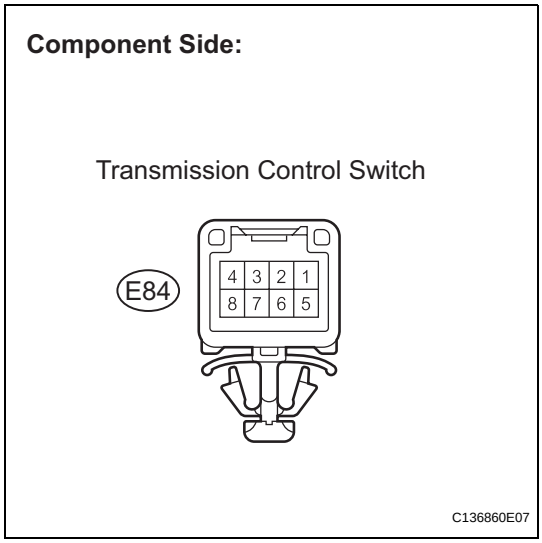

(a) Disconnect the E84 transmission control switch connector.

(b) Measure the resistance according to the value(s) in the table below when the shift lever is moved to each position.

Standard resistance

Shift Position	Tester Connection	Specified Condition
S, "+" and "-"	3 - 7	Below 1 Ω
Except S, "+" and "-"		10 kΩ or higher

(c) Reconnect the transmission control switch.

NG → **REPLACE TRANSMISSION CONTROL SWITCH**

OK

10 CHECK HARNESS AND CONNECTOR

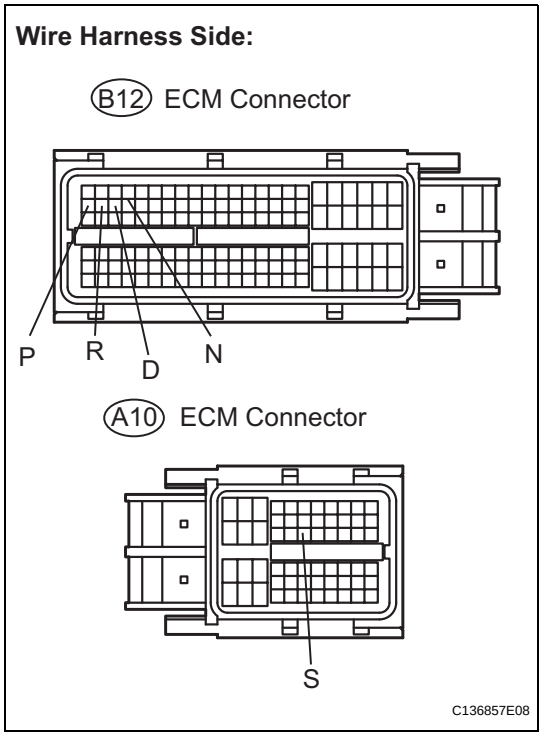

(a) Disconnect the ECM connectors.

(b) Turn the engine switch on (IG), and measure the voltage according to the value(s) in the table below when the shift lever is moved to each position.

Standard voltage

Shift Position	Tester Connection	Specified Condition
P	B12-24 (P) - Body ground	10 to 14 V
Except P		Below 1 V
N	B12-27 (N) - Body ground	10 to 14 V
Except N		Below 1 V

Shift Position	Tester Connection	Specified Condition
R	B12-25 (R) - Body ground	10 to 14 V *
Except R		Below 1 V
D and S	B12-26 (D) - Body ground	10 to 14 V
Except D and S		Below 1 V
S, "+" and "-"	A10-25 (S) - Body ground	10 to 14 V
Except S, "+" and "-"		Below 1 V

HINT:
The voltage will drop slightly due to lighting up of the back up light.

(c) Reconnect the ECM connectors.

NG → **REPAIR OR REPLACE HARNESS OR CONNECTOR**

ES

OK

REPLACE ECM (See page ES-543)

11 CHECK HARNESS AND CONNECTOR (PARK/NEUTRAL POSITION SWITCH - ECM)

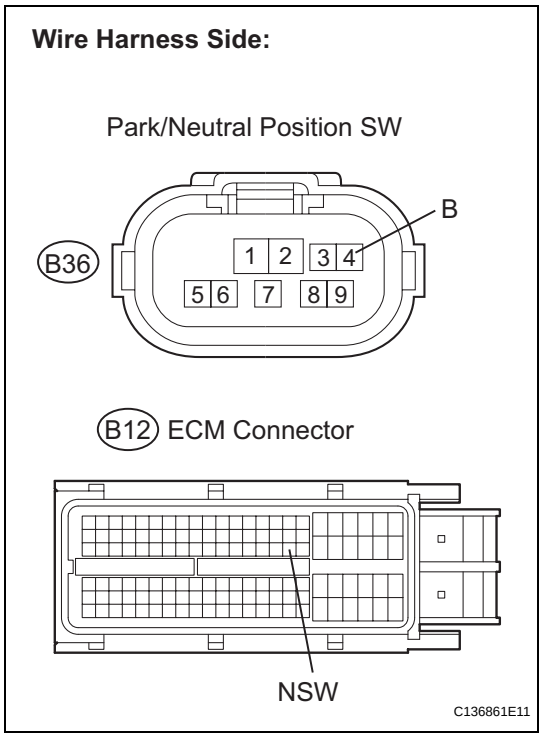

(a) Disconnect the ECM connectors.
(b) Turn the engine switch off.
(c) Measure the resistance according to the value(s) in the table below.

Standard resistance (Check for open)

Tester Connection	Specified Condition
B (B36-4) - NSW (B12-62)	Below 1 Ω

Standard resistance (Check for short)

Tester Connection	Specified Condition
B (B36-4) or NSW (B12-62) - Body ground	10 kΩ or higher

NG → **REPAIR OR REPLACE HARNESS OR CONNECTOR**

OK

REPLACE ECM (See page ES-543)

DTC	P2102	Throttle Actuator Control Motor Circuit Low

DTC	P2103	Throttle Actuator Control Motor Circuit High

SYSTEM DESCRIPTION

The throttle actuator is operated by the ECM and opens and closes the throttle valve using the gears. The opening angle of the throttle valve is detected by the Throttle Position (TP) sensor, which is mounted on the throttle body. The TP sensor provides feedback to the ECM. This feedback allows the ECM to appropriately control the throttle actuator and monitor the throttle opening angle as the ECM responds to driver inputs.

HINT:

ES

This ETCS (Electronic Throttle Control System) does not use a throttle cable.

DTC No.	DTC Detection Condition	Trouble Area
P2102	Conditions (a) and (b) continue for 2.0 seconds (1 trip detection logic): (a) Throttle actuator duty ratio 80 % or more (b) Throttle actuator current 0.5 A or less	• Open in throttle actuator circuit • Throttle actuator • ECM
P2103	Either of the following conditions is met: • Hybrid IC diagnosis signal fails • Hybrid IC current limiter port fails	• Short in throttle actuator circuit • Throttle actuator • Throttle valve • Throttle body assembly • ECM

MONITOR DESCRIPTION

The ECM monitors the electrical current through the electronic actuator, and detects malfunctions and open circuits in the throttle actuator based on this value. If the current is outside the standard range, the ECM determines that there is a malfunction in the throttle actuator. In addition, if the throttle valve does not function properly (for example, stuck on), the ECM determines that there is a malfunction. The ECM then illuminates the MIL and sets a DTC.

Example:

When the electrical current is more than 10 A, or less than 0.5 A and the throttle actuator duty ratio exceeds 80 %, the ECM interprets this as the current being outside the standard range, and illuminates the MIL and sets a DTC.

If the malfunction is not repaired successfully, a DTC is set when the engine is quickly revved up to a high rpm several times after the engine has idled for 5 seconds after engine start.

MONITOR STRATEGY

Related DTCs	P2102: Throttle actuator current (low current) P2103: Throttle actuator current (high current)
Required Sensors/Components (Main)	Throttle actuator (throttle body)
Required Sensors/Components (Related)	None
Frequency of Operation	Continuous
Duration	P2102 (Throttle actuator current (low current)): 2 seconds P2103 (Throttle actuator current (high current)): 25 times or 0.6 seconds
MIL Operation	Immediate
Sequence of Operation	None

TYPICAL ENABLING CONDITIONS

All:

Monitor runs whenever following DTCs are not present	None

P2102:

Throttle motor	ON
Duty-cycle ratio to open throttle actuator	80 % or more
Throttle actuator power supply	8 V or more
Current motor current - Motor current before 0.016 sec.	Less than 0.2 A

P2103:

Throttle motor	ON
Either following condition 1 or 2 is met:	-
1. Throttle actuator power supply	8 V or more
2. Throttle actuator power	ON
Battery voltage	8 V or more
Starter	OFF

TYPICAL MALFUNCTION THRESHOLDS

P2102:

Throttle actuator current	Less than 0.5 A

P2103:

Either of following conditions is met:	A or B
A. Hybrid IC diagnosis signal	Fail
B. Hybrid IC current limiter port	Fail

FAIL-SAFE

When either of these DTCs, as well as other DTCs relating to ETCS (Electronic Throttle Control System) malfunctions, is set, the ECM enters fail-safe mode. During fail-safe mode, the ECM cuts the current to the throttle actuator off, and the throttle valve is returned to a 6° throttle angle by the return spring. The ECM then adjusts the engine output by controlling the fuel injection (intermittent fuel-cut) and ignition timing, in accordance with the accelerator pedal opening angle, to allow the vehicle to continue running at a minimal speed. If the accelerator pedal is depressed gently, the vehicle can be driven slowly.
Fail-safe mode continues until a pass condition is detected, and the engine switch is then turned off.

WIRING DIAGRAM

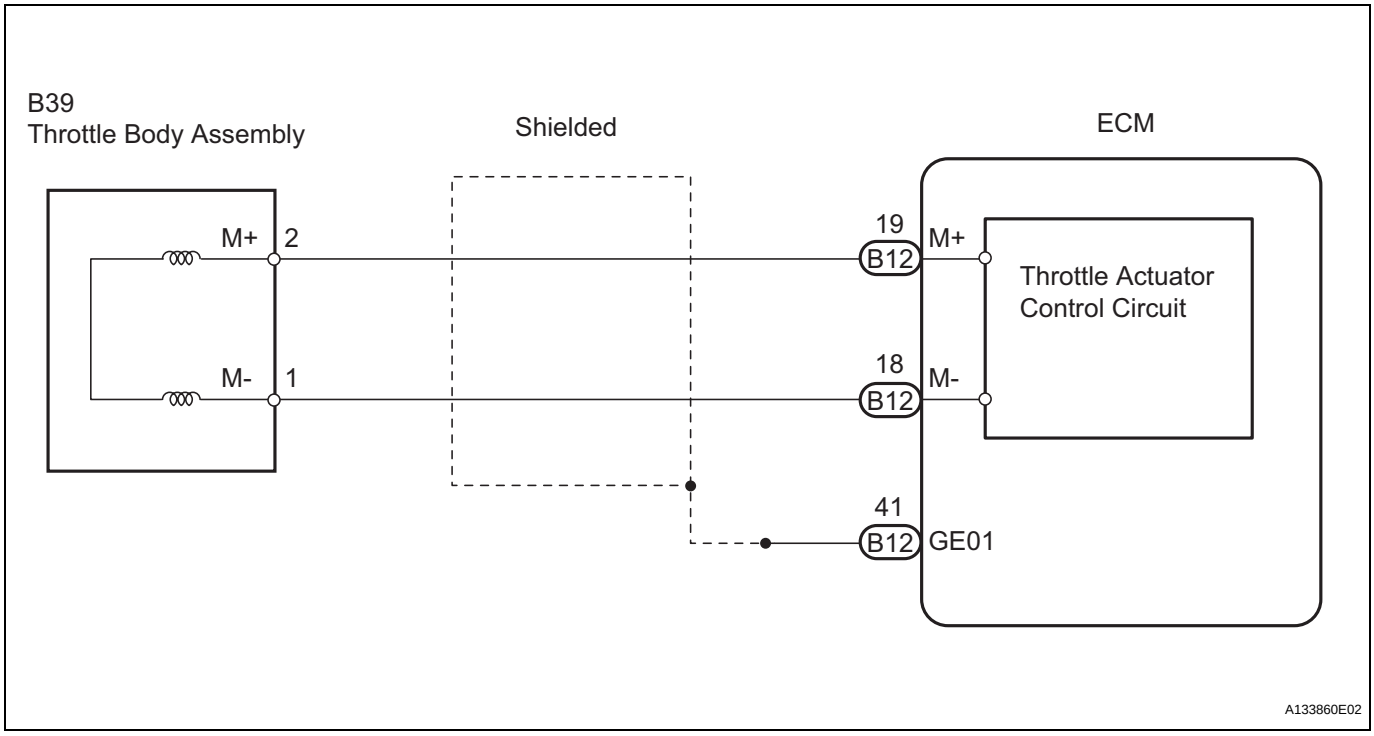

ES

INSPECTION PROCEDURE

HINT:

- Read freeze frame data using an intelligent tester. The ECM records vehicle and driving condition information as freeze frame data the moment a DTC is stored. When troubleshooting, freeze frame data can be helpful in determining whether the vehicle was running or stopped, whether the engine was warmed up or not, whether the air-fuel ratio was lean or rich, as well as other data recorded at the time of a malfunction (See page ES-41).
- The throttle actuator current (THROTTLE MOT) and the throttle actuator duty ratio (THROTTLE OPN / THROTTLE CLS) can be read using the intelligent tester. However, the ECM shuts off the throttle actuator current when the ETCS malfunctions.

1	INSPECT THROTTLE BODY (RESISTANCE OF THROTTLE CONTROL MOTOR)

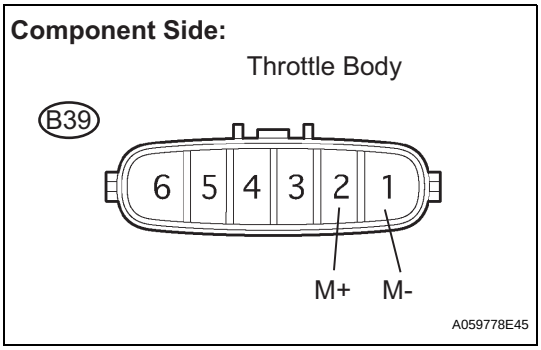

(a) Disconnect the B39 throttle body connector.

(b) Measure the resistance according to the value(s) in the table below.

Standard resistance

Tester Connection	Condition	Specified Condition
M+ (B39-2) - M- (B39-1)	20°C (68°F)	0.3 to 100 Ω

(c) Reconnect the throttle body connector.

NG → **REPLACE THROTTLE BODY (See page ES-519)**

OK

2	CHECK HARNESS AND CONNECTOR (THROTTLE CONTROL MOTOR - ECM)

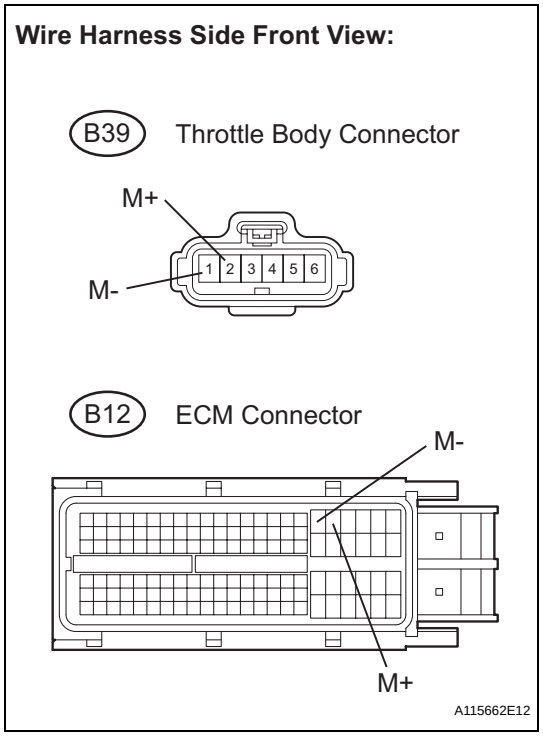

(a) Disconnect the B39 throttle body connector.
(b) Disconnect the B12 ECM connector.
(c) Measure the resistance according to the value(s) in the table below.

Standard resistance (Check for open)

Tester Connection	Specified Condition
M+ (B39-2) - M+ (B12-19)	Below 1 Ω
M- (B39-1) - M- (B12-18)	Below 1 Ω

Standard resistance (Check for short)

Tester Connection	Specified Condition
M+ (B39-2) or M+ (B12-19) - Body ground	10 kΩ or higher
M- (B39-1) or M- (B12-18) - Body ground	10 kΩ or higher

(d) Reconnect the throttle body connector.
(e) Reconnect the ECM connector.

NG → **REPAIR OR REPLACE HARNESS OR CONNECTOR**

OK

3	INSPECT THROTTLE BODY (VISUALLY CHECK THROTTLE VALVE)

(a) Check for foreign objects between the throttle valve and the housing.

NG → **REMOVE FOREIGN OBJECT AND CLEAN THROTTLE BODY**

OK

4	INSPECT THROTTLE VALVE

(a) Check if the throttle valve opens and closes smoothly.

NG → **REPLACE THROTTLE BODY (See page ES-519)**

OK

REPLACE ECM (See page ES-543)

ES

DTC	P2111	Throttle Actuator Control System - Stuck Open

DTC	P2112	Throttle Actuator Control System - Stuck Closed

SYSTEM DESCRIPTION

The throttle actuator is operated by the ECM, and opens and closes the throttle valve using the gears. The opening angle of the throttle valve is detected by the Throttle Position (TP) sensor, which is mounted on the throttle body. The TP sensor provides feedback to the ECM. This feedback allows the ECM to appropriately control the throttle actuator and monitor the throttle opening angle as the ECM responds to driver inputs.

HINT:
This ETCS (Electronic Throttle Control System) does not use a throttle cable.

DTC No.	DTC Detection Condition	Trouble Area
P2111	ECM signals throttle actuator to close, but actuator is stuck (1 trip detection logic)	• Throttle actuator • Throttle body • Throttle valve
P2112	ECM signals throttle actuator to open, but actuator is stuck (1 trip detection logic)	• Throttle actuator • Throttle body • Throttle valve

MONITOR DESCRIPTION

The ECM determines that there is a malfunction in the ETCS when the throttle valve remains at a fixed angle despite a high drive current from the ECM. The ECM illuminates the MIL and sets a DTC.
If the malfunction is not repaired successfully, a DTC is set when the accelerator pedal is fully depressed and released quickly (to fully open and close the throttle valve) after the engine is next started.

MONITOR STRATEGY

Related DTCs	P2111: Throttle actuator stuck open P2112: Throttle actuator stuck closed
Required Sensors/Components (Main)	Throttle actuator
Required Sensors/Components (Sub)	-
Frequency of Operation	Continuous
Duration	0.5 seconds
MIL Operation	Immediate
Sequence of Operation	None

TYPICAL ENABLING CONDITIONS

All:

Monitor runs whenever following DTCs are not present	None

P2111 (Throttle actuator stuck open):

System guard*	ON
Throttle actuator current	2 A or more
Duty cycle to close throttle	80 % or more

P2112 (Throttle actuator stuck closed):

System guard*	ON
Throttle actuator current	2 A or more
Duty cycle to open throttle	80 % or more

*System guard is set when following conditions are met:	-
Throttle actuator	ON
Throttle actuator duty calculation	Executing
Throttle position sensor	Fail determined
Throttle actuator current-cut operation	Not executing
Throttle actuator power supply	4 V or more
Throttle actuator	Fail determined

TYPICAL MALFUNCTION THRESHOLDS

P2111 (Throttle actuator stuck open):

TP sensor voltage change	No change

P2112 (Throttle actuator stuck closed):

TP sensor voltage change	No change

FAIL-SAFE

When either of these DTCs, as well as other DTCs relating to ETCS (Electronic Throttle Control System) malfunctions, is set, the ECM enters fail-safe mode. During fail-safe mode, the ECM cuts the current to the throttle actuator off, and the throttle valve is returned to a 6° throttle angle by the return spring. The ECM then adjusts the engine output by controlling the fuel injection (intermittent fuel-cut) and ignition timing, in accordance with the accelerator pedal opening angle, to allow the vehicle to continue running at a minimal speed. If the accelerator pedal is depressed firmly and gently, the vehicle can be driven slowly. Fail-safe mode continues until a pass condition is detected, and the engine switch is then turned off.

WIRING DIAGRAM

Refer to DTC P2102 (See page ES-323).

INSPECTION PROCEDURE

HINT:
Read freeze frame data using the intelligent tester. The ECM records vehicle and driving condition information as freeze frame data the moment a DTC is stored. When troubleshooting, freeze frame data can be helpful in determining whether the vehicle was running or stopped, whether the engine was warmed up or not, whether the air-fuel ratio was lean or rich, as well as other data recorded at the time of a malfunction (See page ES-41).

1	CHECK ANY OTHER DTCS OUTPUT (IN ADDITION TO DTC P2111 or P2112)

(a) Connect the intelligent tester to the DLC3.
(b) Turn the engine switch on (IG).
(c) Turn the tester on.
(d) Enter the following menus: DIAGNOSIS / ENHANCED OBD II / DTC INFO / CURRENT CODES.
(e) Read the DTCs.

Result

Display (DTC Output)	Proceed to
P2111 or P2112	A
P2111 or P2112 and other DTCs	B

HINT:
If any DTCs other than P2111 or P2112 are output, troubleshoot those DTCs first.

B → **GO TO DTC CHART (See page ES-59)**

A

2	INSPECT THROTTLE BODY (VISUALLY CHECK THROTTLE VALVE)

(a) Check for contamination between the throttle valve and the housing. If necessary, clean the throttle body. And check that the throttle valve moves smoothly.
OK:
Throttle valve is not contaminated with foreign objects and moves smoothly.

ES

NG → **REPLACE THROTTLE BODY ASSEMBLY (See page ES-519)**

OK

3	CHECK WHETHER DTC OUTPUT RECURS (DTC P2111 OR P2112)

(a) Connect the intelligent tester to the DLC3.
(b) Turn the engine switch on (IG).
(c) Turn the tester on.
(d) Clear the DTCs (See page ES-41).
(e) Start the engine, and fully depress and release the accelerator pedal quickly (to fully open and close the throttle valve).
(f) Enter the following menus: DIAGNOSIS / ENHANCED OBD II / DTC INFO / CURRENT CODES.
(g) Read the DTCs.

Result

Display (DTC Output)	Proceed to
No DTC	A
P2111 or P2112	B

B → **REPLACE ECM (See page ES-543)**

A

CHECK FOR INTERMITTENT PROBLEMS

DTC	P2118	Throttle Actuator Control Motor Current Range / Performance

DESCRIPTION

The ETCS (Electronic Throttle Control System) has a dedicated power supply circuit. When the monitored voltage (+BM) is low (less than 4 V), the ECM determines that there is a malfunction in the ETCS and cuts off the current to the throttle actuator.
When the voltage becomes unstable, the ETCS itself becomes unstable. For this reason, when the voltage is low, the current to the throttle actuator is cut. If repairs are made and the system returns to normal, turn the engine switch off. The ECM then allows the current to flow to the throttle actuator so that it can be restarted.
HINT:
The ETCS does not use a throttle cable.

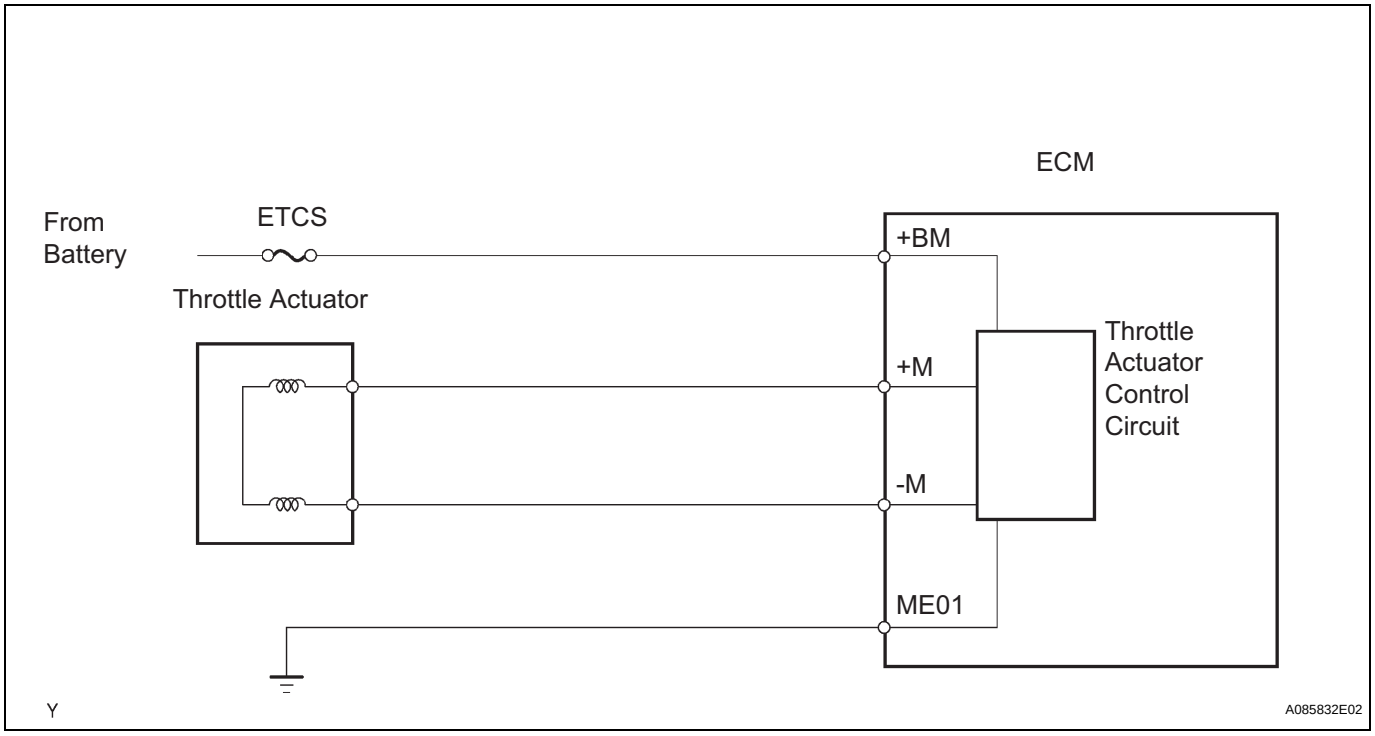

DTC No.	DTC Detection Condition	Trouble Area
P2118	Open in ETCS power source (+BM) circuit (1 trip detection logic)	• Open in ETCS power source circuit • ETCS fuse • ECM

MONITOR DESCRIPTION

The ECM monitors the battery supply voltage applied to the throttle actuator.
When the power supply voltage (+BM) drops below 4 V for 0.8 seconds or more, the ECM interprets this as an open in the power supply circuit (+BM). The ECM illuminates the MIL and sets the DTC.
If the malfunction is not repaired successfully, the DTC is set 5 seconds after the engine is next started.

MONITOR STRATEGY

Related DTCs	P2118: Throttle actuator power supply
Required Sensors/Components (Main)	Throttle actuator, throttle valve, ETCS fuse
Required Sensors/Components (Sub)	None
Frequency of Operation	Continuous
Duration	0.8 seconds

MIL Operation	Immediate
Sequence of Operation	None

TYPICAL ENABLING CONDITIONS

Monitor runs whenever following DTCs are not present	None
Battery voltage	8 V or more
Throttle actuator power	ON

TYPICAL MALFUNCTION THRESHOLDS

Throttle actuator power supply voltage (+BM)	Less than 4 V

COMPONENT OPERATING RANGE

Throttle actuator power supply voltage	9 to 14 V

FAIL-SAFE

When this DTC, as well as other DTCs relating to ETCS (Electronic Throttle Control System) malfunctions, is set, the ECM enters fail-safe mode. During fail-safe mode, the ECM cuts the current to the throttle actuator off, and the throttle valve is returned to a 6° throttle angle by the return spring. The ECM then adjusts the engine output by controlling the fuel injection (intermittent fuel-cut) and ignition timing, in accordance with the accelerator pedal opening angle, to allow the vehicle to continue running at a minimal speed. If the accelerator pedal is depressed firmly and gently, the vehicle can be driven slowly. Fail-safe mode continues until a pass condition is detected, and the engine switch is then turned off.

WIRING DIAGRAM

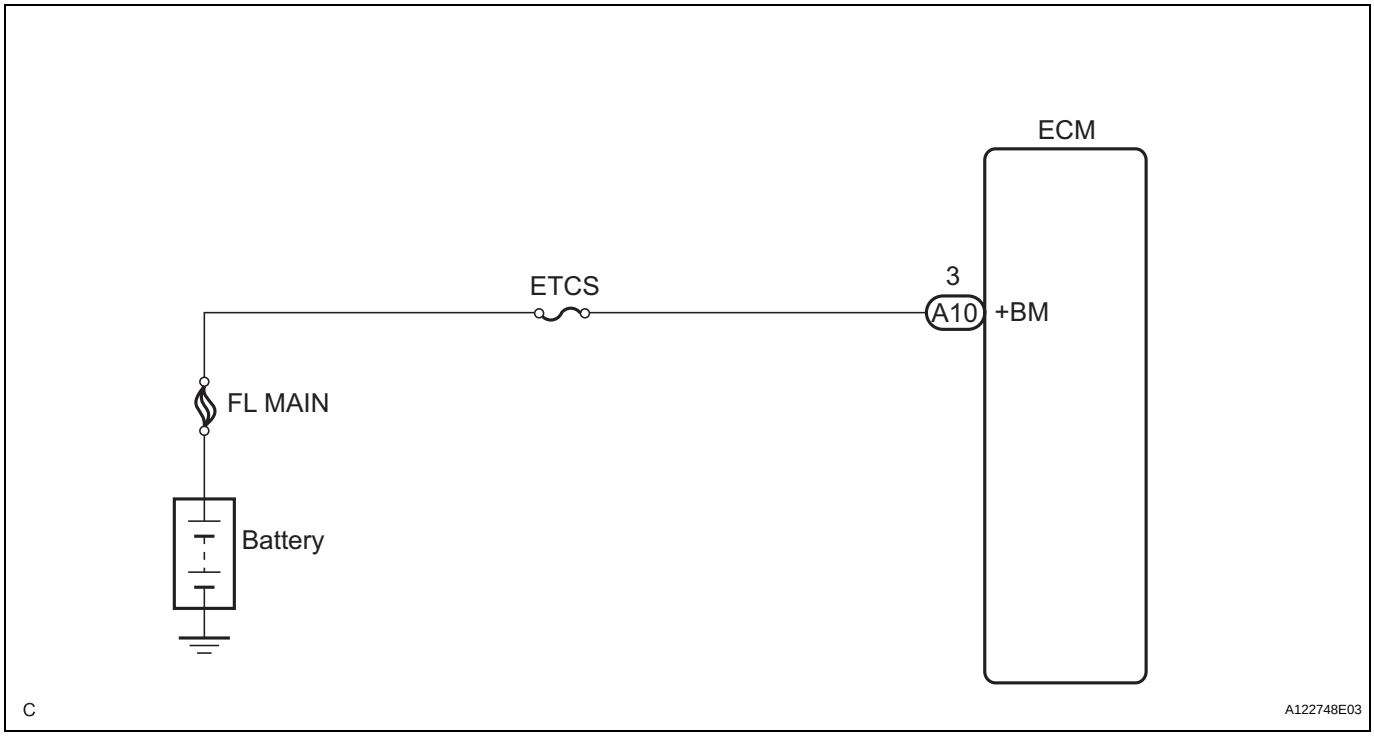

INSPECTION PROCEDURE

HINT:
Read freeze frame data using the intelligent tester. The ECM records vehicle and driving condition information as freeze frame data the moment a DTC is stored. When troubleshooting, freeze frame data can be helpful in determining whether the vehicle was running or stopped, whether the engine was warmed up or not, whether the air-fuel ratio was lean or rich, as well as other data recorded at the time of a malfunction (See page ES-41).

1 CHECK FUSE (ETCS FUSE)

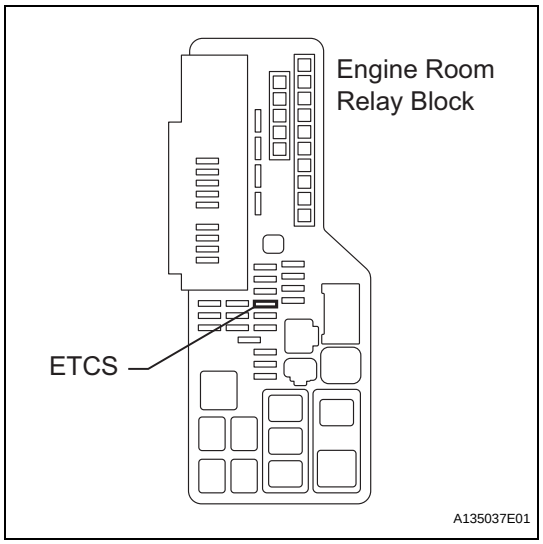

(a) Remove the ETCS fuse from the engine room R/B.
(b) Measure the resistance of the ETCS fuse.
Standard resistance:
Below 1 Ω
(c) Reinstall the ETCS fuse.

NG → **REPLACE ETCS FUSE**

OK

2 INSPECT ECM (+BM VOLTAGE)

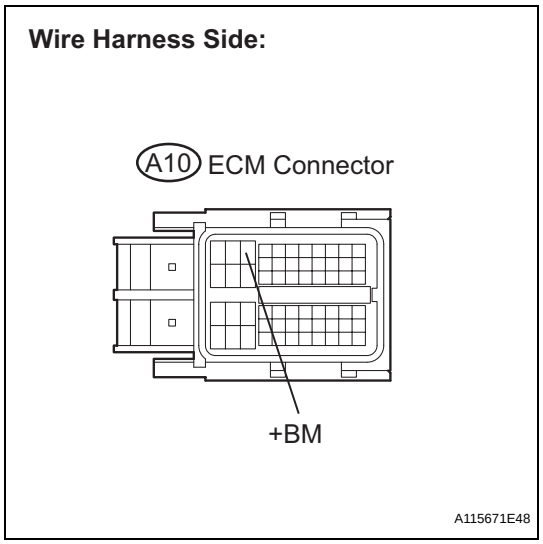

(a) Disconnect the A10 ECM connector.
(b) Measure the voltage according to the value(s) in the table below.
Standard voltage

Tester Connection	Specified Condition
+BM (A10-3) - Body ground	9 to 14 V

(c) Reconnect the ECM connector.

OK → **CHECK FOR INTERMITTENT PROBLEMS**

NG

ES

ES

3	CHECK HARNESS AND CONNECTOR (ECM - ETCS FUSE, ETCS FUSE - BATTERY)

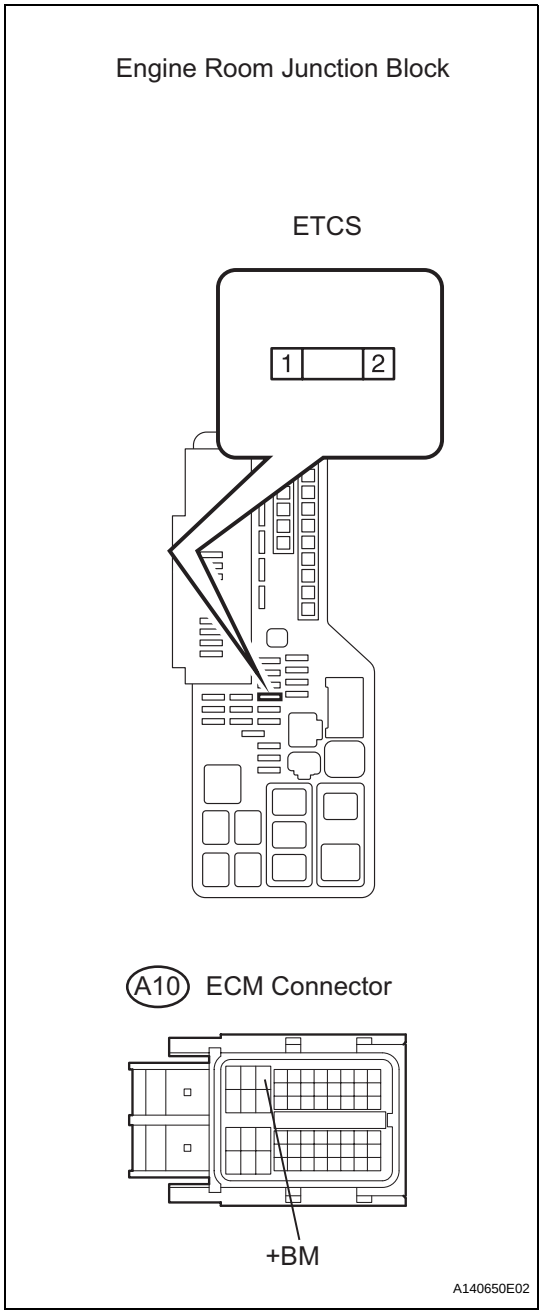

(a) Check the harness and connector between the ETCS fuse and ECM.
  (1) Remove the ETCS fuse from the engine room R/B.
  (2) Disconnect the A10 ECM connector.
  (3) Measure the resistance according to the value(s) in the table below.

Standard resistance (Check for open)

Tester Connection	Specified Condition
Engine room R/B ETCS fuse terminal 2 - +BM (A10-3)	Below 1 Ω

Standard resistance (Check for short)

Tester Connection	Specified Condition
Engine room R/B ETCS fuse terminal 2 or +BM (A10-3) - Body ground	10 kΩ or higher

  (4) Reinstall the ETCS fuse.
  (5) Reconnect the ECM connector.

(b) Check the harness and connector between the ETCS fuse and positive battery cable.
  (1) Remove the ETCS fuse from the engine room R/B.
  (2) Disconnect the negative battery terminal.
  (3) Disconnect the positive battery terminal.
  (4) Measure the resistance according to the value(s) in the table below.

Standard resistance (Check for open)

Tester Connection	Specified Condition
Positive battery terminal - Engine room R/B ETCS fuse terminal 1	Below 1 Ω

Standard resistance (Check for short)

Tester Connection	Specified Condition
Positive battery terminal or Engine room R/B ETCS fuse terminal 1 - Body ground	10 kΩ or higher

  (5) Reinstall the ETCS fuse.
  (6) Reconnect the positive battery terminal.
  (7) Reconnect the negative battery terminal.

NG → **REPAIR OR REPLACE HARNESS OR CONNECTOR**

OK

REPLACE ECM (See page ES-543)

DTC	P2119	Throttle Actuator Control Throttle Body Range / Performance

SYSTEM DESCRIPTION

The Electronic Throttle Control System (ETCS) is composed of the throttle actuator, Throttle Position (TP) sensor, Accelerator Pedal Position (APP) sensor, and ECM. The ECM operates the throttle actuator to regulate the throttle valve in response to driver inputs. The TP sensor detects the opening angle of the throttle valve, and provides the ECM with feedback so that the throttle valve can be appropriately controlled by the ECM.

DTC No.	DTC Detection Condition	Trouble Area
P2119	Throttle valve opening angle continues to vary greatly from target opening angle (1 trip detection logic)	• ETCS • ECM

MONITOR DESCRIPTION

The ECM determines the actual opening angle of the throttle valve from the TP sensor signal. The actual opening angle is compared to the target opening angle commanded by the ECM. If the difference between these two values is outside the standard range, the ECM interprets this as a malfunction in the ETCS. The ECM then illuminates the MIL and sets the DTC.
If the malfunction is not repaired successfully, the DTC is set when the accelerator pedal is quickly released (to close the throttle valve) after the engine speed reaches 5,000 rpm by fully depressing the accelerator pedal (fully open the throttle valve).

MONITOR STRATEGY

Related DTCs	P2119: ETCS malfunction
Required Sensors/Components (Main)	Throttle actuator
Required Sensors/Components (Sub)	-
Frequency of Operation	Continuous
Duration	1 second
MIL Operation	Immediate
Sequence of Operation	None

TYPICAL ENABLING CONDITIONS

Monitor runs whenever following DTCs are not present	None
System guard*	ON
*System guard is set when following conditions are met:	-
Throttle actuator	ON
Throttle actuator duty calculation	Executing
TP sensor	Fail determined
Throttle actuator current-cut operation	Not executing
Throttle actuator power supply	4 V or more
Throttle actuator	Fail determined

TYPICAL MALFUNCTION THRESHOLDS

Either following condition A or B is met	-
A. Commanded closed TP - current closed TP	0.3 V or more for 1 second
B. Commanded open TP - current open TP	0.3 V or more for 0.6 seconds

FAIL-SAFE

When this DTC, as well as other DTCs relating to ETCS (Electronic Throttle Control System) malfunctions, is set, the ECM enters fail-safe mode. During fail-safe mode, the ECM cuts the current to the throttle actuator off, and the throttle valve is returned to a 6° throttle angle by the return spring. The ECM then adjusts the engine output by controlling the fuel injection (intermittent fuel-cut) and ignition timing, in accordance with the accelerator pedal opening angle, to allow the vehicle to continue running at a minimal speed. If the accelerator pedal is depressed firmly and gently, the vehicle can be driven slowly. Fail-safe mode continues until a pass condition is detected, and the engine switch is then turned off.

WIRING DIAGRAM

Refer to DTC P2102 (See page ES-325).

ES

INSPECTION PROCEDURE

HINT:
Read freeze frame data using the intelligent tester. The ECM records vehicle and driving condition information as freeze frame data the moment a DTC is stored. When troubleshooting, freeze frame data can be helpful in determining whether the vehicle was running or stopped, whether the engine was warmed up or not, whether the air-fuel ratio was lean or rich, as well as other data recorded at the time of a malfunction (See page ES-41).

1	CHECK ANY OTHER DTCS OUTPUT (IN ADDITION TO DTC P2119)

(a) Connect the intelligent tester to the DLC3.
(b) Turn the engine switch on (IG).
(c) Turn the tester on.
(d) Enter the following menus: DIAGNOSIS / ENHANCED OBD II / DTC INFO / CURRENT CODES.
(e) Read the DTCs.

Result

Display (DTC Output)	Proceed to
P2119	A
P2119 and other DTCs	B

HINT:
If any DTCs other than P2119 are output, troubleshoot those DTCs first.

B → **GO TO DTC CHART (See page ES-59)**

A

2	CHECK WHETHER DTC OUTPUT RECURS (DTC P2119)

(a) Connect the intelligent tester to the DLC3.
(b) Turn the engine switch on (IG).
(c) Turn the tester on.
(d) Clear the DTCs (See page ES-41).
(e) Allow the engine to idle for 15 seconds.
CAUTION:
Exercise extreme care and take precautions at procedures "A" and "B" below. Failure to do so may result in the vehicle unexpectedly rolling away.

(f) Securely apply the parking brake and move the gear selector lever to the D position (Procedure "A").

(g) While depressing the brake pedal securely, fully depress the accelerator pedal for 5 seconds (Procedure "B").

(h) On the tester, enter the following menus: DIAGNOSIS / ENHANCED OBD II / DTC INFO / CURRENT CODES.

(i) Read the DTCs.

HINT:

The output voltage of the throttle position sensor can be checked during procedure "B" using the intelligent tester. Variations in the output voltage indicate that the throttle actuator is in operation. To check the output voltage using the intelligent tester, enter the following menus: DIAGNOSIS / ENHANCED OBD II / DATA LIST / PRIMARY / THROTTLE POS #1.

OK:

No DTC output.

NG → **REPLACE THROTTLE BODY ASSEMBLY (See page ES-519)**

OK

END

DTC	P2120	Throttle / Pedal Position Sensor / Switch "D" Circuit
DTC	P2122	Throttle / Pedal Position Sensor / Switch "D" Circuit Low Input
DTC	P2123	Throttle / Pedal Position Sensor / Switch "D" Circuit High Input
DTC	P2125	Throttle / Pedal Position Sensor / Switch "E" Circuit
DTC	P2127	Throttle / Pedal Position Sensor / Switch "E" Circuit Low Input
DTC	P2128	Throttle / Pedal Position Sensor / Switch "E" Circuit High Input
DTC	P2138	Throttle / Pedal Position Sensor / Switch "D" / "E" Voltage Correlation

DESCRIPTION

This ETCS (Electronic Throttle Control System) does not use a throttle cable.
The Accelerator Pedal Position (APP) sensor is mounted on the accelerator pedal bracket and has 2 sensor circuits: VPA (main) and VPA2 (sub). This sensor is a non-contact type, and uses Hall-effect elements, in order to yield accurate signals, even in extreme driving conditions, such as at high speeds as well as very low speeds. The voltage, which is applied to terminals VPA and VPA2 of the ECM, varies between 0 V and 5 V in proportion to the operating angle of the accelerator pedal (throttle valve). A signal from VPA indicates the actual accelerator pedal opening angle (throttle valve opening angle) and is used for engine control. A signal from VPA2 conveys the status of the VPA circuit and is used to check the APP sensor itself.
The ECM monitors the actual accelerator pedal opening angle (throttle valve opening angle) through the signals from VPA and VPA2, and controls the throttle actuator according to these signals.

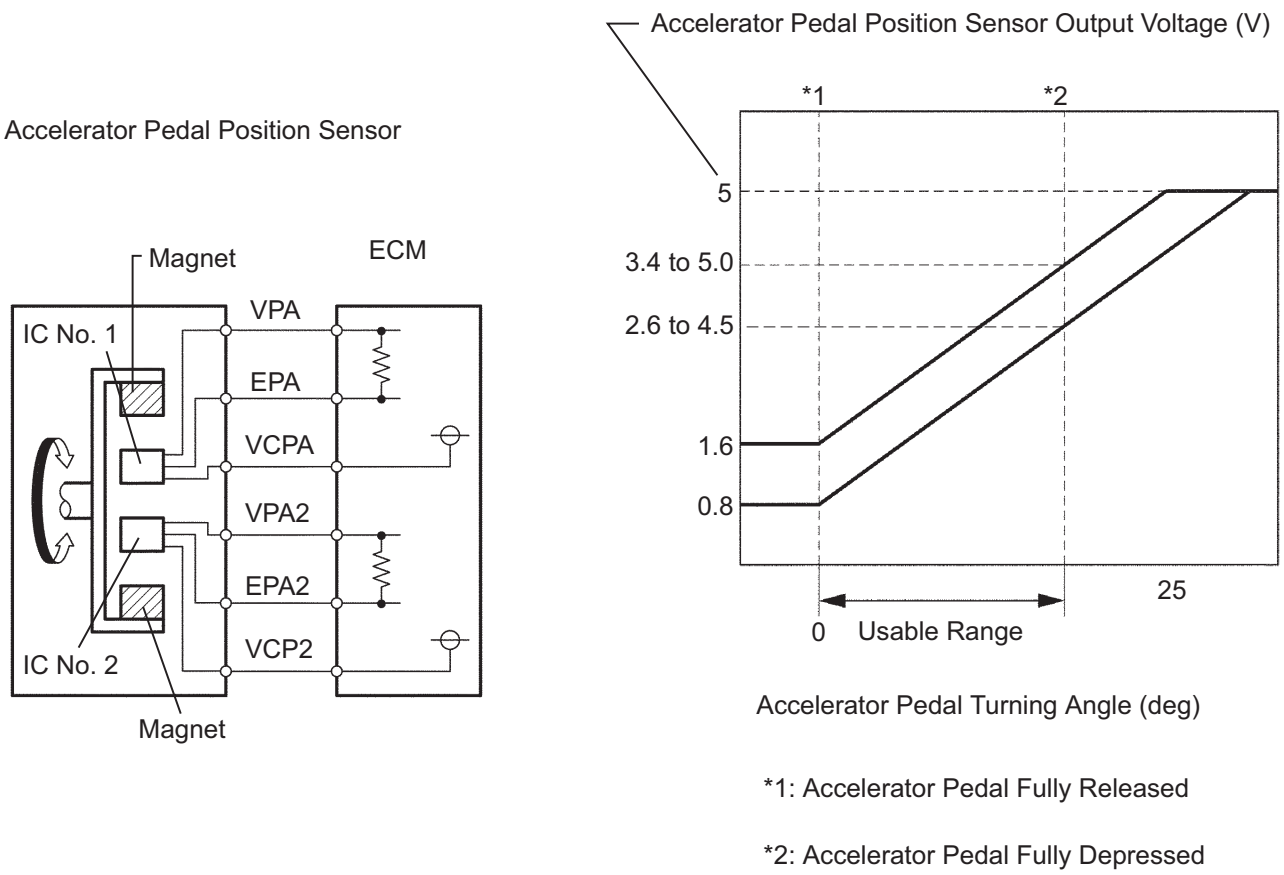

A019803E27

DTC No.	DTC Detection Condition	Trouble Area
P2120	VPA fluctuates rapidly beyond upper and lower malfunction thresholds for 0.5 seconds or more (1 trip detection logic)	• Accelerator Pedal Position (APP) sensor • ECM
P2122	VPA is 0.4 V or less for 0.5 seconds or more when accelerator pedal is fully released (1 trip detection logic)	• APP sensor • Open in VCP1 circuit • Open or ground short in VPA circuit • ECM
P2123	VPA is 4.8 V or more for 2.0 seconds or more (1 trip detection logic)	• APP sensor • Open in EPA circuit • ECM
P2125	VPA2 fluctuates rapidly beyond upper and lower malfunction thresholds for 0.5 seconds or more (1 trip detection logic)	• APP sensor • ECM
P2127	VPA2 is 1.2 V or less for 0.5 seconds or more when accelerator pedal is fully released (1 trip detection logic)	• APP sensor • Open in VCP2 circuit • Open or ground short in VPA2 circuit • ECM
P2128	Conditions (a) and (b) continue for 2.0 seconds or more (1 trip detection logic): (a) VPA2 is 4.8 V or more (b) VPA is between 0.4 V and 3.45 V	• APP sensor • Open in EPA2 circuit • ECM

DTC No.	DTC Detection Condition	Trouble Area
P2138	Condition (a) or (b) continues for 2.0 seconds or more (1 trip detection logic): (a) Difference between VPA and VPA2 is 0.02 V or less (b) VPA is 0.4 V or less and VPA2 is 1.2 V or less	• Short between VPA and VPA2 circuits • APP sensor • ECM

HINT:
When any of these DTCs are set, check the APP sensor voltage by entering the following menus on the intelligent tester: DIAGNOSIS / ENHANCED OBD II / DATA LIST / PRIMARY / ACCEL POS #1 and ACCEL POS #2.

Trouble Areas	ACCEL POS #1 When AP Released	ACCEL POS #2 When AP Released	ACCEL POS #1 When AP Depressed	ACCEL POS #2 When AP Depressed
VCP circuit open	0 to 0.4 V	0 to 1.2 V	0 to 0.4 V	0 to 1.2 V
Open or ground short in VPA circuit	0 to 0.4 V	1.2 to 2.0 V	0 to 0.4 V	3.4 to 5.0 V
Open or ground short in VPA2 circuit	0.5 to 1.1 V	0 to 0.2 V	2.6 to 4.5 V	0 to 0.2 V
EPA circuit open	4.5 to 5.0 V	4.5 to 5.0 V	4.5 to 5.0 V	4.5 to 5.0 V
Normal condition	0.5 to 1.1 V	1.2 to 2.0 V	2.6 to 4.5 V	3.4 to 5.0 V

HINT:
- Accelerator pedal positions are expressed as voltages.
- AP denotes Accelerator Pedal.

MONITOR DESCRIPTION

When either of the output voltages of VPA or VPA2 deviates from the standard range, or the difference between the output voltages of the 2 sensor circuits is less than the threshold, the ECM determines that there is a malfunction in the APP sensor. The ECM then illuminates the MIL and sets a DTC.

Example:

When the output voltage of VPA drops below 0.4 V for more than 0.5 seconds when the accelerator pedal is fully depressed, DTC P2122 is set.

If the malfunction is not repaired successfully, a DTC is set 2 seconds after the engine is next started.

MONITOR STRATEGY

Related DTCs	P2120: Accelerator Pedal Position (APP) sensor 1 range check (fluctuating) P2122: APP sensor 1 range check (low voltage) P2123: APP sensor 1 range check (high voltage) P2125: APP sensor 2 range check (fluctuating) P2127: APP sensor 2 range check (low voltage) P2128: APP sensor 2 range check (high voltage) P2138: APP sensor range check (correlation)
Required Sensors/Components (Main)	APP sensor
Required Sensors/Components (Sub)	-
Frequency of Operation	Continuous
Duration	Accelerator Pedal Position (APP) sensor 1 range check (fluctuating): 0.5 seconds APP sensor 1 range check (low voltage): 0.5 seconds APP sensor 1 range check (high voltage): 2 seconds APP sensor 2 range check (fluctuating): 0.5 seconds APP sensor 2 range check (low voltage): 0.5 seconds APP sensor 2 range check (high voltage): 2 seconds APP sensor range check (correlation): 2 seconds
MIL Operation	Immediate
Sequence of Operation	None

TYPICAL ENABLING CONDITIONS

Monitor runs whenever following DTCs are not present	None

TYPICAL MALFUNCTION THRESHOLDS

P2120:

Either of the following conditions is met:	-
VPA voltage when VPA2 is 0.04 V or more	0.4 V or less
VPA voltage	4.8 V or more

P2122:

VPA voltage when VPA2 is 0.04 V or more	0.4 V or less

P2123:

VPA voltage	4.8 V or more

P2125:

Either of the following conditions is met:	-
VPA2 voltage when VPA 0.04 V or more	1.2 V or less
VPA2 voltage when VPA 0.4 to 3.45 V	4.8 V or more

P2127:

VPA2 voltage when VPA is 0.04 V or more	1.2 V or less

P2128:

VPA2 voltage when VPA is 0.4 to 3.45 V	4.8 V or more

P2138:

Either following condition A or B is met:	-
Condition A	-
Difference between VPA and VPA 2 voltages	0.02 V or less
Condition B	-
VPA voltage	0.4 V or less
VPA2 voltage	1.2 V or less

COMPONENT OPERATING RANGE

Parameter	Standard Value
VPA voltage	0.4 V to 4.8 V
VPA2 voltage	0.5 V to 4.8 V
Difference between VPA and VPA2 voltages	More than 0.02 V

FAIL-SAFE

When any of DTCs P2120, P2121, P2122, P2123, P2125, P2127, P2128 and P2138 are set, the ECM enters fail-safe mode. If either of the 2 sensor circuits malfunctions, the ECM uses the remaining circuit to calculate the accelerator pedal position to allow the vehicle to continue driving. If both of the circuits malfunction, the ECM regards the accelerator pedal as being released. As a result, the throttle valve is closed and the engine idles.

Fail-safe mode continues until a pass condition is detected, and the engine switch is then turned off.

WIRING DIAGRAM

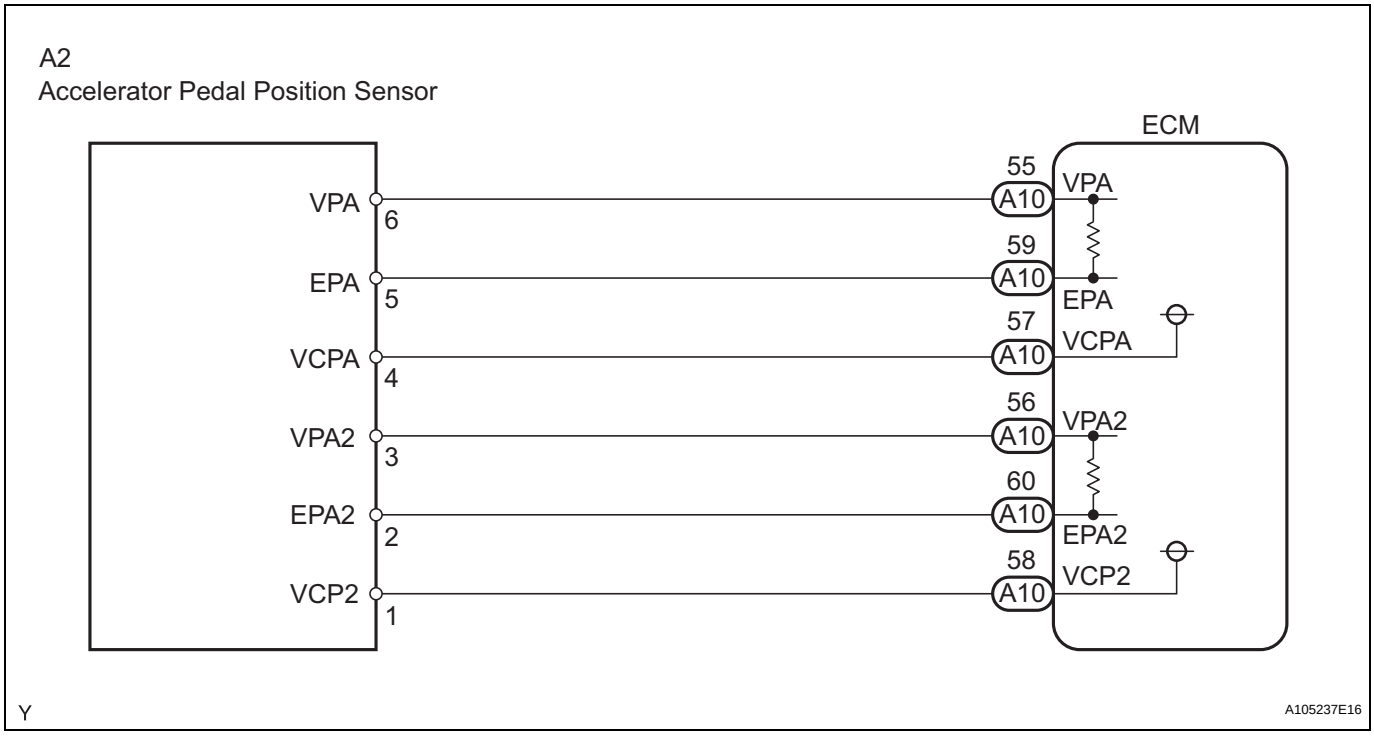

INSPECTION PROCEDURE

HINT:

- Read freeze frame data using the intelligent tester. The ECM records vehicle and driving condition information as freeze frame data the moment a DTC is stored. When troubleshooting, freeze frame data can be helpful in determining whether the vehicle was running or stopped, whether the engine was warmed up or not, whether the air-fuel ratio was lean or rich, as well as other data recorded at the time of a malfunction (See page ES-41).
- These DTCs relate to the Accelerator Pedal Position (APP) sensor.

1	READ VALUE OF INTELLIGENT TESTER (ACCEL POS #1 AND ACCEL POS #2)

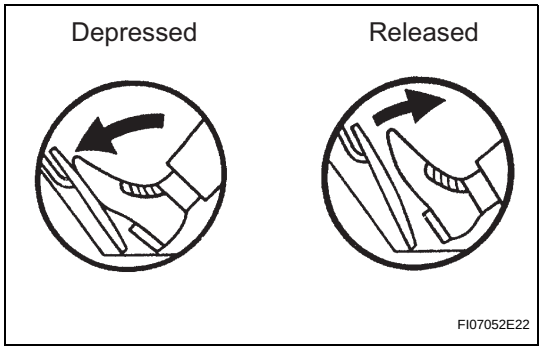

(a) Connect the intelligent tester to the DLC3.
(b) Turn the engine switch on (IG) and turn the tester on.
(c) Enter the following menus: DIAGNOSIS / ENHANCED OBD II / DATA LIST / ALL / ACCEL POS #1 and ACCEL POS #2.
(d) Read the value displayed on the tester.
Standard voltage

Accelerator Pedal Condition	ACCEL POS #1 (AP#1)	ACCEL POS #2 (AP#2)
Released	0.5 to 1.1 V	1.2 to 2.0 V
Depressed	2.6 to 4.5 V	3.4 to 5.0 V

OK → **Go to step 5**

NG

2 CHECK HARNESS AND CONNECTOR (ACCELERATOR PEDAL POSITION SENSOR - ECM)

Wire Harness Side Front View:

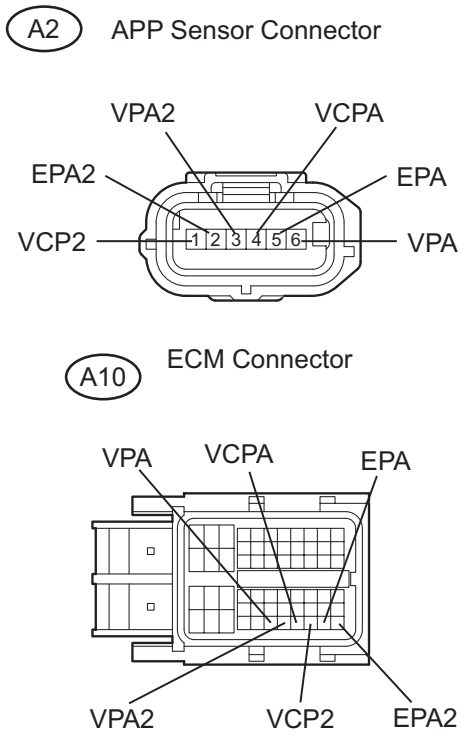

(a) Disconnect the A2 Accelerator Pedal Position (APP) sensor connector.
(b) Disconnect the A10 ECM connector.
(c) Measure the resistance according to the value(s) in the table below.

Standard resistance (Check for open)

Tester Connection	Specified Condition
VPA (A2-6) - VPA (A10-55)	Below 1 Ω
EPA (A2-5) - EPA (A10-59)	Below 1 Ω
VCPA (A2-4) - VCPA (A10-57)	Below 1 Ω
VPA2 (A2-3) - VPA2 (A10-56)	Below 1 Ω
EPA2 (A2-2) - EPA2 (A10-60)	Below 1 Ω
VCP2 (A2-1) - VCP2 (A10-58)	Below 1 Ω

Standard resistance (Check for short)

Tester Connection	Specified Condition
VPA (A2-6) or VPA (A10-55) - body ground	10 kΩ or higher
EPA (A2-5) or EPA (A10-59) - body ground	10 kΩ or higher
VCPA (A2-4) or VCPA (A10-57) - body ground	10 kΩ or higher
VPA2 (A2-3) or VPA2 (A10-56) - body ground	10 kΩ or higher
EPA2 (A2-2) or EPA2 (A10-60) - body ground	10 kΩ or higher
VCP2 (A2-1) or VCP2 (A10-58) - body ground	10 kΩ or higher

(d) Reconnect the APP sensor connector.
(e) Reconnect the ECM connector.

NG → **REPAIR OR REPLACE HARNESS OR CONNECTOR**

OK

3 INSPECT ACCELERATOR PEDAL POSITION SENSOR (VCPA AND VCP2 VOLTAGE)

Wire Harness Side Front View:

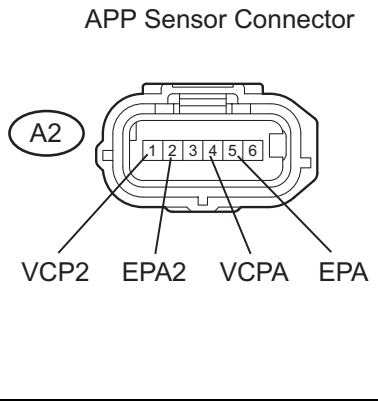

(a) Disconnect the A2 APP sensor connector.
(b) Turn the engine switch on (IG).
(c) Measure the voltage according to the value(s) in the table below.

Standard voltage

Tester Connection	Specified Condition
VCPA (A2-4) - EPA (A2-5)	4.5 to 5.0 V
VCP2 (A2-1) - EPA2 (A2-2)	4.5 to 5.0 V

(d) Reconnect the APP sensor connector.

NG → **REPLACE ECM (See page ES-543)**

ES

OK

4	REPLACE ACCELERATOR PEDAL ROD ASSEMBLY

NEXT

5	CHECK WHETHER DTC OUTPUT RECURS (ACCELERATOR PEDAL POSITION SENSOR DTCS)

ES

(a) Connect the intelligent tester to the DLC3.
(b) Turn the engine switch on (IG) and turn the tester on.
(c) Clear the DTCs (See page ES-41).
(d) Start the engine.
(e) Allow the engine to idle for 15 seconds.
(f) Enter the following menus: DIAGNOSIS / ENHANCED OBD II / DTC INFO / CURRENT CODES.
(g) Read the DTCs.

Result

Display (DTC Output)	Proceed to
P2120, P2122, P2123, P2125, P2127, P2128, and/or P2138	A
No output	B

B → **SYSTEM IS OK**

A

REPLACE ECM (See page ES-543)

DTC	P2121	Throttle / Pedal Position Sensor / Switch "D" Circuit Range / Performance

DESCRIPTION

This ETCS (Electronic Throttle Control System) does not use a throttle cable.
The Accelerator Pedal Position (APP) sensor is mounted on the accelerator pedal bracket and has 2 sensor circuits: VPA (main) and VPA2 (sub). This sensor is a non-contact type, and uses Hall-effect elements, in order to yield accurate signals, even in extreme driving conditions, such as at high speeds as well as very low speeds. The voltage, which is applied to terminals VPA and VPA2 of the ECM, varies between 0 V and 5 V in proportion to the operating angle of the accelerator pedal (throttle valve). A signal from VPA indicates the actual accelerator pedal opening angle (throttle valve opening angle) and is used for engine control. A signal from VPA2 conveys the status of the VPA circuit and is used to check the APP sensor itself.
The ECM monitors the actual accelerator pedal opening angle (throttle valve opening angle) through the signals from VPA and VPA2, and controls the throttle actuator according to these signals.

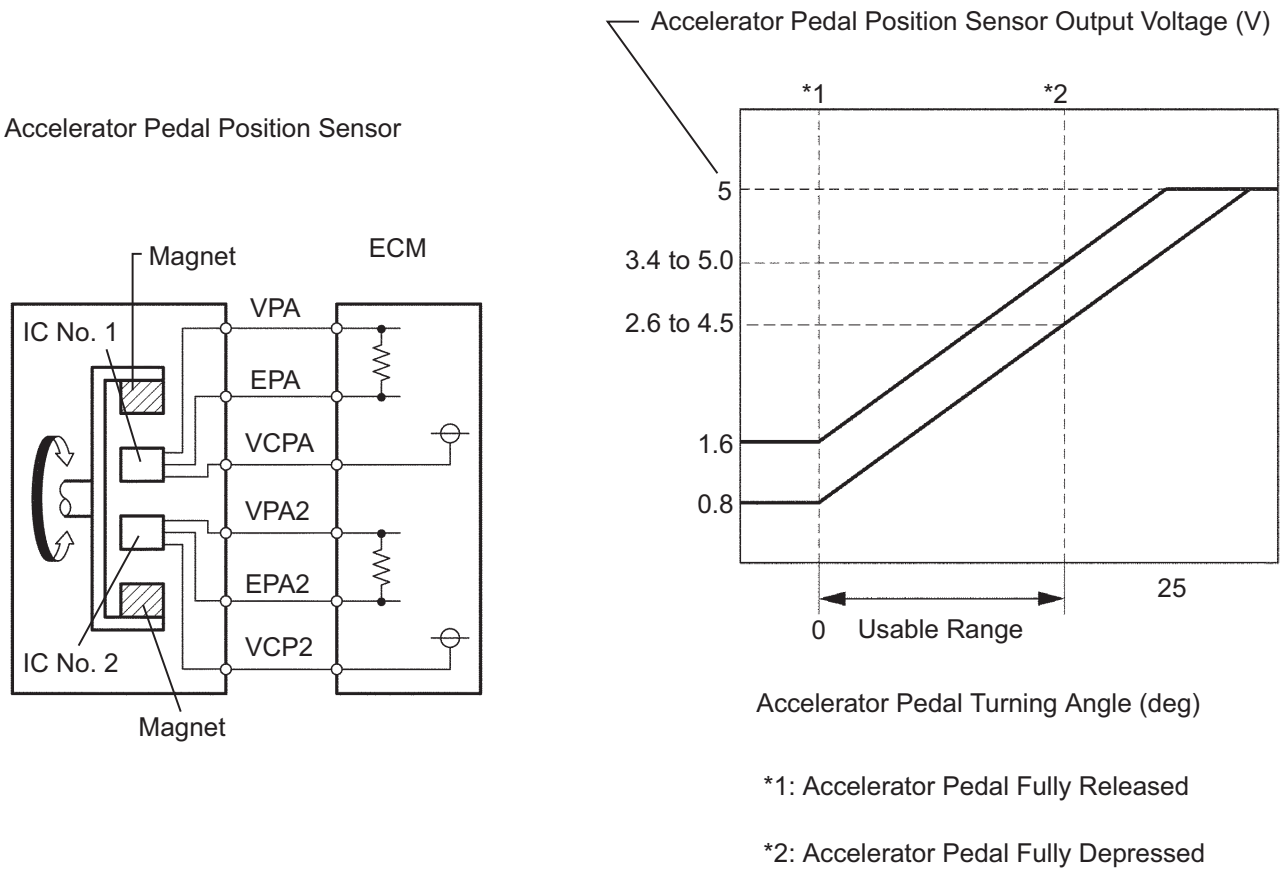

DTC No.	DTC Detection Condition	Trouble Area
P2121	Difference between VPA and VPA2 is less than 0.4 V, or more than 1.2 V for 0.5 seconds (1 trip detection logic)	• Accelerator Pedal Position (APP) sensor • ECM

MONITOR DESCRIPTION

The accelerator pedal position sensor is mounted on the accelerator pedal bracket. The accelerator pedal position sensor has 2 sensor elements and 2 signal outputs: VPA and VPA2. VPA is used to detect the actual accelerator pedal angle (used for engine control) and VPA2 is used to detect malfunctions in VPA. When the difference between the output voltages of VPA and VPA2 deviates from the standard, the ECM determines that the accelerator pedal position sensor is malfunctioning. The ECM turns on the MIL and the DTC is set.

MONITOR STRATEGY

Related DTCs	P2121: Accelerator pedal position (APP) sensor rationality
Required Sensors/Components (Main)	APP sensor
Required Sensors/Components (Sub)	-
Frequency of Operation	Continuous
Duration	0.5 seconds
MIL Operation	Immediate
Sequence of Operation	None

TYPICAL ENABLING CONDITIONS

Monitor runs whenever following DTCs are not present	None

TYPICAL MALFUNCTION THRESHOLDS

Difference between VPA1 voltage (learned value) and VPA2 voltage (learned value)	Less than 0.4 V, or more than 1.2 V

FAIL-SAFE

The accelerator pedal position sensor has two (main and sub) sensor circuits. If a malfunction occurs in either of the sensor circuits, the ECM detects the abnormal signal voltage difference between the two sensor circuits and switches to limp mode. In limp mode, the functioning circuit is used to calculate the accelerator pedal opening angle to allow the vehicle to continue driving. If both circuits malfunction, the ECM regards the opening angle of the accelerator pedal as being fully closed. In this case, the throttle valve remains closed as if the engine is idling.
If a pass condition is detected and then the engine switch is turned off, the fail-safe operation stops and the system returns to a normal condition.

WIRING DIAGRAM

Refer to DTC P2120 (See page ES-341).

INSPECTION PROCEDURE

HINT:

- Read freeze frame data using the intelligent tester. The ECM records vehicle and driving condition information as freeze frame data the moment a DTC is stored. When troubleshooting, freeze frame data can be helpful in determining whether the vehicle was running or stopped, whether the engine was warmed up or not, whether the air-fuel ratio was lean or rich, as well as other data recorded at the time of a malfunction (See page ES-41).
- This DTC relates to the Accelerator Pedal Position (APP) sensor.

1 READ VALUE OF INTELLIGENT TESTER (ACCEL POS #1 AND ACCEL POS #2)

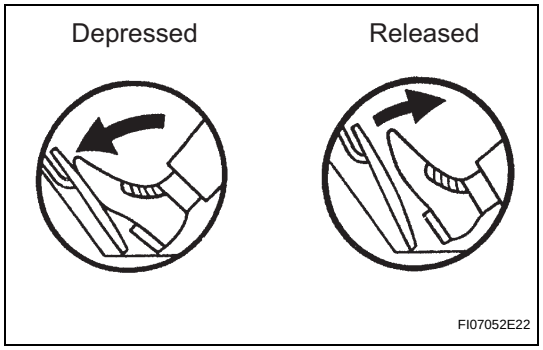

(a) Connect the intelligent tester to the DLC3.
(b) Turn the engine switch on (IG) and turn the tester on.
(c) Enter the following menus: DIAGNOSIS / ENHANCED OBD II / DATA LIST / ALL / ACCEL POS #1 and ACCEL POS #2.
(d) Read the values displayed on the tester.

Standard voltage

Accelerator Pedal Condition	ACCEL POS #1 (AP#1)	ACCEL POS #2 (AP#2)
Released	0.5 to 1.1 V	1.2 to 2.0 V
Depressed	2.6 to 4.5 V	3.4 to 5.0 V

ES

OK → **Go to step 3**

NG

2 CHECK HARNESS AND CONNECTOR (ACCELERATOR PEDAL POSITION SENSOR - ECM)

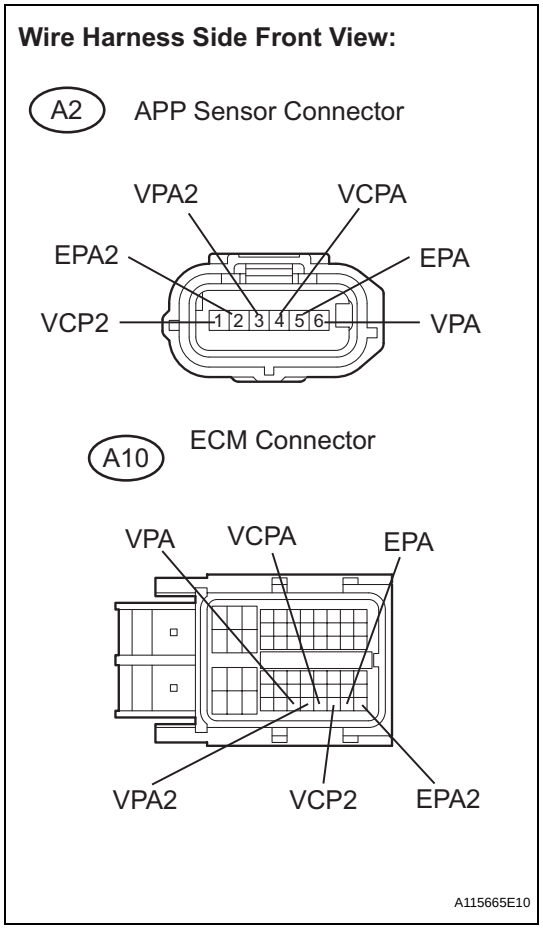

(a) Disconnect the A2 Accelerator Pedal Position (APP) sensor connector.
(b) Disconnect the A10 ECM connector.
(c) Measure the resistance according to the value(s) in the table below.

Standard resistance (Check for open)

Tester Connection	Specified Condition
VPA (A2-6) - VPA (A10-55)	Below 1 Ω
EPA (A2-5) - EPA (A10-59)	Below 1 Ω
VCPA (A2-4) - VCPA (A10-57)	Below 1 Ω
VPA2 (A2-3) - VPA2 (A10-56)	Below 1 Ω
EPA2 (A2-2) - EPA2 (A10-60)	Below 1 Ω
VCP2 (A2-1) - VCP2 (A10-58)	Below 1 Ω

Standard resistance (Check for short)

Tester Connection	Specified Condition
VPA (A2-6) or VPA (A10-55) - body ground	10 kΩ or higher
EPA (A2-5) or EPA (A10-59) - body ground	10 kΩ or higher
VCPA (A2-4) or VCPA (A10-57) - body ground	10 kΩ or higher
VPA2 (A2-3) or VPA2 (A10-56) - body ground	10 kΩ or higher
EPA2 (A2-2) or EPA2 (A10-60) - body ground	10 kΩ or higher
VCP2 (A2-1) or VCP2 (A10-58) - body ground	10 kΩ or higher

(d) Reconnect the APP sensor connector.
(e) Reconnect the ECM connector.

NG → **REPAIR OR REPLACE HARNESS OR CONNECTOR**

OK

3	REPLACE ACCELERATOR PEDAL ROD ASSEMBLY

NEXT

4	CHECK WHETHER DTC OUTPUT RECURS (ACCELERATOR PEDAL POSITION SENSOR DTCS)

(a) Connect the intelligent tester to the DLC3.
(b) Turn the engine switch on (IG) and turn the tester on.
(c) Clear the DTCs (See page ES-41).
(d) Start the engine.
(e) Allow the engine to idle for 15 seconds.
(f) Enter the following menus: DIAGNOSIS / ENHANCED OBD II / DTC INFO / CURRENT CODES.
(g) Read the DTCs.

Result

Display (DTC Output)	Proceed to
P2121	A
No output	B

B → END

A

REPLACE ECM (See page ES-543)

DTC	**P2195**	**Oxygen (A/F) Sensor Signal Stuck Lean (Bank 1 Sensor 1)**

DTC	**P2196**	**Oxygen (A/F) Sensor Signal Stuck Rich (Bank 1 Sensor 1)**

DTC	**P2197**	**Oxygen (A/F) Sensor Signal Stuck Lean (Bank 2 Sensor 1)**

DTC	**P2198**	**Oxygen (A/F) Sensor Signal Stuck Rich (Bank 2 Sensor 1)**

DESCRIPTION

HINT:

- Although the DTC titles include oxygen sensor, these DTCs relate to the Air-Fuel Ratio (A/F) sensor.
- Sensor 1 refers to the sensor mounted in front of the Three-Way Catalytic Converter (TWC) and located near the engine assembly.

The A/F sensor generates voltage* that corresponds to the actual air-fuel ratio. This sensor voltage is used to provide the ECM with feedback so that it can control the air-fuel ratio. The ECM determines the deviation from the stoichiometric air-fuel ratio level, and regulates the fuel injection time. If the A/F sensor malfunctions, the ECM is unable to control the air-fuel ratio accurately.

The A/F sensor is the planar type and is integrated with the heater, which heats the solid electrolyte (zirconia element). This heater is controlled by the ECM. When the intake air volume is low (the exhaust gas temperature is low), a current flows into the heater to heat the sensor, in order to facilitate accurate oxygen concentration detection. In addition, the sensor and heater portions are narrower than the conventional type. The heat generated by the heater is conducted to the solid electrolyte through the alumina, therefore the sensor activation is accelerated.

A three-way catalytic converter (TWC) is used in order to convert the carbon monoxide (CO), hydrocarbon (HC), and nitrogen oxide (NOx) into less harmful substances. To allow the TWC to function effectively, it is necessary to keep the air-fuel ratio of the engine near the stoichiometric air-fuel ratio.

*: Value changes inside the ECM. Since the A/F sensor is the current output element, a current is converted to a voltage inside the ECM. Any measurements taken at the A/F sensor or ECM connectors will show a constant voltage.

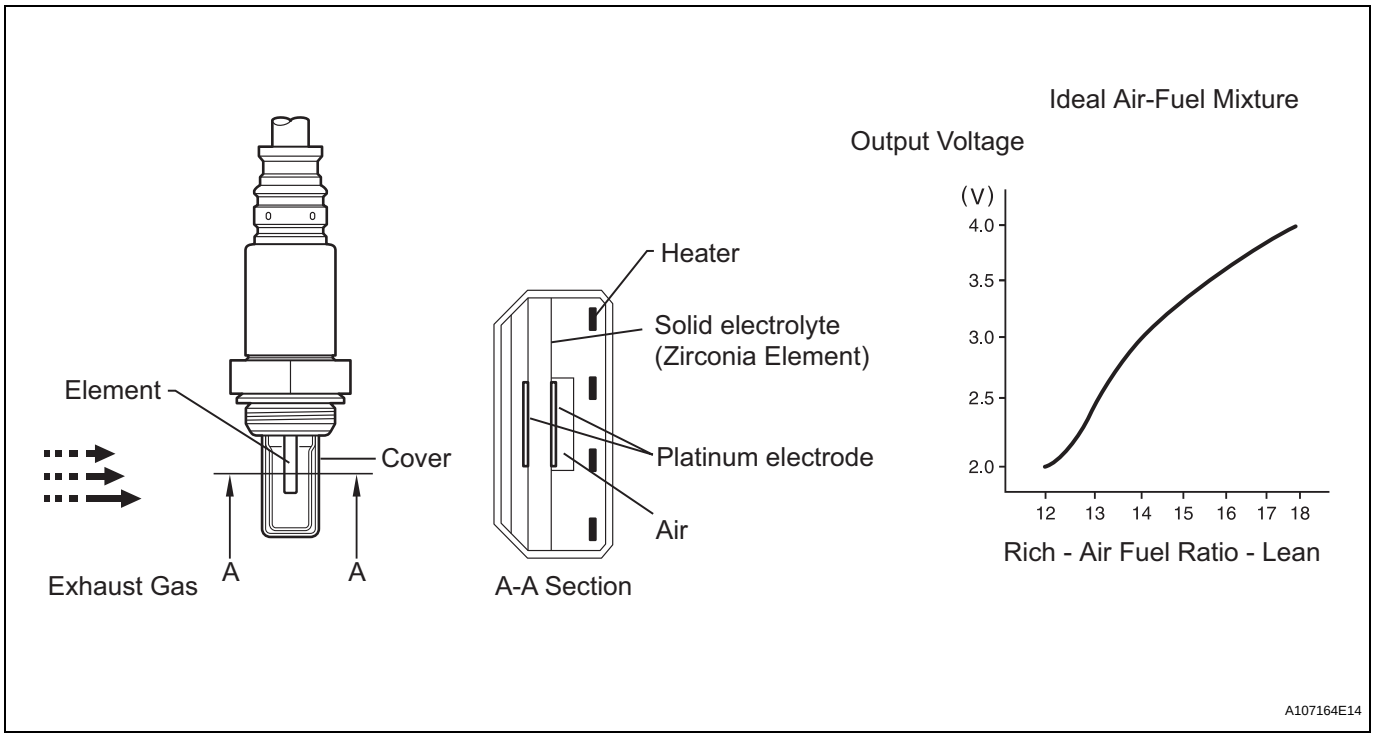

DTC No.	DTC Detection Condition	Trouble Area
P2195 P2197	Conditions (a) and (b) continue for 2 seconds or more (2 trip detection logic): (a) Air-Fuel Ratio (A/F) sensor voltage is more than 3.8 V (b) Heated Oxygen (HO2) sensor voltage is 0.15 V or more	• Open or short in A/F sensor (bank 1, 2 sensor 1) circuit • A/F sensor (bank 1, 2 sensor 1) • A/F sensor (bank 1, 2 sensor 1) heater • A/F sensor heater relay • A/F sensor heater and relay circuits • Air induction system • Injector • ECM
P2195 P2197	While fuel-cut operation is performed (during vehicle deceleration), air-fuel ratio (A/F) sensor current is 3.6 mA or more for 3 seconds (2 trip detection logic)	• A/F sensor • ECM
P2196 P2198	Conditions (a) and (b) continue for 2 seconds or more (2 trip detection logic): (a) A/F sensor voltage is less than 2.8 V (b) HO2 sensor voltage is less than 0.85 V	• Open or short in A/F sensor (bank 1, 2 sensor 1) circuit • A/F sensor (bank 1, 2 sensor 1) • A/F sensor (bank 1, 2 sensor 1) heater • A/F sensor heater relay • A/F sensor heater and relay circuits • Air induction system • Injector • ECM
P2196 P2198	While fuel-cut operation is performed (during vehicle deceleration), air-fuel ratio (A/F) sensor current is 1.4 mA for 3 seconds (2 trip detection logic)	• A/F sensor • ECM

HINT:
- DTCs P2195 and P2196 indicate malfunctions related to the bank 1 A/F sensor circuit.
- DTCs P2197 and P2198 indicate malfunctions related to the bank 2 A/F sensor circuit.
- Bank 1 refers to the bank that includes cylinder No. 1.
- Bank 2 refers to the bank that includes cylinder No. 2.
- When any of these DTCs are set, check the A/F sensor output voltage by entering the following menus on the intelligent tester: DIAGNOSIS / ENHANCED OBD II / DATA LIST / PRIMARY / AFS B1S1.
- Short-term fuel trim values can also be read using an intelligent tester.
- The ECM regulates the voltages at the A1A+, A2A+, A1A- and A2A- terminals of the ECM to a constant level. Therefore, the A/F sensor output voltage cannot be confirmed without using the intelligent tester.

- If an A/F sensor malfunction is detected, the ECM sets a DTC.

MONITOR DESCRIPTION

Sensor voltage detection monitor

Under the air-fuel ratio feedback control, if the A/F sensor output voltage indicates rich or lean for a certain period of time, the ECM determines that there is a malfunction in the A/F sensor. The ECM illuminates the MIL and sets a DTC.

Example:

(1) If the A/F sensor voltage output is less than 2.8 V (very rich condition) for 10 seconds, despite the HO2 sensor output voltage being less than 0.6 V, the ECM sets DTC P2196. Alternatively, if the A/F sensor output voltage is more than 3.8 V (very lean condition) for 15 seconds, despite the HO2 sensor output voltage being 0.15 V or more, DTC P2195 is set.

(2) Sensor current detection monitor

(3) A rich air-fuel mixture causes a low A/F sensor current, and a lean air-fuel mixture causes a high A/F sensor current. Therefore, the sensor output becomes low during acceleration, and it becomes high during deceleration with the throttle valve fully closed. The ECM monitors the A/F sensor current during fuel-cut and detects any abnormal current values.

(4) If the A/F sensor output is 3.6 mA or more for more than 3 seconds of cumulative time, the ECM interprets this as a malfunction in the A/F sensor and sets DTC P2195 (high-side stuck). If the A/F sensor output is 1.0 mA or less for more than 3 seconds of cumulative time, the ECM sets DTC P2196 (low-side stuck).

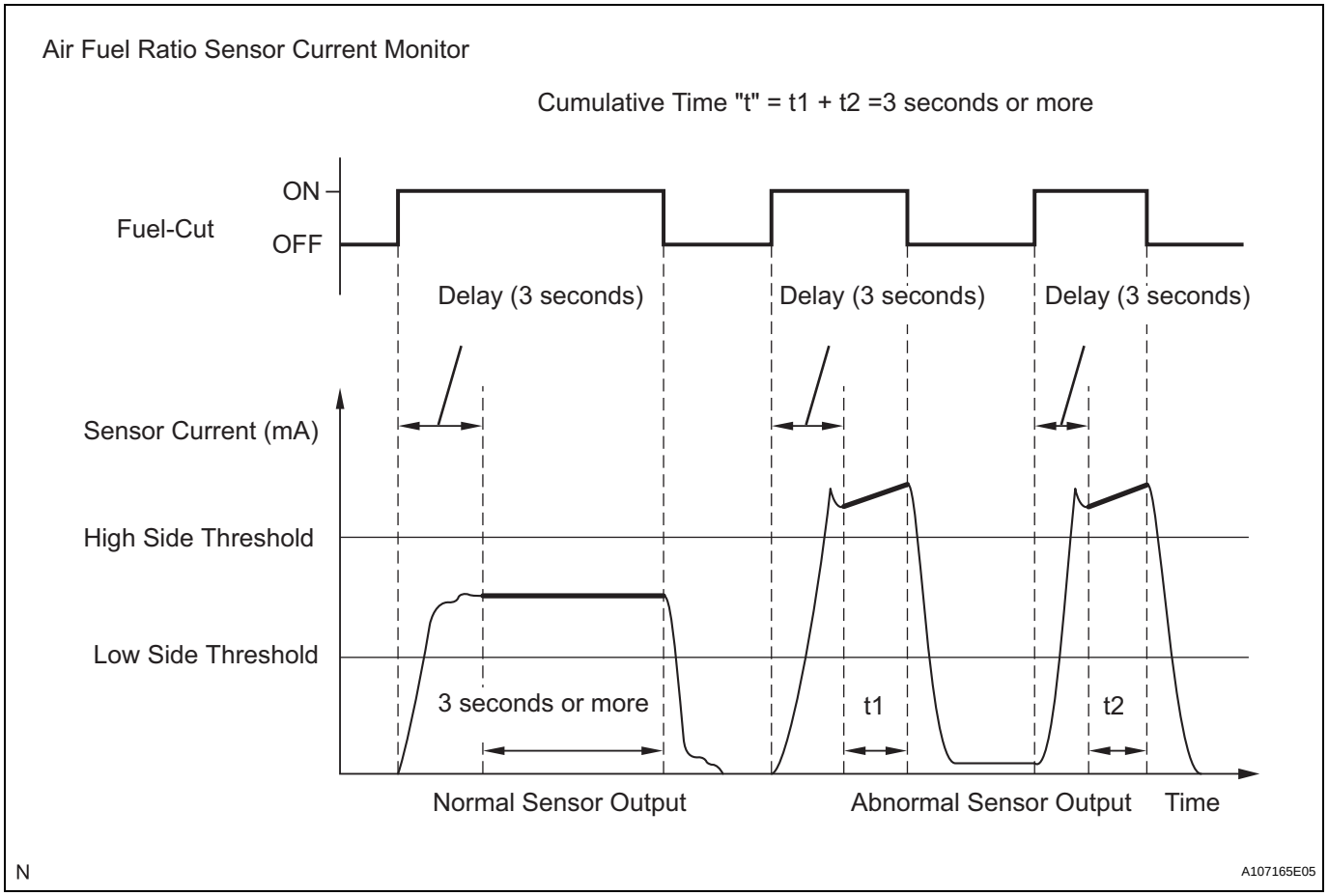

MONITOR STRATEGY

Related DTCs	P2195: A/F sensor (Bank 1) signal stuck lean P2196: A/F sensor (Bank 1) signal stuck rich P2197: A/F sensor (Bank 2) signal stuck lean P2198: A/F sensor (Bank 2) signal stuck rich

Required Sensors/Components (Main)	A/F sensor
Required Sensors/Components (Related)	HO2 sensor
Frequency of Operation	Continuous
Duration	10 seconds
MIL Operation	2 driving cycles
Sequence of Operation	None

TYPICAL ENABLING CONDITIONS

Sensor voltage detection monitor (Lean side malfunction P2195, P2197):

The monitor will run whenever these DTCs are not present	P0031, P0032, P0051, P0052 (A/F sensor heater - Sensor 1) P0100 - P0103 (MAF meter) P0110 - P0113 (IAT sensor) P0115 - P0118 (ECT sensor) P0120 - P0223, P2135 (TP sensor) P0125 (Insufficient ECT for Closed Loop) P0136, P0156 (HO2 Sensor - Sensor 2) P0171, P0172 (Fuel system) P0300 - P0308 (Misfire) P0335 (CKP sensor) P0340, P0341 (CMP sensor) P0500 (VSS)
Time while all of following conditions are met:	2 seconds or more
Rear HO2 sensor voltage	0.15 V or more
Time after engine start	30 seconds or more
A/F sensor status	Activated
Fuel system status	Closed-loop
Engine	Running

Sensor voltage detection monitor (Rich side malfunction P2196, P2198):

The monitor will run whenever these DTCs are not present	P0031, P0032, P0051, P0052 (A/F sensor heater - Sensor 1) P0100 - P0103 (MAF meter) P0110 - P0113 (IAT sensor) P0115 - P0118 (ECT sensor) P0120 - P0223, P2135 (TP sensor) P0125 (Insufficient ECT for Closed Loop) P0136, P0156 (HO2 Sensor - Sensor 2) P0171, P0172 (Fuel system) P0300 - P0308 (Misfire) P0335 (CKP sensor) P0340, P0341 (CMP sensor) P0500 (VSS)
Time while all of following conditions are met:	2 seconds or more
Rear HO2 sensor voltage	Less than 0.6 V
Time after engine start	30 seconds or more
A/F sensor status	Activated
Fuel system status	Closed-loop
Engine	Running

Sensor current detection monitor (High and low side malfunction P2195, P2196, P2197 and P2198):

Monitor runs whenever following DTCs are not present	P0031, P0032, P0051, P0052 (A/F sensor heater - Sensor 1) P0037, P0038, P0057, P0058 (HO2 sensor heater - Sensor 2) P0100 - P0103 (MAF meter) P0110 - P0113 (IAT sensor) P0115 - P0118 (ECT sensor) P0120 - P0223, P2135 (TP sensor) P0125 (Insufficient ECT for Closed Loop) P0136, P0156 (O2 Sensor - Sensor 2) P0171, P0172 (Fuel system) P0300 - P0308 (Misfire) P0335 (CKP sensor) P0340, P0341 (CMP sensor) P0500 (VSS)
Battery voltage	11 V or more
Atmospheric pressure	76 kPa (570 mmHg) or more
A/F sensor status	Activated
Continuous time of fuel cut	3 to 10 seconds
ECT	75°C (167°F) or more

ES

TYPICAL MALFUNCTION THRESHOLDS

Sensor voltage detection monitor (Lean side malfunction P2195, P2197):

A/F sensor voltage	More than 3.8 V

Sensor voltage detection monitor (Rich side malfunction P2196, P2198):

A/F sensor voltage	Less than 2.8 V

Sensor current detection monitor (High side malfunction P2195, P2197):

A/F sensor current	3.6 mA or more

Sensor current detection monitor (Low side malfunction P2196, P2198):

A/F sensor current	Less than 1.4 mA

MONITOR RESULT

Refer to CHECKING MONITOR STATUS (See page ES-45).

WIRING DIAGRAM

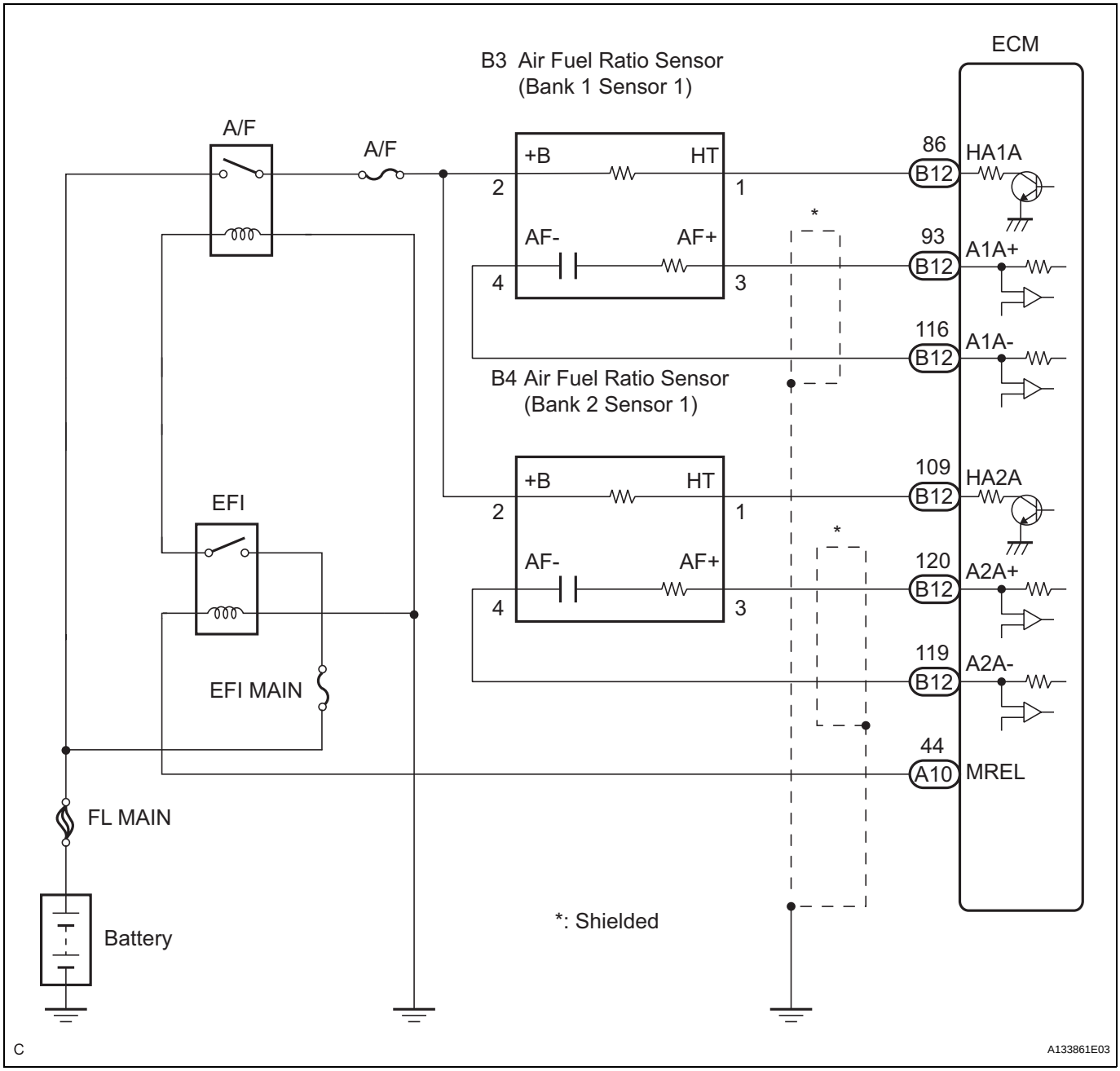

CONFIRMATION DRIVING PATTERN

This confirmation driving pattern is used in steps 2, 4, 7, 17 and 21 of the following diagnostic troubleshooting procedure when using an intelligent tester.

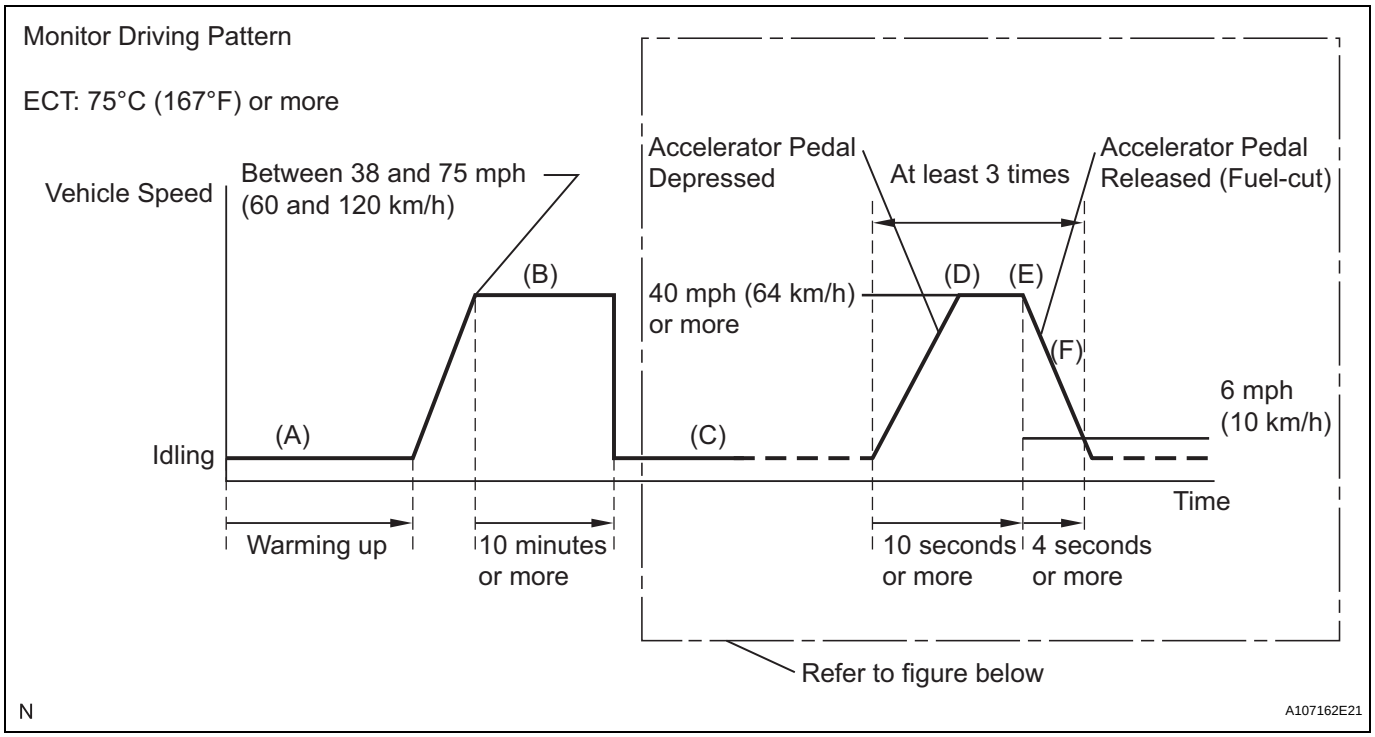

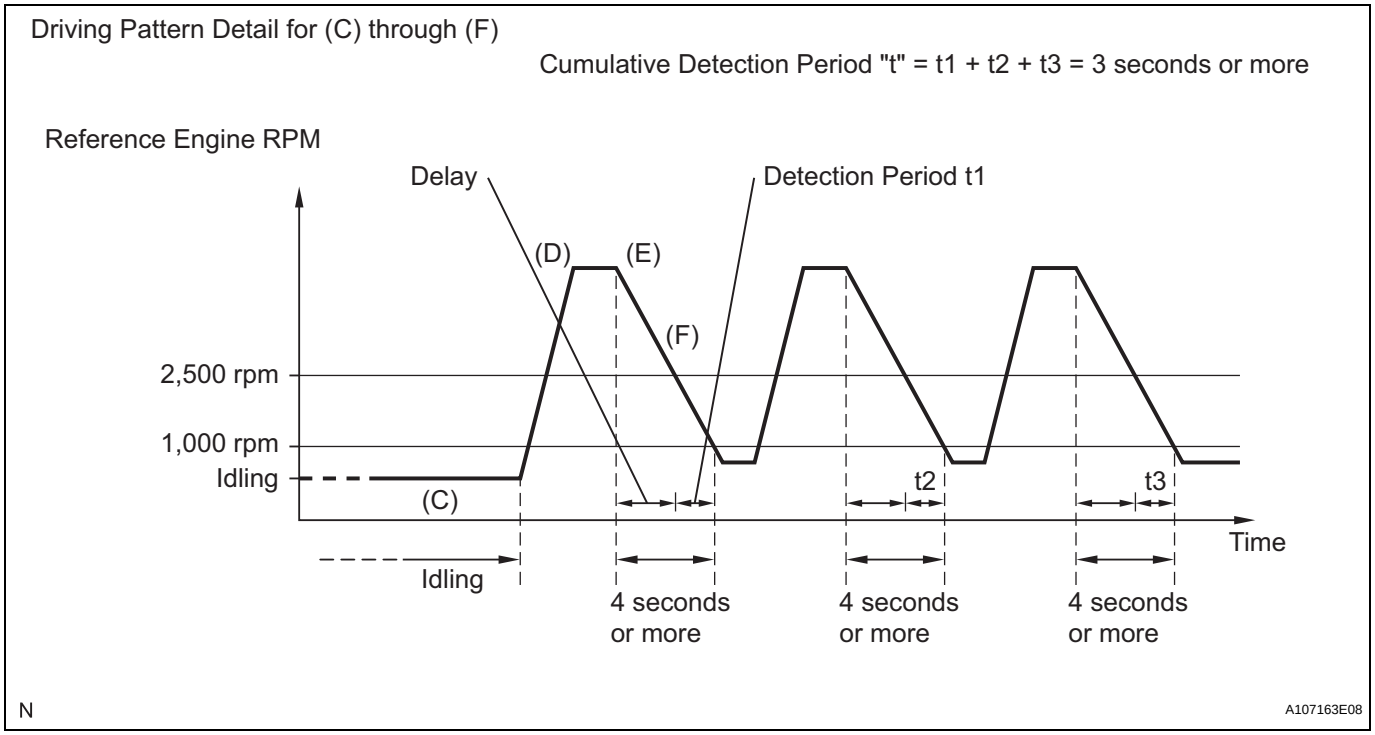

1. Connect an intelligent tester to the DLC3.
2. Turn the engine switch on (IG).
3. Turn the tester on.
4. Clear the DTCs.
5. Start the engine, and warm it up until the ECT reaches 75°C (167°F) or higher (Procedure "A").
6. On the intelligent tester, enter the following menus to check the fuel-cut status: DIAGNOSIS / ENHANCED OBD II / DATA LIST / USER DATA / FC IDLE.
7. Drive the vehicle at between 38 mph (60 km/h) and 75 mph (120 km/h) for at least 10 minutes (Procedure "B").
8. Change the transmission to the 2nd gear (Procedure "C").

9. Drive the vehicle at a proper vehicle speed to perform fuel-cut operation (refer to the following HINT) (Procedure "D").
   HINT:
   Fuel-cut is performed when the following conditions are met:
   - Accelerator pedal is fully released.
   - Engine speed is 2,500 rpm or more (fuel injection resumes at 1,000 rpm).
10. Accelerate the vehicle to 40 rpm (64 km/h) or more by depressing the accelerator pedal for at least 10 seconds (Procedure "E").
11. Soon after performing procedure E above, release the accelerator pedal for at least 4 seconds without depressing the brake pedal, in order to execute fuel-cut control (Procedure "F").
12. Allow the vehicle to decelerate until the vehicle speed declines to less than 6 mph (10 km/h).
13. Repeat procedure from C through F above at least 3 times in one driving cycle.
    HINT:
    Completion of all A/F sensor monitors is required to change the value in TEST RESULT.
    CAUTION:
    Strictly observe posted speed limits, traffic laws, and road conditions when performing these drive patterns.

INSPECTION PROCEDURE

HINT:
Malfunctioning areas can be identified by performing the A/F CONTROL function provided in the ACTIVE TEST. The A/F CONTROL function can help to determine whether the Air-fuel Ratio (A/F) sensor, Heated Oxygen (HO2) sensor and other potential trouble areas are malfunctioning.
The following instructions describe how to conduct the A/F CONTROL operation using the intelligent tester.

1. Connect the intelligent tester to the DLC3.
2. Start the engine and turn the tester on.
3. Warm up the engine at an engine speed of 2,500 rpm for approximately 90 seconds.
4. On the intelligent tester, enter the following menus: DIAGNOSIS / ENHANCED OBD II / ACTIVE TEST / A/F CONTROL.
5. Perform the A/F CONTROL operation with the engine in an idling condition (press the RIGHT or LEFT button to change the fuel injection volume).
6. Monitor the output voltages of the A/F and HO2 sensors (AFS B1 S1 and O2S B1 S2 or AFS B2 S1 and O2S B2 S2) displayed on the tester.

HINT:
- The A/F CONTROL operation lowers the fuel injection volume by 12.5 % or increases the injection volume by 25 %.
- Each sensor reacts in accordance with increases in the fuel injection volume.

Tester Display (Sensor)	Injection Volume	Status	Voltage
AFS B1S1 or AFS B2S1 (A/F)	+25 %	Rich	Less than 3.0 V
AFS B1S1 or AFS B2S1 (A/F)	-12.5 %	Lean	More than 3.35 V
O2S B1S2 or O2S B2S2 (HO2)	+25 %	Rich	More than 0.55 V
O2S B1S2 or O2S B2S2 (HO2)	-12.5 %	Lean	Less than 0.4 V

NOTICE:
The Air-Fuel Ratio (A/F) sensor has an output delay of a few seconds and the HO2S (sensor 2) output has a maximum output delay of 20 seconds.

Case	A/F Sensor (Sensor 1) Output Voltage		HO2 Sensor (Sensor 2) Output Voltage		Main Suspected Trouble Areas
1	Injection Volume +25 % -12.5 %		Injection Volume +25 % -12.5 %		-
	Output Voltage More than 3.35 V Less than 3.0 V	OK	Output Voltage More than 0.55 V Less than 0.4 V	OK	
2	Injection Volume +25 % -12.5 %		Injection Volume +25 % -12.5 %		• A/F sensor • A/F sensor heater • A/F sensor circuit
	Output Voltage Almost no reaction	NG	Output Voltage More than 0.55 V Less than 0.4 V	OK	
3	Injection Volume +25 % -12.5 %		Injection Volume +25 % -12.5 %		• HO2 sensor • HO2 sensor heater • HO2 sensor circuit
	Output Voltage More than 3.35 V Less than 3.0 V	OK	Output Voltage Almost no reaction	NG	
4	Injection Volume +25 % -12.5 %		Injection Volume +25 % -12.5 %		• Fuel pressure • Gas leakage from exhaust system (Air-fuel ratio extremely lean or rich)
	Output Voltage Almost no reaction	NG	Output Voltage Almost no reaction	NG	

- Following the A/F CONTROL procedure enables technicians to check and graph the voltage outputs of both the A/F and HO2 sensors.
- To display the graph, enter the following menus on the tester: DIAGNOSIS / ENHANCED OBD II / ACTIVE TEST / A/F CONTROL / USER DATA / AFS B1 S1 and O2S B 1S2 or AFS B2 S1 and O2S B2 S2 and press the YES button and then the ENTER button followed by the F4 button.

HINT:

- Read freeze frame data using the intelligent tester. The ECM records vehicle and driving condition information as freeze frame data the moment a DTC is stored. When troubleshooting, freeze frame data can be helpful in determining whether the vehicle was running or stopped, whether the engine was warmed up or not, whether the air-fuel ratio was lean or rich, as well as other data recorded at the time of a malfunction (See page ES-41).
- A low A/F sensor voltage could be caused by a rich air-fuel mixture. Check for conditions that would cause the engine to run rich.
- A high A/F sensor voltage could be caused by a lean air-fuel mixture. Check for conditions that would cause the engine to run lean.

1	CHECK ANY OTHER DTCS OUTPUT (IN ADDITION TO P2195, P2196, 2197 OR P2198)

(a) Connect the intelligent tester to the DLC3.
(b) Turn the engine switch on (IG).
(c) Turn the tester on.
(d) Enter the following menus: DIAGNOSIS / ENHANCED OBD II / DTC INFO / CURRENT CODES.
(e) Read the DTCs.

Result

Display (DTC Output)	Proceed to
P2195, P2196, P2197, or P2198	A
P2195, P2196, P2197, or P2198 and other DTCs	B

HINT:
If any DTCs other than P2195, P2196, P2197 or P2198 are output, troubleshoot those DTCs first.

B → **GO TO DTC CHART (See page ES-59)**

A

2 READ VALUE OF INTELLIGENT TESTER (TEST VALUE OF A/F SENSOR)

(a) Connect the intelligent tester to the DLC3.
(b) Turn the engine switch on (IG) and turn the tester on.
(c) Clear the DTCs.
(d) Allow the vehicle to drive in accordance with the driving pattern described in the CONFIRMATION DRIVING PATTERN.
(e) Enter the following menus: DIAGNOSIS / ENHANCED OBD II / MONITOR INFO / MONITOR STATUS.
(f) Check the status of O2S MON is COMPL.
If the status is still INCMPL, drive the vehicle according to the driving pattern again.
HINT:
- AVAIL indicates that the component has not been monitored yet.
- COMPL indicates that the component is functioning normally.
- INCMPL indicates that the component is malfunctioning.

(g) Enter the following menus: DIAGNOSIS / ENHANCED OBD II / MONITOR INFO / TEST RESULT / RANGE B1 S1, then press the ENTER button.
(h) Check the test value of the A/F sensor output current during fuel-cut.

Result

Test Value	Proceed to
Within normal range (1.4 mA or more, and less than 3.6 mA)	A
Outside normal range (Less than 1.4 mA, or 3.6 mA or more)	B

B → **Go to step 20**

A

3 READ VALUE OF INTELLIGENT TESTER (OUTPUT VOLTAGE OF A/F SENSOR)

(a) Connect the intelligent tester to the DLC3.
(b) Start the engine.
(c) Turn the tester on.

(d) Warm up the Air-Fuel Ratio (A/F) sensor at an engine speed of 2,500 rpm for 90 seconds.

(e) On the tester, enter the following menus: DIAGNOSIS / ENHANCED OBD II / SNAPSHOT / MANUAL SNAPSHOT / USER DATA / AFS B1 S1 or AFS B2 S1 and ENGINE SPD.

(f) Check the A/F sensor voltage three times, when the engine is in each of the following conditions:
   (1) While idling (check for at least 30 seconds)
   (2) At an engine speed of approximately 2,500 rpm (without any sudden changes in engine speed)
   (3) Raise the engine speed to 4,000 rpm and then quickly release the accelerator pedal so that the throttle valve is fully closed.

Standard voltage

Condition	A/F Sensor Voltage Variation	Reference
(1) and (2)	Changes at approximately 3.3 V	Between 3.1 V and 3.5 V
(3)	Increases to 3.8 V or more	This occurs during engine deceleration (when fuel-cut performed)

HINT:
- For more information, see the diagrams below.

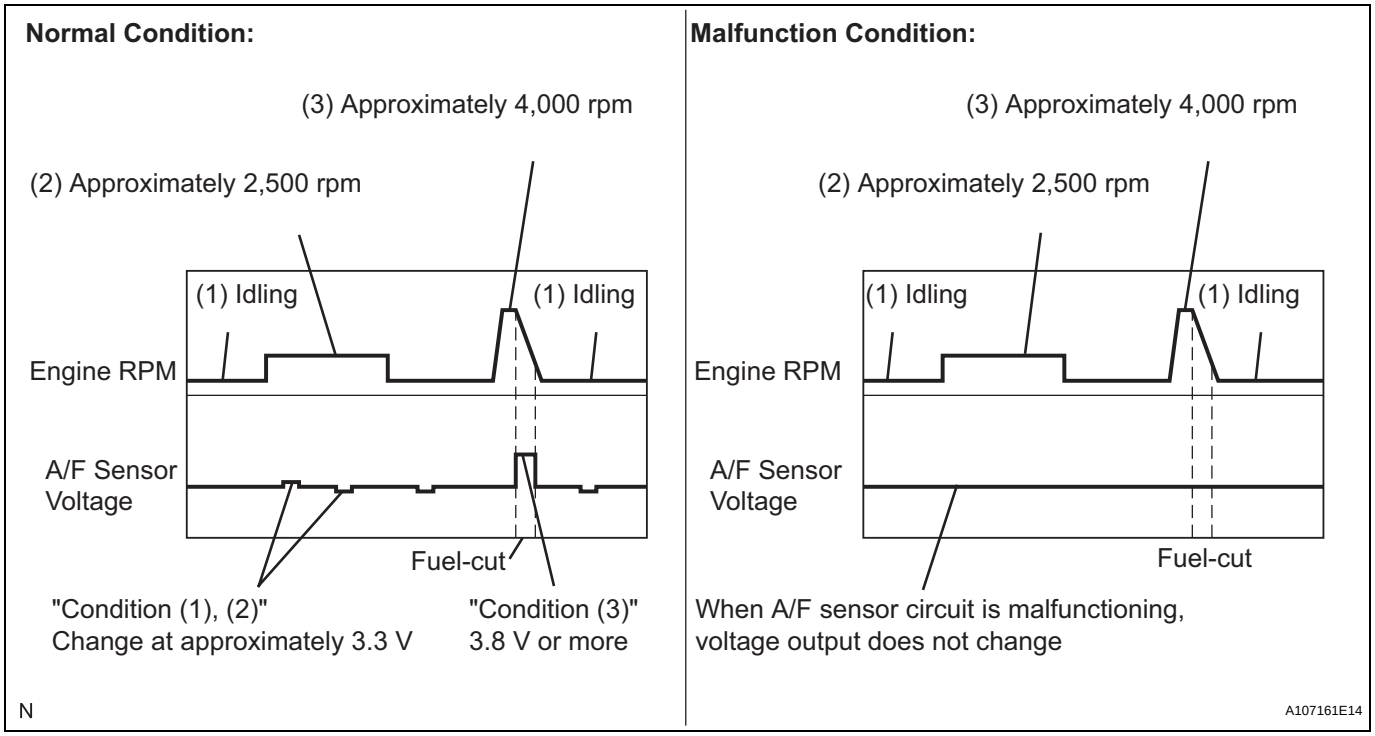

- If the output voltage of the A/F sensor remains at approximately 3.3 V (see the Malfunction Condition diagram) under any conditions, including those above, the A/F sensor may have an open circuit. (This will also happen if the A/F sensor heater has an open circuit.)
- If the output voltage of the A/F sensor remains at either approximately 3.8 V or more, or 2.8 V or less (see the Malfunction Condition diagram) under any conditions, including those above, the A/F sensor may have a short circuit.

ES

- The ECM stops fuel injection (fuel cut) during engine deceleration. This causes a lean condition and results in a momentary increase in the A/F sensor output voltage.
- The ECM must establish a closed throttle valve position learning value to perform fuel cut. If the battery terminal has been reconnected, the vehicle must be driven at over 10 mph (16 km/h) to allow the ECM to learn the closed throttle valve position.
- When the vehicle is driven:
  The output voltage of the A/F sensor may be below 2.8 V during fuel enrichment. For the vehicle, this translates to a sudden increase in speed with the accelerator pedal fully depressed when trying to overtake another vehicle. The A/F sensor is functioning normally.
- The A/F sensor is a current output element; therefore, the current is converted into a voltage inside the ECM. Measuring the voltage at the connectors of the A/F sensor or ECM will show a constant voltage result.

NG → **Go to step 10**

OK

4	PERFORM CONFIRMATION DRIVING PATTERN

NEXT

5	CHECK WHETHER DTC OUTPUT RECURS (DTC P2195, P2196, P2197 OR P2198)

(a) Read the DTCs using the intelligent tester.
(b) Enter the following menus: DIAGNOSIS / ENHANCED OBD II / DTC INFO / CURRENT CODES.

Result

Display (DTC Output)	Proceed to
P2195, P2196, P2197, or P2198	A
No output	B

B → **Go to step 9**

A

6	REPLACE AIR FUEL RATIO SENSOR

(a) Replace the air fuel ratio sensor (See page EC-19).

NEXT

7	PERFORM CONFIRMATION DRIVING PATTERN

NEXT

8 CHECK WHETHER DTC OUTPUT RECURS (DTC P2195, P2196, P2197 OR P2198)

(a) Read the DTCs using the intelligent tester.
(b) Enter the following menus: DIAGNOSIS / ENHANCED OBD II / DTC INFO / CURRENT CODES.

Result

Display (DTC Output)	Proceed to
No output	A
P2195, P2196, P2197, or P2198	B

B → **REPLACE ECM (See page ES-543)**

A

9 CONFIRM IF VEHICLE HAS RUN OUT OF FUEL IN PAST

(a) Has the vehicle run out of fuel in the past?

NO → **CHECK FOR INTERMITTENT PROBLEMS**

YES

DTC CAUSED BY RUNNING OUT OF FUEL

10 INSPECT AIR FUEL RATIO SENSOR (HEATER RESISTANCE)

Component Side:

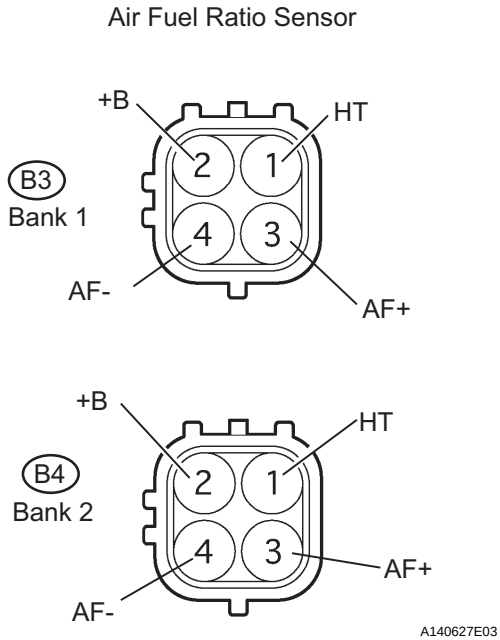

(a) Disconnect the B3 or B4 A/F sensor connector.
(b) Measure the resistance according to the value(s) in the table below.

Standard resistance (Bank 1 sensor 1)

Tester Connection	Condition	Specified Condition
HT (1) - +B (2)	20°C (68°F)	1.8 to 3.4 Ω
HT (1) - AF- (4)	Always	10 kΩ or higher

Standard resistance (Bank 2 sensor 1)

Tester Connection	Condition	Specified Condition
HT (1) - +B (2)	20°C (68°F)	1.8 to 3.4 Ω
HT (1) - AF- (4)	Always	10 kΩ or higher

(c) Reconnect the A/F sensor connector.

NG → **REPLACE AIR FUEL RATIO SENSOR (See page EC-19)**

OK

ES

11	INSPECT FUSE (A/F FUSE)

(a) Remove the A/F fuse from the integration relay.
(b) Measure the A/F fuse resistance.
Standard resistance:
Below 1 Ω
(c) Reinstall the A/F fuse.

NG → **REPLACE A/F FUSE**

OK

ES

12	INSPECT ENGINE ROOM JUNCTION BLOCK (A/F RELAY)

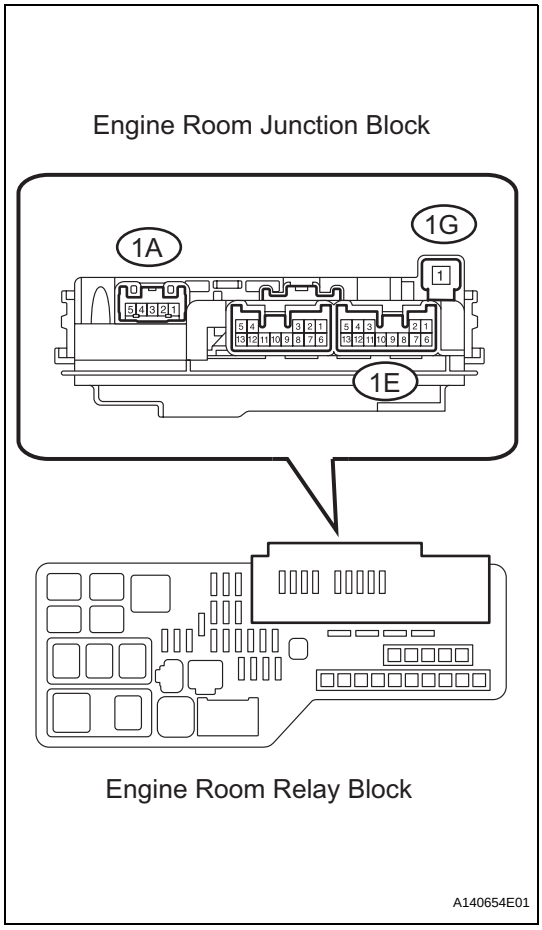

(a) Remove the engine room junction block from the engine room R/B.
(b) Inspect the A/F relay.
(1) Measure the A/F relay resistance.
Standard resistance

Tester Connection	Specified Condition
1G-1 - 1A-4	10 kΩ or higher
1G-1 - 1A-4	Below 1 Ω (Apply battery voltage between terminals 1E-9 and 1E-10)

(c) Reinstall the engine room junction block.

NG → **REPLACE ENGINE ROOM JUNCTION BLOCK**

OK

13 CHECK HARNESS AND CONNECTOR (A/F SENSOR - ECM)

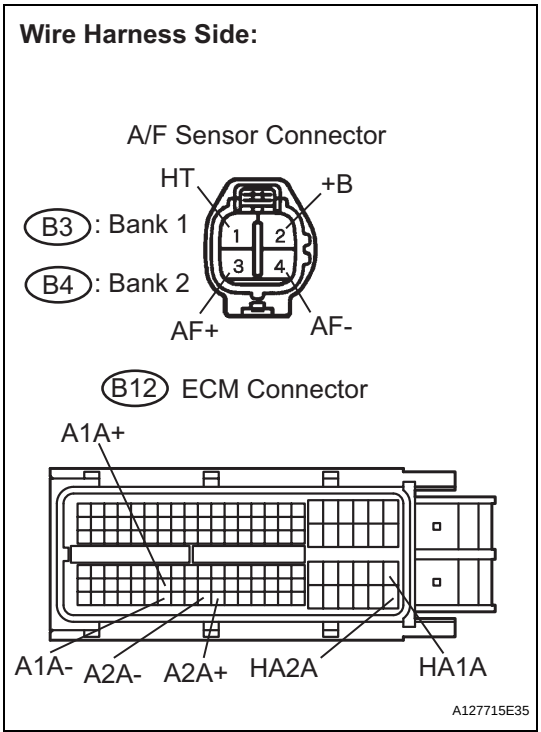

(a) Disconnect the B3 and B4 A/F sensor connectors.
(b) Turn the engine switch on (IG).
(c) Measure the voltage according to the value(s) in the table below.

Standard voltage

Tester Connection	Specified Condition
+B (B3-2) - Body ground	9 to 14 V
+B (B4-2) - Body ground	9 to 14 V

(d) Turn the engine switch off.
(e) Disconnect the B12 ECM connector.
(f) Measure the resistance according to the value(s) in the table below.

Standard resistance (Check for open)

Tester Connection	Specified Condition
HT (B3-1) - HA1A (B12-86)	Below 1 Ω
AF+ (B3-3) - A1A+ (B12-93)	Below 1 Ω
AF- (B3-4) - A1A- (B12-116)	Below 1 Ω
HT (B4-1) - HA2A (B12-109)	Below 1 Ω
AF+ (B4-3) - A2A+ (B12-120)	Below 1 Ω
AF- (B4-4) - A2A- (B12-119)	Below 1 Ω

Standard resistance (Check for short)

Tester Connection	Specified Condition
HT (B3-1) or HA1A (B12-86) - Body ground	10 kΩ or higher
AF+ (B3-3) or A1A+ (B12-93) - Body ground	10 kΩ or higher
AF- (B3-4) or A1A- (B12-116) - Body ground	10 kΩ or higher
HT (B4-1) or HA2A (B12-109) - Body ground	10 kΩ or higher
AF+ (B4-3) or A2A+ (B12-120) - Body ground	10 kΩ or higher
AF- (B4-4) or A2A- (B12-119) - Body ground	10 kΩ or higher

(g) Reconnect the ECM connector.
(h) Reconnect the A/F sensor connectors.

Reference (System Diagram of Bank 1 Sensor 1):

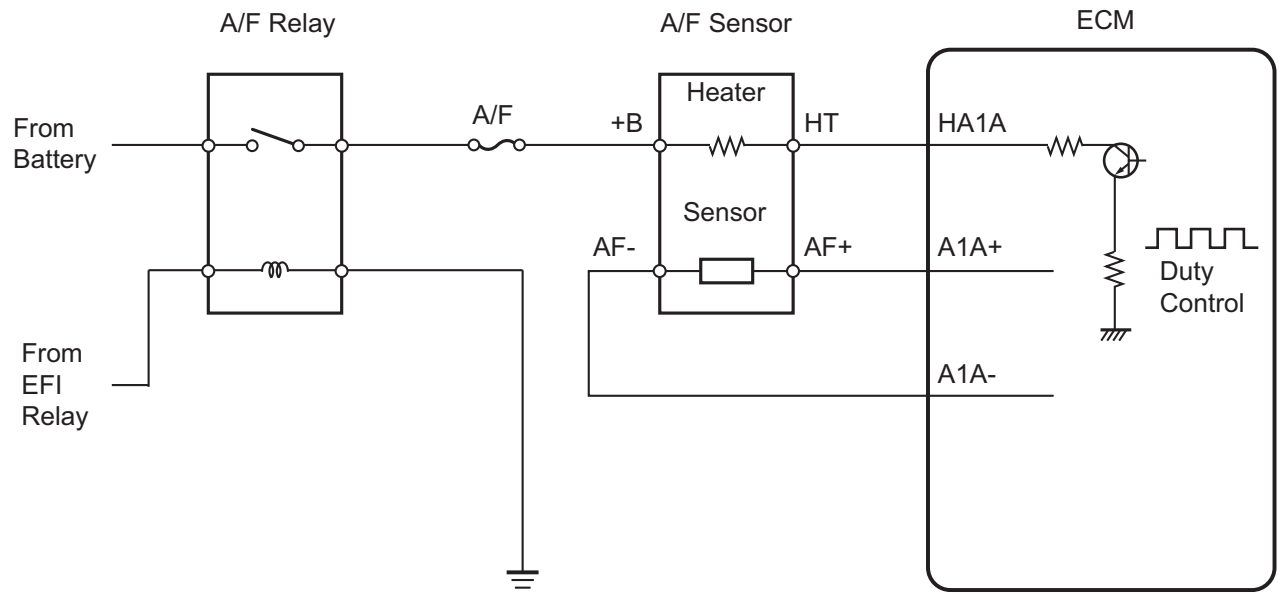

A133850E11

NG → **REPAIR OR REPLACE HARNESS OR CONNECTOR**

OK

14	CHECK AIR INDUCTION SYSTEM

(a) Check the air induction system for vacuum leakage.
OK:
No leakage from air induction system.

NG → **REPAIR OR REPLACE AIR INDUCTION SYSTEM**

OK

15	CHECK FUEL PRESSURE (HIGH PRESSURE SIDE AND LOW PRESSURE SIDE)

(a) Check the fuel pressure.

NG → **REPAIR OR REPLACE FUEL SYSTEM**

OK

16	REPLACE AIR FUEL RATIO SENSOR

(a) Replace the air fuel ratio sensor (See page EC-19).

NEXT

17	PERFORM CONFIRMATION DRIVING PATTERN

NEXT

18	CHECK WHETHER DTC OUTPUT RECURS (DTC P2195, P2196, P2197 OR P2198)

(a) Read the DTCs using the intelligent tester.
(b) Enter the following menus: DIAGNOSIS / ENHANCED OBD II / DTC INFO / PENDING CODES.

Result

Display (DTC Output)	Proceed to
No output	A
P2195, P2196, P2197 or P2198	B

B → **REPAIR OR REPLACE ECM**

A

19	CONFIRM IF VEHICLE HAS RUN OUT OF FUEL IN PAST

(a) Has the vehicle run out of fuel in the past?

NO → **CHECK FOR INTERMITTENT PROBLEMS**

YES

DTC CAUSED BY RUNNING OUT OF FUEL

20	REPLACE AIR FUEL RATIO SENSOR

(a) Replace the air fuel ratio sensor (See page EC-19).

NEXT

21	PERFORM CONFIRMATION DRIVING PATTERN

NEXT

22	CHECK WHETHER DTC OUTPUT RECURS (DTC P2195, P2196, P2197 OR P2198)

(a) Connect the intelligent tester to the DLC3.
(b) Turn the engine switch on (IG) and turn the tester on.
(c) Read the DTCs using the intelligent tester.
(d) Enter the following menus: DIAGNOSIS / ENHANCED OBD II / DTC INFO / PENDING CODES.

Result

Display (DTC Output)	Proceed to
No output	A
P2195, P2196, P2197 or P2198 (A/F sensor pending DTCs)	B

B → **REPLACE ECM (See page ES-543)**

A

END

DTC	P2238	Oxygen (A/F) Sensor Pumping Current Circuit Low (Bank 1 Sensor 1)
DTC	P2239	Oxygen (A/F) Sensor Pumping Current Circuit High (Bank 1 Sensor 1)
DTC	P2241	Oxygen (A/F) Sensor Pumping Current Circuit Low (Bank 2 Sensor 1)
DTC	P2242	Oxygen (A/F) Sensor Pumping Current Circuit High (Bank 2 Sensor 1)
DTC	P2252	Oxygen (A/F) Sensor Reference Ground Circuit Low (Bank 1 Sensor 1)
DTC	P2253	Oxygen (A/F) Sensor Reference Ground Circuit High (Bank 1 Sensor 1)
DTC	P2255	Oxygen (A/F) Sensor Reference Ground Circuit Low (Bank 2 Sensor 1)
DTC	P2256	Oxygen (A/F) Sensor Reference Ground Circuit High (Bank 2 Sensor 1)

DESCRIPTION

HINT:

- Although the DTC titles include oxygen sensor, these DTCs relate to the Air-Fuel Ratio (A/F) sensor.
- Sensor 1 refers to the sensor mounted in front of the Three-Way Catalytic Converter (TWC) and located near the engine assembly.

The A/F sensor generates voltage* that corresponds to the actual air-fuel ratio. This sensor voltage is used to provide the ECM with feedback so that it can control the air-fuel ratio. The ECM determines the deviation from the stoichiometric air-fuel ratio level, and regulates the fuel injection time. If the A/F sensor malfunctions, the ECM is unable to control the air-fuel ratio accurately.

The A/F sensor is the planar type and is integrated with the heater, which heats the solid electrolyte (zirconia element). This heater is controlled by the ECM. When the intake air volume is low (the exhaust gas temperature is low), a current flows into the heater to heat the sensor, in order to facilitate accurate oxygen concentration detection. In addition, the sensor and heater portions are narrower than the conventional type. The heat generated by the heater is conducted to the solid electrolyte through the alumina, therefore the sensor activation is accelerated.

A three-way catalytic converter (TWC) is used in order to convert the carbon monoxide (CO), hydrocarbon (HC), and nitrogen oxide (NOx) into less harmful substances. To allow the TWC to function effectively, it is necessary to keep the air-fuel ratio of the engine near the stoichiometric air-fuel ratio.

*: Value changes inside the ECM. Since the A/F sensor is the current output element, a current is converted to a voltage inside the ECM. Any measurements taken at the A/F sensor or ECM connectors will show a constant voltage.

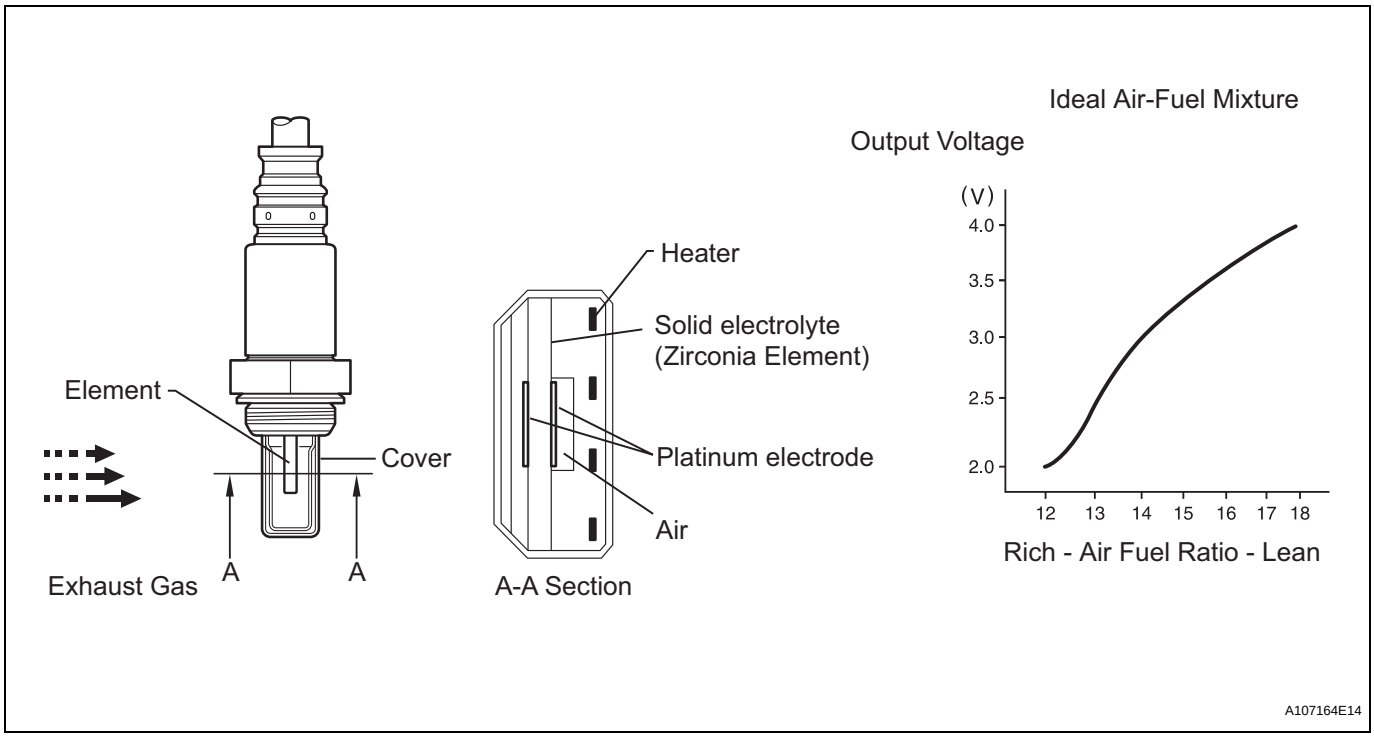

DTC No.	DTC Detection Condition	Trouble Area
P2238 P2241	• Case 1: Condition (a) or (b) continues for 5.0 seconds or more (1 trip detection logic): (a) AF+ voltage is 0.5 V or less (b) (AF+) - (AF-) = 0.1 V or less • Case 2: A/F sensor admittance: Less than 0.022 1/Ω (2 trip detection logic)	• Open or short in A/F sensor (bank 1, 2 sensor 1) circuit • A/F sensor (bank 1, 2 sensor 1) • A/F sensor heater • A/F sensor heater relay • A/F sensor heater and relay circuits • ECM
P2239 P2242	AF+ voltage is more than 4.5 V for 5.0 seconds or more (2 trip detection logic)	• Open or short in A/F sensor (bank 1, 2 sensor 1) circuit • A/F sensor (bank 1, 2 sensor 1) • A/F sensor heater • A/F sensor heater relay • A/F sensor heater and relay circuits • ECM
P2252 P2255	AF- voltage is 0.5 V or less for 5.0 seconds or more (2 trip detection logic)	• Open or short in A/F sensor (bank 1, 2 sensor 1) circuit • A/F sensor (bank 1, 2 sensor 1) • A/F sensor heater • A/F sensor heater relay • A/F sensor heater and relay circuits • ECM
P2253 P2256	AF- voltage is more than 4.5 V for 5.0 seconds or more (2 trip detection logic)	• Open or short in A/F sensor (bank 1, 2 sensor 1) circuit • A/F sensor (bank 1, 2 sensor 1) • A/F sensor heater • A/F sensor heater relay • A/F sensor heater and relay circuits • ECM

HINT:
- DTCs P2238, P2239, P2252 and P2253 indicate malfunctions related to the bank 1 A/F sensor circuit.
- DTCs P2241, P2242, P2255 and P2256 indicate malfunctions related to the bank 2 A/F sensor circuit.
- Bank 1 refers to the bank that includes cylinder No. 1.
- Bank 2 refers to the bank that includes cylinder No. 2.

MONITOR DESCRIPTION

The Air-Fuel Ratio (A/F) sensor varies its output voltage in proportion to the air-fuel ratio. If the A/F sensor impedance (alternating current resistance) or output voltage deviates greatly from the standard range, the ECM determines that there is an open or short malfunction in the A/F sensor circuit.

MONITOR STRATEGY

Related DTCs	P2238: A/F sensor (Bank 1) open circuit between AF+ and AF- P2238: A/F sensor (Bank 1) short circuit between AF+ and AF- P2238: A/F sensor (Bank 1) short circuit between AF+ and GND P2239: A/F sensor (Bank 1) short circuit between AF+ and +B P2241: A/F sensor (Bank 2) open circuit between AF+ and AF- P2241: A/F sensor (Bank 2) short circuit between AF+ and AF- P2241: A/F sensor (Bank 2) short circuit between AF+ and GND P2242: A/F sensor (Bank 2) short circuit between AF+ and +B P2252: A/F sensor (Bank 1) short circuit between AF- and GND P2253: A/F sensor (Bank 1) short circuit between AF- and +B P2255: A/F sensor (Bank 2) short circuit between AF- and GND P2256: A/F sensor (Bank 2) short circuit between AF- and +B
Required Sensors/Components (Main)	A/F sensor
Required Sensors/Components (Sub)	Engine Coolant Temperature (ECT) sensor, Crankshaft position sensor
Frequency of Operation	Once per driving cycle
Duration	10 seconds
MIL Operation	2 driving cycles
Sequence of Operation	None

ES

TYPICAL ENABLING CONDITIONS

Monitor runs whenever following DTCs are not present	P0031, P0032, P0051, P0052 (A/F sensor heater - Sensor 1) P0100 - P0103 (MAF meter) P0110 - P0113 (IAT sensor) P0115 - P0118 (ECT sensor) P0120 - P0223, P2135 (TP sensor) P0125 (Insufficient ECT for Closed Loop) P0171, P0172 (Fuel system) P0300 - P0308 (Misfire) P0335 (CKP sensor) P0500 (VSS)

P2238 and P2241 (open circuit between AF+ and AF-):

AF+ terminal voltage	0.5 to 4.5 V
AF- terminal voltage	0.5 to 4.5 V
Difference between AF+ and AF- terminal voltages	0.1 to 0.8 V
ECT	5°C (41°F) or more (Varies with ECT at engine start)
Engine condition	Running
Fuel-cut	OFF
Time after engine start	10 seconds or more
A/F sensor heater duty-cycle	ON
Time after A/F sensor heating	5 seconds or more
Battery voltage	11 V or more
Engine switch	ON

Others:

Battery voltage	10.5 V or more
Engine switch	ON

TYPICAL MALFUNCTION THRESHOLDS

P2238 and P2241 (Open circuit between AF+ and AF-):

A/F sensor admittance	Below 0.022 1/Ω

P2238 and P2241 (Short circuit between AF+ and GND):

AF+ terminal voltage	0.5 V or less

P2238 and P2241 (Short circuit between AF+ and AF-):

Difference between AF+ and AF- terminal voltages	0.1 v or less

P2239 and P2242 (Short circuit between AF+ and +B):

AF+ terminal voltage	More than 4.5 V

P2252 and P2255 (Short circuit between AF- and GND):

AF- terminal voltage	0.5 V or less

P2253 and P2256 (Short circuit between AF- and +B):

AF- terminal voltage	More than 4.5 V

WIRING DIAGRAM

Refer to DTC P2195 (See page ES-353).

INSPECTION PROCEDURE

HINT:
Intelligent tester only:
Malfunctioning areas can be identified by performing the A/F CONTROL function provided in the ACTIVE TEST. The A/F CONTROL function can help to determine whether the Air-Fuel Ratio (A/F) sensor, Heated Oxygen (HO2) sensor and other potential trouble areas are malfunctioning.
The following instructions describe how to conduct the A/F CONTROL operation using the intelligent tester.

1. Connect the intelligent tester to the DLC3.
2. Start the engine and turn the tester on.
3. Warm up the engine at an engine speed of 2,500 rpm for approximately 90 seconds.
4. On the tester, enter the following menus: DIAGNOSIS / ENHANCED OBD II / ACTIVE TEST / A/F CONTROL.
5. Perform the A/F CONTROL operation with the engine in an idling condition (press the RIGHT or LEFT button to change the fuel injection volume).
6. Monitor the output voltages of the A/F and HO2 sensors (AFS B1 S1 and O2S B1 S2 or AFS B2 S1 and O2S B2 S2) displayed on the tester.

HINT:

- The A/F CONTROL operation lowers the fuel injection volume by 12.5 % or increases the injection volume by 25 %.
- Each sensor reacts in accordance with increases and decreases in the fuel injection volume.

Tester Display (Sensor)	Injection Volume	Status	Voltage
AFS B1S1 or AFS B2S1 (A/F)	+25 %	Rich	Less than 3.0 V
AFS B1S1 or AFS B2S1 (A/F)	-12.5 %	Lean	More than 3.35 V
O2S B1S2 or O2S B2S2 (HO2)	+25 %	Rich	More than 0.55 V
O2S B1S2 or O2S B2S2 (HO2)	-12.5 %	Lean	Less than 0.4 V

NOTICE:
The Air-Fuel Ratio (A/F) sensor has an output delay of a few seconds and the Heated Oxygen (HO2) sensor has a maximum output delay of approximately 20 seconds.

Case	A/F Sensor (Sensor 1) Output Voltage		HO2 Sensor (Sensor 2) Output Voltage		Main Suspected Trouble Areas
1	Injection Volume +25 % -12.5 %		Injection Volume +25 % -12.5 %		-
	Output Voltage More than 3.35 V Less than 3.0 V	OK	Output Voltage More than 0.55 V Less than 0.4 V	OK	
2	Injection Volume +25 % -12.5 %		Injection Volume +25 % -12.5 %		• A/F sensor • A/F sensor heater • A/F sensor circuit
	Output Voltage Almost no reaction	NG	Output Voltage More than 0.55 V Less than 0.4 V	OK	
3	Injection Volume +25 % -12.5 %		Injection Volume +25 % -12.5 %		• HO2 sensor • HO2 sensor heater • HO2 sensor circuit
	Output Voltage More than 3.35 V Less than 3.0 V	OK	Output Voltage Almost no reaction	NG	
4	Injection Volume +25 % -12.5 %		Injection Volume +25 % -12.5 %		• Injector • Fuel pressure • Gas leakage from exhaust system (Air-fuel ratio extremely lean or rich)
	Output Voltage Almost no reaction	NG	Output Voltage Almost no reaction	NG	

- Following the A/F CONTROL procedure enables technicians to check and graph the output voltages of both the A/F and HO2 sensors.
- To display the graph, enter the following menus: DIAGNOSIS / ENHANCED OBD II / ACTIVE TEST / A/F CONTROL / USER DATA / AFS B1 S1 and O2S B1 S2 or AFS B2 S1 and O2S B2 S2, and press the YES button and then the ENTER button followed by the F4 button.

HINT:

- Read freeze frame data using the intelligent tester. The ECM records vehicle and driving condition information as freeze frame data the moment a DTC is stored. When troubleshooting, freeze frame data can be helpful in determining whether the vehicle was running or stopped, whether the engine was warmed up or not, whether the air-fuel ratio was lean or rich, as well as other data recorded at the time of a malfunction (See page ES-41).

ES

ES

1 INSPECT AIR FUEL RATIO SENSOR (HEATER RESISTANCE)

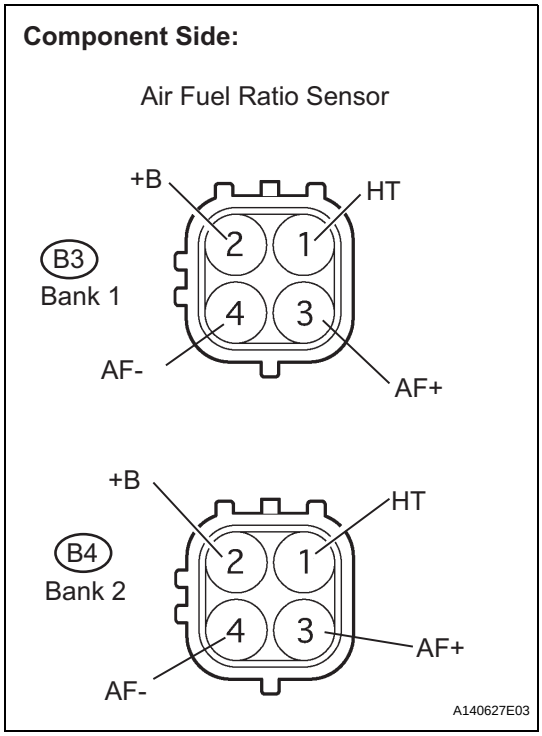

(a) Disconnect the B3 or B4 A/F sensor connector.
(b) Measure the resistance according to the value(s) in the table below.

Standard resistance (Bank 1 sensor 1)

Tester Connection	Condition	Specified Condition
HT (1) - +B (2)	20°C (68°F)	1.8 to 3.4 Ω
HT (1) - AF- (4)	-	10 kΩ or higher

Standard resistance (Bank 2 sensor 1)

Tester Connection	Condition	Specified Condition
HT (1) - +B (2)	20°C (68°F)	1.8 to 3.4 Ω
HT (1) - AF- (4)	-	10 kΩ or higher

(c) Reconnect the A/F sensor connector.

NG → **REPLACE AIR FUEL RATIO SENSOR (See page EC-19)**

OK

2 INSPECT A/F FUSE

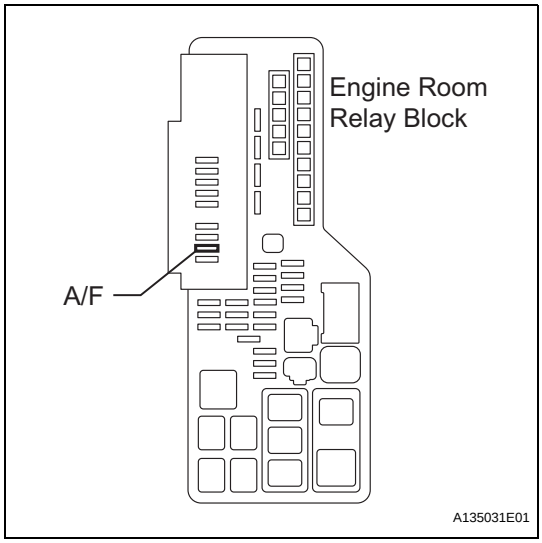

(a) Remove the A/F fuse from the engine room junction block.
(b) Measure the A/F fuse resistance.
Standard resistance:
Below 1 Ω
(c) Reinstall the A/F fuse.

NG → **REPLACE A/F FUSE**

OK

3	INSPECT ENGINE ROOM JUNCTION BLOCK (A/F RELAY)

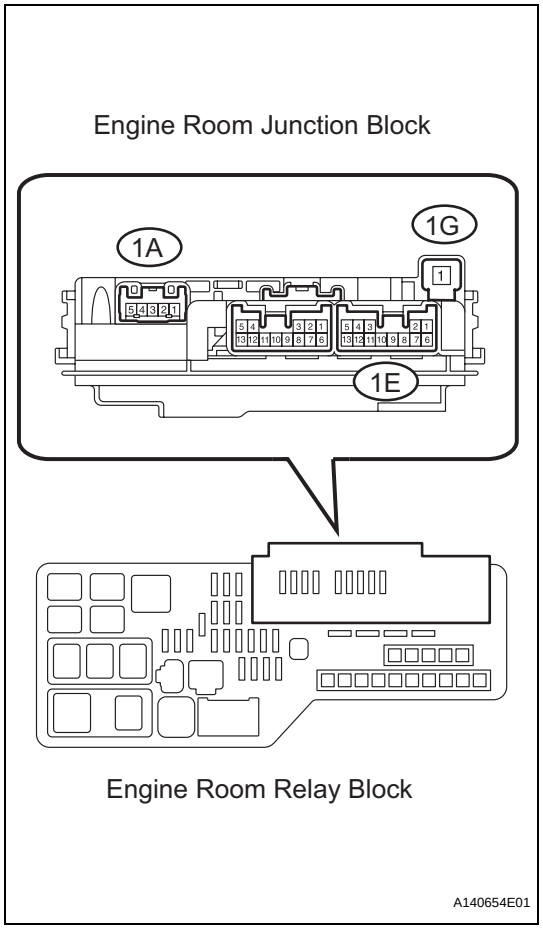

(a) Remove the engine room junction block from the engine room R/B.

(b) Inspect the A/F relay.

(1) Measure the A/F relay resistance.

Standard resistance

Tester Connection	Specified Condition
1G-1 - 1A-4	10 kΩ or higher
1G-1 - 1A-4	Below 1 Ω (Apply battery voltage between terminals 1E-6 and 1E-10)

(c) Reinstall the engine room junction block.

NG → **REPLACE ENGINE ROOM JUNCTION BLOCK**

OK

ES

4	CHECK HARNESS AND CONNECTOR (A/F SENSOR - ECM)

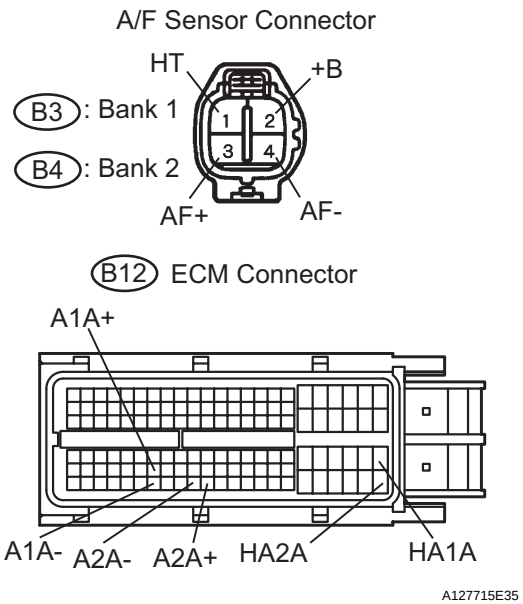

(a) Disconnect the B3 and B4 A/F sensor connectors.
(b) Turn the engine switch on (IG).
(c) Measure the voltage according to the value(s) in the table below.

Standard voltage

Tester Connection	Specified Condition
+B (B3-2) - Body ground	9 to 14 V
+B (B4-2) - Body ground	9 to 14 V

(d) Turn the engine switch off.
(e) Disconnect the B12 ECM connector.
(f) Measure the resistance according to the value(s) in the table below.

Standard resistance (Check for open)

Tester Connection	Specified Condition
HT (B3-1) - HA1A (B12-86)	Below 1 Ω
AF+ (B3-3) - A1A+ (B12-93)	Below 1 Ω
AF- (B3-4) - A1A- (B12-116)	Below 1 Ω
HT (B4-1) - HA2A (B12-109)	Below 1 Ω
AF+ (B4-3) - A2A+ (B12-120)	Below 1 Ω
AF- (B4-4) - A2A- (B12-119)	Below 1 Ω

Standard resistance (Check for short)

Tester Connection	Specified Condition
HT (B3-1) or HA1A (B12-86) - Body ground	10 kΩ or higher
AF+ (B3-3) or A1A+ (B12-93) - Body ground	10 kΩ or higher
AF- (B3-4) or A1A- (B12-116) - Body ground	10 kΩ or higher
HT (B4-1) or HA2A (B12-109) - Body ground	10 kΩ or higher
AF+ (B4-3) or A2A+ (B12-120) - Body ground	10 kΩ or higher
AF- (B4-4) or A2A- (B12-119) - Body ground	10 kΩ or higher

(g) Reconnect the ECM connector.
(h) Reconnect the A/F sensor connectors.

Reference (System Diagram of Bank 1 Sensor 1):

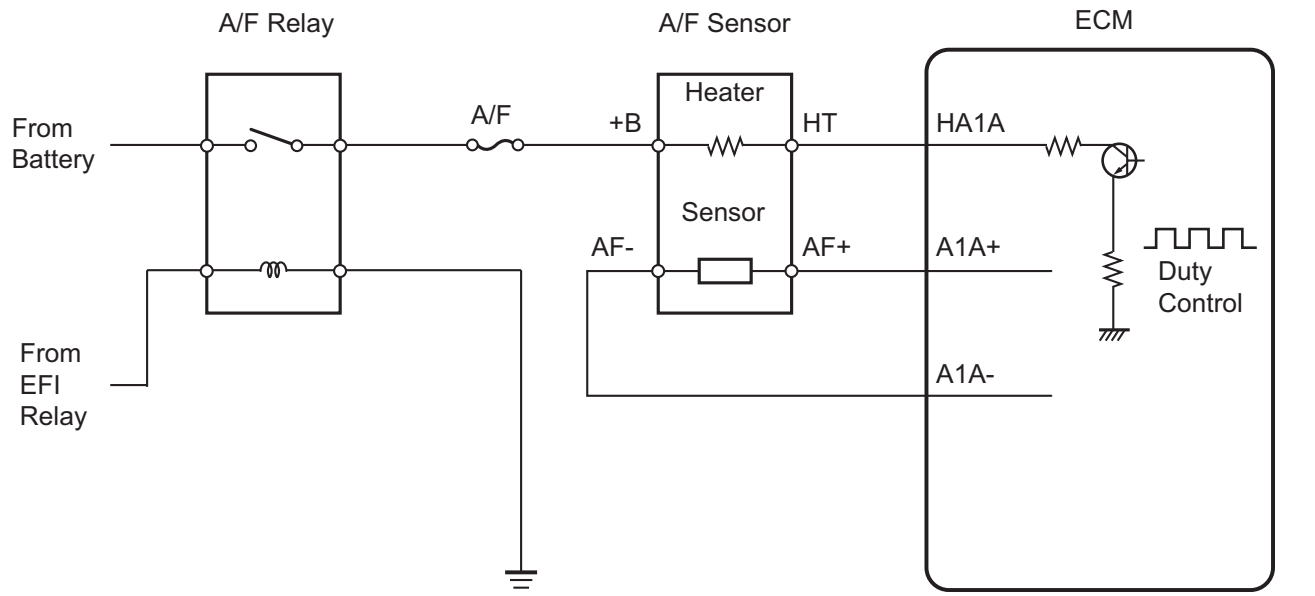

NG → **REPAIR OR REPLACE HARNESS OR CONNECTOR**

OK

REPLACE ECM (See page ES-543)

ES

DTC	P2420	Evaporative Emission System Switching Valve Control Circuit High

DTC SUMMARY

DTC No.	Monitoring Item	DTC Detection Condition	Trouble Area	Detection Timing	Detection Logic
P2420	Vent valve stuck open (vent)	The following condition is met during key-off EVAP monitor • EVAP pressure change when vent valve is closed (ON) is less than 2.3 mmHg	• Pump module (0.02 inch orifice, vacuum pump, vent valve) • Connector / wire harness (Pump module - ECM) • ECM	Engine switch off	2 trip

ES

DESCRIPTION

The circuit description can be found in the EVAP (Evaporative Emission) system (See page ES-395).

INSPECTION PROCEDURE

Refer to the EVAP system (See page ES-395).

MONITOR DESCRIPTION

5 hours*1 after the engine switch is turned off, the electric vacuum pump creates negative pressure (vacuum) in the EVAP (Evaporative Emission) system. The ECM monitors for leaks and actuator malfunctions based on the EVAP pressure.
HINT:
*1: If the engine coolant temperature is not below 35°C (95°F) 5 hours after the engine switch is turned off, the monitor check starts 2 hours later. If it is still not below 35°C (95°F) 7 hours after the engine switch is turned off, the monitor check starts 2.5 hours later.

Sequence	Operations	Descriptions	Duration
-	ECM activation	Activated by soak timer, 5 hours (7 or 9.5 hours) after engine switch is turned off.	-
A	Atmospheric pressure measurement	Vent valve is turned OFF (vent) and EVAP system pressure is measured by ECM in order to register atmospheric pressure. If pressure in EVAP system is not between 70 kPa and 110 kPa (525 mmHg and 825 mmHg), ECM cancels EVAP system monitor.	10 seconds
B	First 0.02 inch leak pressure measurement	In order to determine 0.02 inch leak pressure standard, vacuum pump creates negative pressure (vacuum) through 0.02 inch orifice and then ECM checks if vacuum pump and vent valve operate normally.	60 seconds
C	EVAP system pressure measurement	Vent valve is turned ON (closed) to shut EVAP system. Negative pressure (vacuum) is created in EVAP system, and then EVAP system pressure is measured. Write down measured value as they will be used in leak check. If EVAP pressure does not stabilize within 15 minutes, ECM cancels EVAP system monitor.	15 minutes*2
D	Purge VSV monitor	Purge VSV is opened and then EVAP system pressure is measured by ECM. Large increase indicates normal.	10 seconds
E	Second 0.02 inch leak pressure measurement	After second 0.02 inch leak pressure measurement, leak check is performed by comparing first and second 0.02 inch leak pressure standards. If stabilized system pressure is higher than second 0.02 inch leak pressure standard, ECM determines that there is a leak in EVAP system.	60 seconds
F	Final check	Atmospheric pressure is measured and then monitoring result is recorded by ECM.	-

*2: If only a small amount of fuel is in the fuel tank, it takes longer for the EVAP pressure to stabilize.

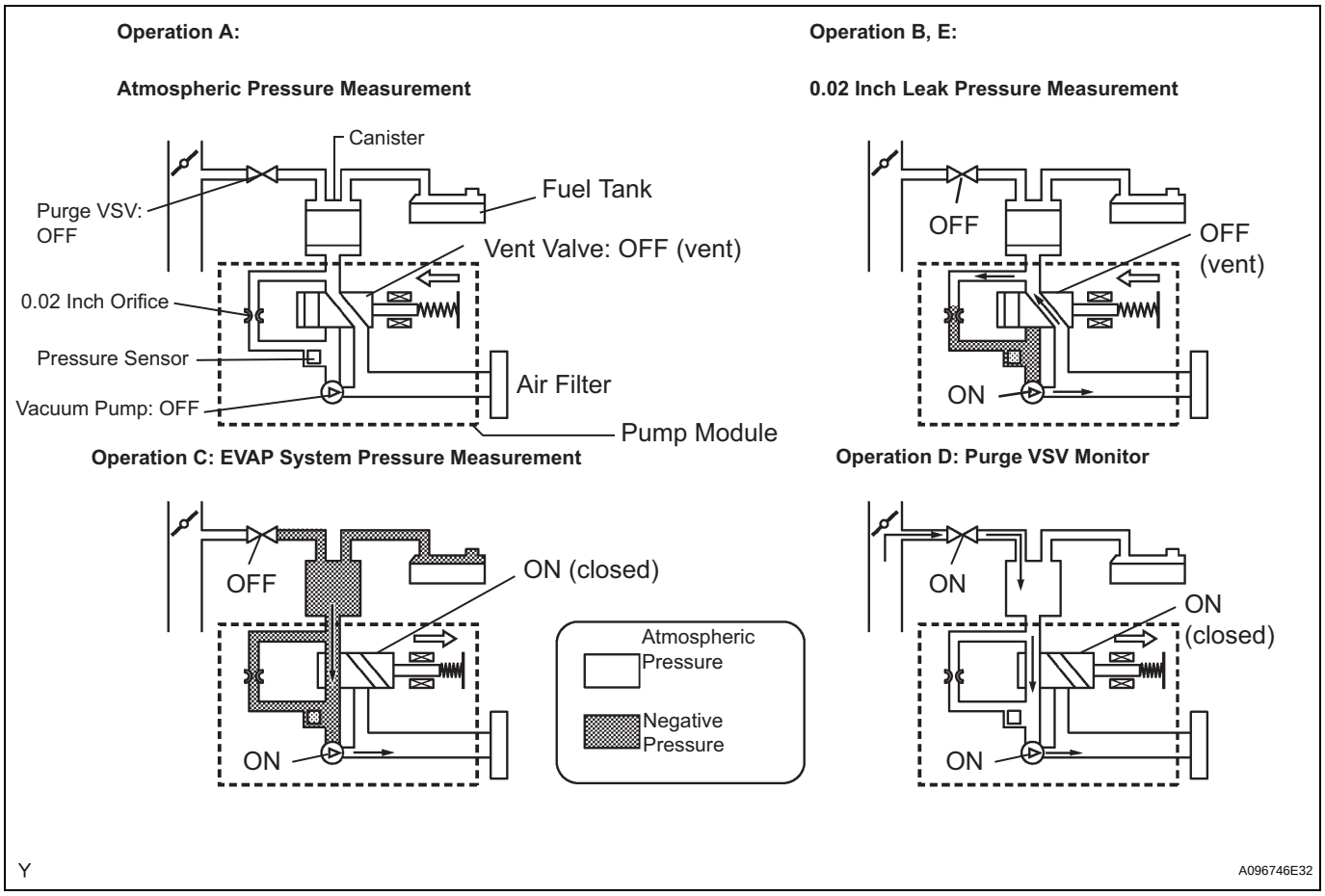

The vent valve turns ON (closes) and the EVAP (Evaporative Emission) system pressure is then measured by the ECM, using the pressure sensor, to conduct an EVAP leak check. If the pressure does not increase when the vent valve is open, the ECM interprets this as the vent valve being stuck open. The ECM illuminates the MIL and sets the DTC.

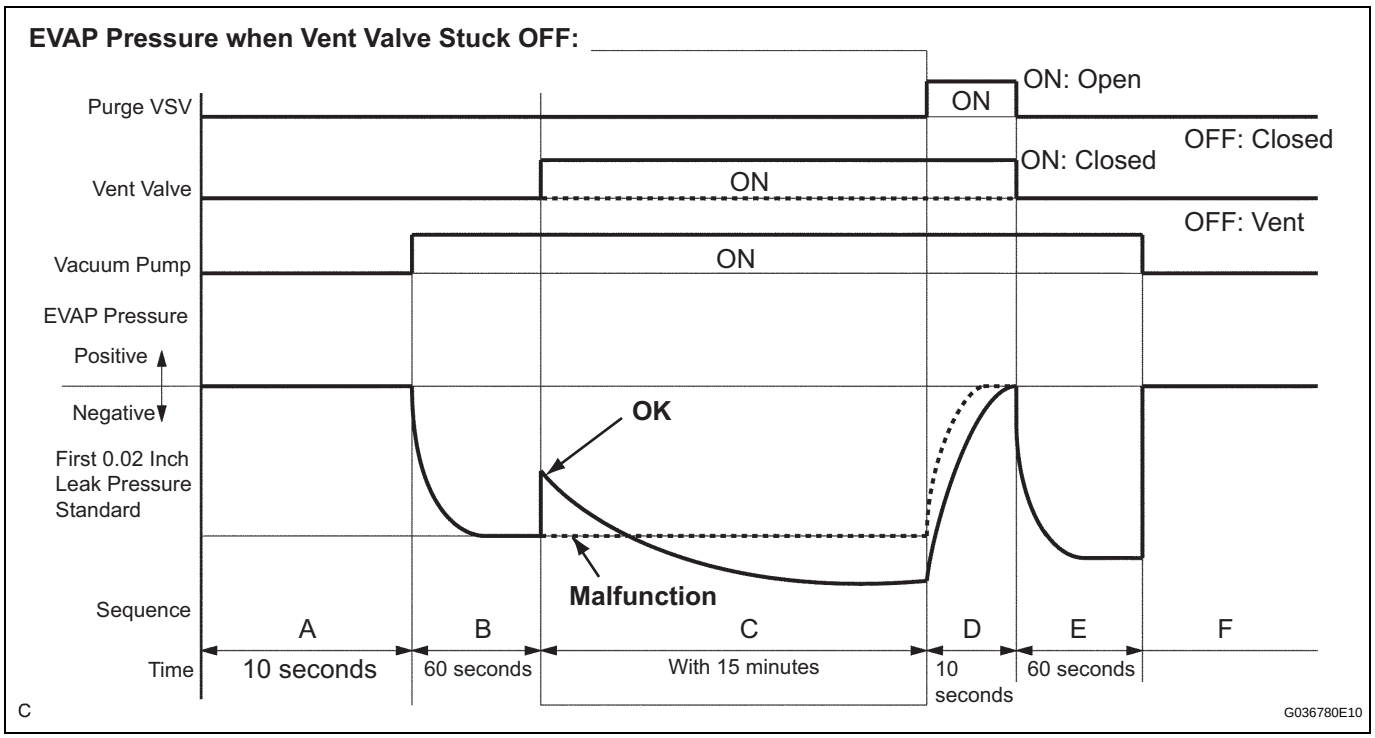

ES

MONITOR STRATEGY

Related DTC	P2420: Vent valve stuck open (vent)
Required Sensors/Components	Purge VSV and pump module
Frequency of Operation	Once per driving cycle
Duration	Within 2 minutes
MIL Operation	2 driving cycles
Sequence of Operation	None

TYPICAL ENABLING CONDITIONS

ES

The monitor will run whenever these DTCs are not present	None
Key-off monitor is run when all of the following conditions are met	-
Atmospheric pressure	70 to 110 kPa (525 to 825 mmHg)
Battery voltage	10.5 V or more
Vehicle speed	2.5 mph (4 km/h) or less
Engine switch	OFF
Time after key-off	5 or 7 or 9.5 hours
EVAP pressure sensor malfunction (P0450, P0452, P0453)	Not detected
EVAP canister purge valve	Not operated by scan tool
EVAP canister vent valve	Not operated by scan tool
EVAP leak detection pump	Not operated by scan tool
Both of the following conditions 1 and 2 are met before key-off	-
1. Duration that vehicle has been driven	5 minutes or more
2. EVAP purge operation	Performed
ECT	4.4 to 35°C (40 to 95°F)
IAT	4.4 to 35°C (40 to 95°F)

Key-off monitor sequence 1 to 8

1. Atmospheric pressure measurement

Next sequence is run if the following condition is met	-
Atmospheric pressure change	Less than 0.3 kPa (2.25 mmHg) in 1 second

2. First reference pressure measurement

Next sequence is run if the following conditions are met	Conditions 1, 2 and 3
1. EVAP pressure just after reference pressure measurement start	-1 kPa (-7.5 mmHg) or less
2. Reference pressure	-4.85 to -1.057 kPa (-36.384 to -7.929 mmHg)
3. Reference pressure	Saturated

3. EVAP canister vent valve close stuck check

Next sequence is run if the following condition is met	-
EVAP pressure change after vent valve is turned ON	0.3 kPa (2.25 mmHg) or more

4. Vacuum introduction

Next sequence is run if the following condition is met	-
EVAP pressure	Saturated within 15 minutes

5. EVAP canister purge valve close stuck check

Next sequence is run if the following condition is met	-
EVAP pressure change after purge valve is opened	0.3 kPa (2.25 mmHg) or more

6. Second reference pressure measurement

Next sequence is run if the following conditions are met	Conditions 1, 2, 3 and 4
1. EVAP pressure just after reference pressure	-1 kPa (-7.5 mmHg) or less
2. Reference pressure	-4.85 to -1.057 kPa (-36.384 to -7.929 mmHg)
3. Reference pressure	Saturated
4. Difference between first reference pressure and second reference pressure	Less than 0.7 kPa (5.25 mmHg)

7. Leak check

Next sequence is run if the following condition is met	-
EVAP pressure when vacuum introduction is complete	Lower than second reference pressure

8. Atmospheric pressure measurement

EVAP monitor is complete if the following condition is met	-
Atmospheric pressure difference between sequence 1 and 8	Within 0.3 kPa (2.25 mmHg)

TYPICAL MALFUNCTION THRESHOLDS

EVAP pressure change after EVAP canister vent valve is turned ON	Less than 0.3 kPa (2.25 mmHg)

MONITOR RESULT

Refer to CHECKING MONITOR STATUS (See page ES-20).

DTC	P2610	ECM / PCM Internal Engine Off Timer Performance

DTC SUMMARY

DTC No.	Monitoring Item	DTC Detection Condition	Trouble Area	Detection Timing	Detection Logic
P2610	Soak timer (built into ECM)	ECM internal malfunction	ECM	Engine running	2 trip

DESCRIPTION

ES

To ensure the accuracy of the EVAP (Evaporative Emission) monitor values, the soak timer, which is built into the ECM, measures 5 hours (+/- 15 minutes) from when the engine switch is turned off, before the monitor is run. This allows the fuel to cool down, which stabilizes the Fuel Tank Pressure (FTP). When 5 hours have elapsed, the ECM turns on.

Soak Timer Circuit (fig. 3):

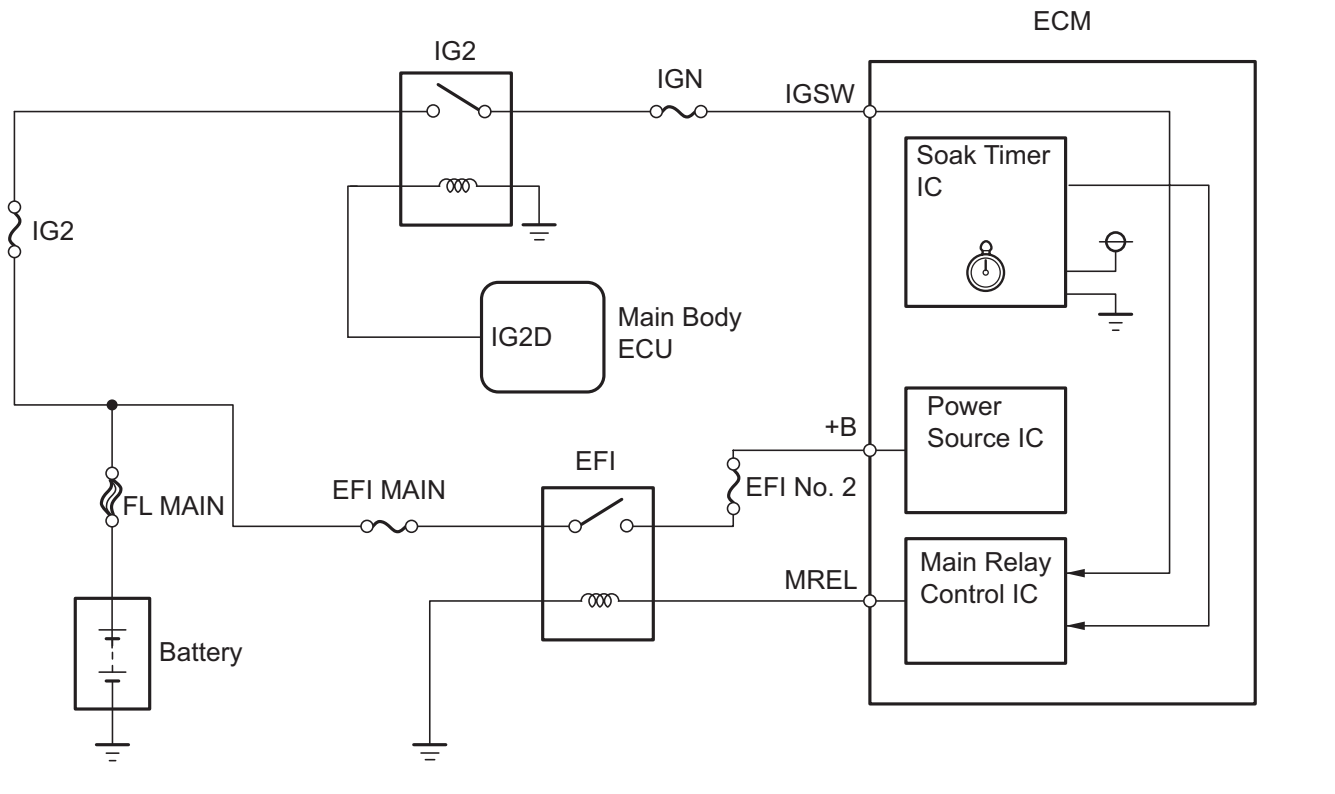

MONITOR DESCRIPTION

5 hours after the engine switch is turned off, the soak timer activates the ECM to begin the EVAP system monitor. While the engine is running, the ECM monitors the synchronization of the soak timer and the CPU clock. If these two are not synchronized, the ECM interprets this as a malfunction, illuminates the MIL and sets the DTC (2 trip detection logic).

MONITOR STRATEGY

Required Sensors/Components	ECM
Frequency of Operation	Once per driving cycle

Duration	10 minutes
MIL Operation	2 driving cycles
Sequence of Operation	None

TYPICAL ENABLING CONDITIONS

Case 1:

Engine switch	ON
Engine	Running
Battery voltage	8 V or more
Starter	OFF

Case 2:

Internal engine OFF timer (elapsed time from engine stop)	10 to 300 minutes
Battery voltage	8 V or more
Engine switch	ON
Starter	OFF

Case 3:

Internal engine OFF timer (elapsed time from engine stop)	310 minutes
Battery voltage	8 V or more
Engine switch	ON
Starter	OFF

TYPICAL MALFUNCTION THRESHOLDS

Case 1:

Soak timer measurement when ECM CPU clock counts 10 minutes	Less than 7 minutes or more than 13 minutes

Case 2:

ECM had the started record by internal engine OFF timer	Yes

Case 3:

ECM had the started record by internal engine OFF timer	No

INSPECTION PROCEDURE

HINT:

- DTC P2610 is set if an internal ECM problem is detected. In this case, diagnostic procedures are not required. ECM replacement is required.
- Read freeze frame data using the intelligent tester. The ECM records vehicle and driving condition information as freeze frame data the moment a DTC is stored. When troubleshooting, freeze frame data can be helpful in determining whether the vehicle was running or stopped, whether the engine was warmed up or not, whether the air-fuel ratio was lean or rich, as well as other data recorded at the time of a malfunction (See page ES-41).

1	REPLACE ECM

(a) Replace the ECM (See page ES-543).

NEXT

2	CHECK WHETHER DTC OUTPUT RECURS

(a) Connect the intelligent tester to the DLC3.
(b) Turn the engine switch on.
(c) Clear the DTCs (See page ES-41).
(d) Start the engine and wait for 10 minutes or more.
(e) On the tester, enter the following menu items: DIAGNOSIS / ENHANCED OBD II / DTC / INFO / PENDING CODES.
(f) If no pending DTC is displayed, the repair has been successfully completed.

NEXT

END

DTC	**P2A00**	**A/F Sensor Circuit Slow Response (Bank 1 Sensor 1)**

DTC	**P2A03**	**A/F Sensor Circuit Slow Response (Bank 2 Sensor 1)**

DESCRIPTION

HINT:

- DTC P2A00 indicates malfunctions related to the bank 1 A/F sensor.
- DTC P2A03 indicates malfunctions related to the bank 2 A/F sensor.
- Bank 1 refers to the bank that includes cylinder No. 1.
- Bank 2 refers to the bank that includes cylinder No. 2.
- Sensor 1 refers to the sensor mounted in front of the Three-Way Catalytic Converter (TWC) and located near the engine assembly.
- Although the DTC titles say oxygen sensor, these DTCs relate to the Air-Fuel Ratio (A/F) sensor.

The A/F sensor generates voltage* that corresponds to the actual air-fuel ratio. This sensor voltage is used to provide the ECM with feedback so that it can control the air-fuel ratio. The ECM determines the deviation from the stoichiometric air-fuel ratio level, and regulates the fuel injection time. If the A/F sensor malfunctions, the ECM is unable to control the air-fuel ratio accurately.

The A/F sensor is the planar type and is integrated with the heater, which heats the solid electrolyte (zirconia element). This heater is controlled by the ECM. When the intake air volume is low (the exhaust gas temperature is low), a current flows into the heater to heat the sensor, in order to facilitate accurate oxygen concentration detection. In addition, the sensor and heater portions are narrower than the conventional type. The heat generated by the heater is conducted to the solid electrolyte through the alumina, therefore the sensor activation is accelerated.

A three-way catalytic converter (TWC) is used in order to convert the carbon monoxide (CO), hydrocarbon (HC), and nitrogen oxide (NOx) into less harmful substances. To allow the TWC to function effectively, it is necessary to keep the air-fuel ratio of the engine near the stoichiometric air-fuel ratio.

*: Value changes inside the ECM. Since the A/F sensor is the current output element, a current is converted to a voltage inside the ECM. Any measurements taken at the A/F sensor or ECM connectors will show a constant voltage.

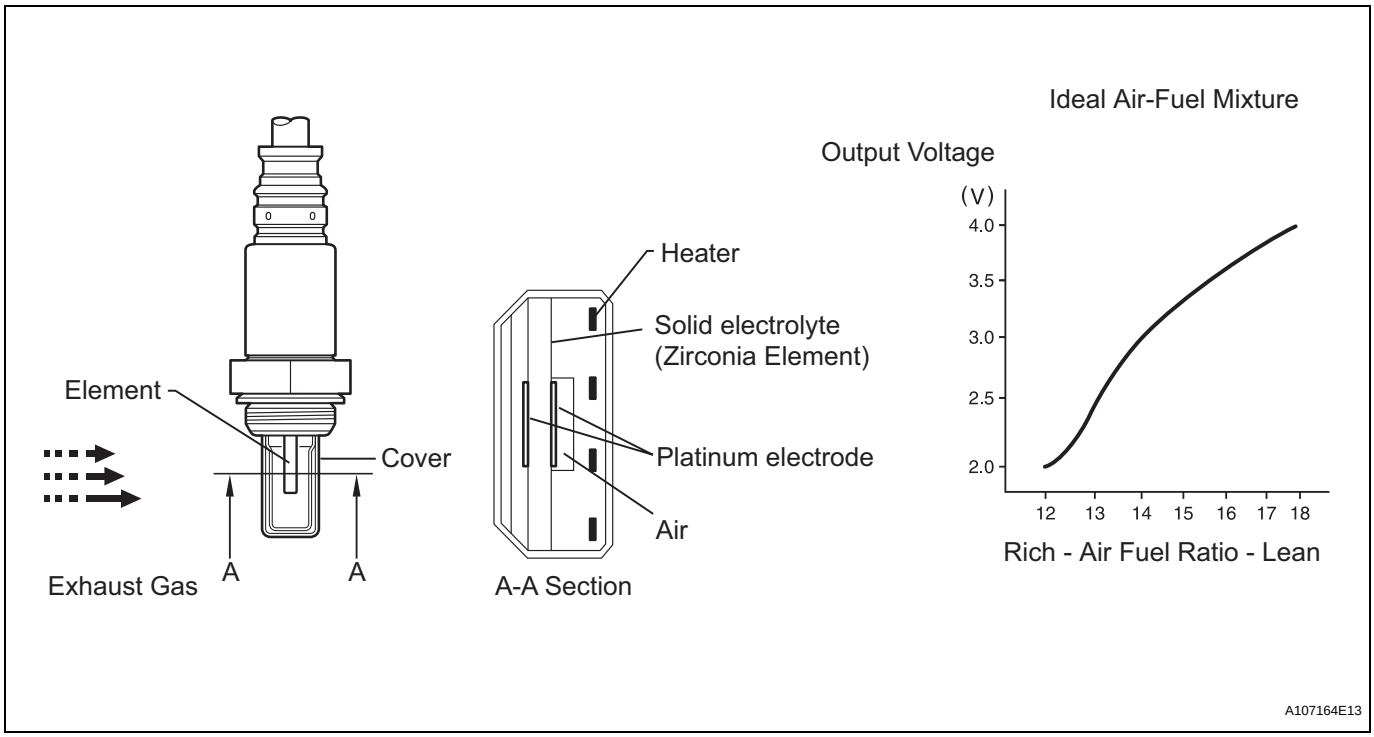

DTC No.	DTC Detection Conditions	Trouble Area
P2A00 P2A03	Calculated value for air-fuel ratio (A/F) sensor response rate deterioration level is less than threshold	• Open or short in A/F sensor circuit • A/F sensor • ECM

MONITOR DESCRIPTION

After the engine is warmed up, the ECM performs air-fuel ratio feedback control to maintain the air-fuel ratio at the stoichiometric level. In addition, active A/F ratio control is performed for approximately 10 seconds after preconditions are met in order to measure the A/F sensor response rate. During active A/F ratio control, the ECM forcibly increases and decreases the injection volume by a certain amount, based on the stoichiometric air-fuel ratio learned during normal air-fuel ratio control, and measures the A/F sensor response rate. The ECM receives a signal from the A/F sensor while performing active A/F ratio control and uses it to calculate the A/F sensor response rate deterioration level.
If the value for A/F sensor response rate deterioration level is less than the threshold, the ECM interprets this as a malfunction and sets the DTC.

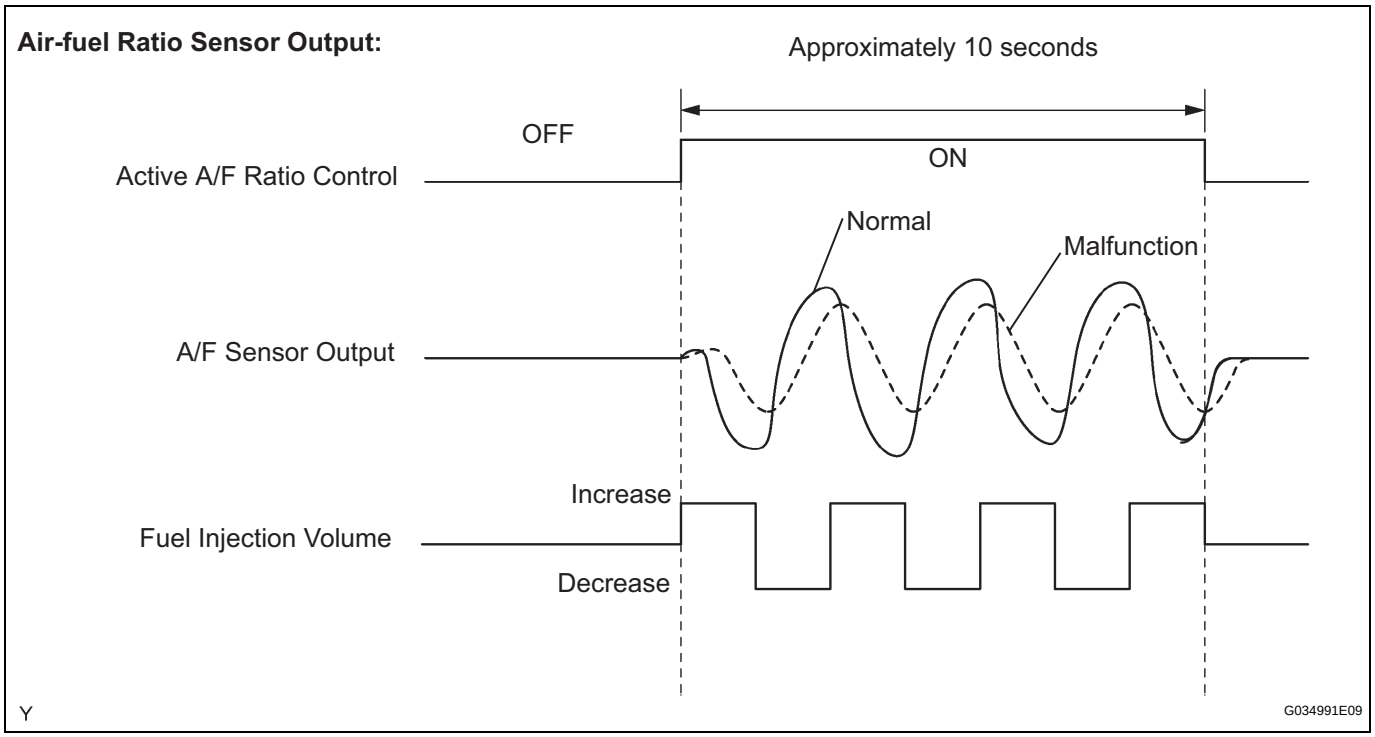

CONFIRMATION DRIVING PATTERN

HINT:

Performing this confirmation pattern will activate the A/F sensor response monitor.

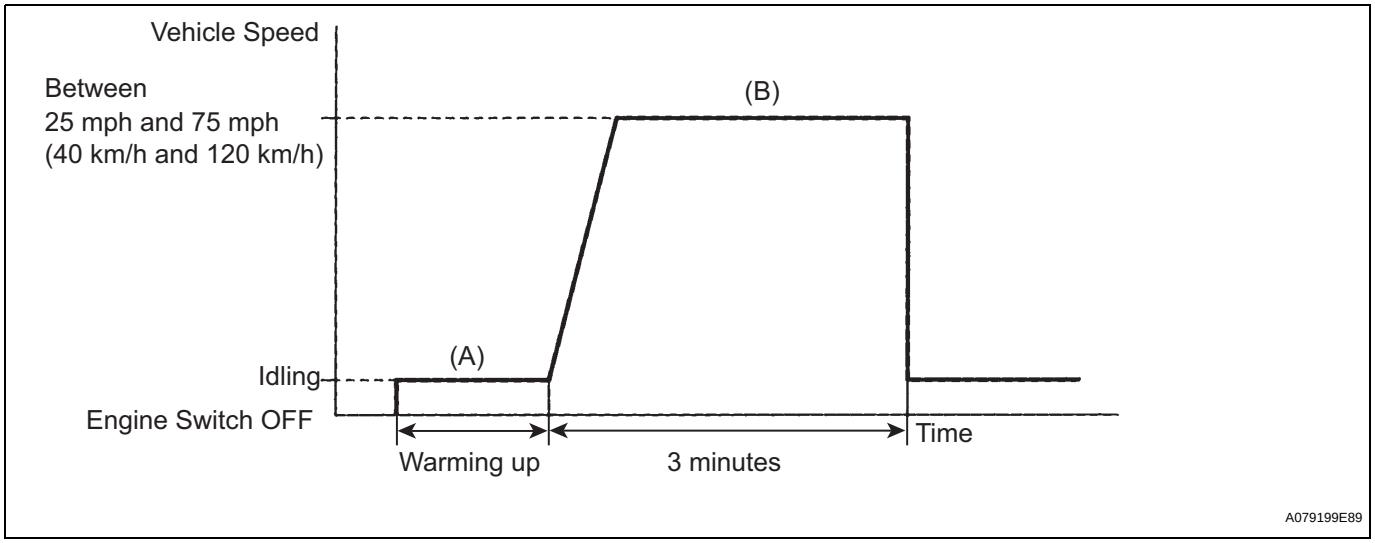

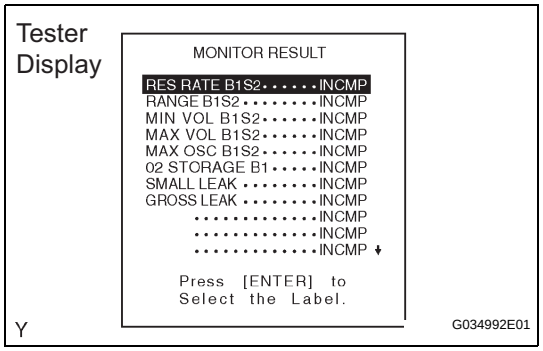

1. Connect an intelligent tester to the DLC3.

2. Turn the engine switch on (IG).
3. Turn the tester on.
4. Clear the DTCs (where set).
5. Select the following menu items: DIAGNOSIS / ENHANCED OBD II / MONITOR INFO / MONITOR RESULT.
6. Check that RES RATE B1S1 is INCOMP.
7. Start the engine and warm it up (Procedure "A").
8. Drive the vehicle at between 25 mph and 75 mph (40 km/h and 120 km/h) for 3 minutes. However, the vehicle should be driven at a constant speed (Procedure "B").
9. Check the monitor result values on the intelligent tester by selecting the following menu items: DIAGNOSIS / ENHANCED OBD II / MONITOR INFO / TEST RESULT.
10. If the values indicated on the tester do not change, perform READINESS MONITOR DRIVE PATTERN for the A/F sensor and the heated oxygen sensor (See page ES-341).
    HINT:
    Completion of all A/F sensor monitors is required to change the value in TEST RESULT.
11. Note the value of the Monitor Result.
12. Select the following menu items: DIAGNOSIS / ENHANCED OBD II / DTC INFO / PENDING CODES.
13. Check if any DTCs (any pending DTCs) are set.

MONITOR STRATEGY

Related DTCs	P2A00: A/F sensor (Bank 1) slow response P2A03: A/F sensor (Bank 2) slow response
Required Sensors/Components (Main)	A/F sensor
Required Sensors/Components (Related)	Vehicle speed sensor, Crankshaft position sensor
Frequency of Operation	Once per driving cycle
Duration	10 to 15 seconds
MIL Operation	2 driving cycles
Sequence of Operation	None

TYPICAL ENABLING CONDITIONS

Monitor runs whenever following DTCs are not present	P0031, P0032, P0051, P0052 (A/F sensor heater - Sensor 1) P0100 - P0103 (MAF meter) P0110 - P0113 (IAT sensor) P0115 - P0118 (ECT sensor) P0120 - P0223, P2135 (TP sensor) P0125 (Insufficient ECT for Closed Loop) P0171, P0172, P0173, P0174 (Fuel system) P0300 - P0308 (Misfire) P0335 (CKP sensor) P0340, P0341 (CMP sensor) P0500 (VSS) P2196, P2198 (A/F sensor - rationality)
Battery voltage	11 V or more
ECT	75°C (167°F) or more
Idle	OFF
Engine rpm	Less than 4,000 rpm
A/F sensor status	Activated
Fuel-cut	OFF
Engine load	10 to 70 %
Shift position	2 or more
Catalyst monitor	Not yet
MAF	2.5 to 15 g/sec.

TYPICAL MALFUNCTION THRESHOLDS

Response rate deterioration level	Less than 0.18 V

MONITOR RESULT

Refer to CHECKING MONITOR STATUS (See page ES-20).

WIRING DIAGRAM

Refer to DTC P2195 (See page ES-353).

INSPECTION PROCEDURE

HINT:
Intelligent tester only:
Malfunctioning areas can be identified by performing the A/F CONTROL function provided in the ACTIVE TEST. The A/F CONTROL function can help to determine whether the Air-fuel Ratio (A/F) sensor, Heated Oxygen (HO2) sensor and other potential trouble areas are malfunctioning.
The following instructions describe how to conduct the A/F CONTROL operation using the intelligent tester.

1. Connect the intelligent tester to the DLC3.
2. Start the engine and turn the tester on.
3. Warm up the engine at an engine speed of 2,500 rpm for approximately 90 seconds.
4. On the intelligent tester, enter the following menus: DIAGNOSIS / ENHANCED OBD II / ACTIVE TEST / A/F CONTROL.
5. Perform the A/F CONTROL operation with the engine in an idling condition (press the RIGHT or LEFT button to change the fuel injection volume).
6. Monitor the output voltages of the A/F and HO2 sensors (AFS B1 S1 and O2S B1 S2 or AFS B2 S1 and O2S B2 S2) displayed on the tester.

HINT:

- The A/F CONTROL operation lowers the fuel injection volume by 12.5 % or increases the injection volume by 25 %.
- Each sensor reacts in accordance with increases in the fuel injection volume.

Tester Display (Sensor)	Injection Volume	Status	Voltage
AFS B1 S1 or AFS B2 S1 (A/F)	+25 %	Rich	Less than 3.0 V
AFS B1 S1 or AFS B2 S1 (A/F)	-12.5 %	Lean	More than 3.35 V
O2S B1 S2 or O2S B2 S2 (HO2)	+25 %	Rich	More than 0.55 V
O2S B1 S2 or O2S B2 S2 (HO2)	-12.5 %	Lean	Less than 0.4 V

NOTICE:
The Air-Fuel Ratio (A/F) sensor has an output delay of a few seconds and the Heated Oxygen (HO2) sensor has a maximum output delay of approximately 20 seconds.

Case	A/F Sensor (Sensor 1) Output Voltage		HO2 Sensor (Sensor 2) Output Voltage		Main Suspected Trouble Areas
1	Injection Volume +25 % -12.5 %		Injection Volume +25 % -12.5 %		-
	Output Voltage More than 3.35 V Less than 3.0 V		Output Voltage More than 0.55 V Less than 0.4 V		

Case	A/F Sensor (Sensor 1) Output Voltage		HO2 Sensor (Sensor 2) Output Voltage		Main Suspected Trouble Areas
2	Injection Volume +25 % -12.5 %		Injection Volume +25 % -12.5 %		• A/F sensor • A/F sensor heater • A/F sensor circuit
	Output Voltage Almost no reaction	NG	Output Voltage More than 0.55 V Less than 0.4 V	OK	
3	Injection Volume +25 % -12.5 %		Injection Volume +25 % -12.5 %		• HO2 sensor • HO2 sensor heater • HO2 sensor circuit
	Output Voltage More than 3.35 V Less than 3.0 V	OK	Output Voltage Almost no reaction	NG	
4	Injection Volume +25 % -12.5 %		Injection Volume +25 % -12.5 %		• Injector • Fuel pressure • Gas leakage from exhaust system (Air-fuel ratio extremely lean or rich)
	Output Voltage Almost no reaction	NG	Output Voltage Almost no reaction	NG	

- Following the A/F CONTROL procedure enables technicians to check and graph the voltage outputs of both the A/F and HO2 sensors.
- To display the graph, enter the following menus: DIAGNOSIS / ENHANCED OBD II / ACTIVE TEST / A/F CONTROL / USER DATA / AFS B1 S1 and O2S B1 S2 or AFS B2 S1 and O2S B2 S2, and press the YES button and then the ENTER button followed by the F4 button.

HINT:

- DTC P2A00 or P2A03 may also be set, when the air-fuel ratio is stuck rich or lean.
- A low A/F sensor voltage could be caused by a rich air-fuel mixture. Check for conditions that would cause the engine to run rich.
- A high A/F sensor voltage could be caused by a lean air-fuel mixture. Check for conditions that would cause the engine to run lean.
- Read freeze frame data using the intelligent tester. The ECM records vehicle and driving condition information as freeze frame data the moment a DTC is stored. When troubleshooting, freeze frame data can be helpful in determining whether the vehicle was running or stopped, whether the engine was warmed up or not, whether the air-fuel ratio was lean or rich, as well as other data recorded at the time of a malfunction (See page ES-41).

1	CHECK ANY OTHER DTCS OUTPUT (IN ADDITION TO DTC P2A00 AND/OR P2A03)

(a) Connect the intelligent tester to the DLC3.
(b) Turn the engine switch on (IG).
(c) Turn the tester on.
(d) Enter the following menus: DIAGNOSIS / ENHANCED OBD II / DTC INFO / CURRENT CODES.
(e) Read the DTCs.

Result

Display (DTC Output)	Proceed to
P2A00 and/or P2A03	A
P2A00 and/or P2A03 and other DTCs	B

HINT:
If any DTCs other than P2A00 or P2A03 are output, troubleshoot those DTCs first.

B → **GO TO DTC CHART (See page ES-59)**

A

2 INSPECT AIR FUEL RATIO SENSOR (HEATER RESISTANCE)

Component Side:

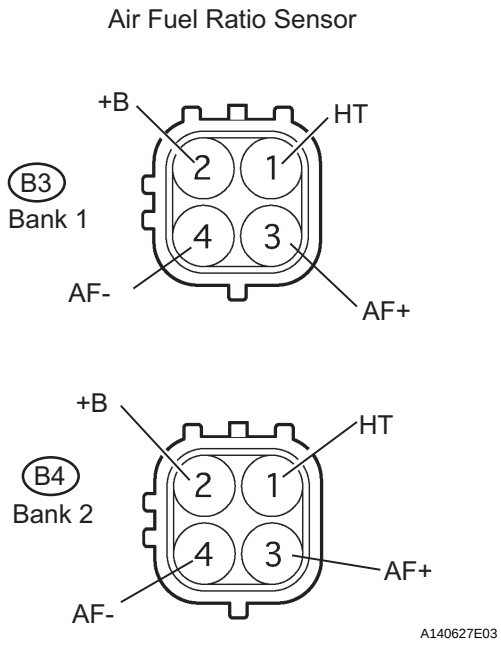

(a) Disconnect the B3 or B4 A/F sensor connector.
(b) Measure the resistance according to the value(s) in the table below.

Standard resistance (Bank 1 sensor 1)

Tester Connection	Condition	Specified Condition
HT (1) - +B (2)	20°C (68°F)	1.8 to 3.4 Ω
HT (1) - AF- (4)	-	10 kΩ or higher

Standard resistance (Bank 2 sensor 1)

Tester Connection	Condition	Specified Condition
HT (1) - +B (2)	20°C (68°F)	1.8 to 3.4 Ω
HT (1) - AF- (4)	-	10 kΩ or higher

(c) Reconnect the A/F sensor connector.

NG → **REPLACE AIR FUEL RATIO SENSOR (See page EC-19)**

OK

ES

ES

3	CHECK HARNESS AND CONNECTOR (A/F SENSOR - ECM)

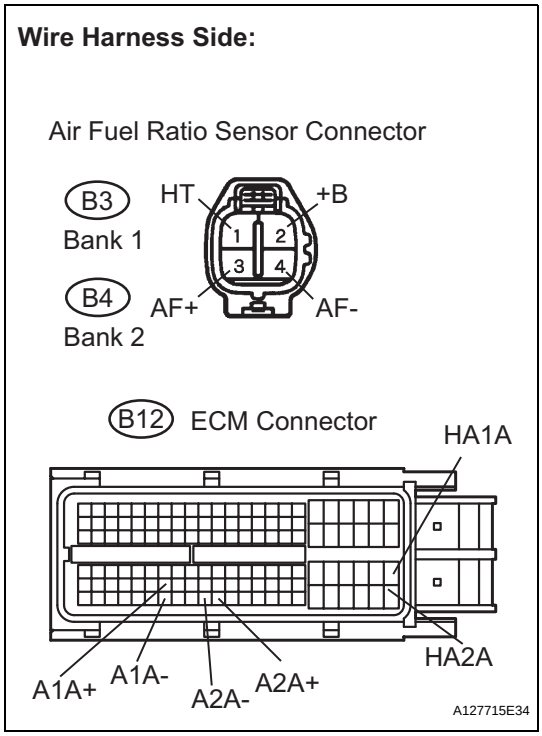

(a) Disconnect the B3 and B4 A/F sensor connectors.
(b) Turn the engine switch on (IG).
(c) Measure the voltage according to the value(s) in the table below.

Standard voltage

Tester Connection	Specified Condition
+B (B3-2) - Body ground	9 to 14 V
+B (B4-2) - Body ground	9 to 14 V

(d) Turn the engine switch off.
(e) Disconnect the B12 ECM connector.
(f) Measure the resistance according to the value(s) in the table below.

Standard resistance (Check for open)

Tester Connection	Specified Condition
HT (B3-1) - HA1A (B12-86)	Below 1 Ω
AF+ (B3-3) - A1A+ (B12-93)	Below 1 Ω
AF- (B3-4) - A1A- (B12-116)	Below 1 Ω
HT (B4-1) - HA2A (B12-109)	Below 1 Ω
AF+ (B4-3) - A2A+ (B12-120)	Below 1 Ω
AF- (B4-4) - A2A- (B12-119)	Below 1 Ω

Standard resistance (Check for short)

Tester Connection	Specified Condition
HT (B3-1) or HA1A (B12-86) - Body ground	10 kΩ or higher
AF+ (B3-3) or A1A+ (B12-93) - Body ground	10 kΩ or higher
AF- (B3-4) or A1A- (B12-116) - Body ground	10 kΩ or higher
HT (B4-1) or HA2A (B12-109) - Body ground	10 kΩ or higher
AF+ (B4-3) or A2A+ (B12-120) - Body ground	10 kΩ or higher
AF- (B4-4) or A2A- (B12-119) - Body ground	10 kΩ or higher

(g) Reconnect the ECM connector.
(h) Reconnect the A/F sensor connectors.

NG → **REPAIR OR REPLACE HARNESS OR CONNECTOR**

OK

4	PERFORM CONFIRMATION DRIVING PATTERN

NEXT

5	CHECK WHETHER DTC OUTPUT RECURS (DTC P2A00 AND/OR P2A03)

(a) Read the DTCs using the intelligent tester.
(b) Enter the following menus: DIAGNOSIS / ENHANCED OBD II / DTC INFO / CURRENT CODES.

Result

Display (DTC Output)	Proceed to
P2A00 and/or P2A03	A
No output	B

B → **REPLACE ECM (See page ES-543)**

A

6 REPLACE AIR FUEL RATIO SENSOR

(a) Replace the air fuel ratio sensor (See page EC-19).

NEXT

7 PERFORM CONFIRMATION DRIVING PATTERN

NEXT

8 CHECK WHETHER DTC OUTPUT RECURS (DTC P2A00 AND/OR P2A03)

(a) Read the DTCs using the intelligent tester.
(b) Enter the following menus: DIAGNOSIS / ENHANCED OBD II / DTC INFO / CURRENT CODES.

Result

Display (DTC Output)	Proceed to
No output	A
P2A00 and/or P2A03	B

B → **REPLACE ECM (See page ES-543)**

A

END

DTC	U0101	Lost Communication with TCM

DESCRIPTION

The Transmission Control Module (TCM) and ECM perform 2-way communications with each other via the Controller Area Network (CAN). The TCM sends signals to the ECM concerning required engine rpm, required engine torques, warning indicators in the combination meter, DTCs and other data. The ECM sends signals to the TCM concerning engine rpm, opening angles of the throttle valve, temperature of intake air, temperature of engine coolant, engine torques and other data. If the TCM cannot communicate with the ECM, the TCM will conclude that there is a malfunction in the CAN system, illuminate the MIL and set a DTC.

DTC No.	DTC Detection Condition	Trouble Area
U0101	No communication from TCM	• Open or short in TCM and ECM circuit • TCM • ECM

MONITOR STRATEGY

Related DTCs	U0101: Verify communication
Required Sensors/Components (Main)	ECM
Required Sensors/Components (Sub)	-
Frequency of Operation	Continuous
Duration	1.25 seconds
MIL Operation	immediate
Sequence of Operation	None

TYPICAL ENABLING CONDITIONS

Monitor runs whenever following DTCs are not present	None
Battery Voltage	10.5 V or more (0.5 second or more)
Engine switch	ON
Starter	OFF

TYPICAL MALFUNCTION THRESHOLDS

Communication signal	Lost communication with TCM

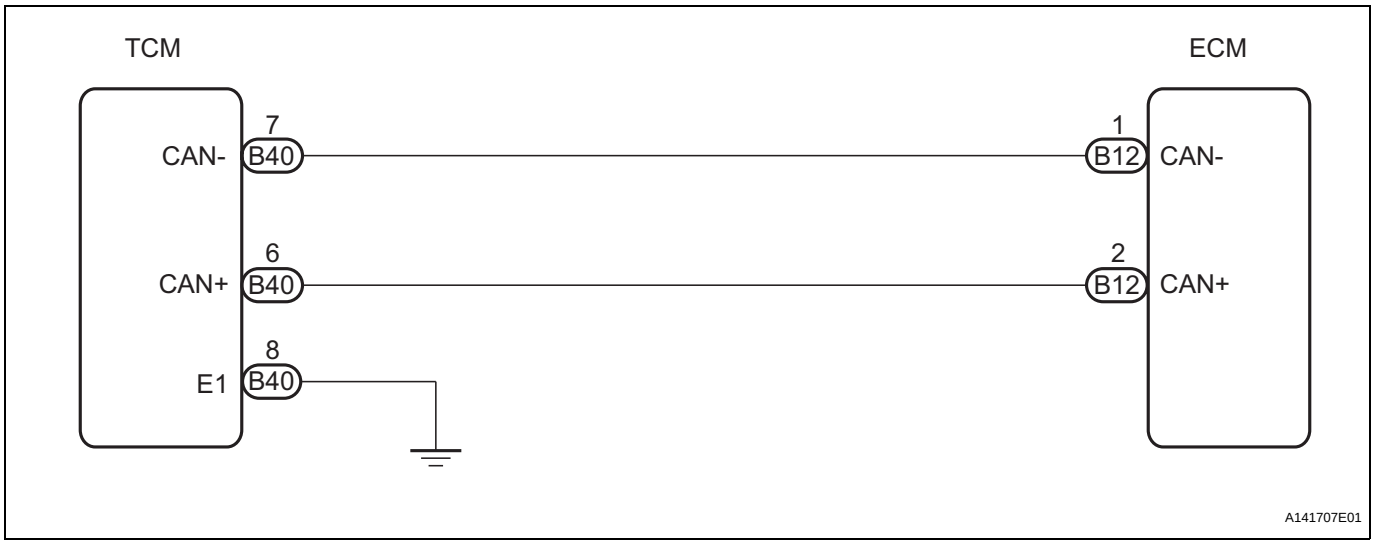

INSPECTION PROCEDURE

1	CHECK OTHER DTC OUTPUT (IN ADDITION TO DTC U0101)

(a) Connect the intelligent tester to the DLC3.
(b) Turn the engine switch on (IG).
(c) Turn the tester on.
(d) Enter the following menus: DIAGNOSIS / ENHANCED OBD II / DTC INFO / CURRENT CODES.
(e) Read the DTCs.

Result

Display (DTC output)	Proceed to
U0101	A
U0101 and other DTCs	B

ES

B → **GO TO DTC CHART (See page ES-59)**

A

2	CHECK TCM TERMINAL VOLTAGE (+B AND E1 TERMINALS)

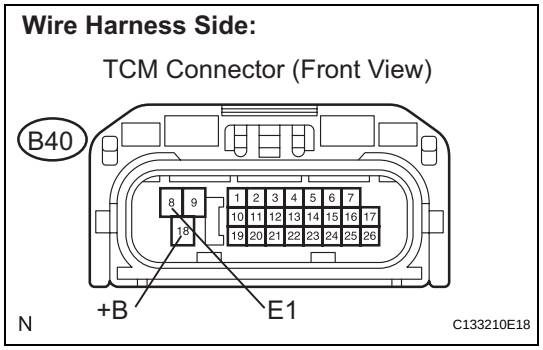

(a) Disconnect the TCM connector.
(b) Turn the engine switch on (IG).
(c) Measure the voltage according to the value(s) in the table below.

Standard voltage

Tester Connection	Specified Condition
B40-18 (+B) - B40-8 (E1)	9 to 14 V

(d) Turn the engine switch off.
(e) Measure the resistance according to the value(s) in the table below.

Standard resistance

Tester Connection	Specified Condition
B40-8 (E1) - Body ground	Below 1 Ω

NG → **REPAIR OR REPLACE HARNESS OR CONNECTOR**

OK

ES

3 CHECK HARNESS AND CONNECTOR

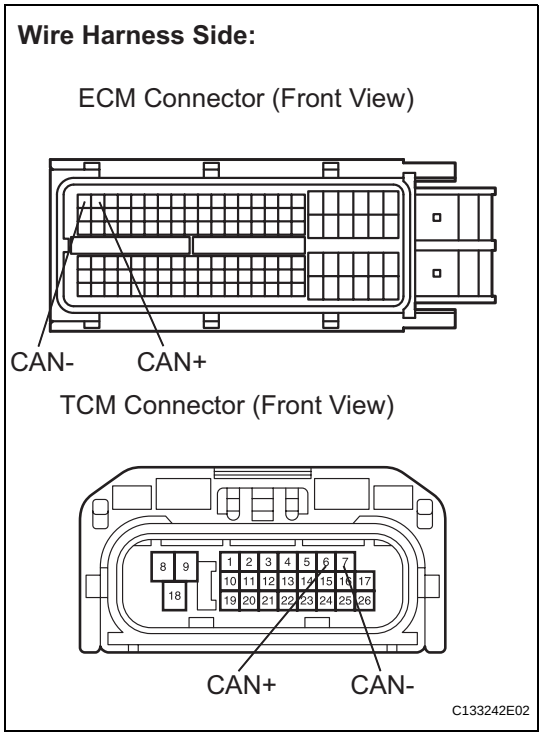

(a) Disconnect the B40 TCM connector.
(b) Disconnect the B12 ECM connector.
(c) Measure the resistance according to the value(s) in the table below.

Standard resistance

Tester Connection	Specified Condition
B40-6 (CAN+) - B12-2 (CAN+)	Below 1 Ω
B40-7 (CAN-) - B12-1 (CAN-)	Below 1 Ω
B40-6 (CAN+) or B12-2 (CAN+) - Body ground	1 MΩ or more
B40-7 (CAN-) or B12-1 (CAN-) - Body ground	1 MΩ or more

NG → **REPAIR OR REPLACE HARNESS OR CONNECTOR**

OK

4 REPLACE ECM

(a) Replace the ECM (See page ES-543).
NOTICE:
Replace the ECM with an ECM from a normally functioning vehicle of the same model.

NEXT

5 CHECK IF DTC RECURS

(a) Connect the intelligent tester to the DLC3.
(b) Clear the DTC.
(c) Start the engine.
(d) Read the DTCs.

Result

Display (DTC Output)	Proceed to
U0101	A
No DTC	B

B → **REPLACE ECM (See page ES-543)**

A

REPLACE TCM (See page ES-543)

EVAP System

RELATED DTCS

DTCs	Monitoring Items	See page
P043E	Reference orifice clogged (built into canister pump module)	ES-251
P043F	Reference orifice high-flow (built into canister pump module)	
P0441	• Purge VSV (Vacuum Switching Valve) stuck closed • Purge VSV stuck open • Purge flow	ES-256
P0450	Canister pressure sensor (built into canister pump module) voltage abnormal fluctuation	ES-263
P0451	• Canister pressure sensor (built into canister pump module) noise • Canister pressure sensor (built into canister pump module) signal becomes fixed/flat	
P0452	Canister pressure sensor (built into canister pump module) voltage low	
P0453	Canister pressure sensor (built into canister pump module) voltage high	
P0455	EVAP gross leak	ES-270
P0456	EVAP small leak	
P2401	Leak detection pump stuck OFF (built into canister pump module)	ES-251
P2402	Leak detection pump stuck ON (built into canister pump module)	
P2419	Vent valve stuck closed (built into canister pump module)	ES-251
P2420	Vent valve stuck open (vent) (built into canister pump module)	ES-375
P2610	Soak timer (built into ECM)	ES-379

If any EVAP system DTCs are set, the malfunctioning area can be determined using the table below.

Malfunctioning Areas \ DTCs	P043E P043F	P0441	P0450	P0451	P0452	P0453	P0455	P0456	P2401 P2402	P2419	P2420
Reference orifice clogged	●								●	●	
Reference orifice high-flow	●								●	●	
Purge VSV stuck open		●					●				
Purge VSV stuck closed		●									
Canister pressure sensor fixed output				●							
Canister pressure sensor noise				●							
Canister pressure sensor low output			●		●						
Canister pressure sensor high output			●			●					
Gross leak		●					●				
Small leak								●			
Leak detection pump stuck OFF	●								●	●	
Leak detection pump stuck ON	●								●	●	
Vent valve stuck closed	●								●	●	
Vent valve stuck open (vent)											●

Y

A106731E11

NOTICE:
If the reference pressure difference between the first and second checks is greater than the specification, all the DTCs relating to the reference pressure (P043E, P043F, P2401, P2402 and P2419) are stored.

ES

DESCRIPTION

Location of EVAP (Evaporative Emission) System:

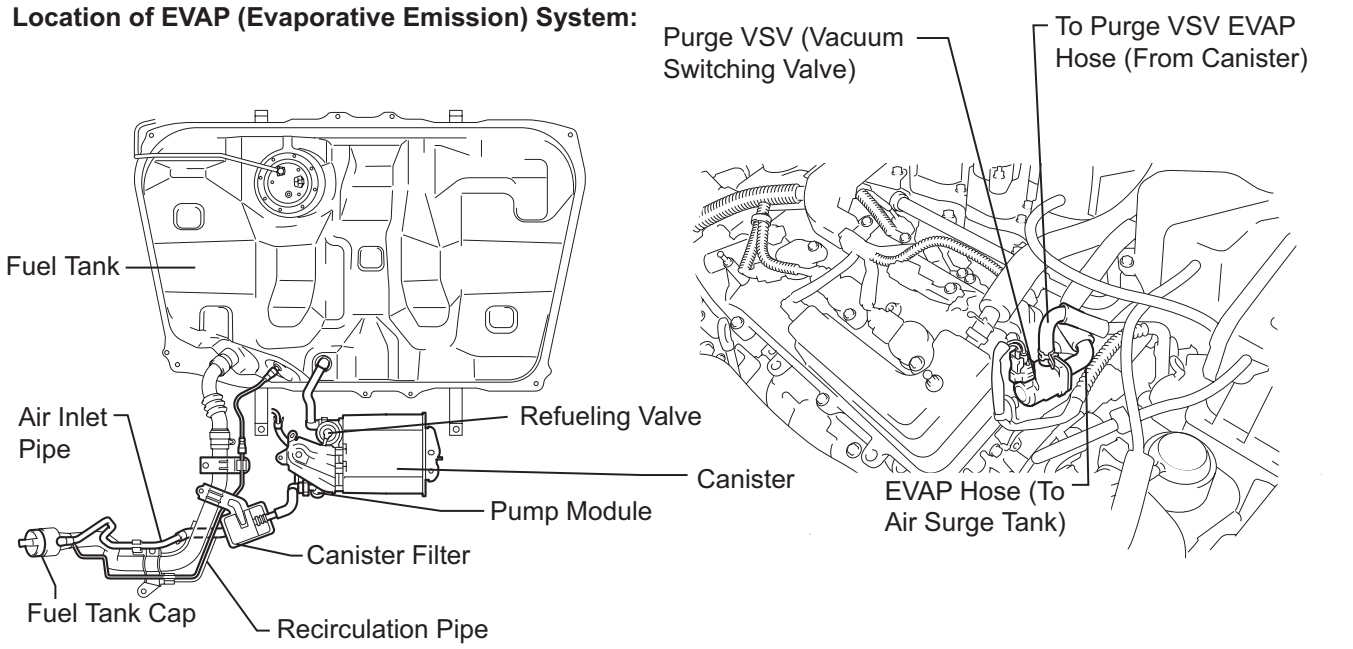

EVAP System Circuit:

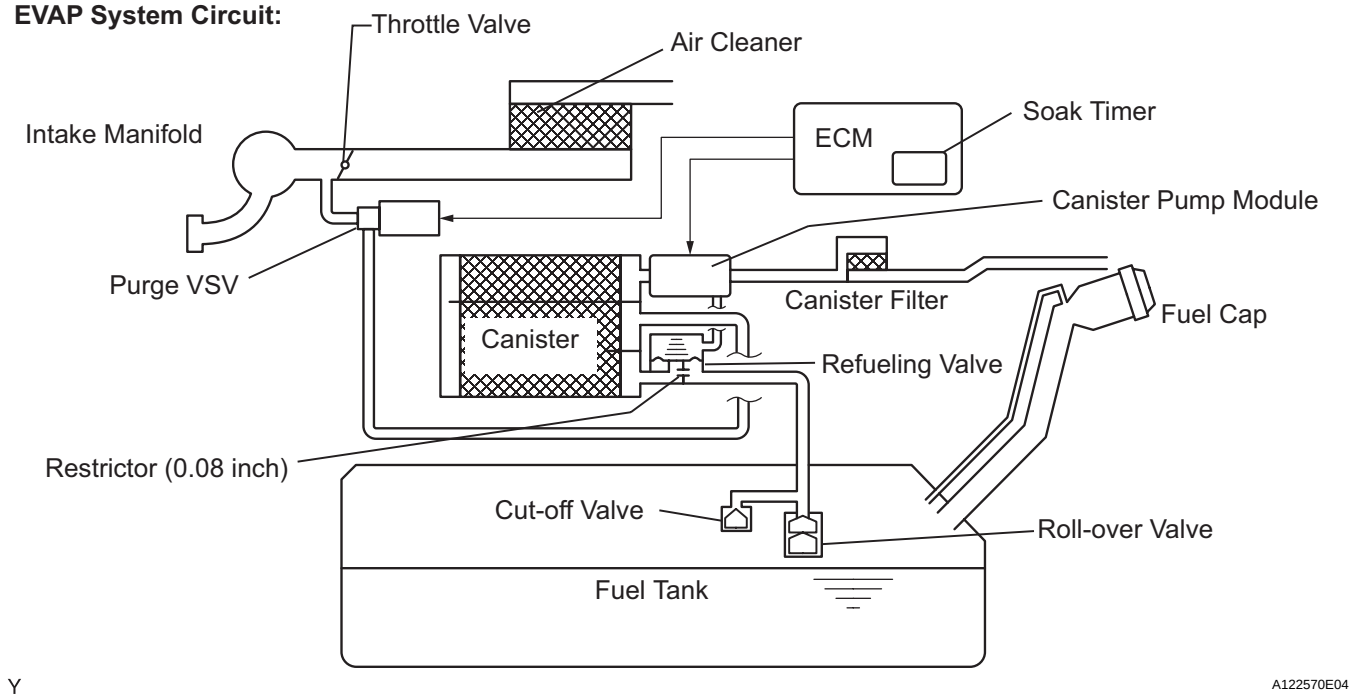

NOTICE:

In this vehicle's EVAP system, turning ON the vent valve does not seal off the EVAP system. To check for leaks in the EVAP system, disconnect the air inlet vent hose and apply pressure from the atmospheric side of the canister.

While the engine is running, if a predetermined condition (closed-loop, etc.) is met, the purge VSV is opened by the ECM and fuel vapors stored in the canister are purged into the intake manifold. The ECM changes the duty cycle ratio of the purge VSV to control purge flow volume.

The purge flow volume is also determined by the intake manifold pressure. Atmospheric pressure is allowed into the canister through the vent valve to ensure that the purge flow is maintained when negative pressure (vacuum) is applied to the canister.

The following two monitors run to confirm the appropriate EVAP system operation.

1. Key-off monitor

This monitor checks for EVAP (Evaporative Emission) system leaks and canister pump module malfunctions. The monitor starts 5 hours* after the engine switch is turned off. At least 5 hours are required for the fuel to cool down to stabilize the EVAP pressure, thus making the EVAP system monitor more accurate.

The leak detection pump creates negative pressure (vacuum) in the EVAP system and the pressure is measured. Finally, the ECM monitors for leaks from the EVAP system, and malfunctions in both the canister pump module and purge VSV, based on the EVAP pressure.

HINT:

*: If the engine coolant temperature is not below 35°C (95°F) 5 hours after the engine switch is turned off, the monitor check starts 2 hours later. If it is still not below 35°C (95°F) 7 hours after the engine switch is turned off, the monitor check starts 2.5 hours later.

2. Purge flow monitor

The purge flow monitor consists of the two monitors. The 1st monitor is conducted every time and the 2nd monitor is activated if necessary.

- The 1st monitor
  While the engine is running and the purge VSV (Vacuum Switching Valve) is ON (open), the ECM monitors the purge flow by measuring the EVAP pressure change. If negative pressure is not created, the ECM begins the 2nd monitor.
- The 2nd monitor
  The vent valve is turned OFF (open) and the EVAP pressure is measured. If the variation in the pressure is less than 0.5 kPa-g (3.75 mmHg-g), the ECM interprets this as the purge VSV being stuck closed, and illuminates the MIL and sets DTC P0441 (2 trip detection logic).

Atmospheric pressure check:

In order to ensure reliable malfunction detection, the variation between the atmospheric pressures, before and after conduction of the purge flow monitor, is measured by the ECM.

EVAP Purge Flow:

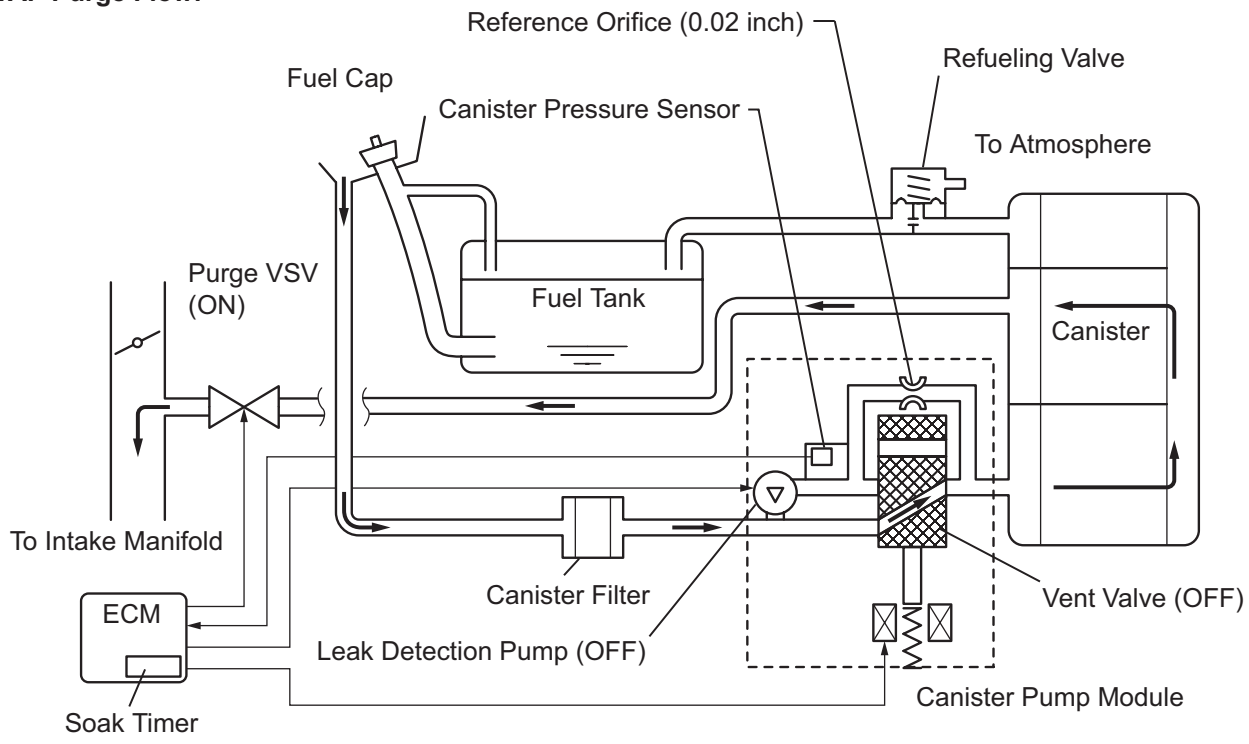

Y

A122571E07

ES

Components	Operations
Canister	Contains activated charcoal to absorb EVAP (Evaporative Emissions) generated in fuel tank.
Cut-off valve	Located in fuel tank. Valve floats and closes when fuel tank is 100 % full.
Purge VSV (Vacuum Switching Valve)	Opens or closes line between canister and intake manifold. ECM uses purge VSV to control EVAP purge flow. In order to discharge EVAP absorbed by canister to intake manifold, ECM opens purge VSV. EVAP discharge volume to intake manifold is controlled by purge VSV duty cycle ratio (current-carrying time) (Open: ON; Closed: OFF).
Refueling valve	Controls EVAP pressure from fuel tank to canister. Valve consists of diaphragm, spring and restrictor (diameter: 0.08 inch). When fuel vapor and pressure inside fuel tank increase, valve opens. While EVAP is purged, valve closes and restrictor prevents large amount of vacuum from affecting pressure in fuel tank. Valve is opened while refueling.
Roll-over valve	Located in fuel tank. Valve is closed by its own weight when vehicle overturns to prevent fuel from spilling out.
Soak timer	Built into ECM. To ensure accurate EVAP monitor, measures 5 hours (+-15 min) after engine switch is turned off. This allows fuel to cool down, stabilizing EVAP pressure. When approximately 5 hours have elapsed, ECM is activated (refer to fig. 3).
Canister pump module	Consists of (a) to (d) below. Canister pump module cannot be disassembled.
(a) Vent valve	Vents and closes EVAP system. When ECM turns valve ON, EVAP system is closed. When ECM turns valve off, EVAP system is vented. Negative pressure (vacuum) is created in EVAP system to check for EVAP leaks by closing purge VSV, turning on vent valve (closed) and operating leak detection pump (refer to fig. 1).
(b) Canister pressure sensor	Indicates pressure as voltages. ECM supplies regulated 5 V to canister pressure sensor, and uses feedback from sensor to monitor EVAP system pressure (refer to fig. 2).
(c) Leak detection pump	Creates negative pressure (vacuum) in EVAP system for leak check.
(d) Reference orifice	Has opening with 0.02 inch diameter. Vacuum is produced through orifice by closing purge VSV, turning off vent valve and operating leak detection pump, to monitor reference pressure. Reference pressure indicates small leak of EVAP.

Canister Pump Module (fig. 1):

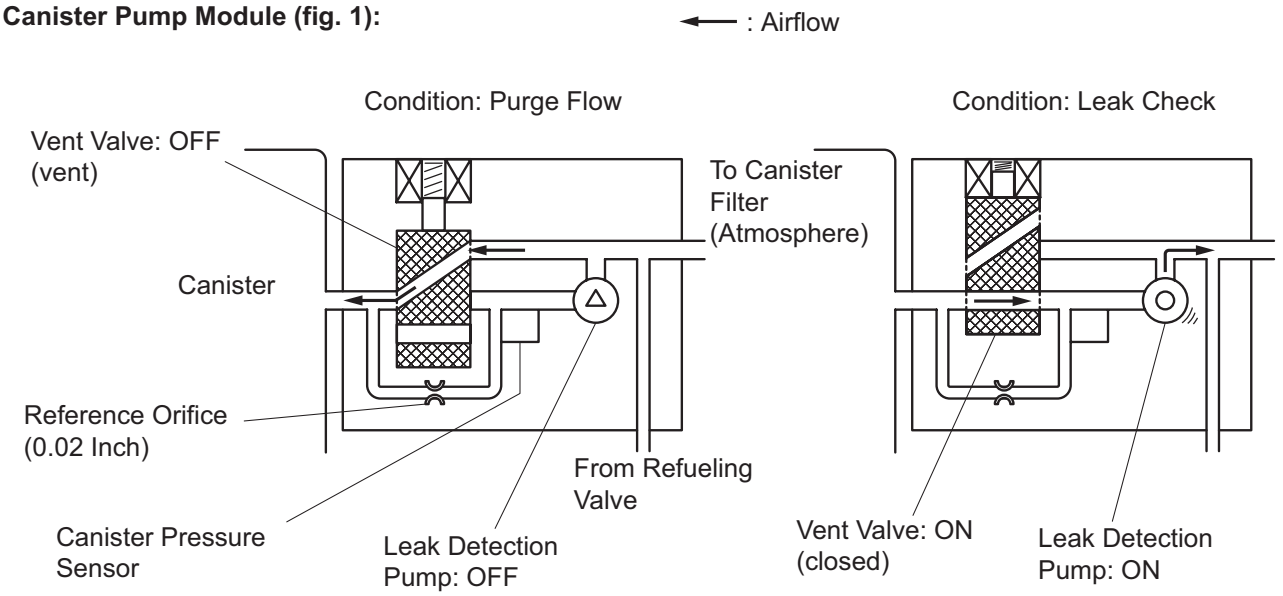

Y

A115902E02

Canister Pressure Sensor Specification (fig. 2):

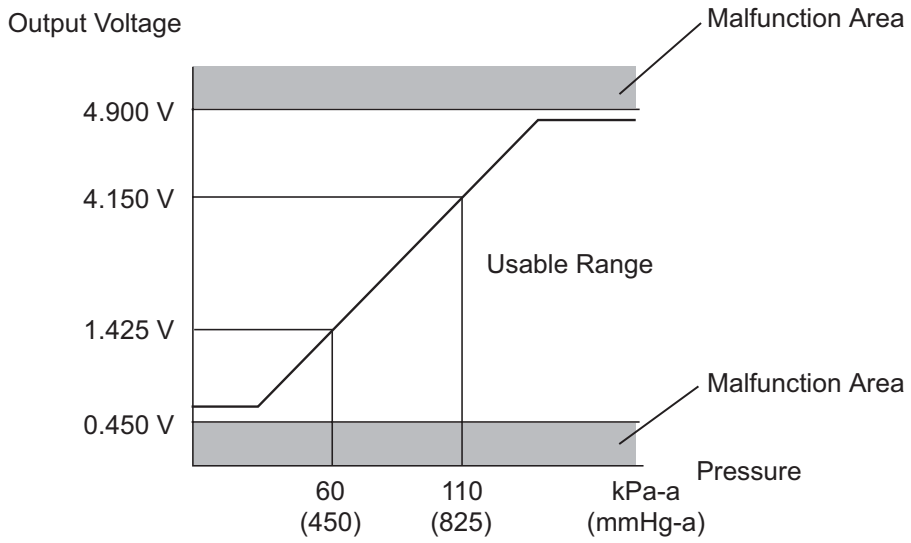

HINT:

Standard atmospheric pressure is 101.3 kPa-a (760 mmHg-a)

A115543E06

Soak Timer Circuit (fig. 3):

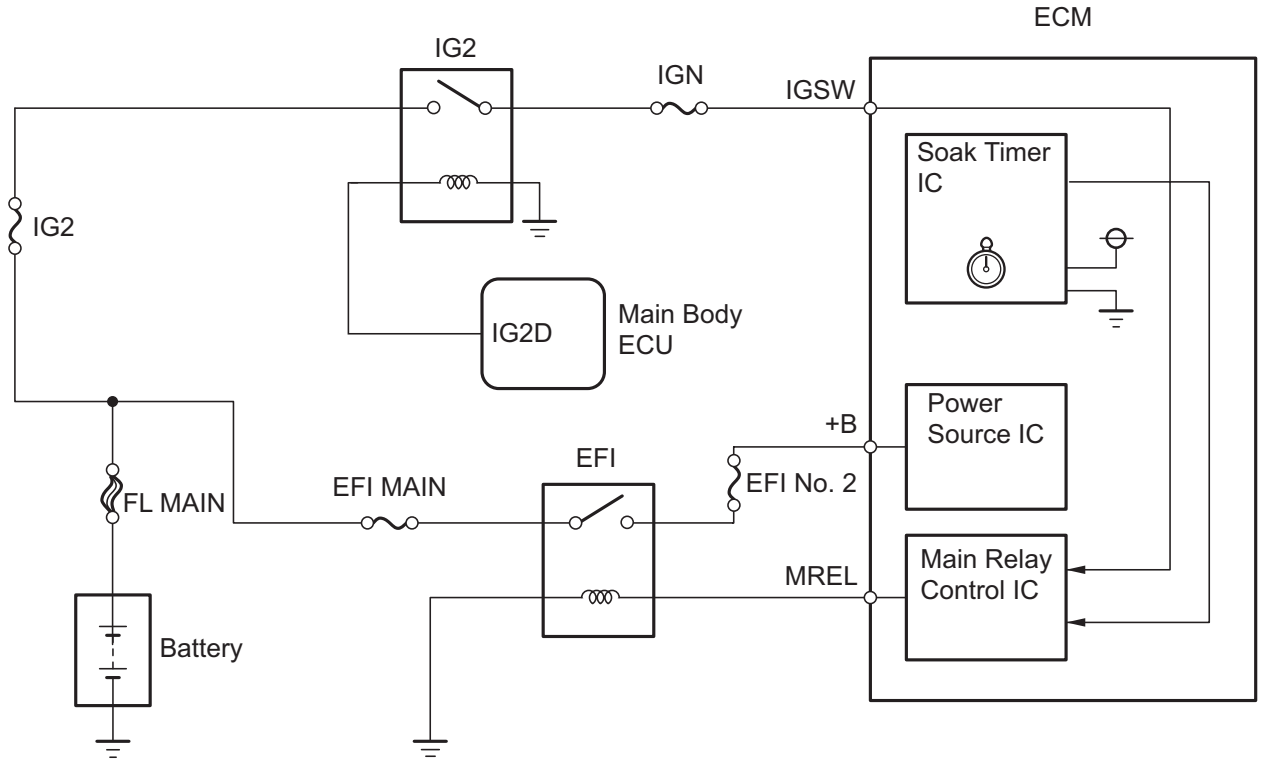

A141702E01

ES

ES

WIRING DIAGRAM

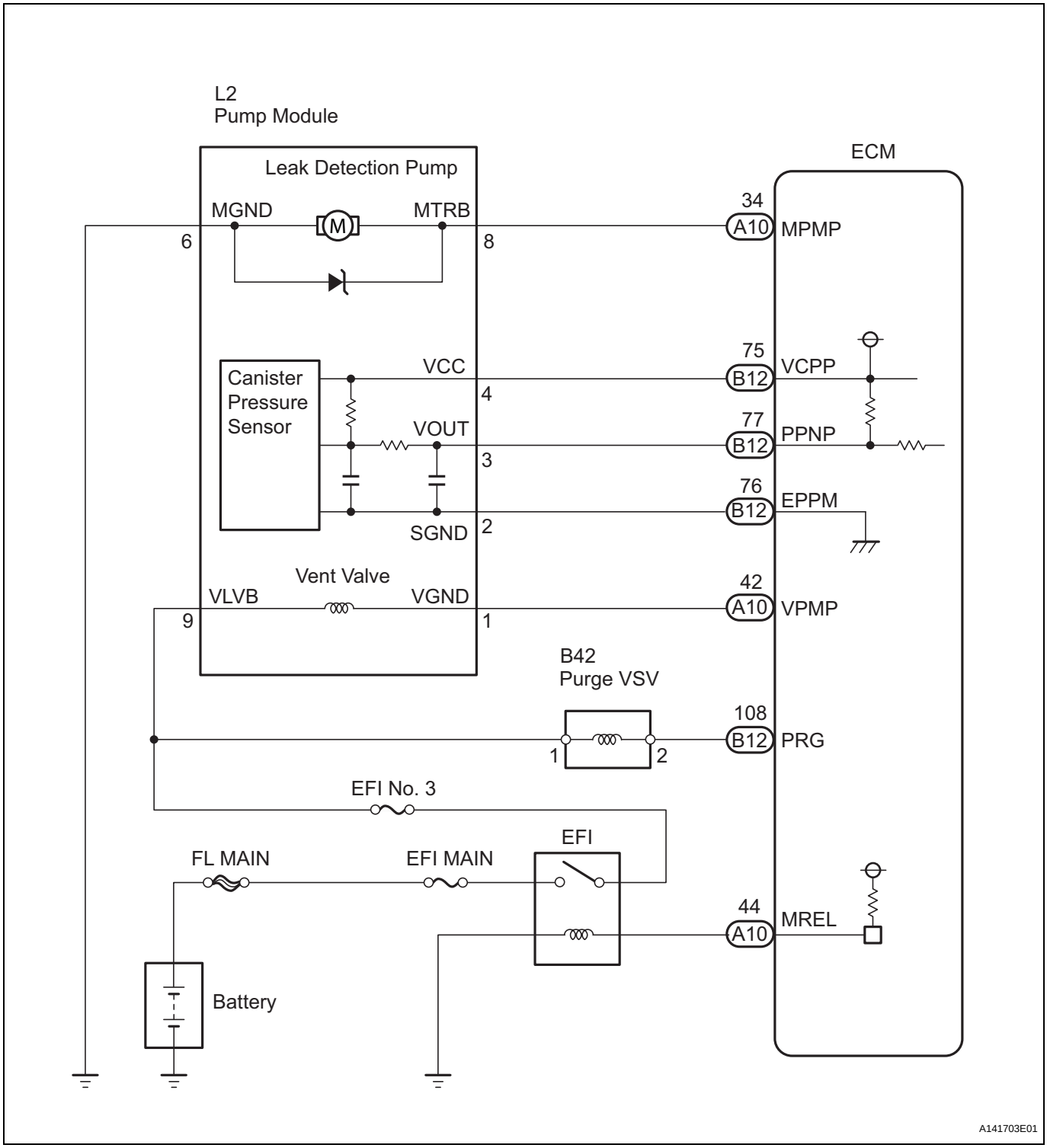

INSPECTION PROCEDURE

NOTICE:

The intelligent tester is required to conduct the following diagnostic troubleshooting procedure.

HINT:

- Using intelligent tester monitor results enables the EVAP (Evaporative Emission) system to be confirmed.

- Read freeze frame data using the intelligent tester. The ECM records vehicle and driving condition information as freeze frame data the moment a DTC is stored. When troubleshooting, freeze frame data can be helpful in determining whether the vehicle was running or stopped, whether the engine was warmed up or not, whether the air-fuel ratio was lean or rich, as well as other data recorded at the time of a malfunction (See page ES-41).

1	CONFIRM DTC

(a) Turn the engine switch off and wait for 10 seconds.
(b) Turn the engine switch on (IG).
(c) Turn the engine switch off and wait for 10 seconds.
(d) Connect an intelligent tester to the DLC3.
(e) Turn the engine switch on (IG) and turn the tester ON.
(f) Select the following menu items: DIAGNOSIS / ENHANCED OBD II / DTC INFO / CURRENT CODES.
(g) Confirm DTCs and freeze frame data.
If any EVAP system DTCs are set, the malfunctioning area can be determined using the table below.
NOTICE:
If the reference pressure difference between the first and second checks is greater than the specification, all the DTCs relating to the reference pressure (P043E, P043F, P2401, P2402 and P2419) are stored.

ES

Malfunctioning Areas \ DTCs	P043E P043F	P0441	P0450	P0451	P0452	P0453	P0455	P0456	P2401 P2402	P2419	P2420
Reference orifice clogged	●								●	●	
Reference orifice high-flow	●								●	●	
Purge VSV stuck open		●					●				
Purge VSV stuck closed		●									
Canister pressure sensor fixed output				●							
Canister pressure sensor noise				●							
Canister pressure sensor low output			●		●						
Canister pressure sensor high output			●			●					
Gross leak		●					●				
Small leak								●			
Leak detection pump stuck OFF	●								●	●	
Leak detection pump stuck ON	●								●	●	
Vent valve stuck closed	●								●	●	
Vent valve stuck open (vent)											●

Y A106731E11

NEXT

2	PERFORM EVAP SYSTEM CHECK (AUTO OPERATION)

NOTICE:

- **The EVAP SYSTEM CHECK (AUTO OPERATION) consists of 5 steps performed automatically by the intelligent tester. It takes a maximum of approximately 18 minutes.**
- **Do not perform the EVAP SYSTEM CHECK when the fuel tank is more than 90% full because the cut-off valve may be closed, making the fuel tank leak check unavailable.**
- **Do not run the engine during this operation.**
- **When the temperature of the fuel is 35°C (95°F) or more, a large amount of vapor forms and any check results become inaccurate. When performing the EVAP SYSTEM CHECK, keep the temperature below 35°C (95°F).**

(a) Clear the DTCs (See page ES-41).

(b) On the tester, select the following menu items: DIAGNOSIS / ENHANCED OBD II / SYSTEM CHECK / EVAP SYS CHECK / AUTO OPERATION.

(c) After the EVAP SYSTEM CHECK is completed, check for pending DTCs by selecting the following menu items: DIAGNOSIS / ENHANCED OBD II / DTC INFO / PENDING CODES.
HINT:
If no pending DTCs are displayed, perform the MONITOR CONFIRMATION (see "Diagnostic Help" menu). After this confirmation, check for pending DTCs. If no DTCs are displayed, the EVAP system is normal.

NEXT

ES

3	PERFORM EVAP SYSTEM CHECK (MANUAL OPERATION)

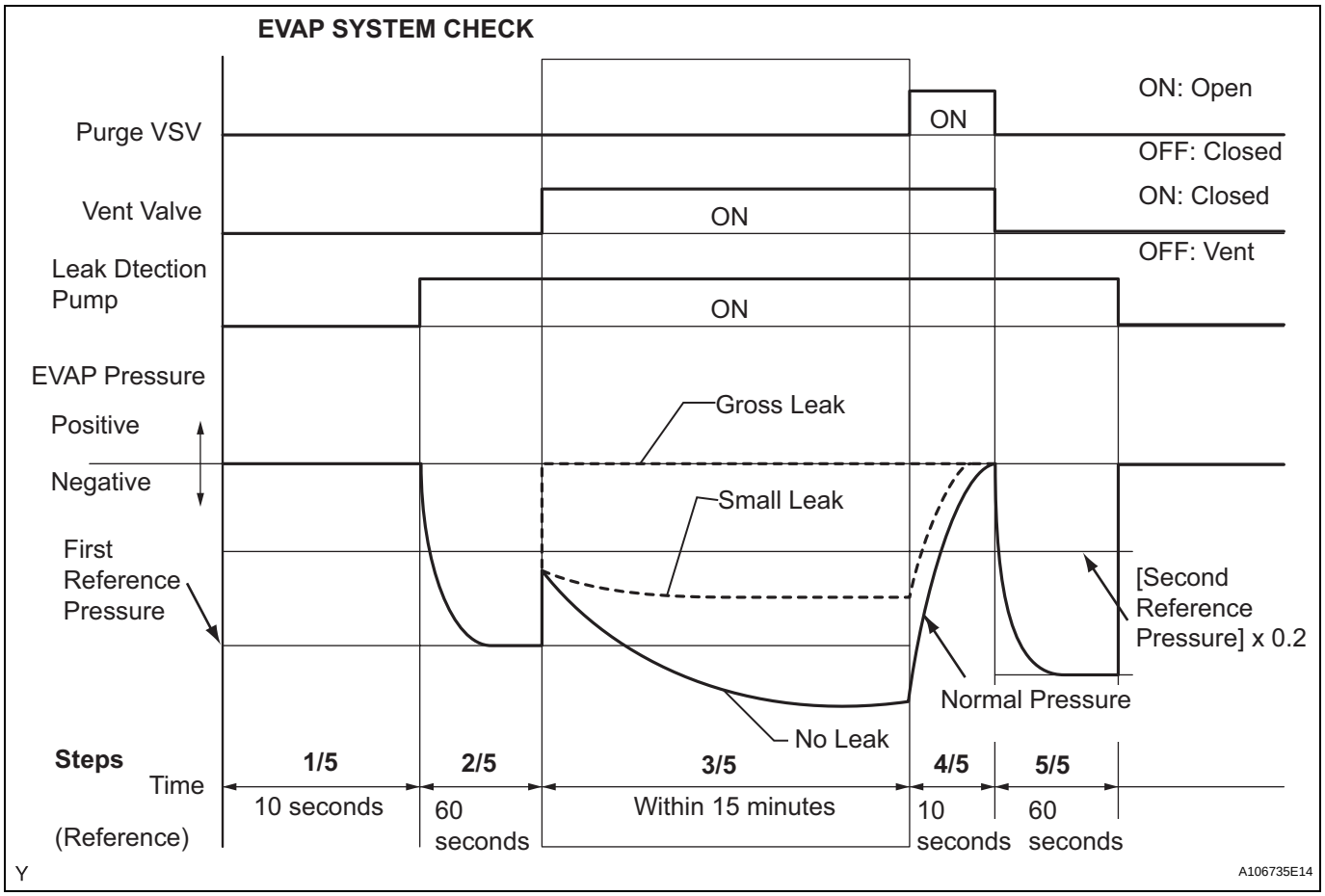

NOTICE:

- **In the EVAP SYSTEM CHECK (MANUAL OPERATION), perform the series of 5 EVAP SYSTEM CHECK steps manually using the intelligent tester.**
- **Do not perform the EVAP SYSTEM CHECK when the fuel tank is more than 90% full because the cut-off valve may be closed, making the fuel tank leak check unavailable.**
- **Do not run the engine during this operation.**

- **When the temperature of the fuel is 35°C (95°F) or more, a large amount of vapor forms and any check results become inaccurate. When performing the EVAP SYSTEM CHECK, keep the temperature below 35°C (95°F).**

(a) Clear the DTCs (See page ES-41).
(b) Select the following menu items: DIAGNOSIS / ENHANCED OBD II / SYSTEM CHECK / EVAP SYS CHECK / MANUAL OPERATION.

NEXT

ES

4	PERFORM EVAP SYSTEM CHECK (STEP 1/5)

(a) Check the EVAP pressure in step 1/5.

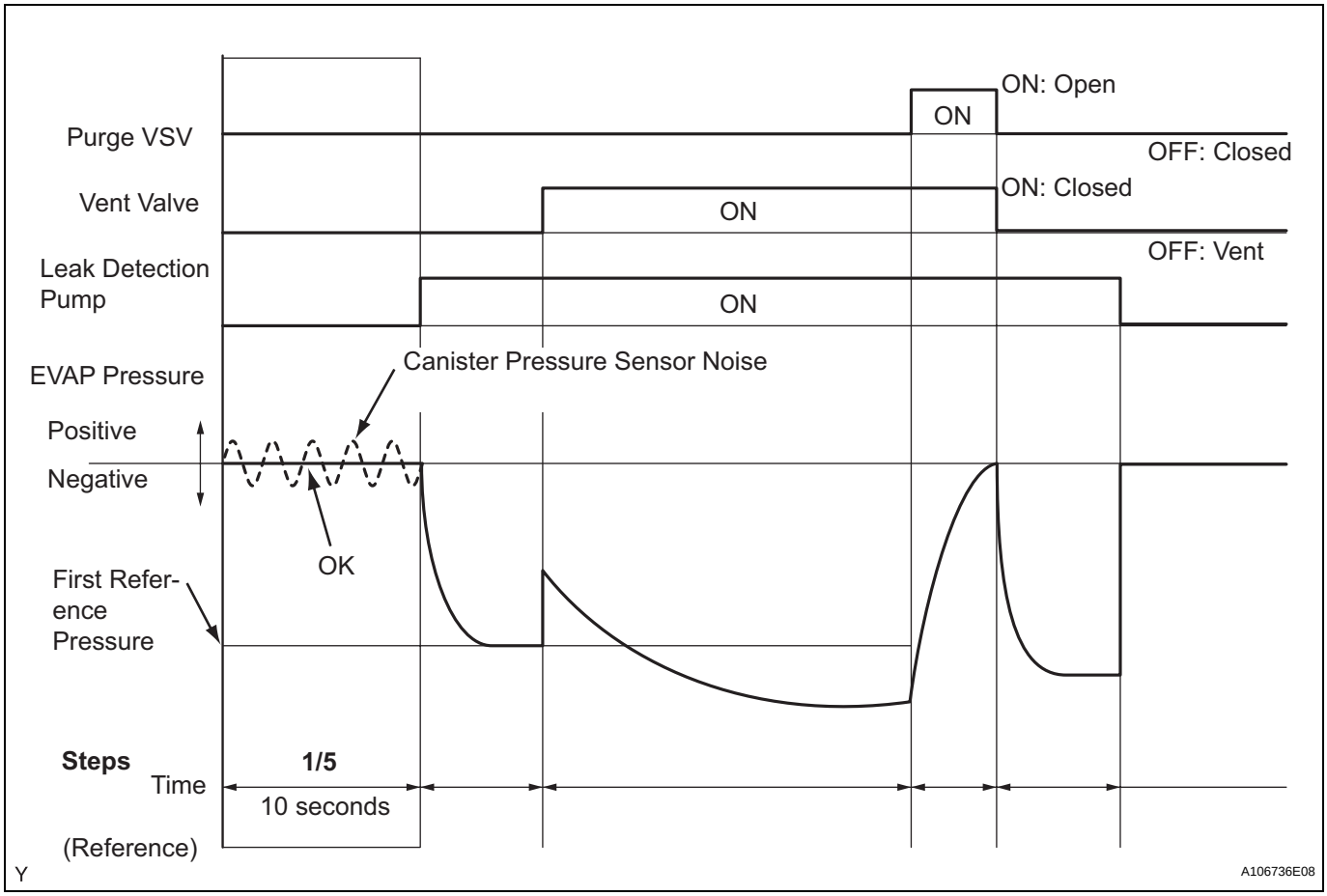

Result

DTCs*	Test Results	Suspected Trouble Areas	Proceed to
-	Virtually no variation in EVAP pressure	Not yet determined	A
P0451	EVAP pressure fluctuates by +-0.3 kPa-g (2.25 mmHg-g) or more	Canister pressure sensor noise	B

*: These DTCs are already present in the ECM when the vehicle arrives and are confirmed in the "CONFIRM DTC" procedures above.

B → **Go to step 29**

A

5	PERFORM EVAP SYSTEM CHECK (STEP 1/5 TO 2/5)

(a) Check the EVAP pressure in steps 1/5 and 2/5.

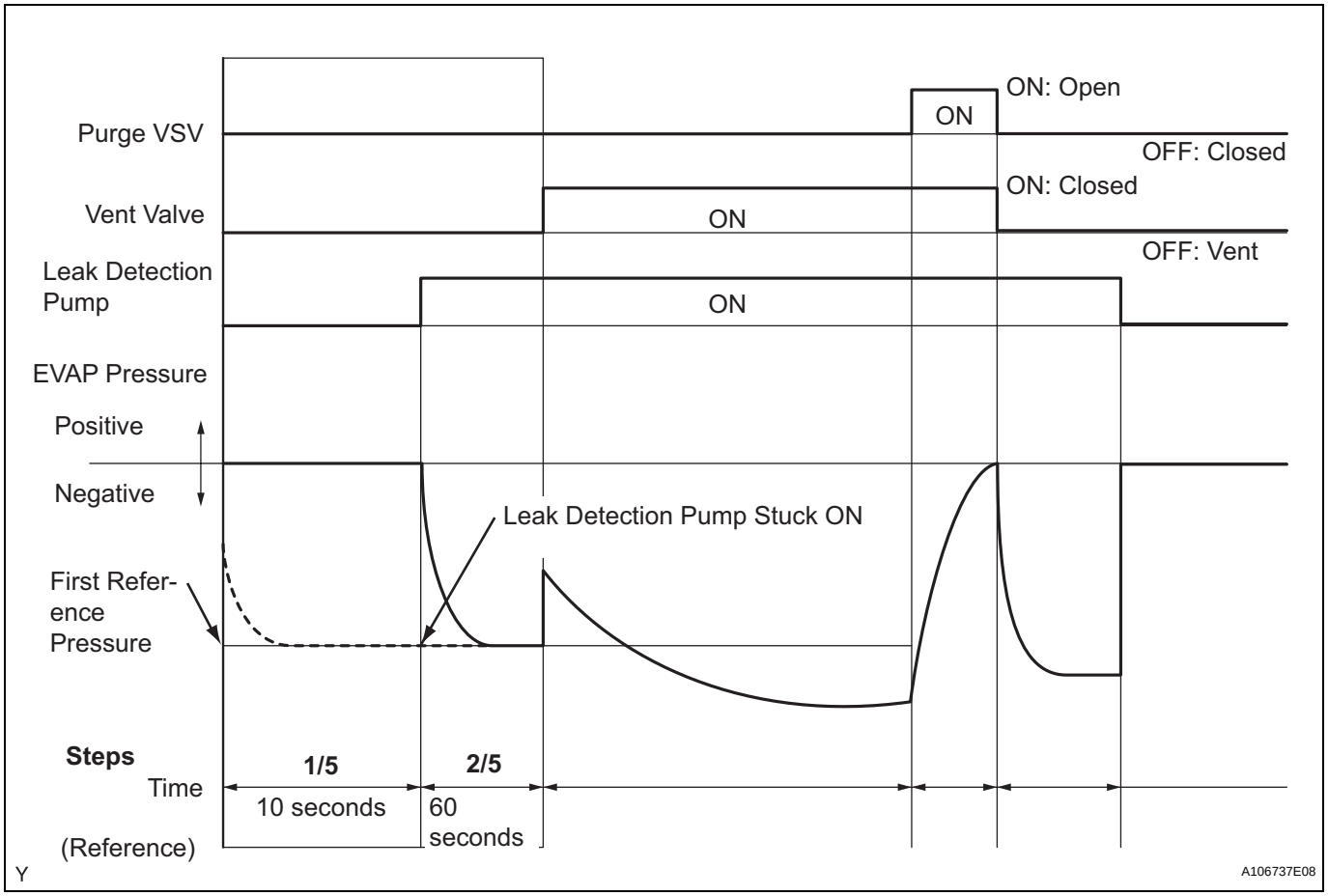

Result

DTCs*	Test Results	Suspected Trouble Areas	Proceed to
-	Virtually no variation in EVAP pressure during step 1/5. Then EVAP pressure decreases to reference pressure.	Not yet determined	A
P2402	Small difference between EVAP pressures during steps 1/5 and 2/5	Leak detection pump stuck ON	B

*: These DTCs are already present in the ECM when the vehicle arrives and are confirmed in the "CONFIRM DTC" procedures above.
HINT:
The first reference pressure is the value determined in step 2/5.

B → **Go to step 22**

A

ES

6	PERFORM EVAP SYSTEM CHECK (STEP 2/5)

HINT:
Make a note of the pressures checked in steps "A" and "B" below.

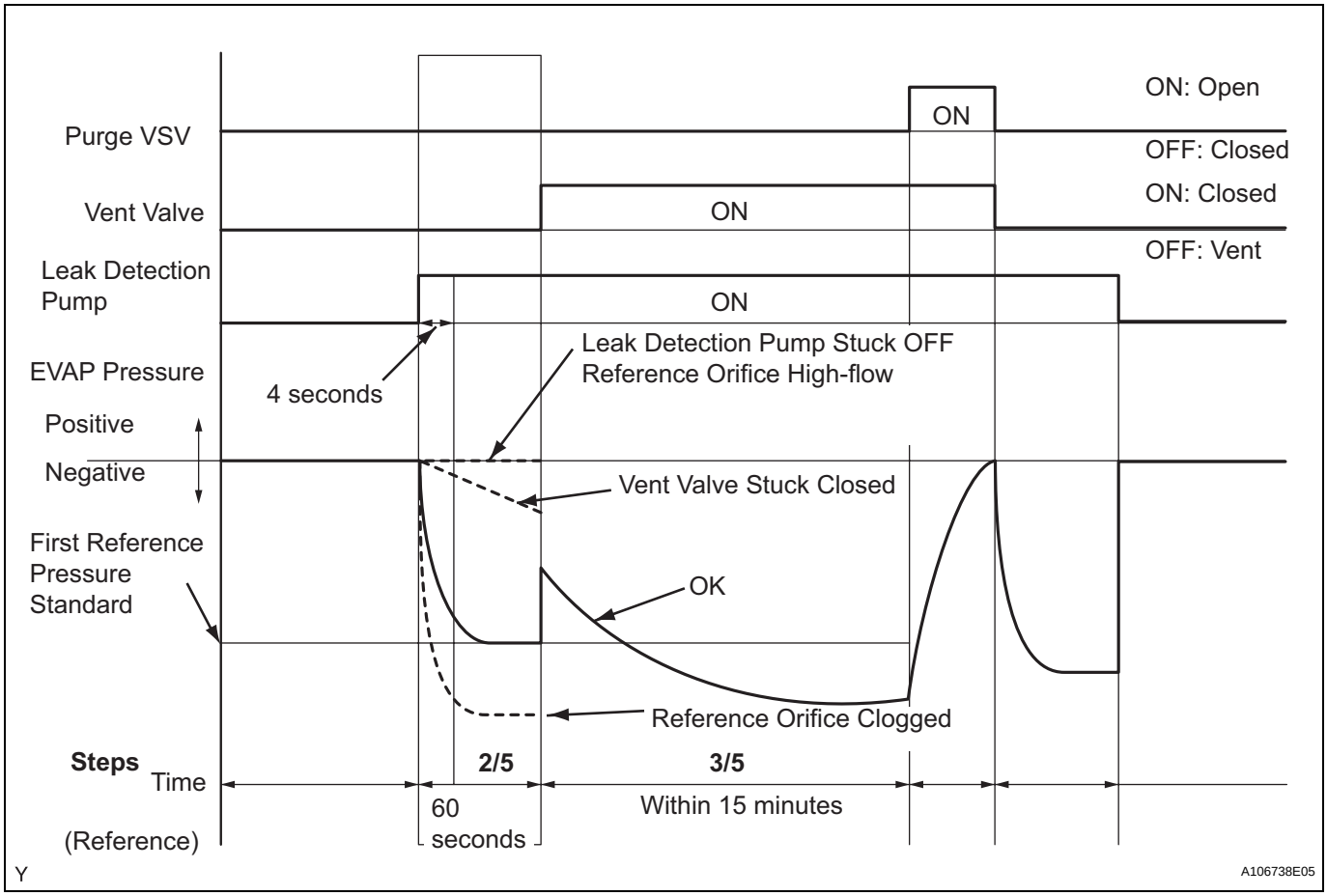

(a) Check the EVAP pressure 4 seconds after the leak detection pump is activated* (Step "A").
*: The leak detection pump begins to operate as step 1/5 finishes and step 2/5 starts.
(b) Check the EVAP pressure again when it has stabilized. This pressure is the reference pressure (Step "B").

Result

DTCs*	Test Results	Suspected Trouble Areas	Proceed to
-	EVAP pressure in step (b) between -4.85 kPa-g and -1.057 kPa-g (-36.4 mmHg-g and -7.93 mmHg-g)	Not yet determined	A
P043F and P2401	EVAP pressure in step (b) -1.057 kPa-g (-7.93 mmHg-g) or more	• Reference orifice high-flow • Leak detection pump stuck OFF	B
P043E	EVAP pressure in step (b) below -4.85 kPa-g (-36.4 mmHg-g)	Reference orifice clogged	C
P2419	EVAP pressure in step (a) more than -1.057 kPa-g (-7.93 mmHg-g)	Vent valve stuck closed	D

*: These DTCs are already present in the ECM when the vehicle arrives and are confirmed in the "CONFIRM DTC" procedures above.

B	Go to step 11
C	Go to step 29
D	Go to step 20

A

7	PERFORM EVAP SYSTEM CHECK (STEP 2/5 TO 3/5)

(a) Check the EVAP pressure increase in step 3/5.

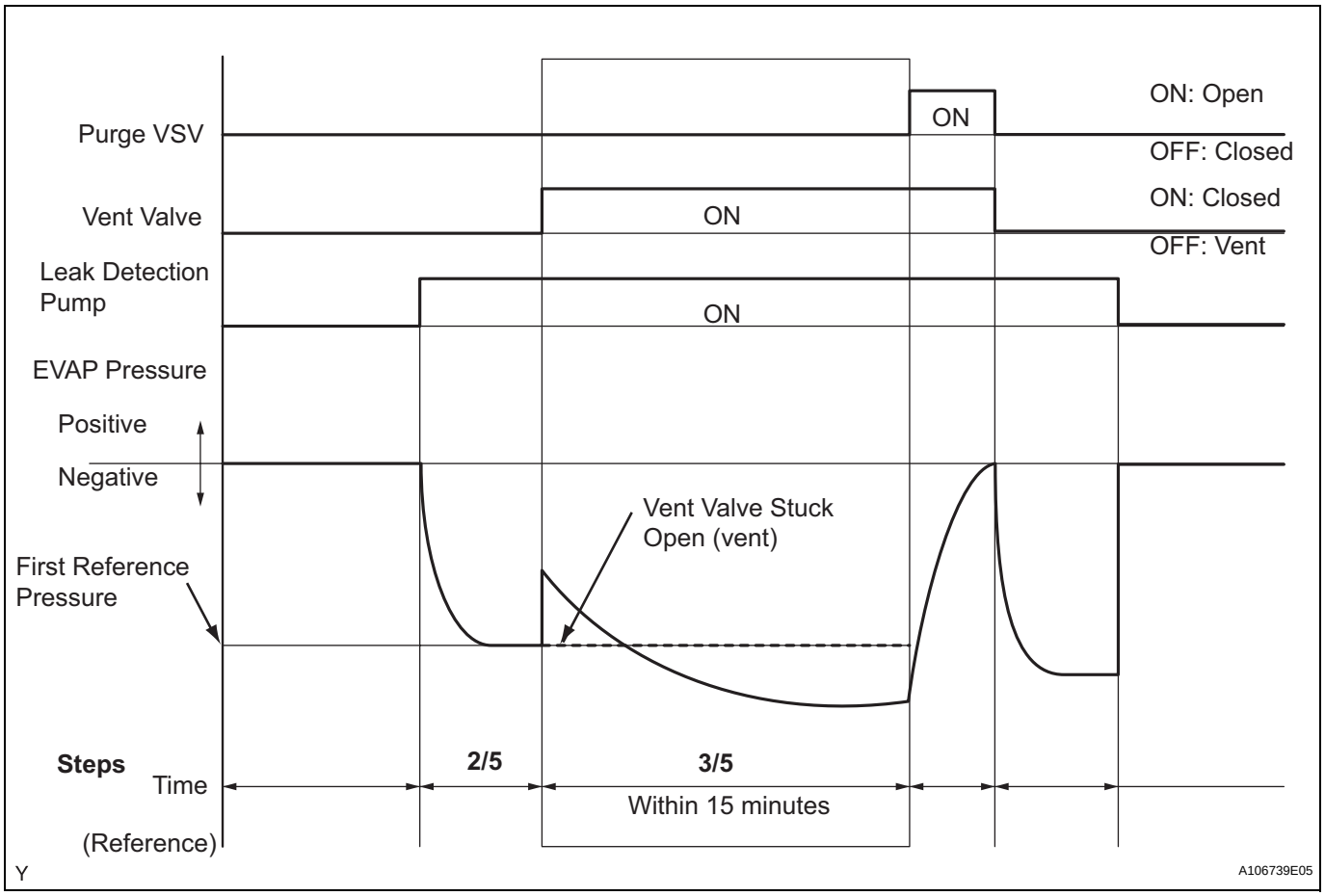

Result

DTCs*	Test Results	Suspected Trouble Areas	Proceed to
-	EVAP pressure increases by 0.3 kPa-g (2.25 mmHg-g) or more within 10 seconds of proceeding from step 2/5 to step 3/5	Not yet determined	A
P2420	No variation in EVAP pressure despite proceeding from step 2/5 to step 3/5	Vent valve stuck open (vent)	B
P0451	No variation in EVAP pressure during steps 1/5 through 3/5	Canister pressure sensor malfunction fixed	C

*: These DTCs are already present in the ECM when the vehicle arrives and are confirmed in the "CONFIRM DTC" procedures above.

B	Go to step 19

C → Go to step 29

A

8	PERFORM EVAP SYSTEM CHECK (STEP 3/5)

(a) Wait until the EVAP pressure change is less than 0.1 kPa-g (0.75 mmHg-g) for 30 seconds.

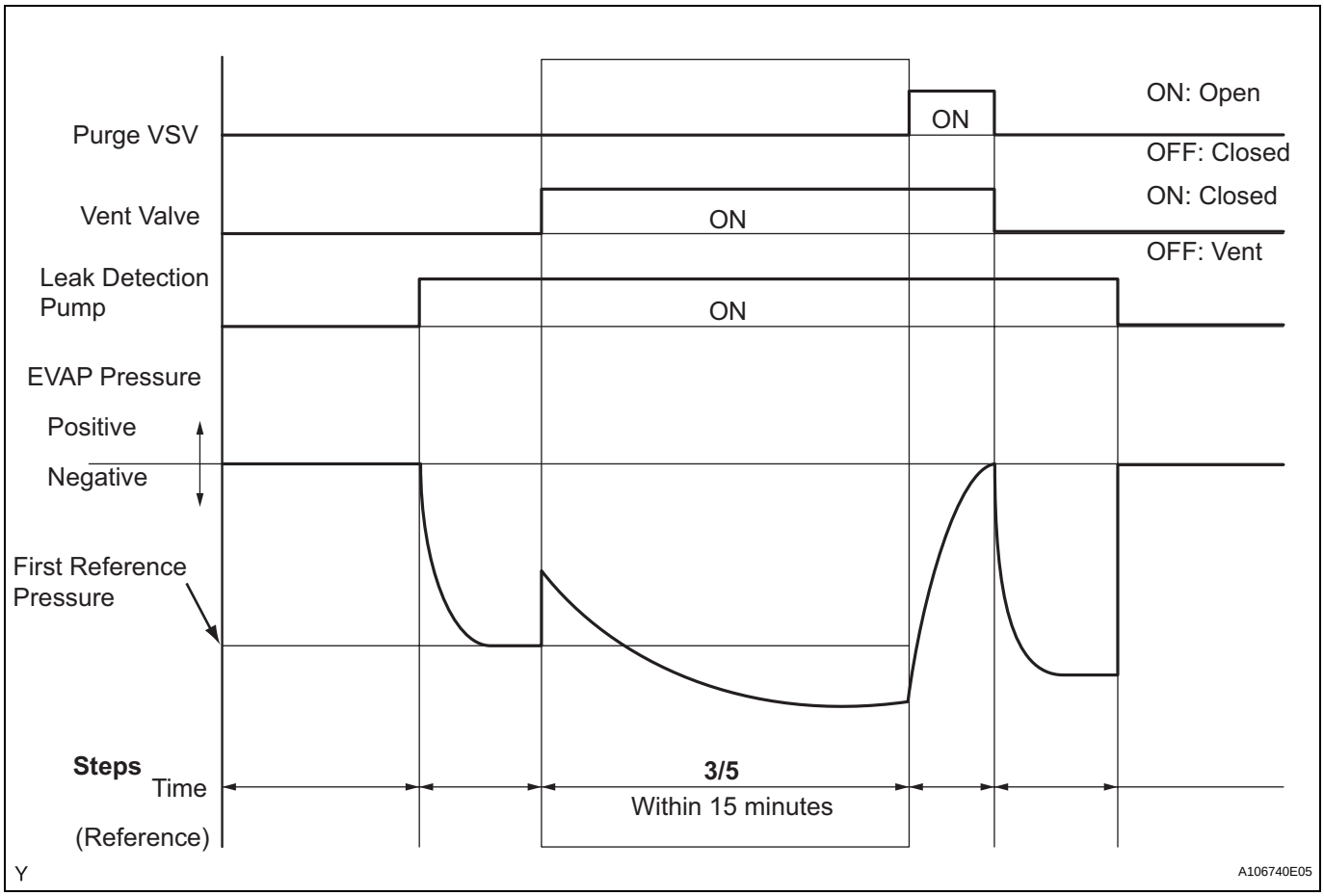

(b) Measure the EVAP pressure and record it.
HINT:
A few minutes are required for the EVAP pressure to become saturated. When there is little fuel in the fuel tank, it takes up to 15 minutes.

NEXT

9	PERFORM EVAP SYSTEM CHECK (STEP 4/5)

(a) Check the EVAP pressure in step 4/5.

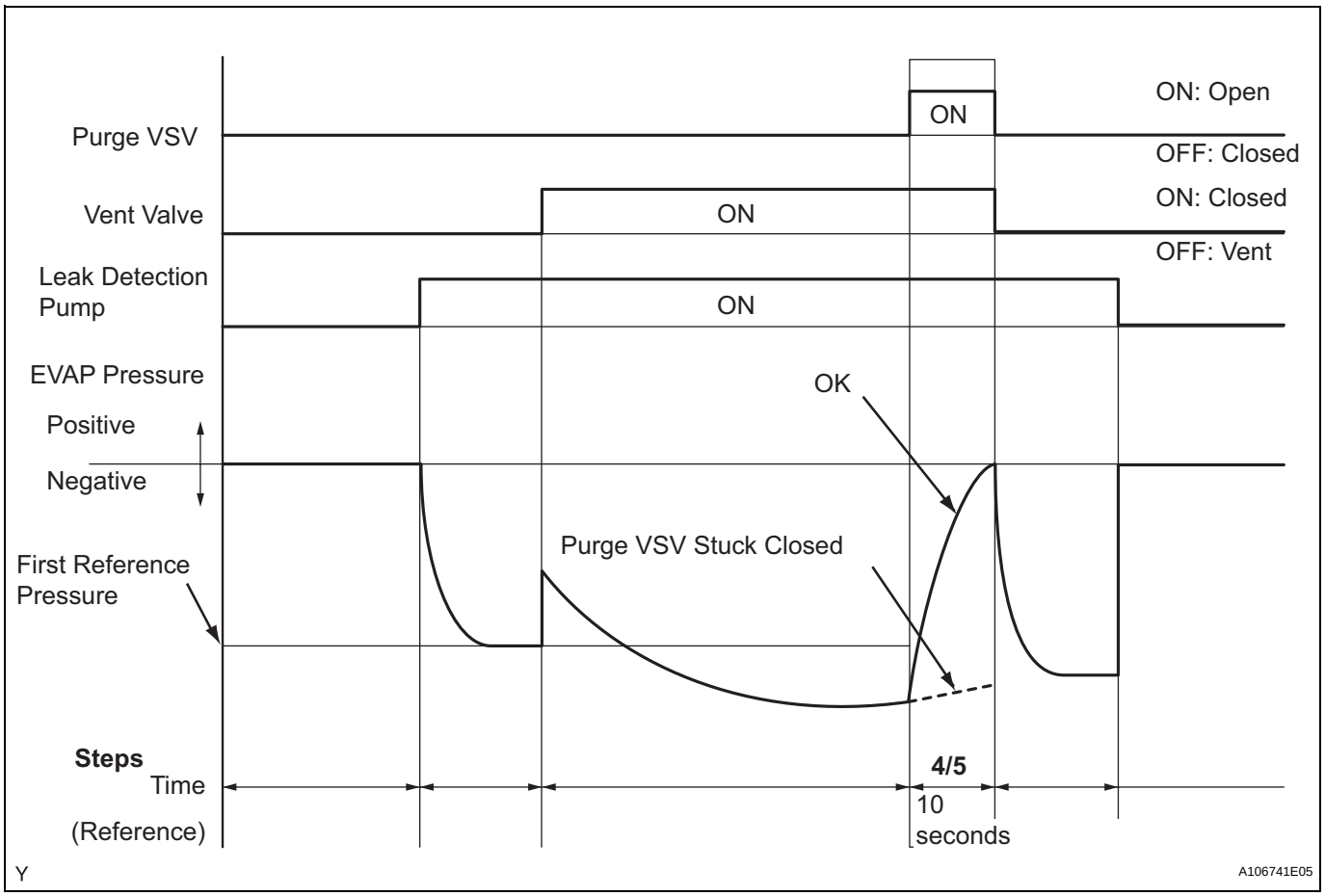

Result

DTCs*	Test Results	Suspected Trouble Areas	Proceed to
-	EVAP pressure increases by 0.3 kPa-g (2.25 mmHg-g) or more within 10 seconds of proceeding from step 3/5 to step 4/5	Not yet determined	A
P0441	EVAP pressure increases by 0.3 kPa-g (2.25 mmHg-g) or more within 10 seconds of proceeding from step 3/5 to step 4/5	Problems in EVAP hose between purge VSV and intake manifold	B
P0441	Variation in EVAP pressure less than 0.3 kPa-g (2.25 mmHg-g) for 10 seconds, after proceeding from step 3/5 to step 4/5	Purge VSV stuck closed	C

*: These DTCs are already present in the ECM when the vehicle arrives and are confirmed in the "CONFIRM DTC" procedures above.

B → **Go to step 15**

C → **Go to step 12**

A

10	PERFORM EVAP SYSTEM CHECK (STEP 5/5)

(a) Check the EVAP pressure in step 5/5.

ES

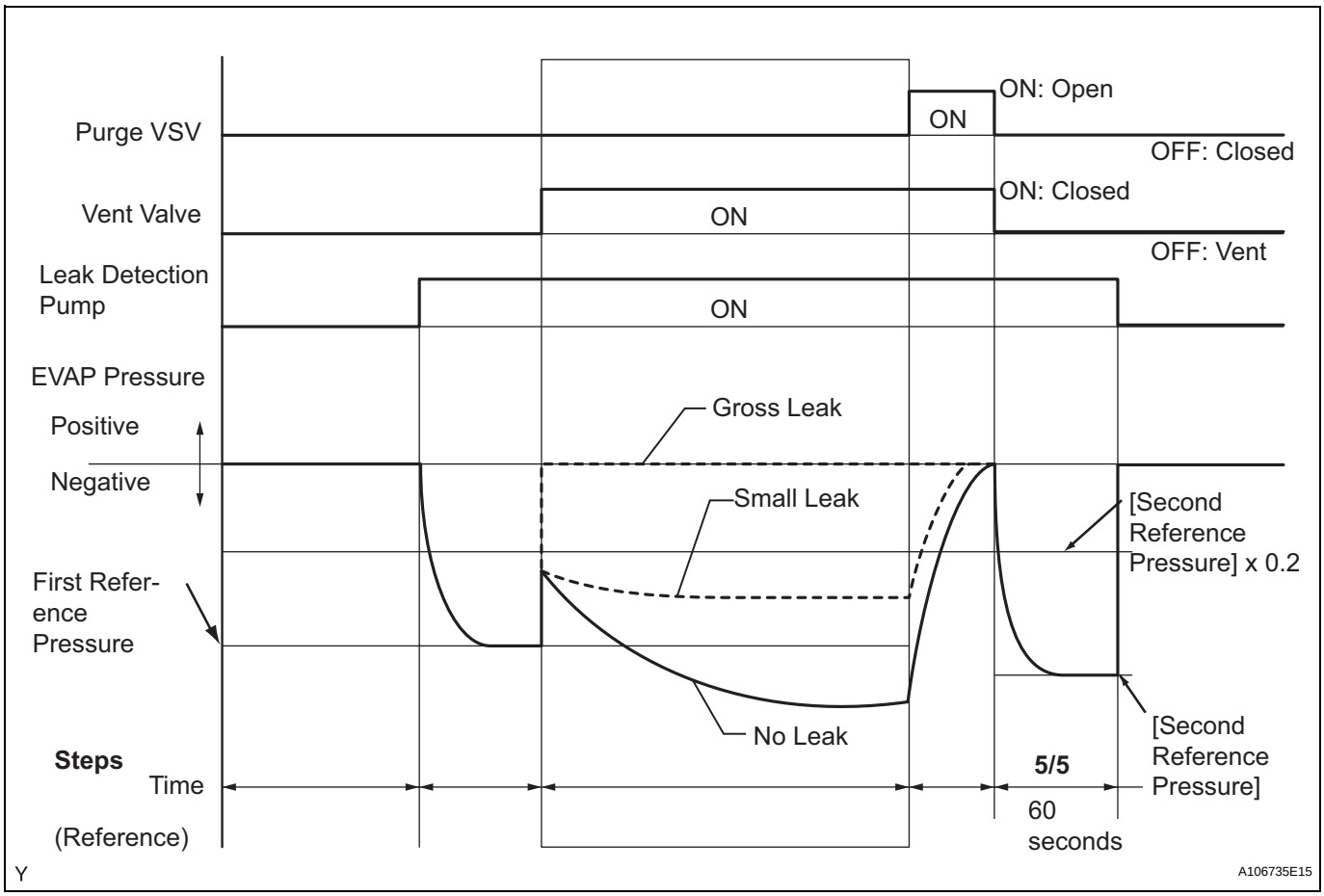

(b) Compare the EVAP pressure in step 3/5 and the second reference pressure (step 5/5).

Result

DTCs*	Test Results	Suspected Trouble Areas	Proceed to
-	EVAP pressure (step 3/5) lower than second reference pressure (step 5/5)	Not yet determined (no leakage from EVAP system)	A
P0441 and P0455	EVAP pressure (step 3/5) higher than [second reference pressure (step 5/5) x 0.2]	• Purge VSV stuck open • EVAP gross leak	B
P0456	EVAP pressure (step 3/5) higher than second reference pressure (step 5/5)	EVAP small leak	B

*: These DTCs are already present in the ECM when the vehicle arrives and are confirmed in the "CONFIRM DTC" procedures above.

A → **Go to step 35**

B → **Go to step 12**

11 PERFORM EVAP SYSTEM CHECK (STEP 3/5)

(a) Check the EVAP pressure in step 3/5.

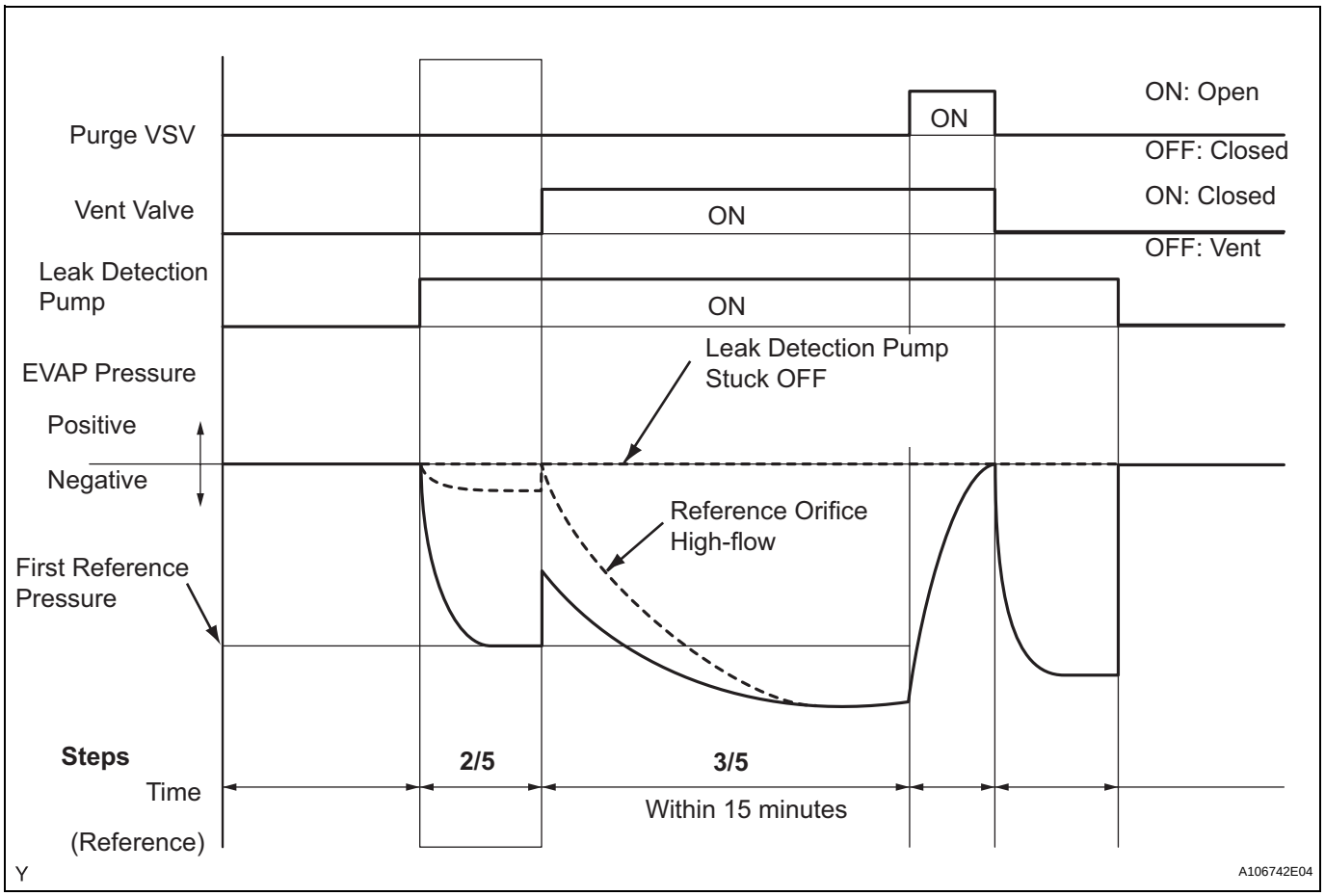

Result

DTCs*	Test Results	Suspected Trouble Areas	Proceed to
P043F	**EVAP pressure less than reference pressure measured at 2/5**	**Reference orifice high-flow**	**A**
P2401	**EVAP pressure almost same as reference pressure measured at 2/5**	**Leak detection pump stuck OFF**	**B**

*: These DTCs are already present in the ECM when the vehicle arrives and are confirmed in the "CONFIRM DTC" procedures above.
HINT:
The first reference pressure is the value determined in step 2/5.

A	**Go to step 29**
B	**Go to step 22**

12 PERFORM ACTIVE TEST USING INTELLIGENT TESTER (PURGE VSV)

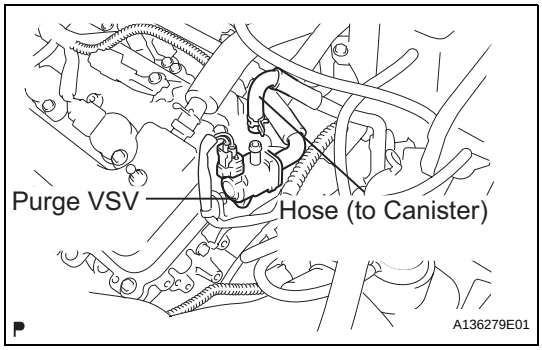

(a) On the intelligent tester, select the following menu items: DIAGNOSIS / ENHANCED OBD II / ACTIVE TEST / EVAP VSV (ALONE).
(b) Disconnect the hose (connected to the canister) from the purge VSV.
(c) Start the engine.
(d) Using the tester, turn off the purge VSV (EVAP VSV: OFF).
(e) Use your finger to confirm that the purge VSV has no suction.
(f) Using the tester, turn on the purge VSV (EVAP VSV: ON).
(g) Use your finger to confirm that the purge VSV has suction.

Result

Test Results	Suspected Trouble Areas	Proceed to
No suction when purge VSV turned OFF, and suction applied when turned ON	Purge VSV normal	A
Suction applied when purge VSV turned OFF	Purge VSV stuck open	B
No suction when purge VSV turned ON	• Purge VSV stuck closed • Problems with EVAP hose between purge VSV and intake manifold	C

(h) Reconnect the hose.

B → **Go to step 14**

C → **Go to step 15**

A

13 CHECK FUEL CAP ASSEMBLY

(a) Check that the fuel cap is correctly installed and confirm the fuel cap meets OEM specifications.
(b) Tighten the fuel cap until a click sounds are heard.
HINT:
If an EVAP tester is available, check the fuel cap using the tester.
1. Remove the fuel cap and install it onto a fuel cap adapter.
2. Connect an EVAP tester pump hose to the adapter, and pressurize the cap to 3.2 to 3.7 kPa (24 to 28 mmHg) using an EVAP tester pump.
3. Seal the adapter and wait for 2 minutes.
4. Check the pressure. If the pressure is 2 kPa (15 mmHg) or more, the fuel cap is normal.

Result

Test Results	Suspected Trouble Areas	Proceed to
Fuel cap correctly installed	-	A

Test Results	Suspected Trouble Areas	Proceed to
Fuel cap loose	• Fuel cap improperly installed • Defective fuel cap • Fuel cap does not meet OEM specifications	B
Defective fuel cap	-	B
No fuel cap	-	C

(c) Reinstall the fuel cap.

A → **Go to step 28**

B → **Go to step 26**

C → **Go to step 27**

14 INSPECT DUTY VACUUM SWITCHING VALVE (PURGE VSV)

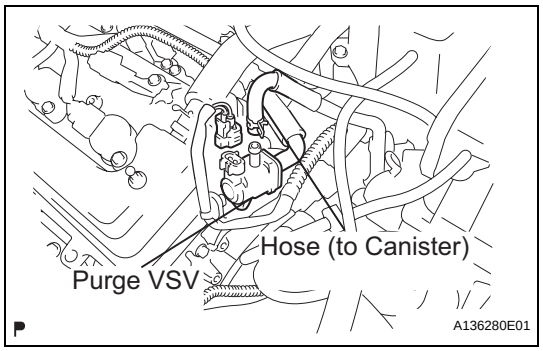

(a) Turn the engine switch off.
(b) Disconnect the B42 purge VSV connector.
(c) Disconnect the hose (connected to the canister) from the purge VSV.
(d) Start the engine.
(e) Use your finger to confirm that the purge VSV has no suction.

Result

Test Results	Suspected Trouble Areas	Proceed to
No suction	ECM	A
Suction applied	Purge VSV	B

(f) Reconnect the purge VSV connector.
(g) Reconnect the hose.

A → **Go to step 34**

B → **Go to step 30**

15 CHECK EVAP HOSE (PURGE VSV - AIR SURGE TANK)

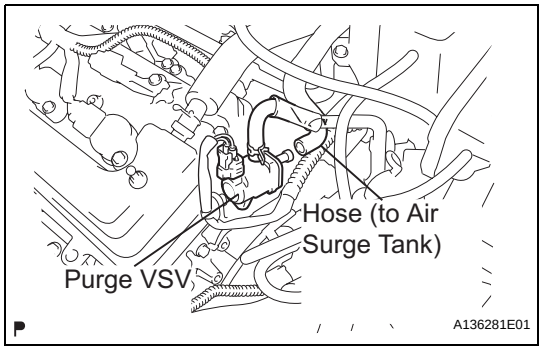

(a) Disconnect the hose (connected to the air surge tank) from the purge VSV.
(b) Start the engine.
(c) Use your finger to confirm that the hose has suction.

Result

Test Results	Suspected Trouble Areas	Proceed to
Suction applied	EVAP hose between purge VSV and intake manifold normal	A
No suction	• Intake manifold port • EVAP hose between purge VSV and intake manifold	B

(d) Reconnect the hose.

B → **Go to step 25**

A

ES

16 INSPECT DUTY VACUUM SWITCHING VALVE (PURGE VSV)

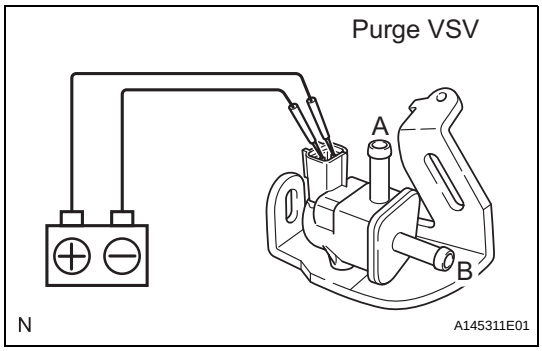

(a) Remove the purge VSV.
(b) Apply the battery voltage to the terminals of the purge VSV.
(c) Using an air gun, confirm that air flows from port A to port B.

Result

Test Results	Suspected Trouble Areas	Proceed to
Air flows	Purge VSV normal	A
No air flow	Purge VSV	B

(d) Install the purge VSV.

B → **Go to step 30**

A

17 CHECK HARNESS AND CONNECTOR (POWER SOURCE OF PURGE VSV)

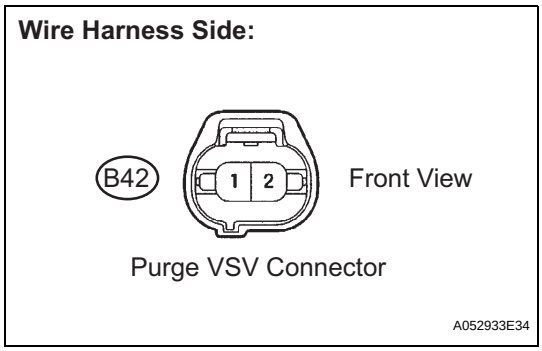

(a) Disconnect the B42 purge VSV connector.
(b) Turn the engine switch on (IG).
(c) Measure the voltage between terminal 2 of the purge VSV connector and body ground.

Result

Test Results	Suspected Trouble Areas	Proceed to
9 to 14 V	Normal	A
Other than result above	Wire harness or connectors between purge VSV and ECM	B

(d) Reconnect the purge VSV connector.

B → **Go to step 31**

A

18 CHECK HARNESS AND CONNECTOR (PURGE VSV - ECM)

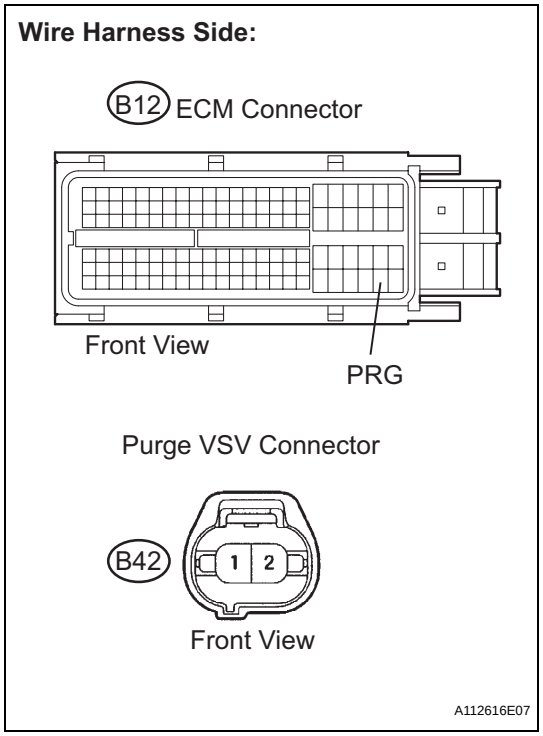

(a) Disconnect the B12 ECM connector and the B42 purge VSV connector.
(b) Measure the resistance.
Standard resistance

Tester Connection	Specified Condition
B12-108 (PRG) - B42-2 (Purge VSV)	Below 1 Ω
B12-108 (PRG) - Body ground	10 kΩ or higher
B42-2 (Purge VSV) - Body ground	10 kΩ or higher

(c) Reconnect the purge VSV connector.
(d) Reconnect the ECM connector.

OK → **Go to step 34**

NG → **Go to step 31**

ES

19	INSPECT CANISTER PUMP MODULE (POWER SOURCE FOR VENT VALVE)

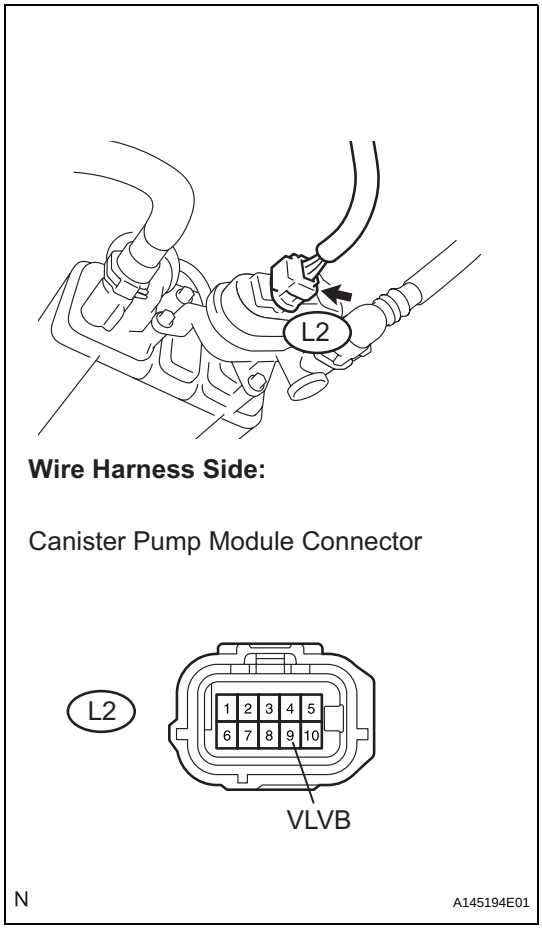

(a) Turn the engine switch off.
(b) Disconnect the L2 canister pump module connector.
(c) Turn the engine switch on (IG).
(d) Measure the voltage between the VLVB terminal of the canister pump module connector and body ground.

Result

Test Results	Suspected Trouble Areas	Proceed to
9 to 14 V	**1. Wire harness between vent valve and ECM 2. Vent valve 3. ECM**	**A**
Below 3 V	**Power source wire harness of vent valve**	**B**

(e) Reconnect the canister pump module connector.

B → **Go to step 31**

A

20 INSPECT CANISTER PUMP MODULE (VENT VALVE OPERATION)

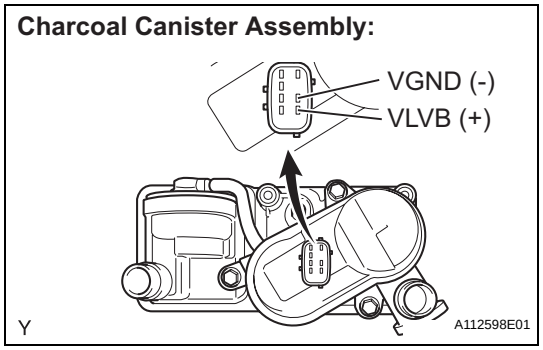

(a) Turn the engine switch off.
(b) Disconnect the L2 canister pump module connector.
(c) Apply battery voltage to the VLVB and VGND terminals of the canister pump module.
(d) Touch the canister pump module to confirm the vent valve operation.

ES

Result

Test Results	Suspected Trouble Areas	Proceed to
Operating	**1. Wire harness between vent valve and ECM 2. ECM**	**A**
Not operating	**Vent valve**	**B**

(e) Reconnect the canister connector.

B → **Go to step 29**

A

21 CHECK HARNESS AND CONNECTOR (ECM - CANISTER PUMP MODULE)

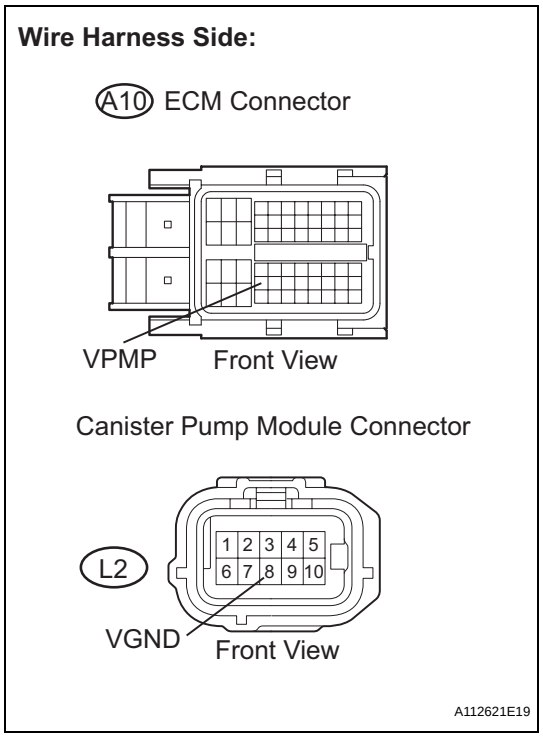

(a) Disconnect the A10 ECM connector.
(b) Disconnect the L2 canister pump module connector.
(c) Measure the resistance between the VPMP terminal of the ECM connector and the VGND terminal of the canister pump module connector.

Result

Test Results	Suspected Trouble Areas	Proceed to
Below 1 Ω	**ECM**	**A**
10 kΩ or higher	**Wire harness between ECM and canister pump module**	**B**

(d) Reconnect the ECM connector.
(e) Reconnect the canister pump module connector.

A → **Go to step 34**

B → **Go to step 31**

22 PERFORM ACTIVE TEST USING INTELLIGENT TESTER (VACUUM PUMP (ALONE))

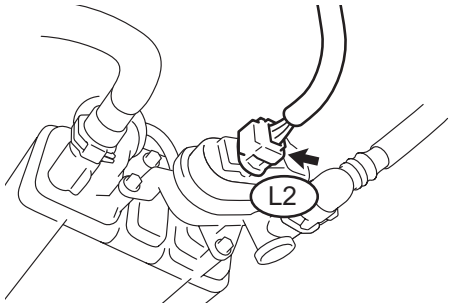

Wire Harness Side:

Canister Pump Module Connector

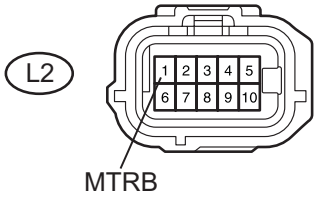

N A145194E02

(a) Turn the engine switch off.
(b) Disconnect the L2 canister pump module connector.
(c) Turn the engine switch on (IG).
(d) On the intelligent tester, select the following menu items: DIAGNOSIS / ENHANCED OBD II / ACTIVE TEST / VACUUM PUMP.
(e) Measure the voltage between the MTRB terminal of the canister pump module connector and body ground when the leak detection pump is turned ON and OFF using the tester.

Result

Test Results	Suspected Trouble Areas	Proceed to
Below 3 V when OFF 9 to 14 V when ON	**1. Wire harness between leak detection pump and body ground 2. Leak detection pump**	**A**
Below 3 V when OFF and ON	**1. Wire harness between leak detection pump and ECM 2. ECM**	**B**

B → **Go to step 24**

A

23	CHECK HARNESS AND CONNECTOR (CANISTER PUMP MODULE - BODY GROUND)

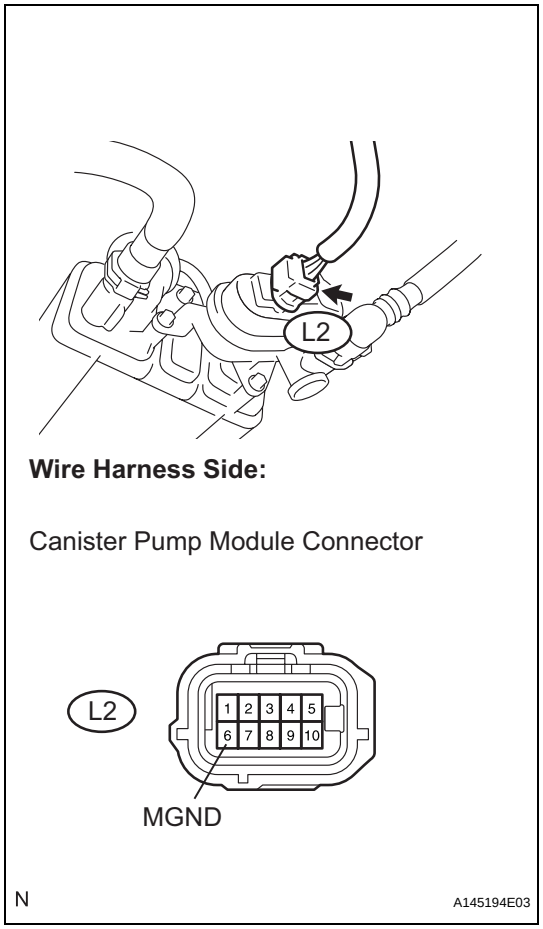

(a) Turn the engine switch off.
(b) Disconnect the L2 canister pump module connector.
(c) Measure the resistance between the MGND terminal of the canister pump module connector and body ground.

ES

Result

Test Results	Suspected Trouble Areas	Proceed to
Below 1 Ω	**Leak detection pump**	**A**
10 kΩ or higher	**Wire harness between canister pump module and body ground**	**B**

(d) Reconnect the canister pump module connector.

A	**Go to step 29**
B	**Go to step 31**

24 CHECK HARNESS AND CONNECTOR (ECM - CANISTER PUMP MODULE)

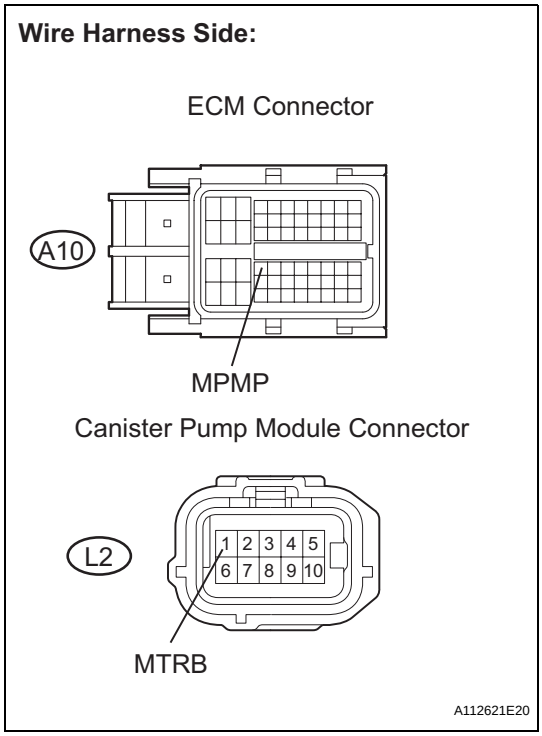

(a) Turn the engine switch off.
(b) Disconnect the L2 canister pump module connector.
(c) Disconnect the A10 ECM connector.
(d) Measure the resistance between the MPMP terminal of the ECM connector and the MTRB terminal of the canister pump module connector.

Result

Test Results	Suspected Trouble Areas	Proceed to
Below 1 Ω	ECM	A
10 kΩ or higher	Wire harness between ECM and canister pump module	B

(e) Reconnect the canister pump module connector.
(f) Reconnect the ECM connector.

A → **Go to step 34**

B → **Go to step 31**

25 INSPECT INTAKE MANIFOLD (EVAP PURGE PORT)

(a) Stop the engine.
(b) Disconnect the EVAP hose from the intake manifold.
(c) Start the engine.
(d) Use your finger to confirm that the port of the intake manifold has suction.

Result

Test Results	Suspected Trouble Areas	Proceed to
Suction applied	EVAP hose between intake manifold and purge VSV	A
No suction	Intake manifold	B

(e) Reconnect the EVAP hose.

A → **Go to step 32**

B → **Go to step 33**

26	CORRECTLY REINSTALL OR REPLACE FUEL CAP

HINT:
- When reinstalling the fuel cap, tighten it until a few click sounds are heard.
- When replacing the fuel cap, use a fuel cap that meets OEM specifications, and install it until a click sounds are heard.

NEXT → **Go to step 36**

27	REPLACE FUEL CAP

HINT:
When installing the fuel cap, tighten it until a few click sounds are heard.

NEXT → **Go to step 36**

28	LOCATE EVAP LEAK PART

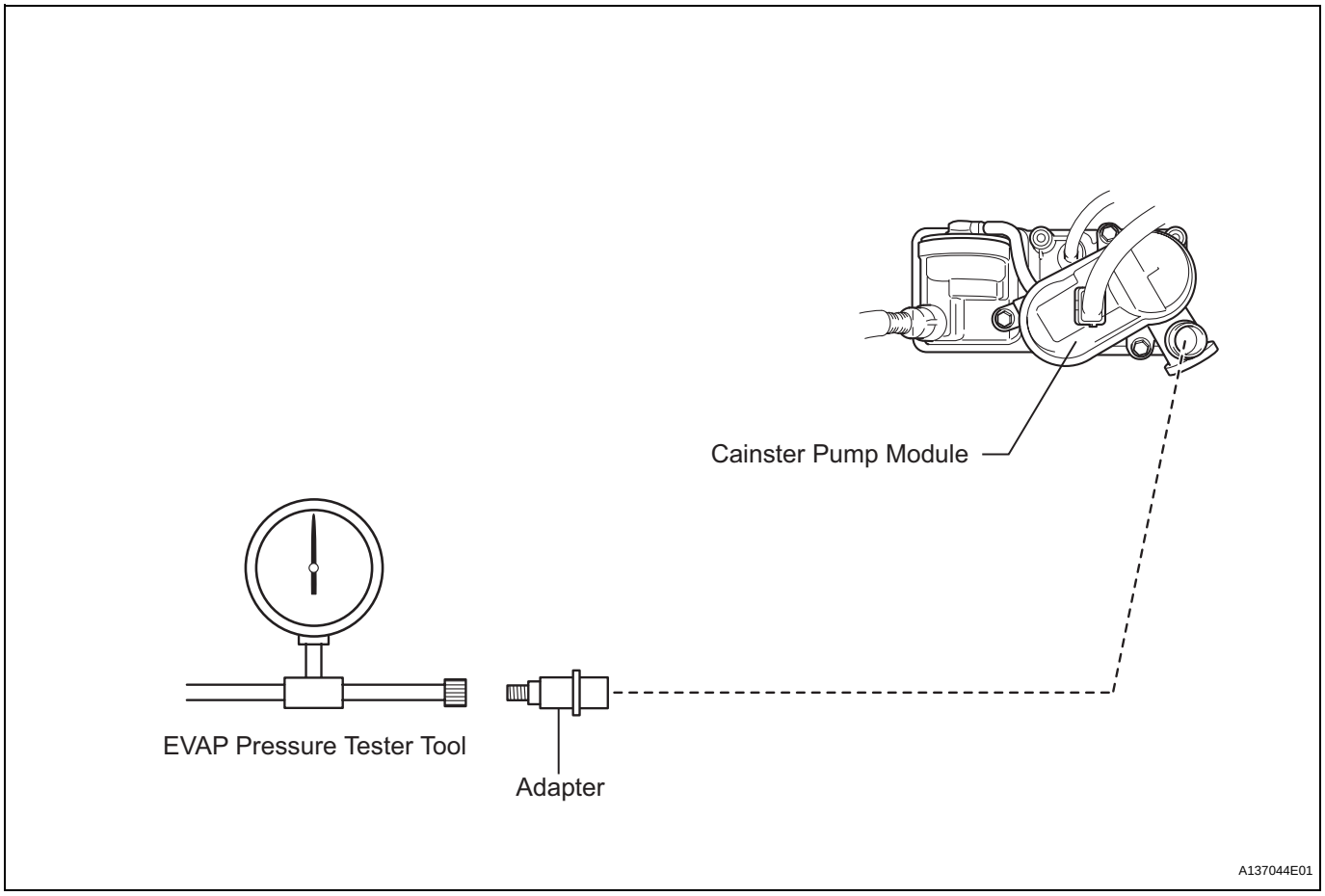

(a) Disconnect the vent hose.
(b) Connect the EVAP pressure tester tool to the canister pump module with the adapter.

(c) Pressurize the EVAP system to 3.2 to 3.7 kPa (24 to 28 mmHg).
(d) Apply soapy water to the piping and connecting parts of the EVAP system.
(e) Look for areas where bubbles appear. This indicates the leak point.
(f) Repair or replace the leak point.
HINT:
Disconnect the hose between the canister and the fuel tank from the canister. Block the canister side and conduct an inspection. In this way, the fuel tank can be excluded as an area suspected of causing fuel leaks.

ES

NEXT	Go to step 36

29	REPLACE CHARCOAL CANISTER ASSEMBLY

(a) Replace the canister assembly (See page EC-9).

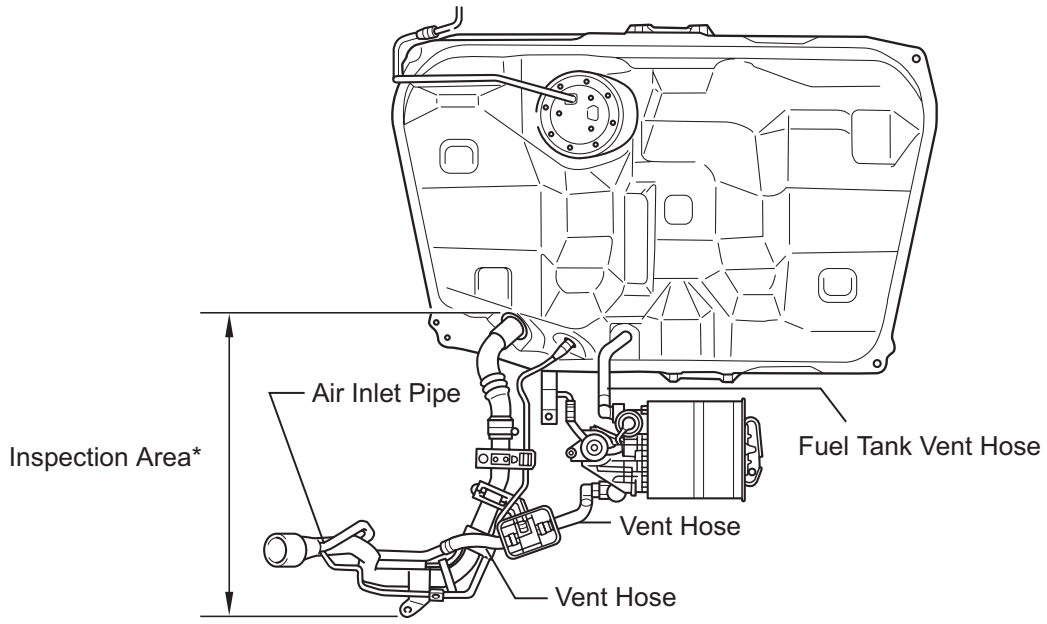

*: Check for disconnection and/or crack

N A132283E05

NOTICE:
When replacing the canister, check the canister pump module interior and related pipes for water, fuel and other liquids. If liquids are present, check for disconnections and/or cracks in the following: 1) the pipe from the air inlet pipe to the canister pump module; 2) the canister filter; and 3) the fuel tank vent hose.

NEXT → Go to step 36

30 REPLACE DUTY VACUUM SWITCHING VALVE (PURGE VSV)

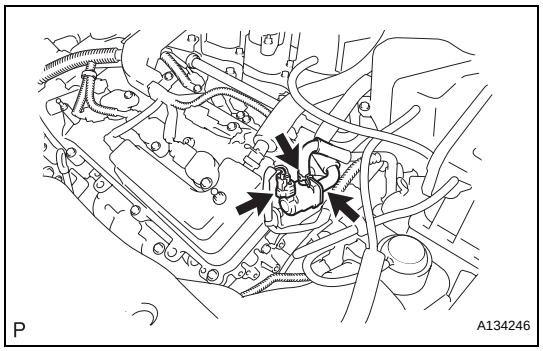

(a) Disconnect the connector and the hoses from the purge VSV.
(b) Remove the purge VSV (See page EC-13).
(c) Install a new purge VSV (See page EC-14).
(d) Reconnect the connector and hoses.

NEXT → Go to step 36

ES

31 REPAIR OR REPLACE HARNESS OR CONNECTOR

NEXT → Go to step 36

32 REPLACE EVAP HOSE (INTAKE MANIFOLD - PURGE VSV)

NEXT → Go to step 36

33 INSPECT INTAKE MANIFOLD (EVAP PURGE PORT)

(a) Check that the EVAP purge port of the intake manifold is not clogged. If necessary, replace the intake manifold.

NEXT → Go to step 36

34 REPLACE ECM

(a) Replace the ECM (See page ES-543).

NEXT → Go to step 36

35 REPAIR OR REPLACE PARTS AND COMPONENTS INDICATED BY OUTPUT DTCS

(a) Repair the malfunctioning areas indicated by the DTCs that had been confirmed when the vehicle was brought in.

NEXT → Go to step 36

36	PERFORM EVAP SYSTEM CHECK (AUTO OPERATION)

NOTICE:

- **The EVAP SYSTEM CHECK (AUTO OPERATION) consists of 5 steps performed automatically by the intelligent tester. It takes a maximum of approximately 18 minutes.**
- **Do not perform the EVAP SYSTEM CHECK when the fuel tank is more than 90% full because the cut-off valve may be closed, making the fuel tank leak check unavailable.**
- **Do not run the engine in this step.**
- **When the temperature of the fuel is 35°C (95°F) or more, a large amount of vapor forms and any check results become inaccurate. When performing an EVAP SYSTEM CHECK, keep the temperature below 35°C (95°F).**

(a) Clear the DTCs (See page ES-41).

(b) On the intelligent tester, select the following menu items: DIAGNOSIS / ENHANCED OBD II / SYSTEM CHECK / EVAP SYS CHECK / AUTO OPERATION.

(c) After the SYSTEM CHECK is completed, check for pending DTCs by selecting the following menu items: DIAGNOSIS / ENHANCED OBD II / DTC INFO / PENDING CODES.
HINT:
If no pending DTCs are found, the repair has been successfully completed.

NEXT

COMPLETED

CONFIRMATION DRIVING PATTERN

HINT:
After a repair, check Monitor Status by performing the Key-Off Monitor Confirmation and Purge Flow Monitor Confirmation described below.

1. KEY-OFF MONITOR CONFIRMATION

(a) Preconditions
The monitor will not run unless:
- The vehicle has been driven for 10 minutes or more (in a city area or on a freeway).
- The fuel tank is less than 90 % full.
- The altitude is less than 8,000 ft (2,400 m).
- The Engine Coolant Temperature (ECT) is between 4.4°C and 35°C (40°F and 95°F).
- The Intake Air Temperature (IAT) is between 4.4°C and 35°C (40°F and 95°F).
- The vehicle remains stationary (the vehicle speed is 0 mph (0 km/h)).

(b) Monitor Conditions
1. Allow the engine to idle for at least 5 minutes.
2. Turn the engine switch off and wait for 6 hours (8 or 10.5 hours).
HINT:
Do not start the engine until checking MONITOR STATUS. If the engine is started, the steps described above must be repeated.

(c) Monitor Status
1. Connect the intelligent tester to the DLC3.
2. Turn the engine switch on (IG) and turn the tester on.
3. Select the following menu items: DIAGNOSIS / ENHANCED OBD II / MONITOR STATUS.
4. Check the Monitor Status displayed on the tester.
   HINT:
   If INCMP is displayed, the monitor is not complete. Make sure that the preconditions have been met, and perform the Monitor Conditions again.

2. PURGE FLOW MONITOR CONFIRMATION (P0441)

HINT:
Perform this monitor confirmation after the Key-Off Monitor Confirmation shows COMPL (complete).

(a) Preconditions
The monitor will not run unless:
- The vehicle has been driven for 10 minutes or more (in a city area or on a freeway)
- The ECT is between 4.4°C and 35°C (40°F and 95°F)
- The IAT is between 4.4°C and 35°C (40°F and 95°F)

(b) Monitor Conditions
1. Release the pressure from the fuel tank by removing and reinstalling the fuel cap.
2. Warm the engine up until the ECT reaches more than 75°C (167°F).
3. Increase the engine speed to 3,000 rpm once.
4. Allow the engine to idle and turn A/C ON for 1 minute.

(c) Monitor Status
1. Turn the engine switch off (if ON or the engine is running).
2. Connect the intelligent tester to the DLC3.
3. Turn the engine switch on (IG) and turn the tester on.
4. Select the following menu items: DIAGNOSIS / ENHANCED OBD II / MONITOR STATUS.
5. Check the Monitor Status displayed on the tester.
   HINT:
   If INCMP is displayed, the monitor is not complete. Make sure that the preconditions have been met, and perform the Monitor Conditions again.

MONITOR RESULT

Refer to CHECKING MONITOR STATUS (See page ES-20).

ECM Power Source Circuit

DESCRIPTION

When the engine switch is turned on (IG), the battery voltage is applied to terminal IGSW of the ECM. The ECM MREL output signal causes a current to flow to the coil, closing the contacts of the EFI MAIN relay and supplying power to terminal +B of the ECM.
If the engine switch is turned off, the ECM holds the EFI MAIN relay ON for a maximum of 2 seconds to allow for the initial setting of the throttle valve.
When the engine switch is turned on (IG), voltage from the ECM's MREL terminal applies to the engine room junction block (EFI relay). This causes the contacts of the engine room junction block (EFI relay) to close, which supplies power to terminal +B or +B1 of the ECM.

WIRING DIAGRAM

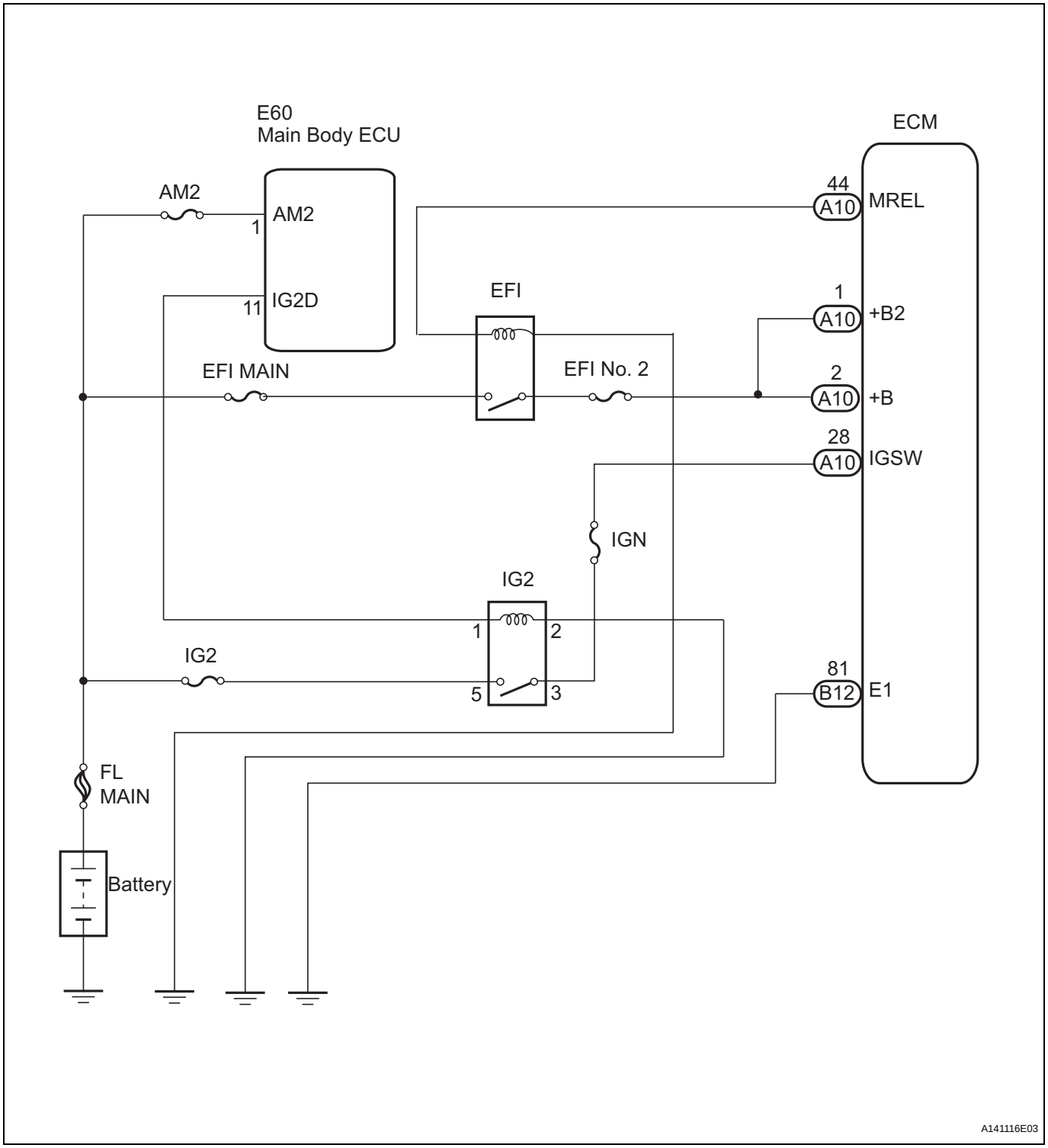

ES

INSPECTION PROCEDURE

1 CHECK HARNESS AND CONNECTOR (ECM - BODY GROUND)

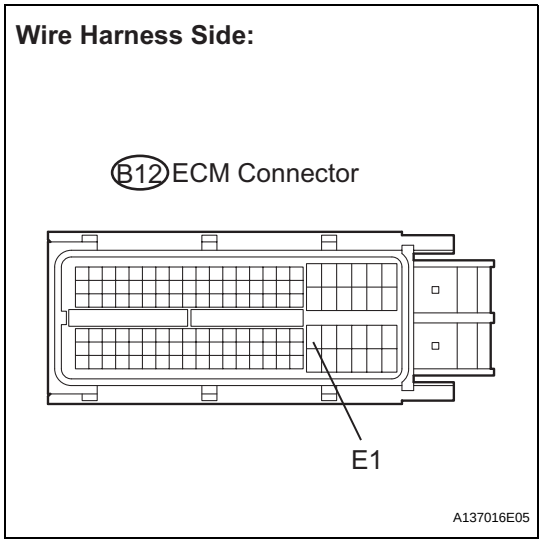

(a) Disconnect the B12 ECM connector.
(b) Measure the resistance according to the value(s) in the table below.
Standard resistance

Tester Connection	Specified Condition
E1 (B12-81) - Body ground	Below 1 Ω

(c) Reconnect the ECM connector.

NG → **REPAIR OR REPLACE HARNESS OR CONNECTOR**

OK

2 CHECK ENGINE ROOM JUNCTION BLOCK (EFI RELAY VOLTAGE)

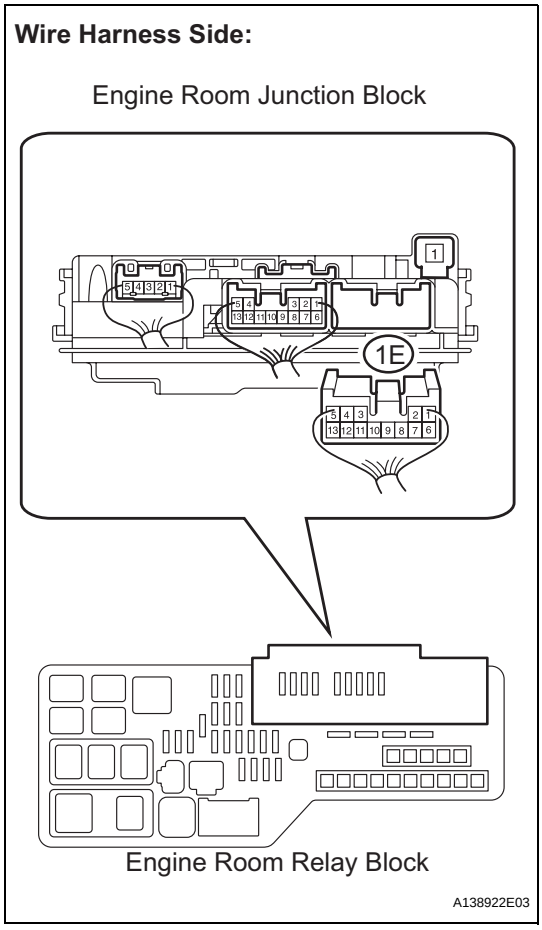

(a) Remove the engine room junction block from the engine room R/B.
(b) Turn the engine switch on (IG).
(c) Measure the voltage according to the value(s) in the table below.
Standard voltage

Tester Connection	Specified Condition
1E-6 - Body ground	9 to 14 V

OK → **Go to step 5**

NG

3 INSPECT EFI MAIN FUSE

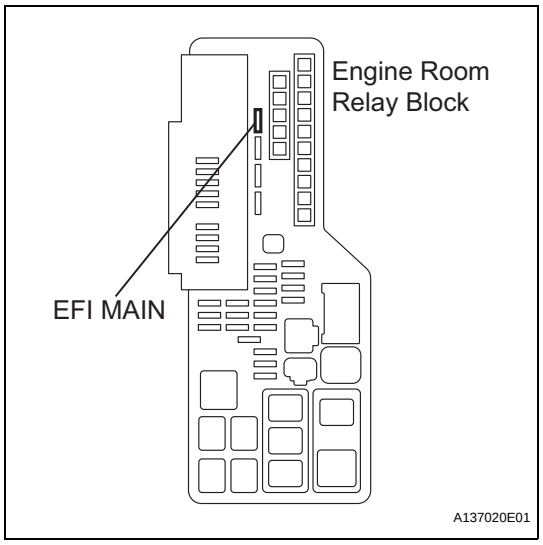

(a) Remove the EFI MAIN fuse from the engine room R/B.
(b) Measure the EFI MAIN fuse resistance.
Standard resistance:
Below 1 Ω
(c) Reinstall the EFI MAIN fuse.

NG → **REPLACE EFI MAIN FUSE**

ES

OK

4 CHECK HARNESS AND CONNECTOR (ENGINE ROOM RELAY BLOCK - BATTERY)

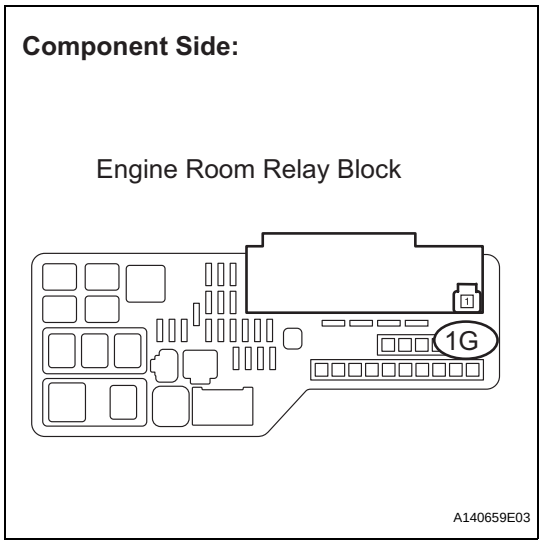

(a) Disconnect the negative battery terminal.
(b) Disconnect the positive battery terminal.
(c) Remove the engine room junction block from the engine room R/B.
(d) Measure the resistance according to the value(s) in the table below.

Standard resistance (Check for open)

Tester Connection	Specified Condition
1G-1 - Positive battery terminal	Below 1 Ω

Standard resistance (Check for short)

Tester Connection	Specified Condition
1G-1 or Positive battery terminal - Body ground	10 kΩ or higher

(e) Reinstall the engine room junction block.
(f) Reconnect the positive battery terminal.
(g) Reconnect the negative battery terminal.

NG → **REPAIR OR REPLACE HARNESS OR CONNECTOR**

OK

PROCEED TO NEXT CIRCUIT INSPECTION SHOWN IN PROBLEM SYMPTOMS TABLE (See page ES-28)

ES

5	INSPECT ENGINE ROOM JUNCTION BLOCK (EFI RELAY)

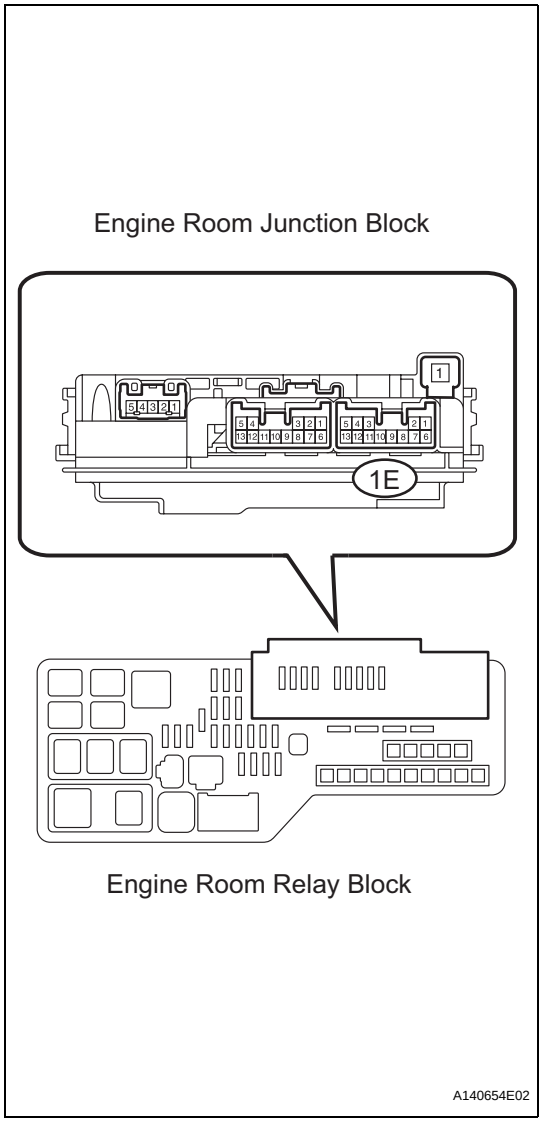

(a) Remove the engine room junction block from the engine room R/B.

(b) Measure the resistance between the terminals.

Standard resistance

Tester Connection	Specified Condition
1E-6 - 1E-12	10 kΩ or higher
1E-6 - 1E-12	Below 1 Ω (Apply battery voltage between terminals 1E-9 and 1E-11)

(c) Reinstall the engine room junction block.

NG → **REPLACE ENGINE ROOM JUNCTION BLOCK**

OK

6	INSPECT EFI NO. 2 FUSE

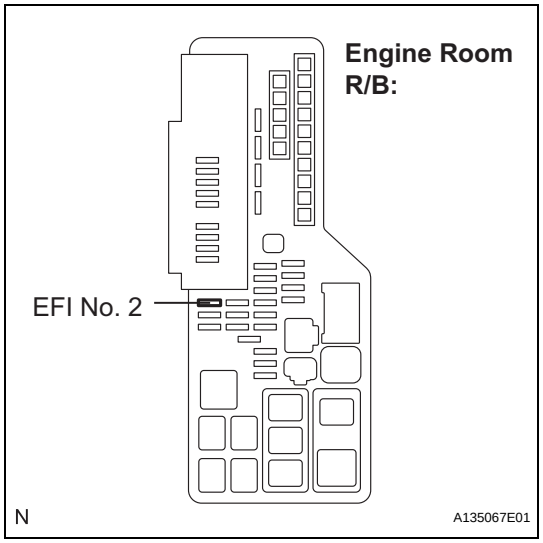

(a) Remove the EFI No. 2 fuse from the engine room R/B.
(b) Measure the EFI No. 2 fuse resistance.
Standard resistance:
Below 1 Ω
(c) Reinstall the EFI No. 2 fuse.

NG → **REPLACE EFI NO. 2 FUSE**

OK

ES

ES

7	CHECK HARNESS AND CONNECTOR (ECM - ENGINE ROOM JUNCTION BLOCK)

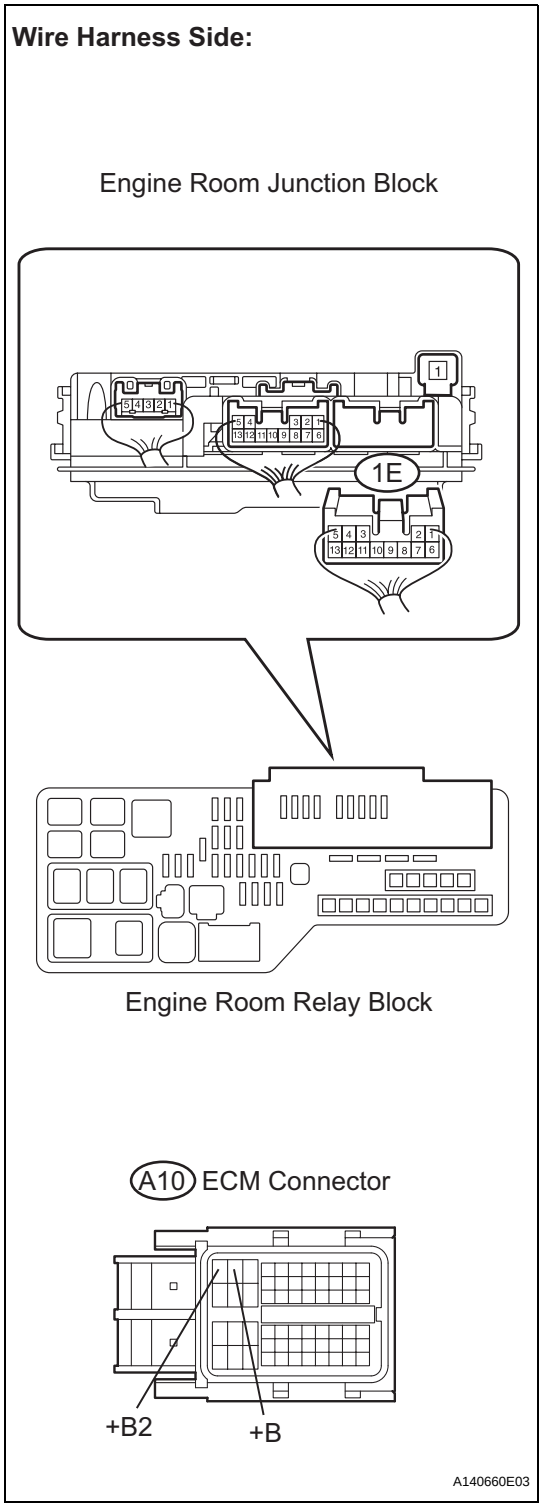

(a) Disconnect the A10 ECM connector.
(b) Remove the engine room junction block from the engine room R/B.
(c) Measure the resistance according to the value(s) in the table below.

Standard resistance (Check for open)

Tester Connection	Specified Condition
1E-6 - +B (A10-2)	Below 1 Ω
1E-6 - +B2 (A10-1)	Below 1 Ω

Standard resistance (Check for short)

Tester Connection	Specified Condition
1E-6 or +B (A10-2) - Body ground	10 kΩ or higher
1E-6 or +B2 (A10-1) - Body ground	10 kΩ or higher

(d) Reinstall the engine room junction block.
(e) Reconnect the ECM connector.

NG → **REPAIR OR REPLACE HARNESS OR CONNECTOR**

OK

8 INSPECT ECM (IGSW VOLTAGE)

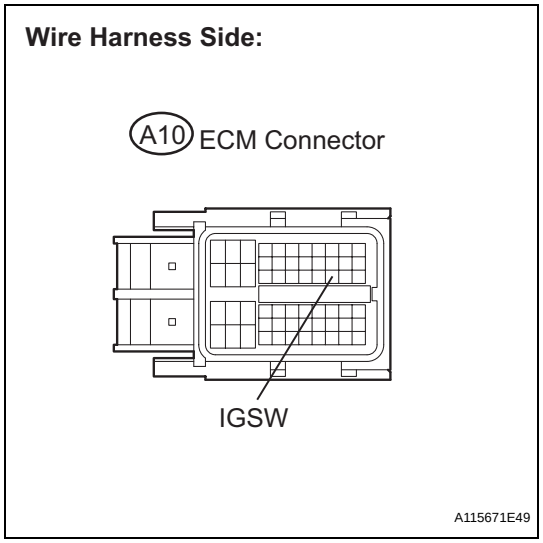

(a) Disconnect the A10 ECM connector.
(b) Measure the voltage according to the value(s) in the table below.
Standard voltage

Tester Connection	Specified Condition
IGSW (A10-28) - Body ground	9 to 14 V

(c) Reconnect the ECM connector.

OK → **Go to step 11**

NG

9 INSPECT IG2 RELAY

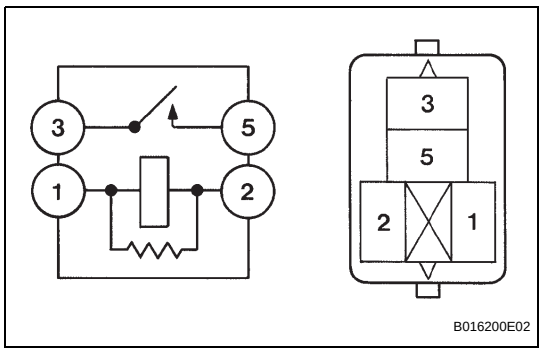

(a) Remove the IG2 relay from the engine room R/B.
(b) Measure the resistance according to the value(s) in the table below.
Standard resistance

Tester Connection	Specified Condition
3 - 5	10 kΩ or higher
3 - 5	Below 1 Ω (Apply battery voltage between terminals 1 and 2)

(c) Reinstall the IG2 relay.

NG → **REPLACE IG2 RELAY**

OK

ES

ES

10 CHECK HARNESS AND CONNECTOR (IG2 RELAY - BODY GROUND)

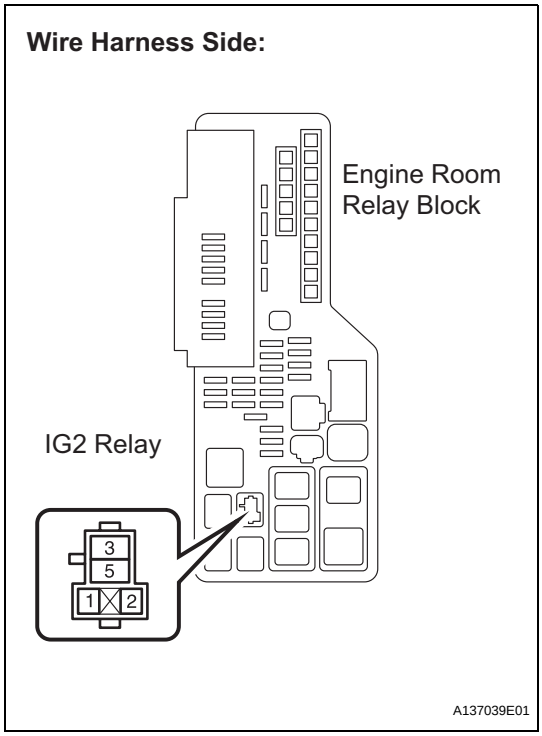

(a) Remove the IG2 relay from the engine room R/B.
(b) Measure the resistance according to the value(s) in the table below.
Standard resistance

Tester Connection	Specified Condition
IG2 relay terminal 2 - Body ground	Below 1 Ω

(c) Reinstall the IG2 relay.
Result

Result	Proceed to
OK	A
NG	B

A → **GO TO SMART ACCESS SYSTEM WITH PUSH-BUTTON START**

B

REPAIR OR REPLACE HARNESS OR CONNECTOR

11 CHECK HARNESS AND CONNECTOR (ECM - BODY GROUND)

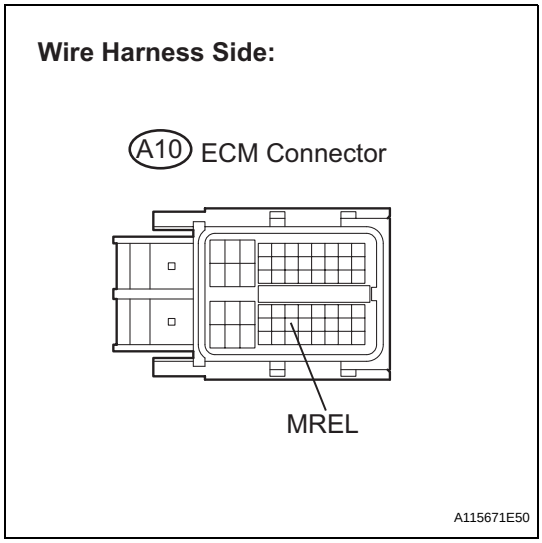

(a) Disconnect the A10 ECM connector.
(b) Measure the resistance according to the value(s) in the table below.
Standard resistance

Tester Connection	Specified Condition
MREL (A10-44) - Body ground	Below 1 Ω

(c) Reconnect the ECM connector.

NG → **REPAIR OR REPLACE HARNESS OR CONNECTOR**

OK

REPLACE ECM (See page ES-543)

VC Output Circuit

DESCRIPTION

The ECM constantly uses 5 V from the battery voltages supplied to the +B (BATT) terminal to operate the microprocessor. The ECM also provides this power to the sensors through the VC output circuit.
When the VC circuit is short-circuited, the microprocessor in the ECM and sensors that are supplied power through the VC circuit are inactivated because the power is not supplied from the VC circuit. Under this condition, the system does not start up and the MIL does not illuminate even if the system malfunctions.
HINT:
Under normal conditions, the MIL is illuminated for several seconds when the engine switch is first turned on (IG). The MIL goes off when the engine is started.

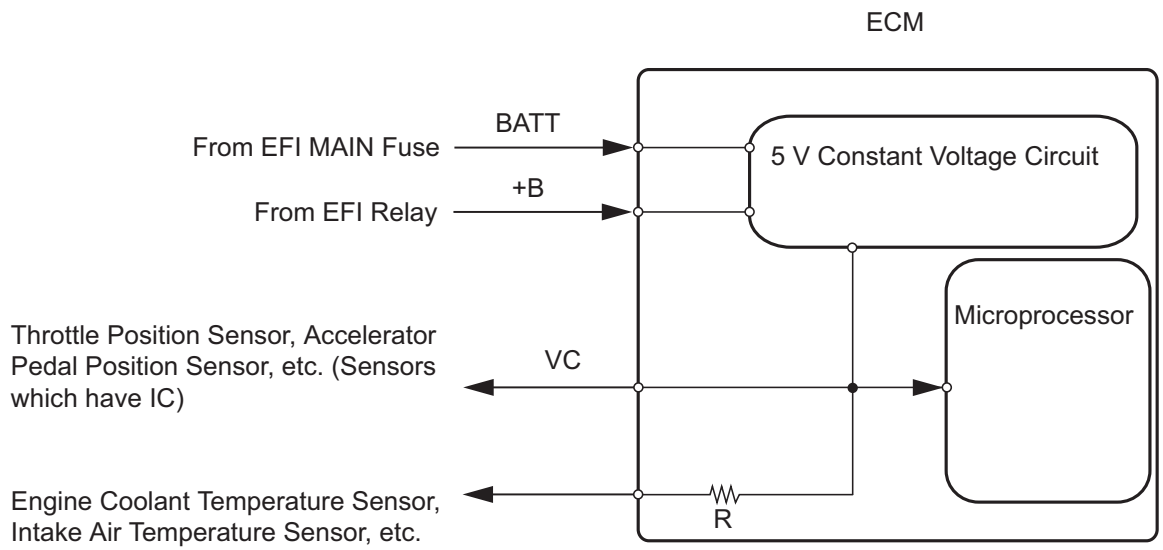

A116143E14

WIRING DIAGRAM

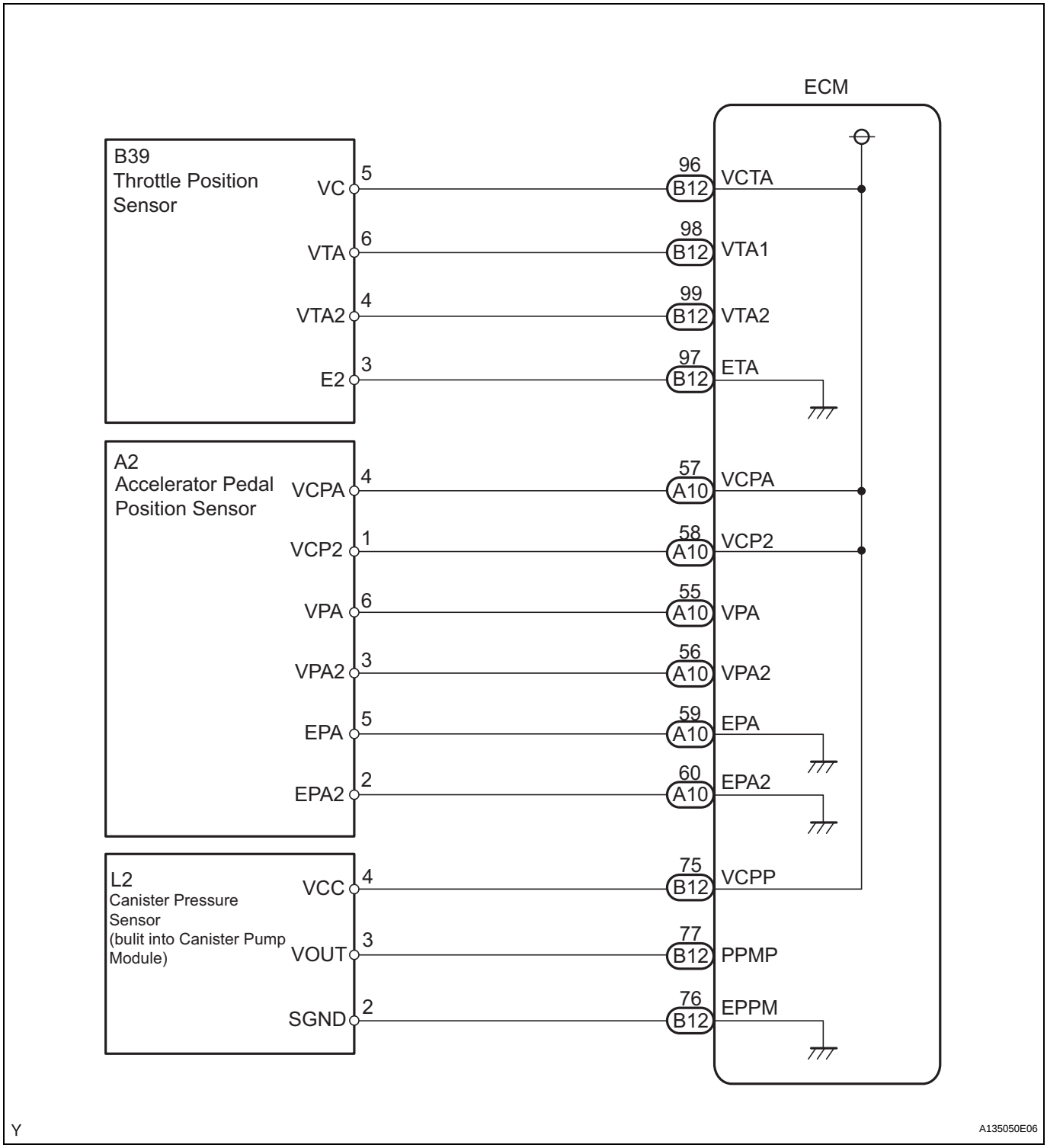

ES

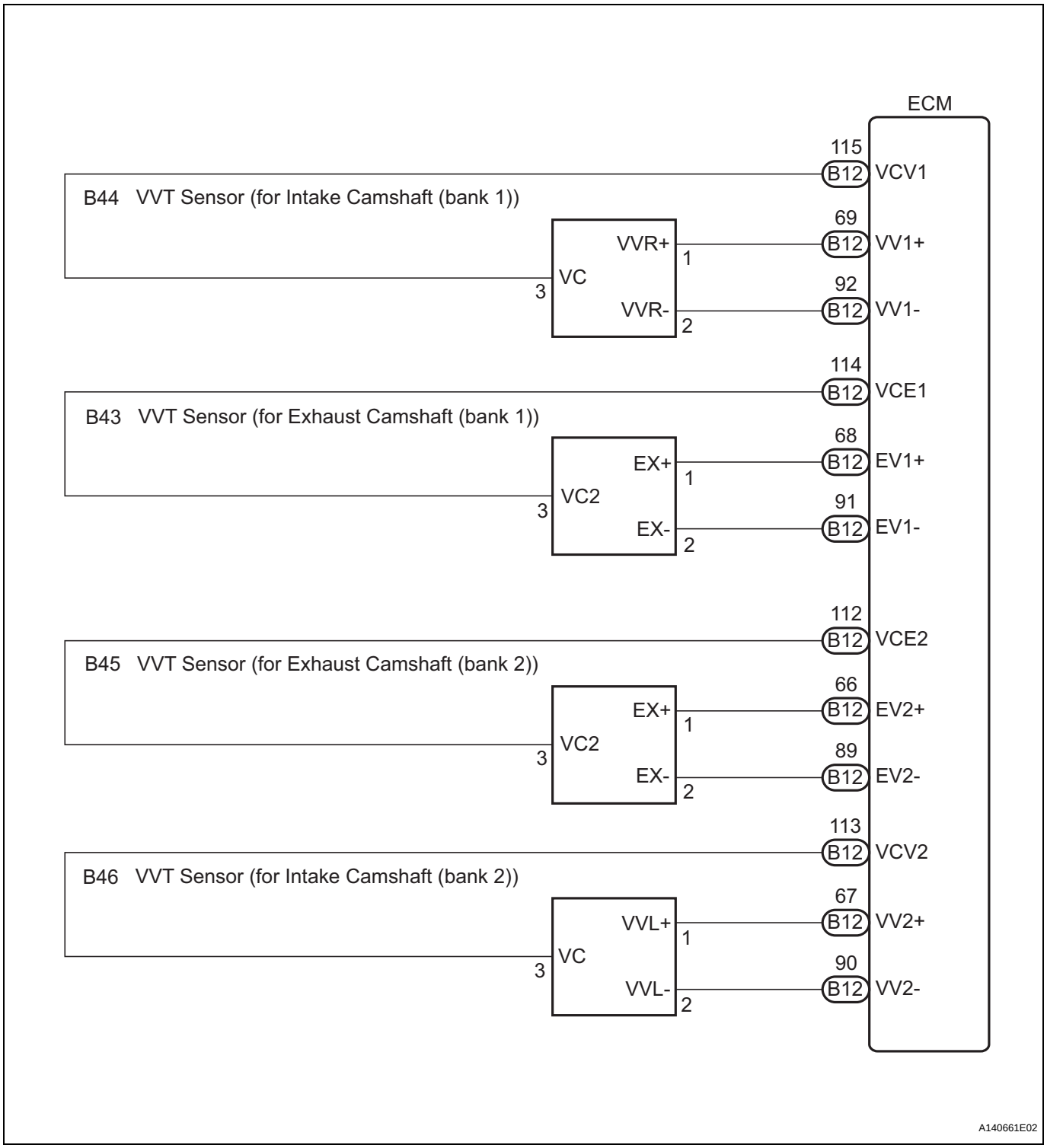

INSPECTION PROCEDURE

1	CHECK MIL

(a) Check that Malfunction Indicator Lamp (MIL) lights up when turning the engine switch on (IG).

OK:

MIL lights up.

ES

OK → GO TO MIL CIRCUIT (See page ES-465)

NG

2 CHECK CONNECTION BETWEEN INTELLIGENT TESTER AND ECM

(a) Connect the intelligent tester to the DLC3.
(b) Turn the engine switch on (IG) and turn the tester on.
(c) Check the communication between the tester and ECM.

Result

Result	Proceed to
Communication is possible	A
Communication is not possible	B

A → GO TO MIL CIRCUIT (See page ES-465)

B

3 CHECK THROTTLE BODY ASSEMBLY (CHECK MIL ILLUMINATED)

(a) Disconnect the throttle body connector.
(b) Turn the engine switch on (IG).
(c) Check the MIL.

Result

Result	Proceed to
MIL illuminates	A
MIL does not illuminate	B

(d) Reconnect the throttle body connector.

A → REPLACE THROTTLE BODY ASSEMBLY (See page ES-519)

B

4 CHECK ACCELERATOR PEDAL ASSEMBLY (CHECK MIL ILLUMINATED)

(a) Disconnect the accelerator pedal position sensor connector.
(b) Turn the engine switch on (IG).
(c) Check the MIL.

Result

Result	Proceed to
MIL illuminates	A
MIL does not illuminate	B

(d) Reconnect the accelerator pedal position sensor connector.

A → REPLACE ACCELERATOR PEDAL ASSEMBLY (See page ES-546)

B

5	CHECK VVT SENSOR FOR INTAKE CAMSHAFT BANK 1 (CHECK MIL ILLUMINATED)

(a) Disconnect the VVT sensor for intake camshaft bank 1 connector.
(b) Turn the engine switch on (IG).
(c) Check the MIL.

Result

Result	Proceed to
MIL illuminates	A
MIL does not illuminate	B

(d) Reconnect the VVT sensor for intake camshaft bank 1 connector.

A → **REPLACE VVT SENSOR FOR INTAKE CAMSHAFT BANK 1 (See page ES-507)**

B

6	CHECK VVT SENSOR FOR EXHAUST CAMSHAFT BANK 1 (CHECK MIL ILLUMINATED)

(a) Disconnect the VVT sensor for exhaust camshaft bank 1 connector.
(b) Turn the engine switch on (IG).
(c) Check the MIL.

Result

Result	Proceed to
MIL illuminates	A
MIL does not illuminate	B

(d) Reconnect the VVT sensor for exhaust camshaft bank 1 connector.

A → **REPLACE VVT SENSOR FOR EXHAUST CAMSHAFT BANK 1 (See page ES-507)**

B

7	CHECK VVT SENSOR FOR INTAKE CAMSHAFT BANK 2 (CHECK MIL ILLUMINATED)

(a) Disconnect the VVT sensor for intake camshaft bank 2 connector.
(b) Turn the engine switch on (IG).
(c) Check the MIL.

Result

Result	Proceed to
MIL illuminates	A
MIL does not illuminate	B

(d) Reconnect the VVT sensor for intake camshaft bank 2 connector.

A → **REPLACE VVT SENSOR FOR INTAKE CAMSHAFT BANK 2 (See page ES-507)**

B

8	CHECK VVT SENSOR FOR EXHAUST CAMSHAFT BANK 2 (CHECK MIL ILLUMINATED)

(a) Disconnect the VVT sensor for exhaust camshaft bank 2 connector.
(b) Turn the engine switch on (IG).
(c) Check the MIL.

ES

Result

Result	Proceed to
MIL illuminates	A
MIL does not illuminate	B

(d) Reconnect the VVT sensor for exhaust camshaft bank 2 connector.

A → **REPLACE VVT SENSOR FOR EXHAUST CAMSHAFT BANK 2 (See page ES-507)**

B

9	CHECK CHARCOAL CANISTER ASSEMBLY (CHECK MIL ILLUMINATED)

(a) Disconnect the canister pump module connector.
(b) Turn the engine switch on (IG).
(c) Check the MIL.

Result

Result	Proceed to
MIL illuminates	A
MIL does not illuminate	B

(d) Reconnect the canister pump module connector.

A → **REPLACE CHARCOAL CANISTER ASSEMBLY (See page EC-9)**

B

10	CHECK HARNESS AND CONNECTOR

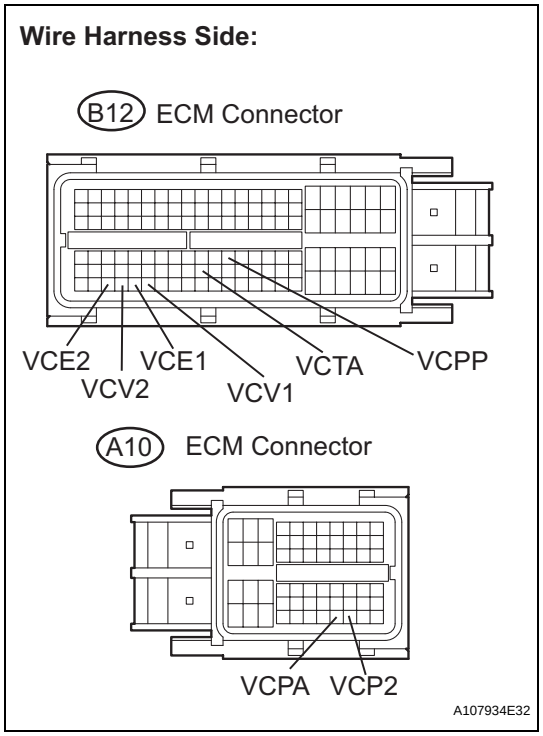

(a) Disconnect the throttle body connector.
(b) Disconnect the accelerator pedal position sensor connector.
(c) Disconnect the VVT sensor for intake camshaft bank 1 connector.
(d) Disconnect the VVT sensor for exhaust camshaft bank 1 connector.
(e) Disconnect the VVT sensor for intake camshaft bank 2 connector.
(f) Disconnect the VVT sensor for exhaust camshaft bank 2 connector.
(g) Disconnect the canister pump module connector.
(h) Disconnect the B12 and A10 ECM connectors.
(i) Measure the resistance according to the value(s) in the table below.

Standard resistance (Check for short)

Tester Connection	Specified Condition
VCTA (B12-96) - Body ground	10 kΩ or higher
VCV1 (B12-115) - Body ground	10 kΩ or higher
VCV2 (B12-113) - Body ground	10 kΩ or higher
VCE1 (B12-114) - Body ground	10 kΩ or higher
VCE2 (B12-112) - Body ground	10 kΩ or higher
VCPA (A10-57) - Body ground	10 kΩ or higher
VCP2 (A10-58) - Body ground	10 kΩ or higher
VCPP (B12-75) - Body ground	10 kΩ or higher

(j) Reconnect the ECM connectors.
(k) Reconnect the canister pump module connector.
(l) Reconnect the fuel pressure sensor connector.
(m) Reconnect the VVT sensor for exhaust camshaft bank 2 connector.
(n) Reconnect the VVT sensor for intake camshaft bank 2 connector.
(o) Reconnect the VVT sensor for exhaust camshaft bank 1 connector.
(p) Reconnect the VVT sensor for intake camshaft bank 1 connector.
(q) Reconnect the accelerator pedal position sensor connector.
(r) Reconnect the throttle body connector.

NG → **REPAIR OR REPLACE HARNESS OR CONNECTOR**

OK

REPLACE ECM (See page ES-543)

ES

Fuel Pump Control Circuit

DESCRIPTION

In the diagram below, when the engine is cranked, current flows from terminal ST1 (STR) of the engine switch (power source control ECU) to the starter relay (Marking: ST) coil and also current flows to terminal STA of the ECM (STA signal).
When the STA signal and NE signal are input to the ECM, Tr is turned ON, current flows to the coil of the circuit opening relay (Marking: C/OPN), the relay switches on, power is supplied to the fuel pump and the fuel pump operates.
While the NE signal is generated (engine running), the ECM keeps Tr ON (circuit opening relay ON) and the fuel pump also keeps operating.

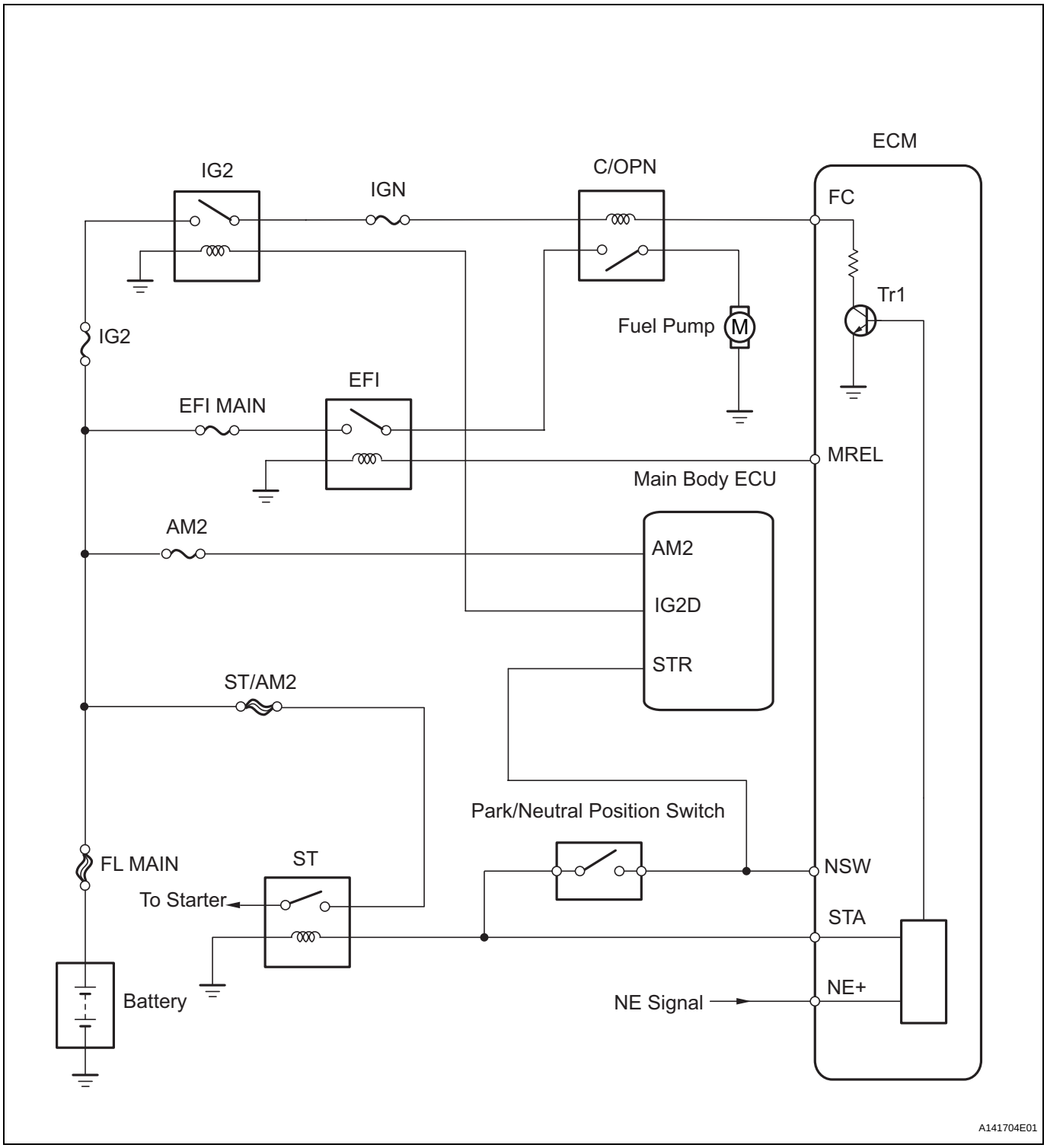
ECM
IG2
IGN
C/OPN
FC
Tr1
Fuel Pump
M
IG2
EFI
EFI MAIN
MREL
Main Body ECU
AM2
AM2
IG2D
STR
ST/AM2
Park/Neutral Position Switch
FL MAIN
ST
NSW
To Starter
STA
Battery
NE+
NE Signal
A141704E01

ES

WIRING DIAGRAM

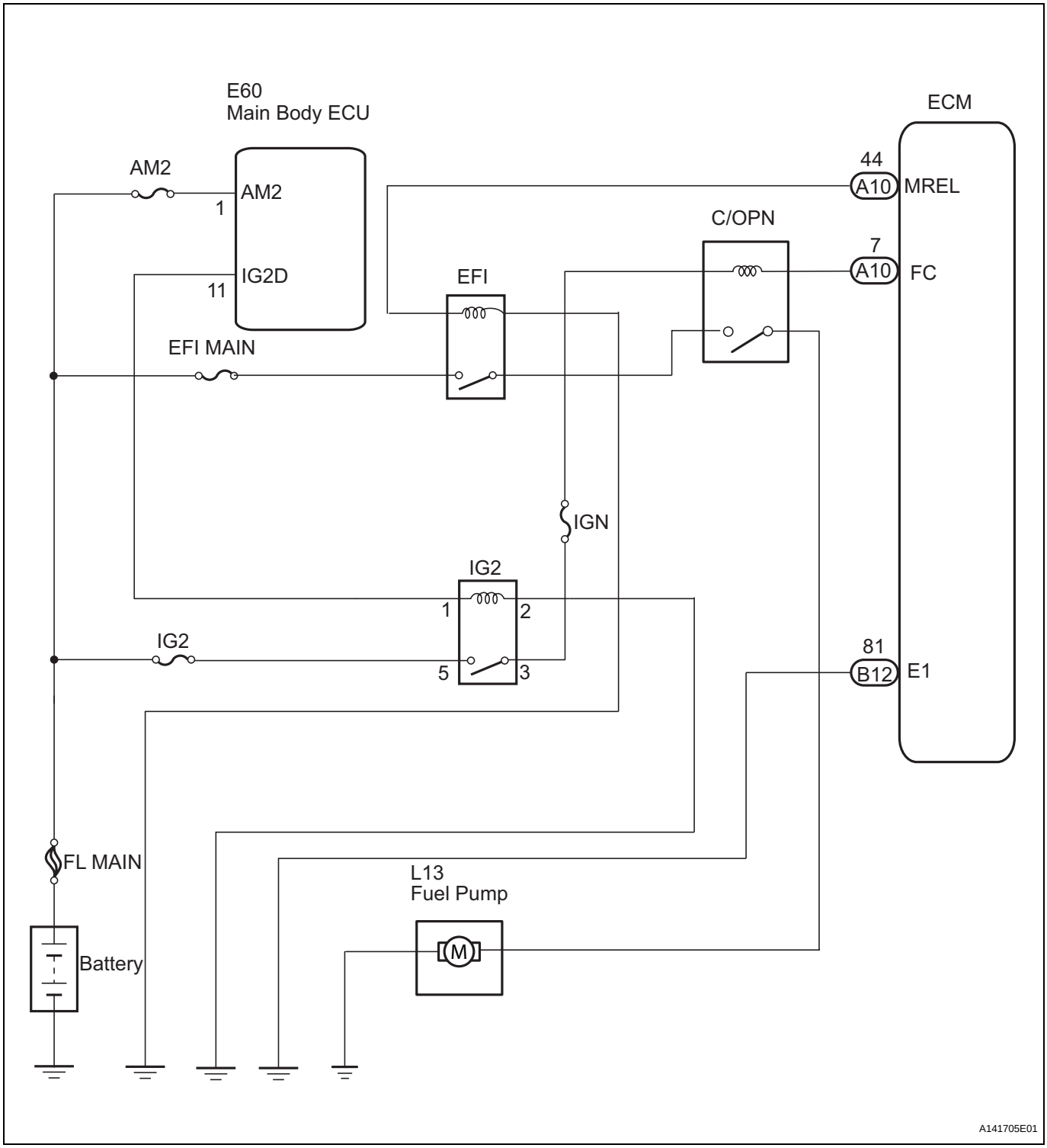

INSPECTION PROCEDURE

1	PERFORM ACTIVE TEST BY INTELLIGENT TESTER (OPERATE C/OPN RELAY)

(a) Connect the intelligent tester to the DLC3.
(b) Turn the engine switch on (IG) and turn the tester on.

(c) Select the following menu items: DIAGNOSIS / ENHANCED OBD II / ACTIVE TEST / FUEL PUMP / SPD.

(d) Check whether the fuel pump operation sound occurs when performing the Active Test on the tester.

OK:

Fuel pump operating sound occurs.

NG → **Go to step 2**

OK

PROCEED TO NEXT CIRCUIT INSPECTION SHOWN IN PROBLEM SYMPTOMS TABLE (See page ES-28)

ES

2 CHECK ECM POWER SOURCE CIRCUIT

NG → **REPAIR OR REPLACE ECM POWER SOURCE CIRCUIT**

OK

3 INSPECT ENGINE ROOM JUNCTION BLOCK (C/OPN RELAY)

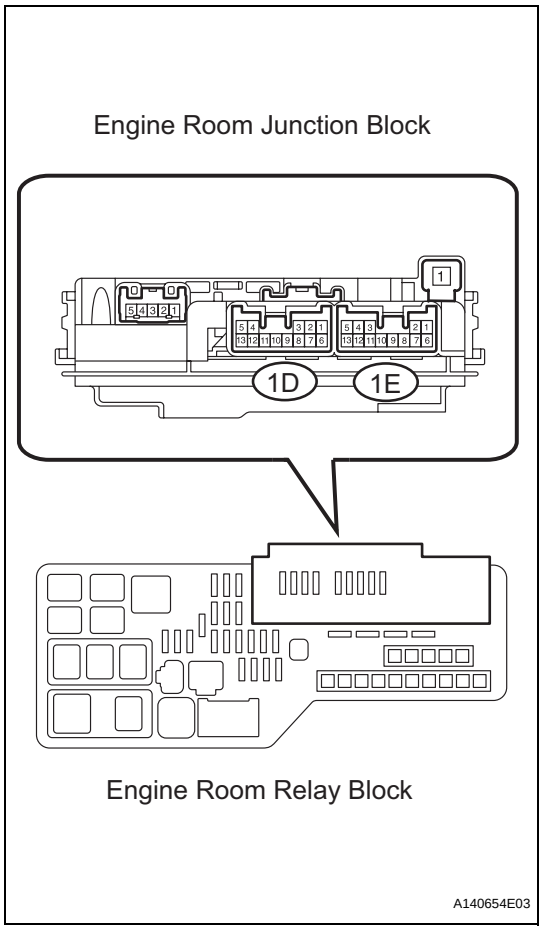

(a) Remove the integration relay from the engine room relay block.

(b) Inspect the C/OPN relay.

(1) Measure the C/OPN relay resistance.

Standard resistance

Tester Connection	Specified Condition
1E-7 - 1E-13	10 kΩ or higher
	Below 1 Ω (Apply battery voltage between terminals 1D-12 and 1E-8)

(c) Reinstall the integration relay.

NG → **REPLACE ENGINE ROOM JUNCTION BLOCK**

OK

4	INSPECT ECM (FC VOLTAGE)

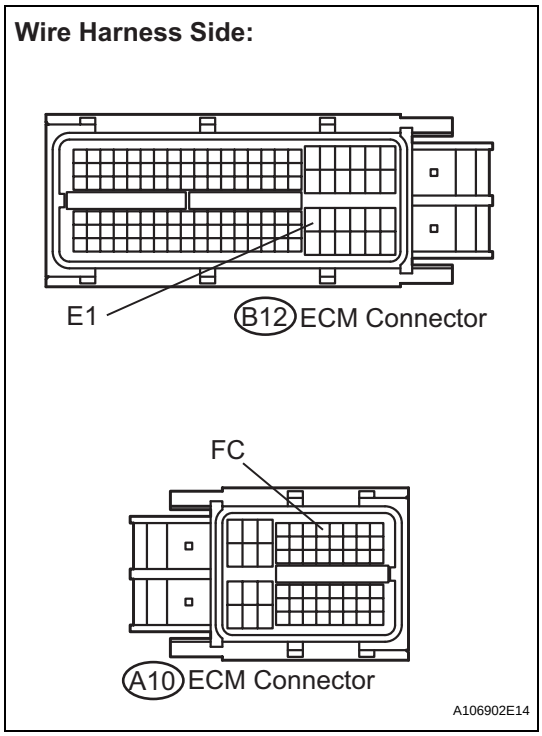

(a) Disconnect the A10 and B12 ECM connectors.
(b) Measure the voltage between the terminals of the A10 and B12 ECM connectors.
Standard voltage

Tester Connection	Specified Condition
A10-7 (FC) - B12-81 (E1)	9 to 14 V

(c) Reconnect the ECM connectors.

NG → **REPAIR OR REPLACE HARNESS OR CONNECTOR (ECM - BATTERY)**

OK

5	INSPECT FUEL PUMP

NG → **REPLACE FUEL PUMP (See page FU-26)**

OK

ES

6	CHECK HARNESS AND CONNECTOR (C/OPN RELAY - FUEL PUMP - BODY GROUND)

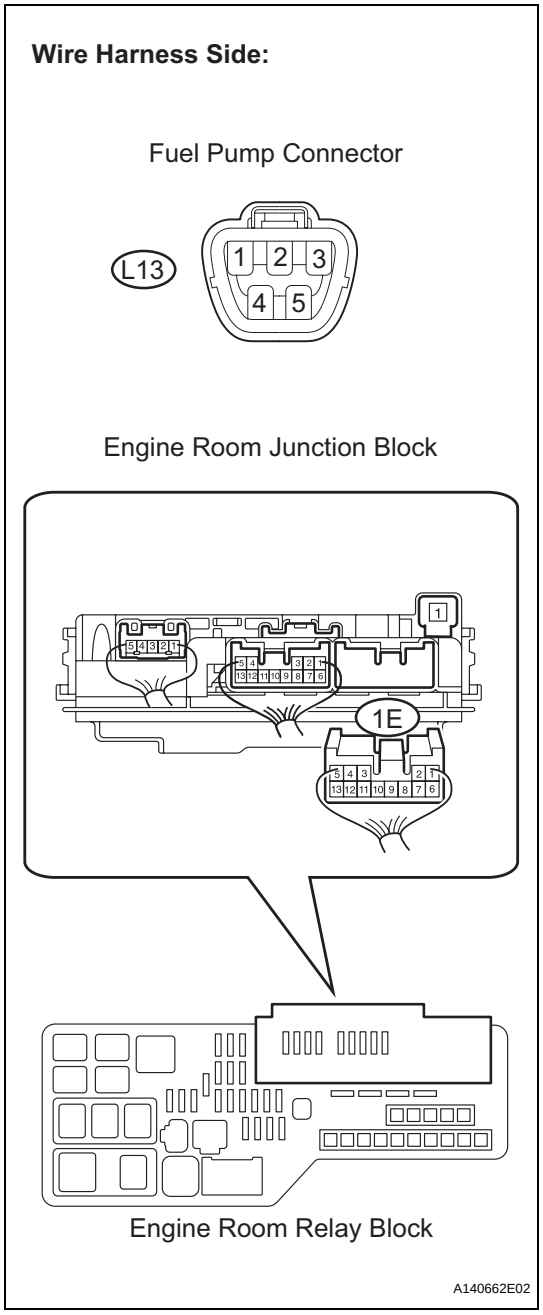

(a) Check the harness and the connectors between the engine room relay block and the fuel pump.
  (1) Disconnect the integration relay connector.
  (2) Disconnect the L13 fuel pump connector.
  (3) Measure the resistance.
  Standard resistance (Check for open)

Tester Connection	Specified Condition
1E-13 - L13-4 (Fuel pump)	Below 1 Ω

Standard resistance (Check for short)

Tester Connection	Specified Condition
1E-13 or L13-4 (Fuel pump) - Body ground	10 kΩ or higher

(b) Check the harness and the connectors between the fuel pump and body ground.
  (1) Disconnect the L13 fuel pump connector.
  (2) Measure the resistance.
  Standard resistance (Check for open)

Tester Connection	Specified Condition
L13-5 (Fuel pump) - Body ground	Below 1 Ω

(c) Reconnect the integration relay connector.
(d) Reconnect the fuel pump connector.

NG → **REPAIR OR REPLACE HARNESS OR CONNECTOR**

OK

REPLACE ECM (See page ES-543)

ES

Cranking Holding Function Circuit

DESCRIPTION

The cranking holding control system provides current to the starter when the ECM detects the engine switch's start signal (STSW). When the ECM performs a firing judgment, the system cuts current to the starter. When the ECM receives the STSW signal, it turns on the ST CUT relay, which prevents flickering of the combination meter, clock, audio system, etc. Also, the ECM sends a signal to the ECM's STAR terminal. Then the STAR output signal travels through the park/neutral position (PNP) switch to the STARTER relay, causing the starter to be activated.
When the engine is cranking, the starter operation signal is sent to the ECM's STA terminal.

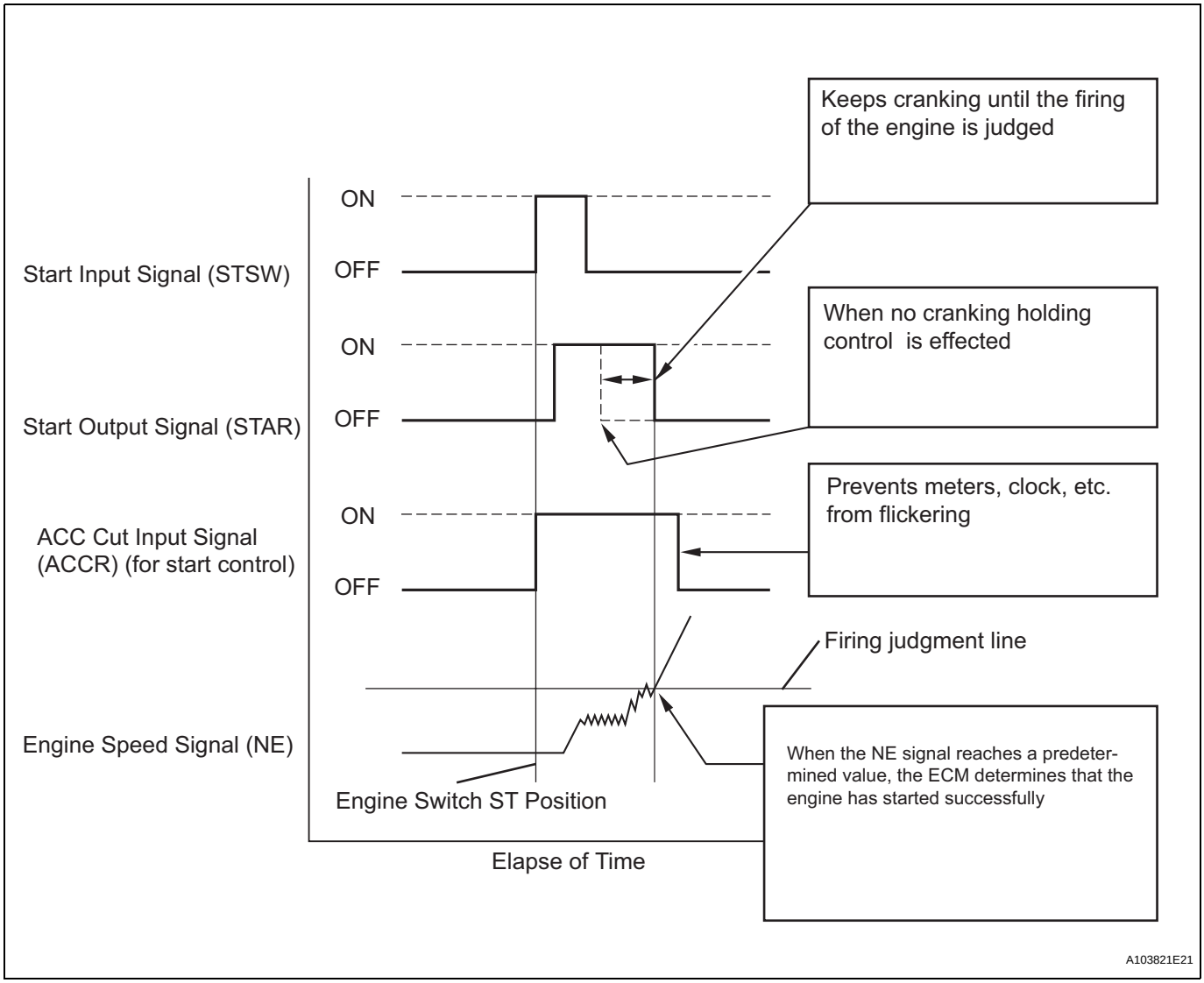

WIRING DIAGRAM

Refer to DTC P0617 (See page ES-306).

INSPECTION PROCEDURE

1	CHECK CRANKING

(a) When starting the engine, check whether the starter motor starts.

OK → CHECK FOR INTERMITTENT PROBLEMS

NG

2	READ VALUE OF INTELLIGENT TESTER (STA SIGNAL)

ES

(a) Connect the intelligent tester to the DLC3.
(b) Turn the engine switch on (IG).
(c) Turn the intelligent tester on.
(d) Select the following menu items: DIAGNOSIS / ENHANCED OBD II / DATA LIST / ALL / STARTER SIG. Read the values.
(e) Check the result when the engine switch is turned on (IG) and when the engine is started.

Standard

Display (STARTER SIG)	Condition
OFF	Engine switch on (IG)
ON	Engine start

OK → Go to step 7

NG

3	INSPECT ECM (STSW VOLTAGE)

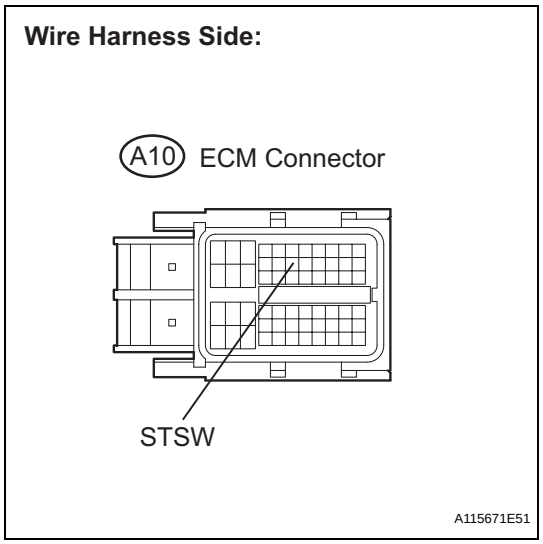

(a) Disconnect the A10 ECM Connector.
(b) Measure the voltage between the specified terminal of the ECM connector and body ground while cranking the engine.

Standard voltage

Tester Connection	Specified Condition
STSW (A10-14) - Body ground	9 to 14 V

(c) Reconnect the ECM connector.

NG → Go to step 11

OK

ES

4 INSPECT ECM (STAR VOLTAGE)

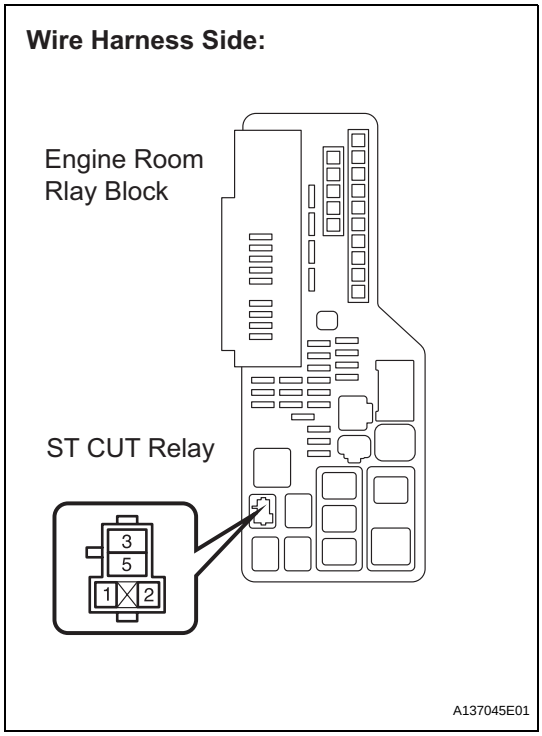

(a) Remove the ST CUT relay from the engine room R/B.
(b) Measure the voltage between the specified terminal of the engine room R/B and body ground while cranking the engine.
Standard voltage

Tester Connection	Specified Condition
ST CUT relay (3) - Body ground	9 to 14 V

(c) Reinstall the ST CUT relay.

NG → **Go to step 8**

OK

5 INSPECT ST CUT RELAY

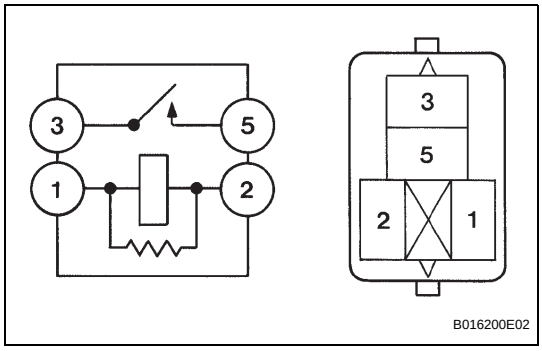

(a) Remove the ST CUT relay from the engine room R/B.
(b) Measure the resistance between the terminals.
Standard resistance

Tester Connection	Specified Condition
3 - 5	10 kΩ or higher
3 - 5	Below 1 Ω (when battery voltage is applied to terminals 1 and 2)

(c) Reinstall the ST CUT relay.

NG → **REPLACE ST CUT RELAY**

OK

6 INSPECT PARK/NEUTRAL SWITCH ASSEMBLY

Component Side:

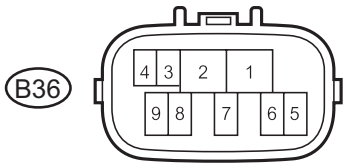

Park/Neutral Position Switch

A107908E07

(a) Inspect the Park/Neutral Position (PNP) switch.
  (1) Disconnect the B36 switch connector.
  (2) Measure the resistance according to the value(s) in the table below.

Standard resistance

Gear Selector Lever Position	Tester Connection	Specified Condition
P	4 - 5	Below 1 Ω
N	4 - 5	Below 1 Ω

  (3) Reconnect the PNP switch connector.

NG → **REPLACE PARK/NEUTRAL POSITION SWITCH ASSEMBLY (See page AX-184)**

OK

CHECK HARNESS AND CONNECTOR

7 INSPECT STARTER RELAY

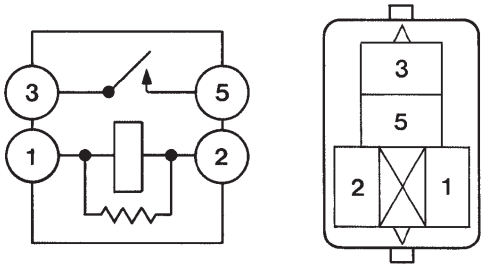

B016200E02

(a) Remove the ST relay from the engine room R/B.
(b) Measure the resistance between the terminals.

Standard resistance

Tester Connection	Specified Condition
3 - 5	10 kΩ or higher
3 - 5	Below 1 Ω (when battery voltage is applied to terminals 1 and 2)

(c) Reinstall the ST relay.

NG → **REPLACE STARTER RELAY**

OK

ES

8	CHECK HARNESS AND CONNECTOR (PARK/NEUTRAL POSITION SWITCH - STARTER RELAY)

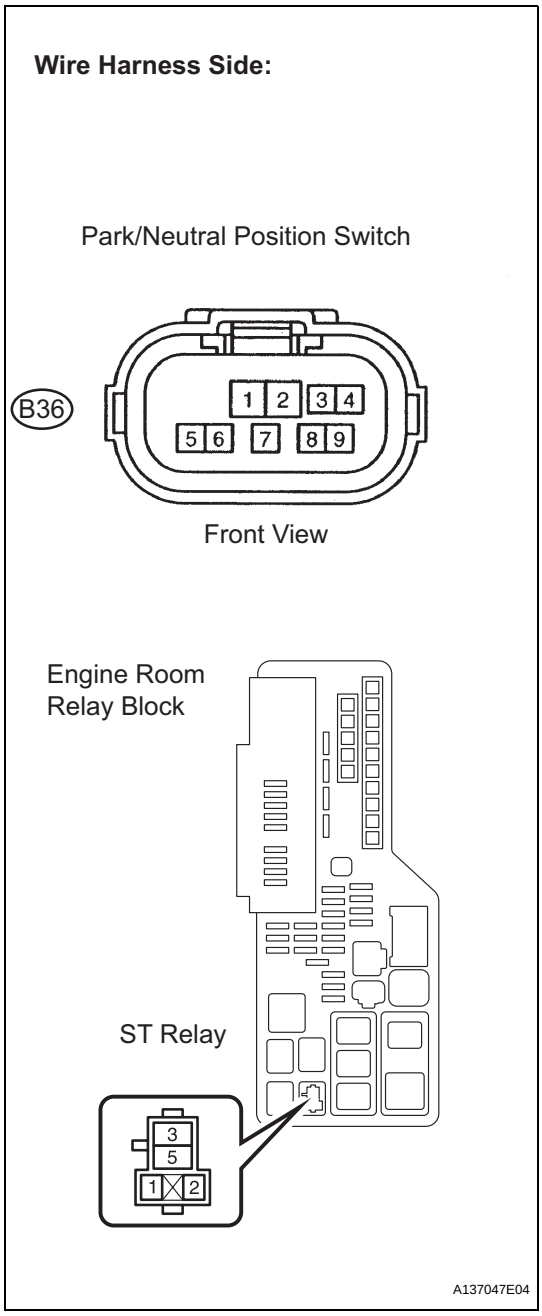

(a) Disconnect the B36 park/neutral position switch connector.
(b) Remove the ST relay from the engine room R/B.
(c) Measure the resistance according to the value(s) in the table below.

Standard resistance (Check for open)

Tester Connection	Specified Condition
B36-9 - ST relay terminal (1)	Below 1 Ω

Standard resistance (Check for open)

Tester Connection	Specified Condition
B36-9 or ST relay terminal (1) - Body ground	10 kΩ or higher

(d) Reinstall the ST relay.

NG → **REPAIR OR REPLACE HARNESS OR CONNECTOR**

OK

9	INSPECT ENGINE ROOM RELAY BLOCK (STARTER RELAY VOLTAGE)

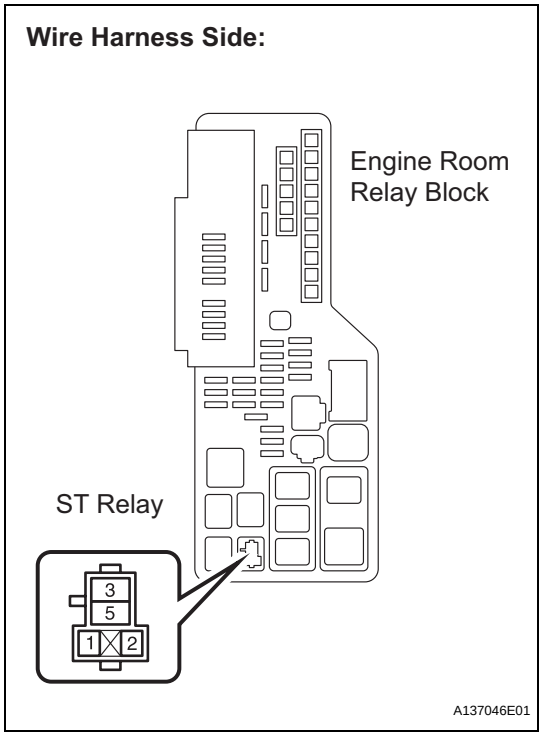

(a) Remove the ST relay from the engine room R/B.
(b) Measure the voltage between the specified terminal of the engine room R/B and body ground.

Standard voltage

Tester Connection	Specified Condition
ST relay (5) - Body ground	9 to 14 V

NG → **REPAIR OR REPLACE HARNESS OR CONNECTOR**

OK

10	INSPECT STARTER ASSEMBLY

NG → **REPAIR OR REPLACE STARTER ASSEMBLY**

OK

REPAIR OR REPLACE HARNESS OR CONNECTOR (STARTER RELAY - STARTER, STARTER - BATTERY)

ES

ES

11	CHECK HARNESS AND CONNECTOR (MAIN BODY ECU - ECM)

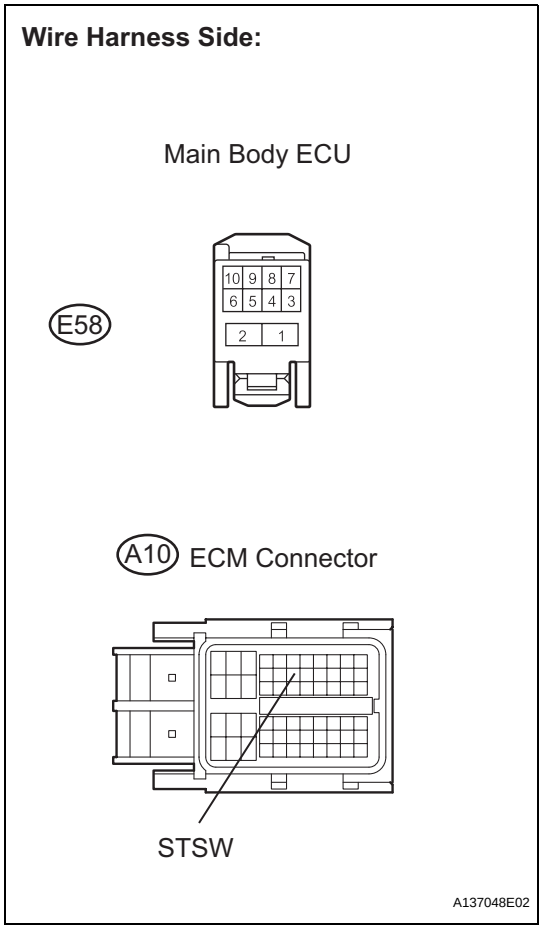

(a) Disconnect the E58 main body ECU connector.
(b) Disconnect the A10 ECM connector.
(c) Measure the resistance according to the value(s) in the table below.

Standard resistance (Check for open)

Tester Connection	Specified Condition
STSW (E58-4) - STSW (A10-14)	Below 1 Ω

Standard resistance (Check for short)

Tester Connection	Specified Condition
STSW (E58-4) or STSW (A10-14) - Body ground	10 kΩ or higher

(d) Reconnect the main body ECU connector.
(e) Reconnect the ECM connector.

NG → **REPAIR OR REPLACE HARNESS OR CONNECTOR**

OK

GO TO SMART KEY SYSTEM

ACIS Control Circuit

DESCRIPTION

This circuit opens and closes the Intake Air Control Valve (IACV) in response to changes in the engine load in order to increase the intake efficiency (ACIS: Acoustic Control Induction System).
When the engine speed is between 0 and 4,450 rpm and the throttle valve opening angle is 60° or more, the ECM supplies current to the VSV (ON status), to close the IACV. Under other conditions, the VSV is usually OFF and the IACV is open.

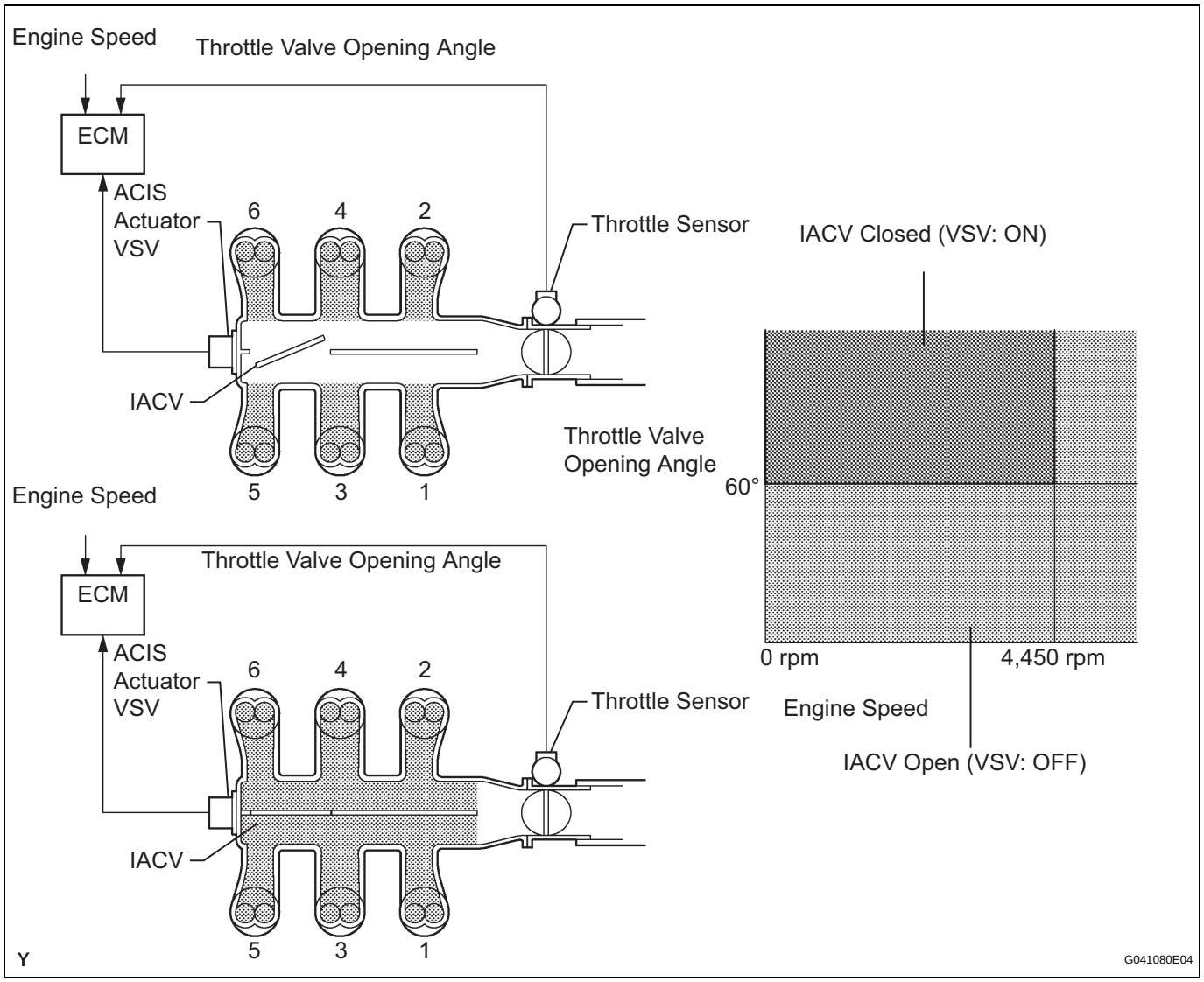

ES

WIRING DIAGRAM

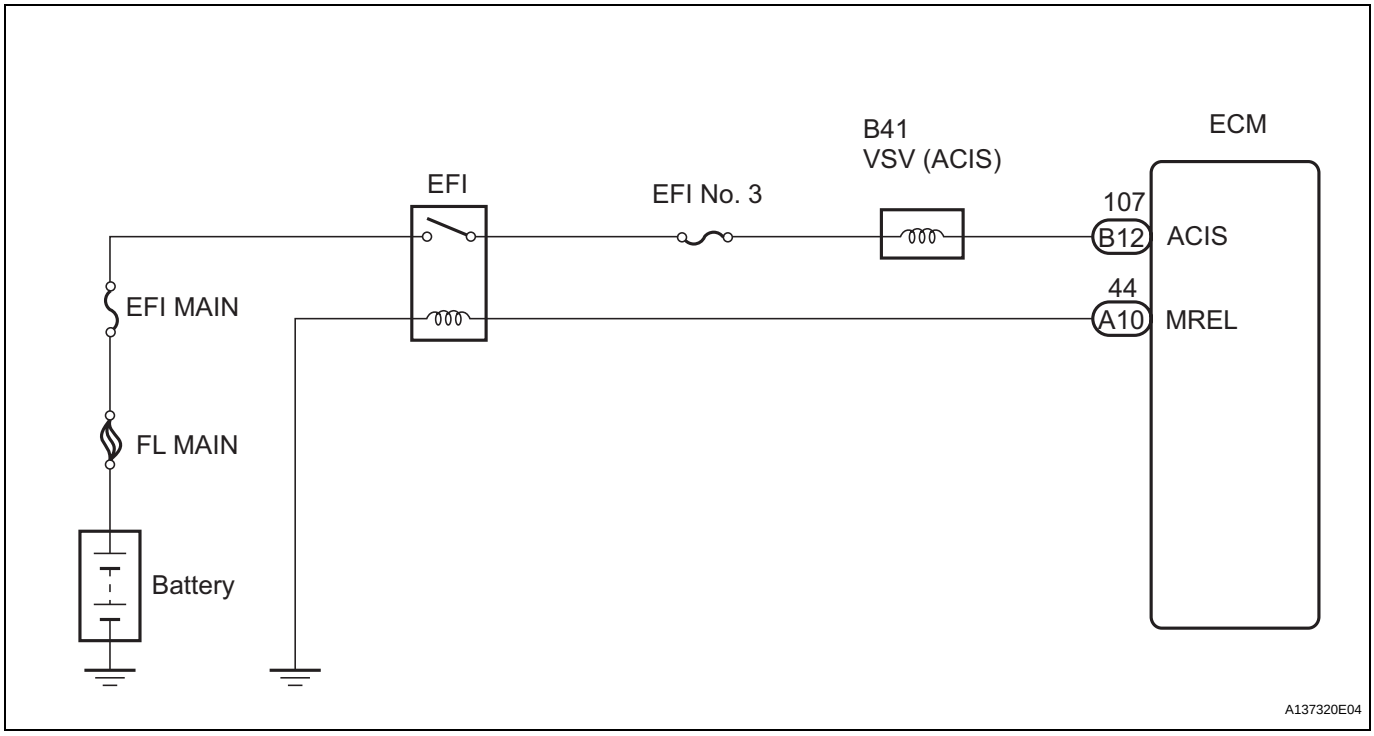

INSPECTION PROCEDURE

1	PERFORM ACTIVE TEST BY INTELLIGENT TESTER (OPERATE VSV FOR ACIS)

(a) Connect the intelligent tester to the DLC3.
(b) Start the engine and turn the intelligent tester on.
(c) Select the following menu items: DIAGNOSIS / ENHANCED OBD II / ACTIVE TEST / INTAKE CTL VSC48. Operate the VSV for AICS.
OK:
Operational noise can be heard.

OK → **PROCEED TO NEXT CIRCUIT INSPECTION SHOWN IN PROBLEM SYMPTOMS TABLE (See page ES-28)**

NG

2	CHECK INTAKE AIR CONTROL VALVE (OPERATION)

Component Side:

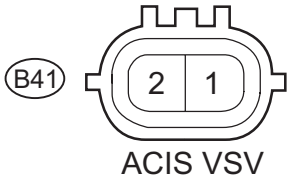

(a) Disconnect the B41 air intake valve connector.
(b) Apply battery voltage between the terminals of the air intake control valve connector.
(c) Check the air intake valve operation.
OK:
Operational noise can be heard.

NG → **REPLACE INTAKE AIR SURGE TANK**

OK

ES

ES

3	CHECK HARNESS AND CONNECTOR (VSV FOR ACIS - ECM, VSV FOR ACIS - EFI RELAY)

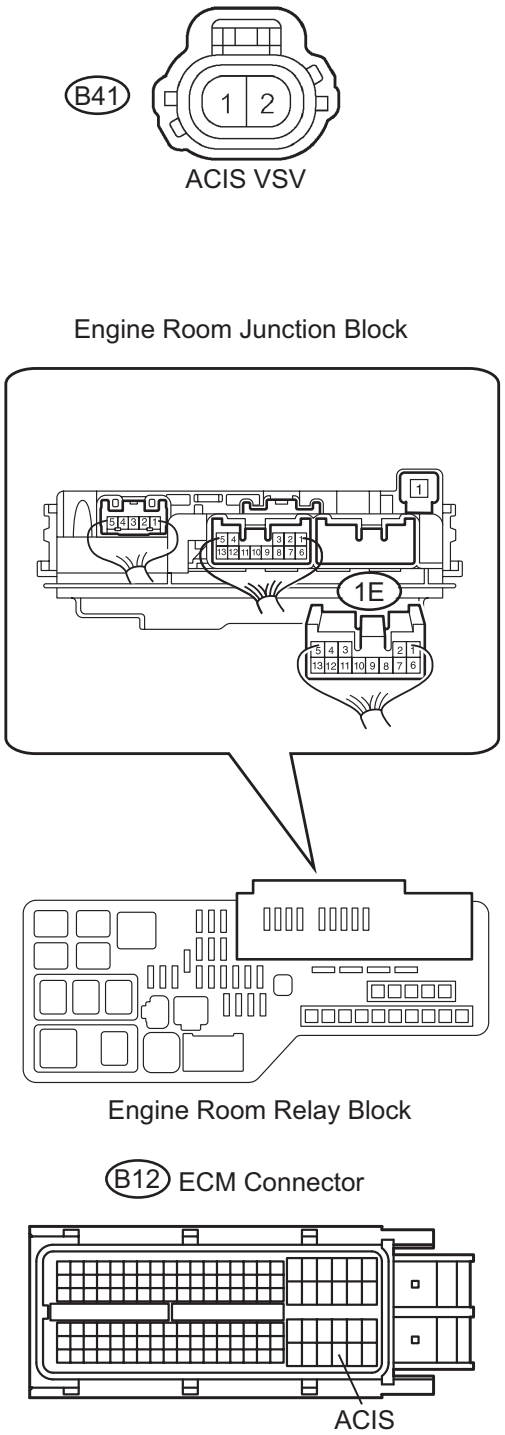

(a) Check the wire harness and connectors between the VSV for ACIS and ECM.
  (1) Disconnect the B41 VSV for ACIS connector.
  (2) Disconnect the B12 ECM connector.
  (3) Measure the resistance according to the value(s) in the table below.

Standard resistance (Check for open)

Tester Connection	Specified Condition
VSV for ACIS (B41-1) - ACIS (B12-107)	Below 1 Ω

Standard resistance (Check for short)

Tester Connection	Specified Condition
VSV for ACIS (B41-1) or ACIS (B12-107) - Body ground	10 kΩ or higher

  (4) Reconnect the VSV for ACIS connector.
  (5) Reconnect the ECM connector.

(b) Check the EFI No. 3 fuse.
  (1) Remove the EFI No. 3 fuse from the engine room R/B.
  (2) Measure the EFI No. 3 fuse resistance.
  Standard resistance:
  Below 1 Ω
  (3) Reinstall the EFI No. 3 fuse.

(c) Check the wire harness between the VSV for ACIS connector and EFI MAIN relay.
  (1) Remove the engine room junction block from the engine room R/B.
  (2) Disconnect the B41 VSV connector.
  (3) Measure the resistance between the terminals.
  Standard resistance (Check for open)

Tester Connection	Specified Condition
VSV for ACIS (B41-2) - 1E-6	Below 1 Ω

  (4) Reinstall the engine room junction block.
  (5) Reconnect the VSV connector.

NG → **REPAIR OR REPLACE HARNESS OR CONNECTOR**

OK

REPLACE ECM (See page ES-543)

Air Intake Control Circuit

DESCRIPTION

The air cleaner is equipped with two inlets, one of which is opened or closed by the Air Intake Control Valve (AICV). This system reduces intake noise and increases engine power at low-to-high engine speed range.

When the engine is operating in the low-to-mid speed range, this control operates the AICV to close one of the air cleaner inlets. When the engine speed is more than 3,600 rpm and the opening angle of the throttle valve is more than 60°, the ECM activates the VSV and opens the AICV.

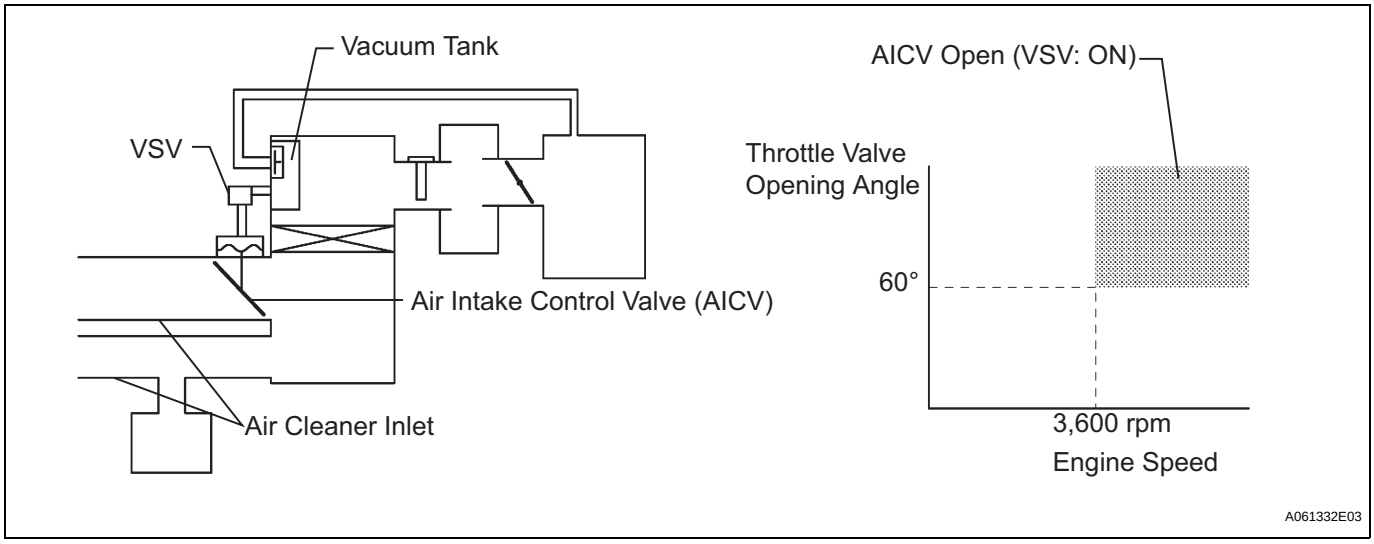

WIRING DIAGRAM

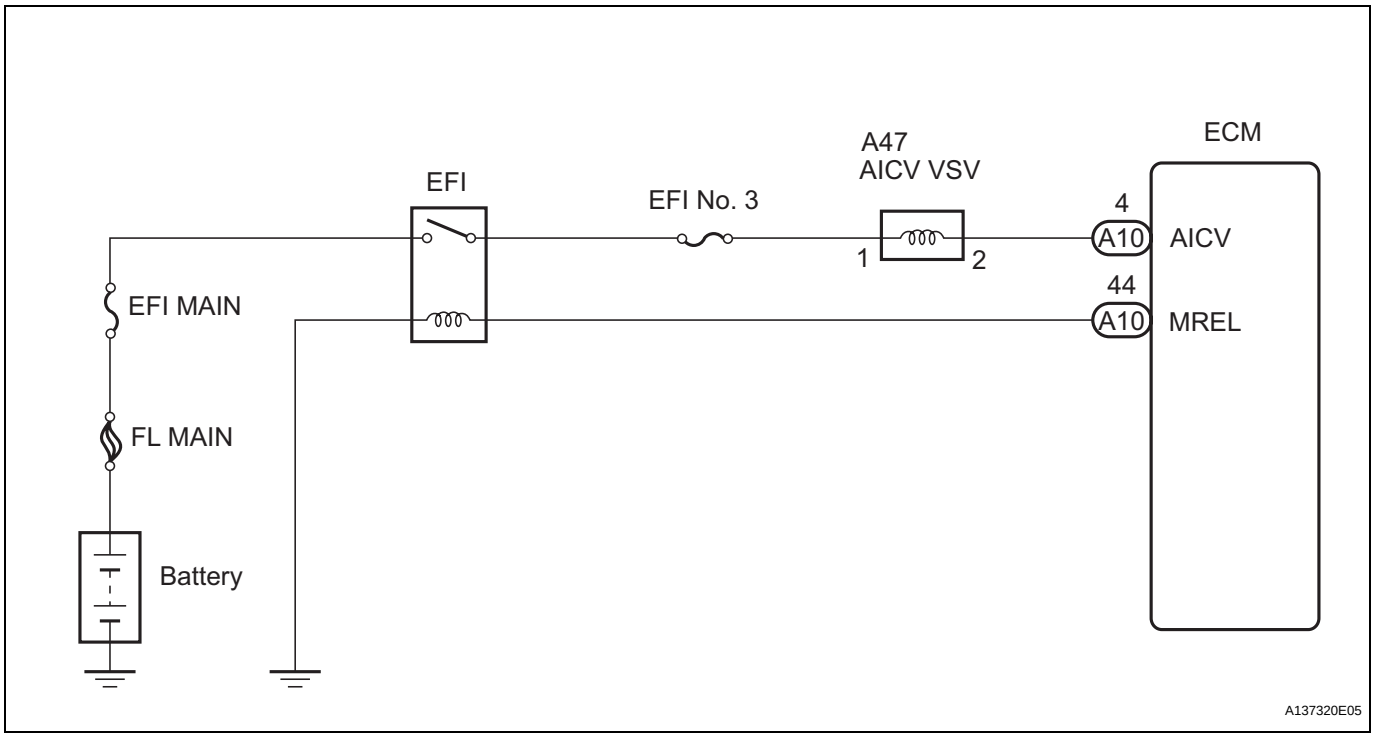

INSPECTION PROCEDURE

1	PERFORM ACTIVE TEST BY INTELLIGENT TESTER (VSV FOR AICV)

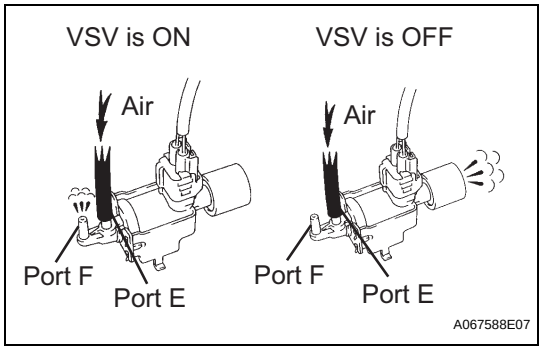

(a) Turn the engine switch on (IG) and turn the intelligent tester ON.
(b) Select the following menu items: DIAGNOSIS / ENHANCED OBD II / ACTIVE TEST / INTAKE CTL VSV1 and operate the VSV for AICV.
(c) Check the operation of the VSV when the VSV is operated by the intelligent tester.
Standard

Tester Operation	Specified Condition
VSV is ON	Air from port E flows out through port F
VSV is OFF	Air from port E flows out through the air filter

ES

OK → **Go to step 4**

NG

2	CHECK VSV (FOR AICV)

(a) Inspect the intake air control valve assembly (See page IT-6).

NG → **REPLACE INTAKE AIR CONTROL VALVE ASSEMBLY**

OK

ES

3	CHECK HARNESS AND CONNECTOR (VSV FOR AICV - ECM, VSV FOR AICV - EFI RELAY)

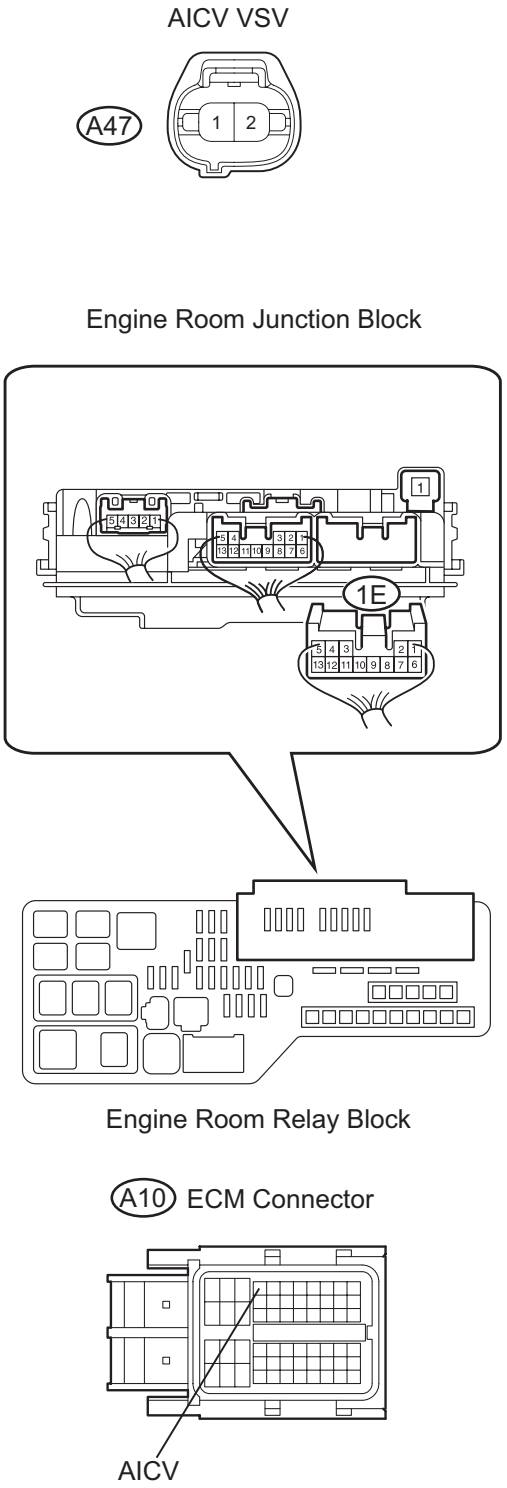

(a) Check the wire harness between the VSV for AICV connector and the ECM connector.
  (1) Disconnect the A47 VSV for AICV connector.
  (2) Disconnect the A10 ECM connector.
  (3) Measure the resistance according to the value(s) in the table below.
  Standard resistance (Check for open)

Tester Connection	Specified Condition
VSV for AICV (A47-2) - AICV (A10-4)	Below 1 Ω

Standard resistance (Check for short)

Tester Connection	Specified Condition
VSV for AICV (A47-2) or AICV (A10-4) - Body ground	10 kΩ or higher

  (4) Reconnect the ECM connector.

(b) Check the EFI No. 3 fuse.
  (1) Remove the EFI No. 3 fuse from the engine room R/B.
  (2) Measure the resistance of the EFI No. 3 fuse.
  Standard resistance:
  Below 1 Ω
  (3) Reinstall the EFI No. 3 fuse.

(c) Check the wire harness between the VSV for AICV and the EFI relay.
  (1) Remove the engine room junction block from the engine room R/B.
  (2) Measure the resistance between the terminals of the wire harness side connectors.
  Standard resistance (Check for open)

Tester Connection	Specified Condition
VSV for AICV (A47-1) - 1E-6	Below 1 Ω

  (3) Reconnect the VSV for AICV connector.
  (4) Reinstall the engine room junction block.

NG → **REPAIR OR REPLACE HARNESS OR CONNECTOR**

OK

4	INSPECT VACUUM TANK

(a) Inspect the vacuum tank (See page IT-3).

NG → **REPAIR OR REPLACE AIR CLEANER CAP**

OK

REPLACE ECM (See page ES-543)

MIL Circuit

DESCRIPTION

The MIL (Malfunction Indicator Lamp) is used to indicate vehicle malfunctions detected by the ECM. When the engine switch is turned on (IG), power is supplied to the MIL circuit, and the ECM provides the circuit ground which illuminates the MIL.
The MIL operation can be checked visually: When the engine switch is first turned on (IG), the MIL should be illuminated and should then turn off. If the MIL remains illuminated or is not illuminated, conduct the following troubleshooting procedure using the intelligent tester.

WIRING DIAGRAM

ES

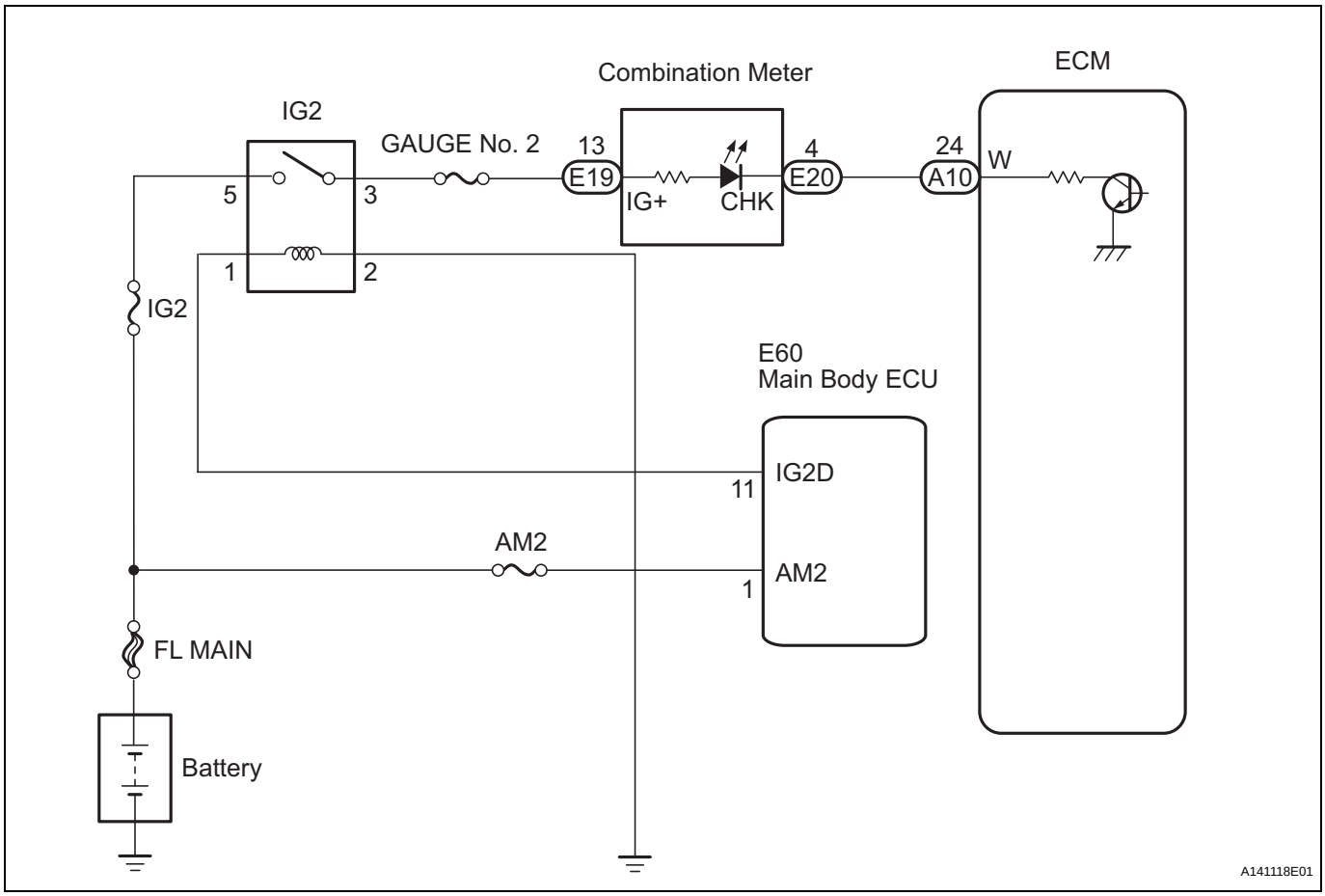

INSPECTION PROCEDURE

1	CHECK THAT MIL IS ILLUMINATED

(a) Perform troubleshooting in accordance with the table below:
Result

Conditions	Proceed to
MIL remains ON	A
MIL does not illuminate	B

B	Go to step 5

A

2	CHECK WHETHER MIL TURNS OFF

(a) Connect the intelligent tester to the DLC3.
(b) Turn the engine switch on (IG) and turn the tester on.
(c) Select the following menu items: DIAGNOSIS / ENHANCED OBD II / DTC INFO / CURRENT CODES.
(d) Check if any DTCs have been stored. Note down any DTCs.
(e) Clear the DTCs (See page ES-41).
(f) Check if the MIL goes off.
Standard:
MIL goes off.

OK → **REPAIR CIRCUITS INDICATED BY OUTPUT DTCS (See page ES-59)**

NG

3	CHECK HARNESS AND CONNECTOR (CHECK FOR SHORT IN WIRE HARNESS)

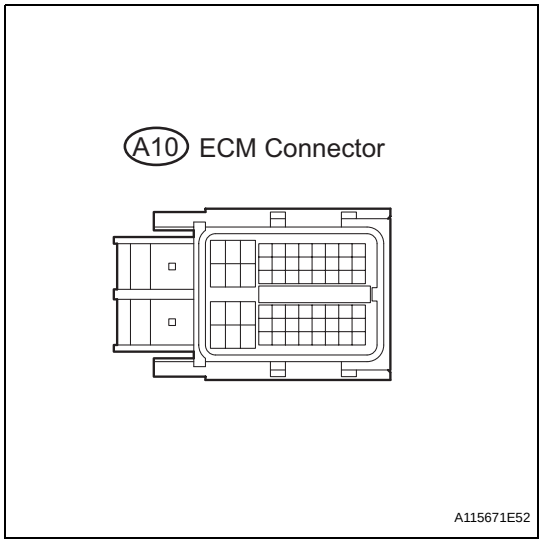

(a) Disconnect the A10 ECM connector.
(b) Turn the engine switch on (IG).
(c) Check that the MIL is not illuminated.
OK:
MIL is not illuminated.
(d) Reconnect the ECM connector.

OK → **REPLACE ECM (See page ES-543)**

NG

ES

4	CHECK HARNESS AND CONNECTOR (COMBINATION METER - ECM)

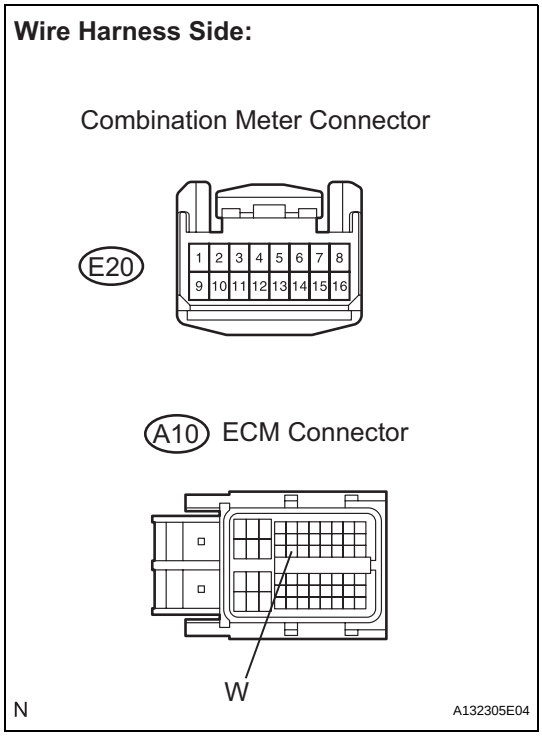

(a) Disconnect the A10 ECM connector.
(b) Disconnect the E20 combination meter connector.
(c) Measure the resistance.
Standard resistance (Check for short)

Tester Connection	Specified Condition
A10-24 (W) or E20-4 (CHK) - Body ground	10 kΩ or higher

(d) Reconnect the ECM connector.
(e) Reconnect the combination meter connector.

OK → **REPAIR OR REPLACE COMBINATION METER ASSEMBLY**

NG

REPAIR OR REPLACE HARNESS OR CONNECTOR

5	CHECK THAT MIL IS ILLUMINATED

(a) Check if the MIL is illuminated when the engine switch is turned on (IG).
OK:
MIL is illuminated.

OK → **SYSTEM OK**

NG

6	CHECK THAT ENGINE STARTS

(a) Turn the engine switch on (IG).
(b) Start the engine.
Result

Result	Proceed to
Engine starts	A
Engine does not start*	B

HINT:
*: The intelligent tester cannot communicate with the ECM.

B → **GO TO VC OUTPUT CIRCUIT (See page ES-436)**

A

7	INSPECT COMBINATION METER ASSEMBLY (MIL CIRCUIT)

(a) Check the MIL circuit (See page ME-14).

NG → **REPAIR OR REPLACE COMBINATION METER ASSEMBLY**

OK

CHECK AND REPLACE HARNESS AND CONNECTOR (COMBINATION METER - ECM)

SYSTEM DIAGRAM

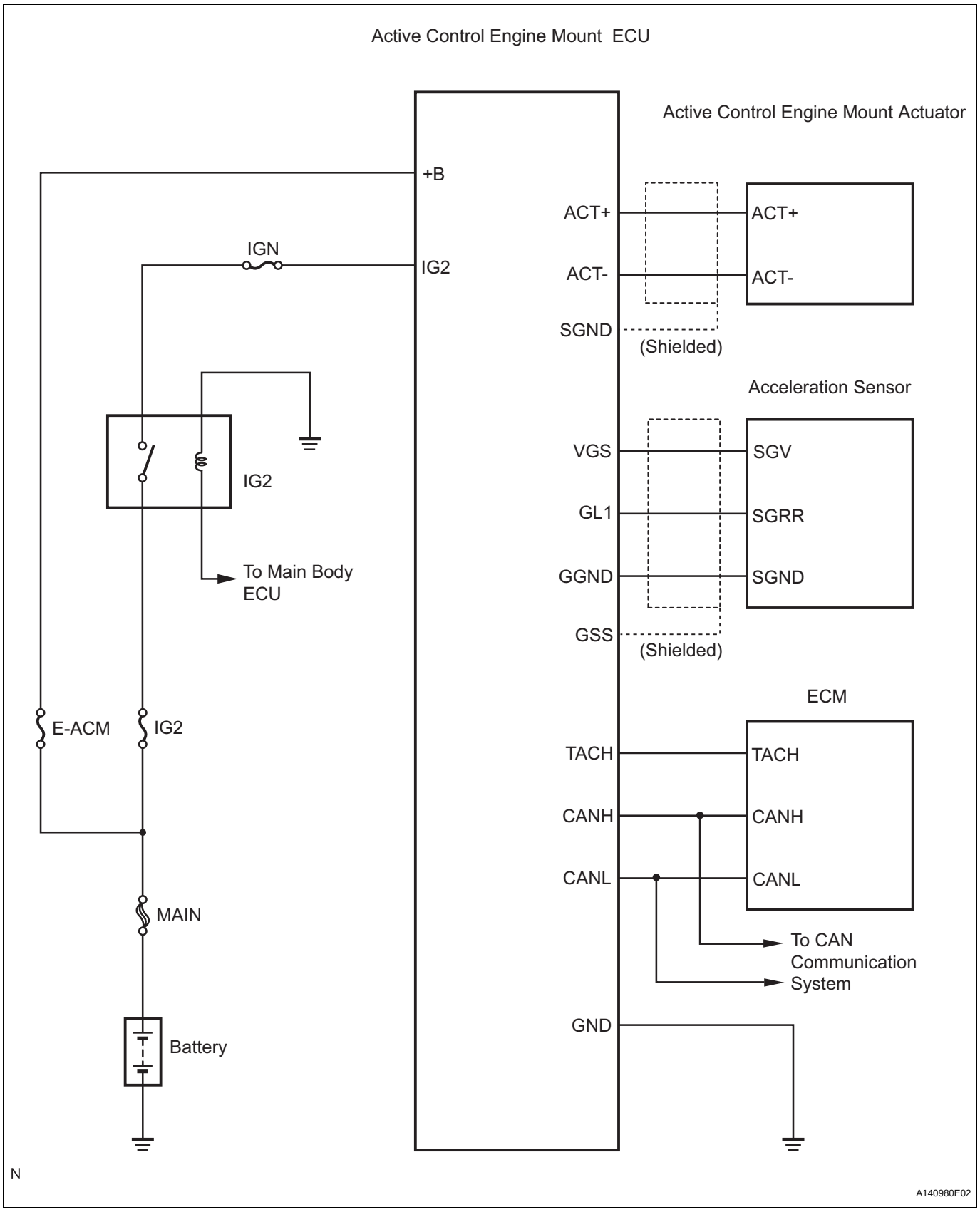

ES

SYSTEM DESCRIPTION

The active mount control system consists of an ECU, actuator, and acceleration sensor. The ECU drives the actuator to generate vibration that is opposite to the engine vibration. As a result, engine vibration is reduced. There is the idle mode that reduces vibration and booming noise while idling.

- Active Control Engine Mount ECU
  The ECU receives information through CAN communication and serial communication and uses the information to control the active control mount. If a malfunction occurs in the active mount control system, the ECU will store this DTC and stop controlling the active mount control.
  (a) Information received through CAN communication:
    * Engine driving flag
    * Engine load ratio
    * Engine coolant temperature
    * Shift position
    * Vehicle speed data
    * Outside air temperature
  (b) Information received through serial communication:
    * Engine speed
    * Acceleration sensor signal
- Active mount control actuator
  The active mount control actuator is built into the front engine mount and is composed of a vibration plate solenoid actuator.
- Acceleration sensor
  The acceleration sensor is installed on the front engine mount to detect vibration of the vehicle.

HOW TO PROCEED WITH TROUBLESHOOTING

HINT:
- Use this procedure to troubleshoot the active engine mounting system.
- The intelligent tester should be used in steps 2, 6 and 7.

ES

1	VEHICLE BROUGHT TO WORKSHOP

NEXT

2	CUSTOMER PROBLEM ANALYSIS

NEXT

3	INSPECT BATTERY VOLTAGE

Standard voltage:
11 to 14 V

If the voltage is below 11 V, recharge or replace the battery before proceeding.

NEXT

4	CHECK AND CLEAR DTCS

(a) Refer to the DTC CHECK / CLEAR (See page ES-477).

NEXT

5	VISUAL INSPECTION

NEXT

6	PERFORM ACTIVE TEST

(a) Connect the intelligent tester to the DLC3.
(b) Start the engine.
(c) Select the item "DIAGNOSIS / OBD/MOBD / E-ACM / ACTIVE TEST / CHECK THE E-ACM".

NEXT

7	CHECK FOR DTC

(a) Check for DTCs and note any codes that are output.
(b) Delete the DTC.

(c) Recheck for DTCs. Try to prompt the DTC by simulating the original activity that the DTC suggests.

Result

Result	Proceed to
DTC does not reoccur	A
DTC reoccurs	B

B → **GO TO DTC CHART**

A

ES

8 OVERALL ANALYSIS AND TROUBLESHOOTING

(a) Terminals of ECU (See page ES-474).

NEXT

9 ADJUST, REPAIR OR REPLACE

NEXT

10 CONFIRMATION TEST

NEXT

END

TERMINALS OF ECU

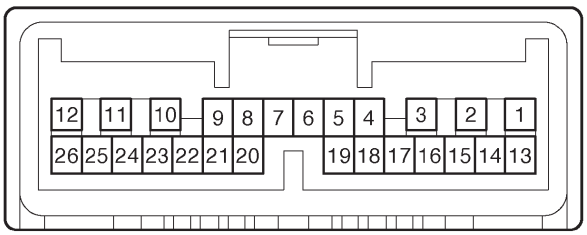

N I034896E12

Symbols (Terminal No.)	Wiring Color	Terminal Description	Condition	Specified Condition
+B (A9-2) - GND (A9-12)	B - GR	+B (BATT) power supply	Always	10 to 14 V
IG2 (A9-10) - GND (A9-12)	P - GR	Ignition power supply	Engine switch on (IG)	10 to 14 V
ACT+ (A9-1) - ACT- (A9-3)	R - L	E-ACM actuator	Idling	Pulse generation (see waveform 1)
VGS (A9-24) - GGND (A9-26)	B - R	Acceleration sensor power supply	Engine switch on (IG)	4.5 to 5.2 V
GL1 (A9-19) - GGND (A9-26)	W - R	Acceleration sensor output voltage	Engine switch on (IG)	0.11 to 4.46 V
TACH (A9-16) - GND (A9-12)	B - GR	Engine speed	Idling	Pulse generation (see waveform 2)
CANH (A9-14) - GND (A9-12)	G - GR	MPX line	Always	Pulse generation (see waveform 3)
CANL (A9-13) - GND (A9-12)	R - GR	MPX line	Always	Pulse generation (see waveform 4)

ES

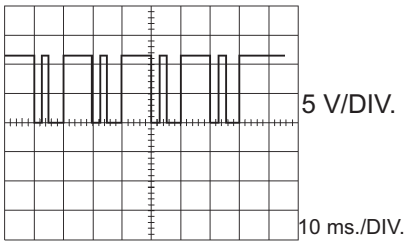

Y A009437E06

1. Waveform 1

(a) Active control engine mount actuator signal

Symbols (Terminal No.)	Between ACT+ and ACT-
Tool Setting	5 V/DIV., 10 ms./DIV.
Condition	Idling with warm engine

HINT:
- The duty ratio varies depending on the active control engine mount actuator operation.
- Do not disconnect the active control engine mount ECU connector.

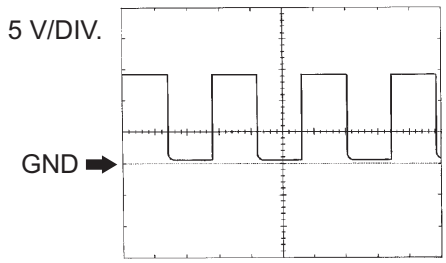

A093225E11

2. Waveform 2

(a) Engine speed signal

Symbols (Terminal No.)	Between TACH and GND
Tool Setting	5 V/DIV., 10 ms./DIV.
Condition	Idling

HINT:
The wavelength becomes shorter as the engine rpm increases.

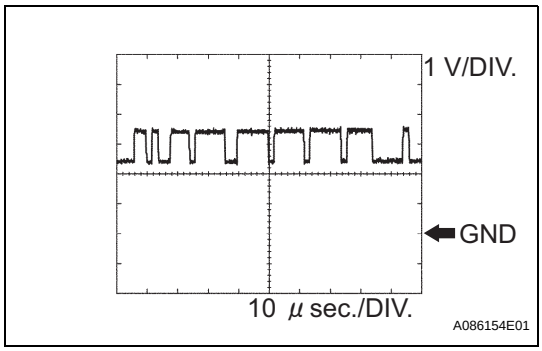

3. Waveform 3

(a) CAN communication signal

Symbols (Terminal No.)	Between CANH and E1
Tool Setting	1 V/DIV., 10 μs/DIV.
Condition	Stop engine and engine switch on (IG)

HINT:
The waveform varies depending on the CAN communication signal.

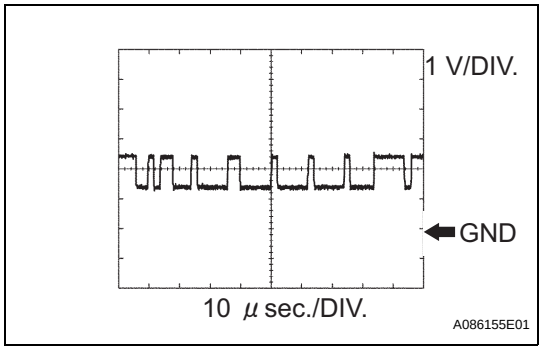

4. Waveform 4

(a) CAN communication signal

Symbols (Terminal No.)	Between CANL and E1
Tool Setting	1 V/DIV., 10 μs/DIV.
Condition	Stop engine and engine switch on (IG)

HINT:
The waveform varies depending on the CAN communication signal.

ES

DIAGNOSIS SYSTEM

1. DESCRIPTION

(a) The active control engine mount ECU controls the functions of the CAN communication system on the vehicle. Data of the CAN communication system and the Diagnostic Trouble Codes (DTCs) can be read through the Data Link Connector 3 (DLC3) of the vehicle.

2. CHECK DLC3

The vehicle's ECU uses ISO 15765-4 for communication protocol. The terminal arrangement of the DLC3 complies with SAEJ 1962 and matches the ISO 15765-4 format.

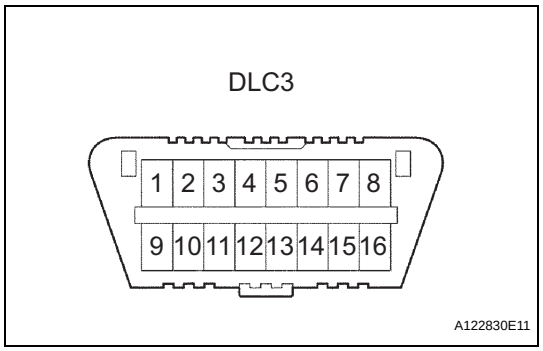

Symbols	Terminal No.	Names	Reference terminal	Results	Condition
SIL	7	Bus "+" line	5 - Signal ground	Pulse generation	During transmission
CG	4	Chassis ground	Body ground	1 Ω or less	Always
SG	5	Signal ground	Body ground	1 Ω or less	Always
BAT	16	Battery ground	Body ground	9 to 14 V	Always
CANH	6	CAN "High" line	CANL	54 to 69 Ω	Engine switch off
CANH	6	CAN "High" line	Battery positive	6 kΩ or higher	Engine switch off
CANH	6	CAN "High" line	CG	200 Ω or higher	Engine switch off
CANL	14	CAN "Low" line	Battery positive	6 kΩ or higher	Engine switch off
CANL	14	CAN "Low" line	CG	200 Ω or higher	Engine switch off

HINT:
The DLC3 is the interface prepared for reading various data from the vehicle's ECU. After connecting the cable of an intelligent tester, turn the engine switch on (IG) and turn the tester on. If a communication failure message is displayed on the tester screen (on the tester: UNABLE TO CONNECT TO VEHICLE), a problem exists in either the vehicle or tester. In order to identify the location of the problem, connect the tester to another vehicle.
If communication is normal: Inspect the DLC3 on the original vehicle.
If communication is still not possible: The problem is probably in the tester itself. Consult the Service Department listed in the instruction manual.

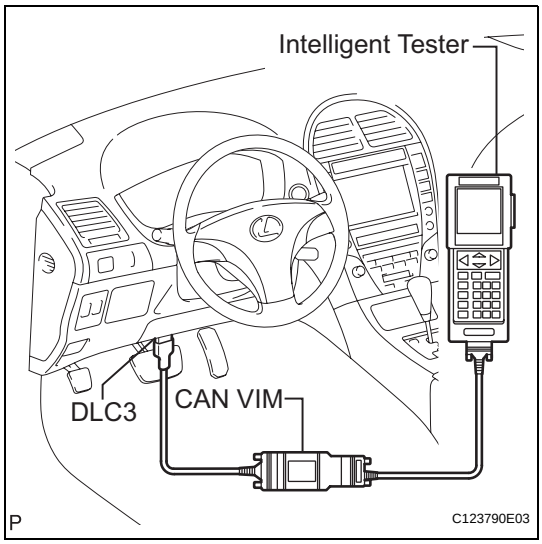

(a) Intelligent tester
HINT:
Connect the cable of the intelligent tester to the DLC3, turn the engine switch on (IG) and attempt to use the tester. If the display indicates that a communication error has occurred, there is a problem either with the vehicle or with the tester.
- If communication is normal when the tester is connected to another vehicle, inspect the DLC3 of the original vehicle.
- If communication is still not possible when the tester is connected to another vehicle, the problem may be in the tester itself. Consult the Service Department listed in the tester's instruction manual.

3. INSPECT BATTERY VOLTAGE
Standard voltage:
11 to 14 V
If the voltage is below 11 V, recharge or replace the battery before proceeding.

DTC CHECK / CLEAR

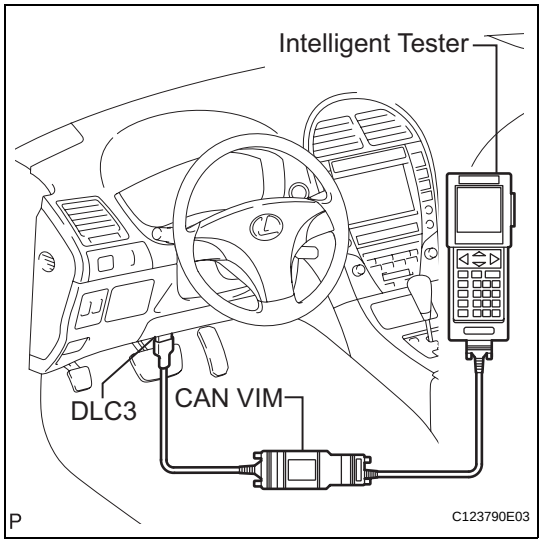

1. CHECK DTC
(a) Connect the intelligent tester to the DLC3.
(b) Turn the engine switch on (IG).
(c) Enter the following menus: DIAGNOSIS / OBD/ MOBD / E-ACM / DTC INFO / CURRENT CODE.
(d) Check the DTCs on the tester screen.
HINT:
Refer to the intelligent tester operator's manual for further details.

2. CLEAR DTC
(a) Connect the intelligent tester to the DLC3.
(b) Turn the engine switch on (IG).
(c) Erase the DTCs by following the prompts on the tester screen.
(d) Enter the following menus: DIAGNOSIS / OBD/ MOBD / E-ACM / DTC INFO / CLEAR CODE.
HINT:
Refer to the intelligent tester operator's manual for further details.

DATA LIST / ACTIVE TEST

1. DATA LIST

HINT:
Using the intelligent tester DATA LIST allows switch, sensor, actuator and other item values to be read without removing any parts. Reading the Data List early in troubleshooting is one way to shorten labor time.

NOTICE:
In the table below, the values listed under "Normal Condition" are reference values. Do not depend solely on these reference values when deciding whether a part is faulty or not.

(a) Warm up the engine.
(b) Turn the engine switch off.
(c) Connect the intelligent tester together with the CAN VIM (controller area network vehicle interface module) to the DLC3.
(d) Turn the engine switch on (IG).
(e) Turn on the tester.
(f) Select the item "DIAGNOSIS / OBD/MOBD / E-ACM / DATA LIST".
(g) According to the display on the tester, read the "DATA LIST".

Tester Display	Measurement Item/Range	Normal Condition	Diagnostic Note
G SENS VOL (1X)	Acceleration sensor value/ Min.: 0 V Max.: 5 V	0.11 to 4.46 V	-
G SENS VOL (11X)	Acceleration sensor value (x11)/ Min.: 0 V Max.: 5 V	0 to 5 V (varies constantly)	11 times amplified value of the difference between the acceleration sensor output value and the acceleration sensor reference voltage.
G SENS STD VOL	Acceleration sensor standard voltage/ Min.: 0 V Max.: 5 V	Engine switch on (IG): 1.94 to 3.08 V	Voltage that the ECU determines as the standard value for the 11-fold amplifier circuit to operate.
IPD SIGNAL	IPD operation signal/ ON or OFF	-	Condition of the operation signal of the component (IPD: Intelligent Power Device) that configures the linear solenoid drive circuit in the ECU.
IPD DIAG	IPD diagnosis/ ON or OFF	-	Condition of diagnostic signals output from the IPD.
FET SIGNAL	FET operation signal/ ON or OFF	OFF	Condition of the operation signal of the component (FET: Field-Effect Transistor) that configures the linear solenoid drive circuit in the ECU.
FET OUTPUT	FET output signal/ ON or OFF	-	Signal that indicates the FET1 output condition.
+B VOLTAGE	+B voltage/ Min.: 0 V Max.: 20 V	Always: 10 to 14 V	-
IG VOLTAGE	IG voltage/ Min.: 0 V Max.: 20 V	Engine switch on (IG): 10 to 14 V	-
VEHICLE SPD	Vehicle speed/ Min.: 0 km/h (0 mph) Max.: 327 km/h (203 mph)	Actual vehicle speed	-

Tester Display	Measurement Item/Range	Normal Condition	Diagnostic Note
COOLANT TEMP	Engine coolant temperature/ Min.: -40°C (-40°F) Max.: 140°C (284°F)	After warming up: 80 to 100°C (176 to 212°F)	-
ENGINE LOAD	Engine load/ Min.: 0 % Max.: 160 %	Idling: 10 to 30 %	-
SHIFT POS D	D range status/ ON or OFF	• Shift lever is in D position: ON • Shift lever position is in any position except D: OFF	-
SHIFT POS N	N range status/ ON or OFF	• Shift lever is in N position: ON • Shift lever position is in any position except N: OFF	-
SHIFT POS R	R range status/ ON or OFF	• Shift lever is in R position: ON • Shift lever position is in any position except R: OFF	-
SHIFT POS P	P range status/ ON or OFF	• Shift lever is in P position: ON • Shift lever position is in any position except P: OFF	-
ENGINE RUN SW	Engine run switch/ ON or OFF	• Engine running: ON • Engine off: OFF	-
ENGINE FREQ	Engine frequency/ Min.: 0 Hz Max.: 100 Hz	Idling: 28 to 38 HZ	-
G SENSOR JUDGE	Acceleration sensor judge / OK or NG	OK	A malfunction is detected in the acceleration sensor.
ACTUATOR JUDGE	Actuator (Including acceleration sensor) judge / OK or NG	OK	A malfunction is detected in the actuator or acceleration sensor.
BATTERY JUDGE	Battery judge / OK or NG	OK	A malfunction is detected in the battery.
TACH JUDGE	Tacho signal judge / OK or NG	OK	An abnormal TACH signal is detected.
CAN COM JUDGE	High speed CAN communication bus judge / OK or NG	OK	A malfunction in the CAN communication.
ACM ACT STATUS	Active control engine mount active status / ON or OFF	-	The active control engine mount ECU is controlling the active control mount: ON The active control engine mount ECU is not controlling the active control mount: OFF
ACM ACT ENABLE	Active control engine mount active enable / ON or OFF	ON	Whether the active control engine mount ECU functions normally or malfunctions is indicated. (ON: functions normally, OFF: malfunctioning)
+B LOW V STATUS	+B low voltage status / ON or OFF	OFF	Low +B voltage (less than 10 V) is indicated. (ON: low voltage, OFF: normal voltage)
AMBIENT TEMP	Ambient temperature value / Min.: -40°C, Max.: 50°C	Actual ambient temperature	-
CODE	Diagnosis code / Min.: 0, Max.: 5	0	A total of the past DTCs and current DTCs.

2. ACTIVE TEST

HINT:

Performing the ACTIVE TEST using the intelligent tester allows the actuator and so on to operate without parts removal. Performing the ACTIVE TEST as the first step in troubleshooting is one method to shorten labor time. It is possible to display the DATA LIST during the ACTIVE TEST.

(a) Warm up the engine.

(b) Turn the engine switch off.
(c) Connect the intelligent tester together with the CAN VIM (controller area network vehicle interface module) to the DLC3.
(d) Turn the engine switch on (IG).
(e) Push the "ON" button of the intelligent tester.
(f) Select the item "DIAGNOSIS / OBD/MOBD / E-ACM / ACTIVE TEST".
(g) According to the display on the tester, perform the "ACTIVE TEST".

Tester Display	Test Part	Control Range	Diagnostic Note
CHECK THE E-ACM	Operate the E-ACM actuator.	ON / OFF	[Vehicle Condition] • Engine running

DIAGNOSTIC TROUBLE CODE CHART

If any trouble code is displayed during DTC check, check the circuit corresponding to the code in the table below. Proceed to the page given for the circuit.

ACTIVE ENGINE MOUNTING:

DTC Code	Detection Item	Trouble Area	See page
P16A0	G Sensor Circuit	1. Open or short in acceleration sensor circuit 2. Acceleration sensor power source circuit 3. Acceleration sensor 4. Active control engine mount ECU	ES-481
P16A1	Linear Solenoid Circuit or G Sensor Circuit	1. Open or short in active control engine mount actuator circuit 2. Front engine mounting insulator 3. Acceleration sensor 4. Active control engine mount ECU	ES-484
P16A2	Battery High Voltage	1. ECU power source circuit 2. Active control engine mount ECU	ES-487
P16A3	TACH Signal Communication	1. Open or short in TACH signal circuit 2. Active control engine mount ECU 3. ECM	ES-489
P16A4	High Speed CAN Communication Bus	1. CAN communication system 2. Active control engine mount ECU 3. ECM 4. A/C amplifier 5. Skid control ECU	ES-492

DTC	P16A0	G Sensor Circuit

DESCRIPTION

A G sensor is installed on the front engine mount to detect vibration of the vehicle. The ECU uses signals sent from the G sensor to determine the vehicle condition, control the active control engine mount actuator, and detect malfunctions in the mount. If there is a malfunction in the G sensor, the ECU stops Active control engine mount operation.

DTC No.	DTC Detection Condition	Trouble Area
P16A0	While the power source voltage of the G sensor (VGS) is 4.8 V or more and less than 5.2 V, the GL1 voltage is less than 0.03 x VGS, or 0.94 x VGS or more for 10 seconds or more.	• Acceleration sensor • Acceleration sensor power source circuit • Open or short in acceleration sensor circuit • Active control engine mount ECU
	While the power source voltage of the G sensor (VGS) is less than 1 V, the GL1 voltage is less than 0.03 x VGS for 10 seconds or more.	
	Power source voltage of the G sensor is less than 4.8 V or 5.2 V or more for 10 seconds or more.	
	Difference between the current 11-fold G sensor value and the last 11-fold G sensor value exceeds the specified value.	
	The G sensor standard voltage in the ECU remains less than 2 V or 3 V or more for 10 seconds or more.	

ES

WIRING DIAGRAM

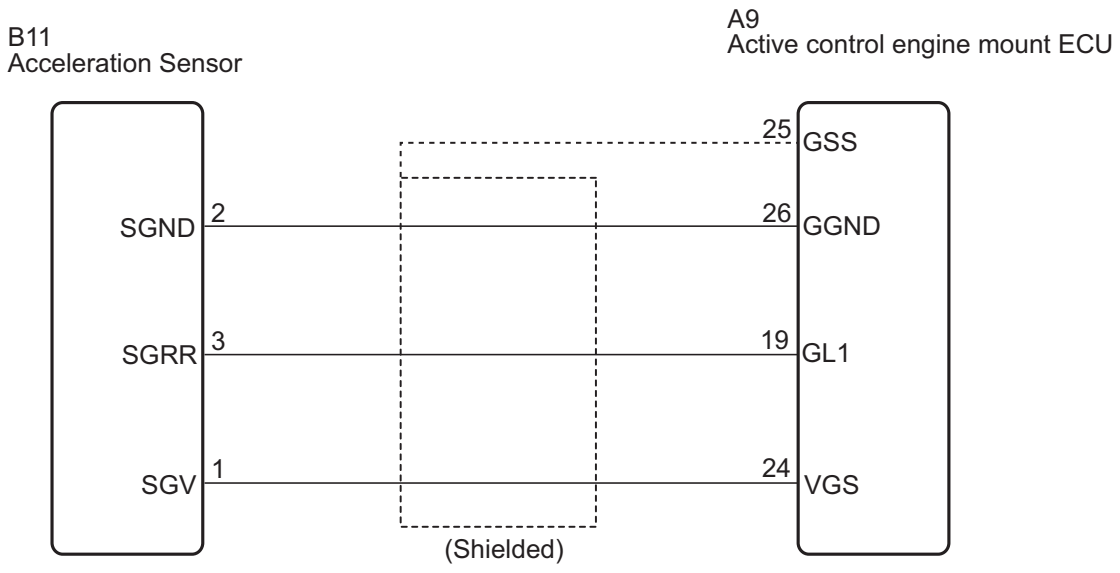

C A140957E03

INSPECTION PROCEDURE

1	READ VALUE OF INTELLIGENT TESTER (G SENS VOL (1X))

(a) Connect the intelligent tester to DLC3.
(b) Start the engine and turn the tester on.

(c) Enter the following menus: DIAGNOSIS / OBD/MOBD / E-ACM / DATA LIST.
(d) Read the G SENS VOL (1X) value.
Standard voltage:
The voltage changes within the range of 0.11 to 4.46 V.

NG → **Go to step 3**

OK

ES

2	READ VALUE OF INTELLIGENT TESTER (G SENS VOL (11X) AND G SENS STD VOL)

(a) Connect the intelligent tester to DLC3.
(b) Start the engine and turn the tester ON.
(c) Enter the following menus: DIAGNOSIS / OBD/MOBD / E-ACM / DATA LIST.
(d) Read the G SENS VOL (11X).
Standard voltage:
The voltage changes within the range of 0 to 5 V.
(e) Read the G SENS STD VOL value.
Standard voltage:
1.94 to 3.08 V

OK → **REPLACE ACTIVE CONTROL ENGINE MOUNT ECU**

NG

3	CHECK HARNESS AND CONNECTOR (ACTIVE CONTROL ENGINE MOUNT ECU - ACCELERATION SENSOR)

Wire Harness Side:

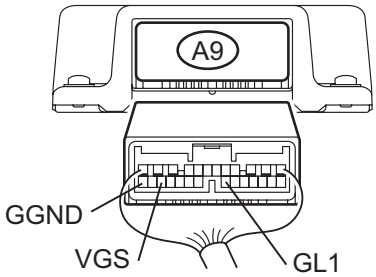

Acceleration Sensor Connector (Front View):

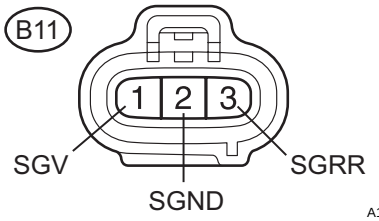

N A140981E02

(a) Disconnect the A9 E-ACM ECU connector and B11 acceleration sensor connector.
(b) Measure the resistance according to the value(s) in the table below.
Standard resistance

Tester Connection	Specified Value
VGS (A9-24) - SGV (B11-1)	Below 1 Ω
GL1 (A9-19) - SGRR (B11-3)	Below 1 Ω
GGND (A9-26) - SGND (B11-2)	Below 1 Ω

NG → **REPAIR OR REPLACE HARNESS OR CONNECTOR**

OK

4 CHECK POWER SOURCE CIRCUIT (ACCELERATION SENSOR)

Wire Harness Side:

Acceleration Sensor Connector (Front View)

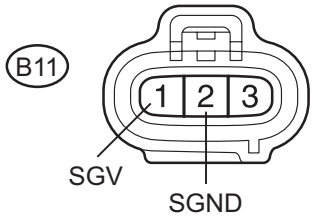

(a) Disconnect the B11 acceleration sensor connector.
(b) Measure the voltage according to the value(s) in the table below.

Standard voltage

Tester Connection	Specified Value
SGV (B11-1) - SGND (B11-2)	4.5 to 5.2 V

NG → **REPLACE ACTIVE CONTROL ENGINE MOUNT ECU**

ES

OK

REPLACE ACCELERATION SENSOR

DTC	P16A1	Linear Solenoid Circuit or G Sensor Circuit

DESCRIPTION

The ECU receives information from the G sensor, ECM (engine speed, engine load ratio coolant temperature, and shift position) skid control ECU (vehicle speed), and A/C ECU (ambient temperature). Based on this information, the ECU drives the solenoid actuator that is built in the front mount to generate vibration that is opposite to the engine vibration in order to reduce engine vibration.

DTC No.	DTC Detection Condition	Trouble Area
P16A1	While the active control engine mount ECU is controlling the actuators, problems (open circuit, short circuit, overcurrent, etc.) occur in the ECU, actuators, or the circuits.	• Acceleration sensor • Front engine mounting insulator • Open or short in active control engine mount actuator circuit • Active control engine mount ECU
	The vibration signal level from the acceleration sensor is lower than specified (problems with the sensor or the actuator may be stuck).	

ES

WIRING DIAGRAM

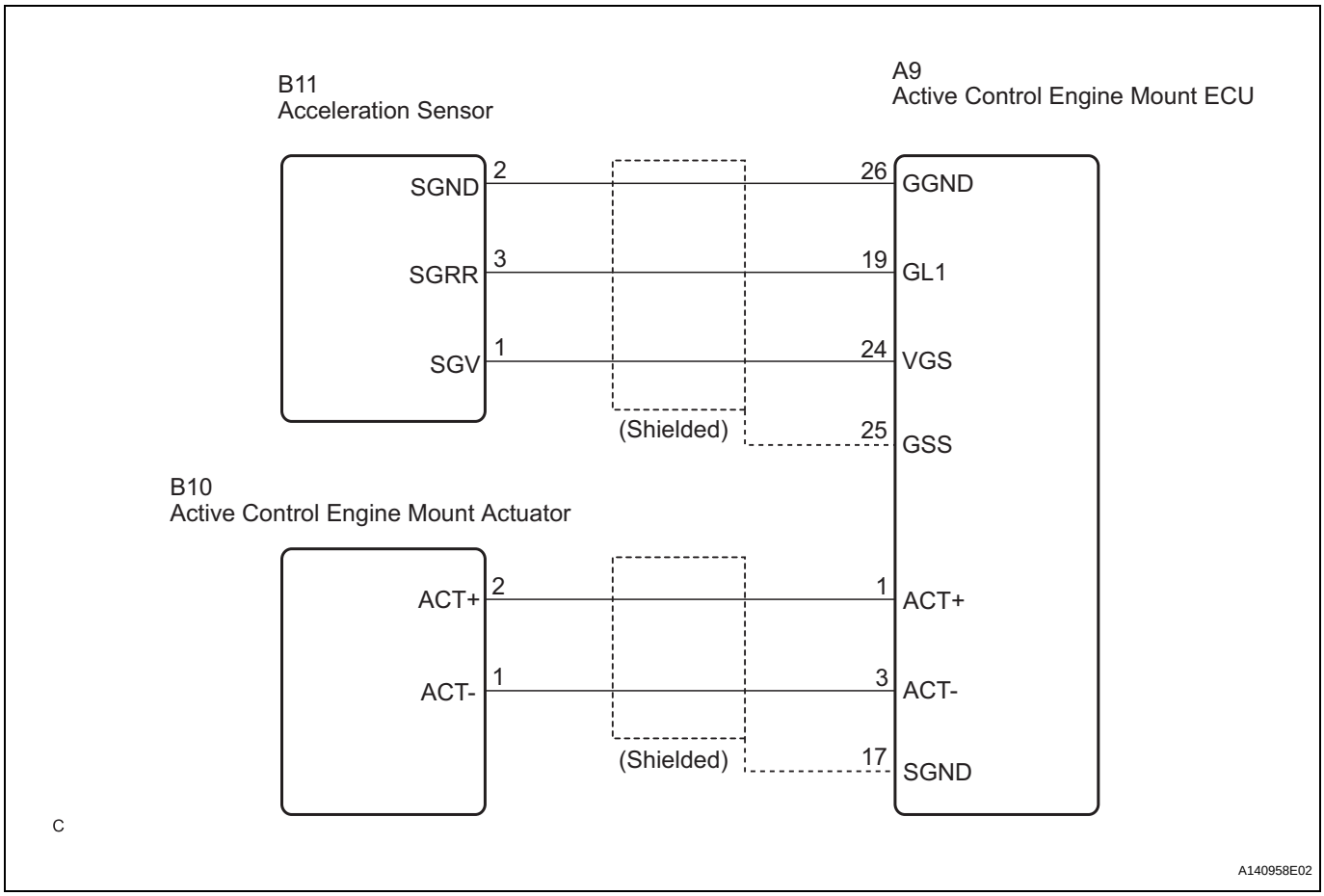

INSPECTION PROCEDURE

1	PERFORM ACTIVE TEST BY INTELLIGENT TESTER (CHECK THE E-ACM)

(a) Connect the intelligent tester to DLC3.
(b) Start the engine and turn the tester ON.

(c) Enter the following menus: DIAGNOSIS / OBD/MOBD / E-ACM / ACTIVE TEST.

(d) Check if the active mount control actuator operates.

Standard:

The active mount control actuator operates normally.

OK → **CHECK ACCELERATION SENSOR (See page ES-481)**

NG

2	CHECK FRONT ENGINE MOUNTING INSULATOR (ACTIVE CONTROL ENGINE MOUNT ACTUATOR)

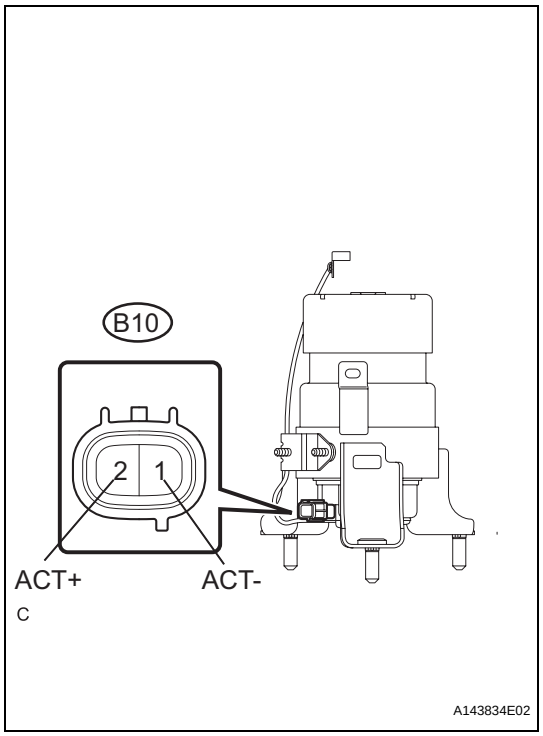

(a) Disconnect the B10 active control mount actuator connector.

(b) Measure the resistance between the ACT+ and ACT- terminals of the actuator connector.

Standard resistance

Tester Connection	Specified Value
ACT+ (B10-2) - ACT- (B10-1)	0.73 to 0.77 Ω
ACT+ (B10-2) - Body ground	1 MΩ or higher
ACT- (B10-1) - Body ground	1 MΩ or higher

NG → **REPLACE FRONT ENGINE MOUNTING INSULATOR**

OK

ES

3	CHECK HARNESS AND CONNECTOR (ECU - ACTUATOR)

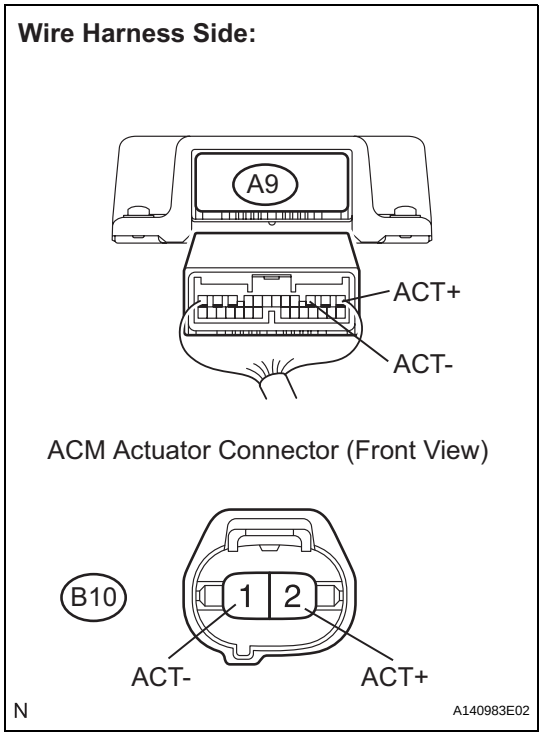

(a) Disconnect the A9 active control engine mount ECU connector and B10 active control engine mount actuator connector.

(b) Measure the resistance according to the value(s) in the table below.

Standard resistance

Tester Connection	Specified Value
ACT+ (A9-1) - ACT+ (B10-2)	Below 1 Ω
ACT- (A9-3) - ACT- (B10-1)	Below 1 Ω

NG → **REPAIR OR REPLACE HARNESS OR CONNECTOR**

OK

REPLACE ACTIVE CONTROL ENGINE MOUNT ECU

ES

DTC	P16A2	Battery High Voltage

DESCRIPTION

If power source voltage drops, the control will stop because the ECU does not operate. If the power source voltage exceeds the specified level, the control is stopped to protect the actuator.

DTC No.	DTC Detection Condition	Trouble Area
P16A2	IG voltage is more than 16 V for 0.5 seconds or more.	• ECU power source circuit • Active control engine mount ECU

WIRING DIAGRAM

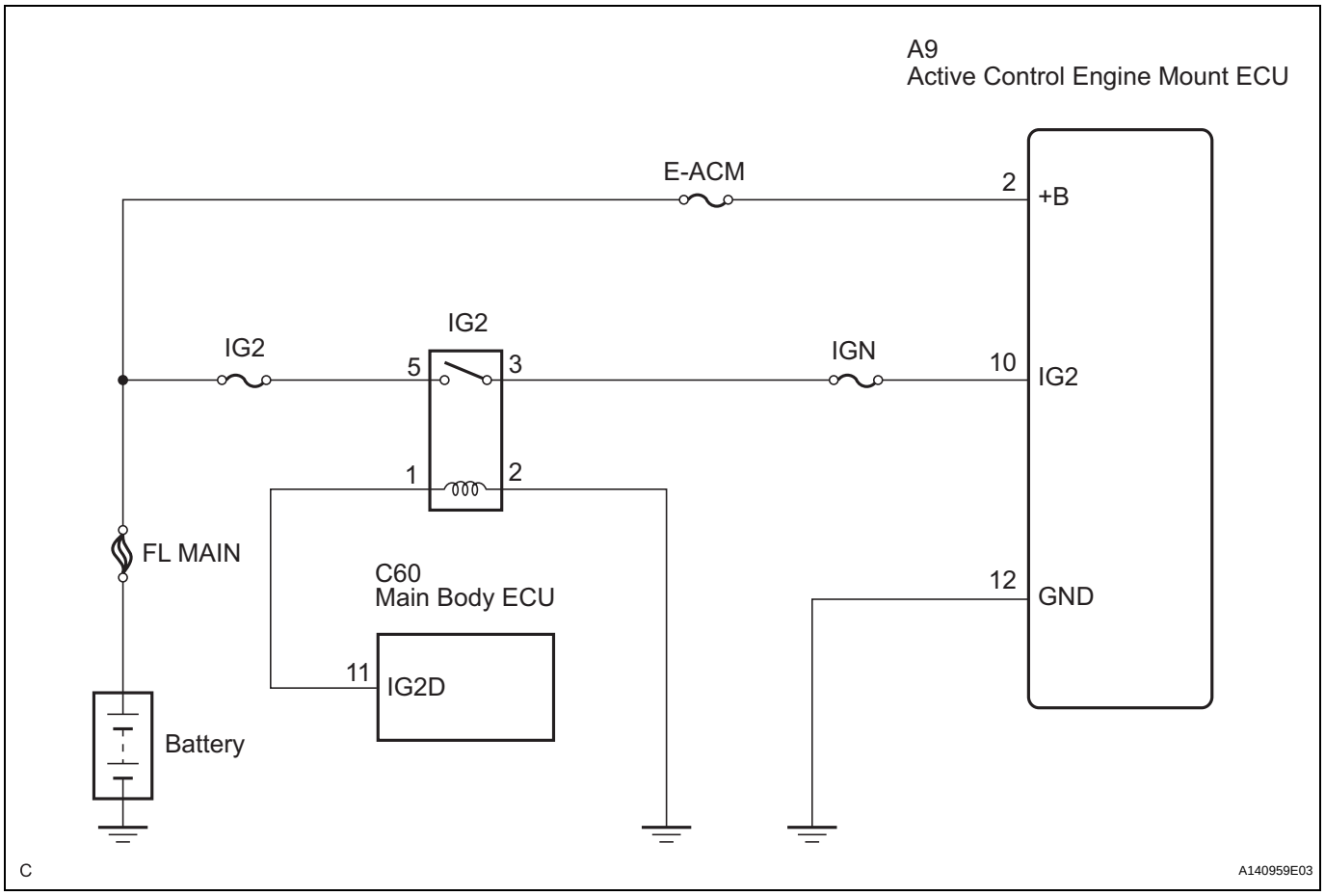

ES

INSPECTION PROCEDURE

1	CHECK ECU TERMINAL VOLTAGE (+B AND IG2 VOLTAGE)

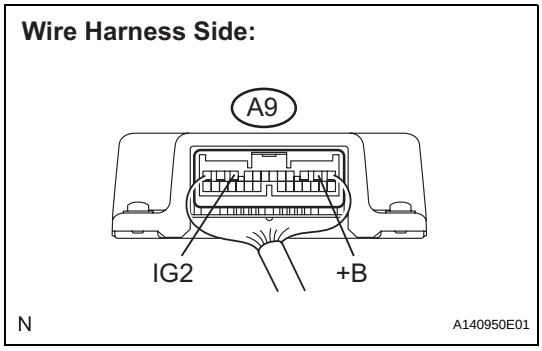

(a) Measure the voltage according to the value(s) in the table below.

Standard voltage

Tester Connection	Condition	Specified Value
+B (A9-2) - Body ground	Always	10 to 14 V
IG2 (A9-10) - Body ground	Engine switch on (IG)	10 to 14 V

NG → **CHECK AND REPAIR HARNESS AND CONNECTOR (E-ACM AND IGN FUSE - ACTIVE CONTROL ENGINE MOUNT ECU)**

OK

2	CHECK HARNESS AND CONNECTOR (ACM ECU - BODY GROUND)

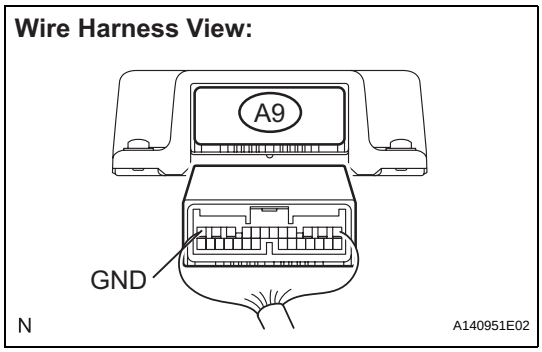

(a) Disconnect the A9 active control engine mount ECU connector.

(b) Measure the resistance according to the value(s) in the table below.

Standard resistance

Tester Connection	Specified Value
GND (A9-12) - Body ground	Below 1 Ω

NG → **REPAIR OR REPLACE HARNESS OR CONNECTOR**

OK

REPLACE ACTIVE CONTROL ENGINE MOUNT ECU

ES

DTC	P16A3	TACH Signal Communication

DESCRIPTION

If the TACH signal cannot be detected and if the communication is interrupted, the ECU will stop controlling the E-ACM.

DTC No.	DTC Detection Condition	Trouble Area
P16A3	TACH signals from the ECM remain interrupted for 1.3 seconds or more.	• Open or short in TACH signal circuit • Active control engine mount ECU • ECM

WIRING DIAGRAM

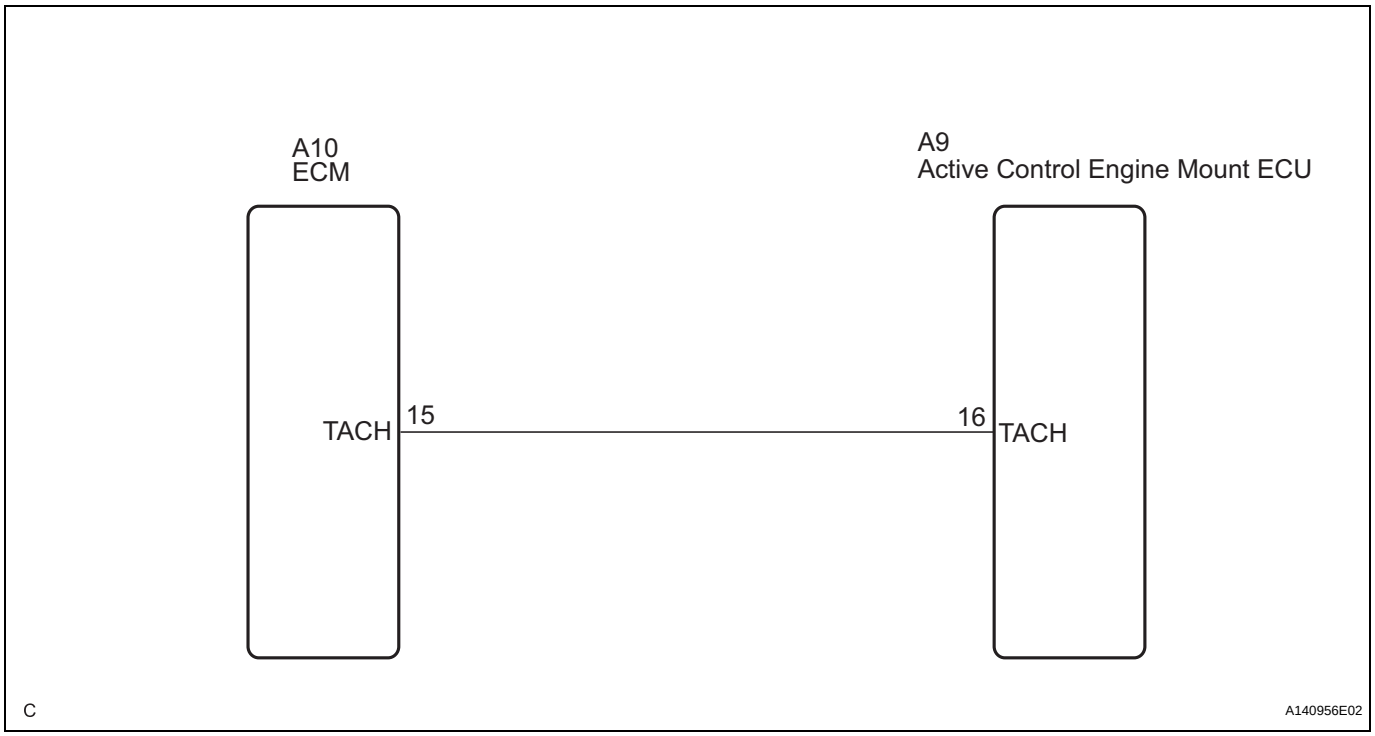

INSPECTION PROCEDURE

1 CHECK TERMINAL VOLTAGE (TACH TERMINAL)

Wire Harness Side:

Active Control Engine Mount ECU

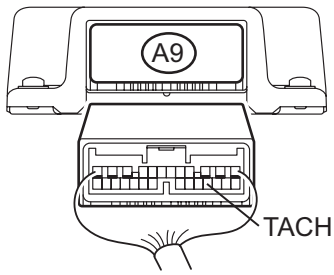

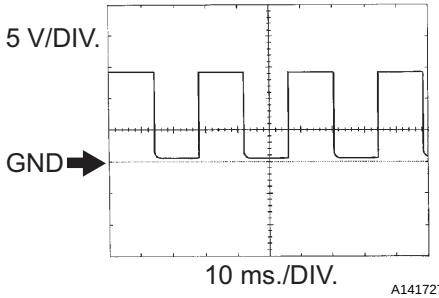

(a) Disconnect the A9 Active control engine mount ECU connector.

(b) Measure the voltage between the TACH terminal of the A9 Active control engine mount ECU connector and body ground.

Standard

Tester Connection	Specified Value
TACH (A9-16) - Body ground	Correct waveform is as shown

OK → **REPLACE ACTIVE CONTROL ENGINE MOUNT ECU**

NG

2 CHECK HARNESS AND CONNECTOR (ACTIVE CONTROL ENGINE MOUNT ECU - ECM)

Wire Harness Side:

ACM ECU Connector

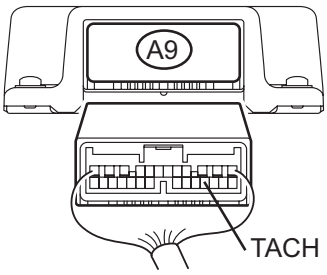

ECM Connector (Front View)

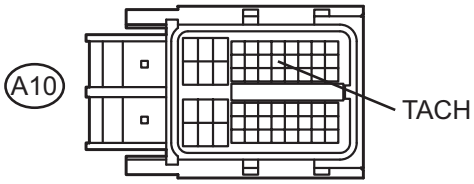

A140985E02

(a) Disconnect the A9 active control engine mount (ACM) ECU connector and A10 ECM connector.

(b) Measure the resistance according to the value(s) in the table below.

Standard resistance

Tester Connection	Specified Value
TACH (A9-16) - TACH (A10-15)	Below 1 Ω

NG → **REPAIR OR REPLACE HARNESS OR CONNECTOR**

ES

OK

REPLACE ECM

DTC	P16A4	High Speed CAN Communication Bus

DESCRIPTION

ECM skid control ECU and A/C amplifier intercommunicates with the active control engine mount ECU through the Controller Area Network (CAN). If there is a problem in this intercommunication, the active control engine mount ECU sets a DTC.

DTC No.	DTC Detection Condition	Trouble Area
P16A4	Communication between the ECM and E-ACM ECU is interrupted.	• ECM • Active control engine mount ECU • Skid control ECU • A/C amplifier • CAN communication system
	Signals indicating ambient temperature of less than -40°C (-40°F) or more than 50°C (122°F) are received for 10.6 seconds or more.	
	Signals indicating coolant temperature of less than -40°C (-40°F) or more than 140°C (284°F) are received for 1.25 seconds or more.	
	Signals indicating that more than one shift position are ON or all shift positions are OFF for 30 seconds or more.	

ES

INSPECTION PROCEDURE

HINT:

- Refer to inspection procedure for CAN communication system (See page CA-11).
- If the CAN communication malfunctions, the ECU cannot receive the current data from the ECM. However, reading the Data List as the first step of troubleshooting is effective to find malfunctions.
- The malfunction area can be checked using the BUS CHECK function of the intelligent tester (See page CA-41).

ECU Power Source Circuit

WIRING DIAGRAM

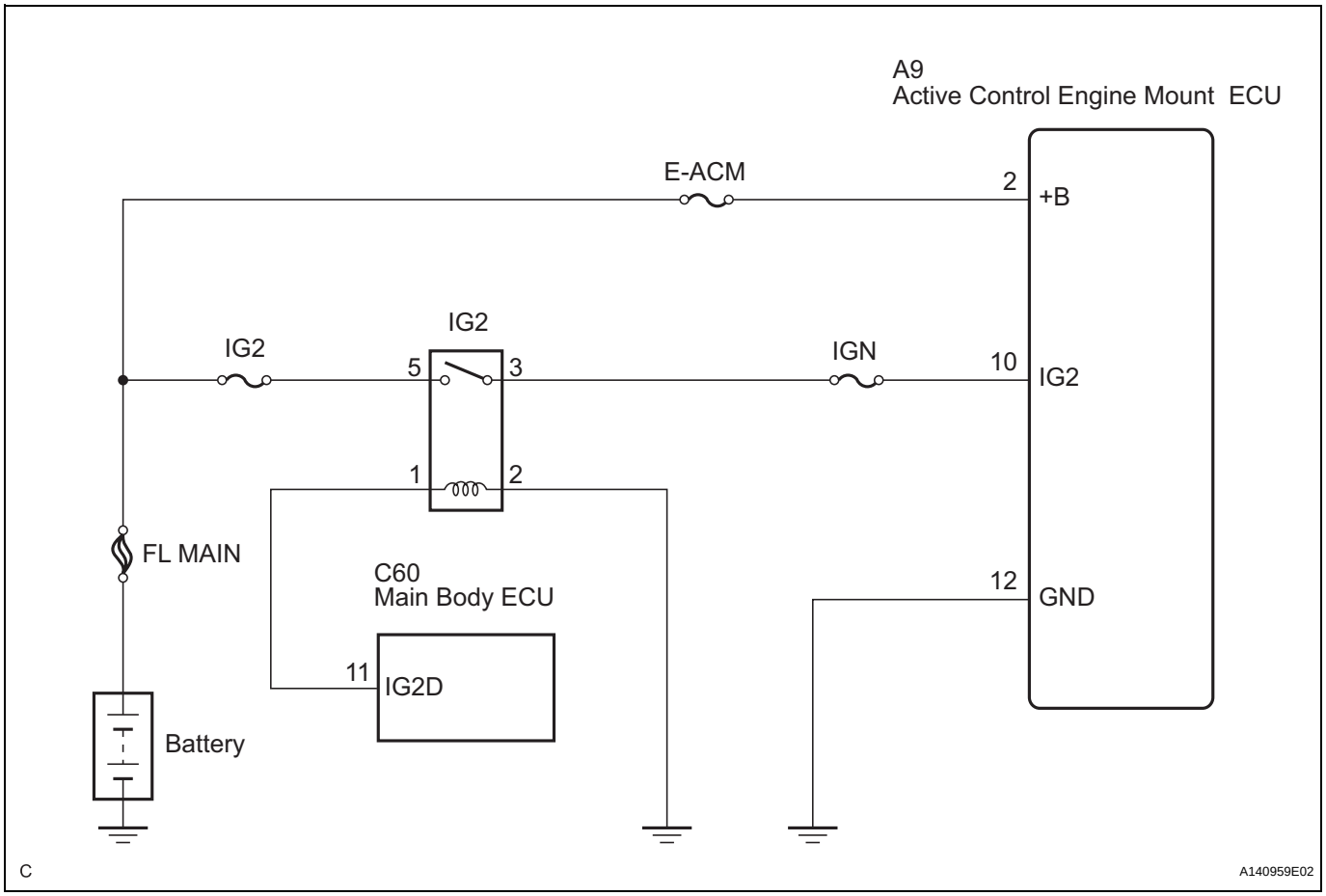

INSPECTION PROCEDURE

1	INSPECT ECU TERMINAL VOLTAGE (+B AND IG2 TERMINAL)

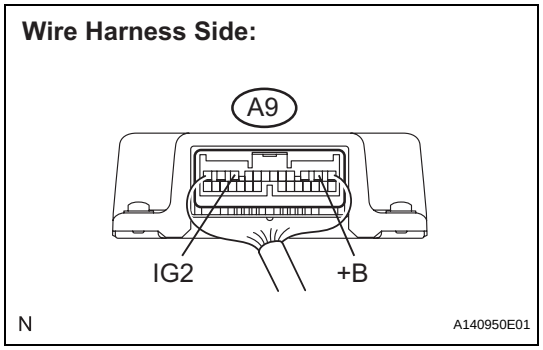

(a) Measure the voltage according to the value(s) in the table below.

Standard voltage

Tester Connection	Condition	Specified Value
+B (A9-2)- Body ground	Always	10 to 14 V
IG2 (A9-10) - Body ground	Engine switch on (IG)	10 to 14 V

OK → **CHECK FOR INTERMITTENT PROBLEMS**

NG

2	CHECK HARNESS AND CONNECTOR (ACTIVE CONTROL ENGINE MOUNT ECU - BODY GROUND)

Wire Harness View:

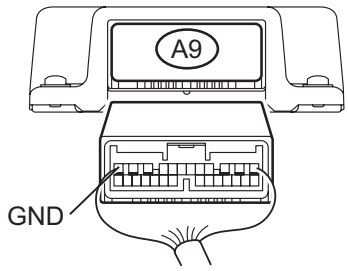

(a) Disconnect the active control engine mount ECU connector.

(b) Measure the resistance according to the value(s) in the table below.

Standard resistance

Tester Connection	Specified Condition
GND (A9-12) - Body ground	Below 1 Ω

(c) Reconnect the active control engine mount ECU connector.

NG → **REPAIR OR REPLACE HARNESS OR CONNECTOR (ACTIVE CONTROL ENGINE MOUNT ECU - BODY GROUND)**

OK

REPAIR OR REPLACE HARNESS OR CONNECTOR (ACTIVE CONTROL ENGINE MOUNT ECU - BATTERY)

ES

ES

REMOVAL

1. **REMOVE COOL AIR INTAKE DUCT SEAL (See page EM-22)**
2. **REMOVE ENGINE ROOM SIDE COVER LH (See page EM-22)**
3. **REMOVE MASS AIR FLOW METER**
   (a) Disconnect the mass air flow meter connector.
   (b) Remove the 2 screws and mass air flow meter.

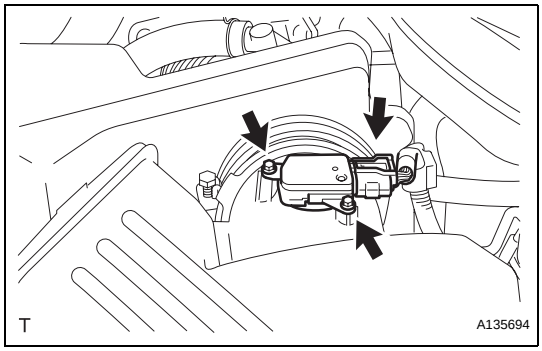

INSTALLATION

1. **INSTALL MASS AIR FLOW METER**
   (a) Install the mass air flow meter with the 2 screws.
   (b) Connect the mass air flow meter connector.
2. **INSTALL ENGINE ROOM SIDE COVER LH (See page EM-50)**
3. **INSTALL COOL AIR INTAKE DUCT SEAL (See page EM-50)**

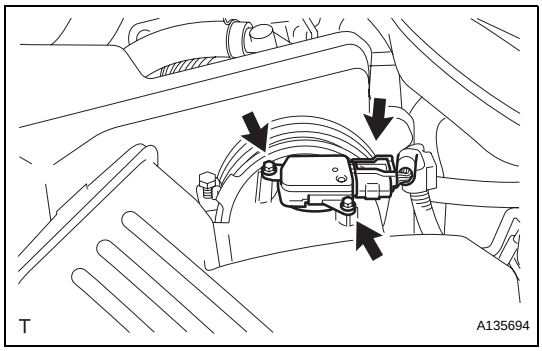

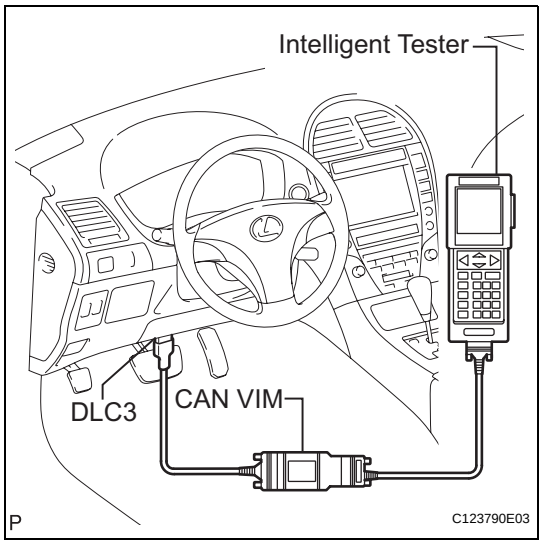

ON-VEHICLE INSPECTION

1. INSPECT CAMSHAFT TIMING OIL CONTROL VALVE ASSEMBLY

(a) Connect the intelligent tester (with CAN VIM) to the DLC3.
(b) Turn the engine switch on (IG).
(c) Start and warm up the engine.
(d) Connect the intelligent tester and select VVT from the ACTIVE TEST menu.
(e) Check the engine speed when the OCV is operated with the intelligent tester.
OK

Condition	Specified Condition
VVT system is OFF (OCV is OFF)	Normal engine speed
VVT system is ON (OCV is ON)	Rough idle or engine stalled

ES

REMOVAL

1. **REMOVE ENGINE UNDER COVER LH**
2. **REMOVE ENGINE UNDER COVER RH**
3. **REMOVE COOL AIR INTAKE DUCT SEAL (See page EM-22)**
4. **REMOVE ENGINE ROOM SIDE COVER LH (See page EM-22)**
5. **REMOVE ENGINE ROOM SIDE COVER RH (See page EM-22)**
6. **DRAIN ENGINE COOLANT (See page CO-5)**
7. **REMOVE FRONT SUSPENSION UPPER CENTER BRACE (See page BR-22)**
8. **REMOVE V-BANK COVER SUB-ASSEMBLY (See page EM-23)**
9. **REMOVE AIR CLEANER INLET ASSEMBLY (See page EM-23)**
10. **REMOVE AIR CLEANER CAP SUB-ASSEMBLY (See page ES-519)**
11. **REMOVE AIR CLEANER CASE SUB-ASSEMBLY (See page EM-23)**
12. **REMOVE NO. 1 AIR CLEANER INLET (See page EM-23)**
13. **REMOVE INTAKE AIR SURGE TANK (See page FU-12)**
14. **REMOVE CAMSHAFT TIMING OIL CONTROL VALVE (for Bank 1 Exhaust Side)**
    (a) Disconnect the camshaft timing oil control valve connector.
    (b) Remove the bolt and camshaft timing oil control valve.
    (c) Remove the O-ring from the camshaft timing oil control valve.

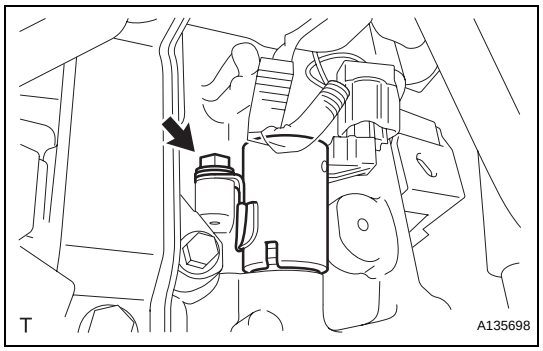

15. **REMOVE CAMSHAFT TIMING OIL CONTROL VALVE (for Bank 1 Intake Side)**
    (a) Disconnect the camshaft timing oil control valve connector.
    (b) Remove the bolt and camshaft timing oil control valve.
    (c) Remove the O-ring from the camshaft timing oil control valve.

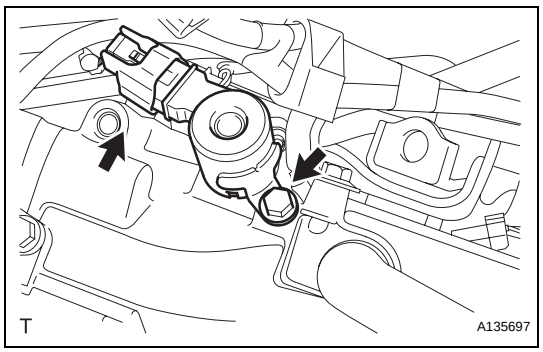

ES

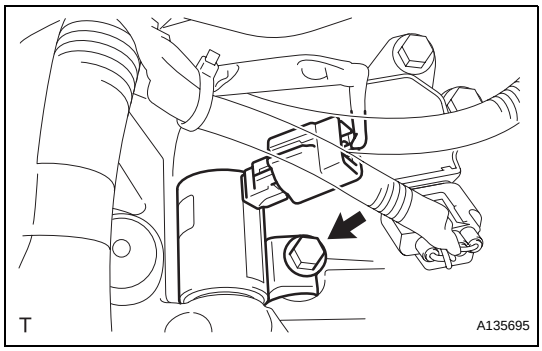

16. REMOVE CAMSHAFT TIMING OIL CONTROL VALVE (for Bank 2 Exhaust Side)

(a) Disconnect the camshaft timing oil control valve connector.

(b) Remove the bolt and camshaft timing oil control valve.

(c) Remove the O-ring from the camshaft timing oil control valve.

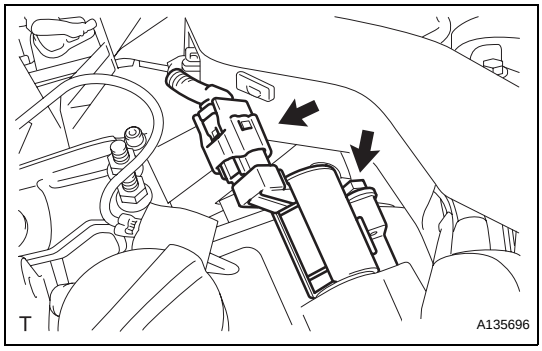

17. REMOVE CAMSHAFT TIMING OIL CONTROL VALVE (for Bank 2 Intake Side)

(a) Disconnect the camshaft timing oil control valve connector.

(b) Remove the bolt and camshaft timing oil control valve.

(c) Remove the O-ring from the camshaft timing oil control valve.

INSPECTION

1. INSPECT CAMSHAFT TIMING OIL CONTROL VALVE ASSEMBLY

(a) Resistance inspection.

(1) Using an ohmmeter, measure the resistance between the terminals.

Standard resistance:

6.9 to 7.9 Ω at 20°C (68°F)

If necessary, replace the camshaft timing oil control valve assembly.

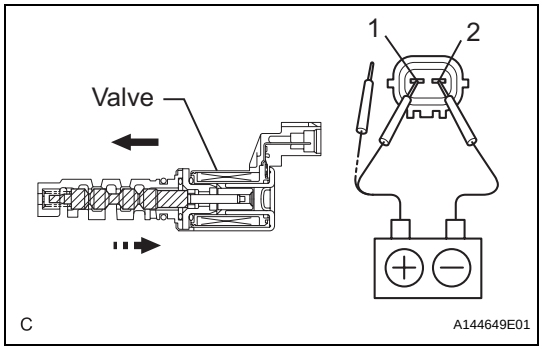

(b) Movement inspection.

(1) Connect the positive (+) lead from the battery to terminal 1 and the negative (-) lead to terminal 2, and check the movement of the valve.

NOTICE:

Confirm that the valve moves freely and does not stick in any position.

If necessary, replace the camshaft timing oil control valve assembly.

HINT:

Accumulation of foreign objects causes subtle pressure leaks. The subtle pressure leaks will cause the camshaft to advance, and this will cause a DTC to be set.

INSTALLATION

1. INSTALL CAMSHAFT TIMING OIL CONTROL VALVE (for Bank 2 Exhaust Side)

(a) Apply a light coat of engine oil to a new O-ring and install it to the camshaft timing oil control valve.

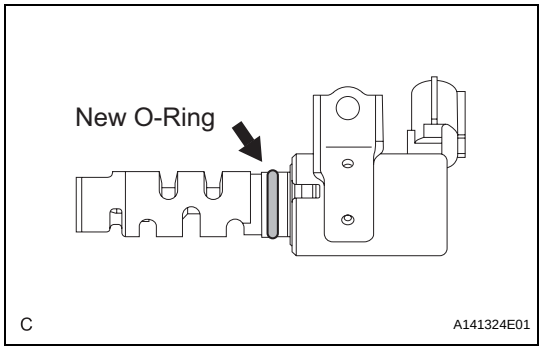

(b) Install the camshaft timing oil control valve with the bolt.

Torque: 10 N*m (102 kgf*cm, 7 ft.*lbf)

NOTICE:

Make sure that the O-ring is not cracked or jammed when installing the oil control valve.

(c) Connect the camshaft timing oil control valve connector.

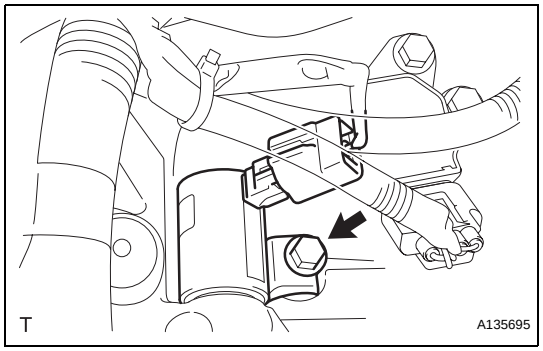

ES

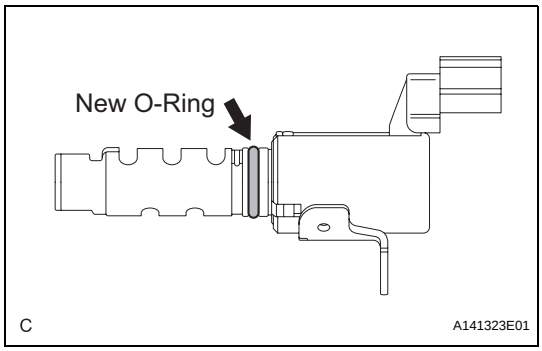

2. INSTALL CAMSHAFT TIMING OIL CONTROL VALVE (for Bank 2 Intake Side)

(a) Apply a light coat of engine oil to a new O-ring and install it to the camshaft timing oil control valve.

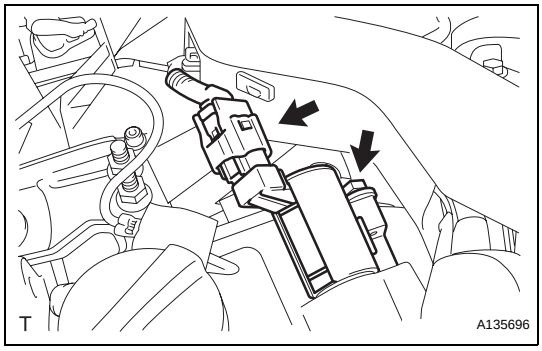

(b) Install the camshaft timing oil control valve with the bolt.
Torque: 10 N*m (102 kgf*cm, 7 ft.*lbf)
NOTICE:
Make sure that the O-ring is not cracked or jammed when installing the oil control valve.

(c) Connect the camshaft timing oil control valve connector.

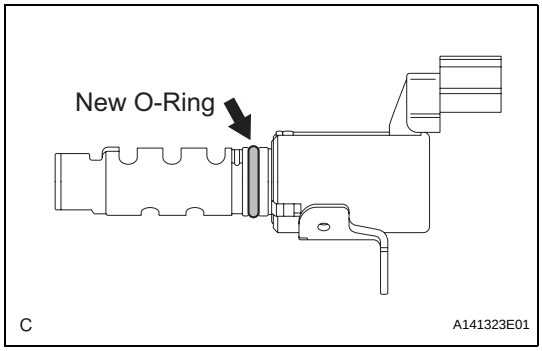

3. INSTALL CAMSHAFT TIMING OIL CONTROL VALVE (for Bank 1 Exhaust Side)

(a) Apply a light coat of engine oil to a new O-ring and install it to the camshaft timing oil control valve.

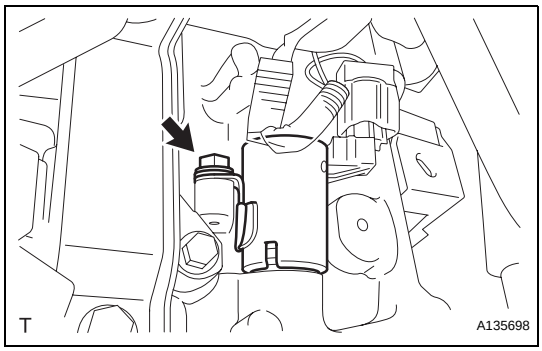

(b) Install the camshaft timing oil control valve with the bolt.
Torque: 10 N*m (102 kgf*cm, 7 ft.*lbf)
NOTICE:
Make sure that the O-ring is not cracked or jammed when installing the oil control valve.

(c) Connect the camshaft timing oil control valve connector.

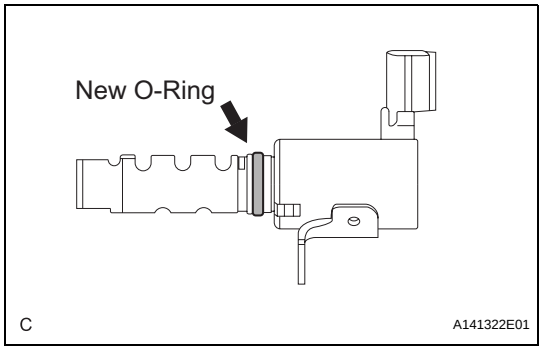

4. INSTALL CAMSHAFT TIMING OIL CONTROL VALVE (for Bank 1 Intake Side)

(a) Apply a light coat of engine oil to a new O-ring and install it to the camshaft timing oil control valve.

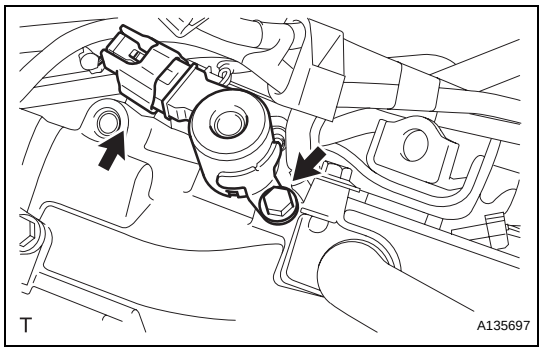

(b) Install the camshaft timing oil control valve with the bolt.
Torque: 10 N*m (102 kgf*cm, 7 ft.*lbf)
NOTICE:
Make sure that the O-ring is not cracked or jammed when installing the oil control valve.

(c) Connect the camshaft timing oil control valve connector.

5. **INSTALL INTAKE AIR SURGE TANK (See page FU-17)**
6. **INSTALL NO. 1 AIR CLEANER INLET (See page EM-48)**
7. **INSTALL AIR CLEANER CASE SUB-ASSEMBLY (See page EM-48)**
8. **INSTALL AIR CLEANER CAP SUB-ASSEMBLY (See page ES-522)**
9. **INSTALL AIR CLEANER INLET ASSEMBLY (See page EM-48)**
10. **INSTALL FRONT SUSPENSION UPPER CENTER BRACE (See page BR-25)**
11. **ADD ENGINE COOLANT (See page CO-6)**
12. **CHECK FOR ENGINE COOLANT LEAKS (See page CO-1)**
13. **INSTALL V-BANK COVER SUB-ASSEMBLY (See page EM-49)**
14. **INSTALL ENGINE ROOM SIDE COVER LH (See page EM-50)**
15. **INSTALL ENGINE ROOM SIDE COVER RH (See page EM-50)**
16. **INSTALL COOL AIR INTAKE DUCT SEAL (See page EM-50)**
17. **INSTALL ENGINE UNDER COVER RH**
18. **INSTALL ENGINE UNDER COVER LH**

REMOVAL

1. **REMOVE ENGINE UNDER COVER LH**
2. **REMOVE ENGINE UNDER COVER RH**
3. **DRAIN ENGINE COOLANT (See page CO-5)**
4. **REMOVE COOL AIR INTAKE DUCT SEAL (See page EM-22)**
5. **REMOVE ENGINE ROOM SIDE COVER LH (See page EM-22)**
6. **REMOVE ENGINE ROOM SIDE COVER RH (See page EM-22)**
7. **REMOVE V-BANK COVER SUB-ASSEMBLY (See page EM-23)**
8. **REMOVE AIR CLEANER INLET ASSEMBLY (See page EM-23)**
9. **REMOVE AIR CLEANER CAP SUB-ASSEMBLY (See page ES-519)**
10. **REMOVE AIR CLEANER CASE SUB-ASSEMBLY (See page EM-23)**
11. **REMOVE NO. 1 AIR CLEANER INLET (See page EM-23)**
12. **REMOVE FRONT SUSPENSION UPPER CENTER BRACE (See page BR-22)**
13. **REMOVE INTAKE AIR SURGE TANK ASSEMBLY (See page FU-12)**
14. **REMOVE VVT SENSOR (for Bank 1 Intake Side)**
    (a) Disconnect the VVT sensor connector.
    (b) Remove the bolt and VVT sensor.

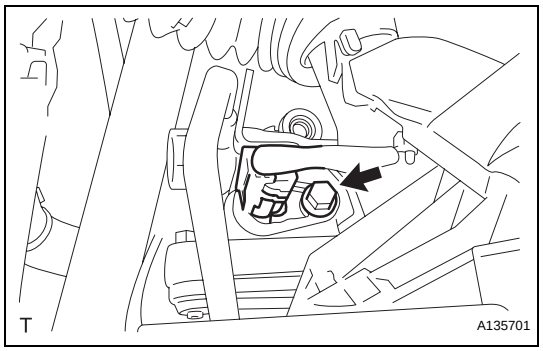

15. **REMOVE VVT SENSOR (for Bank 1 Exhaust Side)**
    (a) Disconnect the VVT sensor connector.
    (b) Remove the bolt and VVT sensor.

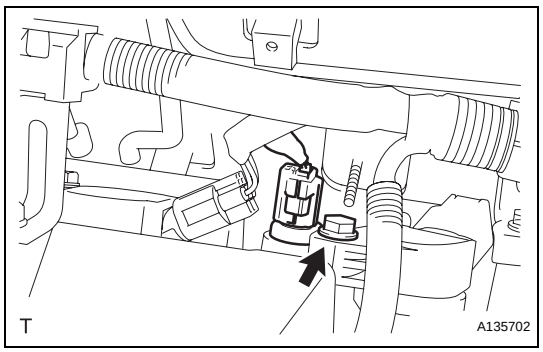

ES

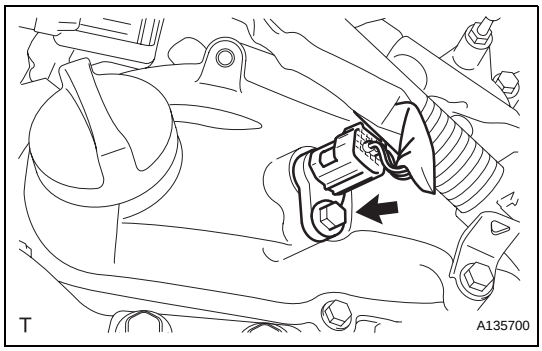

16. REMOVE VVT SENSOR (for Bank 2 Intake Side)
(a) Disconnect the VVT sensor connector.
(b) Remove the bolt and VVT sensor.

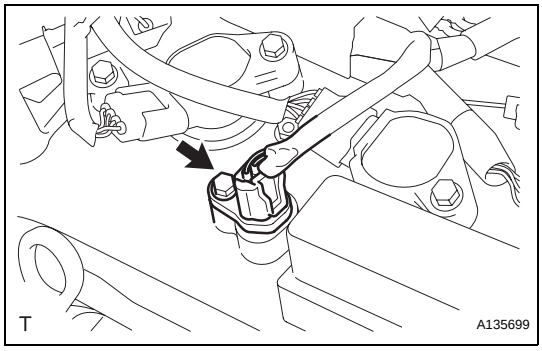

17. REMOVE VVT SENSOR (for Bank 2 Exhaust Side)
(a) Disconnect the VVT sensor connector.
(b) Remove the bolt and VVT sensor.

INSTALLATION

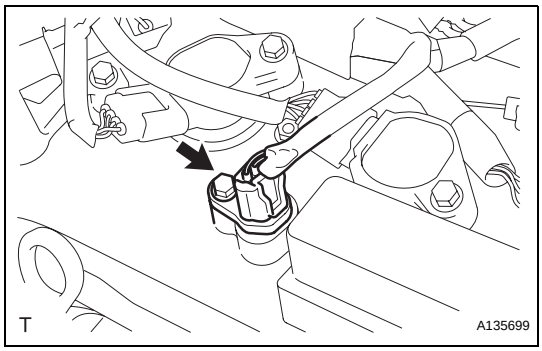

1. INSTALL VVT SENSOR (for Bank 2 Exhaust Side)
(a) Install the VVT sensor with the bolt.
Torque: 10 N*m (102 kgf*cm, 7 ft.*lbf)
(b) Connect the VVT sensor connector.

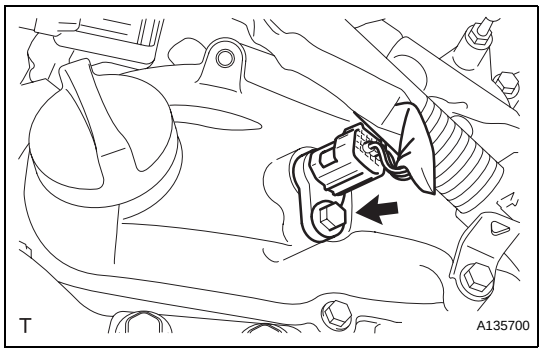

2. INSTALL VVT SENSOR (for Bank 2 Intake Side)
(a) Install the VVT sensor with the bolt.
Torque: 10 N*m (102 kgf*cm, 7 ft.*lbf)
(b) Connect the VVT sensor connector.

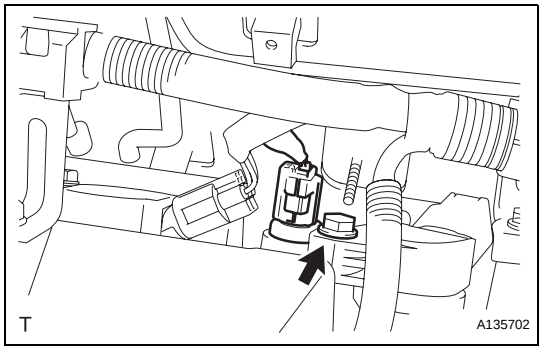

3. INSTALL VVT SENSOR (for Bank 1 Exhaust Side)
(a) Install the VVT sensor with the bolt.
Torque: 10 N*m (102 kgf*cm, 7 ft.*lbf)
(b) Connect the VVT sensor connector.

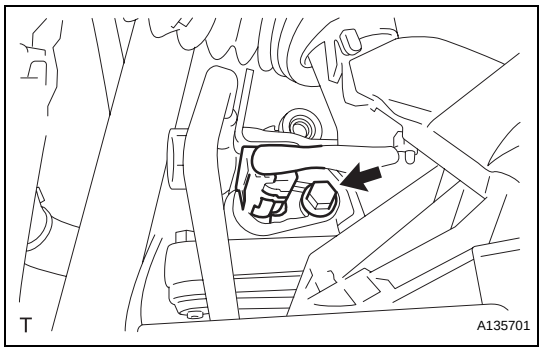

4. **INSTALL VVT SENSOR (for Bank 1 Intake Side)**
   (a) Install the VVT sensor with the bolt.
   Torque: 10 N*m (102 kgf*cm, 7 ft.*lbf)
   (b) Connect the VVT sensor connector.
5. **INSTALL INTAKE AIR SURGE TANK ASSEMBLY (See page FU-17)**
6. **INSTALL NO. 1 AIR CLEANER INLET (See page EM-48)**
7. **INSTALL AIR CLEANER CASE SUB-ASSEMBLY (See page EM-48)**
8. **INSTALL AIR CLEANER CAP SUB-ASSEMBLY (See page ES-522)**
9. **INSTALL AIR CLEANER INLET ASSEMBLY (See page EM-48)**
10. **INSTALL V-BANK COVER SUB-ASSEMBLY (See page EM-49)**
11. **ADD ENGINE COOLANT (See page CO-6)**
12. **CHECK FOR ENGINE COOLANT LEAKS (See page CO-1)**
13. **INSTALL FRONT SUSPENSION UPPER CENTER BRACE (See page BR-25)**
14. **INSTALL ENGINE ROOM SIDE COVER LH (See page EM-50)**
15. **INSTALL ENGINE ROOM SIDE COVER RH (See page EM-50)**
16. **INSTALL COOL AIR INTAKE DUCT SEAL (See page EM-50)**
17. **INSTALL ENGINE UNDER COVER RH**
18. **INSTALL ENGINE UNDER COVER LH**

ES

REMOVAL

1. REMOVE GENERATOR ASSEMBLY

HINT:

(See page CH-13)

2. DISCONNECT COOLER COMPRESSOR ASSEMBLY

HINT:

(See page AC-195)

3. REMOVE CRANKSHAFT POSITION SENSOR

(a) Disconnect the crankshaft position sensor connector.

(b) Remove the bolt and crankshaft position sensor.

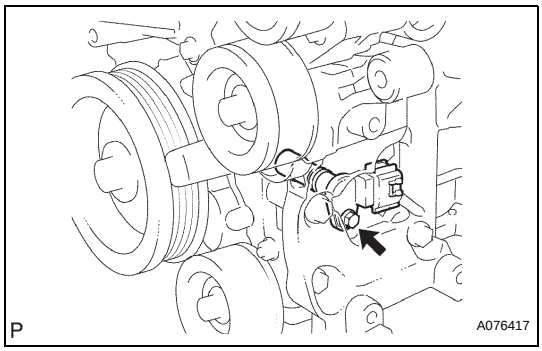

INSPECTION

1. INSPECT CRANKSHAFT POSITION SENSOR

(a) Using an ohmmeter, measure the resistance between the terminals.

Standard resistance

Condition	Specified Condition
Cold	1,630 to 2,740 Ω
Hot	2,065 to 3,225 Ω

NOTICE:

The terms "cold" and "hot" refer to the temperature of the coils. "Cold" means approximately -10 to 50°C (14 to 122°F). "Hot" means approximately 50 to 100°C (122 to 212°F).

If the resistance is not as specified, replace the sensor.

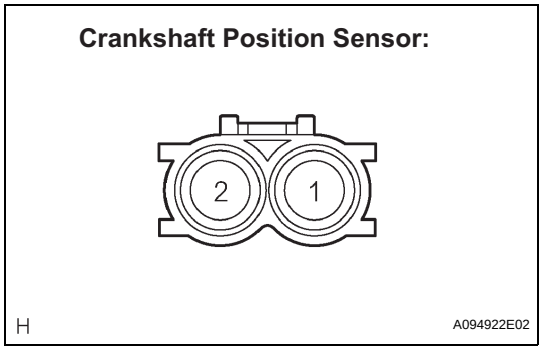

INSTALLATION

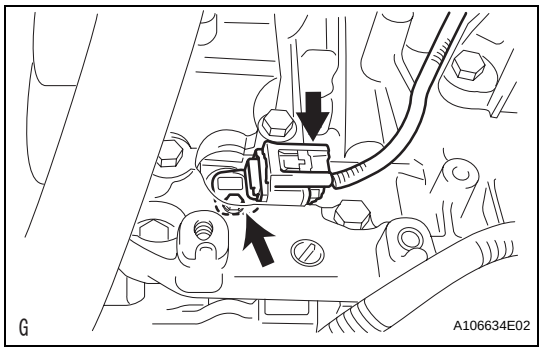

1. INSTALL CRANKSHAFT POSITION SENSOR

(a) Apply a light coat of engine oil to the O-ring of the crankshaft position sensor.

(b) Install the crankshaft position sensor with the bolt.
Torque: 10 N*m (102 kgf*cm, 7 ft.*lbf)

(c) Connect the crankshaft position sensor connector.

2. INSTALL COOLER COMPRESSOR ASSEMBLY

HINT:
(See page AC-201)

3. INSTALL GENERATOR ASSEMBLY

HINT:
(See page CH-22)

ES

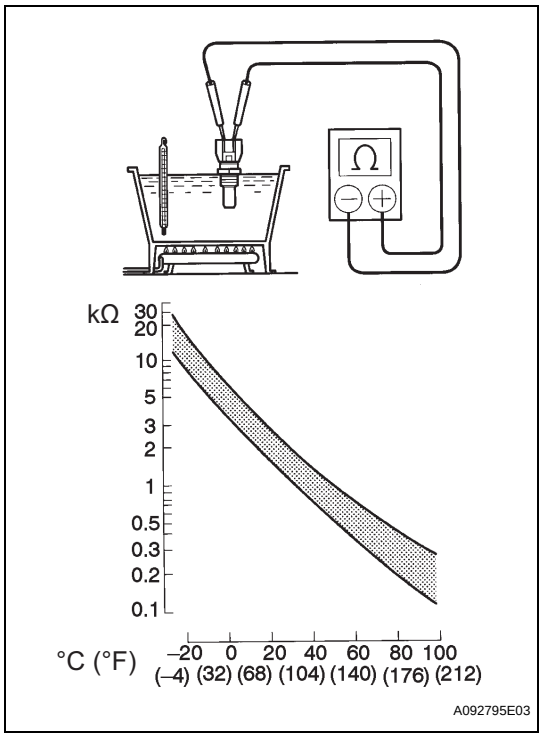

INSPECTION

1. INSPECT ENGINE COOLANT TEMPERATURE SENSOR

(a) Measure the resistance between the terminals.

Standard resistance

Condition	Specified Condition
Approx. 20°C (68°F)	2.32 to 2.59 kΩ
Approx. 80°C (176°F)	0.31 to 0.326 kΩ

If the result is not as specified, replace the sensor.

NOTICE:

If checking the ECT sensor in the water, keep the terminals dry. After checking, dry the sensor.

ES

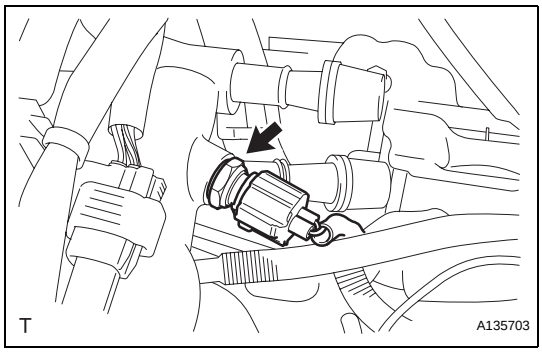

INSTALLATION

1. **INSTALL ENGINE COOLANT TEMPERATURE SENSOR**
   (a) Install a new gasket to the engine coolant temperature sensor.
   (b) Install the engine coolant temperature sensor.
   Torque: 20 N*m (204 kgf*cm, 15 ft.*lbf)
   (c) Connect the engine coolant temperature sensor connector.
2. **INSTALL NO. 1 AIR CLEANER INLET (See page EM-48)**
3. **INSTALL AIR CLEANER CASE SUB-ASSEMBLY (See page EM-48)**
4. **INSTALL AIR CLEANER CAP SUB-ASSEMBLY (See page ES-522)**
5. **INSTALL AIR CLEANER INLET ASSEMBLY (See page EM-48)**
6. **ADD ENGINE COOLANT (See page CO-6)**
7. **CHECK FOR ENGINE COOLANT LEAKS (See page CO-1)**
8. **INSTALL ENGINE ROOM SIDE COVER LH (See page EM-50)**
9. **INSTALL COOL AIR INTAKE DUCT SEAL (See page EM-50)**
10. **INSTALL V-BANK COVER SUB-ASSEMBLY (See page EM-49)**
11. **INSTALL ENGINE UNDER COVER RH**
12. **INSTALL ENGINE UNDER COVER LH**

ES

REMOVAL

1. **REMOVE ENGINE UNDER COVER LH**
2. **REMOVE ENGINE UNDER COVER RH**
3. **DRAIN ENGINE COOLANT (See page CO-5)**
4. **REMOVE COOL AIR INTAKE DUCT SEAL (See page EM-22)**
5. **REMOVE ENGINE ROOM SIDE COVER LH (See page EM-22)**
6. **REMOVE V-BANK COVER SUB-ASSEMBLY (See page EM-23)**
7. **REMOVE AIR CLEANER INLET ASSEMBLY (See page EM-23)**
8. **REMOVE AIR CLEANER CAP SUB-ASSEMBLY**
   (a) Disconnect the 2 vacuum hoses.

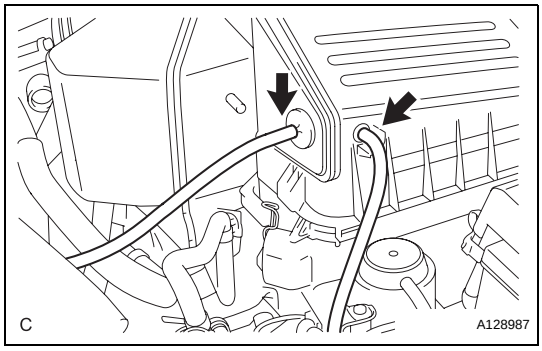

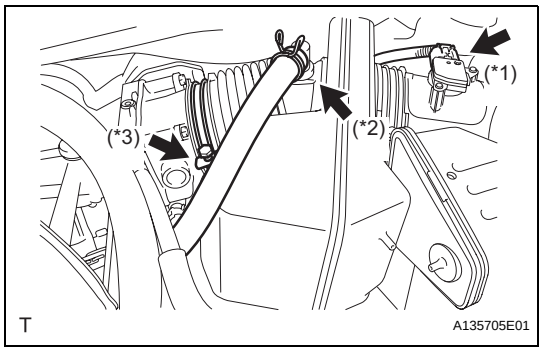

   (b) Disconnect the mass air flow meter connector (*1).
   (c) Disconnect the No. 2 ventilation hose (*2).
   (d) Disconnect the hose band (*3).

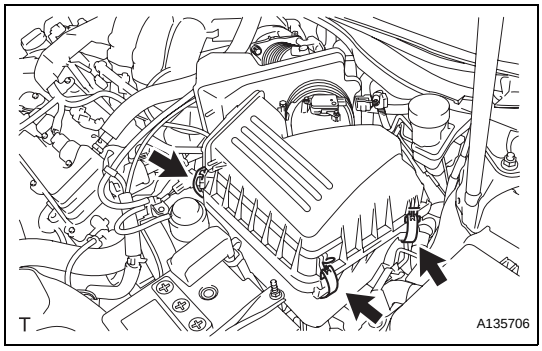

   (e) Disconnect the 3 bands, and remove the air cleaner cap sub-assembly.
9. **REMOVE AIR CLEANER CASE SUB-ASSEMBLY (See page EM-23)**
10. **REMOVE NO. 1 AIR CLEANER INLET (See page EM-23)**

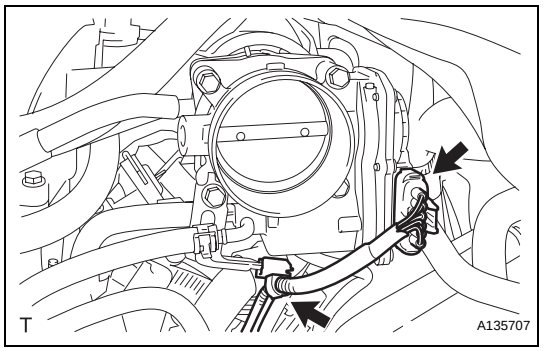

11. REMOVE THROTTLE BODY

(a) Disconnect the throttle body connector and clamp.

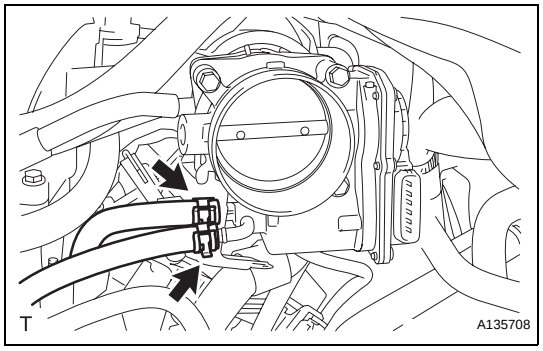

(b) Disconnect the 2 water by-pass hoses from the throttle body.

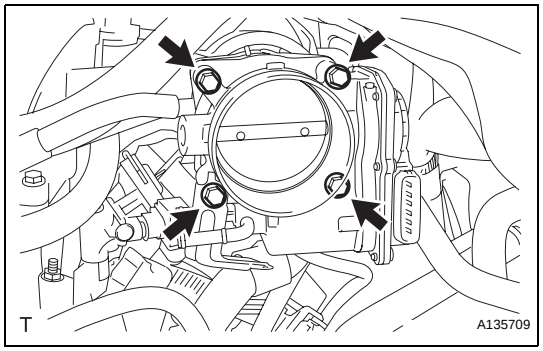

(c) Remove the 4 bolts and throttle body.

(d) Remove the throttle body gasket from the intake air surge tank.

INSPECTION

1. INSPECT THROTTLE BODY

(a) Measure the resistance between the terminals.

Standard resistance

Tester Connection	Condition	Specified Condition
2 (M+) - 1 (M-)	20°C (68°F)	0.3 to 100 Ω
5 (VC) - 3 (E2)	20°C (68°F)	1.2 to 3.2 kΩ

If the result is not as specified, replace the throttle body assembly.

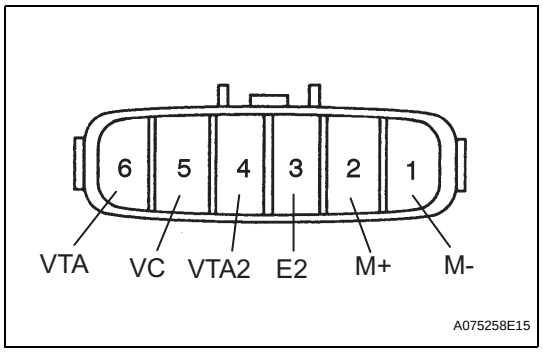

INSTALLATION

1. INSTALL THROTTLE BODY

(a) Install a new throttle body gasket to the intake air surge tank.

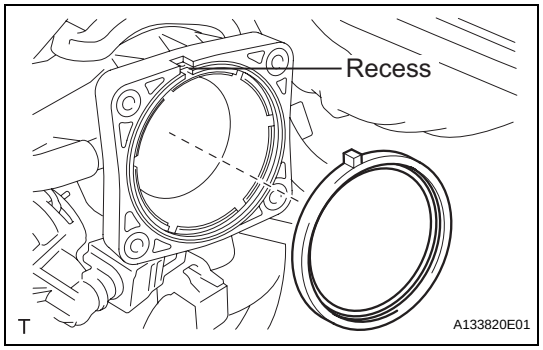

ES

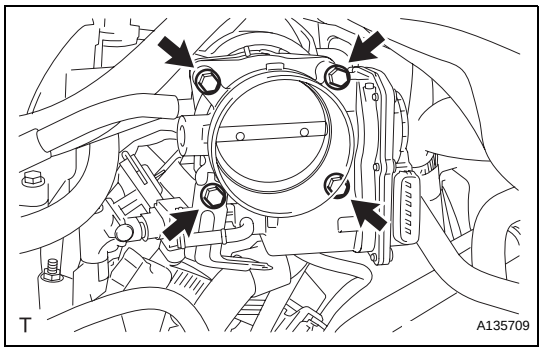

(b) Install the throttle body with the 4 bolts.
Torque: 10 N*m (102 kgf*cm, 7 ft.*lbf)

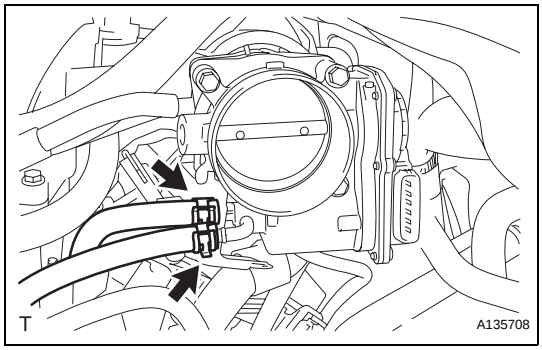

(c) Connect the 2 water by-pass hoses.

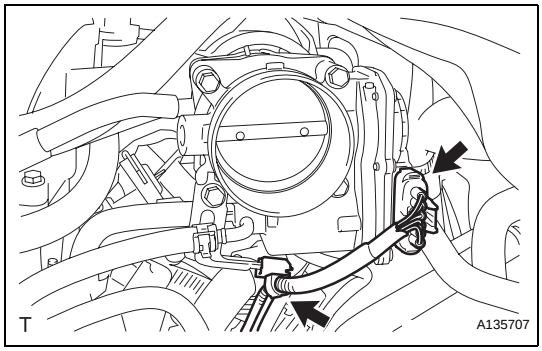

(d) Connect the throttle body connector and clamp.

2. INSTALL NO. 1 AIR CLEANER INLET (See page EM-48)

3. INSTALL AIR CLEANER CASE SUB-ASSEMBLY (See page EM-48)

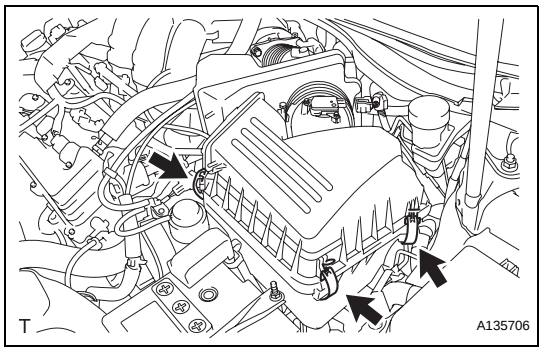

4. INSTALL AIR CLEANER CAP SUB-ASSEMBLY

(a) Install the air cleaner cap sub-assembly, and connect the 3 bands.

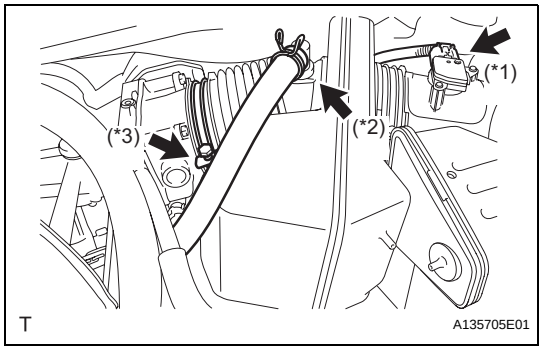

(b) Connect the mass air flow meter connector (*1).

(c) Connect the No. 2 ventilation hose (*2).

(d) Connect the hose band (*3).

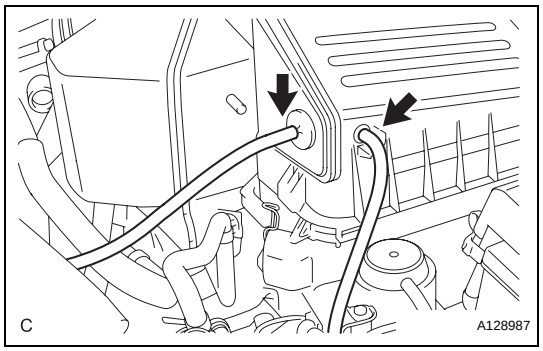

(e) Connect the 2 vacuum hoses.

5. **INSTALL AIR CLEANER INLET ASSEMBLY (See page EM-48)**
6. **ADD ENGINE COOLANT (See page CO-6)**
7. **CHECK FOR ENGINE COOLANT LEAKS (See page CO-1)**
8. **CHECK FUNCTION OF THROTTLE BODY (See page ES-519)**
9. **INSTALL ENGINE ROOM SIDE COVER LH (See page EM-50)**
10. **INSTALL COOL AIR INTAKE DUCT SEAL (See page EM-50)**
11. **INSTALL V-BANK COVER SUB-ASSEMBLY (See page EM-49)**

REMOVAL

1. **DISCHARGE FUEL SYSTEM PRESSURE (See page FU-35)**
2. **REMOVE ENGINE UNDER COVER LH**
3. **REMOVE ENGINE UNDER COVER RH**
4. **DRAIN ENGINE COOLANT (See page CO-5)**
5. **REMOVE COOL AIR INTAKE DUCT SEAL (See page EM-22)**
6. **REMOVE ENGINE ROOM SIDE COVER LH (See page EM-22)**
7. **REMOVE ENGINE ROOM SIDE COVER RH (See page EM-22)**
8. **REMOVE V-BANK COVER SUB-ASSEMBLY (See page EM-23)**
9. **REMOVE FRONT SUSPENSION UPPER CENTER BRACE (See page BR-22)**
10. **REMOVE AIR CLEANER INLET ASSEMBLY (See page EM-23)**
11. **REMOVE AIR CLEANER CAP SUB-ASSEMBLY (See page ES-519)**
12. **REMOVE AIR CLEANER CASE SUB-ASSEMBLY (See page EM-23)**
13. **REMOVE NO. 1 AIR CLEANER INLET (See page EM-23)**
14. **REMOVE INTAKE AIR SURGE TANK (See page FU-12)**
15. **SEPARATE FUEL TUBE SUB-ASSEMBLY (See page FU-13)**
16. **REMOVE INTAKE MANIFOLD (See page EM-31)**
17. **REMOVE KNOCK CONTROL SENSOR**
    (a) Disconnect the 2 knock control sensor connectors.
    (b) Remove the 2 bolts and 2 knock control sensors.

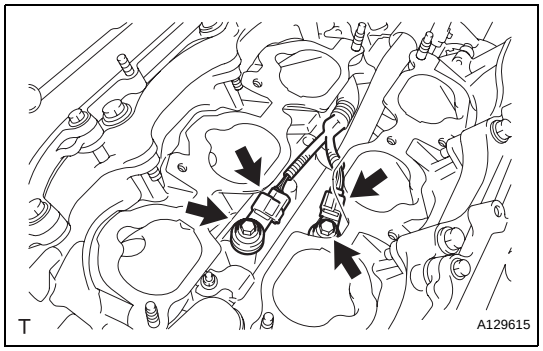

ES

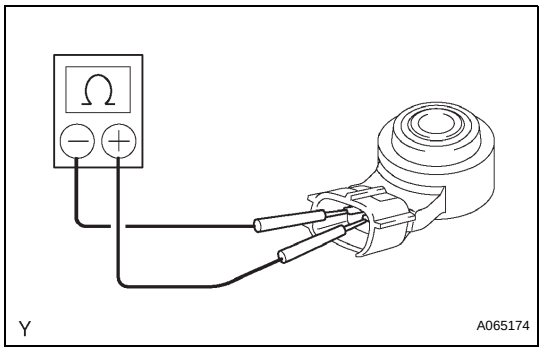

INSPECTION

1. **INSPECT KNOCK CONTROL SENSOR**
   (a) Using an ohmmeter, measure the resistance between the terminals.
   Standard resistance:
   120 to 280 kΩ at 20°C (68°F)
   If the result is not as specified, replace the sensor.

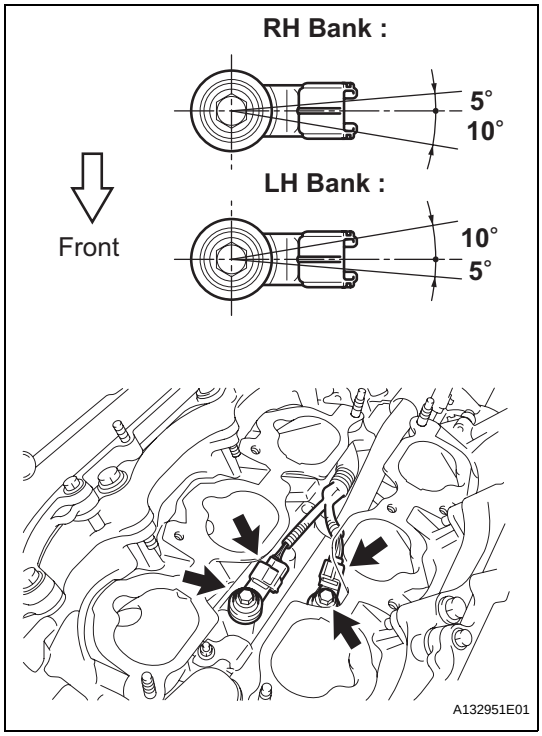

INSTALLATION

1. **INSTALL KNOCK CONTROL SENSOR**
   (a) Install the 2 knock control sensors with the 2 bolts as shown in the illustration.
   Torque: 20 N*m (204 kgf*cm, 15 ft.*lbf)
   (b) Connect the 2 knock control sensor connectors.
2. **INSTALL INTAKE MANIFOLD (See page EM-40)**
3. **CONNECT FUEL TUBE SUB-ASSEMBLY (See page FU-17)**
4. **INSTALL INTAKE AIR SURGE TANK (See page FU-17)**
5. **INSTALL NO. 1 AIR CLEANER INLET (See page EM-48)**
6. **INSTALL AIR CLEANER CASE SUB-ASSEMBLY (See page EM-48)**
7. **INSTALL AIR CLEANER CAP SUB-ASSEMBLY (See page ES-522)**
8. **INSTALL AIR CLEANER INLET ASSEMBLY (See page EM-48)**
9. **ADD ENGINE COOLANT (See page CO-6)**
10. **CHECK FOR ENGINE COOLANT LEAKS (See page CO-1)**
11. **CHECK FOR FUEL LEAKS (See page FU-7)**
12. **INSTALL FRONT SUSPENSION UPPER CENTER BRACE (See page BR-25)**
13. **INSTALL V-BANK COVER SUB-ASSEMBLY (See page EM-49)**
14. **INSTALL ENGINE ROOM SIDE COVER LH (See page EM-50)**
15. **INSTALL ENGINE ROOM SIDE COVER RH (See page EM-50)**
16. **INSTALL COOL AIR INTAKE DUCT SEAL (See page EM-50)**
17. **INSTALL ENGINE UNDER COVER RH**
18. **INSTALL ENGINE UNDER COVER LH**

SYSTEM DIAGRAM

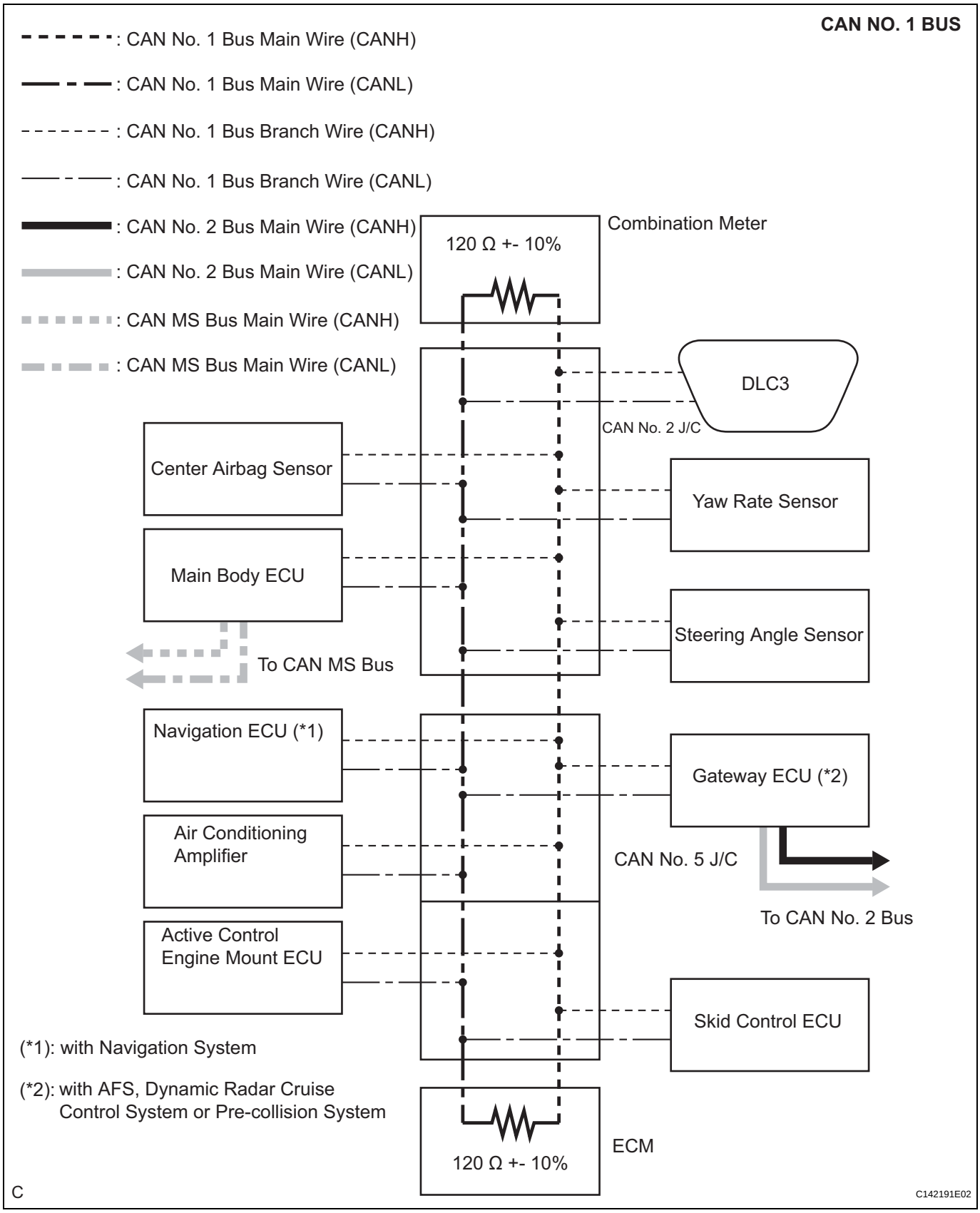

CA

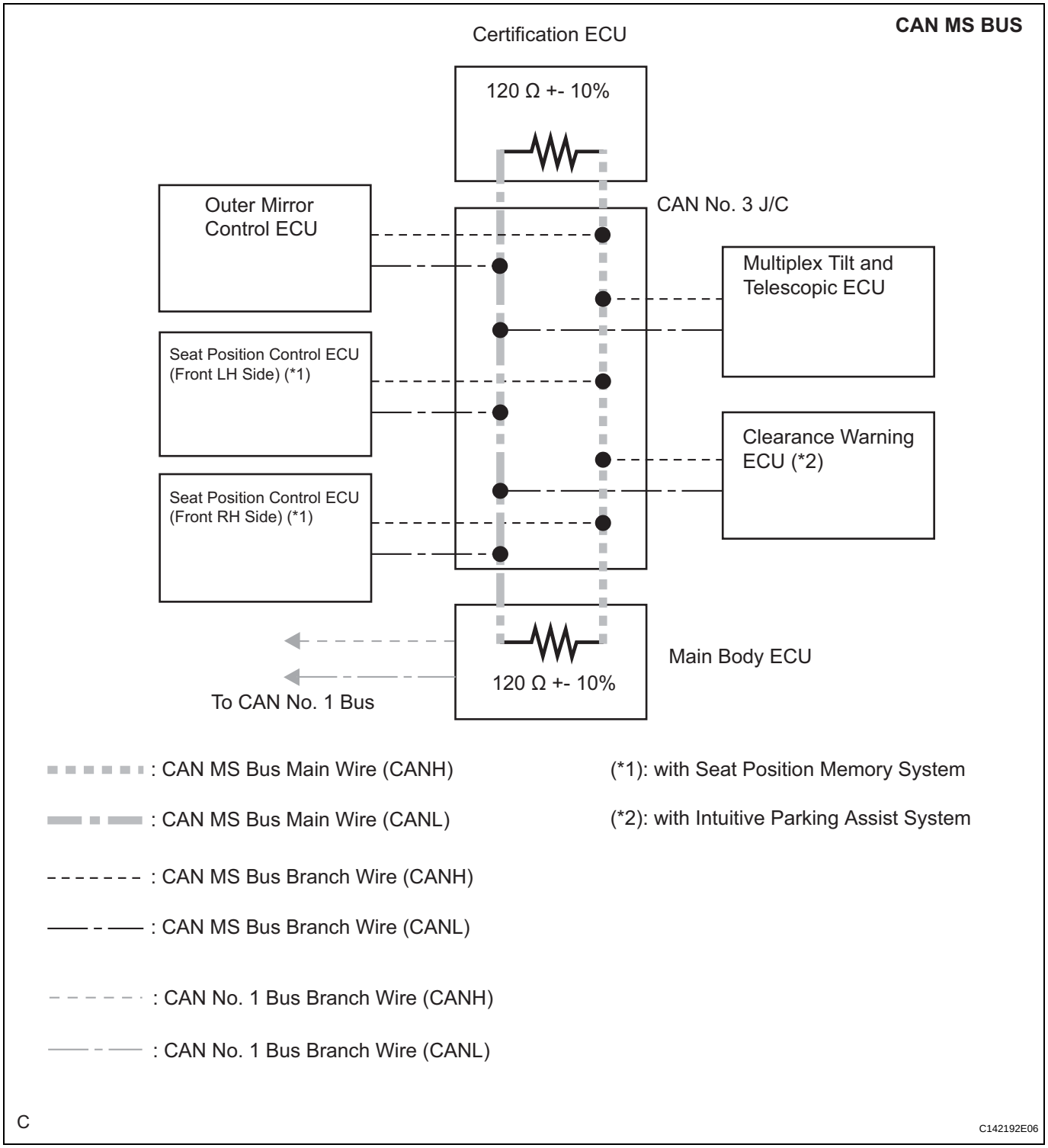
CAN MS BUS
Certification ECU
120 Ω +- 10%
CAN No. 3 J/C
Outer Mirror Control ECU
Multiplex Tilt and Telescopic ECU
Seat Position Control ECU (Front LH Side) (*1)
Clearance Warning ECU (*2)
Seat Position Control ECU (Front RH Side) (*1)
Main Body ECU
120 Ω +- 10%
To CAN No. 1 Bus
: CAN MS Bus Main Wire (CANH)
: CAN MS Bus Main Wire (CANL)
: CAN MS Bus Branch Wire (CANH)
: CAN MS Bus Branch Wire (CANL)
: CAN No. 1 Bus Branch Wire (CANH)
: CAN No. 1 Bus Branch Wire (CANL)
(*1): with Seat Position Memory System
(*2): with Intuitive Parking Assist System
C
C142192E06

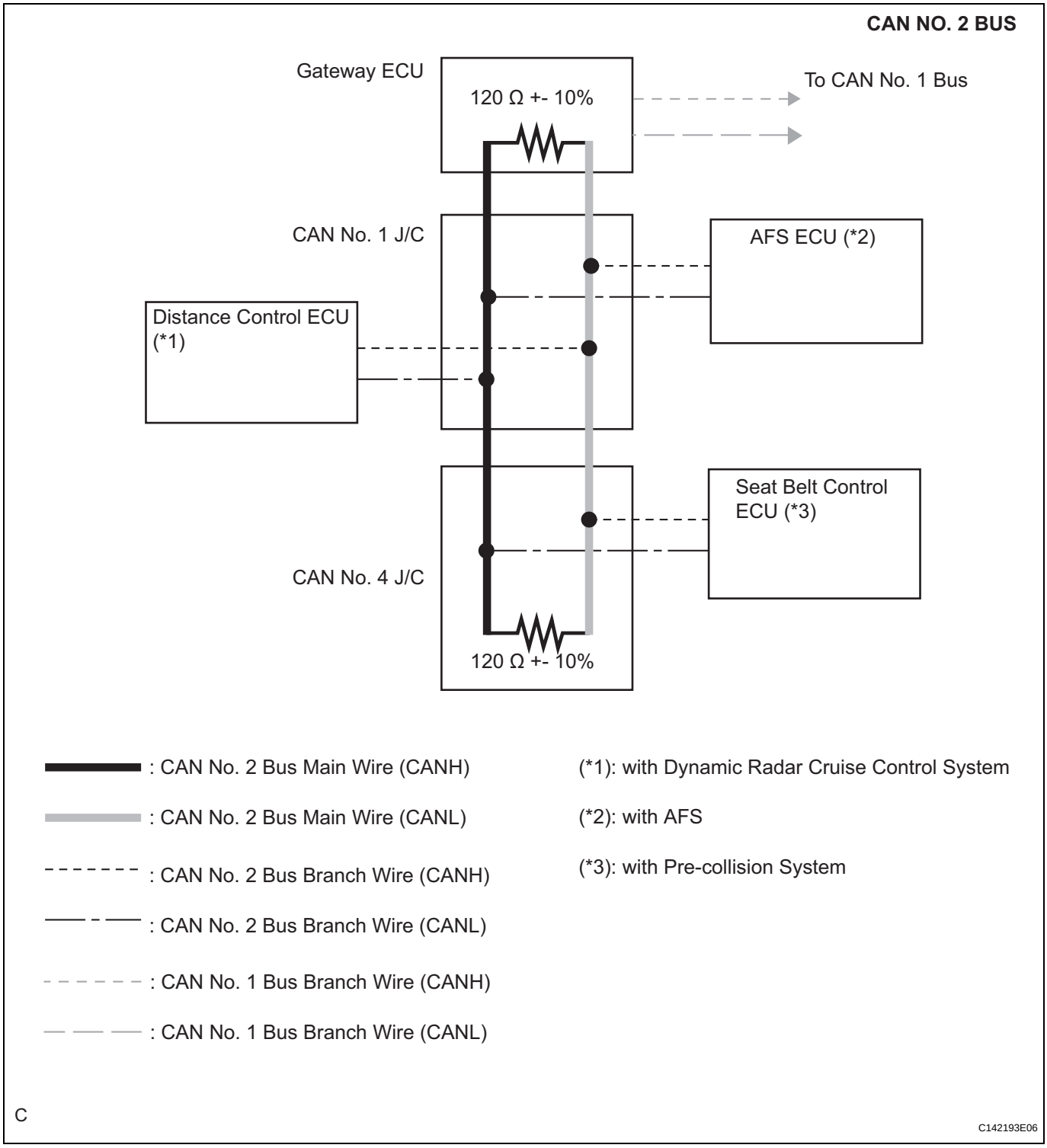

HINT:

- The skid control ECU detects and stores steering angle sensor and yaw rate sensor DTCs and performs DTC communication by receiving information from the steering angle sensor and yaw rate sensor.
- The ECM uses the CAN communication system to perform DTC communication instead of the conventional line (SIL).

SYSTEM DESCRIPTION

1. BRIEF DESCRIPTION

(a) The CAN (Control Area Network) is a serial data communication system for real time application. It is a vehicle multiplex communication system which has a high communication speed and the ability to detect malfunctions.

(b) Two different types of CAN buses are used. The CAN buses are classified into two types based on typical communication speed.
The HS-CAN bus is a high speed communication bus that is used for powertrain, chassis, and some body electrical communication. The HS-CAN bus is referred to as "CAN No. 1 bus" and "CAN No. 2 bus". It operates at speeds of approximately 500 kbps. Terminating resistors for the CAN No. 1 bus are located in the combination meter and ECM. Terminating resistors for the CAN No. 2 bus are located in the gateway ECU and the CAN No. 4 J/C. The resistance of the CAN No. 2 bus cannot be measured from the DLC3 connector.
The MS-CAN bus is a medium speed communication bus that is used for body electrical communication. The MS-CAN bus is referred to as "MS bus" and it operates at speeds of approximately 250 kbps. Terminating resistors for the MS-CAN bus are located in the main body ECU and the certification ECU. The resistance of the MS CAN bus cannot be measured from the DLC3 connector.
Communication between these networks is handled via the main body ECU (for the CAN MS bus) or the gateway ECU (for the CAN No. 2 bus), which acts as a gateway.

(c) By pairing the CANH and CANL bus wires, the CAN performs communication based on differential voltage.

(d) Many ECUs (sensors) installed on the vehicle operate by sharing information and communicating with each other.

(e) The CAN has two resistors of 120 Ω which are necessary to communicate with the main bus wire.

2. DEFINITION OF TERMS

(a) Main bus wire

(1) The main bus wire is a wire harness between the two terminating resistors on the bus (communication wire). This is the main bus in the CAN communication system.

(b) Branch wire

(1) The branch wire is a wire harness which diverges from the main bus wire to an ECU or sensor.

(c) Terminating resistors

(1) Two resistors of 120 Ω are installed in parallel across the ends of the CAN main bus wire. They are called terminating resistors. These resistors allow the changes of the voltage differential between the CAN bus wires to be accurately judged. To allow proper function of CAN communication, it is necessary to have both terminating resistors installed. Since the two resistors are installed in parallel, a measurement of resistance between the two CAN bus wires should produce a reading of approximately 60 Ω.

3. ECUS OR SENSORS WHICH COMMUNICATE THROUGH CAN COMMUNICATION SYSTEM

(a) Skid control ECU
(b) Yaw rate sensor
(c) Steering angle sensor
(d) Main body ECU
(e) Multi-display (*1)
(f) Center airbag sensor
(g) ECM
(h) Gateway ECU (*7)
(i) Certification ECU
(j) Outer mirror control ECU
(k) Active control engine mount ECU
(l) Air conditioning amplifier
(m) Combination meter
(n) Clearance warning ECU (*2)
(o) Seat position control ECU (Front LH seat) (*3)
(p) Seat position control ECU (Front RH seat) (*3)
(q) AFS ECU (*4)
(r) Multiplex tilt and telescopic ECU
(s) Seat belt control ECU (*5)
(t) Distance control ECU (*6)

HINT:

- (*1): with Navigation system
- (*2): with Intuitive parking assist system
- (*3): with Seat position memory system
- (*4): with AFS (Adaptive Front-lighting System)
- (*5): with Pre-collision system
- (*6): with Dynamic radar cruise control system
- (*7): with AFS, Dynamic radar cruise control system or Pre-collision system

4. DIAGNOSTIC CODE FOR CAN COMMUNICATION SYSTEM

(a) DTCs for the CAN communication system are as follows: U0073, U0100, U0122, U0123, U0124, U0126, U0129, U1101, U0151, B2427, B2621, U1002, U0182, U1102, U1100, B1207, B1297, B1276, B1272, B1289, B1213, and B2326.

5. TROUBLESHOOTING REMARKS

(a) DTCs for the CAN communication system can be checked using the intelligent tester via the CAN VIM. The DLC3 is connected to the CAN communication system, but no DTCs exist regarding problems in the DLC3 or the DLC3 branch wires. If there is trouble in the DLC3 or the DLC3 branch wires, ECUs on the CAN network cannot output codes to the intelligent tester via the CAN VIM.

(b) Trouble in the CAN buses (communication wires) can be checked by measuring the resistance between terminals of the DLC3. However, an open circuit in a branch wire other than the DLC3 branch wires cannot be checked from the DLC3.

NOTICE:

Do not insert the tester probes directly into the DLC3. Be sure to use service wires.

6. HOW TO DISTINGUISH THE CAN J/C CONNECTOR

(a) In the CAN communication system, the shape of all connectors connected to the CAN J/C is the same. The connectors connected to the CAN J/C can be distinguished by the colors of the bus wire and the connecting side of the junction connector.

HINT:

See "TERMINALS OF ECU" (See page CA-16) for bus wire color or the type of connecting surface.

HOW TO PROCEED WITH TROUBLESHOOTING

NOTICE:

- **DTCs for the CAN communication system are as follows: U0073, U0100, U0122, U0123, U0124, U0126, U0129, U1101, U0151, B2427, B2621, U1002, U0182, U1102, U1100, B1207, B1297, B1276, B1272, B1289, B1213, and B2326.**
- **Refer to troubleshooting of each system if DTCs regarding the CAN communication system are not output.**

1 CHECK AND CLEAR DTCS

HINT:

- CAN communication DTCs are output when there is an open or short in any of the communication wires. Any problems with the power source of a corresponding ECU or sensor, or problems in the ECU or the sensor itself also cause these DTCs to be output.
- If a CAN communication wire connector is disconnected with the engine switch on (IG), the ECUs of the corresponding system and related systems record a DTC.

NEXT

2 CHECK FOR INSTALLED SYSTEMS (ECUS & SENSORS) THAT ADOPT CAN COMMUNICATION

(a) Check if the vehicle is equipped with any of the following: Navigation system, intuitive parking assist system, seat position memory system, AFS (Adaptive front-lighting system), pre-collision system, and dynamic radar cruise control system (See page CA-41).

NEXT

3 CHECK WITH INTELLIGENT TESTER

(a) Using the intelligent tester, display the "BUS CHECK" screen (See page CA-41).

(b) Observe the screen for approximately 1 minute to check the ECUs and sensors displayed on the screen.

Result

Symptom	Proceed to
All ECUs and sensors connected to the CAN communication system are not displayed on the screen. (Open in CAN No. 1 main bus wire or short in CAN No. 1 bus wire)	A
One of the ECUs and sensors connected to the CAN communication system is not displayed on the screen. (Open in ECU or sensor branch wires, or communication interrupted)	B(*1) (See page CA-41)

Symptom	Proceed to
Some of the ECUs and sensors connected to the CAN communication system are not displayed on the screen. During this check, some ECUs and sensors repeatedly appear and disappear from the screen. (Open in one side of ECU or sensor branch wires)	C (See page CA-198)
• All ECUs and sensors except the main body ECU connected to the MS CAN bus wire are not displayed on the screen. • The main body ECU outputs DTC B2326. (Open in CAN MS main bus wire or short in CAN MS bus wire)	D (See page CA-70)
All ECUs and sensors connected to the MS CAN bus wire are not displayed on the screen. (Open in main body ECU branch wire or main body ECU malfunction)	E (See page CA-139)
• All ECUs and sensors except the gateway ECU connected to the CAN No. 2 bus wire are not displayed on the screen. • The gateway ECU outputs DTC U1002. (Open in CAN No. 2 main bus wire or short in CAN No. 2 bus wire)	F (See page CA-96)
All ECUs and sensors connected to the CAN No. 2 bus wire are not displayed on the screen. (Open in gateway ECU branch wire or gateway ECU malfunction)	G (See page CA-131)
All ECUs and sensors connected to the CAN communication system are displayed on the screen. (CAN bus circuit is currently normal)	H

NOTICE:

- **The systems (ECUs, sensors) that adopt CAN communication vary depending on the vehicle and optional equipment. Check which systems (ECUs, sensors) are installed on the vehicle (See page CA-41).**
- **Non-installed ECUs or sensors will not be displayed. Do not mistake them for being in the communication stop mode.**
- **If only ECT is not displayed, check DTC U0101 of the SFI system (See page ES-391).**
- **The ECUs and sensors that repeatedly appear and disappear from the screen during this check are considered normal. (The response to the intelligent tester and the tester display are affected by signals output from other ECUs which have an open circuit in either of their CAN branch wires.)**

HINT:

- (*1): See the "DTC CHART" instead of the "COMMUNICATION STOP MODE TABLE", when some of the ECUs connected to the CAN MS bus or the CAN No. 2 bus are not displayed on the screen (See page CA-49).
- The ECUs connected to the CAN MS bus are displayed on the screen by the main body ECU.
- The ECUs connected to the CAN No. 2 bus are displayed on the screen by the gateway ECU.
- If communication stops between an ECU and the CAN No. 2 bus, the ECU will not be displayed on the intelligent tester screen.

B → **COMMUNICATION STOP MODE TABLE (*1)**

C → **GO TO "OPEN IN ONE SIDE OF CAN BRANCH WIRE"**

D	GO TO "B2326"
E	GO TO "MAIN BODY ECU COMMUNICATION STOP MODE"
F	GO TO "U1002"
G	GO TO "GATEWAY ECU COMMUNICATION STOP MODE"
H	GO TO STEP 5

A

4 CHECK CAN NO. 1 BUS WIRE

(a) Check the CAN No. 1 bus wire (See page CA-150).
HINT:
If the area where an open or short is occurring in a CAN No. 1 bus wire can be determined, refer to the "PROBLEM SYMPTOMS TABLE" (See page CA-15).

NEXT → GO TO STEP 6

5 RECHECK DTC

HINT:
- Sometimes CAN communication system DTCs are output, but all the ECUs and sensors connected to the CAN communication system are displayed on the intelligent tester. In this case, previous or history DTCs may indicate the cause of the problem.
- ECUs related to a problem in the CAN No. 1 bus will store DTCs to indicate communication malfunctions. The communication stop mode in the CAN No. 1 bus can be determined by comparing the combination of DTCs that have been set. Refer to the DTC combination table for the CAN No. 1 bus.
- The main body ECU will store communication error DTCs when the ECUs connected to the CAN MS bus cannot communicate, or if a network malfunction occurs.
- The gateway ECU will store communication error DTCs when the ECUs connected to the CAN No. 2 bus cannot communicate, or if a network malfunction of the CAN No. 2 bus occurs.

Result

Result	Proceed to
Communication error DTCs other than the codes output from the main body ECU and the gateway ECU are output.	A
The main body ECU outputs CAN MS DTC B2326. (A malfunction occurred in the CAN MS bus)	B (See page CA-70)
The main body ECU outputs DTCs other than CAN MS bus DTC B2326. (A malfunction occurred in an ECU branch wire connected to the CAN MS bus)	C (See page CA-49)

Result	Proceed to
The gateway ECU outputs network trouble code U1002. (A malfunction occurred in the CAN No. 2 bus)	D (See page CA-96)
The gateway ECU outputs DTCs other than network trouble code U1002. (A malfunction occurred in an ECU branch wire connected to the CAN No. 2 bus)	E (See page CA-49)

B → GO TO "B2326"

C → GO TO "DTC CHART"

D → GO TO "U1002"

E → GO TO "DTC CHART"

A

6 DTC COMBINATION TABLE

(a) Confirm trouble according to the combination of output DTCs regarding the CAN communication system (See page CA-41).
HINT:
Previous CAN communication system DTCs may be the cause if CAN communication system DTCs are output and all ECUs and sensors connected to the CAN communication system are displayed on the intelligent tester's "BUS CHECK" screen via the CAN VIM.

NEXT

7 CIRCUIT INSPECTION

NEXT

8 IDENTIFICATION OF PROBLEM

NEXT

9 REPAIR OR REPLACE

NEXT

10 CONFIRMATION TEST

NEXT

END

CAN COMMUNICATION SYSTEM

PRECAUTION

1. STEERING SYSTEM HANDLING PRECAUTIONS

(a) Care must be taken when replacing parts. Incorrect replacement could affect the performance of the steering system and result in hazardous driving.

2. SRS AIRBAG SYSTEM HANDLING PRECAUTIONS

(a) This vehicle is equipped with an SRS (Supplemental Restraint System) which includes components such as the driver airbag and front passenger airbag. Failure to carry out service operations in the correct sequence could cause unexpected SRS deployment during servicing and may lead to a serious accident. Before servicing (including removal or installation of parts, inspection or replacement), be sure to read the precautionary notice for the Supplemental Restraint System (See page RS-1).

3. BUS WIRE REPAIR

(a) After repairing the bus wire with solder, wrap the repaired part with electrical tape.

NOTICE:

- **The CANL bus wire and CANH bus wire must be installed together all the times.**
- **When installing, make sure to twist them.**
- **CAN bus wires are likely to be influenced by electrical noise if they are not twisted.**
- **The difference in length between the CANL bus wire and CANH bus wire should be 100 mm (3.937 in.) or less.**
- **Leave approximately 80 mm (3.150 in.) loose in the twisted wires around the connector.**

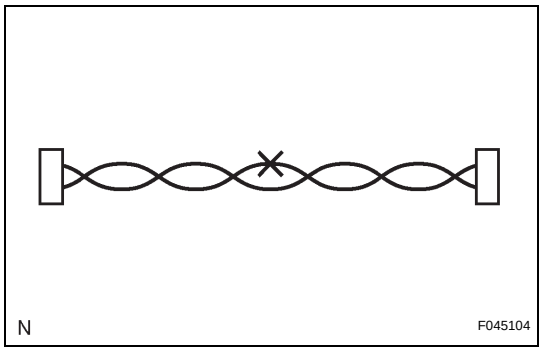

(b) Do not use bypass wiring between the connectors.

NOTICE:

The ability of the twisted bus wires to resist interference will be lost if bypass wiring is used.

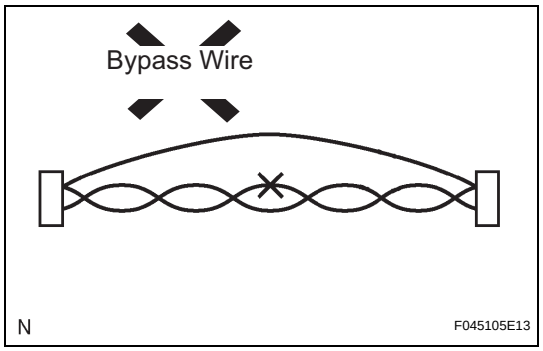

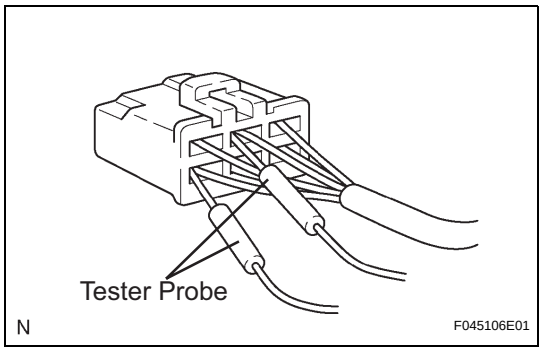

4. CONNECTOR HANDLING

(a) When checking resistance with a tester, insert the tester probes from the backside (harness side) of the connector.

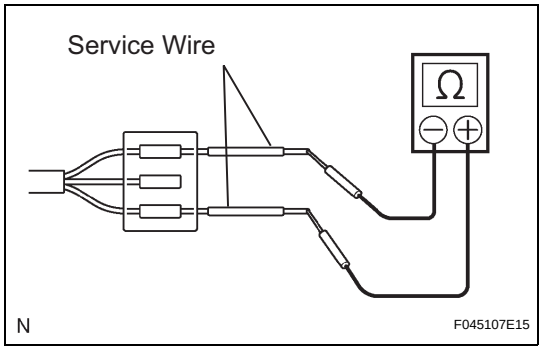

(b) Use a service wire to check the connector if it is impossible to check continuity from the rear of the connector.

5. PRECAUTION FOR DISCONNECTING THE BATTERY CABLE

NOTICE:

Some systems need to be initialized after reconnecting the negative (-) battery terminal (See page IN-33).

SYSTEM DESCRIPTION

1. BRIEF DESCRIPTION

(a) The CAN (Control Area Network) is a serial data communication system for real time application. It is a vehicle multiplex communication system which has a high communication speed and the ability to detect malfunctions.

(b) Two different types of CAN buses are used. The CAN buses are classified into two types based on typical communication speed.
The HS-CAN bus is a high speed communication bus that is used for powertrain, chassis, and some body electrical communication. The HS-CAN bus is referred to as "CAN No. 1 bus" and "CAN No. 2 bus". It operates at speeds of approximately 500 kbps. Terminating resistors for the CAN No. 1 bus are located in the combination meter and ECM. Terminating resistors for the CAN No. 2 bus are located in the gateway ECU and the CAN No. 4 J/C. The resistance of the CAN No. 2 bus cannot be measured from the DLC3 connector.
The MS-CAN bus is a medium speed communication bus that is used for body electrical communication. The MS-CAN bus is referred to as "MS bus" and it operates at speeds of approximately 250 kbps. Terminating resistors for the MS-CAN bus are located in the main body ECU and the certification ECU. The resistance of the MS CAN bus cannot be measured from the DLC3 connector.
Communication between these networks is handled via the main body ECU (for the CAN MS bus) or the gateway ECU (for the CAN No. 2 bus), which acts as a gateway.

(c) By pairing the CANH and CANL bus wires, the CAN performs communication based on differential voltage.

(d) Many ECUs (sensors) installed on the vehicle operate by sharing information and communicating with each other.

(e) The CAN has two resistors of 120 Ω which are necessary to communicate with the main bus wire.

2. DEFINITION OF TERMS

(a) Main bus wire

(1) The main bus wire is a wire harness between the two terminating resistors on the bus (communication wire). This is the main bus in the CAN communication system.

(b) Branch wire

(1) The branch wire is a wire harness which diverges from the main bus wire to an ECU or sensor.

(c) Terminating resistors

(1) Two resistors of 120 Ω are installed in parallel across the ends of the CAN main bus wire. They are called terminating resistors. These resistors allow the changes of the voltage differential between the CAN bus wires to be accurately judged. To allow proper function of CAN communication, it is necessary to have both terminating resistors installed. Since the two resistors are installed in parallel, a measurement of resistance between the two CAN bus wires should produce a reading of approximately 60 Ω.

3. ECUS OR SENSORS WHICH COMMUNICATE THROUGH CAN COMMUNICATION SYSTEM

(a) Skid control ECU
(b) Yaw rate sensor
(c) Steering angle sensor
(d) Main body ECU
(e) Multi-display (*1)
(f) Center airbag sensor
(g) ECM
(h) Gateway ECU (*7)
(i) Certification ECU
(j) Outer mirror control ECU
(k) Active control engine mount ECU
(l) Air conditioning amplifier
(m) Combination meter
(n) Clearance warning ECU (*2)
(o) Seat position control ECU (Front LH seat) (*3)
(p) Seat position control ECU (Front RH seat) (*3)
(q) AFS ECU (*4)
(r) Multiplex tilt and telescopic ECU
(s) Seat belt control ECU (*5)
(t) Distance control ECU (*6)

HINT:

- (*1): with Navigation system
- (*2): with Intuitive parking assist system
- (*3): with Seat position memory system
- (*4): with AFS (Adaptive Front-lighting System)
- (*5): with Pre-collision system
- (*6): with Dynamic radar cruise control system
- (*7): with AFS, Dynamic radar cruise control system or Pre-collision system

4. DIAGNOSTIC CODE FOR CAN COMMUNICATION SYSTEM

(a) DTCs for the CAN communication system are as follows: U0073, U0100, U0122, U0123, U0124, U0126, U0129, U1101, U0151, B2427, B2621, U1002, U0182, U1102, U1100, B1207, B1297, B1276, B1272, B1289, B1213, and B2326.

5. TROUBLESHOOTING REMARKS

(a) DTCs for the CAN communication system can be checked using the intelligent tester via the CAN VIM. The DLC3 is connected to the CAN communication system, but no DTCs exist regarding problems in the DLC3 or the DLC3 branch wires. If there is trouble in the DLC3 or the DLC3 branch wires, ECUs on the CAN network cannot output codes to the intelligent tester via the CAN VIM.

(b) Trouble in the CAN buses (communication wires) can be checked by measuring the resistance between terminals of the DLC3. However, an open circuit in a branch wire other than the DLC3 branch wires cannot be checked from the DLC3.

NOTICE:

Do not insert the tester probes directly into the DLC3. Be sure to use service wires.

6. HOW TO DISTINGUISH THE CAN J/C CONNECTOR

(a) In the CAN communication system, the shape of all connectors connected to the CAN J/C is the same. The connectors connected to the CAN J/C can be distinguished by the colors of the bus wire and the connecting side of the junction connector.

HINT:

See "TERMINALS OF ECU" (See page CA-16) for bus wire color or the type of connecting surface.

HOW TO PROCEED WITH TROUBLESHOOTING

NOTICE:

- **DTCs for the CAN communication system are as follows: U0073, U0100, U0122, U0123, U0124, U0126, U0129, U1101, U0151, B2427, B2621, U1002, U0182, U1102, U1100, B1207, B1297, B1276, B1272, B1289, B1213, and B2326.**
- **Refer to troubleshooting of each system if DTCs regarding the CAN communication system are not output.**

1 CHECK AND CLEAR DTCS

HINT:

- CAN communication DTCs are output when there is an open or short in any of the communication wires. Any problems with the power source of a corresponding ECU or sensor, or problems in the ECU or the sensor itself also cause these DTCs to be output.
- If a CAN communication wire connector is disconnected with the engine switch on (IG), the ECUs of the corresponding system and related systems record a DTC.

NEXT

2 CHECK FOR INSTALLED SYSTEMS (ECUS & SENSORS) THAT ADOPT CAN COMMUNICATION

(a) Check if the vehicle is equipped with any of the following: Navigation system, intuitive parking assist system, seat position memory system, AFS (Adaptive front-lighting system), pre-collision system, and dynamic radar cruise control system (See page CA-41).

NEXT

3 CHECK WITH INTELLIGENT TESTER

(a) Using the intelligent tester, display the "BUS CHECK" screen (See page CA-41).

(b) Observe the screen for approximately 1 minute to check the ECUs and sensors displayed on the screen.

Result

Symptom	Proceed to
All ECUs and sensors connected to the CAN communication system are not displayed on the screen. (Open in CAN No. 1 main bus wire or short in CAN No. 1 bus wire)	A
One of the ECUs and sensors connected to the CAN communication system is not displayed on the screen. (Open in ECU or sensor branch wires, or communication interrupted)	B(*1) (See page CA-41)

Symptom	Proceed to
Some of the ECUs and sensors connected to the CAN communication system are not displayed on the screen. During this check, some ECUs and sensors repeatedly appear and disappear from the screen. (Open in one side of ECU or sensor branch wires)	C (See page CA-198)
• All ECUs and sensors except the main body ECU connected to the MS CAN bus wire are not displayed on the screen. • The main body ECU outputs DTC B2326. (Open in CAN MS main bus wire or short in CAN MS bus wire)	D (See page CA-70)
All ECUs and sensors connected to the MS CAN bus wire are not displayed on the screen. (Open in main body ECU branch wire or main body ECU malfunction)	E (See page CA-139)
• All ECUs and sensors except the gateway ECU connected to the CAN No. 2 bus wire are not displayed on the screen. • The gateway ECU outputs DTC U1002. (Open in CAN No. 2 main bus wire or short in CAN No. 2 bus wire)	F (See page CA-96)
All ECUs and sensors connected to the CAN No. 2 bus wire are not displayed on the screen. (Open in gateway ECU branch wire or gateway ECU malfunction)	G (See page CA-131)
All ECUs and sensors connected to the CAN communication system are displayed on the screen. (CAN bus circuit is currently normal)	H

NOTICE:

- **The systems (ECUs, sensors) that adopt CAN communication vary depending on the vehicle and optional equipment. Check which systems (ECUs, sensors) are installed on the vehicle (See page CA-41).**
- **Non-installed ECUs or sensors will not be displayed. Do not mistake them for being in the communication stop mode.**
- **If only ECT is not displayed, check DTC U0101 of the SFI system (See page ES-391).**
- **The ECUs and sensors that repeatedly appear and disappear from the screen during this check are considered normal. (The response to the intelligent tester and the tester display are affected by signals output from other ECUs which have an open circuit in either of their CAN branch wires.)**

HINT:

- (*1): See the "DTC CHART" instead of the "COMMUNICATION STOP MODE TABLE", when some of the ECUs connected to the CAN MS bus or the CAN No. 2 bus are not displayed on the screen (See page CA-49).
- The ECUs connected to the CAN MS bus are displayed on the screen by the main body ECU.
- The ECUs connected to the CAN No. 2 bus are displayed on the screen by the gateway ECU.
- If communication stops between an ECU and the CAN No. 2 bus, the ECU will not be displayed on the intelligent tester screen.

B → **COMMUNICATION STOP MODE TABLE (*1)**

C → **GO TO "OPEN IN ONE SIDE OF CAN BRANCH WIRE"**

D	GO TO "B2326"
E	GO TO "MAIN BODY ECU COMMUNICATION STOP MODE"
F	GO TO "U1002"
G	GO TO "GATEWAY ECU COMMUNICATION STOP MODE"
H	GO TO STEP 5

A

4 CHECK CAN NO. 1 BUS WIRE

(a) Check the CAN No. 1 bus wire (See page CA-150).
HINT:
If the area where an open or short is occurring in a CAN No. 1 bus wire can be determined, refer to the "PROBLEM SYMPTOMS TABLE" (See page CA-15).

NEXT → GO TO STEP 6

5 RECHECK DTC

HINT:
- Sometimes CAN communication system DTCs are output, but all the ECUs and sensors connected to the CAN communication system are displayed on the intelligent tester. In this case, previous or history DTCs may indicate the cause of the problem.
- ECUs related to a problem in the CAN No. 1 bus will store DTCs to indicate communication malfunctions. The communication stop mode in the CAN No. 1 bus can be determined by comparing the combination of DTCs that have been set. Refer to the DTC combination table for the CAN No. 1 bus.
- The main body ECU will store communication error DTCs when the ECUs connected to the CAN MS bus cannot communicate, or if a network malfunction occurs.
- The gateway ECU will store communication error DTCs when the ECUs connected to the CAN No. 2 bus cannot communicate, or if a network malfunction of the CAN No. 2 bus occurs.

Result

Result	Proceed to
Communication error DTCs other than the codes output from the main body ECU and the gateway ECU are output.	A
The main body ECU outputs CAN MS DTC B2326. (A malfunction occurred in the CAN MS bus)	B (See page CA-70)
The main body ECU outputs DTCs other than CAN MS bus DTC B2326. (A malfunction occurred in an ECU branch wire connected to the CAN MS bus)	C (See page CA-49)

Result	Proceed to
The gateway ECU outputs network trouble code U1002. (A malfunction occurred in the CAN No. 2 bus)	D (See page CA-96)
The gateway ECU outputs DTCs other than network trouble code U1002. (A malfunction occurred in an ECU branch wire connected to the CAN No. 2 bus)	E (See page CA-49)

B → GO TO "B2326"

C → GO TO "DTC CHART"

D → GO TO "U1002"

E → GO TO "DTC CHART"

A

6 DTC COMBINATION TABLE

(a) Confirm trouble according to the combination of output DTCs regarding the CAN communication system (See page CA-41).
HINT:
Previous CAN communication system DTCs may be the cause if CAN communication system DTCs are output and all ECUs and sensors connected to the CAN communication system are displayed on the intelligent tester's "BUS CHECK" screen via the CAN VIM.

NEXT

7 CIRCUIT INSPECTION

NEXT

8 IDENTIFICATION OF PROBLEM

NEXT

9 REPAIR OR REPLACE

NEXT

10 CONFIRMATION TEST

NEXT

END

PROBLEM SYMPTOMS TABLE

RESULT LIST OF CAN BUS WIRE CHECK:

Symptom	Suspected Area	See page
The result of "CAN BUS WIRE CHECK" is "Open in CAN Main Bus Line".	Open in CAN Main Bus Line	CA-154
The result of "CAN BUS WIRE CHECK" is "Short in CAN Bus Lines".	Short in CAN Bus Lines	CA-159
The result of "CAN BUS WIRE CHECK" is "Short to B+ in CAN Bus Line".	Short to B+ in CAN Bus Line	CA-174
The result of "CAN BUS WIRE CHECK" is "Short to GND in CAN Bus Line".	Short to GND in CAN Bus Line	CA-186
The result of "CAN BUS WIRE CHECK" is "Open in One Side of CAN Branch line".	Open in One Side of CAN Branch Line	CA-198

COMMUNICATION STOP MODE TABLE:

Symptom	Suspected Area	See page
"ENGINE" and "ECT" are not displayed on the intelligent tester via CAN VIM.	ECM Communication Stop Mode	CA-137
"ABS/VSC/TRAC" is not displayed on the intelligent tester via CAN VIM.	Skid Control ECU Communication Stop Mode	CA-126
"STEERING SENSOR" is not displayed on the intelligent tester via CAN VIM.	Steering Angle Sensor Communication Stop Mode	CA-133
"YAW/DECELERAT" is not displayed on the intelligent tester via CAN VIM.	Yaw Rate Sensor Communication Stop Mode	CA-135
"A/C" is not displayed on the intelligent tester via CAN VIM.	Air Conditioning Amplifier Communication Stop Mode	CA-128
"SRS AIRBAG" is not displayed on the intelligent tester via CAN VIM.	Center Airbag Sensor Communication Stop Mode	CA-144
"GATEWAY" is not displayed on the intelligent tester via CAN VIM.	Gateway ECU Communication Stop Mode	CA-131
"E-ACM" is not displayed on the intelligent tester via CAN VIM.	Active Control Engine Mount ECU Communication Stop Mode	CA-148
"MAIN BODY" is not displayed on the intelligent tester via CAN VIM.	Main Body ECU Communication Stop Mode	CA-139
"METER" is not displayed on the intelligent tester via CAN VIM.	Combination Meter ECU Communication Stop Mode	CA-142
"AVN" is not displayed on the intelligent tester via CAN VIM.	Navigation Control ECU Communication Stop Mode	CA-146

TERMINALS OF ECU

NOTICE:

- **This section describes the standard CAN values for all CAN related components.**
- **Before measuring the resistance, leave the vehicle as is for at least 1 minute and do not operate the engine switch, any other switches, or the doors. If any doors need to be opened in order to check connectors, open the doors and leave them open.**

1. **JUNCTION CONNECTOR (CAN No. 2 J/C, CAN No. 5 J/C)**
   (a) CAN No. 2 J/C for CAN No. 1 Bus

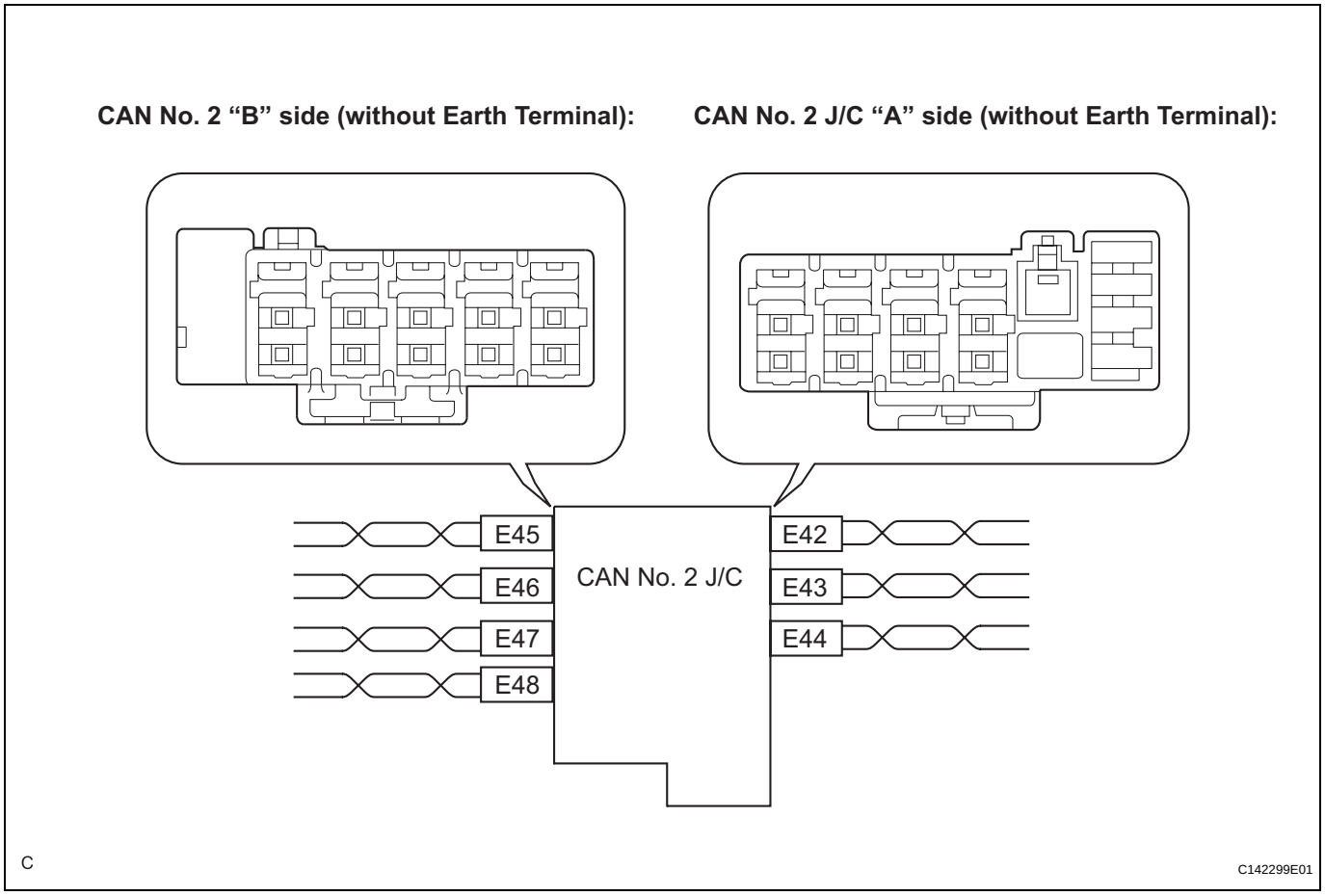

Wiring color:

CAN No. 2 J/C Connector ("A" side, with earth terminal)	Connector Color	Color (CAN-H Side)	Color (CAN-L Side)
CAN No. 1 Bus Wire (E42)	White	B	W
Main Body ECU (E43)	White	BR	GR
DLC3 (E44)	White	LG	P

Wiring color:

CAN No. 2 J/C Connector ("B" side, with earth terminal)	Connector Color	Color (CAN-H Side)	Color (CAN-L Side)
Yaw Rate Sensor (E47)	White	O	P
Center Airbag Sensor (E45)	White	G	Y
Steering Angle Sensor (E46)	White	V	P
Combination Meter (E48)	White	B	W

(b) CAN No. 5 J/C for CAN No. 1 Bus (FRONT SIDE OF THE VEHICLE)

CAN No. 5 J/C (Front Side of the Vehicle) Wire Harness View:

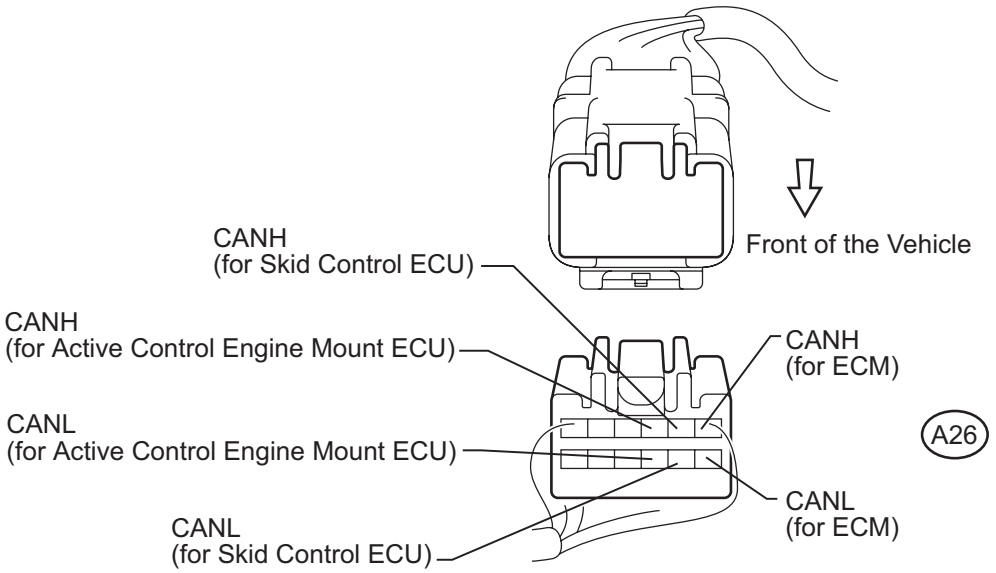

Wiring color:

Terminal	Wiring Color	Destination
A26-1 (CANH)	B	ECM (CANH)
A26-7 (CANL)	W	ECM (CANL)
A26-2 (CANH)	L	Skid Control ECU (CANH)
A26-8 (CANL)	LG	Skid Control ECU (CANL)
A26-3 (CANH)	G	Active Control Engine Mount ECU (CANH)
A26-9 (CANL)	R	Active Control Engine Mount ECU (CANL)

(c) CAN No. 5 J/C for CAN No. 1 Bus (REAR SIDE OF THE VEHICLE)

CAN No. 5 J/C (Rear Side of the Vehicle) Wire Harness View:

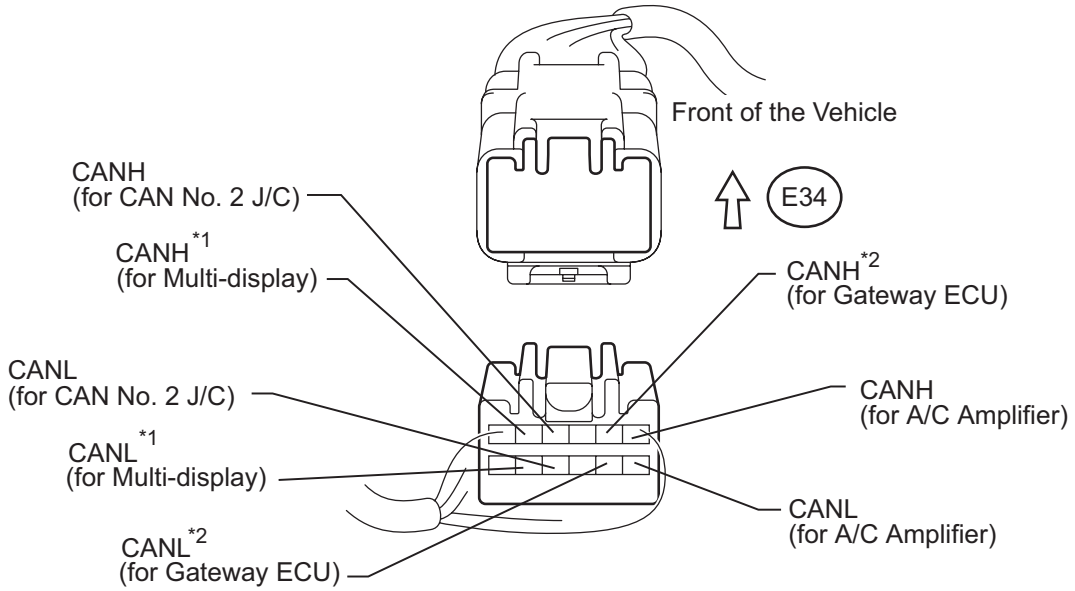

Wiring color:

Terminal	Wiring Color	Destination
E34-1 (CANH)	GR	A/C Amplifier (CANH)
E34-7 (CANL)	BR	A/C Amplifier (CANL)
E34-2 (CANH)*2	P	Gateway ECU (CANH)
E34-8 (CANL)*2	O	Gateway ECU (CANL)
E34-4 (CANH)	B	CAN No. 2 J/C (CANH)
E34-10 (CANL)	W	CAN No. 2 J/C (CANL)
E34-5 (CANH)*1	L	Multi-display (CANH)
E34-11 (CANL)*1	Y	Multi-display (CANL)

HINT:
- *1: with Navigation system
- *2: with AFS, dynamic radar cruise control system or pre-collision system

(d) The connection diagram of the components which are connected to the CAN J/C

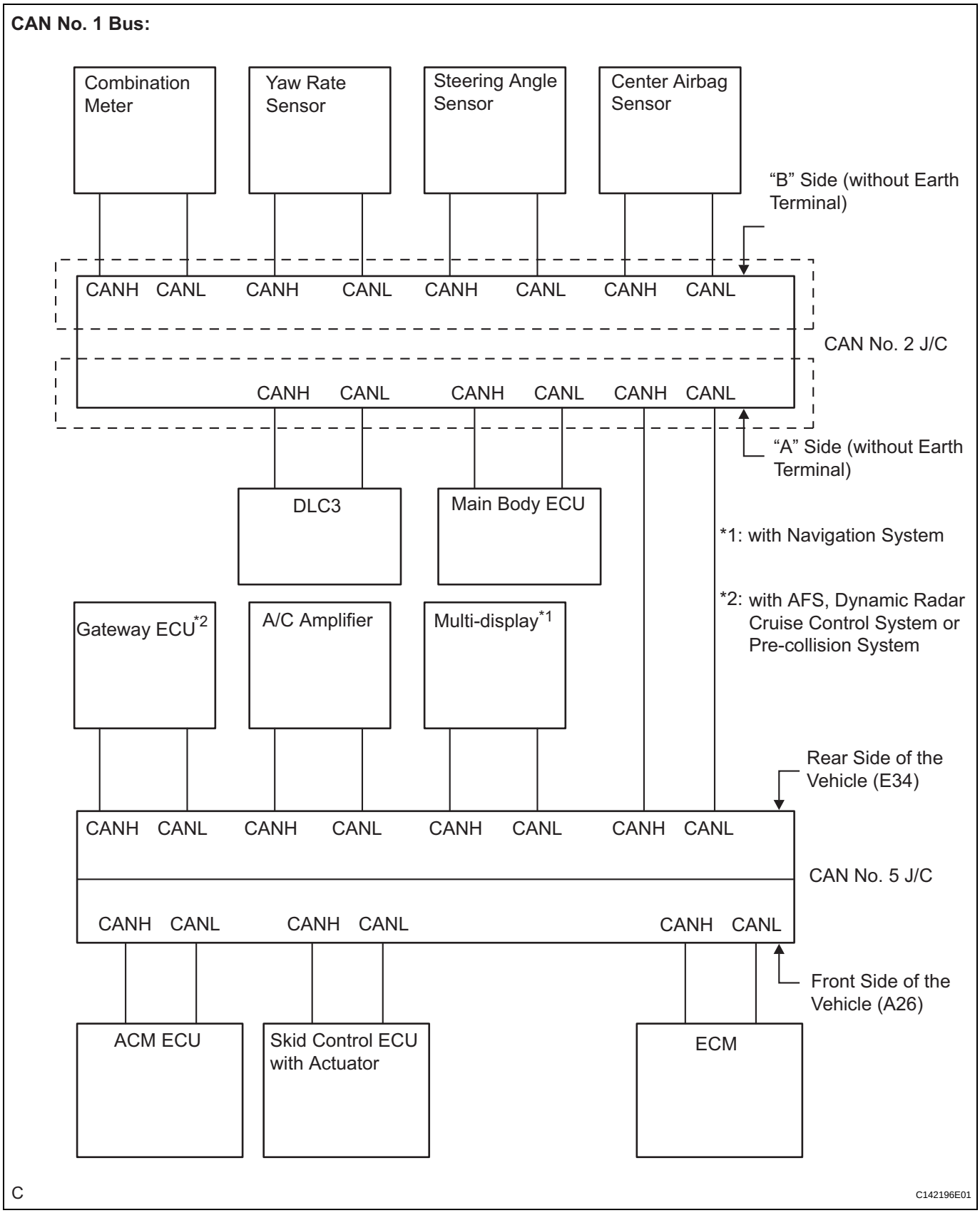

2. JUNCTION CONNECTOR (CAN No. 3 J/C)

(a) CAN No. 3 J/C for CAN MS Bus

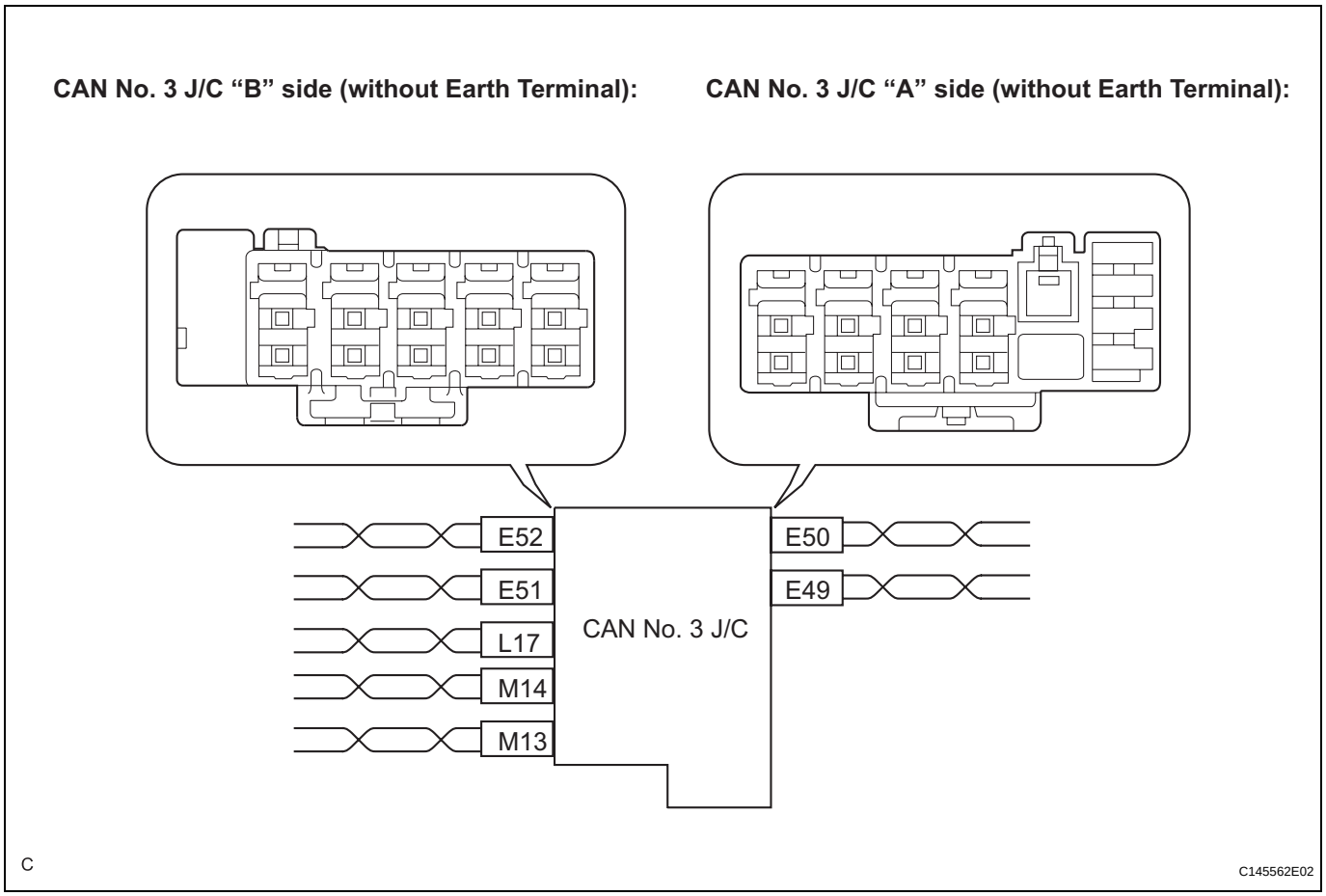

Wiring color:

CAN No. 3 J/C Connector ("A" side, with earth terminal)	Connector Color	Color (CAN-H Side)	Color (CAN-L Side)
Certification ECU (E50)	White	R	W
Main Body ECU (E49)	White	B	W

Wiring color:

CAN No. 3 J/C Connector ("B" side, with earth terminal)	Connector Color	Color (CAN-H Side)	Color (CAN-L Side)
Outer Mirror Control ECU (E52)	White	O	P
Multiplex Tilt and Telescopic ECU (E51)	White	BR	GR
Seat Position Control ECU (Front LH Side) (L17)	Blue	LG	L
Clearance Warning ECU (M13)	Gray	Y	L
Seat Position Control ECU (Front RH Side) (M14)	Black	V	P

3. JUNCTION CONNECTOR (CAN No. 4 J/C)

(a) CAN No. 1 J/C for CAN No. 2 Bus

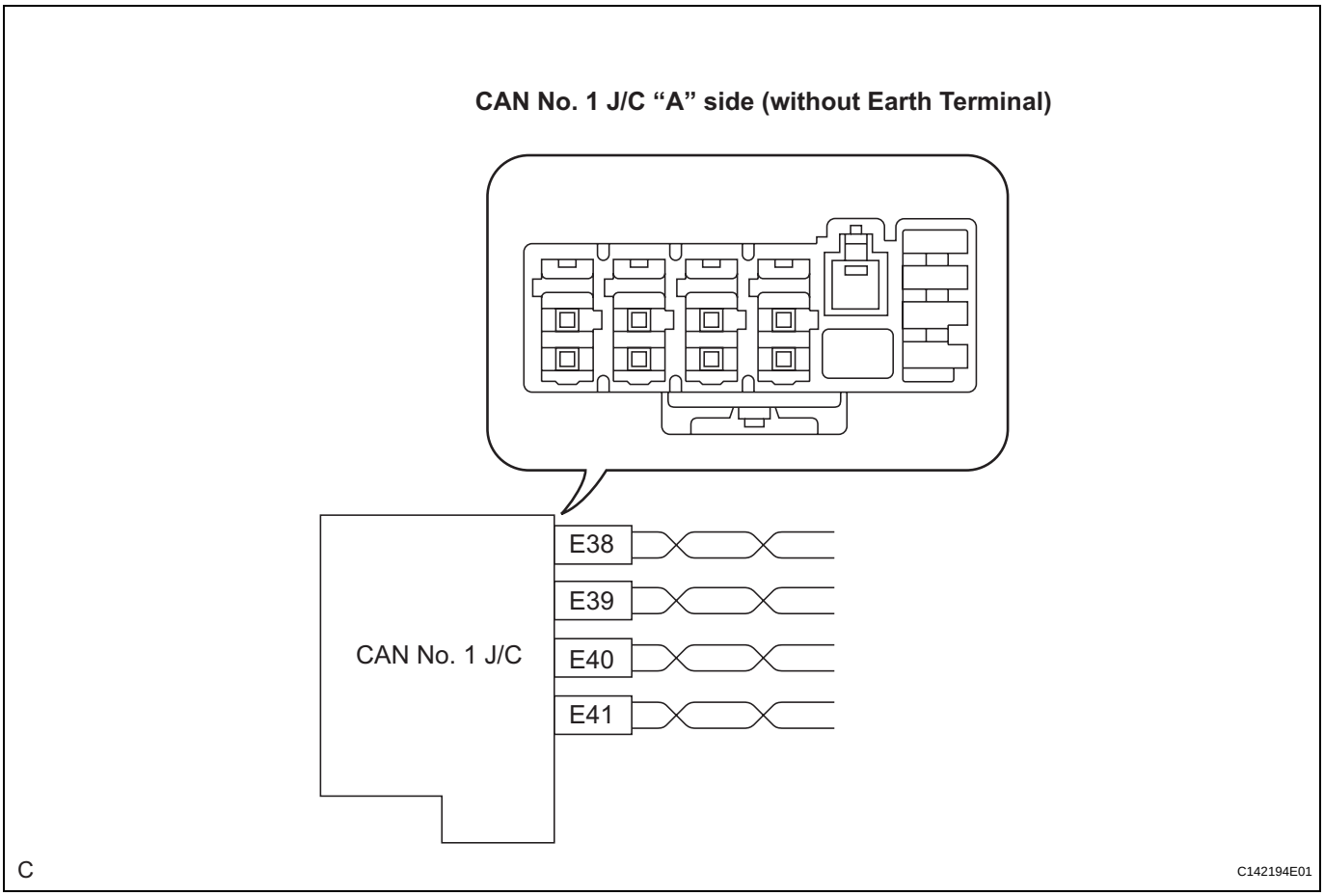

Wiring color:

CAN No. 1 J/C Connector ("A" Side, with earth terminal)	Connector Color	Color (CAN-H Side)	Color (CAN-L Side)
Gateway ECU (E38)	White	B	W
AFS ECU (E39)	White	L	Y
Distance Control ECU (E40)	White	GR	BR
CAN No. 2 Bus Wire (E41)	White	LG	P

(b) CAN No. 4 J/C for CAN No. 2 Bus

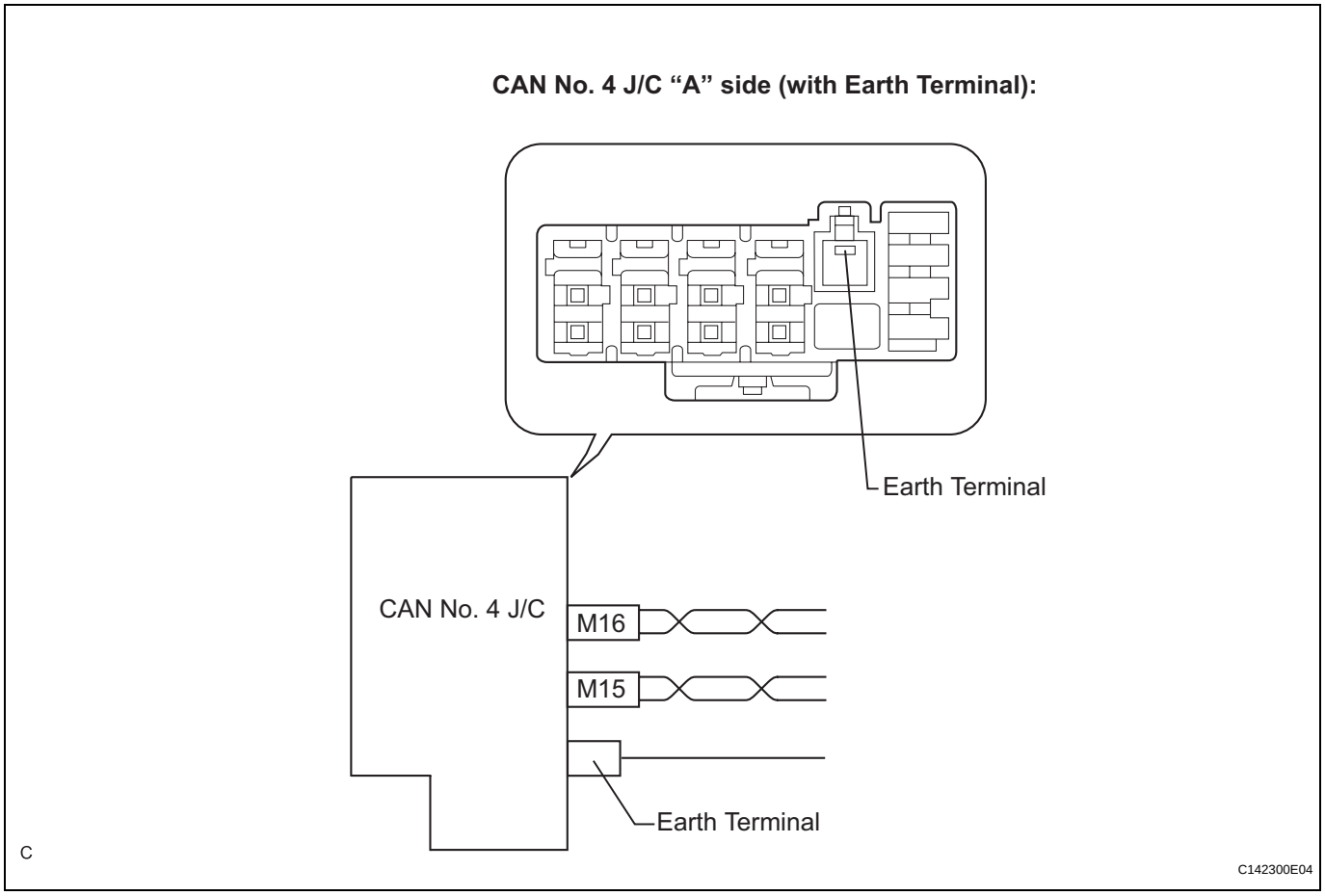

Wiring color:

CAN No. 4 J/C Connector ("A" side, with earth terminal)	Connector Color	Color (CAN-H Side)	Color (CAN-L Side)
CAN No. 1 J/C (M15)	White	LG	P
Seat Belt Control ECU (M16)	White	L	Y

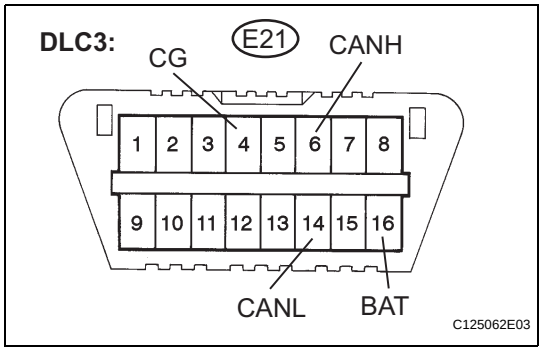

4. DLC3

(a) Measure the resistance according to the value(s) in the table below.

Standard resistance

Terminals	Wiring Color	Terminal Description	Condition	Specified Value
E21-6 (CANH) - E21-14 (CANL)	**LG - P**	**HIGH-level CAN bus wire - LOW-level CAN bus wire**	**Engine switch off**	**54 to 69 Ω**
E21-6 (CANH) - E21-4 (CG)	**LG - W-B**	**HIGH-level CAN bus wire - Ground**	**Engine switch off**	**200 Ω or higher**
E21-14 (CANL) - E21-4 (CG)	**P - W-B**	**LOW-level CAN bus wire - Ground**	**Engine switch off**	**200 Ω or higher**
E21-6 (CANH) - E21-16 (BAT)	**LG - O**	**HIGH-level CAN bus wire - Battery positive**	**Engine switch off**	**6 kΩ or higher**

Terminals	Wiring Color	Terminal Description	Condition	Specified Value
E21-14 (CANL) - E21-16 (BAT)	P - O	LOW-level CAN bus wire - Battery positive	Engine switch off	6 kΩ or higher

5. SKID CONTROL ECU WITH ACTUATOR

(a) Disconnect the connector from the skid control ECU.

(b) Measure the resistance according to the value(s) in the table below.

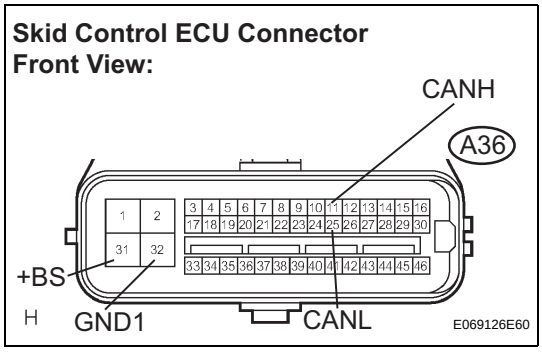

Standard resistance

Terminals	Wiring Color	Terminal Description	Condition	Specified Value
A36-11 (CANH) - A36-25 (CANL)	L - LG	HIGH-level CAN bus wire - LOW-level CAN bus wire	Engine switch off	54 to 69 Ω
A36-11 (CANH) - A36-32 (GND1)	L - W-B	HIGH-level CAN bus wire - Ground	Engine switch off	200 Ω or higher
A36-25 (CANL) - A36-32 (GND1)	LG - W-B	LOW-level CAN bus wire - Ground	Engine switch off	200 Ω or higher
A36-11 (CANH) - A36-31 (+BS)	L - L	HIGH-level CAN bus wire - Battery positive	Engine switch off	6 kΩ or higher
A36-25 (CANL) - A36-31 (+BS)	LG - L	LOW-level CAN bus wire - Battery positive	Engine switch off	6 kΩ or higher

6. STEERING ANGLE SENSOR

(a) Disconnect the connector from the steering angle sensor.

(b) Measure the resistance according to the value(s) in the table below.

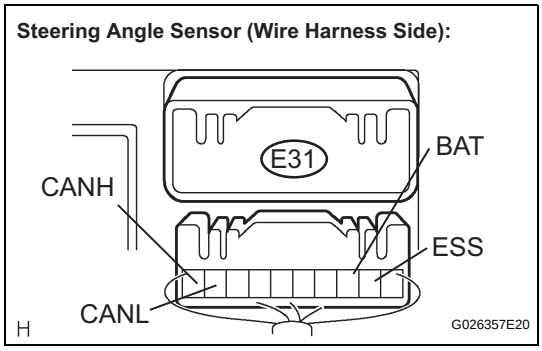

Standard resistance

Terminals	Wiring Color	Terminal Description	Condition	Specified Value
E31-10 (CANH) - E31-9 (CANL)	V - P	HIGH-level CAN bus wire - LOW-level CAN bus wire	Engine switch off	54 to 69 Ω
E31-10 (CANH) - E31-2 (ESS)	V - W-B	HIGH-level CAN bus wire - Ground	Engine switch off	200 Ω or higher
E31-9 (CANL) - E31-2 (ESS)	P - W-B	LOW-level CAN bus wire - Ground	Engine switch off	200 Ω or higher
E31-10 (CANH) - E31-3 (BAT)	V - V	HIGH-level CAN bus wire - Battery positive	Engine switch off	6 kΩ or higher

Terminals	Wiring Color	Terminal Description	Condition	Specified Value
E31-9 (CANL) - E31-3 (BAT)	P - V	LOW-level CAN bus wire - Battery positive	Engine switch off	6 kΩ or higher

7. YAW RATE SENSOR

(a) Disconnect the connector from the yaw rate sensor.

(b) Measure the resistance according to the value(s) in the table below.

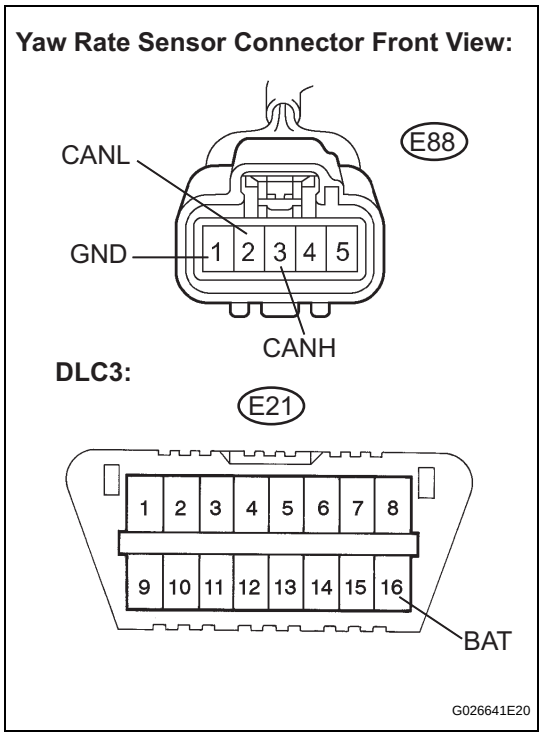

Standard resistance

Terminals	Wiring Color	Terminal Description	Condition	Specified Value
E88-3 (CANH) - E88-2 (CANL)	O - P	HIGH-level CAN bus wire - LOW-level CAN bus wire	Engine switch off	54 to 69 Ω
E88-3 (CANH) - E88-1 (GND)	O - W-B	HIGH-level CAN bus wire - Ground	Engine switch off	200 Ω or higher
E88-2 (CANL) - E88-1 (GND)	P - W-B	LOW-level CAN bus wire - Ground	Engine switch off	200 Ω or higher
E88-3 (CANH) - E21-16 (BAT)	O - O	HIGH-level CAN bus wire - Battery positive	Engine switch off	6 kΩ or higher
E88-2 (CANL) - E21-16 (BAT)	P - O	LOW-level CAN bus wire - Battery positive	Engine switch off	6 kΩ or higher

8. CENTER AIRBAG SENSOR

(a) Disconnect the connector from the center airbag sensor.

Center Airbag Sensor (Wire Harness Side):

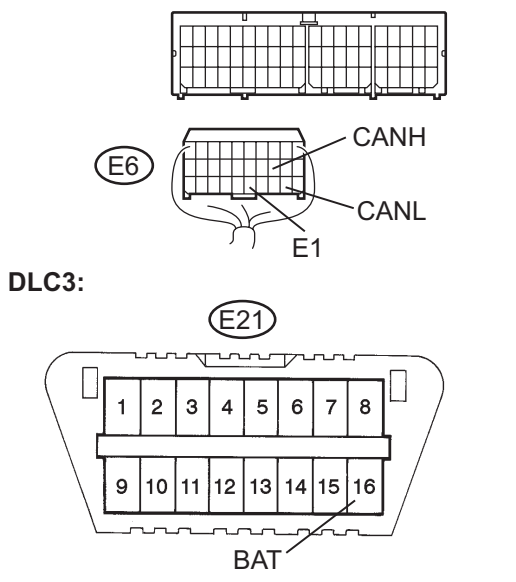

(b) Measure the resistance according to the value(s) in the table below.

Standard resistance

Terminals	Wiring Color	Terminal Description	Condition	Specified Value
E6-13 (CANH) - E6-22 (CANL)	G - Y	HIGH-level CAN bus wire - LOW-level CAN bus wire	Engine switch off	54 to 69 Ω
E6-13 (CANH) - E6-25 (E1)	G - W-B	HIGH-level CAN bus wire - Ground	Engine switch off	200 Ω or higher
E6-22 (CANL) - E6-25 (E1)	Y - W-B	LOW-level CAN bus wire - Ground	Engine switch off	200 Ω or higher
E6-13 (CANH) - E21-16 (BAT)	G - O	HIGH-level CAN bus wire - Battery positive	Engine switch off	6 kΩ or higher
E6-22 (CANL) - E21-16 (BAT)	Y - O	LOW-level CAN bus wire - Battery positive	Engine switch off	6 kΩ or higher

9. ECM

(a) Disconnect the connector from the ECM.

(b) Measure the resistance according to the value(s) in the table below.

ECM (Connector Side):

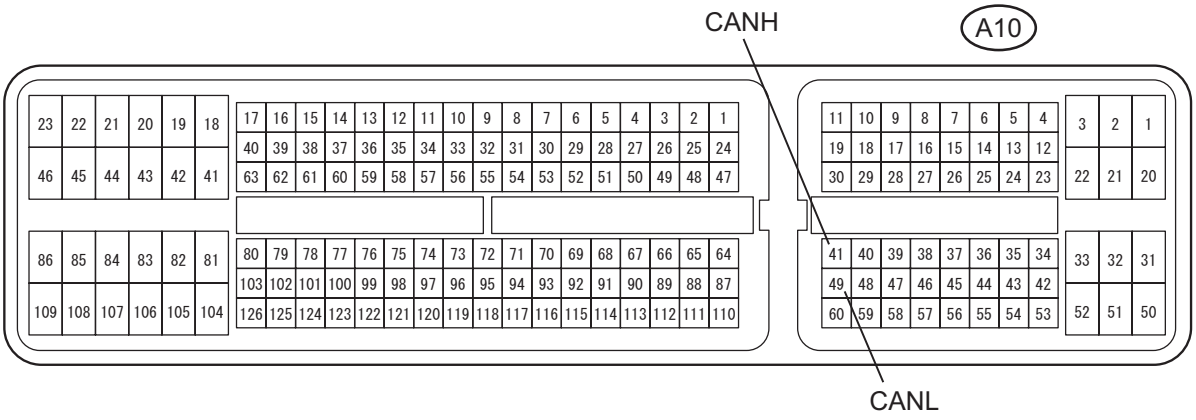

CA

Standard resistance

Terminals	Condition	Specified Value
A10-41 (CANH) - A10-49 (CANL)	Engine switch off	108 to 132 Ω

ECM (Wire Harness Side):

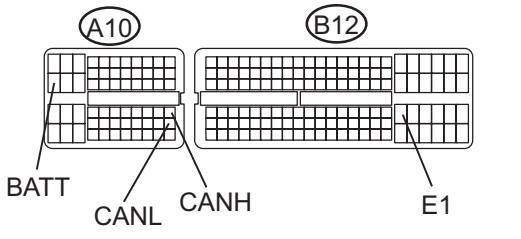

(c) Measure the resistance according to the value(s) in the table below.

Standard resistance

Terminals	Wiring Color	Terminal Description	Condition	Specified Value
A10-41 (CANH) - A10-49 (CANL)	B - W	HIGH-level CAN bus wire - LOW-level CAN bus wire	Engine switch off	108 to 132 Ω
A10-41 (CANH) - B12-81 (E1)	B - W-B	HIGH-level CAN bus wire - Ground	Engine switch off	200 Ω or higher
A10-49 (CANL) - B12-81 (E1)	W - W-B	LOW-level CAN bus wire - Ground	Engine switch off	200 Ω or higher
A10-41 (CANH) - A10-20 (BATT)	B - Y	HIGH-level CAN bus wire - Battery positive	Engine switch off	6 kΩ or higher
A10-49 (CANL) - A10-20 (BATT)	W - Y	LOW-level CAN bus wire - Battery positive	Engine switch off	6 kΩ or higher

10. AIR CONDITIONING AMPLIFIER

(a) Disconnect the connector from the air conditioning amplifier.

(b) Measure the resistance according to the value(s) in the table below.

Air Conditioning Amplifier (Wire Harness Side):

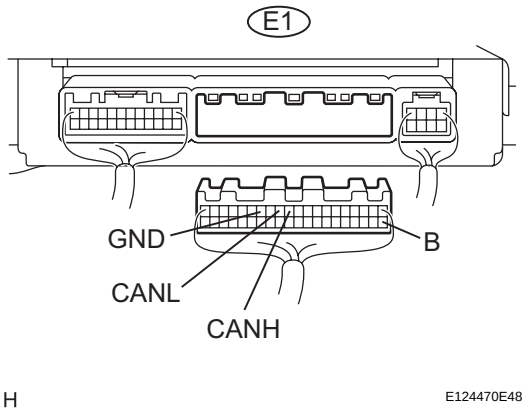

Standard resistance

Terminals	Wiring Color	Terminal Description	Condition	Specified Value
E1-11 (CANH) - E1-12 (CANL)	GR - BR	HIGH-level CAN bus wire - LOW-level CAN bus wire	Engine switch off	54 to 69 Ω
E1-11 (CANH) - E1-14 (GND)	GR - W-B	HIGH-level CAN bus wire - Ground	Engine switch off	200 Ω or higher
E1-12 (CANL) - E1-14 (GND)	BR - W-B	LOW-level CAN bus wire - Ground	Engine switch off	200 Ω or higher

Terminals	Wiring Color	Terminal Description	Condition	Specified Value
E1-11 (CANH) - E1-21 (B)	GR - GR	HIGH-level CAN bus wire - Battery positive	Engine switch off	6 kΩ or higher
E1-12 (CANL) - E1-21 (B)	BR - GR	LOW-level CAN bus wire - Battery positive	Engine switch off	6 kΩ or higher

11. COMBINATION METER

(a) Disconnect the connector from the combination meter.

(b) Measure the resistance according to the value(s) in the table below.

Combination Meter (Component Side):

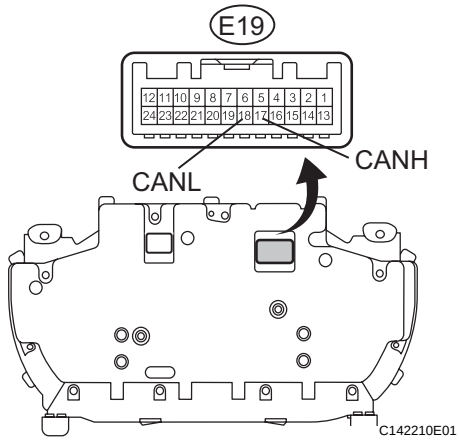

Standard resistance

Terminals	Condition	Specified Value
E19-17 (CANH) - E19-18 (CANL)	Engine switch off	108 to 132 Ω

(c) Measure the resistance according to the value(s) in the table below.

Combination Meter (Wire Harness Side):

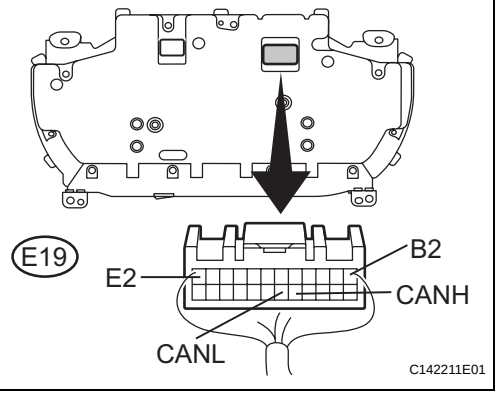

Standard resistance

Terminals	Wiring Color	Terminal Description	Condition	Specified Value
E19-17 (CANH) - E19-18 (CANL)	B - W	HIGH-level CAN bus wire - LOW-level CAN bus wire	Engine switch off	108 to 132 Ω
E19-17 (CANH) - E19-12 (E2)	B - W-B	HIGH-level CAN bus wire - Ground	Engine switch off	200 Ω or higher
E19-18 (CANL) - E19-12 (E2)	W - W-B	LOW-level CAN bus wire - Ground	Engine switch off	200 Ω or higher
E19-17 (CANH) - E19-1 (B2)	B - R	HIGH-level CAN bus wire - Battery positive	Engine switch off	6 kΩ or higher

Terminals	Wiring Color	Terminal Description	Condition	Specified Value
E19-18 (CANL) - E19-1 (B2)	W - R	LOW-level CAN bus wire - Battery positive	Engine switch off	6 kΩ or higher

12. CERTIFICATION ECU

(a) Disconnect the connector from the certification ECU.

(b) Measure the resistance according to the value(s) in the table below.

Certification ECU (Component Side):

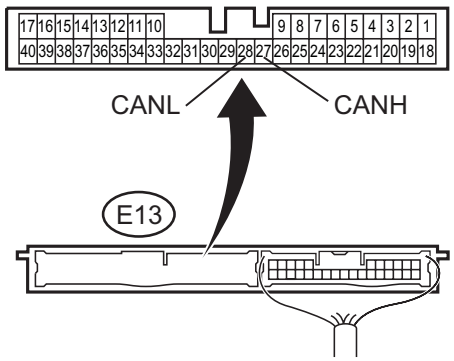

C C142197E01

Standard resistance

Terminals	Condition	Specified Value
E13-27 (CANH) - E13-28 (CANL)	Engine switch off	108 to 132 Ω

(c) Measure the resistance according to the value(s) in the table below.

Certification ECU (Wire Harness Side):

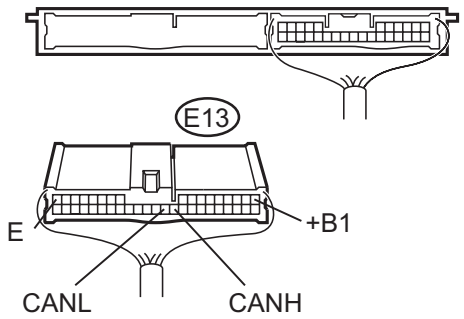

C C142198E01

Standard resistance

Terminals	Wiring Color	Terminal Description	Condition	Specified Value
E13-27 (CANH) - E13-28 (CANL)	R - W	HIGH-level CAN bus wire - LOW-level CAN bus wire	Engine switch off	108 to 132 Ω
E13-27 (CANH) - E13-17 (E)	R - W-B	HIGH-level CAN bus wire - Ground	Engine switch off	200 Ω or higher
E13-28 (CANL) - E13-17 (E)	W - W-B	LOW-level CAN bus wire - Ground	Engine switch off	200 Ω or higher
E13-27 (CANH) - E13-1 (+B1)	R - W	HIGH-level CAN bus wire - Battery positive	Engine switch off	6 kΩ or higher
E13-28 (CANL) - E13-1 (+B1)	W - W	LOW-level CAN bus wire - Battery positive	Engine switch off	6 kΩ or higher

13. MAIN BODY ECU (INSTRUMENT PANEL J/B)

(a) Disconnect the connector from the main body ECU.

(b) Measure the resistance according to the value(s) in the table below.

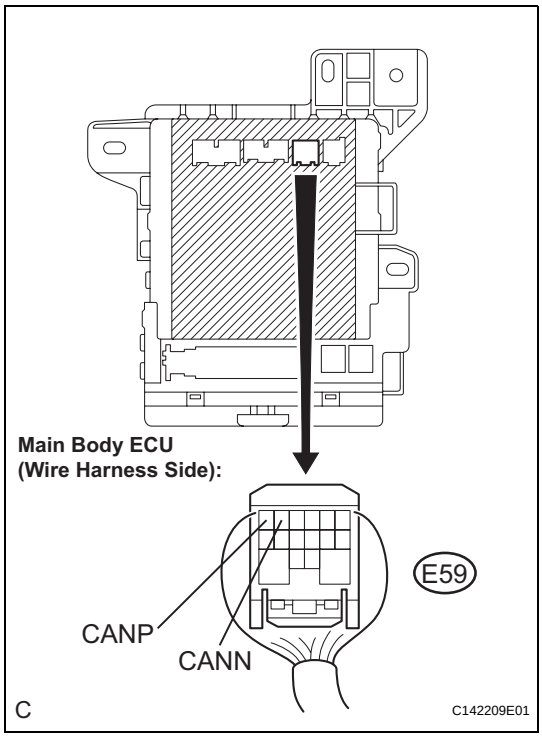

Standard resistance

Terminals	Condition	Specified Value
E59-16 (CANP) - E59-15 (CANN)	Engine switch off	108 to 132 Ω

(c) Measure the resistance according to the value(s) in the table below.

Instrument Panel J/B (Component Side):

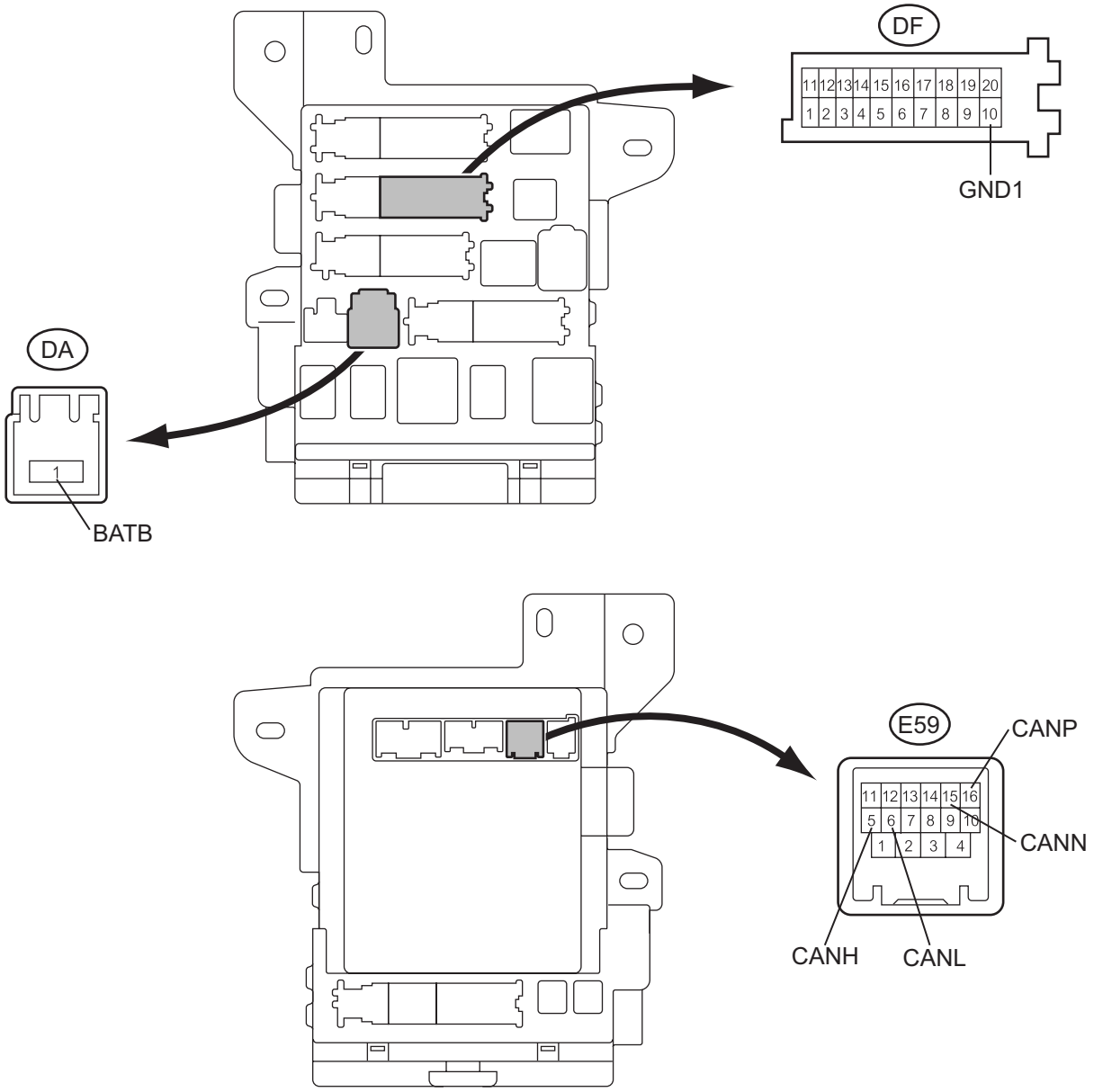

H C142207E01

Standard resistance

Terminals	Wiring Color	Terminal Description	Condition	Specified Value
E59-5 (CANH) - E59-6 (CANL)	BR - GR	HIGH-level CAN bus wire - LOW-level CAN bus wire	Engine switch off	54 to 69 Ω
E59-5 (CANH) - DF-10 (GND1)	BR - W-B	HIGH-level CAN bus wire - Ground	Engine switch off	200 Ω or higher
E59-6 (CANL) - DF-10 (GND1)	GR - W-B	LOW-level CAN bus wire - Ground	Engine switch off	200 Ω or higher

Terminals	Wiring Color	Terminal Description	Condition	Specified Value
E59-5 (CANH) - DA-1 (BATB)	BR - W	HIGH-level CAN bus wire - Battery positive	Engine switch off	6 kΩ or higher
E59-6 (CANL) - DA-1 (BATB)	GR - W	LOW-level CAN bus wire - Battery positive	Engine switch off	6 kΩ or higher
E59-16 (CANP) - E59-15 (CANN)	B - W	HIGH-level CAN bus wire - LOW-level CAN bus wire	Engine switch off	108 to 132 Ω
E59-16 (CANP) - DF-10 (GND1)	B - W-B	HIGH-level CAN bus wire - Ground	Engine switch off	200 Ω or higher
E59-15 (CANN) - DF-10 (GND1)	W - W-B	LOW-level CAN bus wire - Ground	Engine switch off	200 Ω or higher
E59-16 (CANP) - DA-1 (BATB)	B - W	HIGH-level CAN bus wire - Battery positive	Engine switch off	6 kΩ or higher
E59-15 (CANN) - DA-1 (BATB)	W - W	LOW-level CAN bus wire - Battery positive	Engine switch off	6 kΩ or higher

14. ACTIVE CONTROL ENGINE MOUNT ECU

(a) Disconnect the connector from the active control engine mount ECU.

(b) Measure the resistance according to the value(s) in the table below.

Active Control Engine Mount ECU (Wire Harness Side):

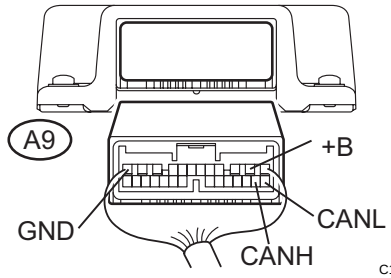

Standard resistance

Terminals	Wiring Color	Terminal Description	Condition	Specified Value
A9-14 (CANH) - A9-13 (CANL)	G - R	HIGH-level CAN bus wire - LOW-level CAN bus wire	Engine switch off	54 to 69 Ω
A9-14 (CANH) - A9-12 (GND)	G - GR	HIGH-level CAN bus wire - Ground	Engine switch off	200 Ω or higher
A9-13 (CANL) - A9-12 (GND)	R - GR	LOW-level CAN bus wire - Ground	Engine switch off	200 Ω or higher
A9-14 (CANH) - A9-2 (+B)	G - B	HIGH-level CAN bus wire - Battery positive	Engine switch off	6 kΩ or higher
A9-13 (CANL) - A9-2 (+B)	R - B	LOW-level CAN bus wire - Battery positive	Engine switch off	6 kΩ or higher

15. GATEWAY ECU

(a) Disconnect the connector from the gateway ECU.

(b) Measure the resistance according to the value(s) in the table below.

Gateway ECU (Component Side):

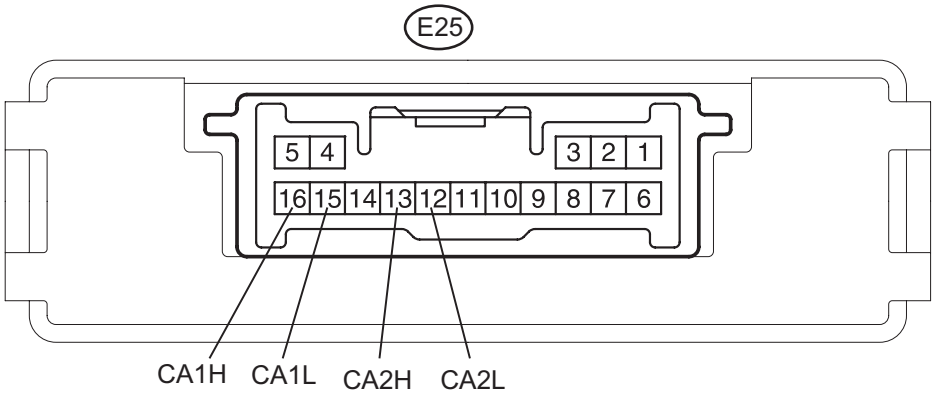

P C142189E01

Standard resistance

Terminals	Condition	Specified Value
E25-13 (CA2H) - E25-12 (CA2L)	Engine switch off	108 to 132 Ω

Certification ECU (Wire Harness Side):

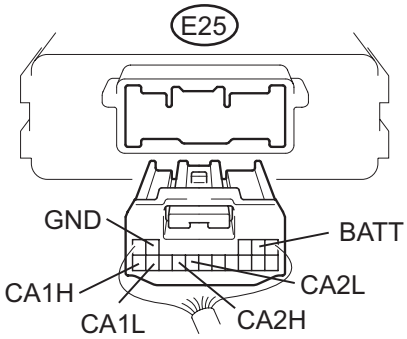

P C142190E01

(c) Measure the resistance according to the value(s) in the table below.

Standard resistance

Terminals	Wiring Color	Terminal Description	Condition	Specified Value
E25-16 (CA1H) - E25-15 (CA1L)	P - O	HIGH-level CAN bus wire - LOW-level CAN bus wire	Engine switch off	54 to 69 Ω
E25-16 (CA1H) - E25-4 (GND)	P - W-B	HIGH-level CAN bus wire - Ground	Engine switch off	200 Ω or higher
E25-15 (CA1L) - E25-4 (GND)	O - W-B	LOW-level CAN bus wire - Ground	Engine switch off	200 Ω or higher
E25-16 (CA1H) - E25-2 (BATT)	P - V	HIGH-level CAN bus wire - Battery positive	Engine switch off	6 kΩ or higher
E25-15 (CA1L) - E25-2 (BATT)	O - V	LOW-level CAN bus wire - Battery positive	Engine switch off	6 kΩ or higher
E25-13 (CA2H) - E25-12 (CA2L)	B - W	HIGH-level CAN bus wire - LOW-level CAN bus wire	Engine switch off	108 to 132 Ω
E25-13 (CA2H) - E25-4 (GND)	B - W-B	HIGH-level CAN bus wire - Ground	Engine switch off	200 Ω or higher

Terminals	Wiring Color	Terminal Description	Condition	Specified Value
E25-12 (CA2L) - E25-4 (GND)	W - W-B	LOW-level CAN bus wire - Ground	Engine switch off	200 Ω or higher
E25-13 (CA2H) - E25-2 (BATT)	B - V	HIGH-level CAN bus wire - Battery positive	Engine switch off	6 kΩ or higher
E25-12 (CA2L) - E25-2 (BATT)	W - V	LOW-level CAN bus wire - Battery positive	Engine switch off	6 kΩ or higher

16. MULTI-DISPLAY

(a) Disconnect the connector from the multi-display.

(b) Measure the resistance according to the value(s) in the table below.

Multi-display (Wire Harness Side):

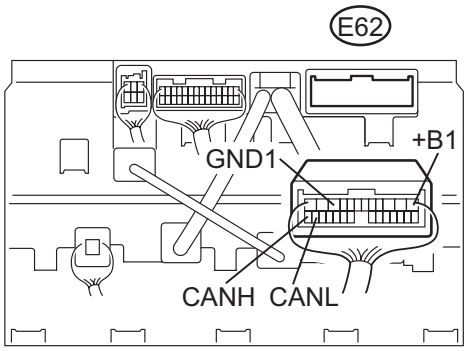

N E119725E07

Standard resistance

Terminals	Wiring Color	Terminal Description	Condition	Specified Value
E62-26 (CANH) - E62-25 (CANL)	L - Y	HIGH-level CAN bus wire - LOW-level CAN bus wire	Engine switch off	54 to 69 Ω
E62-26 (CANH) - E62-10 (GND1)	L - W-B	HIGH-level CAN bus wire - Ground	Engine switch off	200 Ω or higher
E62-25 (CANL) - E62-10 (GND1)	Y - W-B	LOW-level CAN bus wire - Ground	Engine switch off	200 Ω or higher
E62-26 (CANH) - E62-1 (+B1)	L - GR	HIGH-level CAN bus wire - Battery positive	Engine switch off	6 kΩ or higher
E62-25 (CANL) - E62-1 (+B1)	Y - GR	LOW-level CAN bus wire - Battery positive	Engine switch off	6 kΩ or higher

17. OUTER MIRROR CONTROL ECU

(a) Disconnect the connector from the outer mirror control ECU.

Outer Mirror Control ECU (Wire Harness Side):

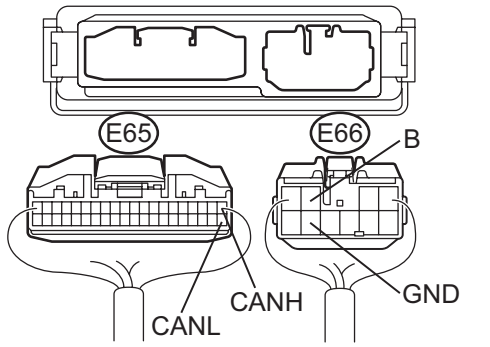

(b) Measure the resistance according to the value(s) in the table below.

Standard resistance

Terminals	Wiring Color	Terminal Description	Condition	Specified Value
E65-1 (CANH) - E65-21 (CANL)	O - P	HIGH-level CAN bus wire - LOW-level CAN bus wire	Engine switch off	54 to 69 Ω
E65-1 (CANH) - E66-9 (GND)	O - W-B	HIGH-level CAN bus wire - Ground	Engine switch off	200 Ω or higher
E65-21 (CANL) - E66-9 (GND)	P - W-B	LOW-level CAN bus wire - Ground	Engine switch off	200 Ω or higher
E65-1 (CANH) - E66-3 (B)	O - V	HIGH-level CAN bus wire - Battery positive	Engine switch off	6 kΩ or higher
E65-21 (CANL) - E66-3 (B)	P - V	LOW-level CAN bus wire - Battery positive	Engine switch off	6 kΩ or higher

18. MULTIPLEX TILT AND TELESCOPIC ECU

(a) Disconnect the connector from the multiplex tilt and telescopic ECU.

(b) Measure the resistance according to the value(s) in the table below.

Multiplex Tilt and Telescopic ECU (Wire Harness Side):

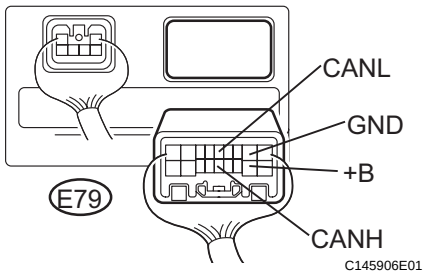

Standard resistance

Terminals	Wiring Color	Terminal Description	Condition	Specified Value
E79-5 (CANH) - E79-14 (CANL)	BR - GR	HIGH-level CAN bus wire - LOW-level CAN bus wire	Engine switch off	54 to 69 Ω
E79-5 (CANH) - E79-11 (GND)	BR - W-B	HIGH-level CAN bus wire - Ground	Engine switch off	200 Ω or higher

Terminals	Wiring Color	Terminal Description	Condition	Specified Value
E79-14 (CANL) - E79-11 (GND)	GR - W-B	LOW-level CAN bus wire - Ground	Engine switch off	200 Ω or higher
E79-5 (CANH) - E79-2 (+B)	BR - W	HIGH-level CAN bus wire - Battery positive	Engine switch off	6 kΩ or higher
E79-14 (CANL) - E79-2 (+B)	GR - W	LOW-level CAN bus wire - Battery positive	Engine switch off	6 kΩ or higher

19. SEAT BELT CONTROL ECU

(a) Disconnect the connector from the seat belt control ECU.

(b) Measure the resistance according to the value(s) in the table below.

Seat Belt Control ECU (Wire Harness Side):

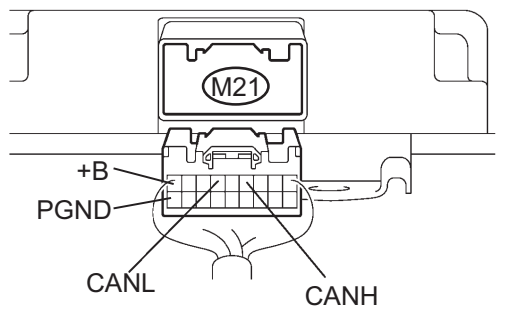

C110546E06

Standard resistance

Terminals	Wiring Color	Terminal Description	Condition	Specified Value
M21-4 (CANH) - M21-6 (CANL)	L - Y	HIGH-level CAN bus wire - LOW-level CAN bus wire	Engine switch off	54 to 69 Ω
M21-4 (CANH) - M21-18 (PGND)	L - W-B	HIGH-level CAN bus wire - Ground	Engine switch off	200 Ω or higher
M21-6 (CANL) - M21-18 (PGND)	Y - W-B	LOW-level CAN bus wire - Ground	Engine switch off	200 Ω or higher
M21-4 (CANH) - M21-9 (+B)	L - BR	HIGH-level CAN bus wire - Battery positive	Engine switch off	6 kΩ or higher
M21-6 (CANL) - M21-9 (+B)	Y - BR	LOW-level CAN bus wire - Battery positive	Engine switch off	6 kΩ or higher

20. SEAT POSITION CONTROL ECU (Front LH Side)

(a) Disconnect the connector from the seat position control ECU.

Seat Position Control ECU (Wire Harness Side):

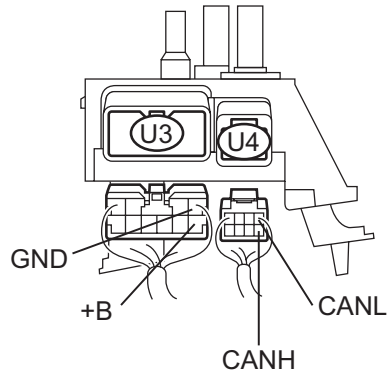

(b) Measure the resistance according to the value(s) in the table below.

Standard resistance

Terminals	Wiring Color	Terminal Description	Condition	Specified Value
U4-5 (CANH) - U4-1 (CANL)	LG - L	HIGH-level CAN bus wire - LOW-level CAN bus wire	Engine switch off	54 to 69 Ω
U4-5 (CANH) - U3-1 (GND)	LG - W-B	HIGH-level CAN bus wire - Ground	Engine switch off	200 Ω or higher
U4-1 (CANL) - U3-1 (GND)	L - W-B	LOW-level CAN bus wire - Ground	Engine switch off	200 Ω or higher
U4-5 (CANH) - U3-5 (+B)	LG - G	HIGH-level CAN bus wire - Battery positive	Engine switch off	6 kΩ or higher
U4-1 (CANL) - U3-5 (+B)	L - G	LOW-level CAN bus wire - Battery positive	Engine switch off	6 kΩ or higher

21. SEAT POSITION CONTROL ECU (Front RH Side)

(a) Disconnect the connector from the seat position control ECU.

(b) Measure the resistance according to the value(s) in the table below.

Seat Position Control ECU (Wire Harness Side):

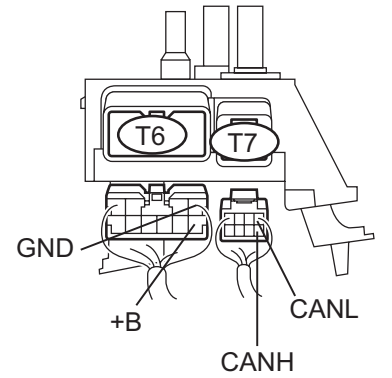

Standard resistance

Terminals	Wiring Color	Terminal Description	Condition	Specified Value
T7-5 (CANH) - T7-1 (CANL)	V - P	HIGH-level CAN bus wire - LOW-level CAN bus wire	Engine switch off	54 to 69 Ω
T7-5 (CANH) - T6-1 (GND)	V - W-B	HIGH-level CAN bus wire - Ground	Engine switch off	200 Ω or higher

Terminals	Wiring Color	Terminal Description	Condition	Specified Value
T7-1 (CANL) - T6-1 (GND)	P - W-B	LOW-level CAN bus wire - Ground	Engine switch off	200 Ω or higher
T7-5 (CANH) - T6-5 (+B)	V - G	HIGH-level CAN bus wire - Battery positive	Engine switch off	6 kΩ or higher
T7-1 (CANL) - T6-5 (+B)	P - G	LOW-level CAN bus wire - Battery positive	Engine switch off	6 kΩ or higher

22. AFS ECU

(a) Disconnect the connector from the AFS ECU.

(b) Measure the resistance according to the value(s) in the table below.

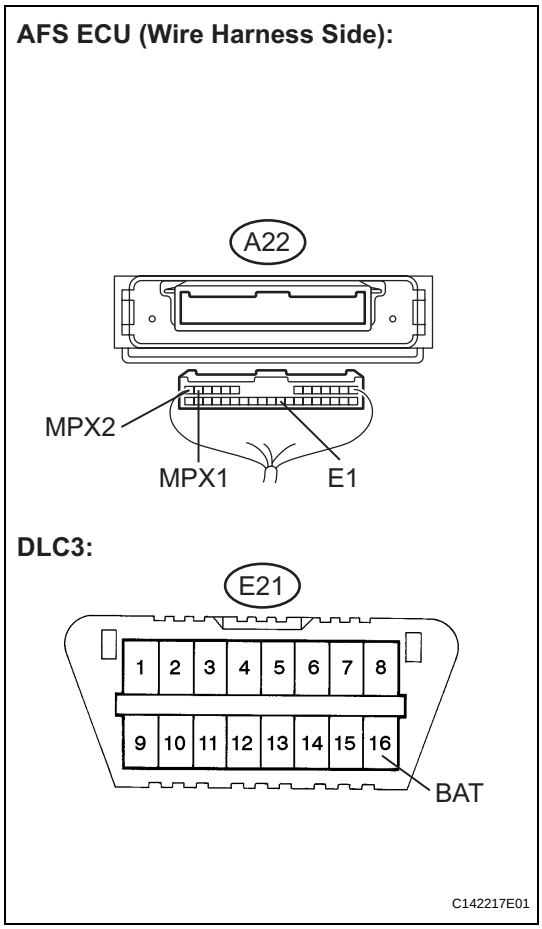

Standard resistance

Terminals	Wiring Color	Terminal Description	Condition	Specified Value
A22-12 (MPX1) - A22-13 (MPX2)	L - Y	HIGH-level CAN bus wire - LOW-level CAN bus wire	Engine switch off	54 to 69 Ω
A22-12 (MPX1) - A22-22 (E1)	L - W	HIGH-level CAN bus wire - Ground	Engine switch off	200 Ω or higher
A22-13 (MPX2) - A22-22 (E1)	Y - W	LOW-level CAN bus wire - Ground	Engine switch off	200 Ω or higher
A22-12 (MPX1) - E21-16 (BAT)	L - O	HIGH-level CAN bus wire - Battery positive	Engine switch off	6 kΩ or higher
A22-13 (MPX2) - E21-16 (BAT)	Y - O	LOW-level CAN bus wire - Battery positive	Engine switch off	6 kΩ or higher

23. DISTANCE CONTROL ECU

(a) Disconnect the connector from the distance control ECU.

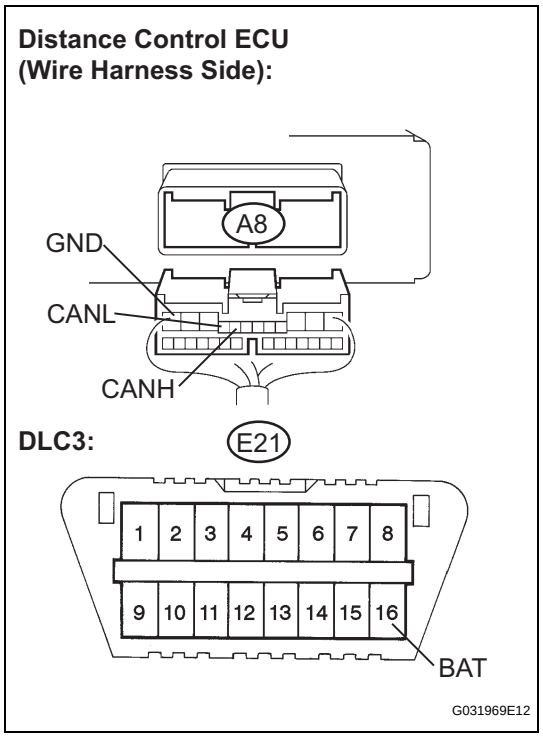

(b) Measure the resistance according to the value(s) in the table below.

Standard resistance

Terminals	Wiring Color	Terminal Description	Condition	Specified Value
A8-8 (CANH) - A8-9 (CANL)	GR - BR	HIGH-level CAN bus wire - LOW-level CAN bus wire	Engine switch off	54 to 69 Ω
A8-8 (CANH) - A8-12 (GND)	GR - GR	HIGH-level CAN bus wire - Ground	Engine switch off	200 Ω or higher
A8-9 (CANL) - A8-12 (GND)	BR - GR	LOW-level CAN bus wire - Ground	Engine switch off	200 Ω or higher
A8-8 (CANH) - E21-16 (BAT)	GR - O	HIGH-level CAN bus wire - Battery positive	Engine switch off	6 kΩ or higher
A8-9 (CANL) - E21-16 (BAT)	BR - O	LOW-level CAN bus wire - Battery positive	Engine switch off	6 kΩ or higher

24. CLEARANCE WARNING ECU

(a) Disconnect the connector from the clearance warning ECU.

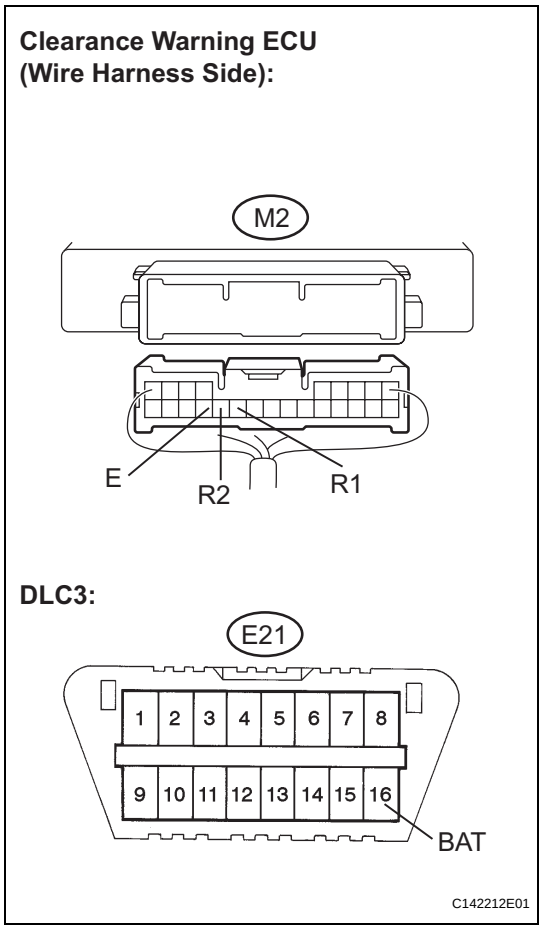

(b) Measure the resistance according to the value(s) in the table below.

Standard resistance

Terminals	Wiring Color	Terminal Description	Condition	Specified Value
M2-19 (R1) - M2-20 (R2)	Y - L	HIGH-level CAN bus wire - LOW-level CAN bus wire	Engine switch off	54 to 69 Ω
M2-19 (R1) - M2-21 (E)	Y - W-B	HIGH-level CAN bus wire - Ground	Engine switch off	200 Ω or higher
M2-20 (R2) - M2-21 (E)	L - W-B	LOW-level CAN bus wire - Ground	Engine switch off	200 Ω or higher
M2-19 (R1) - E21-16 (BAT)	Y - O	HIGH-level CAN bus wire - Battery positive	Engine switch off	6 kΩ or higher
M2-20 (R2) - E21-16 (BAT)	L - O	LOW-level CAN bus wire - Battery positive	Engine switch off	6 kΩ or higher

DIAGNOSIS SYSTEM

1. BUS CHECK

(a) Select "BUS CHECK" from the "OBD/MOBD MENU" screen.
HINT:
The ECUs and sensors that are properly connected to the CAN communication system can be displayed using the intelligent tester via CAN VIM.

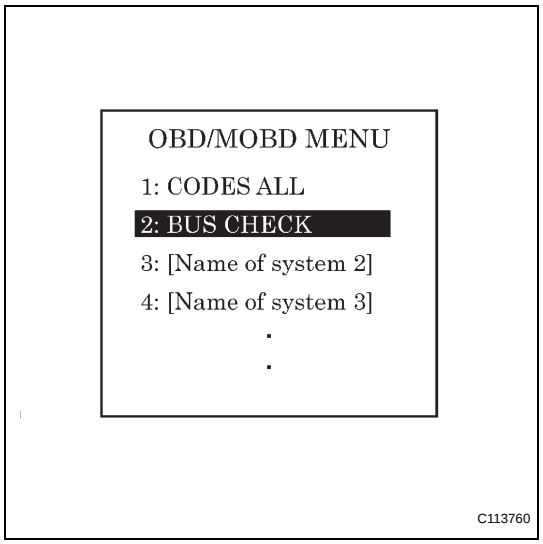

(b) Press "ENTER" on the intelligent tester.

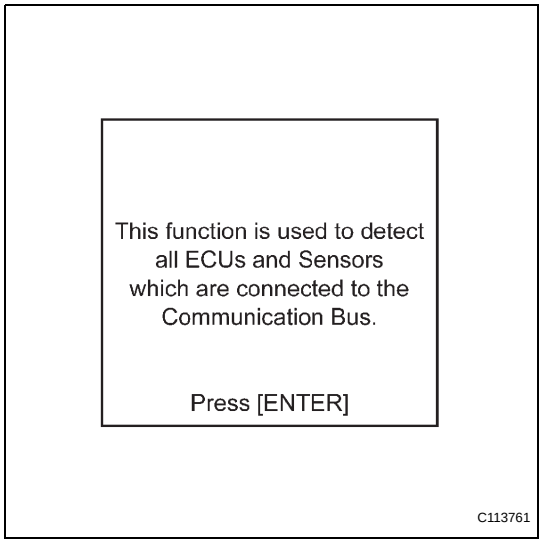

(c) The screen displays the ECUs and sensors that are properly connected to the CAN communication system.
HINT:
There is a communication stop in the system of any properly connected ECUs or sensors that are not displayed.

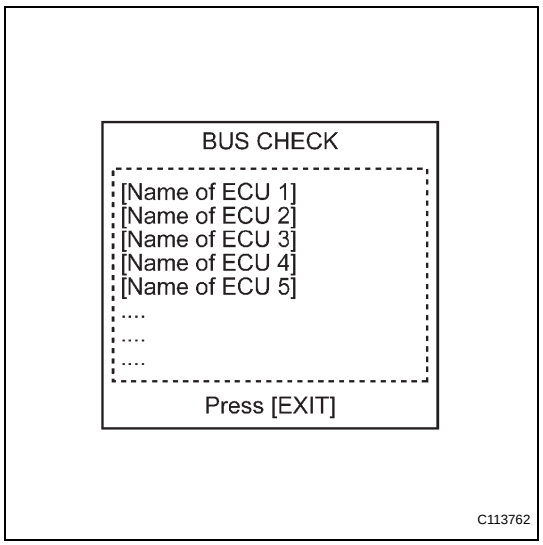

2. CHECK FOR INSTALLED SYSTEMS (ECUS AND SENSORS) THAT ADOPT CAN COMMUNICATION

(a) Systems (ECUs, sensors) that adopt CAN communication vary depending on the vehicle's optional settings. Check which systems (ECUs, sensors) are installed on the vehicle.

ECU/Sensor name	Check method
Skid control ECU	Installed on all vehicles
Steering angle sensor	Installed on all vehicles
Yaw rate sensor	Installed on all vehicles
ECM	Installed on all vehicles

ECU/Sensor name	Check method
Center airbag sensor	Installed on all vehicles
Air conditioning amplifier	Installed on all vehicles
Combination meter	Installed on all vehicles
Main body ECU	Installed on all vehicles
Active control engine mount ECU	Installed on all vehicles
Certification ECU	Installed on all vehicles
Multi-display	Installed on vehicles with navigation system
Gateway ECU	Installed on vehicles with any of AFS, dynamic radar cruise control system, and pre-collision system
Outer mirror control ECU	Installed on all vehicles
Multiplex tilt and telescopic ECU	Installed on all vehicles
Clearance warning ECU	Installed on vehicles with intuitive parking assist system
Seat position control ECU (Front LH side)	Installed on vehicles with seat position memory system
Seat position control ECU (Front RH side)	Installed on vehicles with seat position memory system
AFS ECU	Installed on vehicles with AFS (Adaptive Front-lighting System)
Distance control ECU	Installed on vehicles with dynamic radar cruise control system
Seat belt control ECU	Installed on vehicles with pre-collision system

3. DTC TABLE BY ECU

HINT:

- In the CAN communication system, CAN communication system DTCs can be displayed by the ECU using the intelligent tester.
- If CAN communication system DTCs are output, trouble cannot be determined only by the DTCs. Perform troubleshooting according to "HOW TO PROCEED WITH TROUBLESHOOTING". (See page CA-11)

(a) ECM

HINT:

- DTC communication uses the CAN communication system.
- Distance control ECU data is also output.

DTC No.	Detection Item
U0100 (*3)	Lost Communication with ECM/PCM "A"
U0101 (*1)	Lost Communication with Communication with TCM
U0122 (*3)	Lost Communication with Vehicle Dynamics Control Module
U0123 (*3)	Lost Communication with Yaw Rate Sensor Module
U0126 (*3)	Lost Communication with Steering Angle Sensor Module
U0235 (*2, *3)	Lost Communication with Cruise Control Front Distance Range Sensor
U1101 (*3)	Lost Communication with Distance Control ECU
U1102 (*2)	Lost Communication with Radar Sensor

- *1: If only DTC U0101 is output, refer to SFI system (See page ES-391).
- *2 : If U0235 or U1102 is output alone from the ECUs, the CAN communication is normal (See page CC-85 for U0235, See page CC-88 for U1102).
- *3: This DTC is output only for vehicles with the dynamic radar cruise control system.

(b) SKID CONTROL ECU
HINT:
DTC communication uses the CAN communication system.

DTC No.	Detection Item
U0073	Control Module Communication Bus Off
U0100	Lost Communication with ECM/PCM "A"
U0123	Lost Communication with Yaw Rate Sensor Module
U0124	Lost Communication with Lateral Acceleration Sensor Module
U0126	Lost Communication with Steering Angle Sensor Module

(c) COMBINATION METER
HINT:
DTC communication uses the CAN communication system.

DTC No.	Detection Item
U0100	Lost Communication with ECM/PCM "A"
U0129	Lost Communication with Skid Control ECU

(d) GATEWAY ECU
HINT:
DTC communication uses the CAN communication system.

DTC No.	Detection Item
U0182	Lost Communication with AFS ECU
U1002	Lost Communication with Gateway Module
U1100	Lost Communication with Seat Belt Control ECU
U1102	Lost Communication with Radar Sensor

(e) MAIN BODY ECU
HINT:
DTC communication uses the CAN communication system.

DTC No.	Detection Item
B1207	Certification ECU Communication Malfunction
B1213	Tilt and Telescopic ECU Communication Stop
B1272	Power Seat ECU Communication Stop
B1276	Power Mirror Control ECU Communication Stop
B1289	Passenger Seat ECU Communication Stop
B1297	Clearance Sonar ECU Communication Stop
B2326	CAN MS Bus Line Communication Malfunction

(f) AFS ECU
HINT:
DTC communication uses the CAN communication system.

DTC No.	Detection Item
B2427	CAN Communication Malfunction

(g) SEAT BELT CONTROL ECU
HINT:
DTC communication uses the CAN communication system.

DTC No.	Detection Item
U0100	Lost Communication with ECM/PCM "A"
U0122	Lost Communication with Vehicle Dynamics Control Module
U0151	Lost Communication with Airbag ECU
U0235 (*4)	Lost Communication with Cruise Control Front Distance Range Sensor
U1101	Lost Communication with Distance Control ECU
U1102 (*4)	Lost Communication with Radar Sensor

HINT:
*4 : If U0235 or U1102 is output alone from the ECUs, the CAN communication is normal (See page CC-85 for U0235, See page CC-88 for U1102).

(h) MULTIPLEX TILT AND TELESCOPIC ECU
HINT:
DTC communication uses the CAN communication system.

DTC No.	Detection Item
B2621	Communication Interruption

(i) CENTER AIRBAG SENSOR
HINT:
The center airbag sensor is connected to the CAN communication system, but CAN communication DTCs are not output.

(j) STEERING ANGLE SENSOR
HINT:
The steering angle sensor is connected to the CAN communication system, but CAN communication DTCs are not output.

(k) YAW RATE SENSOR
HINT:
The yaw rate sensor is connected to the CAN communication system, but CAN communication DTCs are not output.

(l) OUTER MIRROR CONTROL ECU
HINT:
The outer mirror control ECU sensor is connected to the CAN communication system, but CAN communication DTCs are not output.

(m) CERTIFICATION ECU
HINT:
The certification ECU is connected to the CAN communication system, but CAN communication DTCs are not output.

(n) MULTI-DISPLAY
HINT:
The multi-display is connected to the CAN communication system, but CAN communication DTCs are not output.

(o) CLEARANCE WARNING ECU
HINT:
The clearance warning ECU is connected to the CAN communication system, but CAN communication DTCs are not output.

(p) SEAT POSITION CONTROL ECU (FRONT LH SIDE)
HINT:
The seat position control ECU (front LH side) is connected to the CAN communication system, but CAN communication DTCs are not output.

(q) SEAT POSITION CONTROL ECU (FRONT RH SIDE)
HINT:
The seat position control ECU (front RH side) is connected to the CAN communication system, but CAN communication DTCs are not output.

4. DTC COMBINATION TABLE

(a) CAN No. 1 Bus

DTC		Trouble Mode				
Output from	**Output DTC**	**ECM Communication Stop Mode**	**Skid Control ECU Communication Stop Mode**	**Steering Angle Sensor Communication Stop Mode**	**Yaw Rate Sensor Communication Stop Mode**	**Combination Meter ECU Communication Stop Mode**
Skid Control ECU	U0073	X	X	X	X	X
	U0100	☐ During driving	X	X	X	X
	U0123	X	X	X	○	X
	U0124	X	X	X	○	X
	U0126	X	X	○	X	X
ECM	U0100	☐ During distance control	X	X	X	X
	U0122	X	☐ During distance control	X	X	X
	U0123	X	X	X	☐ During distance control	X
	U0126	X	X	☐ During distance control	X	X
	U1101	X	X	X	X	X
Combination Meter ECU	U0100	○	X	X	X	X
	U0129	X	○	X	X	X
AFS ECU	B2427	○	○	○	X	X
Seat Belt Control ECU	U0100	○	X	X	X	X
	U0122	X	○	X	X	X
	U0151	X	X	X	X	X
	U1101	X	X	X	X	X
Multiplex tilt and telescopic ECU	B2621	X	X	X	X	○

HINT:
- ○: Set
- X: Not set or may be set according to the malfunctioning part when one side of the CAN bus wire opens
- ☐: Set under the condition shown in the table above

CA

DTC		Trouble Mode					
Output from	Output DTC	Air Conditioning Amplifier Communication Stop Mode	Center Airbag Sensor Communication Stop Mode	Gateway ECU Communication Stop Mode (*2)	Active Control Engine Mount ECU Communication Stop Mode	Main Body ECU Communication Stop Mode	Navigation ECU Communication Stop Mode (*1)
Skid Control ECU	U0073	X	X	X	X	X	X
	U0100	X	X	X	X	X	X
	U0123	X	X	X	X	X	X
	U0124	X	X	X	X	X	X
	U0126	X	X	X	X	X	X
ECM	U0100	X	X	X	X	X	X
	U0122	X	X	X	X	X	X
	U0123	X	X	X	X	X	X
	U0126	X	X	X	X	X	X
	U1101	X	X	☐ During distance control	X	X	X
Combination Meter ECU	U0100	X	X	X	X	X	X
	U0129	X	X	X	X	X	X
AFS ECU	B2427	X	X	○	X	○	X
Seat Belt Control ECU	U0100	X	X	○	X	X	X
	U0122	X	X	○	X	X	X
	U0151	X	○	○	X	X	X
	U1101	X	X	X	X	X	X
Multiplex tilt and telescopic ECU	B2621	X	X	X	X	X	X

HINT:
- ○: Set
- X: Not set or may be set according to the malfunctioning part when one side of the CAN bus wire opens
- (*1): with Navigation system
- (*2): Only when any ECU is connected to the CAN No. 2 bus wire
- Skid Control ECU Communication Stop Mode (See page CA-126)
- Steering Angle Sensor Communication Stop Mode (See page CA-133)
- Yaw Rate Sensor Communication Stop Mode (See page CA-135)
- Gateway ECU Communication Stop Mode (See page CA-131)
- ECM Communication Stop Mode (See page CA-137)
- Main Body ECU Communication Stop Mode (See page CA-139)
- Active Control Engine Mount ECU Communication Stop Mode (See page CA-148)
- Center Airbag Sensor Communication Stop Mode (See page CA-144)
- Navigation ECU Communication Stop Mode (See Page CA-146)

- Combination Meter ECU Communication Stop Mode (See page CA-142).
- Air Conditioning Amplifier Communication Stop Mode (See page CA-128).

DIAGNOSTIC TROUBLE CODE CHART

HINT:
- Parameters listed in the chart may be different from measured values depending on the type of instruments used and other factors.
- If any DTCs are displayed during a check mode, check the circuit for the DTCs listed below. For details of each DTC, refer to the page indicated.

NOTICE:
Only when the DTCs below are output from the main body ECU, proceed to the pages listed in the "See page" column. If the DTCs are output from the ECUs other than the main body ECU, refer to "HOW TO PROCEED WITH TROUBLESHOOTING" to determine the malfunctioning part.

HINT:
When communication with the ECUs connected to the CAN MS bus is interrupted or a malfunction in the CAN MS bus occurs, the main body ECU detects the malfunctions and outputs DTCs.

CAN MS Bus:

DTC Code	Detection Item	Trouble Area	See page
B1207	Certification ECU Communication Malfunction	1. Open or short in CAN No. 3 J/C and certification ECU 2. Certification ECU power source circuit 3. Certification ECU 4. Wire harness or connector	CA-52
B1213	Tilt and Telescopic ECU Communication Stop	1. Open or short in CAN No. 3 J/C and multiplex tilt and telescopic ECU 2. Multiplex tilt and telescopic ECU power source circuit 3. Multiplex tilt and telescopic ECU 4. Wire harness or connector	CA-55
B1272	Power Seat ECU Communication Stop	1. Open or short in CAN No. 3 J/C and seat position control ECU (Front LH side) 2. Seat position control ECU (Front LH side) power source circuit 3. Seat position control ECU (Front LH side) 4. Wire harness or connector	CA-58
B1276	Power Mirror Control ECU Communication Stop	1. Open or short in CAN No. 3 J/C and outer mirror control ECU 2. Outer mirror control ECU power source circuit 3. Outer mirror control ECU 4. Wire harness or connector	CA-61
B1289	Passenger Seat ECU Communication Stop	1. Open or short in CAN No. 3 J/C and seat position control ECU (Front RH side) 2. Seat position control ECU (Front RH side) power source circuit 3. Seat position control ECU (Front RH side) 4. Wire harness or connector	CA-64

DTC Code	Detection Item	Trouble Area	See page
B1297	Clearance Sonar ECU Communication Stop	1. Open or short in CAN No. 3 J/C and clearance warning ECU 2. Clearance warning ECU power source circuit 3. Clearance warning ECU 4. Wire harness or connector	CA-67
B2326	CAN MS Bus Line Communication Malfunction	1. Open or short in MS bus main wire 2. Open or short in MS bus branch wires 3. Wire harness or connector 4. Certification ECU 5. Multiplex tilt and telescopic ECU 6. Seat position control ECU (Front LH side) 7. Seat position control ECU (Front RH side) 8. Outer mirror control ECU 9. Clearance warning ECU 10. Main body ECU 11. CAN No. 3 J/C	CA-70

NOTICE:
Only when the DTCs below are output from the gateway ECU, proceed to the pages listed in the "See page" column. If the DTCs are output from the ECUs other than the gateway ECU, refer to "HOW TO PROCEED WITH TROUBLESHOOTING" to determine the malfunctioning part.
HINT:
- When communication with the ECUs connected to the CAN No. 2 bus is interrupted or a malfunction in the CAN No. 2 bus occurs, the gateway ECU detects the malfunctions and outputs DTCs.
- If a vehicle is not equipped with any of the following: dynamic radar cruise control system, AFS, and pre-collision system, it will not be equipped with a CAN No. 2 main bus.

CAN No. 2 Bus:

DTC Code	Detection Item	Trouble Area	See page
U0182	Lost Communication with AFS ECU	1.Open or short in CAN No. 1 J/C and AFS ECU 2. AFS ECU power source circuit 3. AFS ECU 4. Wire harness or connector	CA-93
U1002	Lost Communication with Gateway Module	1. Open or short in No. 2 bus main wire 2. Open or short in No. 2 bus branch wires 3. CAN No. 1 J/C 4. CAN No. 4 J/C 5. AFS ECU 6. Distance control ECU 7. Seat belt control ECU 8. Wire harness or connector 9. Gateway ECU	CA-96

DTC Code	Detection Item	Trouble Area	See page
U1100	Lost Communication with Seat Belt Control ECU	1. Open or short in CAN No. 4 J/C and seat belt control ECU 2. Open in one side of CAN bus main wire (Between CAN No. 1 J/C and CAN No. 4 J/C) 3. Seat belt control ECU power source circuit 4. Seat belt control ECU 5. CAN No. 4 J/C 6. Wire harness or connector	CA-119
U1102	Lost Communication with Radar Sensor	1. Open or short in CAN No. 1 J/C and distance control ECU 2. Distance control ECU power source circuit 3. Distance control ECU 4. Wire harness or connector	CA-123

DTC	B1207	Certification ECU Communication Malfunction

DESCRIPTION

The main body ECU will store this DTC when no signals can be received from the certification ECU while the CAN MS main bus is normal.

DTC No.	DTC Detection Condition	Trouble Area
B1207	No communication from certification ECU	1. Open or short in CAN No. 3 J/C and certification ECU 2. Certification ECU power source circuit 3. Certification ECU 4. Wire harness or connector

WIRING DIAGRAM

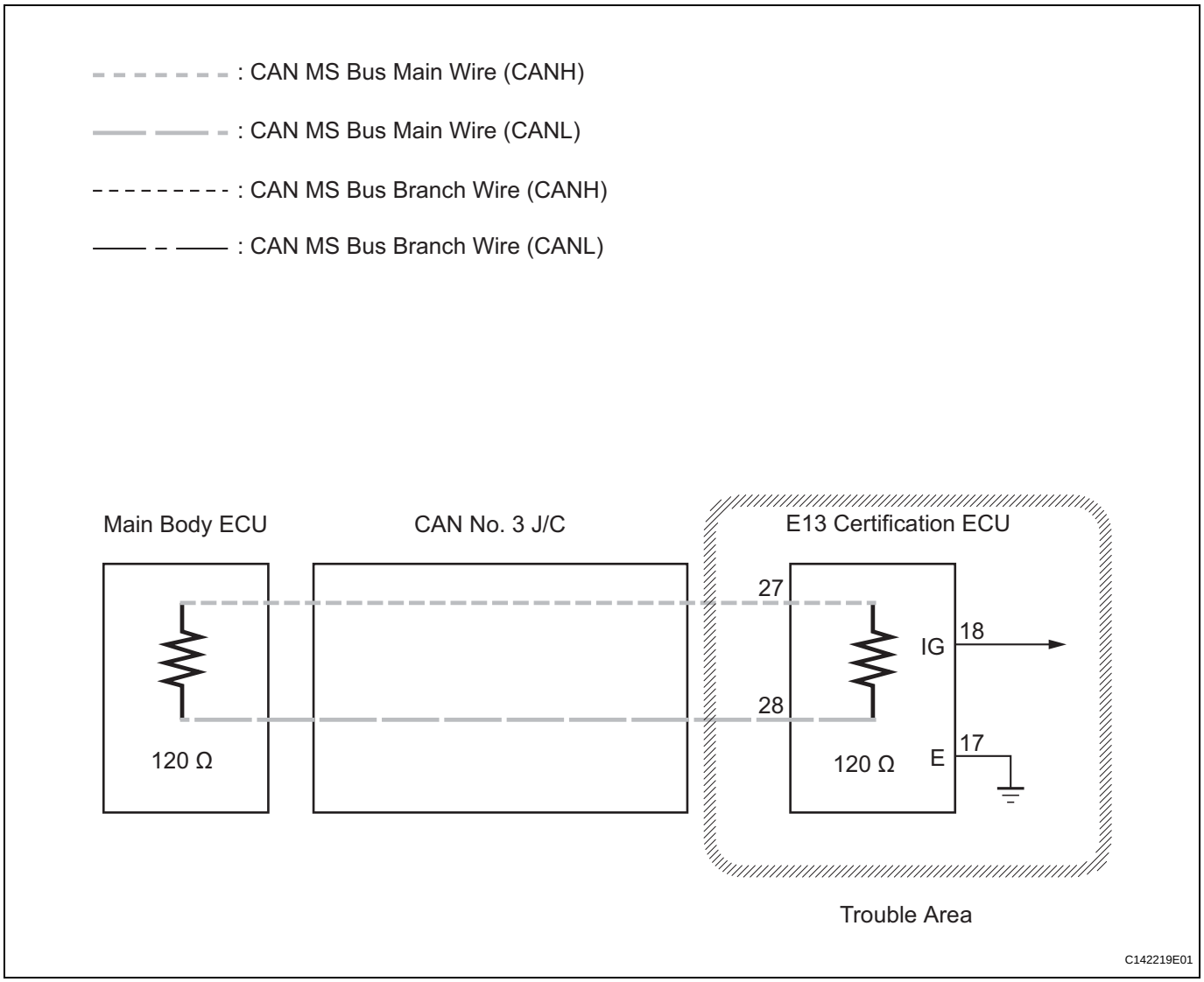

INSPECTION PROCEDURE

NOTICE:

- **Turn the engine switch off before measuring the resistances of CAN bus main wires and CAN bus branch wires.**
- **After the engine switch is turned off, check that the key reminder warning system and light reminder warning system are not in operation.**

- **Before measuring the resistance, leave the vehicle as is for at least 1 minute and do not operate the engine switch, any other switches, or the doors. If any doors need to be opened in order to check connectors, open the doors and leave them open.**

HINT:
Operating the engine switch, any switches, or any doors triggers related ECU and sensor communication on the CAN. This communication will cause the resistance value to change.

1 CHECK DTC

(a) Check for DTCs.
HINT:
If CAN MS bus communication error DTC B2326 is output, troubleshoot for B2326 and check for malfunctions in the CAN MS main bus circuit (See page CA-70).

Result

Result	Proceed to
B2326 is not output	A
B2326 is output	B

B → **GO TO DTC CHART (See page CA-49)**

A

2 CHECK CAN MS BUS WIRE (CERTIFICATION ECU)

Certification ECU (Wire Harness Side):

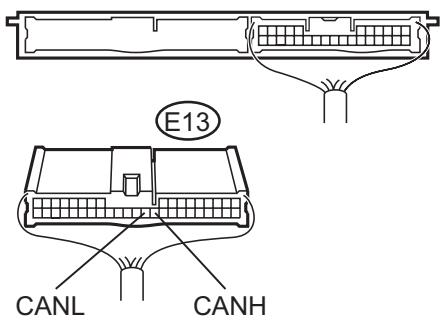

C C142198E02

(a) Turn the engine switch off.
(b) Disconnect connector E13 from the certification ECU.
(c) Measure the resistance according to the value(s) in the table below.

Standard resistance

Tester Connection	Condition	Specified Value
E13-27 (CANH) - E13-28 (CANL)	Engine switch OFF	108 to 132 Ω

NG → **REPAIR OR REPLACE CAN MS BUS MAIN WIRE OR CONNECTOR (CERTIFICATION ECU)**

OK

3 CHECK HARNESS AND CONNECTOR (IG, E)

Certification ECU (Wire Harness Side):

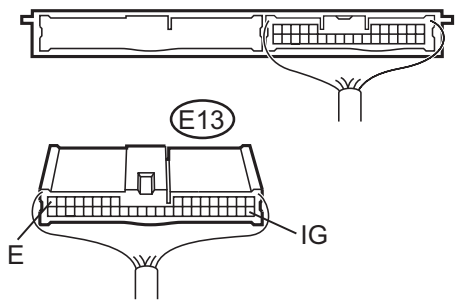

C C142198E03

(a) Measure the resistance according to the value(s) in the table below.

Standard resistance

Tester Connection	Condition	Specified Value
E13-17 (E) - Body ground	Always	Below 1 Ω

(b) Measure the voltage according to the value(s) in the table below.

Standard voltage

Tester Connection	Condition	Specified Value
E13-18 (IG) - Body ground	Engine switch on (IG)	10 to 14 V

NG → **REPAIR OR REPLACE HARNESS OR CONNECTOR**

OK

REPLACE CERTIFICATION ECU

DTC	B1213	Tilt and Telescopic ECU Communication Stop

DESCRIPTION

The main body ECU will store this DTC when no signals can be received from the tilt and telescopic ECU while the CAN MS main bus is normal.

DTC No.	DTC Detection Condition	Trouble Area
B1213	No communication from multiplex tilt and telescopic ECU	1. Open or short in CAN No. 3 J/C and multiplex tilt and telescopic ECU 2. Multiplex tilt and telescopic ECU power source circuit 3. Multiplex tilt and telescopic ECU 4. Wire harness or connector

WIRING DIAGRAM

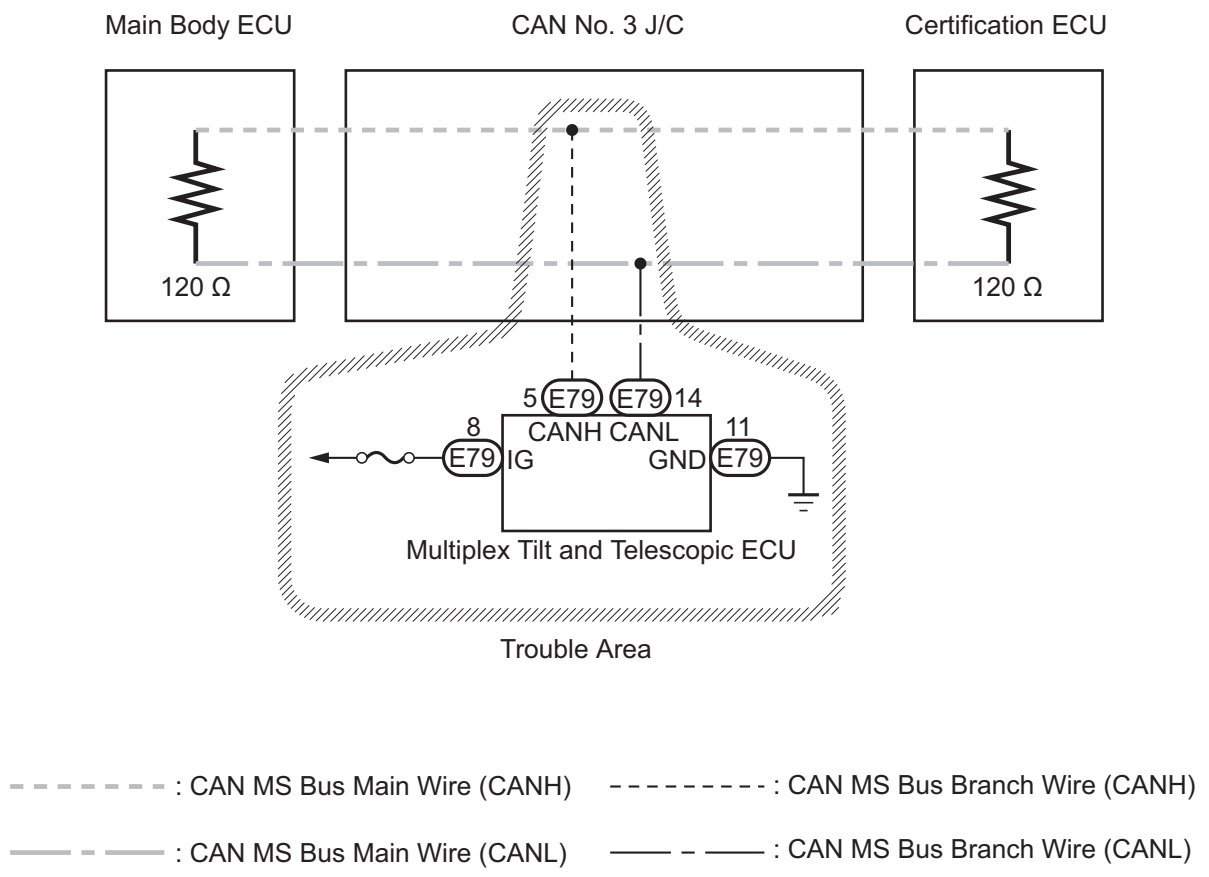

C

C142218E01

INSPECTION PROCEDURE

NOTICE:

- **Turn the engine switch off before measuring the resistances of CAN bus main wires and CAN bus branch wires.**

- **After the engine switch is turned off, check that the key reminder warning system and light reminder warning system are not in operation.**
- **Before measuring the resistance, leave the vehicle as is for at least 1 minute and do not operate the engine switch, any other switches, or the doors. If any doors need to be opened in order to check connectors, open the doors and leave them open.**

HINT:
Operating the engine switch, any switches, or any doors triggers related ECU and sensor communication on the CAN. This communication will cause the resistance value to change.

1 CHECK DTC

(a) Check for DTCs.
HINT:
If CAN MS bus communication error DTC B2326 is output, troubleshoot for B2326 and check for malfunctions in the CAN MS main bus circuit (See page CA-70).

Result

Result	Proceed to
B2326 is not output	A
B2326 is output	B

B → **GO TO DTC CHART (See page CA-49)**

A

2 CHECK CAN MS BUS WIRE (MULTIPLEX TILT AND TELESCOPIC ECU)

Multiplex Tilt and Telescopic ECU (Wire Harness Side):

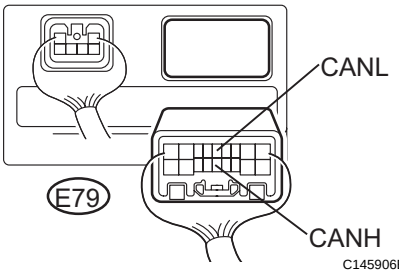

(a) Turn the engine switch off.
(b) Disconnect connector E79 from the multiplex tilt and telescopic ECU.
(c) Measure the resistance according to the value(s) in the table below.

Standard resistance

Tester Connection	Condition	Specified Value
E79-5 (CANH) - E79-14 (CANL)	Engine switch OFF	54 to 69 Ω

NG → **REPAIR OR REPLACE CAN MS BUS BRANCH WIRE OR CONNECTOR (MULTIPLEX TILT AND TELESCOPIC ECU)**

OK

3	CHECK HARNESS AND CONNECTOR (IG, GND)

Multiplex Tilt and Telescopic ECU (Wire Harness Side):

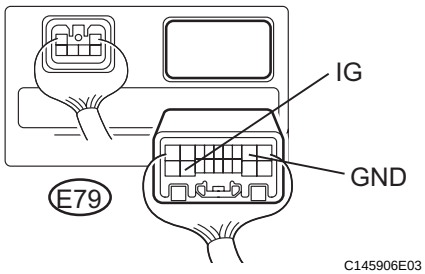

(a) Measure the resistance according to the value(s) in the table below.

Standard resistance

Tester Connection	Condition	Specified Value
E79-11 (GND) - Body ground	Always	Below 1 Ω

(b) Measure the voltage according to the value(s) in the table below.

Standard voltage

Tester Connection	Condition	Specified Value
E79-8 (IG) - Body ground	Engine switch on (IG)	10 to 14 V

NG → **REPAIR OR REPLACE HARNESS OR CONNECTOR**

OK

REPLACE MULTIPLEX TILT AND TELESCOPIC ECU (See page SR-89)

DTC	B1272	Power Seat ECU Communication Stop

DESCRIPTION

The main body ECU will store this DTC when no signals can be received from the seat position control ECU (front LH side) while the CAN MS main bus is normal.

DTC No.	DTC Detection Condition	Trouble Area
B1272	No communication from seat position control ECU (Front LH side)	1. Open or short in CAN No. 3 J/C and seat position control ECU (Front LH side) 2. Seat position control ECU (Front LH side) power source circuit 3. Seat position control ECU (Front LH side) 4. Wire harness or connector

WIRING DIAGRAM

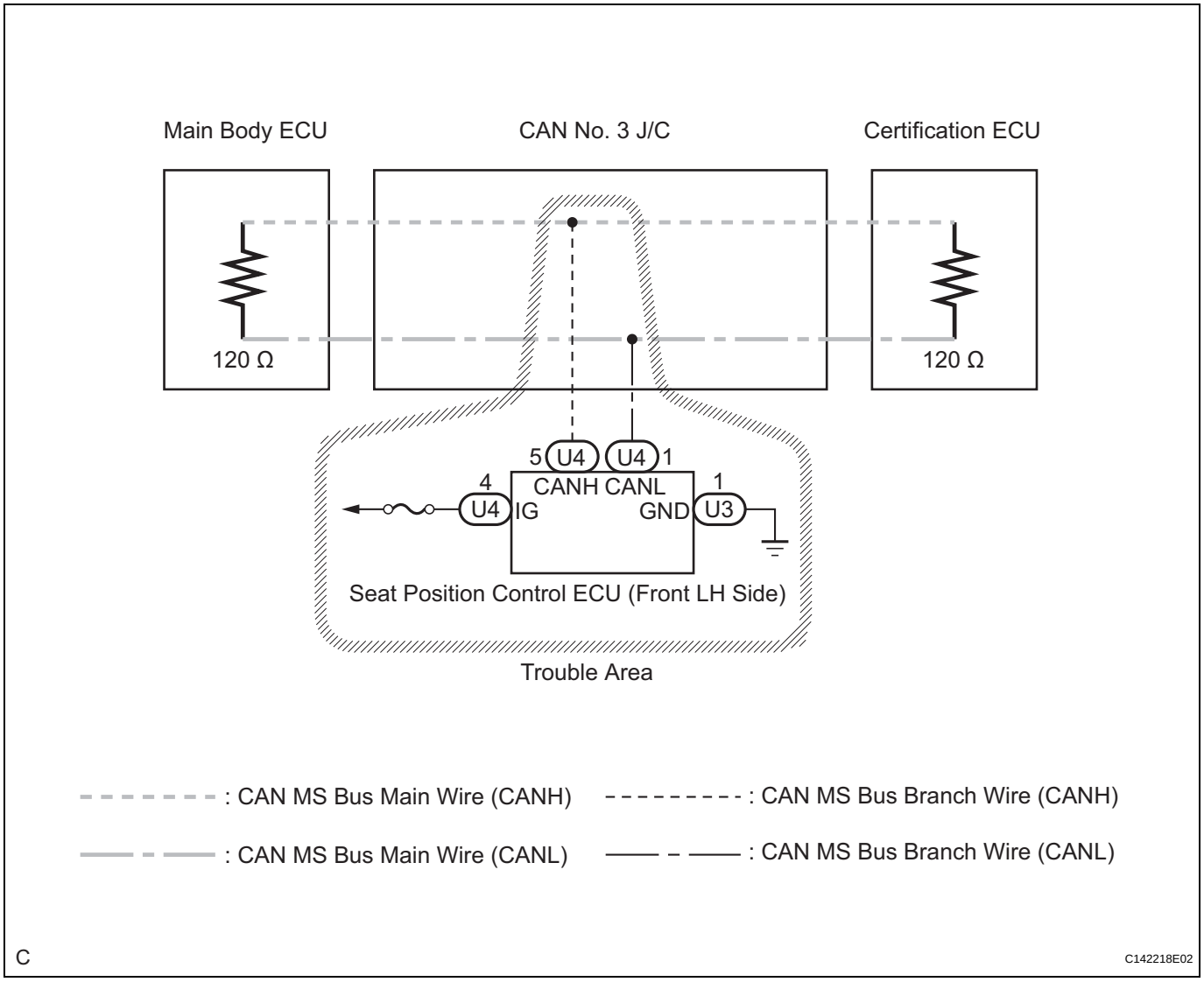

INSPECTION PROCEDURE

NOTICE:

- **Turn the engine switch off before measuring the resistances of CAN bus main wires and CAN bus branch wires.**

- **After the engine switch is turned off, check that the key reminder warning system and light reminder warning system are not in operation.**
- **Before measuring the resistance, leave the vehicle as is for at least 1 minute and do not operate the engine switch, any other switches, or the doors. If any doors need to be opened in order to check connectors, open the doors and leave them open.**

HINT:
Operating the engine switch, any switches, or any doors triggers related ECU and sensor communication on the CAN. This communication will cause the resistance value to change.

1 CHECK DTC

(a) Check for DTCs.
HINT:
If CAN MS bus communication error DTC B2326 is output, troubleshoot for B2326 and check for malfunctions in the CAN MS main bus circuit (See page CA-70).

Result

Result	Proceed to
B2326 is not output	A
B2326 is output	B

B → **GO TO DTC CHART (See page CA-49)**

A

2 CHECK CAN MS BUS WIRE (SEAT POSITION CONTROL ECU FOR FRONT LH SIDE)

Seat Position Control ECU (Wire Harness Side):

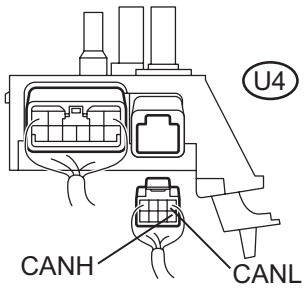

H C142228E01

(a) Turn the engine switch off.
(b) Disconnect connector U4 from the seat position control ECU for the front LH side.
(c) Measure the resistance according to the value(s) in the table below.

Standard resistance

Tester Connection	Condition	Specified Value
U4-5 (CANH) - U4-1 (CANL)	Engine switch OFF	54 to 69 Ω

NG → **REPAIR OR REPLACE CAN MS BUS BRANCH WIRE OR CONNECTOR (SEAT POSITION CONTROL ECU FOR FRONT LH SIDE)**

OK

3 CHECK HARNESS AND CONNECTOR (IG, GND)

Seat Position Control ECU (Wire Harness Side):

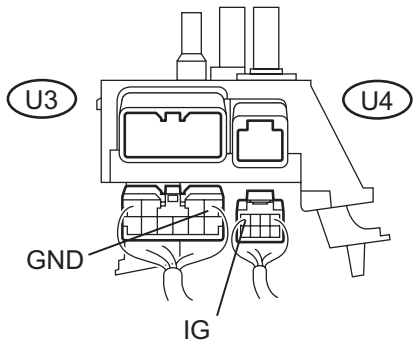

(a) Disconnect connector U3 from the seat position control ECU for the front LH side.

(b) Measure the resistance according to the value(s) in the table below.

Standard resistance

Tester Connection	Condition	Specified Value
U3-1 (GND) - Body ground	Always	Below 1 Ω

(c) Measure the voltage according to the value(s) in the table below.

Standard voltage

Tester Connection	Condition	Specified Value
U4-4 (IG) - Body ground	Engine switch on (IG)	10 to 14 V

NG → **REPAIR OR REPLACE HARNESS OR CONNECTOR**

OK

REPLACE SEAT POSITION CONTROL ECU (FRONT LH SIDE) (See page SE-127)

DTC	B1276	Power Mirror Control ECU Communication Stop

DESCRIPTION

The main body ECU will store this DTC when no signals can be received from the outer mirror control ECU while the CAN MS main bus is normal.

DTC No.	DTC Detection Condition	Trouble Area
B1276	No communication from outer mirror control ECU	1. Open or short in CAN No. 3 J/C and outer mirror control ECU 2. Outer mirror control ECU power source circuit 3. Outer mirror control ECU 4. Wire harness or connector

WIRING DIAGRAM

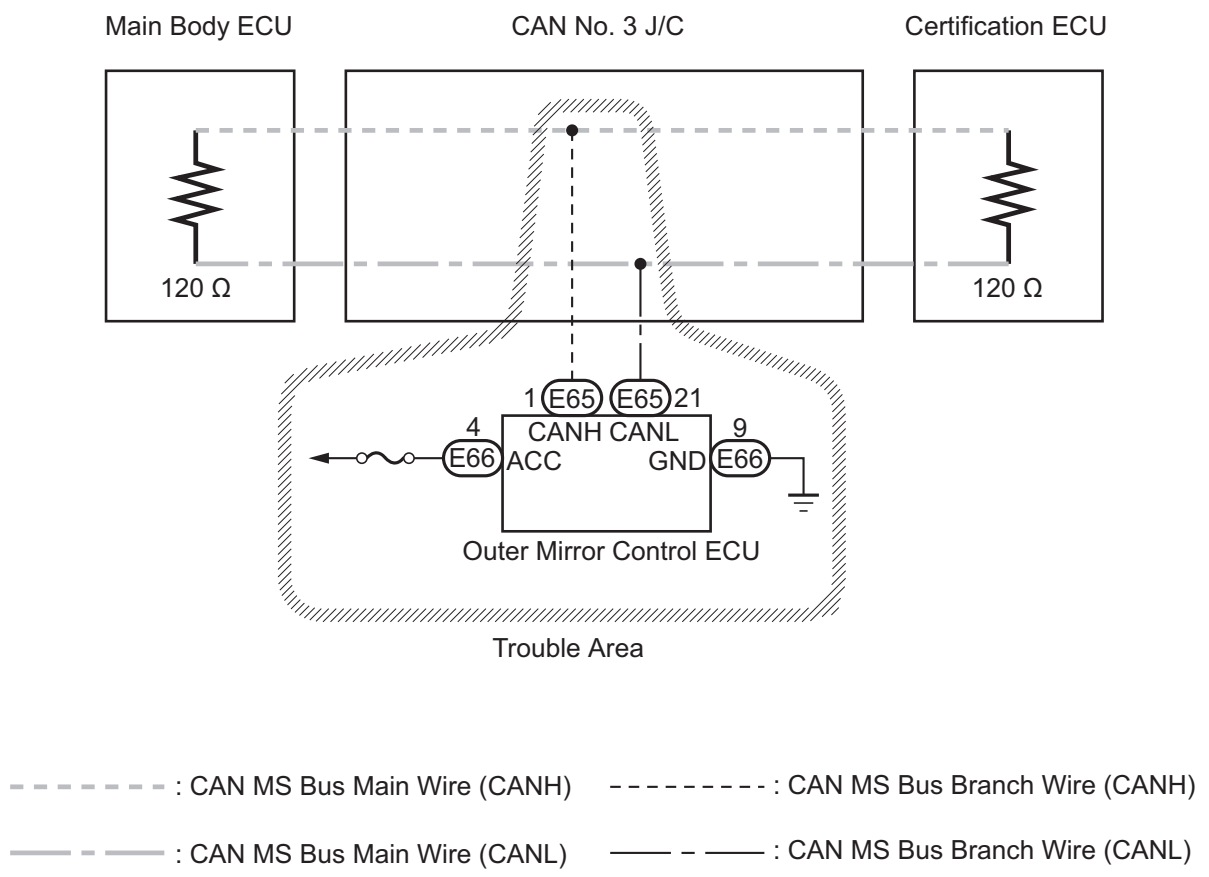

C

C142218E03

INSPECTION PROCEDURE

NOTICE:

- **Turn the engine switch off before measuring the resistances of CAN bus main wires and CAN bus branch wires.**

- **After the engine switch is turned off, check that the key reminder warning system and light reminder warning system are not in operation.**
- **Before measuring the resistance, leave the vehicle as is for at least 1 minute and do not operate the engine switch, any other switches, or the doors. If any doors need to be opened in order to check connectors, open the doors and leave them open.**

HINT:
Operating the engine switch, any switches, or any doors triggers related ECU and sensor communication on the CAN. This communication will cause the resistance value to change.

1 CHECK DTC

(a) Check for DTCs.
HINT:
If CAN MS bus communication error DTC B2326 is output, troubleshoot for B2326 and check for malfunctions in the CAN MS main bus circuit (See page CA-70).

Result

Result	Proceed to
B2326 is not output	A
B2326 is output	B

B → **GO TO DTC CHART (See page CA-49)**

A

2 CHECK CAN MS BUS WIRE (OUTER MIRROR CONTROL ECU)

Outer Mirror Control ECU (Wire Harness Side):

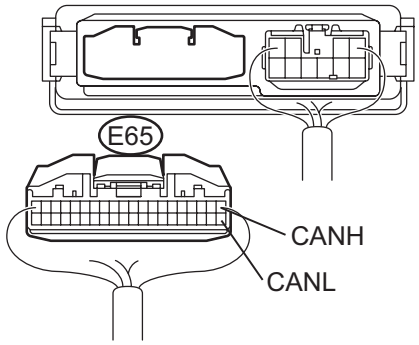

(a) Turn the engine switch off.
(b) Disconnect connector E65 from the outer mirror control ECU.
(c) Measure the resistance according to the value(s) in the table below.

Standard resistance

Tester Connection	Condition	Specified Value
E65-1 (CANH) - E65-21 (CANL)	Engine switch OFF	54 to 69 Ω

NG → **REPAIR OR REPLACE CAN MS BUS BRANCH WIRE OR CONNECTOR (OUTER MIRROR CONTROL ECU)**

OK

3	CHECK HARNESS AND CONNECTOR (ACC, GND)

Outer Mirror Control ECU (Wire Harness Side):

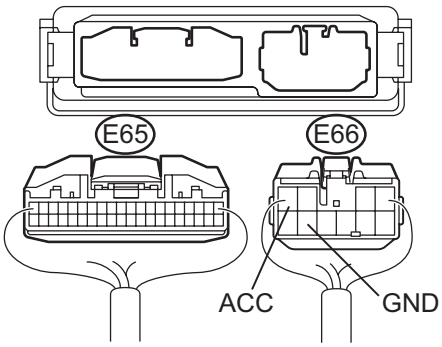

(a) Disconnect connector E66 from the outer mirror control ECU.

(b) Measure the resistance according to the value(s) in the table below.

Standard resistance

Tester Connection	Condition	Specified Value
E66-9 (GND) - Body ground	Always	Below 1 Ω

(c) Measure the voltage according to the value(s) in the table below.

Standard voltage

Tester Connection	Condition	Specified Value
E66-4 (ACC) - Body ground	Engine switch on (ACC)	10 to 14 V

NG → **REPAIR OR REPLACE HARNESS OR CONNECTOR**

OK

REPLACE OUTER MIRROR CONTROL ECU (See page MI-57)

DTC	B1289	Passenger Seat ECU Communication Stop

DESCRIPTION

The main body ECU will store this DTC when no signals can be received from the seat position control ECU (front RH side) while the CAN MS main bus is normal.

DTC No.	DTC Detection Condition	Trouble Area
B1289	No communication from seat position control ECU (Front RH side)	1. Open or short in CAN No. 3 J/C and seat position control ECU (Front RH side) 2. Seat position control ECU (Front RH side) power source circuit 3. Seat position control ECU (Front RH side) 4. Wire harness or connector

WIRING DIAGRAM

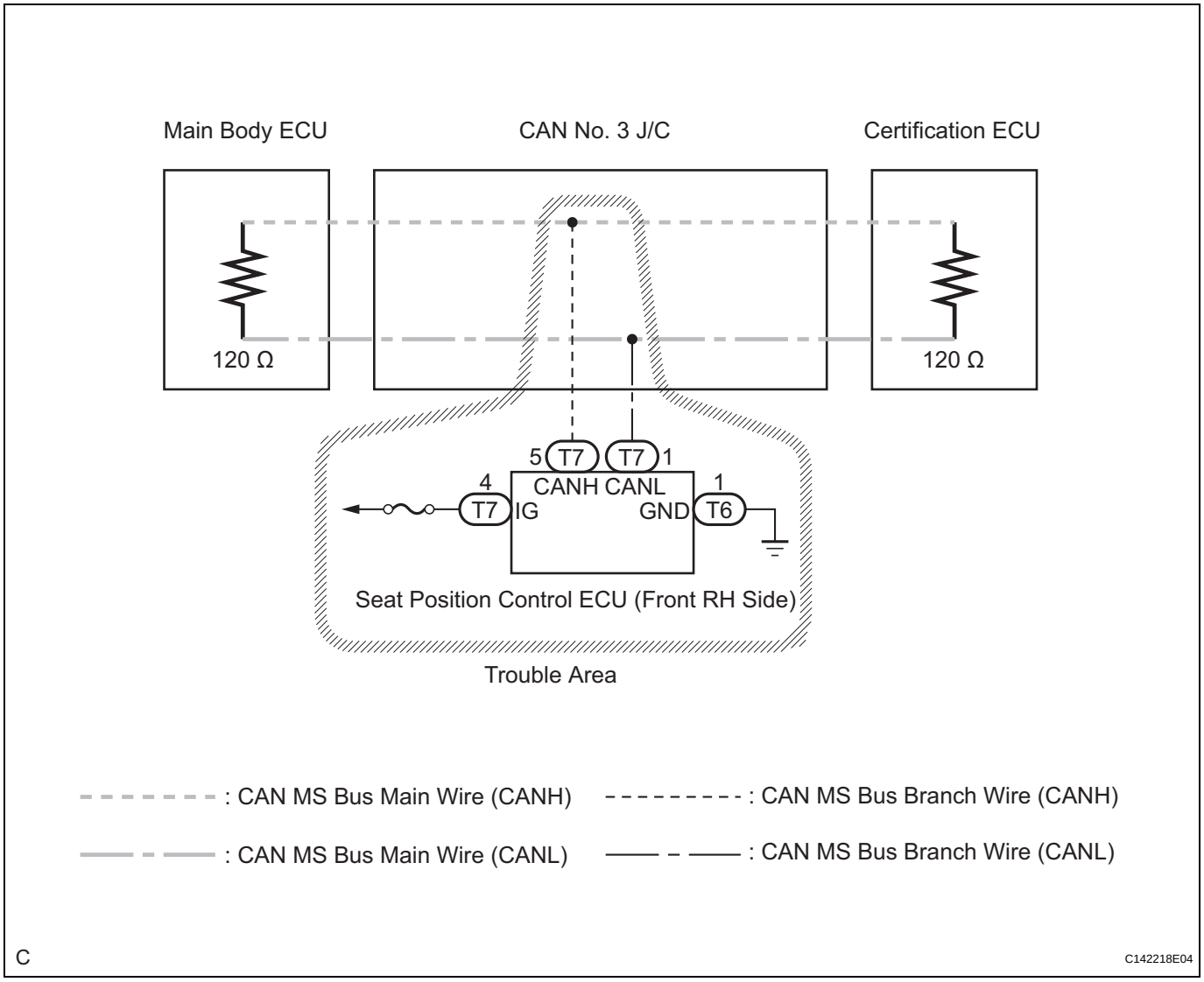

INSPECTION PROCEDURE

NOTICE:

- **Turn the engine switch off before measuring the resistances of CAN bus main wires and CAN bus branch wires.**

- **After the engine switch is turned off, check that the key reminder warning system and light reminder warning system are not in operation.**
- **Before measuring the resistance, leave the vehicle as is for at least 1 minute and do not operate the engine switch, any other switches, or the doors. If any doors need to be opened in order to check connectors, open the doors and leave them open.**

HINT:
Operating the engine switch, any switches, or any doors triggers related ECU and sensor communication on the CAN. This communication will cause the resistance value to change.

1 CHECK DTC

(a) Check for DTCs.
HINT:
If CAN MS bus communication error DTC B2326 is output, troubleshoot for B2326 and check for malfunctions in the CAN MS main bus circuit (See page CA-70).

Result

Result	Proceed to
B2326 is not output	A
B2326 is output	B

B → **GO TO DTC CHART (See page CA-49)**

A

2 CHECK CAN MS BUS WIRE (SEAT POSITION CONTROL ECU FOR FRONT RH SIDE)

Seat Position Control ECU (Wire Harness Side):

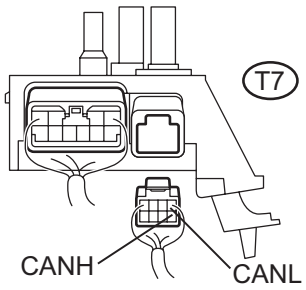

H C142228E02

(a) Turn the engine switch off.
(b) Disconnect connector T7 from the seat position control ECU for the front RH side.
(c) Measure the resistance according to the value(s) in the table below.

Standard resistance

Tester Connection	Condition	Specified Value
T7-5 (CANH) - T7-1 (CANL)	Engine switch OFF	54 to 69 Ω

NG → **REPAIR OR REPLACE CAN MS BUS BRANCH WIRE OR CONNECTOR (SEAT POSITION CONTROL ECU FOR FRONT RH SIDE)**

OK

3 CHECK HARNESS AND CONNECTOR (IG, GND)

Seat Position Control ECU (Wire Harness Side):

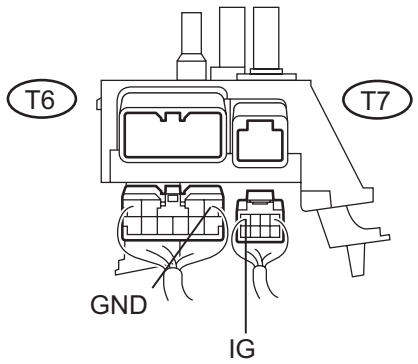

(a) Disconnect connector T7 from the seat position control ECU for the front RH side.

(b) Measure the resistance according to the value(s) in the table below.

Standard resistance

Tester Connection	Condition	Specified Value
T6-1 (GND) - Body ground	Always	Below 1 Ω

(c) Measure the voltage according to the value(s) in the table below.

Standard voltage

Tester Connection	Condition	Specified Value
T7-4 (IG) - Body ground	Engine switch on (IG)	10 to 14 V

NG → **REPAIR OR REPLACE HARNESS OR CONNECTOR**

OK

REPLACE SEAT POSITION CONTROL ECU (FRONT RH SIDE) (See page SE-127)

DTC	B1297	Clearance Sonar ECU Communication Stop

DESCRIPTION

The main body ECU will store this DTC when no signals can be received from the clearance warning ECU while the CAN MS main bus is normal.

DTC No.	DTC Detection Condition	Trouble Area
B1297	No communication from clearance warning ECU	1. Open or short in CAN No. 3 J/C and clearance warning ECU 2. Clearance warning ECU power source circuit 3. Clearance warning ECU 4. Wire harness or connector

WIRING DIAGRAM

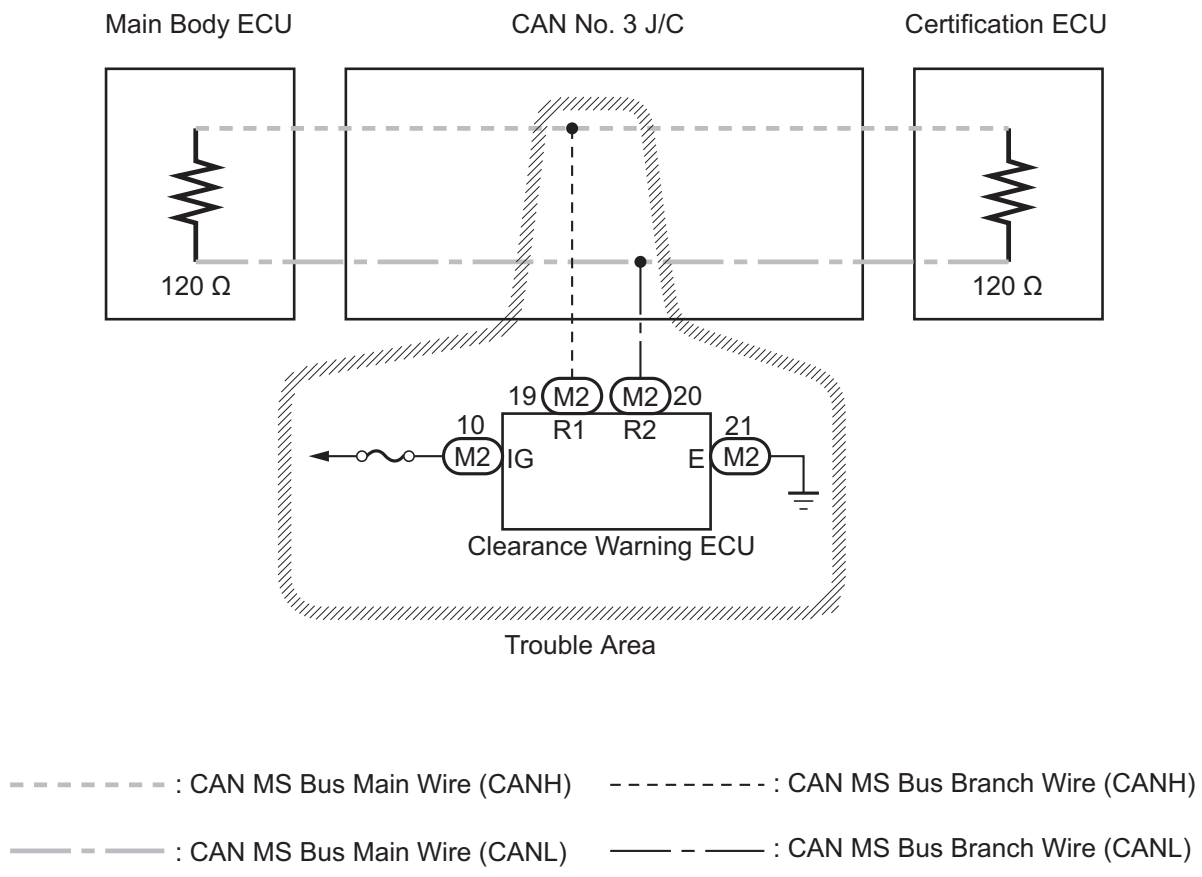

INSPECTION PROCEDURE

NOTICE:

- **Turn the engine switch off before measuring the resistances of CAN bus main wires and CAN bus branch wires.**
- **After the engine switch is turned off, check that the key reminder warning system and light reminder warning system are not in operation.**

- **Before measuring the resistance, leave the vehicle as is for at least 1 minute and do not operate the engine switch, any other switches, or the doors. If any doors need to be opened in order to check connectors, open the doors and leave them open.**

HINT:
Operating the engine switch, any switches, or any doors triggers related ECU and sensor communication on the CAN. This communication will cause the resistance value to change.

1 CHECK DTC

(a) Check for DTCs.
HINT:
If CAN MS bus communication error DTC B2326 is output, troubleshoot for B2326 and check for malfunctions in the CAN MS main bus circuit (See page CA-70).

Result

Result	Proceed to
B2326 is not output	A
B2326 is output	B

B → **GO TO DTC CHART (See page CA-49)**

A

2 CHECK CAN MS BUS WIRE (CLEARANCE WARNING ECU)

Clearance Warning ECU (Wire Harness Side):

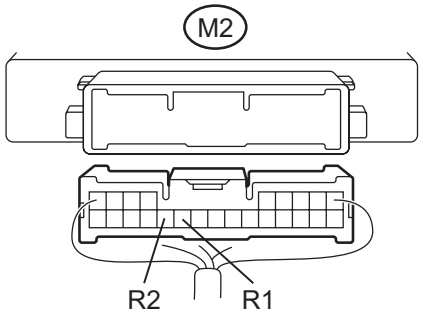

C142213E01

(a) Turn the engine switch off.
(b) Disconnect connector M2 from the clearance warning ECU.
(c) Measure the resistance according to the value(s) in the table below.

Standard resistance

Tester Connection	Condition	Specified Value
M2-19 (R1) - M2-20 (R2)	Engine switch OFF	54 to 69 Ω

NG → **REPAIR OR REPLACE CAN MS BUS BRANCH WIRE OR CONNECTOR (CLEARANCE WARNING ECU)**

OK

3 CHECK HARNESS AND CONNECTOR (IG, E)

Clearance Warning ECU (Wire Harness Side):

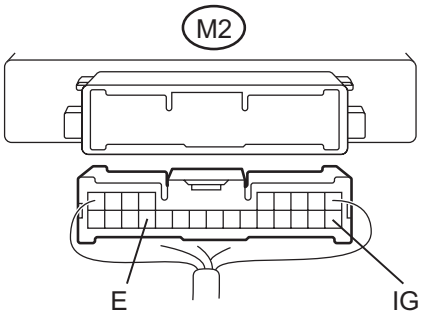

C142213E02

(a) Measure the resistance according to the value(s) in the table below.

Standard resistance

Tester Connection	Condition	Specified Value
M2-21 (E) - Body ground	Always	Below 1 Ω

(b) Measure the voltage according to the value(s) in the table below.

Standard voltage

Tester Connection	Condition	Specified Value
M2-10 (IG) - Body ground	Engine switch on (IG)	10 to 14 V

NG → **REPAIR OR REPLACE HARNESS OR CONNECTOR**

OK

REPLACE CLEARANCE WARNING ECU (See page PM-93)

DTC	B2326	CAN MS Bus Line Communication Malfunction

DESCRIPTION

- The main body ECU will store this DTC when no signals can be received from the ECUs that have been memorized as those that are connected to the CAN MS bus.
- When the main body ECU receives response signals from the ECUs connected to the CAN MS bus, the main body ECU recognizes and memorizes that the ECUs are connected to the CAN MS bus. Based on this memorized data, the main body ECU monitors for malfunctions in the ECUs connected to the CAN MS bus when communicating with those ECUs. If the main body ECU cannot receive response signals from the ECUs that have been memorized as those connected to the CAN MS bus, the main body ECU determines that a malfunction exists.

DTC No.	DTC Detection Condition	Trouble Area
B2326	Main body ECU cannot receive signals from all ECUs that have been memorized as those connected to the CAN MS bus.	1. Open or short in MS bus main wire 2. Open or short in MS bus branch wire 3. Wire harness or connector 4. Certification ECU 5. Multiplex tilt and telescopic ECU 6. Seat position control ECU (Front LH side) 7. Seat position control ECU (Front RH side) 8. Outer mirror control ECU 9. Clearance warning ECU 10. Main body ECU 11. CAN No. 3 J/C

WIRING DIAGRAM

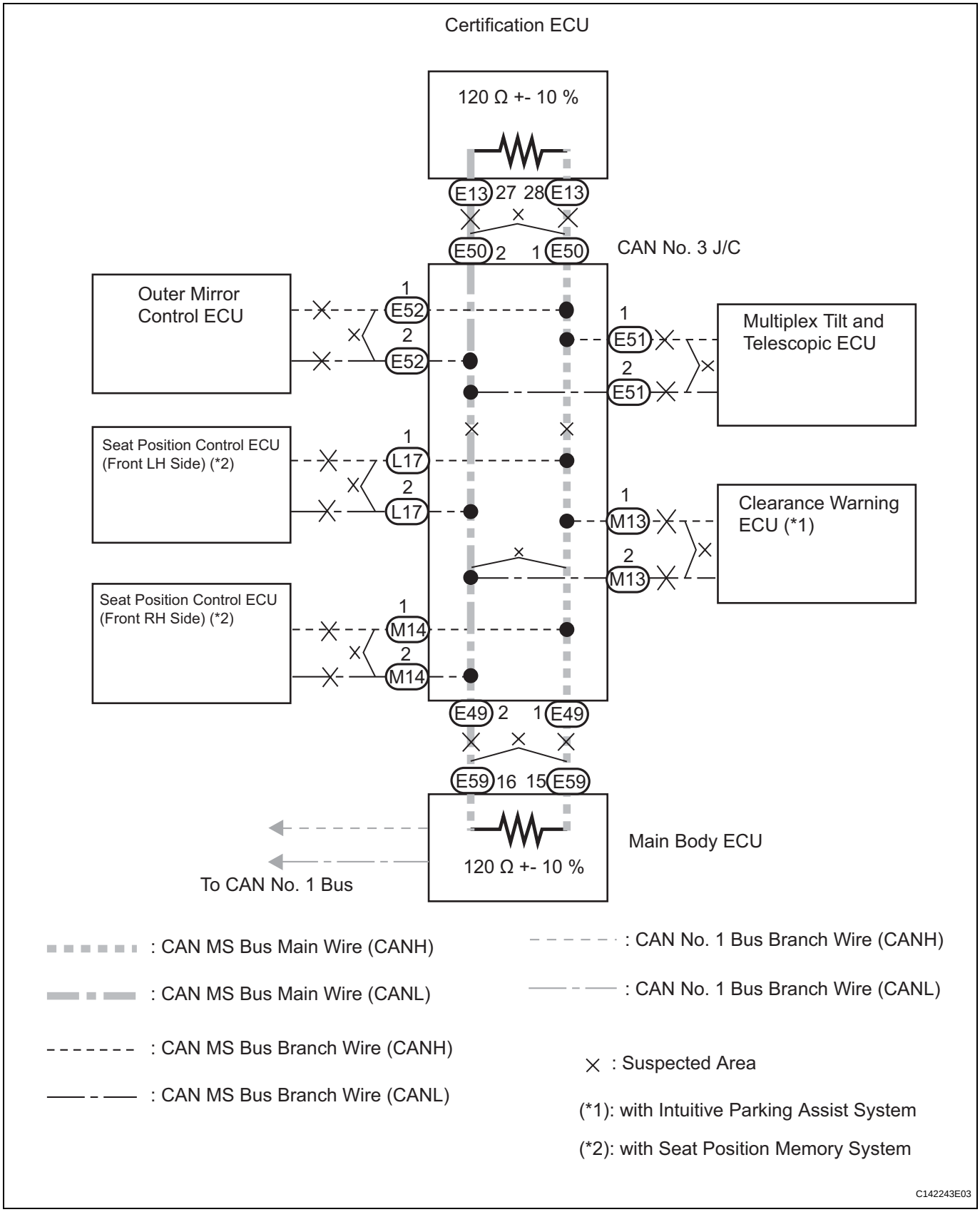

INSPECTION PROCEDURE

NOTICE:

- **Turn the engine switch off before measuring the resistances of CAN bus main wires and CAN bus branch wires.**
- **After the engine switch is turned off, check that the key reminder warning system and light reminder warning system are not in operation.**
- **Before measuring the resistance, leave the vehicle as is for at least 1 minute and do not operate the engine switch, any other switches, or the doors. If any doors need to be opened in order to check connectors, open the doors and leave them open.**

HINT:

- Operating the engine switch, any switches, or any doors triggers related ECU and sensor communication on the CAN. This communication will cause the resistance value to change.
- Even after DTCs are cleared, if a DTC is stored again after driving the vehicle for a while, the malfunction may be occurring due to vibration of the vehicle. In such a case, wiggling the ECUs or wire harness while performing the inspection below will help determine the cause of the malfunction.

1 CHECK CAN MS BUS WIRE

CAN No. 3 J/C "A" Side (without Earth Terminal) Wire Harness View:

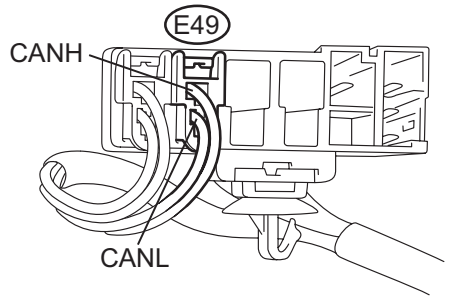

N C142230E01

(a) Turn the engine switch off.
(b) Measure the resistance according to the value(s) in the table below.

Result

Tester Connection	Color	Condition	Specified Value	Proceed to
E49-1 (CANH) - E49-2 (CANL)	B - W	Engine switch off	54 to 69 Ω	A
E49-1 (CANH) - E49-2 (CANL)	B - W	Engine switch off	69 Ω or higher	B
E49-1 (CANH) - E49-2 (CANL)	B - W	Engine switch off	Less than 54 Ω	C

B → **Go to step 5**

C → **Go to step 9**

A

2 CHECK FOR SHORT TO +B IN CAN MS BUS WIRE

CAN No. 3 J/C "A" Side (without Earth Terminal) Wire Harness View:

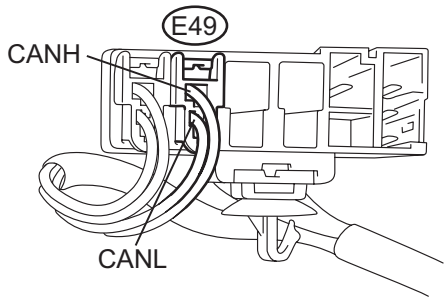

DLC3:

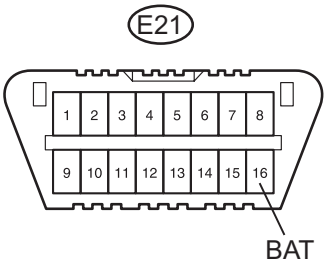

N C142233E01

(a) Measure the resistance according to the value(s) in the table below.

Standard resistance

Tester Connection	Color	Condition	Specified Value
E49-1 (CANH) - E21-16 (BAT)	B - O	Engine switch off	6 kΩ or higher
E49-2 (CANL) - E21-16 (BAT)	W - O	Engine switch off	6 kΩ or higher

NG → **Go to step 14**

OK

3 CHECK FOR SHORT TO GND IN CAN MS BUS WIRE

CAN No. 3 J/C "A" Side (without Earth Terminal) Wire Harness View:

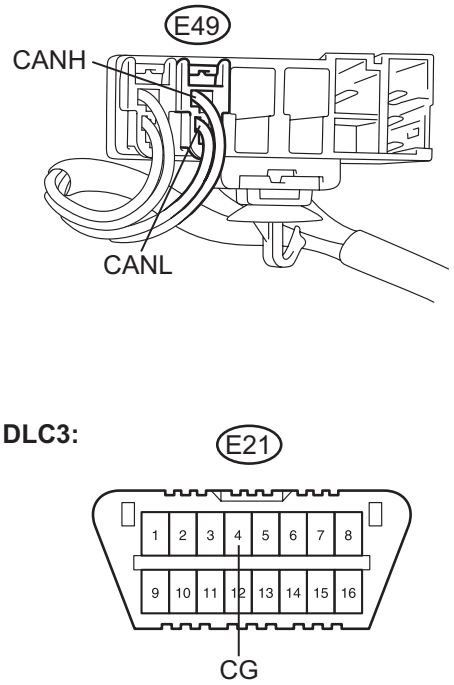

(a) Measure the resistance according to the value(s) in the table below.

Standard resistance

Tester Connection	Color	Condition	Specified Value
E49-1 (CANH) - E21-4 (CG)	B - W-B	Engine switch off	200 Ω or higher
E49-2 (CANL) - E21-4 (CG)	W - W-B	Engine switch off	200 Ω or higher

NG → **Go to step 17**

OK

4 CHECK CAN MS BUS BRANCH WIRE

(a) Check for an open in the branch wires of all ECUs connected to the CAN MS bus.
  (1) Check the outer mirror control ECU branch wire (See page CA-61).
  (2) Check the multiplex tilt and telescopic ECU branch wire (See page CA-55).
  (3) Check the seat position control ECU (front LH side) branch wire (See page CA-58).
  (4) Check the seat position control ECU (front RH side) branch wire (See page CA-64).
  (5) Check the clearance warning ECU branch wire (See page CA-67).

Result

Result	Proceed to
OK	A
NG	B

B → **REPAIR OR REPLACE MALFUNCTIONING PART**

A

REPLACE INSTRUMENT PANEL J/B (MAIN BODY ECU)

5 CHECK FOR OPEN IN CAN MS BUS MAIN WIRE (CERTIFICATION ECU MAIN WIRE)

CAN No. 3 J/C "A" Side (without Earth Terminal) Wire Harness View:

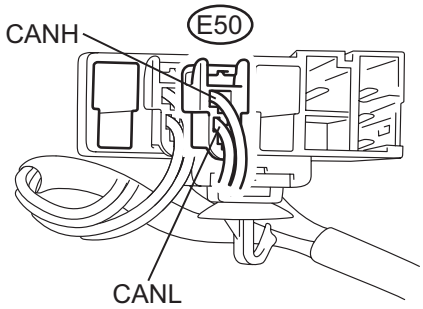

N C142231E01

(a) Disconnect certification ECU main wire connector E50 from the CAN No. 3 J/C.
HINT:
- Before disconnecting the connector, make a note of where it is connected.
- Reconnect the connector to its original position.

(b) Measure the resistance according to the value(s) in the table below.

Standard resistance

Tester Connection	Color	Condition	Specified Value
E50-1 (CANH) - E50-2 (CANL)	R - W	Engine switch off	108 to 132 Ω

OK → **Go to step 7**

NG

6 CHECK FOR OPEN IN CAN MS BUS MAIN WIRE (CERTIFICATION ECU - CAN NO. 3 J/C)

Certification ECU (Component Side):

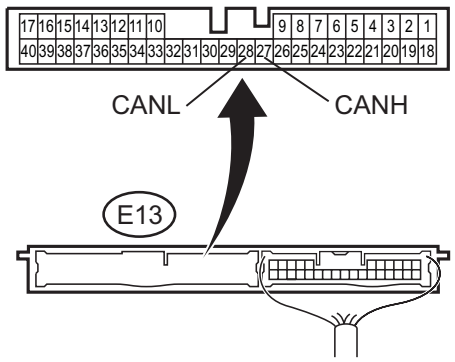

C C142197E01

(a) Reconnect certification ECU main wire connector E50 to the CAN No. 3 J/C.
(b) Disconnect connector E13 from the certification ECU.
(c) Measure the resistance according to the value(s) in the table below.

Standard resistance

Tester Connection	Condition	Specified Value
E13-27 (CANH) - E13-28 (CANL)	Engine switch off	108 to 132 Ω

NG → **REPLACE CERTIFICATION ECU**

OK

REPAIR OR REPLACE CAN MS BUS MAIN WIRE OR CONNECTOR (CERTIFICATION ECU - CAN NO. 3 J/C)

7 CHECK FOR OPEN IN CAN MS BUS MAIN WIRE (MAIN BODY ECU MAIN WIRE)

CAN No. 3 J/C "A" Side (without Earth Terminal) Wire Harness View:

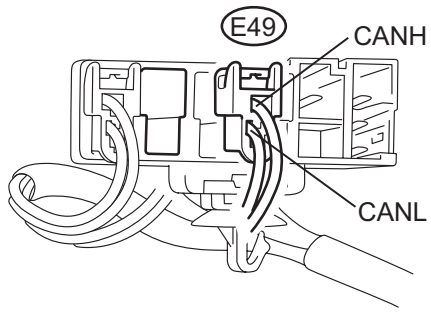

N C142229E01

(a) Reconnect certification ECU main wire connector E50 to the CAN No. 3 J/C.

(b) Disconnect main body ECU main wire connector E49 from the CAN No. 3 J/C.
HINT:
- Before disconnecting the connector, make a note of where it is connected.
- Reconnect the connector to its original position.

(c) Measure the resistance according to the value(s) in the table below.
Standard resistance

Tester Connection	Color	Condition	Specified Value
E49-1 (CANH) - E49-2 (CANL)	B - W	Engine switch off	108 to 132 Ω

OK → **REPLACE CAN NO. 3 J/C**

NG

8 CHECK FOR OPEN IN CAN MS BUS MAIN WIRE (MAIN BODY ECU - CAN NO. 3 J/C)

(a) Reconnect main body ECU main wire connector E49 to the CAN No. 3 J/C.

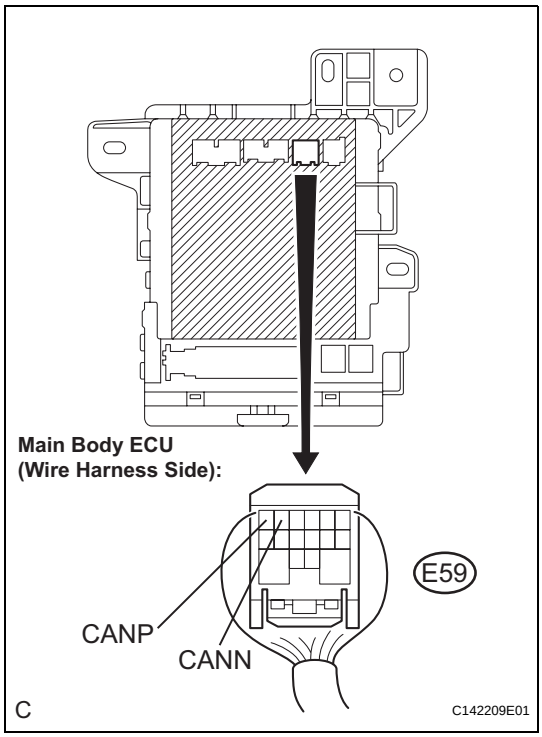

(b) Disconnect connector E59 from the main body ECU.
(c) Measure the resistance according to the value(s) in the table below.

Standard resistance

Tester Connection	Condition	Specified Value
E59-16 (CANP) - E59-15 (CANN)	Engine switch off	108 to 132 Ω

NG → **REPAIR OR REPLACE CAN MS BUS MAIN WIRE OR CONNECTOR (CAN NO. 3 J/C - MAIN BODY ECU)**

OK

REPLACE INSTRUMENT PANEL J/B (MAIN BODY ECU)

9 CHECK FOR SHORT IN CAN MS BUS WIRES (CAN NO. 3 J/C BRANCH WIRE)

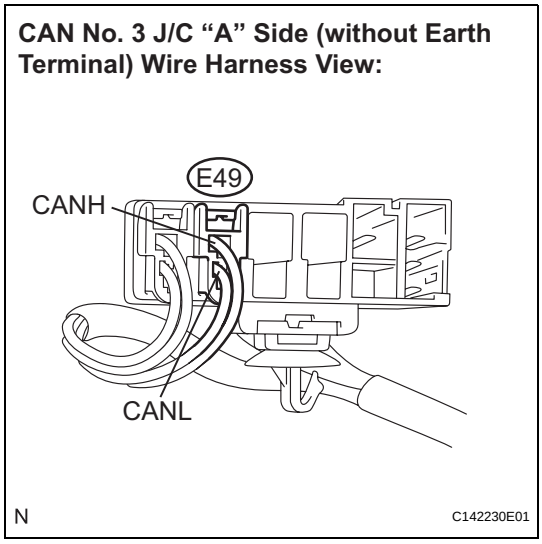

(a) Connect the probes of an ohmmeter to terminals 1 (CANH) and 2 (CANL) of main body ECU main wire connector E49.
(b) While observing the resistance value shown on the tester, disconnect connectors E51, E52, M13, M14, and L17 from the CAN No. 3 J/C one by one until the resistance becomes normal (between 54 and 69 Ω).
HINT:
Disconnect the branch wire connectors only.

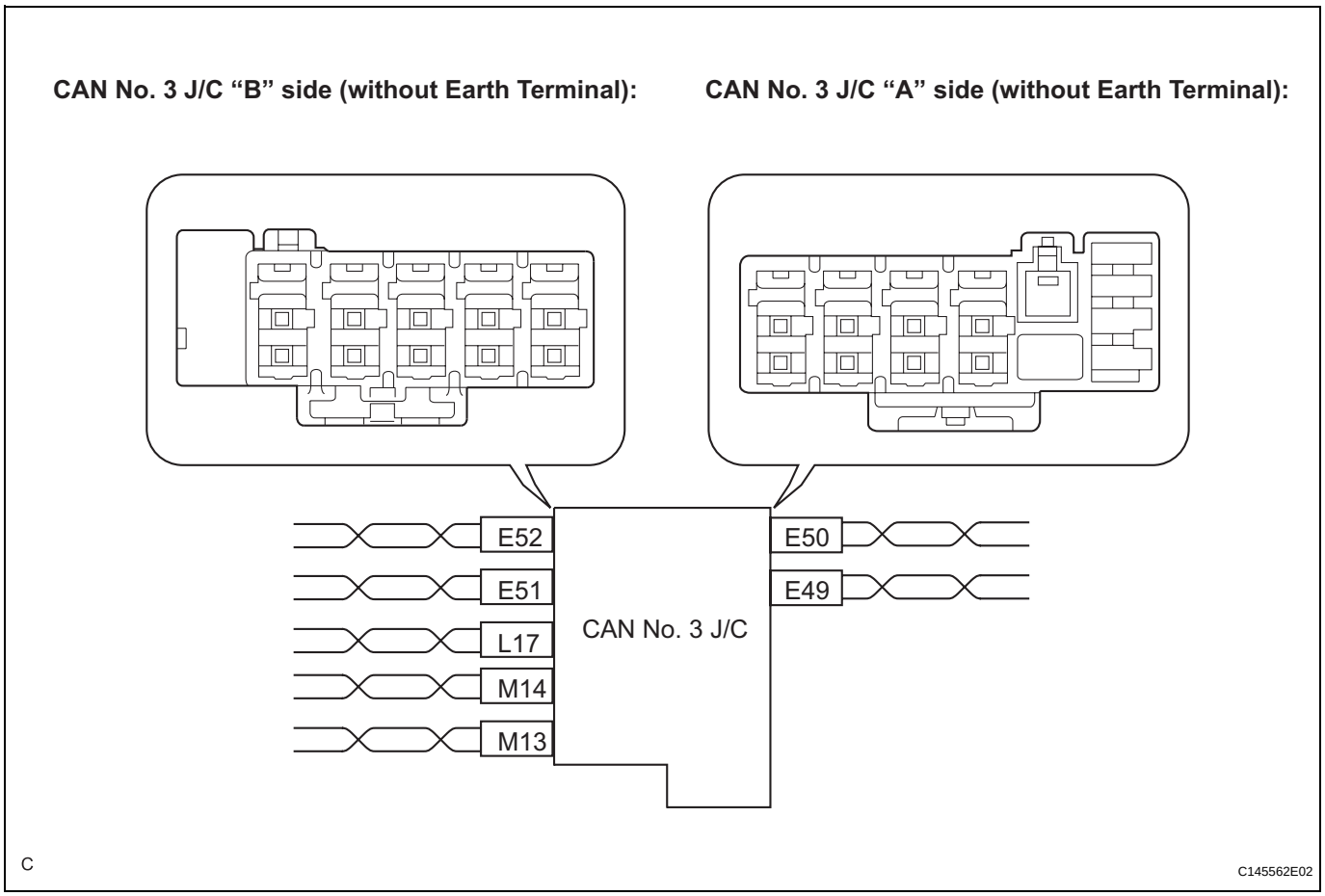

Wiring color:

CAN No. 3 J/C Connector ("B" side, without earth terminal)	Connector Color	Color (CAN-H Side)	Color (CAN-L Side)
Outer Mirror Control ECU (E52)	White	O	P
Multiplex Tilt and Telescopic ECU (E51)	White	BR	GR
Seat Position Control ECU (Front LH Side) (L17)(*1)	Blue	LG	L
Clearance Warning ECU (M13)(*2)	Gray	Y	L
Seat Position Control ECU (Front RH Side) (M14)(*1)	Black	V	P

NOTICE:
Do not reconnect the disconnected connectors until this inspection is complete because there may be a short in 2 or more branch wires.
HINT:
- (*1) : with seat position memory system
- (*2) : with intuitive parking assist system

Result

Symptom	Proceed to
The resistance is still below 54 Ω when all the specified connectors are disconnected. (There are no shorts in the branch wires.)	**A**
The resistance becomes normal (between 54 and 69 Ω) when a connector is disconnected. (There is a short in one or more of the branch wires.)	**B**

(c) When there is a short in one or more of the branch wires:

(1) Reconnect all of the connectors to the CAN No. 3 J/C, except for the one that was disconnected last (the short-circuited bus wire). Check that the resistance shown on the tester is normal (between 54 and 69 Ω) to confirm that there is a short in one branch wire only.
HINT:
- The connectors connected to the CAN No. 3 J/C can be distinguished according to the color of the communication bus wires and the shape of the connectors.
- Reconnecting the connectors to non-specified positions on the CAN No. 3 J/C does not affect system operation. However, it is preferred to reconnect the connectors to their specified positions to avoid negative effects on the wiring such as tension on the wiring harnesses, and to make future maintenance easier.

B → **Go to step 20**

A

10 CHECK FOR SHORT IN CAN MS BUS WIRES (CERTIFICATION ECU MAIN WIRE)

CAN No. 3 J/C "A" Side (without Earth Terminal) Wire Harness View:

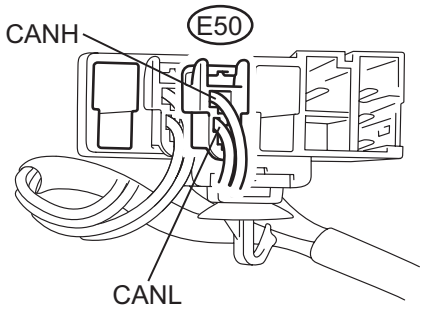

N C142231E01

(a) Disconnect certification ECU main wire connector E50 from the CAN No. 3 J/C.
HINT:
- Before disconnecting the connector, make a note of where it is connected.
- Reconnect the connector to its original position.

(b) Measure the resistance according to the value(s) in the table below.
Standard resistance

Tester Connection	Color	Condition	Specified Value
E50-1 (CANH) - E50-2 (CANL)	R - W	Engine switch off	108 to 132 Ω

OK → **Go to step 12**

NG

11 CHECK FOR SHORT IN CAN MS BUS WIRES (CERTIFICATION ECU - CAN NO. 3 J/C)

Certification ECU (Component Side):

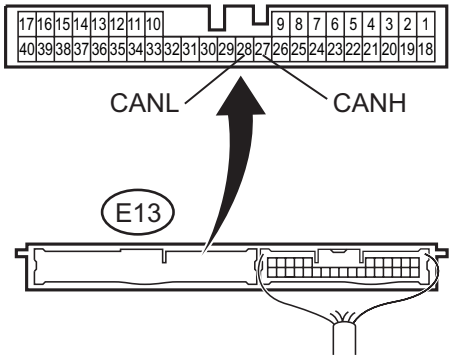

(a) Disconnect connector E13 from the certification ECU.
(b) Measure the resistance according to the value(s) in the table below.
Standard resistance

Tester Connection	Condition	Specified Value
E13-27 (CANH) - E13-28 (CANL)	Engine switch off	108 to 132 Ω

NG → **REPLACE CERTIFICATION ECU**

OK

REPAIR OR REPLACE CAN MS BUS MAIN WIRE OR CONNECTOR (CERTIFICATION ECU - CAN NO. 3 J/C)

12 CHECK FOR SHORT IN CAN MS BUS WIRES (MAIN BODY ECU MAIN WIRE)

CAN No. 3 J/C "A" Side (without Earth Terminal) Wire Harness View:

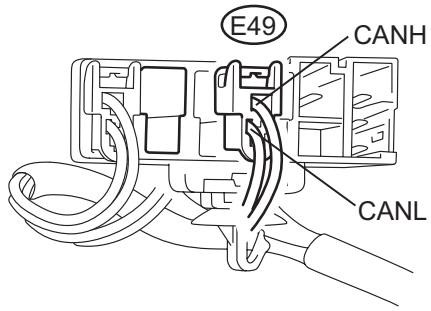

(a) Reconnect certification ECU main wire connector E50 to the CAN No. 3 J/C.
(b) Disconnect main body ECU main wire connector E49 from the CAN No. 3 J/C.
HINT:
- Before disconnecting the connector, make a note of where it is connected.
- Reconnect the connector to its original position.

(c) Measure the resistance according to the value(s) in the table below.
Standard resistance

Tester Connection	Color	Condition	Specified Value
E49-1 (CANH) - E49-2 (CANL)	B - W	Engine switch off	108 to 132 Ω

OK → **REPLACE CAN NO. 3 J/C**

NG

13 CHECK FOR SHORT IN CAN MS BUS WIRES (MAIN BODY ECU - CAN NO. 3 J/C)

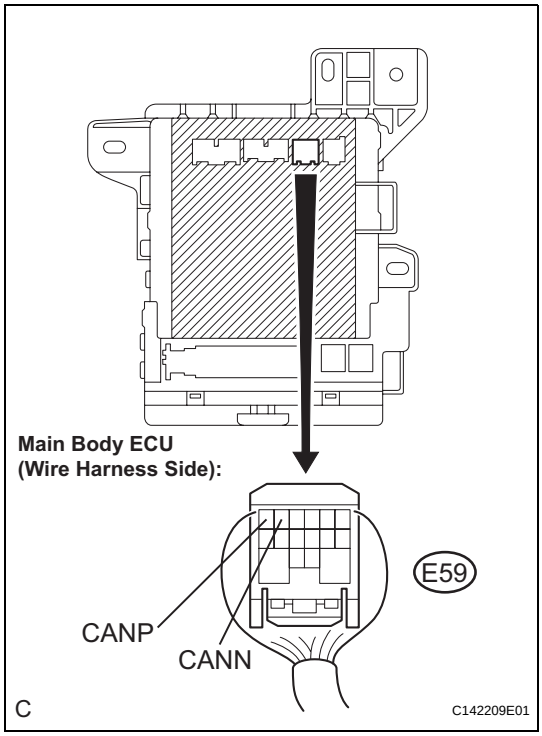

(a) Disconnect connector E59 from the main body ECU.
(b) Measure the resistance according to the value(s) in the table below.

Standard resistance

Tester Connection	Condition	Specified Value
E59-16 (CANP) - E59-15 (CANN)	Engine switch off	1 MΩ or higher

NG → **REPAIR OR REPLACE CAN MS BUS MAIN WIRE OR CONNECTOR (CAN NO. 3 J/C - MAIN BODY ECU)**

OK

REPLACE INSTRUMENT PANEL J/B (MAIN BODY ECU)

14	CHECK FOR SHORT TO +B IN CAN MS BUS WIRE (CAN NO. 3 J/C BRANCH WIRE)

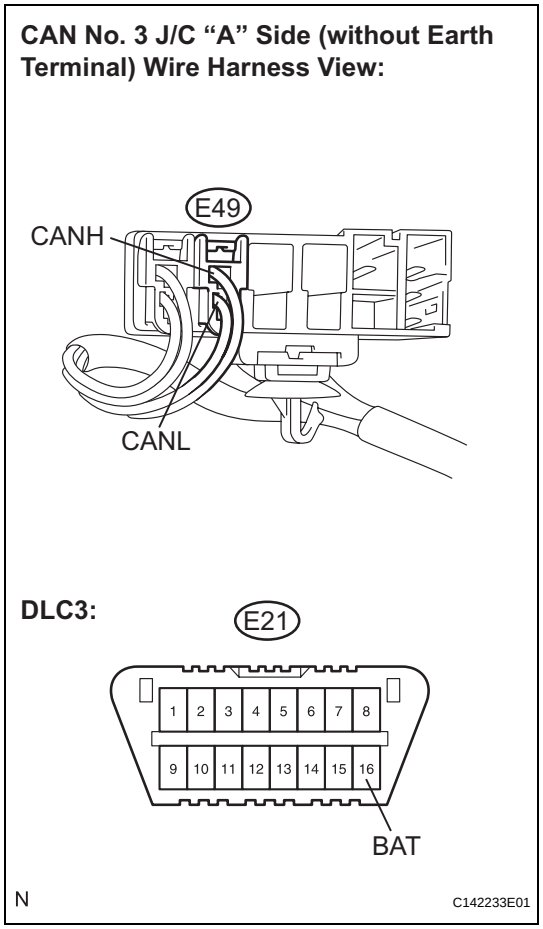

(a) Disconnect connectors from the CAN No. 3 J/C one at a time.
NOTICE:
Disconnect the ECU and sensor connectors other than main body ECU main wire connector E49.

(b) Using an ohmmeter, measure the resistance between terminal 1 (CANH) of main body ECU main wire connector E49 and terminal 16 (BAT) of the DLC3, and between terminal 2 (CANL) of main body ECU main wire connector E49 and terminal 16 (BAT) of the DLC3 each time a connector is disconnected.

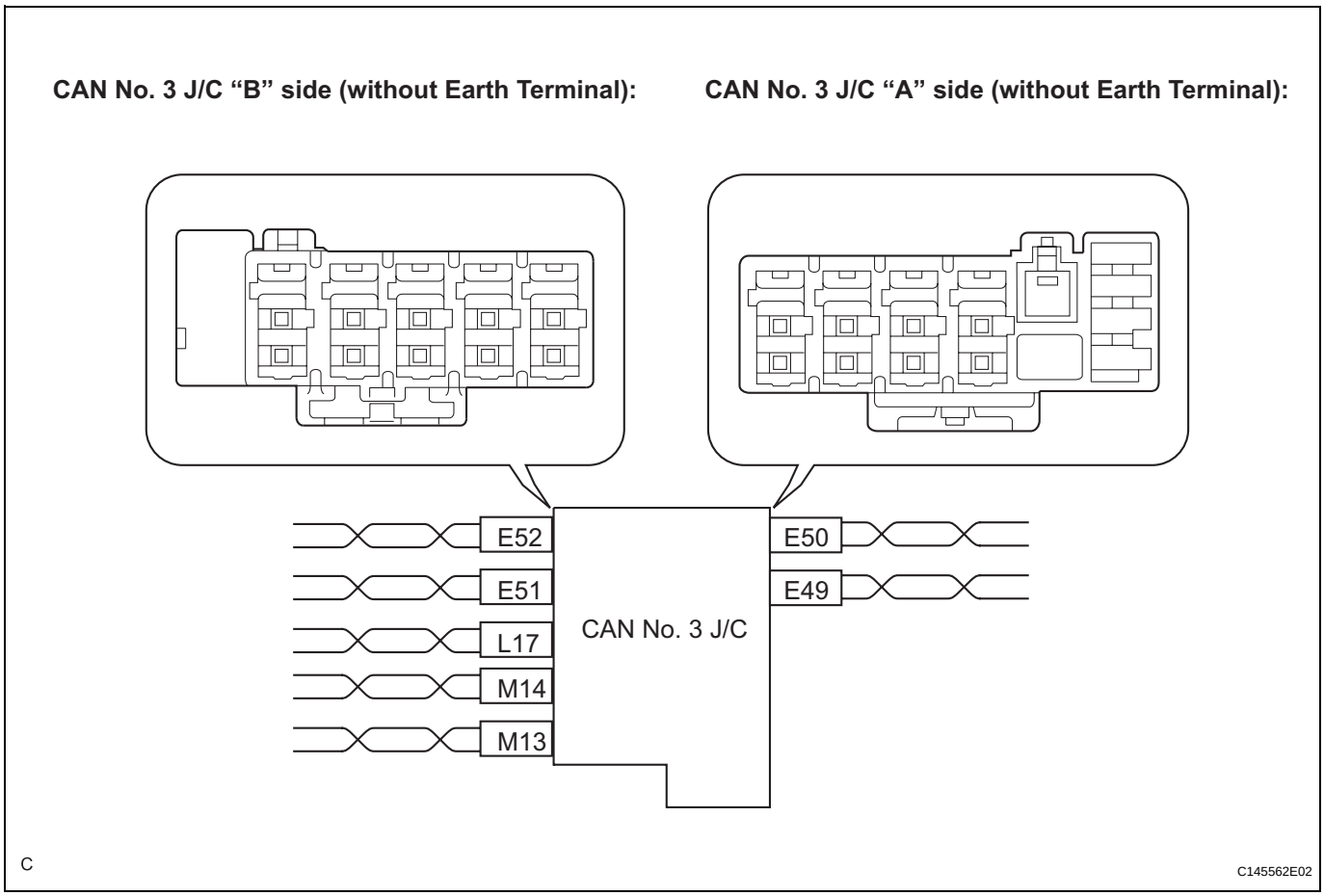

Wiring color:

CAN No. 3 J/C Connector ("A" side, without earth terminal)	Connector Color	Color (CAN-H Side)	Color (CAN-L Side)
Certification ECU (E50)	White	R	W

Wiring color:

CAN No. 3 J/C Connector ("B" side, without earth terminal)	Connector Color	Color (CAN-H Side)	Color (CAN-L Side)
Outer Mirror Control ECU (E52)	White	O	P
Multiplex Tilt and Telescopic ECU (E51)	White	BR	GR
Seat Position Control ECU (Front LH Side) (L17)(*1)	Blue	LG	L
Clearance Warning ECU (M13)(*2)	Gray	Y	L
Seat Position Control ECU (Front RH Side) (M14)(*1)	Black	V	P

NOTICE:
Do not reconnect the disconnected connectors until this inspection is complete because there may be a short to B+ in 2 or more CAN MS bus wires.

HINT:
- (*1) : with seat position memory system
- (*2) : with intuitive parking assist system

CA

Result

Symptom	Proceed to
The resistance between terminals 1 (CANH) and E21-16 (BAT), or the resistance between terminals 2 (CANL) and E21-16 (BAT) is still below 6 kΩ when all the specified connectors are disconnected from the CAN No. 3 J/C. (There is a short to B+ in the CAN MS bus main wires between the CAN No. 3 J/C and the main body ECU.)	**A**

Symptom	Proceed to
The resistance between terminals 6 (CANH) and E21-16 (BAT), or the resistance between terminals 14 (CANL) and E21-16 (BAT) becomes normal (6 kΩ or more) when a connector is disconnected from the CAN No. 3 J/C. (There is a short to B+ in one of the areas that relate to one or more of the disconnected bus wires.)	**B**

(c) When there is a short to B+ in one or more of the bus wires that connect to an ECU (or sensor):

(1) Reconnect all of the connectors to the CAN No. 3 J/C, except for the one that was disconnected last (the bus wire that is shorted to B+). Check that the resistance shown on the tester is normal (6 kΩ or more) to confirm that there is a short to B+ in one bus wire only.

HINT:

- The connectors connected to the CAN No. 3 J/C can be distinguished according to the color of the communication bus wires and the shape of the connectors.
- Reconnecting the connectors to non-specified positions on the CAN No. 3 J/C does not affect system operation. However, it is preferred to reconnect the connectors to their specified positions to avoid negative effects on the wiring such as tension on the wiring harnesses, and to make future maintenance easier.

B → **Go to step 20**

A

15 CHECK FOR SHORT TO +B IN CAN MS BUS WIRE (MAIN BODY ECU MAIN WIRE)

CAN No. 3 J/C "A" Side (without Earth Terminal) Wire Harness View:

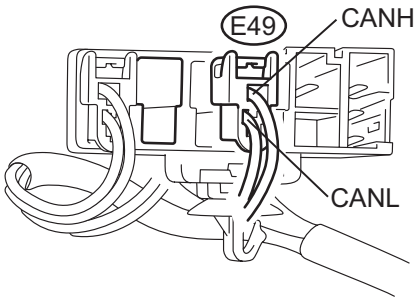

DLC3:

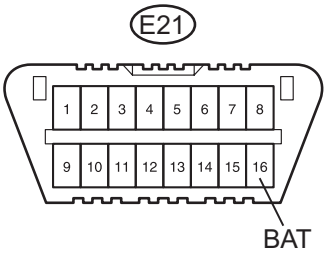

N C142232E01

(a) Disconnect main body ECU main wire connector E49 from the CAN No. 3 J/C.
HINT:
- Before disconnecting the connector, make a note of where it is connected.
- Reconnect the connector to its original position.

(b) Measure the resistance according to the value(s) in the table below.
Standard resistance

Tester Connection	Color	Condition	Specified Value
E49-1 (CANH) - E21-16 (BAT)	B - O	Engine switch off	6 kΩ or higher
E49-2 (CANL) - E21-16 (BAT)	W - O	Engine switch off	6 kΩ or higher

OK → **REPLACE CAN NO. 3 J/C**

NG

16	CHECK FOR SHORT TO +B IN CAN MS BUS WIRE (MAIN BODY ECU - CAN NO. 3 J/C)

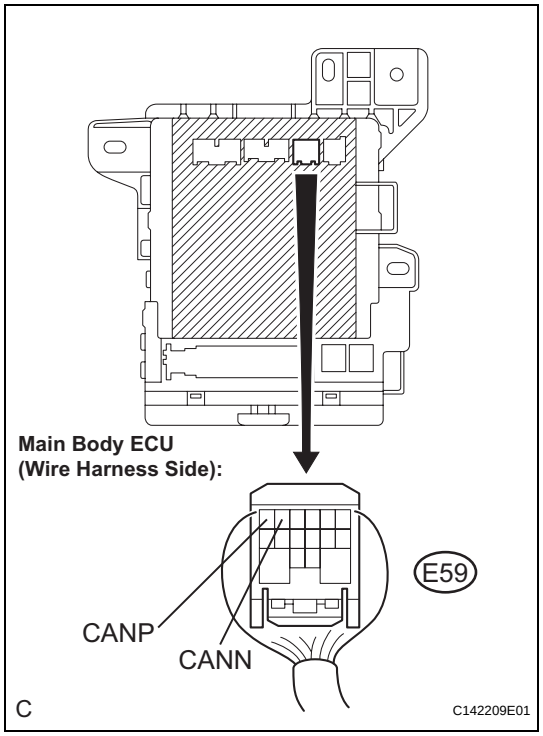

(a) Disconnect connector E59 from the main body ECU.
(b) Measure the resistance according to the value(s) in the table below.

Standard resistance

Tester Connection	Condition	Specified Value
E59-16 (CANP) - E21-16 (BAT)	Engine switch off	6 kΩ or higher
E59-15 (CANN) - E21-16 (BAT)	Engine switch off	6 kΩ or higher

NG → **REPAIR OR REPLACE CAN MS BUS MAIN WIRE OR CONNECTOR (CAN NO. 3 J/C - MAIN BODY ECU)**

OK

REPLACE INSTRUMENT PANEL J/B (MAIN BODY ECU)

17	CHECK FOR SHORT TO GND IN CAN MS BUS WIRE (CAN NO. 3 J/C BRANCH WIRE)

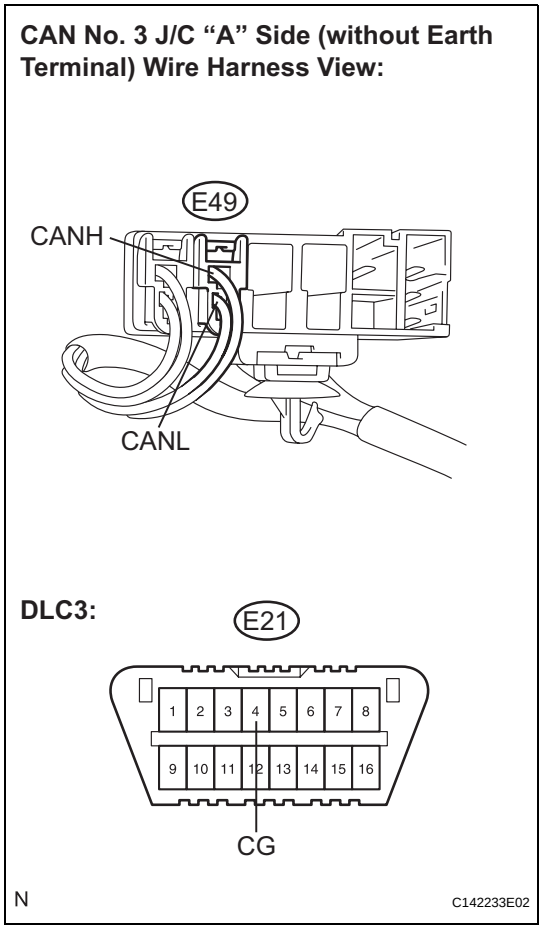

(a) Disconnect connectors from the CAN No. 3 J/C one at a time.
NOTICE:
Disconnect the ECU and sensor connectors other than main body ECU main wire connector E49.

(b) Using an ohmmeter, measure the resistance between terminal 1 (CANH) of main body ECU main wire connector E49 and terminal 4 (CG) of the DLC3, and between terminal 2 (CANL) of main body ECU main wire connector E49 and terminal 4 (CG) of the DLC3 each time a connector is disconnected.

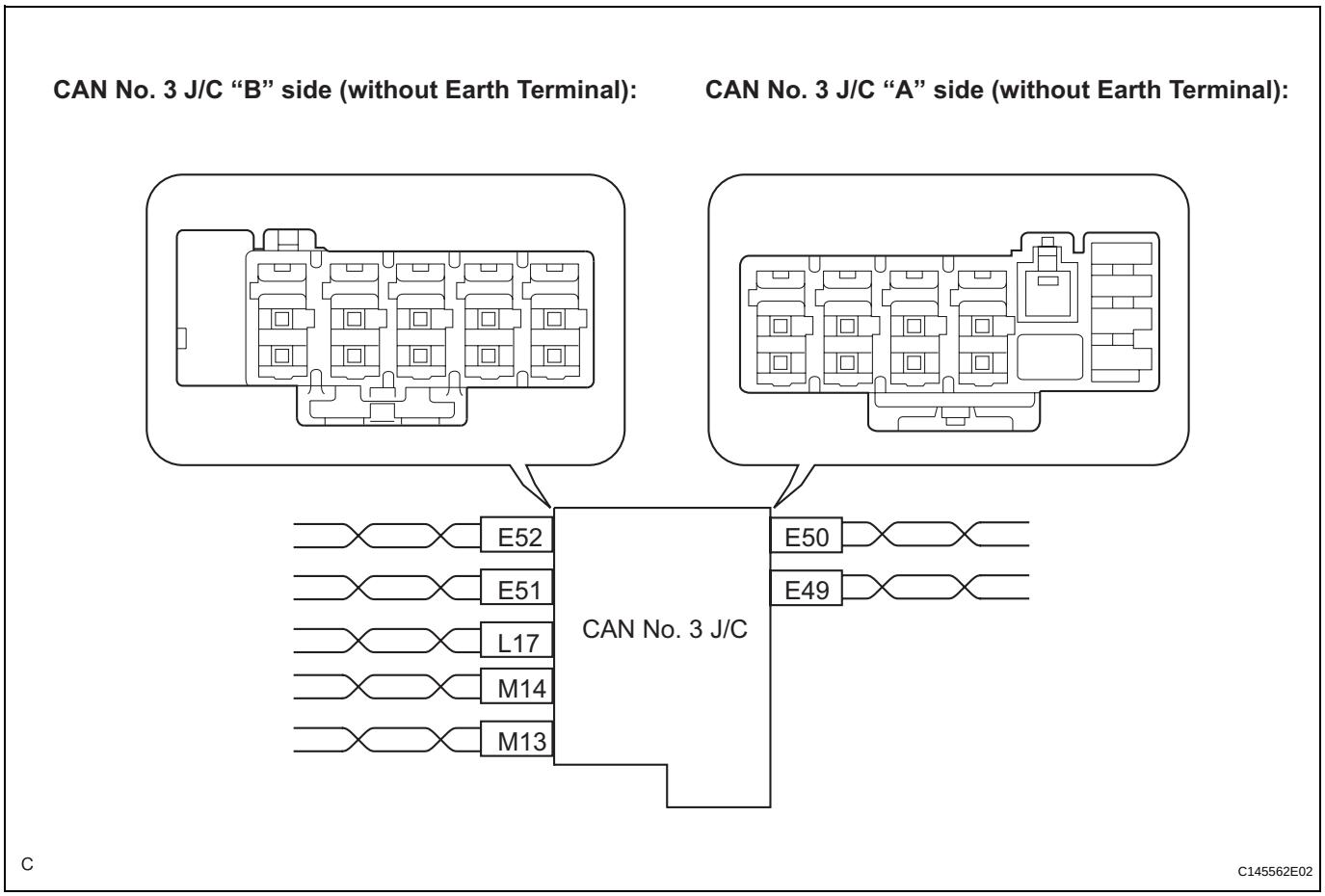

Wiring color:

CAN No. 3 J/C Connector ("A" side, without earth terminal)	Connector Color	Color (CAN-H Side)	Color (CAN-L Side)
Certification ECU (E50)	White	R	W

Wiring color:

CAN No. 3 J/C Connector ("B" side, without earth terminal)	Connector Color	Color (CAN-H Side)	Color (CAN-L Side)
Outer Mirror Control ECU (E52)	White	O	P
Multiplex Tilt and Telescopic ECU (E51)	White	BR	GR
Seat Position Control ECU (Front LH Side) (L17)(*1)	Blue	LG	L
Clearance Warning ECU (M13)(*2)	Gray	Y	L
Seat Position Control ECU (Front RH Side) (M14)(*1)	Black	V	P

NOTICE:
Do not reconnect the disconnected connectors until this inspection is complete because there may be a short to GND in 2 or more CAN MS bus wires.

HINT:
- (*1) : with seat position memory system
- (*2) : with intuitive parking assist system

Result

Symptom	Proceed to
The resistance between terminals 6 (CANH) and E21-4 (CG), or the resistance between terminals 14 (CANL) and E21-4 (CG) is still below 200 Ω when all the specified connectors are disconnected from the CAN No. 3 J/C. (There is a short to GND in the CAN MS bus main wires between the CAN No. 3 J/C and the main body ECU.)	**A**

Symptom	Proceed to
The resistance between terminals 6 (CANH) and E21-4 (CG), or the resistance between terminals 14 (CANL) and E21-4 (CG) becomes normal (200 Ω or more) when a connector is disconnected from the CAN No. 3 J/C. (There is a short to GND in one of the areas that relate to the disconnected bus wires.)	**B**

(c) When there is a short to GND in one or more of the bus wires that connect to an ECU (or sensor):

(1) Reconnect all of the connectors to the CAN No. 3 J/C, except for the one that was disconnected last (the bus wire that is shorted to GND). Check that the resistance shown on the tester is normal (200 Ω or more) to confirm that there is a short to GND in one bus wire only.

HINT:

- The connectors connected to the CAN No. 3 J/C can be distinguished according to the color of the communication bus wires and the shape of the connectors.
- Reconnecting the connectors to non-specified positions on the CAN No. 3 J/C does not affect system operation. However, it is preferred to reconnect the connectors to their specified positions to avoid negative effects on the wiring such as tension on the wiring harnesses, and to make future maintenance easier.

B → **Go to step 20**

A

18 CHECK FOR SHORT TO GND IN CAN MS BUS WIRE (MAIN BODY ECU MAIN WIRE)

CAN No. 3 J/C "A" Side (without Earth Terminal) Wire Harness View:

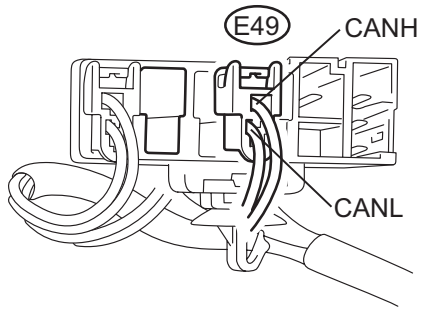

DLC3:

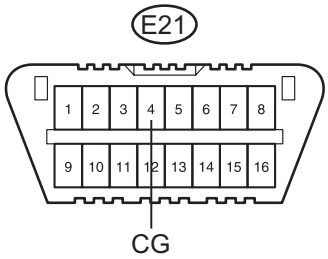

N C142232E02

(a) Disconnect main body ECU main wire connector E49 from the CAN No. 3 J/C.
HINT:
- Before disconnecting the connector, make a note of where it is connected.
- Reconnect the connector to its original position.

(b) Measure the resistance according to the value(s) in the table below.

Standard resistance

Tester Connection	Color	Condition	Specified Value
E49-1 (CANH) - E21-4 (CG)	B - W-B	Engine switch off	200 Ω or higher
E49-2 (CANL) - E21-4 (CG)	W - W-B	Engine switch off	200 Ω or higher

OK → **REPLACE CAN NO. 3 J/C**

NG

19 CHECK FOR SHORT TO GND IN CAN MS BUS WIRE (MAIN BODY ECU - CAN NO. 3 J/C)

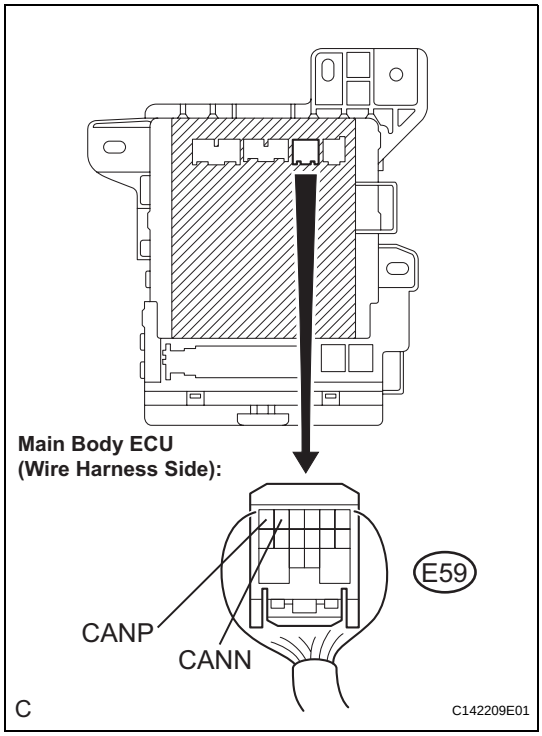

(a) Disconnect connector E59 from the main body ECU.
(b) Measure the resistance according to the value(s) in the table below.
Standard resistance

Tester Connection	Condition	Specified Value
E59-16 (CANP) - E21-4 (CG)	Engine switch off	200 Ω or higher
E59-15 (CANN) - E21-4 (CG)	Engine switch off	200 Ω or higher

NG → **REPAIR OR REPLACE CAN MS BUS MAIN WIRE OR CONNECTOR (CAN NO. 3 J/C - MAIN BODY ECU)**

OK

REPLACE INSTRUMENT PANEL J/B (MAIN BODY ECU)

20 RECONNECT CONNECTOR

(a) Reconnect the connector for the short-circuited main or branch wire to the CAN No. 3 J/C (the connector that caused the bus wire resistance to become normal when it was disconnected).

NEXT

21 CHECK FOR SHORT IN CAN MS BUS WIRES

(a) Disconnect the connector of the ECU that is connected to the short-circuited main or branch wire from the ECU.
(b) Recheck the short-circuited wire with the connector disconnected from the ECU.
Standard:
The wire is not short-circuited.
HINT:
If the short-circuited wire returns to normal after being disconnected from the ECU, an internal ECU short-circuit is suspected.

NG → **REPAIR OR REPLACE CORRESPONDING ECU OR SENSOR BRANCH WIRE OR CONNECTOR**

OK

REPLACE CORRESPONDING ECU OR SENSOR

DTC	U0182	Lost Communication with AFS ECU

DESCRIPTION

The gateway ECU will store this DTC when no signals can be received from the AFS ECU while the CAN No. 2 main bus is normal.

DTC No.	DTC Detection Condition	Trouble Area
U0182	No communication from AFS ECU	1. Open or short in CAN No. 1 J/C and AFS ECU 2. AFS ECU power source circuit 3. AFS ECU 4. Wire harness or connector

WIRING DIAGRAM

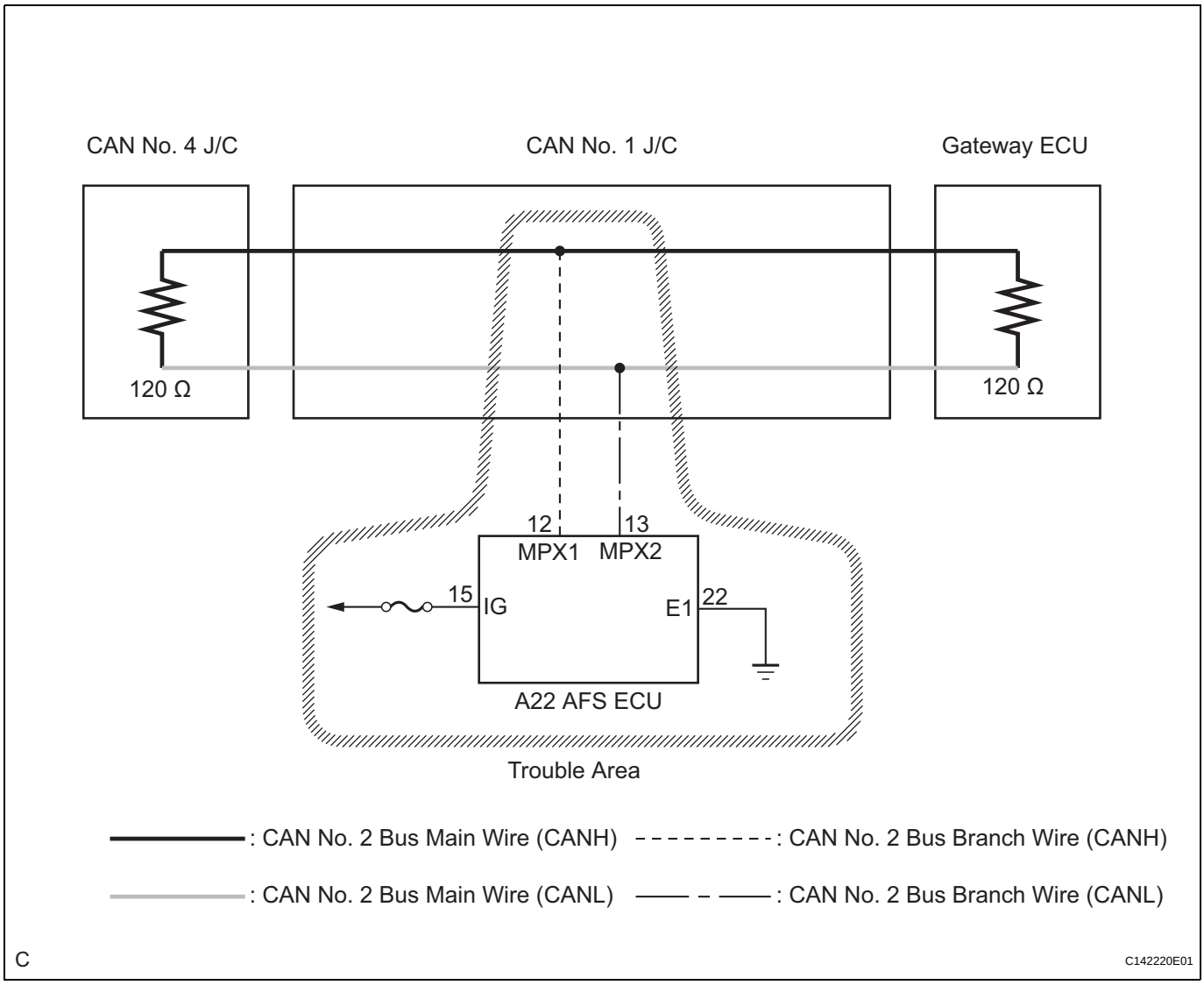

CA

INSPECTION PROCEDURE

NOTICE:

- **Turn the engine switch off before measuring the resistances of CAN bus main wires and CAN bus branch wires.**
- **After the engine switch is turned off, check that the key reminder warning system and light reminder warning system are not in operation.**

- **Before measuring the resistance, leave the vehicle as is for at least 1 minute and do not operate the engine switch, any other switches, or the doors. If any doors need to be opened in order to check connectors, open the doors and leave them open.**

1 CHECK DTC

(a) Check for DTCs.
HINT:
If CAN No. 2 bus DTC U1002 is output, troubleshoot for U1002 and check for malfunctions in the CAN MS main bus circuit.
Result

Result	Proceed to
U1002 is not output	A
U1002 is output	B

B → **GO TO DTC CHART (See page CA-49)**

A

2 CHECK CAN NO. 2 BUS WIRE (AFS ECU)

AFS ECU (Wire Harness Side):

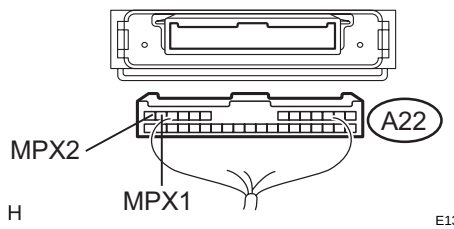

(a) Turn the engine switch off.
(b) Disconnect connector A22 from the AFS ECU.
(c) Measure the resistance according to the value(s) in the table below.
Standard resistance

Tester Connection	Condition	Specified Value
A22-12 (MPX1) - A22-13 (MPX2)	Engine switch off	54 to 69 Ω

NG → **REPAIR OR REPLACE CAN NO. 2 BUS BRANCH WIRE OR CONNECTOR (AFS ECU BRANCH WIRE)**

OK

3 CHECK HARNESS AND CONNECTOR (IG, E1)

AFS ECU (Wire Harness Side):

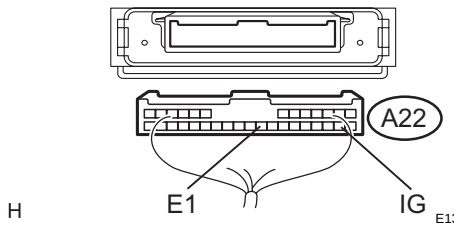

(a) Measure the resistance according to the value(s) in the table below.
Standard resistance

Tester Connection	Condition	Specified Value
A22-22 (E1) - Body ground	Always	Below 1 Ω

(b) Measure the voltage according to the value(s) in the table below.
Standard voltage

Tester Connection	Condition	Specified Value
A22-15 (IG) - Body ground	Engine switch on (IG)	10 to 14 V

NG → **REPAIR OR REPLACE HARNESS OR CONNECTOR**

OK

REPLACE AFS ECU (See page LI-227)

DTC	U1002	Lost Communication with Gateway Module

DESCRIPTION

- The gateway ECU will store this DTC when no signals can be received from the ECUs that have been memorized as those that are connected to the CAN No. 2 bus.
- When the gateway ECU receives response signals from the ECUs connected to the CAN No. 2 bus, the gateway ECU recognizes and memorizes that the ECUs are connected to the CAN No. 2 bus. Based on this memorized data, the gateway ECU monitors for malfunctions in the ECUs connected to the CAN No. 2 bus when communicating with those ECUs. If the gateway ECU cannot receive response signals from the ECUs that have been memorized as those connected to the CAN No. 2 bus, the gateway ECU determines that a malfunction exists.

DTC No.	DTC Detection Condition	Trouble Area
U1002	Gateway ECU cannot receive signals from all ECUs that have been memorized as those connected to the CAN No. 2 bus.	1. Open or short in CAN No. 2 bus main wire 2. Open or short in CAN No. 2 bus branch wire 3. Wire harness or connector 4. AFS ECU 5. Distance control ECU 6. Seat belt control ECU 7. Gateway ECU 8. CAN No. 1 J/C 9. CAN No. 4 J/C

WIRING DIAGRAM

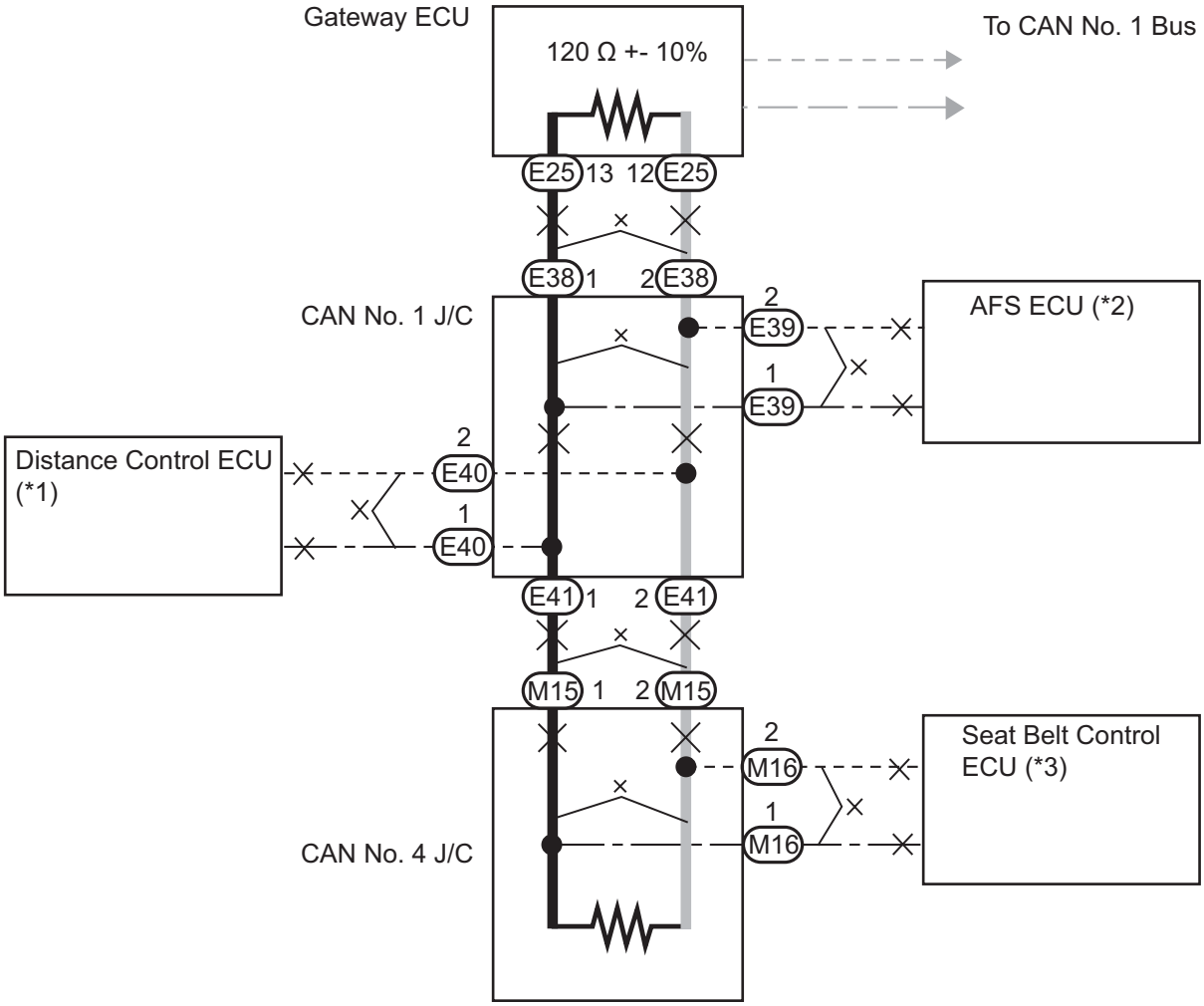

: CAN No. 2 Bus Main Wire (CANH)

: CAN No. 2 Bus Main Wire (CANL)

: CAN No. 2 Bus Branch Wire (CANH)

: CAN No. 2 Bus Branch Wire (CANL)

: CAN No. 1 Bus Branch Wire (CANH)

: CAN No. 1 Bus Branch Wire (CANL)

(*1): with Dynamic Radar Cruise System

(*2): with AFS

(*3): with Pre-collision System

× : Suspected Area

CA

C

C142244E02

INSPECTION PROCEDURE

NOTICE:

- **Turn the engine switch off before measuring the resistances of CAN bus main wires and CAN bus branch wires.**
- **After the engine switch is turned off, check that the key reminder warning system and light reminder warning system are not in operation.**
- **Before measuring the resistance, leave the vehicle as is for at least 1 minute and do not operate the engine switch, any other switches, or the doors. If any doors need to be opened in order to check connectors, open the doors and leave them open.**

HINT:

- Operating the engine switch, any switches, or any doors triggers related ECU and sensor communication on the CAN. This communication will cause the resistance value to change.
- Even after DTCs are cleared, if a DTC is stored again after driving the vehicle for a while, the malfunction may be occurring due to vibration of the vehicle. In such a case, wiggling the ECUs or wire harness while performing the inspection below will help to determine the cause of the malfunction.

1 CHECK CAN NO. 2 BUS WIRE

CAN No. 1 J/C "A" Side (without Earth Terminal) Wire Harness View:

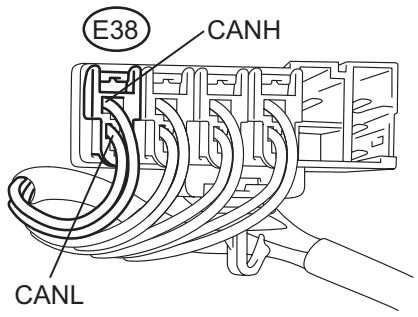

N C142234E01

(a) Turn the engine switch off.
(b) Measure the resistance according to the value(s) in the table below.

Result

Tester Connection	Color	Condition	Specified Value	Proceed to
E38-1 (CANH) - E38-2 (CANL)	B - W	Engine switch off	54 to 69 Ω	A
E38-1 (CANH) - E38-2 (CANL)	B - W	Engine switch off	69 Ω or higher	B
E38-1 (CANH) - E38-2 (CANL)	B - W	Engine switch off	Less than 54 Ω	C

B → **Go to step 5**

C → **Go to step 9**

A

CA

2 CHECK FOR SHORT TO B+ IN CAN NO. 2 BUS WIRE

CAN No. 1 J/C "A" Side (without Earth Terminal) Wire Harness View:

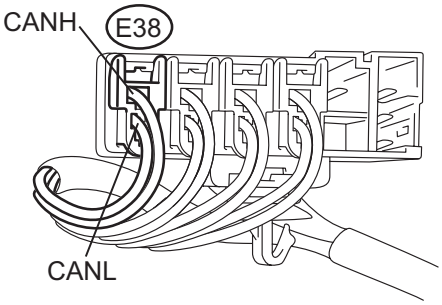

DLC3:

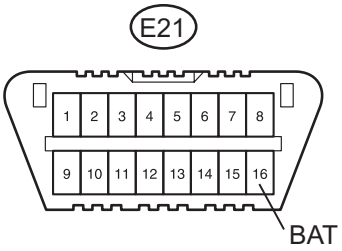

N C142235E01

OK

(a) Measure the resistance according to the value(s) in the table below.

Standard resistance

Tester Connection	Color	Condition	Specified Value
E38-1 (CANH) - E21-16 (BAT)	B - O	Engine switch off	6 kΩ or higher
E38-2 (CANL) - E21-16 (BAT)	W - O	Engine switch off	6 kΩ or higher

NG → **Go to step 15**

3 CHECK FOR SHORT TO GND IN CAN NO. 2 BUS WIRE

CAN No. 1 J/C "A" Side (without Earth Terminal) Wire Harness View:

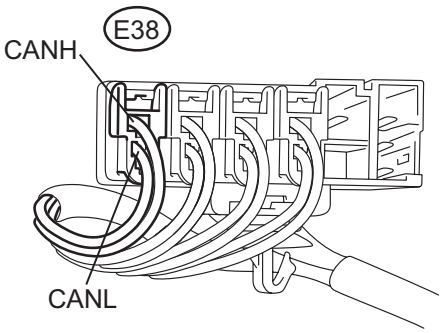

DLC3:

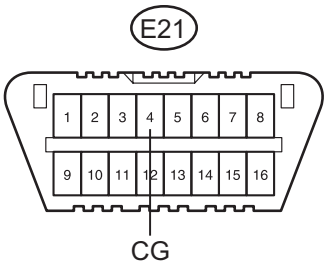

N C142235E02

(a) Measure the resistance according to the value(s) in the table below.

Standard resistance

Tester Connection	Color	Condition	Specified Value
E38-1 (CANH) - E21-4 (CG)	B - W-B	Engine switch off	200 Ω or higher
E38-2 (CANL) - E21-4 (CG)	W - W-B	Engine switch off	200 Ω or higher

NG → **Go to step 19**

OK

4 CHECK CAN NO. 2 BUS BRANCH WIRE

(a) Check for an open in the branch wires of all ECUs connected to the CAN No. 2 bus.
   (1) Check the AFS ECU branch wire (See page CA-93).
   (2) Check the distance control ECU branch wire (See page CA-123).
   (3) Check the seat belt control ECU branch wire (See page CA-119).

Result

Result	Proceed to
OK	A
NG	B

B → **REPAIR OR REPLACE MALFUNCTIONING PART**

CA

A

REPLACE GATEWAY ECU

5 CHECK FOR OPEN IN CAN NO. 2 BUS MAIN WIRE (GATEWAY ECU MAIN WIRE)

CAN No. 1 J/C "A" Side (without Earth Terminal) Wire Harness View:

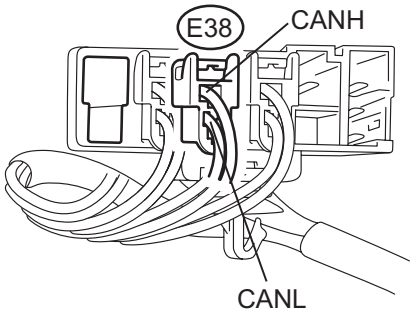

N C142236E01

(a) Disconnect gateway ECU main wire connector E38 from the CAN No. 1 J/C.
HINT:
- Before disconnecting the connector, make a note of where it is connected.
- Reconnect the connector to its original position.

(b) Measure the resistance according to the value(s) in the table below.
Standard resistance

Tester Connection	Color	Condition	Specified Value
E38-1 (CANH) - E38-2 (CANL)	B - W	Engine switch off	108 to 132 Ω

OK → **Go to step 7**

NG

6 CHECK FOR OPEN IN CAN NO. 2 BUS MAIN WIRE (GATEWAY ECU - CAN NO. 1 J/C)

Gateway ECU (Wire Harness Side):

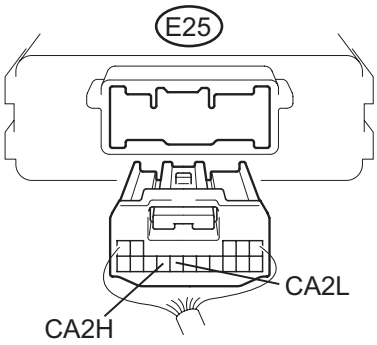

P C142190E04

(a) Reconnect gateway ECU main wire connector E38.
(b) Disconnect connector E25 from the gateway ECU.
(c) Measure the resistance according to the value(s) in the table below.
Standard resistance

Tester Connection	Condition	Specified Value
E25-13 (CA2H) - E25-12 (CA2L)	Engine switch off	108 to 132 Ω

NG → **REPAIR OR REPLACE CAN BUS MAIN WIRE OR CONNECTOR (GATEWAY ECU - CAN NO. 1 J/C)**

CA

OK

REPLACE GATEWAY ECU

7 CHECK FOR OPEN IN CAN NO. 2 BUS MAIN WIRE (CAN NO. 4 J/C)

CAN No. 1 J/C "A" Side (without Earth Terminal) Wire Harness View:

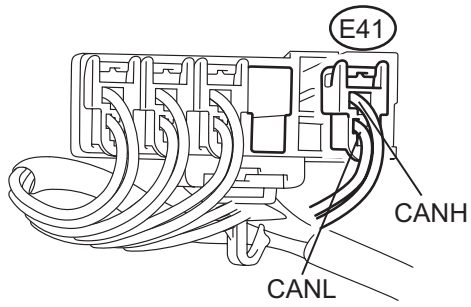

N C142237E01

(a) Reconnect gateway ECU main wire connector E38.
(b) Disconnect CAN No. 4 J/C main wire connector E41.
HINT:
- Before disconnecting the connector, make a note of where it is connected.
- Reconnect the connector to its original position.

(c) Measure the resistance according to the value(s) in the table below.
Standard resistance

Tester Connection	Color	Condition	Specified Value
E41-1 (CANH) - E41-2 (CANL)	LG - P	Engine switch off	108 to 132 Ω

OK → **REPLACE CAN NO. 1 J/C**

NG

8 CHECK FOR OPEN IN CAN NO. 2 BUS MAIN WIRE (CAN NO. 1 J/C - CAN NO. 4 J/C)

CAN No. 4 J/C "A" Side (with Earth Terminal) Wire Harness View:

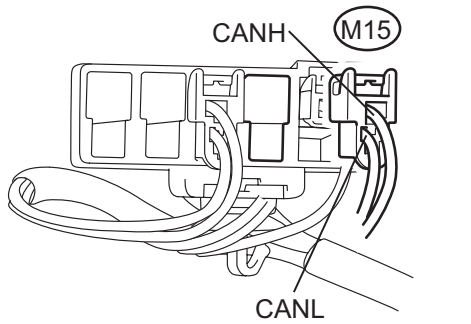

N C142239E01

(a) Reconnect CAN No. 4 J/C main wire connector E41 to the CAN No. 1 J/C.
(b) Disconnect CAN No. 1 J/C main wire connector M15 from the CAN No. 4 J/C.
HINT:
- Before disconnecting the connector, make a note of where it is connected.
- Reconnect the connector to its original position.

(c) Measure the resistance according to the value(s) in the table below.
Standard resistance

Tester Connection	Color	Condition	Specified Value
M15-1 (CANH) - M15-2 (CANL)	LG - P	Engine switch off	108 to 132 Ω

NG → **REPAIR OR REPLACE CAN BUS MAIN WIRE OR CONNECTOR (CAN NO. 1 J/C - CAN NO. 4 J/C)**

OK

REPLACE CAN NO. 4 J/C

9 CHECK FOR SHORT IN CAN NO. 2 BUS WIRE (CAN NO. 1 J/C)

CAN No. 1 J/C "A" Side (without Earth Terminal) Wire Harness View:

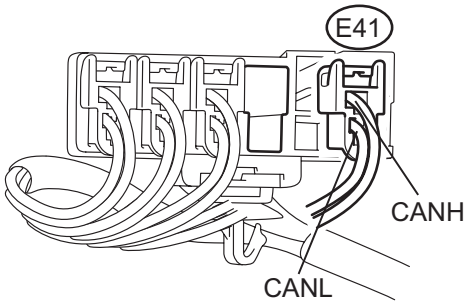

N C142237E01

(a) Disconnect CAN No. 4 J/C main wire connector E41.
HINT:
- Before disconnecting the connector, make a note of where it is connected.
- Reconnect the connector to its original position.

(b) Measure the resistance according to the value(s) in the table below.

Standard resistance

Tester Connection	Color	Condition	Specified Value
E41-1 (CANH) - E41-2 (CANL)	LG - P	Engine switch off	108 to 132 Ω

OK → **Go to step 12**

NG

10 CHECK FOR SHORT IN CAN NO. 2 BUS WIRE (CAN NO. 4 J/C MAIN WIRE)

CAN No. 4 J/C "A" Side (with Earth Terminal) Wire Harness View:

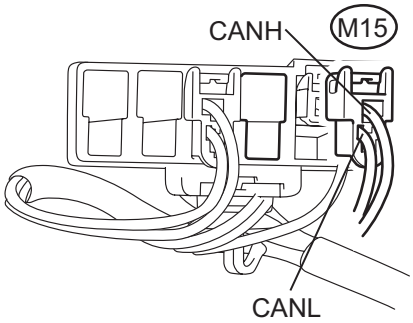

N C142239E01

(a) Reconnect CAN No. 4 J/C main wire connector E41 to the CAN No. 1 J/C.

(b) Disconnect CAN No. 1 J/C main wire connector M15 from the CAN No. 4 J/C.

(c) Measure the resistance according to the value(s) in the table below.

Standard resistance

Tester Connection	Color	Condition	Specified Value
M15-1 (CANH) - M15-2 (CANL)	LG - P	Engine switch off	108 to 132 Ω

Result

Result	Proceed to
OK (with Pre-collision system)	A
OK (without Pre-collision system)	B
NG	C

B → **REPLACE CAN NO. 4 J/C**

C → **REPAIR OR REPLACE CAN BUS MAIN WIRE OR CONNECTOR (CAN NO. 1 J/C - CAN NO. 4 J/C)**

A

11 CHECK FOR SHORT IN CAN NO. 2 BUS WIRE (SEAT BELT ECU BRANCH WIRE)

CAN No. 4 J/C "A" Side (with Earth Terminal) Wire Harness View:

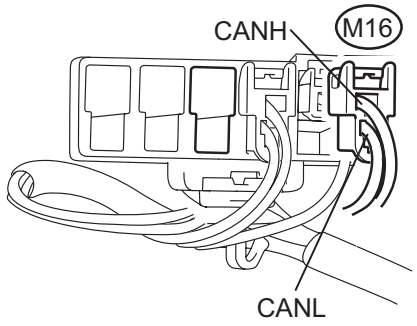

C142245E01

(a) Disconnect seat belt control ECU branch wire connector M16.

(b) Measure the resistance according to the value(s) in the table below.

Standard resistance

Tester Connection	Color	Condition	Specified Value
M16-1 (CANH) - M16-2 (CANL)	L - Y	Engine switch off	More than 1 Ω

NG → **Go to step 23**

OK

REPLACE CAN NO. 4 J/C

12 CHECK FOR SHORT IN CAN NO. 2 BUS WIRE (CAN NO. 1 J/C WIRE)

CAN No. 1 J/C "A" Side (without Earth Terminal) Wire Harness View:

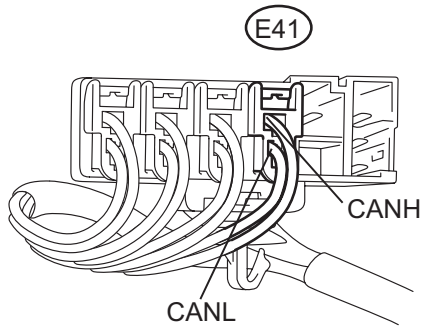

N C142238E01

(a) Reconnect CAN No. 4 J/C main wire connector E41.

(b) Connect the probes of an ohmmeter to terminals 1 (CANH) and 2 (CANL) of CAN No. 4 J/C main wire connector E41.

(c) While observing the resistance value shown on the tester, disconnect connectors E39 and E40 from the CAN No. 1 J/C one by one until the resistance becomes normal (between 54 and 69 Ω).

HINT:

Disconnect the branch wire connectors only.

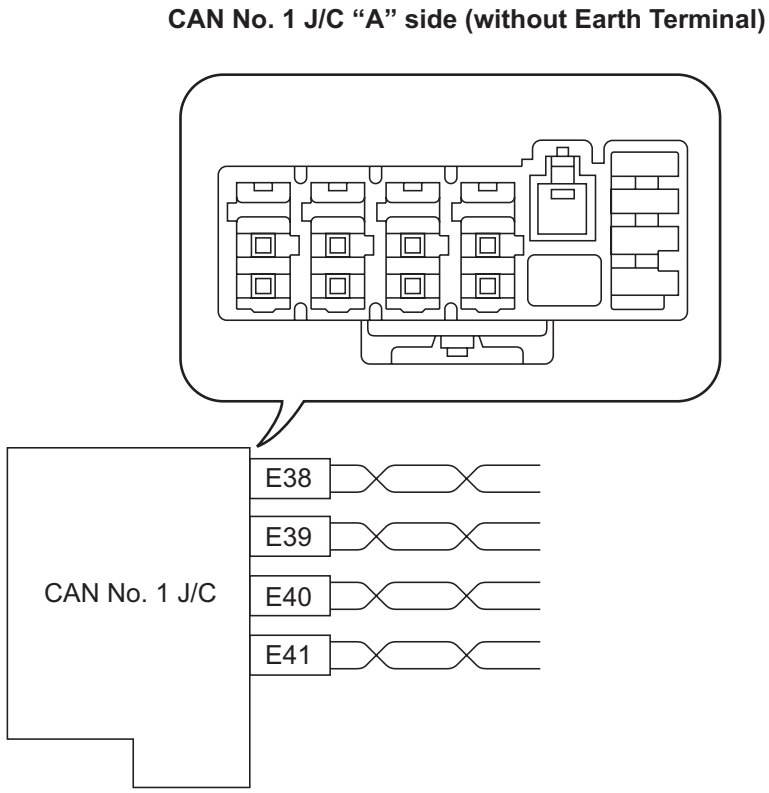

Wiring color:

CAN No. 1 J/C Connector ("A" Side, without earth terminal)	Connector Color	Color (CAN-H Side)	Color (CAN-L Side)
AFS ECU (E39)(*1)	White	L	Y
Distance Control ECU (E40)(*2)	White	GR	BR

NOTICE:
Do not reconnect the disconnected connectors until this inspection is complete because there may be a short in 2 or more branch wires.
HINT:
- (*1) : with AFS
- (*2) : with dynamic radar cruise control system

Result

Symptom	Proceed to
The resistance is still below 54 Ω when all the specified connectors are disconnected. (There are no shorts in the branch wires.)	**A**
The resistance becomes normal (between 54 and 69 Ω) when a connector is disconnected. (There is a short in one or more of the branch wires.)	**B**

CA

(d) When there is a short in one or more of the branch wires:
(1) Reconnect all of the connectors to the CAN No. 1 J/C, except for the one that was disconnected last (the short-circuited bus wire). Check that the resistance shown on the tester is normal (between 54 and 69 Ω) to confirm that there is a short in one branch wire only.

HINT:
- The connectors connected to the CAN No. 1 J/C can be distinguished according to the color of the communication bus wires and the shape of the connectors.
- Reconnecting the connectors to non-specified positions on the CAN No. 1 J/C does not affect system operation. However, it is preferred to reconnect the connectors to their specified positions to avoid negative effects on the wiring such as tension on the wiring harnesses, and to make future maintenance easier.

B → **Go to step 23**

A

13 CHECK FOR SHORT IN CAN NO. 2 BUS WIRE (CAN NO. 1 J/C)

CAN No. 1 J/C "A" Side (without Earth Terminal) Wire Harness View:

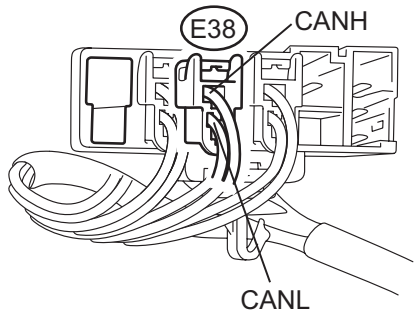

N C142236E01

(a) Disconnect gateway ECU main wire connector E38 from the CAN No. 1 J/C.
HINT:
- Before disconnecting the connector, make a note of where it is connected.
- Reconnect the connector to its original position.

(b) Measure the resistance according to the value(s) in the table below.
Standard resistance

Tester Connection	Color	Condition	Specified Value
E38-1 (CANH) - E38-2 (CANL)	B - W	Engine switch off	108 to 132 Ω

OK → **REPLACE CAN NO. 1 J/C**

NG

14	CHECK FOR SHORT IN CAN NO. 2 BUS WIRE (CAN NO. 1 J/C - GATEWAY ECU)

Gateway ECU (Wire Harness Side):

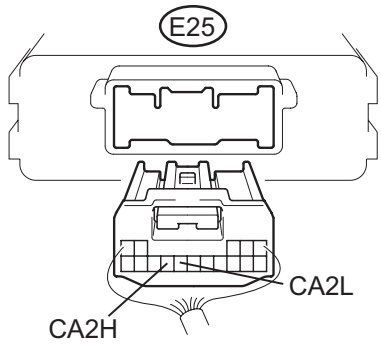

P C142190E04

(a) Disconnect connector E25 from the gateway ECU.
(b) Measure the resistance according to the value(s) in the table below.

Standard resistance

Tester Connection	Condition	Specified Value
E25-13 (CA2H) - E25-12 (CA2L)	Engine switch off	1 MΩ or higher

NG → **REPAIR OR REPLACE CAN BUS MAIN WIRE OR CONNECTOR (GATEWAY ECU - CAN NO. 1 J/C)**

OK

REPLACE GATEWAY ECU

15 CHECK FOR SHORT TO B+ IN CAN NO. 2 BUS WIRE (CAN NO. 4 J/C - GATEWAY ECU)

CAN No. 1 J/C "A" Side (without Earth Terminal) Wire Harness View:

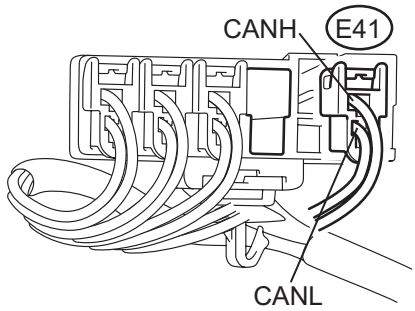

DLC3:

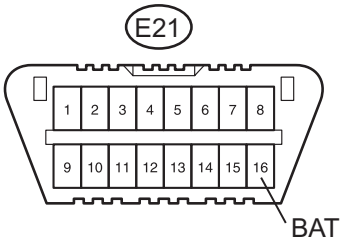

N C142241E01

(a) Disconnect CAN No. 4 J/C main wire connector E41.
HINT:
- Before disconnecting the connector, make a note of where it is connected.
- Reconnect the connector to its original position.

(b) Measure the resistance according to the value(s) in the table below.

Standard resistance

Tester Connection	Color	Condition	Specified Value
E41-1 (CANH) - E21-16 (BAT)	LG - O	Engine switch off	6 kΩ or higher
E41-2 (CANL) - E21-16 (BAT)	P - O	Engine switch off	6 kΩ or higher

OK → **Go to step 18**

NG

16 CHECK FOR SHORT TO B+ IN CAN NO. 2 BUS WIRE (CAN NO. 4 MAIN WIRE)

(a) Reconnect CAN No. 4 J/C main wire connector E41 to the CAN No. 1 J/C.

CAN No. 4 J/C "A" Side (with Earth Terminal) Wire Harness View:

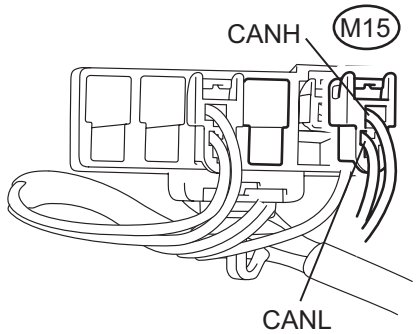

DLC3:

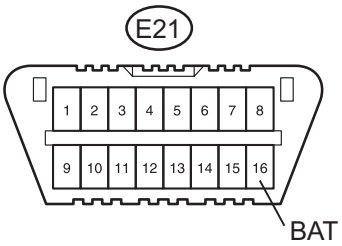

N

C142242E01

(b) Disconnect CAN No. 1 J/C main wire connector M15 from the CAN No. 4 J/C.

(c) Measure the resistance according to the value(s) in the table below.

Standard resistance

Tester Connection	Color	Condition	Specified Value
M15-1 (CANH) - E21-16 (BAT)	LG - O	Engine switch off	6 kΩ or higher
M15-2 (CANL) - E21-16 (BAT)	P - O	Engine switch off	6 kΩ or higher

Result

Result	Proceed to
OK (with Pre-collision system)	A
OK (without Pre-collision system)	B
NG	C

B → **REPLACE CAN NO. 4 J/C**

C → **REPAIR OR REPLACE CAN BUS MAIN WIRE OR CONNECTOR (CAN NO. 1 J/C - CAN NO. 4 J/C)**

A

17 CHECK FOR SHORT TO B+ IN CAN NO. 2 BUS WIRE (SEAT BELT ECU BRANCH WIRE)

(a) Disconnect seat belt control ECU branch wire connector M16.

CAN No. 4 J/C "A" Side (with Earth Terminal) Wire Harness View:

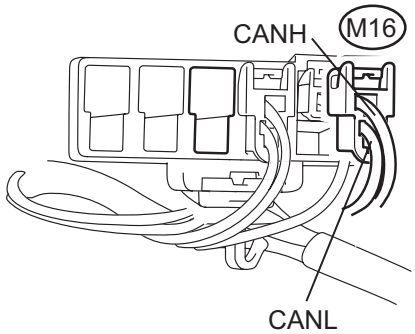

DLC3:

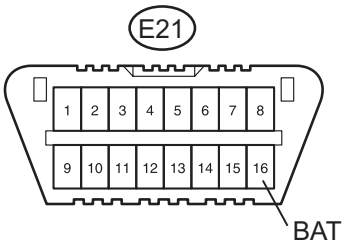

C142246E01

(b) Measure the resistance according to the value(s) in the table below.

Standard resistance

Tester Connection	Color	Condition	Specified Value
M16-1 (CANH) - E21-16 (BAT)	L - O	Engine switch off	6 kΩ or higher
M16-2 (CANL) - E21-16 (BAT)	Y- O	Engine switch off	6 kΩ or higher

NG → **Go to step 23**

OK

REPLACE CAN NO. 4 J/C

18 CHECK FOR SHORT TO B+ IN CAN NO. 2 BUS WIRE (CAN NO. 1 BRANCH WIRE)

(a) Reconnect CAN No. 4 J/C main wire connector E41.

CAN No. 1 J/C "A" Side (without Earth Terminal) Wire Harness View:

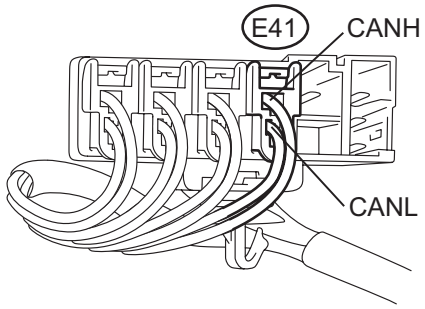

DLC3:

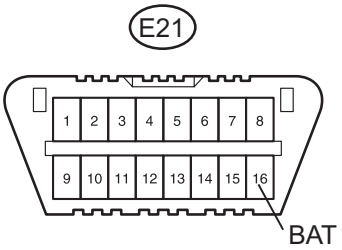

N

C142240E01

(b) Disconnect connectors from the CAN No. 1 J/C one at a time.
HINT:
Disconnect the ECU and sensor connectors other than CAN No. 4 J/C main wire connector E41.

(c) Using an ohmmeter, measure the resistance between terminal 1 (CANH) of CAN No. 4 J/C main wire connector E41 and terminal 16 (BAT) of the DLC3, and between terminal 2 (CANL) of CAN No. 4 J/C main wire connector E41 and terminal 16 (BAT) of the DLC3 each time a connector is disconnected.

CAN No. 1 J/C "A" side (without Earth Terminal)

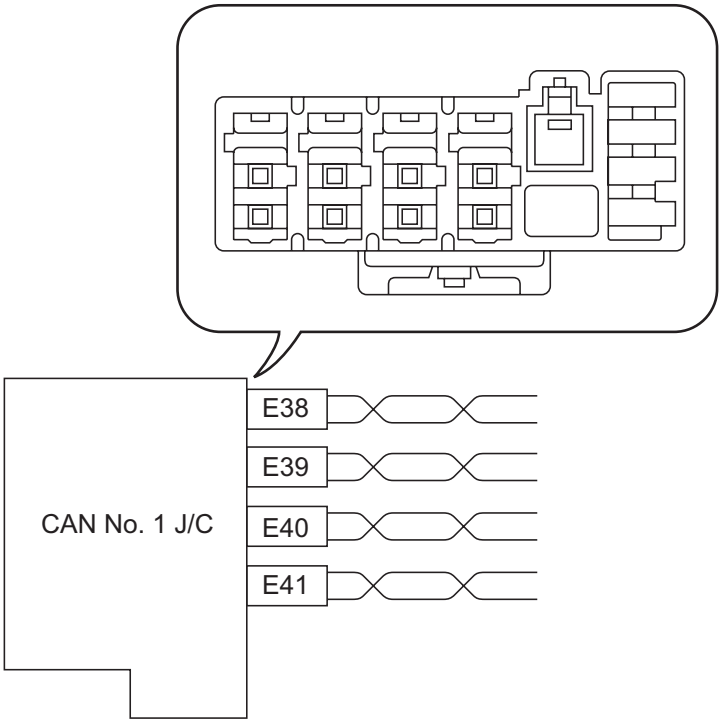

C

C142194E01

Wiring color:

CAN No. 1 J/C Connector ("A" Side, without earth terminal)	Connector Color	Color (CAN-H Side)	Color (CAN-L Side)
Gateway ECU (E38)	White	B	W
AFS ECU (E39)(*1)	White	L	Y
Distance Control ECU (E40)(*2)	White	GR	BR

NOTICE:
Do not reconnect the disconnected connectors until this inspection is complete because there may be a short to B+ in 2 or more CAN No. 2 bus wires.
HINT:
- (*1) : with AFS
- (*2) : with dynamic radar cruise control system

Result

Symptom	Proceed to
The resistance between terminals 1 (CANH) and E21-16 (BAT), or the resistance between terminals 2 (CANL) and E21-16 (BAT) is still below 6 kΩ when all the specified connectors are disconnected from the CAN No. 1 J/C. (There is a short to B+ in the CAN main bus wires between the CAN No. 1 J/C and the CAN No. 4 J/C.)	**A**
The resistance between terminals 6 (CANH) and E21-16 (BAT), or the resistance between terminals 14 (CANL) and E21-16 (BAT) becomes normal (6 kΩ or more) when a connector is disconnected from the CAN No. 1 J/C. (There is a short to B+ in one of the areas that relate to one or more of the disconnected bus wires.)	**B**

(d) When there is a short to B+ in one or more of the bus wires that connect to an ECU (or sensor):
(1) Reconnect all of the connectors to the CAN No. 1 J/C, except for the one that was disconnected last (the bus wire that is shorted to B+). Check that the resistance shown on the tester is normal (6 kΩ or more) to confirm that there is a short to B+ in one bus wire only.
HINT:
- The connectors connected to the CAN No. 1 J/C can be distinguished according to the color of the communication bus wires and the shape of the connectors.
- Reconnecting the connectors to non-specified positions on the CAN No. 1 J/C does not affect system operation. However, it is preferred to reconnect the connectors to their specified positions to avoid negative effects on the wiring such as tension on the wiring harnesses, and to make future maintenance easier.

B → **Go to step 23**

A

REPLACE CAN NO. 1 J/C

19 CHECK FOR SHORT TO GND IN CAN NO. 2 BUS WIRE (CAN NO. 4 - GATEWAY ECU)

CAN No. 1 J/C "A" Side (without Earth Terminal) Wire Harness View:

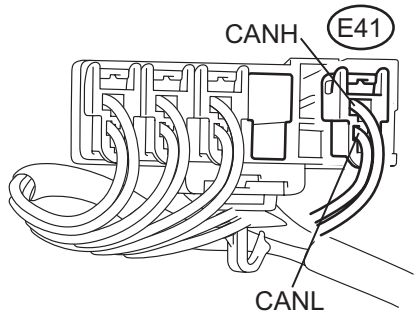

DLC3:

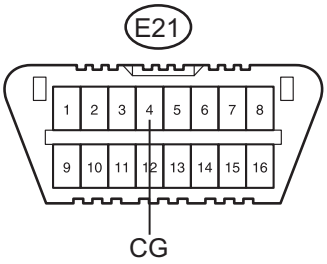

N

C142241E02

(a) Disconnect CAN No. 4 J/C main wire connector E41.
HINT:
- Before disconnecting the connector, make a note of where it is connected.
- Reconnect the connector to its original position.

(b) Measure the resistance according to the value(s) in the table below.

Standard resistance

Tester Connection	Color	Condition	Specified Value
E41-1 (CANH) - E21-4 (CG)	LG - W-B	Engine switch off	200 Ω or higher
E41-2 (CANL) - E21-4 (CG)	P- W-B	Engine switch off	200 Ω or higher

OK → **Go to step 22**

NG

20 CHECK FOR SHORT TO GND IN CAN NO. 2 BUS WIRE (CAN NO. 4 MAIN WIRE)

(a) Reconnect CAN No. 4 J/C main wire connector E41 to the CAN No. 1 J/C.

CAN No. 4 J/C "A" Side (with Earth Terminal) Wire Harness View:

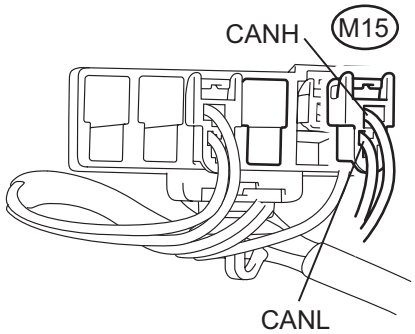

DLC3:

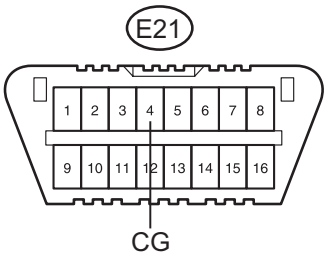

N

C142242E02

(b) Disconnect CAN No. 1 J/C main wire connector M15 from the CAN No. 4 J/C.

(c) Measure the resistance according to the value(s) in the table below.

Standard resistance

Tester Connection	Color	Condition	Specified Value
M15-1 (CANH) - E21-4 (CG)	LG - W-B	Engine switch off	200 Ω or higher
M15-2 (CANL) - E21-4 (CG)	P- W-B	Engine switch off	200 Ω or higher

Result

Result	Proceed to
OK (with Pre-collision system)	A
OK (without Pre-collision system)	B
NG	C

B → **REPLACE CAN NO. 4 J/C**

C → **REPAIR OR REPLACE CAN BUS MAIN WIRE OR CONNECTOR (CAN NO. 1 J/C - CAN NO. 4 J/C)**

A

21 CHECK FOR SHORT TO GND IN CAN NO. 2 BUS WIRE (SEAT BELT ECU BRANCH WIRE)

(a) Disconnect seat belt control ECU branch wire connector M16.

CAN No. 4 J/C "A" Side (with Earth Terminal) Wire Harness View:

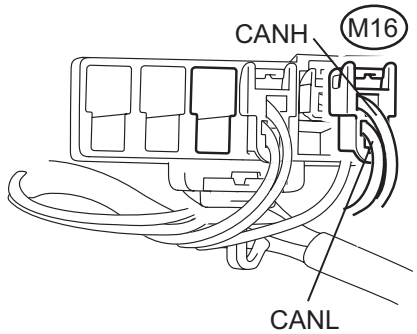

DLC3:

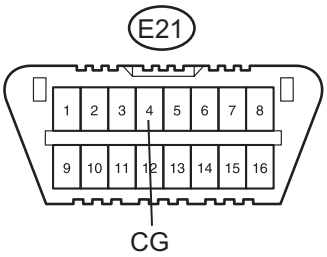

C142246E03

(b) Measure the resistance according to the value(s) in the table below.

Standard resistance

Tester Connection	Color	Condition	Specified Value
M16-1 (CANH) - E21-4 (CG)	L - W-B	Engine switch off	200 Ω or higher
M16-2 (CANL) - E21-4 (CG)	Y - W-B	Engine switch off	200 Ω or higher

NG → **Go to step 23**

OK

REPLACE CAN NO. 4 J/C

22 CHECK FOR SHORT TO GND IN CAN NO. 2 BUS WIRE (CAN NO. 1 J/C BRANCH WIRE)

(a) Reconnect CAN No. 4 J/C main wire connector E41.

CAN No. 1 J/C "A" Side (without Earth Terminal) Wire Harness View:

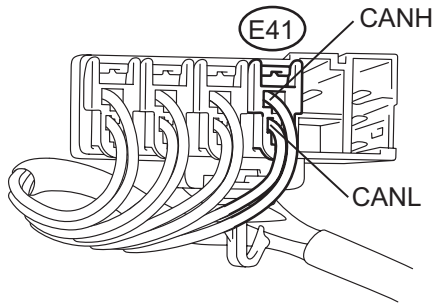

DLC3:

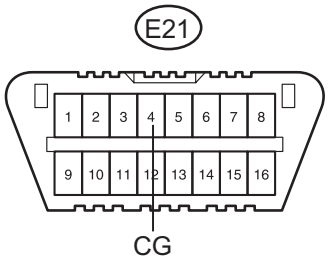

N C142240E02

(b) Disconnect connectors from the CAN No. 1 J/C one at a time.
HINT:
Disconnect the ECU and sensor connectors other than CAN No. 4 J/C main wire connector E41.

(c) Using an ohmmeter, measure the resistance between terminal 1 (CANH) of CAN No. 4 J/C main wire connector E41 and terminal 4 (CG) of the DLC3, and between terminal 2 (CANL) of CAN No. 4 J/C main wire connector E41 and terminal 4 (CG) of the DLC3 each time a connector is disconnected.

CAN No. 1 J/C "A" side (without Earth Terminal)

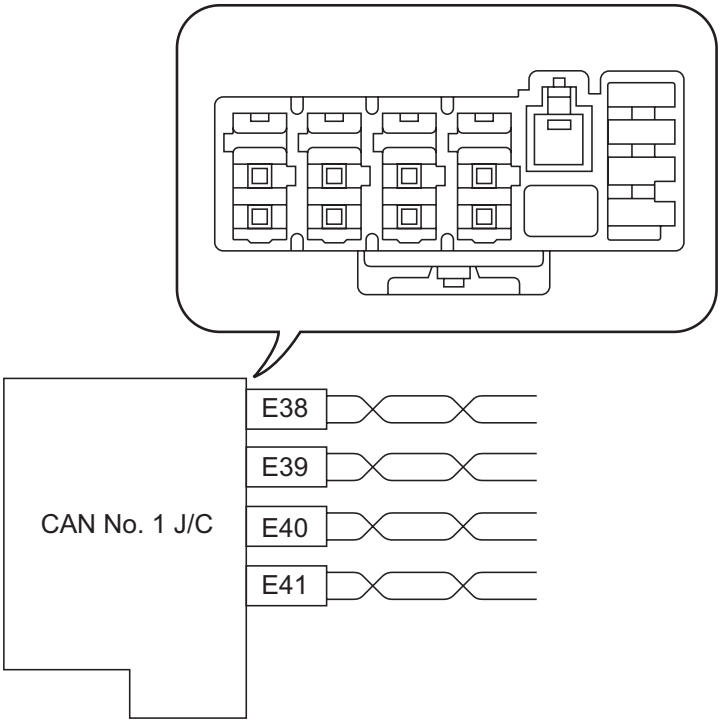

C C142194E01

CA

Wiring color:

CAN No. 1 J/C Connector ("A" Side, without earth terminal)	Connector Color	Color (CAN-H Side)	Color (CAN-L Side)
Gateway ECU (E38)	White	B	W
AFS ECU (E39)(*1)	White	L	Y
Distance Control ECU (E40)(*2)	White	GR	BR

NOTICE:
Do not reconnect the disconnected connectors until this inspection is complete because there may be a short to GND in 2 or more CAN No. 2 bus wires.
HINT:
- (*1) : with AFS
- (*2) : with dynamic radar cruise control system

Result

Symptom	Proceed to
The resistance between terminals 6 (CANH) and E21-4 (CG), or the resistance between terminals 14 (CANL) and E21-4 (CG) is still below 200 Ω when all the specified connectors are disconnected from the CAN No. 1 J/C. (There is a short to GND in the CAN main bus wires between the CAN No. 1 J/C and the CAN No. 4 J/C.	**A**
The resistance between terminals 6 (CANH) and E21-4 (CG), or the resistance between terminals 14 (CANL) and E21-4 (CG) becomes normal (200 Ω or more) when a connector is disconnected from the CAN No. 1 J/C. (There is a short to GND in one of the areas that relate to the disconnected bus wires.)	**B**

(d) When there is a short to GND in one or more of the bus wires that connect to an ECU (or sensor):
(1) Reconnect all of the connectors to the CAN No. 1 J/C, except for the one that was disconnected last (the bus wire that is shorted to GND). Check that the resistance shown on the tester is normal (200 Ω or more) to confirm that there is a short to GND in one bus wire.
HINT:
- The connectors connected to the CAN No. 1 J/C can be distinguished according to the color of the communication bus wires and the shape of the connectors.
- Reconnecting the connectors to non-specified positions on the CAN No. 1 J/C does not affect system operation. However, it is preferred to reconnect the connectors to their specified positions to avoid negative effects on the wiring such as tension on the wiring harnesses, and to make future maintenance easier.

A → **REPLACE CAN NO. 1 J/C**

CA

B

23	RECONNECT CONNECTOR

(a) Reconnect the connector for the short-circuited main or branch wire to the CAN No. 1 J/C or CAN No. 4 J/C (the connector that caused the bus wire resistance to become normal when it was disconnected).

NEXT

24	CHECK FOR SHORT IN CAN NO. 2 BUS WIRE

(a) Disconnect the connector of the ECU that is connected to the short-circuited main or branch wire from the ECU.

(b) Recheck the short-circuited wire with the connector disconnected from the ECU.

OK:

The wire is not short-circuited.

HINT:

If the short-circuited wire returns to normal after being disconnected from the ECU, an internal short in the ECU is suspected.

NG → **REPAIR OR REPLACE CORRESPONDING ECU OR SENSOR BRANCH WIRE OR CONNECTOR**

OK

REPLACE CORRESPONDING ECU OR SENSOR

DTC	U1100	Lost Communication with Seat Belt Control ECU

DESCRIPTION

The gateway ECU will store this DTC when no signals can be received from the seat belt control ECU while the CAN No. 2 main bus is normal.

DTC No.	DTC Detection Condition	Trouble Area
U1100	No communication from seat belt control ECU	1. Open or short in CAN No. 1 J/C and seat belt control ECU 2. Open in one side of CAN bus main wire (Between CAN No. 1 J/C and CAN No. 4 J/C) 3. Seat belt control ECU power source circuit 4. Seat belt control ECU 5. CAN No. 4 J/C 6. Wire harness or connector

WIRING DIAGRAM

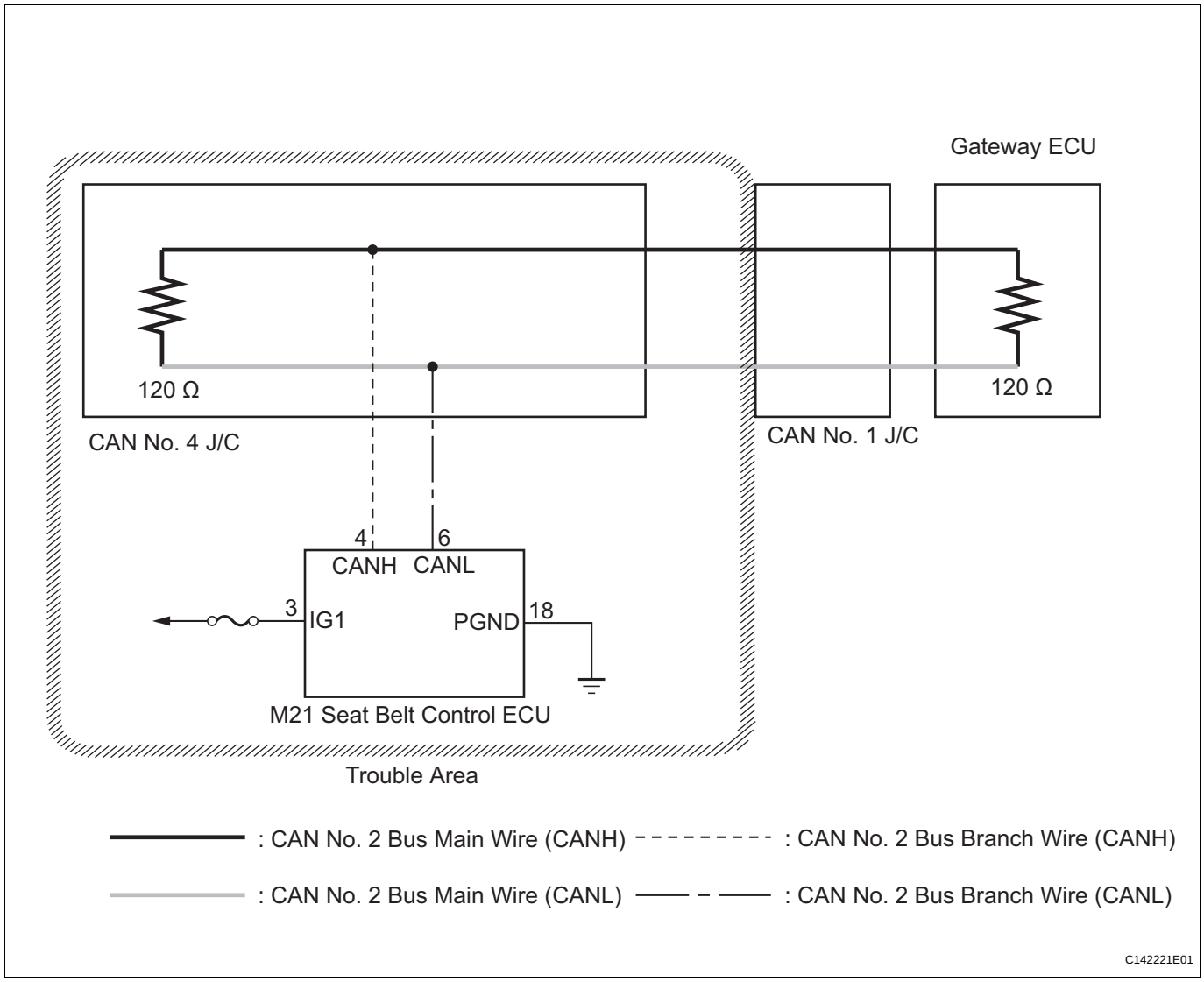

CA

INSPECTION PROCEDURE

NOTICE:

- **Turn the engine switch off before measuring the resistances of CAN bus main wires and CAN bus branch wires.**
- **After the engine switch is turned off, check that the key reminder warning system and light reminder warning system are not in operation.**
- **Before measuring the resistance, leave the vehicle as is for at least 1 minute and do not operate the engine switch, any other switches, or the doors. If any doors need to be opened in order to check connectors, open the doors and leave them open.**

1 CHECK DTC

(a) Check for DTCs.
HINT:
If CAN No. 2 bus DTC U1002 is output, troubleshoot for U1002 and check for malfunctions in the CAN MS main bus circuit.

Result

Result	Proceed to
U1002 is not output	A
U1002 is output	B

B → **GO TO DTC CHART (See page CA-49)**

A

2 CHECK CAN NO. 2 BUS WIRE (SEAT BELT CONTROL ECU)

Seat Belt Control ECU (Wire Harness Side):

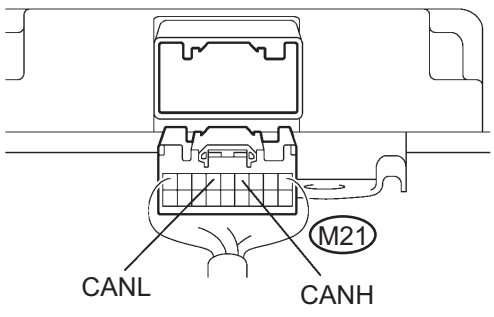

C110546E07

(a) Turn the engine switch off.
(b) Disconnect connector M21 from the seat belt control ECU.
(c) Measure the resistance according to the value(s) in the table below.

Standard resistance

Tester Connection	Condition	Specified Value
M21-4 (CANH) - M21-6 (CANL)	Engine switch OFF	54 to 69 Ω

NG → **Go to step 4**

OK

3 CHECK HARNESS AND CONNECTOR (IG1, PGND)

Seat Belt Control ECU (Wire Harness Side):

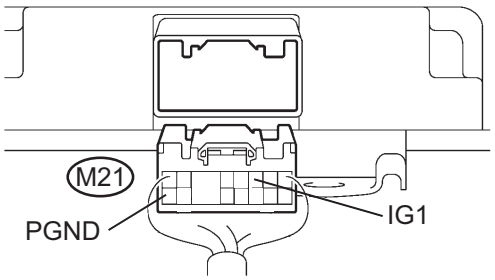

C110546E08

(a) Measure the resistance according to the value(s) in the table below.
Standard resistance

Tester Connection	Condition	Specified Value
M21-18 (PGND) - Body ground	Always	Below 1 Ω

(b) Measure the voltage according to the value(s) in the table below.
Standard voltage

Tester Connection	Condition	Specified Value
M21-3 (IG1) - Body ground	Engine switch on (IG)	10 to 14 V

NG → **REPAIR OR REPLACE HARNESS OR CONNECTOR**

OK

REPLACE SEAT BELT CONTROL ECU (See page SB-64)

4 CHECK CAN NO. 2 BUS BRANCH WIRE (SEAT BELT CONTROL ECU)

CAN No. 4 J/C "A" Side (with Earth Terminal) Wire Harness View:

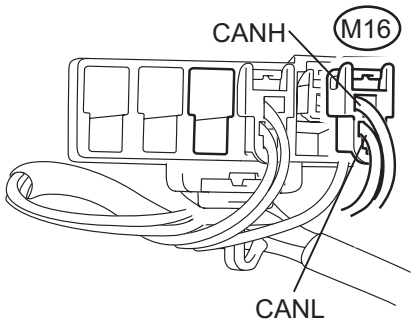

C142245E01

(a) Disconnect the seat belt control ECU branch wire connector M16.
(b) Measure the resistance according to the value(s) in the table below.
Standard resistance

Tester Connection	Color	Condition	Specified Value
M16-1 (CANH) - M16-2 (CANL)	L - Y	Engine switch OFF	1 MΩ or higher

NG → **REPAIR OR REPLACE CAN NO. 2 BUS BRANCH WIRE OR CONNECTOR (SEAT BELT CONTROL ECU BRANCH WIRE)**

OK

5	CHECK CAN NO. 2 BUS MAIN WIRE (CAN NO. 1 J/C - CAN NO. 4 J/C)

CAN No. 4 J/C "A" Side (with Earth Terminal) Wire Harness View:

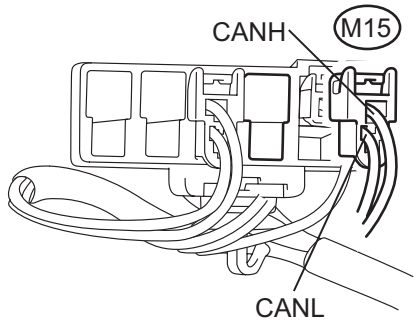

N C142239E01

(a) Disconnect CAN No. 1 J/C main wire connector M15 from the CAN No. 4 J/C.

(b) Measure the resistance according to the value(s) in the table below.

Standard resistance

Tester Connection	Color	Condition	Specified Value
M15-1 (CANH) - M15-2 (CANL)	LG - P	Engine switch OFF	108 to 132 Ω

NG → **REPAIR OR REPLACE CAN NO. 1 BUS MAIN WIRE OR CONNECTOR (CAN NO. 1 J/C - CAN NO. 4 J/C)**

OK

REPLACE CAN NO. 4 J/C

DTC	U1102	Lost Communication with Radar Sensor

DESCRIPTION

The gateway ECU will store this DTC when no signals can be received from the distance control ECU while the CAN No. 2 main bus is normal.

DTC No.	DTC Detection Condition	Trouble Area
U1102	No communication from distance control ECU	1. Open or short in CAN No. 1 J/C and distance control ECU 2. Distance control ECU power source circuit 3. Distance control ECU 4. Wire harness or connector

WIRING DIAGRAM

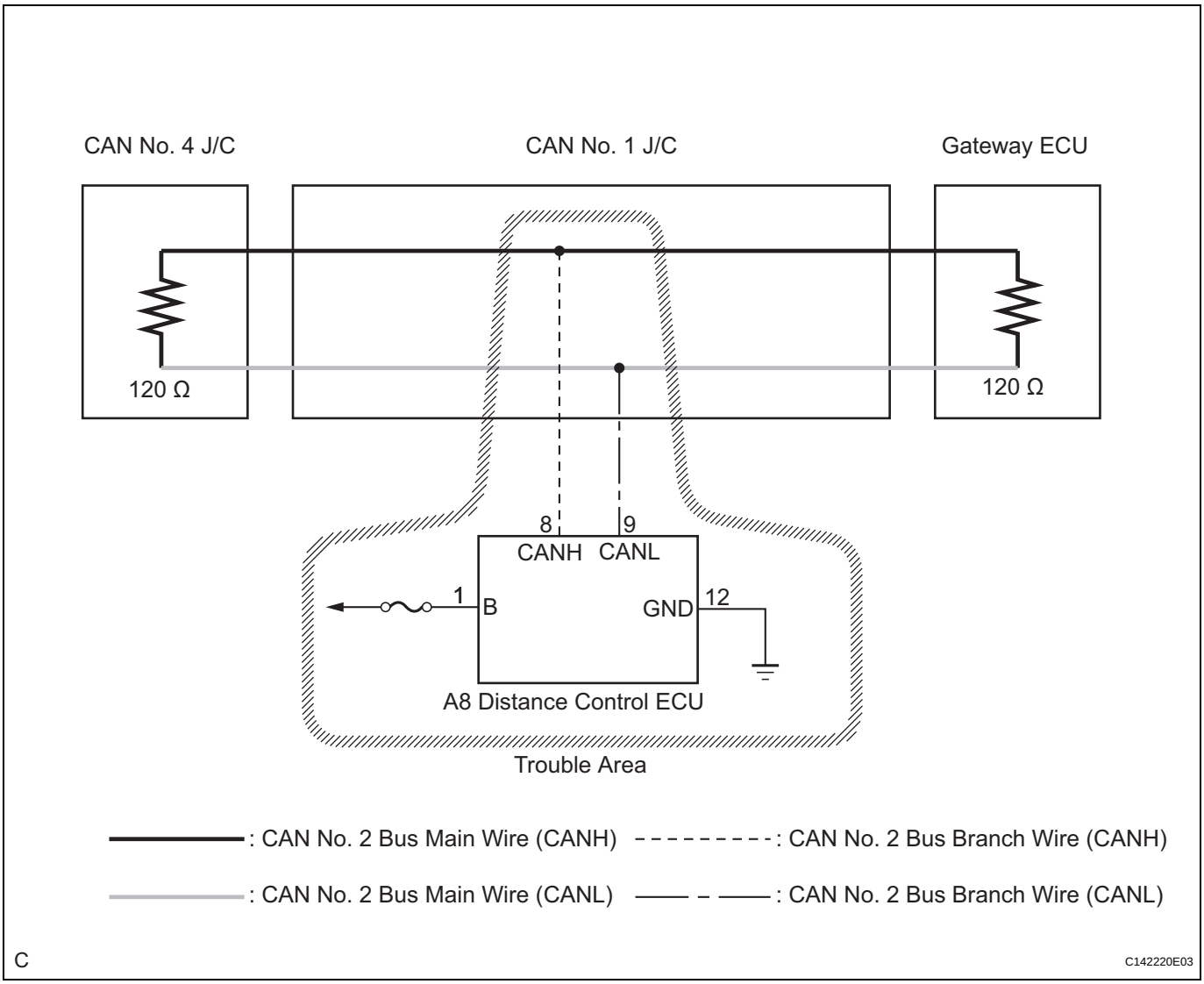

INSPECTION PROCEDURE

NOTICE:

- **Turn the engine switch off before measuring the resistances of CAN bus main wires and CAN bus branch wires.**
- **After the engine switch is turned off, check that the key reminder warning system and light reminder warning system are not in operation.**

- **Before measuring the resistance, leave the vehicle as is for at least 1 minute and do not operate the engine switch, any other switches, or the doors. If any doors need to be opened in order to check connectors, open the doors and leave them open.**

1 CHECK DTC

(a) Check for DTCs.
HINT:
If CAN No. 2 bus DTC U1002 is output, troubleshoot for U1002 and check for malfunctions in the CAN MS main bus circuit.
Result

Result	Proceed to
U1002 is not output	A
U1002 is output	B

B → **GO TO DTC CHART (See page CA-49)**

A

2 CHECK CAN NO. 2 BUS WIRE (DISTANCE CONTROL ECU)

Distance Control ECU (Wire Harness Side):

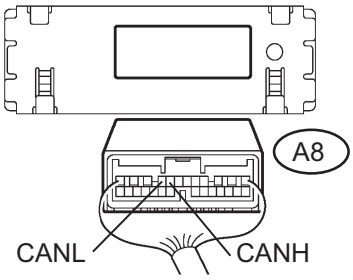

(a) Turn the engine switch off.
(b) Disconnect connector J17 from the distance control ECU.
(c) Measure the resistance according to the value(s) in the table below.
Standard resistance

Tester Connection	Condition	Specified Value
A8-8 (CANH) - A8-9 (CANL)	Engine switch OFF	54 to 69 Ω

NG → **REPAIR OR REPLACE CAN NO. 2 BUS BRANCH WIRE OR CONNECTOR (DISTANCE CONTROL ECU BRANCH WIRE)**

OK

3 CHECK HARNESS AND CONNECTOR (B, GND)

Distance Control ECU (Wire Harness Side):

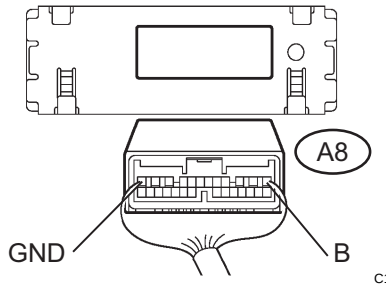

(a) Measure the resistance according to the value(s) in the table below.

Standard resistance

Tester Connection	Condition	Specified Value
A8-12 (GND) - Body ground	Always	Below 1 Ω

(b) Measure the voltage according to the value(s) in the table below.

Standard voltage

Tester Connection	Condition	Specified Value
A8-1 (B) - Body ground	Engine switch on (IG)	10 to 14 V

NG → **REPAIR OR REPLACE HARNESS OR CONNECTOR**

OK

GO TO DYNAMIC RADAR CRUISE CONTROL SYSTEM (See page CC-48)

Skid Control ECU Communication Stop Mode

DESCRIPTION

Detection Item	Symptom	Trouble Area
Skid Control ECU Communication Stop Mode	• "ABS/VSC/TRAC" is not displayed on the "BUS CHECK" screen of the intelligent tester • Applies to "Skid Control ECU Communication Stop Mode" in the "DTC COMBINATION TABLE"	1. Power source circuit of the skid control ECU 2. Skid control ECU branch wire or connector 3. Skid control ECU

HINT:
"ABS/VSC/TRAC" refers to the circuit that includes the skid control ECU.

WIRING DIAGRAM

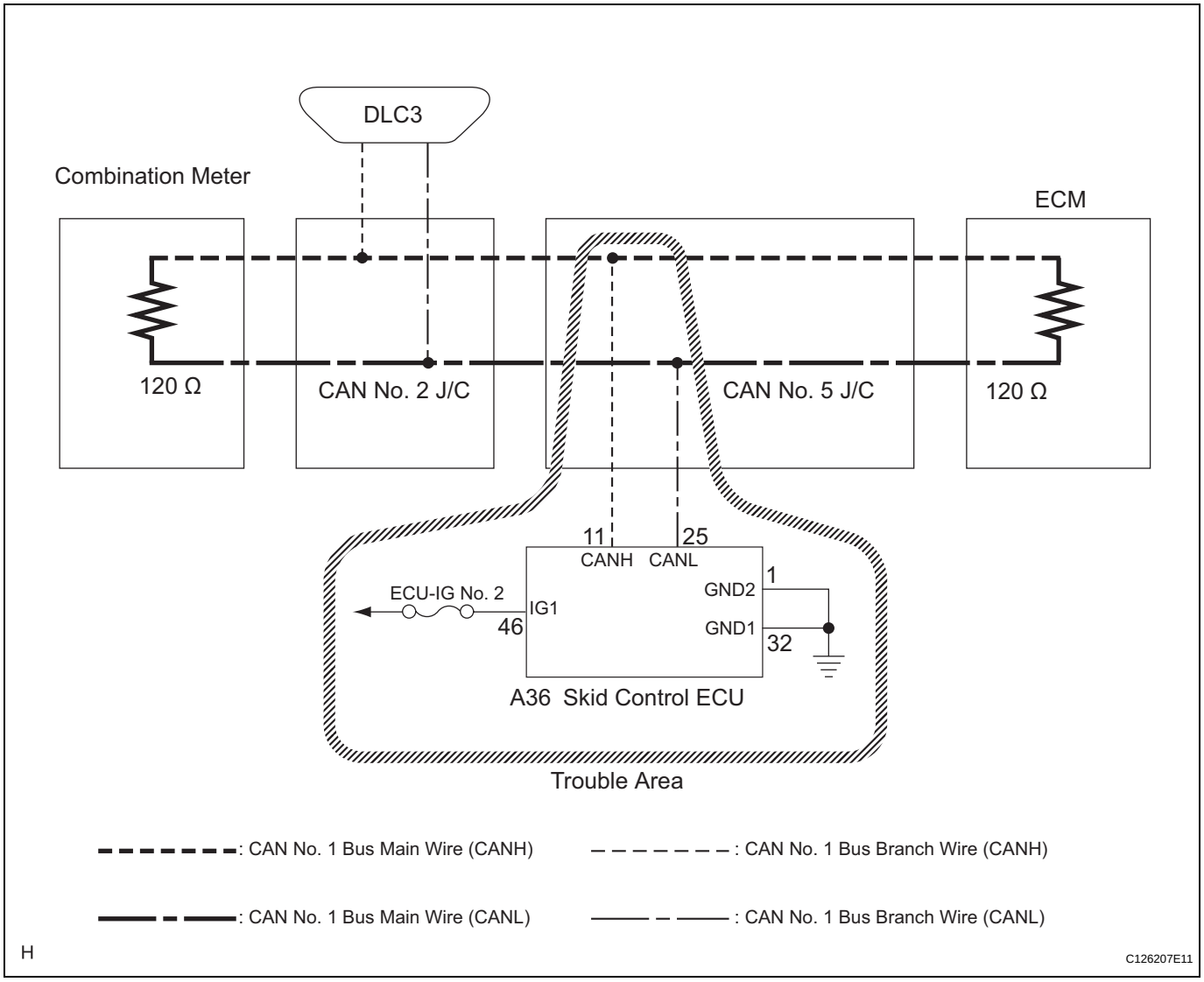

INSPECTION PROCEDURE

NOTICE:

- **Turn the engine switch off before measuring the resistances of CAN bus main wire and CAN bus branch wires.**

CA

- **After the engine switch is turned off, check that the key reminder warning system and light reminder warning system are not in operation.**
- **Before measuring the resistance, leave the vehicle as is for at least 1 minute and do not operate the engine switch, any other switches, or the doors. If any doors need to be opened in order to check connectors, open the doors and leave them open.**

1 CHECK OPEN IN CAN NO. 1 BUS WIRE (SKID CONTROL ECU BRANCH WIRE)

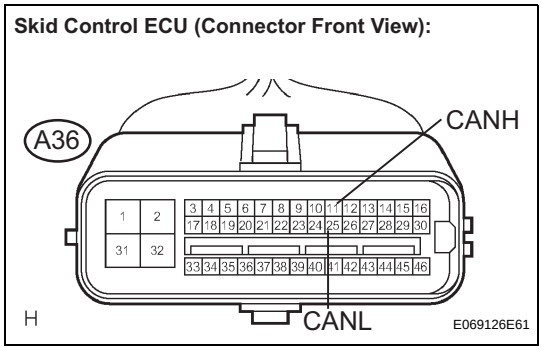

(a) Turn the engine switch off.
(b) Disconnect the skid control ECU connector.
(c) Measure the resistance according to the value(s) in the table below.

Standard resistance

Tester Connection	Condition	Specified Value
A36-11 (CANH) - A36-25 (CANL)	Engine switch off	54 to 69 Ω

NG → **REPAIR OR REPLACE CAN NO. 1 BUS BRANCH WIRE OR CONNECTOR (SKID CONTROL ECU)**

OK

2 CHECK WIRE HARNESS (IG1, GND1, GND2)

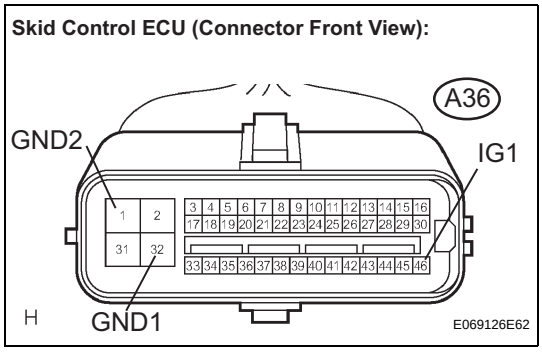

(a) Measure the resistance according to the value(s) in the table below.

Standard resistance

Tester Connection	Condition	Specified Value
A36-32 (GND1) - Body ground	Always	Below 1 Ω
A36-1 (GND2) - Body ground	Always	Below 1 Ω

(b) Measure the voltage according to the value(s) in the table below.

Standard voltage

Tester Connection	Condition	Specified Value
A36-46 (IG1) - Body ground	Engine switch on (IG)	10 to 14 V

NG → **REPAIR OR REPLACE HARNESS OR CONNECTOR**

OK

REPLACE BRAKE ACTUATOR (See page BC-181)

Air Conditioning Amplifier Communication Stop Mode

DESCRIPTION

Detection Item	Symptom	Trouble Area
Air Conditioning Amplifier Communication Stop Mode	• "A/C" is not displayed on the "BUS CHECK" screen of the intelligent tester • Applies to "Air Conditioning Amplifier Communication Stop Mode" in the "DTC COMBINATION TABLE"	1. Power source circuit of the air conditioning amplifier 2. Air conditioning amplifier branch wire or connector 3. Air conditioning amplifier

HINT:
"A/C" refers to the circuit that includes the air conditioning amplifier.

WIRING DIAGRAM

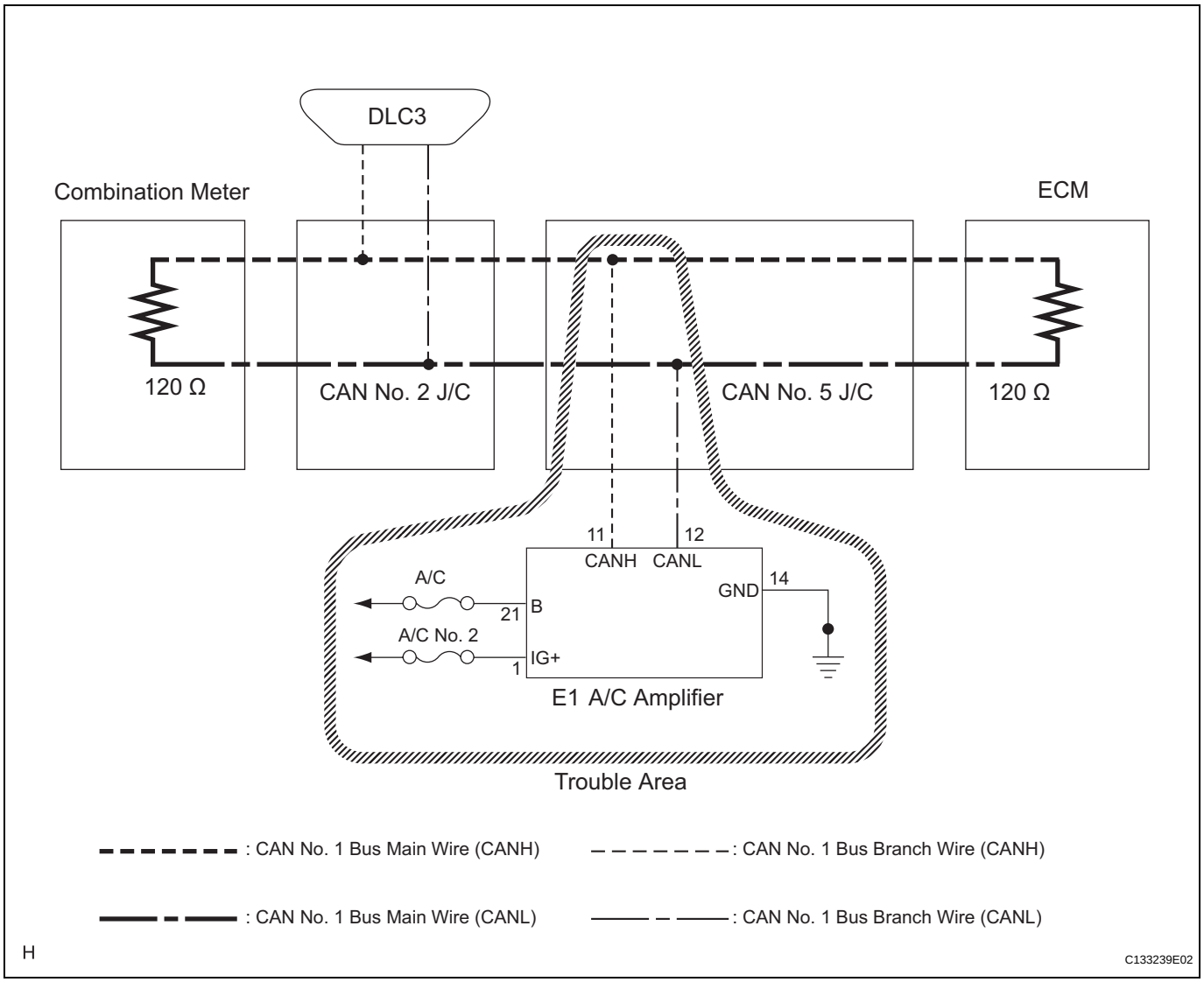

INSPECTION PROCEDURE

NOTICE:

- **Turn the engine switch off before measuring the resistances of CAN bus main wires and CAN bus branch wires.**
- **After the engine switch is turned off, check that the key reminder warning system and light reminder warning system are not in operation.**

- **Before measuring the resistance, leave the vehicle as is for at least 1 minute and do not operate the engine switch, any other switches, or the doors. If any doors need to be opened in order to check connectors, open the doors and leave them open.**

HINT:
Operating the engine switch, any switches, or any doors triggers related ECU and sensor communication on the CAN. This communication will cause the resistance value to change.

1 CHECK FOR OPEN IN CAN NO. 1 BUS WIRE (AIR CONDITIONING AMPLIFIER BRANCH WIRE)

Air Conditioning Amplifier (Wire Harness Side):

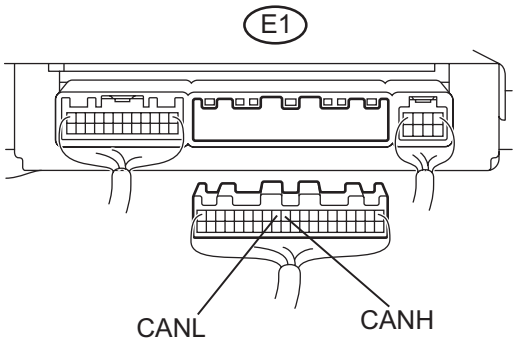

H E124470E50

(a) Turn the engine switch off.
(b) Disconnect the air conditioning amplifier connector.
(c) Measure the resistance according to the value(s) in the table below.

Standard resistance

Tester Connection	Condition	Specified Value
E1-11 (CANH) - E1-12 (CANL)	Engine switch off	54 to 69 Ω

NG → **REPAIR OR REPLACE CAN NO. 1 BUS BRANCH WIRE OR CONNECTOR (AIR CONDITIONING AMPLIFIER)**

OK

2 CHECK HARNESS AND CONNECTOR (IG+, B, GND)

Air Conditioning Amplifier (Wire Harness Side):

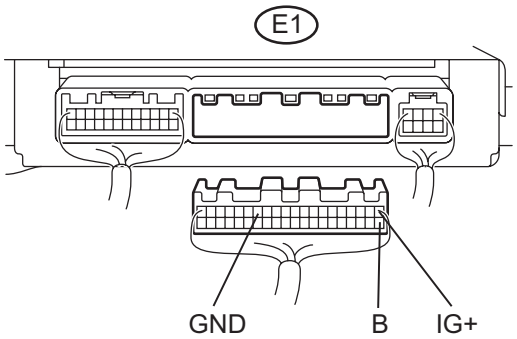

H E124470E51

(a) Disconnect the air conditioning amplifier connector.
(b) Measure the resistance according to the value(s) in the table below.

Standard resistance

Tester Connection	Condition	Specified Value
E1-14 (GND) - Body Ground	Always	Below 1 Ω

(c) Measure the voltage according to the value(s) in the table below.

Standard voltage

Tester Connection	Condition	Specified Value
E1-1 (IG+) - Body Ground	Engine switch on (IG)	10 to 14 V
E1-21 (B) - Body Ground	Always	10 to 14 V

NG → **REPAIR OR REPLACE HARNESS OR CONNECTOR**

OK

REPLACE AIR CONDITIONING AMPLIFIER (See page AC-232)

Gateway ECU Communication Stop Mode

DESCRIPTION

Detection Item	Symptom	Trouble Area
Gateway ECU Communication Stop Mode	• "GATEWAY" is not displayed on the "BUS CHECK" screen of the intelligent tester • Applies to "Gateway ECU Communication Stop Mode" in the "DTC COMBINATION TABLE"	1. Power source circuit of the gateway ECU 2. Gateway ECU branch wire or connector 3. Gateway ECU

HINT:
"GATEWAY" refers to the circuit that includes the gateway ECU.

WIRING DIAGRAM

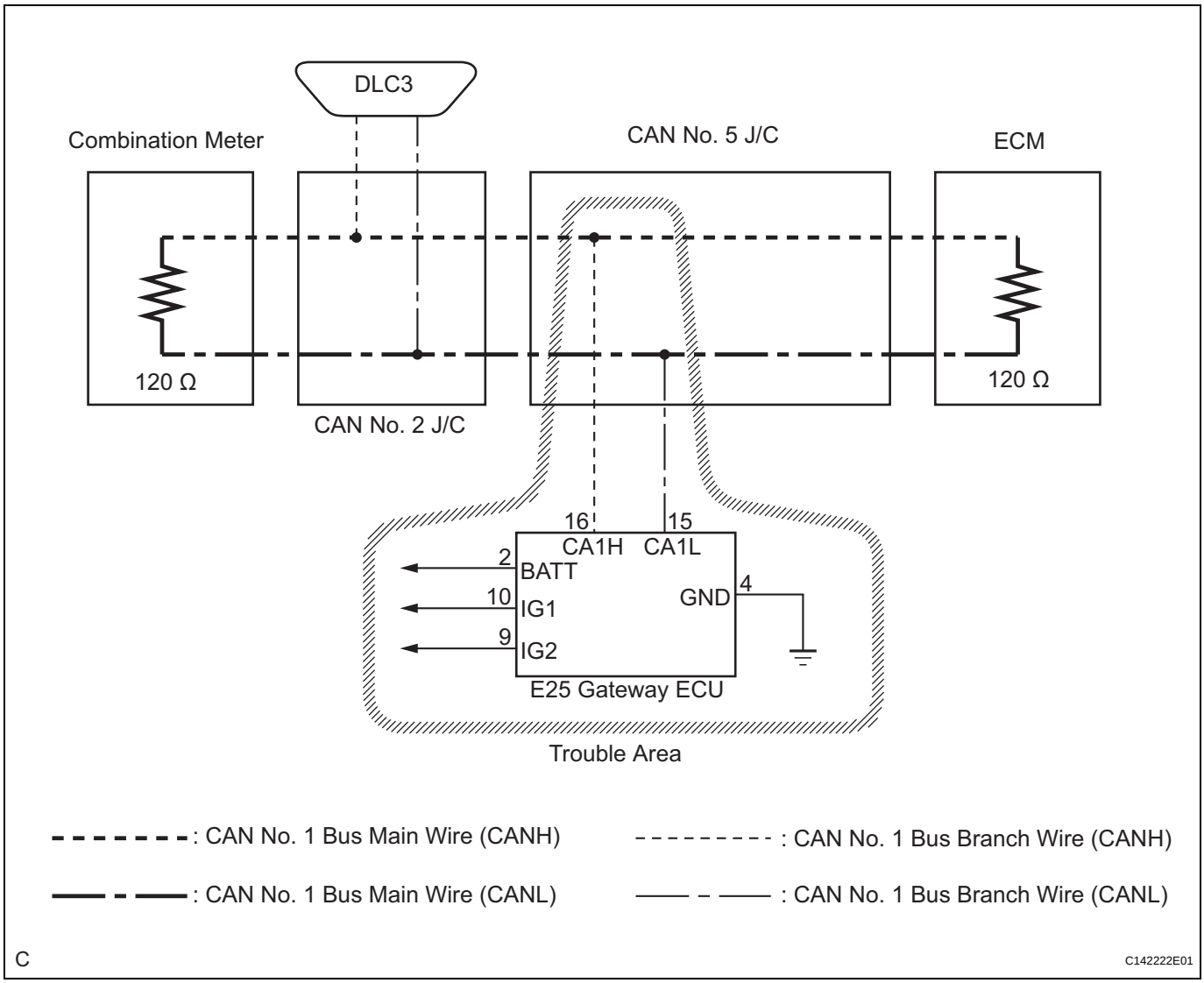

INSPECTION PROCEDURE

NOTICE:

- **Turn the engine switch off before measuring the resistances of CAN bus main wires and CAN bus branch wires.**
- **After the engine switch is turned off, check that the key reminder warning system and light reminder warning system are not in operation.**

- **Before measuring the resistance, leave the vehicle as is for at least 1 minute and do not operate the engine switch, any other switches, or the doors. If any doors need to be opened in order to check connectors, open the doors and leave them open.**

1 CHECK OPEN IN CAN NO. 1 BUS WIRE (GATEWAY ECU BRANCH WIRE)

Gateway ECU (Wire Harness Side):

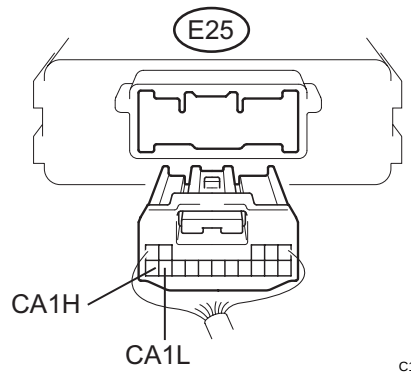

(a) Turn the engine switch off.
(b) Disconnect gateway ECU connector E25.
(c) Measure the resistance according to the value(s) in the table below.

Standard resistance

Tester Connection	Condition	Specified Value
E25-16 (CA1H) - E25-15 (CA1L)	Engine switch on (IG)	54 to 69 Ω

NG → **REPAIR OR REPLACE CAN NO. 1 BUS BRANCH WIRE OR CONNECTOR (GATEWAY ECU)**

OK

2 CHECK HARNESS AND CONNECTOR (BATT, IG1, IG2, GND)

Gateway ECU (Wire Harness Side):

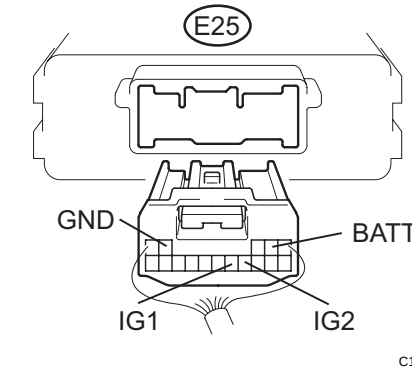

(a) Measure the resistance according to the value(s) in the table below.

Standard resistance

Tester Connection	Condition	Specified Value
E25-4 (GND) - Body ground	Always	Below 1 Ω

(b) Measure the voltage according to the value(s) in the table below.

Standard voltage

Tester Connection	Condition	Specified Value
E25-2 (BATT) - Body ground	Always	10 to 14 V
E25-10 (IG1) - Body ground	Engine switch on (IG)	10 to 14 V
E25-9 (IG2) - Body ground	Engine switch on (IG)	10 to 14 V

NG → **REPAIR OR REPLACE HARNESS OR CONNECTOR**

OK

REPLACE GATEWAY ECU

Steering Angle Sensor Communication Stop Mode

DESCRIPTION

Detection Item	Symptom	Trouble Area
Steering Angle Sensor Communication Stop Mode	• "STEERING SENSOR" is not displayed on the "BUS CHECK" screen of the intelligent tester • Applies to "Steering Angle Sensor Communication Stop Mode" in the "DTC COMBINATION TABLE"	1. Power source circuit of the steering angle sensor 2. Steering angle sensor branch wire or connector 3. Steering angle sensor

HINT:
"STEERING SENSOR" refers to the circuit that includes the steering angle sensor.

WIRING DIAGRAM

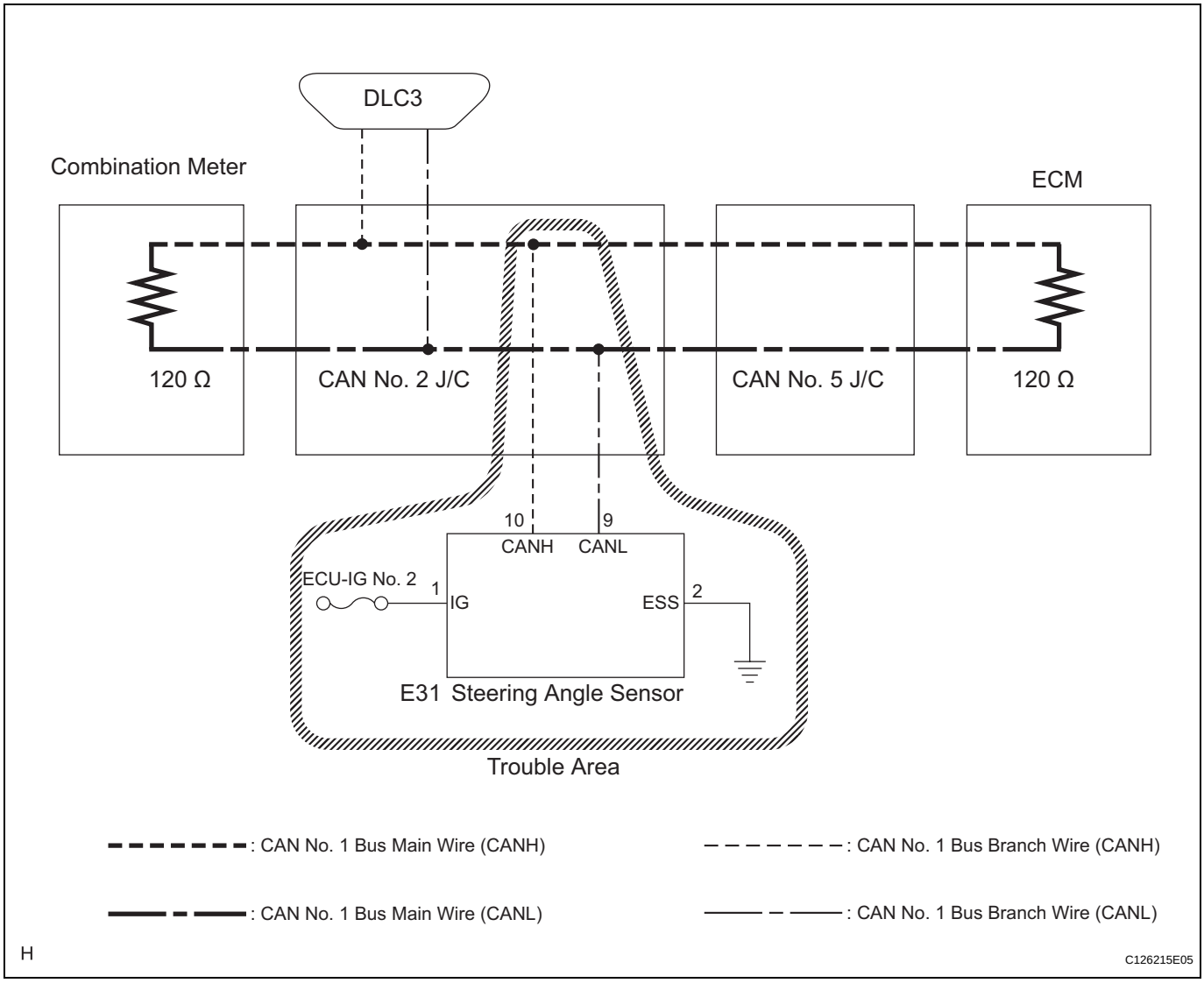

INSPECTION PROCEDURE

NOTICE:

- **Turn the engine switch off before measuring the resistances of CAN bus main wires and CAN bus branch wires.**

- **After the engine switch is turned off, check that the key reminder warning system and light reminder warning system are not in operation.**
- **Before measuring the resistance, leave the vehicle as is for at least 1 minute and do not operate the engine switch, any other switches, or the doors. If any doors need to be opened in order to check connectors, open the doors and leave them open.**

1 CHECK FOR OPEN IN CAN NO. 1 BUS WIRE (STEERING ANGLE SENSOR BRANCH WIRE)

Steering Angle Sensor Connector (Wire Harness Side):

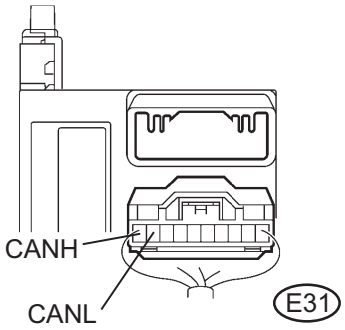

G030155E42

(a) Turn the engine switch off.
(b) Disconnect the steering angle sensor connector.
(c) Measure the resistance according to the value(s) in the table below.

Standard resistance

Tester Connection	Condition	Specified Value
E31-10 (CANH) - E31-9 (CANL)	Engine switch off	54 to 69 Ω

NG → **REPAIR OR REPLACE CAN NO. 1 BUS BRANCH WIRE OR CONNECTOR (STEERING ANGLE SENSOR)**

OK

2 CHECK WIRE HARNESS (IG, ESS)

Steering Angle Sensor Connector (Wire Harness Side):

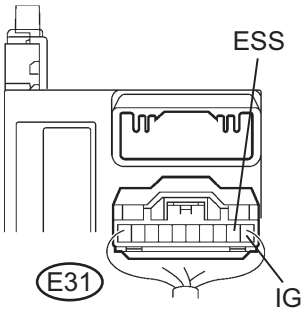

G030155E43

(a) Measure the resistance according to the value(s) in the table below.

Standard resistance

Tester Connection	Condition	Specified Value
E31-2 (ESS) - Body ground	Always	Below 1 Ω

(b) Measure the voltage according to the value(s) in the table below.

Standard voltage

Tester Connection	Condition	Specified Value
E31-1 (IG) - Body ground	Engine switch on (IG)	10 to 14 V

NG → **REPAIR OR REPLACE HARNESS OR CONNECTOR**

OK

REPLACE STEERING ANGLE SENSOR (See page BC-199)

CA

Yaw Rate Sensor Communication Stop Mode

DESCRIPTION

Detection Item	Symptom	Trouble Area
Yaw Rate Sensor Communication Stop Mode	• "YAW/DECELERAT" is not displayed on the "Communication Bus Check" screen of the intelligent tester • Applies to "Yaw Rate Sensor Communication Stop Mode" in the "DTC COMBINATION TABLE"	1. Power source circuit of the yaw rate sensor 2. Yaw rate sensor branch wire or connector 3. Yaw rate sensor

HINT:
"YAW/DECELERAT" refers to the circuit that includes the yaw rate sensor.

WIRING DIAGRAM

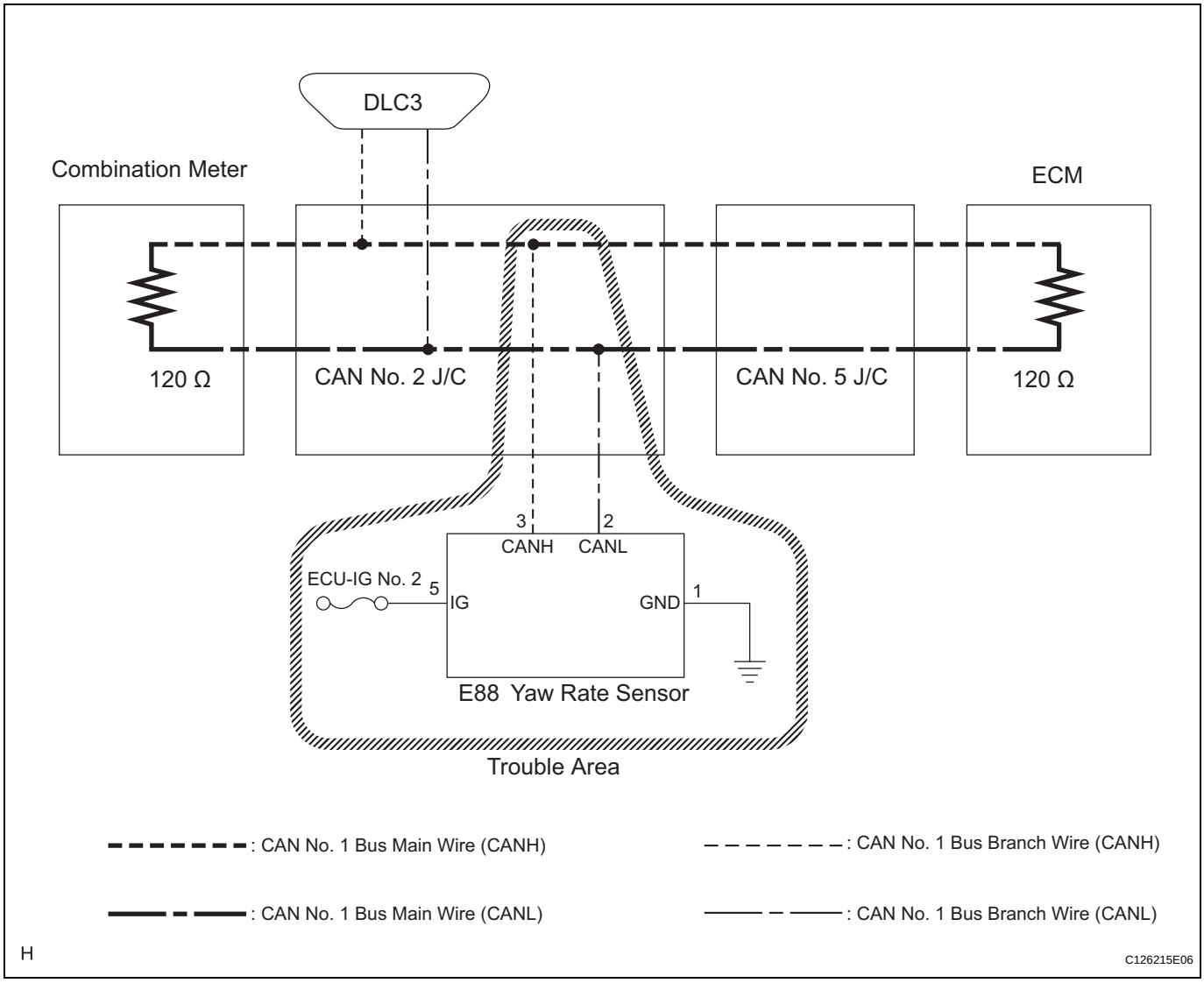

INSPECTION PROCEDURE

NOTICE:

- **Turn the engine switch off before measuring the resistances of CAN bus main wires and CAN bus branch wires.**

- **After the engine switch is turned off, check that the key reminder warning system and light reminder warning system are not in operation.**
- **Before measuring the resistance, leave the vehicle as is for at least 1 minute and do not operate the engine switch, any other switches, or the doors. If any doors need to be opened in order to check connectors, open the doors and leave them open.**

1 CHECK FOR OPEN IN CAN NO. 1 BUS WIRE (YAW RATE SENSOR BRANCH WIRE)

Yaw Rate Sensor (Connector Front View):

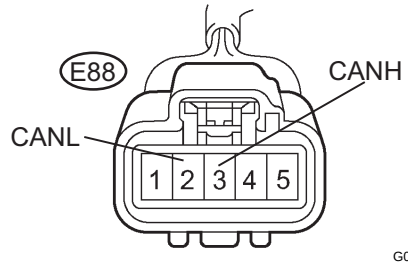

(a) Turn the engine switch off.
(b) Disconnect the yaw rate sensor connector.
(c) Measure the resistance according to the value(s) in the table below.

Standard resistance

Tester Connection	Condition	Specified Value
E88-3 (CANH) - E88-2 (CANL)	Engine switch off	54 to 69 Ω

NG → **REPAIR OR REPLACE CAN NO. 1 BUS BRANCH WIRE OR CONNECTOR (YAW RATE SENSOR)**

OK

2 CHECK WIRE HARNESS (IG, GND)

Yaw Rate Sensor (Connector Front View):

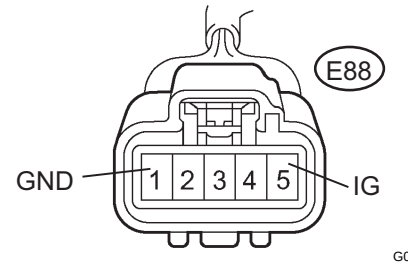

(a) Measure the resistance according to the value(s) in the table below.

Standard resistance

Tester Connection	Condition	Specified Value
E88-1 (GND) - Body ground	Always	Below 1 Ω

(b) Measure the voltage according to the value(s) in the table below.

Standard voltage

Tester Connection	Condition	Specified Value
E88-5 (IG) - Body ground	Engine switch on (IG)	10 to 14 V

NG → **REPAIR OR REPLACE HARNESS OR CONNECTOR**

OK

REPLACE YAW RATE SENSOR (See page BC-196)

ECM Communication Stop Mode

DESCRIPTION

Detection Item	Symptom	Trouble Area
ECM Communication Stop Mode	• "ENGINE" and "ECT" are not displayed on the "BUS CHECK" screen of the intelligent tester • Applies to "ECM Communication Stop Mode" in the "DTC COMBINATION TABLE"	1. Power source circuit of the ECM 2. ECM

HINT:
"ENGINE" and "ECT" refer to the circuit that includes the ECM.

WIRING DIAGRAM

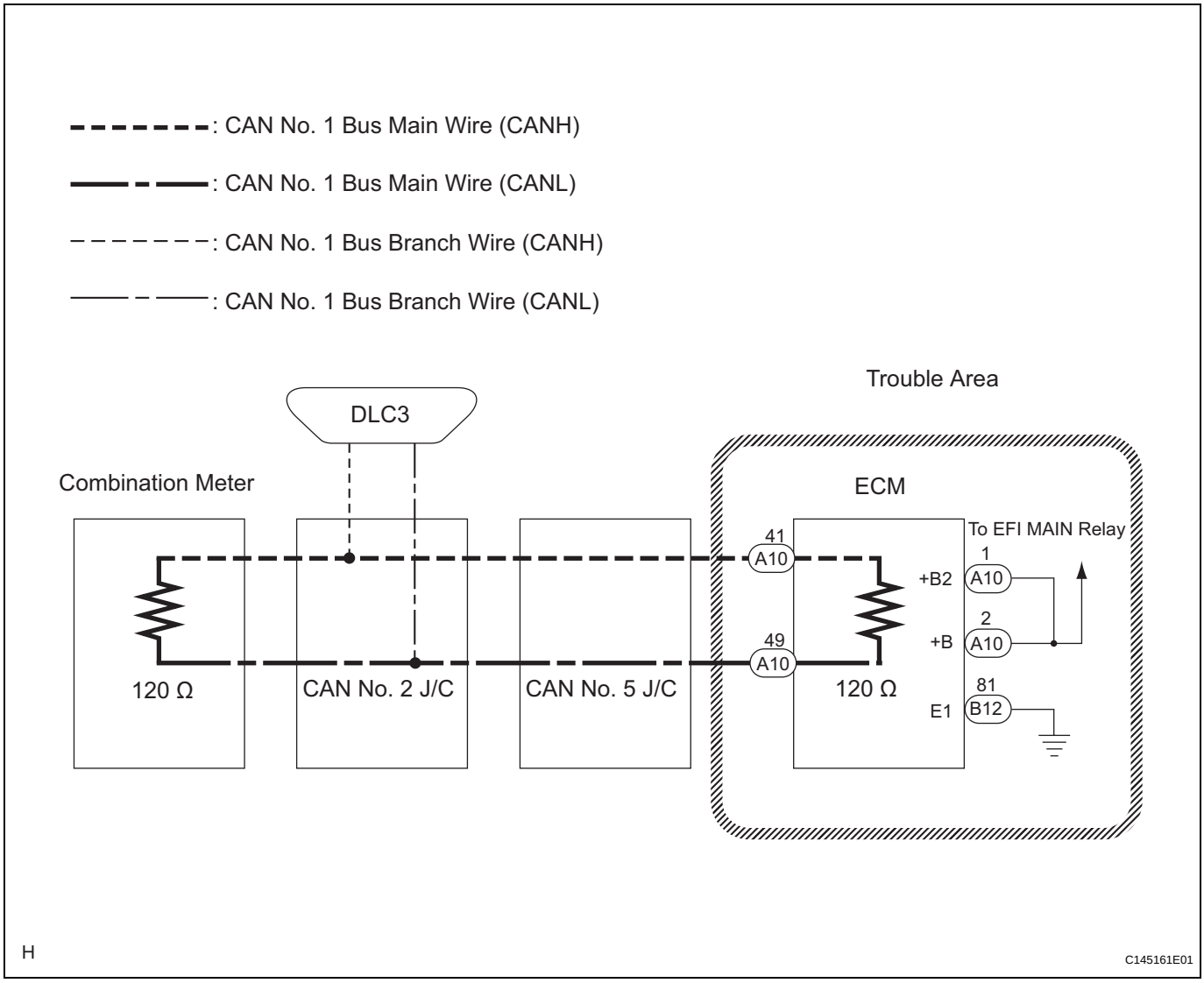

INSPECTION PROCEDURE

NOTICE:

- **Turn the engine switch off before measuring the resistances of CAN bus main wires and CAN bus branch wire.**

- **After the engine switch is turned off, check that the key reminder warning system and light reminder warning system are not in operation.**
- **Before measuring the resistance, leave the vehicle as is for at least 1 minute and do not operate the engine switch, any other switches, or the doors. If any doors need to be opened in order to check connectors, open the doors and leave them open.**

1 CHECK OPEN IN CAN NO. 1 BUS MAIN WIRE (ECM MAIN WIRE)

ECM (Wire Harness Side):

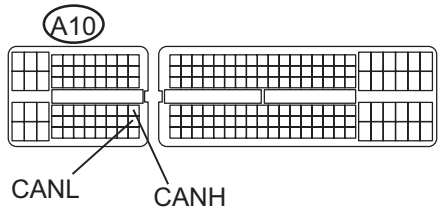

C136709E14

(a) Turn the engine switch off.
(b) Disconnect ECM connectors A10.
(c) Measure the resistance according to the value(s) in the table below.

Standard resistance

Tester Connection	Condition	Specified Value
A10-41 (CANH) - A10-49 (CANL)	Engine switch off	108 to 132 Ω

NG → **REPAIR OR REPLACE CAN NO. 1 BUS MAIN WIRE OR CONNECTOR (ECM)**

OK

2 CHECK WIRE HARNESS (+B, +B2, E1)

ECM (Wire Harness Side):

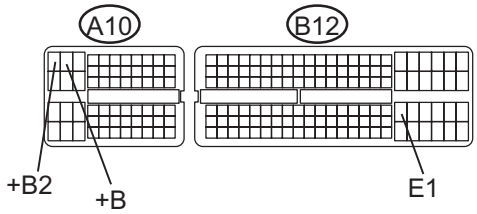

C136709E11

(a) Disconnect ECM connector B12.
(b) Measure the resistance according to the value(s) in the table below.

Standard resistance

Tester Connection	Condition	Specified Value
B12-81 (E1) - Body ground	Always	Below 1 Ω

(c) Measure the voltage according to the value(s) in the table below.

Standard voltage

Tester Connection	Condition	Specified Value
A10-1 (+B2) - Body ground	Engine switch off	10 to 14 V
A10-2 (+B) - Body ground	Engine switch off	10 to 14 V

NG → **REPAIR OR REPLACE HARNESS OR CONNECTOR**

OK

REPLACE ECM (See page ES-543)

Main Body ECU Communication Stop Mode

DESCRIPTION

Detection Item	Symptom	Trouble Area
Main Body ECU Communication Stop Mode	• "MAIN BODY" is not displayed on the "BUS CHECK" screen of the intelligent tester • Applies to "Main Body ECU Communication Stop Mode" in the "DTC COMBINATION TABLE"	1. Power source circuit of the main body ECU 2. Main body ECU branch wire or connector 3. Main body ECU

HINT:
"MAIN BODY" refers to the circuit that includes the main body ECU.

WIRING DIAGRAM

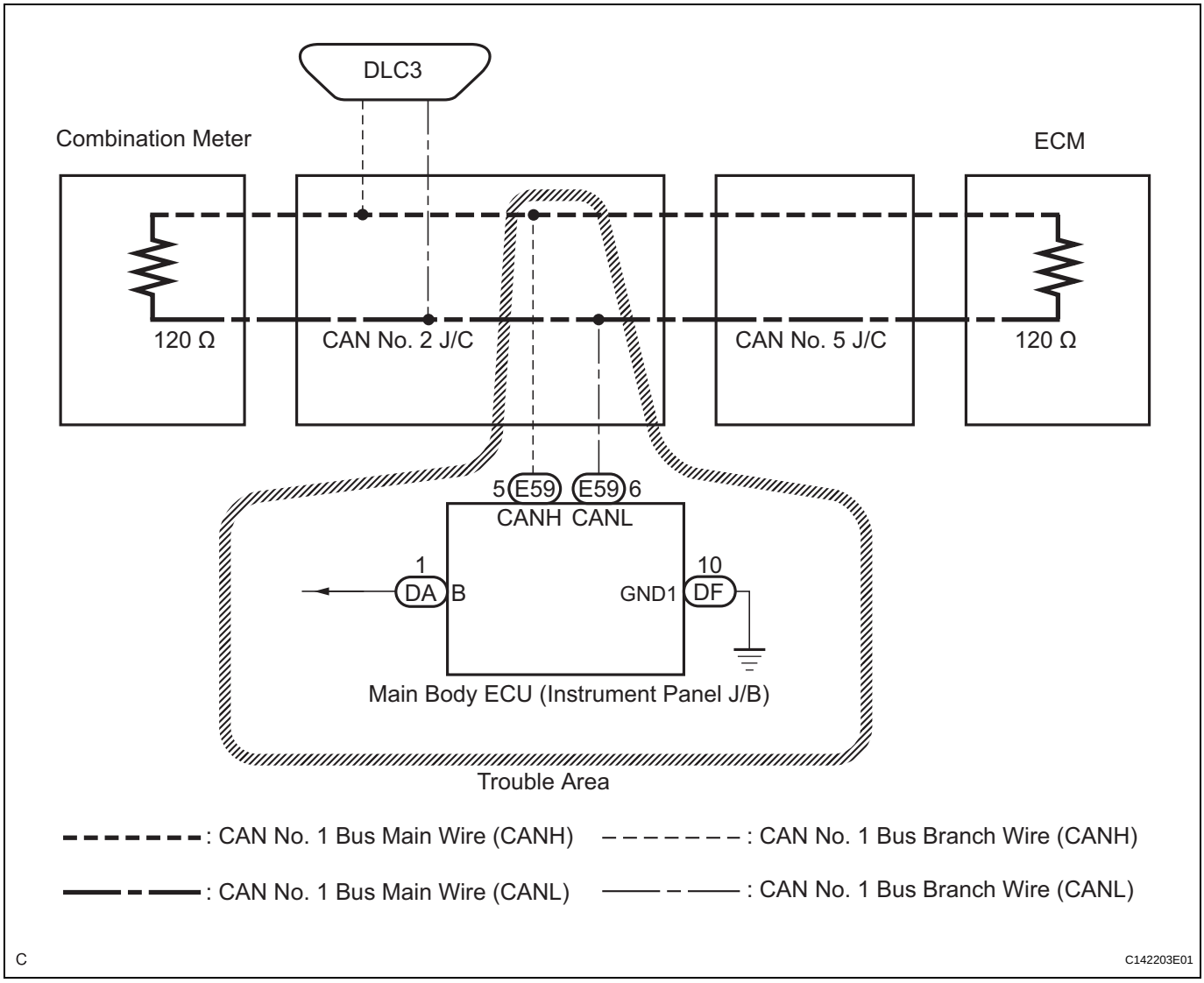

INSPECTION PROCEDURE

NOTICE:

- **Turn the engine switch off before measuring the resistances of CAN bus main wires and CAN bus branch wires.**

- **After the engine switch is turned off, check that the key reminder warning system and light reminder warning system are not in operation.**
- **Before measuring the resistance, leave the vehicle as is for at least 1 minute and do not operate the engine switch, any other switches, or the doors. If any doors need to be opened in order to check connectors, open the doors and leave them open.**

1 CHECK OPEN IN CAN NO. 1 BUS WIRE (MAIN BODY ECU BRANCH WIRE)

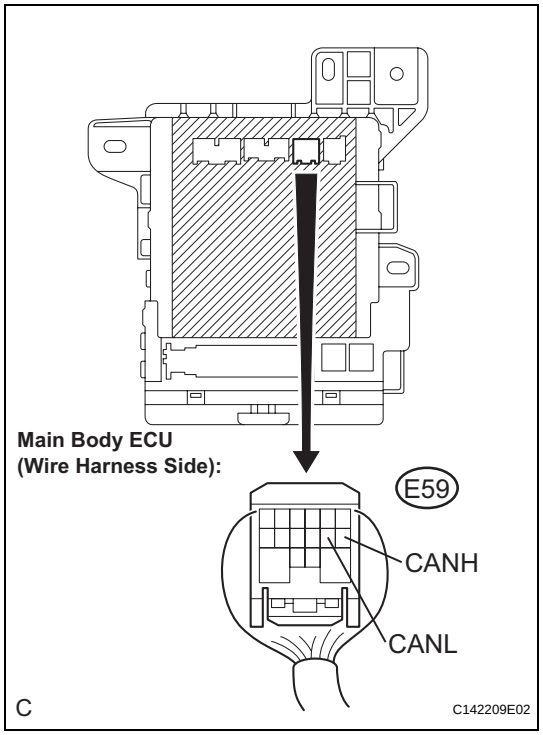

(a) Turn the engine switch off.
(b) Disconnect the main body ECU connector.
(c) Measure the resistance according to the value(s) in the table below.

Standard resistance

Tester Connection	Condition	Specified Value
E59-5 (CANH) - E59-6 (CANL)	Engine switch off	54 to 69 Ω

NG → **REPAIR OR REPLACE CAN NO. 1 BUS BRANCH WIRE OR CONNECTOR (MAIN BODY ECU)**

OK

2 CHECK HARNESS AND CONNECTOR (IG, GND1)

Instrument Panel J/B (Wire Harness Side):

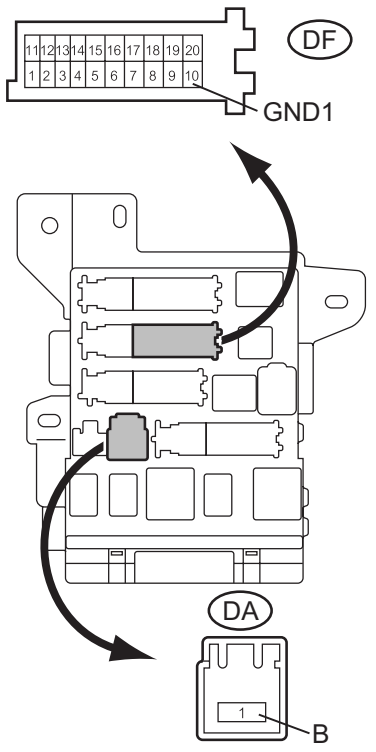

(a) Disconnect connectors DF and DA from the instrument panel J/B.

(b) Measure the resistance according to the value(s) in the table below.

Standard resistance

Tester Connection	Condition	Specified Value
DF-10 (GND1) - Body ground	Always	Below 1 Ω

(c) Measure the voltage according to the value(s) in the table below.

Standard voltage

Tester Connection	Condition	Specified Value
DA-1 (B) - Body ground	Always	10 to 14 V

NG → **REPAIR OR REPLACE HARNESS OR CONNECTOR**

OK

REPLACE MAIN BODY ECU

Combination Meter ECU Communication Stop Mode

DESCRIPTION

Detection Item	Symptom	Trouble Area
Combination Meter ECU Communication Stop Mode	• "METER" is not displayed on the "BUS CHECK" screen of the intelligent tester • Applies to "Combination Meter ECU Communication Stop Mode" in the "DTC COMBINATION TABLE"	1. Power source circuit of the combination meter 2. Combination meter main wire or connector 3. Combination meter

HINT:
"METER" refers to the circuit that includes the combination meter.

WIRING DIAGRAM

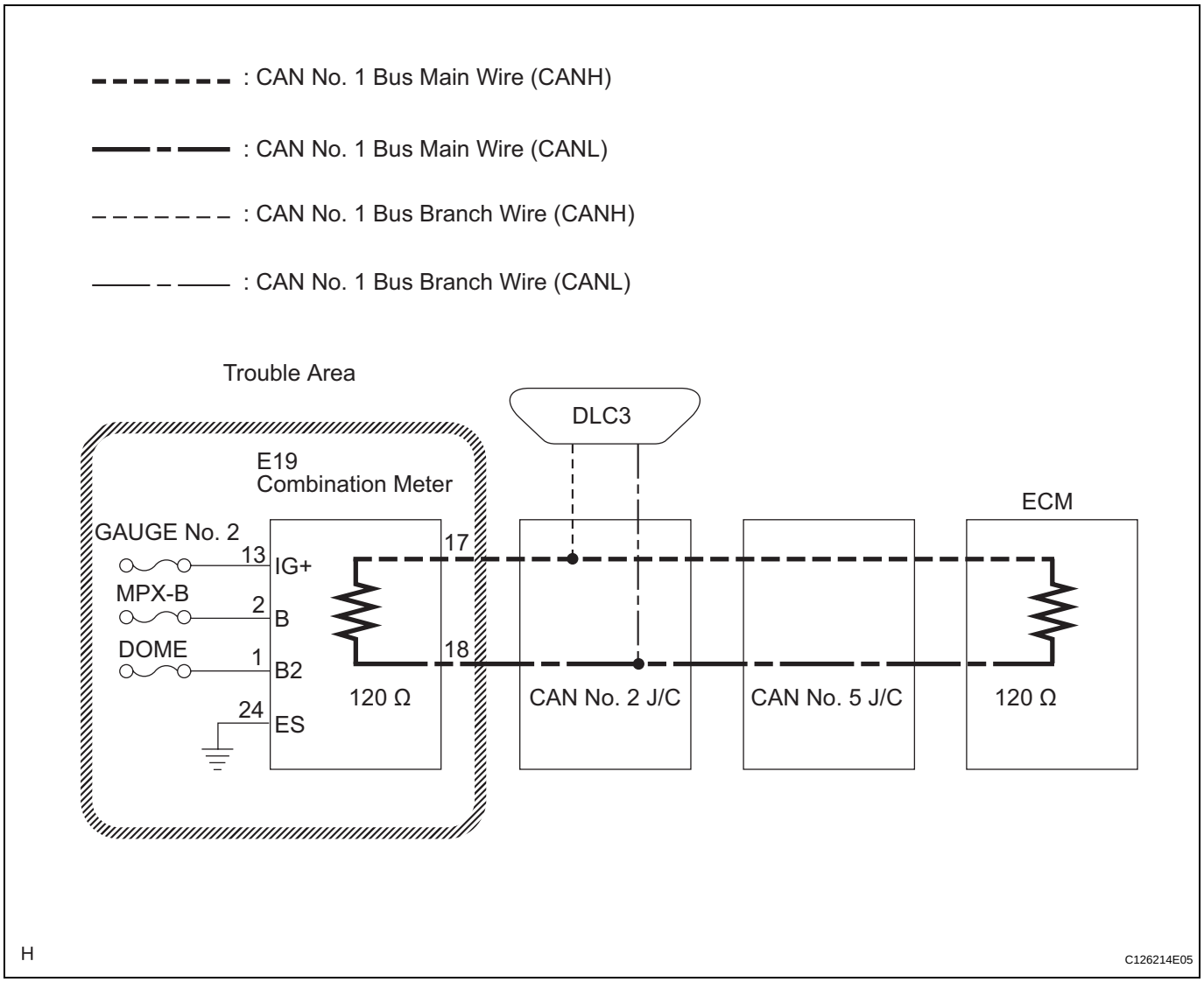

INSPECTION PROCEDURE

NOTICE:

- **Turn the engine switch off before measuring the resistances of CAN bus main wires and CAN bus branch wires.**
- **After the engine switch is turned off, check that the key reminder warning system and light reminder warning system are not in operation.**

CA

- **Before measuring the resistance, leave the vehicle as is for at least 1 minute and do not operate the engine switch, any other switches, or the doors. If any doors need to be opened in order to check connectors, open the doors and leave them open.**

1 CHECK OPEN IN CAN NO. 1 BUS MAIN WIRE (COMBINATION METER MAIN BUS WIRE)

Combination Meter Assembly (Wire Harness Side):

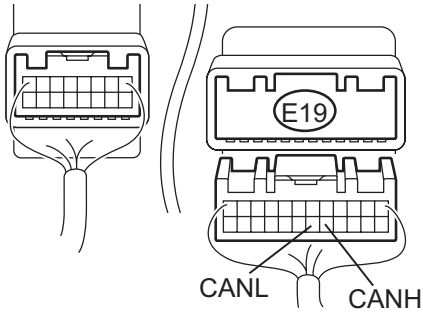

(a) Turn the engine switch off.
(b) Disconnect the combination meter connector.
(c) Measure the resistance according to the value(s) in the table below.

Standard resistance

Tester Connection	Condition	Specified Value
E19-17 (CANH) - E19-18 (CANL)	Engine switch off	108 to 132 Ω

NG → **REPAIR OR REPLACE CAN NO. 1 BUS MAIN WIRE OR CONNECTOR (COMBINATION METER)**

OK

2 CHECK HARNESS AND CONNECTOR (ES, IG+, B, B2)

Combination Meter Assembly (Wire Harness Side):

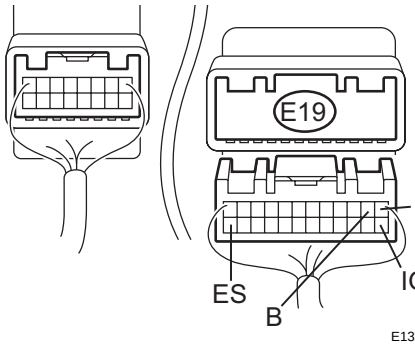

(a) Disconnect the combination meter connector.
(b) Measure the resistance according to the value(s) in the table below.

Standard resistance

Tester Connection	Condition	Specified Value
E19-24 (ES) - Body ground	Always	Below 1 Ω

(c) Measure the voltage according to the value(s) in the table below.

Standard voltage

Tester Connection	Condition	Specified Value
E19-13 (IG+) - Body ground	Engine switch on (IG)	10 to 14 V
E19-2 (B) - Body ground	Always	10 to 14 V
E19-1 (B2) - Body ground	Always	10 to 14 V

NG → **REPAIR OR REPLACE HARNESS OR CONNECTOR**

OK

REPLACE COMBINATION METER (See page ME-67)

Center Airbag Sensor Communication Stop Mode

DESCRIPTION

Detection Item	Symptom	Trouble Area
Center Airbag Sensor Communication Stop Mode	• "SRS AIRBAG" is not displayed on the "BUS CHECK" screen of the intelligent tester • Applies to "Center Airbag Sensor Communication Stop Mode" in the "DTC COMBINATION TABLE"	1. Power source circuit of the center airbag sensor 2. Center airbag sensor branch wire or connector 3. Center airbag sensor

HINT:
"SRS AIRBAG" refers to the circuit that includes the center airbag sensor.

WIRING DIAGRAM

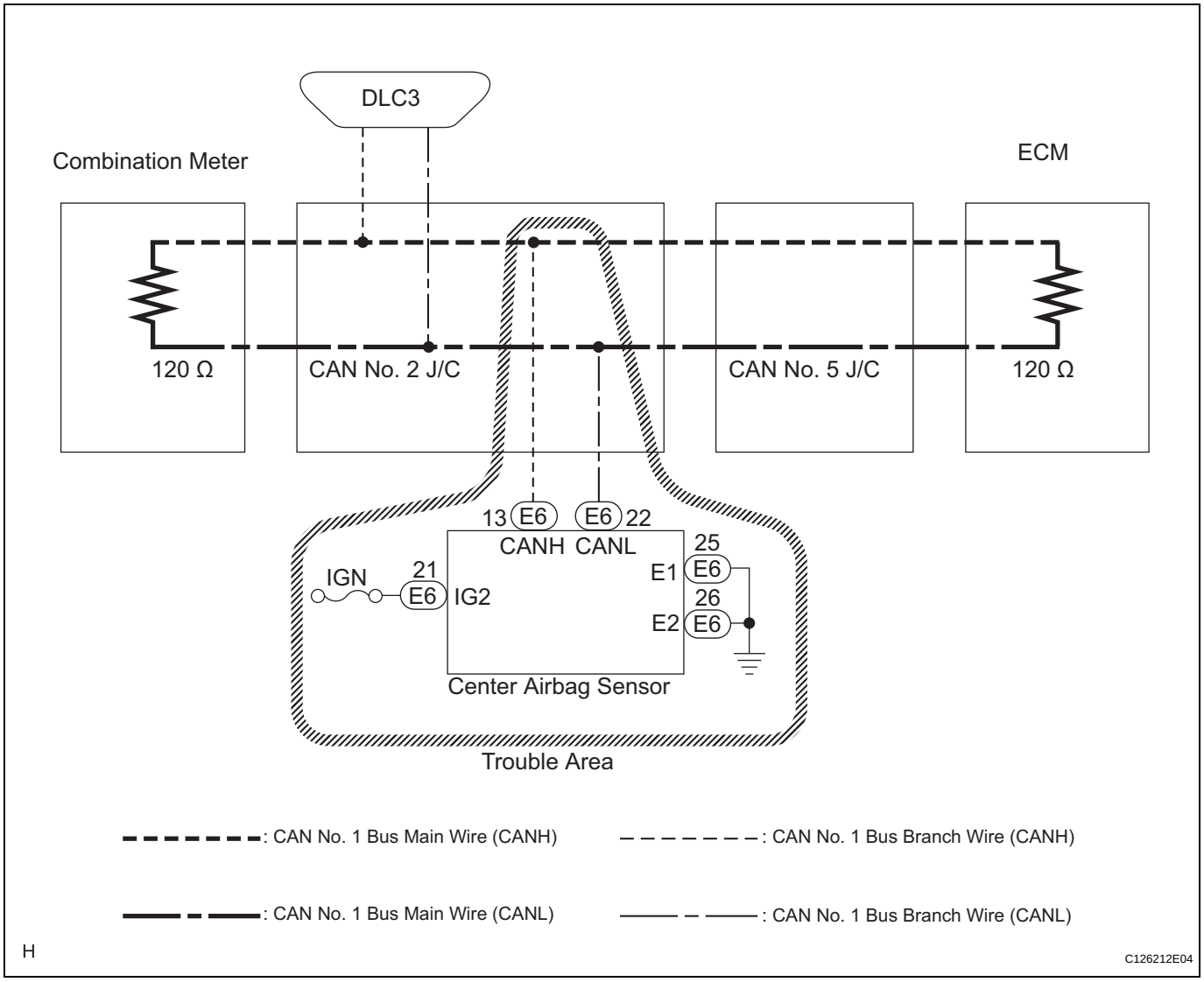

INSPECTION PROCEDURE

NOTICE:

- **Turn the engine switch off before measuring the resistances of CAN bus main wires and CAN bus branch wires.**

CA

- **After the engine switch is turned off, check that the key reminder warning system and light reminder warning system are not in operation.**
- **Before measuring the resistance, leave the vehicle as is for at least 1 minute and do not operate the engine switch, any other switches, or the doors. If any doors need to be opened in order to check connectors, open the doors and leave them open.**

1 CHECK CAN NO. 1 BUS WIRE (CENTER AIRBAG SENSOR BRANCH WIRE)

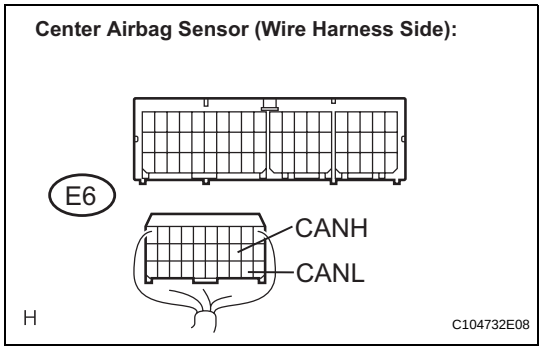

(a) Turn the engine switch off.
(b) Disconnect the center airbag sensor connector.
(c) Measure the resistance according to the value(s) in the table below.

Standard resistance

Tester Connection	Condition	Specified Value
E6-13 (CANH) - E6-22 (CANL)	Engine switch off	54 to 69 Ω

NG → **REPAIR OR REPLACE CAN NO. 1 BUS BRANCH WIRE OR CONNECTOR (CENTER AIRBAG SENSOR)**

OK

2 CHECK WIRE HARNESS (IG2, E1, E2)

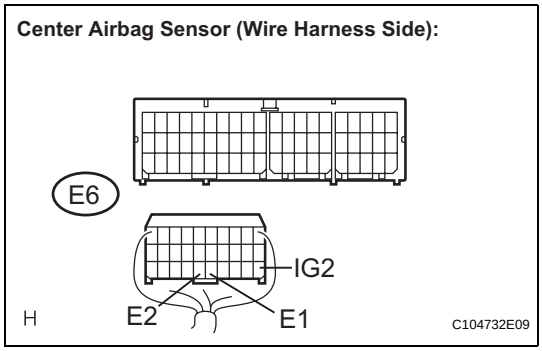

(a) Measure the resistance according to the value(s) in the table below.

Standard resistance

Tester Connection	Condition	Specified Value
E6-25 (E1) - Body ground	Always	Below 1 Ω
E6-26 (E2) - Body ground	Always	Below 1 Ω

(b) Measure the voltage according to the value(s) in the table below.

Standard voltage

Tester Connection	Condition	Specified Value
E6-21 (IG2) - Body ground	Engine switch on (IG)	10 to 14 V

NG → **REPAIR OR REPLACE HARNESS OR CONNECTOR**

OK

REPLACE CENTER AIRBAG SENSOR (See page RS-468)

Navigation ECU Communication Stop Mode

DESCRIPTION

Detection Item	Symptom	Trouble Area
Navigation ECU Communication Stop Mode	• "AVN" is not displayed on the "BUS CHECK" screen of the intelligent tester • Applies to "Navigation Control ECU Communication Stop Mode" in the "DTC COMBINATION TABLE"	1. Power source circuit of the multi-display 2. Navigation ECU branch wire or connector 3. Multi-display

HINT:
"AVN" refers to the circuit that includes the multi-display.

WIRING DIAGRAM

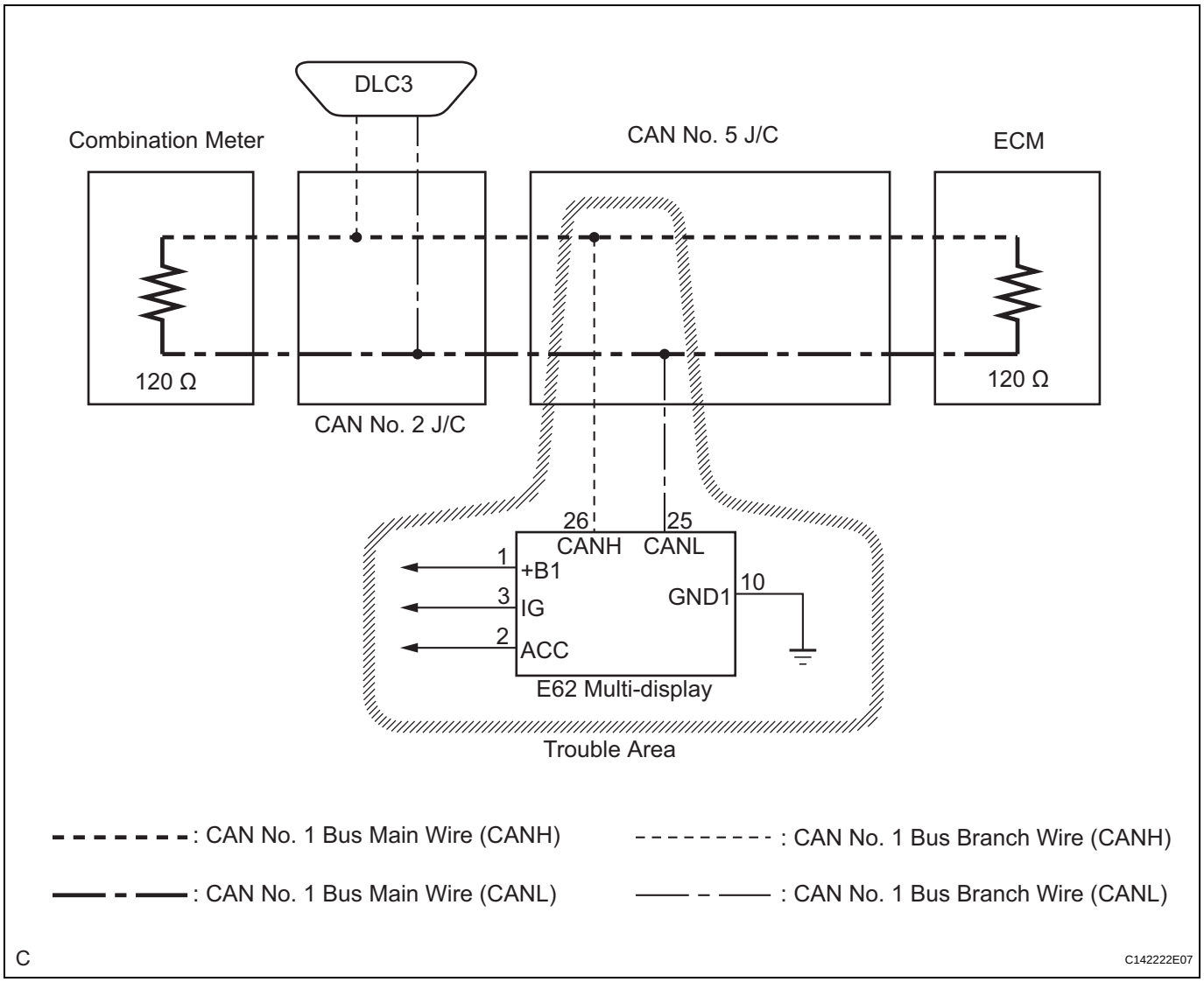

INSPECTION PROCEDURE

NOTICE:

- **Turn the engine switch off before measuring the resistances of CAN bus main wires and CAN bus branch wires.**
- **After the engine switch is turned off, check that the key reminder warning system and light reminder warning system are not in operation.**

- **Before measuring the resistance, leave the vehicle as is for at least 1 minute and do not operate the engine switch, any other switches, or the doors. If any doors need to be opened in order to check connectors, open the doors and leave them open.**

1 CHECK OPEN IN CAN NO. 1 BUS WIRE (NAVIGATION ECU BRANCH WIRE)

Multi-display (Wire Harness Side):

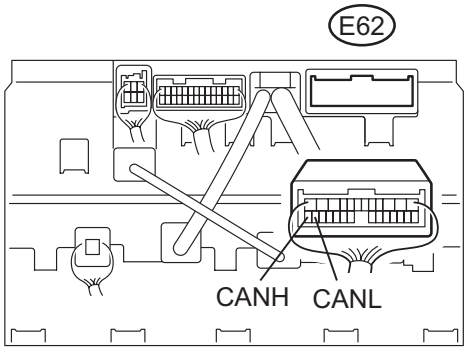

N E119725E08

(a) Turn the engine switch off.
(b) Disconnect the multi-display connector.
(c) Measure the resistance according to the value(s) in the table below.

Standard resistance

Tester Connection	Condition	Specified Value
E62-26 (CANH) - E62-25 (CANL)	Engine switch off	54 to 69 Ω

NG → **REPAIR OR REPLACE CAN NO. 1 BUS BRANCH WIRE OR CONNECTOR (MULTI-DISPLAY)**

OK

2 CHECK HARNESS AND CONNECTOR (+B, IG, ACC, GND)

Multi-display (Wire Harness Side):

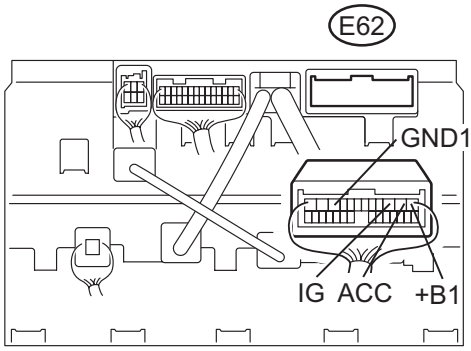

N E119725E15

(a) Measure the resistance according to the value(s) in the table below.

Standard resistance

Tester Connection	Condition	Specified Value
E62-10 (GND1) - Body Ground	Always	Below 1 Ω

(b) Measure the voltage according to the value(s) in the table below.

Standard voltage

Tester Connection	Condition	Specified Value
E62-1 (+B) - Body Ground	Always	10 to 14 V
E62-3 (IG) - Body Ground	Engine switch on (IG)	10 to 14 V
E62-2 (ACC) - Body Ground	Engine switch on (ACC)	10 to 14 V

NG → **REPAIR OR REPLACE HARNESS OR CONNECTOR**

OK

REPLACE MULTI-DISPLAY (See page NS-233)

Active Control Engine Mount ECU Communication Stop Mode

DESCRIPTION

Detection Item	Symptom	Trouble Area
Active Control Engine Mount ECU Communication Stop Mode	• "E-ACM" is not displayed on the "BUS CHECK" screen of the intelligent tester • Applies to "Active Control Engine Mount ECU Communication Stop Mode" in the "DTC COMBINATION TABLE"	1. Power source circuit of the active control engine mount ECU 2. Active control engine mount ECU branch wire or connector 3. Active control engine mount ECU

HINT:
"E-ACM" refers to the circuit that includes the active control engine mount ECU.

WIRING DIAGRAM

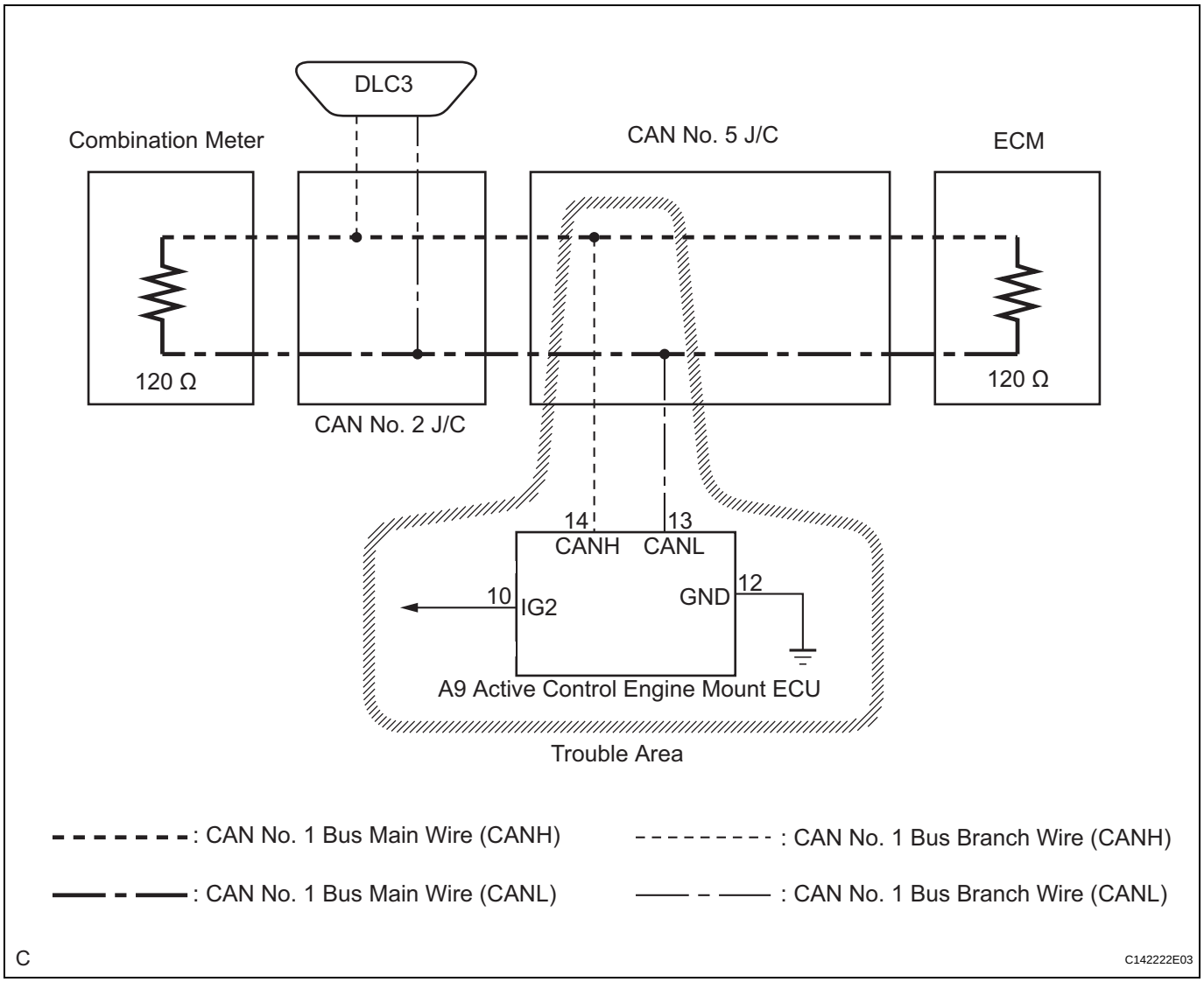

INSPECTION PROCEDURE

NOTICE:

- **Turn the engine switch off before measuring the resistances of CAN bus main wires and CAN bus branch wires.**
- **After the engine switch is turned off, check that the key reminder warning system and light reminder warning system are not in operation.**

- **Before measuring the resistance, leave the vehicle as is for at least 1 minute and do not operate the engine switch, any other switches, or the doors. If any doors need to be opened in order to check connectors, open the doors and leave them open.**

HINT:
Operating the engine switch, any switches, or any doors triggers related ECU and sensor communication with the CAN. This communication will cause the resistance value to change.

1 CHECK OPEN IN CAN NO. 1 BUS WIRE (ACTIVE CONTROL ENGINE MOUNT ECU BRANCH WIRE)

Active Control Engine Mount ECU (Wire Harness Side):

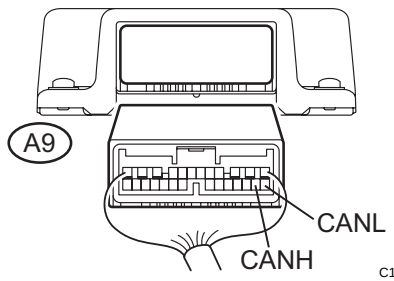

(a) Turn the engine switch off.
(b) Disconnect connector A9 from the active control engine mount ECU.
(c) Measure the resistance according to the value(s) in the table below.
Standard resistance

Tester Connection	Condition	Specified Value
A9-14 (CANH) - A9-13 (CANL)	Engine Switch off	54 to 69 Ω

NG → **REPAIR OR REPLACE CAN NO. 1 BUS BRANCH WIRE OR CONNECTOR (ACTIVE CONTROL ENGINE MOUNT ECU)**

OK

2 CHECK HARNESS AND CONNECTOR (IG2, GND)

Active Control Engine Mount ECU (Wire Harness Side):

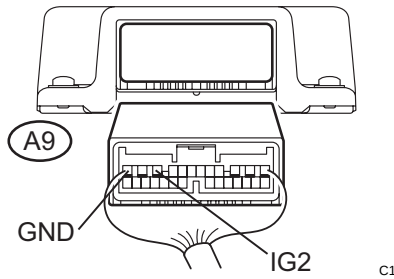

(a) Measure the resistance according to the value(s) in the table below.
Standard resistance

Tester Connection	Condition	Specified Value
A9-12 (GND) - Body Ground	Engine Switch off	Below 1 Ω

(b) Measure the voltage according to the value(s) in the table below.
Standard voltage

Tester Connection	Condition	Specified Value
A9-10 (IG2) - Body Ground	Engine Switch on (IG)	10 to 14 V

NG → **REPAIR OR REPLACE HARNESS OR CONNECTOR**

OK

REPLACE ACTIVE CONTROL ENGINE MOUNT ECU (See page ES-528)

CAN Bus Line

DESCRIPTION

When all DTCs and sensors connected to the CAN communication system are not displayed on the intelligent tester's "BUS CHECK" screen via CAN VIM, first measure the resistance between the terminals of the DLC3 to specify the trouble area.

WIRING DIAGRAM

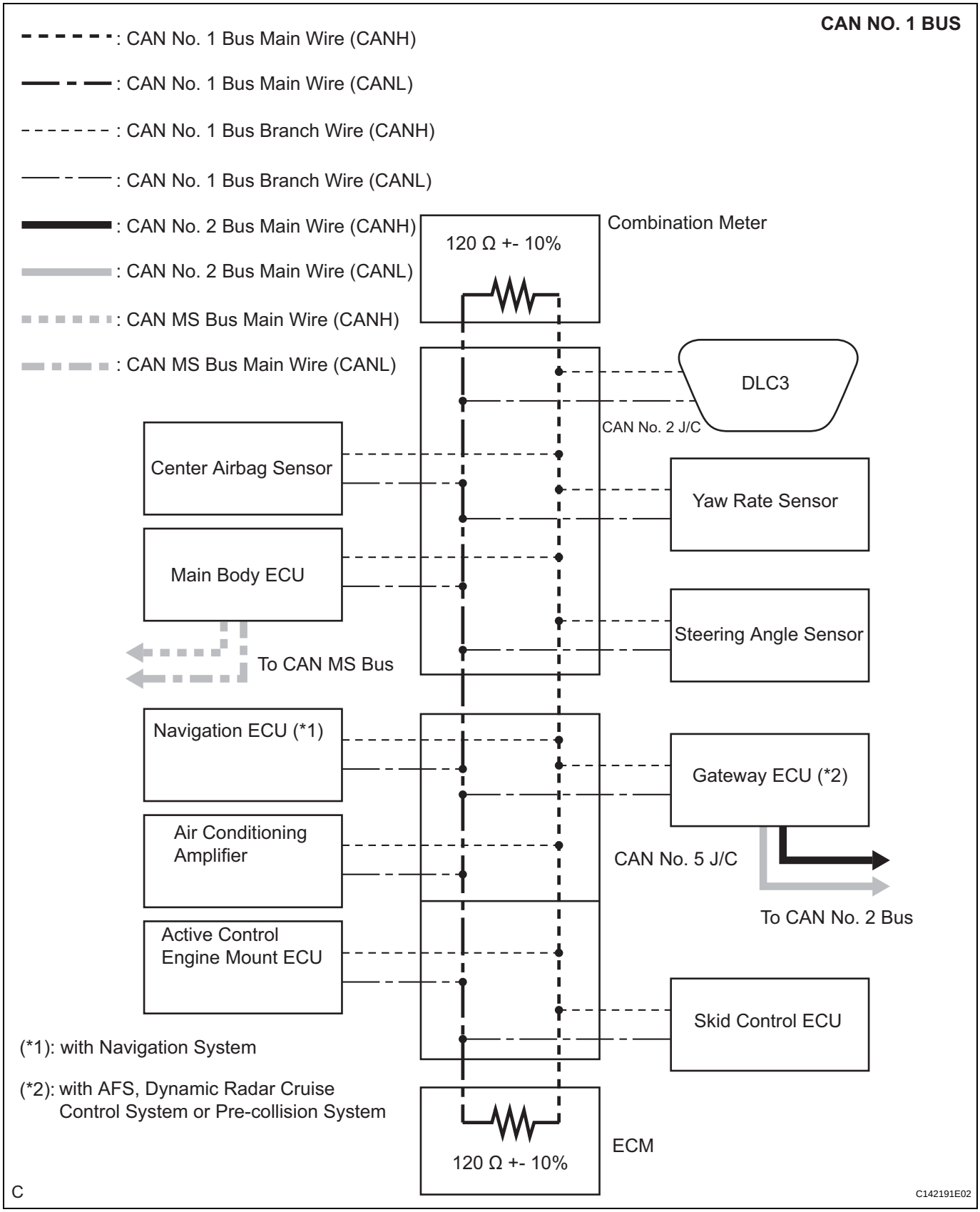

CA

INSPECTION PROCEDURE

NOTICE:

Before measuring the resistance, leave the vehicle as is for at least 1 minute and do not operate the engine switch, any other switches, or the doors. If any doors need to be opened in order to check connectors, open the doors and leave them open.

1 CHECK CAN NO. 1 BUS WIRE

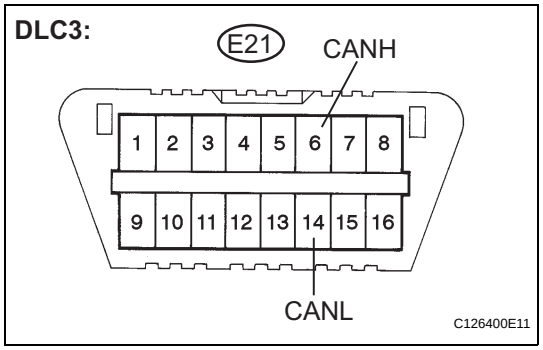

(a) Measure the resistance according to the value(s) in the table below.

Standard resistance

Tester Connection	Condition	Specified Value
E21-6 (CANH) - E21-14 (CANL)	Engine switch off	54 to 69 Ω

Result

Result	Proceed to
OK	A
69 Ω or higher	B
Below 54 Ω	C

B → **OPEN IN CAN NO. 1 BUS MAIN WIRE (See page CA-154)**

C → **SHORT IN CAN NO. 1 BUS WIRE (See page CA-159)**

A

2 CHECK CAN NO. 1 BUS WIRE (SHORT TO B+ IN CAN BUS WIRE)

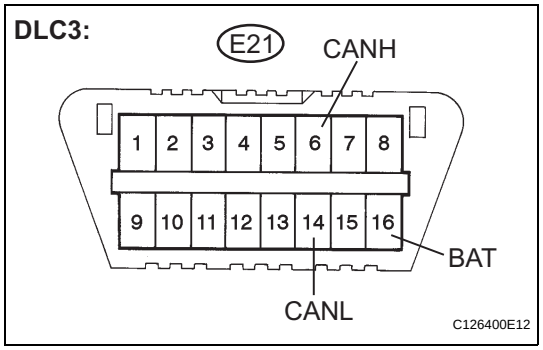

(a) Measure the resistance according to the value(s) in the table below.

Standard resistance

Tester Connection	Condition	Specified Value
E21-6 (CANH) - E21-16 (BAT)	Engine switch off	6 kΩ or higher
E21-14 (CANL) - E21-16 (BAT)	Engine switch off	6 kΩ or higher

NG → **SHORT TO B+ IN CAN NO. 1 BUS WIRE (See page CA-174)**

OK

3	CHECK CAN NO. 1 BUS WIRE (SHORT TO GND IN CAN BUS WIRE)

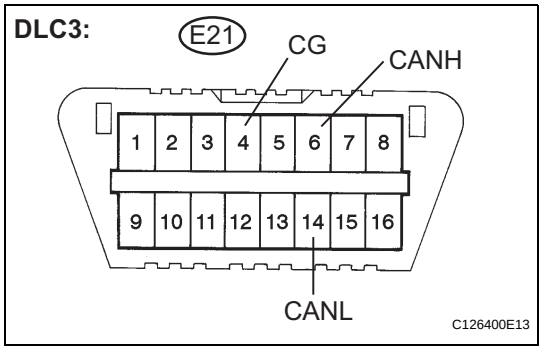

(a) Measure the resistance according to the value(s) in the table below.

Standard resistance

Tester Connection	Condition	Specified Value
E21-4 (CG) - E21-6 (CANH)	Engine switch off	200 Ω or higher
E21-4 (CG) - E21-14 (CANL)	Engine switch off	200 Ω or higher

NG → **SHORT TO GND IN CAN NO. 1 BUS WIRE (See page CA-186)**

OK

GO TO "HOW TO PROCEED WITH TROUBLESHOOTING" (See page CA-11)

Open in CAN Main Bus Line

DESCRIPTION

There may be an open circuit in the CAN No. 1 main bus wire and/or the DLC3 branch wire when the resistance between terminals 6 (CANH) and 14 (CANL) of the DLC3 is 69 Ω or more.

Symptom	Trouble Area
Resistance between terminals 6 (CANH) and 14 (CANL) of the DLC3 is 69 Ω or more.	1. CAN No. 1 main bus wire or connector 2. CAN No. 2 J/C 3. CAN No. 5 J/C 4. DLC3 branch wire or connector 5. Combination meter 6. ECM

WIRING DIAGRAM

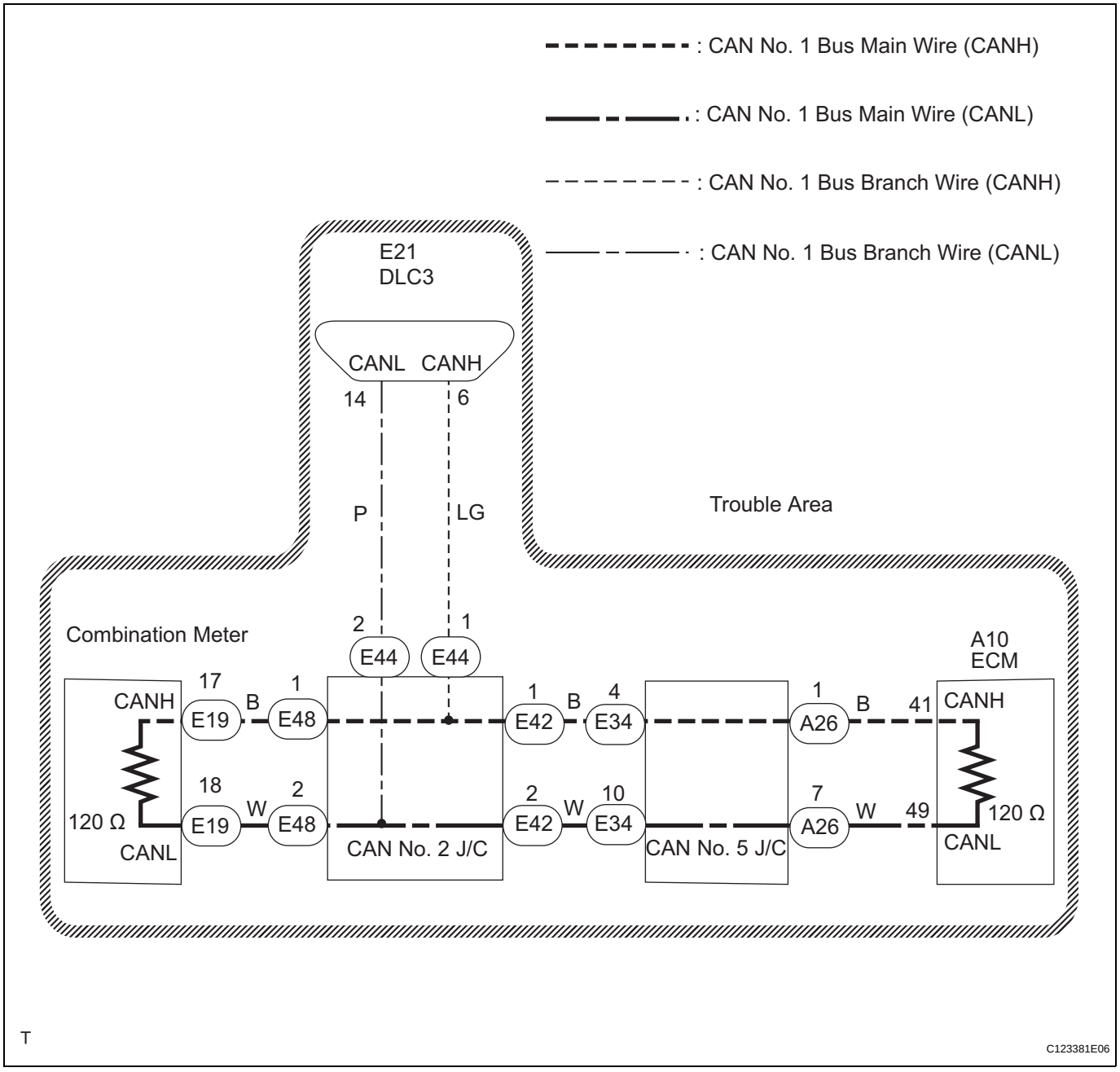

CA

INSPECTION PROCEDURE

NOTICE:

Before measuring the resistance, leave the vehicle as is for at least 1 minute and do not operate the engine switch, any other switches, or the doors. If any doors need to be opened in order to check connectors, open the doors and leave them open.

1 CHECK DLC3

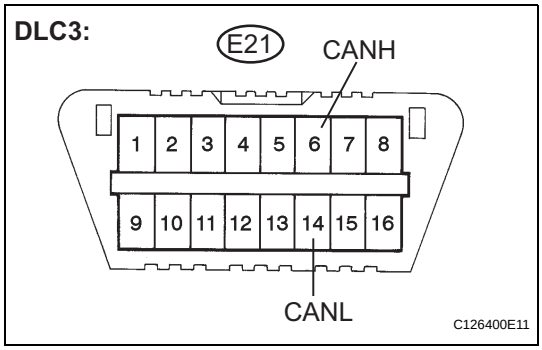

(a) Turn the engine switch off.

(b) Measure the resistance according to the value(s) in the table below.

Result

Tester Connection	Condition	Specified Value	Result
E21-6 (CANH) - E21-14 (CANL)	Engine switch off	108 to 132 Ω	A
E21-6 (CANH) - E21-14 (CANL)	Engine switch off	132 Ω or higher	B

NOTICE:

When the measured value is 132 Ω or higher and a CAN communication system diagnostic trouble code is output, there may be a fault besides disconnection of the DLC3 branch wire. For that reason, troubleshooting should be performed again from "HOW TO PROCEED WITH TROUBLESHOOTING" (See page CA-11) after repairing the trouble area.

B → **REPAIR OR REPLACE DLC3 BRANCH WIRE OR CONNECTOR**

A

2 CHECK FOR OPEN IN CAN NO. 1 BUS MAIN WIRE (COMBINATION METER MAIN BUS WIRE)

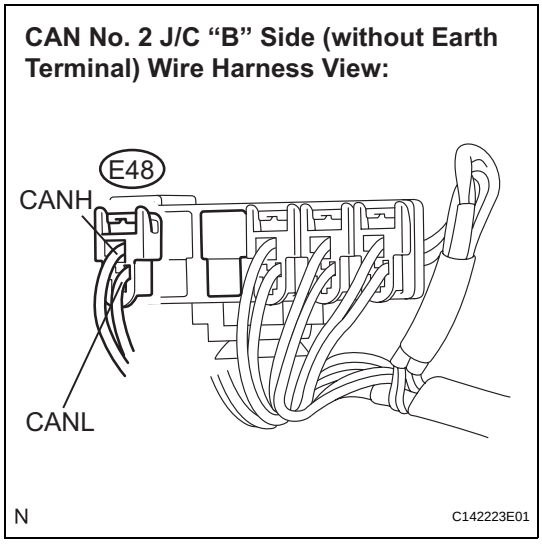

(a) Disconnect CAN main bus wire connector E48 from the CAN No. 2 J/C "B" side (without earth terminal).

NOTICE:

- **Before disconnecting the connector, make a note of where it is connected.**
- **Reconnect the connector to its original position.**

(b) Measure the resistance according to the value(s) in the table below.

Standard resistance

Tester Connection	Condition	Specified Value
E48-1 (CANH) - E48-2 (CANL)	Engine switch off	108 to 132 Ω

NG → **Go to step 7**

OK

CA

3 CHECK FOR OPEN IN CAN NO. 1 BUS MAIN WIRE (CAN NO. 2 J/C)

CAN No. 2 J/C "A" Side (without Earth Terminal) Wire Harness View:

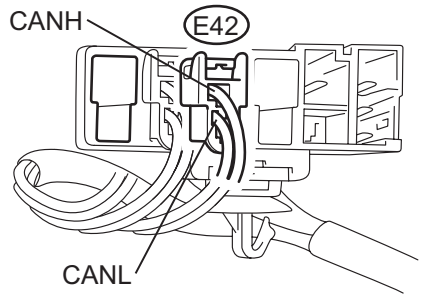

N C142224E01

(a) Reconnect CAN main bus wire connector E48 to the CAN No. 2 J/C "B" side (without earth terminal).

(b) Disconnect CAN main bus wire connector E42 from the CAN No. 2 J/C "A" side (without earth terminal).

NOTICE:

- **Before disconnecting the connector, make a note of where it is connected.**
- **Reconnect the connector to its original position.**

(c) Measure the resistance according to the value(s) in the table below.

Standard resistance

Tester Connection	Condition	Specified Value
E42-1 (CANH) - E42-2 (CANL)	Engine switch off	108 to 132 Ω

OK → **REPLACE CAN NO. 2 J/C**

NG

4 CHECK FOR OPEN IN CAN NO. 1 BUS MAIN WIRE (CAN NO. 2 J/C - CAN NO. 5 J/C)

CAN No. 5 J/C Connector (Rear of the Vehicle) Wire Harness Side View:

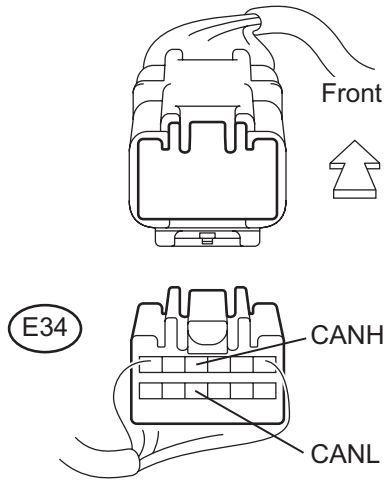

C133246E08

(a) Reconnect CAN main bus wire connector E42 to the CAN No. 2 J/C "A" side (without earth terminal).

(b) Disconnect CAN main bus wire connector E34 from the CAN No. 5 J/C (rear side of the vehicle).

(c) Measure the resistance according to the value(s) in the table below.

Standard resistance

Tester Connection	Condition	Specified Value
E34-4 (CANH) - E34-10 (CANL)	Engine switch off	108 to 132 Ω

NG → **REPAIR OR REPLACE CAN NO. 1 BUS MAIN WIRE OR CONNECTOR (CAN NO. 2 J/C - CAN NO. 5 J/C)**

OK

5 CHECK FOR OPEN IN CAN NO. 1 BUS MAIN WIRE (CAN NO. 5 J/C)

CAN No. 5 J/C Connector (Front of the Vehicle) Wire Harness Side View:

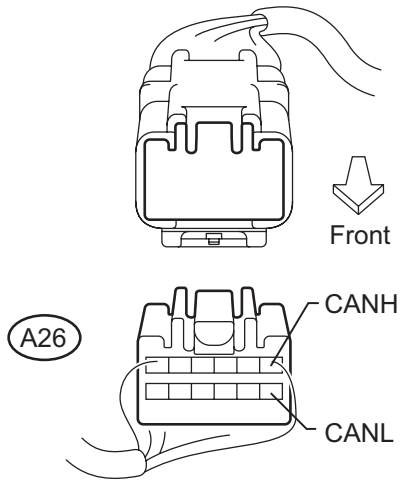

C133245E07

(a) Reconnect CAN main bus wire connector E34 to the CAN No. 5 J/C (rear side of the vehicle).
(b) Disconnect CAN main bus wire connector A26 from the CAN No. 5 J/C (front side of the vehicle).
(c) Measure the resistance according to the value(s) in the table below.

Standard resistance

Tester Connection	Condition	Specified Value
A26-1 (CANH) - A26-7 (CANL)	Engine switch off	108 to 132 Ω

OK → **REPLACE CAN NO. 5 J/C**

NG

6 CHECK FOR OPEN IN CAN NO. 1 BUS MAIN WIRE (ECM CAN MAIN BUS LINE)

ECM (Connector Front View):

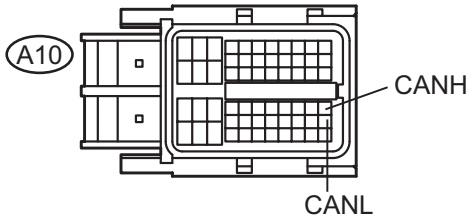

G100098E15

(a) Reconnect CAN main bus wire connector A26 to the CAN No. 5 J/C (front side of the vehicle).
(b) Disconnect the ECM connector.
(c) Measure the resistance according to the value(s) in the table below.

Standard resistance

Tester Connection	Condition	Specified Value
A10-41 (CANH) - A10-49 (CANL)	Engine switch off	108 to 132 Ω

OK → **REPLACE ECM (See page ES-542)**

NG

REPAIR OR REPLACE CAN NO. 1 BUS MAIN WIRE OR CONNECTOR (CAN NO. 5 J/C - ECM)

7	CHECK FOR OPEN IN CAN NO. 1 BUS MAIN WIRE (COMBINATION METER - CAN NO. 2 J/C)

Combination Meter Assembly (Wire Harness Side):

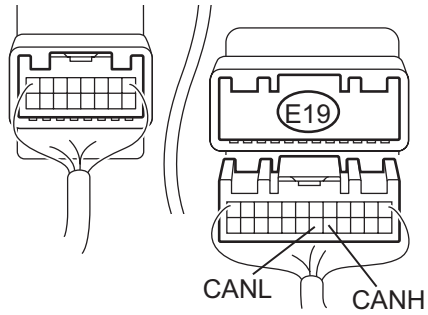

H

E132615E02

(a) Reconnect CAN main bus wire connector E48 to the CAN No. 2 J/C B side (without earth terminal).
(b) Disconnect combination meter connector E19.
(c) Measure the resistance according to the value(s) in the table below.

Standard resistance

Tester Connection	Condition	Specified Value
E19-17 (CANH) - E19-18 (CANL)	Engine switch off	108 to 132 Ω

OK → **REPLACE COMBINATION METER (See page ME-66)**

NG

REPAIR OR REPLACE CAN NO. 1 BUS MAIN WIRE OR CONNECTOR (CAN NO. 2 J/C - COMBINATION METER)

Short in CAN Bus Lines

DESCRIPTION

The CAN bus wires are considered to be shorted when the resistance between terminals 6 (CANH) and 14 (CANL) of the DLC3 is below 54 Ω.

Symptom	Trouble Area
Resistance between terminals 6 (CANH) and 14 (CANL) of the DLC3 is below 54 Ω.	1. Short in CAN bus wires 2. Skid control ECU 3. Steering angle sensor 4. Yaw rate sensor 5. ECM 6. Combination meter 7. Main body ECU 8. A/C amplifier 9. Center airbag sensor 10. Gateway ECU 11. Active control engine mount ECU 12. Multi-display 13. CAN No. 2 J/C 14. CAN No. 5 J/C

WIRING DIAGRAM

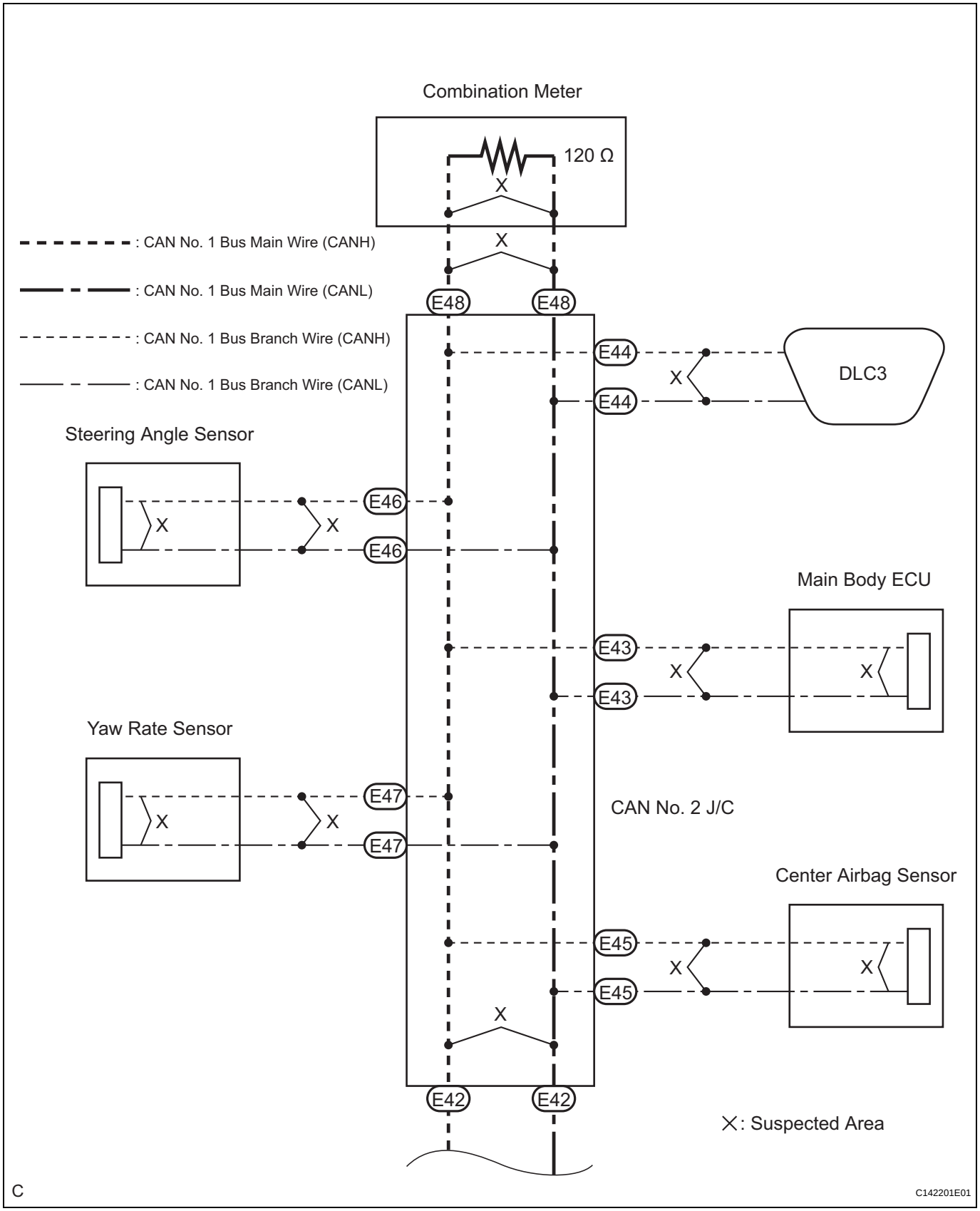

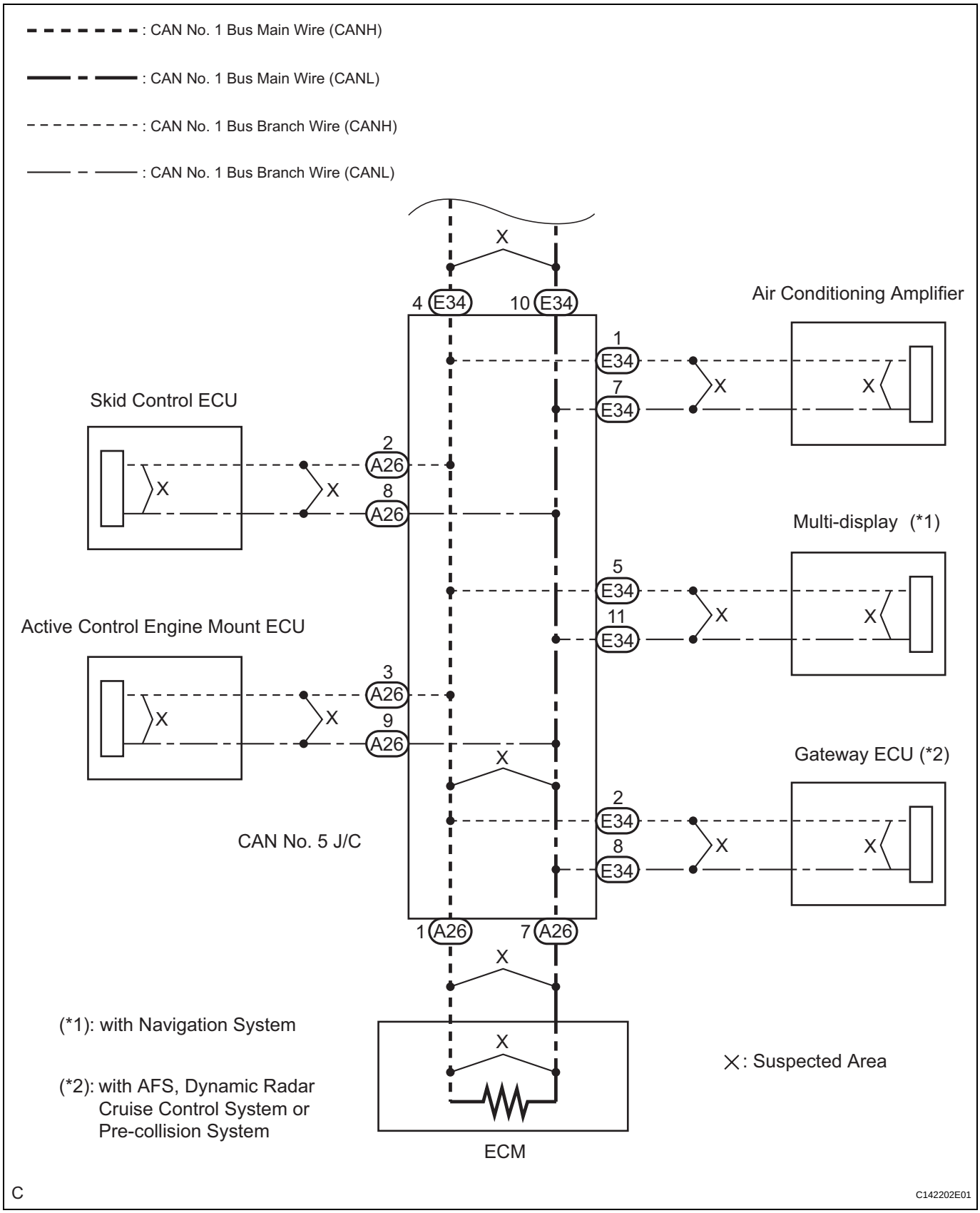
: CAN No. 1 Bus Main Wire (CANH)
: CAN No. 1 Bus Main Wire (CANL)
: CAN No. 1 Bus Branch Wire (CANH)
: CAN No. 1 Bus Branch Wire (CANL)
X
4 E34
10 E34
Air Conditioning Amplifier
1 E34
7 E34
Skid Control ECU
2 A26
8 A26
Multi-display (*1)
5 E34
11 E34
Active Control Engine Mount ECU
3 A26
9 A26
Gateway ECU (*2)
2 E34
8 E34
CAN No. 5 J/C
1 A26
7 A26
ECM
(*1): with Navigation System
(*2): with AFS, Dynamic Radar Cruise Control System or Pre-collision System
X: Suspected Area
C
C142202E01

INSPECTION PROCEDURE

NOTICE:

Before measuring the resistance, leave the vehicle as is for at least 1 minute and do not operate the engine switch, any other switches, or the doors. If any doors need to be opened in order to check connectors, open the doors and leave them open.

1	CHECK FOR SHORT IN CAN NO. 1 BUS WIRE (DLC3 BRANCH WIRE)

CAN No. 2 J/C "A" Side (without Earth Terminal) Wire Harness View:

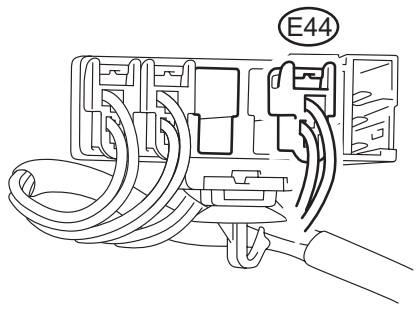

N C142225E01

(a) Turn the engine switch off.

(b) Disconnect DLC3 branch wire connector E44 from the CAN No. 2 J/C "A" side (without earth terminal).

NOTICE:

- **Before disconnecting the connector, make a note of where it is connected.**
- **Reconnect the connector to its original position.**

DLC3:

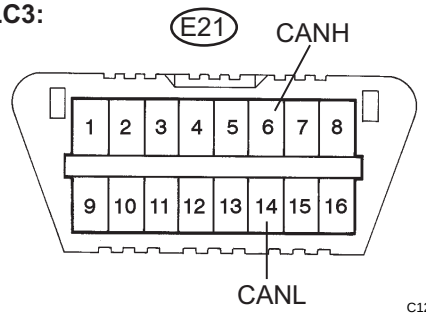

C126400E11

(c) Measure the resistance according to the value(s) in the table below.

Standard resistance

Tester Connection	Condition	Specified Value
E21-6 (CANH) - E21-14 (CANL)	Engine switch off	1 MΩ or higher

(d) Reconnect DLC3 branch wire connector E62 to the CAN No. 2 J/C "A" side (without earth terminal).

NG → **REPAIR OR REPLACE DLC3 BRANCH WIRE OR CONNECTOR**

OK

2 CHECK FOR SHORT IN CAN NO. 1 BUS WIRE (CAN NO. 2 J/C SIDE)

CAN No. 2 J/C “A” Side (without Earth Terminal) Wire Harness View:

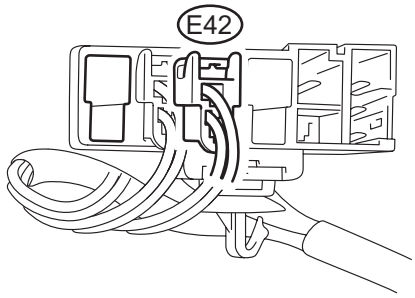

N C142224E02

(a) Disconnect CAN main bus wire connector E42 from the CAN No. 2 J/C "A" side (without earth terminal).

DLC3:

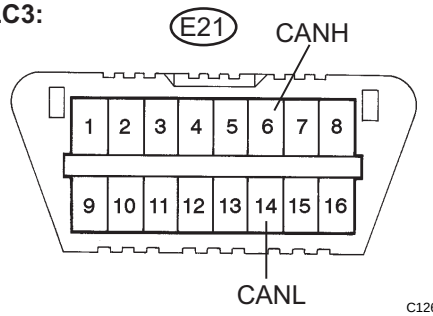

C126400E11

(b) Connect the probes of an ohmmeter to terminals 6 (CANH) and 14 (CANL) of the DLC3.
(c) Measure the resistance according to the value(s) in the table below.

Standard resistance

Tester Connection	Condition	Specified Value
E21-6 (CANH) - E21-14 (CANL)	Engine switch off	108 to 132 Ω

OK → **Go to step 7**

NG

3 CHECK FOR SHORT IN CAN NO. 1 BUS WIRE (CAN NO. 2 J/C BRANCH WIRE)

DLC3:

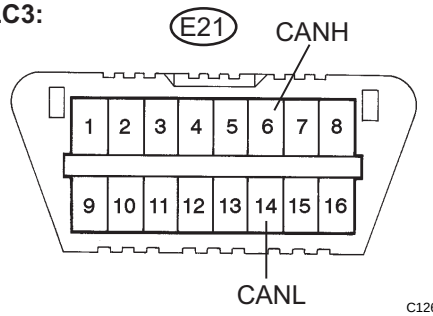

C126400E11

(a) Reconnect CAN main bus wire connector E42 to the CAN No. 2 J/C "A" side (without earth terminal).
(b) Connect the probes of an ohmmeter to terminals 6 (CANH) and 14 (CANL) of the DLC3.
(c) While observing the resistance value shown on the tester, disconnect connectors E43, E45, E46, and E47 from the CAN No. 2 J/C one by one until the resistance becomes normal (between 54 and 69 Ω).
HINT:
Disconnect the branch wire connectors other than those of the DLC3.

CAN No. 1 Bus:

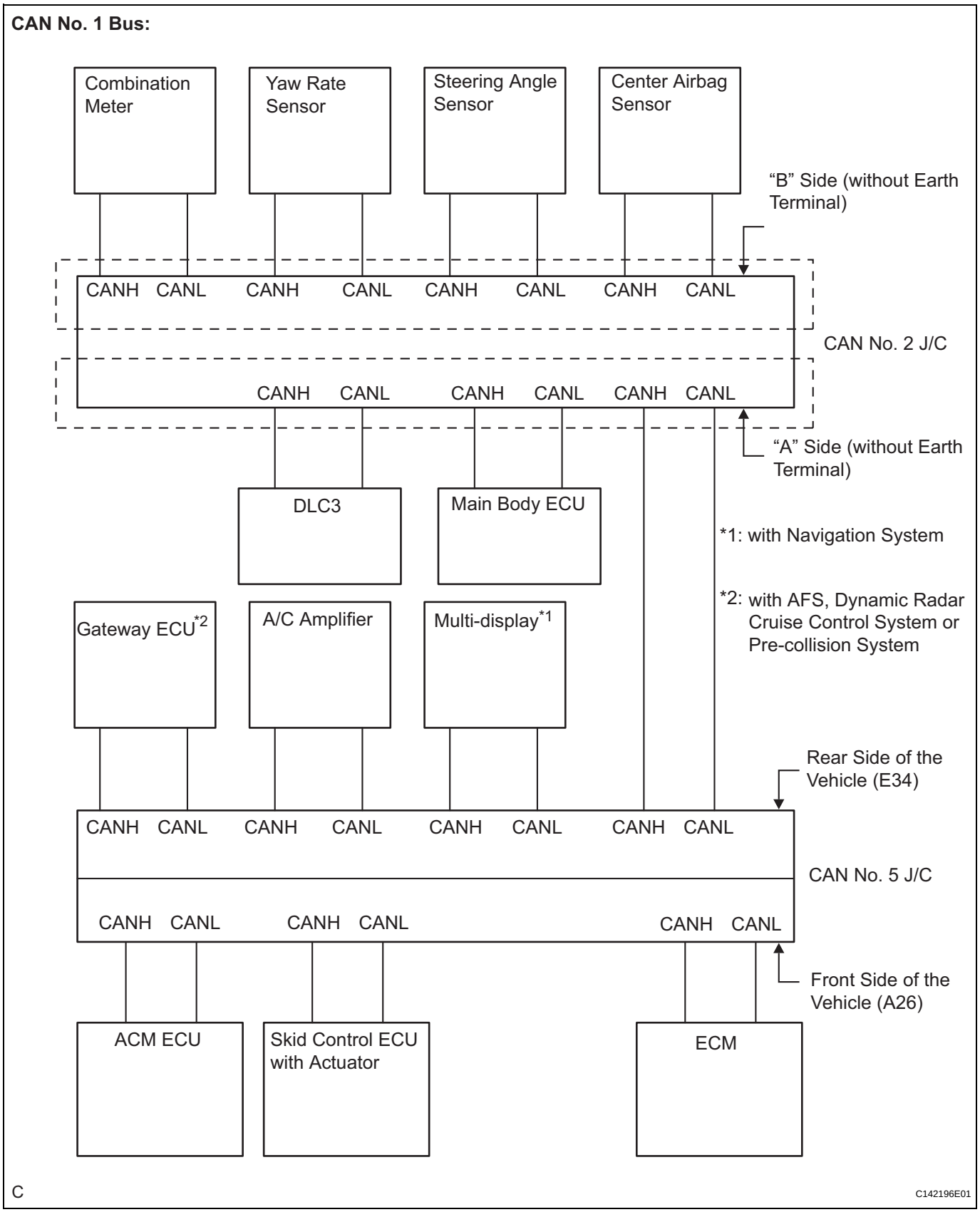

CA

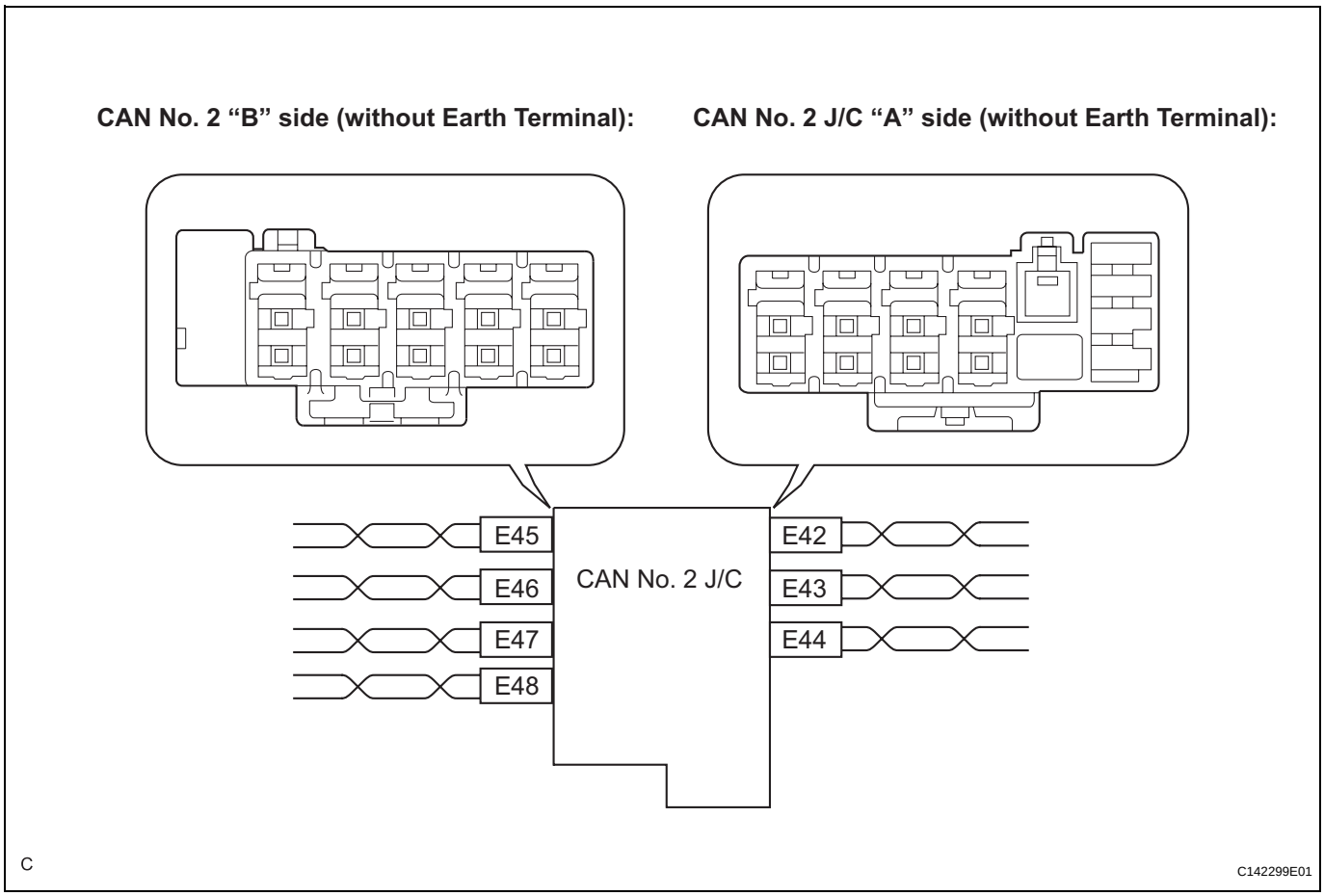

CAN No. 2 J/C Connector ("A" side, without earth terminal)	Connector Color	Color (CAN-H Side)	Color (CAN-L Side)
CAN No. 1 Bus Wire (E42)	White	B	W
Main Body ECU (E43)	White	BR	GR
DLC3 (E44)	White	LG	P

CAN No. 2 J/C Connector ("B" side, without earth terminal)	Connector Color	Color (CAN-H Side)	Color (CAN-L Side)
Yaw Rate Sensor (E47)	White	O	P
Center Airbag Sensor (E45)	White	G	Y
Steering Angle Sensor (E46)	White	V	P
Combination Meter (E48)	White	B	W

NOTICE:
Do not reconnect the disconnected connectors until this inspection is complete because there may be a short in 2 or more branch wires.

Result

CA

Symptom	Proceed to
The resistance is still below 54 Ω when all the specified connectors are disconnected. (There are no shorts in the branch wires.)	**A**
The resistance becomes normal (between 54 and 69 Ω) when a connector is disconnected. (There is a short in one or more of the branch wires.)	**B**

(d) When there is a short in one or more of the branch wires:

(1) Reconnect all of the connectors to the CAN No. 2 J/C, except for the one that was disconnected last (the short-circuited bus wire). Check that the resistance shown on the tester is normal (between 54 and 69 Ω) to confirm that there is a short in one branch wire only.
HINT:
- The connectors connected to the CAN No. 2 J/C can be distinguished according to the color of the communication bus wires and the shape of the connectors.
- Reconnecting the connectors to non-specified positions on the CAN No. 2 J/C does not affect system operation. However, it is preferred to reconnect the connectors to their specified positions to avoid negative effects on the wiring such as tension on the wiring harnesses, and to make future maintenance easier.

B → **Go to step 12**

A

4 CHECK FOR SHORT IN CAN NO. 1 BUS WIRE (COMBINATION METER ECU MAIN BUS WIRE)

CAN No. 2 J/C "B" Side (without Earth Terminal) Wire Harness View:

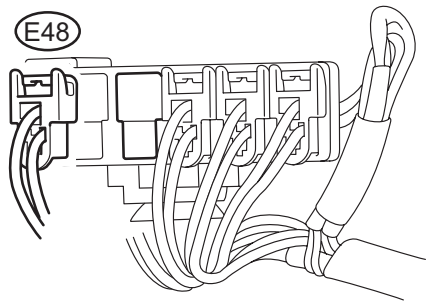

N C142223E02

(a) Disconnect combination meter main bus wire connector E48 from the CAN No. 2 J/C "B" side (without earth terminal).
NOTICE:
- **Before disconnecting the connector, make a note of where it is connected.**
- **Reconnect the connector to its original position.**

DLC3:

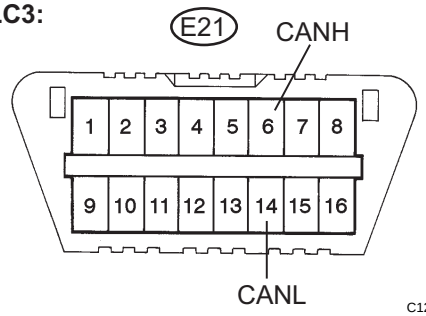

C126400E11

(b) Measure the resistance according to the value(s) in the table below.
Standard resistance

Tester Connection	Condition	Specified Value
E21-6 (CANH) - E21-14 (CANL)	Engine switch off	108 to 132 Ω

NG → **REPLACE CAN NO. 2 J/C**

CA

OK

5	RECONNECT CONNECTOR

(a) Reconnect combination meter main bus wire connector E48 to the CAN No. 2 J/C "B" side (without earth terminal).

NEXT

6	CHECK FOR SHORT IN CAN NO. 1 BUS WIRE (COMBINATION METER)

Combination Meter (Wire Harness Side):

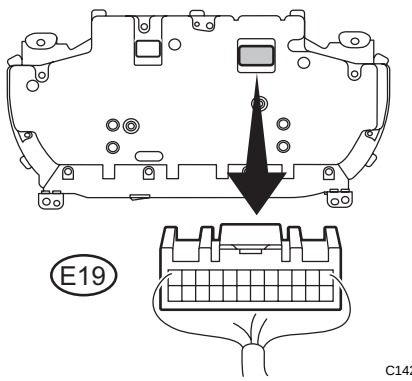

(a) Disconnect combination meter connectoE19.

DLC3:

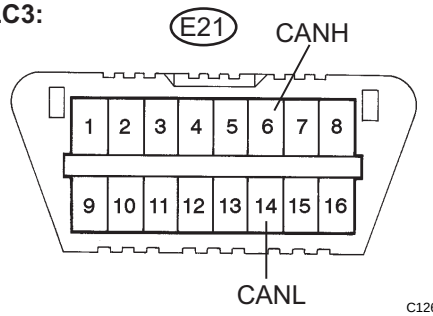

(b) Measure the resistance according to the value(s) in the table below.

Standard resistance

Tester Connection	Condition	Specified Value
E21-6 (CANH) - E21-14 (CANL)	Engine switch off	108 to 132 Ω

HINT:
If the resistance changes to 1 MΩ or more when the connector is disconnected, there may be a short in the ECM.

NG → **REPAIR OR REPLACE CAN NO. 1 BUS MAIN WIRE OR CONNECTOR (COMBINATION METER MAIN BUS WIRE)**

OK

CA

REPLACE COMBINATION METER (See page ME-66)

7	CHECK FOR SHORT IN CAN NO. 1 BUS WIRE (CAN NO. 5 J/C - CAN NO. 2 J/C)

(a) Reconnect CAN No. 2 J/C connector E42.

CAN No. 5 J/C Connector (Rear of the Vehicle) Wire Harness Side View:

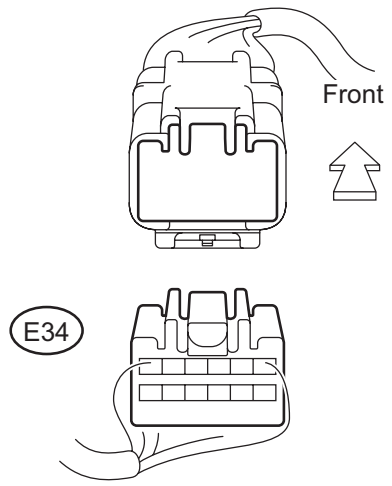

C133246E09

(b) Disconnect CAN No. 5 J/C connector E34.

DLC3:

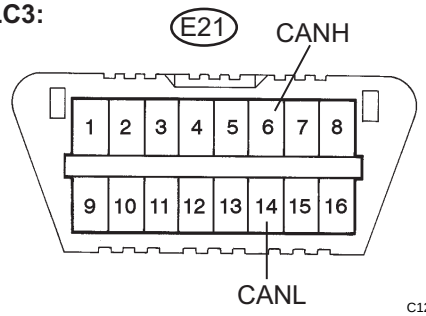

C126400E11

(c) Measure the resistance according to the value(s) in the table below.

Standard resistance

Tester Connection	Condition	Specified Value
E21-6 (CANH) - E21-14 (CANL)	Engine switch off	108 to 132 Ω

NG → **REPAIR OR REPLACE CAN NO. 1 BUS MAIN WIRE OR CONNECTOR (CAN NO. 2 J/C - CAN NO. 5 J/C)**

OK

8	CEHCK FOR SHORT IN CAN NO. 1 BUS WIRE (CAN NO. 5 J/C - CAN NO. 2 J/C)

(a) Reconnect CAN No. 5 J/C connector E34.

CAN No. 5 J/C Connector (Front of the Vehicle) Wire Harness Side View:

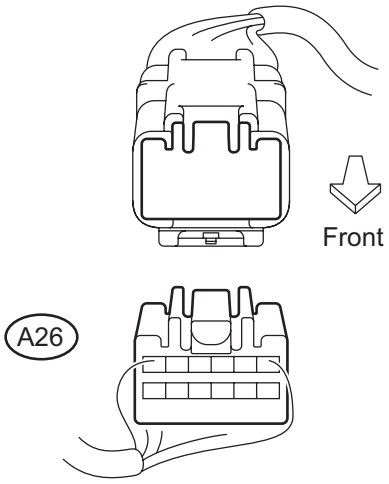

(b) Disconnect CAN No. 5 J/C connector A26.

DLC3:

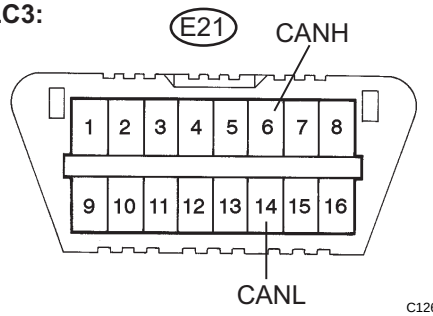

(c) Measure the resistance according to the value(s) in the table below.

Standard resistance

Tester Connection	Condition	Specified Value
E21-6 (CANH) - E21-14 (CANL)	Engine switch off	108 to 132 Ω

OK → **Go to step 10**

NG

9	CHECK FOR SHORT IN CAN NO. 1 BUS WIRE (CAN NO. 5 J/C WIRE)

(a) Reconnect CAN No. 5 J/C connector A26.
(b) Disconnect CAN No. 5 J/C connector E34.

CAN No. 5 J/C (Rear Side of the Vehicle) Wire Harness View:

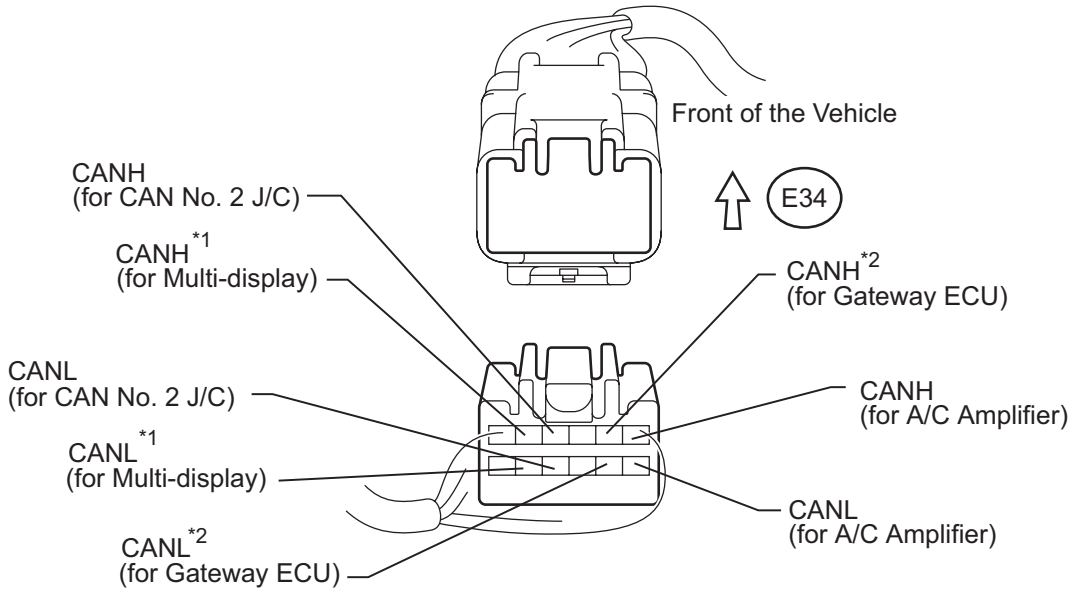

(c) Measure the resistance according to the value(s) in the table below.

Standard resistance

Tester Connection	Destination	Condition	Specified Value
E34-1 (CANH) - E34-7 (CANL)	A/C amplifier	Engine switch off	More than 1 Ω
E34-2 (CANH)*2 - E34-8 (CANL)*2	Gateway ECU*2	Engine switch off	More than 1 Ω
E34-5*1 (CANH) - E34-11*1 (CANL)	Multi-display*1	Engine switch off	More than 1 Ω

HINT:
- *1: with Navigation system
- *2: with AFS, dynamic radar cruise control system or pre-collision system

NG → **Go to step 12**

OK

REPLACE CAN NO. 5 J/C

10 CHECK FOR SHORT IN CAN NO. 1 BUS WIRE (CAN NO. 5 J/C WIRE)

(a) Disconnect CAN No. 5 J/C connector A26.

CAN No. 5 J/C (Front Side of the Vehicle) Wire Harness View:

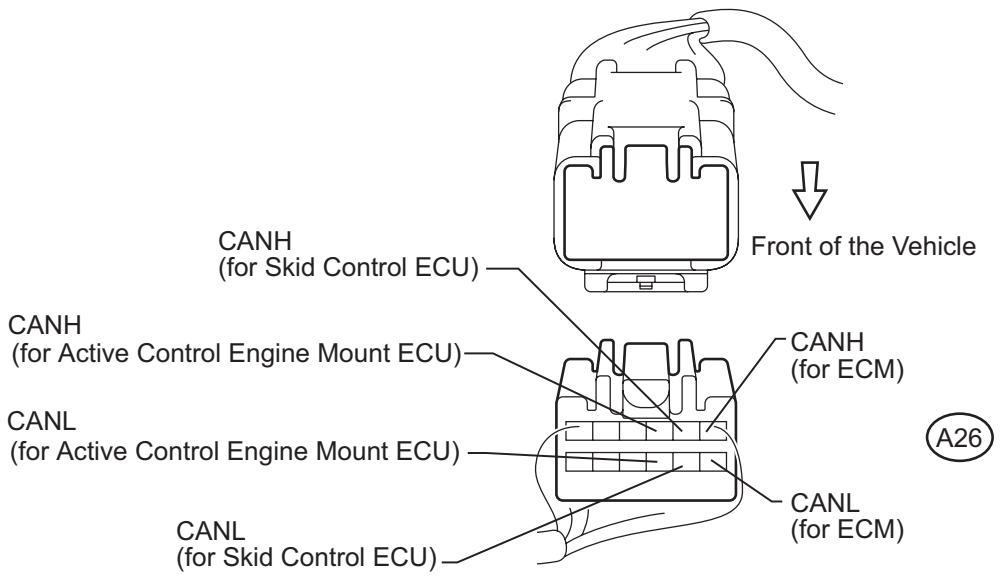

(b) Measure the resistance according to the value(s) in the table below.

Standard resistance

Tester Connection	Destination	Condition	Specified Value
A26-1 (CANH) - A26-7 (CANL)	ECM	Engine switch off	108 to 132 Ω
A26-2 (CANH) - A26-8 (CANL)	Skid control ECU	Engine switch off	More than 1 Ω
A26-3 (CANH) - A26-9 (CANL)	Active control engine mount ECU	Engine switch off	More than 1 Ω

Result

Result	Proceed to
OK	A
NG (Short in wires other than those connected to the ECM)	B
NG (Short in wires connected to the ECM)	C

A → **REPLACE CAN NO. 5 J/C**

B → **Go to step 12**

C

11 CHECK FOR SHORT IN CAN NO. 1 BUS WIRE (ECM MAIN BUS WIRE)

CAN No. 5 J/C Connector (Front of the Vehicle) Wire Harness Side View:

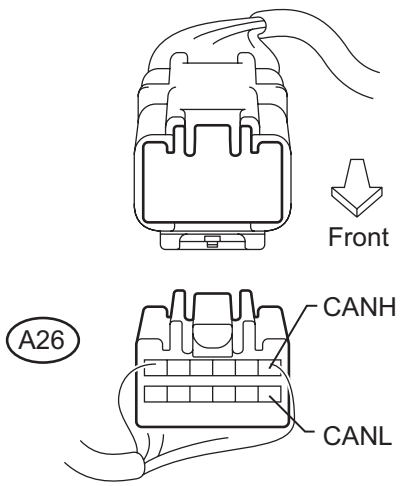

C133245E07

(a) Disconnect ECM connector A10.
(b) Measure the resistance according to the value(s) in the table below.

Standard resistance

Tester Connection	Condition	Specified Value
A26-1 (CANH) - A26-7 (CANL)	Engine switch off	1 MΩ or higher

HINT:
Measure the resistance with CAN No. 5 J/C connector A26 disconnected.

NG → **REPAIR OR REPLACE CAN NO. 1 BUS MAIN WIRE OR CONNECTOR (ECM - CAN NO. 5 J/C)**

OK

REPLACE ECM (See page ES-542)

12 RECONNECT CONNECTOR

(a) Reconnect the connector for the short-circuited branch wire to the CAN No. 2 J/C or CAN No. 5 J/C (the connector that caused the bus wire resistance to become normal (between 54 and 69 Ω) when it was disconnected).

NEXT

13 CHECK FOR SHORT IN CAN NO. 1 BUS WIRE

DLC3:

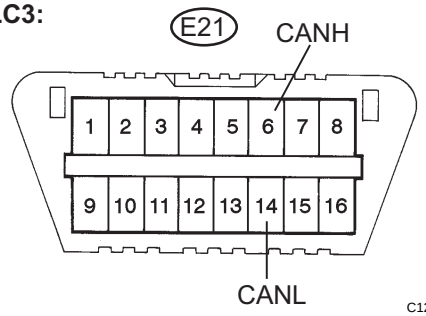

C126400E11

(a) Disconnect the connector that includes terminals CANH and CANL from the ECU (or sensor) to which the short-circuited branch wire is connected. (See page CA-15)
(b) Measure the resistance according to the value(s) in the table below.

Standard resistance

Tester Connection	Condition	Specified Value
E21-6 (CANH) - E21-14 (CANL)	Engine switch off	1 MΩ or higher

HINT:
If the resistance becomes normal (between 54 and 69 Ω) when the connector is disconnected from the ECU (or sensor), there may be a short in the ECU (or sensor).

NG → **REPAIR OR REPLACE CORRESPONDING ECU OR SENSOR BRANCH WIRE OR CONNECTOR**

OK

REPLACE CORRESPONDING ECU OR SENSOR

Short to B+ in CAN Bus Line

DESCRIPTION

A short to B+ is suspected in the CAN bus wire when the resistance between terminals 6 (CANH) and 16 (BAT), or terminals 14 (CANL) and 16 (BAT) of the DLC3 is below 6 kΩ.

Symptom	Trouble Area
The resistance between terminals 6 (CANH) and 16 (BAT), or terminals 14 (CANL) and 16 (BAT) of the DLC3 is below 6 kΩ.	1. Short to B+ in CAN bus wire 2. Skid control ECU 3. Steering angle sensor 4. Yaw rate sensor 5. ECM 6. Combination meter 7. Main body ECU 8. A/C amplifier 9. Gateway ECU 10. Active control engine mount ECU 11. Multi-display 12. Center airbag sensor 13. CAN No. 2 J/C 14. CAN No. 5 J/C

WIRING DIAGRAM

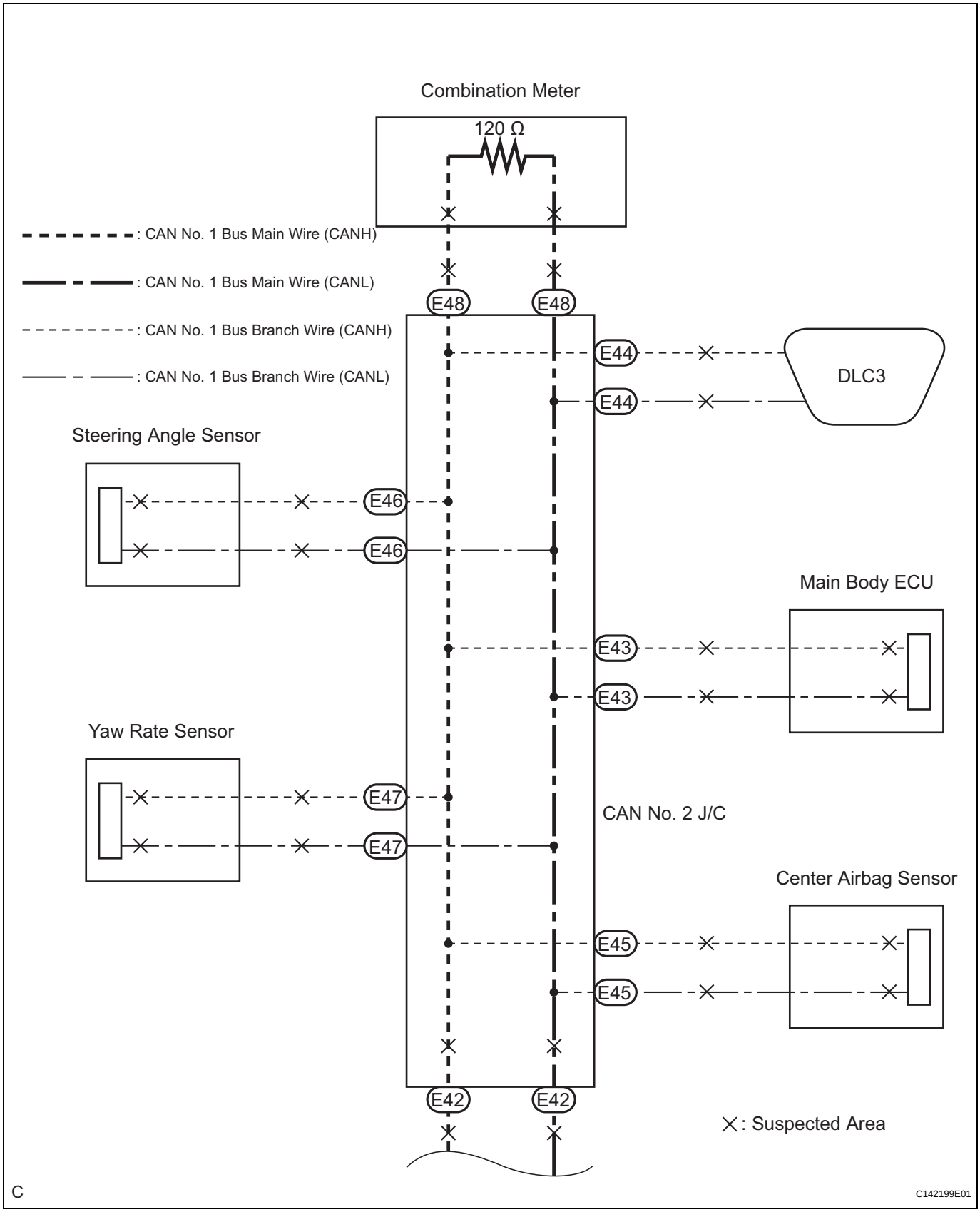

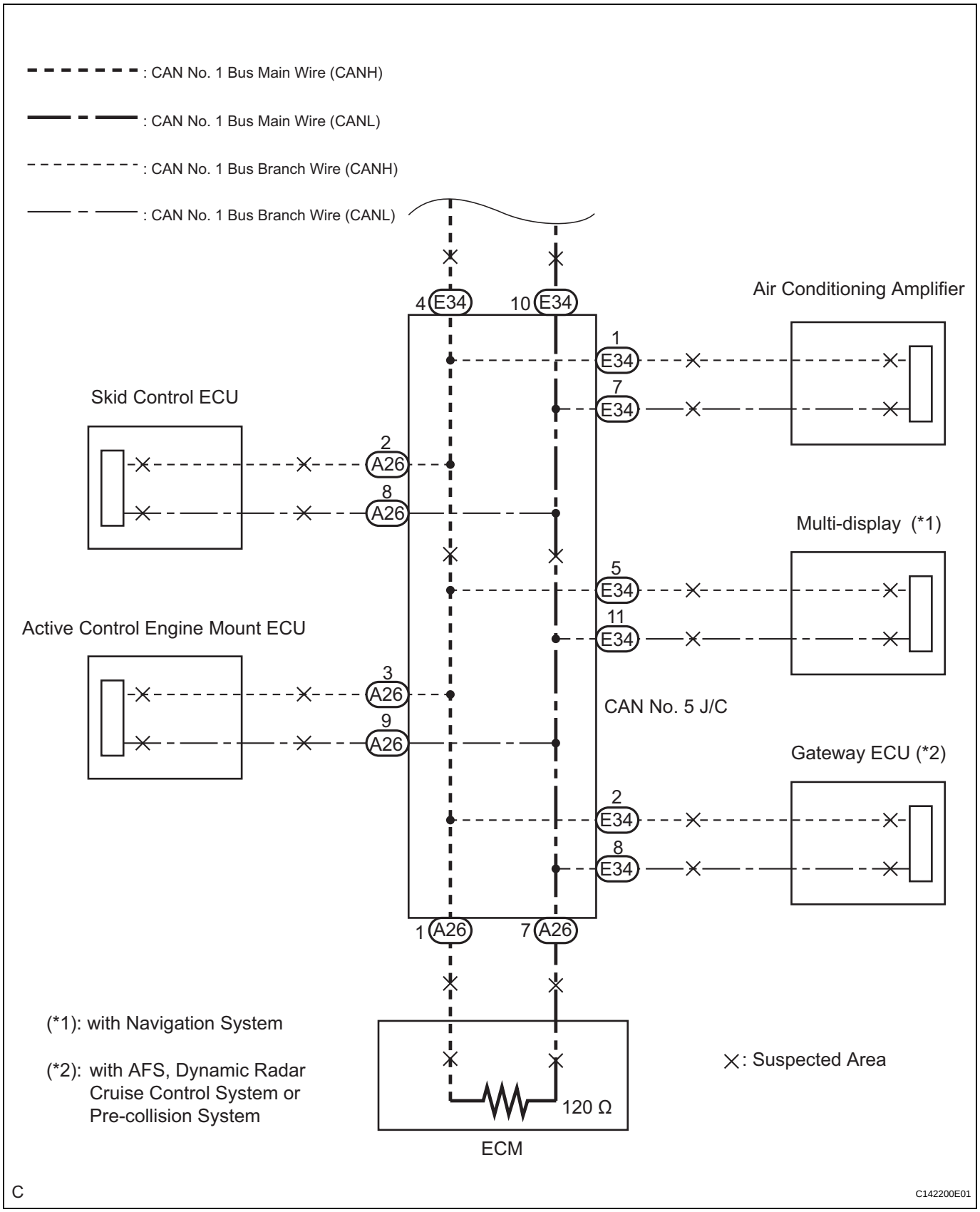
: CAN No. 1 Bus Main Wire (CANH)
: CAN No. 1 Bus Main Wire (CANL)
: CAN No. 1 Bus Branch Wire (CANH)
: CAN No. 1 Bus Branch Wire (CANL)
Air Conditioning Amplifier
Skid Control ECU
Multi-display (*1)
Active Control Engine Mount ECU
CAN No. 5 J/C
Gateway ECU (*2)
4 E34
10 E34
1 E34
7 E34
2 A26
8 A26
5 E34
11 E34
3 A26
9 A26
2 E34
8 E34
1 A26
7 A26
(*1): with Navigation System
(*2): with AFS, Dynamic Radar Cruise Control System or Pre-collision System
: Suspected Area
120 Ω
ECM
C
C142200E01

CA

INSPECTION PROCEDURE

NOTICE:

Before measuring the resistance, leave the vehicle as is for at least 1 minute and do not operate the engine switch, any other switches, or the doors. If any doors need to be opened in order to check connectors, open the doors and leave them open.

1	CHECK FOR SHORT TO B+ IN CAN NO. 1 BUS WIRE (DLC3 BRANCH WIRE)

CAN No. 2 J/C “A” Side (without Earth Terminal) Wire Harness View:

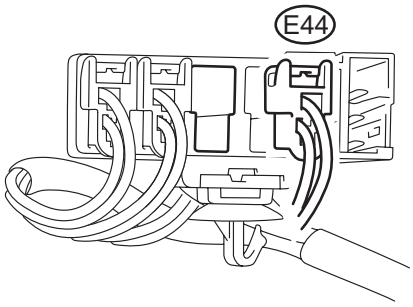

N C142225E01

(a) Turn the engine switch off.

(b) Disconnect DLC3 branch wire connector E44 from the CAN No. 2 J/C "A" side (without earth terminal).

NOTICE:

- **Before disconnecting the connector, make a note of where it is connected.**
- **Reconnect the connector to its original position.**

DLC3:

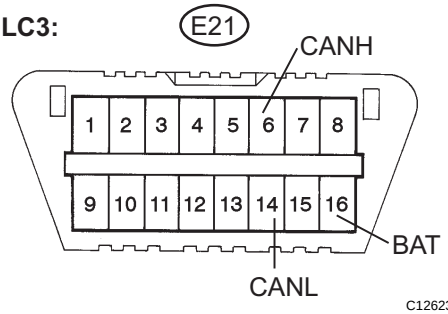

C126231E16

(c) Measure the resistance according to the value(s) in the table below.

Standard resistance

Tester Connection	Condition	Specified Value
E21-6 (CANH) - E21-16 (BAT)	Engine switch off	6 kΩ or higher
E21-14 (CANL) - E21-16 (BAT)	Engine switch off	6 kΩ or higher

(d) Reconnect DLC3 branch wire connector E44 to the CAN No. 2 J/C "A" side (without earth terminal).

NG → **REPAIR OR REPLACE DLC3 BRANCH WIRE OR CONNECTOR**

OK

2 CHECK FOR SHORT TO B+ IN CAN NO. 1 BUS WIRE (CAN NO. 2 J/C SIDE)

CAN No. 2 J/C "A" Side (without Earth Terminal) Wire Harness View:

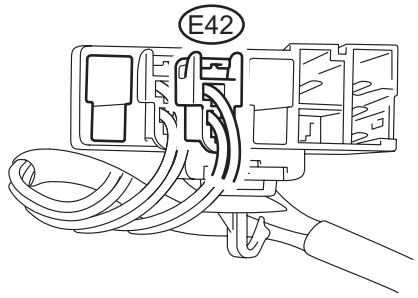

N C142224E02

(a) Disconnect CAN main bus wire connector E42 from the CAN No. 2 J/C "A" side (without earth terminal).

DLC3:

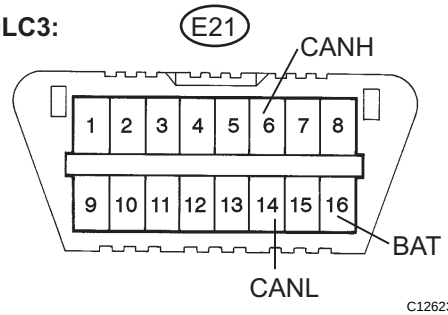

C126231E16

(b) Using an ohmmeter, measure the resistance between terminals 6 (CANH) and 16 (BAT), and between terminals 14 (CANL) and 16 (BAT) of the DLC3 each time a connector is disconnected.

Standard resistance

Tester Connection	Condition	Specified Value
E21-6 (CANH) - E21-16 (BAT)	Engine switch off	6 kΩ or higher
E21-14 (CANL) - E21-16 (BAT)	Engine switch off	6 kΩ or higher

OK → **Go to step 4**

NG

3 CHECK FOR SHORT TO B+ IN CAN NO. 1 BUS WIRE

DLC3:

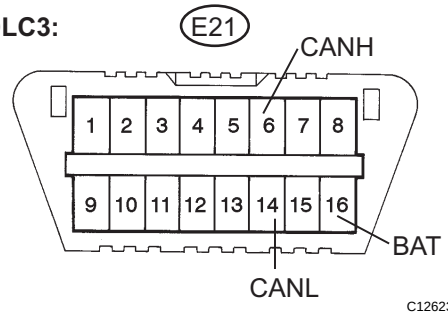

C126231E16

(a) Disconnect connectors from the CAN No. 2 J/C one at a time.
HINT:
Disconnect the ECU and sensor connectors other than the DLC3 branch wires and CAN main bus wires between the CAN No. 2 J/C and CAN No. 5 J/C.

(b) Using an ohmmeter, measure the resistance between terminals 6 (CANH) and 16 (BAT), and between terminals 14 (CANL) and 16 (BAT) of the DLC3 each time a connector is disconnected.

CAN No. 1 Bus:

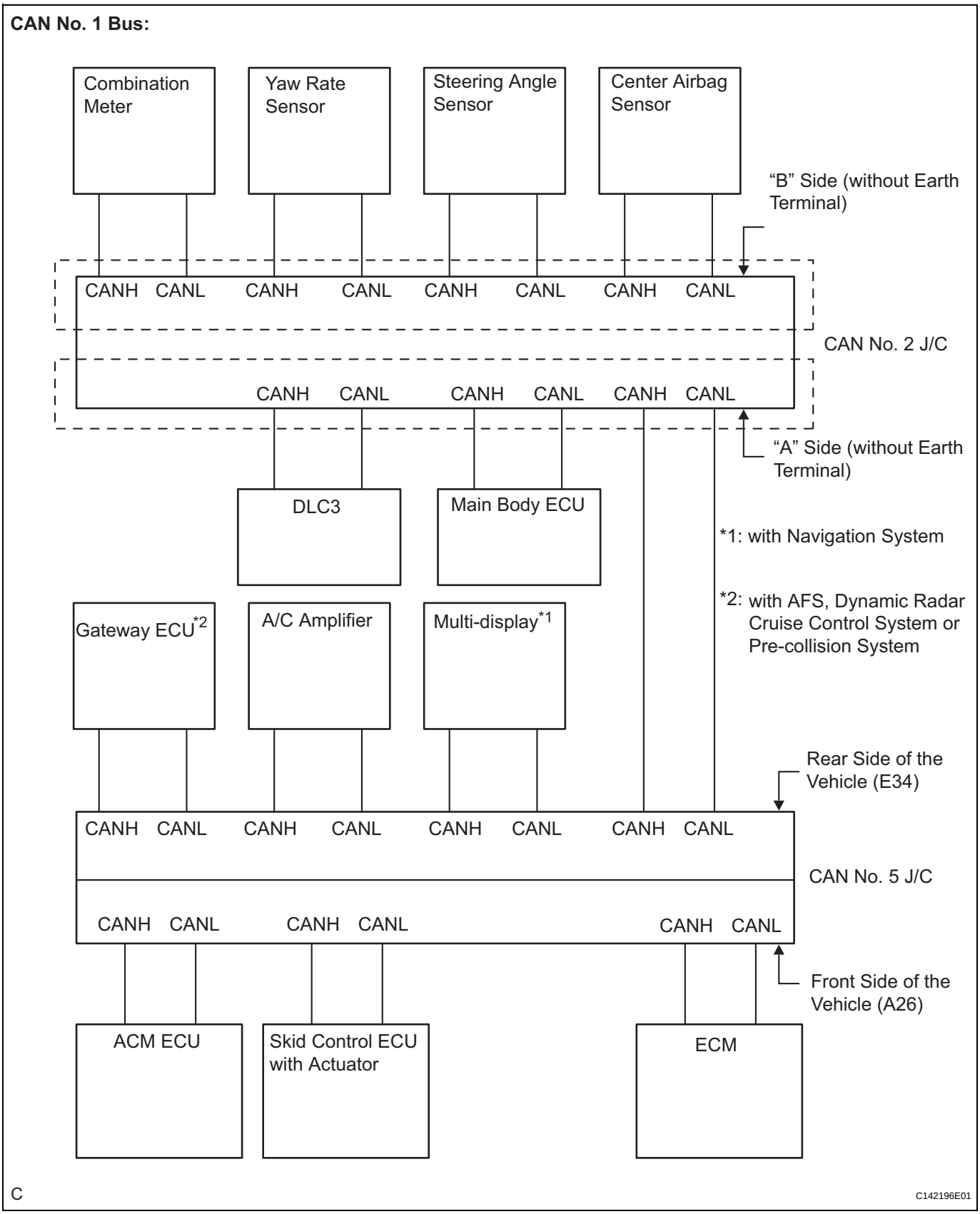
Combination Meter
Yaw Rate Sensor
Steering Angle Sensor
Center Airbag Sensor
"B" Side (without Earth Terminal)
CANH CANL CANH CANL CANH CANL CANH CANL
CAN No. 2 J/C
CANH CANL CANH CANL CANH CANL
"A" Side (without Earth Terminal)
DLC3
Main Body ECU
*1: with Navigation System
*2: with AFS, Dynamic Radar Cruise Control System or Pre-collision System
Gateway ECU*2
A/C Amplifier
Multi-display*1
Rear Side of the Vehicle (E34)
CANH CANL CANH CANL CANH CANL CANH CANL
CAN No. 5 J/C
CANH CANL CANH CANL CANH CANL
Front Side of the Vehicle (A26)
ACM ECU
Skid Control ECU with Actuator
ECM
C
C142196E01

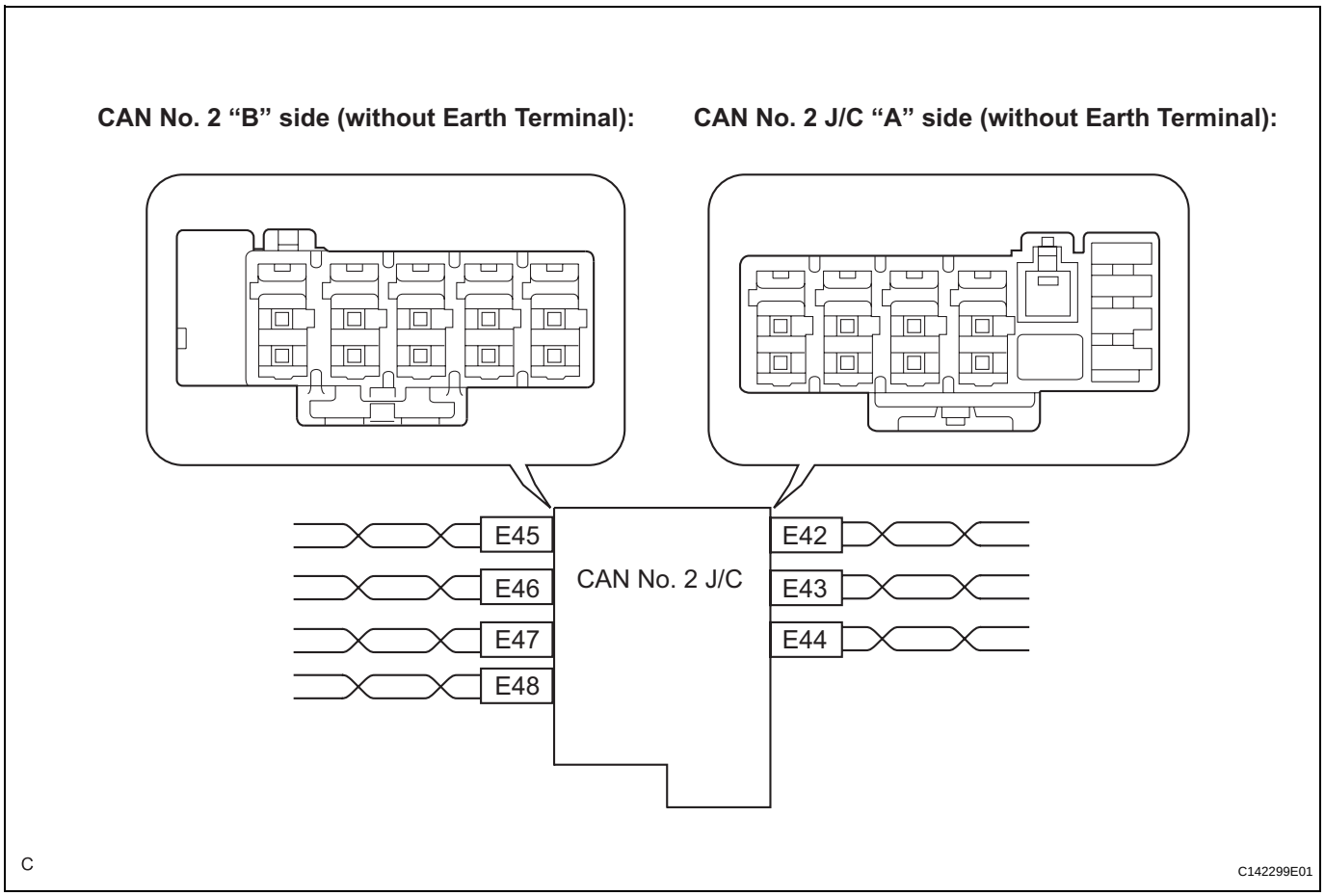

CAN No. 2 J/C Connector ("A" side, without earth terminal)	Connector Color	Color (CAN-H Side)	Color (CAN-L Side)
CAN No. 1 Bus Wire (E42)	White	B	W
Main Body ECU (E43)	White	BR	GR
DLC3 (E44)	White	LG	P

CAN No. 2 J/C Connector ("B" side, without earth terminal)	Connector Color	Color (CAN-H Side)	Color (CAN-L Side)
Yaw Rate Sensor (E47)	White	O	P
Center Airbag Sensor (E45)	White	G	Y
Steering Angle Sensor (E46)	White	V	P
Combination Meter (E48)	White	B	W

NOTICE:
Do not reconnect the disconnected connectors until this inspection is complete because there may be a short to B+ in 2 or more CAN bus wires.

Result

Symptom	Proceed to
The resistance between terminals 6 (CANH) and 16 (BAT), or the resistance between terminals 14 (CANL) and 16 (BAT) is still below 6 kΩ when all the specified connectors are disconnected from the CAN No. 2 J/C. (There is a short to B+ in the CAN No. 2 J/C.)	**A**
The resistance between terminals 6 (CANH) and 16 (BAT), or the resistance between terminals 14 (CANL) and 16 (BAT) becomes normal (6 kΩ or higher) when a connector is disconnected from the CAN No. 2 J/C. (There is a short to B+ in one of the areas that relate to one or more of the disconnected bus wires.)	**B**

(c) When there is a short to B+ in one or more of the bus wires that connect to an ECU (or sensor):
  (1) Reconnect all of the connectors to the CAN No. 2 J/C, except for the one that was disconnected last (the bus wire that is shorted to B+). Check that the resistance shown on the tester is normal (6 kΩ or higher) to confirm that there is a short to B+ in one bus wire only.
  HINT:
  - The connectors connected to the CAN No. 2 J/C can be distinguished according to the color of the communication bus wires and the shape of the connectors.
  - Reconnecting the connectors to non-specified positions on the CAN No. 2 J/C does not affect system operation. However, it is preferred to reconnect the connectors to their specified positions to avoid negative effects on the wiring such as tension on the wiring harnesses, and to make future maintenance easier.

B → **Go to step 7**

A

REPLACE CAN NO. 2 J/C

4	CHECK FOR SHORT TO B+ IN CAN NO. 1 BUS WIRE

CAN No. 5 J/C Connector (Front of the Vehicle) Wire Harness Side View:

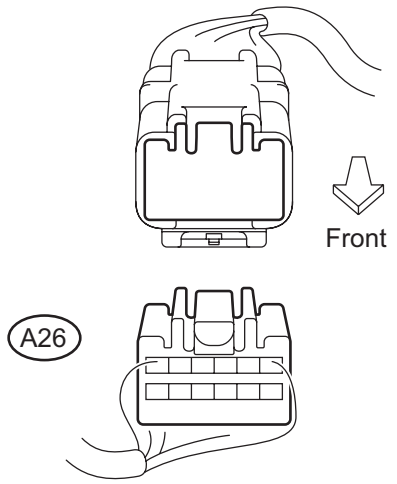

(a) Disconnect CAN No. 5 J/C connector A26.

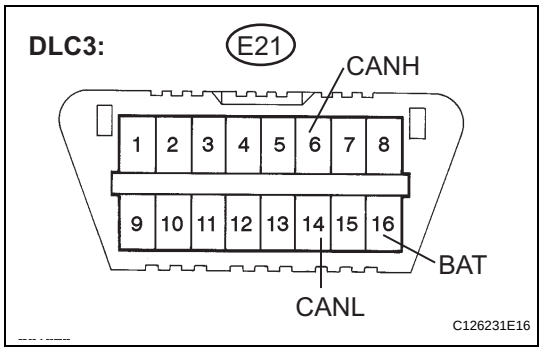

(b) Measure the resistance according to the value(s) in the table below.

Standard resistance

Tester Connection	Condition	Specified Value
E21-6 (CANH) - E21-16 (BAT)	Engine switch off	6 kΩ or higher
E21-14 (CANL) - E21-16 (BAT)	Engine switch off	6 kΩ or higher

OK → **Go to step 6**

NG

5 CHECK FOR SHORT TO B+ IN CAN NO. 1 BUS WIRE (CAN NO. 5 J/C WIRE)

(a) Reconnect CAN No. 5 J/C connector A26.
(b) Disconnect CAN No. 5 J/C connector E34.

CAN No. 5 J/C (Rear Side of the Vehicle) Wire Harness View:

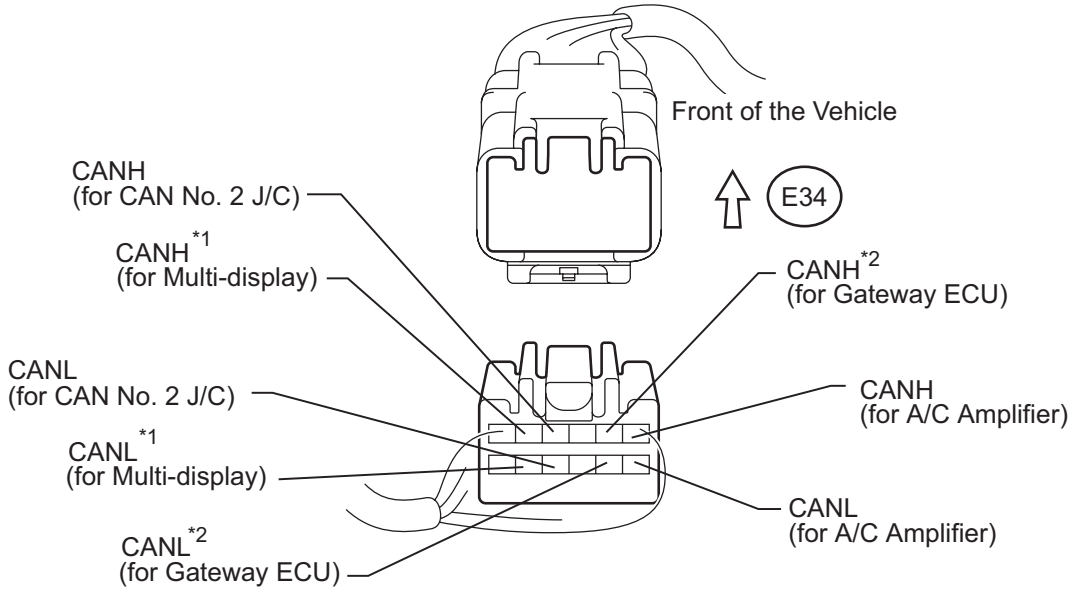

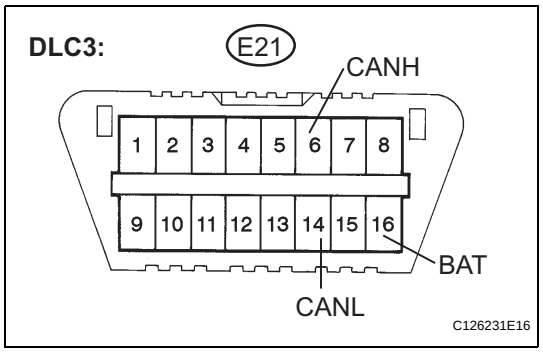

(c) Measure the resistance according to the value(s) in the table below.

Standard resistance

Tester Connection	Destination	Condition	Specified Value
E34-1 (CANH) - E21-16 (BAT)	A/C amplifier	Engine switch off	6 kΩ or higher
E34-7 (CANL) - E21-16 (BAT)			

CA

Tester Connection	Destination	Condition	Specified Value
E34-2 (CANH)*2 - E21-16 (BAT)	Gateway ECU*2	Engine switch off	6 kΩ or higher
E34-8 (CANL)*2 - E21-16 (BAT)			
E34-4 (CANH) - E21-16 (BAT)	CAN No. 2 J/C	Engine switch off	6 kΩ or higher
E34-10 (CANL) - E21-16 (BAT)			
E34-5*1 (CANH) - E21-16 (BAT)	Multi-display*1	Engine switch off	6 kΩ or higher
E34-11*1 (CANL) - E21-16 (BAT)			

HINT:
- *1: with Navigation system
- *2: with AFS, dynamic radar cruise control system or pre-collision system

Result

Result	Proceed to
OK	A
NG (B+ short in wires other than those connected to CAN No. 2 J/C)	B
NG (B+ short in wires connected to CAN No. 2 J/C)	C

B → **Go to step 7**

C → **REPAIR OR REPLACE CAN NO. 1 BUS MAIN WIRE OR CONNECTOR (CAN NO. 2 J/C - CAN NO. 5 J/C)**

A

REPLACE CAN NO. 5 J/C

6 CHECK FOR SHORT TO B+ IN CAN NO. 1 BUS WIRE (CAN NO. 5 J/C WIRE)

(a) Disconnect CAN No. 5 J/C connector A26.

CAN No. 5 J/C (Front Side of the Vehicle) Wire Harness View:

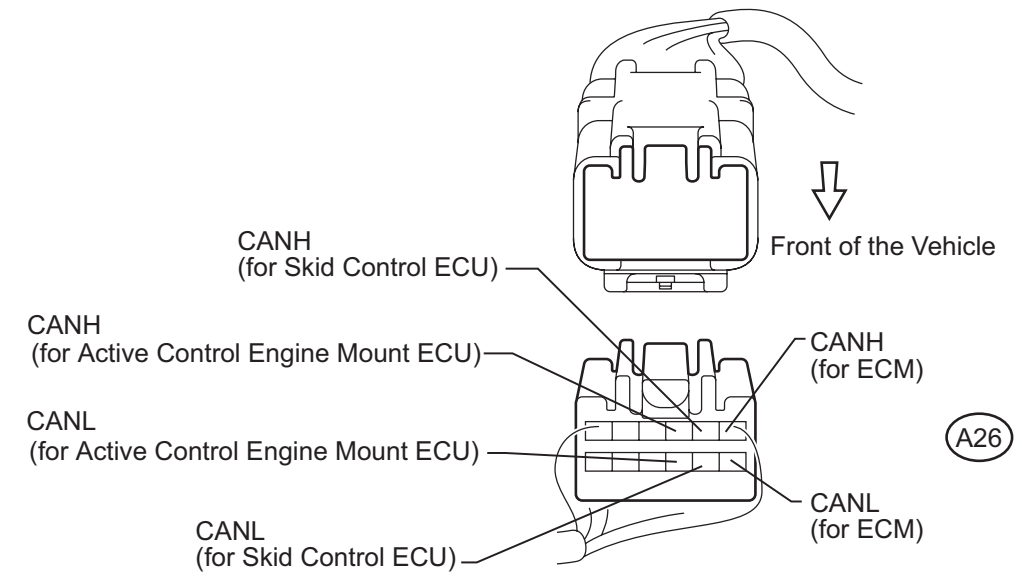

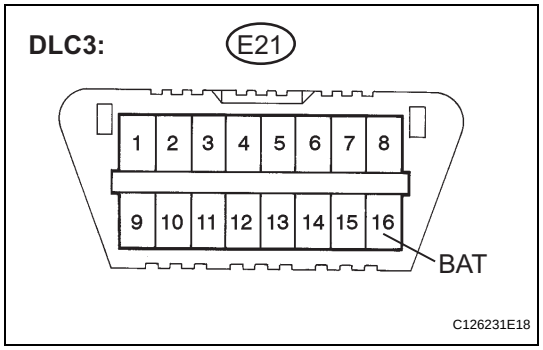

(b) Measure the resistance according to the value(s) in the table below.

Standard resistance

Tester Connection	Destination	Condition	Specified Value
A26-1 (CANH) - E21-16 (BAT)	ECM	Engine switch off	6 kΩ or higher
A26-7 (CANL) - E21-16 (BAT)			
A26-2 (CANH) - E21-16 (BAT)	Skid control ECU	Engine switch off	6 kΩ or higher
A26-8 (CANL) - E21-16 (BAT)			
A26-3 (CANH) - E21-16 (BAT)	Active control engine mount ECU	Engine switch off	6 kΩ or higher
A26-9 (CANL) - E21-16 (BAT)			

OK → **REPLACE CAN NO. 5 J/C**

NG

7	RECONNECT CONNECTOR

(a) Reconnect the connector of the bus wire that is shorted to B+ to the CAN No. 2 J/C or CAN No. 5 J/C (the connector that caused the bus wire resistance to change to 6 kΩ or more when it was disconnected).

NEXT

8	CHECK FOR SHORT TO B+ IN CAN NO. 1 BUS WIRE

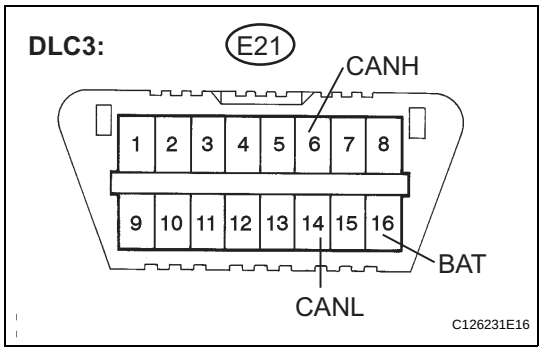

(a) Disconnect the connector that includes terminals CANH and CANL from the ECU (or sensor) to which the bus wire shorted to B+ is connected. (See page CA-15)

(b) Measure the resistance according to the value(s) in the table below.

Standard resistance

Tester Connection	Condition	Specified Value
E21-6 (CANH) - E21-16 (BAT)	Engine switch off	6 kΩ or higher
E21-14 (CANL) - E21-16 (BAT)	Engine switch off	6 kΩ or higher

HINT:
If the resistance changes to 6 kΩ or higher when the connector is disconnected from the ECU (or sensor), there may be a short in the ECU (or sensor).

NG → **REPAIR OR REPLACE CORRESPONDING ECU OR SENSOR BRANCH WIRE OR CONNECTOR**

OK

REPLACE CORRESPONDING ECU OR SENSOR

Short to GND in CAN Bus Line

DESCRIPTION

A short to GND is suspected in the CAN bus wire when the resistance between terminals 4 (CG) and 6 (CANH), or terminals 4 (CG) and 14 (CANL) of the DLC3 is below 200 Ω.

Symptoms	Trouble Area
The resistance between terminals 6 (CANH) and 4 (CG), or terminals 14 (CANL) and 4 (CG) of the DLC3 is below 200 Ω.	1. Short to GND in CAN bus wire 2. ECM 3. Combination meter 4. Skid control ECU 5. Steering angle sensor 6. Yaw rate sensor 7. Main Body ECU 8. A/C amplifier 9. Center airbag sensor 10. Gateway ECU 11. Active control engine mount ECU 12. Multi-display 13. CAN No. 2 J/C 14. CAN No. 5 J/C

WIRING DIAGRAM

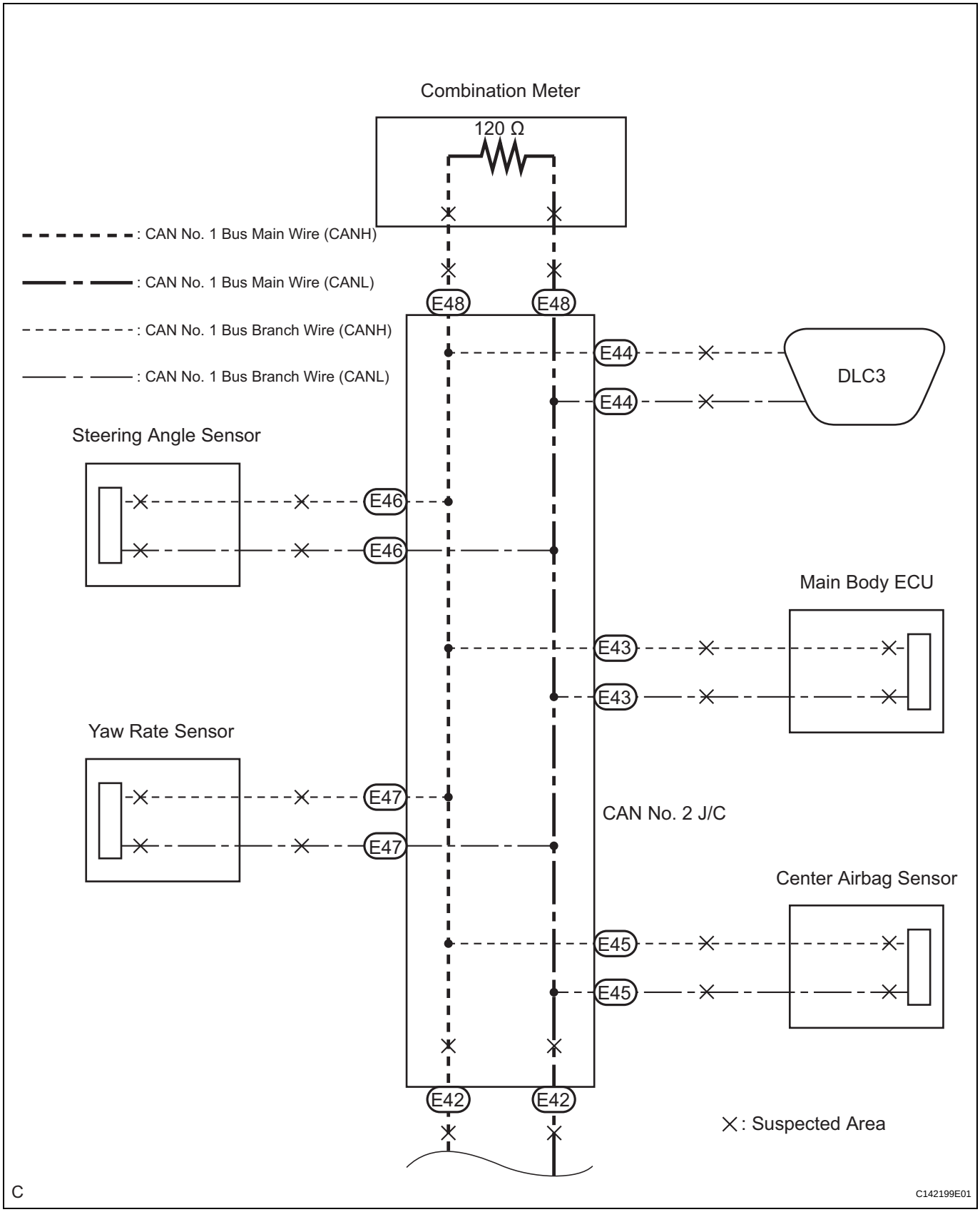

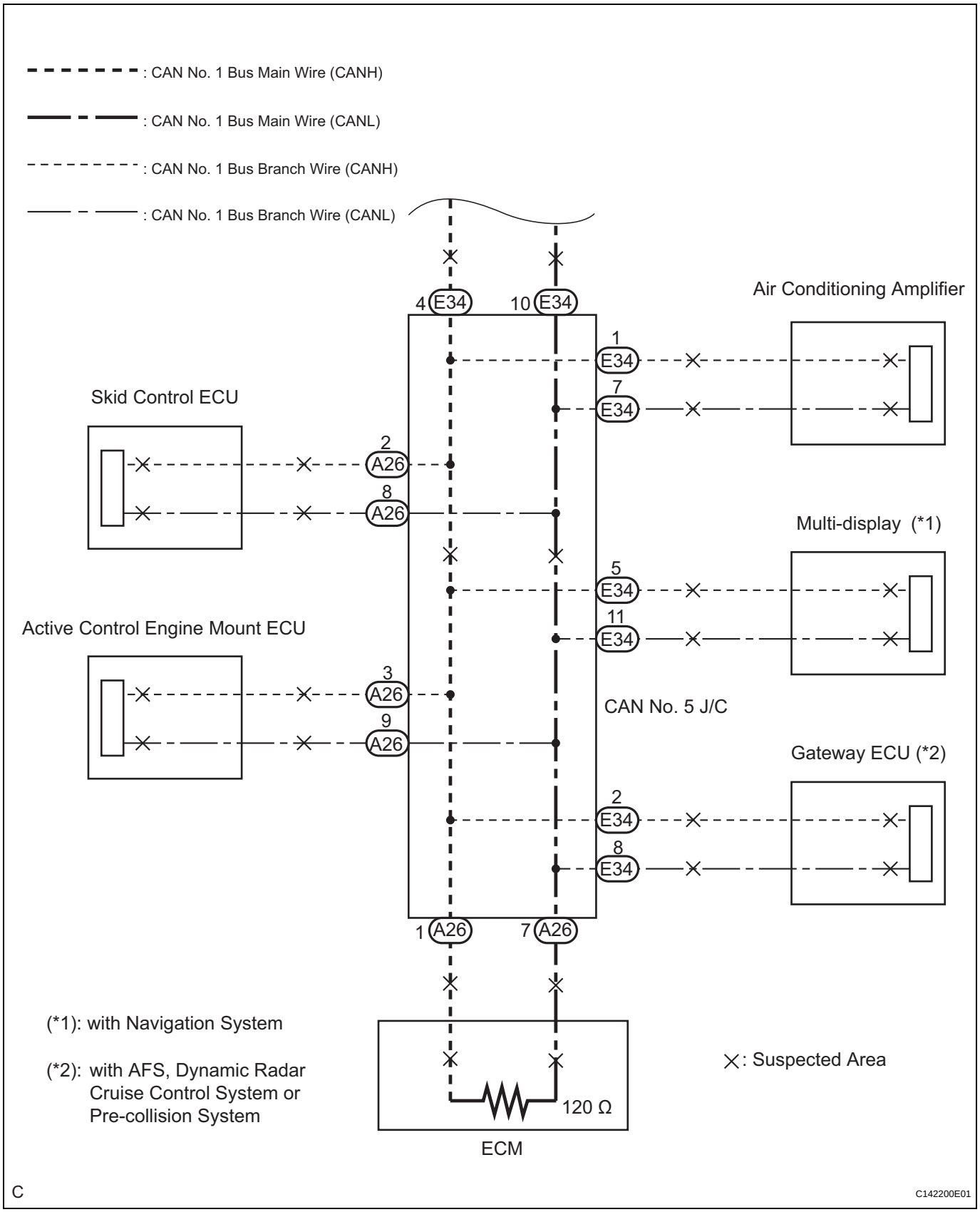
: CAN No. 1 Bus Main Wire (CANH)
: CAN No. 1 Bus Main Wire (CANL)
: CAN No. 1 Bus Branch Wire (CANH)
: CAN No. 1 Bus Branch Wire (CANL)
Air Conditioning Amplifier
Skid Control ECU
Multi-display (*1)
Active Control Engine Mount ECU
CAN No. 5 J/C
Gateway ECU (*2)
4 E34
10 E34
1 E34
7 E34
2 A26
8 A26
5 E34
11 E34
3 A26
9 A26
2 E34
8 E34
1 A26
7 A26
(*1): with Navigation System
(*2): with AFS, Dynamic Radar Cruise Control System or Pre-collision System
: Suspected Area
120 Ω
ECM
C
C142200E01

CA

INSPECTION PROCEDURE

NOTICE:

Before measuring the resistance, leave the vehicle as is for at least 1 minute and do not operate the engine switch, any other switches, or the doors. If any doors need to be opened in order to check connectors, open the doors and leave them open.

1	CHECK FOR SHORT TO GND IN CAN NO. 1 BUS WIRE (DLC3 BRANCH WIRE)

CAN No. 2 J/C "A" Side (without Earth Terminal) Wire Harness View:

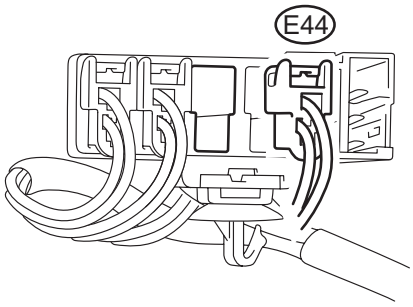

N C142225E01

(a) Turn the engine switch off.

(b) Disconnect DLC3 branch wire connector E44 from the CAN No. 2 J/C "A" side (without earth terminal).

NOTICE:

- **Before disconnecting the connector, make a note of where it is connected.**
- **Reconnect the connector to its original position.**

DLC3:

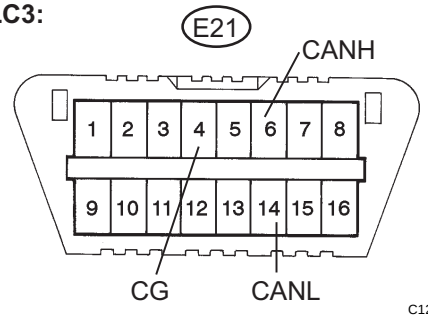

C126231E17

(c) Measure the resistance according to the value(s) in the table below.

Standard resistance

Tester Connection	Condition	Specified Value
E21-6 (CANH) - E21-4 (CG)	Engine switch off	200 Ω or higher
E21-14 (CANL) - E21-4 (CG)	Engine switch off	200 Ω or higher

(d) Reconnect DLC3 branch wire connector E44 to the CAN No. 2 J/C "A" side (without earth terminal).

NG → **REPAIR OR REPLACE DLC3 BRANCH WIRE OR CONNECTOR**

OK

2 CHECK FOR SHORT TO GND IN CAN NO. 1 BUS WIRE (CAN NO. 2 J/C SIDE)

CAN No. 2 J/C "A" Side (without Earth Terminal) Wire Harness View:

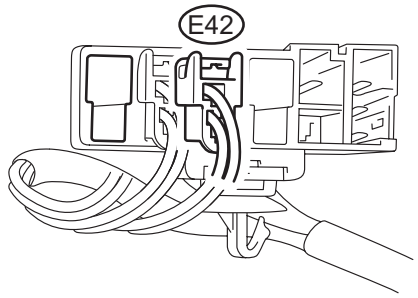

N C142224E02

(a) Disconnect CAN main bus wire connector E42 from the CAN No. 2 J/C "A" side (without earth terminal).

DLC3:

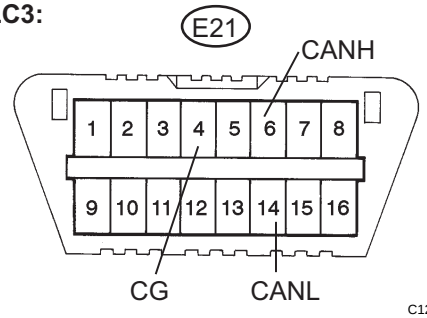

C126231E17

(b) Using an ohmmeter, measure the resistance between terminals 6 (CANH) and 4 (CG), and between terminals 14 (CANL) and 4 (CG) of the DLC3 each time a connector is disconnected.

Standard resistance

Tester Connection	Condition	Specified Value
E21-6 (CANH) - E21-4 (CG)	Engine switch off	200 Ω or higher
E21-14 (CANL) - E21-4 (CG)	Engine switch off	200 Ω or higher

OK → **Go to step 4**

NG

3 CHECK FOR SHORT TO GND IN CAN NO. 1 BUS WIRE

DLC3:

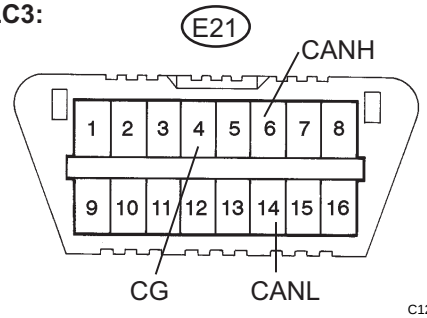

C126231E17

(a) Disconnect connectors from the CAN No. 2 J/C one at a time.
HINT:
Disconnect the ECU and sensor connectors other than the DLC3 branch wires and CAN main bus wires between the CAN No. 2 J/C and CAN No. 5 J/C.

(b) Using an ohmmeter, measure the resistance between terminals 6 (CANH) and 4 (CG), and between terminals 14 (CANL) and 4 (CG) of the DLC3 each time a connector is disconnected.

CAN No. 1 Bus:

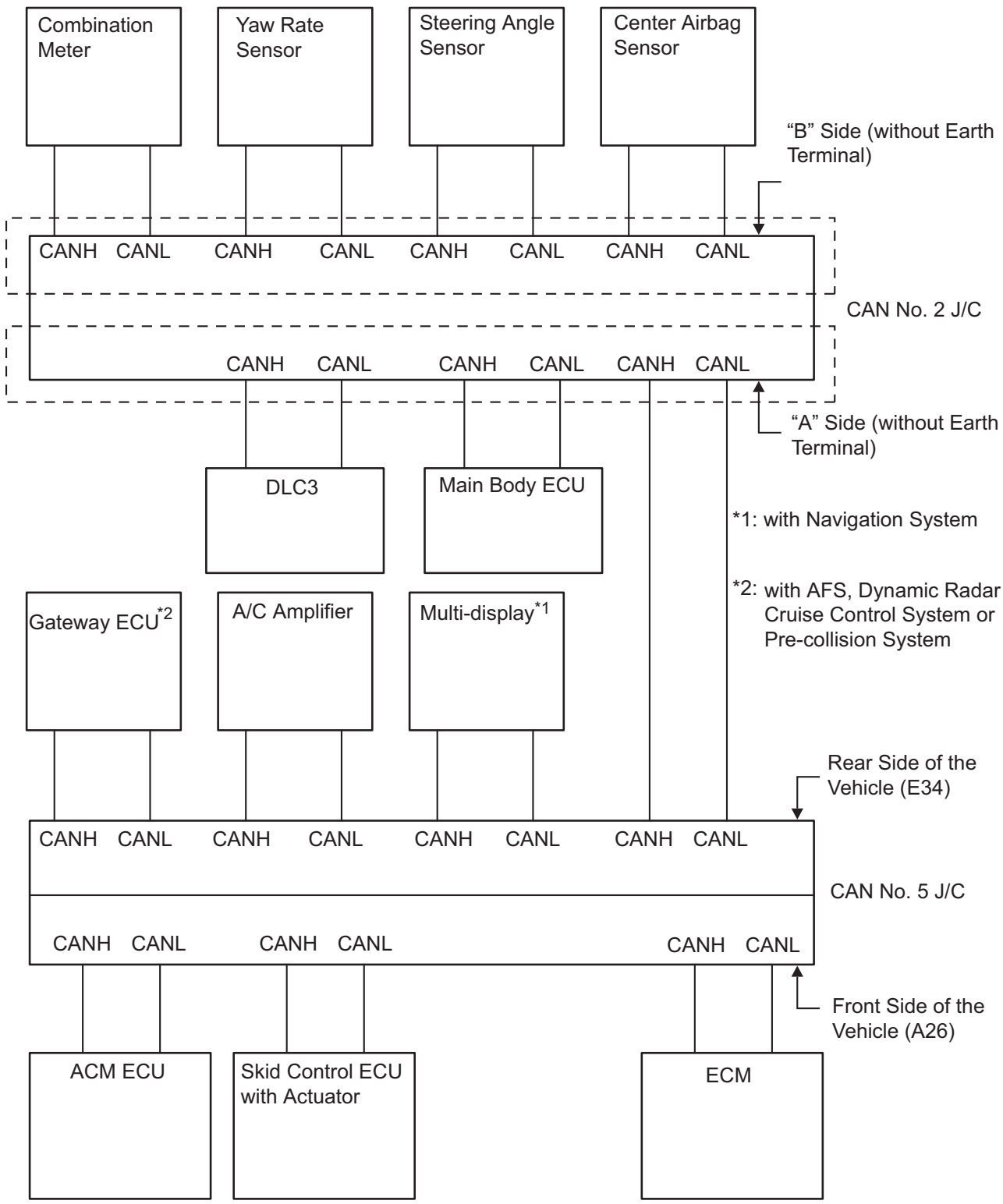

C

C142196E01

CA

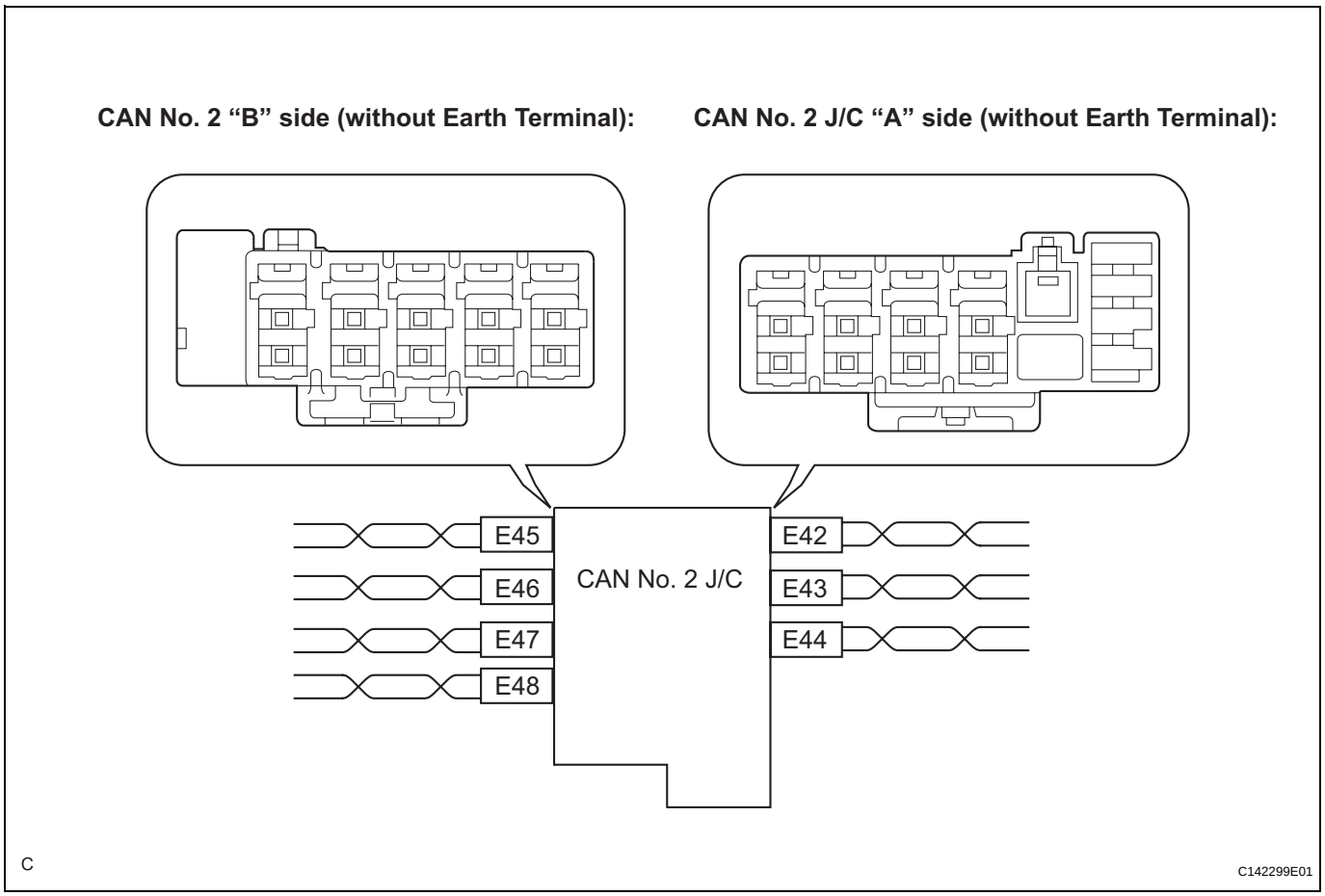

CAN No. 2 J/C Connector ("A" side, without earth terminal)	Connector Color	Color (CAN-H Side)	Color (CAN-L Side)
CAN No. 1 Bus Wire (E42)	White	B	W
Main Body ECU (E43)	White	BR	GR
DLC3 (E44)	White	LG	P

CAN No. 2 J/C Connector ("B" side, without earth terminal)	Connector Color	Color (CAN-H Side)	Color (CAN-L Side)
Yaw Rate Sensor (E47)	White	O	P
Center Airbag Sensor (E45)	White	G	Y
Steering Angle Sensor (E46)	White	V	P
Combination Meter (E48)	White	B	W

NOTICE:
Do not reconnect the disconnected connectors until this inspection is complete because there may be a short to GND in 2 or more CAN bus wires.

Result

Symptom	Proceed to
The resistance between terminals 6 (CANH) and 4 (CG), or the resistance between terminals 14 (CANL) and 4 (CG) is still below 200 Ω when all the specified connectors are disconnected from the CAN No. 2 J/C. (There is a short to GND in the CAN No. 2 J/C.)	**A**
The resistance between terminals 6 (CANH) and 4 (CG), or the resistance between terminals 14 (CANL) and 4 (CG) becomes normal (200 Ω or higher) when a connector is disconnected from the CAN J/C. (There is a short to GND in one of the areas that relate to the disconnected bus wires.)	**B**

(c) When there is a short to GND in one or more of the bus wires that connect to an ECU (or sensor):
  (1) Reconnect all of the connectors to the CAN No. 2 J/C, except for the one that was disconnected last (the bus wire that is shorted to GND). Check that the resistance shown on the tester is normal (200 Ω or higher) to confirm that there is a short to GND in one bus wire only.
  HINT:
  - The connectors connected to the CAN No. 2 J/C can be distinguished according to the color of the communication bus wires and the shape of the connectors.
  - Reconnecting the connectors to non-specified positions on the CAN No. 2 J/C does not affect system operation. However, it is preferred to reconnect the connectors to their specified positions to avoid negative effects on the wiring such as tension on the wiring harnesses, and to make future maintenance easier.

B → **Go to step 7**

A

REPLACE CAN NO. 2 J/C

4	CHECK FOR SHORT TO GND IN CAN NO. 1 BUS WIRE

CAN No. 5 J/C Connector (Front of the Vehicle) Wire Harness Side View:

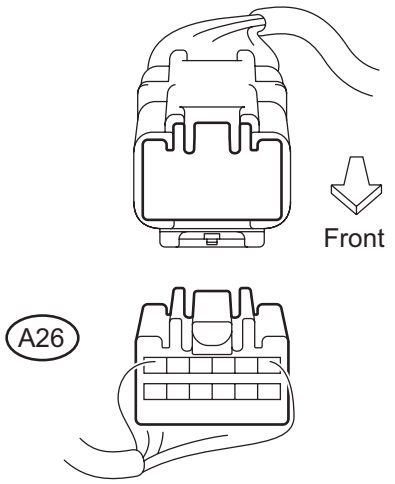

(a) Disconnect CAN No. 5 J/C connector A26.

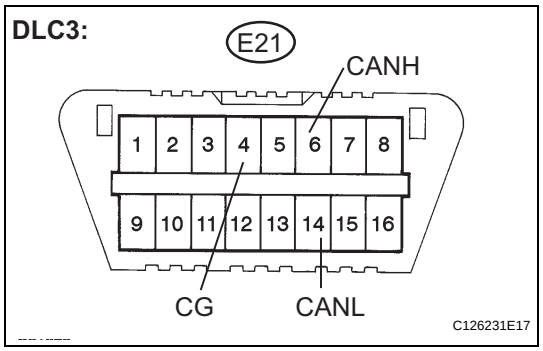

(b) Measure the resistance according to the value(s) in the table below.

Standard resistance

Tester Connection	Condition	Specified Value
E21-6 (CANH) - E21-4 (CG)	Engine switch off	200 Ω or higher
E21-14 (CANL) - E21-4 (CG)	Engine switch off	200 Ω or higher

OK → **Go to step 6**

NG

5 CHECK FOR SHORT TO GND IN CAN NO. 1 BUS WIRE (CAN NO. 5 J/C WIRE)

(a) Reconnect CAN No. 5 J/C connector A26.
(b) Disconnect CAN No. 5 J/C connector E34.

CAN No. 5 J/C (Rear Side of the Vehicle) Wire Harness View:

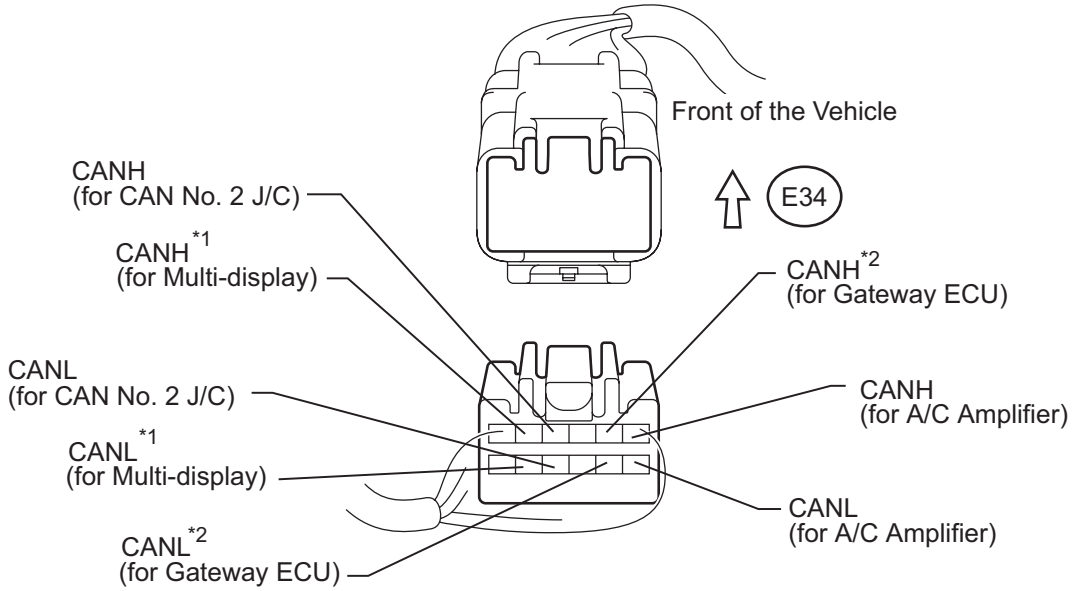

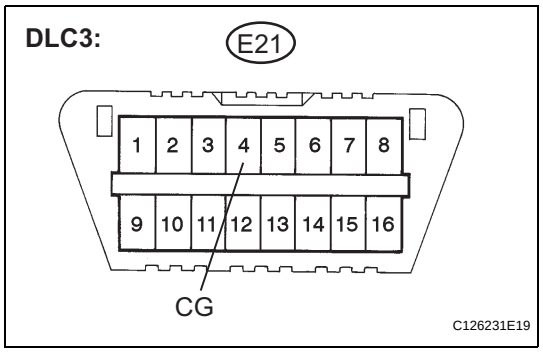

(c) Measure the resistance according to the value(s) in the table below.

Standard resistance

Tester Connection	Destination	Condition	Specified Value
E34-1 (CANH) - E21-4 (CG)	A/C amplifier	Engine switch off	200 Ω or higher
E34-7 (CANL) - E21-4 (CG)			

CA

Tester Connection	Destination	Condition	Specified Value
E34-2 (CANH)*2 - E21-4 (CG)	Gateway ECU*2	Engine switch off	200 Ω or higher
E34-8 (CANL)*2 - E21-4 (CG)			
E34-4 (CANH) - E21-4 (CG)	CAN No. 2 J/C	Engine switch off	200 Ω or higher
E34-10 (CANL) - E21-4 (CG)			
E34-5*1 (CANH) - E21-4 (CG)	Multi-display*1	Engine switch off	200 Ω or higher
E34-11*1 (CANL) - E21-4 (CG)			

Result

Result	Proceed to
OK	A
NG (GND short in wires other than those connected to CAN No. 2 J/C)	B
NG (GND short in wires connected to CAN No. 2 J/C)	C

HINT:
- *1: with Navigation system
- *2: with AFS, dynamic radar cruise control system or pre-collision system

B → **Go to step 7**

C → **REPAIR OR REPLACE CAN NO. 1 BUS MAIN WIRE OR CONNECTOR (CAN NO. 2 J/C - CAN NO. 5 J/C)**

A

REPLACE CAN NO. 5 J/C

6 CHECK FOR SHORT TO GND IN CAN NO. 1 BUS WIRE (CAN NO. 5 WIRE)

(a) Disconnect CAN No. 5 J/C connector A26.

CAN No. 5 J/C (Front Side of the Vehicle) Wire Harness View:

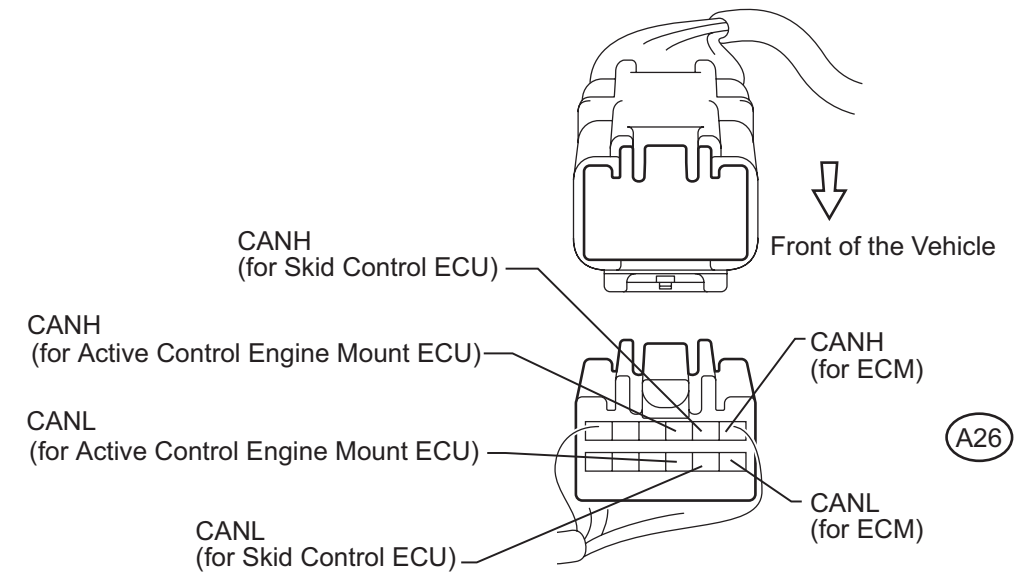

DLC3:

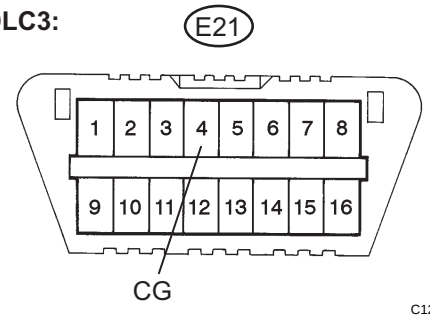

(b) Measure the resistance according to the value(s) in the table below.

Standard resistance

Tester Connection	Destination	Condition	Specified Value
A26-1 (CANH) - E21-4 (CG)	ECM	Engine switch off	200 Ω or higher
A26-7 (CANL) - E21-4 (CG)			
A26-2 (CANH) - E21-4 (CG)	Skid control ECU	Engine switch off	200 Ω or higher
A26-8 (CANL) - E21-4 (CG)			
A26-3 (CANH) - E21-4 (CG)	Active control engine mount ECU	Engine switch off	200 Ω or higher
A26-9 (CANL) - E21-4 (CG)			

OK → **REPLACE CAN NO. 5 J/C**

NG

7	RECONNECT CONNECTOR

(a) Reconnect the connector of the bus wire that is shorted to GND to the CAN No. 2 J/C or CAN No. 5 J/C (the connector that caused the bus wire resistance to change to 200 Ω or more when it was disconnected).

NEXT

8	CHECK FOR SHORT TO GND IN CAN NO. 1 BUS WIRE

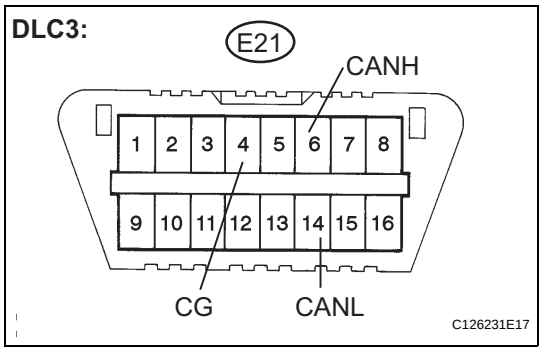

(a) Disconnect the connector that includes terminals CANH and CANL from the ECU (or sensor) to which the bus wire shorted to GND is connected. (See page CA-15)

(b) Measure the resistance according to the value(s) in the table below.

Standard resistance

Tester Connection	Condition	Specified Value
E21-6 (CANH) - E21-4 (CG)	Engine switch off	200 Ω or higher
E21-14 (CANL) - E21-4 (CG)	Engine switch off	200 Ω or higher

HINT:
If the resistance changes to 200 Ω or higher when the connector is disconnected from the ECU (or sensor), there may be a short in the ECU (or sensor).

NG → **REPAIR OR REPLACE CORRESPONDING ECU OR SENSOR BRANCH WIRE OR CONNECTOR**

OK

REPLACE CORRESPONDING ECU OR SENSOR

Open in One Side of CAN Branch Line

DESCRIPTION

If some ECUs and sensors are not displayed on the "BUS CHECK" screen of the intelligent tester and some ECUs and sensors repeatedly appear and disappear from the screen when the CAN main bus wires are normal (there is no open, short, short to B+, or short to GND in the main bus wires), there may be an open circuit in either of the CAN branch wires.

HINT:

If some ECUs and sensors repeatedly appear and disappear from the "BUS CHECK" screen, communication between the normal ECUs (sensors) and intelligent tester may be affected by the incomplete signals that are output from the ECU that has an open circuit in either of its CAN branch wires. In this case, the CAN branch wires for the ECUs and sensors that repeatedly appear and disappear from the screen are normal and the ECU that is not displayed on the screen may be the main cause of the problem (this ECU may have an open circuit in either of its CAN branch wires).

Symptom	Trouble Area
2 or more ECUs and/or sensors do not appear on the intelligent tester "BUS CHECK" screen via the CAN VIM.	One side of the CAN branch wire is open 1. Skid control ECU 2. Steering angle sensor 3. Yaw rate sensor 4. ECM 5. Gateway ECU 6. Combination meter 7. A/C amplifier 8. Active control engine mount ECU 9. Main body ECU 10. Center airbag sensor 11. Multi-display

WIRING DIAGRAM

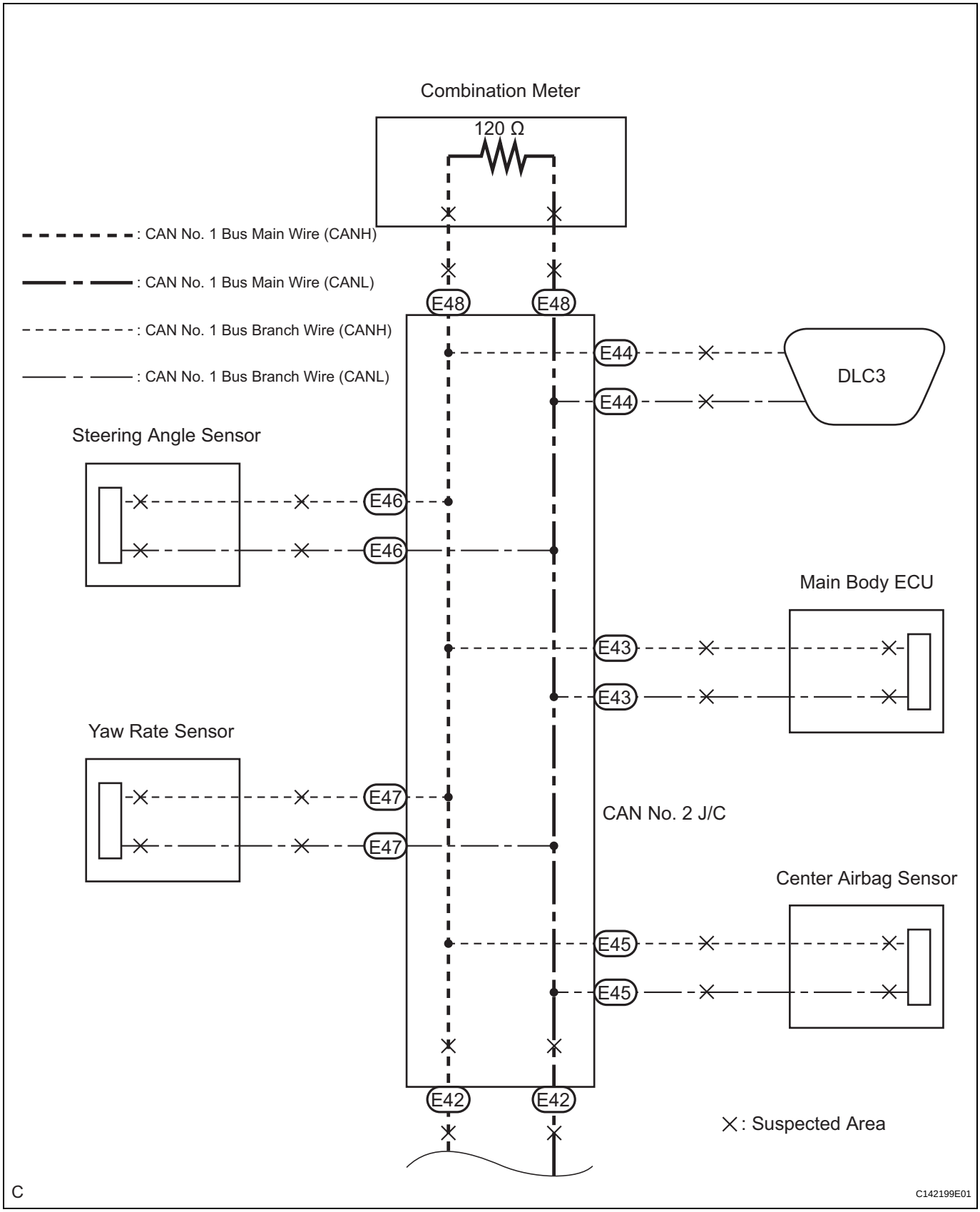

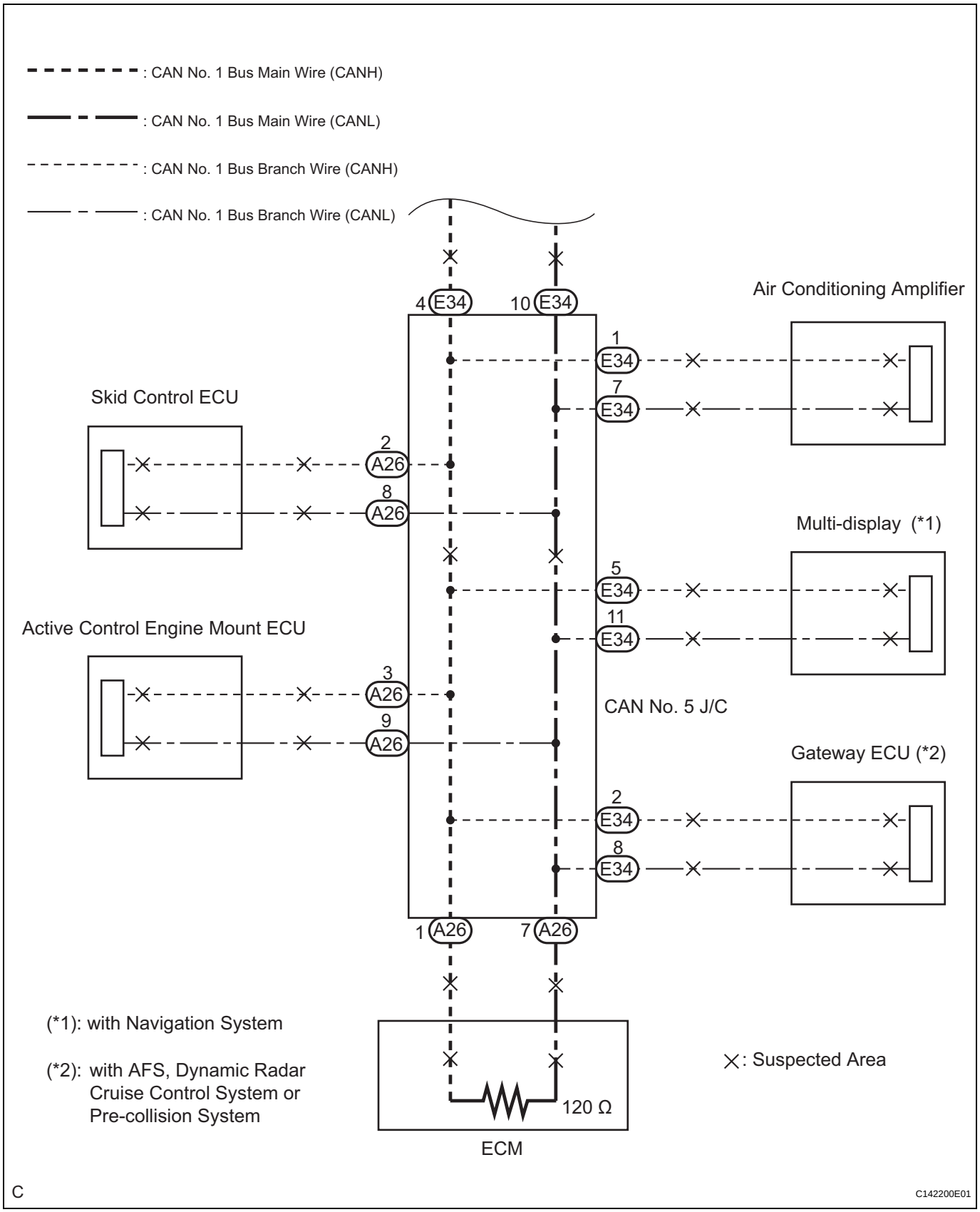
: CAN No. 1 Bus Main Wire (CANH)
: CAN No. 1 Bus Main Wire (CANL)
: CAN No. 1 Bus Branch Wire (CANH)
: CAN No. 1 Bus Branch Wire (CANL)
Air Conditioning Amplifier
Skid Control ECU
Multi-display (*1)
Active Control Engine Mount ECU
CAN No. 5 J/C
Gateway ECU (*2)
4 E34
10 E34
1 E34
7 E34
2 A26
8 A26
5 E34
11 E34
3 A26
9 A26
2 E34
8 E34
1 A26
7 A26
(*1): with Navigation System
(*2): with AFS, Dynamic Radar Cruise Control System or Pre-collision System
: Suspected Area
120 Ω
ECM
C
C142200E01

CA

INSPECTION PROCEDURE

NOTICE:

Before measuring the resistance, leave the vehicle as is for at least 1 minute and do not operate the engine switch, any other switches, or the doors. If any doors need to be opened in order to check connectors, open the doors and leave them open.

1	CHECK FOR OPEN IN ONE SIDE OF CAN NO. 1 BUS BRANCH WIRE

(a) Confirm the systems (ECUs and sensors), which use CAN communication, equipped on the vehicle. (See page CA-41)

(b) Using the intelligent tester, select and perform "BUS CHECK". (See page CA-41)

(c) Observe the screen for approximately 1 minute to check the ECUs and sensors that are not displayed on the screen and also those that repeatedly appear and disappear from the screen.

(d) Disconnect the branch wire connectors, which are connected to the ECUs or sensors that never appear on the screen, from the CAN J/C.

CAN No. 1 Bus:

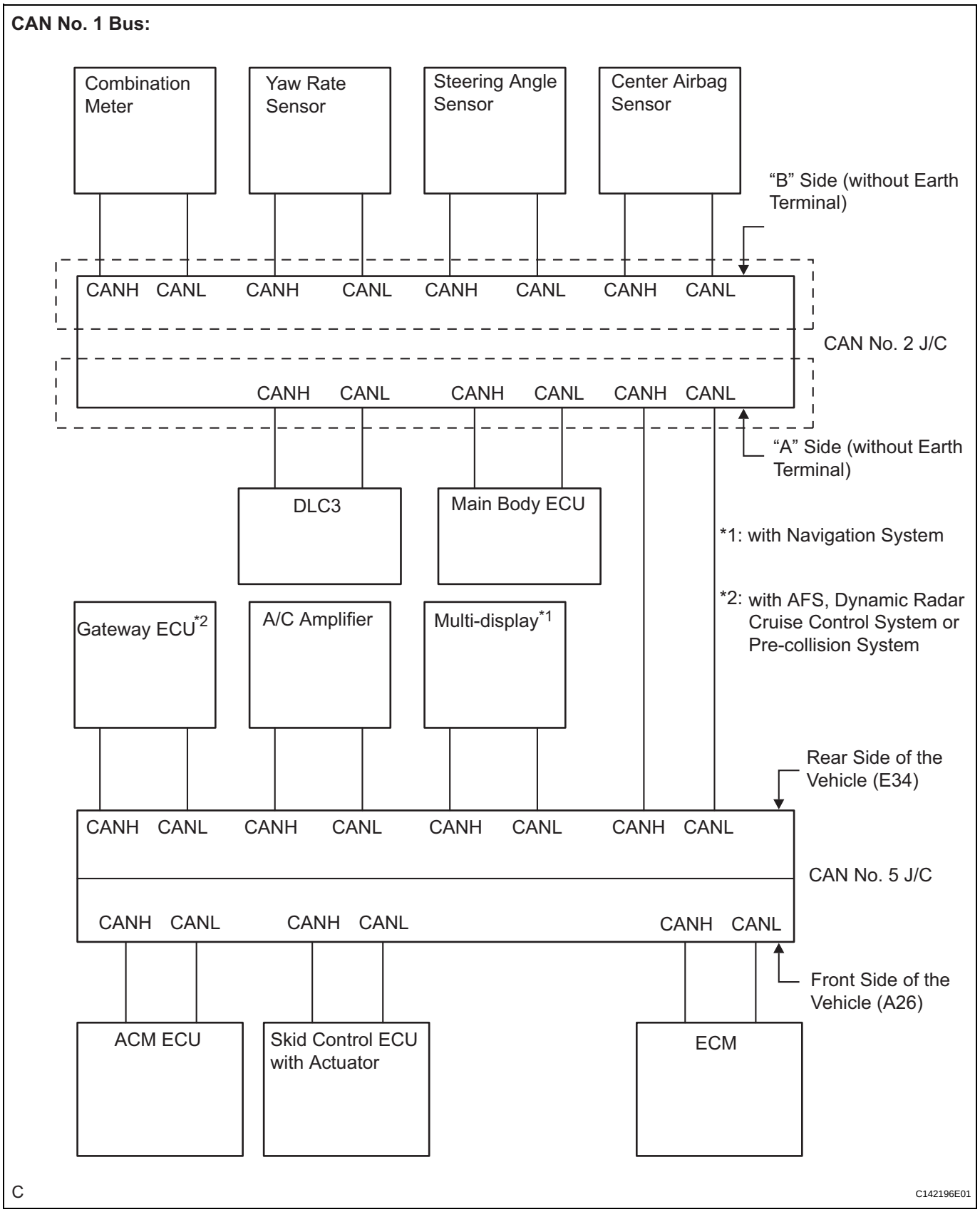

CA

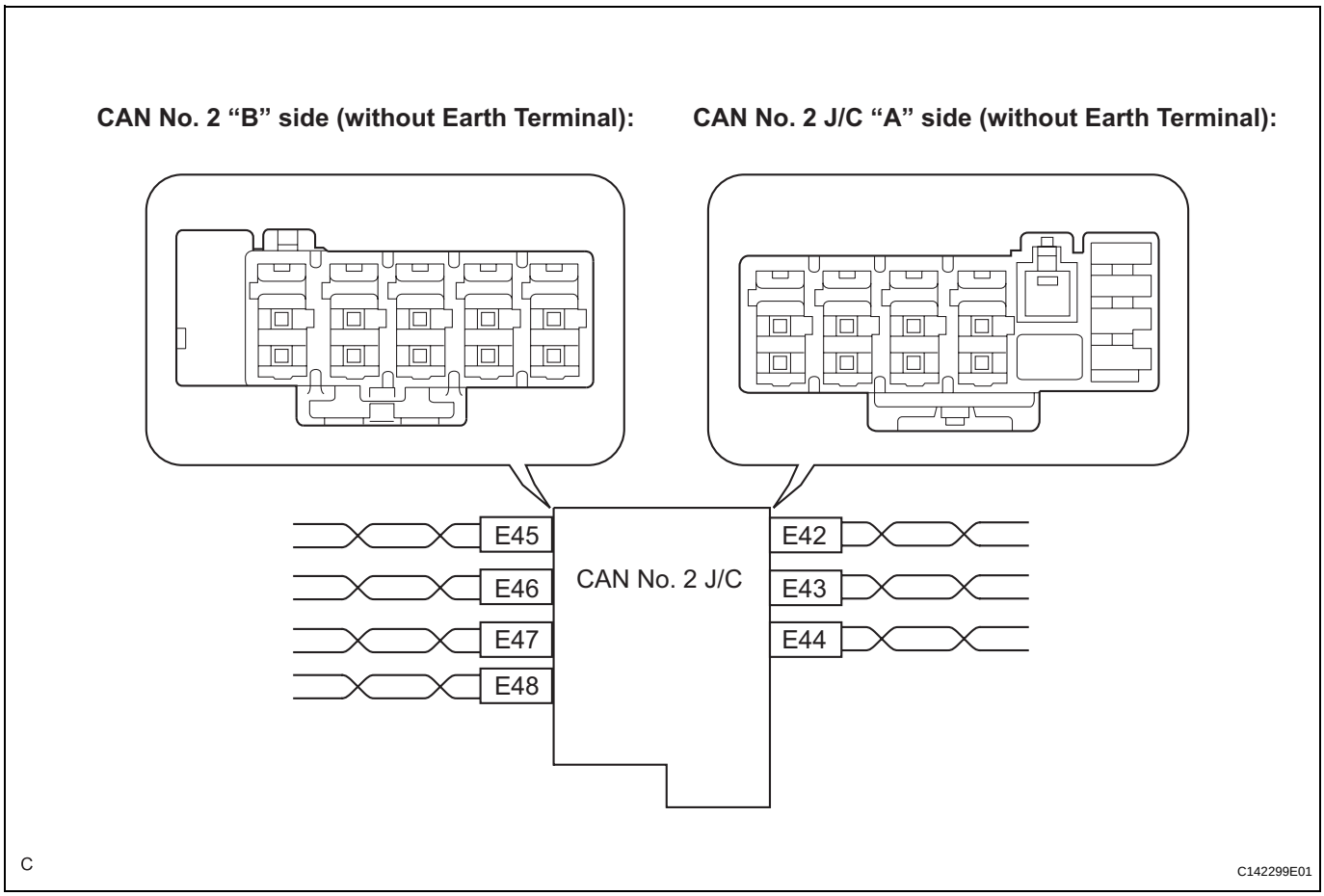

CAN No. 2 J/C Connector ("A" side, with earth terminal)	Connector Color	Color (CAN-H Side)	Color (CAN-L Side)
CAN No. 1 Bus Wire (E42)	White	B	W
Main Body ECU (E43)	White	BR	GR
DLC3 (E44)	White	LG	P

CAN No. 2 J/C Connector ("B" side, with earth terminal)	Connector Color	Color (CAN-H Side)	Color (CAN-L Side)
Yaw Rate Sensor (E47)	White	O	P
Center Airbag Sensor (E45)	White	G	Y
Steering Angle Sensor (E46)	White	V	P
Combination Meter (E48)	White	B	W

CAN No. 5 J/C (Front Side of the Vehicle) Wire Harness View:

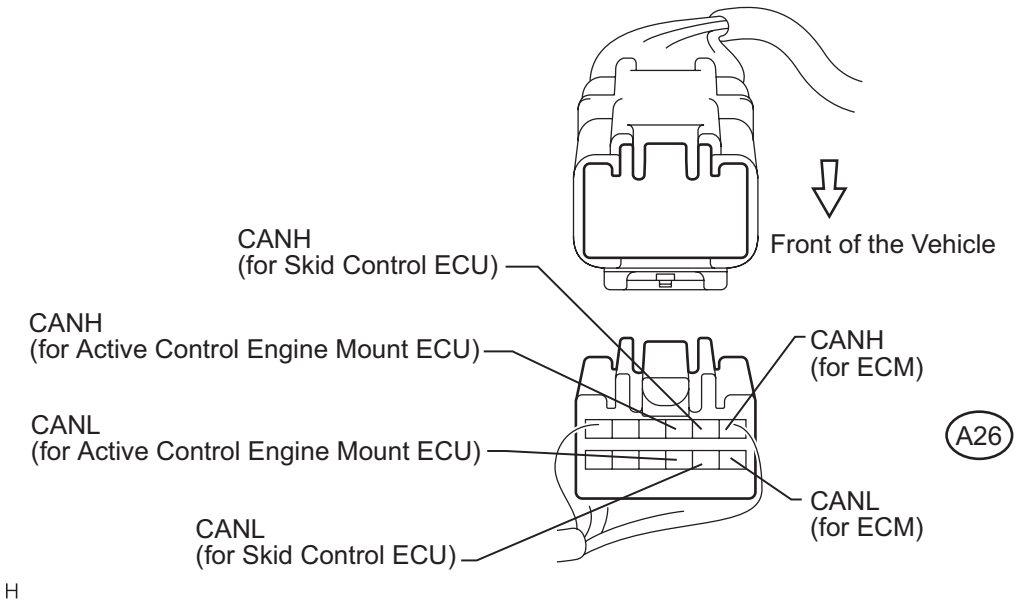

Terminal	Wiring Color	Destination
A26-1 (CANH)	B	ECM (CANH)
A26-7 (CANL)	W	ECM (CANL)
A26-2 (CANH)	L	Skid Control ECU (CANH)
A26-8 (CANL)	LG	Skid Control ECU (CANL)
A26-3 (CANH)	G	Active Control Engine Mount ECU (CANH)
A26-9 (CANL)	R	Active Control Engine Mount ECU (CANL)

CAN No. 5 J/C (Rear Side of the Vehicle) Wire Harness View:

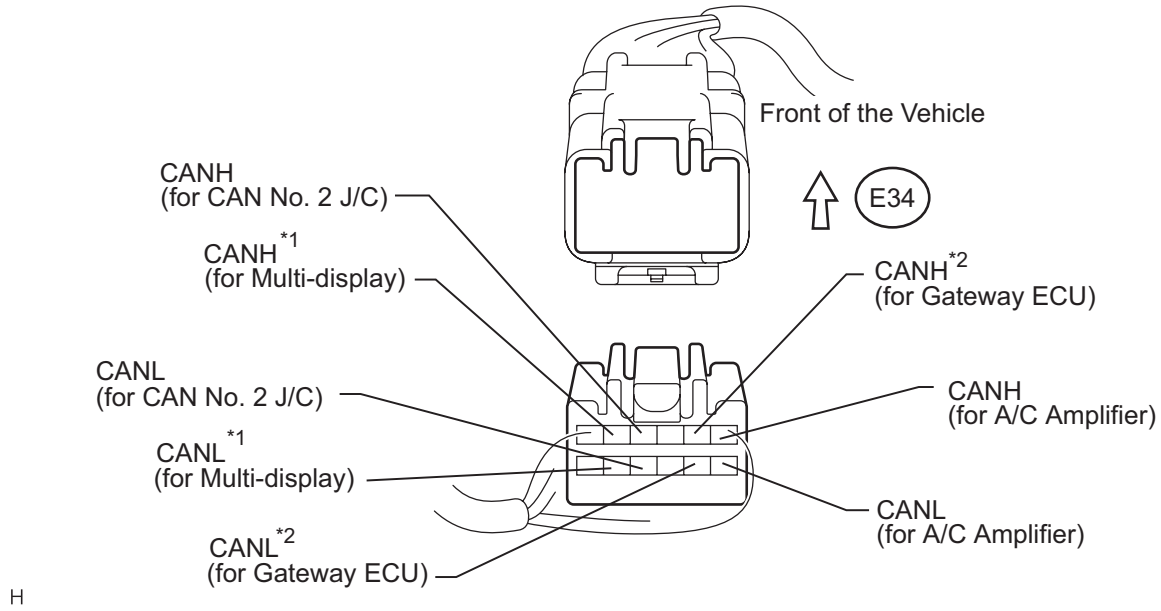

Terminal	Wiring Color	Destination
E34-1 (CANH)	GR	A/C Amplifier (CANH)

CA

Terminal	Wiring Color	Destination
E34-7 (CANL)	BR	A/C Amplifier (CANL)
E34-2 (CANH)*2	P	Gateway ECU (CANH)
E34-8 (CANL)*2	O	Gateway ECU (CANL)
B34-4 (CANH)	B	CAN No. 2 J/C (CANH)
B34-10 (CANL)	W	CAN No. 2 J/C (CANL)
B34-5 (CANH)*1	L	Multi-display (CANH)
B34-11 (CANL)*1	Y	Multi-display (CANL)

HINT:
- *1: with Navigation system
- *2: with AFS, dynamic radar cruise control system or pre-collision system
- Connecting locations of the connectors shown in the above tables are those of a vehicle whose connector locations have never been changed.
- If the connector locations differ from those shown in the above tables, identify each connector according to the color of the bus wires.

(e) Check that the ECUs and sensors, which repeatedly appeared and disappeared from the "BUS CHECK" screen, are constantly displayed.

(f) Perform the communication stop mode check for the ECUs and sensors which correspond to the disconnected branch wire connectors (See page CA-41).
HINT:
If any of the following conditions are met, an open in the CAN bus main wire is suspected. Refer to "Open in CAN Main Bus Line" (See page CA-154).
- Only ECM is not displayed for 1 minute.
- Only combination meter is not displayed for 1 minute.
- All ECUs and sensors connected to the CAN No. 5 J/C are not displayed for 1 minute.

NEXT

GO TO CORRESPONDING COMMUNICATION STOP MODE

PROBLEM SYMPTOMS TABLE

RESULT LIST OF CAN BUS WIRE CHECK:

Symptom	Suspected Area	See page
The result of "CAN BUS WIRE CHECK" is "Open in CAN Main Bus Line".	Open in CAN Main Bus Line	CA-154
The result of "CAN BUS WIRE CHECK" is "Short in CAN Bus Lines".	Short in CAN Bus Lines	CA-159
The result of "CAN BUS WIRE CHECK" is "Short to B+ in CAN Bus Line".	Short to B+ in CAN Bus Line	CA-174
The result of "CAN BUS WIRE CHECK" is "Short to GND in CAN Bus Line".	Short to GND in CAN Bus Line	CA-186
The result of "CAN BUS WIRE CHECK" is "Open in One Side of CAN Branch line".	Open in One Side of CAN Branch Line	CA-198

COMMUNICATION STOP MODE TABLE:

Symptom	Suspected Area	See page
"ENGINE" and "ECT" are not displayed on the intelligent tester via CAN VIM.	ECM Communication Stop Mode	CA-137
"ABS/VSC/TRAC" is not displayed on the intelligent tester via CAN VIM.	Skid Control ECU Communication Stop Mode	CA-126
"STEERING SENSOR" is not displayed on the intelligent tester via CAN VIM.	Steering Angle Sensor Communication Stop Mode	CA-133
"YAW/DECELERAT" is not displayed on the intelligent tester via CAN VIM.	Yaw Rate Sensor Communication Stop Mode	CA-135
"A/C" is not displayed on the intelligent tester via CAN VIM.	Air Conditioning Amplifier Communication Stop Mode	CA-128
"SRS AIRBAG" is not displayed on the intelligent tester via CAN VIM.	Center Airbag Sensor Communication Stop Mode	CA-144
"GATEWAY" is not displayed on the intelligent tester via CAN VIM.	Gateway ECU Communication Stop Mode	CA-131
"E-ACM" is not displayed on the intelligent tester via CAN VIM.	Active Control Engine Mount ECU Communication Stop Mode	CA-148
"MAIN BODY" is not displayed on the intelligent tester via CAN VIM.	Main Body ECU Communication Stop Mode	CA-139
"METER" is not displayed on the intelligent tester via CAN VIM.	Combination Meter ECU Communication Stop Mode	CA-142
"AVN" is not displayed on the intelligent tester via CAN VIM.	Navigation Control ECU Communication Stop Mode	CA-146

TERMINALS OF ECU

NOTICE:

- **This section describes the standard CAN values for all CAN related components.**
- **Before measuring the resistance, leave the vehicle as is for at least 1 minute and do not operate the engine switch, any other switches, or the doors. If any doors need to be opened in order to check connectors, open the doors and leave them open.**

1. **JUNCTION CONNECTOR (CAN No. 2 J/C, CAN No. 5 J/C)**
   (a) CAN No. 2 J/C for CAN No. 1 Bus

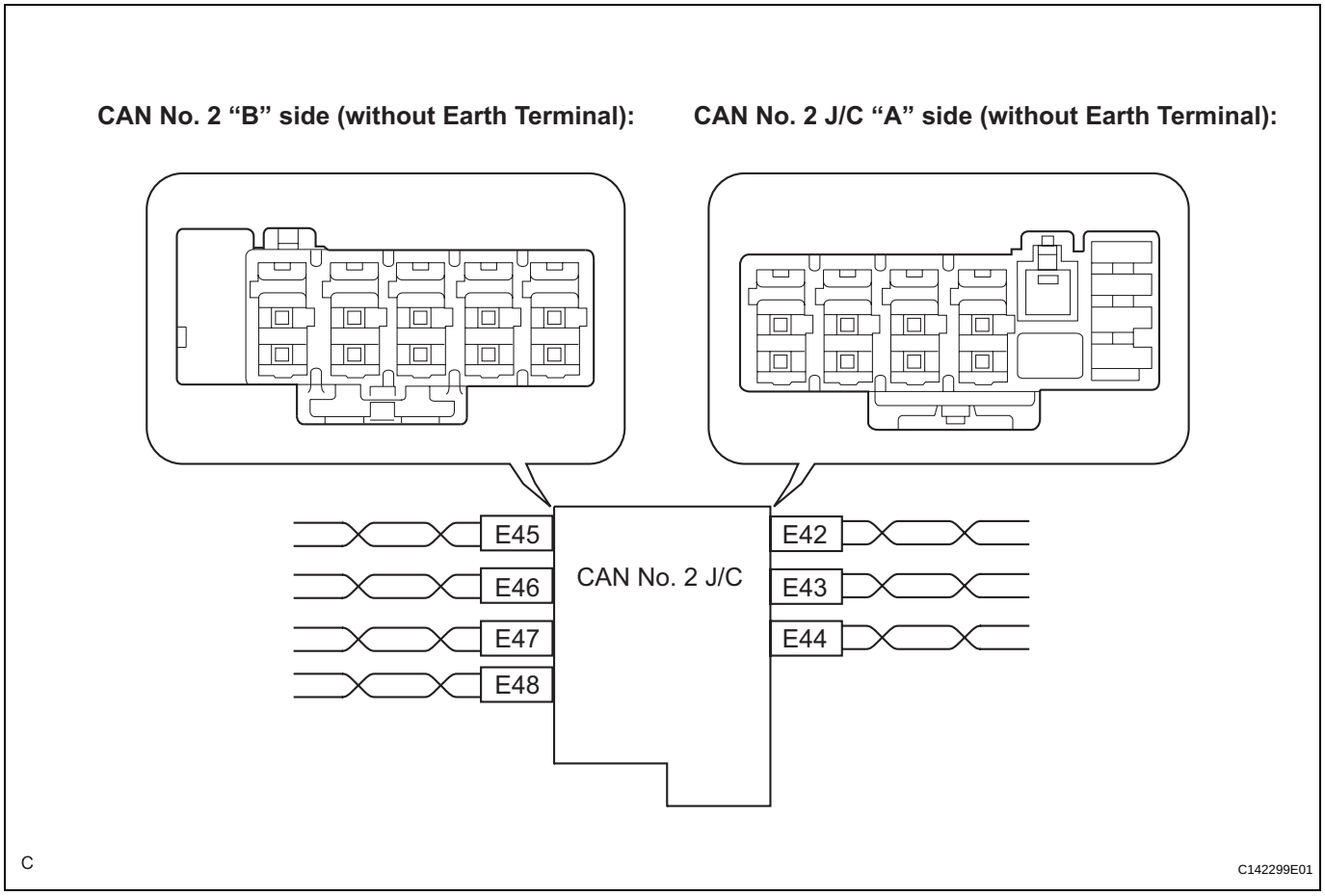

Wiring color:

CAN No. 2 J/C Connector ("A" side, with earth terminal)	Connector Color	Color (CAN-H Side)	Color (CAN-L Side)
CAN No. 1 Bus Wire (E42)	White	B	W
Main Body ECU (E43)	White	BR	GR
DLC3 (E44)	White	LG	P

Wiring color:

CAN No. 2 J/C Connector ("B" side, with earth terminal)	Connector Color	Color (CAN-H Side)	Color (CAN-L Side)
Yaw Rate Sensor (E47)	White	O	P
Center Airbag Sensor (E45)	White	G	Y
Steering Angle Sensor (E46)	White	V	P
Combination Meter (E48)	White	B	W

(b) CAN No. 5 J/C for CAN No. 1 Bus (FRONT SIDE OF THE VEHICLE)

CAN No. 5 J/C (Front Side of the Vehicle) Wire Harness View:

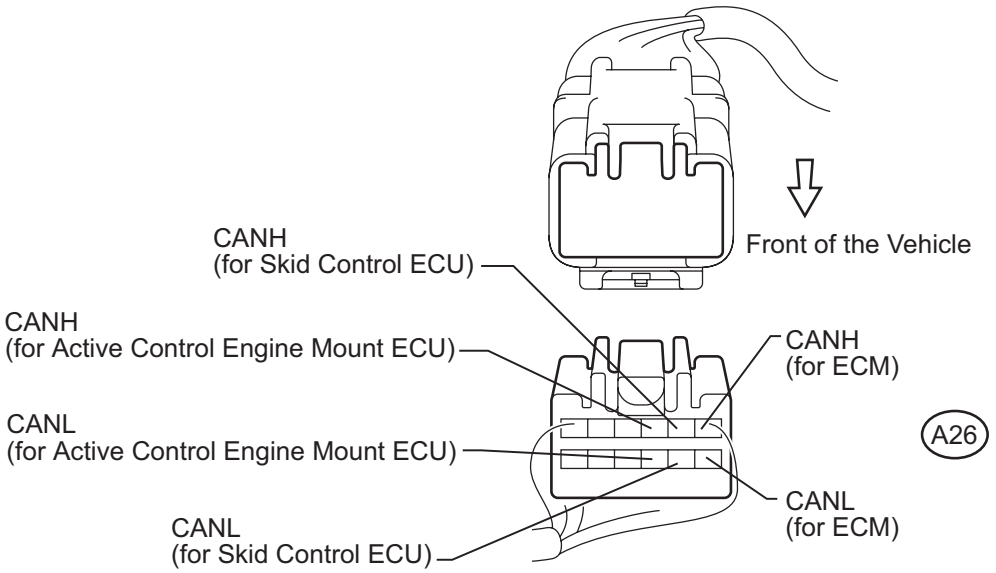

Wiring color:

Terminal	Wiring Color	Destination
A26-1 (CANH)	B	ECM (CANH)
A26-7 (CANL)	W	ECM (CANL)
A26-2 (CANH)	L	Skid Control ECU (CANH)
A26-8 (CANL)	LG	Skid Control ECU (CANL)
A26-3 (CANH)	G	Active Control Engine Mount ECU (CANH)
A26-9 (CANL)	R	Active Control Engine Mount ECU (CANL)

(c) CAN No. 5 J/C for CAN No. 1 Bus (REAR SIDE OF THE VEHICLE)

CAN No. 5 J/C (Rear Side of the Vehicle) Wire Harness View:

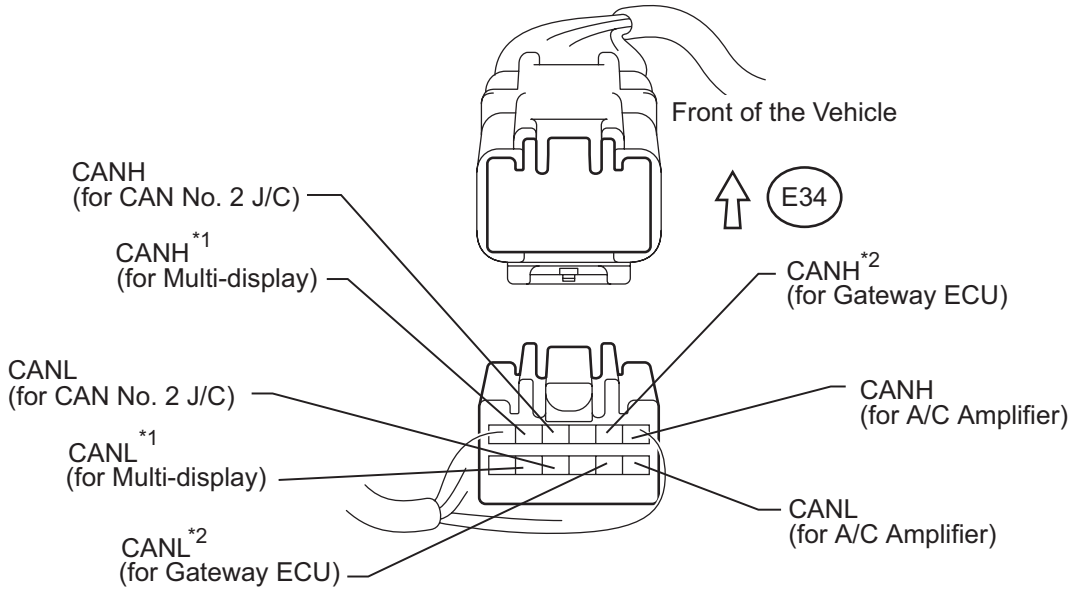

Wiring color:

Terminal	Wiring Color	Destination
E34-1 (CANH)	GR	A/C Amplifier (CANH)
E34-7 (CANL)	BR	A/C Amplifier (CANL)
E34-2 (CANH)*2	P	Gateway ECU (CANH)
E34-8 (CANL)*2	O	Gateway ECU (CANL)
E34-4 (CANH)	B	CAN No. 2 J/C (CANH)
E34-10 (CANL)	W	CAN No. 2 J/C (CANL)
E34-5 (CANH)*1	L	Multi-display (CANH)
E34-11 (CANL)*1	Y	Multi-display (CANL)

HINT:
- *1: with Navigation system
- *2: with AFS, dynamic radar cruise control system or pre-collision system

(d) The connection diagram of the components which are connected to the CAN J/C

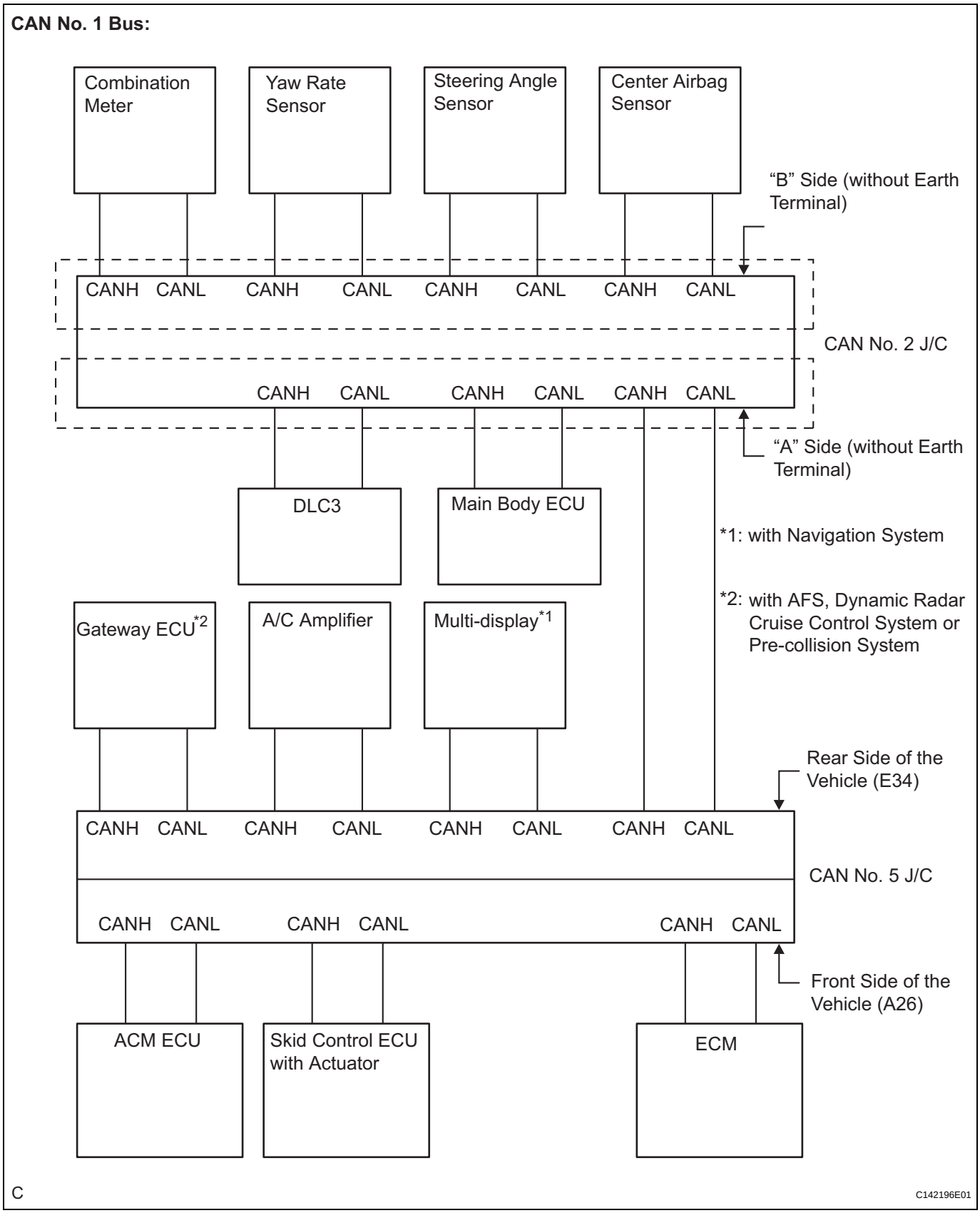

2. JUNCTION CONNECTOR (CAN No. 3 J/C)

(a) CAN No. 3 J/C for CAN MS Bus

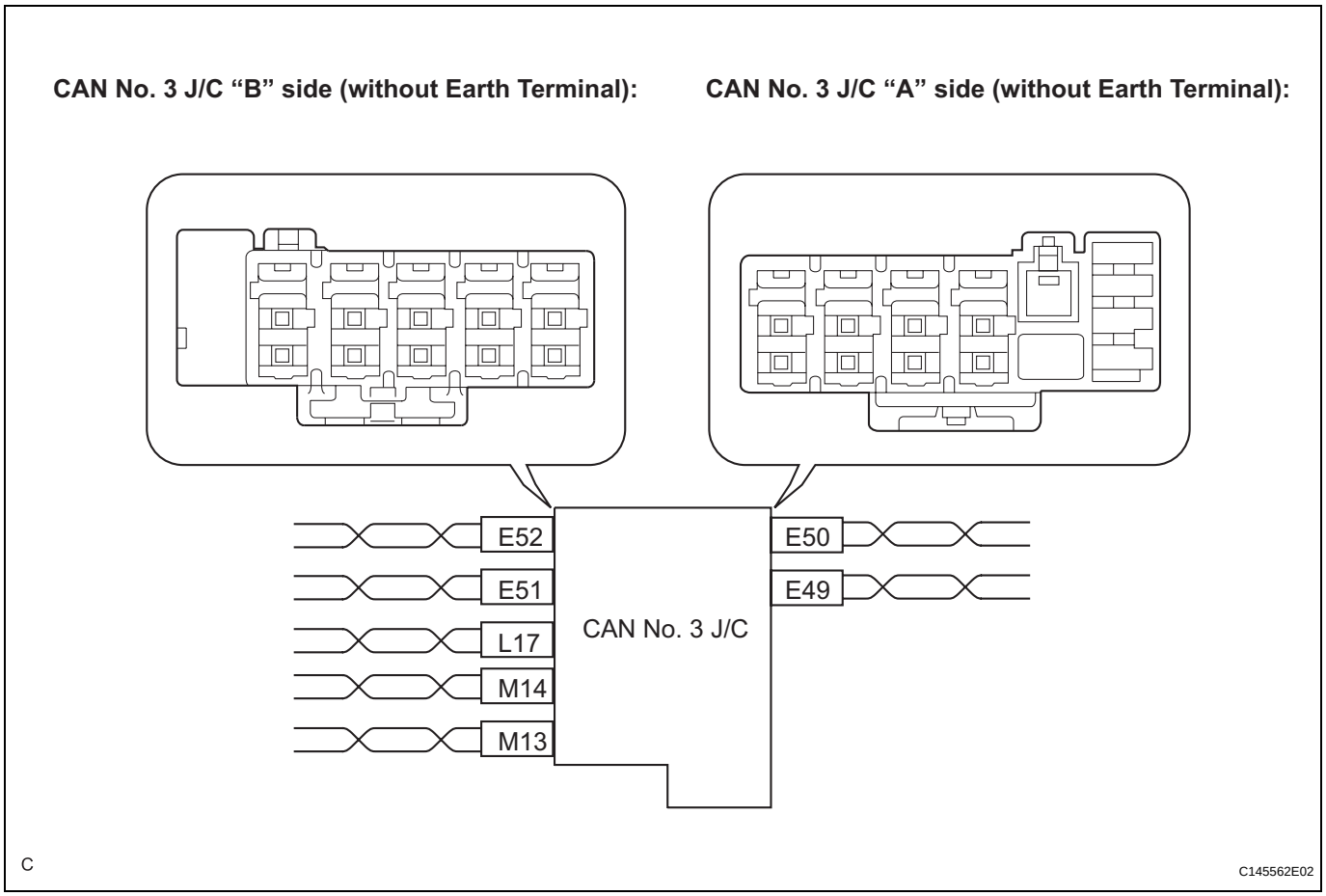

Wiring color:

CAN No. 3 J/C Connector ("A" side, with earth terminal)	Connector Color	Color (CAN-H Side)	Color (CAN-L Side)
Certification ECU (E50)	White	R	W
Main Body ECU (E49)	White	B	W

Wiring color:

CAN No. 3 J/C Connector ("B" side, with earth terminal)	Connector Color	Color (CAN-H Side)	Color (CAN-L Side)
Outer Mirror Control ECU (E52)	White	O	P
Multiplex Tilt and Telescopic ECU (E51)	White	BR	GR
Seat Position Control ECU (Front LH Side) (L17)	Blue	LG	L
Clearance Warning ECU (M13)	Gray	Y	L
Seat Position Control ECU (Front RH Side) (M14)	Black	V	P

3. JUNCTION CONNECTOR (CAN No. 4 J/C)

(a) CAN No. 1 J/C for CAN No. 2 Bus

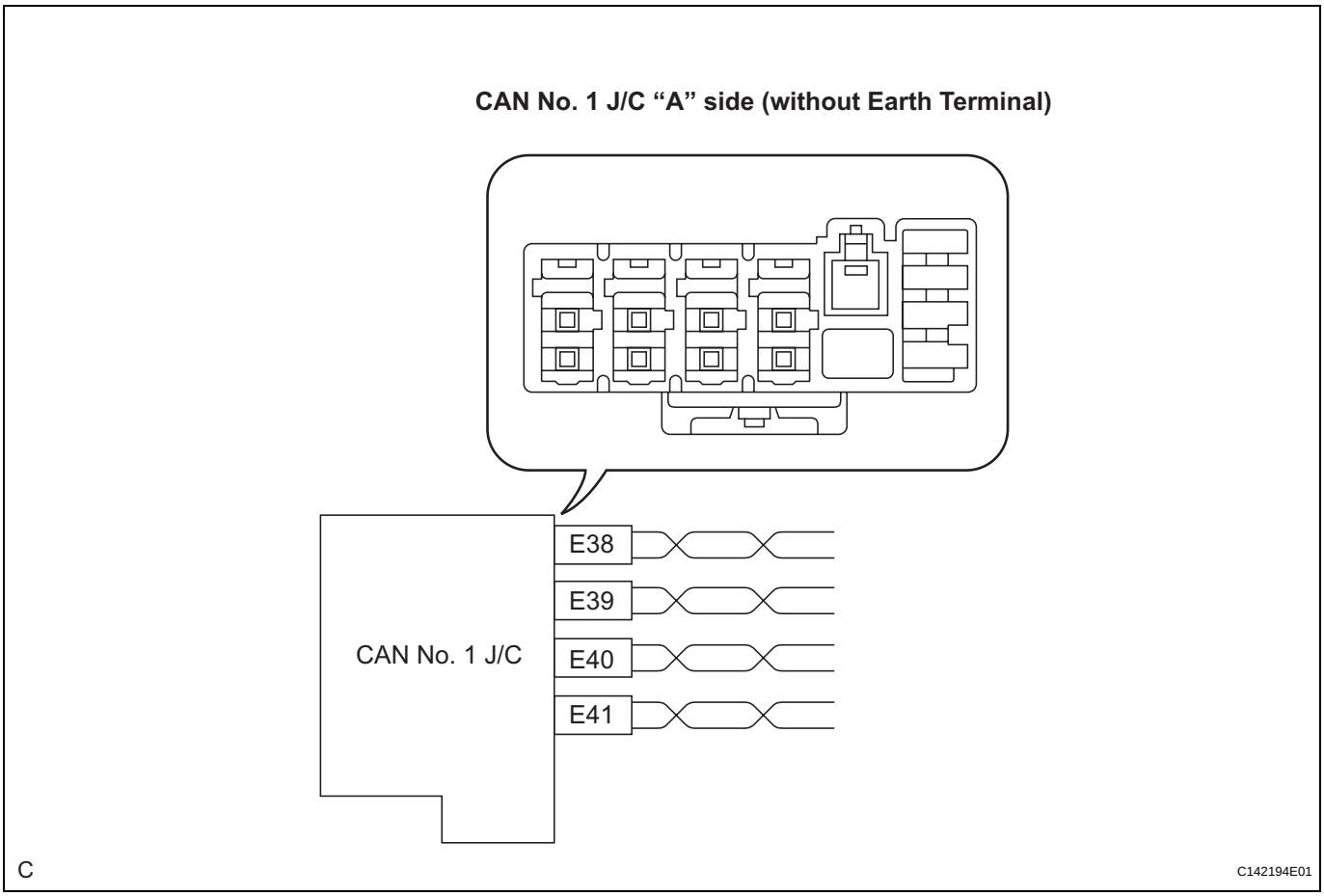

Wiring color:

CAN No. 1 J/C Connector ("A" Side, with earth terminal)	Connector Color	Color (CAN-H Side)	Color (CAN-L Side)
Gateway ECU (E38)	White	B	W
AFS ECU (E39)	White	L	Y
Distance Control ECU (E40)	White	GR	BR
CAN No. 2 Bus Wire (E41)	White	LG	P

(b) CAN No. 4 J/C for CAN No. 2 Bus

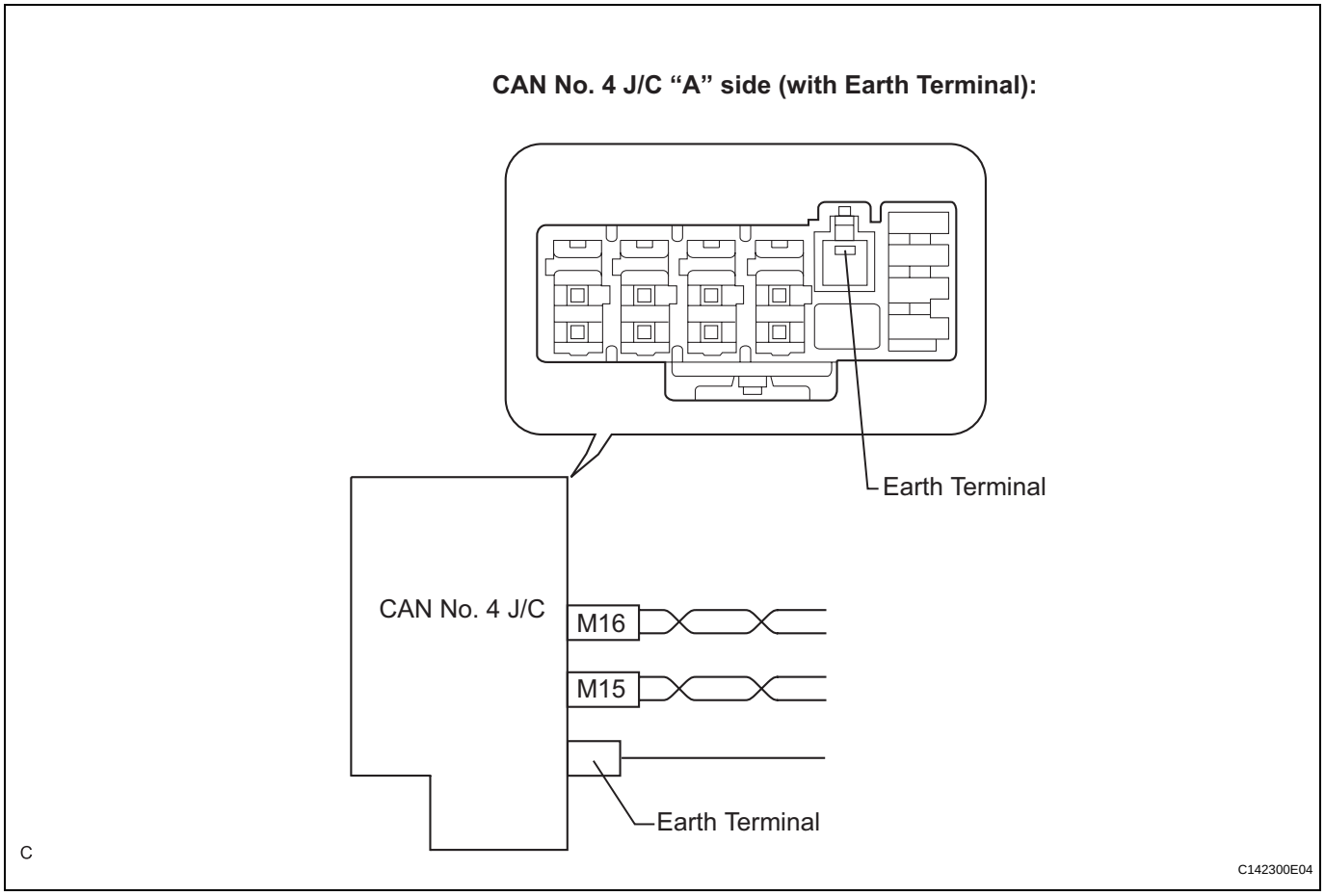

Wiring color:

CAN No. 4 J/C Connector ("A" side, with earth terminal)	Connector Color	Color (CAN-H Side)	Color (CAN-L Side)
CAN No. 1 J/C (M15)	White	LG	P
Seat Belt Control ECU (M16)	White	L	Y

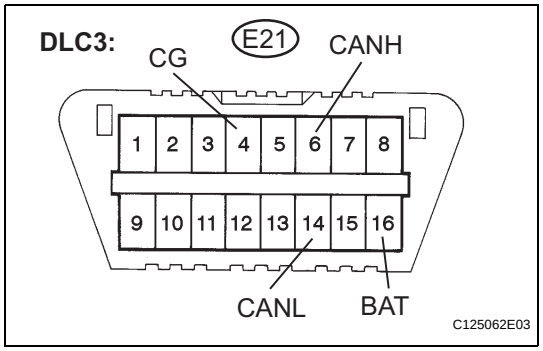

4. DLC3

(a) Measure the resistance according to the value(s) in the table below.

Standard resistance

Terminals	Wiring Color	Terminal Description	Condition	Specified Value
E21-6 (CANH) - E21-14 (CANL)	**LG - P**	**HIGH-level CAN bus wire - LOW-level CAN bus wire**	**Engine switch off**	**54 to 69 Ω**
E21-6 (CANH) - E21-4 (CG)	**LG - W-B**	**HIGH-level CAN bus wire - Ground**	**Engine switch off**	**200 Ω or higher**
E21-14 (CANL) - E21-4 (CG)	**P - W-B**	**LOW-level CAN bus wire - Ground**	**Engine switch off**	**200 Ω or higher**
E21-6 (CANH) - E21-16 (BAT)	**LG - O**	**HIGH-level CAN bus wire - Battery positive**	**Engine switch off**	**6 kΩ or higher**

Terminals	Wiring Color	Terminal Description	Condition	Specified Value
E21-14 (CANL) - E21-16 (BAT)	P - O	LOW-level CAN bus wire - Battery positive	Engine switch off	6 kΩ or higher

5. SKID CONTROL ECU WITH ACTUATOR

(a) Disconnect the connector from the skid control ECU.

(b) Measure the resistance according to the value(s) in the table below.

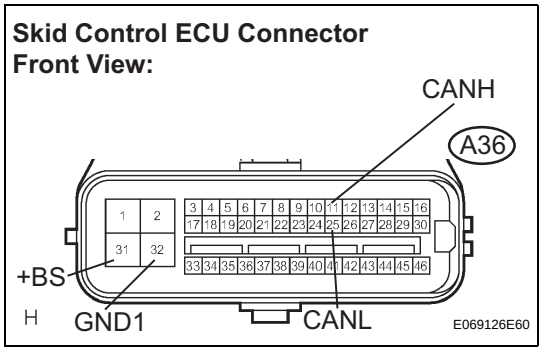

Standard resistance

Terminals	Wiring Color	Terminal Description	Condition	Specified Value
A36-11 (CANH) - A36-25 (CANL)	L - LG	HIGH-level CAN bus wire - LOW-level CAN bus wire	Engine switch off	54 to 69 Ω
A36-11 (CANH) - A36-32 (GND1)	L - W-B	HIGH-level CAN bus wire - Ground	Engine switch off	200 Ω or higher
A36-25 (CANL) - A36-32 (GND1)	LG - W-B	LOW-level CAN bus wire - Ground	Engine switch off	200 Ω or higher
A36-11 (CANH) - A36-31 (+BS)	L - L	HIGH-level CAN bus wire - Battery positive	Engine switch off	6 kΩ or higher
A36-25 (CANL) - A36-31 (+BS)	LG - L	LOW-level CAN bus wire - Battery positive	Engine switch off	6 kΩ or higher

6. STEERING ANGLE SENSOR

(a) Disconnect the connector from the steering angle sensor.

(b) Measure the resistance according to the value(s) in the table below.

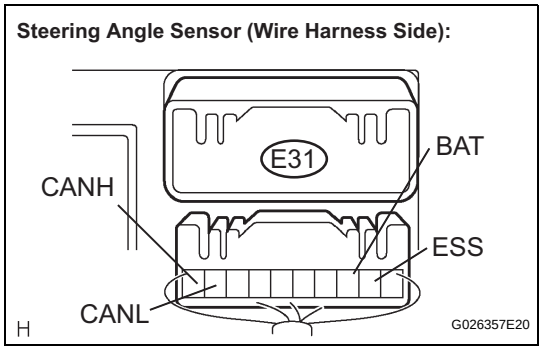

Standard resistance

Terminals	Wiring Color	Terminal Description	Condition	Specified Value
E31-10 (CANH) - E31-9 (CANL)	V - P	HIGH-level CAN bus wire - LOW-level CAN bus wire	Engine switch off	54 to 69 Ω
E31-10 (CANH) - E31-2 (ESS)	V - W-B	HIGH-level CAN bus wire - Ground	Engine switch off	200 Ω or higher
E31-9 (CANL) - E31-2 (ESS)	P - W-B	LOW-level CAN bus wire - Ground	Engine switch off	200 Ω or higher
E31-10 (CANH) - E31-3 (BAT)	V - V	HIGH-level CAN bus wire - Battery positive	Engine switch off	6 kΩ or higher

Terminals	Wiring Color	Terminal Description	Condition	Specified Value
E31-9 (CANL) - E31-3 (BAT)	P - V	LOW-level CAN bus wire - Battery positive	Engine switch off	6 kΩ or higher

7. YAW RATE SENSOR

(a) Disconnect the connector from the yaw rate sensor.

(b) Measure the resistance according to the value(s) in the table below.

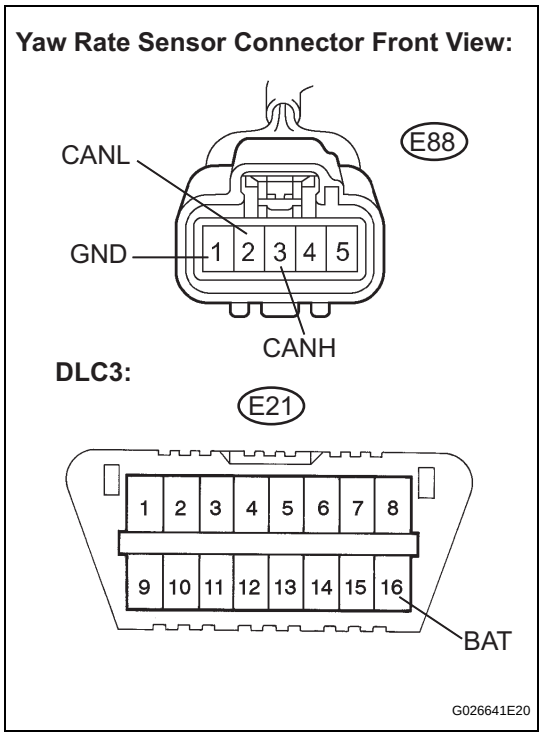

Standard resistance

Terminals	Wiring Color	Terminal Description	Condition	Specified Value
E88-3 (CANH) - E88-2 (CANL)	O - P	HIGH-level CAN bus wire - LOW-level CAN bus wire	Engine switch off	54 to 69 Ω
E88-3 (CANH) - E88-1 (GND)	O - W-B	HIGH-level CAN bus wire - Ground	Engine switch off	200 Ω or higher
E88-2 (CANL) - E88-1 (GND)	P - W-B	LOW-level CAN bus wire - Ground	Engine switch off	200 Ω or higher
E88-3 (CANH) - E21-16 (BAT)	O - O	HIGH-level CAN bus wire - Battery positive	Engine switch off	6 kΩ or higher
E88-2 (CANL) - E21-16 (BAT)	P - O	LOW-level CAN bus wire - Battery positive	Engine switch off	6 kΩ or higher

8. CENTER AIRBAG SENSOR

(a) Disconnect the connector from the center airbag sensor.

Center Airbag Sensor (Wire Harness Side):

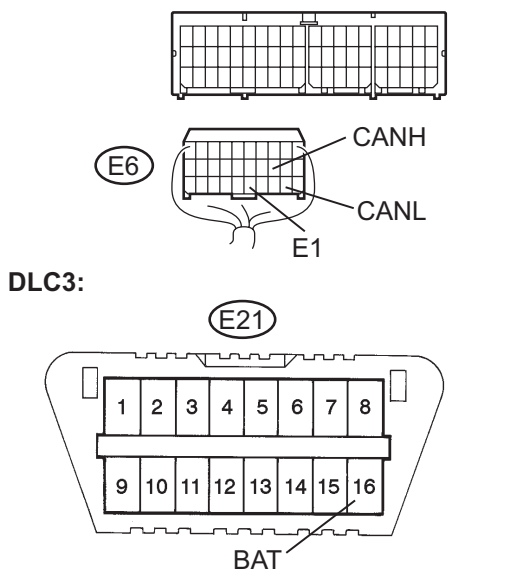

(b) Measure the resistance according to the value(s) in the table below.

Standard resistance

Terminals	Wiring Color	Terminal Description	Condition	Specified Value
E6-13 (CANH) - E6-22 (CANL)	G - Y	HIGH-level CAN bus wire - LOW-level CAN bus wire	Engine switch off	54 to 69 Ω
E6-13 (CANH) - E6-25 (E1)	G - W-B	HIGH-level CAN bus wire - Ground	Engine switch off	200 Ω or higher
E6-22 (CANL) - E6-25 (E1)	Y - W-B	LOW-level CAN bus wire - Ground	Engine switch off	200 Ω or higher
E6-13 (CANH) - E21-16 (BAT)	G - O	HIGH-level CAN bus wire - Battery positive	Engine switch off	6 kΩ or higher
E6-22 (CANL) - E21-16 (BAT)	Y - O	LOW-level CAN bus wire - Battery positive	Engine switch off	6 kΩ or higher

9. ECM

(a) Disconnect the connector from the ECM.

(b) Measure the resistance according to the value(s) in the table below.

ECM (Connector Side):

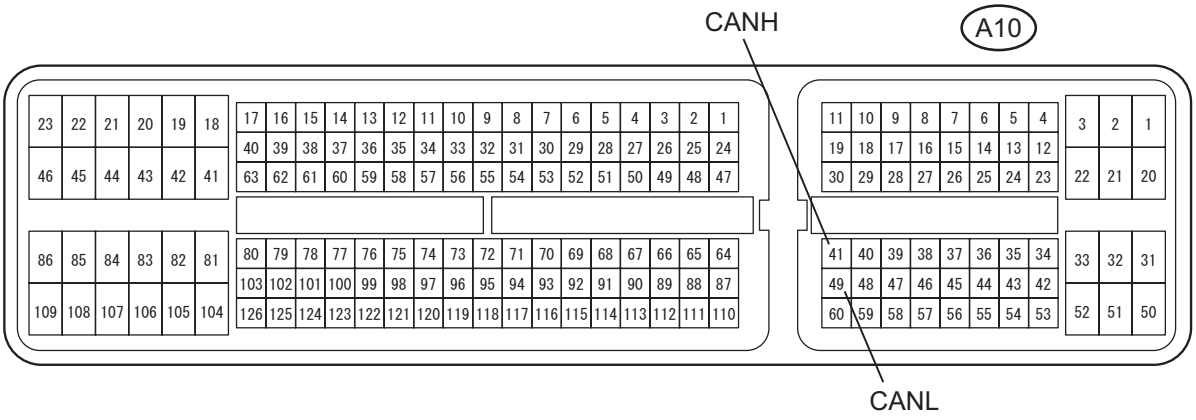

CA

Standard resistance

Terminals	Condition	Specified Value
A10-41 (CANH) - A10-49 (CANL)	Engine switch off	108 to 132 Ω

ECM (Wire Harness Side):

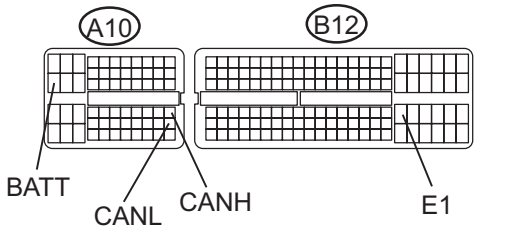

(c) Measure the resistance according to the value(s) in the table below.

Standard resistance

Terminals	Wiring Color	Terminal Description	Condition	Specified Value
A10-41 (CANH) - A10-49 (CANL)	B - W	HIGH-level CAN bus wire - LOW-level CAN bus wire	Engine switch off	108 to 132 Ω
A10-41 (CANH) - B12-81 (E1)	B - W-B	HIGH-level CAN bus wire - Ground	Engine switch off	200 Ω or higher
A10-49 (CANL) - B12-81 (E1)	W - W-B	LOW-level CAN bus wire - Ground	Engine switch off	200 Ω or higher
A10-41 (CANH) - A10-20 (BATT)	B - Y	HIGH-level CAN bus wire - Battery positive	Engine switch off	6 kΩ or higher
A10-49 (CANL) - A10-20 (BATT)	W - Y	LOW-level CAN bus wire - Battery positive	Engine switch off	6 kΩ or higher

10. AIR CONDITIONING AMPLIFIER

(a) Disconnect the connector from the air conditioning amplifier.

(b) Measure the resistance according to the value(s) in the table below.

Air Conditioning Amplifier (Wire Harness Side):

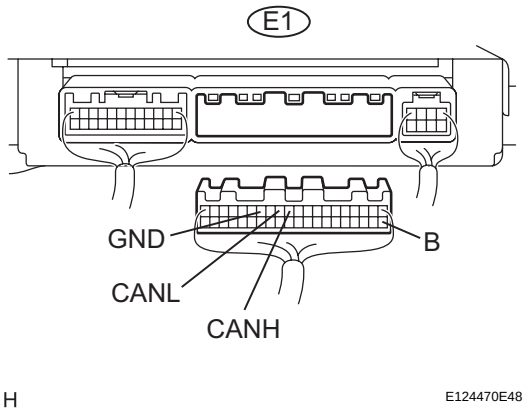

Standard resistance

Terminals	Wiring Color	Terminal Description	Condition	Specified Value
E1-11 (CANH) - E1-12 (CANL)	GR - BR	HIGH-level CAN bus wire - LOW-level CAN bus wire	Engine switch off	54 to 69 Ω
E1-11 (CANH) - E1-14 (GND)	GR - W-B	HIGH-level CAN bus wire - Ground	Engine switch off	200 Ω or higher
E1-12 (CANL) - E1-14 (GND)	BR - W-B	LOW-level CAN bus wire - Ground	Engine switch off	200 Ω or higher

Terminals	Wiring Color	Terminal Description	Condition	Specified Value
E1-11 (CANH) - E1-21 (B)	GR - GR	HIGH-level CAN bus wire - Battery positive	Engine switch off	6 kΩ or higher
E1-12 (CANL) - E1-21 (B)	BR - GR	LOW-level CAN bus wire - Battery positive	Engine switch off	6 kΩ or higher

11. COMBINATION METER

(a) Disconnect the connector from the combination meter.

(b) Measure the resistance according to the value(s) in the table below.

Combination Meter (Component Side):

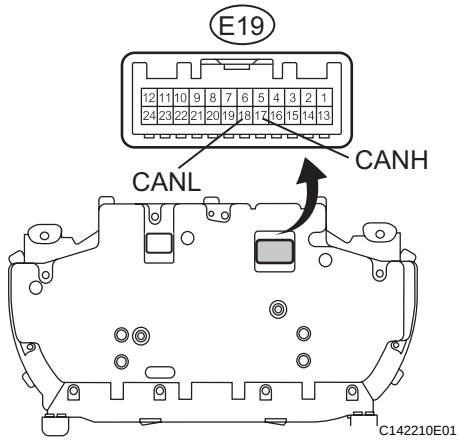

Standard resistance

Terminals	Condition	Specified Value
E19-17 (CANH) - E19-18 (CANL)	Engine switch off	108 to 132 Ω

(c) Measure the resistance according to the value(s) in the table below.

Combination Meter (Wire Harness Side):

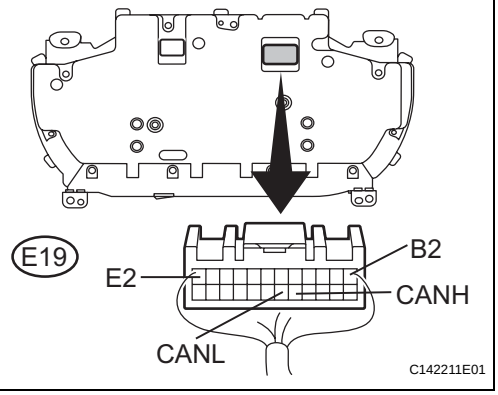

Standard resistance

Terminals	Wiring Color	Terminal Description	Condition	Specified Value
E19-17 (CANH) - E19-18 (CANL)	B - W	HIGH-level CAN bus wire - LOW-level CAN bus wire	Engine switch off	108 to 132 Ω
E19-17 (CANH) - E19-12 (E2)	B - W-B	HIGH-level CAN bus wire - Ground	Engine switch off	200 Ω or higher
E19-18 (CANL) - E19-12 (E2)	W - W-B	LOW-level CAN bus wire - Ground	Engine switch off	200 Ω or higher
E19-17 (CANH) - E19-1 (B2)	B - R	HIGH-level CAN bus wire - Battery positive	Engine switch off	6 kΩ or higher

Terminals	Wiring Color	Terminal Description	Condition	Specified Value
E19-18 (CANL) - E19-1 (B2)	W - R	LOW-level CAN bus wire - Battery positive	Engine switch off	6 kΩ or higher

12. CERTIFICATION ECU

(a) Disconnect the connector from the certification ECU.

(b) Measure the resistance according to the value(s) in the table below.

Certification ECU (Component Side):

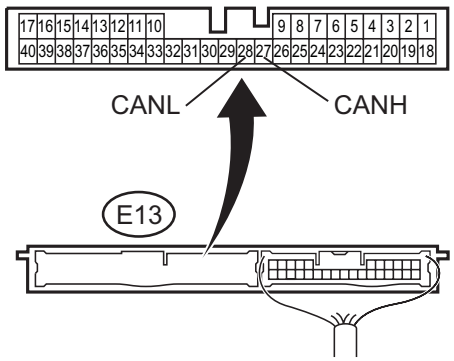

C C142197E01

Standard resistance

Terminals	Condition	Specified Value
E13-27 (CANH) - E13-28 (CANL)	Engine switch off	108 to 132 Ω

(c) Measure the resistance according to the value(s) in the table below.

Certification ECU (Wire Harness Side):

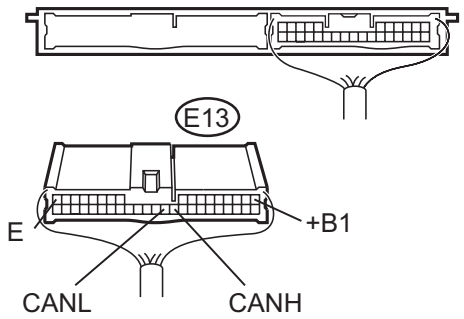

C C142198E01

Standard resistance

Terminals	Wiring Color	Terminal Description	Condition	Specified Value
E13-27 (CANH) - E13-28 (CANL)	R - W	HIGH-level CAN bus wire - LOW-level CAN bus wire	Engine switch off	108 to 132 Ω
E13-27 (CANH) - E13-17 (E)	R - W-B	HIGH-level CAN bus wire - Ground	Engine switch off	200 Ω or higher
E13-28 (CANL) - E13-17 (E)	W - W-B	LOW-level CAN bus wire - Ground	Engine switch off	200 Ω or higher
E13-27 (CANH) - E13-1 (+B1)	R - W	HIGH-level CAN bus wire - Battery positive	Engine switch off	6 kΩ or higher
E13-28 (CANL) - E13-1 (+B1)	W - W	LOW-level CAN bus wire - Battery positive	Engine switch off	6 kΩ or higher

13. MAIN BODY ECU (INSTRUMENT PANEL J/B)

(a) Disconnect the connector from the main body ECU.

(b) Measure the resistance according to the value(s) in the table below.

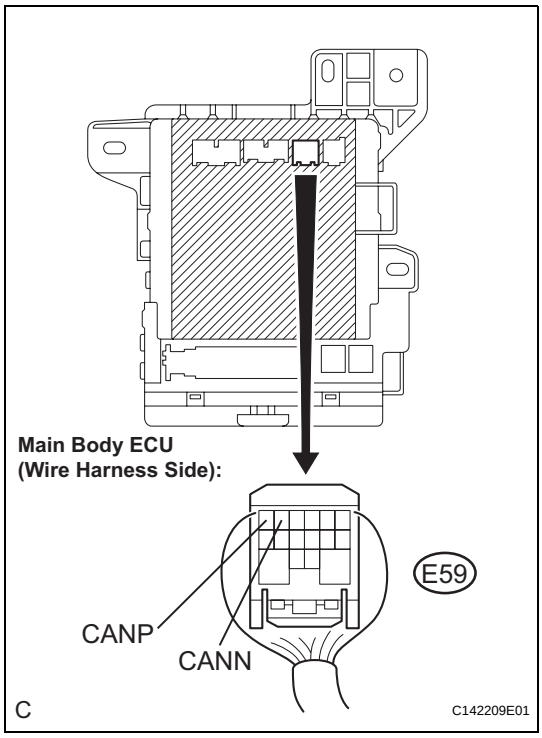

Standard resistance

Terminals	Condition	Specified Value
E59-16 (CANP) - E59-15 (CANN)	Engine switch off	108 to 132 Ω

(c) Measure the resistance according to the value(s) in the table below.

Instrument Panel J/B (Component Side):

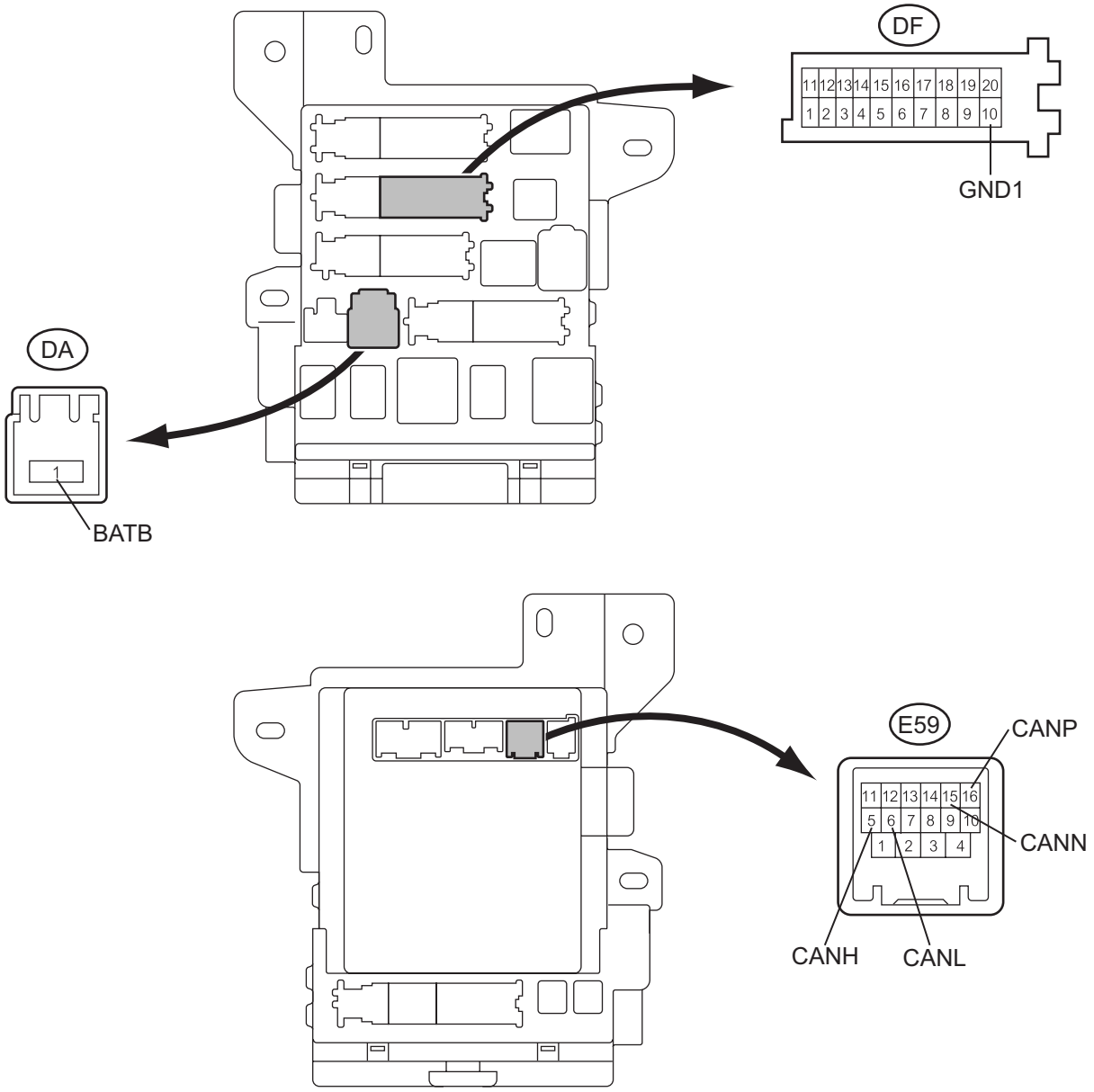

H C142207E01

Standard resistance

Terminals	Wiring Color	Terminal Description	Condition	Specified Value
E59-5 (CANH) - E59-6 (CANL)	BR - GR	HIGH-level CAN bus wire - LOW-level CAN bus wire	Engine switch off	54 to 69 Ω
E59-5 (CANH) - DF-10 (GND1)	BR - W-B	HIGH-level CAN bus wire - Ground	Engine switch off	200 Ω or higher
E59-6 (CANL) - DF-10 (GND1)	GR - W-B	LOW-level CAN bus wire - Ground	Engine switch off	200 Ω or higher

Terminals	Wiring Color	Terminal Description	Condition	Specified Value
E59-5 (CANH) - DA-1 (BATB)	BR - W	HIGH-level CAN bus wire - Battery positive	Engine switch off	6 kΩ or higher
E59-6 (CANL) - DA-1 (BATB)	GR - W	LOW-level CAN bus wire - Battery positive	Engine switch off	6 kΩ or higher
E59-16 (CANP) - E59-15 (CANN)	B - W	HIGH-level CAN bus wire - LOW-level CAN bus wire	Engine switch off	108 to 132 Ω
E59-16 (CANP) - DF-10 (GND1)	B - W-B	HIGH-level CAN bus wire - Ground	Engine switch off	200 Ω or higher
E59-15 (CANN) - DF-10 (GND1)	W - W-B	LOW-level CAN bus wire - Ground	Engine switch off	200 Ω or higher
E59-16 (CANP) - DA-1 (BATB)	B - W	HIGH-level CAN bus wire - Battery positive	Engine switch off	6 kΩ or higher
E59-15 (CANN) - DA-1 (BATB)	W - W	LOW-level CAN bus wire - Battery positive	Engine switch off	6 kΩ or higher

14. ACTIVE CONTROL ENGINE MOUNT ECU

(a) Disconnect the connector from the active control engine mount ECU.

(b) Measure the resistance according to the value(s) in the table below.

Active Control Engine Mount ECU (Wire Harness Side):

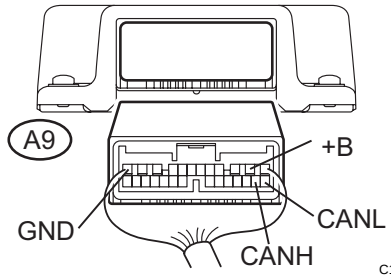

Standard resistance

Terminals	Wiring Color	Terminal Description	Condition	Specified Value
A9-14 (CANH) - A9-13 (CANL)	G - R	HIGH-level CAN bus wire - LOW-level CAN bus wire	Engine switch off	54 to 69 Ω
A9-14 (CANH) - A9-12 (GND)	G - GR	HIGH-level CAN bus wire - Ground	Engine switch off	200 Ω or higher
A9-13 (CANL) - A9-12 (GND)	R - GR	LOW-level CAN bus wire - Ground	Engine switch off	200 Ω or higher
A9-14 (CANH) - A9-2 (+B)	G - B	HIGH-level CAN bus wire - Battery positive	Engine switch off	6 kΩ or higher
A9-13 (CANL) - A9-2 (+B)	R - B	LOW-level CAN bus wire - Battery positive	Engine switch off	6 kΩ or higher

15. GATEWAY ECU

(a) Disconnect the connector from the gateway ECU.

(b) Measure the resistance according to the value(s) in the table below.

Gateway ECU (Component Side):

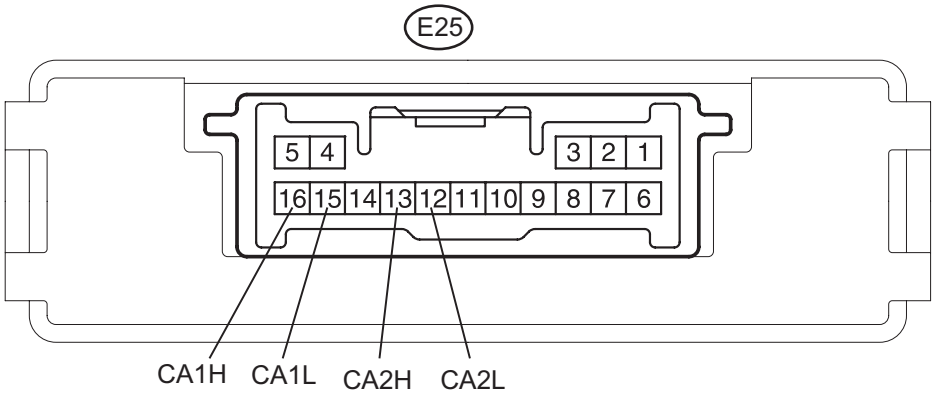

P C142189E01

Standard resistance

Terminals	Condition	Specified Value
E25-13 (CA2H) - E25-12 (CA2L)	Engine switch off	108 to 132 Ω

Certification ECU (Wire Harness Side):

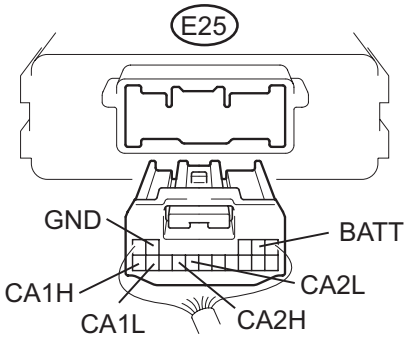

P C142190E01

(c) Measure the resistance according to the value(s) in the table below.

Standard resistance

Terminals	Wiring Color	Terminal Description	Condition	Specified Value
E25-16 (CA1H) - E25-15 (CA1L)	P - O	HIGH-level CAN bus wire - LOW-level CAN bus wire	Engine switch off	54 to 69 Ω
E25-16 (CA1H) - E25-4 (GND)	P - W-B	HIGH-level CAN bus wire - Ground	Engine switch off	200 Ω or higher
E25-15 (CA1L) - E25-4 (GND)	O - W-B	LOW-level CAN bus wire - Ground	Engine switch off	200 Ω or higher
E25-16 (CA1H) - E25-2 (BATT)	P - V	HIGH-level CAN bus wire - Battery positive	Engine switch off	6 kΩ or higher
E25-15 (CA1L) - E25-2 (BATT)	O - V	LOW-level CAN bus wire - Battery positive	Engine switch off	6 kΩ or higher
E25-13 (CA2H) - E25-12 (CA2L)	B - W	HIGH-level CAN bus wire - LOW-level CAN bus wire	Engine switch off	108 to 132 Ω
E25-13 (CA2H) - E25-4 (GND)	B - W-B	HIGH-level CAN bus wire - Ground	Engine switch off	200 Ω or higher

Terminals	Wiring Color	Terminal Description	Condition	Specified Value
E25-12 (CA2L) - E25-4 (GND)	W - W-B	LOW-level CAN bus wire - Ground	Engine switch off	200 Ω or higher
E25-13 (CA2H) - E25-2 (BATT)	B - V	HIGH-level CAN bus wire - Battery positive	Engine switch off	6 kΩ or higher
E25-12 (CA2L) - E25-2 (BATT)	W - V	LOW-level CAN bus wire - Battery positive	Engine switch off	6 kΩ or higher

16. MULTI-DISPLAY

(a) Disconnect the connector from the multi-display.

(b) Measure the resistance according to the value(s) in the table below.

Multi-display (Wire Harness Side):

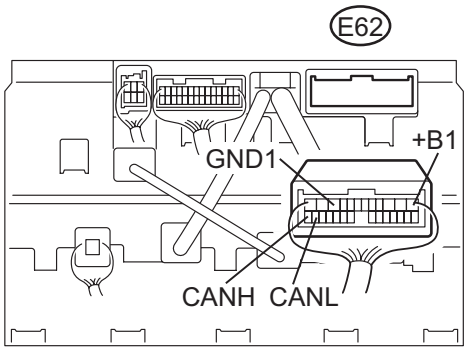

N E119725E07

Standard resistance

Terminals	Wiring Color	Terminal Description	Condition	Specified Value
E62-26 (CANH) - E62-25 (CANL)	L - Y	HIGH-level CAN bus wire - LOW-level CAN bus wire	Engine switch off	54 to 69 Ω
E62-26 (CANH) - E62-10 (GND1)	L - W-B	HIGH-level CAN bus wire - Ground	Engine switch off	200 Ω or higher
E62-25 (CANL) - E62-10 (GND1)	Y - W-B	LOW-level CAN bus wire - Ground	Engine switch off	200 Ω or higher
E62-26 (CANH) - E62-1 (+B1)	L - GR	HIGH-level CAN bus wire - Battery positive	Engine switch off	6 kΩ or higher
E62-25 (CANL) - E62-1 (+B1)	Y - GR	LOW-level CAN bus wire - Battery positive	Engine switch off	6 kΩ or higher

17. OUTER MIRROR CONTROL ECU

(a) Disconnect the connector from the outer mirror control ECU.

Outer Mirror Control ECU (Wire Harness Side):

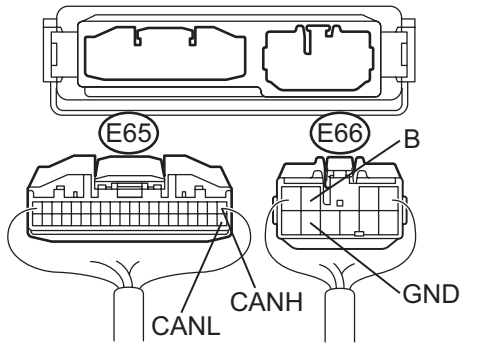

(b) Measure the resistance according to the value(s) in the table below.

Standard resistance

Terminals	Wiring Color	Terminal Description	Condition	Specified Value
E65-1 (CANH) - E65-21 (CANL)	O - P	HIGH-level CAN bus wire - LOW-level CAN bus wire	Engine switch off	54 to 69 Ω
E65-1 (CANH) - E66-9 (GND)	O - W-B	HIGH-level CAN bus wire - Ground	Engine switch off	200 Ω or higher
E65-21 (CANL) - E66-9 (GND)	P - W-B	LOW-level CAN bus wire - Ground	Engine switch off	200 Ω or higher
E65-1 (CANH) - E66-3 (B)	O - V	HIGH-level CAN bus wire - Battery positive	Engine switch off	6 kΩ or higher
E65-21 (CANL) - E66-3 (B)	P - V	LOW-level CAN bus wire - Battery positive	Engine switch off	6 kΩ or higher

18. MULTIPLEX TILT AND TELESCOPIC ECU

(a) Disconnect the connector from the multiplex tilt and telescopic ECU.

(b) Measure the resistance according to the value(s) in the table below.

Multiplex Tilt and Telescopic ECU (Wire Harness Side):

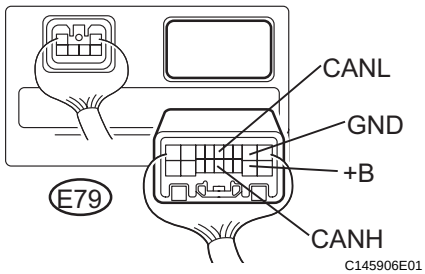

Standard resistance

Terminals	Wiring Color	Terminal Description	Condition	Specified Value
E79-5 (CANH) - E79-14 (CANL)	BR - GR	HIGH-level CAN bus wire - LOW-level CAN bus wire	Engine switch off	54 to 69 Ω
E79-5 (CANH) - E79-11 (GND)	BR - W-B	HIGH-level CAN bus wire - Ground	Engine switch off	200 Ω or higher

Terminals	Wiring Color	Terminal Description	Condition	Specified Value
E79-14 (CANL) - E79-11 (GND)	GR - W-B	LOW-level CAN bus wire - Ground	Engine switch off	200 Ω or higher
E79-5 (CANH) - E79-2 (+B)	BR - W	HIGH-level CAN bus wire - Battery positive	Engine switch off	6 kΩ or higher
E79-14 (CANL) - E79-2 (+B)	GR - W	LOW-level CAN bus wire - Battery positive	Engine switch off	6 kΩ or higher

19. SEAT BELT CONTROL ECU

(a) Disconnect the connector from the seat belt control ECU.

(b) Measure the resistance according to the value(s) in the table below.

Seat Belt Control ECU (Wire Harness Side):

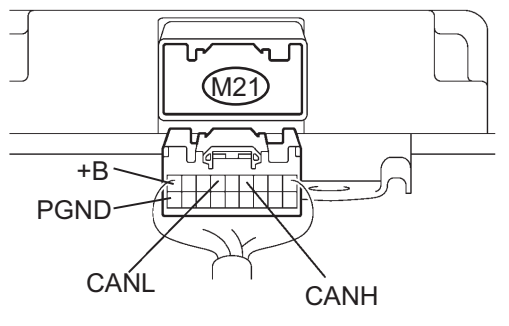

C110546E06

Standard resistance

Terminals	Wiring Color	Terminal Description	Condition	Specified Value
M21-4 (CANH) - M21-6 (CANL)	L - Y	HIGH-level CAN bus wire - LOW-level CAN bus wire	Engine switch off	54 to 69 Ω
M21-4 (CANH) - M21-18 (PGND)	L - W-B	HIGH-level CAN bus wire - Ground	Engine switch off	200 Ω or higher
M21-6 (CANL) - M21-18 (PGND)	Y - W-B	LOW-level CAN bus wire - Ground	Engine switch off	200 Ω or higher
M21-4 (CANH) - M21-9 (+B)	L - BR	HIGH-level CAN bus wire - Battery positive	Engine switch off	6 kΩ or higher
M21-6 (CANL) - M21-9 (+B)	Y - BR	LOW-level CAN bus wire - Battery positive	Engine switch off	6 kΩ or higher

20. SEAT POSITION CONTROL ECU (Front LH Side)

(a) Disconnect the connector from the seat position control ECU.

Seat Position Control ECU (Wire Harness Side):

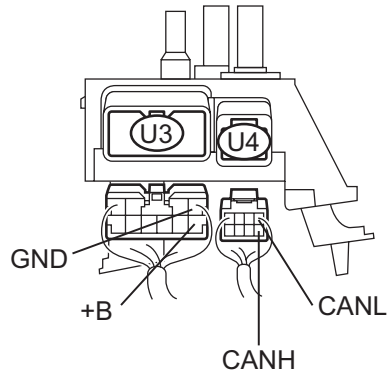

(b) Measure the resistance according to the value(s) in the table below.

Standard resistance

Terminals	Wiring Color	Terminal Description	Condition	Specified Value
U4-5 (CANH) - U4-1 (CANL)	LG - L	HIGH-level CAN bus wire - LOW-level CAN bus wire	Engine switch off	54 to 69 Ω
U4-5 (CANH) - U3-1 (GND)	LG - W-B	HIGH-level CAN bus wire - Ground	Engine switch off	200 Ω or higher
U4-1 (CANL) - U3-1 (GND)	L - W-B	LOW-level CAN bus wire - Ground	Engine switch off	200 Ω or higher
U4-5 (CANH) - U3-5 (+B)	LG - G	HIGH-level CAN bus wire - Battery positive	Engine switch off	6 kΩ or higher
U4-1 (CANL) - U3-5 (+B)	L - G	LOW-level CAN bus wire - Battery positive	Engine switch off	6 kΩ or higher

21. SEAT POSITION CONTROL ECU (Front RH Side)

(a) Disconnect the connector from the seat position control ECU.

(b) Measure the resistance according to the value(s) in the table below.

Seat Position Control ECU (Wire Harness Side):

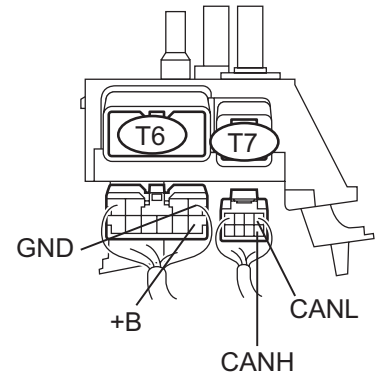

Standard resistance

Terminals	Wiring Color	Terminal Description	Condition	Specified Value
T7-5 (CANH) - T7-1 (CANL)	V - P	HIGH-level CAN bus wire - LOW-level CAN bus wire	Engine switch off	54 to 69 Ω
T7-5 (CANH) - T6-1 (GND)	V - W-B	HIGH-level CAN bus wire - Ground	Engine switch off	200 Ω or higher

Terminals	Wiring Color	Terminal Description	Condition	Specified Value
T7-1 (CANL) - T6-1 (GND)	P - W-B	LOW-level CAN bus wire - Ground	Engine switch off	200 Ω or higher
T7-5 (CANH) - T6-5 (+B)	V - G	HIGH-level CAN bus wire - Battery positive	Engine switch off	6 kΩ or higher
T7-1 (CANL) - T6-5 (+B)	P - G	LOW-level CAN bus wire - Battery positive	Engine switch off	6 kΩ or higher

22. AFS ECU

(a) Disconnect the connector from the AFS ECU.

(b) Measure the resistance according to the value(s) in the table below.

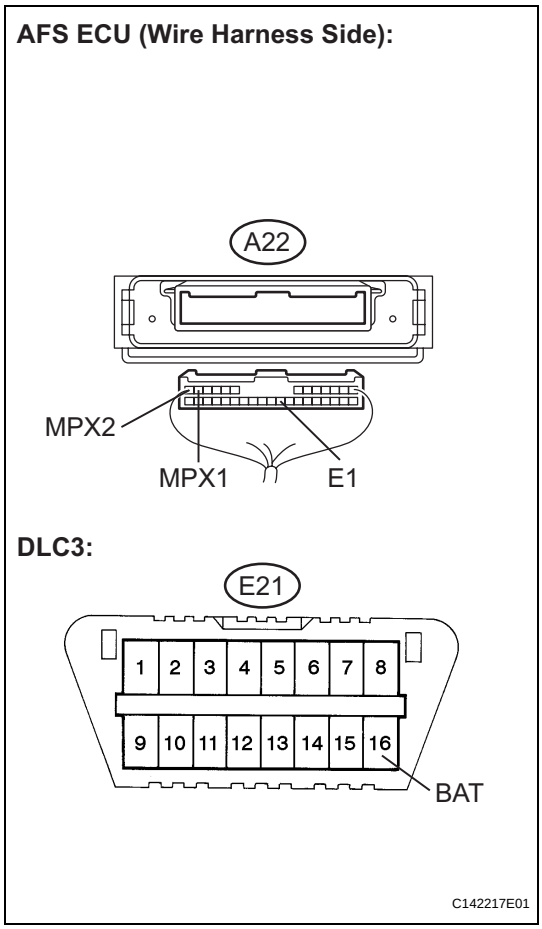

Standard resistance

Terminals	Wiring Color	Terminal Description	Condition	Specified Value
A22-12 (MPX1) - A22-13 (MPX2)	L - Y	HIGH-level CAN bus wire - LOW-level CAN bus wire	Engine switch off	54 to 69 Ω
A22-12 (MPX1) - A22-22 (E1)	L - W	HIGH-level CAN bus wire - Ground	Engine switch off	200 Ω or higher
A22-13 (MPX2) - A22-22 (E1)	Y - W	LOW-level CAN bus wire - Ground	Engine switch off	200 Ω or higher
A22-12 (MPX1) - E21-16 (BAT)	L - O	HIGH-level CAN bus wire - Battery positive	Engine switch off	6 kΩ or higher
A22-13 (MPX2) - E21-16 (BAT)	Y - O	LOW-level CAN bus wire - Battery positive	Engine switch off	6 kΩ or higher

23. DISTANCE CONTROL ECU

(a) Disconnect the connector from the distance control ECU.

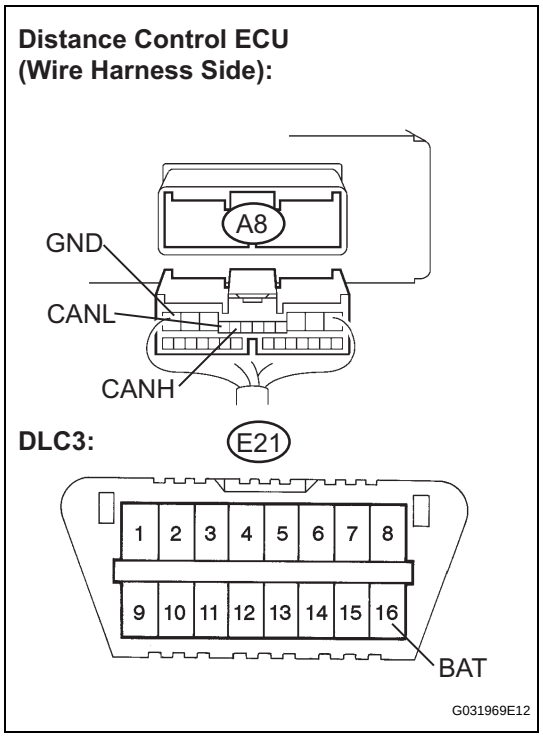

(b) Measure the resistance according to the value(s) in the table below.

Standard resistance

Terminals	Wiring Color	Terminal Description	Condition	Specified Value
A8-8 (CANH) - A8-9 (CANL)	GR - BR	HIGH-level CAN bus wire - LOW-level CAN bus wire	Engine switch off	54 to 69 Ω
A8-8 (CANH) - A8-12 (GND)	GR - GR	HIGH-level CAN bus wire - Ground	Engine switch off	200 Ω or higher
A8-9 (CANL) - A8-12 (GND)	BR - GR	LOW-level CAN bus wire - Ground	Engine switch off	200 Ω or higher
A8-8 (CANH) - E21-16 (BAT)	GR - O	HIGH-level CAN bus wire - Battery positive	Engine switch off	6 kΩ or higher
A8-9 (CANL) - E21-16 (BAT)	BR - O	LOW-level CAN bus wire - Battery positive	Engine switch off	6 kΩ or higher

24. CLEARANCE WARNING ECU

(a) Disconnect the connector from the clearance warning ECU.

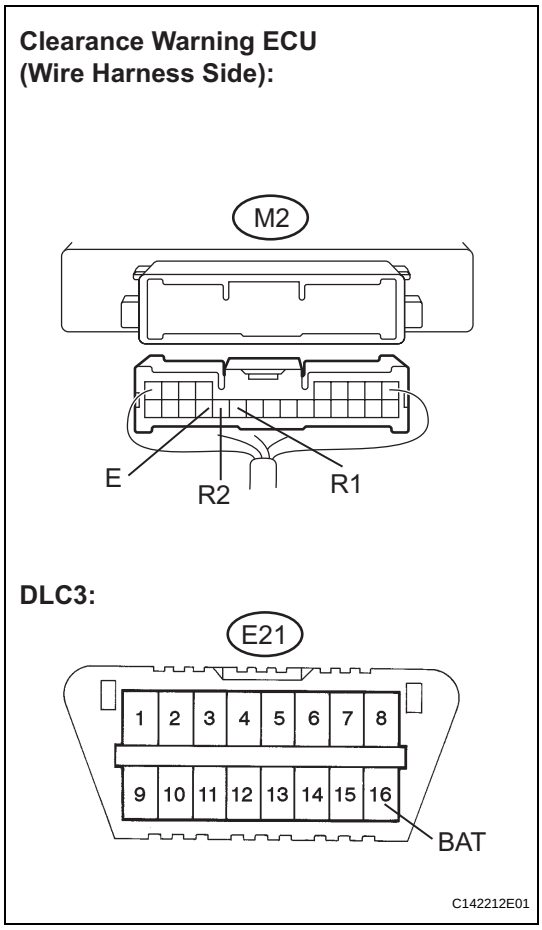

(b) Measure the resistance according to the value(s) in the table below.

Standard resistance

Terminals	Wiring Color	Terminal Description	Condition	Specified Value
M2-19 (R1) - M2-20 (R2)	Y - L	HIGH-level CAN bus wire - LOW-level CAN bus wire	Engine switch off	54 to 69 Ω
M2-19 (R1) - M2-21 (E)	Y - W-B	HIGH-level CAN bus wire - Ground	Engine switch off	200 Ω or higher
M2-20 (R2) - M2-21 (E)	L - W-B	LOW-level CAN bus wire - Ground	Engine switch off	200 Ω or higher
M2-19 (R1) - E21-16 (BAT)	Y - O	HIGH-level CAN bus wire - Battery positive	Engine switch off	6 kΩ or higher
M2-20 (R2) - E21-16 (BAT)	L - O	LOW-level CAN bus wire - Battery positive	Engine switch off	6 kΩ or higher

DIAGNOSIS SYSTEM

1. BUS CHECK

(a) Select "BUS CHECK" from the "OBD/MOBD MENU" screen.
HINT:
The ECUs and sensors that are properly connected to the CAN communication system can be displayed using the intelligent tester via CAN VIM.

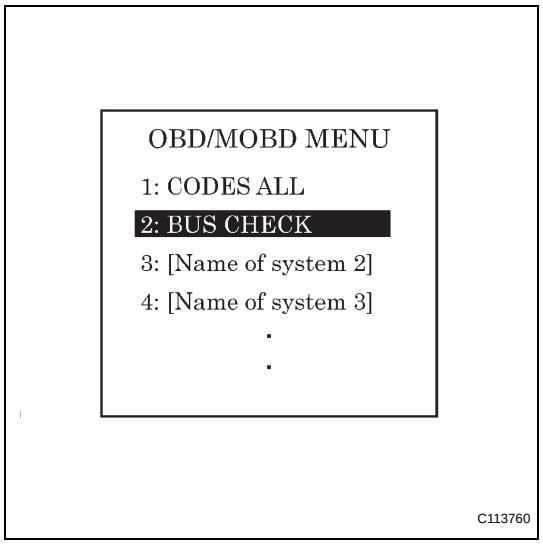

(b) Press "ENTER" on the intelligent tester.

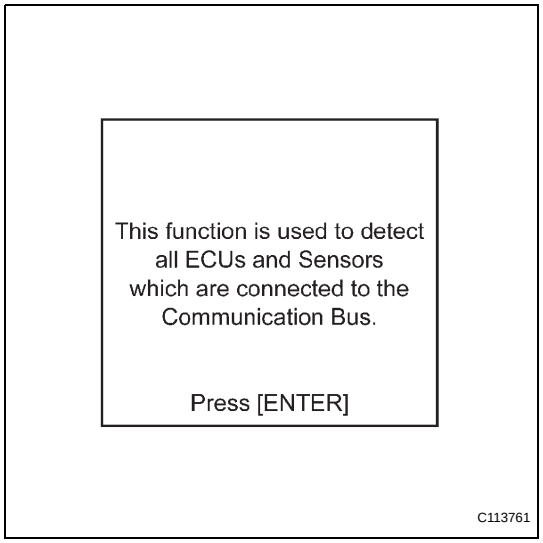

(c) The screen displays the ECUs and sensors that are properly connected to the CAN communication system.
HINT:
There is a communication stop in the system of any properly connected ECUs or sensors that are not displayed.

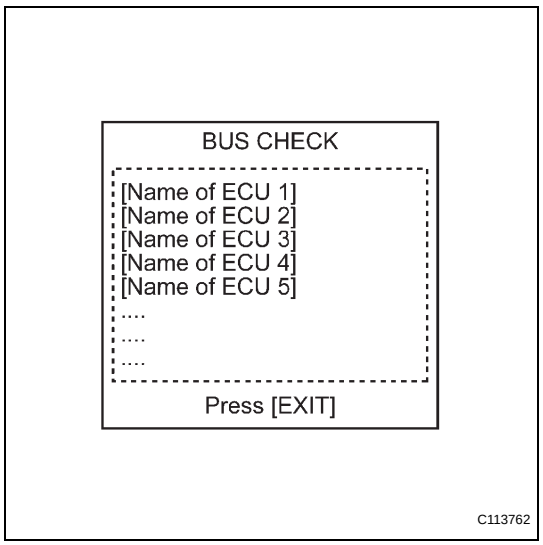

2. CHECK FOR INSTALLED SYSTEMS (ECUS AND SENSORS) THAT ADOPT CAN COMMUNICATION

(a) Systems (ECUs, sensors) that adopt CAN communication vary depending on the vehicle's optional settings. Check which systems (ECUs, sensors) are installed on the vehicle.

ECU/Sensor name	Check method
Skid control ECU	Installed on all vehicles
Steering angle sensor	Installed on all vehicles
Yaw rate sensor	Installed on all vehicles
ECM	Installed on all vehicles

ECU/Sensor name	Check method
Center airbag sensor	Installed on all vehicles
Air conditioning amplifier	Installed on all vehicles
Combination meter	Installed on all vehicles
Main body ECU	Installed on all vehicles
Active control engine mount ECU	Installed on all vehicles
Certification ECU	Installed on all vehicles
Multi-display	Installed on vehicles with navigation system
Gateway ECU	Installed on vehicles with any of AFS, dynamic radar cruise control system, and pre-collision system
Outer mirror control ECU	Installed on all vehicles
Multiplex tilt and telescopic ECU	Installed on all vehicles
Clearance warning ECU	Installed on vehicles with intuitive parking assist system
Seat position control ECU (Front LH side)	Installed on vehicles with seat position memory system
Seat position control ECU (Front RH side)	Installed on vehicles with seat position memory system
AFS ECU	Installed on vehicles with AFS (Adaptive Front-lighting System)
Distance control ECU	Installed on vehicles with dynamic radar cruise control system
Seat belt control ECU	Installed on vehicles with pre-collision system

3. DTC TABLE BY ECU

HINT:

- In the CAN communication system, CAN communication system DTCs can be displayed by the ECU using the intelligent tester.
- If CAN communication system DTCs are output, trouble cannot be determined only by the DTCs. Perform troubleshooting according to "HOW TO PROCEED WITH TROUBLESHOOTING". (See page CA-11)

(a) ECM

HINT:

- DTC communication uses the CAN communication system.
- Distance control ECU data is also output.

DTC No.	Detection Item
U0100 (*3)	Lost Communication with ECM/PCM "A"
U0101 (*1)	Lost Communication with Communication with TCM
U0122 (*3)	Lost Communication with Vehicle Dynamics Control Module
U0123 (*3)	Lost Communication with Yaw Rate Sensor Module
U0126 (*3)	Lost Communication with Steering Angle Sensor Module
U0235 (*2, *3)	Lost Communication with Cruise Control Front Distance Range Sensor
U1101 (*3)	Lost Communication with Distance Control ECU
U1102 (*2)	Lost Communication with Radar Sensor

- *1: If only DTC U0101 is output, refer to SFI system (See page ES-391).
- *2 : If U0235 or U1102 is output alone from the ECUs, the CAN communication is normal (See page CC-85 for U0235, See page CC-88 for U1102).
- *3: This DTC is output only for vehicles with the dynamic radar cruise control system.

(b) SKID CONTROL ECU
HINT:
DTC communication uses the CAN communication system.

DTC No.	Detection Item
U0073	Control Module Communication Bus Off
U0100	Lost Communication with ECM/PCM "A"
U0123	Lost Communication with Yaw Rate Sensor Module
U0124	Lost Communication with Lateral Acceleration Sensor Module
U0126	Lost Communication with Steering Angle Sensor Module

(c) COMBINATION METER
HINT:
DTC communication uses the CAN communication system.

DTC No.	Detection Item
U0100	Lost Communication with ECM/PCM "A"
U0129	Lost Communication with Skid Control ECU

(d) GATEWAY ECU
HINT:
DTC communication uses the CAN communication system.

DTC No.	Detection Item
U0182	Lost Communication with AFS ECU
U1002	Lost Communication with Gateway Module
U1100	Lost Communication with Seat Belt Control ECU
U1102	Lost Communication with Radar Sensor

(e) MAIN BODY ECU
HINT:
DTC communication uses the CAN communication system.

DTC No.	Detection Item
B1207	Certification ECU Communication Malfunction
B1213	Tilt and Telescopic ECU Communication Stop
B1272	Power Seat ECU Communication Stop
B1276	Power Mirror Control ECU Communication Stop
B1289	Passenger Seat ECU Communication Stop
B1297	Clearance Sonar ECU Communication Stop
B2326	CAN MS Bus Line Communication Malfunction

(f) AFS ECU
HINT:
DTC communication uses the CAN communication system.

DTC No.	Detection Item
B2427	CAN Communication Malfunction

(g) SEAT BELT CONTROL ECU
HINT:
DTC communication uses the CAN communication system.

DTC No.	Detection Item
U0100	Lost Communication with ECM/PCM "A"
U0122	Lost Communication with Vehicle Dynamics Control Module
U0151	Lost Communication with Airbag ECU
U0235 (*4)	Lost Communication with Cruise Control Front Distance Range Sensor
U1101	Lost Communication with Distance Control ECU
U1102 (*4)	Lost Communication with Radar Sensor

HINT:
*4 : If U0235 or U1102 is output alone from the ECUs, the CAN communication is normal (See page CC-85 for U0235, See page CC-88 for U1102).

(h) MULTIPLEX TILT AND TELESCOPIC ECU
HINT:
DTC communication uses the CAN communication system.

DTC No.	Detection Item
B2621	Communication Interruption

(i) CENTER AIRBAG SENSOR
HINT:
The center airbag sensor is connected to the CAN communication system, but CAN communication DTCs are not output.

(j) STEERING ANGLE SENSOR
HINT:
The steering angle sensor is connected to the CAN communication system, but CAN communication DTCs are not output.

(k) YAW RATE SENSOR
HINT:
The yaw rate sensor is connected to the CAN communication system, but CAN communication DTCs are not output.

(l) OUTER MIRROR CONTROL ECU
HINT:
The outer mirror control ECU sensor is connected to the CAN communication system, but CAN communication DTCs are not output.

(m) CERTIFICATION ECU
HINT:
The certification ECU is connected to the CAN communication system, but CAN communication DTCs are not output.

(n) MULTI-DISPLAY
HINT:
The multi-display is connected to the CAN communication system, but CAN communication DTCs are not output.

(o) CLEARANCE WARNING ECU
HINT:
The clearance warning ECU is connected to the CAN communication system, but CAN communication DTCs are not output.

(p) SEAT POSITION CONTROL ECU (FRONT LH SIDE)
HINT:
The seat position control ECU (front LH side) is connected to the CAN communication system, but CAN communication DTCs are not output.

(q) SEAT POSITION CONTROL ECU (FRONT RH SIDE)
HINT:
The seat position control ECU (front RH side) is connected to the CAN communication system, but CAN communication DTCs are not output.

4. DTC COMBINATION TABLE

(a) CAN No. 1 Bus

DTC		Trouble Mode				
Output from	**Output DTC**	**ECM Communication Stop Mode**	**Skid Control ECU Communication Stop Mode**	**Steering Angle Sensor Communication Stop Mode**	**Yaw Rate Sensor Communication Stop Mode**	**Combination Meter ECU Communication Stop Mode**
Skid Control ECU	U0073	X	X	X	X	X
	U0100	☐ During driving	X	X	X	X
	U0123	X	X	X	○	X
	U0124	X	X	X	○	X
	U0126	X	X	○	X	X
ECM	U0100	☐ During distance control	X	X	X	X
	U0122	X	☐ During distance control	X	X	X
	U0123	X	X	X	☐ During distance control	X
	U0126	X	X	☐ During distance control	X	X
	U1101	X	X	X	X	X
Combination Meter ECU	U0100	○	X	X	X	X
	U0129	X	○	X	X	X
AFS ECU	B2427	○	○	○	X	X
Seat Belt Control ECU	U0100	○	X	X	X	X
	U0122	X	○	X	X	X
	U0151	X	X	X	X	X
	U1101	X	X	X	X	X
Multiplex tilt and telescopic ECU	B2621	X	X	X	X	○

HINT:
- ○: Set
- X: Not set or may be set according to the malfunctioning part when one side of the CAN bus wire opens
- ☐: Set under the condition shown in the table above

CA

DTC		Trouble Mode					
Output from	Output DTC	Air Conditioning Amplifier Communication Stop Mode	Center Airbag Sensor Communication Stop Mode	Gateway ECU Communication Stop Mode (*2)	Active Control Engine Mount ECU Communication Stop Mode	Main Body ECU Communication Stop Mode	Navigation ECU Communication Stop Mode (*1)
Skid Control ECU	U0073	X	X	X	X	X	X
	U0100	X	X	X	X	X	X
	U0123	X	X	X	X	X	X
	U0124	X	X	X	X	X	X
	U0126	X	X	X	X	X	X
ECM	U0100	X	X	X	X	X	X
	U0122	X	X	X	X	X	X
	U0123	X	X	X	X	X	X
	U0126	X	X	X	X	X	X
	U1101	X	X	☐ During distance control	X	X	X
Combination Meter ECU	U0100	X	X	X	X	X	X
	U0129	X	X	X	X	X	X
AFS ECU	B2427	X	X	○	X	○	X
Seat Belt Control ECU	U0100	X	X	○	X	X	X
	U0122	X	X	○	X	X	X
	U0151	X	○	○	X	X	X
	U1101	X	X	X	X	X	X
Multiplex tilt and telescopic ECU	B2621	X	X	X	X	X	X

HINT:
- ○: Set
- X: Not set or may be set according to the malfunctioning part when one side of the CAN bus wire opens
- (*1): with Navigation system
- (*2): Only when any ECU is connected to the CAN No. 2 bus wire
- Skid Control ECU Communication Stop Mode (See page CA-126)
- Steering Angle Sensor Communication Stop Mode (See page CA-133)
- Yaw Rate Sensor Communication Stop Mode (See page CA-135)
- Gateway ECU Communication Stop Mode (See page CA-131)
- ECM Communication Stop Mode (See page CA-137)
- Main Body ECU Communication Stop Mode (See page CA-139)
- Active Control Engine Mount ECU Communication Stop Mode (See page CA-148)
- Center Airbag Sensor Communication Stop Mode (See page CA-144)
- Navigation ECU Communication Stop Mode (See Page CA-146)

- Combination Meter ECU Communication Stop Mode (See page CA-142).
- Air Conditioning Amplifier Communication Stop Mode (See page CA-128).

FAIL-SAFE CHART

1. FAIL-SAFE FUNCTION

(a) When communication fails in any of the CAN bus wires (communication wires), a fail-safe function(s) will operate. The fail-safe function that is specified for each system operates to prevent those systems from malfunctioning.

(b) The following chart shows the relationships between components and system functions and effects of communication failure on these functions. (For further details, see the pages for each system.)

Function (Function Description)	Control Master	System Related	Fail-safe Operation	DTC (Driver Detectable)
ACM control (Controls active engine mount to reduce engine vibration)	Active control engine mount ECU	• ECM • Skid Control ECU • Air Conditioning Amplifier	ACM control stops	P16A4 (Engine vibration increases)
VSC control (Controls driving force while VSC in operation)	Skid Control ECU	• ECM • Steering Angle Sensor • Yaw Rate Sensor	VSC control is inoperative (VSC control gradually stops)	U0073, U0100, U0123, U0124, U0126 (VSC warning Light comes on)
Buzzer control	Combination Meter	• ECM • Skid Control ECU • Center Airbag Sensor Assembly • Certification ECU • Main Body ECU • Distance Control ECU	Buzzer function stops	U0100, U0129 (Buzzer does not sound)
Meter display (Displays operation condition and DTCs)	Combination Meter	• ECM • Skid Control ECU • Center Airbag Sensor Assembly • Certification ECU • Main Body ECU • AFS ECU • Distance Control ECU • Seat Belt Control ECU	Light does not come on, illuminates abnormally, or blinks abnormally	U0100, U0129 (Abnormal light illumination)
Air conditioning control	Air Conditioning Amplifier	• ECM • Combination Meter • Main Body ECU • Multi-display	Air conditioning function and PTC heater function stop	B1499 (Air conditioning inoperative)
Smart entry/Power door lock control	Certification ECU	• Combination Meter • Main Body ECU	Unlock permitted	B1207, B2326 (Wireless door lock cannot operate)
Security function	Certification ECU	Main Body ECU	Security function is inoperative (Theft deterrent system cannot be set)	B1207, B2326 (Security indicator light does not come on)
Clearance sonar function (Informs driver when an obstacle is detected)	Clearance Warning ECU	• ECM • Combination Meter • Main Body ECU • Navigation Control ECU	Clearance sonar function stops	None (Clearance sonar main switch indicator does not come on)
Mirror surface adjustment/ power retracting function	Outer Mirror Control ECU	Main Body ECU	Mirror surface adjustment/ power retracting function is inoperative	None (Mirror adjustment inoperative)
Mirror automatic retracting/mirror tilt reverse-link function	Outer Mirror Control ECU	• ECM • Main Body ECU	Mirror automatic retracting/mirror tilt reverse-link function is inoperative	None (Mirror adjustment inoperative)

Function (Function Description)	Control Master	System Related	Fail-safe Operation	DTC (Driver Detectable)
Door mirror foot light illumination function	Outer Mirror Control ECU	• Main Body ECU • Certification ECU	Foot illumination is inoperative	None (Foot illumination inoperative)
D seat, mirror, tilt and telescopic positions memorizing/restoring function	Seat Position Control ECU (Front LH Side)	• ECM • Combination Meter • Main Body ECU • Outer Mirror Control ECU • Multiplex Tilt and Telescopic ECU	Positions cannot be memorized or restored	None (Position memorizing/ restoring function inoperative)
Memory call registration/ restoration function (Registration/restoration of positions for each smart/ wireless key)	Seat Position Control ECU (Front LH Side)	• Main Body ECU • Certification ECU • Outer Mirror Control ECU • Multiplex Tilt and Telescopic ECU	Positions cannot be registered or restored	None (Position registration/ restoration inoperative)
P seat position memorizing/restoring function	Seat Position Control ECU (Front RH Side)	• ECM • Combination Meter • Main Body ECU	Position cannot be memorized or restored	None (Position memorizing/ restoring function inoperative)
Auto away/return function (Moves the steering wheel based on the engine switch condition)	Multiplex Tilt and Telescopic ECU	• Combination Meter • Main Body ECU	Auto away/return function is inoperative	None (Auto away/return function inoperative)
AFS control (Headlight left/right angle control)	AFS ECU	• ECM • Skid Control ECU • Steering Angle Sensor • Main Body ECU	Swivel control stops/ leveling control continues	B2427 (AFS OFF indicator blinks)
Dynamic radar cruise control (Maintains vehicle-to-vehicle distance)	Distance Control ECU	• ECM • Skid Control ECU • Steering Angle Sensor • Yaw Rate Sensor	Vehicle-to-vehicle distance control does not operate	U0100, U0122, U0123, U0126 (Master warning light comes on, warning message is displayed on multi-information display, and warning buzzer sounds)
Pre-collision control (Requests seat belt tightening when an unavoidable collision possibility is detected)	Seat Belt Control ECU	• Skid Control ECU • Center Airbag Sensor Assembly • Distance Control ECU	Pre-collision system is inoperative	U0122, U0151, U1101 (PCS warning light comes on)
CAN MS bus monitoring function	Main Body ECU	• Certification ECU • Outer Mirror Control ECU • Seat Position Control ECU (Front LH Side) • Seat Position Control ECU (Front RH Side) • Multiplex Tilt and Telescopic ECU • Clearance warning ECU	Communication error is detected	B1207, B1213, B1272, B1276,B1297, B1289, B2326 (Not detectable)
CAN No. 2 bus monitoring function	Gateway ECU	• AFS ECU • Distance Control ECU • Seat Belt Control ECU	Communication error is detected	U0182, U1002, U1100, U1102 (Not detectable)

DIAGNOSTIC TROUBLE CODE CHART

HINT:
- Parameters listed in the chart may be different from measured values depending on the type of instruments used and other factors.
- If any DTCs are displayed during a check mode, check the circuit for the DTCs listed below. For details of each DTC, refer to the page indicated.

NOTICE:
Only when the DTCs below are output from the main body ECU, proceed to the pages listed in the "See page" column. If the DTCs are output from the ECUs other than the main body ECU, refer to "HOW TO PROCEED WITH TROUBLESHOOTING" to determine the malfunctioning part.

HINT:
When communication with the ECUs connected to the CAN MS bus is interrupted or a malfunction in the CAN MS bus occurs, the main body ECU detects the malfunctions and outputs DTCs.

CAN MS Bus:

DTC Code	Detection Item	Trouble Area	See page
B1207	Certification ECU Communication Malfunction	1. Open or short in CAN No. 3 J/C and certification ECU 2. Certification ECU power source circuit 3. Certification ECU 4. Wire harness or connector	CA-52
B1213	Tilt and Telescopic ECU Communication Stop	1. Open or short in CAN No. 3 J/C and multiplex tilt and telescopic ECU 2. Multiplex tilt and telescopic ECU power source circuit 3. Multiplex tilt and telescopic ECU 4. Wire harness or connector	CA-55
B1272	Power Seat ECU Communication Stop	1. Open or short in CAN No. 3 J/C and seat position control ECU (Front LH side) 2. Seat position control ECU (Front LH side) power source circuit 3. Seat position control ECU (Front LH side) 4. Wire harness or connector	CA-58
B1276	Power Mirror Control ECU Communication Stop	1. Open or short in CAN No. 3 J/C and outer mirror control ECU 2. Outer mirror control ECU power source circuit 3. Outer mirror control ECU 4. Wire harness or connector	CA-61
B1289	Passenger Seat ECU Communication Stop	1. Open or short in CAN No. 3 J/C and seat position control ECU (Front RH side) 2. Seat position control ECU (Front RH side) power source circuit 3. Seat position control ECU (Front RH side) 4. Wire harness or connector	CA-64

DTC Code	Detection Item	Trouble Area	See page
B1297	Clearance Sonar ECU Communication Stop	1. Open or short in CAN No. 3 J/C and clearance warning ECU 2. Clearance warning ECU power source circuit 3. Clearance warning ECU 4. Wire harness or connector	CA-67
B2326	CAN MS Bus Line Communication Malfunction	1. Open or short in MS bus main wire 2. Open or short in MS bus branch wires 3. Wire harness or connector 4. Certification ECU 5. Multiplex tilt and telescopic ECU 6. Seat position control ECU (Front LH side) 7. Seat position control ECU (Front RH side) 8. Outer mirror control ECU 9. Clearance warning ECU 10. Main body ECU 11. CAN No. 3 J/C	CA-70

NOTICE:
Only when the DTCs below are output from the gateway ECU, proceed to the pages listed in the "See page" column. If the DTCs are output from the ECUs other than the gateway ECU, refer to "HOW TO PROCEED WITH TROUBLESHOOTING" to determine the malfunctioning part.
HINT:
- When communication with the ECUs connected to the CAN No. 2 bus is interrupted or a malfunction in the CAN No. 2 bus occurs, the gateway ECU detects the malfunctions and outputs DTCs.
- If a vehicle is not equipped with any of the following: dynamic radar cruise control system, AFS, and pre-collision system, it will not be equipped with a CAN No. 2 main bus.

CAN No. 2 Bus:

DTC Code	Detection Item	Trouble Area	See page
U0182	Lost Communication with AFS ECU	1.Open or short in CAN No. 1 J/C and AFS ECU 2. AFS ECU power source circuit 3. AFS ECU 4. Wire harness or connector	CA-93
U1002	Lost Communication with Gateway Module	1. Open or short in No. 2 bus main wire 2. Open or short in No. 2 bus branch wires 3. CAN No. 1 J/C 4. CAN No. 4 J/C 5. AFS ECU 6. Distance control ECU 7. Seat belt control ECU 8. Wire harness or connector 9. Gateway ECU	CA-96

DTC Code	Detection Item	Trouble Area	See page
U1100	Lost Communication with Seat Belt Control ECU	1. Open or short in CAN No. 4 J/C and seat belt control ECU 2. Open in one side of CAN bus main wire (Between CAN No. 1 J/C and CAN No. 4 J/C) 3. Seat belt control ECU power source circuit 4. Seat belt control ECU 5. CAN No. 4 J/C 6. Wire harness or connector	CA-119
U1102	Lost Communication with Radar Sensor	1. Open or short in CAN No. 1 J/C and distance control ECU 2. Distance control ECU power source circuit 3. Distance control ECU 4. Wire harness or connector	CA-123

DTC	B1207	Certification ECU Communication Malfunction

DESCRIPTION

The main body ECU will store this DTC when no signals can be received from the certification ECU while the CAN MS main bus is normal.

DTC No.	DTC Detection Condition	Trouble Area
B1207	No communication from certification ECU	1. Open or short in CAN No. 3 J/C and certification ECU 2. Certification ECU power source circuit 3. Certification ECU 4. Wire harness or connector

WIRING DIAGRAM

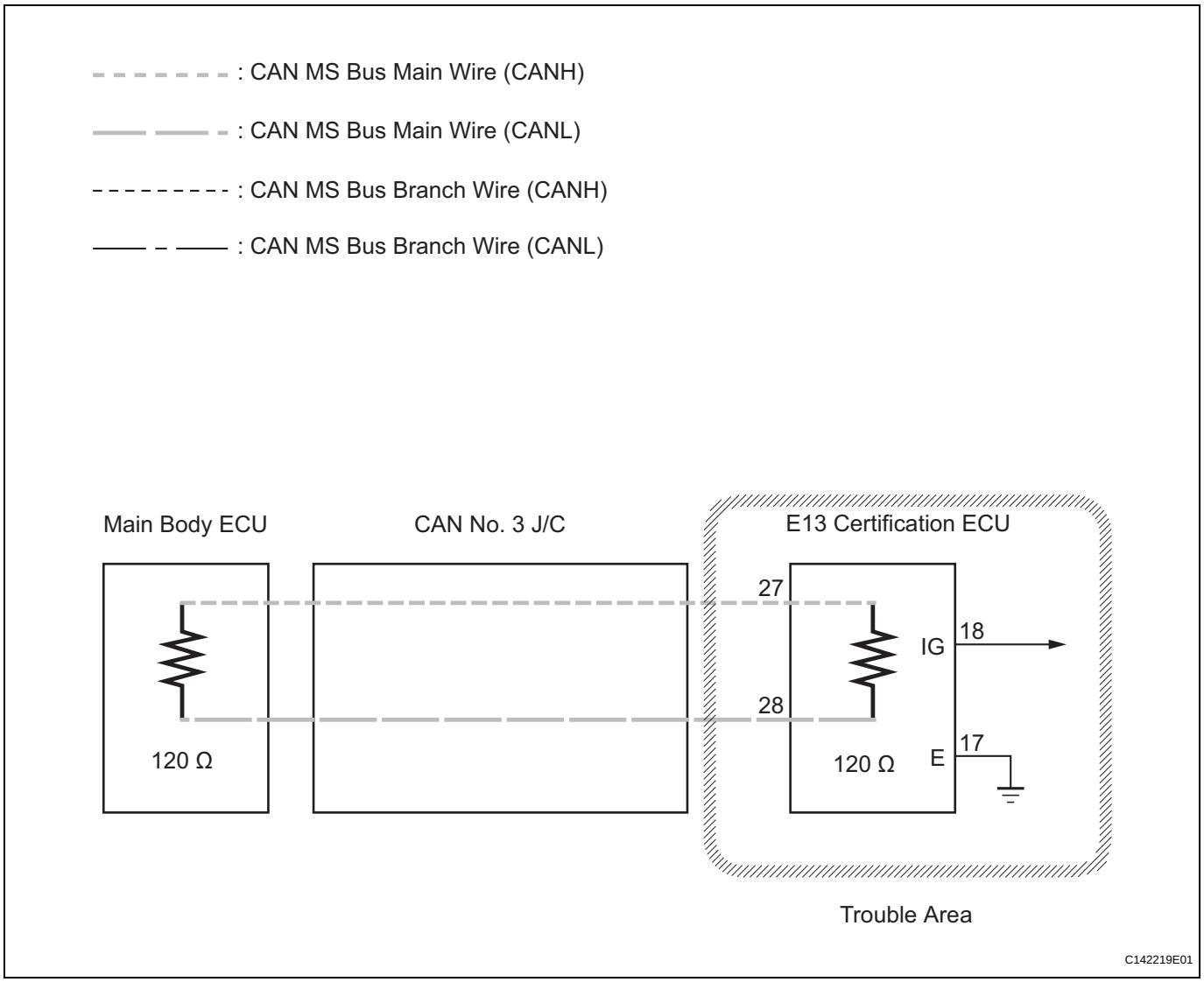

INSPECTION PROCEDURE

NOTICE:

- **Turn the engine switch off before measuring the resistances of CAN bus main wires and CAN bus branch wires.**
- **After the engine switch is turned off, check that the key reminder warning system and light reminder warning system are not in operation.**

- **Before measuring the resistance, leave the vehicle as is for at least 1 minute and do not operate the engine switch, any other switches, or the doors. If any doors need to be opened in order to check connectors, open the doors and leave them open.**

HINT:
Operating the engine switch, any switches, or any doors triggers related ECU and sensor communication on the CAN. This communication will cause the resistance value to change.

1 CHECK DTC

(a) Check for DTCs.
HINT:
If CAN MS bus communication error DTC B2326 is output, troubleshoot for B2326 and check for malfunctions in the CAN MS main bus circuit (See page CA-70).

Result

Result	Proceed to
B2326 is not output	A
B2326 is output	B

B → **GO TO DTC CHART (See page CA-49)**

A

2 CHECK CAN MS BUS WIRE (CERTIFICATION ECU)

Certification ECU (Wire Harness Side):

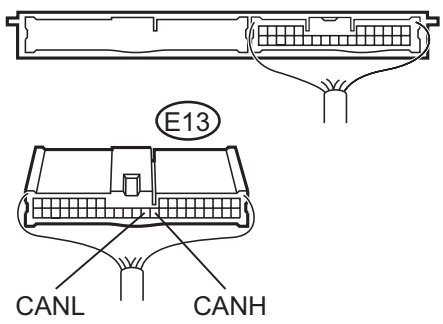

C C142198E02

(a) Turn the engine switch off.
(b) Disconnect connector E13 from the certification ECU.
(c) Measure the resistance according to the value(s) in the table below.

Standard resistance

Tester Connection	Condition	Specified Value
E13-27 (CANH) - E13-28 (CANL)	Engine switch OFF	108 to 132 Ω

NG → **REPAIR OR REPLACE CAN MS BUS MAIN WIRE OR CONNECTOR (CERTIFICATION ECU)**

OK

3 CHECK HARNESS AND CONNECTOR (IG, E)

Certification ECU (Wire Harness Side):

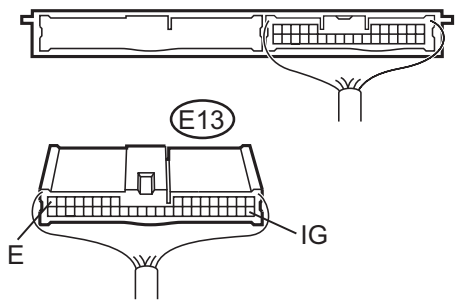

C C142198E03

(a) Measure the resistance according to the value(s) in the table below.

Standard resistance

Tester Connection	Condition	Specified Value
E13-17 (E) - Body ground	Always	Below 1 Ω

(b) Measure the voltage according to the value(s) in the table below.

Standard voltage

Tester Connection	Condition	Specified Value
E13-18 (IG) - Body ground	Engine switch on (IG)	10 to 14 V

NG → **REPAIR OR REPLACE HARNESS OR CONNECTOR**

OK

REPLACE CERTIFICATION ECU

DTC	B1213	Tilt and Telescopic ECU Communication Stop

DESCRIPTION

The main body ECU will store this DTC when no signals can be received from the tilt and telescopic ECU while the CAN MS main bus is normal.

DTC No.	DTC Detection Condition	Trouble Area
B1213	No communication from multiplex tilt and telescopic ECU	1. Open or short in CAN No. 3 J/C and multiplex tilt and telescopic ECU 2. Multiplex tilt and telescopic ECU power source circuit 3. Multiplex tilt and telescopic ECU 4. Wire harness or connector

WIRING DIAGRAM

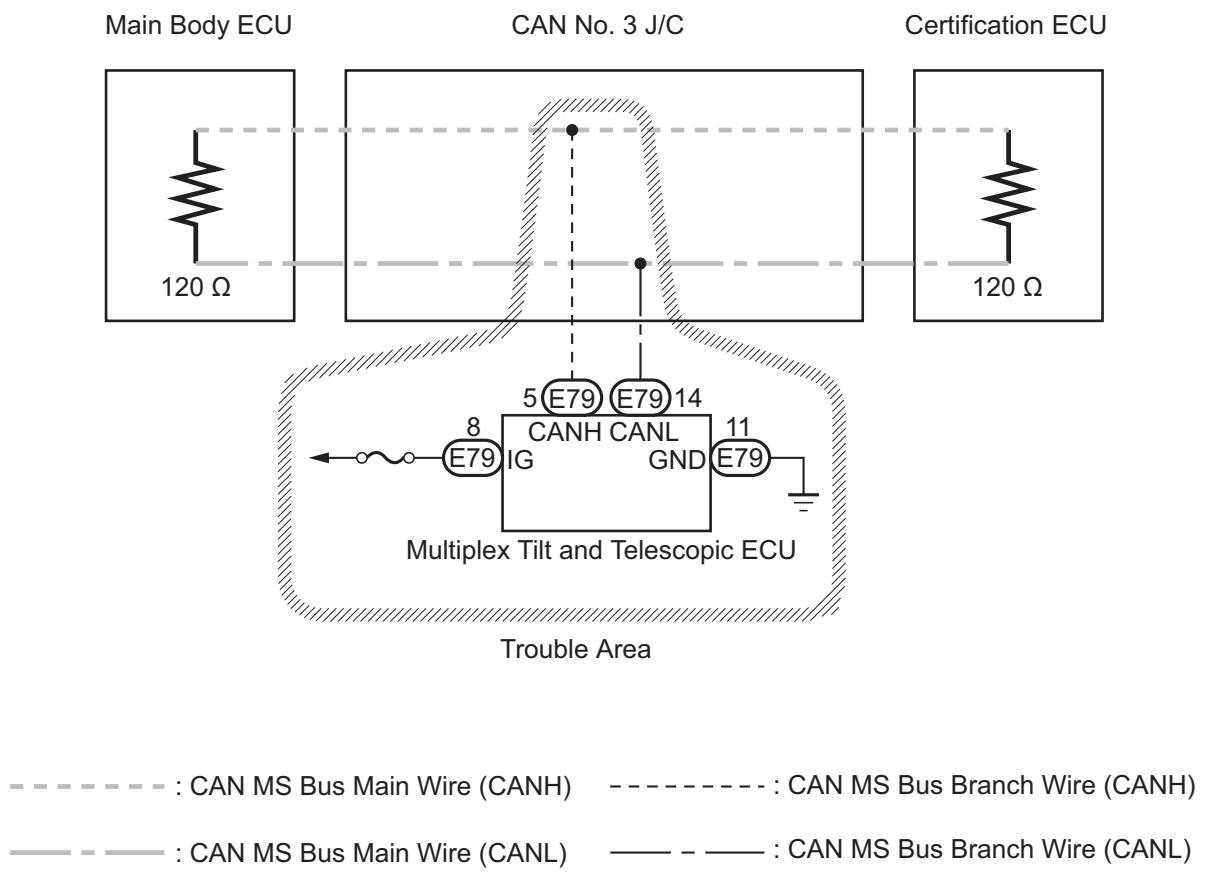

C

C142218E01

INSPECTION PROCEDURE

NOTICE:

- **Turn the engine switch off before measuring the resistances of CAN bus main wires and CAN bus branch wires.**

- **After the engine switch is turned off, check that the key reminder warning system and light reminder warning system are not in operation.**
- **Before measuring the resistance, leave the vehicle as is for at least 1 minute and do not operate the engine switch, any other switches, or the doors. If any doors need to be opened in order to check connectors, open the doors and leave them open.**

HINT:
Operating the engine switch, any switches, or any doors triggers related ECU and sensor communication on the CAN. This communication will cause the resistance value to change.

1 CHECK DTC

(a) Check for DTCs.
HINT:
If CAN MS bus communication error DTC B2326 is output, troubleshoot for B2326 and check for malfunctions in the CAN MS main bus circuit (See page CA-70).

Result

Result	Proceed to
B2326 is not output	A
B2326 is output	B

B → **GO TO DTC CHART (See page CA-49)**

A

2 CHECK CAN MS BUS WIRE (MULTIPLEX TILT AND TELESCOPIC ECU)

Multiplex Tilt and Telescopic ECU (Wire Harness Side):

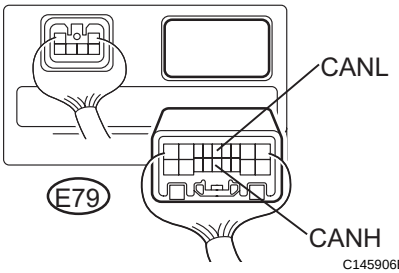

(a) Turn the engine switch off.
(b) Disconnect connector E79 from the multiplex tilt and telescopic ECU.
(c) Measure the resistance according to the value(s) in the table below.

Standard resistance

Tester Connection	Condition	Specified Value
E79-5 (CANH) - E79-14 (CANL)	Engine switch OFF	54 to 69 Ω

NG → **REPAIR OR REPLACE CAN MS BUS BRANCH WIRE OR CONNECTOR (MULTIPLEX TILT AND TELESCOPIC ECU)**

OK

3	CHECK HARNESS AND CONNECTOR (IG, GND)

Multiplex Tilt and Telescopic ECU (Wire Harness Side):

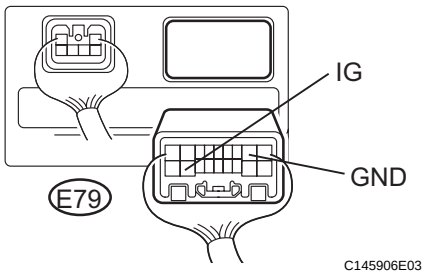

(a) Measure the resistance according to the value(s) in the table below.

Standard resistance

Tester Connection	Condition	Specified Value
E79-11 (GND) - Body ground	Always	Below 1 Ω

(b) Measure the voltage according to the value(s) in the table below.

Standard voltage

Tester Connection	Condition	Specified Value
E79-8 (IG) - Body ground	Engine switch on (IG)	10 to 14 V

NG → **REPAIR OR REPLACE HARNESS OR CONNECTOR**

OK

REPLACE MULTIPLEX TILT AND TELESCOPIC ECU (See page SR-89)

DTC	B1272	Power Seat ECU Communication Stop

DESCRIPTION

The main body ECU will store this DTC when no signals can be received from the seat position control ECU (front LH side) while the CAN MS main bus is normal.

DTC No.	DTC Detection Condition	Trouble Area
B1272	No communication from seat position control ECU (Front LH side)	1. Open or short in CAN No. 3 J/C and seat position control ECU (Front LH side) 2. Seat position control ECU (Front LH side) power source circuit 3. Seat position control ECU (Front LH side) 4. Wire harness or connector

WIRING DIAGRAM

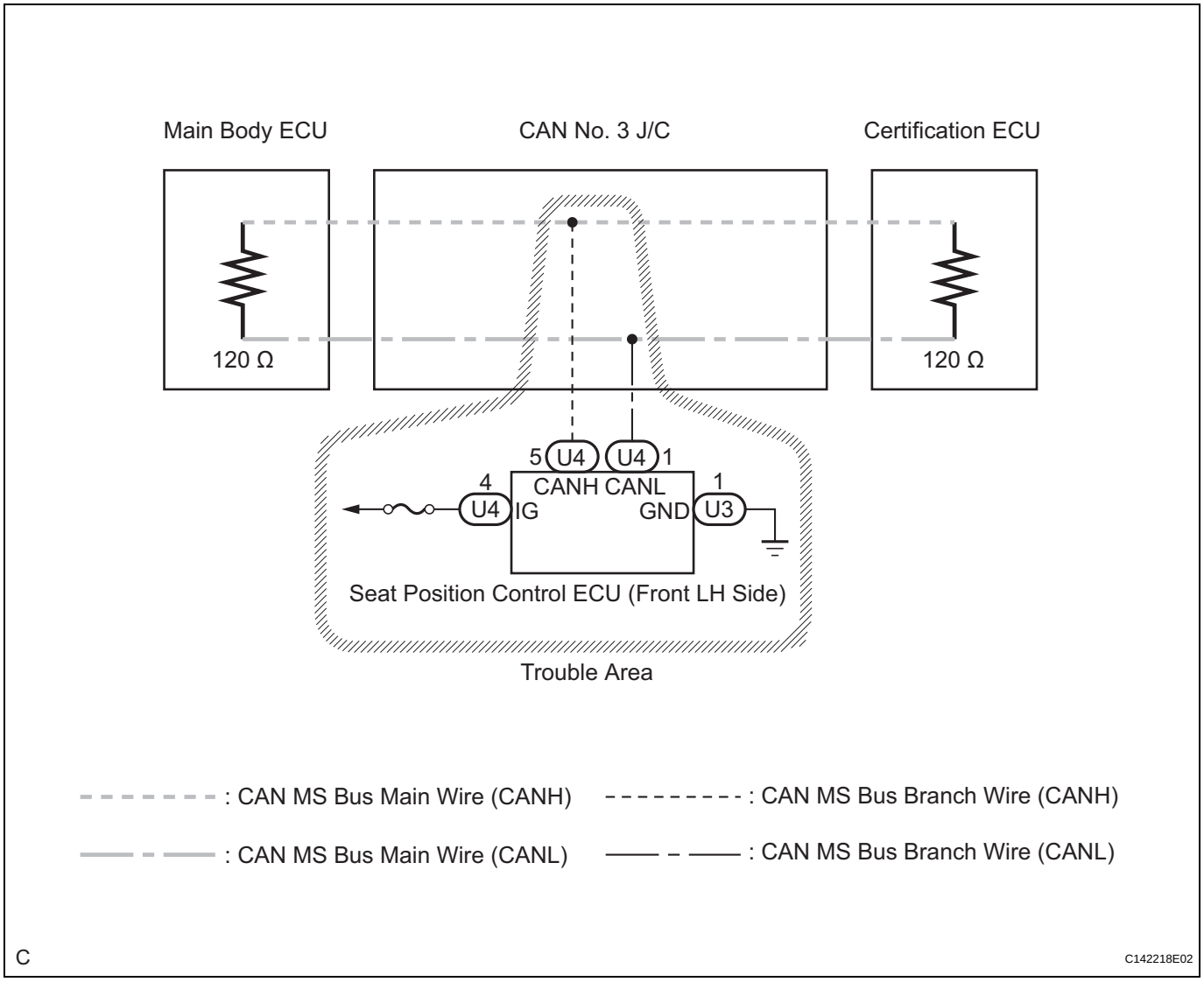

INSPECTION PROCEDURE

NOTICE:

- **Turn the engine switch off before measuring the resistances of CAN bus main wires and CAN bus branch wires.**

- **After the engine switch is turned off, check that the key reminder warning system and light reminder warning system are not in operation.**
- **Before measuring the resistance, leave the vehicle as is for at least 1 minute and do not operate the engine switch, any other switches, or the doors. If any doors need to be opened in order to check connectors, open the doors and leave them open.**

HINT:
Operating the engine switch, any switches, or any doors triggers related ECU and sensor communication on the CAN. This communication will cause the resistance value to change.

1 CHECK DTC

(a) Check for DTCs.
HINT:
If CAN MS bus communication error DTC B2326 is output, troubleshoot for B2326 and check for malfunctions in the CAN MS main bus circuit (See page CA-70).

Result

Result	Proceed to
B2326 is not output	A
B2326 is output	B

B → **GO TO DTC CHART (See page CA-49)**

A

2 CHECK CAN MS BUS WIRE (SEAT POSITION CONTROL ECU FOR FRONT LH SIDE)

Seat Position Control ECU (Wire Harness Side):

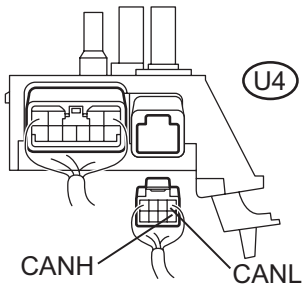

H C142228E01

(a) Turn the engine switch off.
(b) Disconnect connector U4 from the seat position control ECU for the front LH side.
(c) Measure the resistance according to the value(s) in the table below.

Standard resistance

Tester Connection	Condition	Specified Value
U4-5 (CANH) - U4-1 (CANL)	Engine switch OFF	54 to 69 Ω

NG → **REPAIR OR REPLACE CAN MS BUS BRANCH WIRE OR CONNECTOR (SEAT POSITION CONTROL ECU FOR FRONT LH SIDE)**

OK

3 CHECK HARNESS AND CONNECTOR (IG, GND)

Seat Position Control ECU (Wire Harness Side):

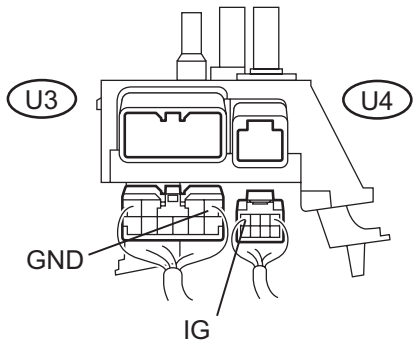

(a) Disconnect connector U3 from the seat position control ECU for the front LH side.

(b) Measure the resistance according to the value(s) in the table below.

Standard resistance

Tester Connection	Condition	Specified Value
U3-1 (GND) - Body ground	Always	Below 1 Ω

(c) Measure the voltage according to the value(s) in the table below.

Standard voltage

Tester Connection	Condition	Specified Value
U4-4 (IG) - Body ground	Engine switch on (IG)	10 to 14 V

NG → **REPAIR OR REPLACE HARNESS OR CONNECTOR**

OK

REPLACE SEAT POSITION CONTROL ECU (FRONT LH SIDE) (See page SE-127)

DTC	B1276	Power Mirror Control ECU Communication Stop

DESCRIPTION

The main body ECU will store this DTC when no signals can be received from the outer mirror control ECU while the CAN MS main bus is normal.

DTC No.	DTC Detection Condition	Trouble Area
B1276	No communication from outer mirror control ECU	1. Open or short in CAN No. 3 J/C and outer mirror control ECU 2. Outer mirror control ECU power source circuit 3. Outer mirror control ECU 4. Wire harness or connector

WIRING DIAGRAM

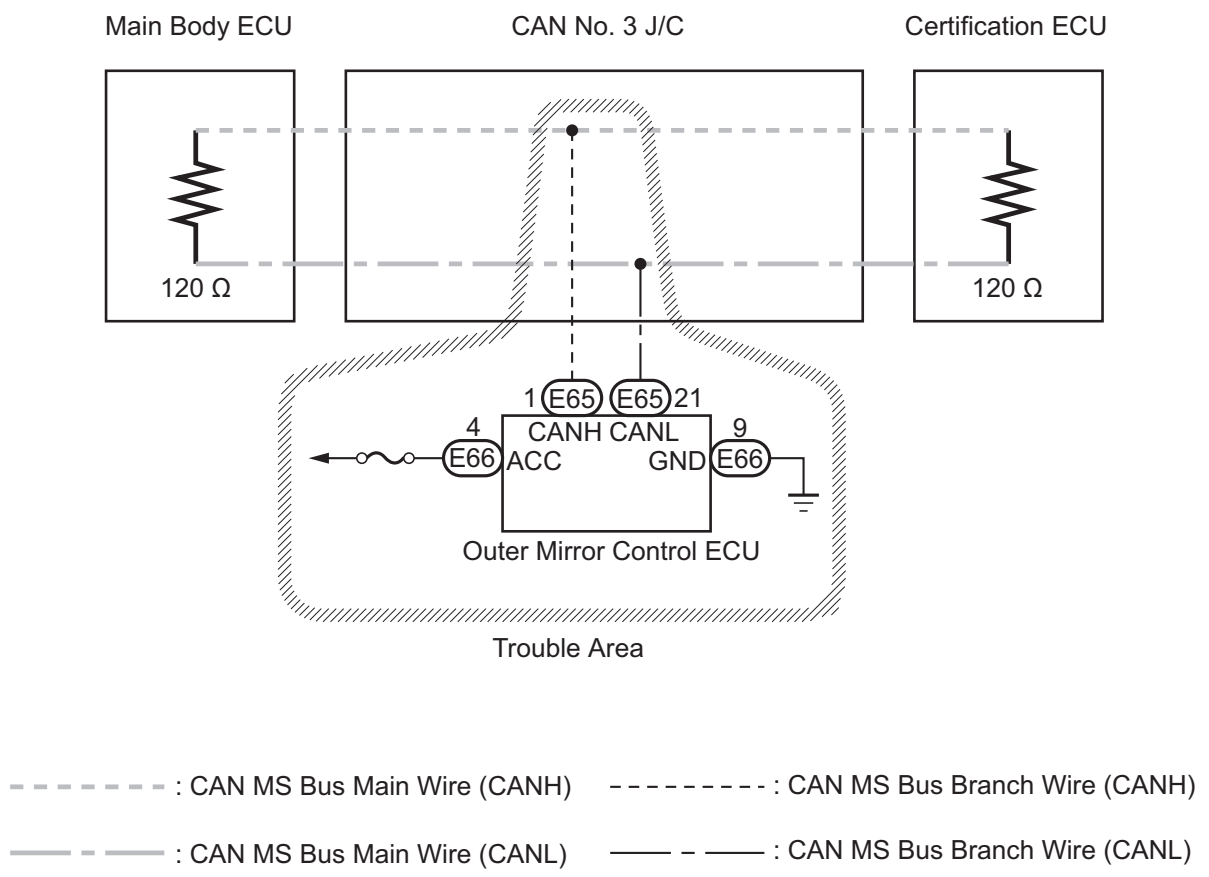

C

C142218E03

INSPECTION PROCEDURE

NOTICE:

- **Turn the engine switch off before measuring the resistances of CAN bus main wires and CAN bus branch wires.**

- **After the engine switch is turned off, check that the key reminder warning system and light reminder warning system are not in operation.**
- **Before measuring the resistance, leave the vehicle as is for at least 1 minute and do not operate the engine switch, any other switches, or the doors. If any doors need to be opened in order to check connectors, open the doors and leave them open.**

HINT:
Operating the engine switch, any switches, or any doors triggers related ECU and sensor communication on the CAN. This communication will cause the resistance value to change.

1 CHECK DTC

(a) Check for DTCs.
HINT:
If CAN MS bus communication error DTC B2326 is output, troubleshoot for B2326 and check for malfunctions in the CAN MS main bus circuit (See page CA-70).

Result

Result	Proceed to
B2326 is not output	A
B2326 is output	B

B → **GO TO DTC CHART (See page CA-49)**

A

2 CHECK CAN MS BUS WIRE (OUTER MIRROR CONTROL ECU)

Outer Mirror Control ECU (Wire Harness Side):

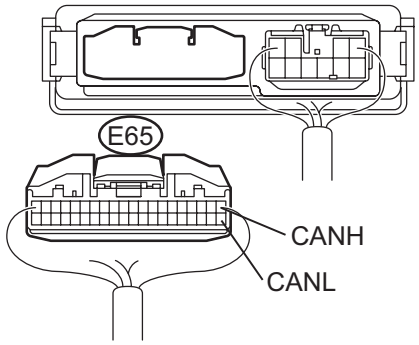

(a) Turn the engine switch off.
(b) Disconnect connector E65 from the outer mirror control ECU.
(c) Measure the resistance according to the value(s) in the table below.

Standard resistance

Tester Connection	Condition	Specified Value
E65-1 (CANH) - E65-21 (CANL)	Engine switch OFF	54 to 69 Ω

NG → **REPAIR OR REPLACE CAN MS BUS BRANCH WIRE OR CONNECTOR (OUTER MIRROR CONTROL ECU)**

OK

3	CHECK HARNESS AND CONNECTOR (ACC, GND)

Outer Mirror Control ECU (Wire Harness Side):

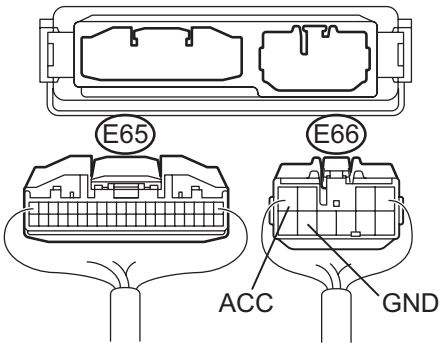

(a) Disconnect connector E66 from the outer mirror control ECU.

(b) Measure the resistance according to the value(s) in the table below.

Standard resistance

Tester Connection	Condition	Specified Value
E66-9 (GND) - Body ground	Always	Below 1 Ω

(c) Measure the voltage according to the value(s) in the table below.

Standard voltage

Tester Connection	Condition	Specified Value
E66-4 (ACC) - Body ground	Engine switch on (ACC)	10 to 14 V

NG → **REPAIR OR REPLACE HARNESS OR CONNECTOR**

OK

REPLACE OUTER MIRROR CONTROL ECU (See page MI-57)

HOW TO USE THIS MANUAL

GENERAL INFORMATION

1. GENERAL DESCRIPTION

(a) This manual is written in accordance with SAE J2008.
  (1) Diagnosis
  (2) Removing / Installing, Replacing, Disassembling / Reassembling, Checking and Adjusting
  (3) Final Inspection

(b) The following procedures are omitted from this manual. However, these procedures must be performed.
  (1) Use a jack or lift to perform operations
  (2) Clean all removed parts
  (3) Perform a visual check

2. INDEX

(a) An alphabetical INDEX section is provided at the end of the manual as a reference to help you find the item to be repaired.

3. PREPARATION

(a) Use of Special Service Tools (SST) and Special Service Materials (SSM) may be required, depending on the repair procedure. Be sure to use SST and SSM when they are required and follow the working procedure properly. A list of SST and SSM is in the "Preparation" section of this manual.

4. REPAIR PROCEDURES

(a) A component illustration is placed under the title where necessary.

(b) Non-reusable parts, grease application areas, precoated parts and torque specifications are noted in the component illustrations.
The following illustration is an example.

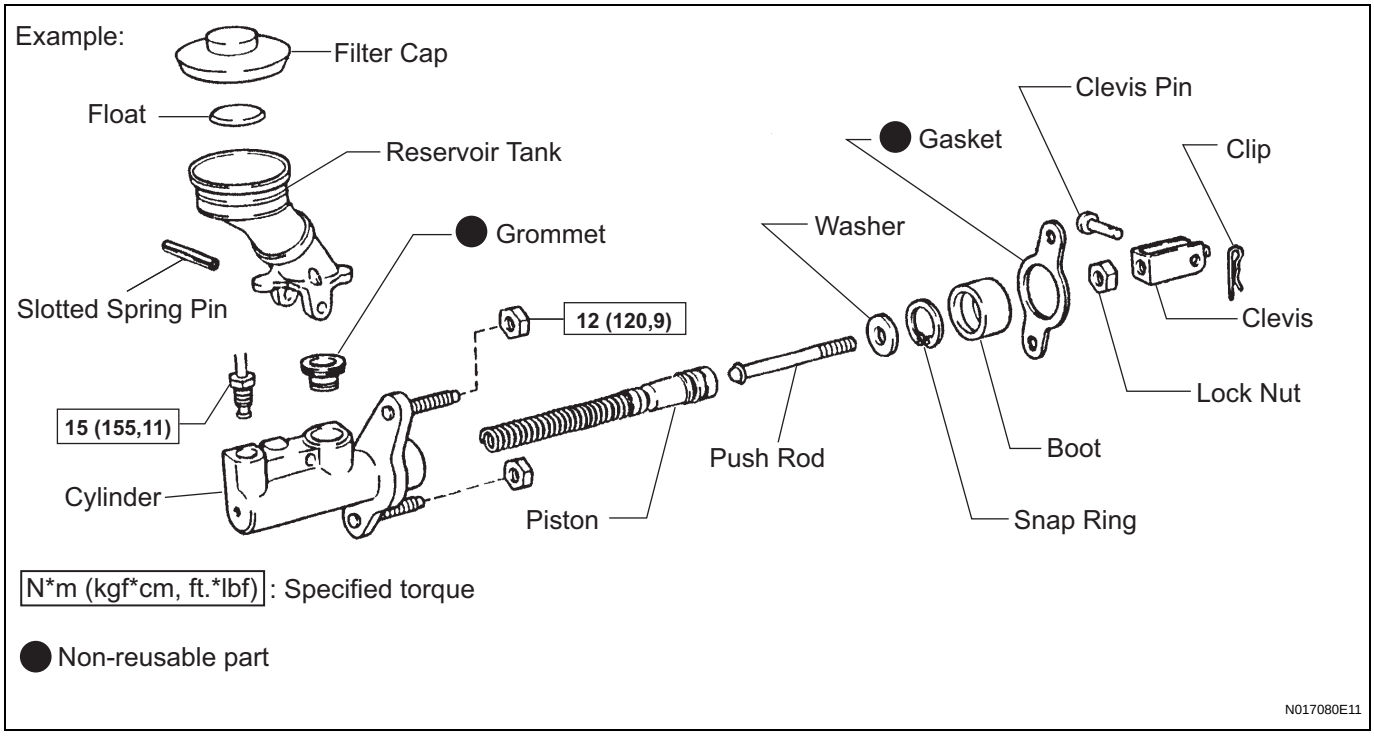

(c) Torque specifications, grease application areas and non-reusable parts are emphasized in the procedures.
HINT:
There are cases where such information can only be explained by using an illustration. In these cases, torque, oil and other information are described in the illustration.

(d) Only items with key points are described in the text. What to do and other details are explained using illustrations next to the text. Both the text and illustrations are accompanied by standard values and notices.

Illustration	What to do and where to do it
Task heading	What work will be performed
Explanation text	How to perform the task Also has information such as specifications and warnings, which are written in boldface text

(e) Illustrations of similar vehicle models are sometimes used. In these cases, minor details may be different from the actual vehicle.

(f) Procedures are presented in a step-by-step format.

5. SERVICE SPECIFICATIONS

(a) SPECIFICATIONS are presented in boldface text throughout the manual. The specifications are also found in the "Service Specifications" section for reference.

6. TERM DEFINITIONS

CAUTION	Possibility of injury to you or other people.
NOTICE	Possibility of damage to components being repaired.
HINT	Provides additional information to help you perform repairs.

7. INTERNATIONAL SYSTEM OF UNITS

(a) The units used in this manual comply with the International System of Units (SI UNIT) standard. Units from the metric system and the English systems are also provided.
Example:
Torque: 30 N*m (310 kgf*cm, 22 ft.*lbf)

IN

IDENTIFICATION INFORMATION

VEHICLE IDENTIFICATION AND SERIAL NUMBERS

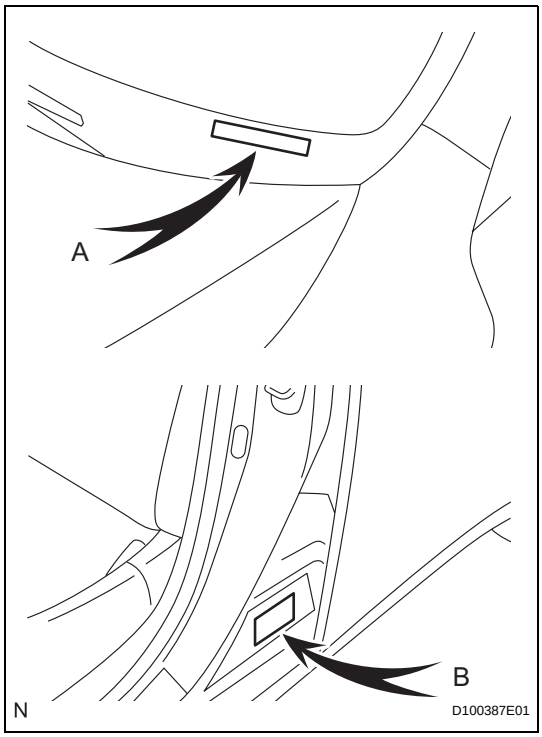

1. VEHICLE IDENTIFICATION NUMBER

(a) The vehicle identification number is stamped on the vehicle body and on the certification label, as shown in the illustration.

A:
Vehicle Identification Number

B:
Certification Label

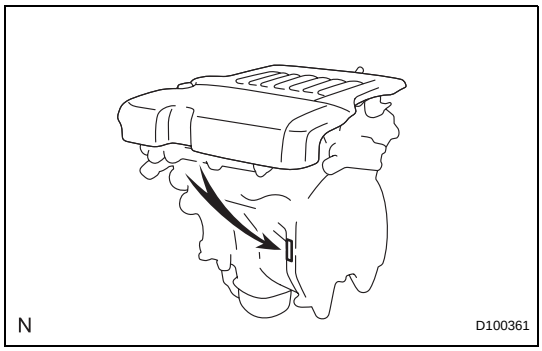

2. ENGINE SERIAL NUMBER AND TRANSAXLE SERIAL NUMBER

(a) The engine serial number is stamped on the cylinder block of the engine as shown in the illustration.

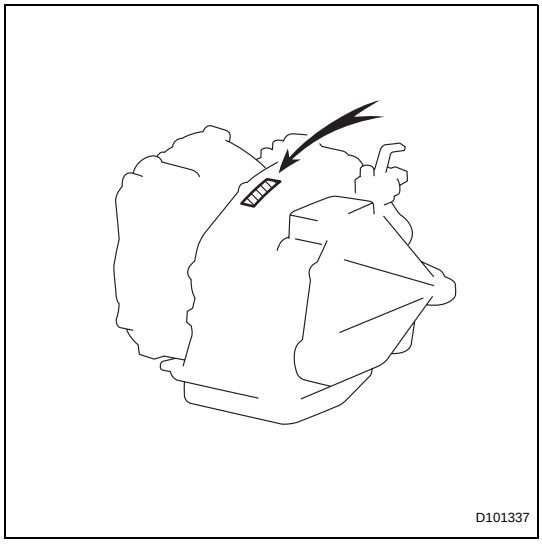

(b) The transaxle serial number is stamped on the case as shown in the illustration.

REPAIR INSTRUCTION

PRECAUTION

1. BASIC REPAIR HINT

(a) HINTS ON OPERATIONS

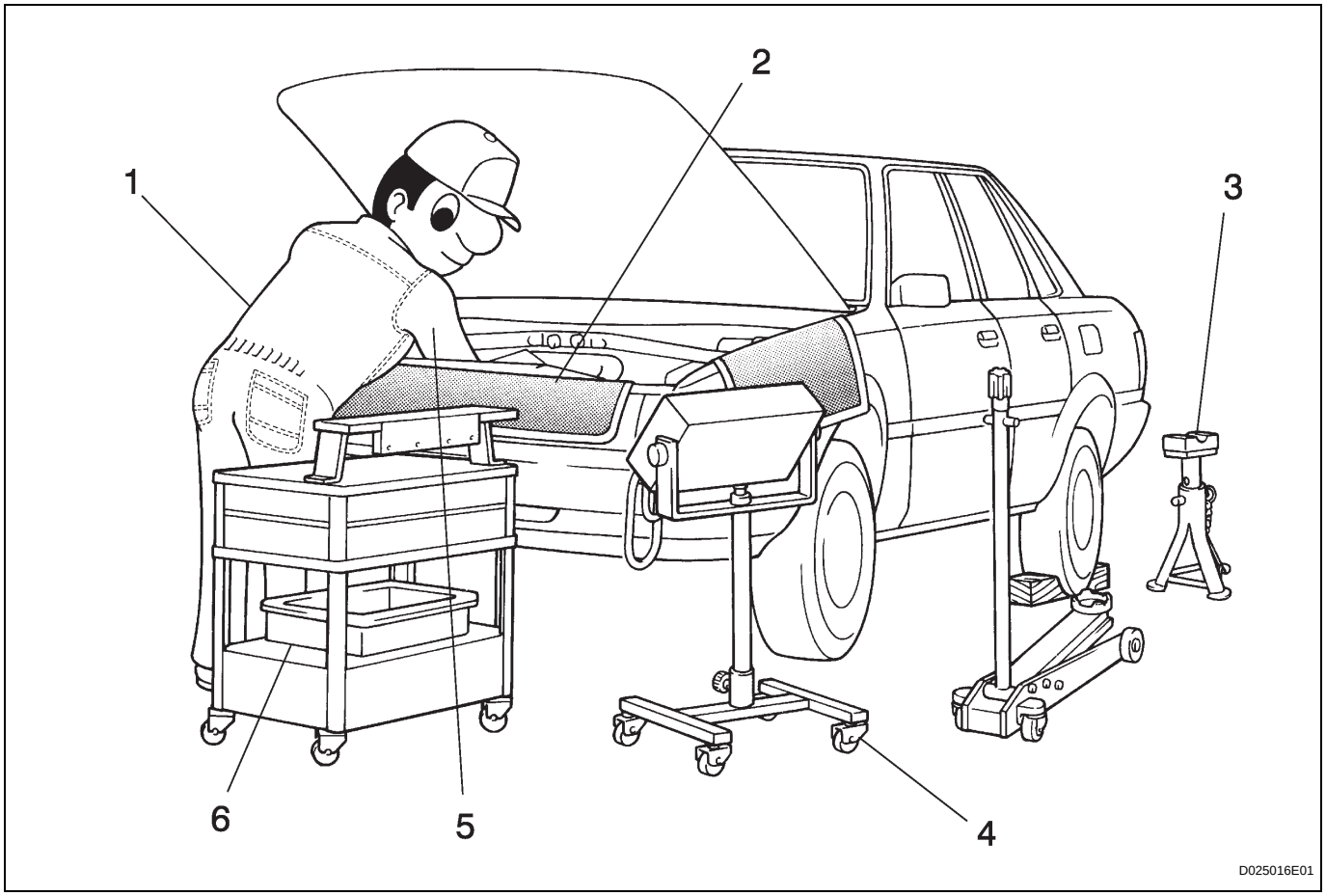

1	Attire	• Always wear a clean uniform. • Hat and safety shoes must be worn.
2	Vehicle protection	Prepare a grille cover, fender cover, seat cover and floor mat before starting the operation.
3	Safety operation	• When working in a pair or groups, be sure to check safety for one another. • When working with the engine running, make sure to provide ventilation for exhaust fumes in the workshop. • If working on high temperature, high pressure, rotating, moving, or vibrating parts, wear appropriate safety equipment and take extra care not to injure yourself or others. • When jacking up the vehicle, be sure to support the specified location with a safety stand. • When lifting up the vehicle, use appropriate safety equipment.
4	Preparation of tools and measuring gauge	Before starting operation, prepare a tool stand, SST, gauge, oil and parts for replacement.
5	Removal and installation, disassembly and assembly operations	• Diagnose with a thorough understanding of proper procedures and of the reported problem. • Before removing the parts, check the general condition of the assembly and for deformation and damage. • When the assembly is complicated, take notes. For example, note the total number of electrical connections, bolts, or hoses removed. Add matchmarks to insure reassembly of components in the original positions. Temporarily mark hoses and their fittings if needed. • Clean and wash the removed parts if necessary and assemble them after a thorough check.

6	Removed parts	• Place the removed parts in a separate box to avoid mixing them up with the new parts or contaminating the new parts. • For non-reusable parts such as gaskets, O-rings, and self-locking nuts, replace them with new ones as instructed in this manual. • Retain the removed parts for customer inspection if requested.

(b) JACKING UP AND SUPPORTING VEHICLE
(1) Care must be taken when jacking up and supporting the vehicle. Be sure to lift and support the vehicle at the proper locations.

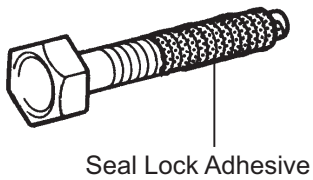

(c) PRECOATED PARTS
(1) Precoated parts are bolts and nuts that are coated with a seal lock adhesive at the factory.
(2) If a precoated part is retightened, loosened or moved in any way, it must be recoated with the specified adhesive.
(3) When reusing a precoated part, clean off the old adhesive and dry the part with compressed air. Then apply new seal lock adhesive appropriate to that part.
(4) Some seal lock agents harden slowly. You may have to wait for the seal lock adhesive to harden.

(d) GASKETS
(1) When necessary, use a sealer on gaskets to prevent leaks.

(e) BOLTS, NUTS AND SCREWS
(1) Carefully follow all the specifications for tightening torques. Always use a torque wrench.

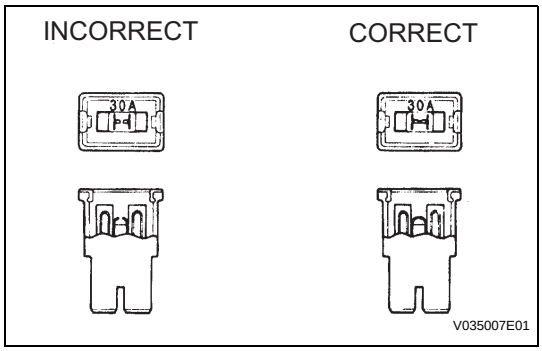

(f) FUSES
(1) When inspecting a fuse, check that the wire of the fuse is not broken.
(2) When replacing fuses, be sure that the new fuse has the correct amperage rating. Do not exceed the rating or use one with a lower rating.

Illustration	Symbol	Part Name	Abbreviation
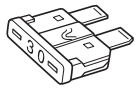 N	N	FUSE	FUSE

Illustration	Symbol	Part Name	Abbreviation
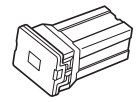 N	N	MEDIUM CURRENT FUSE	M-FUSE
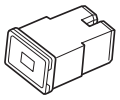 N	N	HIGH CURRENT FUSE	H-FUSE
N	N	FUSIBLE LINK	FL
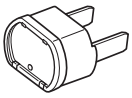 N	N	CIRCUIT BREAKER	CB

(g) CLIPS

(1) The removal and installation methods of typical clips used for vehicle body parts are shown in the table below.

HINT:

If clips are damaged during work, always replace the damaged clip with a new one.

IN

Shape (Example)	Removal/Installation
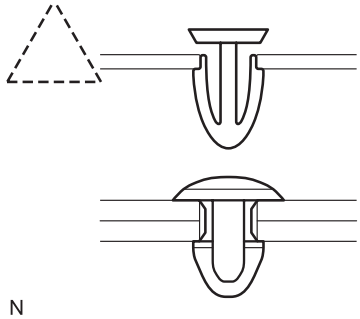 N	Remove clips with clip remover or pliers. 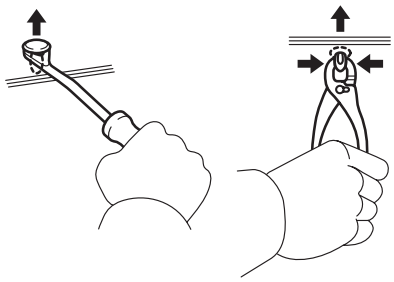 N
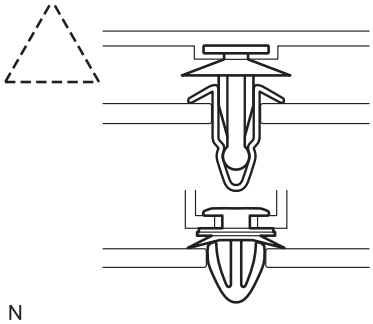 N	Remove fasteners with clip remover or screwdriver. 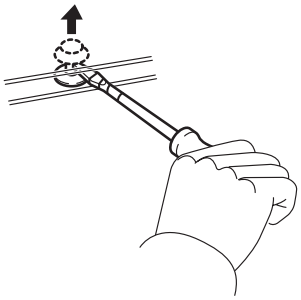 N
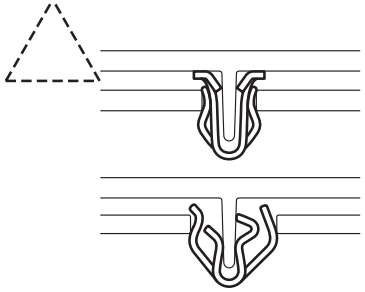 N	Remove clips with wide scraper to prevent panel damage. 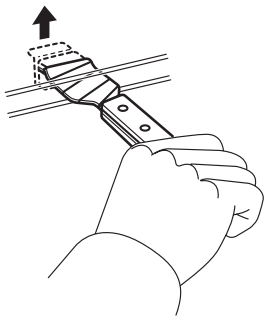 N
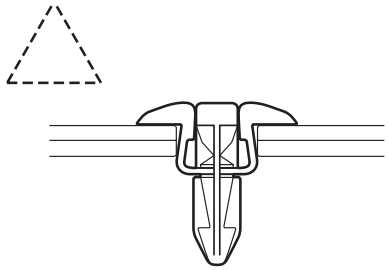 N	Remove clips by pushing center pin through and prying out shell. 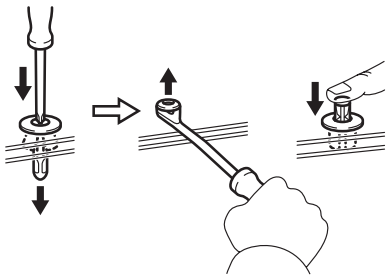 N

Shape (Example)	Removal/Installation
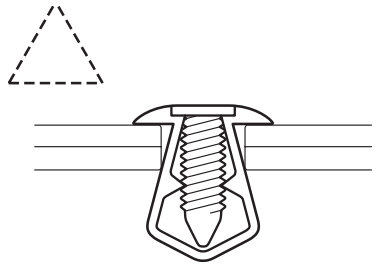 N	Remove clips by unscrewing center pin and prying out shell. 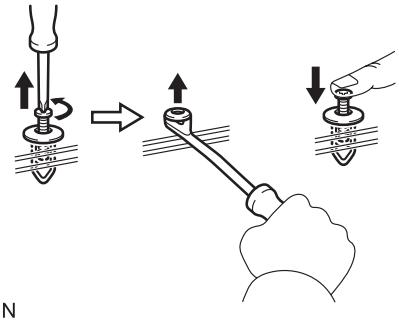 N
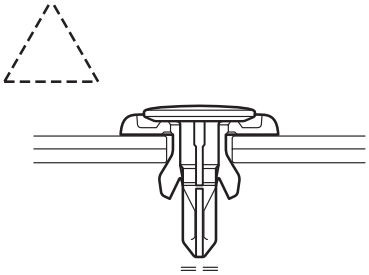 N	Remove clips by prying out pin and then prying out shell. 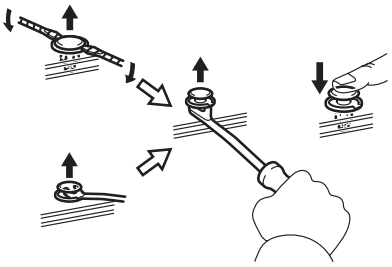 N

(h) CLAWS

(1) The removal and installation methods of typical claws used for vehicle body parts are shown in the table below.

HINT:

If claws are damaged during a procedure, always replace the damaged claws with a new caps or covers.

Shape (Example)	Illustration	Procedures
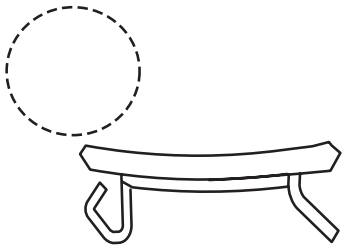	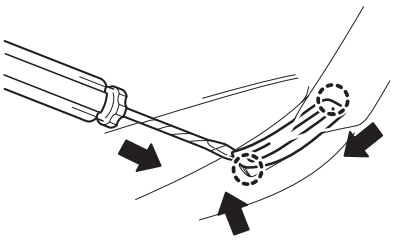	1. Using a screwdriver, detach the claws and remove the cap or covers.
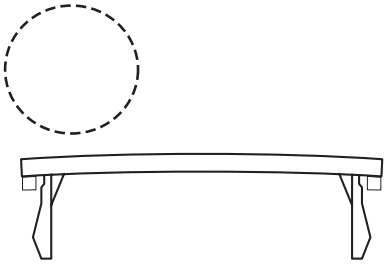	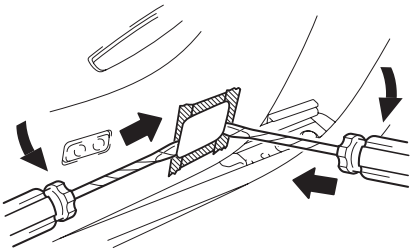	1. Using a screwdriver, detach the claws and remove the cap or covers.

IN

Shape (Example)	Illustration	Procedures
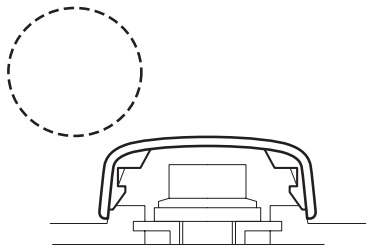	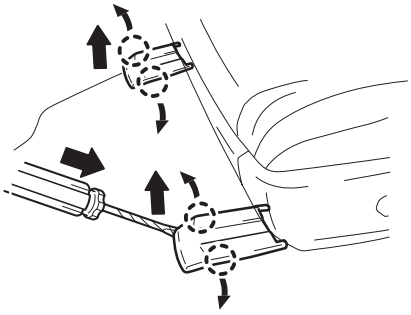	1. Using a screwdriver, detach the claws and remove the cap or covers.

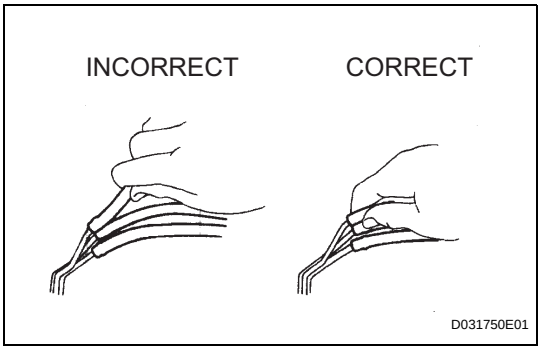

(i) REMOVAL AND INSTALLATION OF VACUUM HOSES

(1) To disconnect a vacuum hose, pull and twist from the end of the hose. Do not pull from the middle of the hose as this may damage the hose.

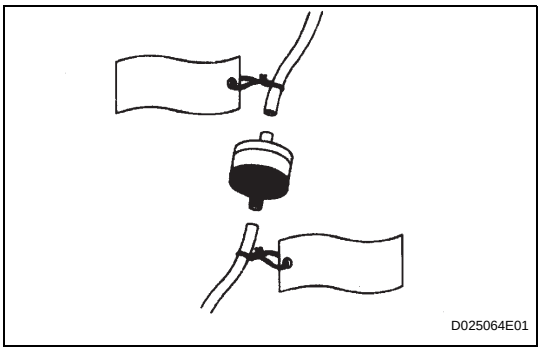

(2) When disconnecting vacuum hoses, use tags to identify where they should be reconnected.

(3) After completing any hose related repairs, double check that the vacuum hoses are properly connected. The label under the hood shows the proper layout.

(4) When using a vacuum gauge, never force the hose onto a connector that is too large. If a hose has been stretched, air may leak. Use a step-down adapter if necessary.

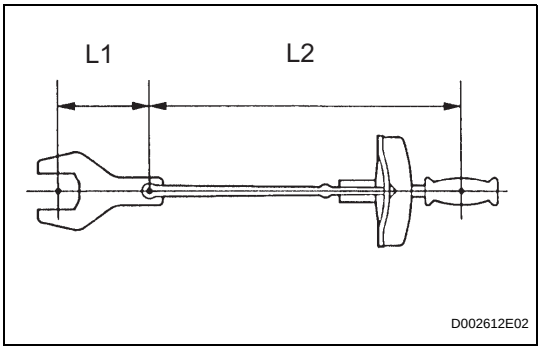

(j) TORQUE WHEN USING TORQUE WRENCH WITH EXTENSION TOOL

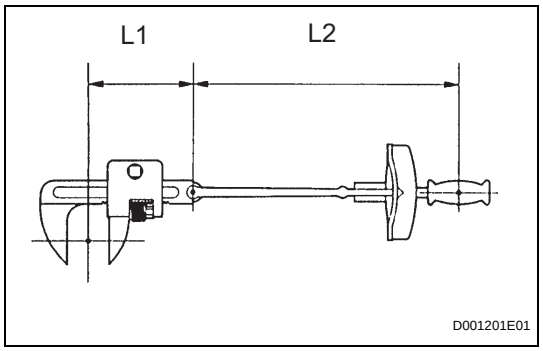

(1) Use the formula below to calculate special torque values for situations where SST or an extension tool is combined with the torque wrench.

Formula:

T' = L2/(L1 + L2) * T

T'	**Reading of torque wrench {N*m (kgf*cm, ft.*lbf)}**
T	**Torque {N*m (kgf*cm, ft.*lbf)}**
L1	**Length of SST or extension tool {cm (in.)}**
L2	**Length of torque wrench {cm (in.)}**

NOTICE:

If an extension tool or SST is combined with a torque wrench and the wrench is used to tighten to a torque specification in this manual, the actual torque will be excessive and parts will be damaged.

2. FOR VEHICLES EQUIPPED WITH SRS AIRBAG AND SEAT BELT PRETENSIONER

The LEXUS ES350 is equipped with a Supplemental Restraint System (SRS).

CAUTION:

Failure to carry out the service operations in the correct sequence could cause the SRS to unexpectedly deploy during servicing and lead to serious injury. Furthermore, if a mistake is made when servicing SRS, it is possible that the SRS may fail to operate properly. Before servicing (including removal or installation of parts, inspection or replacement), be sure to read the following section carefully.

(a) GENERAL NOTICE

(1) As malfunctions of the SRS are difficult to confirm, the Diagnostic Trouble Codes (DTCs) become the most important source of information when troubleshooting. When troubleshooting the SRS, always check the DTCs before disconnecting the battery.

(2) Work must be started at least 90 seconds after the engine switch is turned off and after the cable is disconnected from the negative (-) battery terminal.
The SRS is equipped with a back-up power source. If work is started within 90 seconds after turning the engine switch off and disconnecting the cable from the negative (-) battery terminal, the SRS may deploy.
When the cable is disconnected from the negative (-) battery terminal, clock and audio system memory is erased. Before starting work, make a note of the settings of each memory system. When work is finished, reset the clock and audio system as before.
CAUTION:
Never use a back-up power source (battery or other) to avoid erasing the system memory. The back-up power source may inadvertently power the SRS and cause it to deploy.

(3) In minor collisions where the SRS does not deploy, the steering pad, driver side knee airbag assembly, front passenger side knee airbag assembly, front passenger airbag assembly, curtain shield airbag assembly, front seat side airbag assembly, rear seat side airbag assembly and front seat outer belt assembly should be inspected before further use of the vehicle.
(See page RS-370 for steering pad)
(See page RS-388 for driver side knee airbag assembly)
(See page RS-398 for front passenger side knee airbag assembly)
(See page RS-419 for front passenger airbag assembly)
(See page RS-446 for curtain shield airbag assembly)
(See page RS-452 for front seat side airbag assembly)
(See page RS-461 for rear seat side airbag assembly)
(See page SB-31 for front seat outer belt assembly)

(4) Never use SRS parts from another vehicle. When replacing parts, use new parts.

(5) Before repairs, remove the airbag sensor assemblies if impacts are likely to be applied to the sensor during repairs.

(6) Never disassemble and attempt to repair all airbag sensor assemblies and all airbag assemblies.
1. Steering pad
2. Driver side knee airbag assembly

3. Front passenger side knee airbag assembly
4. Front passenger airbag assembly
5. Curtain shield airbag assembly
6. Front seat side airbag assembly
7. Rear seat side airbag assembly
8. Front seat outer belt assembly

(7) Replace the airbag sensor assemblies and the airbag assemblies if: 1) damage has occurred from being dropped, or 2) cracks, dents or other defects in the case, bracket or connector are present.

(8) Do not directly expose the airbag sensor assembly or airbag assembly to hot air or flames.

(9) Use a voltmeter/ohmmeter with high impedance (minimum = 10 kΩ) for troubleshooting electrical circuits.

(10) Information labels are attached to the SRS components. Follow the instructions on the labels.

(11) After work on the SRS is completed, check the SRS warning light.

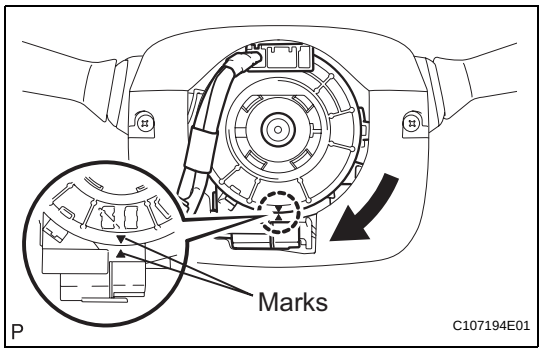

(b) SPIRAL CABLE

(1) The steering wheel must be fitted correctly to the steering column with the spiral cable at the neutral position, as cable disconnection and other problems may occur. Refer to the information about correct installation of the steering wheel (See page RS-382).

(c) STEERING PAD

(1) Always place a removed or new steering pad surface upward as shown in the illustration. Placing the horn button with the pad surface facing down could cause a serious accident if the airbag inflates. Also, do not place anything on top of the horn button.

Example:

N D100381E01

(2) Never measure the resistance of the airbag squib. This may cause the airbag to inflate, which could cause serious injury.

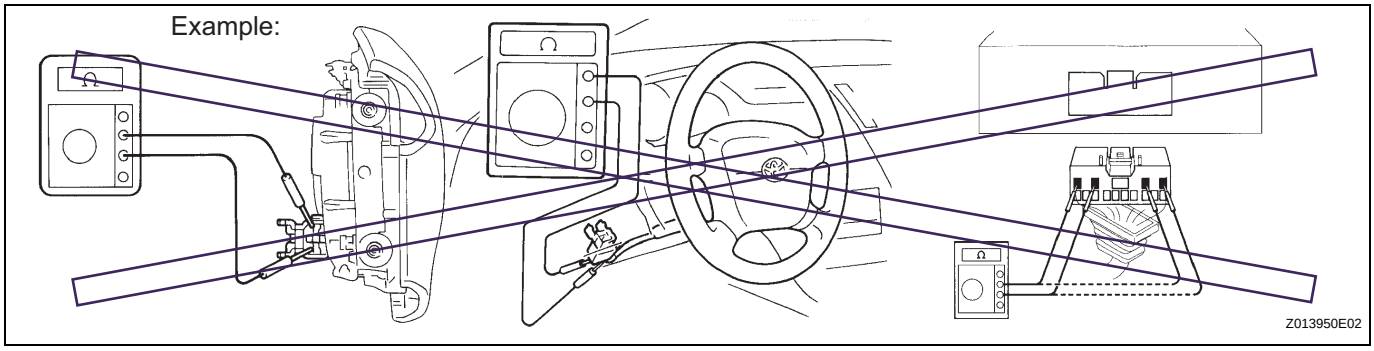

(3) Grease or detergents of any kind should not be applied to the horn button.
(4) Store the horn button assembly in an area where the ambient temperature is below 93°C (200°F), the humidity is not high and there is no electrical noise.
(5) When using electric welding anywhere on the vehicle, disconnect the airbag ECU connectors (4 pins). These connectors contain shorting springs. This feature reduces the possibility of the airbag deploying due to current entering the squib wiring.
(6) When disposing of the vehicle or the horn button assembly by itself, the airbag should be deployed using SST before disposal (See page RS-370). Activate the airbag in a safe place away from electrical noise.

(d) DRIVER SIDE KNEE AIRBAG ASSEMBLY
(1) Always place a removed or new knee airbag assembly with the airbag inflation direction facing upward. Placing the airbag assembly with the airbag inflation direction facing downward could cause a serious accident if the airbag inflates.

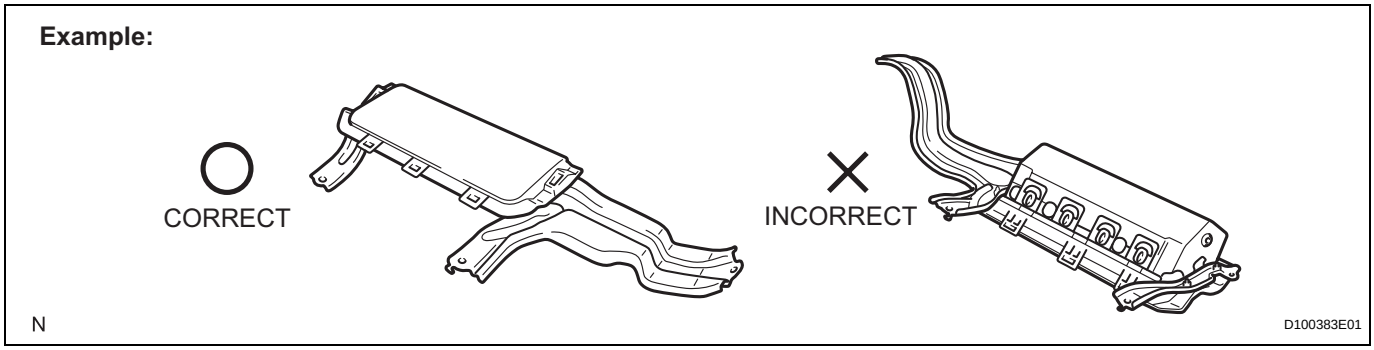

(2) Never measure the resistance of the airbag squib. This may cause the airbag to inflate, which could cause serious injury.

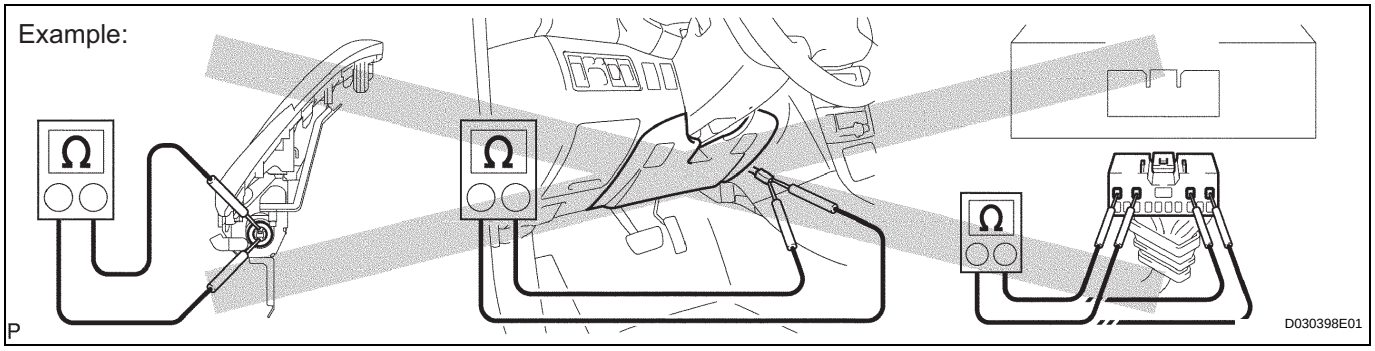

(3) Grease or detergents of any kind should not be applied to the knee airbag assembly.
(4) Store the knee airbag assembly where the ambient temperature is below 93°C (200°F), the humidity is not high and there is no electrical noise.
(5) When using electric welding anywhere on the vehicle, disconnect the airbag ECU connectors (2 pins). These connectors contain shorting springs. This feature reduces the possibility of the airbag deploying due to current entering the squib wiring.
(6) When disposing of a vehicle or knee airbag assembly unit by itself, the airbag should be inflated using SST before disposal (See page RS-388). Activate the airbag in a safe place away from electrical noise.

(e) FRONT PASSENGER SIDE KNEE AIRBAG ASSEMBLY
(1) Always place a removed or new knee airbag assembly with the airbag inflation direction facing upward. Placing the airbag assembly with the airbag inflation direction facing downward could cause a serious accident if the airbag inflates.

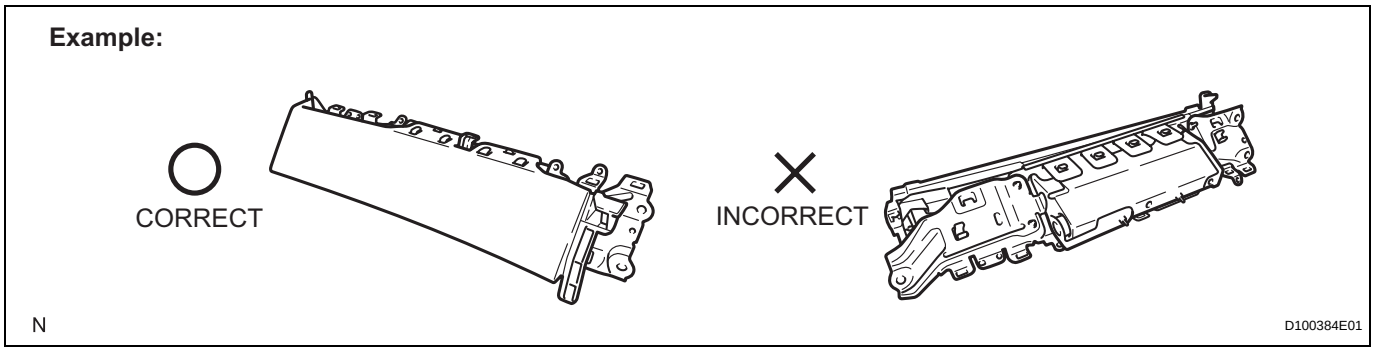

(2) Never measure the resistance of the airbag squib. This may cause the airbag to inflate, which could cause serious injury.

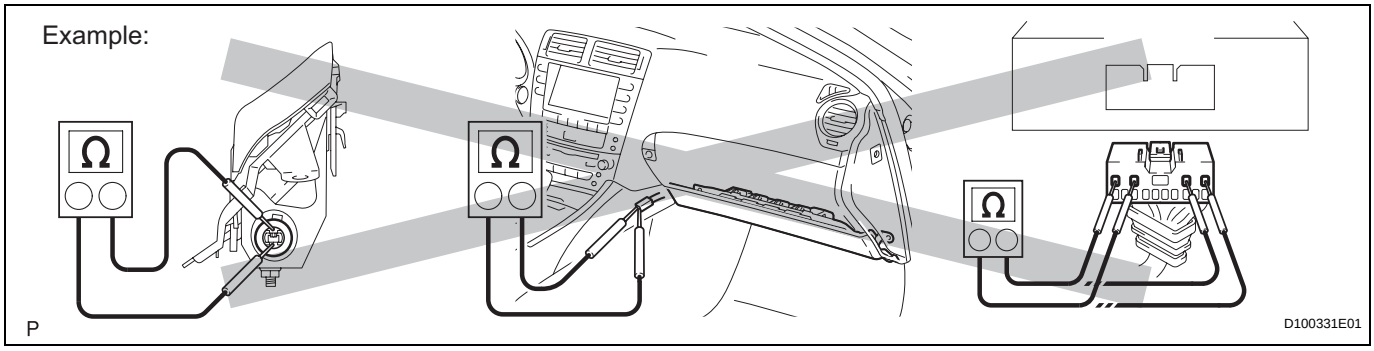

(3) Grease or detergents of any kind should not be applied to the knee airbag assembly.
(4) Store the knee airbag assembly where the ambient temperature is below 93°C (200°F), the humidity is not high and there is no electrical noise.
(5) When using electric welding anywhere on the vehicle, disconnect the airbag ECU connectors (2 pins). These connectors contain shorting springs. This feature reduces the possibility of the airbag deploying due to current entering the squib wiring.
(6) When disposing of a vehicle or knee airbag assembly unit by itself, the airbag should be inflated using SST before disposal (See page RS-398). Activate the airbag in a safe place away from electrical noise.

(f) FRONT PASSENGER AIRBAG ASSEMBLY
(1) Always place a removed or new front passenger airbag assembly with the pad surface facing upward as shown in the illustration. Placing the airbag assembly with the airbag inflation direction facing down could cause a serious accident if the airbag inflates.

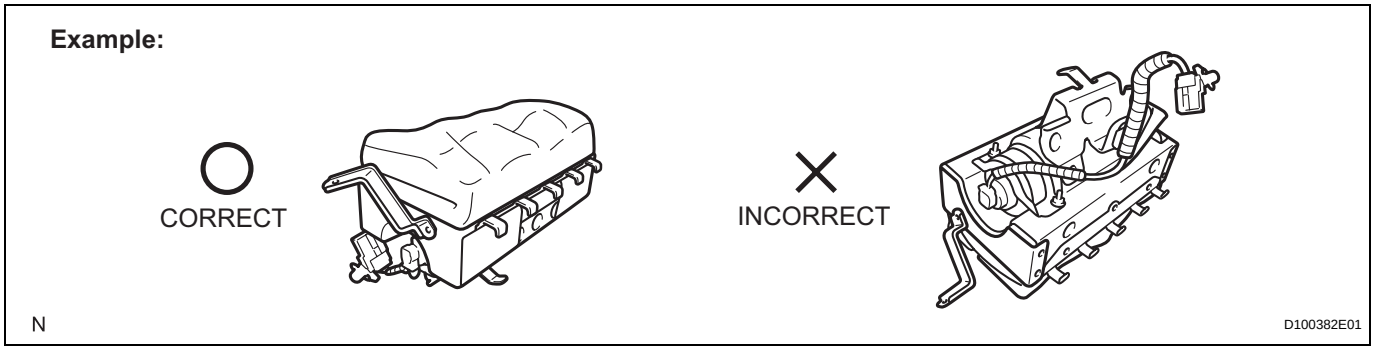

(2) Never measure the resistance of the airbag squib. This may cause the airbag to inflate, which could cause serious injury.

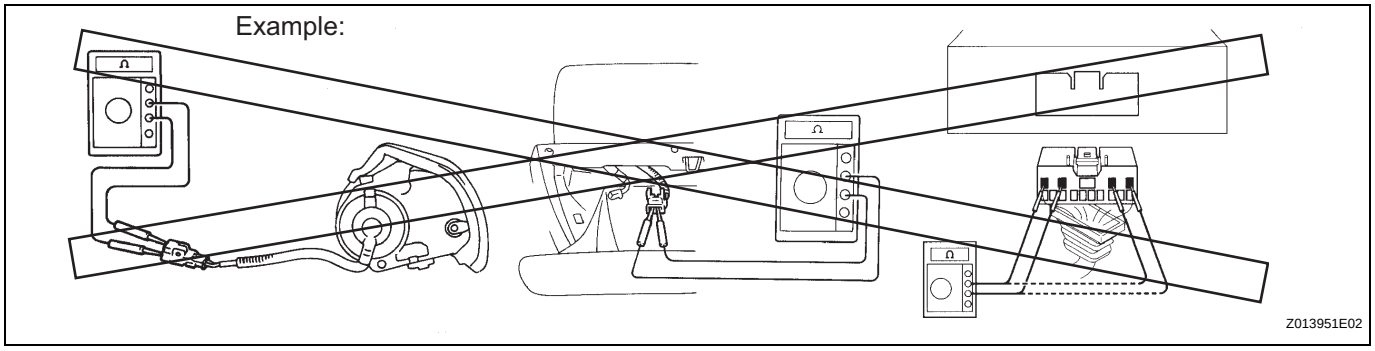

(3) Grease or detergents of any kind should not be applied to the front passenger airbag assembly.
(4) Store the airbag assembly in an area where the ambient temperature is below 93°C (200°F), the humidity is not high and there is no electrical noise.
(5) When using electric welding anywhere on the vehicle, disconnect the airbag ECU connectors (4 pins). These connectors contain shorting springs. This feature reduces the possibility of the airbag deploying due to current entering the squib wiring.
(6) When disposing of the vehicle or the airbag assembly unit by itself, the airbag should be deployed using SST before disposal (See page RS-419). Activate the airbag in a safe place away from electrical noise.

(g) CURTAIN SHIELD AIRBAG ASSEMBLY
(1) Always place a removed or new curtain shield airbag assembly in a clear plastic bag, and keep it in a safe place.

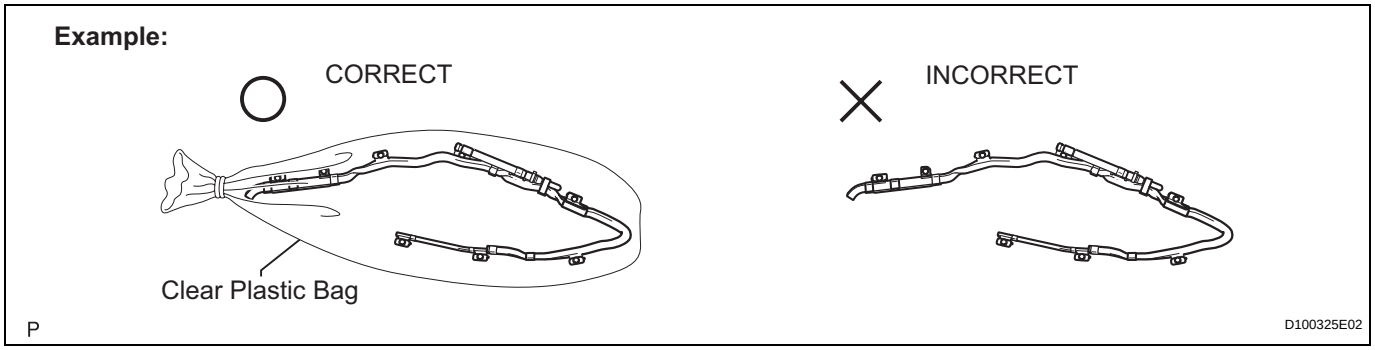

CAUTION:
The plastic bag is not reusable.
NOTICE:
Never disassemble the curtain shield airbag assembly.

(2) Never measure the resistance of the airbag squib. This may cause the airbag to inflate, which could cause serious injury.

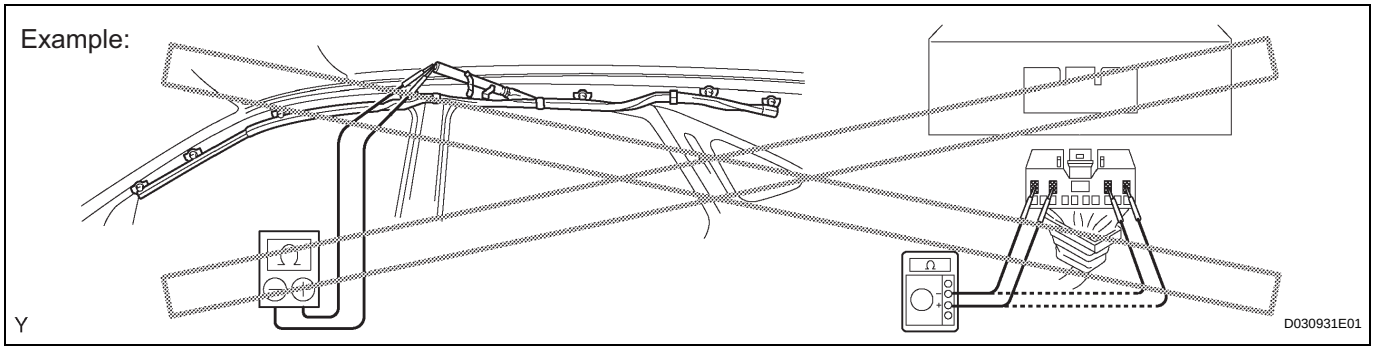

(3) Grease or detergents of any kind should not be applied to the curtain shield airbag assembly.
(4) Store the airbag assembly in an area where the ambient temperature is below 93°C (200°F), the humidity is not high and there is no electrical noise.
(5) When using electric welding anywhere on the vehicle, disconnect the airbag ECU connectors (4 pins). These connectors contain shorting springs. This feature reduces the possibility of the airbag deploying due to current entering the squib wiring.
(6) When disposing of a vehicle or the airbag assembly unit by itself, the airbag should be deployed using SST before disposal (See page RS-446). Activate the airbag in a safe place away from electrical noise.

(h) FRONT SEAT SIDE AIRBAG ASSEMBLY
(1) Always place a removed or new seat side airbag assembly with the airbag inflation direction facing up.
(2) Never measure the resistance of the airbag squib. This may cause the airbag to inflate, which could cause serious injury.

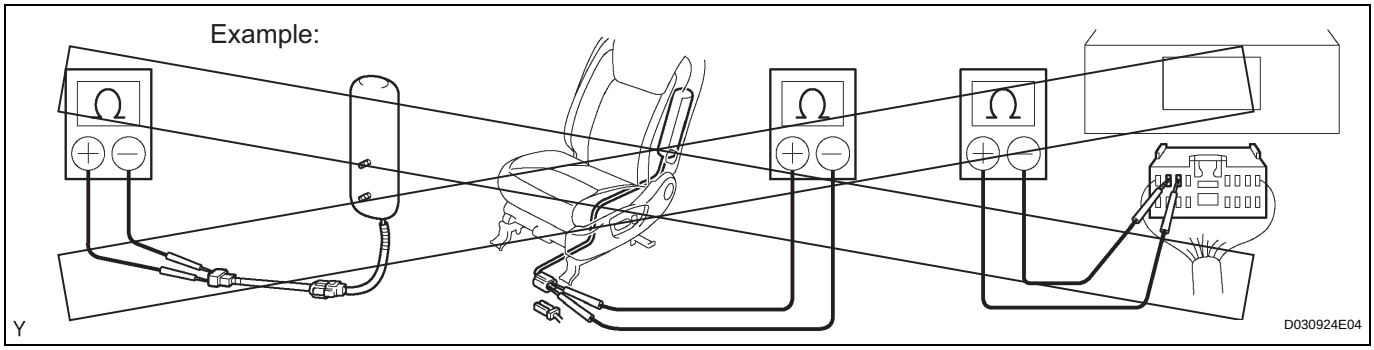

(3) Grease or detergents of any kind should not be applied to the front seat side airbag assembly.
(4) Store the airbag assembly in an area where the ambient temperature is below 93°C (200°F), the humidity is not high and there is no electrical noise.

(5) When using electric welding anywhere on the vehicle, disconnect the airbag ECU connectors (2 pins). These connectors contain shorting springs. This feature reduces the possibility of the airbag deploying due to current entering the squib wiring.

(6) When disposing of a vehicle or the airbag assembly unit by itself, the airbag should be deployed using SST before disposal (See page RS-452). Activate the airbag in a safe place away from electrical noise.

(i) REAR SEAT SIDE AIRBAG ASSEMBLY

(1) Always place a removed or new seat side airbag assembly with the airbag inflation direction facing up.

(2) Never measure the resistance of the airbag squib. This may cause the airbag to inflate, which could cause serious injury.

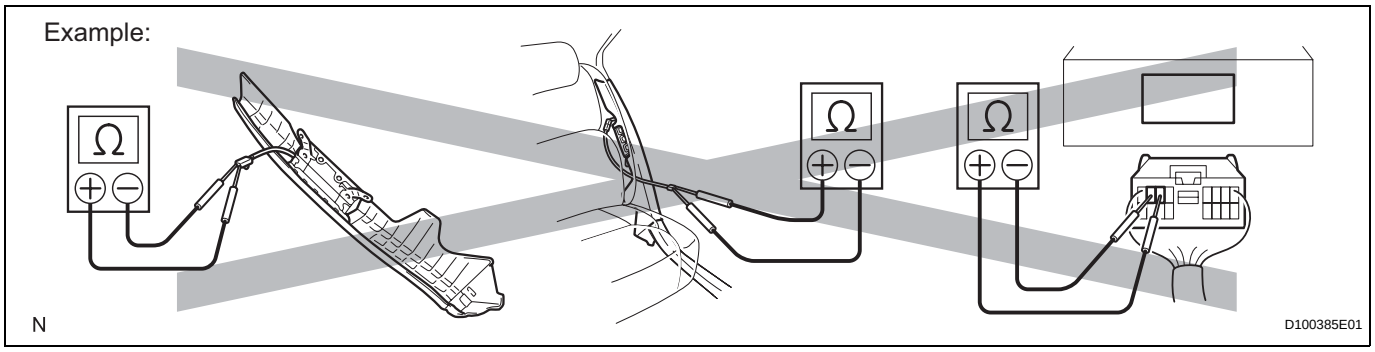

(3) Grease or detergents of any kind should not be applied to the rear seat side airbag assembly.

(4) Store the airbag assembly in an area where the ambient temperature is below 93°C (200°F), the humidity is not high and there is no electrical noise.

(5) When using electric welding anywhere on the vehicle, disconnect the airbag ECU connectors (2 pins). These connectors contain shorting springs. This feature reduces the possibility of the airbag deploying due to current entering the squib wiring.

(6) When disposing of a vehicle or the airbag assembly unit by itself, the airbag should be deployed using SST before disposal (See page RS-461). Activate the airbag in a safe place away from electrical noise.

IN

(j) FRONT SEAT OUTER BELT ASSEMBLY AND REAR SEAT OUTER BELT ASSEMBLY (SEAT BELT PRETENSIONER)

(1) Never measure the resistance of the seat outer belt. This may cause the pretensioner of the seat belt to activate, which could cause serious injury.

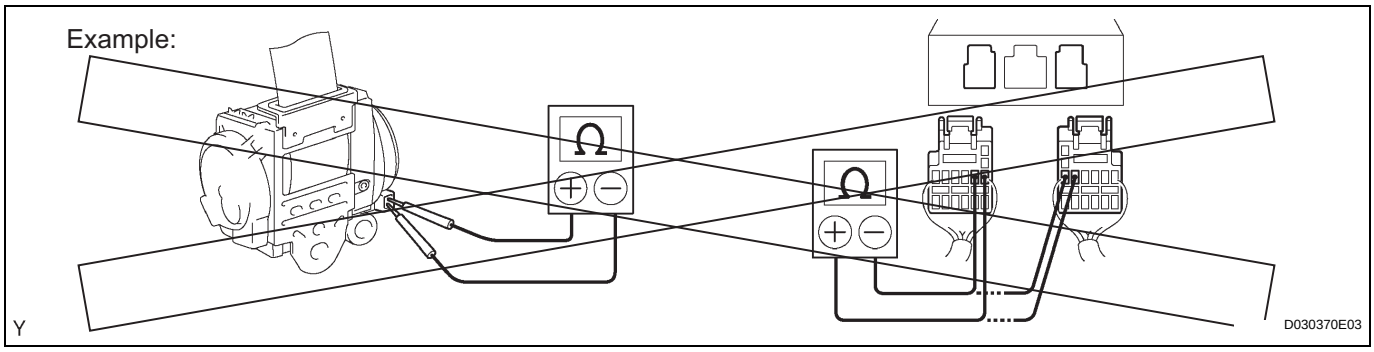

(2) Never disassemble the seat outer belt.

(3) Never install the seat outer belt on another vehicle.

(4) Store the seat outer belt in an area where the ambient temperature is below 80°C (176°F), the humidity is not high and there is no electrical noise.

(5) When using electric welding anywhere on the vehicle, disconnect the airbag ECU connectors (2 pins). These connectors contain shorting springs. This feature reduces the possibility of the airbag deploying due to current entering the squib wiring.

(6) When disposing of a vehicle or the seat outer belt unit by itself, the seat outer belt should be activated before disposal (See page SB-31). Activate the seat outer belt in a safe place away from electrical noise.

(7) As the seat outer belt is hot after being activated, allow some time for it to cool down sufficiently before disposal. Never apply water to cool down the seat outer belt.

(8) Grease, detergents, oil or water should not be applied to the front seat outer belt.

(k) AIRBAG SENSOR ASSEMBLY

(1) Never reuse an airbag sensor assembly that has been involved in a collision where the SRS has deployed.

(2) The connectors to the airbag sensor assembly should be connected or disconnected with the sensor placed on the floor. If the connectors are connected or disconnected while the airbag sensor assembly is not placed on the floor, the SRS may activate.

(3) Work must be started at least 90 seconds after the engine switch is turned off and the cable is disconnected from the negative (-) battery terminal, even if only loosening the set bolts of the airbag sensor assembly.

(l) WIRE HARNESS AND CONNECTOR

(1) The SRS wire harness is integrated with the instrument panel wire harness assembly. All the connectors in the system are a standard yellow color. If the SRS wire harness becomes disconnected or the connector becomes broken, repair or replace it.

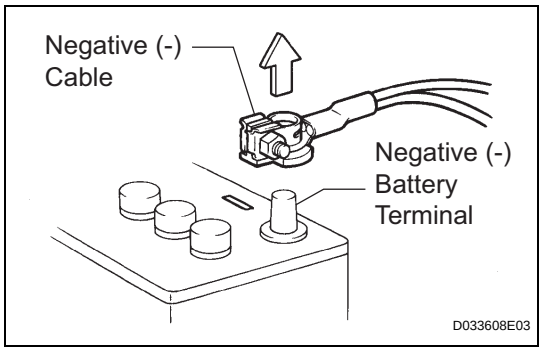

3. ELECTRONIC CONTROL

(a) REMOVAL AND INSTALLATION OF BATTERY TERMINAL

NOTICE:

Certain systems need to be initialized after reconnecting the cable to the negative (-) battery terminal.

(1) Before performing electronic work, disconnect the cable from the negative (-) battery terminal to prevent component and wire damage caused by accidental short circuits.

(2) When disconnecting the cable, turn the engine switch and headlight dimmer switch off and loosen the cable nut completely. Perform these operations without twisting or prying the cable. Then disconnect the cable.

(3) Clock settings, radio settings, audio system memory, DTCs and other data are erased when the cable is disconnected from the negative (-) battery terminal. Write down any necessary data before disconnecting the cable.

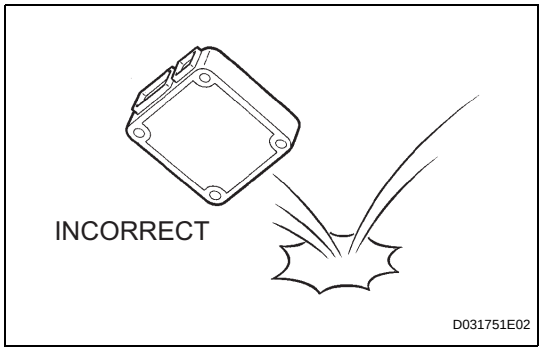

(b) HANDLING OF ELECTRONIC PARTS

(1) Do not open the cover or case of the ECU unless absolutely necessary. If the IC terminals are touched, the IC may be rendered inoperative by static electricity.

(2) Do not pull the wires when disconnecting electronic connectors. Pull the connector itself.

(3) Do not drop electronic components, such as sensors or relays. If they are dropped on a hard surface, they should be replaced.

(4) When cleaning the engine with steam, protect the electronic components, air filter and emission-related components from water.

(5) Never use an impact wrench to remove or install temperature switches or temperature sensors.

(6) When measuring the resistance between terminals of a wire connector, insert the tester probe carefully to prevent terminals from bending.

IN

4. REMOVAL AND INSTALLATION OF FUEL CONTROL PARTS

(a) PLACE FOR REMOVING AND INSTALLING FUEL SYSTEM PARTS
  (1) Work in a location with good air ventilation that does not have welders, grinders, drills, electric motors, stoves, or any other engine sources.
  (2) Never work in a pit or near a pit as vaporized fuel will collect in those places.

(b) REMOVING AND INSTALLING FUEL SYSTEM PARTS
  (1) Prepare a fire extinguisher before starting the operation.
  (2) To prevent static electricity, install a ground wire to the fuel changer, vehicle and fuel tank, do not spray the surrounding area with water. Be careful when performing work in this area, as the work surface will become slippery. Do not clean up gasoline spills with water, as this may cause the gasoline to spread, and possibly create a fire hazard.
  (3) Avoid using electric motors, working lights and other electric equipments that can cause sparks or high temperatures.
  (4) Avoid using iron hammers as they may create sparks.
  (5) Dispose of fuel-contaminated cloth separately using a fire resistant container.

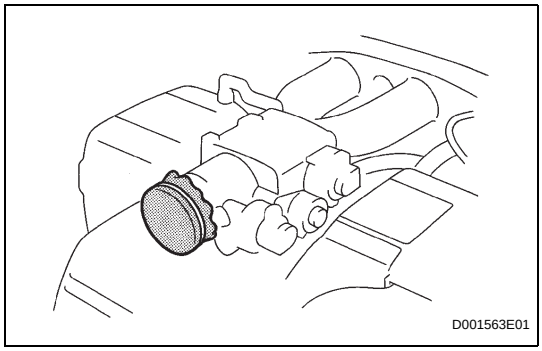

5. REMOVAL AND INSTALLATION OF ENGINE INTAKE PARTS

(a) If any metal particles enter inlet system parts, this may damage the engine.
(b) When removing and installing inlet system parts, cover the openings of the removed parts and engine openings. Use gummed tape or other suitable materials.
(c) When installing inlet system parts, check that no metal particles have entered the engine or the installed parts.

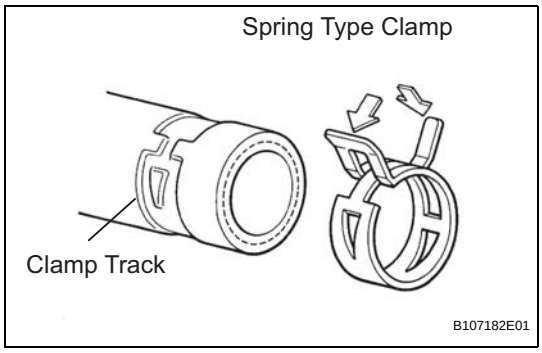

6. HANDLING OF HOSE CLAMPS

(a) Before removing the hose, check the clamp position so that it can be reinstalled in the same position.
(b) Replace any deformed or dented clamps with new ones.
(c) When reusing a hose, attach the clamp on the clamp track portion of the hose.
(d) For a spring type clamp, you may want to spread the tabs slightly after installation by pushing in the direction of the arrows as shown in the illustration.

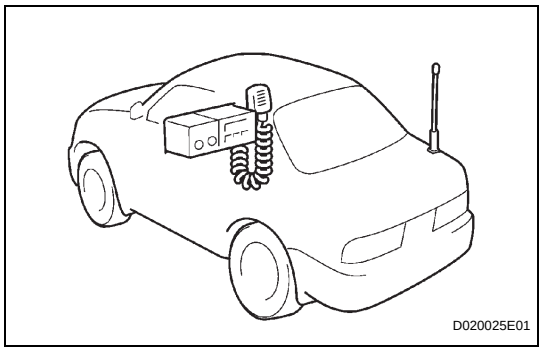

7. FOR VEHICLES EQUIPPED WITH MOBILE COMMUNICATION SYSTEMS

(a) Install the antenna far away from the ECU and sensors of the vehicle electronic systems as possible.

(b) Install an antenna feeder at least 20 cm (7.87 in.) away from the ECU and sensors of the vehicle electronic systems. For details about ECU and sensors locations, refer to the section on the applicable components.

(c) Keep the antenna and feeder separate from other wirings as much as possible. This will prevent signals sent from the communication equipment from affecting vehicle equipment and vice-versa.

(d) Check that the antenna and feeder are correctly adjusted.

(e) Do not install any high-powered mobile communication system.

8. FOR VEHICLES EQUIPPED WITH TRACTION CONTROL (TRAC) AND VEHICLE STABILITY CONTROL (VSC) SYSTEMS

When testing with a 2-wheel drum tester such as a speedometer tester, a combination tester for the speedometer and brake, a chassis dynamometer, or when jacking up the front wheels and turning the wheels, perform the following procedure to enter the inspection mode and stop the TRAC and VSC systems.

(a) Activating inspection mode (Not using the intelligent tester)

HINT:

- Perform procedures "D" to "H" within 30 seconds.
- Perform procedures "F" and "G" within 15 seconds each.

(1) Ensure that the engine switch is off and the engine is stopped (Procedure "A").

(2) Make sure that the shift lever is in the P position (Procedure "B").

(3) Start the engine (Procedure "C").

(4) Apply the parking brake by depressing the parking brake pedal (Procedure "D").

(5) Depress and release the brake pedal twice (Procedure "E").

(6) While holding the brake pedal down, release and apply the parking brake twice (Procedure "F").

(7) With the parking brake applied, depress and release the brake pedal twice (Procedure "G").

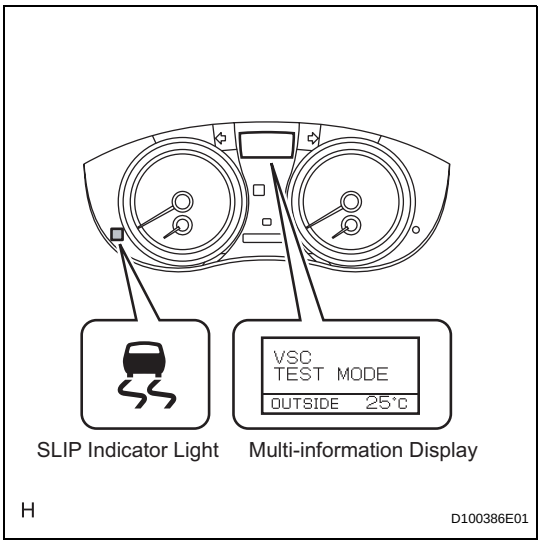

(8) Check that the "VSC TEST MODE" message appears on the multi-information display and SLIP indicator light come on (Procedure "H").
HINT:
- If the "VSC TEST MODE" message appears on the multi-information display and SLIP indicator light do not come on in procedure "H", repeat the procedures from "A" to "H".
- Turning the engine switch off ends inspection mode.

(b) Activating inspection mode (Using the intelligent tester)
(1) Ensure that the engine switch is off and the engine is stopped (Procedure "A").
(2) Make sure that the shift lever is in the P position (Procedure "B").
(3) Connect the intelligent tester to the DLC3 (Procedure "C").
(4) Start the engine (Procedure "D").
(5) Turn the intelligent tester main switch on (Procedure "E").
(6) Select the following menu items: ABS/ INSPECTION MODE (Procedure "F").

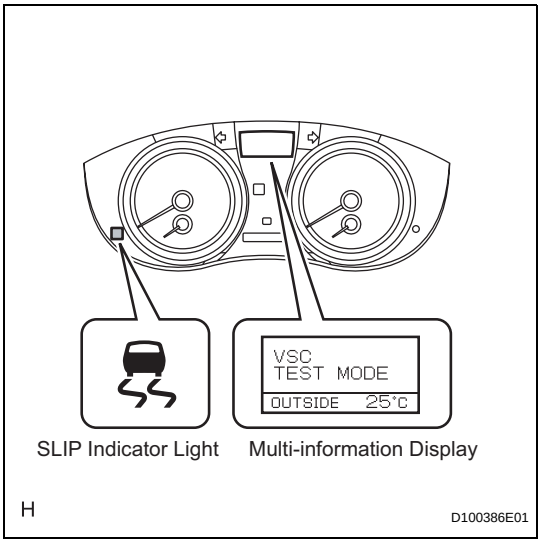

(7) Check that the "VSC TEST MODE" message appears on the multi-information display and SLIP indicator light come on (Procedure "G").
HINT:
- If the "VSC TEST MODE" message appears on the multi-information display and SLIP indicator light do not come on in procedure "G", repeat the procedures from "A" to "G".
- Turning the engine switch off ends inspection mode.

9. FOR VEHICLES EQUIPPED WITH CATALYTIC CONVERTER
CAUTION:
If a large amount of unburned gasoline or gasoline vapors flow into the converter, it may cause overheating and create a fire hazard. To prevent this, observe the following precautions.
(a) Use only unleaded gasoline.
(b) Avoid idling the engine for more than 20 minutes.
(c) Avoid performing unnecessary spark jump tests.
(1) Perform a spark jump test only when absolutely necessary. Perform this test as rapidly as possible.
(2) While testing, never race the engine.
(d) Avoid a prolonged engine compression measurement. Engine compression measurements must be performed as rapidly as possible.
(e) Do not run the engine when the fuel tank is nearly empty. This may cause the engine to misfire and create an extra load on the converter.

HOW TO TROUBLESHOOT ECU CONTROLLED SYSTEMS

GENERAL INFORMATION

A large number of ECU controlled systems are used in the LEXUS ES350. In general, ECU controlled systems are considered to be very intricate, requiring a high level of technical knowledge to troubleshoot. However, most problem checking procedures only involve inspecting the ECU controlled system's circuits one by one. An adequate understanding of the system and a basic knowledge of electricity is enough to perform effective troubleshooting, accurate diagnoses and necessary repairs.

FOR USING INTELLIGENT TESTER

– Before using the intelligent tester, read the tester operator's manual thoroughly.
– If the tester cannot communicate with the ECU controlled systems when the tester is connected to the DLC3 with the engine switch on and the tester turned on, there is a problem on the vehicle side or tester side.
  (1) If communication is normal when the tester is connected to another vehicle, inspect the diagnosis data link line (Bus (+) line) or ECU power circuit of the vehicle.
  (2) If communication is still not possible when the tester is connected to another vehicle, the problem is probably in the tester itself. Perform the Self Test procedures outlined in the tester operator's manual.

ELECTRONIC CIRCUIT INSPECTION PROCEDURE

1. BASIC INSPECTION

(a) WHEN MEASURING RESISTANCE OF ELECTRONIC PARTS

(1) Unless otherwise stated, all resistance measurements should be made at an ambient temperature of 20°C (68°F). Resistance measurements may be inaccurate if measured at high temperatures, i.e. immediately after the engine has been stopped. Measurements should be made after the engine has cooled down.

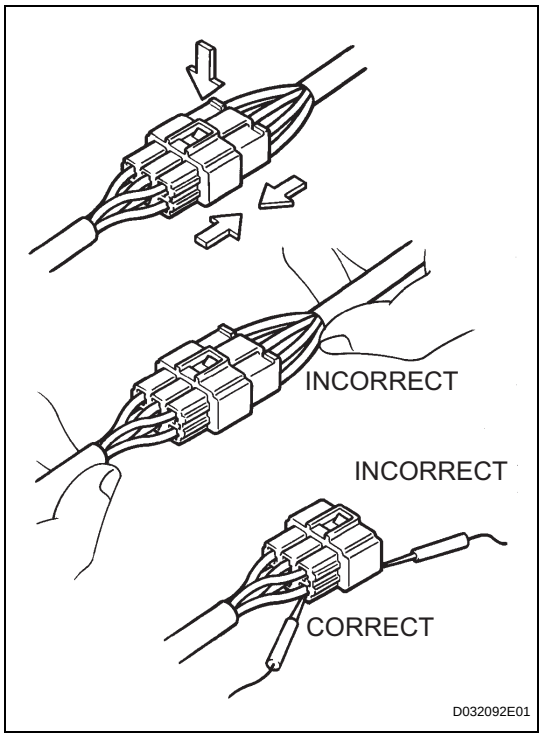

(b) HANDLING CONNECTORS

(1) When disconnecting a connector, first squeeze the mating connector housing halves tightly together to release the lock, and then press the lock claw and separate the connector.

(2) When disconnecting a connector, do not pull on the harnesses. Grasp the connector directly and separate it.

(3) Before connecting a connector, check that there are no deformations, damage, looseness or missing terminals.

(4) When connecting a connector, press firmly until it locks with a "click" sound.

(5) If checking a connector with an intelligent tester, check the connector from the backside (harness side) using a mini test lead.

NOTICE:

- **As a waterproof connector cannot be checked from the backside, check it by connecting a sub-harness.**
- **Do not damage the terminals by moving the inserted tester needle.**

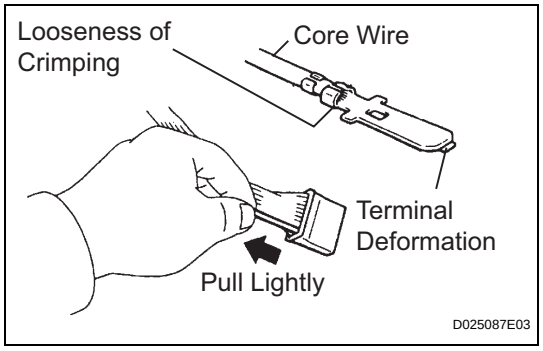

(c) CHECKING CONNECTORS

(1) Checking when a connector is connected: Squeeze the connector together to confirm that they are fully connected and locked.

(2) Checking when a connector is disconnected: Check by pulling the wire harness lightly from the backside of the connector. Look for unlatched terminals, missing terminals, loose crimps or broken conductor wires. Check visually for corrosion, metallic or foreign matter and water, and bent, rusted, overheated, contaminated, or deformed terminals.

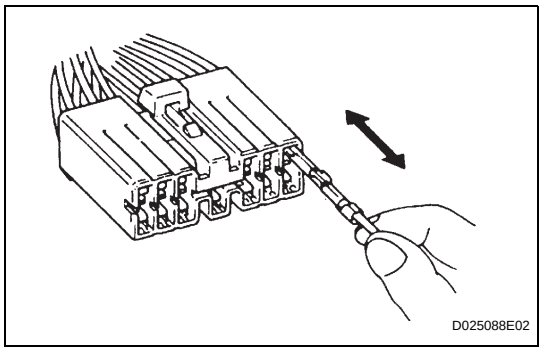

(3) Checking the contact pressure of the terminal: Prepare a spare male terminal. Insert it into a female terminal, and check for ample tension when inserting and after full engagement.
NOTICE:
When testing a gold-plated female terminal, always use a gold-plated male terminal.

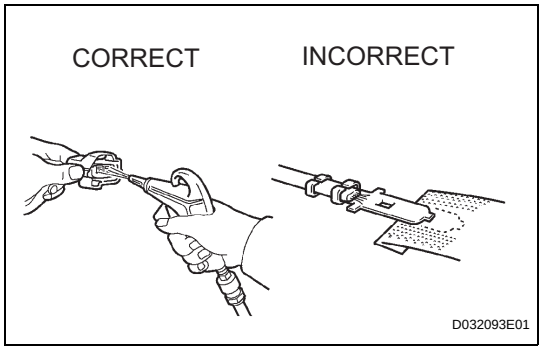

(d) REPAIR METHOD OF CONNECTOR TERMINAL
(1) If there is any foreign matter on the terminal, clean the contact point with compressed air or a cloth. Never rub the contact point using sandpaper as the plating may come off.
(2) If there is abnormal contact pressure, replace the female terminal. If the male terminal is gold-plated (gold color), use a gold-plated female terminal; if it is tin-plated (silver color), use a tin-plated female terminal.
(3) Damaged, deformed, or corroded terminals should be replaced. If the terminal does not lock into the housing, the housing may have to be replaced.

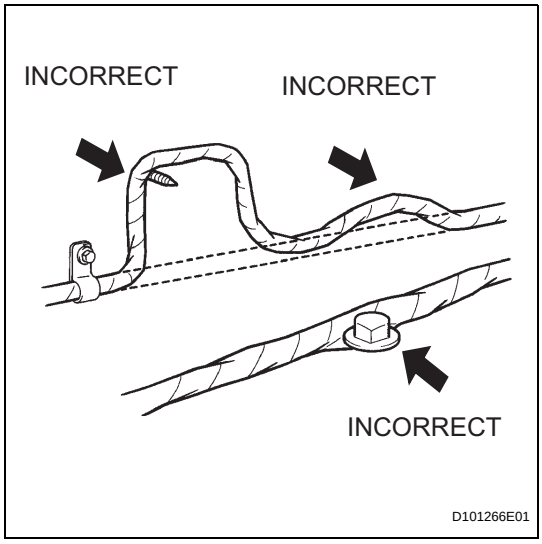

(e) HANDLING OF WIRE HARNESS
(1) If removing a wire harness, check the wiring and clamping before proceeding so that it can be restored in the same way.
(2) Never twist, pull or slacken the wire harness more than necessary.
(3) The wire harness should never come into contact with a high temperature part, or rotating, moving, vibrating or sharp-edged parts. Avoid contact with panel edges, screw tips and other sharp items.
(4) When installing parts, never pinch the wire harness.
(5) Never cut or break the cover of the wire harness. If it is cut or broken, replace it or repair it with vinyl tape.

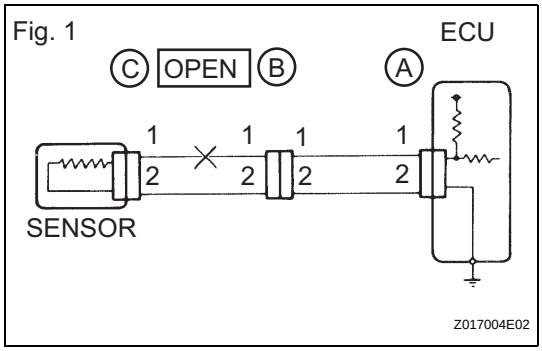

2. CHECK FOR OPEN CIRCUIT
(a) For an open circuit in the wire harness in Fig. 1, the resistance or voltage, as described below.

Fig. 2

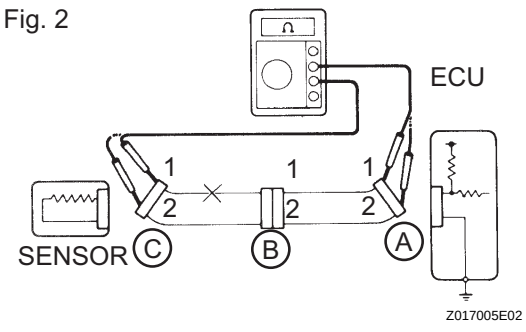

(b) Check the resistance.

(1) Disconnect connectors A and C and measure the resistance between the terminals of the connectors.

Standard resistance (Fig. 2)

Tester Connection	Specified Condition
Connector A terminal 1 - Connector C terminal 1	**10 kΩ or higher**
Connector A terminal 2 - Connector C terminal 2	**Below 1 Ω**

HINT:
Measure the resistance while lightly shaking the wire harness vertically and horizontally. If the results match the examples above, an open circuit exists between terminal 1 of connector A and terminal 1 of connector C.

Fig. 3

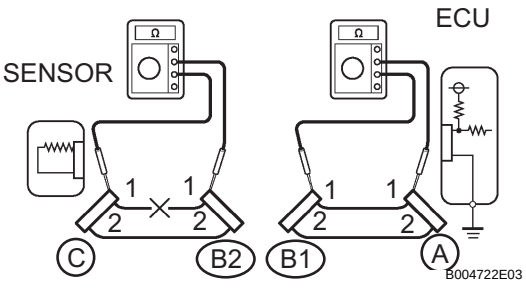

(2) Disconnect connector B and measure the resistance between the terminals of the connectors.

Standard resistance (Fig. 3)

Tester Connection	Specified Condition
Connector A terminal 1 - Connector B1 terminal 1	**Below 1 Ω**
Connector B2 terminal 2 - Connector C terminal 2	**10 kΩ or higher**

If the results match the examples above, an open circuit exists between terminal 1 of connector B2 and terminal 1 of connector C.

Fig. 4

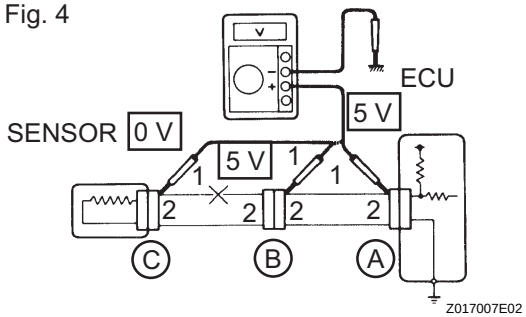

(c) Check the voltage.

(1) In a circuit in which voltage is applied to the ECU connector terminal, an open circuit can be checked by conducting a voltage check.
With each connector still connected, measure the voltage between the body ground and these terminals (in this order): 1) terminal 1 of connector A, 2) terminal 1 of connector B, and 3) terminal 1 of connector C.

Standard voltage (Fig. 4)

Tester Connection	Specified Condition
Connector A terminal 1 - Body ground	**5 V**
Connector B terminal 1 - Body ground	**5 V**
Connector C terminal 1 - Body ground	**Below 1 V**

If the results match the examples above, an open circuit exists in the wire harness between terminal 1 of connector B and terminal 1 of connector C.

Fig. 5

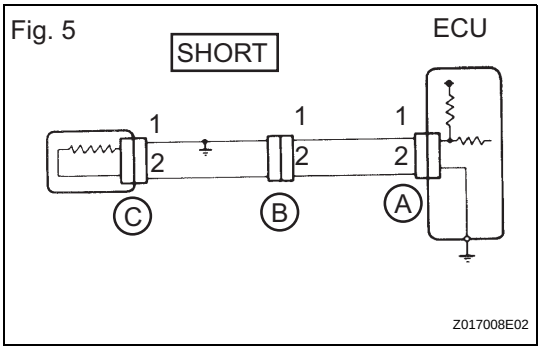

3. CHECK FOR SHORT CIRCUIT

(a) If the wire harness is ground shorted (Fig. 5), locate the section by conducting a resistance check with the body ground (below).

Fig. 6

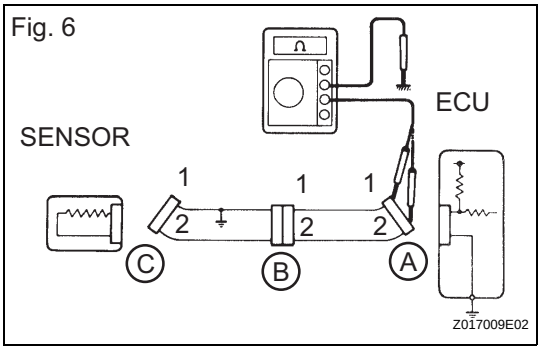

(b) Check the resistance with the body ground.

(1) Disconnect connectors A and C and measure the resistance.

Standard resistance (Fig. 6)

Tester Connection	Specified Condition
Connector A terminal 1 - Body ground	**Below 1 Ω**
Connector A terminal 2 - Body ground	**10 kΩ or higher**

HINT:
Measure the resistance while lightly shaking the wire harness vertically and horizontally. If your results match the examples above, an open circuit exists between terminal 1 of connector A and terminal 1 of connector C.

(2) Disconnect connector B and measure the resistance.

Standard resistance (Fig. 7)

Fig. 7

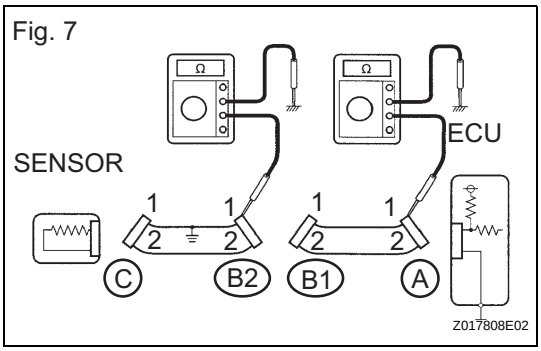

Tester Connection	Specified Condition
Connector A terminal 1 - Body ground	**10 kΩ or higher**
Connector B2 terminal 2 - Body ground	**Below 1 Ω**

If the results match the examples above, a short circuit exists between terminal 1 of connector B2 and terminal 1 of connector C.

4. CHECK AND REPLACE ECU

NOTICE:

- **The connector should not be disconnected from the ECU. Perform the inspection from the backside of the connector on the wire harness side.**
- **When no measuring condition is specified, perform the inspection with the engine stopped and the engine switch on.**
- **Check that the connectors are fully seated. Check for loose, corroded or broken wires.**

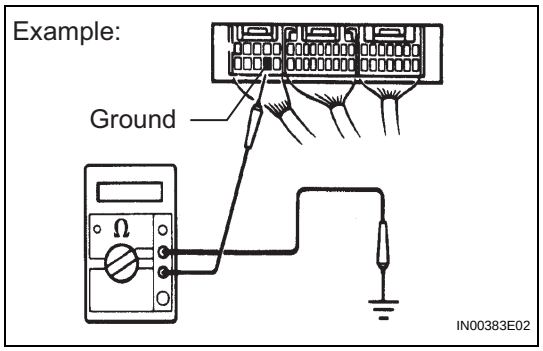

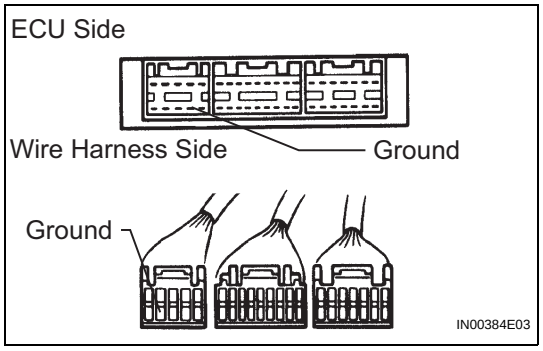

(a) First, check the ECU ground circuit. If it is faulty, repair it. If it is normal, the ECU could be faulty. Temporarily replace the ECU with a normally functioning one and check if the symptoms occur. If the trouble symptoms disappear, replace the original ECU.

(1) Measure the resistance between the ECU ground terminal and body ground.
Standard resistance:
Below 1 Ω

(2) Disconnect the ECU connector. Check the ground terminal on the ECU side and wire harness side for bending, corrosion or foreign matter. Lastly, check the contact pressure of the female terminals.

IN

TERMS

ABBREVIATIONS USED IN MANUAL

Abbreviations	Meaning
ABS	Anti-Lock Brake System
A/C	Air Conditioner
AC	Alternating Current
ACC	Accessory
ACIS	Acoustic Control Induction System
ACM	Active Control Engine Mount
ACSD	Automatic Cold Start Device
A.D.D	Automatic Disconnecting Differential
A/F	Air-Fuel Ratio
AHC	Active Height Control Suspension
ALR	Automatic Locking Retractor
ALT	Alternator
AMP	Amplifier
ANT	Antenna
APPROX.	Approximately
ASSY	Assembly
A/T, ATM	Automatic Transmission (Transaxle)
ATF	Automatic Transmission Fluid
AUTO	Automatic
AUX	Auxiliary
AVG	Average
AVS	Adaptive Variable Suspension
AWD	All Wheel Drive Vehicle
B+	Battery Voltage
BA	Brake Assist
BACS	Boost Altitude Compensation System
BAT	Battery
BDC	Bottom Dead Center
B/L	Bi-Level
B/S	Bore-Stroke Ratio
BTDC	Before Top Dead Center
BVSV	Bimetallic Vacuum Switching Valve
CAN	Controller Area Network
CB	Circuit Breaker
CCo	Catalytic Converter For Oxidation
CCV	Canister Closed Valve
CD	Compact Disc
CF	Cornering Force
CG	Center of Gravity
CH	Channel
CKD	Complete Knock Down
COMB.	Combination
CPE	Coupe
CPS	Combustion Pressure Sensor
CPU	Central Processing Unit
CRS	Child Restraint System

Abbreviations	Meaning
CTR	Center
C/V	Check Valve
CV	Control Valve
CW	Curb Weight
DC	Direct Current
DEF	Defogger
DFL	Deflector
DIFF.	Differential
DIFF. LOCK	Differential Lock
D/INJ	Direct Injection
DLC	Data Link Connector
DLI	Distributorless Ignition
DOHC	Double Overhead Camshaft
DP	Dash Pot
DS	Dead Soak
DSP	Digital Signal Processor
DTC	Diagnostic Trouble Code
DVD	Digital Versatile Disc
EBD	Electric Brake Force Distribution
EC	Electrochromic
ECAM	Engine Control And Measurement System
ECD	Electronically Controlled Diesel
ECDY	Eddy Current Dynamometer
ECT	Electronic Controlled Automatic Transmission
ECU	Electronic Control Unit
ED	Electro-Deposited Coating
EDU	Electronic Driving Unit
EDIC	Electric Diesel Injection Control
EFI	Electronic Fuel Injection
E/G	Engine
EGR	Exhaust Gas Recirculation
EGR-VM	EGR-Vacuum Modulator
ELR	Emergency Locking Retractor
EPS	Electric Power Steering
ENG	Engine
ES	Easy & Smooth
ESA	Electronic Spark Advance
ETCS-i	Electronic Throttle Control System-intelligent
EVAP	Evaporative Emission Control
EVP	Evaporator
E-VRV	Electric Vacuum Regulating Valve
EX	Exhaust
FE	Fuel Economy
FF	Front-Engine-Front-Wheel-Drive
F/G	Fuel Gauge
FIPG	Formed In Place Gasket
FL	Fusible Link
F/P	Fuel Pump
FPU	Fuel Pressure Up

Abbreviations	Meaning
FR	Front
F/W	Flywheel
FW/D	Flywheel Damper
FWD	Front-Wheel-Drive
GAS	Gasoline
GND	Ground
GPS	Global Positioning System
GSA	Gear Shift Actuator
HAC	High Altitude Compensator
H/B	Hatchback
H-FUSE	High Current Fuse
HI	High
HID	High Intensity Discharge (Headlight)
HPU	Hydraulic Power Unit
HSG	Housing
HT	Hard Top
HV	Hybrid Vehicle
HWS	Heated Windshield System
IC	Integrated Circuit
IDI	Indirect Diesel Injection
IFS	Independent Front Suspension
IG	Ignition
IIA	Integrated Ignition Assembly
IN	Intake (Manifold, Valve)
INT	Intermittent
I/P	Instrument Panel
IRS	Independent Rear Suspension
ISC	Idle Speed Control
J/B	Junction Block
J/C	Junction Connector
KD	Kick-Down
LAN	Local Area Network
LB	Liftback
LCD	Liquid Crystal Display
LED	Light Emitting Diode
LH	Left-Hand
LHD	Left-Hand Drive
LIN	Local Interconnect Network
L/H/W	Length, Height, Width
LLC	Long-Life Coolant
LNG	Liquefied Natural Gas
LO	Low
LPG	Liquefied Petroleum Gas
LSD	Limited Slip Differential
LSP & BV	Load Sensing Proportioning and Bypass Valve
LSPV	Load Sensing Proportioning Valve
MAP	Manifold Absolute Pressure
MAX.	Maximum
MIC	Microphone

Abbreviations	Meaning
MIL	Malfunction Indicator Lamp
MIN.	Minimum
MG1	Motor Generator No. 1
MG2	Motor Generator No. 2
MMT	Multi-mode Manual Transmission
MP	Multipurpose
MPI	Multipoint Electronic Injection
MPX	Multiplex Communication System
M/T, MTM	Manual Transmission (Transaxle)
MT	Mount
MTG	Mounting
N	Neutral
NA	Natural Aspiration
NO.	Number
O2S	Oxygen Sensor
OC	Oxidation Catalyst
OCV	Oil Control Valve
O/D	Overdrive
OEM	Original Equipment Manufacturing
OHC	Overhead Camshaft
OHV	Overhead Valve
OPT	Option
ORVR	On-board Refilling Vapor Recovery
O/S	Oversize
P & BV	Proportioning and Bypass Valve
PBD	Power Back Door
PCS	Power Control System
PCV	Positive Crankcase Ventilation
PKB	Parking Brake
PPS	Progressive Power Steering
PROM	Programmable Read Only Memory
PS	Power Steering
PSD	Power Slide Door
PTC	Positive Temperature Coefficient
PTO	Power Take-Off
PZEV	Partial Zero Emission Vehicle
P/W	Power Window
R & P	Rack and Pinion
RAM	Random Access Memory
R/B	Relay Block
RBS	Recirculating Ball Type Steering
R/F	Reinforcement
RFS	Rigid Front Suspension
RH	Right-Hand
RHD	Right-Hand Drive
RLY	Relay
ROM	Read Only Memory
RR	Rear
RRS	Rigid Rear Suspension

Abbreviations	Meaning
RSE	Rear Seat Entertainment
RWD	Rear-Wheel Drive
SC	Supercharger
SCV	Swirl Control Valve
SDN	Sedan
SEN	Sensor
SICS	Starting Injection Control System
SOC	State Of Charge
SOHC	Single Overhead Camshaft
SPEC	Specification
SPI	Single Point Injection
SRS	Supplemental Restraint System
SSM	Special Service Materials
SST	Special Service Tools
STD	Standard
STJ	Cold-Start Fuel Injection
SW	Switch
SYS	System
T/A	Transaxle
TACH	Tachometer
TBI	Throttle Body Electronic Fuel Injection
TC	Turbocharger
TCCS	TOYOTA Computer-Controlled System
TCM	Transmission Control Module
TCV	Timing Control Valve
TDC	Top Dead Center
TEMP.	Temperature
TFT	TOYOTA Free-Tronic
TIS	Total Information System for Vehicle Development
T/M	Transmission
TMC	TOYOTA Motor Corporation
TMMIN	PT. TOYOTA Motor Manufacturing Indonesia
TMMK	TOYOTA Motor Manufacturing Kentucky, Inc.
TMT	TOYOTA Motor Thailand Co. Ltd.
TRAC/TRC	Traction Control System
TURBO	Turbocharge
TVIP	TOYOTA Vehicle Instruction Protection
TWC	Three-Way Catalyst
U/D	Underdrive
U/S	Undersize
VCV	Vacuum Control Valve
VDIM	Vehicle Dynamics Integrated Management
VENT	Ventilator
VIM	Vehicle Interface Module
VGRS	Variable Gear Ratio Steering
VIN	Vehicle Identification Number
VPS	Variable Power Steering
VSC	Vehicle Skid Control
VSV	Vacuum Switching Valve

Abbreviations	Meaning
VTV	Vacuum Transmitting Valve
VVT-i	Variable Valve Timing-intelligent
W/	With
WGN	Wagon
W/H	Wire Harness
W/O	Without
1ST	First
2ND	Second
2WD	Two Wheel Drive Vehicle (4 x 2)
3RD	Third
4TH	Fourth
4WD	Four Wheel Drive Vehicle (4 x 4)
4WS	Four Wheel Steering System
5TH	Fifth

DTC	B2274	ACC Monitor Malfunction

DESCRIPTION

This DTC is output when there is a problem in the ACCD output circuit, which is from the inside of the main body ECU to the ACC relay.
HINT:
When the main body ECU is replaced with a new one and the negative (-) battery terminal is connected, the power source mode becomes the IG-ON mode. When the battery is removed and reinstalled, the power source mode that was selected when the battery was removed is restored.
After the main body ECU is replaced, perform the registration procedures for the engine immobiliser system (See page EI-9).

DTC No.	DTC Detection Condition	Trouble Area
B2274	ACC relay actuation circuit inside main body ECU or other related circuit is malfunctioning	• Main body ECU • ACC relay • Wire harness or connector

WIRING DIAGRAM

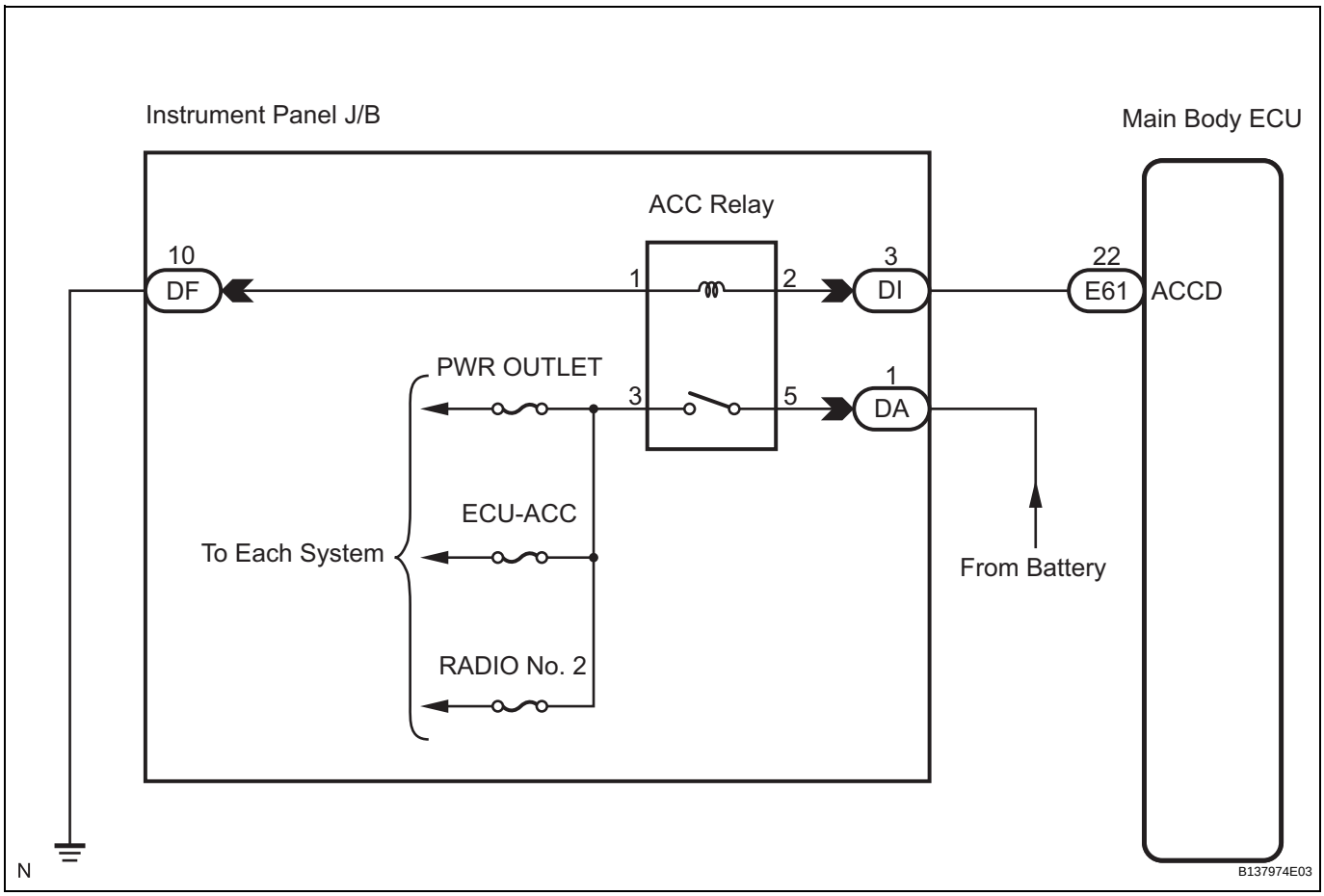

INSPECTION PROCEDURE

1	READ VALUE OF INTELLIGENT TESTER

(a) Connect the intelligent tester to the DLC3.

(b) Turn the engine switch on (IG) and turn the intelligent tester main switch on.

(c) Read the Data List according to the displays on the tester.

HINT:

When using the intelligent tester with the engine switch off, turn on and off any of the door courtesy light switches repeatedly at 1.5 second intervals or less until communication between the tester and vehicle starts.

MAIN BODY:

Item	Measurement Item / Display (Range)	Normal Condition	Diagnostic Note
ACC RELAY MON	Status of ACC Relay Monitor / ON or OFF	ON: Engine switch on (ACC) OFF: Engine switch off	-

OK:

"ON" (engine switch on (ACC)) appears on the screen.

NG → **Go to step 3**

OK

2 CHECK ENGINE SWITCH CONDITION

(a) Check the power source mode change.

(1) When the key is inside the vehicle and the shift lever is in the P position, check that pressing the engine switch causes the power source mode to change as follows:

OK:

off → on (ACC) → on (IG) → off

HINT:

- If power mode does not change to ON (IG and ACC), (See page ST-118).
- If power mode does not change to ON (IG), (See page ST-126).
- If power mode does not change to ON (ACC), (See page ST-135).

NG → **GO TO OTHER PROBLEM**

OK

ST

3 INSPECT RELAY (ACC RELAY)

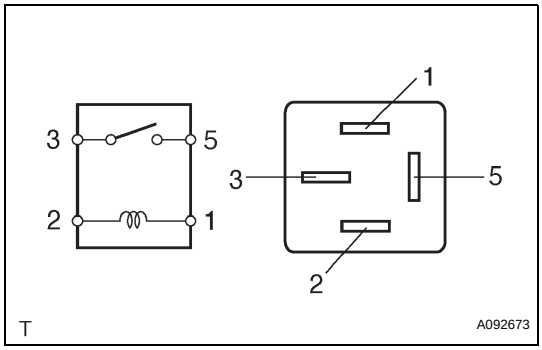

(a) Remove the ACC relay from the instrument panel J/B.
(b) Measure the resistance according to the value(s) in the table below.

Standard resistance

Tester Connection	Specified Condition
3 - 5	10 kΩ or higher
3 - 5	Below 1 Ω (when battery voltage is applied to terminals 1 and 2)

NG → **REPLACE RELAY**

OK

4 CHECK WIRE HARNESS (INSTRUMENT PANEL J/B - MAIN BODY ECU)

(a) Disconnect the E61 ECU connector.

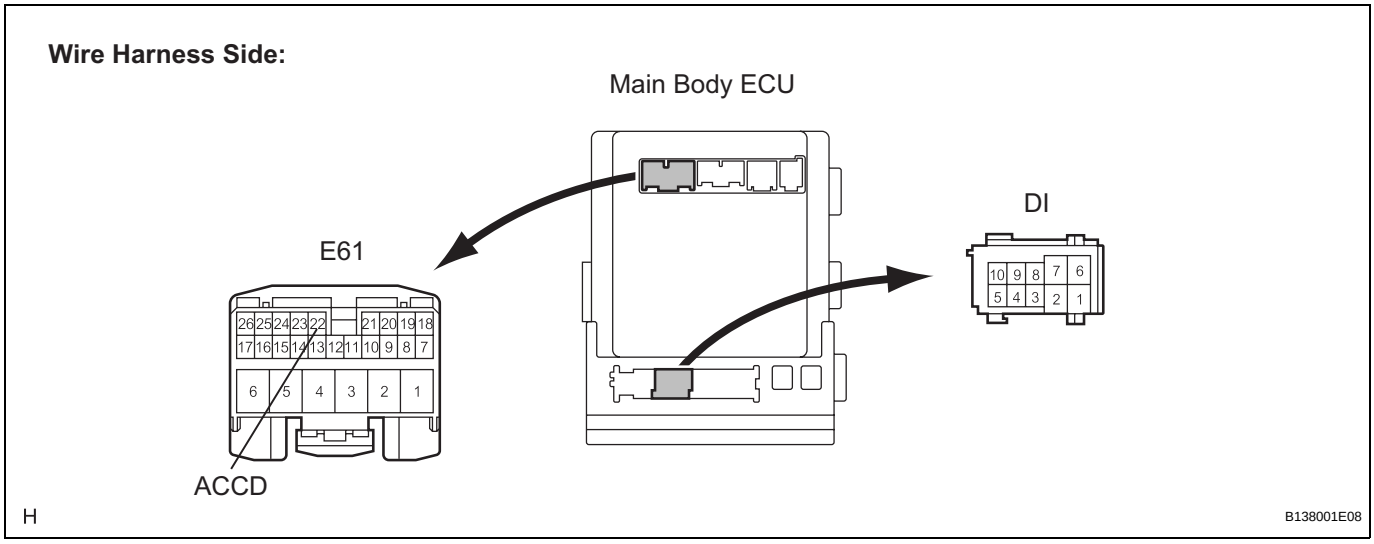

(b) Disconnect the DI J/B connector.
(c) Measure the resistance according to the value(s) in the table below.

Standard resistance

Terminal No. (Symbol)	Condition	Specified Condition
DI-3 - E61-22 (ACCD)	Always	Below 1 Ω
E61-22 (ACCD) or DI-3 - Body ground	Always	10 kΩ or higher

NG → **REPAIR OR REPLACE HARNESS OR CONNECTOR**

OK

ST

5 CHECK WIRE HARNESS (INSTRUMENT PANEL J/B - BATTERY AND BODY GROUND)

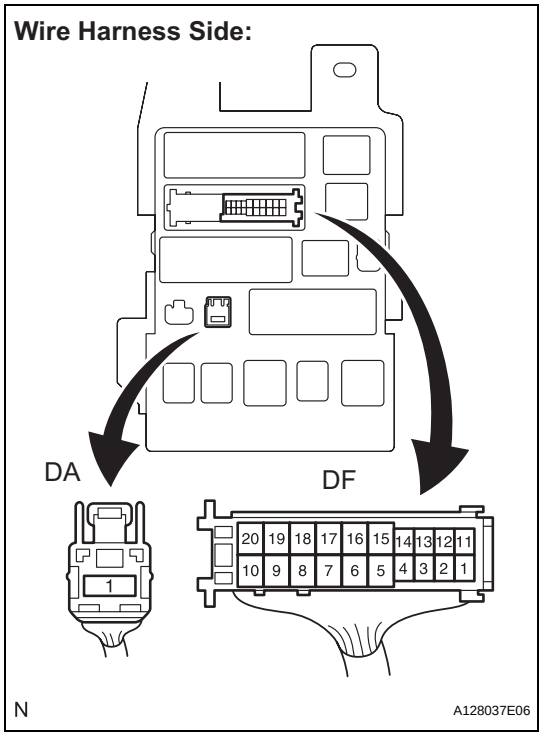

(a) Disconnect the DF and DA J/B connectors.

(b) Measure the resistance according to the value(s) in the table below.

Standard resistance

Terminal No.	Condition	Specified Condition
DF-10 - Body ground	Always	Below 1 Ω

(c) Measure the voltage according to the value(s) in the table below.

Standard voltage

Terminal No.	Condition	Specified Condition
DA-1 - Body ground	Always	10 to 14 V

NG → **REPAIR OR REPLACE HARNESS OR CONNECTOR**

OK

6 INSPECT INSTRUMENT PANEL J/B

ST

(a) Measure the resistance according to the value(s) in the table below.

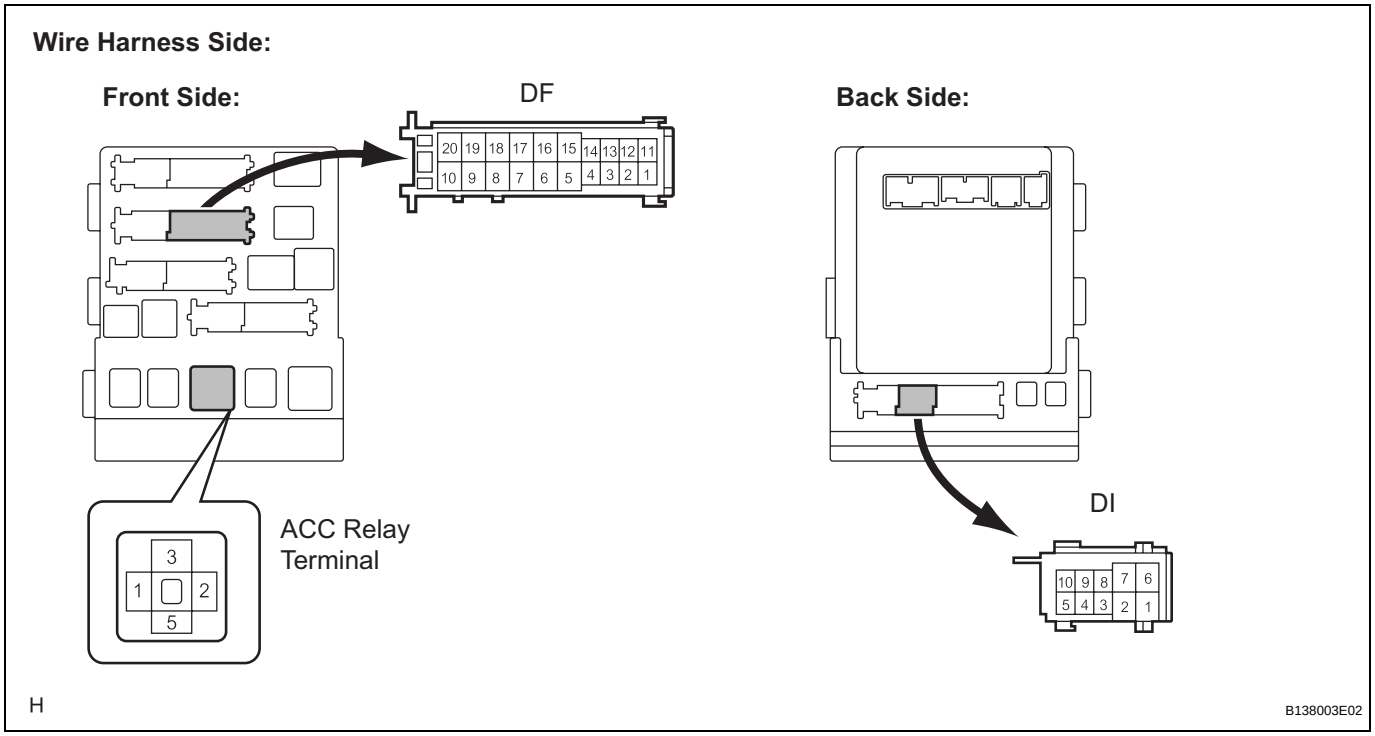

Standard resistance

Terminal No.	Condition	Specified Condition
ACC relay terminal 1 - DF-10	Always	Below 1 Ω
ACC relay terminal 2 - DI-3	Always	Below 1 Ω
DF-10 - Body ground	Always	10 kΩ or higher
DI-3 - Body ground	Always	10 kΩ or higher

NG → **REPLACE INSTRUMENT PANEL J/B**

OK

REPLACE MAIN BODY ECU

DTC	B2275	STSW Monitor Malfunction

DESCRIPTION

This DTC is output when there is an open, short, or any other problem in the engine start request output circuit inside the main body ECU or in the external circuit.
HINT:
When the main body ECU is replaced with a new one and the negative (-) battery terminal is connected, the power source mode becomes the IG-ON mode. When the battery is removed and reinstalled, the power source mode that was selected when the battery was removed is restored.
After the main body ECU is replaced, perform the registration procedures for the engine immobiliser system (See page EI-9).

DTC No.	DTC Detection Condition	Trouble Area
B2275	STSW output circuit (engine starting request signal circuit) inside main body ECU or other related circuit is malfunctioning	• Main body ECU • ECM • Wire harness or connector

WIRING DIAGRAM

INSPECTION PROCEDURE

1	CHECK DTC OUTPUT

(a) Delete the DTCs (See page ST-26).
HINT:
After all DTCs are cleared, turn the engine switch on (IG) and depress the brake pedal. After 15 seconds have elapsed, check if the trouble occurs again.

(b) Check for DTCs again.
OK:
No DTC is output.

NG	Go to step 2

ST

OK

CHECK INTERMITTENT PROBLEMS

2 CHECK WIRE HARNESS (MAIN BODY ECU - ECM)

(a) Disconnect the E58 ECU connector.

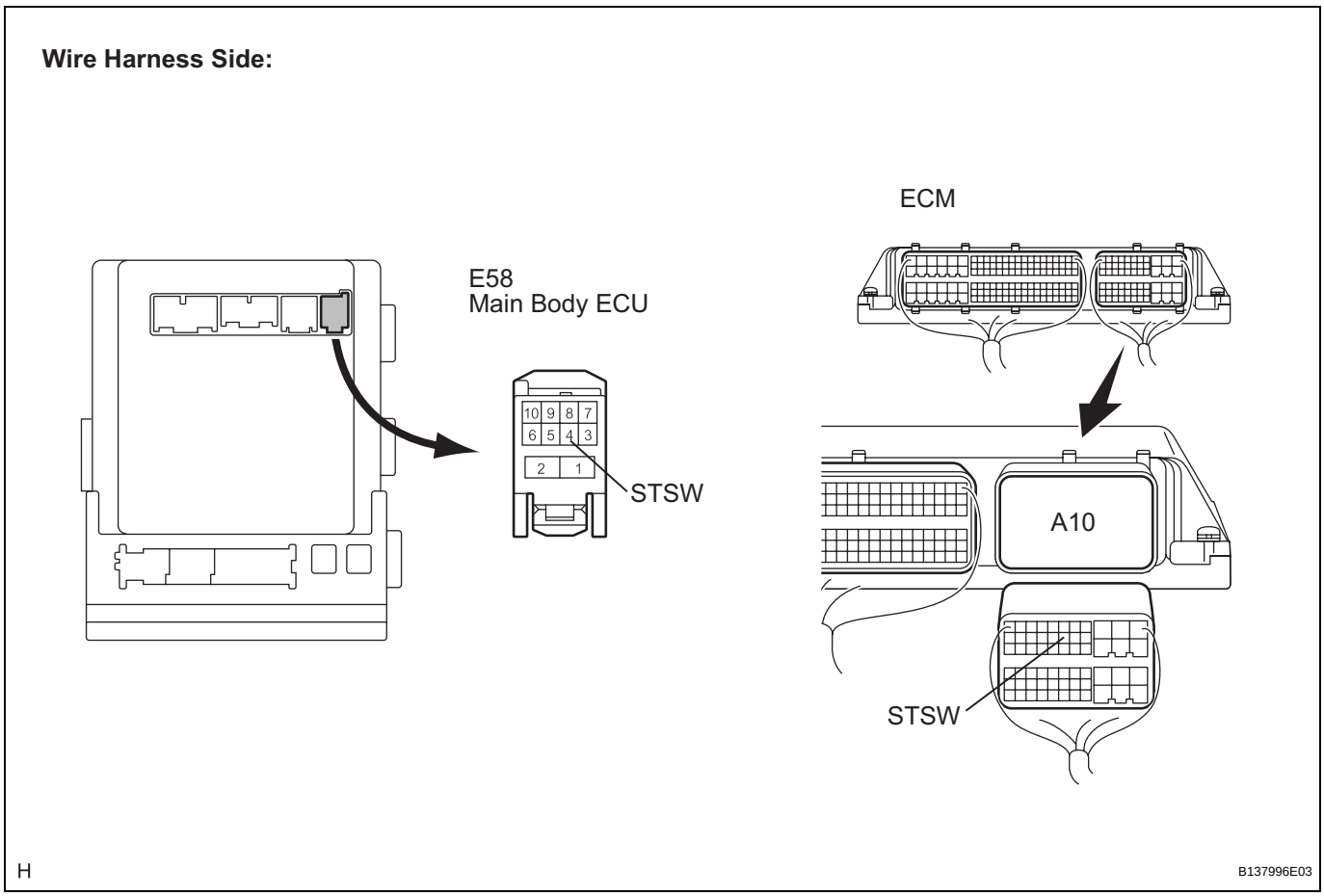

(b) Disconnect the A10 ECM connector.

(c) Measure the resistance according to the value(s) in the table below.

Standard resistance

Terminal No. (Symbol)	Condition	Specified Condition
E58-4 (STSW) - A10-14 (STSW)	Always	Below 1 Ω
E58-4 (STSW) - Body ground	Always	10 kΩ or higher

NG → **REPAIR OR REPLACE HARNESS OR CONNECTOR**

OK

ST

3 INSPECT MAIN BODY ECU

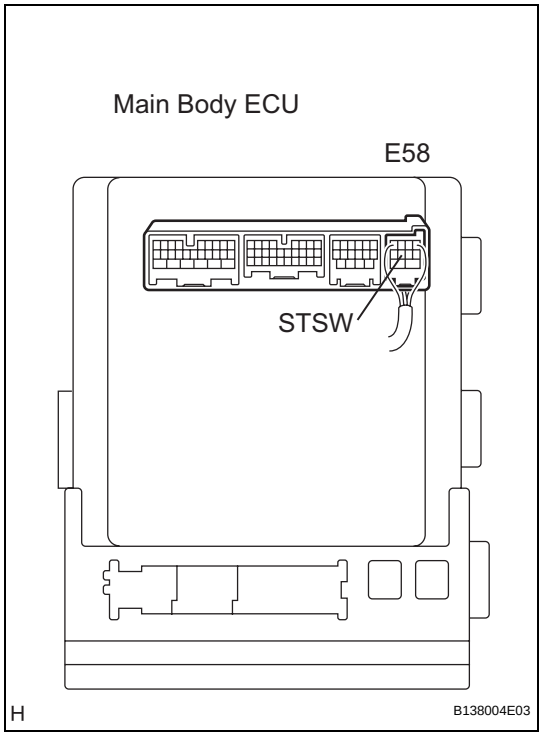

(a) Reconnect the connectors.
(b) Measure the voltage according to the value(s) in the table below.

Standard voltage

Terminal No. (Symbol)	Condition	Specified Condition
E58-4 (STSW) - Body ground	Brake pedal depressed, Engine switch hold on (ST)	Output voltage at terminal AM1 or AM2 is -2 V or more.

NG → **REPLACE MAIN BODY ECU**

OK

4 CHECK MAIN BODY ECU OPERATION

(a) After replacing the main body ECU with a normally functioning ECU, check that the engine can start. Make sure the brake pedal is depressed and the shift position is P at this time.
(b) Check that the engine switch mode can be changed by pushing the engine switch.
HINT:
Without depressing the brake pedal, push the engine switch repeatedly. Engine switch mode should turn from off to on (ACC) to on (IG) and back to off. With the brake pedal depressed, push the engine switch repeatedly. Engine switch mode should turn to ENGINE START from any status.
OK:
Engine can start normally.
HINT:
If engine does not start, (See page ST-97).

NG → **GO TO OTHER PROBLEM**

OK

END (MAIN BODY ECU DEFECTIVE)

ST

DTC	B2276	ACCR Signal Circuit Malfunction

DESCRIPTION

This DTC is output when the ACCR output circuit inside the main body ECU is open or shorted.
HINT:
When the main body ECU is replaced with a new one and the negative (-) battery terminal is connected, the power source mode becomes the IG-ON mode. When the battery is removed and reinstalled, the power source mode that was selected when the battery was removed is restored.
After the main body ECU is replaced, perform the registration procedures for the engine immobiliser system (See page EI-9).

DTC No.	DTC Detection Condition	Trouble Area
B2276	ACCR output circuit inside main body ECU or other related circuit is malfunctioning	• Main body ECU • ECM • Wire harness or connector

WIRING DIAGRAM

ST

INSPECTION PROCEDURE

1	CHECK DTC OUTPUT

(a) Delete the DTCs (See page ST-26).
HINT:
After all DTCs are cleared, check if the trouble occurs again 50 seconds after the engine switch is turned on (IG).

(b) Check for DTCs again.
OK:
No DTC is output.

NG → **Go to step 2**

OK

CHECK INTERMITTENT PROBLEMS

2	CHECK WIRE HARNESS (MAIN BODY ECU - ECM)

(a) Disconnect the E60 ECU connector.

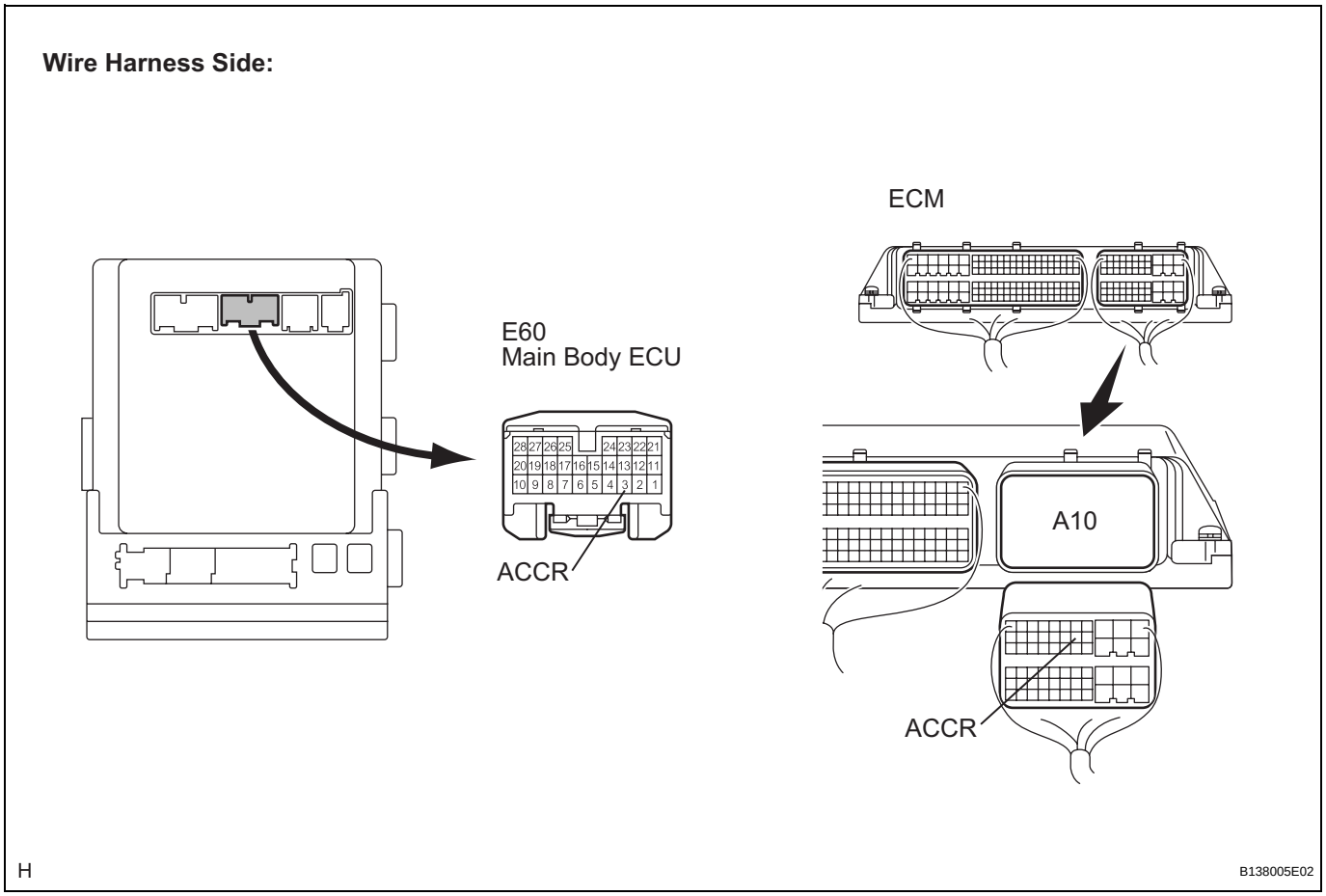

(b) Disconnect the A10 ECM connector.

(c) Measure the resistance according to the value(s) in the table below.

Standard resistance

Terminal No. (Symbol)	Condition	Specified Condition
E60-3 (ACCR) - A10-13 (ACCR)	Always	Below 1 Ω
E60-3 (ACCR) - Body ground	Always	10 kΩ or higher

NG → **REPAIR OR REPLACE HARNESS OR CONNECTOR**

OK

ST

3 INSPECT MAIN BODY ECU

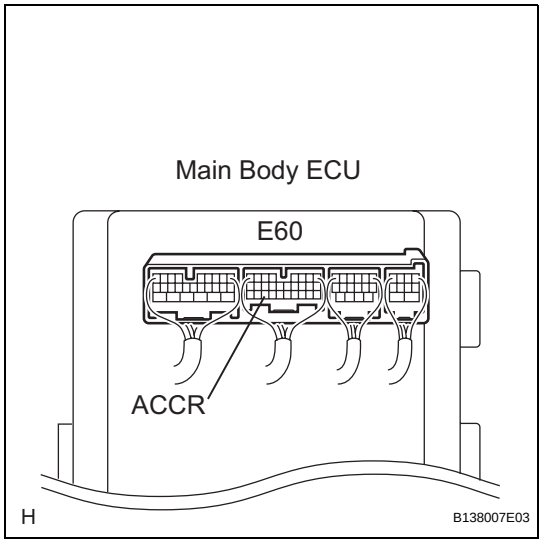

(a) Reconnect the connectors.
(b) Measure the voltage according to the value(s) in the table below.

Standard voltage

Terminal No. (Symbol)	Condition	Specified Condition
E60-3 (ACCR) - Body ground	Brake pedal depressed, shift P position, engine switch is pushed once → on (IG)	0.1 to 0.8 V (*1) Output voltage at terminal AM1 or AM2 is -2 V or more.

HINT:
*1: Voltage is output only when the engine is cranking.

NG → **REPLACE MAIN BODY ECU**

OK

4 CHECK MAIN BODY ECU OPERATION

(a) After replacing the main body ECU with a normally functioning ECU, check that the engine starts. Make sure the brake pedal is depressed and the shift position is P at this time.
(b) Check that the engine switch mode can be changed by pushing the engine switch.
HINT:
Without depressing the brake pedal, push the engine switch repeatedly. Engine switch mode should turn from off to on (ACC) to on (IG) and back to off. With the brake pedal depressed, push the engine switch repeatedly. Engine switch mode should turn to ENGINE START from any status.
OK:
Engine can start normally.
HINT:
If engine does not start, (See page ST-97).

NG → **GO TO OTHER PROBLEM**

OK

END (MAIN BODY ECU DEFECTIVE)

ST

DTC	B2277	Detecting Vehicle Submersion

DESCRIPTION

This DTC is output when the submersion circuit monitor inside the main body ECU detects that the vehicle is submerged in water.
HINT:
When the main body ECU is replaced with a new one and the negative (-) battery terminal is connected, the power source mode becomes the IG-ON mode. When the battery is removed and reinstalled, the power source mode that was selected when the battery was removed is restored.
After the main body ECU is replaced, perform the registration procedures for the engine immobiliser system (See page EI-9).

DTC No.	DTC Detection Condition	Trouble Area
B2277	Submersion circuit monitor inside main body ECU detects that vehicle is submerged in water	Main body ECU

INSPECTION PROCEDURE

1 CHECK FOR WATER DAMAGE

(a) Check the main body ECU, peripheral components, and wire harnesses for traces of water.
OK:
There are no traces of water.

NG → **TAKE APPROPRIATE MEASURES AGAINST CAUSE OF WATER DAMAGE AND REPLACE MAIN BODY ECU**

OK ↓

2 CHECK DTC OUTPUT

(a) Delete the DTCs (See page ST-26).
HINT:
After all DTCs are cleared, check if the trouble occurs again 30 seconds after the engine switch is turned on (IG).
(b) Check for DTCs again.
OK:
No DTC is output.

NG → **REPLACE MAIN BODY ECU**

OK ↓

END

ST

DTC	B2278	Engine Switch Circuit Malfunction

DESCRIPTION

This DTC is output when 1) a malfunction is detected between the main body ECU and the engine switch; or 2) either of the switches inside the engine switch is malfunctioning.

HINT:

When the main body ECU is replaced with a new one and the negative (-) battery terminal is connected, the power source mode becomes the IG-ON mode. When the battery is removed and reinstalled, the power source mode that was selected when the battery was removed is restored.

After the main body ECU is replaced, perform the registration procedures for the engine immobiliser system (See page EI-9).

DTC No.	DTC Detection Condition	Trouble Area
B2278	Communication is abnormal between the main body ECU and engine switch or the engine switch is defective	• Engine switch • Main body ECU • Wire harness or connector

WIRING DIAGRAM

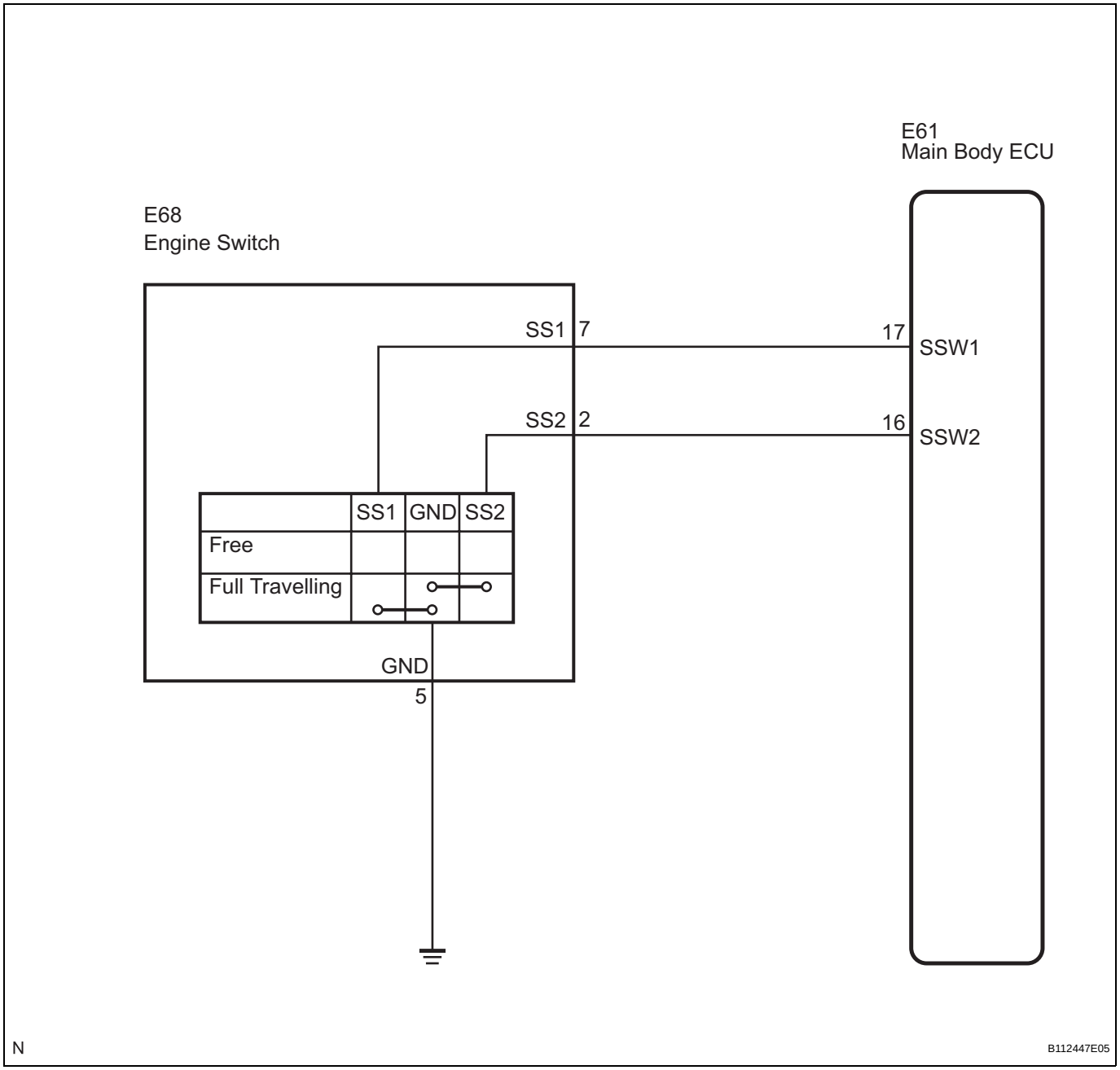

INSPECTION PROCEDURE

1	READ VALUE OF INTELLIGENT TESTER (START SWITCH)

(a) Connect the intelligent tester to the DLC3.
(b) Check the DATA LIST for proper functioning of the start switch.
HINT:
When using the intelligent tester with the engine switch off, turn on and off any of the door courtesy light switches repeatedly at 1.5 second intervals or less until communication between the tester and vehicle starts.

ST

MAIN BODY:

Item	Measurement Item/Display (Range)	Normal Condition	Diagnostic Note
STSW1	Start Switch 1/ON or OFF	ON: Engine switch on (IG) OFF: Engine switch off	-
STSW2	Start Switch 2/ON or OFF	ON: Engine switch on (IG) OFF: Engine switch off	-

OK:
ON (engine switch on (IG)) and OFF (engine switch off) appear on the screen.

NG → **Go to step 3**

OK

2 CHECK ENGINE SWITCH CONDITION

(a) Check the power source mode change.
(1) When the key is inside the vehicle and the shift lever is in the P position, check that pressing the engine switch causes the power source mode to change as follows.
OK:
off → on (ACC) → on (IG) → off
HINT:
- If power mode does not change to ON (IG and ACC), (See page ST-118).
- If power mode does not change to ON (IG), (See page ST-126).
- If power mode does not change to ON (ACC), (See page ST-135).

NG → **GO TO OTHER PROBLEM**

OK

END

3 INSPECT ENGINE SWITCH

(a) Remove the engine switch.

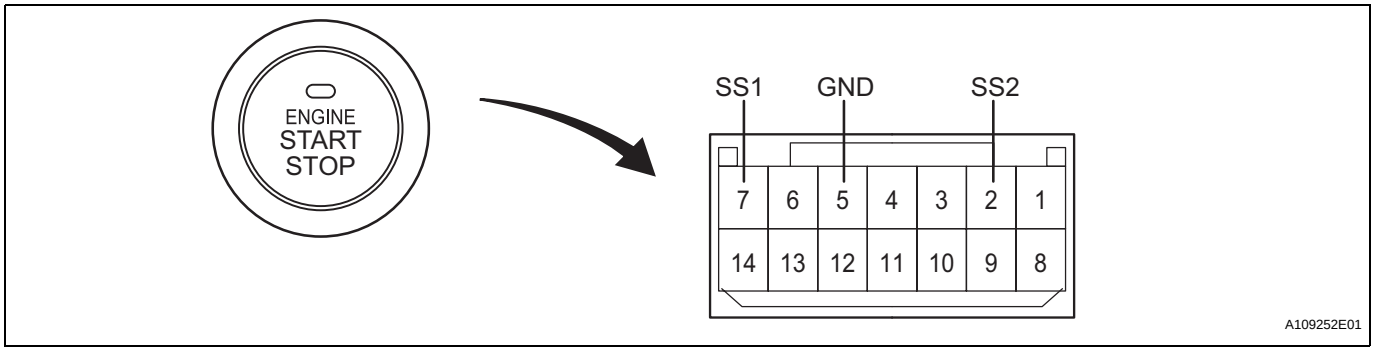

(b) Disconnect the switch connector.

ST

(c) Measure the resistance according to the value(s) in the table below.

Standard resistance

Tester Connection (Symbols)	Switch Condition	Specified Condition
7 (SS1) - 5 (GND)	Pushed	Below 1 Ω
2 (SS2) - 5 (GND)	Pushed	Below 1 Ω
7 (SS1) - 5 (GND)	Not pushed	10 kΩ or higher
2 (SS2) - 5 (GND)	Not pushed	10 kΩ or higher

HINT:
This switch is a momentary type switch.

NG → **REPLACE ENGINE SWITCH**

OK

4 CHECK WIRE HARNESS (ENGINE SWITCH - MAIN BODY ECU AND BODY GROUND)

(a) Disconnect the E61 ECU connector.

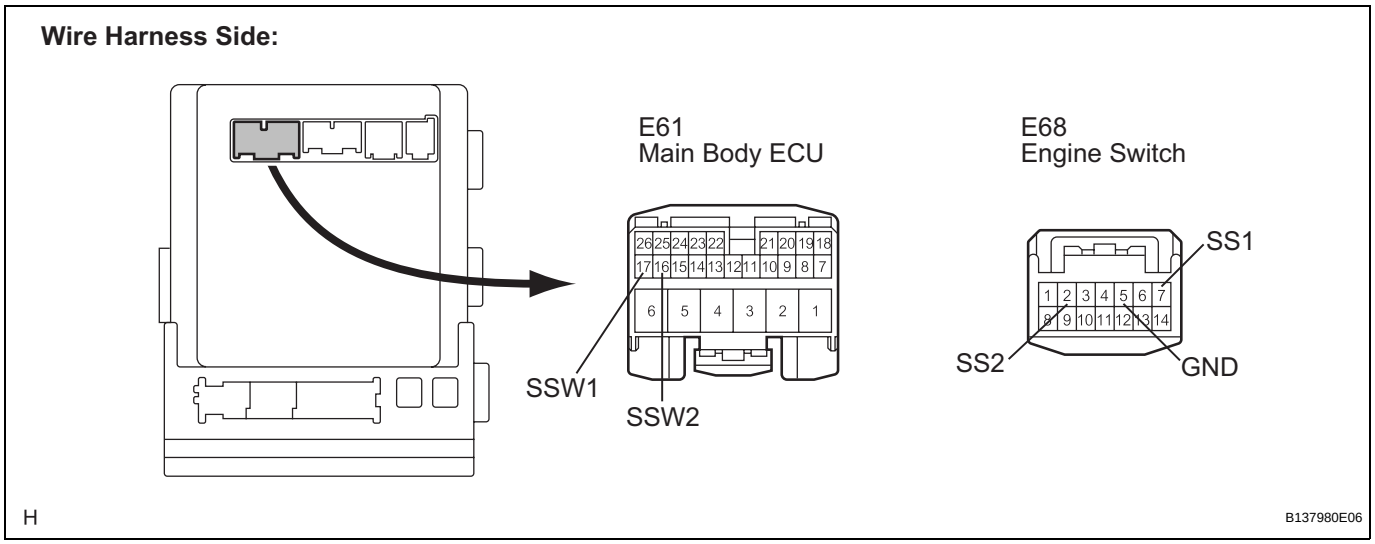

(b) Disconnect the E68 switch connector.

(c) Measure the resistance according to the value(s) in the table below.

Standard resistance

Tester Connection (Symbols)	Condition	Specified Condition
E68-7 (SS1) - E61-17 (SSW1)	Always	Below 1 Ω
E68-2 (SS2) - E61-16 (SSW2)	Always	Below 1 Ω
E68-5 (GND) - Body ground	Always	Below 1 Ω
E68-7 (SS1) or E61-17 (SSW1) - Body ground	Always	10 kΩ or higher
E68-2 (SS2) or E61-16 (SSW2) - Body ground	Always	10 kΩ or higher

ST

NG → **REPAIR OR REPLACE HARNESS OR CONNECTOR**

OK

REPLACE MAIN BODY ECU

DTC	B2281	"P" Signal Malfunction

DESCRIPTION

The ECM and the shift lock control ECU are connected by a cable and the CAN. If the cable information and CAN information are inconsistent, this DTC will be output.
HINT:
After the main body ECU is replaced, perform the registration procedures for the engine immobiliser system (See page EI-9).

DTC No.	DTC Detection Condition	Trouble Area
B2281	Cable information and CAN information between main body ECU and shift lock control ECU are inconsistent	• Main body ECU • Shift lock control ECU • Wire harness or connector

WIRING DIAGRAM

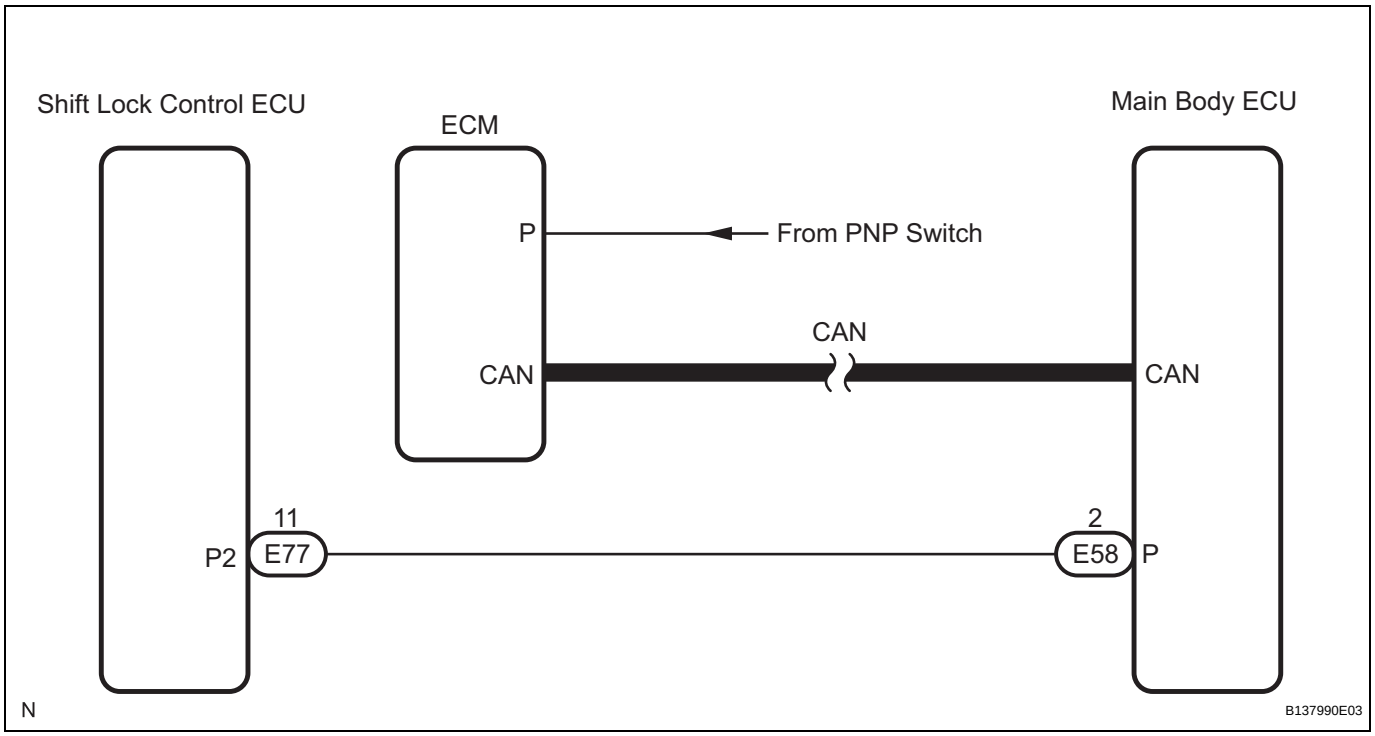

INSPECTION PROCEDURE

1	READ VALUE OF INTELLIGENT TESTER

(a) Connect the intelligent tester to the DLC3.
(b) Turn the engine switch on (IG) and turn the intelligent tester main switch on.
(c) Read the DATA LIST according to the displays on the tester.

MAIN BODY:

Item	Measurement Item / Range (Display)	Normal Condition	Diagnostic Note
SHIFT P SIG	Shift P Signal / ON or OFF	ON: Shift P signal ON (Shift position is P) OFF: Shift P signal OFF (Shift position is not P)	-

ST

OK:
"ON" (P signal is ON) and "OFF" (P signal is OFF) appears on the screen.
HINT:
If the result is not as specified, there may be a malfunction with the shift lock control ECU (See page SR-59).

NG → **Go to step 2**

OK

GO TO SHIFT CONTROL SYSTEM

2 CHECK WIRE HARNESS (MAIN BODY ECU - SHIFT LOCK CONTROL ECU)

(a) Disconnect the E58 and E77 ECU connectors.

Wire Harness Side:

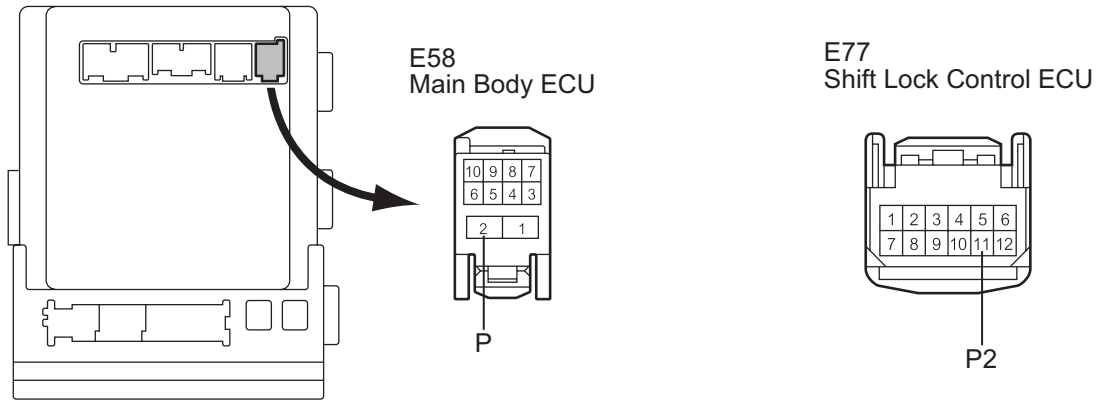

H B138006E02

(b) Measure the resistance according to the value(s) in the table below.
Standard resistance

Terminal No. (Symbol)	Condition	Specified Condition
E58-2 (P) - E77-11 (P2)	Always	Below 1 Ω
E58-2 (P) - Body ground	Always	10 kΩ or higher

NG → **REPAIR OR REPLACE HARNESS OR CONNECTOR**

OK

3	CHECK MAIN BODY ECU OPERATION

(a) After replacing the main body ECU with a normally functioning ECU, check that the engine can start normally. Make sure the brake pedal is depressed and the shift position is P at this time.

(b) Check that the engine switch mode can be changed by pushed the engine switch.

HINT:

Without depressing the brake pedal, push the engine switch repeatedly. Engine switch mode should turn from off to on (ACC) to on (IG) and back to off. With the brake pedal depressed, push the engine switch repeatedly. Engine switch mode should turn to ENGINE START from any status.

OK:

Engine can start normally.

HINT:

If engine does not start, (See page ST-97).

NG → **GO TO OTHER PROBLEM**

OK

END (MAIN BODY ECU DEFECTIVE)

DTC	B2282	Vehicle Speed Signal Malfunction

DESCRIPTION

The main body ECU and the combination meter are connected by a cable and the CAN. DTC B2282 is output when: 1) the cable information and CAN information are inconsistent; and 2) a malfunction is detected between the vehicle speed sensor and combination meter.

HINT:

When the main body ECU is replaced with a new one and the negative (-) battery terminal is connected, the power source mode becomes the IG-ON mode. When the battery is removed and reinstalled, the power source mode that was selected when the battery was removed is restored.

After the main body ECU is replaced, perform the registration procedures for the engine immobiliser system (See page EI-9).

DTC No.	DTC Detection Condition	Trouble Area
B2282	When both conditions below are met: • Cable information and CAN information between the main body ECU and the combination meter are inconsistent • Malfunction is detected between the vehicle speed sensor and the combination meter	• CAN communication system • Combination meter system • Main body ECU • Wire harness or connector

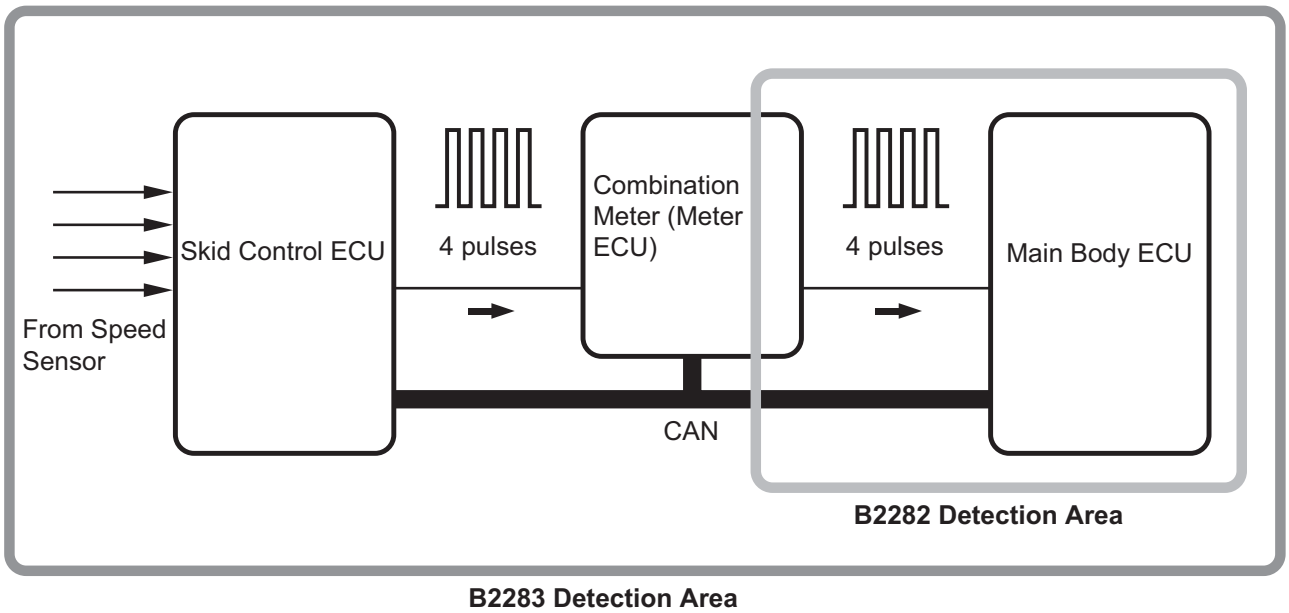

N B138069E01

ST

WIRING DIAGRAM

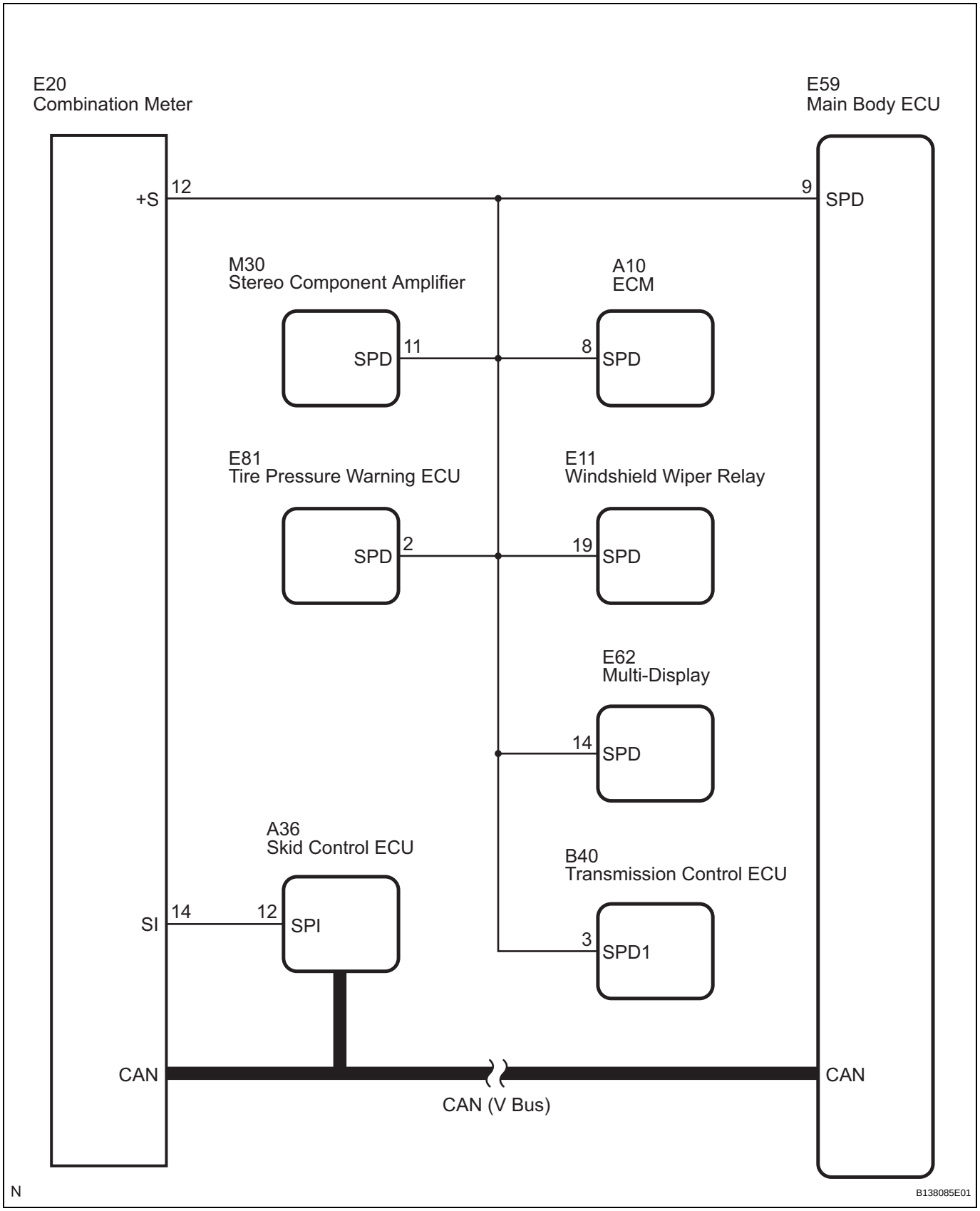

HINT:

- A voltage of 12 V or 5 V is output from each ECU and then input to the combination meter. The signal is changed to a pulse signal at the transistor in the combination meter. Each ECU controls the respective system based on the pulse signal.

ST

- If a short occurs in an ECU, all systems in the diagram above will not operate normally.

INSPECTION PROCEDURE

1	CHECK OPERATION OF SPEEDOMETER

(a) Drive the vehicle and check if the function of the speedometer in the combination meter is normal.
OK:
Actual vehicle speed and the speed indicated on the speedometer are the same.
HINT:
- The vehicle speed sensor is functioning normally when the indication on the speedometer is normal.
- The meter CPU receives vehicle speed signals from the skid control ECU via the CAN communication lines. The vehicle speed sensor detects the voltage that varies according to the vehicle speed. The skid control ECU supplies power to the vehicle speed sensor. The skid control ECU detects vehicle speed signals based on the pulses of the voltage.

OK → **Go to step 3**

NG

2	CHECK DTC OUTPUT (CAN COMMUNICATION SYSTEM)

ST

(a) Delete the DTCs (See page ST-26).
(b) Check for CAN communication system DTCs.
HINT:
If the DTCs for the CAN communication system malfunction are output, inspect those DTCs first (See page CA-49).
OK:
No DTC is output.

NG → **GO TO CAN COMMUNICATION SYSTEM**

OK

GO TO COMBINATION METER SYSTEM

3	CHECK WIRE HARNESS (MAIN BODY ECU - COMBINATION METER)

(a) Disconnect the E59 ECU connector.

Wire Harness Side:

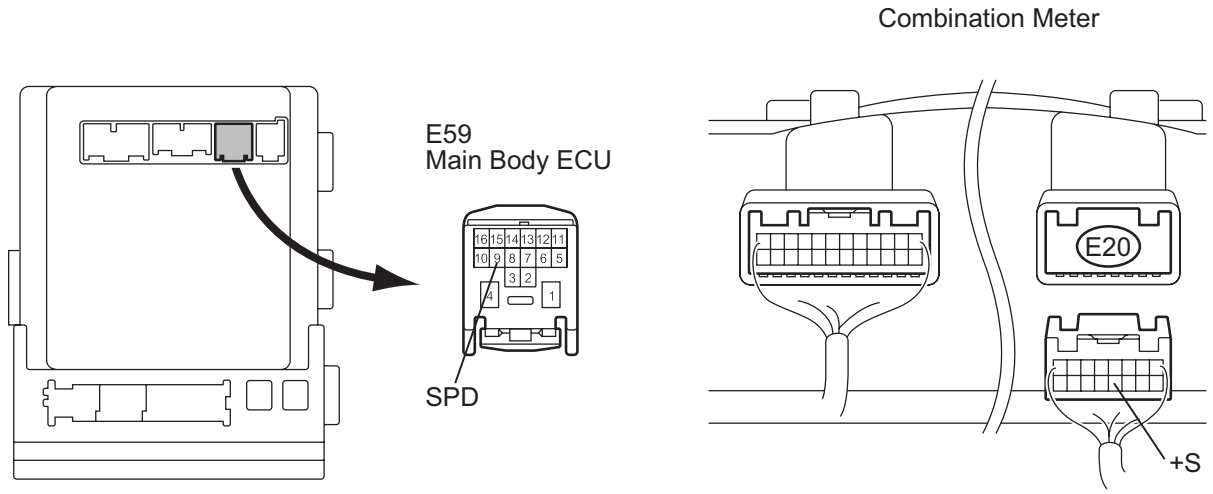

H B137982E02

(b) Disconnect the E20 meter connector.

(c) Measure the resistance according to the value(s) in the table below.

Standard resistance

Tester Connection (Symbols)	Condition	Specified Condition
E59-9 (SPD) - E20-12 (+S) - Body ground	Always	Below 1 Ω

ST

NG → **REPAIR OR REPLACE HARNESS OR CONNECTOR**

OK

4 CHECK WIRE HARNESS (MAIN BODY ECU - BODY GROUND)

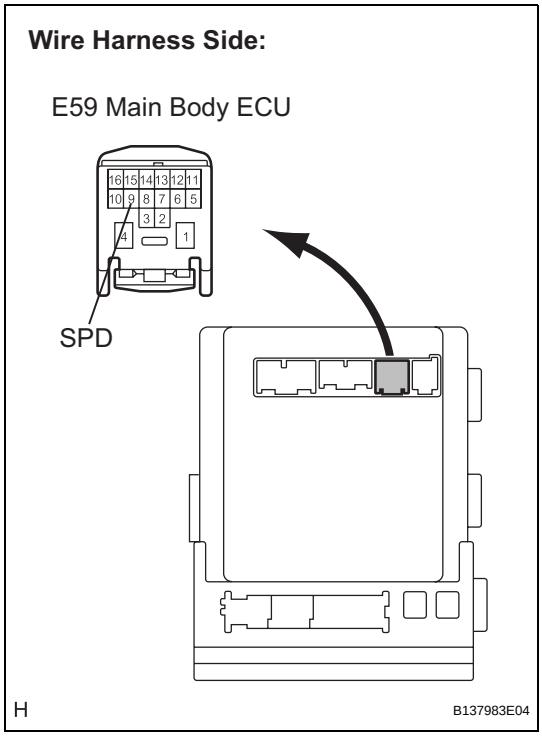

(a) Measure the resistance according to the value(s) in the table below.

Standard resistance

Tester Connection (Symbols)	Condition	Specified Condition
E59-9 (SPD) - Body ground	Always	10 kΩ or higher

HINT:
If the result of the inspection for a short circuit is not as specified, there may be a short in the ECU.

NG → **REPAIR OR REPLACE HARNESS, CONNECTOR OR EACH ECU**

OK

ST

5 INSPECT MAIN BODY ECU (SPEED SIGNAL)

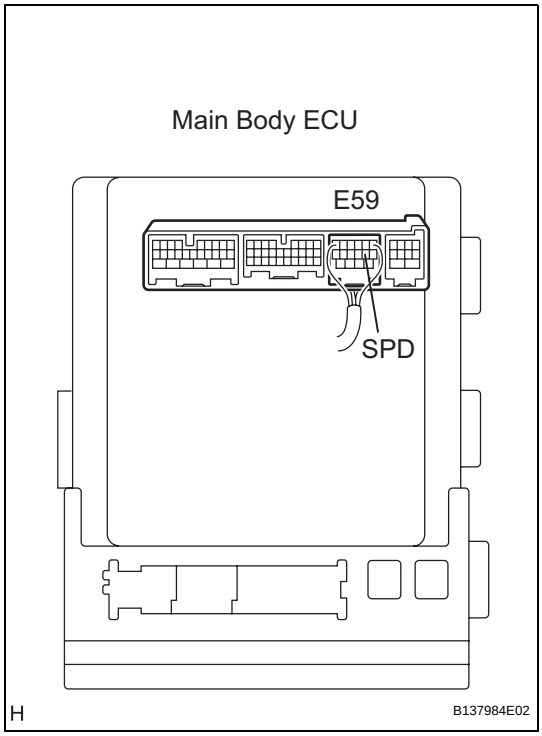

(a) Check the input signal waveform.
  (1) Reconnect the connectors.
  (2) Remove the combination meter assembly with the connector(s) still connected.
  (3) Connect an oscilloscope to terminal E59-9 (SPD) and body ground.
  (4) Turn the engine switch on (IG).
  (5) Turn the wheel slowly.

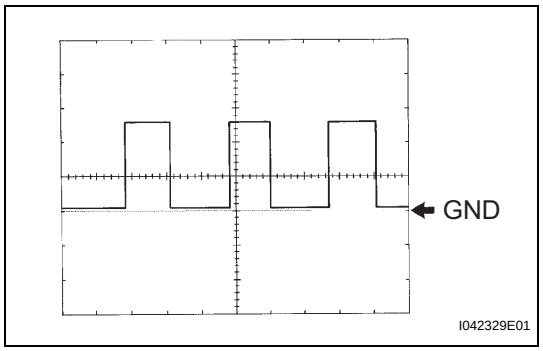

(6) Check the signal waveform according to the condition(s) in the table below.

Item	Condition
Tool setting	5 V/DIV., 10 ms./DIV.
Vehicle condition	Driving at approx. 20 km/h (12 mph)

OK:

The waveform is displayed as shown in the illustration.

HINT:

As the vehicle speed increases, the cycle of the signal waveform narrows.

NG → **REPLACE COMBINATION METER**

OK

REPLACE MAIN BODY ECU

DTC	B2283	Vehicle Speed Sensor Malfunction

DESCRIPTION

The skid control ECU converts these signals into 4-pulse signals and sends them to the combination meter. After this signal is converted into a more precise rectangular waveform by the waveform shaping circuit inside the combination meter, it is then transmitted to the main body ECU. The main body ECU determines the vehicle speed based on the frequency of these pulse signals.

HINT:

When the main body ECU is replaced with a new one and the negative (-) battery terminal is connected, the power source mode becomes the IG-ON mode. When the battery is removed and reinstalled, the power source mode that was selected when the battery was removed is restored.

After the main body ECU is replaced, perform the registration procedures for the engine immobiliser system (See page EI-9).

DTC No.	DTC Detection Condition	Trouble Area
B2283	When both conditions below are met: • Over-deceleration in vehicle speed • Vehicle speed and engine speed do not match	• DTC B2282 detection area • Combination meter • Speed sensor • Skid control ECU • Main body ECU • Wire harness or connector

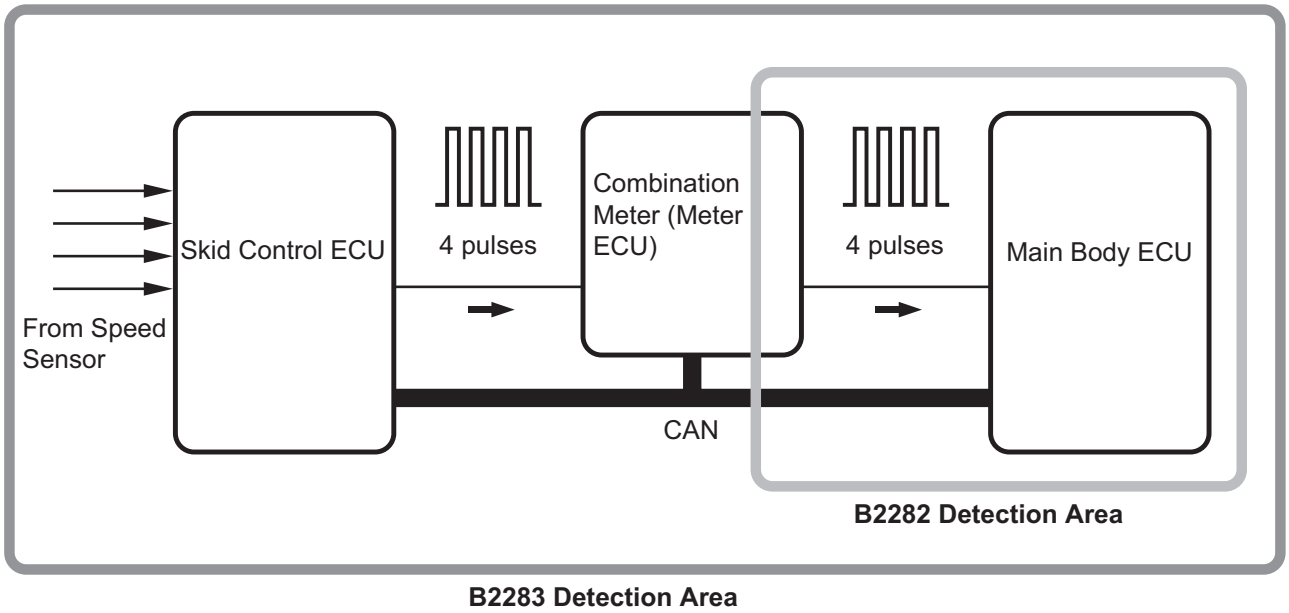

N B138069E01

ST

WIRING DIAGRAM

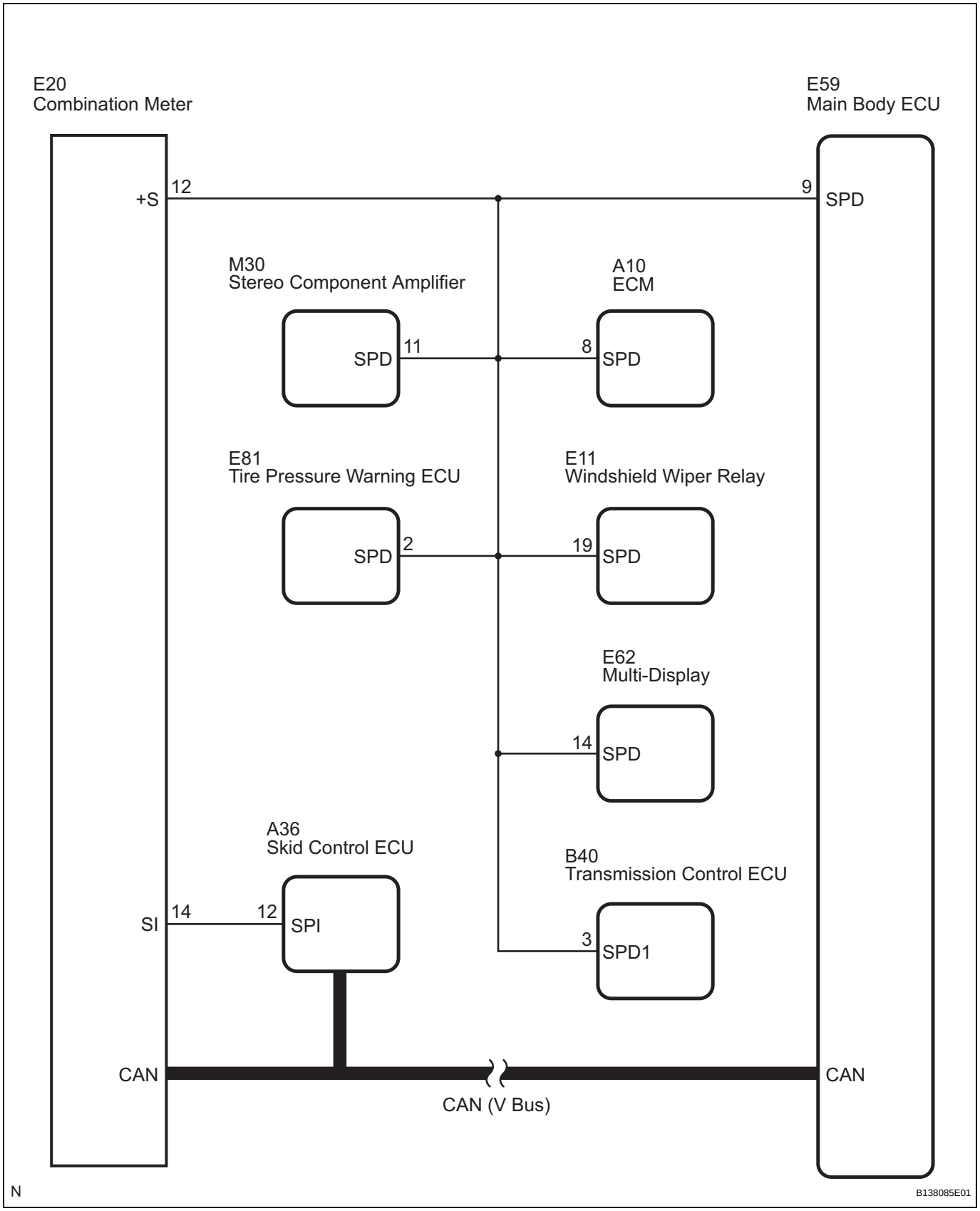

HINT:

- A voltage of 12 V or 5 V is output from each ECU and then input to the combination meter. The signal is changed to a pulse signal at the transistor in the combination meter. Each ECU controls the respective system based on the pulse signal.

ST

- If a short occurs in an ECU, all systems in the diagram above will not operate normally.

INSPECTION PROCEDURE

1	CHECK DTC OUTPUT (SMART ACCESS SYSTEM WITH PUSH-BUTTON START)

(a) Delete the DTCs (See page ST-26).
(b) After all DTCs are cleared, check if the trouble occurs again 320 seconds after the power switch is turned on (IG).
(c) Check for DTC B2282 (Vehicle speed signal malfunction) and DTC B2283 (Vehicle speed sensor malfunction).

Result

Display (DTC output)	Proceed to
"DTC B2283" only	A
"DTC B2283" and "DTC B2282"	B
No DTC	C

HINT:
If DTC B2282 and DTC B2283 are output, perform troubleshooting for DTC B2282 first (See page ST-63).

B → **GO TO DTC B2282**

C → **CHECK INTERMITTENT PROBLEMS**

A

ST

2	CHECK OPERATION OF SPEEDOMETER

(a) Drive the vehicle and check if the function of the speedometer in the combination meter is normal.
OK:
Actual vehicle speed and the speed indicated on the speedometer are the same.
HINT:
- The vehicle speed sensor is functioning normally when the indication on the speedometer is normal.
- The meter CPU receives vehicle speed signals from the skid control ECU via the CAN communication lines. The vehicle speed sensor detects the voltage that varies according to the vehicle speed. The skid control ECU supplies power to the vehicle speed sensor. The skid control ECU detects vehicle speed signals based on the pulses of the voltage.

OK → **Go to step 4**

NG

3	CHECK DTC OUTPUT (BRAKE CONTROL)

(a) Delete the DTCs (See page BC-43).
(b) Check for DTCs (See page BC-52).
OK:
No DTC is output.

NG → **GO TO BRAKE CONTROL SYSTEM**

OK

REPLACE MAIN BODY ECU

4	CHECK WIRE HARNESS (SKID CONTROL ECU - COMBINATION METER)

(a) Disconnect the E20 meter connector.

Skid Control ECU Harness Side Connector Front View:

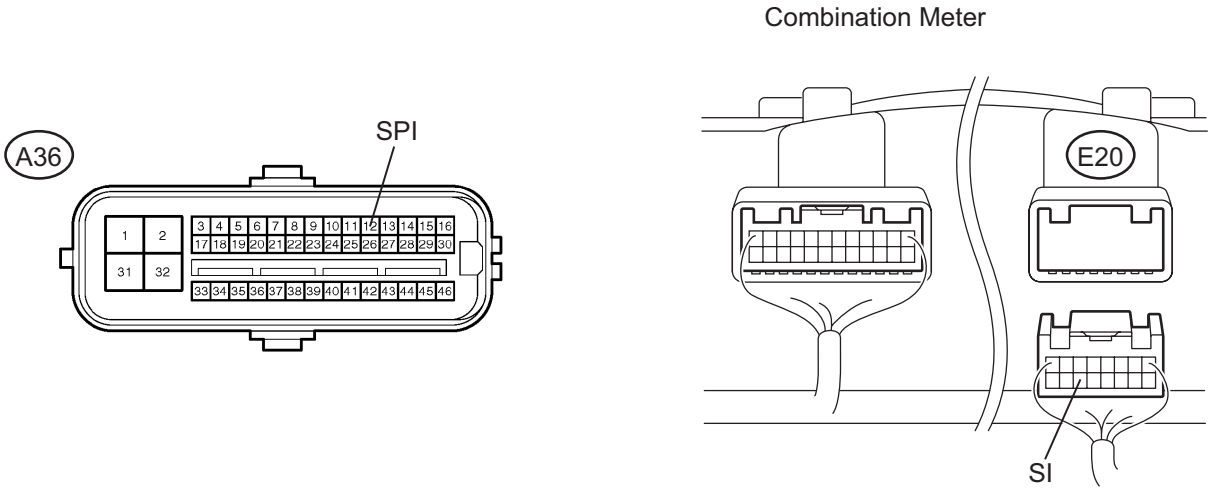

(b) Disconnect the A36 ECU connector.
(c) Measure the resistance according to the value(s) in the table below.
Standard resistance

Tester Connection (Symbols)	Condition	Specified Condition
A36-12 (SPI) - E20-14 (SI)	Always	Below 1 Ω
A36-12 (SPI) or E20-14 (SI) - Body ground	Always	10 kΩ or higher

NG → **REPAIR OR REPLACE HARNESS OR CONNECTOR**

ST

OK

5 INSPECT MAIN BODY ECU (SPEED SIGNAL)

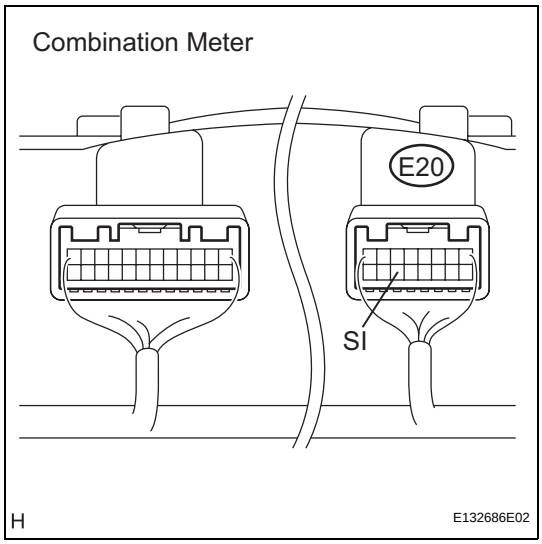

(a) Check the input signal waveform.
   (1) Reconnect the connectors.
   (2) Remove the combination meter assembly with the connector(s) still connected.
   (3) Connect an oscilloscope to terminal E20-14 (SI) and body ground.
   (4) Turn the engine switch on (IG).
   (5) Turn the wheel slowly.

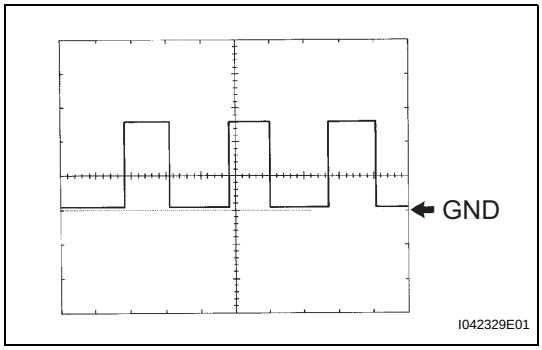

   (6) Check the signal waveform according to the condition(s) in the table below.

Item	Condition
Tool setting	5 V/DIV., 10 ms./DIV.
Vehicle condition	Driving at approx. 20 km/h (12 mph)

OK:
The waveform is displayed as shown in the illustration.
HINT:
As the vehicle speed increases, the cycle of the signal waveform narrows.

NG → **REPLACE SKID CONTROL ECU**

OK

REPLACE COMBINATION METER

ST

DTC	B2284	Brake Signal Malfunction

DESCRIPTION

This DTC is output when: 1) the brake signal circuit between the main body ECU and the stop light switch is malfunctioning; and 2) the CAN information is inconsistent.

HINT:

When the main body ECU is replaced with a new one and the negative (-) battery terminal is connected, the power source mode becomes the IG-ON mode. When the battery is removed and reinstalled, the power source mode that was selected when the battery was removed is restored.

After the main body ECU is replaced, perform the registration procedures for the engine immobiliser system (See page EI-9).

DTC No.	DTC Detection Condition	Trouble Area
B2284	Communication or communication line is abnormal between the main body ECU and the stop light switch	• Stop light switch • CAN communication system • ECM • Main body ECU • Wire harness or connector

WIRING DIAGRAM

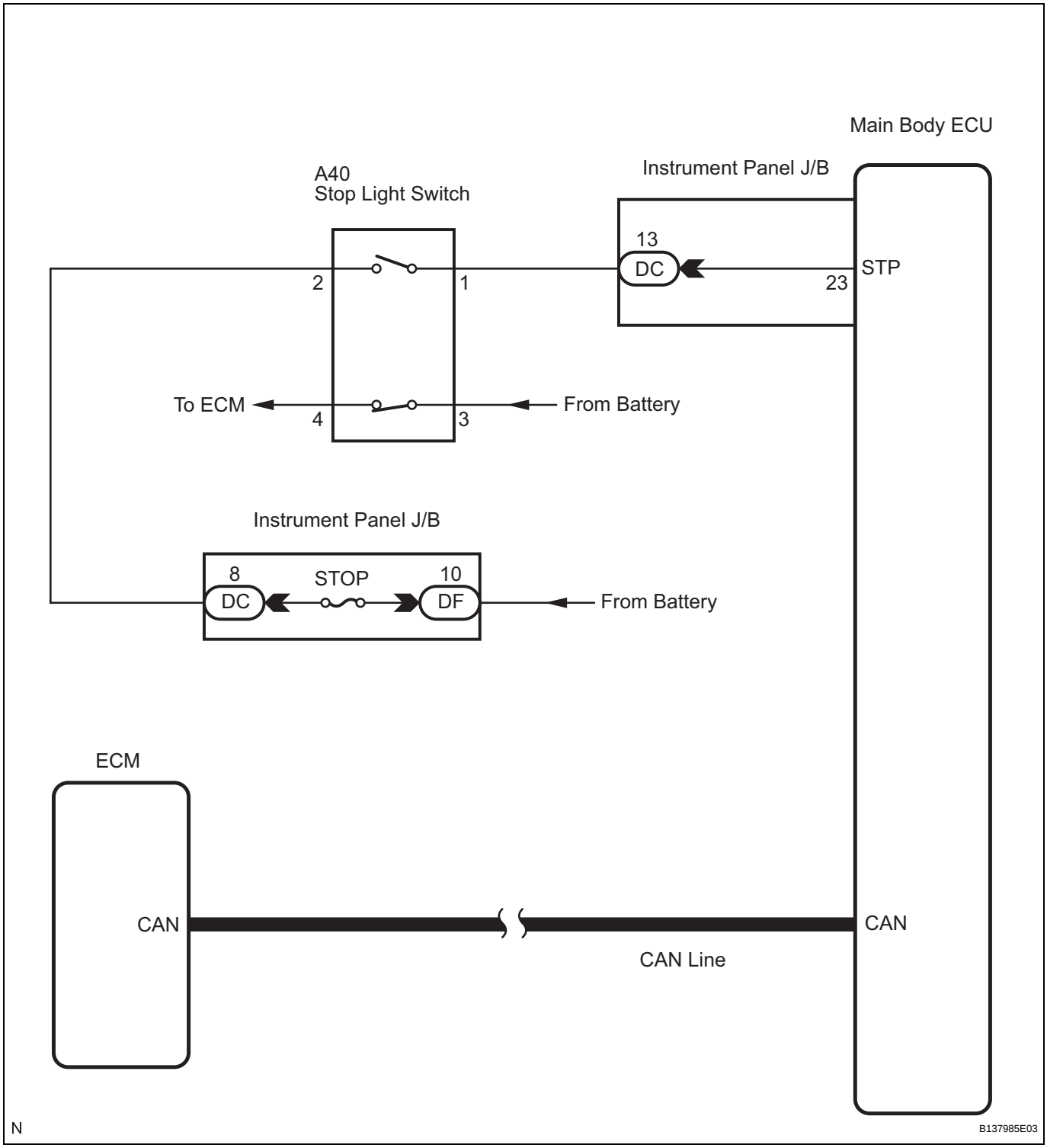

INSPECTION PROCEDURE

1. EMERGENCY ENGINE START CONTROL

(a) If there is a malfunction in the stop light switch or STOP fuse, their signals may not be correctly transmitted to the main body ECU. This may result in the engine not starting even if the engine switch is pressed while the brake pedal is depressed and the shift lever is in the P position.
To activate the starter:
(1) Turn the engine switch from off to on (ACC).
(2) Press and hold the engine switch for 15 seconds.

HINT:
Before performing the inspection, depress the brake pedal and check that the stop lights come on. If the stop lights do not come on when the brake pedal is depressed, refer to the page shown in the brackets (See page LI-32).

1 READ VALUE OF INTELLIGENT TESTER (STOP LIGHT SWITCH)

(a) Connect the intelligent tester to the DLC3.
(b) Turn the engine switch on (IG).
(c) Check the DATA LIST for proper functioning of the stop light switch.

MAIN BODY:

Item	Measurement Item/Display (Range)	Normal Condition	Diagnostic Note
STOP LIGHT SW	Stop light switch/ON or OFF	ON: Brake pedal depressed OFF: Brake pedal released	-

OK:
ON (brake pedal depressed) and OFF (brake pedal released) appear on the screen.

NG → **Go to step 4**

OK

2 CHECK DTC OUTPUT (CAN COMMUNICATION SYSTEM)

(a) Delete the DTCs (See page ST-26).
(b) Check for CAN communication system DTCs (See page CA-49).
HINT:
If the DTCs for the CAN communication system malfunction are output, inspect those DTCs first.
OK:
No DTC is output.

NG → **GO TO CAN COMMUNICATION SYSTEM**

OK

3 CHECK DTC OUTPUT (ENGINE CONTROL SYSTEM)

(a) Delete the DTCs (See page ES-41).
(b) Check for DTC P0500 (Vehicle speed sensor A) (See page ES-59).
OK:
No DTC is output.

NG → **GO TO ENGINE CONTROL SYSTEM**

OK

REPLACE MAIN BODY ECU

ST

4 INSPECT FUSE (STOP)

(a) Remove the STOP fuse from the instrument panel J/B.
(b) Measure the resistance of the fuse.
Standard resistance:
Below 1 Ω

NG → **REPLACE FUSE**

OK

5 CHECK WIRE HARNESS (BATTERY - MAIN BODY ECU)

Wire Harness Side:

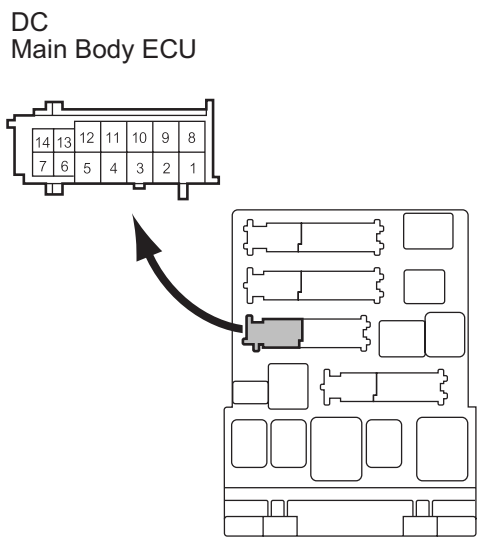

(a) Disconnect the DC ECU connector.
(b) Measure the volage according to the value(s) in the table below.
Standard voltage

Tester Connection	Condition	Specified Condition
DC-13 - Body ground	Brake pedal released	Below 1 V
DC-13 - Body ground	Brake pedal depressed	10 to 14 V

OK → **REPAIR OR REPLACE HARNESS OR CONNECTOR**

NG

6 INSPECT STOP LIGHT SWITCH

Stop Light Switch:

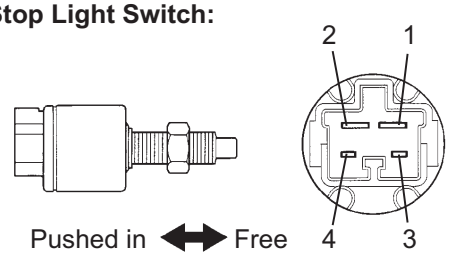

(a) Remove the switch.
(b) Measure the resistance of the switch.
Standard resistance

Tester Connection	Condition	Specified Condition
1 - 2	Switch pin free	Below 1 Ω
3 - 4	Switch pin free	10 kΩ or higher
1 - 2	Switch pin pushed in	10 kΩ or higher
3 - 4	Switch pin pushed in	Below 1 Ω

NG → **REPLACE STOP LIGHT SWITCH**

ST

OK

REPLACE MAIN BODY ECU

DTC	B2285	Steering Lock Position Signal Circuit Malfunction

DESCRIPTION

This DTC is output when serial communication signals and LIN communication signals in the circuit between the main body ECU and steering lock actuator (steering lock ECU) are inconsistent.
HINT:
When the main body ECU is replaced with a new one and the negative (-) battery terminal is connected, the power source mode becomes the IG-ON mode. When the battery is removed and reinstalled, the power source mode that was selected when the battery was removed is restored.
After the main body ECU or steering lock ECU is replaced, perform the registration procedures for the engine immobiliser system (See page EI-9).

DTC No.	DTC Detection Condition	Trouble Area
B2285	Cable and LIN information between the main body ECU and the steering lock ECU are inconsistent	• Main body ECU • Steering lock ECU • Wire harness or connector

WIRING DIAGRAM

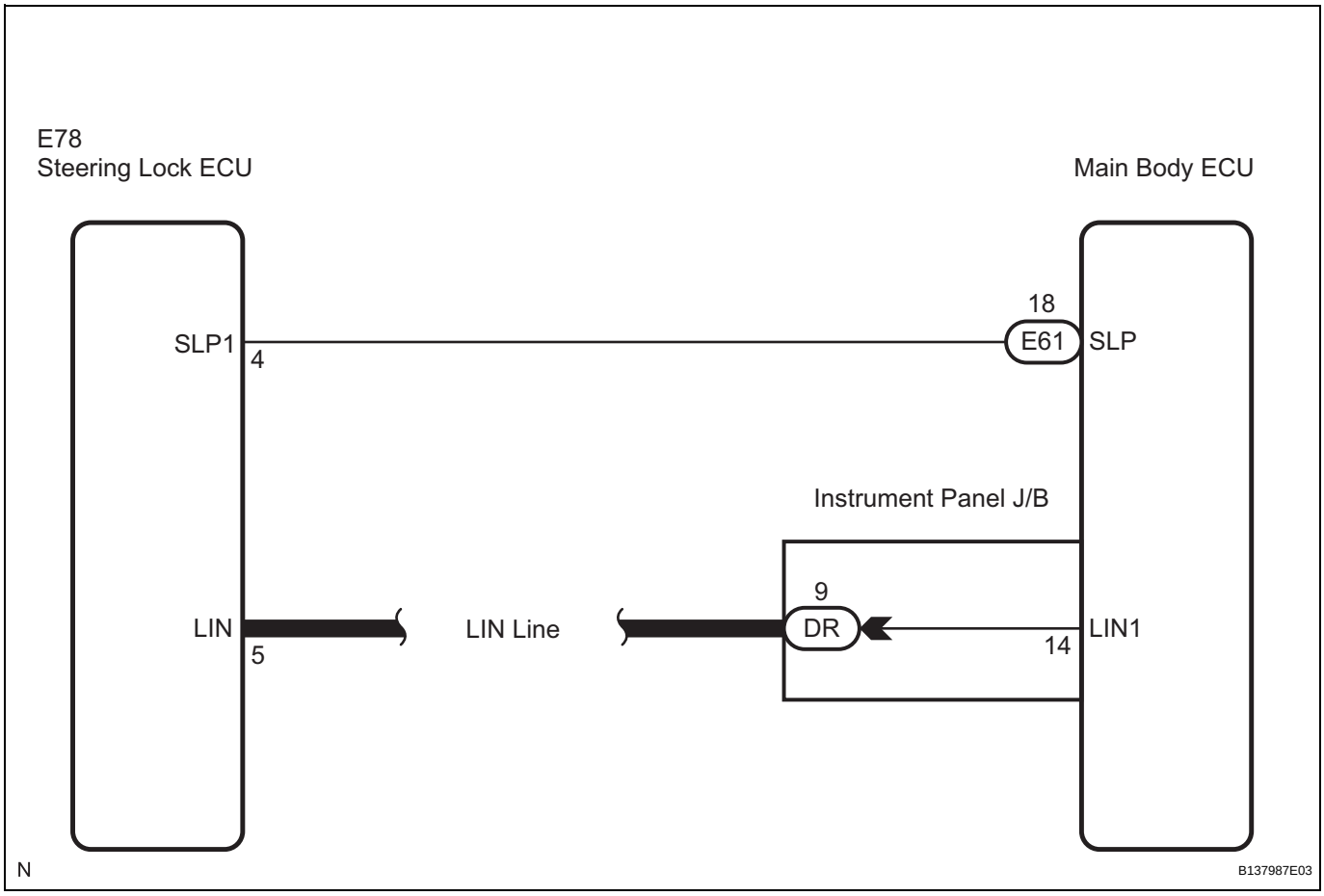

INSPECTION PROCEDURE

1	READ VALUE OF INTELLIGENT TESTER

(a) Connect the intelligent tester to the DLC3.

(b) Check the DATA LIST for proper functioning of the steering lock function.
HINT:
When using the intelligent tester with the engine switch off, turn on and off any of the door courtesy light switches repeatedly at 1.5 second intervals or less until communication between the tester and vehicle starts.

MAIN BODY:

Item	Measurement Item/Display (Range)	Normal Condition	Diagnostic Note
STR UNLOCK SW	Steering lock condition/ON or OFF	ON: Steering is unlocked (Engine switch on (ACC)) OFF: Steering is locked (Engine switch off)	-

OK:
ON (steering is unlocked) and OFF (steering is locked) appear on the screen.

NG → **Go to step 3**

OK

2 CHECK FOR DTCS

(a) Delete the DTCs (See page ST-26).
(b) Check for DTC B2285 (Steering lock position signal circuit malfunction) and DTC B2287 (LIN communication master malfunction) and DTC B2785 (Communication malfunction between ECUs connected by LIN).

Result

Display (DTC output)	Proceed to
"DTC B2285" only	**A**
"DTC B2287" and/or "DTC B2785"	**B**
No DTC	**C**

HINT:
- If DTC B2287 is output, (See page ST-87).
- If DTC B2285 is output, (See page EI-30).

B → **GO TO DTC CHART**

C → **CHECK INTERMITTENT PROBLEMS**

A

REPLACE MAIN BODY ECU

3 CHECK WIRE HARNESS (MAIN BODY ECU - STEERING LOCK ECU)

(a) Disconnect the E61, DR and E78 ECU connectors.

ST

Wire Harness Side:

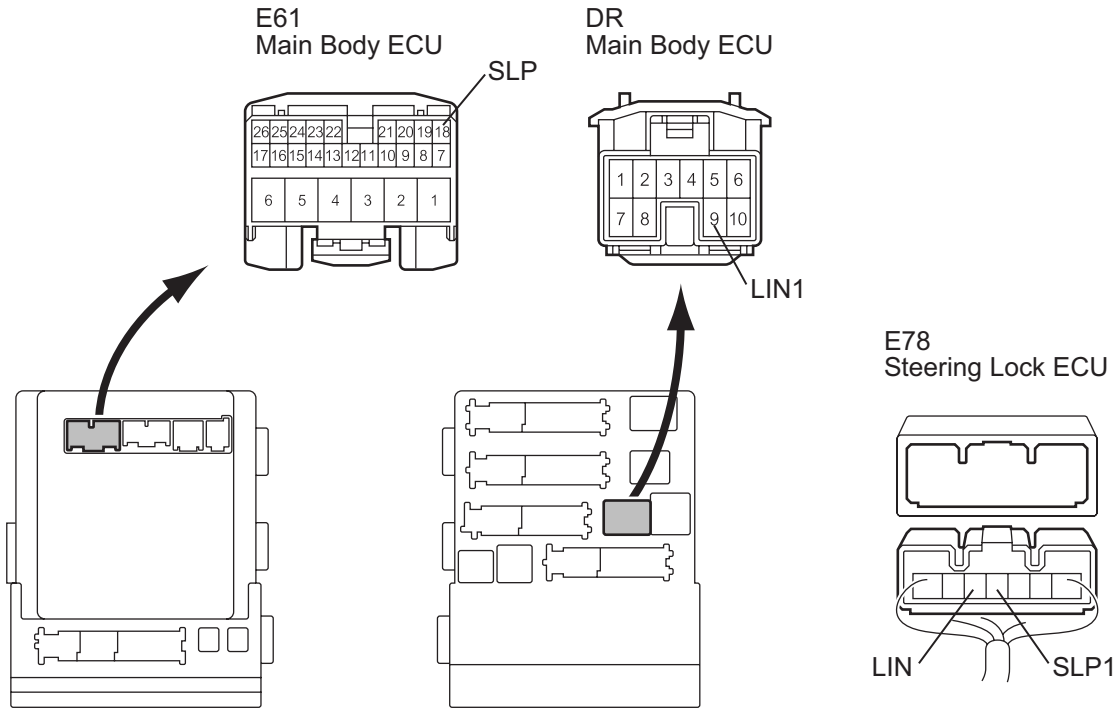

H B137995E02

(b) Measure the resistance according to the value(s) in the table below.

Standard resistance

Tester Connection (Symbols)	Condition	Specified Condition
E61-18 (SLP) - E78-4 (SLP1)	Always	Below 1 Ω
DR-9 (LIN1) - E78-5 (LIN)	Always	Below 1 Ω
E61-18 (SLP) or E78-4 (SLP1) - Body ground	Always	10 kΩ or higher
DR-9 (LIN1) or E78-5 (LIN) - Body ground	Always	10 kΩ or higher

NG → **REPAIR OR REPLACE HARNESS OR CONNECTOR**

OK

ST

4	CHECK MAIN BODY ECU OPERATION

(a) After replacing the main body ECU with a normally functioning ECU, check that the engine starts. Make sure the brake pedal is depressed and the shift position is P at this time.

(b) Check that the engine switch mode can be changed by pushing the engine switch.
HINT:
Without depressing the brake pedal, push the engine switch repeatedly. Engine switch mode should turn from off to on (ACC) to on (IG) and back to off. With the brake pedal depressed, push the engine switch repeatedly. Engine switch mode should turn to ENGINE START from any status.
OK:
Engine can start normally.

NG → **REPLACE STEERING LOCK ECU**

OK ↓

END (MAIN BODY ECU DEFECTIVE)

DTC	B2286	Runnable Signal Malfunction

DESCRIPTION

This DTC is output when serial communication signals and CAN communication signals in the circuit between the main body ECU and ECM are inconsistent.
HINT:
When the main body ECU is replaced with a new one and the negative (-) battery terminal is connected, the power source mode becomes the IG-ON mode. When the battery is removed and reinstalled, the power source mode that was selected when the battery was removed is restored.
After the main body ECU is replaced, perform the registration procedures for the engine immobiliser system (See page EI-9).

DTC No.	DTC Detection Condition	Trouble Area
B2286	Serial communication signals and CAN communication signals in the circuit between the main body ECU and ECM are inconsistent.	• CAN communication system • ECM • Main body ECU • Wire harness or connector

WIRING DIAGRAM

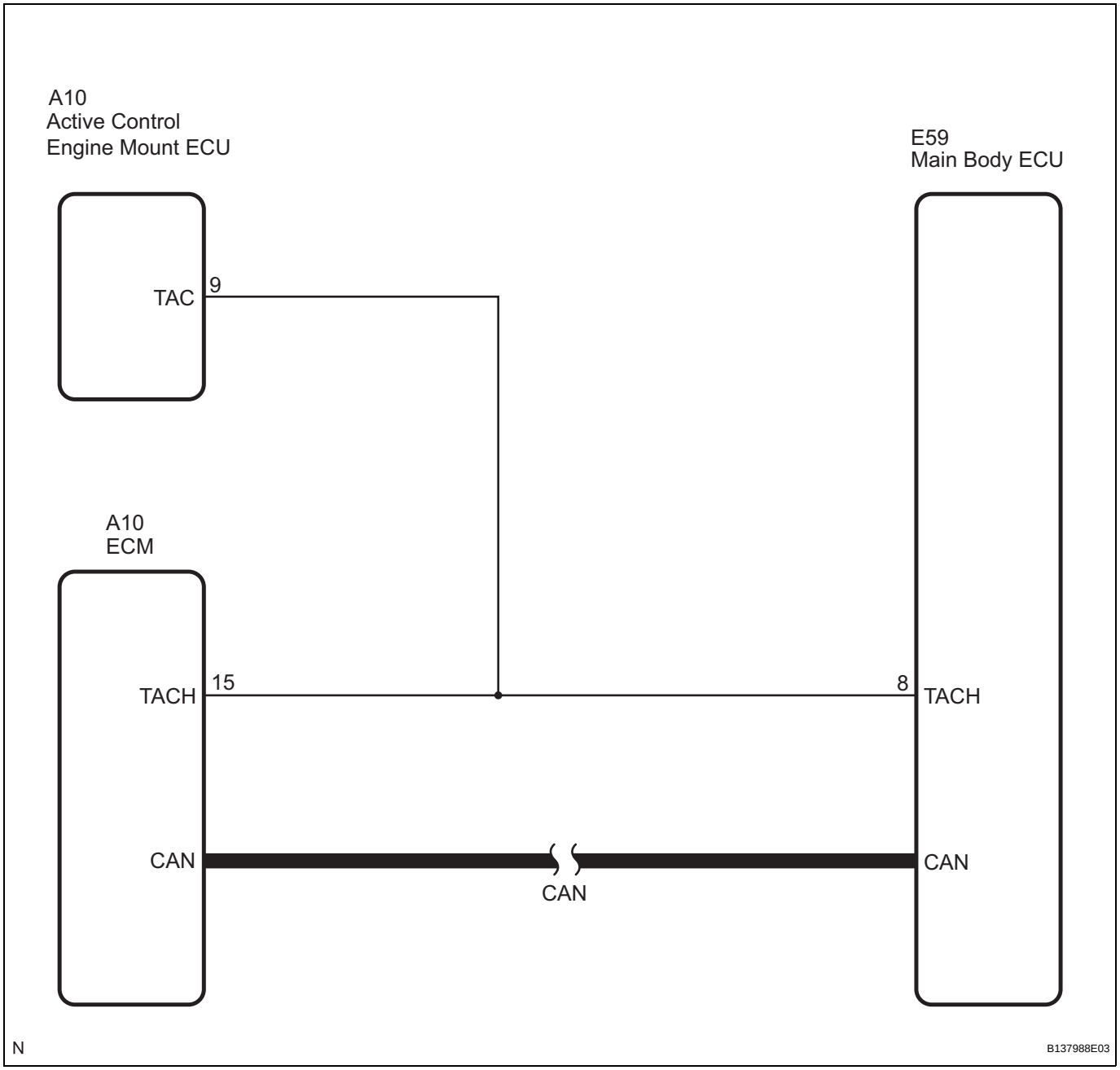

INSPECTION PROCEDURE

1	CHECK OPERATION OF TACHOMETER

(a) Run the engine and check if the function of the tachometer in the combination meter is normal.
OK:
Actual engine revolution speed and the revolution indicated on the tachometer are the same.

OK	Go to step 3

ST

NG

2	CHECK DTC OUTPUT (CAN COMMUNICATION SYSTEM)

(a) Delete the DTC (See page ST-26).
(b) Check for the CAN communication system DTC U0146.
HINT:
If the DTCs for the CAN communication system malfunction are output, inspect those DTCs first (See page CA-49).
OK:
No DTC is output.

NG → **GO TO CAN COMMUNICATION SYSTEM**

OK

GO TO COMBINATION METER SYSTEM

3	CHECK WIRE HARNESS (MAIN BODY ECU - ECM)

(a) Disconnect the A10 ECM connector.

Wire Harness Side:

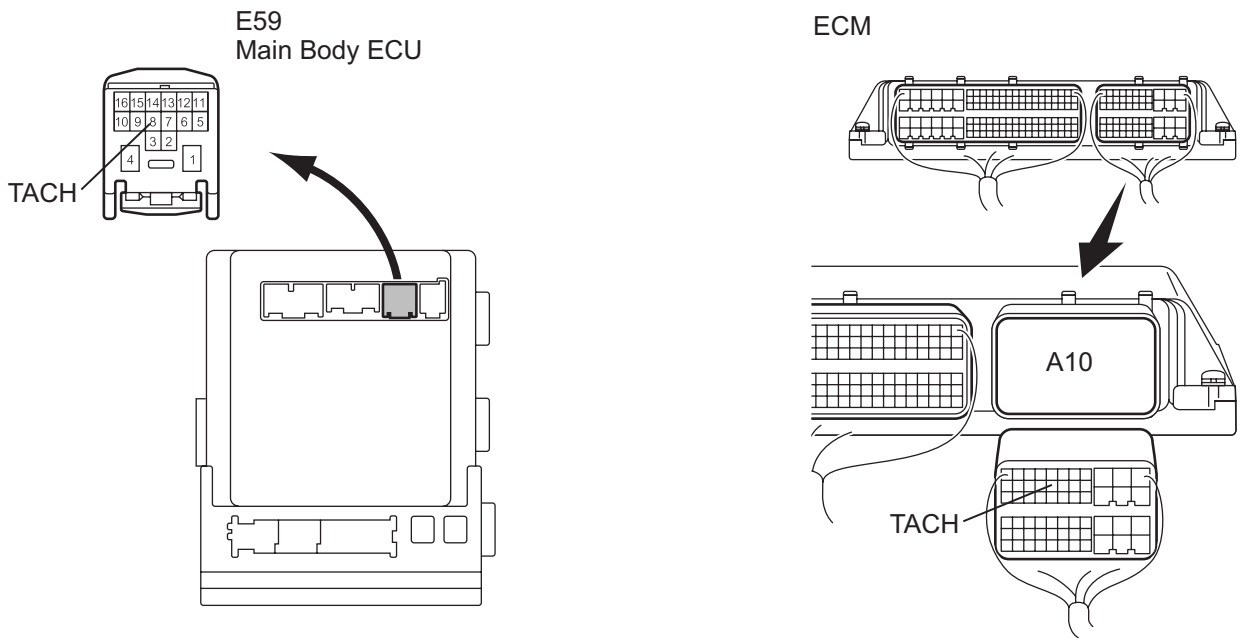

H B138064E02

(b) Disconnect the E59 ECU connector.

(c) Measure the resistance according to the value(s) in the table below.

Standard resistance

Tester Connection (Symbols)	Condition	Specified Condition
E59-8 (TACH) - A10-15 (TACH)	Always	Below 1 Ω
E59-8 (TACH) or A10-15 (TACH) - Body ground	Always	10 kΩ or higher

NG → **REPAIR OR REPLACE HARNESS OR CONNECTOR**

OK

4 READ VALUE OF INTELLIGENT TESTER

(a) Reconnect the connectors.
(b) Connect the intelligent tester to the DLC3.
(c) Check the DATA LIST for proper functioning of the engine.
HINT:
When using intelligent tester with the engine switch off, turn on and off any of the door courtesy light switches repeatedly at 1.5 second intervals or less until communication between the tester and vehicle starts.

MAIN BODY:

Item	Measurement Item/Display (Range)	Normal Condition	Diagnostic Note
E/G COND	Engine condition/STOP or RUN	STOP: Engine is stopped RUN: Engine is running	-

OK:
STOP (engine is stopped) and RUN (engine is running) appear on the screen.

NG → **REPLACE ECM**

OK

REPLACE MAIN BODY ECU

ST

DTC	B2287	LIN Communication Master Malfunction

DESCRIPTION

This DTC is output when there is a LIN communication problem between the main body ECU and certification ECU.
HINT:
When the main body ECU is replaced with a new one and the negative (-) battery terminal is connected, the power source mode becomes the IG-ON mode. When the battery is removed and reinstalled, the power source mode that was selected when the battery was removed is restored.
After the main body ECU or certification ECU is replaced, perform the registration procedures for the engine immobiliser system (See page EI-9).

DTC No.	DTC Detection Condition	Trouble Area
B2287	Communication or communication line is abnormal between the main body ECU and the certification ECU	• Main body ECU • Certification ECU • Wire harness or connector

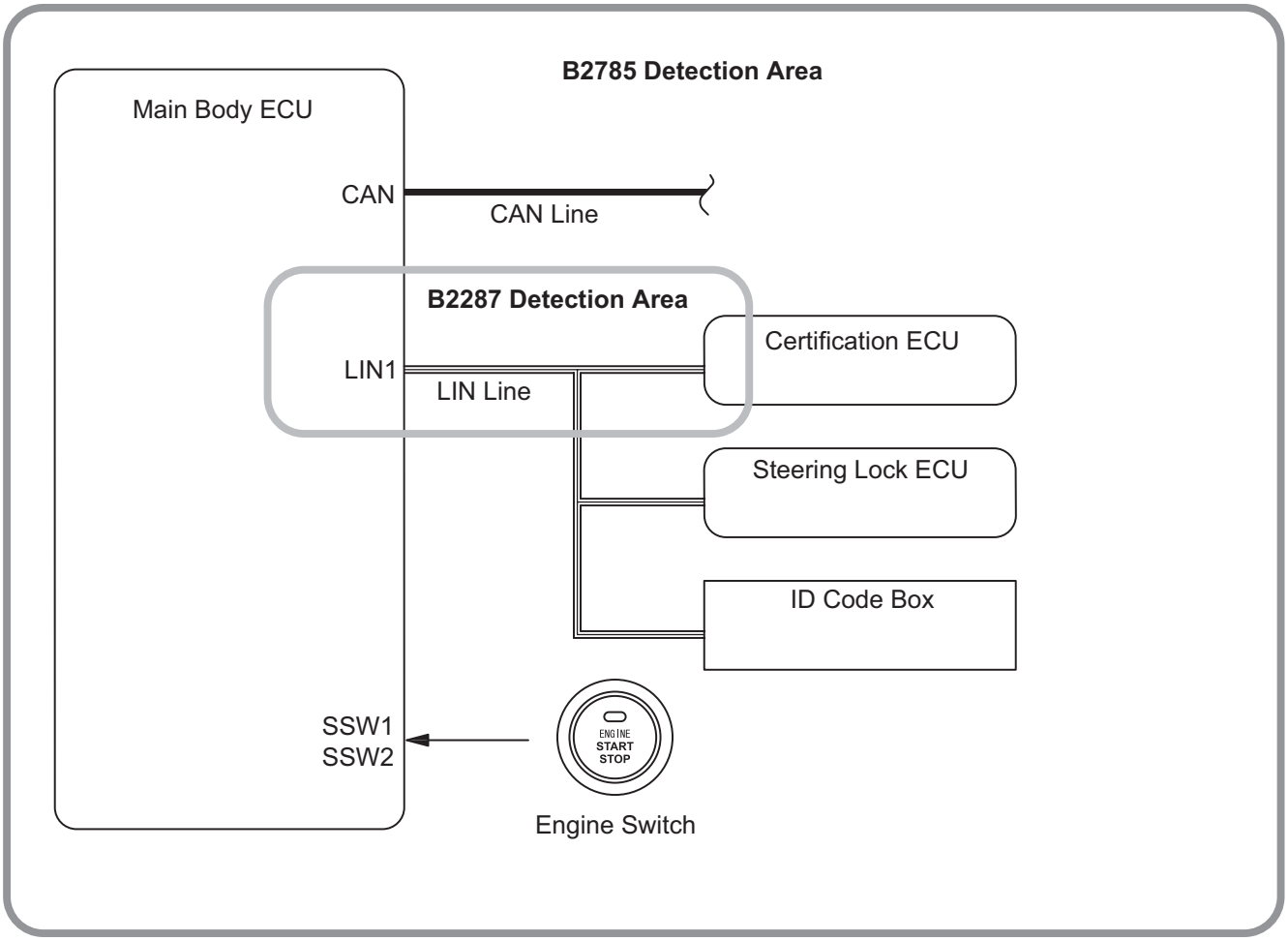

B137997E03

ST

WIRING DIAGRAM

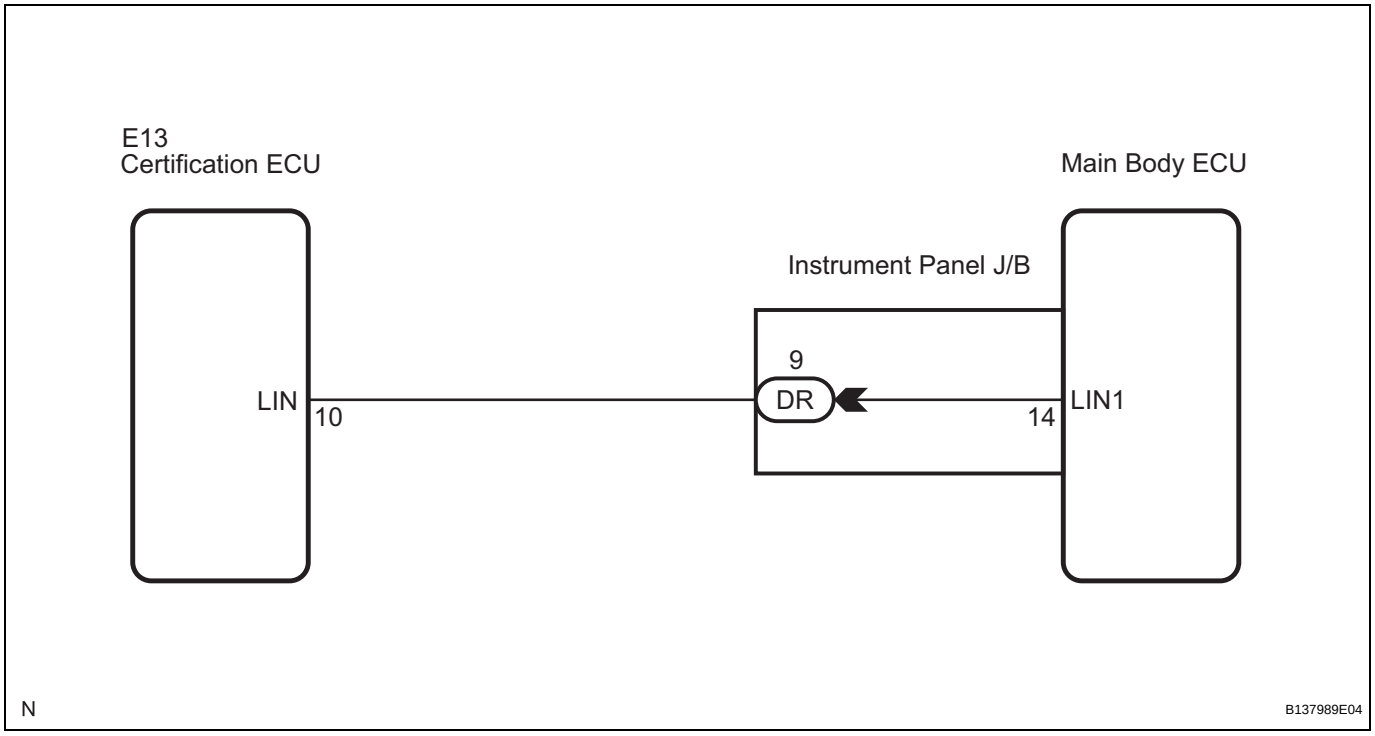

INSPECTION PROCEDURE

1	CHECK FOR DTCS

(a) Delete the DTCs (See page ST-26).
(b) Check for DTC B2287 (LIN communication master malfunction) and B2785 (Communication malfunction between ECUs connected by LIN).

Result

Display (DTC output)	Proceed to
"DTC B2287" only	A
"DTC B2287" and "DTC B2785"	B
No DTC	C

HINT:
If DTC B2785 is output, perform troubleshooting for DTC B2785 first (See page EI-30).

B → **GO TO DTC B2785**

C → **CHECK INTERMITTENT PROBLEMS**

A

2	CHECK WIRE HARNESS (MAIN BODY ECU - CERTIFICATION ECU)

(a) Disconnect the E13 and DR ECU connectors.

ST

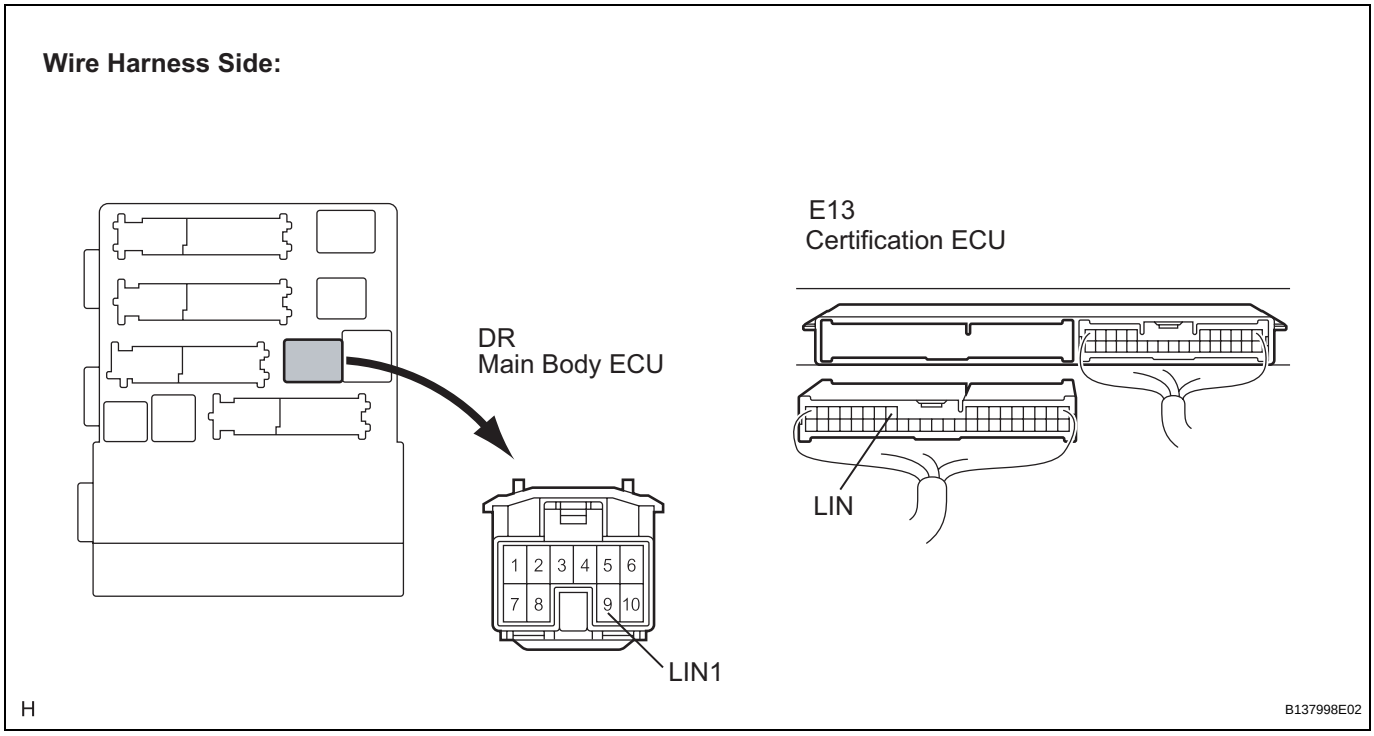

(b) Measure the resistance according to the value(s) in the table below.

Standard resistance

Tester Connection (Symbols)	Condition	Specified Condition
DR-9 (LIN1) - E13-10 (LIN)	Always	Below 1 Ω
DR-9 (LIN1) or E13-10 (LIN) - Body ground	Always	10 kΩ or higher

NG → **REPAIR OR REPLACE HARNESS OR CONNECTOR**

OK

3	CHECK MAIN BODY ECU OPERATION

(a) After replacing the main body ECU with a normally functioning ECU, check that the engine starts.

OK:

Engine can start normally.

NG → **REPLACE CERTIFICATION ECU**

OK

REPLACE END (MAIN BODY ECU DEFECTIVE)

ST

DTC	B2288	Steering Lock Signal Circuit Malfunction

DESCRIPTION

This DTC is output when the main body ECU cannot detect the unlock condition of the steering lock within a specified time.
HINT:
When the main body ECU is replaced with a new one and the negative (-) battery terminal is connected, the power source mode becomes the IG-ON mode. When the battery is removed and reinstalled, the power source mode that was selected when the battery was removed is restored.
After the main body ECU is replaced, perform the registration procedures for the engine immobiliser system (See page EI-9).

DTC No.	DTC Detection Condition	Trouble Area
B2288	After turning engine switch from off to on (IG), the steering wheel does not unlock for a certain period of time (ECU unlocks steering wheel only when it receives an unlock signal from LIN communication and cable)	• Main body ECU • Steering lock ECU • Wire harness or connector

WIRING DIAGRAM

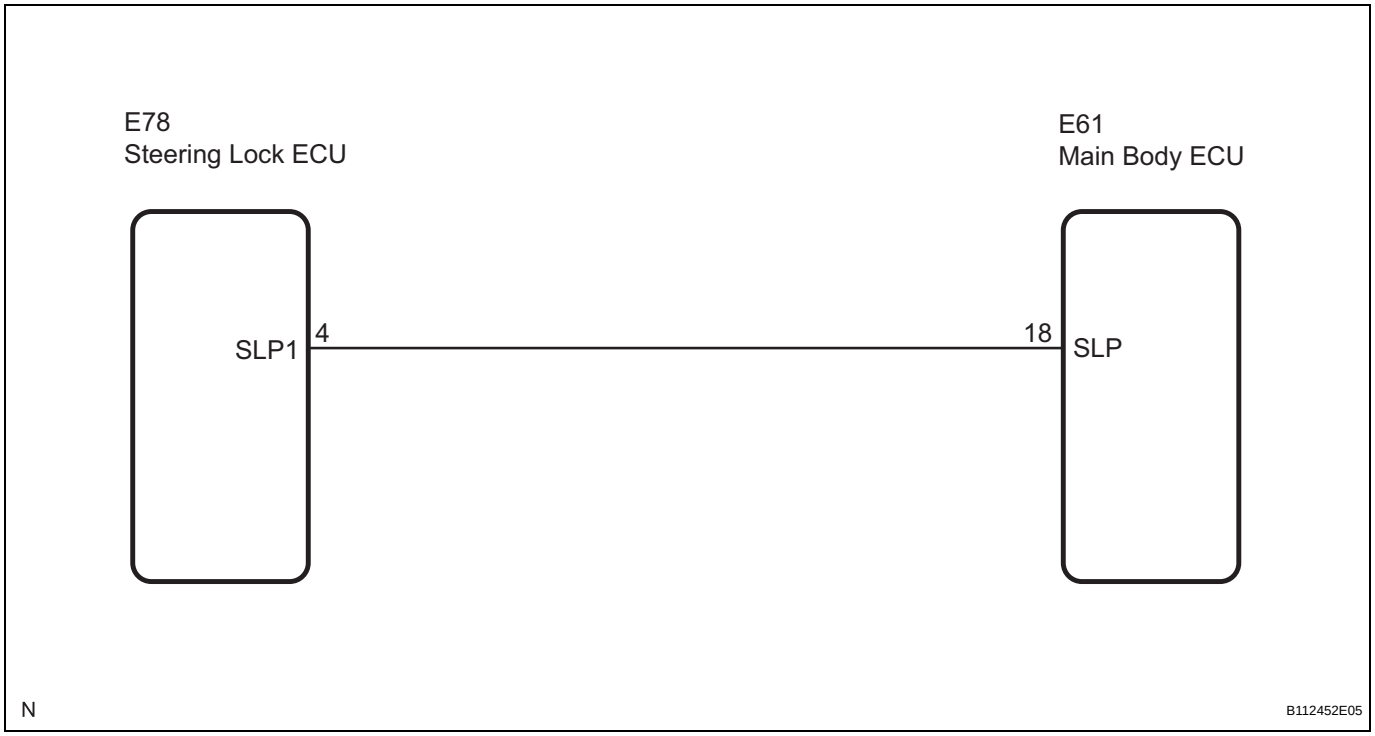

INSPECTION PROCEDURE

1	CHECK FOR DTCS

(a) Delete the DTCs (See page ST-26).
(b) After all DTCs are cleared, check if the trouble occurs again 5 seconds after the engine switch is turned on (IG).
(c) Check for DTCs again.

ST

OK:

DTC B2785 (Communication malfunction between ECUs connected by LIN), DTC B2287 (LIN communication master malfunction) and DTC B2781 (Open/short in steering lock ECU) are not output.

HINT:

- If DTC B2785 is output, (See page EI-30).
- If DTC B2287 is output, (See page ST-87).
- If DTC B2281 is output, (See page SR-61).

NG → **GO TO DTC CHART**

OK

2	CHECK WIRE HARNESS (MAIN BODY ECU - STEERING LOCK ECU)

(a) Disconnect the E61 and E78 ECU connectors.

Wire Harness Side:

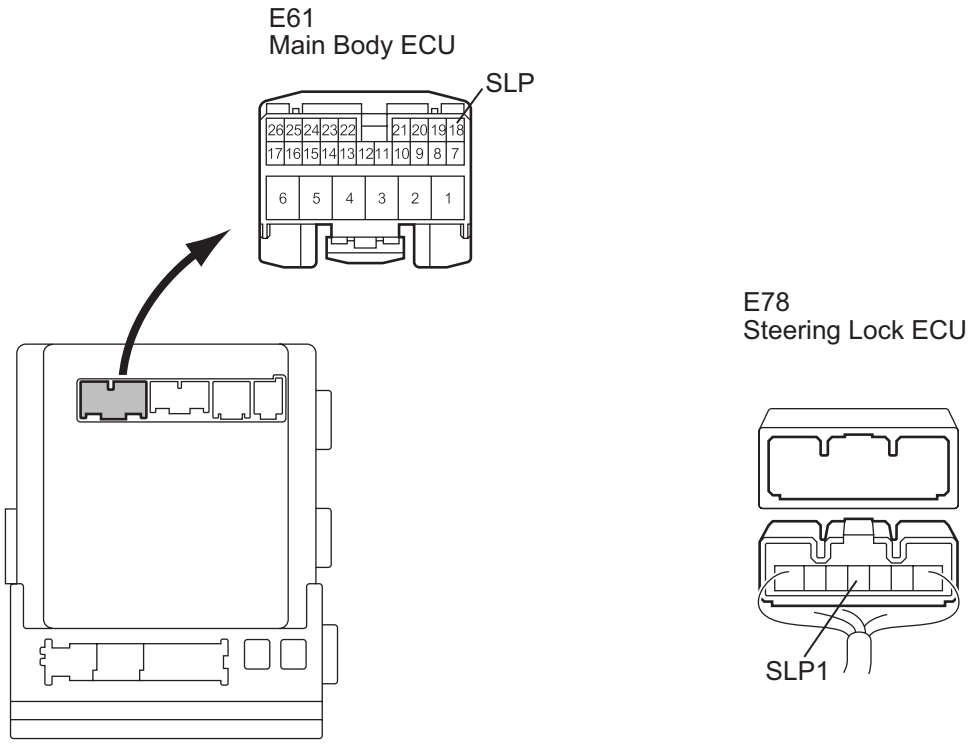

H B137999E02

(b) Measure the resistance according to the value(s) in the table below.

Standard resistance

Tester Connection	Condition	Specified Condition
E61-18 (SLP) - E78-4 (SLP1)	Always	Below 1 Ω
E61-18 (SLP) or E78-4 (SLP1) - Body ground	Always	10 kΩ or higher

NG → **REPAIR OR REPLACE HARNESS OR CONNECTOR**

OK

3	CHECK MAIN BODY ECU OPERATION

(a) After replacing the main body ECU with a normally functioning ECU, check that the engine starts.
OK:
Steering lock/unlock function operates normally.
HINT:
If steering lock/unlock function does not operate, refer to PROBLEM SYMPTOMS TABLE of the electrical steering lock (steering wheel cannot be unlocked) (See page SR-54).

NG → **GO TO ELECTRIC STEERING LOCK**

OK

END (MAIN BODY ECU DEFECTIVE)

DTC	B2289	Key Collation Waiting Time Over

DESCRIPTION

This DTC is output when there is a LIN communication problem between the main body ECU and certification ECU or when there is a problem in the engine immobiliser system.
HINT:
After the main body ECU is replaced, perform the registration procedures for the engine immobiliser system (See page EI-9).

DTC No.	DTC Detection Condition	Trouble Area
B2289	Either condition below is met: • Cable and CAN are abnormal between the main body ECU and the engine immobiliser system • The engine immobiliser system is malfunctioning	• Main body ECU • Engine immobiliser system • Wire harness or connector • Certification ECU

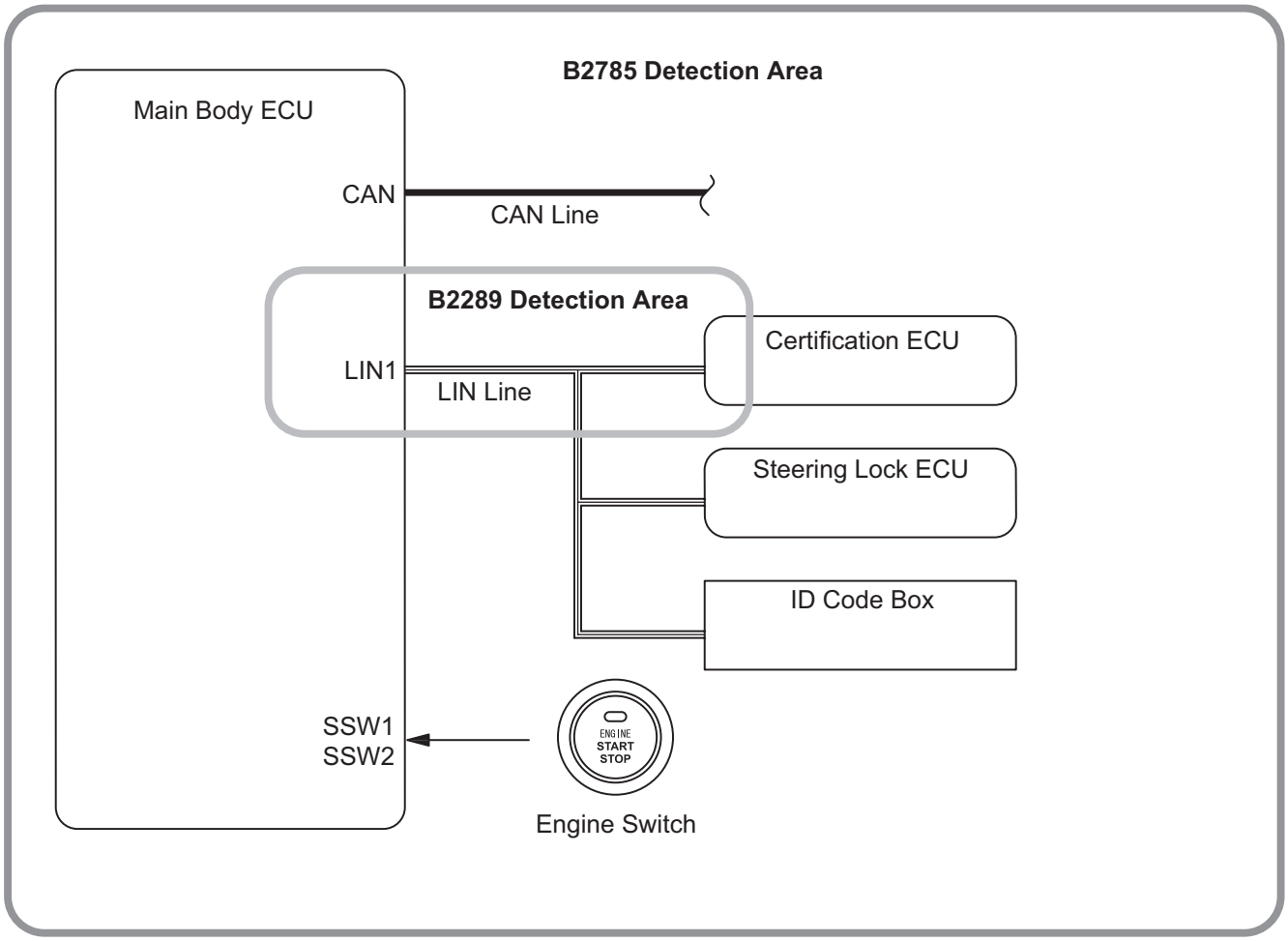

B137997E04

ST

WIRING DIAGRAM

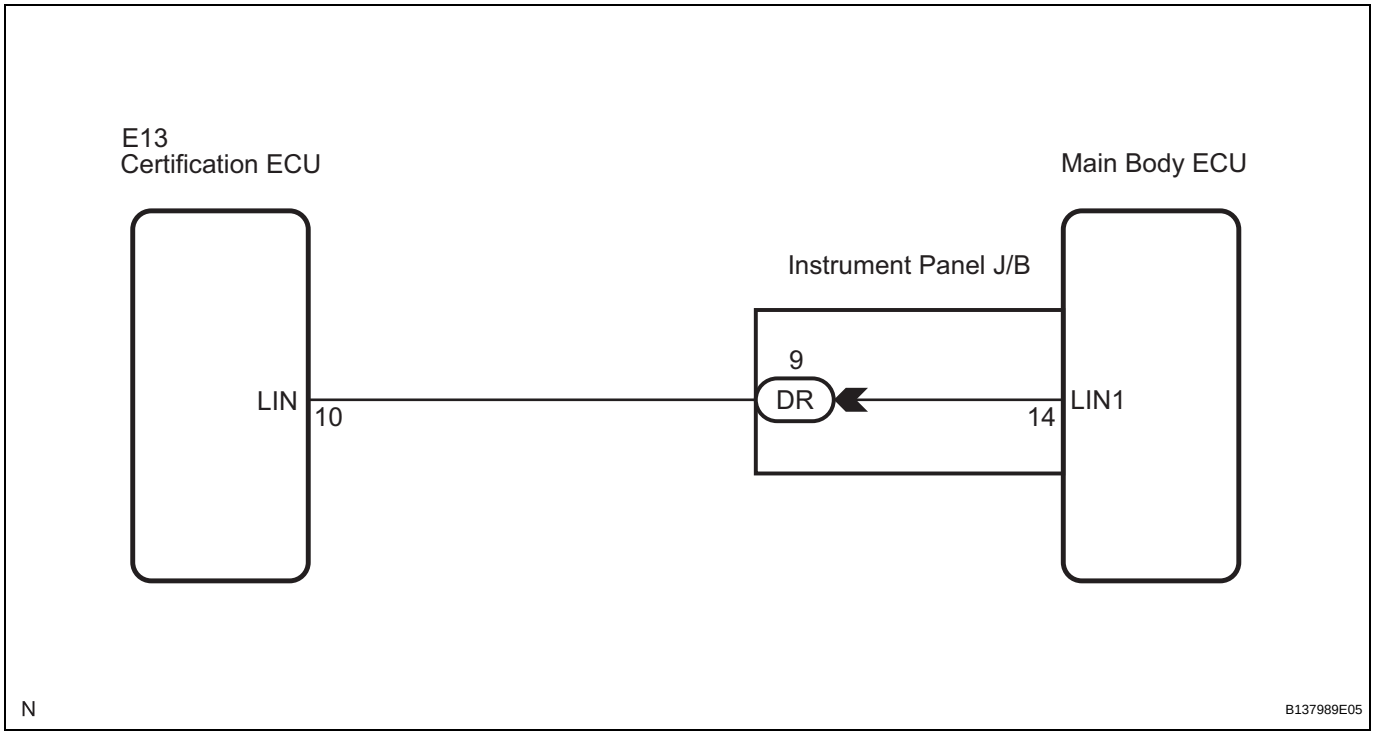

INSPECTION PROCEDURE

1	CHECK FOR DTCS

(a) Delete the DTCs (See page ST-26).
(b) Check for DTC B2289 (Key collection waiting time over) and B2785 (Communication malfunction between ECUs connected by LIN).

Result

Display (DTC output)	Proceed to
"DTC B2289" only	A
"DTC B2785" only	B
No DTC	C

HINT:
- If DTC B2785 is output, perform troubleshooting for DTC B2785 first (See page EI-30).

B → GO TO DTC B2785

C → CHECK INTERMITTENT PROBLEMS

A

2	CHECK WIRE HARNESS (MAIN BODY ECU - CERTIFICATION ECU)

(a) Disconnect the E13 and DR ECU connectors.

ST

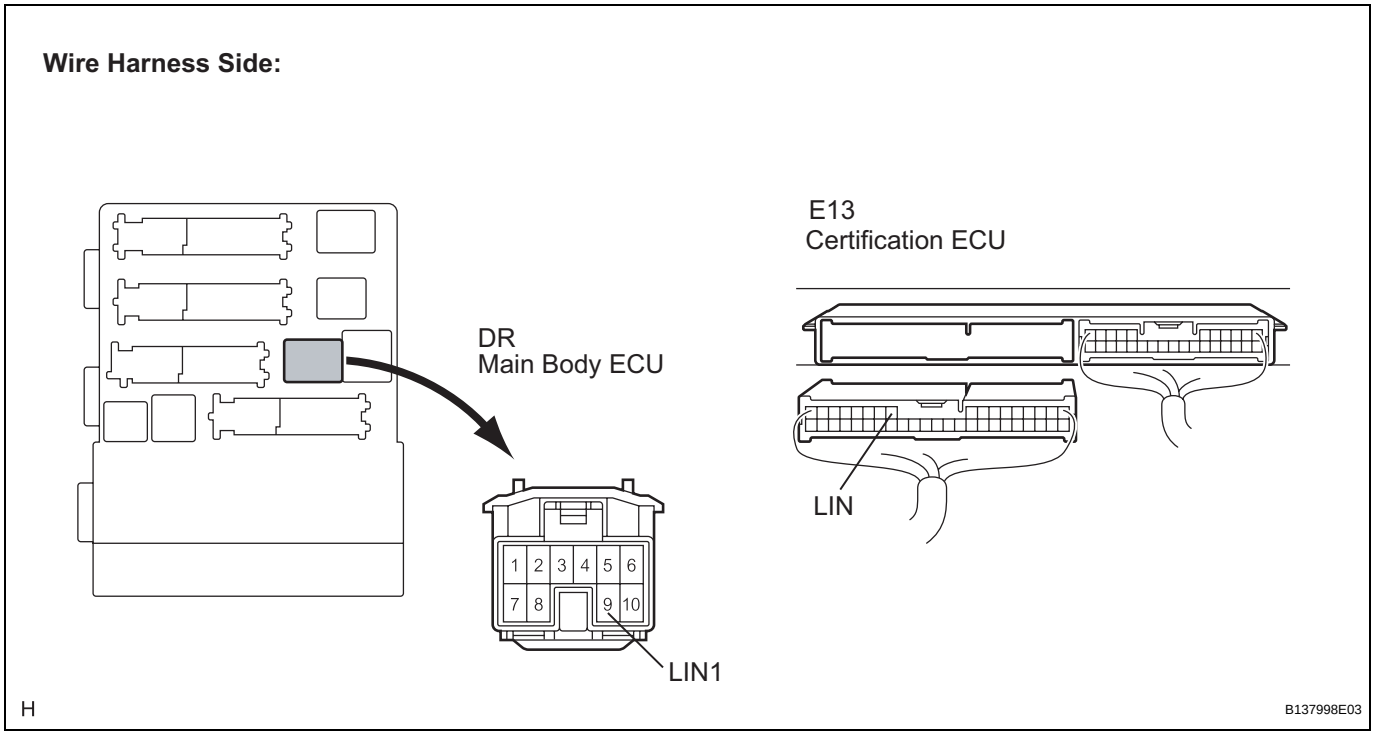

(b) Measure the resistance according to the value(s) in the table below.

Standard resistance

Tester Connection (Symbols)	Condition	Specified Condition
DR-9 (LIN1) - E13-10 (LIN)	Always	Below 1 Ω
DR-9 (LIN1) or E13-10 (LIN) - Body ground	Always	10 kΩ or higher

NG → **REPAIR OR REPLACE HARNESS OR CONNECTOR**

OK

3	CHECK MAIN BODY ECU DEFECTIVE

(a) After replacing the main body ECU with a normally functioning ECU, check that the engine starts.

OK:

Engine can start normally.

HINT:

If the engine does not start, refer to PROBLEM SYMPTOMS TABLE of the smart access system with push-button start (door lock function) (matching for the inside of the cabin cannot be performed) (See page DL-121).

NG → **GO TO SMART ACCESS SYSTEM WITH PUSH-BUTTON START (ENTRY)**

ST

OK

END (MAIN BODY ECU DEFECTIVE)

Engine does not Start

DESCRIPTION

1. ENGINE START SYSTEM FUNCTION

(a) If the engine switch is pressed with the shift lever in the P or N position and the brake pedal depressed, the main body ECU determines that it is an engine start request.
(b) The certification ECU and other ECUs perform key verification via the LIN communication line.
(c) The main body ECU activates the ACC relay.
(d) The main body ECU activates the IG1 and IG2 relays.
(e) The certification ECU outputs a steering UNLOCK signal. The signal is sent to the main body ECU via the steering lock ECU.
(f) The main body ECU sends an engine start request signal to the ECM.
(g) The ECM sends an ACC cut request signal to the main body ECU.
(h) The ECM and main body ECU activate the ST relay.
(i) The main body ECU deactivates the ACC relay until the ECU detects an engine start.
(j) When engine revolution speed reaches 1200 rpm, the ECU determines that the engine has been started.
The ECM stop sending an ACC cut request signal to the main body ECU.
The main body ECU reactivates the ACC relay and turns off the engine switch indicator light.

Symbols of main body ECU	Signals	
STP	Stop light switch ON signal	Input
SSW1/SSW2	Engine switch ON signal	Input
ACCD	ACC relay operation signal	Output
SLP	Shift lock actuator position signal	Input
STP	Stop light signal	Input
IG1D	IG1 relay operation signal	Output
P	Shift lock signal	Input
IG2D	IG2 relay operation signal	Output
STR2	ST relay operation signal (Sub)	Output
STR	Park / neutral position switch signal	Input
TACH	Engine start detection signal	Input
STSW	Starter activation request signal	Output
ACCR	ACC cut request signal	Input

Symbols of ECM	Signals	
ACCR	ACC cut request signal	Output
TACH	Engine revolution speed signal	Output
STSW	Starter activation request signal	Input
NSW	Park / neutral position switch signal	Input
STAR	ST relay operation signal (Main)	Output
STA	Starter activation signal	Input

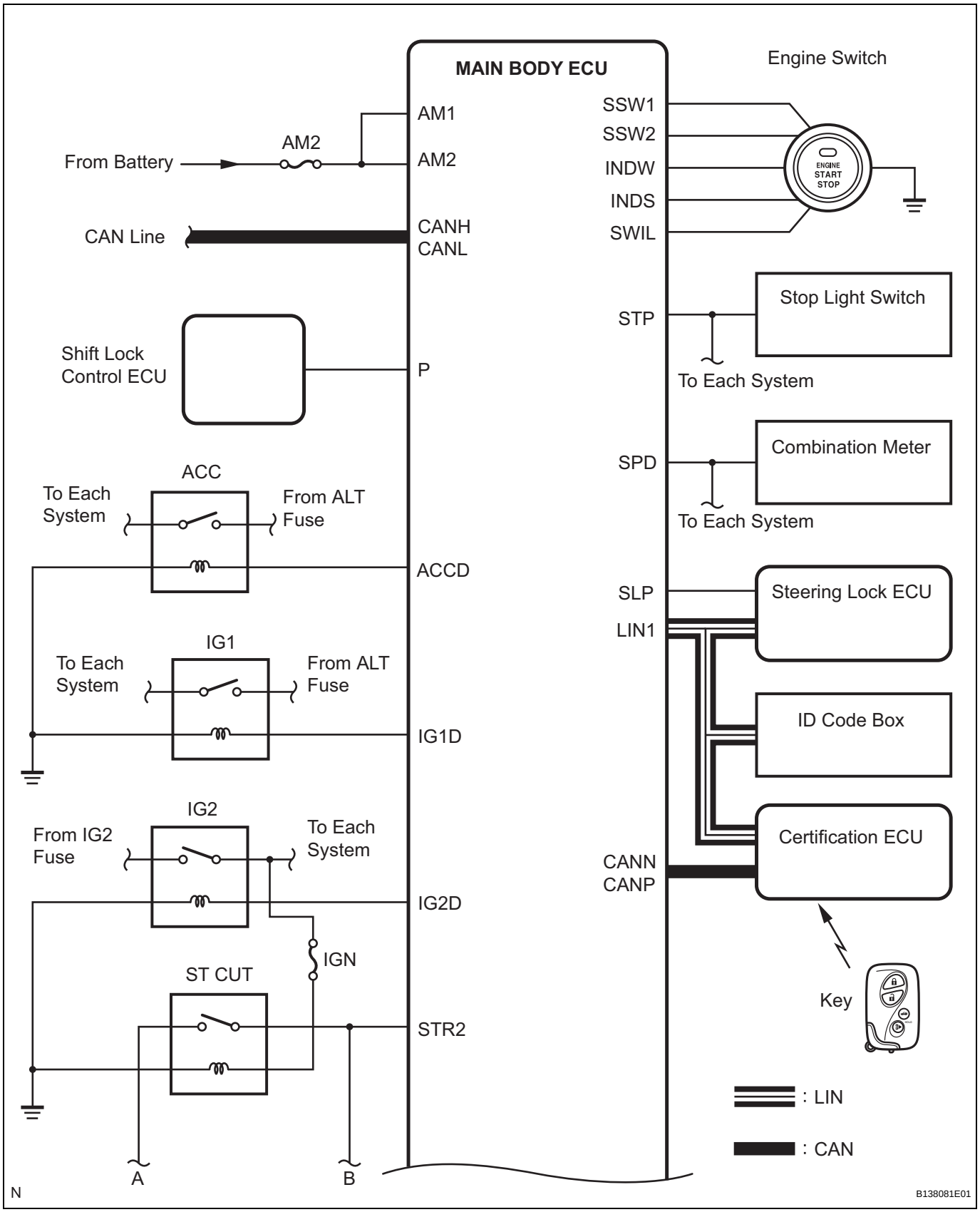
MAIN BODY ECU
Engine Switch
AM1
AM2
From Battery
AM2
CAN Line
CANH
CANL
SSW1
SSW2
INDW
INDS
SWIL
ENGINE START STOP
Stop Light Switch
STP
To Each System
Shift Lock Control ECU
P
Combination Meter
SPD
To Each System
ACC
To Each System
From ALT Fuse
ACCD
SLP
LIN1
Steering Lock ECU
IG1
To Each System
From ALT Fuse
IG1D
ID Code Box
IG2
From IG2 Fuse
To Each System
Certification ECU
CANN
CANP
IG2D
IGN
ST CUT
Key
STR2
: LIN
: CAN
A
B
N
B138081E01

ST

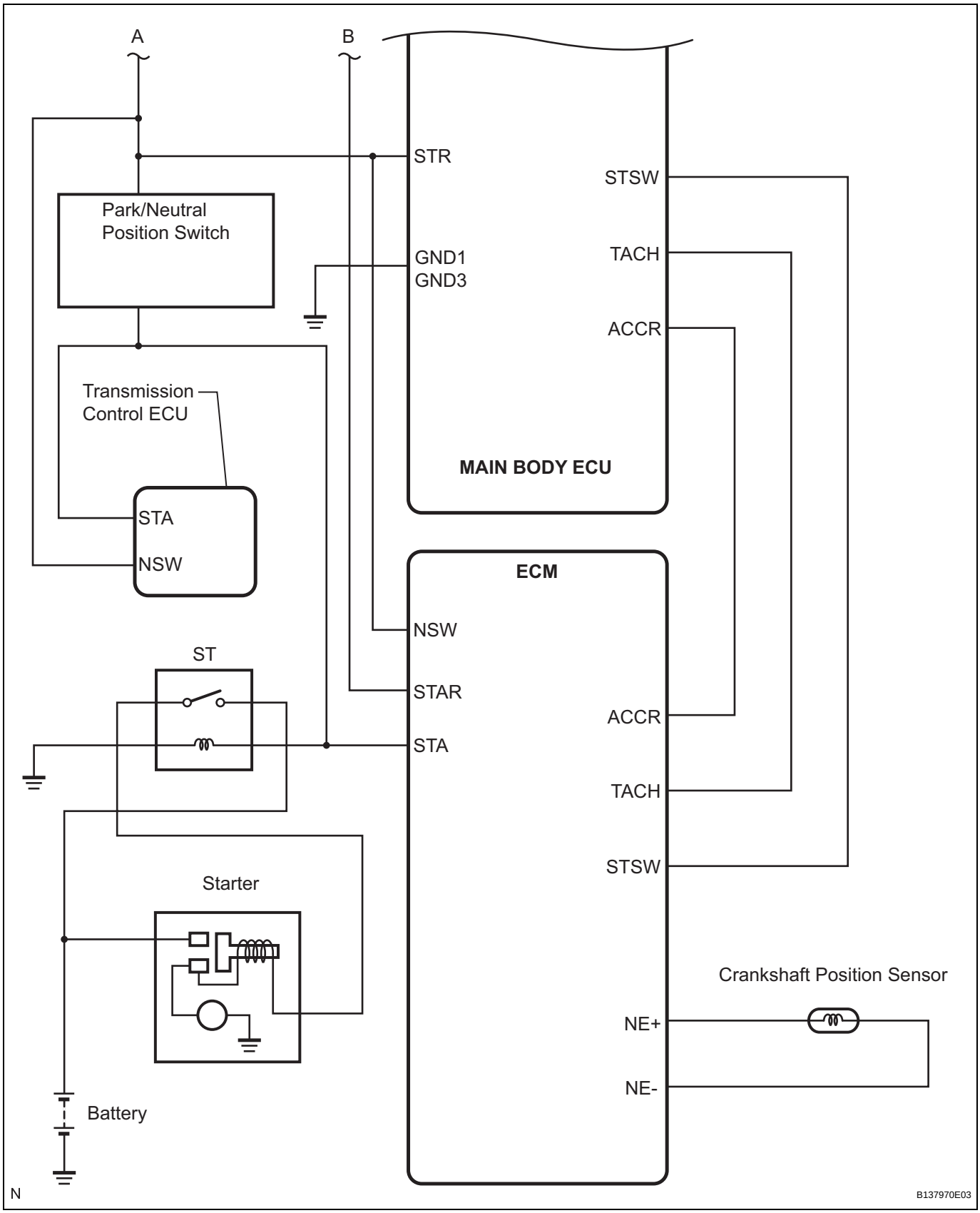

WIRING DIAGRAM

See CRANKING HOLDING FUNCTION CIRCUIT (See page ES-449).

ST

INSPECTION PROCEDURE

1. EMERGENCY ENGINE START CONTROL

(a) If there is a malfunction in the stop light switch or STOP fuse, their signals may not be correctly transmitted to the main body ECU. This may result in the engine not starting even if the engine switch is pressed while the brake pedal is depressed and the shift lever is in the P position.
To activate the starter:
(1) Turn the engine switch from off to on (ACC).
(2) Press and hold the engine switch for 15 seconds.

HINT:
After the main body ECU, certification ECU, steering lock ECU, ID code box and/or ECM are/is replaced, perform the registration procedures for the engine immobiliser system (See page EI-9).

1	CHECK ENTRY FUNCTION DETECTION AREA

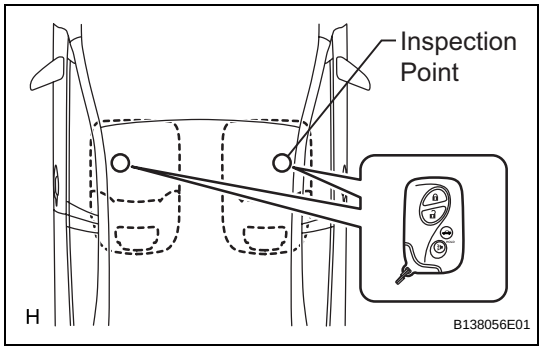

(a) Inspect entry detection area.
(1) When the electrical key is in either of the 2 inspection points in the illustration, the shift lever is in the P position and the brake pedal is depressed, check that the engine switch indicator illuminates in green.
OK:
Engine switch illuminates in green.
HINT:
If the engine switch does not illuminate, perform troubleshooting according to the PROBLEM SYMPTOMS TABLE of the smart access with push-button start (starting) (engine switch indicator light does not come on) (See page ST-17) and the smart access with push-button start (entry door lock) (matching for the inside of the cabin cannot be performed) (See page DL-121).

NG → **GO TO OTHER PROBLEM**

OK

2	CHECK IF ENGINE STARTS (INITIALIZE STEERING LOCK)

(a) Engine switch off.
(b) Make sure that the shift lever is in the P position.
(c) Open and close the driver's door.
(d) When the shift lever is in the P position and the brake pedal is depressed, check if the engine can be started.
OK:
Steering lock/unlock function operates normally and engine can be started.
HINT:
After the battery is discharged and then recharged, the engine may not start unless the steering lock is initialized using the above procedure (See page SR-53).

OK → **END**

ST

NG

3	CHECK FOR DTC

(a) Delete the DTCs (See page ST-26).
(b) Check for DTCs again.
OK:
No DTC is output.
HINT:
- If smart access system with push-button start (starting function) DTCs are output, (See page ST-28).
- If smart access system with push-button start (entry lock function) DTCs are output, (See page DL-134).
- If electrical steering lock DTCs are output, (See page SR-59).
- If engine immobiliser system DTCs are output, (See page EI-27).
- If engine control system DTCs output (2GR-FE), (See page ES-59).

NG → **GO TO DTC CHART**

OK

4	CHECK ENGINE SWITCH CONDITION

ST

(a) Check the power source mode change.
(1) When the key is inside the vehicle and the shift lever is in the P position, check that pressing the engine switch causes the power source mode to change as follows:
OK:
off → on (ACC) → on (IG) → off
HINT:
- If power mode does not change to ON (IG and ACC), (See page ST-118).
- If power mode does not change to ON (IG), (See page ST-126).
- If power mode does not change to ON (ACC), (See page ST-135).

NG → **GO TO OTHER PROBLEM**

OK

5	CHECK CRANKING FUNCTION

(a) Check the engine cranking function.
(1) When there is fuel in the fuel tank, the key is inside the vehicle, and the shift lever is in the P position, check that depressing the brake pedal and pressing the engine switch crank the engine.

OK:
Engine cranks.

OK → **Go to step 23**

NG

6 READ VALUE OF INTELLIGENT TESTER (P SIGNAL)

(a) Connect the intelligent tester to the DLC3.
(b) Turn the engine switch on (IG).
(c) Read the DATA LIST according to the displays on the tester screen.

MAIN BODY:

Item	Measurement Item/Range (Display)	Normal Condition	Diagnostic Note
SHIFT P SIG	Shift P signal / ON or OFF	ON: Shift position is P OFF: Shift position is not P	-

OK:
ON (P signal is ON) and OFF (P signal is OFF) appear on the screen.
HINT:
If the result is not as specified, perform troubleshooting for DTC B2281 ("P" signal malfunction) first (See page ST-60).

NG → **GO TO DTC B2281**

OK

ST

7 READ VALUE OF INTELLIGENT TESTER (STOP LIGHT SWITCH)

(a) Connect the intelligent tester to the DLC3.
(b) Turn the engine switch on (IG).
(c) Check the DATA LIST for proper functioning of the stop light switch.

MAIN BODY:

Item	Measurement Item/Display (Range)	Normal Condition	Diagnostic Note
STOP LIGHT SW	Stop light Switch / ON or OFF	ON: Brake pedal depressed OFF: Brake pedal released	-

OK:
ON (brake pedal depressed) and OFF (brake pedal released) appear on the screen.
HINT:
If the result is not as specified, perform troubleshooting for DTC B2284 (Brake signal malfunction) first (See page ST-74).

NG → **GO TO DTC B2284**

OK

8 READ VALUE OF INTELLIGENT TESTER (STEERING LOCK)

(a) Connect the intelligent tester to the DLC3.
(b) Turn the engine switch on (IG).

MAIN BODY:

Item	Measurement Item/Display (Range)	Normal Condition	Diagnostic Note
STR UNLOCK SW	Steering lock condition / ON or OFF	ON: Steering is unlocked (Engine switch on (ACC)) OFF: Steering is locked (Engine switch off)	-

OK:
ON (steering is unlocked) and OFF (steering is locked) appear on the screen.

HINT:
If the result is not as specified, perform troubleshooting for DTCs B2285 (Steering lock position signal circuit malfunction) and B2288 (Steering lock signal circuit malfunction) first (See page ST-28).

NG → **GO TO DTC B2285**

OK

9 CHECK STEERING LOCK

(a) Check if the steering lock is released when turning the engine switch on (ACC).
OK:
The steering lock is released.

NG → **Go to step 22**

OK

ST

10 INSPECT MAIN BODY ECU (STSW VOLTAGE)

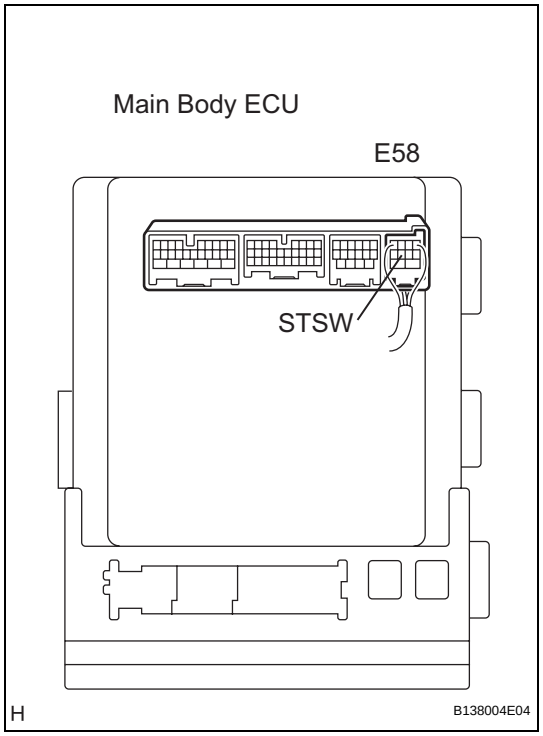

(a) Disconnect the A10 ECM connector.
(b) Measure the voltage according to the value(s) in the table below.

Standard voltage

Tester Connection (Symbols)	Condition	Specified Condition
E58-4 (STSW) - Body ground	Brake pedal depressed, engine switch held on (ST)	Output voltage at terminal AM1 or AM2 is -2 V or more.

HINT:
If the result is not as specified, perform troubleshooting for DTC B2275 (STSW monitor malfunction) first (See page ST-48).

NG → **GO TO DTC B2275**

OK

11 INSPECT ECM (ACCR VOLTAGE)

ST

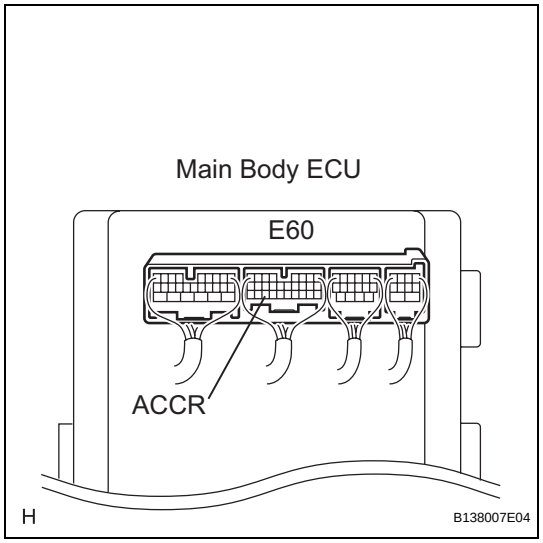

(a) Reconnect the connector.
(b) Measure the voltage according to the value(s) in the table below.

Standard voltage

Tester Connection (Symbols)	Condition	Specified Condition
E60-3 (ACCR) - Body ground	Brake pedal depressed, shift lever P position, engine switch is pushed once → on (IG)	0.1 to 0.8 V*1 → Output voltage at terminal AM1 or AM2 is -2 V or more.

*1: Voltage is output only when the engine is cranking.
HINT:
If the result is not as specified, perform troubleshooting for DTC B2276 (ACCR signal circuit malfunction) first (See page ST-51).

NG → **GO TO DTC B2276**

OK

12 INSPECT MAIN BODY ECU (STR VOLTAGE)

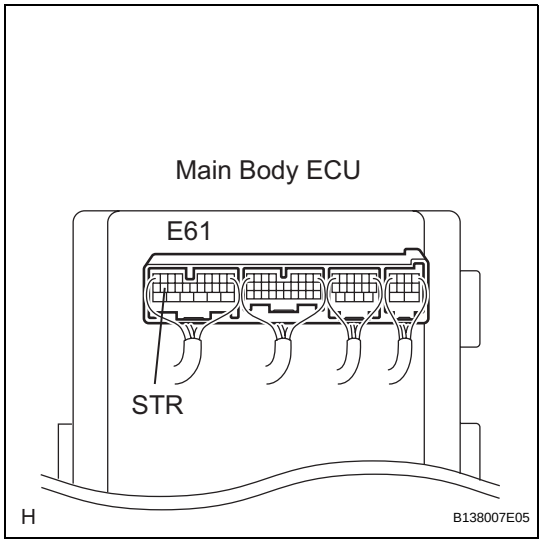

(a) Measure the voltage according to the value(s) in the table below.
Standard voltage

Tester Connection (Symbols)	Condition	Specified Condition
E61-8 (STR) - Body ground	Shift lever P or N position → except P or N position	Below 1 V → Pulse generation

OK → **Go to step 18**

NG

13 INSPECT RELAY (ST CUT)

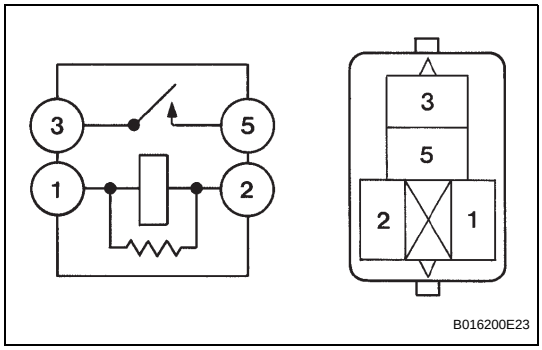

(a) Measure the resistance of the ST CUT relay.
Standard resistance

Tester Connection	Specified Condition
3 - 5	10 kΩ or higher
3 - 5	Below 1 Ω (when battery voltage is applied to terminals 1 and 2

NG → **REPLACE RELAY**

OK

ST

14 INSPECT PARK/NEUTRAL POSITION SWITCH

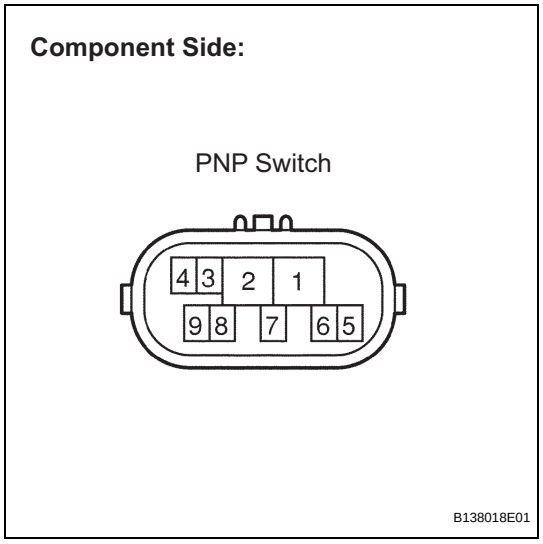

(a) Disconnect the park/neutral position (PNP) switch connector.

(b) Measure the resistance according the the value(s) in the table below.

Standard resistance

Shift Position	Tester Connection	Specified Condition
P	4 - 9	Below 1 Ω
N	4 - 9	Below 1 Ω
Except P and N	4 - 9	10 kΩ or higher

NG → **REPLACE PARK / NEUTRAL POSITION SWITCH**

OK

15 CHECK HARNESS AND CONNECTOR (PARK/NEUTRAL POSITION SWITCH - ECM, MAIN BODY ECU)

(a) Measure the resistance according to the value(s) in the table below.

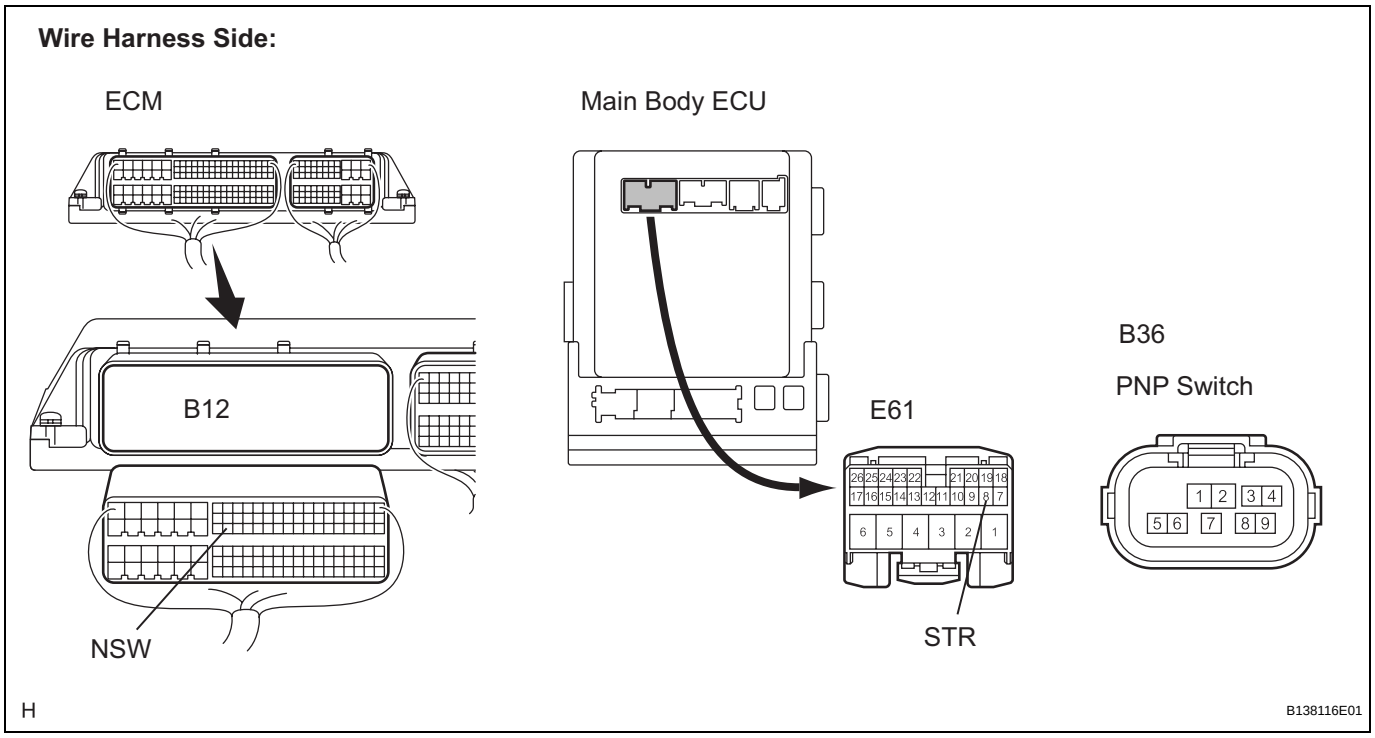

Standard resistance

Tester Connection (Symbols)	Condition	Specified Condition
B12-62 (NSW) - B36-4	Always	Below 1 Ω

ST

Tester Connection (Symbols)	Condition	Specified Condition
B12-62 (NSW) - E61-8 (STR)	Always	Below 1 Ω
B12-62 (NSW) - Body ground	Always	10 kΩ or higher

NG → **REPAIR OR REPLACE HARNESS OR CONNECTOR**

OK

16 INSPECT DRIVER SIDE JUNCTION BLOCK (STR2 VOLTAGE)

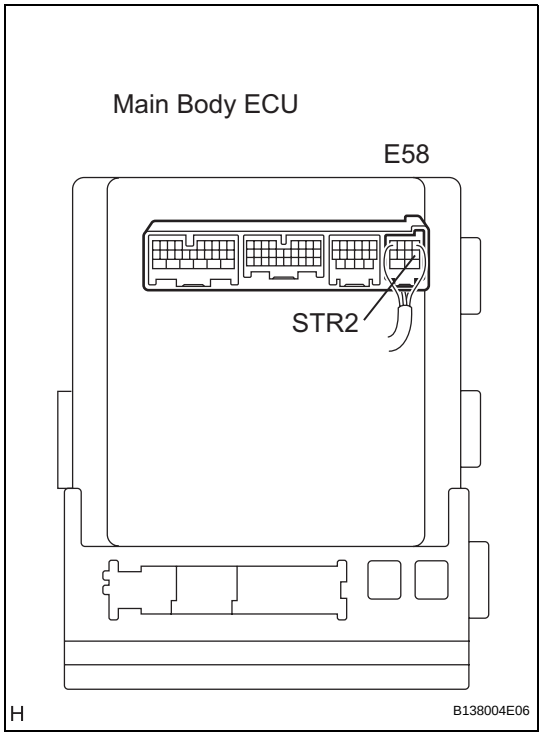

(a) Disconnect the B12 ECM connector.
(b) Measure the voltage according to the value(s) in the table below.

Standard voltage

Tester Connection (Symbols)	Condition	Specified Condition
E58-6 (STR2) - Body ground	Brake pedal depressed, shift lever P or N position, engine switch on (ST)	Output voltage at terminal AM1 or AM2 is - 3.5 V or more.*1

*1: Voltage is output for 0.3 seconds when the engine is cracking to start. Disconnect the B12 connector from the ECM before measuring the voltage.

NG → **REPLACE MAIN BODY ECU**

OK

17 CHECK WIRE HARNESS (MAIN BODY ECU - ECM - ENGINE ROOM R/B)

(a) Remove the ST CUT relay from the engine room R/B.

ST

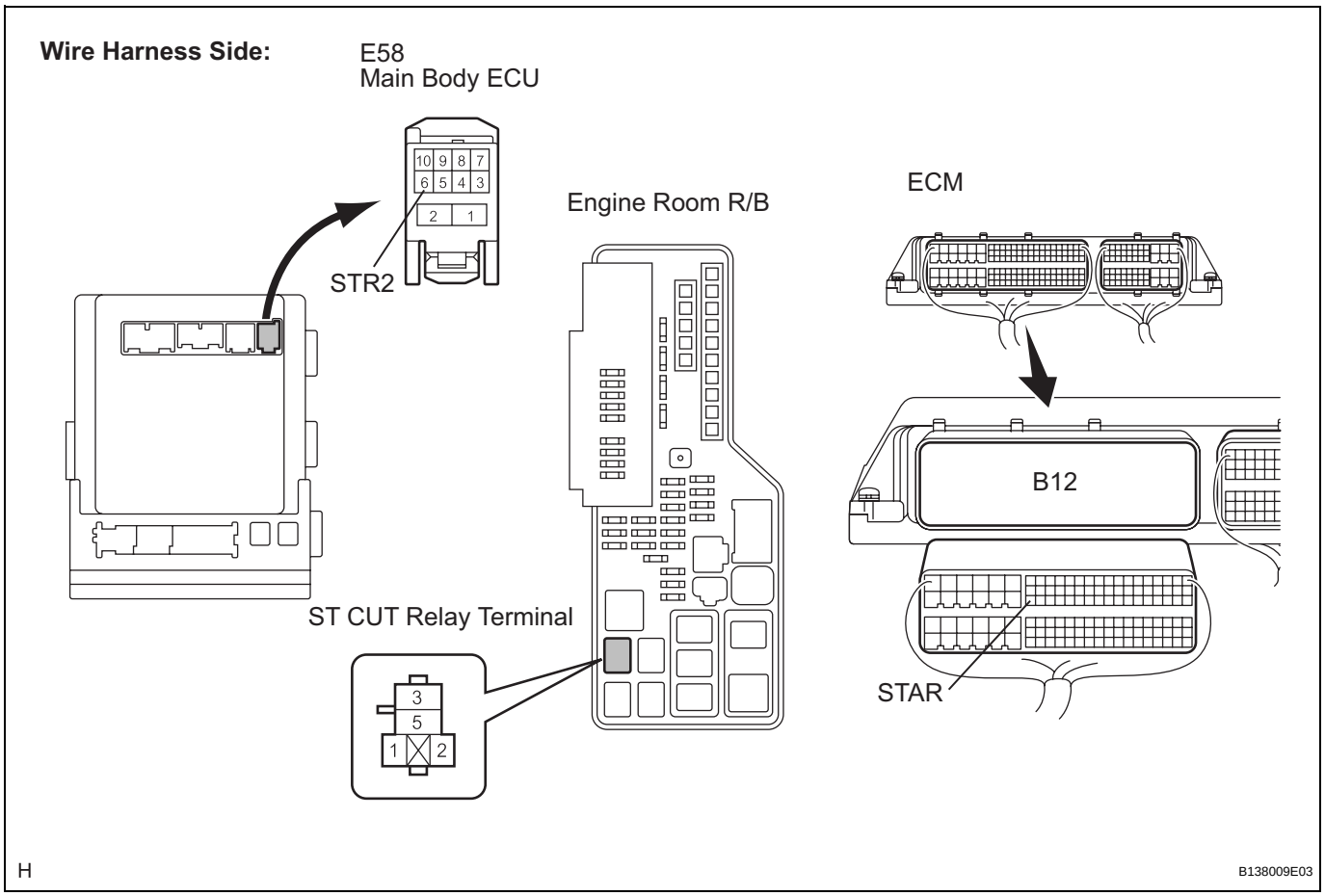

(b) Disconnect the E58 ECU connector.

(c) Measure the resistance according to the value(s) in the table below.

Standard resistance

Tester Connection (Symbols)	Condition	Specified Condition
B12-63 (STAR) - E58-6 (STR2)	Always	Below 1 Ω
B12-63 (STAR) - ST CUT relay terminal - 3	Always	Below 1 Ω
B12-63 (STAR) - Body ground	Always	10 kΩ or higher

NG → **REPAIR OR REPLACE HARNESS OR CONNECTOR**

OK

ST

18 INSPECT RELAY (ST)

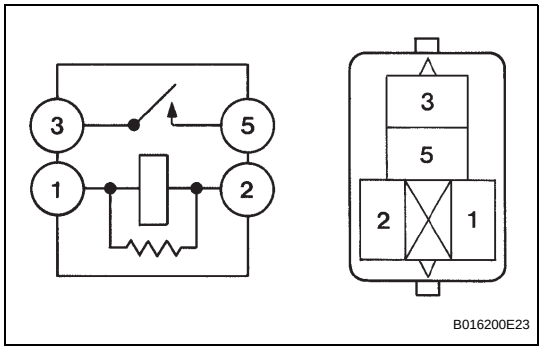

(a) Remove the starter relay from the engine room R/B.
(b) Measure the resistance of the starter relay.
Standard resistance

Tester Connection	Specified Condition
3 - 5	10 kΩ or higher
3 - 5	Below 1 Ω (when battery voltage applied to terminals 1 and 2)

NG → **REPLACE RELAY**

OK

19 CHECK HARNESS AND CONNECTOR (ECM - ST RELAY, PNP SWITCH)

(a) Disconnect the A10 ECM connector.

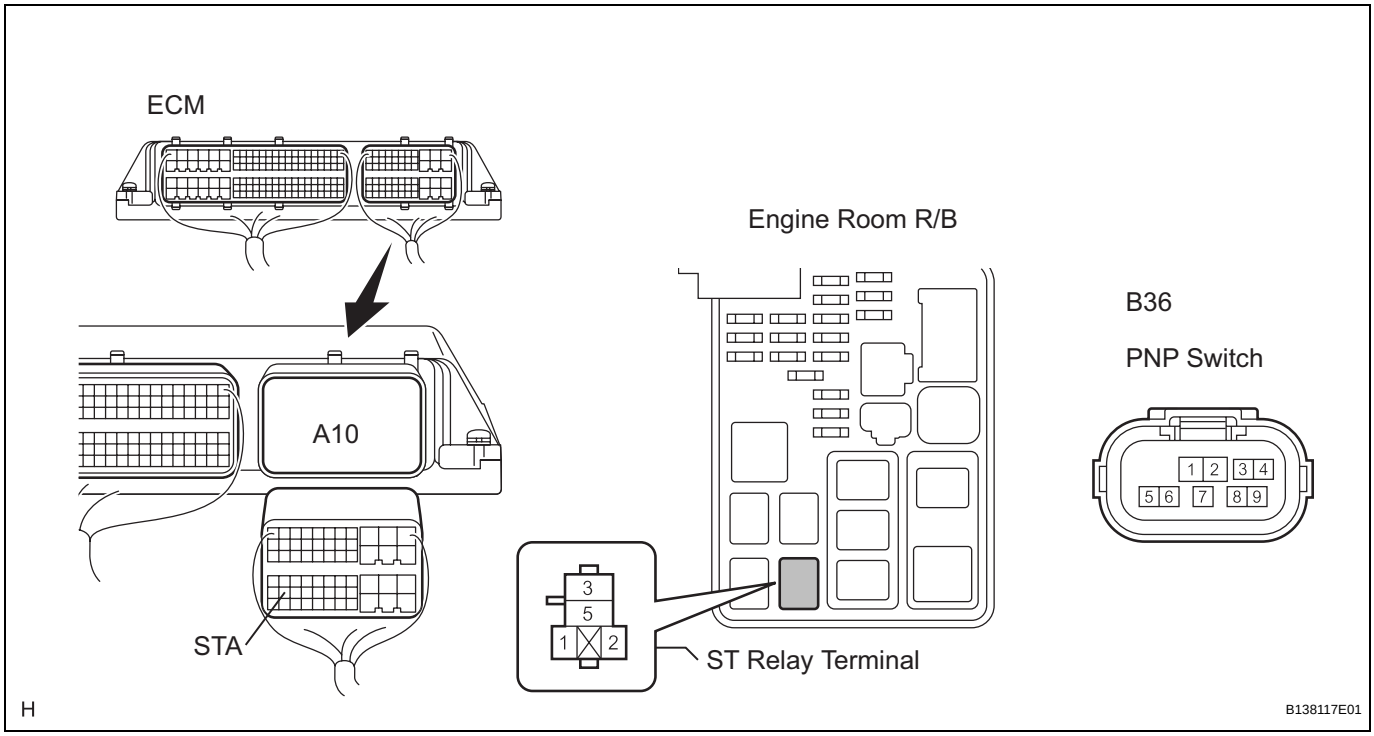

(b) Measure the resistance according the the value(s) in the table below.
Standard resistance

Tester Connection (Symbols)	Condition	Specified Condition
A10-48 (STA) - ST relay terminal - 1	Always	Below 1 Ω
A10-48 (STA) - B36-9	Always	Below 1 Ω
A10-48 (STA) - Body ground	Always	10 kΩ or higher

ST

NG → **REPAIR OR REPLACE HARNESS OR CONNECTOR**

OK

20 INSPECT ENGINE ROOM RELAY BLOCK (ST RELAY VOLTAGE)

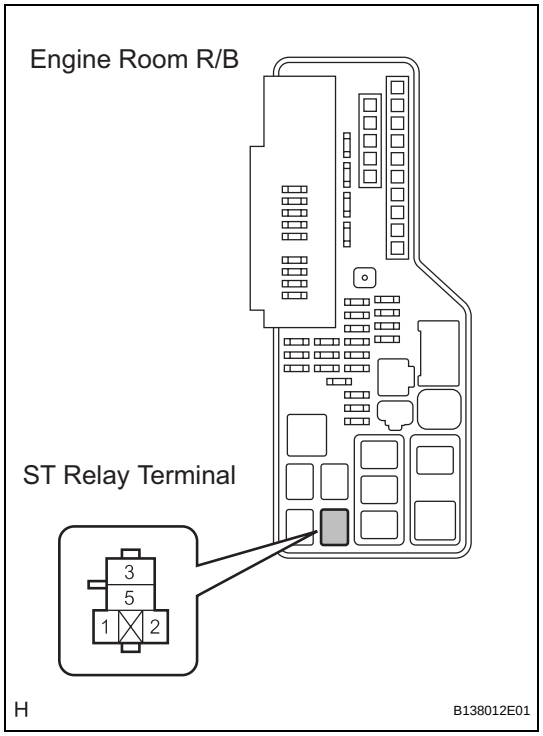

(a) Measure the voltage according to the value(s) in the table below.

Standard voltage

Tester Connection	Condition	Specified Condition
ST relay terminal - 5 - Body ground	Always	9 to 14 V
ST relay terminal - 2 - Body ground	Always	Below 1 V

NG → **REPAIR OR REPLACE HARNESS OR CONNECTOR**

OK

21 INSPECT STARTER ASSEMBLY

HINT:
See page ST-147.

NG → **REPAIR OR REPLACE STARTER ASSEMBLY**

OK

REPAIR OR REPLACE HARNESS OR CONNECTOR (STARTER - BATTERY, ST RELAY)

22 READ VALUE OF INTELLIGENT TESTER (L CODE)

(a) Reconnect the connectors.
(b) Connect the intelligent tester to the DLC3.
HINT:
When using the intelligent tester with the engine switch off, turn on and off any of the door courtesy light switches repeatedly at 1.5 second intervals or less until communication between the tester and vehicle starts.

(c) Turn the engine switch on (IG).

SMART ACCESS (Certification ECU):

Item	Measurement Item/Display (Range)	Normal Condition	Diagnostic Note
L CODE CHK	L code check / ON or NG	OK: Normal NG: Malfunction	Electrical key in the cabin

OK:

OK is displayed on the screen.

HINT:

If the result is not as specified, refer to PROBLEM SYMPTOMS TABLE of the electrical steering lock (steering wheel cannot be unlocked) (See page SR-54).

If the result is not as specified, there may be a malfunction with the steering lock ECU or the ID code box.

NG → **GO TO STEERING LOCK SYSTEM**

OK

23 READ VALUE OF INTELLIGENT TESTER (ENGINE START REQUEST)

(a) Connect the intelligent tester to the DLC3.

HINT:

When using the intelligent tester with the engine switch off, turn on and off any of the door courtesy light switches repeatedly at 1.5 second intervals or less until communication between the tester and vehicle starts.

(b) Turn the engine switch on (IG).

ST

SMART ACCESS (Certification ECU):

Item	Measurement Item/Display (Range)	Normal Condition	Diagnostic Note
START RQST	Start request signal response / OK or NG	OK: Received NG: Not received	-

OK:

OK (received) and NG (not received) appear on the screen.

NG → **REPLACE CERTIFICATION ECU**

OK

24 READ VALUE OF INTELLIGENT TESTER (S CODE)

(a) Connect the intelligent tester to the DLC3.

HINT:

When using the intelligent tester with the engine switch off, turn on and off any of the door courtesy light switches repeatedly at 1.5 second intervals or less until communication between the tester and vehicle starts.

(b) Turn the engine switch on (IG).

SMART ACCESS (Certification ECU):

Item	Measurement Item/Display (Range)	Normal Condition	Diagnostic Note
S CODE CHK	S code check / OK or NG	OK: Normal NG: Malfunction	-

OK:
OK is displayed on the screen.
HINT:
If the result is not as specified, there may be a malfunction with the certification ECU or the ID code box.

NG → **Go to step 26**

OK

25 INSPECT ID CODE BOX

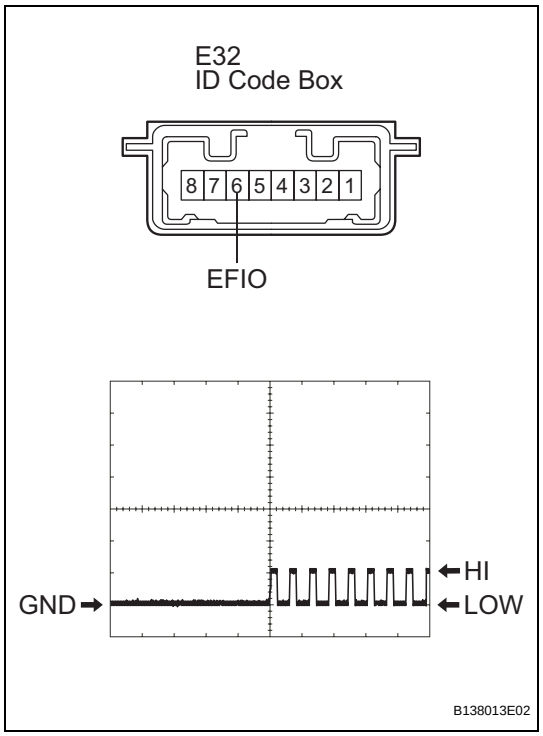

(a) Check the input signal waveform.
(1) Connect an oscilloscope to terminal E32-6 (EFIO) and body ground.
(2) Turn the engine switch on (IG).
(3) Check the signal waveform according to the condition(s) in the table below.

Item	Condition
Tool setting	10 V/DIV., 100 ms./DIV.
Vehicle condition	Engine switch on (IG)

NG → **REPLACE ID CODE BOX**

OK

END

26 REPLACE CERTIFICATION ECU

(a) Replace the certification ECU.
(b) Perform the registration procedures for the engine immobiliser system (See page EI-9).
(c) Check if the engine can be started.

ST

OK:
Engine can be started.

OK → **END (CERTIFICATION ECU IS DEFECTIVE)**

NG

REPLACE ID CODE BOX

Engine Switch Indicator Circuit

DESCRIPTION

Engine start conditions or system malfunctions can be checked by the status of the engine switch indicator light.

Engine switch indicator light condition:

Power Source Mode/Condition	Indicator Light Condition	
	Brake pedal released	**Brake pedal depressed, shift lever in P or N**
off	OFF	ON (Green) (When key and vehicle IDs match)
on (ACC, IG)	ON (Amber)	ON (Green)
Engine running	OFF	OFF
Steering lock not unlocked	Flashes (Green) for 15 sec.	Flashes (Green) for 15 sec.
System malfunction	Flashes (Amber) for 15 sec.	Flashes (Amber) for 15 sec.

WIRING DIAGRAM

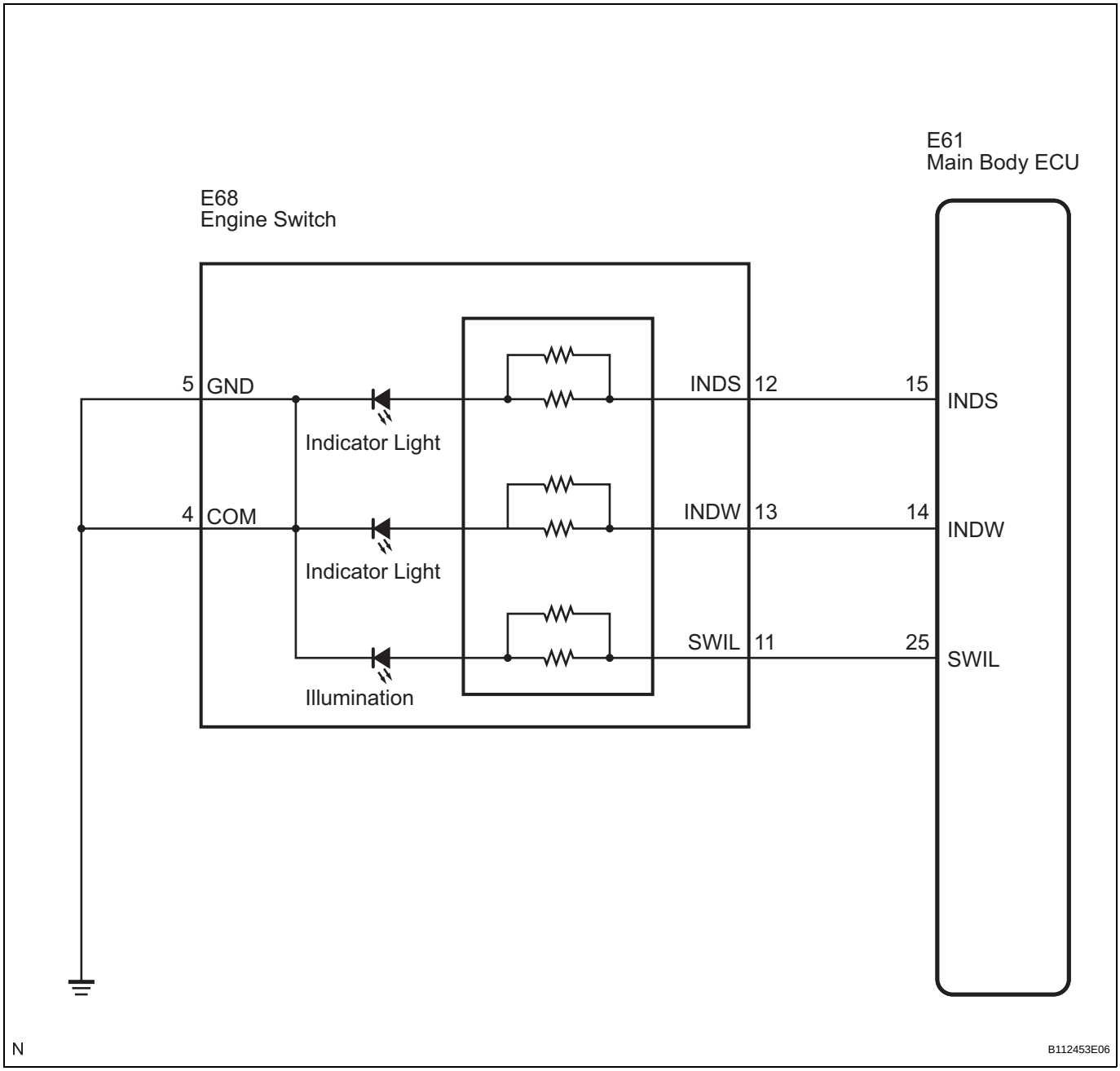

INSPECTION PROCEDURE

1	**INSPECT ENGINE SWITCH**

(a) Remove the engine switch.

ST

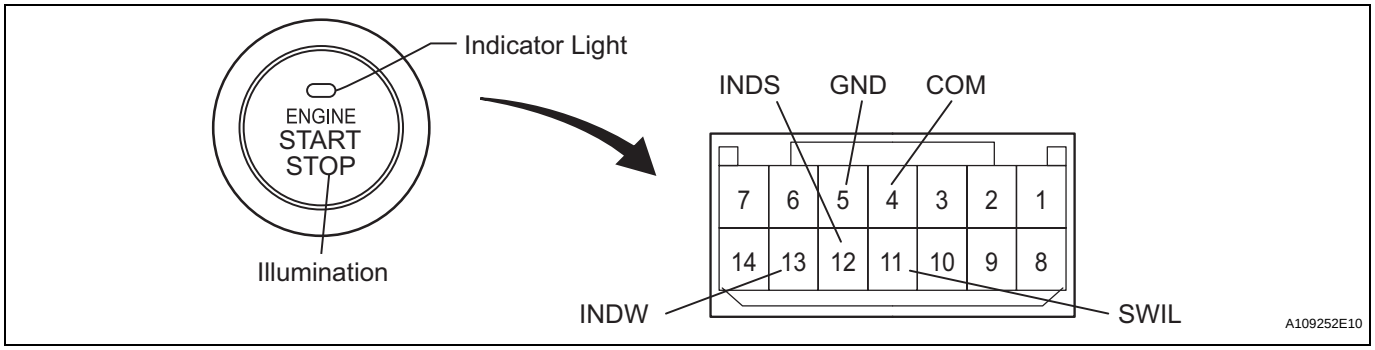

(b) Apply battery voltage between the terminals of the switch, and check the illumination condition of the switch.

NOTICE:

- **If the positive (+) lead and the negative (-) lead are incorrectly connected, the engine switch indicator will not illuminate.**
- **If the voltage is too low, the indicator will not illuminate.**

OK

Measurement Condition	Specified Condition
Battery positive (+) → Terminal 11 (SWIL) Battery negative (-) → Terminal 4 (COM) or 5 (GND)	Illuminates
Battery positive (+) → Terminal 12 (INDS) Battery negative (-) → Terminal 4 (COM) or 5 (GND)	Illuminates
Battery positive (+) → Terminal 13 (INDW) Battery negative (-) → Terminal 4 (COM) or 5 (GND)	Illuminates

NG → **REPLACE ENGINE SWITCH**

ST

OK

2 CHECK WIRE HARNESS (ENGINE SWITCH - MAIN BODY ECU AND BODY GROUND)

(a) Disconnect the E68 switch connector.

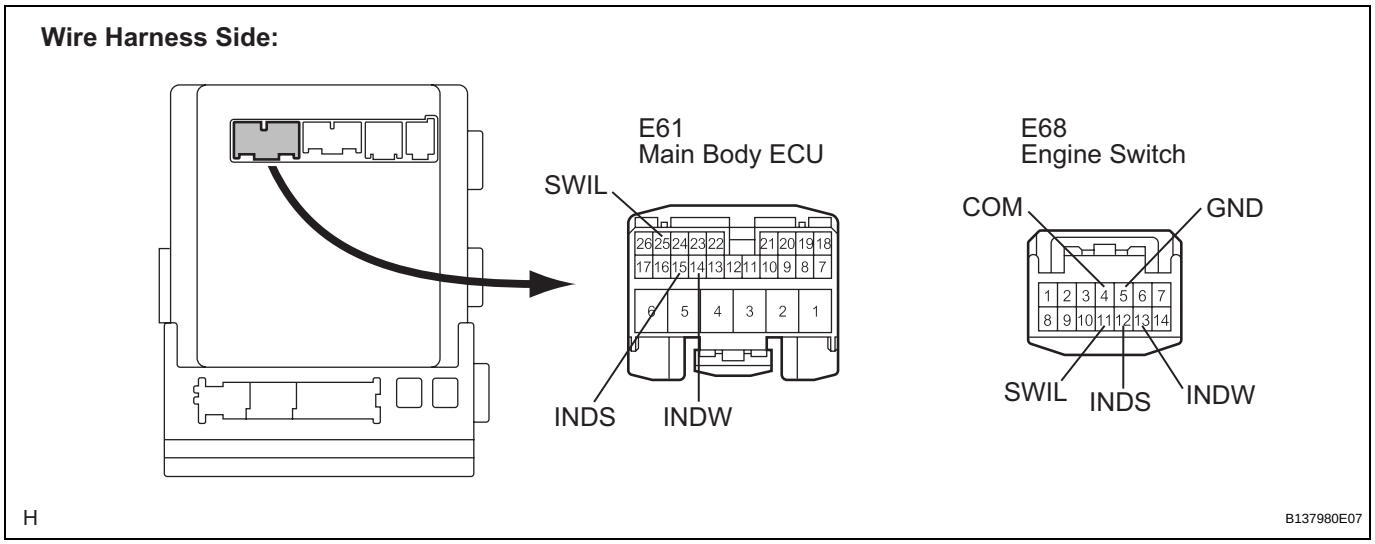

(b) Disconnect the E61 ECU connector.

(c) Measure the resistance according to the value(s) in the table below.

Standard resistance

Tester Connection	Condition	Specified Condition
E68-11 (SWIL) - E61-25 (SWIL)	Always	Below 1 Ω
E68-12 (INDS) - E61-15 (INDS)	Always	Below 1 Ω
E68-13 (INDW) - E61-14 (INDW)	Always	Below 1 Ω
E68-5 (GND) - Body ground	Always	Below 1 Ω
E68-4 (COM) - Body ground	Always	Below 1 Ω
E68-11 (SWIL) or E61-25 (SWIL) - Body ground	Always	10 kΩ or higher
E68-12 (INDS) or E61-15 (INDS) - Body ground	Always	10 kΩ or higher
E68-13 (INDW) or E61-14 (INDW) - Body ground	Always	10 kΩ or higher

NG → **REPAIR OR REPLACE HARNESS OR CONNECTOR**

OK

REPLACE MAIN BODY ECU

Power Source Mode does not Change to ON (IG and ACC)

DESCRIPTION

When the engine switch is pushed with the electrical key in the cabin, the main body ECU receives signals to switch the power source mode.

HINT:

To allow use of the intelligent tester to inspect the push-button start function when the engine switch is off, repeat opening and closing any of the doors. Opening and closing a door establishes communication between the intelligent tester and the main body ECU. (Opening and closing a door can also be simulated by operating a door courtesy light switch.)

WIRING DIAGRAM

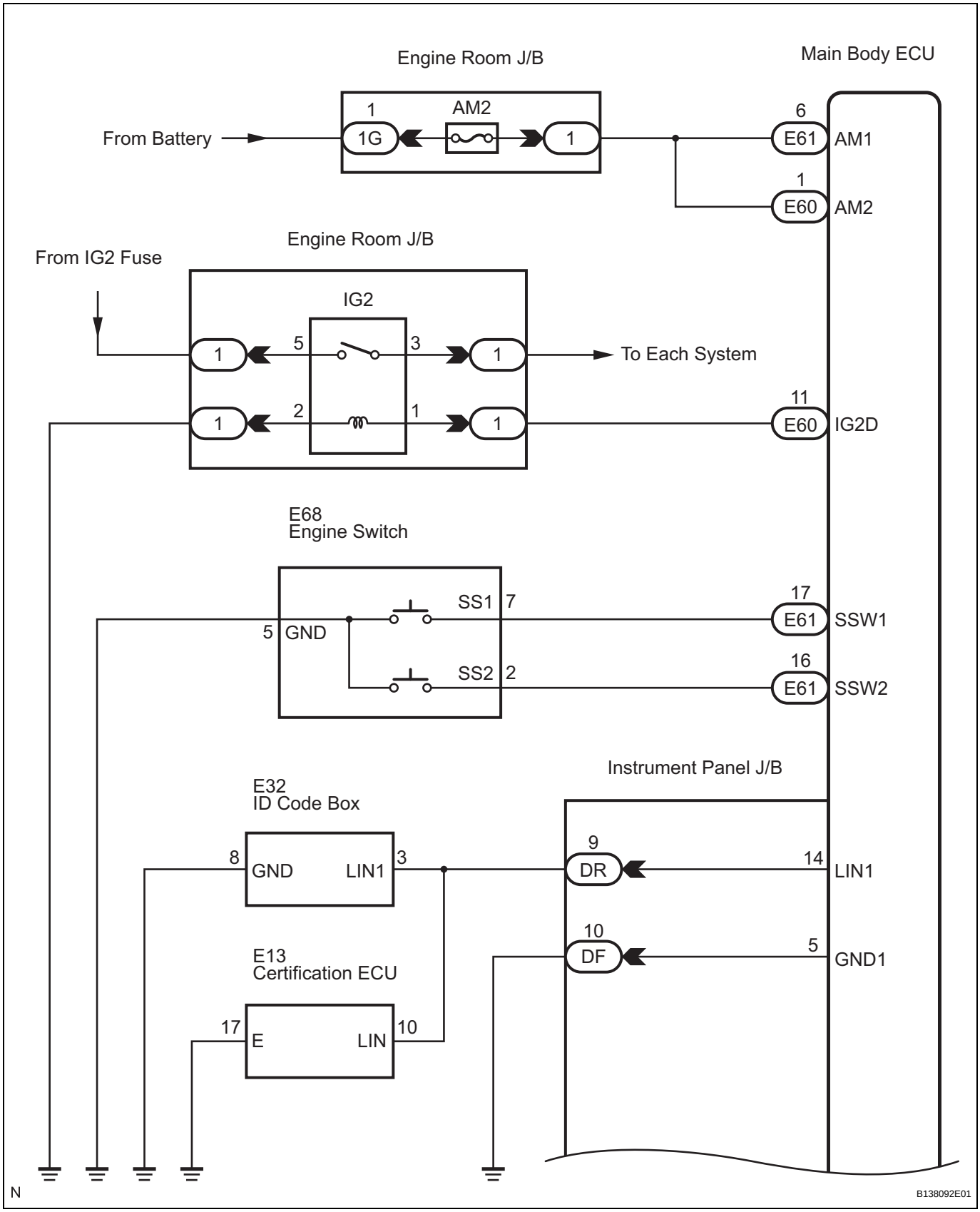

ST

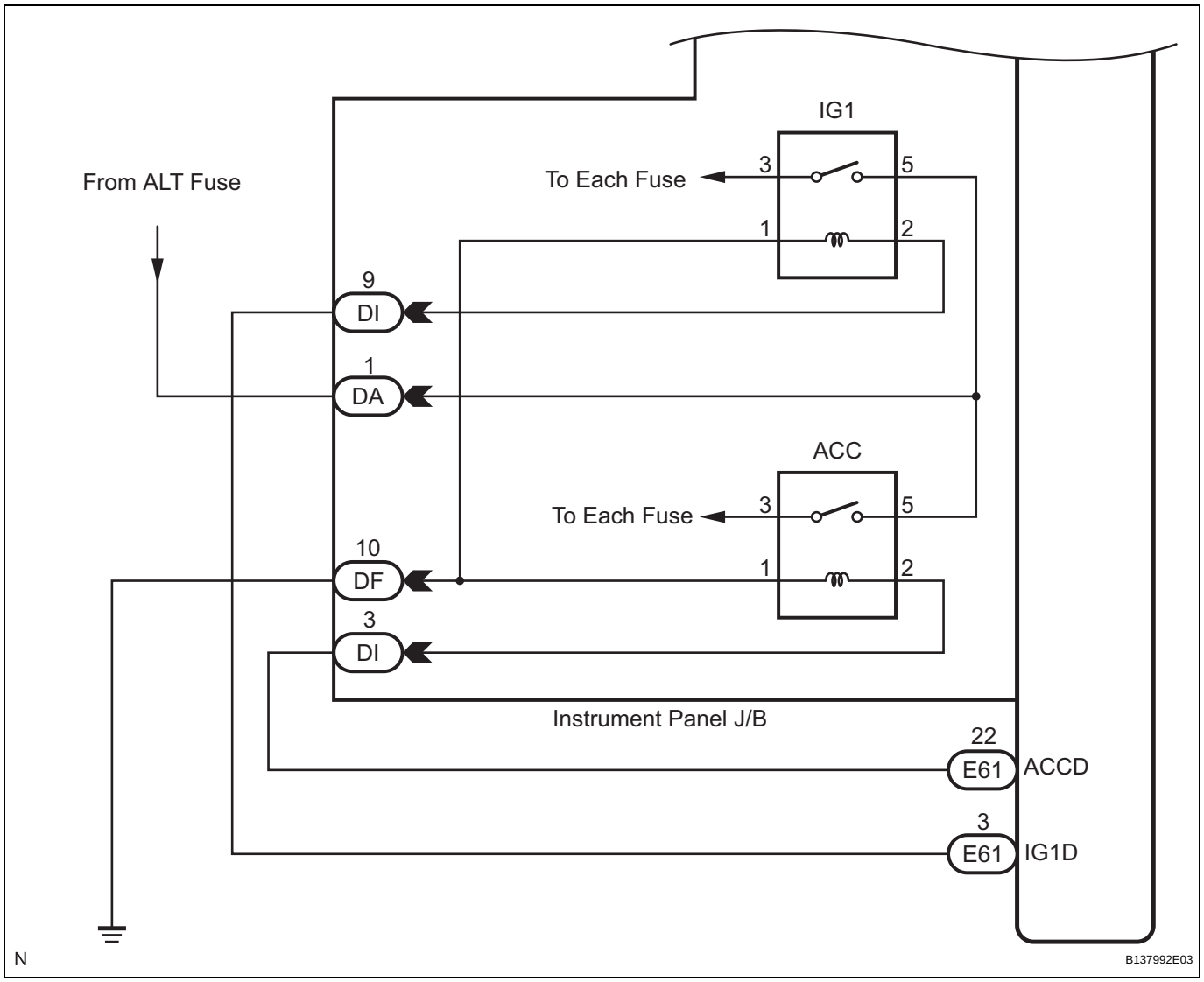

INSPECTION PROCEDURE

1	CHECK ENTRY FUNCTION DETECTION AREA

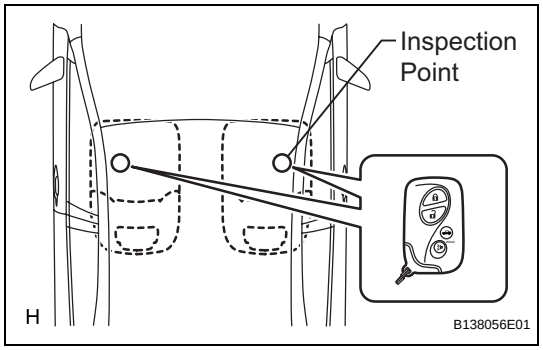

(a) Inspect entry detection area.
   (1) When the electrical key is in either of the 2 inspection points in the illustration, the shift lever is in the P position and the brake pedal is depressed, check that the engine switch indicator illuminates in green.
   OK:
   Engine switch illuminates in green.

ST

HINT:
If the engine switch does not illuminate, perform troubleshooting according to the PROBLEM SYMPTOMS TABLE of the smart access system with push-button start (starting) (engine switch indicator light does not come on) (See page ST-17) and the smart access system with push-button start (Door lock) (matching for inside of the cabin cannot be performed) (See page DL-121).

NG → **GO TO OTHER PROBLEM**

OK

2	INSPECT FUSE (AM2)

(a) Remove the AM2 fuse from the engine room J/B.
(b) Measure the resistance of the fuse.
Standard resistance:
Below 1 Ω

NG → **REPLACE FUSE**

OK

3	CHECK CONNECTORS

(a) Check that the connectors are securely connected and the terminals are not deformed or loose.
OK:
The connectors are securely connected and the terminals are not deformed or loose.

NG → **REPAIR OR REPLACE CONNECTORS**

OK

ST

4	CHECK WIRE HARNESS (MAIN BODY ECU - BATTERY)

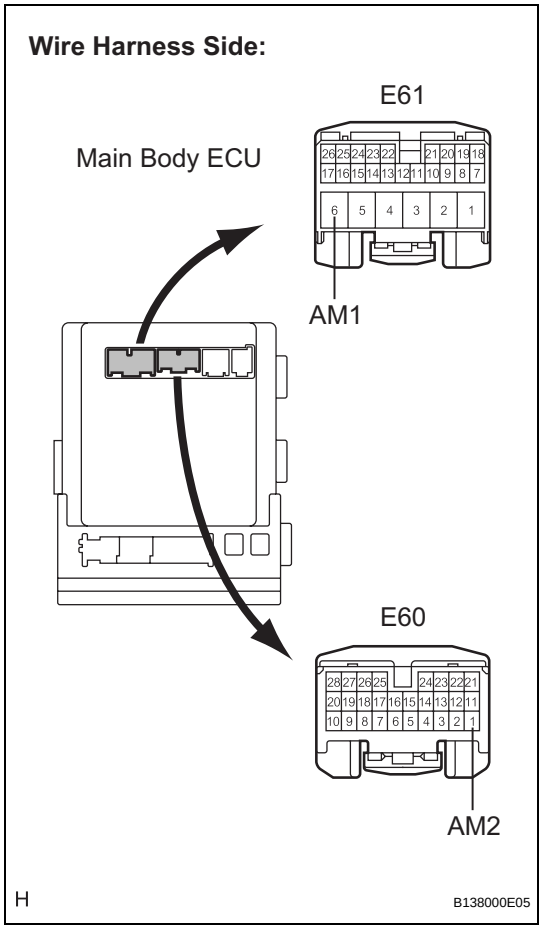

(a) Disconnect the E60 and E61 ECU connectors.

(b) Measure the voltage according to the value(s) in the table below.

Standard voltage

Tester Connection (Symbols)	Condition	Specified Condition
E61-6 (AM1) - Body ground	Always	10 to 14 V
E60-1 (AM2) - Body ground	Always	10 to 14 V

NG → **REPAIR OR REPLACE HARNESS OR CONNECTOR**

OK

ST

5 CHECK WIRE HARNESS (MAIN BODY ECU - BODY GROUND)

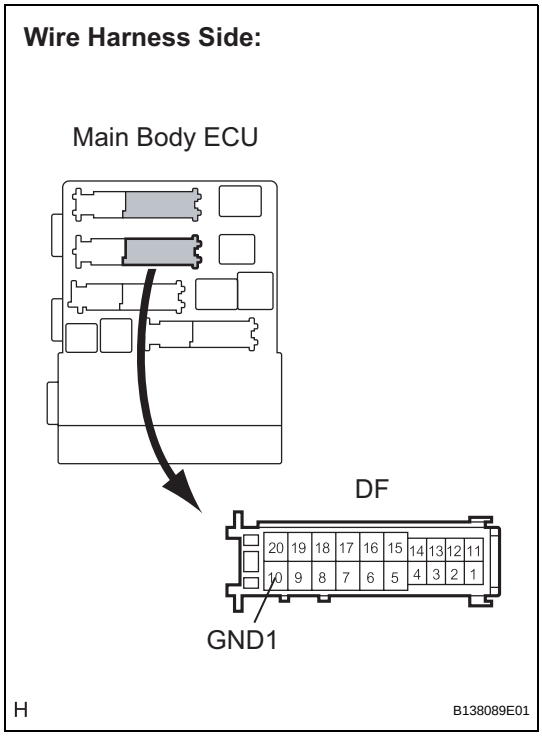

(a) Disconnect the DF ECU connector.
(b) Measure the resistance according to the value(s) in the table below.

Standard resistance

Tester Connection (Symbols)	Condition	Specified Condition
DF-10 (GND1) - Body ground	Always	Below 1 Ω

NG → **REPAIR OR REPLACE HARNESS OR CONNECTOR**

OK

ST

6 CHECK FOR DTCS

(a) Delete the DTCs (See page ST-26).
HINT:
After all the DTCs are cleared, check if the trouble occurs again 5 seconds after the engine switch is turned on (IG).
(b) Check for DTCs again.
HINT:
If the DTCs for the smart access system with push-button start malfunction are output, inspect those DTCs first (See page ST-28).
OK:
No DTC is output.

NG → **GO TO DTC CHART**

OK

7 READ VALUE OF INTELLIGENT TESTER

(a) Connect the intelligent tester to the DLC3.
(b) Turn the engine switch on (IG).
(c) Check the DATA LIST for proper functioning of the start switches 1 and 2.

HINT:
When using the intelligent tester with the engine switch off, turn on and off any of the door courtesy light switches repeatedly at 1.5 second intervals or less until communication between the tester and vehicle starts.

MAIN BODY:

Item	Measurement Item/Display (Range)	Normal Condition	Diagnostic Note
STSW1	Start Switch 1/ON or OFF	ON: Engine switch is pushed OFF: Engine switch is not pushed	-
STSW2	Start Switch 2/ON or OFF	ON: Engine switch is pushed OFF: Engine switch is not pushed	-

OK:
ON (engine switch is pushed) and OFF (engine switch is not pushed) appear on the screen.

OK → **REPLACE MAIN BODY ECU**

NG

8 INSPECT ENGINE SWITCH

(a) Remove the engine switch.

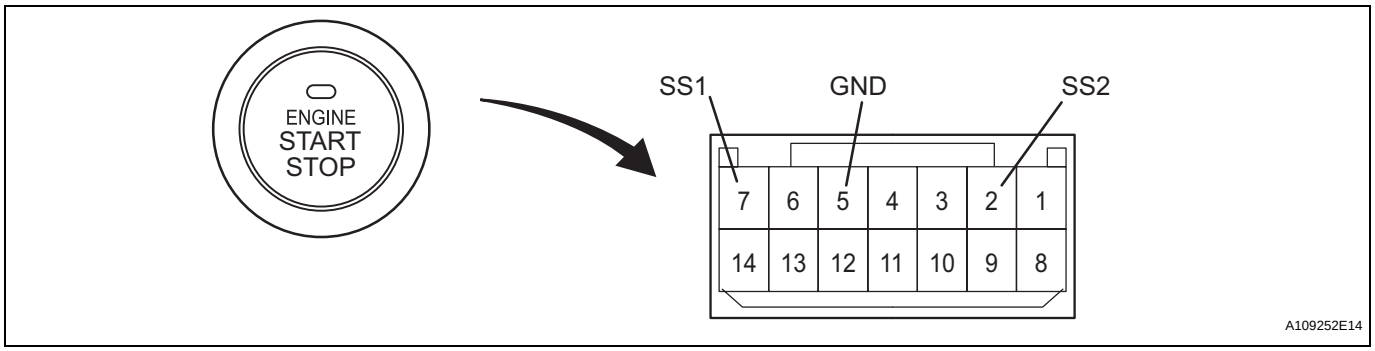

(b) Measure the resistance of the switch.
Standard resistance

Tester Connection	Switch Condition	Specified Condition
7 (SS1) - 5 (GND)	Pushed	Below 1 Ω
2 (SS2) - 5 (GND)	Pushed	Below 1 Ω
7 (SS1) - 5 (GND)	Not pushed	10 kΩ or higher
2 (SS2) - 5 (GND)	Not pushed	10 kΩ or higher

NG → **REPLACE ENGINE SWITCH**

OK

9 CHECK WIRE HARNESS (MAIN BODY ECU AND BODY GROUND - ENGINE SWITCH)

(a) Disconnect the E61 ECU connector.

ST

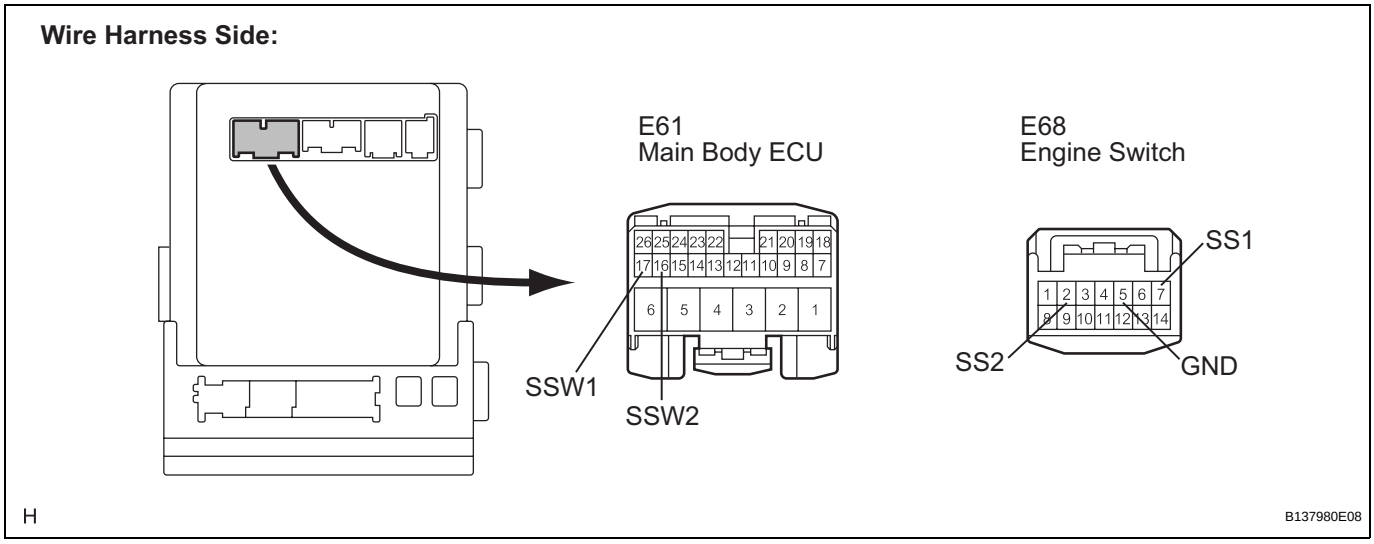

(b) Measure the resistance according to the value(s) in the table below.

Standard resistance

Tester Connection (Symbols)	Condition	Specified Condition
E68-7 (SS1) - E61-17 (SSW1)	Always	Below 1 Ω
E68-2 (SS2) - E61-16 (SSW2)	Always	Below 1 Ω
E68-5 (GND) - Body ground	Always	Below 1 Ω
E68-7 (SS1) or E61-17 (SSW1) - Body ground	Always	10 kΩ or higher
E68-2 (SS2) or E61-16 (SSW2) - Body ground	Always	10 kΩ or higher

NG → **REPAIR OR REPLACE HARNESS OR CONNECTOR**

OK

REPLACE MAIN BODY ECU

ST

Power Source Mode does not Change to ON (IG)

DESCRIPTION

When the engine switch is pushed with the electrical key in the cabin, the main body ECU receives signals to switch the power source mode.

HINT:

To allow use of the intelligent tester to inspect the push-button start function when the engine switch is off, repeat opening and closing any of the doors. Opening and closing a door establishes communication between the intelligent tester and the main body ECU. (Opening and closing a door can also be simulated by operating a door courtesy light switch.)

WIRING DIAGRAM

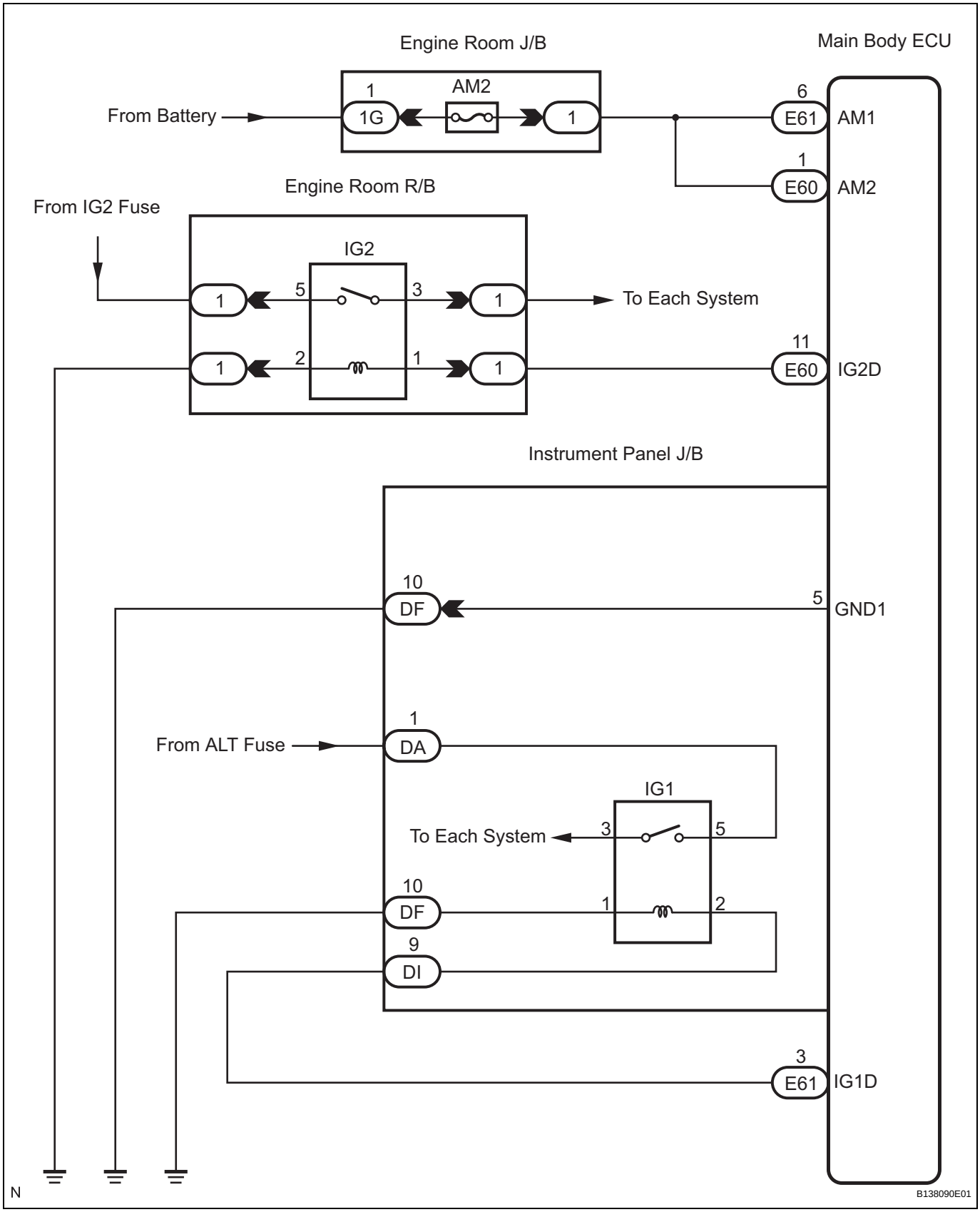

ST

INSPECTION PROCEDURE

1	INSPECT FUSE (AM2)

(a) Remove the AM2 fuse from the engine room J/B.
(b) Measure the resistance of the fuse.
Standard resistance:
Below 1 Ω

NG → **REPLACE FUSE**

OK

2	CHECK CONNECTORS

(a) Check that the connectors are securely connected and the terminals are not deformed or loose.
OK:
The connectors are securely connected and the terminals are not deformed or loose.

NG → **REPAIR OR REPLACE CONNECTORS**

OK

3	CHECK WIRE HARNESS (MAIN BODY ECU - BATTERY)

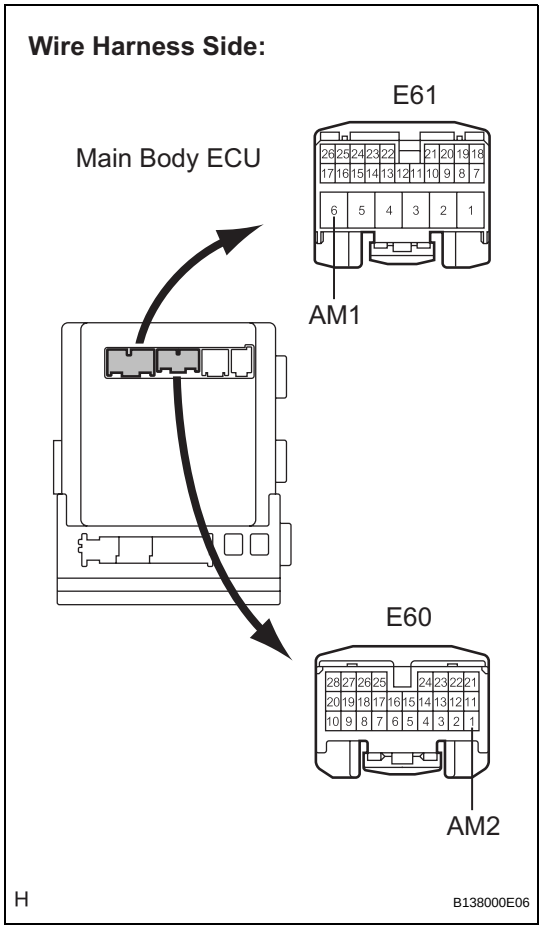

(a) Disconnect the E60 and E61 ECU connectors.

(b) Measure the voltage according to the value(s) in the table below.

Standard voltage

Tester Connection (Symbols)	Condition	Specified Condition
E61-6 (AM1) - Body ground	Always	10 to 14 V
E60-1 (AM2) - Body ground	Always	10 to 14 V

NG → **REPAIR OR REPLACE HARNESS OR CONNECTOR**

OK

ST

4 CHECK WIRE HARNESS (MAIN BODY ECU - BODY GROUND)

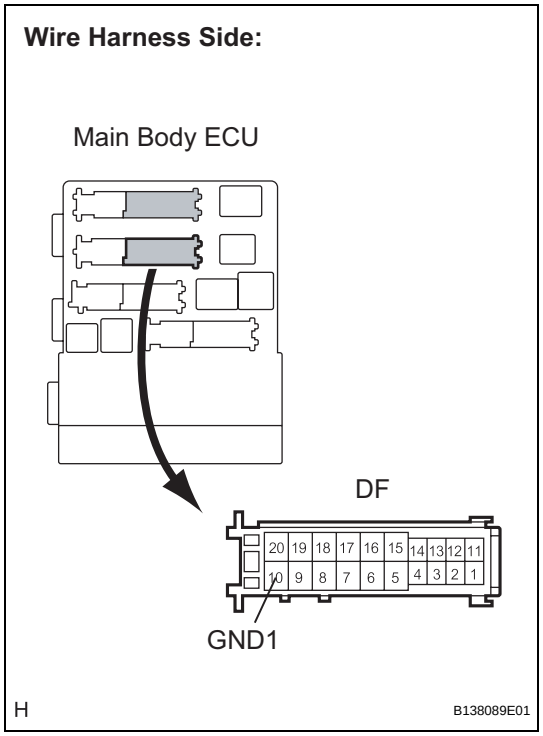

(a) Disconnect the DF ECU connector.
(b) Measure the resistance according to the value(s) in the table below.

Standard resistance

Tester Connection (Symbols)	Condition	Specified Condition
DF-10 (GND1) - Body ground	Always	Below 1 Ω

NG → **REPAIR OR REPLACE HARNESS OR CONNECTOR**

OK

5 INSPECT RELAY (IG2 RELAY)

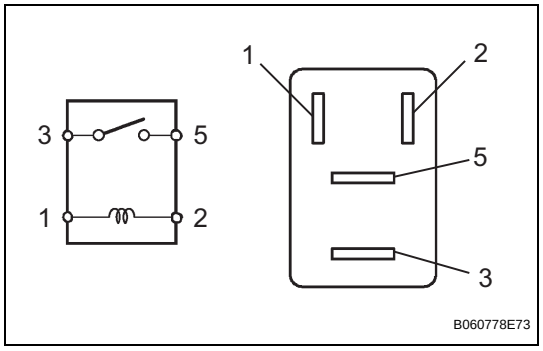

(a) Remove the IG2 relay from the engine room R/B No. 2.
(b) Measure the resistance according to the value(s) in the table below.

Standard resistance

Tester Connection	Specified Condition
3 - 5	10 kΩ or higher
3 - 5	Below 1 Ω (When battery voltage is applied to terminals 1 and 2)

NG → **REPLACE RELAY**

OK

6 CHECK WIRE HARNESS (ENGINE ROOM R/B - MAIN BODY ECU AND BODY GROUND)

(a) Remove the IG2 relay from the engine room R/B.

ST

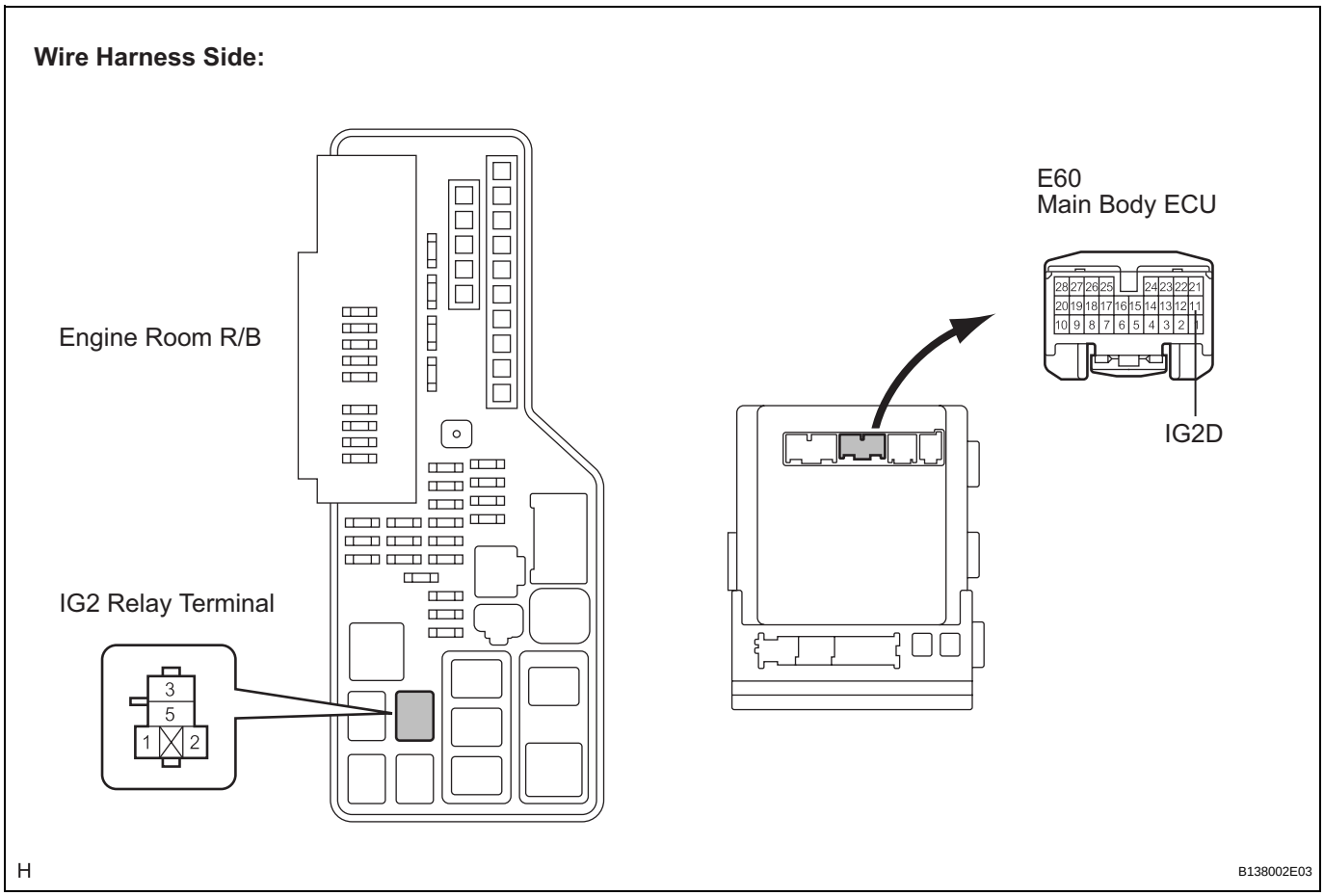

ST

(b) Disconnect the E60 ECU connector.

(c) Measure the resistance according to the value(s) in the table below.

Standard resistance

Terminal No. (Symbol)	Specified Condition
Engine room R/B IG2 relay terminal 1 - E60-11 (IG2D)	Below 1 Ω
Engine room R/B IG2 relay terminal 2 - Body ground	Below 1 Ω
E60-11 (IG2D) - Body ground	10 kΩ or higher

NG → **REPAIR OR REPLACE HARNESS OR CONNECTOR**

OK

7 INSPECT RELAY (IG1 RELAY)

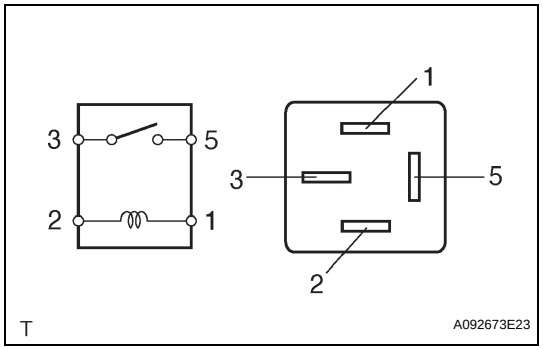

(a) Remove the IG1 relay from the instrument panel J/B.
(b) Measure the resistance according to the value(s) in the table below.

Standard resistance

Tester Connection	Specified Condition
3 - 5	10 kΩ or higher
3 - 5	Below 1 Ω (when battery voltage is applied to terminals 1 and 2)

NG → **REPLACE RELAY**

OK

8 CHECK WIRE HARNESS (INSTRUMENT PANEL J/B - MAIN BODY ECU)

(a) Disconnect the DI J/B connector.

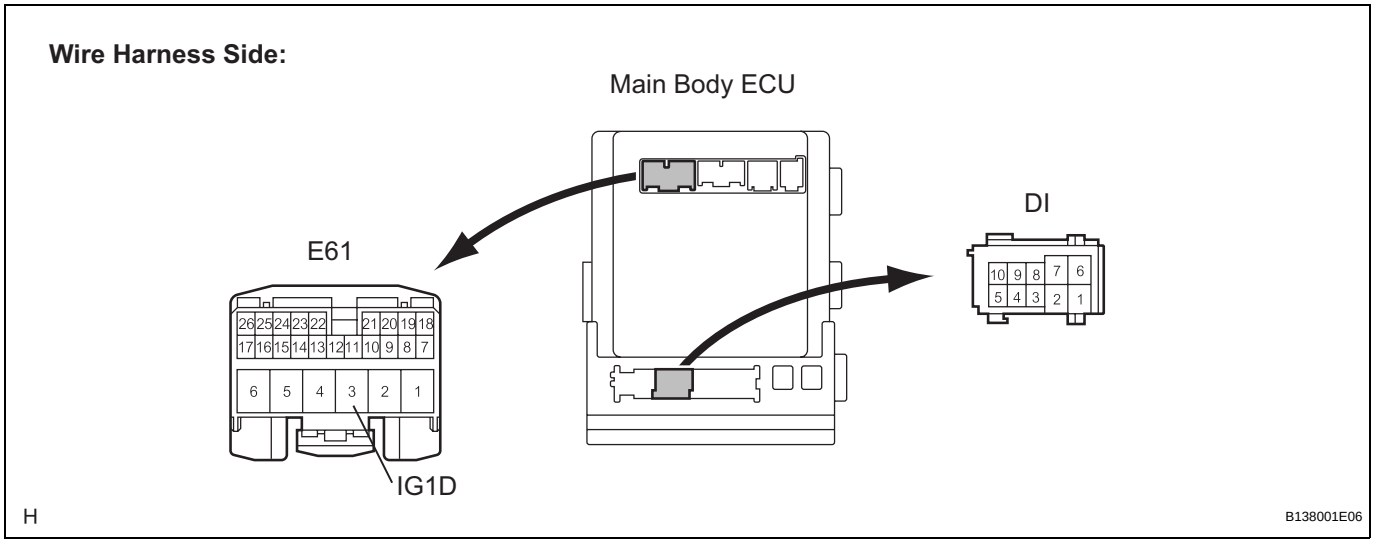

(b) Disconnect the E61 ECU connector.
(c) Measure the resistance according to the value(s) in the table below.

Standard resistance

Terminal No. (Symbol)	Condition	Specified Condition
DI-9 - E61-3 (IG1D)	Always	Below 1 Ω
E61-3 (IG1D) - Body ground	Always	10 kΩ or higher

NG → **REPAIR OR REPLACE HARNESS OR CONNECTOR**

OK

ST

9 CHECK WIRE HARNESS (INSTRUMENT PANEL J/B - BATTERY AND BODY GROUND)

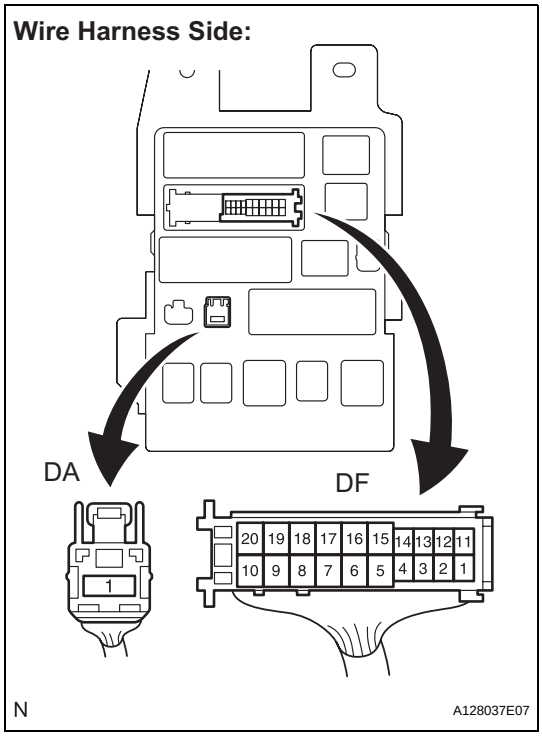

(a) Disconnect the DF and DA J/B connectors.

(b) Measure the resistance according to the value(s) in the table below.

Standard resistance

Terminal No.	Condition	Specified Condition
DF-10 - Body ground	Always	Below 1 Ω

(c) Measure the voltage according to the value(s) in the table below.

Standard voltage

Terminal No.	Condition	Specified Condition
DA-1 - Body ground	Always	10 to 14 V

NG → **REPAIR OR REPLACE HARNESS OR CONNECTOR**

OK

ST

10 INSPECT INSTRUMENT PANEL J/B

(a) Measure the resistance according to the value(s) in the table below.

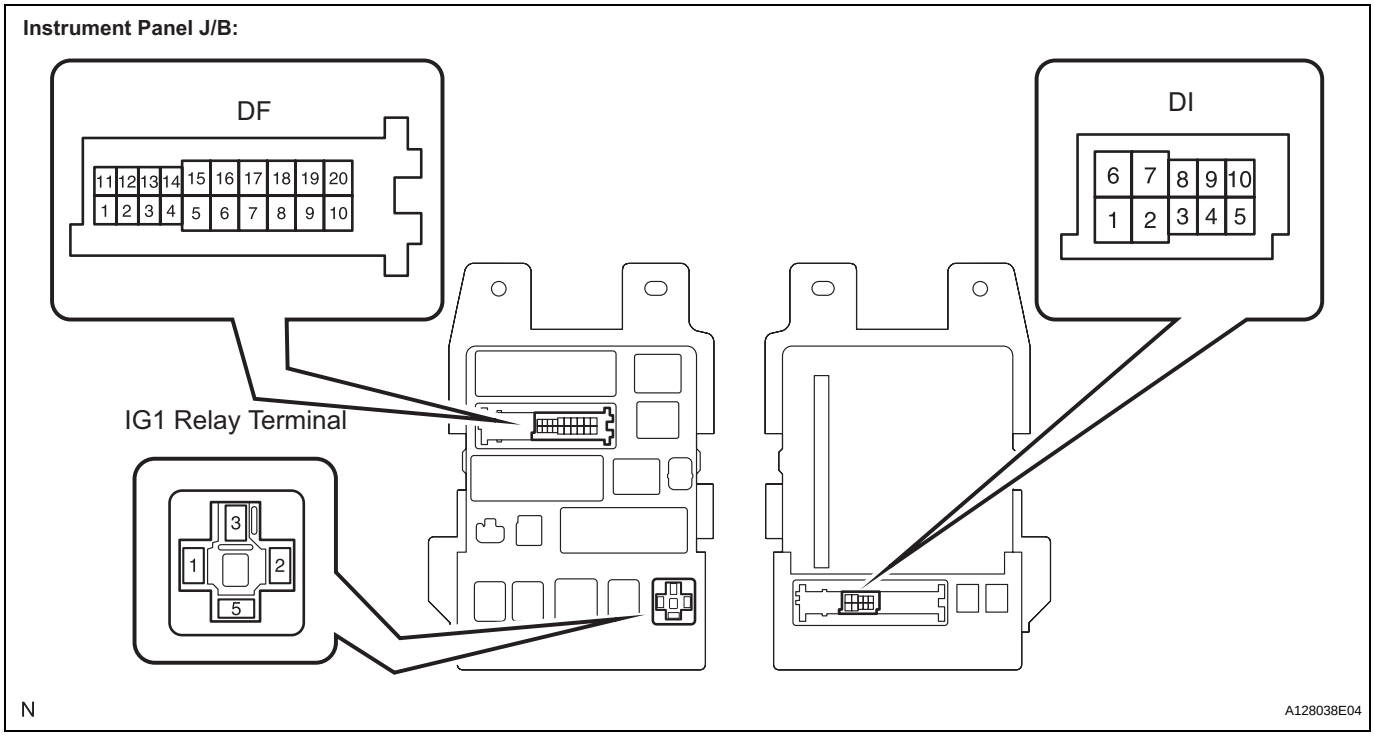

Standard resistance

Terminal No.	Condition	Specified Condition
DF-10 - IG1 relay terminal-1	Always	Below 1 Ω
DI-9 - IG1 relay terminal-2	Always	Below 1 Ω
DF-10 - Body ground	Always	10 kΩ or higher
DI-9 - Body ground	Always	10 kΩ or higher

OK → **REPLACE MAIN BODY ECU**

NG

REPLACE INSTRUMENT PANEL J/B

Power Source Mode does not Change to ON (ACC)

DESCRIPTION

When the engine switch is pushed with the electrical key in the cabin, the main body ECU receives signals to switch the power source mode.

HINT:

To allow use of the intelligent tester to inspect the push-button start function when the engine switch is off, repeat opening and closing any of the doors. Opening and closing a door establishes communication between the intelligent tester and the main body ECU. (Opening and closing a door can also be simulated by operating a door courtesy light switch.)

WIRING DIAGRAM

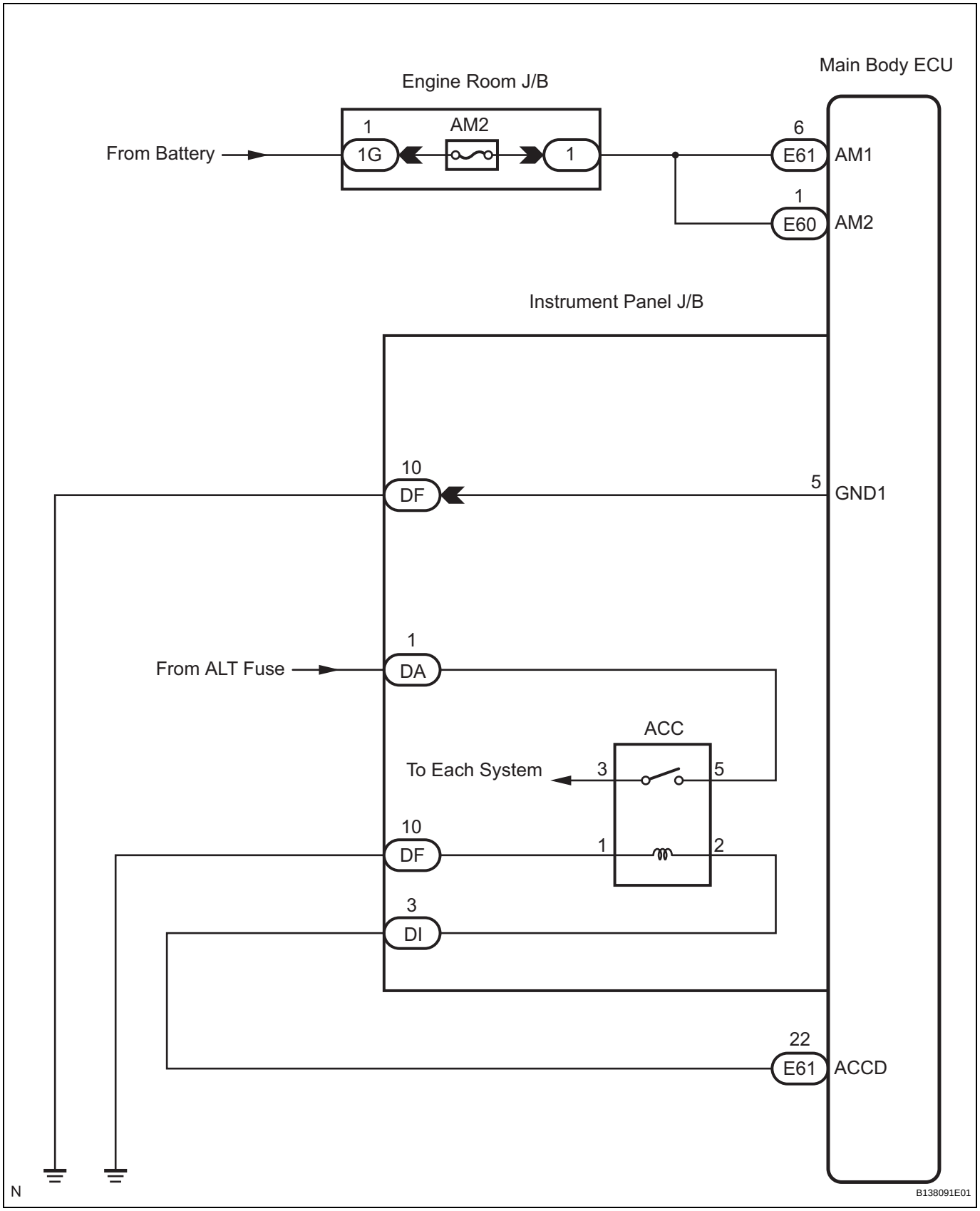

ST

INSPECTION PROCEDURE

1	INSPECT FUSE (AM2)

(a) Remove the AM2 fuse from the engine room J/B.
(b) Measure the resistance of the fuse.
Standard resistance:
Below 1 Ω

NG → **REPLACE FUSE**

OK

2	CHECK CONNECTORS

(a) Check that the connectors are securely connected and the terminals are not deformed or loose.
OK:
The connectors are securely connected and the terminals are not deformed or loose.

NG → **REPAIR OR REPLACE CONNECTORS**

OK

3 CHECK WIRE HARNESS (MAIN BODY ECU - BATTERY)

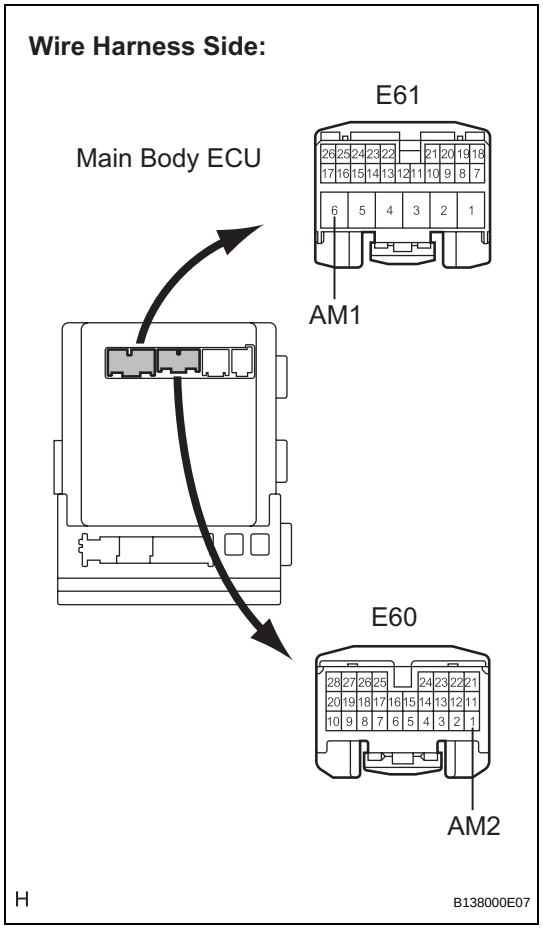

(a) Disconnect the E60 and E61 ECU connectors.

(b) Measure the voltage according to the value(s) in the table below.

Standard voltage

Tester Connection (Symbols)	Condition	Specified Condition
E61-6 (AM1) - Body ground	Always	10 to 14 V
E60-1 (AM2) - Body ground	Always	10 to 14 V

NG → **REPAIR OR REPLACE HARNESS OR CONNECTOR**

OK

ST

4 CHECK WIRE HARNESS (MAIN BODY ECU - BODY GROUND)

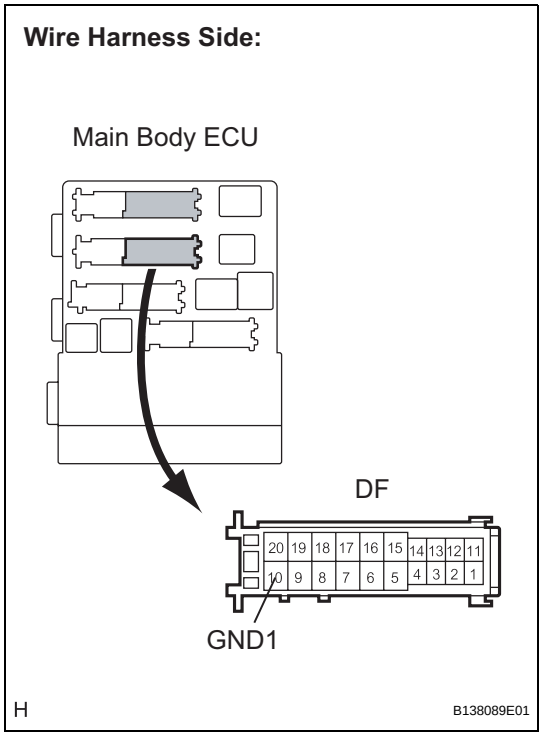

(a) Disconnect the DF ECU connector.
(b) Measure the resistance according to the value(s) in the table below.

Standard resistance

Tester Connection (Symbols)	Condition	Specified Condition
DF-10 (GND1) - Body ground	Always	Below 1 Ω

NG → **REPAIR OR REPLACE HARNESS OR CONNECTOR**

OK

ST

5 INSPECT RELAY (ACC RELAY)

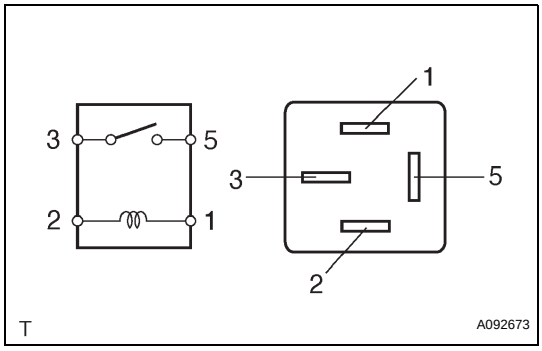

(a) Remove the ACC relay from the instrument panel J/B.
(b) Measure the resistance according to the value(s) in the table below.

Standard resistance

Tester Connection	Specified Condition
3 - 5	10 kΩ or higher
3 - 5	Below 1 Ω (when battery voltage is applied to terminals 1 and 2)

NG → **REPLACE RELAY**

OK

6 CHECK WIRE HARNESS (INSTRUMENT PANEL J/B - MAIN BODY ECU)

(a) Disconnect the E61 ECU connector.

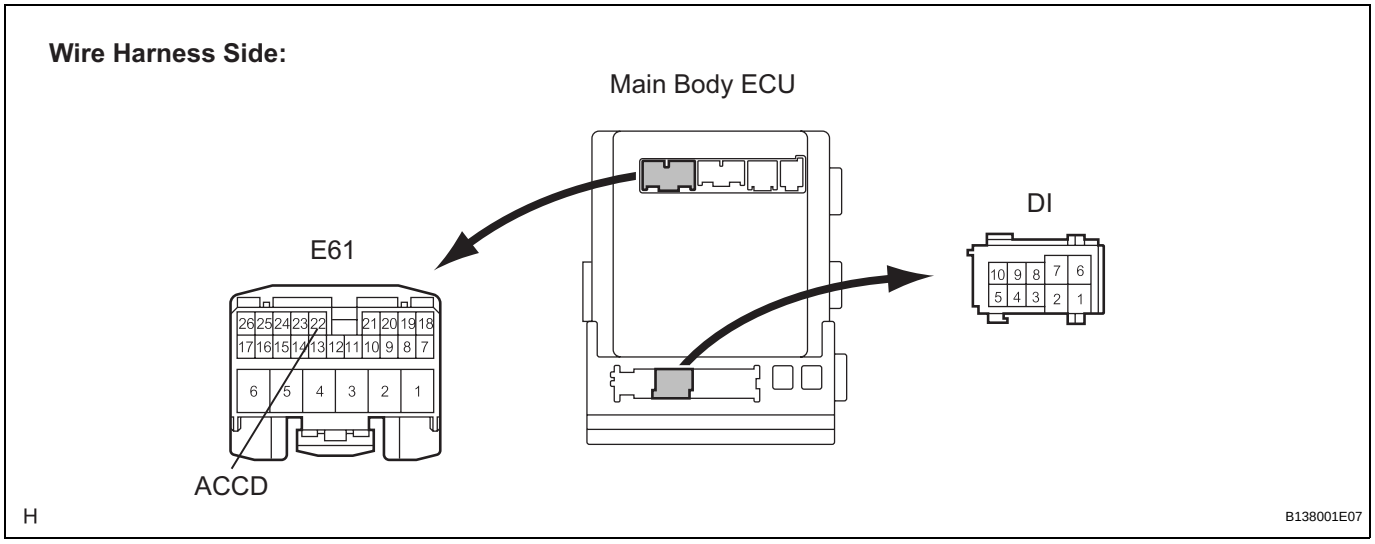

(b) Disconnect the DI J/B connector.

(c) Measure the resistance according to the value(s) in the table below.

Standard resistance

Terminal No. (Symbol)	Condition	Specified Condition
DI-3 - E61-22 (ACCD)	Always	Below 1 Ω
E61-22 or DI-3 - Body ground	Always	10 kΩ or higher

NG → **REPAIR OR REPLACE HARNESS OR CONNECTOR**

OK

7 CHECK WIRE HARNESS (INSTRUMENT PANEL J/B - BATTERY AND BODY GROUND)

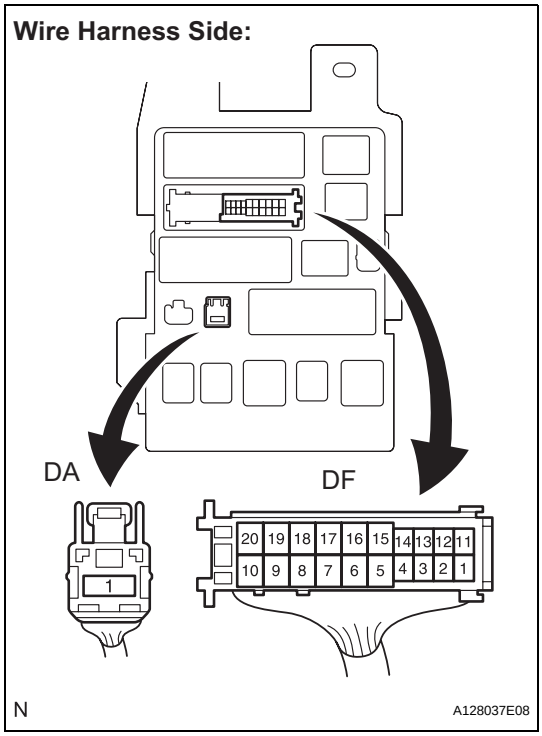

(a) Disconnect the DF and DA J/B connectors.

(b) Measure the resistance according to the value(s) in the table below.

Standard resistance

Terminal No.	Condition	Specified Condition
DF-10 - Body ground	Always	Below 1 Ω

(c) Measure the voltage according to the value(s) in the table below.

Standard voltage

Terminal No.	Condition	Specified Condition
DA-1 - Body ground	Always	10 to 14 V

NG → **REPAIR OR REPLACE HARNESS OR CONNECTOR**

OK

ST

8 INSPECT INSTRUMENT PANEL J/B

(a) Measure the resistance according to the value(s) in the table below.

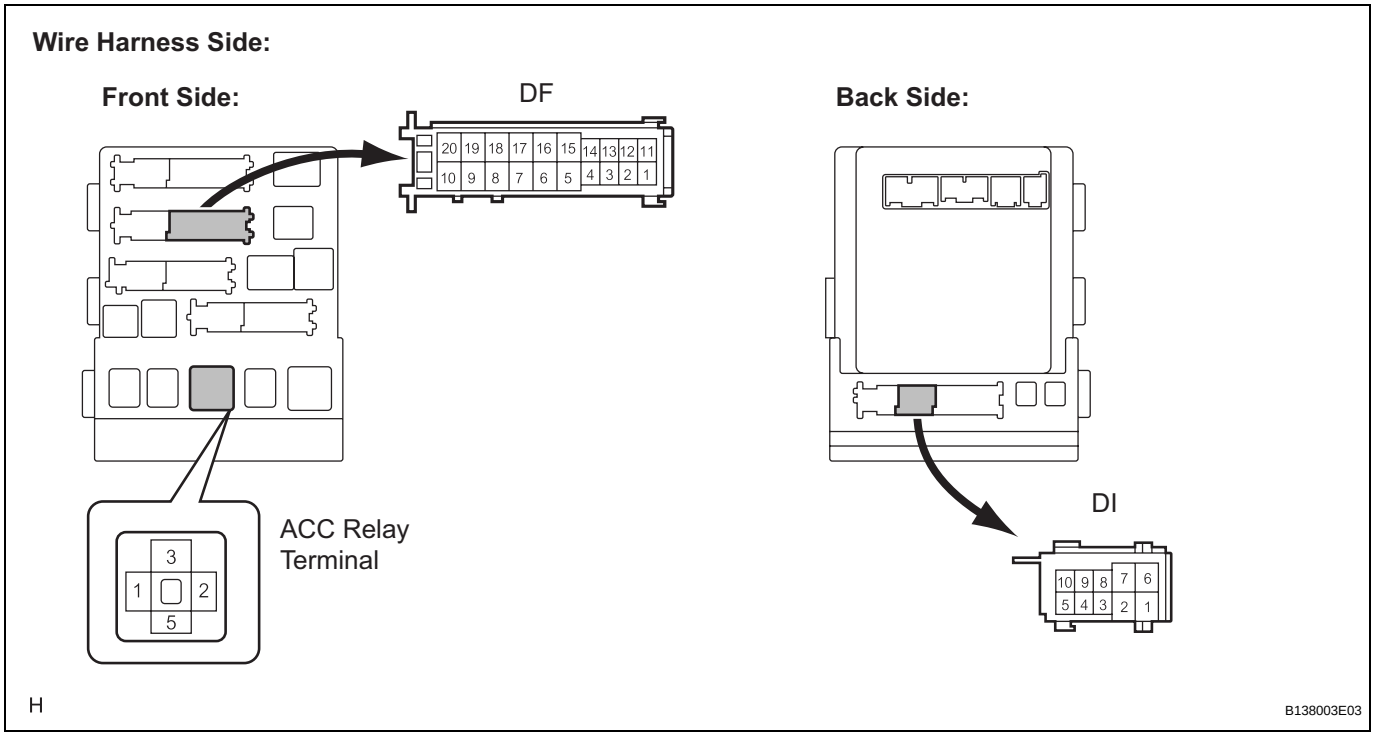

Standard resistance

Terminal No.	Condition	Specified Condition
ACC relay terminal 1 - DF-10	Always	Below 1 Ω
ACC relay terminal 2 - DI-3	Always	Below 1 Ω
DF-10 - Body ground	Always	10 kΩ or higher
DI-3 - Body ground	Always	10 kΩ or higher

NG → **REPLACE INSTRUMENT PANEL J/B**

OK

REPLACE MAIN BODY ECU

REMOVAL

1. **DISCONNECT CABLE FROM NEGATIVE BATTERY TERMINAL**
2. **REMOVE COOL AIR INTAKE DUCT SEAL (See page EM-22)**
3. **REMOVE ENGINE ROOM SIDE COVER LH (See page EM-22)**
4. **REMOVE V-BANK COVER SUB-ASSEMBLY (See page EM-23)**
5. **REMOVE NO. 2 AIR CLEANER INLET (See page EM-23)**
6. **REMOVE AIR CLEANER CAP SUB-ASSEMBLY (See page ES-519)**
7. **REMOVE AIR CLEANER CASE SUB-ASSEMBLY (See page EM-23)**
8. **REMOVE NO. 1 AIR CLEANER INLET (See page EM-23)**
9. **REMOVE STARTER ASSEMBLY**
   (a) Disconnect the terminal 50 connector from the starter assembly.
   (b) Remove the nut and disconnect the wire harness from terminal 30.
   (c) Remove the 2 bolts and starter assembly.

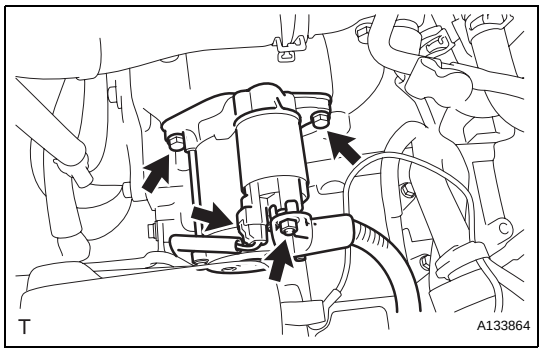

ST

DISASSEMBLY

1. **REMOVE MAGNETIC SWITCH ASSEMBLY**
   (a) Remove the nut and disconnect the lead wire from terminal C.

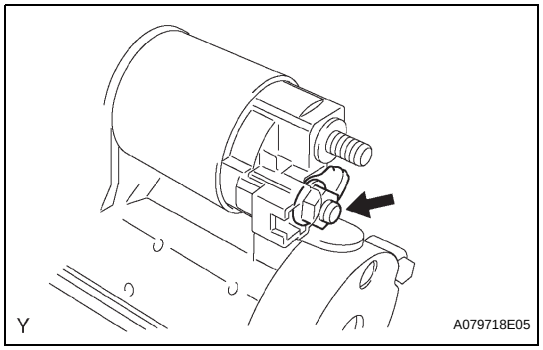

   (b) Remove the 2 screws that hold the magnetic switch assembly to the motor terminal starter kit.
   (c) Remove the magnetic switch assembly.
   (d) Remove the return spring and the plunger from the magnetic switch assembly.

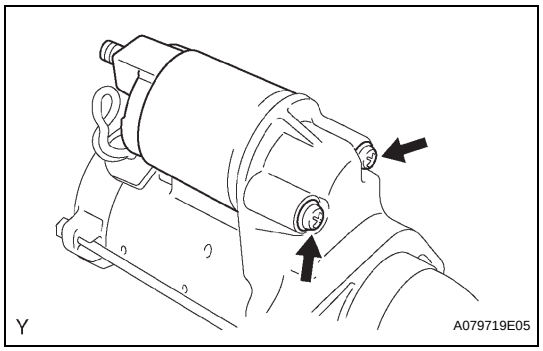

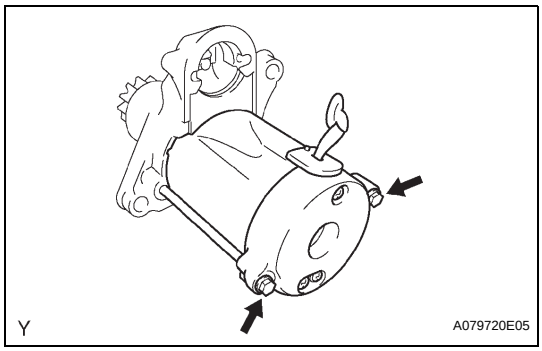

2. REMOVE STARTER YOKE ASSEMBLY

(a) Remove the 2 through bolts and pull out the starter yoke assembly together with the starter commutator end frame assembly.

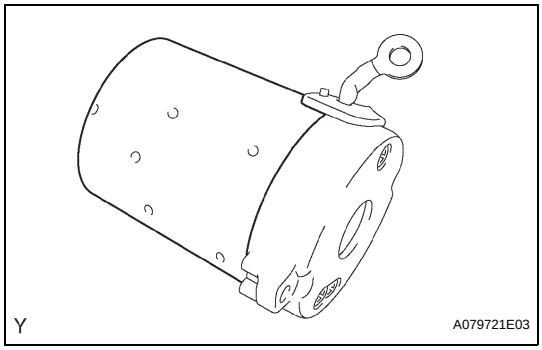

3. REMOVE STARTER COMMUTATOR END FRAME ASSEMBLY

(a) Remove the starter yoke assembly from the starter commutator end frame assembly.

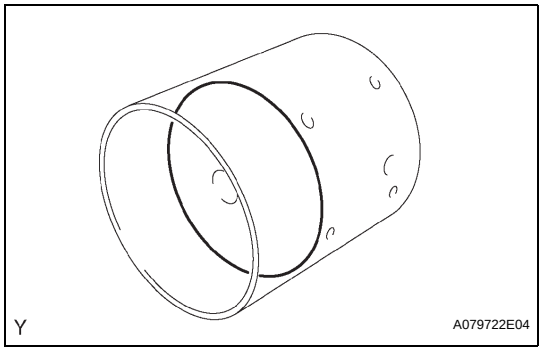

4. REMOVE STARTER ARMATURE PLATE

(a) Remove the starter armature plate from the starter yoke assembly.

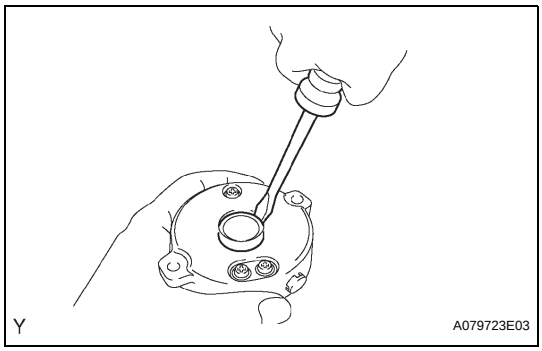

5. REMOVE STARTER COMMUTATOR END FRAME COVER

(a) Using a screwdriver, remove the starter commutator end frame cover.

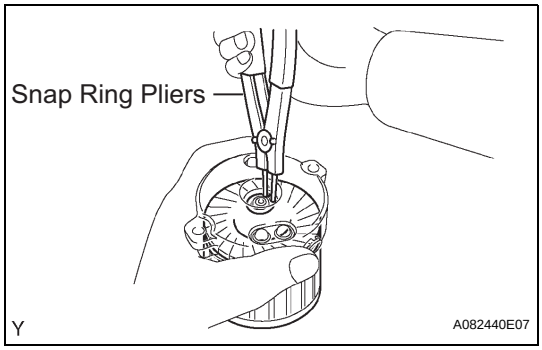

6. REMOVE STARTER ARMATURE ASSEMBLY

(a) Using snap ring pliers, remove the snap ring and plate washer.

(b) Remove the starter armature assembly from the commutator end frame assembly.

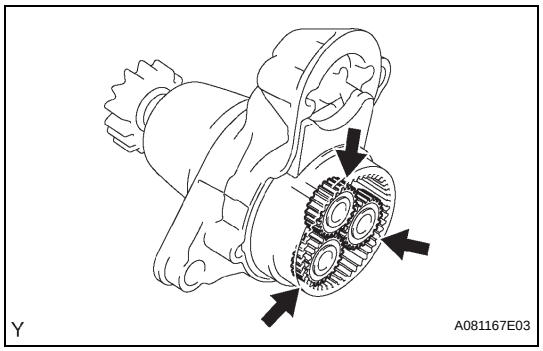

7. REMOVE PLANETARY GEAR

(a) Remove the 3 planetary gears from the starter drive housing assembly.

INSPECTION

1. INSPECT STARTER ASSEMBLY

CAUTION:
Make sure to complete each of the following tests within 5 seconds to prevent the coil from burning out.

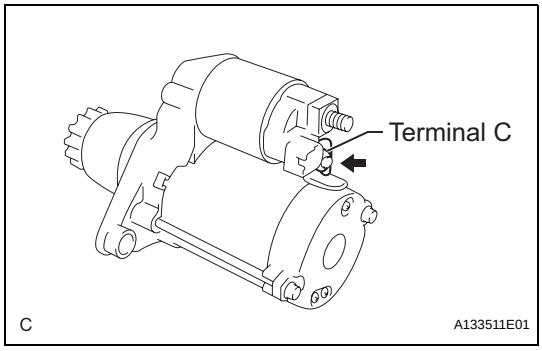

(a) Perform pull-in test:
(1) Disconnect the lead wire from terminal C.

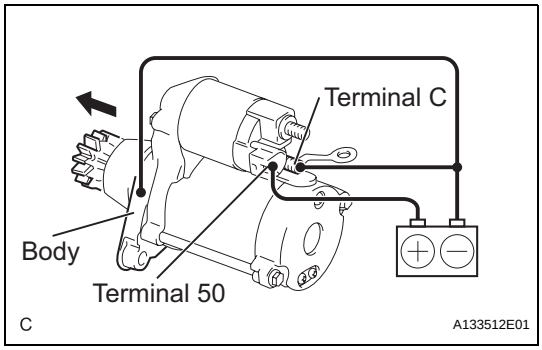

(2) Connect the battery to the magnetic switch as shown in the illustration. Check that the clutch pinion gear moves outward.
If the clutch pinion gear does not move outward, replace the repair service starter kit.

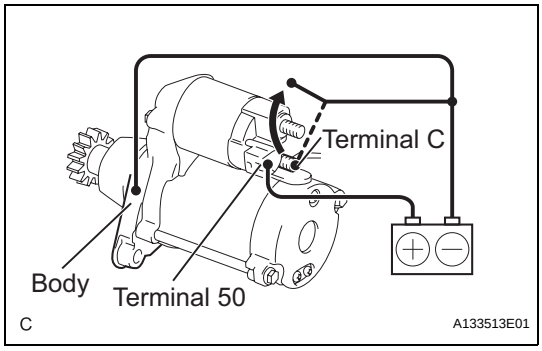

(b) Perform hold-in test:
(1) Disconnect the negative (-) terminal lead from terminal C under the conditions for pull-in test. Check that the pinion gear remains out.
If the clutch pinion gear moves inward, replace the repair service starter kit.

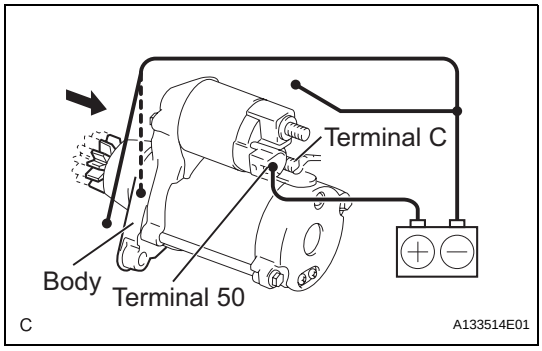

(c) Inspect clutch pinion gear return:
(1) Disconnect the negative (-) lead from the starter body. Check that the clutch pinion gear moves inward.
If the clutch pinion gear does not move inward, replace the repair service starter kit.

(d) Perform no-load performance test:
(1) Connect the field coil wire to terminal C with the nut. Make sure that the lead is not grounded.
Torque: 10 N*m (102 kgf*cm, 7 ft.*lbf)
(2) Clamp the starter in a vise.

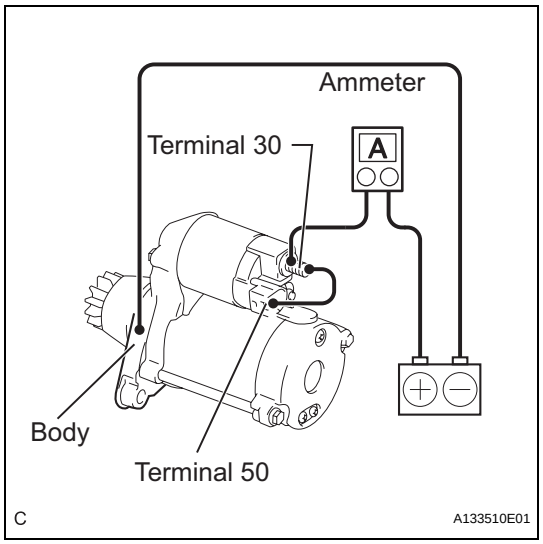

(3) Connect the battery and an ammeter to the starter as shown in the illustration.
(4) Check that the starter rotates smoothly and steadily with the clutch pinion gear extended. Check that the ammeter reads the specified current.
Specified current

Condition	Specified condition
at 11.5 V	90 A or less

If the result is not as specified, overhaul the starter assembly.

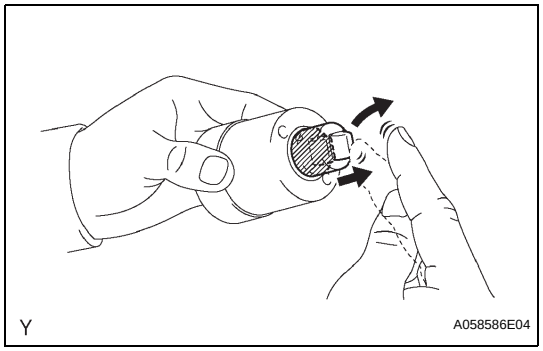

2. INSPECT MAGNETIC SWITCH ASSEMBLY
(a) Check the plunger.
(1) Push in the plunger and check that it returns quickly to its original position.
If necessary, replace the magnetic switch assembly.

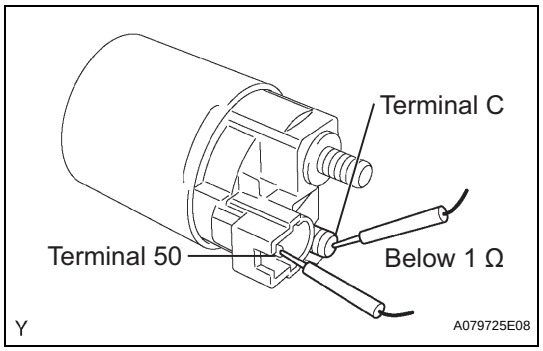

(b) Inspect the resistance of the pull-in coil.
(1) Using an ohmmeter, measure the resistance between terminals 50 and C.
Standard resistance

Tester connection	Specified condition
Terminal 50 - Terminal C	Below 1 Ω

If the resistance is not as specified, replace the magnetic switch assembly.

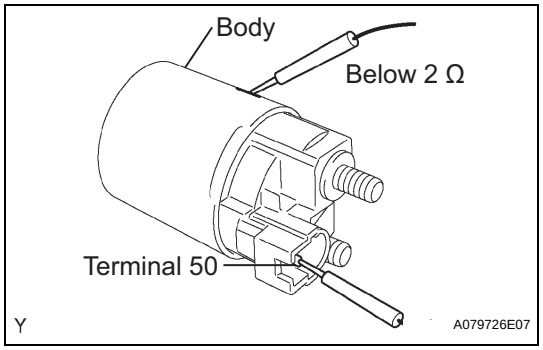

(c) Inspect the resistance of the hold-in coil.
(1) Using an ohmmeter, measure the resistance between terminal 50 and switch body.
Standard resistance

Tester connection	Specified condition
Terminal 50 - Switch body	Below 2 Ω

If the resistance is not as specified, replace the magnetic switch assembly.

3. INSPECT STARTER ARMATURE ASSEMBLY
(a) Check the commutator surface for dirt or burning.
If the surface is dirty or burnt, smooth the surface with 400-grit sandpaper or leather.

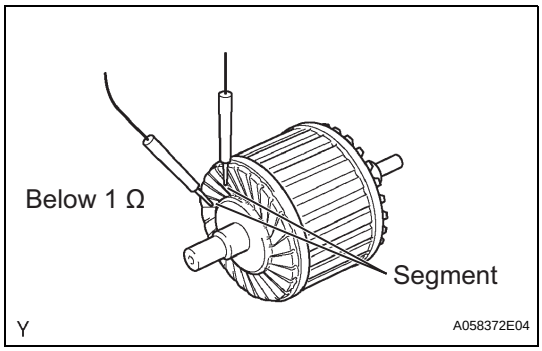

(b) Inspect the resistance of the commutator.
(1) Using an ohmmeter, measure the resistance between the segments of the commutator.
Standard resistance

Tester connection	Specified condition
Segment - Segment	Below 1 Ω

If the resistance is not as specified, replace the starter armature assembly.

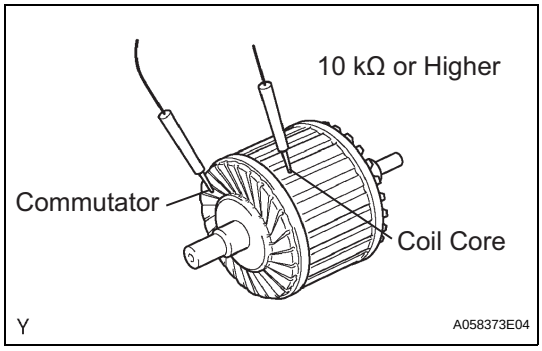

(2) Using an ohmmeter, measure the resistance between the commutator and armature coil core.
Standard resistance

Tester connection	Specified condition
Commutator - Armature coil core	10 kΩ or higher

If the resistance is not as specified, replace the starter armature assembly.

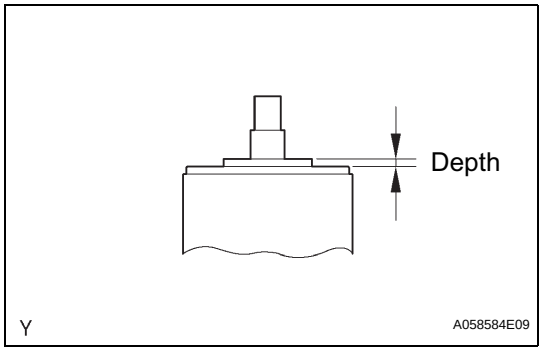

(c) Using vernier calipers, measure the commutator depth.
Specified depth:
3.1 mm (0.122 in.)
Maximum depth:
3.8 mm (0.150 in.)
If the depth is greater than the maximum, replace the starter armature assembly.

ST

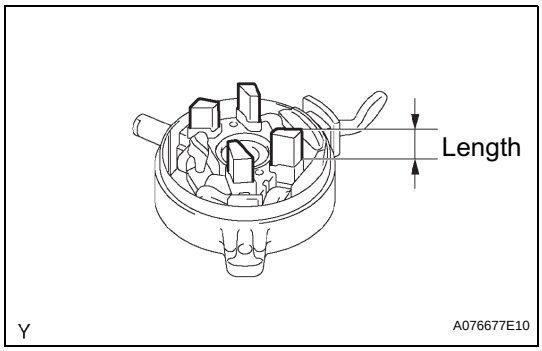

4. INSPECT STARTER COMMUTATOR END FRAME ASSEMBLY

(a) Check the brush length.
(1) Using vernier calipers, measure the brush length.
Specified length:
9.0 mm (0.354 in.)
Maximum length:
4.0 mm (0.157 in.)
If the length is less than the minimum, replace the starter commutator end frame assembly.

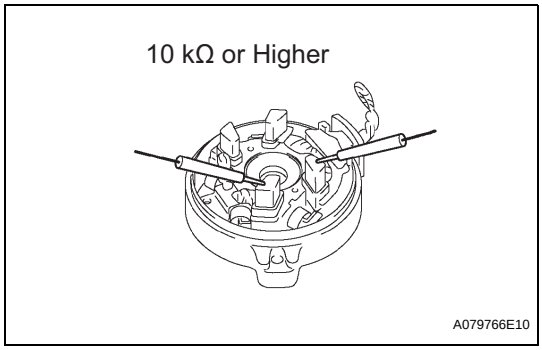

(b) Check the resistance.
(1) Using an ohmmeter, measure the resistance between the positive (+) and negative (-) brushes.
Resistance:
10 kΩ or higher
If the resistance is not as specified, repair or replace the starter commutator end frame assembly.

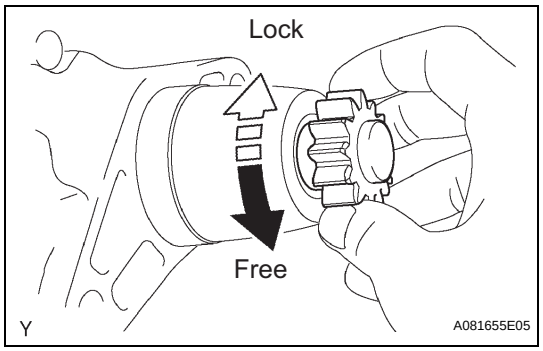

5. INSPECT STARTER CLUTCH

(a) Check the starter clutch.

(1) Rotate the clutch pinion gear counterclockwise and check that it turns freely. Try to rotate the clutch pinion gear clockwise and check that it locks.
If necessary, replace the starter drive housing assembly.

REASSEMBLY

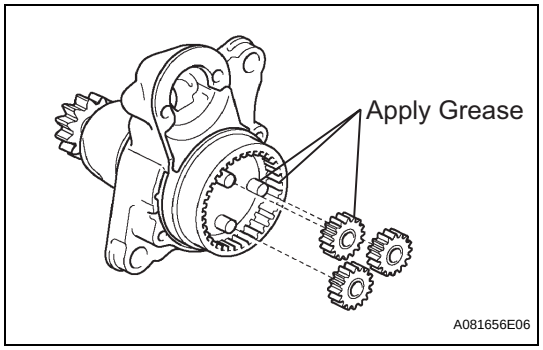

1. INSTALL PLANETARY GEAR

(a) Apply high-temperature grease to the planetary gears and pin parts of the planetary shaft.

(b) Install the 3 planetary gears to the starter drive housing assembly.

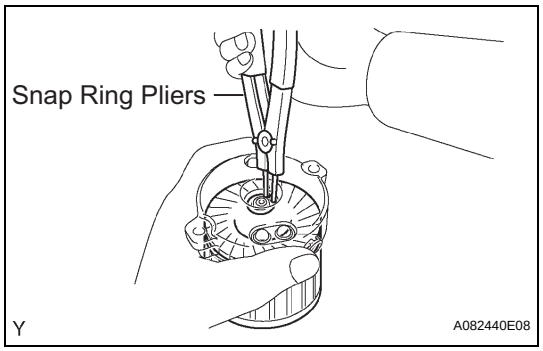

2. INSTALL STARTER ARMATURE ASSEMBLY

(a) Apply high-temperature grease to the plate washer and the armature shaft.

(b) Install the starter armature assembly to the starter commutator end frame assembly.

(c) Using snap ring pliers, install the plate washer and a new snap ring.

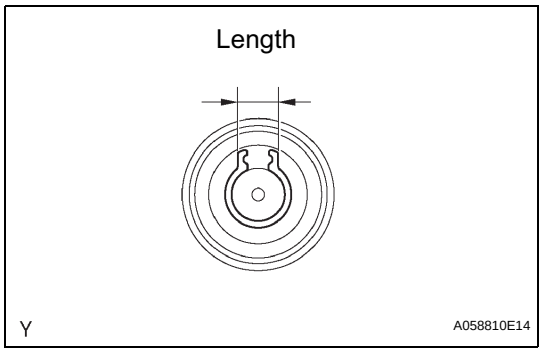

(d) Using vernier calipers, measure the snap ring.
Maximum length:
5.0 mm (0.197 in.)
If the length is greater than the maximum, replace the snap ring with a new one.

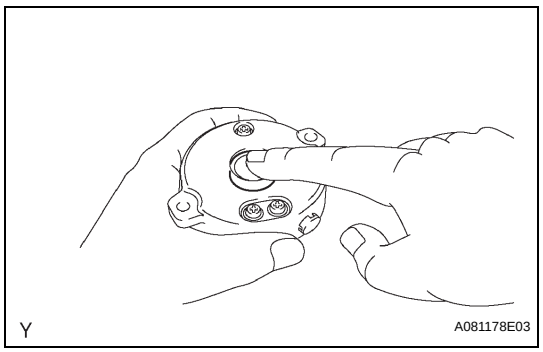

3. INSTALL STARTER COMMUTATOR END FRAME COVER

(a) Install the starter commutator end frame cover to the starter commutator end frame assembly.

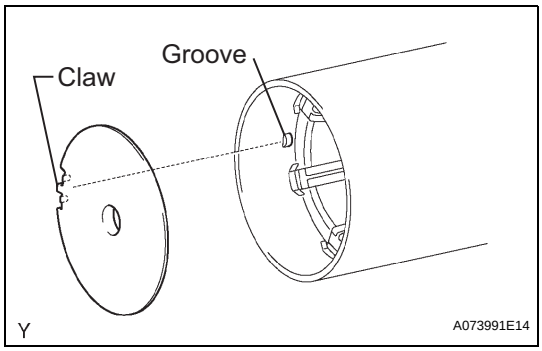

4. INSTALL STARTER ARMATURE PLATE

(a) Align the claw of the armature plate with the groove inside the starter yoke assembly, and install the starter armature plate.

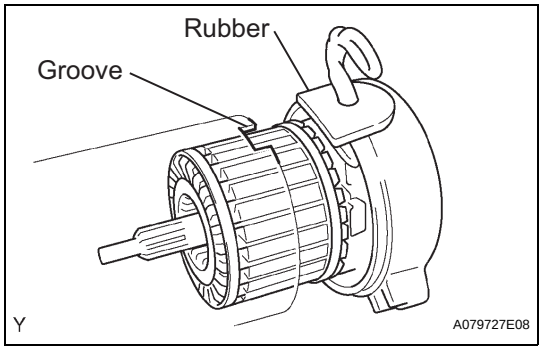

5. INSTALL STARTER COMMUTATOR END FRAME ASSEMBLY

(a) Align the starter commutator end frame rubber with the groove of the starter yoke assembly.

(b) Install the starter commutator end frame assembly to the starter yoke assembly.

NOTICE:

The magnet of the starter yoke assembly may attract the starter armature assembly when the starter commutator end frame assembly is installed, causing the magnet to break.

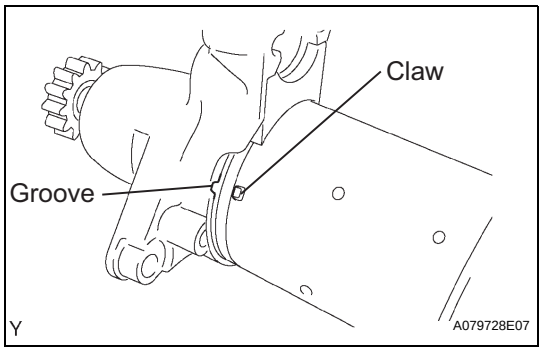

6. INSTALL STARTER YOKE ASSEMBLY

(a) Align the claw of the starter yoke with the groove inside the motor terminal starter kit.

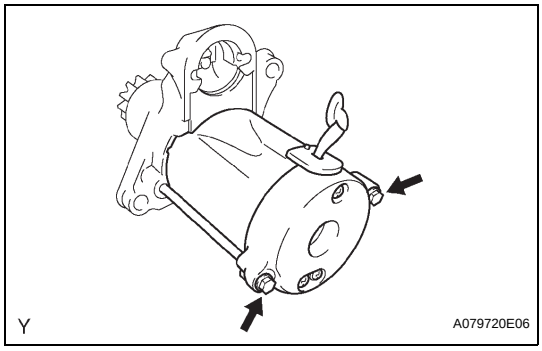

(b) Install the starter yoke with the 2 through bolts.

Torque: 6.0 N*m (61 kgf*cm, 53 in.*lbf)

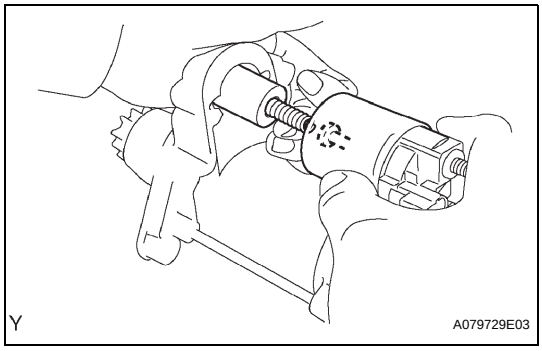

7. INSTALL MAGNETIC SWITCH ASSEMBLY

(a) Apply high-temperature grease to the plunger and the hook.

(b) Hang the plunger hook of the magnetic switch assembly to the drive lever hook.

(c) Install the plunger and the return spring.

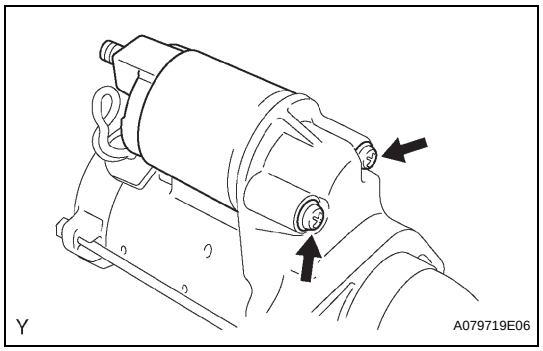

(d) Install the repair magnetic switch assembly with the 2 screws.
Torque: 7.5 N*m (76 kgf*cm, 66 in.*lbf)

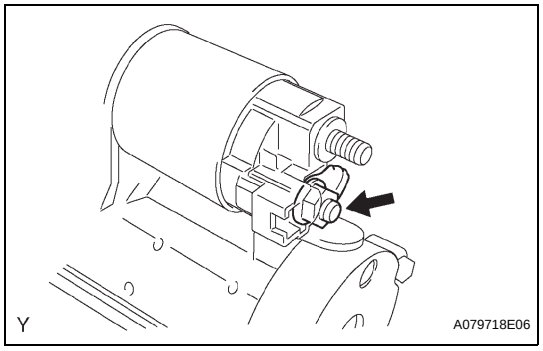

(e) Connect the lead wire to terminal C with the nut.
Torque: 10 N*m (102 kgf*cm, 7 ft.*lbf)

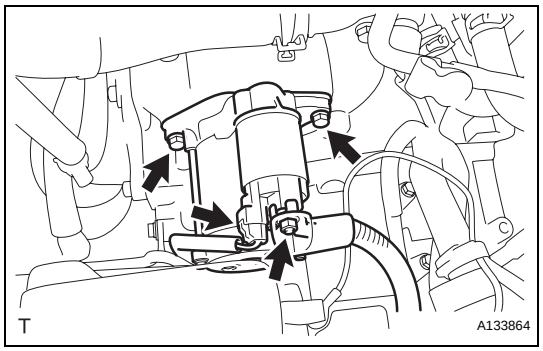

INSTALLATION

1. **INSTALL STARTER ASSEMBLY**
   (a) Install the starter assembly with the 2 bolts.
   Torque: 37 N*m (380 kgf*cm, 28 ft.*lbf)
   (b) Connect the wire harness to terminal 30 and install the nut. Then, attach the terminal cap.
   Torque: 9.8 N*m (100 kgf*cm, 87 in.*lbf)
   (c) Connect the terminal 50 connector to the starter assembly.
2. **INSTALL NO. 1 AIR CLEANER INLET (See page EM-48)**
3. **INSTALL AIR CLEANER CASE SUB-ASSEMBLY (See page EM-48)**
4. **INSTALL AIR CLEANER CAP SUB-ASSEMBLY (See page ES-522)**
5. **INSTALL NO. 2 AIR CLEANER INLET (See page EM-48)**
6. **INSTALL V-BANK COVER SUB-ASSEMBLY (See page EM-49)**
7. **INSTALL ENGINE ROOM SIDE COVER LH (See page EM-50)**
8. **INSTALL COOL AIR INTAKE DUCT SEAL (See page EM-50)**
9. **CONNECT CABLE TO NEGATIVE BATTERY TERMINAL (See page EM-49)**

10. PERFORM INITIALIZATION

(a) Perform initialization procedure (See page IN-33).

NOTICE:

Some vehicle systems require initialization after reconnecting the cable to the negative battery terminal.

INSPECTION

1. INSPECT ENGINE SWITCH

(a) Measure the resistance according to the value(s) in the table below.

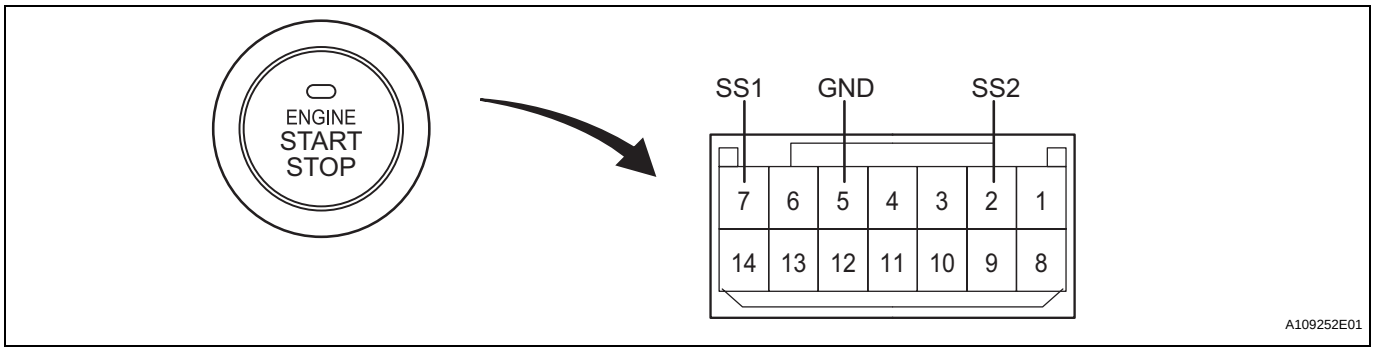

Standard resistance

Tester Connection	Switch Condition	Specified Condition
7 (SS1) - 5 (GND)	Pushed	Below 1 Ω
2 (SS2) - 5 (GND)	Pushed	Below 1 Ω
7 (SS1) - 5 (GND)	Not pushed	10 kΩ or higher
2 (SS2) - 5 (GND)	Not pushed	10 kΩ or higher

If the result is not as specified, replace the engine switch.

(b) Apply battery voltage between the terminals of the switch, and check the illumination condition of the switch.

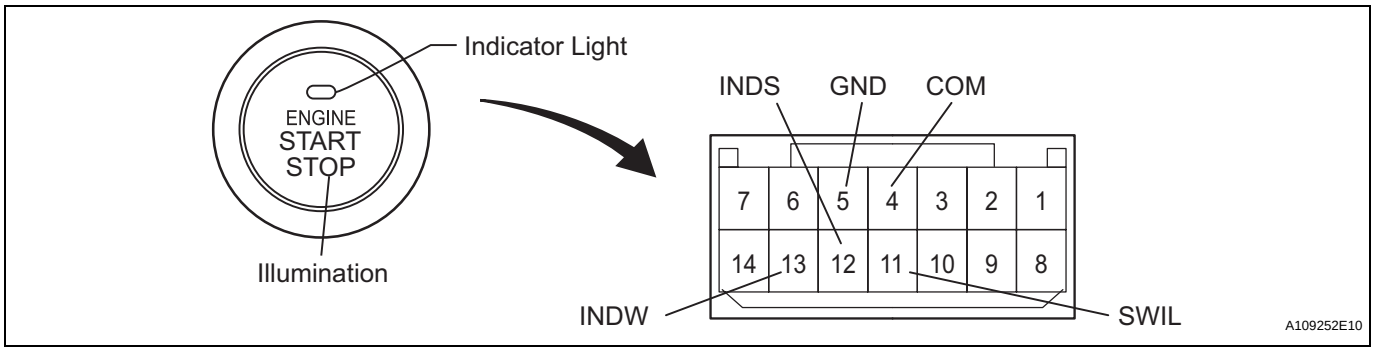

Standard resistance

Measurement Condition	Specified Condition
Battery positive (+) → Terminal 11 (SWIL) Battery negative (-) → Terminal 4 (COM) or 5 (GND)	Illuminates
Battery positive (+) → Terminal 12 (INDS) Battery negative (-) → Terminal 4 (COM) or 5 (GND)	Illuminates
Battery positive (+) → Terminal 13 (INDW) Battery negative (-) → Terminal 4 (COM) or 5 (GND)	Illuminates

If the result is not as specified, replace the engine switch.

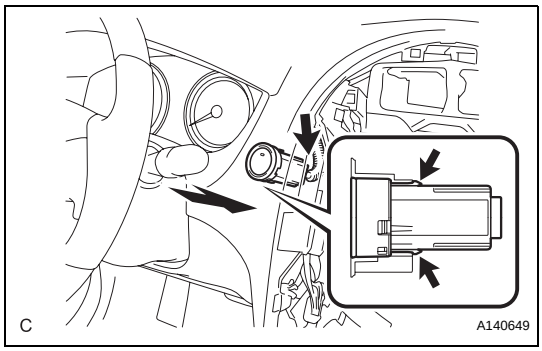

INSTALLATION

1. **INSTALL ENGINE SWITCH**
   (a) Attach the 2 claws to install the switch.
   (b) Connect the switch connector.
2. **INSTALL INTEGRATION CONTROL PANEL WITH RADIO RECEIVER ASSEMBLY (w/o Navigation System) (See page AV-172)**
3. **INSTALL MULTI-DISPLAY WITH RADIO RECEIVER ASSEMBLY (w/ Navigation System) (See page AV-173)**
4. **INSTALL INSTRUMENT PANEL FINISH PANEL END LH (See page IP-46)**
5. **INSTALL INSTRUMENT PANEL FINISH PANEL END RH (See page IP-44)**
6. **INSTALL UPPER CONSOLE PANEL ASSEMBLY WITH FRONT ASH RECEPTACLE (See page IP-42)**
7. **INSTALL NO. 2 INSTRUMENT PANEL REGISTER ASSEMBLY (See page IP-41)**
8. **INSTALL SHIFT LEVER KNOB SUB-ASSEMBLY (See page IP-42)**
9. **ADJUST CLOCK**

7. CHECK MIL

(a) Check that the MIL illuminates when turning the engine switch on (IG).
If the MIL does not illuminate, there is a problem in the MIL circuit (See page ES-465).

(b) When the engine is started, the MIL should turn off.

DTC CHECK / CLEAR

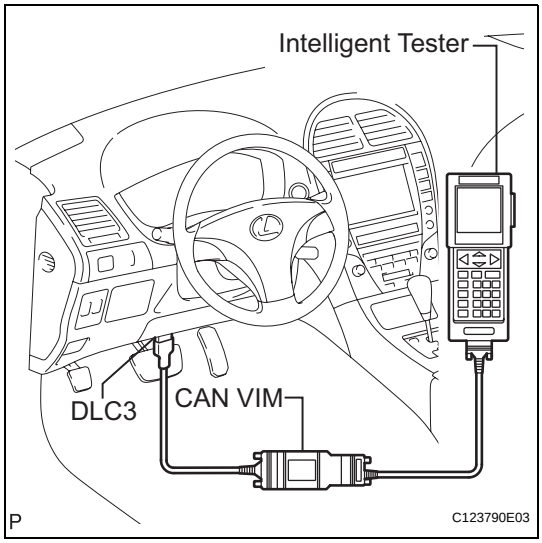

1. CHECK DTC

(a) DTCs which are stored in the TCM can be displayed with the intelligent tester.
These scan tools can display pending DTCs and current DTCs. Some DTCs are not stored if the TCM doesn't detect a malfunction during consecutive driving. However, the malfunction detected while a driving is stored as a pending DTC.

(1) Connect the intelligent tester to the Controller Area Network Vehicle Interface Module (CAN VIM). Then connect the CAN VIM to the Data Link Connector 3 (DLC3).

(2) Turn the engine switch on (IG).

(3) Enter the following menus: DIAGNOSIS / OBD / MOBD / ECT / DTC INFO / CURRENT CODES (or PENDING CODE).

(4) Confirm the DTCs and freeze frame data and then write them down.

(5) Confirm the details of the DTCs (See page AX-45).

NOTICE:
When a symptom has been duplicated using normal mode, use the intelligent tester to check for DTCs. For DTCs that are subject to "2-trip detection logic", perform the following steps:
Turn the engine switch OFF after the symptom has occurred once. Repeat the process of attempting to duplicate the symptom. When the problem or symptom happens for the second time and a DTC has been recorded, the MIL will illuminate, and the code will be stored.

2. CLEAR DTC

(a) Connect the intelligent tester to the CAN VIM. Then connect the CAN VIM to the DLC3.

(b) Turn the engine switch on (IG).

(c) Enter the following menus: DIAGNOSIS / OBD / MOBD / ECT / DTC INFO / CLEAR CODES and press YES.

CHECK MODE PROCEDURE

1. DESCRIPTION

(a) Check mode has a higher sensitivity to malfunctions and can detect malfunctions that normal mode cannot detect. Check mode can also detect all the malfunctions that normal mode can detect. In check mode, DTCs are detected with 1-trip detection logic.

2. CHECK MODE PROCEDURE

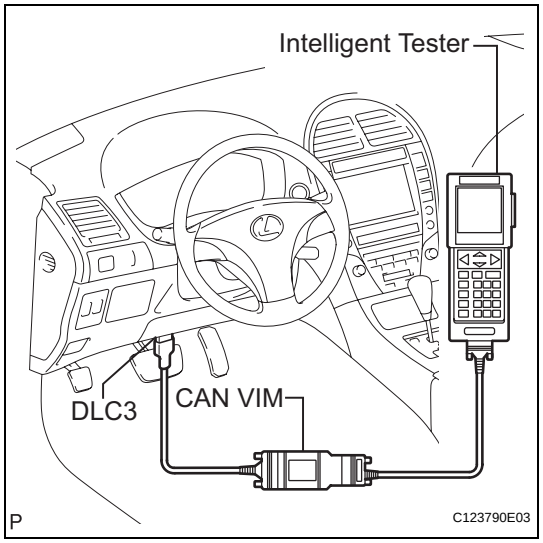

(a) Make sure that the items below are satisfied:
  (1) Battery positive voltage is 11 V or more
  (2) Throttle valve is fully closed
  (3) Transaxle is in the P or N position
  (4) A/C is switched OFF
(b) Turn the engine switch off.
(c) Connect the intelligent tester together with the Controller Area Network Vehicle Interface Module (CAN VIM) to the DLC3.
(d) Turn the engine switch on (IG).
(e) Enter the following menus: DIAGNOSIS / OBD/ MOBD / ECT / CHECK MODE.

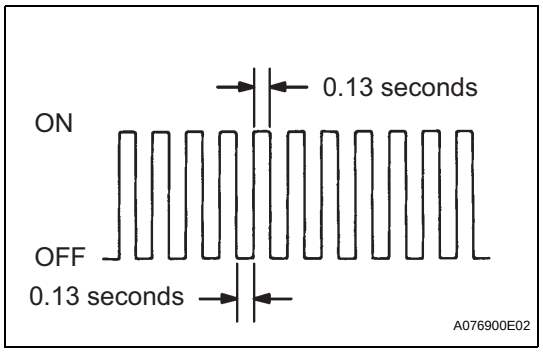

(f) Change the TCM to check mode. Make sure that the MIL flashes as shown in the illustration.
NOTICE:
All DTCs and freeze frame data recorded will be erased if: 1) the intelligent tester is used to change the TCM from normal mode to check mode or vice-versa; or 2) during check mode, the engine switch is turned from on (IG) to on (ACC) or off.
Before entering check mode, make notes of any DTCs and freeze frame data that are present.
(g) Start the engine. The MIL should turn off after the engine starts.
(h) Perform "MONITOR DRIVE PATTERN" for the ECT test (See page AX-26).
(Or, duplicate the conditions of the malfunction described by the customer.)
(i) After duplicating the malfunction conditions, use the intelligent tester diagnosis selector to check the DTC and freeze frame data.

FAIL-SAFE CHART

1. Fail-safe

This function minimizes the loss of operation when any abnormality occurs in a sensor or solenoid.

Fail-safe Control List

Malfunction Part	Function
Input Turbine Speed Sensor	Shifting to only either the 1st or 3rd gear is allowed.
Counter Gear Speed Sensor	• The counter gear speed is determined based on the signals from the skid control ECU (speed sensor signals). • Shifting between 1st to 4th gears is allowed.
ATF Temp. Sensor	Shifting between 1st to 4th gears is allowed.
ECT ECU Power Supply (Voltage is Low)	When the vehicle is being driven in 6th gear, the transaxle is fixed in 6th gear. When being driven in any of the 1st to 5th gears, the transaxle is fixed in 5th gear.
CAN Communication	Shifting to only either 1st or 3rd gear is allowed.
Knock Sensor	Shifting between 1st to 4th gear is allowed.
Solenoid Valve SL1, SL2, SL3 and SL4	The current to the failed solenoid valve is cut off and operating the other solenoid valves with normal operation performs shift control. (Shift controls in fail-safe mode are described in the table on the next page. For details, refer to Fail-Safe Control Chart)

Solenoid Valve Operation when Normal:

Gear Position		1st	2nd	3rd	4th	5th	6th
Solenoid	SL1	ON	ON	ON	ON	OFF	OFF
	SL2	OFF	OFF	OFF	ON	ON	ON
	SL3	OFF	ON	OFF	OFF	OFF	ON
	SL4	OFF	OFF	ON	OFF	ON	OFF

Fail-safe Control Chart:

	Gear Position in Normal Operation	1st	2nd	3rd	4th	5th	6th
SL1	ON Malfunction (without Fail-safe Control) *1	1st	2nd	3rd	4th	4th	4th
	OFF Malfunction (without Fail-safe Control)	1st to N	2nd to N	3rd to N	4th to N	5th	6th
	Fail-safe Control during OFF Malfunction	Fixed in 3rd or 5th					
	Fail-safe Control during OFF Malfunction (ATF Pressure Switches 1 and 2 Malfunctions)	Fixed in 3rd or 5th					
SL2	ON Malfunction (without Fail-safe Control) *1	1st to 4th	2nd to 4th	3rd to 4th	4th	5th	6th
	OFF Malfunction (without Fail-safe Control)	1st	2nd	3rd	4th to 1st	5th to N	6th to N
	Fail-safe Control during OFF malfunction	1st	2nd	3rd	3rd	3rd	3rd
	Fail-safe Control during OFF Malfunction (ATF Pressure Switches 1 and 2 Malfunctions)	Fixed in 2nd or 3rd					
SL3	ON Malfunction (without Fail-safe Control) *1	1st to 2nd	2nd	3rd	4th	5th	6th
	OFF Malfunction (without Fail-safe Control)	1st	2nd to 1st	3rd	4th	5th	6th to N
	Fail-safe Control during OFF malfunction	1st	3rd	3rd	4th	5th	5th
	Fail-safe Control during OFF Malfunction (ATF Pressure Switches 1 and 2 Malfunctions)	Fixed in 3rd					

	Gear Position in Normal Operation	1st	2nd	3rd	4th	5th	6th
SL4	ON Malfunction (without Fail-safe Control)*1	3rd	3rd	3rd	4th	5th	5th
	OFF Malfunction (without Fail-safe Control)	1st	2nd	3rd to 1st	4th	5th to N	6th
	Fail-safe Control during OFF malfunction	1st *2	2nd *2	4th*2	4th*2	6th	6th
	Fail-safe Control during OFF Malfunction (ATF Pressure Switches 1 and 2 Malfunctions)	Fixed in 2nd					

*1: Fail-safe control is not actuated when the ON malfunction occurs.

*2: Shifting to 5th and 6th gears is prohibited.

DATA LIST / ACTIVE TEST

1. DATA LIST

HINT:
Using the DATA LIST using the intelligent tester allows switch, sensor, actuator and other item values to be read without removing any parts. Reading the DATA LIST early in troubleshooting is one way to save labor time.

NOTICE:
In the table below, the values listed under "Normal Condition" are reference values. Do not depend solely on these reference values when deciding whether a part is faulty.

(a) Warm up the engine.
(b) Turn the engine switch off.
(c) Connect the intelligent tester together with the CAN VIM (Controller Area Network Vehicle Interface Module) to the DLC3.
(d) Turn the engine switch on (IG).
(e) Turn the tester on.
(f) Enter the following menus: "DIAGNOSIS / OBD/ MOBD / ECT / DATA LIST".
(g) According to the display on the tester, read "DATA LIST".

Tester Display	Measurement Item/Range	Normal Condition	Diagnostic Note
CALC LOAD	Calculated load by ECM: Min.: 0%, Max.: 100%	• 15.0 to 35.0%: Idling • 10.0 to 30.0%: Running without load (2,000 rpm)	-
ENGINE SPD	Engine speed: Min.: 0 rpm, Max.: 16,383.75 rpm	550 to 800 rpm: Idling	-
VEHICLE SPD	Vehicle speed: Min.: 0 km/h, Max.: 255 km/h	Actual vehicle load	-
COOLANT TEMP	Engine coolant temperature: Min.: -40°C (-40°F), Max.: 140°C (284°F)	80 to 105°C (176 to 221°F): After warming up	• If value is -40°C (-40°F): sensor circuit open • If value is 140°C (284°F): sensor circuit shorted
THROTTLE POS	Throttle position: Min.: 0%, Max.: 100%	10 to 22%: Idling	Calculated value based on VTA1
THROTTLE POS	Throttle position: Min.: 0%, Max.: 100%	• 0%: Accelerator pedal released • 64 to 96%: Accelerator pedal fully depressed	Recognition valve for throttle opening angle on ECM
SPD (NC)	Min.: 0 rpm, Max.: 12,750 rpm	-	-
SPD (NT)	Input turbine speed/ display: 50 r/min	HINT: • Lock-up ON (After warming up the engine): Input turbine speed (NT) equal to the engine speed. • Lock-up OFF (Idling at N position): Input turbine speed (NT) nearly equal to the engine speed.	-
CTP SW	Closed throttle position switch: ON or OFF	• ON: Throttle fully closed • OFF: Throttle open	-

Tester Display	Measurement Item/Range	Normal Condition	Diagnostic Note
PNP SW [NSW]	PNP switch status/ ON or OFF	Shift lever position is; P and N: ON Except P and N: OFF	When the shift lever position displayed on the intelligent tester differs from the actual position, adjustment of the PNP switch or the shift cable may be incorrect. HINT: When the failure still occurs even after adjusting these parts, see page AX-177.
STOP LIGHT SW	Stop light switch status/ ON or OFF	• Brake pedal is depressed: ON • Brake pedal is released: OFF	-
BATTERY VOLTAGE	Battery voltage: Min.: 0, Max.: 65.535 V	9 to 14 V: Idling	-
TC/TE1	TC and TE1 terminals of DLC3: ON or OFF	-	Active Test support data
FC IDL	Fuel cut idle: ON or OFF	ON: Fuel cut operating	FC IDL= "ON" when throttle valve fully closed and engine speed over 2,800 rpm
FC TAU	Fuel cut TAU (Fuel cut during very light load):	ON: Fuel cut operating	Fuel cut being performed under very light load to prevent engine combustion from becoming incomplete
SHIFT	ECM gear shift command/ 1st, 2nd, 3rd, 4th, 5th or 6th	Shift lever position is; • D: 1st, 2nd, 3rd, 4th, 5th or 6th • S: 1st, 2nd, 3rd, 4th, 5th or 6th	-
REVERSE	PNP switch status/ ON or OFF	Shift lever position is; R: ON Except R: OFF	When the shift lever position displayed on the intelligent tester differs from the actual position, adjustment of the PNP switch or the shift cable may be incorrect. HINT: When the failure still occurs even after adjusting these parts, see page AX-170.
PARKING	PNP switch status/ ON or OFF	Shift lever position is; P: ON Except P: OFF	When the shift lever position displayed on the intelligent tester differs from the actual position, adjustment of the PNP switch or the shift cable may be incorrect. HINT: When the failure still occurs even after adjusting these parts, see page AX-170.
NEUTRAL	PNP switch status/ ON or OFF	Shift lever position is; N: ON Except N: OFF	When the shift lever position displayed on the intelligent tester differs from the actual position, adjustment of the PNP switch or the shift cable may be incorrect. HINT: When the failure still occurs even after adjusting these parts, see page AX-170.
DRIVE	PNP switch status/ ON or OFF	Shift lever position is; D and S: ON Except D and S: OFF	When the shift lever position displayed on the intelligent tester differs from the actual position, adjustment of the PNP switch or the shift cable may be incorrect. HINT: When the failure still occurs even after adjusting these parts, see page AX-170.

Tester Display	Measurement Item/Range	Normal Condition	Diagnostic Note
SPORTS UP SW	Sport shift up switch status/ ON or OFF	• Press continuously "+" (Up shift): ON • Release "+" (Up shift): OFF	-
SPORTS DOWN SW	Sport shift down switch status/ ON or OFF	• Press continuously "-" (Down shift): ON • Release "-" (Down shift): OFF	-
MODE SELECT SW	Sport mode select switch status/ ON or OFF	Shift lever position is; S, "+" and "-": ON Except S, "+" and "-": OFF	-
TPS 1 SW	0: OFF / 1: ON	Gear position 1st, 2nd, 3rd or 4th: ON Gear position 5th or 6th: OFF	-
TPS 2 SW	0: OFF / 1: ON	Gear position 4th, 5th or 6th: ON Gear position 1st, 2nd or 3rd: OFF	-
TPS 3 SW	0: OFF / 1: ON	Shift solenoid valve SLU is ON: ON Shift solenoid valve SLU is OFF: OFF	-
A/T OIL TEMP 1	ATF temp. sensor value/ min.: -40°C (-40°F) max.: 215°C (419°F)	• After stall test; Approx. 80°C (176°F) • Equal to ambient temperature when cold soak	If the value is "-40°C (-40°F)" or "215°C (419°F)", ATF temp. sensor circuit is open or shorted.
NT SENS VOL	Min.: 0 V, Max.: 5 V	0.1 to 1.9 V	-
NC SENS VOL	Min.: 0 V, Max.: 5 V	0.1 to 1.9 V	-
ATF	0: OFF / 1: ON		-
LOCK UP	0: OFF / 1: ON	Lock up: ON	-
LOCK UP SOL	Lock up solenoid status/ ON or OFF	• Lock up: ON • Except lock up: OFF	-
SOLENOID (SLU)	Shift solenoid SLU status/ ON or OFF	• Lock up: ON • Except lock up: OFF	-
SOLENOID (SLT)	Shift solenoid SLT status/ ON or OFF	• Accelerator pedal is depressed: OFF • Accelerator pedal is released: ON	-
INTAKE AIR TEMP	Intake air temperature Min.: -40°C (-40°F), Max.: 215°C (419°F)	Equivalent to ambient air temperature	• If value is -40°C (-40°F): sensor circuit open • If value is 215°C (419°F): sensor circuit shorted
THROTTLE POS	Whether throttle position sensor detecting idle: ON or OFF	ON: Idling	-
ACCEL POS	Min.: 0%, Max.: 100%		-
#CODES	# of codes: Min.: 0, Max.: 255	-	Number of detected DTCs
CHECK MODE	Check mode: 0: OFF, 1: ON	ON: Check mode ON	-
SPD TEST	Check mode result for vehicle speed sensor: 0: COMPL, 1: INCMPL	-	-
MIL	MIL status: ON or OFF	ON: MIL ON	-
MIL ON RUN DIST	MIL ON run distance: Min.: 0 mile (65,535 km), Max.: 110,950 mile (178,552 km)	Distance after DTC detected	-
MIL ON RUN TIME	Running time from MIL ON: Min.: 0 minute, Max.: 65,535 minutes	Equivalent to running time after MIL ON	-

Tester Display	Measurement Item/Range	Normal Condition	Diagnostic Note
ENG RUN TIME	Engine run time: Min.: 0 second, Max.: 65,535 seconds	Time after engine start	-
TIME DTC CLEAR	Time after DTC cleared: Min.: 0 minute, Max.: 65,535 minutes	Equivalent to time after DTCs erased	-
DIST DTC CLEAR	Distance after DTC cleared: Min.: 0 km/h, Max.: 65,535 km/h	Equivalent to time after DTCs erased	-
WU CYC DTC CLEAR	Warm-up cycle after DTC cleared: Min.: 0, Max.: 255	-	Number of warm-up cycles after DTC cleared
OBD CERT	OBD requirement	OBD2	-
COMP ON	Comprehensive component monitor 0: NOT AVL, 1: AVAIL	-	Comprehensive component monitor
CCM ENA	Comprehensive component monitor UNABLE or ENABLE	-	-
CCM CMPL	Comprehensive component monitor COMPL or INCMPL	-	-
FUEL ENA	Fuel system monitor UNABLE or ENABLE	-	-
FUEL CMPL	Fuel system monitor COMPL or INCMPL	-	-
MISFIRE ENA	Misfire monitor UNABLE or ENABLE	-	-
MISFIRE CMPL	Misfire monitor COMPL or INCMPL	-	-
HTR ENA	O2S (A/FS) heater monitor UNABLE or ENABLE	-	-
HTR CMPL	O2S (A/FS) heater monitor COMPL or INCMPL	-	-
O2S(A/FS) ENA	O2S (A/FS) monitor UNABLE or ENABLE	-	-
O2S(A/FS) CMPL	O2S (A/FS) monitor COMPL or INCMPL	-	-
EVAP ENA	EVAP monitor UNABLE or ENABLE	-	-
EVAP CMPL	EVAP monitor COMPL or INCMPL	-	-
CAT ENA	Catalyst monitor: UNABLE or ENABLE	-	-
CAT CMPL	Catalyst monitor COMPL or INCMPL	-	-
TRANSMISSION	Transmission type	-	Identifying transmission type: 6 speed
SYSTEM	System identification	-	Identifying engine type: GASOLINE (gasoline engine)

2. ACTIVE TEST

HINT:

Performing the ACTIVE TEST using the intelligent tester allows relays, VSVs, actuators and other items to be operated without removing any parts. Performing the ACTIVE TEST as the first step in troubleshooting is one method to save labor time.

It is possible to display the DATA LIST during the ACTIVE TEST.

(a) Warm up the engine.
(b) Turn the engine switch off.
(c) Connect the intelligent tester together with the CAN VIM (Controller Area Network Vehicle Interface Module) to the DLC3.
(d) Turn the engine switch on (IG).
(e) Turn the intelligent tester on.
(f) Enter the following items: "DIAGNOSIS / OBD / MOBD / ECT / ACTIVE TEST".
(g) According to the display on tester, perform "ACTIVE TEST".

Tester Display	Test Part	Control Range	Diagnostic Note
SHIFT	[Test Details] Operate the shift solenoid valve and set each shift position by yourself. [Vehicle Condition] IDL: ON	[Shift Position] 0001: 1st 0010: 2nd 0011: 3rd 0100: 4th 0101: 5th 0110: 6th	Possible to check the operation of the shift solenoid valves. Upshifts and downshifts should be performed consecutively. A 10-second interval is required between gear changes. Do not downshift at high speeds. Doing so will damage the automatic transaxle.
LOCK UP	[Test Details] Control the shift solenoid SLU to set the automatic transaxle to the lock-up condition. [Vehicle Condition] • Throttle valve opening angle: Less than 35% • Vehicle speed: 37 mph (60 km/h) or more, and 6th gear	[Lock-up] 0: OFF 1: ON	Possible to check the SLU solenoid operation.
SOLENOID (SL1)	[Test Details] Operate the shift solenoid SL1 [Vehicle Condition] • Vehicle Stopped • Shift lever in P or N position	[Solenoid (SL1)] 0: OFF 1: ON	-
SOLENOID (SL2)	[Test Details] Operate the shift solenoid SL2 [Vehicle Condition] • Vehicle Stopped • Shift lever in P or N position	[Solenoid (SL2)] 0: OFF 1: ON	-
SOLENOID (SL3)	[Test Details] Operate the shift solenoid SL3 [Vehicle Condition] • Vehicle Stopped • Shift lever in P or N position	[Solenoid (SL3)] 0: OFF 1: ON	-
SOLENOID (SL4)	[Test Details] Operate the shift solenoid SL4 [Vehicle Condition] • Vehicle Stopped • Shift lever in P or N position	[Solenoid (SL4)] 0: OFF 1: ON	-
SOLENOID (SL)	[Test Details] Operate the shift solenoid SL [Vehicle Condition] • Vehicle Stopped • Shift lever in P or N position	[Solenoid (SL)] 0: OFF 1: ON	-

Tester Display	Test Part	Control Range	Diagnostic Note
SOLENOID (SLT)	[Test Details] Operate the shift solenoid SLT and raise the line pressure. [Vehicle Condition] • Vehicle Stopped • IDL: ON HINT: OFF: Line pressure up (When the active test of "SOLENOID (SLT)" is performed, the ECM commands the SLT solenoid to turn off). ON: No action (normal operation)	[Solenoid (SLT)] 0: OFF 1: ON	-
SOLENOID (SLU)	[Test Details] Operate the shift solenoid SLU and raise the line pressure. [Vehicle Condition] • Vehicle Stopped • IDL: ON HINT: OFF: Line pressure up (When the active test of "SOLENOID (SLU)" is performed, the ECM commands the SLU solenoid to turn off). ON: No action (normal operation)	[Solenoid (SLU)] 0: OFF 1: ON	-

*: "SOLENOID (SLT)" in the ACTIVE TEST is performed to check the line pressure changes by connecting the SST to the automatic transaxle. The same SST is used for the HYDRAULIC TEST (See page AX-16) as well.
HINT:
The pressure values in ACTIVE TEST and HYDRAULIC TEST will be different from each other.

DIAGNOSTIC TROUBLE CODE CHART

If a DTC is displayed during the DTC check, check the parts listed in the table below and proceed to the page given.

HINT:

- *1: MIL (Malfunction Indicator Lamp) comes on.
- *2: "DTC stored" mark means TCM memorizes the trouble code if the TCM detects that the DTC detection condition is satisfied.
- A DTC may be output when the clutch, brake and gear components, etc. inside the automatic transaxle are damaged.

DTC Code	Detection Item	Trouble Area	MIL*1	Memory*2	See page
P0500	Vehicle Speed Sensor "A"	1. Vehicle speed sensor 2. Vehicle speed sensor signal circuit 3. Combination meter 4. TCM	Comes on	DTC stored	AX-50
P0560	System Voltage	1. Open in TCM back-up power source circuit 2. TCM	Comes on	DTC stored	AX-53
P0617	Starter Relay Circuit High	1. Park/neutral Position (PNP) switch 2. Starter relay circuit 3. Cranking holding function circuit 4. TCM	Comes on	DTC stored	AX-56
P0705	Transmission Range Sensor Circuit Malfunction (PRNDL Input)	1. Short in park/ neutral position switch circuit 2. Park/neutral Position switch 3. TCM	Comes on	DTC stored	AX-59
P0710	Transmission Fluid Temperature Sensor "A" Circuit	1. Open or short in ATF temperature sensor circuit 2. Transmission wire (ATF temperature sensor) 3. TCM	Comes on	DTC stored	AX-67
P0711	Transmission Fluid Temperature Sensor "A" Performance	Transmission wire (ATF temperature sensor) Temperature	Comes on	DTC stored	AX-72
P0712	Transmission Fluid Temperature Sensor "A" Circuit Low Input	1. Short in ATF temperature sensor circuit 2. Transmission wire (ATF temperature sensor) 3. TCM	Comes on	DTC stored	AX-67
P0713	Transmission Fluid Temperature Sensor "A" Circuit High Input	1. Open in ATF temperature sensor circuit 2. Transmission wire (ATF temperature sensor) 3. TCM	Comes on	DTC stored	AX-67

DTC Code	Detection Item	Trouble Area	MIL*1	Memory*2	See page
P0715	Input / Turbine Speed Sensor Circuit Malfunction	1. Transmission revolution sensor (speed sensor NT) 2. TCM	Comes on	DTC stored	AX-78
P0717	Input Speed Sensor Circuit No Signal	1. Transmission revolution sensor (speed sensor NT) 2. TCM	Comes on	DTC stored	AX-78
P0724	Brake Switch "B" Circuit High	1. Short in stop light switch signal circuit 2. Stop light switch 3. TCM	Comes on	DTC stored	AX-83
P0741	Torque Converter Clutch Solenoid Performance (Shift Solenoid Valve SL)	1. Shift solenoid valve SL remains closed 2. Valve body is blocked 3. Torque converter clutch 4. Automatic transaxle (clutch, brake or gear etc.) 5. Line pressure is too low	Comes on	DTC stored	AX-86
P0746	Pressure Control Solenoid "A" Performance (Shift Solenoid Valve SL1)	1. Shift solenoid valve SL1 remains open or closed 2. Valve body is blocked 3. Automatic transaxle (clutch, brake or gear etc.)	Comes on	DTC stored	AX-91
P0748	Pressure Control Solenoid "A" Electrical (Shift Solenoid Valve SL1)	1. Open or short in shift solenoid valve SL1 circuit 2. Shift solenoid valve SL1 3. TCM	Comes on	DTC stored	AX-96
P0776	Pressure Control Solenoid "B" Performance (Shift Solenoid Valve SL2)	1. Shift solenoid valve SL2 remains open or closed 2. Valve body is blocked 3. Automatic transaxle (clutch, brake or gear etc.)	Comes on	DTC stored	AX-99
P0778	Pressure Control Solenoid "B" Electrical (Shift Solenoid Valve SL2)	1. Open or short in shift solenoid valve SL2 circuit 2. Shift solenoid valve SL2 3. TCM	Comes on	DTC stored	AX-104
P0791	Intermediate Shaft Speed Sensor "A" Circuit	1. Transmission revolution sensor (speed sensor NC) 2. TCM	Comes on	DTC stored	AX-107
P0793	Intermediate Shaft Speed Sensor "A"	1. Transmission revolution sensor (speed sensor NC) 2. TCM	Comes on	DTC stored	AX-107

DTC Code	Detection Item	Trouble Area	MIL*1	Memory*2	See page
P0796	Pressure Control Solenoid "C" Performance (Shift Solenoid Valve SL3)	1. Shift solenoid valve SL3 remains open or closed. 2. Valve body is blocked. 3. Automatic transaxle (clutch, brake or gear etc.)	Comes on	DTC stored	AX-112
P0798	Pressure Control Solenoid "C" Electrical (Shift Solenoid Valve SL3)	1. Open or short in shift solenoid valve SL3 circuit 2. Shift solenoid valve SL3 3. TCM	Comes on	DTC stored	AX-117
P0872	Transmission Fluid Pressure Switch No.1 Circuit Low	1. ATF temperature sensor assembly (ATF pressure switch No. 1) 2. Transmission wire 3. TCM	-	DTC stored	AX-120
P0873	Transmission Fluid Pressure Switch No.1 Circuit High	1. ATF temperature sensor assembly (ATF pressure switch No. 1) 2. Transmission wire 3. TCM	-	DTC stored	AX-120
P0877	Transmission Fluid Pressure Switch No.2 Circuit Low	1. ATF temperature sensor assembly (ATF pressure switch No. 2) 2. Transmission wire 3. TCM	-	DTC stored	AX-124
P0878	Transmission Fluid Pressure Switch No.2 Circuit High	1. ATF temperature sensor assembly (ATF pressure switch No. 2) 2. Transmission wire 3. TCM	-	DTC stored	AX-124
P0989	Transmission Fluid Pressure Switch No.3 Circuit Low	1. ATF temperature sensor assembly (ATF pressure switch No. 3) 2. Transmission wire 3. TCM	Comes on	DTC stored	AX-128
P0990	Transmission Fluid Pressure Switch No.3 Circuit High	1. ATF temperature sensor assembly (ATF pressure switch No. 3) 2. Transmission wire 3. TCM	Comes on	DTC stored	AX-128
P2714	Pressure Control Solenoid "D" Performance (Shift Solenoid Valve SLT)	1. Shift solenoid valve SLT remains open 2. Shift solenoid valve SL1, SL2, SL3 or SL4 remains open or closed 3. Valve body is blocked 4. Automatic transaxle (clutch, brake or gear, etc.)	Comes on	DTC stored	AX-133

DTC Code	Detection Item	Trouble Area	MIL*1	Memory*2	See page
P2716	Pressure Control Solenoid "D" Electrical (Shift Solenoid Valve SLT)	1. Open or short in shift solenoid valve SLT circuit 2. Shift solenoid valve SLT 3. TCM	Comes on	DTC stored	AX-140
P2757	Torque Converter Clutch Pressure Control Solenoid Performance (Shift Solenoid Valve SLU)	1. Shift solenoid valve SLU remains open or closed 2. Valve body is blocked 3. Torque converter clutch 4. Automatic transaxle (clutch, brake or gear, etc.) 5. Line pressure is too low	Comes on	DTC stored	AX-143
P2759	Torque Converter Clutch Pressure Control Solenoid Control Circuit Electrical (Shift Solenoid Valve SLU)	1. Open or short in shift solenoid valve SLU circuit 2. Shift solenoid valve SLU 3. TCM	Comes on	DTC stored	AX-148
P2769	Short in Torque Converter Clutch Solenoid Circuit (Shift Solenoid Valve SL)	1. Short in shift solenoid valve SL circuit 2. Shift solenoid valve SL 3. TCM	Comes on	DTC stored	AX-151
P2770	Open in Torque Converter Clutch Solenoid Circuit (Shift Solenoid Valve SL)	1. Open in shift solenoid valve SL circuit 2. Shift solenoid valve SL 3. TCM	Comes on	DTC stored	AX-151
P2808	Pressure Control Solenoid "G" Performance or Stuck OFF (Shift Solenoid Valve SL4)	1. Shift solenoid valve SL4 remains open or closed 2. Valve body is blocked 3. Automatic transaxle (clutch, brake or gear etc.)	Comes on	DTC stored	AX-154
P2810	Pressure Control Solenoid "G" Electrical (Shift Solenoid Valve SL4)	1. Open or short in shift solenoid valve SL4 circuit 2. Shift solenoid valve SL4 3. TCM	Comes on	DTC stored	AX-160
U0100	Lost Communication with ECM/PCM "A"	TCM	Comes on	DTC stored	AX-163

DTC	P0500	Vehicle Speed Sensor "A"

DESCRIPTION

The speed sensors detect the wheel speed and send the appropriate signals to the skid control ECU. The skid control ECU converts these wheel speed signals into a 4-pulse signal and outputs it to the TCM via the combination meter. The TCM determines the vehicle speed based on the frequency of these pulse signals.

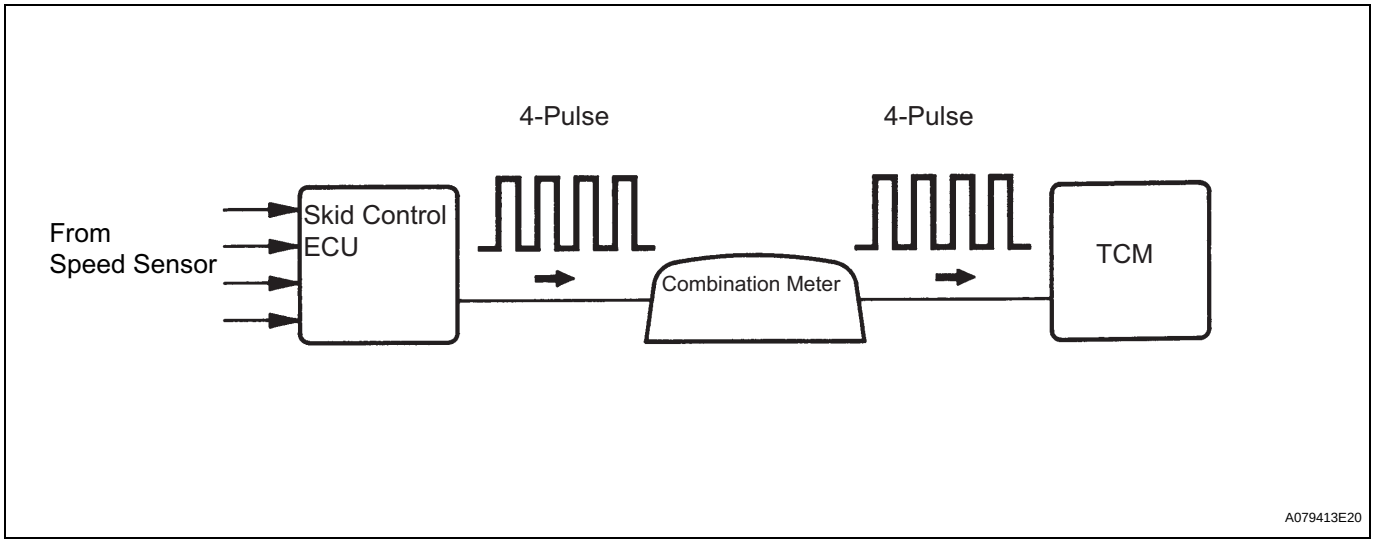

DTC No.	DTC Detection Condition	Trouble Area
P0500	When the ECT sensor is normal and the counter gear speed is 300 rpm or more, the vehicle speed signal is not input for 2 seconds or more.	• Vehicle speed sensor • Vehicle speed sensor signal circuit • Combination meter • TCM

MONITOR DESCRIPTION

AX

The TCM assumes that the vehicle is being driven when the transmission counter gear indicates more than 300 rpm and over 30 seconds have passed since the park/neutral position switch was turned off. If there is no signal from the vehicle speed sensor with these conditions satisfied, the TCM concludes that the vehicle speed sensor is malfunctioning. The TCM will turn on the MIL and a DTC will be set.

MONITOR STRATEGY

Related DTCs	P0500: Vehicle Speed Sensor Circuit
Required sensors/components (Main)	Vehicle speed sensor, Combination meter, Skid control ECU
Required sensors/components (Sub)	Counter gear Speed (CS) sensor, ECT sensor
Frequency of operation	Continuous
Duration	2 seconds
MIL operation	Immediately
Sequence operation	None

TYPICAL ENABLING CONDITIONS

Engine	Running
Transmission counter gear revolution	300 rpm or more
Battery voltage	8 V or more
Engine switch	ON
Starter	OFF

Either a or b is met (See below)	
a. All of the following conditions are met	
ECT	20°C (68°F) or more
ECT sensor fail	Not detected
Time after PNP switch ON to OFF	2 sec. or more
b. All of the following conditions are met	
ECT	Less than 20°C (68°F)
ECT sensor fail	Detected
Time after PNP switch ON to OFF	30 sec. or more

TYPICAL MALFUNCTION THRESHOLDS

Vehicle speed sensor signal	No pulse input

WIRING DIAGRAM

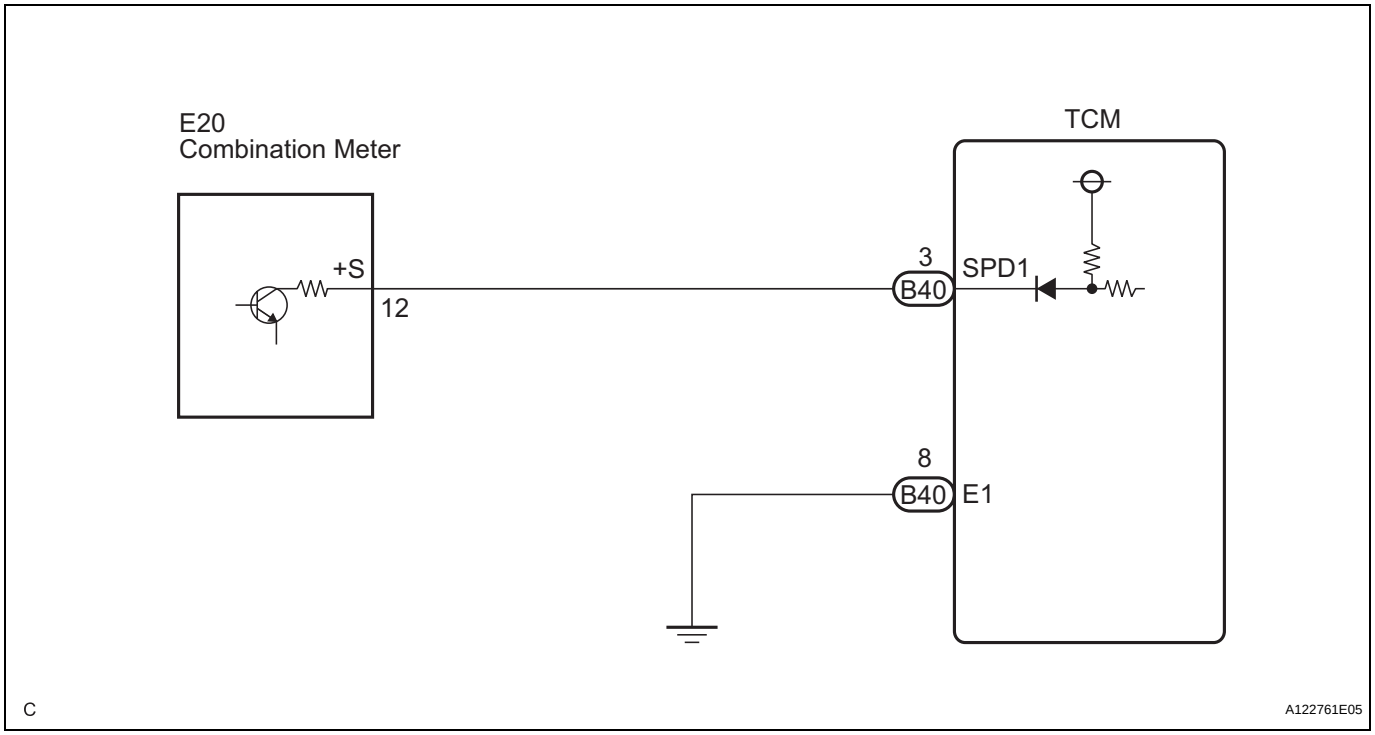

INSPECTION PROCEDURE

1	INSPECT SPEEDOMETER (METER OPERATION)

(a) Drive the vehicle and check if operation of the speedometer in the combination meter is normal.
HINT:
The vehicle speed sensor is operating normally if the speedometer display is normal.

NG → CHECK SPEEDOMETER CIRCUIT

OK

AX

2	INSPECT TCM

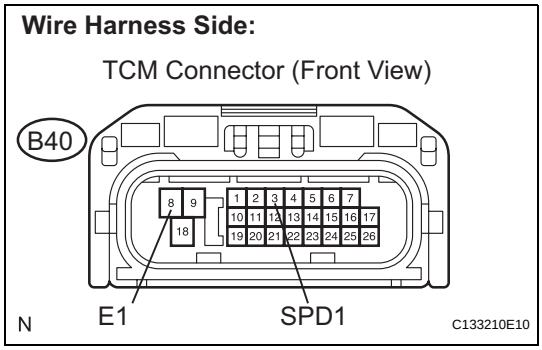

(a) Shift the lever to the neutral position.
(b) Jack up the vehicle.
(c) Disconnect the TCM connector.
(d) Turn the engine switch on (IG).

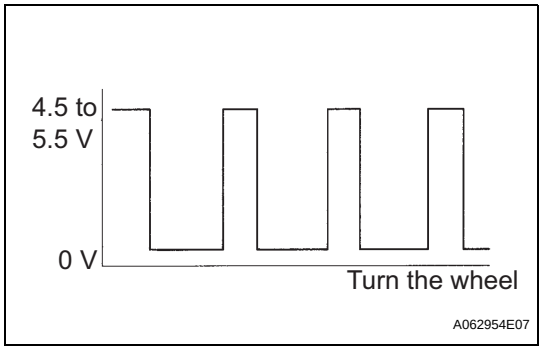

(e) Measure the voltage according to the value(s) in the table below as the wheel is turned slowly.

Standard

Tester Connection	Specified Condition
B40-3 (SPD1) - B40-8 (E1)	Voltage is generated intermittently

HINT:
The output voltage should fluctuate up and down similarly to the diagram when the wheel is turned slowly.

NG → **REPAIR OR REPLACE HARNESS OR CONNECTOR**

OK

REPLACE TCM

AX

DTC	P0560	System Voltage

DESCRIPTION

The battery supplies electricity to the TCM even when the engine switch is off. This power allows the TCM to store data such as DTC history, freeze frame data and fuel trim values. If the battery voltage falls below a minimum level, these memories are cleared and the TCM determines that there is a malfunction in the power supply circuit. When the engine is next started, the TCM will illuminate the MIL and set the DTC.

DTC No.	DTC Detection Condition	Trouble Area
P0560	Open in TCM back-up power source circuit (1 trip detection logic)	• Open in TCM back-up power source circuit • TCM

HINT:
If DTC P0560 is set, the TCM does not store other DTCs.

MONITOR STRATEGY

Related DTCs	P0560: TCM system voltage
Required Sensors/Components (Main)	TCM
Required Sensors/Components (Sub)	-
Frequency of Operation	Continuous
Duration	3 seconds
MIL Operation	Immediate (MIL illuminated after next engine start)
Sequence of Operation	None

TYPICAL ENABLING CONDITIONS

Monitor runs whenever following DTCs are not present:	None
Stand-by RAM	Initialized

TYPICAL MALFUNCTION THRESHOLDS

TCM power source	Less than 3.5 V

WIRING DIAGRAM

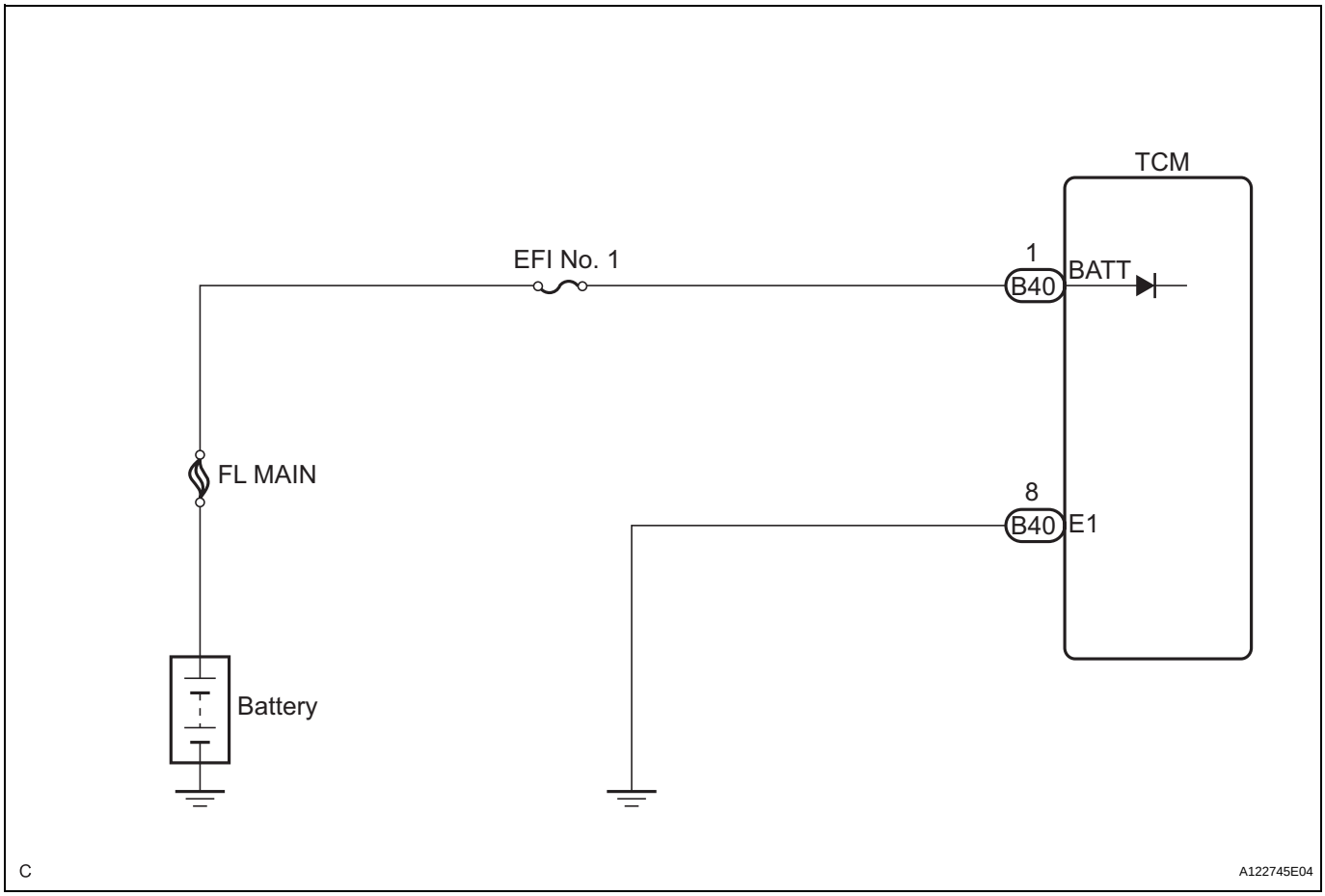

INSPECTION PROCEDURE

AX

1	INSPECT TERMINAL VOLTAGE (BATT VOLTAGE OF TCM)

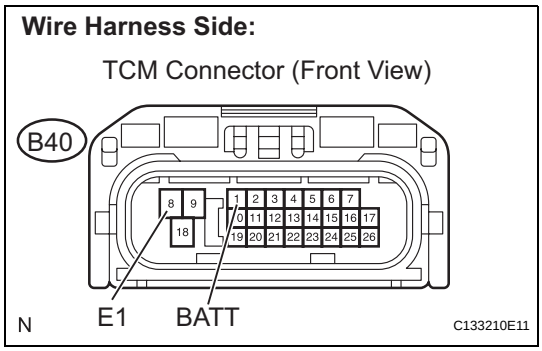

(a) Disconnect the TCM connector.
(b) Turn the engine switch on (IG).
(c) Measure the voltage according to the value(s) in the table below.

Standard voltage

Tester Connection	Specified Condition
BATT (B40-1) - E1 (B40-8)	10 to 14 V

NG → **REPAIR OR REPLACE HARNESS OR CONNECTOR (EFI NO. 1 FUSE - TCM)**

OK

2 CHECK HARNESS AND CONNECTOR

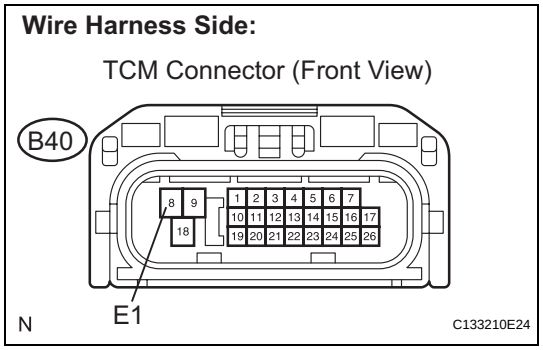

(a) Disconnect the TCM connector.
(b) Measure the resistance according to the value(s) in the table below.

Standard resistance

Tester Connection	Specified Condition
E1 (B40-8) - Body ground	Below 1 Ω

NG → **REPAIR OR REPLACE HARNESS OR CONNECTOR (TCM - BODY GROUND)**

OK

REPLACE TCM

AX

DTC	P0617	Starter Relay Circuit High

DESCRIPTION

While the engine is being cranked, the positive battery voltage is applied to terminal STA of the TCM. If the TCM detects the Starter Control (STA) signal while the vehicle is being driven, it determines that there is a malfunction in the STA circuit. The TCM then illuminates the MIL and sets the DTC.
This monitor runs when the vehicle is driven at 12.4 mph (20 km/h) for over 20 seconds.

DTC No.	DTC Detection Condition	Trouble Area
P0617	When conditions (a), (b) and (c) are met, positive (+B) battery voltage of 10.5 V or more is applied to TCM for 20 seconds (1 trip detection logic): (a) Vehicle speed more than 12.4 mph (20 km/h) (b) Engine speed more than 1,000 rpm (c) STA signal ON	• Park/Neutral Position switch • Starter relay circuit • Cranking holding function circuit • TCM

MONITOR STRATEGY

Related DTCs	P0617: Starter signal
Required Sensors/Components (Main)	STARTER relay, PMP switch, Engine switch
Required Sensors/Components (Sub)	Vehicle speed sensor (VSS), Crankshaft Position (CKP) sensor
Frequency of Operation	Continuous
Duration	20 seconds
MIL Operation	Immediate
Sequence of Operation	None

TYPICAL ENABLING CONDITIONS

Monitor runs whenever these DTCs are not present:	None
Battery voltage	10.5 V or more
Vehicle speed	12.43 mph (20 km/h) or more
Engine speed	1,000 rpm or more

TYPICAL MALFUNCTION THRESHOLDS

Starter signal	ON

WIRING DIAGRAM

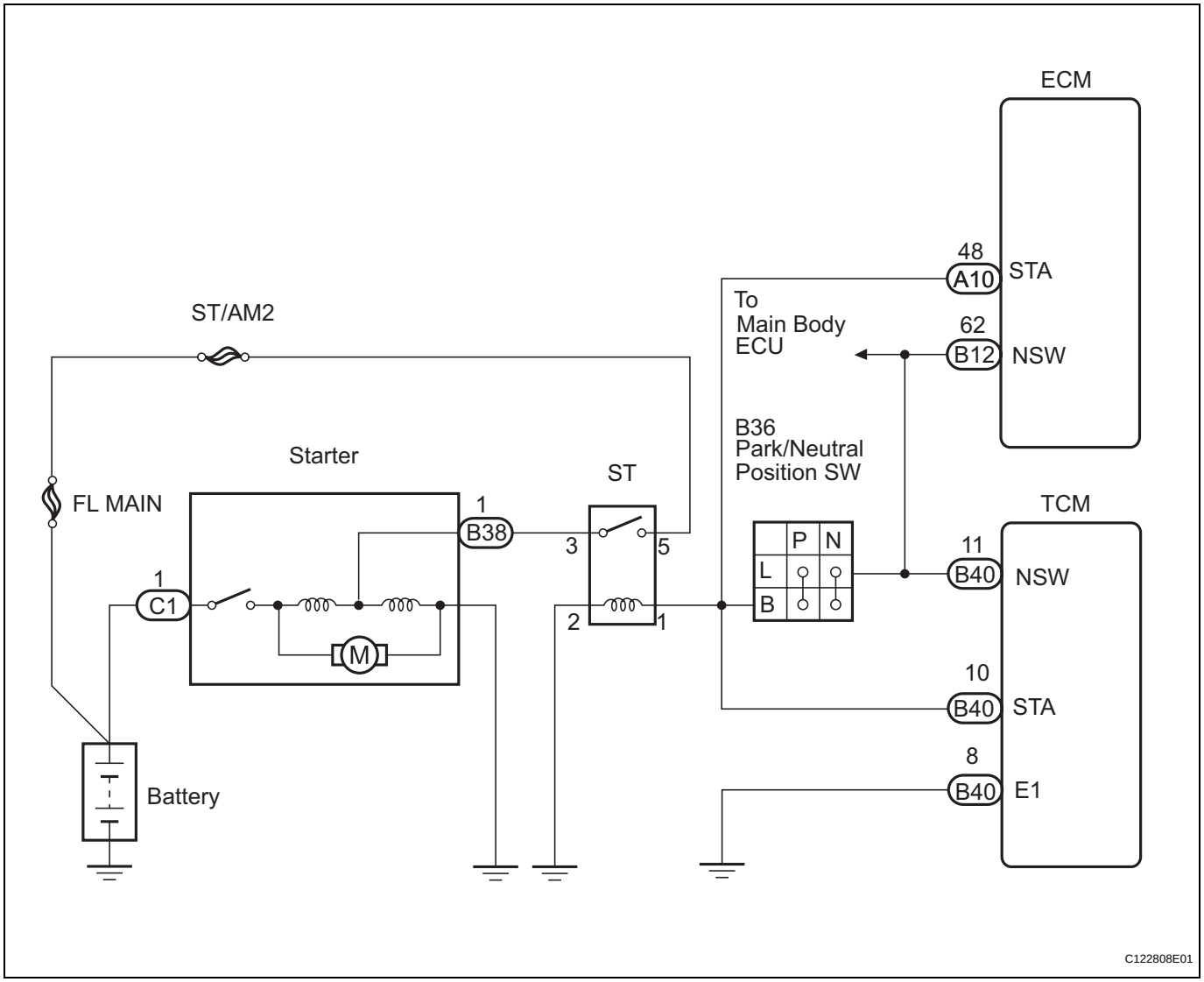

AX

INSPECTION PROCEDURE

HINT:

- The following troubleshooting flowchart is based on the premise that the engine is cranked normally. If the engine does not crank, proceed to the problem symptoms table (See page AX-251).
- Read freeze frame data using the intelligent tester. The TCM records vehicle and driving condition information as freeze frame data the moment a DTC is stored. When troubleshooting, freeze frame data can be helpful in determining whether the vehicle was running or stopped, whether the engine was warmed up or not, whether the air-fuel ratio was lean or rich, as well as other data recorded at the time of a malfunction (See page ES-41).

1	READ VALUE OF INTELLIGENT TESTER (STARTER SIGNAL)

(a) Connect the intelligent tester to the DLC3.
(b) Turn the engine switch on (IG) and turn the tester on.
(c) Enter the following menus: DIAGNOSIS / OBD / MOBD / ECT / DATA LIST.
(d) Check the value displayed on the tester when the engine switch is turned on (IG) and the engine is started.

OK

Engine Switch Condition	ON (IG)	ENGINE START
STARTER SIG	OFF	ON

OK → **Go to step 3**

NG

2 INSPECT PARK / NEUTRAL POSITION SWITCH ASSEMBLY

Component Side:

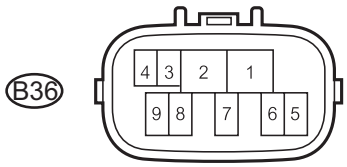

Park/Neutral Position Switch

A107908E08

(a) Inspect the Park / Neutral Position (PNP) switch.
  (1) Disconnect the B36 switch connector.
  (2) Measure the resistance according to the value(s) in the table below.

Standard resistance

Gear Selector Lever Position	Tester Connection	Specified Condition
P	4 - 5	Below 1 Ω
N	4 - 5	Below 1 Ω

  (3) Reconnect the PNP switch connector.

NG → **REPLACE PARK / NEUTRAL POSITION SWITCH (See page AX-184)**

OK

CHECK CRANKING HOLDING FUNCTION CIRCUIT (See page ES-449)

AX

3 CHECK HARNESS AND CONNECTOR

Wire Harness Side:

TCM Connector (Front View)

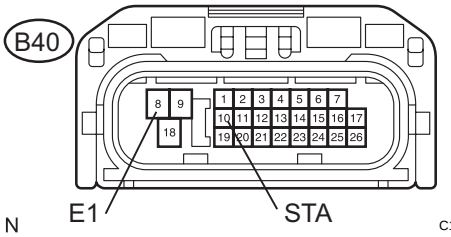

C133210E22

(a) Disconnect the B40 switch connector.
(b) Measure the voltage according to the value(s) in the table below when the shift lever is P or N position.

Standard voltage

Tester Connection	Specified Condition
8 - 10	Below 2 V

(c) Connect the B40 switch connector.

NG → **REPAIR OR REPLACE HARNESS OR CONNECTOR**

OK

REPLACE TCM (See page AX-251)

DTC	P0705	Transmission Range Sensor Circuit Malfunction (PRNDL Input)

DESCRIPTION

The park / neutral position switch detects the shift lever position and sends signals to the ECM.

DTC No.	DTC Detection Condition	Trouble Area
P0705	(A) Any 2 or more of the following conditions are met simultaneously (2-trip detection logic) • NSW input signal is ON. • R input signal is ON. • D input signal is ON. (B) All switches are OFF simultaneously for NSW, R and D.	• Short in park/neutral position switch circuit • Park/neutral position switch • TCM

MONITOR DESCRIPTION

These DTCs indicate a problem with the park/neutral position switch and the wire harness in the park/neutral position switch circuit.
The park/neutral position switch detects the shift lever position and sends a signal to the TCM.
For security, the park/neutral position switch detects the shift lever position so that engine can be started only when the shift lever is in the P or N position.
The park/neutral position switch sends a signal to the TCM according to the shift position (R or D). The TCM determines that there is a problem with the switch or related parts if it receives more than 1 position signal simultaneously. The TCM will turn on the MIL and store the DTC.

MONITOR STRATEGY

Related DTCs	P0705: Park/neutral position switch/Verify switch input
Required sensors/Components	Park/neutral position switch
Frequency of operation	Continuous
Duration	2 sec.
MIL operation	2 driving cycles
Sequence of operation	None

AX

TYPICAL ENABLING CONDITIONS

All:

The monitor will run whenever this DTC is not present.	None
Engine switch	ON
Battery voltage	10.5 V or more

Condition (C):

One of the following conditions is met:	Condition (a) or (b)
(a) Park Neutral position switch	ON
(b) R range position switch	ON

TYPICAL MALFUNCTION THRESHOLDS

1. One of the following conditions is met: Condition (A), (B) and (C)

Condition (A):

Number of the following signal input at the same time	2 or more
R range position switch	ON
D range position switch	ON

Condition (B):

Number of the following signal input at the same time	2 or more
Park neutral position switch	ON
R range switch	ON
D range switch	ON

Condition (C):

Park neutral position switch	OFF
R range switch	OFF
D range switch	OFF

COMPONENT OPERATING RANGE

Park/neutral Position switch	The park/neutral position switch sends only one signal to the TCM.

WIRING DIAGRAM

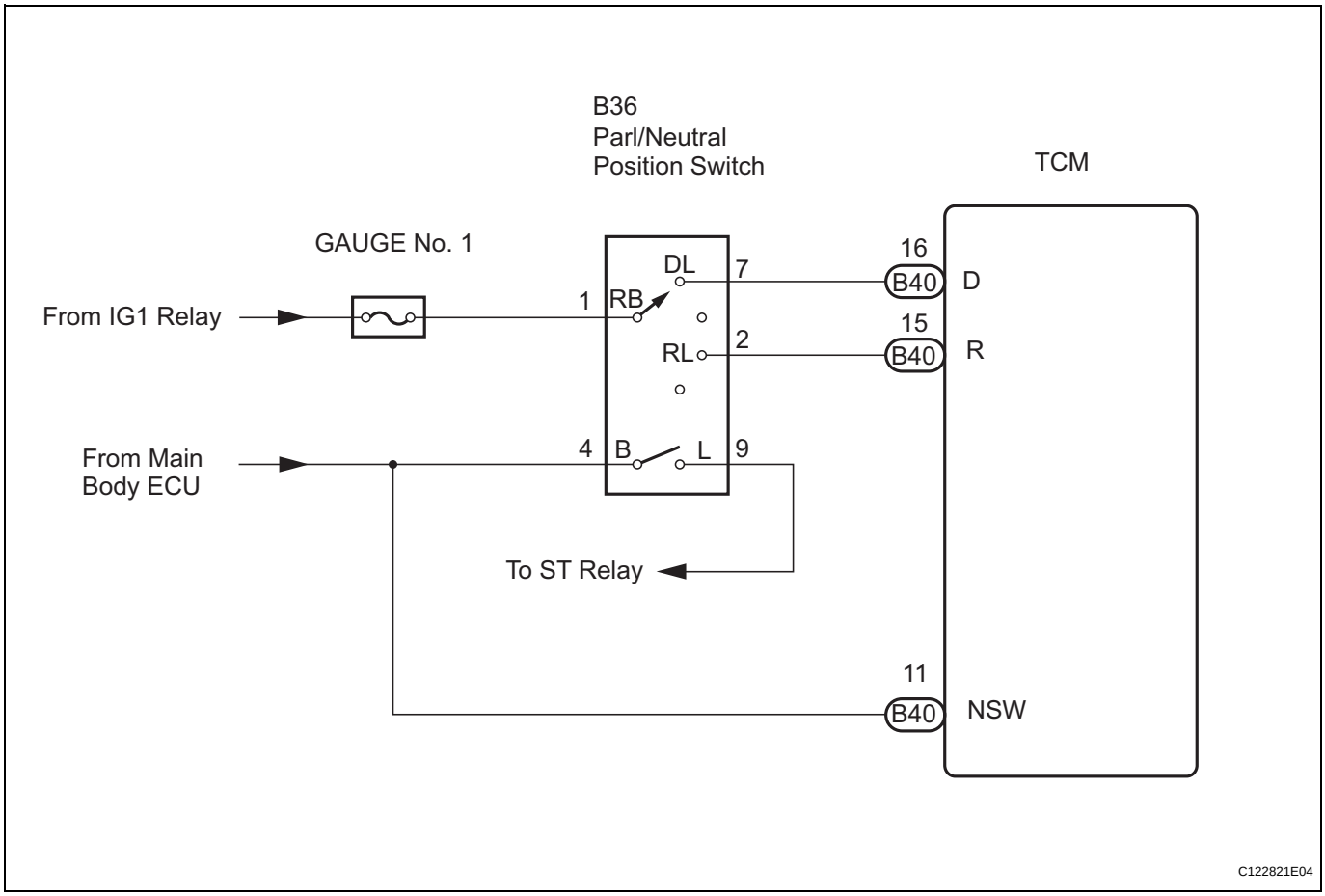

INSPECTION PROCEDURE

HINT:

According to the DATA LIST displayed by the intelligent tester, you can read the value of the switch, sensor, actuator and so on without parts removal. Reading the DATA LIST as the first step of troubleshooting is one method to shorten labor time.

NOTICE:

In the table below, the values listed under "Normal Condition" are reference values. Do not depend solely on these reference values when deciding whether a part is faulty or not.

AX

1. READ DATA LIST

(a) Turn the engine switch off.
(b) Connect the intelligent tester together with the CAN VIM (controller area network vehicle interface module) to the DLC3.
(c) Turn the engine switch on (IG).
(d) Turn on the tester.
(e) Select the item "DIAGNOSIS / OBD / MOBD / ECT / DATA LIST".
(f) According to the display on the tester, read the "DATA LIST".

Item	Measurement Item / Range (Display)	Normal Condition	Diagnostic Note
PNP SW [NSW]	PNP SW Status / ON or OFF	Shift lever position is; P and N: ON Except P or N: OFF	When the shift lever position displayed on the intelligent tester differs from the actual position, adjustment of the PNP switch or the shift cable may be incorrect.
REVERSE	PNP SW Status / ON or OFF	Shift lever position is; R: ON Except R: OFF	When the shift lever position displayed on the intelligent tester differs from the actual position, adjustment of the PNP switch or the shift cable may be incorrect.
DRIVE	PNP SW Status / ON or OFF	Shift lever position is; D and S: ON Except D or S: OFF	When the shift lever position displayed on the intelligent tester differs from the actual position, adjustment of the PNP switch or the shift cable may be incorrect.

1 CHECK HARNESS AND CONNECTOR (D, R POSITION CIRCUIT)

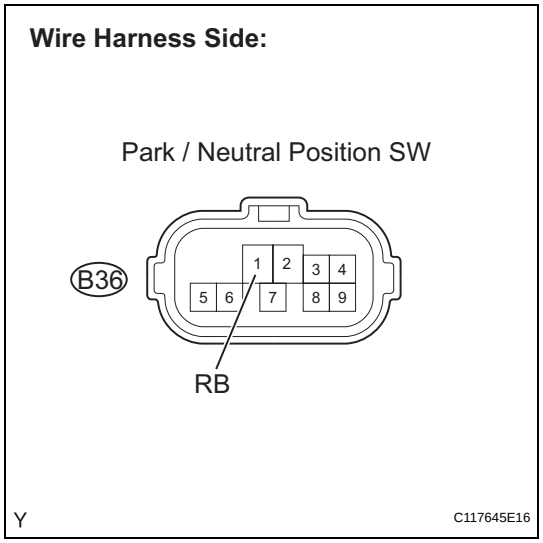

(a) Disconnect the park / neutral position switch connector.
(b) Turn the engine switch on (IG).
(c) Measure the voltage according to the value(s) in the table below.

Standard voltage

Tester Connection	Specified Condition
RB (B36-1) - Body ground	10 to 14 V

NG → **REPAIR OR REPLACE HARNESS OR CONNECTOR**

OK

AX

2	CHECK HARNESS AND CONNECTOR (NSW CIRCUIT)

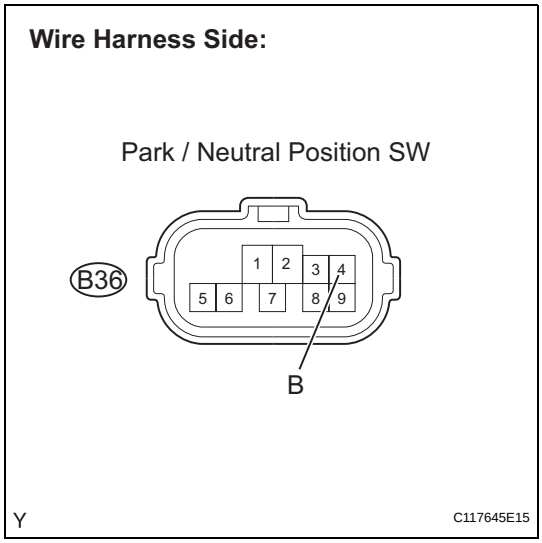

(a) Turn the engine switch on (IG).
(b) Measure the voltage according to the value(s) in the table below.

Standard voltage

Tester Connection	Specified Condition
B (B36-4) - Body ground	Below 3 V

NG → **Go to step 8**

OK

AX

3	CHECK HARNESS AND CONNECTOR (PARK/NEUTRAL POSITION SWITCH - ST RELAY)

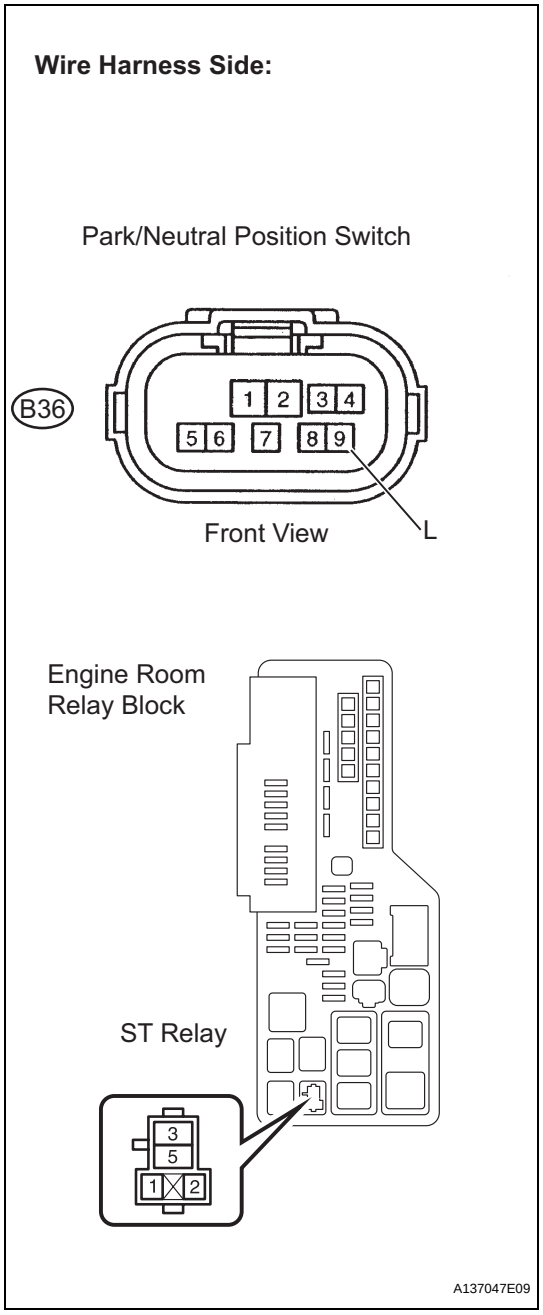

(a) Disconnect the park / neutral position switch connector.
(b) Remove the ST relay from the engine room relay block.
(c) Measure the resistance according to the value(s) in the table below.

Standard resistance

Tester Connection	Specified Condition
L (B36-9) - Body ground	Below 1 Ω

(d) Install the ST relay.
(e) Reconnect the park/neutral position switch connector.

NG → **REPAIR OR REPLACE HARNESS OR CONNECTOR**

OK

AX

4 INSPECT STARTER RELAY ASSEMBLY

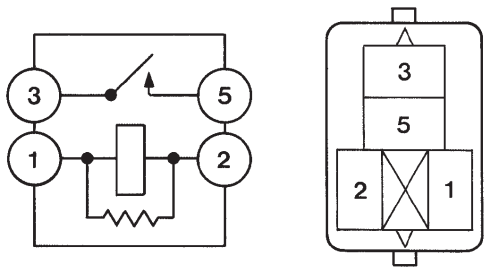

B016200E02

(a) Remove the ST relay from the engine room relay block.
(b) Measure the resistance according to the value(s) in the table below.
Standard resistance

Tester Connection	Specified Condition
3 - 5	10 kΩ or higher
3 - 5	Below 1 Ω or higher

(c) Install the ST relay.

NG → **REPLACE STARTER RELAY ASSEMBLY**

OK

5 CHECK HARNESS AND CONNECTOR (ST RELAY - BODY GROUND)

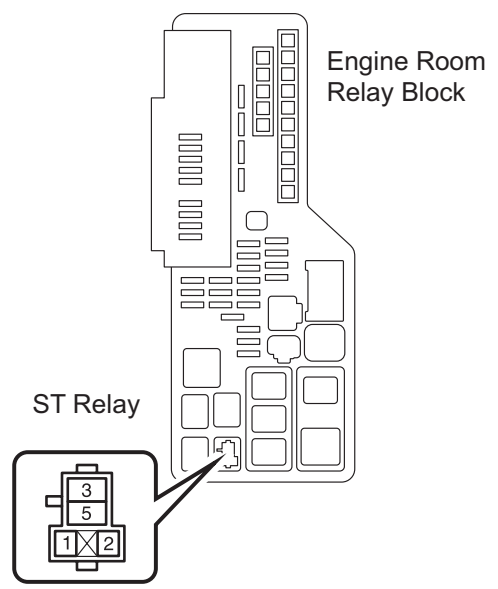

A137046E01

(a) Remove the ST relay from the engine room relay block.
(b) Measure the resistance according to the value(s) in the table below.
Standard resistance

Tester Connection	Specified Condition
ST relay terminal 2 - Body ground	10 kΩ or higher

(c) Install the ST relay.

NG → **REPAIR OR REPLACE HARNESS OR CONNECTOR**

OK

AX

6 INSPECT PARK/NEUTRAL POSITION SWITCH ASSEMBLY

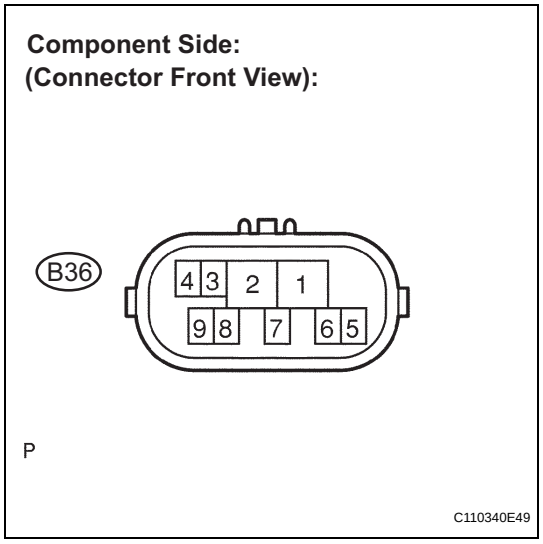

(a) Measure the resistance according to the value(s) in the table below when the shift lever is moved to each position.

Standard resistance

Shift Position	Tester Connection	Specified Condition
P	1 - 3 and 4 - 9	Below 1 Ω
Except P		10 kΩ or higher
R	1 - 2	Below 1 Ω
Except R		10 kΩ or higher
N	1 - 8 and 4 - 9	Below 1 Ω
Except N		10 kΩ or higher
D, S, "+" and "-"	1 - 7	Below 1 Ω
Except D, S, "+" and "-"		10 kΩ or higher

NG → **REPLACE PARK/NEUTRAL POSITION SWITCH (See page AX-184)**

OK

7 CHECK HARNESS AND CONNECTOR

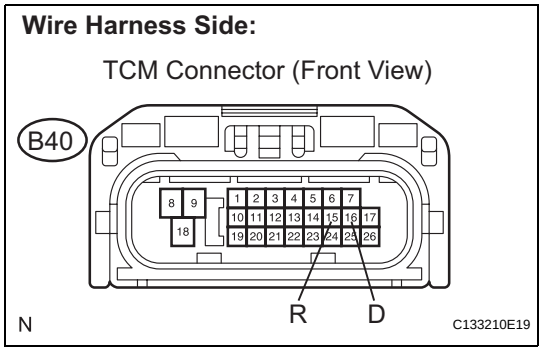

(a) Connect the park / neutral position switch connector.
(b) Disconnect the TCM connectors.
(c) Turn the engine switch on (IG), and measure the voltage according to the value(s) in the table below when the shift lever is moved to each position.

Standard voltage

Shift Position	Tester Connection	Specified Condition
R	R (B40-15) - Body ground	10 to 14 V *
Except R		Below 1 V
D	D (B40-16) - Body ground	10 to 14 V
Except D		Below 1 V

HINT:

*: The voltage will drop slightly due to lighting up of the back up light.

NG → **REPAIR OR REPLACE HARNESS OR CONNECTOR**

OK

REPLACE TCM (See page AX-251)

AX

8	CHECK HARNESS AND CONNECTOR (PARK / NEUTRAL POSITION SWITCH - TCM)

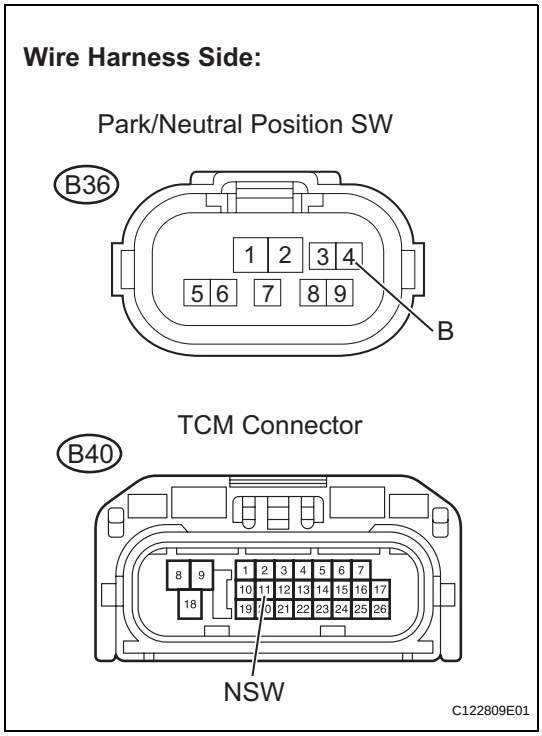

(a) Disconnect the TCM connectors.
(b) Turn the engine switch off.
(c) Measure the resistance according to the value(s) in the table below.

Standard resistance (Check for open)

Tester Connection	Specified Condition
B (B36-4) - NSW (B40-11)	Below 1 Ω

Standard resistance (Check for short)

Tester Connection	Specified Condition
B (B36-4) or NSW (B40-11) - Body ground	10 kΩ or higher

NG → **REPAIR OR REPLACE HARNESS OR CONNECTOR**

OK

REPLACE TCM (See page AX-251)

DTC	P0710	Transmission Fluid Temperature Sensor "A" Circuit

DTC	P0712	Transmission Fluid Temperature Sensor "A" Circuit Low Input

DTC	P0713	Transmission Fluid Temperature Sensor "A" Circuit High Input

DESCRIPTION

The ATF (Automatic Transmission Fluid) temperature sensor converts the fluid temperature into a resistance value for use by the TCM.

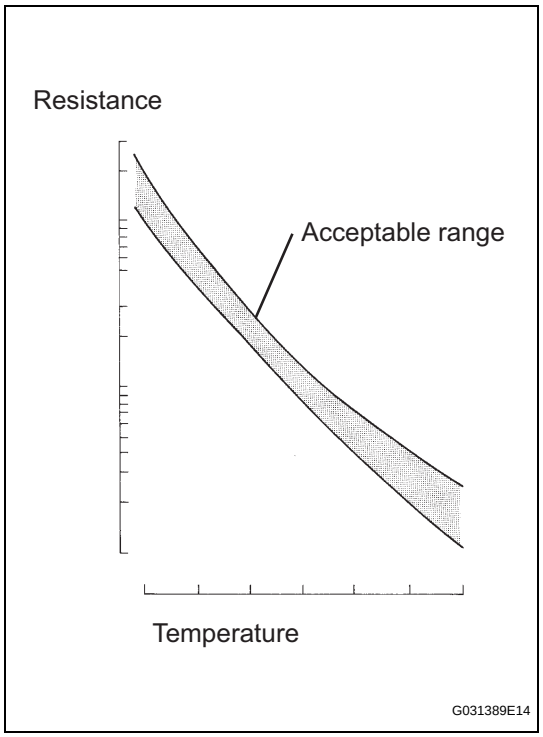

The TCM applies a voltage to the temperature sensor through terminal OIL of the TCM.
The sensor resistance changes with the transmission fluid temperature. As the temperature becomes higher, the sensor resistance decreases.
One terminal of the sensor is grounded so that the sensor resistance decreases and the voltage goes down as the temperature becomes higher.
The TCM calculates the fluid temperature based on the voltage signal.

DTC No.	DTC Detection Condition	Trouble Area
P0710	(a) and (b) are detected momentarily (within 0.5 sec.) when neither P0712 nor P0713 is detected (1-trip detection logic) (a) ATF temperature sensor resistance is less than 79 Ω. (b) ATF temperature sensor resistance is more than 156 kΩ. HINT: Within 0.5 sec., the malfunction switches from (a) to (b) or from (b) to (a)	• Open or short in ATF temperature sensor circuit • Transmission wire (ATF temperature sensor) • TCM

DTC No.	DTC Detection Condition	Trouble Area
P0712	ATF temperature sensor resistance is less than 79 Ω for 0.5 sec. or more (1-trip detection logic)	• Short in ATF temperature sensor circuit • Transmission wire (ATF temperature sensor) • TCM
P0713	ATF temperature sensor resistance is more than 156 kΩ when 15 minutes or more have elapsed after the engine starts DTC is detected for 0.5 sec. or more (1-trip detection logic)	• Open in ATF temperature sensor circuit • Transmission wire (ATF temperature sensor) • TCM

MONITOR DESCRIPTION

These DTCs indicate an open or short in the automatic transmission fluid (ATF) temperature sensor (TFT sensor) circuit. The automatic transmission fluid (ATF) temperature sensor converts ATF temperature into an electrical resistance value. Based on the resistance, the TCM determines the ATF temperature, and the TCM detects an open or short in the ATF temperature circuit. If the resistance value of the ATF temperature is less than 79 Ω*1 or more than 156 kΩ*2, the TCM interprets this as a fault in the ATF sensor or wiring. The TCM will turn on the MIL and store the DTC.
*1: 150°C (302°F) or more is indicated regardless of the actual ATF temperature.
*2: -40°C (-40°F) is indicated regardless of the actual ATF temperature.
HINT:
The ATF temperature can be checked on the intelligent tester display.

MONITOR STRATEGY

Related DTCs	P0710: ATF temperature sensor/Range check (Chattering) P0712: ATF temperature sensor/Range check (Low resistance) P0713: ATF temperature sensor/Range check (High resistance)
Required sensors/Components	ATF temperature sensor (TFT sensor)
Frequency of operation	Continuous
Duration	0.5 sec.
MIL operation	Immediately
Sequence of operation	None

AX

TYPICAL ENABLING CONDITIONS

P0710:

Range check (Chattering)

The monitor will run whenever this DTC is not present.	None
The typical enabling condition is not available.	-

P0712:

Range check (Low resistance)

The monitor will run whenever this DTC is not present.	None
The typical enabling condition is not available.	-

P0713:

Range check (High resistance)

The monitor will run whenever this DTC is not present.	None
Time after engine start	15 min. or more

TYPICAL MALFUNCTION THRESHOLDS

P0710:

Range check (Chattering)

TFT (transmission fluid temperature) sensor resistance	Less than 79 Ω or more than 156 kΩ

P0712:
Range check (Low resistance)

TFT sensor resistance	Less than 79 Ω

P0713:
Range check (High resistance)

TFT sensor resistance	More than 156 kΩ

COMPONENT OPERATING RANGE

TFT sensor	Atmospheric temperature to approx. 130°C (266°F)

WIRING DIAGRAM

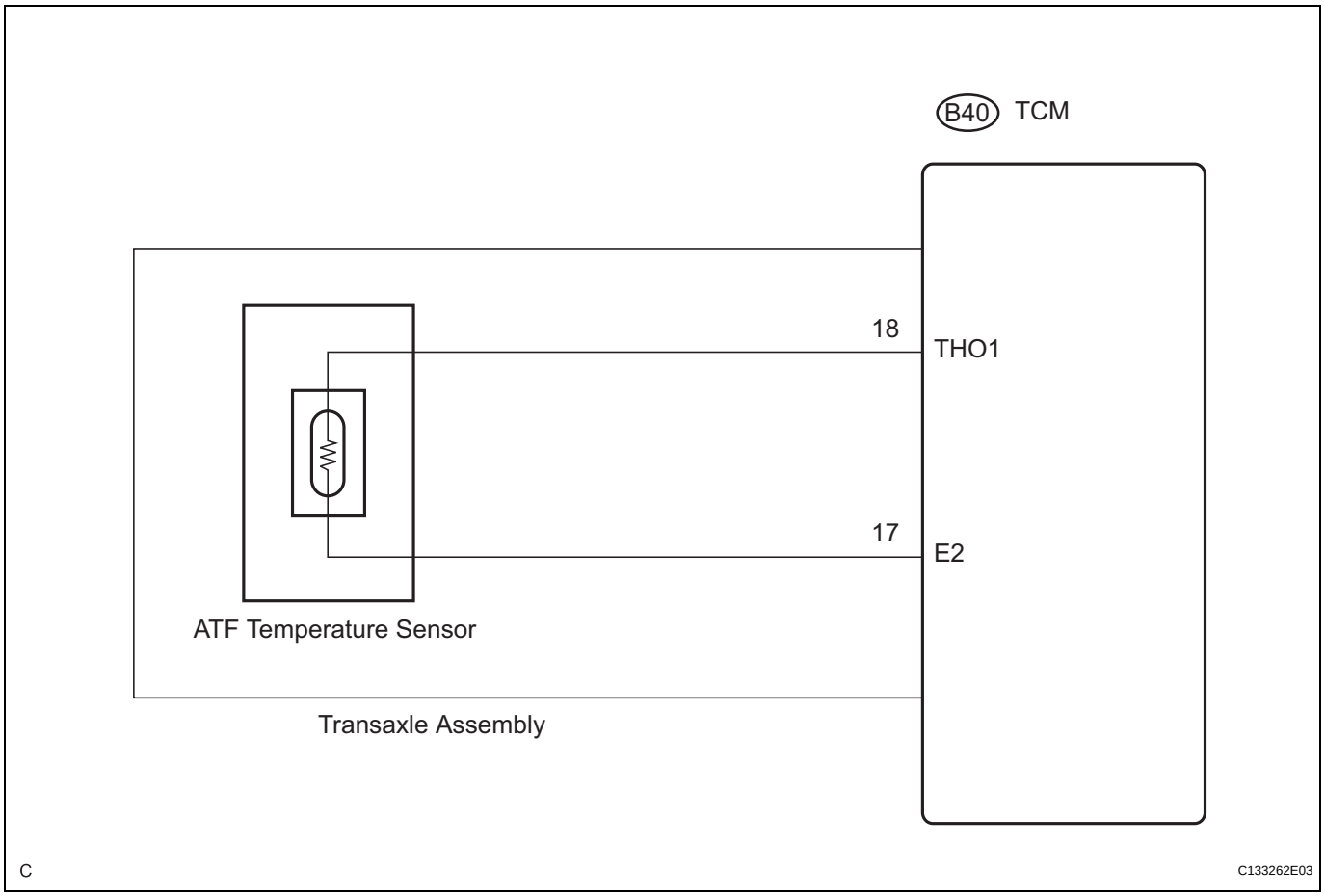

INSPECTION PROCEDURE

1. DATA LIST

HINT:
According to the DATA LIST displayed on the intelligent tester, you can read the value of switches, sensors, actuators and other items without removing any parts. Reading the DATA LIST as the first step in troubleshooting is one method to save labor time.

NOTICE:
In the table below, the values listed under "Normal Condition" are reference values. Do not depend solely on these reference values when deciding whether a part is faulty.

(a) Warm up the engine.
(b) Turn the engine switch off.

AX

(c) Connect the intelligent tester together with the CAN VIM (Controller Area Network Vehicle Interface Module) to the DLC3.
(d) Turn the engine switch on (IG).
(e) Turn on the tester.
(f) Enter the following items: "DIAGNOSIS / OBD/MOBD / ECT / DATA LIST".
(g) According to the display on the tester, read "DATA LIST".

Item	Measurement Item/ Range (display)	Normal Condition
AT OIL TEMP1	ATF Temp. Sensor Value/ min.: -40°C (-40°F) max.: 215°C (419°F)	• After Stall Test; Approx. 80°C (176°F) • Equal to ambient temperature when cold soak

HINT:
When DTC P0712 is output and the intelligent tester indicates 150°C (302°F) or more, there is a short circuit.
When DTC P0713 is output and the intelligent tester indicates -40°C (-40°F), there is an open circuit.
Measure the resistance between terminal OIL and body ground.

Temperature Displayed	Malfunction
-40°C (-40°F)	Open circuit
150°C (302°F) or more	Short circuit

HINT:
If the circuit related to the ATF temperature sensor becomes open, P0713 is immediately set (in 0.5 seconds). When P0713 is set, P0711 cannot be detected.
It is not necessary to inspect the circuit when P0711 is set.

1 INSPECT TRANSMISSION WIRE (ATF TEMPERATURE SENSOR)

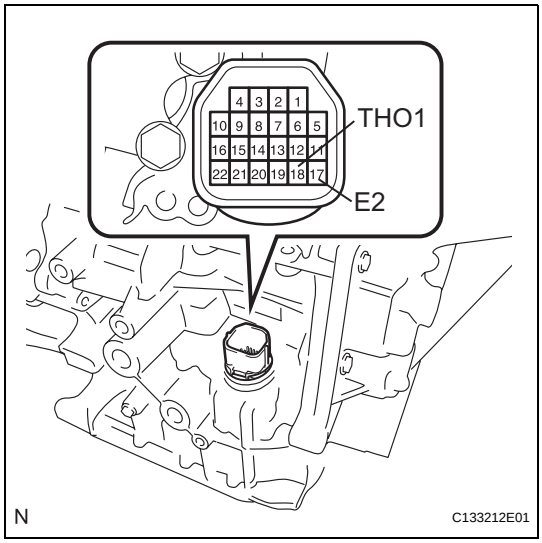

(a) Remove the TCM from the transaxle.
(b) Measure the resistance according to the value(s) in the table below.

Standard resistance

Tester Connection	Specified Condition
17 (E2) - 18 (THO1)	**90 Ω to 156 kΩ**
17 (E2) - Body ground	**10 kΩ or higher**
18 (THO1) - Body ground	**10 kΩ or higher**

HINT:
If the resistance is out of the specified range with the ATF temperature shown in the table below, the driveability of the vehicle may decrease.

Standard resistance

ATF Temperature	Specified Condition
10°C (50°F)	**5.8 to 7.1 kΩ**
110°C (230°F)	**0.23 to 0.26 kΩ**

OK → **REPLACE TCM**

NG

AX

2 INSPECT ATF TEMPERATURE SENSOR

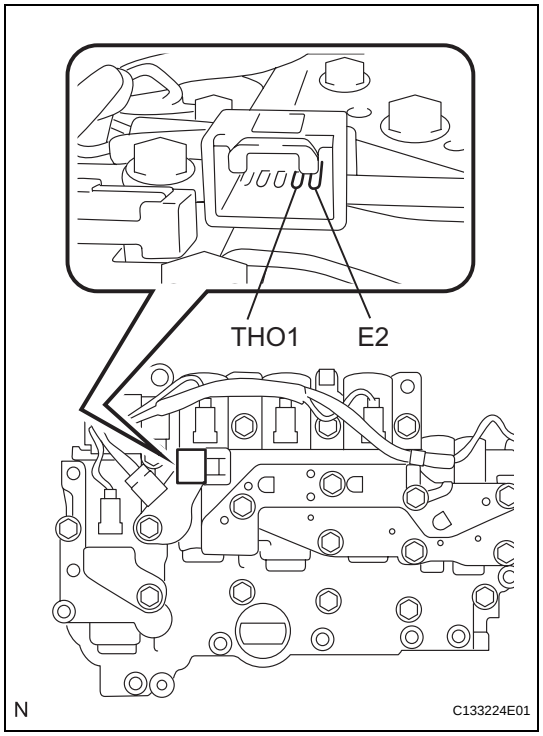

(a) Disconnect the ATF temperature sensor connector from the transmission wire.

(b) Measure the resistance according to the value(s) in the table below.

Standard resistance

Tester Connection	Specified Condition
E2 - THO1	90 Ω to 156 kΩ
E2 - Body ground	10 kΩ or higher
THO1 - Body ground	10 kΩ or higher

HINT:
If the resistance is out of the specified range with the ATF temperature shown in the table below, the driveability of the vehicle may decrease.

Standard resistance

ATF Temperature	Specified Condition
10°C (50°F)	5.8 to 7.1 kΩ
110°C (230°F)	0.22 to 0.28 kΩ

NG → **REPLACE ATF TEMPERATURE SENSOR ASSEMBLY**

OK

REPLACE TRANSMISSION WIRE

DTC	P0711	Transmission Fluid Temperature Sensor "A" Performance

DESCRIPTION

The ATF (Automatic Transmission Fluid) temperature sensor converts the fluid temperature into a resistance value for use by the TCM.

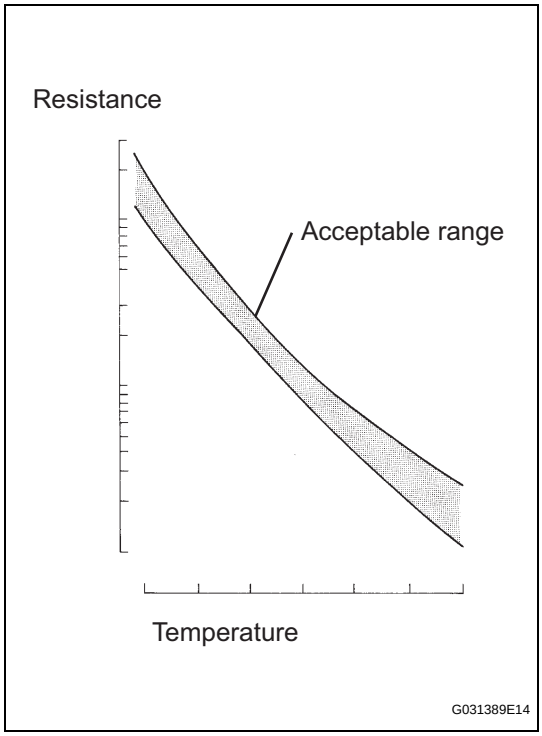

The TCM applies a voltage to the temperature sensor through terminal OIL of the TCM.
The sensor resistance changes with the transmission fluid temperature. As the temperature becomes higher, the sensor resistance decreases.
One terminal of the sensor is grounded so that the sensor resistance decreases and the voltage goes down as the temperature becomes higher.
The TCM calculates the fluid temperature based on the voltage signal.

DTC No.	DTC Detection Condition	Trouble Area
P0711	Both (a) and (b) are detected (2-trip detection logic): (a) Intake air and engine coolant temps. are more than -10°C (14°F) at engine start. (b) After normal driving for over 16 min. and 40 sec. and 5 mile (8 km) or more, ATF temp. is less than 20°C (68°F).	• Transmission wire (ATF temperature sensor) • TCM

MONITOR DESCRIPTION

This DTC indicates that there is a problem with output signals from the automatic transmission fluid (ATF) temperature sensor (TFT sensor) and that the sensor itself is defective. The ATF temperature sensor converts the ATF temperature into an electrical resistance value. Based on the resistance, the TCM determines the ATF temperature and detects an open or short in the ATF temperature circuit or a fault of the ATF temperature sensor.
After running the vehicle for a certain period, the ATF temperature should increase. If the ATF temperature is below 20°C (68°F) after running the vehicle for a certain period, the TCM interprets this as a fault, and turns on the MIL.

MONITOR STRATEGY

Related DTCs	P0711: ATF temperature sensor/Rationality check
Required sensors/Components	ATF temperature sensor (TFT sensor)
Frequency of operation	Continuous
Duration	3 sec.
MIL operation	2 driving cycles
Sequence of operation	None

TYPICAL ENABLING CONDITIONS

ALL:

The monitor will run whenever this DTC is not present	None
TFT (Transmission fluid temperature) sensor circuit	Circuit is not malfunctioning
ECT (Engine coolant temperature) sensor circuit	Circuit is not malfunctioning
IAT (Intake air temperature) sensor circuit	Circuit is not malfunctioning
Turbine speed sensor circuit	Circuit is not malfunctioning
Intermediate shaft speed sensor	Circuit is not malfunctioning
Shift solenoid valve SL1 circuit	Circuit is not malfunctioning
Shift solenoid valve SL2 circuit	Circuit is not malfunctioning
Shift solenoid valve SL3 circuit	Circuit is not malfunctioning
Shift solenoid valve SL4 circuit	Circuit is not malfunctioning
Knock control sensor circuit	Circuit is not malfunctioning
CAN communication system	Circuit is not malfunctioning
Electronic throttle system	Circuit is not malfunctioning
Time after engine start	16 min. and 40 sec. or more
ECT (Engine coolant temperature)	Above -15°C (5°F)

Condition A:

Time after engine start	18 min. and 20 sec.
Driving distance after engine start	5 miles (8 km) or more
IAT (12 sec. after engine start)	Above -10°C (14°F)
ECT (12 sec. after engine start)	Above -10°C (14°F)
Accumulated driving time *1	200 sec. or more
*1: Following conditions are met	
Engine speed - Turbine speed	50 rpm or more
Output speed	400 rpm or more
Throttle valve opening angle	3% or more
TFT (Transmission fluid temperature)	Less than 20°C (68°F)
Shift position	Not "N" or "P"

Condition B:

Time after engine start	30 min.
Driving distance after engine start	9.3 miles (15 km)
IAT (12 sec. after engine start)	-15°C (5°F) or more
ECT (12 sec. after engine start)	-15°C (5°F) or more
TFT (Transmission fluid temperature)	Less than 20°C (68°F)
Accumulated driving time *1	400 sec. or more

Condition C:

Time after engine start	40 min.
Driving distance after engine start	12.4 miles (20 km)
TFT (Transmission fluid temperature)	Less than 20°C (68°F)

Accumulated driving time *1	550 sec. or more

Condition D:

Time after ECT reaches 60°C (140°F)	10 sec. or more
TFT (12 sec. after engine start)	110°C (230°F) or more
ECT (12 sec. after engine start)	35°C (95°F) or less

TYPICAL MALFUNCTION THRESHOLDS

Condition A, B and C:

TFT	Less than 20°C (68°F) (THO = -10°C (14°F) at engine start) (Conditions vary with THO at engine)

Condition D:

TFT	110°C (230°F) or more

COMPONENT OPERATING RANGE

TFT	ATF temperature - approx. 130°C (266°F)

WIRING DIAGRAM

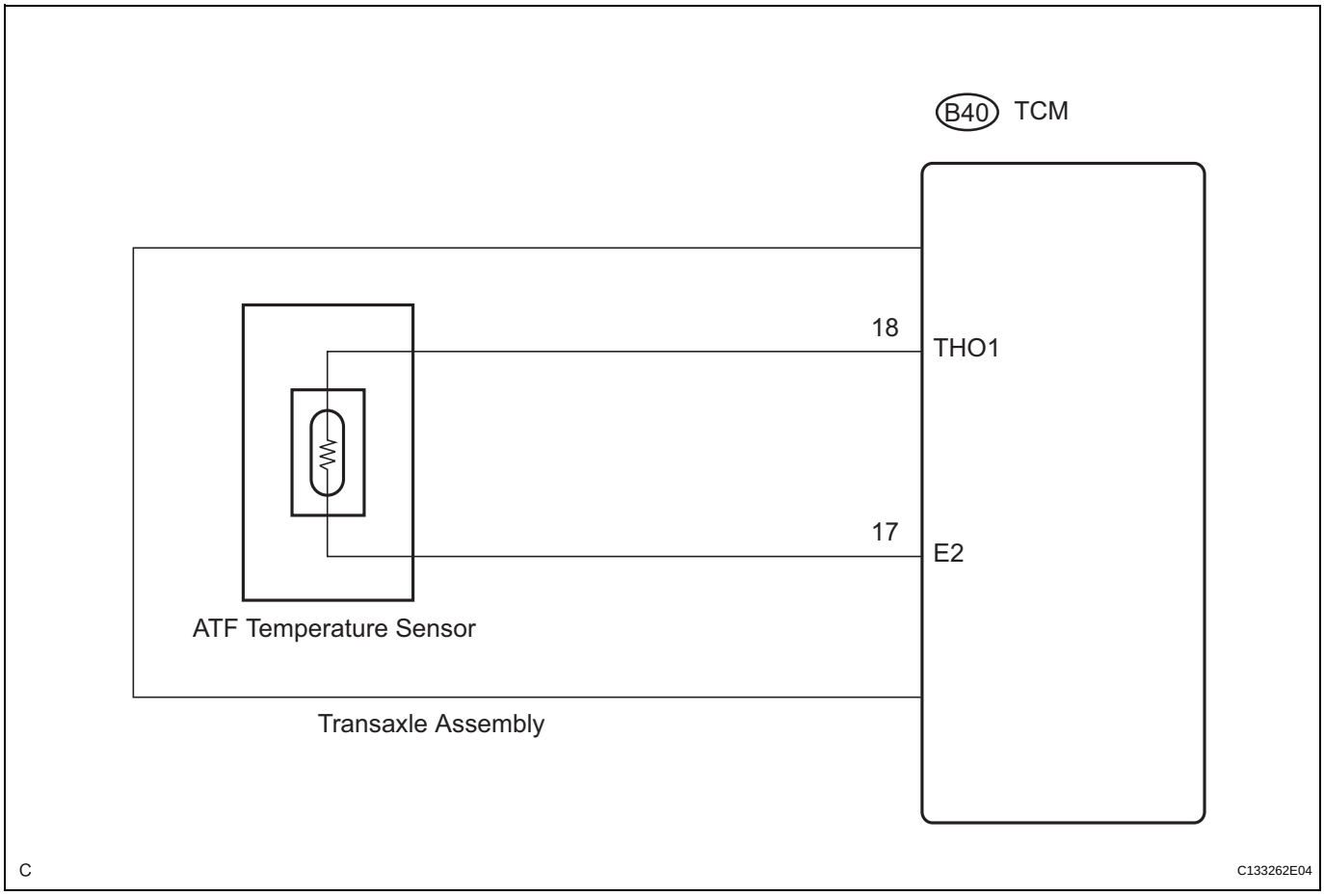

AX

INSPECTION PROCEDURE

1. DATA LIST

HINT:
According to the DATA LIST displayed on the intelligent tester, you can read the value of switches, sensors, actuators and other items without removing any parts. Reading the DATA LIST as the first step in troubleshooting is one method to save labor time.

NOTICE:
In the table below, the values listed under "Normal Condition" are reference values. Do not depend solely on these reference values when deciding whether a part is faulty.

(a) Warm up the engine.
(b) Turn the engine switch off.
(c) Connect the intelligent tester together with the CAN VIM (Controller Area Network Vehicle Interface Module) to the DLC3.
(d) Turn the engine switch on (IG).
(e) Turn on the tester.
(f) Enter the following items: "DIAGNOSIS / OBD / MOBD / ECT / DATA LIST".
(g) According to the display on the tester, read "DATA LIST".

Item	Measurement Item/ Range (display)	Normal Condition
AT OIL TEMP1	ATF Temp. Sensor Value/ min.: -40°C (-40°F) max.: 215°C (419°F)	• After Stall Test; Approx. 80°C (176°F) • Equal to ambient temperature when cold soak

HINT:
When DTC P0712 is output and the intelligent tester indicates 150°C (302°F) or more, there is a short circuit.
When DTC P0713 is output and the intelligent tester indicates -40°C (-40°F), there is an open circuit.
Measure the resistance between terminal THO1 (OT) and body ground.

Temperature Displayed	Malfunction
-40°C (-40°F)	Open circuit
150°C (302°F) or more	Short circuit

AX

HINT:
If a circuit related to the ATF temperature sensor becomes open, P0713 is immediately set (in 0.5 seconds). When P0713 is set, P0711 cannot be detected.
It is not necessary to inspect the circuit when P0711 is set.

1	CHECK OTHER DTCS OUTPUT (IN ADDITION TO DTC P0711)

(a) Connect the the intelligent tester to the DLC3.
(b) Turn the engine switch on (IG) and turn the the intelligent tester on.
(c) Select the items: "DIAGNOSIS / OBD/MOBD / ECT / DTC INFO / CURRENT CODES".
(d) Read the DTCs using the intelligent tester.

Result

Display (DTC output)	Proceed to
Only "P0711" is output	**A**
"P0711" and other DTCs	**B**

HINT:
If any other codes besides "P0711" are output, perform troubleshooting for those DTCs first.

B → **GO TO DTC CHART**

A

2 CHECK TRANSMISSION FLUID LEVEL

(a) Check the transmission fluid level.

OK:

Automatic transmission fluid level is correct.

NG → **ADD FLUID**

OK

3 INSPECT TRANSMISSION WIRE (ATF TEMPERATURE SENSOR)

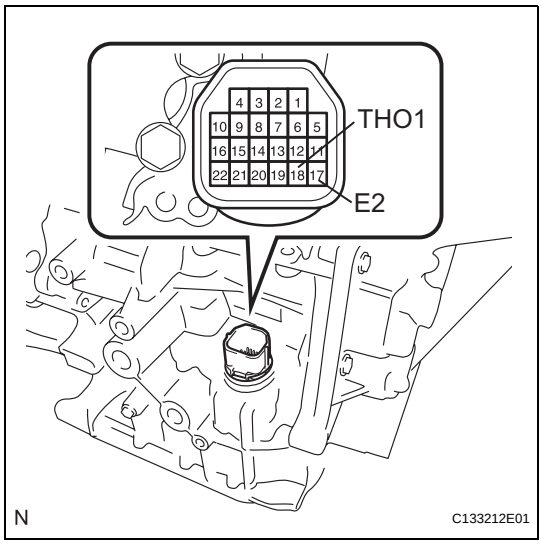

(a) Remove the TCM from the transaxle.

(b) Measure the resistance according to the value(s) in the table below.

Standard resistance

Tester Connection	Specified Condition
17 (E2) - 18 (THO1)	90 Ω to 156 kΩ
17 (E2) - Body ground	10 kΩ or higher
18 (THO1) - Body ground	10 kΩ or higher

HINT:
If the resistance is out of the specified range with the ATF temperature shown in the table below, the driveability of the vehicle may decrease.

Standard resistance

ATF Temperature	Specified Condition
10°C (50°F)	5.8 to 7.1 kΩ
110°C (230°F)	0.23 to 0.26 kΩ

OK → **REPLACE TCM**

NG

AX

4 CHECK ATF TEMPERATURE SENSOR

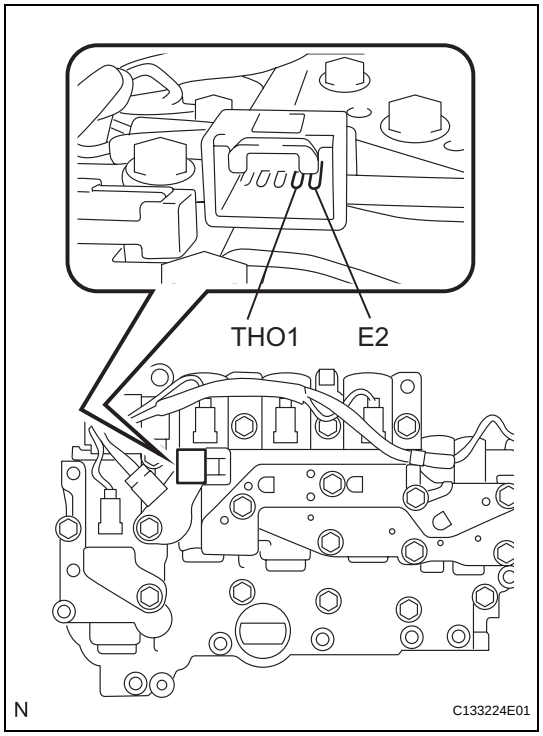

(a) Disconnect the ATF temperature sensor connector from the transmission wire.

(b) Measure the resistance according to the value(s) in the table below.

Standard resistance

Tester Connection	Specified Condition
E2 - THO1	90 Ω to 156 kΩ
E2 - Body ground	10 kΩ or higher
THO1 - Body ground	10 kΩ or higher

HINT:
If the resistance is out of the specified range with the ATF temperature shown in the table below, the driveability of the vehicle may decrease.

Standard resistance

ATF Temperature	Specified Condition
10°C (50°F)	5.8 to 7.1 kΩ
110°C (230°F)	0.23 to 0.26 kΩ

NG → **REPLACE ATF TEMPERATURE SENSOR ASSEMBLY**

OK

REPLACE TRANSMISSION WIRE

DTC	P0715	Input / Turbine Speed Sensor Circuit Malfunction

DTC	P0717	Input Speed Sensor Circuit No Signal

SYSTEM DESCRIPTION

This sensor detects the rotation speed of the turbine which shows the input revolution of transaxle. By comparing the input turbine speed signal (NT) with the counter gear speed sensor signal (NC), the TCM detects the shift timing of the gears and appropriately controls the engine torque and hydraulic pressure according to various conditions, thus, providing smooth gear shift.

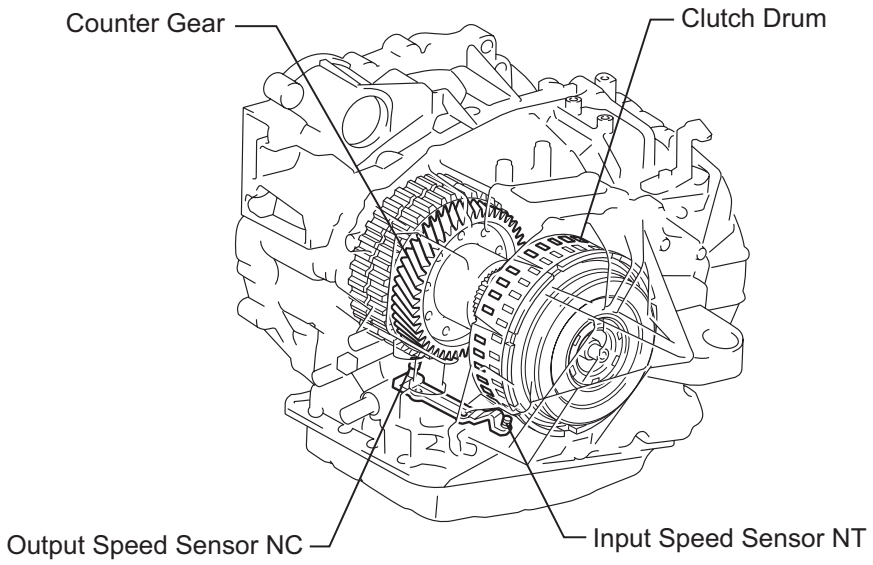

N C133216E01

AX

DTC No.	DTC Detection Condition	Trouble Area
P0715	When the speed sensor input voltage is either more than 1.9 V or less than 0.1 V for 4.5 seconds or more.	• Transmission revolution sensor (speed sensor NT) • TCM
P0717	ECM detects conditions (a), (b) and (c) continuously for 5 sec. or more (1-trip detection logic): (a) Vehicle speed: 31 mph (50 km/h) or more (b) Park/neutral position switch (STAR and R) is OFF (c) Speed sensor (NT): less than 300 rpm	

MONITOR DESCRIPTION

The NT terminal of the TCM detects a revolution signal from the speed sensor (NT) (input RPM). The TCM calculates a gearshift comparing the speed sensor (NT) with the speed sensor (NC).
While the vehicle is operating in 2nd, 3rd, 4th or 5th gear in the shift position of D, if the input shaft revolution is less than 300 rpm *1although the output shaft revolution is more than 1,000 rpm *2, the TCM interprets this as a fault, illuminates the MIL and stores the DTC.
*1: Pulse is not output or is irregularly output.
*2: The vehicle speed is 31 mph (50 km/h) or more.

MONITOR STRATEGY

Related DTCs	P0717: Speed sensor (NT)/Verify pulse input

Required sensors/Components	Speed sensor (NT), Speed sensor (NC)
Frequency of operation	Continuous
Duration	5 sec.
MIL operation	Immediate
Sequence of operation	None

TYPICAL ENABLING CONDITIONS

P0715:

Battery voltage	8 V or more
Engine switch	ON
Starter	OFF

P0717:

The monitor will run whenever this DTC is not present.	P0500 (VSS) P0748, P0778, P0798 (Shift solenoid valve (range))
Shift change	Shift change is completed before starting next shift change operation
TCM selected gear	2nd, 3rd, 4th, 5th or 6th
Output shaft rpm	1,000 rpm or more
STAR switch	OFF
R switch	OFF
Engine	Running
Battery voltage	8 V or more
Engine switch	ON
Starter	OFF

TYPICAL MALFUNCTION THRESHOLDS

P0715:

Sensor voltage	Less than 0.1 V or more than 1.9 V

P0717:

Sensor signal rpm	Less than 300 rpm

COMPONENT OPERATING RANGE

Speed sensor (NT)	Turbine speed is equal to engine speed with lock-up ON

WIRING DIAGRAM

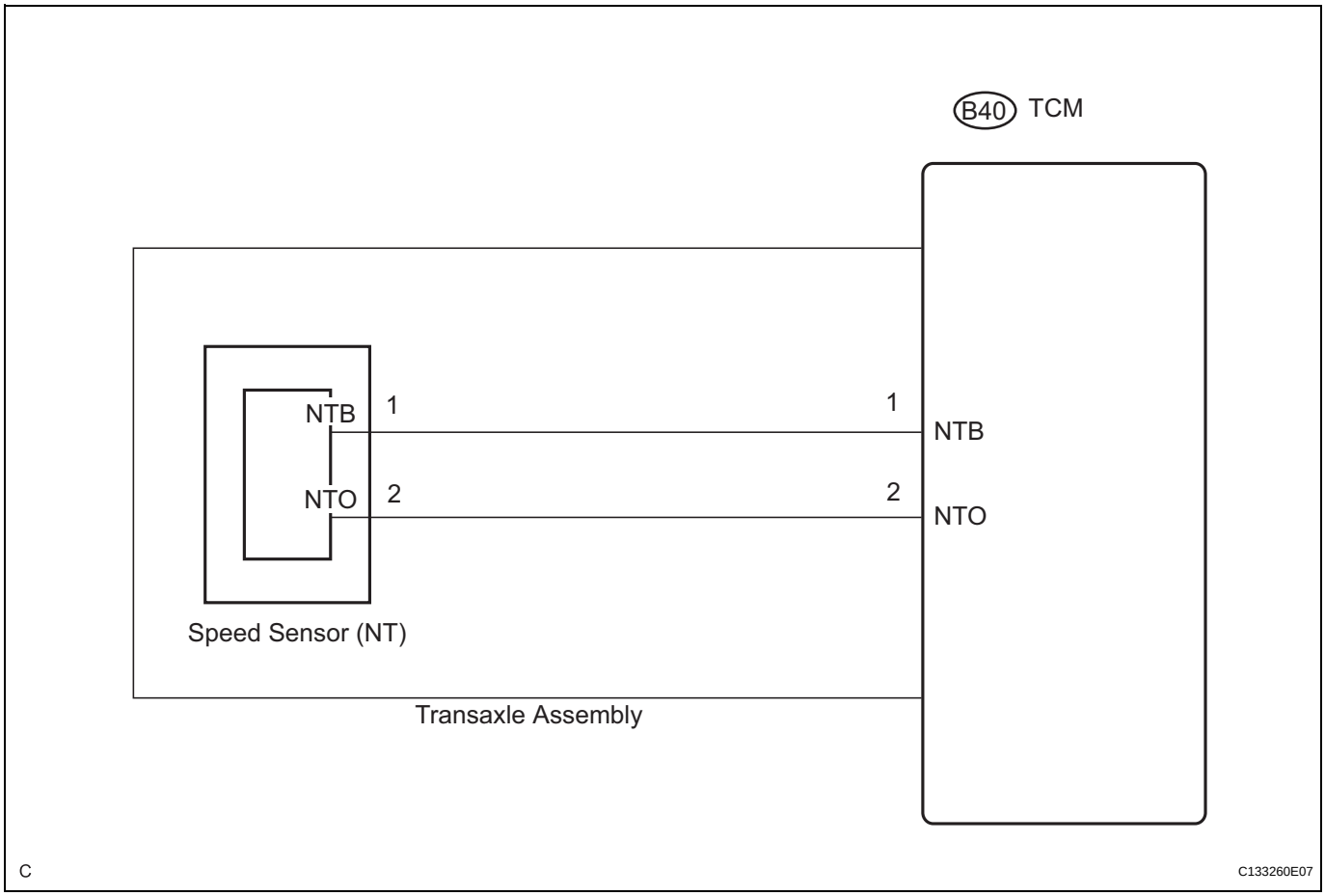

INSPECTION PROCEDURE

AX

1. DATA LIST

NOTICE:

In the table below, the values listed under "Normal Condition" are reference values. Do not depend solely on these reference values when deciding whether a part is faulty.

HINT:

According to the DATA LIST displayed on the intelligent tester, you can read the value of switches, sensors, actuators and other items without removing any parts. Reading the DATA LIST as the first step in troubleshooting is one method to save labor time.

(a) Warm up the engine.
(b) Turn the engine switch off.
(c) Connect the intelligent tester together with the CAN VIM (Controller Area Network Vehicle Interface Module) to the DLC3.
(d) Turn the engine switch on (IG).
(e) Turn on the tester.
(f) Enter the following items: "DIAGNOSIS / OBD / MOBD / ECT / DATA LIST".
(g) According to the display on the tester, read "DATA LIST".

Item	Measurement Item/ Range (display)	Normal Condition
SPD (NT)	Input Turbine Speed/display: 50 r/min	HINT: • Lock-up ON (after warming up the engine); input turbine speed (NT) is equal to the engine speed. • Lock-up OFF (idling at N position); input turbine speed (NT) is nearly equal to the engine speed.

HINT:
- SPD (NT) is always 0 while driving: Open or short in the sensor or circuit.
- SPD (NT) is always more than 0 and less than 300 rpm while driving the vehicle at 31 mph (50 km/h) or more: Sensor trouble, improper installation, or intermittent connection trouble of the circuit.

1 INSPECT SPEED SENSOR (SENSOR INSTALLATION)

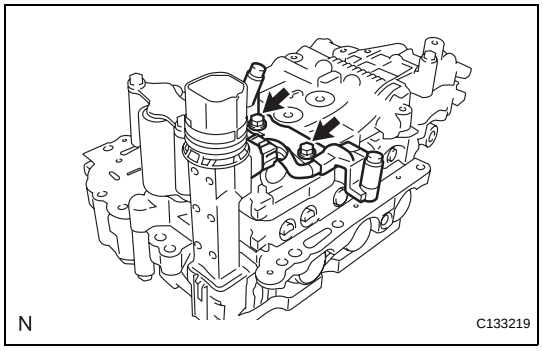

(a) Make sure that the connector is properly connected, and check the speed sensor installation.
OK:
The installation bolt is tightened properly and there is no clearance between the sensor and transaxle case.

NG → **REPAIR OR REPLACE SPEED SENSOR**

OK

2 CHECK TRANSMISSION WIRE

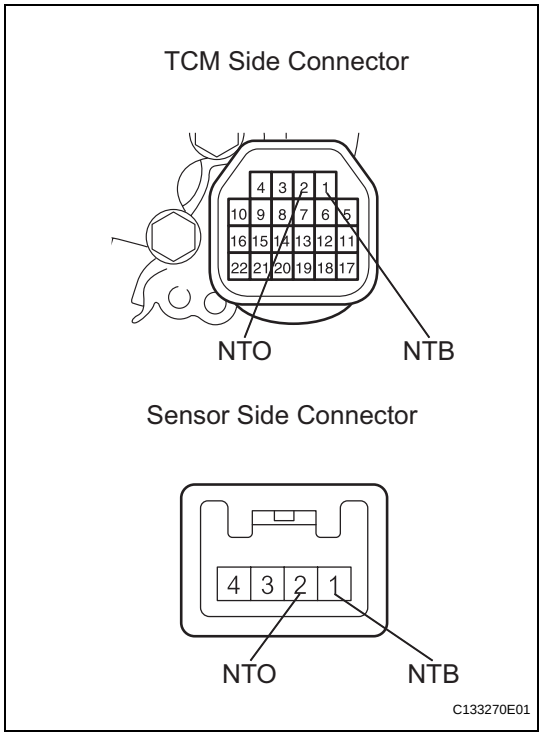

(a) Remove the TCM.
(b) Disconnect the speed sensor connector from the transmission wire.
(c) Measure the resistance according to the value(s) in the table below.
Standard resistance

Tester Condition	Specified Condition
NTO - NTO	Below 1 Ω
NTB - NTB	Below 1 Ω
NTO - NTB	10 kΩ or higher

NG → **REPLACE TRANSMISSION WIRE**

OK

3 REPLACE SPEED SENSOR

NEXT

AX

4	CHECK IF DTC OUTPUT RECURS (SEE IF DTC P0715 AND/OR P0717 IS OUTPUT AGAIN)

(a) Connect the intelligent tester to the DLC3.
(b) Start the engine and turn the intelligent tester main switch ON.
(c) Perform the monitor drive pattern (See page AX-26).
(d) When you use the intelligent tester:
Select the item "DIAGNOSIS / OBD / MOBD / ECT / DTC INFO / CURRENT CODES".
(e) Read the DTCs using the intelligent tester.

Result

Display (DTC output)	Proceed to
Only "P0715 or P0717" is output	A
No output	B

B → END

A

REPLACE TCM

DTC	P0724	Brake Switch "B" Circuit High

DESCRIPTION

The purpose of this circuit is to prevent the engine from stalling while driving in lock-up condition when brakes are suddenly applied.
When the brake pedal is depressed, this switch sends a signal to the TCM. Then the TCM cancels the operation of the lock-up clutch while braking is in progress.

DTC No.	DTC Detection Condition	Trouble Area
P0724	The stop light switch remains ON even when the vehicle is driven in a STOP (less than 2 mph (3 km/h)) and GO (19 mph (30 km/h) or more) fashion 5 times. (2-trip detection logic).	• Short in stop light switch signal circuit • Stop light switch • TCM

MONITOR DESCRIPTION

This DTC indicates that the stop light switch remains ON. When the stop light switch remains ON during "stop and go" driving, the TCM interprets this as a fault in the stop light switch, illuminates the MIL, and stores the DTC. The vehicle must stop (less than 2 mph (3 km/h)) and go (19 mph (30 km/h) or more) five times for two consecutive driving cycles in order to set this DTC.

MONITOR STRATEGY

Related DTCs	P0724: Stop light switch/Range check/Rationality
Required sensors/Components	Stop light switch
Frequency of operation	Continuous
Duration	GO and STOP 5 times
MIL operation	2 driving cycles
Sequence of operation	None

TYPICAL ENABLING CONDITIONS

The stop light switch remains ON during GO and STOP 10 times.

GO and STOP are defined as follows;

The monitor will run whenever this DTC is not present.	None
GO: (Vehicle speed is 18.63 mph (30 km/h) or more)	18.7 mph (30 km/h) or more
STOP: (Vehicle speed is less than 1.86 mph (3 km/h))	Less than 1.86 mph (3 km/h)
Starter	OFF
Battery voltage	8 V or more
Engine switch	ON

TYPICAL MALFUNCTION THRESHOLDS

Switch status	ON stuck

WIRING DIAGRAM

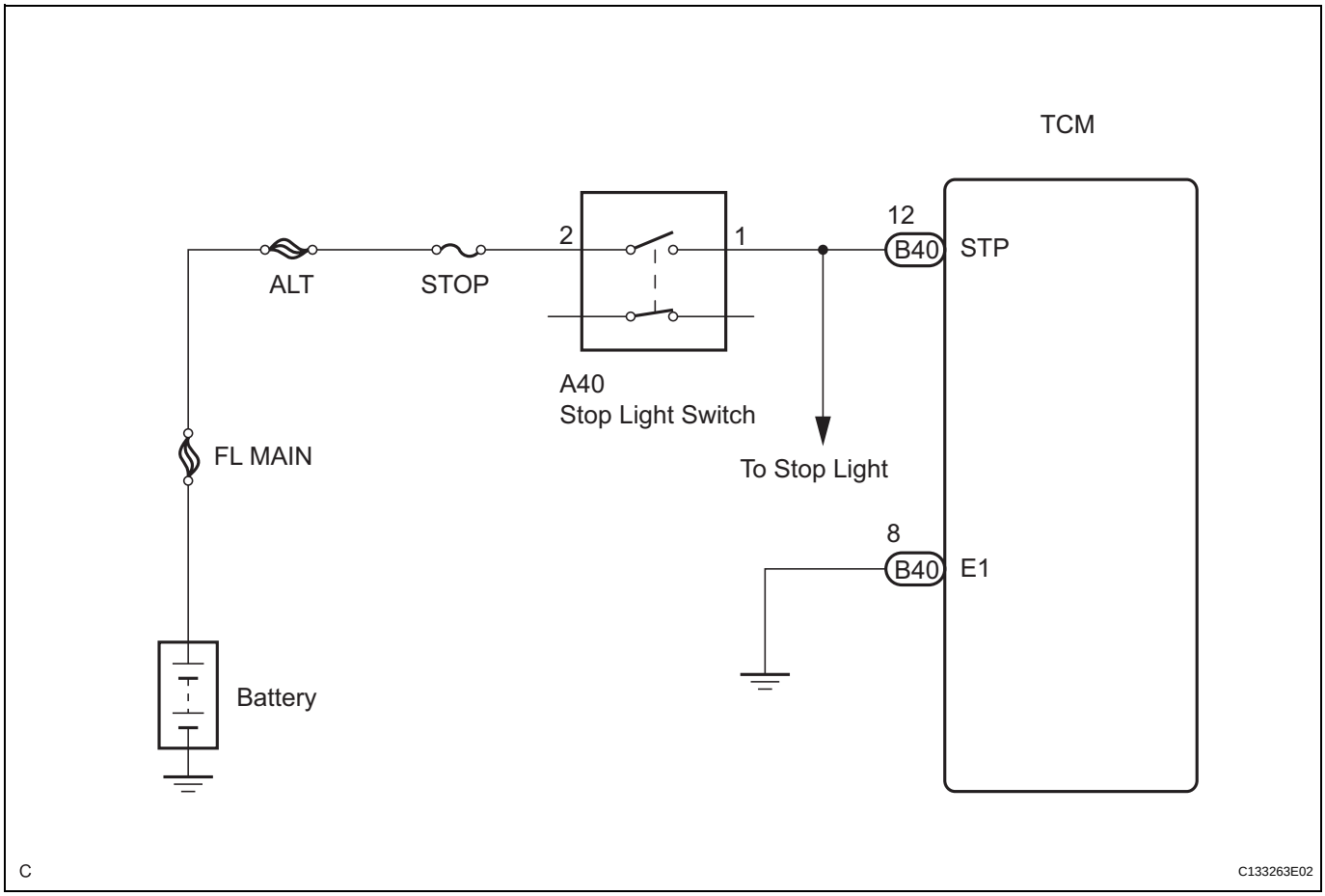

INSPECTION PROCEDURE

AX

1	READ VALUE OF DATA LIST (STP SIGNAL)

HINT:
According to the DATA LIST displayed on the intelligent tester, you can read the value of switches, sensors, actuators and other items without removing any parts. Reading the DATA LIST as the first step in troubleshooting is one method to save labor time.

(a) Turn the engine switch off.
(b) Connect the intelligent tester together with the CAN VIM (Controller Area Network Vehicle Interface Module) to the DLC3.
(c) Turn the engine switch on (IG).
(d) Turn on the tester.
(e) Enter the following items: "DIAGNOSIS / OBD / MOBD / ECT / DATA LIST".
(f) According to the display on the tester, read "DATA LIST".

Standard

Item	Measurement Item/ Range (display)	Normal Condition
STOP LIGHT SW	Stop light switch status/ ON or OFF	• Brake pedal is depressed: ON • Brake pedal is released: OFF

NOTICE:
In the table above, the conditions listed under "Normal Condition" are reference conditions. Do not depend solely on these reference conditions when deciding whether a part is faulty.

OK → **Go to step 3**

NG

2 INSPECT STOP LIGHT SWITCH ASSEMBLY

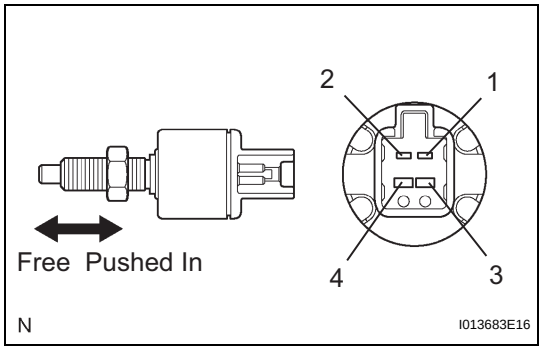

(a) Remove the stop light switch assembly.
(b) Measure the resistance according to the value(s) in the table below.

Standard resistance

Switch Position	Tester Connection	Specified Condition
Switch pin free	1 - 2	Below 1 Ω
Switch pin pushed in	1 - 2	10 kΩ or higher
Switch pin free	3 - 4	10 kΩ or higher
Switch pin pushed in	3 - 4	Below 1 Ω

NG → **REPLACE STOP LIGHT SWITCH ASSEMBLY**

OK

3 CHECK HARNESS AND CONNECTOR (STOP LIGHT SWITCH ASSEMBLY - TCM)

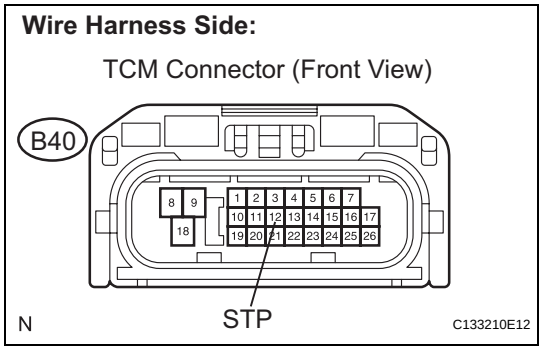

(a) Install the stop light switch assembly.
(b) Disconnect the TCM connector.
(c) Measure the voltage according to the value(s) in the table below when the brake pedal is depressed and released.

Standard voltage

Condition	Tester Connection	Specified Condition
Brake pedal is depressed	B40-12 (STP) - Body ground	10 to 14 V
Brake pedal is released	B40-12 (STP) - Body ground	Below 1 V

NG → **REPAIR OR REPLACE HARNESS OR CONNECTOR**

OK

REPLACE TCM

AX

DTC	P0741	Torque Converter Clutch Solenoid Performance (Shift Solenoid Valve SL)

SYSTEM DESCRIPTION

The TCM uses signals from the throttle position sensor, air-flow meter, turbine (input) speed sensor, intermediate (counter) speed sensor and crankshaft position sensor to help determine the engagement timing of the lock-up clutch. The TCM monitors the engagement of the clutch using the turbine (input) speed sensor, intermediate (counter) speed sensor and crankshaft position sensor.
Then the TCM compares the engagement condition of the lock-up clutch with the lock-up schedule in the TCM memory to detect shift solenoid valve SL, valve body and torque converter clutch mechanical problems.

DTC No.	DTC Detection Condition	Trouble Area
P0741	When both of the following are detected (2-trip detection logic): • Lock-up does not occur when requested. • Transmission fluid pressure switch No. 3 is ON.	• Shift solenoid valve SL (closed) • Valve body (blocked) • Torque converter clutch • Automatic transaxle (clutch, brake or gear etc.) • Line pressure is too low

MONITOR DESCRIPTION

Torque converter lock-up is controlled by the TCM based on the speed sensor (NT), speed sensor (NC), engine rpm, engine load, engine temperature, vehicle speed, transmission fluid temperature, and gear selection. The TCM determines the lock-up status of the torque converter by comparing the engine rpm (NE) to the input turbine rpm (NT). The TCM calculates the actual transmission gear by comparing the input turbine rpm (NT) to the counter gear rpm (NC). When conditions are appropriate, the TCM requests "lock-up" by applying control voltage to the shift solenoid SL. When the SL is turned on, it applies pressure to the lock-up relay valve and locks the torque converter clutch.
If the TCM detects no lock-up after lock-up has been requested or if it detects lock-up when it is not requested, the TCM interprets this as a fault in the shift solenoid valve SL or lock-up system performance. The TCM will turn on the MIL and store the DTC.
HINT:
Example:
When any of the following is met, the system judges it as a malfunction.

- There is a difference in rotation between the input side (engine speed) and output side (input turbine speed) of the torque converter when the TCM commands lock-up.
  (Engine speed is at least 70 rpm greater than the input turbine speed.)
- There is no difference in rotation between the input side (engine speed) and output side (input turbine speed) of the torque converter when the TCM commands lock-up off.
  (The difference between the engine speed and input turbine speed is less than 20 rpm.)

MONITOR STRATEGY

Related DTCs	P0741: Shift solenoid valve SL OFF malfunction Shift solenoid valve SL ON malfunction
Required sensors/Components	Shift solenoid valve SL, Speed sensor (NT), Speed sensor (NC), Crankshaft position sensor (NE), Throttle position sensor (VPA1), Mass air flow sensor (MAF), Transmission temperature sensor (THO1), Engine coolant temperature sensor (ECT)
Frequency of operation	Continuous
Duration	OFF malfunction 3.5 sec.
MIL operation	2 driving cycles
Sequence of operation	None

TYPICAL ENABLING CONDITIONS

ALL:

The monitor will run whenever this DTC is not present.	P0115 - P0118 (ECT sensor) P0125 (Insufficient ECT for closed loop) P0500 (VSS) P0748, P0778, P0798 (Shift solenoid valve (range))
ECT (Engine coolant temperature)	40°C (104°F) or more
Transmission range	"D"
TFT (Transmission fluid temperature)	-10°C (-14°F) or more
TFT sensor circuit	No circuit malfunction
ECT sensor circuit	No circuit malfunction
Turbine speed sensor circuit	No circuit malfunction
Intermediate shaft speed sensor circuit	No circuit malfunction
Torque converter clutch circuit	No circuit malfunction
Knock control sensor circuit	No circuit malfunction
Shift solenoid valve SL1 circuit	No circuit malfunction
Shift solenoid valve SL2 circuit	No circuit malfunction
Shift solenoid valve SL3 circuit	No circuit malfunction
Shift solenoid valve SL4 circuit	No circuit malfunction
Shift solenoid valve SLU circuit	No circuit malfunction
CAN communication circuit	No circuit malfunction
Electronic throttle system	No circuit malfunction
TCM selected gear	No 1st
Vehicle speed	15.5 miles (25 km)
Turbine speed/Output speed (NT/NO) with 1st	3.304 to 7.724
Turbine speed/Output speed (NT/NO) with 2nd	1.901 to 2.340
Turbine speed/Output speed (NT/NO) with 3rd	1.399 to 1.649
Turbine speed/Output speed (NT/NO) with 4th	0.998 to 1.138
Turbine speed/Output speed (NT/NO) with 5th	0.705 to 0.836
Turbine speed/Output speed (NT/NO) with 6th	0.568 to 0.695

TYPICAL MALFUNCTION THRESHOLDS

OFF malfunction:

Following conditions are met	(a) and (b)
(a) Engine Speed - Turbine speed	70 rpm or more
(b) Transmission fluid pressure switch	ON

INSPECTION PROCEDURE

HINT:

Performing the ACTIVE TEST using the intelligent tester allows relays, VSVs, actuators and so on to operate without removing any parts. Performing the ACTIVE TEST as the first step in troubleshooting is one method to save labor time.

It is possible to display the DATA LIST during the ACTIVE TEST.

1. PERFORM ACTIVE TEST

(a) Warm up the engine.
(b) Turn the engine switch off.
(c) Connect the intelligent tester to the DLC3.
(d) Turn the engine switch on (IG).
(e) Turn the intelligent tester on.
(f) When using the intelligent tester:
Enter the following items: "DIAGNOSIS / OBD/MOBD / ECT / ACTIVE TEST".

(g) According to the display on the tester, perform "ACTIVE TEST".

Item	Test Details	Diagnostic Note
LOCK UP	[Test Details] Control the shift solenoid SL to set the automatic transaxle to the lock-up condition. [Vehicle Condition] Vehicle Speed: 37 mph (60 km/h) or more	Possible to check the SL operation.

HINT:
- This test can be conducted when the vehicle speed is 37 mph (60 km/h) or more.
- This test can be conducted in the 6th gear.

(h) Lightly depress the accelerator pedal and check that the engine speed does not change abruptly.
HINT:
- When changing the accelerator pedal opening angle while driving, if the engine speed does not change, lock-up is on.
- Slowly release, but not fully, the accelerator pedal in order to decelerate. (Fully releasing the pedal will close the throttle valve and lock-up may be turned off.)

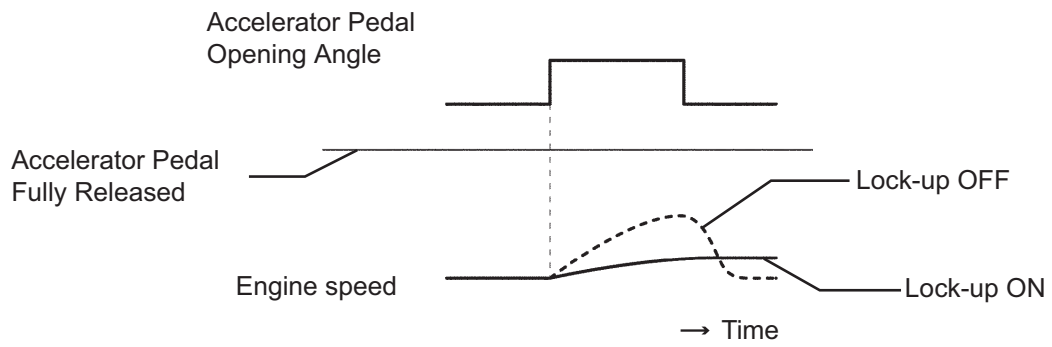

AX

1	CHECK OTHER DTCS OUTPUT (IN ADDITION TO DTC P0741)

(a) Connect the intelligent tester to the DLC3.
(b) Turn the engine switch on (IG) and turn the intelligent tester on.
(c) Enter the following items: "DIAGNOSIS / OBD/MOBD / ECT / DTC INFO / CURRENT CODES".
(d) Read the DTCs using the intelligent tester.

Result

Display (DTC output)	Proceed to
Only "P0741" is output	**A**
"P0741" and other DTCs	**B**

HINT:
If any other codes besides "P0741" are output, perform the troubleshooting for those DTCs first.

B → **GO TO DTC CHART**

A

2 CHECK TRANSMISSION WIRE

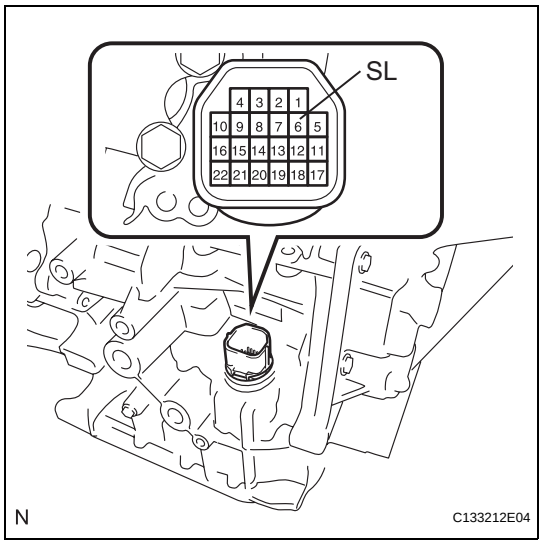

(a) Remove the TCM from the transaxle.
(b) Measure the resistance according to the value(s) in the table below.

Standard resistance

Tester Connection	Specified Condition 20°C (68°F)
6 (SL) - Body ground	11 to 15 Ω

OK → **Go to step 4**

NG

3 CHECK SHIFT SOLENOID VALVE SL (RESISTANCE)

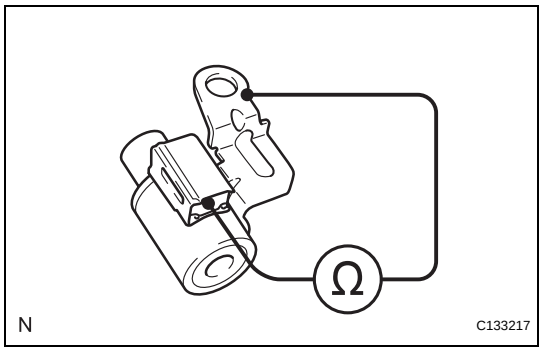

(a) Remove the shift solenoid valve SL.
(b) Measure the resistance according to the value(s) in the table below.

Standard resistance

Tester Connection	Specified Condition 20°C (68°F)
Solenoid Connector (SL) - Solenoid Body (SL)	11 to 15 Ω

NG → **REPLACE SHIFT SOLENOID VALVE SL**

OK

REPAIR OR REPLACE TRANSMISSION WIRE

AX

4	CHECK SHIFT SOLENOID VALVE SL (OPERATION)

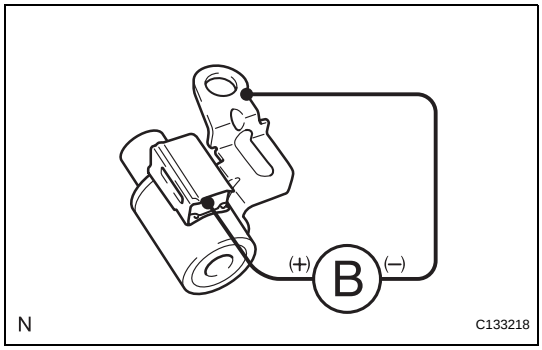

(a) Remove the shift solenoid valve SL.
(b) Connect a positive (+) lead to the terminal of the solenoid connector, and a negative (-) lead to the solenoid body.

OK:
The solenoid valve makes an operating noise.

NG → **REPLACE SHIFT SOLENOID VALVE SL**

OK

5	CHECK TRANSMISSION VALVE BODY ASSEMBLY

OK:
There are no foreign objects on each valve and they operate smoothly.

NG → **REPAIR OR REPLACE TRANSMISSION WIRE**

OK

6	CHECK TORQUE CONVERTER CLUTCH ASSEMBLY

OK:
The torque converter clutch operates normally.

NG → **REPLACE TORQUE CONVERTER CLUTCH ASSEMBLY**

OK

REPAIR OR REPLACE AUTOMATIC TRANSAXLE ASSEMBLY

DTC	P0746	Pressure Control Solenoid "A" Performance (Shift Solenoid Valve SL1)

SYSTEM DESCRIPTION

The TCM uses the vehicle speed signal to determine the actual gear position (1st, 2nd, 3rd, 4th, 5th or 6th gear).
Then the TCM compares the actual gear with the shift schedule in the TCM memory to detect mechanical problems of the shift solenoid valves and valve body.

DTC No.	DTC Detecting Condition	Trouble Area
P0746	The engine revs freely when 1st, 2nd, 3rd, or 4th gear is requested (2-trip detection logic). When either of the following is detected twice (2-trip detection logic): • When 5th gear is requested, 4th gear is engaged. • When 6th gear is requested, 4th gear is engaged.	• Shift solenoid valve SL1 (open or closed) • Valve body (blocked) • Automatic transaxle (clutch, brake or gear etc.)

MONITOR DESCRIPTION

The TCM commands gear shifts by turning the shift solenoid valves on or off. According to the input shaft revolution, intermediate (counter) shaft revolution and output shaft revolution, the TCM detects the actual gear position (1st, 2nd, 3rd, 4th, 5th or 6th gear position). When the gear position commanded by the TCM and the actual gear position are not the same, the TCM illuminates the MIL.

MONITOR STRATEGY

Related DTCs	P0746: Shift solenoid valve SL1 OFF malfunction Shift solenoid valve SL1 ON malfunction
Required sensors/Components	Shift solenoid valve SL1, Speed sensor (NT), Speed sensor (NC), Crankshaft position sensor (NE)
Frequency of operation	Continuous
Duration	ON malfunction: 0.8 sec. OFF malfunction: 0.5 sec.
MIL operation	2 driving cycles
Sequence of operation	None

AX

TYPICAL ENABLING CONDITIONS

ALL:

The monitor will run whenever this DTC is not present.	P0115 - P0118 (ECT sensor) P0125 (Insufficient ECT for closed loop) P0500 (VSS) P0748, P0778, P0798 (Shift solenoid valve (range))
Transmission range	"D"
TFT (Transmission fluid temperature)	-10°C (14°F) or more
ECT sensor circuit	Circuit is not malfunctioning
Turbine speed sensor circuit	Circuit is not malfunctioning
Intermediate shaft speed sensor circuit	Circuit is not malfunctioning
Knock control sensor circuit	Circuit is not malfunctioning
Shift solenoid valve SL1 circuit	Circuit is not malfunctioning
Shift solenoid valve SL2 circuit	Circuit is not malfunctioning
Shift solenoid valve SL3 circuit	Circuit is not malfunctioning
Shift solenoid valve SL4 circuit	Circuit is not malfunctioning
CAN communication circuit	Circuit is not malfunctioning
Electronic throttle system	Circuit is not malfunctioning

OFF malfunction:

TCM selected gear	1st, 2nd, 3rd or 4th
TCM indicated pressure value of SL1	1,200 kPa
Throttle valve opening angle	3% or more

ON malfunction:

TCM selected gear	5th or 6th
Vehicle speed	1.2 mph (2 km/h) or more
ECT (Engine coolant temperature)	40°C (104°F) or more
Throttle valve opening angle	4.5% or more at engine speed 2,000 rpm (Varies with engine speed)

TYPICAL MALFUNCTION THRESHOLDS

Either of the following conditions is met:

OFF malfunction:

Turbine speed - Output speed x Gear ratio	1,000 or more

ON malfunction:

Input (turbine) speed/Intermediate shaft speed when output speed less than 1,000 rpm	0.998 to 1.138

INSPECTION PROCEDURE

1	CHECK OTHER DTCS OUTPUT (IN ADDITION TO DTC P0746)

(a) Connect the intelligent tester to the DLC3.
(b) Start the engine and turn the intelligent tester on.
(c) Enter the following items: "DIAGNOSIS / OBD/MOBD / ECT / DTC INFO / CURRENT CODES".
(d) Read the DTCs using the intelligent tester.

AX

Result

Display (DTC output)	Proceed to
Only "P0746" is output	A
"P0746" and other DTCs	B

HINT:
If a solenoid is stuck OFF, DTCs for several solenoids including the malfunctioning solenoid will be detected.

A → **Go to step 3**

B

2	PERFORM ACTIVE TEST BY SHIFT

NOTICE:
This test should always be performed with at least 2 people.

(a) Connect the intelligent tester to the DLC3.
(b) Turn the engine switch on (IG) and turn the intelligent tester on.
(c) Enter the following items: "DIAGNOSIS / OBD/MOBD / ECT / ACTIVE TEST / SHIFT".

HINT:
Comparing the shift position commanded by the ACTIVE TEST with the actual shift position enables confirmation of the problem (See page AX-38).

Item	Test Details	Diagnostic Note
SHIFT	[Test Details] Operate the shift solenoid valve and set each shift position by yourself. [Others] • Press "←" button: Shift up • Press "→" button: Shift down	Possible to check the operation of the shift solenoid valves.

NOTICE:
- **This test can be conducted when the vehicle is stopped.**
- **When shifting gears using the Active Test function, do not operate the accelerator pedal for 2 seconds before and after shifting gears.**

HINT:
The shift position commanded by the TCM is shown in the DATA LIST/SHIFT display on the intelligent tester.

(d) Check the vehicle speed and the gear position when the engine speed is 1,000 rpm.

HINT:
Because the torque converter clutch has not engaged, it may be difficult to obtain the speeds specified in 4th, 5th, and 6th gear, however a difference of speed should still be evident following each gear change.

Standard

1st	2nd	3rd	4th	5th	6th
5 to 7.5 mph (8 to 12 km/h)	9.3 to 11.8 mph (15 to 19 km/h)	13.0 to 15.5 mph (21 to 25 km/h)	19.3 to 21.7 mph (31 to 35 km/h)	27.3 to 29.8 mph (44 to 48 km/h)	32.3 to 34.8 mph (52 to 56 km/h)

(e) Compare the TCM gear shift command and the actual gear position.

Result

Actuator gear position under malfunction		TCM gear shift command						Proceed to
		1st	2nd	3rd	4th	5th	6th	
Shift solenoid SL1	Stuck ON	1st	2nd	3rd	4th	4th	4th	A
	Stuck OFF	N*1	N*1	N*1	N*1	5th	6th	
Shift solenoid SL2	Stuck ON	4th	4th	4th	4th	5th	6th	B
	Stuck OFF	1st	2nd	3rd	1st	N*1	N*1	
Shift solenoid SL3	Stuck ON	2nd	2nd	3rd	4th	5th	6th	C
	Stuck OFF	1st	1st	3rd	4th	5th	N*1	
Shift solenoid SL4	Stuck ON*3	3rd	3rd	3rd	4th	5th	5th	D
	Stuck OFF	1st	2nd	1st	4th	N*1	6th	
Shift solenoid SLT	Stuck ON	N*2	N*2	N*2	N*2	N*2	N*2	E
	Stuck OFF*3	1st	2nd	3rd	4th	5th	6th	

HINT:
- *1: Neutral

AX

- *2: If the shift solenoid SLT is stuck on, the line pressure will be low. Therefore, the amount of torque that can be transmitted by each gear is lower than the normal limit. When the engine power exceeds this lowered limit, the engine speed will increase freely.
- *3: When the shift solenoid SLT is stuck OFF, gear shifting is normal.

B → **GO TO DTC CHART (RELATED SHIFT SOLENOID VALVE (SL2) PERFORMANCE DTC P0776)**

C → **GO TO DTC CHART (RELATED SHIFT SOLENOID VALVE (SL3) PERFORMANCE DTC P0796)**

D → **GO TO DTC CHART (RELATED SHIFT SOLENOID VALVE (SL4) PERFORMANCE DTC P2808)**

E → **GO TO DTC CHART (RELATED SHIFT SOLENOID VALVE (SLT) PERFORMANCE DTC P2714)**

A

3 INSPECT SHIFT SOLENOID VALVE (SL1)

Shift Solenoid Valve SL1:

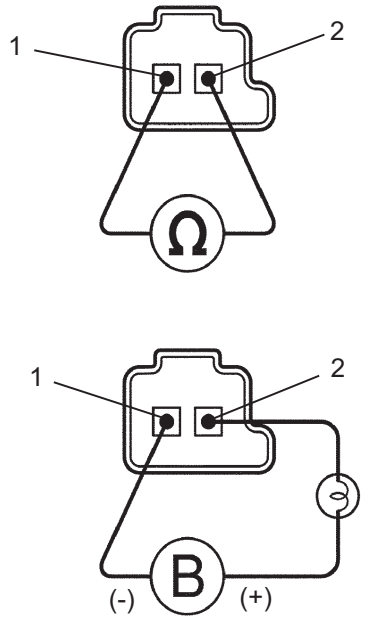

P G020767E05

(a) Remove the shift solenoid valve SL1.

(b) Measure the resistance according to the value(s) in the table below.

Standard resistance

Tester Connection	Specified Condition 20°C (68°F)
1 - 2	5.0 to 5.6 Ω

(c) Connect a positive (+) lead through a 21 W bulb to terminal 2 and a negative (-) lead to terminal 1 of the solenoid valve connector, then check the movement of the valve.

OK:

The solenoid makes an operating noise.

NG → **REPLACE SHIFT SOLENOID VALVE (SL1)**

OK

AX

4	INSPECT TRANSMISSION VALVE BODY ASSEMBLY

OK:
There are no foreign objects on each valve and they operate smoothly.

NG → **REPAIR OR REPLACE TRANSMISSION VALVE BODY ASSEMBLY**

OK

5	INSPECT TORQUE CONVERTER CLUTCH ASSEMBLY

OK:
The torque converter clutch operates normally.

NG → **REPLACE TORQUE CONVERTER CLUTCH ASSEMBLY**

OK

REPAIR OR REPLACE AUTOMATIC TRANSAXLE ASSEMBLY

DTC	P0748	Pressure Control Solenoid "A" Electrical (Shift Solenoid Valve SL1)

DESCRIPTION

Shifting from 1st to 6th is performed in combination with "ON" and "OFF" operation of the shift solenoid valves SL1, SL2, SL3, SL4 and SL which is controlled by the TCM. If an open or short circuit occurs in any of the shift solenoid valves, the TCM controls the remaining normal shift solenoid valves to allow the vehicle to be operated smoothly (See page AX-38).

DTC No.	DTC Detection Condition	Trouble Area
P0748	The TCM checks for an open or short in the shift solenoid valve SL1 circuit while driving and shifting between 4th and 5th gears. (1-trip detection logic) • Output signal duty equals 100%. (NOTE: SL1 output signal duty is less than 100% under normal condition.)	• Open or short in shift solenoid valve SL1 circuit • Shift solenoid valve SL1 • TCM

MONITOR DESCRIPTION

This DTC indicates an open or short in the shift solenoid valve SL1 circuit. The TCM causes gear shifts to occur by turning the shift solenoid valves on or off. When there is an open or short circuit in any shift solenoid valve circuit, the TCM detects the problem and illuminates the MIL and stores the DTC. The TCM also performs the fail-safe function and turns the other normal shift solenoid valves on or off. (In case of an open or short circuit, the TCM stops sending current to the circuit.)
While driving and shifting between 4th and 5th gears, if the TCM detects an open or short in the shift solenoid valve SL1 circuit, the TCM determines there is a malfunction (See page AX-38).

MONITOR STRATEGY

Related DTCs	P0748: Shift solenoid valve SL1/Range check
Required sensors/Components	Shift solenoid valve SL1
Frequency of operation	Continuous
Duration	1 sec.
MIL operation	Immediate
Sequence of operation	None

AX

TYPICAL ENABLING CONDITIONS

ALL:

The monitor will run whenever this DTC is not present	None
Engine switch	ON
Starter	OFF

Malfunction (A):

Battery voltage	12 V or more

Malfunction (B):

Battery voltage	10 V or more and less than 12 V
CPU commanded duty	Less than 75%

TYPICAL MALFUNCTION THRESHOLDS

Output signal duty	100% or more

WIRING DIAGRAM

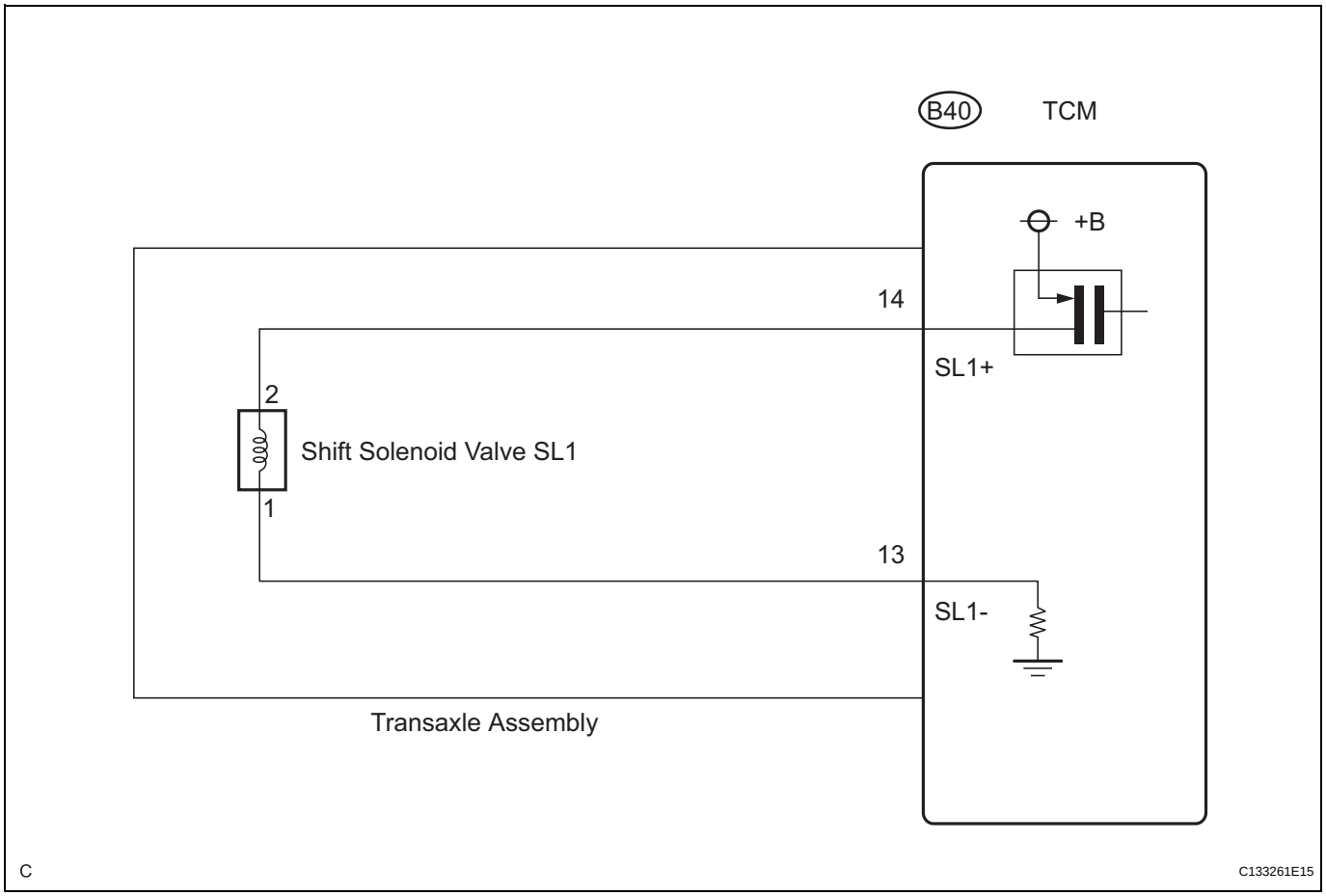

INSPECTION PROCEDURE

HINT:

The shift solenoid valve SL1 is turned on or off automatically when the shift lever is in the D position:

TCM command gearshift	1st	2nd	3rd	4th	5th	6th
Shift solenoid valve SL1	ON	ON	ON	ON	OFF	OFF

AX

1 INSPECT TRANSMISSION WIRE (SL1)

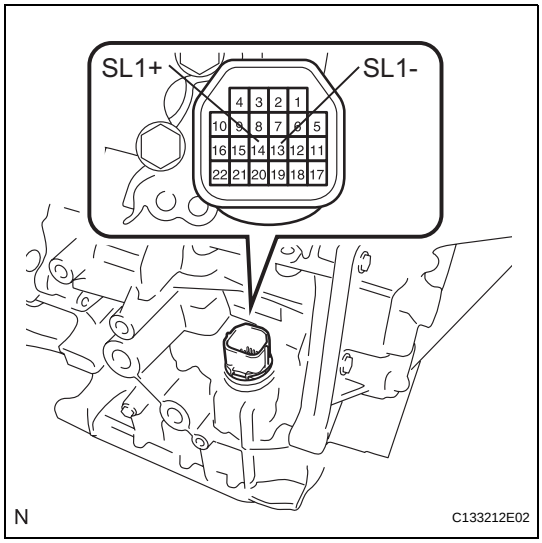

(a) Remove the TCM from the transaxle.
(b) Measure the resistance according to the value(s) in the table below.
Standard resistance

Tester Connection	Specified Condition 20°C (68°F)
14 (SL1+) - 13 (SL1-)	5.0 to 5.6 Ω

(c) Measure the resistance according to the value(s) in the table below.
Standard resistance:
Check for short

Tester Connection	Specified Condition
14 (SL1+) - Body ground	10 kΩ or higher
13 (SL1-) - Body ground	10 kΩ or higher

OK → **REPLACE TCM**

NG

2 INSPECT SHIFT SOLENOID VALVE SL1

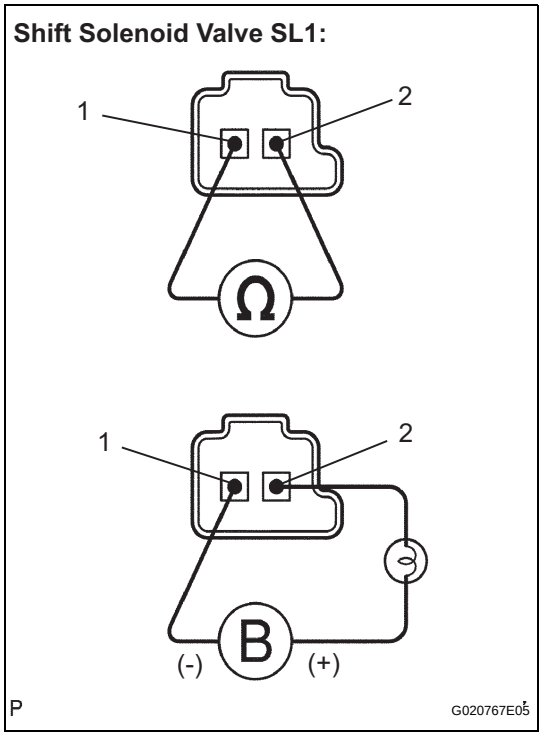

(a) Remove the shift solenoid valve SL1.
(b) Measure the resistance according to the value(s) in the table below.
Standard resistance

Tester Connection	Specified Condition 20°C (68°F)
1 - 2	5.0 to 5.6 Ω

(c) Connect a positive (+) lead through a 21 W bulb to terminal 2 and a negative (-) lead to terminal 1 of the solenoid valve connector, then check the movement of the valve.
OK:
The solenoid makes an operating sound.

NG → **REPLACE SHIFT SOLENOID VALVE SL1**

OK

REPLACE TRANSMISSION WIRE

AX

DTC	P0776	Pressure Control Solenoid "B" Performance (Shift Solenoid Valve SL2)

SYSTEM DESCRIPTION

The TCM uses the vehicle speed signal to detect the actual gear position (1st, 2nd, 3rd, 4th, 5th or 6th gear).
Then the TCM compares the actual gear with the shift schedule in the TCM memory to detect shift solenoid valves and valve body mechanical problems.

DTC No.	DTC Detecting Condition	Trouble Area
P0776	The engine revs freely when 4th, 5th, or 6th gear is requested (2-trip detection logic). When any of the following is detected twice (2-trip detection logic): • When 1st gear is requested, 4th gear is engaged. • When 2nd gear is requested, 4th gear is engaged. • When 3rd gear is requested, 4th gear is engaged.	• Shift solenoid valve SL2 (open or closed) • Valve body (blocked) • Automatic transaxle (clutch, brake or gear etc.)

MONITOR DESCRIPTION

The TCM commands gear shifts by turning the shift solenoid valves on or off. According to the input shaft revolution, intermediate (counter) shaft revolution and output shaft revolution, the TCM detects the actual gear position (1st, 2nd, 3rd, 4th, 5th or 6th gear position). When the gear position commanded by the TCM and the actual gear position are not the same, the TCM illuminates the MIL and stores the DTC.

MONITOR STRATEGY

Related DTCs	P0776: Shift solenoid valve SL2/OFF malfunction Shift solenoid valve SL2/ON malfunction
Required sensors/Components	Shift solenoid valve SL2, Speed sensor (NT), Speed sensor (NC), Crankshaft position sensor (NE)
Frequency of operation	Continuous
Duration	OFF malfunction 0.5 sec. ON malfunction 0.8 sec.
MIL operation	2 driving cycles
Sequence of operation	None

AX

TYPICAL ENABLING CONDITIONS

All:

The monitor will run whenever this DTC is not present.	P0115 - P0118 (ECT sensor) P0125 (Insufficient ECT for closed loop) P0500 (VSS) P0748, P0778, P0798 (Shift solenoid valve (range))
Transmission range	"D"
TFT (Transmission fluid temperature)	-10°C (-14°F) or more
Knock control sensor circuit	Circuit is not malfunctioning
ECT sensor circuit	Circuit is not malfunctioning
Turbine speed sensor circuit	Circuit is not malfunctioning
Intermediate shaft speed sensor circuit	Circuit is not malfunctioning
Shift solenoid valve SL1 circuit	Circuit is not malfunctioning
Shift solenoid valve SL2 circuit	Circuit is not malfunctioning
Shift solenoid valve SL3 circuit	Circuit is not malfunctioning
Shift solenoid valve SL4 circuit	Circuit is not malfunctioning

CAN communication system	Circuit is not malfunctioning
Electronic throttle system	Circuit is not malfunctioning

OFF malfunction:

TCM selected gear	4th, 5th or 6th
TCM indicated pressure value of SL2	1,200 kPa
Throttle valve opening angle	3% or more

ON malfunction (A):

TCM selected gear	1st
Vehicle speed	1.2 mph (2 km/h) to 25 mph (40 km/h)
ECT (Engine coolant temperature)	40°C (104°F) or more
Engine speed - Turbine speed	50 rpm or more

ON malfunction (B):

TCM selected gear	2nd
Throttle valve opening angle	4.5% or more at engine speed 2,000 rpm (Varies with engine speed)
Vehicle speed	1.2 mph (2 km/h) or more
ECT (Engine coolant temperature)	40°C (104°F) or more

ON malfunction (C):

TCM selected gear	3rd
Throttle valve opening angle	4.5% or more at engine speed 2,000 rpm (Varies with engine speed)
Vehicle speed	1.2 mph (2 km/h) or more
ECT (Engine coolant temperature)	40°C (104°F) or more

TYPICAL MALFUNCTION THRESHOLDS

OFF malfunction:

Input (turbine) speed-Intermediate shaft speed x Gear ratio	1,000 rpm or more

AX

ON malfunction:

Input (turbine) speed/Intermediate shaft speed when output speed less than 1,000 rpm	0.998 to 1.138

INSPECTION PROCEDURE

1	CHECK OTHER DTCS OUTPUT (IN ADDITION TO DTC P0776)

(a) Connect the intelligent tester to the DLC3.
(b) Turn the engine switch on (IG) and turn the intelligent tester on.
(c) Enter the following items: "DIAGNOSIS / OBD/MOBD / ECT / DTC INFO / CURRENT CODES".
(d) Read the DTCs using the intelligent tester.

Result

Display (DTC output)	Proceed to
Only "P0776" is output	**A**
"P0776" and other DTCs	**B**

HINT:
If a solenoid is stuck OFF, DTCs for several solenoids including the malfunctioning solenoid will be detected.

A → **Go to step 3**

B

2 PERFORM ACTIVE TEST BY INTELLIGENT TESTER

NOTICE:
This test should always be performed with at least 2 people.

(a) Connect the intelligent tester to the DLC3.
(b) Start the engine and turn the intelligent tester on.
(c) Enter the following items: "DIAGNOSIS / OBD/MOBD / ECT / ACTIVE TEST / SHIFT".
HINT:
Comparing the shift position commanded by the ACTIVE TEST with the actual shift position enables confirm of the problem (See page AX-38).

Item	Test Details	Diagnostic Note
SHIFT	[Test Details] Operate the shift solenoid valve and set each shift position by yourself. [Others] • Press "←" button: Shift up • Press "→" button: Shift down	Possible to check the operation of the shift solenoid valves.

NOTICE:
- **This test can be conducted when the vehicle is stopped.**
- **When shifting gears using the Active Test function, do not operate the accelerator pedal for 2 seconds before and after shifting gears.**

HINT:
The shift position commanded by the TCM is shown in the DATA LIST/SHIFT display on the intelligent tester.

(d) Check the vehicle speed and the gear position when the engine speed is 1,000 rpm.
HINT:
Because the torque converter clutch has not engaged, it may be difficult to obtain the speeds specified in 4th, 5th, and 6th gear, however a difference of speed should still be evident following each gear change.

Standard

1st	2nd	3rd	4th	5th	6th
5 to 7.5 mph (8 to 12 km/h)	9.3 to 11.8 mph (15 to 19 km/h)	13.0 to 15.5 mph (21 to 25 km/h)	19.3 to 21.7 mph (31 to 35 km/h)	27.3 to 29.8 mph (44 to 48 km/h)	32.3 to 34.8 mph (52 to 56 km/h)

(e) Compare the TCM gear shift command and the actual gear position.

AX

Result

Actuator gear position under malfunction		TCM gear shift command						Proceed to
		1st	2nd	3rd	4th	5th	6th	
Shift solenoid SL1	Stuck ON	1st	2nd	3rd	4th	4th	4th	A
	Stuck OFF	N*1	N*1	N*1	N*1	5th	6th	
Shift solenoid SL2	Stuck ON	4th	4th	4th	4th	5th	6th	B
	Stuck OFF	1st	2nd	3rd	1st	N*1	N*1	
Shift solenoid SL3	Stuck ON	2nd	2nd	3rd	4th	5th	6th	C
	Stuck OFF	1st	1st	3rd	4th	5th	N*1	
Shift solenoid SL4	Stuck ON*3	3rd	3rd	3rd	4th	5th	5th	D
	Stuck OFF	1st	2nd	1st	4th	N*1	6th	
Shift solenoid SLT	Stuck ON	N*2	N*2	N*2	N*2	N*2	N*2	E
	Stuck OFF*3	1st	2nd	3rd	4th	5th	6th	

HINT:
- *1: Neutral
- *2: If the shift solenoid SLT is stuck on, the line pressure will be low. Therefore, the amount of torque that can be transmitted by each gear is lower than the normal limit. When the engine power exceeds this lowered limit, the engine speed will increase freely.
- *3: When the shift solenoid SLT is stuck OFF, gear shifting is normal.

A → **GO TO DTC CHART (RELATED SHIFT SOLENOID VALVE (SL1) PERFORMANCE DTC P0746)**

C → **GO TO DTC CHART (RELATED SHIFT SOLENOID VALVE (SL3) PERFORMANCE DTC P0796)**

D → **GO TO DTC CHART (RELATED SHIFT SOLENOID VALVE (SL4) PERFORMANCE DTC P2808)**

E → **GO TO DTC CHART (RELATED SHIFT SOLENOID VALVE (SLT) PERFORMANCE DTC P2714)**

AX

B

3 INSPECT SHIFT SOLENOID VALVE (SL2)

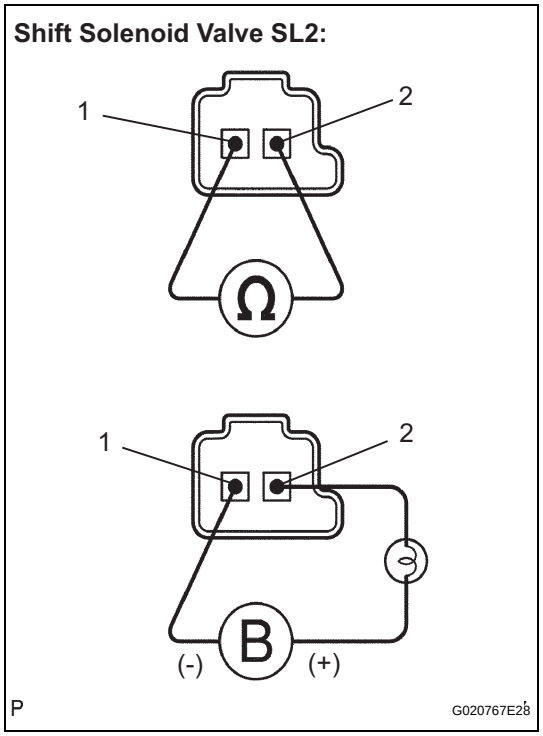

(a) Remove the shift solenoid valve SL2.

(b) Measure the resistance according to the value(s) in the table below.

Standard resistance

Tester Connection	Specified Condition 20°C (68°F)
1 - 2	5.0 to 5.6 Ω

(c) Connect a positive (+) lead through a 21 W bulb to terminal 2 and a negative (-) lead to terminal 1 of the solenoid valve connector, then check the movement of the valve.

OK:

The solenoid makes an operating noise.

NG → **REPLACE SHIFT SOLENOID VALVE (SL2)**

OK

4 INSPECT TRANSMISSION VALVE BODY ASSEMBLY

OK:

There are no foreign objects on each valve and they operate smoothly.

NG → **REPAIR OR REPLACE TRANSMISSION VALVE BODY ASSEMBLY**

OK

5 INSPECT TORQUE CONVERTER CLUTCH ASSEMBLY

OK:

The torque converter clutch operates normally.

NG → **REPLACE TORQUE CONVERTER CLUTCH ASSEMBLY**

OK

REPLACE AUTOMATIC TRANSAXLE ASSEMBLY

AX

DTC	P0778	Pressure Control Solenoid "B" Electrical (Shift Solenoid Valve SL2)

DESCRIPTION

Shifting from 1st to 6th is performed in combination with "ON" and "OFF" operation of the shift solenoid valves SL1, SL2, SL3, SL4 and SL which is controlled by the TCM. If an open or short circuit occurs in any of the shift solenoid valves, the TCM controls the remaining normal shift solenoid valves to allow the vehicle to be operated smoothly (See page AX-38).

DTC No.	DTC Detection Condition	Trouble Area
P0778	The TCM checks for an open or short in the shift solenoid valve SL2 circuit while driving and shifting gears. (1-trip detection logic) • Output signal duty equals to 100%. (NOTE: SL2 output signal duty is less than 100% under normal condition.)	• Open or short in shift solenoid valve SL2 circuit • Shift solenoid valve SL2 • TCM

MONITOR DESCRIPTION

This DTC indicates an open or short in the shift solenoid valve SL2 circuit. The TCM commands gear shifts by turning the shift solenoid valves on or off. When there is an open or short circuit in any of the shift solenoid valve circuits, the TCM detects the problem and illuminates the MIL and stores the DTC. The TCM also performs the fail-safe function and turns the other normal shift solenoid valves on or off. (In case of an open or short circuit, the TCM stops sending current to the circuit.)
While driving and shifting gears, if the TCM detects an open or short in the shift solenoid valve SL2 circuit, the TCM determines there is a malfunction (See page AX-38).

MONITOR STRATEGY

Related DTCs	P0778: Shift solenoid valve SL2/Range check
Required sensors/Components	Shift solenoid valve SL2
Frequency of operation	Continuous
Duration	1 sec.
MIL operation	Immediate
Sequence of operation	None

AX

TYPICAL ENABLING CONDITIONS

ALL:

The monitor will run whenever this DTC is not present	None
Engine switch	ON
Starter	OFF

Malfunction (A):

Battery voltage	12 V or more

Malfunction (B):

Battery voltage	10 V or more and less than 12 V
CPU commanded duty	Less than 75%

TYPICAL MALFUNCTION THRESHOLDS

Output signal duty	100% or more

WIRING DIAGRAM

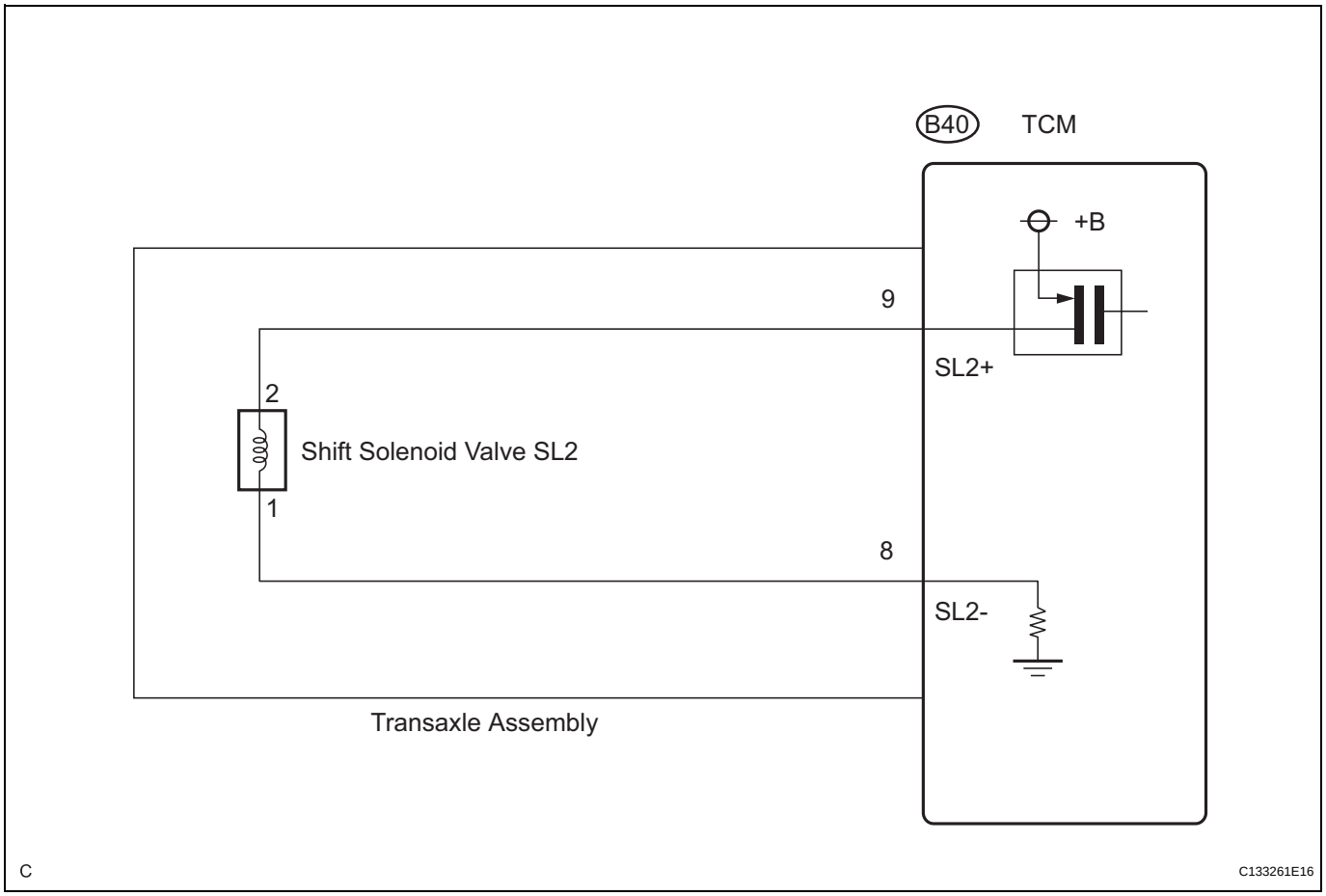

INSPECTION PROCEDURE

HINT:

The shift solenoid valve SL2 is turned on or off automatically when the shift lever is in the D position:

TCM command gearshift	1st	2nd	3rd	4th	5th	6th
Shift solenoid valve SL2	OFF	OFF	OFF	ON	ON	ON

AX

1 INSPECT TRANSMISSION WIRE (SL2)

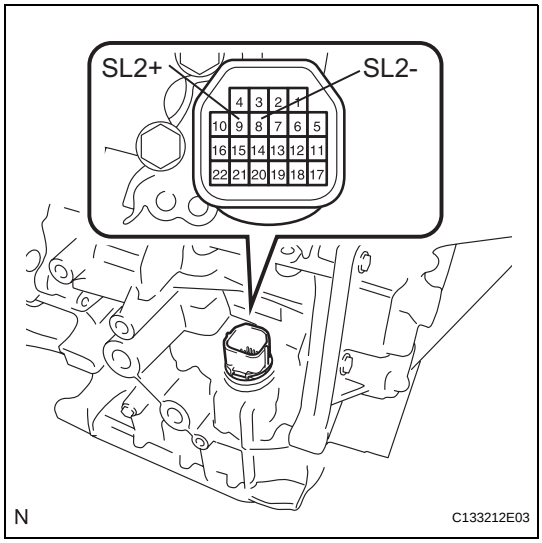

(a) Remove the TCM from the transaxle.

(b) Measure the resistance according to the value(s) in the table below.

Standard resistance

Tester Connection	Specified Condition 20°C (68°F)
9 (SL2+) - 8 (SL2-)	5.0 to 5.6 Ω

(c) Measure the resistance according to the value(s) in the table below.

Standard resistance:
Check for short

Tester Connection	Specified Condition
9 (SL2+) - Body ground	10 kΩ or higher
8 (SL2-) - Body ground	10 kΩ or higher

OK → **REPLACE TCM**

NG

2 INSPECT SHIFT SOLENOID VALVE SL2

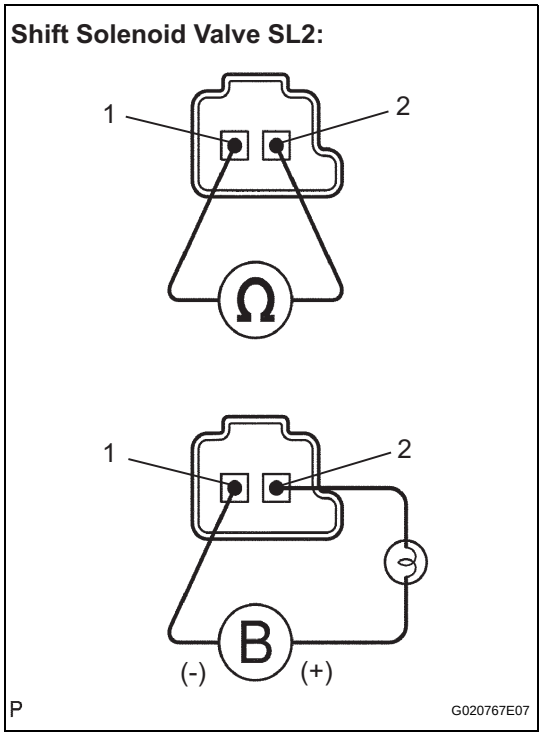

(a) Remove the shift solenoid valve SL2.

(b) Measure the resistance according to the value(s) in the table below.

Standard resistance

Tester Connection	Specified Condition 20°C (68°F)
1 - 2	5.0 to 5.6 Ω

(c) Connect a positive (+) lead through a 21 W bulb to terminal 2 and a negative (-) lead to terminal 1 of the solenoid valve connector, then check the movement of the valve.

OK:
The solenoid makes an operating sound.

NG → **REPLACE SHIFT SOLENOID VALVE SL2**

OK

REPLACE TRANSMISSION WIRE

AX

DTC	P0791	Intermediate Shaft Speed Sensor "A" Circuit

DTC	P0793	Intermediate Shaft Speed Sensor "A"

DESCRIPTION

This sensor detects the rotation speed of the turbine which shows the input speed of transaxle. By comparing the input turbine speed signal (NC) with the counter gear speed sensor signal (NC), the TCM detects the shift timing of the gears and appropriately controls the engine torque and hydraulic pressure according to various conditions, thus, providing smooth gear shift.

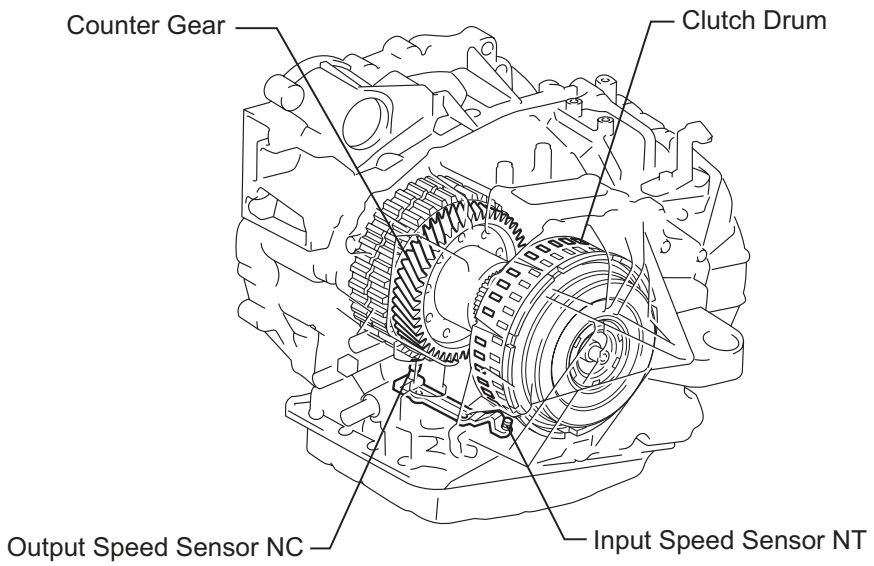

N C133216E01

AX

DTC No.	DTC Detection Condition	Trouble Area
P0791	When the speed sensor input voltage is either more than 1.9 V or less than 0.1 V for 2 seconds or more.	• Transmission revolution sensor (speed sensor NC) • TCM
P0793	When the vehicle speed is 15.5 mph (25 km/h) or higher, the counter gear speed is less than 300 rpm for 2 seconds or more.	

MONITOR DESCRIPTION

The NT terminal of the TCM detects a revolution signal from the speed sensor (NT) (input RPM). The TCM calculates a gearshift comparing the speed sensor (NT) with the speed sensor (NC).
While the vehicle is operating in 2nd, 3rd, 4th or 5th gear in the shift position of D, if the input shaft revolution is less than 300 rpm *1although the output shaft revolution is more than 1,000 rpm *2, the TCM interprets this as a fault, illuminates the MIL and stores the DTC.
*1: Pulse is not output or is irregularly output.
*2: The vehicle speed is 31 mph (50 km/h) or more.

MONITOR STRATEGY

Related DTCs	P0717: Speed sensor (NT) /Verify pulse input
Required sensors/Components	Speed sensor (NT), Speed sensor (NC)
Frequency of operation	Continuous

Duration	5 sec.
MIL operation	Immediate
Sequence of operation	None

TYPICAL ENABLING CONDITIONS

The monitor will run whenever this DTC is not present.	P0500 (VSS) P0748, P0778, P0798 (Shift solenoid valve (range))
Vehicle speed	15.5 mph (25 km/h) or more
Battery voltage	8 V or more
Engine switch	ON
Starter	OFF

TYPICAL MALFUNCTION THRESHOLDS

P0791:

Sensor voltage	Less than 0.1 V or more than 1.9 V

P0793:

Sensor signal rpm	Less than 300 rpm

WIRING DIAGRAM

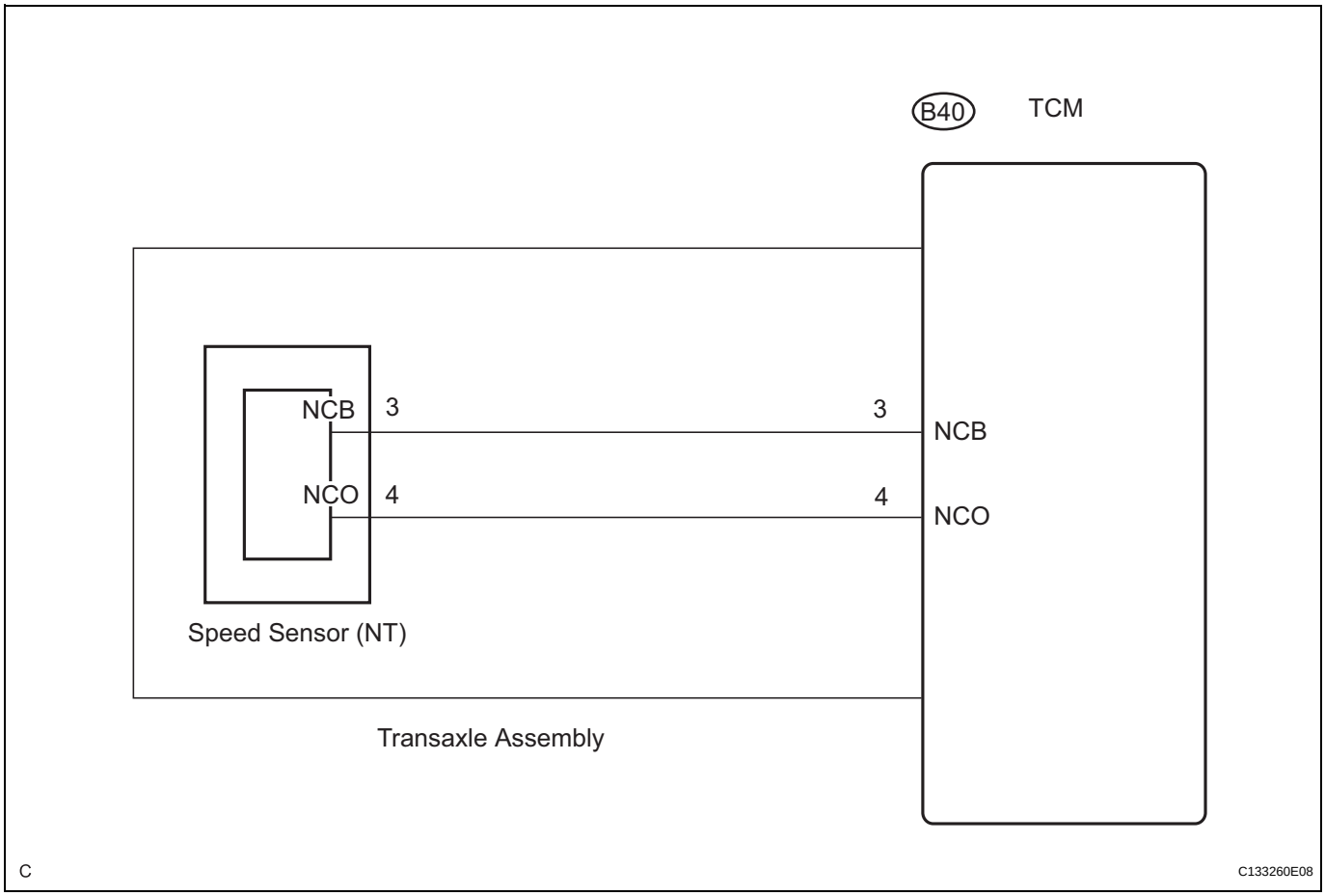

AX

INSPECTION PROCEDURE

1. DATA LIST

NOTICE:

In the table below, the values listed under "Normal Condition" are reference values. Do not depend solely on these reference values when deciding whether a part is faulty.

HINT:

According to the DATA LIST displayed on the intelligent tester, you can read the value of switches, sensors, actuators and other items without removing any parts. Reading the DATA LIST as the first step in troubleshooting is one method to save labor time.

(a) Warm up the engine.
(b) Turn the engine switch off.
(c) Connect the intelligent tester together with the CAN VIM (Controller Area Network Vehicle Interface Module) to the DLC3.
(d) Turn the engine switch on (IG).
(e) Turn on the tester.
(f) Enter the following items: "DIAGNOSIS / ENHANCED OBD / DATA LIST".
(g) According to the display on the tester, read "DATA LIST".

Item	Measurement Item/ Range (display)	Normal Condition
SPD (NC)	Counter Gear Speed/ display: 50 r/min	HINT: • Lock-up ON (after warming up the engine); input turbine speed (NC) is equal to the engine speed. • Lock-up OFF (Idling at N position); input turbine speed (NC) is nearly equal to the engine speed.

HINT:

- SPD (NC) is always 0 while driving: Open or short in the sensor or circuit.
- SPD (NC) is always more than 0 and less than 300 rpm while driving the vehicle at 31 mph (50 km/h) or more: Sensor trouble, improper installation, or intermittent connection trouble of the circuit.

1	INSPECT SPEED SENSOR (SENSOR INSTALLATION)

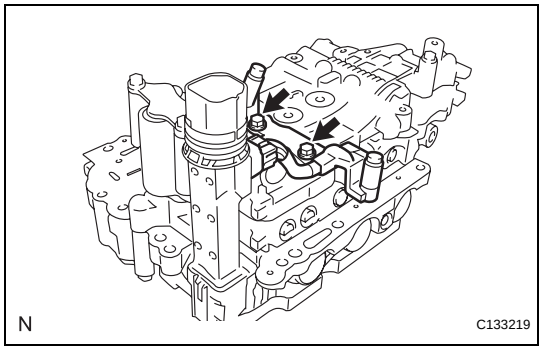

(a) Make sure that the connector is properly connected, and check the speed sensor installation.

OK:

The installation bolts are tightened properly and there is no clearance between the sensor and transaxle case.

NG → **REPAIR OR REPLACE SPEED SENSOR**

OK

AX

2 CHECK TRANSMISSION WIRE

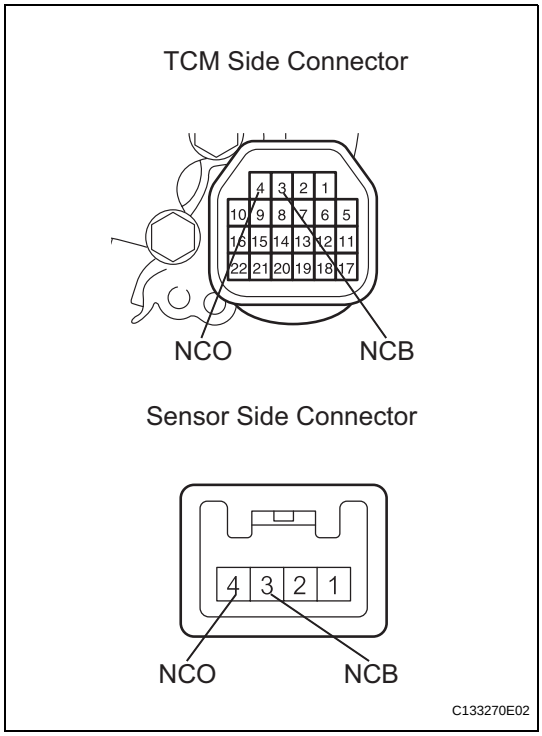

(a) Remove the TCM.
(b) Disconnect the speed sensor connector from the transmission wire.
(c) Measure the resistance according to the value(s) in the table below.

Standard resistance

Tester Condition	Specified Condition
NCO - NCO	Below 1 Ω
NCB - NCB	Below 1 Ω
NCO - NCB	10 kΩ or higher

NG → **REPLACE TRANSMISSION WIRE**

OK

3 REPLACE SPEED SENSOR

NEXT

AX

4 CHECK IF DTC OUTPUT RECURS (SEE IF DTC P0791 AND/OR P0793 IS OUTPUT AGAIN)

(a) Connect the intelligent tester to the DLC3.
(b) Start the engine and turn the intelligent tester main switch ON.
(c) Perform the monitor drive pattern (See page AX-26).
(d) When you use the intelligent tester:
Select the item "DIAGNOSIS / OBD/MOBD / ECT / DTC INFO / CURRENT CODES".
(e) Read the DTCs using the intelligent tester.

Result

Display (DTC output)	Proceed to
Only "P0791 or P0793" is output	A
No output	B

B → **END**

A

REPLACE TCM

DTC	P0796	Pressure Control Solenoid "C" Performance (Shift Solenoid Valve SL3)

SYSTEM DESCRIPTION

The TCM uses the vehicle speed signal to determine the actual gear position (1st, 2nd, 3rd, 4th, 5th or 6th gear).
Then the TCM compares the actual gear with the shift schedule in the TCM memory to detect shift solenoid valves and valve body mechanical problems.

DTC No.	DTC Detecting Condition	Trouble Area
P0796	The engine revs freely when 2nd or 6th gear is requested (2-trip detection logic). When the following is detected twice (2-trip detection logic): • When 1st gear is requested, 2nd gear is engaged.	• Shift solenoid valve SL3 (open or closed) • Valve body (blocked) • Automatic transaxle (clutch, brake or gear etc.)

MONITOR DESCRIPTION

The TCM commands gear shifts by turning the shift solenoid valves on or off. According to the input shaft revolution, intermediate (counter) shaft revolution and output shaft revolution, the TCM detects the actual gear position (1st, 2nd, 3rd, 4th, 5th or 6th gear position). When the gear position commanded by the TCM and the actual gear position are not the same, the TCM illuminates the MIL and stores the DTC.

MONITOR STRATEGY

Related DTCs	P0796: Shift solenoid valve SL3/OFF malfunction Shift solenoid valve SL3/ON malfunction
Required sensors/Components	Shift solenoid valve SL3, Speed sensor (NT), Speed sensor (NC), Crankshaft position sensor (NE)
Frequency of operation	Continuous
Duration	OFF malfunction (A) and (B) 0.5 sec. OFF malfunction (C) and (D) 0.8 sec.
MIL operation	2 driving cycles
Sequence of operation	None

AX

TYPICAL ENABLING CONDITIONS

All:

The monitor will run whenever this DTC is not present.	P0115 - P0118 (ECT sensor) P0125 (Insufficient ECT for closed loop) P0500 (VSS) P0748, P0778, P0798 (Shift solenoid valve (range))
Transmission range	"D"
TFT (Transmission fluid temperature)	Above -10°C (-14°F)
Knock control sensor circuit	Circuit is not malfunctioning
ECT sensor circuit	Circuit is not malfunctioning
Turbine speed sensor circuit	Circuit is not malfunctioning
Intermediate shaft speed sensor circuit	Circuit is not malfunctioning
Shift solenoid valve SL1 circuit	Circuit is not malfunctioning
Shift solenoid valve SL2 circuit	Circuit is not malfunctioning
Shift solenoid valve SL3 circuit	Circuit is not malfunctioning
Shift solenoid valve SL4 circuit	Circuit is not malfunctioning
CAN communication system	Circuit is not malfunctioning

Electronic throttle system	Circuit is not malfunctioning

OFF malfunction (A):

TCM selected gear	2nd
Throttle valve opening angle	3% or more
TCM indicated pressure value of SL1	1,200 kPa
TCM indicated pressure value of SL2	0 kPa
TCM indicated pressure value of SL3	1,200 kPa

OFF malfunction (B):

TCM selected gear	6th
Throttle valve opening angle	3% or more
TCM indicated pressure value of SL1	0 kPa
TCM indicated pressure value of SL2	1,200 kPa
TCM indicated pressure value of SL3	1,200 kPa

OFF malfunction (C):

TCM selected gear	2nd
Throttle valve opening angle:	
(When condition "D" is not detected)	4.5% or more at engine speed 2,000 rpm (condition varies with engine speed)
(When condition "D" is detected)	0.5% or more at engine speed 500 rpm (condition varies with engine speed)
ECT (engine coolant temperature)	40°C (104°F) or more

OFF malfunction (D):

Throttle valve opening angle	0.5% or more at engine speed 500 rpm (condition varies with engine speed)

ON malfunction:

TCM selected gear	1st
Vehicle speed	1.2 mph (2 km/h) or more
Engine speed - Turbine speed	50 rpm or more
ECT (engine coolant temperature)	Above 40°C (104°F)

TYPICAL MALFUNCTION THRESHOLDS

AX

Either of the following conditions is met: OFF malfunction (A) or (B) or ((C) and (D)), or ON malfunctions

2 detections are necessary per driving cycle:

1st detection; temporary flag ON

2nd detection; pending fault code ON

OFF malfunction (A):

Turbine speed - Output speed x 2nd gear ratio	1,000 rpm or more

OFF malfunction (B):

Turbine speed - Output speed x 6th gear ratio	1,000 rpm or more

OFF malfunction (C):

Input (turbine) speed/Intermediate shaft speed	3.304 to 7.724

OFF malfunction (D):

Input (turbine) speed/Intermediate shaft speed	3.304 to 7.724

ON malfunction:

Input (turbine) speed/Intermediate shaft speed	1.901 to 2.340

INSPECTION PROCEDURE

1	CHECK OTHER DTCS OUTPUT (IN ADDITION TO DTC P0796)

(a) Connect the intelligent tester to the DLC3.
(b) Turn the engine switch on (IG) and turn the intelligent tester on.
(c) Enter the following items: "DIAGNOSIS / OBD/MOBD / ECT / DTC INFO / CURRENT CODES".
(d) Read the DTCs using the intelligent tester.

Result

Display (DTC output)	Proceed to
Only "P0796" is output	A
"P0796" and other DTCs	B

HINT:
If a solenoid is stuck OFF, DTCs for several solenoids including the malfunctioning solenoid will be detected.

A → **Go to step 3**

B

2	PERFORM ACTIVE TEST BY INTELLIGENT TESTER

NOTICE:
This test should always be performed with at least 2 people.

(a) Connect the intelligent tester to the DLC3.
(b) Start the engine and turn the intelligent tester on.
(c) Enter the following items: "DIAGNOSIS / OBD/MOBD / ECT / ACTIVE TEST / SHIFT".
HINT:
Comparing the shift position commanded by the ACTIVE TEST with the actual shift position enables you to confirm the problem (See page AX-38).

Item	Test Details	Diagnostic Note
SHIFT	[Test Details] Operate the shift solenoid valve and set each shift position by yourself. [Others] • Press "←" button: Shift up • Press "→" button: Shift down	Possible to check the operation of the shift solenoid valves.

NOTICE:
- **This test can be conducted when the vehicle is stopped.**
- **When shifting gears using the Active Test function, do not operate the accelerator pedal for 2 seconds before and after shifting gears.**

HINT:
The shift position commanded by the TCM is shown in the DATA LIST/SHIFT display on the intelligent tester.

(d) Check the vehicle speed and the gear position when the engine speed is 1,000 rpm.

AX

HINT:
Because the torque converter clutch has not engaged, it may be difficult to obtain the speeds specified in 4th, 5th, and 6th gears, however a difference of speed should still be evident following each gear change.

Standard

1st	2nd	3rd	4th	5th	6th
5 to 7.5 mph (8 to 12 km/h)	9.3 to 11.8 mph (15 to 19 km/h)	13.0 to 15.5 mph (21 to 25 km/h)	19.3 to 21.7 mph (31 to 35 km/h)	27.3 to 29.8 mph (44 to 48 km/h)	32.3 to 34.8 mph (52 to 56 km/h)

(e) Compare the TCM gear shift command and the actual gear position.

Result

Actuator gear position under malfunction		TCM gear shift command						Proceed to
		1st	2nd	3rd	4th	5th	6th	
Shift solenoid SL1	Stuck ON	1st	2nd	3rd	4th	4th	4th	A
	Stuck OFF	N*1	N*1	N*1	N*1	5th	6th	
Shift solenoid SL2	Stuck ON	4th	4th	4th	4th	5th	6th	B
	Stuck OFF	1st	2nd	3rd	1st	N*1	N*1	
Shift solenoid SL3	Stuck ON	2nd	2nd	3rd	4th	5th	6th	C
	Stuck OFF	1st	1st	3rd	4th	5th	N*1	
Shift solenoid SL4	Stuck ON*3	3rd	3rd	3rd	4th	5th	5th	D
	Stuck OFF	1st	2nd	1st	4th	N*1	6th	
Shift solenoid SLT	Stuck ON	N*2	N*2	N*2	N*2	N*2	N*2	E
	Stuck OFF*3	1st	2nd	3rd	4th	5th	6th	

HINT:
- *1: Neutral
- *2: If the shift solenoid SLT is stuck on, the line pressure will be low. Therefore, the amount of torque that can be transmitted by each gear is lower than the normal limit. When the engine power exceeds this lowered limit, the engine speed will increase freely.
- *3: When shift solenoid SLT is stuck OFF, gear shifting is normal.

AX

A → **GO TO DTC CHART (RELATED SHIFT SOLENOID VALVE (SL1) PERFORMANCE DTC P0746)**

B → **GO TO DTC CHART (RELATED SHIFT SOLENOID VAVLE (SL2) PERFORMANCE DTC P0776)**

D → **GO TO DTC CHART (RELATED SHIFT SOLENOID VALVE (SL4) PERFORMANCE DTC P2808)**

E → **GO TO DTC CHART (RELATED SHIFT SOLENOID VAVLE (SLT) PERFORMANCE DTC P2714)**

C

3	INSPECT SHIFT SOLENOID VALVE (SL3)

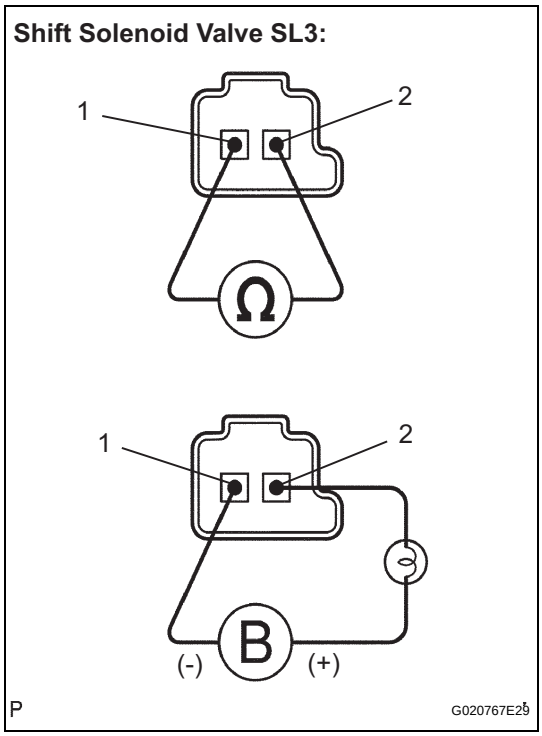

(a) Remove the shift solenoid valve SL3.
(b) Measure the resistance according to the value(s) in the table below.
Standard resistance

Tester Connection	Specified Condition 20°C (68°F)
1 - 2	5.0 to 5.6 Ω

(c) Connect a positive (+) lead through a 21 W bulb to terminal 2 and a negative (-) lead to terminal 1 of the solenoid valve connector, then check the movement of the valve.
OK:
The solenoid makes an operating noise.

NG → **REPLACE SHIFT SOLENOID VALVE (SL3)**

OK

4	INSPECT TRANSMISSION VALVE BODY ASSEMBLY

AX

OK:
There are no foreign objects on each valve and they operate smoothly.

NG → **REPAIR OR REPLACE TRANSMISSION VALVE BODY ASSEMBLY**

OK

5	INSPECT TORQUE CONVERTER CLUTCH ASSEMBLY

OK:
The torque converter clutch operates normally.

NG → **REPLACE TORQUE CONVERTER CLUTCH ASSEMBLY**

OK

REPLACE AUTOMATIC TRANSAXLE ASSEMBLY

DTC	P0798	Pressure Control Solenoid "C" Electrical (Shift Solenoid Valve SL3)

DESCRIPTION

Shifting gears from 1st through 5th is performed in combination with "ON" and "OFF" operation of the shift solenoid valves SL1, SL2, SL3 and SL4 which are controlled by the TCM. If an open or short circuit occurs in any of the shift solenoid valves, the TCM controls the remaining normal shift solenoid valves to allow the vehicle to be operated smoothly (Fail safe function).

DTC No.	DTC Detecting Condition	Trouble Area
P0798	The TCM checks for an open or short in the shift solenoid valve SL3 circuit while driving and shifting gears. (1-trip detection logic) • Output signal duty equals 100%. (NOTE: SL3 output signal duty is less than 100% under normal condition.)	• Open or short in shift solenoid valve SL3 circuit • Shift solenoid valve SL3 • TCM

MONITOR DESCRIPTION

The TCM commands gear shifts by turning the shift solenoid valves on or off. When there is an open or short circuit in any shift solenoid valve circuit, the TCM detects the problem and illuminates the MIL and stores the DTC. And the TCM performs the fail-safe function and turns the other normal shift solenoid valves on or off. (In case of an open or short circuit, the TCM stops sending current to the circuit.)
(See page AX-38)

MONITOR STRATEGY

Related DTCs	P0798: Shift solenoid valve SL3/Range check
Required sensors/Components	Shift solenoid valve SL3
Frequency of operation	Continuous
Duration	1 sec.
MIL operation	Immediate
Sequence of operation	None

AX

TYPICAL ENABLING CONDITIONS

ALL:

The monitor will run whenever this DTC is not present	None
Engine switch	ON
Starter	OFF

Malfunction (A):

Battery voltage	12 V or more

Malfunction (B):

Battery voltage	10 V or more and less than 12 V
CPU commanded duty	Less than 75%

TYPICAL MALFUNCTION THRESHOLDS

Output signal duty	100%

COMPONENT OPERATING RANGE

Output signal duty	Less than 100%

WIRING DIAGRAM

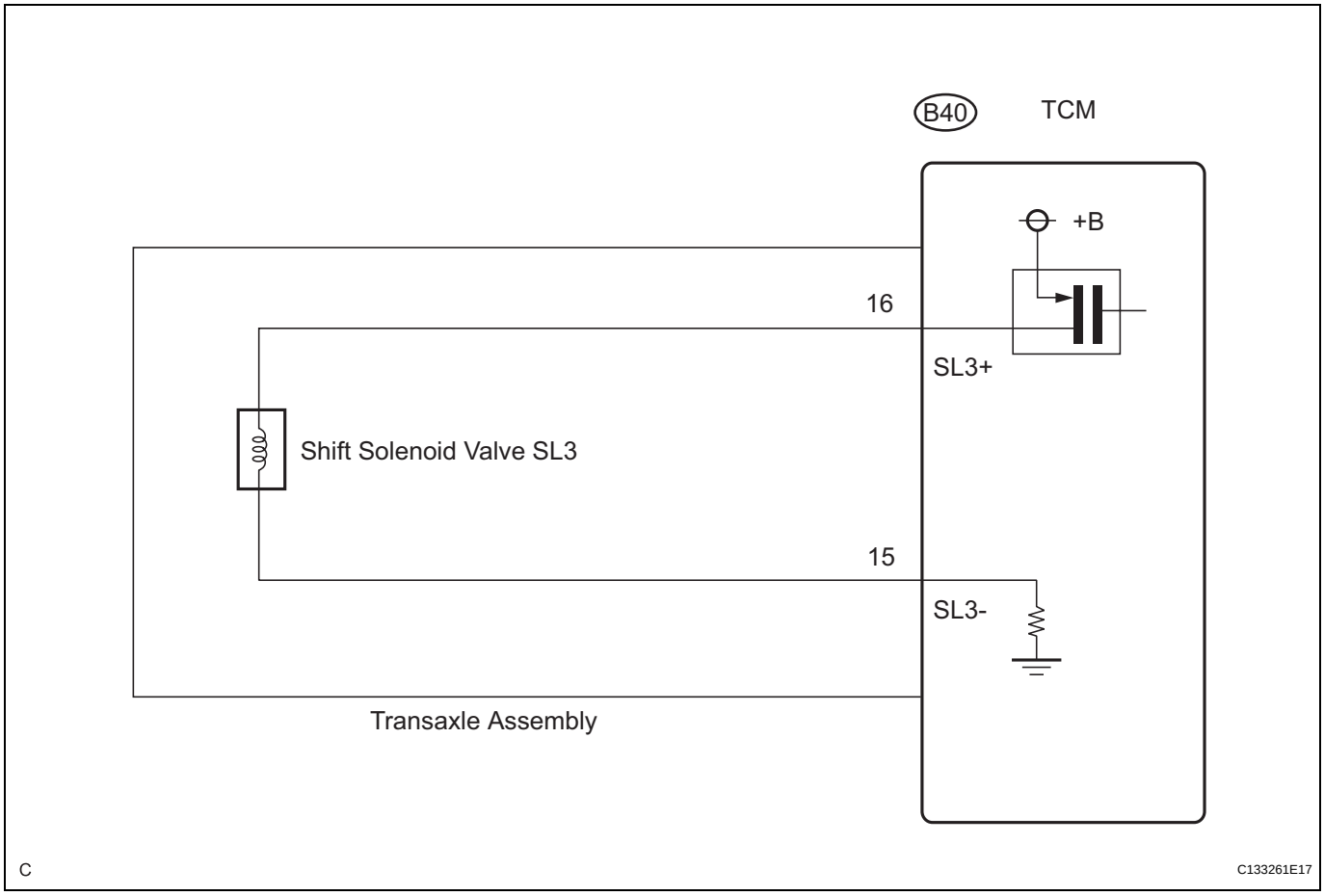

INSPECTION PROCEDURE

AX

1	INSPECT TRANSMISSION WIRE (SL3)

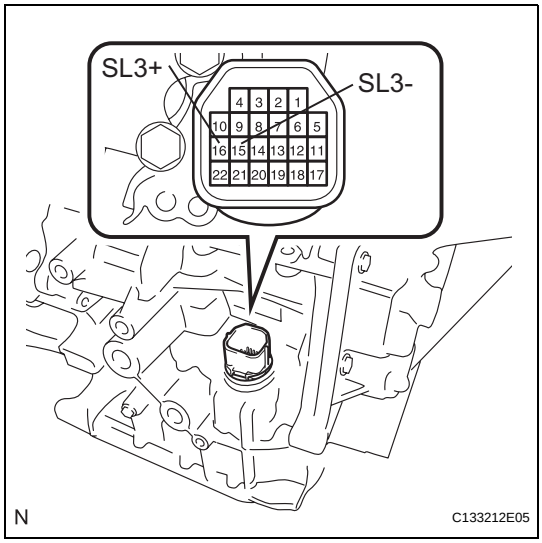

(a) Remove the TCM from the transaxle.

(b) Measure the resistance according to the value(s) in the table below.

Standard resistance

Tester Connection	Specified Condition 20°C (68°F)
16 (SL3+) - 15 (SL3-)	5.0 to 5.6 Ω

(c) Measure the resistance according to the value(s) in the table below.

Standard resistance:
Check for short

Tester Connection	Specified Condition
16 (SL3+) - Body ground	10 kΩ or higher
15 (SL3-) - Body ground	10 kΩ or higher

OK → **REPLACE TCM**

NG

2 INSPECT SHIFT SOLENOID VALVE (SL3)

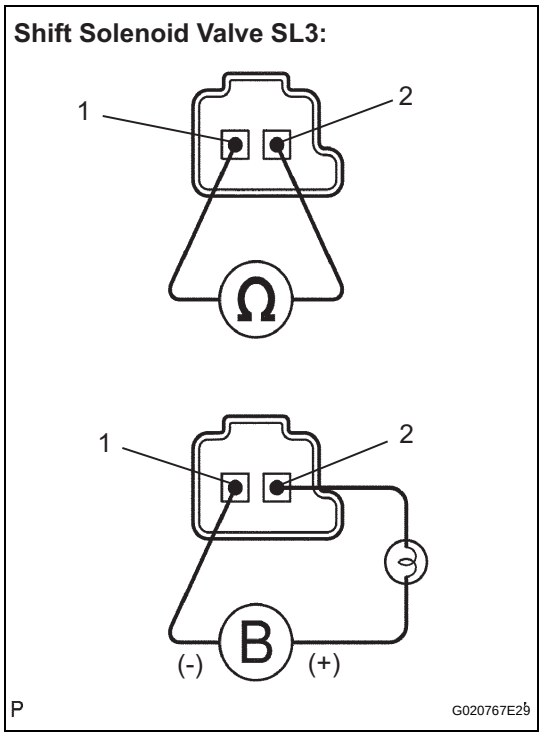

(a) Remove the shift solenoid valve SL3.

(b) Measure the resistance according to the value(s) in the table below.

Standard resistance

Tester Connection	Specified Condition 20°C (68°F)
1 - 2	5.0 to 5.6 Ω

(c) Connect a positive (+) lead through a 21 W bulb to terminal 2 and a negative (-) lead to terminal 1 of the solenoid valve connector, then check the movement of the valve.

OK:

The solenoid makes an operating noise.

NG → **REPLACE SHIFT SOLENOID VALVE (SL3)**

OK

REPLACE TRANSMISSION WIRE

AX

DTC	P0872	Transmission Fluid Pressure Switch No.1 Circuit Low

DTC	P0873	Transmission Fluid Pressure Switch No.1 Circuit High

DESCRIPTION

ATF pressure switch No. 1 is installed in the shift solenoid valve ATF output passage. This switch is used to identify the malfunctioning part when a fail-safe operation is performed. If the shift solenoid valve malfunctions when the ATF pressure switch has a malfunction, a fail-safe operation will be performed. This fail-safe operation is different from the fail-safe operation performed when the solenoid valve malfunctions and the ATF pressure switch is normal.

DTC No.	DTC Detecting Condition	Trouble Area
P0872	ATF pressure switch No. 1 OFF is detected twice when any of the gears from 1st to 4th engages normally.	• ATF temperature sensor assembly (ATF pressure switch No. 1) • Transmission wire • TCM
P0873	ATF pressure switch No. 1 ON is detected twice when 5th or 6th gear engages normally.	

WIRING DIAGRAM

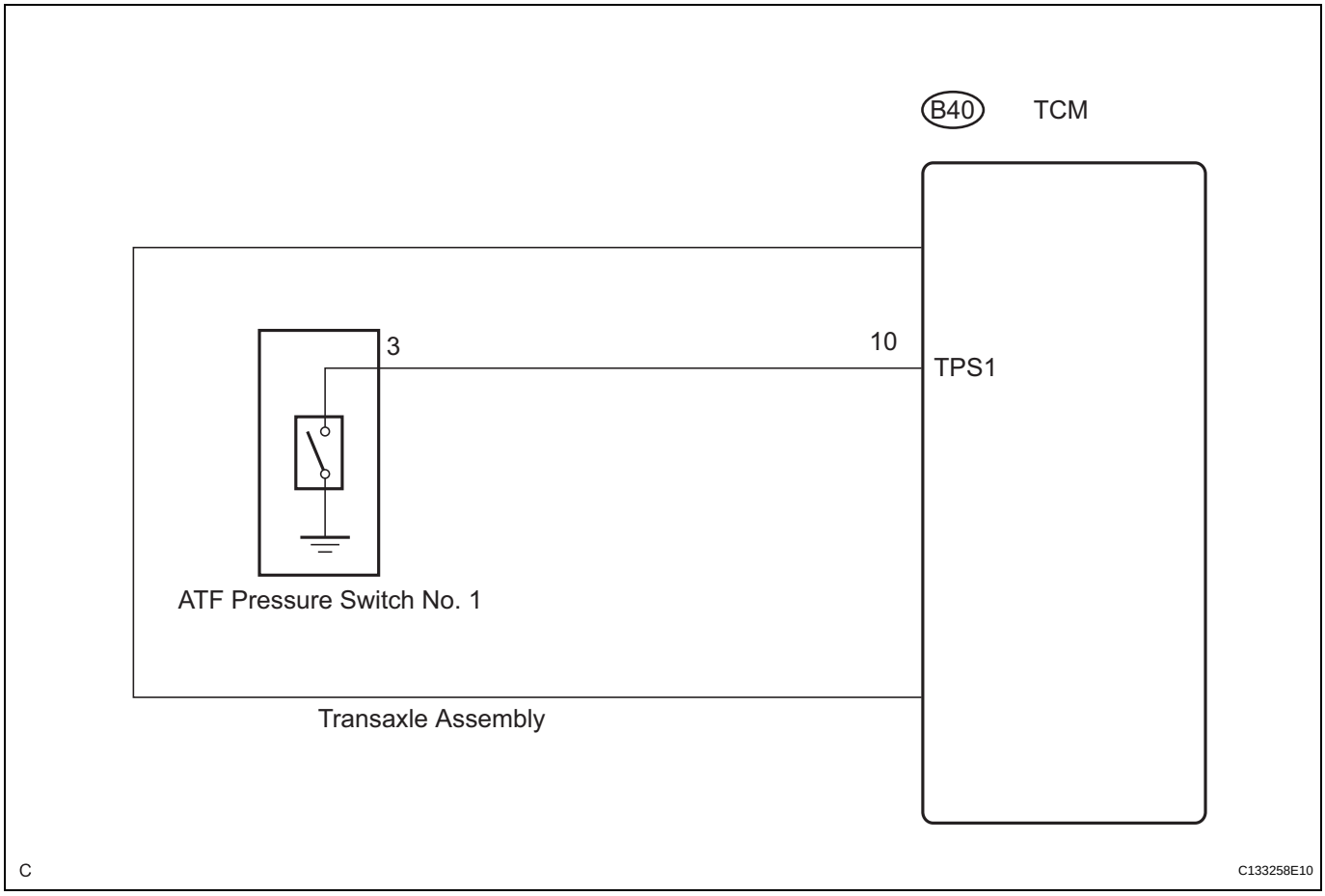

AX

INSPECTION PROCEDURE

1 CHECK OTHER DTC OUTPUT (IN ADDITION TO DTC P0872 OR P0873)

(a) Connect the intelligent tester to the DLC3.
(b) Turn the engine switch on (IG) and turn the intelligent tester on.
(c) Enter the following items: "DIAGNOSIS / OBD/MOBD / ECT / DTC INFO / CURRENT CODES".
(d) Read the DTCs using the intelligent tester.

Result

Display (DTC output)	Proceed to
Only "P0873" is output	A
Only "P0872" is output	B
"P0872 or P0873" and other DTCs	C

HINT:
If a solenoid is stuck OFF, DTCs for several solenoids including the malfunctioning solenoid will be detected.

B → **Go to step 4**

C → **GO TO DTC CHART**

A

2 CHECK TRANSMISSION WIRE (SHORT TO GROUND)

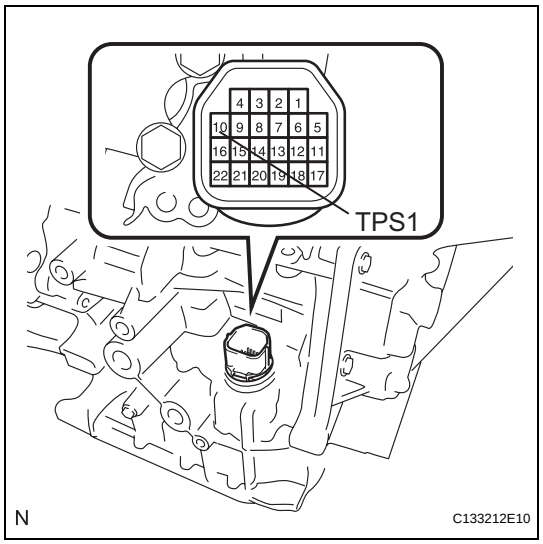

(a) Remove the TCM.
(b) Measure the resistance according to the value(s) in the table below.

Standard resistance

Tester Condition	Specified Condition
10 (TPS1) - Body ground (Valve body assembly)	10 kΩ or higher

OK → **REPLACE TCM**

NG

AX

3	CHECK ATF TEMPERATURE SENSOR ASSEMBLY (ATF PRESSURE SWITCH NO. 1)

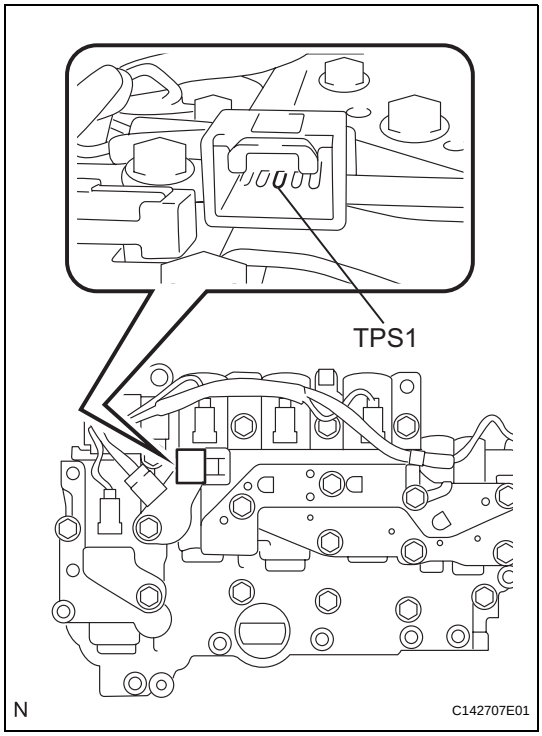

(a) Disconnect the transmission wire connector from the ATF temperature sensor assembly.

(b) Measure the resistance according to the value(s) in the table below.

Standard resistance

Tester Condition	Specified Condition
3 (TPS1) - Body ground (Valve body assembly)	10 kΩ or higher

NG → **REPLACE ATF TEMPERATURE SENSOR ASSEMBLY**

OK

REPLACE TRANSMISSION WIRE

4 CHECK TRANSMISSION WIRE

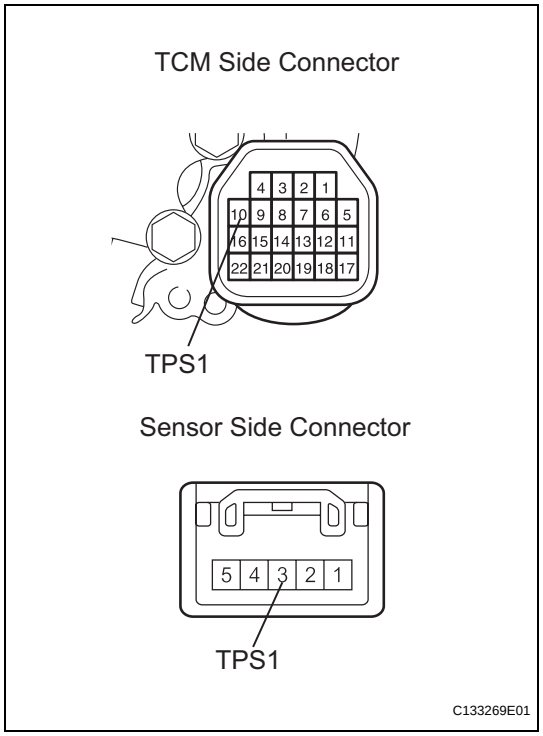

(a) Remove the TCM.
(b) Disconnect the connector from the ATF temperature sensor assembly.
(c) Measure the resistance according to the value(s) in the table below.

Standard resistance

Tester Condition	Specified Condition
10 (TPS1) - 3 (TPS1)	Below 1 Ω
10 (TPS1) or 3 (TPS1) - Body ground (Valve body assembly)	10 kΩ or higher

NG → **REPLACE TRANSMISSION WIRE**

OK

REPLACE ATF TEMPERATURE SENSOR ASSEMBLY

AX

DTC	P0877	Transmission Fluid Pressure Switch No.2 Circuit Low

DTC	P0878	Transmission Fluid Pressure Switch No.2 Circuit High

DESCRIPTION

ATF pressure switch No. 2 is installed in the shift solenoid valve ATF output passage. This switch is used to identify the malfunctioning part when a fail-safe operation is performed. If the shift solenoid valve malfunctions when the ATF pressure switch has a malfunction, a fail-safe operation will be performed. This fail-safe operation is different from the fail-safe operation performed when the solenoid valve malfunctions and the ATF pressure switch is normal.

DTC No.	DTC Detecting Condition	Trouble Area
P0877	ATF pressure switch No. 2 OFF is detected twice when any of the gears from 4th to 6th engages normally.	• ATF temperature sensor assembly (ATF pressure switch No. 2) • Transmission wire • TCM
P0878	ATF pressure switch No. 2 ON is detected twice when any of the gears from 1st to 3rd engages normally.	

WIRING DIAGRAM

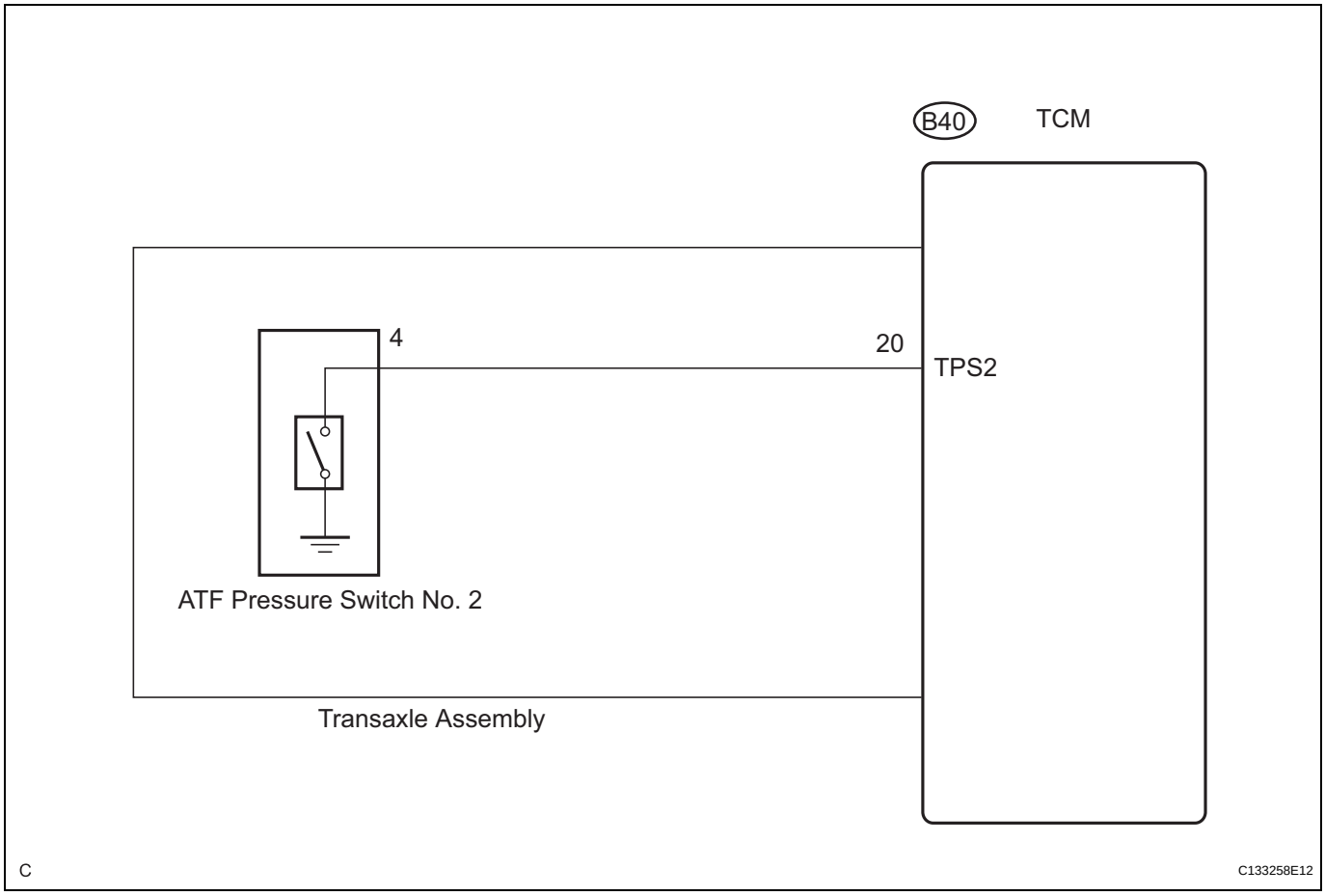

AX

INSPECTION PROCEDURE

1 CHECK OTHER DTC OUTPUT (IN ADDITION TO DTC P0877 OR P0878)

(a) Connect the intelligent tester to the DLC3.
(b) Turn the engine switch on (IG) and turn the intelligent tester on.
(c) Enter the following items: "DIAGNOSIS / OBD/MOBD / ECT / DTC INFO / CURRENT CODES".
(d) Read the DTCs using the intelligent tester.

Result

Display (DTC output)	Proceed to
Only "P0878" is output	A
Only "P0877" is output	B
"P0877 or P0878" and other DTCs	C

HINT:
If a solenoid is stuck OFF, DTCs for several solenoids including the malfunctioning solenoid will be detected.

B → **Go to step 4**

C → **GO TO DTC CHART**

A

2 CHECK TRANSMISSION WIRE (SHORT TO GROUND)

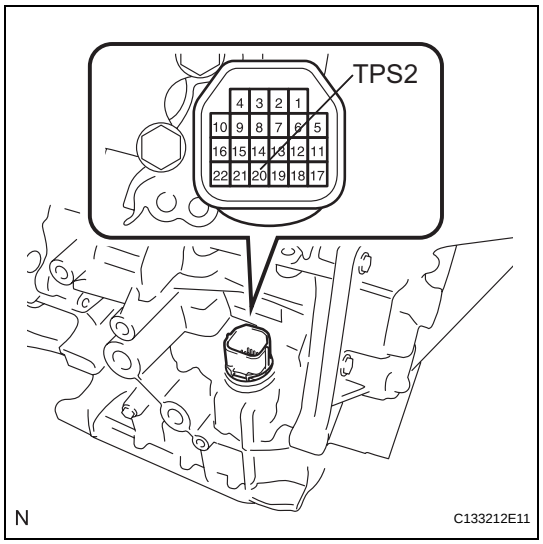

(a) Remove the TCM.
(b) Measure the resistance according to the value(s) in the table below.

Standard resistance

Tester Condition	Specified Condition
20 (TPS2) - Body ground (Valve body assembly)	10 kΩ or higher

OK → **REPAIR OR REPLACE TCM**

NG

AX

3	CHECK ATF TEMPERATURE SENSOR ASSEMBLY (ATF PRESSURE SWITCH NO. 2)

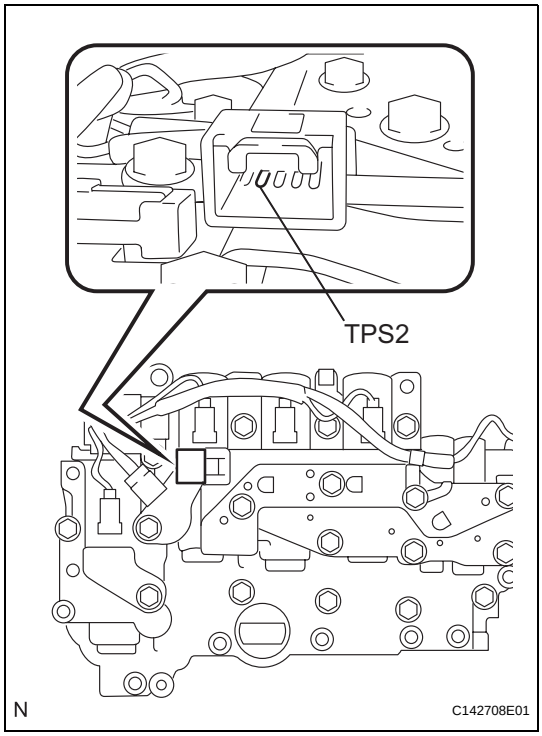

(a) Disconnect the transmission wire connector from the ATF temperature sensor assembly.

(b) Measure the resistance according to the value(s) in the table below.

Standard resistance

Tester Condition	Specified Condition
4 (TPS2) - Body ground (Valve body assembly)	10 kΩ or higher

NG → **REPLACE ATF TEMPERATURE SENSOR ASSEMBLY**

OK

REPLACE TRANSMISSION WIRE

4 CHECK TRANSMISSION WIRE

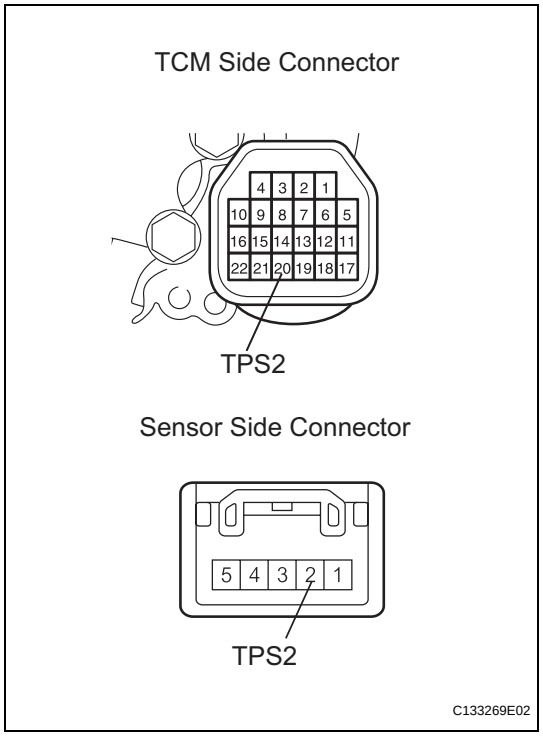

(a) Remove the TCM.
(b) Disconnect the connector from the ATF temperature sensor assembly.
(c) Measure the resistance according to the value(s) in the table below.

Standard resistance

Tester Condition	Specified Condition
20 (TPS2) - 2 (TPS2)	Below 1 Ω
20 (TPS2) or 2 (TPS2) - Body ground (Valve body assembly)	10 kΩ or higher

NG → **REPLACE TRANSMISSION WIRE**

OK

REPLACE ATF TEMPERATURE SENSOR ASSEMBLY

AX

DTC	P0989	Transmission Fluid Pressure Switch No.3 Circuit Low

DTC	P0990	Transmission Fluid Pressure Switch No.3 Circuit High

DESCRIPTION

ATF pressure switch No. 3 is installed in the lock-up solenoid ATF output passage and is used to detect a malfunction in the lock-up solenoid.

DTC No.	DTC Detection Condition	Trouble Area
P0989	Transmission fluid pressure switch No. 3 is OFF when lock-up occurs in response to a lock-up request (2 trip detection logic).	• ATF temperature sensor assembly (ATF pressure switch No. 3) • Transmission wire • TCM
P0990	When both of the following are detected (2 trip detection logic): • Transmission fluid pressure switch No. 3 is ON when lock-up does not occur. • Lock-up does not occur when shift solenoid valve (SLU) is requested to turn off in the lock-up range.	

MONITOR DESCRIPTION

The TCM illuminates the MIL and stores the DTC when the TCM detects that the ATF pressure switch is OFF with the lock-up solenoid ON or when the TCM detects that the ATF pressure switch is ON with the lock-up solenoid OFF.

MONITOR STRATEGY

Related DTCs	P0989: Transmission fluid pressure switch No. 3 OFF malfunction P0990: Transmission fluid pressure switch No. 3 ON malfunction
Required sensors/Components	Transmission fluid pressure switch No. 3
Frequency of operation	Continuous
Duration	P0989: 1.8 sec., P0990: 1.2 sec.
MIL operation	2 driving cycles
Sequence of operation	None

AX

TYPICAL ENABLING CONDITIONS

The following items are common to all conditions below.

The monitor will run whenever this DTC is not present.	None
Turbine speed sensor circuit	Circuit is not malfunctioning
Intermediate shaft speed sensor circuit	Circuit is not malfunctioning
Shift solenoid valve SL1 circuit	Circuit is not malfunctioning
Shift solenoid valve SL2 circuit	Circuit is not malfunctioning
Shift solenoid valve SL3 circuit	Circuit is not malfunctioning
Shift solenoid valve SL4 circuit	Circuit is not malfunctioning
Shift solenoid valve SLU circuit	Circuit is not malfunctioning
Knock sensor circuit	Circuit is not malfunctioning
ETCS (Electric throttle control system)	System is not down
Transmission shift position	"D"
ECT (Engine coolant temperature)	40°C (104°F) or more
Spark advance from Max. retard timing by KCS control	0°CA or more
TFT (Transmission fluid temperature)	-10°C (14°F) or more

TCM selected gear	Not 1st
Vehicle speed	15.5 mph (25 km/h) or more
Torque converter clutch circuit	Circuit is not malfunctioning
ECT circuit	Circuit is not malfunctioning
CAN communication system	Circuit is not malfunctioning
Turbine speed/Output speed (NT/NO) with 1st	3.304 to 7.724
Turbine speed/Output speed (NT/NO) with 2nd	1.901 to 2.340
Turbine speed/Output speed (NT/NO) with 3rd	1.399 to 1.649
Turbine speed/Output speed (NT/NO) with 4th	0.998 to 1.138
Turbine speed/Output speed (NT/NO) with 5th	0.705 to 0.836
Turbine speed/Output speed (NT/NO) with 6th	0.568 to 0.695

P0989:

TCM lock-up command	ON
Engine speed - Turbine speed	Less than 20 rpm
Throttle valve opening angle	7% or more
Vehicle speed	Less than 62 mph (100 km/h)
Shift solenoid valve SLU	Not ON malfunction

P0990:

TCM indicated pressure valve of SLU	Less than 4 kPa
TCM lock-up command	OFF
Shift solenoid valve SLU	Not malfunction
Shift solenoid valve SL	Not OFF malfunction

TYPICAL MALFUNCTION THRESHOLDS

P0989:

Transmission fluid pressure switch No. 3	OFF

P0990:

Following conditions are met	(a) and (b)
(a) Engine speed - Turbine speed	20 rpm or more
(b) Transmission fluid pressure switch No. 3	ON

WIRING DIAGRAM

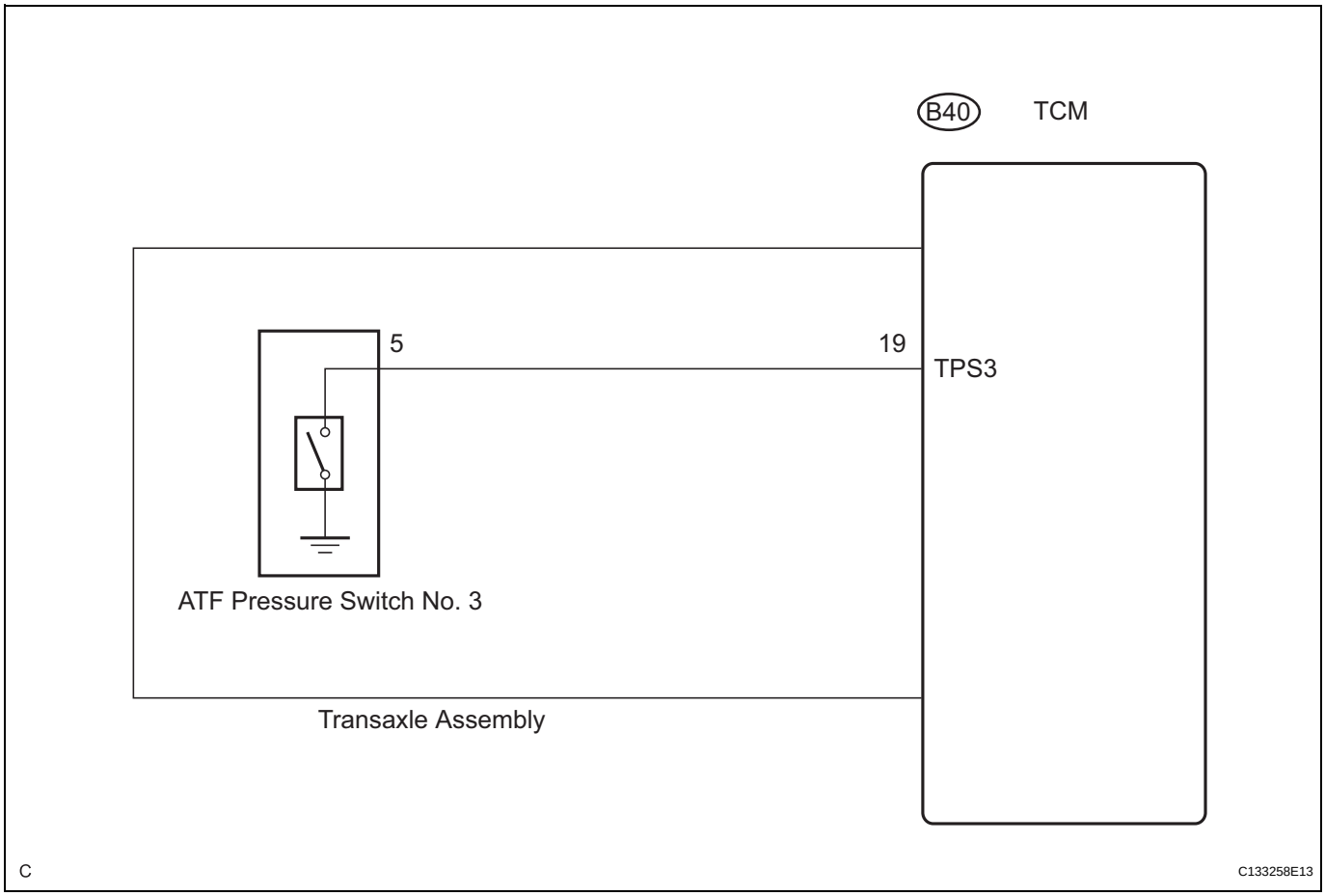

INSPECTION PROCEDURE

AX

1	CHECK OTHER DTC OUTPUT (IN ADDITION TO DTC P0989 OR P0990)

(a) Connect the intelligent tester to the DLC3.
(b) Turn the engine switch on (IG) and turn the intelligent tester on.
(c) Enter the following items: "DIAGNOSIS / OBD/MOBD / ECT / DTC INFO / CURRENT CODES".
(d) Read the DTCs using the intelligent tester.

Result

Display (DTC output)	Proceed to
Only "P0990" is output	A
Only "P0989" is output	B
"P0989 or P0990" and other DTCs	C

HINT:
If a solenoid is stuck OFF, DTCs for several solenoids including the malfunctioning solenoid will be detected.

B	Go to step 4
C	GO TO DTC CHART

A

2 CHECK TRANSMISSION WIRE (SHORT TO GROUND)

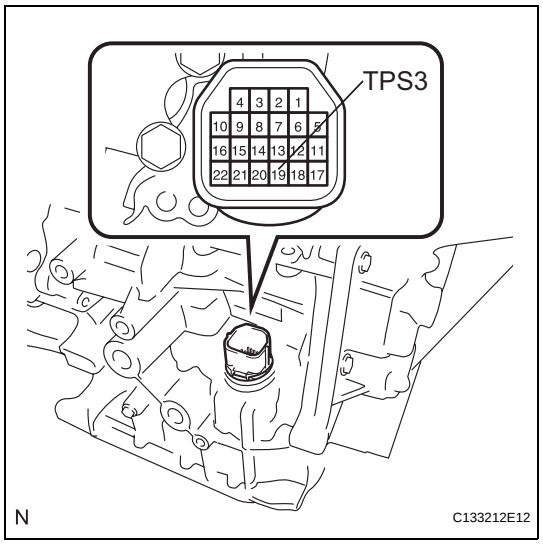

(a) Remove the TCM.
(b) Measure the resistance according to the value(s) in the table below.

Standard resistance

Tester Condition	Specified Condition
19 (TPS3) - Body ground (Valve body assembly)	10 kΩ or higher

OK → **REPLACE TCM**

NG

3 CHECK ATF TEMPERATURE SENSOR ASSEMBLY (ATF PRESSURE SWITCH NO. 3)

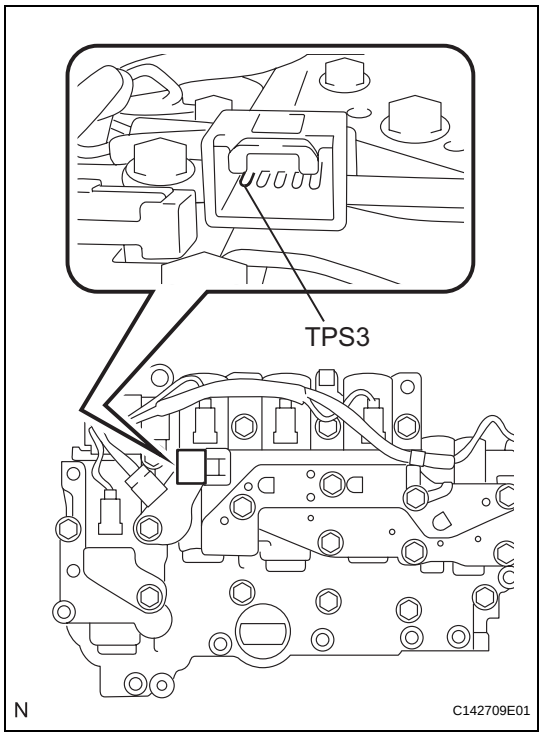

(a) Disconnect the connector from the ATF temperature sensor assembly.
(b) Measure the resistance according to the value(s) in the table below.

Standard resistance

Tester Condition	Specified Condition
5 (TPS3) - Body ground (Valve body assembly)	10 kΩ or higher

NG → **REPLACE ATF TEMPERATURE SENSOR ASSEMBLY**

OK

REPLACE TRANSMISSION WIRE

AX

4 CHECK TRANSMISSION WIRE

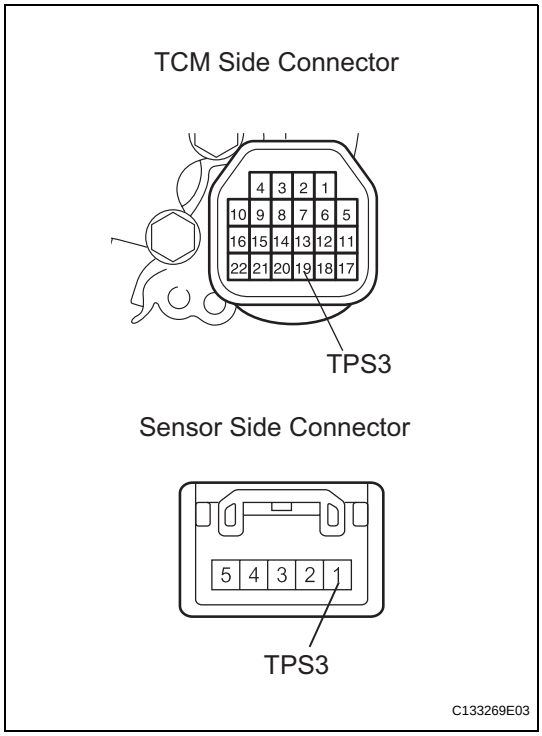

(a) Remove the TCM.
(b) Disconnect the connector from the ATF temperature sensor assembly.
(c) Measure the resistance according to the value(s) in the table below.

Standard resistance

Tester Condition	Specified Condition
19 (TPS3) - 1 (TPS3)	Below 1 Ω
19 (TPS3) or 1 (TPS3) - Body ground (Valve body assembly)	10 kΩ or higher

NG → **REPLACE TRANSMISSION WIRE**

OK

REPLACE ATF TEMPERATURE SENSOR ASSEMBLY

DTC	P2714	Pressure Control Solenoid "D" Performance (Shift Solenoid Valve SLT)

SYSTEM DESCRIPTION

The linear solenoid valve (SLT) controls the transmission line pressure for smooth transmission operation based on signals from the throttle position sensor and the vehicle speed sensor. The TCM adjusts the duty ratio (*) of the SLT solenoid valve to control hydraulic line pressure coming from the primary regulator valve. Appropriate line pressure assures smooth shifting with varying engine outputs.
(*): Duty Ratio
The duty ratio is the ratio of the period of continuity in one cycle. For example, if A is the period of continuity in one cycle, and B is the period of non-continuity, then
Duty Ratio = A/(A + B) x 100 (%)

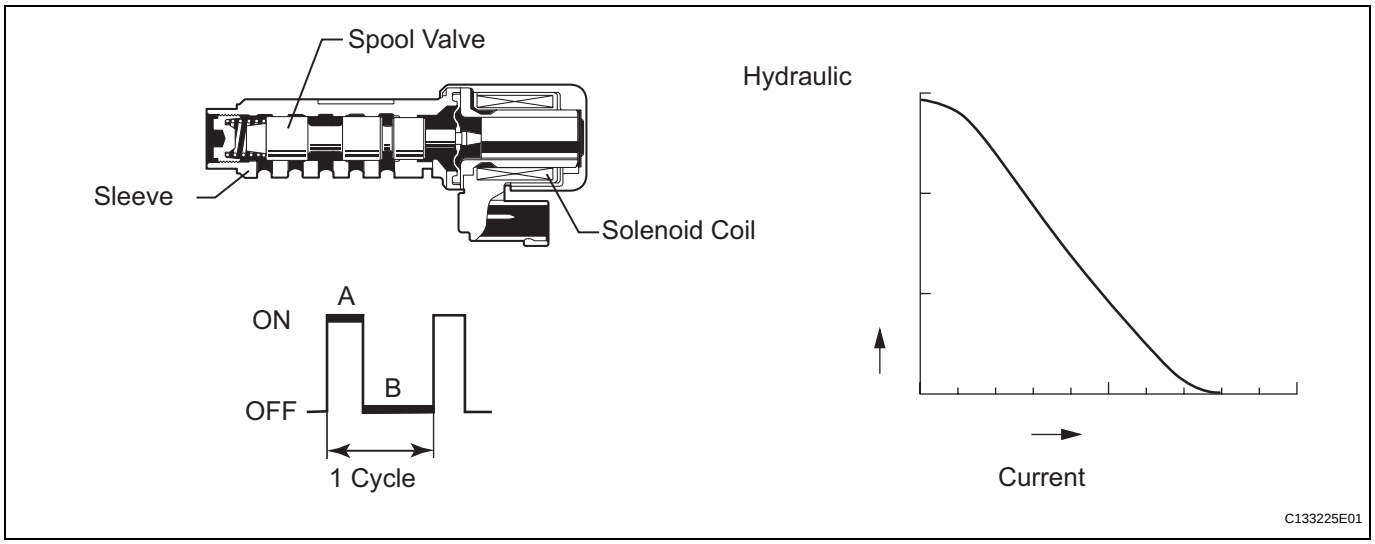

DTC No.	DTC Detection Condition	Trouble Area
P2714	The ECM detects a malfunction in the shift solenoid valve SLT (ON side) according to the difference in the speed between the turbine and the output shaft, and also by the transmission fluid pressure. (2-trip detection logic)	• Shift solenoid valve SLT (open) • Shift solenoid valve SL1, SL2, SL3 or SL4 (open or closed) • Valve body (blocked) • Automatic transaxle (clutch, brake or gear, etc.)

AX

MONITOR DESCRIPTION

The TCM calculates the amount of heat absorbed by the friction material based on the difference in revolution (clutch slippage) between the turbine and output shaft. The TCM turns on the MIL and outputs this DTC when the amount of heat absorption exceeds the specified value.
When the shift solenoid valve SLT remains on, oil pressure goes down and clutch engagement force decreases.
NOTICE:
If driving continues under these conditions, the clutches will burn out and the vehicle will no longer be drivable.

MONITOR STRATEGY

Related DTCs	P2714: Shift solenoid valve SLT/ON malfunction
Required sensors/Components	Shift solenoid valve SLT
Frequency of operation	Continuous
Duration	2 sec.
MIL operation	2 driving cycles
Sequence of operation	None

TYPICAL ENABLING CONDITIONS

ON malfunction:

The monitor will run whenever this DTC is not present.	None
Turbine speed sensor circuit	Circuit is not malfunctioning
TFT sensor circuit	Circuit is not malfunctioning
Shift solenoid valve SL1 circuit	Circuit is not malfunctioning
Shift solenoid valve SL2 circuit	Circuit is not malfunctioning
Shift solenoid valve SL3 circuit	Circuit is not malfunctioning
Shift solenoid valve SL4 circuit	Circuit is not malfunctioning
Shift solenoid valve SLT circuit	Circuit is not malfunctioning
ECT (Engine coolant temperature) sensor circuit	Circuit is not malfunctioning
Knock control sensor circuit	Circuit is not malfunctioning
ETCS (Electric throttle control system)	System is not down
Transmission range	"D"
Engine	Starting
TFT	-10°C (5°F) or more
Input turbine torque	100 N*m or more
Turbine speed	250 rpm or more
Output speed	250 rpm or more

TYPICAL MALFUNCTION THRESHOLDS

ON malfunction:

Detection criteria	Threshold
Turbine speed - Output speed x Gear ratio at output speed 1,000 rpm (Condition varies with output speed)	75 rpm or more

INSPECTION PROCEDURE

AX

1	CHECK OTHER DTCS OUTPUT (IN ADDITION TO DTC P2714)

(a) Connect the intelligent tester to the DLC3.
(b) Turn the engine switch on (IG) and turn the intelligent tester on.
(c) Enter the following items: "DIAGNOSIS / OBD/MOBD / ECT / DTC INFO / CURRENT CODES".
(d) Read the DTCs using the intelligent tester.

Result

Display (DTC output)	Proceed to
Only "P2714" is output	**A**
"P2714" and other DTCs	**B**

HINT:
If a solenoid is stuck ON, DTCs for several solenoids including the malfunctioning solenoid will be detected.

A → **INSPECT SHIFT SOLENOID VALVE SLT**

B

2	PERFORM ACTIVE TEST BY INTELLIGENT TESTER (SHIFT SOLENOID VALVE SLT)

NOTICE:

- **Perform the test at the normal operating ATF (Automatic Transmission Fluid) temperature: 50 to 80°C (122 to 176°F)**
- **Be sure to prevent SST hose from interfering with the exhaust pipe.**
- **This check must be conducted after checking and adjusting the engine.**
- **Perform the test with the A/C OFF.**

HINT:

Performing the ACTIVE TEST using the intelligent tester allows relays, VSVs, actuators and other items to operate without removing any parts. Performing the ACTIVE TEST as the first step in troubleshooting is one method to save labor time.

It is possible to display the DATA LIST during the ACTIVE TEST.

(a) Turn the engine switch off.
(b) Lift the vehicle up.
(c) Remove the test plug on the transmission case center right side and connect SST.
SST 09992-00095 (09992-00231, 09992-00271)
(d) Lower the vehicle.
(e) Fully apply the parking brake and chock the 4 wheels.
(f) Connect the intelligent tester together with the CAN VIM (Controller Area Network Vehicle Interface Module) to the DLC3.
(g) Start the engine.
(h) Warm up the ATF (Automatic Transmission Fluid).
(i) Measure the line pressure when the engine is idling.
(j) Turn on the tester.
(k) Enter the following items: DIAGNOSIS / OBD/MOBD / ECT / ACTIVE TEST / SOLENOID (SLT)".
(l) Follow the instructions on the tester and perform the ACTIVE TEST.
(m) Measure the line pressure with SST.

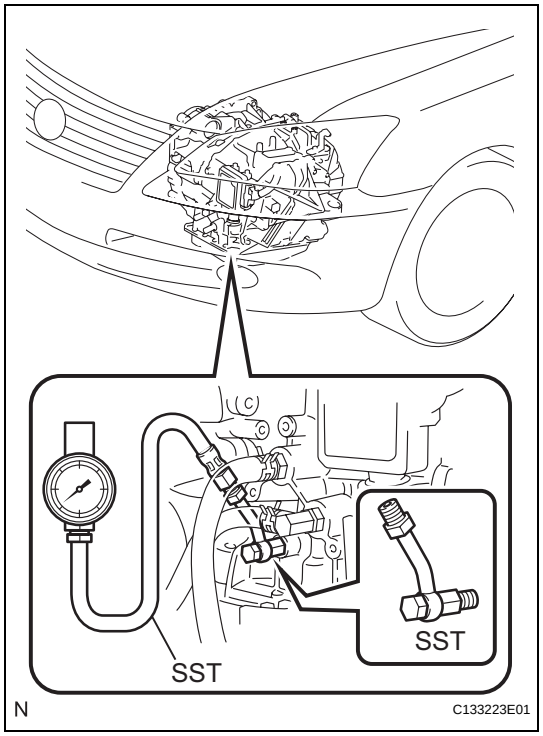

Item	Test Details
SOLENOID (SLT)*	[Test Details] Operate the shift solenoid SLT and raise the line pressure. [Vehicle Condition] • Vehicle Stopped. • IDL: ON HINT: OFF: Line pressure up (When the active test of "SOLENOID (SLT)" is performed, the TCM commands the SLT solenoid to turn off). ON: No action (normal operation)

AX

*: "SOLENOID (SLT)" in the ACTIVE TEST is performed to check that the line pressure changes by connecting the SST to the automatic transaxle. The same SST is used in the HYDRAULIC TEST (See page AX-16) as well.
HINT:
The pressure values in ACTIVE TEST and HYDRAULIC TEST are different from each other.
OK:
The line pressure changes as specified when performing the ACTIVE TEST.

NG → **Go to step 5**

OK

3 PERFORM ACTIVE TEST BY INTELLIGENT TESTER (SHIFTING TEST)

NOTICE:
This test should always be performed with at least 2 people.
HINT:
Performing the ACTIVE TEST using the intelligent tester allows relays, VSVs, actuators and other items to be operated without removing any parts. Performing the ACTIVE TEST as the first step in troubleshooting is one method to save labor time.
The DATA LIST can be displayed during the ACTIVE TEST.
(a) Warm up the engine.
(b) Turn the engine switch off.
(c) Connect the intelligent tester together with the CAN VIM (Controller Area Network Vehicle Interface Module) to the DLC3.
(d) Start the engine.
(e) Turn on the tester.
(f) Enter the following items: "DIAGNOSIS / OBD/MOBD / ECT / ACTIVE TEST".
(g) Follow the instructions on the tester and read the ACTIVE TEST.

AX

Item	Test Details	Diagnostic Note
SHIFT	[Test Details] Operate the shift solenoid valve and set each shift position by yourself. [Vehicle Condition] • IDL: ON [Others] • Press "→" button: Shift up • Press "←" button: Shift down	It is possible to check the operation of the shift solenoid valves.

NOTICE:
- **This test can be conducted when the vehicle is stopped.**
- **When shifting gears using the Active Test function, do not operate the accelerator pedal for 2 seconds before and after shifting gears.**

HINT:
The shift position commanded by the TCM is shown on the DATA LIST/SHIFT display on the intelligent tester.

(h) Check the vehicle speed and the gear position when the engine speed is 1,000 rpm.
HINT:
Because the torque converter clutch has not engaged, it may be difficult to obtain the speeds specified in 4th, 5th, and 6th gears, however a difference of speed should still be evident following each gear change.

Standard

1st	2nd	3rd	4th	5th	6th
5 to 7.5 mph (8 to 12 km/h)	9.3 to 11.8 mph (15 to 19 km/h)	13.0 to 15.5 mph (21 to 25 km/h)	19.3 to 21.7 mph (31 to 35 km/h)	27.3 to 29.8 mph (44 to 48 km/h)	32.3 to 34.8 mph (52 to 56 km/h)

(i) Compare the TCM gear shift command and the actual gear position.

Result

Actuator gear position under malfunction		TCM gear shift command						Proceed to
		1st	2nd	3rd	4th	5th	6th	
Shift solenoid SL1	Stuck ON	1st	2nd	3rd	4th	4th	4th	A
	Stuck OFF	N*1	N*1	N*1	N*1	5th	6th	
Shift solenoid SL2	Stuck ON	4th	4th	4th	4th	5th	6th	B
	Stuck OFF	1st	2nd	3rd	1st	N*1	N*1	
Shift solenoid SL3	Stuck ON	2nd	2nd	3rd	4th	5th	6th	C
	Stuck OFF	1st	1st	3rd	4th	5th	N*1	
Shift solenoid SL4	Stuck ON*3	3rd	3rd	3rd	4th	5th	5th	D
	Stuck OFF	1st	2nd	1st	4th	N*1	6th	
Shift solenoid SLT	Stuck ON	N*2	N*2	N*2	N*2	N*2	N*2	E
	Stuck OFF*3	1st	2nd	3rd	4th	5th	6th	

HINT:
- *1: Neutral
- *2: If the shift solenoid SLT is stuck on, the line pressure will be low. Therefore, the amount of torque that can be transmitted by each gear is lower than the normal limit. When the engine power exceeds this lowered limit, the engine speed will increase freely.
- *3: When the shift solenoid SLT is stuck OFF, gear shifting is normal.

A → **GO TO DTC CHART (RELATED SHIFT SOLENOID VALVE (SL1) PERFORMANCE DTC P0746)**

B → **GO TO DTC CHART (RELATED SHIFT SOLENOID VALVE (SL2) PERFORMANCE DTC P0776)**

C → **GO TO DTC CHART (RELATED SHIFT SOLENOID VALVE (SL3) PERFORMANCE DTC P0796)**

D → **GO TO DTC CHART (RELATED SHIFT SOLENOID VALVE (SL4) PERFORMANCE DTC P2808)**

E

4 INSPECT SHIFT SOLENOID VALVE SLT

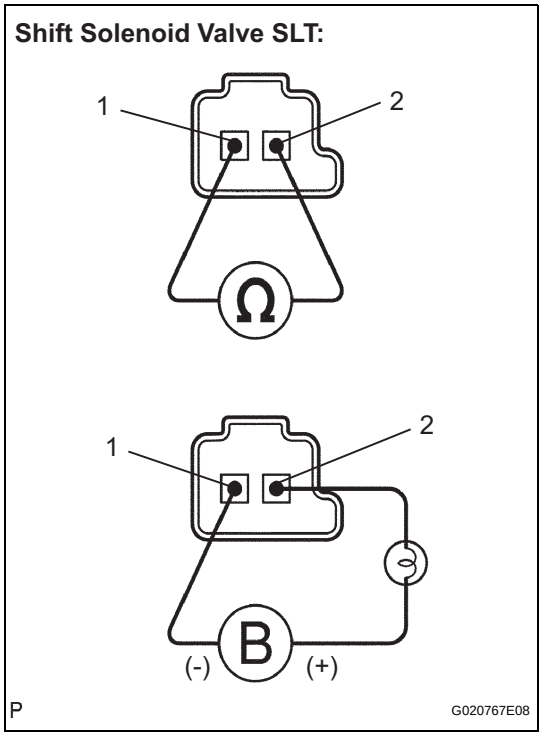

(a) Remove the shift solenoid valve SLT.

(b) Measure the resistance according to the value(s) in the table below.

Standard resistance

Tester Connection	Specified Condition 20°C (68°F)
1 - 2	5.0 to 5.6 Ω

(c) Connect a positive (+) lead through a 21 W bulb to terminal 2 and a negative (-) lead to terminal 1 of the solenoid valve connector, then check the movement of the valve.

OK:

The solenoid makes an operating sound.

NG → **REPLACE SHIFT SOLENOID VALVE SLT**

OK

5 INSPECT TRANSMISSION VALVE BODY ASSEMBLY

OK:

There are no foreign objects on each valve.

NG → **REPLACE TRANSMISSION VALVE BODY ASSEMBLY**

OK

6 INSPECT TORQUE CONVERTER CLUTCH ASSEMBLY

(a) Check the torque converter clutch assembly (See page AX-248).

OK:

The torque converter clutch operates normally.

AX

NG → **REPLACE TORQUE CONVERTER CLUTCH ASSEMBLY**

OK

REPLACE AUTOMATIC TRANSMISSION ASSEMBLY

DTC	P2716	Pressure Control Solenoid "D" Electrical (Shift Solenoid Valve SLT)

DESCRIPTION

Refer to DTC P2714 (See page AX-133).

DTC No.	DTC Detection Condition	Trouble Area
P2716	Open or short is detected in shift solenoid valve SLT circuit for 1 second or more while driving (1-trip detection logic).	• Open or short in shift solenoid valve SLT circuit • Shift solenoid valve SLT • TCM

MONITOR DESCRIPTION

When an open or short in the linear solenoid valve (SLT) circuit is detected, the TCM interprets this as a fault. The TCM will turn on the MIL and store the DTC.

MONITOR STRATEGY

Related DTCs	P2716: Shift solenoid valve SLT/Range check
Required sensors/Components	Shift solenoid valve SLT
Frequency of operation	Continuous
Duration	1 sec.
MIL operation	Immediate
Sequence of operation	None

TYPICAL ENABLING CONDITIONS

ALL:

The monitor will run whenever this DTC is not present	None
Solenoid current cut status	Not cut
Engine switch	ON
Starter	OFF

AX

Malfunction (A):

Battery voltage	10 V to 12 V

Malfunction (B):

Battery voltage	10 V or more and less than 12 V
Target current	0.75 A

Malfunction (C):

Battery voltage	8 V or more
Target current	1 A

Malfunction (D):

Battery voltage	11 V or more
Target current	1 A or more

Malfunction (E):

Battery voltage	11 V or more
Target current	0.1 A or more
Commanded voltage - Last commanded voltage	Less than 0.02 V

TYPICAL MALFUNCTION THRESHOLDS

Malfunction (A) and (B):

Output signal duty	100% or more

Malfunction (C):

Output signal duty	0% or less

Malfunction (D):

Output signal monitor	No signal

Malfunction (E):

Commanded voltage - Last commanded voltage	0.02 V or more

COMPONENT OPERATING RANGE

Output signal duty	Less than 100%

WIRING DIAGRAM

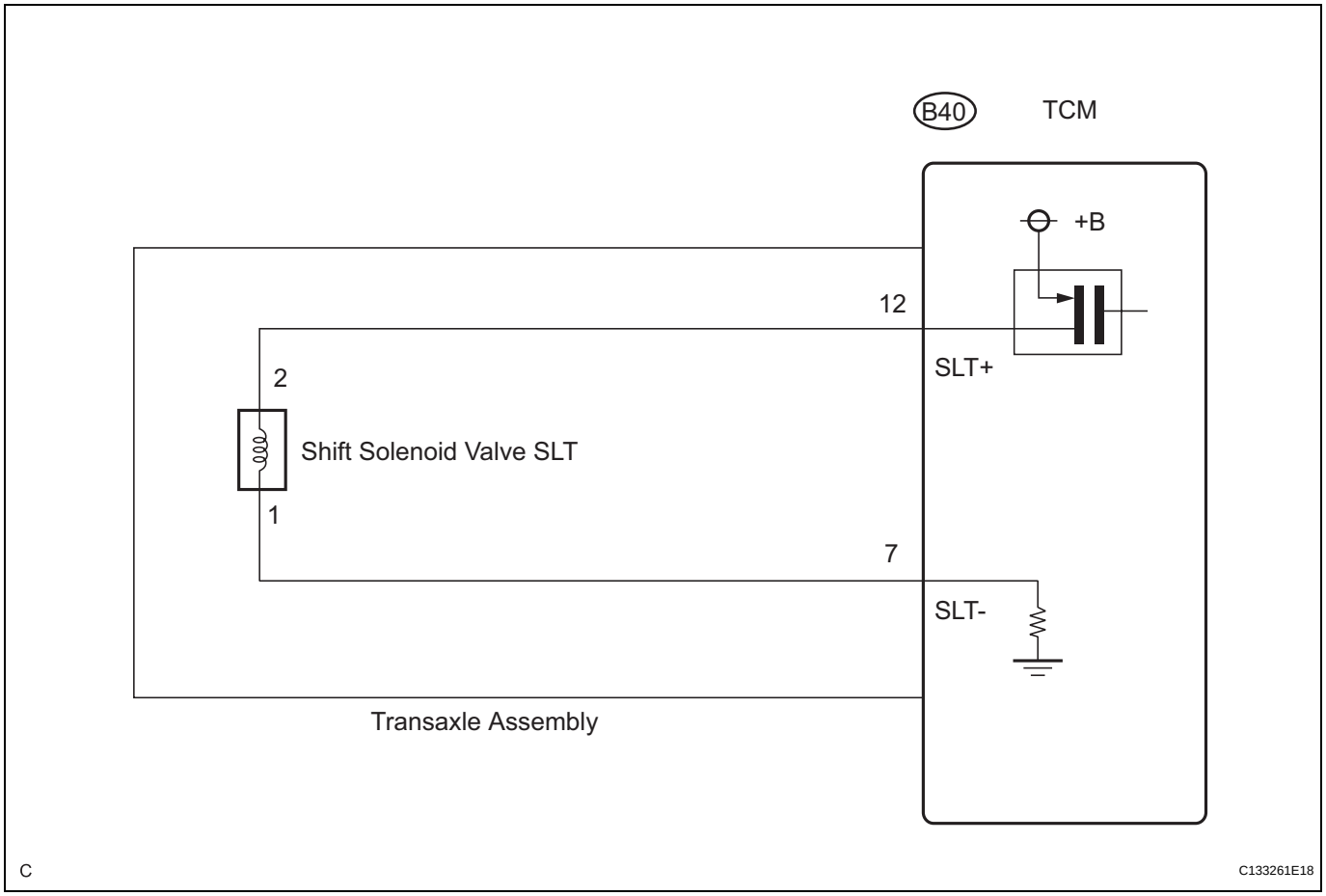

AX

INSPECTION PROCEDURE

1 INSPECT TRANSMISSION WIRE (SLT)

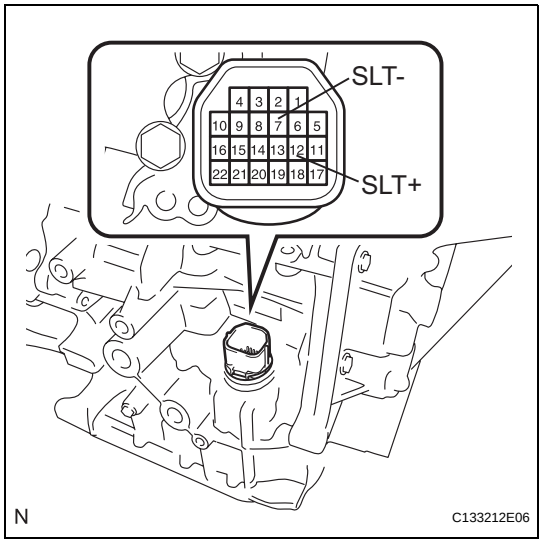

(a) Remove the TCM from the transaxle.
(b) Measure the resistance according to the value(s) in the table below.
Standard resistance

Tester Connection	Specified Condition 20°C (68°F)
12 (SLT+) - 7 (SLT-)	5.0 to 5.6 Ω

(c) Measure the resistance according to the value(s) in the table below.
Standard resistance:
Check for short

Tester Connection	Specified Condition
12 (SLT+) - Body ground	10 kΩ or higher
7 (SLT-) - Body ground	10 kΩ or higher

OK → **REPLACE TCM**

NG

2 INSPECT SHIFT SOLENOID VALVE SLT

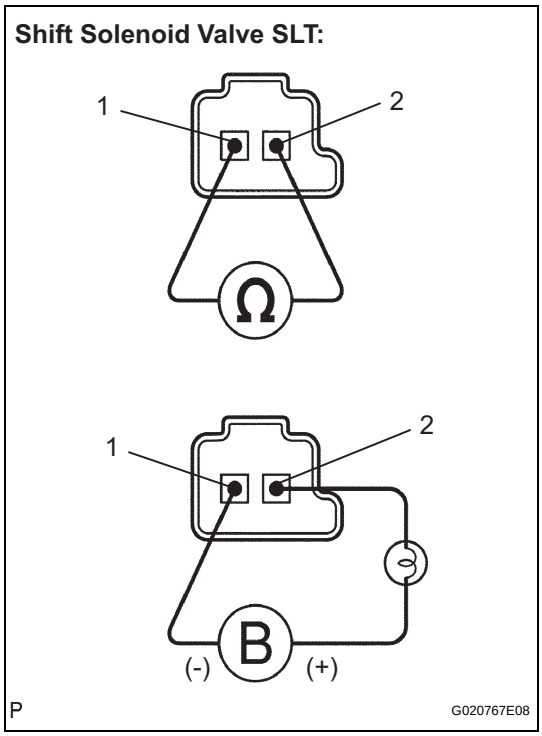

(a) Remove the shift solenoid valve SLT.
(b) Measure the resistance according to the value(s) in the table below.
Standard resistance

Tester Connection	Specified Condition 20°C (68°F)
1 - 2	5.0 to 5.6 Ω

(c) Connect a positive (+) lead through a 21 W bulb to terminal 2 and a negative (-) lead to terminal 1 of the solenoid valve connector, then check the movement of the valve.
OK:
The solenoid makes an operating sound.

NG → **REPLACE SHIFT SOLENOID VALVE SLT**

OK

REPLACE TRANSMISSION WIRE

AX

DTC	P2757	Torque Converter Clutch Pressure Control Solenoid Performance (Shift Solenoid Valve SLU)

SYSTEM DESCRIPTION

The TCM uses the signals from the throttle position sensor, air-flow meter, turbine (input) speed sensor, output speed sensor and crankshaft position sensor to monitor the engagement condition of the lock-up clutch.

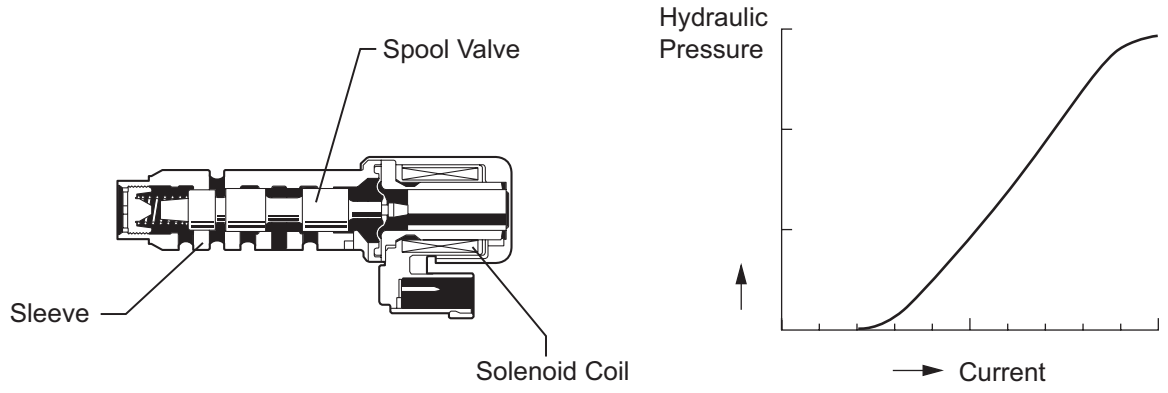

The TCM compares the engagement condition of the lock-up clutch with the lock-up schedule in the TCM memory to detect shift solenoid valve SLU, valve body and torque converter clutch mechanical problems.

DTC No.	DTC Detection Condition	Trouble Area
P2757	When both of the following are detected (2-trip detection logic): • Lock-up does not occur when requested. • Transmission fluid pressure switch No. 3 is OFF. When both of the following are detected (2-trip detection logic): • Transmission fluid pressure switch No. 3 is ON when lock-up does not occur. • Lock-up occurs when the shift solenoid valve SLU is requested to turn on in the lock-up range.	• Shift solenoid valve SLU (open or closed) • Valve body (blocked) • Torque converter clutch • Automatic transaxle (clutch, brake or gear, etc.) • Line pressure is too low

AX

MONITOR DESCRIPTION

Torque converter lock-up is controlled by the TCM based on the turbine (input) speed sensor NT, output speed sensor NC, engine rpm, engine load, engine temperature, vehicle speed, transmission fluid temperature, and gear selection. The TCM determines the lock-up status of the torque converter by comparing the engine rpm (NE) to the input turbine rpm (NT). The TCM calculates the actual transmission gear by comparing input turbine rpm (NT) to output shaft rpm (NC). When conditions are appropriate, the TCM requests "lock-up" by applying control voltage to the shift solenoid SLU. When the SLU is turned on, it applies pressure to the lock-up relay valve and locks the torque converter clutch.
If the TCM detects no lock-up after lock-up has been requested or if it detects lock-up when it is not requested, the TCM interprets this as a fault in the shift solenoid valve SLU or lock-up system performance.
The TCM will turn on the MIL and store the DTC.
Example:
When any of the following is met, the system judges it as a malfunction.

- There is a difference in rotation between the input side (engine speed) and output side (input turbine speed) of the torque converter when the TCM commands lock-up.
  (Engine speed is at least 70 rpm greater than input turbine speed.)
- There is no difference in rotation between the input side (engine speed) and output side (input turbine speed) of the torque converter when the TCM commands lock-up off.
  (The difference between engine speed and input turbine speed is less than 20 rpm.)

MONITOR STRATEGY

Related DTCs	P2757: Shift solenoid valve SLU OFF malfunction Shift solenoid valve SLU ON malfunction
Required sensors/Components	Shift solenoid valve SLU
Frequency of operation	Continuous
Duration	OFF malfunction (A): 3.5 sec. OFF malfunction (B): 0.05 sec. ON malfunction: 1.8 sec.
MIL operation	2 driving cycles
Sequence of operation	None

TYPICAL ENABLING CONDITIONS

The following items are common to all conditions below.

The monitor will run whenever this DTC is not present.	None
Turbine speed sensor circuit	Circuit is not malfunctioning
Intermediate shaft speed sensor circuit	Circuit is not malfunctioning
Shift solenoid valve SL1 circuit	Circuit is not malfunctioning
Shift solenoid valve SL2 circuit	Circuit is not malfunctioning
Shift solenoid valve SL3 circuit	Circuit is not malfunctioning
Shift solenoid valve SL4 circuit	Circuit is not malfunctioning
Shift solenoid valve SLU circuit	Circuit is not malfunctioning
Knock sensor circuit	Circuit is not malfunctioning
ETCS (Electric throttle control system)	System is not down
Transmission shift position	"D"
ECT (Engine coolant temperature)	40°C (104°F) or more
Spark advance from Max. retard timing by KCS control	0°CA or more
TFT (Transmission fluid temperature)	-10°C (14°F) or more
TCM selected gear	Not 1st
Vehicle speed	15.5 mph (25 km/h) or more
Torque converter clutch circuit	Circuit is not malfunctioning
ECT circuit	Circuit is not malfunctioning
CAN communication system	Circuit is not malfunctioning
Turbine speed/Output speed (NT/NO) with 1st	3.304 to 7.724
Turbine speed/Output speed (NT/NO) with 2nd	1.901 to 2.340
Turbine speed/Output speed (NT/NO) with 3rd	1.399 to 1.649
Turbine speed/Output speed (NT/NO) with 4th	0.998 to 1.138
Turbine speed/Output speed (NT/NO) with 5th	0.705 to 0.836
Turbine speed/Output speed (NT/NO) with 6th	0.568 to 0.695

OFF malfunction (A):

TCM lock-up command	ON
Duration time from lock-up on command	3 sec. or more
Shift solenoid valve SLU	ON malfunction not occuring

ON malfunction:

TCM lock-up command	OFF (SLU pressure: less than 4 kPa (0.04 kgfcm^2, 0.6 psi)
Duration time from lock-up on command	0.064 sec. or more
Throttle valve opening angle	7% or more
Vehicle speed	Less than 37.3 mph (60 km/h)

TYPICAL MALFUNCTION THRESHOLDS

OFF malfunction:

Following conditions are met	(a) and (b)
(a) Engine speed - Turbine speed	70 rpm or more
(b) Transmission fluid pressure switch	OFF

ON malfunction:

Following conditions are met	(a) and (b)
(a) Engine speed - Turbine speed	Less than 35 rpm
(b) Transmission fluid pressure switch	ON

COMPONENT OPERATING RANGE

Speed sensor (NT)	Input speed is equal to engine speed when lock-up is ON.

INSPECTION PROCEDURE

1. ACTIVE TEST

HINT:

Performing the ACTIVE TEST using the intelligent tester allows relays, VSVs, actuators and other items to be operated without removing any parts. Performing the ACTIVE TEST as the first step in troubleshooting is one method to save labor time.

It is possible to display the DATA LIST during the ACTIVE TEST.

(a) Warm up the engine.
(b) Turn the engine switch off.
(c) Connect the intelligent tester together with the CAN VIM (Controller Area Network Vehicle Interface Module) to the DLC3.
(d) Turn the engine switch on (IG).
(e) Turn on the tester.
(f) Enter the following items: "DIAGNOSIS / OBD/MOBD / ECT / ACTIVE TEST".
(g) According to the display on the tester, perform "ACTIVE TEST".

Item	Test Details	Diagnostic Note
LOCK UP	[Test Details] Control the shift solenoid SLU to set the automatic transaxle to the lock-up condition. [Vehicle Condition] • Throttle valve opening angle: Less than 35% • Vehicle Speed: 37 mph (60 km/h) or more	Possible to check the SLU operation.

HINT:

- This test can be conducted when the vehicle speed is 37 mph (60 km/h) or more.
- This test can be conducted with the 6th gear.

(h) Lightly depress the accelerator pedal and check that the engine speed does not change abruptly.

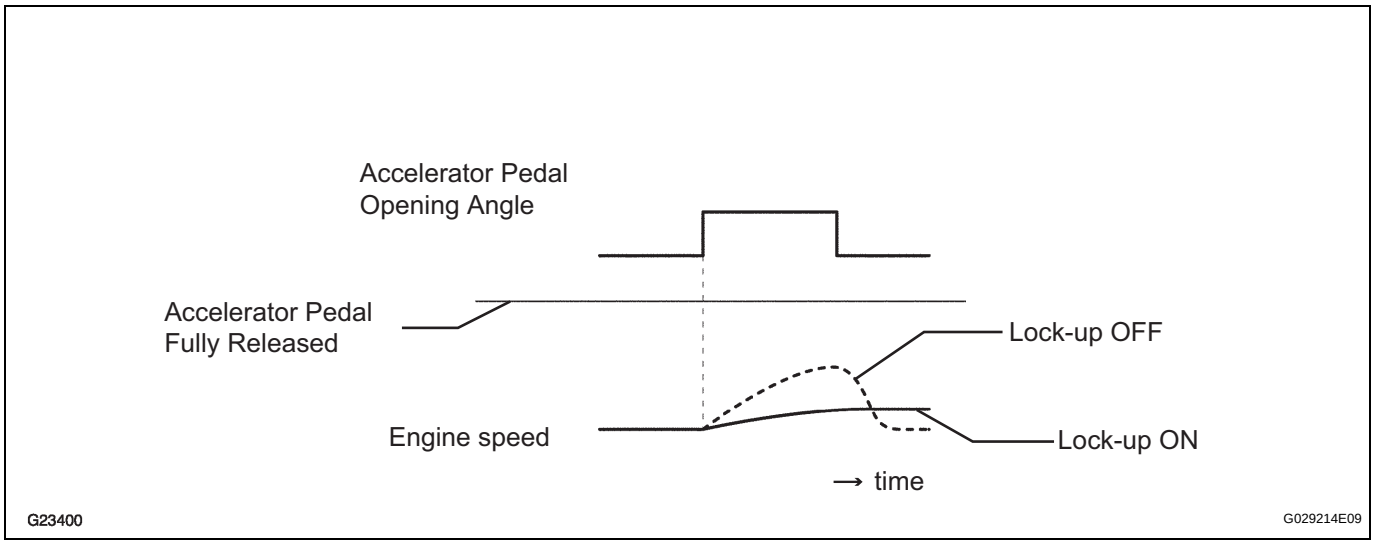

HINT:
- When changing the accelerator pedal opening angle while driving, if the engine speed does not change, lock-up is on.
- Slowly release, but not fully, the accelerator pedal in order to decelerate. (Fully releasing the pedal will close the throttle valve and lock-up may be turned off automatically.)

1	CHECK OTHER DTCS OUTPUT (IN ADDITION TO DTC P2757)

(a) Connect the intelligent tester to the DLC3.
(b) Turn the engine switch on (IG) and turn the intelligent tester on.
(c) Enter the following items: "DIAGNOSIS / OBD/MOBD / ECT / DTC INFO / CURRENT CODES".
(d) Read the DTCs using the intelligent tester.

AX

Result

Display (DTC output)	Proceed to
Only "P2757" is output	A
"P2757" and other DTCs	B

HINT:
If any other codes besides "P2757" are output, perform troubleshooting for those DTCs first.

B → **GO TO DTC CHART**

A

2 INSPECT SHIFT SOLENOID VALVE SLU

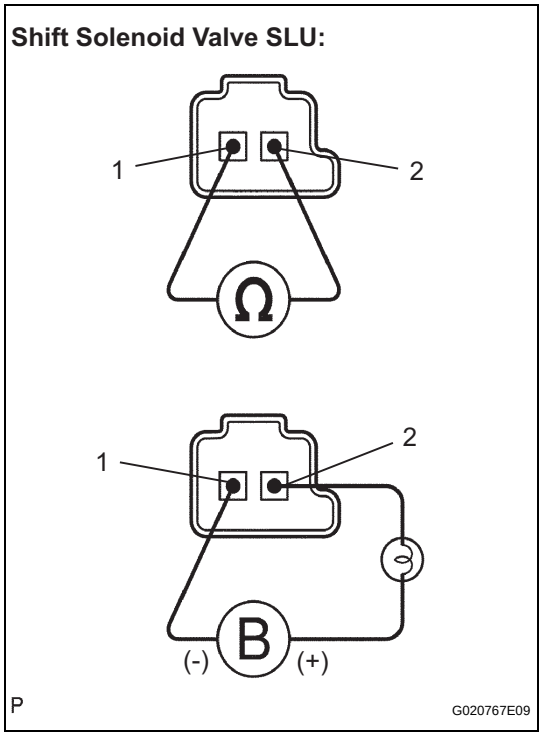

(a) Remove the shift solenoid valve SLU.

(b) Measure the resistance according to the value(s) in the table below.

Standard resistance

Tester Connection	Specified Condition 20°C (68°F)
1 - 2	5.0 to 5.6 Ω

(c) Connect a positive (+) lead through a 21 W bulb to terminal 2 and a negative (-) lead to terminal 1 of the solenoid valve connector, then check the movement of the valve.

OK:

The solenoid makes an operating sound.

NG → **REPLACE SHIFT SOLENOID VALVE SLU**

OK

3 INSPECT TRANSMISSION VALVE BODY ASSEMBLY

OK:

There are no foreign objects on each valve.

NG → **REPLACE TRANSMISSION VALVE BODY ASSEMBLY**

OK

4 INSPECT TORQUE CONVERTER CLUTCH ASSEMBLY

(a) Check the torque converter clutch assembly (See page AX-248).

OK:

The torque converter clutch operates normally.

NG → **REPLACE TORQUE CONVERTER CLUTCH ASSEMBLY**

OK

REPLACE AUTOMATIC TRANSMISSION ASSEMBLY

AX

DTC	P2759	Torque Converter Clutch Pressure Control Solenoid Control Circuit Electrical (Shift Solenoid Valve SLU)

DESCRIPTION

The amount of current flow to the solenoid is controlled by the (*) duty ratio of the TCM output signal. The higher the duty ratio becomes, the higher the lock-up hydraulic pressure becomes during the lock-up operation.

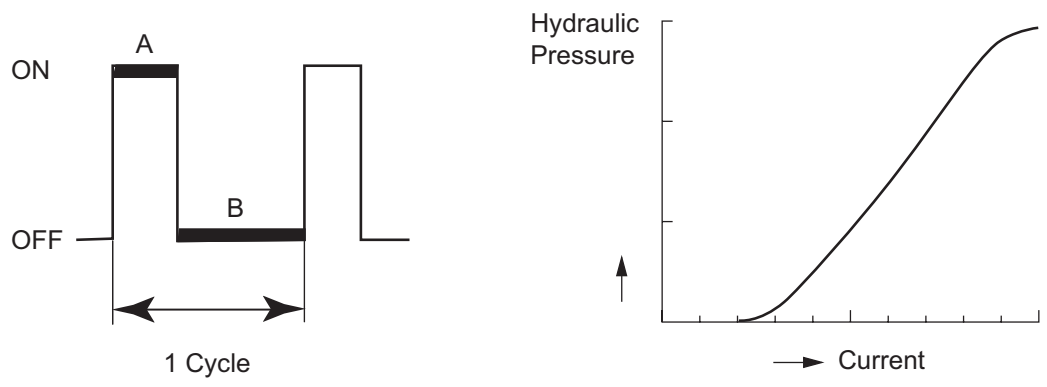

(*) Duty Ratio

The duty ratio is the ratio of the period of continuity in one cycle. For example, if A is the period of continuity in one cycle, and B is the period of non-continuity, then Duty Ratio = A/(A + B) x 100 (%).

DTC No.	DTC Detection Condition	Trouble Area
P2759	Open or short is detected in shift solenoid valve SLU circuit for 1 second or more while driving (1-trip detection logic).	• Open or short in shift solenoid valve SLU circuit • Shift solenoid valve SLU • TCM

AX

MONITOR DESCRIPTION

When an open or short in a shift solenoid valve (SLU) circuit is detected, the TCM determines there is a malfunction. The TCM will turn on the MIL and store this DTC.

MONITOR STRATEGY

Related DTCs	P2759: Shift solenoid valve SLU/Range check
Required sensors/Components	Shift solenoid valve SLU
Frequency of operation	Continuous
Duration	1 sec.
MIL operation	Immediate
Sequence of operation	None

TYPICAL ENABLING CONDITIONS

ALL:

The monitor will run whenever this DTC is not present	None
Engine switch	ON
Starter	OFF

Malfunction (A):

Battery voltage	12 V or more

Malfunction (A):

Battery voltage	10 V or more and less than 12 V
CPU commanded duty	Less than 75%

TYPICAL MALFUNCTION THRESHOLDS

Output signal duty	100% or more

COMPONENT OPERATING RANGE

Output signal duty	Less than 100%

WIRING DIAGRAM

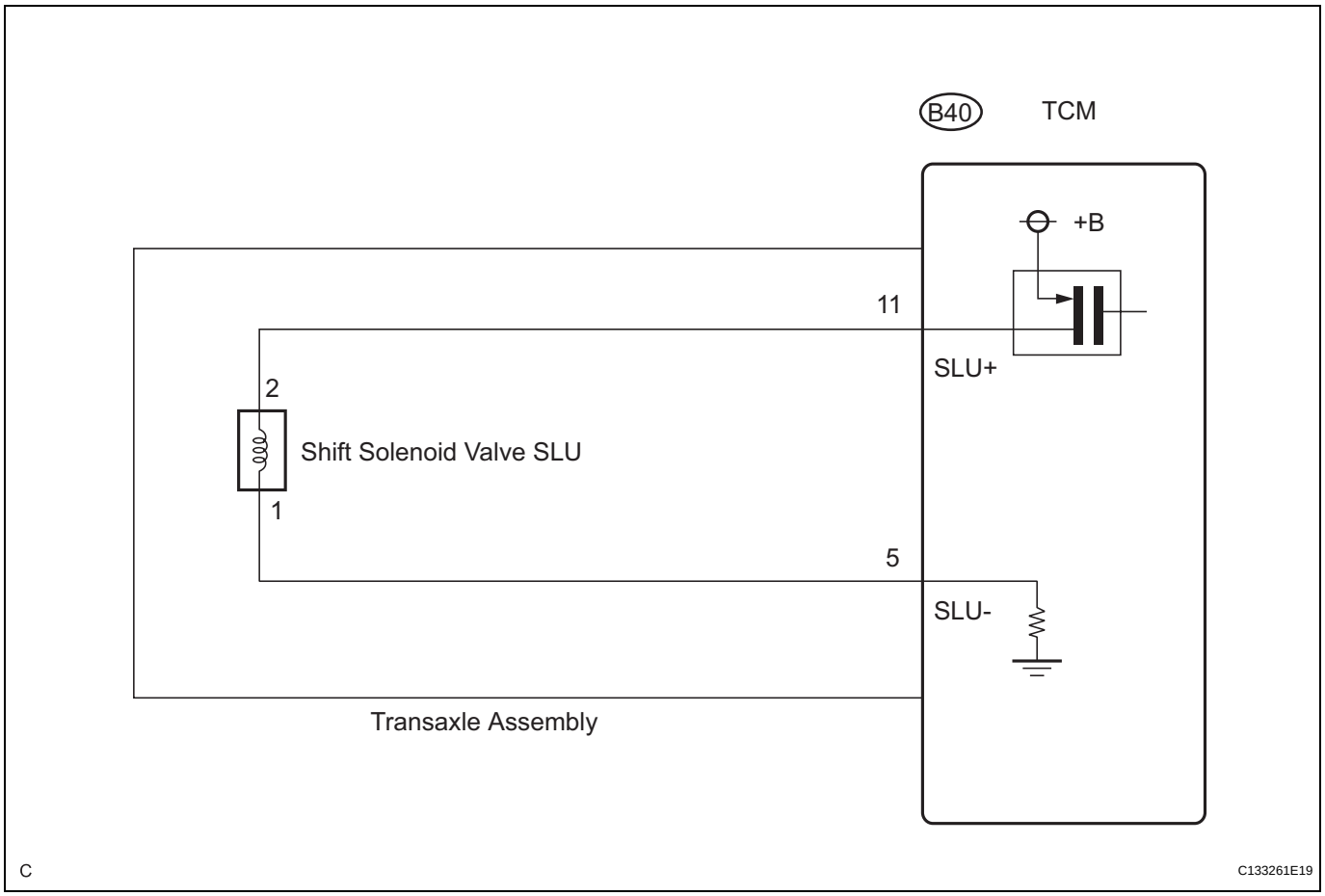

AX

INSPECTION PROCEDURE

1 INSPECT TRANSMISSION WIRE (SLU)

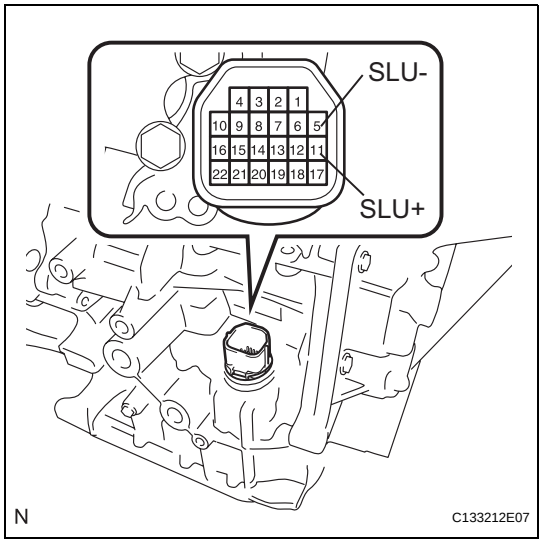

(a) Remove the TCM from the transaxle.
(b) Measure the resistance according to the value(s) in the table below.
Standard resistance

Tester Connection	Specified Condition 20°C (68°F)
11 (SLU+) - 5 (SLU-)	5.0 to 5.6 Ω

(c) Measure the resistance according to the value(s) in the table below.
Standard resistance:
Check for short

Tester Connection	Specified Condition
11 (SLU+) - Body ground	10 kΩ or higher
5 (SLU-) - Body ground	10 kΩ or higher

OK → **REPLACE TCM**

NG

2 INSPECT SHIFT SOLENOID VALVE SLU

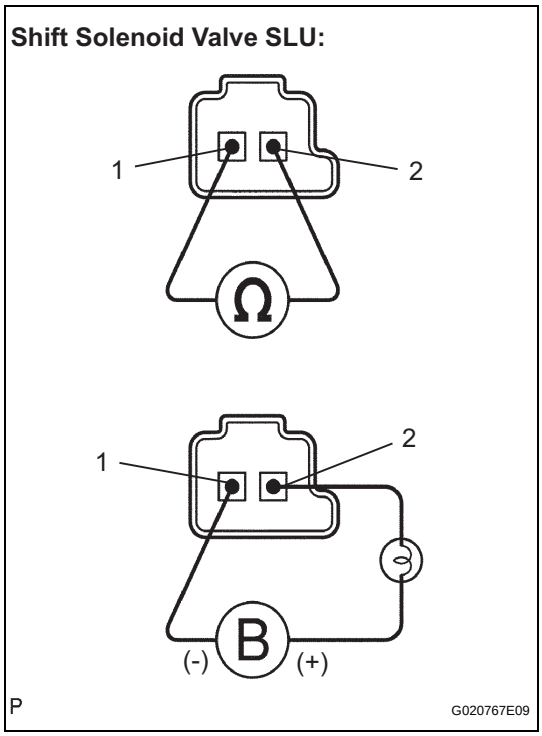

(a) Remove the shift solenoid valve SLU.
(b) Measure the resistance according to the value(s) in the table below.
Standard resistance

Tester Connection	Specified Condition 20°C (68°F)
1 - 2	5.0 to 5.6 Ω

(c) Connect a positive (+) lead through a 21 W bulb to terminal 2 and a negative (-) lead to terminal 1 of the solenoid valve connector, then check the movement of the valve.
OK:
The solenoid makes an operating sound.

NG → **REPLACE SHIFT SOLENOID VALVE SLU**

OK

REPLACE TRANSMISSION WIRE

AX

DTC	P2769	Short in Torque Converter Clutch Solenoid Circuit (Shift Solenoid Valve SL)

DTC	P2770	Open in Torque Converter Clutch Solenoid Circuit (Shift Solenoid Valve SL)

DESCRIPTION

The shift solenoid valve SL is turned ON or OFF by signals from the TCM to control the hydraulic pressure acting on the lock-up relay valve, which then controls operation of the lock-up clutch.

DTC No.	DTC Detection Condition	Trouble Area
P2769	TCM detects a short in the shift solenoid valve SL circuit when the shift solenoid valve SL is operated (2 trip detection logic).	• Short in shift solenoid valve SL circuit • Shift solenoid valve SL • TCM
P2770	TCM detects an open in the shift solenoid valve SL circuit when the shift solenoid valve SL is not operated (2 trip detection logic).	• Open in shift solenoid valve SL circuit • Shift solenoid valve SL • TCM

Fail-safe function:
If the TCM detects a malfunction, it turns the shift solenoid valve SL OFF.

MONITOR DESCRIPTION

Based on the signals from the throttle position sensor, the air flow meter and the crankshaft position sensor, the TCM sends a signal to the solenoid valve SL to regulate the hydraulic pressure and provide smoother torque converter clutch engagement. The shift solenoid valve SL responds to commands from the TCM. The valve controls the lock-up relay valve to perform the torque-converter lock-up function. If the TCM detects an open or short circuit for shift solenoid valve SL, it will illuminate the MIL.

MONITOR STRATEGY

Related DTCs	P2769: Shift solenoid valve SL/Range check (Low resistance) P2770: Shift solenoid valve SL/Range check (High resistance)
Required sensors/Components	Shift solenoid valve SL
Frequency of operation	Continuous
Duration	1 time
MIL operation	2 driving cycles
Sequence of operation	None

AX

TYPICAL ENABLING CONDITIONS

P2769: Range check (Low resistance):

The monitor will run whenever the following DTCs are not present	None
Solenoid	ON
Time after solenoid OFF to ON	More than 0.008 sec.

P2770: Range check (High resistance):

The monitor will run whenever the following DTCs are not present	None
Solenoid	ON
Time after solenoid ON to OFF	More than 0.008 sec.

TYPICAL MALFUNCTION THRESHOLDS

P2769: Range check (Low resistance):

Intelligent power MOS diagnosis fail signals detected while the solenoid is operated	Fail at solenoid resistance: 8 Ω or less

P2770: Range check (High resistance):

Intelligent power MOS diagnosis fail signals detected while the solenoid is not operated	Fail at solenoid resistance: 100 kΩ or more

COMPONENT OPERATING RANGE

Shift solenoid valve SL	Resistance: 11 to 15 Ω at 20°C (68°F)

WIRING DIAGRAM

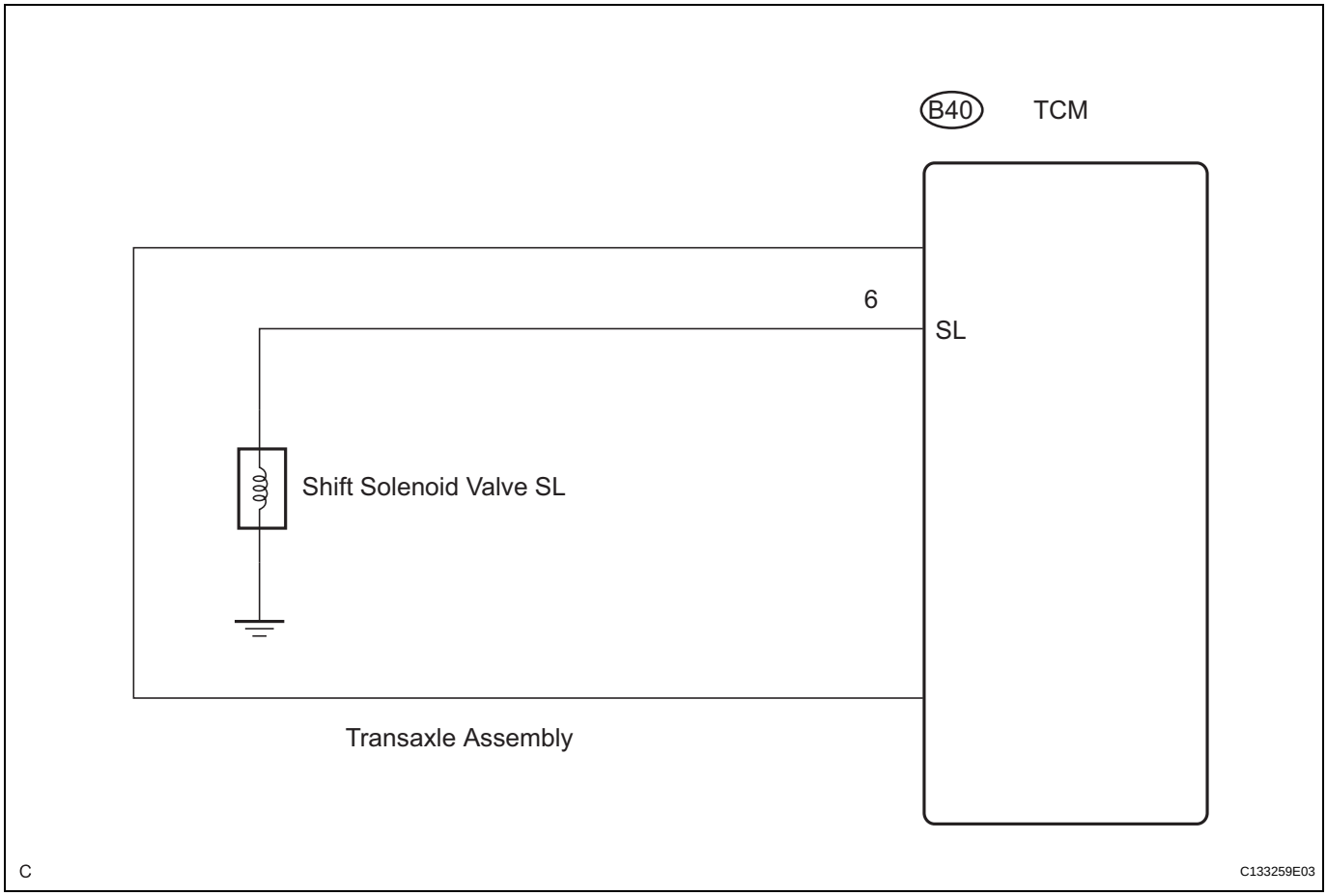

AX

INSPECTION PROCEDURE

1 INSPECT TRANSMISSION WIRE (SHIFT SOLENOID VALVE SL)

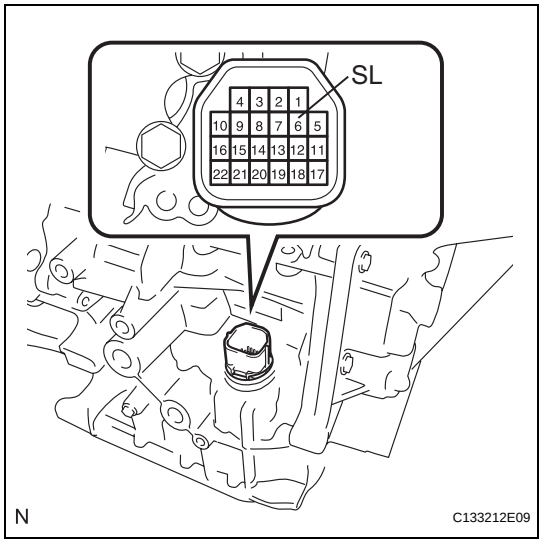

(a) Remove the TCM from the transaxle.
(b) Measure the resistance of the transmission wire.
Standard resistance

Tester Connection	Condition	Specified Condition
6 (SL) - Body ground	20°C (68°F)	11 to 15 Ω

OK → **REPLACE TCM**

NG

2 INSPECT SHIFT SOLENOID VALVE SL (RESISTANCE)

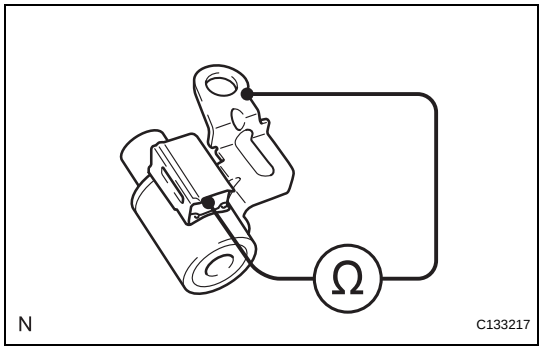

(a) Remove the shift solenoid valve SL.
(b) Measure the resistance between the solenoid valve terminal and solenoid valve body.
Standard resistance:
11 to 15 Ω at 20°C (68°F)

NG → **REPLACE SHIFT SOLENOID VALVE SL**

AX

OK

REPLACE TRANSMISSION WIRE

DTC	P2808	Pressure Control Solenoid "G" Performance or Stuck OFF (Shift Solenoid Valve SL4)

DESCRIPTION

The TCM uses the vehicle speed signal to determine the actual gear position (1st, 2nd, 3rd, 4th, 5th or 6th gear).
Then the TCM compares the actual gear with the shift schedule in the TCM memory to detect shift solenoid valves and valve body mechanical problems.

DTC No.	DTC Detecting Condition	Trouble Area
P2808	The engine revs freely when 3rd or 5th gear is requested. (2-trip detection logic) When any of the following is detected. In addition, the condition that 4th gear is engaged when 4th gear is requested occurs twice. (2-trip detection logic) • When 1st gear is requested, 3rd gear is engaged. • When 2nd gear is requested, 3rd gear is engaged. • When 6th gear is requested, 5th gear is engaged.	• Shift solenoid valve SL4 (open or closed) • Valve body (blocked) • Automatic transaxle (clutch, brake or gear etc.)

MONITOR DESCRIPTION

The TCM commands gear shifts by turning the shift solenoid valves on or off. According to the input shaft revolution, intermediate (counter) shaft revolution and output shaft revolution, the TCM detects the actual gear position (1st, 2nd, 3rd, 4th or 5th gear position). When the gear position commanded by the TCM and the actual gear position are not the same, the TCM illuminates the MIL and stores the DTC.

MONITOR STRATEGY

Related DTCs	P2808: Shift solenoid valve SL4/OFF malfunction Shift solenoid valve SL4/ON malfunction
Required sensors/Components	Shift solenoid valve SL4, Speed sensor (NT), Speed sensor (NC), Crankshaft position sensor (NE)
Frequency of operation	Continuous
Duration	OFF malfunction (A): 0.5 sec. OFF malfunction (B): 0.8 sec. ON malfunction: 0.8 sec.
MIL operation	2 driving cycles
Sequence of operation	None

AX

TYPICAL ENABLING CONDITIONS

All:

Turbine speed sensor circuit	Circuit is not malfunctioning
Intermediate shaft speed sensor circuit	Circuit is not malfunctioning
Shift solenoid valve SL1 circuit	Circuit is not malfunctioning
Shift solenoid valve SL2 circuit	Circuit is not malfunctioning
Shift solenoid valve SL3 circuit	Circuit is not malfunctioning
Shift solenoid valve SL4 circuit	Circuit is not malfunctioning
ECT (Engine coolant temperature) sensor circuit	Circuit is not malfunctioning
Knock control sensor circuit	Circuit is not malfunctioning
Electronic throttle system	Circuit is not malfunctioning
CAN communication system	Circuit is not malfunctioning
Transmission range	"D"
Transmission fluid temperature	Above -10°C (5°F)

OFF malfunction (A):

TCM select gear	3rd or 5th
Throttle valve opening angle	3% or more

OFF malfunction (B):

TCM select gear	3rd
Throttle valve opening angle	4.5% or more
Vehicle speed	1.2 mph (2 km/h) or more
ECT (Engine coolant temperature)	40°C (104°F) or more
Turbine speed/Output speed (NT/NO) with 1st	3.304 to 7.724
Turbine speed/Output speed (NT/NO) with 2nd	1.901 to 2.340
Turbine speed/Output speed (NT/NO) with 3rd	1.399 to 1.649
Turbine speed/Output speed (NT/NO) with 4th	0.998 to 1.138
Turbine speed/Output speed (NT/NO) with 5th	0.705 to 0.836
Turbine speed/Output speed (NT/NO) with 6th	0.568 to 0.695

ON malfunction (A):

TCM select gear	1st
Time after transmission to 1st gear	0.1 sec. or more
Vehicle speed	1.2 mph (2 km/h) to 25 mph (40 km/h)
ECT (Engine coolant temperature)	40°C (104°F) or more
Turbine speed/Output speed (NT/NO) with 1st	3.304 to 7.724
Turbine speed/Output speed (NT/NO) with 2nd	1.901 to 2.340
Turbine speed/Output speed (NT/NO) with 3rd	1.399 to 1.649
Turbine speed/Output speed (NT/NO) with 4th	0.998 to 1.138
Turbine speed/Output speed (NT/NO) with 5th	0.705 to 0.836
Turbine speed/Output speed (NT/NO) with 6th	0.568 to 0.695

ON malfunction (B):

TCM select gear	2nd
Throttle valve opening angle	4.5% or more at engine speed 2,000 rpm (condition varies with engine speed)
Vehicle speed	1.2 mph (2 km/h) or more
ECT (Engine coolant temperature)	40°C (104°F) or more
Turbine speed/Output speed (NT/NO) with 1st	3.304 to 7.724
Turbine speed/Output speed (NT/NO) with 2nd	1.901 to 2.340
Turbine speed/Output speed (NT/NO) with 3rd	1.399 to 1.649
Turbine speed/Output speed (NT/NO) with 4th	0.998 to 1.138
Turbine speed/Output speed (NT/NO) with 5th	0.705 to 0.836
Turbine speed/Output speed (NT/NO) with 6th	0.568 to 0.695

ON malfunction (C):

TCM select gear	6th
Throttle valve opening angle	4.5% or more at engine speed 2,000 rpm (condition varies with engine speed)
Vehicle speed	1.2 mph (2 km/h) or more
ECT (Engine coolant temperature)	40°C (104°F) or more
Turbine speed/Output speed (NT/NO) with 1st	3.304 to 7.724
Turbine speed/Output speed (NT/NO) with 2nd	1.901 to 2.340
Turbine speed/Output speed (NT/NO) with 3rd	1.399 to 1.649
Turbine speed/Output speed (NT/NO) with 4th	0.998 to 1.138
Turbine speed/Output speed (NT/NO) with 5th	0.705 to 0.836
Turbine speed/Output speed (NT/NO) with 6th	0.568 to 0.695

ON malfunction (D):

TCM select gear	4th
Throttle valve opening angle	4.5% or more at engine speed 2,000 rpm (condition varies with engine speed)
Vehicle speed	1.2 mph (2 km/h) or more
ECT (Engine coolant temperature)	40°C (104°F) or more
Turbine speed/Output speed (NT/NO) with 1st	3.304 to 7.724
Turbine speed/Output speed (NT/NO) with 2nd	1.901 to 2.340
Turbine speed/Output speed (NT/NO) with 3rd	1.399 to 1.649
Turbine speed/Output speed (NT/NO) with 4th	0.998 to 1.138
Turbine speed/Output speed (NT/NO) with 5th	0.705 to 0.836
Turbine speed/Output speed (NT/NO) with 6th	0.568 to 0.695

TYPICAL MALFUNCTION THRESHOLDS

OFF malfunction (A):

Engine speed - Turbine speed x Gear ratio	1,000 rpm or more

OFF malfunction (B):

Turbine speed / Output speed	3.304 to 7.724

ON malfunction (A) and (B):

Turbine speed / Output speed	1.399 to 1.649

ON malfunction (C):

Turbine speed / Output speed	0.705 to 0.836

ON malfunction (D):

Turbine speed / Output speed	0.998 to 1.138

INSPECTION PROCEDURE

AX

1	CHECK OTHER DTCS OUTPUT (IN ADDITION TO DTC P2808)

(a) Connect the intelligent tester to the DLC3.
(b) Turn the engine switch on (IG) and turn the intelligent tester on.
(c) Enter the following items: "DIAGNOSIS / OBD/MOBD / DTC INFO / CURRENT CODES".
(d) Read the DTCs using the intelligent tester.

Result

Display (DTC output)	Proceed to
Only "P2808" is output	A
"P2808" and other DTCs	B

HINT:
If a solenoid is stuck OFF, DTCs for several solenoids including the malfunctioning solenoid will be detected.

A → **Go to step 3**

B

2	PERFORM ACTIVE TEST BY INTELLIGENT TESTER

NOTICE:
This test should always be performed with at least 2 people.

(a) Connect the intelligent tester to the DLC3.
(b) Start the engine and turn the intelligent tester on.
(c) Enter the following items: "DIAGNOSIS / OBD/MOBD / ECT / ACTIVE TEST / SHIFT".
HINT:
While driving, the shift position can be forcibly changed with the intelligent tester.
Comparing the shift position commanded by the ACTIVE TEST with the actual shift position enables you to confirm the problem (See page AX-38).

Item	Test Details	Diagnostic Note
SHIFT	[Test Details] Operate the shift solenoid valve and set each shift position by yourself. [Others] • Press "←" button: Shift up • Press "→" button: Shift down	It is possible to check the operation of the shift solenoid valves.

NOTICE:
- **This test can be conducted when the vehicle is stopped.**
- **When shifting gears using the Active Test function, do not operate the accelerator pedal for 2 seconds before and after shifting gears.**

HINT:
The shift position commanded by the TCM is shown on the DATA LIST/SHIFT display on the intelligent tester.

(d) Check the vehicle speed and the gear position when the engine speed is 1,000 rpm.
HINT:
Because the torque converter clutch has not engaged, it may be difficult to obtain the speeds specified in 4th, 5th, and 6th gears, however a difference of speed should still be evident following each gear change.

Standard

1st	2nd	3rd	4th	5th	6th
5 to 7.5 mph (8 to 12 km/h)	9.3 to 11.8 mph (15 to 19 km/h)	13.0 to 15.5 mph (21 to 25 km/h)	19.3 to 21.7 mph (31 to 35 km/h)	27.3 to 29.8 mph (44 to 48 km/h)	32.3 to 34.8 mph (52 to 56 km/h)

(e) Compare the TCM gear shift command and the actual gear position.

Result

Actuator gear position under malfunction		TCM gear shift command						Proceed to
		1st	2nd	3rd	4th	5th	6th	
Shift solenoid SL1	Stuck ON	1st	2nd	3rd	4th	4th	4th	A
	Stuck OFF	N*1	N*1	N*1	N*1	5th	6th	
Shift solenoid SL2	Stuck ON	4th	4th	4th	4th	5th	6th	B
	Stuck OFF	1st	2nd	3rd	1st	N*1	N*1	

AX

Actuator gear position under malfunction		TCM gear shift command						Proceed to
		1st	2nd	3rd	4th	5th	6th	
Shift solenoid SL3	Stuck ON	2nd	2nd	3rd	4th	5th	6th	C
	Stuck OFF	1st	1st	3rd	4th	5th	N*1	
Shift solenoid SL4	Stuck ON*3	3rd	3rd	3rd	4th	5th	5th	D
	Stuck OFF	1st	2nd	1st	4th	N*1	6th	
Shift solenoid SLT	Stuck ON	N*2	N*2	N*2	N*2	N*2	N*2	E
	Stuck OFF*3	1st	2nd	3rd	4th	5th	6th	

HINT:
- *1: Neutral
- *2: If the shift solenoid SLT is stuck on, the line pressure will be low. Therefore, the amount of torque that can be transmitted by each gear is lower than the normal limit. When the engine power exceeds this lowered limit, the engine speed will increase freely.
- *3: When the shift solenoid SLT is stuck OFF, gear shifting is normal.

A → **GO TO DTC CHART (RELATED SHIFT SOLENOID VALVE (SL1) PERFORMANCE DTC P0746)**

B → **GO TO DTC CHART (RELATED SHIFT SOLENOID VALVE (SL2) PERFORMANCE DTC P0776)**

C → **GO TO DTC CHART (RELATED SHIFT SOLENOID VALVE (SL3) PERFORMANCE DTC P0796)**

E → **GO TO DTC CHART (RELATED SHIFT SOLENOID VALVE (SLT) PERFORMANCE DTC P2714)**

D

AX

3 INSPECT SHIFT SOLENOID VALVE SL4

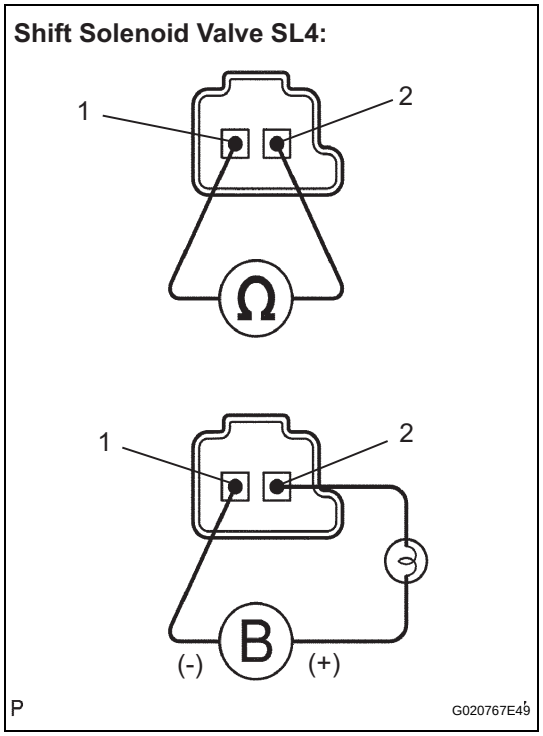

(a) Remove the shift solenoid valve SL4.

(b) Measure the resistance according to the value(s) in the table below.

Standard resistance

Tester Connection	Specified Condition 20°C (68°F)
1 - 2	5.0 to 5.6 Ω

(c) Connect a positive (+) lead through a 21 W bulb to terminal 2 and a negative (-) lead to terminal 1 of the solenoid valve connector, then check the movement of the valve.

OK:

The solenoid makes an operating noise.

NG → **REPLACE SHIFT SOLENOID VALVE SL4**

OK

4 INSPECT TRANSMISSION VALVE BODY ASSEMBLY

OK:

There are no foreign objects on each valve and they operate smoothly.

NG → **REPLACE TRANSMISSION VALVE BODY ASSEMBLY**

OK

5 TORQUE CONVERTER CLUTCH ASSEMBLY

OK:

The torque converter clutch operates normally.

NG → **REPLACE TORQUE CONVERTER CLUTCH ASSEMBLY**

OK

REPLACE AUTOMATIC TRANSAXLE ASSEMBLY

AX

DTC	P2810	Pressure Control Solenoid "G" Electrical (Shift Solenoid Valve SL4)

DESCRIPTION

Shifting gears from 1st through 5th is performed in combination with "ON" and "OFF" operation of the shift solenoid valves SL1, SL2, SL3 and SL4 which are controlled by the TCM. If an open or short circuit occurs in either of the shift solenoid valve, the TCM controls the remaining normal shift solenoid valves to allow the vehicle to be operated smoothly (Fail safe function).

DTC No.	DTC Detecting Condition	Trouble Area
P2810	The TCM checks for an open or short in the shift solenoid valve SL4 circuit while driving and shifting gears. (1-trip detection logic) • Output signal duty equals 100%. (NOTE: SL4 output signal duty is less than 100% under normal condition.)	• Open or short in shift solenoid valve SL4 circuit • Shift solenoid valve SL4 • TCM

MONITOR DESCRIPTION

The TCM commands gear shifts by turning the shift solenoid valves on or off. When there is an open or short circuit in any shift solenoid valve circuit, the TCM detects the problem and illuminates the MIL and stores the DTC. And the TCM performs the fail-safe function and turns the other normal shift solenoid valves on or off. (In case of an open or short circuit, the TCM stops sending current to the circuit.)
(See page AX-38)

MONITOR STRATEGY

Related DTCs	P0798: Shift solenoid valve SL3/Range check
Required sensors/Components	Shift solenoid valve SL3
Frequency of operation	Continuous
Duration	1 sec.
MIL operation	Immediate
Sequence of operation	None

AX

TYPICAL ENABLING CONDITIONS

ALL:

The monitor will run whenever this DTC is not present	None
Engine switch	ON
Starter	OFF

Malfunction (A):

Battery voltage	12 V or more

Malfunction (B):

Battery voltage	10 V or more and less than 12 V
CPU commanded duty	Less than 75%

TYPICAL MALFUNCTION THRESHOLDS

Output signal duty	100% or more

WIRING DIAGRAM

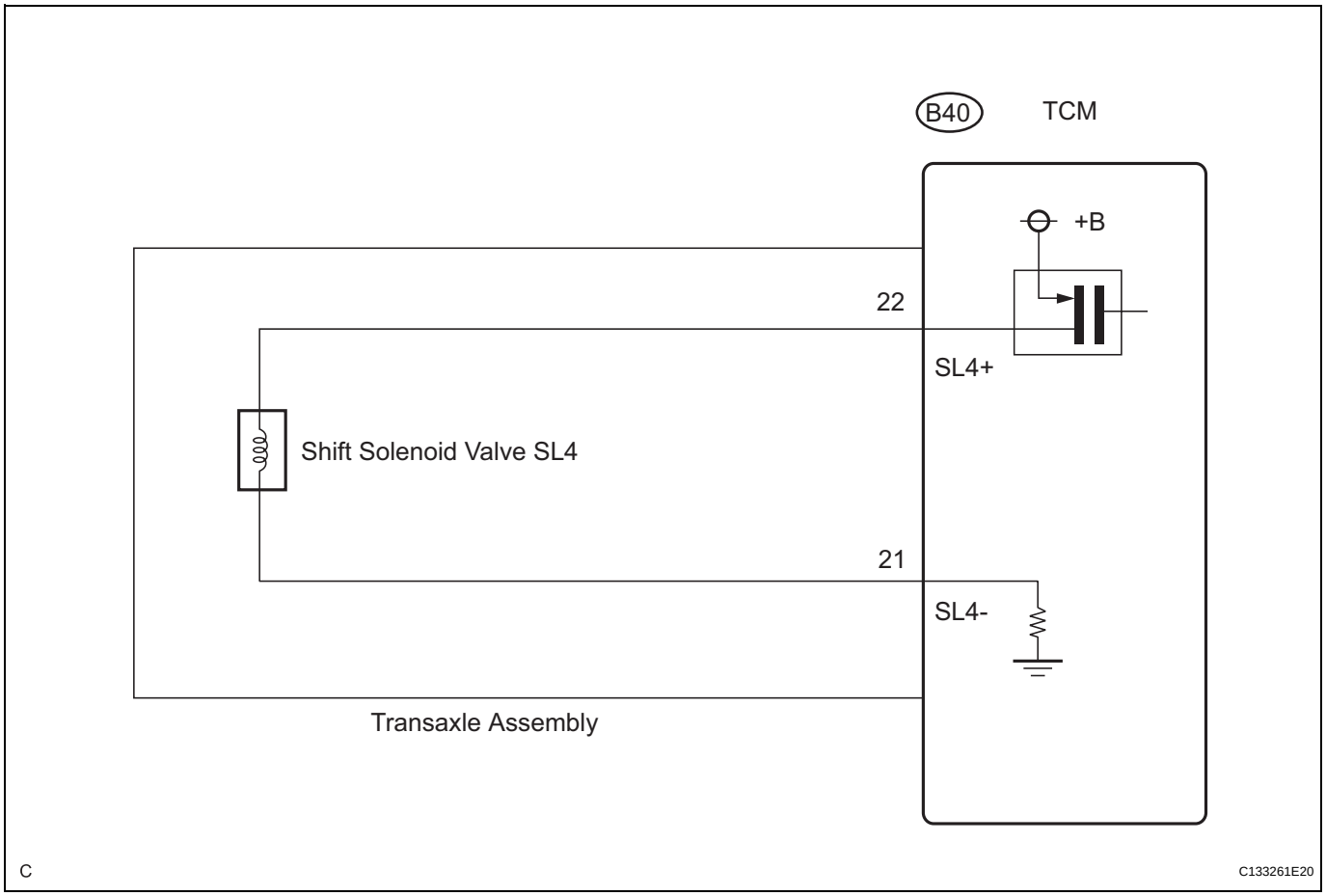

INSPECTION PROCEDURE

AX

1	INSPECT TRANSMISSION WIRE (SL4 CIRCUIT)

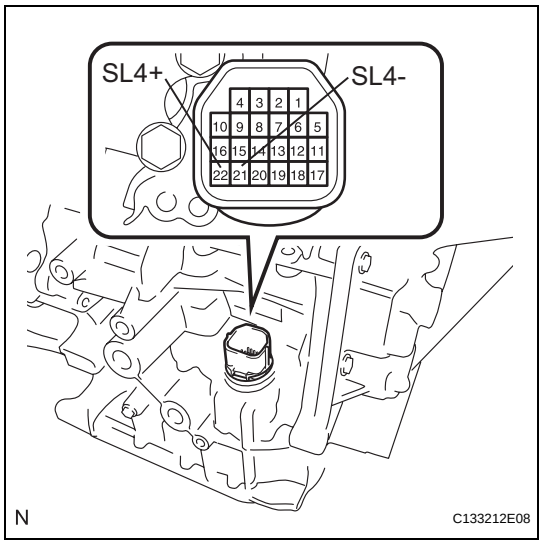

(a) Remove the TCM from the transaxle.

(b) Measure the resistance according to the value(s) in the table below.

Standard resistance

Tester Connection	Specified Condition 20°C (68°F)
22 (SL4+) - 21 (SL4-)	5.0 to 5.6 Ω

(c) Measure the resistance according to the value(s) in the table below.

Standard resistance:
Check for short

Tester Connection	Specified Condition
22 (SL4+) - Body ground	10 kΩ or higher
21 (SL4-) - Body ground	10 kΩ or higher

OK → **REPLACE TCM**

NG

2 INSPECT SHIFT SOLENOID VALVE SL4

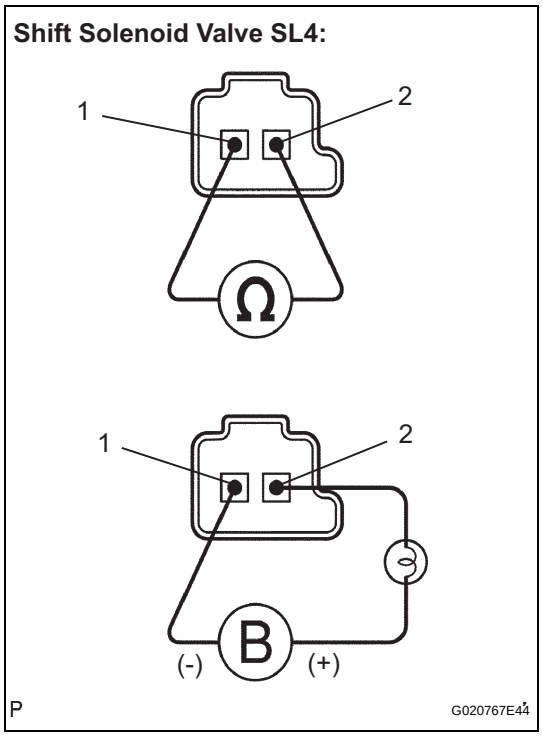

(a) Remove the shift solenoid valve SL4.

(b) Measure the resistance according to the value(s) in the table below.

Standard resistance

Tester Connection	Specified Condition 20°C (68°F)
1 - 2	5.0 to 5.6 Ω

(c) Connect a positive (+) lead through a 21 W bulb to terminal 2 and a negative (-) lead to terminal 1 of the solenoid valve connector, then check the movement of the valve.

OK:

The solenoid makes an operating noise.

NG → **REPLACE SHIFT SOLENOID VALVE SL4**

OK

REPLACE TRANSMISSION WIRE

DTC	U0100	Lost Communication with ECM/PCM "A"

DESCRIPTION

The engine control unit intercommunicates with the TCM with the Controller Area Network (CAN).
If there is a problem in this intercommunication, the TCM sets a DTC.

DTC No.	DTC Detection Condition	Trouble Area
U0100	Following conditions are met for 1.25 seconds (1 trip detection logic): • Engine switch on (IG) • Battery voltage is 10.5 V or more • No intercommunication between the ECM and TCM	TCM

MONITOR STRATEGY

Related DTCs	U0100: Verify communication
Required Sensors/Components (Main)	TCM
Required Sensors/Components (Related)	-
Frequency of Operation	Continuous
Duration	1.25 seconds
MIL Operation	Immediate
Sequence of Operation	None

TYPICAL ENABLING CONDITIONS

Monitor runs whenever following DTCs not present	None
Battery Voltage	10.5 V or more
Engine Switch	ON
Starter	OFF

TYPICAL MALFUNCTION THRESHOLDS

Communication between TCM and ECM	No communication

WIRING DIAGRAM

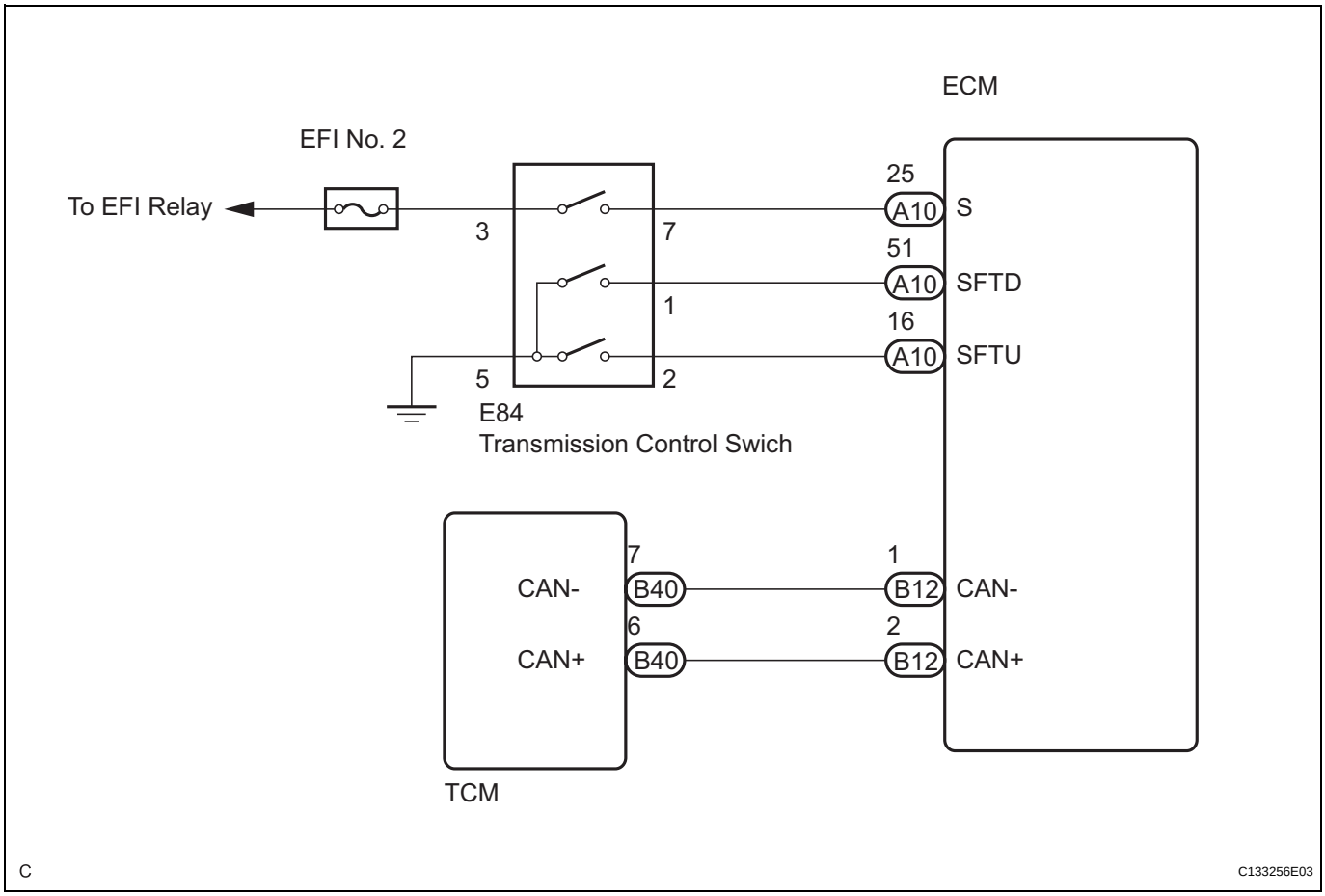

INSPECTION PROCEDURE

HINT:

- Refer to inspection procedure for CAN communication system (See page CA-11).
- If the CAN communication malfunctions, the TCM cannot receive the current data from the ECM. In this case, the freeze frame data output from the TCM has not been updated, so the data will not be useful for the inspection. However, reading the Data List as the first step in troubleshooting is effective to find malfunctions.
- The malfunction area can be checked using the BUS CHECK function on the intelligent tester (See page CA-41).

1	CHECK ECU TERMINAL VOLTAGE (+B AND E1 TERMINALS)

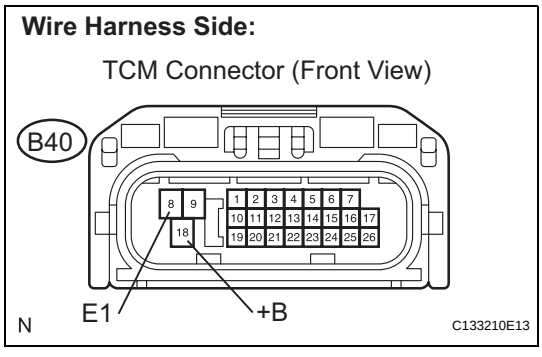

(a) Disconnect the TCM connector.
(b) Turn the engine switch on (IG).
(c) Measure the voltage of the TCM connector.

Standard voltage

Tester Connection	Specified Condition
B40-18 (+B) - B40-8 (E1)	9 to 14 V

(d) Turn the engine switch off.
(e) Measure the resistance of the TCM connector.

Standard resistance

Tester Connection	Specified Condition
B40-8 (E1) - Body ground	Below 1 Ω

NG → **REPAIR OR REPLACE HARNESS OR CONNECTOR**

OK

2 CHECK HARNESS AND CONNECTOR (TCM - ECM)

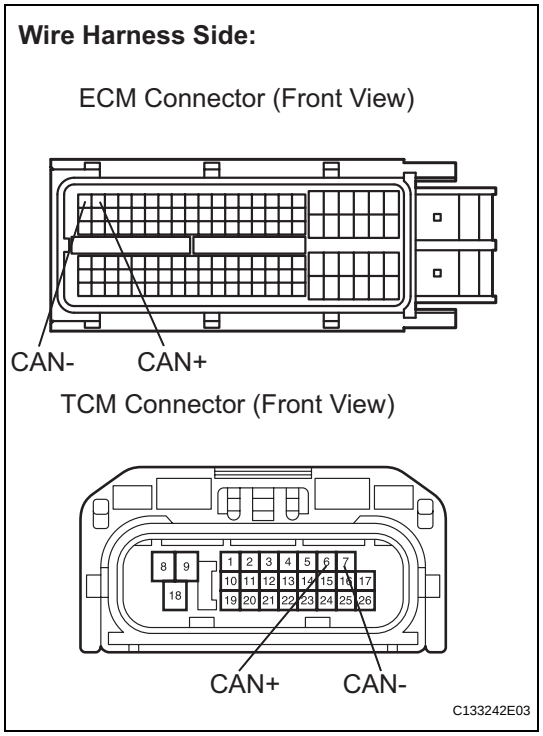

(a) Disconnect the B40 TCM connector.
(b) Disconnect the B12 ECM connector.
(c) Measure the resistance of the wire harness side connectors.

Standard resistance

Tester Connection	Specified Condition
B40-6 (CAN+) - B12-2 (CAN+)	Below 1 Ω
B40-7 (CAN-) - B12-1 (CAN-)	Below 1 Ω
B40-6 (CAN+) or B12-2 (CAN+) - Body ground	1 MΩ or more
B40-7 (CAN-) or B12-1 (CAN-) - Body ground	1 MΩ or more

NG → **REPAIR OR REPLACE HARNESS OR CONNECTOR**

OK

AX

3 CHECK IF DTC OUTPUT RECURS

(a) Connect the intelligent tester to the DLC3.
(b) Clear the DTC.
(c) Replace the TCM.
HINT:
Replace the TCM with the TCM of a normally functioning vehicle of the same model.
(d) Start the engine.
(e) Read the DTCs.

Result

Display (DTC Output)	Proceed to
P0100	A
No DTC	B

B → **REPLACE TCM**

A

REPLACE ECM

Transmission Control Switch Circuit

DESCRIPTION

When moving the shift lever into the S position using the transmission control switch, it is possible to switch the shift range position between "1" (first range) and "6" (sixth range).
Shifting up "+" once raises one shift range position, and shifting down "-" lowers one shift range position.

WIRING DIAGRAM

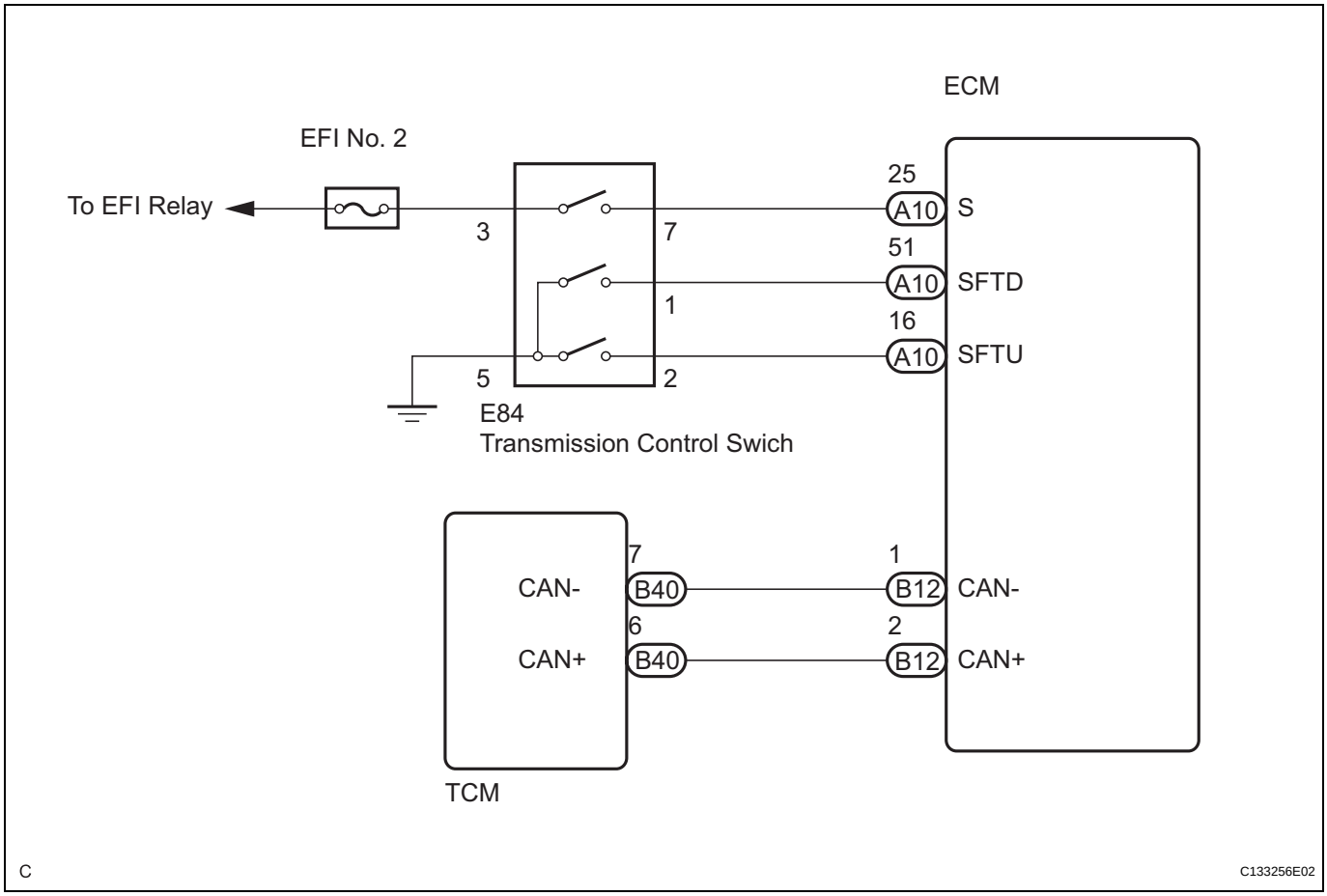

AX

INSPECTION PROCEDURE

1 CHECK HARNESS AND CONNECTOR (BATTERY - TRANSMISSION CONTROL SWITCH)

Wire Harness Side:
(Connector Front View):

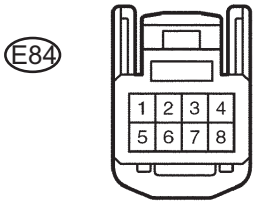

C110345E24

(a) Disconnect the transmission control switch connector of the shift lock control unit assembly.
(b) Measure the voltage according to the value(s) in the table below.
Standard voltage

Switch Condition	Tester Connection	Specified Condition
Engine switch on (IG)	3 - Body ground	10 to 14 V
Engine switch off		Below 1 V

NG → **REPAIR OR REPLACE HARNESS OR CONNECTOR**

OK

2 CHECK HARNESS AND CONNECTOR (TRANSMISSION CONTROL SWITCH - BODY GROUND)

Wire Harness Side:
(Connector Front View):

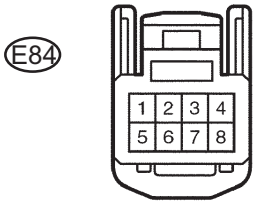

C110345E24

(a) Measure the resistance according to the value(s) in the table below.
Standard resistance

Tester Connection	Specified Condition
5 - Body ground	Below 1 Ω

NG → **REPAIR OR REPLACE HARNESS OR CONNECTOR**

OK

AX

3 INSPECT TRANSMISSION CONTROL SWITCH

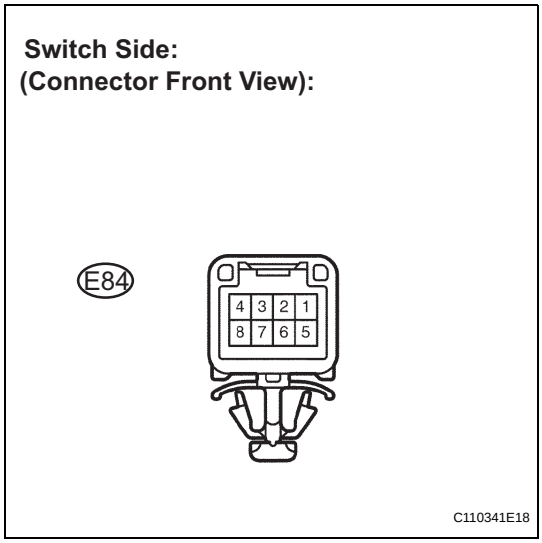

(a) Measure the resistance between each terminal of the shift lock control unit assembly when the shift lever is moved to each position.

Standard resistance

Shift Position	Tester Connection	Specified Condition
S, "+" and "-"	3 - 7	Below 1 Ω
Except S, "+" and "-"		10 kΩ or higher
Press continuously "+" (Up shift)	2 - 5	Below 1 Ω
S		10 kΩ or higher
Press continuously "-" (Down shift)	1 - 5	Below 1 Ω
S		10 kΩ or higher

NG → **REPLACE TRANSMISSION CONTROL SWITCH**

OK

4 CHECK HARNESS AND CONNECTOR (TRANSMISSION CONTROL SWITCH - ECM)

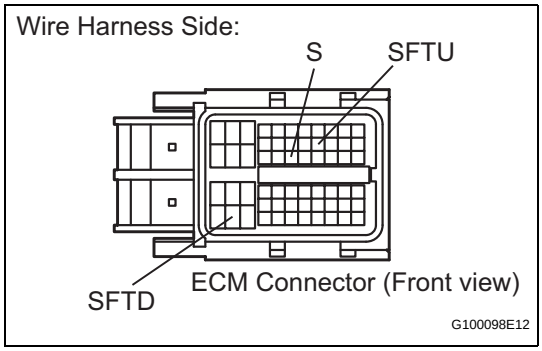

(a) Connect the transmission control switch connector of the shift lock control unit assembly.
(b) Disconnect the A10 ECM connector.
(c) Turn the engine switch on (IG), and measure the voltage according to the value(s) in the table below when the shift lever is moved to each position.

Standard voltage

Shift Position	Tester Connection	Specified Condition
S, "+" and "-"	A10-25 (S) - Body ground	10 to 14 V
Except S, "+" and "-"		Below 1 V

(d) Turn the engine switch off.
(e) Disconnect the ECM connector.
(f) Measure the resistance according to the value(s) in the table below when the shift lever is moved to each position.

Standard resistance

Shift Position	Tester Connection	Specified Condition
Press continuously "+" (Up shift)	A10-16 (SFTU) - Body ground	Below 1 Ω
S		10 kΩ or higher
Press continuously "-" (Down shift)	A10-51 (SFTD) - Body ground	Below 1 Ω
S		10 kΩ or higher

AX

NG → **REPAIR OR REPLACE HARNESS OR CONNECTOR**

OK

PROCEED TO NEXT CIRCUIT INSPECTION SHOWN IN PROBLEM SYMPTOMS TABLE

Park / Neutral Position Switch Circuit

DESCRIPTION

The park/neutral position switch detects the shift lever position and sends signals to the TCM.

WIRING DIAGRAM

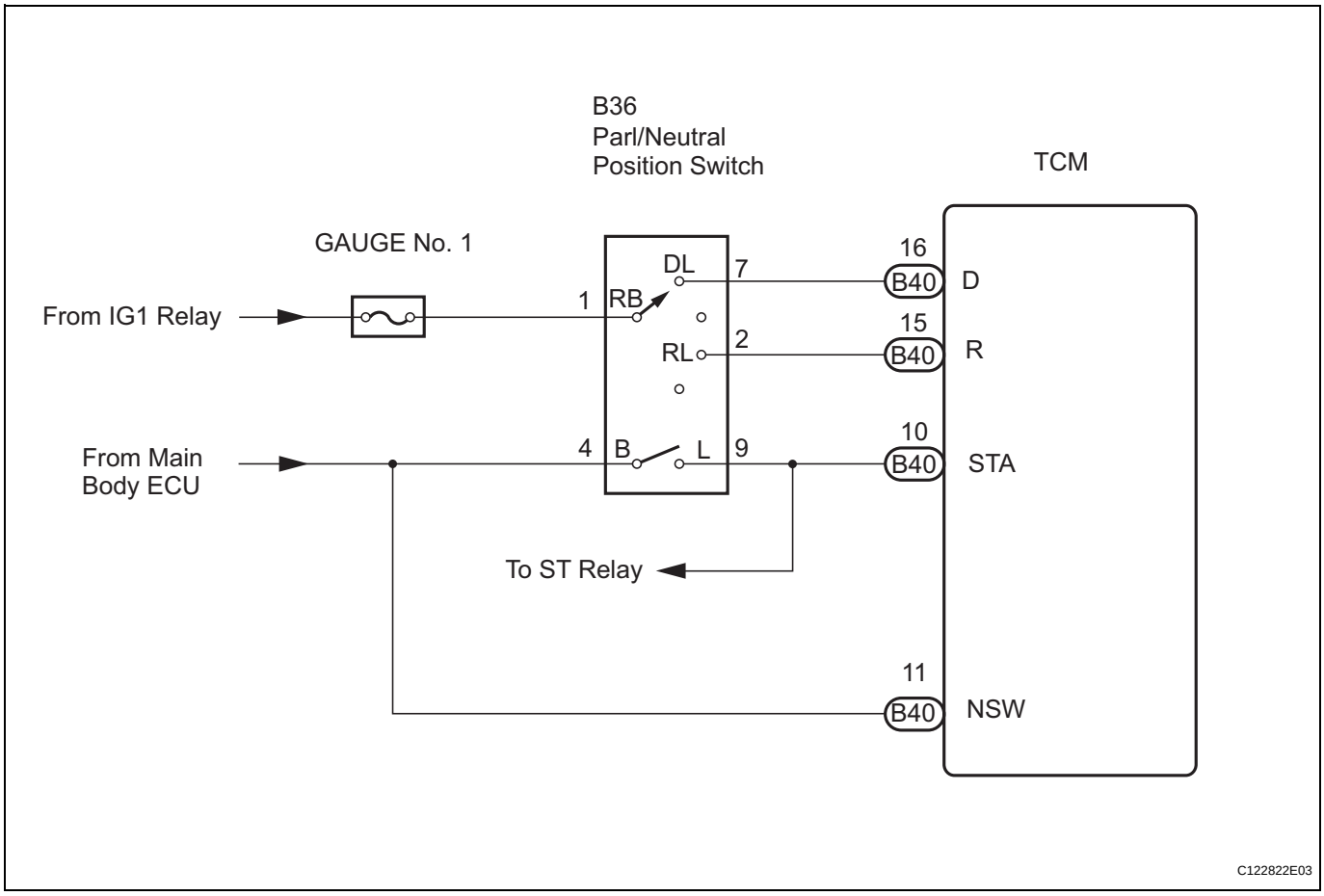

INSPECTION PROCEDURE

1. DATA LIST

HINT:

According to the DATA LIST displayed on the intelligent tester, you can read the value of switches, sensors, actuators and other items without removing any parts. Reading the DATA LIST as the first step in troubleshooting is one method to save labor time.

NOTICE:

In the table below, the values listed under "Normal Condition" are reference values. Do not depend solely on these reference values when deciding whether a part is faulty.

(a) Warm up the engine.
(b) Turn the engine switch off.
(c) Connect the intelligent tester together with the CAN VIM (Controller Area Network Vehicle Interface Module) to the DLC3.
(d) Turn the engine switch on (IG).
(e) Turn on the tester.
(f) Enter the following items: "DIAGNOSIS / OBD / MOBD / ECT / DATA LIST".

(g) According to the display on the tester, read "DATA LIST".

Item	Measurement Item/ Range (display)	Normal Condition	Diagnostic Note
PNP SW [NSW]	PNP Switch Status/ ON or OFF	Shift lever position is; P and N: ON Except P and N: OFF	When the shift lever position displayed on the intelligent tester differs from the actual position, adjustment of the PNP switch or the shift cable may be incorrect.
REVERSE	PNP Switch Status/ ON or OFF	Shift lever position is; R: ON Except R: OFF	When the shift lever position displayed on the intelligent tester differs from the actual position, adjustment of the PNP switch or the shift cable may be incorrect.
PARKING	PNP Switch Status/ ON or OFF	Shift lever position is; P: ON Except P: OFF	When the shift lever position displayed on the intelligent tester differs from the actual position, adjustment of the PNP switch or the shift cable may be incorrect.
NEUTRAL	PNP Switch Status/ ON or OFF	Shift lever position is; N: ON Except N: OFF	When the shift lever position displayed on the intelligent tester differs from the actual position, adjustment of the PNP switch or the shift cable may be incorrect.
DRIVE	PNP Switch Status/ ON or OFF	Shift lever position is; D and S: ON Except D and S: OFF	When the shift lever position displayed on the intelligent tester differs from the actual position, adjustment of the PNP switch or the shift cable may be incorrect.
MODE SELECT SW	Sport Mode Select Switch Status/ ON or OFF	Shift lever position is; S, "+" and "-": ON Except S, "+" and "-": OFF	-

1 INSPECT PARK/NEUTRAL POSITION SWITCH ASSEMBLY

Component Side:
(Connector Front View):

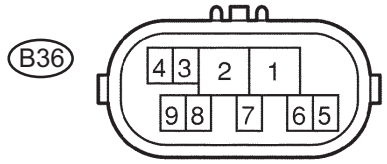

P

C110340E49

(a) Disconnect the park/neutral position switch connector.
(b) Measure the resistance according to the value(s) in the table below when the shift lever is moved to each position.

Standard resistance

Shift Position	Tester Connection	Specified Condition
P	**1 - 3 and 4 - 9**	**Below 1 Ω**
Except P		**10 kΩ or higher**
R	**1 - 2**	**Below 1 Ω**
Except R		**10 kΩ or higher**
N	**1 - 8 and 4 - 9**	**Below 1 Ω**
Except N		**10 kΩ or higher**
D, S, "+" and "-"	**1 - 7**	**Below 1 Ω**
Except D, S, "+" and "-"		**10 kΩ or higher**

NG → **REPLACE PARK/NEUTRAL POSITION SWITCH ASSEMBLY**

OK

AX

2 INSPECT TRANSMISSION CONTROL SWITCH

Switch Side:
(Connector Front View):

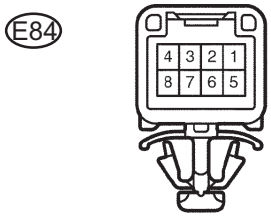

C110341E18

(a) Connect the park/neutral position switch connector.
(b) Disconnect the transmission control switch connector of the shift lock control unit assembly.
(c) Measure the resistance according to the value(s) in the table below when the shift lever is moved to each position.

Standard resistance

Shift Position	Tester Connection	Specified Condition
S, "+" and "-"	3 - 7	Below 1 Ω
Except S, "+" and "-"		10 kΩ or higher

NG → **REPLACE TRANSMISSION CONTROL SWITCH**

OK

3 CHECK ECU TERMINAL VOLTAGE (STA TERMINAL)

Wire Harness Side:

TCM Connector (Front View)

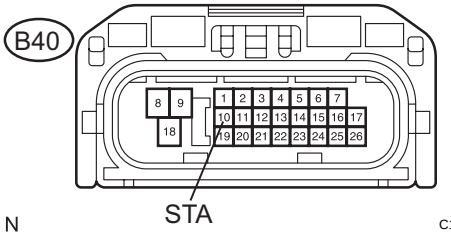

N C133210E14

(a) Connect the transmission control switch connector of the shift lock control unit assembly.
(b) Measure the voltage according to the value(s) in the table below while cranking the engine.

Standard voltage

Tester Connection	Specified Condition
STA (B40-10) - Body ground	9 to 14 V

NG → **REPAIR OR REPLACE HARNESS OR CONNECTOR (TCM - ECM)**

OK

AX

4 CHECK HARNESS AND CONNECTOR (PARK/NEUTRAL POSITION SWITCH - TCM)

Wire Harness Side:

TCM Connector (Front View)

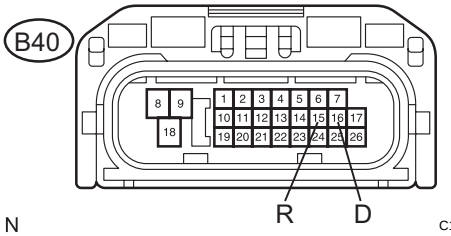

N C133210E15

(a) Disconnect the TCM connector.
(b) Turn the engine switch on (IG), and measure the voltage according to the value(s) in the table below when the shift lever is moved to each position.

Standard voltage

Shift Position	Tester Connection	Specified Condition
R	R (B40-15) - Body ground	10 to 14 V *
Except R		Below 1 V
D	D (B40-16) - Body ground	10 to 14 V
Except D		Below 1 V

HINT:
*: The voltage will drop slightly because the back up light is turned on.

NG → **REPAIR OR REPLACE HARNESS OR CONNECTOR (PARK/NEUTRAL POSITION SWITCH - TCM)**

OK

REPLACE TCM

ECU Power Source Circuit

DESCRIPTION

When the engine switch is turned on (IG), voltage from the ECM's MREL terminal is applied to the EFI relay. This causes the contacts of the EFI relay to close, which supplies power to terminal +B of the TCM.

WIRING DIAGRAM

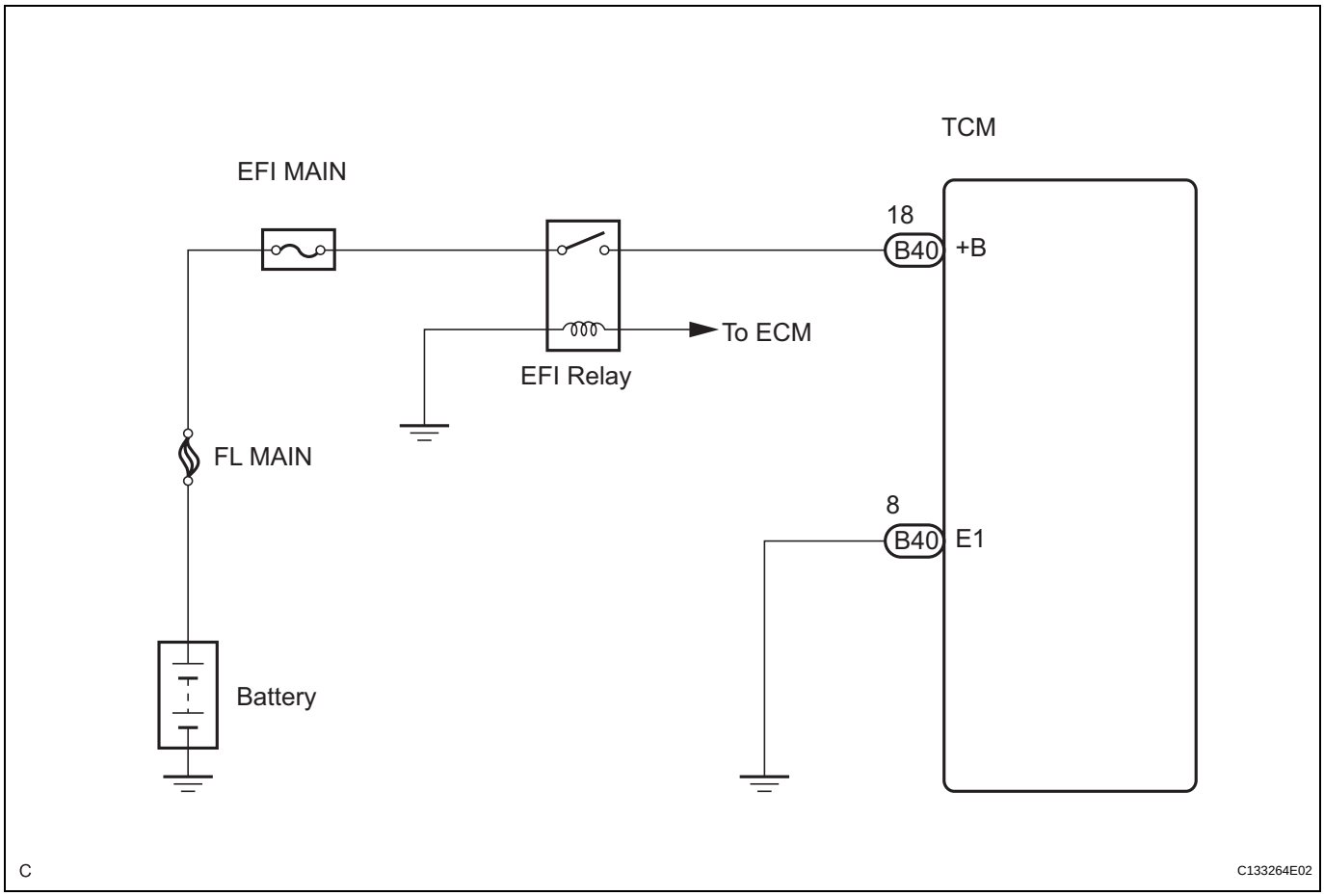

INSPECTION PROCEDURE

1	INSPECT ECU TERMINAL VOLTAGE (+B TERMINAL)

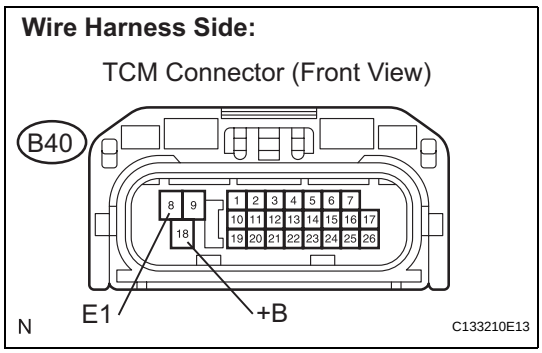

(a) Disconnect the TCM connector.
(b) Turn the engine switch on (IG).
(c) Measure the voltage according to the value(s) in the table below.

Standard voltage

Tester Connection	Specified Condition
+B (B40-18) - E1 (B40-8)	9 to 14 V

OK → **CHECK FOR INTERMITTENT PROBLEMS**

NG

AX

2	CHECK HARNESS AND CONNECTOR (TCM - BODY GROUND)

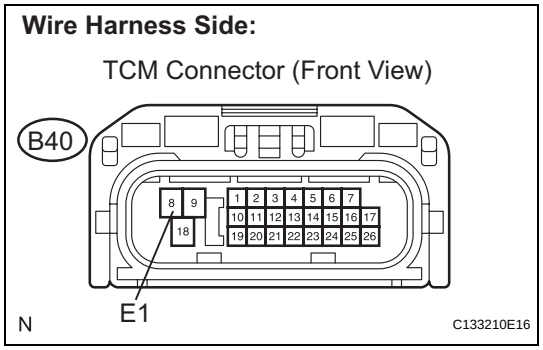

(a) Measure the resistance according to the value(s) in the table below.

Standard resistance

Tester Connection	Specified Condition
E1 (B40-8) - Body ground	Below 1 Ω

(b) Reconnect the TCM connector.

NG → **REPAIR OR REPLACE HARNESS OR CONNECTOR (TCM - BODY GROUND)**

OK

REPAIR OR REPLACE HARNESS OR CONNECTOR (TCM - EFI RELAY)

REMOVAL

1. **DISCONNECT CABLE FROM NEGATIVE BATTERY TERMINAL**
2. **REMOVE COOL AIR INTAKE DUCT SEAL (See page EM-22)**
3. **REMOVE ENGINE ROOM SIDE COVER LH (See page EM-22)**
4. **REMOVE AIR CLEANER INLET ASSEMBLY (See page EM-23)**
5. **REMOVE AIR CLEANER CAP SUB-ASSEMBLY**
6. **REMOVE AIR CLEANER CASE SUB-ASSEMBLY (See page EM-23)**
7. **REMOVE NO. 1 AIR CLEANER INLET (See page EM-23)**
8. **REMOVE AIR CLEANER BRACKET**
   (a) Separate the wire harness clamp.
   (b) Remove the 3 bolts and air cleaner bracket.

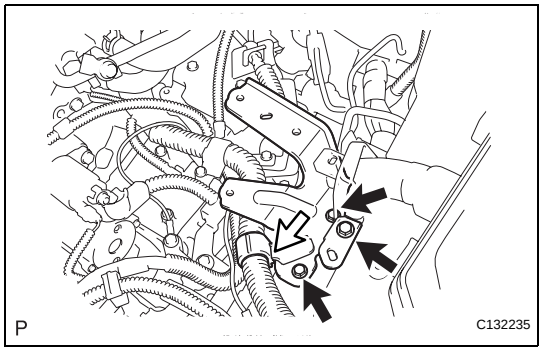

9. **REMOVE PARK/NEUTRAL POSITION SWITCH ASSEMBLY**
   (a) Remove the clip from the transmission cable bracket.

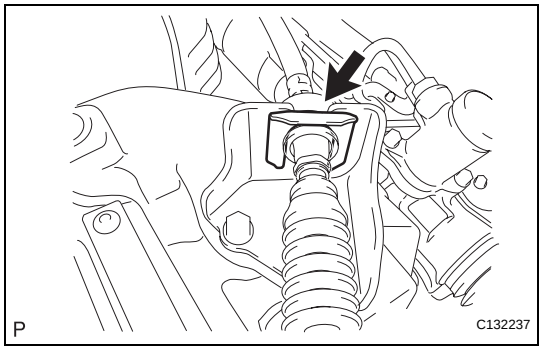

   (b) Remove the nut and transmission control cable from the control shaft lever.
   (c) Disconnect the connector from the park/neutral position switch.

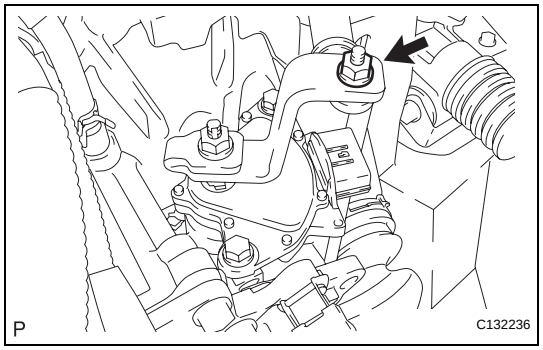

AX

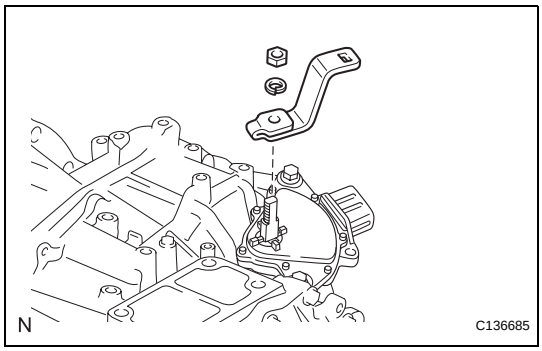

(d) Remove the nut, washer and control shaft lever from the control shaft.

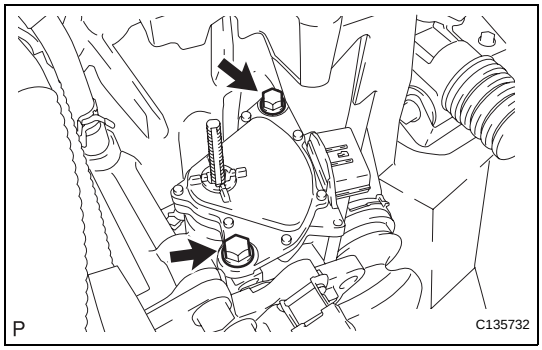

(e) Remove the 2 bolts and park/neutral position switch from the control shaft.

NOTICE:

Before removing the park/neutral position switch, remove any dirt or rust on the installation portion of the control shaft. Be sure to remove the switch straight along the shaft while being careful not to deform the plate spring that supports the shaft. If the plate spring is deformed, the park/neutral switch cannot be reinstalled correctly.

INSPECTION

1. INSPECT PARK/NEUTRAL POSITION SWITCH ASSEMBLY

(a) Measure the resistance according to the value(s) in the table below when the shift lever is moved to each position.

Standard resistance:

Shift Position	Tester Connection	Specified Condition
P	1 (RB) - 3 (PL) and 4 (B) - 9 (L)	Below 1 Ω
Except P	↑	10 kΩ or higher
R	2 (RL) - 1 (RB)	Below 1 Ω
Except R	↑	10 kΩ or higher
N	1 (RB) - 8 (NL) and 4 (B) - 9 (L)	Below 1 Ω
Except N	↑	10 kΩ or higher
D, S, "+" and "-"	1 (RB) - 7 (DL)	Below 1 Ω
Except D, S, "+" and "-"	↑	10 kΩ or higher

If operation cannot be done as specified, replace the park/neutral position switch.

Switch Side:

(Connector Front View):

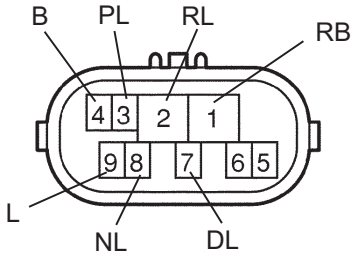

AX

INSTALLATION

1. INSTALL PARK/NEUTRAL POSITION SWITCH ASSEMBLY

(a) Move the shift lever to the N position.

(b) Align the protrusions of the park/neutral position switch.

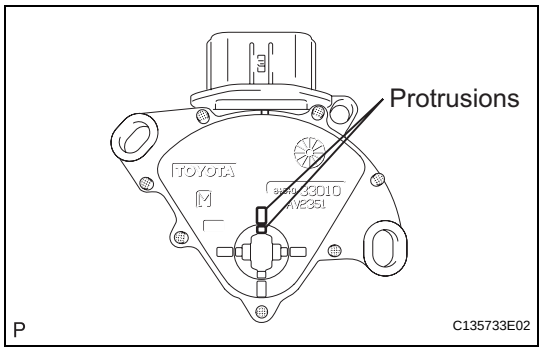

(c) Install the park/neutral position switch to the control shaft with the 2 bolts.
Torque: 5.4 N*m (55 kgf*cm, 48 in.*lbf)
NOTICE:
- **Before installing the park/neutral position switch, remove any dirt or rust on the installation portion of the control shaft. Be sure to install the switch straight along the shaft while being careful not to deform the plate spring that supports the shaft. If the plate spring is deformed, the park/neutral switch cannot be reinstalled correctly.**
- **After installing the park/neutral position switch, confirm that the 2 protrusions on the switch are aligned.**

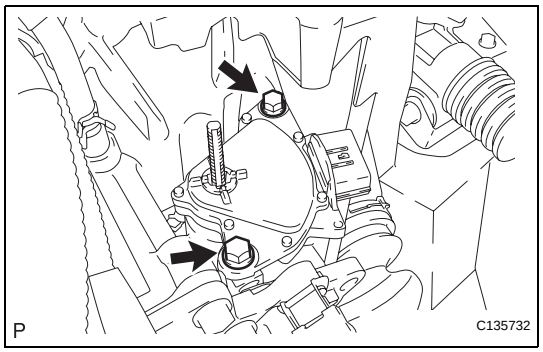

(d) Install the control shaft lever to the control shaft with the nut and washer.
Torque: 13 N*m (130 kgf*cm, 9 ft.*lbf)

(e) Connect the connector to the park/neutral position switch.

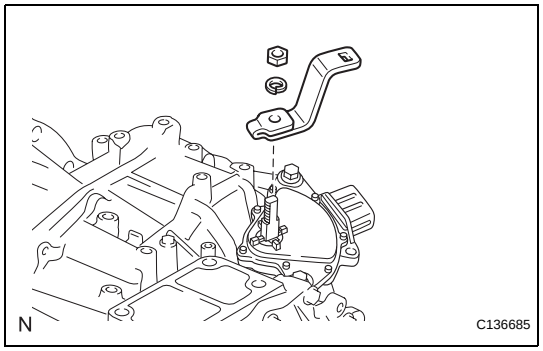

(f) Connect the transmission control cable to the transmission control cable bracket with a new clip.

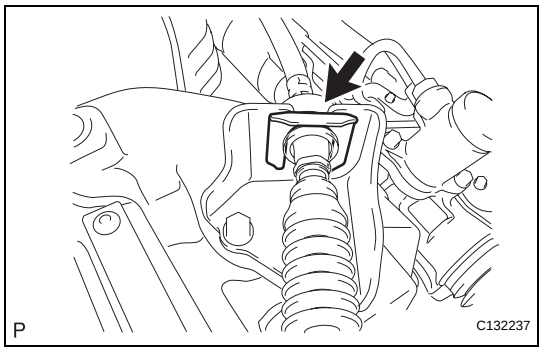

AX

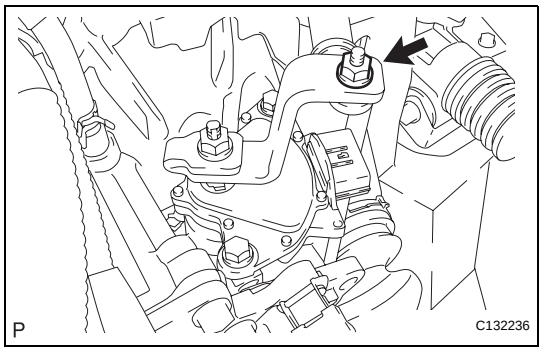

(g) Connect the transmission control cable to the control shaft lever with the nut.
Torque: 13 N*m (130 kgf*cm, 9 ft.*lbf)

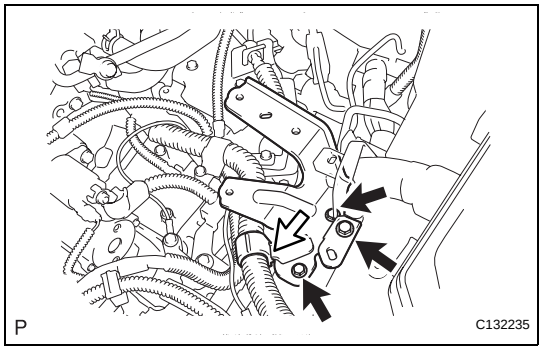

2. INSTALL AIR CLEANER BRACKET
(a) Install the air cleaner bracket with the 3 bolts.
Torque: 7.8 N*m (80 kgf*cm, 69 in.*lbf)
(b) Install the wire harness clamp.

3. INSTALL NO. 1 AIR CLEANER INLET (See page EM-48)

4. INSTALL AIR CLEANER CASE SUB-ASSEMBLY (See page EM-48)

5. INSTALL AIR CLEANER CAP SUB-ASSEMBLY

6. INSTALL AIR CLEANER INLET ASSEMBLY (See page EM-48)

7. INSTALL ENGINE ROOM SIDE COVER LH (See page EM-50)

8. INSTALL COOL AIR INTAKE DUCT SEAL (See page EM-50)

9. CONNECT CABLE TO NEGATIVE BATTERY TERMINAL (See page EM-49)

10. INSPECT PARK/NEUTRAL POSITION SWITCH ASSEMBLY OPERATION (See page AX-184)

11. INSPECT SHIFT LEVER POSITION (See page AX-200)

12. ADJUST SHIFT LEVER POSITION (See page AX-200)

13. PERFORM INITIALIZATION
(a) Perform initialization procedure (See page IN-33).
NOTICE:
Some systems need initialization after reconnecting the cable to the negative battery terminal.

ADJUSTMENT

1. INSPECT SHIFT LEVER POSITION

(a) When shifting from the P to the R position with the engine switch on (IG) and the brake pedal depressed, make sure that the shift lever moves smoothly and moves correctly into position.

(b) Start the engine and make sure that the vehicle moves forward when shifting from the N to the D position and moves rearward when shifting to the R position.
If operation cannot be done as specified, inspect the park/neutral position switch assembly and check the shift lever assembly installation condition.

2. ADJUST SHIFT LEVER POSITION

(a) Move the shift lever to the N position.

(b) Remove the nut and transmission control cable from the control shaft lever.

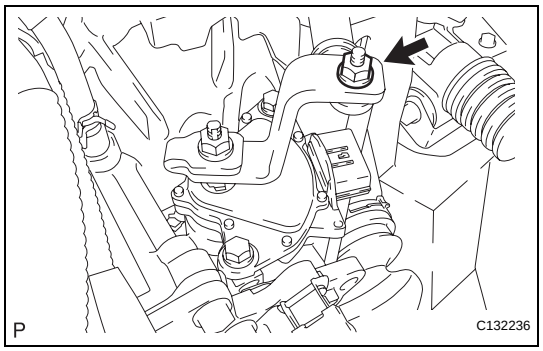

(c) Align the protrusions of the park/neutral position switch.

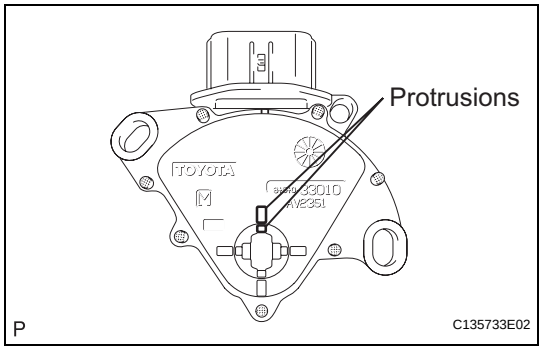

AX

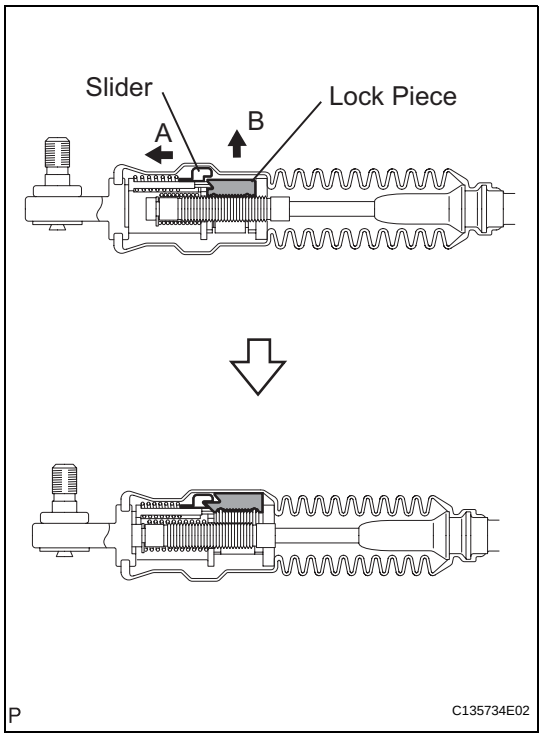

(d) Move the slider in the direction indicated by arrow A and pull up the lock piece in the direction indicated by arrow B.
NOTICE:
Do not damage the boot.

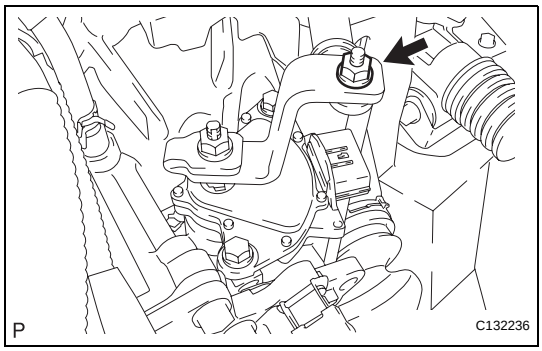

(e) Install the control cable to the control shaft with the nut.
Torque: 13 N*m (130 kgf*cm, 9 ft.*lbf)
NOTICE:
- **If the control cable end is excessively pushed up, the shift lever cannot be adjusted.**
- **When tightening the nu t, confirm that the control cable is properly stretched.**

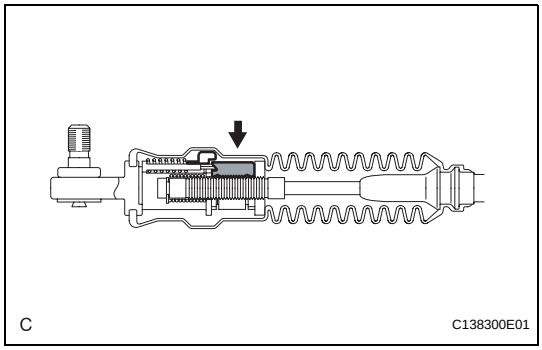

(f) Push in the lock piece.
NOTICE:
Firmly push in the lock piece until the slider lock is engaged.

(g) Start the engine and make sure that the vehicle moves forward when moving the lever from the N to the D position and moves rearward when moving it to the R position. If it becomes hard to move the shift lever, readjust the shift lever position.

INSTALLATION

1. INSTALL NO. 2 SHIFT CABLE GROMMET RETAINER

(a) Pass the control cable from the cabin to the engine compartment.

(b) Install the No. 2 shift cable grommet retainer with the 2 bolts.
Torque: 5.0 N*m (51 kgf*cm, 44 in.*lbf)

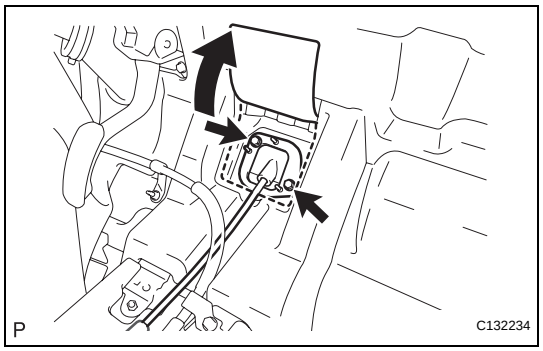

2. INSTALL TRANSMISSION CONTROL CABLE ASSEMBLY

(a) Move the shift lever to the N position.

(b) Install the transmission control cable assembly as shown in the illustration.
HINT:
- Install the floor shift cable with the uneven surface facing up.
- Securely engage the claws of the floor shift cable.

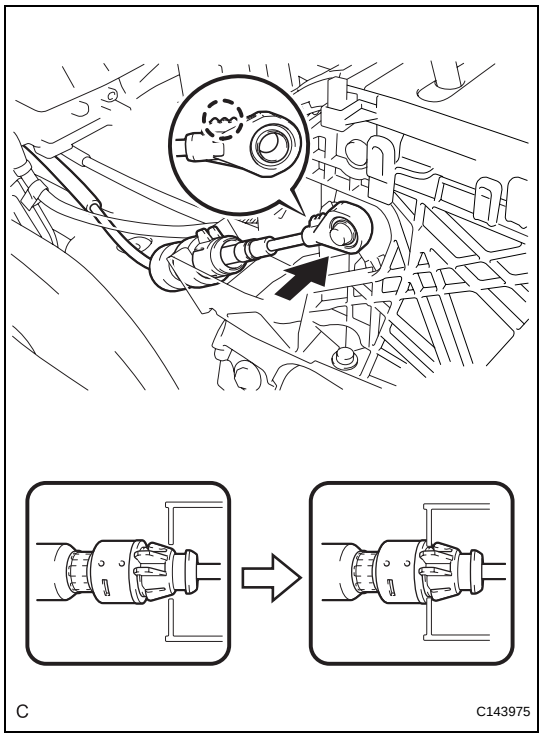

(c) Connect the control cable to the bracket with a new clip.

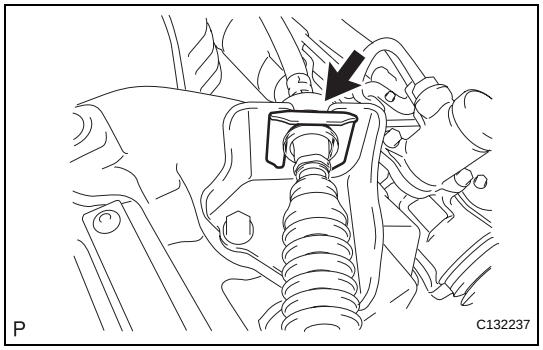

AX

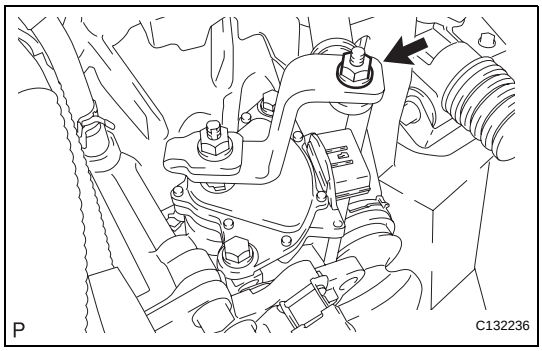

(d) Install the control cable to the control shaft lever with the nut.
Torque: 13 N*m (130 kgf*cm, 9 ft.*lbf)

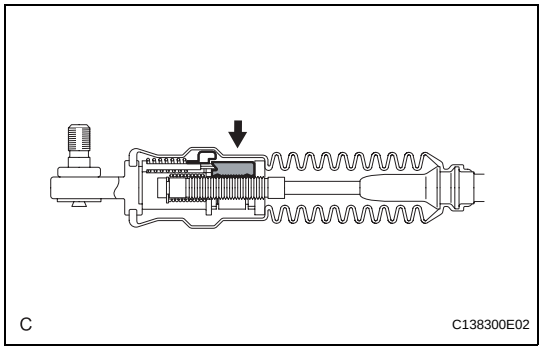

(e) Push in the lock piece of the transmission control cable.
NOTICE:
Firmly push in the lock piece until the slider lock is engaged.
HINT:
After pushing in the lock piece, make sure that the boot is not deformed.

3. **INSTALL CENTER AIRBAG SENSOR ASSEMBLY (See page RS-469)**
4. **INSTALL NO. 1 AIR CLEANER INLET (See page EM-48)**
5. **INSTALL AIR CLEANER CASE SUB-ASSEMBLY (See page EM-48)**
6. **INSTALL AIR CLEANER CAP SUB-ASSEMBLY**
7. **INSTALL AIR CLEANER INLET ASSEMBLY (See page EM-48)**
8. **INSTALL AIR CONDITIONING UNIT**
   HINT:
   (See page AC-159)
9. **INSTALL ENGINE ROOM SIDE COVER LH**
10. **INSTALL COOL AIR INTAKE DUCT SEAL (See page EM-50)**
11. **INSPECT SHIFT LEVER POSITION (See page AX-200)**
12. **ADJUST SHIFT LEVER POSITION (See page AX-200)**

REMOVAL

1. **DRAIN AUTOMATIC TRANSAXLE FLUID (See page AX-215)**
2. **REMOVE FRONT WHEELS**
3. **REMOVE FRONT AXLE HUB NUT LH (See page DS-5)**
4. **REMOVE FRONT AXLE HUB NUT RH**
   HINT:
   Use the same procedures described for the LH side.
5. **SEPARATE FRONT STABILIZER LINK ASSEMBLY LH (See page DS-5)**
6. **SEPARATE FRONT STABILIZER LINK ASSEMBLY RH**
   HINT:
   Use the same procedures described for the LH side.
7. **SEPARATE FRONT SPEED SENSOR LH (See page DS-5)**
8. **SEPARATE FRONT SPEED SENSOR RH**
   HINT:
   Use the same procedures described for the LH side.
9. **SEPARATE TIE ROD ASSEMBLY LH (See page DS-6)**
10. **SEPARATE TIE ROD ASSEMBLY RH**
    HINT:
    Use the same procedures described for the LH side.
11. **SEPARATE FRONT SUSPENSION LOWER NO. 1 ARM LH (See page DS-6)**
12. **SEPARATE FRONT SUSPENSION LOWER NO. 1 ARM RH**
13. **SEPARATE FRONT AXLE ASSEMBLY LH (See page DS-6)**
14. **SEPARATE FRONT AXLE ASSEMBLY RH**
    HINT:
    Use the same procedures described for the LH side.
15. **REMOVE FRONT DRIVE SHAFT ASSEMBLY LH (See page DS-6)**
16. **REMOVE FRONT DRIVE SHAFT ASSEMBLY RH (See page DS-7)**
17. **SECURE FRONT AXLE HUB SUB-ASSEMBLY (See page DS-7)**

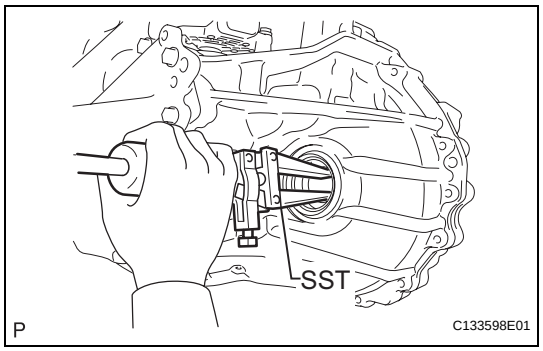

18. REMOVE TRANSAXLE CASE OIL SEAL

(a) Using SST, remove the oil seal from the transaxle case.
SST 09308-00010

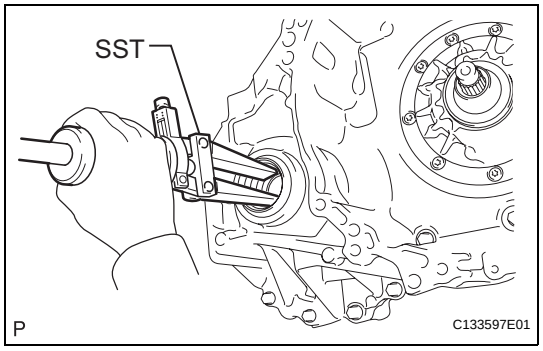

19. REMOVE FRONT TRANSAXLE CASE OIL SEAL

(a) Using SST, remove the oil seal from the transaxle housing.
SST 09308-00010

INSTALLATION

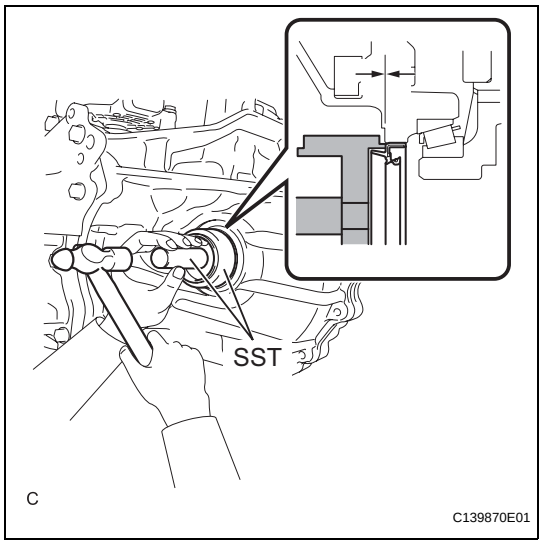

1. INSTALL TRANSAXLE CASE OIL SEAL

(a) Using SST and a hammer, install a new oil seal to the transaxle case.
SST 09316-10010, 09950-70010 (09951-07100)
Oil seal installation depth:
-0.5 to 0.5 mm (-0.020 to 0.020 in.)

(b) Coat the lip of the oil seal with MP grease.

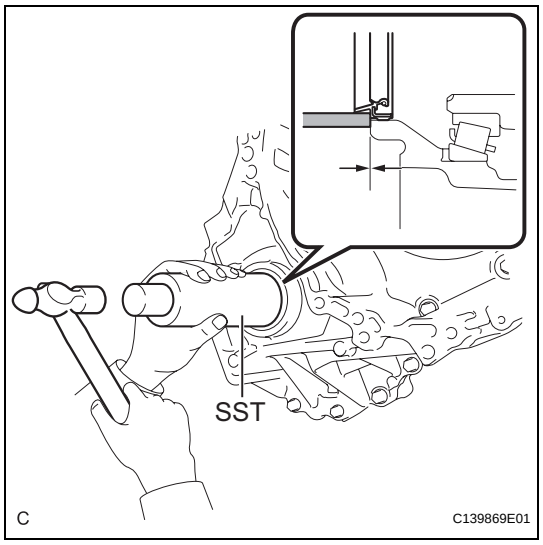

2. INSTALL FRONT TRANSAXLE CASE OIL SEAL

(a) Using SST and a hammer, install a new oil seal to the transaxle housing.
SST 09308-14010
Oil seal installation depth:
-0.5 to 0.5 mm (-0.020 to 0.020 in.)

(b) Coat the lip of the oil seal with MP grease.

3. INSTALL FRONT DRIVE SHAFT ASSEMBLY LH (See page DS-16)

4. INSTALL FRONT DRIVE SHAFT ASSEMBLY RH (See page DS-16)

5. INSTALL FRONT AXLE ASSEMBLY LH (See page DS-16)

6. **INSTALL FRONT AXLE ASSEMBLY RH**
   HINT:
   Use the same procedures described for the LH side.

7. **INSTALL FRONT SUSPENSION LOWER NO. 1 ARM LH (See page DS-16)**

8. **INSTALL FRONT SUSPENSION LOWER NO. 1 ARM RH**
   HINT:
   Use the same procedures described for the LH side.

9. **INSTALL TIE ROD ASSEMBLY LH (See page DS-16)**

10. **INSTALL TIE ROD ASSEMBLY RH**
    HINT:
    Use the same procedures described for the LH side.

11. **INSTALL FRONT SPEED SENSOR LH (See page DS-17)**

12. **INSTALL FRONT SPEED SENSOR RH**

13. **INSTALL FRONT STABILIZER LINK ASSEMBLY LH (See page DS-17)**

14. **INSTALL FRONT STABILIZER LINK ASSEMBLY RH**
    HINT:
    Use the same procedures described for the LH side.

15. **INSTALL FRONT AXLE HUB NUT LH (See page DS-17)**

16. **INSTALL FRONT AXLE HUB NUT RH**
    HINT:
    Use the same procedures described for the LH side.

17. **INSTALL FRONT WHEELS (See page DS-17)**

18. **ADD AUTOMATIC TRANSAXLE FLUID**
    HINT:
    (See page AX-176)

19. **ADJUST FRONT WHEEL ALIGNMENT**
    HINT:
    (See page SP-4)

20. **CHECK ABS SPEED SENSOR SIGNAL**
    HINT:
    (See page BC-24)

REMOVAL

1. **REMOVE AUTOMATIC TRANSAXLE ASSEMBLY**
   HINT:
   (See page AX-215)
2. **REMOVE AUTOMATIC TRANSAXLE OIL PAN SUB-ASSEMBLY (See page AX-192)**
3. **REMOVE VALVE BODY OIL STRAINER ASSEMBLY (See page AX-192)**
4. **REMOVE TRANSMISSION VALVE BODY ASSEMBLY (See page AX-193)**

DISASSEMBLY

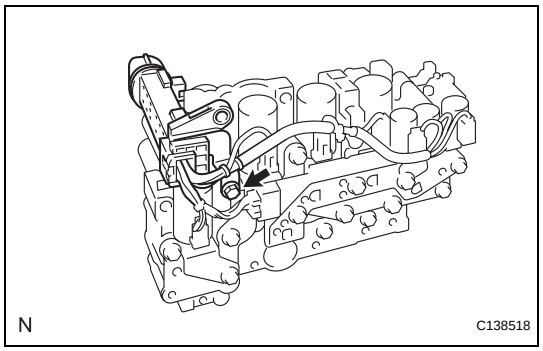

1. **REMOVE TRANSMISSION WIRE**
   (a) Disconnect the connector from the transmission wire.
   (b) Remove the bolt and lock plate from the valve body assembly.

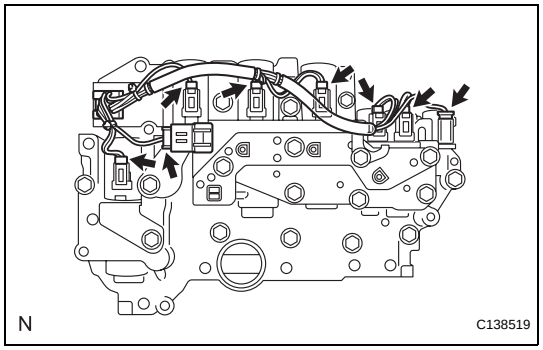

   (c) Disconnect the 8 connectors and remove the transmission wire from the valve body assembly.

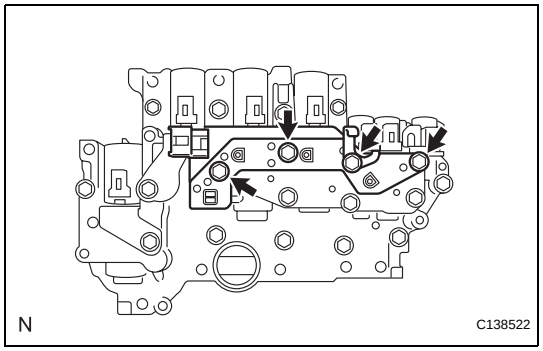

2. **REMOVE ATF TEMPERATURE SENSOR ASSEMBLY**
   (a) Remove the 4 bolts, ATF temperature sensor assembly and clamp from the valve body assembly.

AX

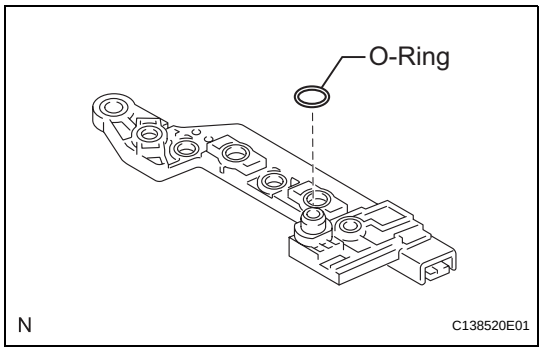

(b) Remove the O-ring from the ATF temperature sensor assembly. O-ring

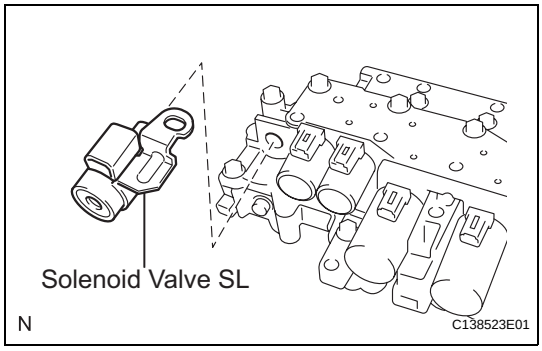

3. REMOVE SHIFT SOLENOID VALVE SL

(a) Remove the shift solenoid valve SL from the valve body assembly.

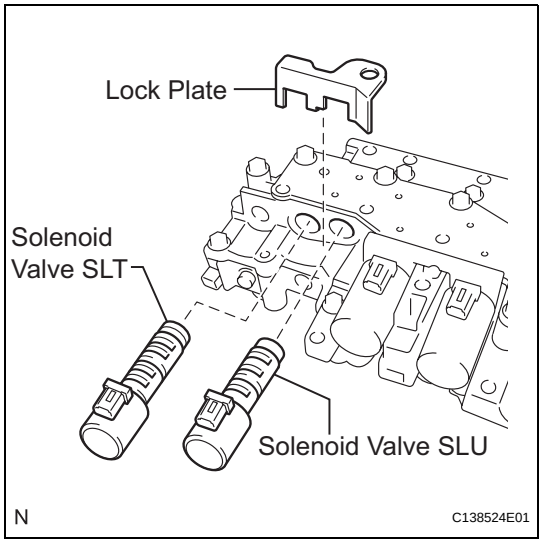

4. REMOVE SHIFT SOLENOID VALVE SLT

(a) Remove the lock plate and shift solenoid valve SLT from the valve body assembly

5. REMOVE SHIFT SOLENOID VALVE SLU

(a) Remove the shift solenoid valve SLU from the valve body assembly.

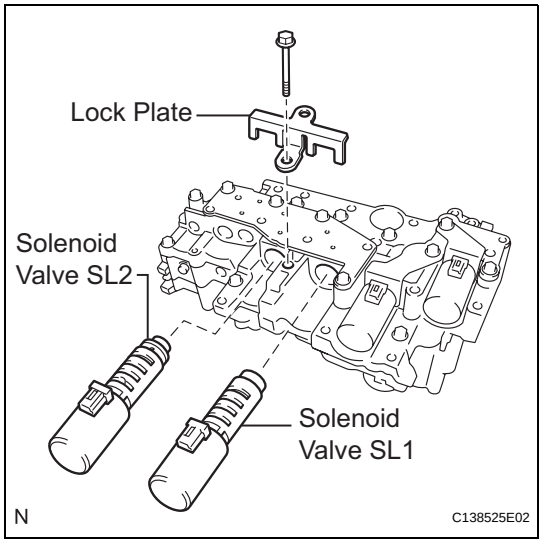

6. REMOVE SHIFT SOLENOID VALVE SL2

(a) Remove the bolt, lock plate and shift solenoid valve SL2 from the valve body assembly.

7. REMOVE SHIFT SOLENOID VALVE SL1

(a) Remove the shift solenoid valve SL1 from the valve body assembly.

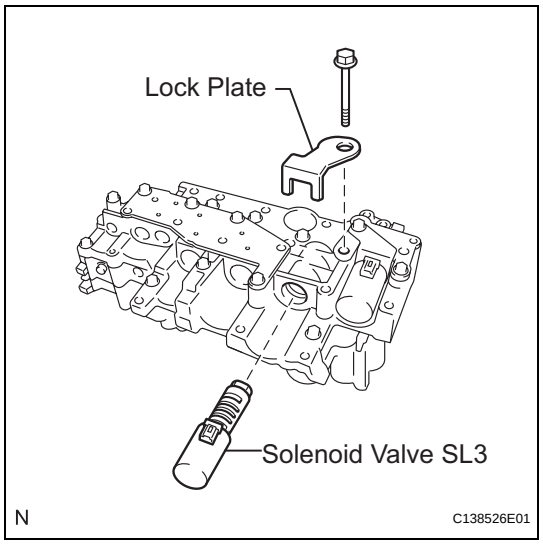

8. REMOVE SHIFT SOLENOID VALVE SL3

(a) Remove the bolt, lock plate and shift solenoid valve SL3 from the valve body assembly.

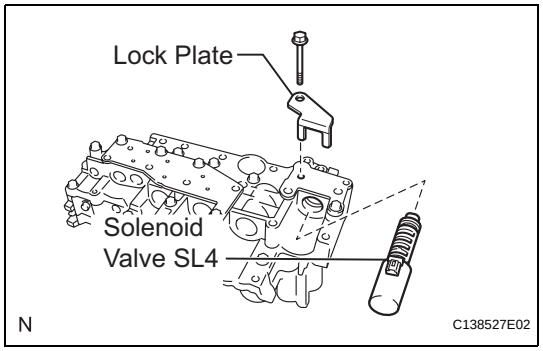

9. REMOVE SHIFT SOLENOID VALVE SL4

(a) Remove the bolt, lock plate and shift solenoid valve SL4 from the valve body assembly.

INSPECTION

1. INSPECT SHIFT SOLENOID VALVE SL

(a) Measure the resistance according to the value(s) in the table below.

Standard resistance

Tester Connection	Specified Condition 20°C (68°F)
Solenoid Connector (SL) - Solenoid Body (SL)	11 to 15 Ω

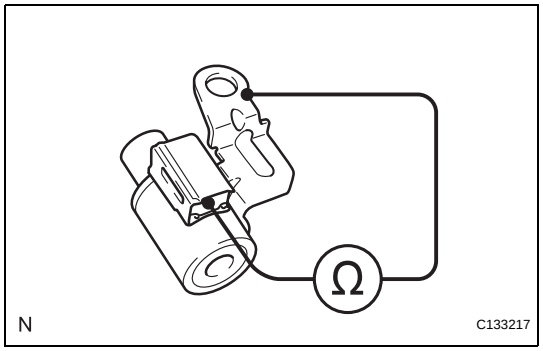

If the value is not as specified, replace the shift solenoid valve.

(b) Connect the positive (+) lead to terminal 2 and the negative (-) lead to terminal 1 of the solenoid valve connector, then check the movement of the shift solenoid valve.

OK:

The solenoid makes an operating noise.

If the operation is not as specified, replace the shift solenoid valve.

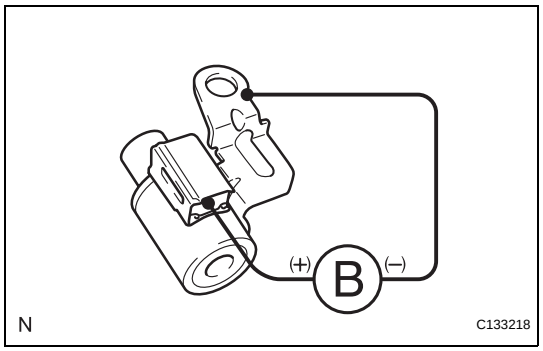

AX

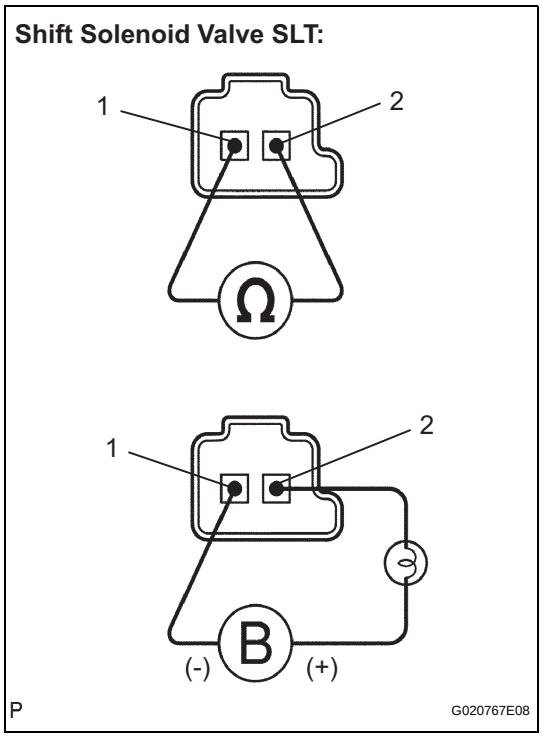

2. INSPECT SHIFT SOLENOID VALVE SLT

(a) Measure the resistance according to the value(s) in the table below.

Standard resistance

Tester Connection	Specified Condition 20°C (68°F)
1 - 2	5.0 to 5.6 Ω

If the value is not as specified, replace the shift solenoid valve.

(b) Connect the positive (+) lead with a 21 W bulb to terminal 2 and the negative (-) lead to terminal 1 of the solenoid valve connector, then check the movement of the shift solenoid valve.

OK:

The solenoid makes an operating noise.

If the operation is not as specified, replace the shift solenoid valve.

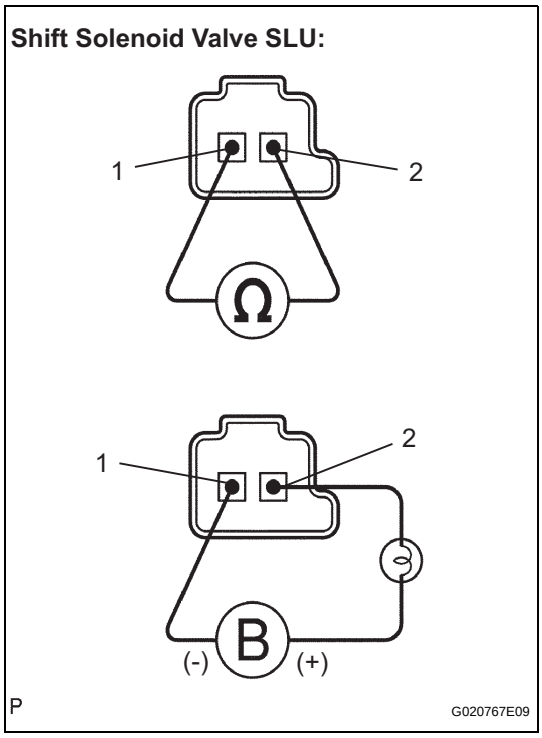

3. INSPECT SHIFT SOLENOID VALVE SLU

(a) Measure the resistance according to the value(s) in the table below.

Standard resistance

Tester Connection	Specified Condition 20°C (68°F)
1 - 2	5.0 to 5.6 Ω

If the value is not as specified, replace the shift solenoid valve.

(b) Connect the positive (+) lead with a 21 W bulb to terminal 2 and the negative (-) lead to terminal 1 of the solenoid valve connector, then check the movement of the shift solenoid valve.

OK:

The solenoid makes an operating noise.

If the operation is not as specified, replace the shift solenoid valve.

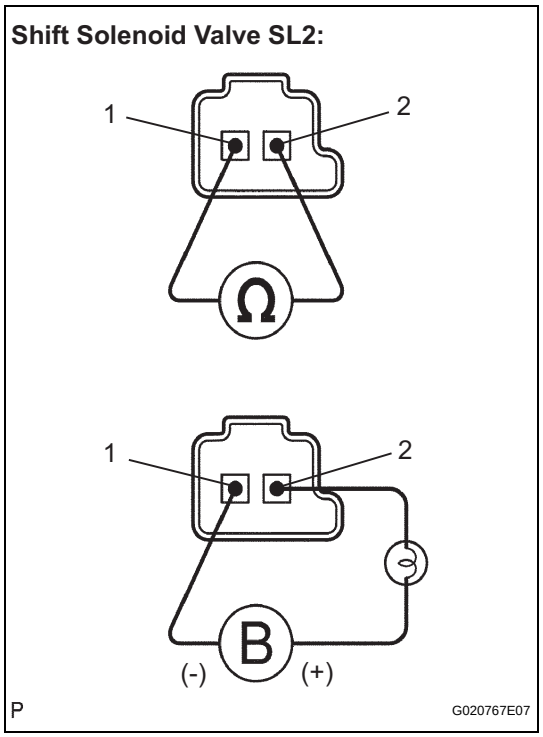

4. INSPECT SHIFT SOLENOID VALVE SL2

(a) Measure the resistance according to the value(s) in the table below.

Standard resistance

Tester Connection	Specified Condition 20°C (68°F)
1 - 2	5.0 to 5.6 Ω

If the value is not as specified, replace the shift solenoid valve.

(b) Connect the positive (+) lead with a 21 W bulb to terminal 2 and the negative (-) lead to terminal 1 of the solenoid valve connector, then check the movement of the shift solenoid valve.

OK:

The solenoid makes an operating noise.

If the operation is not as specified, replace the shift solenoid valve.

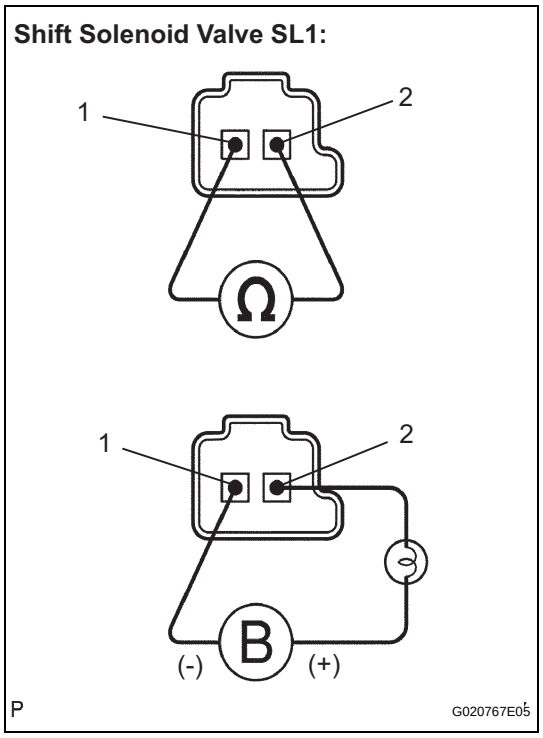

5. INSPECT SHIFT SOLENOID VALVE SL1

(a) Measure the resistance according to the value(s) in the table below.

Standard resistance

Tester Connection	Specified Condition 20°C (68°F)
1 - 2	5.0 to 5.6 Ω

If the value is not as specified, replace the shift solenoid valve.

(b) Connect the positive (+) lead with a 21 W bulb to terminal 2 and the negative (-) lead to terminal 1 of the solenoid valve connector, then check the movement of the shift solenoid valve.

OK:

The solenoid makes an operating noise.

If the operation is not as specified, replace the shift solenoid valve.

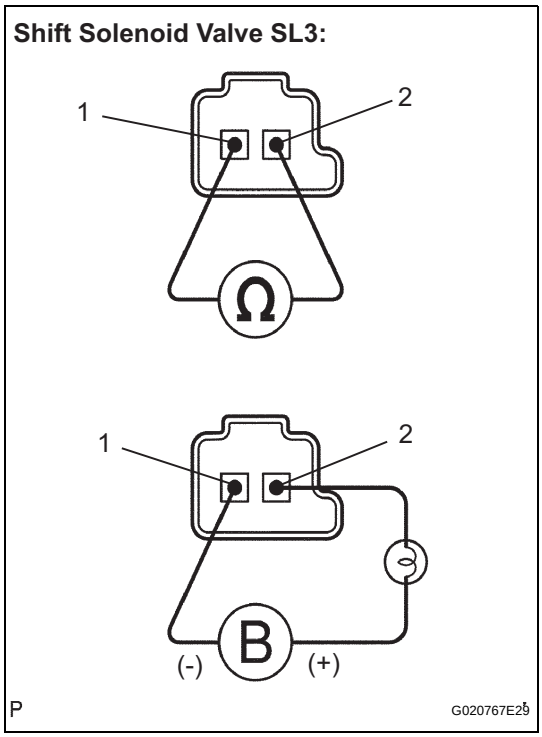

6. INSPECT SHIFT SOLENOID VALVE SL3

(a) Measure the resistance according to the value(s) in the table below.

Standard resistance

Tester Connection	Specified Condition 20°C (68°F)
1 - 2	5.0 to 5.6 Ω

If the value is not as specified, replace the shift solenoid valve.

(b) Connect the positive (+) lead with a 21 W bulb to terminal 2 and the negative (-) lead to terminal 1 of the solenoid valve connector, then check the movement of the shift solenoid valve.

OK:

The solenoid makes an operating noise.

If the operation is not as specified, replace the shift solenoid valve.

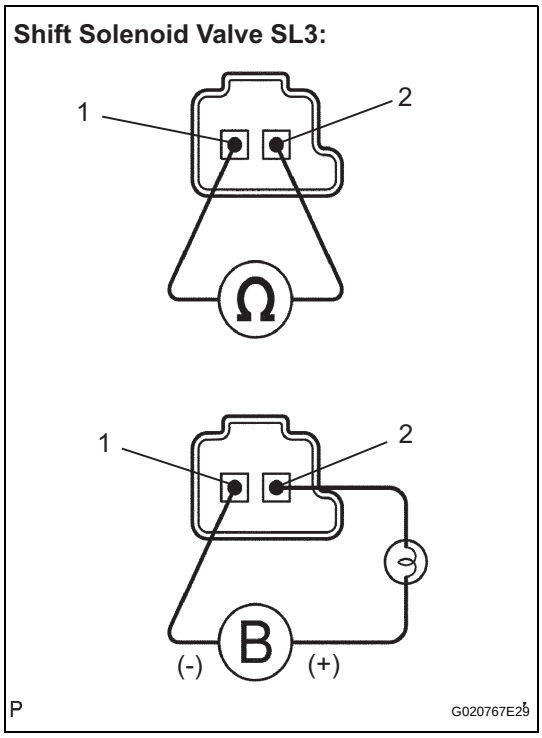

7. INSPECT SHIFT SOLENOID VALVE SL4

(a) Measure the resistance according to the value(s) in the table below.

Standard resistance

Tester Connection	Specified Condition 20°C (68°F)
1 - 2	5.0 to 5.6 Ω

If the value is not as specified, replace the shift solenoid valve.

(b) Connect the positive (+) lead with a 21 W bulb to terminal 2 and the negative (-) lead to terminal 1 of the solenoid valve connector, then check the movement of the shift solenoid valve.

OK:

The solenoid makes an operating noise.

If the operation is not as specified, replace the shift solenoid valve.

AX

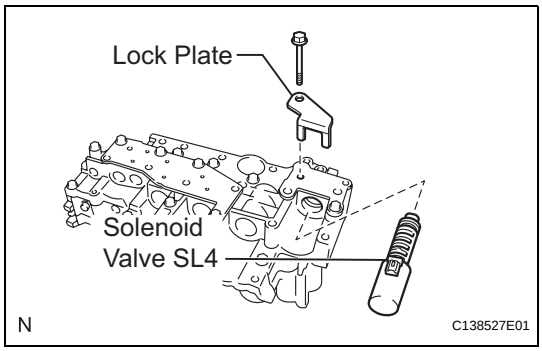

REASSEMBLY

1. INSTALL SHIFT SOLENOID VALVE SL4

(a) Coat the shift solenoid valve SL4 and bolt with ATF.

(b) Install the shift solenoid valve SL4 and lock plate to the valve body assembly with the bolt.

Torque: 11 N*m (112 kgf*cm, 8 ft.*lbf)

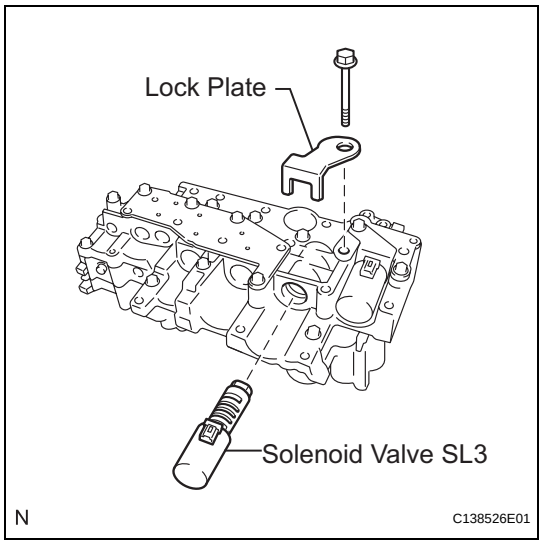

2. INSTALL SHIFT SOLENOID VALVE SL3

(a) Coat the shift solenoid valve SL3 and bolt with ATF.

(b) Install the shift solenoid valve SL3 and lock plate to the valve body assembly with the bolt.
Torque: 11 N*m (112 kgf*cm, 8 ft.*lbf)

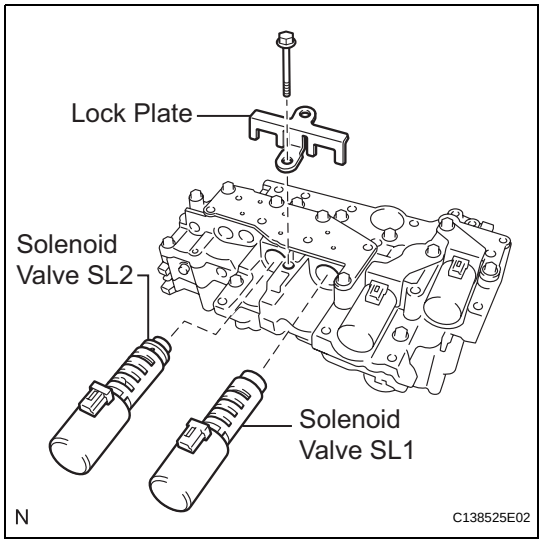

3. INSTALL SHIFT SOLENOID VALVE SL1

(a) Coat the shift solenoid valve SL1 with ATF.

(b) Install the shift solenoid valve SL1 to the valve body assembly.

4. INSTALL SHIFT SOLENOID VALVE SL2

(a) Coat the shift solenoid valve SL2 and bolt with ATF.

(b) Install the shift solenoid valve SL2 and lock plate to the valve body assembly with the bolt.
Torque: 11 N*m (112 kgf*cm, 8 ft.*lbf)

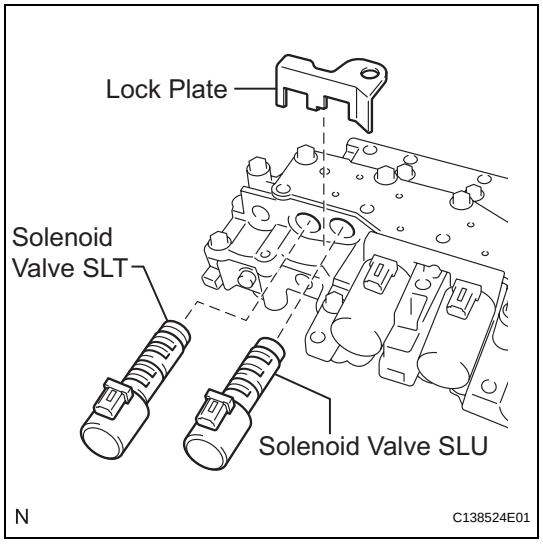

5. INSTALL SHIFT SOLENOID VALVE SLU

(a) Coat the shift solenoid valve SLU with ATF.

(b) Install the shift solenoid valve SLU to the valve body assembly.

6. INSTALL SHIFT SOLENOID VALVE SLT

(a) Coat the shift solenoid valve SLT with ATF.

(b) Install the shift solenoid valve SLT and lock plate to the valve body assembly.

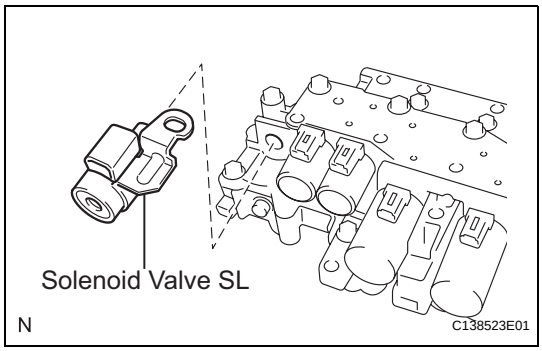

7. INSTALL SHIFT SOLENOID VALVE SL

(a) Coat the shift solenoid valve SL with ATF.

(b) Install the shift solenoid valve SL to the valve body assembly.

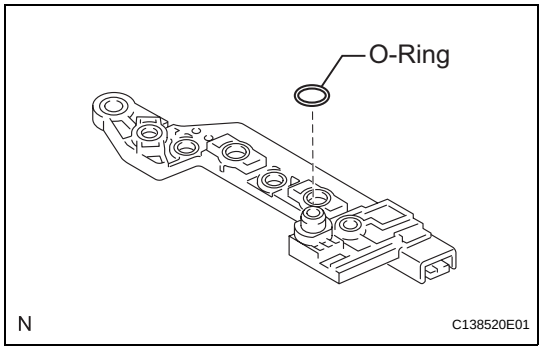

8. INSTALL ATF TEMPERATURE SENSOR ASSEMBLY

(a) Coat a new O-ring with ATF and install it to the ATF temperature sensor assembly.

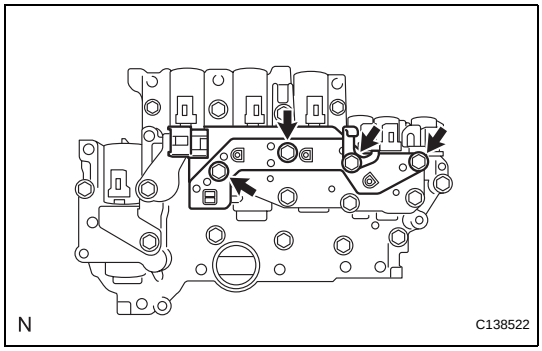

(b) Coat the 4 bolts with ATF.

(c) Install the ATF temperature sensor assembly and clamp to the valve body assembly with the 4 bolts.
Torque: 11 N*m (112 kgf*cm, 8 ft.*lbf)

AX

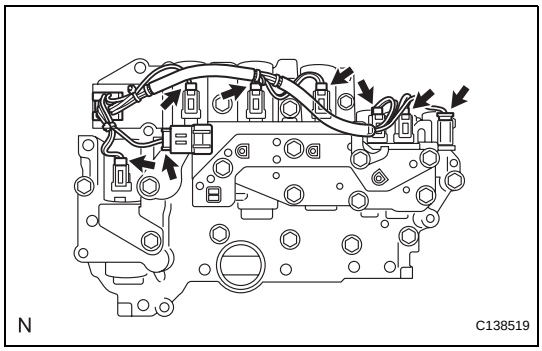

9. INSTALL TRANSMISSION WIRE

(a) Connect the 8 connectors to the valve body assembly.

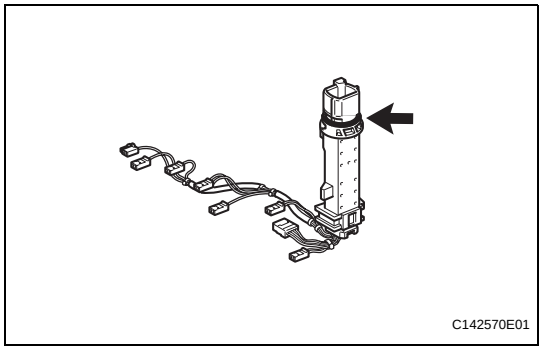

(b) Coat the O-ring with ATF.

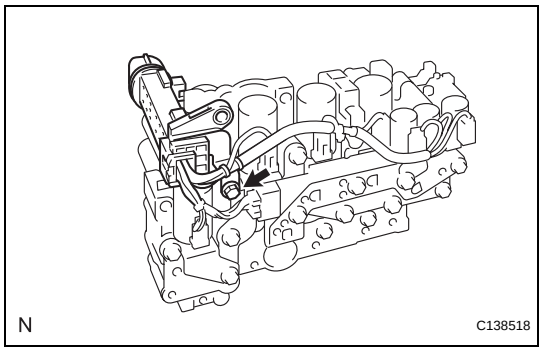

(c) Coat the bolt with ATF.

(d) Install the transmission wire and lock plate to the valve body assembly with the bolt.
Torque: 11 N*m (112 kgf*cm, 8 ft.*lbf)

INSTALLATION

1. **INSTALL TRANSMISSION VALVE BODY ASSEMBLY (See page AX-193)**
2. **INSTALL VALVE BODY OIL STRAINER ASSEMBLY (See page AX-194)**
3. **INSTALL AUTOMATIC TRANSAXLE OIL PAN SUB-ASSEMBLY (See page AX-195)**
4. **INSTALL AUTOMATIC TRANSAXLE ASSEMBLY**
   HINT:
   (See page AX-222)

DIAGNOSTIC TROUBLE CODE CHART

HINT:

- If no abnormality is found when the parts are inspected, inspect the tire pressure warning ECU.
- If a malfunction code is displayed during the DTC check, inspect the circuit listed for that code. For details of each code, refer to the relevant page listed under respective "DTC No." in the DTC chart.

TIRE PRESSURE WARNING SYSTEM

DTC Code	Detection Item	Trouble Area	See page
C2111/11	Transmitter ID1 Operation Stop	1. Tire pressure warning valve and transmitter 2. Tire pressure warning ECU	TW-36
C2112/12	Transmitter ID2 Operation Stop	1. Tire pressure warning valve and transmitter 2. Tire pressure warning ECU	TW-36
C2113/13	Transmitter ID3 Operation Stop	1. Tire pressure warning valve and transmitter 2. Tire pressure warning ECU	TW-36
C2114/14	Transmitter ID4 Operation Stop	1. Tire pressure warning valve and transmitter 2. Tire pressure warning ECU	TW-36
C2115/15	Transmitter ID5 Operation Stop	1. Tire pressure warning valve and transmitter 2. Tire pressure warning ECU	TW-36
C2121/21	No Signal from Transmitter ID1 in Main Mode	1. Tire pressure warning valve and transmitter 2. Wire harness or connector 3. Tire pressure warning ECU 4. Tire pressure warning antenna and receiver	TW-40
C2122/22	No Signal from Transmitter ID2 in Main Mode	1. Tire pressure warning valve and transmitter 2. Wire harness or connector 3. Tire pressure warning ECU 4. Tire pressure warning antenna and receiver	TW-40
C2123/23	No Signal from Transmitter ID3 in Main Mode	1. Tire pressure warning valve and transmitter 2. Wire harness or connector 3. Tire pressure warning ECU 4. Tire pressure warning antenna and receiver	TW-40
C2124/24	No Signal from Transmitter ID4 in Main Mode	1. Tire pressure warning valve and transmitter 2. Wire harness or connector 3. Tire pressure warning ECU 4. Tire pressure warning antenna and receiver	TW-40
C2125/25	No Signal from Transmitter ID5 in Main Mode	1. Tire pressure warning valve and transmitter 2. Wire harness or connector 3. Tire pressure warning ECU 4. Tire pressure warning antenna and receiver	TW-40
C2131/31	No Signal from Transmitter ID1 in 2nd Mode	1. Tire pressure warning valve and transmitter 2. Wire harness or connector 3. Tire pressure warning ECU 4. Tire pressure warning antenna and receiver	TW-40

DTC Code	Detection Item	Trouble Area	See page
C2132/32	No Signal from Transmitter ID2 in 2nd Mode	1. Tire pressure warning valve and transmitter 2. Wire harness or connector 3. Tire pressure warning ECU 4. Tire pressure warning antenna and receiver	TW-40
C2133/33	No Signal from Transmitter ID3 in 2nd Mode	1. Tire pressure warning valve and transmitter 2. Wire harness or connector 3. Tire pressure warning ECU 4. Tire pressure warning antenna and receiver	TW-40
C2134/34	No Signal from Transmitter ID4 in 2nd Mode	1. Tire pressure warning valve and transmitter 2. Wire harness or connector 3. Tire pressure warning ECU 4. Tire pressure warning antenna and receiver	TW-40
C2135/35	No Signal from Transmitter ID5 in 2nd Mode	1. Tire pressure warning valve and transmitter 2. Wire harness or connector 3. Tire pressure warning ECU 4. Tire pressure warning antenna and receiver	TW-40
C2141/41	Transmitter ID1 Error	1. Tire pressure warning valve and transmitter 2. Tire pressure warning ECU	TW-49
C2142/42	Transmitter ID2 Error	1. Tire pressure warning valve and transmitter 2. Tire pressure warning ECU	TW-49
C2143/43	Transmitter ID3 Error	1. Tire pressure warning valve and transmitter 2. Tire pressure warning ECU	TW-49
C2144/44	Transmitter ID4 Error	1. Tire pressure warning valve and transmitter 2. Tire pressure warning ECU	TW-49
C2145/45	Transmitter ID5 Error	1. Tire pressure warning valve and transmitter 2. Tire pressure warning ECU	TW-49
C2165/65	Abnormal Temperature Inside ID1 Tire	1. Tires 2. Tire pressure warning valve and transmitter 3. Tire pressure warning ECU	TW-52
C2166/66	Abnormal Temperature Inside ID2 Tire	1. Tires 2. Tire pressure warning valve and transmitter 3. Tire pressure warning ECU	TW-52
C2167/67	Abnormal Temperature Inside ID3 Tire	1. Tires 2. Tire pressure warning valve and transmitter 3. Tire pressure warning ECU	TW-52
C2168/68	Abnormal Temperature Inside ID4 Tire	1. Tires 2. Tire pressure warning valve and transmitter 3. Tire pressure warning ECU	TW-52
C2169/69	Abnormal Temperature Inside ID5 Tire	1. Tires 2. Tire pressure warning valve and transmitter 3. Tire pressure warning ECU	TW-52
C2171/71	Transmitter ID not Registered in Main Mode	1. Tire pressure warning light	TW-55
C2172/72	Transmitter ID not Registered in 2nd Mode	1. Tire pressure warning light	TW-55

DTC Code	Detection Item	Trouble Area	See page
C2176/76	Receiver Error	1. Tire pressure warning antenna and receiver 2. Wire harness or connector 3. Tire pressure warning ECU	TW-57
C2177/77	Initialization not Completed	1. Tire pressure warning valve and transmitter 2. Tire pressure warning ECU	TW-60
C2181/81	Transmitter ID1 not Received (Test Mode DTC)	1. Tire pressure warning valve and transmitter 2. Wire harness or connector 3. Tire pressure warning ECU 4. Tire pressure warning antenna and receiver	TW-40
C2182/82	Transmitter ID2 not Received (Test Mode DTC)	1. Tire pressure warning valve and transmitter 2. Wire harness or connector 3. Tire pressure warning ECU 4. Tire pressure warning antenna and receiver	TW-40
C2183/83	Transmitter ID3 not Received (Test Mode DTC)	1. Tire pressure warning valve and transmitter 2. Wire harness or connector 3. Tire pressure warning ECU 4. Tire pressure warning antenna and receiver	TW-40
C2184/84	Transmitter ID4 not Received (Test Mode DTC)	1. Tire pressure warning valve and transmitter 2. Wire harness or connector 3. Tire pressure warning ECU 4. Tire pressure warning antenna and receiver	TW-40
C2185/85	Transmitter ID5 not Received (Test Mode DTC)	1. Tire pressure warning valve and transmitter 2. Wire harness or connector 3. Tire pressure warning ECU 4. Tire pressure warning antenna and receiver	TW-40
C2191/91	Vehicle Speed Signal Error (Test Mode DTC)	1. Vehicle speed sensor 2. Combination meter 3. Wire harness or connector 4. Tire pressure warning ECU	TW-63
C2192/92	Select Switch Error (Test Mode DTC)	1. Tire pressure warning select switch 2. Wire harness or connector 3. Tire pressure warning ECU	TW-65

DTC	C2111/11	Transmitter ID1 Operation Stop

DTC	C2112/12	Transmitter ID2 Operation Stop

DTC	C2113/13	Transmitter ID3 Operation Stop

DTC	C2114/14	Transmitter ID4 Operation Stop

DTC	C2115/15	Transmitter ID5 Operation Stop

DESCRIPTION

The tire pressure warning valve and transmitters that are installed in the tire and wheel assemblies measure the air pressures of the tires. The measured values are transmitted to the tire pressure warning antenna and receiver on the body as radio waves and then sent to the tire pressure warning ECU. The ECU compares the measured air pressure values with the air pressure threshold. When the measured air pressure value is less than this threshold, the warning light in the combination meter comes on. The tire pressure warning ECU stores a DTC when the tire pressure warning valve and transmitter stops transmitting signals. At this time, forcibly transmit the signals by releasing the tire pressure rapidly. The stored DTC is cleared when the signal transmission is resumed.

DTC No.	DTC Detecting Condition	Trouble Area
C2111/11 C2112/12 C2113/13 C2114/14 C2115/15	Tire pressure warning valve and transmitters stop transmitting signals	• Tire pressure warning valve and transmitter • Tire pressure warning ECU

HINT:
- It is necessary to perform the procedure to identify the tire pressure warning valve and transmitter that is malfunctioning because it cannot be identified by the output DTC.
- DTC C2115/15 are used only when the vehicle is equipped with a full-size spare tire.

INSPECTION PROCEDURE

NOTICE:
- **When replacing the tire pressure warning ECU, read the IDs stored in the old ECU using the intelligent tester and write them down before removal.**
- **It is necessary to perform initialization (See page TW-18) after registration (See page TW-15) of the transmitter IDs into the tire pressure warning ECU after the ECU and / or valve and transmitter has been replaced.**

TW

1	PERFORM FORCED TRANSMISSION OF TRANSMITTER ID OF ALL WHEELS

(a) Set the tire pressure to the specified value.

Cold tire inflation pressure

Tire size	Front kPa (kgf/cm^2, psi)	Rear kPa (kgf/cm^2, psi)
P215/55R17 93V	210 (2.1, 30)	210 (2.1, 30)

(b) Connect the intelligent tester to the DLC3.
(c) Turn the engine switch on (IG) and turn the tester on.

(d) Select "TIREPRESS" by following the prompts displayed on the intelligent tester.

TIRE PRESSURE:

Tester Display	Measurement Item/Range	Normal Condition	Diagnostic Note
TIREPRESS1	ID1 tire inflation pressure / min.: 0 kPa (0 kgf/cm^2, 0 psi), max.: 637.5 kPa (6.48 kgf/cm^2, 92.2 psi)	Actual tire inflation pressure	-
TIREPRESS2	ID2 tire inflation pressure / min.: 0 kPa (0 kgf/cm^2, 0 psi), max.: 637.5 kPa (6.48 kgf/cm^2, 92.2 psi)	Actual tire inflation pressure	-
TIREPRESS3	ID3 tire inflation pressure / min.: 0 kPa (0 kgf/cm^2, 0 psi), max.: 637.5 kPa (6.48 kgf/cm^2, 92.2 psi)	Actual tire inflation pressure	-
TIREPRESS4	ID4 tire inflation pressure / min.: 0 kPa (0 kgf/cm^2, 0 psi), max.: 637.5 kPa (6.48 kgf/cm^2, 92.2 psi)	Actual tire inflation pressure	-
TIREPRESS5	ID5 tire inflation pressure / min.: 0 kPa (0 kgf/cm^2, 0 psi), max.: 637.5 kPa (6.48 kgf/cm^2, 92.2 psi)	Actual tire inflation pressure	-

(e) Rapidly release the pressures from each wheel by approximately 40 kPa (0.4 kgf/cm^2, 5.8 psi) /30 seconds or more.

(1) Check that each tire pressure data displayed on the intelligent tester screen has changed.

NOTICE:

- **It takes about 1 minute or more to display the updated tire pressure data.**
- **When the "TIREPRESS" data has not changed, reset the tire pressure to the appropriate specified value and rotate the tire 90 to 270 degrees (including the full-size spare tire). Then rapidly release the tire pressure and recheck it.**

(2) After confirming that all of the tire pressure data displayed on the intelligent tester screen have changed, set the tire pressure to the appropriate specified values.

HINT:

If the tire pressure data displayed on the intelligent tester screen has not changed after rechecking, go to other problem procedure (For malfunction in transmission or reception function (See page TW-23)

TW

Result

Condition	Proceed to
All tire pressure readings are equal to specified values	**A**
Any of tire pressure valves are not displayed	**B**
All tire pressure values are not displayed	**C**

A → **END**

B → **INSPECT OTHER PROBLEM (MALFUNCTION IN TRANSMISSION OR RECEPTION FUNCTION)**

C

2 SWITCH TIRE PRESSURE WARNING SELECT SWITCH

(a) Switch tire pressure warning select switch to the other position (MAIN to 2nd or 2nd to MAIN).
(b) Set the tire pressure to the specified value.

Cold tire inflation pressure

Tire size	Front kPa (kgf/cm^2, psi)	Rear kPa (kgf/cm^2, psi)
P215/55R17 93V	210 (2.1, 30)	210 (2.1, 30)

(c) Connect the intelligent tester to the DLC3.
(d) Turn the engine switch on (IG) and turn the tester on.
(e) Select "TIREPRESS" by following the prompts displayed on the intelligent tester.

Tester Display	Measurement Item/Range	Normal Condition	Diagnostic Note
TIREPRESS1	ID1 tire inflation pressure / min.:0 kPa (0 kgf/cm^2, 0 psi), max.: 637.5 kPa (6.48 kgf / cm^2, 92.2 psi)	Actual tire inflation pressure	-
TIREPRESS2	ID2 tire inflation pressure / min.:0 kPa (0 kgf/cm^2, 0 psi), max.: 637.5 kPa (6.48 kgf / cm^2, 92.2 psi)	Actual tire inflation pressure	-
TIREPRESS3	ID3 tire inflation pressure / min.:0 kPa (0 kgf/cm^2, 0 psi), max.: 637.5 kPa (6.48 kgf / cm^2, 92.2 psi)	Actual tire inflation pressure	-
TIREPRESS4	ID4 tire inflation pressure / min.:0 kPa (0 kgf/cm^2, 0 psi), max.: 637.5 kPa (6.48 kgf / cm^2, 92.2 psi)	Actual tire inflation pressure	-
TIREPRESS5	ID5 tire inflation pressure / min.:0 kPa (0 kgf/cm^2, 0 psi), max.: 637.5 kPa (6.48 kgf / cm^2, 92.2 psi)	Actual tire inflation pressure	-

(f) Rapidly release the pressures from each wheel by approximately 40 kPa (0.4 kgf / cm^2, 5.8 psi) /30 seconds or more.
(1) Check that each tire pressure data displayed on the intelligent tester screen has changed.
NOTICE:
- **It takes about 1 minute or more to display the updated tire pressure data.**

- **When the "TIREPRESS" data has not changed, reset the tire pressure to the appropriate specified value and rotate the tire 90 to 270 degrees (including the full-size spare tire). Then rapidly release the tire pressure and recheck it.**

(2) After confirming that all of the tire pressure data displayed on the intelligent tester screen have changed, set the tire pressure to the appropriate specified values.

Result

Condition	Proceed to
All tire pressure readings are equal to specified values	A
Tire pressure values are not displayed	B

A → **END**

B

3	RETURN TIRE PRESSURE WARNING SELECT SWITCH TO ORIGINAL POSITION

NEXT

INSPECT OTHER PROBLEM (MALFUNCTION IN TRANSMISSION OR RECEPTION FUNCTION)

DTC	C2121/21	No Signal from Transmitter ID1 in Main Mode
DTC	C2122/22	No Signal from Transmitter ID2 in Main Mode
DTC	C2123/23	No Signal from Transmitter ID3 in Main Mode
DTC	C2124/24	No Signal from Transmitter ID4 in Main Mode
DTC	C2125/25	No Signal from Transmitter ID5 in Main Mode
DTC	C2131/31	No Signal from Transmitter ID1 in 2nd Mode
DTC	C2132/32	No Signal from Transmitter ID2 in 2nd Mode
DTC	C2133/33	No Signal from Transmitter ID3 in 2nd Mode
DTC	C2134/34	No Signal from Transmitter ID4 in 2nd Mode
DTC	C2135/35	No Signal from Transmitter ID5 in 2nd Mode
DTC	C2181/81	Transmitter ID1 not Received (Test Mode DTC)
DTC	C2182/82	Transmitter ID2 not Received (Test Mode DTC)
DTC	C2183/83	Transmitter ID3 not Received (Test Mode DTC)
DTC	C2184/84	Transmitter ID4 not Received (Test Mode DTC)
DTC	C2185/85	Transmitter ID5 not Received (Test Mode DTC)

DESCRIPTION

The tire pressure warning valve and transmitters that are installed in the tire and wheel assemblies measure the air pressure of the tires. The measured values are transmitted to the tire pressure warning antenna and receiver on the body as radio waves and then sent to the tire pressure warning ECU. The ECU compares the measured air pressure values with the air pressure threshold. When the measured air pressure value is less than this threshold, the warning light in the combination meter comes on.
The tire pressure warning valve and transmitters constantly send radio waves to the tire pressure warning antenna and receiver.
Under the following conditions below, the tire pressure warning antenna and receiver is unable to receive the signals from the tire pressure warning valves and transmitters, and a DTC is stored.

- Facilities or devices that use similar radio frequencies are located in the vicinity of the vehicle.
- Devices using similar radio frequencies are used in the vehicle.

HINT:
When no signals are received for 51 minutes or more, a DTC is output.

DTCs from C2121/21 to C2135/35 can only be cleared by using the tester. DTCs from C2181/81 to C2185/85 can be cleared when the transmitter in the tire pressure warning valve and transmitter sends a forced transmission signal or when the test mode ends. DTCs from C2181/81 to C2185/85 are output only in test mode.

DTC No.	DTC Detecting Condition	Trouble Area
C2121/21 C2122/22 C2123/23 C2124/24 C2125/25 C2131/31 C2132/32 C2133/33 C2134/34 C2135/35	These DTCs are detected when no signals are received for 51 minutes or more.	• Tire pressure warning valve and transmitter • Wire harness or connector • Tire pressure warning ECU
C2181/81 C2182/82 C2183/83 C2184/84 C2185/85	Malfunction in the transmitting/receiving circuit	• Tire pressure warning valve and transmitter • Wire harness or connector • Tire pressure warning ECU

HINT:

- It is necessary to perform the procedure to identify the tire pressure warning valve and transmitter that is malfunctioning because it cannot be identified by the output DTC.
- DTCs C2125/25, C2135/35 and C2185/85 are used only when the vehicle is equipped with a full-size spare tire.

WIRING DIAGRAM

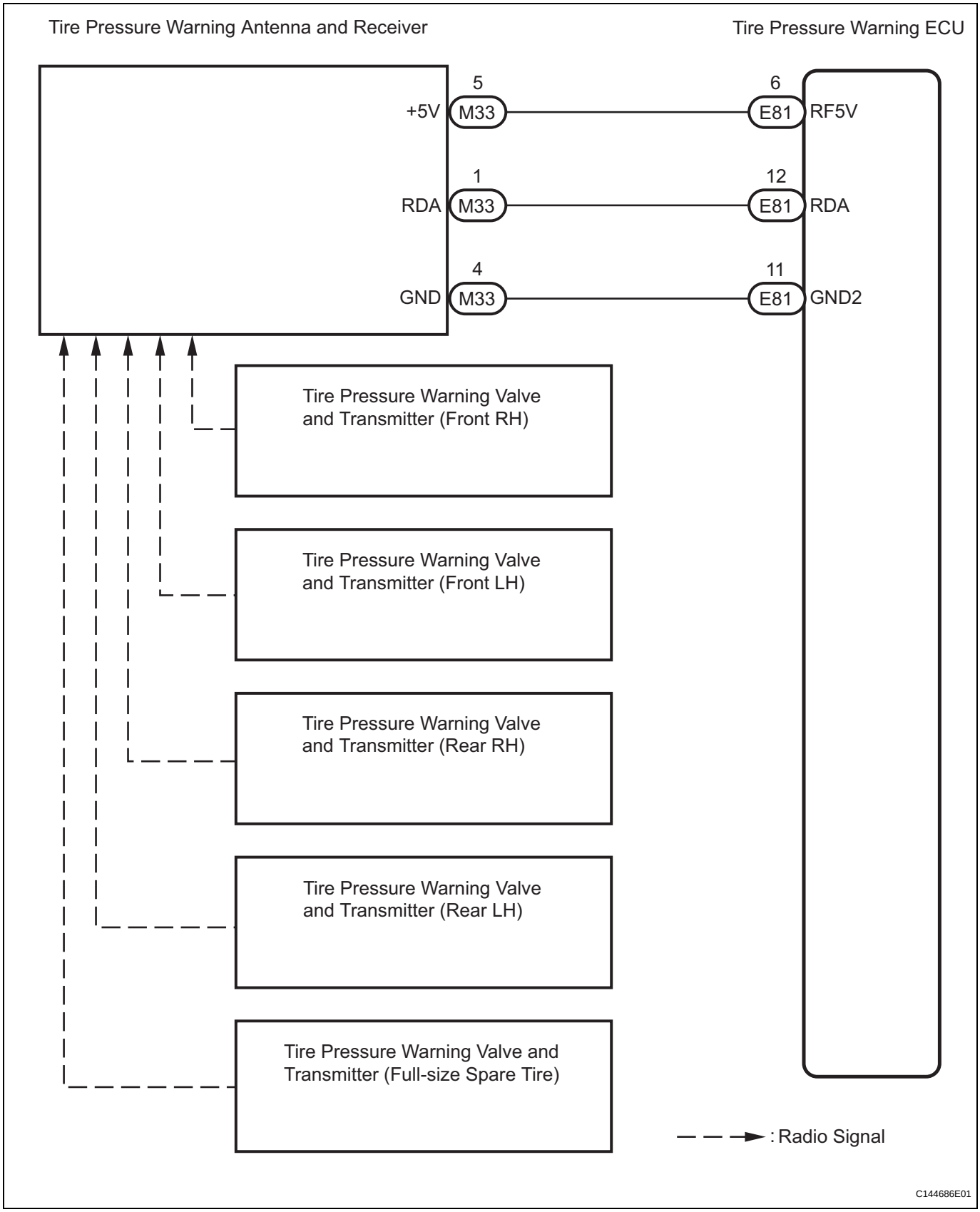

INSPECTION PROCEDURE

NOTICE:

- **When replacing the tire pressure warning ECU, read the IDs stored in the old ECU using the intelligent tester and write them down before removal.**
- **It is necessary to perform initialization (See page TW-18) after registration (See page TW-15) of the transmitter IDs into the tire pressure warning ECU after the ECU and/or valve and transmitter has been replaced.**

1 CHECK FREQUENCY RECEIVING CONDITION

(a) Check if the vehicle is not located in areas such as described below:

(1) Facilities or devices that use similar radio frequencies are located in the vicinity of the vehicle.
HINT:
If the vehicle is located in areas described above, the tire pressure warning light may come on only in a particular area.

(2) Devices using similar radio frequencies are used in the vehicle.
OK:
Facilities, or devices that use similar radio frequencies are not located in the vicinity of the vehicle.
HINT:
Radio frequency may be interrupted due to surroundings or devices installed by the user.

NG → **CHECK IF ANY DEVICE IS INSTALLED BY USER**

OK

2 IDENTIFY TRANSMITTER CORRESPONDING TO DTC

(a) Set the tire pressure to the appropriate specified values.

Cold tire inflation pressure

Tire size	Front kPa (kgf/cm^2, psi)	Rear kPa (kgf/cm^2, psi)
P215/55R17 93V	210 (2.1, 30)	210 (2.1, 30)

TW

(b) Select "TIREPRESS" by following the prompts displayed on the intelligent tester.

TIRE PRESSURE:

Tester Display	Measurement Item/Range	Normal Condition	Diagnostic Note
TIREPRESS1	ID1 tire inflation pressure/ min.: 0 kPa (0 kgf/cm^2, 0 psi), max.: 637.5 kPa (6.48 kgf/cm^2, 92.2 psi)	Actual tire inflation pressure	-
TIREPRESS2	ID2 tire inflation pressure/ min.: 0 kPa (0 kgf/cm^2, 0 psi), max.: 637.5 kPa (6.48 kgf/cm^2, 92.2 psi)	Actual tire inflation pressure	-
TIREPRESS3	ID3 tire inflation pressure/ min.: 0 kPa (0 kgf/cm^2, 0 psi), max.: 637.5 kPa (6.48 kgf/cm^2, 92.2 psi)	Actual tire inflation pressure	-

Tester Display	Measurement Item/Range	Normal Condition	Diagnostic Note
TIREPRESS4	ID4 tire inflation pressure/ min.: 0 kPa (0 kgf/cm^2, 0 psi), max.: 637.5 kPa (6.48 kgf/cm^2, 92.2 psi)	Actual tire inflation pressure	-
TIREPRESS5	ID5 tire inflation pressure/ min.: 0 kPa (0 kgf/cm^2, 0 psi), max.: 637.5 kPa (6.48 kgf/cm^2, 92.2 psi)	Actual tire inflation pressure	-

(c) Rapidly reduce the tire pressure for each wheel at least 40 kPa (0.41 kg/cm^2, 5.8 psi) within 30 seconds.

(d) Check the DATA LIST.

NOTICE:

- **It takes about 1 minute or more to display the updated tire pressure data.**
- **When no "TIREPRESS" data has changed, reset the tire pressure to the appropriate specified value and rotate the tire 90 to 270 degrees. Then rapidly release the tire pressure and recheck it.**
- **Record the transmitter ID of which "TIREPRESS" data corresponds to each tire.**

(e) After confirming that one of "TIREPRESS" data for one tire (ID1 to ID4 or ID5) has changed, repeat this procedure one by one. Identify the transmitter that corresponds to DTC.

Result

Condition	Proceed to
All tire pressure readings are equal to specified values	A
Any of tire pressure values are not displayed	B
All tire pressure values are not displayed	C

A → END

B → Go to step 6

C

3 SWITCH TIRE PRESSURE WARNING SELECT SWITCH

TW

(a) Switch tire pressure warning select switch to the other position (MAIN to 2nd or 2nd to MAIN).

(b) Set the tire pressure to the appropriate specified values.

Cold tire inflation pressure

Tire size	Front kPa (kgf/cm^2, psi)	Rear kPa (kgf/cm^2, psi)
P215/55R17 93V	210 (2.1, 30)	210 (2.1, 30)

(c) Select "TIREPRESS" by following the prompts displayed on the intelligent tester.

TIRE PRESSURE:

Tester Display	Measurement Item/Range	Normal Condition	Diagnostic Note
TIREPRESS1	ID1 tire inflation pressure/ min.: 0 kPa (0 kgf/cm^2, 0 psi), max.: 637.5 kPa (6.48 kgf/cm^2, 92.2 psi)	Actual tire inflation pressure	-

Tester Display	Measurement Item/Range	Normal Condition	Diagnostic Note
TIREPRESS2	ID2 tire inflation pressure/ min.: 0 kPa (0 kgf/cm^2, 0 psi), max.: 637.5 kPa (6.48 kgf/cm^2, 92.2 psi)	Actual tire inflation pressure	-
TIREPRESS3	ID3 tire inflation pressure/ min.: 0 kPa (0 kgf/cm^2, 0 psi), max.: 637.5 kPa (6.48 kgf/cm^2, 92.2 psi)	Actual tire inflation pressure	-
TIREPRESS4	ID4 tire inflation pressure/ min.: 0 kPa (0 kgf/cm^2, 0 psi), max.: 637.5 kPa (6.48 kgf/cm^2, 92.2 psi)	Actual tire inflation pressure	-
TIREPRESS5	ID5 tire inflation pressure/ min.: 0 kPa (0 kgf/cm^2, 0 psi), max.: 637.5 kPa (6.48 kgf/cm^2, 92.2 psi)	Actual tire inflation pressure	-

(d) Rapidly reduce the tire pressure for each wheel at least 40 kPa (0.41 kg/cm^2, 5.8 psi) within 30 seconds.

(e) Check the DATA LIST.

NOTICE:

- **It takes about 1 minute or more to display the updated tire pressure data.**
- **When no "TIREPRESS" data has changed, reset the tire pressure to the appropriate specified value and rotate the tire 90 to 270 degrees. Then rapidly release the tire pressure and recheck it.**
- **Record the transmitter ID of which "TIREPRESS" data corresponds to each tire.**

(f) After confirming that one of "TIREPRESS" data for one tire (ID1 to ID4 or ID5) has changed, repeat this procedure one by one. Identify the transmitter that corresponds to DTC.

Result

Condition	Proceed to
All tire pressure readings are equal to specified values	A
Tire pressure values are not displayed	B

A → **END**

B

4	RETURN TIRE PRESSURE WARNING SELECT SWITCH TO ORIGINAL POSITION

NEXT

5 CHECK HARNESS AND CONNECTOR (ECU - RECEIVER)

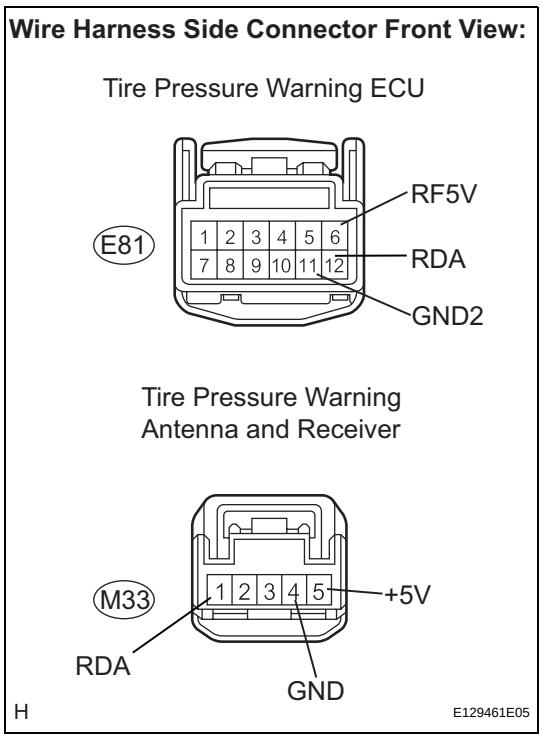

(a) Disconnect the E81 ECU connector.
(b) Disconnect the M33 receiver connector.
(c) Measure the resistance according to the value(s) in the table below.

Standard resistance

Tester Connection	Specified Condition
E81-12 (RDA) - M33-1 (RDA)	Below 1 Ω
E81-11 (GND2) - M33-4 (GND)	
E81-6 (RF5V) - M33-5 (+5V)	
E81-12 (RDA) - Body ground	10 kΩ or higher
E81-11 (GND2) - Body ground	
E81-6 (RF5V) - Body ground	

NG → **REPAIR OR REPLACE HARNESS OR CONNECTOR**

OK

6 INSPECT TIRE PRESSURE WARNING ANTENNA AND RECEIVER

(a) Select REGIT ID CODE by following the prompts displayed on the intelligent tester.

TIRE PRESSURE:

Tester Display	Measurement Item/Range	Normal Condition	Diagnostic Note
REGIT ID1 CODE	Registered ID1 code/ min.: 0, max.: FFFFFF*	The ID No. registered in the transmitter ID1 is displayed	*: Displayed only when the ID No. is not registered.
REGIT ID2 CODE	Registered ID2 code/ min.: 0, max.: FFFFFF*	The ID No. registered in the transmitter ID2 is displayed	*: Displayed only when the ID No. is not registered.
REGIT ID3 CODE	Registered ID3 code/ min.: 0, max.: FFFFFF*	The ID No. registered in the transmitter ID3 is displayed	*: Displayed only when the ID No. is not registered.
REGIT ID4 CODE	Registered ID4 code/ min.: 0, max.: FFFFFF*	The ID No. registered in the transmitter ID4 is displayed	*: Displayed only when the ID No. is not registered.
REGIT ID5 CODE	Registered ID5 code/ min.: 0, max.: FFFFFF*	The ID No. registered in the transmitter ID5 is displayed	*: Displayed only when the ID No. is not registered.

(b) Check the ID number on the identified transmitter by removing it from the tire and wheel.

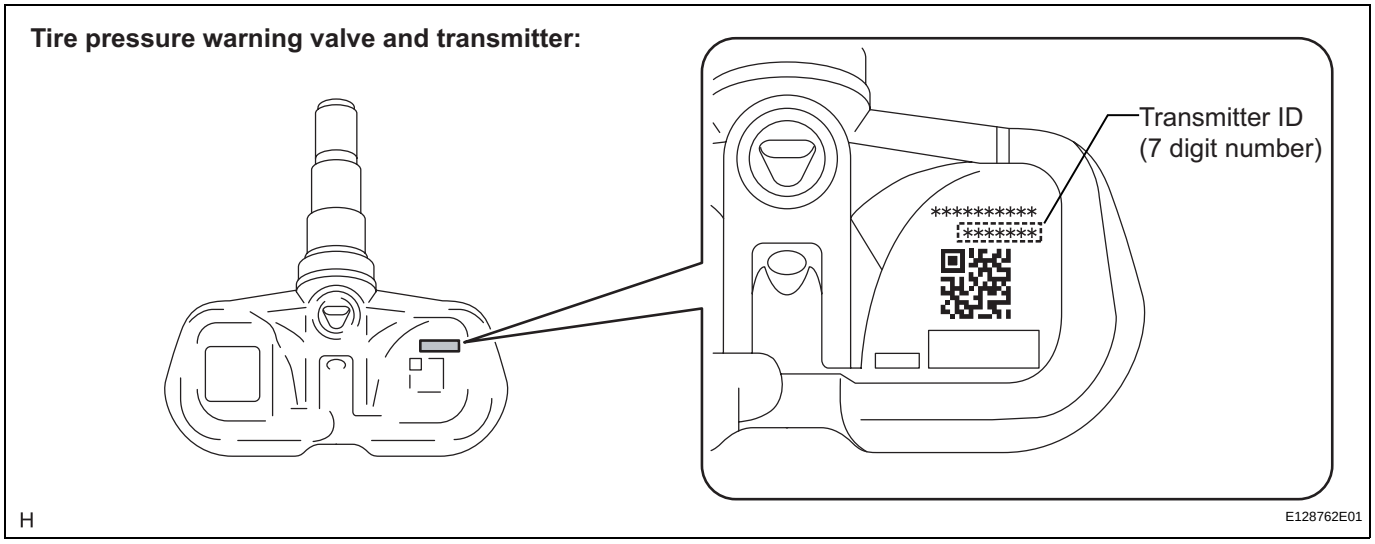

(c) Confirm that the ID number on the transmitter and recorded transmitter ID match.

Result

Result	Proceed to
Match	A
Do not match	B

B → **Go to step 8**

A

7 REPLACE TIRE PRESSURE WARNING VALVE AND TRANSMITTER

HINT:
(See page TW-80)

NEXT

8 REGISTRATION OF TRANSMITTER ID

(a) Perform registration (See page TW-15).
(b) Set the tire air pressure appropriate specified values.

Cold tire inflation pressure

Tire size	Front kPa (kgf/cm^2, psi)	Rear kPa (kgf/cm^2, psi)
P215/55R17 93V	210 (2.1, 30)	210 (2.1, 30)

NEXT

9 PERFORM INITIALIZATION

(a) Perform initialization (See page TW-18).

NEXT

10 READ VALUE OF DATA LIST

(a) Turn the engine switch off, and then turn it on (IG).
(b) Select "TIREPRESS" by following the prompts displayed on the intelligent tester.
HINT:
It may take up to 1 minute or more to display the tire pressure data.

Result

Condition	Proceed to
All tire pressure readings are equal to specified values.	A
Tire pressure values are not displayed.	B

A → **END**

B

11 REPLACE TIRE PRESSURE WARNING ANTENNA AND RECEIVER

(a) Replace the tire pressure warning antenna and receiver (See page TW-77).

NEXT

12 READ VALUE OF DATA LIST

(a) Turn the engine switch off, and then turn it on (IG).
(b) Select "TIREPRESS" by following the prompts displayed on the intelligent tester.
HINT:
It may take up to 1 minute or more to display the tire pressure data.

Result

Condition	Proceed to
All tire pressure readings are equal to specified values.	A
Tire pressure values are not displayed.	B

B → **REPLACE TIRE PRESSURE WARNING ECU (See page TW-85)**

A

END

DTC	C2141/41	Transmitter ID1 Error

DTC	C2142/42	Transmitter ID2 Error

DTC	C2143/43	Transmitter ID3 Error

DTC	C2144/44	Transmitter ID4 Error

DTC	C2145/45	Transmitter ID5 Error

DESCRIPTION

The tire pressure warning valve and transmitters that are installed in the tire and wheel assemblies measure the air pressure of the tires. The measured values are transmitted to the tire pressure warning antenna and receiver on the body as radio waves and then sent to the tire pressure warning ECU. The ECU compares the measured air pressure values with the air pressure threshold. When the measured air pressure value is less than this threshold, the warning light in the combination meter comes on.
When the internal circuit of the tire pressure warning valve and transmitter is malfunctioning, this DTC is output.

DTC No.	DTC Detecting Condition	Trouble Area
C2141/41 C2142/42 C2143/43 C2144/44 C2145/45	If an "ERROR" signal is received 3 times consecutively, the tire pressure warning valve and transmitter will be judged as defective and a DTC will be output. This will happen in situations where the inflation pressure is outside the range 0 to 637.5 kPa (0 to 6.48 kgf/cm^2, 0 psi to 92.2 psi), the temperature inside the tire is outside the specified range -40 to 120°C (-40 to 253°F), or an error occurs in the tire pressure warning valve and transmitter or the surrounding area.	• Tire pressure warning valve and transmitter • Tire pressure warning ECU

HINT:
- It is necessary to perform the procedure to identify the tire pressure warning valve and transmitter that is malfunctioning because it cannot be identified by the output DTC.
- DTC 2145/45 is used only when the vehicle is equipped with the full-size spare tire.

INSPECTION PROCEDURE

NOTICE:
- **When replacing the tire pressure warning ECU, read the IDs stored in the old ECU using the intelligent tester and write them down before removal.**
- **It is necessary to perform initialization (See page TW-18) after registration (See page TW-15) of the transmitter IDs into the tire pressure warning ECU after the ECU and/or valve and transmitter has been replaced.**

TW

1	IDENTIFY TRANSMITTER CORRESPONDING TO DTC

(a) Set the tire pressure to the specified value.

Cold tire inflation pressure

Tire size	Front kPa (kgf/cm^2, psi)	Rear kPa (kgf/cm^2, psi)
P215/55R17 93V	210 (2.1, 30)	210 (2.1, 30)

(b) Display the "TIREPRESS" data for each wheel using the intelligent tester.

(c) Rapidly reduce the tire pressure for each wheel at least 40 kPa (0.41 kg/cm^2, 5.8 psi) within 30 seconds. If "TIREPRESS" displayed on the tester (ID1 to ID4 or ID5) does not change, the tire pressure warning valve and transmitter corresponds to the DTC that was detected.
HINT:
- Identify the malfunctioning tire pressure warning valve and transmitter by repeatedly decreasing the tire pressure for each tire.
- Record which "TIREPRESS" data (ID1 to ID4 or ID5) corresponds to each tire.

TIRE PRESSURE:

Tester Display	Measurement Item/Range	Normal Condition	Diagnostic Note
TIREPRESS1	ID1 tire inflation pressure/ min.: 0 kPa (0 kgf/cm^2, 0 psi), max.: 637.5 kPa (6.48 kgf/cm^2, 92.2 psi)	Actual tire inflation pressure	-
TIREPRESS2	ID2 tire inflation pressure/ min.: 0 kPa (0 kgf/cm^2, 0 psi), max.: 637.5 kPa (6.48 kgf/cm^2, 92.2 psi)	Actual tire inflation pressure	-
TIREPRESS3	ID3 tire inflation pressure/ min.: 0 kPa (0 kgf/cm^2, 0 psi), max.: 637.5 kPa (6.48 kgf/cm^2, 92.2 psi)	Actual tire inflation pressure	-
TIREPRESS4	ID4 tire inflation pressure/ min.: 0 kPa (0 kgf/cm^2, 0 psi), max.: 637.5 kPa (6.48 kgf/cm^2, 92.2 psi)	Actual tire inflation pressure	-
TIREPRESS5	ID5 tire inflation pressure/ min.: 0 kPa (0 kgf/cm^2, 0 psi), max.: 637.5 kPa (6.48 kgf/cm^2, 92.2 psi)	Actual tire inflation pressure	-

(d) Check the DATA LIST.

Result

Condition	Detection Condition
One of "TIREPRESS" data (ID1 to ID4 or ID5) changed.	**Normal**
"TIREPRESS" data did not change.	**Transmitter corresponding to DTC**

NOTICE:
- **When "TIREPRESS" data has not changed, reset the tire pressure to the appropriate specified value and rotate the tire 90 to 270 degrees. Then forcibly transmit the transmitter ID and recheck.**
- **Record the transmitter ID and position of transmitters that are normal.**

(e) When the "TIREPRESS" data (ID1 to ID4 or ID5) has changed, repeat this procedure to identify the tire pressure warning valve and transmitter that corresponds to a DTC.

(f) When all of the "TIREPRESS" data (ID1 to ID4 or ID5) have changed, identify the malfunctioning tire pressure warning valve and transmitter using recorded ID numbers and output DTC.

(g) Set the tire pressures to the appropriate specified values.

NEXT

2 REPLACE TIRE PRESSURE WARNING VALVE AND TRANSMITTER

(a) Replace the identified tire pressure warning valve and transmitter with a new one.
HINT:
- Before installing a new tire pressure warning valve and transmitter, read and write down its transmitter ID.
- The IDs for the tire pressure warning valve and transmitter not be replaced should be checked using the tester and recorded.

NEXT

3 REGISTRATION OF TRANSMITTER ID

(a) Register the transmitter ID for all wheels (See page TW-15).
(b) Set the tire air pressure to the specified value.

Result

Condition	Detection Condition
One of "TIREPRESS" data (ID1 to ID4 or ID5) changed.	Normal
"TIREPRESS" data did not change.	Transmitter corresponding to DTC

NEXT

4 PERFORM INITIALIZATION

(a) Perform initialization (See page TW-18).

NEXT

5 CHECK DTC

(a) Check for a DTC (See page TW-29).

Result

Condition	Proceed to
Any of the DTCs from C2141/41 to C2144/44 or C2145/45 are output.	A
Any of the DTCs from C2141/41 to C2144/44 or C2145/45 are not output.	B

B → END

A

REPLACE TIRE PRESSURE WARNING ECU (See page TW-85)

TW

DTC	C2165/65	Abnormal Temperature Inside ID1 Tire

DTC	C2166/66	Abnormal Temperature Inside ID2 Tire

DTC	C2167/67	Abnormal Temperature Inside ID3 Tire

DTC	C2168/68	Abnormal Temperature Inside ID4 Tire

DTC	C2169/69	Abnormal Temperature Inside ID5 Tire

DESCRIPTION

Each tire pressure warning valve and transmitter measures the internal temperature of its tire as well as tire pressure, and transmits the information to the tire pressure warning ECU along with the transmitter ID. If the measured temperature is out of the specified range, the tire pressure warning ECU recognizes it as a malfunction, outputs DTCs, and blinks (come on after blinking for 1 minute) the tire pressure warning light.

DTC No.	DTC Detecting Condition	Trouble Area
C2165/65 C2166/66 C2167/67 C2168/68 C2169/69	Temperature inside the tire exceeds 119°C (246.2°F) more than once.	• Tires • Tire pressure warning valve and transmitter • Tire pressure warning ECU

HINT:
- It is necessary to perform the procedure to identify the tire pressure warning valve and transmitter that is malfunctioning because it cannot be identified by the output DTC.
- DTC 2169/69 is used only when the vehicle is equipped with a full-size spare tire.

INSPECTION PROCEDURE

NOTICE:
- **When replacing the tire pressure warning ECU, read the IDs stored in the old ECU using the intelligent tester and note them down before removal.**
- **It is necessary to perform initialization (See page TW-18) after registration (See page TW-15) of the transmitter IDs into the tire pressure warning ECU after the ECU and/or valve and transmitter has been replaced.**

TW

1	CHECK TIRES

(a) Check the tire is not flat, and there is no indication of air pressure drop.
OK:
Tire is normal.
HINT:
If a tire is damaged, the tire pressure warning valve and transmitter may also have been damaged at the same time.

NG → **REPLACE TIRE AND TIRE PRESSURE WARNING VALVE AND TRANSMITTER**

OK

2	IDENTIFY TRANSMITTER CORRESPONDING TO DTC

(a) Set the tire pressure to the specified value.

Cold tire inflation pressure

Tire size	Front kPa (kgf/cm^2, psi)	Rear kPa (kgf/cm^2, psi)
P215/55R17 93V	210 (2.1, 30)	210 (2.1, 30)

(b) Display the "TIREPRESS" data for each wheel using the intelligent tester.

(c) Rapidly reduce the tire pressure for each wheel at least 40 kPa (0.41 kg/cm^2, 5.8 psi) within 30 seconds.

(d) Check the DATA LIST

TIRE PRESSURE:

Tester Display	Measurement Item/Range	Normal Condition	Diagnostic Note
TIREPRESS1	ID1 tire inflation pressure/ min.: 0 kPa (0 kgf/cm^2, 0 psi), max.: 637.5 kPa (6.48 kgf/cm^2, 92.2 psi)	Actual tire inflation pressure	-
TIREPRESS2	ID2 tire inflation pressure/ min.: 0 kPa (0 kgf/cm^2, 0 psi), max.: 637.5 kPa (6.48 kgf/cm^2, 92.2 psi)	Actual tire inflation pressure	-
TIREPRESS3	ID3 tire inflation pressure/ min.: 0 kPa (0 kgf/cm^2, 0 psi), max.: 637.5 kPa (6.48 kgf/cm^2, 92.2 psi)	Actual tire inflation pressure	-
TIREPRESS4	ID4 tire inflation pressure/ min.: 0 kPa (0 kgf/cm^2, 0 psi), max.: 637.5 kPa (6.48 kgf/cm^2, 92.2 psi)	Actual tire inflation pressure	-
TIREPRESS5	ID5 tire inflation pressure/ min.: 0 kPa (0 kgf/cm^2, 0 psi), max.: 637.5 kPa (6.48 kgf/cm^2, 92.2 psi)	Actual tire inflation pressure	-

Result

Condition	Detection Condition
One of "TIREPRESS" data (ID1 to ID4 or ID5) changed.	**Normal**
No "TIREPRESS" data changed.	**Transmitter corresponding to DTC**

NOTICE:

- **It takes about 1 minute or more to display the updated data.**
- **When no "TIREPRESS" data has changed, reset the tire pressure to the appropriate specified value and rotate the tire 90 to 270 degrees. Then forcibly transmit the transmitter ID and recheck it.**
- **Record the transmitter ID and position that is normal condition.**

(e) When the "TIREPRESS" data (ID1 to ID4 or ID5) has changed, repeat this procedure to identify the tire pressure warning valve and transmitter that corresponds to a DTC.

(f) When all of the "TIREPRESS" data (ID1 to ID4 or ID5) has changed, identify the malfunctioning tire pressure warning valve and transmitter based on the recorded ID numbers and output DTC.

NEXT

3	REPLACE TIRE PRESSURE WARNING VALVE AND TRANSMITTER

(a) Replace the identified tire pressure warning valve and transmitter with a new one (See page TW-80).

HINT:

- Before installing a new tire pressure warning valve and transmitter, read and write down its transmitter ID.
- The IDs for the tire pressure warning valve and transmitter not be replaced should be checked using the tester and recorded.

NEXT

4	CHECK REGISTRATION OF TRANSMITTER ID

(a) Register the transmitter ID for 4 or 5 wheels (See page TW-15).

(b) Set the tire pressure of all wheels to the specified value.

Cold tire inflation pressure

Tire size	Front kPa (kgf/cm^2, psi)	Rear kPa (kgf/cm^2, psi)
P215/55R17 93V	210 (2.1, 30)	210 (2.1, 30)

NEXT

5	PERFORM INITIALIZATION

(a) Perform initialization (See page TW-18).

NEXT

6	CHECK DTC

(a) Check for a DTC (See page TW-18).

TW

Result

Condition	Proceed to
Any of the DTCs from C2165/65 to C2168/68 or C2169/69 are output.	A
Any of the DTCs from C2165/65 to C2168/68 or C2169/69 are not output.	B

B → END

A

REPLACE TIRE PRESSURE WARNING ECU (See page TW-85)

DTC	C2171/71	Transmitter ID not Registered in Main Mode

DTC	C2172/72	Transmitter ID not Registered in 2nd Mode

DESCRIPTION

The IDs of each tire pressure warning valve and transmitter are registered to the tire pressure warning ECU. When the ECU detects that an ID is not the one of registered IDs, or cannot receive an ID signal, a DTC is output.

DTC No.	DTC Detection Condition	Trouble Area
C2171/71 C2172/72	Transmitter ID code is not registered. (When an ID code is unregistered for 51 minutes or more)	Tire pressure warning ECU

INSPECTION PROCEDURE

NOTICE:

- **When replacing the tire pressure warning ECU, read the IDs stored in the old ECU using the intelligent tester and note them down before removal.**
- **It is necessary to perform initialization (See page TW-18) after registration (See page TW-15) of the transmitter IDs into the tire pressure warning ECU after the ECU and/valve and transmitter has been replaced.**

1 CONFIRM REGISTRATION CONDITION (REGISTERED ID CODES)

(a) Connect the intelligent tester to the DLC3 connector.
(b) Turn the engine switch on (IG) and turn the tester on.
(c) Select REGIT ID CODE by following the prompts displayed on the intelligent tester.
OK:
The registered transmitter ID codes are displayed on the intelligent tester.

OK → **REPLACE TIRE PRESSURE WARNING ECU (See page TW-85)**

NG ↓

2 PERFORM REGISTRATION

(a) Register the transmitter IDs for all the wheels (See page TW-15).
(b) Set the tire pressure of all the wheels to the appropriate specified values.

NEXT ↓

3 READ VALUE ON INTELLIGENT TESTER

(a) Check the DATA LIST (See page TW-30)
(b) Select "TIREPRESS" by following the prompts displayed on the intelligent tester.

TW

HINT:
It may take up to 1 minute or more to display the tire pressure data.

Result

Condition	Proceed to
All tire pressure readings are equal to specified values.	A
Tire pressure values are not displayed	B

B → **REPLACE TIRE PRESSURE WARNING ECU (See page TW-85)**

A

END

DTC	C2176/76	Receiver Error

DESCRIPTION

The signals are transmitted to the tire pressure warning antenna and receiver on the body as radio waves and then sent to the tire pressure warning ECU.

DTC No.	DTC Detection Condition	Trouble Area
C2176/76	DTC is stored when any of the following is detected: • Malfunction in the tire pressure warning ECU internal circuit. • Terminal RF5V is shorted to ground. • Malfunction in the tire pressure warning antenna and receiver internal circuit.	• Tire pressure warning antenna and receiver • Wire harness or connector • Tire pressure warning ECU

WIRING DIAGRAM

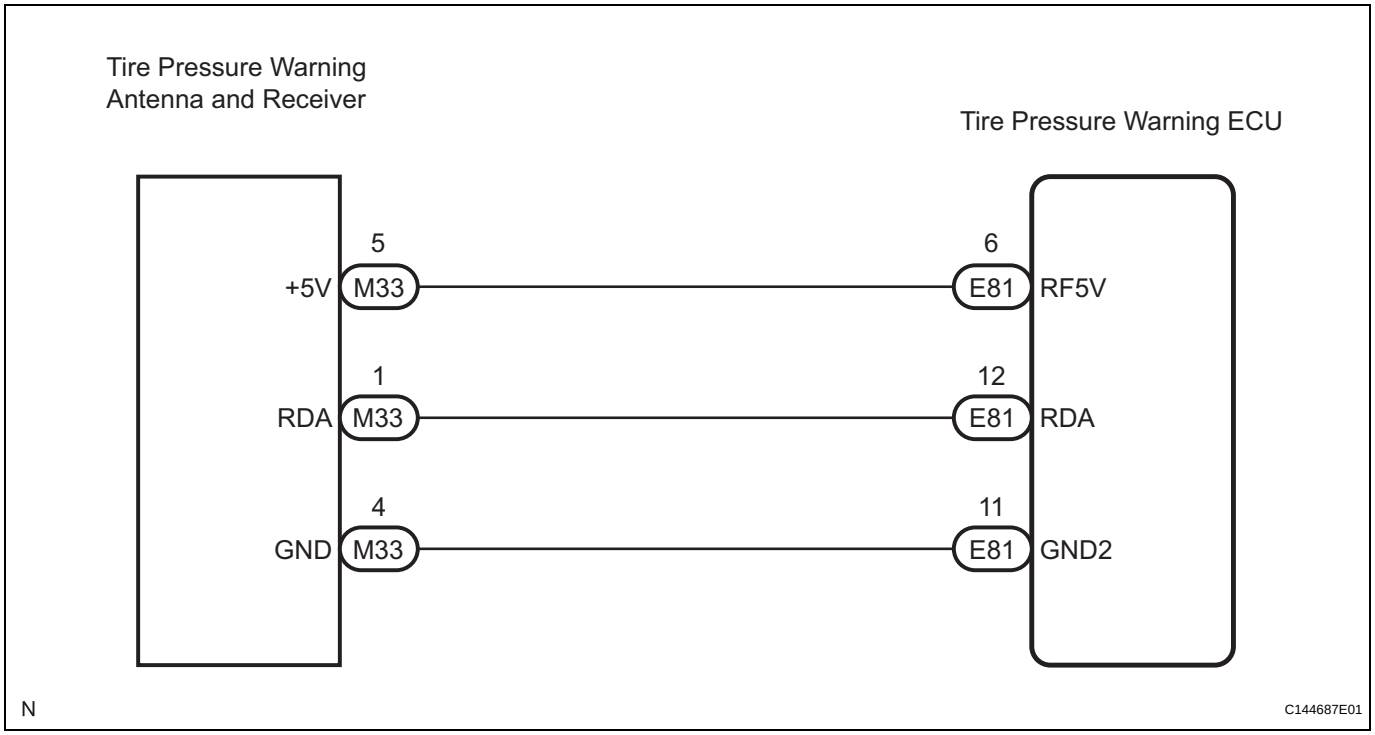

INSPECTION PROCEDURE

NOTICE:

- **When replacing the tire pressure warning ECU, read the IDs stored in the ECU using the intelligent tester and write them down before removal.**
- **It is necessary to perform initialization (See page TW-18) after registration (See page TW-15) of the transmitter IDs into the tire pressure warning ECU after the ECU and/or valve and transmitter has been replaced.**

TW

1 CHECK TIRE PRESSURE WARNING ECU

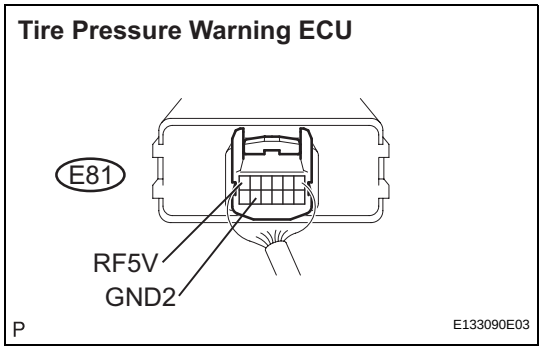

(a) Measure the voltage according to the value(s) in the table below.

Standard voltage

Tester Connection	Switch Condition	Specified Condition
E81-6 (RF5V) - E81-11 (GND2)	Engine switch on (IG)	4.5 to 5.5 V

NG → **Go to step 5**

OK

2 CHECK WIRE HARNESS (ECU - RECEIVER)

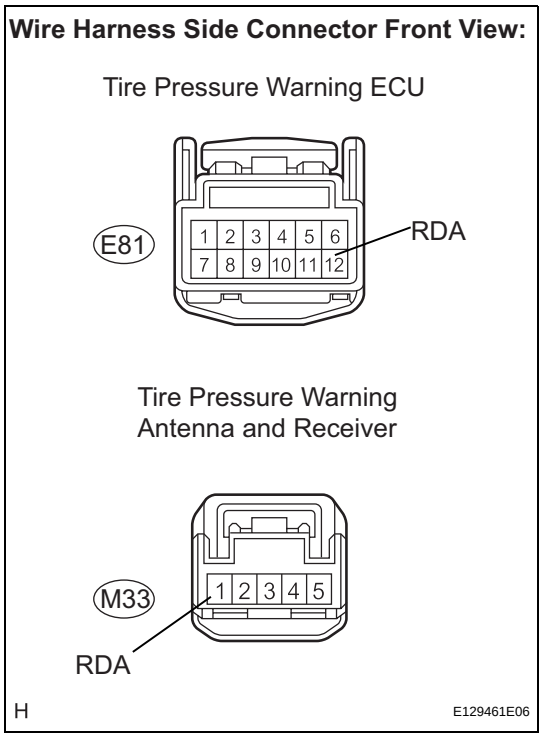

(a) Disconnect the E81 ECU connector.
(b) Disconnect the M33 receiver connector.
(c) Measure the resistance according to the value(s) in the table below.

Standard resistance

Tester Connection	Specified Condition
E81-12 (RDA) - M33-1 (RDA)	Below 1 Ω
E81-12 - Body ground	

NG → **REPAIR OR REPLACE HARNESS OR CONNECTOR**

OK

3 REPLACE TIRE PRESSURE WARNING ANTENNA AND RECEIVER

HINT:
Replace tire pressure warning antenna and receiver (See page TW-77).

NEXT

TW

4	CHECK DTC

(a) Check for DTC (See page TW-29).
OK:
DTC is not output.
HINT:
- It is necessary to register IDs when replacing the tire pressure warning ECU (See page TW-15).
- Read the IDs on the DATA LIST before removing the tire pressure warning ECU. Register the ID in the new tire pressure warning ECU.

NG → **REPLACE TIRE PRESSURE WARNING ECU**

OK

END

5	CHECK HARNESS AND CONNECTOR (ECU - RECEIVER)

Wire Harness Side Connector Front View:

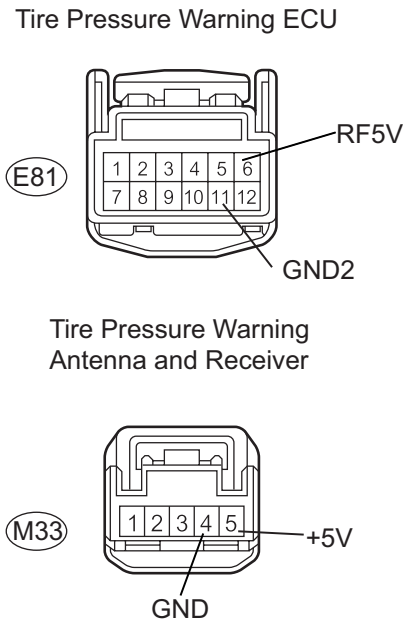

(a) Disconnect the E81 ECU connector.
(b) Disconnect the M33 receiver connector.
(c) Measure the resistance according to the value(s) in the table below.

Standard resistance

Tester Connection	Specified Condition
E81-11 (GND2) - M33-4 (GND)	Below 1 Ω
E81-6 (RF5V) - M33-5 (+5V)	
E81-11 (GND2) - Body ground	10 kΩ or higher
E81-6 (RF5V) - Body ground	

Result

Result	Proceed to
OK	A
OK (When troubleshooting in accordance with PROBLEM SYMPTOMS TABLE)	B
NG	C

A → **REPLACE TIRE PRESSURE WARNING ECU (See page TW-85)**

C → **REPAIR OR REPLACE HARNESS OR CONNECTOR AND REPLACE TIRE PRESSURE WARNING ECU (See page TW-85)**

B

PROCEED TO NEXT CIRCUIT INSPECTION SHOWN IN PROBLEM SYMPTOMS TABLE

TW

DTC	C2177/77	Initialization not Completed

DESCRIPTION

Initialization is necessary after replacing any of the ECU, tires with different tire pressure, or tire pressure warning valve and transmitter, after rotating the tires or when a new vehicle is delivered.

DTC No.	DTC Detection Condition	Trouble Area
C2177/77	Initialization is not completed after vehicle speed of 5 mph (8 km/h) or more continues for 20 minutes or more (total).	• Tire pressure warning valve and transmitter • Tire pressure warning ECU • Tire pressure warning reset switch

INSPECTION PROCEDURE

NOTICE:

- **When replacing the tire pressure warning ECU, read the IDs stored in the old ECU using the intelligent tester and write them down before removal.**
- **It is necessary to perform initialization (See page TW-18) after registration (See page TW-15) of the transmitter IDs into the tire pressure warning ECU after the ECU and/or valve and transmitter has been replaced.**

1 CHECK FREQUENCY RECEIVING CONDITION

(a) Check if the vehicle is not located in areas such as described below:

(1) Facilities or devices that use similar radio frequencies are located in the vicinity of the vehicle.
HINT:
If the vehicle is located in areas described above, the tire pressure warning light may come on only in a particular area.

(2) Devices using similar radio frequencies are used in the vehicle.
OK:
Facilities, or devices that use similar radio frequencies are not located in the vicinity of the vehicle.
HINT:
Radio frequency may be interrupted due to surroundings or devices installed by the user.

NG → **CHECK IF ANY DEVICE IS INSTALLED BY USER**

OK

2 CHECK TIRE PRESSURE WARNING SELECT SWITCH

(a) Check that the position of the tire pressure warning select switch (MAIN or 2nd).
OK:
Tire pressure warning select switch position is the same as the type of registration ID of the wheels being used.

TW

NG → **CHANGE TIRE PRESSURE WARNING SELECT SWITCH POSITION**

OK

3 PERFORM INITIALIZATION

(a) Perform initialization (See page TW-18).
NOTICE:
Signals from a tire pressure warning valve and transmitter may be interrupted depending on the position of the valve. If initialization is not completed, rotate the tire 90 to 270 degrees and perform initialization again.

OK → **END**

NG

4 INSPECT TIRE PRESSURE WARNING VALVE AND TRANSMITTER

(a) Select REGIT ID CODE by following the prompts displayed on the intelligent tester.

TIRE PRESSURE:

Tester Display	Measurement Item/Range	Normal Condition	Diagnostic Note
TIREPRESS1	ID1 tire inflation pressure/ min.: 0 kPa (0 kgf/cm^2, 0 psi), max.: 637.5 kPa (6.48 kgf/cm^2, 92.2 psi)	Actual tire inflation pressure	-
TIREPRESS2	ID2 tire inflation pressure/ min.: 0 kPa (0 kgf/cm^2, 0 psi), max.: 637.5 kPa (6.48 kgf/cm^2, 92.2 psi)	Actual tire inflation pressure	-
TIREPRESS3	ID3 tire inflation pressure/ min.: 0 kPa (0 kgf/cm^2, 0 psi), max.: 637.5 kPa (6.48 kgf/cm^2, 92.2 psi)	Actual tire inflation pressure	-
TIREPRESS4	ID4 tire inflation pressure/ min.: 0 kPa (0 kgf/cm^2, 0 psi), max.: 637.5 kPa (6.48 kgf/cm^2, 92.2 psi)	Actual tire inflation pressure	-
TIREPRESS5	ID5 tire inflation pressure/ min.: 0 kPa (0 kgf/cm^2, 0 psi), max.: 637.5 kPa (6.48 kgf/cm^2, 92.2 psi)	Actual tire inflation pressure	-

(b) Check the ID number on the identified transmitter by removing it from the tire and wheel.

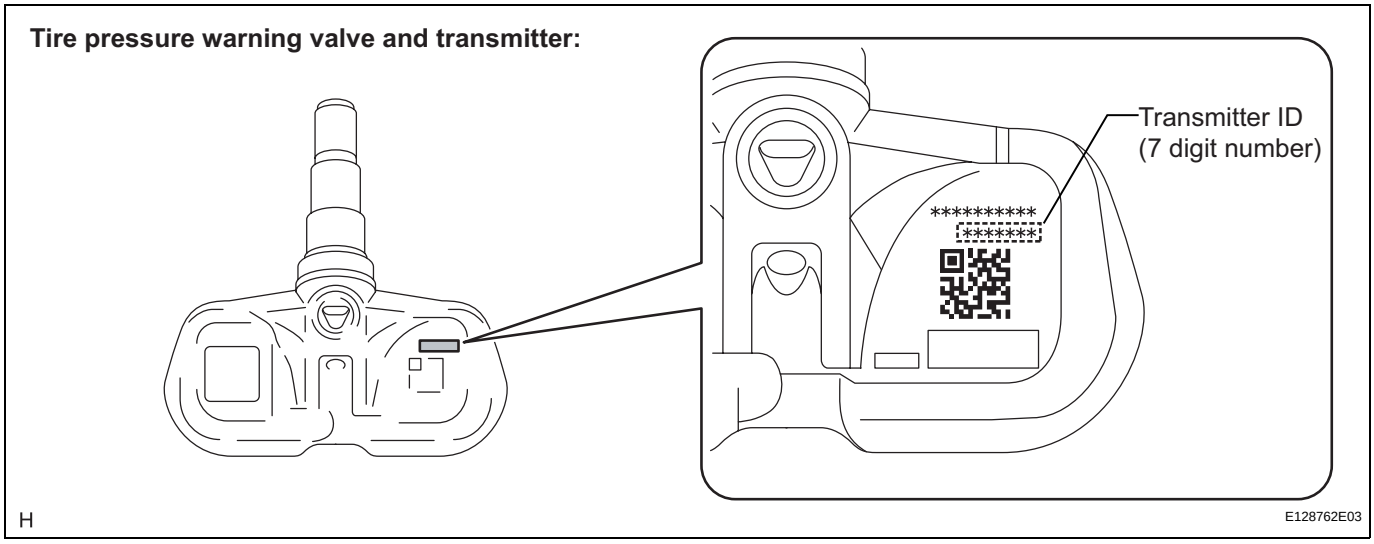

Result

Result	Proceed to
Matched	A
Not matched	B

NG → **REGISTRATION OF TRANSMITTER ID (See page TW-15)**

OK

5 CHECK DTC

(a) Check for a DTC (See page TW-29).

Result

Condition	Proceed to
Only DTC C2177/77 is output.	A
DTC C2177/77 and any of the DTCs from C2121/21 to C2125/25 are output.	B

B → **REPAIR CIRCUITS INDICATED BY OUTPUT DTCS (See page TW-40)**

TW

A

REPAIR OR REPLACE TIRE PRESSURE WARNING ECU (See page TW-85)

DTC	C2191/91	Vehicle Speed Signal Error (Test Mode DTC)

DESCRIPTION

The tire pressure warning ECU receives a speed signal from the combination meter. This DTC is stored upon entering test mode, and cleared when a vehicle speed signal of 12 mph (20 km/h) is detected for 3 seconds or more. This DTC is output only in test mode.

DTC No.	DTC Detecting Condition	Trouble Area
C2191/91	Speed sensor circuit malfunction	• Vehicle speed sensor • Tire pressure warning ECU • Combination meter • Wire harness or connector

WIRING DIAGRAM

INSPECTION PROCEDURE

NOTICE:

- **When replacing the tire pressure warning ECU, read the IDs stored in the ECU using the intelligent tester and write them down before removal.**
- **It is necessary to perform initialization (See page TW-18) after registration (See page TW-15) of the transmitter IDs into the tire pressure warning ECU after the ECU and/or valve and transmitter has been replaced.**

TW

1	READ VALUE ON INTELLIGENT TESTER

(a) Connect the intelligent tester to DLC3.
(b) Turn the engine switch on (IG), and turn the intelligent tester on.
(c) Select the item below in the Data List, and read the value displayed on the intelligent tester.

HINT:
Enter the following menus: DIAGNOSIS / OBD/MOBD / METER / DATA LIST.

Tester Display	Measurement Item/Range	Normal Condition	Diagnostic Note
VEHICLE SPD	Vehicle speed/Min.:0 km/h (0 mph) MAX.:255 km/h (158 mph)	Almost same as actual vehicle speed	-

(d) Check that the values indicated on the tester and on the combination meter are the same.
OK:
Vehicle speed indicated on the intelligent tester indicates the actual speed.

NG → **GO TO METER / GAUGE SYSTEM**

OK

2 CHECK HARNESS AND CONNECTOR (ECU - COMBINATION METER)

Wire Harness Side Connector Front View:

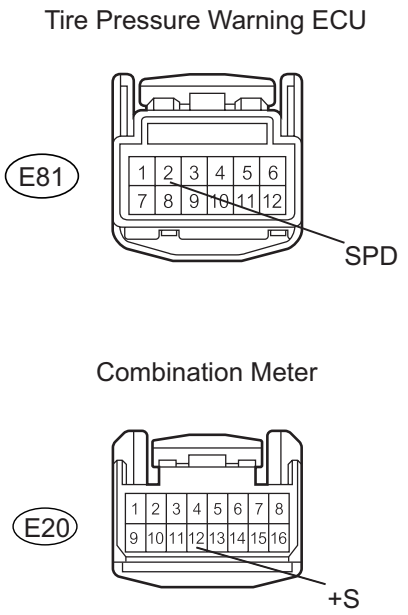

(a) Disconnect the E81 ECU connector.
(b) Disconnect the E20 meter connector.
(c) Measure the resistance according to the value(s) in the table below.
Standard resistance

Tester Connection	Specified Condition
E81-2 (SPD) - E20-12 (+S)	**Below 1 Ω**
E81-2 (SPD) - Body ground	**10 kΩ or higher**

NG → **REPAIR OR REPLACE HARNESS OR CONNECTOR**

TW

OK

REPLACE TIRE PRESSURE WARNING ECU (See page TW-85)

DTC	C2192/92	Select Switch Error (Test Mode DTC)

DESCRIPTION

The tire pressure warning select switch has 2 positions: "MAIN" and "2nd". 2 sets of ID (2 sets of tires) for the tire pressure warning valve and transmitter can be registered to the tire pressure warning ECU.

DTC No.	DTC Detecting Condition	Trouble Area
C2192/92	In test mode, switch position is not detected in the order: "MAIN", "2nd", "MAIN"	• Tire pressure warning select switch • Wire harness or connector • Tire pressure warning ECU

WIRING DIAGRAM

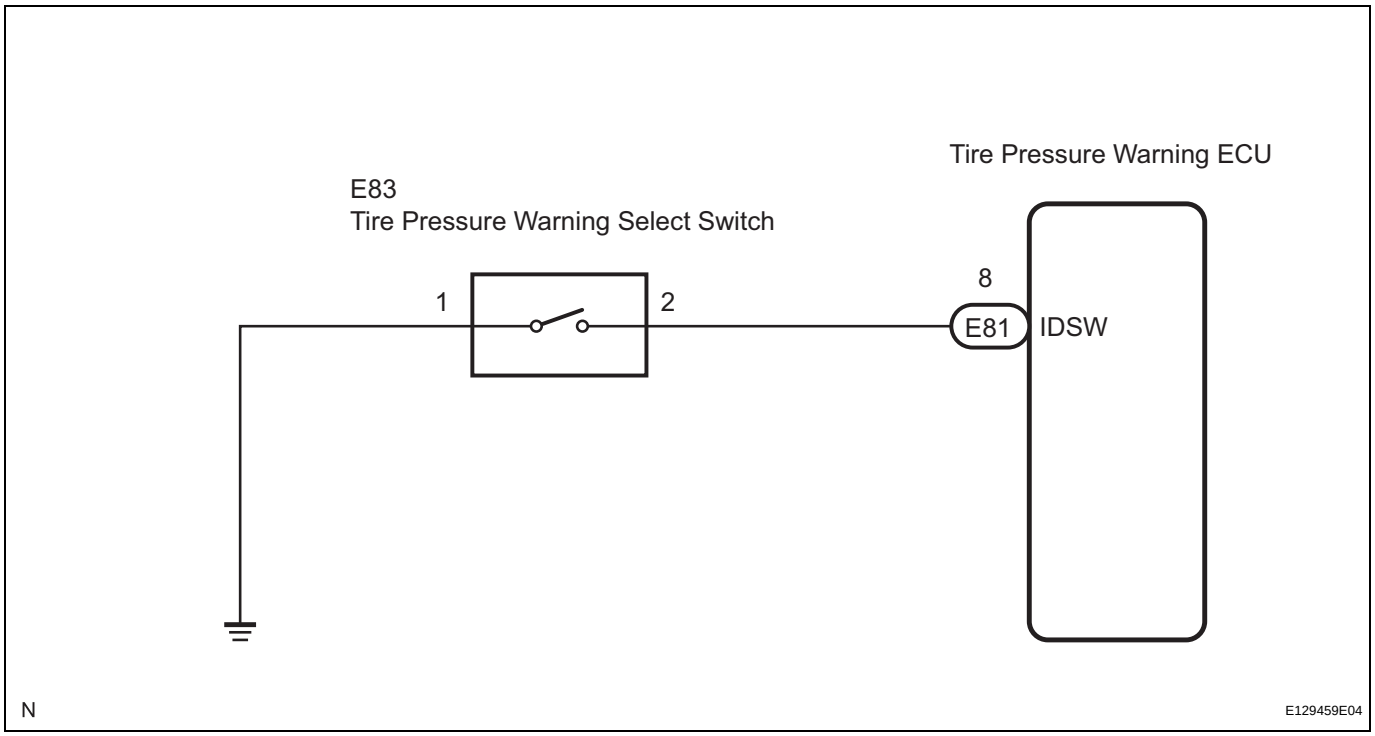

INSPECTION PROCEDURE

NOTICE:

- **When replacing the tire pressure warning ECU, read the IDs stored in the old ECU using the intelligent tester and write them down before removal.**
- **It is necessary to perform initialization (See page TW-18) after registration (See page TW-15) of the transmitter IDs into the tire pressure warning ECU after the ECU and/or valve and transmitter has been replaced.**

TW

1	READ VALUE ON INTELLIGENT TESTER

(a) Connect the intelligent tester to the DLC3.
(b) Turn the engine switch on (IG).
(c) Select the item below in the DATA LIST, and read its value displayed on the intelligent tester.

TIRE PRESSURE

Tester Display	Measurement Item/Range	Normal Condition	Diagnostic Note
SELECT SW	Tire pressure warning select switch status	No pressing: MAIN Pressing: 2nd	-

TIRE PRESSURE

Item	Normal Condition
SELECT SW	Not pressing: MAIN Pressing: 2nd

(d) Check that the value displayed on the intelligent tester changes when pressing the tire pressure warning select switch.
OK:
Tire pressure warning select switch value changes.

OK → **END**

NG

2 INSPECT TIRE PRESSURE WARNING SELECT SWITCH

Tire Pressure Warning Select Switch:

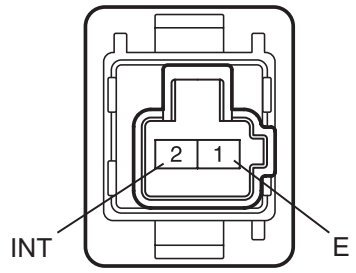

P C111007E02

(a) Disconnect the tire pressure warning select switch E83 connector.
(b) Measure the resistance according to the value(s) in the table below.
Standard resistance

Switch Position	Tester Connection	Specified Condition
MAIN	2 (INT) - 1 (E)	10 kΩ or higher
2nd	2 (INT) - 1 (E)	Below 1 Ω

NG → **REPLACE TIRE PRESSURE WARNING SELECT SWITCH**

OK

TW

3	CHECK HARNESS AND CONNECTOR (TIRE PRESSURE WARNING ECU-TIRE PRESSURE SELECT SWITCH)

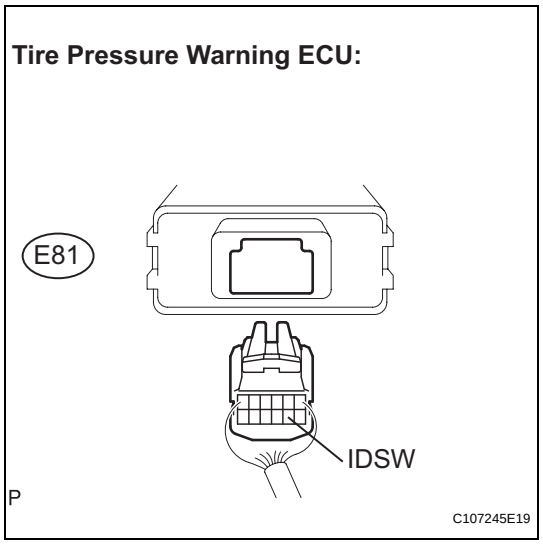

(a) Disconnect the tire pressure warning ECU E81 connector.

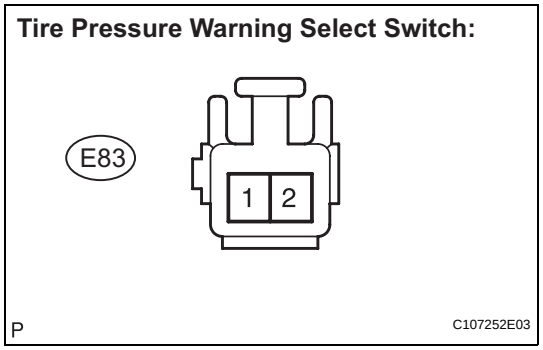

(b) Measure the resistance according to the value(s) in the table below.

Standard resistance

Tester Connection	Specified Condition
E81-8 (IDSW) - E83-2	Below 1 Ω
E81-8 (IDSW) - Body ground	10 kΩ or higher

NG → **REPAIR OR REPLACE HARNESS OR CONNECTOR**

OK

4	CHECK HARNESS AND CONNECTOR (TIRE PRESSURE WARNING SELECT SWITCH-BODY GROUND)

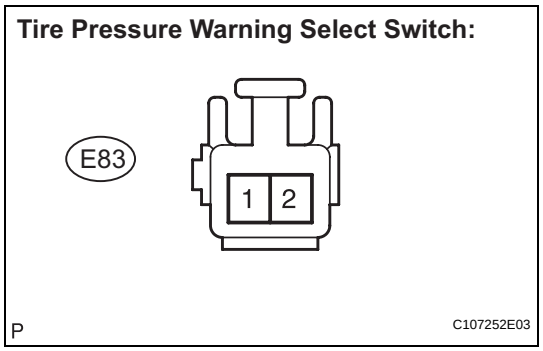

(a) Measure the resistance according to the value(s) in the table below.

Standard resistance

Tester Connection	Specified Condition
E83-1 - Body ground	Below 1 Ω

NG → **REPAIR OR REPLACE HARNESS OR CONNECTOR**

OK

REPLACE TIRE PRESSURE WARNING ECU (See page TW-85)

TW

Tire Pressure Warning Reset Switch Circuit

DESCRIPTION

Receiving a signal from the tire pressure warning reset switch, the tire pressure warning ECU and receiver indicates the initialization of the tire pressure warning system.

WIRING DIAGRAM

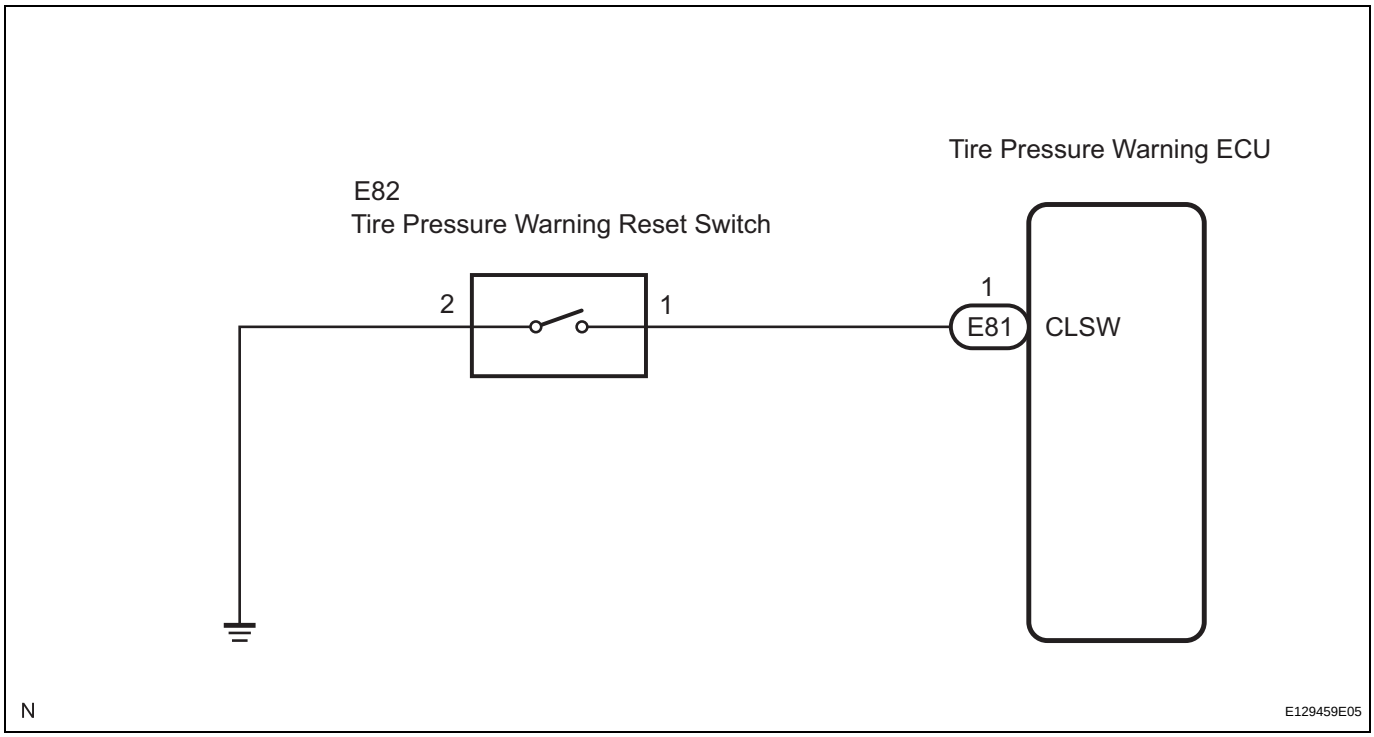

INSPECTION PROCEDURE

NOTICE:

- **When replacing the tire pressure warning ECU, read the IDs stored in the old ECU using the intelligent tester and write them down before removal.**
- **It is necessary to perform initialization (See page TW-18) after registration (See page TW-15) of the transmitter IDs into the tire pressure warning ECU after the ECU and/or valve and transmitter has been replaced.**

TW

1	CHECK TIRE PRESSURE WARNING RESET SWITCH FUNCTION

(a) Perform the tire pressure warning reset switch test in TEST MODE PROCEDURE (See page TW-20).

OK:

Reset switch ON:

Tire pressure warning light comes on.

Reset switch OFF:

Tire pressure warning light blinks.

NG	Go to step 2

OK

END

2 INSPECT TIRE PRESSURE WARNING RESET SWITCH

Tire Pressure Warning Reset Switch:

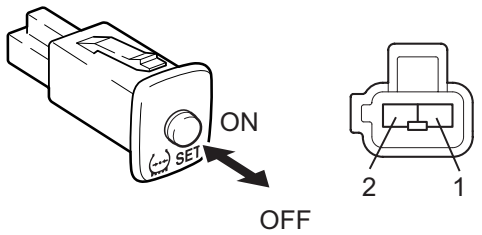

(a) Disconnect the tire pressure warning reset switch connector.

(b) Measure the resistance between terminals 1 and 2 of the tire pressure warning reset switch when the tire pressure warning switch is ON and OFF.

Standard resistance

Switch Condition	Specified Condition
ON	Below 1 Ω
OFF	10 kΩ or higher

NG → **REPLACE TIRE PRESSURE WARNING RESET SWITCH (See page TW-87)**

OK

3 CHECK HARNESS AND CONNECTOR (RESET SWITCH - ECU)

Tire Pressure Warning Reset Switch: (harness side connector)

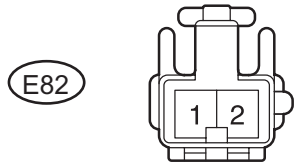

Tire Pressure Warning ECU:

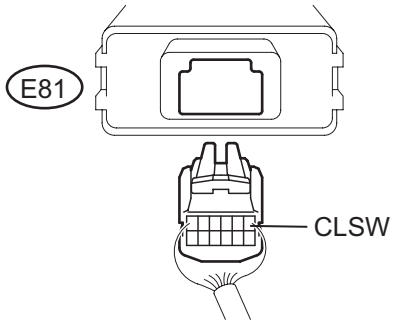

(a) Disconnect the tire pressure warning reset switch E82 connector and tire pressure warning ECU E81 connector.

(b) Measure the resistance according to the value(s) in the table below.

Standard resistance

Switch Condition	Specified Condition
E81-1 (CLSW) - E82-1	Below 1 Ω
E81-1 (CLSW) - Body ground	10 kΩ or higher
E82-2 - Body ground	Below 1 Ω

NG → **REPAIR OR REPLACE HARNESS OR CONNECTOR**

OK

REPLACE TIRE PRESSURE WARNING ECU (See page TW-85)

Tire Pressure Warning Light Circuit

DESCRIPTION

If the ECU detects trouble, the tire pressure warning light blinks (comes on after blinking for 1 minute) and tire pressure warning system operation is cancelled at the same time. At this time, the ECU records a DTC in the memory.
Connect terminals TC and CG of DLC3 to make the tire pressure warning light blink and output the DTC.

WIRING DIAGRAM

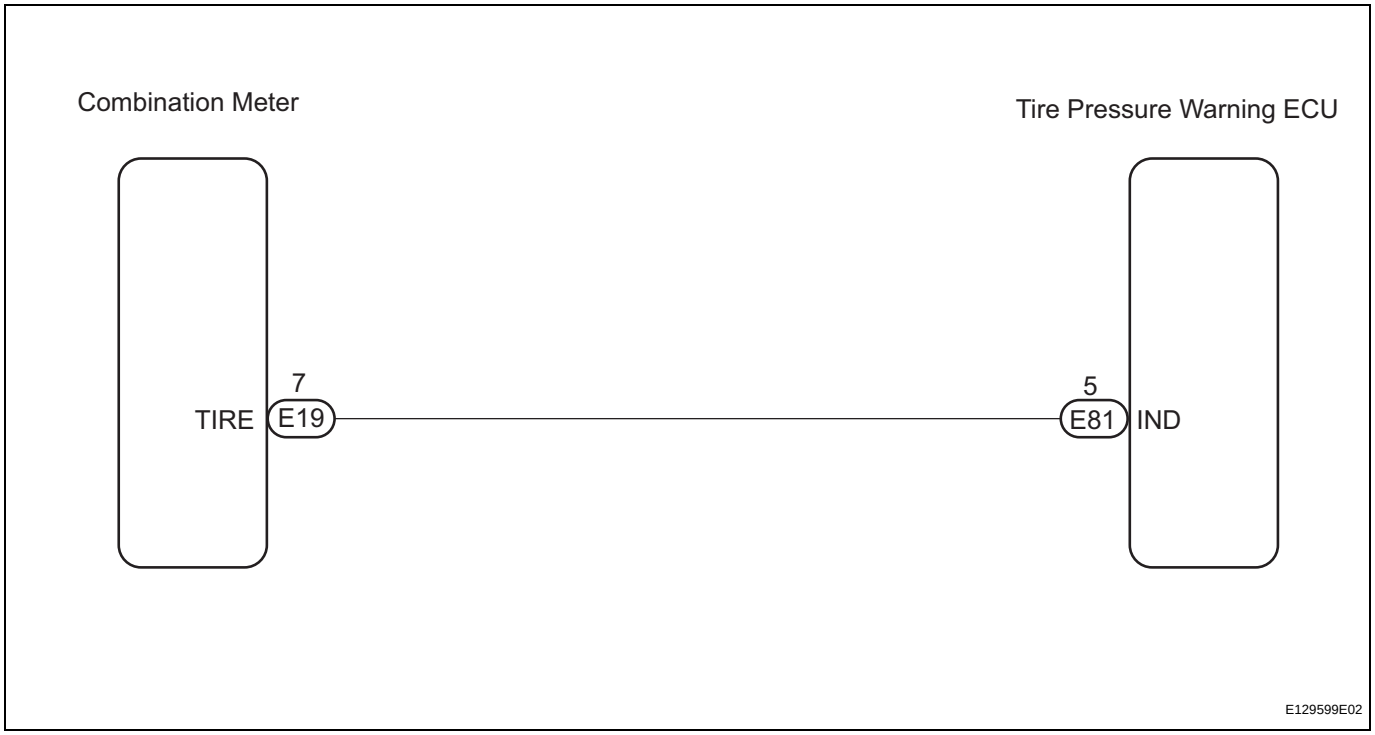

INSPECTION PROCEDURE

NOTICE:

- **When replacing the tire pressure warning ECU, read the IDs stored in the old ECU using the intelligent tester and write them down before removal.**
- **It is necessary to perform initialization (See page TW-18) after registration (See page TW-15) of the transmitter IDs into the tire pressure warning ECU after the ECU and/or valve and transmitter has been replaced.**

HINT:
This procedure must be performed according to the PROBLEM SYMPTOMS TABLE.

1 CHECK HARNESS AND CONNECTOR (COMBINATION METER - TIRE PRESSURE WARNING ECU)

Combination Meter Wire Harness View:

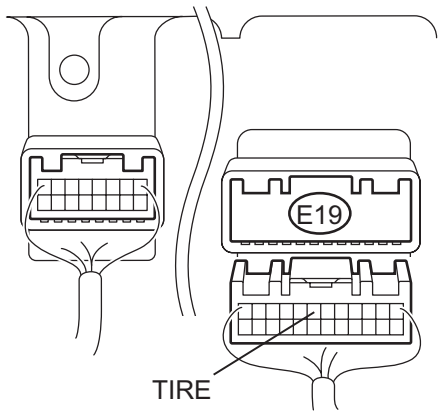

(a) Disconnect the E19 combination meter connector.

Tire Pressure Warning ECU

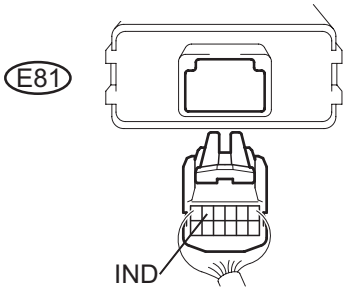

(b) Disconnect the E81 tire pressure warning ECU connector.

(c) Measure the resistance according to the value(s) in the table below.

Standard resistance

Tester Connection	Specified Condition
E19-7 (TIRE) - E81-5 (IND)	Below 1 Ω
E19-7 (TIRE) - Body ground	10 kΩ or higher

NG → **REPAIR OR REPLACE HARNESS OR CONNECTOR**

OK

2 INSPECT COMBINATION METER

Tire Pressure Warning ECU

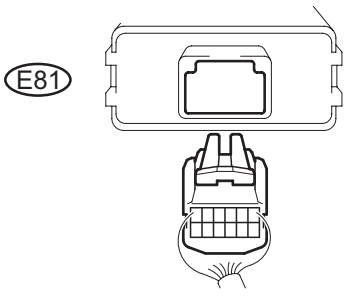

(a) Disconnect the connector from the tire pressure warning ECU.

(b) Turn the engine switch on (IG), and check the condition of the tire pressure warning light illumination.

Result

Condition	Proceed to
Illuminates	A
Does not illuminate	B

B → **REPLACE COMBINATION METER**

A

REPLACE TIRE PRESSURE WARNING ECU (See page TW-85)

TW

ECU Power Source Circuit

DESCRIPTION

This is the power source for the tire pressure warning ECU.

WIRING DIAGRAM

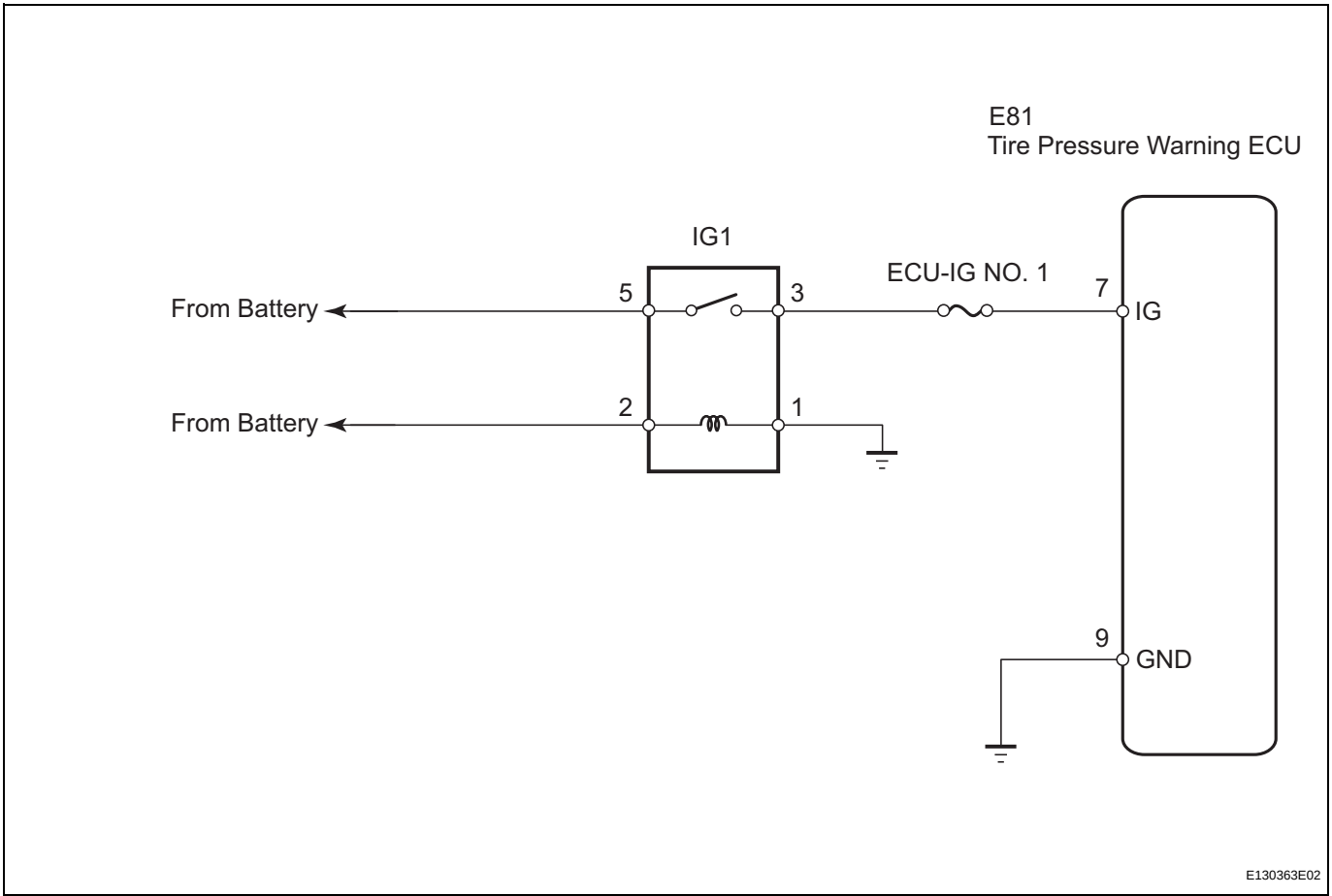

INSPECTION PROCEDURE

NOTICE:

- **When replacing the tire pressure warning ECU, read the IDs stored in the old ECU using the intelligent tester and write them down before removal.**
- **It is necessary to perform initialization (See page TW-18) after registration (See page TW-15) of the transmitter IDs into the tire pressure warning ECU after the ECU and/or valve and transmitter has been replaced.**

TW

1	INSPECT FUSE (ECU-IG NO. 1)

(a) Remove the ECU-IG NO. 1 fuse from the instrument panel junction block.

(b) Measure the resistance of the fuse.

Standard resistance:

Below 1 Ω

NG	REPLACE FUSE

OK

2 INSPECT IG1 RELAY

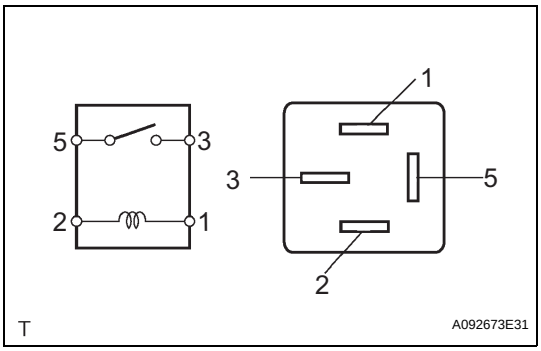

(a) Remove the IG1 relay from the instrument panel junction block.

(b) Measure the resistance according to the value(s) in the table below.

Standard resistance

Tester Connection	Specified Condition
3 - 5	10 kΩ or higher
	Below 1 Ω (When battery voltage is applied to terminals 1 and 2)

NG → **REPLACE IG1 RELAY**

OK

3 CHECK HARNESS AND CONNECTOR (ECU - BATTERY AND BODY GROUND)

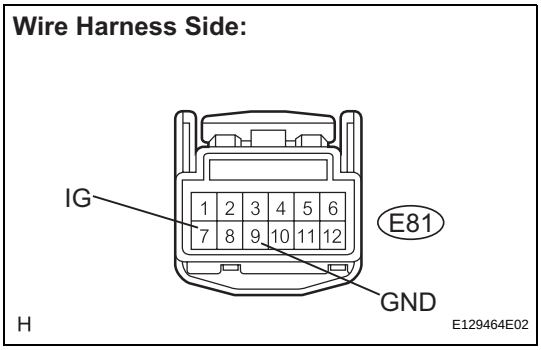

(a) Disconnect the E81 ECU connector.

(b) Measure the voltage according to the value(s) in the table below.

Standard voltage

Tester Connection	Switch Condition	Specified Condition
E81-7 (IG) - Body ground	Engine switch on (IG)	10 to 14 V
	Engine switch off	Below 1 V

(c) Measure the resistance according to the value(s) in the table below.

Standard resistance

Tester Connection	Specified Condition
E81-9 (GND) - Body ground	Below 1 Ω

NG → **REPAIR OR REPLACE HARNESS OR CONNECTOR**

TW

OK

PROCEED TO NEXT CIRCUIT INSPECTION SHOWN IN PROBLEM SYMPTOMS TABLE

TC and CG Terminal Circuit

DESCRIPTION

DTC output mode is set by connecting terminals 13 (TC) and 4 (CG) of the DLC3. The DTCs are indicated by the blinking of the tire pressure warning light.

WIRING DIAGRAM

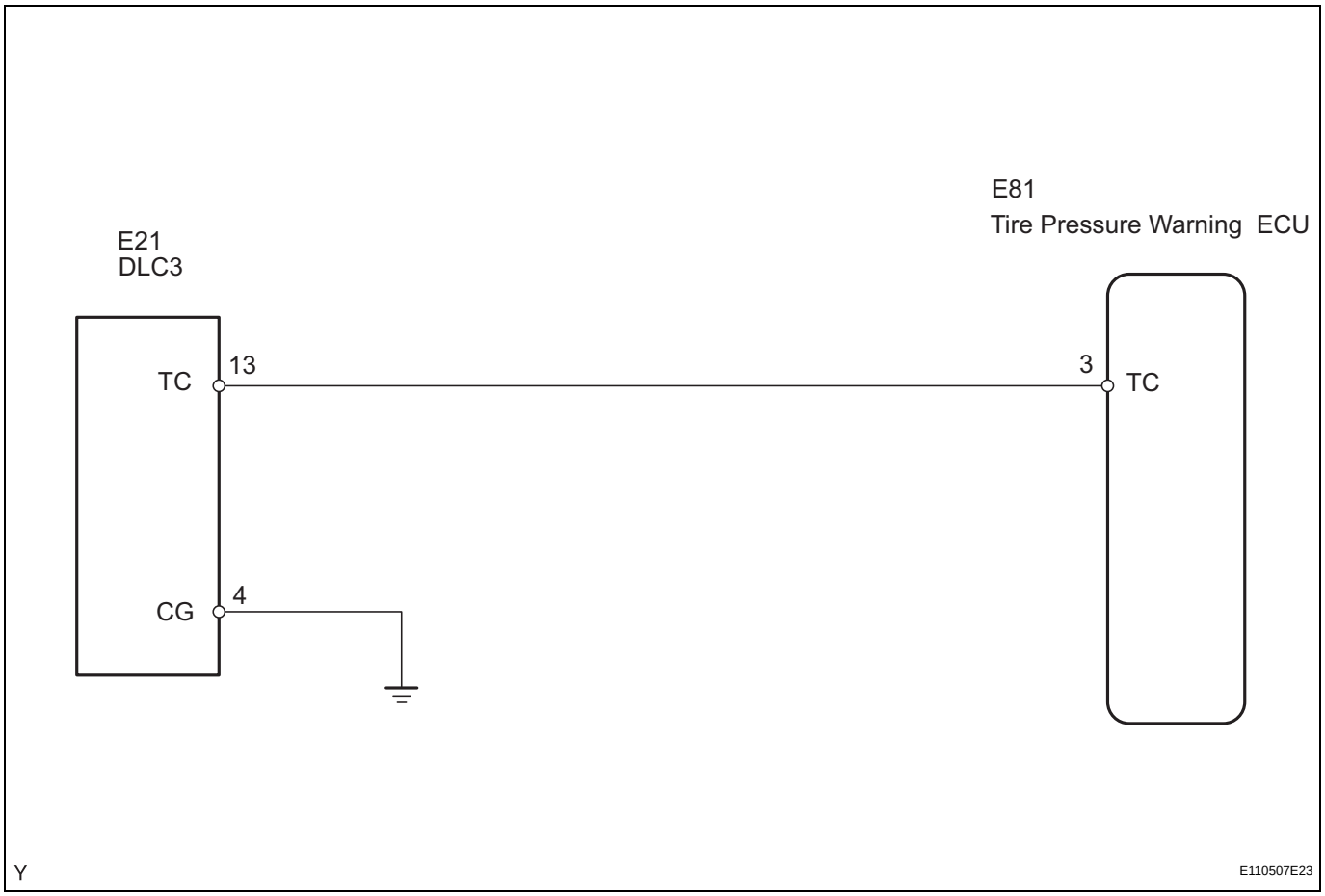

HINT:
When each warning light blinks continuously, a ground short in the wiring of terminal TC of the DLC3 or an internal ground short in an ECU connected to this circuit may have occurred.

TW

INSPECTION PROCEDURE

NOTICE:

- **When replacing the tire pressure warning ECU, read the IDs stored in the old ECU using the intelligent tester and write them down before removal.**
- **It is necessary to perform initialization (See page TW-18) after registration (See page TW-15) of the transmitter IDs into the tire pressure warning ECU after the ECU and/or valve and transmitter has been replaced.**

1	CHECK HARNESS AND CONNECTOR (DLC3 - TIRE PRESSURE WARNING ECU)

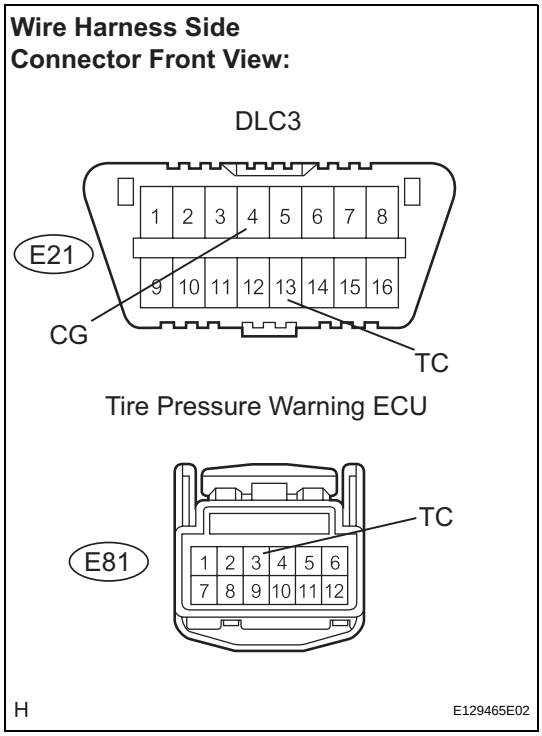

(a) Disconnect the E81 ECU connector.
(b) Measure the resistance according to the value(s) in the table below.

Standard resistance

Tester Connection	Specified Condition
E81-3 (TC) - E21-13 (TC)	Below 1 Ω
E21-4 (CG) - Body ground	

NG → **REPAIR OR REPLACE HARNESS OR CONNECTOR**

OK

PROCEED TO NEXT CIRCUIT INSPECTION SHOWN IN PROBLEM SYMPTOMS TABLE

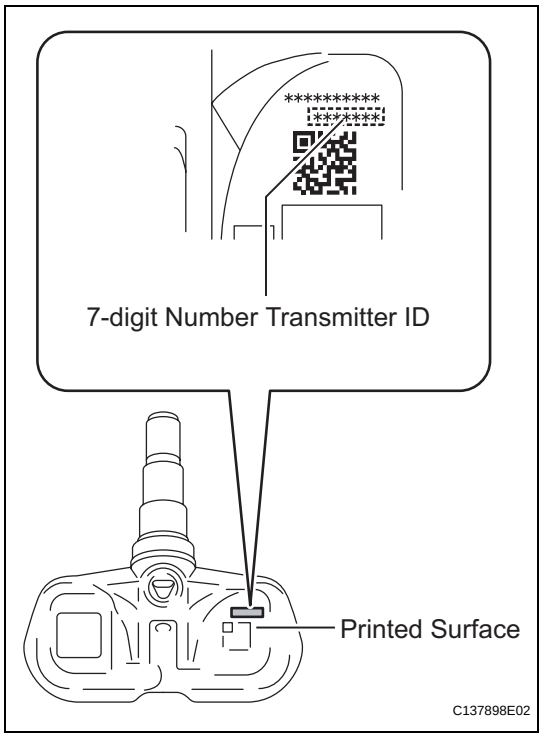

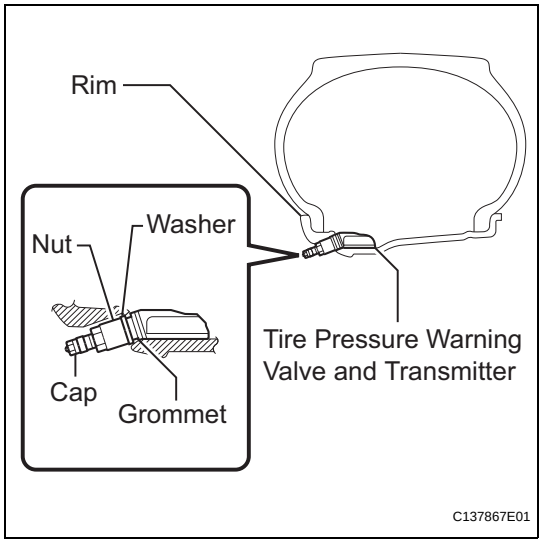

INSTALLATION

1. INSTALL TIRE PRESSURE WARNING VALVE SUB-ASSEMBLY

(a) Insert the tire pressure warning valve and transmitter into the valve installation hole. Insert it from the inside of the rim so that the printed surface can be seen.

NOTICE:

- **Check that there is no visible deformation, damage, or other abnormalities on the tire pressure warning valve and transmitter.**
- **Check that there is no foreign matter on the inner grommet and around the rim hole.**
- **If the tire pressure warning valve and transmitter is installed upside down, it may be damaged or fail to transmit signals when running at high speeds.**
- **If installing a new tire pressure warning valve and transmitter, write down the ID number before installation.**
- **It is necessary to register the ID in the ECU after installation (See page TW-15).**

(b) Install the washer on the tire pressure warning valve and transmitter from the rim side and tighten the nut.

Torque: 4.0 N*m (41 kgf*cm, 35 in.*lbf)

NOTICE:

- **No further tightening is required once the nut is tightened to the specified torque.**
- **Check that there is no foreign matter on the washer and nut.**
- **If the tire and tire pressure warning valve and transmitter have been removed, check that there is no damage or cuts visible, and no foreign matter, such as mud, dirt, or sand is attached to the grommet. Replace the grommet with a new one if any of the defects mentioned above are found.**
- **Check that there is no oil, water, or lubricant around the rim hole, tire pressure warning valve and transmitter, washer, and nut. Failing to do so may result in improper installation.**

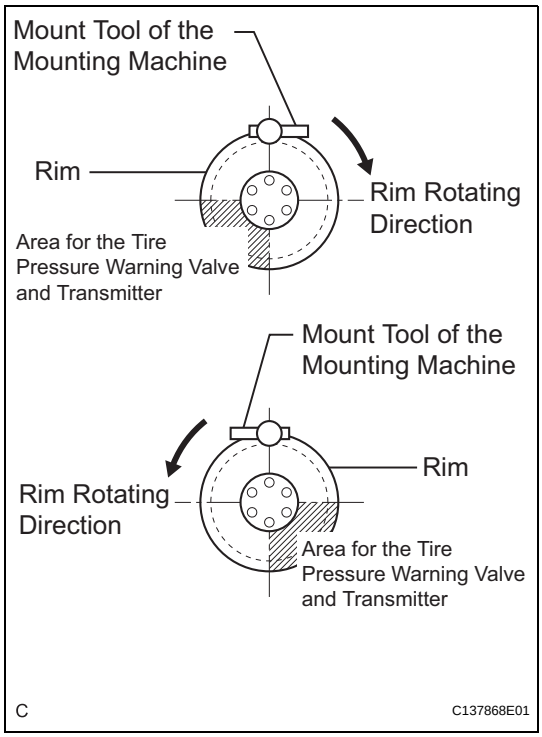

(c) Set the wheel disc to the mounting machine and install the lower tire bead. Position the main body of the tire pressure warning valve and transmitter in the shaded area shown in the illustration.

NOTICE:

- **If the tire pressure warning valve and transmitter is positioned outside this area, it will be interfered with the tire bead, and may cause damage to the tire pressure warning valve and transmitter.**
- **If the use of lubricant is required when installing the bead, do not apply the lubricant directly to the tire pressure warning valve and transmitter.**

(d) Install the upper bead.

NOTICE:

Make sure that the tire bead and tool do not interfere with the main body of the tire pressure warning valve and transmitter and that it is not clamped by the bead.

(e) After the tire is inflated, the valve nut may be loose. Retighten the nut to the specified torque and then check for air leaks with soapy water.

Torque: 4.0 N*m (41 kgf*cm, 35 in.*lbf)

NOTICE:

No further tightening is required once the nut is tightened to the specified torque.

2. **INSTALL FRONT WHEEL**
   Torque: 103 N*m (1,050 kgf*cm, 76 ft.*lbf)

3. **INSTALL REAR WHEEL**
   Torque: 103 N*m (1,050 kgf*cm, 76 ft.*lbf)

4. **INSTALL GRAND SPARE TIRE (w/ Grand Spare Tire)**

5. **INSPECT TIRE**
   HINT:
   (See page TW-3)

6. **REGISTER TRANSMITTER ID**
   HINT:
   (See page TW-15)

7. **INSPECT TIRE PRESSURE WARNING SYSTEM**
   HINT:
   (See page TW-20)

DISPOSAL

HINT:
The tire pressure warning valve sub-assembly is powered by a lithium battery. When disposing of the tire pressure warning valve sub-assembly, remove the battery and dispose of it correctly.

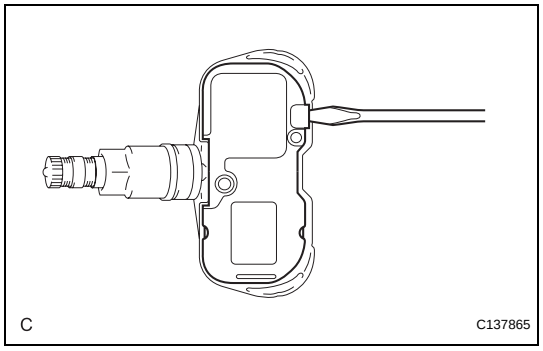

1. DISPOSE OF TIRE PRESSURE WARNING VALVE SUB-ASSEMBLY

(a) Use the tip of a screwdriver to pry off the back cover.

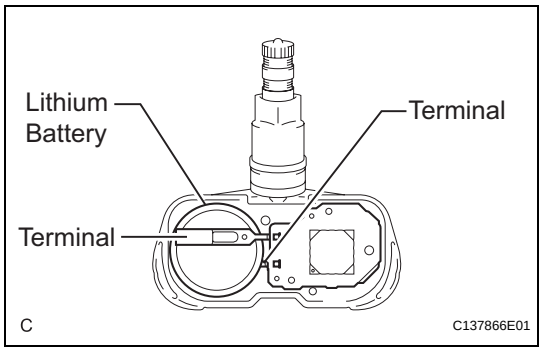

(b) The battery and base board covered with resin are exposed. While taking out the battery, cut the 2 terminals that connect the battery to the base board.

2GR-FE ENGINE CONTROL SYSTEM

RECOMMENDED TOOLS

	09082-00040	TOYOTA Electrical Tester	
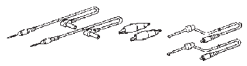	(09083-00150)	Test Lead Set	

EQUIPMENT

Ohmmeter	
Radiator cap tester	
Service Wire Harness	
Torque wrench	

2GR-FE ENGINE MECHANICAL

SST

	09032-00100	Oil Pan Seal Cutter	
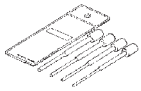	09201-10000	Valve Guide Bushing Remover & Replacer Set	
	(09201-01050)	Valve Guide Bushing Remover & Replacer 5	
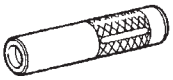	09201-41020	Valve Stem Oil Seal Replacer	
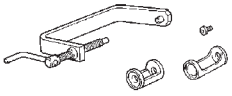	09202-70020	Valve Spring Compressor	
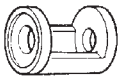	(09202-00010)	Attachment	
	09213-70011	Crankshaft Pully Holding Tool	
	(09213-70020)	Bolt	
	09223-15030	Oil Seal & Bearing Replacer	
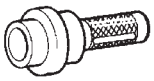	09223-22010	Crankshaft Front Oil Seal Replacer	
	09228-06501	Oil Filter Wrench	

PP

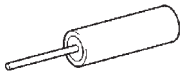	09276-75010	Valve Lifter Tool	
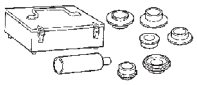	09316-60011	Transmission & Transfer Bearing Replacer	
	(09316-00011)	Replacer Pipe	
	09330-00021	Companion Flange Holding Tool	
	09506-35010	Differential Drive Pinion Rear Bearing Replacer	
	09843-18030	Tacho-pulse Pickup Wire No.2	
	09843-18040	Diagnosis Check Wire No.2	
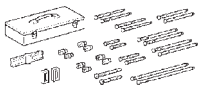	09950-50013	Puller C Set	
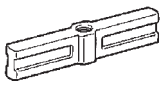	(09951-05010)	Hanger 150	
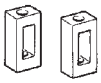	(09952-05010)	Slide Arm	
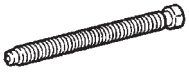	(09953-05020)	Center Bolt 150	
	(09954-05021)	Claw No.2	

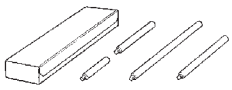	09950-70010	Handle Set	
	(09951-07100)	Handle 100	
	(09951-07150)	Handle 150	

2GR-FE FUEL

SST

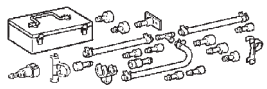	09268-31011	Injection Measuring Tool Set	
	(09268-41500)	Fuel Tube Connector	
	(90467-13001)	Clip	
	(95336-08070)	Hose	
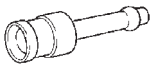	09268-41140	Adapter	
	09268-41400	Clamp	
	09268-45014	EFI Fuel Pressure Gauge	
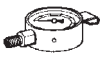	(09268-41200)	Gauge	
	(09268-41220)	Hose	
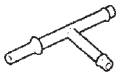	(09268-41250)	T Joint	
	09842-30080	Wire H EFI Inspection	

PP

RECOMMENDED TOOLS

	09082-00040	TOYOTA Electrical Tester	

2GR-FE EMISSION CONTROL

SST

	09224-00010	O2 Sensor Wrench	
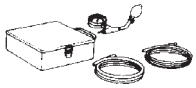	09992-00242	Turbocharger Pressure Gauge	

RECOMMENDED TOOLS

	09082-00040	TOYOTA Electrical Tester	
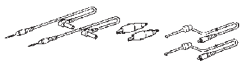	(09083-00150)	Test Lead Set	

2GR-FE INTAKE

EQUIPMENT

Intelligent tester	
Ohmmeter	
Intelligent vacuum pump	

2GR-FE EXHAUST

EQUIPMENT

Torque wrench	

PP

2GR-FE COOLING

SST

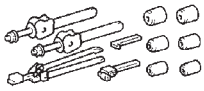	09230-01010	Radiator Service Tool Set	
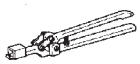	(09231-01010)	Overhaul Handle	
	(09231-01030)	Claw	
	09231-14010	Punch	
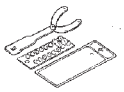	09960-10010	Variable Pin Wrench Set	
	(09962-01000)	Variable Pin Wrench Arm Assembly	
	(09963-00700)	Pin 7	

RECOMMENDED TOOLS

	09082-00040	TOYOTA Electrical Tester	
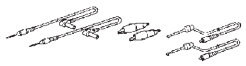	(09083-00150)	Test Lead Set	

2GR-FE LUBRICATION

SST

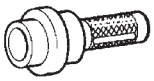	09223-22010	Crankshaft Front Oil Seal Replacer	
	09228-06501	Oil Filter Wrench	
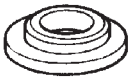	09506-35010	Differential Drive Pinion Rear Bearing Replacer	

RECOMMENDED TOOLS

	09200-00010	Engine Adjust Kit	

2GR-FE IGNITION

RECOMMENDED TOOLS

	09082-00040	TOYOTA Electrical Tester	
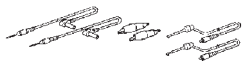	(09083-00150)	Test Lead Set	

EQUIPMENT

Spark plug cleaner	
Torque wrench	

PP

2GR-FE STARTING

RECOMMENDED TOOLS

	09082-00040	TOYOTA Electrical Tester	
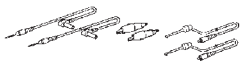	(09083-00150)	Test Lead Set	
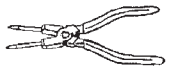	09905-00013	Snap Ring Pliers	

EQUIPMENT

Sandpaper (#400)	
Service wire harness	
Torque wrench	
Vernier calipers	

2GR-FE CHARGING

SST

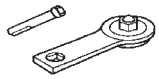	09820-63020	Alternator Pulley Wrench Set	
	09950-40011	Puller B Set	
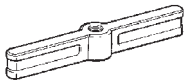	(09951-04020)	Hanger 200	
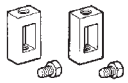	(09952-04010)	Slide Arm	
	(09953-04020)	Center Bolt 150	
	(09954-04010)	Arm 25	
	(09955-04071)	Claw No.7	
	(09957-04010)	Attachment	
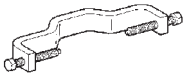	(09958-04011)	Holder	
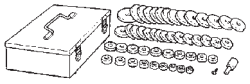	09950-60010	Replacer Set	
	(09951-00250)	Replacer 25	

PP

	(09951-00470)	Replacer 47	
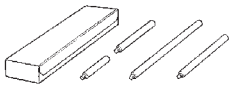	09950-70010	Handle Set	
	(09951-07100)	Handle 100	

U660E AUTOMATIC TRANSAXLE

SST

	09223-15030	Oil Seal & Bearing Replacer	
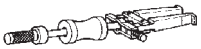	09308-00010	Oil Seal Puller	
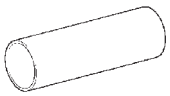	09308-14010	Replacer Pipe A	
	09316-10010	Remover & Replacer	
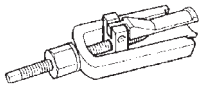	09319-60020	Output Shaft Needle Roller Bearing Remover	
	09350-32014	TOYOTA Automatic Transmission Tool Set	
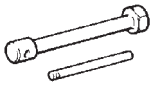	(09351-32010)	One-way Clutch Test Tool	
	(09351-32020)	Stator Stopper	
	(09351-32140)	Oil Seal Replacer	
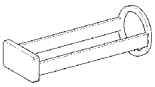	09387-00020	Direct Clutch Wrench	
	09387-00060	Second Brake Wrench	

PP

PP

	09387-00070	First & Reverse Brake Wrench	
	09387-00130	Counter Drive Gear Nut Wrench	
	09495-65040	Axle Hub Oil Seal Replacer	
	09527-17011	Rear Axle Shaft Bearing Remover	
	09564-33010	Drive Pinion Lock Nut Socket	
	09710-04081	Base	
	09843-18040	Diagnosis Check Wire No.2	
	09930-00010	Drive Shaft Nut Chisel	
	09950-00020	Bearing Remover	
	09950-00030	Bearing Remover Attachment	
	09950-40011	Puller B Set	
	(09951-04010)	Hanger 150	

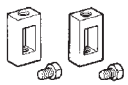	(09952-04010)	Slide Arm	
	(09953-04020)	Center Bolt 150	
	(09954-04010)	Arm 25	
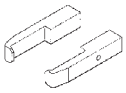	(09955-04071)	Claw No.7	
	(09957-04010)	Attachment	
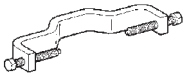	(09958-04011)	Holder	
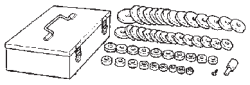	09950-60010	Replacer Set	
	(09951-00220)	Replacer 22	
	(09951-00230)	Replacer 23	
	(09951-00320)	Replacer 32	
	(09951-00400)	Replacer 40	
	(09951-00420)	Replacer 42	

PP

	(09951-00480)	Replacer 48	
	(09951-00530)	Replacer 53	
	(09951-00540)	Replacer 54	
	(09951-00580)	Replacer 58	
	(09951-00650)	Replacer 65	
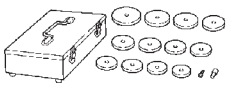	09950-60020	Replacer Set No.2	
	(09951-00710)	Replacer 71	
	(09951-00790)	Replacer 79	
	(09951-00810)	Replacer 81	
	(09951-01030)	Replacer 103	
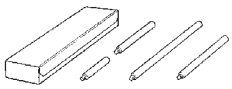	09950-70010	Handle Set	
	(09951-07100)	Handle 100	

	(09951-07150)	Handle 150	
	(09951-07200)	Handle 200	
	09951-01100	Replacer 110	
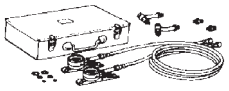	09992-00095	Automatic Transmission Oil Pressure Gauge Set	
	(09992-00231)	Adaptor C	
	(09992-00271)	Gauge Assy	

DRIVE SHAFT

SST

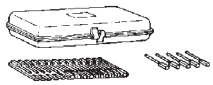	09240-00020	Wire Gauge Set	
	09520-01010	Drive Shaft Remover Attachment	
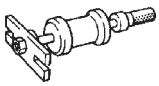	09520-24010	Differential Side Gear Shaft Puller	
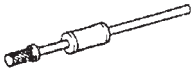	(09520-32040)	Shocker Set	
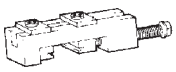	09521-24010	Rear Axle Shaft Puller	
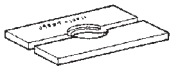	09527-10011	Rear Axle Shaft Bearing Remover	
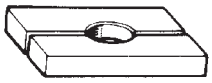	09527-30010	Rear Axle Shaft Bearing Remover	
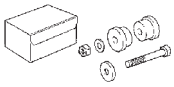	09608-16042	Front Hub Bearing Adjusting Tool	
	(09608-02021)	Bolt & Nut	
	(09608-02041)	Retainer	
	09628-00011	Ball Joint Puller	

PP

	09726-40010	Lower Control Shaft Bearing Replacer	
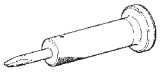	09930-00010	Drive Shaft Nut Chisel	
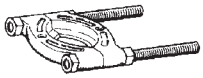	09950-00020	Bearing Remover	

AXLE

SST

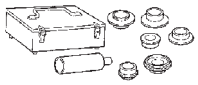	09316-60011	Transmission & Transfer Bearing Replacer	
	(09316-00011)	Replacer Pipe	
	(09316-00031)	Replacer B	
	09520-00031	Rear Axle Shaft Puller	
	09527-17011	Rear Axle Shaft Bearing Remover	
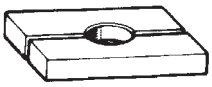	09527-20011	Rear Axle Shaft Bearing Remover	
	09555-55010	Differential Drive Pinion Bearing Replacer	
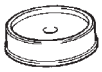	09608-32010	Steering Knuckle Oil Seal Replacer	
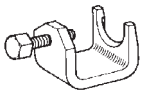	09628-10011	Ball Joint Puller	
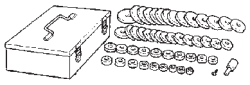	09950-60010	Replacer Set	
	(09951-00400)	Replacer 40	

PP

	(09951-00430)	Replacer 43	
	(09951-00600)	Replacer 60	
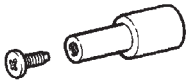	(09952-06010)	Adapter	
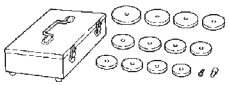	09950-60020	Replacer Set No.2	
	(09951-00810)	Replacer 81	
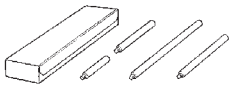	09950-70010	Handle Set	
	(09951-07100)	Handle 100	

SUSPENSION

SST

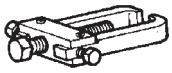	09628-62011	Boll Joint Puller	
	09727-30021	Coil Spring Compressor	
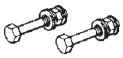	(09727-00010)	Bolt Set	
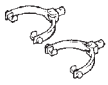	(09727-00021)	Arm Set	
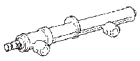	(09727-00031)	Compressor	

RECOMMENDED TOOLS

	09011-12301	Socket Wrench 30 mm	
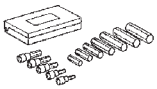	09040-00011	Hexagon Wrench Set	
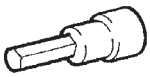	(09043-20050)	Socket Hexagon Wrench 5	
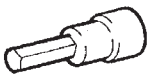	(09043-20060)	Socket Hexagon Wrench 6	
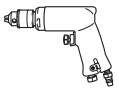	09050-00032	Air Drill	

TIRE AND WHEEL

RECOMMENDED TOOLS

	09082-00040	TOYOTA Electrical Tester	
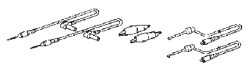	(09083-00150)	Test Lead Set	

EQUIPMENT

Tire pressure gauge	
Dial indicator with magnetic base	
Wheel balancer	
Torque wrench	

BRAKE CONTROL

SST

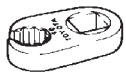	09023-00101	Union Nut Wrench 10 mm	
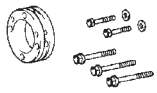	09213-58013	Crankshaft Pulley Holding Tool	
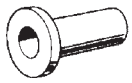	09309-36010	Transmission Rear Bearing Replacer	
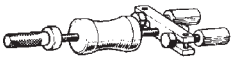	09520-00031	Rear Axle Shaft Puller	
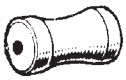	(09520-00040)	Shocker	
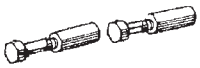	(09521-00010)	Rod with Grip	
	09521-00020	Drive Shaft Boot Clamping Tool	
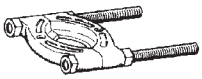	09950-00020	Bearing Remover	

PP

EQUIPMENT

Torque wrench	

BRAKE

SST

	09023-00101	Union Nut Wrench 10 mm	
	09330-00021	Companion Flange Holding Tool	

EQUIPMENT

Ruler	
Micrometer	
Dial indicator with magnetic base	
Torque wrench	

PARKING BRAKE

SST

	09023-00101	Union Nut Wrench 10 mm	

EQUIPMENT

Torque wrench	
Slide calipers	
Brake drum gauge	
Feeler gauge	

STEERING COLUMN

SST

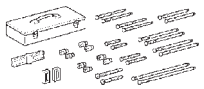	09950-50013	Puller C Set	
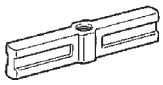	(09951-05010)	Hanger 150	
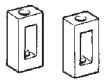	(09952-05010)	Slide Arm	
	(09953-05020)	Center Bolt 150	
	(09954-05011)	Claw No.1	

RECOMMENDED TOOLS

	09082-00040	TOYOTA Electrical Tester	
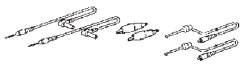	(09083-00150)	Test Lead Set	

POWER STEERING

SST

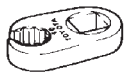	09023-12701	Union Nut Wrench 17mm	
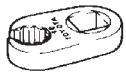	09023-38201	Union Nut Wrench 12mm	
	09249-63010	Torque Wrench Adaptor	
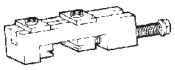	09521-24010	Rear Axle Shaft Puller	
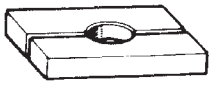	09527-21011	Rear Axle Shaft Bearing Remover	
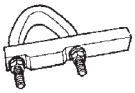	09612-00012	Rack & Pinion Steering Rack Housing Stand	
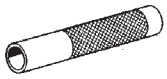	09612-22011	Tilt Handle Bearing Replacer	
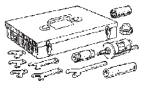	09612-24014	Steering Gear Housing Overhaul Tool Set	
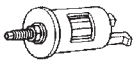	(09613-22011)	Steering Rack Shaft Bushing Puller	
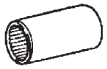	09616-00011	Steering Worm Bearing Adjusting Socket	
	09628-00011	Ball Joint Puller	

	09630-00014	Power Steering Gear Housing Overhaul Tool Set	
	(09631-00132)	Vane Pump Bracket	
	09631-00200	Rack Seal GuIde NO.2	
	09631-12071	Steering Rack Oil Seal Test Tool	
	(09633-00010)	Packing	
	09631-33010	Steering Rack Cover I	
	09640-10010	Power Steering Pressure Gauge Set	
	(09641-01010)	Gauge Assy	
	(09641-01030)	Attachment B	
	(09641-01060)	Attachment E	
	09922-10010	Variable Open Wrench	
	09950-60010	Replacer Set	

PP

	(09951-00180)	Replacer 18	
	(09951-00250)	Replacer 25	
	(09951-00280)	Replacer 28	
	(09951-00290)	Replacer 29	
	(09951-00320)	Replacer 32	
	(09951-00340)	Replacer 34	
	(09951-00400)	Replacer 40	
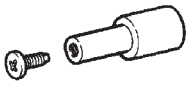	(09952-06010)	Adapter	
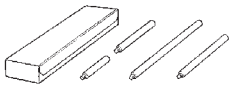	09950-70010	Handle Set	
	(09951-07100)	Handle 100	
	(09951-07150)	Handle 150	
	(09951-07360)	Handle 360	

AIR CONDITIONING

SST

	07110-58060	Air Conditioner Service Tool Set	
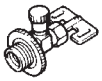	(07117-58060)	Refrigerant Drain Service Valve	
	(07117-58070)	T-Joint	
	(07117-58080)	Quick Disconnect Adapter	
	(07117-58090)	Quick Disconnect Adapter	
	(07117-78050)	Refrigerant Charging Gauge	
	(07117-88060)	Refrigerant Charging Hose	
	(07117-88070)	Refrigerant Charging Hose	
	(07117-88080)	Refrigerant Charging Hose	

PP

RECOMMENDED TOOLS

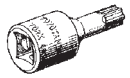	09042-00020	Torx Socket T40	
	09082-00040	TOYOTA Electrical Tester	
	(09083-00150)	Test Lead Set	
	09904-00010	Expander Set	
	(09904-00050)	No. 4 Claw	

HINT:
Torx is a registered trademark of Textron Inc.

PRE-COLLISION

RECOMMENDED TOOLS

	09082-00040	TOYOTA Electrical Tester	
	(09083-00150)	Test Lead Set	

SUPPLEMENTAL RESTRAINT SYSTEM

SST

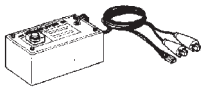	09082-00700	SRS Airbag Deployment Tool	
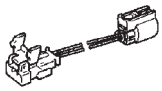	09082-00750	Airbag Deployment Wire Sub-harness No.3	
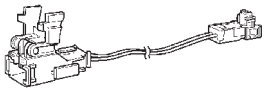	09082-00770	Airbag Deployment Wire Sub-harness No.5	
	09082-00780	Airbag Deployment Wire Sub-harness No.6	
	09082-00802	Airbag Deployment Wire Sub-Harness No. 8	
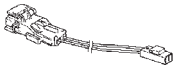	(09082-10801)	Wire A	
	(09082-20801)	Wire B	
	(09082-30801)	Wire C	
	09843-18060	SRS Check Wire	

PP

RECOMMENDED TOOLS

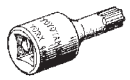	09042-00010	Torx Socket T30	
	09082-00040	TOYOTA Electrical Tester	
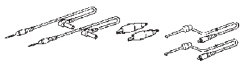	(09083-00150)	Test Lead Set	

SEAT BELT

SST

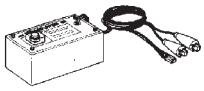	09082-00700	SRS Airbag Deployment Tool	
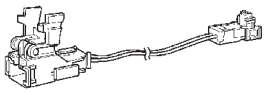	09082-00770	Airbag Deployment Wire Sub-harness No.5	

RECOMMENDED TOOLS

	09082-00040	TOYOTA Electrical Tester	
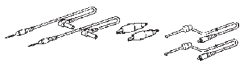	(09083-00150)	Test Lead Set	

THEFT DETERRENT SYSTEM

RECOMMENDED TOOLS

	09082-00040	TOYOTA Electrical Tester	
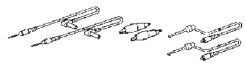	(09083-00150)	Test Lead Set	

EQUIPMENT

Torque wrench	

ENGINE IMMOBILISER

SST

	09843-18040	Diagnosis Check Wire No.2	

RECOMMENDED TOOLS

	09082-00040	TOYOTA Electrical Tester	
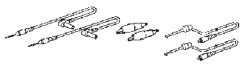	(09083-00150)	Test Lead Set	

CRUISE CONTROL

SST

	09870-60000	LAZER RADAR ADJUSTING REFLECTOR	
	(09870-60010)	BASE STAND	
	(09870-60040)	REFLECTOR C	

RECOMMENDED TOOLS

	09082-00040	TOYOTA Electrical Tester	
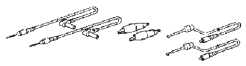	(09083-00150)	Test Lead Set	

LIGHTING

RECOMMENDED TOOLS

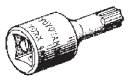	09042-00010	Torx Socket T30	
	09082-00040	TOYOTA Electrical Tester	
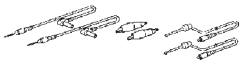	(09083-00150)	Test Lead Set	

EQUIPMENT

Clip remover	
Torque wrench	
Tire pressure gage	
White paper	

WIPER AND WASHER

RECOMMENDED TOOLS

	09082-00040	TOYOTA Electrical Tester	
	(09083-00150)	Test Lead Set	

EQUIPMENT

Protective tape	
Torque wrench	
Wire brush	
MP grease	

DOOR LOCK

RECOMMENDED TOOLS

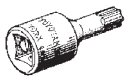	09042-00010	Torx Socket T30	
	09082-00040	TOYOTA Electrical Tester	
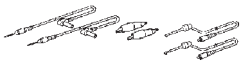	(09083-00150)	Test Lead Set	

HINT:
TORX is a registered trademark of Textron Inc.

EQUIPMENT

MP grease	
Protective tape	
Torque wrench	

METER

RECOMMENDED TOOLS

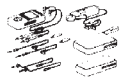	09082-00050	TOYOTA Electrical Tester Set	
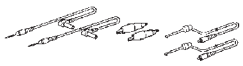	(09083-00150)	Test Lead Set	

EQUIPMENT

Torque wrench	

AUDIO / VISUAL

RECOMMENDED TOOLS

	09070-20010	Moulding Remover	
	09082-00040	TOYOTA Electrical Tester	
	(09083-00150)	Test Lead Set	

EQUIPMENT

Torque wrench	
Double-sided tape	
Tape	
Protective tape	

NAVIGATION

RECOMMENDED TOOLS

	09082-00040	TOYOTA Electrical Tester	
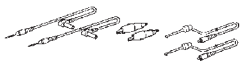	(09083-00150)	Test Lead Set	

PARK ASSIST / MONITORING

RECOMMENDED TOOLS

	09082-00040	TOYOTA Electrical Tester	
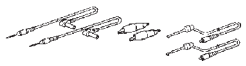	(09083-00150)	Test Lead Set	

HORN

RECOMMENDED TOOLS

	09082-00040	TOYOTA Electrical Tester	
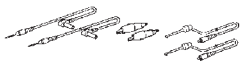	(09083-00150)	Test Lead Set	

EQUIPMENT

Torque wrench	

GARAGE DOOR OPENER

RECOMMENDED TOOLS

	09070-20010	Moulding Remover	

OTHER SYSTEM

RECOMMENDED TOOLS

	09082-00040	TOYOTA Electrical Tester	
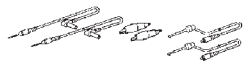	(09083-00150)	Test Lead Set	

WINDSHIELD / WINDOWGLASS

RECOMMENDED TOOLS

	09082-00040	TOYOTA Electrical Tester	
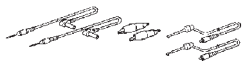	(09083-00150)	Test Lead Set	

EQUIPMENT

Torque wrench	
Protective Tape	
Knife	
Suction cup	
Piano wire	
Wooden block or similar object	
Plastic sheet	
Scraper	
Brush or sponge	
Sealer gun	

PP

MIRROR

RECOMMENDED TOOLS

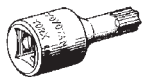	09042-00030	Torx Socket T20	
	09070-20010	Moulding Remover	
	09082-00040	TOYOTA Electrical Tester	
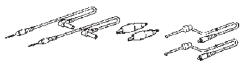	(09083-00150)	Test Lead Set	

HINT:
TORX is a registered trademark of Textron Inc.

EQUIPMENT

Torque wrench	
Protective tape	

INSTRUMENT PANEL

RECOMMENDED TOOLS

	09070-20010	Moulding Remover	

EQUIPMENT

Torque wrench	
Tape	To avoid surface damage

SEAT

RECOMMENDED TOOLS

	09082-00040	TOYOTA Electrical Tester	
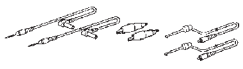	(09083-00150)	Test Lead Set	

EQUIPMENT

Hog ring	**-**
Hog ring pliers	-
Tape	To avoid surface damage
Torque wrench	-

ENGINE HOOD / DOOR

SST

	09812-00010	Door Hinge Set Bolt Wrench	

PP

RECOMMENDED TOOLS

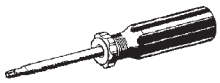	09041-00020	Torx Driver T25	
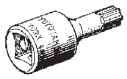	09042-00010	Torx Socket T30	
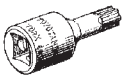	09042-00020	Torx Socket T40	
	09082-00040	TOYOTA Electrical Tester	
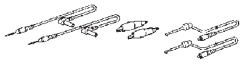	(09083-00150)	Test Lead Set	

HINT:
TORX is a registered trademark of Textron Inc.

PP

EXTERIOR

RECOMMENDED TOOLS

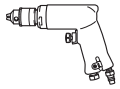	09050-00032	Air Drill	
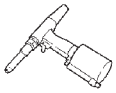	09050-20010	Air Riveter	
	(09050-02020)	Nose Piece No.1	
	09070-20010	Moulding Remover	

EQUIPMENT

Torque wrench	
Protective tape	To avoid surface damage
Heat light	
Double-sided tape	
Piano wire	
Wooden block or similar object	For tying both piano wire ends
Drill (Safety equipment: protective goggles, etc.)	
Drill bit	
Hand riveter	
Rivet	
Vacuum cleaner	
4 mm hexagon wrench	

INTERIOR

RECOMMENDED TOOLS

	09070-20010	Moulding Remover	
	09082-00040	TOYOTA Electrical Tester	
	(09083-00150)	Test Lead Set	

EQUIPMENT

Clip remover	
Protective tape	
Double-sided tape	
Adhesive tape	

PP

SLIDING ROOF

RECOMMENDED TOOLS

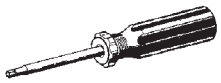	09041-00010	TORX Driver T20	
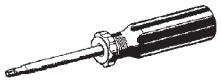	09041-00020	TORX Driver T25	
	09082-00040	TOYOTA Electrical Tester	
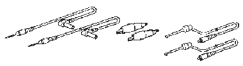	(09083-00150)	Test Lead Set	

HINT:
"TORX" is a registered trademark of Textron Inc.

EQUIPMENT

Torque wrench	
Protective tape	

CAN COMMUNICATION

RECOMMENDED TOOLS

	09082-00040	TOYOTA Electrical Tester	
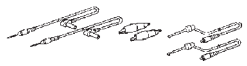	(09083-00150)	Test Lead Set	

FREEZE FRAME DATA

1. FREEZE FRAME DATA

(a) Whenever an ABS DTC is detected, the skid control ECU stores the current vehicle (sensor) state as Freeze Frame Data.

(b) The skid control ECU stores the number of times (maximum: 31) the engine switch has been turned from off to on (IG) since the last time the ABS was activated.

HINT:

- However, if the vehicle is stopped or at a low speed (7 km/h (4.3 mph) or less), or if a DTC is detected, the skid control ECU will stop counting the number.
- Freeze Frame Data at the time the ABS operates:
  The skid control ECU stores and updates data whenever the ABS system operates.
  When the ECU stores data at the time a DTC is detected, the data stored during ABS operation is erased.
- Freeze Frame Data at the time a DTC is detected:
  When the skid control ECU stores data at the time a DTC is detected, no updates will be performed until the data is cleared.

2. CHECK FREEZE FRAME DATA

(a) Connect the intelligent tester to the DLC3.

(b) Turn the engine switch on (IG).

(c) On the tester display, select the Freeze Frame Data.

Tester Display	Measurement Item	Reference Value
VEHICLE SPD	Vehicle speed reading	Min.: 0 km/h (0 mph), Max.: 326.4 km/h (202 mph)
STOP LAMP SW	Stop light switch signal	Stop light switch ON: ON, OFF: OFF
#IG ON	Number of operations of engine switch on (IG) after storing Freeze Frame Data	0 to 31
MAS CYL PRESS 1	Master cylinder pressure sensor reading	Brake pedal released: 0.3 to 0.5 V
M/C PRESS GRADE	Master cylinder pressure sensor change	Min.: -30 MPa/s, Max.: 225 MPa/s
YAW RATE	Yaw rate sensor reading	Min.: -128 deg/s, Max.: 127 deg/s
STEERING SEN	Steering angle sensor reading	Left turn: Increase Right turn: Decrease
FORWARD&REA G	Forward and backward G	Min.: -25.11 m/s^2, Max.: 24.91 m/s^2
SPD GRADE	Vehicle speed grade	Min.: -25.11 m/s^2, Max.: 24.91 m/s^2
BUZZER	Skid control buzzer signal	Skid control buzzer ON: ON, OFF: OFF
ACCELERATOR %	Accelerator opening angle %	Min.: 0 %, Max.: 128 %
PARKING BRAKE SW	Parking brake switch signal	Parking brake switch ON: ON, OFF: OFF
ENGINE TORQUE	Real engine torque	Min.: -1024 N*m, Max.: 1023 N*m
FR WHEEL SPD	FR wheel speed	Min.: 0 km/h (0 mph), Max.: 326.4 km/h (202 mph)
FL WHEEL SPD	FL wheel speed	Min.: 0 km/h (0 mph), Max.: 326.4 km/h (202 mph)
RR WHEEL SPD	RR wheel speed	Min.: 0 km/h (0 mph), Max.: 326.4 km/h (202 mph)

Tester Display	Measurement Item	Reference Value
RL WHEEL SPD	RL wheel speed	Min.: 0 km/h (0 mph), Max.: 326.4 km/h (202 mph)
LATERAL G	Lateral G	Min.: -25.11 m/s^2, Max.: 24.91 m/s^2
GEAR POSITION	Gear position information	FAIL 1st 2nd 3rd 4th 5th 6th P, N R NOT R
LEVER POSITION	Shift lever position information	FAIL 1st 2nd 3rd 4th 5th 6th/B D/M P, N R
OPERATED SYSTEM	Operated system status	ABS activated: ABS VSC activated: VSC TRAC activated: TRAC BA activated: BA HAB activated: HAB PBA activated: PBA PB activated: PB Fail safe mode activated: FAIL No system activated: NON System prohibited: SYS
FREEZE TIME	Elapsed time after freeze trigger	Min.: 0 ms, Max.: 500 ms
TROUBLE CODE	Freeze frame DTC	Displays to output DTC
INSPECTION MODE	Inspection mode	OTHER: Normal, INSPECT: Service

3. CLEAR FREEZE FRAME DATA

NOTICE:

Clearing the DTC will also clear the Freeze Frame Data.

(a) Connect the intelligent tester to the DLC3.

(b) Turn the engine switch on (IG).

(c) Clear the DTC and Freeze Frame Data.

HINT:

Refer to the intelligent tester operator's manual for further details.

FAIL-SAFE CHART

1. FAIL SAFE OPERATION

- If there is a problem with sensor signals or actuator systems, the skid control ECU prohibits power supply to the brake actuator assembly and informs the ECM of VSC system failure.
  The brake actuator assembly turns off each solenoid and the ECM shuts off VSC control (traction control signal) from the skid control ECU accordingly, which turns out to be as if the ABS, TRAC and VSC systems were not installed.
  The ABS control will be prohibited, but EBD control continues as much as possible. If EBD control is impossible, the BRAKE warning light comes on to warn the driver (See page BC-39).
- If system components have any malfunction before starting control, immediately stop the operation. If system components have any malfunction during control, gradually stop the control so as not to trigger a sudden change in vehicle conditions.
  If it is impossible to control the systems, the warning light comes on to inform the driver of termination of the systems (See page BC-39).

HINT:
If the hydraulic brake booster encounters a malfunction, brake performance is gradually lost and ABS, BA, TRAC and VSC systems are prohibited.

ABS, EBD and BA system:

Malfunction Area	Control Method
ABS system	ABS, BA, TRAC and VSC control prohibited
BA system	ABS, BA, TRAC and VSC control prohibited
EBD system	ABS, EBD, BA, TRAC and VSC control prohibited

HINT:
A malfunction in either the ABS or BA system will result in an identical operation, with ABS, BA, TRAC and VSC system control prohibited.

TRAC and VSC system:

Malfunction Area	Control Method
Engine control system (TRAC and VSC systems)	Before control: Disables control During control: Uses only the brakes to effect control
Brake control system (VSC system)	Before control: Disables control During control: Uses only the engine to effect control
Brake control system (TRAC system)	Before control: Disables control During control: Disables control (by gradually ending control)

HINT:
As for the TRAC and VSC systems, different systems prohibit different controls depending on a malfunctioning part.

DATA LIST / ACTIVE TEST

1. DATA LIST

HINT:
With the intelligent tester connected to the DLC3 and the engine switch on (IG), the ABS, TRAC and VSC Data List can be displayed. Follow the prompts on the tester screen to access the Data List.

Tester Display	Measurement Item/Range	Normal Condition	Diagnostic Note
ABS MTR RELAY	ABS motor relay / ON or OFF	ON: Motor relay ON OFF: Motor relay OFF	-
SOL RELAY	Solenoid relay / ON or OFF	ON: Solenoid relay ON OFF: Solenoid relay OFF	-
FAIL MTR RELAY	Fail safe motor relay / ON or OFF	ON: Motor relay ON OFF: Motor relay OFF	-
IDLE SW	Main idle switch / ON or OFF	ON: Accelerator pedal released OFF: Accelerator pedal depressed	-
STOP LAMP SW	Stop light switch / ON or OFF	ON: Brake pedal depressed OFF: Brake pedal released	-
PARKING BRAKE SW	Parking brake switch / ON or OFF	ON: Parking brake applied OFF: Parking brake released	-
ENG REVOLUTIONS	Engine revolutions / min.: 0 r/min, max.: 65,535 r/min	-	-
GEAR POSITION	Gear position information / P/N, R, 1st-6th, FAIL, NOT R	-	-
LEVER POSITION	Shift lever position information / P/N, R, D/M, 1st-6th/B, FAIL	-	-
SHIFT INFO	Shift information / ON or OFF	ON: During gear change	-
FR WHEEL SPD	FR wheel speed sensor reading / min.: 0 km/h (0 mph), max.: 326 km/h (202 mph)	Actual wheel speed	Similar speed as indicated on speedometer
FL WHEEL SPD	FL wheel speed sensor reading / min.: 0 km/h (0 mph), max.: 326 km/h (202 mph)	Actual wheel speed	Similar speed as indicated on speedometer
RR WHEEL SPD	RR wheel speed sensor reading / min.: 0 km/h (0 mph), max.: 326 km/h (202 mph)	Actual wheel speed	Similar speed as indicated on speedometer
RL WHEEL SPD	RL wheel speed sensor reading / min.: 0 km/h (0 mph), max.: 326 km/h (202 mph)	Actual wheel speed	Similar speed as indicated on speedometer
DECELERAT SEN	Acceleration sensor 1 reading / min.: -1.889 G, max.: 1.875 G	Approximately 0+-0.13 G while stationary	Reading changes when vehicle is bounced
DECELERAT SEN 2	Acceleration sensor 2 reading / min.: -1.889 G, max.: 1.875 G	Approximately 0+-0.13 G while stationary	Reading changes when vehicle is bounced
SFRR	ABS solenoid (SFRR) / ON or OFF	ON: Operates	-
SFRH	ABS solenoid (SFRH) / ON or OFF	ON: Operates	-
SFLR	ABS solenoid (SFLR) / ON or OFF	ON: Operates	-
SFLH	ABS solenoid (SFLH) / ON or OFF	ON: Operates	-
SRRR	ABS solenoid (SRRR) / ON or OFF	ON: Operates	-
SRRH	ABS solenoid (SRRH) / ON or OFF	ON: Operates	-
SRLR	ABS solenoid (SRLR) / ON or OFF	ON: Operates	-

Tester Display	Measurement Item/Range	Normal Condition	Diagnostic Note
SRLH	ABS solenoid (SRLH) / ON or OFF	ON: Operates	-
SM1	Master cut solenoid (SM1) / ON or OFF	ON: Operates	-
SM2	Master cut solenoid (SM2) / ON or OFF	ON: Operates	-
VEHICLE SPD	Maximum wheel speed sensor reading / min.: 0 km/h (0 mph), max.: 326 km/h (202 mph)	Actual vehicle speed	Speed indicated on speedometer
YAW RATE SENS 1	Yaw rate sensor 1 / min.: -128 deg/s, max.: 127 deg/s	Min.: -128 deg/s Max.: 127 deg/s	-
ZERO YAW RATE	Memorized zero value / min.: -128 deg/s, max.: 127 deg/s	Min.: -128 deg/s Max.: 127 deg/s	-
STEERING SEN	Steering angle sensor / min.: -3,276.8 deg, max.: 3,276.7 deg	Left turn: Increase Right turn: Decrease	-
MAS CYL PRESS 1	Master cylinder pressure sensor 1 reading / min.: 0 V, max.: 5 V	When brake pedal is released: 0.3 to 0.5 V	Reading increases when brake pedal is depressed
ACCELERATOR %	The difference of a present accelerator / min.: 0%, max.: 128%	-	-
ENGINE TORQUE	Real engine torque / min.: -1,024 N*m, max.: 1,023 N*m	-	-
FR SPD OPN	FR speed sensor open detection / ERROR or NORMAL	ERROR: Momentary interruption NORMAL: Normal	-
FL SPD OPN	FL speed sensor open detection / ERROR or NORMAL	ERROR: Momentary interruption NORMAL: Normal	-
RR SPD OPN	RR speed sensor open detection / ERROR or NORMAL	ERROR: Momentary interruption NORMAL: Normal	-
RL SPD OPN	RL speed sensor open detection / ERROR or NORMAL	ERROR: Momentary interruption NORMAL: Normal	-
YAW RATE OPN	Yaw rate sensor open detection / ERROR or NORMAL	ERROR: Momentary interruption NORMAL: Normal	-
DECELERAT OPN	Acceleration sensor open detection / ERROR or NORMAL	ERROR: Momentary interruption NORMAL: Normal	-
STEERING OPN	Steering angle sensor open detection / ERROR or NORMAL	ERROR: Momentary interruption NORMAL: Normal	-
M/C OPN	Master cylinder pressure sensor open detection / ERROR or NORMAL	ERROR: Momentary interruption NORMAL: Normal	-
EFI COM OPN	EFI communication open detection / ERROR or NORMAL	ERROR: Momentary interruption NORMAL: Normal	-
#DTC	Number of DTC / min.: 0, max.: 255	-	-
ABS WARN LAMP	ABS warning light / ON or OFF	ON: Warning light ON OFF: Warning light OFF	-
BRAKE WARN LAMP	BRAKE warning light / ON or OFF	ON: Warning light ON OFF: Warning light OFF	-
SLIP INDI LAMP	SLIP indicator light / ON or OFF	ON: Indicator light ON OFF: Indicator light OFF	-
BUZZER	Skid control buzzer / ON or OFF	ON: Buzzer ON OFF: Buzzer OFF	-
VSC WARN LAMP	VSC warning (multi information display) / ON or OFF	ON: Display ON OFF: Display OFF	-
ZERO M/C SEN	Memorized zero value / min.: -12.5 MPa, max.: 12.4 MPa	Min.: -12.5 MPa Max.: 12.4 MPa	-
FR WHEEL ACCEL	FR wheel acceleration / min.: -200.84 m/s^2, max.: 199.27 m/s^2	Min.: -200.84 m/s^2 Max.: 199.27 m/s^2	-

Tester Display	Measurement Item/Range	Normal Condition	Diagnostic Note
FL WHEEL ACCEL	FL wheel acceleration / min.: -200.84 m/s^2, max.: 199.27 m/s^2	Min.: -200.84 m/s^2 Max.: 199.27 m/s^2	-
RR WHEEL ACCEL	RR wheel acceleration / min.: -200.84 m/s^2, max.: 199.27 m/s^2	Min.: -200.84 m/s^2 Max.: 199.27 m/s^2	-
RL WHEEL ACCEL	RL wheel acceleration / min.: -200.84 m/s^2, max.: 199.27 m/s^2	Min.: -200.84 m/s^2 Max.: 199.27 m/s^2	-
ZERO DECELERAT	Memorized zero value / min.: -25.11 m/s^2, max.: 24.91 m/s^2	Min.: -25.11 m/s^2 Max.: 24.91 m/s^2	-
ZERO DECELERAT 2	Memorized zero value / min.: -25.11 m/s^2, max.: 24.91 m/s^2	Min.: -25.11 m/s^2 Max.: 24.91 m/s^2	-
ZERO STEERING	Memorized zero value / min.: -3,276.8 deg, max.: 3,276.7 deg	Min.: -3,276.8 deg Max.: 3,276.7 deg	-
LATERAL G	Lateral G / min.: -25.11 m/s^2, max.: 24.91 m/s^2	Min.: -25.11 m/s^2 Max.: 24.91 m/s^2	-
FORWARD&REA G	Forward and rearward G / min.: -25.11 m/s^2, max.: 24.91 m/s^2	Min.: -25.11 m/s^2 Max.: 24.91 m/s^2	-
YAW RATE VALUE	Yaw rate value / min.: -128 deg/s, max.: 127 deg/s	Min.: -128 deg/s Max.: 127 deg/s	-
STEERING ANGLE	Steering angle value / min.: -3,276.8 deg, max.: 3,276.7 deg	Min.: -3,276.8 deg Max.: 3,276.7 deg	-
TRAC STATUS	TRAC control status / ON or OFF	ON: During the control	-
TRAC ENG STATUS	TRAC engine control status / ON or OFF	ON: During the control	-
TRAC BRK STATUS	TRAC brake control status / ON or OFF	ON: During the control	-
FR VSC STATUS	FR wheel VSC control status / ON or OFF	ON: During the control	-
FL VSC STATUS	FL wheel VSC control status / ON or OFF	ON: During the control	-
RR VSC STATUS	RR wheel VSC control status / ON or OFF	ON: During the control	-
RL VSC STATUS	RL wheel VSC control status / ON or OFF	ON: During the control	-
FR ABS STATUS	FR wheel ABS control status / ON or OFF	ON: During the control	-
FL ABS STATUS	FL wheel ABS control status / ON or OFF	ON: During the control	-
RR ABS STATUS	RR wheel ABS control status / ON or OFF	ON: During the control	-
RL ABS STATUS	RL wheel ABS control status / ON or OFF	ON: During the control	-
RR EBD STATUS	RR wheel EBD control status / ON or OFF	ON: During the control	-
RL EBD STATUS	RL wheel EBD control status / ON or OFF	ON: During the control	-
BA STATUS	BA control status / ON or OFF	ON: During the control	-
PBA STATUS	PBA control status / ON or OFF	ON: During the control	-
INSPECTION MODE	Inspection mode / OTHER or INSPECT	-	-
#IG ON2	Number of engine switch on (IG) after entering the inspection mode / min.: 0, max.: 255	-	-

2. ACTIVE TEST

HINT:
Performing the Active Test using the intelligent tester allows the relay, actuator, and other items to operate without removing any parts. Performing the Active Test as the first step in troubleshooting is one of the methods to save labor time.
It is possible to display the Data List during the Active Test.

(a) Connect the intelligent tester to the DLC3.
(b) Turn the engine switch on (IG).
(c) On the tester display, select the Active Test.
HINT:
The engine switch must be turned on (IG) to proceed to the Active Test using the intelligent tester.

Tester Display	Test Part	Control Range	Diagnostic Note
SFRR	ABS solenoid (SFRR)	Solenoid ON / OFF	Operating sound of solenoid (clicking sound) can be heard
SFRH	ABS solenoid (SFRH)	Solenoid ON / OFF	Operating sound of solenoid (clicking sound) can be heard
SFLR	ABS solenoid (SFLR)	Solenoid ON / OFF	Operating sound of solenoid (clicking sound) can be heard
SFLH	ABS solenoid (SFLH)	Solenoid ON / OFF	Operating sound of solenoid (clicking sound) can be heard
SRRR	ABS solenoid (SRRR)	Solenoid ON / OFF	Operating sound of solenoid (clicking sound) can be heard
SRRH	ABS solenoid (SRRH)	Solenoid ON / OFF	Operating sound of solenoid (clicking sound) can be heard
SRLR	ABS solenoid (SRLR)	Solenoid ON / OFF	Operating sound of solenoid (clicking sound) can be heard
SRLH	ABS solenoid (SRLH)	Solenoid ON / OFF	Operating sound of solenoid (clicking sound) can be heard
SMF	Master cut solenoid (SM1)	Solenoid ON / OFF	Operating sound of solenoid (clicking sound) can be heard
SMR	Master cut solenoid (SM2)	Solenoid ON / OFF	Operating sound of solenoid (clicking sound) can be heard
SOL RELAY	ABS solenoid relay	Relay ON / OFF	-
MOTOR RELAY	ABS motor relay	Relay ON / OFF	Operating sound of relay (clicking sound) and motor can be heard
ABS WARN LAMP	ABS warning light	Warning light ON / OFF	Observe combination meter
VSC WARN LAMP	VSC warning (multi information display)	Warning (display) ON / OFF	Observe combination meter
SLIP INDI LAMP	SLIP indicator light	Indicator light ON / OFF	Observe combination meter

Tester Display	Test Part	Control Range	Diagnostic Note
BRAKE WARN LAMP	BRAKE warning light	Warning light ON / OFF	Observe combination meter
BUZZER	Skid control buzzer	Buzzer ON / OFF	Buzzer can be heard
STP LAMP RELAY (*1)	Stop light control relay	Relay ON / OFF	Stop light comes on (Does not come on for 5 seconds or more)

(*1): with dynamic radar cruise control

DIAGNOSTIC TROUBLE CODE CHART

- If a trouble code is displayed during the DTC check, check the circuit indicated by the DTC. For details of each code, refer to the page for the respective "DTC Code" in the DTC chart.
- Inspect the fuse and relay before investigating the trouble areas as shown in the table below.

DTC chart of ABS:

DTC Code	Detection Item	Trouble Area	See page
C0200/31 (*1)	Front Speed Sensor RH Circuit	1. Front speed sensor RH 2. Speed sensor circuit 3. Speed sensor rotor 4. Sensor installation 5. Brake actuator assembly (Skid control ECU)	BC-58
C0205/32 (*1)	Front Speed Sensor LH Circuit	1. Front speed sensor LH 2. Speed sensor circuit 3. Speed sensor rotor 4. Sensor installation 5. Brake actuator assembly (Skid control ECU)	BC-58
C0210/33 (*1)	Rear Speed Sensor RH Circuit	1. Rear speed sensor RH 2. Speed sensor circuit 3. Speed sensor rotor 4. Sensor installation 5. Brake actuator assembly (Skid control ECU)	BC-66
C0215/34 (*1)	Rear Speed Sensor LH Circuit	1. Rear speed sensor LH 2. Speed sensor circuit 3. Speed sensor rotor 4. Sensor installation 5. Brake actuator assembly (Skid control ECU)	BC-66
C0226/21	SFR Solenoid Circuit	1. Brake actuator assembly 2. SFRH or SFRR circuit	BC-74
C0236/22	SFL Solenoid Circuit	1. Brake actuator assembly 2. SFLH or SFLR circuit	BC-74
C0246/23	SRR Solenoid Circuit	1. Brake actuator assembly 2. SRRH or SRRR circuit	BC-74
C0256/24	SRL Solenoid Circuit	1. Brake actuator assembly 2. SRLH or SRLR circuit	BC-74
C0273/13 (*1)	Open in ABS Motor Relay Circuit	1. ABS NO. 1 fuse 2. VSC NO. 2 relay 3. VSC NO. 2 relay circuit 4. Brake actuator assembly	BC-77
C0274/14	Short to B+ in ABS Motor Relay Circuit	1. ABS NO. 1 fuse 2. VSC NO. 2 relay 3. VSC NO. 2 relay circuit 4. Brake actuator assembly	BC-77
C0278/11	Open in ABS Solenoid Relay Circuit	1. ABS NO. 2 fuse 2. ABS solenoid relay 3. ABS solenoid relay circuit 4. Brake actuator assembly	BC-84
C0279/12	Short to B+ in ABS Solenoid Relay Circuit	Brake actuator assembly	BC-84
C1225/25	SM Solenoid Circuit	1. Brake actuator assembly 2. SM1 or SM2 circuit	BC-74
C1235/35	Foreign Object is Attached on Tip of Front Speed Sensor RH	1. Front speed sensor RH 2. Speed sensor rotor 3. Sensor installation 4. Brake actuator assembly (Skid control ECU)	BC-98

DTC Code	Detection Item	Trouble Area	See page
C1236/36	Foreign Object is Attached on Tip of Front Speed Sensor LH	1. Front speed sensor LH 2. Speed sensor rotor 3. Sensor installation 4. Brake actuator assembly (Skid control ECU)	BC-98
C1238/38	Foreign Object is Attached on Tip of Rear Speed Sensor RH	1. Rear speed sensor RH 2. Speed sensor rotor 3. Sensor installation 4. Brake actuator assembly (Skid control ECU)	BC-98
C1239/39	Foreign Object is Attached on Tip of Rear Speed Sensor LH	1. Rear speed sensor LH 2. Speed sensor rotor 3. Sensor installation 4. Brake actuator assembly (Skid control ECU)	BC-98
C1241/41	Low Battery Positive Voltage	1. ECU-IG NO. 2 fuse 2. Battery 3. Charging system 4. Power source circuit 5. Internal power supply circuit of the skid control ECU	BC-107
C1243/43 (*1)	Acceleration Sensor Stuck Malfunction	1. Yaw rate and acceleration sensor 2. Yaw rate and acceleration sensor circuit	BC-94
C1244/44	Open or Short in Acceleration Sensor Circuit	1. Yaw rate and acceleration sensor 2. Yaw rate and acceleration sensor circuit	BC-94
C1245/45 (*1)	Acceleration Sensor Output Malfunction	1. Yaw rate and acceleration sensor 2. Yaw rate and acceleration sensor circuit	BC-94
C1246/46 (*2)	Master Cylinder Pressure Sensor Malfunction	1. Master cylinder pressure sensor 2. Master cylinder pressure sensor circuit 3. Stop light switch circuit 4. Brake actuator assembly	BC-111
C1249/49	Open in Stop Light Switch Circuit	1. STOP fuse 2. Stop light switch 3. Stop light switch circuit 4. Stop light control relay (*3) 5. Stop light control relay circuit (*3) 6. Brake actuator assembly (Skid control ECU)	BC-114
C1251/51 (*1)	Open in Pump Motor Circuit	1. Brake actuator assembly (GND circuit) 2. Brake actuator assembly (Motor circuit)	BC-126
C1361/91	Short Circuit in ABS Motor Fail Safe Relay Circuit	1. ABS NO. 1 fuse 2. VSC NO. 1 (fail safe) relay 3. VSC NO. 1 (fail safe) relay circuit 4. Brake actuator assembly	BC-77
C1381/97	Yaw Rate and / or Acceleration Sensor Power Supply Voltage Malfunction	1. Yaw rate and acceleration sensor 2. Yaw rate and acceleration sensor power source circuit	BC-94
U0073/94	Control Module Communication Bus OFF	CAN communication system	BC-136

DTC Code	Detection Item	Trouble Area	See page
U0124/95	Lost Communication with Lateral Acceleration Sensor Module	CAN communication system (Skid control ECU to yaw rate and acceleration sensor)	BC-136

(*1, *2):
Even after the trouble areas are repaired, the ABS warning light will not go off unless the following operations are performed:

- (*1):
  (a) Drive the vehicle at 20 km/h (12 mph) for 30 seconds or more and check that the ABS warning light goes off.
  (b) Clear the DTC.
- (*2):
  (a) Keep the vehicle stationary for 5 seconds or more and depress the brake pedal lightly 2 or 3 times.
  (b) Drive the vehicle at the vehicle speed of 50 km/h (31 mph) and keep depressing the brake pedal strongly for approximately 3 seconds.
  (c) Repeat the above operation 3 times or more and check that the ABS warning light goes off.
  (d) Clear the DTC.

HINT:
In some cases, the intelligent tester cannot be used when the ABS warning light remains on.
(*3): with dynamic radar cruise control

DTC chart of VSC:

DTC Code	Detection Item	Trouble Area	See page
43	ABS Control System Malfunction	ABS control system	BC-57
C1201/51	Engine Control System Malfunction	Engine control system	BC-87
C1203/53	ECM Communication Circuit Malfunction	ECM	BC-88
C1210/36	Zero Point Calibration of Yaw Rate Sensor Undone	1. Brake actuator assembly (Skid control ECU) 2. Yaw rate and acceleration sensor 3. Zero point calibration undone	BC-89
C1231/31	Steering Angle Sensor Circuit Malfunction	1. Steering angle sensor 2. Steering angle sensor circuit 3. Steering angle sensor power supply 4. Brake actuator assembly (Skid control ECU)	BC-91
C1232/32	Stuck in Acceleration Sensor	1. Yaw rate and acceleration sensor 2. Yaw rate and acceleration sensor circuit	BC-94
C1234/34	Yaw Rate Sensor Malfunction	1. Yaw rate and acceleration sensor 2. Yaw rate and acceleration sensor circuit	BC-94
C1290/66	Steering Angle Sensor Zero Point Malfunction	1. Yaw rate and acceleration sensor zero point calibration incomplete 2. Poor adjustment of the centered position of the steering wheel 3. Poor adjustment of front wheel alignment	BC-129

DTC Code	Detection Item	Trouble Area	See page
C1336/39	Zero Point Calibration of Acceleration Sensor Undone	1. Brake actuator assembly (Skid control ECU) 2. Yaw rate and acceleration sensor 3. Zero point calibration undone	BC-89
C1380/64 (*3)	Stop Light Control Relay Malfunction	1. STOP fuse 2. Stop light switch 3. Stop light switch circuit 4. Stop light control relay 5. Stop light control relay circuit 6. Brake actuator assembly (Skid control ECU)	BC-131
U0100/65	Lost Communication with ECM / PCM	CAN communication system (Skid control ECU to ECM)	BC-136
U0123/62	Lost Communication with Yaw Rate Sensor Module	CAN communication system (Skid control ECU to yaw rate and acceleration sensor)	BC-136
U0126/63	Lost Communication with Steering Angle Sensor Module	CAN communication system (Skid control ECU to steering angle sensor)	BC-136

HINT:
In some cases, the intelligent tester cannot be used when the VSC warning (multi information display) remains on.
(*3): with dynamic radar cruise control

Test Mode DTC of ABS:

DTC Code	Detection Item	Trouble Area	See page
C1271/71	Low Output Signal of Front Speed Sensor RH (Test Mode DTC)	1. Front speed sensor RH 2. Sensor installation 3. Speed sensor rotor	BC-58
C1272/72	Low Output Signal of Front Speed Sensor LH (Test Mode DTC)	1. Front speed sensor LH 2. Sensor installation 3. Speed sensor rotor	BC-58
C1273/73	Low Output Signal of Rear Speed Sensor RH (Test Mode DTC)	1. Rear speed sensor RH 2. Sensor installation 3. Speed sensor rotor	BC-66
C1274/74	Low Output Signal of Rear Speed Sensor LH (Test Mode DTC)	1. Rear speed sensor LH 2. Sensor installation 3. Speed sensor rotor	BC-66
C1275/75	Abnormal Change in Output Signal of Front Speed Sensor RH (Test Mode DTC)	Speed sensor rotor	BC-98
C1276/76	Abnormal Change in Output Signal of Front Speed Sensor LH (Test Mode DTC)	Speed sensor rotor	BC-98
C1277/77	Abnormal Change in Output Signal of Rear Speed Sensor RH (Test Mode DTC)	Speed sensor rotor	BC-98
C1278/78	Abnormal Change in Output Signal of Rear Speed Sensor LH (Test Mode DTC)	Speed sensor rotor	BC-98
C1279/79	Acceleration Sensor Output Voltage Malfunction (Test Mode DTC)	1. Yaw rate and acceleration sensor 2. Sensor installation	BC-94
C1281/81	Master Cylinder Pressure Sensor Output Malfunction (Test Mode DTC)	1. Stop light switch 2. Master cylinder pressure sensor	BC-111

Test Mode DTC of VSC:

DTC Code	Detection Item	Trouble Area	See page
C0371/71	Yaw Rate Sensor (Test Mode DTC)	Yaw rate and acceleration sensor	BC-94

DTC	43	ABS Control System Malfunction

DESCRIPTION

This DTC is output when the VSC system detects a malfunction in the ABS control system.

DTC Code	DTC Detection Condition	Trouble Area
43	Malfunction in the ABS control system.	ABS control system

INSPECTION PROCEDURE

NOTICE:

When replacing the brake actuator assembly, perform zero point calibration (See page BC-20).

1 CHECK ABS CONTROL SYSTEM

(a) Clear the DTC (See page BC-43).
(b) Turn the engine switch on (IG).
(c) Check if the same DTC is recorded (See page BC-43).

Result

Condition	Proceed to
DTC (ABS control system DTC) is not output	A
DTC (ABS control system DTC) is output	B

B → **REPAIR CIRCUIT INDICATED BY OUTPUT DTC (See page BC-52)**

A

2 RECONFIRM DTC

(a) Turn the engine switch off.
(b) Clear the DTC (See page BC-43).
(c) Turn the engine switch on (IG).
(d) Check if the same DTC is recorded (See page BC-43).

Result

Condition	Proceed to
DTC (43) is not output	A
DTC (43) is output	B

B → **REPLACE BRAKE ACTUATOR ASSEMBLY**

A

CHECK FOR INTERMITTENT PROBLEMS (SYMPTOM SIMULATION)

DTC	C0200/31	Front Speed Sensor RH Circuit

DTC	C0205/32	Front Speed Sensor LH Circuit

DTC	C1271/71	Low Output Signal of Front Speed Sensor RH (Test Mode DTC)

DTC	C1272/72	Low Output Signal of Front Speed Sensor LH (Test Mode DTC)

DESCRIPTION

The speed sensors detect wheel speed and transmit the signals to the ECU. These signals are used for control of the ABS control system. Each of the front and rear rotors have 48 serrations. When the rotors rotate, the magnetic filed generated by the permanent magnet in the speed sensor induces an AC voltage.

Since the frequency of this AC voltage changes in direct proportion to the speed of the rotor, the frequency is used by the ECU to detect the speed of each wheel.

DTCs C1271/71 and C1272/72 can be deleted when the speed sensor sends a wheel speed signal or the Test Mode ends. DTCs C1271/71 and C1272/72 are output only in the Test Mode.

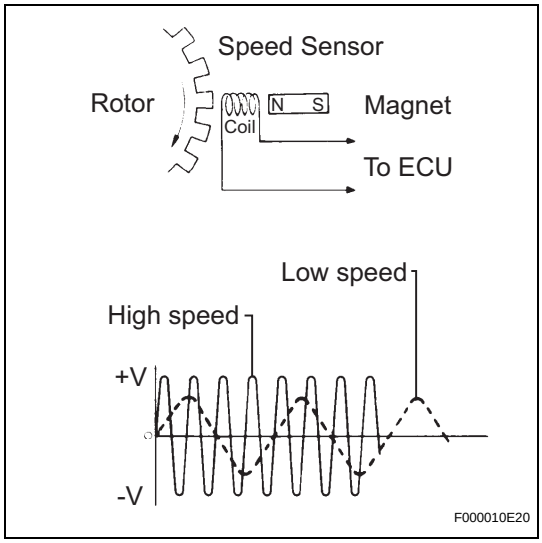

DTC Code	DTC Detection Condition	Trouble Area
C0200/31 C0205/32	When any of the following is detected: 1. At a vehicle speed of 10 km/h (6 mph) or more, an open or short in the sensor signal circuit continues for 1 second or more. 2. Momentary interruption of the sensor signal from the abnormal wheel occurs 7 times or more. 3. An open in the speed sensor signal circuit continues for 0.5 seconds or more.	• Front speed sensor RH/LH • Speed sensor circuit • Speed sensor rotor • Sensor installation • Brake actuator assembly (Skid control ECU)
C1271/71 C1272/72	Detected only during Test Mode.	• Front speed sensor RH/LH • Sensor installation • Speed sensor rotor

HINT:
- DTCs C0200/31 and C1271/71 are for the front speed sensor RH.
- DTCs C0205/32 and C1272/72 are for the front speed sensor LH.

WIRING DIAGRAM

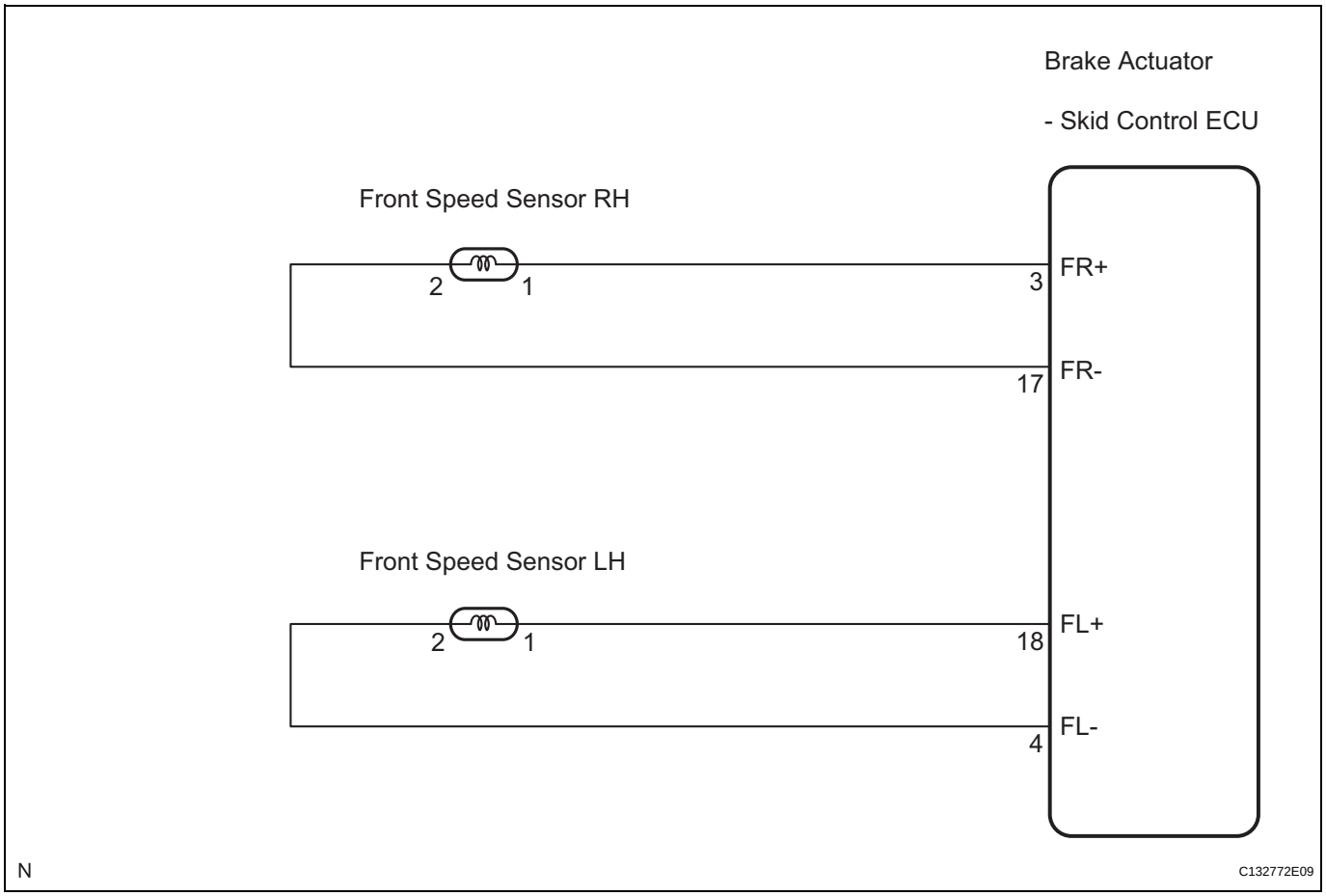

INSPECTION PROCEDURE

NOTICE:

When replacing the brake actuator assembly, perform zero point calibration (See page BC-20).

1	CHECK HARNESS AND CONNECTOR (MOMENTARY INTERRUPTION)

(a) Using the intelligent tester, check for any momentary interruption in the wire harness and connector corresponding to a DTC (See page BC-19).

ABS / VSC:

Tester Display	Measurement Item/Range	Normal Condition
FR SPD OPN	FR speed sensor open detection / ERROR or NORMAL	ERROR: Momentary interruption NORMAL: Normal
FL SPD OPN	FL speed sensor open detection / ERROR or NORMAL	ERROR: Momentary interruption NORMAL: Normal

BC

Result

Condition	Proceed to
There are no momentary interruptions	**A**
There are momentary interruptions	**B**
There is a constant open circuit	**C**

HINT:
Perform the above inspection before removing the sensor and connector.

B → Go to step 11

C → Go to step 5

A

2 READ VALUE OF INTELLIGENT TESTER (FRONT SPEED SENSOR)

(a) Turn the engine switch off.
(b) Connect the intelligent tester to the DLC3.
(c) Start the engine.
(d) Select the Data List mode on the intelligent tester.

ABS / VSC:

Tester Display	Measurement Item/Range	Normal Condition
FR WHEEL SPD	FR wheel speed sensor reading / min.: 0 km/h (0 mph), max.: 326 km/h (202 mph)	Actual wheel speed
FL WHEEL SPD	FL wheel speed sensor reading / min.: 0 km/h (0 mph), max.: 326 km/h (202 mph)	Actual wheel speed

(e) Check that there is no difference between the speed value output from the speed sensor displayed on the intelligent tester and the speed value displayed on the speedometer when driving the vehicle.
OK:
The speed value output from the speed sensor displayed on the intelligent tester is the same as the actual vehicle speed.

NG → Go to step 5

OK

3 PERFORM TEST MODE (SIGNAL CHECK)

(a) Perform sensor check in the Test Mode procedure (See page BC-24).
OK:
All Test Mode DTCs are erased.

NG → Go to step 5

BC

OK

4 RECONFIRM DTC

(a) Turn the engine switch off.
(b) Clear the DTC (See page BC-43).
(c) Start the engine.
(d) Drive the vehicle at the speed of 32 km/h (20 mph) or more for at least 60 seconds.
(e) Check if the same DTC is recorded (See page BC-43).

Result

Condition	Proceed to
DTCs (C0200/31 and/or C0205/32) are not output	A
DTCs (C0200/31 and/or C0205/32) are output	B

HINT:
If troubleshooting has been carried out according to the Problem Symptoms Table, refer back to the table and proceed to the next step (See page BC-35).

B → **Go to step 7**

A

CHECK FOR INTERMITTENT PROBLEMS (SYMPTOM SIMULATION)

5 CHECK FRONT SPEED SENSOR INSTALLATION

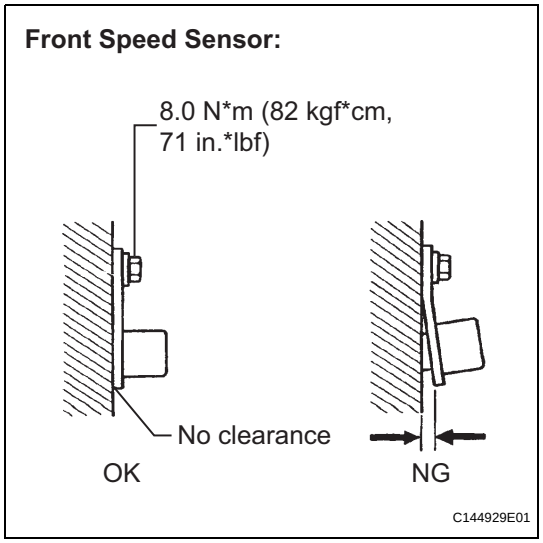

(a) Turn the engine switch off.
(b) Check the speed sensor installation.
OK:
There is no clearance between the sensor and the front steering knuckle.
The installation bolt is tightened properly.
Torque: 8.0 N*m (82 kgf*cm, 71 in.*lbf)

NG → **INSTALL FRONT SPEED SENSOR CORRECTLY**

OK

6 CHECK FRONT SPEED SENSOR TIP

(a) Remove the front speed sensor (See page BC-187).
(b) Check the speed sensor tip.
OK:
No scratches or foreign matter on the sensor tip.
NOTICE:
Check the speed sensor signal after cleaning or replacement (See page BC-24).

NG → **CLEAN OR REPLACE FRONT SPEED SENSOR**

OK

BC

7 INSPECT FRONT SPEED SENSOR

Front Speed Sensor:

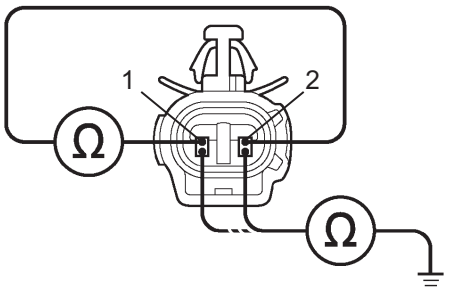

C136017E03

(a) Turn the engine switch off.
(b) Install the front speed sensor.
(c) Disconnect the front speed sensor connector.
(d) Measure the resistance according to the value(s) in the table below.

Standard resistance:

RH

Tester Connection	Condition	Specified Condition
1 (FR+) - 2 (FR-)	Always	1.4 to 1.8 kΩ at 20°C (68°F)
1 (FR+) - Body ground	Always	10 kΩ or higher
2 (FR-) - Body ground	Always	10 kΩ or higher

LH

Tester Connection	Condition	Specified Condition
1 (FL+) - 2 (FL-)	Always	1.4 to 1.8 kΩ at 20°C (68°F)
1 (FL+) - Body ground	Always	10 kΩ or higher
2 (FL-) - Body ground	Always	10 kΩ or higher

NOTICE:
Check the speed sensor signal after replacement (See page BC-24).

NG → **REPLACE FRONT SPEED SENSOR**

OK

8 CHECK HARNESS AND CONNECTOR (SKID CONTROL ECU - FRONT SPEED SENSOR)

Skid Control ECU Harness Side Connector Front View:

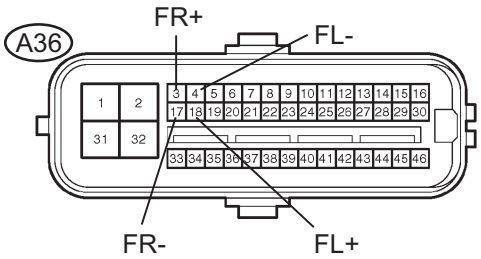

Front Speed Sensor Harness Side Connector Front View:

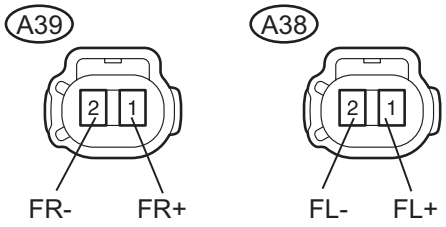

C136018E02

(a) Disconnect the skid control ECU connector.

(b) Measure the resistance according to the value(s) in the table below.

Standard resistance:

RH

Tester Connection	Condition	Specified Condition
A36-3 (FR+) - A39-1 (FR+)	Always	Below 1 Ω
A36-3 (FR+) - Body ground	Always	10 kΩ or higher
A36-17 (FR-) - A39-2 (FR-)	Always	Below 1 Ω
A36-17 (FR-) - Body ground	Always	10 kΩ or higher

LH

Tester Connection	Condition	Specified Condition
A36-18 (FL+) - A38-1 (FL+)	Always	Below 1 Ω
A36-18 (FL+) - Body ground	Always	10 kΩ or higher
A36-4 (FL-) - A38-2 (FL-)	Always	Below 1 Ω
A36-4 (FL-) - Body ground	Always	10 kΩ or higher

NG → **REPAIR OR REPLACE HARNESS OR CONNECTOR**

OK

9 CHECK SPEED SENSOR AND SPEED SENSOR ROTOR SERRATIONS

Skid Control ECU Harness Side Connector Front View:

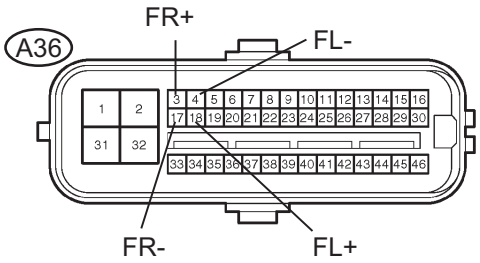

Normal Signal Waveform:

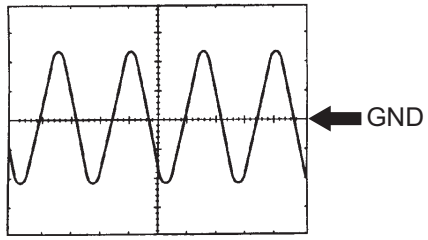

1 V/Division, 2 ms/Division

C136019E06

(a) Reconnect the front speed sensor connector.
(b) Connect the oscilloscope to the front speed sensor terminal of the skid control ECU.
(c) Check that a waveform is output when the tires are rotated (by the sensor circuit).

OK:

The same waveform is output from all the 4 wheels and there is no noise or interference in the waveform.

HINT:

- As the vehicle speed (wheel revolution speed) increases, a cycle of the waveform narrows and the output voltage becomes greater.
- When noise is identified in the waveform on the oscilloscope, the erratic signals are generated due to speed sensor rotor's scratches, looseness or foreign matter attached to it.

NOTICE:

Check the speed sensor signal after cleaning or replacement (See page BC-24).

NG → **CLEAN OR REPLACE SPEED SENSOR OR SPEED SENSOR ROTOR**

OK

10 RECONFIRM DTC

(a) Turn the engine switch off.
(b) Reconnect the skid control ECU connector.
(c) Clear the DTC (See page BC-43).
(d) Start the engine.
(e) Drive the vehicle at the speed of 32 km/h (20 mph) or more for at least 60 seconds.
(f) Check if the same DTC is recorded (See page BC-43).

Result

Condition	Proceed to
DTCs (C0200/31 and/or C0205/32) are not output	A
DTCs (C0200/31 and/or C0205/32) are output	B

HINT:

If troubleshooting has been carried out according to the Problem Symptoms Table, refer back to the table and proceed to the next step (See page BC-35).

B → **REPLACE BRAKE ACTUATOR ASSEMBLY**

A

CHECK FOR INTERMITTENT PROBLEMS (SYMPTOM SIMULATION)

11	REPAIR OR REPLACE HARNESS OR CONNECTOR (SKID CONTROL ECU - FRONT SPEED SENSOR)

(a) Turn the engine switch off.
(b) Repair or replace the harness or connector.
(c) Check for any momentary interruption between the skid control ECU and front speed sensor (See page BC-19).
(d) Check that there is no momentary interruption.

NEXT

12	RECONFIRM DTC

(a) Turn the engine switch off.
(b) Clear the DTC (See page BC-43).
(c) Start the engine.
(d) Drive the vehicle at the speed of 32 km/h (20 mph) or more for at least 60 seconds.
(e) Check if the same DTC is recorded (See page BC-43).

Result

Condition	Proceed to
DTCs (C0200/31 and/or C0205/32) are not output	A
DTCs (C0200/31 and/or C0205/32) are output	B

HINT:
If troubleshooting has been carried out according to the Problem Symptoms Table, refer back to the table and proceed to the next step (See page BC-35).

B → **Go to step 2**

A

END

DTC	C0210/33	Rear Speed Sensor RH Circuit

DTC	C0215/34	Rear Speed Sensor LH Circuit

DTC	C1273/73	Low Output Signal of Rear Speed Sensor RH (Test Mode DTC)

DTC	C1274/74	Low Output Signal of Rear Speed Sensor LH (Test Mode DTC)

DESCRIPTION

The speed sensors detect wheel speed and transmit the signals to the ECU. These signals are used for control of the ABS control system. Each of the front and rear rotors have 48 serrations.
When the rotors rotate, the magnetic field generated by the permanent magnet in the speed sensor induces an AC voltage.
Since the frequency of this AC voltage changes in direct proportion to the speed of the rotor, the frequency is used by the ECU to detect the speed of each wheel.
DTCs C1273/73 and C1274/74 can be deleted when the speed sensor sends a wheel speed signal or the Test Mode ends. DTCs C1273/73 and C1274/74 are output only in the Test Mode.

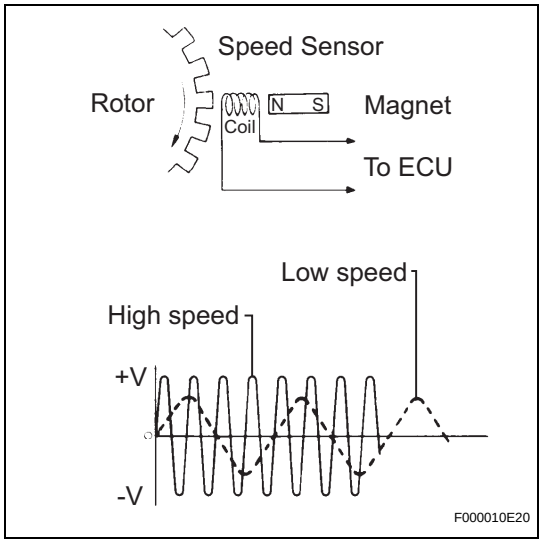

DTC Code	DTC Detection Condition	Trouble Area
C0210/33 C0215/34	When any of the following is detected: 1. At a vehicle speed of 10 km/h (6 mph) or more, an open or short in the sensor signal circuit continues for 1 second or more. 2. Momentary interruption of the sensor signal from the abnormal wheel occurs 7 times or more. 3. An open in the speed sensor signal circuit continues for 0.5 seconds or more.	• Rear speed sensor RH/LH • Speed sensor circuit • Speed sensor rotor • Sensor installation • Brake actuator assembly (Skid control ECU)
C1273/73 C1274/74	Detected only during Test Mode.	• Rear speed sensor RH/LH • Sensor installation • Speed sensor rotor

HINT:
- DTCs C0210/33 and C1273/73 are for the rear speed sensor RH.
- DTCs C0215/34 and C1274/74 are for the rear speed sensor LH.

WIRING DIAGRAM

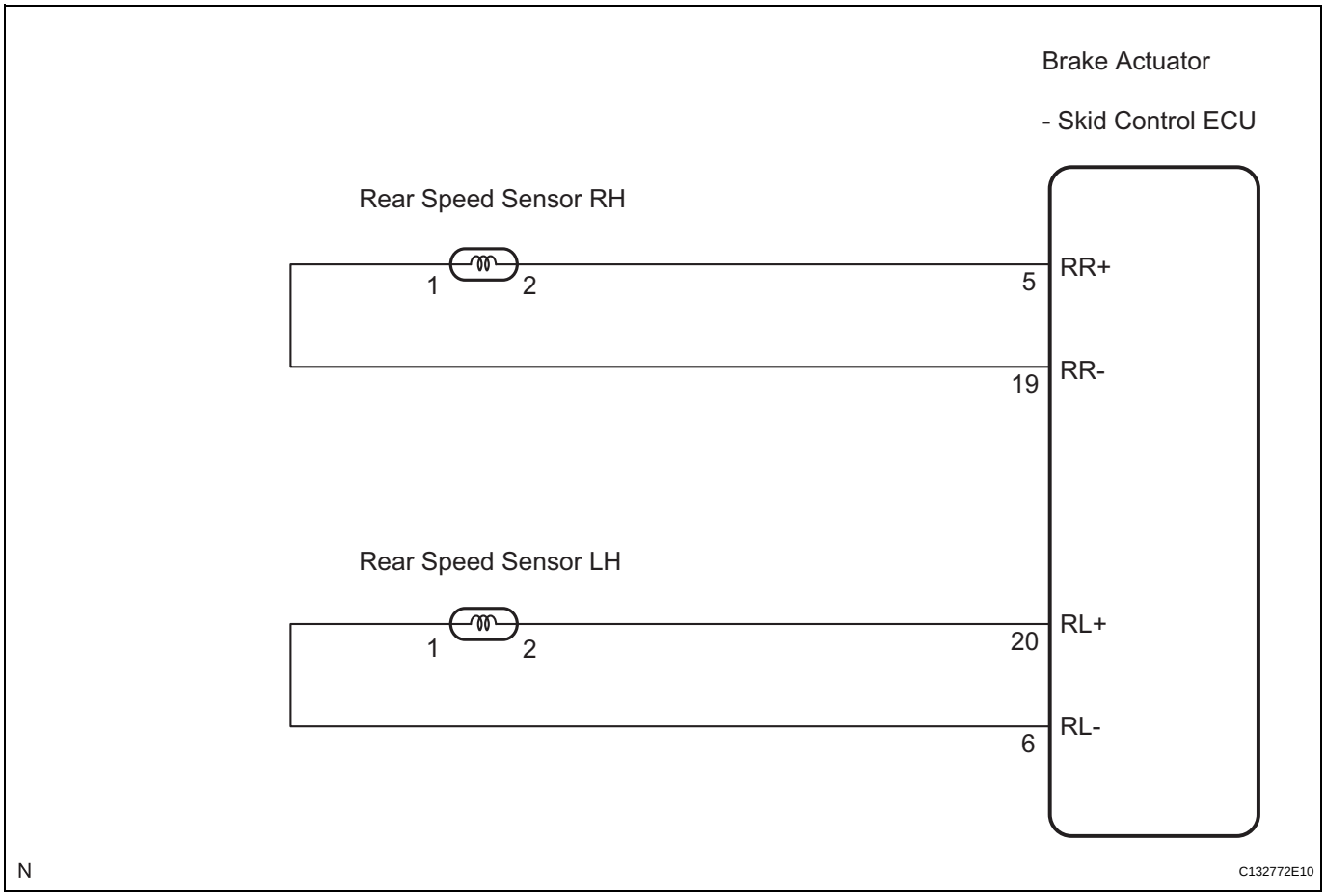

INSPECTION PROCEDURE

NOTICE:

When replacing the brake actuator assembly, perform zero point calibration (See page BC-20).

1	CHECK HARNESS AND CONNECTOR (MOMENTARY INTERRUPTION)

(a) Using the intelligent tester, check for any momentary interruption in the wire harness and connector corresponding to a DTC (See page BC-19).

ABS / VSC:

Tester Display	Measurement Item/Range	Normal Condition
RR SPD OPN	RR speed sensor open detection / ERROR or NORMAL	ERROR: Momentary interruption NORMAL: Normal
RL SPD OPN	RL speed sensor open detection / ERROR or NORMAL	ERROR: Momentary interruption NORMAL: Normal

BC

Result

Condition	Proceed to
There are no momentary interruptions	**A**
There are momentary interruptions	**B**
There is a constant open circuit	**C**

HINT:
Perform the above inspection before removing the sensor and connector.

B → Go to step 11

C → Go to step 5

A

2 READ VALUE OF INTELLIGENT TESTER (REAR SPEED SENSOR)

(a) Turn the engine switch off.
(b) Connect the intelligent tester to the DLC3.
(c) Start the engine.
(d) Select the Data List mode on the intelligent tester.

ABS / VSC:

Tester Display	Measurement Item/Range	Normal Condition
RR WHEEL SPD	RR wheel speed sensor reading / min.: 0 km/h (0 mph), max.: 326 km/h (202 mph)	Actual wheel speed
RL WHEEL SPD	RL wheel speed sensor reading / min.: 0 km/h (0 mph), max.: 326 km/h (202 mph)	Actual wheel speed

(e) Check that there is no difference between the speed value output from the speed sensor displayed on the intelligent tester and the speed value displayed on the speedometer when driving the vehicle.
OK:
The speed value output from the speed sensor displayed on the intelligent tester is the same as the actual vehicle speed.

NG → Go to step 5

OK

3 PERFORM TEST MODE (SIGNAL CHECK)

(a) Perform sensor check in the Test Mode procedure (See page BC-24).
OK:
All Test Mode DTCs are erased.

NG → Go to step 5

BC

OK

4 RECONFIRM DTC

(a) Turn the engine switch off.
(b) Clear the DTC (See page BC-43).
(c) Start the engine.
(d) Drive the vehicle at the speed of 32 km/h (20 mph) or more for at least 60 seconds.
(e) Check if the same DTC is recorded (See page BC-43).

Result

Condition	Proceed to
DTCs (C0210/33 and/or C0215/34) are not output	A
DTCs (C0210/33 and/or C0215/34) are output	B

HINT:
If troubleshooting has been carried out according to the Problem Symptoms Table, refer back to the table and proceed to the next step (See page BC-35).

B → **Go to step 6**

A

CHECK FOR INTERMITTENT PROBLEMS (SYMPTOM SIMULATION)

5 CHECK REAR SPEED SENSOR INSTALLATION

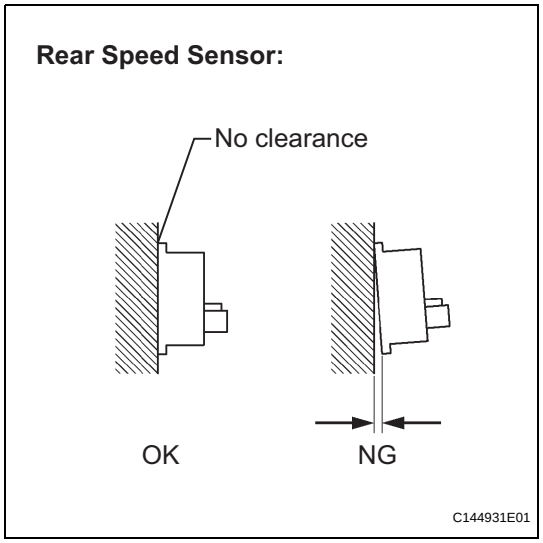

(a) Turn the engine switch off.
(b) Check the speed sensor installation.
OK:
There is no clearance between the sensor and rear axle carrier.

NG → **INSTALL REAR SPEED SENSOR CORRECTLY**

OK

6 INSPECT REAR SPEED SENSOR

Rear Speed Sensor:

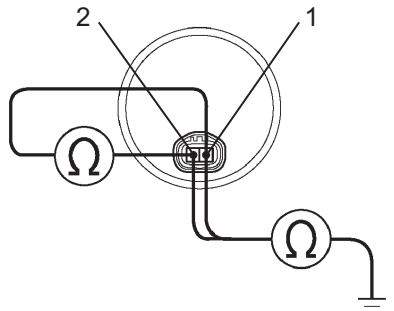

(a) Turn the engine switch off.
(b) Disconnect the rear speed sensor connector.
(c) Measure the resistance according to the value(s) in the table below.

Standard resistance:

RH

Tester Connection	Condition	Specified Condition
2 (RR+) - 1 (RR-)	Always	0.9 to 2.1 kΩ
2 (RR+) - Body ground	Always	10 kΩ or higher
1 (RR-) - Body ground	Always	10 kΩ or higher

LH

Tester Connection	Condition	Specified Condition
2 (RL+) - 1 (RL-)	Always	0.9 to 2.1 kΩ
2 (RL+) - Body ground	Always	10 kΩ or higher
1 (RL-) - Body ground	Always	10 kΩ or higher

NOTICE:
Check the speed sensor signal after replacement (See page BC-24).

NG → **REPLACE REAR SPEED SENSOR**

OK

7 CHECK HARNESS AND CONNECTOR (SKID CONTROL SENSOR WIRE)

Skid Control Sensor Wire:

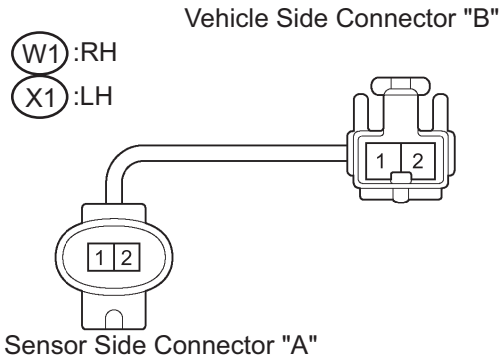

(a) Disconnect the skid control sensor wire.
(b) Measure the resistance according to the value(s) in the table below.

Standard resistance:

RH

Tester Connection	Condition	Specified Condition
W1 ("A"-1) - W1 ("B"-2)	Always	Below 1 Ω
W1 ("A"-1) - W1 ("B"-1)	Always	10 kΩ or higher
W1 ("A"-1) - Body ground	Always	10 kΩ or higher
W1 ("A"-2) - W1 ("B"-1)	Always	Below 1 Ω
W1 ("A"-2) - W1 ("B"-2)	Always	10 kΩ or higher
W1 ("A"-2) - Body ground	Always	10 kΩ or higher

LH

Tester Connection	Condition	Specified Condition
X1 ("A"-1) - X1 ("B"-2)	Always	Below 1 Ω
X1 ("A"-1) - X1 ("B"-1)	Always	10 kΩ or higher
X1 ("A"-1) - Body ground	Always	10 kΩ or higher
X1 ("A"-2) - X1 ("B"-1)	Always	Below 1 Ω
X1 ("A"-2) - X1 ("B"-2)	Always	10 kΩ or higher
X1 ("A"-2) - Body ground	Always	10 kΩ or higher

NOTICE:
Check the speed sensor signal after replacement (See page BC-24).

NG → **REPLACE SKID CONTROL SENSOR WIRE**

OK

8 CHECK HARNESS AND CONNECTOR (SKID CONTROL ECU - REAR SPEED SENSOR)

Skid Control ECU Harness Side Connector Front View:

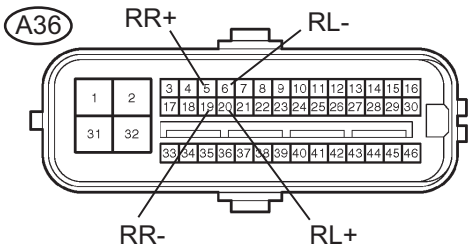

Rear Speed Sensor Harness Side Connector Front View:

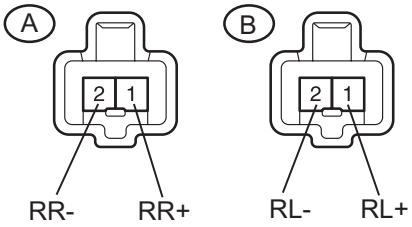

N C136020E02

(a) Disconnect the skid control ECU connector.
(b) Measure the resistance according to the value(s) in the table below.

Standard resistance:

RH

Tester Connection	Condition	Specified Condition
A36-5 (RR+) - A-1 (RR+)	Always	Below 1 Ω
A36-5 (RR+) - Body ground	Always	10 kΩ or higher
A36-19 (RR-) - A-2 (RR-)	Always	Below 1 Ω
A36-19 (RR-) - Body ground	Always	10 kΩ or higher

LH

Tester Connection	Condition	Specified Condition
A36-20 (RL+) - B-1 (RL+)	Always	Below 1 Ω
A36-20 (RL+) - Body ground	Always	10 kΩ or higher
A36-6 (RL-) - B-2 (RL-)	Always	Below 1 Ω
A36-6 (RL-) - Body ground	Always	10 kΩ or higher

NG → **REPAIR OR REPLACE HARNESS OR CONNECTOR**

OK

9 CHECK SPEED SENSOR AND SPEED SENSOR ROTOR SERRATIONS

Skid Control ECU Harness Side Connector Front View:

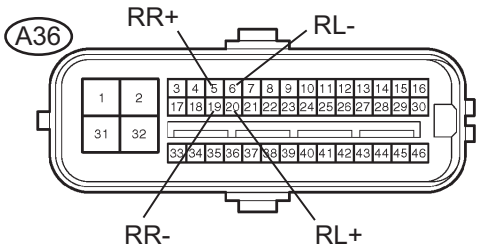

Normal Signal Waveform:

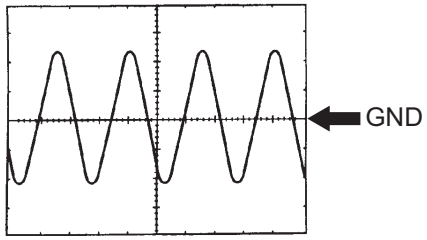

1 V/Division, 2 ms/Division

C136019E07

(a) Reconnect the skid control sensor wire.
(b) Reconnect the rear speed sensor connector.
(c) Connect the oscilloscope to the rear speed sensor terminal of the skid control ECU.
(d) Check that waveform is output when the tires are rotated (by the sensor circuit).

OK:

The same waveform is output from all the 4 wheels and there is no noise or interference in the waveform.

HINT:

- As the vehicle speed (wheel revolution speed) increases, a cycle of the waveform narrows and the output voltage becomes greater.
- When noise is identified in the waveform on the oscilloscope, the erratic signals are generated due to speed sensor rotor's scratches, looseness or foreign matter attached to it.

NOTICE:

Check the speed sensor signal after cleaning or replacement (See page BC-24).

NG → **CLEAN OR REPLACE SPEED SENSOR OR SPEED SENSOR ROTOR**

OK

10 RECONFIRM DTC

(a) Turn the engine switch off.
(b) Reconnect the skid control ECU connector.
(c) Clear the DTC (See page BC-43).
(d) Start the engine.
(e) Drive the vehicle at the speed of 32 km/h (20 mph) or more for at least 60 seconds.
(f) Check if the same DTC is recorded (See page BC-43).

Result

Condition	Proceed to
DTCs (C0210/33 and/or C0215/34) are not output	A
DTCs (C0210/33 and/or C0215/34) are output	B

HINT:

If troubleshooting has been carried out according to the Problem Symptoms Table, refer back to the table and proceed to the next step (See page BC-35).

B → **REPLACE BRAKE ACTUATOR ASSEMBLY**

A

CHECK FOR INTERMITTENT PROBLEMS (SYMPTOM SIMULATION)

11	REPAIR OR REPLACE HARNESS OR CONNECTOR (SKID CONTROL ECU - REAR SPEED SENSOR)

(a) Turn the engine switch off.
(b) Repair or replace the harness or connector.
(c) Check for any momentary interruption between the skid control ECU and rear speed sensor (See page BC-19).
(d) Check that there is no momentary interruption.

NEXT

12	RECONFIRM DTC

(a) Turn the engine switch off.
(b) Clear the DTC (See page BC-43).
(c) Start the engine.
(d) Drive the vehicle at the speed of 32 km/h (20 mph) or more for at least 60 seconds.
(e) Check if the same DTC is recorded (See page BC-43).

Result

Condition	Proceed to
DTCs (C0210/33 and/or C0215/34) are not output	A
DTCs (C0210/33 and/or C0215/34) are output	B

HINT:
If troubleshooting has been carried out according to the Problem Symptoms Table, refer back to the table and proceed to the next step (See page BC-35).

B → **Go to step 2**

A

END

BC

DTC	C0226/21	SFR Solenoid Circuit

DTC	C0236/22	SFL Solenoid Circuit

DTC	C0246/23	SRR Solenoid Circuit

DTC	C0256/24	SRL Solenoid Circuit

DTC	C1225/25	SM Solenoid Circuit

DESCRIPTION

These solenoids turn on when signals are received from the skid control ECU and they control the pressure acting on the wheel cylinders to control the braking force.

DTC Code	DTC Detection Condition	Trouble Area
C0226/21 C0236/22 C0246/23 C0256/24	Open or short in the solenoid circuit continues for 0.05 seconds or more.	• Brake actuator assembly • Solenoid circuit
C1225/25	When any of the following is detected: • While outputting switching solenoid (SM1 or SM2) ON, overcurrent continues for 0.05 seconds or more. • While outputting switching solenoid (SM1 or SM2) OFF, an open circuit continues for 0.05 seconds or more. • While outputting switching solenoid (SM1 or SM2) ON, an open circuit continues for 0.1 second or more. • While outputting switching solenoid (SM1 or SM2) OFF, current continues to be applied for 0.1 second or more. • Short to GND in the switching solenoid (SM1 or SM2) continues for 0.1 second or more. • Switching solenoids SM1 and SM2 are shorted for 0.1 second or more.	• Brake actuator assembly • SM1 or SM2 circuit

WIRING DIAGRAM

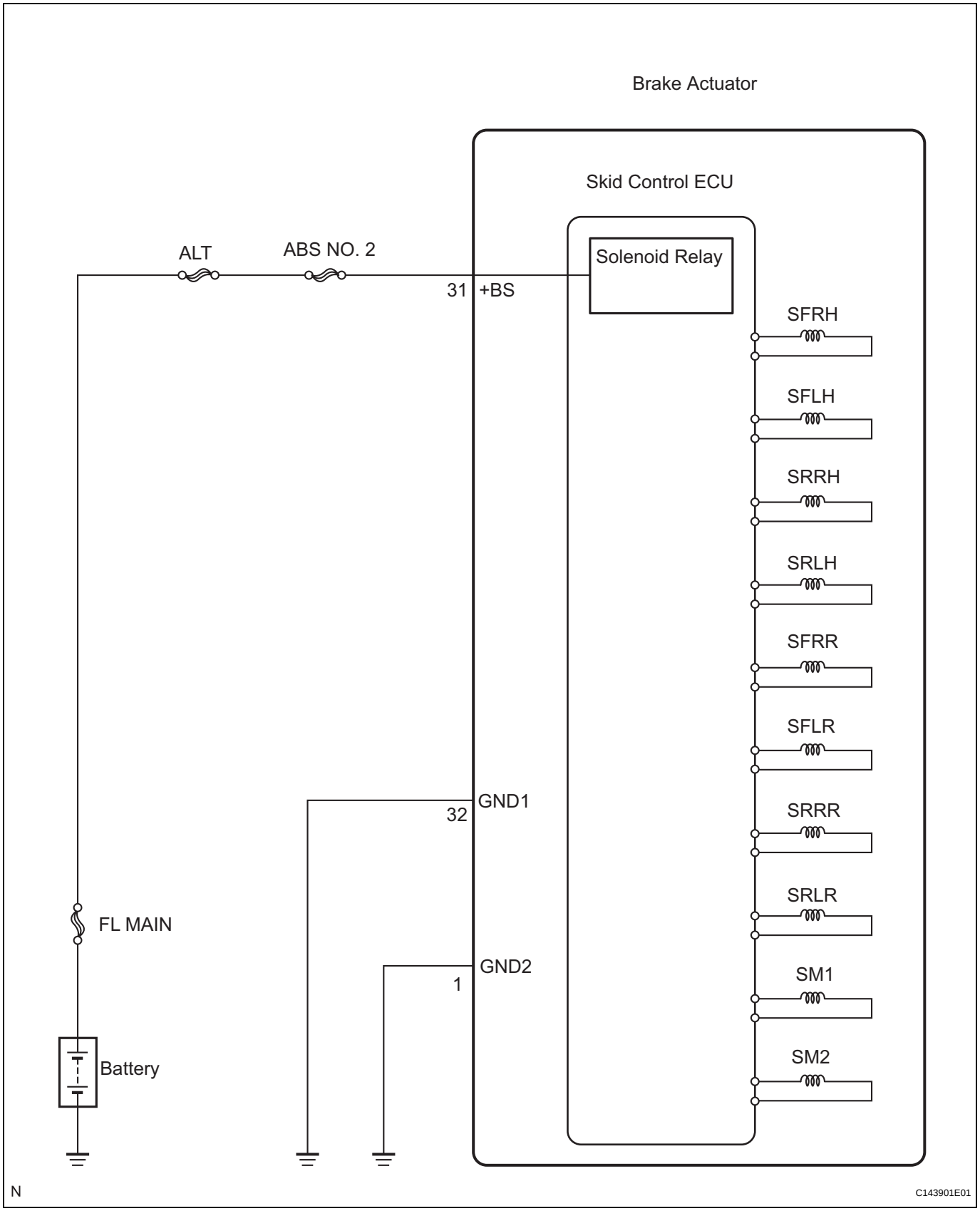

INSPECTION PROCEDURE

NOTICE:

When replacing the brake actuator assembly, perform zero point calibration (See page BC-20).

BC

1	RECONFIRM DTC

HINT:
These codes are detected when a problem is determined in the brake actuator assembly.
The solenoid circuits are in the brake actuator assembly. Therefore, solenoid circuit inspection and solenoid unit inspection cannot be performed. Be sure to check if any DTC code is output before replacing the brake actuator assembly.

(a) Clear the DTC (See page BC-43).
(b) Start the engine.
(c) Drive the vehicle at the speed of 6 km/h (4 mph) or more.
(d) Check if the same DTC is recorded (See page BC-43).

Result

Condition	Proceed to
DTCs (C0226/21, C0236/22, C0246/23, C0256/24 and/or C1225/25) are not output	A
DTCs (C0226/21, C0236/22, C0246/23, C0256/24 and/or C1225/25) are output	B

HINT:
- If a speed signal of 6 km/h (4 mph) or more is input to the skid control ECU, with the engine switch on (IG) and the stop light switch off, the ECU performs self diagnosis of the motor and solenoid circuits.
- If the normal system code is output (the trouble code is not output), slightly jiggle the connectors, wire harness, and fuses of the brake actuator assembly. Make sure that no DTCs are output.
- If any DTCs are output while jiggling a connector or wire harness of the brake actuator assembly (skid control ECU), inspect and repair the connector or wire harness.

B → **REPLACE BRAKE ACTUATOR ASSEMBLY**

A

CHECK FOR INTERMITTENT PROBLEMS (SYMPTOM SIMULATION)

DTC	C0273/13	Open in ABS Motor Relay Circuit

DTC	C0274/14	Short to B+ in ABS Motor Relay Circuit

DTC	C1361/91	Short Circuit in ABS Motor Fail Safe Relay Circuit

DESCRIPTION

If a DTC of the motor line is stored, the VSC NO. 1 (fail safe) relay cuts off the power supply to the VSC NO. 2 relay and performs fail safe.
While any of the ABS, TRAC, VSC, or BA is operating, the skid control ECU (housed in the actuator assembly) turns the VSC NO. 2 relay on and activates the pump motor in the brake actuator.
This code may be stored if the motor relay (BM) voltage becomes lower than the DTC detecting condition due to insufficient output from the battery or alternator.

DTC Code	DTC Detection Condition	Trouble Area
C0273/13	When any of the following (1 or 2) is detected: 1. All of the following conditions continue for 0.12 seconds or more. – The IG1 terminal voltage is between 9.5 and 17.2 V. – During initial check and ABS, BA, TRAC, or VSC are operating. – Relay contact is open when the relay is ON. 2. All of the following conditions continue for 0.12 seconds. – The IG1 terminal voltage is 9.5 V or less. – Relay contact remains open when the relay is ON.	• ABS NO. 1 fuse • VSC NO. 2 relay • VSC NO. 2 relay circuit • Brake actuator assembly
C0274/14	When the motor relay is OFF, the VSC NO. 2 relay remains closed for 4 seconds or more.	• ABS NO. 1 fuse • VSC NO. 2 relay • VSC NO. 2 relay circuit • Brake actuator assembly
C1361/91	Immediately after the engine switch is turned on (IG), the relay contact is closed for 4 seconds when the VSC NO. 1 (fail safe) relay is OFF.	• ABS NO. 1 fuse • VSC NO. 1 (fail safe) relay • VSC NO. 1 (fail safe) relay circuit • Brake actuator assembly

WIRING DIAGRAM

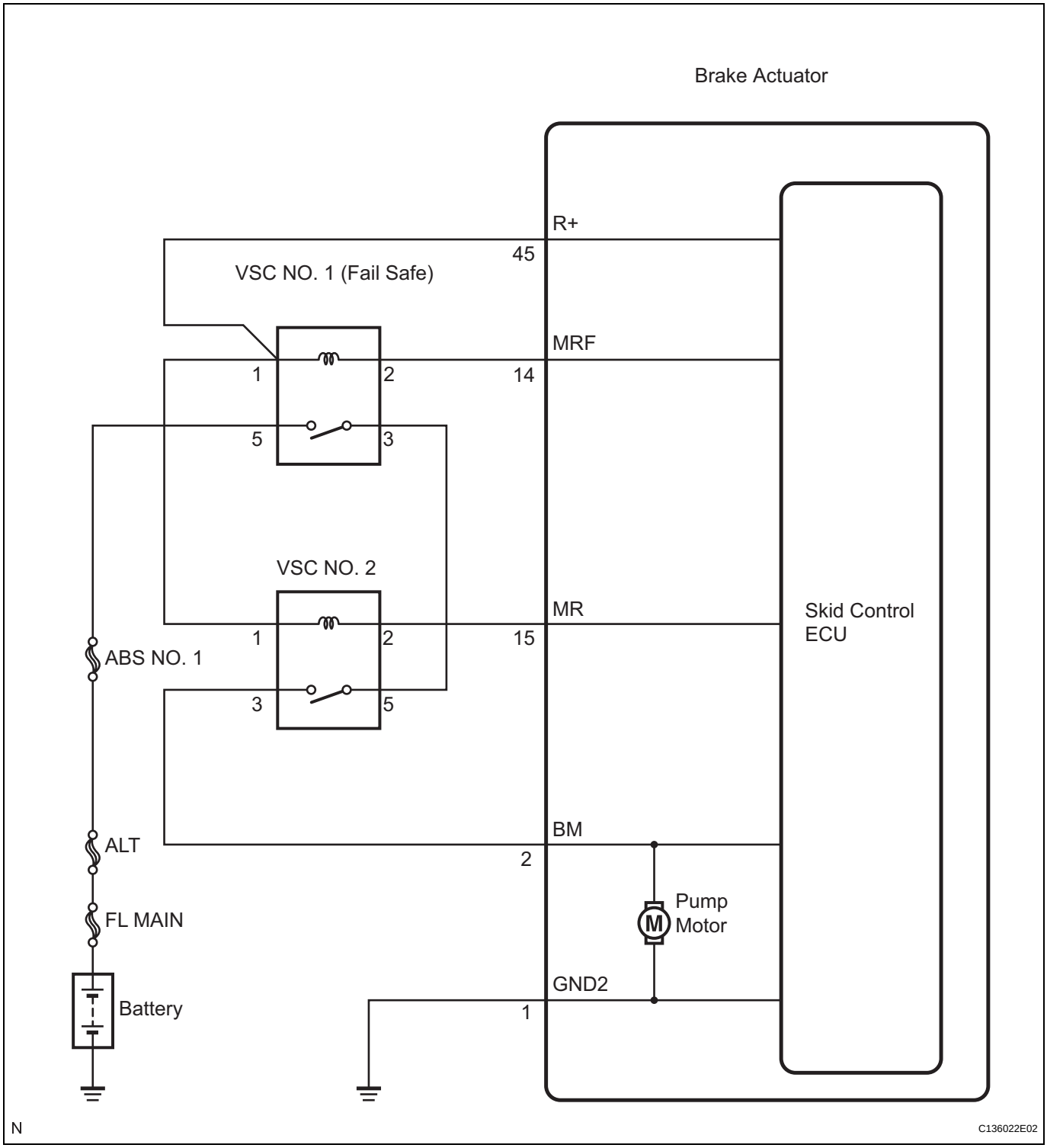

INSPECTION PROCEDURE

NOTICE:

When replacing the brake actuator assembly, perform zero point calibration (See page BC-20).

1	**INSPECT ABS NO. 1 FUSE**

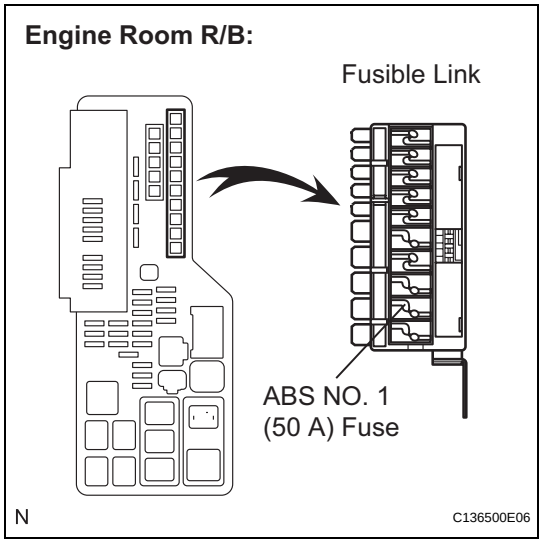

(a) Remove the fusible link from the engine room R/B.

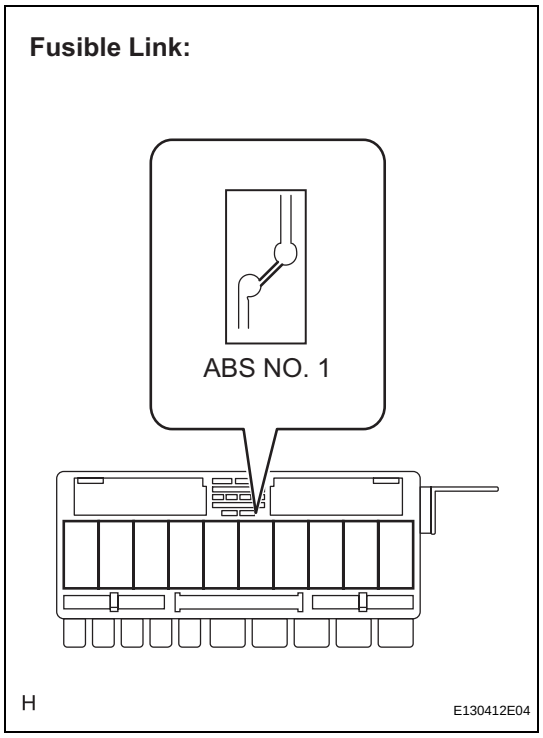

(b) Check if the fusible link is melted.
OK:
The fusible link is melted.

(c) Install the fusible link to the engine room R/B with the nut.
Torque: 5.4 N*m (55 kgf*cm, 48 in.*lbf)

NG → **REPLACE FUSIBLE LINK (ABS NO. 1 FUSE)**

OK

BC

2 INSPECT ABS MOTOR RELAY (VSC NO. 2 RELAY)

VSC NO. 2 Relay:

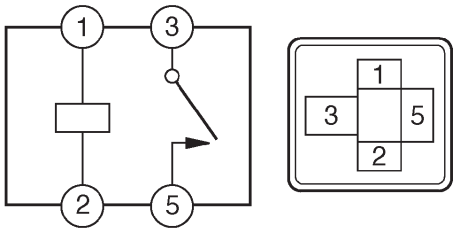

C144829E02

(a) Remove the VSC NO. 2 relay.
(b) Measure the resistance according to the value(s) in the table below.

Standard resistance

Tester Connection	Condition	Specified Condition
3 - 5	Always	10 kΩ or higher
3 - 5	Apply B+ between terminals 1 and 2	Below 1 Ω

NG → **REPLACE ABS MOTOR RELAY (VSC NO. 2 RELAY)**

OK

3 INSPECT ABS MOTOR RELAY (VSC NO. 1 (FAIL SAFE) RELAY)

VSC NO. 1 (Fail Safe) Relay:

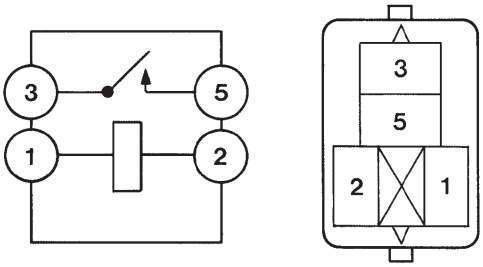

C143433E03

(a) Remove the VSC NO. 1 (fail safe) relay.
(b) Measure the resistance according to the value(s) in the table below.

Standard resistance

Tester Connection	Condition	Specified Condition
3 - 5	Always	10 kΩ or higher
3 - 5	Apply B+ between terminals 1 and 2	Below 1 Ω

NG → **REPLACE ABS MOTOR RELAY (VSC NO. 1 (FAIL SAFE) RELAY)**

OK

4 INSPECT ENGINE ROOM RELAY BLOCK (POWER SOURCE TERMINAL)

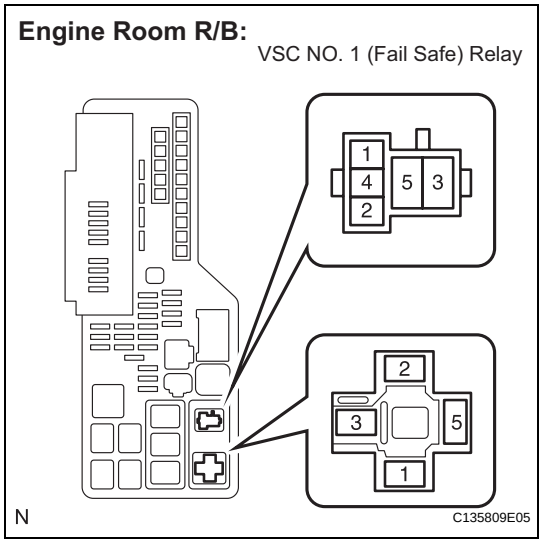

(a) Measure the voltage according to the value(s) in the table below.

Standard voltage

Tester Connection	Condition	Specified Condition
VSC NO. 1 (fail safe) relay terminal 5 - Body ground	Always	10 to 14 V

NG → **REPAIR OR REPLACE HARNESS OR CONNECTOR (POWER SOURCE CIRCUIT)**

OK

5 INSPECT ENGINE ROOM RELAY BLOCK

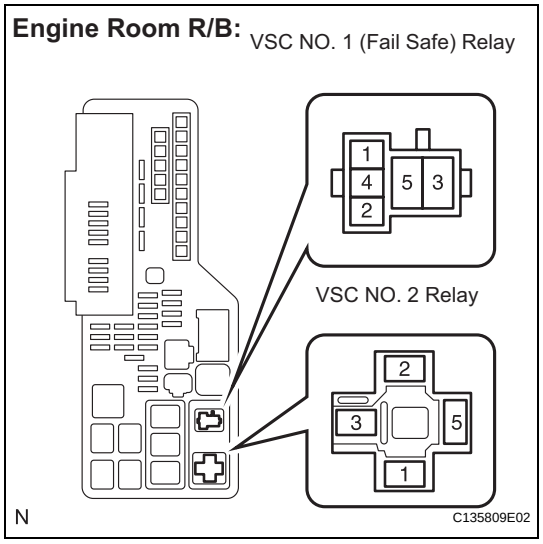

(a) Measure the resistance according to the value(s) in the table below.

Standard resistance

Tester Connection	Condition	Specified Condition
VSC NO. 1 (fail safe) relay terminal 3 - VSC NO. 2 relay terminal 5	Always	Below 1 Ω
VSC NO. 1 (fail safe) relay terminal 3 - Body ground	Always	10 kΩ or higher

NG → **REPAIR OR REPLACE ENGINE ROOM RELAY BLOCK**

OK

6 CHECK HARNESS AND CONNECTOR (SKID CONTROL ECU - ENGINE ROOM RELAY BLOCK)

Skid Control ECU Harness Side Connector Front View:

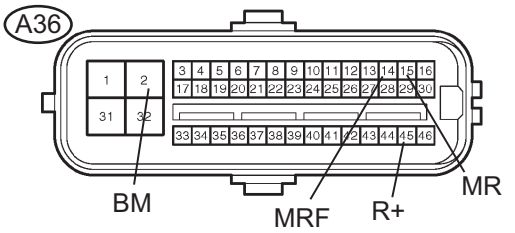

Engine Room R/B:

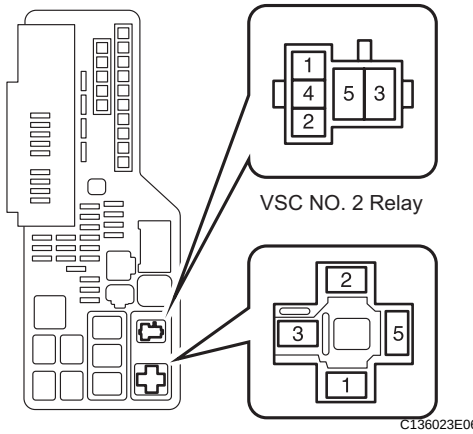

(a) Disconnect the skid control ECU connector.
(b) Measure the resistance according to the value(s) in the table below.

Standard resistance

Tester Connection	Condition	Specified Condition
A36-2 (BM) - VSC NO. 2 relay terminal 3	Always	Below 1 Ω
A36-2 (BM) - Body ground	Always	10 kΩ or higher
A36-14 (MRF) - VSC NO. 1 (fail safe) relay terminal 2	Always	Below 1 Ω
A36-14 (MRF) - Body ground	Always	10 kΩ or higher
A36-15 (MR) - VSC NO. 2 relay terminal 2	Always	Below 1 Ω
A36-15 (MR) - Body ground	Always	10 kΩ or higher
A36-45 (R+) - VSC NO. 1 (fail safe) relay terminal 1	Always	Below 1 Ω
A36-45 (R+) - Body ground	Always	10 kΩ or higher

NG → **REPAIR OR REPLACE HARNESS OR CONNECTOR**

OK

7 RECONFIRM DTC

(a) Clear the DTC (See page BC-43).
(b) Start the engine.
(c) Drive the vehicle at the speed of 6 km/h (4 mph) or more.
(d) Check if the same DTC is recorded (See page BC-43).
HINT:
Reinstall the relays, connectors, etc. and restore the vehicle to its prior condition before rechecking for DTCs.

Result

Condition	Proceed to
DTCs (C0273/13, C0274/14 and/or C1361/91) are not output	A
DTCs (C0273/13, C0274/14 and/or C1361/91) are output	B

HINT:
- If a speed signal of 6 km/h (4 mph) or more is input to the skid control ECU, with the engine switch on (IG) and the stop light switch off, the ECU performs self diagnosis of the motor and solenoid circuits.

- If the normal system code is output (the trouble code is not output), slightly jiggle the connectors, wire harness, and fuses of the brake actuator assembly. Make sure that no DTCs are output.
- If any DTCs are output while jiggling a connector or wire harness of the brake actuator assembly (skid control ECU), inspect and repair the connector or wire harness.

B → **REPLACE BRAKE ACTUATOR ASSEMBLY**

A

CHECK FOR INTERMITTENT PROBLEMS (SYMPTOM SIMULATION)

DTC	C0278/11	Open in ABS Solenoid Relay Circuit

DTC	C0279/12	Short to B+ in ABS Solenoid Relay Circuit

DESCRIPTION

The ABS solenoid relay supplies power to the ABS solenoid and TRAC solenoid.
The solenoid relay is turned on 1.5 seconds after the engine switch is turned on (IG), and is turned off if an open or short in the solenoid is detected by self diagnosis performed when the vehicle starts running.
The ABS solenoid relay is housed in the skid control ECU in the actuator assembly.
HINT:
If a speed signal of 6 km/h (4 mph) or more is input to the skid control ECU, with the engine switch turned on (IG) and the stop light switch off, the ECU performs self diagnosis of the motor and solenoid circuits.

DTC Code	DTC Detection Condition	Trouble Area
C0278/11	When any of the following (1 or 2) is detected: 1. Both of the following conditions continue for 0.2 seconds or more. – The IG1 terminal voltage is between 9.5 and 17.2 V. – The solenoid relay contact is open when the relay is ON. 2. Both of the following conditions continue for 0.2 seconds or more. – IG1 terminal voltage becomes lower than 9.5 V or less when the relay is turned on. – The relay contact remains open.	• ABS NO. 2 fuse • ABS solenoid relay • ABS solenoid relay circuit • Brake actuator assembly
C0279/12	Immediately after the engine switch is turned on (IG), the solenoid relay contact is closed for 0.2 seconds when the relay is turned off.	Brake actuator assembly

WIRING DIAGRAM

Refer to DTCs C0226/21, C0236/22, C0246/23, C0256/24 and C1225/25 (See page BC-75).

INSPECTION PROCEDURE

NOTICE:
When replacing the brake actuator assembly, perform zero point calibration (See page BC-20).

1	INSPECT ABS NO. 2 FUSE

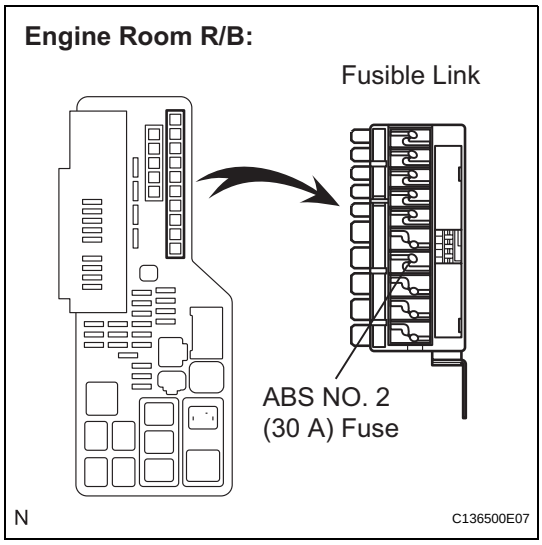

(a) Remove the fusible link from the engine room R/B.

BC

Fusible Link:

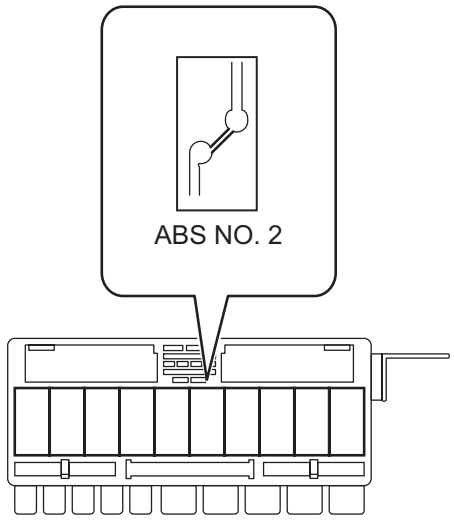

H E130412E05

(b) Check if the fusible link is melted.
OK:
The fusible link is melted.

(c) Install the fusible link to the engine room R/B with the nut.
Torque: 5.4 N*m (55 kgf*cm, 48 in.*lbf)

NG → **REPLACE FUSIBLE LINK (ABS NO. 2 FUSE)**

OK

2 INSPECT SKID CONTROL ECU (+BS TERMINAL)

Skid Control ECU Harness Side Connector Front View:

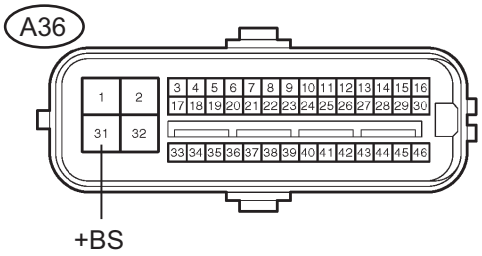

C141673E04

(a) Disconnect the skid control ECU connector.

(b) Measure the voltage according to the value(s) in the table below.
Standard voltage

Tester Connection	Condition	Specified Condition
A36-31 (+BS) - Body ground	Always	10 to 14 V

NG → **REPAIR OR REPLACE HARNESS OR CONNECTOR (+BS CIRCUIT)**

OK

3 INSPECT SKID CONTROL ECU (GND TERMINAL)

Skid Control ECU Harness Side Connector Front View:

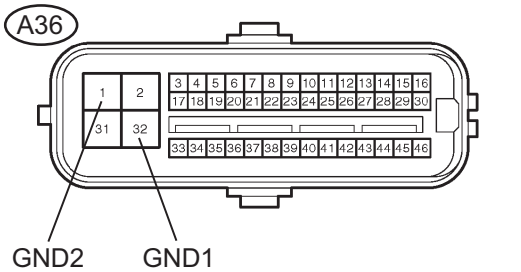

(a) Measure the resistance according to the value(s) in the table below.

Standard resistance

Tester Connection	Condition	Specified Condition
A36-32 (GND1) - Body ground	Always	Below 1 Ω
A36-1 (GND2) - Body ground	Always	Below 1 Ω

NG → **REPAIR OR REPLACE HARNESS OR CONNECTOR (GND CIRCUIT)**

OK

4 RECONFIRM DTC

(a) Reconnect the skid control ECU connector.
(b) Clear the DTC (See page BC-43).
(c) Start the engine.
(d) Drive the vehicle at the speed of 6 km/h (4 mph) or more.
(e) Check if the same DTC is recorded (See page BC-43).

Result

Condition	Proceed to
DTCs (C0278/11 and/or C0279/12) are not output	A
DTCs (C0278/11 and/or C0279/12) are output	B

HINT:
- If a speed signal of 6 km/h (4 mph) or more is input to the skid control ECU, with the engine switch on (IG) and the stop light switch off, the ECU performs self diagnosis of the motor and solenoid circuits.
- If the normal system code is output (the trouble code is not output), slightly jiggle the connectors, wire harnesses, and fuses of the brake actuator assembly. Make sure that no DTCs are output.
- If any DTCs are output while jiggling a connector or wire harness of the brake actuator assembly (skid control ECU), inspect and repair the connector or wire harness.

B → **REPLACE BRAKE ACTUATOR ASSEMBLY**

A

CHECK FOR INTERMITTENT PROBLEMS (SYMPTOM SIMULATION)

DTC	C1201/51	Engine Control System Malfunction

DESCRIPTION

If a malfunction in the engine control system is detected, the operations of VSC and TRAC are prohibited by the fail safe function. When the signals from the engine are input normally, the fail safe is cancelled and the DTC is not stored.

DTC Code	DTC Detection Condition	Trouble Area
C1201/51	Engine control system malfunction signal continues for 5 seconds.	Engine control system

INSPECTION PROCEDURE

1	CHECK ENGINE CONTROL SYSTEM

(a) Check if the engine control system DTC is output (See page ES-41).

Result

Condition	Proceed to
DTC is not output	A
DTC is output	B

B → INSPECT ENGINE CONTROL SYSTEM

A

REPLACE ECM

DTC	C1203/53	ECM Communication Circuit Malfunction

DESCRIPTION

The circuit is used to send TRAC and VSC control information from the skid control ECU to the ECM, and engine control information from the ECM to the skid control ECU through the CAN communication system.

DTC Code	DTC Detection Condition	Trouble Area
C1203/53	Engine, drive source and destination variations that are sent from the ECM do not match the ones of the skid control ECU.	ECM

INSPECTION PROCEDURE

1 CHECK PART NUMBER (ECM AND BRAKE ACTUATOR ASSEMBLY)

(a) Check that the proper ECM and brake actuator assembly (skid control ECU) are installed.
OK:
Proper ECUs are installed.

NG → **REPLACE ECUS WITH PROPER ONES**

OK

REPLACE ECM

DTC	C1210/36	Zero Point Calibration of Yaw Rate Sensor Undone

DTC	C1336/39	Zero Point Calibration of Acceleration Sensor Undone

DESCRIPTION

The skid control ECU receives signals from the yaw rate and acceleration sensor via the CAN communication system.
The yaw rate sensor has the built in acceleration sensor and detects the vehicle's condition using 2 circuits (GL1, GL2). If there is trouble in the bus lines between the yaw rate and acceleration sensor and the CAN communication system, the DTCs U0123/62 (yaw rate sensor communication trouble) and U0124/95 (acceleration sensor communication trouble) are output.
The DTCs are also output when the calibration has not been completed.

DTC Code	DTC Detection Condition	Trouble Area
C1210/36	Zero point calibration of yaw rate sensor undone.	• Brake actuator assembly (Skid control ECU) • Yaw rate and acceleration sensor • Zero point calibration undone (Perform zero point calibration and check DTC. If DTC is not output again, the sensor is normal)
C1336/39	When either of the following is detected: 1. The vehicle runs in the normal mode with zero point calibration undone. 2. After the zero point has been obtained, the zero point voltage of the sensor is not between 2.38 and 2.62 V.	• Brake actuator assembly (Skid control ECU) • Yaw rate and acceleration sensor • Zero point calibration undone (Perform zero point calibration and check DTC. If DTC is not output again, the sensor is normal)

INSPECTION PROCEDURE

NOTICE:

When replacing the brake actuator assembly, perform zero point calibration (See page BC-20).

HINT:

When U0123/62, U0124/95 or U0126/63 is output along with C1210/36 or C1336/39, inspect and repair trouble areas indicated by U0123/62, U0124/95 or U0126/63 first.

1	PERFORM ZERO POINT CALIBRATION OF YAW RATE AND ACCELERATION SENSOR

(a) Perform zero point calibration of the yaw rate and acceleration sensor (See page BC-20).

NEXT

BC

2	RECONFIRM DTC

(a) Turn the engine switch off.
(b) Clear the DTC (See page BC-43).
(c) Turn the engine switch on (IG).
(d) Check if the same DTCs are recorded (See page BC-43).

Result

Condition	Proceed to
DTCs (C1210/36 and/or C1336/39) are output	A
DTCs (C1210/36 and/or C1336/39) are not output	B

HINT:
- The DTCs are recorded because zero point calibration has not been completed.
- End the procedure as the same DTCs are not recorded after completion of zero point calibration.

B → **END**

A

3	CHECK YAW RATE AND ACCELERATION SENSOR INSTALLATION

(a) Turn the engine switch off.
(b) Check that the yaw rate and acceleration sensor has been installed properly (See page BC-196).
OK:
The sensor should be tightened to the specified torque.
The sensor should not be tilted.

NG → **INSTALL YAW RATE AND ACCELERATION SENSOR CORRECTLY**

OK

REPLACE BRAKE ACTUATOR ASSEMBLY

DTC	C1231/31	Steering Angle Sensor Circuit Malfunction

DESCRIPTION

The steering angle sensor signal is sent to the skid control ECU via the CAN communication system. When there is a malfunction in the CAN communication system, it will be detected by the steering angle sensor zero point malfunction diagnostic function.

DTC Code	DTC Detection Condition	Trouble Area
C1231/31	When ECU IG1 terminal voltage is 9.5 V or more, the steering angle sensor malfunction signal is received.	• Steering angle sensor • Steering angle sensor circuit • Steering angle sensor power supply • Brake actuator assembly (Skid control ECU)

WIRING DIAGRAM

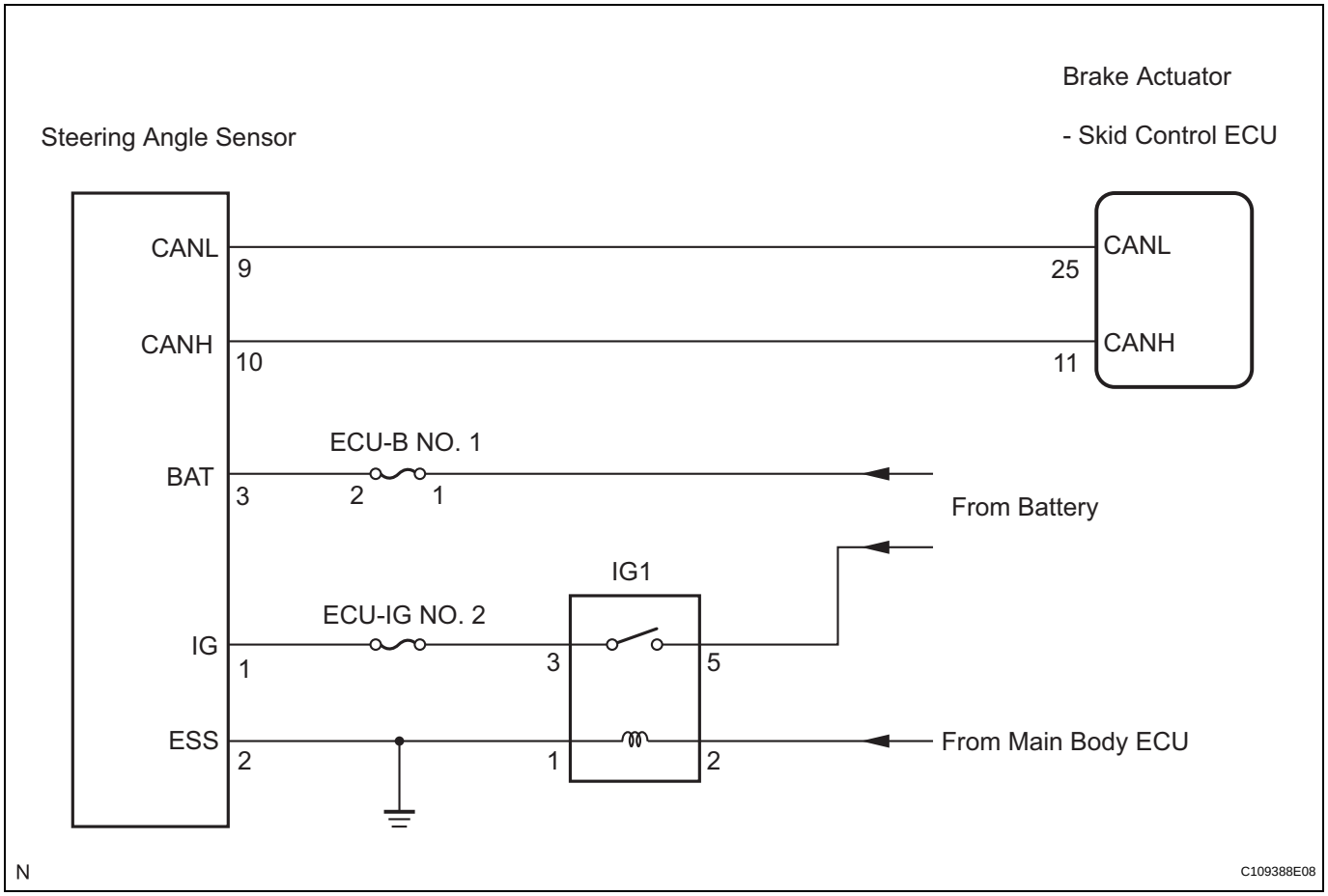

BC

INSPECTION PROCEDURE

HINT:

- When U0073/94, U0123/62, U0124/95 or U0126/63 is output together with C1231/31, inspect and repair the trouble areas indicated by U0073/94, U0123/62, U0124/95 or U0126/63 first.
- When the speed sensor or the yaw rate sensor has trouble, DTCs for the steering angle sensor may be output even when the steering angle sensor is normal. When DTCs for the speed sensor or yaw rate sensor are output together with other DTCs for the steering angle sensor, inspect and repair the speed sensor and yaw rate sensor first, and then inspect and repair the steering angle sensor.

1 CHECK DTC

(a) Clear the DTC (See page BC-43).
(b) Turn the engine switch off.
(c) Turn the engine switch on (IG) again and check that no CAN communication system DTC is output.
(d) Drive the vehicle and turn the steering wheel to the right and left at the speed of 35 km/h (22 mph) and check that no speed sensor and yaw rate sensor DTCs are output.

Result

Condition	Proceed to
No CAN communication system DTC and the speed sensor or yaw rate sensor DTC are output	A
CAN communication system DTC is output	B
Speed sensor or yaw rate sensor DTC is output	C

HINT:
- If there is a malfunction in the speed sensor or the yaw rate sensor, an abnormal value may be output although the steering angle sensor is normal.
- If the speed sensor and the yaw rate sensor DTCs are output simultaneously, repair the sensors and inspect the steering angle sensor.

B → **INSPECT CAN COMMUNICATION SYSTEM**

C → **REPAIR CIRCUIT INDICATED BY OUTPUT DTC (See page BC-52)**

A

2 INSPECT STEERING ANGLE SENSOR (POWER SOURCE TERMINAL)

Steering Angle Sensor Wire Harness View:

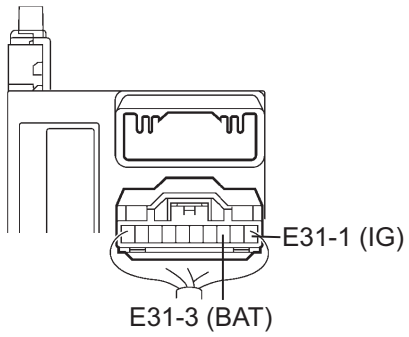

G030156E22

(a) Turn the engine switch off.
(b) Remove the steering wheel and the column cover lower.
(c) Disconnect the steering angle sensor connector.
(d) Measure the voltage according to the value(s) in the table below.

Standard voltage

Tester Connection	Condition	Specified Condition
E31-1 (IG) - Body ground	Engine switch on (IG)	10 to 14 V
E31-3 (BAT) - Body ground	Always	10 to 14 V

NG → **REPAIR OR REPLACE HARNESS OR CONNECTOR (POWER SOURCE CIRCUIT)**

OK

BC

3	INSPECT STEERING ANGLE SENSOR (GROUND TERMINAL)

Steering Angle Sensor Wire Harness View:

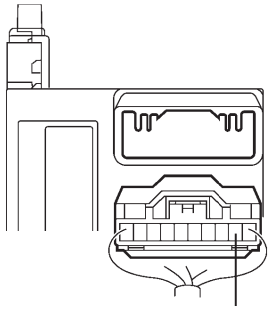

G030156E23

(a) Turn the engine switch off.
(b) Measure the resistance according to the value(s) in the table below.

Standard resistance

Tester Connection	Condition	Specified Condition
E31-2 (ESS) - Body ground	Always	Below 1 Ω

HINT:
If troubleshooting has been carried out according to the Problem Symptoms Table, refer back to the table and proceed to the next step (See page BC-35).

NG → **REPAIR OR REPLACE HARNESS OR CONNECTOR (GROUND CIRCUIT)**

OK

REPLACE STEERING ANGLE SENSOR

DTC	C1232/32	Stuck in Acceleration Sensor

DTC	C0371/71	Yaw Rate Sensor (Test Mode DTC)

DTC	C1234/34	Yaw Rate Sensor Malfunction

DTC	C1243/43	Acceleration Sensor Stuck Malfunction

DTC	C1244/44	Open or Short in Acceleration Sensor Circuit

DTC	C1245/45	Acceleration Sensor Output Malfunction

DTC	C1279/79	Acceleration Sensor Output Voltage Malfunction (Test Mode DTC)

DTC	C1381/97	Yaw Rate and / or Acceleration Sensor Power Supply Voltage Malfunction

DESCRIPTION

The skid control ECU receives signals from the yaw rate and acceleration sensor via the CAN communication system.
The yaw rate sensor has a built in acceleration sensor and detects the vehicle's condition using 2 circuits (GL1, GL2).
If there is trouble in the bus lines between the yaw rate and acceleration sensor and the CAN communication system, the DTC U0123/62 (malfunction in CAN communication with the yaw rate sensor) and U0124/95 (malfunction in CAN communication with the acceleration sensor) are output.
These DTCs are also output when calibration has not been completed.
DTCs C0371/71 and C1279/79 can be deleted when the yaw rate and acceleration sensor sends a yaw rate and/or acceleration signal or the Test Mode ends. DTCs C0371/71 and C1279/79 are output only in the Test Mode.

DTC Code	DTC Detection Condition	Trouble Area
C1232/32	At a vehicle speed of 10 km/h (6 mph) or more, either GL1 or GL2 (input signal) does not change for 30 seconds or more.	• Yaw rate and acceleration sensor • Yaw rate and acceleration sensor circuit
C1234/34	Sensor malfunction signal is received from the yaw rate sensor.	• Yaw rate and acceleration sensor • Yaw rate and acceleration sensor circuit
C1243/43	While the vehicle speed changes from 30 km/h (19 mph) to 0 km/h (0 mph), the condition that the values of GL1 and GL2 do not change occurs 16 times or more.	• Yaw rate and acceleration sensor • Yaw rate and acceleration sensor circuit
C1244/44	When either of the following is detected: 1. A data malfunction signal is received from the acceleration sensor. 2. After the difference between GL1 and GL2 becomes 0.6 G or more with the vehicle stationary, the difference remains 0.4 G or more for 60 seconds or more.	• Yaw rate and acceleration sensor • Yaw rate and acceleration sensor circuit
C1245/45	At a vehicle speed of 30 km/h (19 mph) or more, the difference between the forward and backward G calculated from the acceleration sensor value and that calculated from the vehicle speed sensor exceeds 0.35 G for 60 seconds or more.	• Yaw rate and acceleration sensor • Yaw rate and acceleration sensor circuit
C1381/97	At a vehicle speed of more than 3 km/h (2 mph), the acceleration sensor power source malfunction signal is received for 10 seconds or more.	• Yaw rate and acceleration sensor • Yaw rate and acceleration sensor power source circuit

DTC Code	DTC Detection Condition	Trouble Area
C0371/71	Detected only during Test Mode.	Yaw rate and acceleration sensor
C1279/79	Detected only during Test Mode.	• Yaw rate and acceleration sensor • Sensor installation

WIRING DIAGRAM

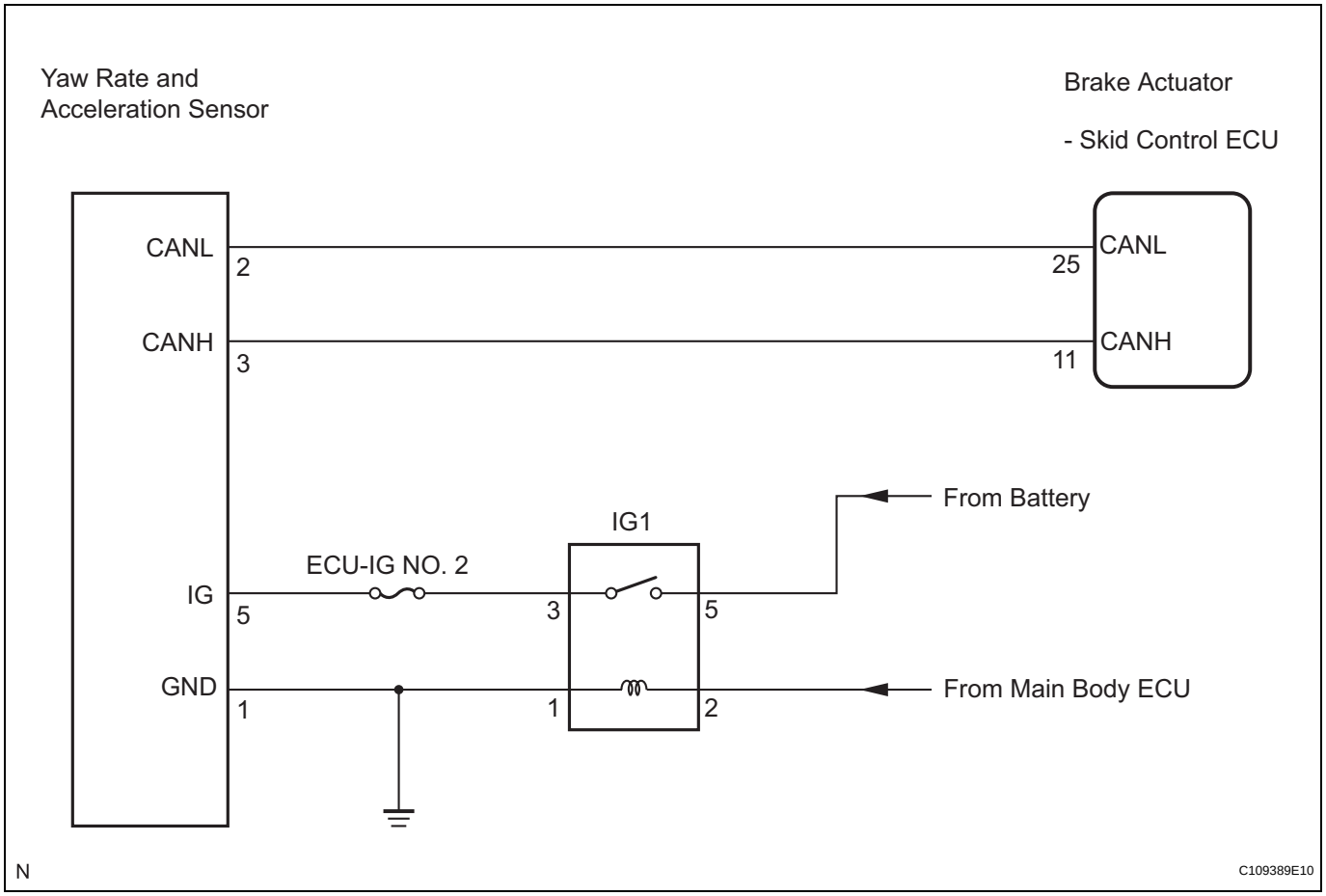

INSPECTION PROCEDURE

NOTICE:

When replacing the yaw rate and acceleration sensor, perform zero point calibration (See page BC-20).

HINT:

When U0123/62, U0124/95 or U0126/63 is output together with C1232/32, C1234/34, C1243/43, C1244/44, C1245/45, or C1381/97, inspect and repair the trouble areas indicated by U0123/62, U0124/95 or U0126/63 first.

BC

1	CHECK DTC

(a) Clear the DTC (See page BC-43).
(b) Turn the engine switch off.
(c) At a speed of 30 km/h (19 mph) or more, drive the vehicle, turn the steering wheel, and decelerate the vehicle (depress the brake pedal).
(d) Turn the engine switch on (IG) again and check that no CAN communication system DTC is output.

(e) Check if DTCs for zero point calibration of the yaw rate sensor undone (C1210/36) or for zero point calibration of the acceleration sensor undone (C1336/39) are output.

Result

Condition	Proceed to
DTCs (C1210/36, C1336/39 and/or CAN communication system DTC) are not output	A
CAN communication system DTC is output	B
DTCs (C1210/36 and/or C1336/39) are output	C

B → **INSPECT CAN COMMUNICATION SYSTEM**

C → **REPAIR CIRCUIT INDICATED BY OUTPUT DTC (See page BC-52)**

A

2 CHECK YAW RATE AND ACCELERATION SENSOR INSTALLATION

(a) Turn the engine switch off.
(b) Check that the yaw rate and acceleration sensor has been installed properly (See page BC-196).
OK:
The sensor is tightened to the specified torque.
The sensor is not tilted.

NG → **INSTALL YAW RATE AND ACCELERATION SENSOR CORRECTLY**

OK

3 INSPECT YAW RATE AND ACCELERATION SENSOR (IG TERMINAL)

Yaw Rate and Acceleration Sensor Harness Side Connector Front View:

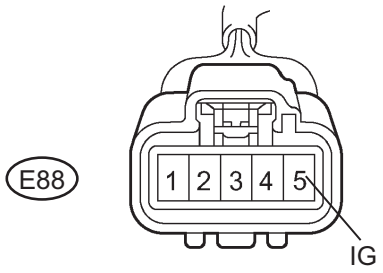

(a) Disconnect the yaw rate and acceleration sensor connector.
(b) Turn the engine switch on (IG).
(c) Measure the voltage according to the value(s) in the table below.
Standard voltage

Tester Connection	Condition	Specified Condition
E88-5 (IG) - Body ground	Engine switch on (IG)	10 to 14 V

NG → **REPAIR OR REPLACE HARNESS OR CONNECTOR (IG CIRCUIT)**

OK

BC

4 INSPECT YAW RATE AND ACCELERATION SENSOR (GND TERMINAL)

Yaw Rate and Acceleration Sensor Harness Side Connector Front View:

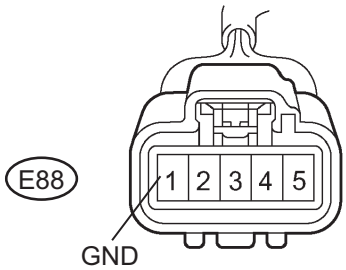

C141994E02

(a) Turn the engine switch off.

(b) Measure the resistance according to the value(s) in the table below.

Standard resistance

Tester Connection	Condition	Specified Condition
E88-1 (GND) - Body ground	Always	Below 1 Ω

NOTICE:

Check the yaw rate and acceleration sensor signal after replacement (See page BC-24).

HINT:

If troubleshooting has been carried out according to the Problem Symptoms Table, refer back to the table and proceed to the next step (See page BC-35).

NG → **REPAIR OR REPLACE HARNESS OR CONNECTOR (GND CIRCUIT)**

OK

REPLACE YAW RATE AND ACCELERATION SENSOR

DTC	C1235/35	Foreign Object is Attached on Tip of Front Speed Sensor RH
DTC	C1236/36	Foreign Object is Attached on Tip of Front Speed Sensor LH
DTC	C1238/38	Foreign Object is Attached on Tip of Rear Speed Sensor RH
DTC	C1239/39	Foreign Object is Attached on Tip of Rear Speed Sensor LH
DTC	C1275/75	Abnormal Change in Output Signal of Front Speed Sensor RH (Test Mode DTC)
DTC	C1276/76	Abnormal Change in Output Signal of Front Speed Sensor LH (Test Mode DTC)
DTC	C1277/77	Abnormal Change in Output Signal of Rear Speed Sensor RH (Test Mode DTC)
DTC	C1278/78	Abnormal Change in Output Signal of Rear Speed Sensor LH (Test Mode DTC)

DESCRIPTION

The speed sensors detect wheel speed and transmit the signals to the ECU. These signals are used for control of the ABS control system. Each of the front and rear rotors have 48 serrations. When the rotors rotate, the magnetic field generated by the permanent magnet in the speed sensor induces an AC voltage.

Since the frequency of this AC voltage changes in direct proportion to the speed of the rotor, the frequency is used by the ECU to detect the speed of each wheel.

When foreign matter adheres to the speed sensor tip or speed sensor rotor, or the rotor teeth are chipped, these DTCs are output. An abnormal waveform input from the sensor determines these conditions.

These DTCs may be detected when a malfunction occurs in the connector terminals or wire harness of the speed sensor circuit.

DTCs C1275/75 to C1278/78 can be deleted when the speed sensor sends a vehicle speed signal or the Test Mode ends. DTCs from C1275/75 to C1278/78 are output only in the Test Mode.

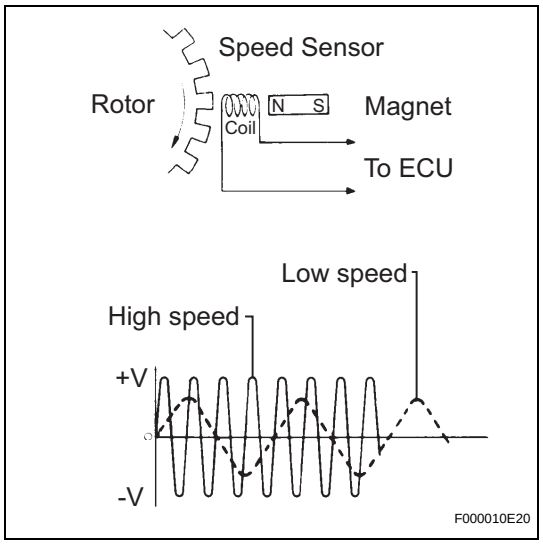

DTC Code	DTC Detection Condition	Trouble Area
C1235/35 C1236/36 C1238/38 C1239/39	At a vehicle speed of 20 km/h (12 mph) or more, noise occurs in the sensor signal from the abnormal wheel for 5 seconds or more.	• Speed sensor • Speed sensor rotor • Sensor installation • Brake actuator assembly (Skid control ECU)
C1275/75 C1276/76 C1277/77 C1278/78	Detected only during Test Mode.	Speed sensor rotor

HINT:
- DTCs C1235/35 and C1275/75 are for the front speed sensor RH.
- DTCs C1236/36 and C1276/76 are for the front speed sensor LH.
- DTCs C1238/38 and C1277/77 are for the rear speed sensor RH.
- DTCs C1239/39 and C1278/78 are for the rear speed sensor LH.

WIRING DIAGRAM

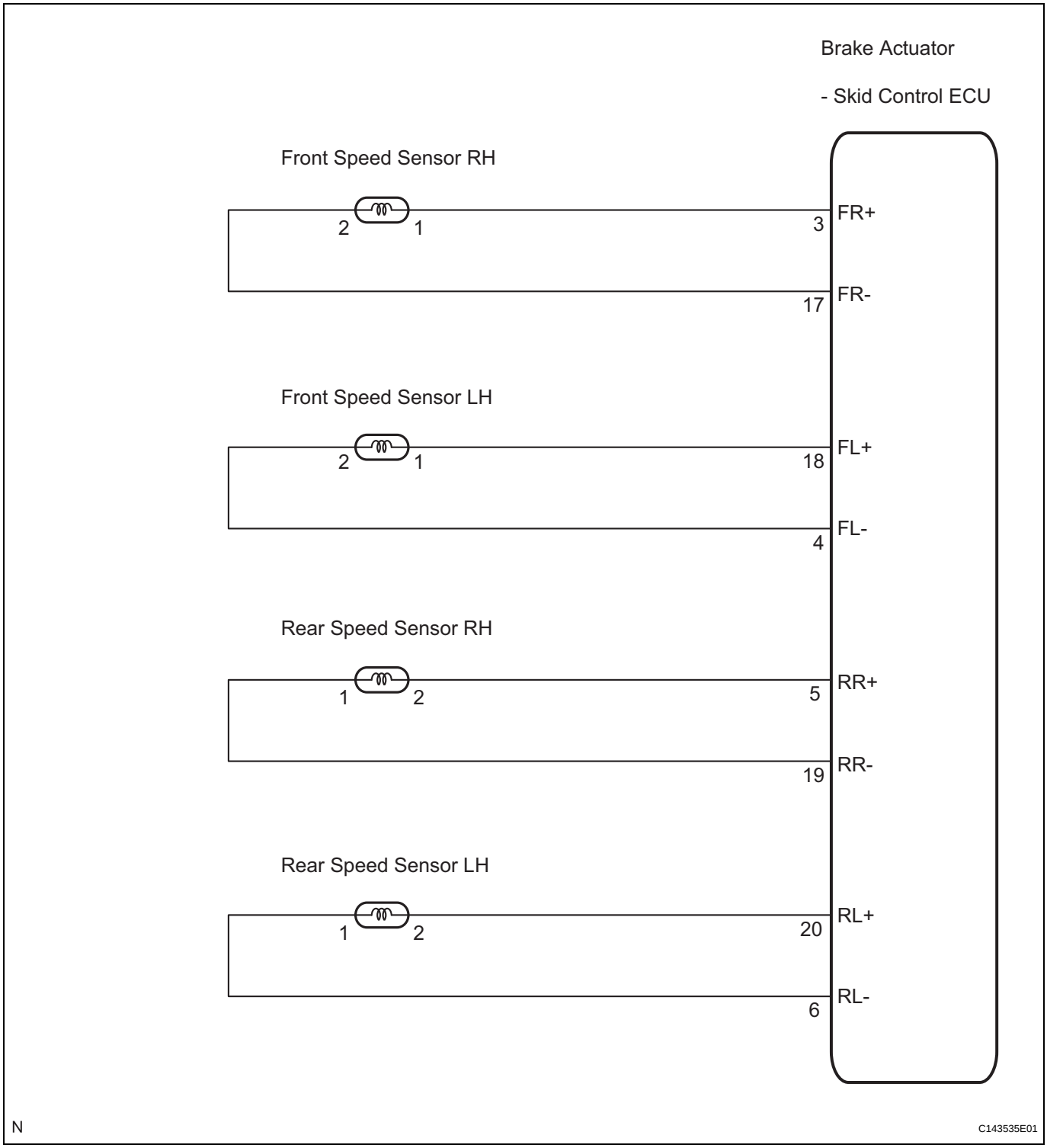

INSPECTION PROCEDURE

NOTICE:

When replacing the brake actuator assembly, perform zero point calibration (See page BC-20).

HINT:

When C0200/31, C0205/32, C0210/33, or C0215/34 is output together with C1235/35, C1236/36, C1238/38, or C1239/39, inspect and repair the trouble areas indicated by C0200/31, C0205/32, C0210/33, or C0215/34 first.

1 CHECK SPEED SENSOR AND SPEED SENSOR ROTOR SERRATIONS

Skid Control ECU Harness Side Connector Front View:

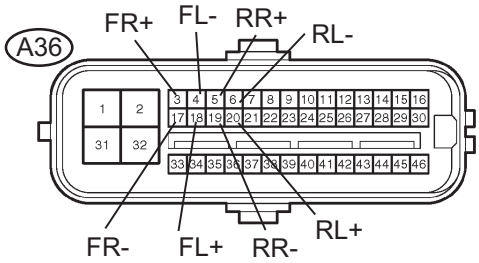

Normal Signal Waveform:

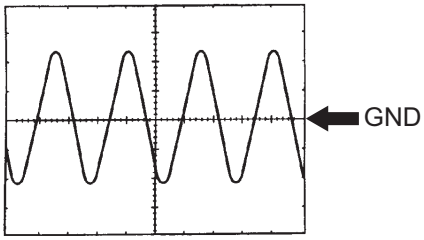

1 V/Division, 2 ms/Division

C136019E08

(a) Disconnect the skid control ECU connector.
(b) Connect the oscilloscope to each speed sensor terminal of the skid control ECU.
(c) Check that a waveform is output when the tires are rotated (by the sensor circuit).
OK:
The same waveform is output from all the 4 wheels and there is no noise or waveform.
(d) Check that the waveform does not change while jiggling a connector or a wire harness.
OK:
The waveform does not change.
HINT:
- As the vehicle speed (wheel revolution speed) increases, a cycle of the waveform narrows and the output voltage becomes greater.
- When noise is identified in the waveform on the oscilloscope, the erratic signals are generated due to speed sensor rotor's scratches, looseness or foreign matter attached to it.

NG → **Go to step 3**

OK

2 RECONFIRM DTC

(a) Turn the engine switch off.
(b) Reconnect the skid control ECU connector.
(c) Clear the DTC (See Page BC-43).
(d) Start the engine.
(e) Drive the vehicle at the speed of 20 km/h (12 mph) or more for at least 60 seconds.
(f) Check if the same DTC is recorded (See page BC-43).

BC

Result

Condition	Proceed to
DTCs (C1235/35, C1236/36, C1238/38 and/or C1239/39) are not output	A
DTCs (C1235/35, C1236/36, C1238/38 and/or C1239/39) are output	B

B → **REPLACE BRAKE ACTUATOR ASSEMBLY**

A

CHECK FOR INTERMITTENT PROBLEMS (SYMPTOM SIMULATION)

3 INSPECT EACH SPEED SENSOR

Front Speed Sensor:

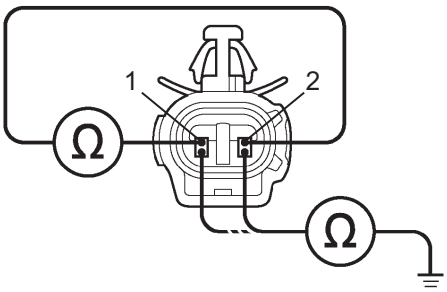

Rear Speed Sensor:

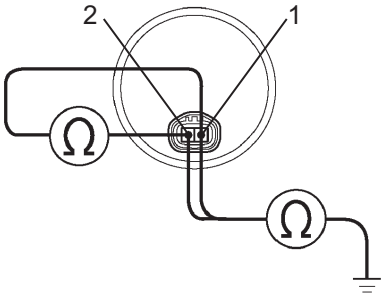

C136027E04

(a) Turn the engine switch off.
(b) Disconnect each speed sensor connector.
(c) Measure the resistance according to the value(s) in the table below.

Standard resistance:

RH

Tester Connection	Condition	Specified Condition
1 (FR+) - 2 (FR-)	Always	1.4 to 1.8 kΩ at 20°C (68°F)
1 (FR+) - Body ground	Always	10 kΩ or higher
2 (FR-) - Body ground	Always	10 kΩ or higher
2 (RR+) - 1 (RR-)	Always	0.9 to 2.1 kΩ
2 (RR+) - Body ground	Always	10 kΩ or higher
1 (RR-) - Body ground	Always	10 kΩ or higher

LH

Tester Connection	Condition	Specified Condition
1 (FL+) - 2 (FL-)	Always	1.4 to 1.8 kΩ at 20°C (68°F)
1 (FL+) - Body ground	Always	10 kΩ or higher
2 (FL-) - Body ground	Always	10 kΩ or higher
2 (RL+) - 1 (RL-)	Always	0.9 to 2.1 kΩ
2 (RL+) - Body ground	Always	10 kΩ or higher
1 (RL-) - Body ground	Always	10 kΩ or higher

Result

Result	Proceed to
OK (for rear)	A
OK (for front)	B
NG	C

BC

B → Go to step 5

C → REPLACE EACH SPEED SENSOR

A

4 CHECK HARNESS AND CONNECTOR (SKID CONTROL SENSOR WIRE)

Skid Control Sensor Wire:

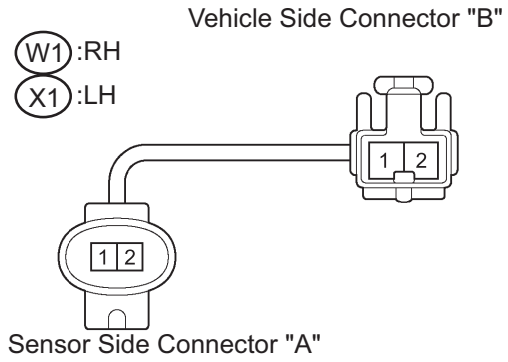

(a) Disconnect the skid control sensor wire.

(b) Measure the resistance according to the value(s) in the table below.

Standard resistance:

RH

Tester Connection	Condition	Specified Condition
W1 ("A"-1) - W1 ("B"-2)	Always	Below 1 Ω
W1 ("A"-1) - W1 ("B"-1)	Always	10 kΩ or higher
W1 ("A"-1) - Body ground	Always	10 kΩ or higher
W1 ("A"-2) - W1 ("B"-1)	Always	Below 1 Ω
W1 ("A"-2) - W1 ("B"-2)	Always	10 kΩ or higher
W1 ("A"-2) - Body ground	Always	10 kΩ or higher

LH

Tester Connection	Condition	Specified Condition
X1 ("A"-1) - X1 ("B"-2)	Always	Below 1 Ω
X1 ("A"-1) - X1 ("B"-1)	Always	10 kΩ or higher
X1 ("A"-1) - Body ground	Always	10 kΩ or higher
X1 ("A"-2) - X1 ("B"-1)	Always	Below 1 Ω
X1 ("A"-2) - X1 ("B"-2)	Always	10 kΩ or higher
X1 ("A"-2) - Body ground	Always	10 kΩ or higher

NOTICE:
Check the speed sensor signal after replacement (See page BC-24).

NG → **REPLACE SKID CONTROL SENSOR WIRE**

OK

5 CHECK HARNESS AND CONNECTOR (SKID CONTROL ECU - EACH SPEED SENSOR)

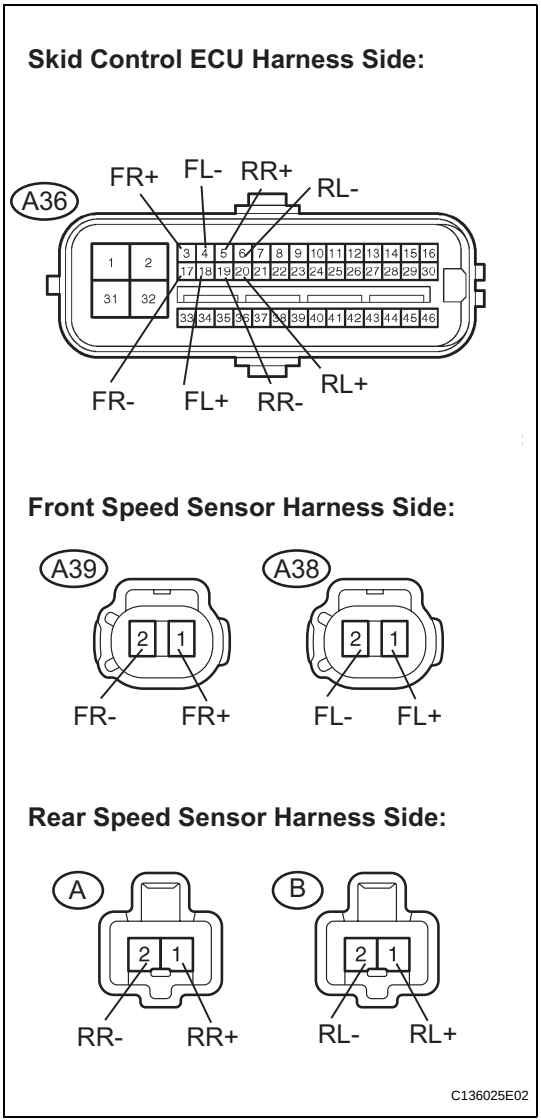

(a) Measure the resistance according to the value(s) in the table below.

Standard resistance:

RH

Tester Connection	Condition	Specified Condition
A36-3 (FR+) - A39-1 (FR+)	Always	Below 1 Ω
A36-3 (FR+) - Body ground	Always	10 kΩ or higher
A36-17 (FR-) - A39-2 (FR-)	Always	Below 1 Ω
A36-17 (FR-) - Body ground	Always	10 kΩ or higher
A36-5 (RR+) - A-1 (RR+)	Always	Below 1 Ω
A36-5 (RR+) - Body ground	Always	10 kΩ or higher
A36-19 (RR-) - A-2 (RR-)	Always	Below 1 Ω
A36-19 (RR-) - Body ground	Always	10 kΩ or higher

LH

Tester Connection	Condition	Specified Condition
A36-18 (FL+) - A38-1 (FL+)	Always	Below 1 Ω
A36-18 (FL+) - Body ground	Always	10 kΩ or higher
A36-4 (FL-) - A38-2 (FL-)	Always	Below 1 Ω
A36-4 (FL-) - Body ground	Always	10 kΩ or higher
A36-20 (RL+) - B-1 (RL+)	Always	Below 1 Ω
A36-20 (RL+) - Body ground	Always	10 kΩ or higher
A36-6 (RL-) - B-2 (RL-)	Always	Below 1 Ω
A36-6 (RL-) - Body ground	Always	10 kΩ or higher

NG → **REPAIR OR REPLACE HARNESS OR CONNECTOR**

OK

6 RECONFIRM DTC

(a) Reconnect the skid control sensor wire.
(b) Reconnect the skid control ECU connector and the speed sensor connector.
(c) Clear the DTC (See page BC-43).
(d) Start the engine.
(e) Drive the vehicle at the speed of 20 km/h (12 mph) or more for at least 60 seconds.
(f) Check if the same DTC is recorded (See page BC-43).

Result

Condition	Proceed to
DTCs (C1235/35, C1236/36, C1238/38 and/or C1239/39) are output (for front)	A
DTCs (C1235/35, C1236/36, C1238/38 and/or C1239/39) are output (for rear)	B

Condition	Proceed to
DTCs (C1235/35, C1236/36, C1238/38 and/or C1239/39) are not output	C

B → **Go to step 8**

C → **CHECK FOR INTERMITTENT PROBLEMS (SYMPTOM SIMULATION)**

A

7 CHECK FRONT SPEED SENSOR TIP

(a) Turn the engine switch off.
(b) Remove the front speed sensor (See page BC-187).
(c) Check the speed sensor tip.
OK:
No scratches or foreign matter on the sensor tip.
NOTICE:
Check the speed sensor signal after cleaning or replacement (See page BC-24).

NG → **CLEAN OR REPLACE FRONT SPEED SENSOR**

OK

8 CHECK EACH SPEED SENSOR ROTOR

(a) Turn the engine switch off.
(b) Remove each speed sensor rotor (See page DS-4 for front, or AH-15 for rear).
(c) Check the speed sensor rotor.
OK:
No scratches, missing teeth, or foreign matter on the rotors.
NOTICE:
Check the speed sensor signal after cleaning or replacement (See page BC-24).

NG → **CLEAN OR REPLACE EACH SPEED SENSOR ROTOR**

BC

OK

9 RECONFIRM DTC

(a) Install the front speed sensor and the speed sensor rotor.
(b) Clear the DTC (See page BC-43).
(c) Start the engine.
(d) Drive the vehicle at the speed of 20 km/h (12 mph) or more for at least 60 seconds.
(e) Check if the same DTC is recorded (See page BC-43).

Result

Condition	Proceed to
DTCs (C1235/35, C1236/36, C1238/38 and/or C1239/39) are not output	A
DTCs (C1235/35, C1236/36, C1238/38 and/or C1239/39) are output	B

B → **REPLACE BRAKE ACTUATOR ASSEMBLY**

A

CHECK FOR INTERMITTENT PROBLEMS (SYMPTOM SIMULATION)

DTC	C1241/41	Low Battery Positive Voltage

DESCRIPTION

If a malfunction is detected in the power supply circuit, the skid control ECU (housed in the actuator assembly) stores this DTC and the fail safe function prohibits ABS operation.
This DTC is stored when the IG1 terminal voltage deviates from the DTC detection condition due to a malfunction in the power supply or charging circuit such as the battery or alternator circuit, etc.
The DTC is cancelled when the IG1 terminal voltage returns to normal.

DTC Code	DTC Detection Condition	Trouble Area
C1241/41	When any of the following is detected: 1. At a vehicle speed of 3 km/h (2 mph) or more, the IG1 terminal voltage is 9.5 V or less for 10 seconds or more. 2. When the solenoid relay remains ON and the IG1 terminal voltage is 9.5 V or less, the relay contact is open for 0.2 seconds or more. 3. While the VSC NO. 1 (fail safe) relay is ON after VSC NO. 2 relay ON, the IG1 terminal voltage is 9.5 V or less and the actuator pump drive motor is OFF for 0.1 second or more.	• ECU-IG NO. 2 fuse • Battery • Charging system • Power source circuit • Internal power supply circuit of the skid control ECU

WIRING DIAGRAM

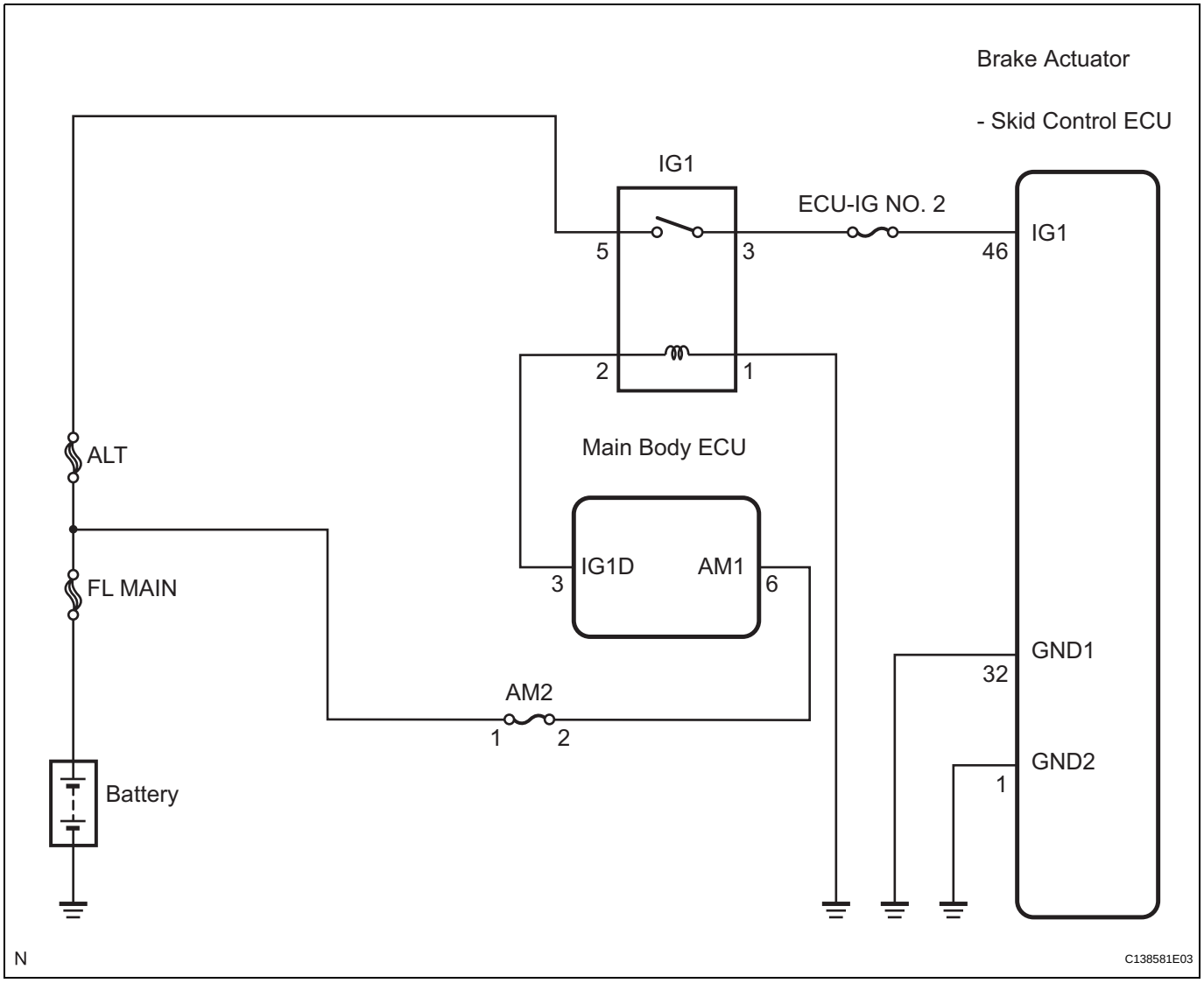

BC

INSPECTION PROCEDURE

NOTICE:

When replacing the brake actuator assembly, perform zero point calibration (See page BC-20).

1 INSPECT ECU-IG NO. 2 FUSE

Main Body ECU:

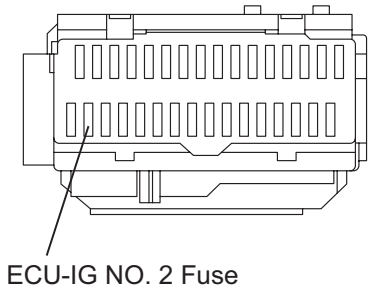

N C135806E01

(a) Remove the ECU-IG NO. 2 fuse from the main body ECU.

(b) Measure the resistance according to the value(s) in the table below.

Standard resistance

Tester Connection	Condition	Specified Condition
ECU-IG NO. 2 (7.5 A) fuse	Always	Below 1 Ω

NG → **REPLACE ECU-IG NO. 2 FUSE**

OK

2 CHECK BATTERY

(a) Install the ECU-IG NO. 2 fuse.

(b) Check the battery voltage.

Standard voltage:

11 to 14 V

NG → **CHECK AND REPLACE CHARGING SYSTEM OR BATTERY**

OK

3 INSPECT SKID CONTROL ECU (IG1 TERMINAL)

Skid Control ECU Harness Side Connector Front View:

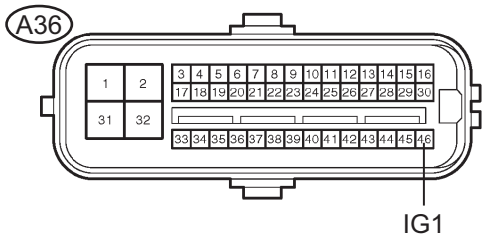

C141673E03

(a) Disconnect the skid control ECU connector.
(b) Turn the engine switch on (IG).
(c) Measure the voltage according to the value(s) in the table below.

Standard voltage

Tester Connection	Condition	Specified Condition
A36-46 (IG1) - Body ground	Engine switch on (IG)	10 to 14 V

NG → **REPAIR OR REPLACE HARNESS OR CONNECTOR (IG1 CIRCUIT)**

OK

4 INSPECT SKID CONTROL ECU (GND TERMINAL)

Skid Control ECU Harness Side Connector Front View:

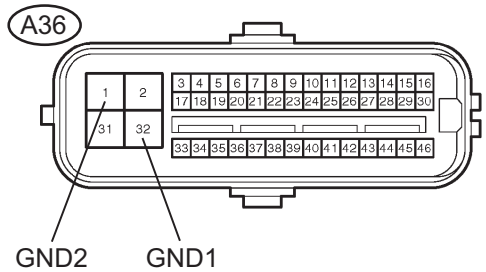

C141673E02

(a) Turn the engine switch off.
(b) Measure the resistance according to the value(s) in the table below.

Standard resistance

Tester Connection	Condition	Specified Condition
A36-32 (GND1) - Body ground	Always	Below 1 Ω
A36-1 (GND2) - Body ground	Always	Below 1 Ω

NG → **REPAIR OR REPLACE HARNESS OR CONNECTOR (GND CIRCUIT)**

OK

5 RECONFIRM DTC

(a) Reconnect the skid control ECU connector.
(b) Clear the DTC (See page BC-43).
(c) Turn the engine switch on (IG).
(d) Check if the same DTC is recorded (See page BC-43).

Result

Condition	Proceed to
DTC (C1241/41) is not output	A
DTC (C1241/41) is output	B

HINT:
If troubleshooting has been carried out according to the Problem Symptoms Table, refer back to the table and proceed to the next step (See page BC-35).

B → **REPLACE BRAKE ACTUATOR ASSEMBLY**

A

CHECK FOR INTERMITTENT PROBLEMS (SYMPTOM SIMULATION)

DTC	C1246/46	Master Cylinder Pressure Sensor Malfunction

DTC	C1281/81	Master Cylinder Pressure Sensor Output Malfunction (Test Mode DTC)

DESCRIPTION

Master cylinder pressure sensor is connected to the skid control ECU in the brake actuator assembly. DTC C1281/81 can be deleted when the master cylinder pressure sensor sends a master cylinder pressure signal or the Test Mode ends. DTC C1281/81 is output only in the Test Mode.

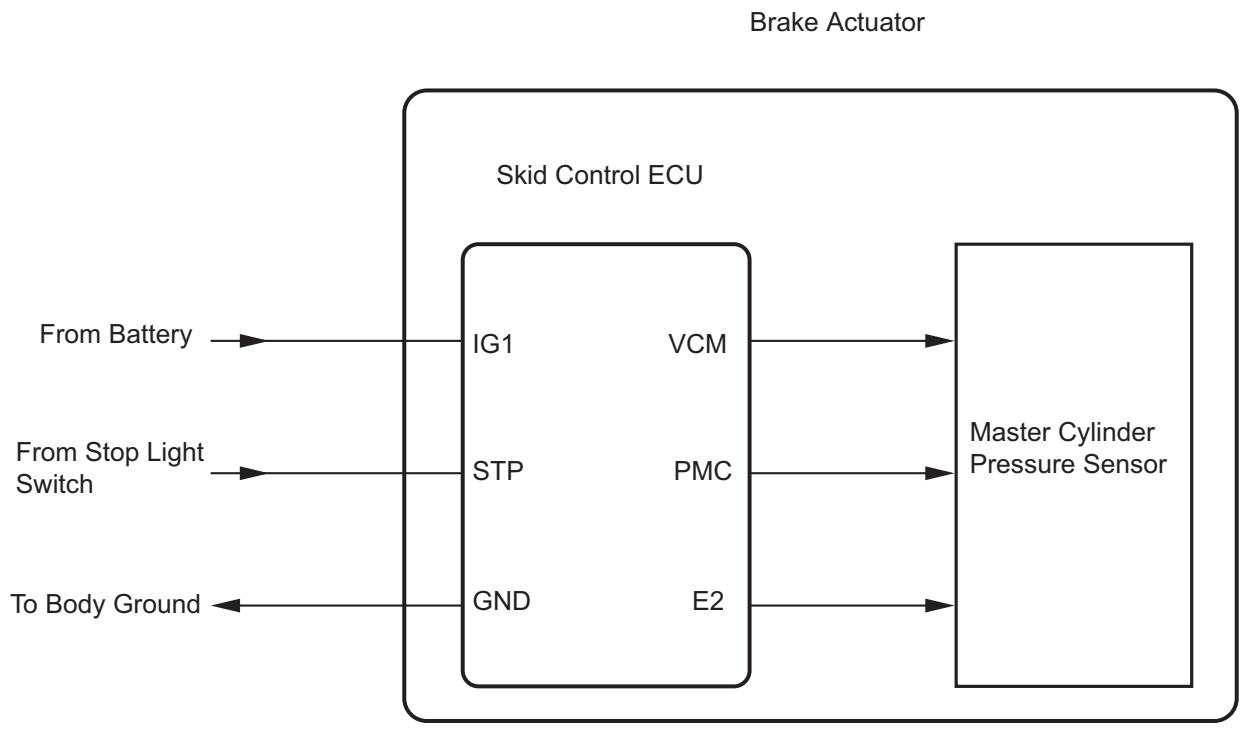

VCM: Power Supply for Master Cylinder Pressure Sensor

PMC: Master Cylinder Pressure Sensor Input

E2: Master Cylinder Pressure Sensor Ground

N

C106656E06

BC

DTC Code	DTC Detection Condition	Trouble Area
C1246/46	When any of the following is detected: • At a vehicle speed of 7 km/h (4.3 mph) or more, when the PMC terminal voltage is over 0.86 V, it does not change by 0.005 V or more for 30 seconds. • Noise occurs in the PMC terminal 7 times or more within 5 seconds. • When the stop light switch is OFF, the PMC terminal voltage is more than 0.86 V or less than 0.3 V for 5 seconds or more. • With the IG1 terminal voltage between 9.5 and 17.2 V, the VCM terminal voltage is not between 4.4 and 5.6 V for 1.2 seconds or more. • When the VCM terminal voltage is between 4.4 and 5.6 V, the PCM terminal voltage is not between 0.14 and 4.85 V for 1.2 seconds or more.	• Master cylinder pressure sensor • Master cylinder pressure sensor circuit • Stop light switch circuit • Brake actuator assembly
C1281/81	Detected only during Test Mode.	• Stop light switch • Master cylinder pressure sensor

INSPECTION PROCEDURE

NOTICE:

When replacing the brake actuator assembly, perform zero point calibration (See page BC-20).

1 CHECK STOP LIGHT OPERATION

(a) Check that the stop light comes on when the brake pedal is depressed, and goes off when the brake pedal is released.

OK

Condition	Illumination Condition
Brake pedal depressed	**ON**
Brake pedal released	**OFF**

NG → **INSPECT STOP LIGHT CIRCUIT**

OK

2 READ VALUE OF INTELLIGENT TESTER (MASTER CYLINDER PRESSURE SENSOR)

(a) Connect the intelligent tester to the DLC3.
(b) Start the engine.
(c) Select the Data List mode on the intelligent tester.

BC

ABS / VSC:

Tester Display	Measurement Item/Range	Normal Condition
MAS CYL PRESS 1	Master cylinder pressure sensor 1 reading / min.: 0 V, max.: 5 V	When brake pedal is released: 0.3 to 0.5 V

(d) Check that the brake fluid pressure value of the master cylinder pressure sensor observed on the intelligent tester changes when the brake pedal is depressed.

OK:

When the pedal is depressed, voltage displayed on the intelligent tester increases.

NG → **REPLACE BRAKE ACTUATOR ASSEMBLY**

OK

3	READ VALUE OF INTELLIGENT TESTER (STOP LIGHT SWITCH)

(a) Select the Data List mode on the intelligent tester.

ABS / VSC:

Tester Display	Measurement Item/Range	Normal Condition
STOP LAMP SW	Stop light switch / ON or OFF	ON: Brake pedal depressed OFF: Brake pedal released

(b) Check that the stop light condition observed on the intelligent tester changes when the brake pedal is depressed.

OK:

When the brake pedal is depressed, the intelligent tester displays "ON".

NG → **REPLACE BRAKE ACTUATOR ASSEMBLY**

OK

4	RECONFIRM DTC

(a) Turn the engine switch off.
(b) Clear the DTC (See page BC-43).
(c) Start the engine.
(d) At a speed of 30 km/h (18 mph) or more, drive the vehicle and perform braking test (decelerate the vehicle by depressing the brake pedal).
(e) Check if the same DTC is recorded (See page BC-43).

Result

Condition	Proceed to
DTC (C1246/46) is not output	A
DTC (C1246/46) is output	B

B → **REPLACE BRAKE ACTUATOR ASSEMBLY**

A

CHECK FOR INTERMITTENT PROBLEMS (SYMPTOM SIMULATION)

DTC	C1249/49	Open in Stop Light Switch Circuit

DESCRIPTION

The skid control ECU (housed in the actuator assembly) inputs the stop light switch signal and the condition of brake operation.
The skid control ECU has an open detection circuit, which outputs this DTC when detecting an open in the stop light input line while the stop light switch is OFF.

DTC Code	DTC Detection Condition	Trouble Area
C1249/49	When IG1 terminal voltage is 9.5 to 17.2 V, an open circuit of the stop light switch continues for 0.3 seconds or more.	• STOP fuse • Stop light switch • Stop light switch circuit • Stop light control relay (*1) • Stop light control relay circuit (*1) • Brake actuator assembly (Skid control ECU)

(*1): with dynamic radar cruise control

WIRING DIAGRAM

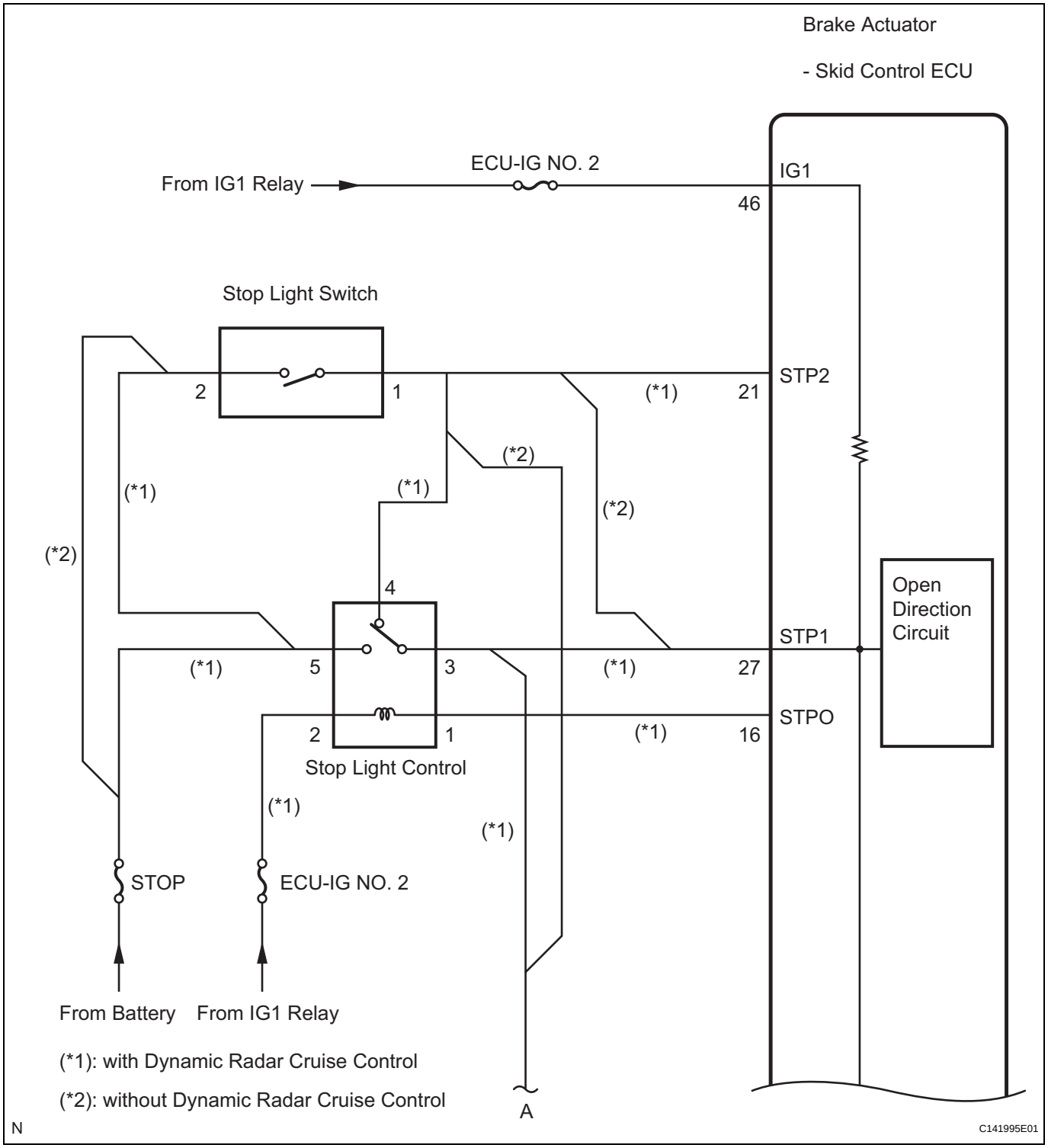

BC

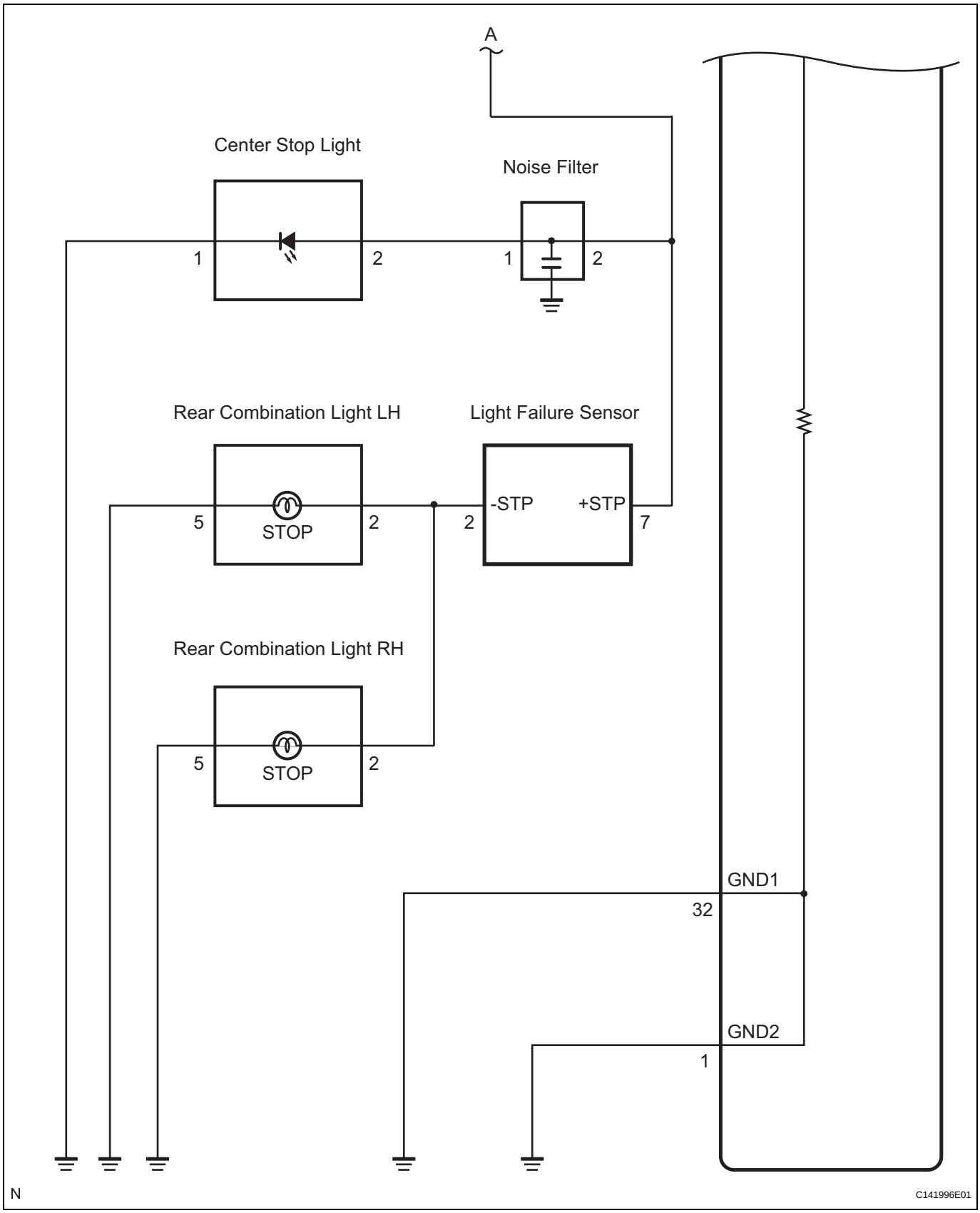

INSPECTION PROCEDURE

NOTICE:

When replacing the brake actuator assembly, perform zero point calibration (See page BC-20).

1 INSPECT STOP FUSE

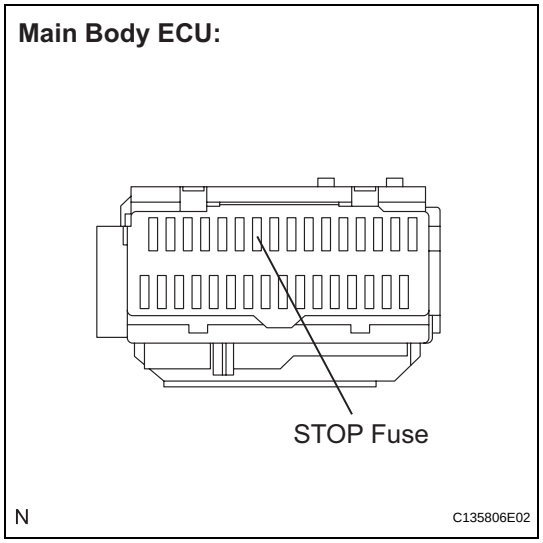

(a) Remove the STOP fuse from the main body ECU.
(b) Measure the resistance according to the value(s) in the table below.

Standard resistance

Tester Connection	Condition	Specified Condition
STOP (10 A) fuse	Always	Below 1 Ω

NG → **REPLACE STOP FUSE**

OK

2 CHECK STOP LIGHT OPERATION

(a) Install the STOP fuse.
(b) Check that the stop light comes on when the brake pedal is depressed, and goes off when the brake pedal is released.

OK

Condition	Illumination Condition
Brake pedal depressed	ON
Brake pedal released	OFF

NG → **Go to step 7**

OK

3 INSPECT SKID CONTROL ECU (STP1 TERMINAL)

Skid Control ECU Harness Side Connector Front View:

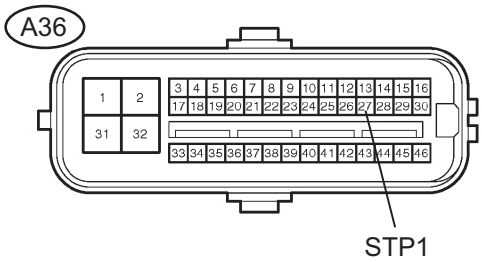

C141673E05

(a) Disconnect the skid control ECU connector.
(b) Measure the voltage according to the value(s) in the table below.

Standard voltage

Tester Connection	Condition	Specified Condition
A36-27 (STP1) - Body ground	Stop light switch ON (Brake pedal depressed)	8 to 14 V
A36-27 (STP1) - Body ground	Stop light switch OFF (Brake pedal released)	Below 1.5 V

NG → **REPAIR OR REPLACE HARNESS OR CONNECTOR (STP1 CIRCUIT)**

OK

4 INSPECT SKID CONTROL ECU (IG1 TERMINAL)

Skid Control ECU Harness Side Connector Front View:

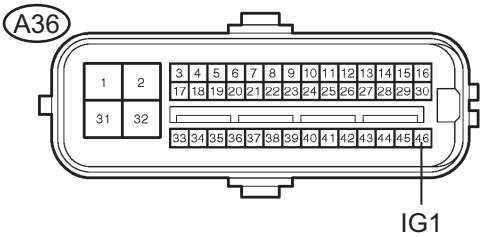

C141673E03

(a) Turn the engine switch on (IG).
(b) Measure the voltage according to the value(s) in the table below.

Standard voltage

Tester Connection	Condition	Specified Condition
A36-46 (IG1) - Body ground	Engine switch on (IG)	10 to 14 V

NG → **REPAIR OR REPLACE HARNESS OR CONNECTOR (IG1 CIRCUIT)**

OK

5 INSPECT SKID CONTROL ECU (GND TERMINAL)

Skid Control ECU Harness Side Connector Front View:

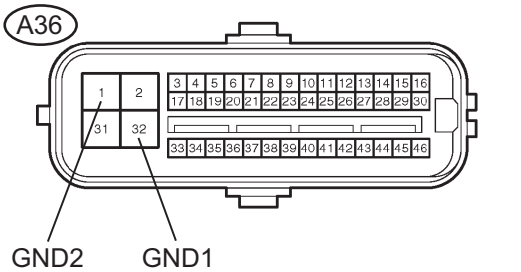

(a) Turn the engine switch off.
(b) Measure the resistance according to the value(s) in the table below.

Standard resistance

Tester Connection	Condition	Specified Condition
A36-32 (GND1) - Body ground	Always	Below 1 Ω
A36-1 (GND2) - Body ground	Always	Below 1 Ω

NG → **REPAIR OR REPLACE HARNESS OR CONNECTOR (GND CIRCUIT)**

OK

6 RECONFIRM DTC

(a) Reconnect the skid control ECU connector.
(b) Clear the DTC (See page BC-43).
(c) Start the engine.
(d) Depress the brake pedal several times to test the stop light circuit.
(e) Check if the same DTC is recorded (See page BC-43).

Result

Condition	Proceed to
DTC (C1249/49) is not output	A
DTC (C1249/49) is output	B

HINT:
If troubleshooting has been carried out according to the Problem Symptoms Table, refer back to the table and proceed to the next step (See page BC-35).

B → **REPLACE BRAKE ACTUATOR ASSEMBLY**

A

CHECK FOR INTERMITTENT PROBLEMS (SYMPTOM SIMULATION)

7 INSPECT STOP LIGHT SWITCH (POWER SOURCE TERMINAL)

Stop Light Switch Harness Side Connector Front View:

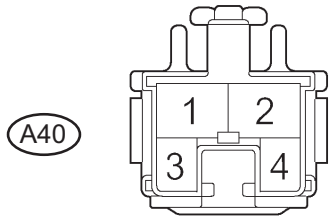

C142000E01

(a) Disconnect the stop light switch connector.
(b) Measure the voltage according to the value(s) in the table below.

Standard voltage

Tester Connection	Condition	Specified Condition
A40-2 - Body ground	Always	10 to 14 V

NG → **REPAIR OR REPLACE HARNESS OR CONNECTOR (POWER SOURCE CIRCUIT)**

OK

8 INSPECT STOP LIGHT SWITCH

Stop Light Switch:

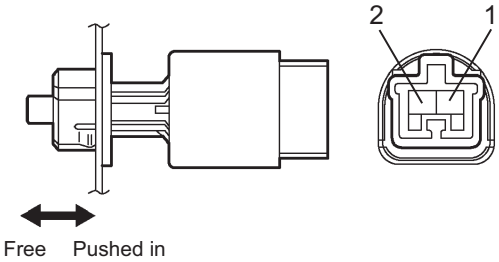

C124796E03

(a) Measure the resistance according to the value(s) in the table below.

Standard resistance

Tester Connection	Condition	Specified Condition
1 - 2	Switch pin free	Below 1 Ω
1 - 2	Switch pin pushed in	10 kΩ or higher

BC

Result

Result	Proceed to
OK (with dynamic radar cruise control)	A
OK (without dynamic radar cruise control)	B
NG	C

B → **Go to step 13**

C → **REPLACE STOP LIGHT SWITCH**

A

9 INSPECT STOP LIGHT CONTROL RELAY

Stop Light Control Relay:

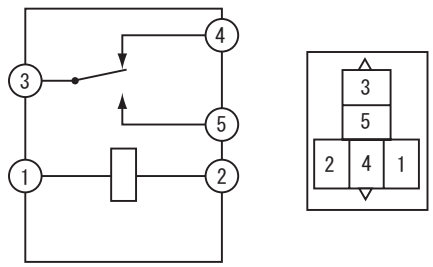

C126459E01

(a) Remove the stop light control relay.
(b) Measure the resistance according to the value(s) in the table below.

Standard resistance

Tester Connection	Condition	Specified Condition
3 - 4	Always	Below 1 Ω

NG → **REPLACE STOP LIGHT CONTROL RELAY**

OK

10	CHECK HARNESS AND CONNECTOR (STOP LIGHT SWITCH - ENGINE ROOM RELAY BLOCK)

Stop Light Switch Harness Side Connector Front View:

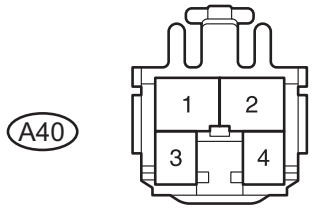

Engine Room R/B:

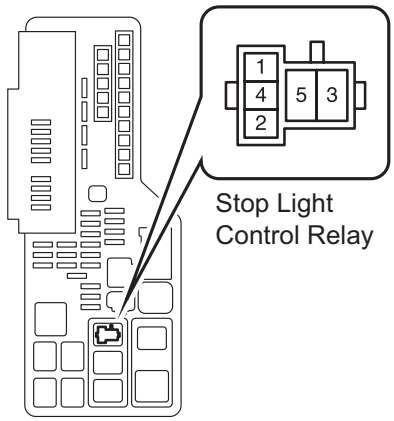

N

C141997E02

(a) Measure the resistance according to the value(s) in the table below.

Standard resistance

Tester Connection	Condition	Specified Condition
A40-1 - Stop light control relay terminal 4	Always	Below 1 Ω
A40-1 - Body ground	Always	10 kΩ or higher

NG → **REPAIR OR REPLACE HARNESS OR CONNECTOR**

OK

11 CHECK HARNESS AND CONNECTOR (SKID CONTROL ECU - ENGINE ROOM RELAY BLOCK)

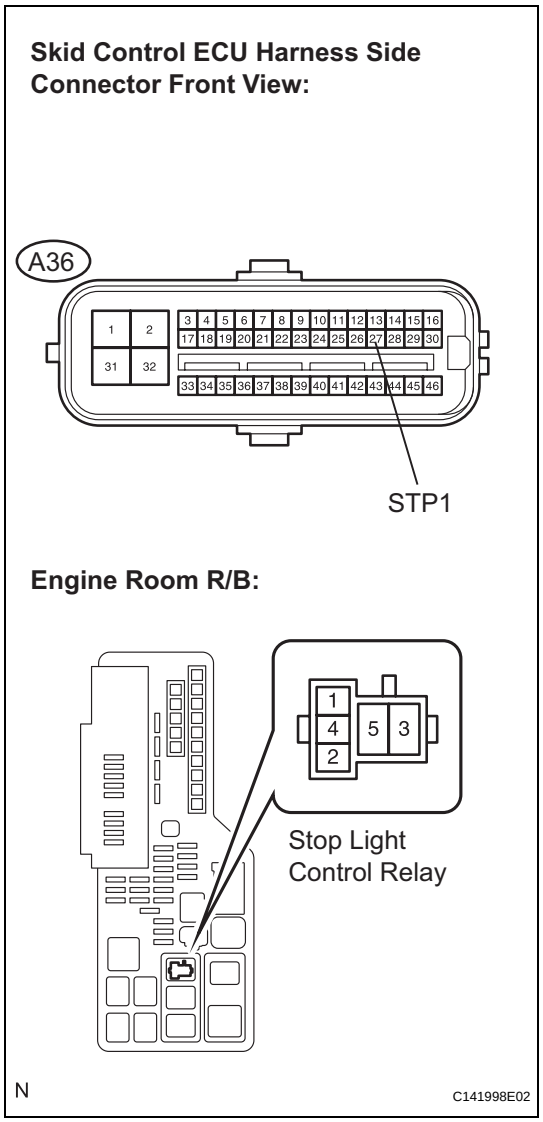

(a) Disconnect the skid control ECU connector.
(b) Measure the resistance according to the value(s) in the table below.

Standard resistance

Tester Connection	Condition	Specified Condition
A36-27 (STP1) - Stop light control relay terminal 3	Always	Below 1 Ω
A36-27 (STP1) - Body ground	Always	10 kΩ or higher

NG → **REPAIR OR REPLACE HARNESS OR CONNECTOR**

OK

12 RECONFIRM DTC

BC

(a) Clear the DTC (See page BC-43).
(b) Start the engine.
(c) Depress the brake pedal several times to test the stop light circuit.
(d) Check if the same DTC is recorded (See page BC-43).
HINT:
Reinstall the relay, connectors, etc. and restore the vehicle to its prior condition before rechecking for DTCs.

Result

Condition	Proceed to
DTC (C1249/49) is not output	A
DTC (C1249/49) is output	B

HINT:
If troubleshooting has been carried out according to the Problem Symptoms Table, refer back to the table and proceed to the next step (See page BC-35).

B → **REPLACE BRAKE ACTUATOR ASSEMBLY**

A

INSPECT LIGHTING SYSTEM (STOP LIGHT CIRCUIT)

13 CHECK HARNESS AND CONNECTOR (SKID CONTROL ECU - STOP LIGHT SWITCH)

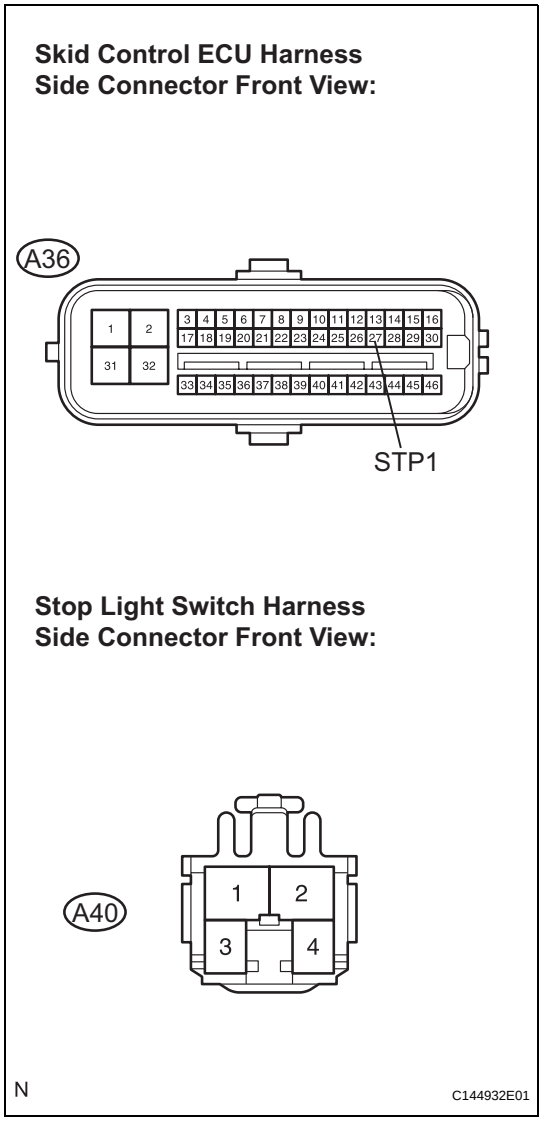

(a) Disconnect the skid control ECU connector.
(b) Measure the resistance according to the value(s) in the table below.

Standard resistance

Tester Connection	Condition	Specified Condition
A36-27 (STP1) - A40-1	Always	Below 1 Ω
A36-27 (STP1) - Body ground	Always	10 kΩ or higher

NG → **REPAIR OR REPLACE HARNESS OR CONNECTOR**

OK

14 RECONFIRM DTC

(a) Reconnect the skid control ECU connector and the stop light switch connector.

BC

(b) Clear the DTC (See page BC-43).
(c) Start the engine.
(d) Depress the brake pedal several times to test the stop light circuit.
(e) Check if the same DTC is recorded (See page BC-43).

Result

Condition	Proceed to
DTC (C1249/49) is not output	A
DTC (C1249/49) is output	B

HINT:
If troubleshooting has been carried out according to the Problem Symptoms Table, refer back to the table and proceed to the next step (See page BC-35).

B → **REPLACE BRAKE ACTUATOR ASSEMBLY**

A

INSPECT LIGHTING SYSTEM (STOP LIGHT CIRCUIT)

DTC	C1251/51	Open in Pump Motor Circuit

DESCRIPTION

DTC Code	DTC Detection Condition	Trouble Area
C1251/51	• Actuator pump motor does not operate properly. • Open in actuator pump motor circuit continues for at least 2 seconds.	• Brake actuator assembly (GND circuit) • Brake actuator assembly (Motor circuit)

WIRING DIAGRAM

Refer to DTCs C0273/13, C0274/14 and C1361/91 (See page BC-78).

INSPECTION PROCEDURE

NOTICE:

When replacing the brake actuator assembly, perform zero point calibration (See page BC-20).

1	PERFORM ACTIVE TEST BY INTELLIGENT TESTER (ABS MOTOR RELAY)

(a) Connect the intelligent tester to the DLC3.
(b) Start the engine.
(c) Select the Active Test mode on the intelligent tester.

ABS / VSC:

Tester Display	Test Part	Control Range	Diagnostic Note
MOTOR RELAY	ABS motor relay	Relay ON / OFF	Operating sound of relay (clicking sound) and motor can be heard

(d) Check the operating sound of the ABS motor relay and motor when operating it with the intelligent tester.
OK:
The operating sound of the ABS motor relay and motor can be heard.

OK → **Go to step 3**

NG

2 INSPECT SKID CONTROL ECU (GND2 TERMINAL)

Skid Control ECU Harness Side Connector Front View:

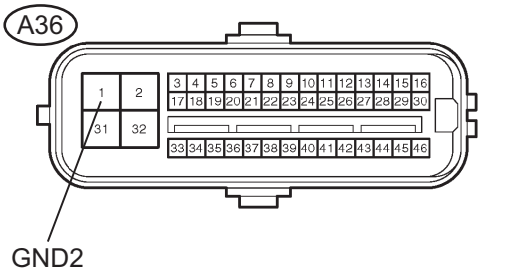

(a) Turn the engine switch off.
(b) Disconnect the skid control ECU connector.
(c) Measure the resistance according to the value(s) in the table below.

Standard resistance

Tester Connection	Condition	Specified Condition
A36-1 (GND2) - Body ground	Always	Below 1 Ω

NG → **REPAIR OR REPLACE HARNESS OR CONNECTOR (GND2 CIRCUIT)**

OK

3 RECONFIRM DTC

(a) Reconnect the skid control ECU connector.
(b) Turn the engine switch off.
(c) Clear the DTC (See page BC-43).
(d) Start the engine.
(e) Drive the vehicle at the speed of 7 km/h (4.3 mph) or more.
(f) Check if the same DTC is recorded (See page BC-43).

Result

Condition	Proceed to
DTC (C1251/51) is not output	A
DTC (C1251/51) is output	B

HINT:
- If a speed signal of 6 km/h (4 mph) or more is input to the skid control ECU, with the engine switch on (IG) and the stop light switch off, the ECU performs self diagnosis of the motor and solenoid circuits.
- If a normal system code is output (the trouble code is not output), slightly jiggle the connectors, wire harness, and fuses of the brake actuator assembly. Make sure that no DTCs are output.
- If any DTCs are output while jiggling a connector or wire harness of the brake actuator assembly (skid control ECU), inspect and repair the connector or wire harness.

B → **REPLACE BRAKE ACTUATOR ASSEMBLY**

A

CHECK FOR INTERMITTENT PROBLEMS (SYMPTOM SIMULATION)

DTC	C1290/66	Steering Angle Sensor Zero Point Malfunction

DESCRIPTION

The skid control ECU acquires steering angle sensor zero point every time the engine switch is turned on (IG) and the vehicle is driven at 35 km/h (22 mph) or more for approximately 5 seconds. The ECU also stores the previous zero point.
If front wheel alignment or steering wheel position is adjusted without disconnecting the negative battery terminal, or if yaw rate and acceleration sensor zero point is not acquired after the adjustments have been completed, the skid control ECU detects the difference between the previous zero point and newly acquired zero point and outputs this DTC to indicate a poor adjustment.
Warning of the steering angle sensor zero point malfunction will be cancelled by turning the engine switch off.

DTC Code	DTC Detection Condition	Trouble Area
C1290/66	The steering angle sensor zero point calibration position vastly differs from the recorded value	• Yaw rate and acceleration sensor zero point calibration incomplete • Poor adjustment of the centered position of the steering wheel • Poor adjustment of front wheel alignment

INSPECTION PROCEDURE

NOTICE:
When replacing the brake actuator assembly, perform zero point calibration (See page BC-20).

1	PERFORM ZERO POINT CALIBRATION OF YAW RATE AND ACCELERATION SENSOR

(a) Perform zero point calibration of the yaw rate and acceleration sensor (See page BC-20).
HINT:
- When the stored zero point of the yaw rate and acceleration sensor is erased, steering angle sensor zero point will also be erased.
- If the zero point and output value of the yaw rate and acceleration sensor and the output value of the speed sensors are not normal, steering angle sensor zero point cannot be acquired normally even if the vehicle is driven straight ahead at 35 km/h (22 mph) or more.

NEXT

2	CHECK STEERING ANGLE SENSOR ZERO POINT CALIBRATION

BC

(a) Drive the vehicle straight ahead at 35 km/h (22 mph) or more for at least 5 seconds.
(b) Check that the centered position of the steering wheel is correctly set while driving straight ahead.
HINT:
If front wheel alignment and steering position are adjusted as a result of abnormal centered position of the steering wheel, acquire yaw rate and acceleration sensor zero point again after the adjustments are completed.

OK:
The centered position of the steering wheel is correctly set.

NG → **ADJUST FRONT WHEEL ALIGNMENT OR STEERING POSITION**

OK

3	RECONFIRM DTC

(a) Turn the engine switch off.
(b) Clear the DTC (See page BC-43).
(c) Start the engine.
(d) Drive the vehicle and turn the steering wheel to the right and left at the speed of 35 km/h (22 mph) or more.
(e) Check if the same DTC is recorded (See page BC-43).

Result

Condition	Proceed to
DTC (C1290/66) is not output	A
DTC (C1290/66) is output	B

B → **REPLACE BRAKE ACTUATOR ASSEMBLY**

A

END

DTC	C1380/64	Stop Light Control Relay Malfunction

DESCRIPTION

Upon receiving the dynamic radar cruise control operating signal from the skid control ECU, the relay contact turns on and the stop light comes on.

DTC Code	DTC Detection Condition	Trouble Area
C1380/64 (*1)	When either of the following is detected: • When the voltage at the IG1 terminal is between 10 to 14 V and the stop light control relay drive output (STPO) is ON, a signal has not been input to the STP terminal for 5 seconds or more. • When the voltage at the IG1 terminal is between 10 to 14 V and the stop light control relay drive output (STPO) is OFF, the signal at the STP1 is different from the input signal at the STP2 for 5 seconds or more.	• STOP fuse • Stop light switch • Stop light switch circuit • Stop light control relay • Stop light control relay circuit • Brake actuator assembly (Skid control ECU)

(*1): with dynamic radar cruise control

WIRING DIAGRAM

Refer to DTC C1249/49 (See page BC-115).

INSPECTION PROCEDURE

NOTICE:

When replacing the brake actuator assembly, perform zero point calibration (See page BC-20).

HINT:

When C1249/49 is output together with C1380/64, inspect and repair the trouble areas indicated by C1249/49 first.

1 INSPECT STOP FUSE

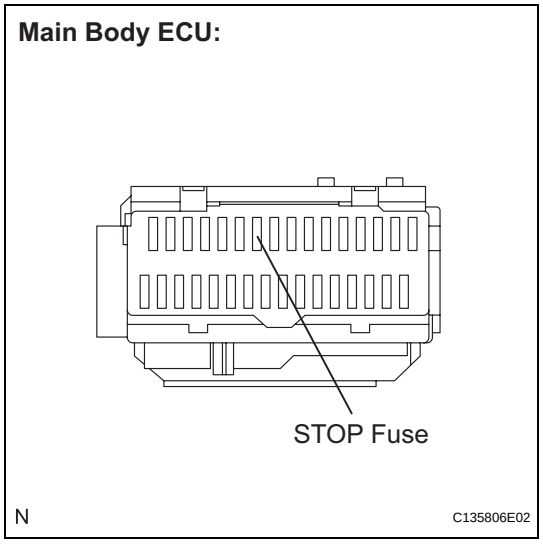

(a) Remove the STOP fuse from the main body ECU.

(b) Measure the resistance according to the value(s) in the table below.

Standard resistance

Tester Connection	Condition	Specified Condition
STOP (10 A) fuse	Always	Below 1 Ω

NG → **REPLACE STOP FUSE**

OK

2 CHECK STOP LIGHT OPERATION

(a) Install the STOP fuse.

BC

(b) Check that the stop light comes on when the brake pedal is depressed, and goes off when the brake pedal is released.

OK

Condition	Illumination Condition
Brake pedal depressed	ON
Brake pedal released	OFF

NG → **INSPECT STOP LIGHT CIRCUIT**

OK

3 INSPECT SKID CONTROL ECU (STP1 TERMINAL)

Skid Control ECU Harness Side Connector Front View:

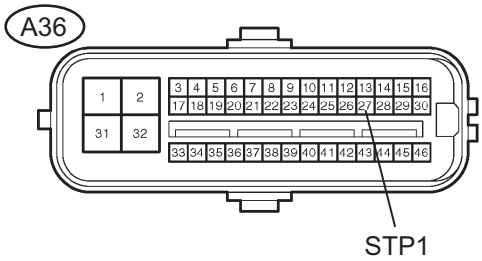

C141673E05

(a) Disconnect the skid control ECU connector.
(b) Measure the voltage according to the value(s) in the table below.

Standard voltage

Tester Connection	Condition	Specified Condition
A36-27 (STP1) - Body ground	Stop light switch ON (Brake pedal depressed)	8 to 14 V
A36-27 (STP1) - Body ground	Stop light switch OFF (Brake pedal released)	Below 1.5 V

NG → **REPAIR OR REPLACE HARNESS OR CONNECTOR (STP1 CIRCUIT)**

OK

4 INSPECT SKID CONTROL ECU (STP2 TERMINAL)

Skid Control ECU Harness Side Connector Front View:

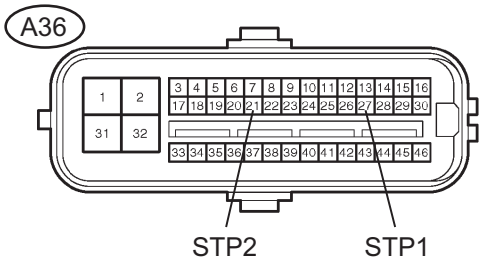

C141673E07

(a) Measure the resistance according to the value(s) in the table below.

Standard resistance

Tester Connection	Condition	Specified Condition
A36-27 (STP1) - A36-21 (STP2)	Always	Below 1 Ω

NG → **REPAIR OR REPLACE HARNESS OR CONNECTOR (STP2 CIRCUIT)**

BC

OK

5 PERFORM ACTIVE TEST BY INTELLIGENT TESTER (STOP LIGHT CONTROL RELAY)

(a) Reconnect the skid control ECU connector.
(b) Connect the intelligent tester to the DLC3.
(c) Start the engine.
(d) Select the Active Test mode on the intelligent tester.

ABS / VSC:

Tester Display	Test Part	Control Range	Diagnostic Note
STOP LAMP RELAY	Stop light control relay	Relay ON / OFF	Stop light comes on (Does not come on for 5 seconds or more)

(e) Check that the "ON" and "OFF" of the stop light can be shown on the rear combination light by the intelligent tester.
OK:
The stop light turns on or off in accordance with the intelligent tester.

OK → **Go to step 9**

NG

6 INSPECT STOP LIGHT CONTROL RELAY

Stop Light Control Relay:

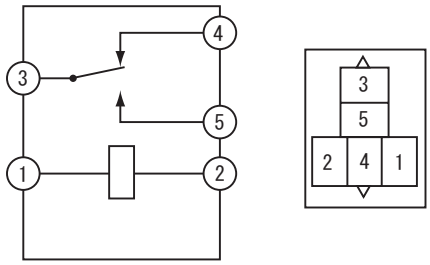

C126459E01

(a) Turn the engine switch off.
(b) Remove the stop light control relay.
(c) Measure the resistance according to the value(s) in the table below.
Standard resistance

Tester Connection	Condition	Specified Condition
3 - 4	Always	Below 1 Ω
3 - 5	Always	10 kΩ or higher
3 - 4	When battery positive voltage is applied to terminal 1 and battery negative voltage to terminal 2	10 kΩ or higher
3 - 5	When battery positive voltage is applied to terminal 1 and battery negative voltage to terminal 2	Below 1 Ω

NG → **REPLACE STOP LIGHT CONTROL RELAY**

OK

BC

7 INSPECT ENGINE ROOM RELAY BLOCK (POWER SOURCE TERMINAL)

Engine Room R/B:

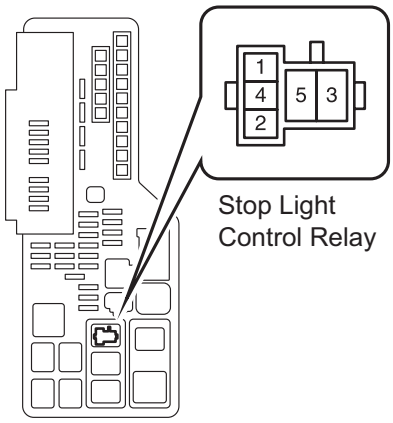

N C142010E02

(a) Measure the voltage according to the value(s) in the table below.

Standard voltage

Tester Connection	Condition	Specified Condition
Stop light control relay terminal 5 - Body ground	Always	8 to 14 V
Stop light control relay terminal 2 - Body ground	Engine switch on (IG)	8 to 14 V

NG → **REPAIR OR REPLACE HARNESS OR CONNECTOR (POWER SOURCE CIRCUIT)**

OK

8 INSPECT SKID CONTROL ECU (STPO TERMINAL)

Skid Control ECU Harness Side Connector Front View:

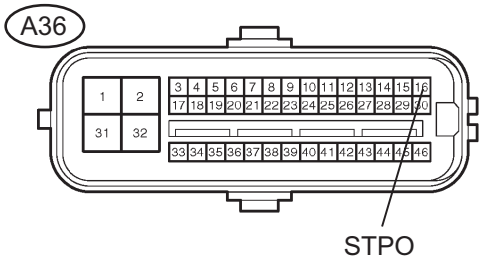

C141673E08

(a) Turn the engine switch off.
(b) Install the stop light control relay.
(c) Disconnect the skid control ECU connector.
(d) Turn the engine switch on (IG).
(e) Measure the voltage according to the value(s) in the table below.

Standard voltage

Tester Connection	Condition	Specified Condition
A36-16 (STPO) - Body ground	Engine switch on (IG)	10 to 14 V

NG → **REPAIR OR REPLACE HARNESS OR CONNECTOR (STPO CIRCUIT)**

BC

OK

9 RECONFIRM DTC

(a) Turn the engine switch off.
(b) Reconnect the skid control ECU connector.
(c) Clear the DTC (See page BC-43).
(d) Perform a road test (See page CC-50).
(e) Check if the same DTC is recorded (See page BC-43).

Result

Condition	Proceed to
DTC (C1380/64) is not output	A

Condition	Proceed to
DTC (C1380/64) is output	B

B → **REPLACE BRAKE ACTUATOR ASSEMBLY**

A

CHECK FOR INTERMITTENT PROBLEMS (SYMPTOM SIMULATION)

DTC	U0073/94	Control Module Communication Bus OFF

DTC	U0100/65	Lost Communication with ECM / PCM

DTC	U0123/62	Lost Communication with Yaw Rate Sensor Module

DTC	U0124/95	Lost Communication with Lateral Acceleration Sensor Module

DTC	U0126/63	Lost Communication with Steering Angle Sensor Module

DESCRIPTION

The skid control ECU receives the signals from the ECM, steering angle sensor, and yaw rate and acceleration sensor via the CAN communication system.

DTC Code	DTC Detection Condition	Trouble Area
U0073/94	When any of the following is detected: 1. With the IG1 terminal voltage 10 V or more, after the output of data from the skid control ECU is completed, the sending continues for 5 seconds or more. 2. With the IG1 terminal voltage 10 V or more, the condition that bus OFF state occurs once or more within 100 ms occurs 10 times in succession. (Sent signals cannot be received.) 3. With the IG1 terminal voltage 10 V or more, a delay in receiving data from the yaw rate and acceleration sensor and steering angle sensor continues for 1 second or more. 4. With the IG1 terminal voltage 10 V or more, the condition that a delay in receiving data from the yaw rate and acceleration sensor and the steering angle sensor occurs more than once within 5 seconds occurs 10 times in succession within 60 seconds.	CAN communication system
U0100/65	When either of the following is detected: 1. With the IG1 terminal voltage 10 V or more and the vehicle speed 15 km/h (9 mph) or more, data cannot be sent to the ECM for 2 seconds or more. 2. The IG1 terminal voltage 10 V or more and the vehicle speed 15 km/h (9 mph) or more for 2 seconds or more.	CAN communication system (Skid control ECU to ECM)
U0123/62	When either of the following is detected: 1. With the IG1 terminal voltage 10 V or more, data from the yaw rate sensor cannot be received for 1 second or more. 2. With the IG1 terminal voltage 10 V or more, the following occurs 10 times in succession within 60 seconds. • The condition that data from the yaw rate sensor cannot be received occurs once or more within 5 seconds.	CAN communication system (Skid control ECU to yaw rate and acceleration sensor)
U0124/95	When either of the following is detected: 1. With the IG1 terminal voltage 10 V or more, data from the acceleration sensor cannot be received for 1 second or more. 2. With the IG1 terminal voltage 10 V or more, the following occurs 10 times in succession within 60 seconds. • The condition that data from the acceleration sensor cannot be received occurs once or more within 5 seconds.	CAN communication system (Skid control ECU to yaw rate and acceleration sensor)

DTC Code	DTC Detection Condition	Trouble Area
U0126/63	When either of the following is detected: 1. With the IG1 terminal voltage 10 V or more, data from the steering angle sensor cannot be received for 1 second or more. 2. With the IG1 terminal voltage 10 V or more, the following occurs 10 times in succession within 60 seconds. • The condition that data from the steering angle sensor cannot be received occurs once or more within 5 seconds.	CAN communication system (Skid control ECU to steering angle sensor)

WIRING DIAGRAM

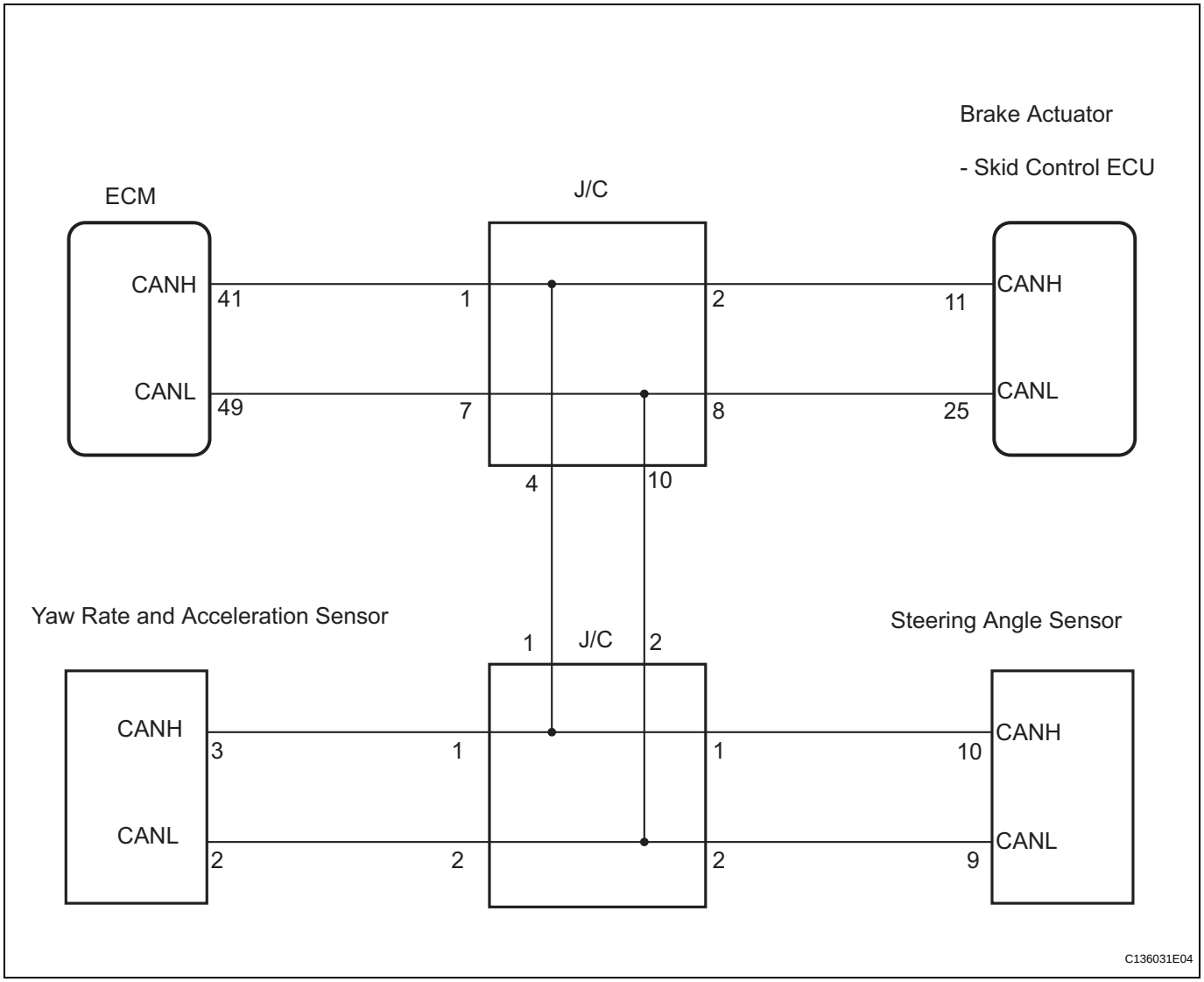

BC

INSPECTION PROCEDURE

1	CHECK HARNESS AND CONNECTOR (MOMENTARY INTERRUPTION)

(a) Using the intelligent tester, check for any momentary interruption in the wire harness and connector corresponding to a DTC (See page BC-19).

ABS / VSC:

Tester Display	Measurement Item/Range	Normal Condition
EFI COM OPN	EFI communication open detection / ERROR or NORMAL	ERROR: Momentary interruption NORMAL: Normal
STEERING OPN	Steering sensor open detection / ERROR or NORMAL	ERROR: Momentary interruption NORMAL: Normal
YAW RATE OPN	Yaw rate sensor open detection / ERROR or NORMAL	ERROR: Momentary interruption NORMAL: Normal

Result

Condition	Proceed to
There is a constant open circuit	**A**
There are no momentary interruptions	**B**
There are momentary interruptions	**C**

HINT:
Perform the above inspection before removing the sensor and connector.

B → **Go to step 3**

C → **Go to step 4**

A

2	CHECK IF EACH SENSOR AND ECM CONNECTOR IS SECURELY CONNECTED

(a) Turn the engine switch off.
(b) Check if each sensor or ECM connector is securely connected.
OK:
The connector should be securely connected.

NG → **CONNECT CONNECTOR TO EACH SENSOR OR ECM CORRECTLY**

BC

OK

3	RECONFIRM DTC

(a) Turn the engine switch off.
(b) Record the output DTCs (for ABS, VSC, and CAN communication).

HINT:
If the CAN communication system DTC and the relevant sensor DTCs are output simultaneously, troubleshoot the relevant sensor DTCs (for ABS and VSC) after the CAN communication system returns to normal.

Result

Condition	Proceed to
DTC (CAN communication system DTC) is output	A
DTC (ABS and/or VSC DTC) is output	B
DTC is not output	C

B → **REPAIR CIRCUIT INDICATED BY OUTPUT DTC (See page BC-52)**

C → **CHECK FOR INTERMITTENT PROBLEMS (SYMPTOM SIMULATION)**

A

INSPECT CAN COMMUNICATION SYSTEM

4 REPAIR OR REPLACE HARNESS OR CONNECTOR

(a) Turn the engine switch off.
(b) Repair or replace the harness or connector.
(c) Check for any momentary interruption between the skid control ECU and each sensor or ECM (See page BC-19).
(d) Check that there is no momentary interruption.

NEXT

5 RECONFIRM DTC

(a) Turn the engine switch off.
(b) Clear the DTC (See page BC-43).
(c) Start the engine.
(d) Drive the vehicle and turn the steering wheel to the right and left at a speed of 15 km/h (9 mph) or more.
(e) Check that no CAN communication system DTC is output.
(f) If ABS and VSC DTCs are output, record them.

Result

Condition	Proceed to
DTC output for the CAN communication system	A
No DTC is output (ABS and/or VSC DTC is output)	B
No DTC is output (No ABS and/or VSC DTC is output)	C

HINT:
The CAN communication system must be normal when repairing each sensor DTC (for ABS and VSC).

B → **REPAIR CIRCUIT INDICATED BY OUTPUT DTC (See page BC-52)**

C → **END**

A

INSPECT CAN COMMUNICATION SYSTEM

ABS Warning Light Remains ON

DESCRIPTION

The skid control ECU is connected to the combination meter via CAN communication.
If any of the following is detected, the ABS warning light remains on.

- The skid control ECU connectors are disconnected from the skid control ECU.
- There is a malfunction in the skid control ECU internal circuit.
- There is an open in the harness between the combination meter and the skid control ECU.

HINT:
In some cases, the intelligent tester cannot be used when the skid control ECU is abnormal.

WIRING DIAGRAM

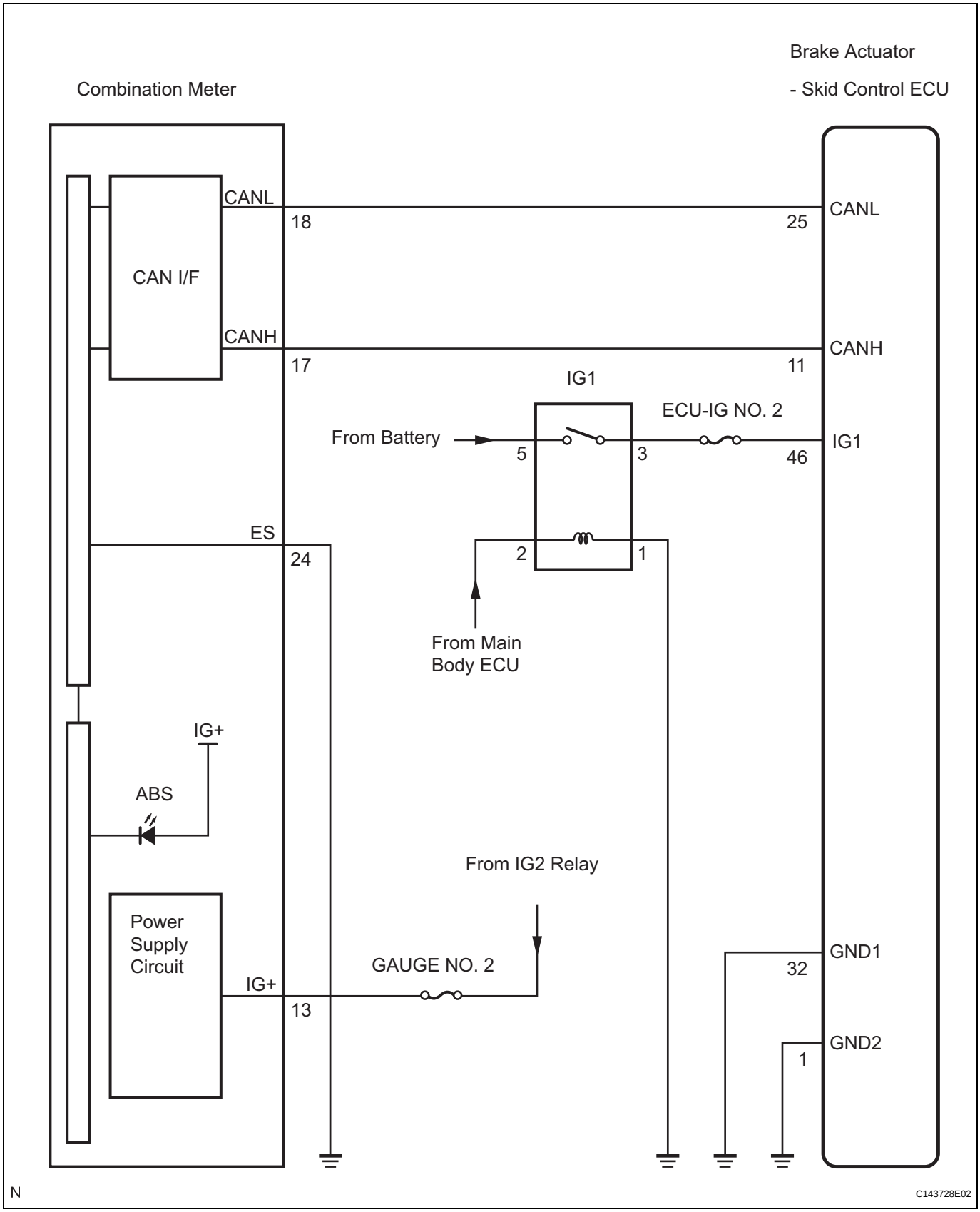

INSPECTION PROCEDURE

NOTICE:

When replacing the brake actuator assembly, perform zero point calibration (See page BC-20).

BC

1	CHECK CAN COMMUNICATION SYSTEM

(a) Check if the CAN communication system DTC is output (See page CA-41).

Result

Condition	Proceed to
DTC is not output	A
DTC is output	B

B → **INSPECT CAN COMMUNICATION SYSTEM**

A

2	CHECK IF SKID CONTROL ECU CONNECTOR IS SECURELY CONNECTED

(a) Check if the skid control ECU connector is securely connected.
OK:
The connector should be securely connected.

NG → **CONNECT CONNECTOR TO ECU CORRECTLY**

OK

3	CHECK BATTERY

(a) Check the battery voltage.
Standard voltage:
11 to 14 V

NG → **CHECK AND REPLACE CHARGING SYSTEM OR BATTERY**

OK

4 INSPECT SKID CONTROL ECU (IG1 TERMINAL)

Skid Control ECU Harness Side Connector Front View:

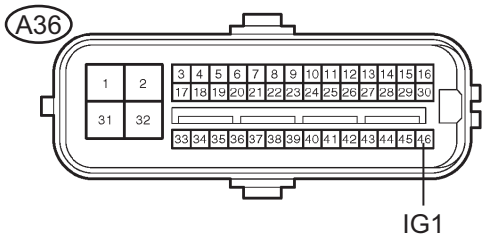

(a) Disconnect the skid control ECU connector.
(b) Turn the engine switch on (IG).
(c) Measure the voltage according to the value(s) in the table below.

Standard voltage

Tester Connection	Condition	Specified Condition
A36-46 (IG1) - Body ground	Engine switch on (IG)	10 to 14 V

NG → **REPAIR OR REPLACE HARNESS OR CONNECTOR (IG1 CIRCUIT)**

OK

5 INSPECT SKID CONTROL ECU (GND TERMINAL)

Skid Control ECU Harness Side Connector Front View:

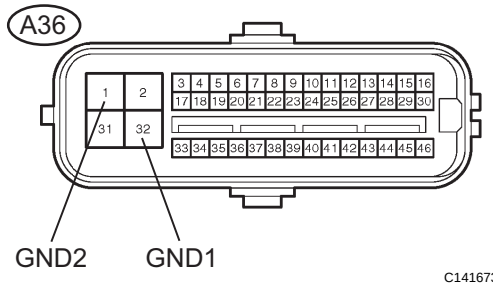

(a) Turn the engine switch off.
(b) Measure the resistance according to the value(s) in the table below.

Standard resistance

Tester Connection	Condition	Specified Condition
A36-32 (GND1) - Body ground	Always	Below 1 Ω
A36-1 (GND2) - Body ground	Always	Below 1 Ω

NG → **REPAIR OR REPLACE HARNESS OR CONNECTOR (GND CIRCUIT)**

BC

OK

6 INSPECT COMBINATION METER ASSEMBLY

(a) Reconnect the skid control ECU connector.
(b) Perform Active Test of the combination meter (meter CPU) using the intelligent tester (See page ME-29).

OK:

The ABS warning light turns on or off in accordance with the intelligent tester.

HINT:
If troubleshooting has been carried out according to the Problem Symptoms Table, refer back to the table and proceed to the next step before replacing the part (See page BC-35).

NG → **REPLACE COMBINATION METER ASSEMBLY**

OK

REPLACE BRAKE ACTUATOR ASSEMBLY

ABS Warning Light does not Come ON

DESCRIPTION

The skid control ECU is connected to the combination meter via CAN communication.

WIRING DIAGRAM

Refer to ABS Warning Light Remains ON (See page BC-142).

INSPECTION PROCEDURE

NOTICE:

When replacing the brake actuator assembly, perform zero point calibration (See page BC-20).

1 CHECK CAN COMMUNICATION SYSTEM

(a) Check if the CAN communication system DTC is output (See page CA-41).

Result

Condition	Proceed to
DTC is not output	A
DTC is output	B

B → **INSPECT CAN COMMUNICATION SYSTEM**

A

2 CHECK ABS WARNING LIGHT

(a) Disconnect the skid control ECU connector.
(b) Turn the engine switch on (IG).
(c) Check that the ABS warning light comes on.
OK:
The ABS warning light comes on.
HINT:
If troubleshooting has been carried out according to the Problem Symptoms Table, refer back to the table and proceed to the next step before replacing the part (See page BC-35).

OK → **REPLACE BRAKE ACTUATOR ASSEMBLY**

NG

3 INSPECT COMBINATION METER ASSEMBLY

(a) Turn the engine switch off.
(b) Reconnect the skid control ECU connector.
(c) Perform Active Test of the combination meter (meter CPU) using the intelligent tester (See page ME-29).
OK:
The ABS warning light turns on or off in accordance with the intelligent tester.

HINT:
If troubleshooting has been carried out according to the Problem Symptoms Table, refer back to the table and proceed to the next step (See page BC-35).

NG → **REPLACE COMBINATION METER ASSEMBLY**

OK

REPLACE BRAKE ACTUATOR ASSEMBLY

VSC Warning Light Remains ON

DESCRIPTION

The skid control ECU communicates with the combination meter via CAN communication. If the ECU stores a DTC, the DTC will be displayed on the multi information display in the combination meter.

WIRING DIAGRAM

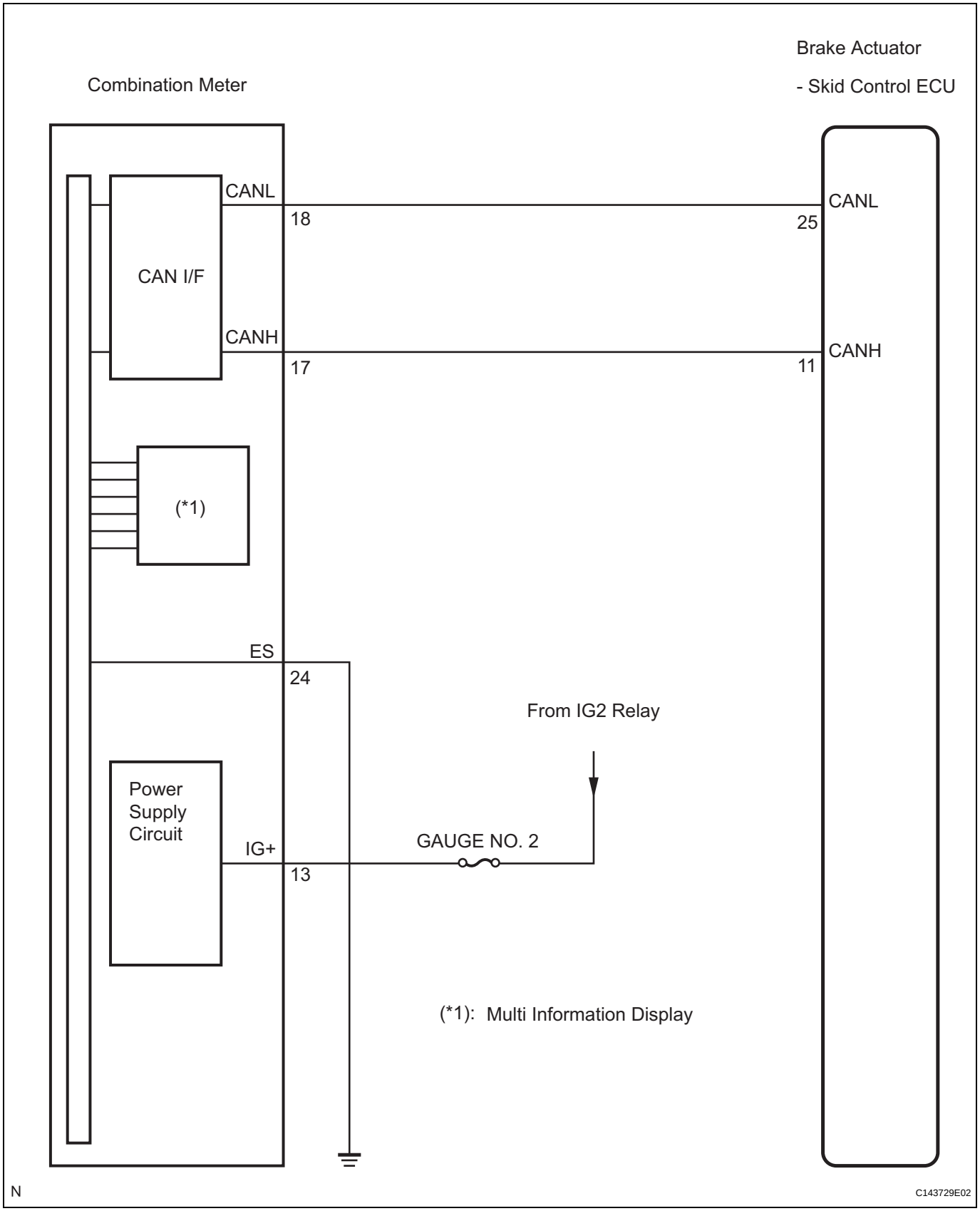

INSPECTION PROCEDURE

NOTICE:

When replacing the brake actuator assembly, perform zero point calibration (See page BC-20).

BC

1 CHECK CAN COMMUNICATION SYSTEM

(a) Check if the CAN communication system DTC is output (See page CA-41).

Result

Condition	Proceed to
DTC is not output	A
DTC is output	B

B → **INSPECT CAN COMMUNICATION SYSTEM**

A

2 CHECK IF SKID CONTROL ECU CONNECTOR IS SECURELY CONNECTED

(a) Check if the skid control ECU connector is securely connected.
OK:
The connector should be securely connected.

NG → **CONNECT CONNECTOR TO ECU CORRECTLY**

OK

3 CHECK BATTERY

(a) Check the battery voltage.
Standard voltage:
11 to 14 V

NG → **CHECK AND REPLACE CHARGING SYSTEM OR BATTERY**

OK

4 INSPECT COMBINATION METER ASSEMBLY

BC

(a) Perform Active Test of the combination meter (meter CPU) using the intelligent tester (See page ME-29).
OK:
The VSC warning (multi information display) turns on or off in accordance with the intelligent tester.
HINT:
If troubleshooting has been carried out according to the Problem Symptoms Table, refer back to the table and proceed to the next step before replacing the part (See page BC-35).

NG → **REPLACE COMBINATION METER ASSEMBLY**

OK

REPLACE BRAKE ACTUATOR ASSEMBLY

VSC Warning Light does not Come ON

DESCRIPTION

The skid control ECU communicates with the combination meter via CAN communication. If the ECU stores a DTC, the DTC will be displayed on the multi information display in the combination meter.

WIRING DIAGRAM

Refer to VSC Warning Light Remains ON (See page BC-149).

INSPECTION PROCEDURE

NOTICE:

When replacing the brake actuator assembly, perform zero point calibration (See page BC-20).

1 CHECK CAN COMMUNICATION SYSTEM

(a) Check if the CAN communication system DTC is output (See page CA-41).

Result

Condition	Proceed to
DTC is not output	A
DTC is output	B

B → **INSPECT CAN COMMUNICATION SYSTEM**

A

2 CHECK VSC WARNING LIGHT

(a) Connect the intelligent tester to the DLC3.
(b) Start the engine.
(c) Select "VSC WARN LAMP" in the Active Test and operate the VSC warning (multi information display) using the intelligent tester.

ABS / VSC:

Tester Display	Test Part	Control Range	Diagnostic Note
VSC WARN LAMP	VSC warning (multi information display)	Warning (display) ON / OFF	Observe combination meter

BC

(d) Check that "ON" and "OFF" of the VSC warning (multi information display) are indicated on the combination meter when using the intelligent tester.

OK:

The VSC warning (multi information display) turns on or off in accordance with the intelligent tester.

HINT:

If troubleshooting has been carried out according to the Problem Symptoms Table, refer back to the table and proceed to the next step before replacing the part (See page BC-35).

OK → **REPLACE BRAKE ACTUATOR ASSEMBLY**

NG

3	**INSPECT COMBINATION METER ASSEMBLY**

(a) Turn the engine switch off.
(b) Perform Active Test of the combination meter (meter CPU) using the intelligent tester (See page ME-29).
OK:
The VSC warning (multi information display) turns on or off in accordance with the intelligent tester.
HINT:
If troubleshooting has been carried out according to the Problem Symptoms Table, refer back to the table and proceed to the next step (See page BC-35).

NG → **REPLACE COMBINATION METER ASSEMBLY**

OK

REPLACE BRAKE ACTUATOR ASSEMBLY

Brake Warning Light Remains ON

DESCRIPTION

The skid control ECU is connected to the combination meter via CAN communication.
If any of the following is detected, the BRAKE warning light remains on:

- The skid control ECU connector is disconnected from the skid control ECU.
- The brake fluid level is insufficient.
- The parking brake is applied.
- EBD operation is not possible.

WIRING DIAGRAM

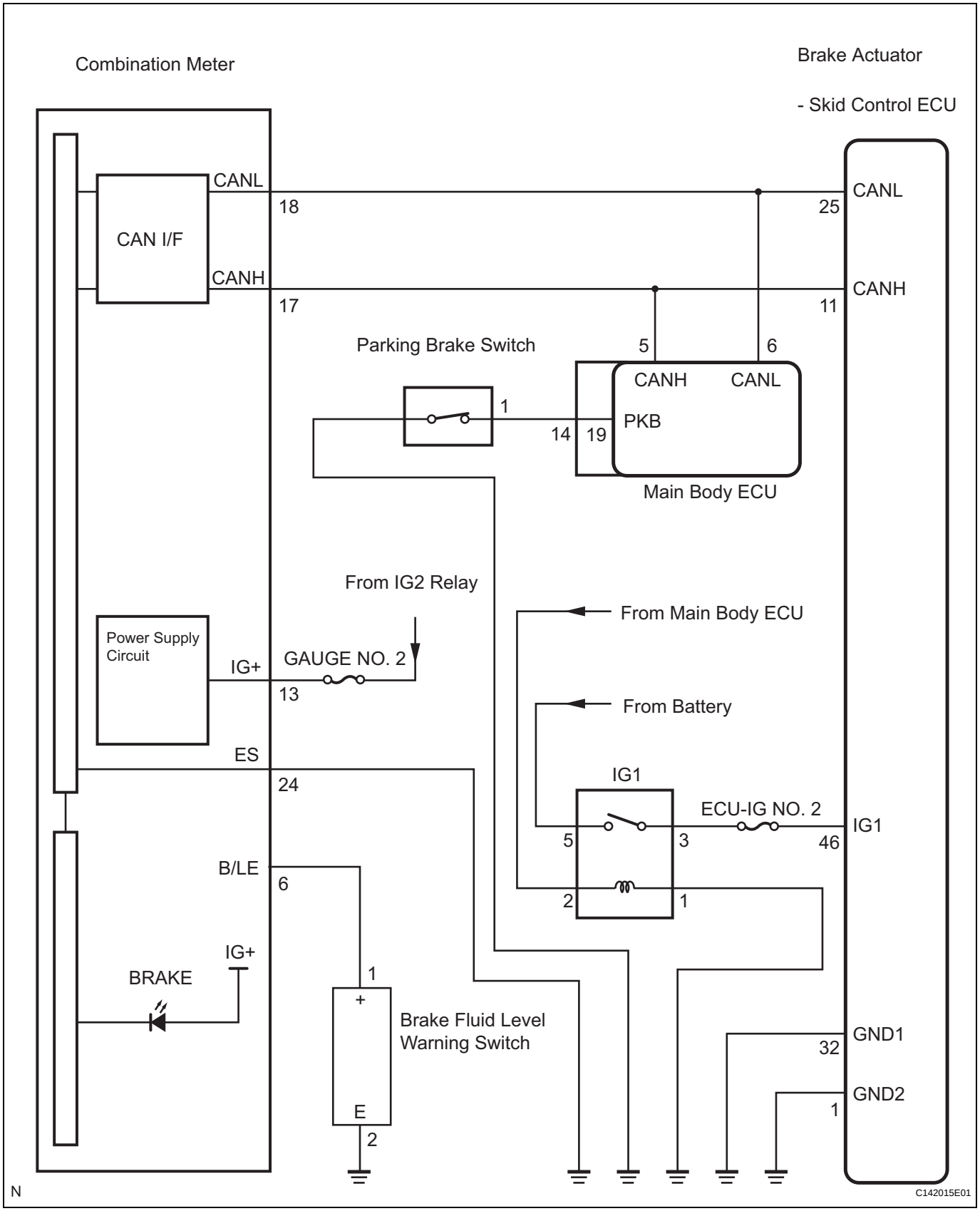

INSPECTION PROCEDURE

NOTICE:

When replacing the brake actuator assembly, perform zero point calibration (See page BC-20).

BC

1	CHECK CAN COMMUNICATION SYSTEM

(a) Check if the CAN communication system DTC is output (See page CA-41).

Result

Condition	Proceed to
DTC is not output	A
DTC is output	B

B → **INSPECT CAN COMMUNICATION SYSTEM**

A

2	CHECK IF SKID CONTROL ECU CONNECTOR IS SECURELY CONNECTED

(a) Check if the skid control ECU connector is securely connected.
OK:
The connector should be securely connected.

NG → **CONNECT CONNECTOR TO ECU CORRECTLY**

OK

3	CHECK BATTERY

(a) Check the battery voltage.
Standard voltage:
11 to 14 V

NG → **CHECK AND REPLACE CHARGING SYSTEM OR BATTERY**

OK

4 INSPECT SKID CONTROL ECU (IG1 TERMINAL)

Skid Control ECU Harness Side Connector Front View:

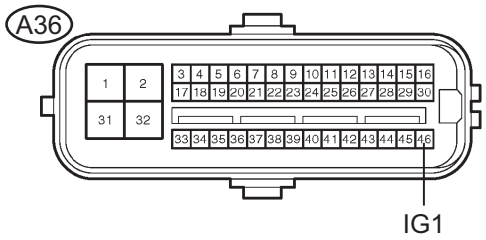

C141673E03

(a) Disconnect the skid control ECU connector.
(b) Turn the engine switch on (IG).
(c) Measure the voltage according to the value(s) in the table below.

Standard voltage

Tester Connection	Condition	Specified Condition
A36-46 (IG1) - Body ground	Engine switch on (IG)	10 to 14 V

NG → **REPAIR OR REPLACE HARNESS OR CONNECTOR (IG1 CIRCUIT)**

OK

5 INSPECT SKID CONTROL ECU (GND TERMINAL)

Skid Control ECU Harness Side Connector Front View:

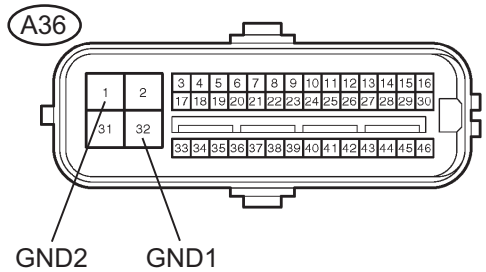

C141673E02

(a) Turn the engine switch off.
(b) Measure the resistance according to the value(s) in the table below.

Standard resistance

Tester Connection	Condition	Specified Condition
A36-32 (GND1) - Body ground	Always	Below 1 Ω
A36-1 (GND2) - Body ground	Always	Below 1 Ω

NG → **REPAIR OR REPLACE HARNESS OR CONNECTOR (GND CIRCUIT)**

OK

6 INSPECT PARKING BRAKE SWITCH

Parking Brake Switch:

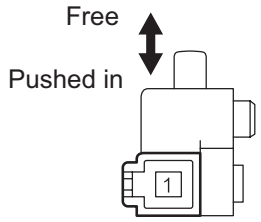

H C106667E03

(a) Disconnect the parking brake switch connector.
(b) Measure the resistance according to the value(s) in the table below.

Standard resistance

Tester Connection	Condition	Specified Condition
1 - Body ground	Parking brake switch ON (Switch pin free)	Below 1 Ω
1 - Body ground	Parking brake switch OFF (Switch pin pushed in)	10 kΩ or higher

NG → **REPLACE PARKING BRAKE SWITCH**

OK

7 CHECK HARNESS AND CONNECTOR (MAIN BODY ECU - PARKING BRAKE SWITCH)

Main Body ECU Harness Side Connector Front View:

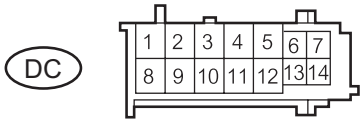

Parking Brake Switch Harness Side Connector Front View:

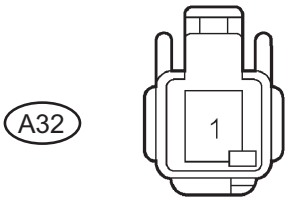

C141686E01

(a) Disconnect the main body ECU connector.
(b) Measure the resistance according to the value(s) in the table below.

Standard resistance

Tester Connection	Condition	Specified Condition
DC-14 (PKB) - A32-1	Always	Below 1 Ω
DC-14 (PKB) - Body ground	Always	10 kΩ or higher

NG → **REPAIR OR REPLACE HARNESS OR CONNECTOR**

OK

BC

8	INSPECT BRAKE FLUID LEVEL WARNING SWITCH

Brake Fluid Level Warning Switch:

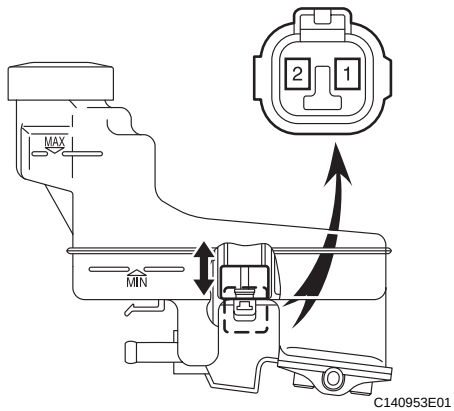

(a) Remove the reservoir tank cap and strainer.
(b) Disconnect the brake fluid level warning switch connector.
(c) Measure the resistance according to the value(s) in the table below.
HINT:
A float is located inside the reservoir. Its position can be changed by increasing or decreasing the level of brake fluid.

Standard resistance

Tester Connection	Condition	Specified Condition
1 - 2	Float up (Switch OFF)	1.9 to 2.1 kΩ
1 - 2	Float down (Switch ON)	Below 1 Ω

HINT:
If there is no problem after finishing the above check, adjust the brake fluid level to the MAX level.

NG → **REPLACE BRAKE MASTER CYLINDER RESERVOIR SUB-ASSEMBLY (BRAKE FLUID LEVEL WARNING SWITCH)**

OK

9	CHECK HARNESS AND CONNECTOR (COMBINATION METER - BRAKE FLUID LEVEL WARNING SWITCH)

Combination Meter Wire Harness View:

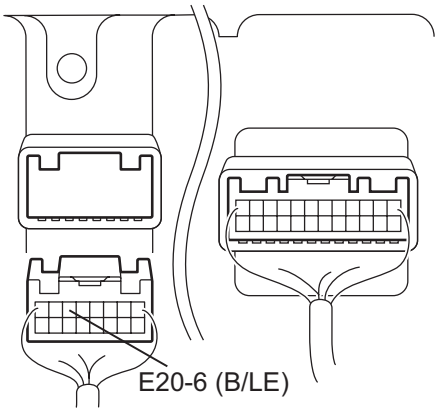

Brake Fluid Level Warning Switch Harness Side Connector Front View:

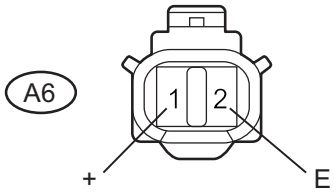

(a) Disconnect the combination meter connector.
(b) Measure the resistance according to the value(s) in the table below.

Standard resistance

Tester Connection	Condition	Specified Condition
E20-6 (B/LE) - A6-1 (+)	Always	Below 1 Ω
E20-6 (B/LE) - Body ground	Always	10 kΩ or higher
A6-2 (E) - Body ground	Always	Below 1 Ω

NG → **REPAIR OR REPLACE HARNESS OR CONNECTOR**

OK

10	INSPECT COMBINATION METER ASSEMBLY

(a) Perform Active Test of the combination meter (meter CPU) using the intelligent tester (See page ME-29).

OK:

The BRAKE warning light turns on or off in accordance with the intelligent tester.

HINT:

- Reinstall the connectors and restore the vehicle to its prior condition before checking the combination meter.
- If troubleshooting has been carried out according to the Problem Symptoms Table, refer back to the table and proceed to the next step before replacing the part (See page BC-35).

NG → **REPLACE COMBINATION METER ASSEMBLY**

BC

OK

REPLACE BRAKE ACTUATOR ASSEMBLY

Brake Warning Light does not Come ON

DESCRIPTION

The skid control ECU is connected to the combination meter via CAN communication.

WIRING DIAGRAM

Refer to Brake Warning Light Remains ON (See page BC-155).

INSPECTION PROCEDURE

NOTICE:

When replacing the brake actuator assembly, perform zero point calibration (See page BC-20).

1 CHECK CAN COMMUNICATION SYSTEM

(a) Check if the CAN communication system DTC is output (See page CA-41).

Result

Condition	Proceed to
DTC is not output	A
DTC is output	B

B → **INSPECT CAN COMMUNICATION SYSTEM**

A

2 CHECK BRAKE WARNING LIGHT

(a) Disconnect the skid control ECU connector.
(b) Turn the engine switch on (IG).
(c) Check that the BRAKE warning light comes on.
OK:
The BRAKE warning light comes on.
HINT:
If troubleshooting has been carried out according to the Problem Symptoms Table, refer back to the table and proceed to the next step before replacing the part (See page BC-35).

OK → **REPLACE BRAKE ACTUATOR ASSEMBLY**

NG

3 INSPECT COMBINATION METER ASSEMBLY

(a) Turn the engine switch off.
(b) Reconnect the skid control ECU connector.
(c) Perform Active Test of the combination meter (meter CPU) using the intelligent tester (See page ME-29).
OK:
The BRAKE warning light turns on or off in accordance with the intelligent tester.

HINT:
If troubleshooting has been carried out according to the Problem Symptoms Table, refer back to the table and proceed to the next step (See page BC-35).

NG → **REPLACE COMBINATION METER ASSEMBLY**

OK

REPLACE BRAKE ACTUATOR ASSEMBLY

Slip Indicator Light Remains ON

DESCRIPTION

The skid control ECU is connected to the combination meter via CAN communication.
The SLIP indicator light blinks during VSC and/or TRAC operation.
When the system fails, the SLIP indicator light comes on to warn the driver (See page BC-39).

WIRING DIAGRAM

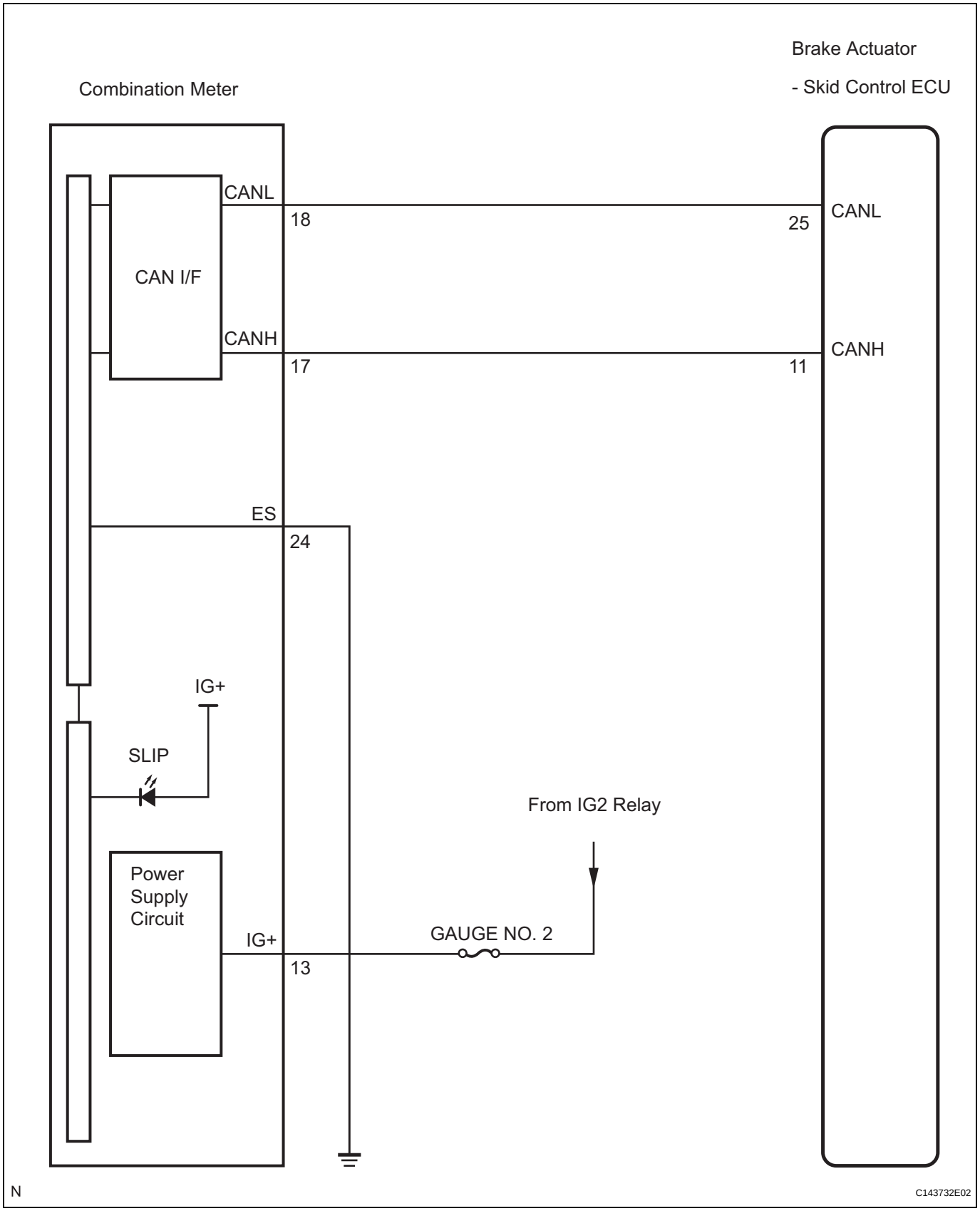

INSPECTION PROCEDURE

NOTICE:

When replacing the brake actuator assembly, perform zero point calibration (See page BC-20).

BC

1	CHECK CAN COMMUNICATION SYSTEM

(a) Check if the CAN communication system DTC is output (See page CA-41).

Result

Condition	Proceed to
DTC is not output	A
DTC is output	B

B → **INSPECT CAN COMMUNICATION SYSTEM**

A

2	CHECK IF SKID CONTROL ECU CONNECTOR IS SECURELY CONNECTED

(a) Check if the skid control ECU connector is securely connected.
OK:
The connector should be securely connected.

NG → **CONNECT CONNECTOR TO ECU CORRECTLY**

OK

3	CHECK BATTERY

(a) Check the battery voltage.
Standard voltage:
11 to 14 V

NG → **CHECK AND REPLACE CHARGING SYSTEM OR BATTERY**

OK

4	INSPECT COMBINATION METER ASSEMBLY

BC

(a) Perform Active Test of the combination meter (meter CPU) using the intelligent tester (See page ME-29).
OK:
The SLIP indicator light turns on or off in accordance with the intelligent tester.
HINT:
If troubleshooting has been carried out according to the Problem Symptoms Table, refer back to the table and proceed to the next step before replacing the part (See page BC-35).

NG → **REPLACE COMBINATION METER ASSEMBLY**

OK

REPLACE BRAKE ACTUATOR ASSEMBLY

Slip Indicator Light does not Come ON

DESCRIPTION

The skid control ECU is connected to the combination meter via CAN communication.
The SLIP indicator light blinks during VSC and/or TRAC operation.
When the system fails, the SLIP indicator light comes on to warn the driver (See page BC-39).

WIRING DIAGRAM

Refer to Slip Indicator Light Remains ON (See page BC-165).

INSPECTION PROCEDURE

NOTICE:
When replacing the brake actuator assembly, perform zero point calibration (See page BC-20).

1 CHECK CAN COMMUNICATION SYSTEM

(a) Check if the CAN communication system DTC is output (See page CA-41).

Result

Condition	Proceed to
DTC is not output	A
DTC is output	B

B → **INSPECT CAN COMMUNICATION SYSTEM**

A

2 CHECK SLIP INDICATOR LIGHT

(a) Connect the intelligent tester to the DLC3.
(b) Start the engine.
(c) Select "SLIP INDI LAMP" in the Active Test and operate the SLIP indicator light using the intelligent tester.

ABS / VSC:

Tester Display	Test Part	Control Range	Diagnostic Note
SLIP INDI LAMP	SLIP indicator light	Indicator light ON / OFF	Observe combination meter

(d) Check that "ON" and "OFF" of the SLIP indicator light are indicated on the combination meter when using the intelligent tester.
OK:
The SLIP indicator light turns on or off in accordance with the intelligent tester.
HINT:
If troubleshooting has been carried out according to the Problem Symptoms Table, refer back to the table and proceed to the next step before replacing the part (See page BC-35).

OK → **REPLACE BRAKE ACTUATOR ASSEMBLY**

NG

3	**INSPECT COMBINATION METER ASSEMBLY**

(a) Turn the engine switch off.
(b) Perform Active Test of the combination meter (meter CPU) using the intelligent tester (See page ME-29).
OK:
The SLIP indicator light turns on or off in accordance with the intelligent tester.
HINT:
If troubleshooting has been carried out according to the Problem Symptoms Table, refer back to the table and proceed to the next step (See page BC-35).

NG → **REPLACE COMBINATION METER ASSEMBLY**

OK

REPLACE BRAKE ACTUATOR ASSEMBLY

Skid Control Buzzer Circuit

DESCRIPTION

The skid control buzzer sounds while the accumulator pressure is abnormally low or when an abnormality causing low fluid pressure occurs, and then the VSC is activated.

WIRING DIAGRAM

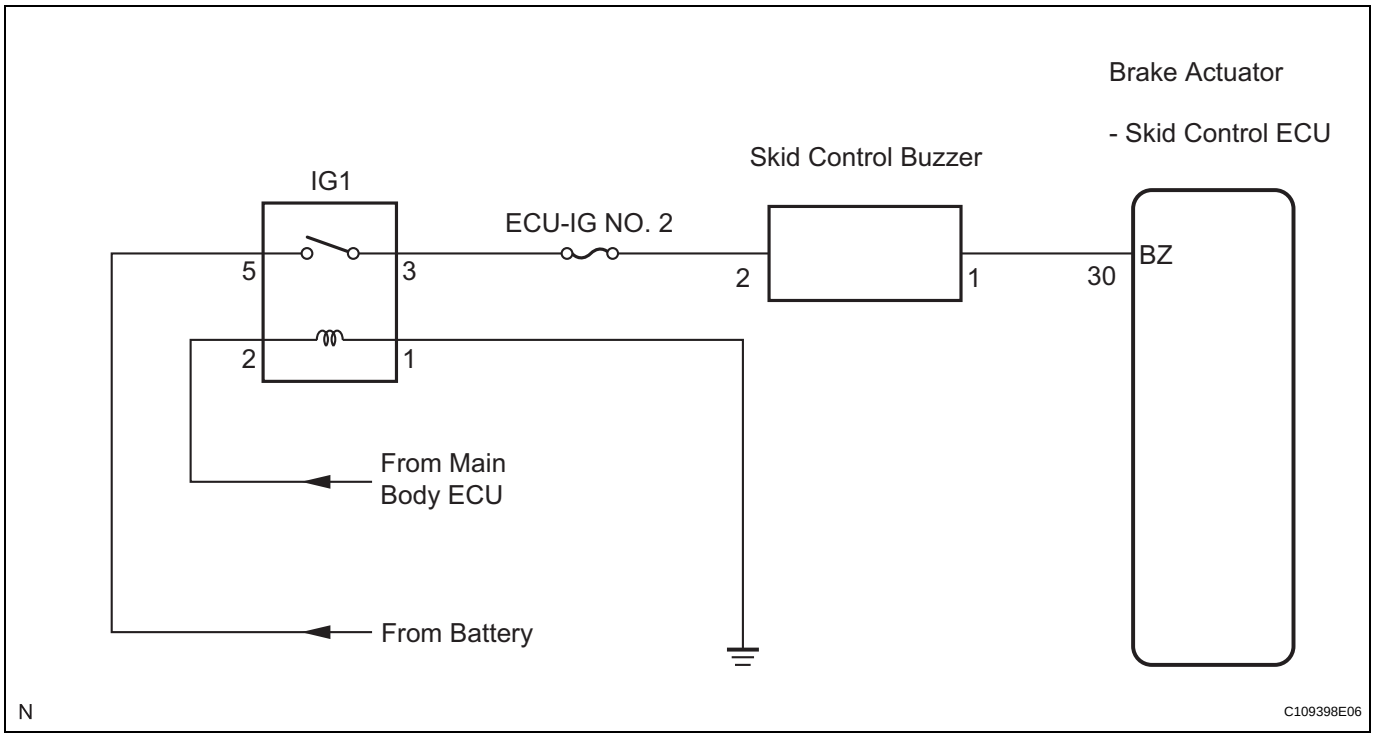

INSPECTION PROCEDURE

NOTICE:

When replacing the brake actuator assembly, perform zero point calibration (See page BC-20).

1	PERFORM ACTIVE TEST BY INTELLIGENT TESTER (SKID CONTROL BUZZER)

(a) Connect the intelligent tester to the DLC3.
(b) Start the engine.
(c) Select the Active Test mode on the intelligent tester.

BC

ABS / VSC:

Tester Display	Test Part	Control Range	Diagnostic Note
BUZZER	Skid control buzzer	Buzzer ON / OFF	Buzzer can be heard

(d) Check that the buzzer sounds/stops when turning the skid control buzzer on/off by using the intelligent tester.

Result

Condition	Proceed to
Buzzer does not sound or sounds constantly	**A**
Buzzer sounds/stops	**B**

HINT:
If troubleshooting has been carried out according to the Problem Symptoms Table, refer back to the table and proceed to the next step (See page BC-35).

B → **END**

A

2 INSPECT SKID CONTROL BUZZER (POWER SOURCE TERMINAL)

Skid Control Buzzer Harness Side Connector Front View:

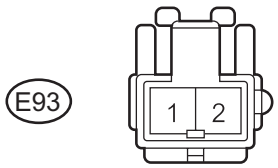

H C142646E01

(a) Turn the engine switch off.
(b) Disconnect the skid control buzzer connector.
(c) Turn the engine switch on (IG).
(d) Measure the voltage according to the value(s) in the table below.

Standard voltage

Tester Connection	Condition	Specified Condition
E93-2 - Body ground	Engine switch on (IG)	10 to 14 V

NG → **REPAIR OR REPLACE HARNESS OR CONNECTOR (POWER SOURCE CIRCUIT)**

OK

3 INSPECT SKID CONTROL BUZZER

Skid Control Buzzer:

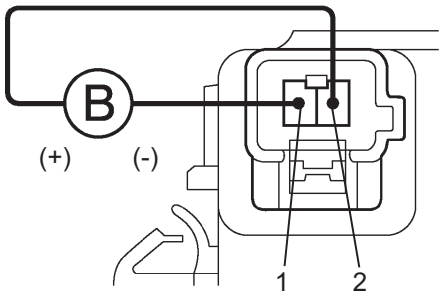

C125130E01

(a) Apply battery negative voltage to terminal 1, and battery positive voltage to terminal 2 of the skid control buzzer, and then check that the buzzer sounds.

OK:
The skid control buzzer sounds.

NG → **REPLACE SKID CONTROL BUZZER**

OK

BC

4	CHECK HARNESS AND CONNECTOR (SKID CONTROL ECU - SKID CONTROL BUZZER)

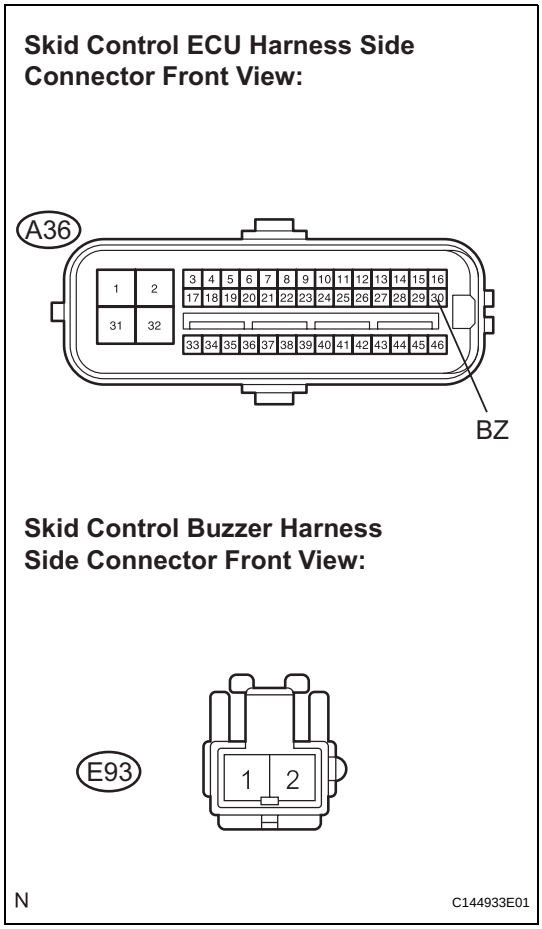

(a) Turn the engine switch off.
(b) Disconnect the skid control ECU connector.
(c) Measure the resistance according to the value(s) in the table below.

Standard resistance

Tester Connection	Condition	Specified Condition
A36-30 (BZ) - E93-1	Always	Below 1 Ω
A36-30 (BZ) - Body ground	Always	10 kΩ or higher

HINT:
If troubleshooting has been carried out according to the Problem Symptoms Table, refer back to the table and proceed to the next step before replacing the part (See page BC-35).

NG → **REPAIR OR REPLACE HARNESS OR CONNECTOR**

OK

REPLACE BRAKE ACTUATOR ASSEMBLY

TC and CG Terminal Circuit

DESCRIPTION

Connecting terminals TC and CG of the DLC3 causes the ECU to display the DTC by blinking the ABS warning light.

WIRING DIAGRAM

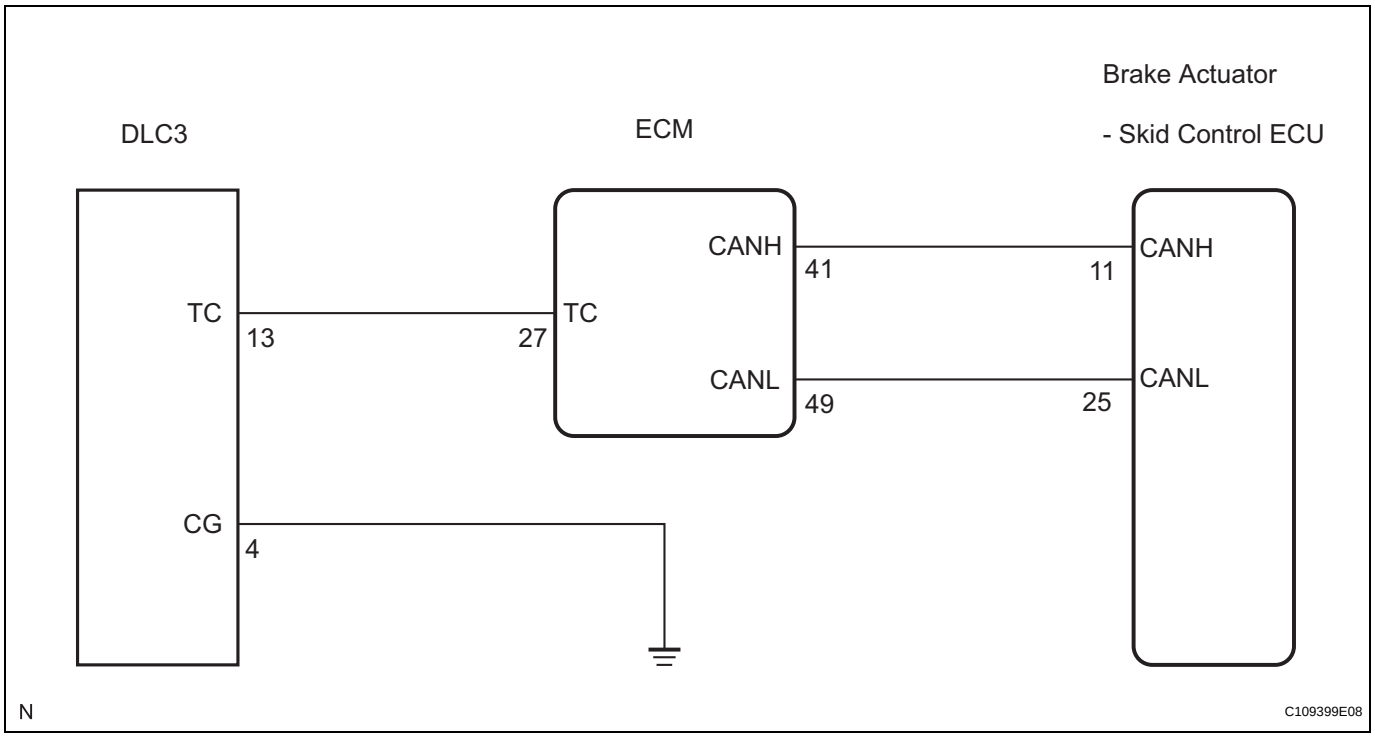

INSPECTION PROCEDURE

NOTICE:

When replacing the brake actuator assembly, perform zero point calibration (See page BC-20).

1	CHECK CAN COMMUNICATION SYSTEM

(a) Check if the CAN communication system DTC is output (See page CA-41).

Result

Condition	Proceed to
DTC is not output	A
DTC is output	B

B → INSPECT CAN COMMUNICATION SYSTEM

A

BC

2 INSPECT DLC3

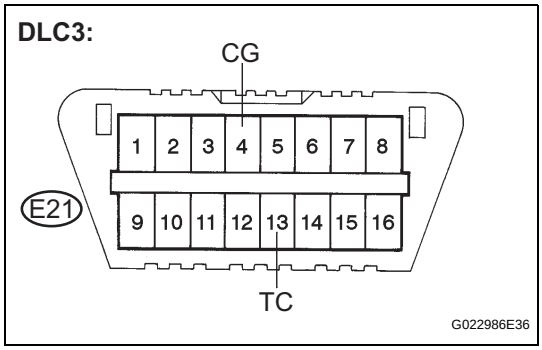

(a) Turn the engine switch on (IG).
(b) Measure the voltage according to the value(s) in the table below.

Standard voltage

Tester Connection	Condition	Specified Condition
E21-13 (TC) - E21-4 (CG)	Engine switch on (IG)	10 to 14 V

OK → **Go to step 5**

NG

3 CHECK HARNESS AND CONNECTOR (TC of DLC3 - ECM)

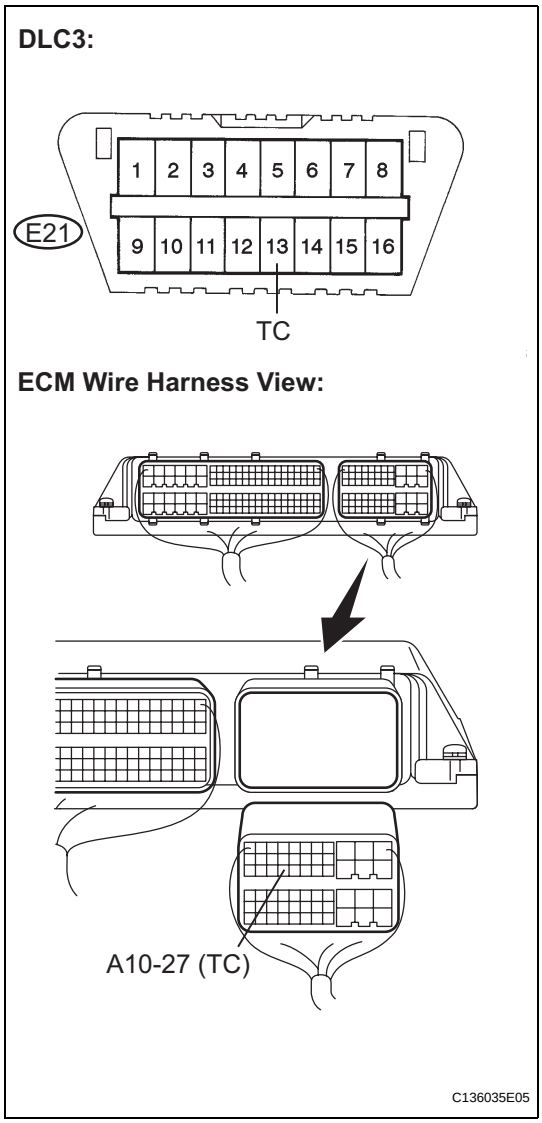

(a) Turn the engine switch off.
(b) Disconnect the ECM connector.
(c) Measure the resistance according to the value(s) in the table below.

Standard resistance

Tester Connection	Condition	Specified Condition
E21-13 (TC) - A10-27 (TC)	Always	Below 1 Ω
E21-13 (TC) - Body ground	Always	10 kΩ or higher

NG → **REPAIR OR REPLACE HARNESS OR CONNECTOR**

OK

BC

4 CHECK HARNESS AND CONNECTOR (CG of DLC3 - BODY GROUND)

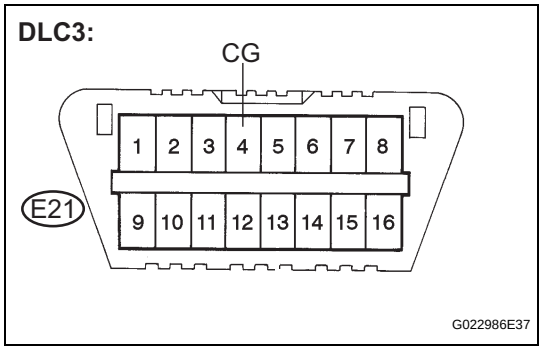

(a) Measure the resistance according to the value(s) in the table below.

Standard resistance

Tester Connection	Condition	Specified Condition
E21-4 (CG) - Body ground	Always	Below 1 Ω

NG → **REPAIR OR REPLACE HARNESS OR CONNECTOR**

OK

5 CHECK ECM (TC of DLC3 INPUT)

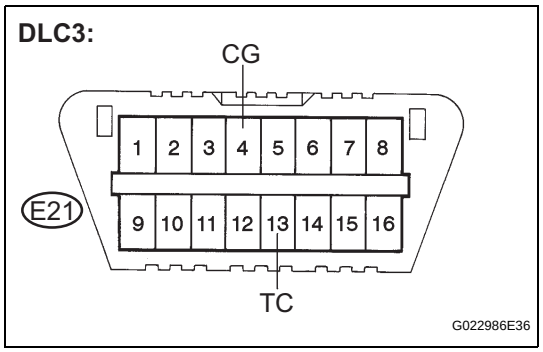

(a) Turn the engine switch off.
(b) Reconnect the ECM connector.
(c) Using SST, connect terminals TC and CG of the DLC3.
(d) Turn the engine switch on (IG).
(e) Check that the check engine warning light is blinking.

Result

Condition	Proceed to
Check engine warning light is blinking	A
Check engine warning light is not blinking	B

HINT:
If troubleshooting has been carried out according to the Problem Symptoms Table, refer back to the table and proceed to the next step before replacing the part (See page BC-35).

B → **REPAIR OR REPLACE WIRE HARNESS OR ECM (TC of ECM CIRCUIT)**

A

REPLACE BRAKE ACTUATOR ASSEMBLY

TS and CG Terminal Circuit

DESCRIPTION

In the Test Mode (signal check), a malfunction of the speed sensor that cannot be detected when the vehicle is stopped can be detected while driving.
Transition to the sensor check mode can be performed by connecting terminals TS and CG of the DLC3 and turning the engine switch from off to on (IG).

WIRING DIAGRAM

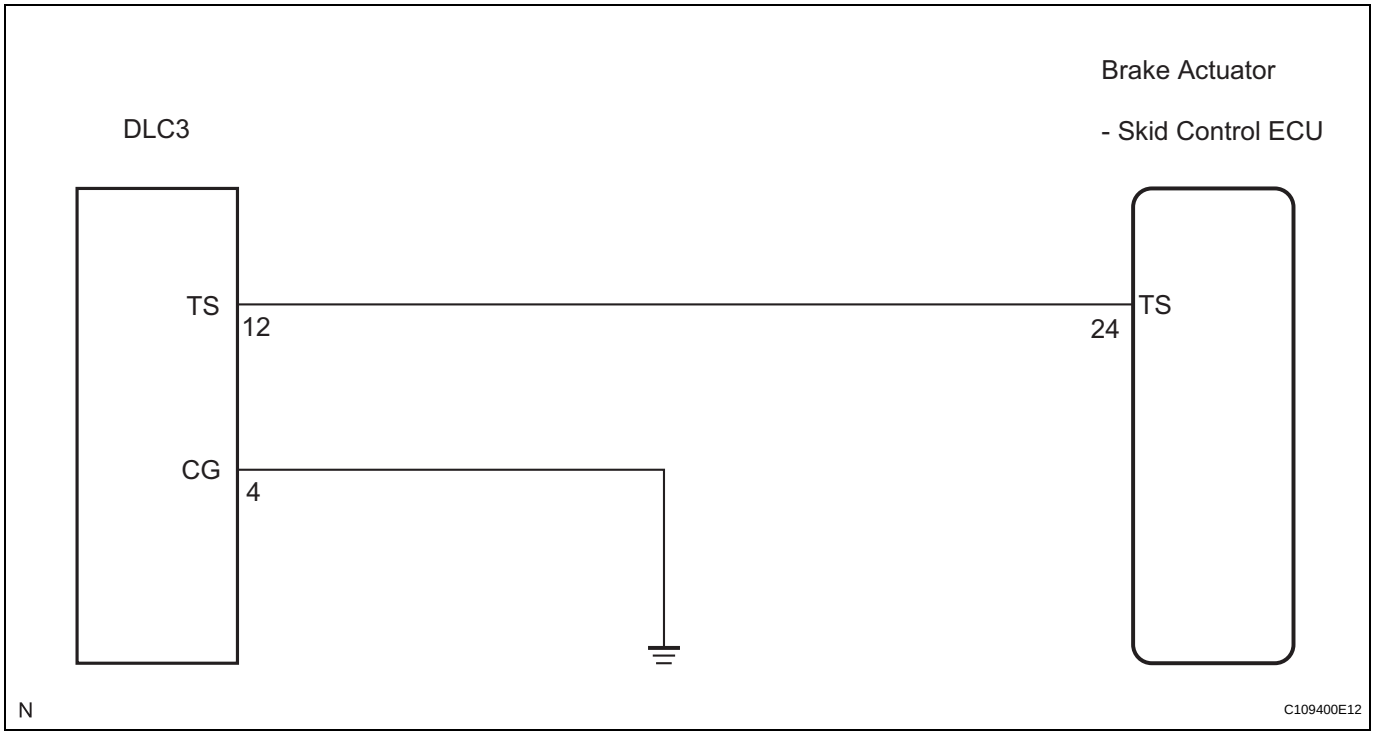

INSPECTION PROCEDURE

NOTICE:

When replacing the brake actuator assembly, perform zero point calibration (See page BC-20).

1 CHECK HARNESS AND CONNECTOR (SKID CONTROL ECU - TS of DLC3)

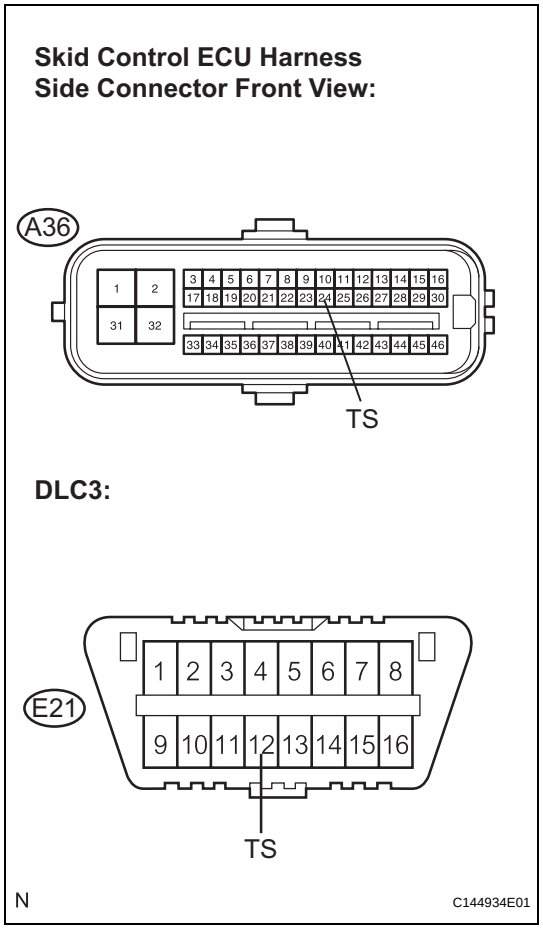

(a) Disconnect the skid control ECU connector.
(b) Measure the resistance according to the value(s) in the table below.

Standard resistance

Tester Connection	Condition	Specified Condition
A36-24 (TS) - E21-12 (TS)	Always	Below 1 Ω

NG → **REPAIR OR REPLACE HARNESS OR CONNECTOR**

OK

2 CHECK HARNESS AND CONNECTOR (CG of DLC3 - BODY GROUND)

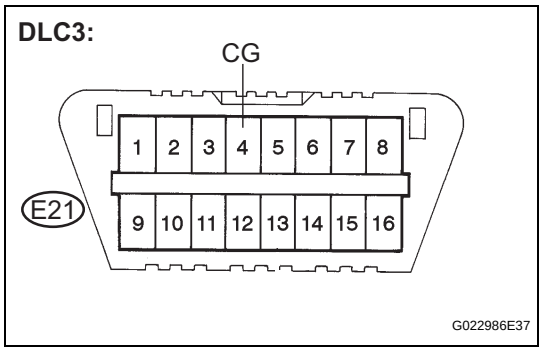

(a) Measure the resistance according to the value(s) in the table below.

Standard resistance

Tester Connection	Condition	Specified Condition
E21-4 (CG) - Body ground	Always	Below 1 Ω

NG → **REPAIR OR REPLACE HARNESS OR CONNECTOR**

OK

BC

3	CHECK HARNESS AND CONNECTOR (TS of DLC3 - BODY GROUND)

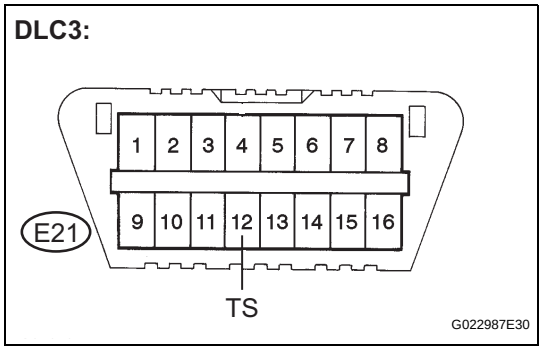

(a) Measure the resistance according to the value(s) in the table below.

Standard resistance

Tester Connection	Condition	Specified Condition
E21-12 (TS) - Body ground	Always	10 kΩ or higher

HINT:
If troubleshooting has been carried out according to the Problem Symptoms Table, refer back to the table and proceed to the next step before replacing the part (See page BC-35).

NG → **REPAIR OR REPLACE HARNESS OR CONNECTOR**

OK

REPLACE BRAKE ACTUATOR ASSEMBLY

REMOVAL

1. DISCONNECT CABLE FROM NEGATIVE BATTERY TERMINAL

2. REMOVE RADIATOR RESERVE TANK ASSEMBLY

(a) Separate the radiator reserve tank hose.

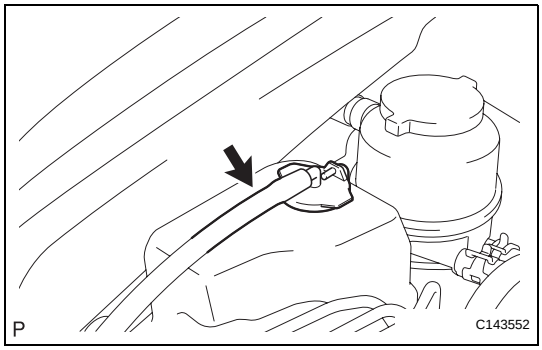

(b) Remove the radiator reserve tank assembly.

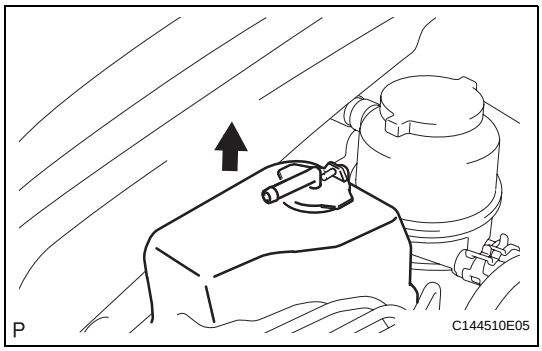

3. DRAIN BRAKE FLUID

NOTICE:
If brake fluid leaks onto any painted surface, immediately clean it off completely.

4. REMOVE BRAKE ACTUATOR WITH BRAKE ACTUATOR BRACKET ASSEMBLY

(a) Release the lock lever and disconnect the brake actuator connector.

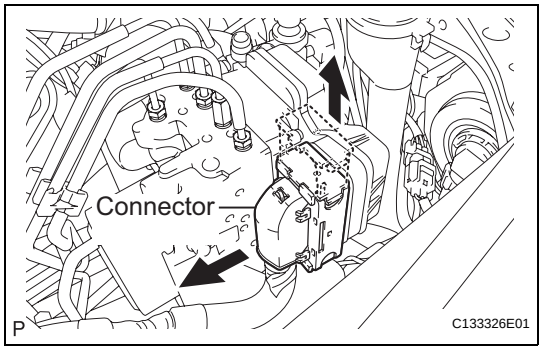

(b) Using SST, disconnect the 6 brake lines from the brake actuator with brake actuator bracket assembly.
SST 09023-00101

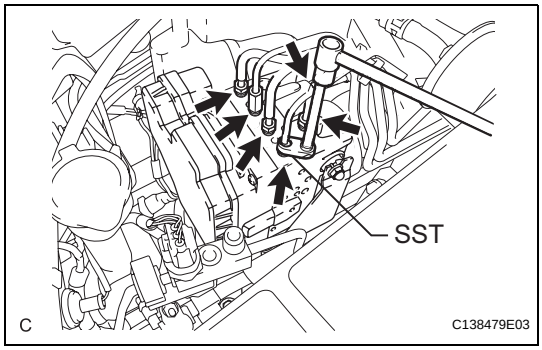

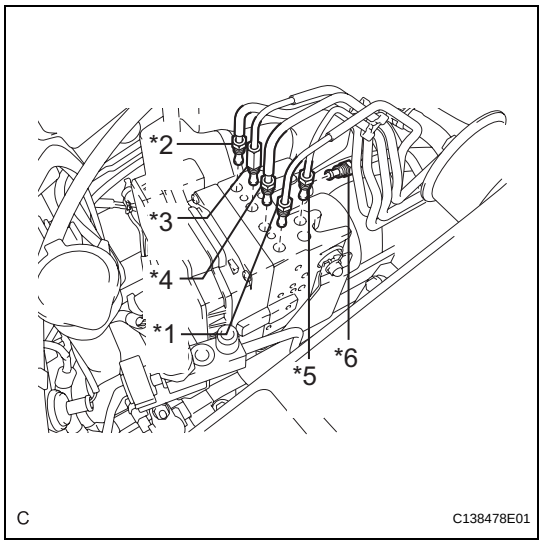

(c) Use tags or make a memo to identify the places to reconnect.
HINT:
- *1: To Front Wheel Cylinder RH
- *2: To Front Wheel Cylinder LH
- *3: To Rear Wheel Cylinder RH
- *4: To Rear Wheel Cylinder LH
- *5: From 1st Master Cylinder
- *6: From 2nd Master Cylinder

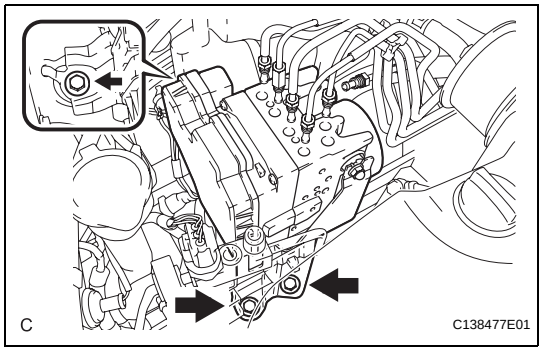

(d) Remove the 3 bolts and the brake actuator with brake actuator bracket assembly from the body.
NOTICE:
Do not damage the brake lines and wire harness.

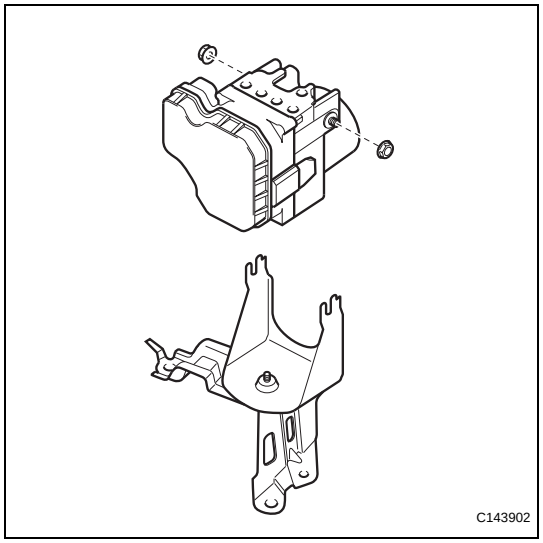

DISASSEMBLY

1. REMOVE BRAKE ACTUATOR

(a) Remove the 2 nuts and the brake actuator from the brake actuator bracket assembly.

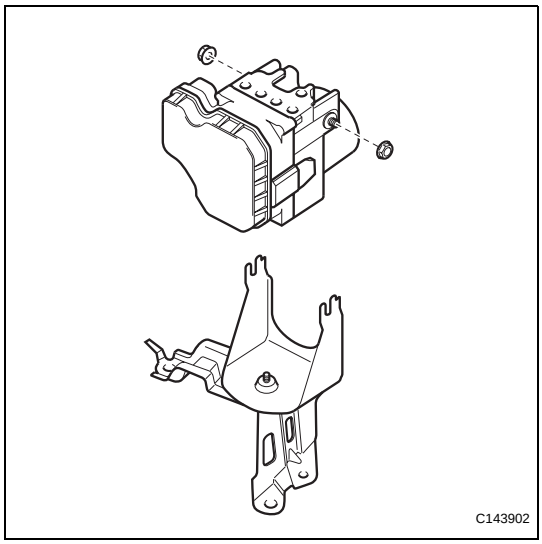

REASSEMBLY

1. INSTALL BRAKE ACTUATOR

(a) Install the actuator to the brake actuator bracket assembly with the 2 nuts.
Torque: 5.4 N*m (55 kgf*cm, 48 in.*lbf)
NOTICE:
Do not remove the hole plug before installing a new brake actuator because the brake actuator is filled with brake fluid.

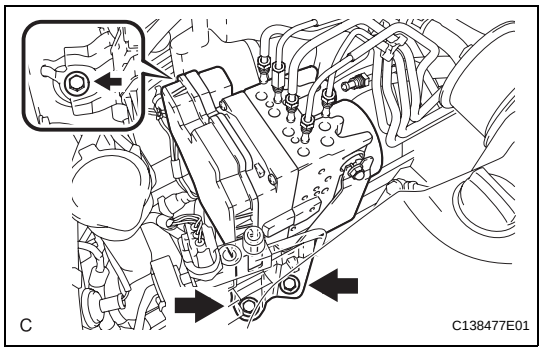

INSTALLATION

1. INSTALL BRAKE ACTUATOR WITH BRAKE ACTUATOR BRACKET ASSEMBLY

(a) Install the brake actuator with brake actuator bracket assembly to the body with the 3 bolts.
Torque: 19 N*m (194 kgf*cm, 14 ft.*lbf)
NOTICE:
Do not damage the brake lines and wire harness.

(b) Temporarily tighten each brake line to the correct positions of the brake actuator with brake actuator bracket assembly as shown in the illustration.
HINT:
- *1: To Front Wheel Cylinder RH
- *2: To Front Wheel Cylinder LH
- *3: To Rear Wheel Cylinder RH
- *4: To Rear Wheel Cylinder LH
- *5: From 1st Master Cylinder
- *6: From 2nd Master Cylinder

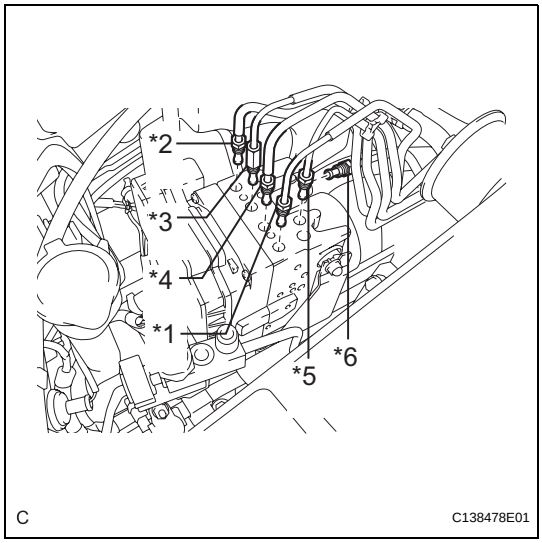

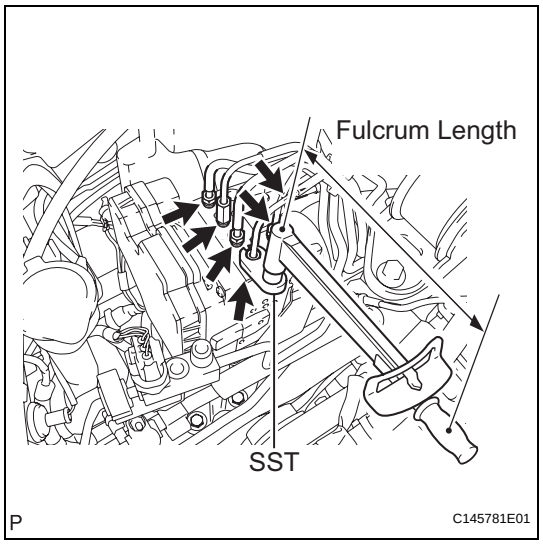

(c) Using SST, fully tighten each brake line.
SST 09023-00101
Torque: without SST
15 N*m (155 kgf*cm, 11 ft.*lbf)
with SST
14 N*m (143 kgf*cm, 10 ft.*lbf)
NOTICE:
- **Use a torque wrench with a fulcrum length of 250 mm (9.84 in.).**
- **This torque value is effective when SST is parallel to a torque wrench.**

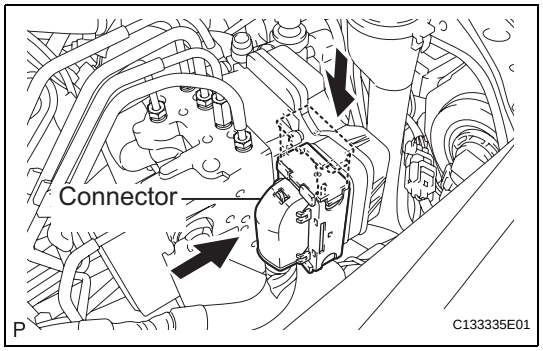

(d) Connect the brake actuator connector.
NOTICE:
Make sure that the connector is locked securely.

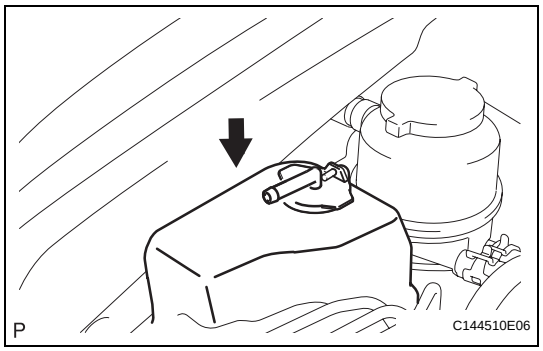

2. INSTALL RADIATOR RESERVE TANK ASSEMBLY
(a) Install the radiator reserve tank assembly.

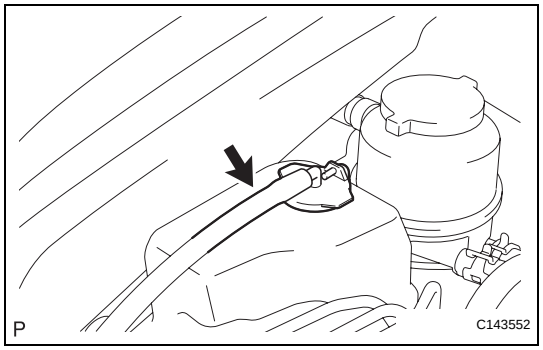

(b) Connect the radiator reservoir tank hose.

3. FILL RESERVOIR WITH BRAKE FLUID (See page BR-6)

4. BLEED BRAKE LINE (See page BR-8)

5. CONNECT CABLE TO NEGATIVE BATTERY TERMINAL

6. BLEED BRAKE ACTUATOR (See page BR-8)

7. INSPECT BRAKE FLUID LEVEL (See page BR-11)

8. CHECK FOR BRAKE FLUID LEAKS

9. PERFORM YAW RATE SENSOR ZERO POINT CALIBRATION
HINT:
(See page BC-20)

10. INSPECT ACTUATOR WITH INTELLIGENT TESTER

HINT:

(See page BC-180)

11. PERFORM INITIALIZATION

Some systems need initialization after reconnecting the cable to the negative battery terminal (See page IN-33).

INSPECTION

1. INSPECT FRONT SPEED SENSOR

(a) Inspect the front speed sensor. If any of the following occurs, replace the front speed sensor with a new one:
- The surface of the front speed sensor is cracked, dented, or chipped off.
- The connector or wire harness is scratched, cracked, or damaged.
- The front speed sensor has been dropped.

(b) Measure the resistance according to the value(s) in the table below.
Standard resistance:
RH

Tester Connection	Condition	Specified Condition
1 (FR+) - 2 (FR-)	Always	1.4 to 1.8 kΩ at 20°C (68°F)
1 (FR+) - Body ground	Always	10 kΩ or higher
2 (FR-) - Body ground	Always	10 kΩ or higher

LH

Tester Connection	Condition	Specified Condition
1 (FL+) - 2 (FL-)	Always	1.4 to 1.8 kΩ at 20°C (68°F)
1 (FL+) - Body ground	Always	10 kΩ or higher
2 (FL-) - Body ground	Always	10 kΩ or higher

If the value is not as specified, replace the front speed sensor.

Front Speed Sensor:

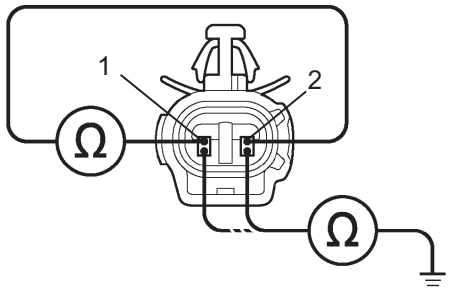

C136017E01

INSTALLATION

1. INSTALL FRONT SPEED SENSOR

(a) Install the front speed sensor with the bolt.
Torque: 8.0 N*m (82 kgf*cm, 71 in.*lbf)
NOTICE:
Prevent foreign matter from attaching to the sensor tip.

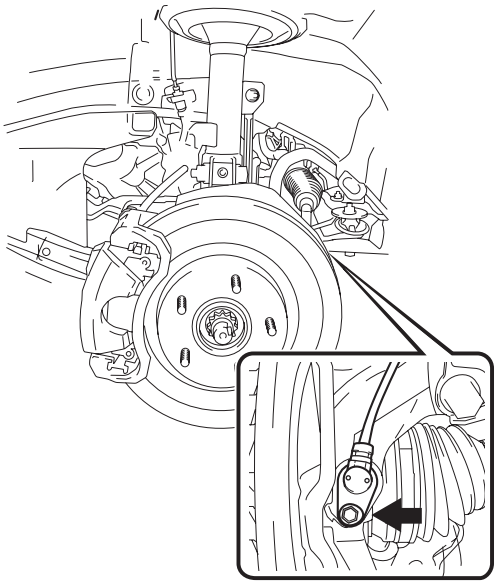

C144142

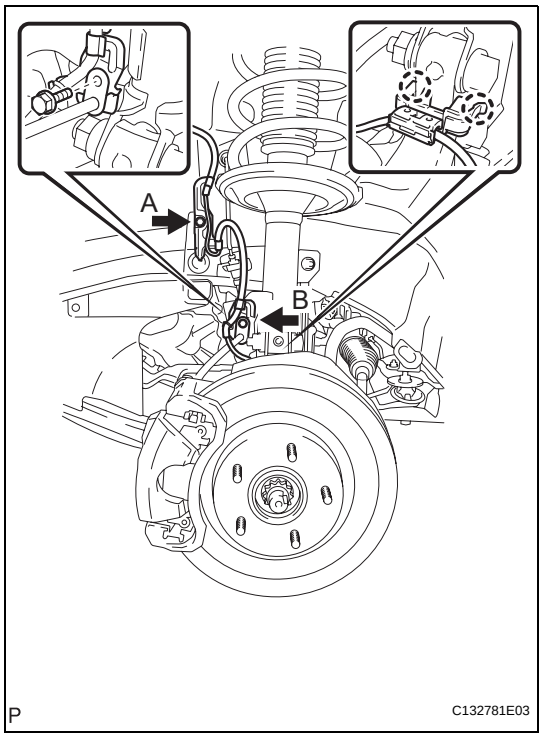

(b) Install the front speed sensor with the 2 bolts and engage the 2 claws.

Torque: Bolt A
5.0 N*m (51 kgf*cm, 44 in.*lbf)
Bolt B
19 N*m (194 kgf*cm, 14 ft.*lbf)

NOTICE:

- **Do not twist the wire harness for the front speed sensor when installing the speed sensor.**
- **The bolt B tightens the brake flexible hose and front speed sensor together. Make sure that the flexible hose is positioned over the front speed sensor.**
- **Install the stopper firmly to the hole in the body.**

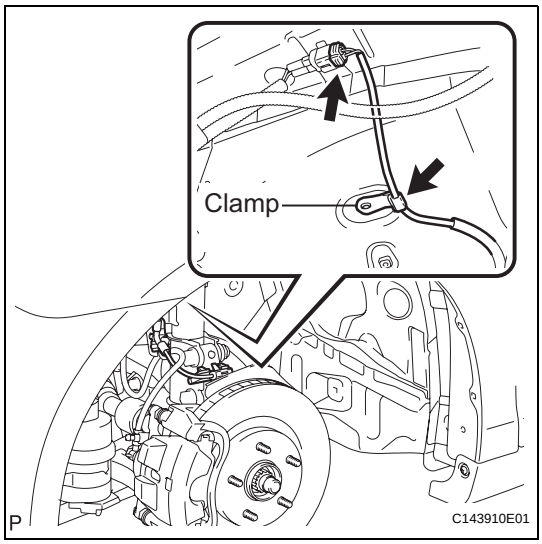

(c) Connect the front speed sensor connector and engage the clamp.

2. **INSTALL FRONT FENDER LINER (See page ED-28)**

3. **INSTALL FRONT WHEEL OPENING EXTENSION PAD LH (See page ED-28)**

4. **INSTALL FRONT WHEEL**
Torque: 103 N*m (1,050 kgf*cm, 76 ft.*lbf)

5. **CHECK SPEED SENSOR SIGNAL**
HINT:
(See page BC-24)

INSPECTION

1. INSPECT SKID CONTROL SENSOR

(a) Inspect the skid control sensor. If any of the following occurs, replace the skid control sensor with a new one:
- The surface of the skid control sensor is cracked, dented, or chipped off.
- The connector is scratched, cracked, or damaged.
- The skid control sensor has been dropped.

(b) Measure the resistance according to the value(s) in the table below.
Standard resistance:
RH

Tester Connection	Condition	Specified Condition
2 (RR+) - 1 (RR-)	Always	0.9 to 2.1 kΩ
2 (RR+) - Body ground	Always	10 kΩ or higher
1 (RR-) - Body ground	Always	10 kΩ or higher

LH

Tester Connection	Condition	Specified Condition
2 (RL+) - 1 (RL-)	Always	0.9 to 2.1 kΩ
2 (RL+) - Body ground	Always	10 kΩ or higher
1 (RL-) - Body ground	Always	10 kΩ or higher

If the value is not as specified, replace the skid control sensor.

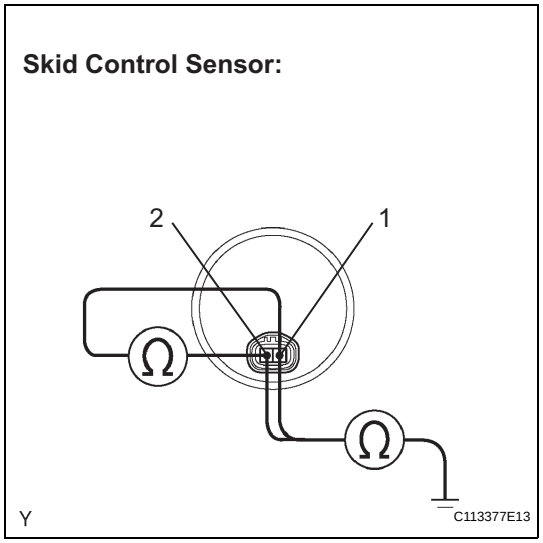

INSTALLATION

1. INSTALL SKID CONTROL SENSOR

(a) Clean the contact surface between the axle hub and a new skid control sensor.
NOTICE:
Prevent foreign matter from attaching to the sensor rotor.

(b) Place the skid control sensor on the axle hub so that the connector is positioned as shown in the illustration.

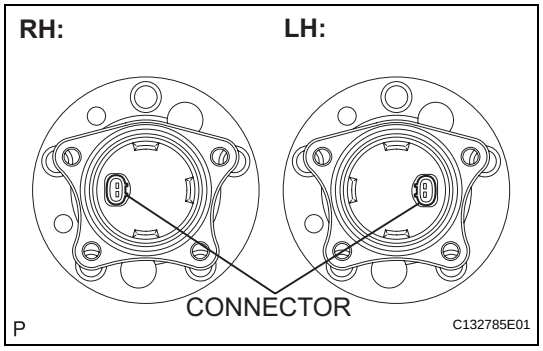

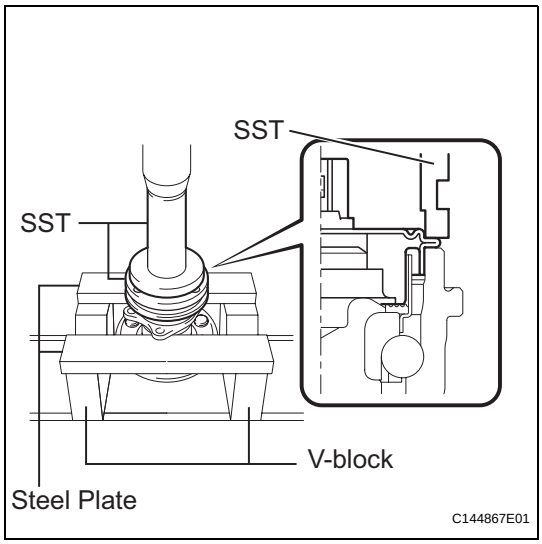

(c) Using SST, a press, 2 V-blocks, and 2 steel plates, install the skid control sensor to the axle hub.
SST 09309-36010, 09213-58013
NOTICE:
- **Keep the sensor away from magnets.**
- **Do not use a hammer on the skid control sensor.**
- **Check that there is no foreign matter such as iron chips on the detecting portion of the skid control sensor.**
- **Slowly press the skid control sensor straight.**

2. INSTALL REAR AXLE HUB AND BEARING ASSEMBLY WITH SKID CONTROL SENSOR (See page AH-16)

3. INSPECT REAR AXLE HUB BEARING LOOSENESS (See page AH-15)

4. INSPECT REAR AXLE HUB RUNOUT (See page AH-15)

5. INSTALL REAR DISC (See page BR-50)

6. INSTALL REAR DISC BRAKE CALIPER ASSEMBLY (See page AH-20)

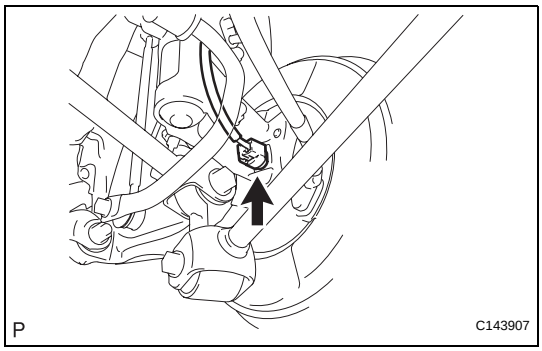

7. CONNECT SKID CONTROL SENSOR WIRE
(a) Connect the connector to the skid control sensor.

8. INSTALL REAR WHEEL
Torque: 103 N*m (1,050 kgf*cm, 76 ft.*lbf)

9. INSPECT AND ADJUST REAR WHEEL ALIGNMENT
HINT:
(See page SP-11)

10. CHECK SPEED SENSOR SIGNAL
HINT:
(See page BC-24)

INSPECTION

1. INSPECT YAW RATE AND ACCELERATION SENSOR

(a) Inspect the yaw rate and acceleration sensor. If any of the following occurs, replace the yaw rate and acceleration sensor with a new one:
- The surface of the yaw rate and acceleration sensor is cracked, dented, or chipped off.
- The connector is scratched, cracked, or damaged.
- The yaw rate and acceleration sensor has been dropped.

INSTALLATION

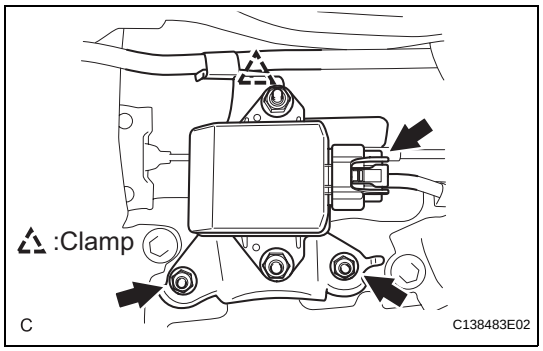

1. INSTALL YAW RATE AND ACCELERATION SENSOR

(a) Install the yaw rate and acceleration sensor with the 2 bolts.
Torque: 13 N*m (133 kgf*cm, 10 ft.*lbf)
NOTICE:
- **Do not damage the yaw rate and acceleration sensor.**
- **Make sure that the yaw rate and acceleration sensor is installed securely.**

(b) Connect the yaw rate and acceleration sensor connector and clamp.

2. INSTALL NO. 3 CONSOLE BOX DUCT (See page PB-19)

3. INSTALL REAR CONSOLE BOX ASSEMBLY (See page IP-58)

4. INSTALL CONSOLE REAR END PANEL SUB-ASSEMBLY (See page IP-59)

5. INSTALL CONSOLE BOX CARPET (See page IP-59)

6. INSTALL CONSOLE POCKET (See page IP-59)

7. INSTALL INSTRUMENT PANEL FINISH END PANEL LH (See page IP-46)

8. INSTALL INSTRUMENT PANEL FINISH END PANEL RH (See page IP-44)

9. INSTALL UPPER CONSOLE PANEL SUB-ASSEMBLY WITH FRONT ASH RECEPTACLE (See page IP-42)

10. INSTALL SHIFT LEVER KNOB SUB-ASSEMBLY (See page IP-42)

11. PERFORM YAW RATE SENSOR ZERO POINT CALIBRATION
HINT:
(See page BC-20)

12. INSPECT SENSOR SIGNAL
HINT:
(See page BC-24)

INSPECTION

1. INSPECT STEERING ANGLE SENSOR

(a) Inspect the steering angle sensor. If any of the following occurs, replace the steering angle sensor with a new one:
- The surface of the steering angle sensor is cracked, dented, or chipped off.
- The connector is scratched, cracked, or damaged.
- The steering angle sensor has been dropped.

INSTALLATION

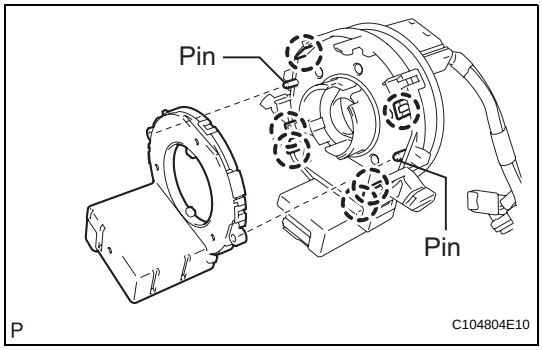

1. INSTALL STEERING ANGLE SENSOR

(a) Align the locating pins, engage the claws, and install the steering angle sensor to the spiral cable.

2. INSTALL SPIRAL CABLE SUB-ASSEMBLY WITH STEERING ANGLE SENSOR (See page RS-382)

3. INSTALL STEERING COLUMN COVER (See page SR-87)

4. ADJUST SPIRAL CABLE (See page RS-382)

5. INSTALL STEERING WHEEL ASSEMBLY (See page SR-87)

6. INSPECT STEERING WHEEL CENTER POINT

7. INSTALL STEERING PAD (See page RS-368)

8. INSTALL NO. 2 LOWER STEERING WHEEL COVER (See page RS-369)

9. INSTALL NO. 3 LOWER STEERING WHEEL COVER (See page RS-369)

10. CONNECT CABLE TO NEGATIVE BATTERY TERMINAL

11. INSPECT STEERING PAD (See page RS-369)

12. INSPECT SRS WARNING LIGHT

HINT:
(See page RS-37)

13. PERFORM INITIALIZATION

Some systems need initialization after reconnecting the cable to the negative battery terminal (See page IN-33).

REMOVAL

1. **PRECAUTION**
2. **REMOVE SHIFT LEVER KNOB (See page IP-16)**
3. **REMOVE UPPER CONSOLE PANEL SUB-ASSEMBLY WITH FRONT ASH RECEPTACLE (See page IP-16)**
4. **REMOVE INSTRUMENT PANEL FINISH END PANEL LH (See page IP-13)**
5. **REMOVE INSTRUMENT PANEL FINISH END PANEL RH (See page IP-15)**
6. **REMOVE CONSOLE POCKET (See page IP-52)**
7. **REMOVE CONSOLE BOX CARPET (See page IP-52)**
8. **REMOVE CONSOLE REAR END PANEL SUB-ASSEMBLY (See page IP-53)**
9. **REMOVE REAR CONSOLE BOX ASSEMBLY (See page IP-53)**
10. **REMOVE NO. 2 INSTRUMENT PANEL REGISTER ASSEMBLY (See page IP-17)**
11. **REMOVE INTEGRATION CONTROL PANEL WITH RADIO RECEIVER ASSEMBLY (w/o Navigation System) (See page AV-168)**
12. **REMOVE MULTI-DISPLAY WITH RADIO RECEIVER ASSEMBLY (w/ Navigation System) (See page AV-170)**
13. **REMOVE SKID CONTROL BUZZER**
    (a) Disconnect the skid control buzzer connector.
    (b) Remove the clip and skid control buzzer assembly.

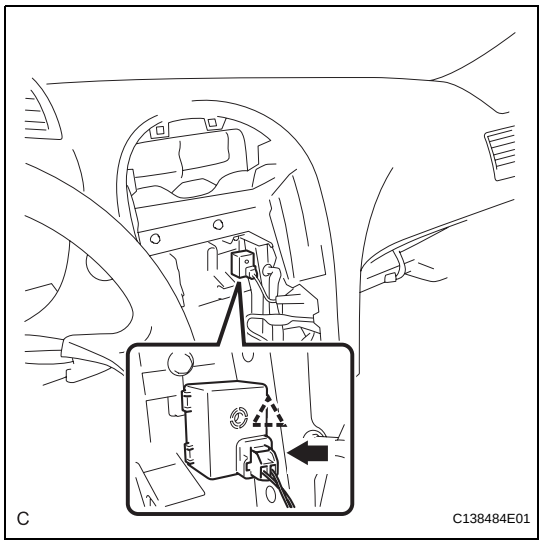

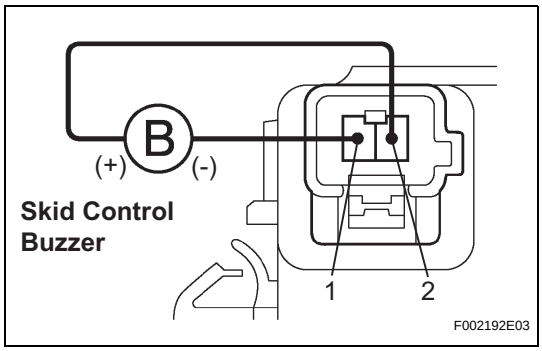

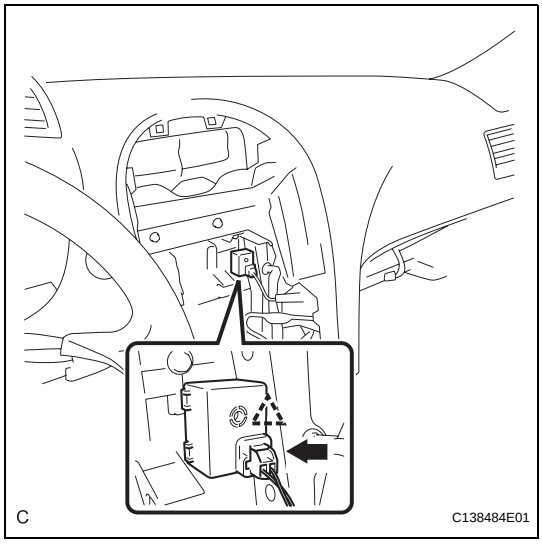

INSPECTION

1. **INSPECT SKID CONTROL BUZZER**
   (a) Apply battery negative voltage to terminal 1, and battery positive voltage to terminal 2 of the skid control buzzer, and then check that the buzzer sounds.
   OK:
   The skid control buzzer sounds.
   If the skid control buzzer does not sound, replace the skid control buzzer.

INSTALLATION

1. **INSTALL SKID CONTROL BUZZER**
   (a) Attach the clip and install the skid control buzzer.
   (b) Connect the skid control buzzer assembly connector.
2. **INSTALL INTEGRATION CONTROL PANEL WITH RADIO RECEIVER ASSEMBLY (w/o Navigation System) (See page AV-172)**
3. **INSTALL MULTI-DISPLAY WITH RADIO RECEIVER ASSEMBLY (w/ Navigation System) (See page AV-173)**
4. **INSTALL NO. 2 INSTRUMENT PANEL REGISTER ASSEMBLY (See page IP-41)**
5. **INSTALL REAR CONSOLE BOX ASSEMBLY (See page IP-58)**
6. **INSTALL CONSOLE PANEL SUB-ASSEMBLY (See page IP-59)**
7. **INSTALL CONSOLE BOX CARPET (See page IP-59)**
8. **INSTALL CONSOLE POCKET (See page IP-59)**
9. **INSTALL INSTRUMENT PANEL FINISH END PANEL RH (See page IP-44)**
10. **INSTALL INSTRUMENT PANEL FINISH END PANEL LH (See page IP-46)**
11. **INSTALL UPPER CONSOLE PANEL SUB-ASSEMBLY WITH FRONT ASH RECEPTACLE (See page IP-42)**
12. **INSTALL SHIFT LEVER KNOB (See page IP-42)**

INSTALLATION

1. INSTALL REAR BRAKE FLEXIBLE HOSE

(a) Install a new gasket.

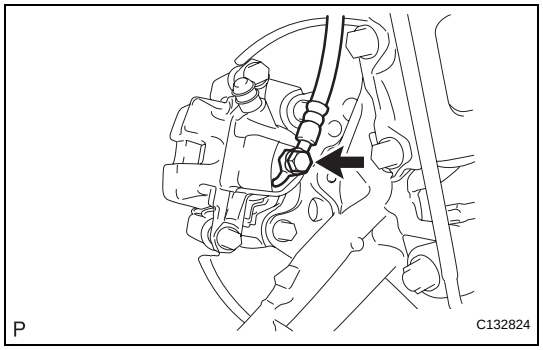

(b) Connect the rear brake flexible hose with the union bolt.
Torque: 33 N*m (337 kgf*cm, 24 ft.*lbf)

(c) Install the rear brake flexible hose with a new clip.
NOTICE:
- **When installing the rear brake flexible hose, face the identification mark toward the exterior of the vehicle and minimize twisting of the hose.**
- **Install the clip as far as it will go.**

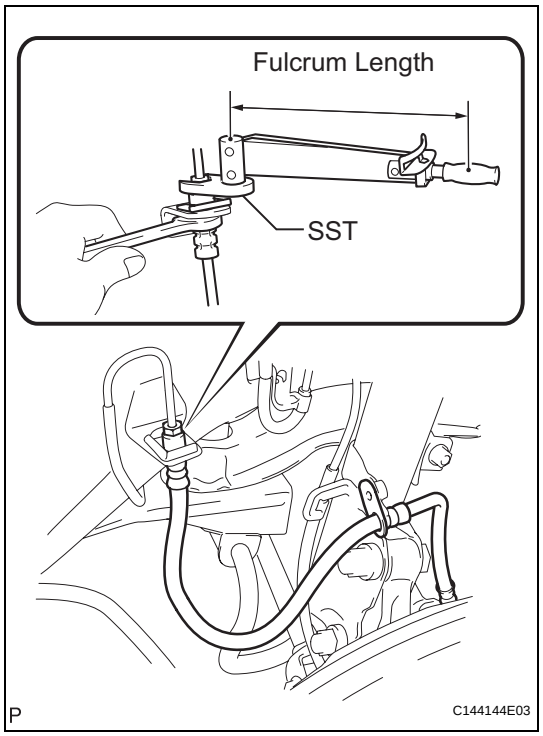

(d) Using SST, connect the brake line to the rear brake flexible hose while holding the flexible hose with a wrench.
SST 09023-00101
Torque: Without SST
15 N*m (155 kgf*cm, 11 ft.*lbf)
With SST
14 N*m (143 kgf*cm, 10 ft.*lbf)
NOTICE:
- **Do not bend or damage the brake tube.**
- **Do not allow any foreign matter such as dirt and dust to enter the brake tube from the connecting points.**
- **Use a torque wrench with a fulcrum length of 250 mm (9.84 in.).**
- **This torque value is effective when SST is parallel to a torque wrench.**

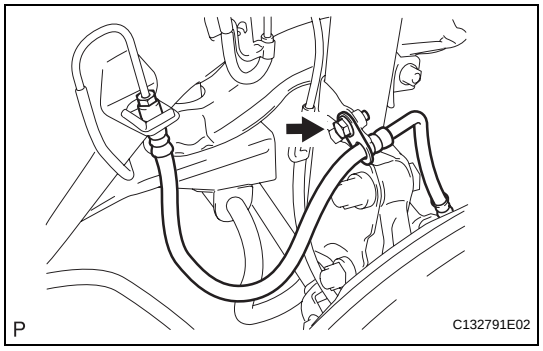

(e) Install the rear flexible hose to the shock absorber with the bolt.
Torque: 19 N*m (194 kgf*cm, 14 ft.*lbf)

2. FILL RESERVOIR WITH BRAKE FLUID (See page BR-6)

3. BLEED BRAKE LINE (See page BR-8)

4. BLEED BRAKE ACTUATOR ASSEMBLY (See page BR-8)

5. INSPECT BRAKE FLUID LEVEL IN RESERVOIR (See page BR-11)

6. CHECK FOR BRAKE FLUID LEAKS

7. INSTALL REAR WHEEL
Torque: 103 N*m (1,050 kgf*cm, 76 ft.*lbf)

DTC	B2611	Telescopic Position Sensor or Telescopic Motor Circuit Malfunction

DESCRIPTION

The telescopic motor is operated by the power source voltage supplied from the multiplex tilt and telescopic ECU and slides the steering column forward and backward. The telescopic position sensor (hall IC) in the telescopic motor detects the sliding position in the forward and backward directions of the steering column and outputs a signal to the based on that sliding amount.

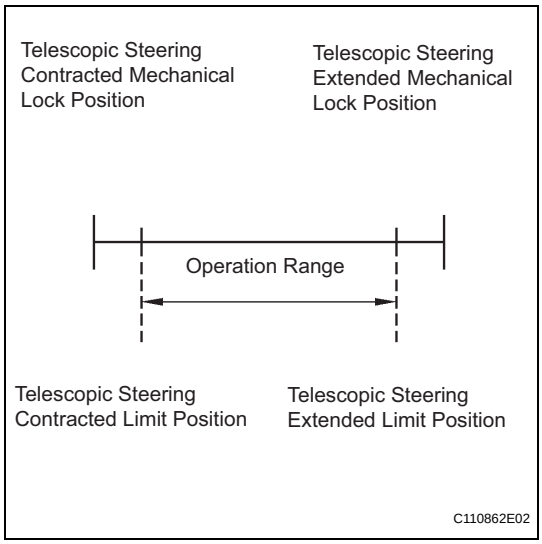

HINT:
Limit positions can be confirmed on the screen of the intelligent tester.

DTC No.	Detection Item	Trouble Area
B2611	Telescopic operation stops within the operation range while operating.	• Wire harness or connector • Telescopic position sensor or telescopic motor • Multiplex tilt and telescopic ECU

WIRING DIAGRAM

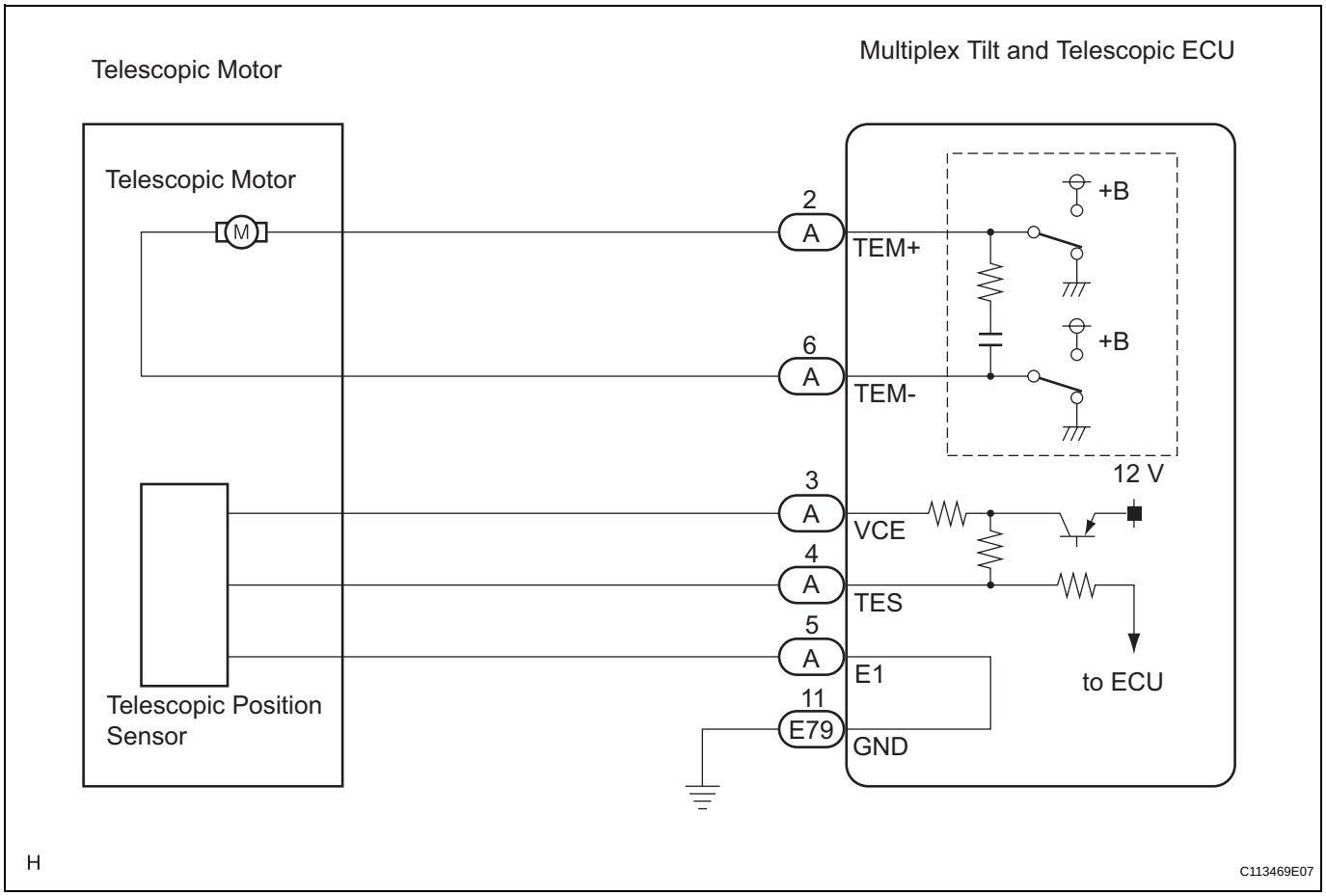

INSPECTION PROCEDURE

HINT:
The wire harness between the multiplex tilt and telescopic ECU and telescopic motor is provided with the steering column assembly.

1	PERFORM ACTIVE TEST BY INTELLIGENT TESTER

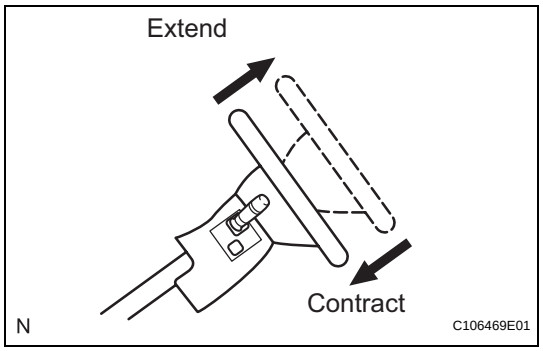

(a) Connect the intelligent tester to the DLC3.
(b) Turn the engine switch on (IG) and turn the intelligent tester on.
(c) Select "TILT & TELESCO".
(d) Select "TELESCO", and perform the ACTIVE TEST using the intelligent tester.
(e) Check that the steering column contracts (extends) when the ACTIVE TEST is carried out.
OK:
The steering column contracts (extends).

OK → **Go to step 3**

NG

SR

2 INSPECT TELESCOPIC MOTOR

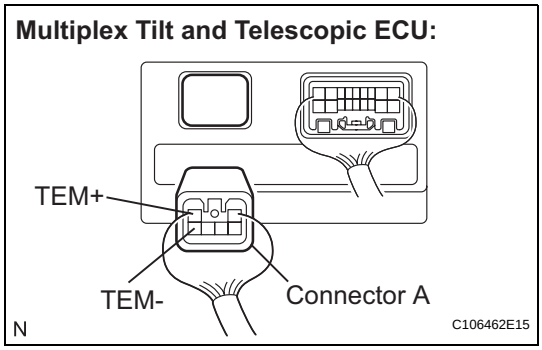

(a) Disconnect connector A from the multiplex tilt and telescopic ECU.

(b) Connect the positive battery terminal to terminal TEM+ (A-2) and the negative battery terminal to terminal TEM- (A-6) of the telescopic motor connector. Then confirm that the steering column contracts.

OK:

The steering column contracts.

(c) Connect the negative battery terminal to terminal TEM+ (A-2) and the positive battery terminal to terminal TEM- (A-6) of the telescopic motor connector. Then confirm that the steering column extends.

OK:

The steering column extends.

NG → **REPLACE STEERING COLUMN ASSEMBLY**

OK

REPLACE MULTIPLEX TILT AND TELESCOPIC ECU

3 INSPECT MULTIPLEX TILT AND TELESCOPIC ECU (VCE TERMINAL VOLTAGE)

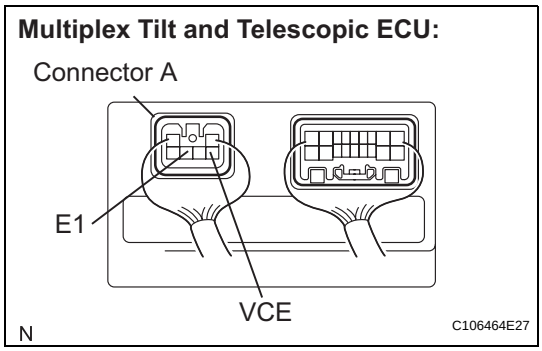

(a) Measure the voltage according to the value(s) in the table below.

Standard voltage

Tester Connection	Condition	Specified Condition
VCE (A-3) - E1 (A-5)	Engine switch on (IG)	8 to 16 V

NG → **Go to step 5**

OK

4 INSPECT TELESCOPIC POSITION SENSOR

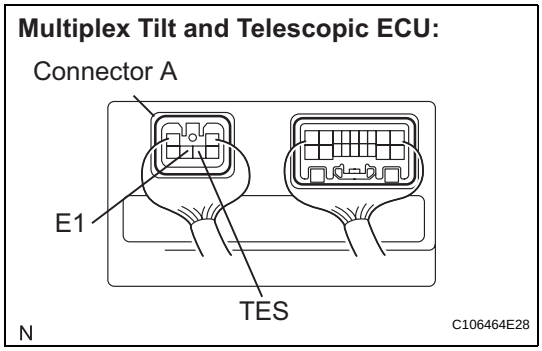

(a) Measure the voltage according to the value(s) in the table below.

Standard voltage

Tester Connection	Condition	Specified Condition
TES (A-4) - E1 (A-5)	Telescopic steering contracted or extended	8 to 16 V (Pulse HI)
		Below 1 V (Pulse LOW)

NG → **REPLACE STEERING COLUMN ASSEMBLY**

OK

REPLACE MULTIPLEX TILT AND TELESCOPIC ECU

5 CHECK HARNESS AND CONNECTOR (ECU - BODY GROUND (VCE CIRCUIT))

Multiplex Tilt and Telescopic ECU:

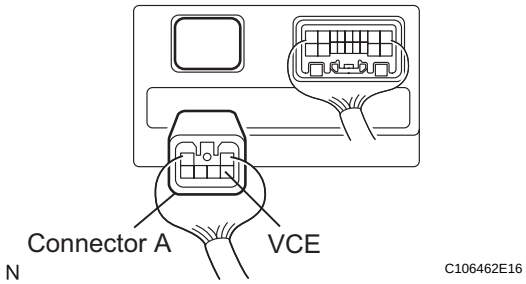

(a) Disconnect connector A from the multiplex tilt and telescopic ECU.

(b) Measure the resistance according to the value(s) in the table below.

Standard resistance

Tester Connection	Condition	Specified Condition
VCE (A-3) - Body ground	Always	10 kΩ or higher

NG → **REPAIR OR REPLACE HARNESS OR CONNECTOR**

OK

6 CHECK HARNESS AND CONNECTOR (ECU - BODY GROUND (GND CIRCUIT))

Multiplex Tilt and Telescopic ECU:

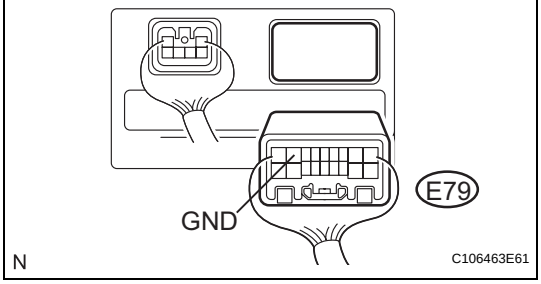

(a) Disconnect the E79 connector from the multiplex tilt and telescopic ECU.

(b) Measure the resistance according to the value(s) in the table below.

Standard resistance

Tester Connection	Condition	Specified Condition
GND (E79-11) - Body ground	Always	Below 1 Ω

NG → **REPAIR OR REPLACE HARNESS OR CONNECTOR**

OK

REPLACE MULTIPLEX TILT AND TELESCOPIC ECU

DTC	B2620	ECU Power Source Circuit Malfunction

DESCRIPTION

The ECU power source circuit supplies positive voltage to the multiplex tilt and telescopic ECU.

DTC No.	Detection Item	Trouble Area
B2620	The voltage of the ECU power source drops to 8 V or less and this condition continues for 10 secs. or more.	• Battery • Wire harness or connector • Multiplex tilt and telescopic ECU

WIRING DIAGRAM

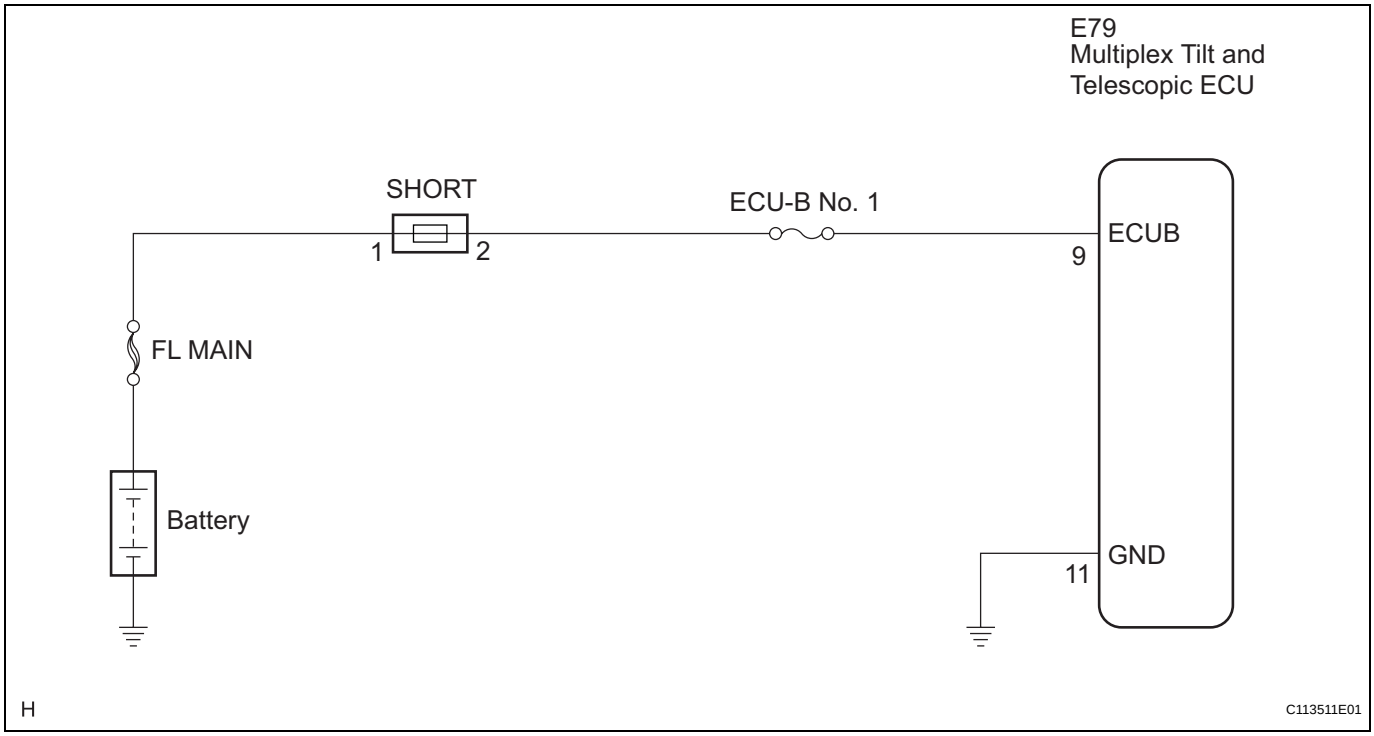

INSPECTION PROCEDURE

1	INSPECT FUSE

(a) Remove the ECU-B No. 1 fuse from the engine room J/B.

(b) Measure the resistance of the ECU-B No. 1 fuse.

Standard resistance:

Below 1 Ω

NG → **REPLACE FUSE**

OK

SR

2	**CHECK HARNESS AND CONNECTOR (MULTIPLEX TILT AND TELESCOPIC ECU - BATTERY)**

Multiplex Tilt and Telescopic ECU:

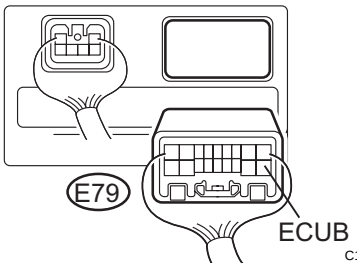

(a) Disconnect the E79 connector from the multiplex tilt and telescopic ECU.

(b) Measure the voltage according to the value(s) in the table below.

Standard voltage

Tester Connection	Condition	Specified Condition
ECUB (E79-9) - Body ground	Always	10 to 14 V

NG → **REPAIR OR REPLACE HARNESS OR CONNECTOR**

OK

3	**CHECK HARNESS AND CONNECTOR (MULTIPLEX TILT AND TELESCOPIC ECU - BODY GROUND)**

Multiplex Tilt and Telescopic ECU:

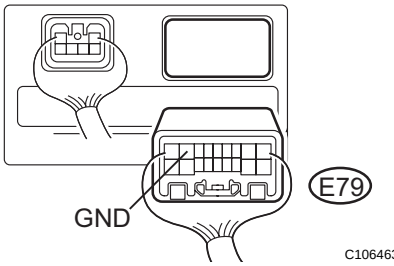

(a) Measure the resistance according to the value(s) in the table below.

Standard resistance

Tester Connection	Condition	Specified Condition
GND (E79-11) - Body ground	Always	Below 1 Ω

NG → **REPAIR OR REPLACE HARNESS OR CONNECTOR**

OK

REPLACE MULTIPLEX TILT AND TELESCOPIC ECU

DTC	B2621	Communication Interruption

DESCRIPTION

The multiplex tilt and telescopic ECU forms a network with the ECUs of other systems through the communication bus. Each ECU informs the other ECUs that they are connected to the network by outputting a specified signal (periodical signal) onto the communication bus on a regular schedule. The multiplex tilt and telescopic ECU detects the connection of each ECU based on the signal.

DTC No.	Detection Item	Trouble Area
B2621	Periodical signal from the specified ECU has stopped.	• CAN communication system • Main body ECU • Front power seat switch LH (Position control ECU) • Combination meter assembly • Multiplex tilt and telescopic ECU

INSPECTION PROCEDURE

1 CHECK DTC (CAN COMMUNICATION SYSTEM)

(a) Check the DTC of the CAN communication system (See page CA-49).

Result

Result	Proceed to
DTC is not output	A
DTC is output	B

B → **GO TO CAN COMMUNICATION SYSTEM**

A

2 READ VALUE OF INTELLIGENT TESTER (MAIN BODY ECU COMMUNICATION SIGNAL)

(a) Connect the intelligent tester to the DLC3.
(b) Turn the engine switch on (IG) and turn the intelligent tester on.
(c) Select "J/B" from DATA LIST.
(d) Check the signal communication state of the main body ECU on the tester screen.

TILT & TELESCO:

Tester Display	Measurement Item/Range	Normal Condition	Diagnostic Note
J/B	Communication state of body ECU signal / OK or Interruption	OK: Communication is normal Interruption: Communication is interrupted	-

OK:
"OK" is displayed.

NG → **REPLACE MAIN BODY ECU**

OK

SR

3	READ VALUE OF INTELLIGENT TESTER (DRIVER SEAT ECU COMMUNICATION SIGNAL)

(a) Select "SEAT ECU INFO" from DATA LIST.
(b) Check the signal communication state of the front power seat switch LH (position control ECU) on the tester screen.

TILT & TELESCO:

Tester Display	Measurement Item/Range	Normal Condition	Diagnostic Note
SEAT ECU INFO	Communication state of seat ECU signal / OK or Interruption	OK: Communication is normal Interruption: Communication is interrupted	-

OK:
"OK" is displayed.

NG → **REPLACE FRONT POWER SEAT SWITCH (DRIVER SEAT ECU)**

OK

4	READ VALUE OF INTELLIGENT TESTER (COMBINATION METER ECU COMMUNICATION SIGNAL)

(a) Select "METER ECU INFO" from DATA LIST.
(b) Check the signal communication state of the power source control ECU on the tester screen.

TILT & TELESCO:

Tester Display	Measurement Item/Range	Normal Condition	Diagnostic Note
METER ECU INFO	Communication state of power source control ECU signal / OK or Interruption	OK: Communication is normal Interruption: Communication is interrupted	-

OK:
"OK" is displayed.

NG → **REPLACE COMBINATION METER ASSEMBLY (COMBINATION METER ECU)**

OK

REPLACE MULTIPLEX TILT AND TELESCOPIC ECU

DTC	B2624	Vehicles Speed Malfunction

DESCRIPTION

The multiplex tilt and telescopic ECU forms a network with the ECUs of other systems through the communication bus. Each ECU informs the other ECUs that they are connected to the network by outputting a specified signal (periodic signal) onto the communication bus on a regular basis. The multiplex tilt and telescopic ECU receives vehicle speed signals from the combination meter via the communication bus to prevent improper operation of the auto away/return function during driving.

DTC No.	Detection Item	Trouble Area
B2624	• The auto away function is disabled with the last vehicle speed signal (*1) of 10 km/h (6 mph) or more. • Vehicle speed signal is lost for 5 seconds or more and the auto away/return function is disabled.	• CAN communication system • Combination meter assembly • Multiplex tilt and telescopic ECU

HINT:
*1: If the engine switch is turned off immediately after the vehicle comes to a sudden stop, the last vehicle speed signal may not be 0 km/h (0 mph).

INSPECTION PROCEDURE

1 CHECK CAN COMMUNICATION SYSTEM

(a) Check the "COMMUNICATION STOP MODE TABLE" of the CAN communication system (See page CA-15).

Result

Tester Display	Proceed to
"Meter" is displayed.	A
"Meter" is not displayed.	B

B → GO TO CAN COMMUNICATION SYSTEM

A

2 READ VALUE OF INTELLIGENT TESTER (SPEED SIGNAL)

(a) Connect the intelligent tester to the DLC3.
(b) Turn the engine switch on (IG) and turn the intelligent tester on.
(c) Select "FREEZ SPD INFO" from DATA LIST.
(d) Check the vehicle speed signal on the tester screen.

TILT & TELESCO:

Tester Display	Measurement Item/Range	Inspection Condition	Standard
FREEZ SPD INFO	Vehicle speed data / min.: 0 km/h (0 mph), max.: 255 km/h (158 mph)	Stop → Drive → Stop	0 km/h (0 mph) → Same speed as indicated on speedometer → 0 km/h (0 mph)

Result

Result	Proceed to
OK	A
NG (Tester indication is abnormal)	B
NG (Meter indication is abnormal)	C

HINT:
Vehicle speed of 3 km/h (2 mph) or more may be displayed on the tester screen immediately after the vehicle comes to a sudden stop. This is caused by a delay in vehicle signal input via the communication bus and not a malfunction.

B → **REPLACE MULTIPLEX TILT AND TELESCOPIC ECU**

C → **CHECK COMBINATION METER SYSTEM**

A

REPLACE MULTIPLEX TILT AND TELESCOPIC ECU

Actuator Power Source Circuit

DESCRIPTION

This is the power source for the motors.

WIRING DIAGRAM

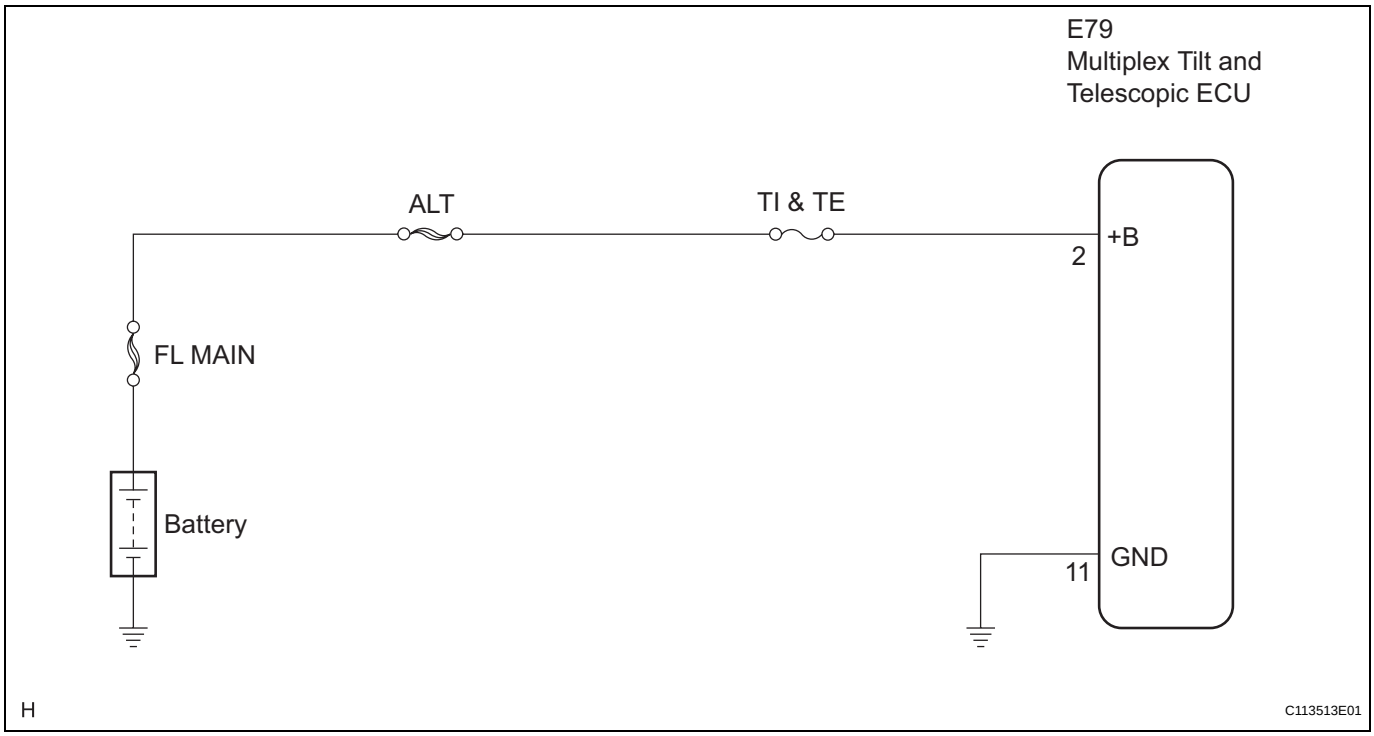

INSPECTION PROCEDURE

1	INSPECT FUSE (TI & TE)

(a) Remove the TI & TE fuse from the instrument panel J/B.
(b) Measure the resistance of the TI & TE fuse.
Standard resistance:
Below 1 Ω

NG → **REPLACE FUSE**

OK

2	**CHECK HARNESS AND CONNECTOR (MULTIPLEX TILT AND TELESCOPIC ECU - BATTERY)**

Multiplex Tilt and Telescopic ECU:

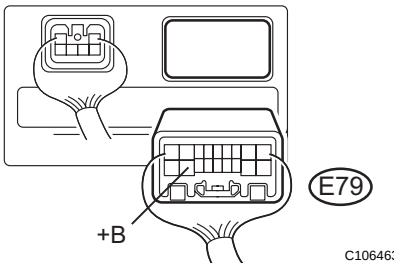

(a) Disconnect the E79 connector from the multiplex tilt and telescopic ECU.

(b) Measure the voltage according to the value(s) in the table below.

Standard voltage

Tester Connection	Condition	Specified Condition
+B (E79-2) - Body ground	Always	10 to 14 V

NG → **REPAIR OR REPLACE HARNESS OR CONNECTOR**

OK

3	**CHECK HARNESS AND CONNECTOR (MULTIPLEX TILT AND TELESCOPIC ECU - BODY GROUND)**

Multiplex Tilt and Telescopic ECU:

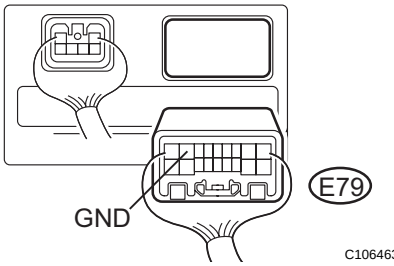

(a) Measure the resistance according to the value(s) in the table below.

Standard resistance

Tester Connection	Condition	Specified Condition
GND (E79-11) - Body ground	Always	Below 1 Ω

NG → **REPAIR OR REPLACE HARNESS OR CONNECTOR**

OK

PROCEED TO NEXT CIRCUIT INSPECTION SHOWN IN PROBLEM SYMPTOMS TABLE

Tilt and Telescopic Manual Switch Circuit

DESCRIPTION

The signals generated by operating the manual switch are sent to the multiplex tilt and telescopic ECU through the communication bus.

INSPECTION PROCEDURE

1 READ VALUE OF INTELLIGENT TESTER (COMBINATION SWITCH)

(a) Connect the intelligent tester to the DLC3.
(b) Turn the engine switch on (IG) and turn the intelligent tester on.
(c) Select "COMBINATION SWITCH".
(d) Select the following items from the DATA LIST.
(e) Check the tilt and telescopic manual switch.

COMBINATION SWITCH:

Tester Display	Measurement Item/Range	Normal Condition	Normal Condition
TELESC SHORT SW	Telescopic SHORT switch status / OFF or ON	OFF: Telescopic short is not activated by manual switch ON: Telescopic short is activated by manual switch	-
TELESC LONG SW	Telescopic LONG switch status / OFF or ON	OFF: Telescopic long is not activated by manual switch ON: Telescopic long is activated by manual switch	-
TILT DOWN SW	Tilt DOWN switch status / OFF or ON	OFF: Tilt down is not activated by manual switch ON: Tilt down is activated by manual switch	-
TILT UP SW	Tilt UP switch status / OFF or ON	OFF: Tilt up is not activated by manual switch ON: Tilt up is activated by manual switch	-

OK:
"ON" is displayed on the tester screen when each switch is turned on.
"OFF" is displayed on the tester screen when each switch is turned off.

NG → **REPLACE HEADLIGHT DIMMER SWITCH ASSEMBLY**

OK

PROCEED TO NEXT CIRCUIT INSPECTION SHOWN IN PROBLEM SYMPTOMS TABLE

IG Power Source Circuit

DESCRIPTION

When the engine switch is turned on (IG), the IG power source circuit supplies positive voltage to the multiplex tilt and telescopic ECU.
The multiplex tilt and telescopic ECU also receives engine switch signals via this circuit.

WIRING DIAGRAM

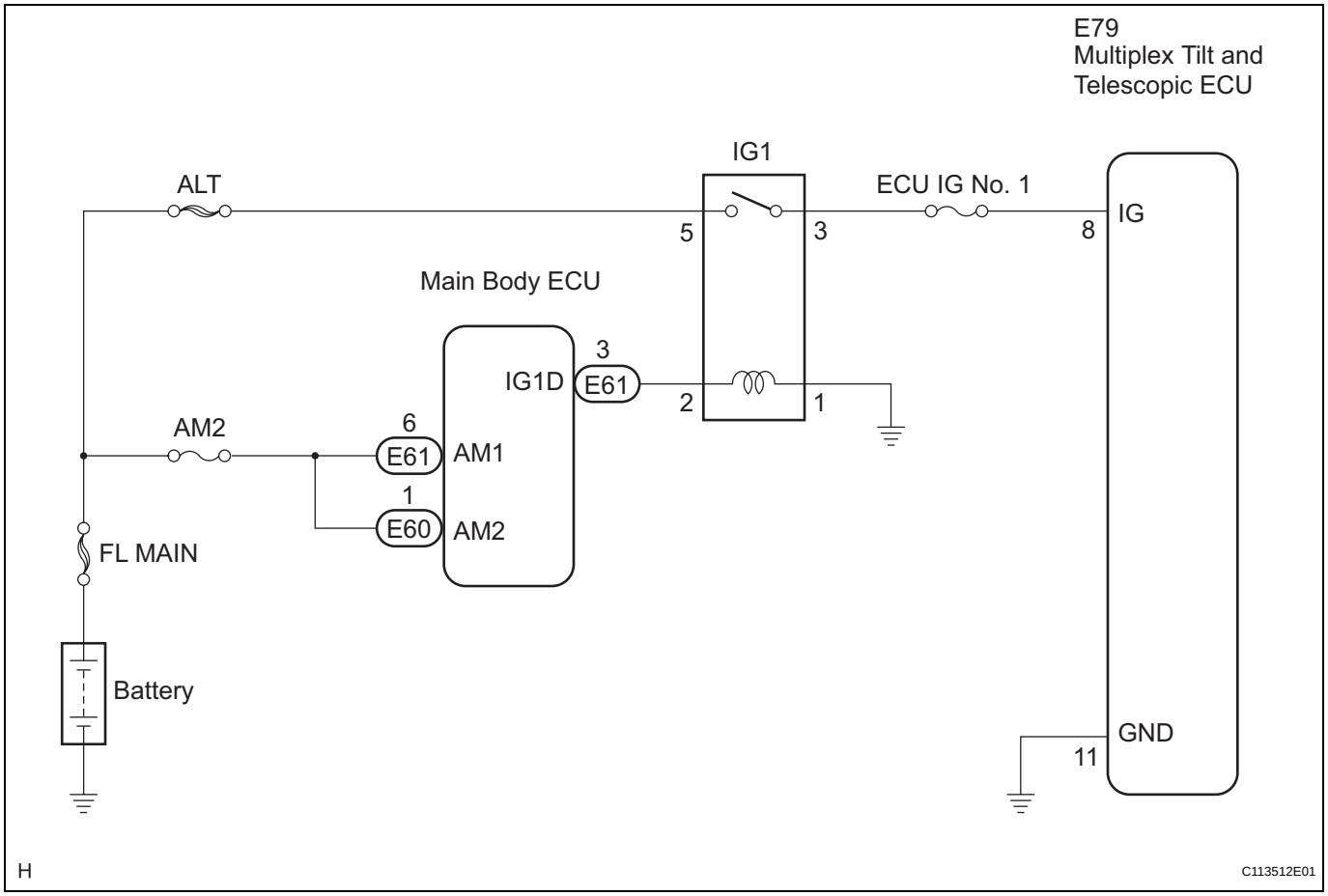

INSPECTION PROCEDURE

1	INSPECT FUSE (ECU IG NO. 1)

(a) Remove the ECU-IG No. 1 fuse from the instrument panel J/B.
(b) Measure the resistance of the ECU-IG No. 1 fuse.
Standard resistance:
Below 1 Ω

NG → **REPLACE FUSE**

OK

SR

2 INSPECT MULTIPLEX TILT AND TELESCOPIC ECU (IG TERMINAL VOLTAGE)

Multiplex Tilt and Telescopic ECU:

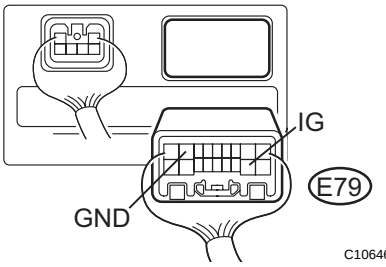

(a) Disconnect the E79 connector from the multiplex tilt and telescopic ECU.

(b) Measure the voltage according to the value(s) in the table below.

Standard voltage

Tester Connection	Condition	Specified Condition
IG (E79-8) - GND (E79-11)	Engine switch on (IG)	10 to 14 V

OK → **PROCEED TO NEXT CIRCUIT INSPECTION SHOWN IN PROBLEM SYMPTOMS TABLE**

NG

3 CHECK HARNESS AND CONNECTOR (MULTIPLEX TILT AND TELESCOPIC ECU - BODY GROUND)

Multiplex Tilt and Telescopic ECU:

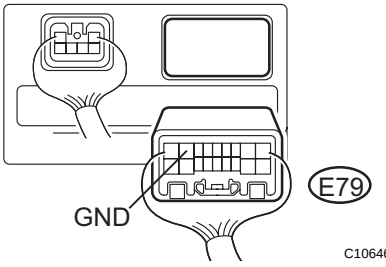

(a) Measure the resistance according to the value(s) in the table below.

Standard resistance

Tester Connection	Condition	Specified Condition
GND (E79-11) - Body ground	Always	Below 1 Ω

NG → **REPAIR OR REPLACE HARNESS OR CONNECTOR**

OK

REPLACE MULTIPLEX TILT AND TELESCOPIC ECU

SYSTEM DIAGRAM

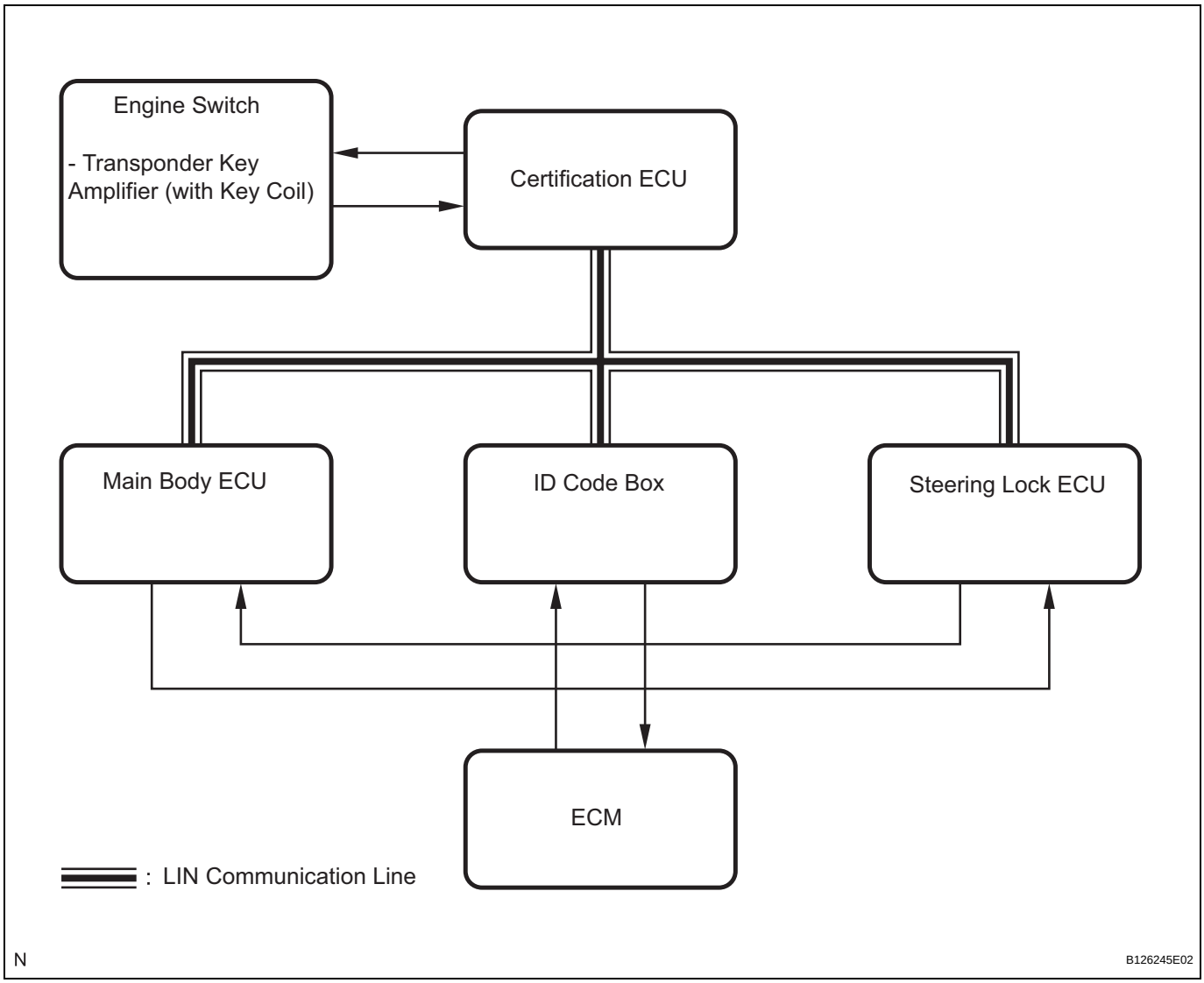

Input and output signals of each ECU:

Transmitting ECU (transmitter)	Receiving ECU	Signals	Communication Method
Main Body ECU	Steering Lock ECU	Power supply status (to steering lock motor)	LIN
Steering Lock ECU	• Certification ECU • Main Body ECU • ID Code Box	Sleep available status	LIN
Steering Lock ECU	• Certification ECU • Main Body ECU • ID Code Box	Lock / Unlock sensor status	LIN
Steering Lock ECU	• Certification ECU • Main Body ECU • ID Code Box	Steering lock status	LIN
Steering Lock ECU	• Certification ECU • Main Body ECU • ID Code Box	Motor control status	LIN
Steering Lock ECU	• Certification ECU • Main Body ECU • ID Code Box	Diagnostic response status	LIN
Steering Lock ECU	• Certification ECU • Main Body ECU • ID Code Box	Lock / Unlock sensor malfunction	LIN

Transmitting ECU (transmitter)	Receiving ECU	Signals	Communication Method
Steering Lock ECU	• Certification ECU • Main Body ECU • ID Code Box	Power supply malfunction (to steering lock motor)	LIN
Steering Lock ECU	• Certification ECU • Main Body ECU • ID Code Box	Motor driver malfunction	LIN
Steering Lock ECU	• Certification ECU • Main Body ECU • ID Code Box	Lock bar (stuck) status	LIN
Steering Lock ECU	• Certification ECU • Main Body ECU • ID Code Box	Push start status	LIN
Steering Lock ECU	• Certification ECU • Main Body ECU • ID Code Box	Lock / Unlock relay drive status	LIN
Steering Lock ECU	• Certification ECU • Main Body ECU • ID Code Box	Engine start control status	LIN

SYSTEM DESCRIPTION

1. DESCRIPTION

(a) The steering lock system locks or unlocks the steering lock by activating the steering lock bar with a motor. The steering lock ECU activates the motor based on signals from the certification ECU and main body ECU.

(b) A LIN (Local Interconnect Network) is used for communication between different ECUs in this system.

2. FUNCTIONS OF COMPONENTS

(a) The steering lock ECU controls the system based on information from the following components.

Item	Function
Steering lock actuator assembly	Consists of a motor, lock bar, lock and unlock position sensors, etc. Activated by the steering lock ECU.
Steering lock ECU	Included in the steering lock actuator assembly. This ECU activates the steering lock motor based on permission signals from the main body ECU and certification ECU. Detects steering lock or unlock state and transmits this information to other ECUs.
Main body ECU	Permits the steering lock ECU to supply power to activate the motor. The main body ECU and certification ECU permit engine start after receiving an unlock signal from the steering lock ECU.
Certification ECU	Orders the steering lock ECU to lock / unlock the steering. The main body ECU and certification ECU permit engine start after receiving an unlock signal from the steering lock ECU.
IG2 relay	Controlled by the main body ECU. This ECU sends IG signals to the steering lock ECU.

HOW TO PROCEED WITH TROUBLESHOOTING

*: Use the intelligent tester.

1	VEHICLE BROUGHT TO WORKSHOP

NEXT

2	CHECK AND CLEAR DTCS*

NEXT

3	PROBLEM SYMPTOM CONFIRMATION

→ SYMPTOM DOES NOT OCCUR (Go to step 4)

→ SYMPTOM OCCURS (Go to step 5)

4	SYMPTOM SIMULATION

NEXT

5	CHECK CAN COMMUNICATION SYSTEM*

HINT:
Check that there are no problems with the CAN communication system before troubleshooting the steering lock system.

NEXT

6	DTC CHECK*

→ DTC IS NOT OUTPUT (Go to step 7)

→ DTC IS OUTPUT (Go to step 8)

7	PROBLEM SYMPTOMS TABLE

→ Go to step 9

8	DTC CHART

NEXT

9	CIRCUIT INSPECTION*

NEXT

10	PROBLEM IDENTIFICATION

NEXT

11	REPAIR OR REPLACEMENT

NEXT

12	CONFIRMATION TEST

NEXT

END

INITIALIZATION

HINT:
In vehicles equipped with the smart access system with push-button start function, the starting function may not operate after recharging or while jump-starting a discharged battery. This condition is most common if the battery voltage drops below 9 V. The following procedure has been developed to address this condition.

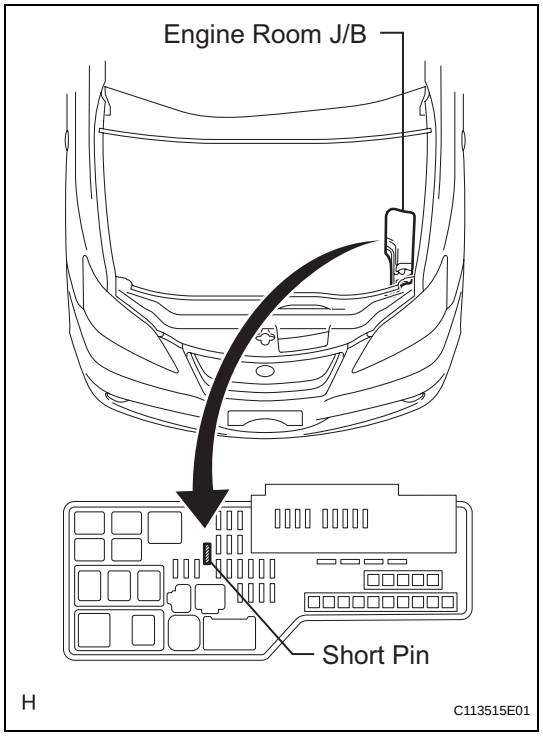

1. INITIALIZATION PROCEDURE

(a) Confirm that the short pin is installed.
HINT:
If the short pin fuse is not installed, install it at this time.

(b) Move the shift lever to the P position.

(c) Turn the engine switch off.

(d) Open the driver's door.
HINT:
Opening the driver's door will start an initialization process between the steering lock ECU and the engine room J/B.

(e) Depress the brake pedal.

(f) Press the "START STOP" switch.

PROBLEM SYMPTOMS TABLE

Inspect the suspected areas in numerical order by referring to the corresponding pages when any of the following symptoms occurs:

ELECTRIC STEERING LOCK FUNCTION:

Symptom	Suspected Area	See page
Steering wheel cannot be unlocked (the engine cannot be started).	1. Initialization	SR-53
	2. Check for DTCs in the smart access system with push-button start.	ST-28
	3. Check for DTCs in the engine immobiliser system.	EI-25
	4. Check that the LCK/UNLCK REC item in the DATA LIST of the certification ECU displays YES within 10 seconds after starting the engine. (If it displays NO, see "No steering unlock command" in this table.)	SR-58
	5. Check the input signal from the IGE terminal of the steering lock ECU.	SR-68
	6. Steering lock ECU power source circuit.	SR-74
	7. Replace the steering lock ECU.	SR-82
Steering wheel cannot be unlocked (no steering unlock command).	1. Check that the S CODE MACH item in the DATA LIST of the certification ECU displays OK. (If it displays NG, replace the ID code box.)	-
	2. Check that the L CODE MACH item in the DATA LIST of the certification ECU displays OK. (If it displays NG, replace the ID code box.)	-
	3. Replace the certification ECU.	-
Steering wheel cannot be locked.	1. Check for DTCs in the smart access system with push-button start.	ST-28
	2. Check for DTCs in the engine immobiliser system.	EI-25
	3. With the engine switch off and the shift lever in the P position, open and close the drivers door. After that, check that the LCK/UNLCK REC item in the DATA LIST of the certification ECU displays YES within 10 seconds. (If it displays NO, see "No steering lock command" in this table.)	SR-58
	4. Check the input signal from the IGE terminal of the steering lock ECU.	SR-68
	5. Steering lock ECU power source circuit.	SR-74
	6. Replace the steering lock ECU.	SR-82
Steering wheel cannot be locked (no steering lock command).	1. Courtesy light switch circuit	LI-94
	2. Check that the S CODE MACH item in the DATA LIST of the certification ECU displays OK. (If it displays NG, replace the ID code box.)	-
	3. Check that the L CODE MACH item in the DATA LIST of the certification ECU displays OK. (If it displays NG, replace the ID code box.)	-
	4. Replace the certification ECU.	-

SMART ACCESS SYSTEM WITH PUSH-BUTTON START FUNCTION:

Symptom	Suspected Area	See page
Engine does not start.	1. Initialization	SR-53
	2. Check for DTCs in the smart access system with push-button start.	ST-28
	3. Check for DTCs in the engine immobiliser system.	EI-25
	4. Check that the engine switch is turned on (IG).	-
	5. Check cranking operation. (If cranking operation is possible, see "Engine does not start due to the engine immobiliser" in this table.)	-
	6. Check SHIFT P SIG in the DATA LIST of the power source control ECU and confirm that the shift signal is normal.	-
	7. Check whether the steering wheel is locked or unlocked. (If it is locked, see "Steering wheel cannot be unlocked" in the steering lock function table.)	-
	8. Check the output from the SLP terminal of the steering lock ECU.	SR-72
	9. Check the output signal from the ST SW of the certification ECU (DTC B2275).	ST-48
	10. Replace the main body ECU.	-
Engine does not start due to the engine immobiliser.	1. Check that the L CODE MACH item in the DATA LIST of the certification ECU displays OK. (If it displays NG, replace the ID code box.)	-
	2. Check that the ENG START REQ item in the DATA LIST of the certification ECU displays YES. (If it displays NO, replace the certification ECU.)	-
	3. Check that the S CODE MACH item in the DATA LIST of the certification ECU displays OK. (If it displays NG, replace the ID code box.)	-
	4. Replace the ID code box.	-

TERMINALS OF ECU

1. STEERING LOCK ACTUATOR ASSEMBLY (STEERING LOCK ECU)

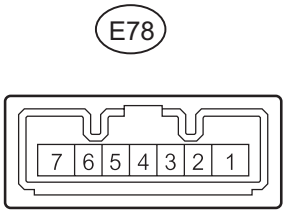

Terminal No. (Symbols)	Wiring Color	Terminal Description	Condition	Specified Condition
E78-1 (GND) - Body ground	W-B - Body ground	Ground	Always	Below 1 V
E78-2 (SGND) - Body ground	W-B - Body ground	Signal ground	Always	Below 1 V
E78-3 (IGE) - E78-1 (GND)	BR - W-B	Power source for driving motor	• Motor is in operation • Motor is not in operation	• Below 1 V • 10 to 12 V
E78-4 (SLP1) - E78-2 (SGND)	GR - W-B	Unlock position sensor output signal	• Steering is locked • Steering lock is released	• 10 to 14 V • Below 1 V
E78-5 (LIN) - E78-2 (SGND)	O - W-B	LIN communication bus	Engine switch on (IG)	Pulse generation
E78-6 (IG2) - E78-1 (GND)	B - W-B	IG signal input	Engine switch on (IG)	10 to 14 V
E78-7 (B) - E78-1 (GND)	B - W-B	Power source	Always	10 to 14 V

DIAGNOSIS SYSTEM

1. DESCRIPTION

(a) DIAGNOSTIC SYSTEM

When troubleshooting a vehicle with a diagnostic system, the only difference from the usual troubleshooting procedure is connecting the intelligent tester to the vehicle and reading various data output from the vehicle's steering lock ECU. The steering lock ECU records DTCs when the computer detects a malfunction in the computer itself or in system circuits.

To check the DTCs, connect the intelligent tester to the DLC3 on the vehicle. The intelligent tester enables the DTCs to be cleared, the indicators to be activated, and the DATA LIST to be checked.

(b) The steering lock ECU diagnosis information cannot be read directly from the steering lock ECU by the tester. The diagnosis information from the steering lock ECU is transmitted to the tester via the certification ECU to the tester using the controller area network (CAN).

2. CHECK DLC3

(a) The certification ECU uses ISO 15765-4 for communication. The terminal arrangement of the DLC3 complies with SAE J1962 and matches the ISO 15765-4 format.

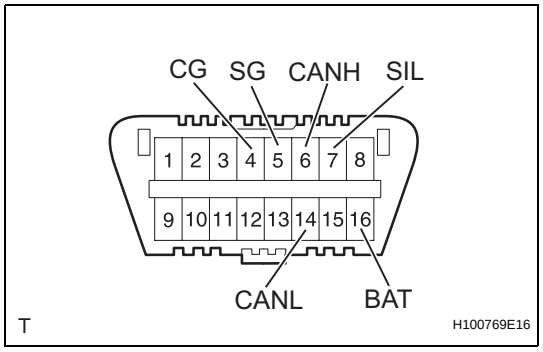

Symbols (Terminal No.)	Terminal Description	Condition	Specified Condition
SIL (7) - SG (5)	Bus "+" line	During transmission	Pulse generation
CG (4) - Body ground	Chassis ground	Always	Below 1 Ω
SG (5) - Body ground	Signal ground	Always	Below 1 Ω
BAT (16) - Body ground	Battery positive	Always	11 to 14 V
CANH (6) - CANL (14)	CAN bus line	Engine Switch off*	54 to 69 Ω
CANH (6) - CG (4)	HIGH-level CAN bus line	Engine Switch off*	200 Ω or higher
CANL (14) - CG (4)	LOW-level CAN bus line	Engine Switch off*	200 Ω or higher
CANH (6) - BAT (16)	HIGH-level CAN bus line	Engine Switch off*	6 kΩ or higher
CANL (14) - BAT (16)	LOW-level CAN bus line	Engine Switch off*	6 kΩ or higher

NOTICE:

***: Before measuring the resistance, leave the vehicle as is for at least 1 minute and do not operate the engine switch, and other switches or the doors.**

If the result is not as specified, the DLC3 may have a malfunction. Repair or replace the harness and connector.

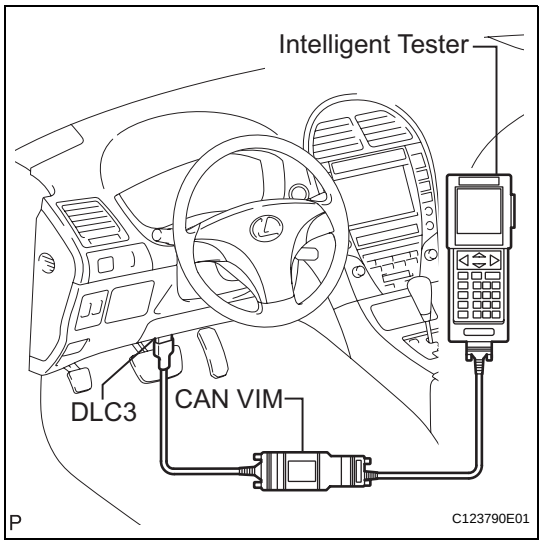

(b) Connect the cable of the intelligent tester to the DLC3, turn the engine switch on (IG) and attempt to use the tester. If the display indicates that a communication error has occurred, there is a problem either with the vehicle or with the tester.
- If communication is normal when the tester is connected to another vehicle, inspect the DLC3 of the original vehicle.
- If communication is still not possible when the tester is connected to another vehicle, the problem may be in the tester itself. Consult the Service Department listed in the tester's instruction manual.

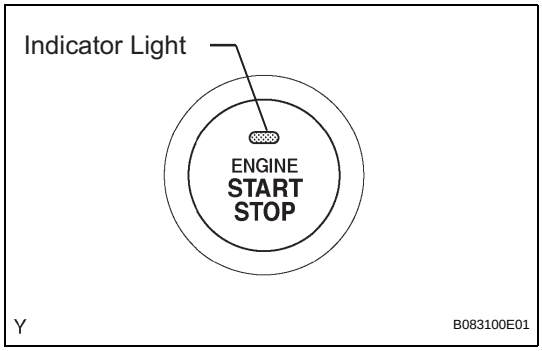

3. WARNING FUNCTION OF ENGINE SWITCH INDICATOR

(a) The steering lock ECU blinks the LED indicator of the engine switch when any of the following problems occurs in the system:

Detection Item	Indicator Light Blink Pattern	Indication Status	Countermeasure
Steering lock is still not released	• Blinks green at 1-second intervals • Goes off 15 seconds after blinking starts	The motor operates to release the steering lock, but the steering lock cannot be released (e.g. the lock bar is stuck in the steering column).	Push the engine switch while turning the steering wheel left or right.
Malfunction in smart access system with push-button start	• Blinks amber at 2-second intervals • Goes off 15 seconds after the engine switch is turned off while blinking	• There is a short in the devices activating the motor. • There is a problem in the steering lock ECU or main body ECU.	Troubleshoot by following "HOW TO PROCEED WITH TROUBLESHOOTING" (See page SR-51).

4. WARNING FUNCTION OF COMBINATION METER

(a) The steering lock ECU displays a warning on the combination meter when any of the following problems occurs in the system.

Detection Item	Display	Indication Status	Countermeasure
Steering lock is still not released	"S/T IS NOT UNLOCKED" • Goes off 15 seconds after blinking starts	The motor operates to release the steering lock, but the steering lock cannot be released (e.g. the lock bar is stuck in the steering column).	Push the engine switch while turning the steering wheel left or right.
Malfunction in smart access system with push-button start	"CHECK S/T LOCK" • Goes off 15 seconds after the engine switch is turned off while blinking	• There is a short in the devices activating the motor. • There is a problem in the steering lock ECU or main body ECU.	Troubleshoot by following "HOW TO PROCEED WITH TROUBLESHOOTING" (See page SR-51).

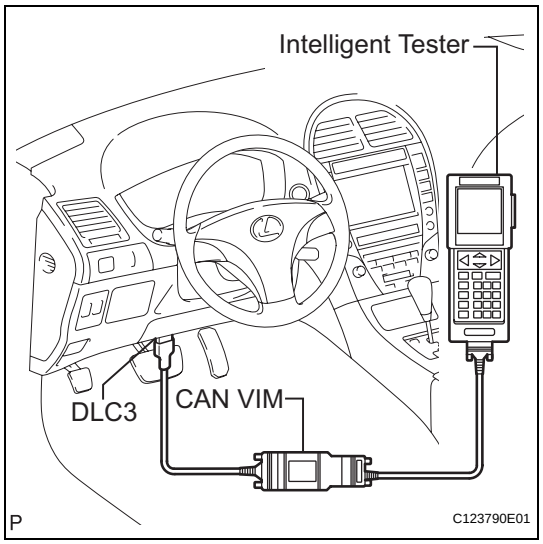

DTC CHECK / CLEAR

1. CHECK FOR DTCS

(a) Prepare the intelligent tester.

(b) Connect the intelligent tester to the DLC3 at the lower part of the instrument panel.

(c) Turn the engine switch on (IG) and turn the intelligent tester on.

(d) Use the intelligent tester to check for DTCs, and note or print the result (see the operator's manual for operating instructions).

(e) Confirm the details of the DTCs (See page SR-59).

2. CLEAR DTCS

(a) Operate the intelligent tester to clear the DTCs (see the operator's manual for operating instructions).

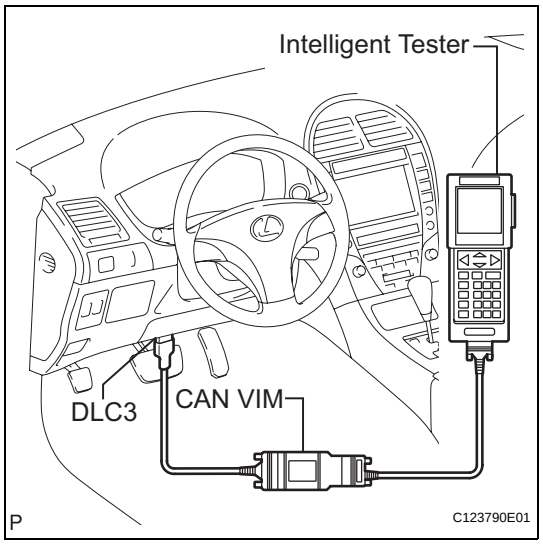

DATA LIST / ACTIVE TEST

1. DATA LIST

(a) Connect the intelligent tester to the DLC3.

HINT:

By accessing the DATA LIST displayed on the intelligent tester, it is possible to perform such functions as reading the values of switches and sensors without removing any parts. Reading the DATA LIST is the first step in troubleshooting and is one method to save diagnostic time.

(b) Turn the engine switch on (IG) and turn the intelligent tester on.

(c) Operate the intelligent tester according to the steps on the display and select DATA LIST.

SMART:

Tester Display	Measurement Item/Range	Normal Condition	Diagnostic Note
SLCK SLEEP COND	Steering lock ECU sleep condition / YES or NO	YES: Steering lock ECU sleep mode can be entered NO: Steering lock ECU sleep mode cannot be entered	-
SLCK START COND	Steering lock ECU start signal / YES or NO	YES: Steering lock ECU sent a start signal NO: Steering lock ECU did not send a start signal	-
ENG START COND	Engine start condition / OK or NG	OK: Engine is allowed to start NG: Engine is not allowed to start	-
SENSOR VALUE	Sensor malfunction / NG (PAST) or OK	NG (PAST): Sensor malfunction OK: No malfunction	-
PWR SUPPLY SHRT	Short in ECU / NG (PAST) or OK	NG (PAST): Short in ECU OK: No malfunction	-
PWR SUPPLY OPEN	Open in ECU / NG (PAST) or OK	NG (PAST): Open in ECU OK: No malfunction	-
MTR DRIVER SHRT	Short in driver ECU / NG (PAST) or OK	NG (PAST): Short in driver ECU OK: No malfunction	-
MTR DRIVER OPEN	Open in driver ECU / NG (PAST) or OK	NG (PAST): Open in driver ECU OK: No malfunction	-

Tester Display	Measurement Item/Range	Normal Condition	Diagnostic Note
LCK/UNLCK REC	Steering lock command reception record / YES or NO	YES: Steering lock / unlock signal received NO: Steering lock / unlock signal no received	-
LCK BAR STUCK	Lock bar stuck malfunction / NG (PAST) or OK	NG (PAST): Lock bar stuck malfunction OK: No malfunction	-
PUSH START ERR	Push button start function malfunction / NG (PAST) or OK	NG (PAST): Malfunction in push button start OK: No malfunction	-
IG2	IG2 voltage / ON or OFF	ON: 10 to 14 V OFF: Below 1 V	-
IG (LIN)	LIN bus IG status / ON or OFF	ON: LIN bus IG ON status OFF: LIN bus IG OFF status	-

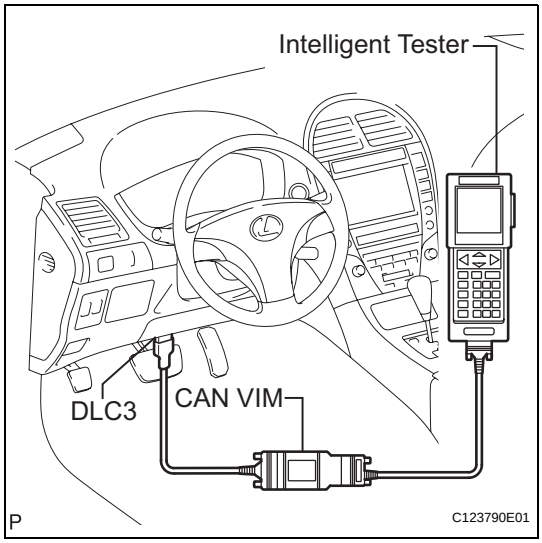

2. ACTIVE TEST

(a) Connect the intelligent tester to the DLC3.
HINT:
Performing the ACTIVE TEST is one of the methods to save diagnostic time. It is possible to display the DATA LIST during the ACTIVE TEST.

(b) Turn the engine switch on (IG) and turn the intelligent tester on.

(c) Following the display on the intelligent tester, perform the ACTIVE TEST.

MAIN BODY:

Tester Display	Test Part	Control Range	Diagnostic Note
STR LOCK PWR	Steering Lock Power Source	ON / OFF	-

DIAGNOSTIC TROUBLE CODE CHART

If a trouble code is displayed during the DTC check, check the parts listed for that code in the table below and proceed to the appropriate page.
HINT:
The steering lock ECU does not store DTCs regarding the past problems.

ELECTRIC STEERING LOCK:

DTC Code	Detection Item	Trouble Area	See page
B2781	Open / Short in Steering Lock ECU	Steering lock actuator assembly (Steering lock ECU)	SR-61
B2782	Power Source Control ECU Malfunction	1. Wire harness 2. Steering lock actuator assembly (Steering lock ECU) 3. Main body ECU	SR-62
B2788	IG2 Signal Malfunction	1. IG2 relay 2. Wire harness 3. Main body ECU 4. Steering lock actuator assembly (Steering lock ECU)	SR-65

DTC	B2781	Open / Short in Steering Lock ECU

DESCRIPTION

If the steering lock ECU determines that there is a malfunction inside the ECU, it outputs this DTC. The steering lock ECU diagnosis information cannot be read directly from the steering lock ECU by the tester. The diagnosis information from the steering lock ECU is transmitted to the tester via the certification ECU to the tester using the controller area network (CAN).

DTC No.	DTC Detecting Condition	Trouble Area
B2781	• Steering lock motor drive circuit is defective. • Both lock and unlock position sensors detect "ON".	Steering lock actuator assembly (Steering lock ECU)

INSPECTION PROCEDURE

1	REPLACE STEERING LOCK ACTUATOR ASSEMBLY (STEERING LOCK ECU)

HINT:
The steering lock ECU and steering lock actuator assembly are supplied as a unit.

(a) Replace the steering lock actuator assembly (See page SR-82).

NEXT

END

DTC	B2782	Power Source Control ECU Malfunction

DESCRIPTION

The main body ECU (*) controls the power supply to activate the steering lock motor. This prevents the steering from being locked while the vehicle is moving.
HINT:
*: The power source control ECU is not a physical part. This code refers to the power source control function performed by the main body ECU.

DTC No.	DTC Detecting Condition	Trouble Area
B2782	Steering lock motor drive control circuit is defective.	• Wire harness • Steering lock actuator assembly (Steering lock ECU) • Main body ECU

WIRING DIAGRAM

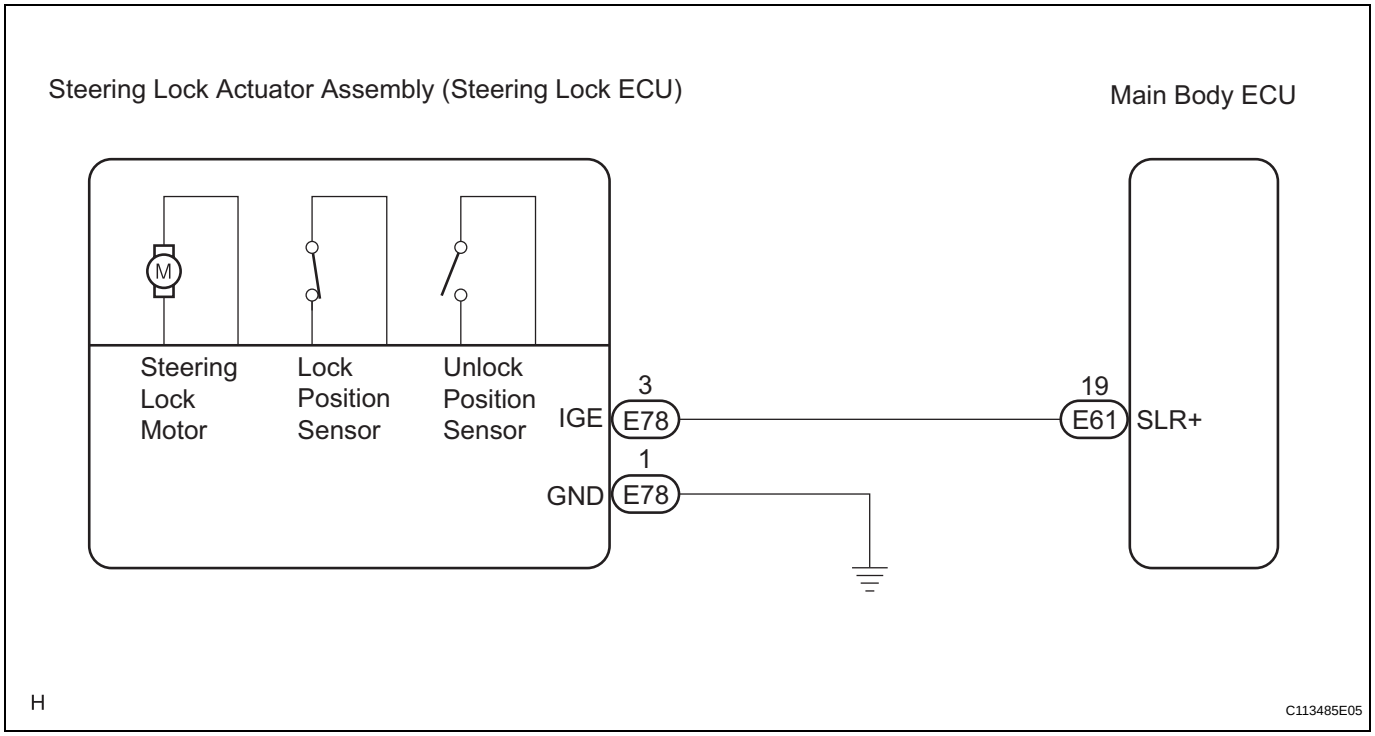

INSPECTION PROCEDURE

1	INSPECT STEERING LOCK ACTUATOR ASSEMBLY (STEERING LOCK ECU)

Steering Lock Actuator Assembly:

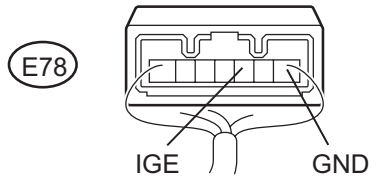

(a) Measure the voltage according to the value(s) in the table below.

Standard voltage

Tester Connection	Condition	Specified Condition
E78-3 (IGE) - E78-1 (GND)	**The specified condition should be checked after performing the following:** **1. Turn the engine switch off** **2. Turn the engine switch on (ACC or IG)**	• **Motor activated: Below 1 V** • **Motor not activated: 10 to 12 V**

SR

Tester Connection	Condition	Specified Condition
E78-3 (IGE) - E78-1 (GND)	The specified condition should be checked after performing the following: 1. Move the shift lever to the P position 2. Turn the engine switch off 3. Open the driver's door	• Motor activated: Below 1 V • Motor not activated: 10 to 12 V

HINT:
The steering lock ECU and steering lock actuator assembly are supplied as a unit.

OK → **REPLACE STEERING LOCK ACTUATOR ASSEMBLY (STEERING LOCK ECU)**

NG

2 CHECK HARNESS AND CONNECTOR (STEERING LOCK ACTUATOR ASSEMBLY - BODY GROUND)

Steering Lock Actuator Assembly:

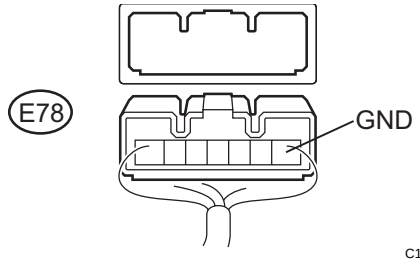

(a) Disconnect the E78 connector from the steering lock actuator assembly.
(b) Measure the resistance according to the value(s) in the table below.

Standard resistance

Tester Connection	Condition	Specified Condition
E78-1 (GND) - Body ground	Always	Below 1 Ω

NG → **REPAIR OR REPLACE HARNESS OR CONNECTOR**

OK

3	CHECK HARNESS AND CONNECTOR (STEERING LOCK ACTUATOR ASSEMBLY - MAIN BODY ECU)

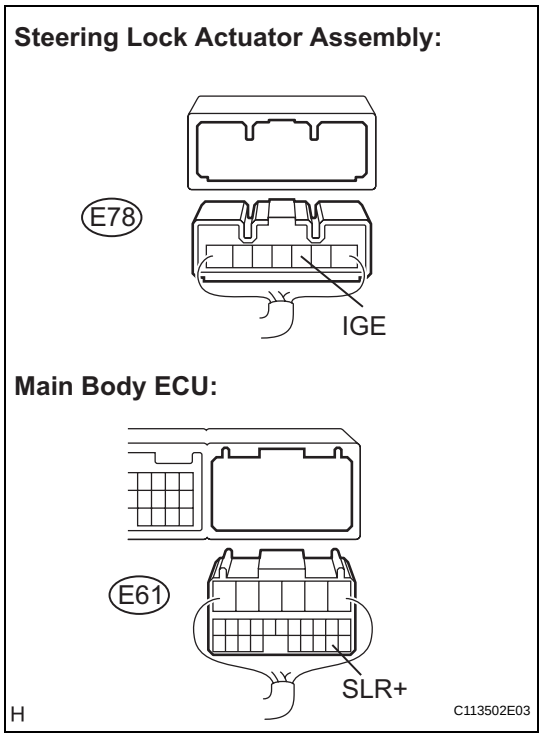

(a) Disconnect the E61 connector from the main body ECU.
(b) Measure the resistance according to the value(s) in the table below.

Standard resistance

Tester Connection	Condition	Specified Condition
E78-3 (IGE) - E61-19 (SLR+)	Always	Below 1 Ω
E78-3 (IGE) - Body ground	Always	10 kΩ or higher

NG → **REPAIR OR REPLACE HARNESS OR CONNECTOR**

OK

REPLACE MAIN BODY ECU

DTC	B2788	IG2 Signal Malfunction

DESCRIPTION

The steering lock ECU receives power from the IG2 relay. When the digital signal from the certification ECU and the voltage from the IG2 relay are received by the steering lock ECU, the steering will be unlocked. The steering lock ECU will not lock the steering when power from the IG2 relay is present (this prevents the steering from being locked while the vehicle is moving).

DTC No.	DTC Detecting Condition	Trouble Area
B2788	Different information is obtained from IG2 signals received directly from the IG2 circuit, and from IG2 signals sent via LIN communication for a period of 1 second.	• IG2 relay • Wire harness • Main body ECU • Steering lock actuator assembly (Steering lock ECU)

WIRING DIAGRAM

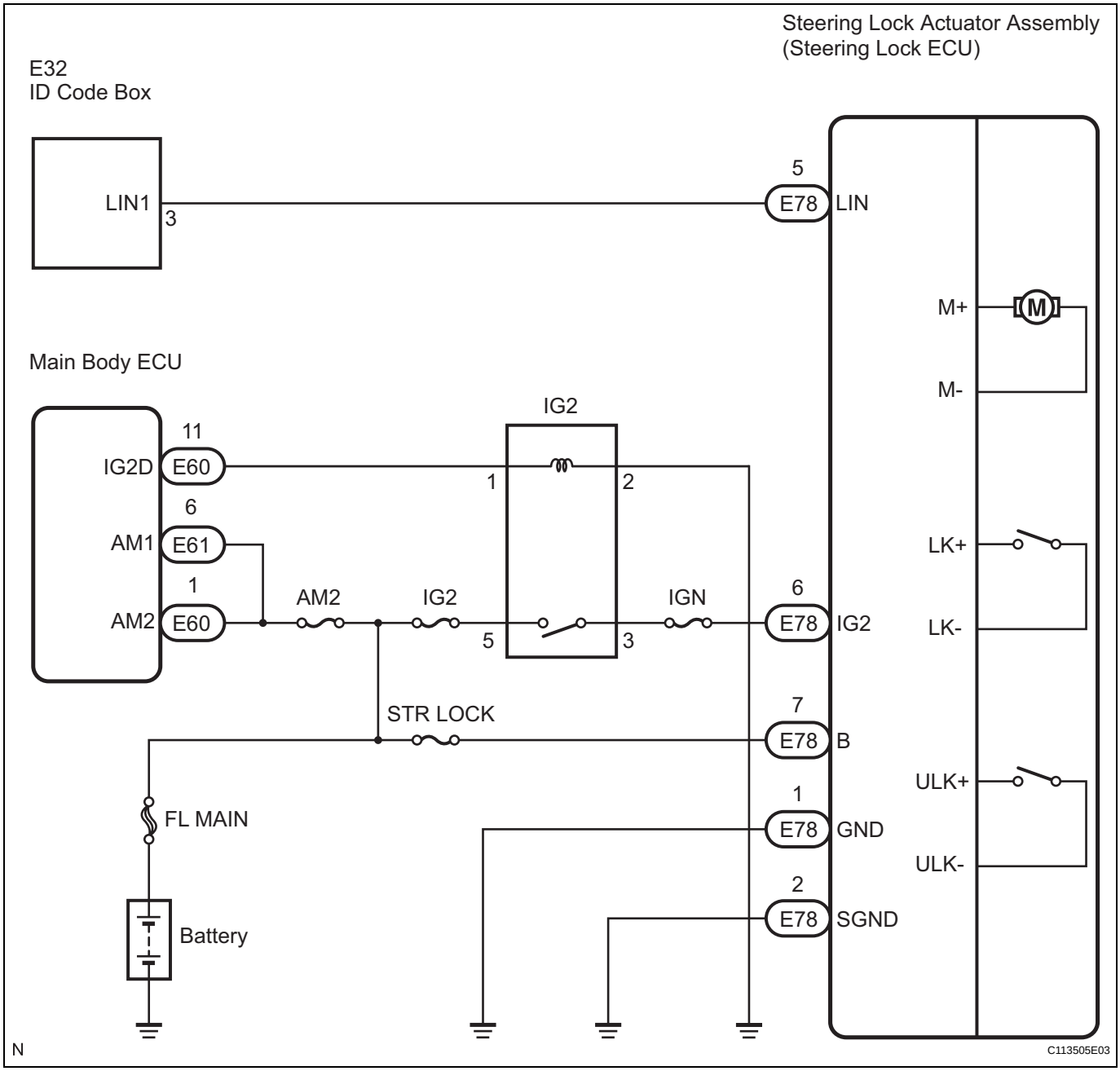

INSPECTION PROCEDURE

1 INSPECT IG2 RELAY

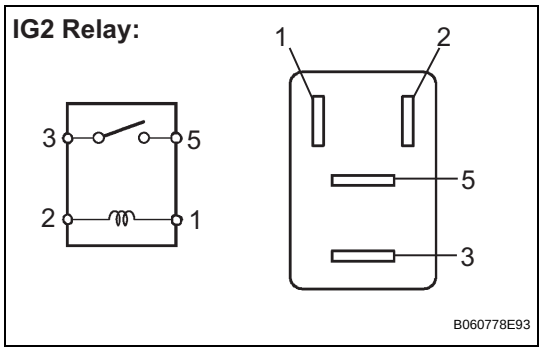

(a) Remove the IG2 relay from the engine room R/B.
(b) Measure the resistance according to the value(s) in the table below.

Standard resistance

Tester Connection	Condition	Specified Condition
3 - 5	Always	10 kΩ or higher
3 - 5	When battery voltage is applied to terminals 1 and 2	Below 1 Ω

NG → **REPLACE IG2 RELAY**

OK

2 CHECK HARNESS AND CONNECTOR (STEERING LOCK ACTUATOR ASSEMBLY - BODY GROUND)

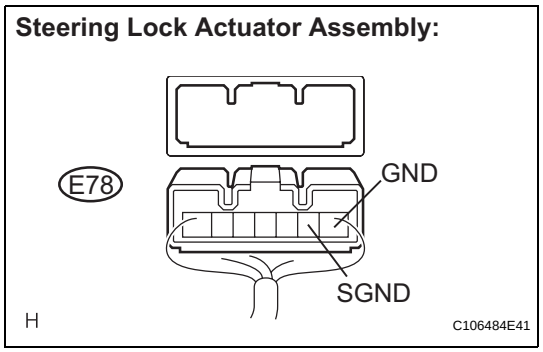

(a) Disconnect the E78 connector from the steering lock actuator assembly.
(b) Measure the resistance according to the value(s) in the table below.

Standard resistance

Tester Connection	Condition	Specified Condition
E78-1 (GND) - Body ground	Always	Below 1 Ω
E78-2 (SGND) - Body ground	Always	Below 1 Ω

NG → **REPAIR OR REPLACE HARNESS OR CONNECTOR**

OK

3 CHECK HARNESS AND CONNECTOR (STEERING LOCK ACTUATOR ASSEMBLY - BATTERY)

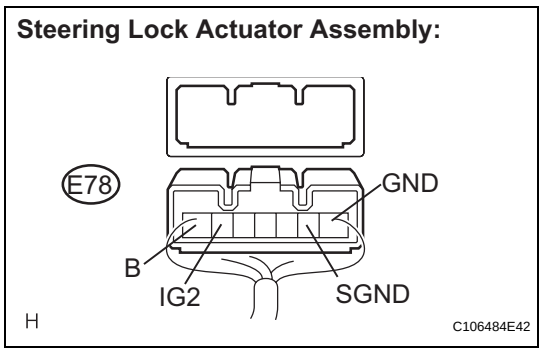

(a) Measure the voltage according to the value(s) in the table below.

Standard voltage

Tester Connection	Condition	Specified Condition
E78-6 (IG2) - E78-1 (GND)	Engine switch on (IG)	10 to 14 V
E78-6 (IG2) - E78-2 (SGND)	Engine switch on (IG)	10 to 14 V

(b) Measure the resistance according to the value(s) in the table below.

Standard resistance

Tester Connection	Condition	Specified Condition
*E78-6 (IG2) - E78-7 (B)	Engine switch off	10 kΩ or higher

*: This measurement is performed with the engine switch off to check for a short between IG2 and battery voltage.

OK → **REPLACE STEERING LOCK ACTUATOR ASSEMBLY (STEERING LOCK ECU)**

NG

REPAIR OR REPLACE HARNESS OR CONNECTOR (STEERING LOCK ACTUATOR ASSEMBLY - BATTERY)

Steering Lock Motor Drive Power Circuit

DESCRIPTION

The steering lock ECU is connected to the main body ECU and certification ECU. The steering lock ECU cannot activate the motor unless it receives permission signals from both ECUs. (The main body ECU permits the steering lock ECU to supply power to activate the motor.)

WIRING DIAGRAM

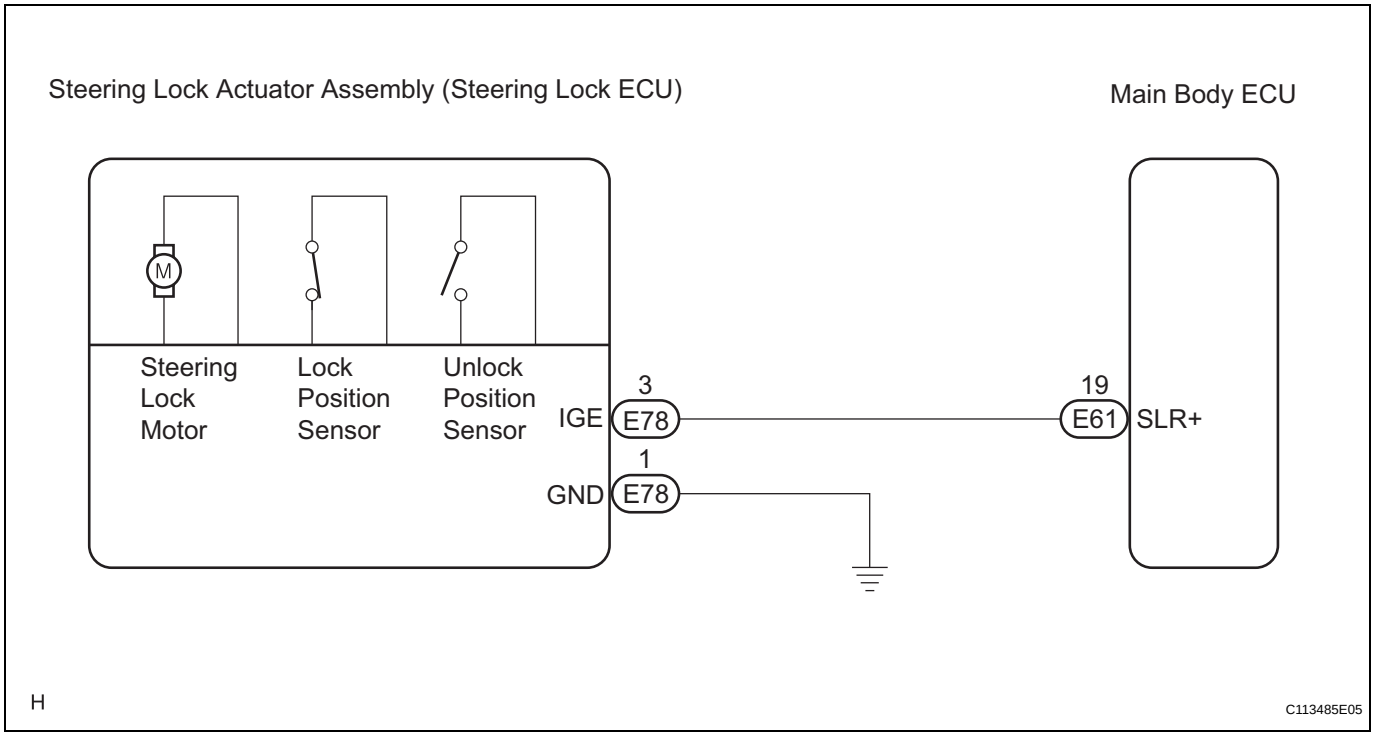

INSPECTION PROCEDURE

1	CHECK VEHICLE CONDITION

(a) Check the problem symptom of the steering lock system.
Result

Condition	Proceed to
Steering lock cannot be released	A
Steering cannot be locked	B

B → **Go to step 6**

A

2	READ VALUE OF INTELLIGENT TESTER

(a) Connect the intelligent tester to the DLC3.
(b) Turn the engine switch on (IG), and turn the intelligent tester on.

(c) Select the item below in the DATA LIST, and read its value displayed on the intelligent tester.

SMART:

Tester Display	Measurement Item/Range	Normal Condition	Diagnostic Note
LCK/UNLCK REC	Steering lock command reception record / YES or NO	YES: Steering lock / unlock signal received NO: Steering lock / unlock signal not received	-

(d) Check if a steering unlock command signal has been received.

OK:

"YES" is displayed on the tester display.

NG → **CHECK SMART ACCESS SYSTEM WITH PUSH-BUTTON START**

OK

3 INSPECT STEERING LOCK ACTUATOR ASSEMBLY (STEERING LOCK ECU)

Steering Lock Actuator Assembly:

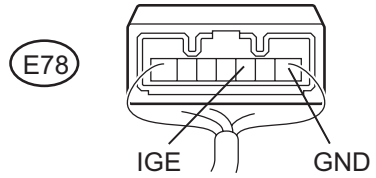

H C106483E28

(a) Measure the voltage according to the value(s) in the table below.

Standard voltage

Tester Connection	Condition	Specified Condition
E78-3 (IGE) - E78-1 (GND)	1. Engine switch off 2. Engine switch on (ACC or IG)	• Motor activated: Below 1 V • Motor not activated: 10 to 12 V

OK → **PROCEED TO NEXT CIRCUIT INSPECTION SHOWN IN PROBLEM SYMPTOMS TABLE**

NG

4 CHECK HARNESS AND CONNECTOR (STEERING LOCK ACTUATOR ASSEMBLY - BODY GROUND)

Steering Lock Actuator Assembly:

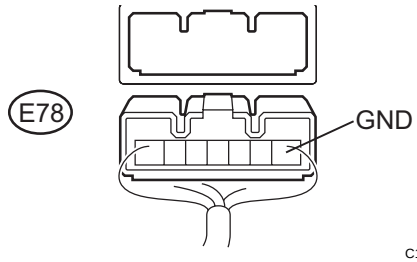

H C106484E40

(a) Disconnect the E78 connector from the steering lock actuator assembly.

(b) Measure the resistance according to the value(s) in the table below.

Standard resistance

Tester Connection	Condition	Specified Condition
E78-1 (GND) - Body ground	Always	Below 1 Ω

NG → **REPAIR OR REPLACE HARNESS OR CONNECTOR**

OK

SR

5 CHECK HARNESS AND CONNECTOR (STEERING LOCK ACTUATOR ASSEMBLY - MAIN BODY ECU)

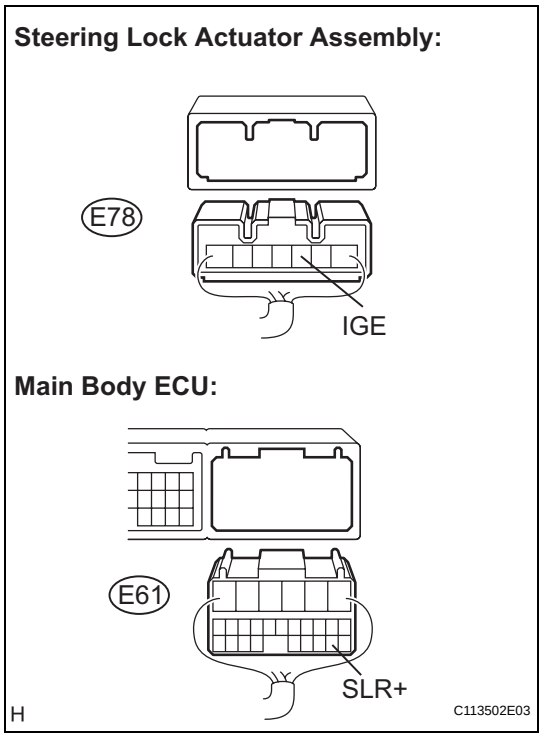

(a) Disconnect the E61 connector from the main body ECU.
(b) Measure the resistance according to the value(s) in the table below.

Standard resistance

Tester Connection	Condition	Specified Condition
E78-3 (IGE) - E61-19 (SLR+)	Always	Below 1 Ω
E78-3 (IGE) - Body ground	Always	10 kΩ or higher

NG → **REPAIR OR REPLACE HARNESS OR CONNECTOR**

OK

REPLACE MAIN BODY ECU

6 INSPECT STEERING LOCK ACTUATOR ASSEMBLY (STEERING LOCK ECU)

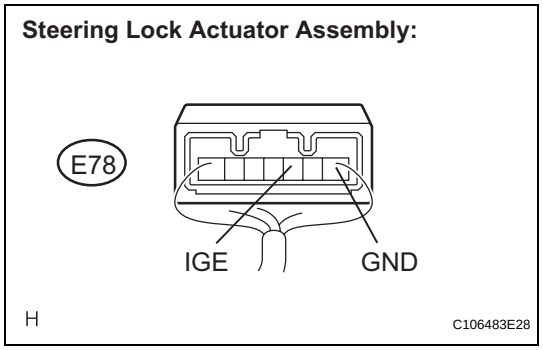

(a) Measure the voltage according to the value(s) in the table below.

Standard voltage

Tester Connection	Condition	Specified Condition
E78-3 (IGE) - E78-1 (GND)	The specified condition should be checked after performing the following: 1. Move the shift lever to the P position 2. Turn the engine switch off 3. Open the driver's door	• Motor activated: Below 1 V • Motor not activated: 10 to 12 V

OK → **PROCEED TO NEXT CIRCUIT INSPECTION SHOWN IN PROBLEM SYMPTOMS TABLE**

NG

SR

7	CHECK HARNESS AND CONNECTOR (STEERING LOCK ACTUATOR ASSEMBLY - MAIN BODY ECU)

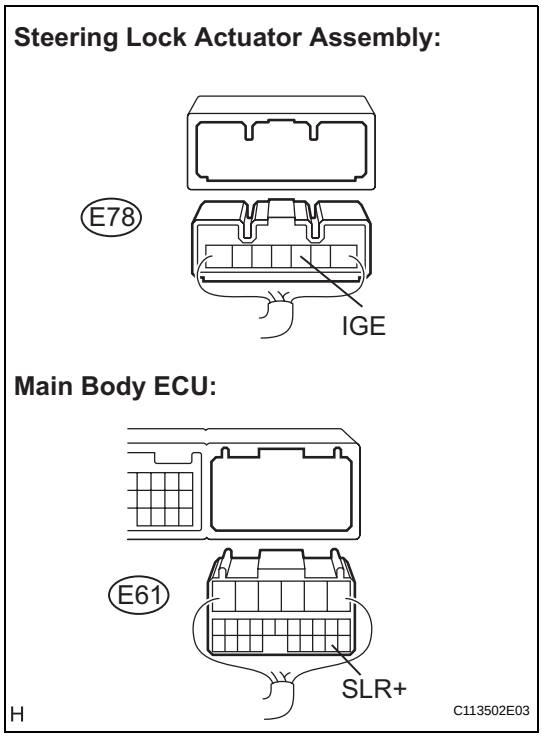

(a) Disconnect the E78 connector from the steering lock actuator assembly.
(b) Disconnect the E61 connector from the main body ECU.
(c) Measure the resistance according to the value(s) in the table below.

Standard resistance

Tester Connection	Condition	Specified Condition
E78-3 (IGE) - E61-19 (SLR+)	Always	Below 1 Ω
E78-3 (IGE) - Body ground	Always	10 kΩ or higher

NG → **REPAIR OR REPLACE HARNESS OR CONNECTOR**

OK

REPLACE MAIN BODY ECU

Unlock Position Sensor Signal Circuit

DESCRIPTION

The unlock position sensor is one of the components in the steering lock actuator. The sensor switch contact closes when the steering lock is released. The steering lock release signal is then sent to the main body ECU. Receiving the signal, the ECU permits engine start. (This prevents the engine from being started with the steering locked.)

WIRING DIAGRAM

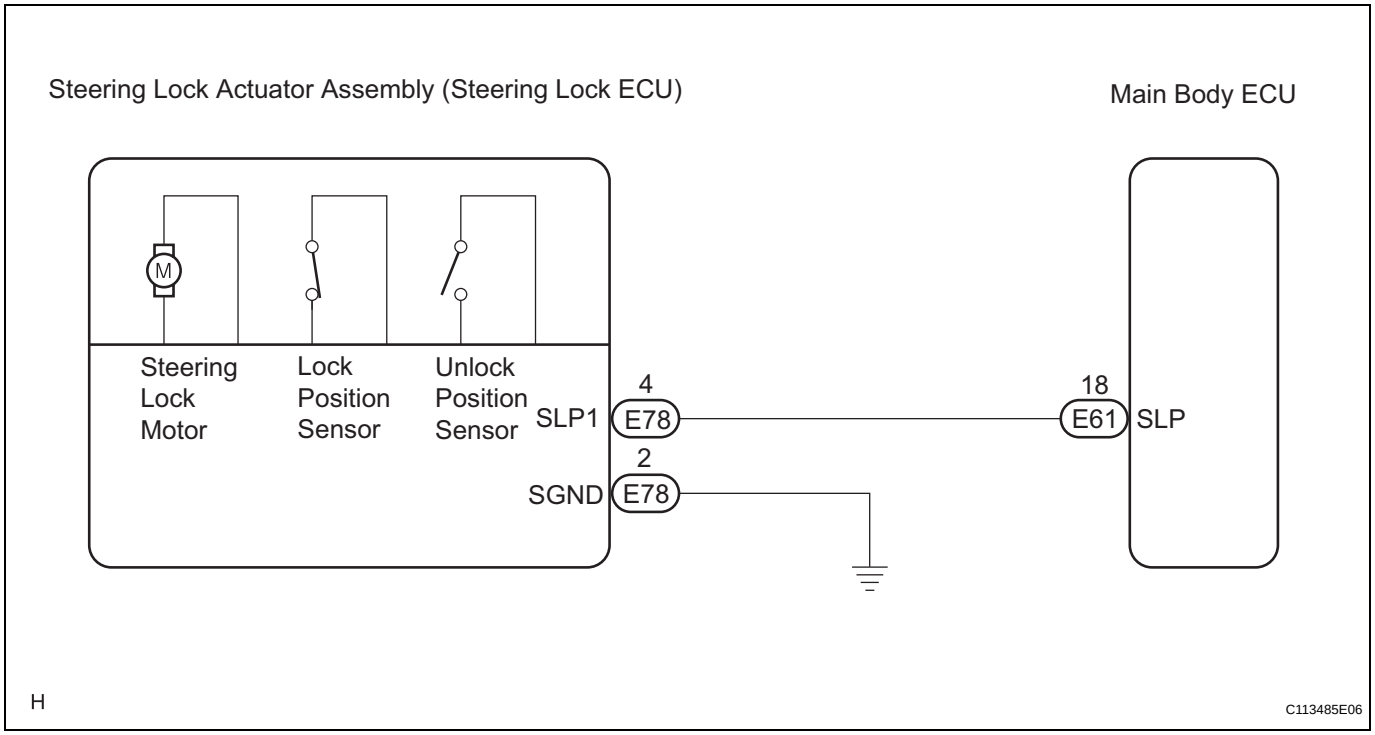

INSPECTION PROCEDURE

1	INSPECT STEERING LOCK ACTUATOR ASSEMBLY (STEERING LOCK ECU)

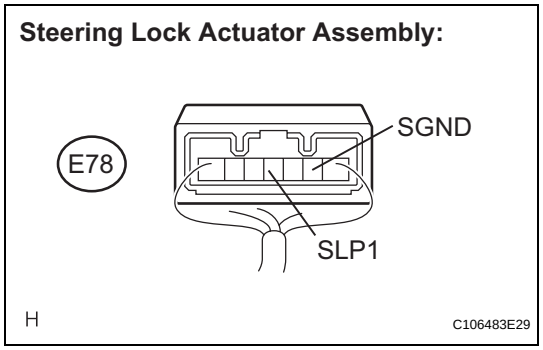

(a) Measure the voltage according to the value(s) in the table below.

Standard voltage

Tester Connection	Condition	Specified Condition
E78-4 (SLP1) - E78-2 (SGND)	1. Engine switch off 2. Engine switch on (ACC or IG)	Below 1 V

OK → **CHECK SMART ACCESS SYSTEM WITH PUSH-BUTTON START FUNCTION**

NG

SR

2	CHECK HARNESS AND CONNECTOR (STEERING LOCK ACTUATOR ASSEMBLY - MAIN BODY ECU)

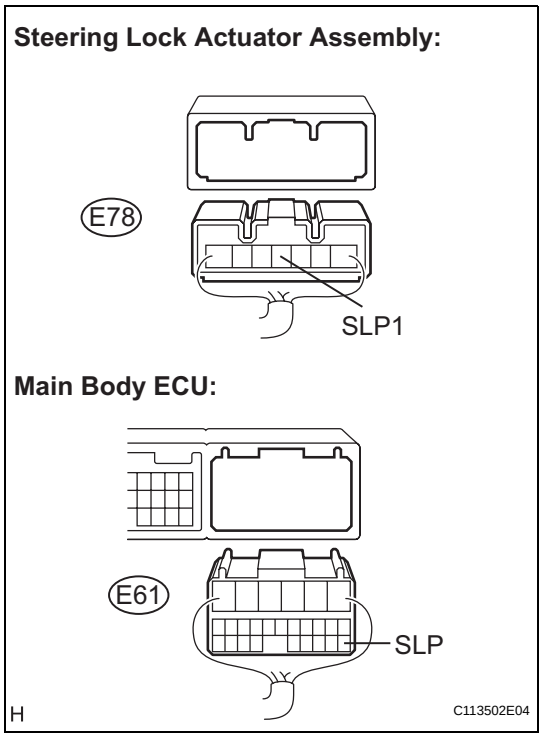

(a) Disconnect the E78 connector from the steering lock actuator assembly.
(b) Disconnect the E61 connector from the main body ECU.
(c) Measure the resistance according to the value(s) in the table below.

Standard resistance

Tester Connection	Condition	Specified Condition
E78-4 (SLP1) - E61-18 (SLP)	Always	Below 1 Ω
E78-4 (SLP1) - Body ground	Always	10 kΩ or higher

NG → **REPAIR OR REPLACE HARNESS OR CONNECTOR**

OK

PROCEED TO NEXT CIRCUIT INSPECTION SHOWN IN PROBLEM SYMPTOMS TABLE

Power Source Circuit

DESCRIPTION

This circuit supplies voltage from the battery to terminal B of the steering lock ECU. This circuit is used as power source for the steering lock CPU, motor, communication, and peripheral circuits.

WIRING DIAGRAM

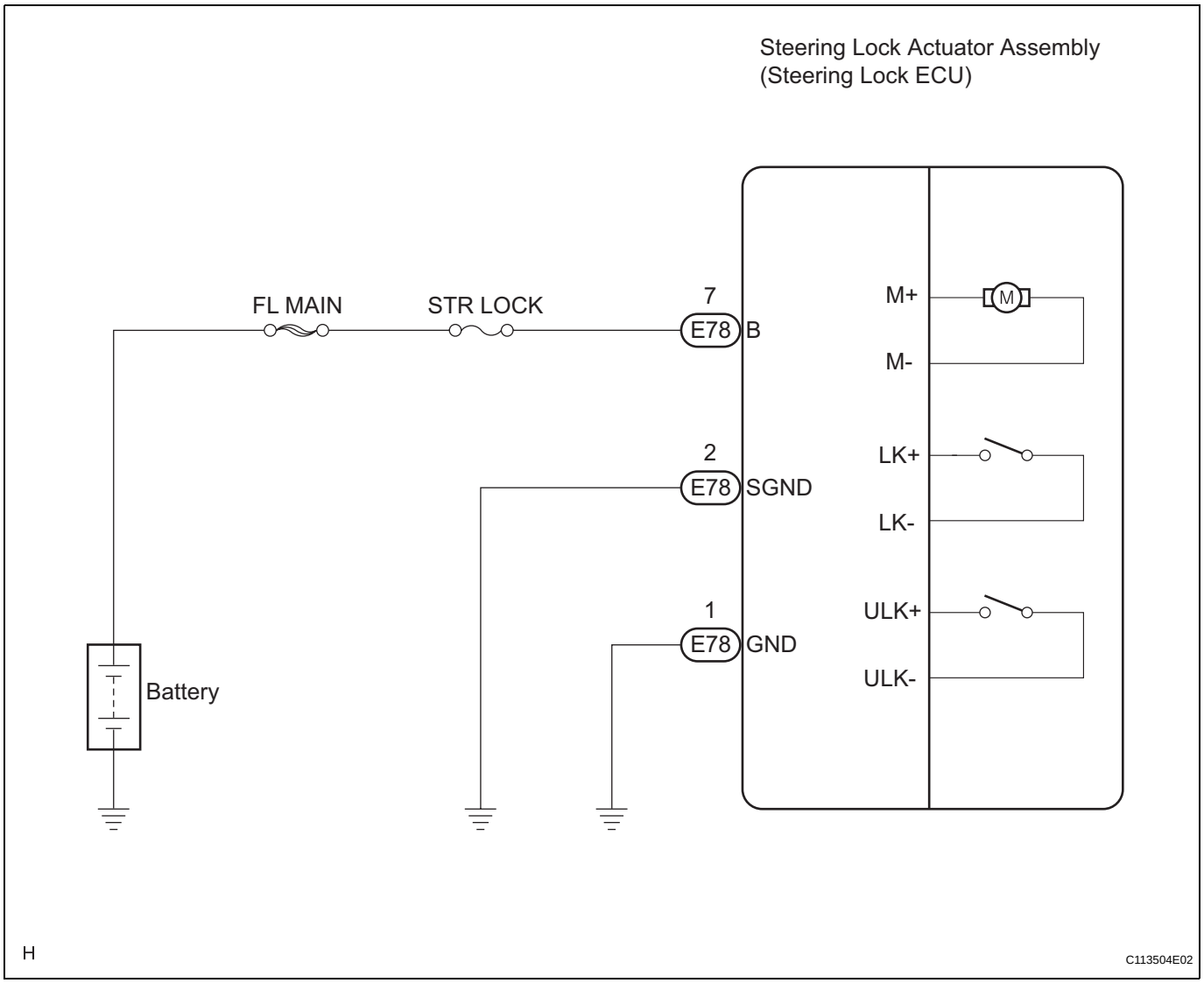

INSPECTION PROCEDURE

1 **CHECK HARNESS AND CONNECTOR (STEERING LOCK ACTUATOR ASSEMBLY - BODY GROUND)**

Steering Lock Actuator Assembly:

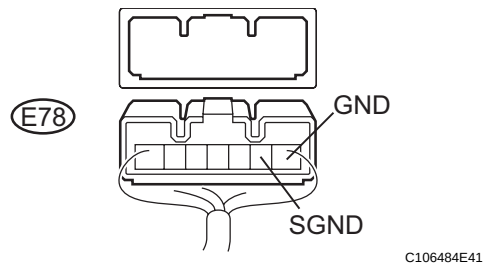

(a) Disconnect the E78 connector from the steering lock actuator assembly.

(b) Measure the resistance according to the value(s) in the table below.

Standard resistance

Tester Connection	Condition	Specified Condition
E78-1 (GND) - Body ground	Always	Below 1 Ω
E78-2 (SGND) - Body ground	Always	Below 1 Ω

NG → **REPAIR OR REPLACE HARNESS OR CONNECTOR**

OK

2 **CHECK HARNESS AND CONNECTOR (STEERING LOCK ACTUATOR ASSEMBLY - BATTERY)**

Steering Lock Actuator Assembly:

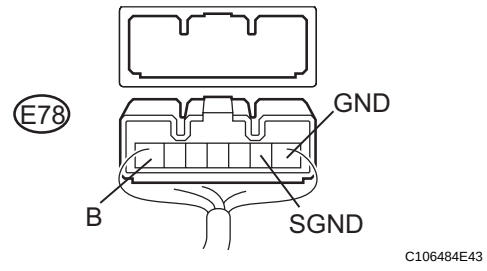

(a) Measure the voltage according to the value(s) in the table below.

Standard voltage

Tester Connection	Condition	Specified Condition
E78-7 (B) - E78-1 (GND)	Always	10 to 14 V
E78-7 (B) - E78-2 (SGND)	Always	10 to 14 V

OK → **PROCEED TO NEXT CIRCUIT INSPECTION SHOWN IN PROBLEM SYMPTOMS TABLE**

NG

REPAIR OR REPLACE HARNESS OR CONNECTOR (STEERING LOCK ACTUATOR ASSEMBLY - BATTERY)

REMOVAL

1. **PRECAUTION**
   HINT:
   (See page SR-1)

2. **PLACE FRONT WHEELS FACING STRAIGHT AHEAD**

3. **REMOVE FRONT WHEEL LH**

4. **DISCONNECT CABLE FROM NEGATIVE BATTERY TERMINAL**
   (a) Disable the AUTO TILT AWAY function by changing the customize parameter (See page SR-9).
   NOTICE:
   Record the current customize parameter setting (whether the AUTO TILT AWAY function is enabled or disabled) in order to restore the current setting after finishing the operation.
   HINT:
   Performing the above operation causes the AUTO TILT AWAY function to be disabled when the engine switch is turned off.
   (b) Turn the engine switch on (IG). Operate the tilt and telescopic switch to fully extend and lower the steering column assembly.
   (c) Turn the engine switch off and disconnect the cable from the negative battery terminal.
   NOTICE:
   Wait at least 90 seconds after disconnecting the cable from the negative (-) battery terminal to prevent airbag and seat belt pretensioner activation.

5. **REMOVE FRONT DOOR SCUFF PLATE LH (See page IR-39)**

6. **REMOVE FRONT DOOR OPENING TRIM COVER LH (See page IR-39)**

7. **REMOVE SIDE INSTRUMENT PANEL LH (See page IP-12)**

8. **REMOVE INSTRUMENT PANEL FINISH PANEL END LH (See page IP-13)**

9. **REMOVE LOWER INSTRUMENT PANEL SUB-ASSEMBLY (See page IP-13)**

10. **REMOVE DRIVER SIDE KNEE AIRBAG ASSEMBLY (See page RS-386)**

11. **REMOVE NO. 2 LOWER STEERING WHEEL COVER (See page RS-367)**

12. **REMOVE NO. 3 LOWER STEERING WHEEL COVER (See page RS-367)**

13. **REMOVE STEERING PAD (See page RS-367)**

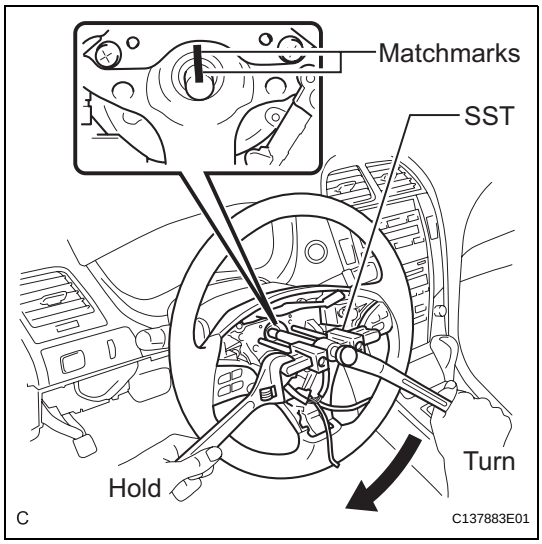

14. REMOVE STEERING WHEEL ASSEMBLY

(a) Remove the steering wheel assembly set nut.

(b) Put matchmarks on the steering wheel assembly and main shaft assembly.

(c) Using SST, remove the steering wheel assembly.

SST 09950-50013 (09951-05010, 09952-05010, 09953-05020, 09954-05011)

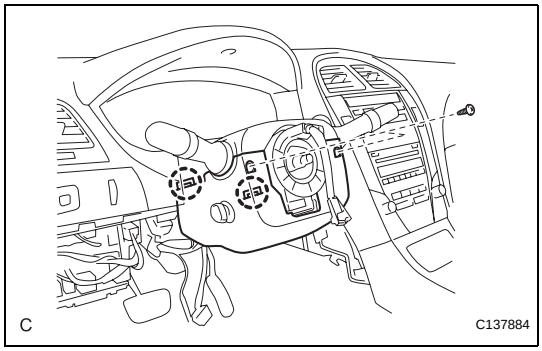

15. REMOVE STEERING COLUMN COVER

(a) Remove the 2 screws.

(b) Disengage the 2 claws to remove the lower steering column cover.

NOTICE:

Do not damage the tilt and telescopic switch.

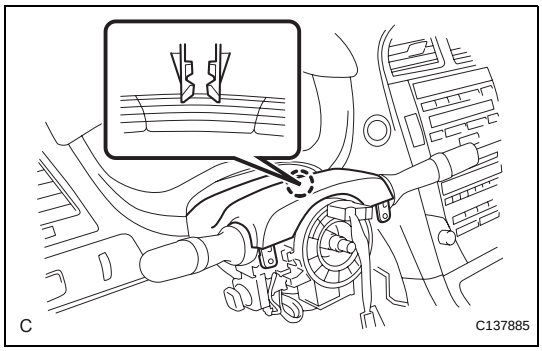

(c) Disengage the claw to remove the upper steering column cover.

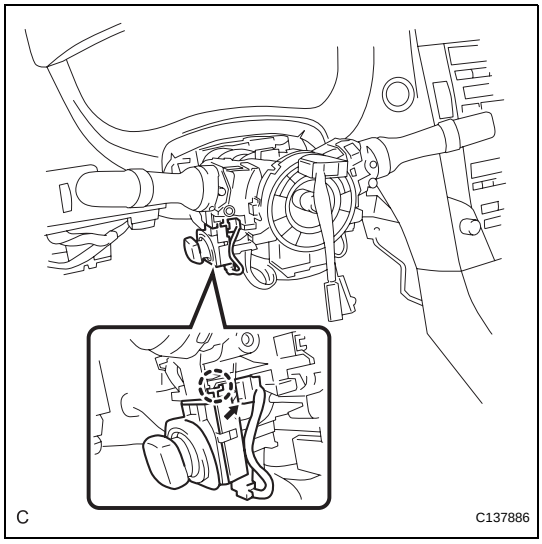

16. REMOVE TILT AND TELESCOPIC SWITCH

(a) Disconnect the connector.

(b) Using a screwdriver, disengage the claw and pull out the tilt and telescopic switch.

NOTICE:

Pushing on the claw too hard will break the claw.

HINT:

Tape the screwdriver tip before use.

17. REMOVE TURN SIGNAL SWITCH ASSEMBLY WITH SPIRAL CABLE SUB-ASSEMBLY

(a) Disconnect the connectors from the turn signal switch assembly with spiral cable sub-assembly.

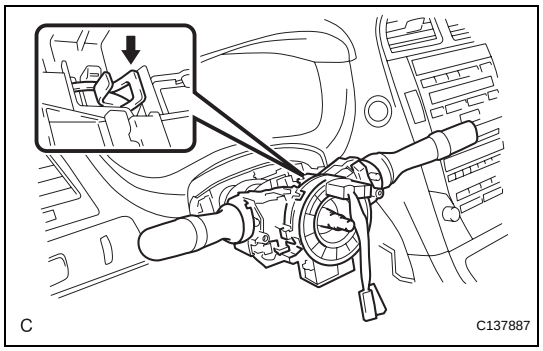

(b) Using pliers, grip the claws of the clip and remove the turn signal switch assembly with spiral cable sub-assembly from the steering column assembly.

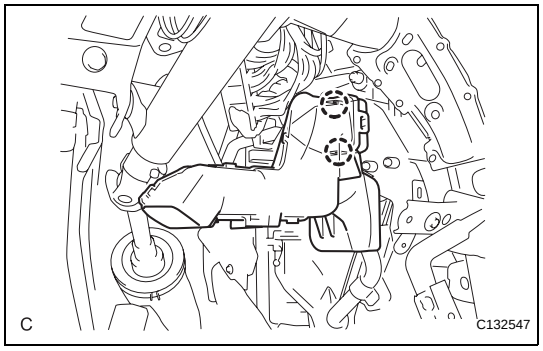

18. REMOVE NO. 1 AIR DUCT SUB-ASSEMBLY

(a) Disengage the 2 claws and remove the No. 1 air duct sub-assembly.

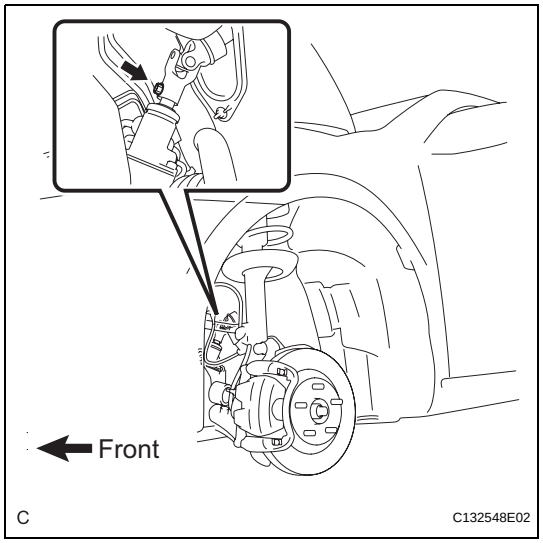

19. SEPARATE STEERING INTERMEDIATE SHAFT ASSEMBLY

(a) Remove the bolt and slide the steering intermediate shaft assembly.

NOTICE:

Do not separate the steering intermediate shaft assembly from the power steering link assembly.

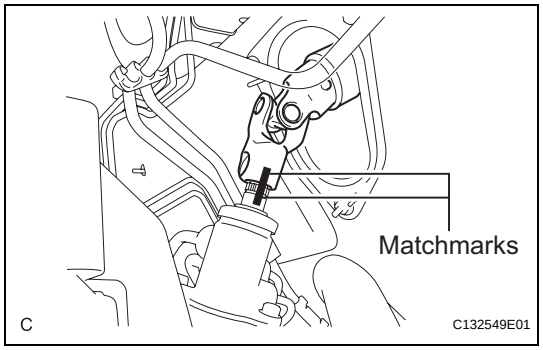

(b) Put matchmarks on the steering intermediate shaft assembly and the power steering link assembly.

(c) Separate the steering intermediate shaft assembly from the power steering link assembly.

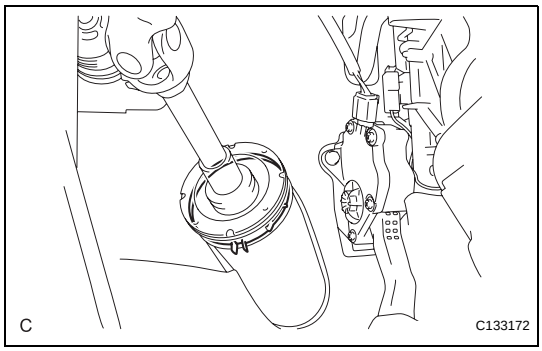

20. REMOVE STEERING COLUMN ASSEMBLY

(a) Remove the clamp from the steering column hole shield.

(b) Disconnect the connectors and wire harness clamps from the steering column assembly.

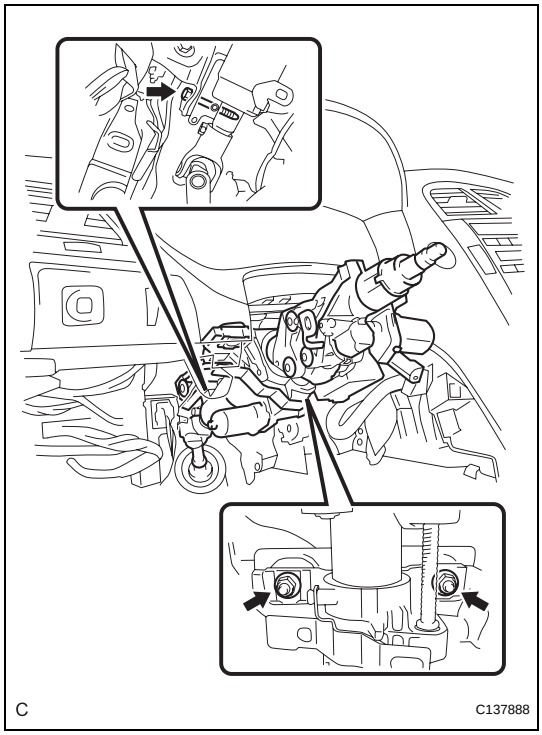

(c) Remove the bolt, 2 nuts, and steering column assembly.

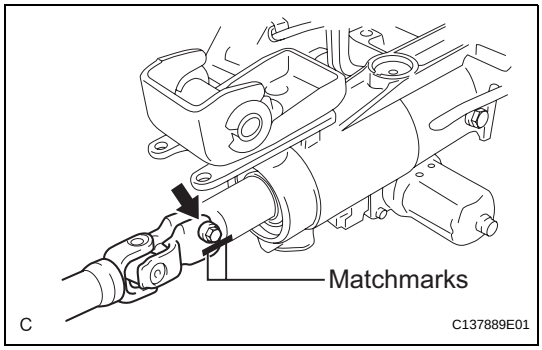

21. REMOVE STEERING INTERMEDIATE SHAFT ASSEMBLY

(a) Put matchmarks on the steering intermediate shaft assembly and the steering main shaft.

(b) Remove the bolt and the steering intermediate shaft assembly.

DISASSEMBLY

1. REMOVE STEERING LOCK ACTUATOR ASSEMBLY

(a) Using a center punch, mark the center of the 2 tapered-head bolts.

(b) Using a 3 to 4 mm (0.12 to 0.16 in.) drill, drill a hole in the 2 tapered-head bolts.

(c) Using a screw extractor, remove the 2 tapered-head bolts and steering lock actuator assembly from the steering column assembly.

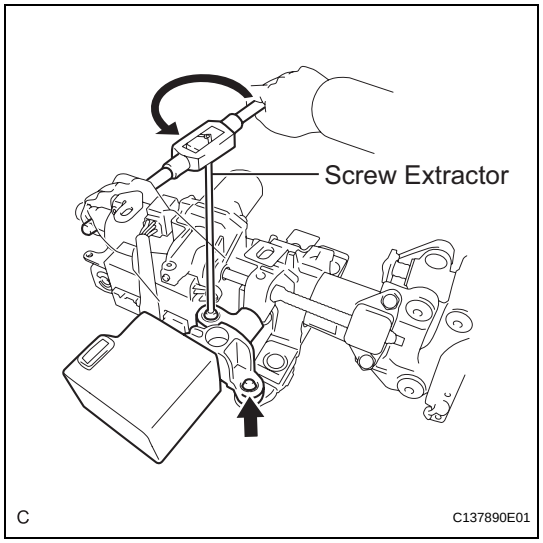

2. REMOVE MULTIPLEX TILT AND TELESCOPIC ECU (See page SR-90)

INSPECTION

1. INSPECT STEERING COLUMN ASSEMBLY (Tilt Motor)

(a) Connect the positive battery terminal to terminal TIM+ (E80-1) and the negative battery terminal to terminal TIM- (E80-2) of the tilt motor connector. Then confirm that the steering wheel tilts up.

OK:

The steering wheel tilts up.

(b) Connect the negative battery terminal to terminal TIM+ (E80-1) and the positive battery terminal to terminal TIM- (E80-2) of the tilt motor connector. Then confirm that the steering wheel tilts down.

OK:

The steering wheel tilts down.

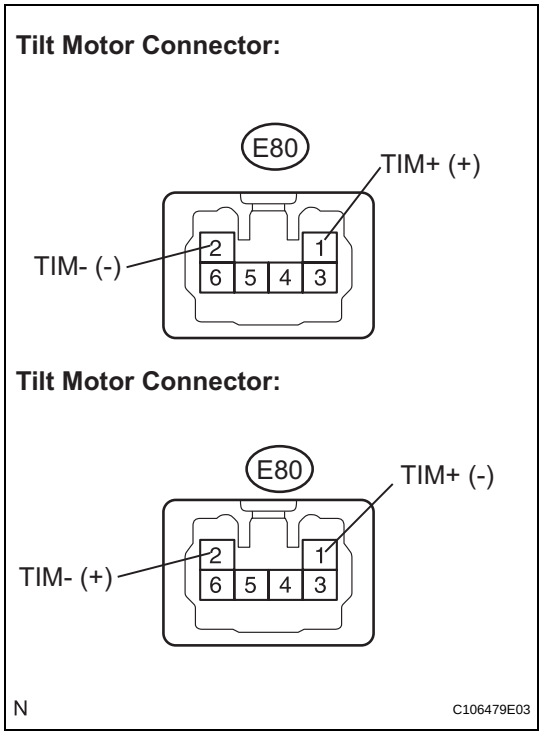

Multiplex Tilt and Telescopic ECU:

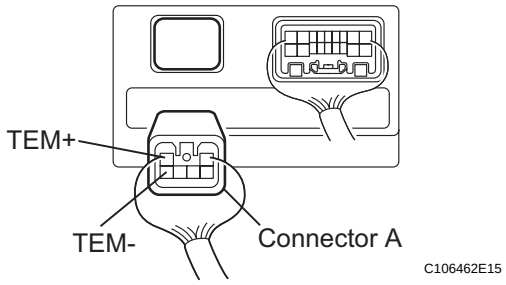

2. INSPECT STEERING COLUMN ASSEMBLY (Telescopic Motor)

(a) Disconnect connector A from the multiplex tilt and telescopic ECU.

(b) Connect the positive battery terminal to terminal TEM+ (A-2) and the negative battery terminal to terminal TEM- (A-6) of the telescopic motor connector. Then confirm that the steering column contracts.

OK:

The steering column contracts.

(c) Connect the negative battery terminal to terminal TEM+ (A-2) and the positive battery terminal to terminal TEM- (A-6) of the telescopic motor connector. Then confirm that the steering column extends.

OK:

The steering column extends.

REASSEMBLY

1. **INSTALL MULTIPLEX TILT AND TELESCOPIC ECU (See page SR-90)**

2. **INSTALL STEERING LOCK ACTUATOR ASSEMBLY**
   (a) Temporarily install the steering lock actuator assembly with 2 new tapered-head bolts.
   (b) Tighten the 2 tapered-head bolts until the bolt heads break off.

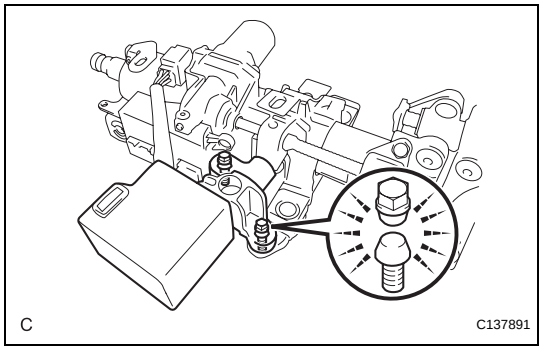

INSTALLATION

1. **INSTALL STEERING INTERMEDIATE SHAFT ASSEMBLY**
   (a) Align the matchmarks on the steering intermediate shaft assembly and the steering main shaft.
   (b) Install the bolt.
   Torque: 35 N*m (360 kgf*cm, 26 ft.*lbf)

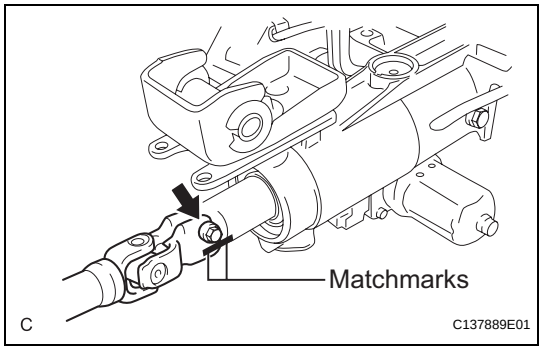

2. **INSTALL STEERING COLUMN ASSEMBLY**
   (a) Install the steering column assembly with the bolt and 2 nuts.
   Torque: 21 N*m (214 kgf*cm, 16 ft.*lbf)
   (b) Connect the connectors and wire harness clamps to the steering column assembly.

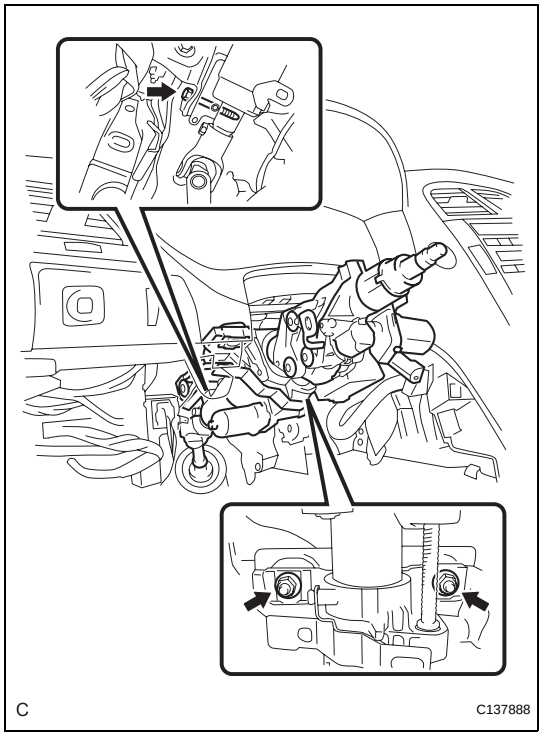

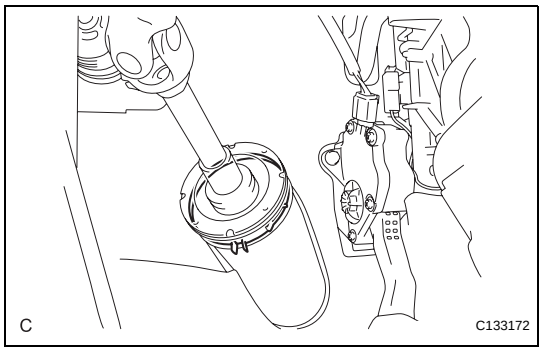

(c) Install the clamp to the steering column hole shield.

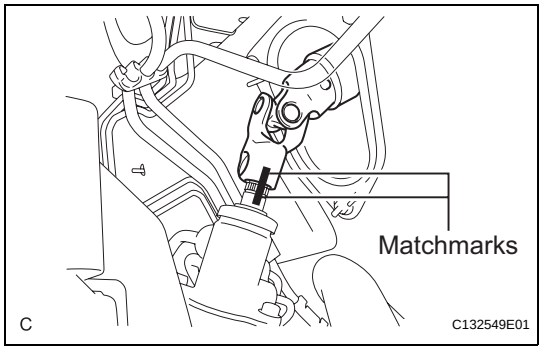

3. CONNECT STEERING INTERMEDIATE SHAFT ASSEMBLY

(a) Align the matchmarks on the steering intermediate shaft assembly and the power steering link assembly.

(b) Install the bolt.
Torque: 35 N*m (360 kgf*cm, 26 ft.*lbf)

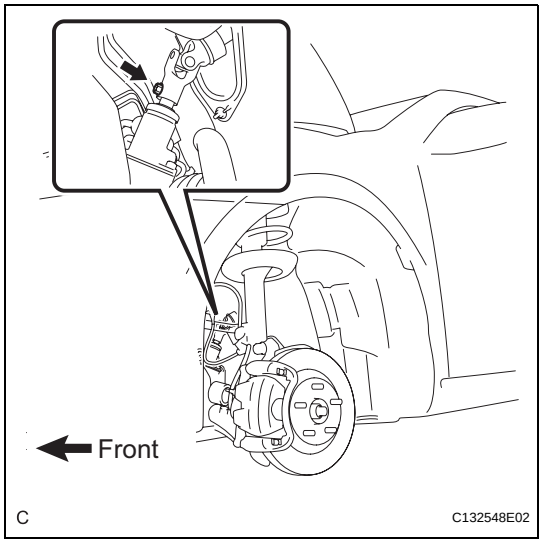

4. INSTALL FRONT WHEEL LH
Torque: 103 N*m (1,050 kgf*cm, 76 ft.*lbf)

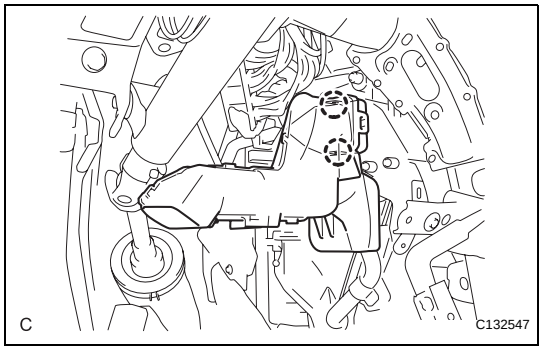

5. INSTALL NO. 1 AIR DUCT SUB-ASSEMBLY

(a) Engage the 2 claws to install the No. 1 air duct sub-assembly.

6. PLACE FRONT WHEELS FACING STRAIGHT AHEAD

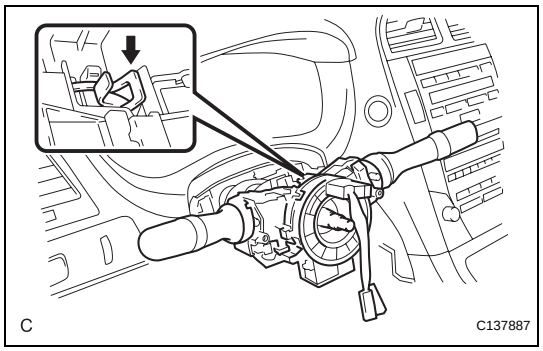

7. INSTALL TURN SIGNAL SWITCH ASSEMBLY WITH SPIRAL CABLE SUB-ASSEMBLY

(a) Install the turn signal switch assembly with spiral cable sub-assembly to the steering column assembly with the clamp.

(b) Connect the connectors to the turn signal switch assembly with spiral cable sub-assembly.

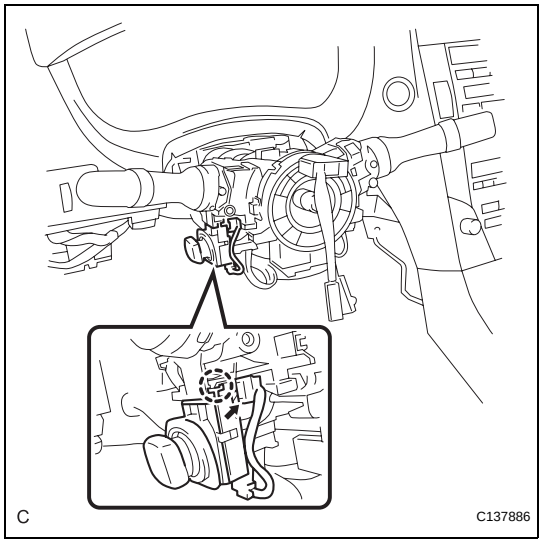

8. INSTALL TILT AND TELESCOPIC SWITCH

(a) Engage the claw to install the tilt and telescopic switch.

(b) Connect the connector.

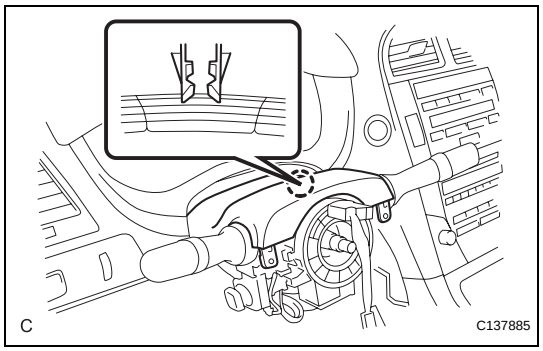

9. INSTALL STEERING COLUMN COVER

(a) Engage the claw to install the upper steering column cover.

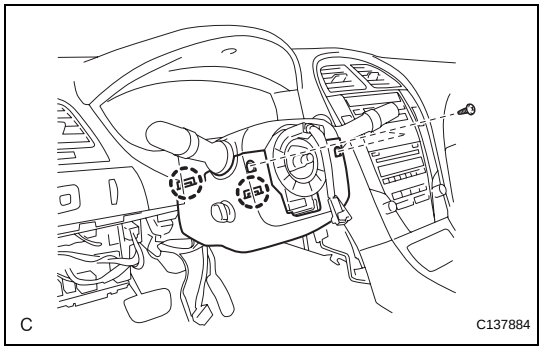

(b) Engage the 2 claws to install the lower steering column cover.

NOTICE:

Do not damage the tilt and telescopic switch.

(c) Install the 2 screws.

Torque: 2.0 N*m (20 kgf*cm, 18 in.*lbf)

10. ADJUST SPIRAL CABLE (See page RS-382)

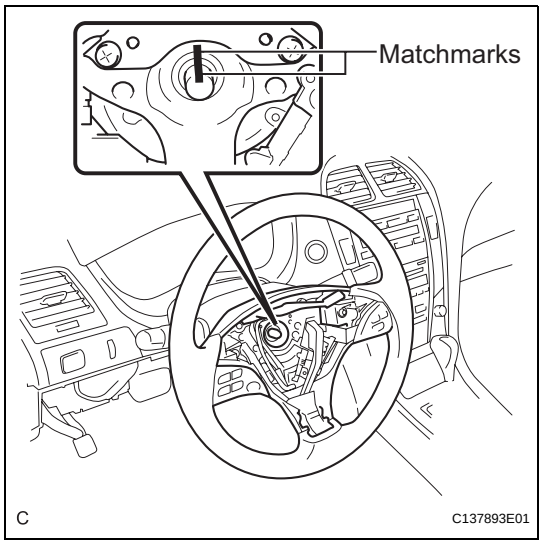

11. INSTALL STEERING WHEEL ASSEMBLY
(a) Align the matchmarks on the steering wheel assembly and steering main shaft assembly.
(b) Install the steering wheel assembly set nut.
Torque: 50 N*m (510 kgf*cm, 37 ft.*lbf)

12. INSPECT STEERING WHEEL CENTER POINT

13. INSTALL DRIVER SIDE KNEE AIRBAG ASSEMBLY (See page RS-387)

14. INSTALL LOWER INSTRUMENT PANEL SUB-ASSEMBLY (See page IP-46)

15. INSTALL INSTRUMENT PANEL FINISH PANEL END LH (See page IP-46)

16. INSTALL SIDE INSTRUMENT PANEL LH (See page IP-47)

17. INSTALL FRONT DOOR OPENING TRIM COVER LH (See page IR-64)

18. INSTALL FRONT DOOR SCUFF PLATE LH (See page IR-65)

19. INSTALL STEERING PAD (See page RS-368)

20. INSTALL NO. 3 LOWER STEERING WHEEL COVER (See page RS-369)

21. INSTALL NO. 2 LOWER STEERING WHEEL COVER (See page RS-369)

22. INSPECT STEERING PAD (See page RS-369)

23. CONNECT CABLE TO NEGATIVE BATTERY TERMINAL
NOTICE:
Reset the AUTO TILT AWAY function setting to the previous condition by changing the customize parameter (See page SR-9).

24. INSPECT SRS WARNING LIGHT
HINT:
(See page RS-37)

25. PERFORM INITIALIZATION
NOTICE:
Some systems need initialization after reconnecting the cable to the negative battery terminal (See page IN-33).

DTC	B1411/11	Room Temperature Sensor Circuit

DESCRIPTION

This sensor detects the cabin temperature that is used as the basis for temperature control and sends a signal to the A/C amplifier.

DTC No.	DTC Detection Condition	Trouble Area
B1411/11	Open or short in room temperature sensor circuit	• A/C room temperature sensor • Harness or connector between A/C room temperature sensor and A/C amplifier • A/C amplifier

WIRING DIAGRAM

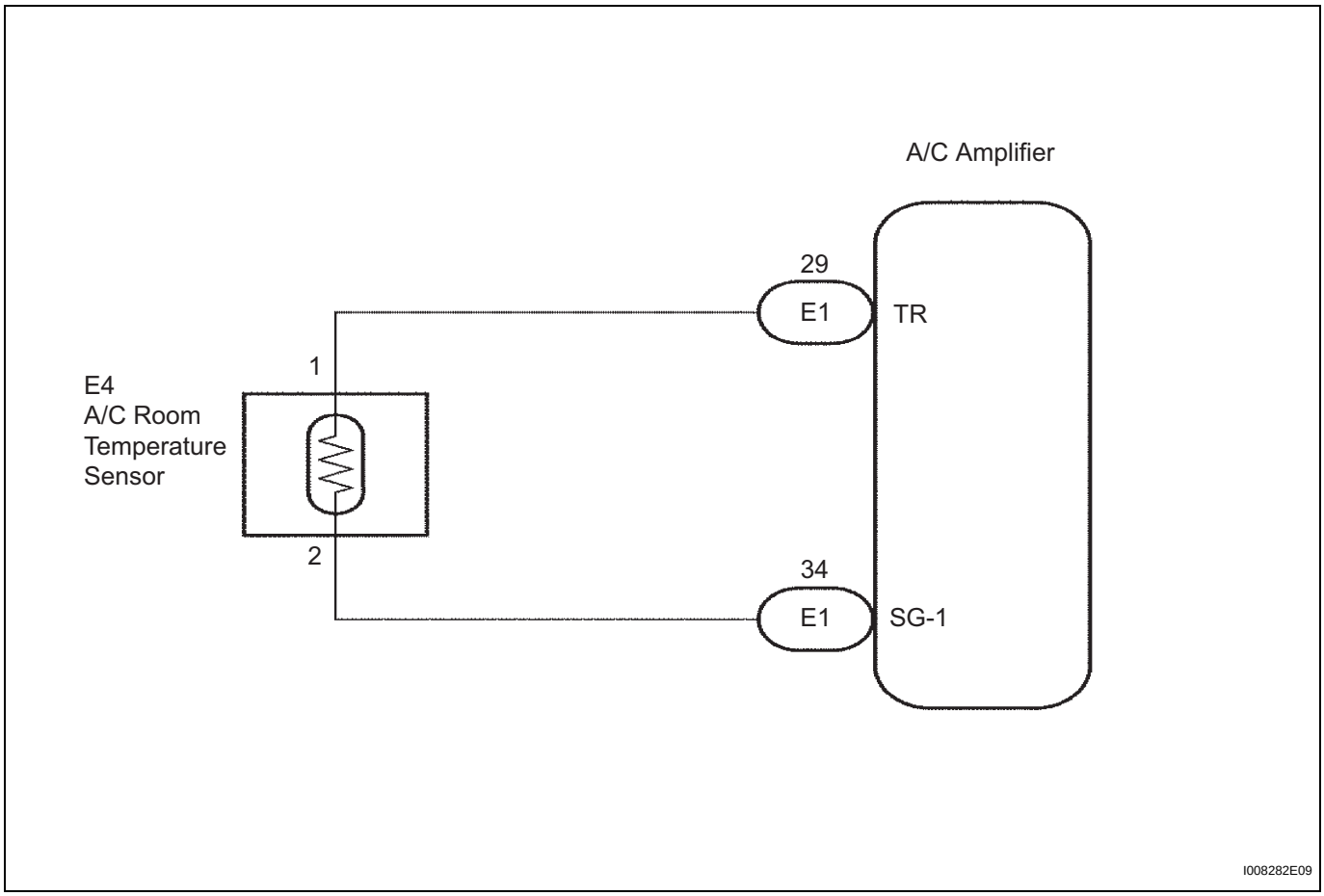

INSPECTION PROCEDURE

1	READ VALUE OF INTELLIGENT TESTER

(a) Connect the intelligent tester to the DLC3.
(b) Turn the engine switch on (IG) and turn the intelligent tester main switch on.

(c) Select the item below in the DATA LIST, and read the display on the intelligent tester.

DATA LIST / AIR CONDITIONER:

Tester Display	Measurement Item/Range	Normal Condition	Diagnostic Note
ROOM TEMP	Room temperature sensor / Min.: -6.5°C (20.3°F), Max.: 57.25°C (135.05°F)	Actual cabin temperature is displayed	-

OK:

The display is as specified in the normal condition column.

Result

Result	Proceed to
NG	**A**
OK (When troubleshooting according to the PROBLEM SYMPTOMS TABLE)	**B**
OK (When troubleshooting according to the DTC)	**C**

B → **PROCEED TO NEXT CIRCUIT INSPECTION SHOWN IN PROBLEM SYMPTOMS TABLE**

C → **REPLACE AIR CONDITIONING AMPLIFIER**

A

2 INSPECT AIR CONDITIONING AMPLIFIER

Air Conditioning Amplifier Connector Wire Harness View:

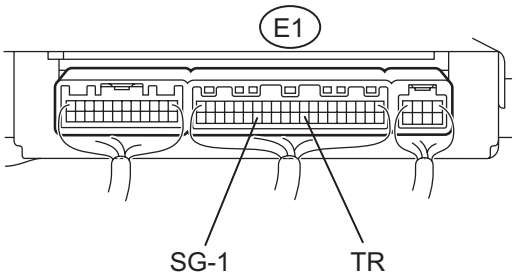

H E124471E17

(a) Remove the A/C amplifier with the connectors still connected.

(b) Turn the engine switch on (IG).

(c) Measure the voltage according to the value(s) in the table below.

Standard voltage

Tester Connection	Condition	Specified Condition
E1-29 (TR) - E1-34 (SG-1)	**Engine switch on (IG) at 25°C (77°F)**	**1.35 to 1.75 V**
E1-29 (TR) - E1-34 (SG-1)	**Engine switch on (IG) at 40°C (104°F)**	**0.9 to 1.2 V**

HINT:

As the temperature increases, the voltage decreases.

Result

Result	Proceed to
NG	**A**
OK (When troubleshooting according to the PROBLEM SYMPTOMS TABLE)	**B**
OK (When troubleshooting according to the DTC)	**C**

B → **PROCEED TO NEXT CIRCUIT INSPECTION SHOWN IN PROBLEM SYMPTOMS TABLE**

C → **REPLACE AIR CONDITIONING AMPLIFIER**

A

3 INSPECT A/C ROOM TEMPERATURE SENSOR

A/C Room Temperature Sensor Connector Front View:

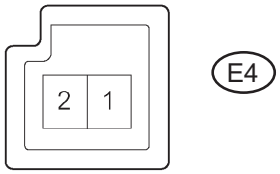

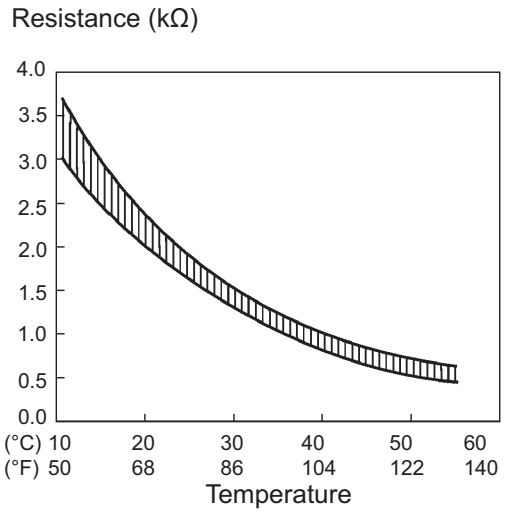

(a) Remove the A/C room temperature sensor.
(b) Measure the resistance according to the value(s) in the table below.

Standard resistance

Tester Connection	Condition	Specified Condition
E4-1 - E4-2	10°C (50°F)	3.00 to 3.73 kΩ
E4-1 - E4-2	15°C (59°F)	2.45 to 2.88 kΩ
E4-1 - E4-2	20°C (68°F)	1.95 to 2.30 kΩ
E4-1 - E4-2	25°C (77°F)	1.60 to 1.80 kΩ
E4-1 - E4-2	30°C (86°F)	1.28 to 1.47 kΩ
E4-1 - E4-2	35°C (95°F)	1.00 to 1.22 kΩ
E4-1 - E4-2	40°C (104°F)	0.80 to 1.00 kΩ
E4-1 - E4-2	45°C (113°F)	0.65 to 0.85 kΩ
E4-1 - E4-2	50°C (122°F)	0.50 to 0.70 kΩ
E4-1 - E4-2	55°C (131°F)	0.44 to 0.60 kΩ
E4-1 - E4-2	60°C (140°F)	0.36 to 0.50 kΩ

NOTICE:
- **Hold the sensor only by its connector. Touching the sensor may change the resistance value.**
- **When measuring, the sensor temperature must be the same as the ambient temperature.**

HINT:
As the temperature increases, the resistance decreases (see the graph).

NG → **REPLACE A/C ROOM TEMPERATURE SENSOR**

OK

4	CHECK HARNESS AND CONNECTOR (A/C ROOM TEMPERATURE SENSOR - AIR CONDITIONING AMPLIFIER)

A/C Conditioning Amplifier Connector Wire Harness View:

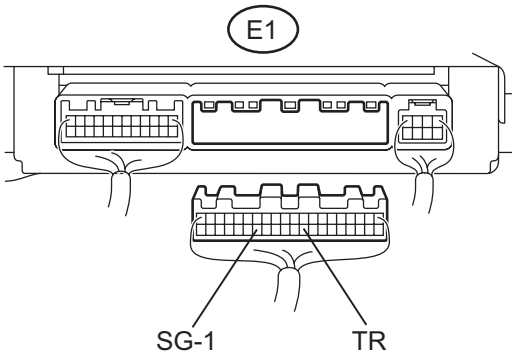

H E124470E31

(a) Disconnect the connector from the A/C amplifier.

A/C Room Temperature Sensor Connector Front View:

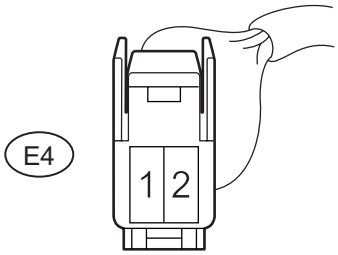

H E124472E03

(b) Disconnect the connector from the A/C room temperature sensor.

(c) Measure the resistance according to the value(s) in the table below.

Standard resistance

Tester Connection	Condition	Specified Condition
E1-29 (TR) - E4-1	Always	Below 1 Ω
E1-34 (SG-1) - E4-2	Always	Below 1 Ω
E1-29 (TR) - Body ground	Always	10 kΩ or higher
E1-34 (SG-1) - Body ground	Always	10 kΩ or higher

NG → **REPAIR OR REPLACE HARNESS OR CONNECTOR**

OK

REPLACE AIR CONDITIONING AMPLIFIER

DTC	B1412/12	Ambient Temperature Sensor Circuit

DESCRIPTION

The ambient temperature sensor is installed in front of the condenser to detect the ambient temperature which is used to control the air conditioner "AUTO" mode. This sensor is connected to the A/C amplifier and detects fluctuations in the ambient temperature. This data is used for controlling the cabin temperature. The sensor sends a signal to the A/C amplifier. The resistance of the ambient temperature sensor changes in accordance with the ambient temperature. As the temperature decreases, the resistance increases. As the temperature increases, the resistance decreases.
The A/C amplifier applies voltage (5 V) to the ambient temperature sensor and reads voltage changes as the resistance of the ambient temperature sensor changes.

DTC No.	DTC Detection Condition	Trouble Area
B1412/12	Open or short in ambient temperature sensor circuit	• Ambient temperature sensor • Harness or connector between ambient temperature sensor and A/C amplifier • A/C amplifier

WIRING DIAGRAM

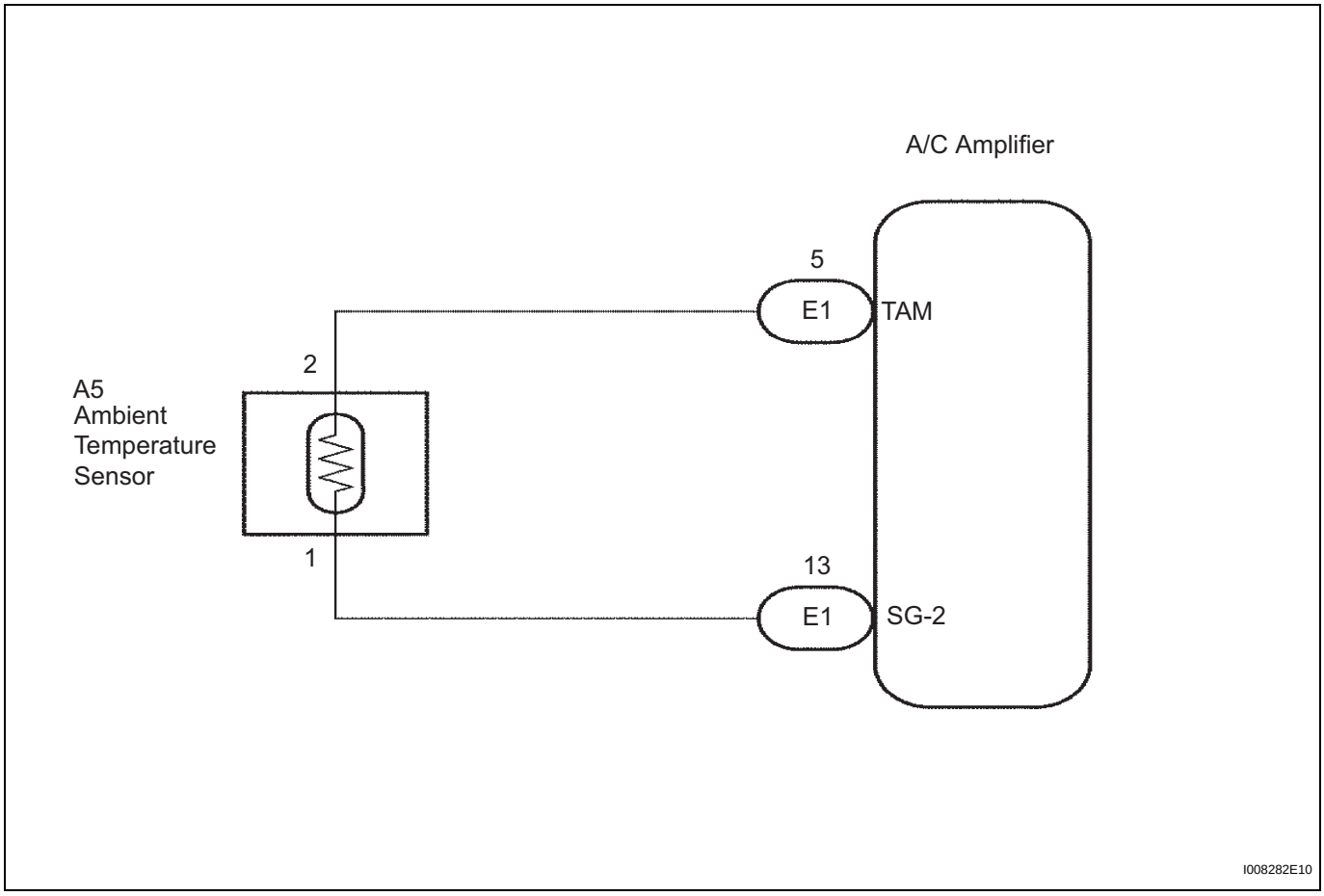

INSPECTION PROCEDURE

AC

1	READ VALUE OF INTELLIGENT TESTER

(a) Connect the intelligent tester to the DLC3.

(b) Turn the engine switch on (IG) and turn the intelligent tester main switch on.
(c) Select the item below in the DATA LIST, and read the display on the intelligent tester.

DATA LIST / AIR CONDITIONER:

Tester Display	Measurement Item/Range	Normal Condition	Diagnostic Note
AMBI TEMP SENS (Ambient temperature sensor)	Ambient temperature sensor / Min: -23.3°C (-9.94°F), Max: 65.95°C (150.71°F)	Actual ambient temperature is displayed	Open in circuit: -23.3°C (-9.94°F) Short in circuit: 65.95°C (150.71°F)

OK:
The display is as specified in the normal condition column.

Result

Result	Proceed to
NG	A
OK (When troubleshooting according to the PROBLEM SYMPTOMS TABLE)	B
OK (When troubleshooting according to the DTC)	C

B → **PROCEED TO NEXT CIRCUIT INSPECTION SHOWN IN PROBLEM SYMPTOMS TABLE**

C → **REPLACE AIR CONDITIONING AMPLIFIER**

A

2 INSPECT AIR CONDITIONING AMPLIFIER

Air Conditioning Amplifier Connector Wire Harness View:

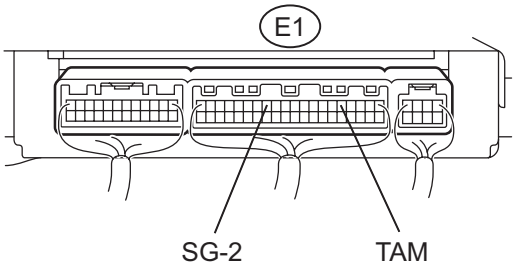

H E124471E24

(a) Remove the A/C amplifier with the connector still connected.
(b) Turn the engine switch on (IG).
(c) Measure the voltage according to the value(s) in the table below.

Standard voltage

Tester Connection	Condition	Specified Condition
E1-5 (TAM) - E1-13 (SG-2)	Engine switch on (IG) at 25°C (77°F)	1.35 to 1.75 V
E1-5 (TAM) - E1-13 (SG-2)	Engine switch on (IG) at 40°C (104°F)	0.9 to 1.2 V

HINT:
As the temperature increases, the voltage decreases.

Result

Result	Proceed to
NG	A
OK (When troubleshooting according to the PROBLEM SYMPTOMS TABLE)	B
OK (When troubleshooting according to the DTC)	C

B → **PROCEED TO NEXT CIRCUIT INSPECTION SHOWN IN PROBLEM SYMPTOMS TABLE**

C → **REPLACE AIR CONDITIONING AMPLIFIER**

A

3 INSPECT AMBIENT TEMPERATURE SENSOR

Ambient Temperature Sensor Connector Front View:

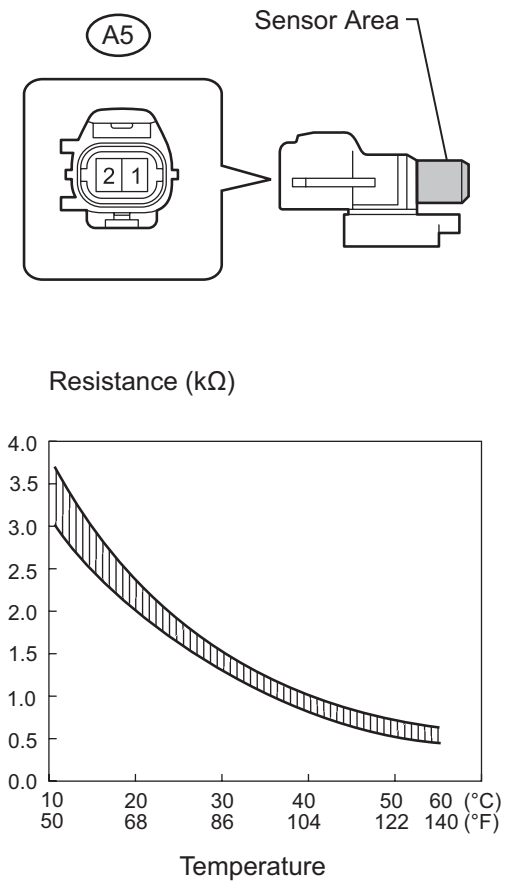

(a) Remove the ambient temperature sensor.

(b) Measure the resistance according to the value(s) in the table below.

Standard resistance

Tester Connection	Condition	Specified Condition
A5-1 - A5-2	10°C (50°F)	3.00 to 3.73 kΩ
A5-1 - A5-2	15°C (59°F)	2.45 to 2.88 kΩ
A5-1 - A5-2	20°C (68°F)	1.95 to 2.30 kΩ
A5-1 - A5-2	25°C (77°F)	1.60 to 1.80 kΩ
A5-1 - A5-2	30°C (86°F)	1.28 to 1.47 kΩ
A5-1 - A5-2	35°C (95°F)	1.00 to 1.22 kΩ
A5-1 - A5-2	40°C (104°F)	0.80 to 1.00 kΩ
A5-1 - A5-2	45°C (113°F)	0.65 to 0.85 kΩ
A5-1 - A5-2	50°C (122°F)	0.50 to 0.70 kΩ
A5-1 - A5-2	55°C (131°F)	0.44 to 0.60 kΩ
A5-1 - A5-2	60°C (140°F)	0.36 to 0.50 kΩ

NOTICE:

- **Even slightly touching the sensor may change the resistance value. Be sure to hold the connector of the sensor.**
- **When measuring, the sensor temperature must be the same as the ambient temperature.**

HINT:

As the temperature increases, the resistance decreases (see the graph).

NG → **REPLACE AMBIENT TEMPERATURE SENSOR**

OK

4	CHECK HARNESS AND CONNECTOR (AMBIENT TEMPERATURE SENSOR - A/C AMPLIFIER)

Ambient Temperature Sensor Connector Front View:

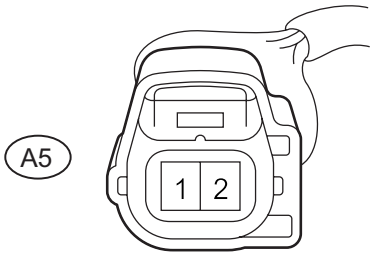

H E124473E04

(a) Disconnect the ambient temperature sensor connector.

Air Conditioning Amplifier Connector Wire Harness View:

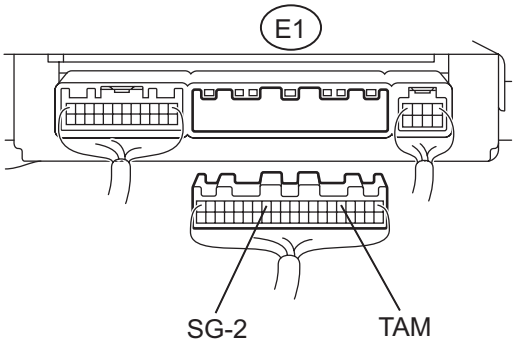

H E124470E32

(b) Disconnect the A/C amplifier connector.

(c) Measure the resistance according to the value(s) in the table below.

Standard resistance

Tester Connection	Condition	Specified Condition
A5-2 - E1-5 (TAM)	Always	Below 1 Ω
A5-1 - E1-13 (SG-2)	Always	Below 1 Ω
E1-5 (TAM) - Body ground	Always	10 kΩ or higher
E1-13 (SG-2) - Body ground	Always	10 kΩ or higher

NG → **REPAIR OR REPLACE HARNESS OR CONNECTOR**

OK

REPLACE AIR CONDITIONING AMPLIFIER

DTC	B1413/13	Evaporator Temperature Sensor Circuit

DESCRIPTION

The evaporator temperature sensor (A/C thermistor) is installed on the evaporator in the air conditioner unit. It detects the temperature of the cooled air that has passed through the evaporator and its signal is used to control the air conditioning. It sends a signal to the A/C amplifier. The resistance of the evaporator temperature sensor (A/C thermistor) changes in accordance with the temperature of the cooled air that has passed through the evaporator. As the temperature decreases, the resistance increases. As the temperature increases, the resistance decreases.
The A/C amplifier applies voltage (5 V) to the evaporator temperature sensor (A/C thermistor) and reads voltage changes as the resistance of the evaporator temperature sensor (A/C thermistor) changes. This sensor is used to prevent the evaporator from freezing.

DTC No.	DTC Detection Condition	Trouble Area
B1413/13	Open or short in evaporator temperature sensor circuit	• Air conditioning harness (evaporator temperature sensor) • A/C amplifier

WIRING DIAGRAM

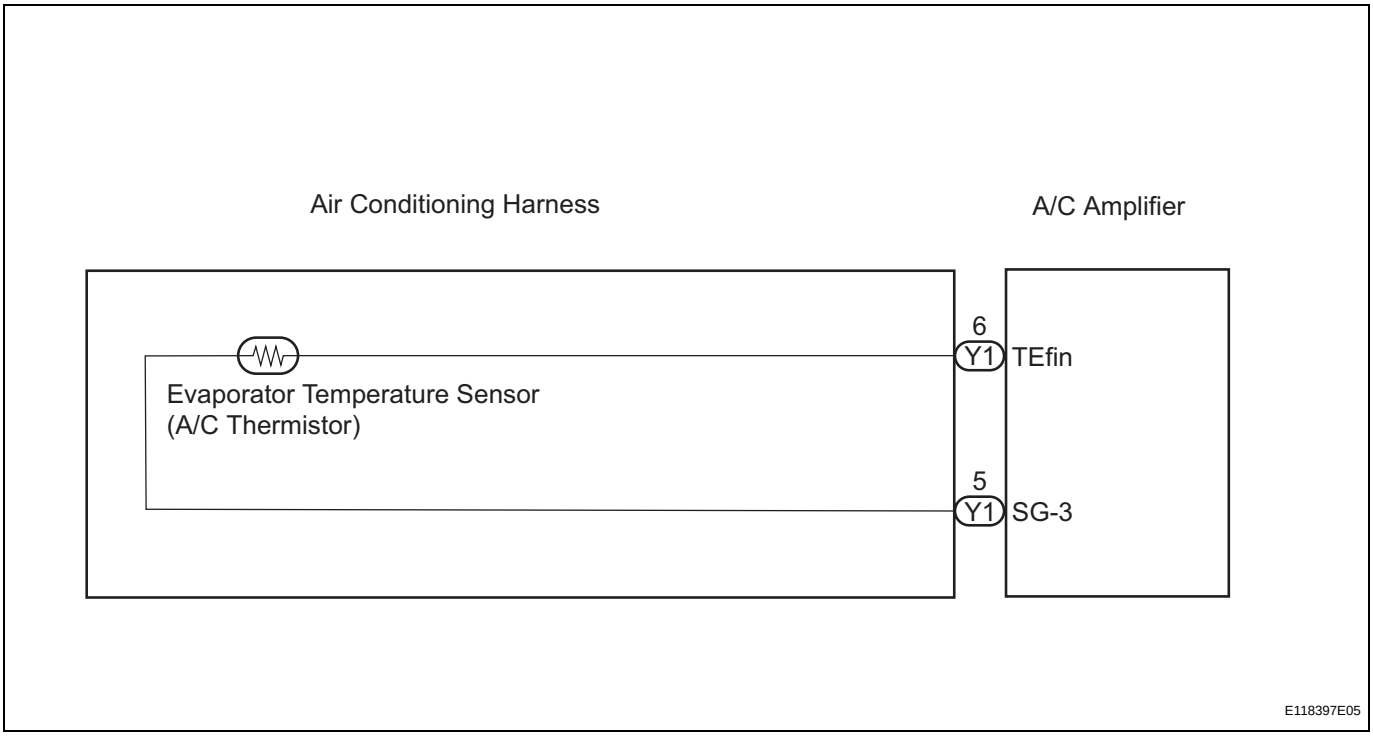

INSPECTION PROCEDURE

1	READ VALUE OF INTELLIGENT TESTER

(a) Connect the intelligent tester to the DLC3.
(b) Turn the engine switch on (IG) and turn the intelligent tester main switch on.

(c) Select the item below in the DATA LIST, and read the display on the intelligent tester.

DATA LIST / AIR CONDITIONER:

Tester Display	Measurement Item/Range	Normal Condition	Diagnostic Note
EVAP FIN TEMP (Evaporator fin thermistor)	Evaporator fin thermistor / Min.: -29.7°C (-21.46°F), Max.: 59.55°C (139.19°F)	Actual evaporator temperature is displayed	Open in circuit: -29.7°C (-21.46°F) Short in circuit: 59.55°C (139.19°F)

OK:

The display is as specified in the normal condition column.

Result

Result	Proceed to
NG	**A**
OK (When troubleshooting according to the PROBLEM SYMPTOMS TABLE)	**B**
OK (When troubleshooting according to the DTC)	**C**

B → **PROCEED TO NEXT CIRCUIT INSPECTION SHOWN IN PROBLEM SYMPTOMS TABLE**

C → **REPLACE AIR CONDITIONING AMPLIFIER**

A

2 INSPECT AIR CONDITIONING HARNESS

Air Conditioning Harness:
(A/C Evaporator Temperature Sensor)

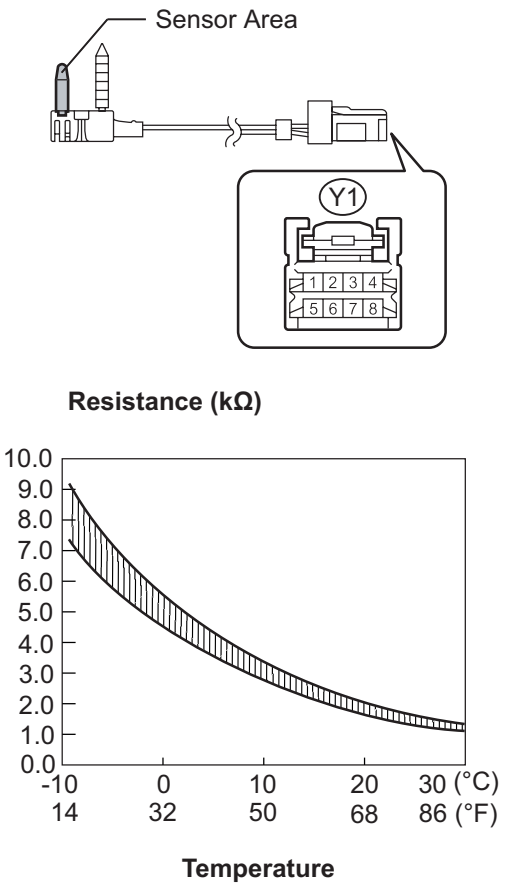

(a) Remove the air conditioning harness (evaporator temperature sensor).

(b) Measure the resistance according to the value(s) in the table below.

Standard resistance

Tester Connection	Condition	Specified Condition
Y1-5 - Y1-6	-10°C (14°F)	7.30 to 9.10 kΩ
Y1-5 - Y1-6	-5°C (23°F)	5.65 to 6.95 kΩ
Y1-5 - Y1-6	0°C (32°F)	4.40 to 5.35 kΩ
Y1-5 - Y1-6	5°C (41°F)	3.40 to 4.15 kΩ
Y1-5 - Y1-6	10°C (50°F)	2.70 to 3.25 kΩ
Y1-5 - Y1-6	15°C (59°F)	2.14 to 2.58 kΩ
Y1-5 - Y1-6	20°C (68°F)	1.71 to 2.05 kΩ
Y1-5 - Y1-6	25°C (77°F)	1.38 to 1.64 kΩ
Y1-5 - Y1-6	30°C (86°F)	1.11 to 1.32 kΩ

NOTICE:

- **Even slightly touching the sensor may change the resistance value. Be sure to hold the connector of the sensor.**
- **When measuring, the sensor temperature must be the same as the ambient temperature.**

HINT:
As the temperature increases, the resistance decreases (see the graph).

NG → **REPLACE AIR CONDITIONING HARNESS**

OK

REPLACE AIR CONDITIONING AMPLIFIER

DTC	B1418/18	Exhaust Gas Sensor Circuit

DESCRIPTION

The smog ventilation sensor, which is installed on the front of the condenser, is used for automatic air inlet control. This sensor detects CO and HC in the emission gas and transmits signals to the A/C amplifier.

DTC No.	DTC Detection Condition	Trouble Area
B1418/18	Open or short in smog ventilation sensor circuit (HC, CO)	• Smog ventilation sensor (emission gas sensor) • Harness or connector between smog ventilation sensor (emission gas sensor) and A/C amplifier • A/C amplifier

WIRING DIAGRAM

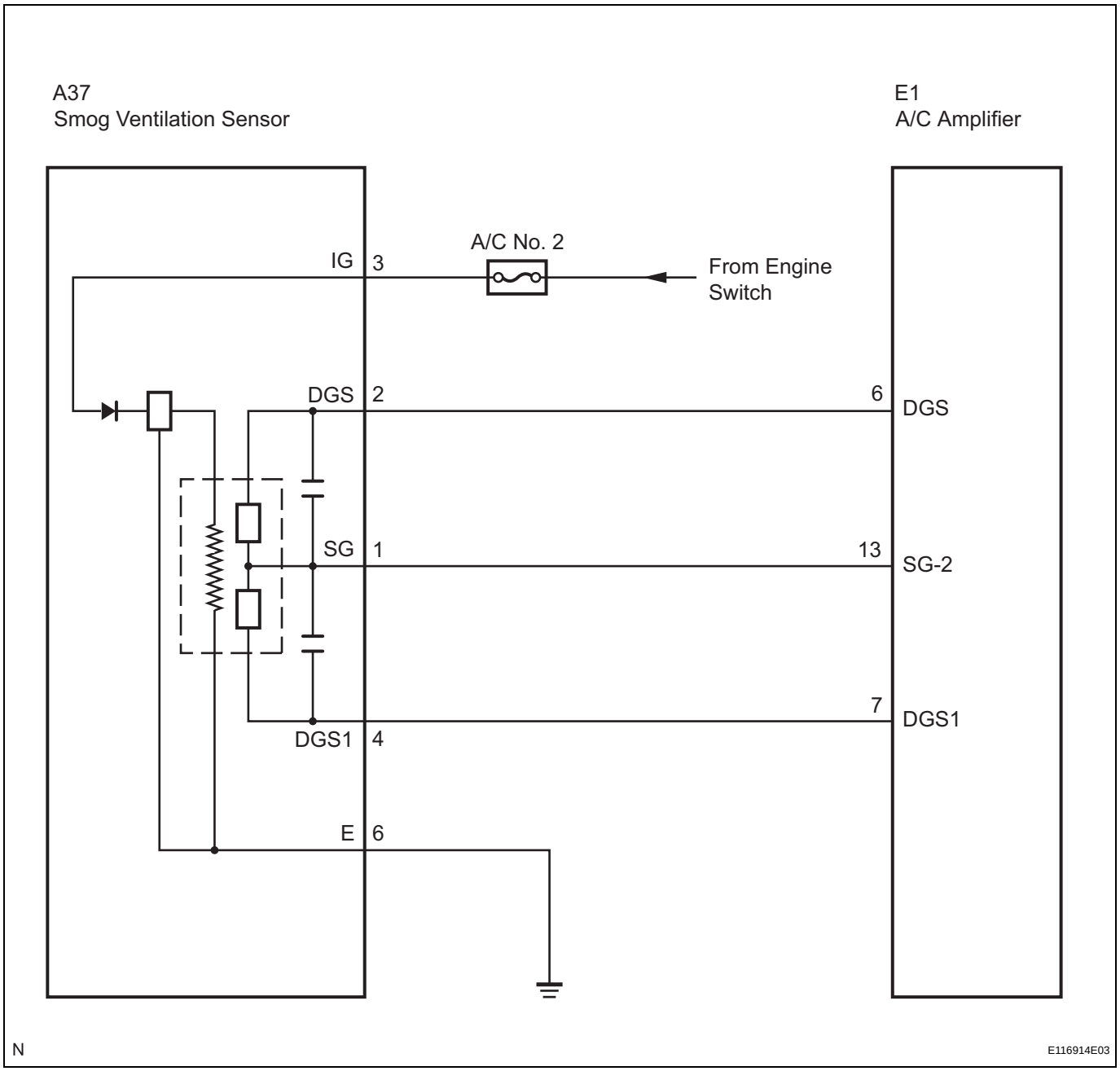

AC

INSPECTION PROCEDURE

1 INSPECT FUSE (LH-IG)

(a) Remove the LH-IG fuse from the cowl side junction block LH.
(b) Measure the resistance according to the value(s) in the table below.

Standard resistance

Tester Item	Condition	Specified Condition
LH-IG fuse	Always	Below 1 Ω

NG → **REPLACE FUSE (LH-IG)**

OK

2 READ VALUE OF INTELLIGENT TESTER

(a) Connect the intelligent tester to the DLC3.
(b) Turn the engine switch on (IG) and turn the intelligent tester main switch on.
(c) Allow exhaust gas (HC, CO) to travel to the sensing portion of the smog ventilation sensor.
(d) Select the item below in the DATA LIST, and read the display on the intelligent tester.

DATA LIST / AIR CONDITIONER:

Tester Display	Measurement Item/Range	Normal Condition	Diagnostic Note
EMISS GAS SENS (Emission gas sensor)	Emission gas / Min.: 0 V, Max.: 255 V	Smog ventilation sensor value increases as gas amount increases	-

OK:
The display is as specified in the normal condition column.

Result

Result	Proceed to
NG	A
OK (When troubleshooting according to the PROBLEM SYMPTOMS TABLE)	B
OK (When troubleshooting according to the DTC)	C

B → **PROCEED TO NEXT CIRCUIT INSPECTION SHOWN IN PROBLEM SYMPTOMS TABLE**

C → **REPLACE AIR CONDITIONING AMPLIFIER**

A

3 CHECK HARNESS AND CONNECTOR (SMOG VENTILATION SENSOR - BODY GROUND)

Wire Harness Side Connector Front View:

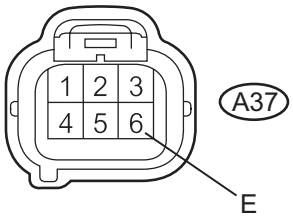

H E107005E13

(a) Disconnect the smog ventilation sensor connector.
(b) Measure the resistance according to the value(s) in the table below.

Standard resistance

Tester Connection	Condition	Specified Condition
A37-6 (E) - Body ground	Always	Below 1 Ω

NG → **REPAIR OR REPLACE HARNESS OR CONNECTOR**

OK

4 CHECK HARNESS AND CONNECTOR (SMOG VENTILATION SENSOR - BATTERY)

Wire Harness Side Connector Front View:

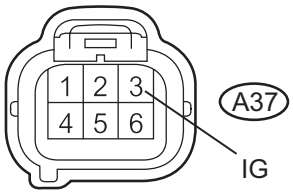

H E107005E14

(a) Disconnect the smog ventilation sensor connector.
(b) Measure the voltage according to the value(s) in the table below.

Standard voltage

Tester Connection	Condition	Specified Condition
A37-3 (IG) - Body ground	Engine switch on (IG)	10 to 14 V
	Engine switch off	Below 1 V

NG → **REPAIR OR REPLACE HARNESS OR CONNECTOR**

OK

5 INSPECT SMOG VENTILATION SENSOR

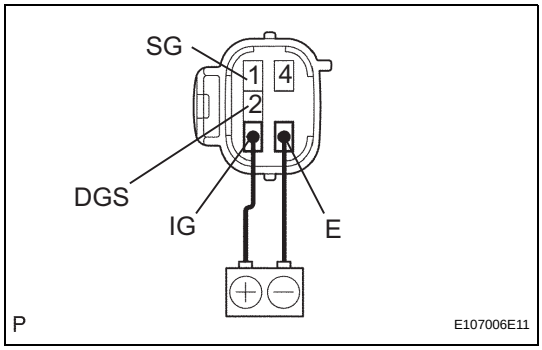

(a) Remove the smog ventilation sensor.
(b) Apply battery voltage between terminals 3 (IG) and 6 (E).
(c) Allow exhaust gas (HC, CO) to travel to the sensing portion of the smog ventilation sensor, and measure the resistance between terminals 1 (SG) and 2 (DGS).
OK:
When the sensor is exposed to the exhaust gas, the resistance increases.
HINT:
The resistance before blowing exhaust gas is 10 kΩ to 40 kΩ.

NG → **REPLACE SMOG VENTILATION SENSOR**

OK

6 CHECK HARNESS AND CONNECTOR (SMOG VENTILATION SENSOR - A/C AMPLIFIER)

Wire Harness Side Connector Front View:

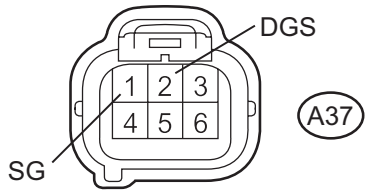

(a) Disconnect the smog ventilation sensor.

Air Conditioning Amplifier Connector Wire Harness View:

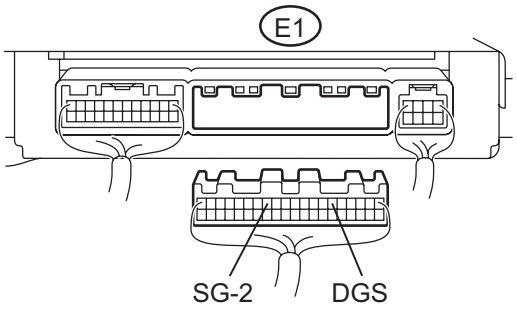

(b) Disconnect the A/C amplifier connector.
(c) Measure the resistance according to the value(s) in the table below.
Standard resistance

Tester Connection	Condition	Specified Condition
A37-1 (SG) - E1-13 (SG-2)	Always	Below 1 Ω
A37-2 (DGS) - E1-6 (DGS)	Always	Below 1 Ω
E1-13 (SG-2) - Body ground	Always	10 kΩ or higher
E1-6 (DGS) - Body ground	Always	10 kΩ or higher

NG → **REPAIR OR REPLACE HARNESS OR CONNECTOR**

OK

REPLACE AIR CONDITIONING AMPLIFIER

DTC	B1421/21	Solar Sensor Circuit (Passenger Side)

DESCRIPTION

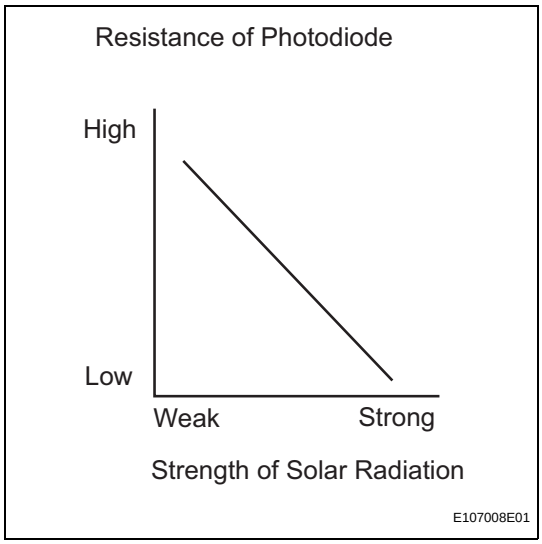

The solar sensor, which is installed on the upper side of the instrument panel, detects sunlight and controls the air conditioning in AUTO mode. The output voltage from the solar sensor varies according to the amount of sunlight. When the sunlight increases, the output voltage increases. As the sunlight decreases, the output voltage decreases. The A/C amplifier detects voltage output from the solar sensor.

DTC No.	DTC Detection Condition	Trouble Area
B1421/21	Open or short in passenger side solar sensor circuit	• Solar sensor • Harness or connector between solar sensor and A/C amplifier • Harness or connector between solar sensor and main body ECU • A/C amplifier • Main body ECU

WIRING DIAGRAM

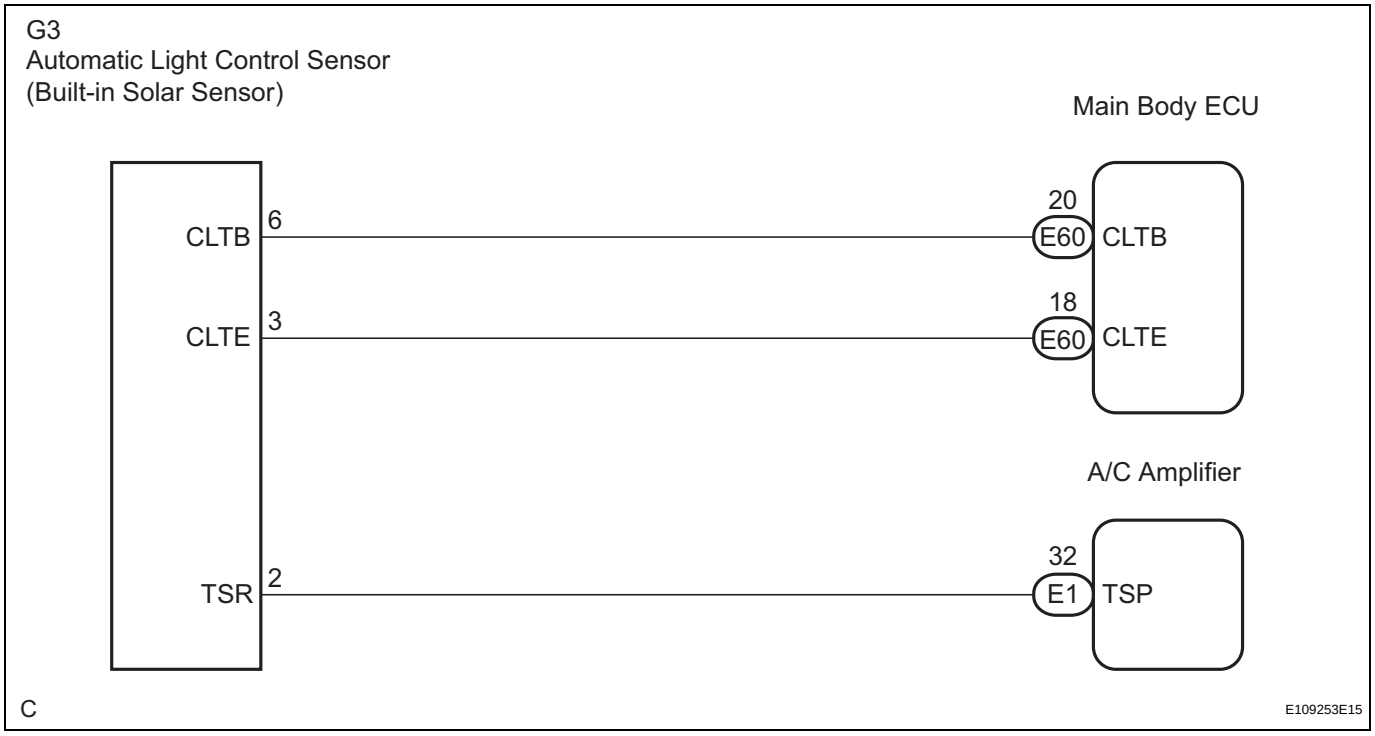

INSPECTION PROCEDURE

HINT:

- If DTC B1244 is output at the same time, troubleshoot DTC B1244 first (See page LI-49).
- If the check is performed in a dark place, DTC B1421/21 or B1424/24 (solar sensor circuit abnormal) may be output even though the system is normal.

1	READ VALUE OF INTELLIGENT TESTER

(a) Connect the intelligent tester to the DLC3.
(b) Turn the engine switch on (IG) and turn the intelligent tester main switch on.
(c) Expose the sensing portion of the solar sensor to light.
HINT:
Use an incandescent light for inspection.
(d) Select the item below in the DATA LIST, and read the display on the intelligent tester.

DATA LIST / AIR CONDITIONER:

Tester Display	Measurement Item/Range	Normal Condition	Diagnostic Note
SOLAR SENS-P (Solar sensor (P side))	Passenger side solar sensor / Min.: 0, Max.: 255	Passenger side solar sensor value increases as brightness increases	-

OK:

The display is as specified in the normal condition column.

Result

Result	Proceed to
NG	A
OK (When troubleshooting according to the PROBLEM SYMPTOMS TABLE)	B
OK (When troubleshooting according to the DTC)	C

B → **PROCEED TO NEXT CIRCUIT INSPECTION SHOWN IN PROBLEM SYMPTOMS TABLE**

C → **REPLACE AIR CONDITIONING AMPLIFIER**

A

2 CHECK HARNESS AND CONNECTOR (SOLAR SENSOR)

A/C Solar Sensor Connector Wire Harness View:

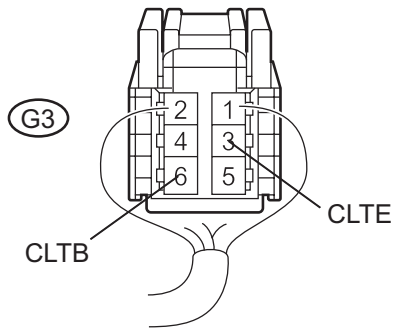

(a) Disconnect the solar sensor connector.
(b) Measure the voltage according to the value(s) in the table below.

Standard voltage

Tester Connection	Condition	Specified Condition
G3-6 (CLTB) - G3-3 (CLTE)	Engine switch off	Below 1 V
G3-6 (CLTB) - G3-3 (CLTE)	Engine switch on (IG)	10 to 14 V

OK → **Go to step 4**

NG

3 CHECK HARNESS AND CONNECTOR (MAIN BODY ECU - SOLAR SENSOR)

Main Body ECU Connector Front View:

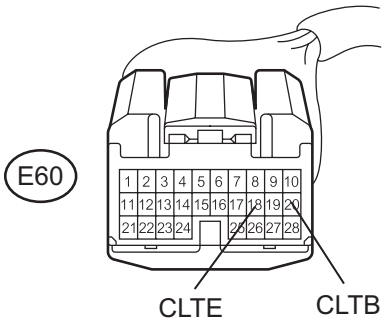

(a) Disconnect the main body ECU connector.

A/C Solar Sensor Connector Wire Harness View:

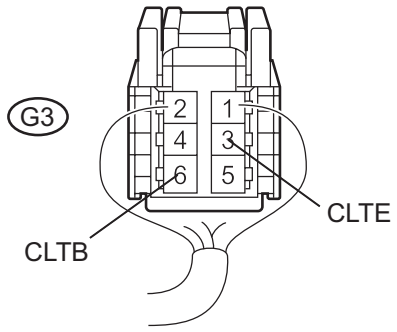

H E124476E11

(b) Measure the resistance according to the value(s) in the table below.

Standard resistance

Tester Connection	Condition	Specified Condition
E60-20 (CLTB) - G3-6 (CLTB)	Always	Below 1 Ω
E60-18 (CLTE) - G3-3 (CLTE)	Always	Below 1 Ω
E60-20 (CLTB) - Body ground	Always	10 kΩ or higher
E60-18 (CLTE) - Body ground	Always	10 kΩ or higher

NG → **REPAIR OR REPLACE HARNESS OR CONNECTOR**

OK

REPLACE MAIN BODY ECU

4 CHECK SOLAR SENSOR

Solar Sensor Connector Front View:

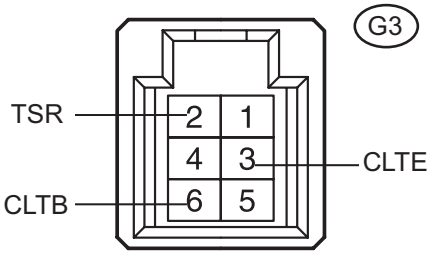

P E109215E18

(a) Remove the solar sensor with its connector still connected.

(b) Connect the positive (+) lead from the battery to terminal 6 (CLTB), and the negative (-) lead to terminal 3 (CLTE) of the solar sensor.

(c) Measure the voltage according to the value(s) in the table below.

Standard voltage

Tester Connection	Condition	Specified Condition
G3-2 (TSR) - G3-3 (CLTE)	Sensor is subjected to electric light	0.8 to 4.3 V
G3-2 (TSR) - G3-3 (CLTE)	Sensor is covered with a cloth	Below 0.8 V

NOTICE:

- **The connection procedure for using a digital tester such as a TOYOTA electrical tester is shown above. When using an analog tester, connect the negative (-) lead to terminal 6, and the positive (+) lead to terminal 3 of the solar sensor.**
- **While using the battery during inspection, do not bring the positive and negative tester probes too close to each other as a short circuit may occur.**

HINT:

- Use an incandescent light for inspection. Bring it within about 30 cm (11.8 in.) of the solar sensor.
- As the inspection light is moved away from the sensor, the voltage increases.

NG → **REPLACE SOLAR SENSOR**

OK

5	CHECK HARNESS AND CONNECTOR (SOLAR SENSOR - A/C AMPLIFIER)

A/C Solar Sensor Connector Wire Harness View:

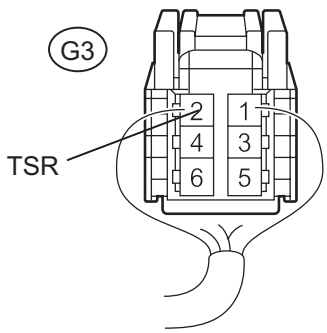

H E124476E12

(a) Disconnect the solar sensor connector.

Air Conditioning Amplifier Connector Wire Harness View:

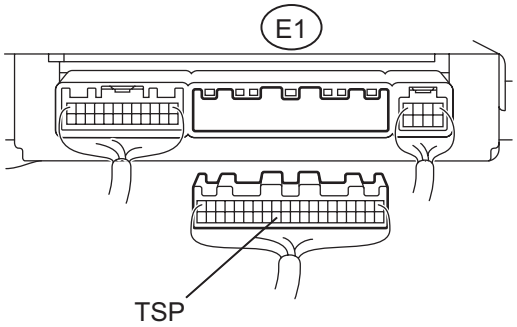

H E124470E34

(b) Disconnect the A/C amplifier connector.

(c) Measure the resistance according to the value(s) in the table below.

Standard resistance

Tester Connection (Symbols)	Condition	Specified Condition
E1-32 (TSP) - G3-2 (TSR)	Always	Below 1 Ω
E1-32 (TSP) - Body ground	Always	10 kΩ or higher

NG → **REPAIR OR REPLACE HARNESS OR CONNECTOR**

OK

REPLACE AIR CONDITIONING AMPLIFIER

DTC	B1422/22	Compressor Lock Sensor Circuit

SYSTEM DESCRIPTION

The ECM sends an engine speed signal to the A/C amplifier via CAN communication.
The A/C amplifier reads the difference between compressor speed and engine speed. When the difference becomes too large, the A/C amplifier determines that the compressor locks, and turns the magnetic clutch off.

DTC No.	DTC Detection Condition	Trouble Area
B1422/22	Open or short in compressor lock sensor circuit	• A/C compressor (A/C lock sensor) • Compressor drive belt • Harness or connector between compressor and magnetic clutch (A/C lock sensor) • A/C amplifier • CAN communication system

WIRING DIAGRAM

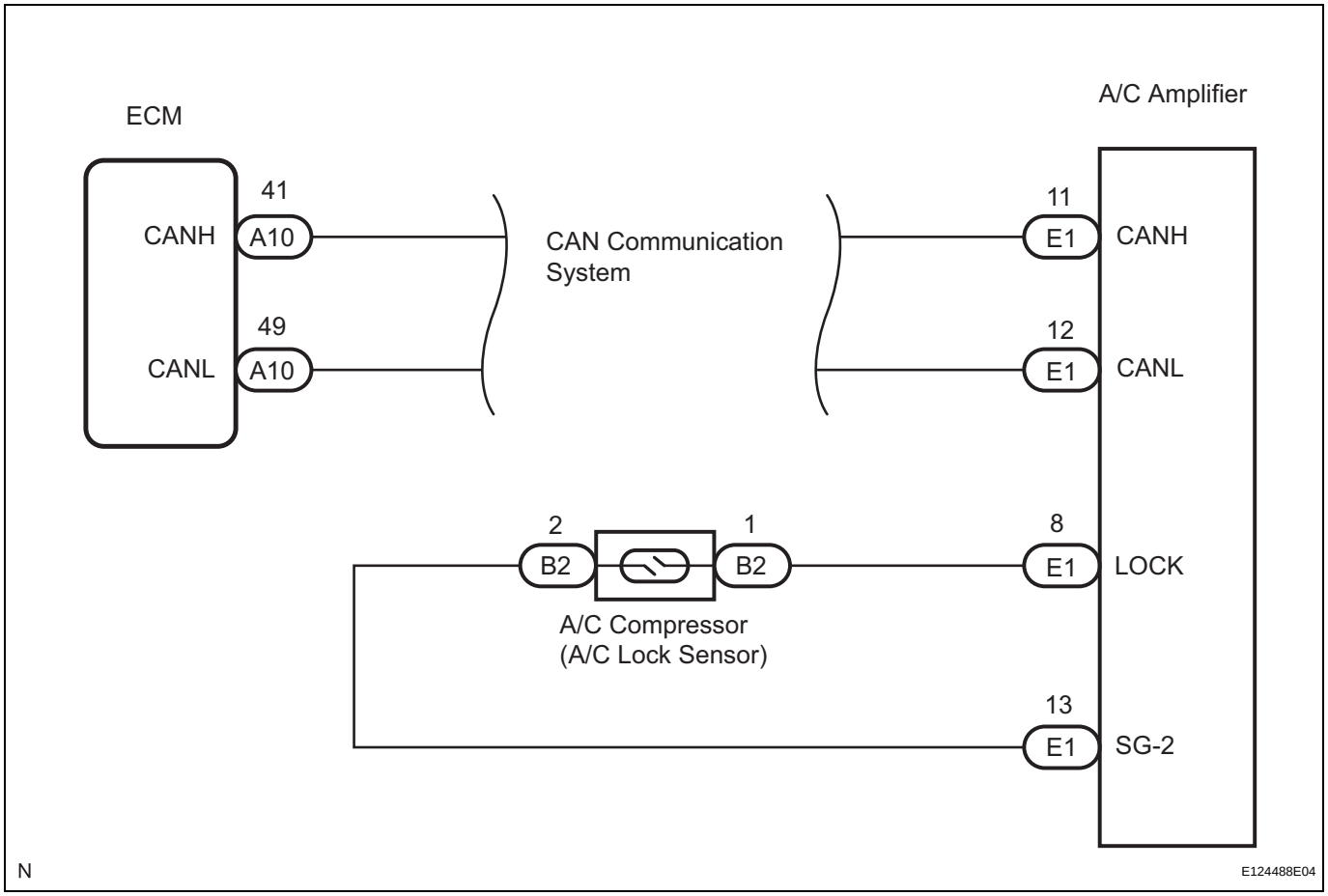

INSPECTION PROCEDURE

1	CHECK CAN COMMUNICATION SYSTEM

(a) Use the intelligent tester to check if the CAN Communication System is functioning normally.

AC

Result

Result	Proceed to
CAN DTC is not output	A
CAN DTC is output	B

B → **GO TO CAN COMMUNICATION SYSTEM (See page CA-11)**

A

2 INSPECT AIR CONDITIONING AMPLIFIER

Air Conditioning Amplifier Connector Wire Harness View:

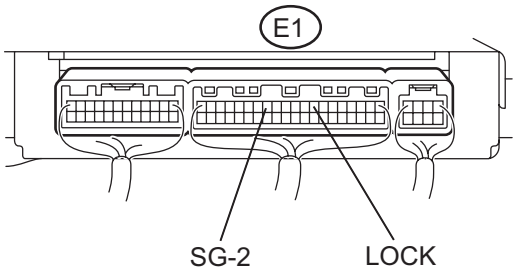

H E124471E18

(a) Remove the A/C amplifier with the connectors still connected.

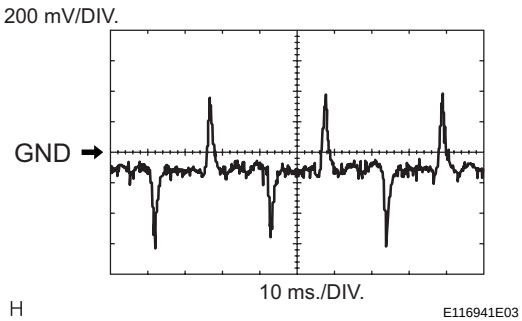

H E116941E03

(b) Measure the waveform of the connector.

Item	Contents
Tool setting	200 mV/DIV., 10 ms./DIV.
Vehicle condition	Engine is running A/C switch: ON Blower switch: LO

Standard

Tester Connection (Symbols)	Condition	Specified Condition
E1-8 (LOCK) - E1-13 (SG-2)	Engine is running A/C switch: ON Blower switch: LO	Pulse generation

Result

Result	Proceed to
NG	A
OK (When troubleshooting according to the PROBLEM SYMPTOMS TABLE)	B
OK (When troubleshooting according to the DTC)	C

B → **PROCEED TO NEXT CIRCUIT INSPECTION SHOWN IN PROBLEM SYMPTOMS TABLE**

C → **REPLACE AIR CONDITIONING AMPLIFIER**

A

3 INSPECT COMPRESSOR AND MAGNETIC CLUTCH (A/C LOCK SENSOR)

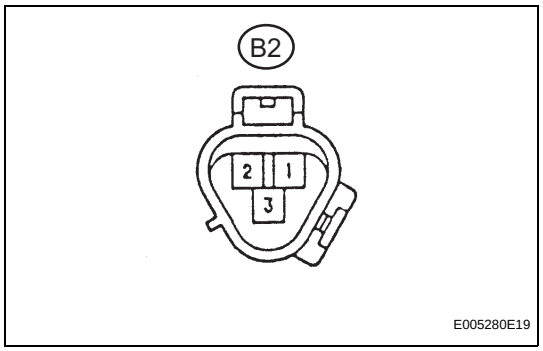

(a) Disconnect the connector from the A/C compressor.
(b) Measure the resistance according to the value(s) in the table below.

Standard resistance

Tester Connection	Condition	Specified Condition
B2-1 (SSR+) - B2-2 (SSR-)	Always (at 20°C (68°F))	165 to 205 Ω

NG → **REPLACE COMPRESSOR AND MAGNETIC CLUTCH (A/C LOCK SENSOR)**

OK

4 CHECK HARNESS AND CONNECTOR (A/C AMPLIFIER - A/C LOCK SENSOR)

Air Conditioning Amplifier Connector Wire Harness View:

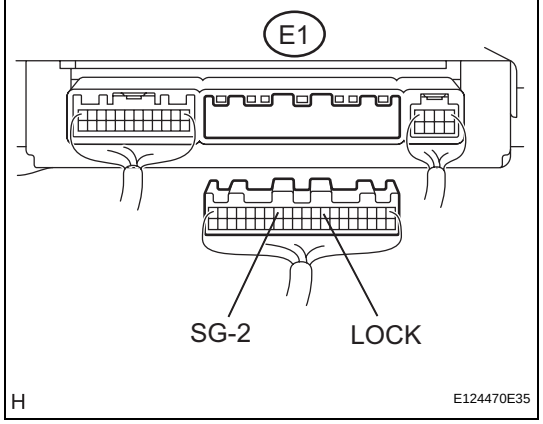

(a) Disconnect the connector from the A/C amplifier.

Compressor and Magnetic Clutch Connector Front View:

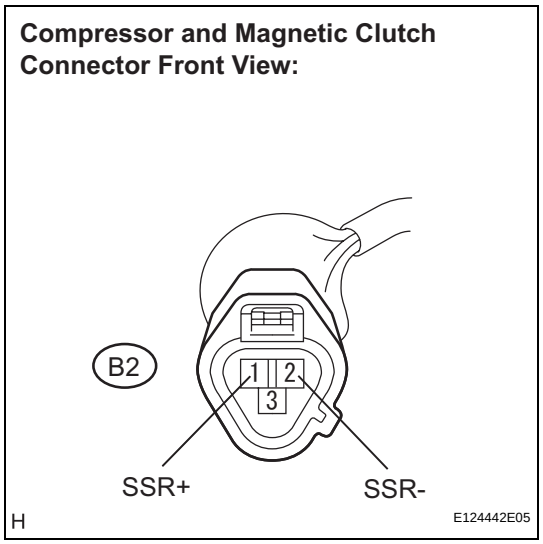

(b) Measure the resistance according to the value(s) in the table below.

Standard resistance

Tester Connection (Symbols)	Condition	Specified Condition
E1-8 (LOCK) - B2-1 (SSR+)	Always	Below 1 Ω
E1-13 (SG-2) - B2-2 (SSR-)	Always	Below 1 Ω
E1-8 (LOCK) - Body ground	Always	10 kΩ or higher
E1-13 (SG-2) - Body ground	Always	10 kΩ or higher

NG → **REPAIR OR REPLACE HARNESS OR CONNECTOR**

OK

REPLACE AIR CONDITIONING AMPLIFIER

DTC	B1423/23	Pressure Sensor Circuit

DESCRIPTION

This DTC is output when refrigerant pressure is extremely low (0.19 MPa (2.0 kgf/cm^2, 28 psi) or less) or extremely high (3.14 MPa (32.0 kgf/cm^2, 455 psi) or more). The A/C pressure sensor, which is installed on the pipe of the high pressure side to detect refrigerant pressure, outputs a refrigerant pressure signal to the A/C amplifier. The A/C amplifier converts this signal to pressure according to the sensor characteristics to control the compressor.
HINT:
Be sure to check the refrigerant volume first when this DTC is output because this DTC can also be output if there is no refrigerant in the system.

DTC No.	DTC Detection Condition	Trouble Area
B1423/23	Open or short in pressure switch circuit	• A/C pressure sensor • Harness or connector between pressure sensor and A/C amplifier • Refrigerant pipe line • A/C amplifier

WIRING DIAGRAM

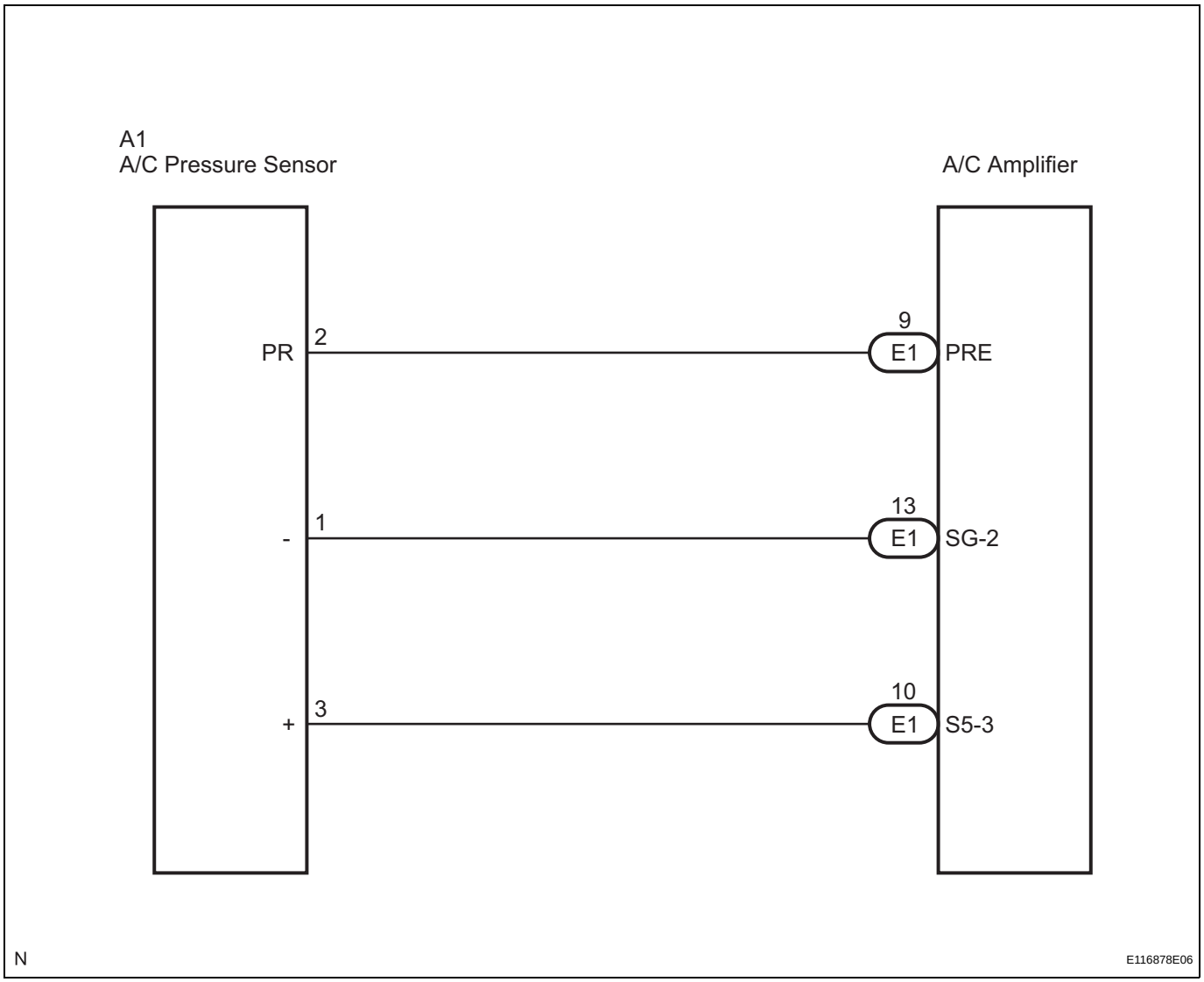

AC

INSPECTION PROCEDURE

1 CHECK REFRIGERANT

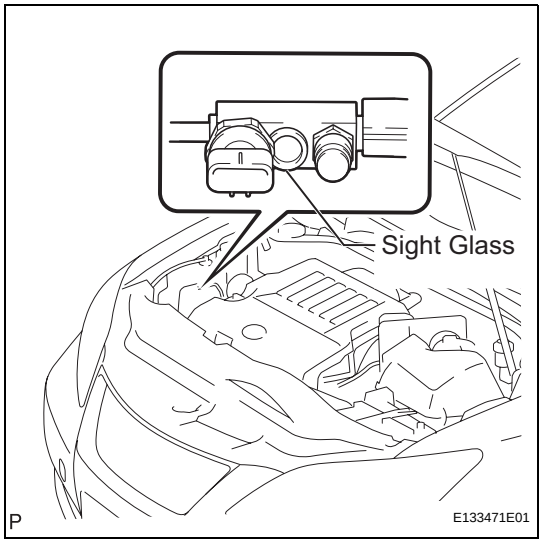

(a) Check the sight glass of the cooler unit refrigerant liquid pipe.

(1) Prepare the vehicle according to the chart below.

Item	Condition
Vehicle Doors	Fully open
Temperature Setting	MAX COLD
Blower Speed	HI
A/C	ON

(2) Compare the sight glass to the following chart.

Item	Symptom	Amount of Refrigerant	Corrective Actions
1	Bubbles visible	Insufficient*	1. Check for gas leakage and repair if necessary 2. Recharge with proper amount of refrigerant (See page AC-127)
2	No bubbles visible	Empty, insufficient, or excessive	Refer to 3 and 4
3	No temperature difference between compressor inlet and outlet	Empty or nearly empty	1. Check for gas leakage with gas leak detector and repair if necessary 2. Evacuate A/C system and recharge with proper amount of refrigerant (See page AC-127)
4	Considerable temperature difference between compressor inlet and outlet	Proper or excessive	Refer to 5 and 6
5	Immediately after air conditioning is turned OFF, refrigerant clears	Excessive	1. Recover refrigerant 2. Evacuate A/C system and recharge with proper amount of refrigerant (See page AC-127)
6	Immediately after air conditioning is turned OFF, refrigerant foams and then becomes clear	Proper	-

*: Bubbles in the sight glass with the vehicle interior temperature above 35°C (95°F) can be considered normal if cooling is sufficient.

NG → **CHARGE REFRIGERANT**

OK

2 CHECK HARNESS AND CONNECTOR (PRESSURE SENSOR - A/C AMPLIFIER)

A/C Pressure Sensor Connector Front View:

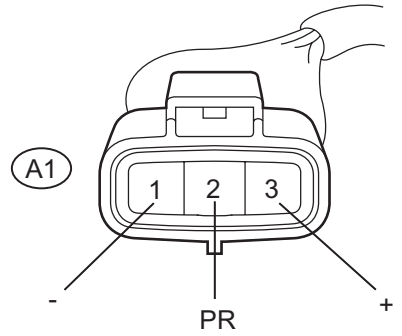

H E124477E04

(a) Disconnect the pressure sensor connector.

Air Conditioning Amplifier Connector Wire Harness View:

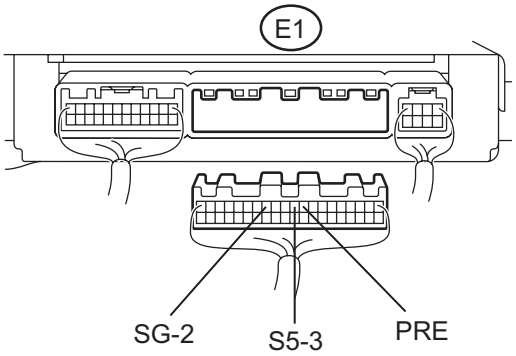

H E124470E36

(b) Disconnect the A/C amplifier connector.

(c) Measure the resistance according to the value(s) in the table below.

Standard resistance

Tester Connection	Condition	Specified Condition
A1-2 (PR) - E1-9 (PRE)	Always	Below 1 Ω
A1-3 (+) - E1-10 (S5-3)	Always	Below 1 Ω
A1-1 (-) - E1-13 (SG-2)	Always	Below 1 Ω
E1-9 (PRE) - Body ground	Always	10 kΩ or higher
E1-10 (S5-3) - Body ground	Always	10 kΩ or higher
E1-13 (SG-2) - Body ground	Always	10 kΩ or higher

NG → **REPAIR OR REPLACE HARNESS OR CONNECTOR**

OK

3 INSPECT PRESSURE SENSOR

(a) Install the manifold gauge set (See page AC-122).

A/C Pressure Sensor Connector Front View:

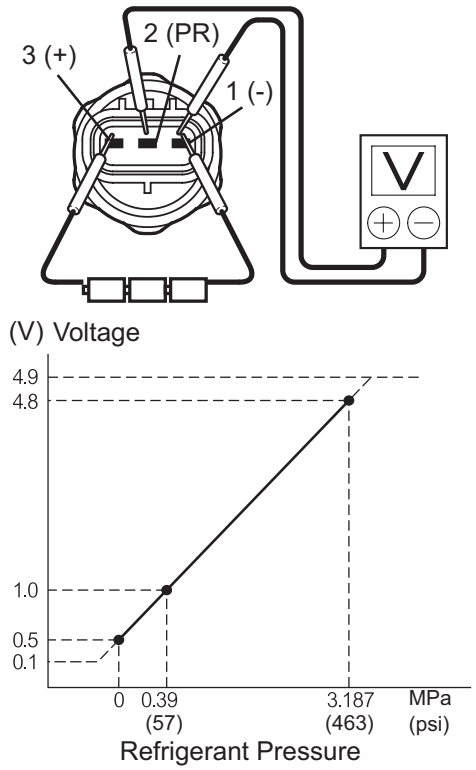

(b) Connect the three 1.5 V dry cell batteries' positive (+) lead to terminal 3, and the negative (-) lead to terminal 1. Then connect the voltmeter's positive (+) lead to terminal 2, and the negative (-) lead to terminal 1. Measure the voltage.

OK:

The voltage changes according to refrigerant pressure, as shown in the graph.

Result

Result	Proceed to
NG	A
OK (When troubleshooting according to the DTC)	B
OK (When troubleshooting according to the PROBLEM SYMPTOMS TABLE)	C

B → **REPLACE AIR CONDITIONING AMPLIFIER**

C → **PROCEED TO NEXT CIRCUIT INSPECTION SHOWN IN PROBLEM SYMPTOMS TABLE**

A

REPLACE PRESSURE SENSOR

DTC	B1424/24	Solar Sensor Circuit (Driver Side)

DESCRIPTION

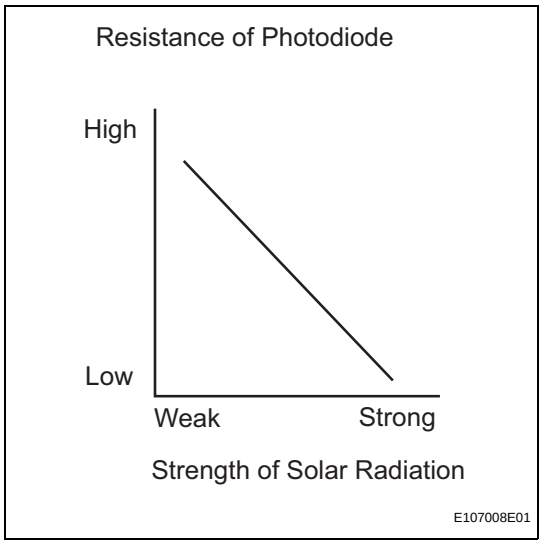

The solar sensor, which is installed on the upper side of the instrument panel, detects sunlight and controls the air conditioning in AUTO mode. The output voltage from the solar sensor varies according to the amount of sunlight. When the sunlight increases, the output voltage increases. As the sunlight decreases, the output voltage decreases. The A/C amplifier detects output voltage from the solar sensor.

DTC No.	DTC Detection Condition	Trouble Area
B1424/24	Open or short in driver side solar sensor circuit	• Solar sensor • Harness or connector between solar sensor and A/C amplifier • Harness or connector between solar sensor and main body ECU • A/C amplifier • Main body ECU

WIRING DIAGRAM

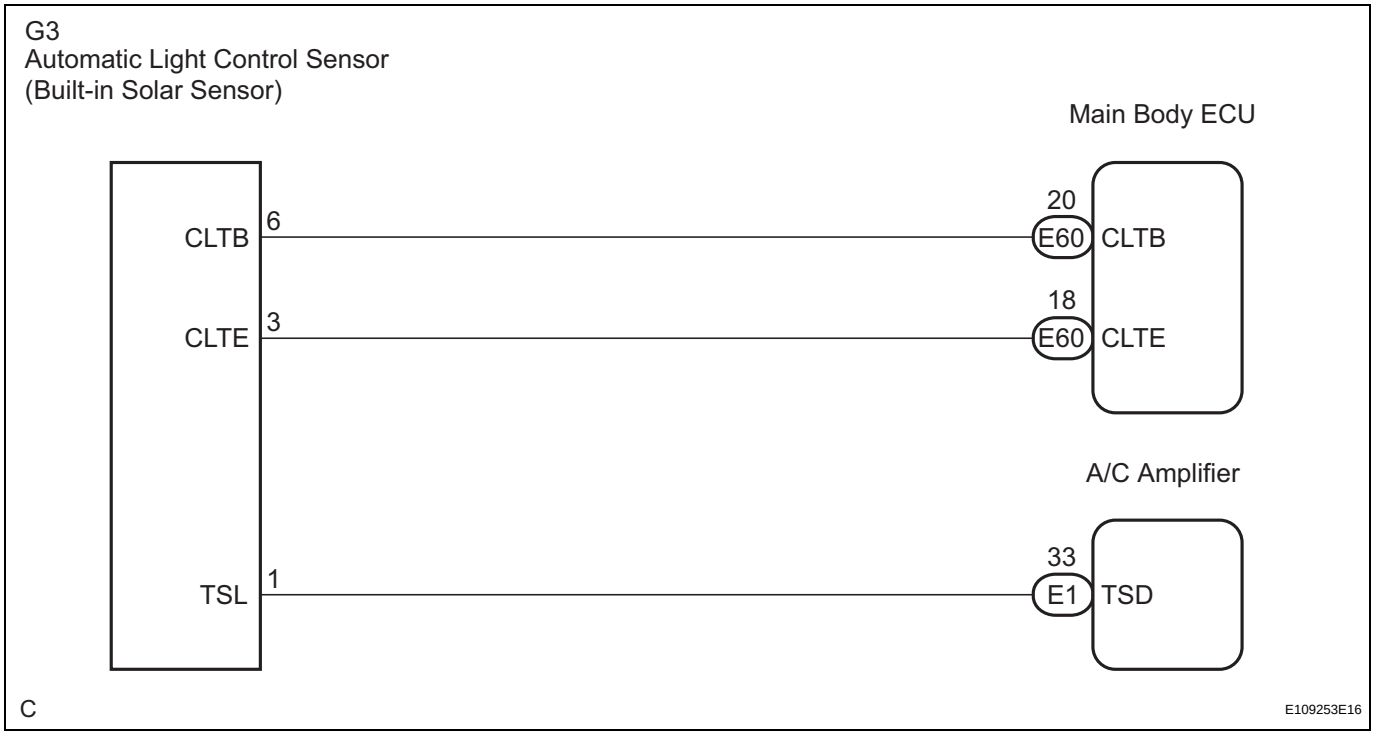

INSPECTION PROCEDURE

HINT:

- If DTC B1244 is output at the same time, troubleshoot DTC B1244 first (See page LI-49).
- If the check is performed in a dark place, DTC B1421/21 or B1424/24 (solar sensor circuit abnormal) may be output even though the system is normal.

1	READ VALUE OF INTELLIGENT TESTER

(a) Connect the intelligent tester to the DLC3.
(b) Turn the engine switch on (IG) and turn the intelligent tester main switch on.
(c) Expose the sensing portion of the solar sensor to light.
HINT:
Use an incandescent light for inspection.
(d) Select the item below in the DATA LIST, and read the display on the intelligent tester.

DATA LIST / AIR CONDITIONER:

Tester Display	Measurement Item/Range	Normal Condition	Diagnostic Note
SOLAR SENS-D (Solar sensor (D side))	Driver side solar sensor / Min.: 0, Max.: 255	Driver side solar sensor value increases as brightness increases	-

OK:
The display is as specified in the normal condition column.

AC

Result

Result	Proceed to
NG	A
OK (When troubleshooting according to the PROBLEM SYMPTOMS TABLE)	B
OK (When troubleshooting according to the DTC)	C

B → **PROCEED TO NEXT CIRCUIT INSPECTION SHOWN IN PROBLEM SYMPTOMS TABLE**

C → **REPLACE AIR CONDITIONING AMPLIFIER**

A

2 CHECK HARNESS AND CONNECTOR (SOLAR SENSOR)

A/C Solar Sensor Connector Wire Harness View:

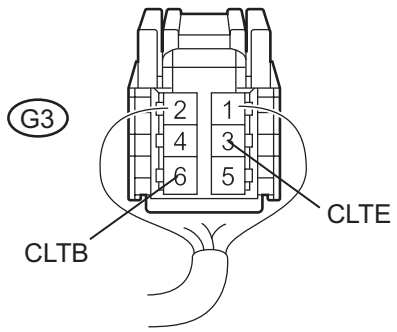

H E124476E13

(a) Disconnect the solar sensor connector.
(b) Measure the voltage according to the value(s) in the table below.

Standard voltage

Tester Connection	Condition	Specified Condition
G3-6 (CLTB) - G3-3 (CLTE)	Engine switch on (IG)	10 to 14 V
G3-6 (CLTB) - G3-3 (CLTE)	Engine switch off	Below 1 V

OK → **Go to step 4**

NG

3 CHECK HARNESS AND CONNECTOR (SOLAR SENSOR - MAIN BODY ECU)

Main Body ECU Connector Front View:

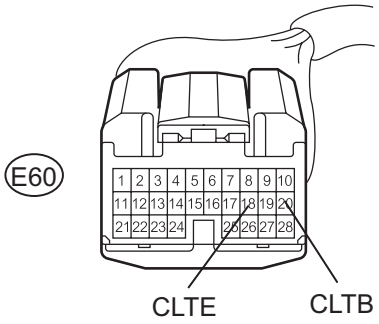

H E124475E05

(a) Disconnect the main body ECU connector.

A/C Solar Sensor Connector Wire Harness View:

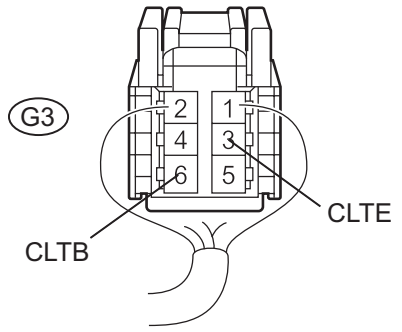

H E124476E14

(b) Measure the resistance according to the value(s) in the table below.

Standard resistance

Tester Connection	Condition	Specified Condition
E60-20 (CLTB) - G3-6 (CLTB)	Always	Below 1 Ω
E60-18 (CLTE) - G3-3 (CLTE)	Always	Below 1 Ω
E60-20 (CLTB) - Body ground	Always	10 kΩ or higher
E60-18 (CLTE) - Body ground	Always	10 kΩ or higher

NG → **REPAIR OR REPLACE HARNESS OR CONNECTOR**

OK

REPLACE MAIN BODY ECU

4 CHECK SOLAR SENSOR

Solar Sensor Connector Front View:

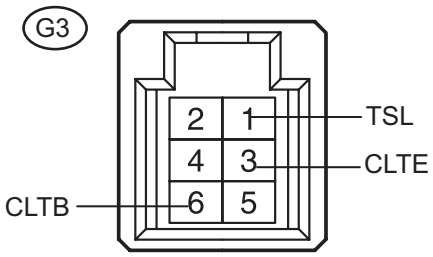

P E109215E19

(a) Remove the solar sensor with its connector still connected.

(b) Connect the positive (+) lead from the battery to terminal 6 (CLTB), and the negative (-) lead to terminal 3 (CLTE) of the solar sensor.

(c) Measure the voltage according to the value(s) in the table below.

Standard voltage

Tester Connection	Condition	Specified Condition
G3-1 (TSL) - G3-3 (CLTE)	Sensor is subjected to electric light	0.8 to 4.3 V
G3-1 (TSL) - G3-3 (CLTE)	Sensor is covered with a cloth	Below 0.8 V

NOTICE:

- **The connection procedure for using a digital tester such as a TOYOTA electrical tester is shown above. When using an analog tester, connect the negative (-) lead to terminal 6, and the positive (+) lead to terminal 3 of the solar sensor.**
- **While using the battery during inspection, do not bring the positive and negative tester probes too close to each other as a short circuit may occur.**

HINT:

- Use an incandescent light for inspection. Bring it within about 30 cm (11.8 in.) of the solar sensor.
- As the inspection light is moved away from the sensor, the voltage increases.

NG → **REPLACE SOLAR SENSOR**

OK

5	CHECK HARNESS AND CONNECTOR (SOLAR SENSOR - A/C AMPLIFIER)

A/C Solar Sensor Connector Wire Harness View:

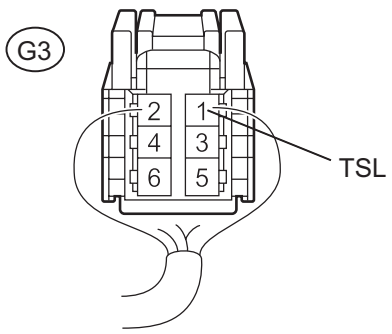

H E124476E15

(a) Disconnect the solar sensor connector.

Air Conditioning Amplifier Connector Wire Harness View:

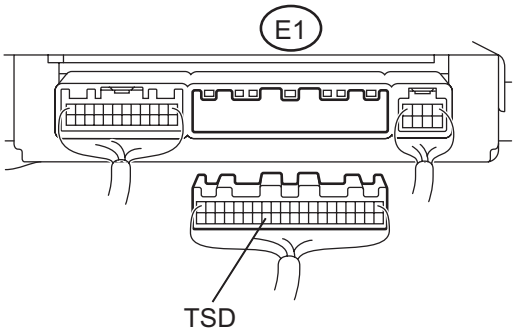

H E124470E37

(b) Disconnect the A/C amplifier connector.

(c) Measure the resistance according to the value(s) in the table below.

Standard resistance

Tester Connection	Condition	Specified Condition
E1-33 (TSD) - G3-1 (TSL)	Always	Below 1 Ω
E1-33 (TSD) - Body ground	Always	10 kΩ or higher

NG → **REPAIR OR REPLACE HARNESS OR CONNECTOR**

OK

REPLACE AIR CONDITIONING AMPLIFIER

DTC	B1441/41	Air Mix Damper Control Servo Motor Circuit (Passenger Side)

DESCRIPTION

The air mix damper servo sends pulse signals to inform the air conditioning amplifier of the damper position. The air conditioning amplifier activates the motor (normal, reverse) based on the signals to move the air mix damper (passenger seat) to any position, which adjusts the amount of air passing the heater core after passing the evaporator to control the blowing temperature.
HINT:
Confirm that no mechanical problem is present because this diagnostic code can be output when either a damper link or damper is mechanically locked.

DTC No.	DTC Detection Condition	Trouble Area
B1441/41	Air mix damper position sensor value does not change even if air conditioning amplifier operates air mix control servo motor	• Air mix control servo motor • Air conditioning harness • A/C amplifier

WIRING DIAGRAM

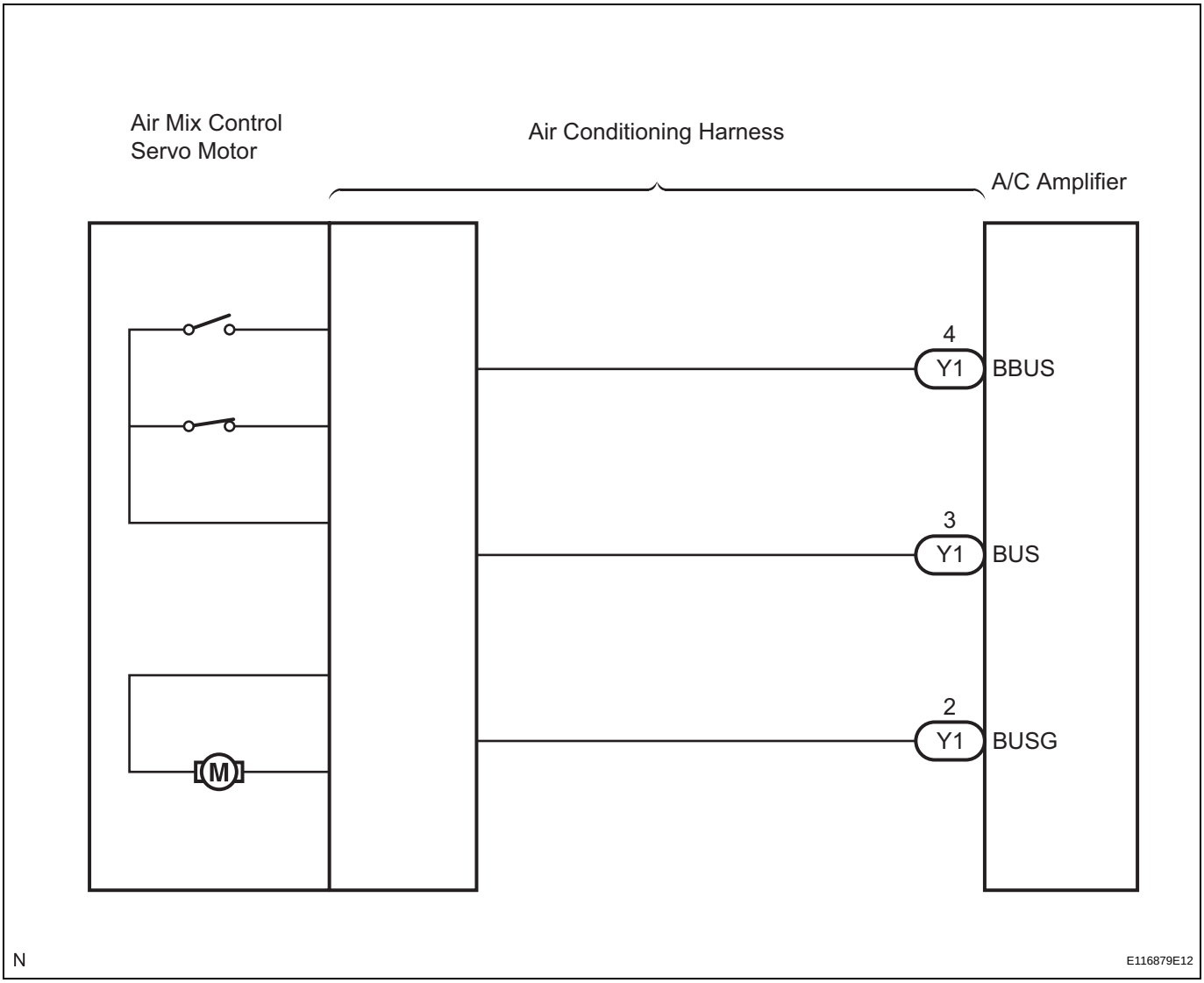

INSPECTION PROCEDURE

1 READ VALUE OF INTELLIGENT TESTER

(a) Connect the intelligent tester to the DLC3.
(b) Turn the engine switch on (IG) and turn the intelligent tester main switch on.
(c) Operate the front passenger side temperature adjustment switch.
(d) Select the item below in the DATA LIST, and read the display on the intelligent tester.

DATA LIST / AIR CONDITIONER:

Tester Display	Measurement Item/Range	Normal Condition	Diagnostic Note
AIR MIX PULSE-P (Air mix servomotor target pulse (P side))	Passenger side air mix servo motor target pulse / Min.: 0, Max.: 255	MAX. COLD: 105 (pulse) MAX. HOT: 7 (pulse)	-

OK:
The display is as specified in the normal condition column.

Result

Result	Proceed to
NG	**A**
OK (When troubleshooting according to the PROBLEM SYMPTOMS TABLE)	**B**
OK (When troubleshooting according to the DTC)	**C**

B → **PROCEED TO NEXT CIRCUIT INSPECTION SHOWN IN PROBLEM SYMPTOMS TABLE**

C → **REPLACE AIR CONDITIONING AMPLIFIER**

A

2 REPLACE AIR MIX CONTROL SERVO MOTOR

(a) Replace the air mix control servo motor.
HINT:
Since the servo motor cannot be inspected while it is removed from the vehicle, replace the servo motor with a normal one and check that the condition returns to normal.
(b) Check for DTCs.
Result

Result	Proceed to
DTC B1441/41 is output	**A**
DTC B1441/41 is not output	**B**

B → **END**

A

REPLACE AIR CONDITIONING HARNESS

DTC	B1442/42	Air Inlet Damper Control Servo Motor Circuit

DESCRIPTION

The damper servo (air inlet control) sends pulse signals to inform the air conditioning amplifier of the damper position. The air conditioning amplifier activates the motor (normal, reverse) based on the signals to move the air inlet damper to any position, which controls the intake air settings (FRESH, FRESH/RECIRCULATION, and RECIRCULATION).

HINT:

Confirm that no mechanical problem is present because this diagnostic code can be output when either a damper link or damper is mechanically locked.

DTC No.	DTC Detection Condition	Trouble Area
B1442/42	Air inlet damper position sensor value does not change even if air conditioning amplifier operates air inlet control servo motor	• Air inlet control servo motor • Air conditioning harness • A/C amplifier

WIRING DIAGRAM

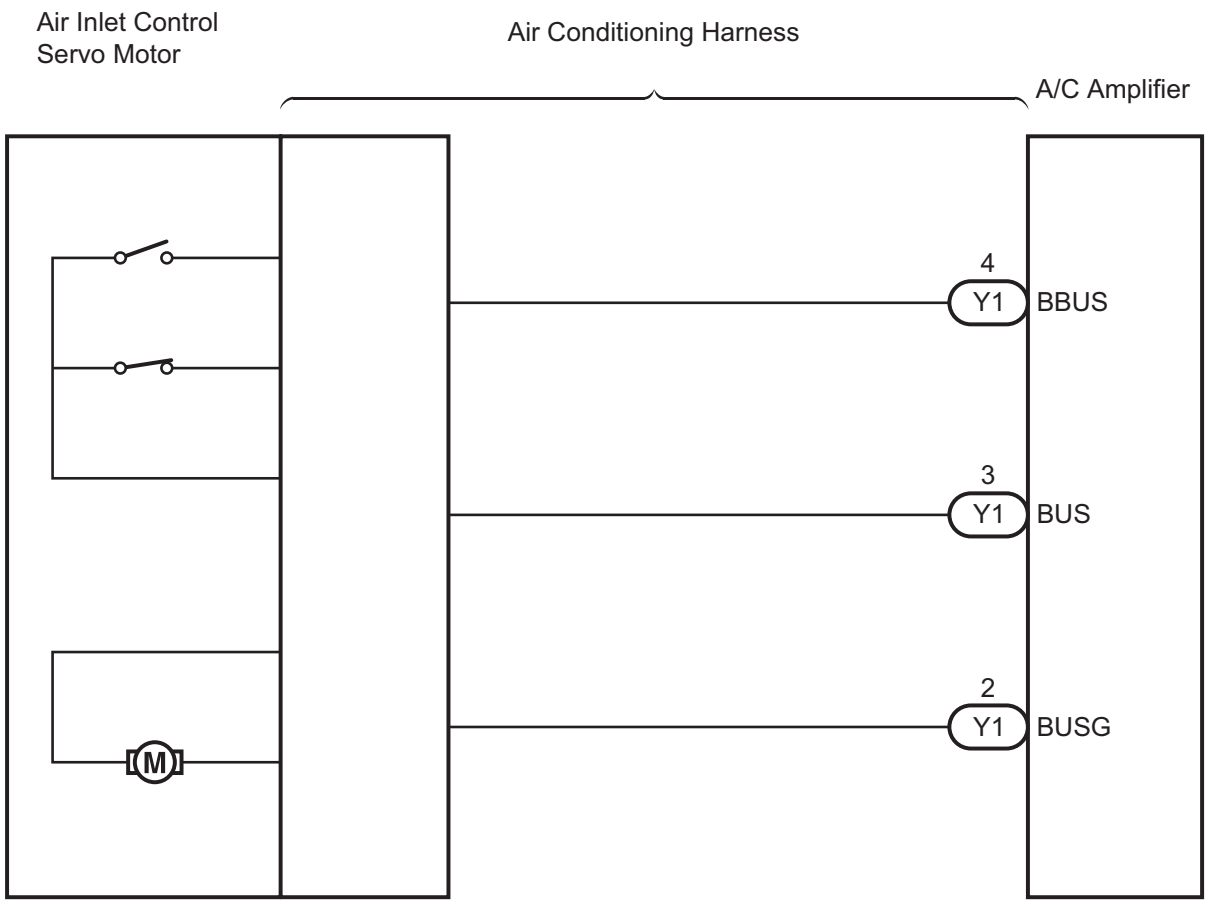

N

E116879E13

INSPECTION PROCEDURE

1 READ VALUE OF INTELLIGENT TESTER

(a) Connect the intelligent tester to the DLC3.
(b) Turn the engine switch on (IG) and turn the intelligent tester main switch on.
(c) Operate the R/F (Recirculation/Fresh) switch.
(d) Select the item below in the DATA LIST, and read the display on the intelligent tester.

DATA LIST / AIR CONDITIONER:

Tester Display	Measurement Item/Range	Normal Condition	Diagnostic Note
A/I DAMP PLS (Air inlet damper target pulse)	Air inlet damper target pulse / Min.: 0, Max.: 255	RECIRCULATION: 7 (pulse) FRESH: 28 (pulse)	-

OK:
The display is as specified in the normal condition column.

Result

Result	Proceed to
NG	A
OK (When troubleshooting according to the PROBLEM SYMPTOMS TABLE)	B
OK (When troubleshooting according to the DTC)	C

B → **PROCEED TO NEXT CIRCUIT INSPECTION SHOWN IN PROBLEM SYMPTOMS TABLE**

C → **REPLACE AIR CONDITIONING AMPLIFIER**

A

2 REPLACE AIR INLET CONTROL SERVO MOTOR

(a) Replace the air inlet control servo motor.
HINT:
Since the servo motor cannot be inspected while it is removed from the vehicle, replace the servo motor with a normal one and check that the condition returns to normal.
(b) Check for DTCs.
Result

Result	Proceed to
DTC B1442/42 is output	A
DTC B1442/42 is not output	B

B → **END**

A

REPLACE AIR CONDITIONING HARNESS

DTC	B1443/43	Air Outlet Damper Control Servo Motor Circuit

DESCRIPTION

The mode damper servo sends pulse signals to inform the air conditioning amplifier of the damper position. The air conditioning amplifier activates the motor (normal, reverse) based on the signals to move the air outlet damper to any position, which controls the air outlet switching.
HINT:
Confirm that no mechanical problem is present because this diagnostic code can be output when either a damper link or damper is mechanically locked.

DTC No.	DTC Detection Condition	Trouble Area
B1443/43	Air outlet damper position sensor value does not change even if air conditioning amplifier operates air outlet control servo motor	• Air outlet control servo motor • Air conditioning harness • A/C amplifier

WIRING DIAGRAM

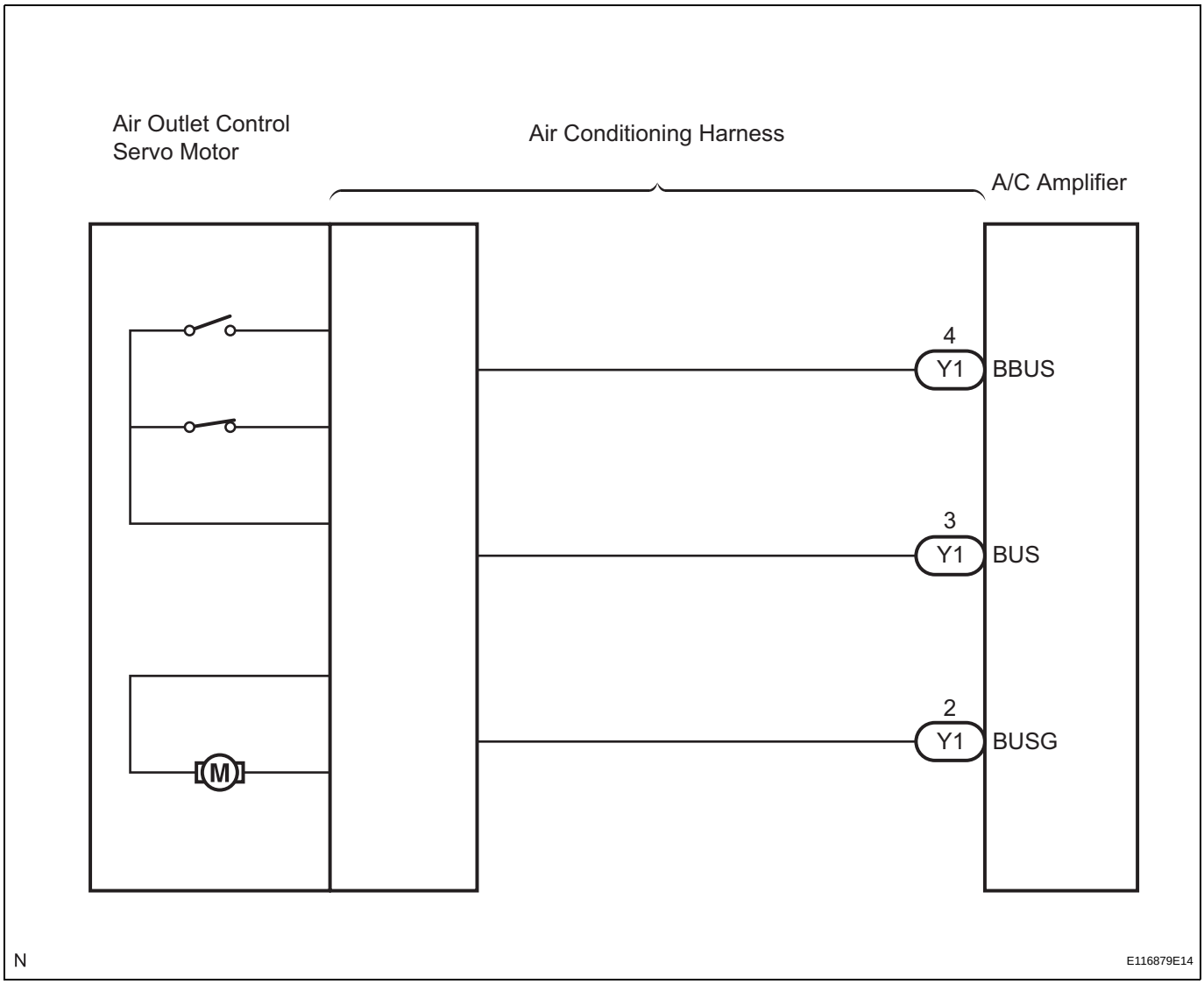

INSPECTION PROCEDURE

1	READ VALUE OF INTELLIGENT TESTER

(a) Connect the intelligent tester to the DLC3.
(b) Turn the engine switch on (IG) and turn the intelligent tester main switch on.
(c) Operate the MODE switch.
(d) Select the item below in the DATA LIST, and read the display on the intelligent tester.

DATA LIST / AIR CONDITIONER:

Tester Display	Measurement Item/Range	Normal Condition	Diagnostic Note
AIR OUT PULSE-D (Air outlet servomotor target pulse (D side))	Driver side air outlet servo motor target pulse / Min.: 0, Max.: 255	FACE: 8 (pulse) B/L: 30 to 38 (pulse) FOOT: 50 to 74 (pulse) FOOT/DEF: 80 (pulse) DEF: 97 (pulse)	-

OK:
The display is as specified in the normal condition column.

Result

Result	Proceed to
NG	A
OK (When troubleshooting according to the PROBLEM SYMPTOMS TABLE)	B
OK (When troubleshooting according to the DTC)	C

B → **PROCEED TO NEXT CIRCUIT INSPECTION SHOWN IN PROBLEM SYMPTOMS TABLE**

C → **REPLACE AIR CONDITIONING AMPLIFIER**

A

2	REPLACE AIR OUTLET CONTROL SERVO MOTOR

(a) Replace the air outlet control servo motor.
HINT:
Since the servo motor cannot be inspected while it is removed from the vehicle, replace the servo motor with a normal one and check that the condition returns to normal.
(b) Check for DTCs.
Result

Result	Proceed to
DTC B1443/43 is output	A
DTC B1443/43 is not output	B

B → **END**

A

REPLACE AIR CONDITIONING HARNESS

DTC	B1446/46	Air Mix Damper Control Servo Motor Circuit (Driver Side)

DESCRIPTION

The air mix damper servo sends pulse signals to inform the air conditioning amplifier of the damper position. The air conditioning amplifier activates the motor (normal, reverse) based on the signals to move the air mix damper (driver seat) to any position. As a result, the amount of air passing through the heater core after passing through the evaporator is adjusted, and the temperature of the air blowing toward the driver seat side is controlled.

HINT:

Confirm that no mechanical problem is present because this diagnostic code can be output when either a damper link or damper is mechanically locked.

DTC No.	DTC Detection Condition	Trouble Area
B1446/46	Air mix damper position sensor value does not change even if air conditioning amplifier operates air mix control servo motor	• Air mix control servo motor • Air conditioning harness • A/C amplifier

WIRING DIAGRAM

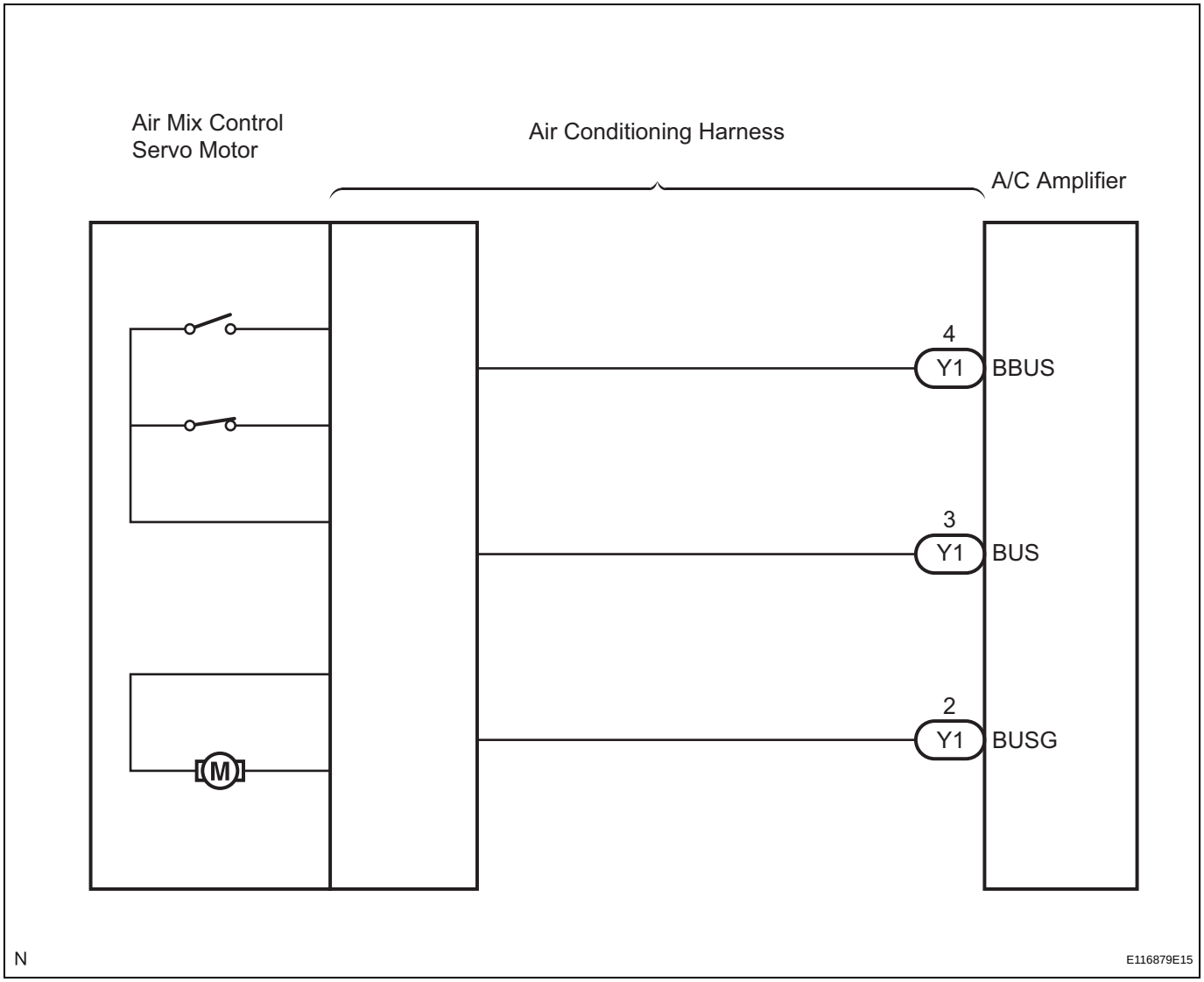

AC

INSPECTION PROCEDURE

1 READ VALUE OF INTELLIGENT TESTER

(a) Connect the intelligent tester to the DLC3.
(b) Turn the engine switch on (IG) and turn the intelligent tester main switch on.
(c) Operate the driver side temperature adjustment switch.
(d) Select the item below in the DATA LIST, and read the display on the intelligent tester.

DATA LIST / AIR CONDITIONER:

Tester Display	Measurement Item/Range	Normal Condition	Diagnostic Note
AIR MIX PULSE-D (Air mix servomotor target pulse (D side))	Driver side air mix servo motor target pulse / Min.: 0, Max.: 255	MAX COLD: 5 (pulse) MAX HOT: 103 (pulse)	-

OK:
The display is as specified in the normal condition column.

Result

Result	Proceed to
NG	A
OK (When troubleshooting according to the PROBLEM SYMPTOMS TABLE)	B
OK (When troubleshooting according to the DTC)	C

B → **PROCEED TO NEXT CIRCUIT INSPECTION SHOWN IN PROBLEM SYMPTOMS TABLE**

C → **REPLACE AIR CONDITIONING AMPLIFIER**

A

2 REPLACE AIR MIX CONTROL SERVO MOTOR

(a) Replace the air mix control servo motor.
HINT:
Since the servo motor cannot be inspected while it is removed from the vehicle, replace the servo motor with a normal one and check that the condition returns to normal.
(b) Check for DTCs.
Result

Result	Proceed to
DTC B1446/46 is output	A
DTC B1446/46 is not output	B

B → **END**

AC

A

REPLACE AIR CONDITIONING HARNESS

DTC	B1451/51	Compressor Solenoid Circuit

DESCRIPTION

In this circuit, the compressor receives a refrigerant compression demand signal from the air conditioning amplifier.
Based on this signal, the compressor changes the amount of compressor output.

DTC No.	DTC Detection Condition	Trouble Area
B1451/51	Open or short in externally changeable compressor solenoid circuit	• A/C compressor • Harness or connector between A/C amplifier and solenoid of externally changeable compressor • A/C amplifier

WIRING DIAGRAM

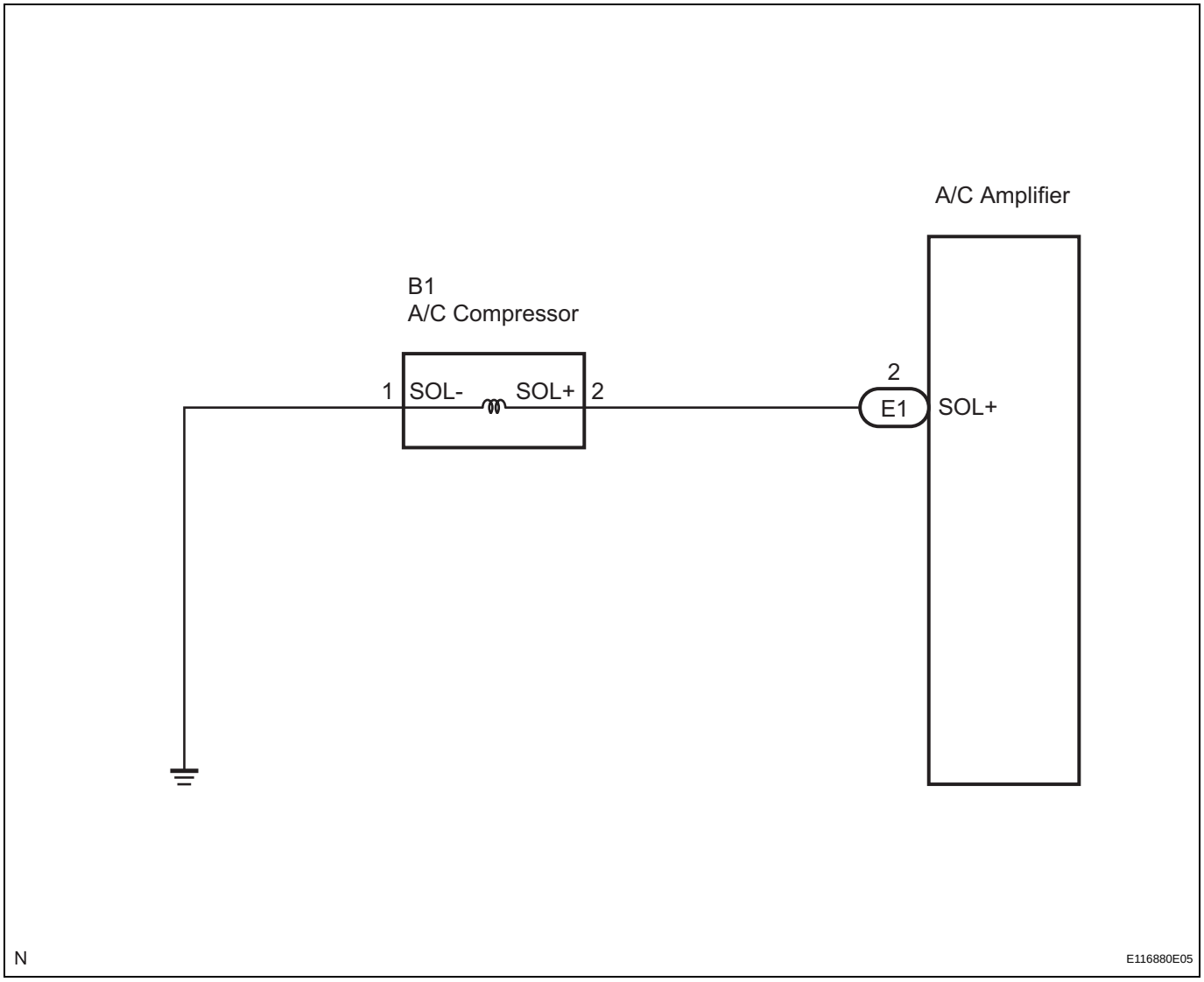

INSPECTION PROCEDURE

1 INSPECT A/C COMPRESSOR

A/C Compressor Connector Front View:

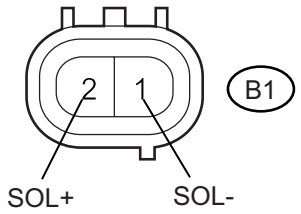

H E116970E05

(a) Disconnect the A/C compressor connector.
(b) Measure the resistance according to the value(s) in the table below.

Standard resistance

Tester Connection	Condition	Specified Condition
B1-2 (SOL+) - B1-1 (SOL-)	20°C (68°F)	10 to 11 Ω

NG → **REPLACE A/C COMPRESSOR**

OK

2 CHECK HARNESS AND CONNECTOR (A/C COMPRESSOR - BODY GROUND)

A/C Compressor Connector Front View:

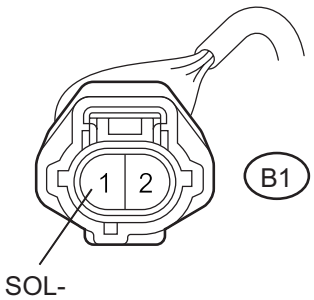

H E116971E04

(a) Disconnect the A/C compressor connector.
(b) Measure the resistance according to the value(s) in the table below.

Standard resistance

Tester Connection	Condition	Specified Condition
B1-1 (SOL-) - Body ground	Always	Below 1 Ω

NG → **REPAIR OR REPLACE HARNESS OR CONNECTOR**

OK

3	CHECK HARNESS AND CONNECTOR (A/C COMPRESSOR - A/C AMPLIFIER)

A/C Compressor Connector Front View:

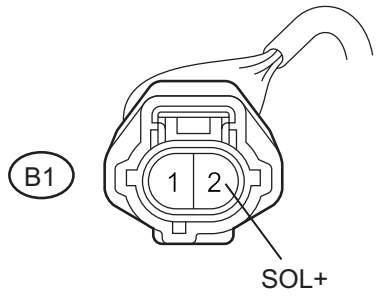

H E116971E05

(a) Disconnect the A/C compressor connector.

Air Conditioning Amplifier Connector Wire Harness View:

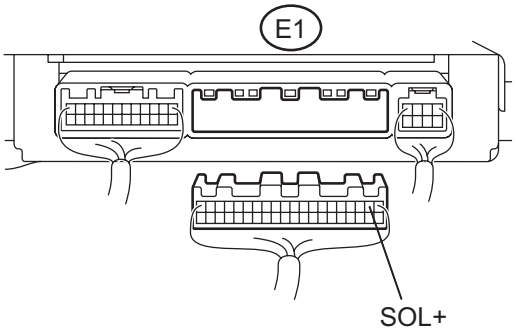

H E124470E38

(b) Disconnect the A/C amplifier connector.

(c) Measure the resistance according to the value(s) in the table below.

Standard resistance

Tester Connection	Condition	Specified Condition
E1-2 (SOL+) - B1-2 (SOL+)	Always	Below 1 Ω
E1-2 (SOL+) - Body ground	Always	10 kΩ or higher

Result

Result	Proceed to
NG	A
OK (When troubleshooting according to the PROBLEM SYMPTOMS TABLE)	B
OK (When troubleshooting according to the DTC)	C

B → **PROCEED TO NEXT CIRCUIT INSPECTION SHOWN IN PROBLEM SYMPTOMS TABLE**

C → **REPLACE AIR CONDITIONING AMPLIFIER**

A

REPAIR OR REPLACE HARNESS OR CONNECTOR

DTC	B1461/61	Emission Gas NOx Sensor Circuit

DESCRIPTION

The smog ventilation sensor detects NOx in the emission gas and transmits signals to the A/C amplifier. Based on the signals, the A/C amplifier performs automatic air inlet control (FRESH, FRESH/ RECIRCULATION, or RECIRCULATION mode).

DTC No.	DTC Detection Condition	Trouble Area
B1461/61	Open or short in emission gas NOx sensor circuit	• Smog ventilation sensor (emission gas NOx sensor) • Harness or connector between smog ventilation sensor (emission gas NOx sensor) and A/C amplifier • A/C amplifier

WIRING DIAGRAM

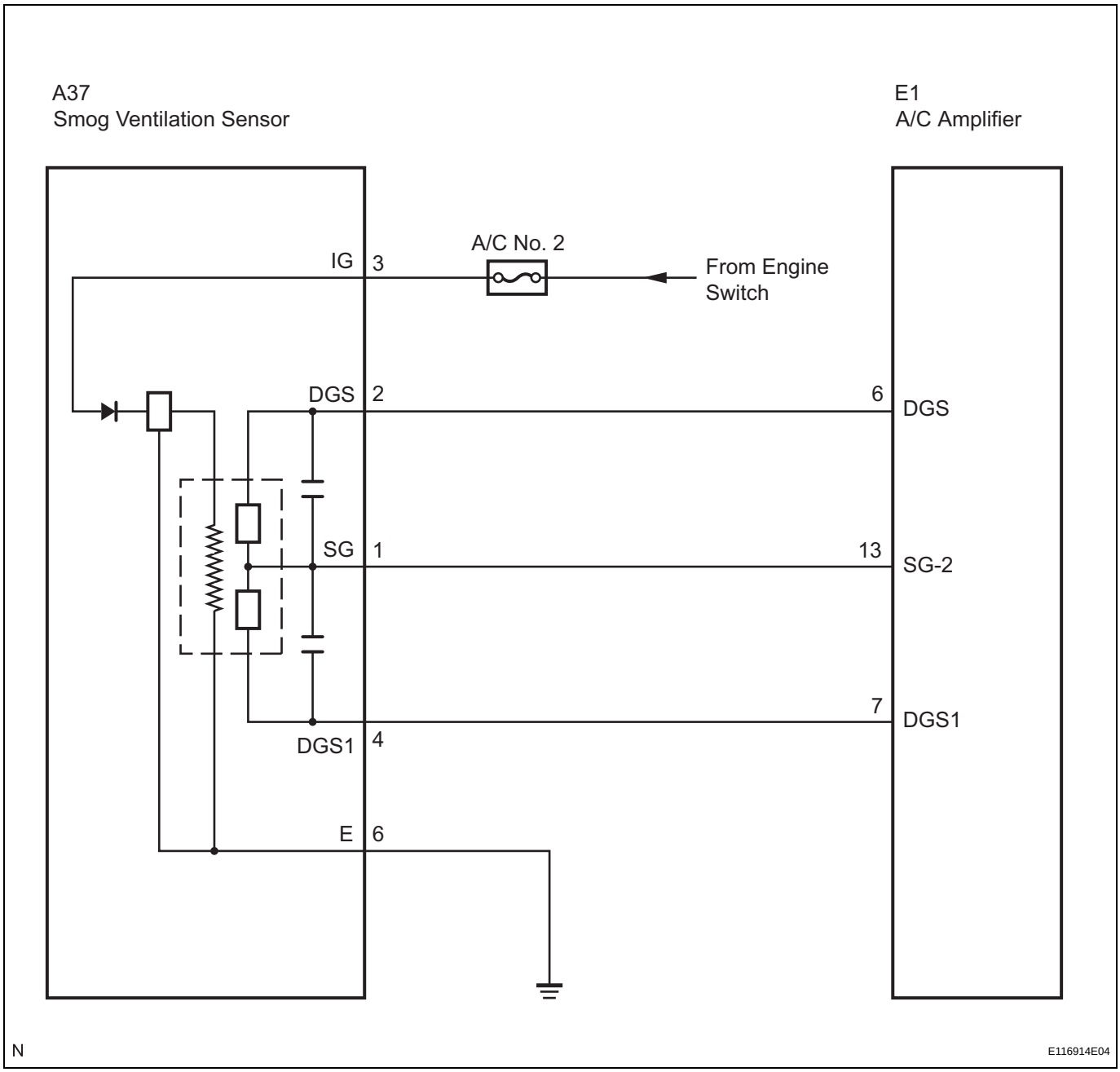

INSPECTION PROCEDURE

1 INSPECT FUSE (LH-IG)

(a) Remove the LH-IG fuse from the cowl side junction block LH.
(b) Measure the resistance according to the value(s) in the table below.

Standard resistance

Tester Item	Condition	Specified Condition
LH-IG fuse	Always	Below 1 Ω

NG → **REPLACE FUSE (LH-IG)**

OK

2 READ VALUE OF INTELLIGENT TESTER

(a) Connect the intelligent tester to the DLC3.
(b) Turn the engine switch on (IG) and turn the intelligent tester main switch on.
(c) Allow exhaust gas (NOx) to travel to the sensing portion of the smog ventilation sensor.
(d) Select the item below in the DATA LIST, and read the display on the intelligent tester.

DATA LIST / AIR CONDITIONER:

Tester Display	Measurement Item/Range	Normal Condition	Diagnostic Note
NOX GAS SENS (Emission gas NOx sensor)	Emission gas NOx sensor / Min.: 0, Max.: 255	Smog ventilation sensor value increases as gas amount increases	-

OK:
The display is as specified in the normal condition column.

Result

Result	Proceed to
NG	A
OK (When troubleshooting according to the PROBLEM SYMPTOMS TABLE)	B
OK (When troubleshooting according to the DTC)	C

B → **PROCEED TO NEXT CIRCUIT INSPECTION SHOWN IN PROBLEM SYMPTOMS TABLE**

C → **REPLACE AIR CONDITIONING AMPLIFIER**

A

3 CHECK HARNESS AND CONNECTOR (SMOG VENTILATION SENSOR - BODY GROUND)

Wire Harness Side Connector Front View:

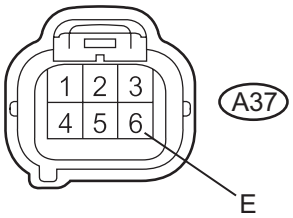

H E107005E13

(a) Disconnect the smog ventilation sensor connector.
(b) Measure the resistance according to the value(s) in the table below.

Standard resistance

Tester Connection	Condition	Specified Condition
A37-6 (E) - Body ground	Always	Below 1 Ω

NG → **REPAIR OR REPLACE HARNESS OR CONNECTOR**

OK

4 CHECK HARNESS AND CONNECTOR (SMOG VENTILATION SENSOR - BATTERY)

Wire Harness Side Connector Front View:

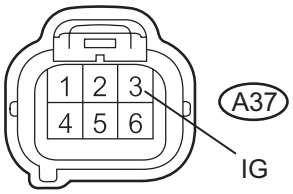

H E107005E17

(a) Disconnect the smog ventilation sensor connector.
(b) Measure the voltage according to the value(s) in the table below.

Standard voltage

Tester Connection	Condition	Specified Condition
A37-3 (IG) - Body ground	Engine switch on (IG)	10 to 14 V
	Engine switch off	Below 1 V

NG → **REPAIR OR REPLACE HARNESS OR CONNECTOR**

OK

5 INSPECT SMOG VENTILATION SENSOR

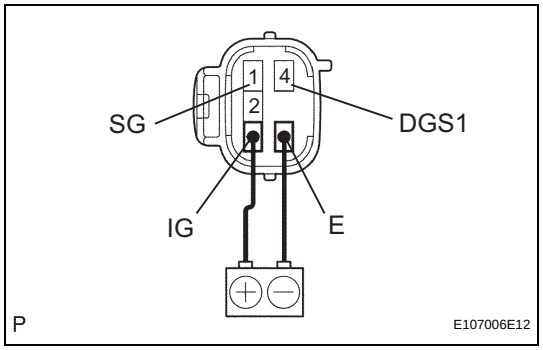

(a) Remove the smog ventilation sensor.
(b) Apply battery voltage between terminals 3 (IG) and 6 (E).
(c) Allow exhaust gas (NOx) to travel to the sensing portion of the smog ventilation sensor, and measure the resistance between terminals 1 (SG) and 4 (DGS1).
OK:
When the sensor is exposed to the exhaust gas, the resistance increases.
HINT:
The resistance before blowing exhaust gas is 10 kΩ to 40 kΩ.

NG → **REPLACE SMOG VENTILATION SENSOR**

OK

6 CHECK HARNESS AND CONNECTOR (SMOG VENTILATION SENSOR - A/C AMPLIFIER)

Wire Harness Side Connector Front View:

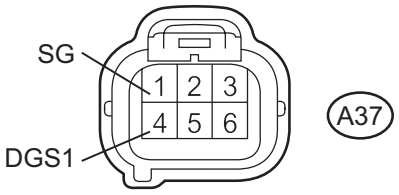

(a) Disconnect the exhaust gas sensor connector.

Air Conditioning Amplifier Connector Wire Harness View:

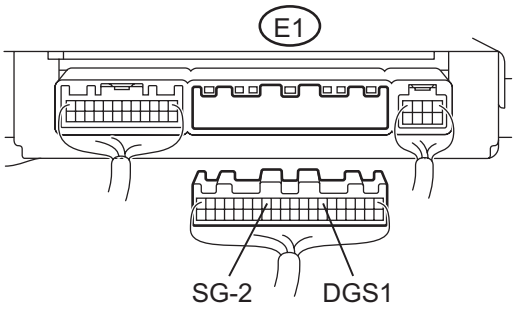

(b) Disconnect the A/C amplifier connector.
(c) Measure the resistance according to the value(s) in the table below.
Standard resistance

Tester Connection	Condition	Specified Condition
A37-1 (SG) - E1-13 (SG-2)	Always	Below 1 Ω
A37-4 (DGS1) - E1-7 (DGS1)	Always	Below 1 Ω
E1-13 (SG-2) - Body ground	Always	10 kΩ or higher
E1-7 (DGS1) - Body ground	Always	10 kΩ or higher

NG → **REPAIR OR REPLACE HARNESS OR CONNECTOR**

OK

REPLACE AIR CONDITIONING AMPLIFIER

DTC	B1497/97	BUS IC Communication Malfunction

DESCRIPTION

The air conditioning harness connects the air conditioning amplifier and each servo motor. The air conditioning amplifier supplies power and sends operation instructions to each servo motor through the air conditioning harness. Each servo motor sends the damper position information to the air conditioning amplifier.

DTC No.	DTC Detection Condition	Trouble Area
B1497/97	Communication line error or open	• Air conditioning harness • A/C amplifier

WIRING DIAGRAM

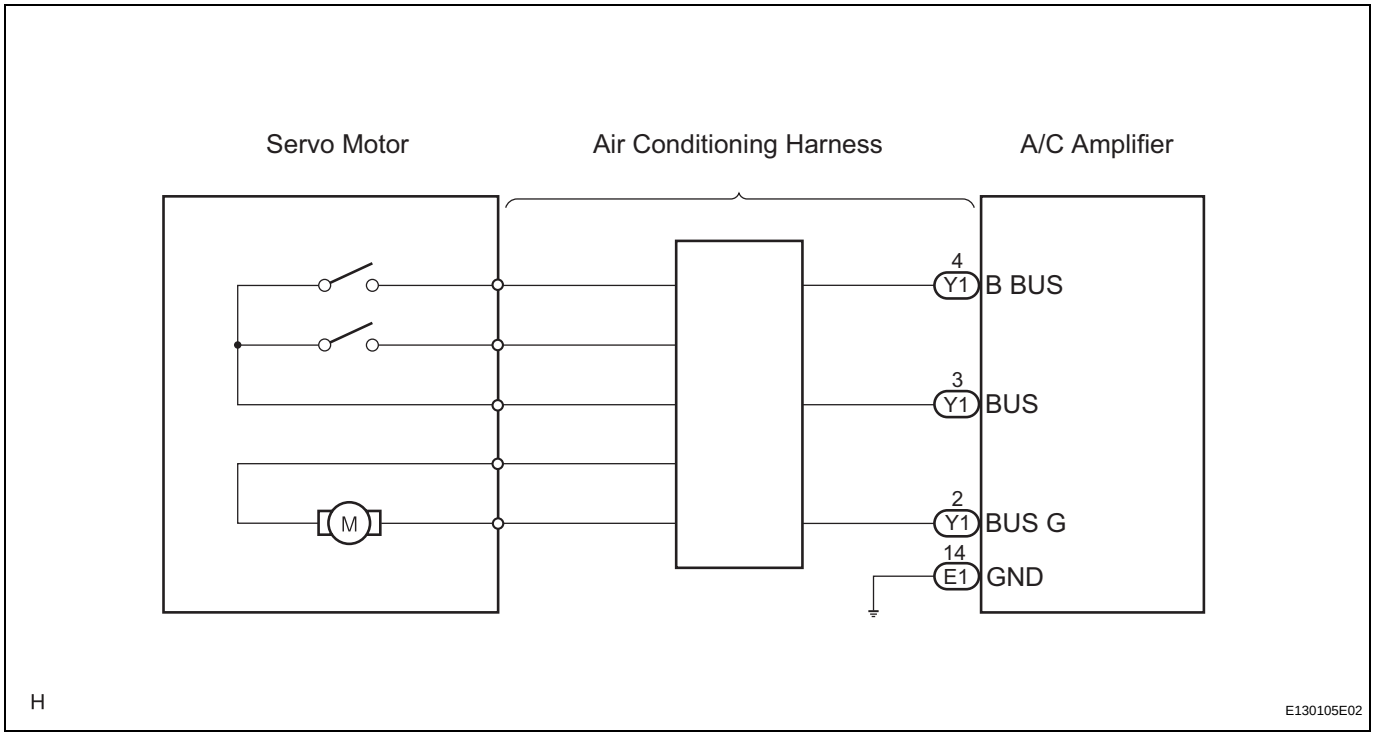

INSPECTION PROCEDURE

1	CHECK HARNESS AND CONNECTOR

(a) Remove the A/C amplifier.

Air Conditioning Amplifier Connector Wire Harness View:

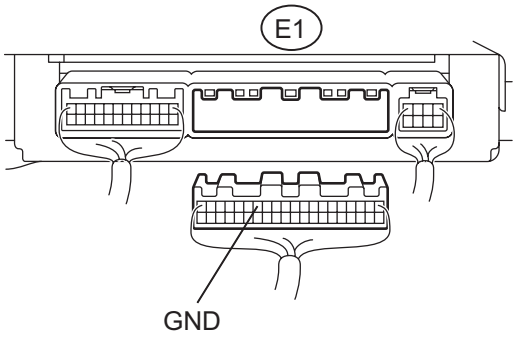

H E124470E40

(b) Disconnect the connector from the A/C amplifier.
(c) Measure the resistance according to the value(s) in the table below.

Standard resistance

Tester Connection	Condition	Specified Condition
E1-14 (GND) - Body ground	Always	Below 1 Ω

NG → **REPAIR OR REPLACE HARNESS OR CONNECTOR**

OK

2 INSPECT AIR CONDITIONING AMPLIFIER

Air Conditioning Amplifier Connector Wire Harness View:

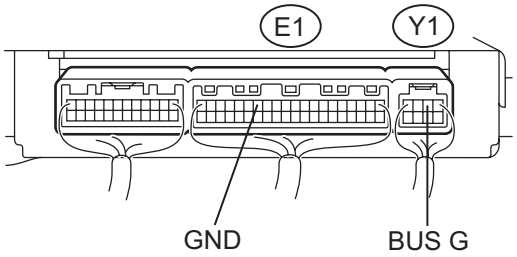

H E124471E19

(a) Reconnect the connector to the A/C amplifier.
(b) Measure the resistance according to the value(s) in the table below.

Standard resistance

Tester Connection	Condition	Specified Condition
Y1-2 (BUS G) - E1-14 (GND)	Always	Below 1 Ω

NG → **REPLACE AIR CONDITIONING AMPLIFIER**

OK

3 INSPECT AIR CONDITIONING AMPLIFIER

Air Conditioning Amplifier Connector Wire Harness View:

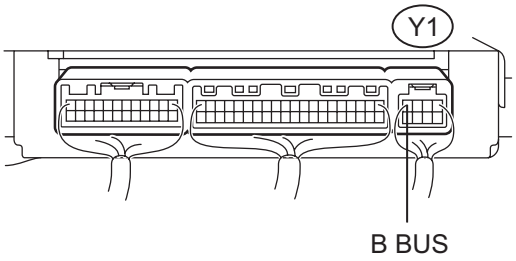

H E124471E20

(a) Disconnect the connector (Y1) from the A/C amplifier.
(b) Measure the voltage according to the value(s) in the table below.

Standard voltage

Tester Connection	Condition	Specified Condition
Y1-4 (B BUS) - Body ground	Engine switch off	Below 1 V
Y1-4 (B BUS) - Body ground	Engine switch on (IG)	10 to 14 V

NG → **REPLACE AIR CONDITIONING AMPLIFIER**

OK

4 REPLACE AIR CONDITIONING HARNESS

(a) Replace the air conditioning harness.
HINT:
Since the air conditioning harness cannot be inspected while it is removed from the vehicle, replace the air conditioning harness with a normal one and check that the condition returns to normal.
(b) Check for DTCs.

Result

Result	Proceed to
DTC B1497/97 is output.	A
DTC B1497/97 is not output.	B

B → **END**

A

REPLACE AIR CONDITIONING AMPLIFIER

DTC	B1499/99	Multiplex Communication Circuit

DESCRIPTION

DTC No.	DTC Detection Condition	Trouble Area
B1499/99	Open in CAN communication circuit	CAN communication system

INSPECTION PROCEDURE

HINT:
Refer to the CAN communication system (See page CA-11).

Blower Motor Circuit

DESCRIPTION

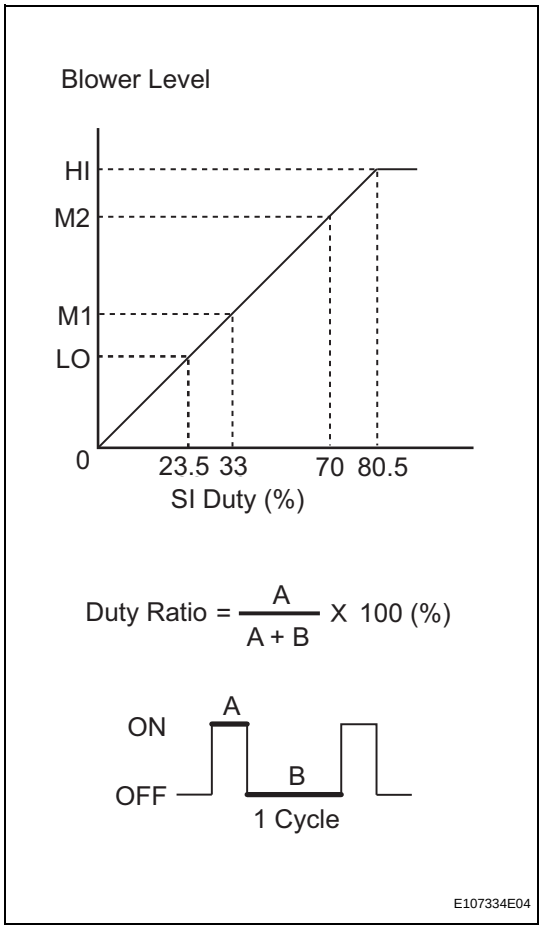

The blower motor is operated by signals from the A/C amplifier. The blower motor speed is controlled using various duty ratios.

Duty Ratio:

The duty ratio is the ratio of the blower motor ON time (A) to the total of the blower motor ON and OFF time (A + B).

The blower motor controller controls the blower motor speed.

WIRING DIAGRAM

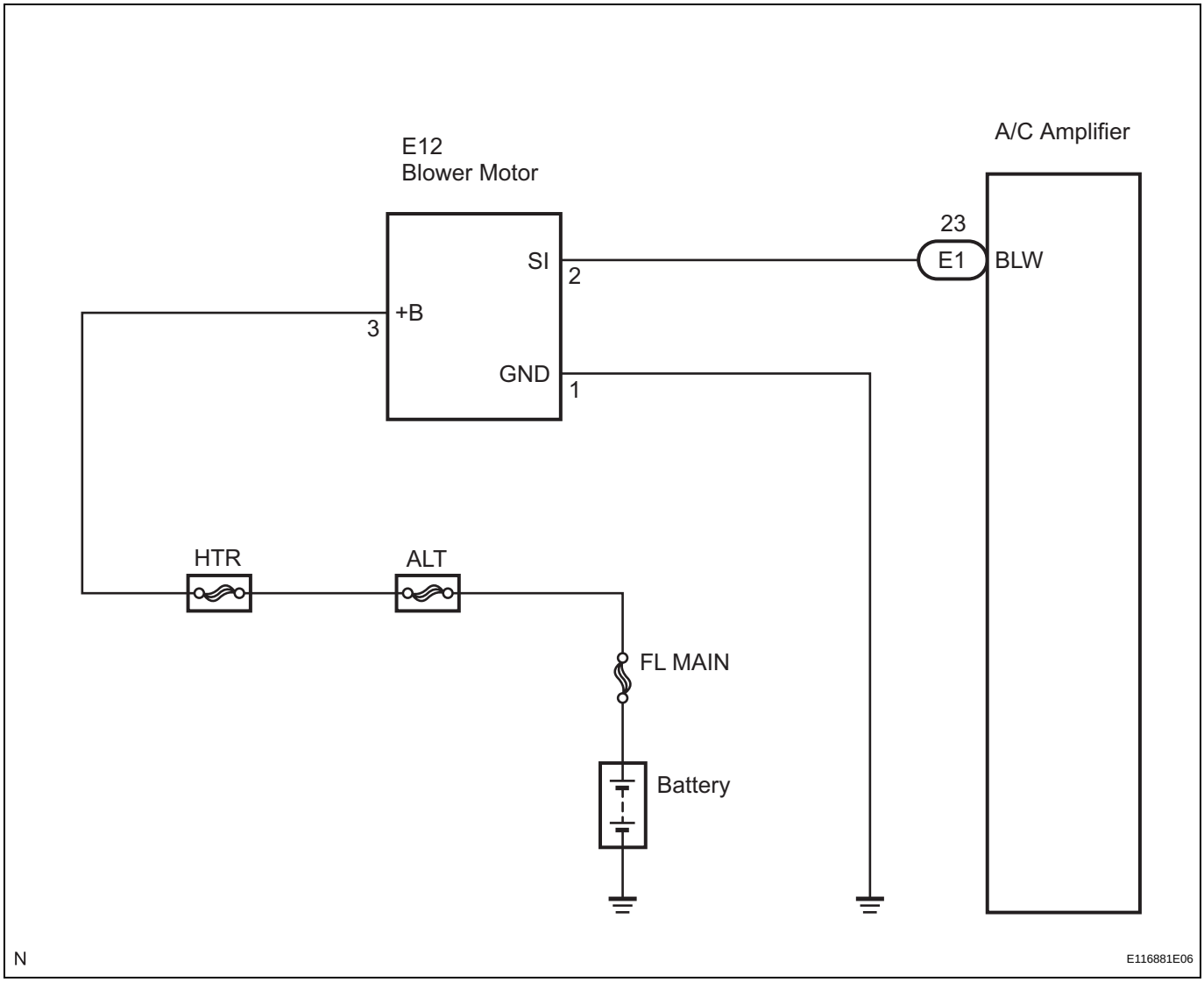

INSPECTION PROCEDURE

1	PERFORM ACTIVE TEST BY INTELLIGENT TESTER

(a) Connect the intelligent tester to the DLC3.
(b) Turn the engine switch on (IG) and turn the intelligent tester main switch on.
(c) Select the item below in the ACTIVE TEST and then check that the blower motor operates.

ACTIVE TEST / AIR CONDITIONER:

Tester Display	Test Part	Control Range
BLOWER MOTOR (Blower motor)	Blower motor / Min.: Level 01, Max.: Level 31	-

AC

Result

Result	Proceed to
OK	**A**
NG (blower motor does not operate)	**B**

Result	Proceed to
NG (blower motor operates but does not change speed)	C

B → Go to step 2

C → Go to step 6

A

PROCEED TO NEXT CIRCUIT INSPECTION SHOWN IN PROBLEM SYMPTOMS TABLE

2 INSPECT FUSIBLE LINK (HTR)

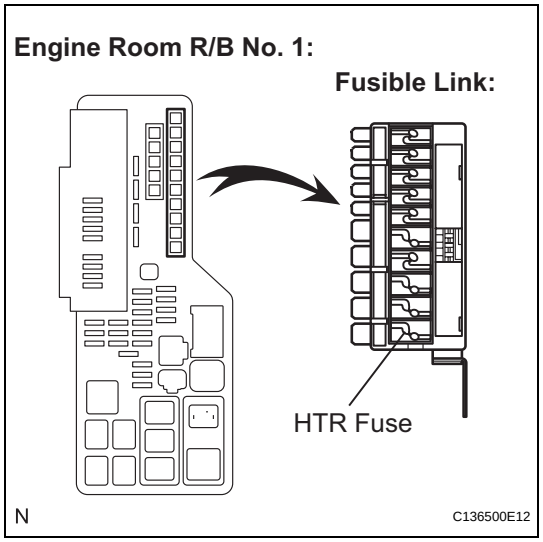

(a) Remove the fusible link from the engine room R/B No. 1.

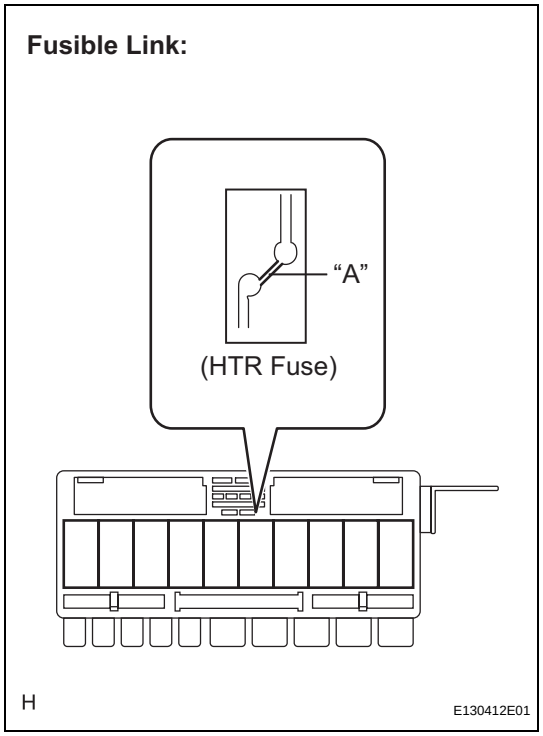

(b) Check if the fusible link is melted.
OK:
The point indicated by "A" is not melted.

Fusible Link:

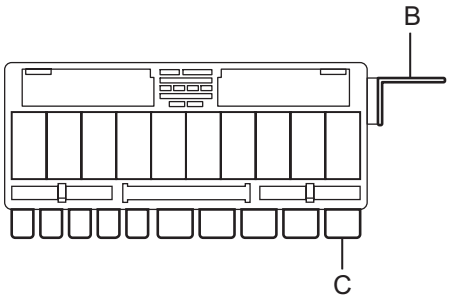

E133955E01

(c) Measure the resistance according to the value(s) in the table below.

Standard resistance

Tester Item	Condition	Specified Condition
HTR fuse (B - C)	Always	Below 1 Ω

(d) Install the fusible link to the engine room R/B with the nut.

NG → **REPLACE FUSIBLE LINK (HTR)**

OK

3 CHECK HARNESS AND CONNECTOR (BLOWER MOTOR - BODY GROUND)

Blower Motor Connector Front View:

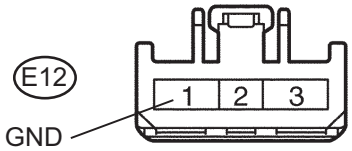

I041124E18

(a) Disconnect the blower motor connector.
(b) Measure the resistance according to the value(s) in the table below.

Standard resistance

Tester Connection	Condition	Specified Condition
E12-1 (GND) - Body ground	Always	Below 1 Ω

NG → **REPAIR OR REPLACE HARNESS OR CONNECTOR**

OK

4 CHECK HARNESS AND CONNECTOR (BLOWER MOTOR - BATTERY)

Blower Motor Connector Front View:

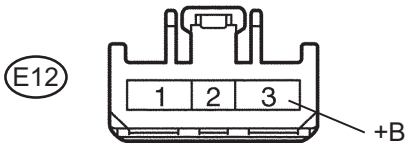

I041124E19

(a) Disconnect the blower motor connector.
(b) Measure the voltage according to the value(s) in the table below.

Standard voltage

Tester Connection	Condition	Specified Condition
E12-3 (+B) - Body ground	Always	10 to 14 V

NG → **REPAIR OR REPLACE HARNESS OR CONNECTOR**

OK

5 CHECK HARNESS AND CONNECTOR (A/C AMPLIFIER - BLOWER MOTOR)

Air Conditioning Amplifier Connector Wire Harness View:

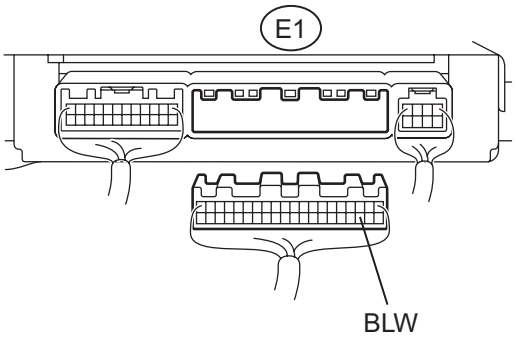

(a) Disconnect the A/C amplifier connector.

Blower Motor Connector Front View:

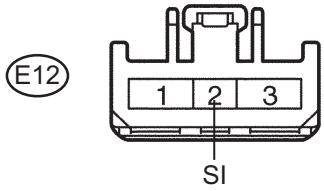

(b) Measure the resistance according to the value(s) in the table below.

Standard resistance

Tester Connection (Symbols)	Condition	Specified Condition
E12-2 (SI) - E1-23 (BLW)	Always	Below 1 Ω
E12-2 (SI) - Body ground	Always	10 kΩ or higher

NG → **REPAIR OR REPLACE HARNESS OR CONNECTOR**

OK

6 INSPECT BLOWER MOTOR

Air Conditioning Amplifier Connector Wire Harness View:

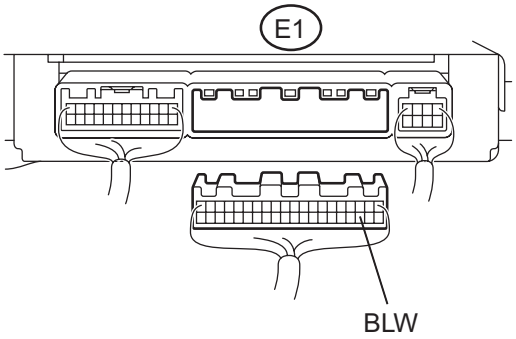

(a) Reconnect the connector to the blower motor.

(b) Measure the voltage on the A/C amplifier connector side according to the value(s) in the table below.

Standard voltage

Tester Connection	Condition	Specified Condition
E1-23 (BLW) - Body ground	Engine switch on (IG)	4.5 to 5.5 V

NG → **REPLACE BLOWER MOTOR**

OK

7	INSPECT AIR CONDITIONING AMPLIFIER

Air Conditioning Amplifier Connector Wire Harness View:

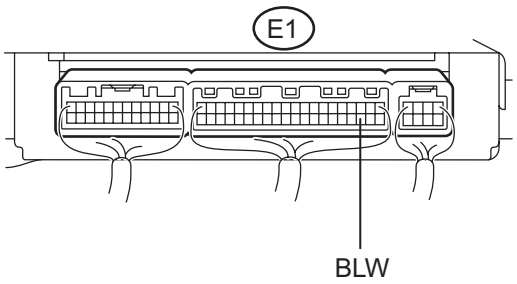

H E124471E21

(a) Remove the A/C amplifier.
(b) Reconnect the connector to the A/C amplifier.

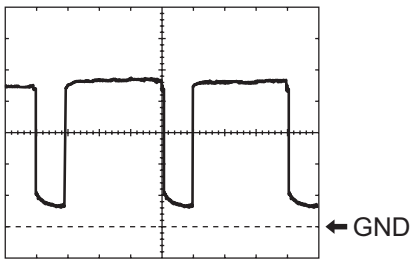

H E103396E01

(c) Turn the engine switch on (IG) .
(d) Turn the blower switch ON.
(e) Measure the waveform between terminal E1-23 (BLW) of the A/C amplifier and body ground.
OK:
Waveform is as shown in the illustration.
HINT:
Waveform varies with the blower level.

Item	Contents
Tool setting	1 V/DIV., 500 μs/DIV.
Vehicle condition	Engine switch on (IG) Blower switch ON

NG → **REPLACE AIR CONDITIONING AMPLIFIER**

OK

REPLACE BLOWER MOTOR

Heater Control Panel Power Source Circuit

DESCRIPTION

Battery voltage is supplied to the A/C control assembly through the A/C fuse and A/C No. 2 fuse.

WIRING DIAGRAM

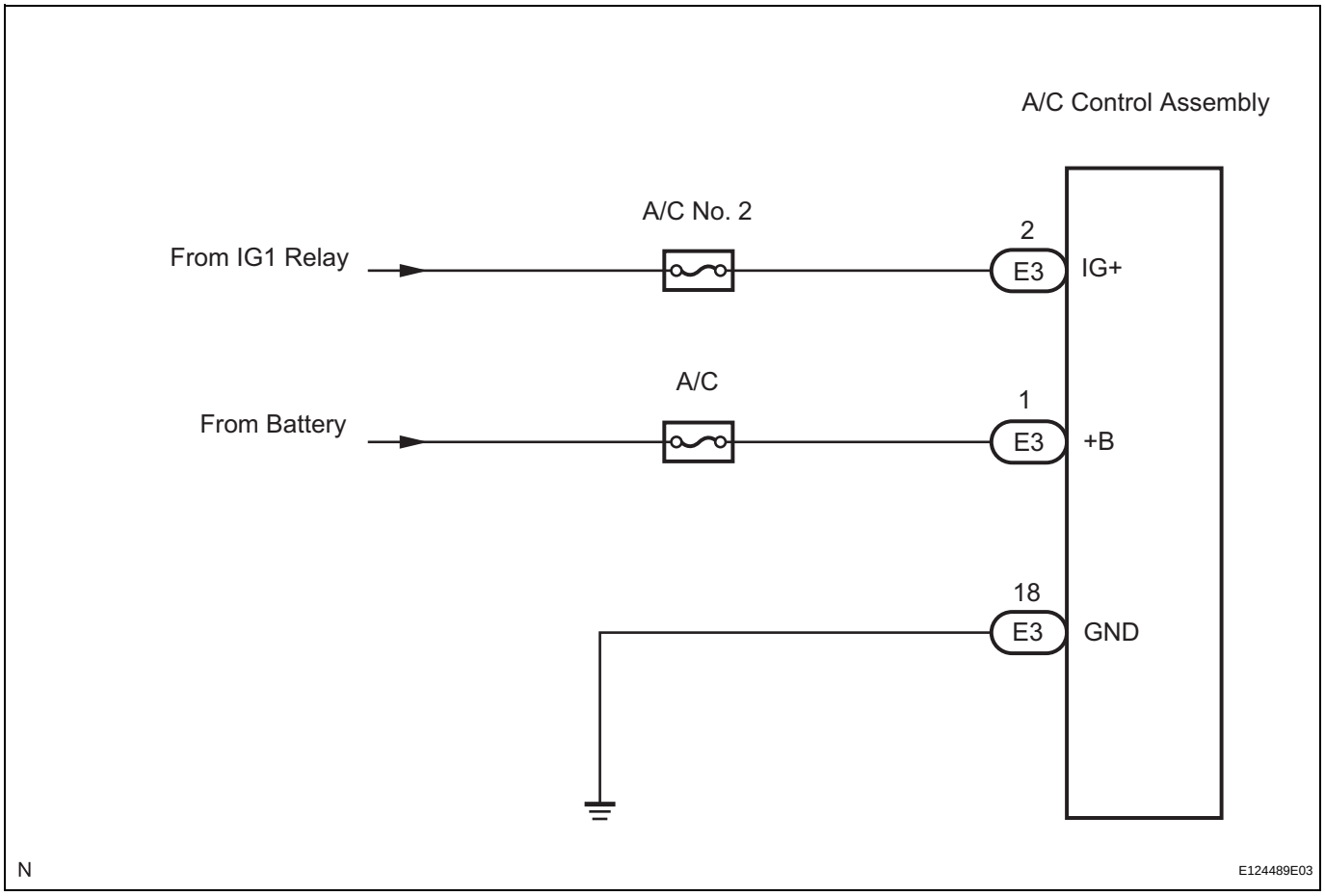

INSPECTION PROCEDURE

1 CHECK HARNESS AND CONNECTOR (IG+, B - BODY GROUND)

A/C Control Assembly Connector Wire Harness View:

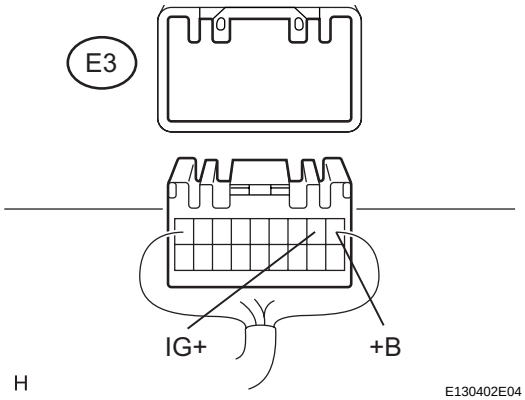

(a) Disconnect the connector from the A/C control assembly.
(b) Measure the voltage according to the value(s) in the table below.

Standard voltage

Tester Connection (Symbols)	Condition	Specified Condition
E3-2 (IG+) - Body ground	Engine switch on (IG)	10 to 14 V
E3-2 (IG+) - Body ground	Engine switch off	Below 1 V
E3-1 (+B) - Body ground	Always	10 to 14 V

NG → **GO TO SMART ACCESS SYSTEM WITH PUSH-BUTTON START (See page ST-15)**

OK

2 CHECK HARNESS AND CONNECTOR (GND - BODY GROUND)

A/C Control Assembly Connector Wire Harness View:

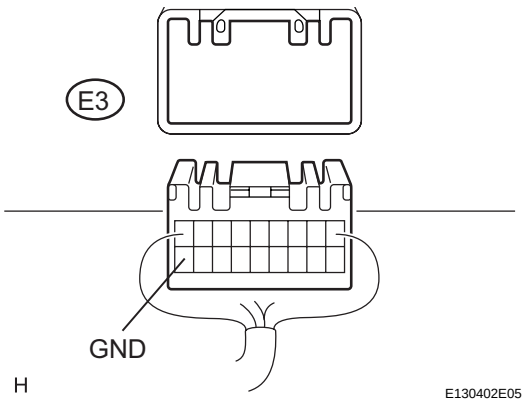

(a) Measure the resistance according to the value(s) in the table below.

Standard resistance

Tester Connection (Symbols)	Condition	Specified Condition
E3-18 (GND) - Body ground	Always	Below 1 Ω

NG → **REPAIR OR REPLACE HARNESS OR CONNECTOR**

OK

PROCEED TO NEXT CIRCUIT INSPECTION SHOWN IN PROBLEM SYMPTOMS TABLE

Air Conditioning Compressor Magnetic Clutch Circuit

DESCRIPTION

When the A/C amplifier is turned on, a magnetic clutch ON signal is sent from the MGC terminal of the A/C amplifier. Then, the MGC relay turns on to operate the magnetic clutch.

WIRING DIAGRAM

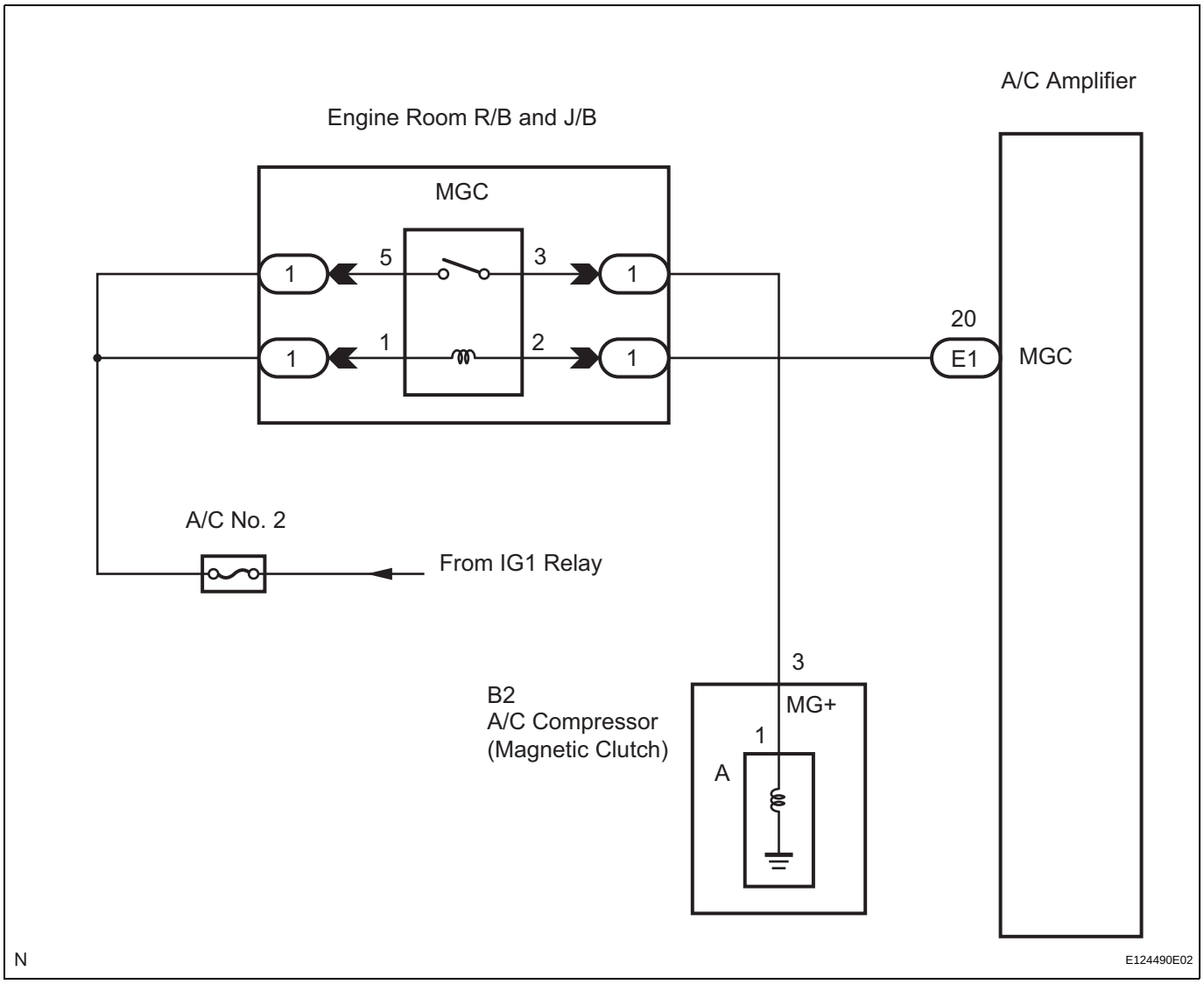

INSPECTION PROCEDURE

1	CHECK CAN COMMUNICATION SYSTEM

(a) Use the intelligent tester to check if the CAN Communication System is functioning normally.

Result

Result	Proceed to
CAN DTC is not output	A
CAN DTC is output	B

AC

B → **GO TO CAN COMMUNICATION SYSTEM (See page CA-11)**

A

2 READ VALUE OF INTELLIGENT TESTER

(a) Connect the intelligent tester to the DLC3.
(b) Turn the engine switch on (IG) and turn the intelligent tester main switch on.
(c) Turn the A/C switch on and off.
(d) Select the item below in the DATA LIST, and read the display on the intelligent tester.

DATA LIST / ENGINE:

Tester Display	Measurement Item/Range	Normal Condition	Diagnostic Note
A/C SIGNAL (A/C Signal)	A/C signal / ON or OFF	ON: A/C ON OFF: A/C OFF	-

OK:
The display is as specified in the normal condition column.

NG → **PROCEED TO NEXT CIRCUIT INSPECTION SHOWN IN PROBLEM SYMPTOMS TABLE**

OK

3 PERFORM ACTIVE TEST BY INTELLIGENT TESTER

(a) Connect the intelligent tester to the DLC3.
(b) Turn the engine switch on (IG) and turn the intelligent tester main switch on.
(c) Select the item below in the ACTIVE TEST and check that the magnetic clutch relay operates.

ACTIVE TEST / AIR CONDITIONER:

Tester Display	Test Part	Control Range
A/C MAG CLUTCH (Magnetic clutch relay)	Magnetic clutch relay / OFF, ON	-

OK:
The magnetic clutch relay operates normally.

OK → **PROCEED TO NEXT CIRCUIT INSPECTION SHOWN IN PROBLEM SYMPTOMS TABLE**

NG

4 INSPECT FUSE (A/C NO. 2)

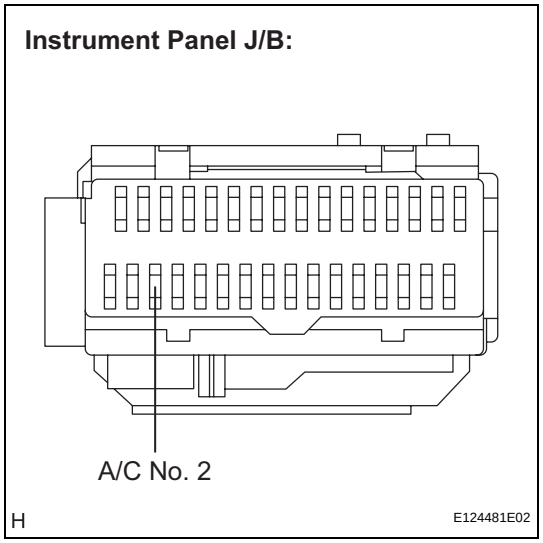

(a) Remove the A/C No. 2 fuse from the instrument panel J/B.

(b) Measure the resistance of the fuse.

Standard resistance

Tester Item	Condition	Specified Condition
A/C No. 2 fuse	Always	Below 1 Ω

(c) Reconnect the A/C No. 2 fuse to the instrument panel J/B.

NG → **REPLACE FUSE (A/C NO. 2)**

OK

5 INSPECT RELAY (MGC)

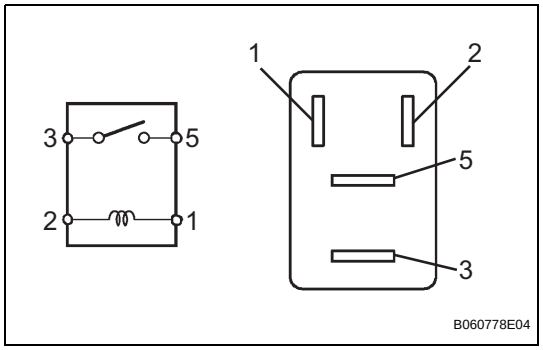

(a) Remove the MGC relay from the engine room R/B and J/B.

(b) Measure the resistance according to the value(s) in the table below.

Standard resistance

Tester Connection	Specified Condition
3 - 5	10 kΩ or higher
3 - 5	Below 1 Ω (when battery voltage is applied to terminals 1 and 2)

(c) Install the MGC relay to the engine room R/B and J/B.

NG → **REPLACE RELAY (MGC)**

OK

6 CHECK HARNESS AND CONNECTOR (A/C AMPLIFIER - BATTERY)

Air Conditioning Amplifier Connector Wire Harness View:

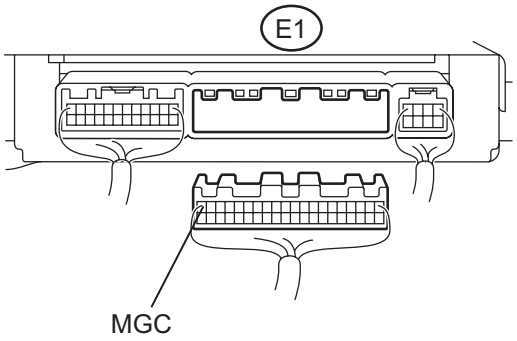

H E124470E43

(a) Disconnect the connector from the A/C amplifier.
(b) Measure the voltage according to the value(s) in the table below.

Standard voltage

Tester Connection (Symbols)	Condition	Specified Condition
E1-20 (MGC) - Body ground	Engine switch off	Below 1 V
E1-20 (MGC) - Body ground	Engine switch on (IG)	10 to 14 V

NG → **REPAIR OR REPLACE HARNESS OR CONNECTOR**

OK

7 INSPECT AIR CONDITIONING AMPLIFIER

Air Conditioning Amplifier Connector Wire Harness View:

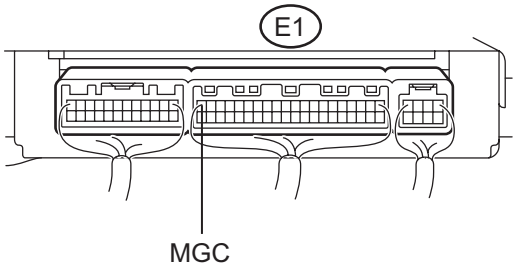

H E124471E22

(a) Reconnect the connector to the A/C amplifier.
(b) Measure the voltage according to the value(s) in the table below.

Standard voltage

Tester Connection (Symbols)	Condition	Specified Condition
E1-20 (MGC) - Body ground	Engine switch on (IG) A/C switch: OFF	10 to 14 V
E1-20 (MGC) - Body ground	Engine switch on (IG) A/C switch: ON	Below 1 V

NG → **REPLACE AIR CONDITIONING AMPLIFIER**

OK

8 INSPECT A/C COMPRESSOR

A/C Compressor Connector Front View:

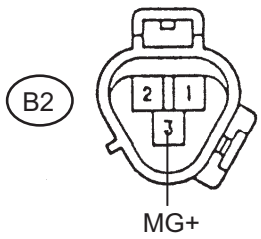

E005280E20

(a) Disconnect the connector from the A/C compressor.

Magnetic Clutch Connector Front View:

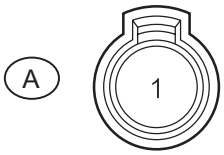

H

E124482E01

(b) Disconnect the connector from the magnetic clutch.

(c) Measure the resistance according to the value(s) in the table below.

Standard resistance

Tester Connection (Symbols)	Condition	Specified Condition
B2-3 (MG+) - A-1	Always	Below 1 Ω
B2-3 (MG+) - Body ground	Always	10 kΩ or higher

NG → **REPLACE A/C COMPRESSOR**

OK

9 INSPECT MAGNETIC CLUTCH

Magnetic Clutch Connector Front View:

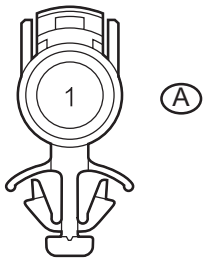

H

E113611E01

(a) Measure the resistance according to the value(s) in the table below.

Standard resistance

Tester Connection	Condition	Specified Condition
A-1 - Body ground	Always	3.4 to 3.8 Ω

(b) When connector terminal A-1 is connected to the positive (+) battery terminal, check that the following occurs: 1) the magnetic clutch's operating sound can be heard, and 2) the magnetic clutch's hub and rotor lock.

NG → **REPLACE MAGNETIC CLUTCH**

OK

10	CHECK HARNESS AND CONNECTOR (ENGINE ROOM R/B AND J/B - BATTERY)

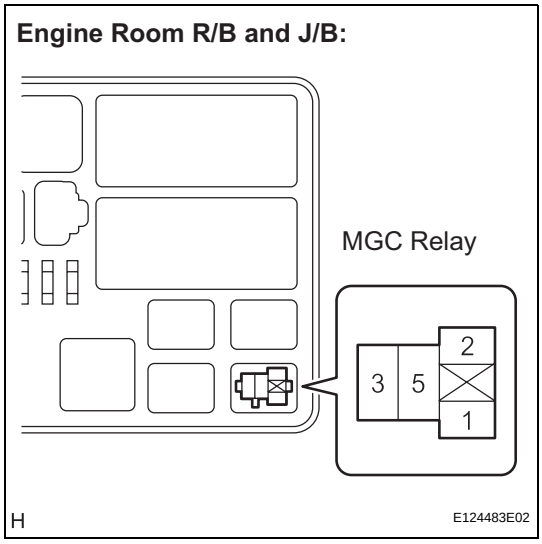

(a) Remove the MGC relay from the engine room R/B and J/B.
(b) Turn the engine switch on (IG).
(c) Measure the voltage according to the value(s) in the table below.

Standard voltage

Tester Connection	Specified Condition
Relay block MGC relay terminal 5 - Body ground	10 to 14 V
Relay block MGC relay terminal 1 - Body ground	10 to 14 V

NG → **REPAIR OR REPLACE HARNESS OR CONNECTOR**

OK

REPAIR OR REPLACE HARNESS OR CONNECTOR (ENGINE ROOM R/B AND J/B - A/C COMPRESSOR)

IG Power Source Circuit

DESCRIPTION

The main power source is supplied to the A/C amplifier when the engine switch is turned on (IG).
The power source is used for operating the A/C amplifier and servo motor, etc.

WIRING DIAGRAM

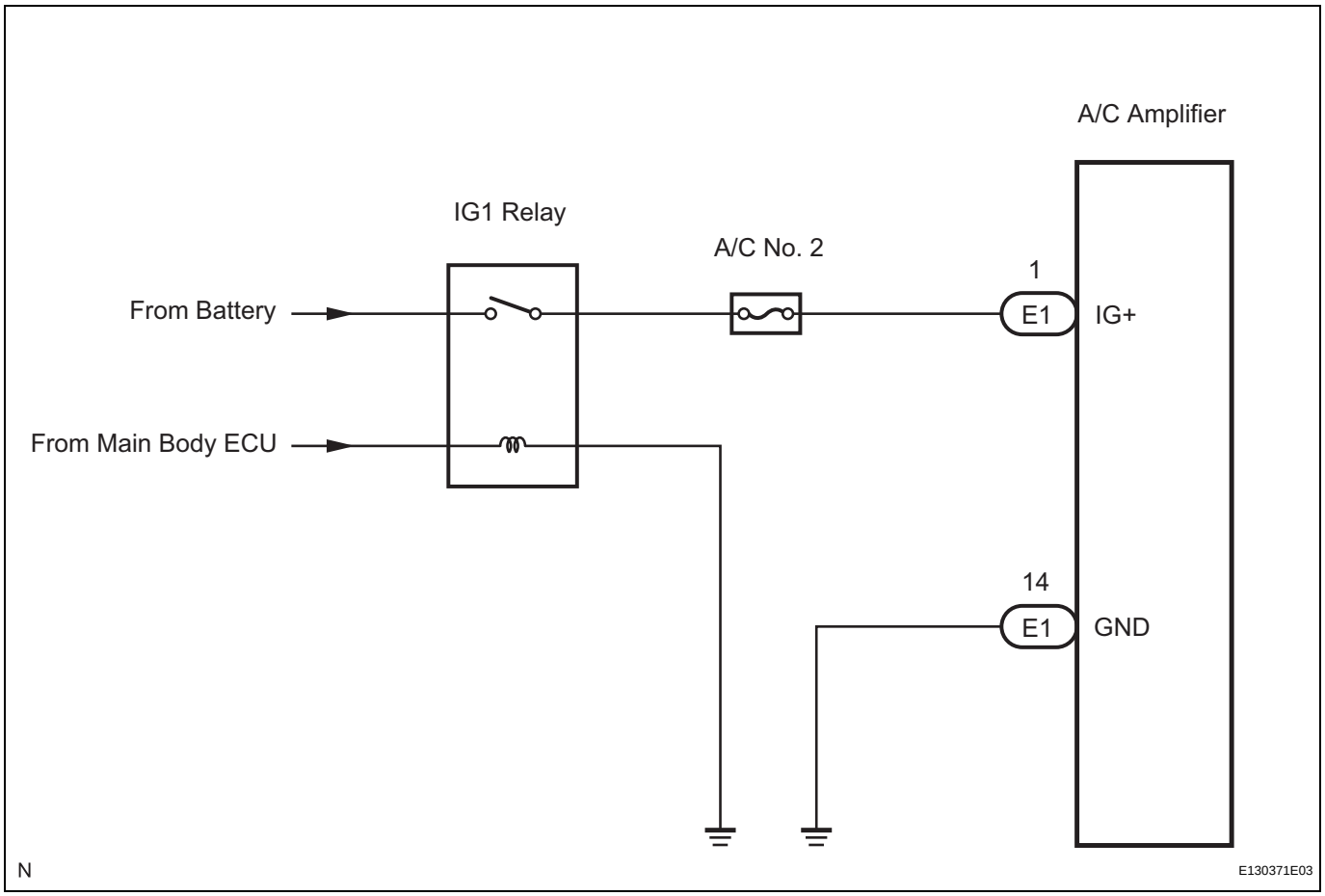

INSPECTION PROCEDURE

HINT:
Start the engine before inspection. Check the IG1 relay or battery if the engine does not start.

1 INSPECT FUSE (A/C NO. 2)

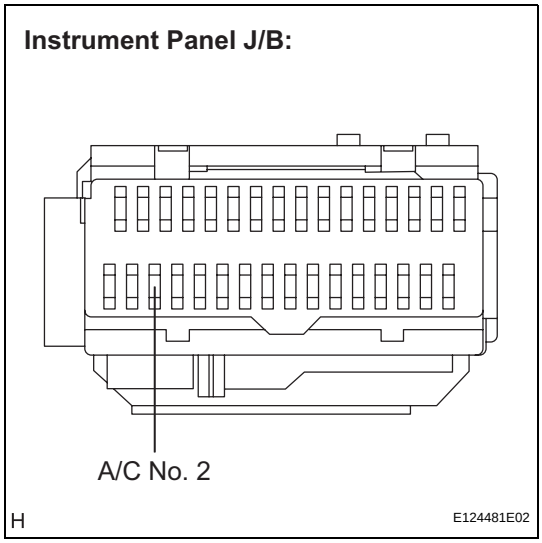

(a) Remove the A/C No. 2 fuse from the instrument panel J/B.
(b) Measure the resistance according to the value(s) in the table below.

Standard resistance

Tester Item	Condition	Specified Condition
A/C No. 2 fuse	Always	Below 1 Ω

NG → **REPLACE FUSE (A/C NO. 2)**

OK

2 INSPECT AIR CONDITIONING AMPLIFIER (IG+ - GND)

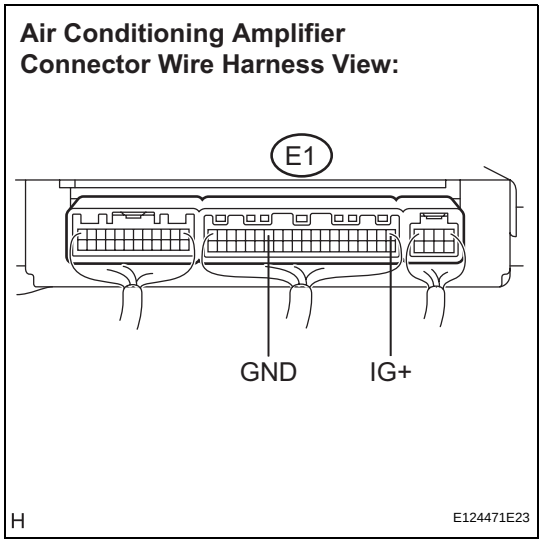

(a) Remove the A/C amplifier with its connectors still connected.
(b) Turn the engine switch on (IG).
(c) Measure the voltage according to the value(s) in the table below.

Standard voltage

Tester Connection	Condition	Specified Condition
E1-1 (IG+) - E1-14 (GND)	Engine switch on (IG)	10 to 14 V

NG → **Go to step 3**

OK

PROCEED TO NEXT CIRCUIT INSPECTION SHOWN IN PROBLEM SYMPTOMS TABLE

3 CHECK WIRE HARNESS (AIR CONDITIONING AMPLIFIER - BATTERY)

Air Conditioning Amplifier Connector Wire Harness View:

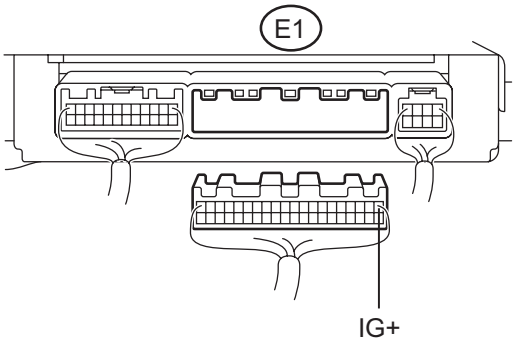

H E124470E44

(a) Disconnect the A/C amplifier connector.
(b) Measure the voltage according to the value(s) in the table below.

Standard voltage

Tester Connection	Condition	Specified Condition
E1-1 (IG+) - Body ground	Engine switch off	Below 1 V
	Engine switch on (IG)	10 to 14 V

NG → **REPAIR OR REPLACE HARNESS OR CONNECTOR**

OK

4 CHECK WIRE HARNESS (AIR CONDITIONING AMPLIFIER - BODY GROUND)

Air Conditioning Amplifier Connector Wire Harness View:

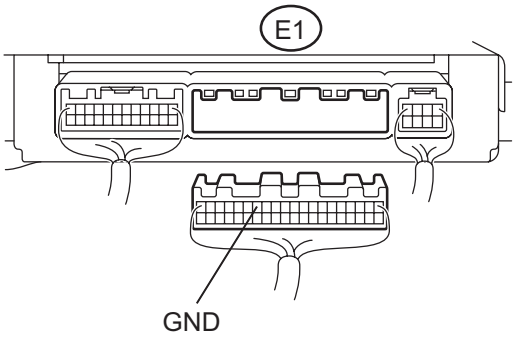

H E124470E45

(a) Disconnect the A/C amplifier connector.
(b) Measure the resistance according to the value(s) in the table below.

Standard resistance

Tester Connection	Condition	Specified Condition
E1-14 (GND) - Body ground	Always	Below 1 Ω

NG → **REPAIR OR REPLACE HARNESS OR CONNECTOR**

OK

REPLACE AIR CONDITIONING AMPLIFIER

Back-up Power Source Circuit

DESCRIPTION

The back-up power source circuit for the A/C amplifier is shown below. Power is supplied even when turning the engine switch off and is used for diagnostic trouble code memory, etc.

WIRING DIAGRAM

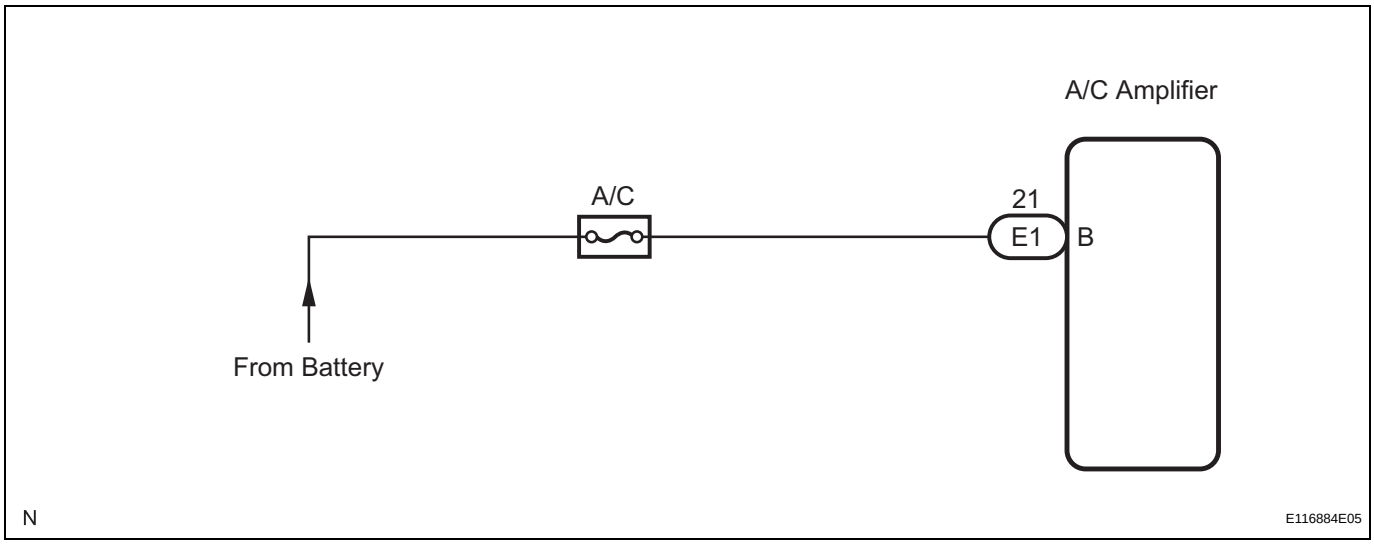

INSPECTION PROCEDURE

1	INSPECT FUSE (A/C)

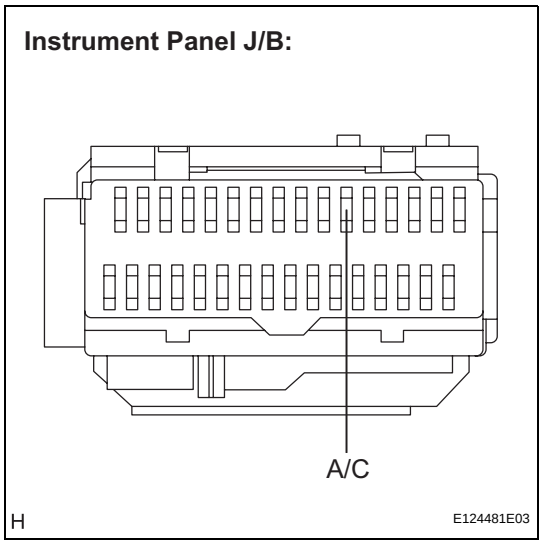

(a) Remove the A/C fuse from the instrument panel J/B.
(b) Measure the resistance according to the value(s) in the table below.

Standard resistance

Tester Item	Condition	Specified Condition
A/C fuse	Always	Below 1 Ω

NG → **REPLACE FUSE (A/C)**

OK

2	**INSPECT AIR CONDITIONING AMPLIFIER (AIR CONDITIONING AMPLIFIER - BODY GROUND)**

Air Conditioning Amplifier Connector Wire Harness View:

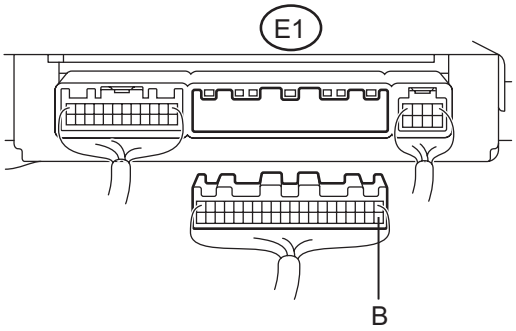

H E124470E46

(a) Disconnect the A/C amplifier connector.
(b) Measure the voltage according to the value(s) in the table below.

Standard voltage

Tester Connection	Condition	Specified Condition
E1-21 (B) - Body ground	Always	10 to 14 V

NG → **REPAIR OR REPLACE HARNESS OR CONNECTOR**

OK

PROCEED TO NEXT CIRCUIT INSPECTION SHOWN IN PROBLEM SYMPTOMS TABLE

LIN Communication Circuit

DESCRIPTION

The operation signal of a switch etc. is exchanged between terminal TX+ of the A/C control assembly and terminal LIN1 of the A/C amplifier.

WIRING DIAGRAM

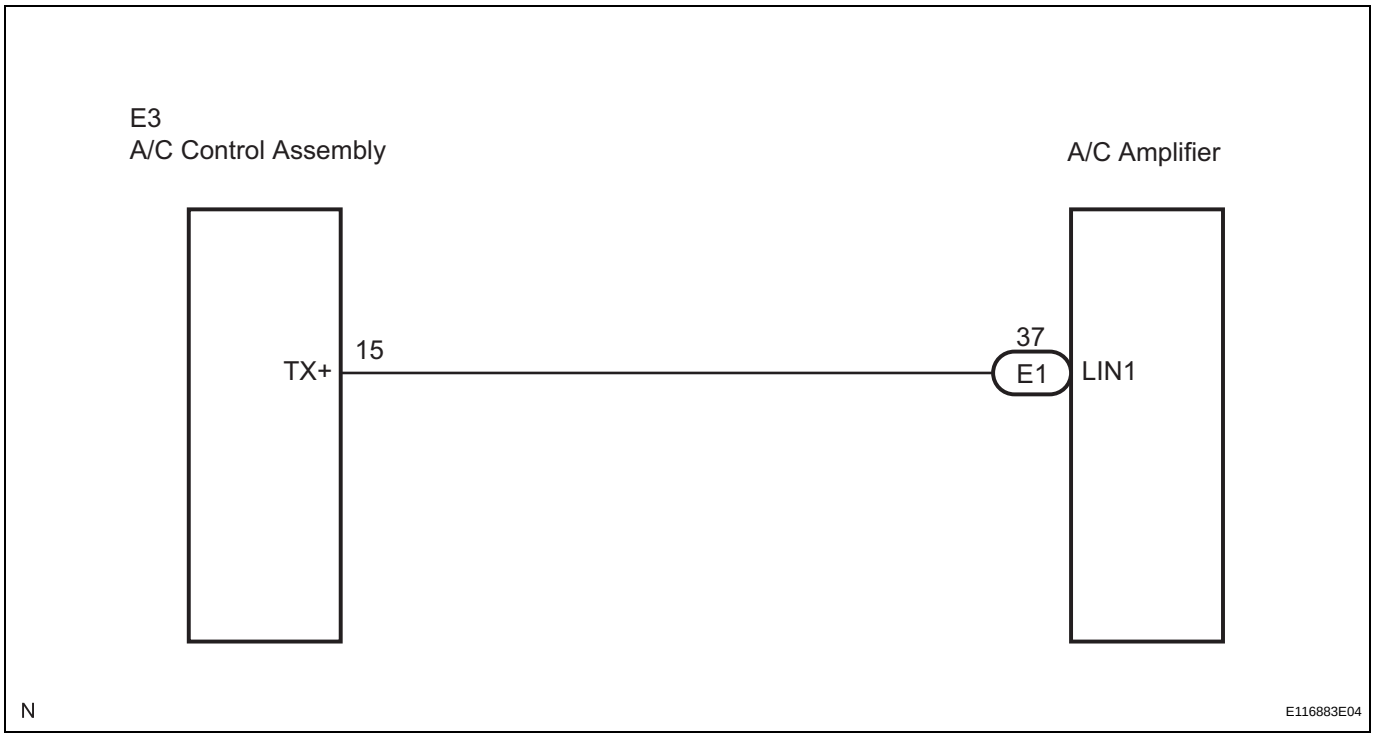

INSPECTION PROCEDURE

1	CHECK HARNESS AND CONNECTOR (A/C CONTROL ASSEMBLY - AIR CONDITIONING AMPLIFIER)

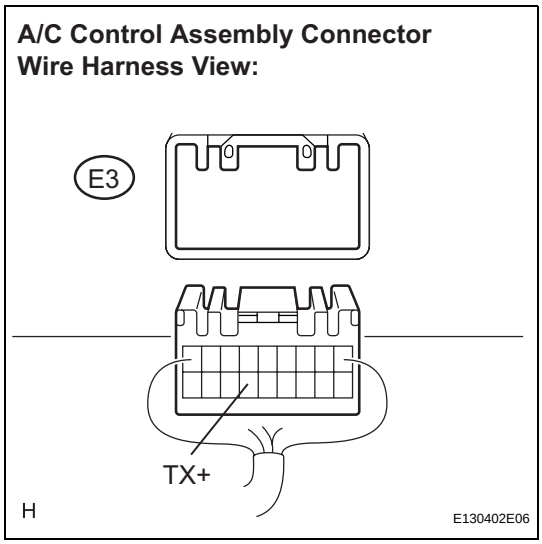

(a) Disconnect the connector from the A/C control assembly.

Air Conditioning Amplifier Connector Wire Harness View:

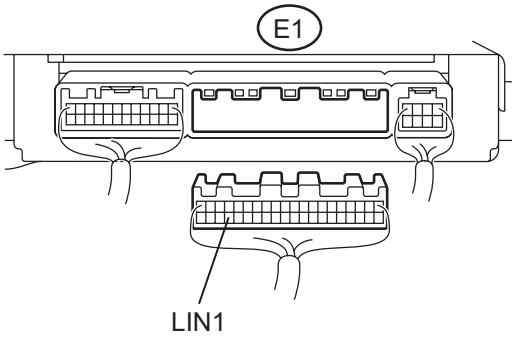

H E124470E47

(b) Disconnect the connector from the A/C amplifier.

(c) Measure the resistance according to the value(s) in the table below.

Standard resistance

Tester Connection (Symbols)	Condition	Specified Condition
E1-37 (LIN1) - E3-15 (TX1)	Always	Below 1 Ω
E1-37 (LIN1) - Body ground	Always	10 kΩ or higher

NG → **REPAIR OR REPLACE HARNESS OR CONNECTOR**

OK

PROCEED TO NEXT CIRCUIT INSPECTION SHOWN IN PROBLEM SYMPTOMS TABLE

REPLACEMENT

1. RECOVER REFRIGERANT FROM REFRIGERATION SYSTEM

(a) Start up the engine.
(b) Turn the A/C switch on.
(c) Operate the cooler compressor at an engine speed of approximately 1,000 rpm for 5 to 6 minutes to circulate the refrigerant. This causes most of the compressor oil from the various components of the A/C system to collect in the A/C compressor.
(d) Stop the engine.
(e) Recover the refrigerant from the A/C system using a refrigerant recovery unit.

2. CHARGE WITH REFRIGERANT

(a) Perform vacuum purging using a vacuum pump.
(b) Using SST charge with refrigerant HFC-134a (R134a).

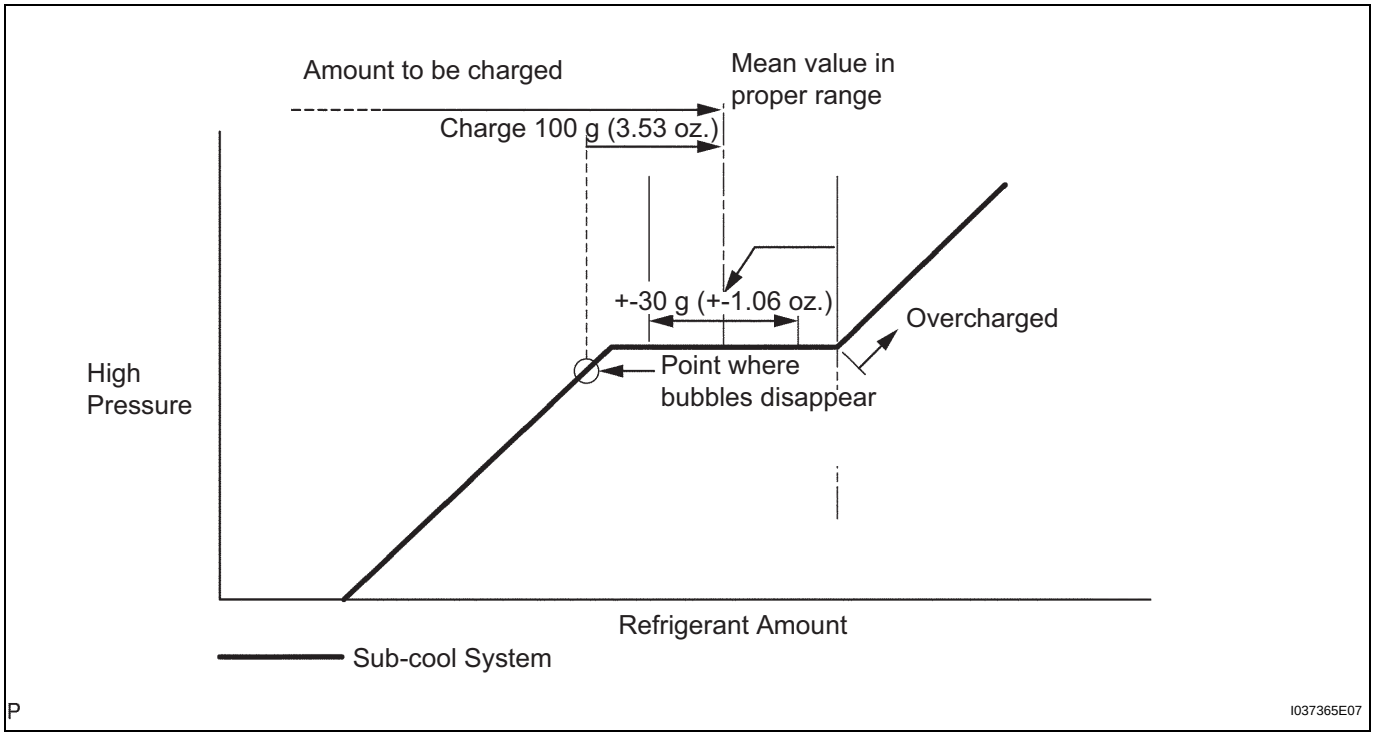

Standard:
470 to 530 g (16.6 to 18.7 oz.)

SST 07110-58060 (07117-58060, 07117-58070, 07117-58080, 07117-58090, 07117-78050, 07117-88060, 07117-88070, 07117-88080)

NOTICE:

- **Do not turn the A/C on before charging with refrigerant. Doing so will cause the cooler compressor to work without refrigerant, resulting in overheating of the cooler compressor.**

- **Approximately 100 g (3.53 oz.) of refrigerant may need to be charged after bubbles disappear.**
  The refrigerant amount should be checked by quantity, not with the sight glass.

HINT:
Ensure that sufficient refrigerant is available to recharge the system when using a refrigerant recovery unit. Refrigerant recovery units are not always able to recover 100 % of the refrigerant from the A/C system.

3. WARM UP COMPRESSOR

(a) Keep the A/C switch on for at least 2 minutes to warm up the compressor.
NOTICE:
Be sure to warm up the compressor when turning the A/C on after removing and installing the cooler refrigerant lines (including the compressor), to prevent damage to the compressor.

4. CHECK FOR LEAKAGE OF REFRIGERANT

(a) After recharging with refrigerant gas, check for leakage of refrigerant gas using a halogen leak detector.

(b) Carry out the test as follows:
- Turn the engine switch off.
- Secure good ventilation (the gas leak detector may react to volatile gases which are not refrigerant, such as evaporated gasoline and exhaust gas).
- Repeat the test 2 or 3 times.
- Make sure that there is some refrigerant remaining in the refrigeration system.
  When the compressor is off: approx. 392 to 588 kPa (4 to 6 kgf/cm^2, 57 to 85 psi)

(c) Using a gas leak detector, check for leakage from the refrigerant lines.

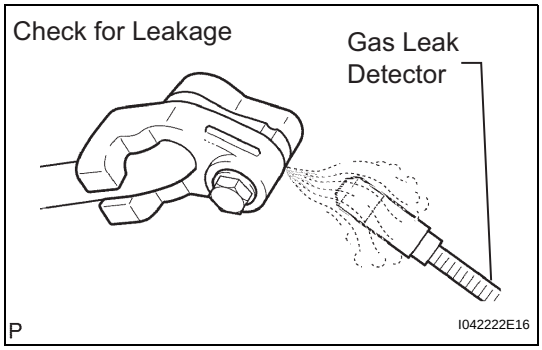

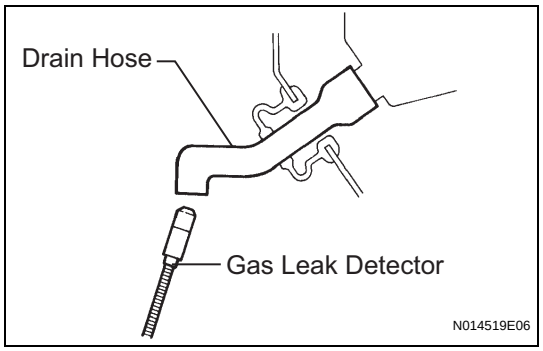

(d) Bring the gas leak detector close to the drain hose with the detector's power off, and then turn the detector on.
HINT:
- After the blower motor has stopped, let the cooling unit stand for more than 15 minutes.
- Bring the gas leak detector sensor under the drain hose.
- When bringing the gas leak detector close to the drain hose, make sure that the gas leak detector does not react to volatile gases.
  If it is not possible to avoid interference from volatile gases, the vehicle should be lifted up to allow testing.

(e) If a gas leak is not detected from the drain hose, remove the blower motor control from the cooling unit. Insert the gas leak detector sensor into the unit and perform the test.

(f) Disconnect the pressure switch connector and leave it for approximately 20 minutes. Bring the gas leak detector close to the pressure switch and perform the test.

REMOVAL

1. **RECOVER REFRIGERANT FROM REFRIGERATION SYSTEM**
   (a) Start up the engine.
   (b) Turn the A/C switch on.
   (c) Operate the cooler compressor at an engine speed of approximately 1,000 rpm for 5 to 6 minutes to circulate the refrigerant. This causes most of the compressor oil from the various components of the A/C system to collect in the A/C compressor.
   (d) Stop the engine.
   (e) Recover the refrigerant from the A/C system using a refrigerant recovery unit.
2. **ALIGN FRONT WHEELS FACING STRAIGHT AHEAD**
3. **DISCONNECT BATTERY NEGATIVE TERMINAL**
   NOTICE:
   Wait for 90 seconds after disconnecting the terminal to prevent the airbag from deploying (See page RS-1).
4. **REMOVE COOL AIR INTAKE DUCT SEAL (See page EM-22)**
5. **REMOVE HOOD HINGE COVER (for LH Side) (See page WW-38)**
6. **REMOVE HOOD HINGE COVER (for RH Side) (See page WW-39)**
7. **REMOVE ENGINE ROOM SIDE COVER LH (See page WW-39)**
8. **REMOVE ENGINE ROOM SIDE COVER RH (See page WW-39)**
9. **REMOVE AIR CLEANER CAP SUB-ASSEMBLY (See page ES-519)**
10. **REMOVE AIR CLEANER FILTER ELEMENT SUB-ASSEMBLY**
11. **REMOVE FRONT SUSPENSION UPPER CENTER BRACE (See page BR-22)**
12. **REMOVE FRONT WIPER ARM AND BLADE ASSEMBLY LH (See page WW-39)**
13. **REMOVE FRONT WIPER ARM AND BLADE ASSEMBLY RH (See page WW-39)**
14. **REMOVE COWL TOP VENTILATOR LOUVER SUB-ASSEMBLY (See page WW-40)**
15. **REMOVE WINDSHIELD WIPER MOTOR AND LINK ASSEMBLY (See page WW-40)**

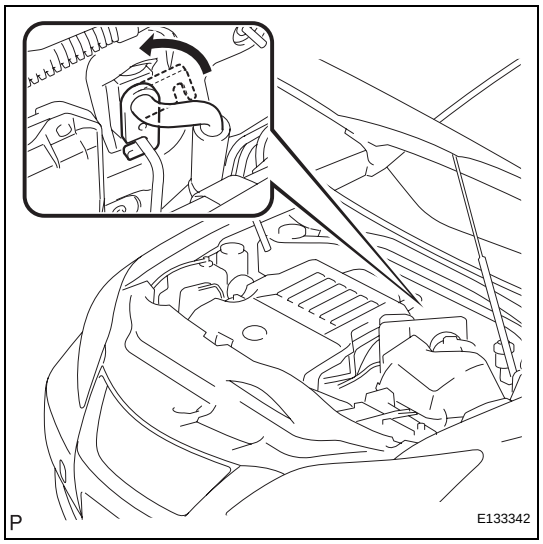

16. DISCONNECT SUCTION PIPE SUB-ASSEMBLY

(a) Remove the bolt, and slide the hook connector.

(b) Disconnect the suction pipe sub-assembly.

(c) Remove the O-ring from the suction hose sub-assembly.

NOTICE:

Seal the openings of the disconnected parts using vinyl tape to prevent entry of moisture and foreign matter.

17. DISCONNECT AIR CONDITIONER TUBE AND ACCESSORY

(a) Disconnect the air conditioner tube and accessory.

(b) Remove the O-ring from the air conditioner tube and accessory.

NOTICE:

Seal the openings of the disconnected parts using vinyl tape to prevent entry of moisture and foreign matter.

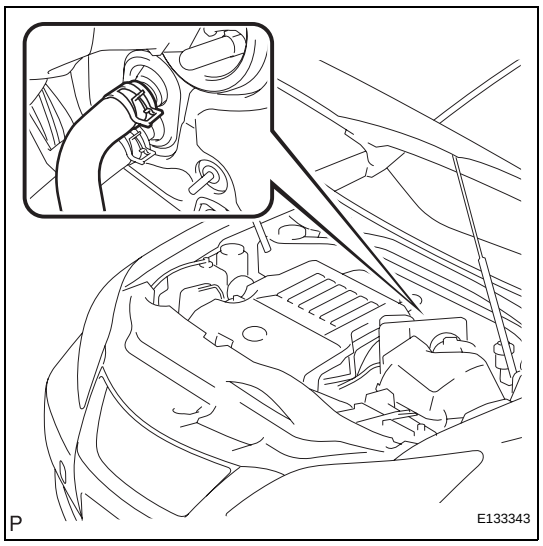

18. DISCONNECT HEATER OUTLET WATER HOSE

(a) Using pliers, grip the claws of the clip and slide the clip to disconnect the heater outlet water hose.

NOTICE:

- **Do not apply excessive force to the heater outlet water hose.**
- **Prepare a drain pan or cloth in case the coolant leaks.**

19. DISCONNECT HEATER INLET WATER HOSE

HINT:

Disconnection procedure for the heater inlet water hose is the same as that for the heater outlet water hose.

20. REMOVE LOWER NO. 3 STEERING WHEEL COVER (See page RS-367)

21. REMOVE LOWER NO. 2 STEERING WHEEL COVER (See page RS-367)

22. REMOVE STEERING PAD (See page RS-367)

23. REMOVE STEERING WHEEL ASSEMBLY (See page SR-80)

24. REMOVE FRONT DOOR SCUFF PLATE LH (See page IR-39)

25. REMOVE FRONT DOOR OPENING TRIM COVER LH (See page IR-39)

26. REMOVE SIDE INSTRUMENT PANEL LH (See page IP-12)

27. REMOVE INSTRUMENT PANEL FINISH PANEL END LH (See page IP-13)

28. REMOVE LOWER INSTRUMENT PANEL SUB-ASSEMBLY (See page IP-13)

29. REMOVE STEERING COLUMN COVER (See page IP-13)

30. **REMOVE TURN SIGNAL SWITCH ASSEMBLY WITH SPIRAL CABLE SUB-ASSEMBLY (See page SR-80)**
31. **REMOVE TILT & TELESCOPIC SWITCH (See page SR-80)**
32. **REMOVE INSTRUMENT CLUSTER FINISH PANEL SUB-ASSEMBLY (See page IP-14)**
33. **REMOVE COMBINATION METER ASSEMBLY (See page IP-14)**
34. **REMOVE NO. 1 SWITCH HOLE BASE (See page IP-14)**
35. **REMOVE INSTRUMENT PANEL FINISH PANEL END RH (See page IP-15)**
36. **REMOVE FRONT DOOR SCUFF PLATE RH (See page IR-42)**
37. **REMOVE FRONT DOOR OPENING TRIM COVER RH (See page IR-42)**
38. **REMOVE NO. 2 INSTRUMENT PANEL UNDER COVER SUB-ASSEMBLY (See page IP-15)**
39. **REMOVE SIDE INSTRUMENT PANEL RH (See page IP-15)**
40. **REMOVE FRONT PASSENGER SIDE KNEE AIRBAG ASSEMBLY (See page RS-396)**
41. **REMOVE LOWER INSTRUMENT PANEL RH (See page IP-16)**
42. **REMOVE SHIFT LEVER KNOB SUB-ASSEMBLY (See page IP-16)**
43. **REMOVE UPPER CONSOLE PANEL ASSEMBLY WITH FRONT ASH RECEPTACLE (See page IP-16)**
44. **REMOVE NO. 2 INSTRUMENT PANEL REGISTER ASSEMBLY (See page IP-17)**
45. **REMOVE INTEGRATION CONTROL PANEL WITH RADIO RECEIVER ASSEMBLY (w/o Navigation System) (See page AV-168)**
46. **REMOVE MULTI-DISPLAY WITH RADIO RECEIVER ASSEMBLY (w/ Navigation System) (See page AV-170)**
47. **REMOVE HEATER SEAT SWITCH CONSOLE BASE (w/o Seat Heater System) (See page IP-17)**
48. **REMOVE HEATER SEAT SWITCH CONSOLE BASE (w/ Seat Heater System) (See page IP-18)**
49. **REMOVE CONSOLE BOX POCKET (See page IP-18)**
50. **REMOVE CONSOLE BOX CARPET (See page IP-18)**
51. **REMOVE CONSOLE REAR END PANEL SUB-ASSEMBLY (See page IP-19)**

52. **REMOVE REAR CONSOLE BOX ASSEMBLY (See page IP-19)**
53. **REMOVE FRONT PILLAR GARNISH LH (See page IR-39)**
54. **REMOVE NO. 1 INSTRUMENT PANEL SPEAKER PANEL SUB-ASSEMBLY (See page IP-20)**
55. **REMOVE FRONT NO. 2 SPEAKER ASSEMBLY (for LH Side) (See page AV-184)**
56. **REMOVE NO. 1 INSTRUMENT PANEL REGISTER ASSEMBLY (See page IP-20)**
57. **REMOVE FRONT PILLAR GARNISH RH (See page IR-42)**
58. **REMOVE NO. 2 INSTRUMENT PANEL SPEAKER PANEL SUB-ASSEMBLY (See page IP-21)**
59. **REMOVE FRONT NO. 2 SPEAKER ASSEMBLY (for RH Side) (See page IP-21)**
60. **REMOVE NO. 3 INSTRUMENT PANEL REGISTER ASSEMBLY (See page IP-21)**
61. **REMOVE NO. 1 SPEAKER HOLE COVER (See page IP-21)**
62. **REMOVE FRONT STEREO COMPONENT SPEAKER ASSEMBLY (See page AV-188)**
63. **REMOVE NO. 1 INSTRUMENT PANEL MOUNTING BRACKET (See page IP-22)**
64. **REMOVE PUSH START SWITCH (See page IP-22)**
65. **DISCONNECT INSTRUMENT PANEL WIRE ASSEMBLY (See page RS-414)**
66. **REMOVE ROOM TEMPERATURE SENSOR (See page AC-214)**
67. **REMOVE INSTRUMENT PANEL SAFETY PAD ASSEMBLY (w/o DVD Player) (See page IP-22)**
68. **REMOVE INSTRUMENT PANEL SAFETY PAD ASSEMBLY (w/ DVD Player) (See page IP-24)**

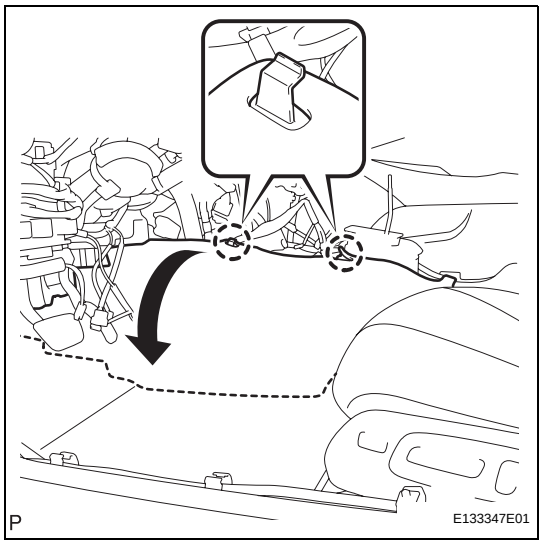

69. REMOVE FLOOR CARPET BRACKET LH

(a) Release the 2 claws.
(b) Turn back the floor carpet.

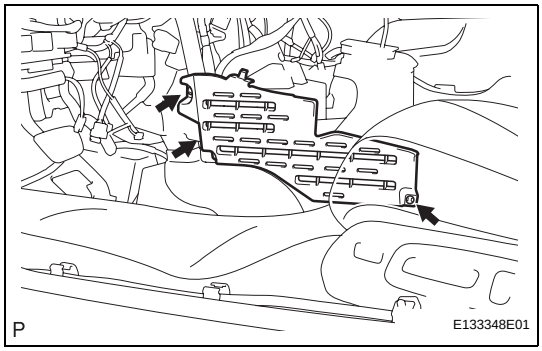

(c) Remove the 3 clips.
(d) Remove the floor carpet bracket LH.

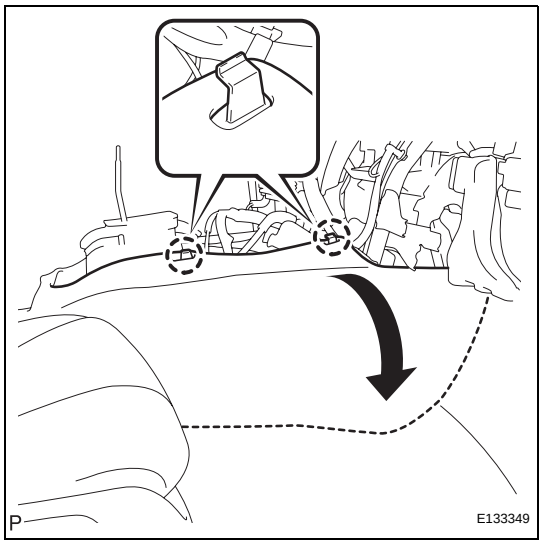

70. REMOVE FLOOR CARPET BRACKET RH

(a) Release the 2 claws.
(b) Turn back the floor carpet.

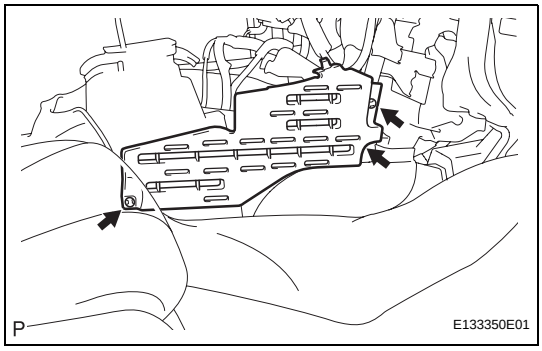

(c) Remove the 3 clips.
(d) Remove the floor carpet bracket RH.

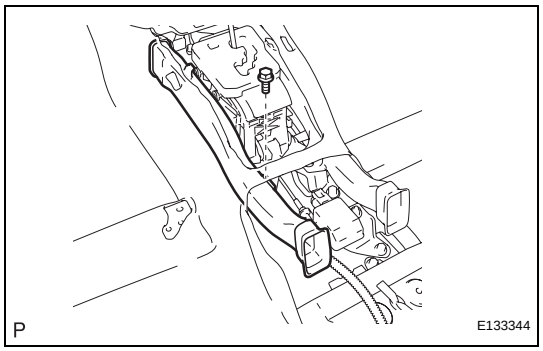

71. REMOVE NO. 2 CONSOLE BOX DUCT

(a) Remove the bolt and No. 2 console box duct.

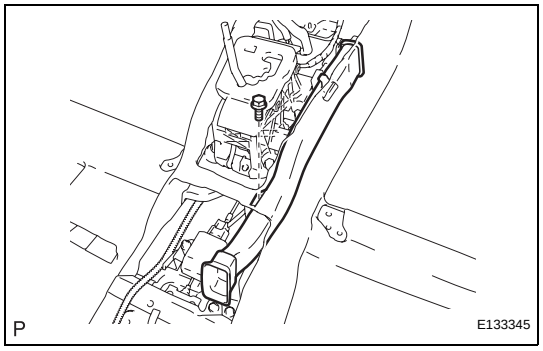

72. REMOVE NO. 3 CONSOLE BOX DUCT

(a) Remove the bolt and No. 3 console box duct.

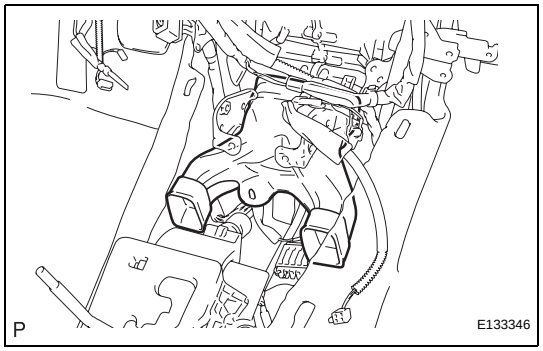

73. REMOVE NO. 1 CONSOLE BOX DUCT

(a) Remove the No. 1 console box duct.

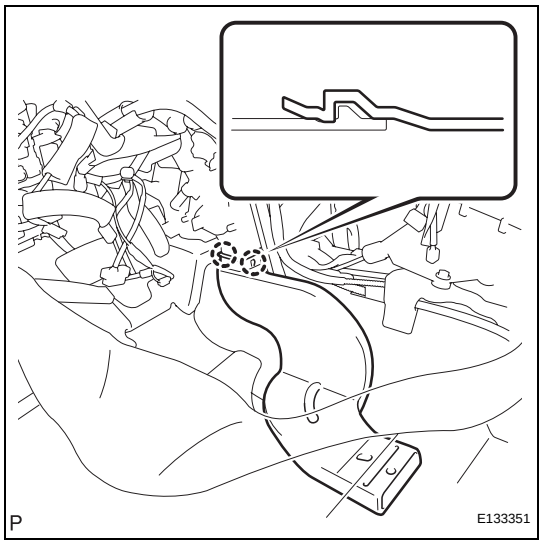

74. REMOVE REAR NO. 2 AIR DUCT

(a) Release the 2 claws and remove the rear No. 2 air duct.

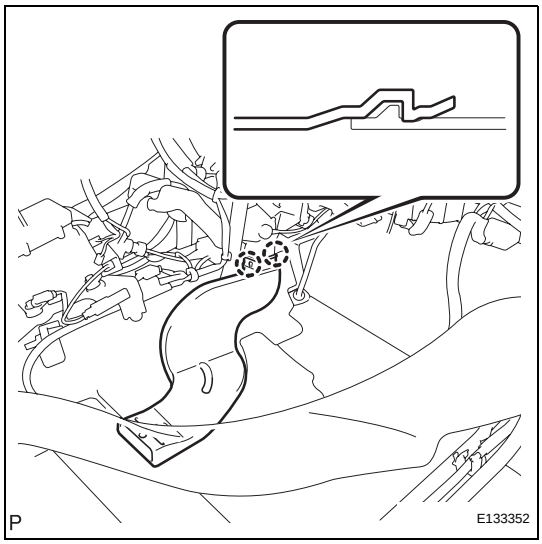

75. REMOVE REAR NO. 1 AIR DUCT

(a) Release the 2 claws and remove the rear No. 1 air duct.

76. REMOVE NO. 1 AIR DUCT SUB-ASSEMBLY (See page SR-81)

77. SEPARATE STEERING INTERMEDIATE SHAFT ASSEMBLY (See page SR-81)

78. REMOVE STEERING COLUMN ASSEMBLY (See page SR-82)

79. REMOVE AIR CONDITIONING AMPLIFIER ASSEMBLY (See page AC-232)

80. REMOVE INSTRUMENT PANEL REINFORCEMENT ASSEMBLY

(a) Remove the 24 clamps, disconnect the 11 connectors, and then disconnect the wire harness.

(b) Remove the 8 nuts, 7 bolts, and junction block.

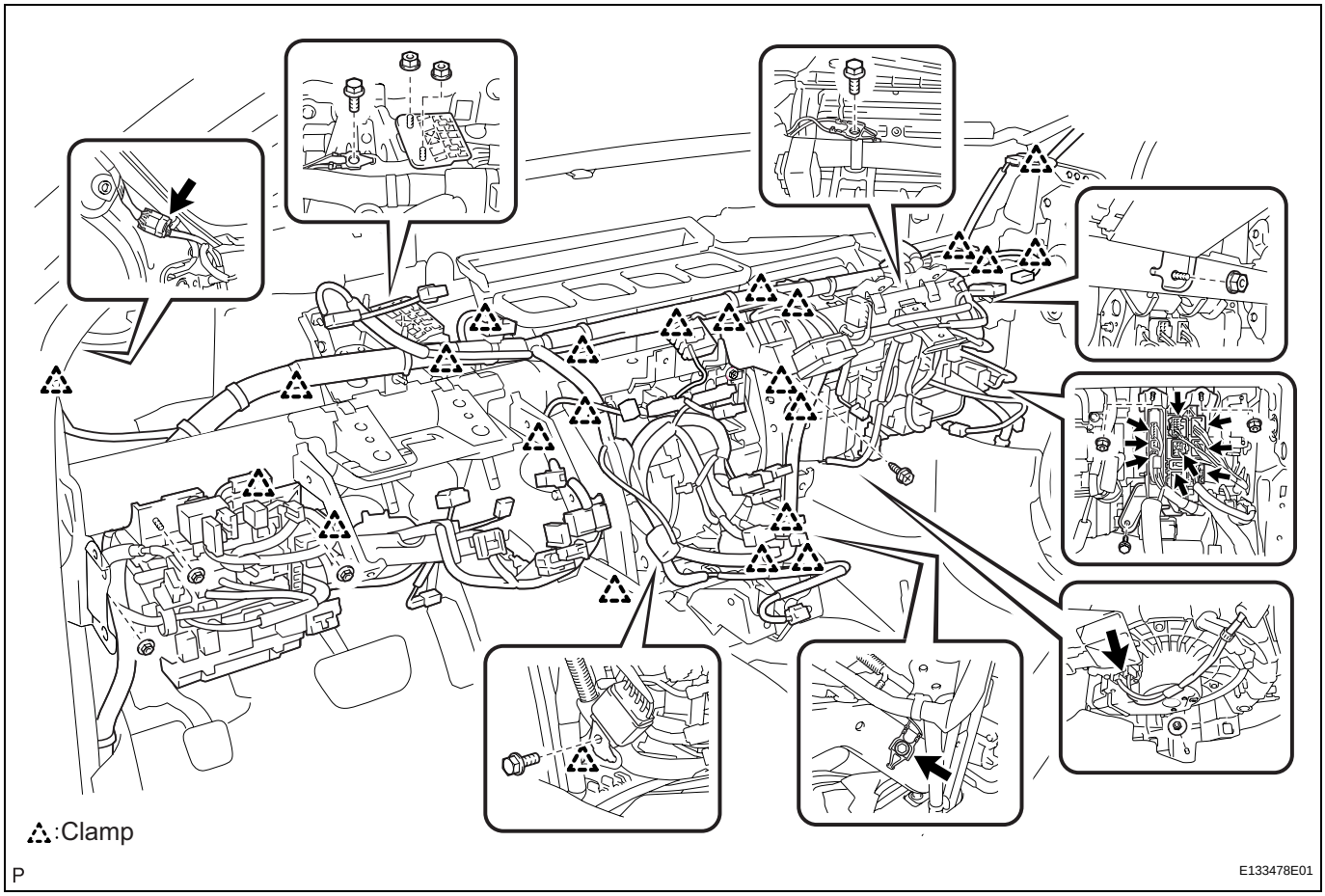

(c) Remove the cap and bolt from the engine compartment side.

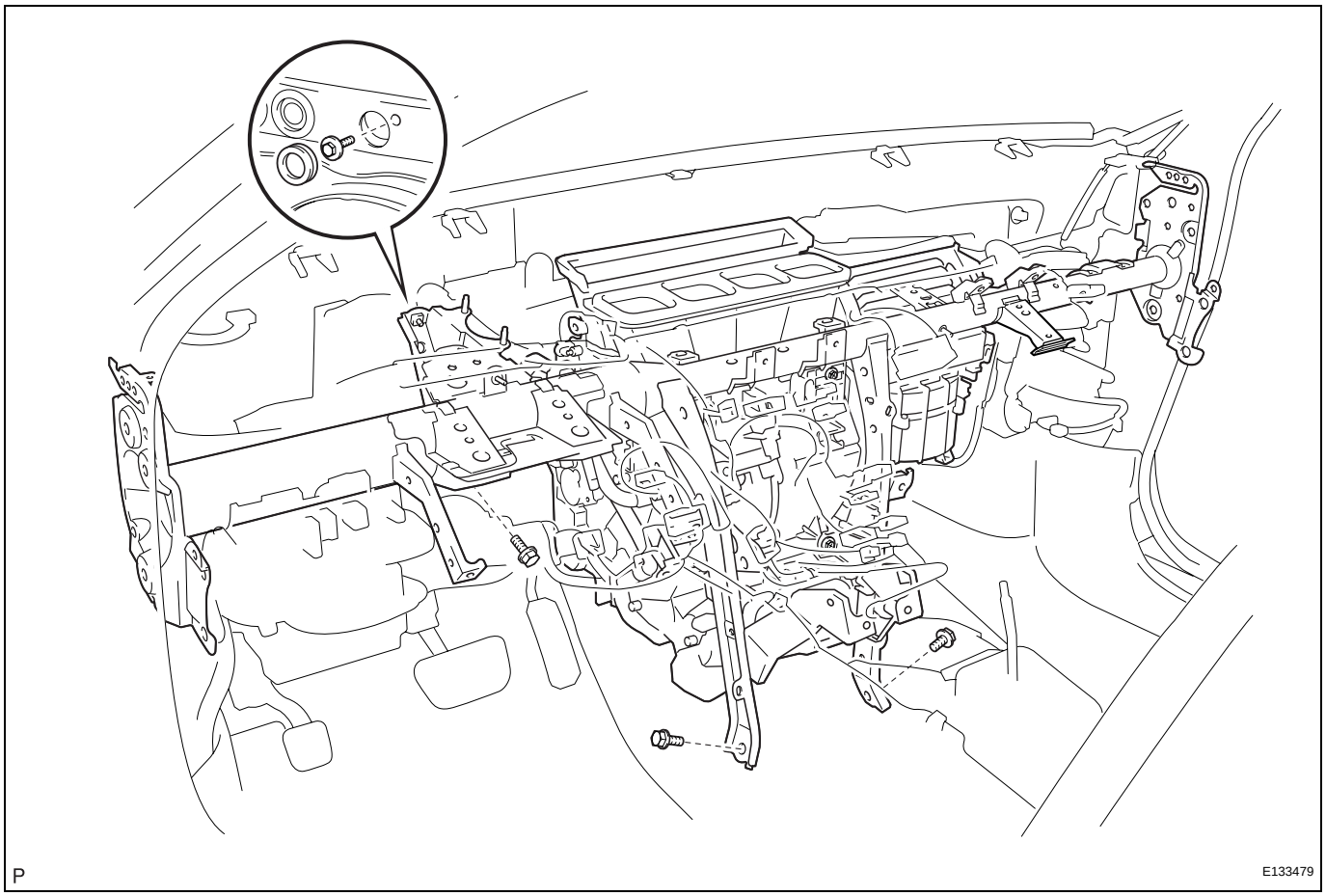

(d) Remove the 3 bolts and nut.

(e) Using a "TORX" socket wrench (T40), remove the 5 "TORX" bolts.

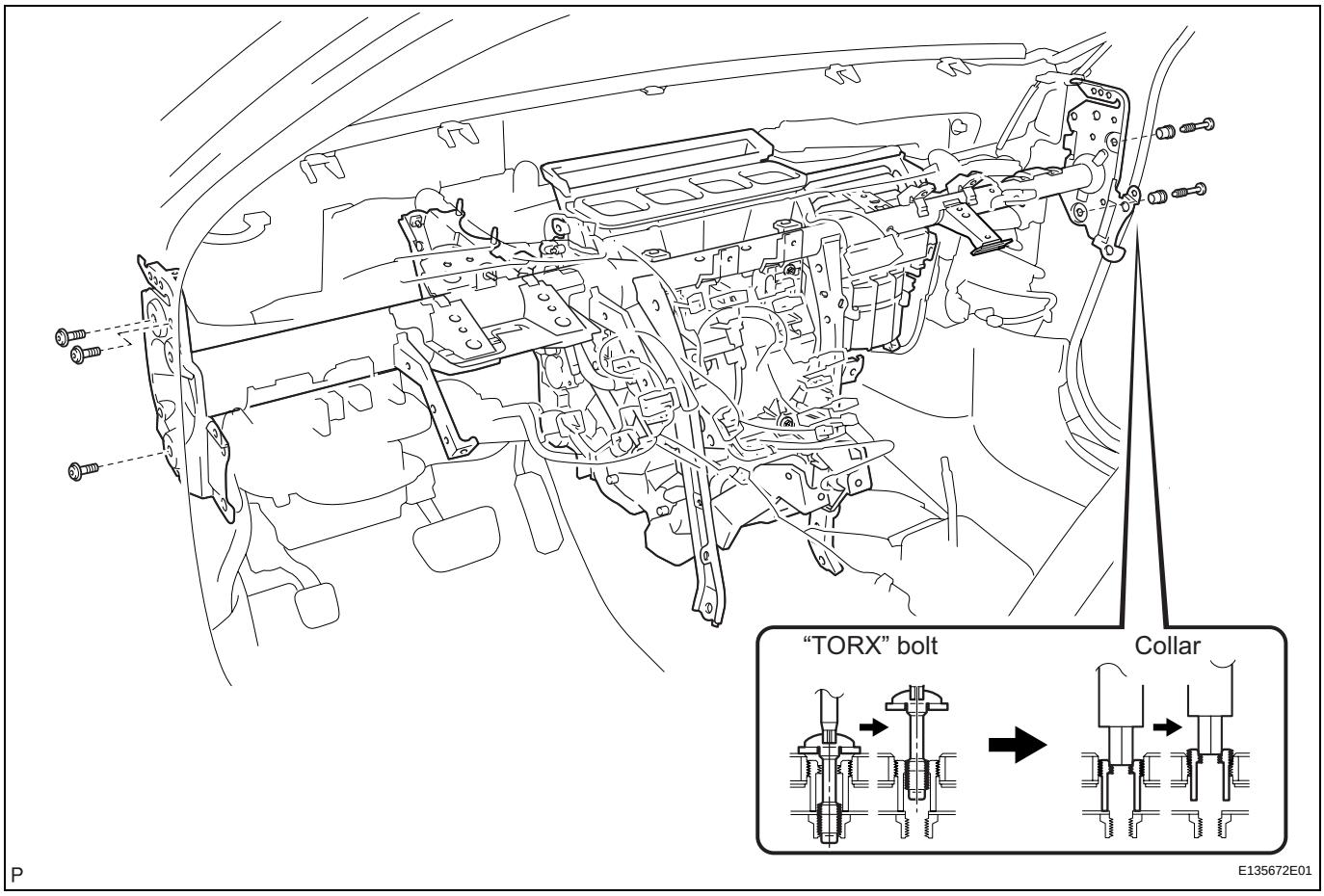

HINT:
The "TORX" bolts on the passenger side can be removed with the collars for adjustment.

(f) Using a hexagon wrench 12 mm, remove the 2 collars and instrument panel reinforcement assembly with the air conditioner unit assembly.

(g) Remove the 3 bolts, 2 screws, and instrument panel reinforcement assembly.

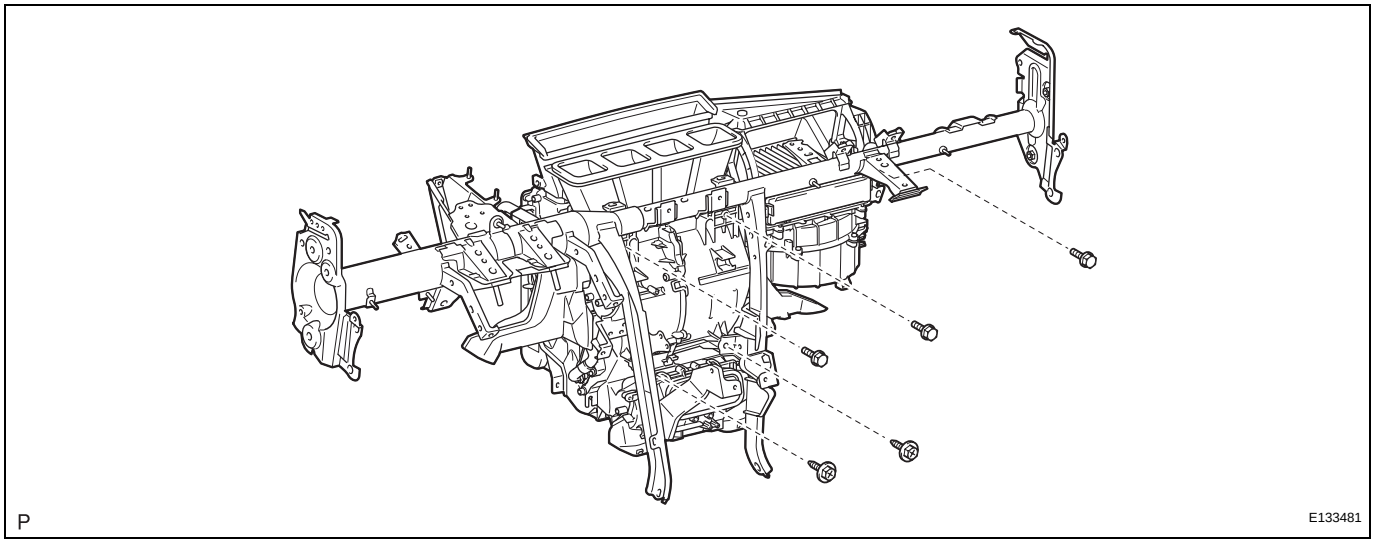

DISASSEMBLY

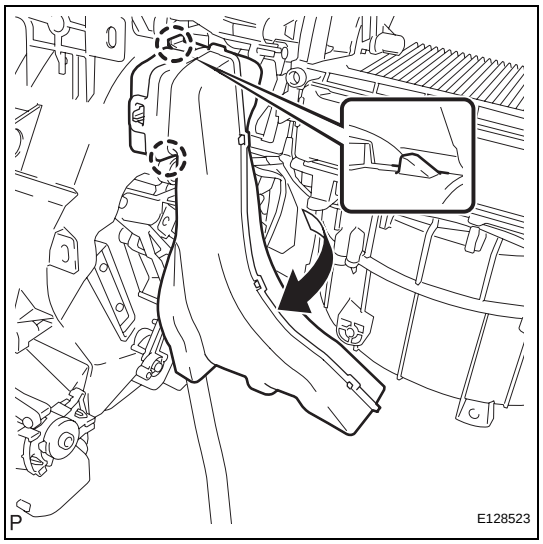

1. REMOVE NO. 2 AIR DUCT SUB-ASSEMBLY

(a) Release the 2 claws and remove the No. 2 air duct sub-assembly as shown in the illustration.

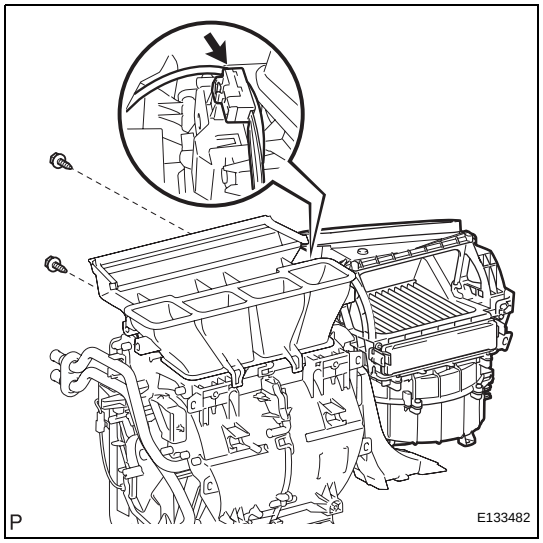

2. REMOVE BLOWER ASSEMBLY

(a) Disconnect the connector.

(b) Remove the 2 screws and blower assembly.

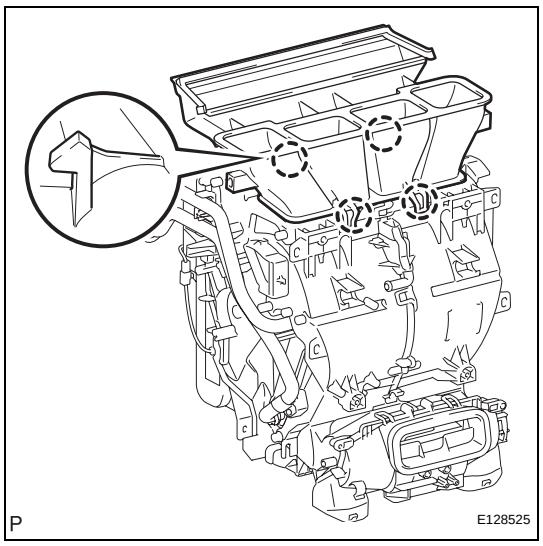

3. REMOVE NO. 6 HEATER TO REGISTER DUCT ASSEMBLY

(a) Release the 4 claws and remove the No. 6 heater to register duct assembly.

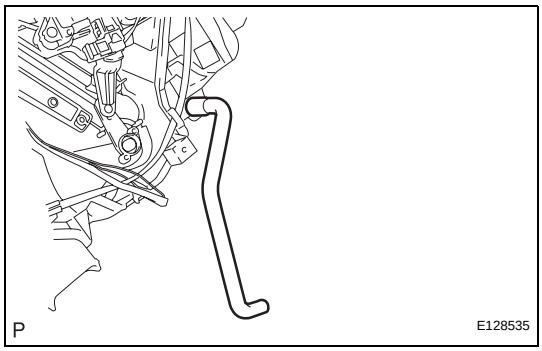

4. REMOVE DRAIN COOLER HOSE

(a) Remove the drain cooler hose from the air conditioning radiator assembly.

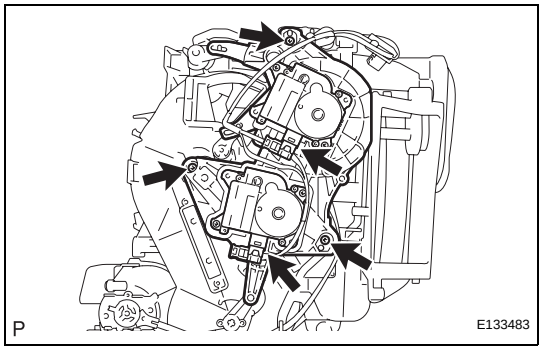

5. REMOVE AIR OUTLET CONTROL SERVO MOTOR

(a) Disconnect the 2 connectors and remove the air conditioner harness.

(b) Remove the 3 screws and then remove the air outlet control servo motor.

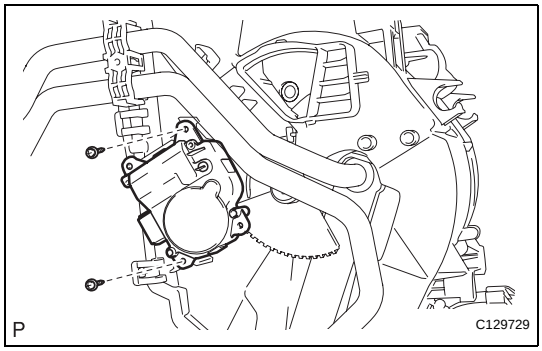

6. REMOVE AIR MIX CONTROL SERVO MOTOR

(a) Remove the 2 screws and air mix control servo motor.

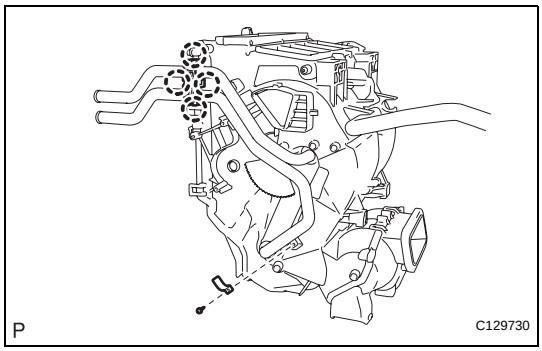

7. REMOVE HEATER RADIATOR UNIT SUB-ASSEMBLY

(a) Remove the screw and clamp.

(b) Release the 4 claws and remove the clamp.

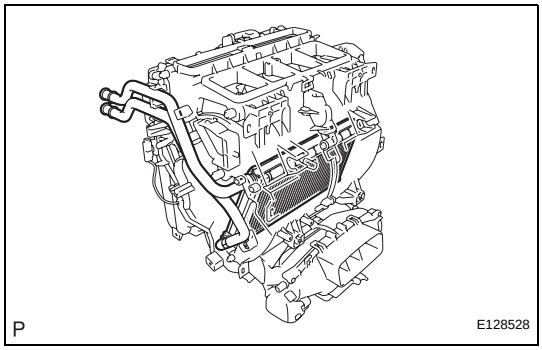

(c) Remove the heater radiator unit sub-assembly from the air conditioning radiator assembly.

NOTICE:

Prepare a drain pan or cloth in case the cooling water leaks.

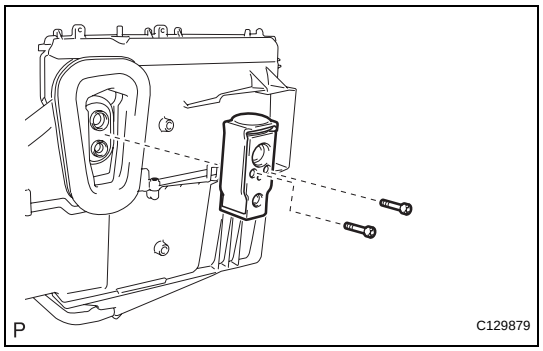

8. REMOVE COOLER EXPANSION VALVE

(a) Using a 4 mm hexagon wrench, remove the 2 hexagon bolts and cooler expansion valve.

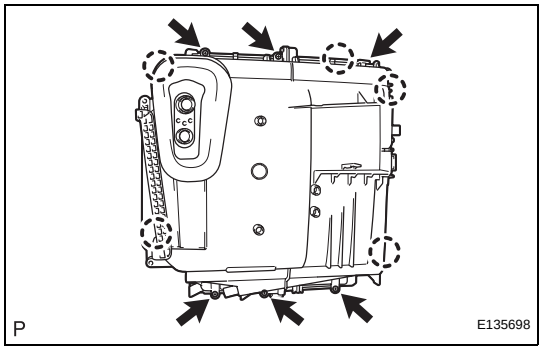

9. REMOVE NO. 1 COOLER EVAPORATOR SUB-ASSEMBLY

(a) Remove the 6 screws, release the 5 claws, and remove the plate cover.

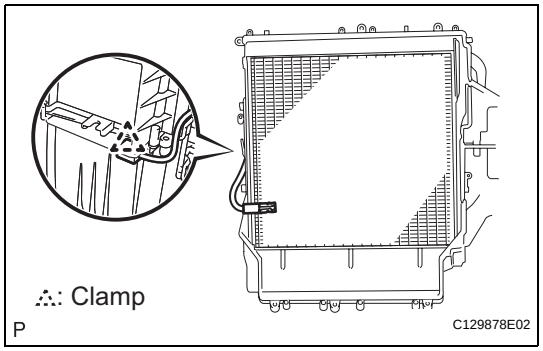

(b) Remove the clamp and No. 1 cooler thermistor.

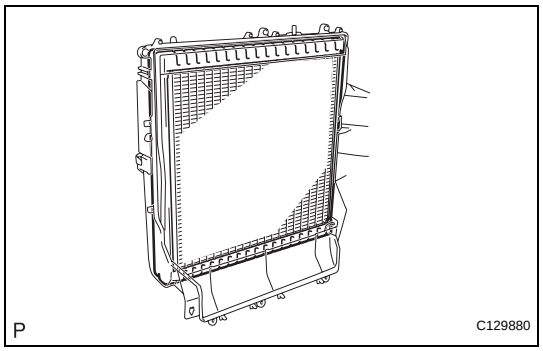

(c) Remove the No. 1 cooler evaporator sub-assembly.

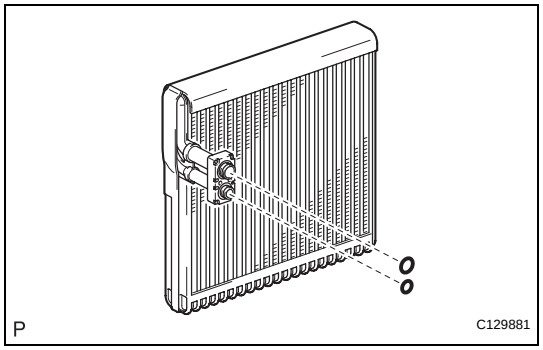

(d) Remove the 2 O-rings from the No. 1 cooler evaporator sub-assembly.

REASSEMBLY

1. INSTALL NO. 1 COOLER THERMISTOR

(a) If using a new evaporator:

(1) Install the No. 1 cooler thermistor to the evaporator as shown in the illustration.

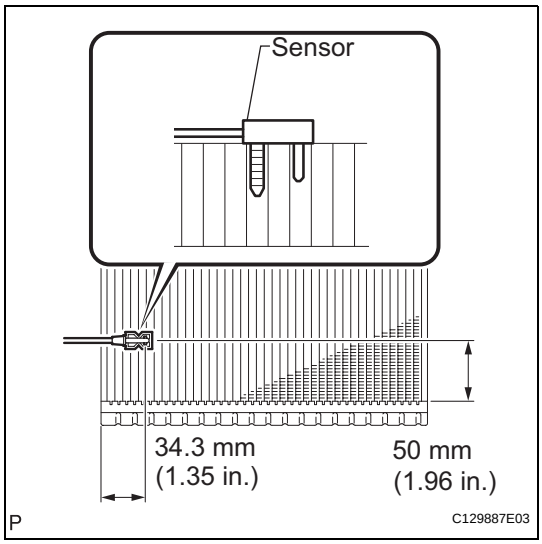

(b) If reusing the evaporator:

(1) Install the No. 1 cooler thermistor to the evaporator as shown in the illustration.

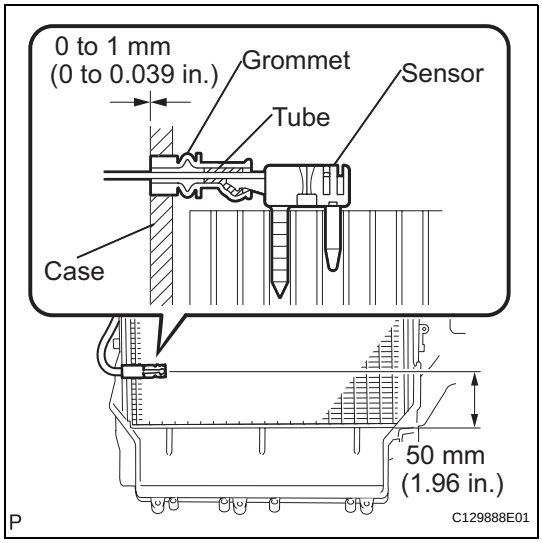

2. INSTALL NO. 1 COOLER EVAPORATOR SUB-ASSEMBLY

(a) Sufficiently apply compressor oil to 2 new O-rings and the fitting surfaces.

(b) Install the 2 O-rings to the No. 1 cooler evaporator sub-assembly.

Compressor oil:
ND-OIL 8 or equivalent

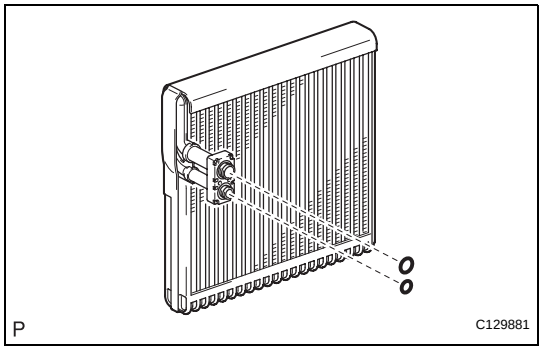

(c) Install the No. 1 cooler evaporator sub-assembly.

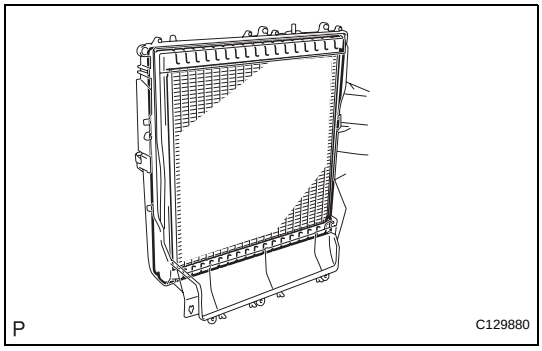

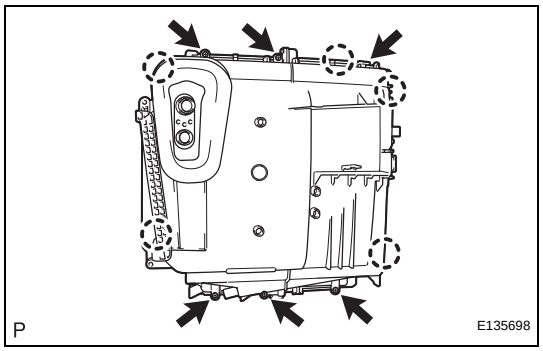

(d) Engage the 5 claws and install the plate cover with the 6 screws.

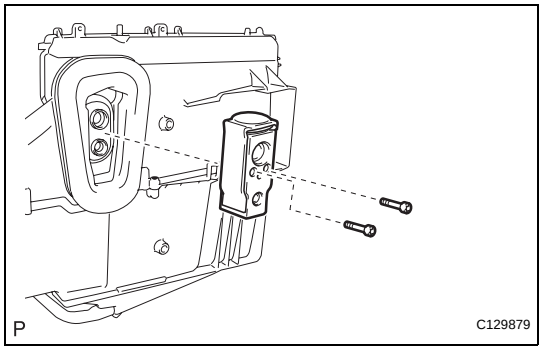

3. INSTALL COOLER EXPANSION VALVE

(a) Using a 4 mm hexagon wrench, install the cooler expansion valve with the 2 hexagon bolts.
Torque: 3.5 N*m (35 kgf*cm, 30 in.*lbf)

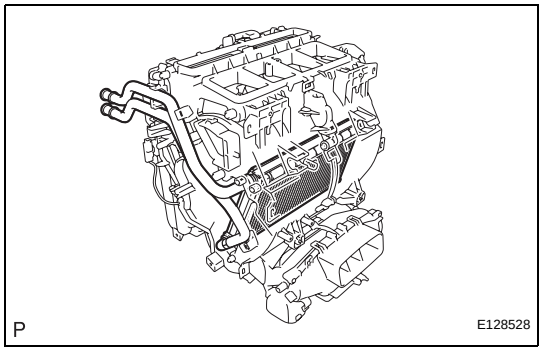

4. INSTALL HEATER RADIATOR UNIT SUB-ASSEMBLY

(a) Install the heater radiator unit sub-assembly to the air conditioner radiator assembly.

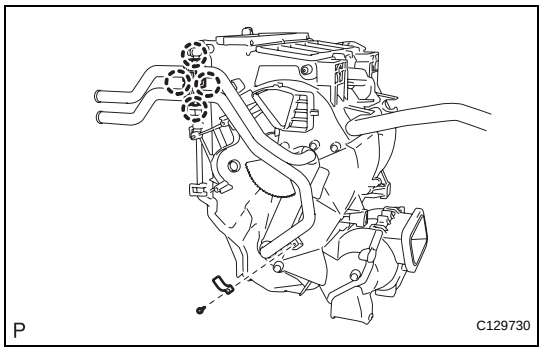

(b) Install the clamp with the screw.
(c) Engage the 4 claws and install the heater clamp.

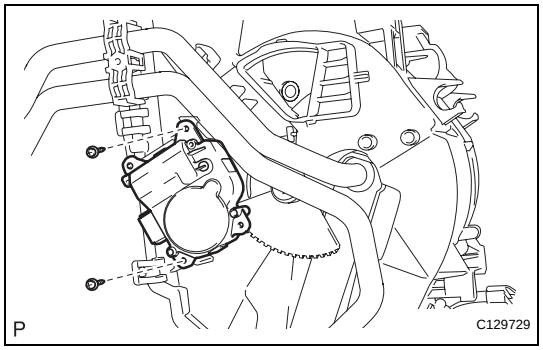

5. INSTALL AIR MIX CONTROL SERVO MOTOR

(a) Install the air mix control servo motor with the 2 screws.

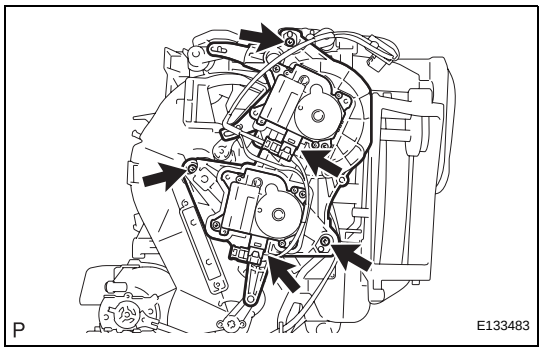

6. INSTALL AIR OUTLET CONTROL SERVO MOTOR

(a) Install the air outlet control servo motor with the 3 screws.

(b) Connect the 2 connectors and install the air conditioner harness.

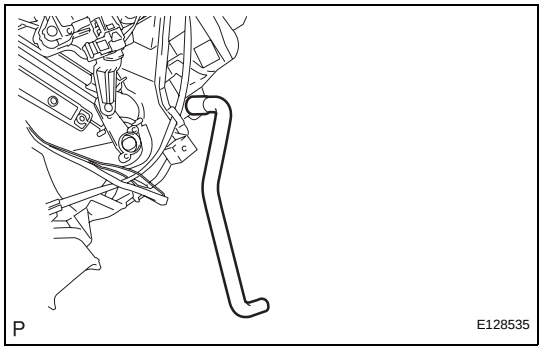

7. INSTALL DRAIN COOLER HOSE

(a) Install the drain cooler hose to the air conditioner radiator assembly.

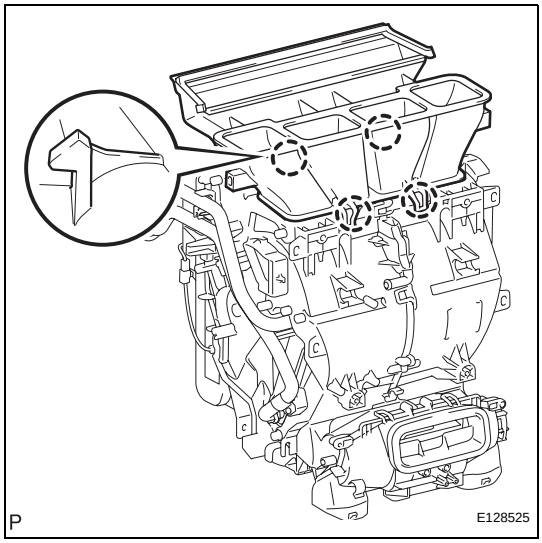

8. INSTALL NO. 6 HEATER TO REGISTER DUCT ASSEMBLY

(a) Engage the 4 claws to install the No. 6 heater to register duct assembly.

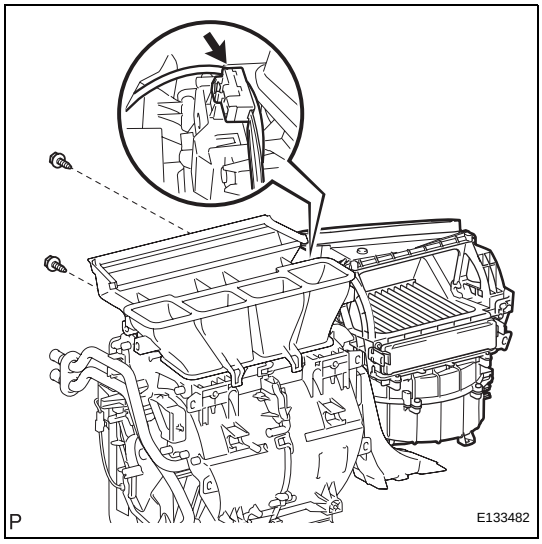

9. INSTALL BLOWER ASSEMBLY

(a) Install the blower assembly with the 2 screws.

(b) Connect the connector.

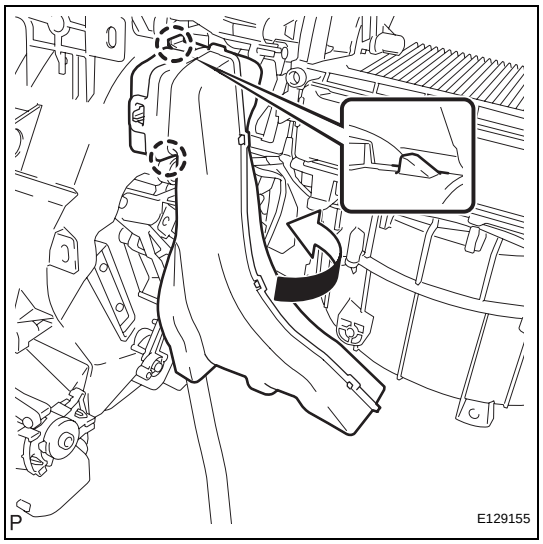

10. INSTALL NO. 2 AIR DUCT SUB-ASSEMBLY

(a) Engage the 2 claws to install the No. 2 air duct sub-assembly.

INSTALLATION

1. INSTALL INSTRUMENT PANEL REINFORCEMENT ASSEMBLY

(a) Install the conditioner unit assembly to the instrument panel reinforcement assembly with the 2 screws and 3 bolts.

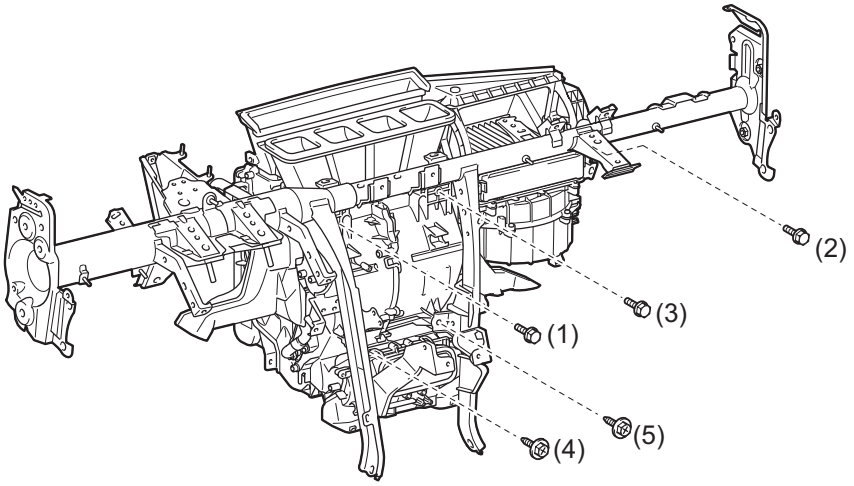

Torque: 9.8 N*m (100 kgf*cm, 87 in.*lbf)
NOTICE:
Tighten the bolts and screws in the order shown in the illustration to install the air conditioner unit assembly.

(b) Driver seat:

(1) Using a "TORX" socket wrench (T40), install the instrument panel reinforcement assembly with the 3 "TORX" bolts.

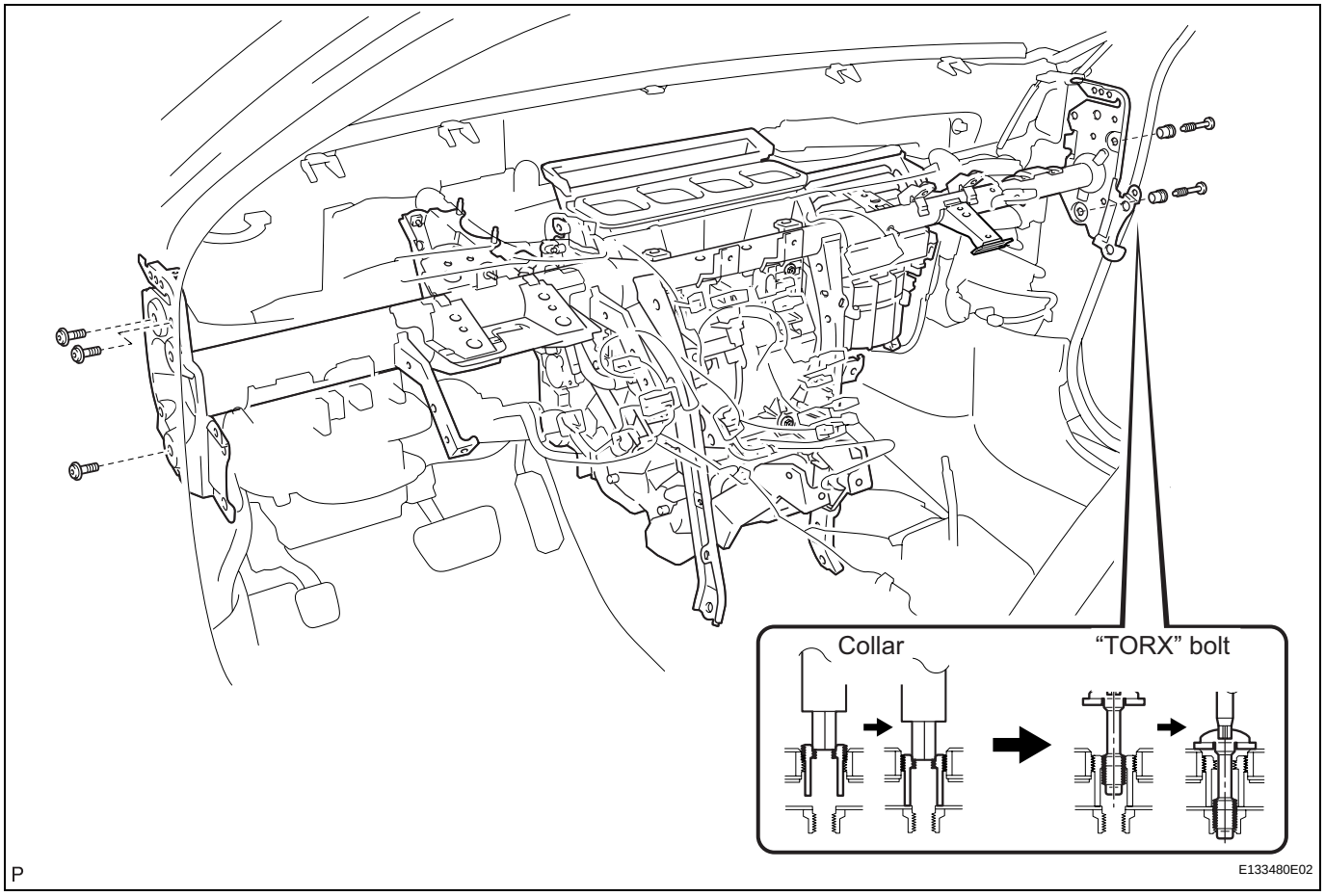

Torque: 17 N*m (173 kgf*cm, 13 ft.*lbf)

(c) Passenger seat:

(1) Using a 12 mm hexagon wrench, adjust the position of the 2 collars.
Torque: 6.0 N*m (61 kgf*cm, 53 in.*lbf)

(2) Using a "TORX" socket wrench (T40), install the instrument panel reinforcement assembly with the 2 "TORX" bolts.
Torque: 20 N*m (204 kgf*cm, 15 ft.*lbf)

(d) Install the instrument panel reinforcement assembly with the 3 bolts and nut.

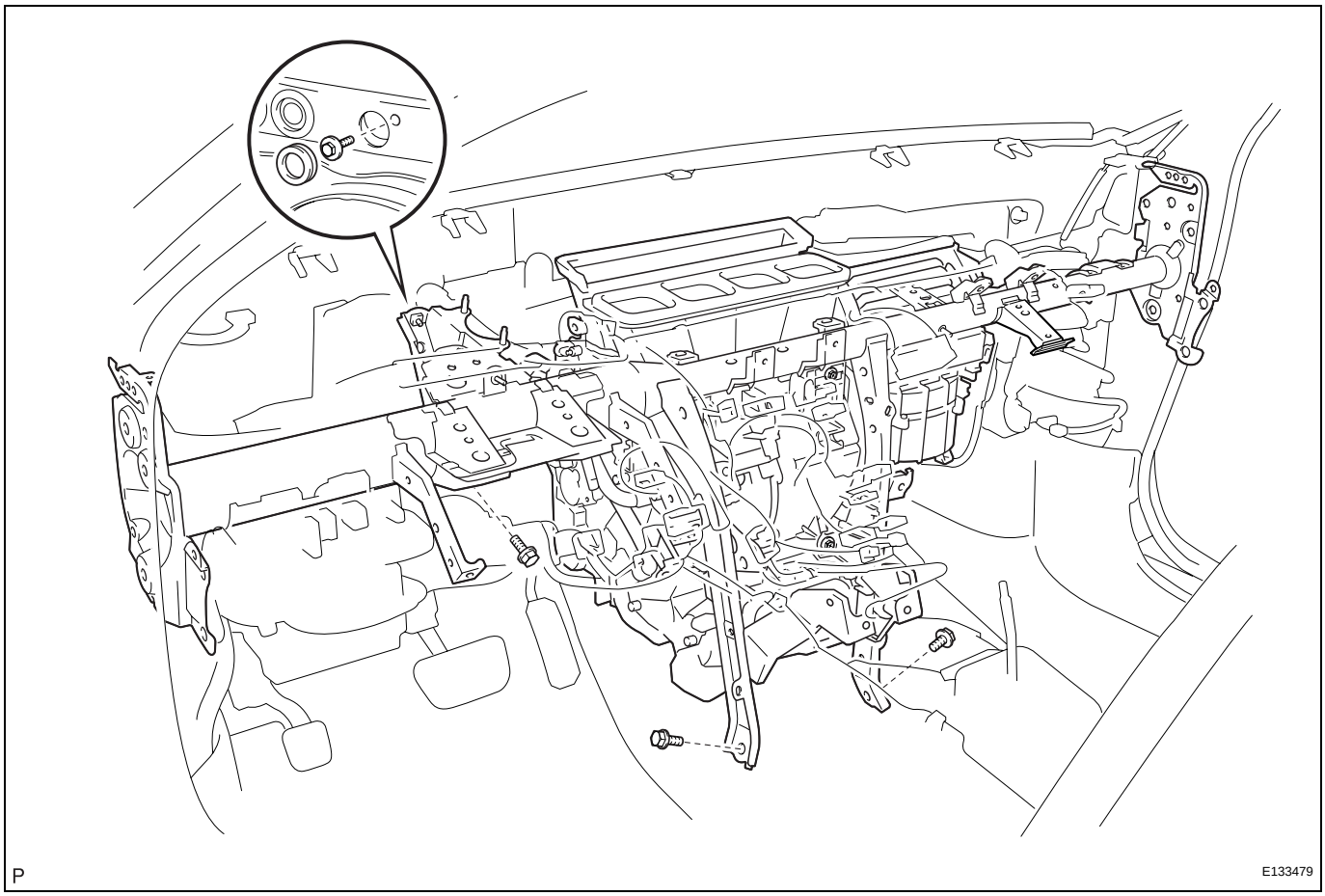

Torque: 9.8 N*m (100 kgf*cm, 87 in.*lbf) (NUT)

(e) Install the bolt and cap.

(f) Connect the connectors and clamps.

(g) Install the 8 nuts and 7 bolts.

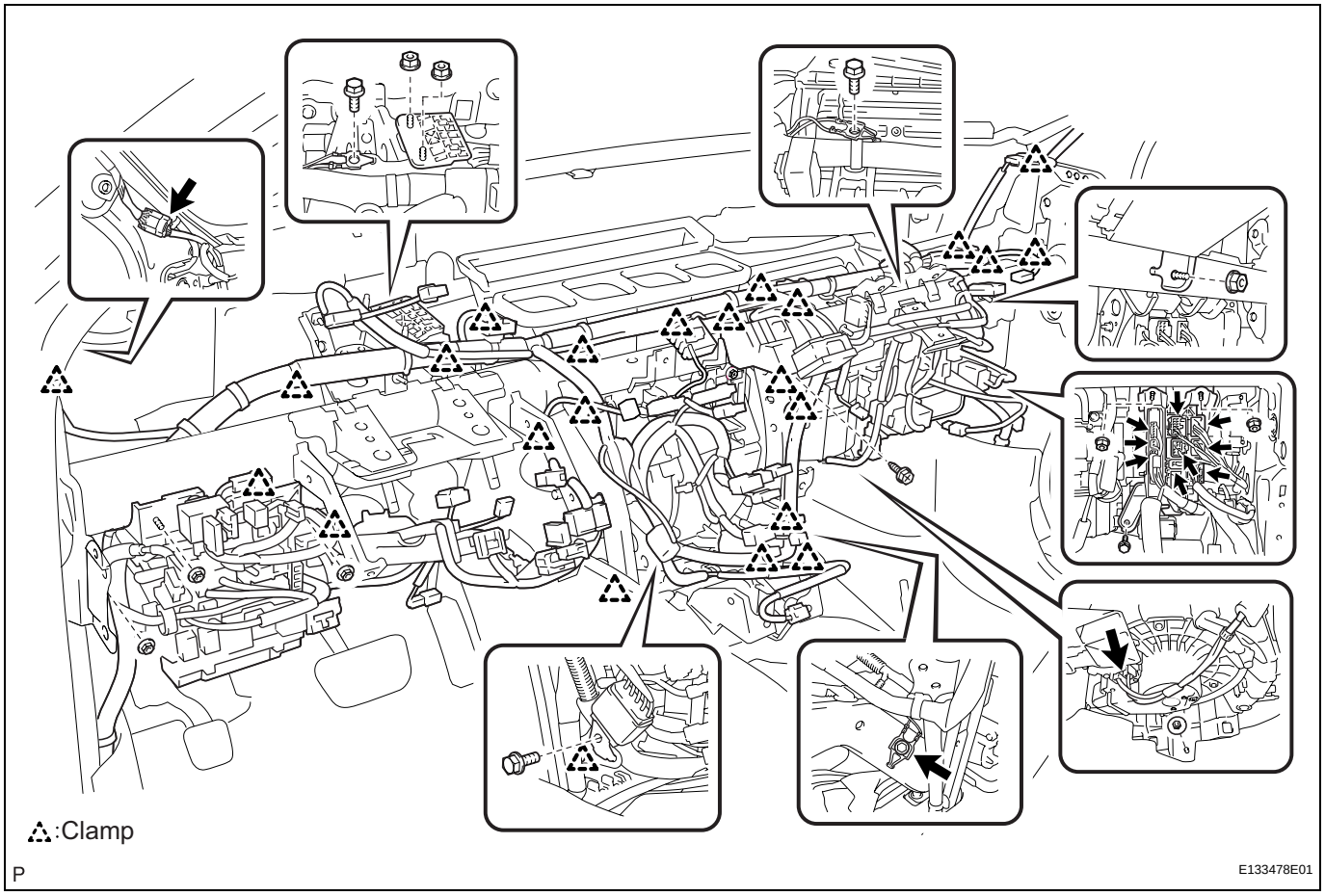

2. **INSTALL AIR CONDITIONING AMPLIFIER ASSEMBLY (See page AC-232)**

3. **INSTALL STEERING COLUMN ASSEMBLY (See page SR-85)**

4. **CONNECT STEERING INTERMEDIATE SHAFT ASSEMBLY (See page SR-85)**

5. **INSTALL NO. 1 AIR DUCT SUB-ASSEMBLY (See page SR-86)**

6. **INSTALL REAR NO. 1 AIR DUCT**
   (a) Engage the 2 claws to install the rear No. 1 air duct.

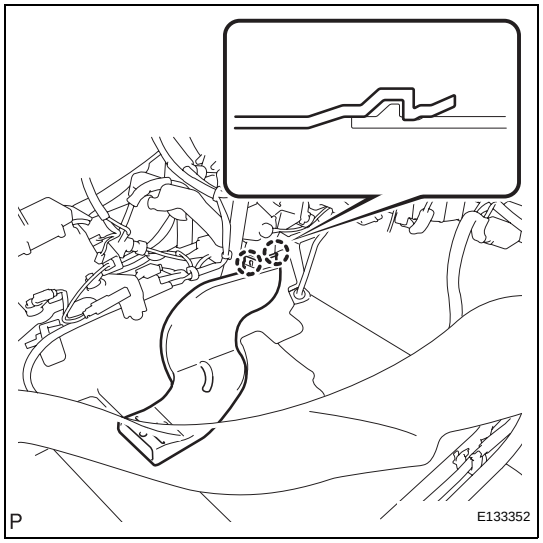

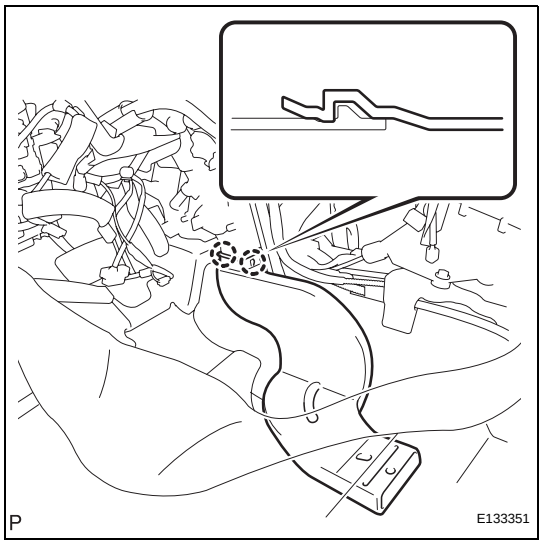

7. INSTALL REAR NO. 2 AIR DUCT

(a) Engage the 2 claws to install the rear No. 2 air duct.

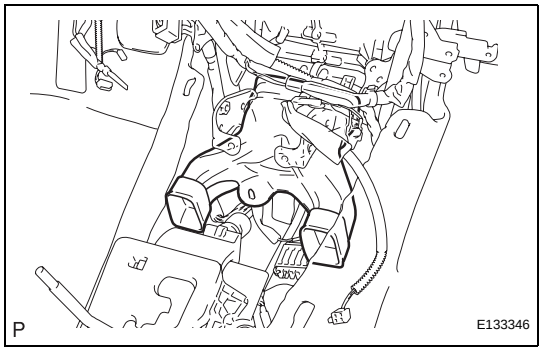

8. INSTALL NO. 1 CONSOLE BOX DUCT

(a) Install the No. 1 console box duct.

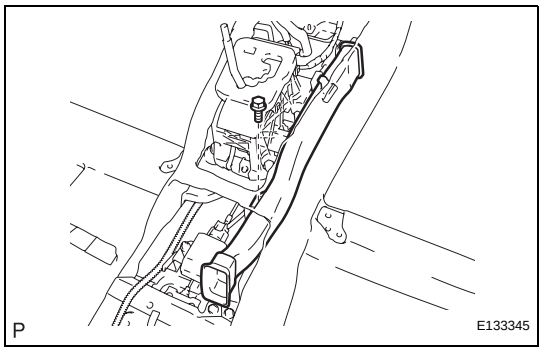

9. INSTALL NO. 3 CONSOLE BOX DUCT

(a) Install the bolt and No. 3 console box duct.

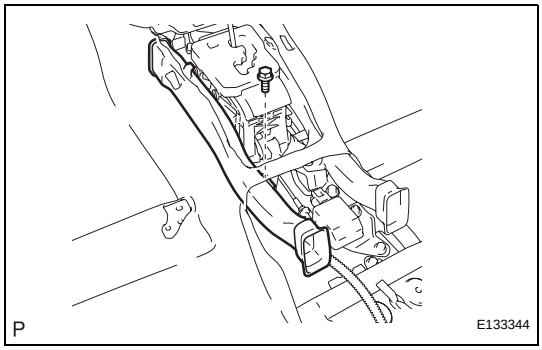

10. INSTALL NO. 2 CONSOLE BOX DUCT

(a) Install the bolt and No. 2 console box duct.

11. INSTALL FLOOR CARPET BRACKET RH

12. INSTALL FLOOR CARPET BRACKET LH

13. INSTALL INSTRUMENT PANEL SAFETY PAD ASSEMBLY (w/o DVD Player) (See page IP-33)

14. INSTALL INSTRUMENT PANEL SAFETY PAD ASSEMBLY (w/ DVD Player) (See page IP-35)

15. INSTALL ROOM TEMPERATURE SENSOR (See page AC-215)

16. CONNECT INSTRUMENT PANEL WIRE ASSEMBLY (See page RS-416)

17. INSTALL PUSH START SWITCH (See page IP-37)

18. **INSTALL NO. 1 INSTRUMENT PANEL MOUNTING BRACKET (See page IP-38)**
19. **INSTALL FRONT STEREO COMPONENT SPEAKER ASSEMBLY (See page AV-188)**
20. **INSTALL NO. 1 SPEAKER HOLE COVER (See page IP-38)**
21. **INSTALL NO. 1 INSTRUMENT PANEL REGISTER ASSEMBLY (See page IP-38)**
22. **INSTALL FRONT NO. 2 SPEAKER ASSEMBLY (for LH Side) (See page AV-185)**
23. **INSTALL NO. 1 INSTRUMENT PANEL SPEAKER PANEL SUB-ASSEMBLY (See page IP-39)**
24. **INSTALL FRONT PILLAR GARNISH LH (See page IR-64)**
25. **INSTALL NO. 3 INSTRUMENT PANEL REGISTER ASSEMBLY (See page IP-39)**
26. **INSTALL FRONT NO. 2 SPEAKER ASSEMBLY (for RH Side) (See page IP-39)**
27. **INSTALL NO. 2 INSTRUMENT PANEL SPEAKER PANEL SUB-ASSEMBLY (See page IP-39)**
28. **INSTALL FRONT PILLAR GARNISH RH (See page IR-65)**
29. **INSTALL REAR CONSOLE BOX ASSEMBLY (See page IP-39)**
30. **INSTALL CONSOLE REAR END PANEL SUB-ASSEMBLY (See page IP-40)**
31. **INSTALL CONSOLE BOX CARPET (See page IP-41)**
32. **INSTALL CONSOLE BOX POCKET (See page IP-41)**
33. **INSTALL HEATER SEAT SWITCH CONSOLE BASE (w/o Seat Heater System) (See page IP-41)**
34. **INSTALL HEATER SEAT SWITCH CONSOLE BASE (w/ Seat Heater System) (See page IP-41)**
35. **INSTALL INTEGRATION CONTROL PANEL WITH RADIO RECEIVER ASSEMBLY (w/o Navigation System) (See page AV-172)**
36. **INSTALL MULTI-DISPLAY WITH RADIO RECEIVER ASSEMBLY (w/ Navigation System) (See page AV-173)**
37. **INSTALL NO. 2 INSTRUMENT PANEL REGISTER ASSEMBLY (See page IP-41)**
38. **INSTALL UPPER CONSOLE PANEL ASSEMBLY WITH FRONT ASH RECEPTACLE (See page IP-42)**
39. **INSTALL SHIFT LEVER KNOB SUB-ASSEMBLY (See page IP-42)**

40. **INSTALL LOWER INSTRUMENT PANEL RH (See page IP-42)**
41. **INSTALL FRONT PASSENGER SIDE KNEE AIRBAG ASSEMBLY (See page RS-396)**
42. **INSTALL SIDE INSTRUMENT PANEL RH (See page IP-43)**
43. **INSTALL NO. 2 INSTRUMENT PANEL UNDER COVER SUB-ASSEMBLY (See page IP-44)**
44. **INSTALL FRONT DOOR OPENING TRIM COVER RH (See page IR-65)**
45. **INSTALL FRONT DOOR SCUFF PLATE RH (See page IR-65)**
46. **INSTALL INSTRUMENT PANEL FINISH PANEL END RH (See page IP-44)**
47. **INSTALL NO. 1 SWITCH HOLE BASE (See page IP-44)**
48. **INSTALL COMBINATION METER ASSEMBLY (See page IP-45)**
49. **INSTALL INSTRUMENT CLUSTER FINISH PANEL SUB-ASSEMBLY (See page IP-45)**
50. **INSTALL TURN SIGNAL SWITCH ASSEMBLY WITH SPIRAL CABLE (See page SR-86)**
51. **INSTALL TILT & TELESCOPIC SWITCH (See page SR-86)**
52. **INSTALL STEERING COLUMN COVER (See page IP-46)**
53. **ADJUST SPIRAL CABLE SUB-ASSEMBLY (See page RS-382)**
54. **INSTALL LOWER INSTRUMENT PANEL SUB-ASSEMBLY (See page IP-46)**
55. **INSTALL INSTRUMENT PANEL FINISH PANEL END LH (See page IP-46)**
56. **INSTALL SIDE INSTRUMENT PANEL LH (See page IP-47)**
57. **INSTALL FRONT DOOR OPENING TRIM COVER LH (See page IR-64)**
58. **INSTALL FRONT DOOR SCUFF PLATE LH (See page IR-65)**
59. **INSTALL STEERING WHEEL ASSEMBLY (See page SR-87)**
60. **INSTALL STEERING PAD (See page RS-368)**
61. **INSTALL LOWER NO. 3 STEERING WHEEL COVER (See page RS-369)**

62. INSTALL LOWER NO. 2 STEERING WHEEL COVER (See page RS-369)

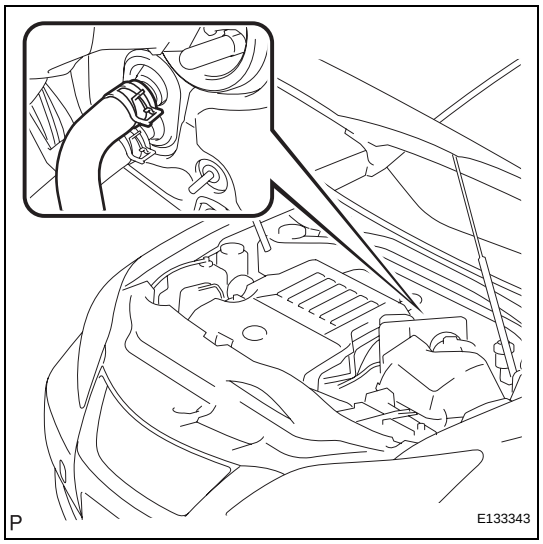

63. INSTALL HEATER INLET WATER HOSE
(a) Install the water hose and attach the clip.

64. INSTALL HEATER OUTLET WATER HOSE
(a) Use the same procedure described for the heater inlet water hose.

65. INSTALL AIR CONDITIONER TUBE AND ACCESSORY
(a) Remove the attached vinyl tape from the tube.
(b) Sufficiently apply compressor oil to a new O-ring and fitting surface of the air conditioning tube assembly.
Compressor oil:
ND-OIL 8 or equivalent
(c) Install the O-ring on the air conditioner tube and accessory.
(d) Install the air conditioner tube and accessory.

66. INSTALL SUCTION HOSE SUB-ASSEMBLY
(a) Remove the attached vinyl tape from the hose.
(b) Sufficiently apply compressor oil to a new O-ring and the fitting surface of the suction hose sub-assembly.
Compressor oil:
ND-OIL 8 or equivalent
(c) Install the O-ring on the suction hose sub-assembly.

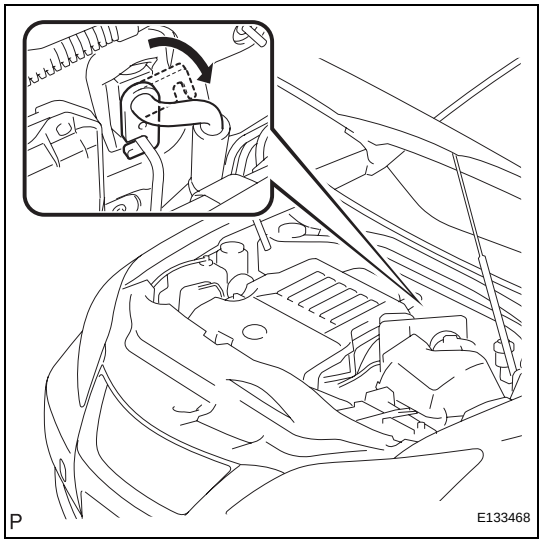

(d) Move the hook connector in the direction indicated by the arrow in the illustration.
(e) Insert the pipe joint into the fitting hole securely and tighten the bolt.
Torque: 9.8 N*m (100 kgf*cm, 87 in.*lbf)

67. INSTALL WINDSHIELD WIPER MOTOR AND LINK ASSEMBLY (See page WW-43)

68. INSTALL FRONT FENDER TO COWL SIDE SEAL RH (See page WW-43)

69. INSTALL FRONT FENDER TO COWL SIDE SEAL LH (See page WW-43)

70. INSTALL COWL TOP VENTILATOR LOUVER SUB-ASSEMBLY (See page WW-44)

71. INSTALL FRONT WIPER ARM AND BLADE ASSEMBLY LH (See page WW-44)

72. INSTALL FRONT WIPER ARM AND BLADE ASSEMBLY RH (See page WW-45)

73. CONNECT CABLE TO NEGATIVE BATTERY TERMINAL

74. INSPECT STEERING PAD (See page RS-369)

75. INSPECT FRONT PASSENGER SIDE KNEE AIRBAG ASSEMBLY (See page RS-395)

76. INSPECT SRS WARNING LIGHT

(a) Inspect the SRS warning light (See page RS-37).

77. PERFORM INITIALIZATION

NOTICE:

Some systems need initialization after reconnecting the negative battery terminal (See page IN-33).

78. ADD ENGINE COOLANT (See page CO-6)

79. CHECK FOR ENGINE COOLANT LEAKS

80. CHARGE WITH REFRIGERANT (See page AC-127)

81. WARM UP COMPRESSOR (See page AC-128)

82. CHECK FOR REFRIGERANT LEAKS (See page AC-128)

83. INSTALL ENGINE ROOM SIDE COVER RH (See page WW-47)

84. INSTALL ENGINE ROOM SIDE COVER LH (See page WW-47)

85. INSTALL HOOD HINGE COVER (for RH Side) (See page WW-47)

86. INSTALL HOOD HINGE COVER (for LH Side) (See page WW-47)

87. INSTALL COOL AIR INTAKE DUCT SEAL (See page ET-14)

REMOVAL

1. RECOVER REFRIGERANT FROM REFRIGERATION SYSTEM (See page AC-126)
2. ALIGN FRONT WHEELS FACING STRAIGHT AHEAD
3. DISCONNECT BATTERY NEGATIVE TERMINAL
   NOTICE:
   Wait for 90 seconds after disconnecting the terminal to prevent the airbag from deploying (See page RS-1).
4. REMOVE COOL AIR INTAKE DUCT SEAL (See page ET-4)
5. REMOVE HOOD HINGE COVER (for LH Side) (See page WW-38)
6. REMOVE HOOD HINGE COVER (for RH Side) (See page WW-39)
7. REMOVE ENGINE ROOM SIDE COVER LH (See page WW-39)
8. REMOVE ENGINE ROOM SIDE COVER RH (See page WW-39)
9. REMOVE AIR CLEANER CAP SUB-ASSEMBLY (See page ES-519)
10. REMOVE AIR CLEANER FILTER ELEMENT SUB-ASSEMBLY
11. REMOVE FRONT SUSPENSION UPPER CENTER BRACE (See page BR-22)
12. REMOVE FRONT WIPER ARM AND BLADE ASSEMBLY LH (See page WW-39)
13. REMOVE FRONT WIPER ARM AND BLADE ASSEMBLY RH (See page WW-39)
14. REMOVE COWL TOP VENTILATOR LOUVER SUB-ASSEMBLY (See page WW-40)
15. REMOVE WINDSHIELD WIPER MOTOR AND LINK ASSEMBLY (See page WW-40)
16. DISCONNECT SUCTION PIPE SUB-ASSEMBLY (See page AC-145)
17. DISCONNECT AIR CONDITIONER TUBE AND ACCESSORY (See page AC-145)
18. DISCONNECT HEATER OUTLET WATER HOSE (See page AC-145)
19. DISCONNECT HEATER INLET WATER HOSE (See page AC-145)
20. REMOVE LOWER NO. 3 STEERING WHEEL COVER (See page RS-367)
21. REMOVE LOWER NO. 2 STEERING WHEEL COVER (See page RS-367)

22. **REMOVE STEERING PAD (See page RS-367)**
23. **REMOVE STEERING WHEEL ASSEMBLY (See page SR-80)**
24. **REMOVE FRONT DOOR SCUFF PLATE LH (See page IR-39)**
25. **REMOVE FRONT DOOR OPENING TRIM COVER LH (See page IR-39)**
26. **REMOVE SIDE INSTRUMENT PANEL LH (See page IP-12)**
27. **REMOVE INSTRUMENT PANEL FINISH PANEL END LH (See page IP-13)**
28. **REMOVE LOWER INSTRUMENT PANEL SUB-ASSEMBLY (See page IP-13)**
29. **REMOVE STEERING COLUMN COVER (See page IP-13)**
30. **REMOVE TURN SIGNAL SWITCH ASSEMBLY WITH SPIRAL CABLE SUB-ASSEMBLY (See page SR-80)**
31. **REMOVE TILT & TELESCOPIC SWITCH (See page SR-80)**
32. **REMOVE INSTRUMENT CLUSTER FINISH PANEL SUB-ASSEMBLY (See page IP-14)**
33. **REMOVE COMBINATION METER ASSEMBLY (See page IP-14)**
34. **REMOVE NO. 1 SWITCH HOLE BASE (See page IP-14)**
35. **REMOVE INSTRUMENT PANEL FINISH PANEL END RH (See page IP-15)**
36. **REMOVE FRONT DOOR SCUFF PLATE RH (See page IR-42)**
37. **REMOVE FRONT DOOR OPENING TRIM COVER RH (See page IR-42)**
38. **REMOVE NO. 2 INSTRUMENT PANEL UNDER COVER SUB-ASSEMBLY (See page IP-15)**
39. **REMOVE SIDE INSTRUMENT PANEL RH (See page IP-15)**
40. **REMOVE FRONT PASSENGER SIDE KNEE AIRBAG ASSEMBLY (See page RS-396)**
41. **REMOVE LOWER INSTRUMENT PANEL RH (See page IP-16)**
42. **REMOVE SHIFT LEVER KNOB SUB-ASSEMBLY (See page IP-16)**
43. **REMOVE UPPER CONSOLE PANEL ASSEMBLY WITH FRONT ASH RECEPTACLE (See page IP-16)**

44. **REMOVE NO. 2 INSTRUMENT PANEL REGISTER ASSEMBLY (See page IP-17)**
45. **REMOVE INTEGRATION CONTROL PANEL WITH RADIO RECEIVER ASSEMBLY (w/o Navigation System) (See page AV-168)**
46. **REMOVE MULTI-DISPLAY WITH RADIO RECEIVER ASSEMBLY (w/ Navigation System) (See page AV-170)**
47. **REMOVE HEATER SEAT SWITCH CONSOLE BASE (w/o Seat Heater System) (See page IP-17)**
48. **REMOVE HEATER SEAT SWITCH CONSOLE BASE (w/ Seat Heater System) (See page IP-18)**
49. **REMOVE CONSOLE BOX POCKET (See page IP-18)**
50. **REMOVE CONSOLE BOX CARPET (See page IP-18)**
51. **REMOVE CONSOLE REAR END PANEL SUB-ASSEMBLY (See page IP-19)**
52. **REMOVE REAR CONSOLE BOX ASSEMBLY (See page IP-19)**
53. **REMOVE FRONT PILLAR GARNISH LH (See page IR-39)**
54. **REMOVE NO. 1 INSTRUMENT PANEL SPEAKER PANEL SUB-ASSEMBLY (See page IP-20)**
55. **REMOVE FRONT NO. 2 SPEAKER ASSEMBLY (for LH Side) (See page AV-184)**
56. **REMOVE NO. 1 INSTRUMENT PANEL REGISTER ASSEMBLY (See page IP-20)**
57. **REMOVE FRONT PILLAR GARNISH RH (See page IR-42)**
58. **REMOVE NO. 2 INSTRUMENT PANEL SPEAKER PANEL SUB-ASSEMBLY (See page IP-21)**
59. **REMOVE FRONT NO. 2 SPEAKER ASSEMBLY (for RH Side) (See page IP-21)**
60. **REMOVE NO. 3 INSTRUMENT PANEL REGISTER ASSEMBLY (See page IP-21)**
61. **REMOVE NO. 1 SPEAKER HOLE COVER (See page IP-21)**
62. **REMOVE FRONT STEREO COMPONENT SPEAKER ASSEMBLY (See page AV-188)**
63. **REMOVE NO. 1 INSTRUMENT PANEL MOUNTING BRACKET (See page IP-22)**
64. **REMOVE PUSH START SWITCH (See page IP-22)**
65. **DISCONNECT INSTRUMENT PANEL WIRE ASSEMBLY (See page RS-414)**

66. **REMOVE ROOM TEMPERATURE SENSOR (See page AC-214)**

67. **REMOVE INSTRUMENT PANEL SAFETY PAD ASSEMBLY (w/o DVD Player) (See page IP-22)**

68. **REMOVE INSTRUMENT PANEL SAFETY PAD ASSEMBLY (w/ DVD Player) (See page IP-24)**

69. **REMOVE FLOOR CARPET BRACKET LH (See page AC-148)**

70. **REMOVE FLOOR CARPET BRACKET RH (See page AC-148)**

71. **REMOVE NO. 2 CONSOLE BOX DUCT (See page AC-149)**

72. **REMOVE NO. 3 CONSOLE BOX DUCT (See page AC-149)**

73. **REMOVE NO. 1 CONSOLE BOX DUCT (See page AC-149)**

74. **REMOVE REAR NO. 2 AIR DUCT (See page AC-149)**

75. **REMOVE REAR NO. 1 AIR DUCT (See page AC-150)**

76. **REMOVE NO. 1 AIR DUCT SUB-ASSEMBLY (See page SR-81)**

77. **SEPARATE STEERING INTERMEDIATE SHAFT ASSEMBLY (See page SR-81)**

78. **REMOVE STEERING COLUMN ASSEMBLY (See page SR-82)**

79. **REMOVE AIR CONDITIONING AMPLIFIER ASSEMBLY (See page AC-232)**

80. **REMOVE INSTRUMENT PANEL REINFORCEMENT ASSEMBLY (See page AC-150)**

81. **REMOVE BLOWER ASSEMBLY**
    (a) Disconnect the connector.
    (b) Remove the 2 screws and blower assembly.

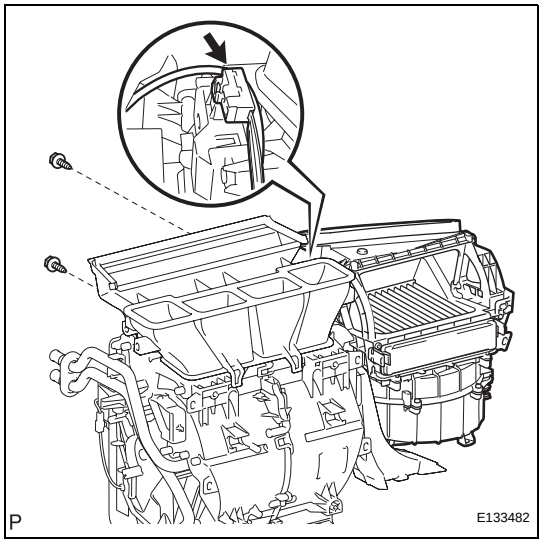

DISASSEMBLY

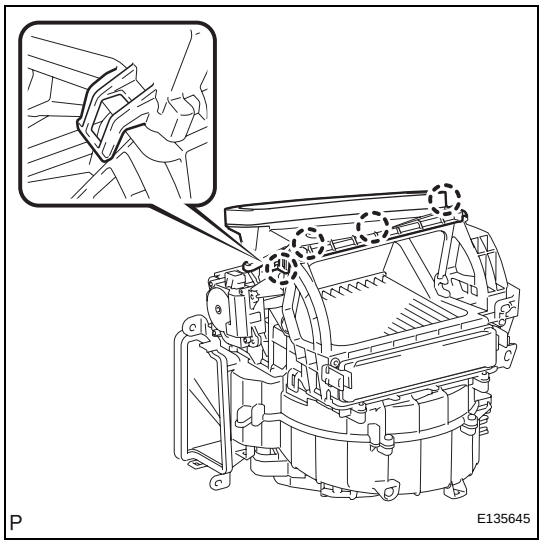

1. REMOVE AIR DUCT SUB-ASSEMBLY

(a) Release the 4 claws and remove the air duct sub-assembly.

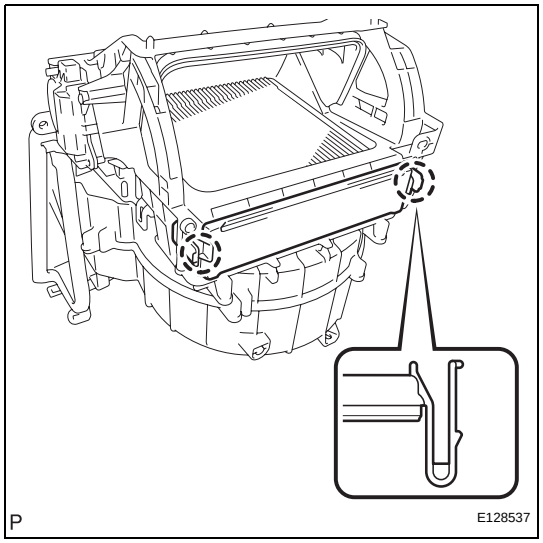

2. REMOVE AIR FILTER COVER PLATE

(a) Release the 2 claws and remove the air filter cover plate.

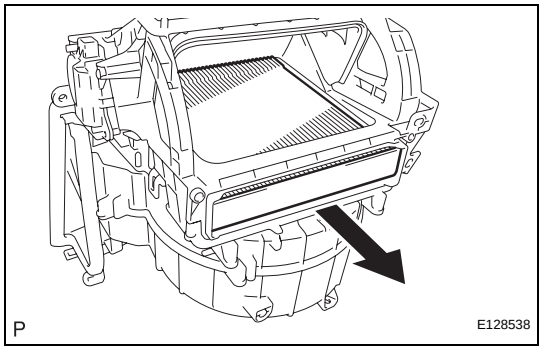

3. REMOVE CLEAN AIR FILTER

(a) Remove the clean air filter as shown in the illustration.

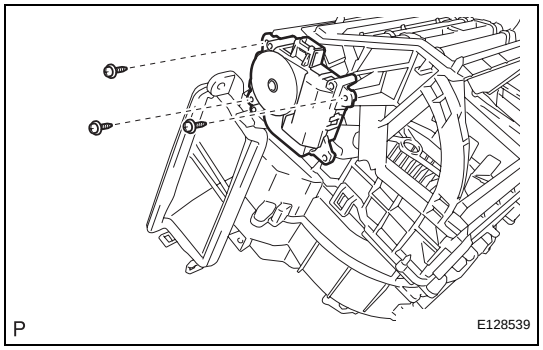

4. REMOVE AIR INLET SERVO MOTOR

(a) Remove the 3 screws and air inlet servo motor.

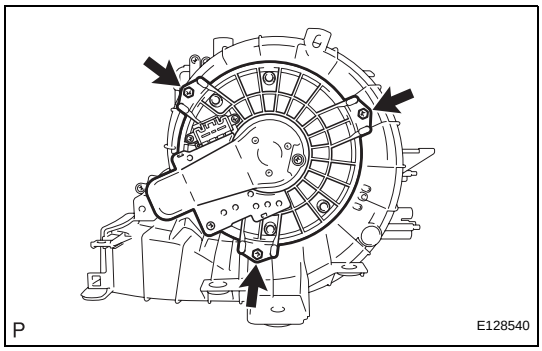

5. REMOVE BLOWER WITH FAN MOTOR SUB-ASSEMBLY

(a) Remove the 3 screws and blower with fan motor sub-assembly.

REASSEMBLY

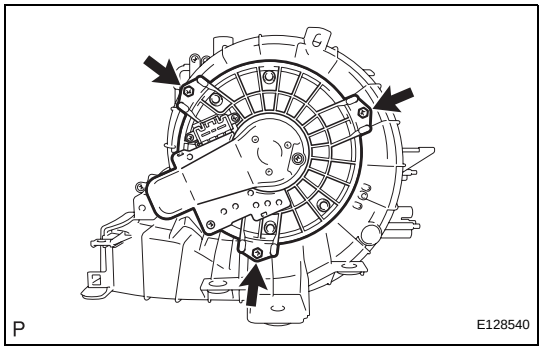

1. INSTALL BLOWER WITH FAN MOTOR SUB-ASSEMBLY

(a) Install the blower with fan motor sub-assembly with the 3 screws.

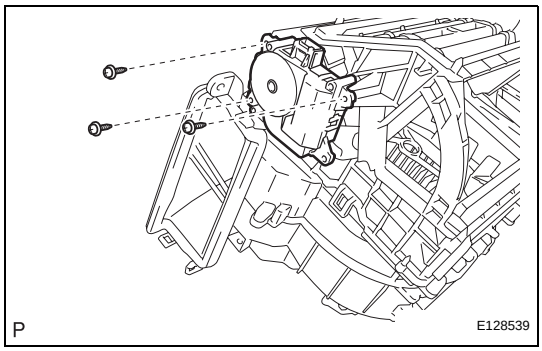

2. INSTALL AIR INLET SERVO MOTOR

(a) Install the air inlet servo motor with the 3 screws.

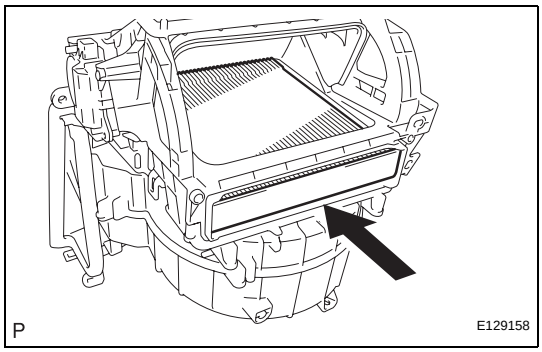

3. INSTALL CLEAN AIR FILTER

(a) Install the clean air filter as shown in the illustration.

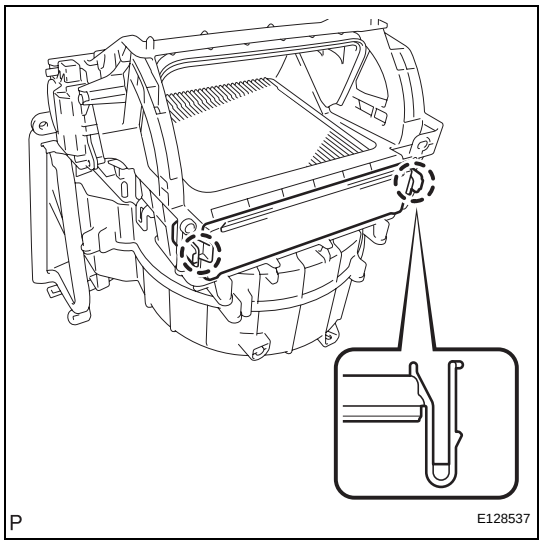

4. **INSTALL AIR FILTER COVER PLATE**
   (a) Engage the 2 claws to install the air filter cover plate.

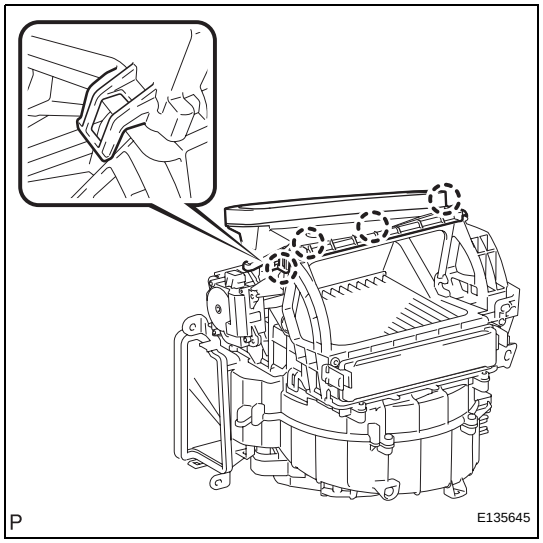

5. **INSTALL AIR DUCT SUB-ASSEMBLY**
   (a) Engage the 4 claws to install the air duct sub-assembly.

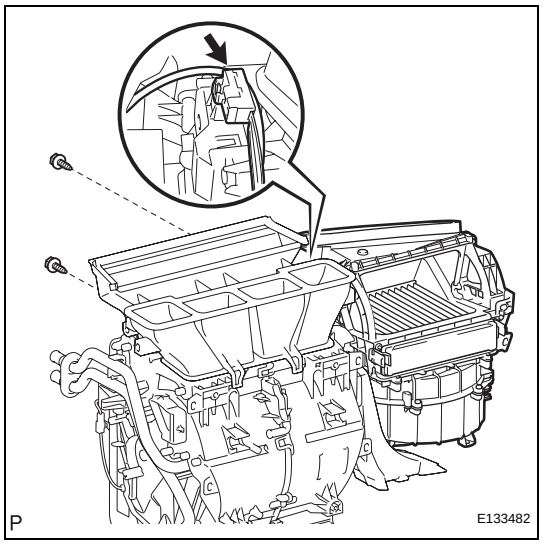

INSTALLATION

1. **INSTALL BLOWER ASSEMBLY**
   (a) Install the blower assembly with the 2 screws.
   (b) Connect the connector.
2. **INSTALL INSTRUMENT PANEL REINFORCEMENT ASSEMBLY (See page AC-159)**
3. **INSTALL AIR CONDITIONING AMPLIFIER ASSEMBLY (See page AC-232)**
4. **INSTALL STEERING COLUMN ASSEMBLY (See page SR-85)**
5. **CONNECT STEERING INTERMEDIATE SHAFT ASSEMBLY (See page SR-85)**
6. **INSTALL NO. 1 AIR DUCT SUB-ASSEMBLY (See page SR-86)**
7. **INSTALL REAR NO. 1 AIR DUCT (See page AC-162)**
8. **INSTALL REAR NO. 2 AIR DUCT (See page AC-163)**
9. **INSTALL NO. 1 CONSOLE BOX DUCT (See page AC-163)**

10. **INSTALL NO. 3 CONSOLE BOX DUCT (See page AC-163)**
11. **INSTALL NO. 2 CONSOLE BOX DUCT (See page AC-163)**
12. **INSTALL FLOOR CARPET BRACKET RH**
13. **INSTALL FLOOR CARPET BRACKET LH**
14. **INSTALL INSTRUMENT PANEL SAFETY PAD ASSEMBLY (w/o DVD Player) (See page IP-33)**
15. **INSTALL INSTRUMENT PANEL SAFETY PAD ASSEMBLY (w/ DVD Player) (See page IP-35)**
16. **INSTALL ROOM TEMPERATURE SENSOR (See page AC-215)**
17. **CONNECT INSTRUMENT PANEL WIRE ASSEMBLY (See page RS-416)**
18. **INSTALL PUSH START SWITCH (See page IP-37)**
19. **INSTALL NO. 1 INSTRUMENT PANEL MOUNTING BRACKET (See page IP-38)**
20. **INSTALL FRONT STEREO COMPONENT SPEAKER ASSEMBLY (See page AV-188)**
21. **INSTALL NO. 1 SPEAKER HOLE COVER (See page IP-38)**
22. **INSTALL NO. 1 INSTRUMENT PANEL REGISTER ASSEMBLY (See page IP-38)**
23. **INSTALL FRONT NO. 2 SPEAKER ASSEMBLY (for LH Side) (See page AV-185)**
24. **INSTALL NO. 1 INSTRUMENT PANEL SPEAKER PANEL SUB-ASSEMBLY (See page IP-39)**
25. **INSTALL FRONT PILLAR GARNISH LH (See page IR-64)**
26. **INSTALL NO. 3 INSTRUMENT PANEL REGISTER ASSEMBLY (See page IP-39)**
27. **INSTALL FRONT NO. 2 SPEAKER ASSEMBLY (for RH Side) (See page IP-39)**
28. **INSTALL NO. 2 INSTRUMENT PANEL SPEAKER PANEL SUB-ASSEMBLY (See page IP-39)**
29. **INSTALL FRONT PILLAR GARNISH RH (See page IR-65)**
30. **INSTALL REAR CONSOLE BOX ASSEMBLY (See page IP-39)**
31. **INSTALL CONSOLE REAR END PANEL SUB-ASSEMBLY (See page IP-40)**
32. **INSTALL CONSOLE BOX CARPET (See page IP-41)**
33. **INSTALL CONSOLE BOX POCKET (See page IP-41)**

34. **INSTALL HEATER SEAT SWITCH CONSOLE BASE (w/o Seat Heater System) (See page IP-41)**
35. **INSTALL HEATER SEAT SWITCH CONSOLE BASE (w/ Seat Heater System) (See page IP-41)**
36. **INSTALL INTEGRATION CONTROL PANEL WITH RADIO RECEIVER ASSEMBLY (w/o Navigation System) (See page AV-172)**
37. **INSTALL MULTI-DISPLAY WITH RADIO RECEIVER ASSEMBLY (w/ Navigation System) (See page AV-173)**
38. **INSTALL NO. 2 INSTRUMENT PANEL REGISTER ASSEMBLY (See page IP-41)**
39. **INSTALL UPPER CONSOLE PANEL ASSEMBLY WITH FRONT ASH RECEPTACLE (See page IP-42)**
40. **INSTALL SHIFT LEVER KNOB SUB-ASSEMBLY (See page IP-42)**
41. **INSTALL LOWER INSTRUMENT PANEL RH (See page IP-42)**
42. **INSTALL FRONT PASSENGER SIDE KNEE AIRBAG ASSEMBLY (See page RS-396)**
43. **INSTALL SIDE INSTRUMENT PANEL RH (See page IP-43)**
44. **INSTALL NO. 2 INSTRUMENT PANEL UNDER COVER SUB-ASSEMBLY (See page IP-44)**
45. **INSTALL FRONT DOOR OPENING TRIM COVER RH (See page IR-65)**
46. **INSTALL FRONT DOOR SCUFF PLATE RH (See page IR-65)**
47. **INSTALL INSTRUMENT PANEL FINISH PANEL END RH (See page IP-44)**
48. **INSTALL NO. 1 SWITCH HOLE BASE (See page IP-44)**
49. **INSTALL COMBINATION METER ASSEMBLY (See page IP-45)**
50. **INSTALL INSTRUMENT CLUSTER FINISH PANEL SUB-ASSEMBLY (See page IP-45)**
51. **INSTALL TURN SIGNAL SWITCH ASSEMBLY WITH SPIRAL CABLE (See page SR-86)**
52. **INSTALL TILT & TELESCOPIC SWITCH (See page SR-86)**
53. **INSTALL STEERING COLUMN COVER (See page IP-46)**
54. **ADJUST SPIRAL CABLE SUB-ASSEMBLY (See page RS-382)**

55. **INSTALL LOWER INSTRUMENT PANEL SUB-ASSEMBLY (See page IP-46)**
56. **INSTALL INSTRUMENT PANEL FINISH PANEL END LH (See page IP-46)**
57. **INSTALL SIDE INSTRUMENT PANEL LH (See page IP-47)**
58. **INSTALL FRONT DOOR OPENING TRIM COVER LH (See page IR-64)**
59. **INSTALL FRONT DOOR SCUFF PLATE LH (See page IR-65)**
60. **INSTALL STEERING WHEEL ASSEMBLY (See page SR-87)**
61. **INSTALL STEERING PAD (See page RS-368)**
62. **INSTALL LOWER NO. 3 STEERING WHEEL COVER (See page RS-369)**
63. **INSTALL LOWER NO. 2 STEERING WHEEL COVER (See page RS-369)**
64. **INSTALL HEATER INLET WATER HOSE (See page AC-166)**
65. **INSTALL HEATER OUTLET WATER HOSE (See page AC-166)**
66. **INSTALL AIR CONDITIONER TUBE AND ACCESSORY (See page AC-166)**
67. **INSTALL SUCTION HOSE SUB-ASSEMBLY (See page AC-166)**
68. **INSTALL WINDSHIELD WIPER MOTOR AND LINK ASSEMBLY (See page WW-43)**
69. **INSTALL FRONT FENDER TO COWL SIDE SEAL RH (See page WW-43)**
70. **INSTALL FRONT FENDER TO COWL SIDE SEAL LH (See page WW-43)**
71. **INSTALL COWL TOP VENTILATOR LOUVER SUB-ASSEMBLY (See page WW-44)**
72. **INSTALL FRONT WIPER ARM AND BLADE ASSEMBLY LH (See page WW-44)**
73. **INSTALL FRONT WIPER ARM AND BLADE ASSEMBLY RH (See page WW-45)**
74. **CONNECT CABLE TO NEGATIVE BATTERY TERMINAL**
75. **INSPECT STEERING PAD (See page RS-369)**
76. **INSPECT FRONT PASSENGER SIDE KNEE AIRBAG ASSEMBLY (See page RS-395)**
77. **INSPECT SRS WARNING LIGHT**
    (a) Inspect the SRS warning light (See page RS-37).

78. **PERFORM INITIALIZATION**
    NOTICE:
    Some systems need initialization after reconnecting the negative battery terminal (See page IN-33).
79. **ADD ENGINE COOLANT (See page CO-6)**
80. **CHECK FOR ENGINE COOLANT LEAKS**
81. **CHARGE WITH REFRIGERANT (See page AC-127)**
82. **WARM UP COMPRESSOR (See page AC-128)**
83. **CHECK FOR REFRIGERANT LEAKS (See page AC-128)**
84. **INSTALL ENGINE ROOM SIDE COVER RH (See page WW-47)**
85. **INSTALL ENGINE ROOM SIDE COVER LH (See page WW-47)**
86. **INSTALL HOOD HINGE COVER (for RH Side) (See page WW-47)**
87. **INSTALL HOOD HINGE COVER (for LH Side) (See page WW-47)**
88. **INSTALL COOL AIR INTAKE DUCT SEAL (See page ET-14)**

REMOVAL

1. RECOVER REFRIGERANT FROM REFRIGERATION SYSTEM (See page AC-126)
2. DISCONNECT CABLE FROM NEGATIVE BATTERY TERMINAL
3. REMOVE FRONT WHEEL RH
4. REMOVE FRONT FENDER APRON SEAL RH
5. REMOVE COOL AIR INTAKE DUCT SEAL (See page EM-22)
6. REMOVE ENGINE ROOM SIDE COVER LH (See page EM-22)
7. REMOVE ENGINE ROOM SIDE COVER RH (See page EM-22)
8. REMOVE V-BANK COVER SUB-ASSEMBLY (See page EM-23)
9. REMOVE FRONT WHEEL OPENING EXTENSION PAD LH
10. REMOVE FRONT WHEEL OPENING EXTENSION PAD RH
11. REMOVE ENGINE UNDER COVER LH
12. REMOVE ENGINE UNDER COVER RH
13. DRAIN ENGINE COOLANT (See page CO-5)
14. REMOVE AIR CLEANER CAP SUB-ASSEMBLY (See page ES-519)
15. REMOVE NO. 2 AIR CLEANER INLET
16. REMOVE NO. 1 AIR CLEANER INLET
17. REMOVE FRONT BUMPER ASSEMBLY (See page ET-5)
18. REMOVE FRONT BUMPER ENERGY ABSORBER
19. REMOVE MILLIMETER WAVE RADAR SENSOR ASSEMBLY (w/ Dynamic Radar Cruise Control System) (See page CC-122)
20. SEPARATE RADIATOR RESERVE TANK HOSE (See page CO-25)
21. DISCONNECT RADIATOR HOSE INLET (See page CO-25)
22. DISCONNECT RADIATOR HOSE OUTLET (See page CO-25)
23. DISCONNECT NO. 1 OIL COOLER INLET HOSE (See page CO-26)
24. DISCONNECT NO. 1 OIL COOLER OUTLET HOSE (See page CO-26)

25. REMOVE RADIATOR SUPPORT UPPER (See page CO-26)

26. REMOVE FAN SHROUD (See page CO-27)

27. REMOVE RADIATOR ASSEMBLY (See page CO-27)

28. REMOVE V-RIBBED BELT (See page EM-6)

29. REMOVE GENERATOR ASSEMBLY (See page CH-14)

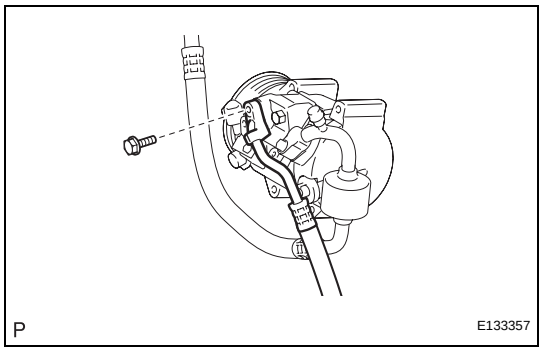

30. DISCONNECT NO. 1 COOLER REFRIGERANT DISCHARGE HOSE

(a) Remove the bolt and disconnect the No. 1 cooler refrigerant discharge hose from the compressor and pulley.

(b) Remove the O-ring from the No. 1 cooler refrigerant discharge hose.

NOTICE:

Seal the openings of the disconnected parts using vinyl tape to prevent entry of moisture and foreign matter.

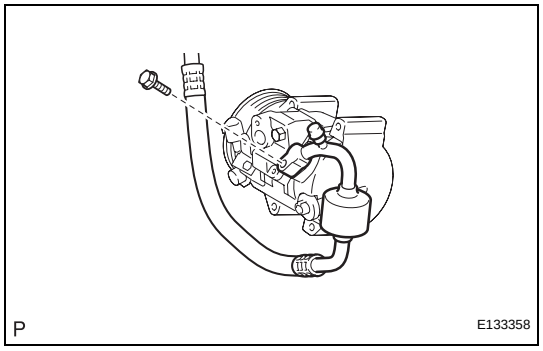

31. DISCONNECT NO. 1 COOLER REFRIGERANT SUCTION HOSE

(a) Remove the bolt and disconnect the No. 1 cooler refrigerant suction hose from the compressor and pulley.

(b) Remove the O-ring from the No. 1 cooler refrigerant suction hose.

NOTICE:

Seal the openings of the disconnected parts using vinyl tape to prevent entry of moisture and foreign matter.

32. REMOVE COMPRESSOR AND MAGNETIC CLUTCH

(a) Disconnect the magnetic clutch connector.

(b) Remove the 4 bolts.

(c) Remove the compressor and magnetic clutch.

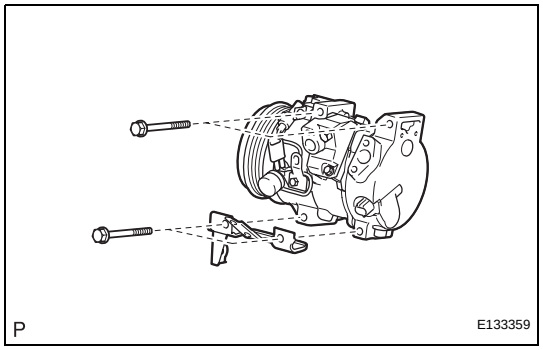

DISASSEMBLY

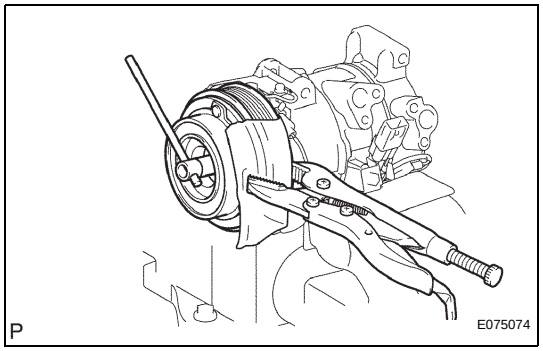

1. REMOVE MAGNETIC CLUTCH ASSEMBLY

(a) Place the compressor and magnetic clutch in a vise.

(b) Using locking pliers, hold the magnetic clutch hub.

(c) Remove the bolt, magnetic clutch hub, and magnetic clutch washers.

HINT:

There is no set number of magnetic clutch washers because they are used for adjustment.

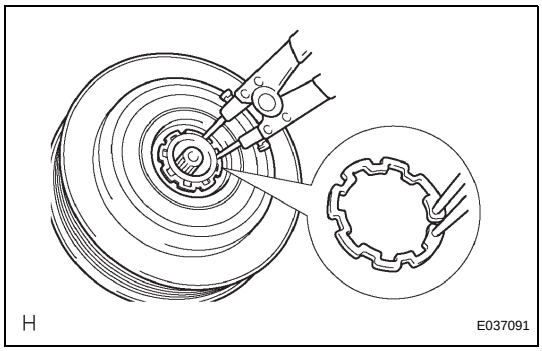

(d) Using a snap ring expander, remove the snap ring and then remove the magnetic clutch rotor.
NOTICE:
Take care not to damage the seal cover of the bearing when removing the snap ring.

(e) Disconnect the connector.

(f) Remove the screw.

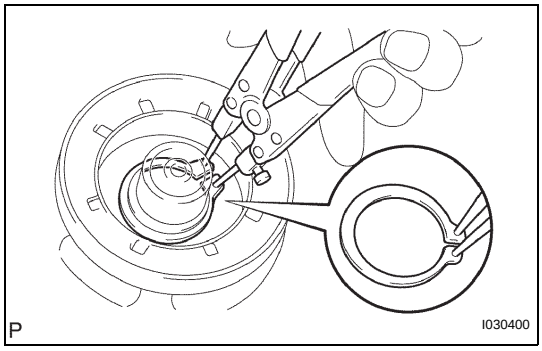

(g) Using a snap ring expander, remove the snap ring and magnetic clutch stator.

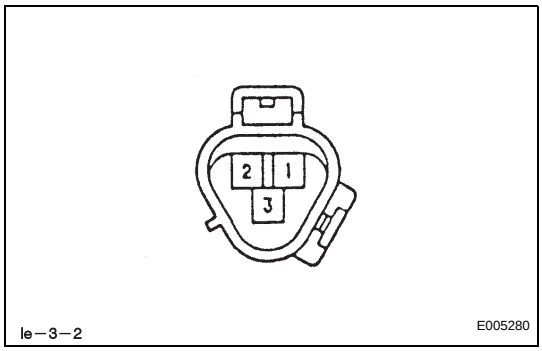

INSPECTION

1. INSPECT COMPRESSOR AND MAGNETIC CLUTCH (A/C LOCK SENSOR)

(a) Measure the resistance according to the value(s) in the table below.
Standard resistance

Tester Connection	Condition	Specified Condition
1 - 2	Always (at 20°C (68°F))	165 to 205 Ω

If the resistance is not as specified, replace the compressor and magnetic clutch.

Compressor and Magnetic Clutch Connector Front View:

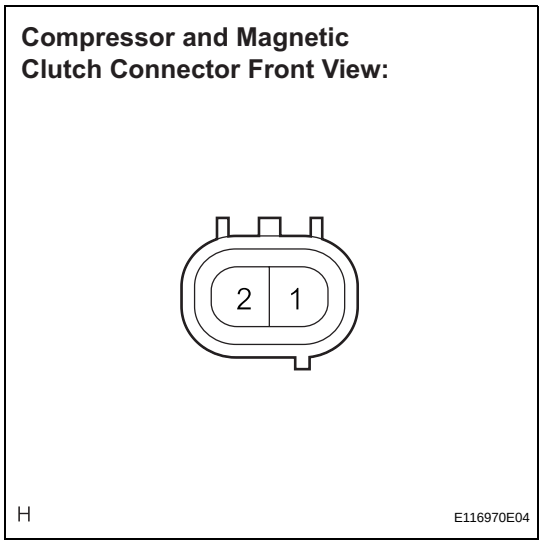

2. INSPECT COMPRESSOR AND MAGNETIC CLUTCH (A/C COMPRESSOR SOLENOID)

(a) Measure the resistance according to the value(s) in the table below.
Standard resistance

Tester Connection	Condition	Specified Condition
2 - 1	20°C (68°F)	10 to 11 Ω

If the resistance is not as specified, replace the compressor and magnetic clutch.

A/C Compressor Connector Front View:

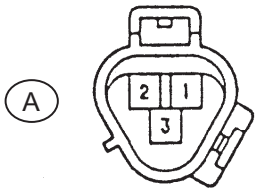

Ie–3–2 E005280E18

3. INSPECT COMPRESSOR AND MAGNETIC CLUTCH

(a) Disconnect the connector from the compressor and magnetic clutch.

Magnetic Clutch Connector Front View:

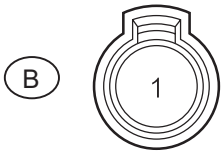

H E124482E03

(b) Disconnect the connector from the magnetic clutch.

(c) Measure the resistance according to the value(s) in the table below.

Standard resistance

Tester Connection	Condition	Specified Condition
A-3 - B-1	Always	Below 1 Ω
A-3 - Body ground	Always	10 kΩ or higher

If the resistance is not as specified, replace the compressor and magnetic clutch.

Magnetic Clutch Connector Front View:

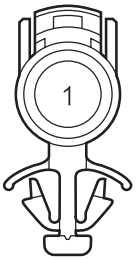

H E113611E02

4. INSPECT MAGNETIC CLUTCH

(a) Measure the resistance according to the value(s) in the table below.

Standard resistance

Tester Connection	Condition	Specified Condition
1 - Body ground	Always	3.4 to 3.8 Ω

If the resistance is not as specified, replace the magnetic clutch.

(b) When connector terminal 1 is connected to the positive (+) battery terminal, check that the following occurs: 1) the magnetic clutch's operating sound can be heard, and 2) the magnetic clutch's hub and rotor lock.

OK:

1):

The magnetic clutch's operating sound can be heard.

2):

The magnetic clutch's hub and rotor lock.

If the result is not as specified, replace the magnetic clutch.

REASSEMBLY

1. INSTALL MAGNETIC CLUTCH ASSEMBLY

(a) Install the magnetic clutch stator while aligning the protrusion on the stator with the notch on the air compressor assembly as shown in the illustration.

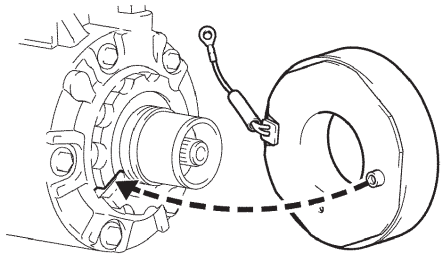

P E075075

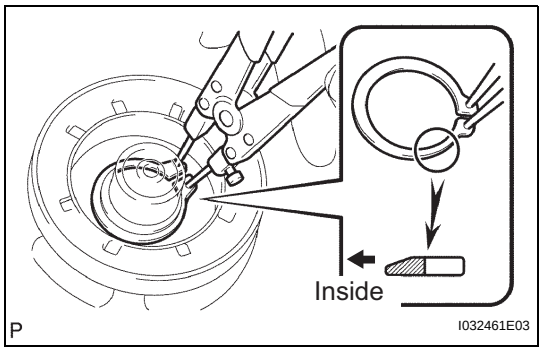

(b) Using a snap ring expander, install a new snap ring with the chamfered side facing up.
NOTICE:
Take care not to damage the seal cover of the bearing when installing the snap ring.

(c) Connect the connector.

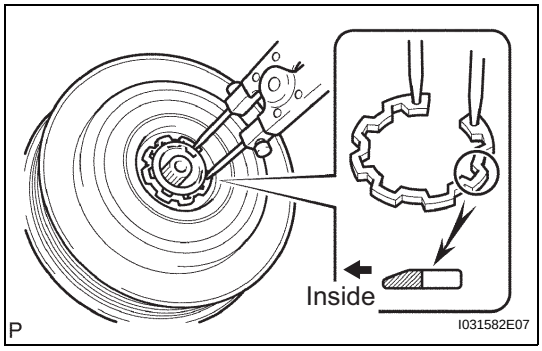

(d) Using a snap ring expander, install the magnetic clutch rotor and a new snap ring with the chamfered side facing up.
NOTICE:
- **Do not expand the snap ring by more than 35.5 mm (1.39 in.) when installing it.**
- **Do not damage the seal cover of the bearing when installing the snap ring.**

(e) Install the magnetic clutch washer and magnetic clutch hub.
NOTICE:
Do not change the combination of the magnetic clutch washers used before disassembly.

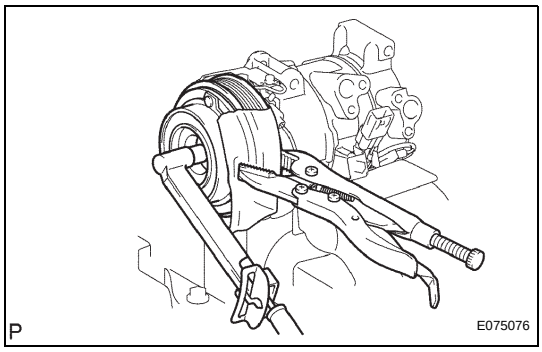

(f) Using locking pliers, hold the magnetic clutch hub and install the bolt.
Torque: 18 N*m (184 kgf*cm, 13 ft.*lbf)
NOTICE:
Make sure that there is no foreign matter or oil on the compressor shaft, bolt, and clutch hub.

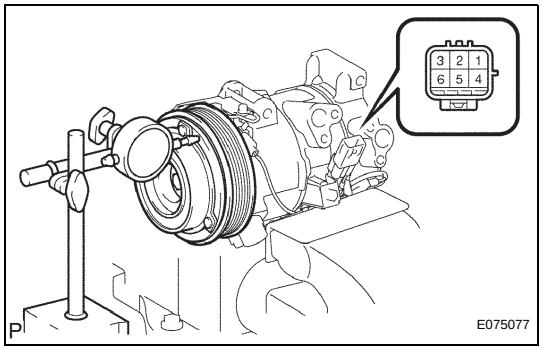

2. INSPECT MAGNETIC CLUTCH CLEARANCE

(a) Set the dial indicator to the magnetic clutch hub.

(b) Connect the battery positive lead to terminal 1 of the magnetic clutch connector, and the negative lead to the ground wire. Turn the magnetic clutch on and off and measure the clearance.
Standard clearance:
0.26 to 0.60 mm (0.010 to 0.024 in.)
If the measured value is not within the standard range, remove the magnetic clutch hub and adjust it with magnetic clutch washers.
NOTICE:
Adjustment should be performed with 3 or less magnetic clutch washers.

(c) Remove the compressor and magnetic clutch from the vise.

3. ADJUST COMPRESSOR OIL LEVEL

(a) When replacing the compressor and magnetic clutch with a new one, gradually discharge the refrigerant gas from the service valve, and drain the following amount of oil from the new compressor and magnetic clutch before installation.

Standard:

(Oil capacity inside the new compressor and magnetic clutch: 130 + 15 cc (4.6 + 0.51 fl.oz.)) - (Remaining oil amount in the removed compressor and magnetic clutch) = (Oil amount to be removed from the new compressor when replacing)

NOTICE:

- **When checking the compressor oil level, observe the precautions on the cooler removal/installation.**
- **If a new compressor and magnetic clutch are installed without removing some oil, due to the oil remaining in the pipes of the vehicle, the oil amount will be too large. This prevents heat exchange in the refrigerant cycle and causes refrigerant failure.**
- **If the volume of oil remaining in the removed compressor and magnetic clutch is too small, check for oil leakage.**
- **Be sure to use ND-OIL 8 or equivalent for compressor oil.**

INSTALLATION

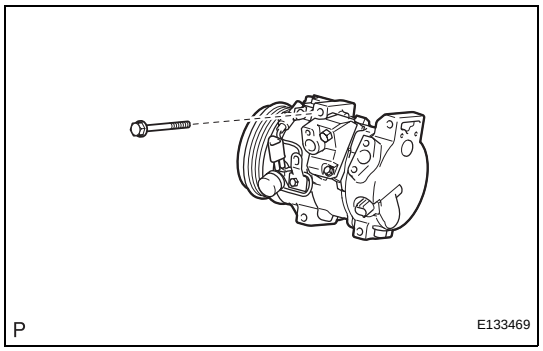

1. TEMPORARILY TIGHTEN COMPRESSOR AND MAGNETIC CLUTCH

(a) Temporarily install the compressor and magnetic clutch onto the bolt.

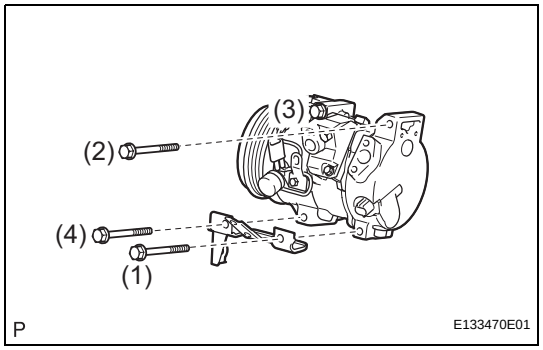

2. FULLY TIGHTEN COMPRESSOR AND MAGNETIC CLUTCH

(a) Install the compressor and magnetic clutch with the 4 bolts.

Torque: 25 N*m (255 kgf*cm, 18 ft.*lbf)

NOTICE:

Tighten the bolts in the order shown in the illustration to install the compressor and magnetic clutch.

3. INSTALL NO. 1 COOLER REFRIGERANT SUCTION HOSE

(a) Remove the attached vinyl tape from the hose.

(b) Apply sufficient compressor oil to a new O-ring and the fitting surface of the compressor and magnetic clutch.
Compressor oil:
ND-OIL 8 or equivalent

(c) Install the O-ring onto the No. 1 cooler refrigerant suction hose.

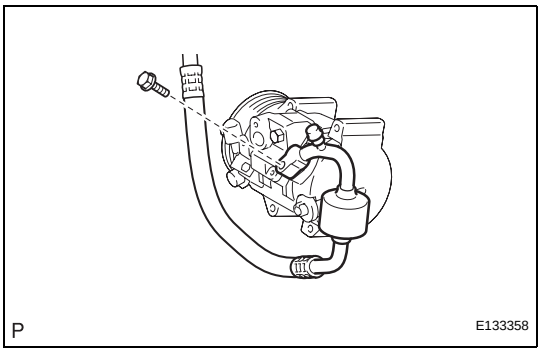

(d) Install the No. 1 cooler refrigerant suction hose onto the compressor and magnetic clutch with the bolt.
Torque: 9.8 N*m (100 kgf*cm, 87 in.*lbf)

4. INSTALL NO. 1 COOLER REFRIGERANT DISCHARGE HOSE

(a) Remove the attached vinyl tape from the hose.

(b) Apply sufficient compressor oil to a new O-ring and the fitting surface of the compressor and magnetic clutch.
Compressor oil:
ND-OIL 8 or equivalent

(c) Install the O-ring onto the No. 1 cooler refrigerant discharge hose sub-assembly.

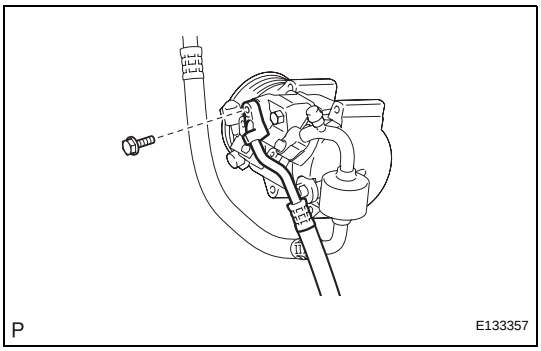

(d) Install the No. 1 cooler refrigerant discharge hose onto the compressor and magnetic clutch with the bolt.
Torque: 9.8 N*m (100 kgf*cm, 87 in.*lbf)

5. INSTALL GENERATOR ASSEMBLY (See page CH-22)

6. INSTALL V-RIBBED BELT (See page EM-7)

7. INSTALL RADIATOR ASSEMBLY (See page CO-33)

8. INSTALL FAN SHROUD (See page CO-33)

9. INSTALL RADIATOR SUPPORT UPPER (See page CO-33)

10. CONNECT NO. 1 OIL COOLER OUTLET TUBE (See page CO-34)

11. CONNECT NO. 1 OIL COOLER INLET TUBE (See page CO-34)

12. CONNECT RADIATOR HOSE OUTLET (See page CO-35)

13. CONNECT RADIATOR HOSE INLET (See page CO-35)

14. CONNECT RADIATOR RESERVOIR TANK HOSE (See page CO-35)

15. INSTALL MILLIMETER WAVE RADAR SENSOR ASSEMBLY (w/ Dynamic Radar Cruise Control System) (See page CC-128)

16. INSTALL FRONT BUMPER ENERGY ABSORBER

17. INSTALL FRONT BUMPER ASSEMBLY (See page ET-14)

18. **INSTALL NO. 1 AIR CLEANER INLET (See page EM-48)**
19. **INSTALL NO. 2 AIR CLEANER INLET (See page EM-48)**
20. **INSTALL AIR CLEANER CAP SUB-ASSEMBLY (See page ES-522)**
21. **CONNECT CABLE TO NEGATIVE BATTERY TERMINAL**
22. **ADD ENGINE COOLANT (See page CO-6)**
23. **CHECK FOR ENGINE COOLANT LEAKS (See page CO-1)**
24. **CHARGE WITH REFRIGERANT (See page AC-127)**
25. **WARM UP COMPRESSOR (See page AC-128)**
26. **CHECK FOR REFRIGERANT LEAKS (See page AC-128)**
27. **PERFORM INITIALIZATION**
    NOTICE:
    Some systems need initialization after reconnecting the negative battery terminal (See page IN-33).
28. **INSTALL COOL AIR INTAKE DUCT SEAL (See page ET-14)**
29. **INSTALL ENGINE ROOM SIDE COVER LH (See page WW-47)**
30. **INSTALL ENGINE ROOM SIDE COVER RH (See page WW-47)**
31. **INSTALL V-BANK COVER SUB-ASSEMBLY (See page EM-49)**
32. **INSTALL ENGINE UNDER COVER LH**
33. **INSTALL ENGINE UNDER COVER RH**
34. **INSTALL FRONT WHEEL OPENING EXTENSION PAD LH**
35. **INSTALL FRONT WHEEL OPENING EXTENSION PAD RH**
36. **ADJUST MILLIMETER WAVE RADAR SENSOR (See page CC-122)**
37. **VEHICLE PREPARATION FOR FOG LIGHT AIM ADJUSTMENT (See page LI-141)**
38. **PREPARATION FOR FOG LIGHT AIMING (See page LI-142)**
39. **FOG LIGHT AIMING INSPECTION (See page LI-143)**
40. **FOG LIGHT AIMING ADJUSTMENT (See page LI-144)**

REMOVAL

1. RECOVER REFRIGERANT FROM REFRIGERATION SYSTEM (See page AC-126)
2. REMOVE FRONT WHEEL OPENING EXTENSION PAD LH
3. REMOVE FRONT WHEEL OPENING EXTENSION PAD RH
4. REMOVE ENGINE UNDER COVER LH
5. REMOVE ENGINE UNDER COVER RH
6. DRAIN ENGINE COOLANT (See page CO-5)
7. REMOVE V-BANK COVER SUB-ASSEMBLY (See page EM-23)
8. REMOVE COOL AIR INTAKE DUCT SEAL (See page EM-22)
9. REMOVE ENGINE ROOM SIDE COVER LH (See page EM-22)
10. REMOVE ENGINE ROOM SIDE COVER RH (See page EM-22)
11. REMOVE AIR CLEANER CAP SUB-ASSEMBLY (See page ES-519)
12. REMOVE AIR CLEANER INLET SUB-ASSEMBLY (See page EM-23)
13. REMOVE NO. 1 AIR CLEANER INLET (See page EM-23)
14. REMOVE FRONT BUMPER ASSEMBLY (See page ET-5)
15. REMOVE FRONT BUMPER ENERGY ABSORBER (See page ET-9)
16. REMOVE MILLIMETER WAVE RADAR SENSOR ASSEMBLY (w/ Dynamic Radar Cruise Control System) (See page CC-122)
17. SEPARATE RADIATOR RESERVE TANK HOSE (See page CO-25)
18. DISCONNECT RADIATOR HOSE INLET (See page CO-25)
19. DISCONNECT RADIATOR HOSE OUTLET (See page CO-25)
20. DISCONNECT NO. 1 OIL COOLER INLET HOSE (See page CO-26)
21. DISCONNECT NO. 1 OIL COOLER OUTLET HOSE (See page CO-26)
22. REMOVE RADIATOR SUPPORT UPPER (See page CO-26)

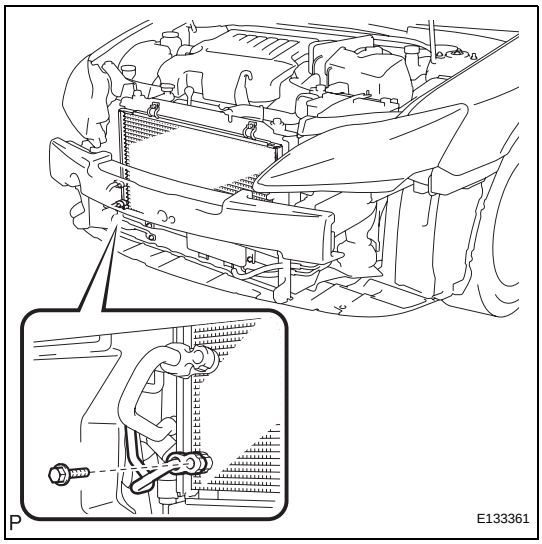

23. DISCONNECT LIQUID TUBE SUB-ASSEMBLY

(a) Remove the bolt and disconnect the liquid tube sub-assembly from the condenser.

(b) Remove the O-ring from the liquid tube sub-assembly.

NOTICE:

Seal the openings of the disconnected parts using vinyl tape to prevent entry of moisture and foreign matter.

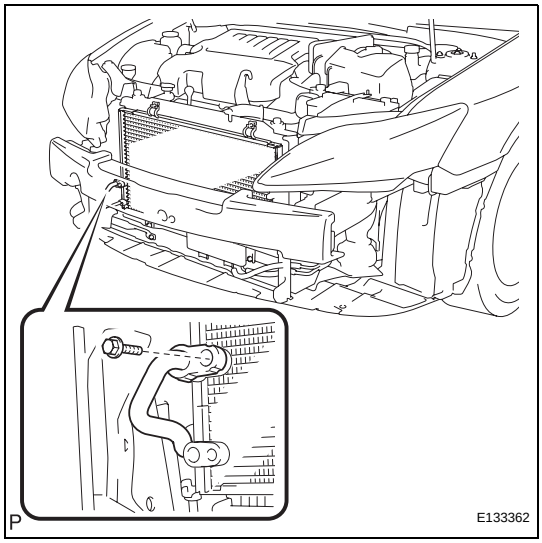

24. DISCONNECT COOLER REFRIGERANT DISCHARGE PIPE

(a) Remove the bolt and disconnect the cooler refrigerant discharge pipe from the condenser.

(b) Remove the O-ring from the cooler refrigerant discharge pipe.

NOTICE:

Seal the openings of the disconnected parts using vinyl tape to prevent entry of moisture and foreign matter.

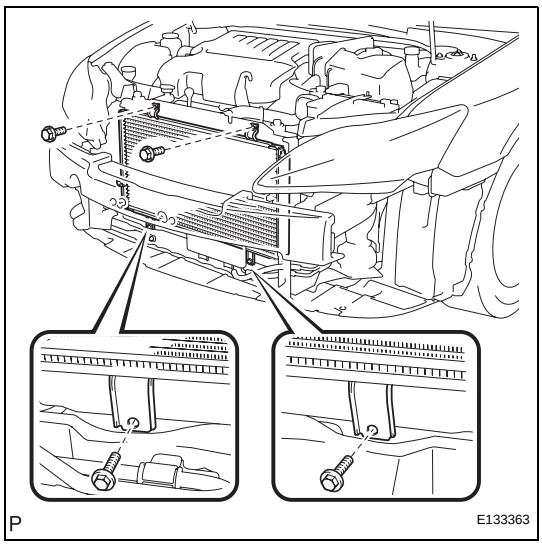

25. REMOVE COOLER CONDENSER ASSEMBLY

(a) Remove the 4 bolts and condenser.

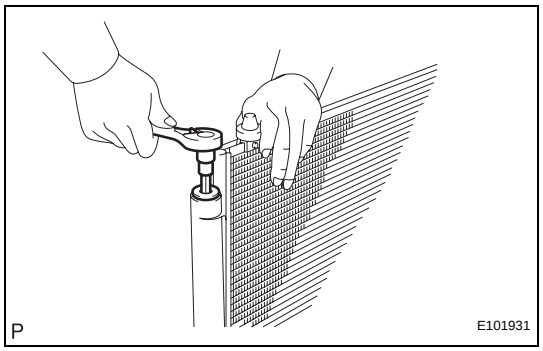

26. REMOVE COOLER DRYER

(a) Using a 14 mm straight hexagon wrench, remove the cap from the modulator.

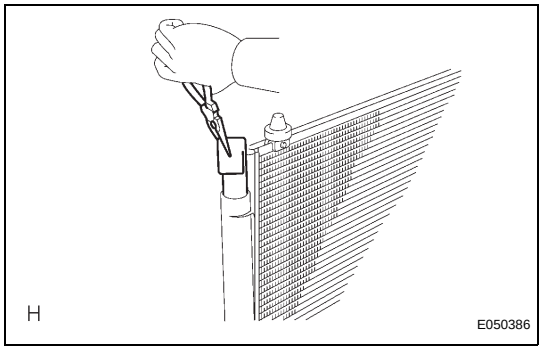

(b) Using pliers, remove the cooler dryer.

INSTALLATION

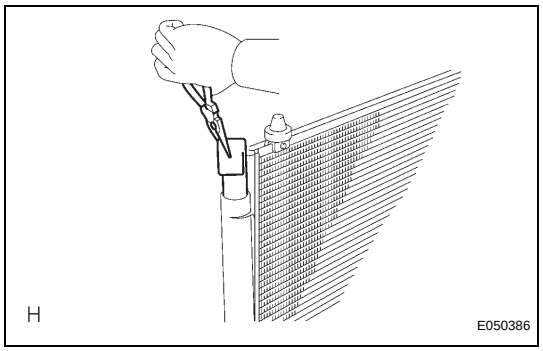

1. INSTALL COOLER DRYER

(a) Using pliers, install the cooler dryer to the modulator.

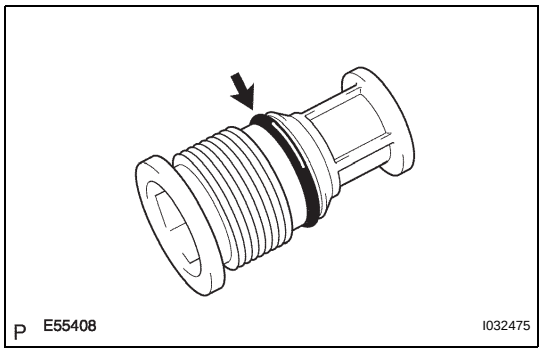

(b) Apply sufficient compressor oil to an O-ring and cap fitting surface.
Compressor oil:
ND-OIL 8 or equivalent

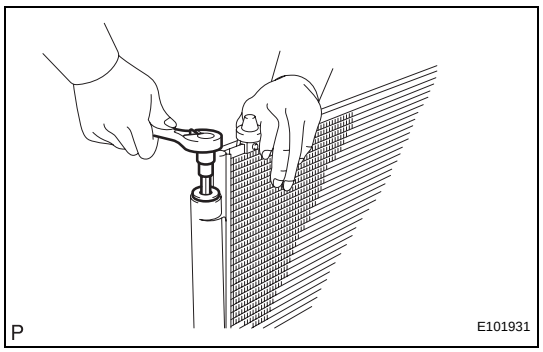

(c) Using a straight hexagon wrench 14 mm, install the cap to the cooler condenser core.
Torque: 2.9 N*m (30 kgf*cm, 26 in.*lbf)

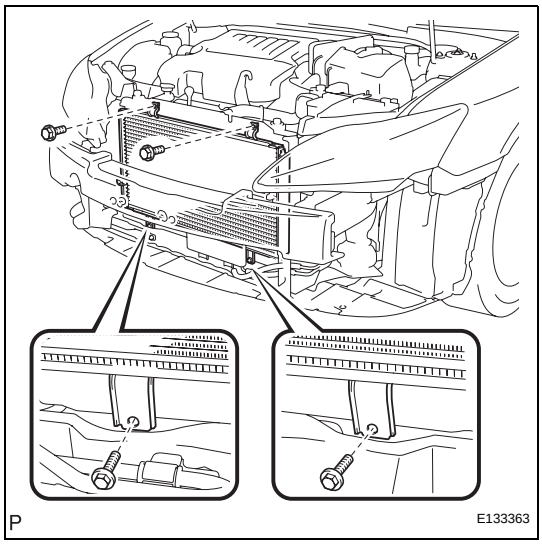

2. INSTALL COOLER CONDENSER ASSEMBLY

(a) Install the cooler condenser assembly with the 4 bolts.
Torque: 5.0 N*m (51 kgf*cm, 44 in.*lbf)
HINT:
If the condenser is replaced with a new one, add compressor oil to the new condenser.
Capacity:
40 cc (1.4 fl. oz.)
Compressor oil:
ND-8 or equivalent

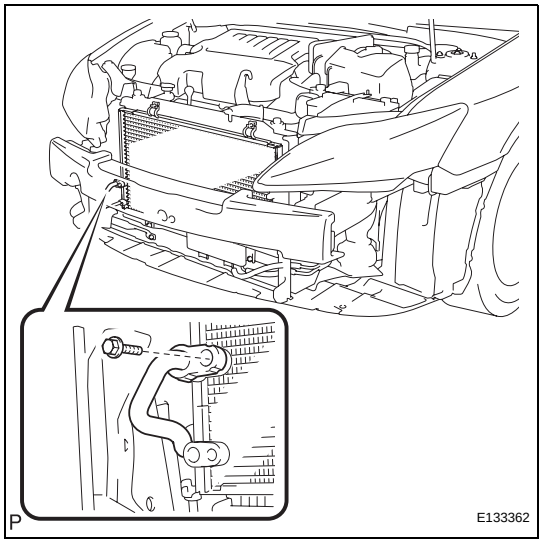

3. INSTALL COOLER REFRIGERANT DISCHARGE PIPE

(a) Remove the attached vinyl tape from the pipe and the connecting part of the cooler condenser assembly.
(b) Sufficiently apply compressor oil to a new O-ring and the fitting surface of the pipe joint.
Compressor oil:
ND-OIL 8 or equivalent
(c) Install the O-ring on the cooler refrigerant discharge pipe.
Torque: 9.8 N*m (100 kgf*cm, 87 in.*lbf)

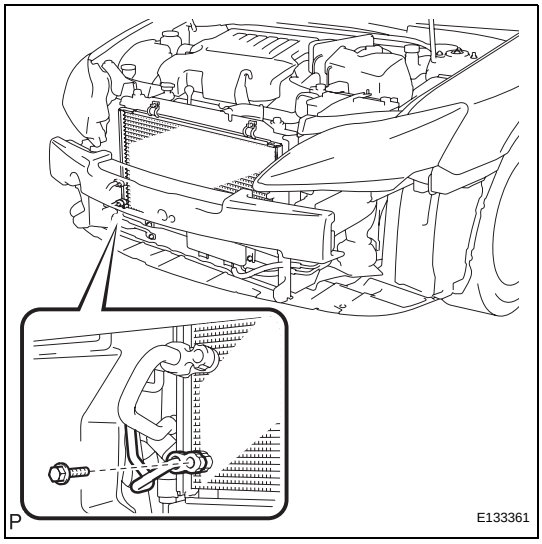

4. INSTALL LIQUID TUBE SUB-ASSEMBLY

(a) Remove the attached vinyl tape from the tube and the connecting part of the cooler condenser assembly.
(b) Sufficiently apply compressor oil to a new O-ring and the fitting surface of the tube joint.
Compressor oil:
ND-OIL 8 or equivalent
(c) Install the O-ring on the liquid tube sub-assembly.
(d) Install the liquid tube sub-assembly on the cooler condenser assembly with the bolt.
Torque: 9.8 N*m (100 kgf*cm, 87 in.*lbf)

5. INSTALL RADIATOR SUPPORT UPPER (See page CO-33)

6. CONNECT NO. 1 OIL COOLER OUTLET TUBE (See page CO-34)

7. CONNECT NO. 1 OIL COOLER INLET TUBE (See page CO-34)

8. CONNECT RADIATOR HOSE OUTLET (See page CO-35)

9. CONNECT RADIATOR HOSE INLET (See page CO-35)
10. CONNECT RADIATOR RESERVOIR TANK HOSE (See page CO-35)
11. INSTALL MILLIMETER WAVE RADAR SENSOR ASSEMBLY (w/ Dynamic Radar Cruise Control System) (See page CC-128)
12. INSTALL FRONT BUMPER ENERGY ABSORBER (See page ET-10)
13. INSTALL FRONT BUMPER ASSEMBLY (See page ET-14)
14. INSTALL NO. 1 AIR CLEANER INLET (See page EM-48)
15. INSTALL AIR CLEANER INLET SUB-ASSEMBLY (See page EM-48)
16. INSTALL AIR CLEANER CAP SUB-ASSEMBLY (See page ES-522)
17. ADD ENGINE COOLANT (See page CO-6)
18. CHECK FOR ENGINE COOLANT LEAKS (See page CO-1)
19. CHARGE WITH REFRIGERANT (See page AC-127)
20. WARM UP COMPRESSOR (See page AC-128)
21. CHECK FOR REFRIGERANT LEAKS (See page AC-128)
22. INSTALL COOL AIR INTAKE DUCT SEAL (See page EM-50)
23. INSTALL ENGINE ROOM SIDE COVER LH (See page WW-47)
24. INSTALL ENGINE ROOM SIDE COVER RH (See page WW-47)
25. INSTALL V-BANK COVER SUB-ASSEMBLY (See page EM-49)
26. INSTALL ENGINE UNDER COVER LH
27. INSTALL ENGINE UNDER COVER RH
28. INSTALL FRONT WHEEL OPENING EXTENSION PAD LH
29. INSTALL FRONT WHEEL OPENING EXTENSION PAD RH
30. ADJUST MILLIMETER WAVE RADAR SENSOR (w/ Dynamic Radar Cruise Control System) (See page CC-122)
31. VEHICLE PREPARATION FOR FOG LIGHT AIM ADJUSTMENT (See page LI-141)

32. **PREPARATION FOR FOG LIGHT AIMING (See page LI-142)**
33. **FOG LIGHT AIMING INSPECTION (See page LI-143)**
34. **FOG LIGHT AIMING ADJUSTMENT (See page LI-144)**

A/C Room Temperature Sensor Connector Front View:

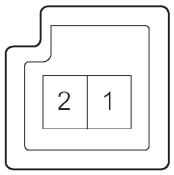

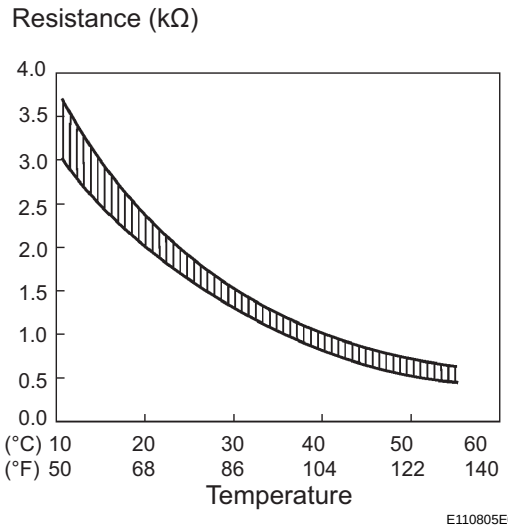

INSPECTION

1. INSPECT ROOM TEMPERATURE SENSOR

(a) Measure the resistance according to the value(s) in the table below.

Standard resistance

Tester Connection	Condition	Specified Condition
1 - 2	10°C (50°F)	3.00 to 3.73 kΩ
1 - 2	15°C (59°F)	2.45 to 2.88 kΩ
1 - 2	20°C (68°F)	1.95 to 2.30 kΩ
1 - 2	15°C (77°F)	1.60 to 1.80 kΩ
1 - 2	30°C (86°F)	1.28 to 1.47 kΩ
1 - 2	35°C (95°F)	1.00 to 1.22 kΩ
1 - 2	40°C (104°F)	0.80 to 1.00 kΩ
1 - 2	45°C (113°F)	0.65 to 0.85 kΩ
1 - 2	50°C (122°F)	0.50 to 0.70 kΩ
1 - 2	55°C (131°F)	0.44 to 0.60 kΩ
1 - 2	60°C (140°F)	0.36 to 0.50 kΩ

NOTICE:

- **Hold the sensor only by its connector. Touching the sensor may change the resistance value.**
- **When measuring, the sensor temperature must be the same as the ambient temperature.**

HINT:

As the temperature increases, the resistance decreases (see the graph).

If the resistance is not as specified, replace the room temperature sensor.

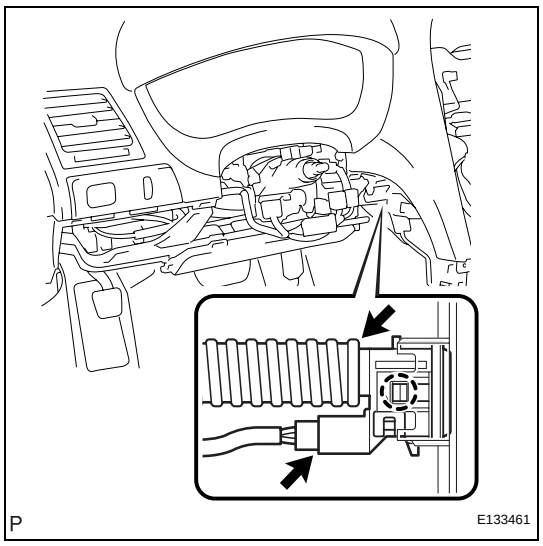

INSTALLATION

1. INSTALL ROOM TEMPERATURE SENSOR

(a) Engage the claw to install the sensor.

(b) Connect the connector and attach the air hose.

2. INSTALL LOWER INSTRUMENT PANEL SUB-ASSEMBLY (See page IP-46)

3. INSTALL INSTRUMENT PANEL FINISH PANEL END LH (See page IP-46)

4. INSTALL SIDE INSTRUMENT PANEL LH (See page IP-47)

5. INSTALL FRONT DOOR OPENING TRIM COVER LH (See page IR-64)

6. INSTALL FRONT DOOR SCUFF PLATE LH (See page IR-65)

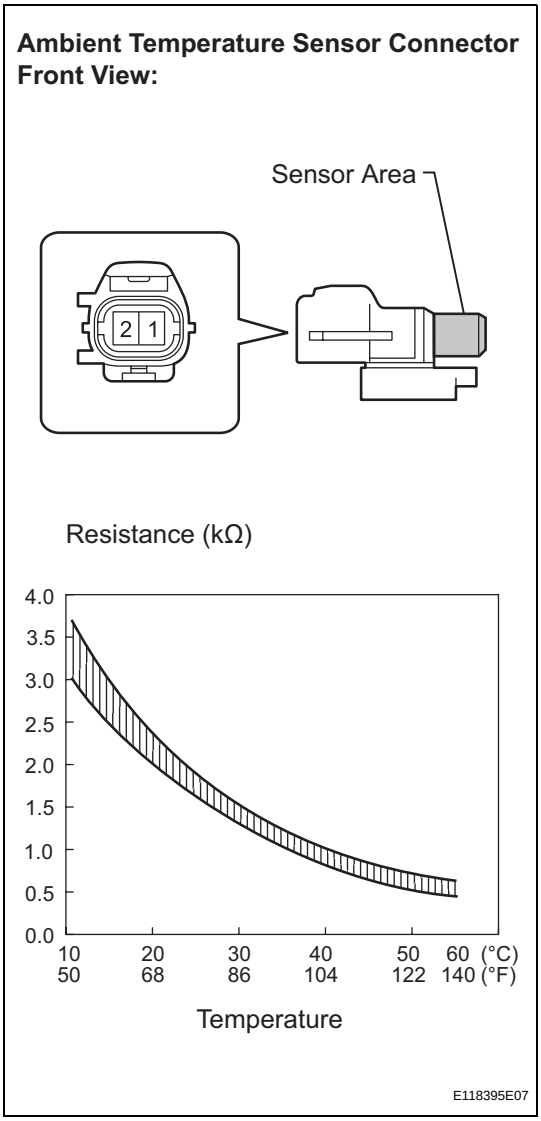

INSPECTION

1. INSPECT AMBIENT TEMPERATURE SENSOR

(a) Measure the resistance according to the value(s) in the table below.

Standard resistance

Tester Connection	Condition	Specified Condition
1 - 2	10°C (50°F)	3.00 to 3.73 kΩ
1 - 2	15°C (59°F)	2.45 to 2.88 kΩ
1 - 2	20°C (68°F)	1.95 to 2.30 kΩ
1 - 2	25°C (77°F)	1.60 to 1.80 kΩ
1 - 2	30°C (86°F)	1.28 to 1.47 kΩ
1 - 2	35°C (95°F)	1.00 to 1.22 kΩ
1 - 2	40°C (104°F)	0.80 to 1.00 kΩ
1 - 2	45°C (113°F)	0.65 to 0.85 kΩ
1 - 2	50°C (122°F)	0.50 to 0.70 kΩ
1 - 2	55°C (131°F)	0.44 to 0.60 kΩ
1 - 2	60°C (140°F)	0.36 to 0.50 kΩ

NOTICE:

- **Even slightly touching the sensor may change the resistance value. Be sure to hold the connector of the sensor.**
- **When measuring, the sensor temperature must be the same as the ambient temperature.**

HINT:

As the temperature increases, the resistance decreases (see the graph).

If the resistance is not as specified, replace the ambient temperature sensor.

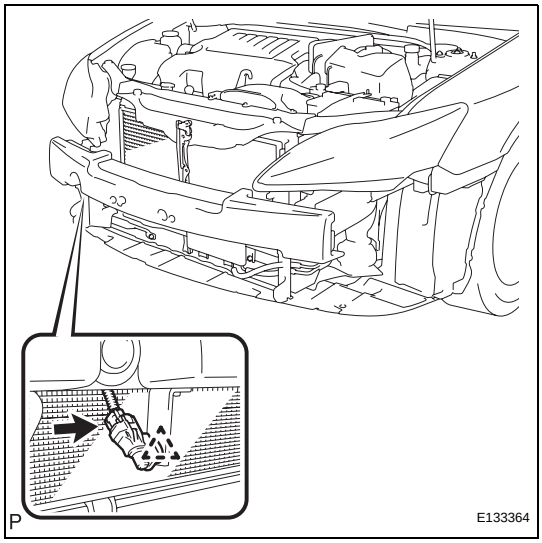

INSTALLATION

1. INSTALL AMBIENT TEMPERATURE SENSOR

(a) Install the ambient temperature sensor with the clamp.

(b) Connect the connector.

2. INSTALL FRONT BUMPER ASSEMBLY (See page ET-14)

3. INSTALL COOL AIR INTAKE DUCT SEAL (See page ET-14)

DTC	B2006	Short to GND in Seat Belt Motor LH Circuit

DESCRIPTION

The seat belt control ECU receives information from the distance control ECU using CAN communication and tightens the seat belt by operating the motor in the front seat outer belt assembly LH.

CAUTION:

The pretensioner is built into the front seat outer belt assembly LH. Be sure to follow the correct inspection procedure, as failure to follow the correct procedure (such as inspection of incorrect connectors) may deploy the pretensioner.

DTC No.	DTC Detection Condition	Trouble Area
B2006	• Short to ground in seat belt motor LH circuit continues for 1 second or more • Short in seat belt motor LH circuit	• Front seat outer belt assembly LH • Wire harness (Seat belt control ECU - front seat outer belt assembly LH) • Seat belt control ECU

WIRING DIAGRAM

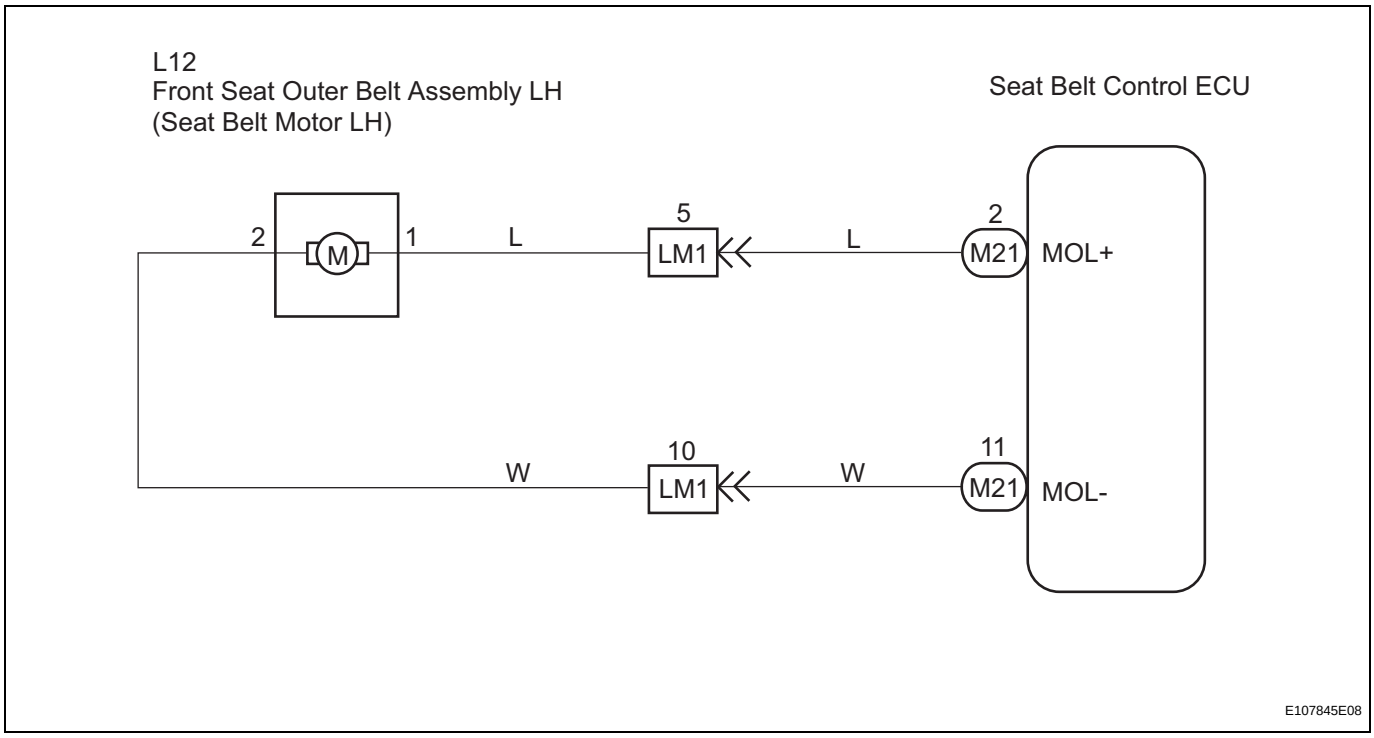

INSPECTION PROCEDURE

NOTICE:

When the seat belt control ECU is replaced with a new one, INITIALIZATION must be performed. (See page PC-11)

1 INSPECT FRONT SEAT OUTER BELT ASSEMBLY LH

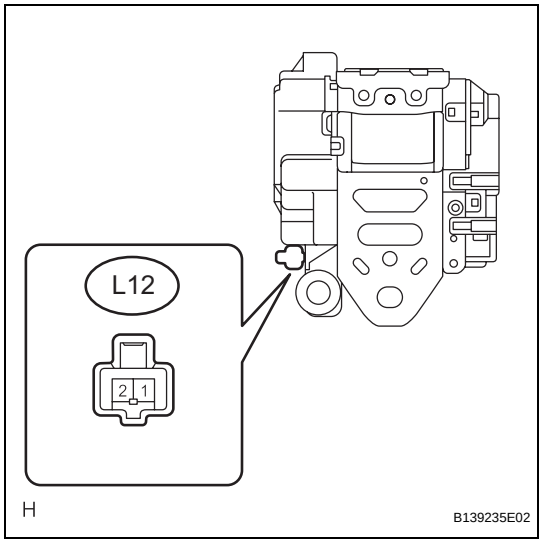

(a) Disconnect the L12 connector of the front seat outer belt assembly LH.
(b) Measure the resistance according to the value(s) in the table below.

Standard resistance

Tester Connection	Condition	Specified Condition
L12-1 - Body ground	Always	1 MΩ or higher
L12-2 - Body ground	Always	1 MΩ or higher

NG → **REPLACE FRONT SEAT OUTER BELT ASSEMBLY LH (See page SB-27)**

OK

2 CHECK HARNESS AND CONNECTOR (FRONT SEAT OUTER BELT ASSEMBLY - SEAT BELT CONTROL ECU)

Wire Harness Side Connector Front View:

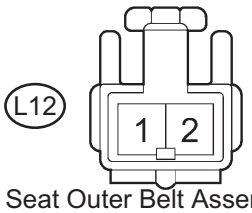

Front Seat Outer Belt Assembly LH

H045168E21

(a) Disconnect the negative (-) battery terminal.
(b) Disconnect the M21 connector of the seat belt control ECU.
(c) Measure the resistance according to the value(s) in the table below.

Standard resistance

Tester Connection	Condition	Specified Condition
L12-1 - Body ground	Always	1 MΩ or higher
L12-2 - Body ground	Always	1 MΩ or higher
L12-1 - L12-2	Always	1 MΩ or higher

NG → **REPAIR OR REPLACE HARNESS OR CONNECTOR**

OK

REPLACE SEAT BELT CONTROL ECU (See page SB-64)

DTC	B2007	Open in Seat Belt Motor LH Circuit

DESCRIPTION

The seat belt control ECU receives information from the distance control ECU using CAN communication and tightens the seat belt by operating the motor in the front seat outer belt assembly LH.

CAUTION:

The pretensioner is built into the front seat outer belt assembly LH. Be sure to follow the correct inspection procedure, as failure to follow the correct procedure (such as inspection of incorrect connectors) may deploy the pretensioner.

DTC No.	DTC Detection Condition	Trouble Area
B2007	Open in seat belt motor LH circuit continues for 1 second or more	• Front seat outer belt assembly LH • Wire harness (seat belt control ECU - front seat outer belt assembly LH) • Seat belt control ECU

WIRING DIAGRAM

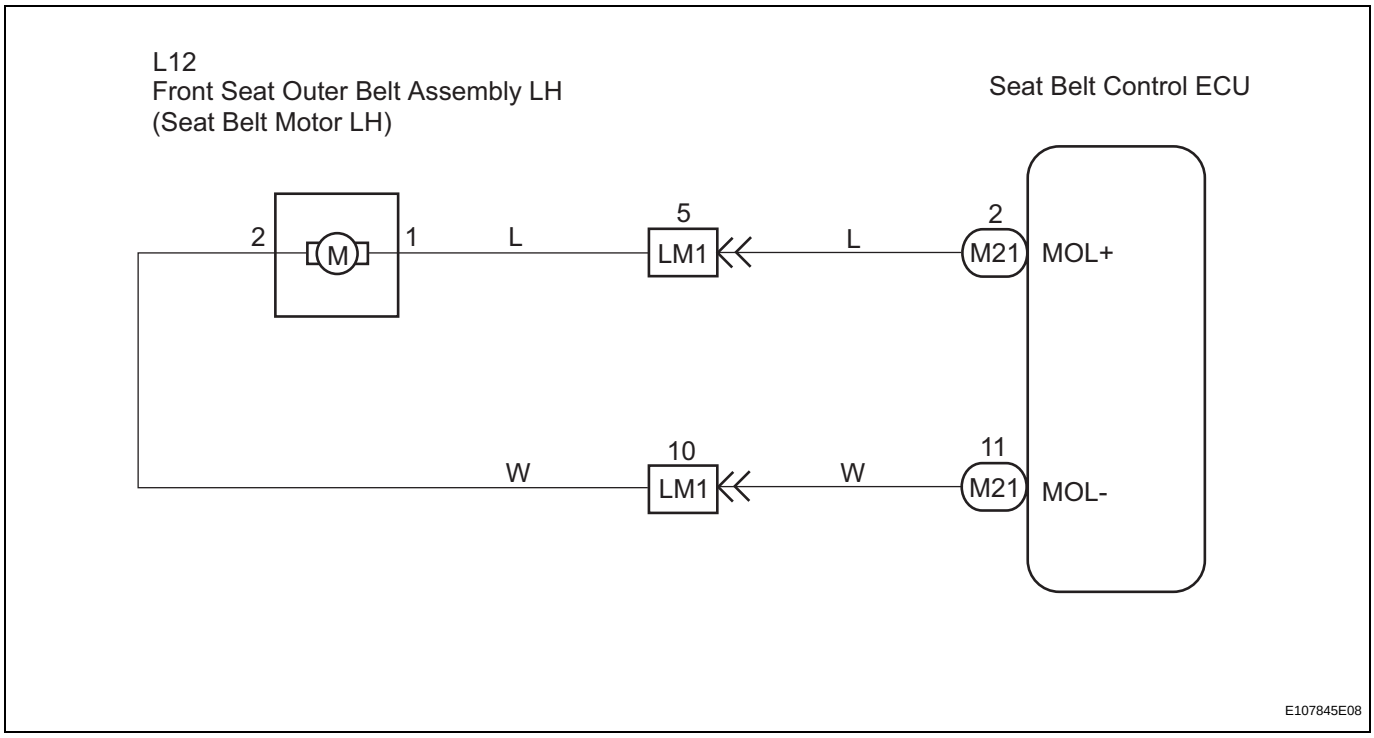

INSPECTION PROCEDURE

NOTICE:

When the seat belt control ECU is replaced with a new one, INITIALIZATION must be performed. (See page PC-11)

1 INSPECT FRONT SEAT OUTER BELT ASSEMBLY LH

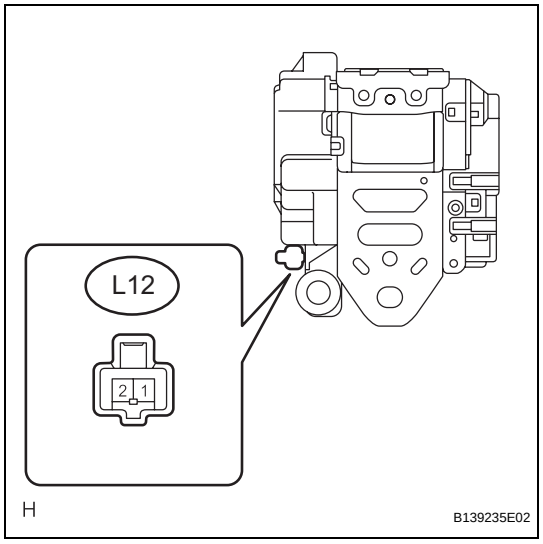

(a) Disconnect the L12 connector of the front seat outer belt assembly LH.
(b) Measure the resistance according to the value(s) in the table below.
Standard resistance

Tester Connection	Condition	Specified Condition
L12-1 - L12-2	Always	Below 1 MΩ

NG → **REPLACE FRONT SEAT OUTER BELT ASSEMBLY LH (See page SB-27)**

OK

2 CHECK HARNESS AND CONNECTOR (FRONT SEAT OUTER BELT ASSEMBLY LH - SEAT BELT CONTROL ECU)

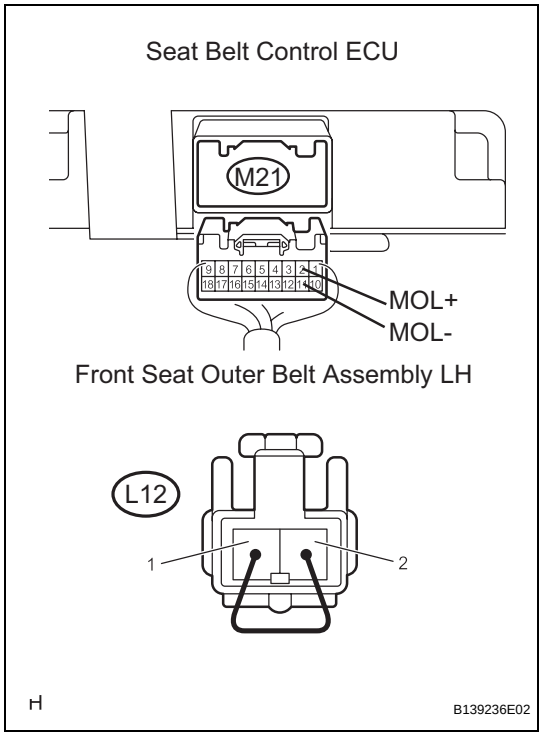

(a) Disconnect the negative (-) battery terminal.
(b) Disconnect the M21 connector of the seat belt control ECU.
(c) Using a service wire, connect L12-1 and L12-2 of the connector on the front seat outer belt assembly LH side.
NOTICE:
Do not forcibly insert the service wire into the terminals of the connector.
(d) Measure the resistance according to the value(s) in the table below.
Standard resistance

Tester Connection	Condition	Specified Condition
M21-2 (MOL+) - M21-11 (MOL-)	Always	Below 1 Ω

NG → **REPAIR OR REPLACE HARNESS OR CONNECTOR**

OK

REPLACE SEAT BELT CONTROL ECU (See page SB-64)

DTC	B2015	Open in Right Side Upper MOS
DTC	B2016	Open in Right Side Lower MOS
DTC	B2020	Open in Left Side Upper MOS
DTC	B2021	Open in Left Side Lower MOS
DTC	B2025	Right Side Current Detection Circuit Malfunction Hi
DTC	B2026	Right Side Current Detection Circuit Malfunction Lo
DTC	B2027	Right Side Over-Current Malfunction
DTC	B2030	Left Side Current Detection Circuit Malfunction Hi
DTC	B2031	Left Side Current Detection Circuit Malfunction Lo
DTC	B2032	Left Side Over-Current Malfunction
DTC	B2036	Power Supply Relay Malfunction Open
DTC	B2040	EEPROM Malfunction
DTC	B2041	Fall of Raised Voltage
DTC	B2043	Fall of B+ Voltage
DTC	B2047	Seat Belt Control ECU Inner Circuit Malfunction

DESCRIPTION

The DTCs above are output during the seat belt control ECU's self diagnosis.

DTC No.	DTC Detection Condition	Trouble Area
B2015	Open in right side upper MOS	Seat belt control ECU
B2016	Open in right side lower MOS	Seat belt control ECU
B2020	Open in left side upper MOS	Seat belt control ECU
B2021	Open in left side lower MOS	Seat belt control ECU
B2025	Malfunction in right side current detection HI circuit	Seat belt control ECU

DTC No.	DTC Detection Condition	Trouble Area
B2026	Malfunction in right side current detection LO circuit	Seat belt control ECU
B2027	Over-current in right side circuit	Seat belt control ECU
B2030	Malfunction in left side current detection HI circuit	Seat belt control ECU
B2031	Malfunction in left side current detection LO circuit	Seat belt control ECU
B2032	Over-current in left side circuit	Seat belt control ECU
B2036	Open in power supply relay	Seat belt control ECU
B2040	EEPROM malfunction	Seat belt control ECU
B2041	Decline in raised voltage	Seat belt control ECU
B2043	Fall of B+ voltage	Seat belt control ECU
B2047	Malfunction in the inner circuit of the seat belt control ECU	Seat belt control ECU

INSPECTION PROCEDURE

NOTICE:

When the seat belt control ECU is replaced with a new one, INITIALIZATION must be performed. (See page PC-11)

1 CHECK DTC OUTPUT

(a) Turn the engine switch on (IG).
(b) Clear the DTCs stored in memory (See page PC-14).
(c) Turn the engine switch off.
(d) Turn the engine switch on (IG).
(e) Check for the DTCs (See page PC-14).
OK:
No DTC is output.

NG → **REPLACE SEAT BELT CONTROL ECU (See page SB-64)**

OK

USE SIMULATION METHOD TO CHECK

DTC	B2035	Power Supply Relay Adherence Malfunction

DESCRIPTION

The DTC is output during the power supply relay adherence malfunction in the seat belt control ECU.

DTC No.	DTC Detection Condition	Trouble Area
B2035	Adherence in power supply relay	• Front seat outer belt assembly RH • Front seat outer belt assembly LH • Wire harness (seat belt control ECU - front seat outer belt assembly RH) • Wire harness (seat belt control ECU - front seat outer belt assembly LH) • Seat belt control ECU

WIRING DIAGRAM

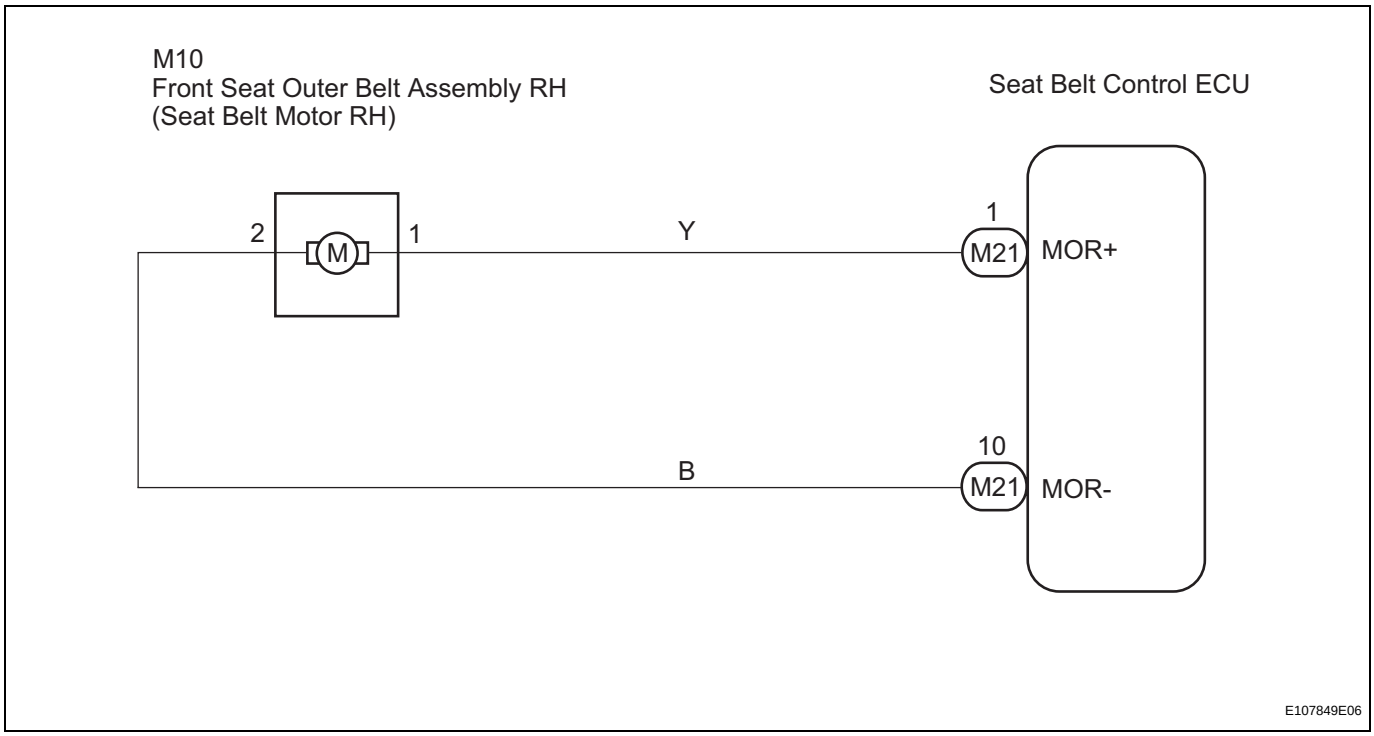

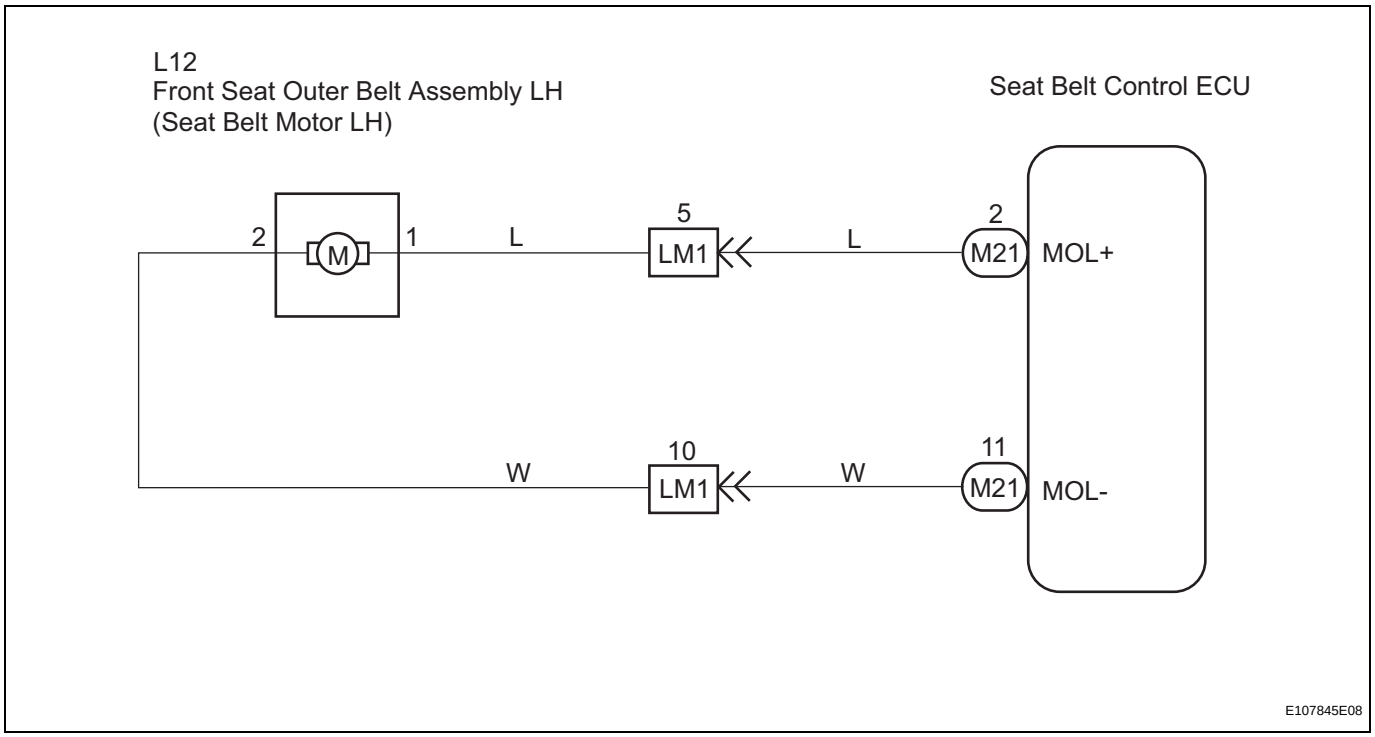

INSPECTION PROCEDURE

NOTICE:

When the seat belt control ECU is replaced with a new one, INITIALIZATION must be performed. (See page PC-11)

1	INSPECT FRONT SEAT OUTER BELT ASSEMBLY RH

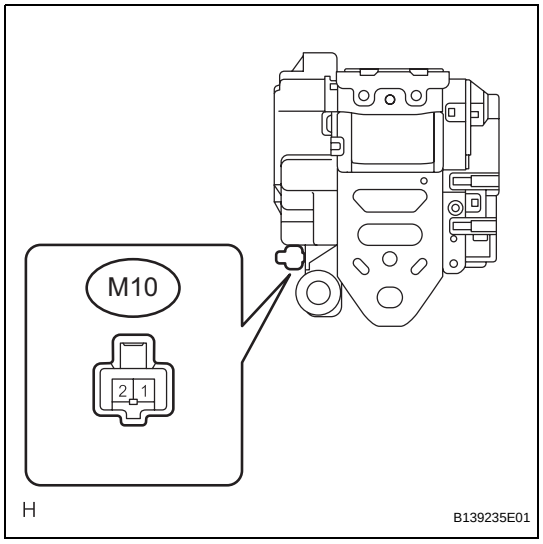

(a) Disconnect the M10 connector of the front seat outer belt assembly RH.

(b) Measure the voltage according to the value(s) in the table below.

Standard voltage

Tester Connection	Condition	Specified Condition
M10-1 - Body ground	Engine switch on (IG)	Below 1 V
M10-2 - Body ground	Engine switch on (IG)	Below 1 V

NG → **REPLACE FRONT SEAT OUTER BELT ASSEMBLY RH (See page SB-27)**

OK

2 INSPECT FRONT SEAT OUTER BELT ASSEMBLY LH

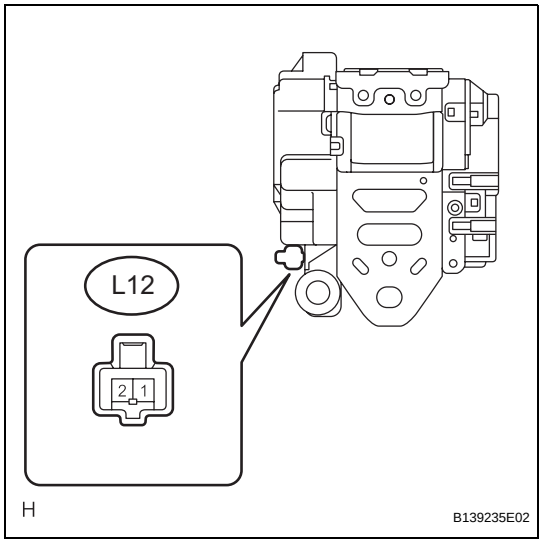

(a) Disconnect the L12 connector of the front seat outer belt assembly LH.
(b) Measure the voltage according to the value(s) in the table below.

Standard voltage

Tester Connection	Condition	Specified Condition
L12-1 - Body ground	Engine switch on (IG)	Below 1 V
L12-2 - Body ground	Engine switch on (IG)	Below 1 V

NG → **REPLACE FRONT SEAT OUTER BELT ASSEMBLY LH (See page SB-27)**

OK

3 CHECK HARNESS AND CONNECTOR (FRONT SEAT BELT ASSEMBLY RH - SEAT BELT CONTROL ECU)

Wire Harness Side Connector Front View:

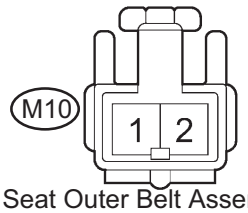

Front Seat Outer Belt Assembly RH

H045168E20

(a) Disconnect the negative (-) battery terminal.
(b) Disconnect the M21 connector of the seat belt control ECU.
(c) Connect the negative (-) terminal to the battery.
(d) Measure the voltage according to the value(s) in the table below.

Standard voltage

Tester Connection	Condition	Specified Condition
M10-1 - Body ground	Engine switch on (IG)	Below 1 V
M10-2 - Body ground	Engine switch on (IG)	Below 1 V

NG → **REPAIR OR REPLACE HARNESS OR CONNECTOR**

OK

4	CHECK HARNESS AND CONNECTOR (FRONT SEAT BELT ASSEMBLY LH - SEAT BELT CONTROL ECU)

Wire Harness Side Connector Front View:

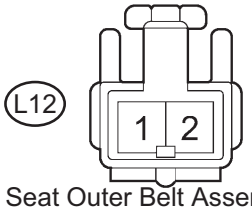

Front Seat Outer Belt Assembly LH

H045168E21

(a) Disconnect the negative (-) battery terminal.
(b) Disconnect the M21 connector of the seat belt control ECU.
(c) Connect the negative (-) terminal to the battery.
(d) Measure the voltage according to the value(s) in the table below.

Standard voltage

Tester Connection	Condition	Specified Condition
L12-1 - Body ground	Engine switch on (IG)	Below 1 V
L12-2 - Body ground	Engine switch on (IG)	Below 1 V

NG → **REPAIR OR REPLACE HARNESS OR CONNECTOR**

OK

5	CHECK DTC OUTPUT

(a) Turn the engine switch on (IG).
(b) Clear the DTCs stored in memory (See page PC-14).
(c) Turn the engine switch off.
(d) Turn the engine switch on (IG).
(e) Check for DTCs (See page PC-14).

OK:

No DTC is output.

NG → **REPLACE SEAT BELT CONTROL ECU (See page SB-64)**

OK

USE SIMULATION METHOD TO CHECK

DTC	B2055	Radar Sensor Malfunction

DESCRIPTION

This DTC is output when one of the following occurs: 1) an error in communication with the millimeter wave radar sensor assembly is detected, or 2) vehicle information sent from the radar sensor assembly is abnormal. If output, perform initialization of the radar sensor assembly to register the vehicle information to the radar sensor assembly.

DTC No.	DTC Detection Condition	Trouble Area
B2055	Radar sensor assembly malfunction is detected or initialization settings are faulty	• Millimeter wave radar sensor • Seat belt control ECU

INSPECTION PROCEDURE

NOTICE:

When the seat belt control ECU is replaced with a new one, INITIALIZATION must be performed. (See page PC-11)

1	CHECK DTC OUTPUT (DYNAMIC RADAR CRUISE CONTROL SYSTEM)

(a) Delete the DTC (See page PC-14).
(b) Recheck for DTCs.
OK:
DTC P1570 is not output.

NG → **GO TO DYNAMIC RADAR CRUISE CONTROL SYSTEM (See page CC-65)**

OK

2	CHECK DTC OUTPUT (PRE-COLLISION SYSTEM)

(a) Delete the DTC (See page PC-14).
(b) Recheck for DTCs.
OK:
DTC B2055 is not output.

NG → **REPLACE SEAT BELT CONTROL ECU (See page SB-64)**

OK

USE SIMULATION METHOD TO CHECK

DTC	B2056	Axial Gap of Radar Sensor

DESCRIPTION

DTC No.	DTC Detection Condition	Trouble Area
B2056	Radar sensor assembly malfunction is detected or initialization settings are faulty	• Millimeter wave radar sensor (axial adjustment) • Seat belt control ECU

INSPECTION PROCEDURE

NOTICE:

When the seat belt control ECU is replaced with a new one, INITIALIZATION must be performed. (See page PC-11)

1 CHECK DTC OUTPUT (DYNAMIC RADAR CRUISE CONTROL SYSTEM)

(a) Delete the DTC (See page PC-14).
(b) Recheck for DTCs.
OK:
DTC P1572 is not output.

NG → **GO TO DYNAMIC RADAR CRUISE CONTROL SYSTEM (See page CC-65)**

OK

2 CHECK DTC OUTPUT (PRE-COLLISION SYSTEM)

(a) Delete the DTC (See page PC-14).
(b) Recheck for DTCs.
OK:
DTC B2056 is not output.

NG → **REPLACE SEAT BELT CONTROL ECU (See page SB-64)**

OK

USE SIMULATION METHOD TO CHECK

DTC	B2057	Yaw Rate Sensor

DESCRIPTION

This DTC is output when a malfunction in the yaw rate sensor is detected. This circuit consists of the yaw rate sensor and seat belt control ECU. Signals are sent from the yaw rate sensor using CAN communication.

DTC No.	DTC Detection Condition	Trouble Area
B2057	Malfunction in yaw rate sensor	• Yaw rate sensor • Seat belt control ECU

INSPECTION PROCEDURE

NOTICE:

When the seat belt control ECU is replaced with a new one, INITIALIZATION must be performed. (See page PC-11)

1	CHECK DTC OUTPUT (CAN COMMUNICATION SYSTEM)

(a) Delete the DTC (See page PC-14).
(b) Recheck for DTCs.
OK:
DTC U0123 is not output.

NG → **GO TO CAN COMMUNICATION SYSTEM (See page CA-49)**

OK

2	CHECK DTC OUTPUT (BRAKE CONTROL SYSTEM)

(a) Delete the DTC (See page PC-14).
(b) Recheck for DTCs.
OK:
DTC C1234 is not output.

NG → **GO TO BRAKE CONTROL SYSTEM (See page BC-52)**

OK

3	CHECK DTC OUTPUT (PRE-COLLISION SYSTEM)

(a) Delete the DTC (See page PC-14).
(b) Recheck for DTCs.
OK:
DTC B2057 is not output.

NG → **REPLACE SEAT BELT CONTROL ECU (See page SB-64)**

OK

USE SIMULATION METHOD TO CHECK

DTC	B2058	Steering Angle Sensor

DESCRIPTION

This DTC is output when a malfunction in the steering angle sensor is detected. This circuit consists of the steering angle sensor and seat belt control ECU. Signals are sent from the steering sensor using CAN communication.

DTC No.	DTC Detection Condition	Trouble Area
B2058	Malfunction in steering angle sensor is detected	• Steering angle sensor • Seat belt control ECU

INSPECTION PROCEDURE

NOTICE:

When the seat belt control ECU is replaced with a new one, INITIALIZATION must be performed. (See page PC-11)

1 CHECK DTC OUTPUT (CAN COMMUNICATION SYSTEM)

(a) Delete the DTC (See page PC-14).
(b) Recheck for DTCs.
OK:
DTC U0126 is not output.

NG → **GO TO CAN COMMUNICATION SYSTEM (See page CA-49)**

OK

2 CHECK DTC OUTPUT (BRAKE CONTROL SYSTEM)

(a) Delete the DTC (See page PC-14).
(b) Recheck for DTCs.
OK:
DTC C1231 is not output.

NG → **GO TO BRAKE CONTROL SYSTEM (See page BC-52)**

OK

3 CHECK DTC OUTPUT (PRE-COLLISION SYSTEM)

(a) Delete the DTC (See page PC-14).
(b) Recheck for DTCs.
OK:
DTC B2058 is not output.

NG → **REPLACE SEAT BELT CONTROL ECU (See page SB-64)**

OK

USE SIMULATION METHOD TO CHECK

DTC	B2059	Vehicle Speed Malfunction

DESCRIPTION

The distance control ECU uses the combination meter to send vehicle speed information to the ECM. The ECM and the skid control ECU use CAN communication to send vehicle speed information to the distance control ECU. This DTC is output when the difference between the vehicle speed information from the ECM and the skid control ECU is more than the specified value.

DTC No.	DTC Detection Condition	Trouble Area
B2059	Difference between vehicle speed information from ECM and ABS & traction actuator assembly is more than specified value	• Combination meter assembly • ECM • Skid control ECU • Distance control ECU • Seat belt control ECU

INSPECTION PROCEDURE

NOTICE:

When the distance control ECU is replaced with a new one, INITIALIZATION must be performed. (See page PC-11)

1	CHECK DTC OUTPUT (CAN COMMUNICATION SYSTEM)

(a) Delete the DTC (See page PC-14).
(b) Recheck for DTCs.
OK:
DTC U0100, U0122 or U1101 is not output.

NG → **GO TO CAN COMMUNICATION SYSTEM (See page CA-49)**

OK

2	CHECK DTC OUTPUT (ENGINE CONTROL SYSTEM)

(a) Delete the DTC (See page PC-14).
(b) Recheck for DTCs.
OK:
DTC P0500 is not output.

NG → **GO TO ENGINE CONTROL SYSTEM (See page ES-59)**

OK

3	CHECK DTC OUTPUT (BRAKE CONTROL SYSTEM)

(a) Delete the DTC (See page PC-14).
(b) Recheck for DTCs.
OK:
DTC C0200, C0205, C0210, C0215, C1235, C1236, C1238 or C1239 is not output.

NG → **GO TO BRAKE CONTROL SYSTEM (See page BC-52)**

OK

4 READ VALUE OF INTELLIGENT TESTER

(a) Operate the intelligent tester according to the steps on the display and select the "DATA LIST".

COMBINATION METER

Tester Display	Measurement item /Range	Normal Condition	Diagnostic Note
SPEED METER	Vehicle speed/Min: 0 km/h (0 mph), Max: 255 km/h (158 mph)	Almost same as actual vehicle speed (When driving)	-

OK:
Vehicle speed displayed on the tester is almost the same as the actual vehicle speed.

NG → **GO TO COMBINATION METER SYSTEM (See page ME-14)**

OK

5 REPLACE DISTANCE CONTROL ECU ASSEMBLY

(a) Replace the distance control ECU assembly (See page CC-118).

NEXT

6 CHECK DTC OUTPUT (PRE-COLLISION SYSTEM)

(a) Delete the DTC (See page PC-14).
(b) Recheck for DTCs.
OK:
DTC B2059 is not output.

NG → **REPLACE SEAT BELT CONTROL ECU (See page SB-64)**

OK

END

DTC	B2060	ABS Malfunction

DESCRIPTION

This DTC is output when a malfunction in the brake system is detected. This circuit consists of the skid control ECU and seat belt control ECU. Signals are sent from the skid control ECU using the CAN communication.

DTC No.	DTC Detection Condition	Trouble Area
B2060	Malfunction in brake system is detected	• Skid control ECU • Seat belt control ECU

INSPECTION PROCEDURE

NOTICE:

When the seat belt control ECU is replaced with a new one, INITIALIZATION must be performed. (See page PC-11)

1 CHECK DTC OUTPUT (CAN COMMUNICATION SYSTEM)

(a) Delete the DTC (See page PC-14).
(b) Recheck for DTCs.
OK:
DTC U0122 is not output.

NG → **GO TO CAN COMMUNICATION SYSTEM (See page CA-49)**

OK

2 CHECK DTC OUTPUT (BRAKE CONTROL SYSTEM)

(a) Delete the DTC (See page PC-14).
(b) Recheck for DTCs.
OK:
DTC is not output.

NG → **GO TO BRAKE CONTROL SYSTEM (See page BC-52)**

OK

3 CHECK DTC OUTPUT (PRE-COLLISION SYSTEM)

(a) Delete the DTC (See page PC-14).
(b) Recheck for DTCs.
OK:
DTC B2060 is not output.

NG → **REPLACE SEAT BELT CONTROL ECU (See page SB-64)**

OK

USE SIMULATION METHOD TO CHECK

DTC	B2065	Distance Control ECU Malfunction

DESCRIPTION

DTC No.	DTC Detection Condition	Trouble Area
B2065	Distance control ECU assembly setting is faulty	• Distance control ECU • Seat belt control ECU

INSPECTION PROCEDURE

NOTICE:

When the seat belt control ECU is replaced with a new one, Active Test must be performed. (See page PC-11)

1	CHECK DTC OUTPUT (DYNAMIC RADAR CRUISE CONTROL SYSTEM)

(a) Delete the DTC (See page PC-14).
(b) Check for DTCs.
OK:
DTC P1617 is not output.

NG → **GO TO DYNAMIC RADAR CRUISE CONTROL SYSTEM (See page CC-65)**

OK

2	CHECK DTC OUTPUT (PRE-COLLISION SYSTEM)

(a) Delete the DTC (See page PC-14).
(b) Recheck for DTCs.
OK:
DTC B2065 is not output.

NG → **REPLACE SEAT BELT CONTROL ECU (See page SB-64)**

OK

USE SIMULATION METHOD TO CHECK

DTC	B2074	Driver Side Seat Belt Buckle Switch Circuit Malfunction

DTC	B2075	Passenger Side Seat Belt Buckle Switch Circuit Malfunction

DESCRIPTION

This DTC is output when a malfunction is detected in the driver's side buckle switch circuit or passenger's side buckle switch circuit.

DTC No.	DTC Detection Condition	Trouble Area
B2074	Malfunction in front seat belt inner LH	• Wire harness • Front seat inner belt LH assembly • Center airbag sensor assembly • Seat belt control ECU
B2075	Malfunction in front seat belt inner RH	• Wire harness • Front seat inner belt RH assembly • Occupant classification ECU • Center airbag sensor assembly • Seat belt control ECU

WIRING DIAGRAM

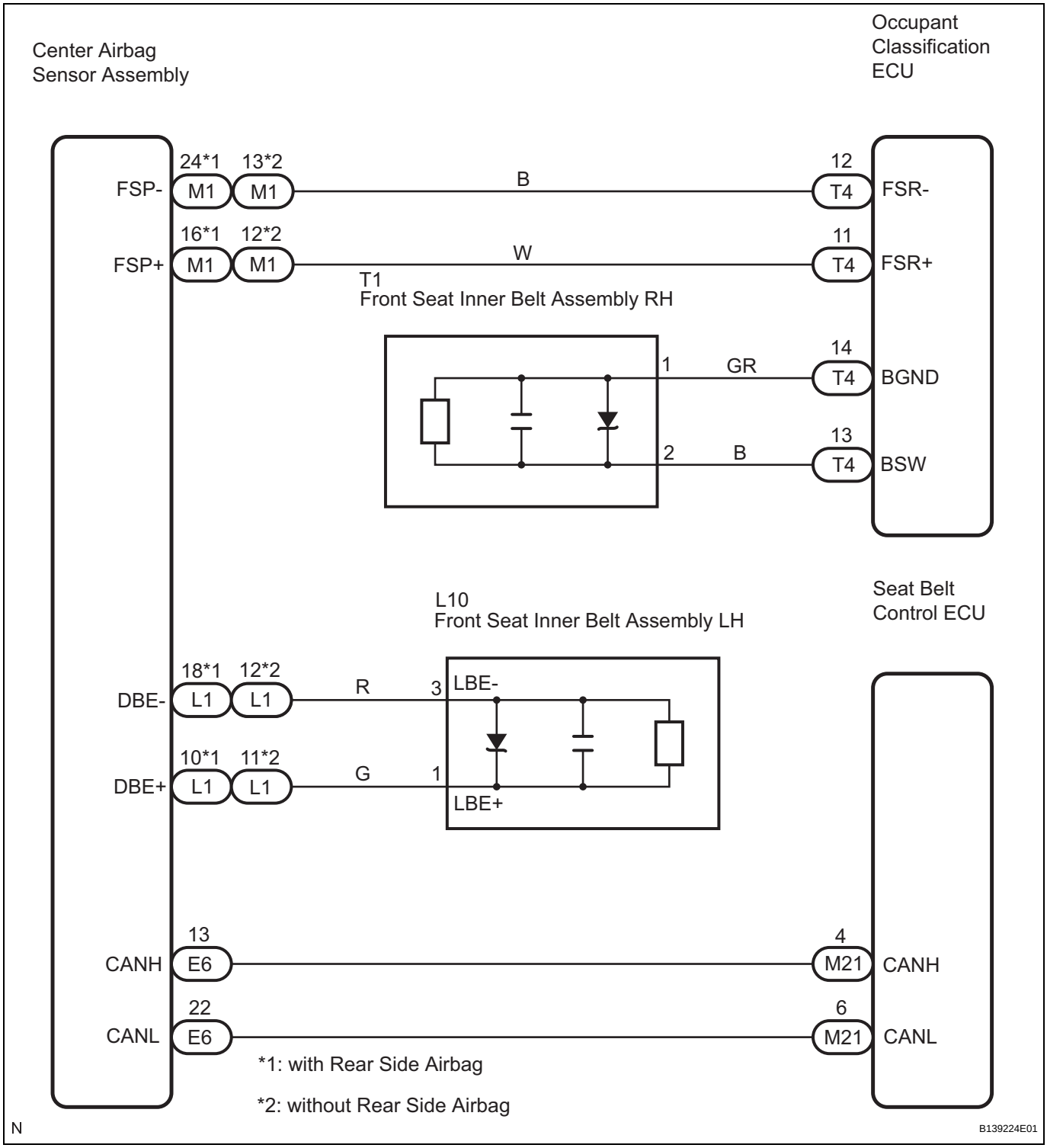

INSPECTION PROCEDURE

NOTICE:

When the seat belt control ECU is replaced with a new one, INITIALIZATION must be performed. (See page PC-11)

PC

1	CHECK DTC OUTPUT (CAN COMMUNICATION SYSTEM)

(a) Delete the DTC (See page PC-14).

(b) Recheck for DTCs.
OK:
DTC U0151 is not output.

NG → **GO TO CAN COMMUNICATION SYSTEM (See page CA-49)**

OK

2	CHECK DTC OUTPUT (SUPPLEMENTAL RESTRAINT SYSTEM)

(a) Delete the DTC (See page RS-49).
(b) Recheck for DTCs.
OK:
DTC B1655 is not output.

NG → **GO TO SUPPLEMENTAL RESTRAINT SYSTEM (See page RS-53)**

OK

3	CHECK DTC OUTPUT (OCCUPANT CLASSIFICATION SYSTEM)

(a) Delete the DTC (See page RS-318).
(b) Recheck for DTCs.
OK:
DTC B1771 is not output.

NG → **GO TO OCCUPANT CLASSIFICATION SYSTEM (See page RS-320)**

OK

4	CHECK DTC OUTPUT (PRE-COLLISION SYSTEM)

(a) Delete the DTC (See page PC-14).
(b) Recheck for DTCs.
OK:
DTC B2074 or B2075 is not output.

NG → **REPLACE SEAT BELT CONTROL ECU (See page SB-64)**

OK

USE SIMULATION METHOD TO CHECK

DTC	U0100	Lost Communication with ECM/PCM "A"

DTC	U0122	Lost Communication with Vehicle Dynamics Control Module

DTC	U0151	Lost Communication with Airbag ECU

DTC	U1101	Lost Communication with Distance Control ECU

DESCRIPTION

The seat belt control ECU receives signals from the skid control ECU, center airbag sensor assembly, and distance control ECU via CAN communication system.
The distance control ECU receives signals from the ECM via CAN communication system.

DTC No.	DTC Detection Item	Inspection Area
U0100	ECM communication error	• CAN communication system • ECM • Distance control ECU
U0122	Skid control ECU communication error	• CAN communication system • Skid control ECU • Seat belt control ECU
U0151	Center airbag sensor communication error	• CAN communication system • Center airbag sensor assembly • Seat belt control ECU
U1101	Distance control ECU communication error	• CAN communication system • Distance control ECU • Seat belt control ECU

HINT:
When two or more DTCs starting with "U" are output simultaneously, inspect the connectors and wire harness of each ECU.

INSPECTION PROCEDURE

Refer to the U0100 (CAN communication system) (See page CA-137).
Refer to the U0122 (CAN communication system) (See page CA-126).
Refer to the U0151 (CAN communication system) (See page CA-144).
Refer to the U1101 (CAN communication system) (See page CC-82).

DTC	U0235	Lost Communication with Cruise Control Front Distance Range Sensor

DTC	U1102	Lost Communication with Radar Sensor

DESCRIPTION

The millimeter wave radar sensor and distance control ECU transmit the data for general vehicle control and diagnosis function along the communication line.

DTC No.	DTC Detection Condition	Trouble Area
U0235	ECM detects communication error signal from millimeter wave radar sensor to distance control ECU for 0.15 sec. or more while dynamic radar cruise control is in operation.	• CAN communication system • Millimeter wave radar sensor • Distance control ECU
U1102	ECM detects communication error signal (from distance control ECU to millimeter wave radar sensor to distance control ECU) for 0.15 sec. or more while dynamic radar cruise control is in operation.	• CAN communication system • Millimeter wave radar sensor • Distance control ECU

INSPECTION PROCEDURE

Refer to the U0235 (Dynamic radar cruise control system) (See page CC-85).
Refer to the U1102 (Dynamic radar cruise control system) (See page CC-88).

Power Source Circuit

DESCRIPTION

This circuit supplies power to the seat belt control ECU.

WIRING DIAGRAM

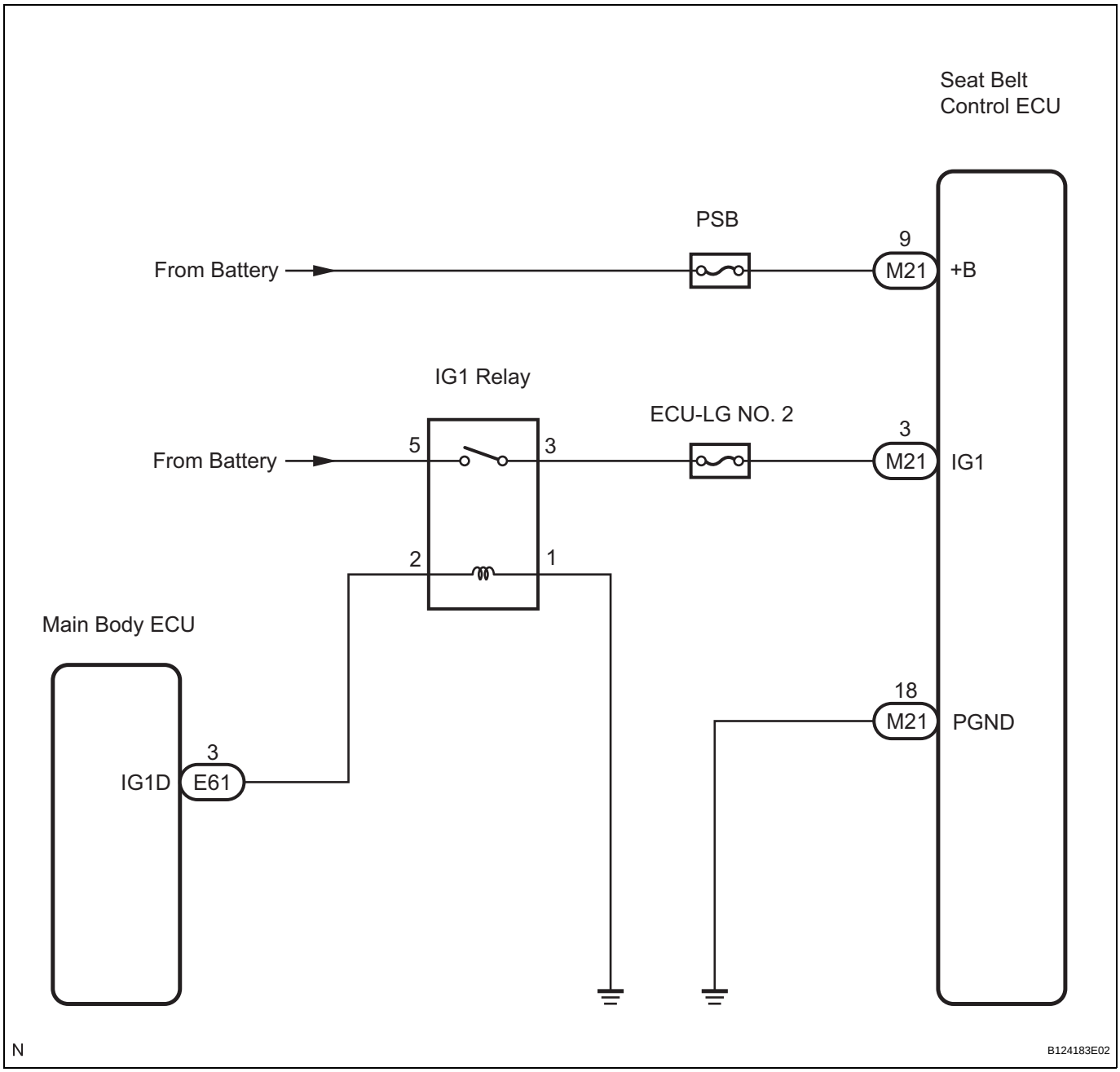

INSPECTION PROCEDURE

NOTICE:

When the seat belt control ECU is replaced with a new one, INITIALIZATION must be performed. (See page PC-11)

1 CHECK HARNESS AND CONNECTOR (POWER SOURCE CIRCUIT)

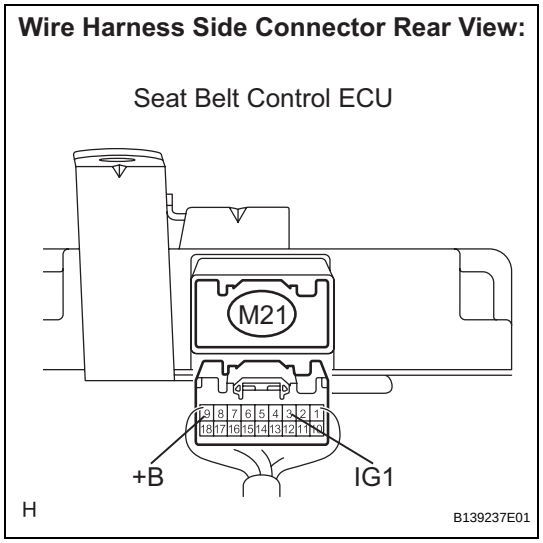

(a) Disconnect the negative (-) terminal cable from the battery.
(b) Disconnect the M21 seat belt control ECU connector.
(c) Connect the negative (-) terminal cable to the battery.
(d) Measure the voltage according to the value(s) in the table below.

Standard voltage

Tester Connection	Condition	Specified Condition
M21-3 (IG1) - Body ground	Engine switch off	Below 1 V
	Engine switch on (IG)	10 to 14 V
M21-9 (+B) - Body ground	Always	10 to 14 V

NG → **REPAIR OR REPLACE HARNESS OR CONNECTOR**

OK

2 CHECK HARNESS AND CONNECTOR (GROUND CIRCUIT)

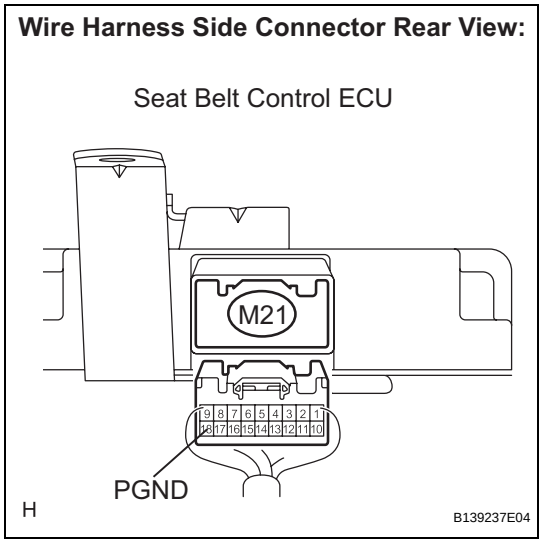

(a) Disconnect the negative (-) terminal cable from the battery.
(b) Measure the resistance according to the value(s) in the table below.

Standard resistance

Tester Connection	Condition	Specified Condition
M21-18 (PGND) - Body ground	Always	Below 1 Ω

NG → **REPAIR OR REPLACE HARNESS OR CONNECTOR**

OK

REPLACE SEAT BELT CONTROL ECU (See page SB-64)

DTC	B1610/13	Front Airbag Sensor RH Malfunction

DESCRIPTION

The front airbag sensor RH consists of the diagnostic circuit, the frontal deceleration sensor, etc.
If the center airbag sensor assembly receives signals from the frontal deceleration sensor, it determines whether the SRS should be activated.
DTC B1610/13 is recorded when a malfunction is detected in the front airbag sensor RH circuit.

RS

DTC No.	DTC Detection Condition	Trouble Area
B1610/13	• Front airbag sensor RH malfunction • Center airbag sensor assembly malfunction	• Front airbag sensor RH • Center airbag sensor assembly

WIRING DIAGRAM

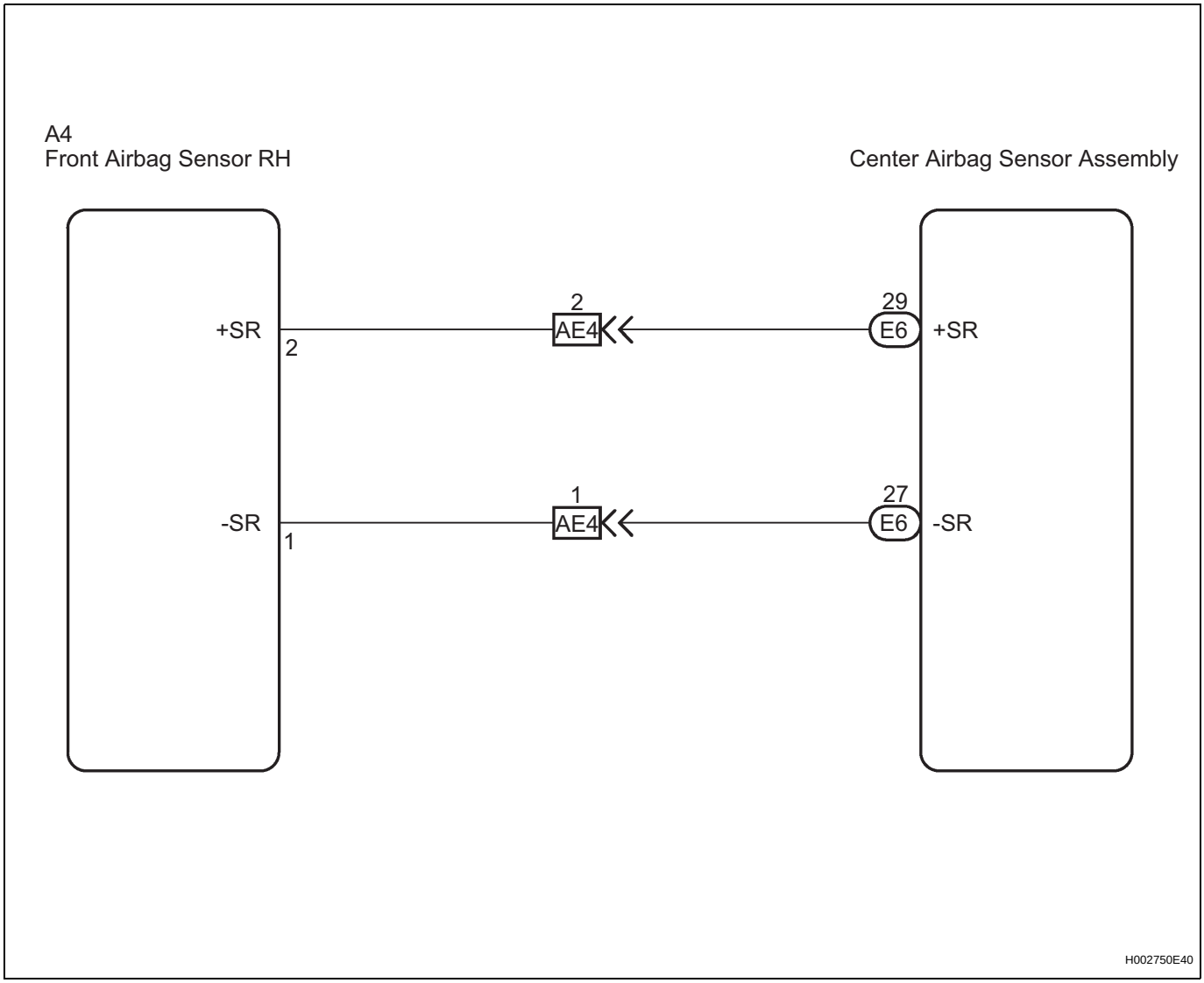

INSPECTION PROCEDURE

1	CHECK FRONT AIRBAG SENSOR RH

(a) Turn the engine switch off.

(b) Disconnect the negative (-) terminal cable from the battery, and wait for at least 90 seconds.
(c) Interchange the front airbag sensor LH with RH and connect the connectors to them.
(d) Connect the negative (-) terminal cable to the battery, and wait for at least 2 seconds.
(e) Turn the engine switch on (IG), and wait for at least 60 seconds.
(f) Clear the DTCs stored in the memory (See page RS-49).
(g) Turn the engine switch off.
(h) Turn the engine switch on (IG), and wait for at least 60 seconds.
(i) Check the DTCs (See page RS-49).

Result

Result	Proceed to
DTC B1610/13 is output.	A
DTC B1615/14 is output.	B
DTC B1610/13 and B1615/14 are not output.	C

HINT:
Codes other than DTC B1610/13 and B1615/14 may be output at this time, but they are not related to this check.

A → **REPLACE CENTER AIRBAG SENSOR ASSEMBLY (See page RS-468)**

B → **REPLACE FRONT AIRBAG SENSOR RH (See page RS-473)**

C

USE SIMULATION METHOD TO CHECK (See page RS-37)

DTC	B1615/14	Front Airbag Sensor LH Malfunction

DESCRIPTION

The front airbag sensor LH consists of the diagnostic circuit and the frontal deceleration sensor, etc.
If the center airbag sensor assembly receives signals from the frontal deceleration sensor, it determines whether the SRS should be activated.
DTC B1615/14 is recorded when a malfunction is detected in the front airbag sensor LH circuit.

RS

DTC No.	DTC Detection Condition	Trouble Area
B1615/14	• Front airbag sensor LH malfunction • Center airbag sensor assembly malfunction	• Front airbag sensor LH • Center airbag sensor assembly

WIRING DIAGRAM

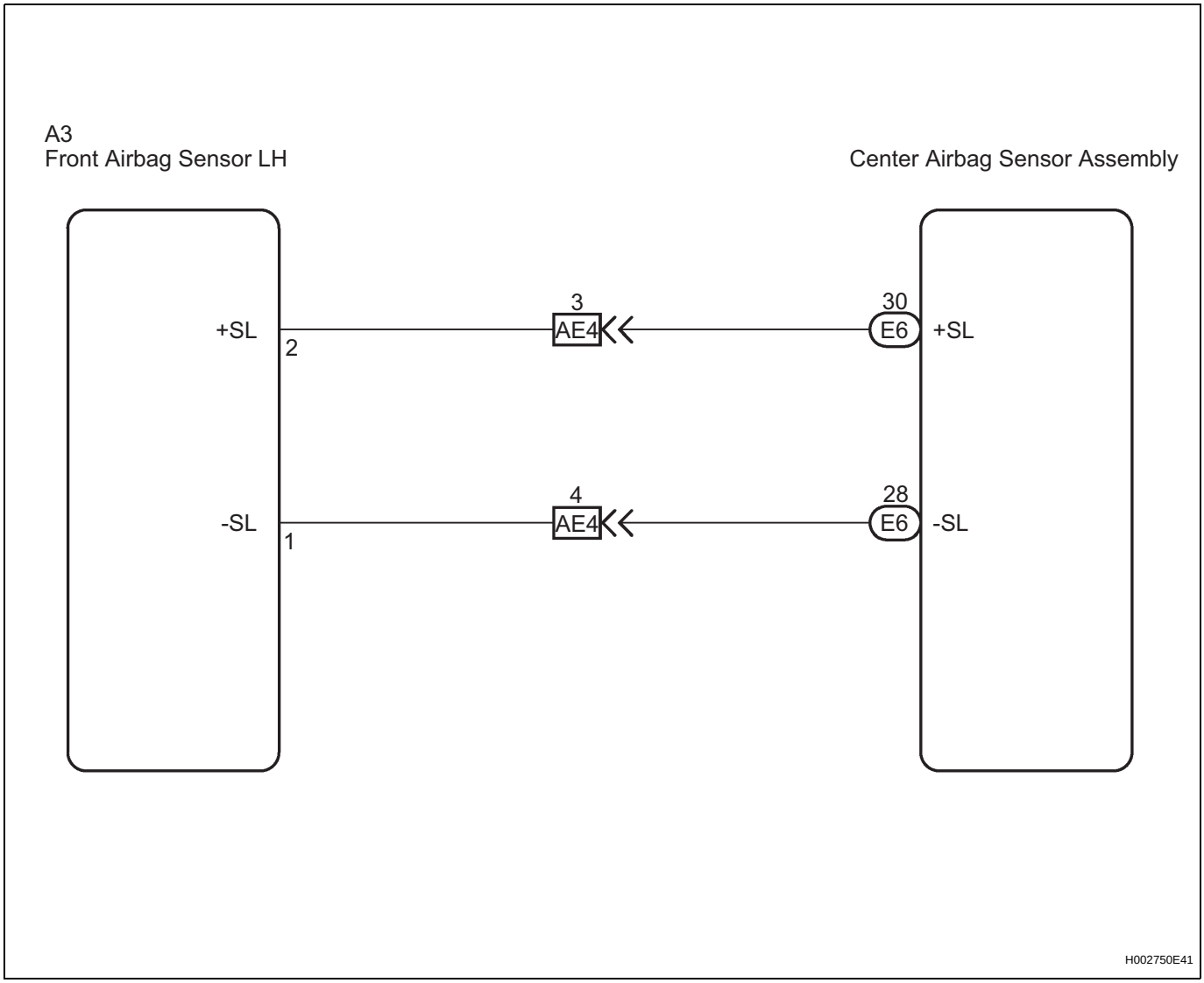

INSPECTION PROCEDURE

1	CHECK FRONT AIRBAG SENSOR LH

(a) Turn the engine switch off.

(b) Disconnect the negative (-) terminal cable from the battery, and wait for at least 90 seconds.
(c) Interchange the front airbag sensor RH with LH and connect the connectors to them.
(d) Connect the negative (-) terminal cable to the battery, and wait for at least 2 seconds.
(e) Turn the engine switch on (IG), and wait for at least 60 seconds.
(f) Clear the DTCs stored in the memory (See page RS-49).
(g) Turn the engine switch off.
(h) Turn the engine switch on (IG), and wait for at least 60 seconds.
(i) Check the DTCs (See page RS-49).

Result

Result	Proceed to
DTC B1615/14 is output.	A
DTC B1610/13 is output.	B
DTC B1610/13 and B1615/14 are not output.	C

HINT:
Codes other than DTC B1610/13 and B1615/14 may be output at this time, but they are not related to this check.

A → **REPLACE CENTER AIRBAG SENSOR ASSEMBLY (See page RS-468)**

B → **REPLACE FRONT AIRBAG SENSOR LH (See page RS-473)**

C

USE SIMULATION METHOD TO CHECK (See page RS-37)

DTC	B1620/21	Driver Side - Side Airbag Sensor Malfunction

DESCRIPTION

The side airbag sensor LH consists of the safing sensor, the diagnostic circuit, the lateral deceleration sensor, etc.

RS

If the center airbag sensor assembly receives signals from the lateral deceleration sensor, it determines whether the SRS should be activated.

DTC B1620/21 is recorded when a malfunction is detected in the driver side - side airbag sensor circuit.

DTC No.	DTC Detection Condition	Trouble Area
B1620/21	• Side airbag sensor LH malfunction • Center airbag sensor assembly malfunction	• Side airbag sensor LH • Center airbag sensor assembly

WIRING DIAGRAM

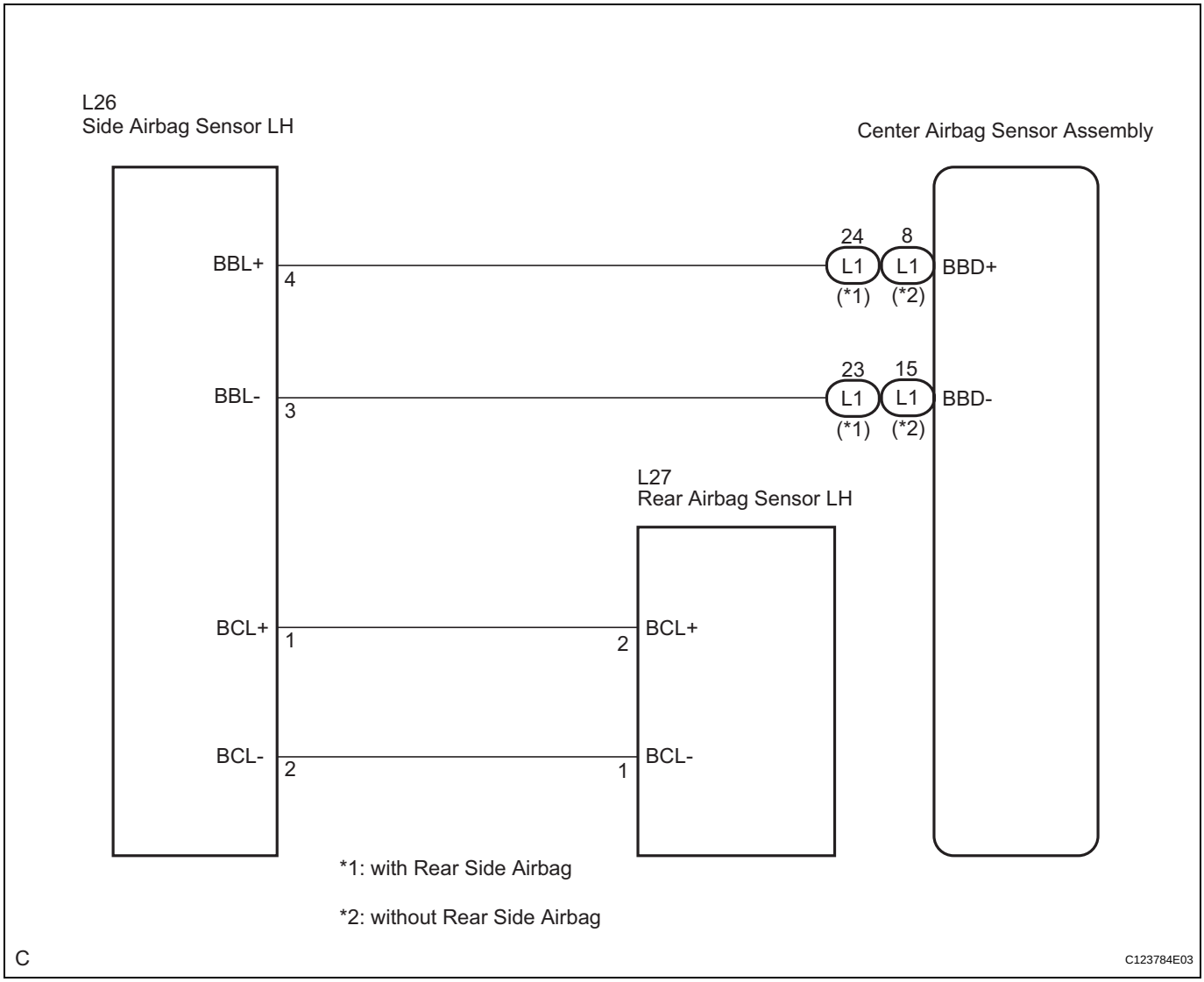

INSPECTION PROCEDURE

1	CHECK DTC

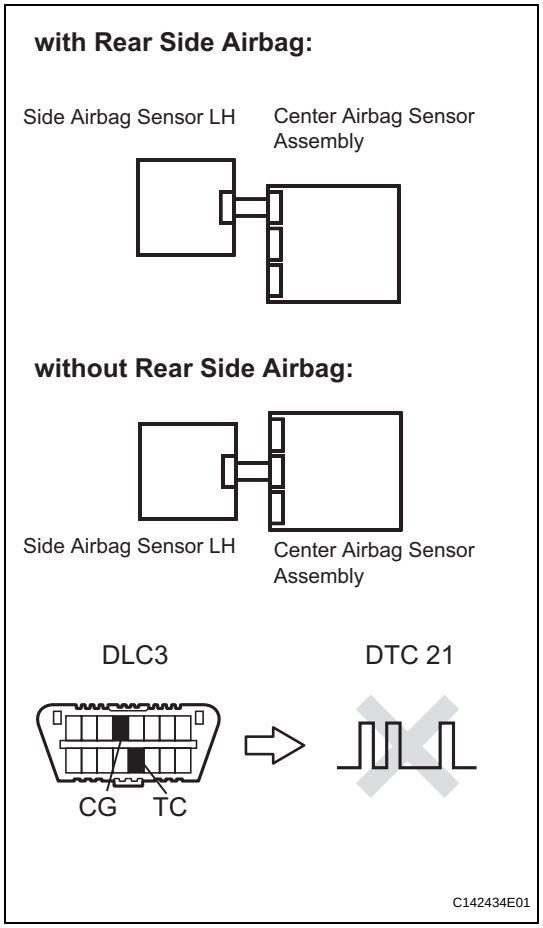

(a) Turn the engine switch on (IG), and wait for at least 60 seconds.
(b) Clear the DTCs stored in the memory (See page RS-49).
(c) Turn the engine switch off.
(d) Turn the engine switch on (IG), and wait for at least 60 seconds.
(e) Check the DTCs (See page RS-49).
OK:
DTC B1620/21 is not output.
HINT:
Codes other than DTC B1620/21 may be output at this time, but they are not related to this check.

OK → **USE SIMULATION METHOD TO CHECK (See page RS-37)**

NG

2	CONFIRM PART NUMBER OF SIDE AIRBAG SENSOR

(a) Turn the engine switch off.
(b) Disconnect the negative (-) terminal cable from the battery, and wait for at least 90 seconds.
(c) Check that the part number of the side airbag sensor LH is equal to the number of the other side.
OK:
Those numbers are the same.

NG → **Go to step 4**

OK

RS

3 CHECK SIDE AIRBAG SENSOR LH

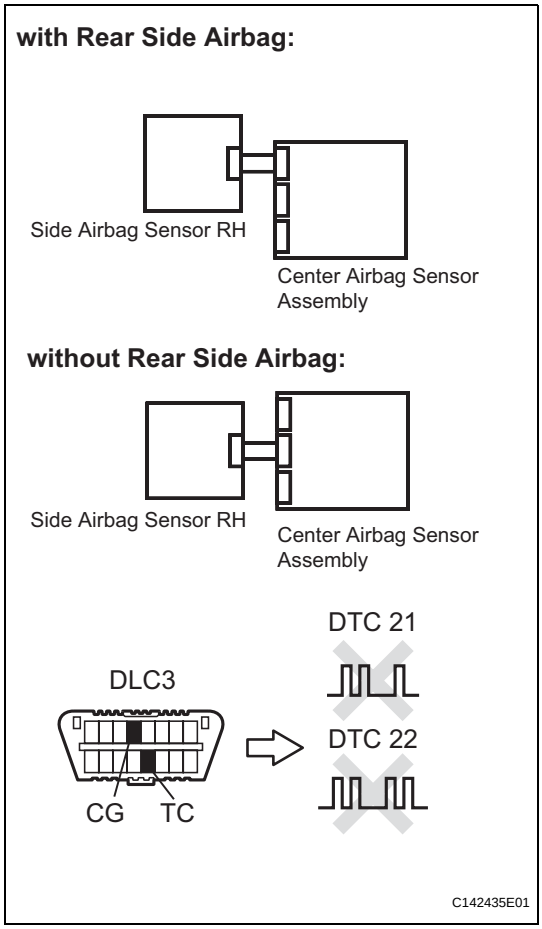

(a) Interchange the side airbag sensor RH with LH and connect the connectors to them.
(b) Connect the negative (-) terminal cable to the battery, and wait for at least 2 seconds.
(c) Turn the engine switch on (IG), and wait for at least 60 seconds.
(d) Clear the DTCs stored in the memory (See page RS-49).
(e) Turn the engine switch off.
(f) Turn the engine switch on (IG), and wait for at least 60 seconds.
(g) Check the DTCs (See page RS-49).

Result

Result	Proceed to
DTC B1620/21 is output.	A
DTC B1625/22 is output.	B
DTC B1620/21 and B1625/22 are not output.	C

HINT:
Codes other than DTC B1620/21 and B1625/22 may be output at this time, but they are not related to this check.

(h) Turn the engine switch off.
(i) Disconnect the negative (-) terminal cable from the battery, and wait for at least 90 seconds.
(j) Return the side airbag sensor RH and LH to their original positions and connect the connectors to them.

A → **Go to step 5**

B → **REPLACE SIDE AIRBAG SENSOR LH (See page RS-477)**

C

USE SIMULATION METHOD TO CHECK (See page RS-37)

4 REPLACE SIDE AIRBAG SENSOR LH

(a) Replace the side airbag sensor LH (See page RS-477).
HINT:
Perform inspection using parts from a normal vehicle if possible.

NEXT

5	CHECK CENTER AIRBAG SENSOR ASSEMBLY

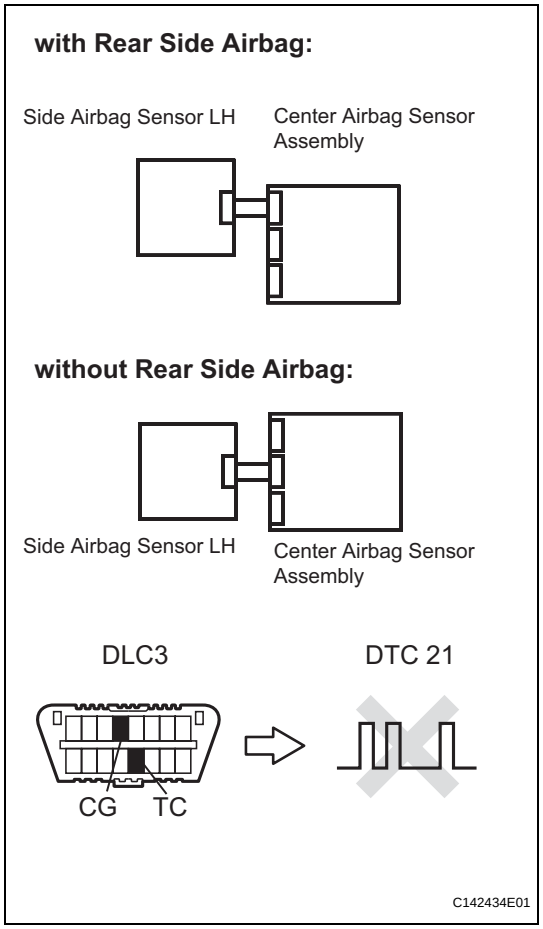

(a) Connect the negative (-) terminal cable to the battery, and wait for at least 2 seconds.
(b) Turn the engine switch on (IG), and wait for at least 60 seconds.
(c) Clear the DTCs stored in the memory (See page RS-49).
(d) Turn the engine switch off.
(e) Turn the engine switch on (IG), and wait for at least 60 seconds.
(f) Check the DTCs (See page RS-49).
OK:
DTC B1620/21 is not output.
HINT:
Codes other than DTC B1620/21 may be output at this time, but they are not related to this check.

NG → **REPLACE CENTER AIRBAG SENOR ASSEMBLY (See page RS-468)**

OK

USE SIMULATION METHOD TO CHECK (See page RS-37)

RS

DTC	**B1622/81**	**Lost Communication with Driver Side - Side Airbag Sensor Assembly**

DTC	**B1623/81**	**Driver Side - Side Airbag Sensor Assembly Initialization Incomplete**

DTC	**B1632/81**	**Lost Communication with Driver Side Rear Airbag Sensor**

DTC	**B1633/81**	**Driver Side Rear Airbag Sensor Initialization Incomplete**

DTC	**B1642/81**	**Lost Communication with Driver Side Satellite Sensor Bus**

DTC	**B1643/81**	**Driver Side Satellite Sensor Bus Initialization Incomplete**

DESCRIPTION

The circuit for the side collision sensor LH (to determine deployment of the front seat side airbag assembly LH and curtain shield airbag assembly LH) is composed of the center airbag sensor assembly, side airbag sensor LH, and rear airbag sensor LH.
The side airbag sensor LH and rear airbag sensor LH detect impacts to the vehicle and send signals to the center airbag sensor assembly to determine if the airbag should be deployed.
DTC B1622/81, B1623/81, B1632/81, B1633/81, B1642/81, or B1643/81 is recorded when a malfunction is detected in the circuit for the side collision sensor LH (to determine deployment of the front seat side airbag assembly LH and curtain shield airbag assembly LH).

DTC No.	DTC Detecting Condition	Trouble Area
1622/81 1623/81 1632/81 1633/81 1642/81 1643/81	• The center airbag sensor assembly receives a line short circuit signal, an open circuit signal, a short circuit to ground signal or a short circuit to B+ signal in the circuit for the side collision sensor LH (to determine deployment of the front seat side airbag assembly LH and curtain shield airbag assembly LH) for 2 seconds. • Side airbag sensor LH malfunction • Rear airbag sensor LH malfunction • Center airbag sensor assembly malfunction	• Floor wire • Side airbag sensor LH • Rear airbag sensor LH • Center airbag sensor assembly

WIRING DIAGRAM

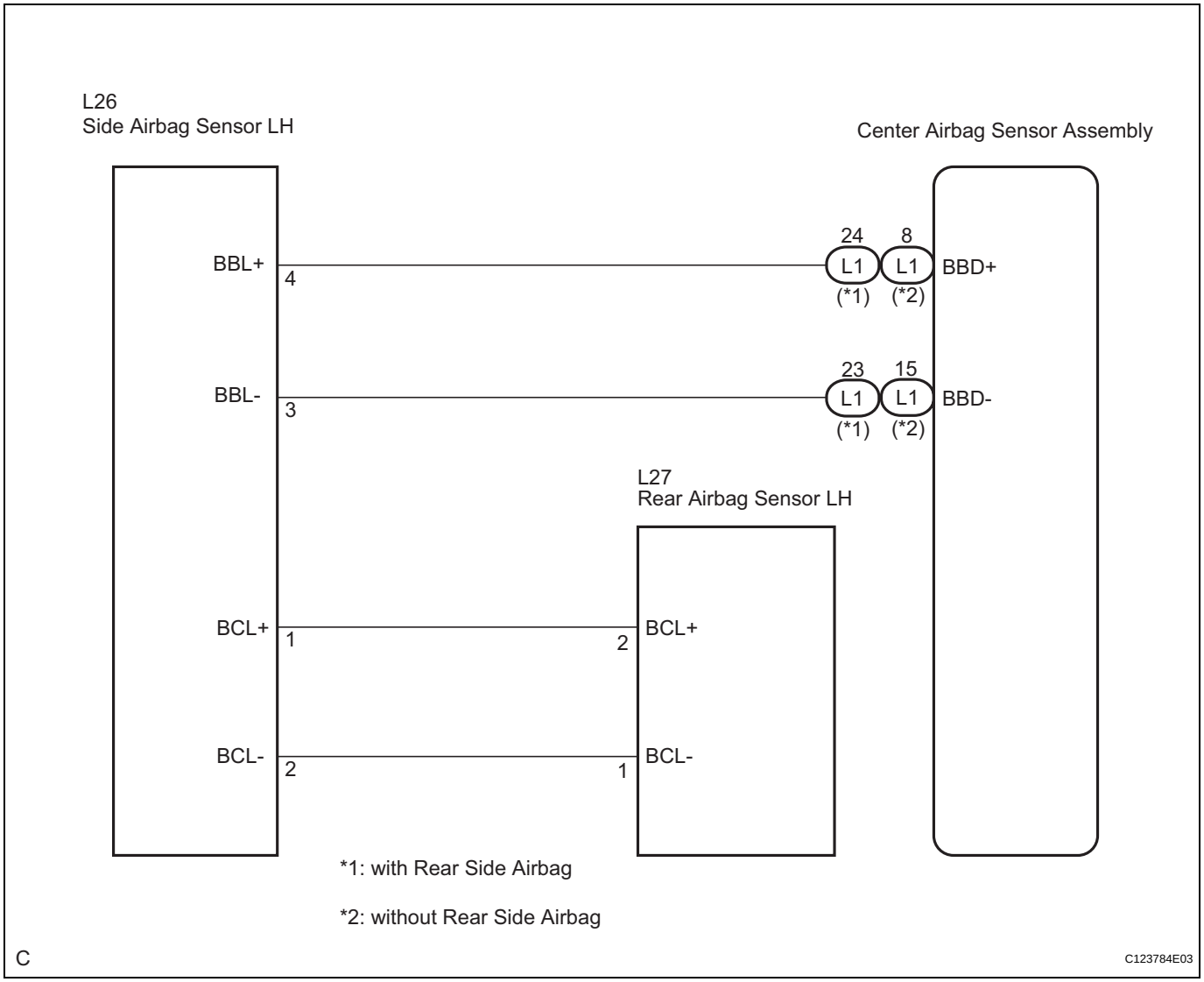

INSPECTION PROCEDURE

1	CHECK PRESENT DTC

(a) Turn the engine switch on (IG), and wait for at least 60 seconds.

(b) Turn the engine switch off.
HINT:
If a communication error occurs, DTCs for both the LH and RH sides will be stored simultaneously. To identify the malfunctioning area, turn the engine switch off and then on (IG) again.

(c) Turn the engine switch on (IG), and wait for at least 60 seconds.

(d) Check the present DTCs (See page RS-49).
Result

Result	Proceed to
Present DTC B1623, B1633, B1643, or 81 is output.	**A**

Result	Proceed to
Present DTC B1628, B1638, B1648, or 82 is output.	B
Present DTC B1623, B1633, B1643, or 81 and B1628, B1638, B1648, or 82 are not output.	C

HINT:
- DTCs indicating communication errors will be changed to DTCs indicating errors in initialization by turning the engine switch off and then on (IG) again.
- Codes other than present DTC B1623, B1633, B1643, or 81 and B1628, B1638, B1648, or 82 may be output at this time, but they are not related to this check.

B → **REPAIR CIRCUITS INDICATED BY OUTPUT DTCS**

C → **USE SIMULATION METHOD TO CHECK (See page RS-37)**

A

2 CHECK PAST DTC

(a) Check the past DTCs (See page RS-49).
Result

Result	Proceed to
• Past DTC B1632, B1642, or 81 is output. • Past DTC B1622, B1632, B1642, or 81 is not output.	A
Past DTC B1622 is output.	B

HINT:
Codes other than past DTC B1622, B1632, B1642, or 81 may be output at this time, but they are not related to this check.

B → **Go to step 27**

A

3 CHECK CONNECTION OF CONNECTORS

(a) Turn the engine switch off.
(b) Disconnect the negative (-) terminal cable from the battery, and wait for at least 90 seconds.
(c) Check that the connectors are properly connected to the center airbag sensor assembly and the side airbag sensor LH.
OK:
The connectors are properly connected.

NG → **CONNECT CONNECTORS PROPERLY**

OK

4	CHECK CONNECTORS

(a) Disconnect the connectors from the center airbag sensor assembly and side airbag sensor LH.

(b) Check that the connectors (on the center airbag sensor assembly side and side airbag sensor LH side) are not damaged.

OK:

The connectors are not deformed or damaged.

NG → **REPAIR OR REPLACE FLOOR WIRE**

OK

5	CHECK VEHICLE CONDITION

(a) Check whether or not the vehicle is equipped with the rear side airbag.

Result:

A:

with the rear side airbag

B:

without the rear side airbag

B → **Go to step 12**

A

RS

6 CHECK FLOOR WIRE (OPEN)

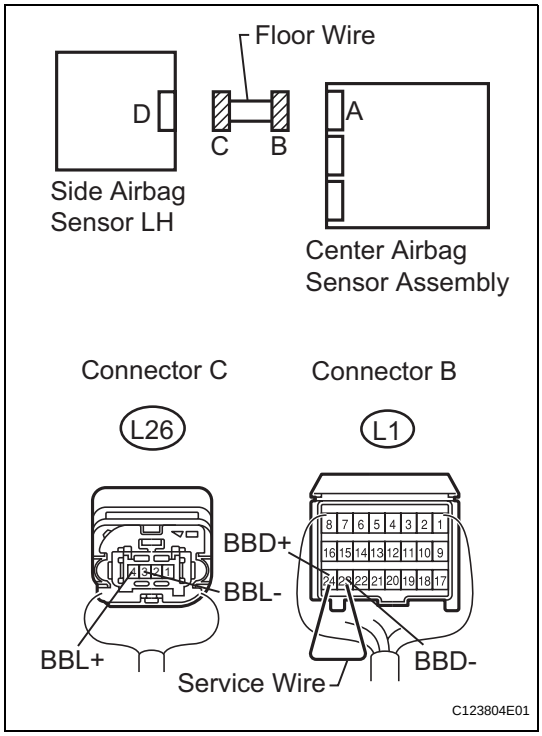

(a) Using a service wire, connect terminals 24 (BBD+) and 23 (BBD-) of connector B.
NOTICE:
Do not forcibly insert a service wire into the terminals of the connector when connecting the wire.

(b) Measure the resistance according to the value(s) in the table below.
Standard resistance

Tester Connection	Condition	Specified Condition
L26-4 (BBL+) - L26-3 (BBL-)	Always	Below 1 Ω

NG → **REPAIR OR REPLACE FLOOR WIRE**

OK

7 CHECK FLOOR WIRE (SHORT)

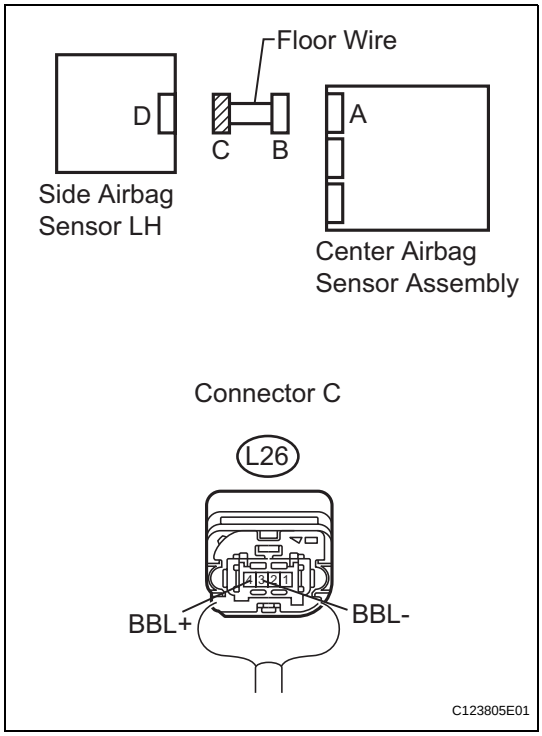

(a) Disconnect the service wire from connector B.

(b) Measure the resistance according to the value(s) in the table below.
Standard resistance

Tester Connection	Condition	Specified Condition
L26-4 (BBL+) - L26-3 (BBL-)	Always	1 MΩ or higher

NG → **REPAIR OR REPLACE FLOOR WIRE**

OK

RS

8 CHECK FLOOR WIRE (SHORT TO B+)

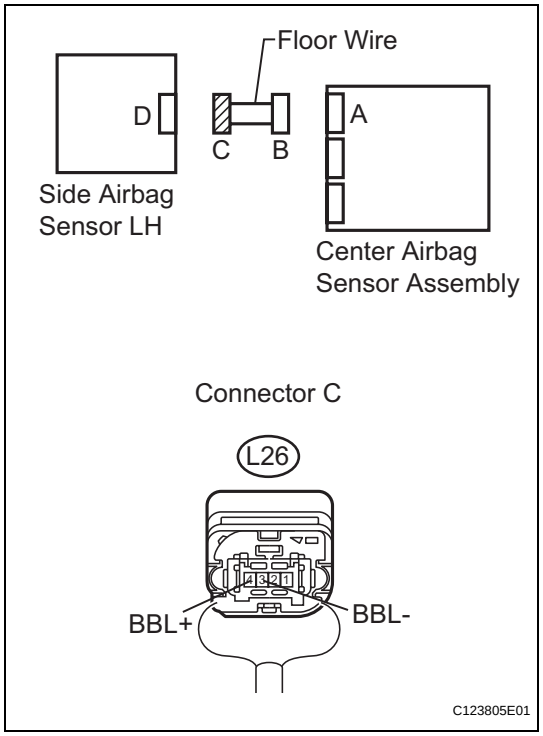

(a) Connect the negative (-) terminal cable to the battery, and wait for at least 2 seconds.
(b) Turn the engine switch on (IG).
(c) Measure the voltage according to the value(s) in the table below.

Standard voltage

Tester Connection	Condition	Specified Condition
L26-4 (BBL+) - Body ground	Engine switch on (IG)	Below 1 V
L26-3 (BBL-) - Body ground	Engine switch on (IG)	Below 1 V

NG → **REPAIR OR REPLACE FLOOR WIRE**

OK

9 CHECK FLOOR WIRE (SHORT TO GROUND)

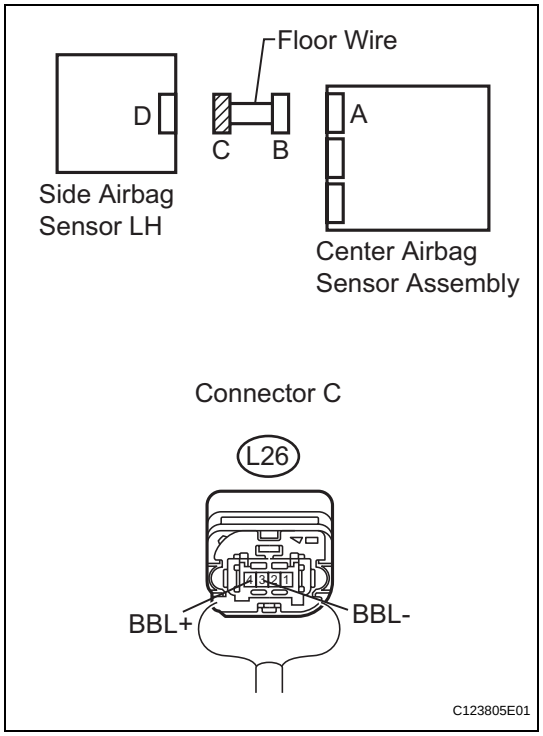

(a) Turn the engine switch off.
(b) Disconnect the negative (-) terminal cable from the battery, and wait for at least 90 seconds.
(c) Measure the resistance according to the value(s) in the table below.

Standard resistance

Tester Connection	Condition	Specified Condition
L26-4 (BBL+) - Body ground	Always	1 MΩ or higher
L26-3 (BBL-) - Body ground	Always	1 MΩ or higher

NG → **REPAIR OR REPLACE FLOOR WIRE**

OK

RS

10	CONFIRM PART NUMBER OF SIDE AIRBAG SENSOR

(a) Check that the part number of the side airbag sensor LH is equal to the number of the other side.
OK:
Those numbers are the same.

(b) Connect the connectors to the center airbag sensor assembly and the side airbag sensor LH.

NG → **Go to step 18**

OK

11	CHECK SIDE AIRBAG SENSOR LH

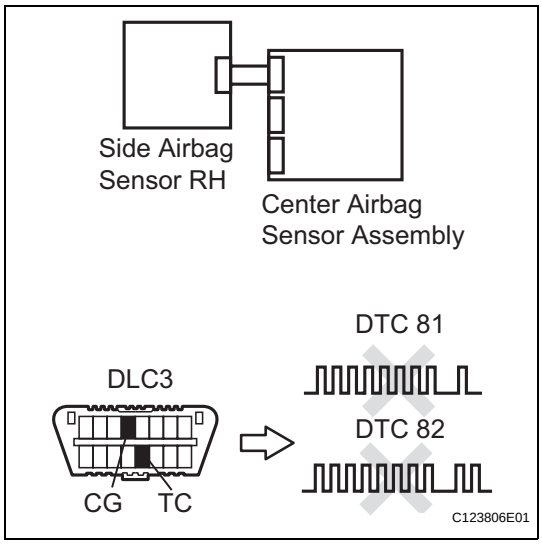

(a) Interchange the side airbag sensor RH with LH and connect the connectors to them.
(b) Connect the negative (-) terminal cable to the battery, and wait for at least 2 seconds.
(c) Turn the engine switch on (IG), and wait for at least 60 seconds.
(d) Clear the DTCs stored in the the memory (See page RS-49).
(e) Turn the engine switch off.
(f) Turn the engine switch on (IG), and wait for at least 60 seconds.
(g) Check the DTCs (See page RS-49).
Result

Result	Proceed to
DTC B1623, B1633, B1643, or 81 and B1628, B1638, B1648, or 82 are not output.	A
DTC B1628, B1638, B1648, or 82 is output.	B
DTC B1623, B1633, B1643, or 81 is output.	C

(h) Turn the engine switch off.
(i) Disconnect the negative (-) terminal cable from the battery, and wait for at least 90 seconds.
(j) Return the side airbag sensor RH and LH to their original positions and connect the connectors to them.

B → **REPLACE SIDE AIRBAG SENSOR LH (See page RS-477)**

C → **Go to step 18**

A

USE SIMULATION METHOD TO CHECK (See page RS-37)

RS

12 CHECK FLOOR WIRE (OPEN)

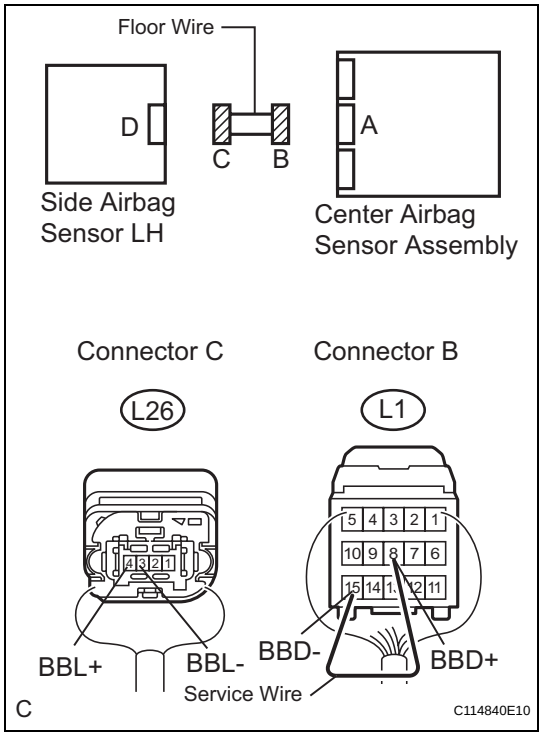

(a) Using a service wire, connect terminals 8 (BBD+) and 15 (BBD-) of connector B.
NOTICE:
Do not forcibly insert a service wire into the terminals of the connector when connecting the wire.

(b) Measure the resistance according to the value(s) in the table below.
Standard resistance

Tester Connection	Condition	Specified Condition
L26-4 (BBL+) - L26-3 (BBL-)	Always	Below 1 Ω

NG → **REPAIR OR REPLACE FLOOR WIRE**

OK

13 CHECK FLOOR WIRE (SHORT)

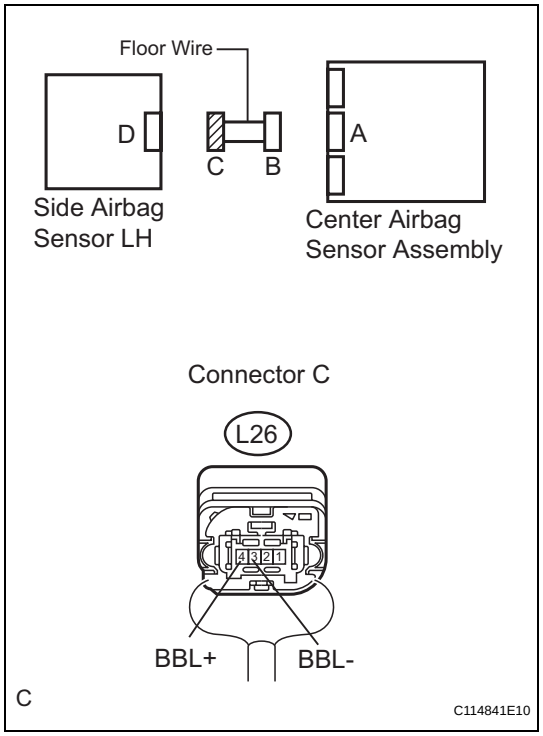

(a) Disconnect the service wire from connector B.

(b) Measure the resistance according to the value(s) in the table below.
Standard resistance

Tester Connection	Condition	Specified Condition
L26-4 (BBL+) - L26-3 (BBL-)	Always	1 MΩ or higher

NG → **REPAIR OR REPLACE FLOOR WIRE**

OK

RS

14 CHECK FLOOR WIRE (SHORT TO B+)

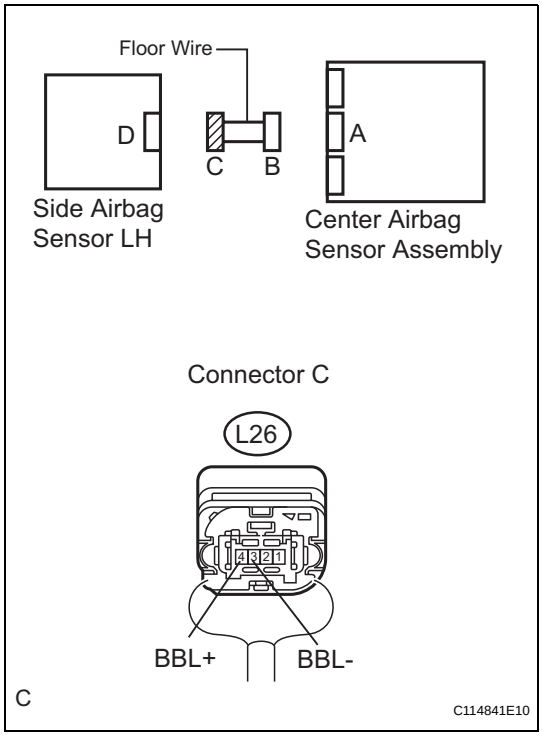

(a) Connect the negative (-) terminal cable to the battery, and wait for at least 2 seconds.
(b) Turn the engine switch on (IG).
(c) Measure the voltage according to the value(s) in the table below.

Standard voltage

Tester Connection	Condition	Specified Condition
L26-4 (BBL+) - Body ground	Engine switch on (IG)	Below 1 V
L26-3 (BBL-) - Body ground	Engine switch on (IG)	Below 1 V

NG → **REPAIR OR REPLACE FLOOR WIRE**

OK

15 CHECK FLOOR WIRE (SHORT TO GROUND)

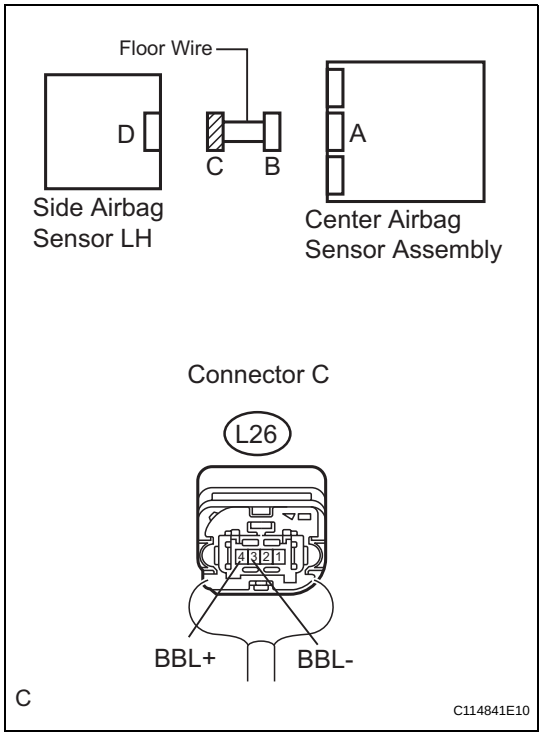

(a) Turn the engine switch off.
(b) Disconnect the negative (-) terminal cable from the battery, and wait for at least 90 seconds.
(c) Measure the resistance according to the value(s) in the table below.

Standard resistance

Tester Connection	Condition	Specified Condition
L26-4 (BBL+) - Body ground	Always	1 MΩ or higher
L26-3 (BBL-) - Body ground	Always	1 MΩ or higher

NG → **REPAIR OR REPLACE FLOOR WIRE**

OK

RS

16 CONFIRM PART NUMBER OF SIDE AIRBAG SENSOR

(a) Check that the part number of the side airbag sensor LH is equal to the number of the other side.
OK:
Those numbers are the same.

(b) Connect the connectors to the center airbag sensor assembly and the side airbag sensor LH.

NG → **Go to step 18**

OK

17 CHECK SIDE AIRBAG SENSOR LH

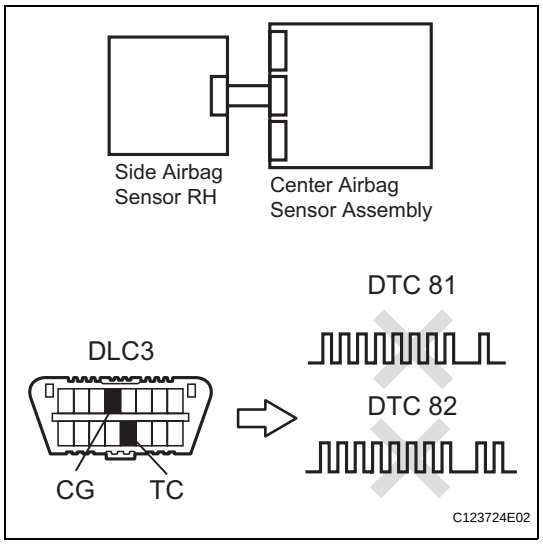

(a) Interchange the side airbag sensor RH with LH and connect the connectors to them.
(b) Connect the negative (-) terminal cable to the battery, and wait for at least 2 seconds.
(c) Turn the engine switch on (IG), and wait for at least 60 seconds.
(d) Clear the DTCs stored in the the memory (See page RS-49).
(e) Turn the engine switch off.
(f) Turn the engine switch on (IG), and wait for at least 60 seconds.
(g) Check the DTCs (See page RS-49).
Result

Result	Proceed to
DTC B1623, B1633, B1643, or 81 is output.	A
DTC B1628, B1638, B1648, or 82 is output.	B
DTC B1623, B1633, B1643, or 81 and B1628, B1638, B1648, or 82 are not output.	C

(h) Turn the engine switch off.
(i) Disconnect the negative (-) terminal cable from the battery, and wait for at least 90 seconds.
(j) Return the side airbag sensor RH and LH to their original positions and connect the connectors to them.

B → **REPLACE SIDE AIRBAG SENSOR LH (See page RS-477)**

C → **USE SIMULATION METHOD TO CHECK (See page RS-37)**

A

18 CHECK CONNECTION OF CONNECTOR

(a) Check that the connector is properly connected to the rear airbag sensor LH.

OK:
The connector is properly connected.

NG → **CONNECT CONNECTOR PROPERLY**

OK

RS

19 CHECK CONNECTOR

(a) Disconnect the connectors from the side airbag sensor LH and rear airbag sensor LH.
(b) Check that the connector (on the rear airbag sensor LH side) is not damaged.
OK:
The connector is not deformed or damaged.

NG → **REPAIR OR REPLACE FLOOR WIRE**

OK

20 CHECK FLOOR WIRE (OPEN)

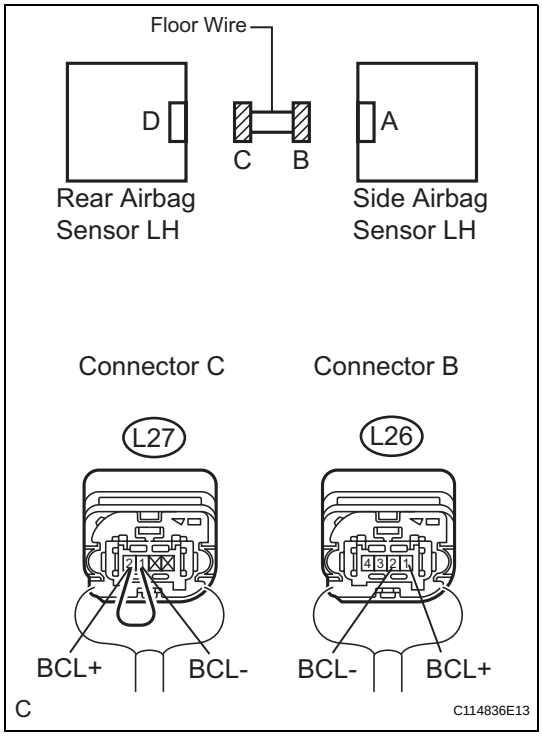

(a) Using a service wire, connect terminals 2 (BCL+) and 1 (BCL-) of connector C.
NOTICE:
Do not forcibly insert a service wire into the terminals of the connector when connecting the wire.
(b) Measure the resistance according to the value(s) in the table below.
Standard resistance

Tester Connection	Condition	Specified Condition
L26-1 (BCL+) - L26-2 (BCL-)	Always	Below 1 Ω

NG → **REPAIR OR REPLACE FLOOR WIRE**

OK

RS

21 CHECK FLOOR WIRE (SHORT)

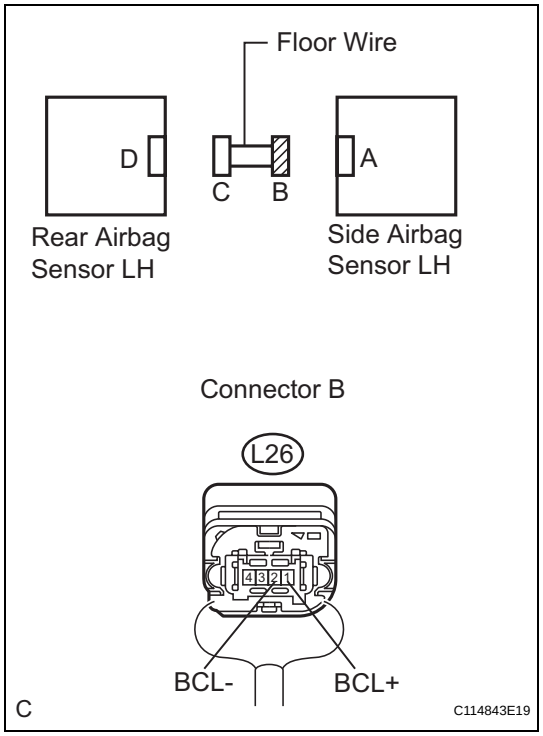

(a) Disconnect the service wire from connector C.
(b) Measure the resistance according to the value(s) in the table below.

Standard resistance

Tester Connection	Condition	Specified Condition
L26-1 (BCL+) - L26-2 (BCL-)	Always	1 MΩ or higher

NG → **REPAIR OR REPLACE FLOOR WIRE**

OK

22 CHECK FLOOR WIRE (SHORT TO B+)

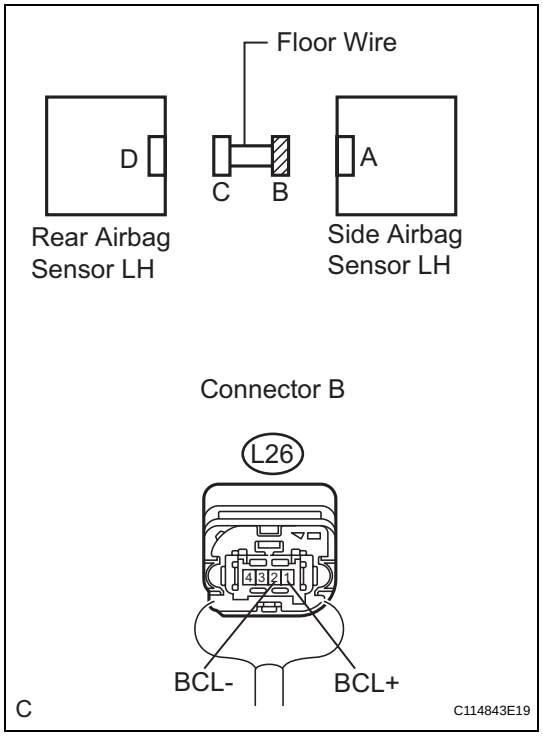

(a) Connect the negative (-) terminal cable to the battery, and wait for at least 2 seconds.
(b) Turn the engine switch on (IG).
(c) Measure the voltage according to the value(s) in the table below.

Standard voltage

Tester Connection	Condition	Specified Condition
L26-1 (BCL+) - Body ground	Engine switch on (IG)	Below 1 V
L26-2 (BCL-) - Body ground	Engine switch on (IG)	Below 1 V

NG → **REPAIR OR REPLACE FLOOR WIRE**

OK

RS

23 CHECK FLOOR WIRE (SHORT TO GROUND)

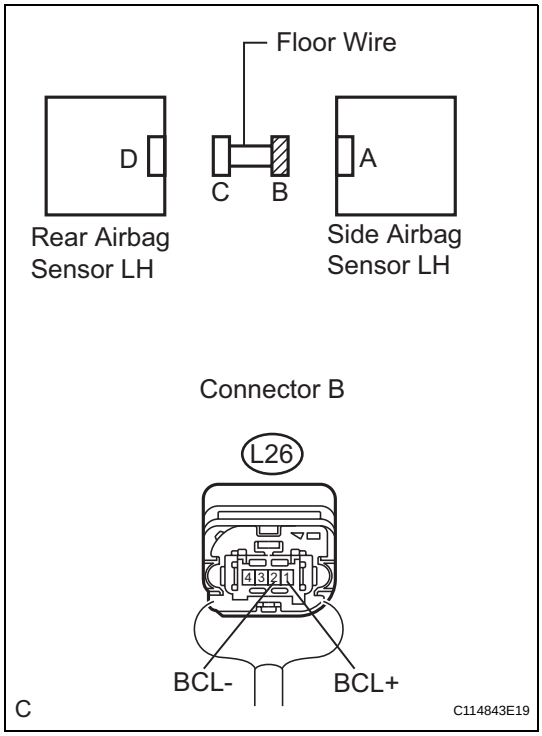

(a) Turn the engine switch off.
(b) Disconnect the negative (-) terminal cable from the battery, and wait for at least 90 seconds.
(c) Measure the resistance according to the value(s) in the table below.
Standard resistance

Tester Connection	Condition	Specified Condition
L26-1 (BCL+) - Body ground	Always	1 MΩ or higher
L26-2 (BCL-) - Body ground	Always	1 MΩ or higher

NG → **REPAIR OR REPLACE FLOOR WIRE**

OK

24 CONFIRM PART NUMBER OF REAR AIRBAG SENSOR

(a) Check that the part number of the rear airbag sensor LH is equal to the number of the other side.
OK:
Those numbers are the same.
(b) Connect the connectors to the side airbag sensor LH and the rear airbag sensor LH.

NG → **Go to step 26**

OK

RS

25 CHECK REAR AIRBAG SENSOR LH

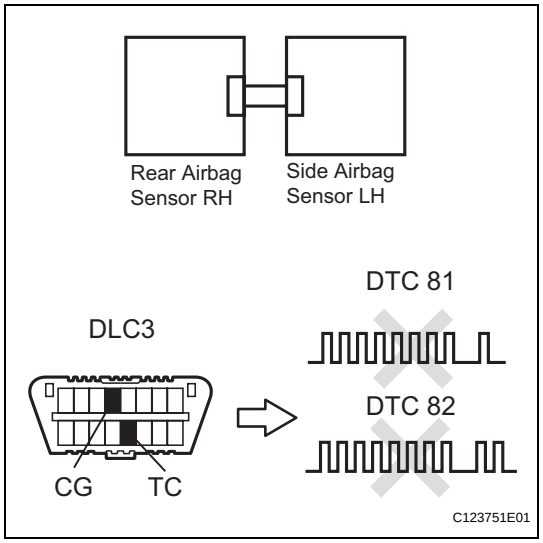

(a) Interchange the rear airbag sensor RH with LH and connect the connectors to them.
(b) Connect the negative (-) terminal cable to the battery, and wait for at least 2 seconds.
(c) Turn the engine switch on (IG), and wait for at least 60 seconds.
(d) Clear the DTCs stored in the memory (See page RS-49).
(e) Turn the engine switch off.
(f) Turn the engine switch on (IG), and wait for at least 60 seconds.
(g) Check the DTCs (See page RS-49).
Result

Result	Proceed to
DTC B1623, B1633, B1643, or 81 is output.	**A**
DTC B1628, B1638, B1648, or 82 is output.	**B**
DTC B1623, B1633, B1643, or 81 and B1628, B1638, B1648, or 82 are not output.	**C**

HINT:
Codes other than DTC B1623, B1633, B1643, or 81 and B1628, B1638, B1648, or 82 may be output at this time, but they are not related to this check.
(h) Turn the engine switch off.
(i) Disconnect the negative (-) terminal cable from the battery, and wait for at least 90 seconds.
(j) Return the rear airbag sensor RH and LH to their original positions and connect the connectors to them.

B → **REPLACE REAR AIRBAG SENSOR LH (See page RS-480)**

C → **USE SIMULATION METHOD TO CHECK (See page RS-37)**

A

26 CHECK CENTER AIRBAG SENSOR ASSEMBLY

(a) Connect the negative (-) terminal cable to the battery, and wait for at least 2 seconds.
(b) Turn the engine switch on (IG), and wait for at least 60 seconds.
(c) Clear the DTCs stored in the memory (See page RS-49).
(d) Turn the engine switch off.
(e) Turn the engine switch on (IG), and wait for at least 60 seconds.
(f) Check the DTCs (See page RS-49).
OK:
DTC B1623, B1633, B1643, or 81 is not output.

HINT:
Codes other than DTC B1623, B1633, B1643, or 81 may be output at this time, but they are not related to this check.

NG → **REPLACE CENTER AIRBAG SENSOR ASSEMBLY (See page RS-468)**

RS

OK

USE SIMULATION METHOD TO CHECK (See page RS-37)

27 CHECK CONNECTION OF CONNECTORS

(a) Turn the engine switch off.
(b) Disconnect the negative (-) terminal cable from the battery, and wait for at least 90 seconds.
(c) Check that the connectors are properly connected to the center airbag sensor assembly and the side airbag sensor LH.
OK:
The connectors are properly connected.

NG → **CONNECT CONNECTORS PROPERLY**

OK

28 CHECK CONNECTORS

(a) Disconnect the connectors from the center airbag sensor assembly and side airbag sensor LH.
(b) Check that the connectors (on the center airbag sensor assembly side and side airbag sensor LH side) are not damaged.
OK:
The connectors are not deformed or damaged.

NG → **REPAIR OR REPLACE FLOOR WIRE**

OK

29 CHECK VEHICLE CONDITION

(a) Check whether or not the vehicle is equipped with the rear side airbag.
Result:
A:
with the rear side airbag
B:
without the rear side airbag

B → **Go to step 37**

A

30 CHECK FLOOR WIRE (OPEN)

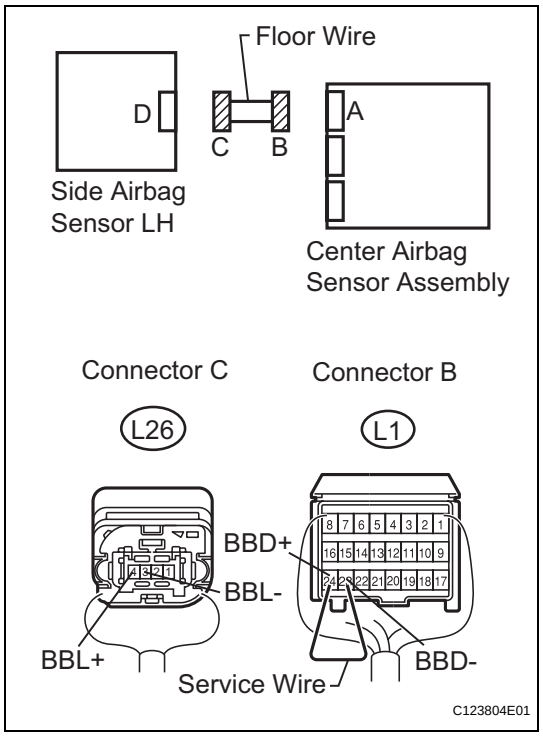

(a) Using a service wire, connect terminals 24 (BBD+) and 23 (BBD-) of connector B.
NOTICE:
Do not forcibly insert a service wire into the terminals of the connector when connecting the wire.

(b) Measure the resistance according to the value(s) in the table below.
Standard resistance

Tester Connection	Condition	Specified Condition
L26-4 (BBL+) - L26-3 (BBL-)	Always	Below 1 Ω

NG → **REPAIR OR REPLACE FLOOR WIRE**

OK

31 CHECK FLOOR WIRE (SHORT)

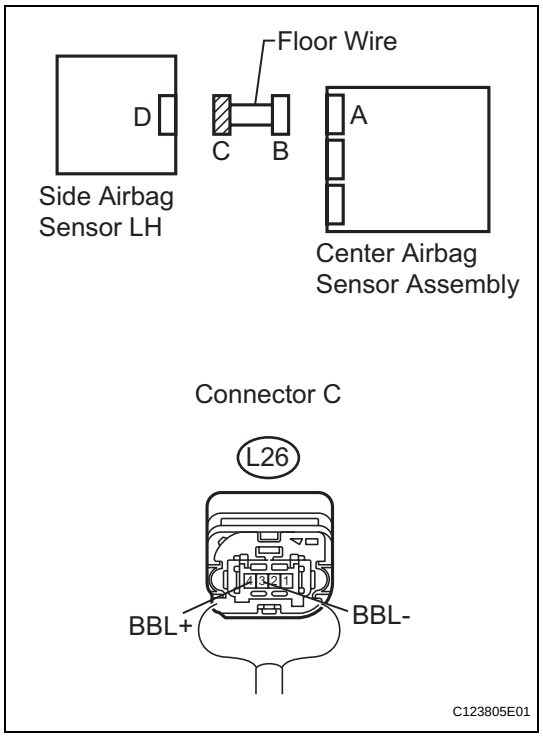

(a) Disconnect the service wire from connector B.

(b) Measure the resistance according to the value(s) in the table below.
Standard resistance

Tester Connection	Condition	Specified Condition
L26-4 (BBL+) - L26-3 (BBL-)	Always	1 MΩ or higher

NG → **REPAIR OR REPLACE FLOOR WIRE**

OK

32 CHECK FLOOR WIRE (SHORT TO B+)

RS

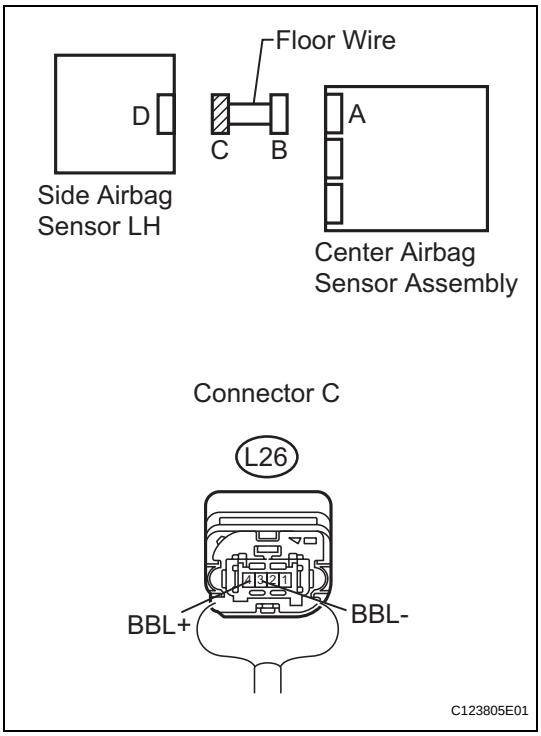

(a) Connect the negative (-) terminal cable to the battery, and wait for at least 2 seconds.
(b) Turn the engine switch on (IG).
(c) Measure the voltage according to the value(s) in the table below.

Standard voltage

Tester Connection	Condition	Specified Condition
L26-4 (BBL+) - Body ground	Engine switch on (IG)	Below 1 V
L26-3 (BBL-) - Body ground	Engine switch on (IG)	Below 1 V

NG → **REPAIR OR REPLACE FLOOR WIRE**

OK

33 CHECK FLOOR WIRE (SHORT TO GROUND)

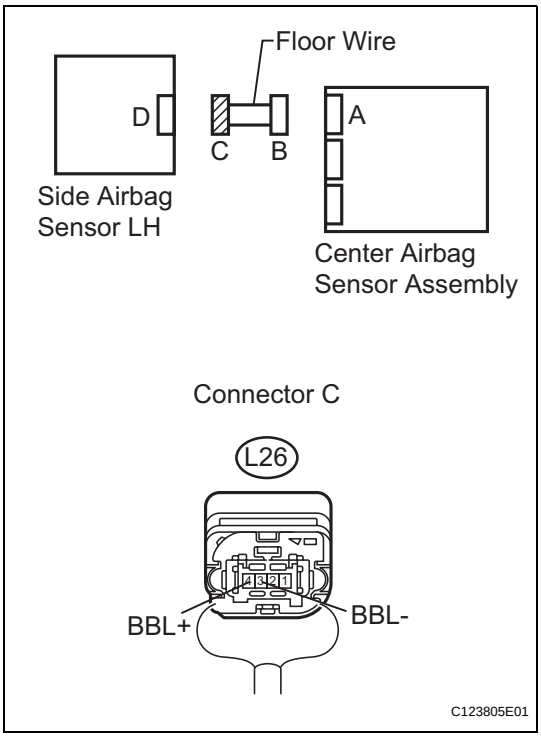

(a) Turn the engine switch off.
(b) Disconnect the negative (-) terminal cable from the battery, and wait for at least 90 seconds.
(c) Measure the resistance according to the value(s) in the table below.

Standard resistance

Tester Connection	Condition	Specified Condition
L26-4 (BBL+) - Body ground	Always	1 MΩ or higher
L26-3 (BBL-) - Body ground	Always	1 MΩ or higher

NG → **REPAIR OR REPLACE FLOOR WIRE**

OK

34 CONFIRM PART NUMBER OF SIDE AIRBAG SENSOR

(a) Check that the part number of the side airbag sensor LH is equal to the number of the other side.
OK:
Those numbers are the same.

(b) Connect the connectors to the center airbag sensor assembly and the side airbag sensor LH.

NG → **Go to step 36**

OK

35 CHECK SIDE AIRBAG SENSOR LH

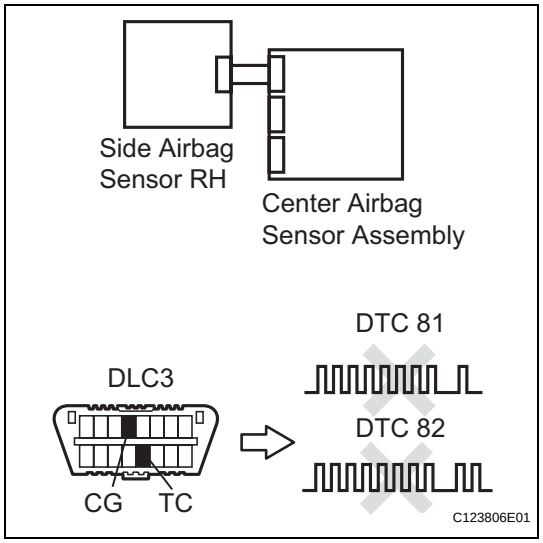

(a) Interchange the side airbag sensor RH with LH and connect the connectors to them.
(b) Connect the negative (-) terminal cable to the battery, and wait for at least 2 seconds.
(c) Turn the engine switch on (IG), and wait for at least 60 seconds.
(d) Clear the DTCs stored in the memory (See page RS-49).
(e) Turn the engine switch off.
(f) Turn the engine switch on (IG), and wait for at least 60 seconds.
(g) Check the DTCs (See page RS-49).
Result

Result	Proceed to
DTC B1623, B1633, B1643, or 81 is output.	A
DTC B1628, B1638, B1648, or 82 is output.	B
DTC B1623, B1633, B1643, or 81 and B1628, B1638, B1648, or 82 are not output.	C

(h) Turn the engine switch off.
(i) Disconnect the negative (-) terminal cable from the battery, and wait for at least 90 seconds.
(j) Return the side airbag sensor RH and LH to their original positions and connect the connectors to them.

B → **REPLACE SIDE AIRBAG SENSOR LH (See page RS-477)**

C → **USE SIMULATION METHOD TO CHECK (See page RS-37)**

A

36 CHECK CENTER AIRBAG SENSOR ASSEMBLY

(a) Connect the negative (-) terminal cable to the battery, and wait for at least 2 seconds.

RS

(b) Turn the engine switch on (IG), and wait for at least 60 seconds.
(c) Clear the DTCs stored in the memory (See page RS-49).
(d) Turn the engine switch off.
(e) Turn the engine switch on (IG), and wait for at least 60 seconds.
(f) Check the DTCs (See page RS-49).
OK:
DTC B1623, B1633, B1643, or 81 is not output.
HINT:
Codes other than DTC B1623, B1633, B1643, or 81 may be output at this time, but they are not related to this check.

NG → **REPLACE CENTER AIRBAG SENSOR ASSEMBLY (See page RS-468)**

OK

USE SIMULATION METHOD TO CHECK (See page RS-37)

37 CHECK FLOOR WIRE (OPEN)

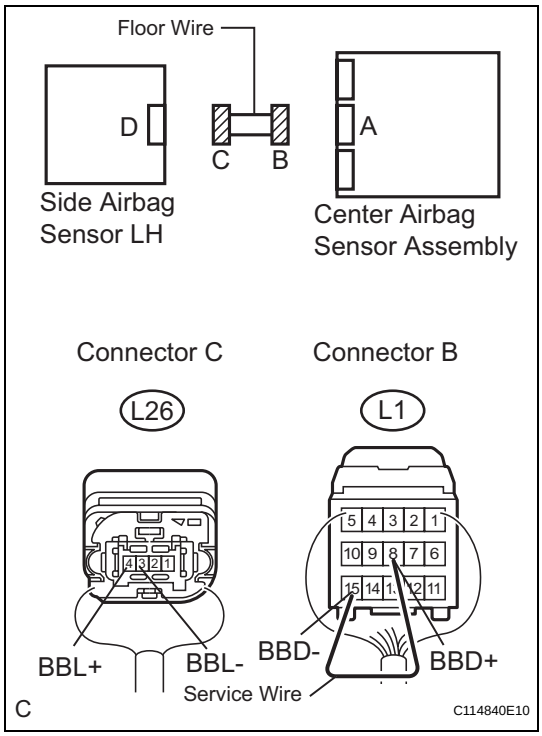

(a) Using a service wire, connect terminals 8 (BBD+) and 15 (BBD-) of connector B.
NOTICE:
Do not forcibly insert a service wire into the terminals of the connector when connecting the wire.
(b) Measure the resistance according to the value(s) in the table below.
Standard resistance

Tester Connection	Condition	Specified Condition
L26-4 (BBL+) - L26-3 (BBL-)	Always	Below 1 Ω

NG → **REPAIR OR REPLACE FLOOR WIRE**

OK

RS

38 CHECK FLOOR WIRE (SHORT)

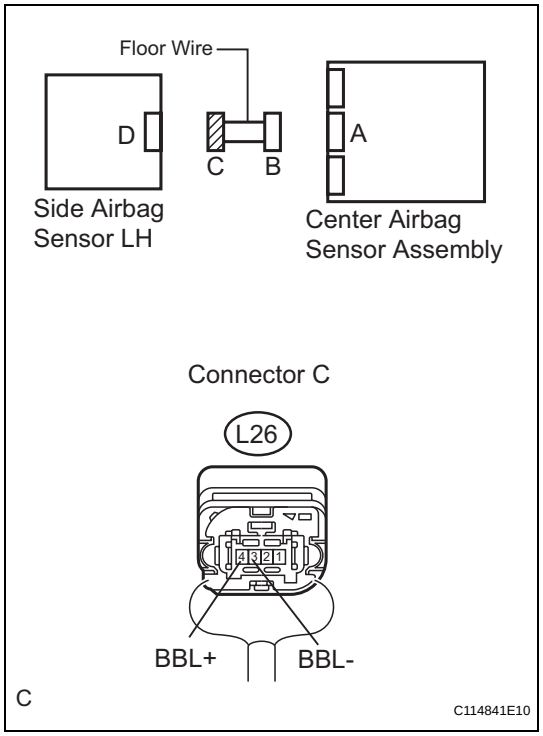

(a) Disconnect the service wire from connector B.
(b) Measure the resistance according to the value(s) in the table below.

Standard resistance

Tester Connection	Condition	Specified Condition
L26-4 (BBL+) - L26-3 (BBL-)	Always	1 MΩ or higher

NG → **REPAIR OR REPLACE FLOOR WIRE**

OK

39 CHECK FLOOR WIRE (SHORT TO B+)

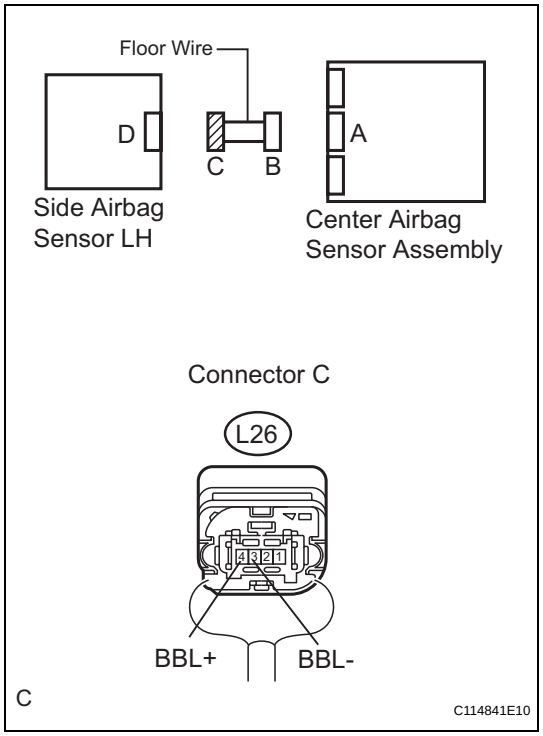

(a) Connect the negative (-) terminal cable to the battery, and wait for at least 2 seconds.
(b) Turn the engine switch on (IG).
(c) Measure the voltage according to the value(s) in the table below.

Standard voltage

Tester Connection	Condition	Specified Condition
L26-4 (BBL+) - Body ground	Engine switch on (IG)	Below 1 V
L26-3 (BBL-) - Body ground	Engine switch on (IG)	Below 1 V

NG → **REPAIR OR REPLACE FLOOR WIRE**

OK

RS

40 CHECK FLOOR WIRE (SHORT TO GROUND)

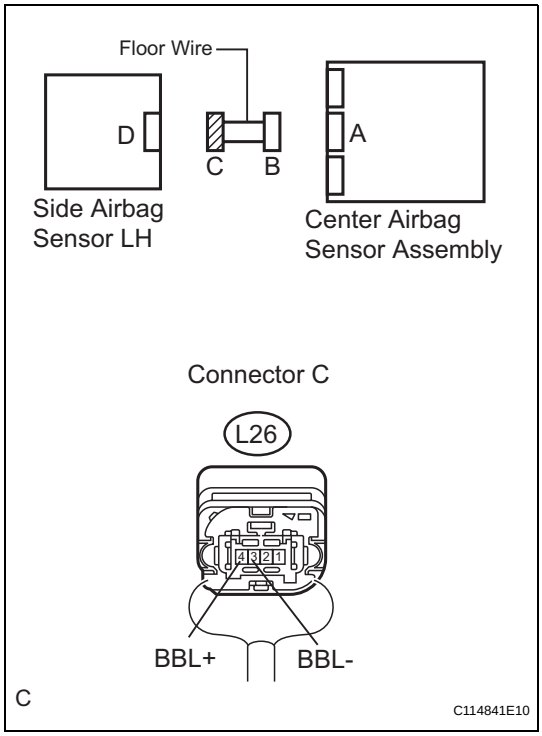

(a) Turn the engine switch off.
(b) Disconnect the negative (-) terminal cable from the battery, and wait for at least 90 seconds.
(c) Measure the resistance according to the value(s) in the table below.
Standard resistance

Tester Connection	Condition	Specified Condition
L26-4 (BBL+) - Body ground	Always	1 MΩ or higher
L26-3 (BBL-) - Body ground	Always	1 MΩ or higher

NG → **REPAIR OR REPLACE FLOOR WIRE**

OK

41 CONFIRM PART NUMBER OF SIDE AIRBAG SENSOR

(a) Check that the part number of the side airbag sensor LH is equal to the number of the other side.
OK:
Those numbers are the same.
(b) Connect the connectors to the center airbag sensor assembly and the side airbag sensor LH.

NG → **Go to step 43**

OK

RS

42 CHECK SIDE AIRBAG SENSOR LH

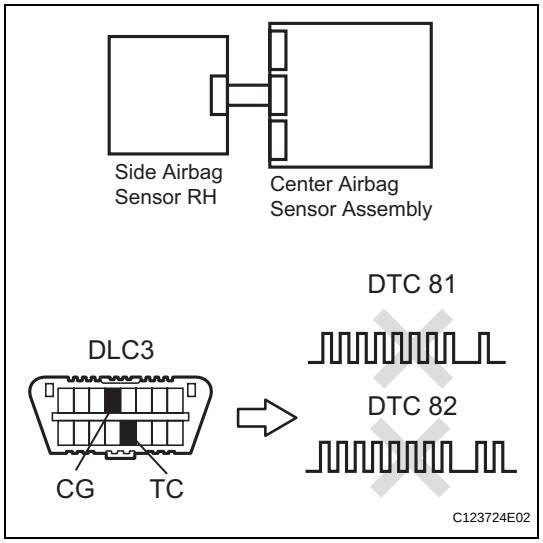

(a) Interchange the side airbag sensor RH with LH and connect the connectors to them.
(b) Connect the negative (-) terminal cable to the battery, and wait for at least 2 seconds.
(c) Turn the engine switch on (IG), and wait for at least 60 seconds.
(d) Clear the DTCs stored in the the memory (See page RS-49).
(e) Turn the engine switch off.
(f) Turn the engine switch on (IG), and wait for at least 60 seconds.
(g) Check the DTCs (See page RS-49).

Result

Result	Proceed to
DTC B1623, B1633, B1643, or 81 is output.	A
DTC B1628, B1638, B1648, or 82 is output.	B
DTC B1623, B1633, B1643, or 81 and B1628, B1638, B1648, or 82 are not output.	C

(h) Turn the engine switch off.
(i) Disconnect the negative (-) terminal cable from the battery, and wait for at least 90 seconds.
(j) Return the side airbag sensor RH and LH to their original positions and connect the connectors to them.

B → **REPLACE SIDE AIRBAG SENSOR LH (See page RS-477)**

C → **USE SIMULATION METHOD TO CHECK (See page RS-37)**

A

43 CHECK CENTER AIRBAG SENSOR ASSEMBLY

(a) Connect the negative (-) terminal cable to the battery, and wait for at least 2 seconds.
(b) Turn the engine switch on (IG), and wait for at least 60 seconds.
(c) Clear the DTCs stored in the memory (See page RS-49).
(d) Turn the engine switch off.
(e) Turn the engine switch on (IG), and wait for at least 60 seconds.
(f) Check the DTCs (See page RS-49).

OK:

DTC B1623, B1633, B1643, or 81 is not output.

HINT:
Codes other than DTC B1623, B1633, B1643, or 81 may be output at this time, but they are not related to this check.

NG → **REPLACE CENTER AIRBAG SENSOR ASSEMBLY (See page RS-468)**

OK

RS

USE SIMULATION METHOD TO CHECK (See page RS-37)

DTC	B1625/22	Front Passenger Side - Side Airbag Sensor Malfunction

DESCRIPTION

The side airbag sensor RH consists of the safing sensor, the diagnostic circuit, the lateral deceleration sensor, etc.
If the center airbag sensor assembly receives signals from the lateral deceleration sensor, it determines whether the SRS should be activated.
DTC B1625/22 is recorded when a malfunction is detected in the front passenger side - side airbag sensor circuit.

DTC No.	DTC Detection Condition	Trouble Area
B1625/22	• Side airbag sensor RH malfunction • Center airbag sensor assembly malfunction	• Side airbag sensor RH • Center airbag sensor assembly

WIRING DIAGRAM

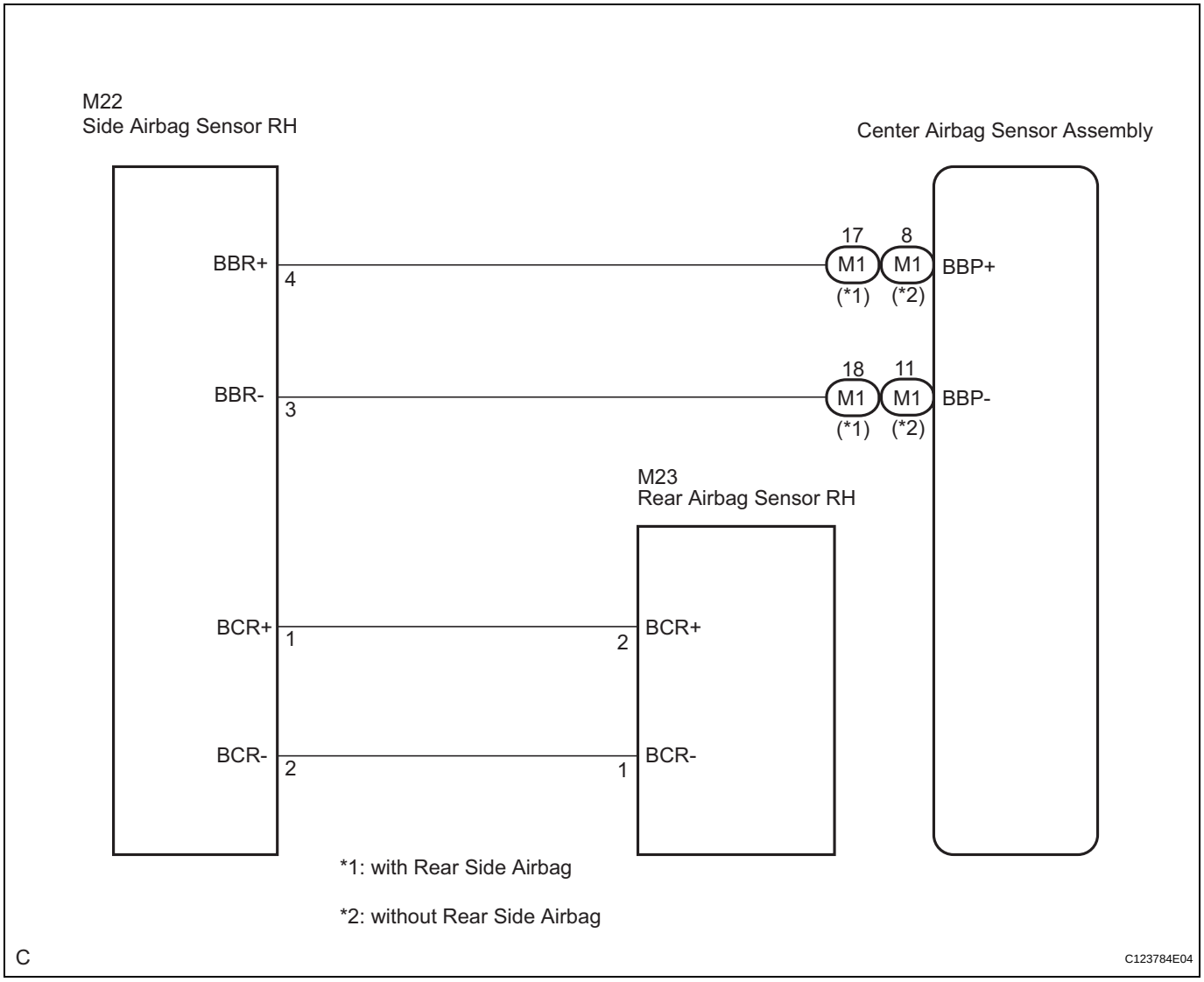

INSPECTION PROCEDURE

RS

1	CHECK DTC

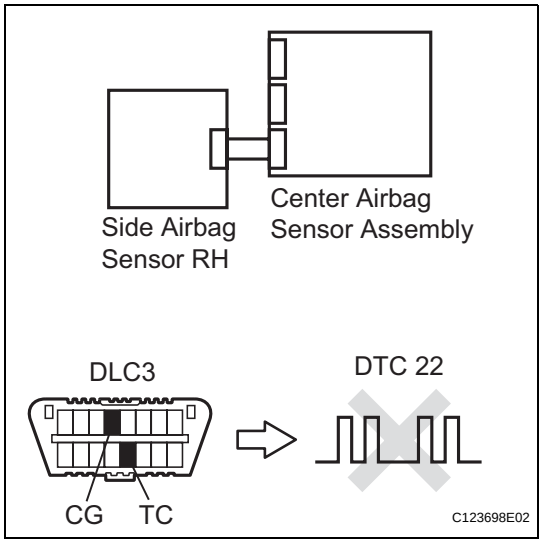

(a) Turn the engine switch on (IG), and wait for at least 60 seconds.
(b) Clear the DTCs stored in the memory (See page RS-49).
(c) Turn the engine switch off.
(d) Turn the engine switch on (IG), and wait for at least 60 seconds.
(e) Check the DTCs (See page RS-49).
OK:
DTC B1625/22 is not output.
HINT:
Codes other than DTC B1625/22 may be output at this time, but they are not related to this check.

OK → **USE SIMULATION METHOD TO CHECK (See page RS-37)**

NG

2	CONFIRM PART NUMBER OF SIDE AIRBAG SENSOR

(a) Turn the engine switch off.
(b) Disconnect the negative (-) terminal cable from the battery, and wait for at least 90 seconds.
(c) Check that the part number of the side airbag sensor RH is equal to the number of the other side.
OK:
Those numbers are the same.

NG → **Go to step 4**

OK

RS

3 CHECK SIDE AIRBAG SENSOR RH

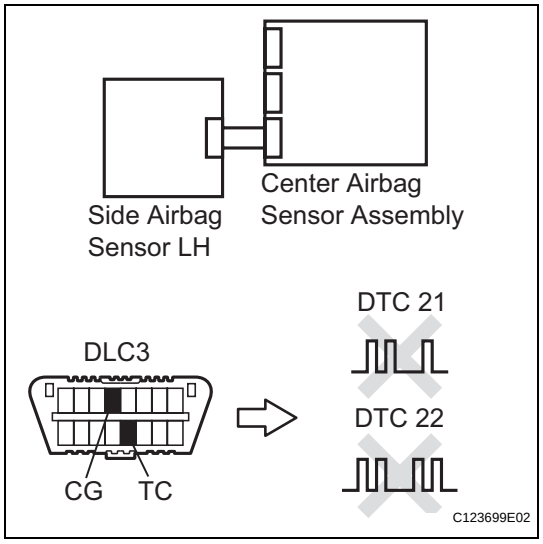

(a) Connect the connectors to the center airbag sensor assembly.
(b) Interchange the side airbag sensor LH with RH and connect the connectors to them.
(c) Connect the negative (-) terminal cable to the battery, and wait for at least 2 seconds.
(d) Turn the engine switch on (IG), and wait for at least 60 seconds.
(e) Clear the DTCs stored in the memory (See page RS-49).
(f) Turn the engine switch off.
(g) Turn the engine switch on (IG), and wait for at least 60 seconds.
(h) Check the DTCs (See page RS-49).

Result

Result	Proceed to
DTC B1625/22 is output.	A
DTC B1620/21 is output.	B
DTC B1620/21 and B1625/22 are not output.	C

HINT:
Codes other than DTC B1620/21 and B1625/22 may be output at this time, but they are not related to this check.

(i) Turn the engine switch off.
(j) Disconnect the negative (-) terminal cable from the battery, and wait for at least 90 seconds.
(k) Return the side airbag sensor LH and RH to their original positions and connect the connectors to them.

A → **Go to step 5**

B → **REPLACE SIDE AIRBAG SENSOR RH (See page RS-477)**

C

USE SIMULATION METHOD TO CHECK (See page RS-37)

4 REPLACE SIDE AIRBAG SENSOR RH

(a) Replace the side airbag sensor RH (See page RS-477).
HINT:
Perform inspection using parts from a normal vehicle if possible.

NEXT

RS

5	CHECK CENTER AIRBAG SENSOR ASSEMBLY

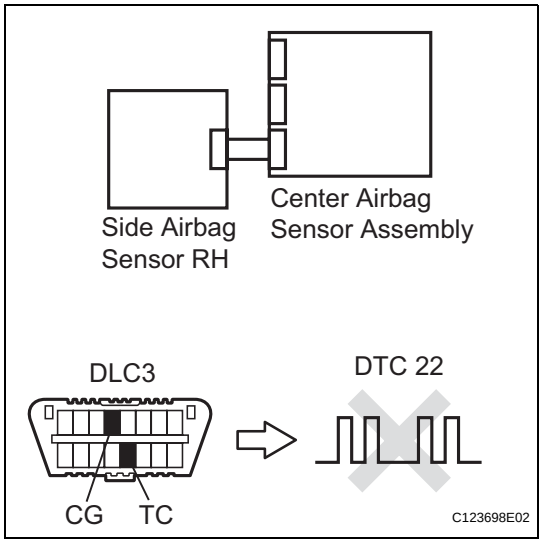

(a) Connect the negative (-) terminal cable to the battery, and wait for at least 2 seconds.
(b) Turn the engine switch on (IG), and wait for at least 60 seconds.
(c) Clear the DTCs stored in the memory (See page RS-49).
(d) Turn the engine switch off.
(e) Turn the engine switch on (IG), and wait for at least 60 seconds.
(f) Check the DTCs (See page RS-49).
OK:
DTC B1625/22 is not output.
HINT:
Codes other than DTC B1625/22 may be output at this time, but they are not related to this check.

NG → **REPLACE CENTER AIRBAG SENSOR ASSEMBLY (See page RS-468)**

OK

USE SIMULATION METHOD TO CHECK (See page RS-37)

DTC	**B1627/82**	**Lost Communication with Front Passenger Side - Side Airbag Sensor Assembly**

DTC	**B1628/82**	**Front Passenger Side - Side Airbag Sensor Assembly Initialization Incomplete**

DTC	**B1637/82**	**Lost Communication with Passenger Side Rear Airbag Sensor**

DTC	**B1638/82**	**Passenger Side Rear Airbag Sensor Initialization Incomplete**

DTC	**B1647/82**	**Lost Communication with Front Passenger Side Satellite Sensor Bus**

DTC	**B1648/82**	**Front Passenger Side Satellite Sensor Bus Initialization Incomplete**

DESCRIPTION

The circuit for the side collision sensor RH (to determine deployment of the front seat side airbag assembly RH and curtain shield airbag assembly RH) is composed of the center airbag sensor assembly, side airbag sensor RH, and rear airbag sensor RH.
The side airbag sensor RH and rear airbag sensor RH detect impacts to the vehicle and send signals to the center airbag sensor assembly to determine if the airbag should be deployed.
DTC B1627/82, B1628/82, B1637/82, B1638/82, B1647/82, or B1648/82 is recorded when a malfunction is detected in the circuit for the side collision sensor RH.

DTC No.	DTC Detecting Condition	Trouble Area
B1627/82 B1628/82 B1637/82 B1638/82 B1647/82 B1648/82	• The center airbag sensor assembly receives a line short circuit signal, an open circuit signal, a short circuit to ground signal or a short circuit to B+ signal in the circuit for the side collision sensor RH (to determine deployment of the front seat side airbag assembly RH and curtain shield airbag assembly RH) for 2 seconds. • Side airbag sensor RH malfunction • Rear airbag sensor RH malfunction • Center airbag sensor assembly malfunction	• Floor wire No. 2 • Side airbag sensor RH • Rear airbag sensor RH • Center airbag sensor assembly

RS

WIRING DIAGRAM

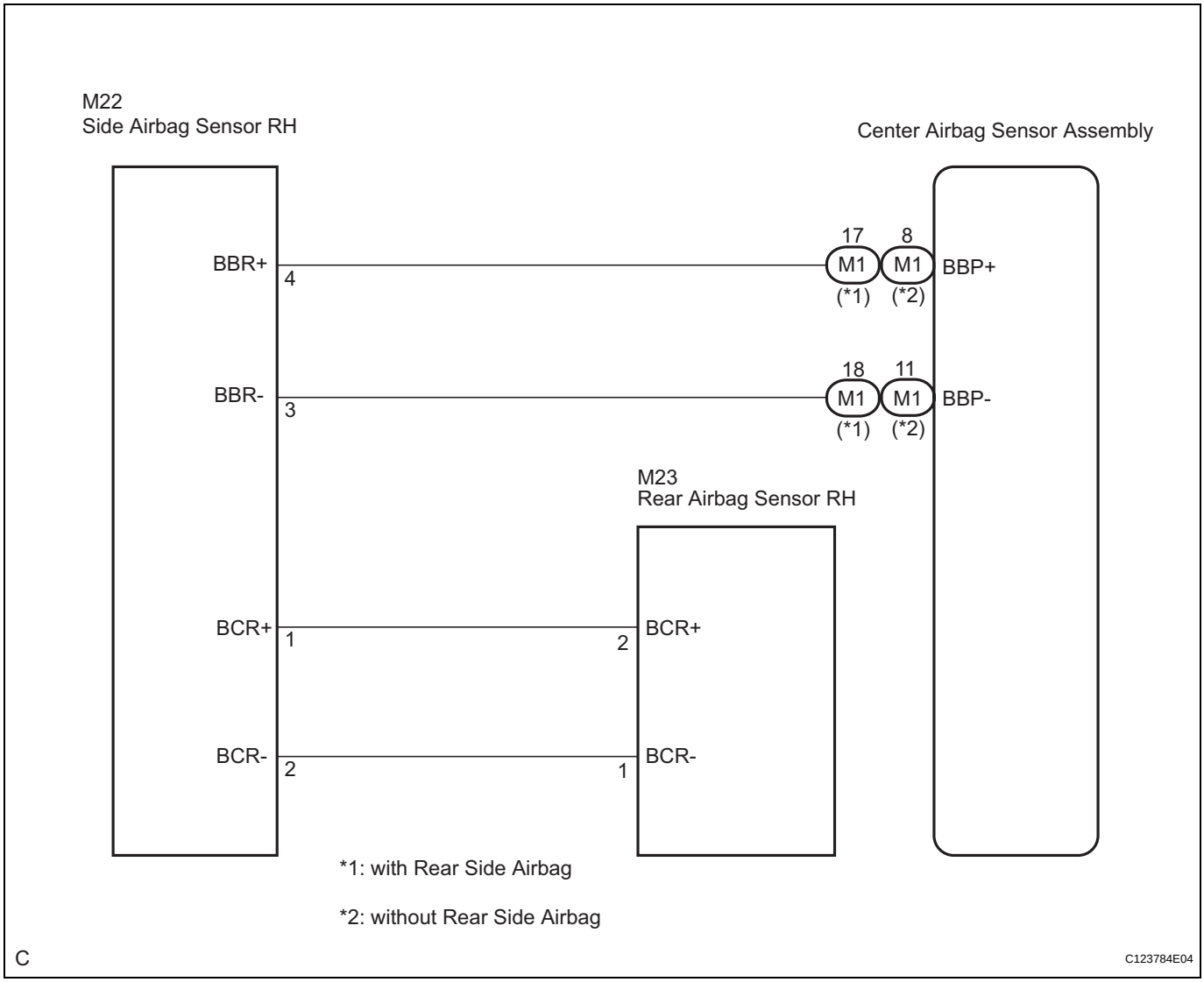

INSPECTION PROCEDURE

1	CHECK DTC

(a) Turn the engine switch on (IG), and wait for at least 60 seconds.

(b) Turn the engine switch off.
HINT:
If a communication error occurs, DTCs for both the LH and RH sides will be stored simultaneously. To identify the malfunctioning area, turn the engine switch off and then on (IG) again.

(c) Turn the engine switch on (IG), and wait for at least 60 seconds.

(d) Check the present DTCs (See page RS-49).
Result

Result	Proceed to
Present DTC B1628, B1638, B1648, or 82 is output.	**A**

Result	Proceed to
Present DTC B1623, B1633 B1643, or 81 is output.	B
Present DTC B1623, B1633, B1643, or 81 and B1628, B1638, B1648, or 82 are not output.	C

HINT:
- DTCs indicating communication errors will be changed to DTCs indicating errors in initialization by turning the engine switch off and then on (IG) again.
- Codes other than present DTC B1623, B1633, B1643, or 81 and B1628, B1638, B1648, or 82 may be output at this time, but they are not related to this check.

B → **REPAIR CIRCUITS INDICATED BY OUTPUT DTCS**

C → **USE SIMULATION METHOD TO CHECK (See page RS-37)**

A

2 CHECK PAST DTC

(a) Check the past DTCs (See page RS-49).
Result

Result	Proceed to
• Past DTC B1637, B1647, or 82 is output. • Past DTC B1627, B1637, B1647, or 82 is not output.	A
Past DTC B1627 is output.	B

HINT:
Codes other than past DTC B1627, B1637, B1647, or 82 may be output at this time, but they are not related to this check.

B → **Go to step 20**

A

3 CHECK CONNECTION OF CONNECTORS

(a) Turn the engine switch off.
(b) Disconnect the negative (-) terminal cable from the battery, and wait for at least 90 seconds.
(c) Check that the connectors are properly connected to the center airbag sensor assembly and the side airbag sensor RH.
OK:
The connectors are properly connected.

NG → **CONNECT CONNECTORS PROPERLY**

OK

4	CHECK CONNECTORS

RS

(a) Disconnect the connectors from the center airbag sensor assembly and side airbag sensor RH.
(b) Check that the connectors (on the center airbag sensor assembly side and side airbag sensor RH side) are not damaged.
OK:
The connectors are not deformed or damaged.

NG → **REPAIR OR REPLACE FLOOR WIRE NO. 2**

OK

5	CHECK FLOOR WIRE NO. 2 (OPEN)

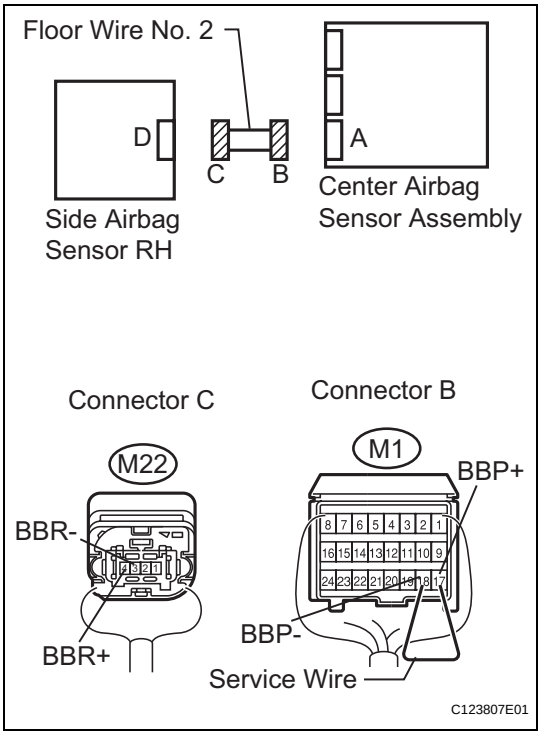

(a) with Rear side airbag:
Using a service wire, connect terminals 17 (BBP+) and 18 (BBP-) of connector B.
NOTICE:
Do not forcibly insert a service wire into the terminals of the connector when connecting the wire.

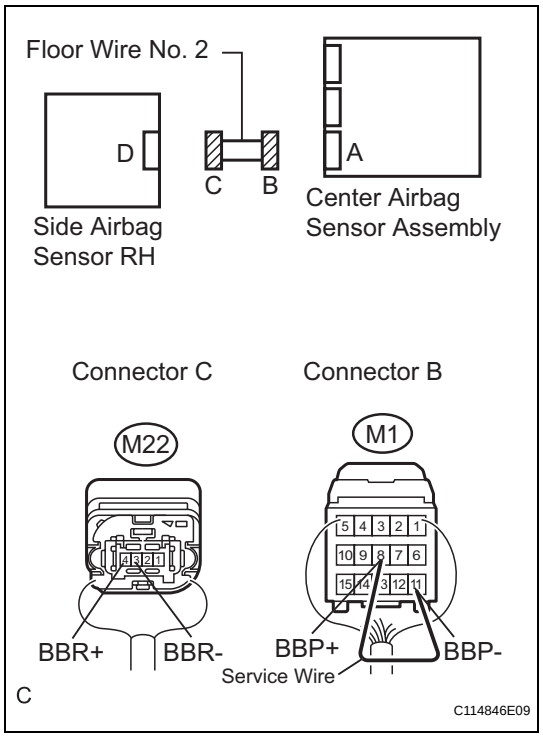

(b) without Rear side airbag:
Using a service wire, connect terminals 8 (BBP+) and 11 (BBP-) of connector B.
NOTICE:
Do not forcibly insert a service wire into the terminals of the connector when connecting the wire.

(c) Measure the resistance according to the value(s) in the table below.
Standard resistance

Tester Connection	Condition	Specified Condition
M22-4 (BBR+) - M22-3 (BBR-)	Always	Below 1 Ω

NG → **REPAIR OR REPLACE FLOOR WIRE NO. 2**

OK

6 CHECK FLOOR WIRE NO. 2 (SHORT)

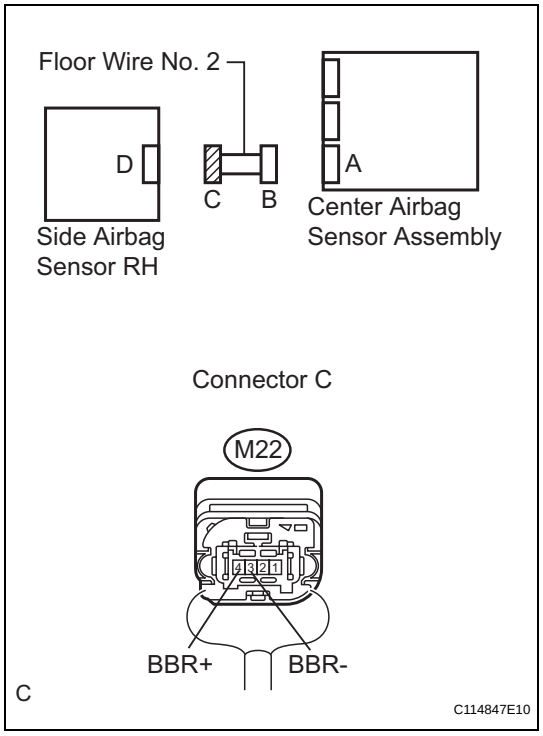

(a) Disconnect the service wire from connector B.

(b) Measure the resistance according to the value(s) in the table below.
Standard resistance

Tester Connection	Condition	Specified Condition
M22-4 (BBR+) - M22-3 (BBR-)	Always	1 MΩ or higher

NG → **REPAIR OR REPLACE FLOOR WIRE NO. 2**

OK

RS

7 CHECK FLOOR WIRE NO. 2 (SHORT TO B+)

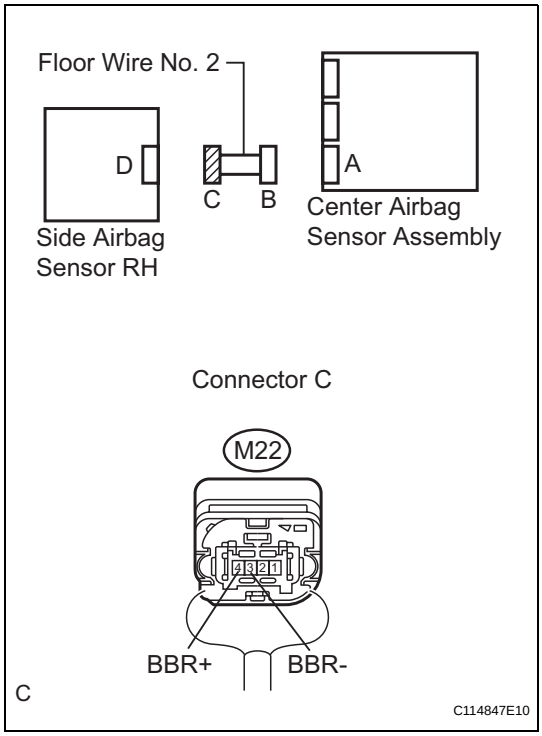

(a) Connect the negative (-) terminal cable to the battery, and wait for at least 2 seconds.
(b) Turn the engine switch on (IG).
(c) Measure the voltage according to the value(s) in the table below.

Standard voltage

Tester Connection	Condition	Specified Condition
M22-4 (BBR+) - Body ground	Engine switch on (IG)	Below 1 V
M22-3 (BBR-) - Body ground	Engine switch on (IG)	Below 1 V

NG → **REPAIR OR REPLACE FLOOR WIRE NO. 2**

OK

8 CHECK FLOOR WIRE NO. 2 (SHORT TO GROUND)

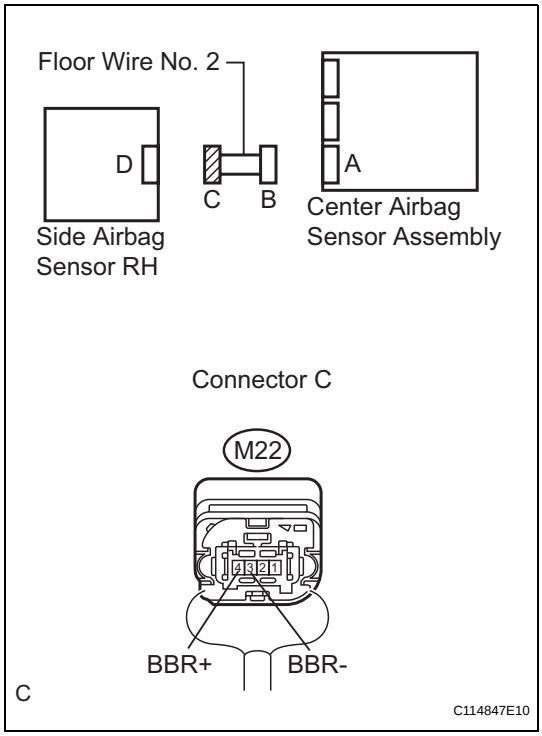

(a) Turn the engine switch off.
(b) Disconnect the negative (-) terminal cable from the battery, and wait for at least 90 seconds.
(c) Measure the resistance according to the value(s) in the table below.

Standard resistance

Tester Connection	Condition	Specified Condition
M22-4 (BBR+) - Body ground	Always	1 MΩ or higher
M22-3 (BBR-) - Body ground	Always	1 MΩ or higher

NG → **REPAIR OR REPLACE FLOOR WIRE NO. 2**

OK

RS

9	CONFIRM PART NUMBER OF SIDE AIRBAG SENSOR

(a) Check that the part number of the side airbag sensor RH is equal to the number of the other side.
OK:
Those numbers are the same.

(b) Connect the connectors to the center airbag sensor assembly and the side airbag sensor RH.

NG → **Go to step 11**

OK

10	CHECK SIDE AIRBAG SENSOR RH

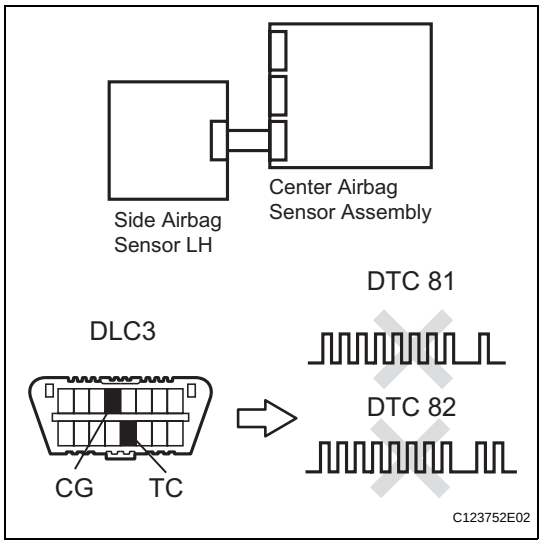

(a) Interchange the side airbag sensor LH with RH and connect the connectors to them.
(b) Connect the negative (-) terminal cable to the battery, and wait for at least 2 seconds.
(c) Turn the engine switch on (IG), and wait for at least 60 seconds.
(d) Clear the DTCs stored in the memory (See page RS-49).
(e) Turn the engine switch off.
(f) Turn the engine switch on (IG), and wait for at least 60 seconds.
(g) Check the DTCs (See page RS-49).
Result

Result	Proceed to
DTC B1628, B1638, B1648, or 82 is output.	A
DTC B1623, B1633, B1643, or 81 is output.	B
DTC B1623, B1633, B1643, or 81 and B1628, B1638, B1648, or 82 are not output.	C

(h) Turn the engine switch off.
(i) Disconnect the negative (-) terminal cable from the battery, and wait for at least 90 seconds.
(j) Return the side airbag sensor LH and RH to their original positions and connect the connectors to them.

B → **REPLACE SIDE AIRBAG SENSOR RH (See page RS-477)**

C → **USE SIMULATION METHOD TO CHECK (See page RS-37)**

A

11	CHECK CONNECTION OF CONNECTOR

(a) Check that the connector is properly connected to the rear airbag sensor RH.
OK:
The connector is properly connected.

NG → **CONNECT CONNECTOR PROPERLY**

OK

RS

12 CHECK CONNECTOR

(a) Disconnect the connectors from the side airbag sensor RH and rear airbag sensor RH.
(b) Check that the connector (on the rear airbag sensor RH side) is not damaged.
OK:
The connector is not deformed or damaged.

NG → **REPAIR OR REPLACE FLOOR WIRE NO. 2**

OK

13 CHECK FLOOR WIRE NO. 2 (OPEN)

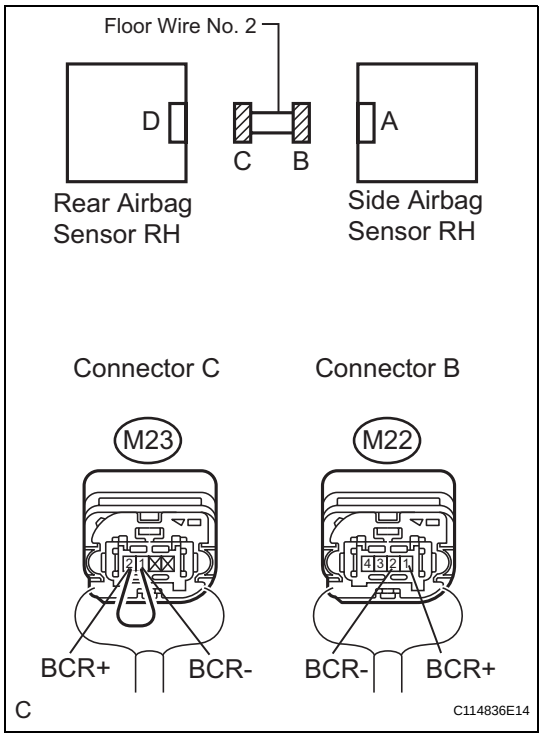

(a) Using a service wire, connect terminals 2 (BCR+) and 1 (BCR-) of connector C.
NOTICE:
Do not forcibly insert a service wire into the terminals of the connector when connecting the wire.
(b) Measure the resistance according to the value(s) in the table below.
Standard resistance

Tester Connection	Condition	Specified Condition
M22-2 (BCR-) - M22-1 (BCR+)	Always	Below 1 Ω

NG → **REPAIR OR REPLACE FLOOR WIRE NO. 2**

OK

RS

14 CHECK FLOOR WIRE NO. 2 (SHORT)

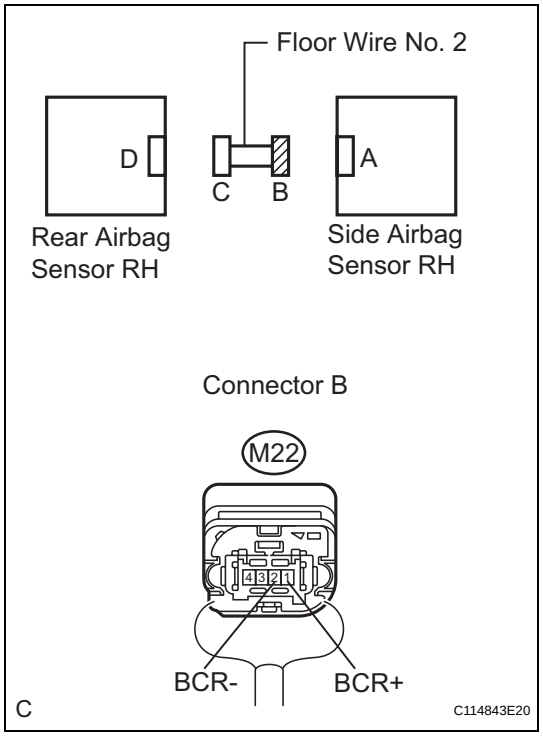

(a) Disconnect the service wire from connector C.
(b) Measure the resistance according to the value(s) in the table below.

Standard resistance

Tester Connection	Condition	Specified Condition
M22-1 (BCR+) - M22-2 (BCR-)	Always	1 MΩ or higher

NG → **REPAIR OR REPLACE FLOOR WIRE NO. 2**

OK

15 CHECK FLOOR WIRE NO. 2 (SHORT TO B+)

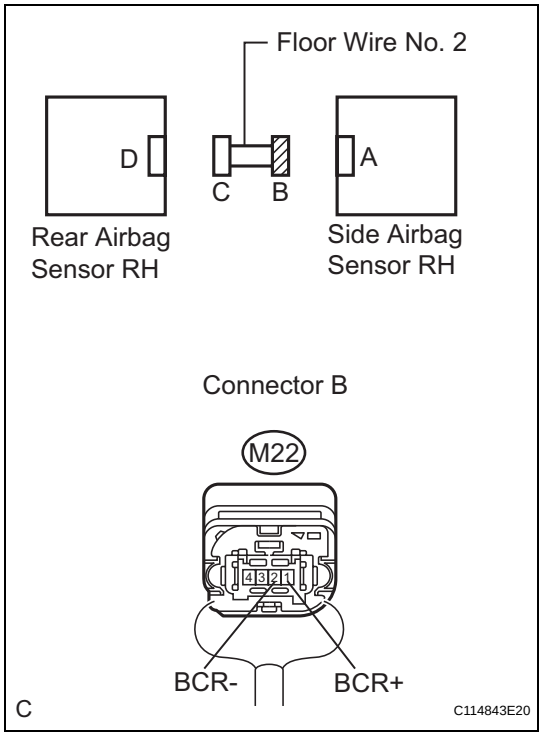

(a) Connect the negative (-) terminal cable to the battery, and wait for at least 2 seconds.
(b) Turn the engine switch on (IG).
(c) Measure the voltage according to the value(s) in the table below.

Standard voltage

Tester Connection	Condition	Specified Condition
M22-1 (BCR+) - Body ground	Engine switch on (IG)	Below 1 V
M22-2 (BCR-) - Body ground	Engine switch on (IG)	Below 1 V

NG → **REPAIR OR REPLACE FLOOR WIRE NO. 2**

OK

RS

16 CHECK FLOOR WIRE NO. 2 (SHORT TO GROUND)

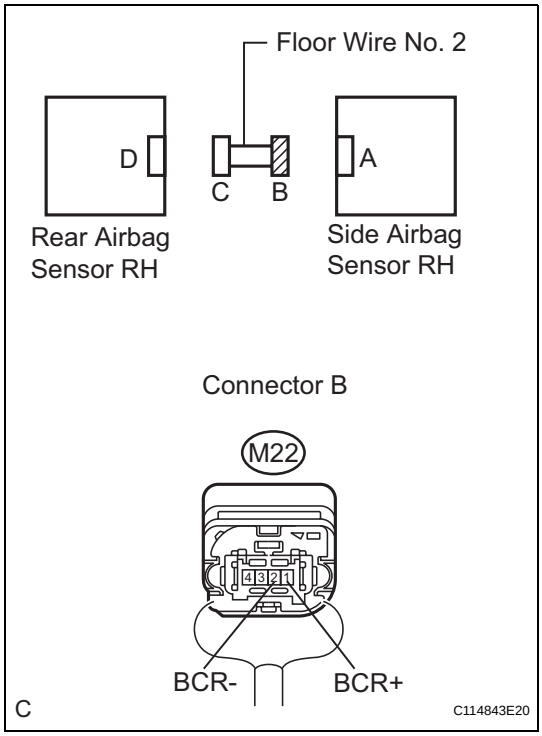

(a) Turn the engine switch off.
(b) Disconnect the negative (-) terminal cable from the battery, and wait for at least 90 seconds.
(c) Measure the resistance according to the value(s) in the table below.
Standard resistance

Tester Connection	Condition	Specified Condition
M22-1 (BCR+) - Body ground	Always	1 MΩ or higher
M22-2 (BCR-) - Body ground	Always	1 MΩ or higher

NG → **REPAIR OR REPLACE FLOOR WIRE NO. 2**

OK

17 CONFIRM PART NUMBER OF REAR AIRBAG SENSOR

(a) Check that the part number of the rear airbag sensor RH is equal to the number of the other side.
OK:
Those numbers are the same.
(b) Connect the connectors to the side airbag sensor RH and the rear airbag sensor RH.

NG → **Go to step 19**

OK

RS

18 CHECK REAR AIRBAG SENSOR RH

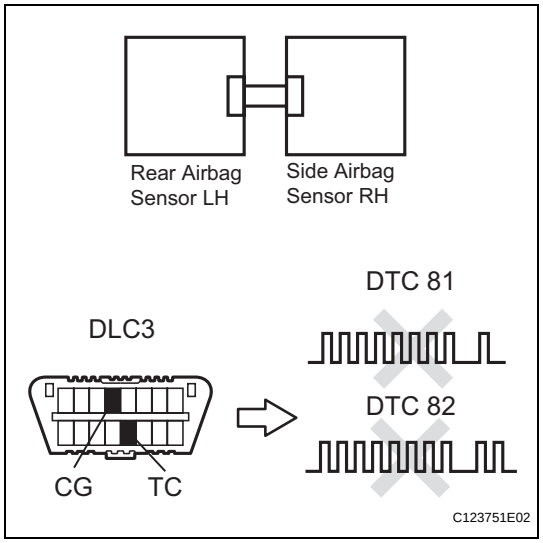

(a) Interchange the side airbag sensor LH with RH and connect the connectors to them.
(b) Connect the negative (-) terminal cable to the battery, and wait for at least 2 seconds.
(c) Turn the engine switch on (IG), and wait for at least 60 seconds.
(d) Clear the DTCs stored in the memory (See page RS-49).
(e) Turn the engine switch off.
(f) Turn the engine switch on (IG), and wait for at least 60 seconds.
(g) Check the DTCs (See page RS-49).
Result

Result	Proceed to
DTC B1628, B1638, B1648, or 82 is output.	**A**
DTC B1623, B1633, B1643, or 81 is output.	**B**
DTC B1623, B1633, B1643, or 81 and B1628, B1638, B1648, or 82 are not output.	**C**

HINT:
Codes other than DTC B1623, B1633, B1643, or 81 and B1628, B1638, B1648, or 82 may be output at this time, but they are not related to this check.
(h) Turn the engine switch off.
(i) Disconnect the negative (-) terminal cable from the battery, and wait for at least 90 seconds.
(j) Return the rear airbag sensor LH and RH to their original positions and connect the connectors to them.

B → **REPLACE REAR AIRBAG SENSOR RH (See page RS-480)**

C → **USE SIMULATION METHOD TO CHECK (See page RS-37)**

A

19 CHECK CENTER AIRBAG SENSOR ASSEMBLY

(a) Connect the negative (-) terminal cable to the battery, and wait for at least 2 seconds.
(b) Turn the engine switch on (IG), and wait for at least 60 seconds.
(c) Clear the DTCs stored in the memory (See page RS-49).
(d) Turn the engine switch off.
(e) Turn the engine switch on (IG), and wait for at least 60 seconds.
(f) Check the DTCs (See page RS-49).
OK:
DTC B1628, B1638, B1648, or 82 is not output.

HINT:
Codes other than DTC B1628, B1638, B1648, or 82 may be output at this time, but they are not related to this check.

NG → **REPLACE CENTER AIRBAG SENSOR ASSEMBLY (See page RS-468)**

RS

OK

USE SIMULATION METHOD TO CHECK (See page RS-37)

20 CHECK CONNECTION OF CONNECTORS

(a) Turn the engine switch off.
(b) Disconnect the negative (-) terminal cable from the battery, and wait for at least 90 seconds.
(c) Check that the connectors are properly connected to the center airbag sensor assembly and the side airbag sensor RH.
OK:
The connectors are properly connected.

NG → **CONNECT CONNECTORS PROPERLY**

OK

21 CHECK CONNECTORS

(a) Disconnect the connectors from the center airbag sensor assembly and side airbag sensor RH.
(b) Check that the connectors (on the center airbag sensor assembly side and side airbag sensor RH side) are not damaged.
OK:
The connectors are not deformed or damaged.

NG → **REPAIR OR REPLACE FLOOR WIRE NO. 2**

OK

RS

22 CHECK FLOOR WIRE NO. 2 (OPEN)

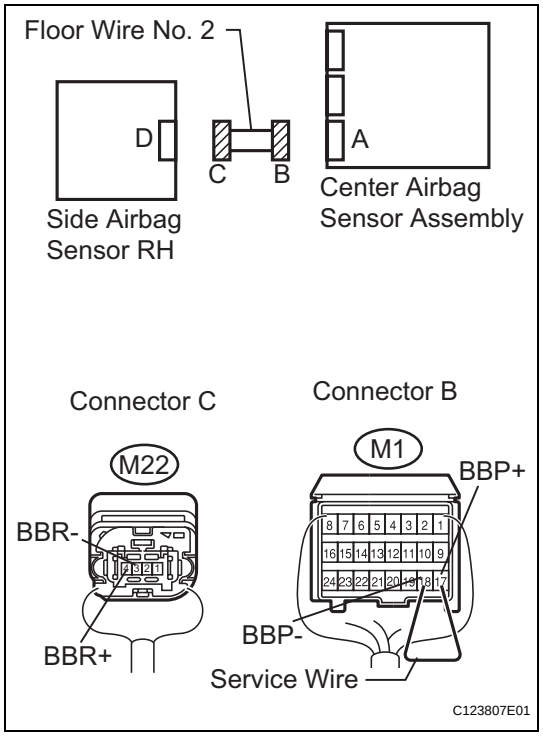

(a) with Rear side airbag:
Using a service wire, connect terminals 17 (BBP+) and 18 (BBP-) of connector B.
NOTICE:
Do not forcibly insert a service wire into the terminals of the connector when connecting the wire.

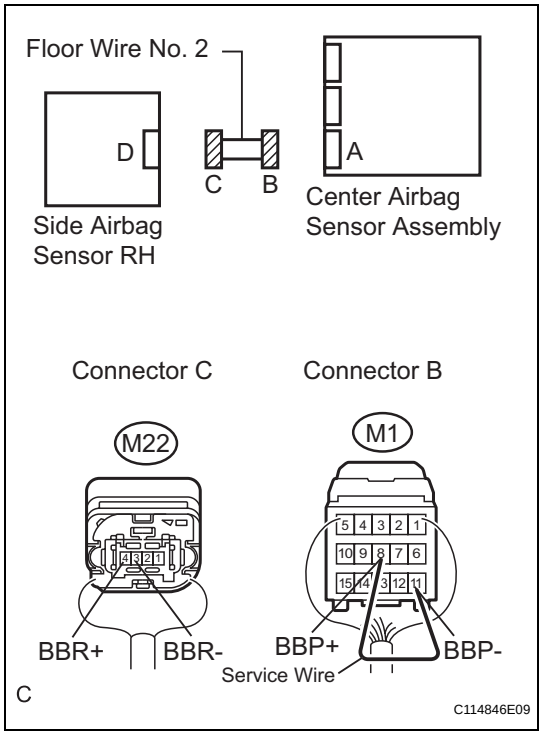

(b) without Rear side airbag:
Using a service wire, connect terminals 8 (BBP+) and 11 (BBP-) of connector B.
NOTICE:
Do not forcibly insert a service wire into the terminals of the connector when connecting the wire.

(c) Measure the resistance according to the value(s) in the table below.
Standard resistance

Tester Connection	Condition	Specified Condition
M22-4 (BBR+) - M22-3 (BBR-)	Always	Below 1 Ω

NG → **REPAIR OR REPLACE FLOOR WIRE NO. 2**

OK

RS

23 CHECK FLOOR WIRE NO. 2 (SHORT)

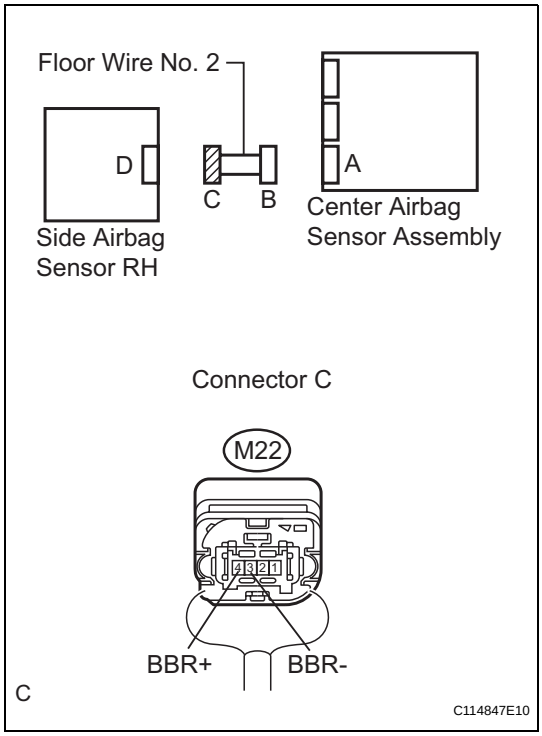

(a) Disconnect the service wire from connector B.
(b) Measure the resistance according to the value(s) in the table below.

Standard resistance

Tester Connection	Condition	Specified Condition
M22-4 (BBR+) - M22-3 (BBR-)	Always	1 MΩ or higher

NG → **REPAIR OR REPLACE FLOOR WIRE NO. 2**

OK

24 CHECK FLOOR WIRE NO. 2 (SHORT TO B+)

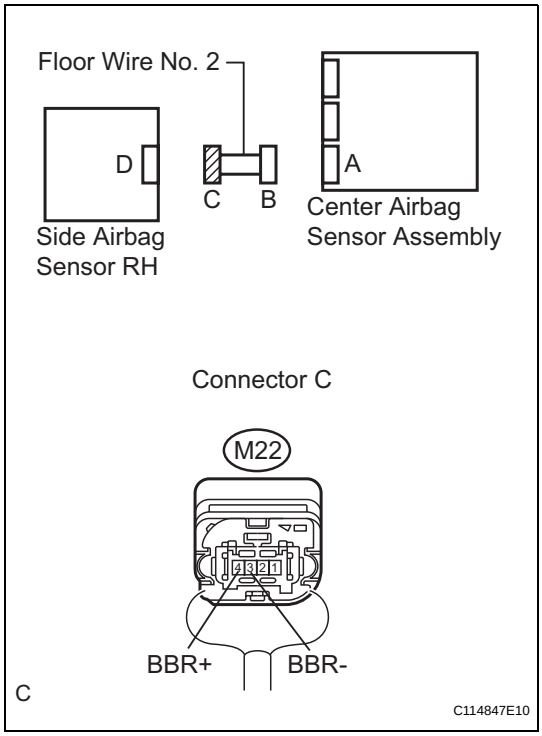

(a) Connect the negative (-) terminal cable to the battery, and wait for at least 2 seconds.
(b) Turn the engine switch on (IG).
(c) Measure the voltage according to the value(s) in the table below.

Standard voltage

Tester Connection	Condition	Specified Condition
M22-4 (BBR+) - Body ground	Engine switch on (IG)	Below 1 V
M22-3 (BBR-) - Body ground	Engine switch on (IG)	Below 1 V

NG → **REPAIR OR REPLACE FLOOR WIRE NO. 2**

OK

RS

25 CHECK FLOOR WIRE NO. 2 (SHORT TO GROUND)

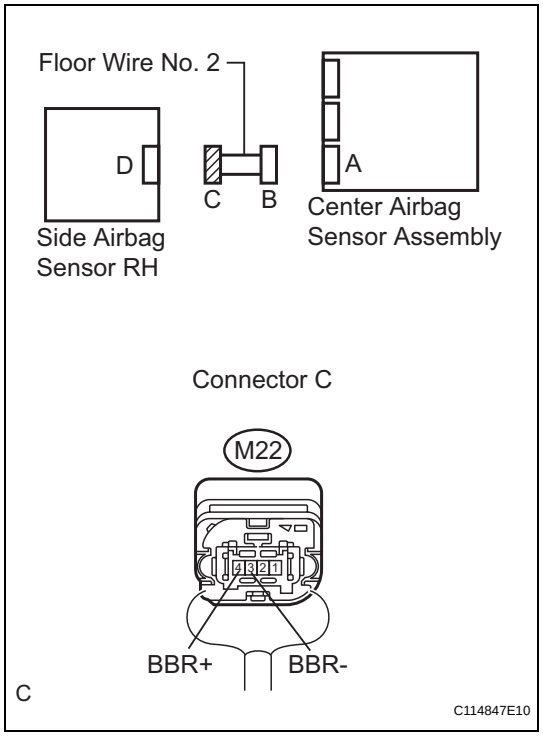

(a) Turn the engine switch off.
(b) Disconnect the negative (-) terminal cable from the battery, and wait for at least 90 seconds.
(c) Measure the resistance according to the value(s) in the table below.
Standard resistance

Tester Connection	Condition	Specified Condition
M22-4 (BBR+) - Body ground	Always	1 MΩ or higher
M22-3 (BBR-) - Body ground	Always	1 MΩ or higher

NG → **REPAIR OR REPLACE FLOOR WIRE NO. 2**

OK

26 CONFIRM PART NUMBER OF SIDE AIRBAG SENSOR

(a) Check that the part number of the side airbag sensor RH is equal to the number of the other side.
OK:
Those numbers are the same.
(b) Connect the connectors to the center airbag sensor assembly and the side airbag sensor RH.

NG → **Go to step 28**

OK

RS

27 CHECK SIDE AIRBAG SENSOR RH

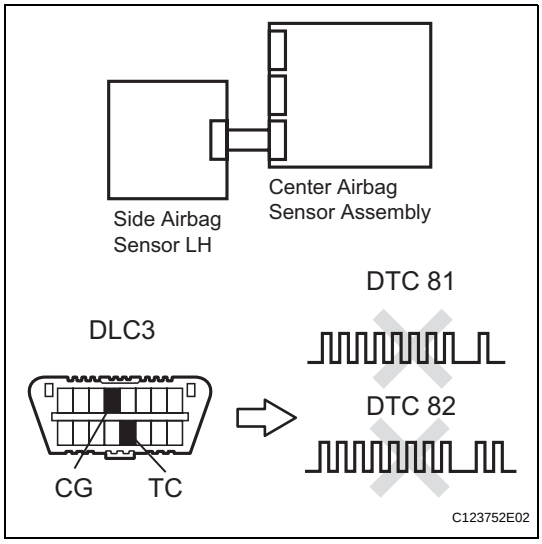

(a) Interchange the side airbag sensor LH with RH and connect the connectors to them.
(b) Connect the negative (-) terminal cable to the battery, and wait for at least 2 seconds.
(c) Turn the engine switch on (IG), and wait for at least 60 seconds.
(d) Clear the DTCs stored in the memory (See page RS-49).
(e) Turn the engine switch off.
(f) Turn the engine switch on (IG), and wait for at least 60 seconds.
(g) Check the DTCs (See page RS-49).
Result

Result	Proceed to
DTC B1628, B1638, B1648, or 82 is output.	**A**
DTC B1623, B1633, B1643, or 81 is output.	**B**
DTC B1623, B1633, B1643, or 81 and B1628, B1638, B1648, or 82 are not output.	**C**

(h) Turn the engine switch off.
(i) Disconnect the negative (-) terminal cable from the battery, and wait for at least 90 seconds.
(j) Return the side airbag sensor LH and RH to their original positions and connect the connectors to them.

B → **REPLACE SIDE AIRBAG SENSOR RH (See page RS-477)**

C → **USE SIMULATION METHOD TO CHECK (See page RS-37)**

A

28 CHECK CENTER AIRBAG SENSOR ASSEMBLY

(a) Connect the negative (-) terminal cable to the battery, and wait for at least 2 seconds.
(b) Turn the engine switch on (IG), and wait for at least 60 seconds.
(c) Clear the DTCs stored in the memory (See page RS-49).
(d) Turn the engine switch off.
(e) Turn the engine switch on (IG), and wait for at least 60 seconds.
(f) Check the DTCs (See page RS-49).
OK:
DTC B1628, B1638, B1648, or 82 is not output.
HINT:
Codes other than DTC B1628, B1638, B1648, or 82 may be output at this time, but they are not related to this check.

NG → **REPLACE CENTER AIRBAG SENSOR ASSEMBLY (See page RS-468)**

OK

USE SIMULATION METHOD TO CHECK (See page RS-37)

DTC	B1630/23	Driver Side Rear Airbag Sensor Malfunction

DESCRIPTION

The rear airbag sensor LH consists of the safing sensor, the diagnostic circuit, the lateral deceleration sensor, etc.

RS

If the center airbag sensor assembly receives signals from the lateral deceleration sensor, it determines whether the SRS should be activated.

DTC B1630/23 is recorded when a malfunction is detected in the driver side rear airbag sensor circuit.

DTC No.	DTC Detection Condition	Trouble Area
B1630/23	• Rear airbag sensor LH malfunction • Center airbag sensor assembly malfunction	• Rear airbag sensor LH • Center airbag sensor assembly

WIRING DIAGRAM

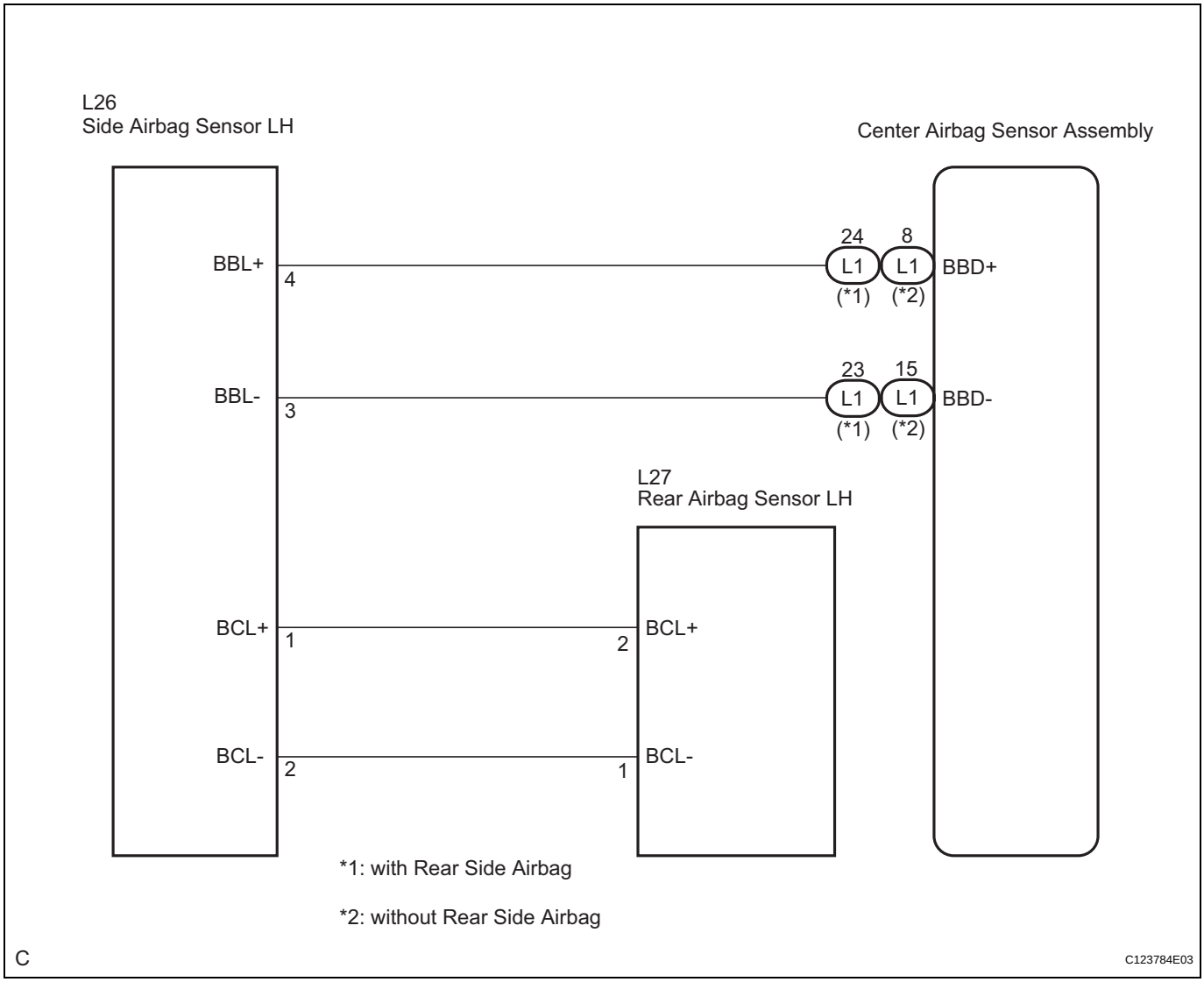

INSPECTION PROCEDURE

1	CHECK DTC

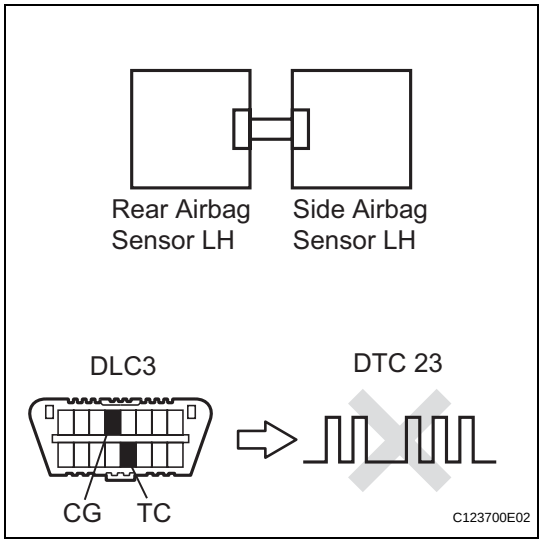

(a) Turn the engine switch on (IG), and wait for at least 60 seconds.
(b) Clear the DTCs stored in the memory (See page RS-49).
(c) Turn the engine switch off.
(d) Turn the engine switch on (IG), and wait for at least 60 seconds.
(e) Check the DTCs (See page RS-49).
OK:
DTC B1630/23 is not output.

OK → **USE SIMULATION METHOD TO CHECK (See page RS-37)**

NG

2	CONFIRM PART NUMBER OF REAR AIRBAG SENSOR

(a) Turn the engine switch off.
(b) Disconnect the negative (-) terminal cable from the battery, and wait for at least 90 seconds.
(c) Check that the part number of the rear airbag sensor LH is equal to the number of the other side.
OK:
Those numbers are the same.

NG → **Go to step 4**

OK

RS

3 CHECK REAR AIRBAG SENSOR LH

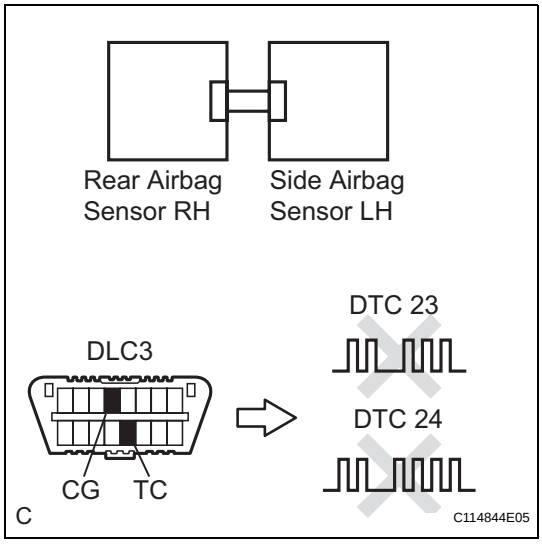

(a) Interchange the rear airbag sensor RH with LH and connect the connectors to them.
(b) Connect the negative (-) terminal cable to the battery, and wait for at least 2 seconds.
(c) Turn the engine switch on (IG), and wait for at least 60 seconds.
(d) Clear the DTCs stored in the memory (See page RS-49).
(e) Turn the engine switch off.
(f) Turn the engine switch on (IG), and wait for at least 60 seconds.
(g) Check the DTCs (See page RS-49).
Result

Result	Proceed to
DTC B1630/23 is output.	**A**
DTC B1635/24 is output.	**B**
DTC B1630/23 and B1635/24 are not output.	**C**

HINT:
Codes other than DTC B1630/23 and B1635/24 may be output at this time, but they are not related to this check.
(h) Turn the engine switch off.
(i) Disconnect the negative (-) terminal cable from the battery, and wait for at least 90 seconds.
(j) Return the rear airbag sensor RH and LH to their original positions and connect the connectors to them.

A → **Go to step 5**

B → **REPLACE REAR AIRBAG SENSOR LH (See page RS-480)**

C

USE SIMULATION METHOD TO CHECK (See page RS-37)

4 REPLACE REAR AIRBAG SENSOR LH

(a) Replace the rear airbag sensor LH (See page RS-480).
HINT:
Perform inspection using parts from a normal vehicle if possible.

NEXT

5	CHECK CENTER AIRBAG SENSOR ASSEMBLY

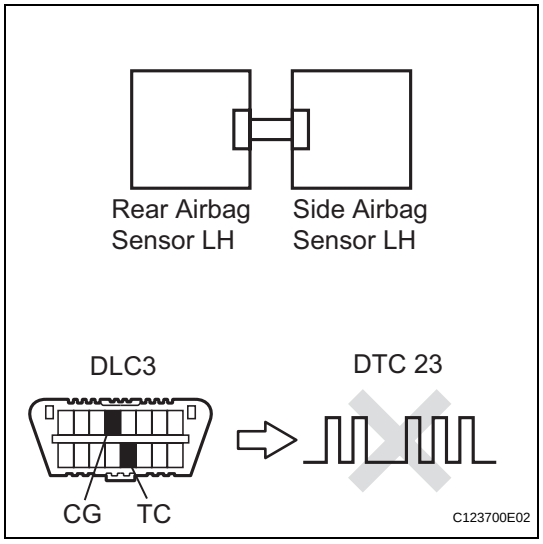

(a) Connect the negative (-) terminal cable to the battery, and wait for at least 2 seconds.
(b) Turn the engine switch on (IG), and wait for at least 60 seconds.
(c) Clear the DTCs stored in the memory (See page RS-49).
(d) Turn the engine switch off.
(e) Turn the engine switch on (IG), and wait for at least 60 seconds.
(f) Check the DTCs (See page RS-49).
OK:
DTC B1630/23 is not output.
HINT:
Codes other than DTC B1630/23 and B1635/24 may be output at this time, but they are not related to this check.

NG → **REPLACE CENTER AIRBAG SENSOR ASSEMBLY (See page RS-468)**

OK

USE SIMULATION METHOD TO CHECK (See page RS-37)

RS

DTC	B1635/24	Front Passenger Side Rear Airbag Sensor Malfunction

DESCRIPTION

RS

The rear airbag sensor RH consists of the safing sensor, the diagnostic circuit, the lateral deceleration sensor, etc.
If the center airbag sensor assembly receives signals from the lateral deceleration sensor, it determines whether the SRS should be activated.
DTC B1635/24 is recorded when a malfunction is detected in the front passenger side rear airbag sensor circuit.

DTC No.	DTC Detection Condition	Trouble Area
B1635/24	• Rear airbag sensor RH malfunction • Center airbag sensor assembly malfunction	• Rear airbag sensor RH • Center airbag sensor assembly

WIRING DIAGRAM

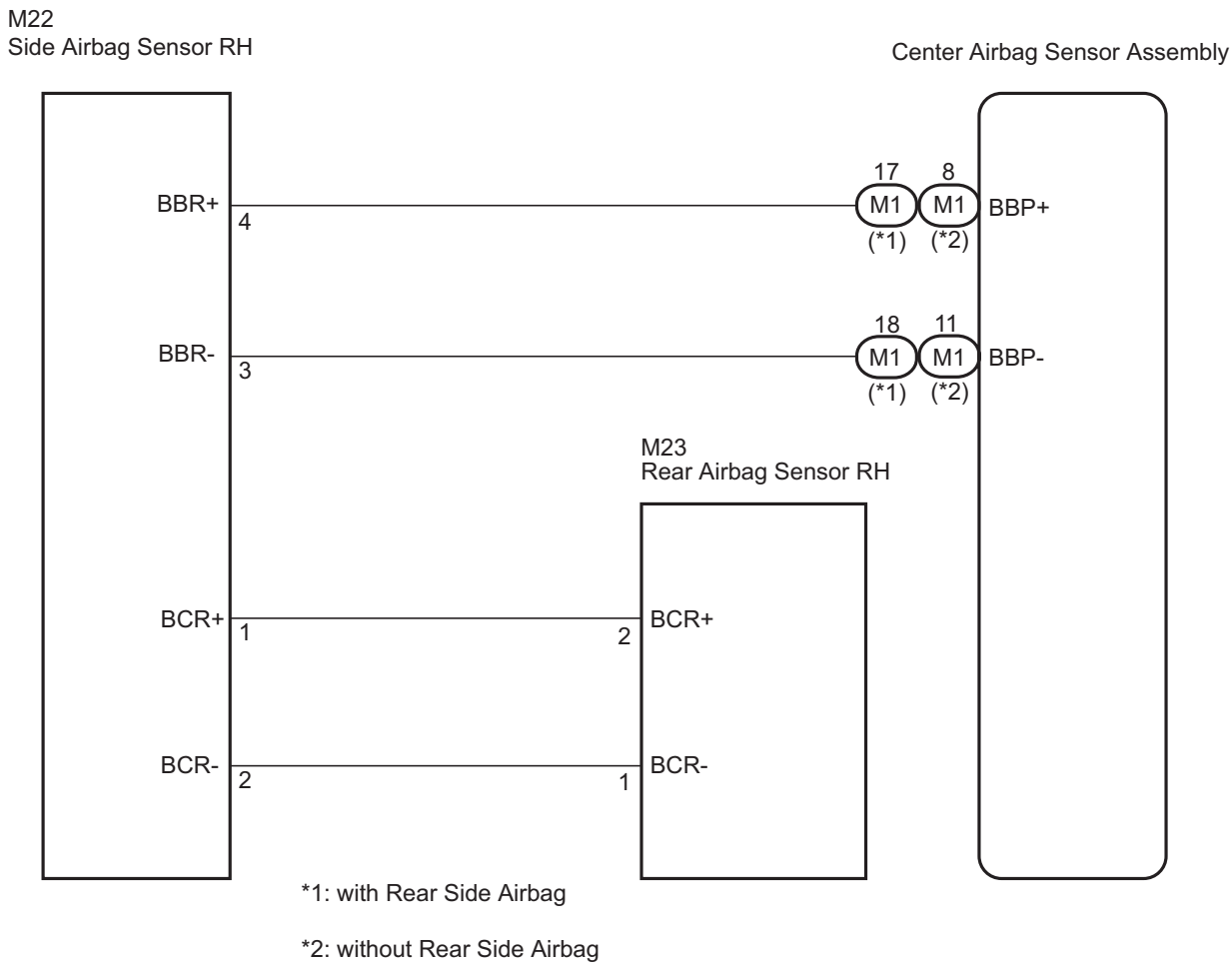

INSPECTION PROCEDURE

1	CHECK DTC

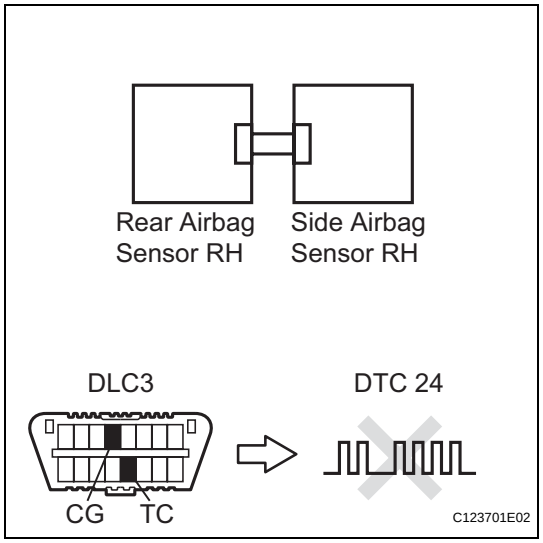

(a) Turn the engine switch on (IG), and wait for at least 60 seconds.
(b) Clear the DTCs stored in the memory (See page RS-49).
(c) Turn the engine switch off.
(d) Turn the engine switch on (IG), and wait for at least 60 seconds.
(e) Check the DTCs (See page RS-49).
OK:
DTC B1635/24 is not output.
HINT:
Codes other than DTC B1635/24 may be output at this time, but they are not related to this check.

OK → **USE SIMULATION METHOD TO CHECK (See page RS-37)**

NG

2	CONFIRM PART NUMBER OF REAR AIRBAG SENSOR

(a) Turn the engine switch off.
(b) Disconnect the negative (-) terminal cable from the battery, and wait for at least 90 seconds.
(c) Check that the part number of the rear airbag sensor RH is equal to the number of the other side.
OK:
Those numbers are the same.

NG → **Go to step 4**

OK

RS

3 CHECK REAR AIRBAG SENSOR RH

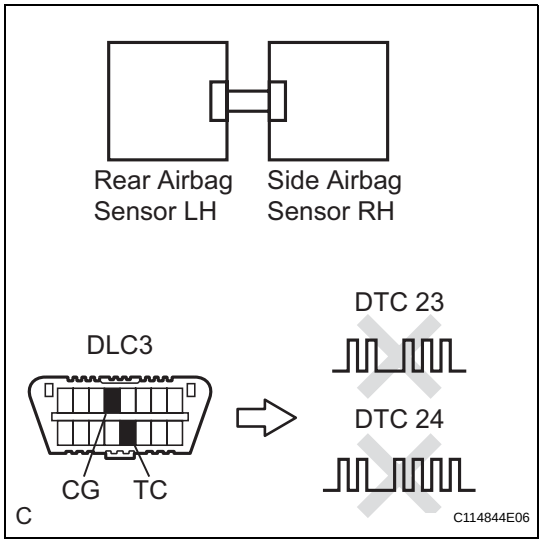

(a) Interchange the rear airbag sensor LH with RH and connect the connectors to them.
(b) Connect the negative (-) terminal cable to the battery, and wait for at least 2 seconds.
(c) Turn the engine switch on (IG), and wait for at least 60 seconds.
(d) Clear the DTCs stored in the memory (See page RS-49).
(e) Turn the engine switch off.
(f) Turn the engine switch on (IG), and wait for at least 60 seconds.
(g) Check the DTCs (See page RS-49).

Result

Result	Proceed to
DTC B1635/24 is output.	**A**
DTC B1630/23 is output.	**B**
DTC B1630/23 and B1635/24 are not output.	**C**

HINT:
Codes other than DTC B1630/23 and B1635/24 may be output at this time, but they are not related to this check.

(h) Turn the engine switch off.
(i) Disconnect the negative (-) terminal cable from the battery, and wait for at least 90 seconds.
(j) Return the rear airbag sensor LH and RH to their original positions and connect the connectors to them.

A → **Go to step 5**

B → **REPLACE REAR AIRBAG SENSOR RH (See page RS-480)**

C

USE SIMULATION METHOD TO CHECK (See page RS-37)

4 REPLACE REAR AIRBAG SENSOR RH

(a) Replace the rear airbag sensor RH (See page RS-480).
HINT:
Perform inspection using parts from a normal vehicle if possible.

NEXT

5	CHECK CENTER AIRBAG SENSOR ASSEMBLY

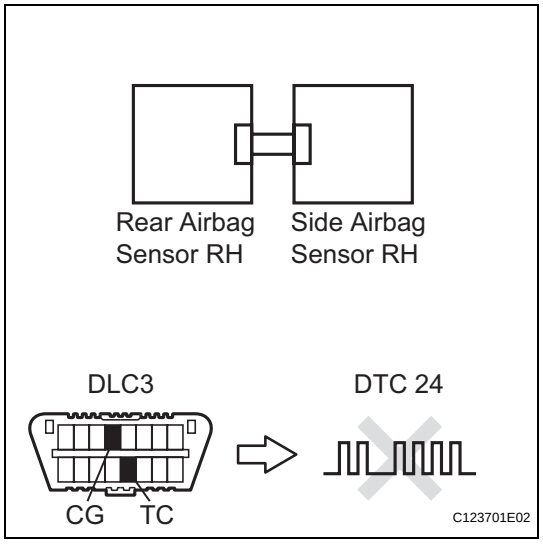

(a) Connect the negative (-) terminal cable to the battery, and wait for at least 2 seconds.
(b) Turn the engine switch on (IG), and wait for at least 60 seconds.
(c) Clear the DTCs stored in the memory (See page RS-49).
(d) Turn the engine switch off.
(e) Turn the engine switch on (IG), and wait for at least 60 seconds.
(f) Check the DTCs (See page RS-49).
OK:
DTC B1635/24 is not output.
HINT:
Codes other than DTC B1635/24 may be output at this time, but they are not related to this check.

NG → **REPLACE CENTER AIRBAG SENSOR ASSEMBLY (See page RS-468)**

OK

USE SIMULATION METHOD TO CHECK (See page RS-37)

RS

DTC	B1650/32	Occupant Classification System Malfunction

DESCRIPTION

The occupant classification system circuit consists of the center airbag sensor assembly and the occupant classification system.

RS

If the center airbag sensor assembly receives signals from the occupant classification ECU, it determines whether the front passenger airbag assembly, the front seat side airbag assembly RH and front seat outer belt assembly should be operated.

DTC B1650/32 is recorded when a malfunction is detected in the occupant classification system circuit.

DTC No.	DTC Detecting Condition	Trouble Area
B1650/32	• Occupant classification system malfunction • The center airbag sensor assembly receives a line short circuit signal, an open circuit signal, a short circuit to ground signal or a short circuit to B+ signal in the occupant classification system circuit for 2 seconds. • Center airbag sensor assembly malfunction	• Floor wire No. 2 • Front seat wire RH • Occupant classification system • Center airbag sensor assembly

WIRING DIAGRAM

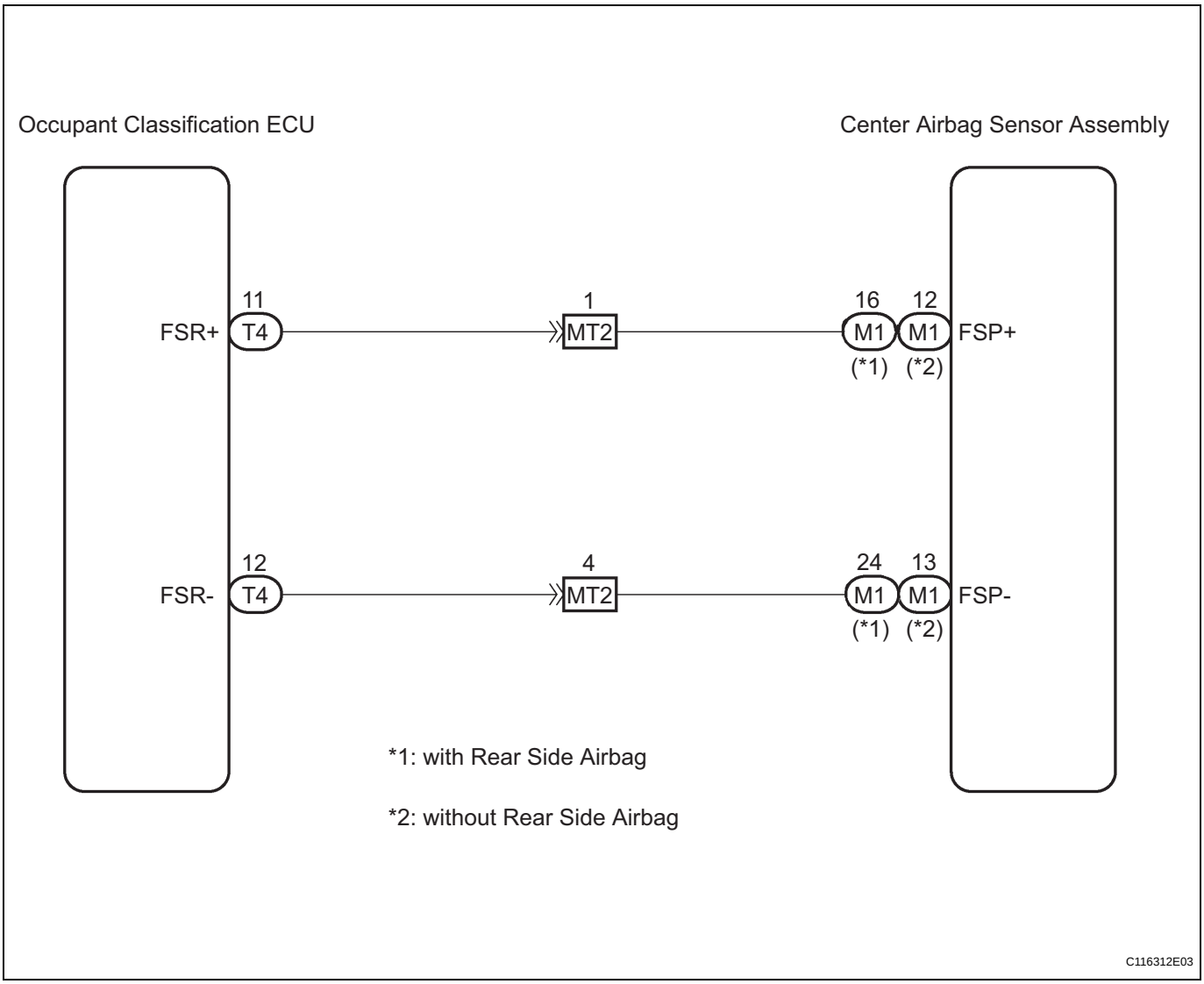

INSPECTION PROCEDURE

1 CHECK DTC (OCCUPANT CLASSIFICATION ECU)

(a) Turn the engine switch on (IG), and wait for at least 10 seconds.
(b) Using the intelligent tester, check the DTCs of the occupant classification ECU (See page RS-318).
OK:
DTC is not output.

NG → **REPAIR CIRCUITS INDICATED BY OUTPUT DTCS**

OK

2 CHECK DTC (CENTER AIRBAG SENSOR ASSEMBLY)

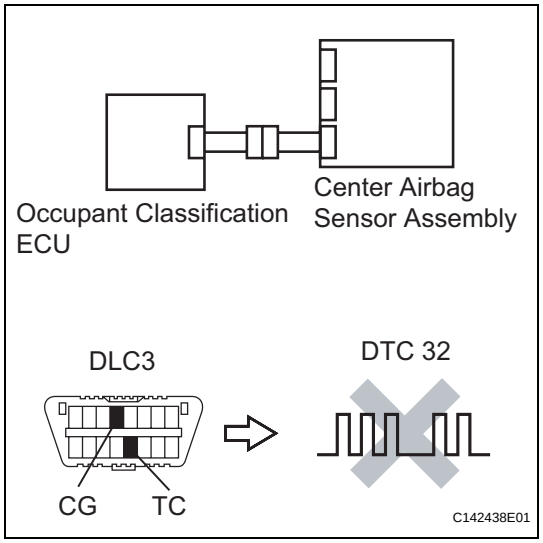

(a) Turn the engine switch on (IG), and wait for at least 60 seconds.
(b) Clear the DTCs stored in the memory (See page RS-49).
(c) Turn the engine switch off.
(d) Turn the engine switch on (IG), and wait for at least 60 seconds.
(e) Check the DTCs (See page RS-49).
OK:
DTC B1650/32 is not output.
HINT:
Codes other than DTC B1650/32 may be output at this time, but they are not related to this check.

OK → **USE SIMULATION METHOD TO CHECK (See page RS-37)**

NG

3 CHECK CONNECTION OF CONNECTORS

(a) Turn the engine switch off.
(b) Disconnect the negative (-) terminal cable from the battery, and wait for at least 90 seconds.
(c) Check that the connectors are properly connected to the center airbag sensor assembly and the occupant classification ECU.
OK:
The connectors are properly connected.

NG → **CONNECT CONNECTORS PROPERLY**

OK

RS

4	CHECK CONNECTORS

(a) Disconnect the connectors from the center airbag sensor assembly and the occupant classification ECU.
(b) Check that the connectors (on the center airbag sensor assembly side and occupant classification ECU side) are not damaged.
OK:
The connectors are not deformed or damaged.

NG → **REPAIR OR REPLACE WIRE HARNESS**

OK

5	CHECK OCCUPANT CLASSIFICATION SYSTEM CIRCUIT (OPEN)

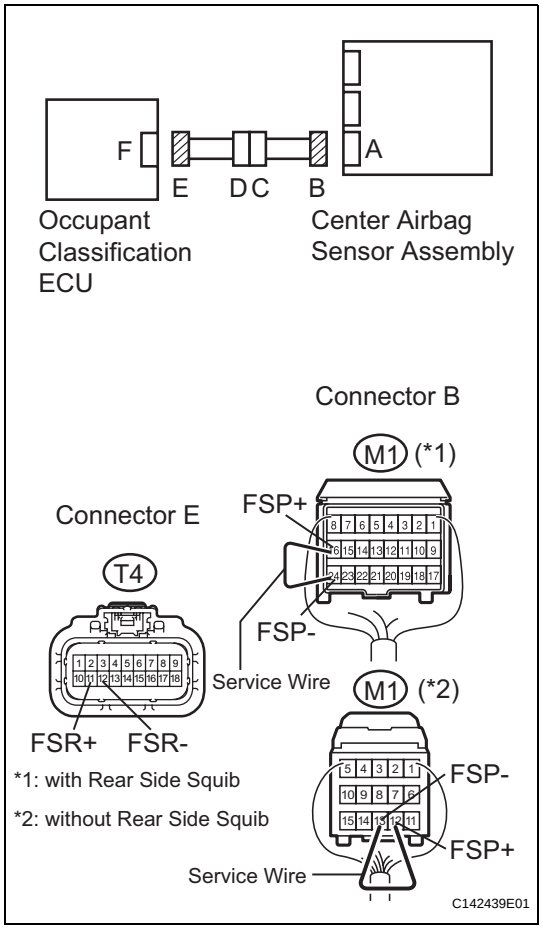

(a) with Rear side airbag:
Using a service wire, connect terminals 16 (FSP+) and 24 (FSP-) of connector B.
NOTICE:
Do not forcibly insert a service wire into the terminals of the connector when connecting the wire.
(b) without Rear side airbag:
Using a service wire, connect terminals 12 (FSP+) and 13 (FSP-) of connector B.
NOTICE:
Do not forcibly insert a service wire into the terminal of the connector when connecting the wire.
(c) Measure the resistance according to the value(s) in the table below.
Standard resistance

Tester Connection	Condition	Specified Condition
T4-11 (FSR+) - T4-12 (FSR-)	Always	Below 1 Ω

NG → **Go to step 9**

OK

RS

6 CHECK OCCUPANT CLASSIFICATION SYSTEM CIRCUIT (SHORT)

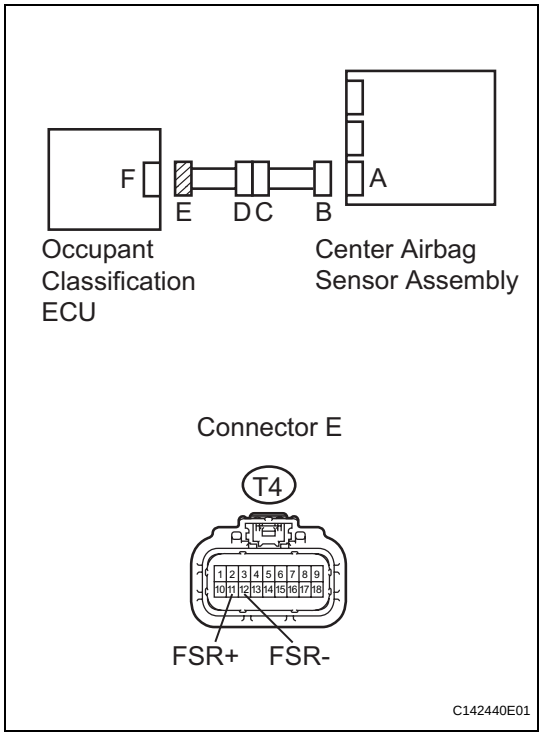

(a) Disconnect the service wire from connector B.
(b) Measure the resistance according to the value(s) in the table below.

Standard resistance

Tester Connection	Condition	Specified Condition
T4-11 (FSR+) - T4-12 (FSR-)	Always	1 MΩ or higher

NG → **Go to step 10**

OK

7 CHECK OCCUPANT CLASSIFICATION SYSTEM CIRCUIT (SHORT TO B+)

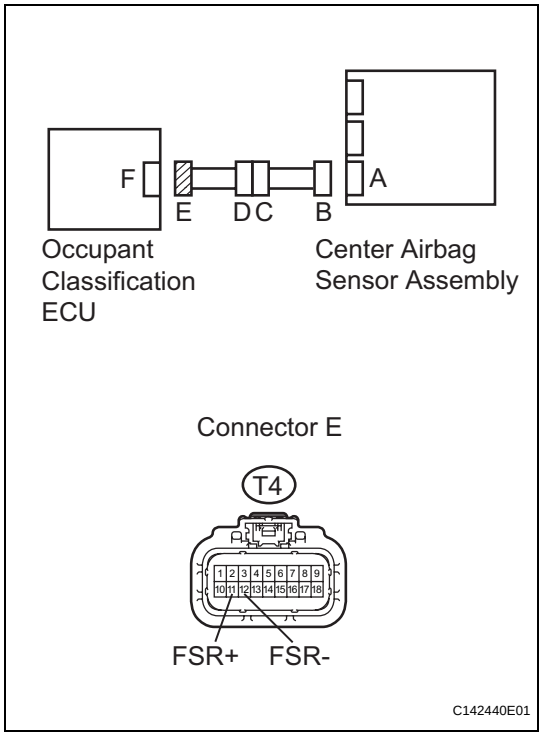

(a) Connect the negative (-) terminal cable to the battery, and wait for at least 2 seconds.
(b) Turn the engine switch on (IG).
(c) Measure the voltage according to the value(s) in the table below.

Standard voltage

Tester Connection	Condition	Specified Condition
T4-11 (FSR+) - Body ground	Engine switch on (IG)	Below 1 V
T4-12 (FSR-) - Body ground	Engine switch on (IG)	Below 1 V

NG → **Go to step 11**

OK

RS

8	CHECK OCCUPANT CLASSIFICATION SYSTEM CIRCUIT (SHORT TO GROUND)

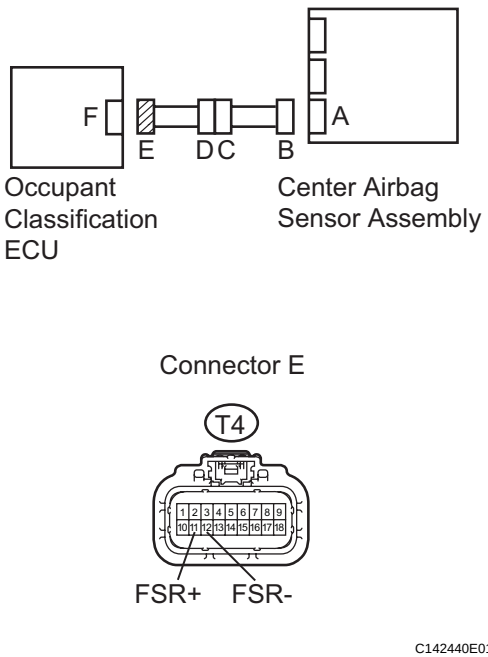

(a) Turn the engine switch off.
(b) Disconnect the negative (-) terminal cable from the battery, and wait for at least 90 seconds.
(c) Measure the resistance according to the value(s) in the table below.

Standard resistance

Tester Connection	Condition	Specified Condition
T4-11 (FSR+) - Body ground	Always	1 MΩ or higher
T4-12 (FSR-) - Body ground	Always	1 MΩ or higher

HINT:
After replacing the center airbag sensor assembly, check for DTCs of the center airbag sensor assembly. If the DTC B1650/32 is detected, replace the occupant classification ECU (See page RS-501) and perform "zero point calibration" and "sensitivity check" of the occupant classification system (See page RS-312).

NG → **Go to step 12**

OK

REPLACE CENTER AIRBAG SENSOR ASSEMBLY (See page RS-468)

RS

9	CHECK FLOOR WIRE NO. 2 (OPEN)

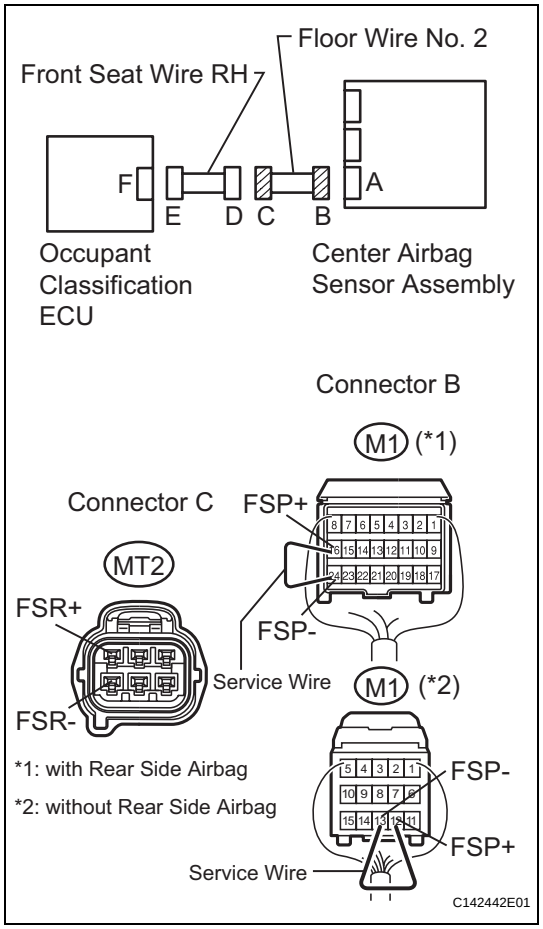

(a) Disconnect the front seat wire RH connector from the floor wire No. 2.
HINT:
The service wire has already been inserted into connector B.

(b) Measure the resistance according to the value(s) in the table below.
Standard resistance

Tester Connection	Condition	Specified Condition
MT2-1 (FSR+) - MT2-4 (FSR-)	Always	Below 1 Ω

NG → **REPAIR OR REPLACE FLOOR WIRE NO. 2**

OK

REPAIR OR REPLACE FRONT SEAT WIRE RH

RS

10	CHECK FLOOR WIRE NO. 2 (SHORT)

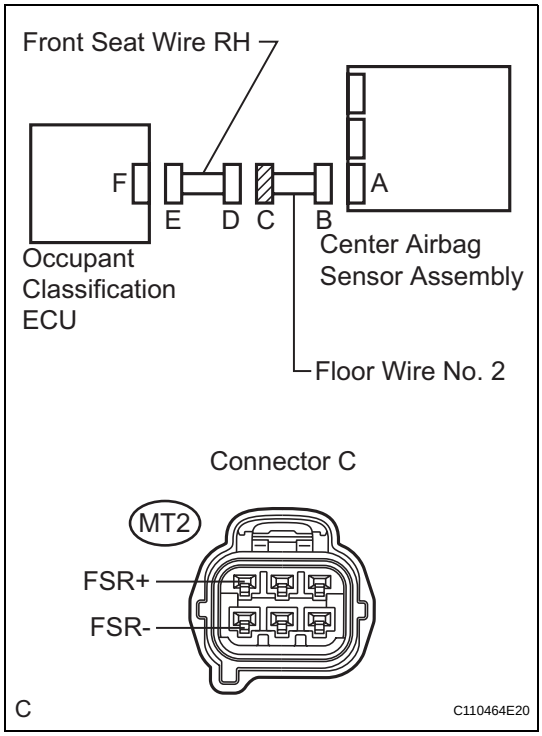

(a) Disconnect the front seat wire RH connector from the floor wire No. 2.

(b) Measure the resistance according to the value(s) in the table below.

Standard resistance

Tester Connection	Condition	Specified Condition
MT2-1 (FSR+) - MT2-4 (FSR-)	Always	1 MΩ or higher

NG → **REPAIR OR REPLACE FLOOR WIRE NO. 2**

OK

REPAIR OR REPLACE FRONT SEAT WIRE RH

RS

11 CHECK FLOOR WIRE NO. 2 (SHORT TO B+)

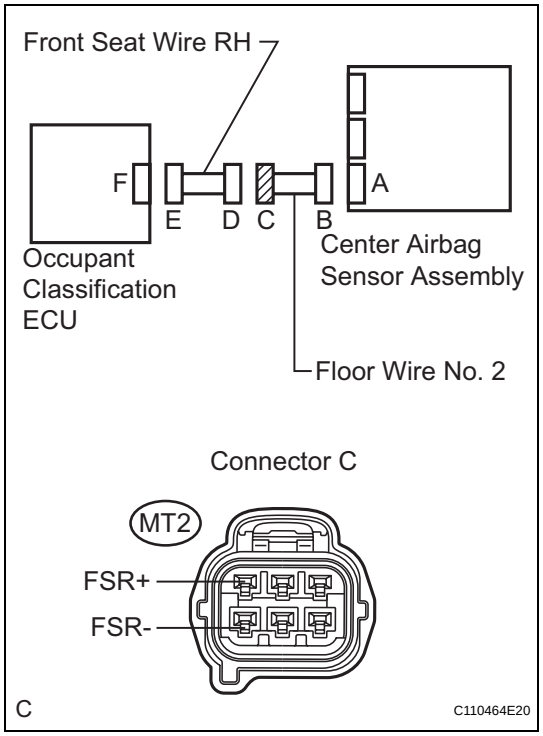

(a) Turn the engine switch off.
(b) Disconnect the negative (-) terminal cable from the battery, and wait for at least 90 seconds.
(c) Disconnect the front seat wire RH connector from the floor wire No. 2.
(d) Connect the negative (-) terminal cable to the battery, and wait for at least 2 seconds.
(e) Turn the engine switch on (IG).
(f) Measure the voltage according to the value(s) in the table below.

Standard voltage

Tester Connection	Condition	Specified Condition
MT2-1 (FSR+) - Body ground	Engine switch on (IG)	Below 1 V
MT2-4 (FSR-) - Body ground	Engine switch on (IG)	Below 1 V

NG → **REPAIR OR REPLACE FLOOR WIRE NO. 2**

OK

REPAIR OR REPLACE FRONT SEAT WIRE RH

RS

12 CHECK FLOOR WIRE NO. 2 (SHORT TO GROUND)

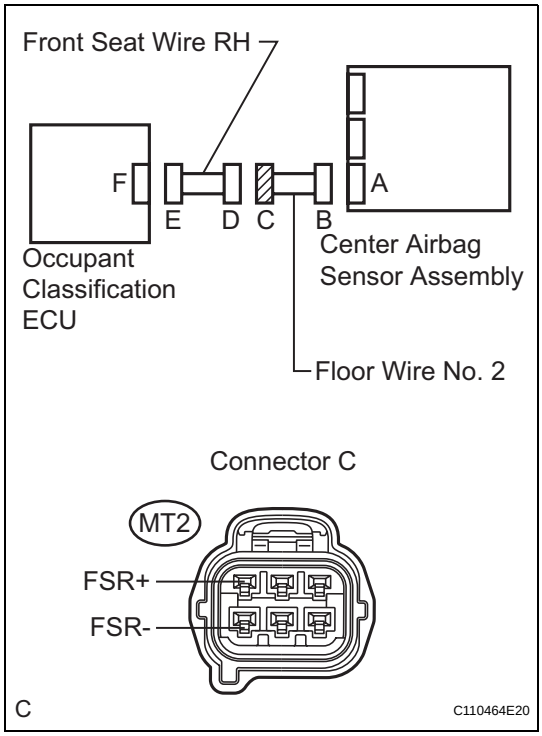

(a) Disconnect the front seat wire RH connector from the floor wire No. 2.

(b) Measure the resistance according to the value(s) in the table below.

Standard resistance

Tester Connection	Condition	Specified Condition
MT2-1 (FSR+) - Body ground	Always	1 MΩ or higher
MT2-4 (FSR-) - Body ground	Always	1 MΩ or higher

NG → **REPAIR OR REPLACE FLOOR WIRE NO. 2**

OK

REPAIR OR REPLACE FRONT SEAT WIRE RH

DTC	B1653/35	Seat Position Airbag Sensor Circuit Malfunction

DESCRIPTION

The seat position airbag sensor circuit consists of the center airbag sensor assembly and the seat position airbag sensor.
DTC B1653/35 is recorded when a malfunction is detected in the seat position airbag sensor circuit.

DTC No.	DTC Detecting Condition	Trouble Area
B1653/35	• The center airbag sensor assembly receives a line short circuit signal, an open circuit signal, a short circuit to ground signal or a short circuit to B+ signal in the seat position airbag sensor circuit for 2 seconds. • Seat position airbag sensor malfunction • Center airbag sensor assembly malfunction	• Floor wire • Seat position airbag sensor • Center airbag sensor assembly

WIRING DIAGRAM

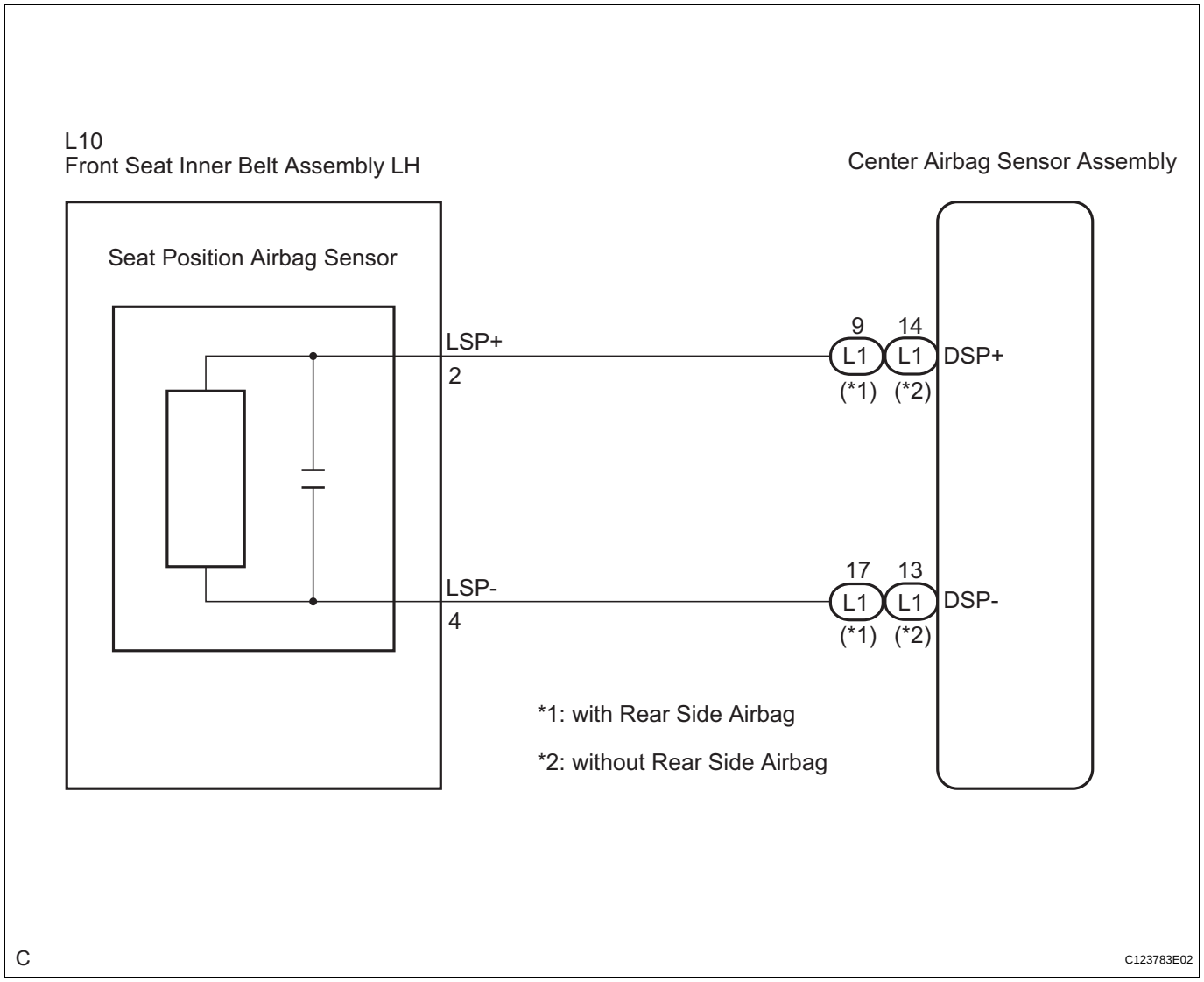

INSPECTION PROCEDURE

1	CHECK DTC

RS

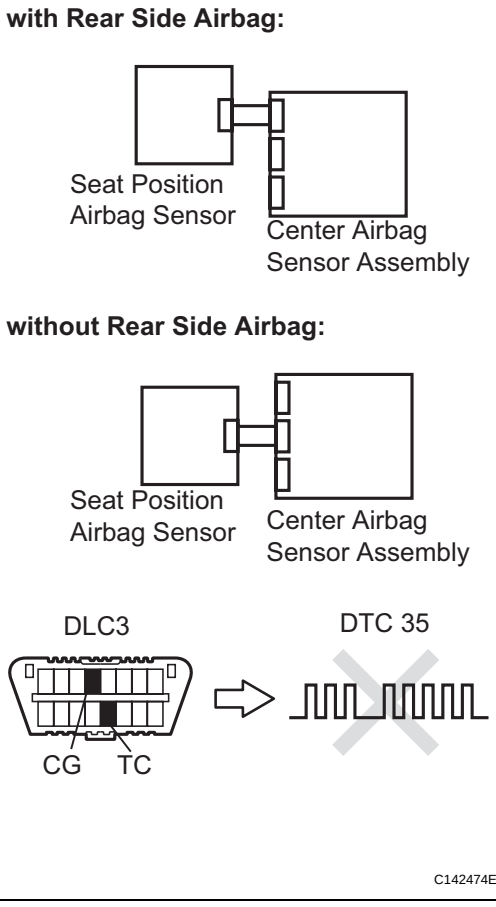

(a) Turn the engine switch on (IG), and wait for at least 60 seconds.
(b) Clear the DTCs stored in the memory (See page RS-49).
(c) Turn the engine switch off.
(d) Turn the engine switch on (IG), and wait for at least 60 seconds.
(e) Check the DTCs (See page RS-49).
OK:
DTC B1653/35 is not output.
HINT:
Codes other than DTC B1653/35 may be output at this time, but they are not related to this check.

OK → **USE SIMULATION METHOD TO CHECK (See page RS-37)**

NG

2	CHECK CONNECTION OF CONNECTORS

(a) Turn the engine switch off.
(b) Disconnect the negative (-) terminal cable from the battery, and wait for at least 90 seconds.
(c) Check that the connectors are properly connected to the center airbag sensor assembly and the seat position airbag sensor.
OK:
The connectors are properly connected.

NG → **CONNECT CONNECTORS PROPERLY, THEN GO TO STEP 1**

OK

RS

3 CHECK CONNECTORS

(a) Disconnect the connectors from the center airbag sensor assembly and the seat position airbag sensor.

(b) Check that the connectors (on the center airbag sensor assembly side and seat position airbag sensor side) are not damaged.

OK:

The connectors are not deformed or damaged.

NG → **REPAIR OR REPLACE FLOOR WIRE**

OK

4 CHECK VEHICLE CONDITION

(a) Check whether or not the vehicle is equipped with the rear side airbag.

Result:

A:

with the rear side airbag

B:

without the rear side airbag

B → **Go to step 12**

A

5 CHECK FLOOR WIRE (OPEN)

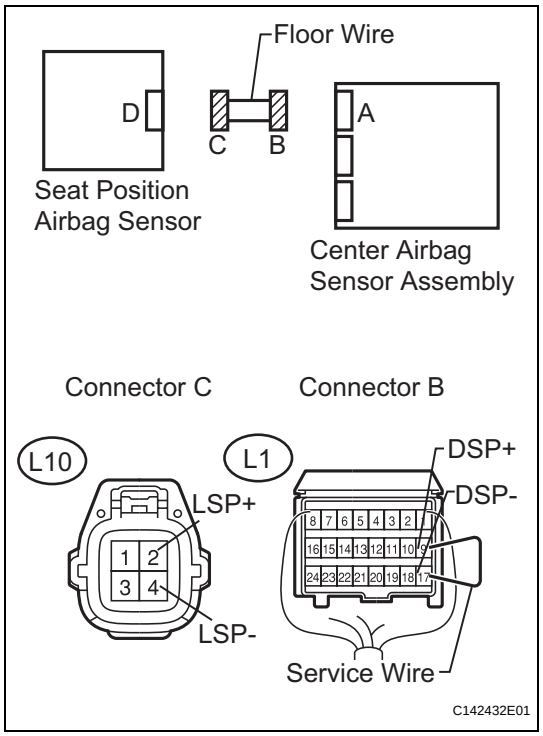

(a) Using a service wire, connect terminals 9 (DSP+) and 17 (DSP-) of connector B.

NOTICE:

Do not forcibly insert a service wire into the terminals of the connector when connecting the wire.

(b) Measure the resistance according to the value(s) in the table below.

Standard resistance

Tester Connection	Condition	Specified Condition
L10-2 (LSP+) - L10-4 (LSP-)	Always	Below 1 Ω

NG → **REPAIR OR REPLACE FLOOR WIRE**

OK

6 CHECK FLOOR WIRE (SHORT)

RS

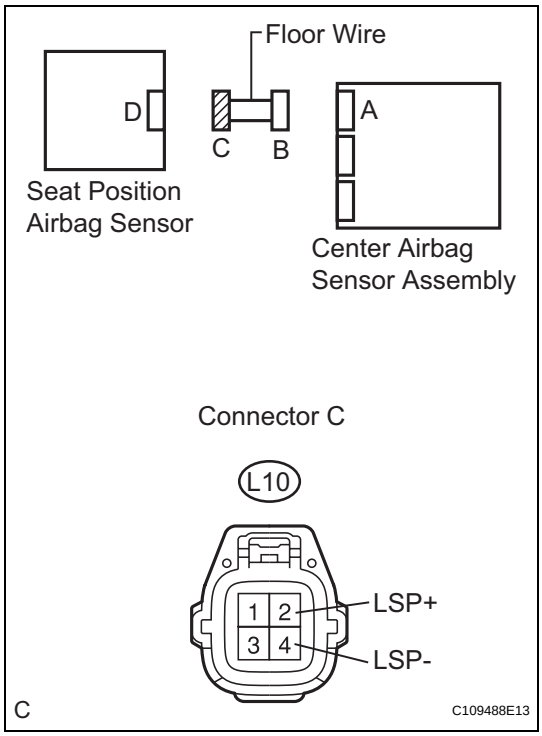

(a) Disconnect the service wire from connector B.
(b) Measure the resistance according to the value(s) in the table below.

Standard resistance

Tester Connection	Condition	Specified Condition
L10-2 (LSP+) - L10-4 (LSP-)	Always	1 MΩ or higher

NG → **REPAIR OR REPLACE FLOOR WIRE**

OK

7 CHECK FLOOR WIRE (SHORT TO B+)

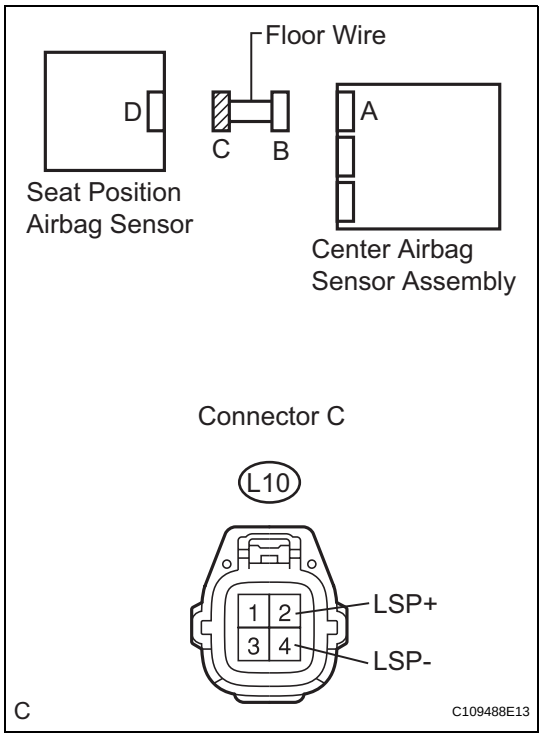

(a) Connect the negative (-) terminal cable to the battery, and wait for at least 2 seconds.
(b) Turn the engine switch on (IG).
(c) Measure the voltage according to the value(s) in the table below.

Standard voltage

Tester Connection	Condition	Specified Condition
L10-2 (LSP+) - Body ground	Engine switch on (IG)	Below 1 V
L10-4 (LSP-) - Body ground	Engine switch on (IG)	Below 1 V

NG → **REPAIR OR REPLACE FLOOR WIRE**

OK

8 CHECK FLOOR WIRE (SHORT TO GROUND)

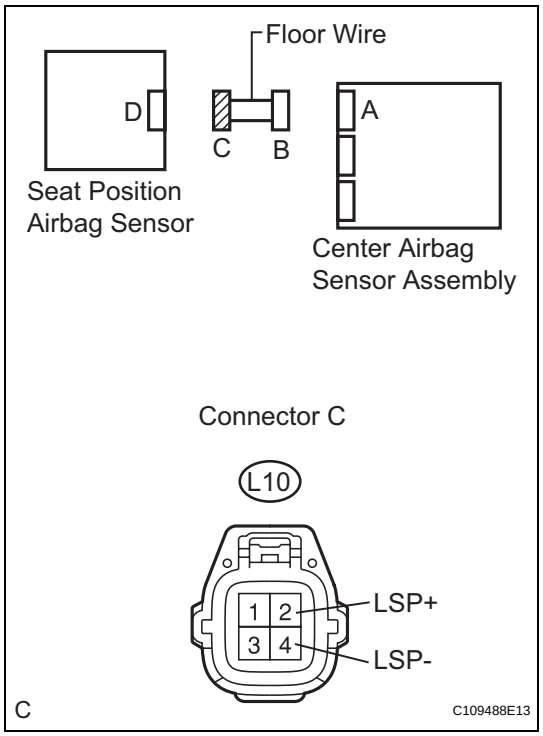

(a) Turn the engine switch off.
(b) Disconnect the negative (-) terminal cable from the battery, and wait for at least 90 seconds.
(c) Measure the resistance according to the value(s) in the table below.

Standard resistance

Tester Connection	Condition	Specified Condition
L10-2 (LSP+) - Body ground	Always	1 MΩ or higher
L10-4 (LSP-) - Body ground	Always	1 MΩ or higher

NG → **REPAIR OR REPLACE FLOOR WIRE**

OK

9 CHECK SEAT POSITION AIRBAG SENSOR

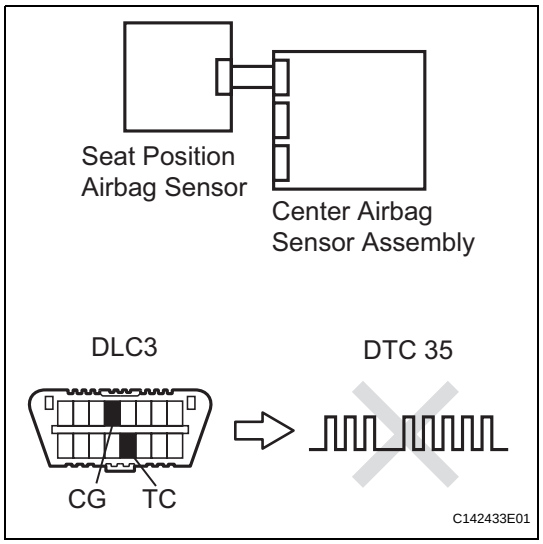

(a) Connect the connectors to the center airbag sensor assembly and the seat position airbag sensor.
(b) Connect the negative (-) terminal cable to the battery, and wait for at least 2 seconds.
(c) Turn the engine switch on (IG), and wait for at least 60 seconds.
(d) Clear the DTCs stored in the memory (See page RS-49).
(e) Turn the engine switch off.
(f) Turn the engine switch on (IG), and wait for at least 60 seconds.
(g) Check the DTCs (See page RS-49).

OK:

DTC B1653/35 is not output.

HINT:

Codes other than DTC B1653/35 may be output at this time, but they are not related to this check.

OK → **USE SIMULATION METHOD TO CHECK (See page RS-37)**

NG

RS

10	REPLACE SEAT POSITION AIRBAG SENSOR

(a) Turn the engine switch off.
(b) Disconnect the negative (-) terminal cable from the battery, and wait for at least 90 seconds.
(c) Replace the seat position airbag sensor (See page RS-484).
HINT:
Perform inspection using parts from a normal vehicle if possible.

NEXT

11	CHECK CENTER AIRBAG SENSOR ASSEMBLY

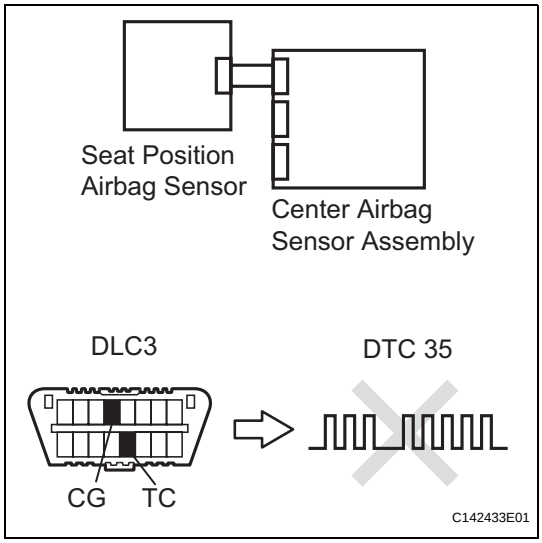

(a) Connect the negative (-) terminal cable to the battery, and wait for at least 2 seconds.
(b) Turn the engine switch on (IG), and wait for at least 60 seconds.
(c) Clear the DTCs stored in the memory (See page RS-49).
(d) Turn the engine switch off.
(e) Turn the engine switch on (IG), and wait for at least 60 seconds.
(f) Check the DTCs (See page RS-49).
OK:
DTC B1653/35 is not output.
HINT:
Codes other than DTC B1653/35 may be output at this time, but they are not related to this check.

NG → **REPLACE CENTER AIRBAG SENSOR ASSEMBLY (See page RS-468)**

OK

END

RS

12 CHECK FLOOR WIRE (OPEN)

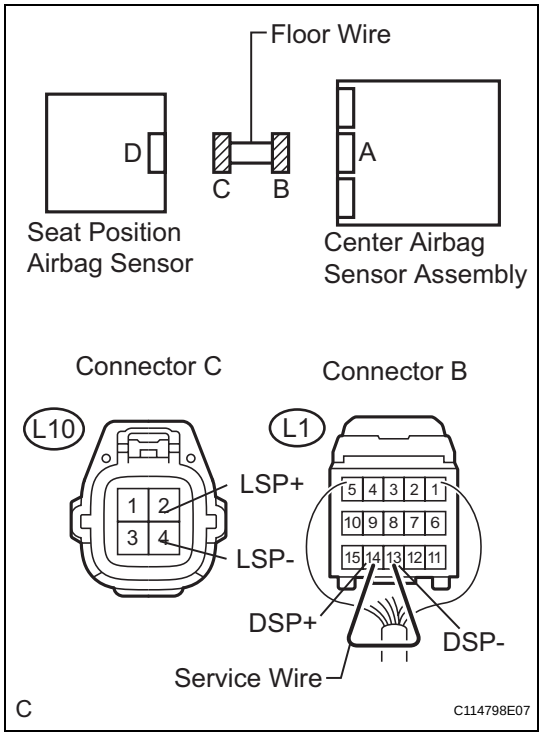

(a) Using a service wire, connect terminals 9 (DSP+) and 17 (DSP-) of connector B.
NOTICE:
Do not forcibly insert a service wire into the terminals of the connector when connecting the wire.

(b) Measure the resistance according to the value(s) in the table below.
Standard resistance

Tester Connection	Condition	Specified Condition
L10-2 (LSP+) - L10-4 (LSP-)	Always	Below 1 Ω

NG → **REPAIR OR REPLACE FLOOR WIRE**

OK

13 CHECK FLOOR WIRE (SHORT)

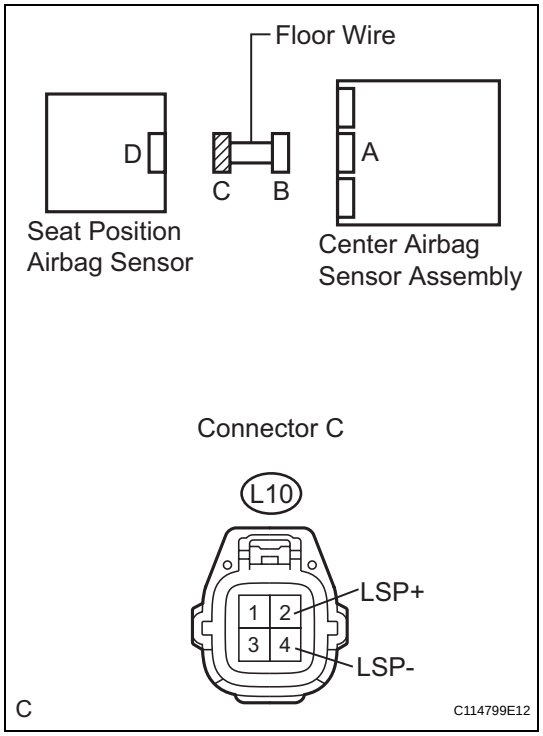

(a) Disconnect the service wire from connector B.

(b) Measure the resistance according to the value(s) in the table below.
Standard resistance

Tester Connection	Condition	Specified Condition
L10-2 (LSP+) - L10-4 (LSP-)	Always	1 MΩ or higher

NG → **REPAIR OR REPLACE FLOOR WIRE**

OK

RS

14 CHECK FLOOR WIRE (SHORT TO B+)

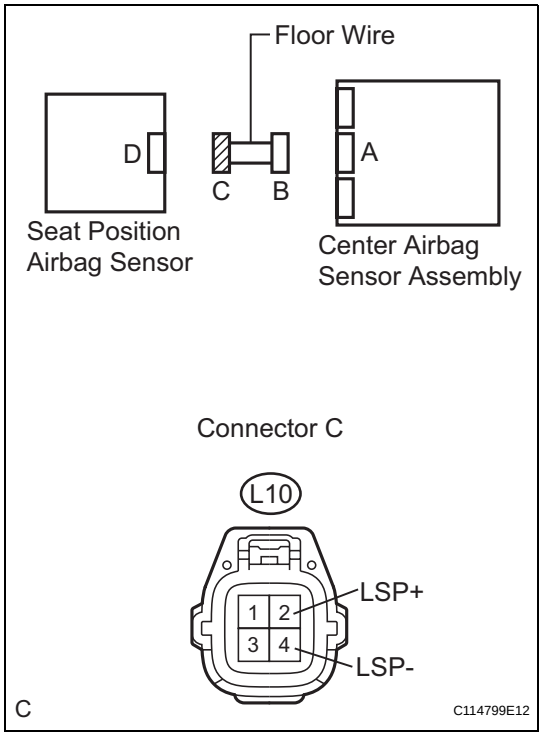

(a) Connect the negative (-) terminal cable to the battery, and wait for at least 2 seconds.
(b) Turn the engine switch on (IG).
(c) Measure the voltage according to the value(s) in the table below.

Standard voltage

Tester Connection	Condition	Specified Condition
L10-2 (LSP+) - Body ground	Engine switch on (IG)	Below 1 V
L10-4 (LSP-) - Body ground	Engine switch on (IG)	Below 1 V

NG → **REPAIR OR REPLACE FLOOR WIRE**

OK

15 CHECK FLOOR WIRE (SHORT TO GROUND)

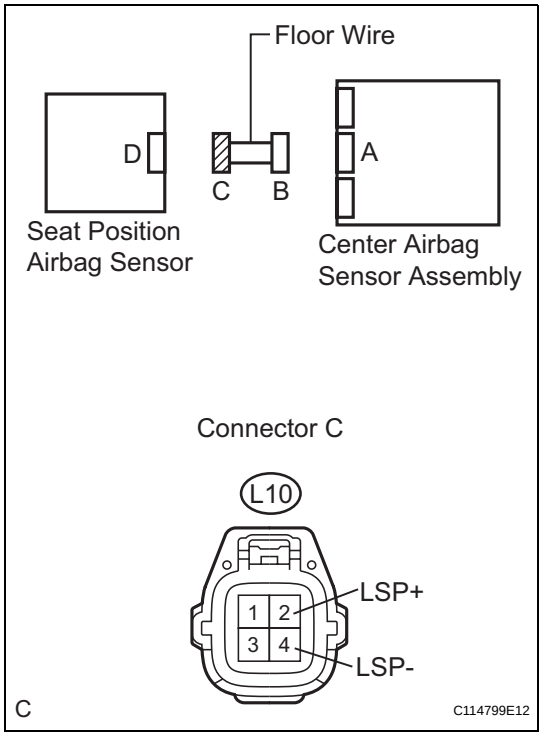

(a) Turn the engine switch off.
(b) Disconnect the negative (-) terminal cable from the battery, and wait for at least 90 seconds.
(c) Measure the resistance according to the value(s) in the table below.

Standard resistance

Tester Connection	Condition	Specified Condition
L10-2 (LSP+) - Body ground	Always	1 MΩ or higher
L10-4 (LSP-) - Body ground	Always	1 MΩ or higher

NG → **REPAIR OR REPLACE FLOOR WIRE**

OK

RS

16 CHECK SEAT POSITION AIRBAG SENSOR

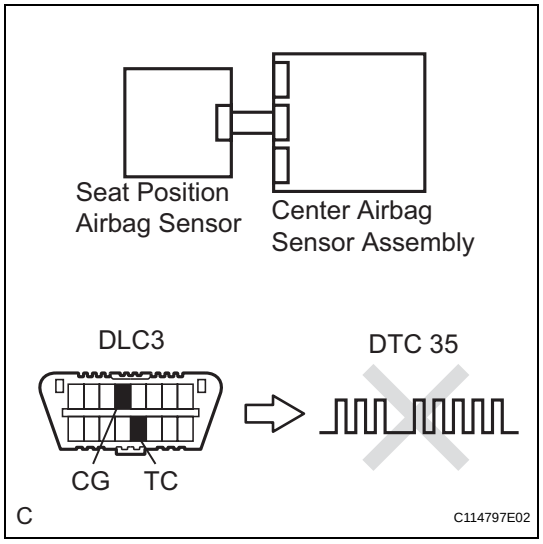

(a) Connect the connectors to the center airbag sensor assembly and the seat position airbag sensor.
(b) Connect the negative (-) terminal cable to the battery, and wait for at least 2 seconds.
(c) Turn the engine switch on (IG), and wait for at least 60 seconds.
(d) Clear the DTCs stored in the memory (See page RS-49).
(e) Turn the engine switch off.
(f) Turn the engine switch on (IG), and wait for at least 60 seconds.
(g) Check the DTCs (See page RS-49).
OK:
DTC B1653/35 is not output.
HINT:
Codes other than DTC B1653/35 may be output at this time, but they are not related to this check.

OK → **USE SIMULATION METHOD TO CHECK (See page RS-37)**

NG

17 REPLACE SEAT POSITION AIRBAG SENSOR

(a) Turn the engine switch off.
(b) Disconnect the negative (-) terminal cable from the battery, and wait for at least 90 seconds.
(c) Replace the seat position airbag sensor (See page RS-484).
HINT:
Perform inspection using parts from a normal vehicle if possible.

NEXT

RS

18	CHECK CENTER AIRBAG SENSOR ASSEMBLY

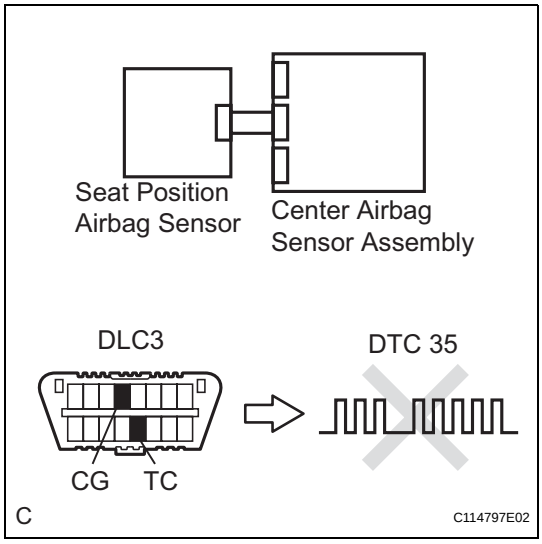

(a) Connect the negative (-) terminal cable to the battery, and wait for at least 2 seconds.
(b) Turn the engine switch on (IG), and wait for at least 60 seconds.
(c) Clear the DTCs stored in the memory (See page RS-49).
(d) Turn the engine switch off.
(e) Turn the engine switch on (IG), and wait for at least 60 seconds.
(f) Check the DTCs (See page RS-49).
OK:
DTC B1653/35 is not output.
HINT:
Codes other than DTC B1653/35 may be output at this time, but they are not related to this check.

NG → **REPLACE CENTER AIRBAG SENSOR ASSEMBLY (See page RS-468)**

OK

END

DTC	B1655/37	Driver Side Seat Belt Buckle Switch Circuit Malfunction

DESCRIPTION

The driver side seat belt buckle switch circuit consists of the center airbag sensor assembly and the front seat inner belt assembly LH.

DTC B1655/37 is recorded when a malfunction is detected in the driver side seat belt buckle switch circuit.

DTC No.	DTC Detection Condition	Trouble Area
B1655/37	• The center airbag sensor assembly receives a line short circuit signal, an open circuit signal, a short circuit to ground signal or a short circuit to B+ signal in the driver side seat belt buckle switch circuit for 2 seconds. • Front seat inner belt assembly LH malfunction • Center airbag sensor assembly malfunction	• Floor wire • Front seat inner belt assembly LH (Driver side seat belt buckle switch) • Center airbag sensor assembly

WIRING DIAGRAM

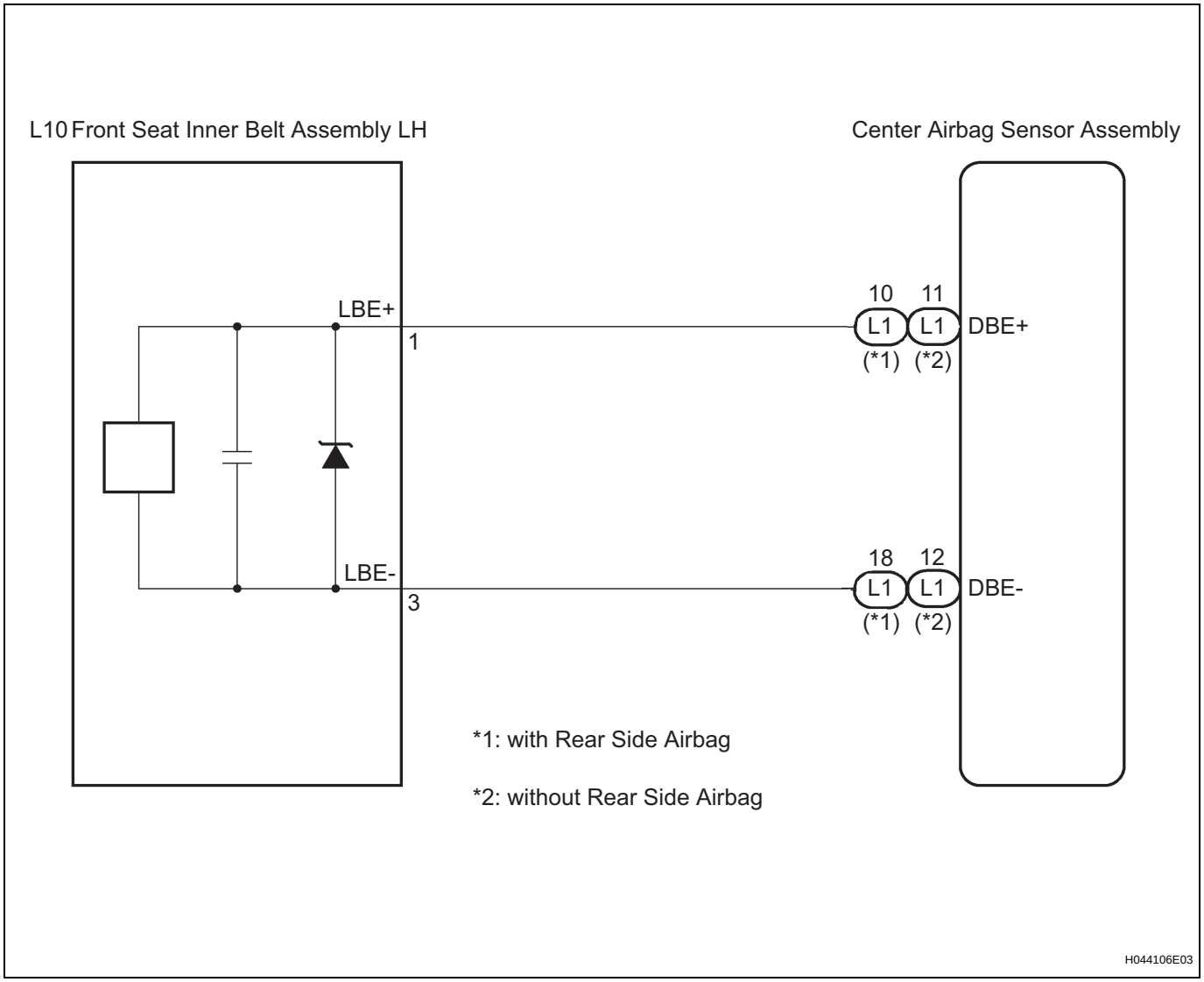

INSPECTION PROCEDURE

1	CHECK DTC

RS

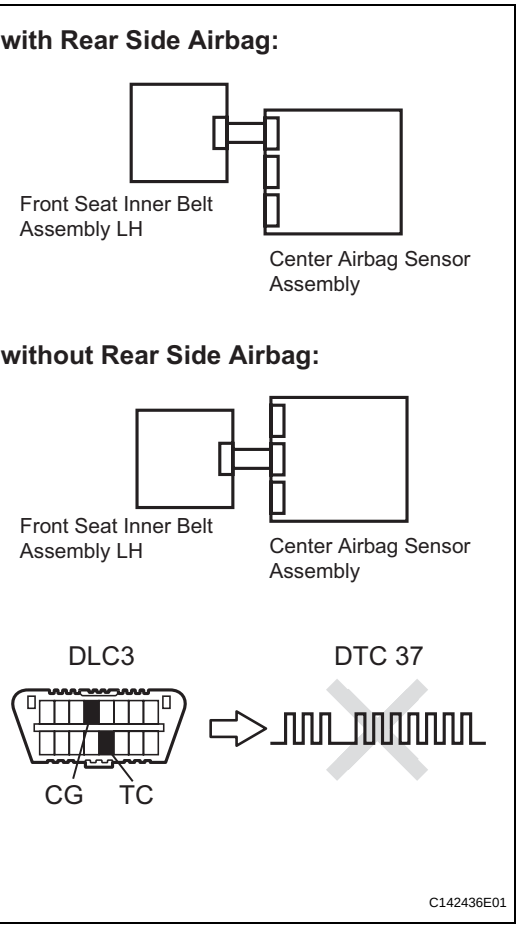

(a) Turn the engine switch on (IG), and wait for at least 60 seconds.
(b) Clear the DTCs stored in the memory (See page RS-49).
(c) Turn the engine switch off.
(d) Turn the engine switch on (IG), and wait for at least 60 seconds.
(e) Check the DTCs (See page RS-52).
OK:
DTC B1655/37 is not output.
HINT:
Codes other than DTC B1655/37 may be output at this time, but they are not related to this check.

OK → **USE SIMULATION METHOD TO CHECK (See page RS-37)**

NG

2	CHECK CONNECTION OF CONNECTORS

(a) Turn the engine switch off.
(b) Disconnect the negative (-) terminal cable from the battery, and wait for at least 90 seconds.
(c) Check that the connectors are properly connected to the center airbag sensor assembly and front seat inner belt assembly LH.
OK:
The connectors are properly connected.

NG → **CONNECT CONNECTORS PROPERLY, THEN GO TO STEP 1**

OK

RS

3 CHECK CONNECTORS

(a) Disconnect the connectors from the center airbag sensor assembly and the front seat inner belt assembly LH.

(b) Check that the connectors (on the center airbag sensor assembly side and front seat inner belt assembly LH side) are not damaged.

OK:

The connectors are not deformed or damaged.

NG → **REPAIR OR REPLACE FLOOR WIRE**

OK

4 CHECK VEHICLE CONDITION

(a) Check whether or not the vehicle is equipped with the rear side airbag.

Result:

A:

with the rear side airbag

B:

without the rear side airbag

B → **Go to step 12**

A

5 CHECK FLOOR WIRE (OPEN)

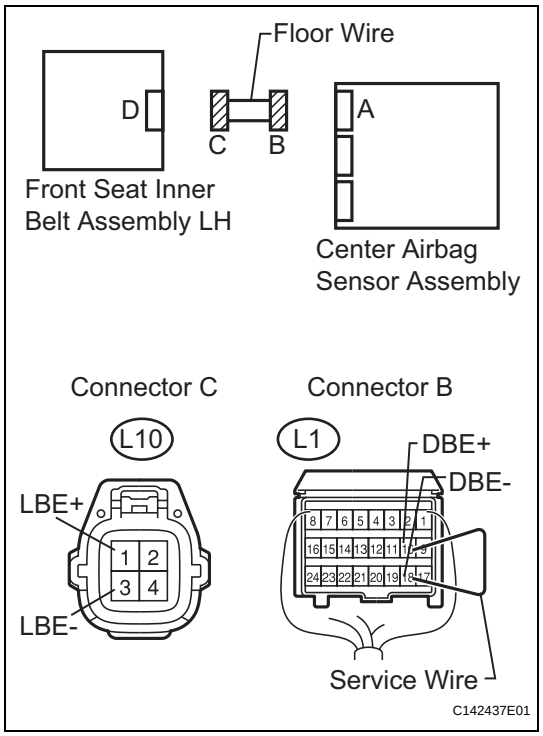

(a) Using a service wire, connect terminals 10 (DBE+) and 18 (DBE-) of connector B.

NOTICE:

Do not forcibly insert a service wire into the terminals of the connector when connecting the wire.

(b) Measure the resistance according to the value(s) in the table below.

Standard resistance

Tester Connection	Condition	Specified Condition
L10-1 (LBE+) - L10-3 (LBE-)	Always	Below 1 Ω

NG → **REPAIR OR REPLACE FLOOR WIRE**

OK

6 CHECK FLOOR WIRE (SHORT)

RS

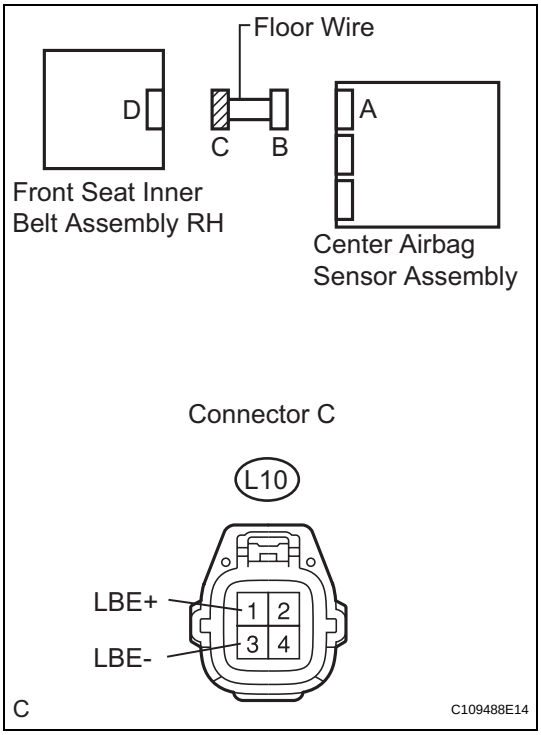

(a) Disconnect the service wire from connector B.
(b) Measure the resistance according to the value(s) in the table below.

Standard resistance

Tester Connection	Condition	Specified Condition
L10-1 (LBE+) - L10-3 (LBE-)	Always	1 MΩ or higher

NG → **REPAIR OR REPLACE FLOOR WIRE**

OK

7 CHECK FLOOR WIRE (SHORT TO B+)

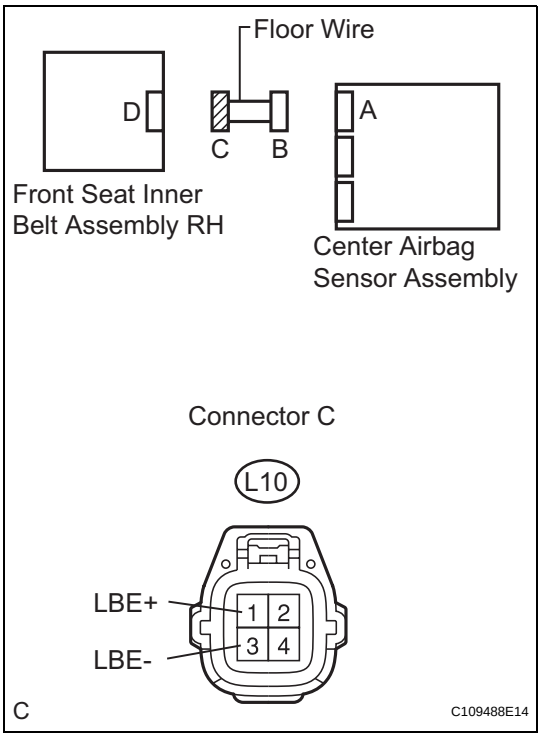

(a) Connect the negative (-) terminal cable to the battery, and wait for at least 2 seconds.
(b) Turn the engine switch on (IG).
(c) Measure the voltage according to the value(s) in the table below.

Standard voltage

Tester Connection	Condition	Specified Condition
L10-1 (LBE+) - Body ground	Engine switch on (IG)	Below 1 V
L10-3 (LBE-) - Body ground	Engine switch on (IG)	Below 1 V

NG → **REPAIR OR REPLACE FLOOR WIRE**

OK

8 CHECK FLOOR WIRE (SHORT TO GROUND)

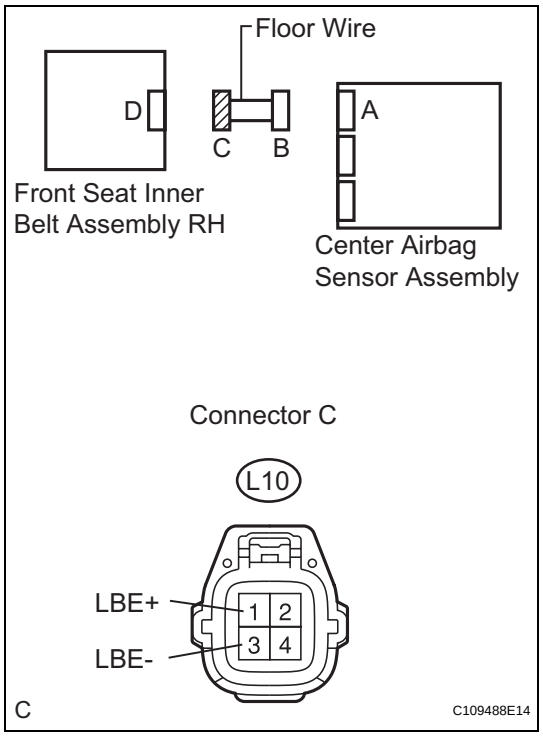

(a) Turn the engine switch off.
(b) Disconnect the negative (-) terminal cable from the battery, and wait for at least 90 seconds.
(c) Measure the resistance according to the value(s) in the table below.

Standard resistance

Tester Connection	Condition	Specified Condition
L10-1 (LBE+) - Body ground	Always	1 MΩ or higher
L10-3 (LBE-) - Body ground	Always	1 MΩ or higher

NG → **REPAIR OR REPLACE FLOOR WIRE**

OK

9 CHECK FRONT SEAT INNER BELT ASSEMBLY LH

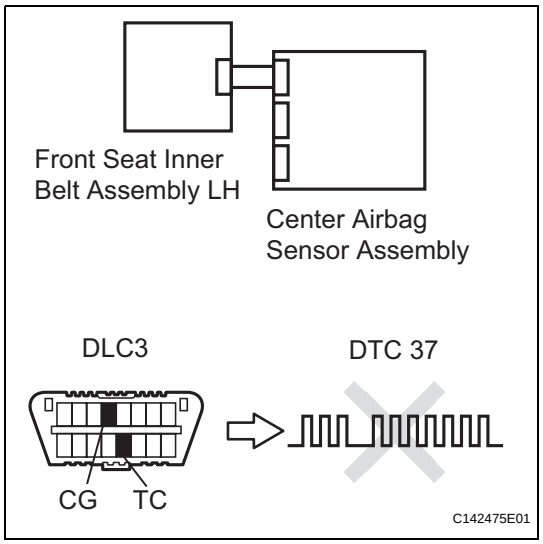

(a) Connect the connector to the center airbag sensor assembly and the front seat inner belt assembly LH.
(b) Connect the negative (-) terminal cable to the battery, and wait for at least 2 seconds.
(c) Turn the engine switch on (IG), and wait for at least 60 seconds.
(d) Clear the DTCs stored in the memory (See page RS-49).
(e) Turn the engine switch off.
(f) Turn the engine switch on (IG), and wait for at least 60 seconds.
(g) Check the DTCs (See page RS-49).

OK:

DTC B1655/37 is not output.

HINT:

Codes other than DTC B1655/37 may be output at this time, but they are not related to this check.

OK → **USE SIMULATION METHOD TO CHECK (See page RS-37)**

NG

RS

10	REPLACE FRONT SEAT INNER BELT ASSEMBLY LH

(a) Turn the engine switch off.
(b) Disconnect the negative (-) terminal cable from the battery, and wait for at least 90 seconds.
(c) Replace the front seat inner belt assembly LH (See page SB-22).
HINT:
Perform inspection using parts from a normal vehicle if possible.

NEXT

11	CHECK CENTER AIRBAG SENSOR ASSEMBLY

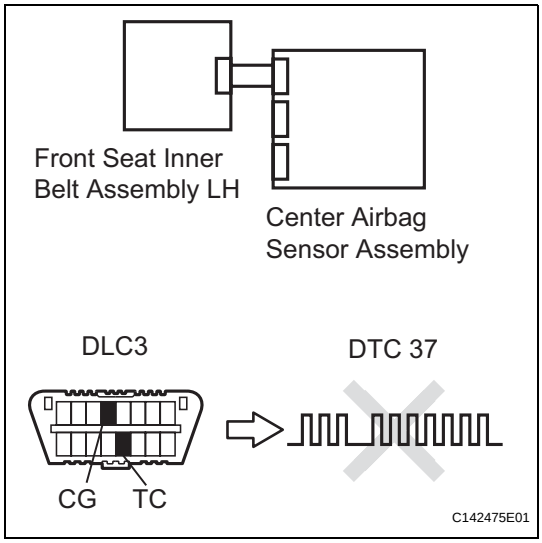

(a) Connect the negative (-) terminal cable to the battery, and wait for at least 2 seconds.
(b) Turn the engine switch on (IG), and wait for at least 60 seconds.
(c) Clear the DTCs stored in the memory (See page RS-49).
(d) Turn the engine switch off.
(e) Turn the engine switch on (IG), and wait for at least 60 seconds.
(f) Check the DTCs (See page RS-49).
OK:
DTC B1655/37 is not output.
HINT:
Codes other than DTC B1655/37 may be output at this time, but they are not related to this check.

NG → **REPLACE CENTER AIRBAG SENSOR ASSEMBLY (See page RS-468)**

OK

END

RS

12 CHECK FLOOR WIRE (OPEN)

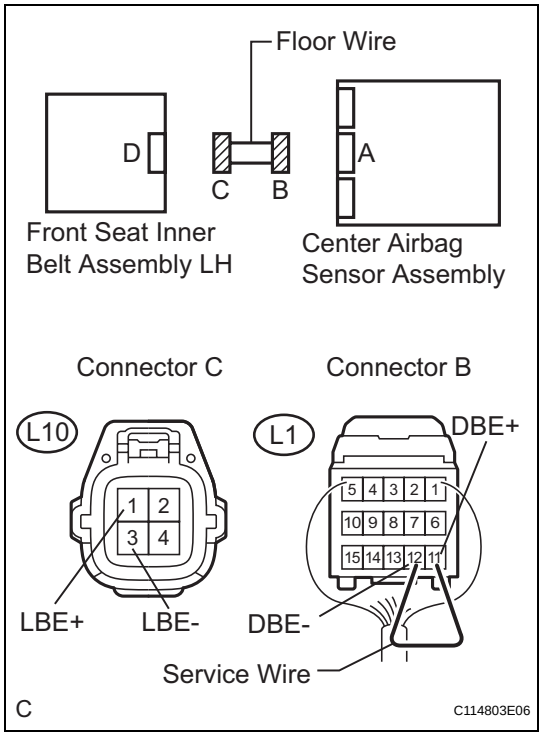

(a) Using a service wire, connect terminals 10 (DBE+) and 18 (DBE-) of connector B.
NOTICE:
Do not forcibly insert a service wire into the terminals of the connector when connecting the wire.

(b) Measure the resistance according to the value(s) in the table below.
Standard resistance

Tester Connection	Condition	Specified Condition
L10-1 (LBE+) - L10-3 (LBE-)	Always	Below 1 Ω

NG → **REPAIR OR REPLACE FLOOR WIRE**

OK

13 CHECK FLOOR WIRE (SHORT)

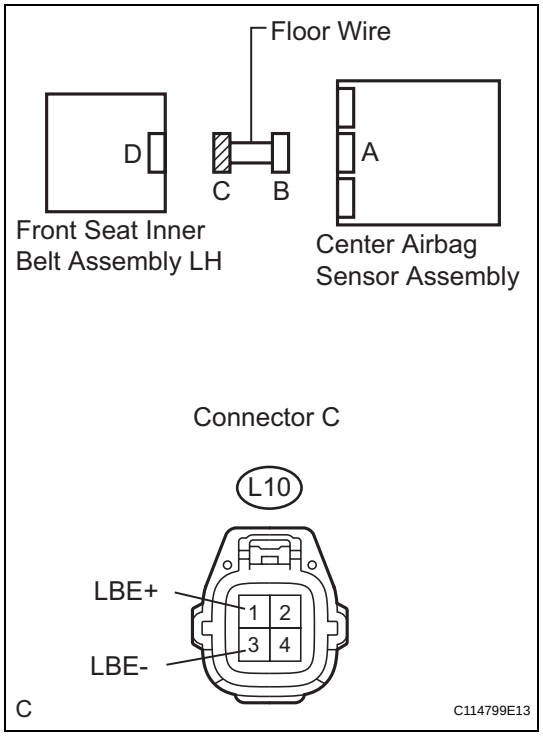

(a) Disconnect the service wire from connector B.

(b) Measure the resistance according to the value(s) in the table below.
Standard resistance

Tester Connection	Condition	Specified Condition
L10-1 (LBE+) - L10-3 (LBE-)	Always	1 MΩ or higher

NG → **REPAIR OR REPLACE FLOOR WIRE**

OK

RS

14 CHECK FLOOR WIRE (SHORT TO B+)

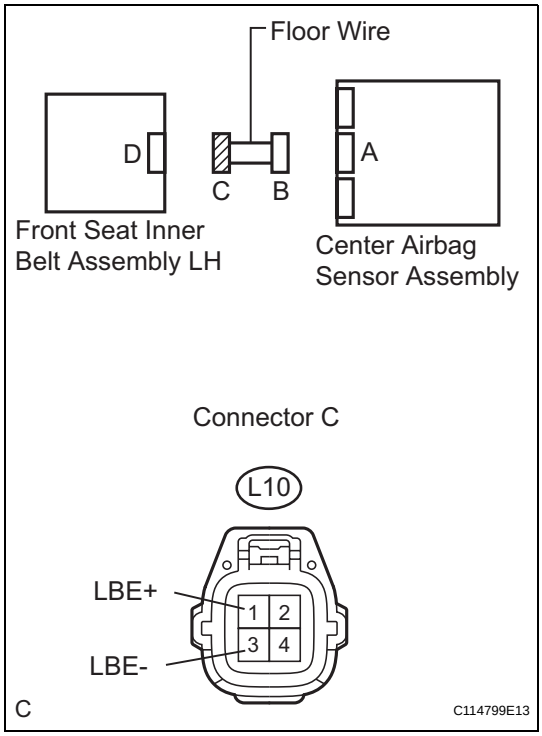

(a) Connect the negative (-) terminal cable to the battery, and wait for at least 2 seconds.
(b) Turn the engine switch on (IG).
(c) Measure the voltage according to the value(s) in the table below.

Standard voltage

Tester Connection	Condition	Specified Condition
L10-1 (LBE+) - Body ground	Engine switch on (IG)	Below 1 V
L10-3 (LBE-) - Body ground	Engine switch on (IG)	Below 1 V

NG → **REPAIR OR REPLACE FLOOR WIRE**

OK

15 CHECK FLOOR WIRE (SHORT TO GROUND)

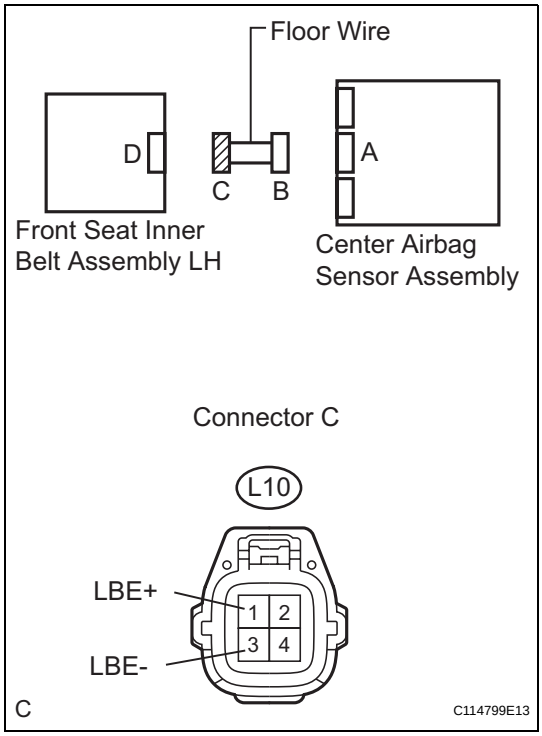

(a) Turn the engine switch off.
(b) Disconnect the negative (-) terminal cable from the battery, and wait for at least 90 seconds.
(c) Measure the resistance according to the value(s) in the table below.

Standard resistance

Tester Connection	Condition	Specified Condition
L10-1 (LBE+) - Body ground	Always	1 MΩ or higher
L10-3 (LBE-) - Body ground	Always	1 MΩ or higher

NG → **REPAIR OR REPLACE FLOOR WIRE**

OK

RS

16 CHECK FRONT SEAT INNER BELT ASSEMBLY LH

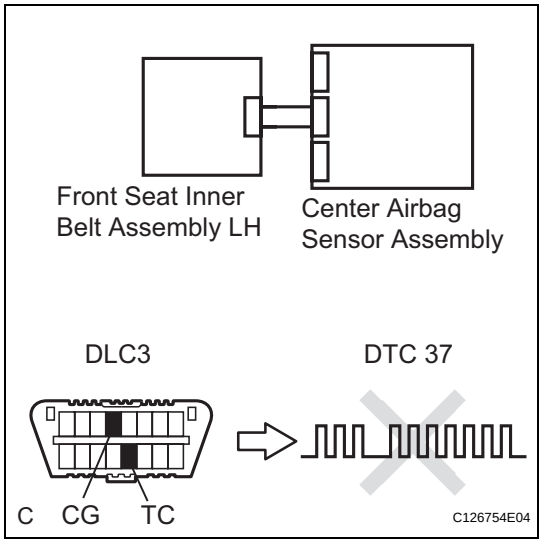

(a) Connect the connector to the center airbag sensor assembly and the front seat inner belt assembly LH.
(b) Connect the negative (-) terminal cable to the battery, and wait for at least 2 seconds.
(c) Turn the engine switch on (IG), and wait for at least 60 seconds.
(d) Clear the DTCs stored in the memory (See page RS-49).
(e) Turn the engine switch off.
(f) Turn the engine switch on (IG), and wait for at least 60 seconds.
(g) Check the DTCs (See page RS-49).
OK:
DTC B1655/37 is not output.
HINT:
Codes other than DTC B1655/37 may be output at this time, but they are not related to this check.

OK → **USE SIMULATION METHOD TO CHECK (See page RS-37)**

NG

17 REPLACE FRONT SEAT INNER BELT ASSEMBLY LH

(a) Turn the engine switch off.
(b) Disconnect the negative (-) terminal cable from the battery, and wait for at least 90 seconds.
(c) Replace the front seat inner belt assembly LH (See page SB-22).
HINT:
Perform inspection using parts from a normal vehicle if possible.

NEXT

RS

18	CHECK CENTER AIRBAG SENSOR ASSEMBLY

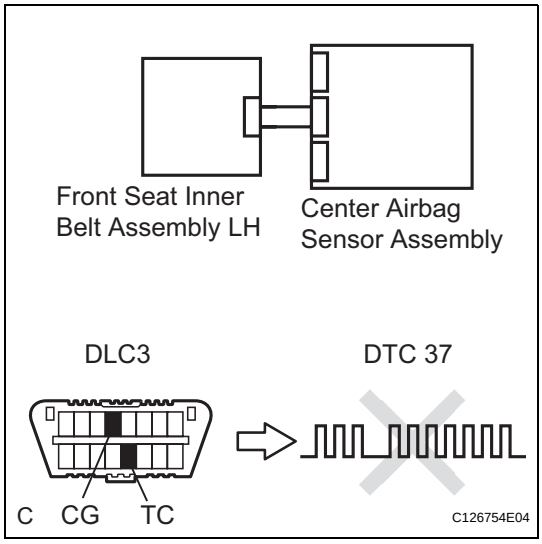

(a) Connect the negative (-) terminal cable to the battery, and wait for at least 2 seconds.
(b) Turn the engine switch on (IG), and wait for at least 60 seconds.
(c) Clear the DTCs stored in the memory (See page RS-49).
(d) Turn the engine switch off.
(e) Turn the engine switch on (IG), and wait for at least 60 seconds.
(f) Check the DTCs (See page RS-49).
OK:
DTC B1655/37 is not output.
HINT:
Codes other than DTC B1655/37 may be output at this time, but they are not related to this check.

NG → **REPLACE CENTER AIRBAG SENSOR ASSEMBLY (See page RS-468)**

OK

END

DTC	B1660/43	Passenger Airbag ON / OFF Indicator Circuit Malfunction

DESCRIPTION

The passenger airbag ON/OFF indicator circuit consists of the center airbag sensor assembly and the passenger airbag ON/OFF indicator.
The passenger airbag ON/OFF indicator indicates the operation condition of the front passenger airbag assembly, front passenger side knee airbag assembly, front seat side airbag assembly RH and front seat outer belt assembly RH.
DTC B1660/43 is recorded when a malfunction is detected in the passenger airbag ON/OFF indicator circuit.

DTC No.	DTC Detecting Condition	Trouble Area
B1660/43	• The center airbag sensor assembly receives an open circuit signal, a short circuit to ground signal or a short circuit to B+ signal in the passenger airbag ON/OFF indicator circuit for 2 seconds. • Passenger airbag ON/OFF indicator malfunction • Center airbag sensor assembly malfunction	• Instrument panel wire • Multi-display assembly (with Navigation system) • Air conditioner panel sub-assembly (without Navigation system) • Center airbag sensor assembly

WIRING DIAGRAM

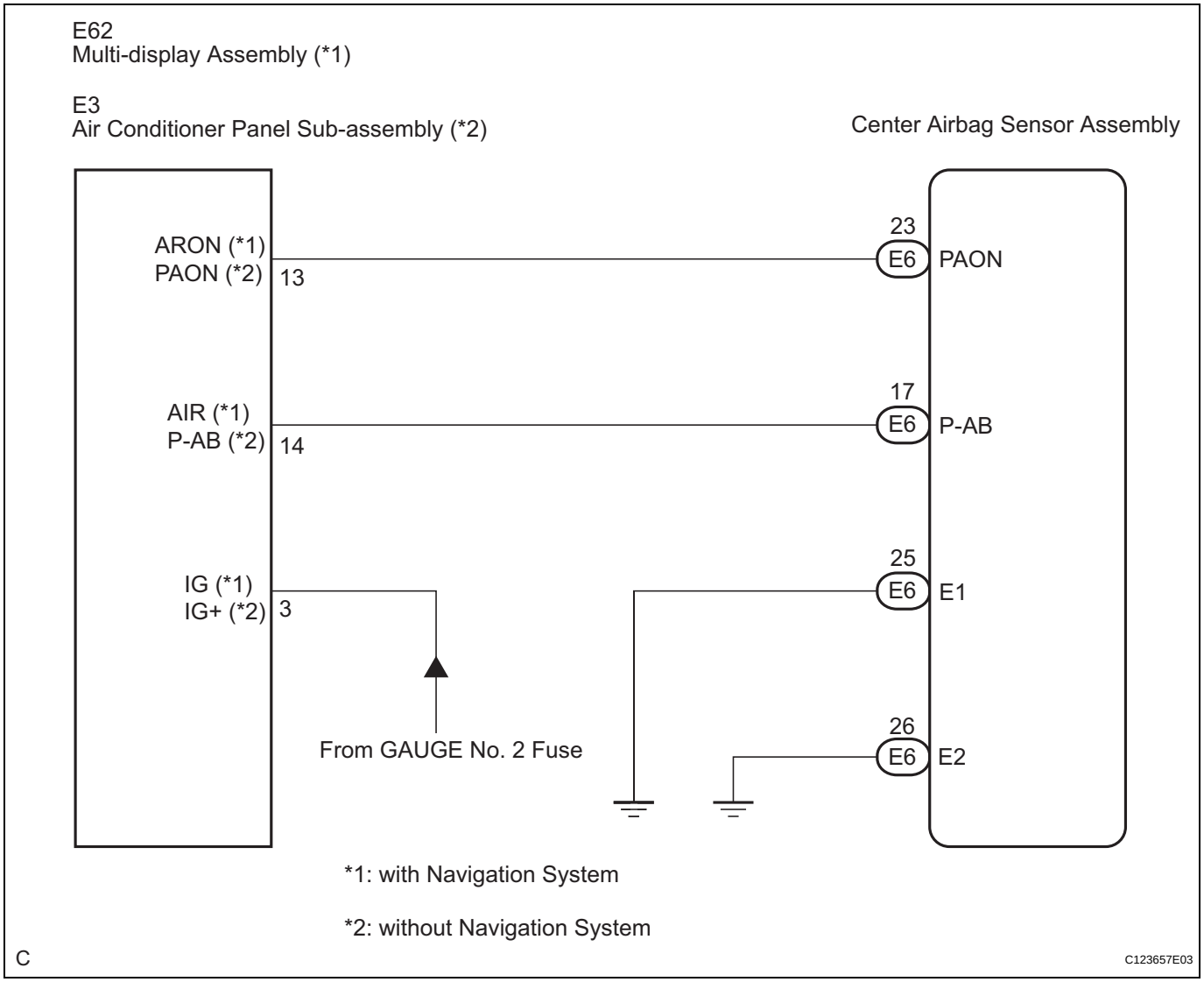

RS

INSPECTION PROCEDURE

1	CHECK PASSENGER AIRBAG ON/OFF INDICATOR CONDITION

(a) Turn the engine switch on (IG).
(b) Check the passenger airbag ON/OFF indicator operation.
HINT:
Refer to the normal condition of the passenger airbag ON/OFF indicator (See page RS-37).

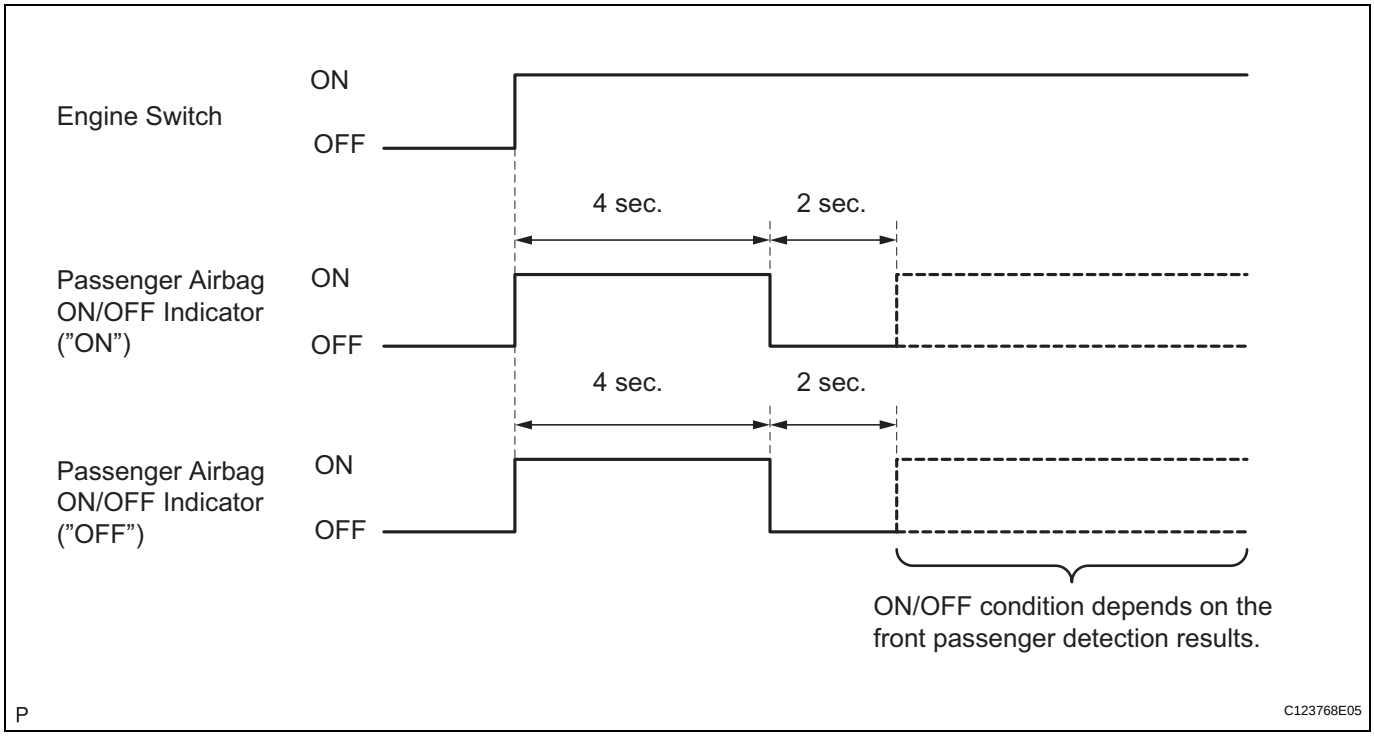

Result

ON/OFF Indicator Illumination	Proceed to
Always ON	A
OFF	B

B → **Go to step 17**

A

2	CHECK CONNECTION OF CONNECTORS

(a) Turn the engine switch off.
(b) Disconnect the negative (-) terminal cable from the battery, and wait for at least 90 seconds.
(c) with Navigation system:
Check that the connectors are properly connected to the center airbag sensor assembly and the multi-display assembly.
OK:
The connectors are properly connected.

(d) without Navigation system:
Check that the connectors are properly connected to the center airbag sensor assembly and the air conditioner panel sub-assembly.
OK:
The connectors are properly connected.

NG → **CONNECT CONNECTORS PROPERLY**

RS

OK

3 CHECK CONNECTORS

(a) with Navigation system:
(1) Disconnect the connectors from the center airbag sensor assembly and the multi-display assembly.
(2) Check that the connectors (on the center airbag sensor assembly side and multi-display assembly side) are not damaged.
OK:
The connectors are not deformed or damaged.

(b) without Navigation system:
(1) Disconnect the connectors from the center airbag sensor assembly and the air conditioner panel sub-assembly.
(2) Check that the connectors (on the center airbag sensor assembly side and air conditioner panel sub-assembly side) are not damaged.
OK:
The connectors are not deformed or damaged.

NG → **REPAIR OR REPLACE INSTRUMENT PANEL WIRE**

OK

4 CHECK VEHICLE CONDITION

(a) Check whether or not the vehicle is equipped with the rear side airbag.
Result:
A:
with the rear side airbag
B:
without the rear side airbag

B → **Go to step 11**

A

RS

5 CHECK PASSENGER AIRBAG ON/OFF INDICATOR

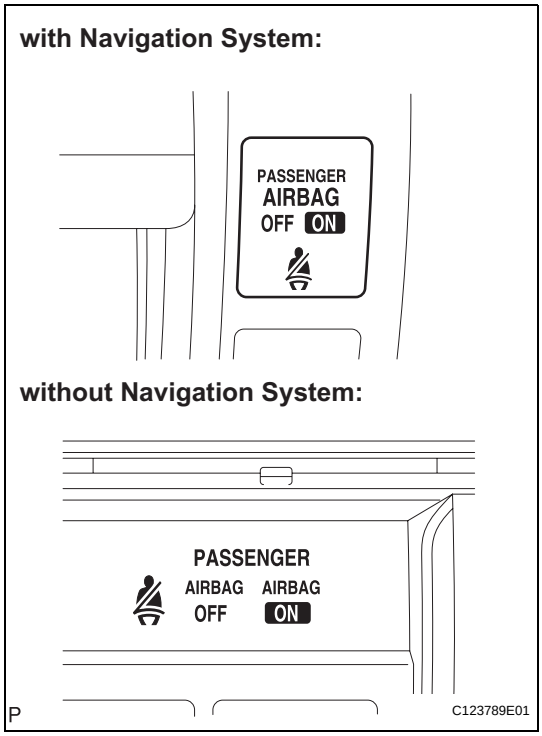

(a) with Navigation system:
Connect the connector to the multi-display assembly.
(b) without Navigation system:
Connect the connector to the air conditioner panel sub-assembly.
(c) Connect the negative (-) terminal cable to the battery, and wait for at least 2 seconds.
(d) Turn the engine switch on (IG).
(e) Check the passenger airbag ON/OFF indicator operation.
OK:
The passenger airbag ON/OFF indicator does not come on.

NG → **Go to step 7**

OK

6 CHECK CENTER AIRBAG SENSOR ASSEMBLY

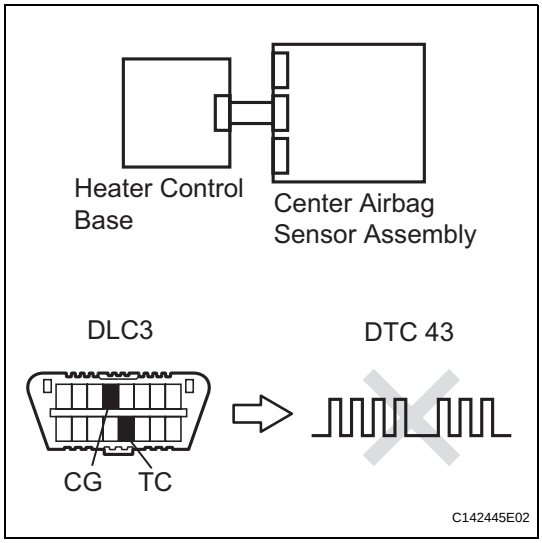

(a) Connect the connector to the center airbag sensor assembly.
(b) Connect the negative (-) terminal cable to the battery, and wait for at least 2 seconds.
(c) Turn the engine switch on (IG), and wait for at least 60 seconds.
(d) Clear the DTCs stored in the memory (See page RS-49).
(e) Turn the engine switch off.
(f) Turn the engine switch on (IG), and wait for at least 60 seconds.
(g) Check for DTCs (See page RS-49).
OK:
DTC B1660/43 is not output.
HINT:
Codes other than DTC B1660/43 may be output at this time, but they are not related to this check.

NG → **REPLACE CENTER AIRBAG SENSOR ASSEMBLY (See page RS-468)**

OK

USE SIMULATION METHOD TO CHECK (See page RS-37)

RS

7 CHECK INSTRUMENT PANEL WIRE (OPEN)

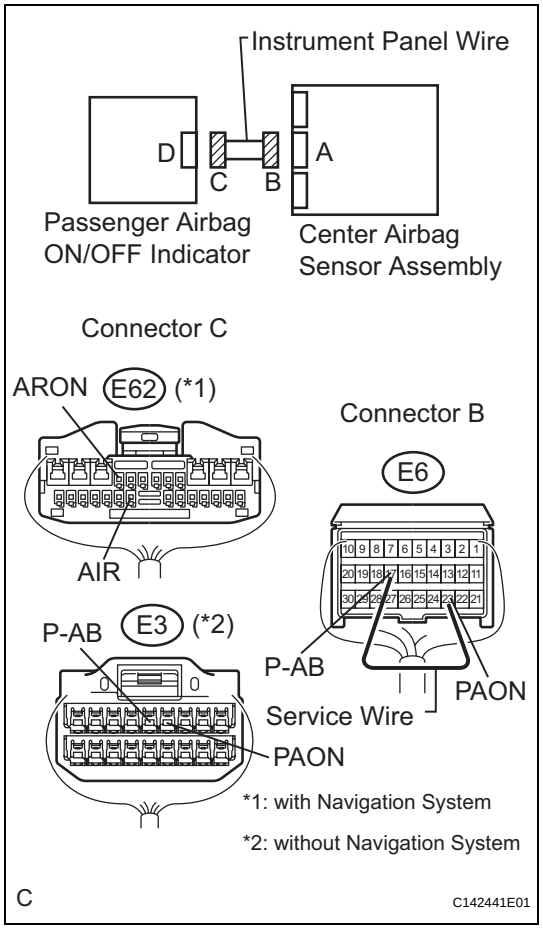

(a) Turn the engine switch off.

(b) Disconnect the negative (-) terminal cable from the battery, and wait for at least 90 seconds.

(c) with Navigation system:
Disconnect the connector from the multi-display assembly.

(d) without Navigation system:
Disconnect the connector from the air conditioner panel sub-assembly.

(e) Using a service wire, connect terminals 23 (PAON) and 17 (P-AB) of connector B.
NOTICE:
Do not forcibly insert a service wire into the terminals of the connector when connecting the wire.

(f) Measure the resistance according to the value(s) in the table below.
Standard resistance:
with Navigation system

Tester Connection	Condition	Specified Condition
E62-9 (ARON) - E62-20 (AIR)	Always	Below 1 Ω

without Navigation system

Tester Connection	Condition	Specified Condition
E3-4 (PAON) - E3-5 (P-AB)	Always	Below 1 Ω

NG → **REPAIR OR REPLACE INSTRUMENT PANEL WIRE**

OK

RS

8 CHECK INSTRUMENT PANEL WIRE (SHORT)

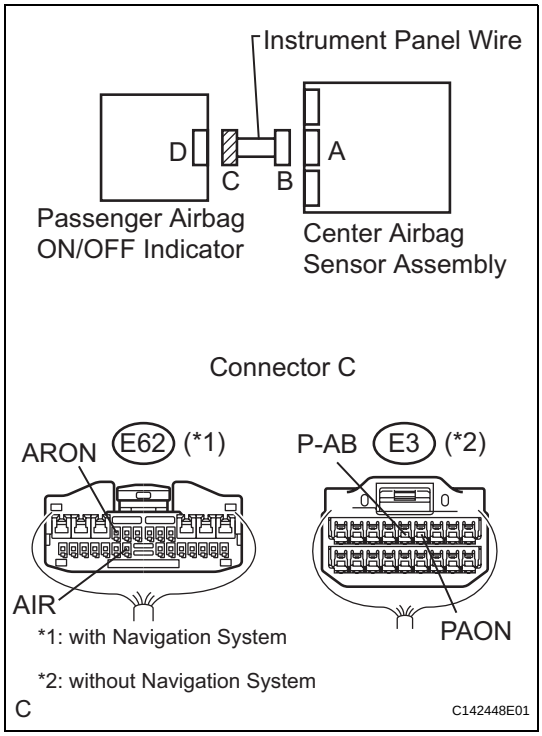

(a) Disconnect the service wire from connector B.
(b) Measure the resistance according to the value(s) in the table below.

Standard resistance:
with Navigation system

Tester Connection	Condition	Specified Condition
E62-9 (ARON) - E62-20 (AIR)	Always	1 MΩ or higher

without Navigation system

Tester Connection	Condition	Specified Condition
E3-4 (PAON) - E3-5 (P-AB)	Always	1 MΩ or higher

NG → **REPAIR OR REPLACE INSTRUMENT PANEL WIRE**

OK

9 CHECK INSTRUMENT PANEL WIRE (SHORT TO GROUND)

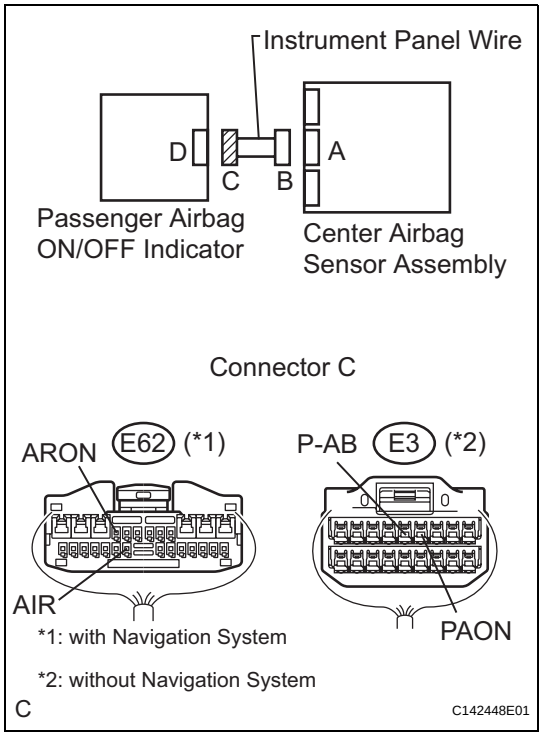

(a) Measure the resistance according to the value(s) in the table below.

Standard resistance:
with Navigation system

Tester Connection	Condition	Specified Condition
E62-9 (ARON) - Body ground	Always	1 MΩ or higher
E62-20 (AIR) - Body ground	Always	1 MΩ or higher

without Navigation system

Tester Connection	Condition	Specified Condition
E3-4 (PAON) - Body ground	Always	1 MΩ or higher
E3-5 (P-AB) - Body ground	Always	1 MΩ or higher

NG → **REPAIR OR REPLACE INSTRUMENT PANEL WIRE**

OK

RS

10 CHECK INSTRUMENT PANEL WIRE (SHORT TO B+)

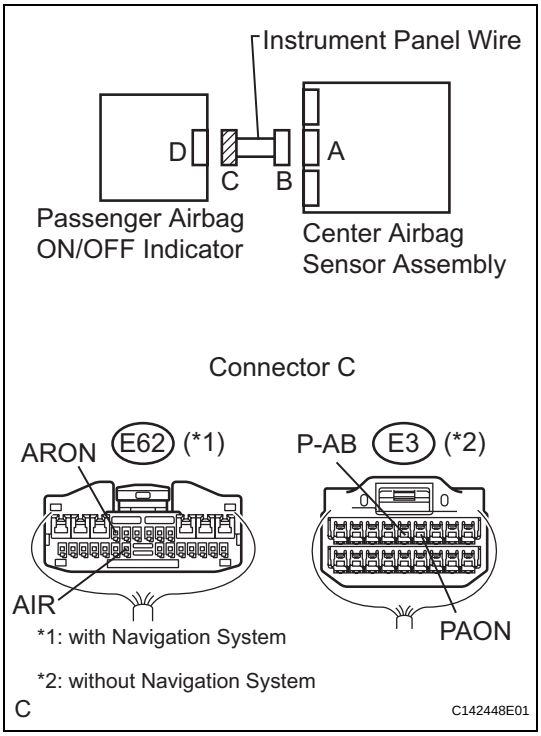

(a) Connect the negative (-) terminal cable to the battery, and wait for at least 2 seconds.
(b) Turn the engine switch on (IG).
(c) Measure the voltage according to the value(s) in the table below.

Standard voltage:
with Navigation system

Tester Connection	Condition	Specified Condition
E62-9 (ARON) - Body ground	Engine switch on (IG)	Below 1 V
E62-20 (AIR) - Body ground	Engine switch on (IG)	Below 1 V

without Navigation system

Tester Connection	Condition	Specified Condition
E3-4 (PAON) - Body ground	Engine switch on (IG)	Below 1 V
E3-5 (P-AB) - Body ground	Engine switch on (IG)	Below 1 V

Result

Result	Proceed to
OK (with Navigation system)	A
OK (without Navigation system)	B
NG	C

A → **REPLACE MULTI-DISPLAY ASSEMBLY (See page NS-233)**

B → **REPLACE AIR CONDITIONER PANEL SUB-ASSEMBLY (See page AC-227)**

C

REPAIR OR REPLACE INSTRUMENT PANEL WIRE

RS

11 CHECK PASSENGER AIRBAG ON/OFF INDICATOR

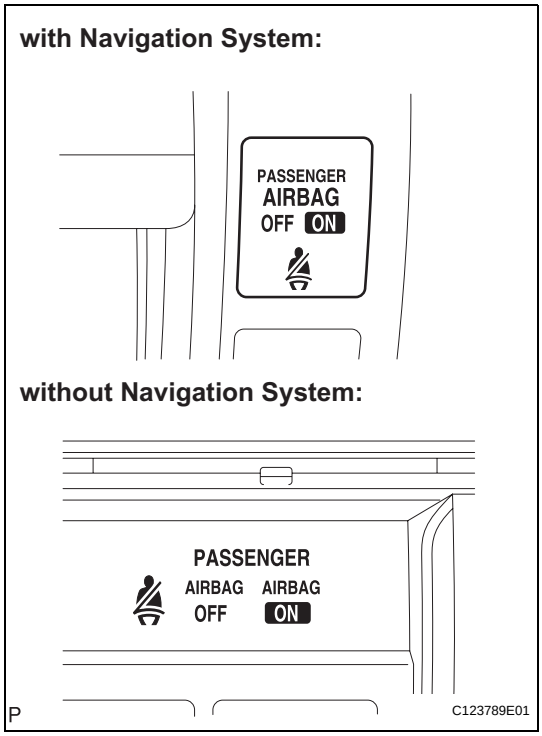

(a) with Navigation system:
Connect the connector to the multi-display assembly.
(b) without Navigation system:
Connect the connector to the air conditioner panel sub-assembly.
(c) Connect the negative (-) terminal cable to the battery, and wait for at least 2 seconds.
(d) Turn the engine switch on (IG).
(e) Check the passenger airbag ON/OFF indicator operation.
OK:
The passenger airbag ON/OFF indicator does not come on.

NG → **Go to step 13**

OK

12 CHECK CENTER AIRBAG SENSOR ASSEMBLY

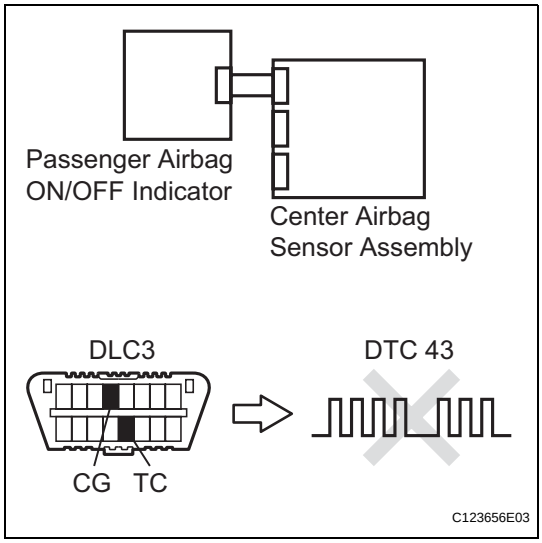

(a) Connect the connector to the center airbag sensor assembly.
(b) Connect the negative (-) terminal cable to the battery, and wait for at least 2 seconds.
(c) Turn the engine switch on (IG), and wait for at least 60 seconds.
(d) Clear the DTCs stored in the memory (See page RS-49).
(e) Turn the engine switch off.
(f) Turn the engine switch on (IG), and wait for at least 60 seconds.
(g) Check for DTCs (See page RS-49).
OK:
DTC B1660/43 is not output.
HINT:
Codes other than DTC B1660/43 may be output at this time, but they are not related to this check.

NG → **REPLACE CENTER AIRBAG SENSOR ASSEMBLY (See page RS-468)**

OK

USE SIMULATION METHOD TO CHECK (See page RS-37)

RS

13 CHECK INSTRUMENT PANEL WIRE (OPEN)

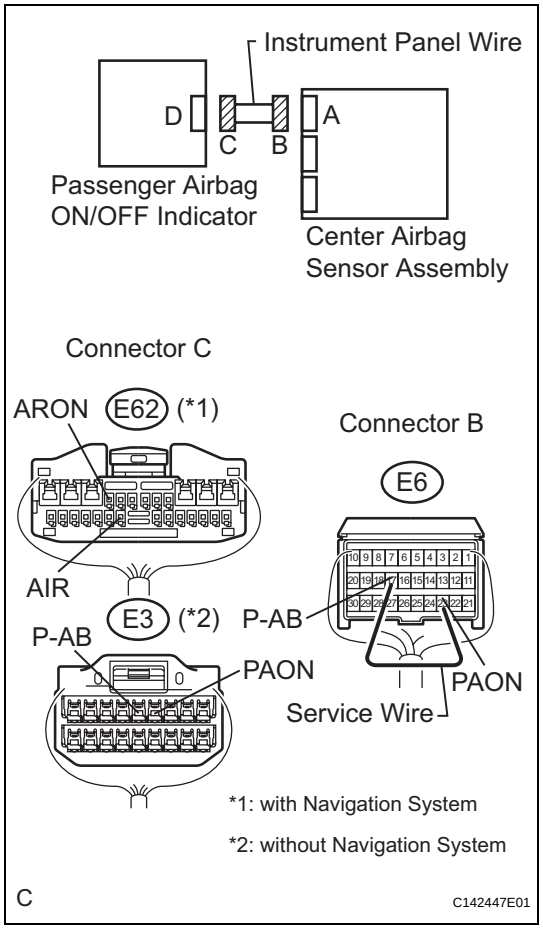

(a) Turn the engine switch off.

(b) Disconnect the negative (-) terminal cable from the battery, and wait for at least 90 seconds.

(c) with Navigation system:
Disconnect the connector from the multi-display assembly.

(d) without Navigation system:
Disconnect the connector from the air conditioner panel sub-assembly.

(e) Using a service wire, connect terminals 23 (PAON) and 17 (P-AB) of connector B.
NOTICE:
Do not forcibly insert a service wire into the terminals of the connector when connecting the wire.

(f) Measure the resistance according to the value(s) in the table below.
Standard resistance:
with Navigation system

Tester Connection	Condition	Specified Condition
E62-9 (ARON) - E62-20 (AIR)	Always	Below 1 Ω

without Navigation system

Tester Connection	Condition	Specified Condition
E3-4 (PAON) - E3-5 (P-AB)	Always	Below 1 Ω

NG → **REPAIR OR REPLACE INSTRUMENT PANEL WIRE**

OK

RS

14 CHECK INSTRUMENT PANEL WIRE (SHORT)

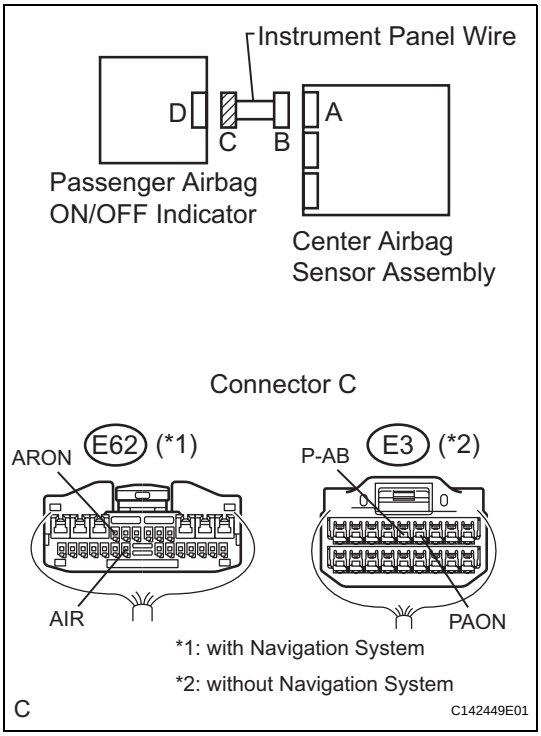

(a) Disconnect the service wire from connector B.
(b) Measure the resistance according to the value(s) in the table below.

Standard resistance:
with Navigation system

Tester Connection	Condition	Specified Condition
E62-9 (ARON) - E62-20 (AIR)	Always	1 MΩ or higher

without Navigation system

Tester Connection	Condition	Specified Condition
E3-4 (PAON) - E3-5 (P-AB)	Always	1 MΩ or higher

NG → **REPAIR OR REPLACE INSTRUMENT PANEL WIRE**

OK

15 CHECK INSTRUMENT PANEL WIRE (SHORT TO GROUND)

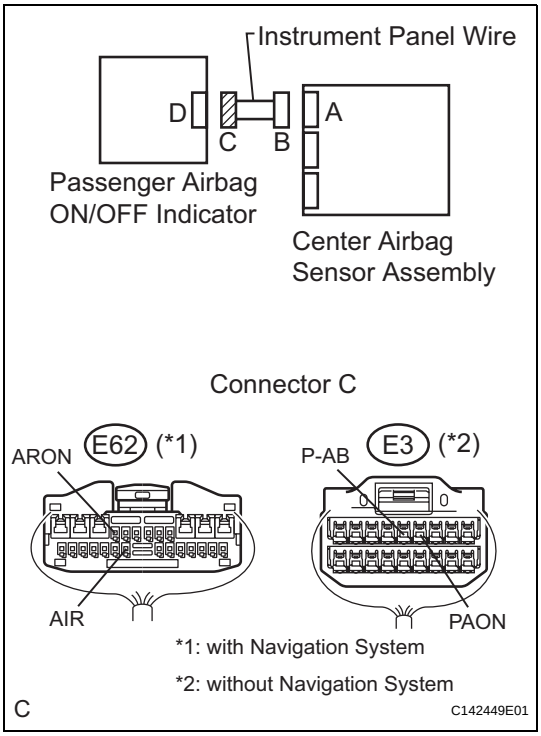

(a) Measure the resistance according to the value(s) in the table below.

Standard resistance:
with Navigation system

Tester Connection	Condition	Specified Condition
E62-9 (ARON) - Body ground	Always	1 MΩ or higher
E62-20 (AIR) - Body ground	Always	1 MΩ or higher

without Navigation system

Tester Connection	Condition	Specified Condition
E3-4 (PAON) - Body ground	Always	1 MΩ or higher
E3-5 (P-AB) - Body ground	Always	1 MΩ or higher

NG → **REPAIR OR REPLACE INSTRUMENT PANEL WIRE**

OK

RS

16 CHECK INSTRUMENT PANEL WIRE (SHORT TO B+)

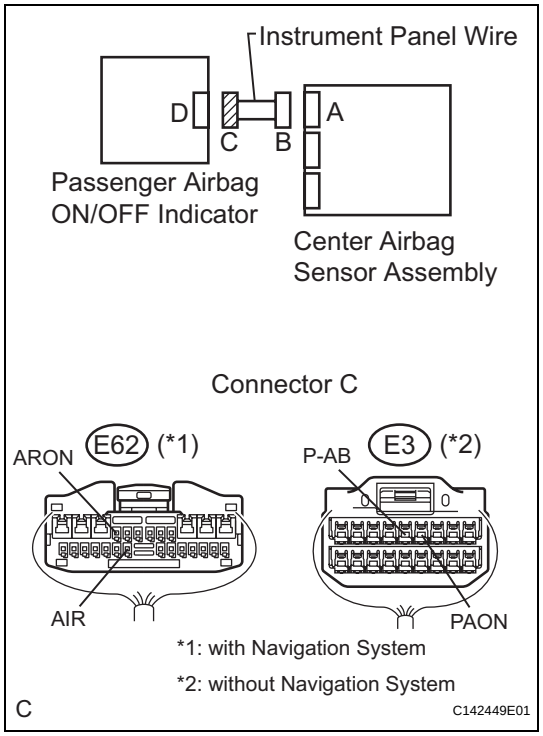

(a) Connect the negative (-) terminal cable to the battery, and wait for at least 2 seconds.
(b) Turn the engine switch on (IG).
(c) Measure the voltage according to the value(s) in the table below.

Standard voltage:
with Navigation system

Tester Connection	Condition	Specified Condition
E62-9 (ARON) - Body ground	Engine switch on (IG)	Below 1 V
E62-20 (AIR) - Body ground	Engine switch on (IG)	Below 1 V

without Navigation system

Tester Connection	Condition	Specified Condition
E3-4 (PAON) - Body ground	Engine switch on (IG)	Below 1 V
E3-5 (P-AB) - Body ground	Engine switch on (IG)	Below 1 V

Result

Result	Proceed to
OK (with Navigation system)	A
OK (without Navigation system)	B
NG	C

A → **REPLACE MULTI-DISPLAY ASSEMBLY (See page NS-233)**

B → **REPLACE AIR CONDITIONER PANEL SUB-ASSEMBLY (See page AC-227)**

C

REPAIR OR REPLACE INSTRUMENT PANEL WIRE

17 CHECK CONNECTION OF CONNECTORS

(a) Turn the engine switch off.
(b) Disconnect the negative (-) terminal cable from the battery, and wait for at least 90 seconds.
(c) with Navigation system:
Check that the connectors are properly connected to the center airbag sensor assembly and the multi-display assembly.
OK:
The connectors are properly connected.
(d) without Navigation system:

RS

Check that the connectors are properly connected to the center airbag sensor assembly and the air conditioner panel sub-assembly.

OK:

The connectors are properly connected.

NG → **CONNECT CONNECTORS PROPERLY**

OK

18	CHECK CONNECTORS

(a) with Navigation system:

(1) Disconnect the connectors from the center airbag sensor assembly and the multi-display assembly.

(2) Check that the connectors (on the center airbag sensor assembly side and multi-display assembly side) are not damaged.

OK:

The connectors are not deformed or damaged.

(b) without Navigation system:

(1) Disconnect the connectors from the center airbag sensor assembly and the air conditioner panel sub-assembly.

(2) Check that the connectors (on the center airbag sensor assembly side and air conditioner panel sub-assembly side) are not damaged.

OK:

The connectors are not deformed or damaged.

NG → **REPAIR OR REPLACE INSTRUMENT PANEL WIRE**

OK

19	CHECK VEHICLE CONDITION

(a) Check whether or not the vehicle is equipped with the rear side airbag.

Result:

A:

with the rear side airbag

B:

without the rear side airbag

B → **Go to step 27**

A

RS

20 CHECK INSTRUMENT PANEL WIRE (OPEN)

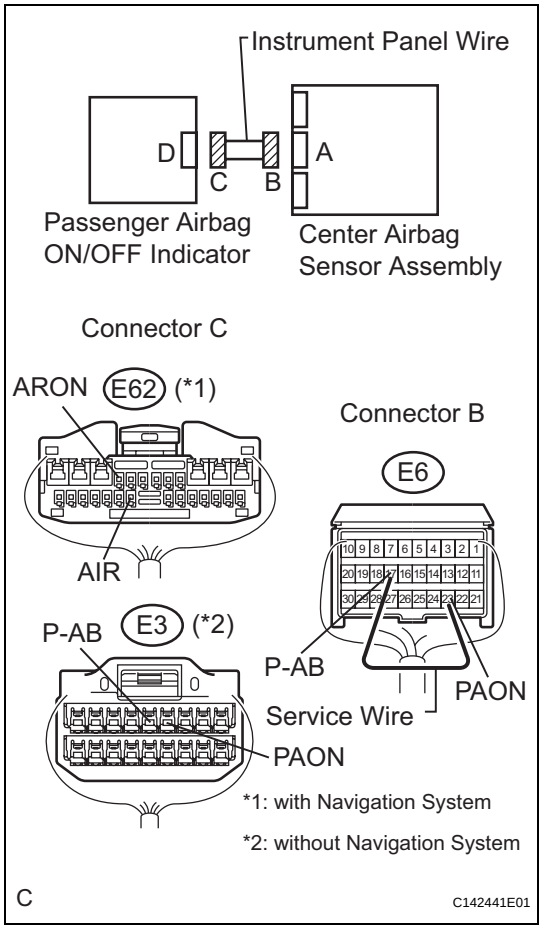

(a) Turn the engine switch off.

(b) Disconnect the negative (-) terminal cable from the battery, and wait for at least 90 seconds.

(c) with Navigation system:
Disconnect the connector from the multi-display assembly.

(d) without Navigation system:
Disconnect the connector from the air conditioner panel sub-assembly.

(e) Using a service wire, connect terminals 23 (PAON) and 17 (P-AB) of connector B.
NOTICE:
Do not forcibly insert a service wire into the terminals of the connector when connecting the wire.

(f) Measure the resistance according to the value(s) in the table below.
Standard resistance:
with Navigation system

Tester Connection	Condition	Specified Condition
E62-9 (ARON) - E62-20 (AIR)	Always	Below 1 Ω

without Navigation system

Tester Connection	Condition	Specified Condition
E3-4 (PAON) - E3-5 (P-AB)	Always	Below 1 Ω

NG → **REPAIR OR REPLACE INSTRUMENT PANEL WIRE**

OK

RS

21 CHECK INSTRUMENT PANEL WIRE (SHORT)

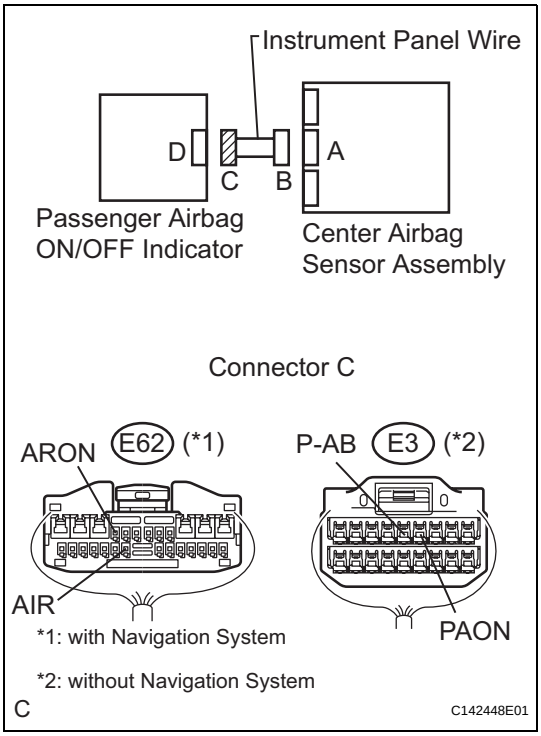

(a) Disconnect the service wire from connector B.
(b) Measure the resistance according to the value(s) in the table below.

Standard resistance:
with Navigation system

Tester Connection	Condition	Specified Condition
E62-9 (ARON) - E62-20 (AIR)	Always	1 MΩ or higher

without Navigation system

Tester Connection	Condition	Specified Condition
E3-4 (PAON) - E3-5 (P-AB)	Always	1 MΩ or higher

NG → **REPAIR OR REPLACE INSTRUMENT PANEL WIRE**

OK

22 CHECK INSTRUMENT PANEL WIRE (SHORT TO GROUND)

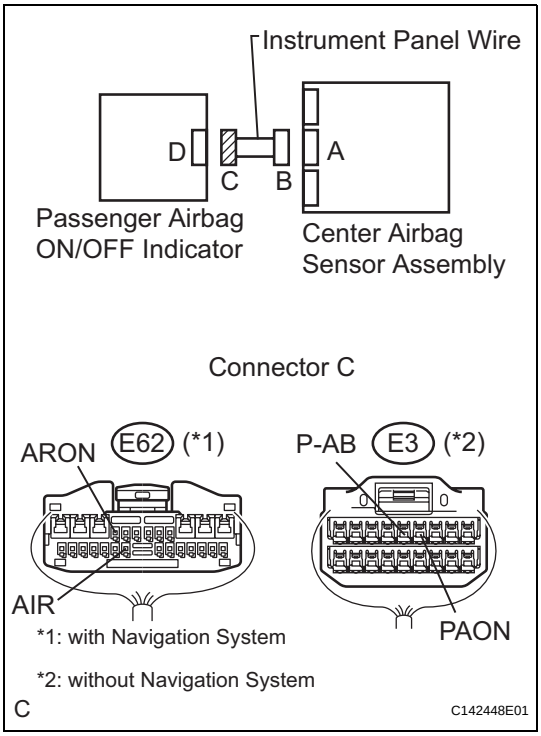

(a) Measure the resistance according to the value(s) in the table below.

Standard resistance:
with Navigation system

Tester Connection	Condition	Specified Condition
E62-9 (ARON) - Body ground	Always	1 MΩ or higher
E62-20 (AIR) - Body ground	Always	1 MΩ or higher

without Navigation system

Tester Connection	Condition	Specified Condition
E3-4 (PAON) - Body ground	Always	1 MΩ or higher
E3-5 (P-AB) - Body ground	Always	1 MΩ or higher

NG → **REPAIR OR REPLACE INSTRUMENT PANEL WIRE**

OK

RS

23 CHECK INSTRUMENT PANEL WIRE (SHORT TO B+)

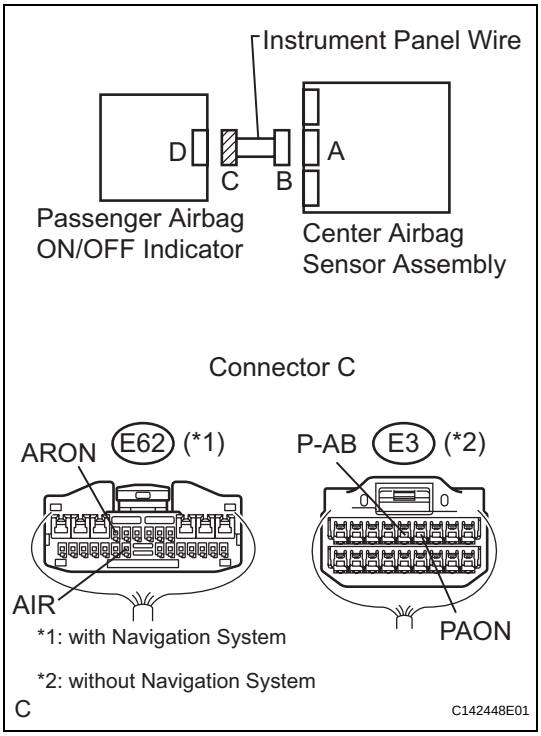

(a) Connect the negative (-) terminal cable to the battery, and wait for at least 2 seconds.
(b) Turn the engine switch on (IG).
(c) Measure the voltage according to the value(s) in the table below.

Standard voltage:
with Navigation system

Tester Connection	Condition	Specified Condition
E62-9 (ARON) - Body ground	Engine switch on (IG)	Below 1 V
E62-20 (AIR) - Body ground	Engine switch on (IG)	Below 1 V

without Navigation system

Tester Connection	Condition	Specified Condition
E3-4 (PAON) - Body ground	Engine switch on (IG)	Below 1 V
E3-5 (P-AB) - Body ground	Engine switch on (IG)	Below 1 V

NG → **REPAIR OR REPLACE INSTRUMENT PANEL WIRE**

OK

24 CHECK PASSENGER AIRBAG ON/OFF INDICATOR (SOURCE VOLTAGE)

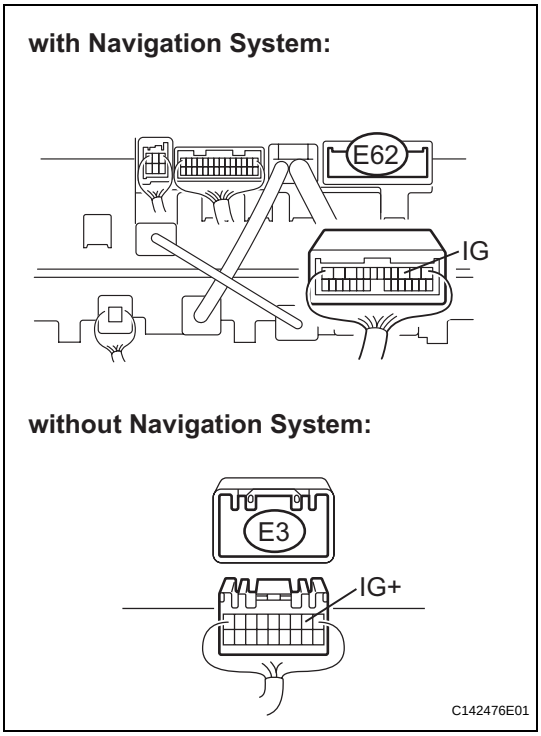

(a) Connect the connectors to the center airbag sensor assembly.
(b) Connect the negative (-) terminal cable to the battery, and wait for at least 2 seconds.
(c) Turn the engine switch on (IG).
(d) Measure the voltage according to the value(s) in the table below.

Standard voltage:
with Navigation system

Tester Connection	Condition	Specified Condition
E62-3 (IG) - Body ground	Engine switch on (IG)	10 to 14 V

without Navigation system

Tester Connection	Condition	Specified Condition
E3-2 (IG+) - Body ground	Engine switch on (IG)	10 to 14 V

NG → **REPAIR OR REPLACE WIRE HARNESS (PASSENGER AIRBAG ON/OFF INDICATOR - BATTERY) OR BATTERY**

OK

25 CHECK PASSENGER AIRBAG ON/OFF INDICATOR

RS

Center Airbag Sensor Assembly Side:

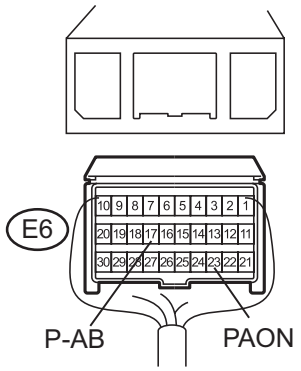

C142450E01

(a) Turn the engine switch off.
(b) Disconnect the negative (-) terminal cable from the battery, and wait for at least 90 seconds.
(c) with Navigation system
Connect the connector to the multi-display assembly.
(d) without Navigation system
Connect the connector to the clock assembly.
(e) Disconnect the connectors from the center airbag sensor assembly.
(f) Connect the negative (-) terminal cable to the battery, and wait for at least 2 seconds.
(g) Turn the engine switch on (IG).
(h) Check the indicator according to the conditions in the table below.

Result

Tester Connection	Condition	Passenger airbag ON/ OFF indicator
E6-23 (PAON) - Body ground	Engine switch on (IG)	"ON" comes on
E6-17 (P-AB) - Body ground	Engine switch on (IG)	"OFF" comes on

Result

Result	Proceed to
NG (with Navigation system)	A
NG (without Navigation system)	B
OK	C

A → **REPLACE MULTI-DISPLAY ASSEMBLY (See page NS-233)**

B → **REPLACE AIR CONDITIONER PANEL SUB-ASSEMBLY (See page AC-227)**

C

26	CHECK CENTER AIRBAG SENSOR ASSEMBLY

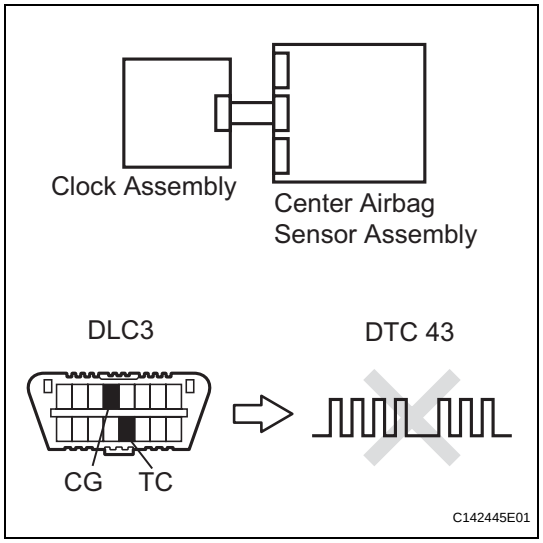

(a) Turn the engine switch off.
(b) Disconnect the negative (-) terminal cable from the battery, and wait for at least 90 seconds.
(c) Connect the connectors to the center airbag sensor assembly.
(d) Connect the negative (-) terminal cable to the battery and wait for at least 2 seconds.
(e) Turn the engine switch on (IG), and wait for at least 60 seconds.
(f) Clear the DTCs stored in the memory (See page RS-49).
(g) Turn the engine switch off.
(h) Turn the engine switch on (IG), and wait for at least 60 seconds.
(i) Check for DTCs (See page RS-49).
OK:
DTC B1660/43 is not output.
HINT:
Codes other than DTC B1660/43 may be output at this time, but they are not related to this check.

NG → **REPLACE CENTER AIRBAG SENSOR ASSEMBLY (See page RS-468)**

OK

USE SIMULATION METHOD TO CHECK (See page RS-37)

RS

RS

27	CHECK INSTRUMENT PANEL WIRE (OPEN)

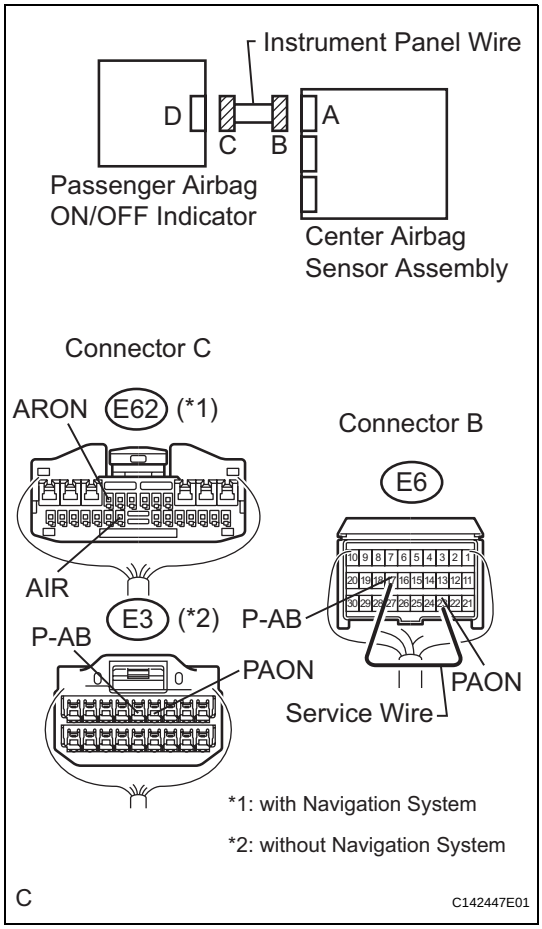

(a) Turn the engine switch off.
(b) Disconnect the negative (-) terminal cable from the battery, and wait for at least 90 seconds.
(c) with Navigation system:
Disconnect the connector from the multi-display assembly.
(d) without Navigation system:
Disconnect the connector from the air conditioner panel sub-assembly.
(e) Using a service wire, connect terminals 23 (PAON) and 17 (P-AB) of connector B.
NOTICE:
Do not forcibly insert a service wire into the terminals of the connector when connecting the wire.
(f) Measure the resistance according to the value(s) in the table below.
Standard resistance:
with Navigation system

Tester Connection	Condition	Specified Condition
E62-9 (ARON) - E62-20 (AIR)	Always	Below 1 Ω

without Navigation system

Tester Connection	Condition	Specified Condition
E3-4 (PAON) - E3-5 (P-AB)	Always	Below 1 Ω

NG → **REPAIR OR REPLACE INSTRUMENT PANEL WIRE**

OK

RS

28 CHECK INSTRUMENT PANEL WIRE (SHORT)

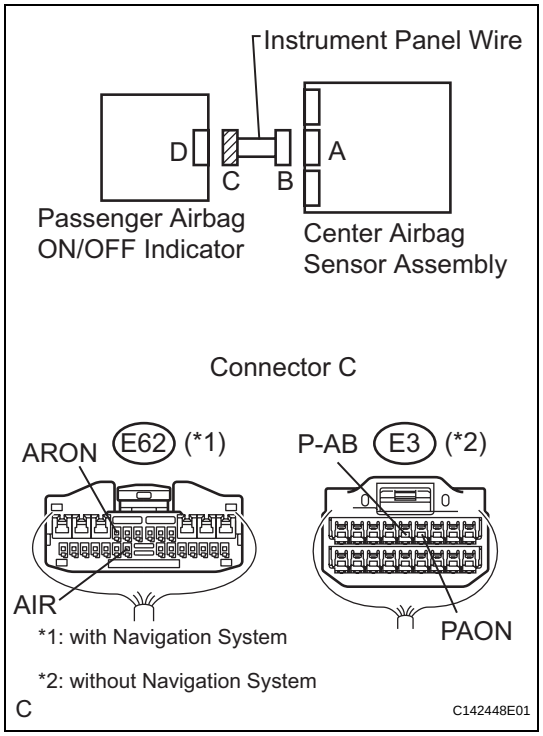

(a) Disconnect the service wire from connector B.
(b) Measure the resistance according to the value(s) in the table below.

Standard resistance:
with Navigation system

Tester Connection	Condition	Specified Condition
E62-9 (ARON) - E62-20 (AIR)	Always	1 MΩ or higher

without Navigation system

Tester Connection	Condition	Specified Condition
E3-4 (PAON) - E3-5 (P-AB)	Always	1 MΩ or higher

NG → **REPAIR OR REPLACE INSTRUMENT PANEL WIRE**

OK

29 CHECK INSTRUMENT PANEL WIRE (SHORT TO GROUND)

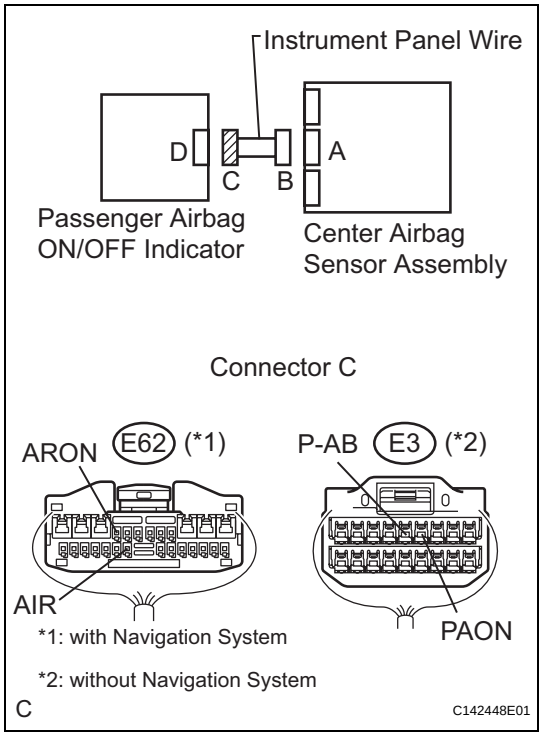

(a) Measure the resistance according to the value(s) in the table below.

Standard resistance:
with Navigation system

Tester Connection	Condition	Specified Condition
E62-9 (ARON) - Body ground	Always	1 MΩ or higher
E62-20 (AIR) - Body ground	Always	1 MΩ or higher

without Navigation system

Tester Connection	Condition	Specified Condition
E3-4 (PAON) - Body ground	Always	1 MΩ or higher
E3-5 (P-AB) - Body ground	Always	1 MΩ or higher

NG → **REPAIR OR REPLACE INSTRUMENT PANEL WIRE**

OK

RS

30 CHECK INSTRUMENT PANEL WIRE (SHORT TO B+)

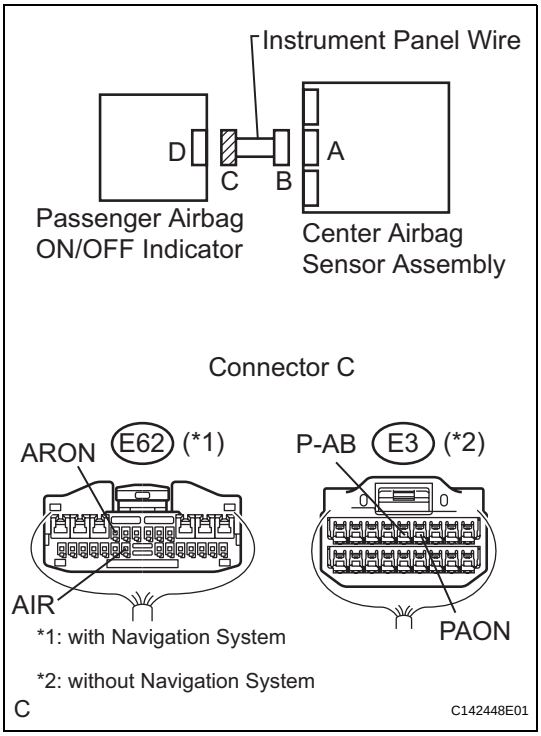

(a) Connect the negative (-) terminal cable to the battery, and wait for at least 2 seconds.
(b) Turn the engine switch on (IG).
(c) Measure the voltage according to the value(s) in the table below.

Standard voltage:
with Navigation system

Tester Connection	Condition	Specified Condition
E62-9 (ARON) - Body ground	Engine switch on (IG)	Below 1 V
E62-20 (AIR) - Body ground	Engine switch on (IG)	Below 1 V

without Navigation system

Tester Connection	Condition	Specified Condition
E3-4 (PAON) - Body ground	Engine switch on (IG)	Below 1 V
E3-5 (P-AB) - Body ground	Engine switch on (IG)	Below 1 V

NG → **REPAIR OR REPLACE INSTRUMENT PANEL WIRE**

OK

31 CHECK PASSENGER AIRBAG ON/OFF INDICATOR (SOURCE VOLTAGE)

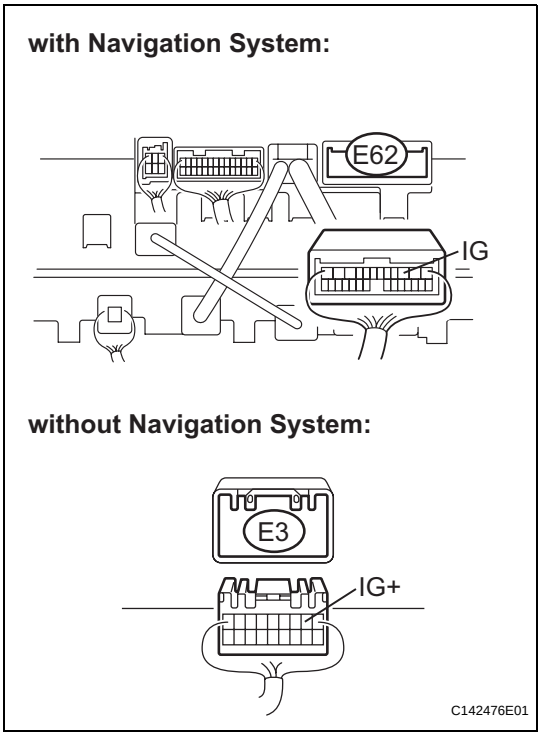

(a) Connect the connectors to the center airbag sensor assembly.
(b) Connect the negative (-) terminal cable to the battery, and wait for at least 2 seconds.
(c) Turn the engine switch on (IG).
(d) Measure the voltage according to the value(s) in the table below.

Standard voltage:
with Navigation system

Tester Connection	Condition	Specified Condition
E62-3 (IG) - Body ground	Engine switch on (IG)	10 to 14 V

without Navigation system

Tester Connection	Condition	Specified Condition
E3-2 (IG+) - Body ground	Engine switch on (IG)	10 to 14 V

NG → **REPAIR OR REPLACE WIRE HARNESS (PASSENGER AIRBAG ON/OFF INDICATOR - BATTERY) OR BATTERY**

OK

32 CHECK PASSENGER AIRBAG ON/OFF INDICATOR

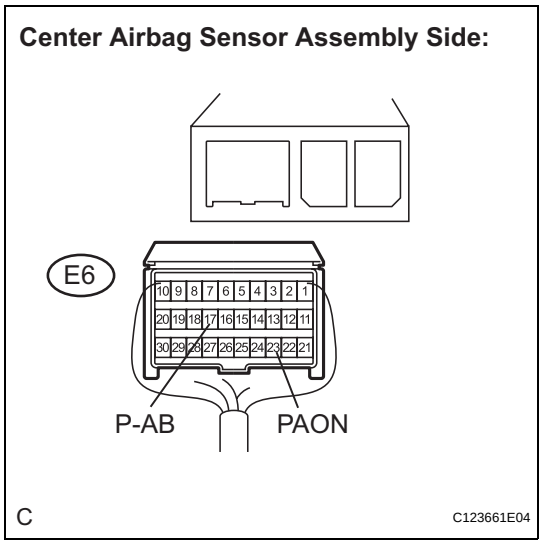

(a) Turn the engine switch off.
(b) Disconnect the negative (-) terminal cable from the battery, and wait for at least 90 seconds.
(c) with Navigation system
Connect the connector to the multi-display assembly.
(d) without Navigation system
Connect the connector to the clock assembly.
(e) Disconnect the connectors from the center airbag sensor assembly.
(f) Connect the negative (-) terminal cable to the battery, and wait for at least 2 seconds.
(g) Turn the engine switch on (IG).
(h) Check the indicator according to the conditions in the table below.

Result

Tester Connection	Condition	Passenger airbag ON/ OFF indicator
E6-23 (PAON) - Body ground	Engine switch on (IG)	"ON" comes on
E6-17 (P-AB) - Body ground	Engine switch on (IG)	"OFF" comes on

Result

Result	Proceed to
NG (with Navigation system)	A
NG (without Navigation system)	B
OK	C

A → **REPLACE MULTI-DISPLAY ASSEMBLY (See page NS-233)**

B → **REPLACE AIR CONDITIONER PANEL SUB-ASSEMBLY (See page AC-227)**

C

RS

33	CHECK CENTER AIRBAG SENSOR ASSEMBLY

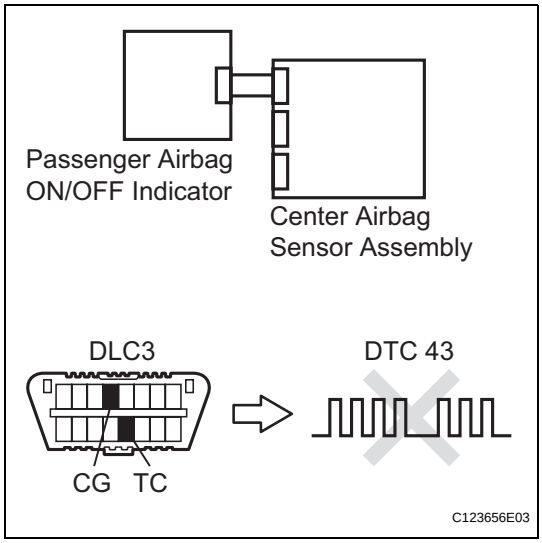

(a) Turn the engine switch off.
(b) Disconnect the negative (-) terminal cable from the battery, and wait for at least 90 seconds.
(c) Connect the connector to the center airbag sensor assembly.
(d) Connect the negative (-) terminal cable to the battery and wait for at least 2 seconds.
(e) Turn the engine switch on (IG), and wait for at least 60 seconds.
(f) Clear the DTCs stored in the memory (See page RS-49).
(g) Turn the engine switch off.
(h) Turn the engine switch on (IG), and wait for at least 60 seconds.
(i) Check for DTCs (See page RS-49).
OK:
DTC B1660/43 is not output.
HINT:
Codes other than DTC B1660/43 may be output at this time, but they are not related to this check.

NG → **REPLACE CENTER AIRBAG SENSOR ASSEMBLY (See page RS-468)**

OK

USE SIMULATION METHOD TO CHECK (See page RS-37)

DTC	B1800/51	Short in Driver Side Squib Circuit

DTC	B1801/51	Open in Driver Side Squib Circuit

DTC	B1802/51	Short to GND in Driver Side Squib Circuit

DTC	B1803/51	Short to B+ in Driver Side Squib Circuit

DESCRIPTION

The driver side squib circuit consists of the center airbag sensor assembly, the spiral cable, and the steering pad.
The circuit instructs the SRS to deploy when deployment conditions are met.
These DTCs are recorded when a malfunction is detected in the driver side squib circuit.

DTC No.	DTC Detecting Condition	Trouble Area
B1800/51	• The center airbag sensor assembly receives a line short circuit signal 5 times in the driver side squib circuit during primary check. • Driver side squib malfunction • Spiral cable malfunction • Center airbag sensor assembly malfunction	• Instrument panel wire • Spiral cable • Steering pad (Driver side squib) • Center airbag sensor assembly
B1801/51	• The center airbag sensor assembly receives an open circuit signal in the driver side squib circuit for 2 seconds. • Driver side squib malfunction • Spiral cable malfunction • Center airbag sensor assembly malfunction	• Instrument panel wire • Spiral cable • Steering pad (Driver side squib) • Center airbag sensor assembly
B1802/51	• The center airbag sensor assembly receives a short circuit to ground signal in the driver side squib circuit for 0.5 seconds. • Driver side squib malfunction • Spiral cable malfunction • Center airbag sensor assembly malfunction	• Instrument panel wire • Spiral cable • Steering pad (Driver side squib) • Center airbag sensor assembly
B1803/51	• The center airbag sensor assembly receives a short circuit to B+ signal in the driver side squib circuit for 0.5 seconds. • Driver side squib malfunction • Spiral cable malfunction • Center airbag sensor assembly malfunction	• Instrument panel wire • Spiral cable • Steering pad (Driver side squib) • Center airbag sensor assembly

RS

WIRING DIAGRAM

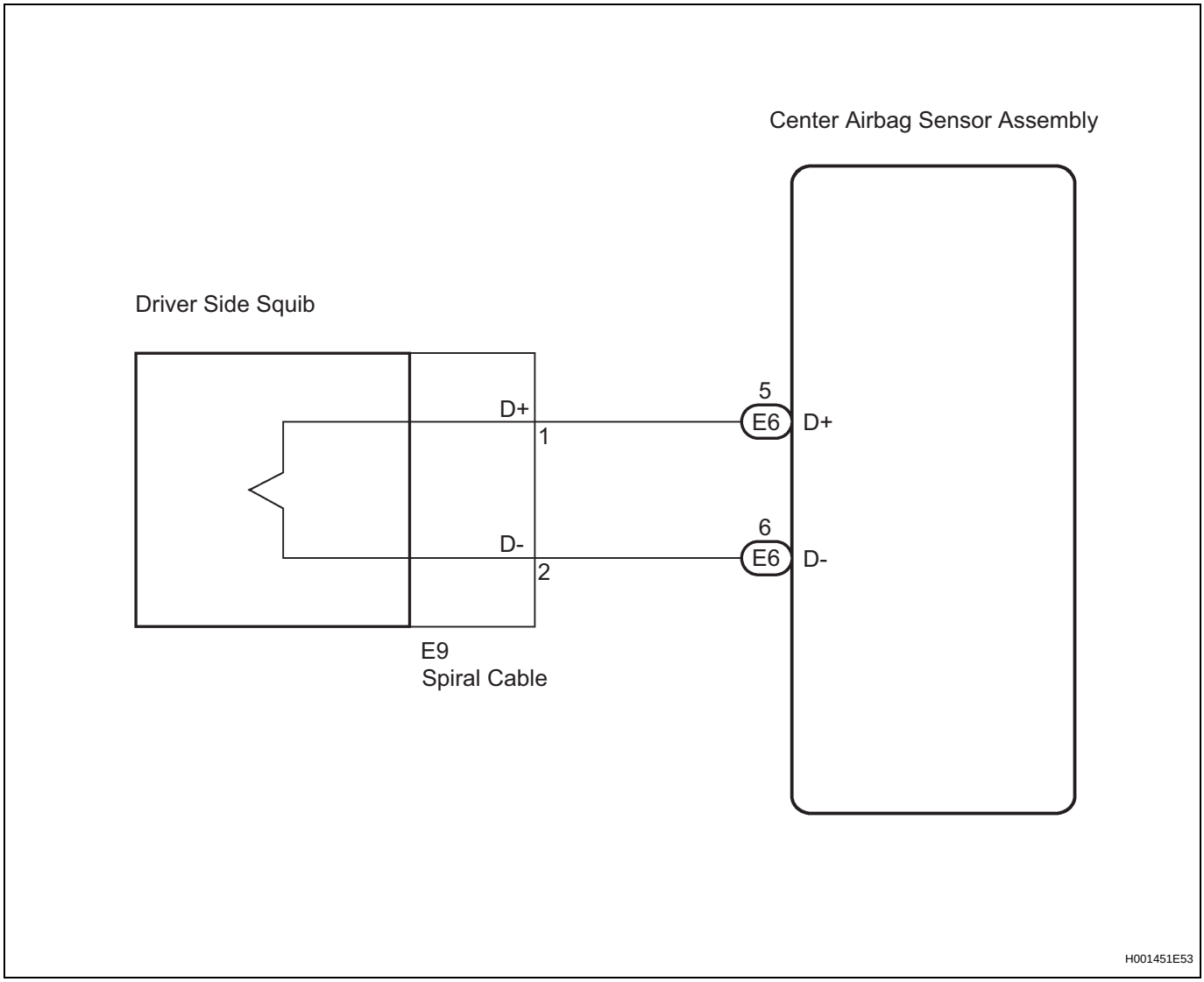

INSPECTION PROCEDURE

HINT:

- Perform the simulation method by selecting the "check mode" (signal check) with the intelligent tester (See page RS-52).
- After selecting the "check mode" (signal check), perform the simulation method by wiggling each connector of the airbag system or driving the vehicle on a city or rough road (See page RS-52).

RS

1 CHECK STEERING PAD (DRIVER SIDE SQUIB)

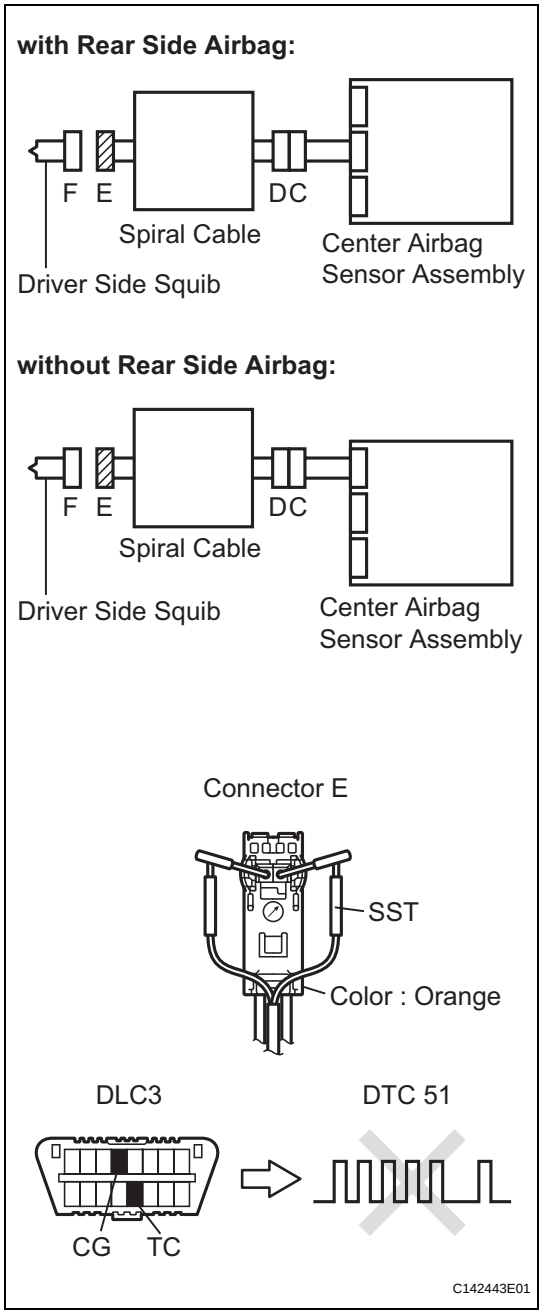

(a) Turn the engine switch off.
(b) Disconnect the negative (-) terminal cable from the battery, and wait for at least 90 seconds.
(c) Disconnect the connectors from the steering pad.
(d) Connect the white wire side of SST (resistance 2.1 Ω) to connector E (orange connector).
CAUTION:
Never connect the tester to the steering pad (driver side squib) for measurement, as this may lead to a serious injury due to airbag deployment.
NOTICE:
- **Do not forcibly insert the SST into the terminals of the connector when connecting the SST.**
- **Insert straight the SST into the terminals of the connector.**

SST 09843-18060

(e) Connect the negative (-) terminal cable to the battery, and wait for at least 2 seconds.
(f) Turn the engine switch on (IG), and wait for at least 60 seconds.
(g) Clear the DTCs stored in the memory (See page RS-49).
(h) Turn the engine switch off.
(i) Turn the engine switch on (IG), and wait for at least 60 seconds.
(j) Check the DTCs (See page RS-49).
OK:
DTC B1800, B1801, B1802, B1803, or 51 is not output.
HINT:
Codes other than DTC B1800, B1801, B1802, B1803, and 51 may be output at this time, but they are not related to this check.

OK → **REPLACE STEERING PAD (See page RS-366)**

NG

2 CHECK CONNECTOR

(a) Turn the engine switch off.
(b) Disconnect the negative (-) terminal cable from the battery, and wait for at least 90 seconds.
(c) Disconnect the SST from connector E.
(d) Check that the spiral cable connectors (on the steering pad side) are not damaged.

OK:
The lock button is not disengaged, or the claw of the lock is not deformed or damaged.

NG → **REPLACE SPIRAL CABLE (See page RS-379)**

RS

OK

3 CHECK DRIVER SIDE SQUIB CIRCUIT

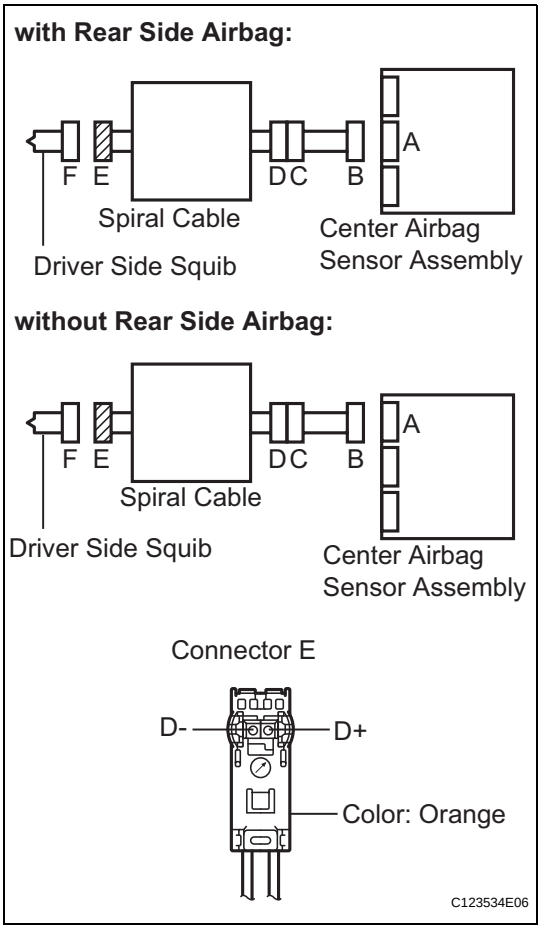

(a) Disconnect the connectors from the center airbag sensor assembly.

(b) Check for a short to B+ in the circuit.
  (1) Connect the negative (-) terminal cable to the battery, and wait for at least 2 seconds.
  (2) Turn the engine switch on (IG).
  (3) Measure the voltage according to the value(s) in the table below.
  Standard voltage

Tester Connection	Condition	Specified Condition
D+ - Body ground	Engine switch on (IG)	Below 1 V
D- - Body ground	Engine switch on (IG)	Below 1 V

(c) Check for an open in the circuit.
  (1) Turn the engine switch off.
  (2) Disconnect the negative (-) terminal cable from the battery, and wait for at least 90 seconds.
  (3) Measure the resistance according to the value(s) in the table below.
  Standard resistance

Tester Connection	Condition	Specified Condition
D+ - D-	Always	Below 1 Ω

(d) Check for a short to ground in the circuit.
  (1) Measure the resistance according to the value(s) in the table below.
  Standard resistance

Tester Connection	Condition	Specified Condition
D+ - Body ground	Always	1 MΩ or higher
D- - Body ground	Always	1 MΩ or higher

(e) Check for a short in the circuit.
  (1) Release the activation prevention mechanism built into connector B (See page RS-37).
  (2) Measure the resistance according to the value(s) in the table below.
  Standard resistance

Tester Connection	Condition	Specified Condition
D+ - D-	Always	1 MΩ or higher

NG → **Go to step 5**

OK

4	CHECK CENTER AIRBAG SENSOR ASSEMBLY

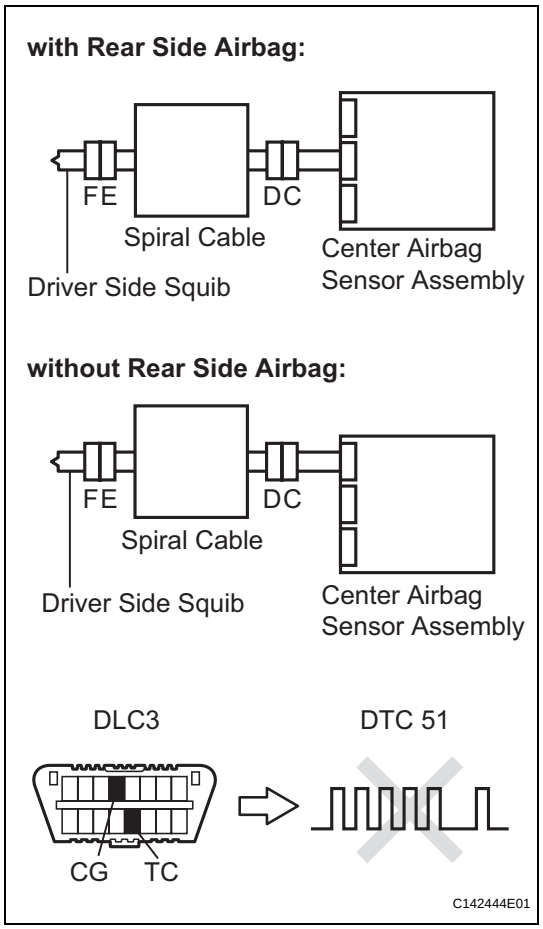

(a) Connect the connectors to the steering pad and the center airbag sensor assembly.
(b) Connect the negative (-) terminal cable to the battery, and wait for at least 2 seconds.
(c) Turn the engine switch on (IG), and wait for at least 60 seconds.
(d) Clear the DTCs stored in the memory (See page RS-49).
(e) Turn the engine switch off.
(f) Turn the engine switch on (IG), and wait for at least 60 seconds.
(g) Check the DTCs (See page RS-49).
OK:
DTC B1800, B1801, B1802, B1803, or 51 is not output.
HINT:
Codes other than DTC B1800, B1801, B1802, B1803, and 51 may be output at this time, but they are not related to this check.

NG → **REPLACE CENTER AIRBAG SENSOR ASSEMBLY (See page RS-468)**

OK

USE SIMULATION METHOD TO CHECK (See page RS-37)

RS

RS

5	CHECK INSTRUMENT PANEL WIRE

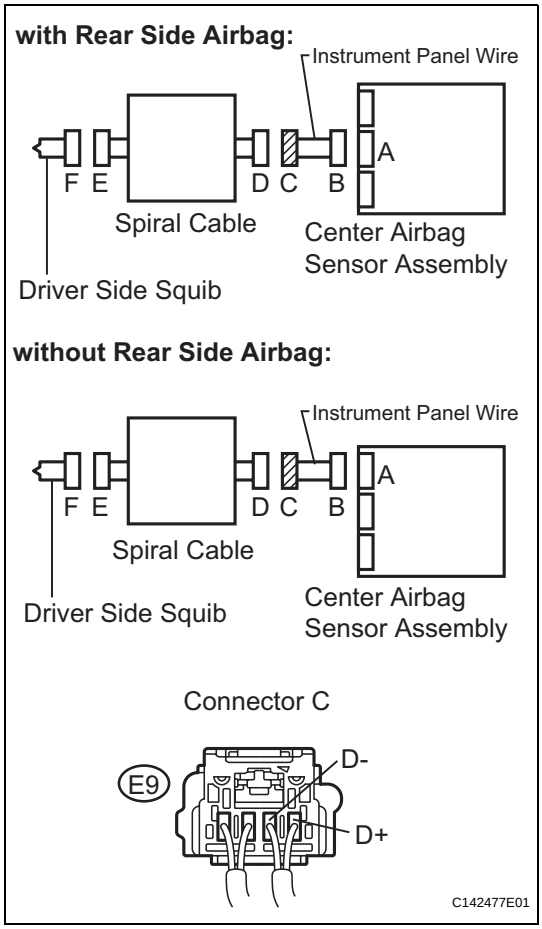

(a) Restore the released activation prevention mechanism of connector B to the original condition.

(b) Disconnect the instrument panel wire connector from the spiral cable.

(c) Check for a short to B+ in the circuit.
  (1) Connect the negative (-) terminal cable to the battery, and wait for at least 2 seconds.
  (2) Turn the engine switch on (IG).
  (3) Measure the voltage according to the value(s) in the table below.

Standard voltage

Tester Connection	Condition	Specified Condition
E9-1 (D+) - Body ground	Engine switch on (IG)	Below 1 V
E9-2 (D-) - Body ground	Engine switch on (IG)	Below 1 V

(d) Check for an open in the circuit.
  (1) Turn the engine switch off.
  (2) Disconnect the negative (-) terminal cable from the battery, and wait for at least 90 seconds.
  (3) Measure the resistance according to the value(s) in the table below.

Standard resistance

Tester Connection	Condition	Specified Condition
E9-1 (D+) - E9-2 (D-)	Always	Below 1 Ω

(e) Check for a short to ground in the circuit.
  (1) Measure the resistance according to the value(s) in the table below.

Standard resistance

Tester Connection	Condition	Specified Condition
E9-1 (D+) - Body ground	Always	1 MΩ or higher
E9-2 (D-) - Body ground	Always	1 MΩ or higher

(f) Check for a short in the circuit.
  (1) Release the activation prevention mechanism built into connector B (See page RS-37).
  (2) Measure the resistance according to the value(s) in the table below.

Standard resistance

Tester Connection	Condition	Specified Condition
E9-1 (D+) - E9-2 (D-)	Always	1 MΩ or higher

NG → **REPAIR OR REPLACE INSTRUMENT PANEL WIRE**

OK

RS

6 CHECK SPIRAL CABLE

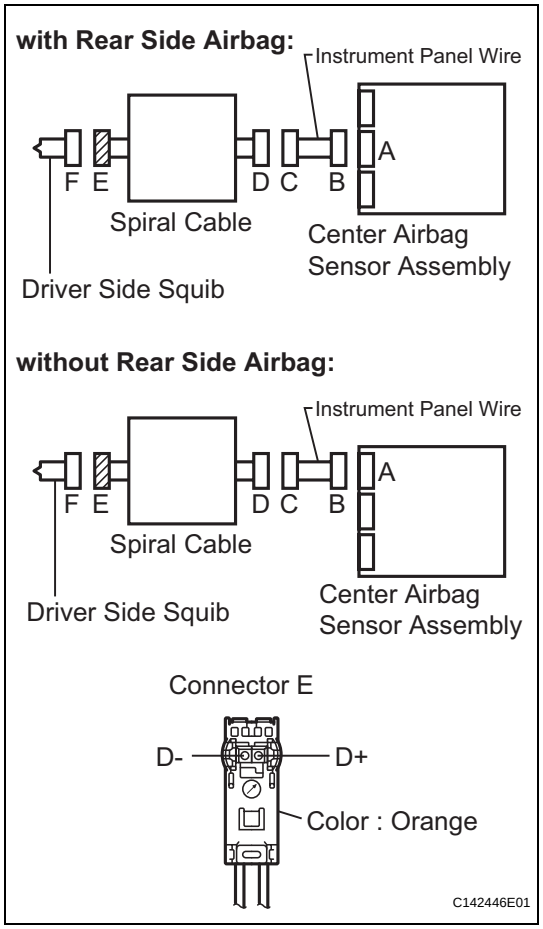

(a) Check for a short to B+ in the circuit.
(1) Connect the negative (-) terminal cable to the battery, and wait for at least 2 seconds.
(2) Turn the engine switch on (IG).
(3) Measure the voltage according to the value(s) in the table below.

Standard voltage

Tester Connection	Condition	Specified Condition
D+ - Body ground	Engine switch on (IG)	Below 1 V
D- - Body ground	Engine switch on (IG)	Below 1 V

(b) Check for an open in the circuit.
(1) Turn the engine switch off.
(2) Disconnect the negative (-) terminal cable from the battery, and wait for at least 90 seconds.
(3) Measure the resistance according to the value(s) in the table below.

Standard resistance

Tester Connection	Condition	Specified Condition
D+ - D-	Always	Below 1 Ω

(c) Check for a short to ground in the circuit.
(1) Measure the resistance according to the value(s) in the table below.

Standard resistance

Tester Connection	Condition	Specified Condition
D+ - Body ground	Always	1 MΩ or higher
D- - Body ground	Always	1 MΩ or higher

(d) Check for a short in the circuit.
(1) Release the activation prevention mechanism built into connector D (See page RS-37).
(2) Measure the resistance according to the value(s) in the table below.

Standard resistance

Tester Connection	Condition	Specified Condition
D+ - D-	Always	1 MΩ or higher

NG → **REPLACE SPIRAL CABLE (See page RS-379)**

OK

USE SIMULATION METHOD TO CHECK (See page RS-37)

DTC	B1805/52	Short in Front Passenger Side Squib Circuit

DTC	B1806/52	Open in Front Passenger Side Squib Circuit

RS

DTC	B1807/52	Short to GND in Front Passenger Side Squib Circuit

DTC	B1808/52	Short to B+ in Front Passenger Side Squib Circuit

DESCRIPTION

The front passenger side squib circuit consists of the center airbag sensor assembly and the front passenger airbag assembly.
The circuit instructs the SRS to deploy when deployment conditions are met.
These DTCs are recorded when a malfunction is detected in the front passenger side squib circuit.

DTC No.	DTC Detection Condition	Trouble Area
B1805/52	• The center airbag sensor assembly receives a line short circuit signal 5 times in the front passenger side squib circuit during primary check. • Front passenger side squib malfunction • Center airbag sensor assembly malfunction	• Instrument panel wire • Instrument panel wire assembly • Front passenger airbag assembly (Front passenger side squib) • Center airbag sensor assembly
B1806/52	• The center airbag sensor assembly receives an open circuit signal in the front passenger side squib circuit for 2 seconds. • Front passenger side squib malfunction • Center airbag sensor assembly malfunction	• Instrument panel wire • Instrument panel wire assembly • Front passenger airbag assembly (Front passenger side squib) • Center airbag sensor assembly
B1807/52	• The center airbag sensor assembly receives a short circuit to ground signal in the front passenger side squib circuit for 0.5 seconds. • Front passenger side squib malfunction • Center airbag sensor assembly malfunction	• Instrument panel wire • Instrument panel wire assembly • Front passenger airbag assembly (Front passenger side squib) • Center airbag sensor assembly
B1808/52	• The center airbag sensor assembly receives a short circuit to B+ signal in the front passenger side squib circuit for 0.5 seconds. • Front passenger side squib malfunction • Center airbag sensor assembly malfunction	• Instrument panel wire • Instrument panel wire assembly • Front passenger airbag assembly (Front passenger side squib) • Center airbag sensor assembly

RS

WIRING DIAGRAM

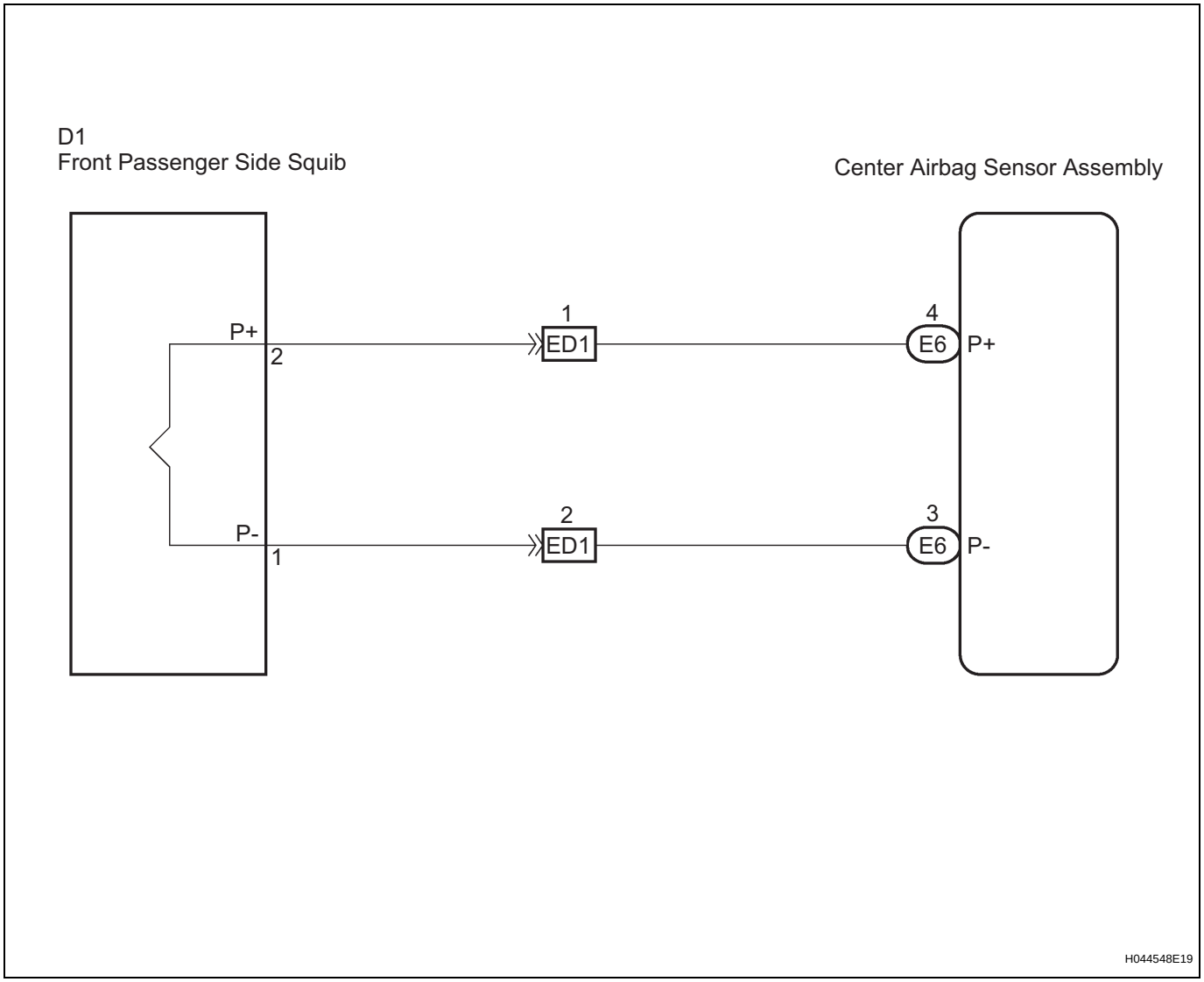

INSPECTION PROCEDURE

HINT:

- Perform the simulation method by selecting "check mode" (signal check) with the intelligent tester (See page RS-52).
- After selecting "check mode" (signal check), perform the simulation method by wiggling each connector of the airbag system or driving the vehicle on a city or rough road (See page RS-52).

RS

1	CHECK FRONT PASSENGER AIRBAG ASSEMBLY (FRONT PASSENGER SIDE SQUIB)

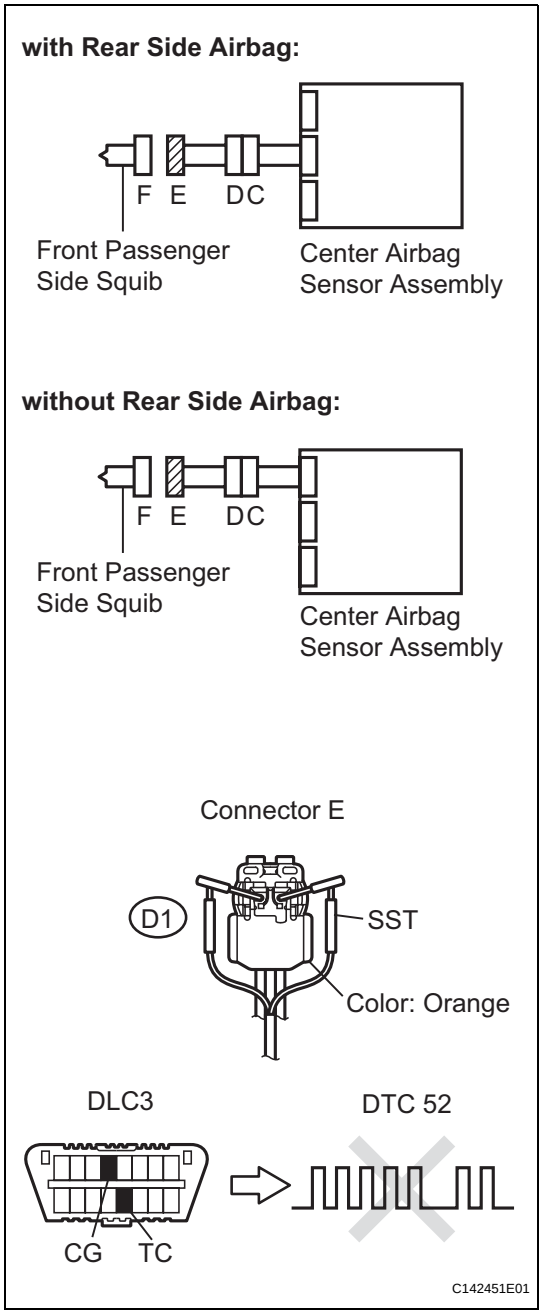

(a) Turn the engine switch off.
(b) Disconnect the negative (-) terminal cable from the battery, and wait for at least 90 seconds.
(c) Disconnect the connectors from the front passenger airbag assembly.
(d) Connect the white wire side of SST (resistance 2.1 Ω) to connector E (orange connector).
CAUTION:
Never connect the tester to the front passenger airbag assembly (front passenger side squib) for measurement, as this may lead to a serious injury due to airbag deployment.
NOTICE:
- **Do not forcibly insert the SST into the terminals of the connector when connecting the SST.**
- **Insert straight the SST into the terminals of the connector.**

SST 09843-18060

(e) Connect the negative (-) terminal cable to the battery, and wait for at least 2 seconds.
(f) Turn the engine switch on (IG), and wait for at least 60 seconds.
(g) Clear the DTCs stored in the memory (See page RS-49).
(h) Turn the engine switch off.
(i) Turn the engine switch on (IG), and wait for at least 60 seconds.
(j) Check the DTCs (See page RS-49).
OK:
DTC B1805, B1806, B1807, B1808, or 52 is not output.
HINT:
Codes other than DTC B1805, B1806, B1807, B1808, and 52 may be output at this time, but they are not related to this check.

OK → **REPLACE FRONT PASSENGER AIRBAG ASSEMBLY (See page RS-412)**

NG

2	CHECK CONNECTOR

(a) Turn the engine switch off.
(b) Disconnect the negative (-) terminal cable from the battery, and wait for at least 90 seconds.
(c) Disconnect the SST from connector E.
(d) Check that the instrument panel wire assembly connectors (on the front passenger airbag assembly side) are not damaged.

OK:
The lock button is not disengaged, or the claw of the lock is not deformed or damaged.

NG → **REPAIR OR REPLACE INSTRUMENT PANEL WIRE ASSEMBLY**

RS

OK

3 CHECK FRONT PASSENGER SIDE SQUIB CIRCUIT

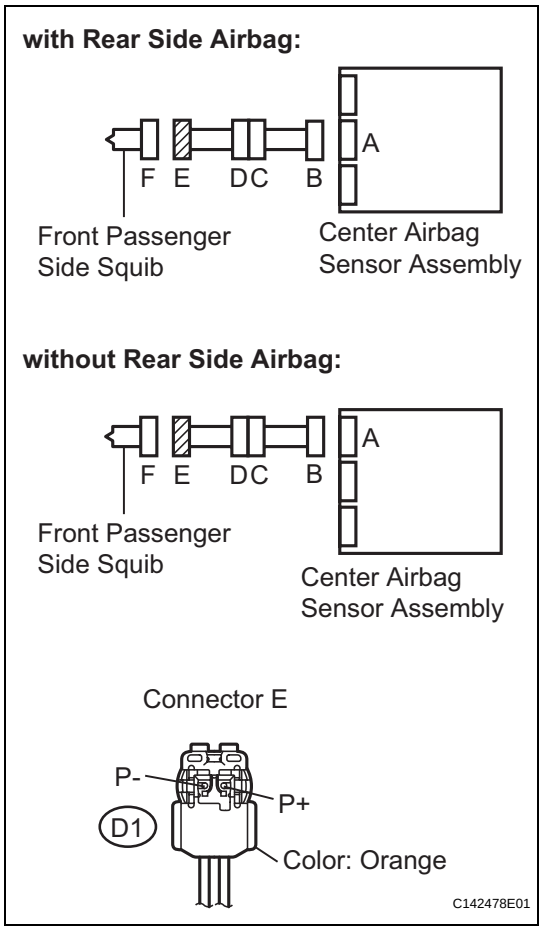

(a) Disconnect the connectors from the center airbag sensor assembly.

(b) Check for a short to B+ in the circuit.
  (1) Connect the negative (-) terminal cable to the battery, and wait for at least 2 seconds.
  (2) Turn the engine switch on (IG).
  (3) Measure the voltage according to the value(s) in the table below.
  Standard voltage

Tester Connection	Condition	Specified Condition
D1-2 (P+) - Body ground	Engine switch on (IG)	Below 1 V
D1-1 (P-) - Body ground	Engine switch on (IG)	Below 1 V

(c) Check for an open in the circuit.
  (1) Turn the engine switch off.
  (2) Disconnect the negative (-) terminal cable from the battery, and wait for at least 90 seconds.
  (3) Measure the resistance according to the value(s) in the table below.
  Standard resistance

Tester Connection	Condition	Specified Condition
D1-2 (P+) - D1-1 (P-)	Always	Below 1 Ω

(d) Check for a short to ground in the circuit.
  (1) Measure the resistance according to the value(s) in the table below.
  Standard resistance

Tester Connection	Condition	Specified Condition
D1-2 (P+) - Body ground	Always	1 MΩ or higher
D1-1 (P-) - Body ground	Always	1 MΩ or higher

(e) Check for a short in the circuit.
  (1) Release the activation prevention mechanism built into connector B (See page RS-37).
  (2) Measure the resistance according to the value(s) in the table below.
  Standard resistance

Tester Connection	Condition	Specified Condition
D1-2 (P+) - D1-1 (P-)	Always	1 MΩ or higher

NG → **Go to step 5**

OK

4	CHECK CENTER AIRBAG SENSOR ASSEMBLY

RS

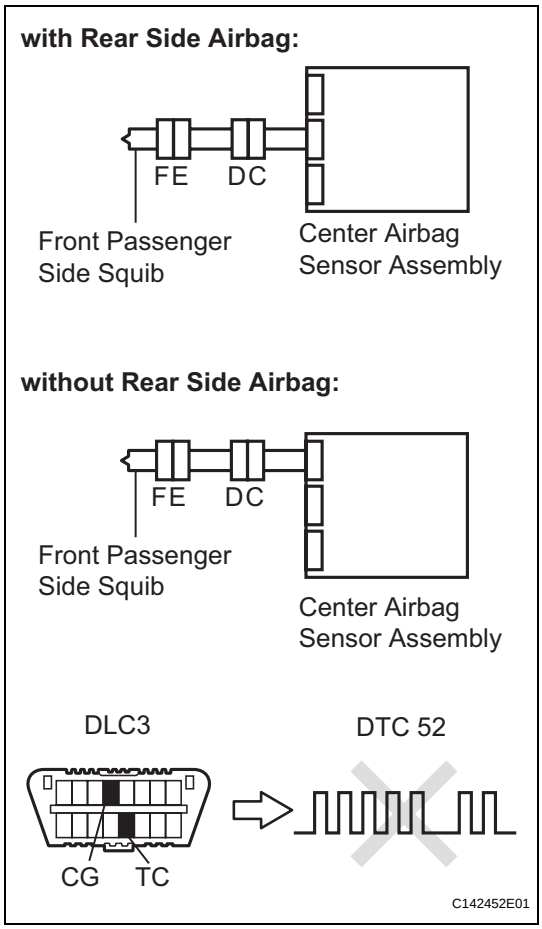

(a) Connect the connectors to the front passenger airbag assembly and the center airbag sensor assembly.
(b) Connect the negative (-) terminal cable to the battery, and wait for at least 2 seconds.
(c) Turn the engine switch on (IG), and wait for at least 60 seconds.
(d) Clear the DTCs stored in the memory (See page RS-49).
(e) Turn the engine switch off.
(f) Turn the engine switch on (IG), and wait for at least 60 seconds.
(g) Check the DTCs (See page RS-49).
OK:
DTC B1805, B1806, B1807, B1808, or 52 is not output.
HINT:
Codes other than DTC B1805, B1806, B1807, B1808, and 52 may be output at this time, but they are not related to this check.

NG → **REPLACE CENTER AIRBAG SENSOR ASSEMBLY (See page RS-468)**

OK

USE SIMULATION METHOD TO CHECK (See page RS-37)

RS

5 CHECK INSTRUMENT PANEL WIRE

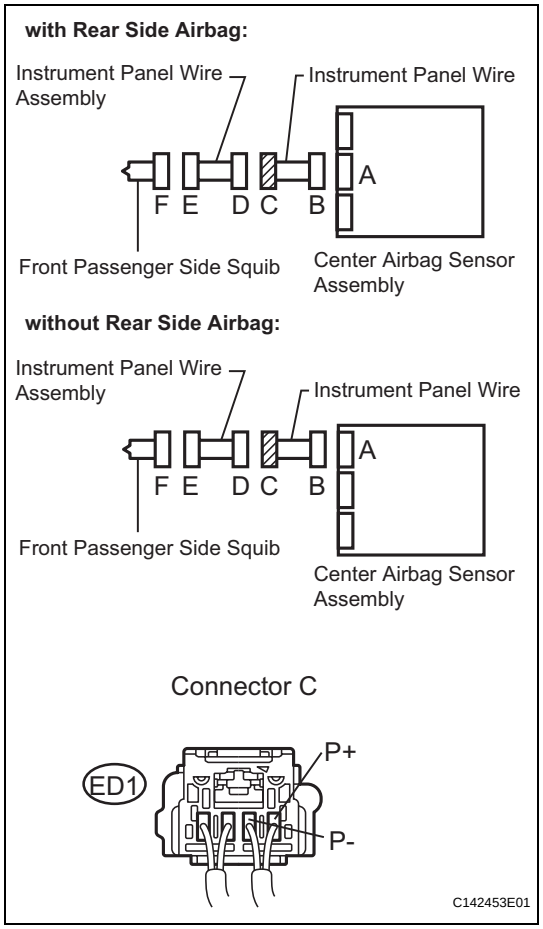

(a) Restore the released activation prevention mechanism of connector B to the original condition.

(b) Disconnect the instrument panel wire connector from the instrument panel wire assembly.

(c) Check for a short to B+ in the circuit.
   (1) Connect the negative (-) terminal cable to the battery, and wait for at least 2 seconds.
   (2) Turn the engine switch on (IG).
   (3) Measure the voltage according to the value(s) in the table below.
   Standard voltage

Tester Connection	Condition	Specified Condition
ED1-1 (P+) - Body ground	Engine switch on (IG)	Below 1 V
ED1-2 (P-) - Body ground	Engine switch on (IG)	Below 1 V

(d) Check for an open in the circuit.
   (1) Turn the engine switch off.
   (2) Disconnect the negative (-) terminal cable from the battery, and wait for at least 90 seconds.
   (3) Measure the resistance according to the value(s) in the table below.
   Standard resistance

Tester Connection	Condition	Specified Condition
ED1-1 (P+) - ED1-2 (P-)	Always	Below 1 Ω

(e) Check for a short to ground in the circuit.
   (1) Measure the resistance according to the value(s) in the table below.
   Standard resistance

Tester Connection	Condition	Specified Condition
ED1-1 (P+) - Body ground	Always	1 MΩ or higher
ED1-2 (P-) - Body ground	Always	1 MΩ or higher

(f) Check for a short in the circuit.
   (1) Release the activation prevention mechanism built into connector B (See page RS-37).
   (2) Measure the resistance according to the value(s) in the table below.
   Standard resistance

Tester Connection	Condition	Specified Condition
ED1-1 (P+) - ED1-2 (P-)	Always	1 MΩ or higher

NG → **REPAIR OR REPLACE INSTRUMENT PANEL WIRE**

OK

RS

6 CHECK INSTRUMENT PANEL WIRE ASSEMBLY

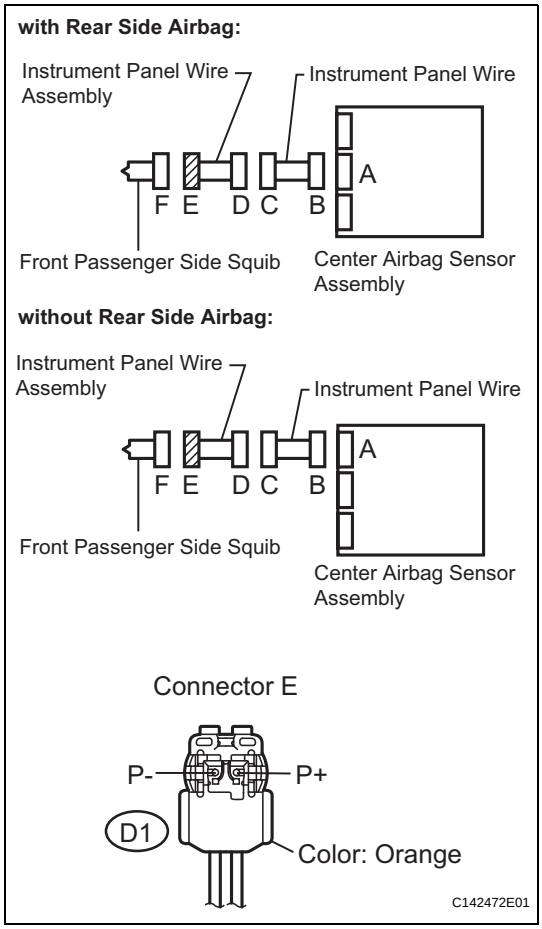

(a) Check for a short to B+ in the circuit.
  (1) Connect the negative (-) terminal cable to the battery, and wait for at least 2 seconds.
  (2) Turn the engine switch on (IG).
  (3) Measure the voltage according to the value(s) in the table below.
  Standard voltage

Tester Connection	Condition	Specified Condition
D1-2 (P+) - Body ground	Engine switch on (IG)	Below 1 V
D1-1 (P-) - Body ground	Engine switch on (IG)	Below 1 V

(b) Check for a open in the circuit.
  (1) Turn the engine switch off.
  (2) Disconnect the negative (-) terminal cable from the battery, and wait for at least 90 seconds.
  (3) Measure the resistance according to the value(s) in the table below.
  Standard resistance

Tester Connection	Condition	Specified Condition
D1-2 (P+) - D1-1 (P-)	Always	Below 1 Ω

(c) Check for a short to ground in the circuit.
  (1) Measure the resistance according to the value(s) in the table below.
  Standard resistance

Tester Connection	Condition	Specified Condition
D1-2 (P+) - Body ground	Always	1 MΩ or higher
D1-1 (P-) - Body ground	Always	1 MΩ or higher

(d) Check for a short in the circuit.
  (1) Release the activation prevention mechanism built into connector D (See page RS-37).
  (2) Measure the resistance according to the value(s) in the table below.
  Standard resistance

Tester Connection	Condition	Specified Condition
D1-2 (P+) - D1-1 (P-)	Always	1 MΩ or higher

NG → **REPAIR OR REPLACE INSTRUMENT PANEL WIRE ASSEMBLY**

OK

USE SIMULATION METHOD TO CHECK (See page RS-37)

DTC	B1810/53	Short in Driver Side Squib 2nd Step Circuit

DTC	B1811/53	Open in Driver Side Squib 2nd Step Circuit

DTC	B1812/53	Short to GND in Driver Side Squib 2nd Step Circuit

DTC	B1813/53	Short to B+ in Driver Side Squib 2nd Step Circuit

DESCRIPTION

The driver side squib 2nd step circuit consists of the center airbag sensor assembly, the spiral cable, and the steering pad.
The circuit instructs the SRS to deploy when deployment conditions are met.
These DTCs are recorded when a malfunction is detected in the driver side squib 2nd step circuit.

DTC No.	DTC Detecting Condition	Trouble Area
B1810/53	• The center airbag sensor assembly receives a line short circuit signal 5 times in the driver side squib 2nd step circuit during primary check. • Driver side squib 2nd step malfunction • Spiral cable malfunction • Center airbag sensor assembly malfunction	• Instrument panel wire • Spiral cable • Steering pad (Driver side squib 2nd step) • Center airbag sensor assembly
B1811/53	• The center airbag sensor assembly receives an open circuit signal in the driver side squib 2nd step circuit for 2 seconds. • Driver side squib 2nd step malfunction • Spiral cable malfunction • Center airbag sensor assembly malfunction	• Instrument panel wire • Spiral cable • Steering pad (Driver side squib 2nd step) • Center airbag sensor assembly
B1812/53	• The center airbag sensor assembly receives a short circuit to ground signal in the driver side 2nd step circuit for 0.5 seconds. • Driver side squib 2nd step malfunction • Spiral cable malfunction • Center airbag sensor assembly malfunction	• Instrument panel wire • Spiral cable • Steering pad (Driver side squib 2nd step) • Center airbag sensor assembly
B1813/53	• The center airbag sensor assembly receives a short circuit to B+ signal in the driver side squib 2nd step circuit for 0.5 seconds. • Driver side squib 2nd step malfunction • Spiral cable malfunction • Center airbag sensor assembly malfunction	• Instrument panel wire • Spiral cable • Steering pad (Driver side squib 2nd step) • Center airbag sensor assembly

RS

WIRING DIAGRAM

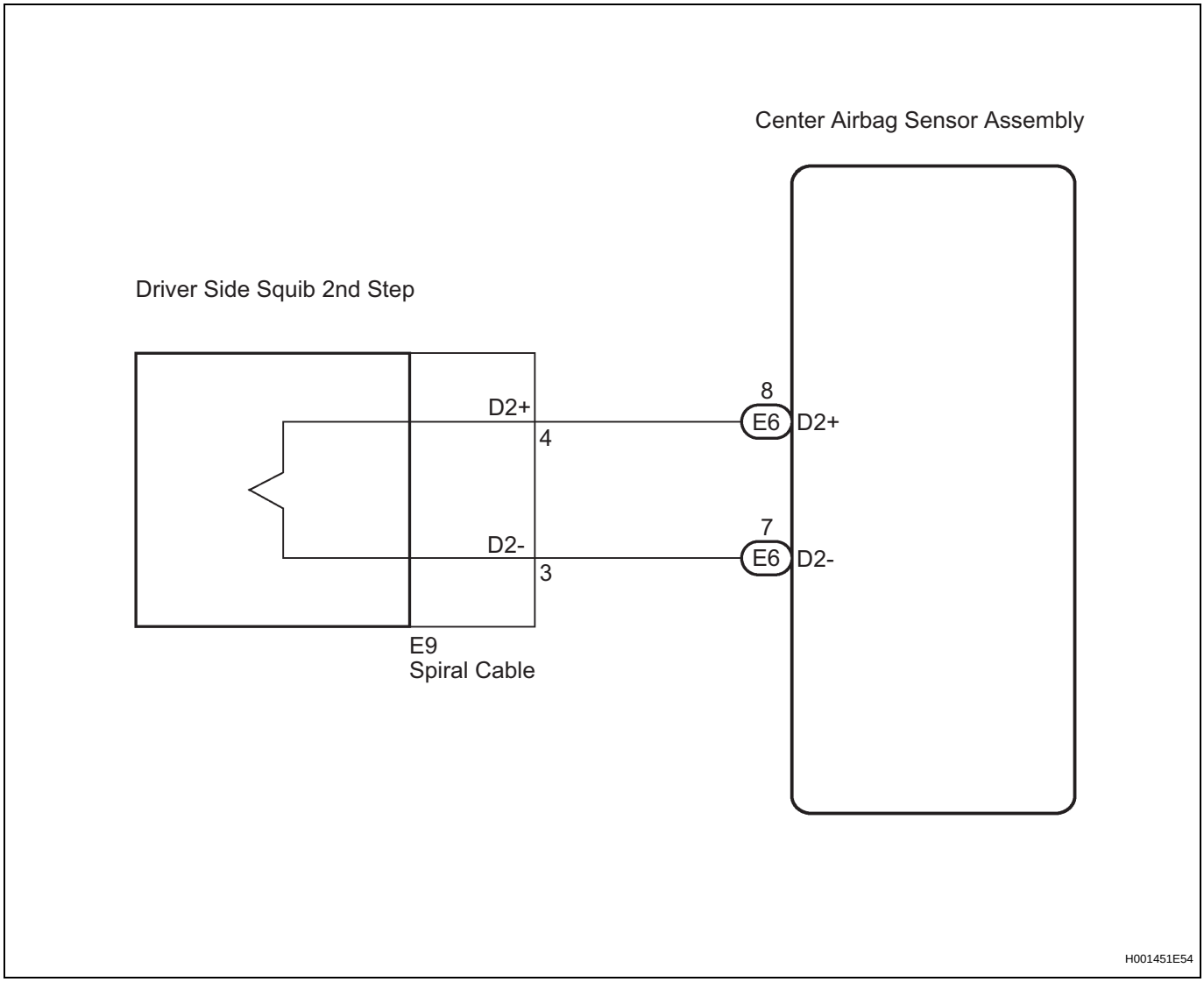

INSPECTION PROCEDURE

HINT:

- Perform the simulation method by selecting "check mode" (signal check) with the intelligent tester (See page RS-52).
- After selecting "check mode" (signal check), perform the simulation method by wiggling each connector of the airbag system or driving the vehicle on a city or rough road (See page RS-52).

RS

1 CHECK STEERING PAD (DRIVER SIDE SQUIB 2ND STEP)

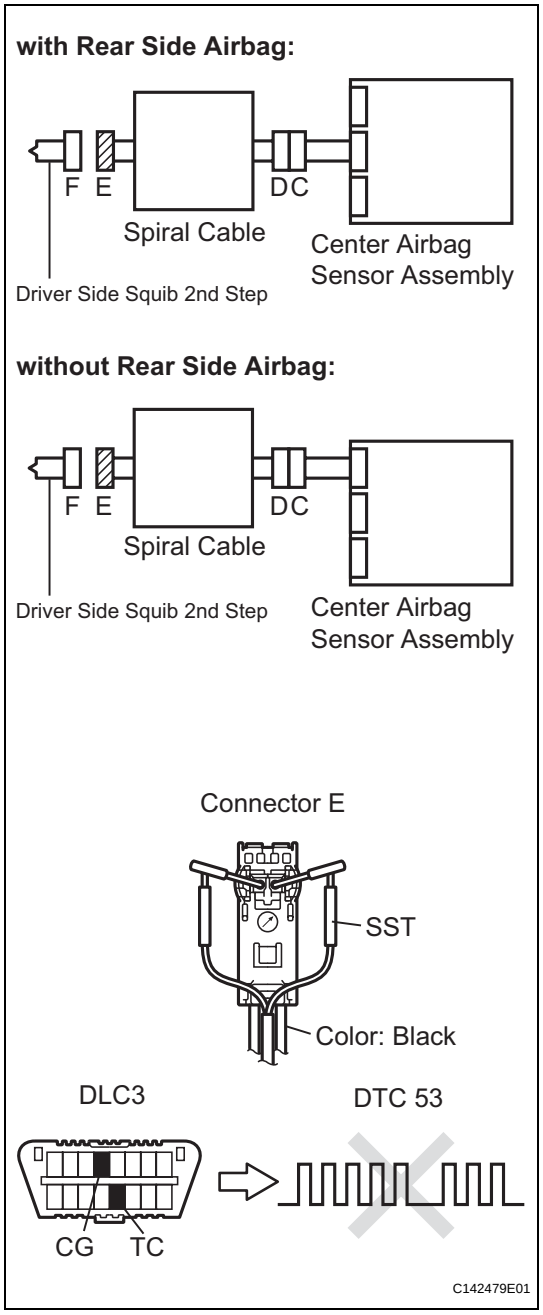

(a) Turn the engine switch off.
(b) Disconnect the negative (-) terminal cable from the battery, and wait for at least 90 seconds.
(c) Disconnect the connectors from the steering pad.
(d) Connect the white wire side of SST (resistance 2.1 Ω) to connector E (black connector).

CAUTION:
Never connect the tester to the steering pad (driver side squib 2nd step) for measurement, as this may lead to a serious injury due to airbag deployment.

NOTICE:
- **Do not forcibly insert the SST into the terminals of the connector when connecting the SST.**
- **Insert straight the SST into the terminals of the connector.**

SST 09843-18060

(e) Connect the negative (-) terminal cable to the battery, and wait for at least 2 seconds.
(f) Turn the engine switch on (IG), and wait for at least 60 seconds.
(g) Clear the DTCs stored in the memory (See page RS-49).
(h) Turn the engine switch off.
(i) Turn the engine switch on (IG), and wait for at least 60 seconds.
(j) Check the DTCs (See page RS-49).

OK:
DTC B1810, B1811, B1812, B1813, or 53 is not output.

HINT:
Codes other than DTC B1810, B1811, B1812, B1813, and 53 may be output at this time, but they are not related to this check.

OK → **REPLACE STEERING PAD (See page RS-366)**

NG

2 CHECK CONNECTOR

(a) Turn the engine switch off.
(b) Disconnect the negative (-) terminal cable from the battery, and wait for at least 90 seconds.
(c) Disconnect the SST from connector E.
(d) Check that the spiral cable connectors (on the steering pad side) are not damaged.

OK:
The lock button is not disengaged, or the claw of the lock is not deformed or damaged.

NG → **REPLACE SPIRAL CABLE (See page RS-379)**

RS

OK

3 CHECK DRIVER SIDE SQUIB 2ND STEP CIRCUIT

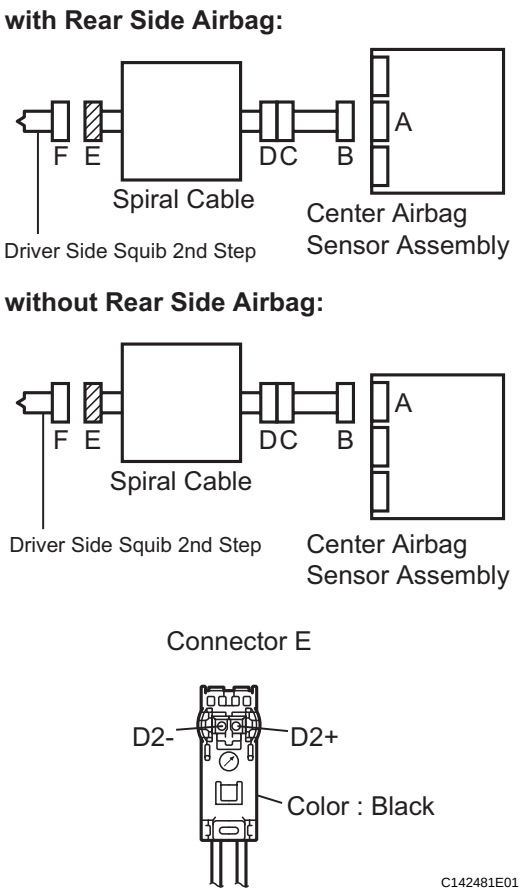

(a) Disconnect the connectors from the center airbag sensor assembly.

(b) Check for a short to B+ in the circuit.
  (1) Connect the negative (-) terminal cable to the battery, and wait for at least 2 seconds.
  (2) Turn the engine switch on (IG).
  (3) Measure the voltage according to the value(s) in the table below.
  Standard voltage

Tester Connection	Condition	Specified Condition
D2+ - Body ground	Engine switch on (IG)	Below 1 V
D2- - Body ground	Engine switch on (IG)	Below 1 V

(c) Check for an open in the circuit.
  (1) Turn the engine switch off.
  (2) Disconnect the negative (-) terminal cable from the battery, and wait for at least 90 seconds.
  (3) Measure the resistance according to the value(s) in the table below.
  Standard resistance

Tester Connection	Condition	Specified Condition
D2+ - D2-	Always	Below 1 Ω

(d) Check for a short to ground in the circuit.
  (1) Measure the resistance according to the value(s) in the table below.
  Standard resistance

Tester Connection	Condition	Specified Condition
D2+ - Body ground	Always	1 MΩ or higher
D2- - Body ground	Always	1 MΩ or higher

(e) Check for a short in the circuit.
  (1) Release the activation prevention mechanism built into connector B (See page RS-37).
  (2) Measure the resistance according to the value(s) in the table below.
  Standard resistance

Tester Connection	Condition	Specified Condition
D2+ - D2-	Always	1 MΩ or higher

NG → **Go to step 5**

OK

4	CHECK CENTER AIRBAG SENSOR ASSEMBLY

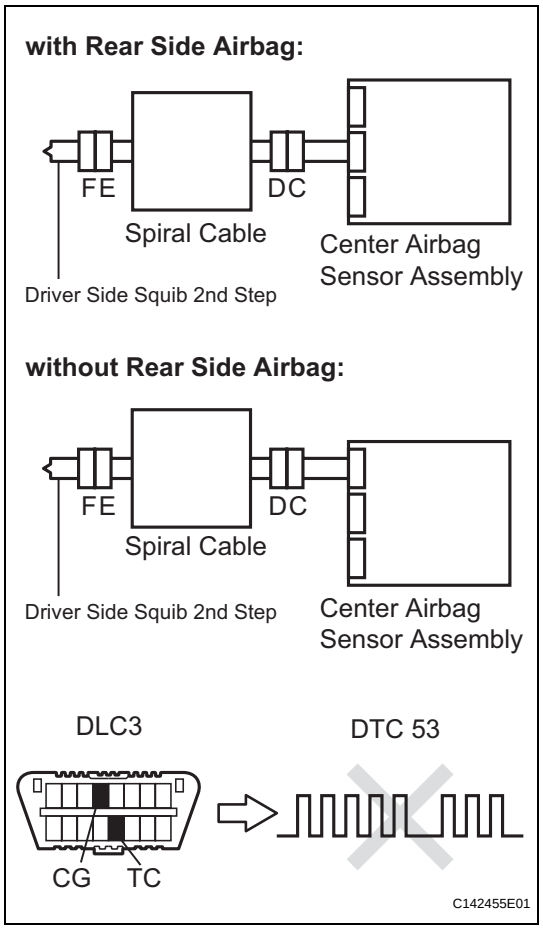

(a) Connect the connectors to the steering pad and the center airbag sensor assembly.
(b) Connect the negative (-) terminal cable to the battery, and wait for at least 2 seconds.
(c) Turn the engine switch on (IG), and wait for at least 60 seconds.
(d) Clear the DTCs stored in the memory (See page RS-49).
(e) Turn the engine switch off.
(f) Turn the engine switch on (IG), and wait for at least 60 seconds.
(g) Check the DTCs (See page RS-49).
OK:
DTC B1810, B1811, B1812, B1813, or 53 is not output.
HINT:
Codes other than DTC B1810, B1811, B1812, B1813, and 53 may be output at this time, but they are not related to this check.

NG → **REPLACE CENTER AIRBAG SENSOR ASSEMBLY (See page RS-468)**

OK

USE SIMULATION METHOD TO CHECK (See page RS-37)

RS

RS

5 CHECK INSTRUMENT PANEL WIRE

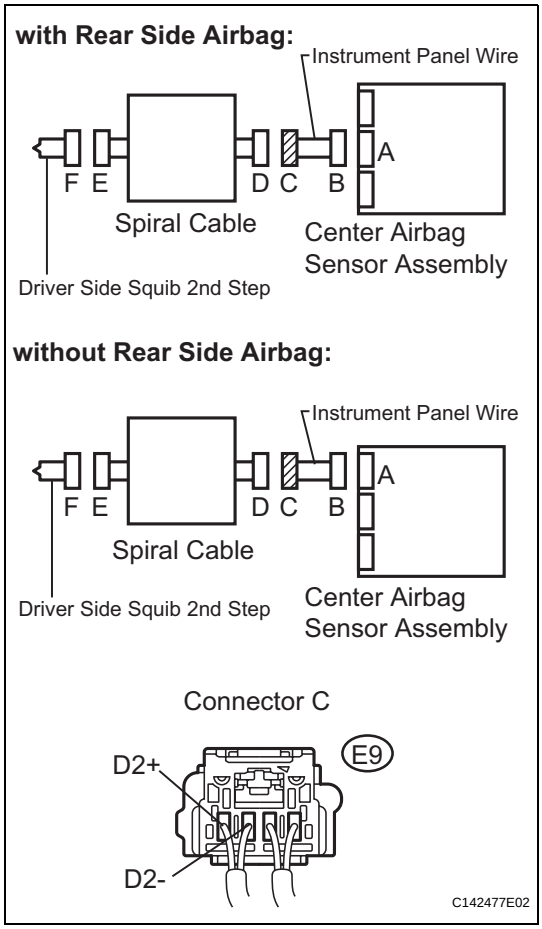

(a) Check for a short to B+ in the circuit.
  (1) Restore the released activation prevention mechanism of connector B to the original condition.
  (2) Disconnect the instrument panel wire connector from the spiral cable.
  (3) Connect the negative (-) terminal cable to the battery, and wait for at least 2 seconds.
  (4) Turn the engine switch on (IG).
  (5) Measure the voltage according to the value(s) in the table below.

Standard voltage

Tester Connection	Condition	Specified Condition
E9-4 (D2+) - Body ground	Engine switch on (IG)	Below 1 V
E9-3 (D2-) - Body ground	Engine switch on (IG)	Below 1 V

(b) Check for an open in the circuit.
  (1) Turn the engine switch off.
  (2) Disconnect the negative (-) terminal cable from the battery, and wait for at least 90 seconds.
  (3) Measure the resistance according to the value(s) in the table below.

Standard resistance

Tester Connection	Condition	Specified Condition
E9-4 (D2+) - E9-3 (D2-)	Always	Below 1 Ω

(c) Check for a short to ground in the circuit.
  (1) Measure the resistance according to the value(s) in the table below.

Standard resistance

Tester Connection	Condition	Specified Condition
E9-4 (D2+) - Body ground	Always	1 MΩ or higher
E9-3 (D2-) - Body ground	Always	1 MΩ or higher

(d) Check for a short in the circuit.
  (1) Release the activation prevention mechanism built into connector B (See page RS-37).
  (2) Measure the resistance according to the value(s) in the table below.

Standard resistance

Tester Connection	Condition	Specified Condition
E9-4 (D2+) - E9-3 (D2-)	Always	1 MΩ or higher

NG → **REPAIR OR REPLACE INSTRUMENT PANEL WIRE ASSEMBLY**

OK

RS

6 CHECK SPIRAL CABLE

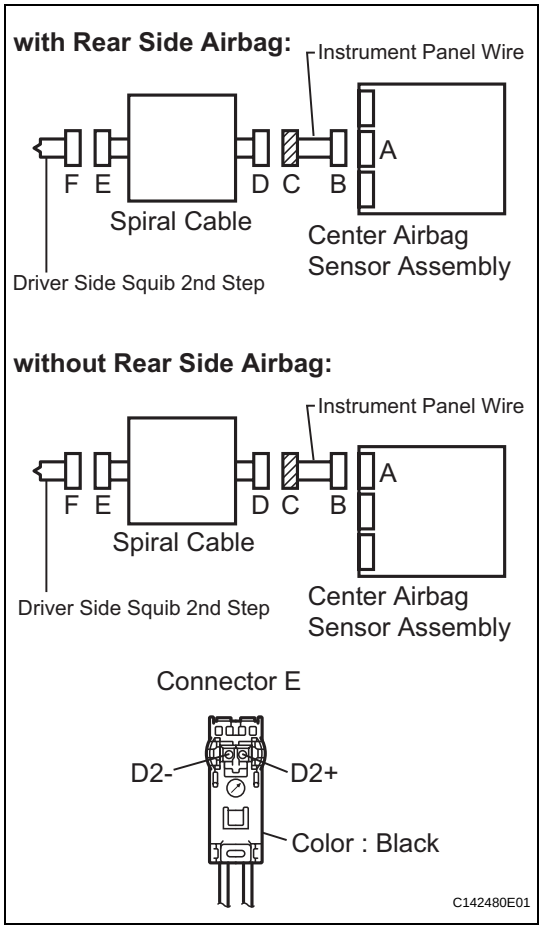

(a) Check for a short to B+ in the circuit.
(1) Connect the negative (-) terminal cable to the battery, and wait for at least 2 seconds.
(2) Turn the engine switch on (IG).
(3) Measure the voltage according to the value(s) in the table below.

Standard voltage

Tester Connection	Condition	Specified Condition
D2+ - Body ground	Engine switch on (IG)	Below 1 V
D2- - Body ground	Engine switch on (IG)	Below 1 V

(b) Check for an open in the circuit.
(1) Turn the engine switch off.
(2) Disconnect the negative (-) terminal cable from the battery, and wait for at least 90 seconds.
(3) Measure the resistance according to the value(s) in the table below.

Standard resistance

Tester Connection	Condition	Specified Condition
D2+ - D2-	Always	Below 1 Ω

(c) Check for a short to ground in the circuit.
(1) Measure the resistance according to the value(s) in the table below.

Standard resistance

Tester Connection	Condition	Specified Condition
D2+ - Body ground	Always	1 MΩ or higher
D2- - Body ground	Always	1 MΩ or higher

(d) Check for a short in the circuit.
(1) Release the activation prevention mechanism built into connector D (See page RS-37).
(2) Measure the resistance according to the value(s) in the table below.

Standard resistance

Tester Connection	Condition	Specified Condition
D2+ - D2-	Always	1 MΩ or higher

NG → **REPLACE SPIRAL CABLE (See page RS-379)**

OK

USE SIMULATION METHOD TO CHECK (See page RS-37)

DTC	**B1815/54**	**Short in Front Passenger Side Squib 2nd Step Circuit**

DTC	**B1816/54**	**Open in Front Passenger Side Squib 2nd Step Circuit**

DTC	**B1817/54**	**Short to GND in Front Passenger Side Squib 2nd Step Circuit**

DTC	**B1818/54**	**Short to B+ in Front Passenger Side Squib 2nd Step Circuit**

DESCRIPTION

The front passenger side squib 2nd step circuit consists of the center airbag sensor assembly and the front passenger airbag assembly.
The circuit instructs the SRS to deploy when deployment conditions are met.
These DTCs are recorded when a malfunction is detected in the front passenger side squib 2nd step circuit.

DTC No.	DTC Detecting Condition	Trouble Area
B1815/54	• The center airbag sensor assembly receives a line short circuit signal 5 times in the front passenger side squib 2nd step circuit during primary check. • Front passenger side squib 2nd step malfunction • Center airbag sensor assembly malfunction	• Instrument panel wire • Instrument panel wire assembly • Front passenger airbag assembly (Front passenger side squib 2nd step) • Center airbag sensor assembly
B1816/54	• The center airbag sensor assembly receives an open circuit signal in the front passenger side squib 2nd step circuit for 2 seconds. • Front passenger side squib 2nd step malfunction • Center airbag sensor assembly malfunction	• Instrument panel wire • Instrument panel wire assembly • Front passenger airbag assembly (Front passenger side squib 2nd step) • Center airbag sensor assembly
B1817/54	• The center airbag sensor assembly receives a short circuit to ground signal in the front passenger side squib 2nd step circuit for 0.5 seconds. • Front passenger side squib 2nd step malfunction • Center airbag sensor assembly malfunction	• Instrument panel wire • Instrument panel wire assembly • Front passenger airbag assembly (Front passenger side squib 2nd step) • Center airbag sensor assembly
B1818/54	• The center airbag sensor assembly receives a short circuit to B+ signal in the front passenger side squib 2nd step circuit for 0.5 seconds. • Front passenger side squib 2nd step malfunction • Center airbag sensor assembly malfunction	• Instrument panel wire • Instrument panel wire assembly • Front passenger airbag assembly (Front passenger side squib 2nd step) • Center airbag sensor assembly

RS

WIRING DIAGRAM

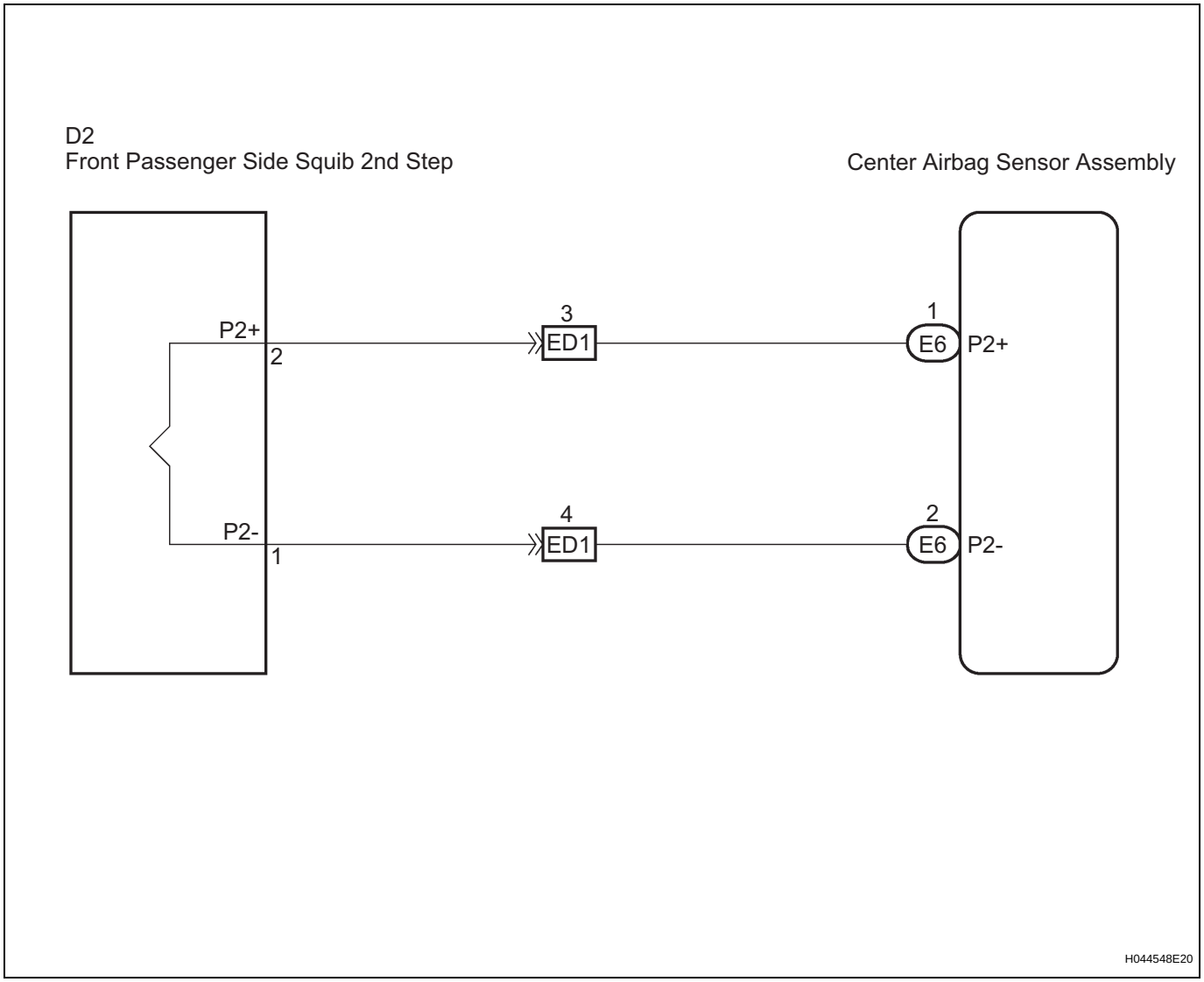

INSPECTION PROCEDURE

HINT:

- Perform the simulation method by selecting "check mode" (signal check) with the intelligent tester (See page RS-52).
- After selecting "check mode" (signal check), perform the simulation method by wiggling each connector of the airbag system or driving the vehicle on a city or rough road (See page RS-52).

RS

1	CHECK FRONT PASSENGER AIRBAG ASSEMBLY (FRONT PASSENGER SIDE SQUIB 2ND STEP)

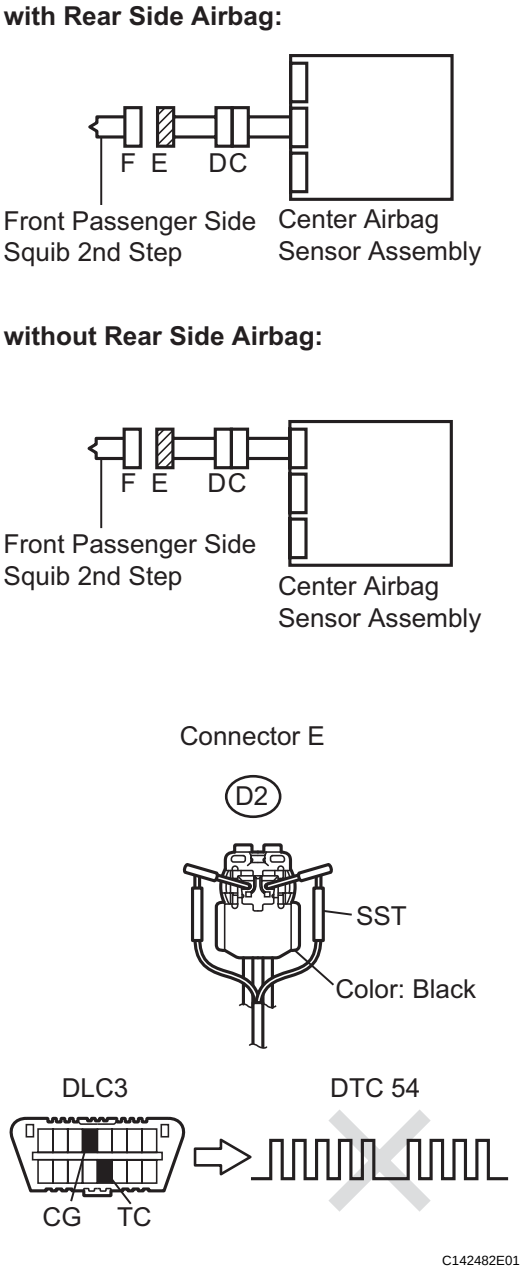

(a) Turn the engine switch off.
(b) Disconnect the negative (-) terminal cable from the battery, and wait for at least 90 seconds.
(c) Disconnect the connectors from the front passenger airbag assembly.
(d) Connect the white wire side of SST (resistance 2.1 Ω) to connector E (black connector).
CAUTION:
Never connect the tester to the front passenger airbag assembly (front passenger side squib 2nd step) for measurement, as this may lead to a serious injury due to airbag deployment.
NOTICE:
- **Do not forcibly insert the SST into the terminals of the connector when connecting the SST.**
- **Insert straight the SST into the terminals of the connector.**

SST 09843-18060

(e) Connect the negative (-) terminal cable to the battery, and wait for at least 2 seconds.
(f) Turn the engine switch on (IG), and wait for at least 60 seconds.
(g) Clear the DTCs stored in the memory (See page RS-49).
(h) Turn the engine switch off.
(i) Turn the engine switch on (IG), and wait for at least 60 seconds.
(j) Check the DTCs (See page RS-49).
OK:
DTC B1815, B1816, B1817, B1818, or 54 is not output.
HINT:
Codes other than DTC B1815, B1816, B1817, B1818, and 54 may be output at this time, but they are not related to this check.

OK → **REPLACE FRONT PASSENGER AIRBAG ASSEMBLY (See page RS-412)**

NG

2	CHECK CONNECTOR

(a) Turn the engine switch off.
(b) Disconnect the negative (-) terminal cable from the battery, and wait for at least 90 seconds.
(c) Disconnect the SST from connector E.
(d) Check that the instrument panel wire assembly connectors (on the front passenger airbag assembly side) are not damaged.

OK:
The lock button is not disengaged, or the claw of the lock is not damaged or deformed.

NG → **REPAIR OR REPLACE INSTRUMENT PANEL WIRE ASSEMBLY**

RS

OK

3 CHECK FRONT PASSENGER SIDE SQUIB 2ND STEP CIRCUIT

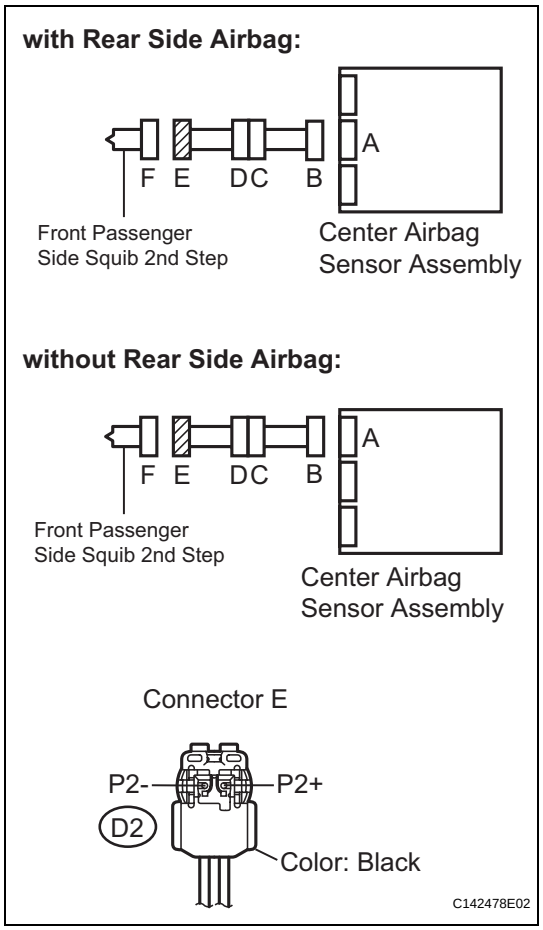

(a) Disconnect the connectors from the center airbag sensor assembly.

(b) Check for a short to B+ in the circuit.
  (1) Connect the negative (-) terminal cable to the battery, and wait for at least 2 seconds.
  (2) Turn the engine switch on (IG).
  (3) Measure the voltage according to the value(s) in the table below.
  Standard voltage

Tester Connection	Condition	Specified Condition
D2-2 (P2+) - Body ground	Engine switch on (IG)	Below 1 V
D2-1 (P2-) - Body ground	Engine switch on (IG)	Below 1 V

(c) Check for an open in the circuit.
  (1) Turn the engine switch off.
  (2) Disconnect the negative (-) terminal cable from the battery, and wait for at least 90 seconds.
  (3) Measure the resistance according to the value(s) in the table below.
  Standard resistance

Tester Connection	Condition	Specified Condition
D2-2 (P2+) - D2-1 (P2-)	Always	Below 1 Ω

(d) Check for a short to ground in the circuit.
  (1) Measure the resistance according to the value(s) in the table below.
  Standard resistance

Tester Connection	Condition	Specified Condition
D2-2 (P2+) - Body ground	Always	1 MΩ or higher
D2-1 (P2-) - Body ground	Always	1 MΩ or higher

(e) Check for a short in the circuit.
  (1) Release the activation prevention mechanism built into connector B (See page RS-37).
  (2) Measure the resistance according to the value(s) in the table below.
  Standard resistance

Tester Connection	Condition	Specified Condition
D2-2 (P2+) - D2-1 (P2-)	Always	1 MΩ or higher

NG → **Go to step 5**

OK

RS

4 CHECK CENTER AIRBAG SENSOR ASSEMBLY

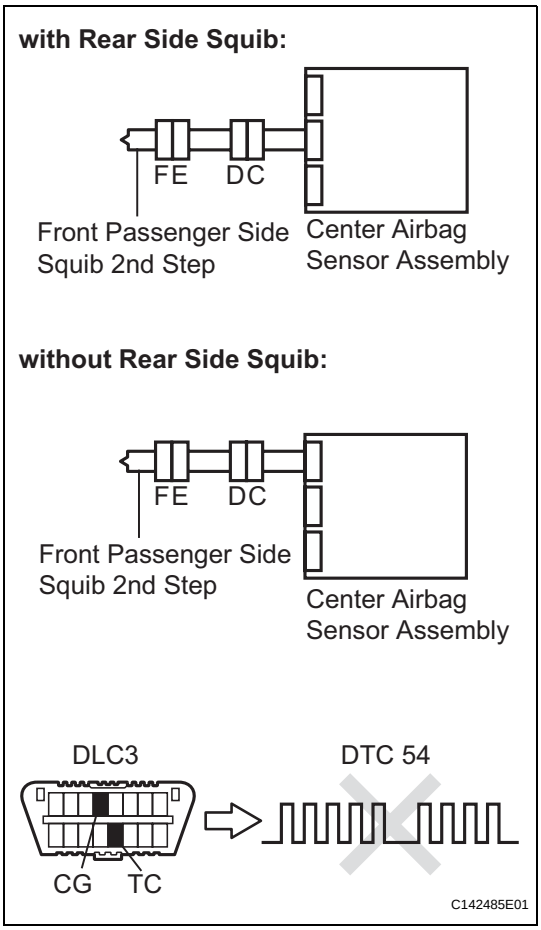

(a) Connect the connectors to the front passenger airbag assembly and the center airbag sensor assembly.
(b) Connect the negative (-) terminal cable to the battery, and wait for at least 2 seconds.
(c) Turn the engine switch on (IG), and wait for at least 60 seconds.
(d) Clear the DTCs stored in the memory (See page RS-49).
(e) Turn the engine switch off.
(f) Turn the engine switch on (IG), and wait for at least 60 seconds.
(g) Check the DTCs (See page RS-49).
OK:
DTC B1815, B1816, B1817, B1818, or 54 is not output.
HINT:
Codes other than DTC B1815, B1816, B1817, B1818, and 54 may be output at this time, but they are not related to this check.

NG → **REPLACE CENTER AIRBAG SENSOR ASSEMBLY (See page RS-468)**

OK

USE SIMULATION METHOD TO CHECK (See page RS-37)

RS

5 CHECK INSTRUMENT PANEL WIRE

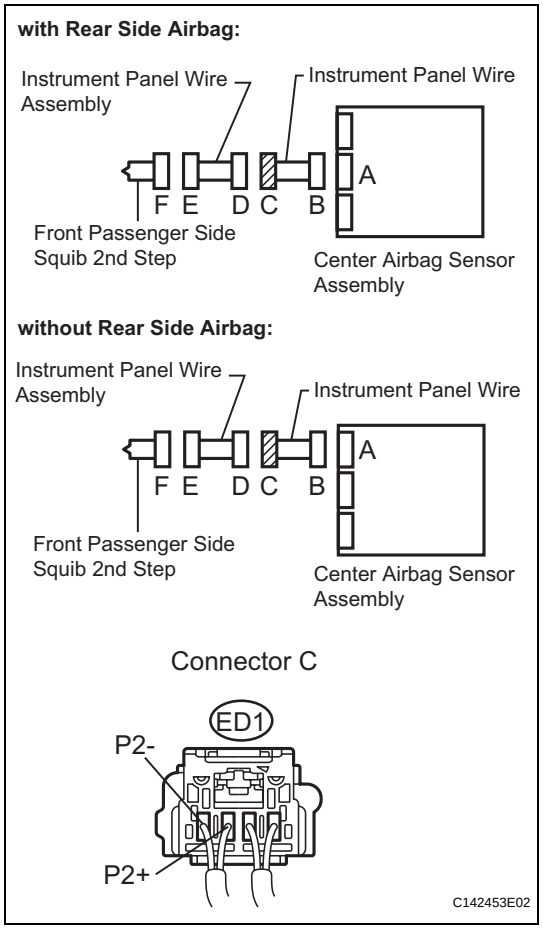

(a) Check for a short to B+ in the circuit.
  (1) Restore the released activation prevention mechanism of connector B to the original condition.
  (2) Disconnect the instrument panel wire connector from the instrument panel wire assembly.
  (3) Connect the negative (-) terminal cable to the battery, and wait for at least 2 seconds.
  (4) Turn the engine switch on (IG).
  (5) Measure the voltage according to the value(s) in the table below.

Standard voltage

Tester Connection	Condition	Specified Condition
ED1-3 (P2+) - Body ground	Engine switch on (IG)	Below 1 V
ED1-4 (P2-) - Body ground	Engine switch on (IG)	Below 1 V

(b) Check for an open in the circuit.
  (1) Turn the engine switch off.
  (2) Disconnect the negative (-) terminal cable from the battery, and wait for at least 90 seconds.
  (3) Measure the resistance according to the value(s) in the table below.

Standard resistance

Tester Connection	Condition	Specified Condition
ED1-3 (P2+) - ED1-4 (P2-)	Always	Below 1 Ω

(c) Check for a short to ground in the circuit.
  (1) Measure the resistance according to the value(s) in the table below.

Standard resistance

Tester Connection	Condition	Specified Condition
ED1-3 (P2+) - Body ground	Always	1 MΩ or higher
ED1-4 (P2-) - Body ground	Always	1 MΩ or higher

(d) Check for a short in the circuit.
  (1) Release the activation prevention mechanism built into connector B (See page RS-37).
  (2) Measure the resistance according to the value(s) in the table below.

Standard resistance

Tester Connection	Condition	Specified Condition
ED1-3 (P2+) - ED1-4 (P2-)	Always	1 MΩ or higher

NG → **REPAIR OR REPLACE INSTRUMENT PANEL WIRE**

OK

RS

6 CHECK INSTRUMENT PANEL WIRE ASSEMBLY

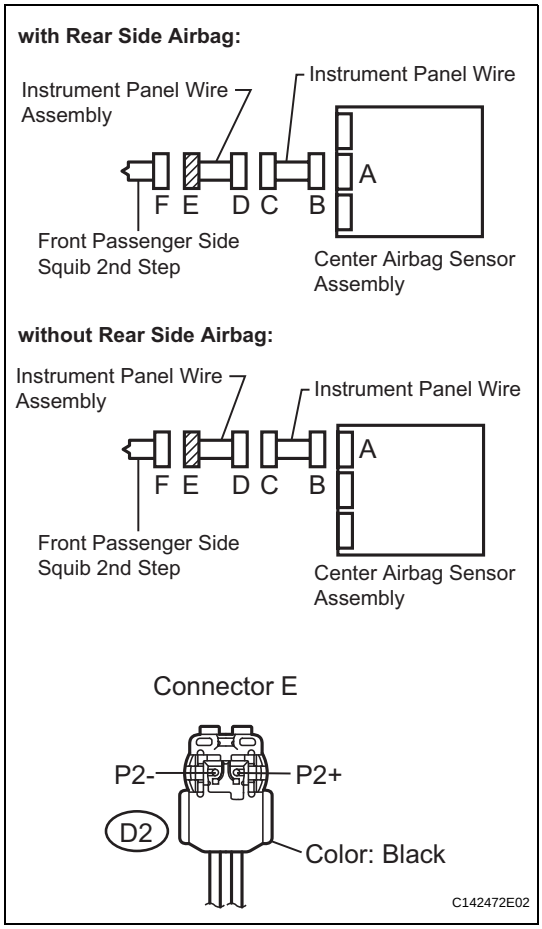

(a) Check for a short to B+ in the circuit.
  (1) Connect the negative (-) terminal cable to the battery, and wait for at least 2 seconds.
  (2) Turn the engine switch on (IG).
  (3) Measure the voltage according to the value(s) in the table below.
  Standard voltage

Tester Connection	Condition	Specified Condition
D2-2 (P2+) - Body ground	Engine switch on (IG)	Below 1 V
D2-1 (P2-) - Body ground	Engine switch on (IG)	Below 1 V

(b) Check for an open in the circuit.
  (1) Turn the engine switch off.
  (2) Disconnect the negative (-) terminal cable from the battery, and wait for at least 90 seconds.
  (3) Measure the resistance according to the value(s) in the table below.
  Standard resistance

Tester Connection	Condition	Specified Condition
D2-2 (P2+) - D2-1 (P2-)	Always	Below 1 Ω

(c) Check for a short to ground in the circuit.
  (1) Measure the resistance according to the value(s) in the table below.
  Standard resistance

Tester Connection	Condition	Specified Condition
D2-2 (P2+) - Body ground	Always	1 MΩ or higher
D2-1 (P2-) - Body ground	Always	1 MΩ or higher

(d) Check for a short in the circuit.
  (1) Release the activation prevention mechanism built into connector D (See page RS-37).
  (2) Measure the resistance according to the value(s) in the table below.
  Standard resistance

Tester Connection	Condition	Specified Condition
D2-2 (P2+) - D2-1 (P2-)	Always	1 MΩ or higher

NG → **REPAIR OR REPLACE INSTRUMENT PANEL WIRE ASSEMBLY**

OK

USE SIMULATION METHOD TO CHECK (See page RS-37)

DTC	B1820/55	Short in Front Driver Side - Side Squib Circuit

DTC	B1821/55	Open in Front Driver Side - Side Squib Circuit

DTC	B1822/55	Short to GND in Front Driver Side - Side Squib Circuit

DTC	B1823/55	Short to B+ in Front Driver Side - Side Squib Circuit

DESCRIPTION

The front driver side - side squib circuit consists of the center airbag sensor assembly and the front seat side airbag assembly LH.
This circuit instructs the SRS to deploy when deployment conditions are met.
These DTCs are recorded when a malfunction is detected in the front driver side - side squib circuit.

DTC No.	DTC Detection Condition	Trouble Area
B1820/55	• The center airbag sensor assembly receives a line short circuit signal 5 times in the front driver side - side squib circuit during primary check. • Front driver side - side squib malfunction • Center airbag sensor assembly malfunction	• Floor wire • Front seat side airbag assembly LH (Front driver side - side squib) • Center airbag sensor assembly
B1821/55	• The center airbag sensor assembly receives an open circuit signal in the front driver side - side squib circuit for 2 seconds. • Front driver side - side squib malfunction • Center airbag sensor assembly malfunction	• Floor wire • Front seat side airbag assembly LH (Front driver side - side squib) • Center airbag sensor assembly
B1822/55	• The center airbag sensor assembly receives a short circuit to ground signal in the front driver side - side squib circuit for 0.5 seconds. • Front driver side - side squib malfunction • Center airbag sensor assembly malfunction	• Floor wire • Front seat side airbag assembly LH (Front driver side - side squib) • Center airbag sensor assembly
B1823/55	• The center airbag sensor assembly receives a short circuit to B+ signal in the front driver side - side squib circuit for 0.5 seconds. • Front driver side - side squib malfunction • Center airbag sensor assembly malfunction	• Floor wire • Front seat side airbag assembly LH (Front driver side - side squib) • Center airbag sensor assembly

RS

WIRING DIAGRAM

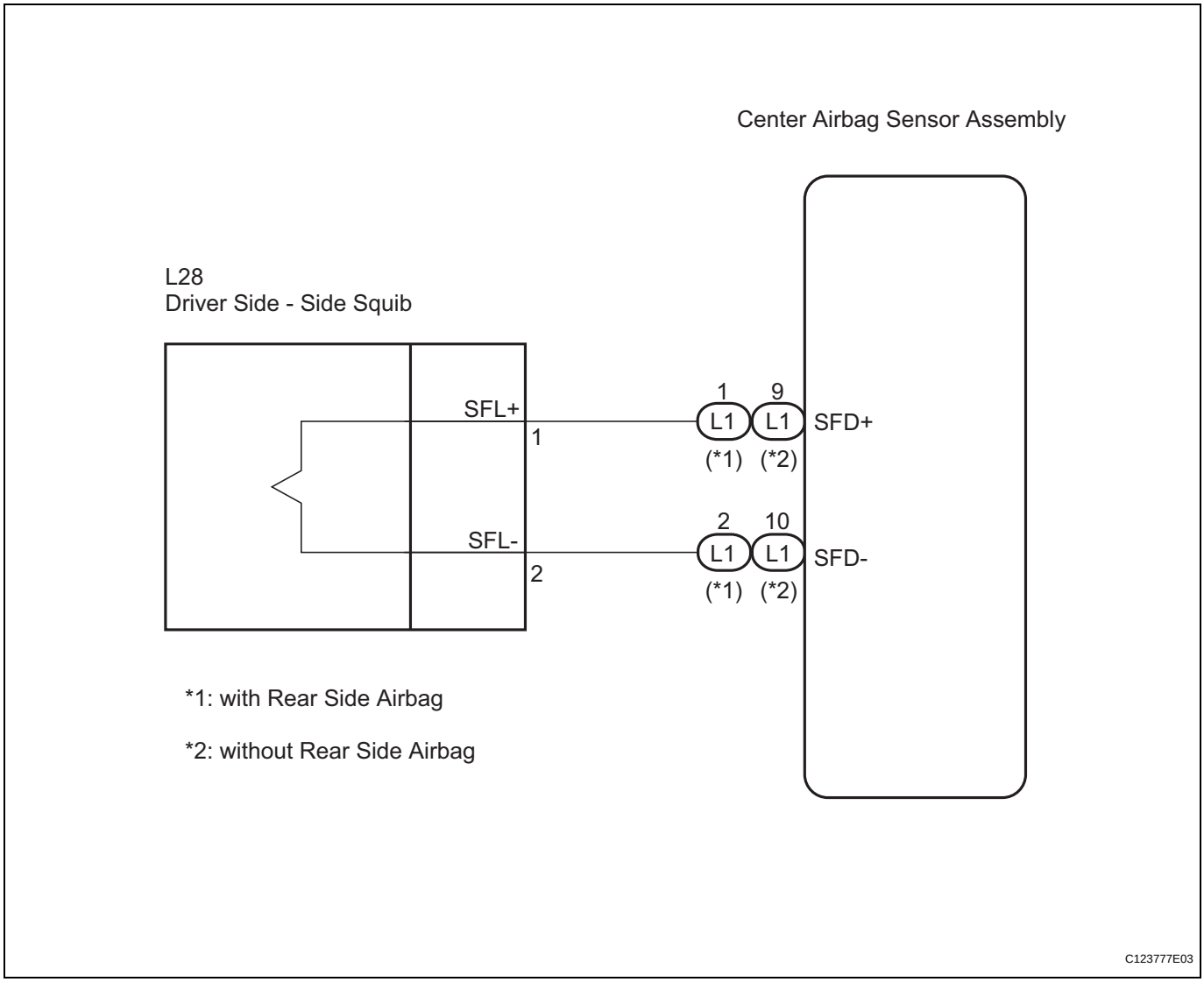

INSPECTION PROCEDURE

HINT:

- Perform the simulation method by selecting "check mode" (signal check) with the intelligent tester (See page RS-52).
- After selecting "check mode" (signal check), perform the simulation method by wiggling each connector of the airbag system or driving the vehicle on a city or rough road (See page RS-52).

RS

1	CHECK FRONT SEAT SIDE AIRBAG ASSEMBLY LH (FRONT DRIVER SIDE - SIDE SQUIB)

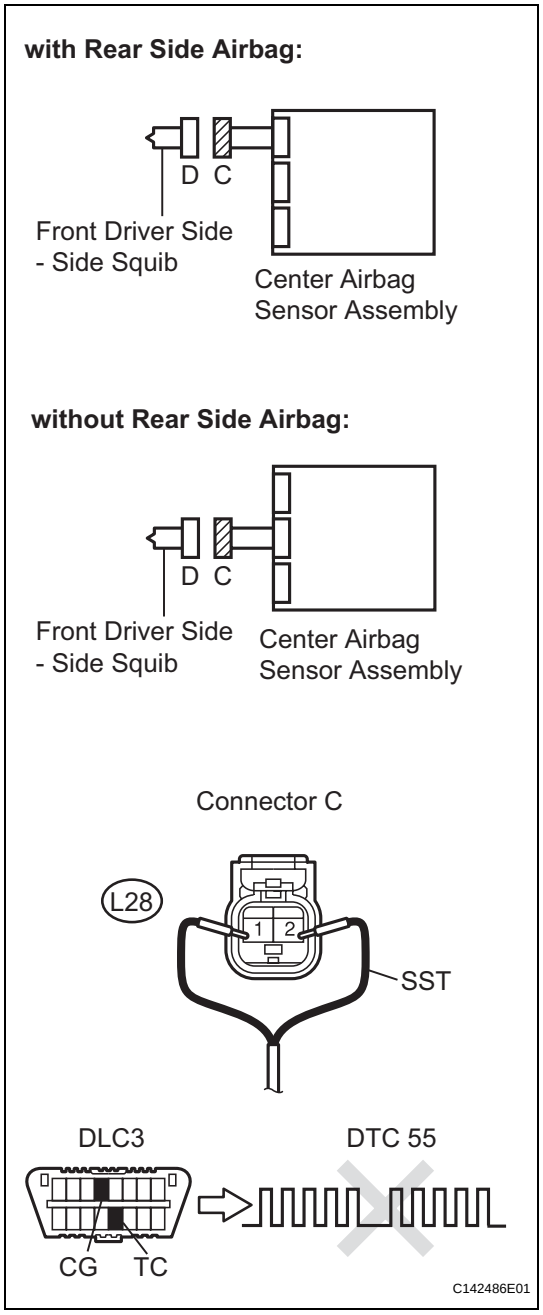

(a) Turn the engine switch off.

(b) Disconnect the negative (-) terminal cable from the battery, and wait for at least 90 seconds.

(c) Disconnect the connector from the front seat side airbag assembly LH.

(d) Connect the black wire side of SST (resistance 2.1 Ω) to connector C.

CAUTION:

Never connect the tester to the front seat side airbag assembly LH (front driver side - side squib) for measurement, as this may lead to a serious injury due to airbag deployment.

NOTICE:

- **Do not forcibly insert the SST into the terminals of the connector when connecting the SST.**
- **Insert straight the SST into the terminals of the connector.**

SST 09843-18060

(e) Connect the negative (-) terminal cable to the battery, and wait for at least 2 seconds.

(f) Turn the engine switch on (IG), and wait for at least 60 seconds.

(g) Clear the DTCs stored in the memory (See page RS-49).

(h) Turn the engine switch off.

(i) Turn the engine switch on (IG), and wait for at least 60 seconds.

(j) Check the DTCs (See page RS-49).

OK:

DTC B1820, B1821, B1822, B1823, or 55 is not output.

HINT:

Codes other than DTC B1820, B1821, B1822, B1823, and 55 may be output at this time, but they are not related to this check.

OK → **REPLACE FRONT SEAT ASSEMBLY LH (See page SE-83)**

NG

RS

2	CHECK FLOOR WIRE (FRONT DRIVER SIDE - SIDE SQUIB CIRCUIT)

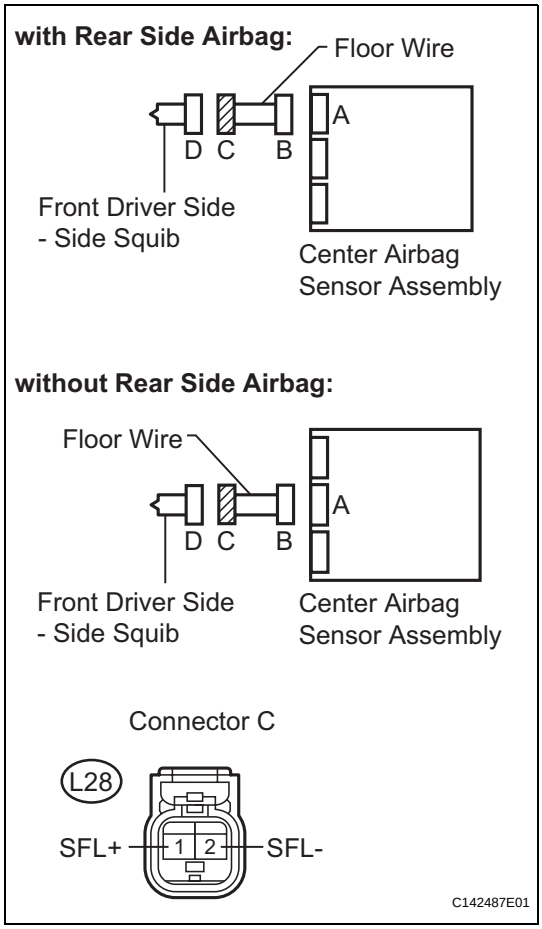

(a) Turn the engine switch off.
(b) Disconnect the negative (-) terminal cable from the battery, and wait for at least 90 seconds.
(c) Disconnect the SST from connector C.
(d) Disconnect the connectors from the center airbag sensor assembly.
(e) Check for a short to B+ in the circuit.
  (1) Connect the negative (-) terminal cable to the battery, and wait for at least 2 seconds.
  (2) Turn the engine switch on (IG).
  (3) Measure the voltage according to the value(s) in the table below.
  Standard voltage

Tester Connection	Condition	Specified Condition
L28-1 (SFL+) - Body ground	Engine switch on (IG)	Below 1 V
L28-2 (SFL-) - Body ground	Engine switch on (IG)	Below 1 V

(f) Check for an open in the circuit.
  (1) Turn the engine switch off.
  (2) Disconnect the negative (-) terminal cable from the battery, and wait for at least 90 seconds.
  (3) Measure the resistance according to the value(s) in the table below.
  Standard resistance

Tester Connection	Condition	Specified Condition
L28-1 (SFL+) - L28-2 (SFL-)	Always	Below 1 Ω

(g) Check for a short to ground in the circuit.
  (1) Measure the resistance according to the value(s) in the table below.
  Standard resistance

Tester Connection	Condition	Specified Condition
L28-1 (SFL+) - Body ground	Always	1 MΩ or higher
L28-2 (SFL-) - Body ground	Always	1 MΩ or higher

(h) Check for a short in the circuit.
  (1) Release the activation prevention mechanism built into connector B (See page RS-37).
  (2) Measure the resistance according to the value(s) in the table below.
  Standard resistance

Tester Connection	Condition	Specified Condition
L28-1 (SFL+) - L28-2 (SFL-)	Always	1 MΩ or higher

NG → **REPAIR OR REPLACE FLOOR WIRE**

OK

3	CHECK CENTER AIRBAG SENSOR ASSEMBLY

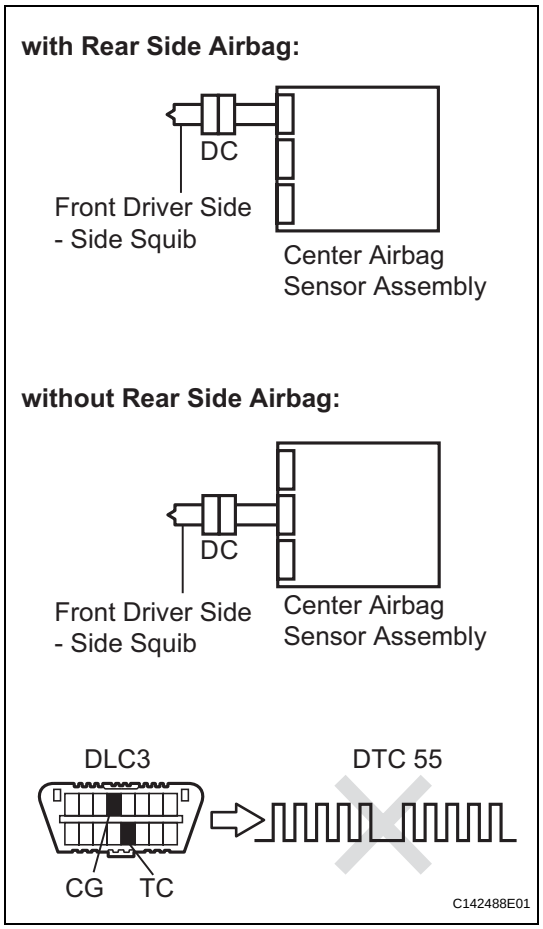

(a) Connect the connectors to the front seat side airbag assembly LH and the center airbag sensor assembly.
(b) Connect the negative (-) terminal cable to the battery, and wait for at least 2 seconds.
(c) Turn the engine switch on (IG), and wait for at least 60 seconds.
(d) Clear the DTCs stored in the memory (See page RS-49).
(e) Turn the engine switch off.
(f) Turn the engine switch on (IG), and wait for at least 60 seconds.
(g) Check the DTCs (See page RS-49).
OK:
DTC B1820, B1821, B1822, B1823, or 55 is not output.
HINT:
Codes other than DTC B1820, B1821, B1822, B1823, and 55 may be output at this time, but they are not related to this check.

NG → **REPLACE CENTER AIRBAG SENSOR ASSEMBLY (See page RS-468)**

OK

USE SIMULATION METHOD TO CHECK (See page RS-37)

RS

RS

DTC	**B1825/56**	**Short in Front Passenger Side - Side Squib Circuit**

DTC	**B1826/56**	**Open in Front Passenger Side - Side Squib Circuit**

DTC	**B1827/56**	**Short to GND in Front Passenger Side - Side Squib Circuit**

DTC	**B1828/56**	**Short to B+ in Front Passenger Side - Side Squib Circuit**

DESCRIPTION

The front passenger side - side squib circuit consists of the center airbag sensor assembly and the front seat side airbag assembly RH.
The circuit instructs the SRS to deploy when deployment conditions are met.
These DTCs are recorded when a malfunction is detected in the front passenger side - side squib circuit.

DTC No.	DTC Detection Condition	Trouble Area
B1825/56	• The center airbag sensor assembly receives a line short circuit signal 5 times in the front passenger side - side squib circuit during primary check. • Front passenger side - side squib malfunction • Center airbag sensor assembly malfunction	• Floor wire No. 2 • Front seat side airbag assembly RH (Front passenger side - side squib) • Center airbag sensor assembly
B1826/56	• The center airbag sensor assembly receives an open circuit signal in the front passenger side - side squib circuit for 2 seconds. • Front passenger side - side squib malfunction • Center airbag sensor assembly malfunction	• Floor wire No. 2 • Front seat side airbag assembly RH (Front passenger side - side squib) • Center airbag sensor assembly
B1827/56	• The center airbag sensor assembly receives a short circuit to ground signal in the front passenger side - side squib circuit for 0.5 seconds. • Front passenger side - side squib malfunction • Center airbag sensor assembly malfunction	• Floor wire No. 2 • Front seat side airbag assembly RH (Front passenger side - side squib) • Center airbag sensor assembly
B1828/56	• The center airbag sensor assembly receives a short circuit to B+ signal in the front passenger side - side squib circuit for 0.5 seconds. • Front passenger side - side squib malfunction • Center airbag sensor assembly malfunction	• Floor wire No. 2 • Front seat side airbag assembly RH (Front passenger side - side squib) • Center airbag sensor assembly

WIRING DIAGRAM

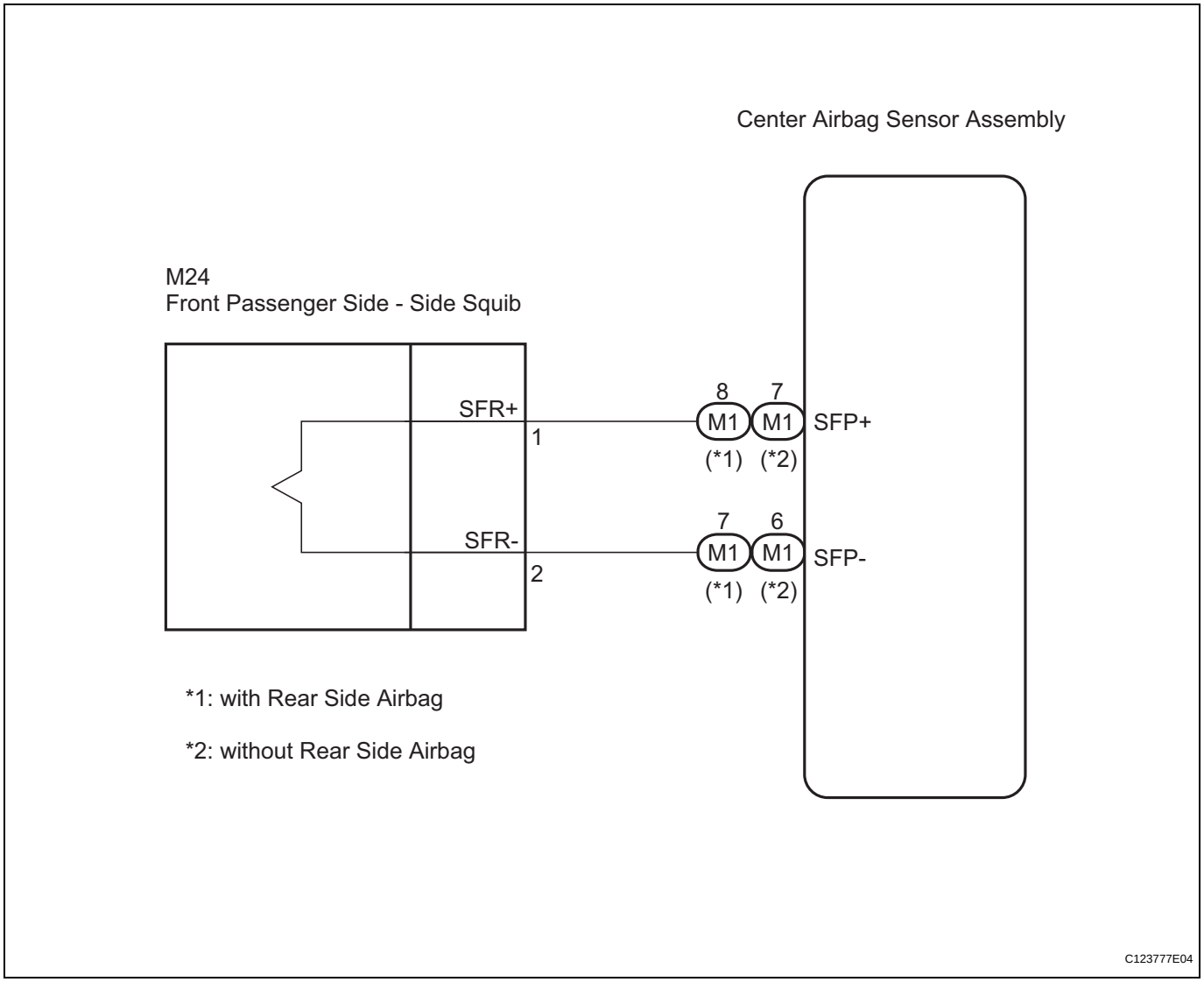

INSPECTION PROCEDURE

HINT:

- Perform the simulation method by selecting "check mode" (signal check) with the intelligent tester (See page RS-52).
- After selecting "check mode" (signal check), perform the simulation method by wiggling each connector of the airbag system or driving the vehicle on a city or rough road (See page RS-52).

RS

1	CHECK FRONT SEAT SIDE AIRBAG ASSEMBLY RH (FRONT PASSENGER SIDE - SIDE SQUIB)

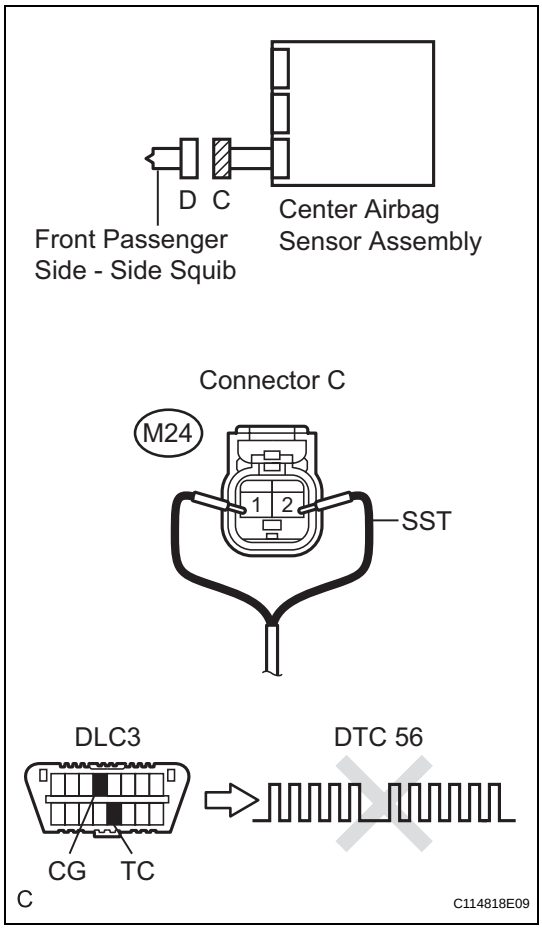

(a) Turn the engine switch off.
(b) Disconnect the negative (-) terminal cable from the battery, and wait for at least 90 seconds.
(c) Disconnect the connector from the front seat side airbag assembly RH.
(d) Connect the black wire side of SST (resistance 2.1 Ω) to connector C.
CAUTION:
Never connect the tester to the front seat side airbag assembly RH (front passenger side - side squib) for measurement, as this may lead to a serious injury due to airbag deployment.
NOTICE:
- **Do not forcibly insert the SST into the terminals of the connector when connecting the SST.**
- **Insert straight the SST into the terminals of the connector.**

SST 09843-18060
(e) Connect the negative (-) terminal cable to the battery, and wait for at least 2 seconds.
(f) Turn the engine switch on (IG), and wait for at least 60 seconds.
(g) Clear the DTCs stored in the memory (See page RS-49).
(h) Turn the engine switch off.
(i) Turn the engine switch on (IG), and wait for at least 60 seconds.
(j) Check the DTCs (See page RS-49).
OK:
DTC B1825, B1826, B1827, B1828, or 56 is not output.
HINT:
Codes other than DTC B1825, B1826, B1827, B1828, and 56 may be output at this time, but they are not related to this check.

OK → **REPLACE FRONT SEAT ASSEMBLY RH (See page SE-83)**

NG

RS

2 CHECK FLOOR WIRE NO. 2 (FRONT PASSENGER SIDE - SIDE SQUIB CIRCUIT)

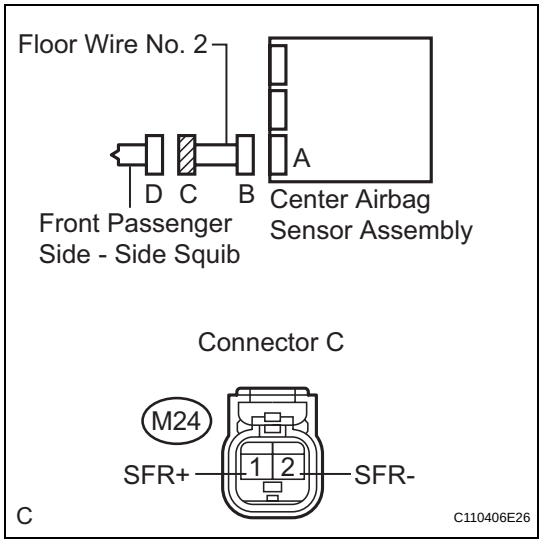

(a) Turn the engine switch off.
(b) Disconnect the negative (-) terminal cable from the battery, and wait for at least 90 seconds.
(c) Disconnect the SST from connector C.
(d) Disconnect the connectors from the center airbag sensor assembly.
(e) Check for a short to B+ in the circuit.
  (1) Connect the negative (-) terminal cable to the battery, and wait for at least 2 seconds.
  (2) Turn the engine switch on (IG).
  (3) Measure the voltage according to the value(s) in the table below.
  Standard voltage

Tester Connection	Condition	Specified Condition
M24-1 (SFR+) - Body ground	Engine switch on (IG)	Below 1 V
M24-2 (SFR-) - Body ground	Engine switch on (IG)	Below 1 V

(f) Check for an open in the circuit.
  (1) Turn the engine switch off.
  (2) Disconnect the negative (-) terminal cable from the battery, and wait for at least 90 seconds.
  (3) Measure the resistance according to the value(s) in the table below.
  Standard resistance

Tester Connection	Condition	Specified Condition
M24-1 (SFR+) - M24-2 (SFR-)	Always	Below 1 Ω

(g) Check for a short to ground in the circuit.
  (1) Measure the resistance according to the value(s) in the table below.
  Standard resistance

Tester Connection	Condition	Specified Condition
M24-1 (SFR+) - Body ground	Always	1 MΩ or higher
M24-2 (SFR-) - Body ground	Always	1 MΩ or higher

(h) Check for a short in the circuit.
  (1) Release the activation prevention mechanism built into connector B (See page RS-37).
  (2) Measure the resistance according to the value(s) in the table below.
  Standard resistance

Tester Connection	Condition	Specified Condition
M24-1 (SFR+) - M24-2 (SFR-)	Always	1 MΩ or higher

NG → **REPAIR OR REPLACE FLOOR WIRE NO. 2**

OK

3	CHECK CENTER AIRBAG SENSOR ASSEMBLY

RS

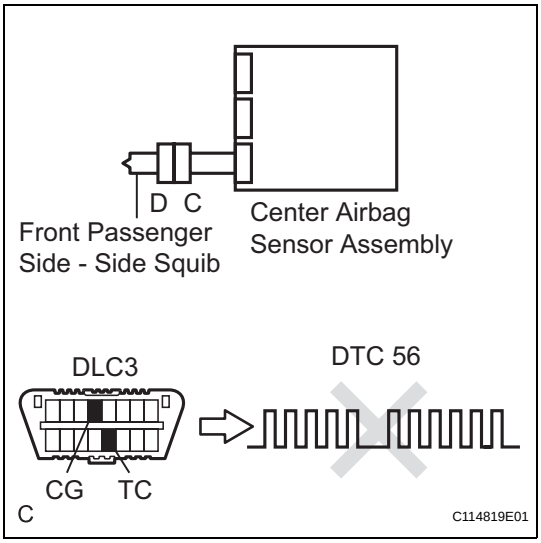

(a) Connect the connectors to the front seat side airbag assembly RH and the center airbag sensor assembly.
(b) Connect the negative (-) terminal cable to the battery, and wait for at least 2 seconds.
(c) Turn the engine switch on (IG), and wait for at least 60 seconds.
(d) Clear the DTCs stored in the memory (See page RS-49).
(e) Turn the engine switch off.
(f) Turn the engine switch on (IG), and wait for at least 60 seconds.
(g) Check the DTCs (See page RS-49).
OK:
DTC B1825, B1826, B1827, B1828, or 56 is not output.
HINT:
Codes other than DTC B1825, B1826, B1827, B1828, and 56 may be output at this time, but they are not related to this check.

NG → **REPLACE CENTER AIRBAG SENSOR ASSEMBLY (See page RS-468)**

OK

USE SIMULATION METHOD TO CHECK (See page RS-37)

DTC	**B1830/57**	**Short in Driver Side Curtain Shield Squib Circuit**

DTC	**B1831/57**	**Open in Driver Side Curtain Shield Squib Circuit**

DTC	**B1832/57**	**Short to GND in Driver Side Curtain Shield Squib Circuit**

DTC	**B1833/57**	**Short to B+ in Driver Side Curtain Shield Squib Circuit**

DESCRIPTION

The driver side curtain shield squib circuit consists of the center airbag sensor assembly and the curtain shield airbag assembly LH.
The circuit instructs the SRS to deploy when deployment conditions are met.
These DTCs are recorded when a malfunction is detected in the driver side curtain shield squib circuit.

DTC No.	DTC Detection Condition	Trouble Area
B1830/57	• The center airbag sensor assembly receives a line short circuit signal 5 times in the driver side curtain shield squib circuit during primary check. • Driver side curtain shield squib malfunction • Center airbag sensor assembly malfunction	• Floor wire • Curtain shield airbag assembly LH (Driver side curtain shield squib) • Center airbag sensor assembly
B1831/57	• The center airbag sensor assembly receives an open circuit signal in the driver side curtain shield squib circuit for 2 seconds. • Driver side curtain shield squib malfunction • Center airbag sensor assembly malfunction	• Floor wire • Curtain shield airbag assembly LH (Driver side curtain shield squib) • Center airbag sensor assembly
B1832/57	• The center airbag sensor assembly receives a short circuit to ground signal in the driver side curtain shield squib circuit for 0.5 seconds. • Driver side curtain shield squib malfunction • Center airbag sensor assembly malfunction	• Floor wire • Curtain shield airbag assembly LH (Driver side curtain shield squib) • Center airbag sensor assembly
B1833/57	• The center airbag sensor assembly receives a short circuit to B+ signal in the driver side curtain shield squib circuit for 0.5 seconds. • Driver side curtain shield squib malfunction • Center airbag sensor assembly malfunction	• Floor wire • Curtain shield airbag assembly LH (Driver side curtain shield squib) • Center airbag sensor assembly

RS

WIRING DIAGRAM

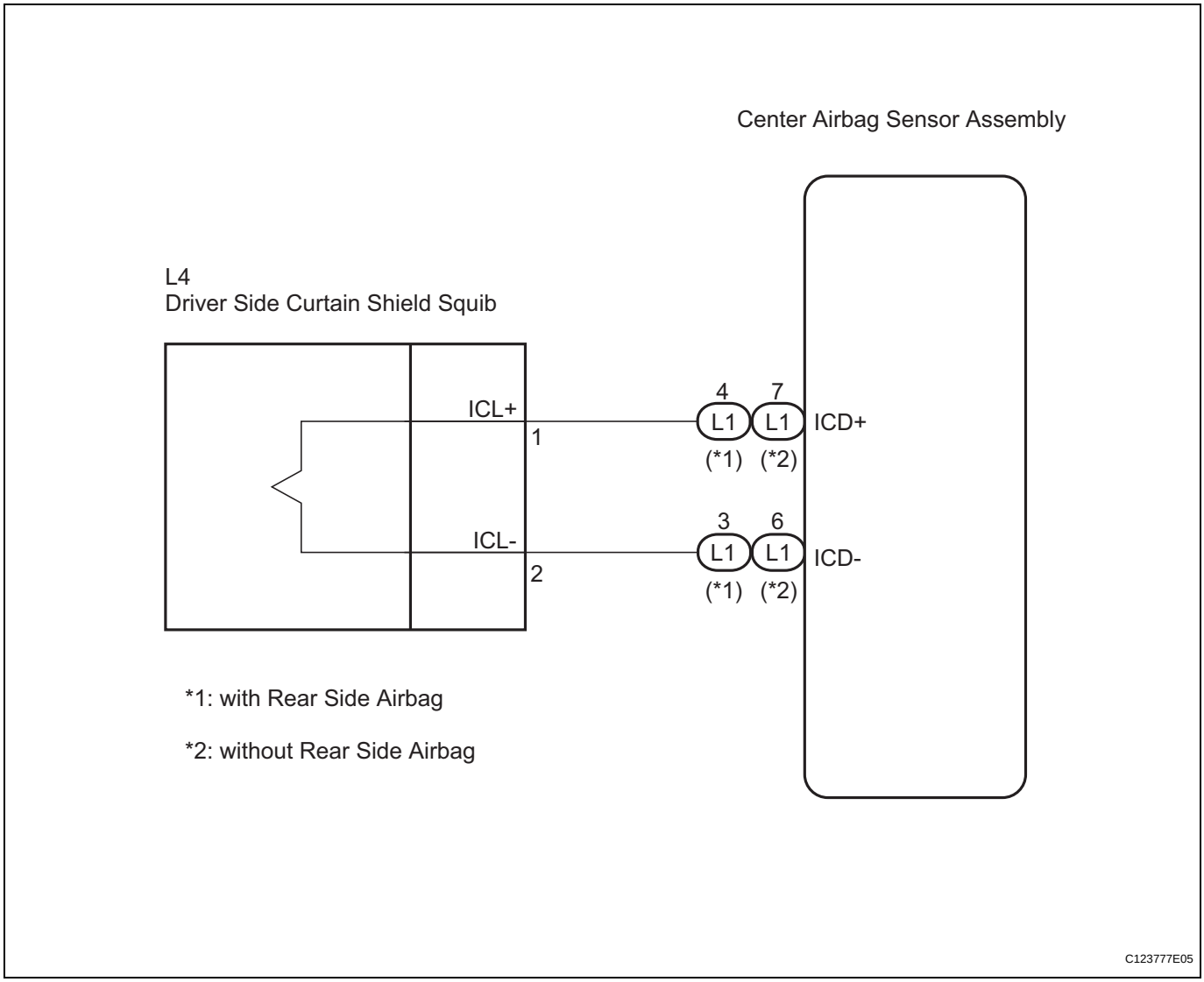

INSPECTION PROCEDURE

HINT:

- Perform the simulation method by selecting "check mode" (signal check) with the intelligent tester (See page RS-52).
- After selecting "check mode" (signal check), perform the simulation method by wiggling each connector of the airbag system or driving the vehicle on a city or rough road (See page RS-52).

RS

1	CHECK CURTAIN SHIELD AIRBAG ASSEMBLY LH (DRIVER SIDE CURTAIN SHIELD SQUIB)

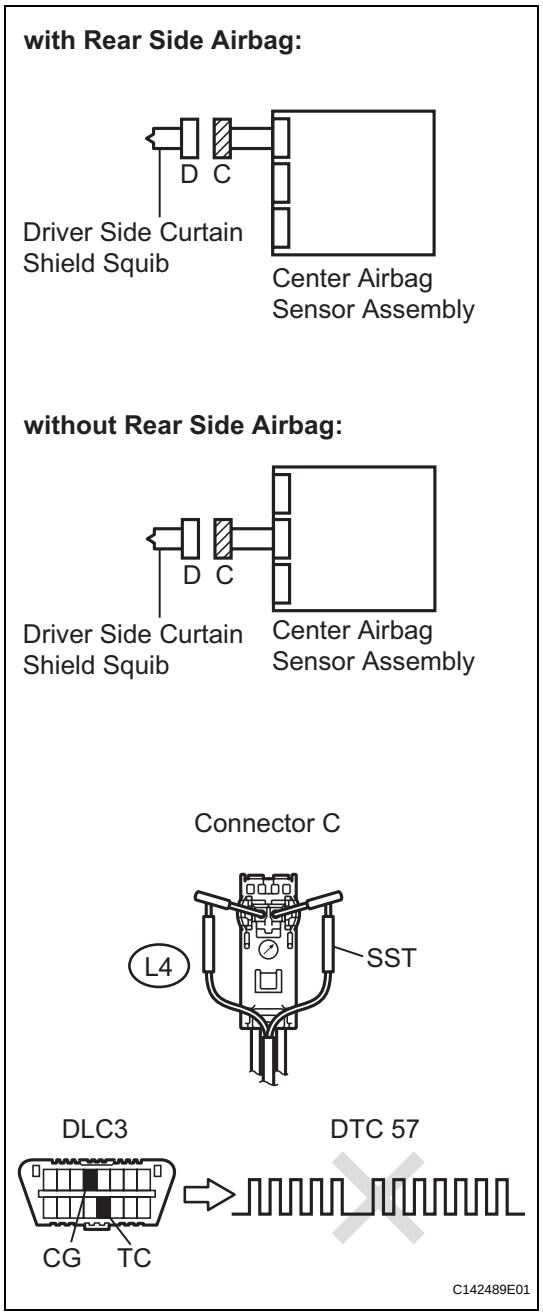

(a) Turn the engine switch off.
(b) Disconnect the negative (-) terminal cable from the battery, and wait for at least 90 seconds.
(c) Disconnect the connector from the curtain shield airbag assembly LH.
(d) Connect the white wire side of SST (resistance 2.1 Ω) to connector C.
CAUTION:
Never connect the tester to the curtain shield airbag assembly LH (driver side curtain shield squib) for measurement, as this may lead to a serious injury due to airbag deployment.
NOTICE:
- **Do not forcibly insert the SST into the terminals of the connector when connecting the SST.**
- **Insert straight the SST into the terminals of the connector.**

SST 09843-18060

(e) Connect the negative (-) terminal cable to the battery, and wait for at least 2 seconds.
(f) Turn the engine switch on (IG), and wait for at least 60 seconds.
(g) Clear the DTCs stored in the memory (See page RS-49).
(h) Turn the engine switch off.
(i) Turn the engine switch on (IG), and wait for at least 60 seconds.
(j) Check the DTCs (See page RS-49).
OK:
DTC B1830, B1831, B1832, B1833, or 57 is not output.
HINT:
Codes other than DTC B1830, B1831, B1832, B1833, and 57 may be output at this time, but they are not related to this check.

OK → **REPLACE CURTAIN SHIELD AIRBAG ASSEMBLY LH (See page RS-435)**

NG

2	CHECK CONNECTOR

(a) Turn the engine switch off.
(b) Disconnect the negative (-) terminal cable from the battery, and wait for at least 90 seconds.
(c) Disconnect the SST from connector C.
(d) Check that the floor wire connector (on the curtain shield airbag assembly LH side) is not damaged.

OK:
The lock button is not disengaged, or the claw of the lock is not deformed or damaged.

NG → **REPAIR OR REPLACE FLOOR WIRE**

RS

OK

3 CHECK FLOOR WIRE (DRIVER SIDE CURTAIN SHIELD SQUIB CIRCUIT)

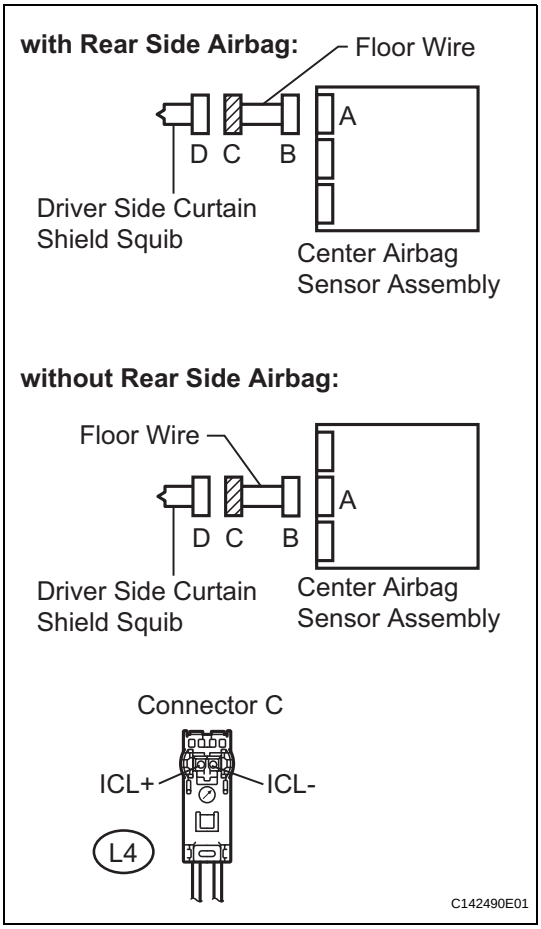

(a) Disconnect the connectors from the center airbag sensor assembly.

(b) Check for a short to B+ in the circuit.
  (1) Connect the negative (-) terminal cable to the battery, and wait for at least 2 seconds.
  (2) Turn the engine switch on (IG).
  (3) Measure the voltage according to the value(s) in the table below.
  Standard voltage

Tester Connection	Condition	Specified Condition
L4-1 (ICL+) - Body ground	Engine switch on (IG)	Below 1 V
L4-2 (ICL-) - Body ground	Engine switch on (IG)	Below 1 V

(c) Check for an open in the circuit.
  (1) Turn the engine switch off.
  (2) Disconnect the negative (-) terminal cable from the battery, and wait for at least 90 seconds.
  (3) Measure the resistance according to the value(s) in the table below.
  Standard resistance

Tester Connection	Condition	Specified Condition
L4-1 (ICL+) - L4-2 (ICL-)	Always	Below 1 Ω

(d) Check for a short to ground in the circuit.
  (1) Measure the resistance according to the value(s) in the table below.
  Standard resistance

Tester Connection	Condition	Specified Condition
L4-1 (ICL+) - Body ground	Always	1 MΩ or higher
L4-2 (ICL-) - Body ground	Always	1 MΩ or higher

(e) Check for a short in the circuit.
  (1) Release the activation prevention mechanism built into connector B (See page RS-37).
  (2) Measure the resistance according to the value(s) in the table below.
  Standard resistance

Tester Connection	Condition	Specified Condition
L4-1 (ICL+) - L4-2 (ICL-)	Always	1 MΩ or higher

NG → **REPAIR OR REPLACE FLOOR WIRE**

OK

4 CHECK CENTER AIRBAG SENSOR ASSEMBLY

RS

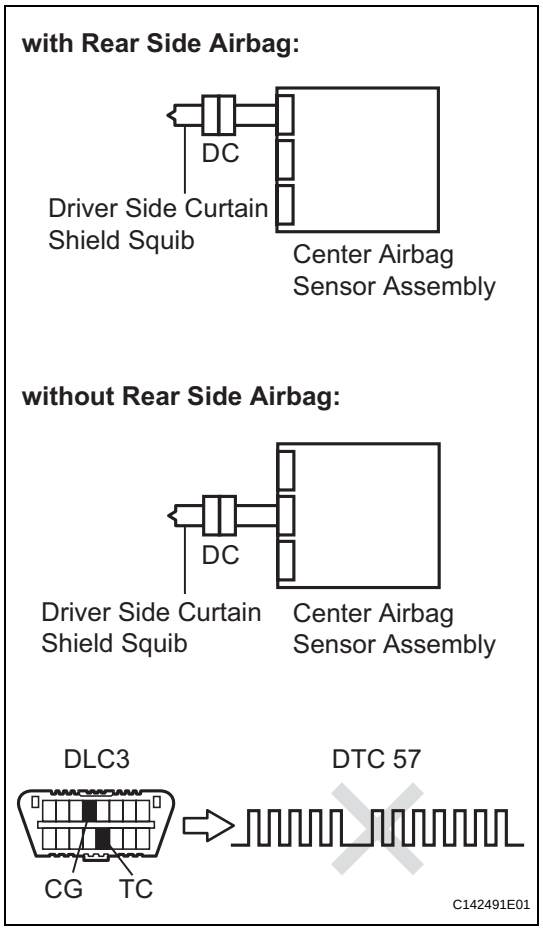

(a) Connect the connectors to the curtain shield airbag assembly LH and the center airbag sensor assembly.
(b) Connect the negative (-) terminal cable to the battery, and wait for at least 2 seconds.
(c) Turn the engine switch on (IG), and wait for at least 60 seconds.
(d) Clear the DTCs stored in the memory (See page RS-49).
(e) Turn the engine switch off.
(f) Turn the engine switch on (IG), and wait for at least 60 seconds.
(g) Check the DTCs (See page RS-49).
OK:
DTC B1830, B1831, B1832, B1833, or 57 is not output.
HINT:
Codes other than DTC B1830, B1831, B1832, B1833, and 57 may be output at this time, but they are not related to this check.

NG → **REPLACE CENTER AIRBAG SENSOR ASSEMBLY (See page RS-468)**

OK

USE SIMULATION METHOD TO CHECK (See page RS-37)

RS

DTC	**B1835/58**	**Short in Front Passenger Side Curtain Shield Squib Circuit**

DTC	**B1836/58**	**Open in Front Passenger Side Curtain Shield Squib Circuit**

DTC	**B1837/58**	**Short to GND in Front Passenger Side Curtain Shield Squib Circuit**

DTC	**B1838/58**	**Short to B+ in Front Passenger Side Curtain Shield Squib Circuit**

DESCRIPTION

The front passenger side curtain shield squib circuit consists of the center airbag sensor assembly and the curtain shield airbag assembly RH.
The circuit instructs the SRS to deploy when deployment conditions are met.
These DTCs are recorded when a malfunction is detected in the front passenger side curtain shield squib circuit.

DTC No.	DTC Detection Condition	Trouble Area
B1835/58	• The center airbag sensor assembly receives a line short circuit signal 5 times in the front passenger side curtain shield squib circuit during primary check. • Front passenger side curtain shield squib malfunction • Center airbag sensor assembly malfunction	• Floor wire No. 2 • Curtain shield airbag assembly RH (Front passenger side curtain shield squib) • Center airbag sensor assembly
B1836/58	• The center airbag sensor assembly receives an open circuit signal in the front passenger side curtain shield squib circuit for 2 seconds. • Front passenger side curtain shield squib malfunction • Center airbag sensor assembly malfunction	• Floor wire No. 2 • Curtain shield airbag assembly RH (Front passenger side curtain shield squib) • Center airbag sensor assembly
B1837/58	• The center airbag sensor assembly receives a short circuit to ground signal in the front passenger side curtain shield squib circuit for 0.5 seconds. • Front passenger side curtain shield squib malfunction • Center airbag sensor assembly malfunction	• Floor wire No. 2 • Curtain shield airbag assembly RH (Front passenger side curtain shield squib) • Center airbag sensor assembly
B1838/58	• The center airbag sensor assembly receives a short circuit to B+ signal in the front passenger side curtain shield squib circuit for 0.5 seconds. • Front passenger side curtain shield squib malfunction • Center airbag sensor assembly malfunction	• Floor wire No. 2 • Curtain shield airbag assembly RH (Front passenger side curtain shield squib) • Center airbag sensor assembly

WIRING DIAGRAM

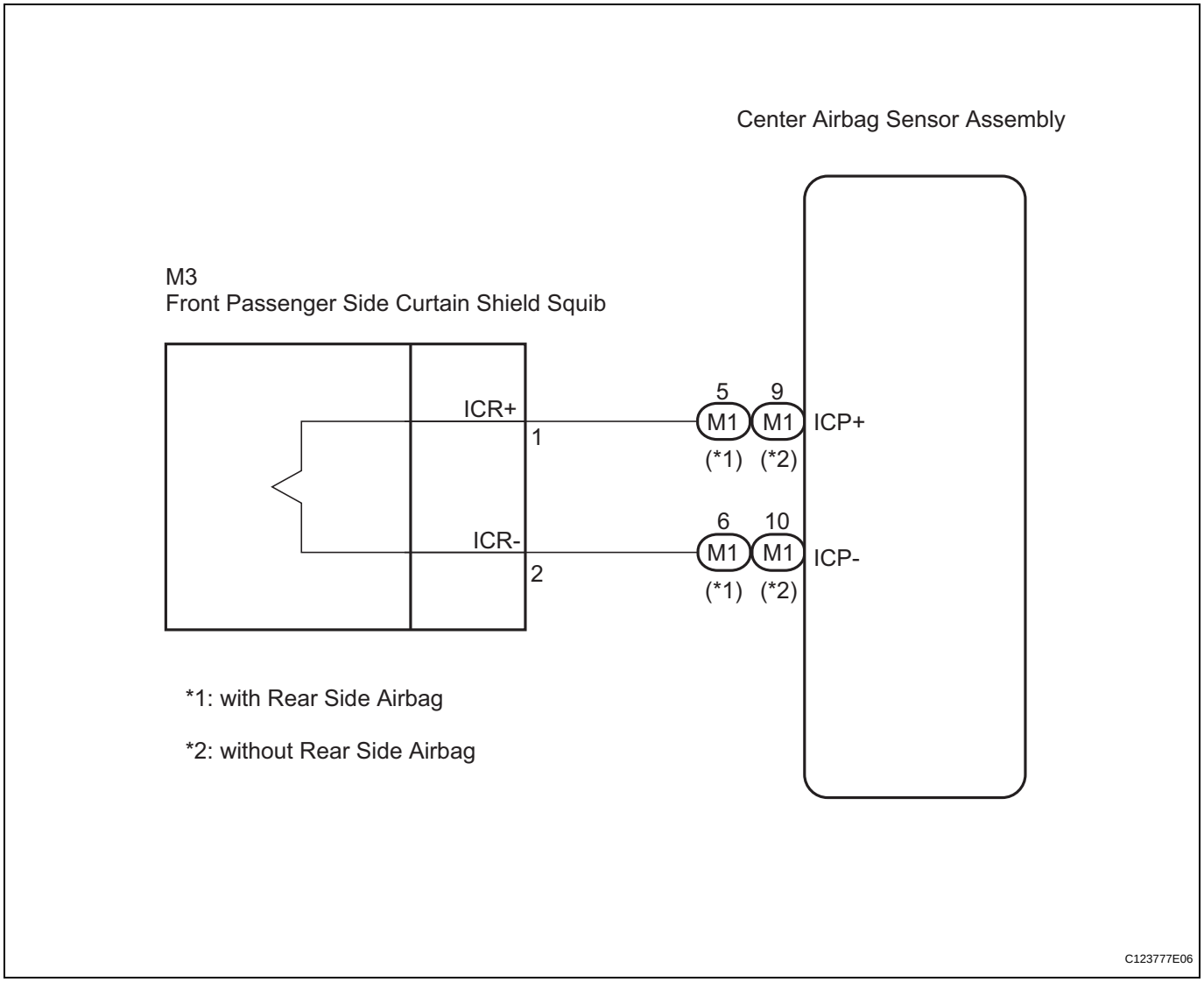

INSPECTION PROCEDURE

HINT:

- Perform the simulation method by selecting "check mode" (signal check) with the intelligent tester (See page RS-52).
- After selecting "check mode" (signal check), perform the simulation method by wiggling each connector of the airbag system or driving the vehicle on a city or rough road (See page RS-52).

RS

1	CHECK CURTAIN SHIELD AIRBAG ASSEMBLY RH (FRONT PASSENGER SIDE CURTAIN SHIELD SQUIB)

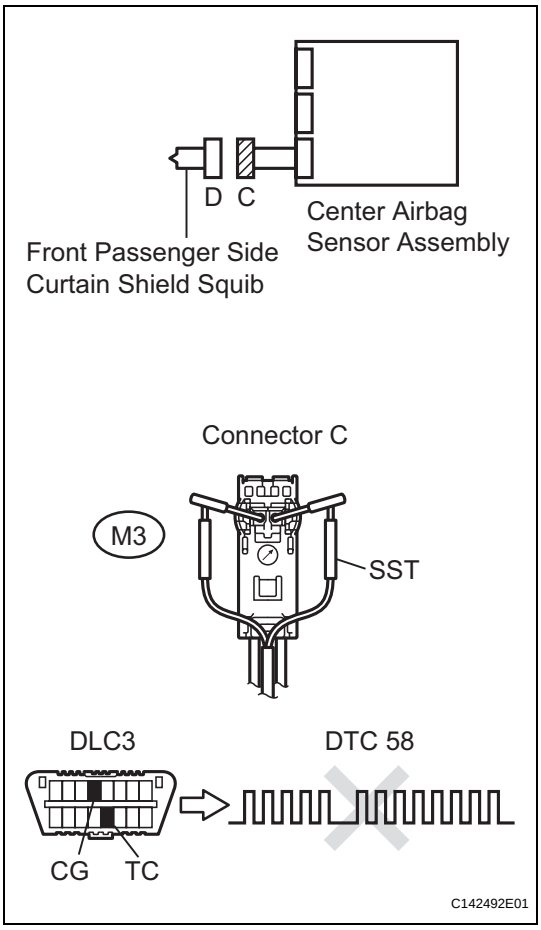

(a) Turn the engine switch off.
(b) Disconnect the negative (-) terminal cable from the battery, and wait for at least 90 seconds.
(c) Disconnect the connectors from the curtain shield airbag assembly RH.
(d) Connect the white wire side of SST (resistance 2.1 Ω) to connector C.
CAUTION:
Never connect the tester to the curtain shield airbag assembly RH (front passenger side curtain shield squib) for measurement, as this may lead to a serious injury due to airbag deployment.
NOTICE:
- **Do not forcibly insert the SST into the terminals of the connector when connecting the SST.**
- **Insert straight the SST into the terminals of the connector.**

SST 09843-18060

(e) Connect the negative (-) terminal cable to the battery, and wait for at least 2 seconds.
(f) Turn the engine switch on (IG), and wait for at least 60 seconds.
(g) Clear the DTCs stored in the memory (See page RS-49).
(h) Turn the engine switch off.
(i) Turn the engine switch on (IG), and wait for at least 60 seconds.
(j) Check the DTCs (See page RS-49).
OK:
DTC B1835, B1836, B1837, B1838, or 58 is not output.
HINT:
Codes other than DTC B1835, B1836, B1837, B1838, and 58 may be output at this time, but they are not related to this check.

OK → **REPLACE CURTAIN SHIELD AIRBAG ASSEMBLY RH (See page RS-435)**

NG

2	CHECK CONNECTOR

(a) Turn the engine switch off.
(b) Disconnect the negative (-) terminal cable from the battery, and wait for at least 90 seconds.
(c) Disconnect the SST from connector C.
(d) Check that the floor wire No. 2 connectors (on the curtain shield airbag assembly RH side) are not damaged.

OK:
The lock button is not disengaged, or the claw of the lock is not deformed or damaged.

NG → **REPAIR OR REPLACE FLOOR WIRE NO. 2**

OK

3 CHECK FLOOR WIRE NO. 2 (FRONT PASSENGER SIDE CURTAIN SHIELD SQUIB CIRCUIT)

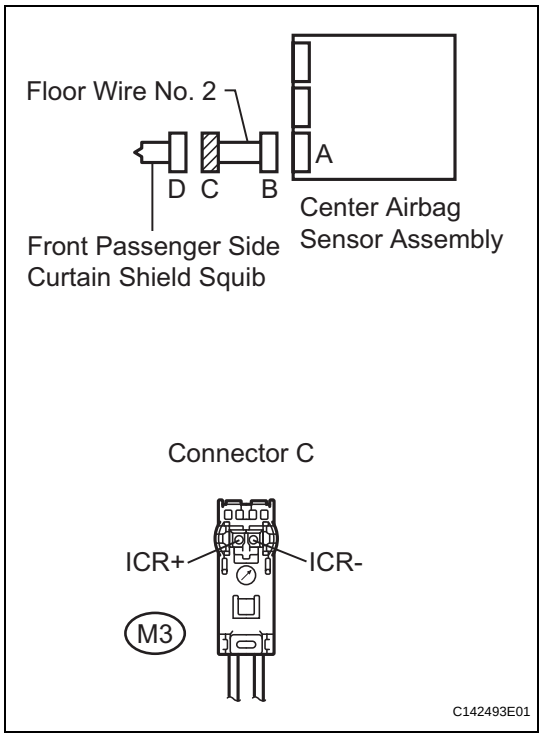

(a) Disconnect the connectors from the center airbag sensor assembly.

(b) Check for a short to B+ in the circuit.
  (1) Connect the negative (-) terminal cable to the battery, and wait for at least 2 seconds.
  (2) Turn the engine switch on (IG).
  (3) Measure the voltage according to the value(s) in the table below.
  Standard voltage

Tester Connection	Condition	Specified Condition
M3-1 (ICR+) - Body ground	Engine switch on (IG)	Below 1 V
M3-2 (ICR-) - Body ground	Engine switch on (IG)	Below 1 V

(c) Check for an open in the circuit.
  (1) Turn the engine switch off.
  (2) Disconnect the negative (-) terminal cable from the battery, and wait for at least 90 seconds.
  (3) Measure the resistance according to the value(s) in the table below.
  Standard resistance

Tester Connection	Condition	Specified Condition
M3-1 (ICR+) - M3-2 (ICR-)	Always	Below 1 Ω

(d) Check for a short to ground in the circuit.
  (1) Measure the resistance according to the value(s) in the table below.
  Standard resistance

Tester Connection	Condition	Specified Condition
M3-1 (ICR+) - Body ground	Always	1 MΩ or higher
M3-2 (ICR-) - Body ground	Always	1 MΩ or higher

(e) Check for a short in the circuit.
  (1) Release the activation prevention mechanism built into connector B (See page RS-37).
  (2) Measure the resistance according to the value(s) in the table below.
  Standard resistance

Tester Connection	Condition	Specified Condition
M3-1 (ICR+) - M3-2 (ICR-)	Always	1 MΩ or higher

NG → **REPAIR OR REPLACE FLOOR WIRE NO. 2**

OK

4	CHECK CENTER AIRBAG SENSOR ASSEMBLY

RS

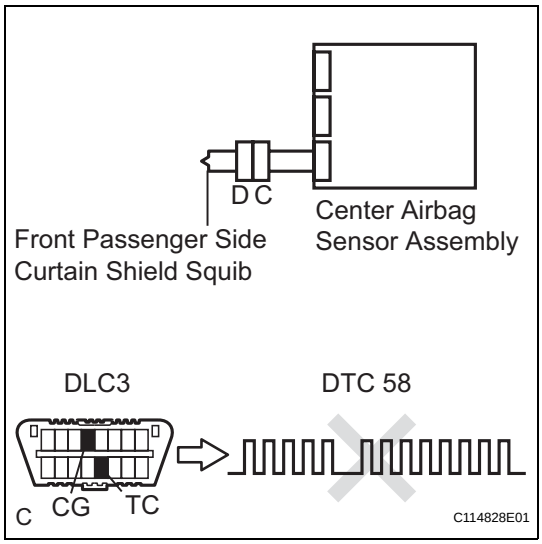

(a) Connect the connectors to the curtain shield airbag assembly RH and the center airbag sensor assembly.
(b) Connect the negative (-) terminal cable to the battery, and wait for at least 2 seconds.
(c) Turn the engine switch on (IG), and wait for at least 60 seconds.
(d) Clear the DTCs stored in the memory (See page RS-49).
(e) Turn the engine switch off.
(f) Turn the engine switch on (IG), and wait for at least 60 seconds.
(g) Check the DTCs (See page RS-49).
OK:
DTC B1835, B1836, B1837, B1838, or 58 is not output.
HINT:
Codes other than DTC B1835, B1836, B1837, B1838, and 58 may be output at this time, but they are not related to this check.

NG → **REPLACE CENTER AIRBAG SENSOR ASSEMBLY (See page RS-468)**

OK

USE SIMULATION METHOD TO CHECK (See page RS-37)

DTC	B1850/62	Short in Rear Driver Side - Side Squib Circuit

DTC	B1851/62	Open in Rear Driver Side - Side Squib Circuit

DTC	B1852/62	Short to GND in Rear Driver Side - Side Squib Circuit

DTC	B1853/62	Short to B+ in Rear Driver Side - Side Squib Circuit

DESCRIPTION

The rear driver side - side squib circuit consists of the center airbag sensor assembly and the rear seat side airbag assembly LH.
This circuit instructs the SRS to deploy when deployment conditions are met.
These DTCs are recorded when a malfunction is detected in the rear driver side - side squib circuit.

DTC No.	DTC Detecting Condition	Trouble Area
B1850/62	• The center airbag sensor assembly receives a line short circuit signal 5 times in the rear driver side - side squib circuit during primary check. • Rear driver side - side squib malfunction • Center airbag sensor assembly malfunction	• Floor wire • Rear seat side airbag assembly LH (Rear driver side - side squib) • Center airbag sensor assembly
B1851/62	• The center airbag sensor assembly receives an open circuit signal in the rear driver side - side squib circuit for 2 seconds. • Rear driver side - side squib malfunction • Center airbag sensor assembly malfunction	• Floor wire • Rear seat side airbag assembly LH (Rear driver side - side squib) • Center airbag sensor assembly
B1852/62	• The center airbag sensor assembly receives a short circuit to ground signal in the rear driver side - side squib circuit for 0.5 seconds. • Rear driver side - side squib malfunction • Center airbag sensor assembly malfunction	• Floor wire • Rear seat side airbag assembly LH (Rear driver side - side squib) • Center airbag sensor assembly
B1853/62	• The center airbag sensor assembly receives a short circuit to B+ signal in the rear driver side - side squib circuit for 0.5 seconds. • Rear driver side - side squib malfunction • Center airbag sensor assembly malfunction	• Floor wire • Rear seat side airbag assembly LH (Rear driver side - side squib) • Center airbag sensor assembly

RS

WIRING DIAGRAM

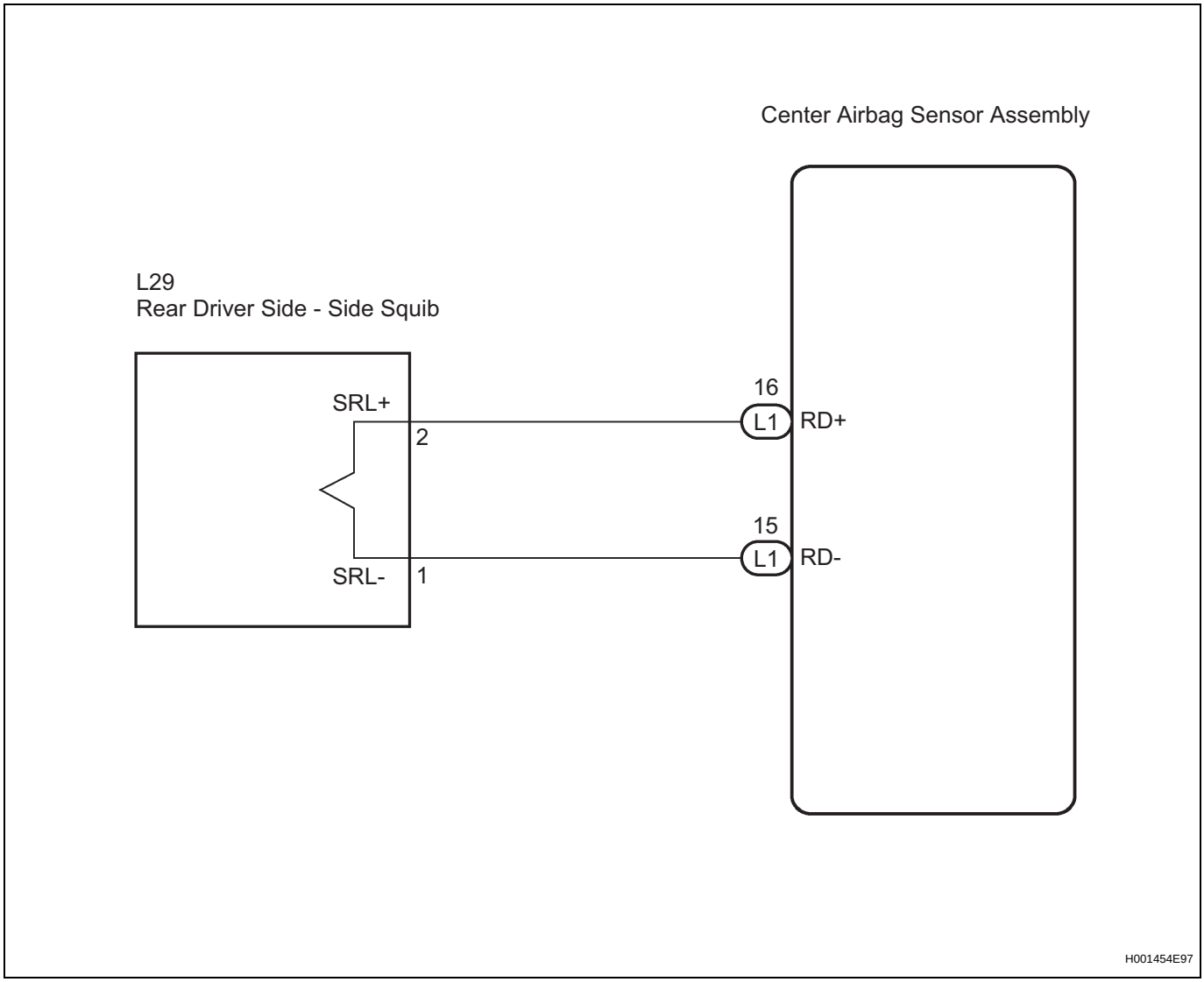

INSPECTION PROCEDURE

HINT:

- Perform the simulation method by selecting "check mode" (signal check) with the intelligent tester (See page RS-52).
- After selecting "check mode" (signal check), perform the simulation method by wiggling each connector of the airbag system or driving the vehicle on a city or rough road (See page RS-52).

RS

1	CHECK REAR SEAT SIDE AIRBAG ASSEMBLY LH (REAR DRIVER SIDE - SIDE SQUIB)

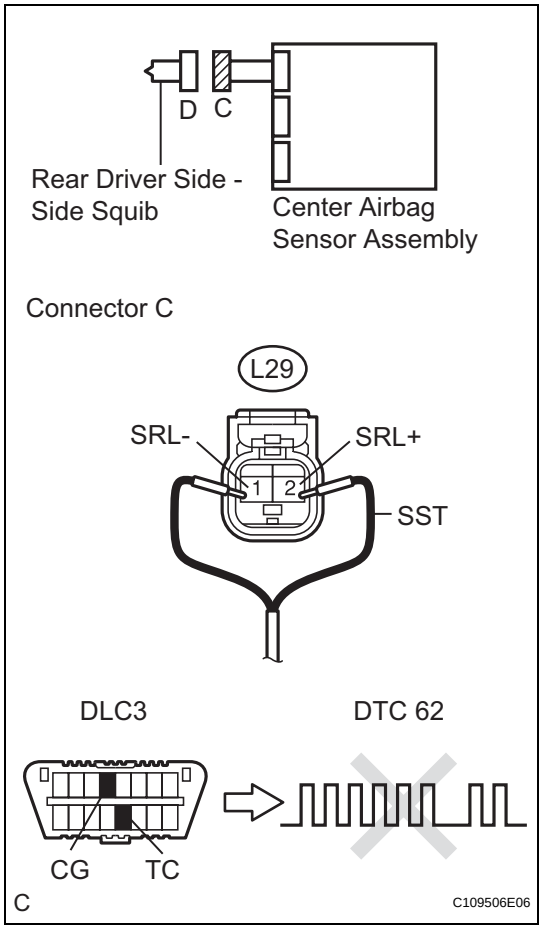

(a) Turn the engine switch off.
(b) Disconnect the negative (-) terminal cable from the battery, and wait for at least 90 seconds.
(c) Disconnect the connector from the rear seat side airbag assembly LH.
(d) Connect the black wire side of SST (resistance 2.1 Ω) to connector C.
CAUTION:
Never connect a tester to the rear seat side airbag assembly RH (rear driver side - side squib) for measurement, as this may lead to a serious injury due to airbag deployment.
NOTICE:
- **Do not forcibly insert the SST into the terminals of the connector when connecting the SST.**
- **Insert straight the SST into the terminals of the connector.**

SST 09843-18060

(e) Connect the negative (-) terminal cable to the battery, and wait for at least 2 seconds.
(f) Turn the engine switch on (IG), and wait for at least 60 seconds.
(g) Clear the DTCs stored in the memory (See page RS-49).
(h) Turn the engine switch off.
(i) Turn the engine switch on (IG), and wait for at least 60 seconds.
(j) Check the DTCs (See page RS-49).
OK:
DTC B1850, B1851, B1852, B1853, or 62 is not output.
HINT:
Codes other than DTC B1850, B1851, B1852, B1853, and 62 may be output at this time, but they are not related to this check.

OK → **REPLACE REAR SEAT SIDE AIRBAG ASSEMBLY LH (See page SE-113)**

NG

RS

2	CHECK FLOOR WIRE (REAR DRIVER SIDE - SIDE SQUIB CIRCUIT)

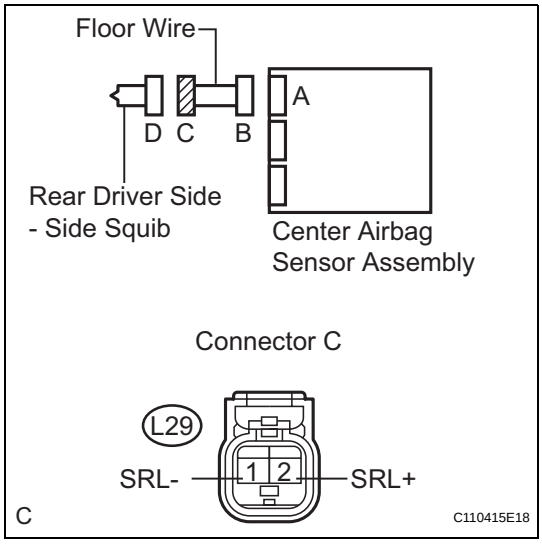

(a) Turn the engine switch off.
(b) Disconnect the negative (-) terminal cable from the battery, and wait for at least 90 seconds.
(c) Disconnect the SST from connector C.
(d) Disconnect the connectors from the center airbag sensor assembly.
(e) Check the short to B+ in the circuit.
  (1) Connect the negative (-) terminal cable to the battery, and wait for at least 2 seconds.
  (2) Turn the engine switch on (IG).
  (3) Measure the voltage according to the value(s) in the table below.
  Standard voltage

Tester Connection	Condition	Specified Condition
L29-2 (SRL+) - Body ground	Engine switch on (IG)	Below 1 V
L29-1 (SRL-) - Body ground	Engine switch on (IG)	Below 1 V

(f) Check the open in the circuit.
  (1) Turn the engine switch off.
  (2) Disconnect the negative (-) terminal cable from the battery, and wait for at least 90 seconds.
  (3) Measure the resistance according to the value(s) in the table below.
  Standard resistance

Tester Connection	Condition	Specified Condition
L29-2 (SRL+) - L29-1 (SRL-)	Always	Below 1 Ω

(g) Check the short to ground in the circuit.
  (1) Measure the resistance according to the value(s) in the table below.
  Standard resistance

Tester Connection	Condition	Specified Condition
L29-2 (SRL+) - Body ground	Always	1 MΩ or higher
L29-1 (SRL-) - Body ground	Always	1 MΩ or higher

(h) Check the short in the circuit.
  (1) Release the activation prevention mechanism built into connector B (See page RS-37).
  (2) Measure the resistance according to the value(s) in the table below.
  Standard resistance

Tester Connection	Condition	Specified Condition
L29-2 (SRL+) - L29-1 (SRL-)	Always	1 MΩ or higher

NG → **REPAIR OR REPLACE FLOOR WIRE**

OK

3	CHECK CENTER AIRBAG SENSOR ASSEMBLY

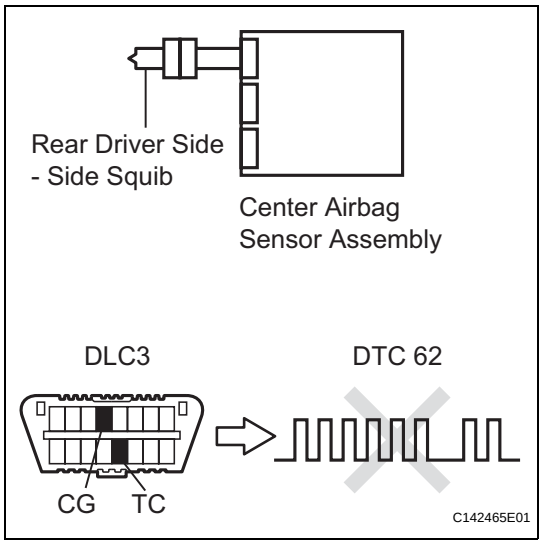

(a) Connect the connectors to the rear seat side airbag assembly LH and the center airbag sensor assembly.
(b) Connect the negative (-) terminal cable to the battery, and wait for at least 2 seconds.
(c) Turn the engine switch on (IG), and wait for at least 60 seconds.
(d) Clear the DTCs stored in the memory (See page RS-49).
(e) Turn the engine switch off.
(f) Turn the engine switch on (IG), and wait for at least 60 seconds.
(g) Check the DTCs (See page RS-49).
OK:
DTC B1850, B1851, B1852, B1853, or 62 is not output.
HINT:
Codes other than DTC B1850, B1851, B1852, B1853, and 62 may be output at this time, but they are not related to this check.

NG → **REPLACE CENTER AIRBAG SENSOR ASSEMBLY (See page RS-468)**

OK

USE SIMULATION METHOD TO CHECK (See page RS-37)

RS

RS

DTC	**B1855/63**	**Short in Rear Passenger Side - Side Squib Circuit**

DTC	**B1856/63**	**Open in Rear Passenger Side - Side Squib Circuit**

DTC	**B1857/63**	**Short to GND in Rear Passenger Side - Side Squib Circuit**

DTC	**B1858/63**	**Short to B+ in Rear Passenger Side - Side Squib Circuit**

DESCRIPTION

The rear passenger side - side squib circuit consists of the center airbag sensor assembly and the rear seat side airbag assembly RH.
The circuit instructs the SRS to deploy when deployment conditions are met.
These DTCs are recorded when a malfunction is detected in the rear passenger side - side squib circuit.

DTC No.	DTC Detecting Condition	Trouble Area
B1855/63	• The center airbag sensor assembly receives a line short circuit signal 5 times in the rear passenger side - side squib circuit during primary check. • Rear passenger side - side squib malfunction • Center airbag sensor assembly malfunction	• Floor wire No. 2 • Rear seat side airbag assembly RH (Rear passenger side - side squib) • Center airbag sensor assembly
B1856/63	• The center airbag sensor assembly receives an open circuit signal in the rear passenger side - side squib circuit for 2 seconds. • Rear passenger side - side squib malfunction • Center airbag sensor assembly malfunction	• Floor wire No. 2 • Rear seat side airbag assembly RH (Rear passenger side - side squib) • Center airbag sensor assembly
B1857/63	• The center airbag sensor assembly receives a short circuit to ground signal in the rear passenger side - side squib circuit for 0.5 seconds. • Rear passenger side - side squib malfunction • Center airbag sensor assembly malfunction	• Floor wire No. 2 • Rear seat side airbag assembly RH (Rear passenger side - side squib) • Center airbag sensor assembly
B1858/63	• The center airbag sensor assembly receives a short circuit to B+ signal in the rear passenger side - side squib circuit for 0.5 seconds. • Rear passenger side - side squib malfunction • Center airbag sensor assembly malfunction	• Floor wire No. 2 • Rear seat side airbag assembly RH (Rear passenger side - side squib) • Center airbag sensor assembly

RS

WIRING DIAGRAM

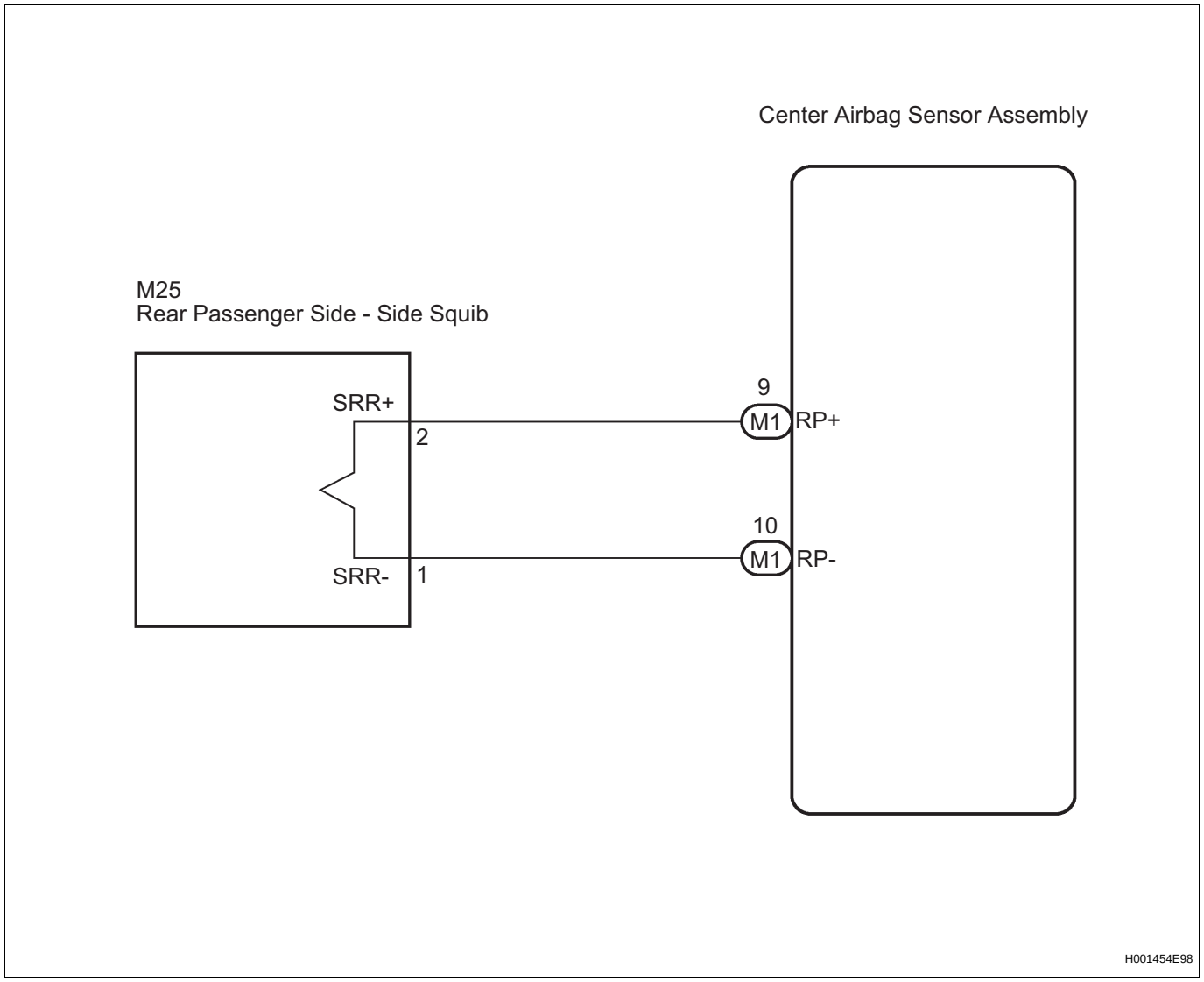

INSPECTION PROCEDURE

HINT:

- Change the intelligent tester to the "check mode" (signal check) with the intelligent tester (See page RS-52).
- After selecting the "check mode" (signal check), perform the simulation method by wiggling each connector of the airbag system or driving the vehicle on various types of roads (See page RS-52).

RS

1	CHECK REAR SEAT SIDE AIRBAG ASSEMBLY RH (REAR PASSENGER SIDE - SIDE SQUIB)

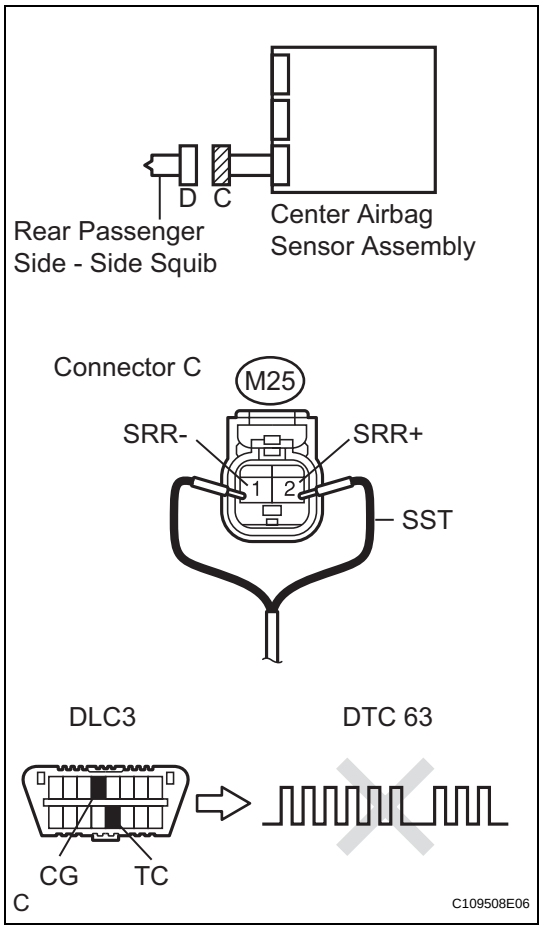

(a) Turn the engine switch off.
(b) Disconnect the negative (-) terminal cable from the battery, and wait for at least 90 seconds.
(c) Disconnect the connector from the rear seat side airbag RH.
(d) Connect the black wire side of SST (resistance 2.1 Ω) to connector C.
CAUTION:
Never connect a tester to the rear seat side airbag RH (rear passenger side - side squib) for measurement, as this may lead to a serious injury due to airbag deployment.
NOTICE:
- **Do not forcibly insert the SST into the terminals of the connector when connecting the SST.**
- **Insert straight the SST into the terminals of the connector.**

SST 09843-18060

(e) Connect the negative (-) terminal cable to the battery, and wait for at least 2 seconds.
(f) Turn the engine switch on (IG), and wait for at least 60 seconds.
(g) Clear the DTCs stored in the memory (See page RS-49).
(h) Turn the engine switch off.
(i) Turn the engine switch on (IG), and wait for at least 60 seconds.
(j) Check the DTCs (See page RS-49).
OK:
DTC B1855, B1856, B1857, B1858, or 63 is not output.
HINT:
Codes other than DTC B1855, B1856, B1857, B1858, and 63 may be output at this time, but they are not related to this check.

OK → **REPLACE REAR SEAT SIDE AIRBAG ASSEMBLY RH (See page SE-113)**

NG

RS

2 CHECK FLOOR WIRE NO. 2 (REAR PASSENGER SIDE - SIDE SQUIB CIRCUIT)

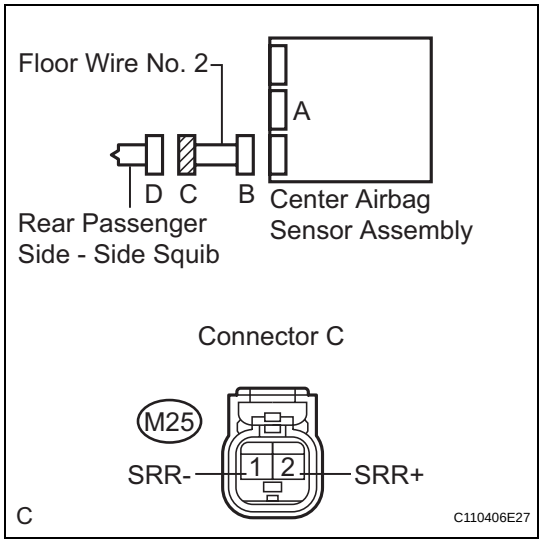

(a) Turn the engine switch off.
(b) Disconnect the negative (-) terminal cable from the battery, and wait for at least 90 seconds.
(c) Disconnect the SST (resistance 2.1 Ω) from the floor wire No. 2.
(d) Disconnect the connectors from the center airbag sensor assembly.
(e) Check the short to B+ in the circuit.
  (1) Connect the negative (-) terminal cable to the battery, and wait for at least 2 seconds.
  (2) Turn the engine switch on (IG).
  (3) Measure the voltage according to the value(s) in the table below.

Standard voltage

Tester Connection	Condition	Specified Condition
M25-2 (SRR+) - Body ground	Engine switch on (IG)	Below 1 V
M25-1 (SRR-) - Body ground	Engine switch on (IG)	Below 1 V

(f) Check the open in the circuit.
  (1) Turn the engine switch off.
  (2) Disconnect the negative (-) terminal cable from the battery, and wait for at least 90 seconds.
  (3) Measure the resistance according to the value(s) in the table below.

Standard resistance

Tester Connection	Condition	Specified Condition
M25-2 (SRR+) - M25-1 (SRR-)	Always	Below 1 Ω

(g) Check the short to ground in the circuit.
  (1) Measure the resistance according to the value(s) in the table below.

Standard resistance

Tester Connection	Condition	Specified Condition
M25-2 (SRR+) - Body ground	Always	1 MΩ or higher
M25-1 (SRR-) - Body ground	Always	1 MΩ or higher

(h) Check the short in the circuit.
  (1) Release the activation prevention mechanism built into connector B (See page RS-37).
  (2) Measure the resistance according to the value(s) in the table below.

Standard resistance

Tester Connection	Condition	Specified Condition
M25-2 (SRR+) - M25-1 (SRR-)	Always	1 MΩ or higher

NG → **REPAIR OR REPLACE FLOOR WIRE NO. 2**

OK

RS

3 CHECK CENTER AIRBAG SENSOR ASSEMBLY

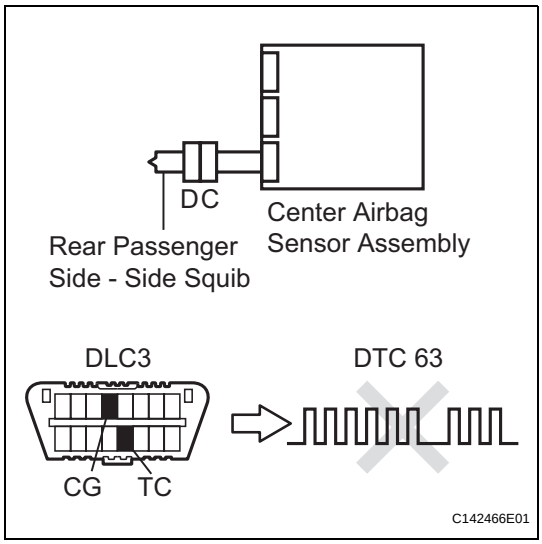

(a) Connect the connectors to the rear seat side airbag assembly RH and the center airbag sensor assembly.
(b) Connect the negative (-) terminal cable to the battery, and wait for at least 2 seconds.
(c) Turn the engine switch on (IG), and wait for at least 60 seconds.
(d) Clear the DTCs stored in the memory (See page RS-49).
(e) Turn the engine switch off.
(f) Turn the engine switch on (IG), and wait for at least 60 seconds.
(g) Check the DTCs (See page RS-49).
OK:
DTC B1855, B1856, B1857, B1858, or 63 is not output.
HINT:
Codes other than DTC B1855, B1856, B1857, B1858, and 63 may be output at this time, but they are not related to this check.

NG → **REPLACE CENTER AIRBAG SENSOR ASSEMBLY (See page RS-468)**

OK

USE SIMULATION METHOD TO CHECK (See page RS-37)

DTC	B1860/64	Short in Driver Side Knee Airbag Squib Circuit

DTC	B1861/64	Open in Driver Side Knee Airbag Squib Circuit

DTC	B1862/64	Short to GND in Driver Side Knee Airbag Squib Circuit

DTC	B1863/64	Short to B+ in Driver Side Knee Airbag Squib Circuit

DESCRIPTION

The driver side knee airbag squib circuit consists of the center airbag sensor assembly and the driver side knee airbag assembly.
This circuit instructs the SRS to deploy when deployment conditions are met.
These DTCs are recorded when a malfunction is detected in the driver side knee airbag squib circuit.

DTC No.	DTC Detecting Condition	Trouble Area
B1860/64	• The center airbag sensor assembly receives a line short circuit signal 5 times in the driver side knee airbag squib circuit during primary check. • Driver side knee airbag squib malfunction • Center airbag sensor assembly malfunction	• Instrument panel wire • Driver side knee airbag assembly (Driver side knee airbag squib) • Center airbag sensor assembly
B1861/64	• The center airbag sensor assembly receives an open circuit signal in the driver side knee airbag squib circuit for 2 seconds. • Driver side knee airbag squib malfunction • Center airbag sensor assembly malfunction	• Instrument panel wire • Driver side knee airbag assembly (Driver side knee airbag squib) • Center airbag sensor assembly
B1862/64	• The airbag sensor assembly center receives a short circuit to ground signal in the knee airbag (D side) squib circuit for 0.5 seconds. • Driver side knee airbag squib malfunction • Center airbag sensor assembly malfunction	• Instrument panel wire • Driver side knee airbag assembly (Driver side knee airbag squib) • Center airbag sensor assembly
B1863/64	• The airbag sensor assembly center receives a short circuit to B+ signal in the knee airbag (D side) squib circuit for 0.5 seconds. • Driver side knee airbag squib malfunction • Center airbag sensor assembly malfunction	• Instrument panel wire • Driver side knee airbag assembly (Driver side knee airbag squib) • Center airbag sensor assembly

RS

WIRING DIAGRAM

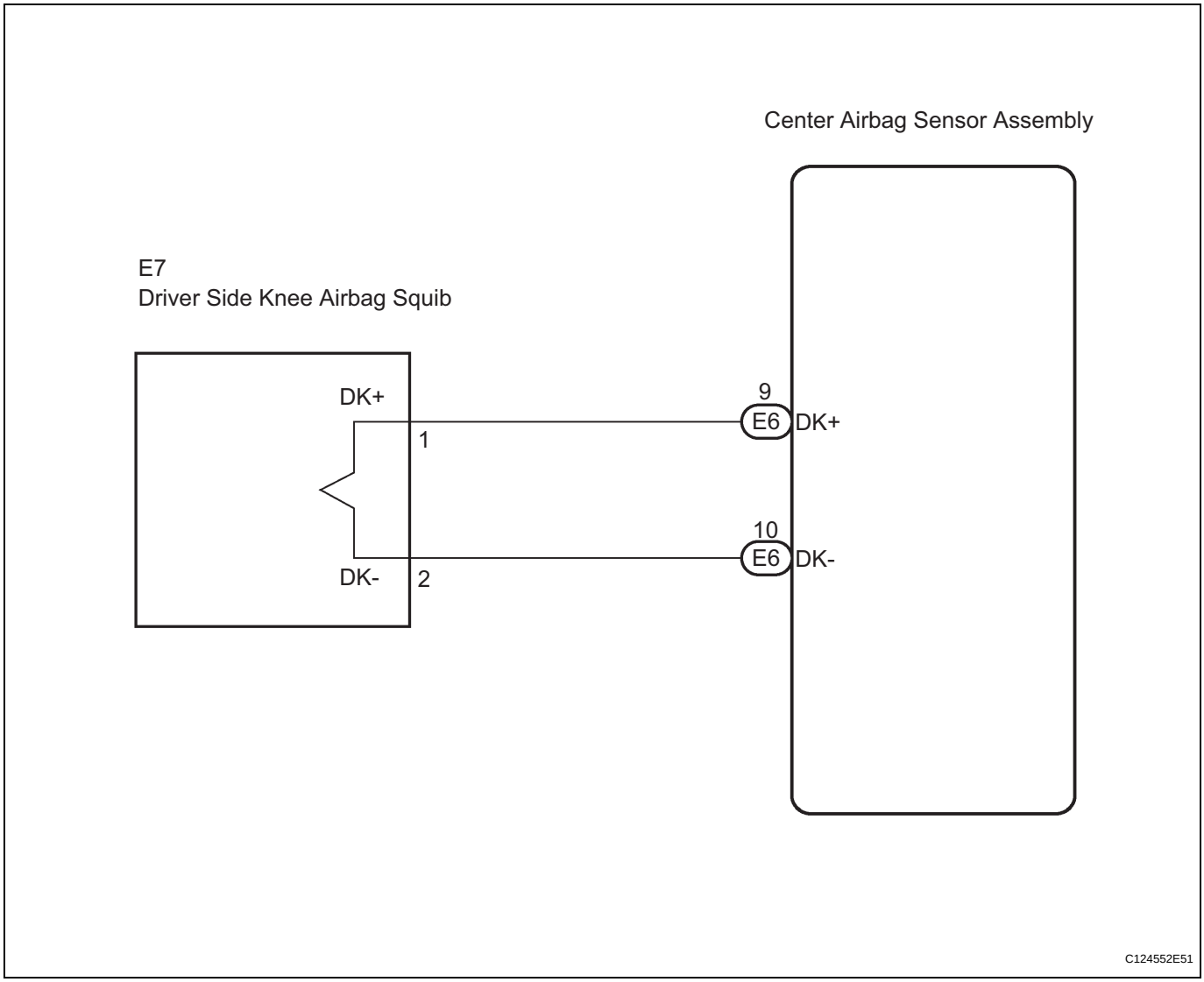

INSPECTION PROCEDURE

HINT:

- Perform the simulation method by selecting "check mode" (signal check) with the intelligent tester (See page RS-52).
- After selecting "check mode" (signal check), perform the simulation method by wiggling each connector of the airbag system or driving the vehicle on a city or rough road (See page RS-52).

RS

1	CHECK DRIVER SIDE KNEE AIRBAG ASSEMBLY (DRIVER SIDE KNEE AIRBAG SQUIB)

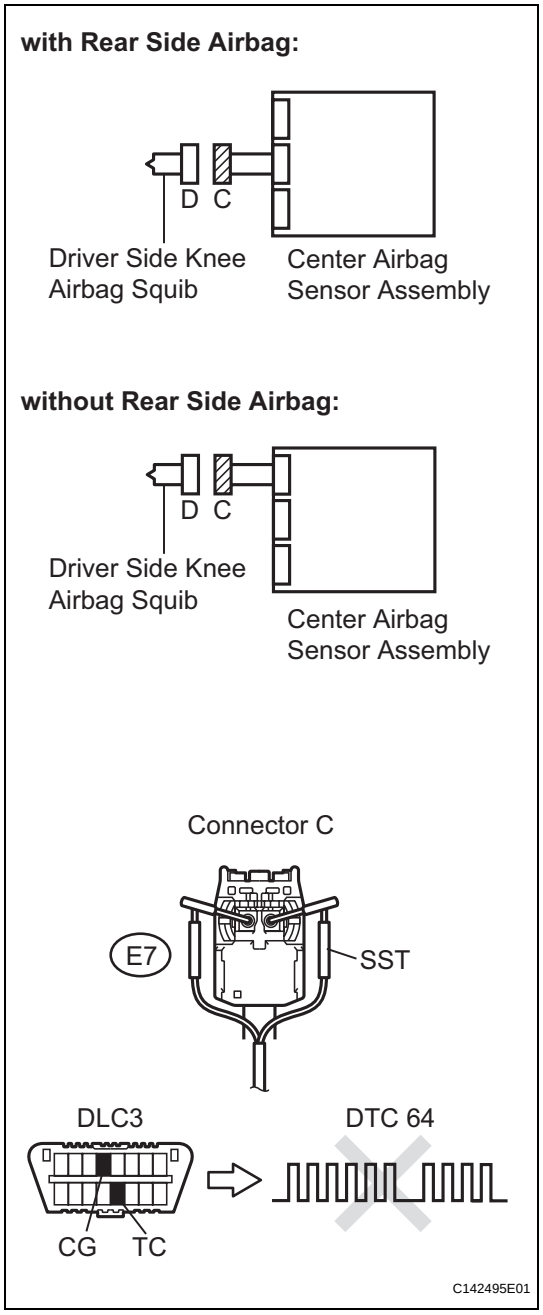

(a) Turn the engine switch off.
(b) Disconnect the negative (-) terminal cable from the battery, and wait for at least 90 seconds.
(c) Disconnect the connector from the driver side knee airbag assembly.
(d) Connect the white wire side of SST (resistance 2.1 Ω) to connector C.
CAUTION:
Never connect the tester to the driver side knee airbag assembly (driver side knee airbag squib) for measurement, as this may lead to a serious injury due to airbag deployment.
NOTICE:
- **Do not forcibly insert the SST into the terminals of the connector when connecting the SST.**
- **Insert straight the SST into the terminals of the connector.**

SST 09843-18060

(e) Connect the negative (-) terminal cable to the battery, and wait for at least 2 seconds.
(f) Turn the engine switch on (IG), and wait for at least 60 seconds.
(g) Clear the DTCs stored in the memory (See page RS-49).
(h) Turn the engine switch off.
(i) Turn the engine switch on (IG), and wait for at least 60 seconds.
(j) Check the DTCs (See page RS-49).
OK:
DTC B1860, B1861, B1862, B1863, or 64 is not output.
HINT:
Codes other than DTC B1860, B1861, B1862, B1863, and 64 may be output at this time, but they are not related to this check.

OK → **REPLACE DRIVER SIDE KNEE AIRBAG ASSEMBLY (See page RS-385)**

NG

2	CHECK CONNECTOR

(a) Turn the engine switch off.
(b) Disconnect the negative (-) terminal cable from the battery, and wait for at least 90 seconds.
(c) Disconnect the SST from connector C.
(d) Check that the instrument panel wire connector (on the driver side knee airbag assembly side) is not damaged.

OK:
The lock button is not disengaged, or the claw of the lock is not deformed or damaged.

NG → **REPAIR OR REPLACE INSTRUMENT PANEL WIRE**

RS

OK

3 CHECK INSTRUMENT PANEL WIRE (DRIVER SIDE KNEE AIRBAG SQUIB CIRCUIT)

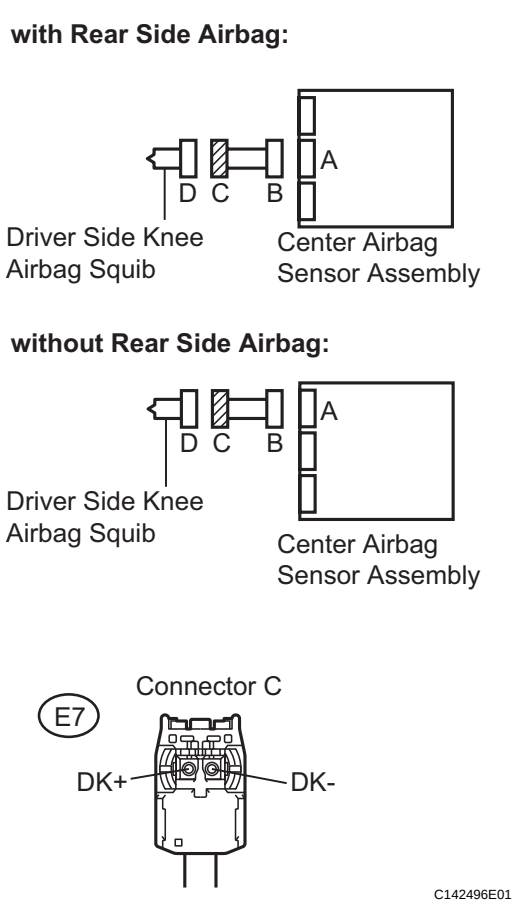

(a) Disconnect the connectors from the center airbag sensor assembly.

(b) Check for a short to B+ in the circuit.
  (1) Connect the negative (-) terminal cable to the battery, and wait for at least 2 seconds.
  (2) Turn the engine switch on (IG).
  (3) Measure the voltage according to the value(s) in the table below.
  Standard voltage

Tester Connection	Condition	Specified Condition
E7-1 (DK+) - Body ground	Engine switch on (IG)	Below 1 V
E7-2 (DK-) - Body ground	Engine switch on (IG)	Below 1 V

(c) Check for an open in the circuit.
  (1) Turn the engine switch off.
  (2) Disconnect the negative (-) terminal cable from the battery, and wait for at least 90 seconds.
  (3) Measure the resistance according to the value(s) in the table below.
  Standard resistance

Tester Connection	Condition	Specified Condition
E7-1 (DK+) - E7-2 (DK-)	Always	Below 1 Ω

(d) Check for a short to ground in the circuit.
  (1) Measure the resistance according to the value(s) in the table below.
  Standard resistance

Tester Connection	Condition	Specified Condition
E7-1 (DK+) - Body ground	Always	1 MΩ or higher
E7-2 (DK-) - Body ground	Always	1 MΩ or higher

(e) Check for a short in the circuit.
  (1) Release the activation prevention mechanism built into connector B (See page RS-37).
  (2) Measure the resistance according to the value(s) in the table below.
  Standard resistance

Tester Connection	Condition	Specified Condition
E7-1 (DK+) - E7-2 (DK-)	Always	1 MΩ or higher

NG → **REPAIR OR REPLACE INSTRUMENT PANEL WIRE**

OK

RS

4 CHECK CENTER AIRBAG SENSOR ASSEMBLY

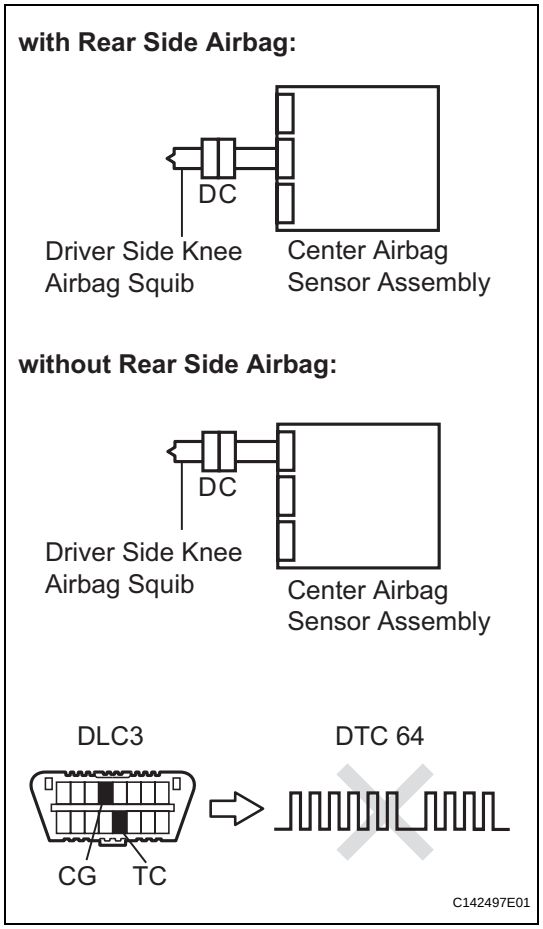

(a) Connect the connectors to the driver side knee airbag assembly and the center airbag sensor assembly.
(b) Connect the negative (-) terminal cable to the battery, and wait for at least 2 seconds.
(c) Turn the engine switch on (IG), and wait for at least 60 seconds.
(d) Clear the stored DTCs in the memory (See page RS-49).
(e) Turn the engine switch off.
(f) Turn the engine switch on (IG), and wait for at least 60 seconds.
(g) Check the DTCs (See page RS-49).
OK:
DTC B1860, B1861, B1862, B1863, or 64 is not output.
HINT:
Codes other than DTC B1860, B1861, B1862, B1863, and 64 may be output at this time, but they are not related to this check.

NG → **REPLACE CENTER AIRBAG SENSOR ASSEMBLY (See page RS-468)**

OK

USE SIMULATION METHOD TO CHECK (See page RS-37)

DTC	**B1865/65**	**Short in Front Passenger Side Knee Airbag Squib Circuit**

DTC	**B1866/65**	**Open in Front Passenger Side Knee Airbag Squib Circuit**

DTC	**B1867/65**	**Short to GND in Front Passenger Side Knee Airbag Squib Circuit**

DTC	**B1868/65**	**Short to B+ in Front Passenger Side Knee Airbag Squib Circuit**

DESCRIPTION

The front passenger side knee airbag squib circuit consists of the center airbag sensor assembly and the front passenger side knee airbag assembly.
The circuit instructs the SRS to deploy when deployment conditions are met.
These DTCs are recorded when a malfunction is detected in the front passenger side knee airbag squib circuit.

DTC No.	DTC Detecting Condition	Trouble Area
B1865/65	• The center airbag sensor assembly receives a line short circuit signal 5 times in the front passenger side knee airbag squib circuit during primary check. • Front passenger side knee airbag squib malfunction • Center airbag sensor assembly malfunction	• Instrument panel wire • Front passenger side knee airbag assembly (Front passenger side knee airbag squib) • Center airbag sensor assembly
B1866/65	• The center airbag sensor assembly receives an open circuit signal in the front passenger side knee airbag squib circuit for 2 seconds. • Front passenger side knee airbag squib malfunction • Center airbag sensor assembly malfunction	• Instrument panel wire • Front passenger side knee airbag assembly (Front passenger side knee airbag squib) • Center airbag sensor assembly
B1867/65	• The center airbag sensor assembly receives a short circuit to ground signal in the front passenger side knee airbag squib circuit for 0.5 seconds. • Front passenger side knee airbag squib malfunction • Center airbag sensor assembly malfunction	• Instrument panel wire • Front passenger side knee airbag assembly (Front passenger side knee airbag squib) • Center airbag sensor assembly
B1868/65	• The center airbag sensor assembly receives a short circuit to B+ signal in the front passenger side knee airbag squib circuit for 0.5 seconds. • Front passenger side knee airbag squib malfunction • Center airbag sensor assembly malfunction	• Instrument panel wire • Front passenger side knee airbag assembly (Front passenger side knee airbag squib) • Center airbag sensor assembly

RS

WIRING DIAGRAM

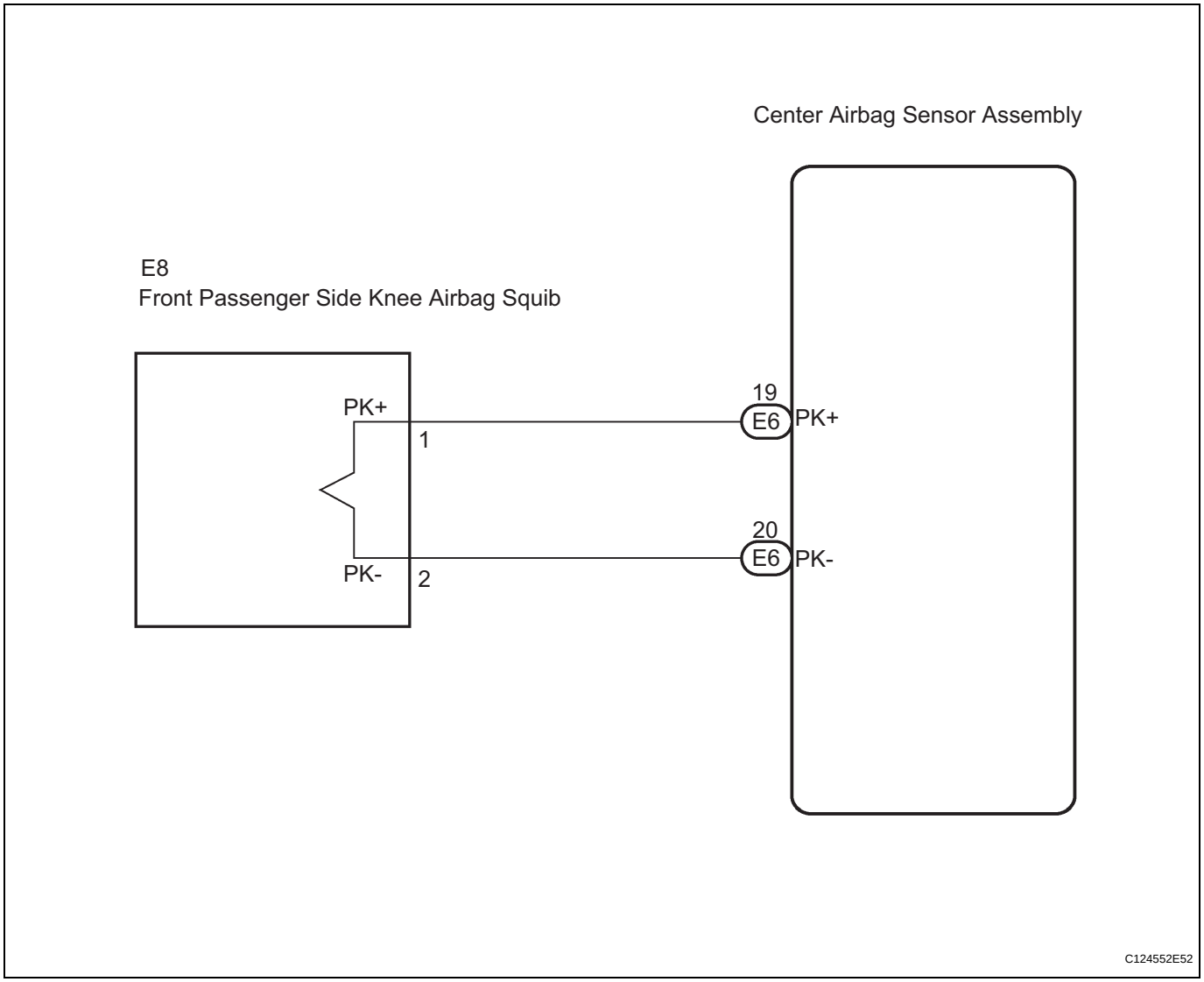

INSPECTION PROCEDURE

HINT:

- Perform the simulation method by selecting the "check mode" (signal check) with the intelligent tester (See page RS-52).
- After selecting the "check mode" (signal check), perform the simulation method by wiggling each connector of the airbag system or driving the vehicle on a city or rough road (See page RS-52).

RS

1	CHECK FRONT PASSENGER SIDE KNEE AIRBAG ASSEMBLY (FRONT PASSENGER SIDE KNEE AIRBAG SQUIB)

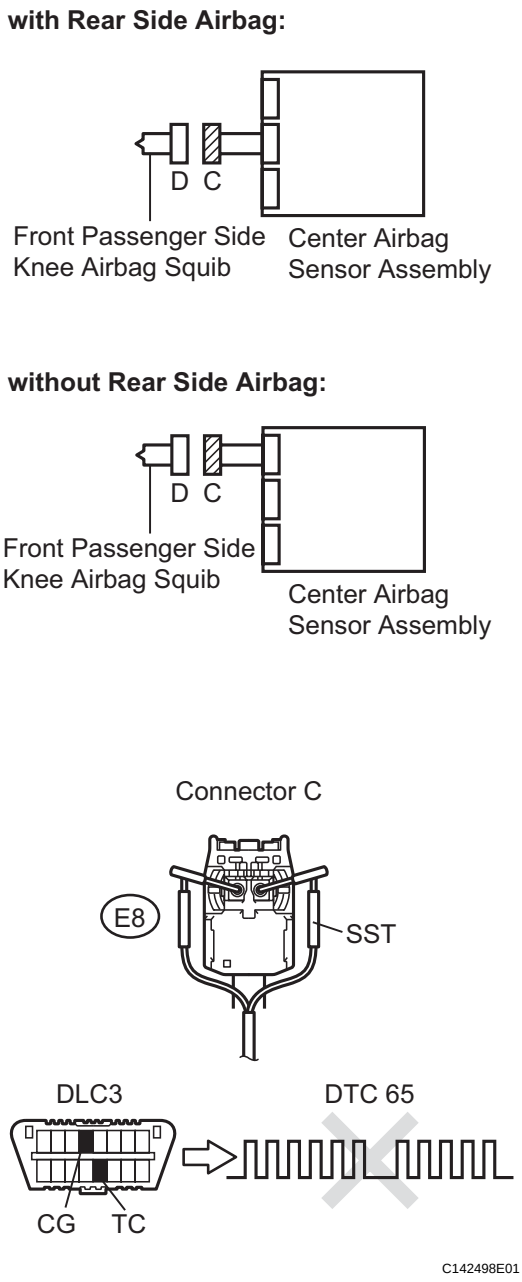

(a) Turn the engine switch off.
(b) Disconnect the negative (-) terminal cable from the battery, and wait for at least 90 seconds.
(c) Disconnect the connector from the front passenger side knee airbag assembly.
(d) Connect the white wire side of SST (resistance 2.1 Ω) to connector C.
CAUTION:
Never connect a tester to the front passenger side knee airbag assembly (front passenger side knee airbag squib) for measurement, as this may lead to a serious injury due to airbag deployment.
NOTICE:
- **Do not forcibly insert the SST into the terminals of the connector when connecting the SST.**
- **Insert straight the SST into the terminals of the connector.**

SST 09843-18060
(e) Connect the negative (-) terminal cable to the battery, and wait for at least 2 seconds.
(f) Turn the engine switch on (IG), and wait for at least 60 seconds.
(g) Clear the DTCs stored in the memory (See page RS-49).
(h) Turn the engine switch off.
(i) Turn the engine switch on (IG), and wait for at least 60 seconds.
(j) Check the DTCs (See page RS-49).
OK:
DTC B1865, B1866, B1867, B1868, or 65 is not output.
HINT:
Codes other than DTC B1865, B1866, B1867, B1868, and 65 may be output at this time, but they are not related to this check.

OK → **REPLACE FRONT PASSENGER SIDE KNEE AIRBAG ASSEMBLY (See page RS-412)**

NG

2	CHECK CONNECTOR

(a) Turn the engine switch off.
(b) Disconnect the negative (-) terminal cable from the battery, and wait for at least 90 seconds.
(c) Disconnect the SST from connector C.
(d) Check that the instrument panel wire connector (on the front passenger side knee airbag assembly side) is not damaged.

OK:
The lock button is not disengaged, or the claw of the lock is not deformed or damaged.

NG → **REPAIR OR REPLACE INSTRUMENT PANEL WIRE**

OK

3	CHECK INSTRUMENT PANEL WIRE (FRONT PASSENGER KNEE AIRBAG SQUIB CIRCUIT)

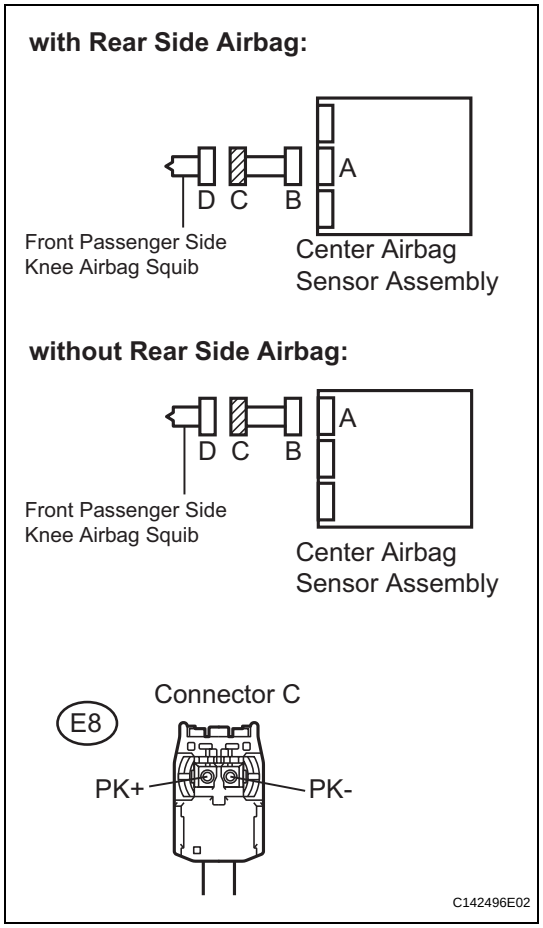

(a) Disconnect the connectors from the center airbag sensor assembly.

(b) Check for a short to B+ in the circuit.
  (1) Connect the negative (-) terminal cable to the battery, and wait for at least 2 seconds.
  (2) Turn the engine switch on (IG).
  (3) Measure the voltage according to the value(s) in the table below.
  Standard voltage

Tester Connection	Condition	Specified Condition
E8-1 (PK+) - Body ground	Engine switch on (IG)	Below 1 V
E8-2 (PK-) - Body ground	Engine switch on (IG)	Below 1 V

(c) Check for an open in the circuit.
  (1) Turn the engine switch off.
  (2) Disconnect the negative (-) terminal cable from the battery, and wait for at least 90 seconds.
  (3) Measure the resistance according to the value(s) in the table below.
  Standard resistance

Tester Connection	Condition	Specified Condition
E8-1 (PK+) - E8-2 (PK-)	Always	Below 1 Ω

(d) Check for a short to ground in the circuit.
  (1) Measure the resistance according to the value(s) in the table below.
  Standard resistance

Tester Connection	Condition	Specified Condition
E8-1 (PK+) - Body ground	Always	1 MΩ or higher
E8-2 (PK-) - Body ground	Always	1 MΩ or higher

(e) Check for a short in the circuit.
  (1) Release the activation prevention mechanism built into connector B (See page RS-37).
  (2) Measure the resistance according to the value(s) in the table below.
  Standard resistance

Tester Connection	Condition	Specified Condition
E8-1 (PK+) - E8-2 (PK-)	Always	1 MΩ or higher

NG → **REPAIR OR REPLACE INSTRUMENT PANEL WIRE**

OK

RS

4 CHECK CENTER AIRBAG SENSOR ASSEMBLY

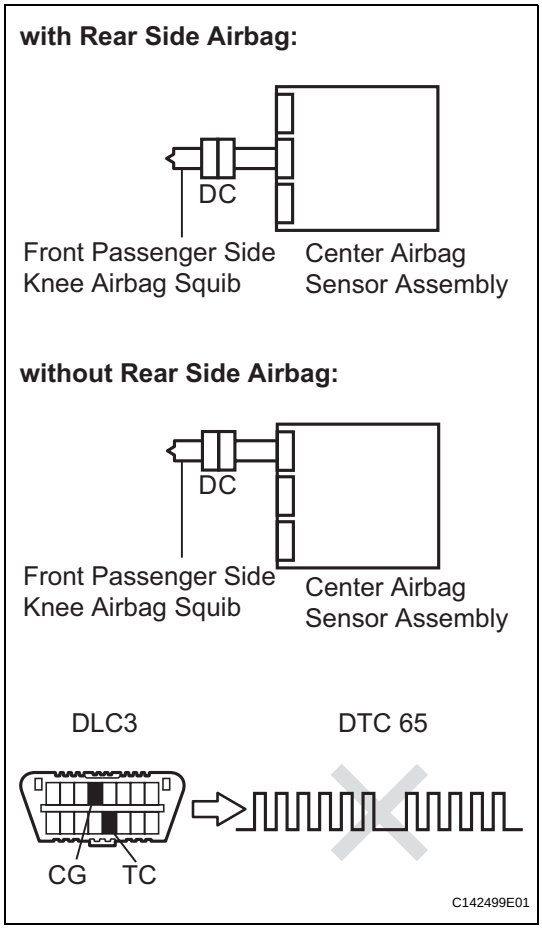

(a) Connect the connectors to the front passenger side knee airbag assembly and the center airbag sensor assembly.
(b) Connect the negative (-) terminal cable to the battery, and wait for at least 2 seconds.
(c) Turn the engine switch on (IG), and wait for at least 60 seconds.
(d) Clear the DTCs stored in the memory (See page RS-49).
(e) Turn the engine switch off.
(f) Turn the engine switch on (IG), and wait for at least 60 seconds.
(g) Check the DTCs (See page RS-49).
OK:
DTC B1865, B1866, B1867, B1868 or 65 is not output.
HINT:
Codes other than DTC B1865, B1866, B1867, B1868 and 65 may be output at this time, but they are not related to this check.

NG → **REPLACE CENTER AIRBAG SENSOR ASSEMBLY (See page RS-468)**

OK

USE SIMULATION METHOD TO CHECK (See page RS-37)

DTC	B1900/73	Short in Front Driver Side Pretensioner Squib Circuit

DTC	B1901/73	Open in Front Driver Side Pretensioner Squib Circuit

DTC	B1902/73	Short to GND in Front Driver Side Pretensioner Squib Circuit

DTC	B1903/73	Short to B+ in Front Driver Side Pretensioner Squib Circuit

DESCRIPTION

The front driver side pretensioner squib circuit consists of the center airbag sensor assembly and the front seat outer belt assembly LH.
This circuit instructs the SRS to deploy when deployment conditions are met.
These DTCs are recorded when a malfunction is detected in the front driver side pretensioner squib circuit.

DTC No.	DTC Detection Condition	Trouble Area
B1900/73	• The center airbag sensor assembly receives a line short circuit signal 5 times in the front driver side pretensioner squib circuit during primary check. • Front driver side pretensioner squib malfunction • Center airbag sensor assembly malfunction	• Floor wire • Front seat outer belt assembly LH (Front driver side pretensioner squib) • Center airbag sensor assembly
B1901/73	• The center airbag sensor assembly receives an open circuit signal in the front driver side pretensioner squib circuit for 2 seconds. • Front driver side pretensioner squib malfunction • Center airbag sensor assembly malfunction	• Floor wire • Front seat outer belt assembly LH (Front driver side pretensioner squib) • Center airbag sensor assembly
B1902/73	• The center airbag sensor assembly receives a short circuit to ground signal in the front driver side pretensioner squib circuit for 0.5 seconds. • Front driver side pretensioner squib malfunction • Center airbag sensor assembly malfunction	• Floor wire • Front seat outer belt assembly LH (Front driver side pretensioner squib) • Center airbag sensor assembly
B1903/73	• The center airbag sensor assembly receives a short circuit to B+ signal in the front driver side pretensioner squib circuit for 0.5 seconds. • Front driver side pretensioner squib malfunction • Center airbag sensor assembly malfunction	• Floor wire • Front seat outer belt assembly LH (Front driver side pretensioner squib) • Center airbag sensor assembly

RS

WIRING DIAGRAM

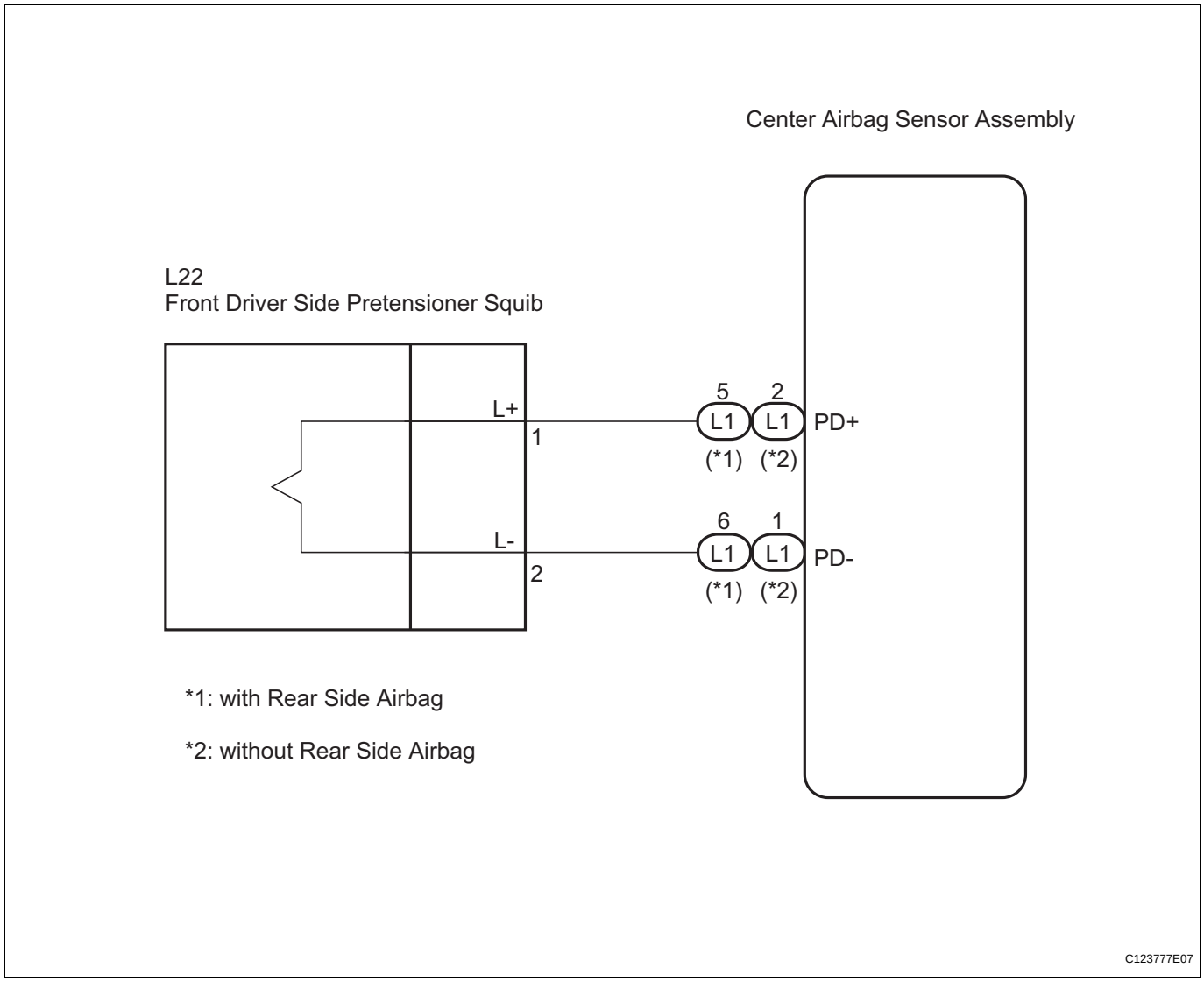

INSPECTION PROCEDURE

HINT:

- Perform the simulation method by selecting "check mode" (signal check) with the intelligent tester (See page RS-52).
- After selecting "check mode" (signal check), perform the simulation method by wiggling each connector of the airbag system or driving the vehicle on a city or rough road (See page RS-52).

RS

1	CHECK FRONT SEAT OUTER BELT ASSEMBLY LH (FRONT DRIVER SIDE PRETENSIONER SQUIB)

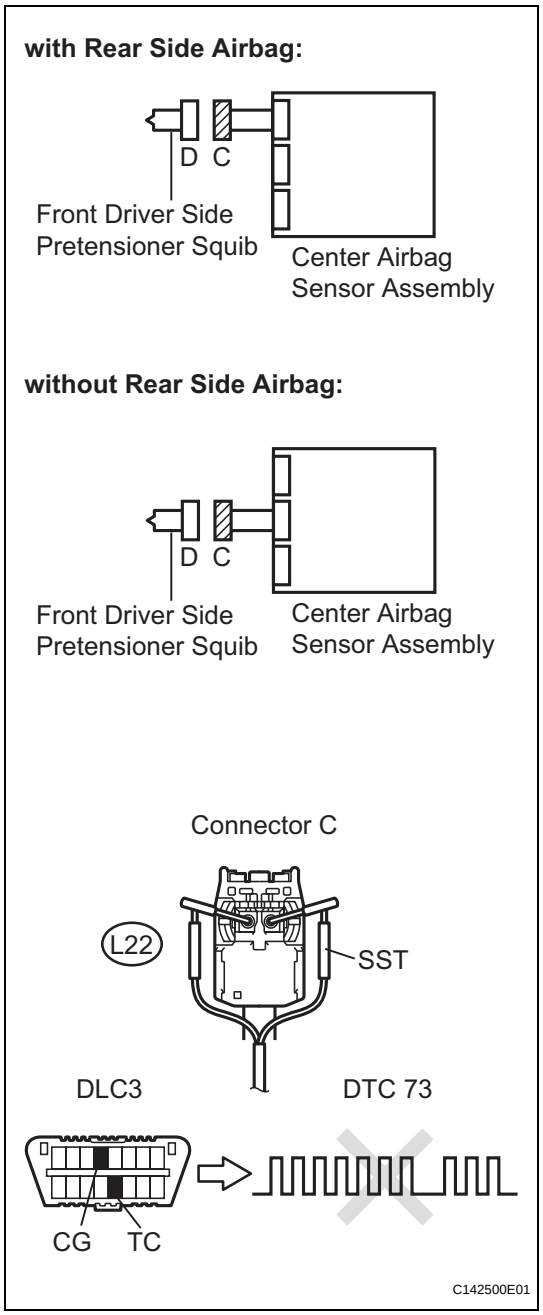

(a) Turn the engine switch off.
(b) Disconnect the negative (-) terminal cable from the battery, and wait for at least 90 seconds.
(c) Disconnect the connectors from the front seat outer belt assembly LH.
(d) Connect the white wire side of SST (resistance 2.1 Ω) to connector C.
CAUTION:
Never connect the tester to the front seat outer belt assembly LH (front driver side pretensioner squib) for measurement, as this may lead to a serious injury due to airbag deployment.
NOTICE:
- **Do not forcibly insert the SST into the terminals of the connector when connecting.**
- **Insert straight the SST into the terminals of the connector.**

SST 09843-18060

(e) Connect the negative (-) terminal cable to the battery, and wait for at least 2 seconds.
(f) Turn the engine switch on (IG), and wait for at least 60 seconds.
(g) Clear the DTCs stored in the memory (See page RS-49).
(h) Turn the engine switch off.
(i) Turn the engine switch on (IG), and wait for at least 60 seconds.
(j) Check the DTCs (See page RS-49).
OK:
DTC B1900, B1901, B1902, B1903, or 73 is not output.
HINT:
Codes other than DTC B1900, B1901, B1902, B1903, and 73 may be output at this time, but they are not related to this check.

OK → **REPLACE FRONT SEAT OUTER BELT ASSEMBLY LH (See page SB-27)**

NG

2	CHECK CONNECTOR

(a) Turn the engine switch off.
(b) Disconnect the negative (-) terminal cable from the battery, and wait for at least 90 seconds.
(c) Disconnect the SST from connector C.
(d) Check that the floor wire connector (on the front seat outer belt assembly LH side) is not damaged.

OK:
The lock button is not disengaged, or the claw of the lock is not deformed or damaged.

NG → **REPAIR OR REPLACE FLOOR WIRE**

RS

OK

3 CHECK FLOOR WIRE (FRONT DRIVER SIDE PRETENSIONER SQUIB CIRCUIT)

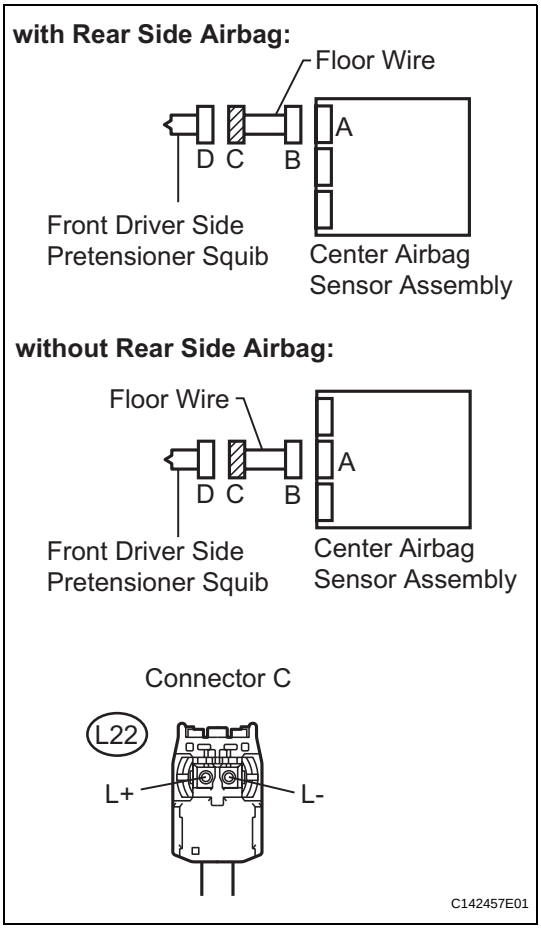

(a) Disconnect the connectors from the center airbag sensor assembly.

(b) Check for a short to B+ in the circuit.
  (1) Connect the negative (-) terminal cable to the battery, and wait for at least 2 seconds.
  (2) Turn the engine switch on (IG).
  (3) Measure the voltage according to the value(s) in the table below.
  Standard voltage

Tester Connection	Condition	Specified Condition
L22-1 (L+) - Body ground	Engine switch on (IG)	Below 1 V
L22-2 (L-) - Body ground	Engine switch on (IG)	Below 1 V

(c) Check for an open in the circuit.
  (1) Turn the engine switch off.
  (2) Disconnect the negative (-) terminal cable from the battery, and wait for at least 90 seconds.
  (3) Measure the resistance according to the value(s) in the table below.
  Standard resistance

Tester Connection	Condition	Specified Condition
L22-1 (L+) - L22-2 (L-)	Always	Below 1 Ω

(d) Check for a short to ground in the circuit.
  (1) Measure the resistance according to the value(s) in the table below.
  Standard resistance

Tester Connection	Condition	Specified Condition
L22-1 (L+) - Body ground	Always	1 MΩ or higher
L22-2 (L-) - Body ground	Always	1 MΩ or higher

(e) Check for a short in the circuit.
  (1) Release the activation prevention mechanism built into connector B (See page RS-37).
  (2) Measure the resistance according to the value(s) in the table below.
  Standard resistance

Tester Connection	Condition	Specified Condition
L22-1 (L+) - L22-2 (L-)	Always	1 MΩ or higher

NG → **REPAIR OR REPLACE FLOOR WIRE**

OK

4	CHECK CENTER AIRBAG SENSOR ASSEMBLY

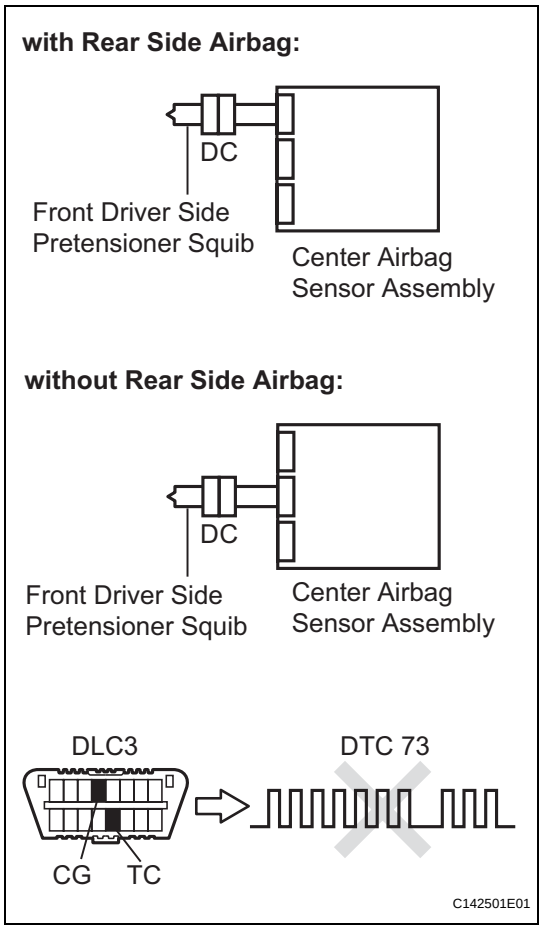

(a) Connect the connectors to the front seat outer belt assembly LH and the center airbag sensor assembly.
(b) Connect the negative (-) terminal cable to the battery, and wait for at least 2 seconds.
(c) Turn the engine switch on (IG), and wait for at least 60 seconds.
(d) Clear the DTCs stored in the memory (See page RS-49).
(e) Turn the engine switch off.
(f) Turn the engine switch on (IG), and wait for at least 60 seconds.
(g) Check the DTCs (See page RS-49).
OK:
DTC B1900, B1901, B1902, B1903, or 73 is not output.
HINT:
Codes other than DTC B1900, B1901, B1902, B1903, or 73 may be output at this time, but they are not related to this check.

NG → **REPLACE CENTER AIRBAG SENSOR ASSEMBLY (See page RS-468)**

OK

USE SIMULATION METHOD TO CHECK (See page RS-37)

RS

RS

DTC	**B1905/74**	**Short in Front Passenger Side Pretensioner Squib Circuit**

DTC	**B1906/74**	**Open in Front Passenger Side Pretensioner Squib Circuit**

DTC	**B1907/74**	**Short to GND in Front Passenger Side Pretensioner Squib Circuit**

DTC	**B1908/74**	**Short to B+ in Front Passenger Side Front Pretensioner Squib Circuit**

DESCRIPTION

The front passenger side pretensioner squib circuit consists of the center airbag sensor assembly and the front seat outer belt assembly RH.
This circuit instructs the SRS to deploy when deployment conditions are met.
These DTCs are recorded when a malfunction is detected in the front passenger side pretensioner squib circuit.

DTC No.	DTC Detection Condition	Trouble Area
B1905/74	• The center airbag sensor assembly receives a line short circuit signal 5 times in the front passenger side pretensioner squib circuit during primary check. • Front passenger side pretensioner squib malfunction • Center airbag sensor assembly malfunction	• Floor wire No. 2 • Front seat outer belt assembly RH (Front passenger side pretensioner squib) • Center airbag sensor assembly
B1906/74	• The center airbag sensor assembly receives an open circuit signal in the front passenger side pretensioner squib circuit for 2 seconds. • Front passenger side pretensioner squib malfunction • Center airbag sensor assembly malfunction	• Floor wire No. 2 • Front seat outer belt assembly RH (Front passenger side pretensioner squib) • Center airbag sensor assembly
B1907/74	• The center airbag sensor assembly receives a short circuit to ground signal in the front passenger side pretensioner squib circuit for 0.5 seconds. • Front passenger side pretensioner squib malfunction • Center airbag sensor assembly malfunction	• Floor wire No. 2 • Front seat outer belt assembly RH (Front passenger side pretensioner squib) • Center airbag sensor assembly
B1908/74	• The center airbag sensor assembly receives a short circuit to B+ signal in the front passenger side pretensioner squib circuit for 0.5 seconds. • Front passenger side pretensioner squib malfunction • Center airbag sensor assembly malfunction	• Floor wire No. 2 • Front seat outer belt assembly RH (Front passenger side pretensioner squib) • Center airbag sensor assembly

WIRING DIAGRAM

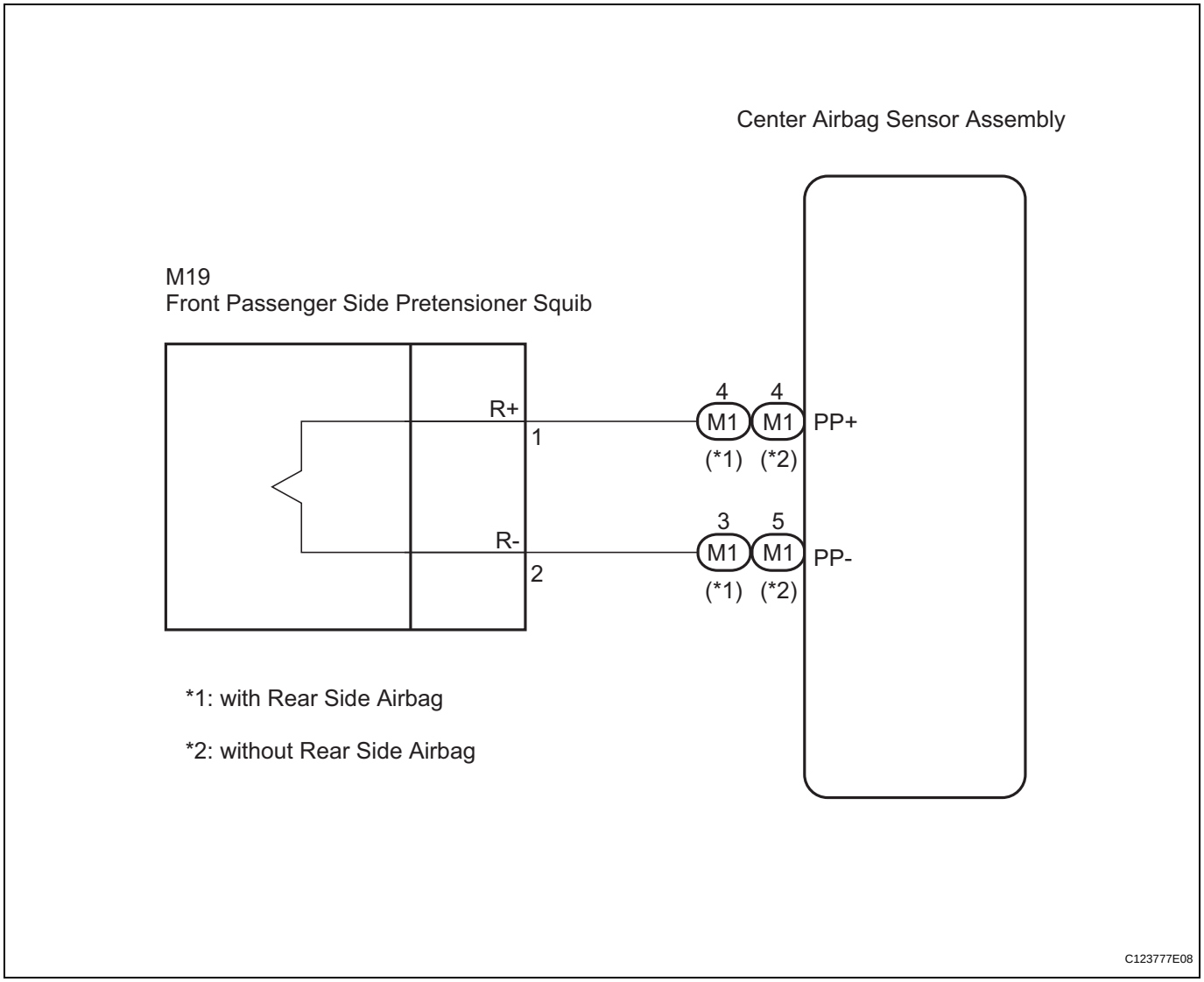

INSPECTION PROCEDURE

HINT:

- Perform the simulation method by selecting "check mode" (signal check) with the intelligent tester (See page RS-52).
- After selecting "check mode" (signal check), perform the simulation method by wiggling each connector of the airbag system or driving the vehicle on a city or rough road (See page RS-52).

RS

1	CHECK FRONT SEAT OUTER BELT ASSEMBLY RH (FRONT PASSENGER SIDE PRETENSIONER SQUIB)

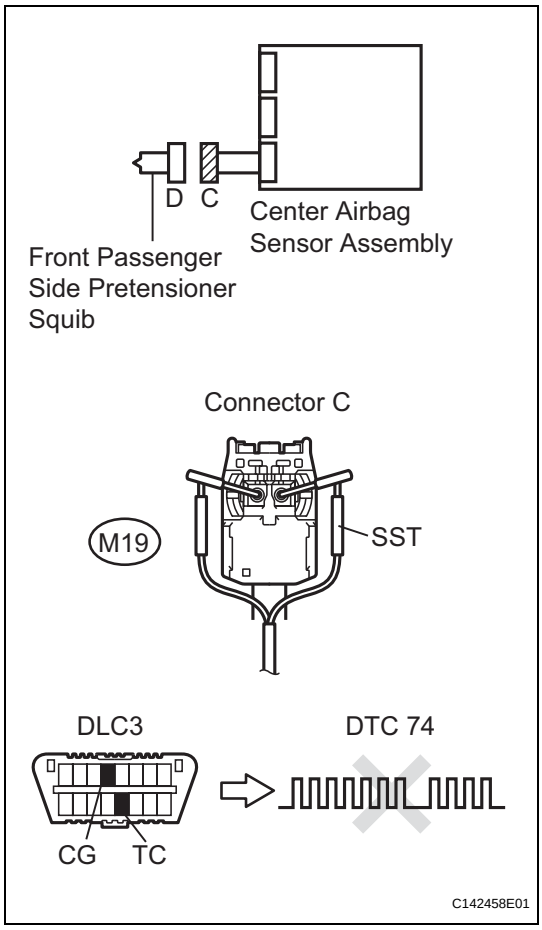

(a) Turn the engine switch off.
(b) Disconnect the negative (-) terminal cable from the battery, and wait for at least 90 seconds.
(c) Disconnect the connectors from the front seat outer belt assembly RH.
(d) Connect the white wire side of SST (resistance 2.1 Ω) to connector C.
CAUTION:
Never connect the tester to the front seat outer belt assembly RH (front passenger side pretensioner squib) for measurement, as this may lead to a serious injury due to airbag deployment.
NOTICE:
- **Do not forcibly insert the SST into the terminals of the connector when connecting the SST.**
- **Insert straight the SST into the terminals of the connector.**

SST 09843-18060

(e) Connect the negative (-) terminal cable to the battery, and wait for at least 2 seconds.
(f) Turn the engine switch on (IG), and wait for at least 60 seconds.
(g) Clear the DTCs stored in the memory (See page RS-49).
(h) Turn the engine switch off.
(i) Turn the engine switch on (IG), and wait for at least 60 seconds.
(j) Check the DTCs (See page RS-49).
OK:
DTC B1905, B1906, B1907, B1908, or 74 is not output.
HINT:
Codes other than DTC B1905, B1906, B1907, B1908, and 74 may be output at this time, but they are not related to this check.

OK → **REPLACE FRONT SEAT OUTER BELT ASSEMBLY RH (See page SB-27)**

NG

2	CHECK CONNECTOR

(a) Turn the engine switch off.
(b) Disconnect the negative (-) terminal cable from the battery, and wait for at least 90 seconds.
(c) Disconnect the SST from connector C.
(d) Check that the floor wire No. 2 connector (on the front seat outer belt assembly RH side) is not damaged.

OK:
The lock button is not disengaged, or the claw of the lock is not deformed or damaged.

NG → **REPAIR OR REPLACE FLOOR WIRE NO. 2**

OK

3	CHECK FLOOR WIRE NO. 2 (FRONT PASSENGER SIDE PRETENSIONER SQUIB CIRCUIT)

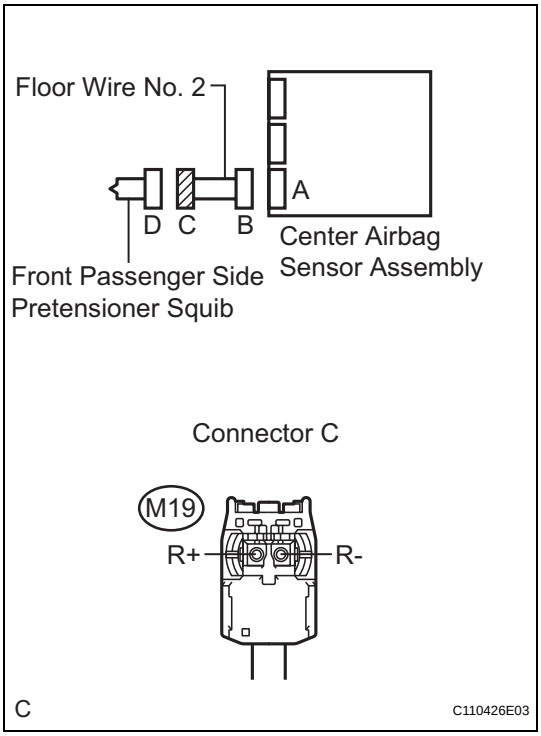

(a) Disconnect the connectors from the center airbag sensor assembly.

(b) Check for a short to B+ in the circuit.
  (1) Connect the negative (-) terminal cable to the battery, and wait for at least 2 seconds.
  (2) Turn the engine switch on (IG).
  (3) Measure the voltage according to the value(s) in the table below.
  Standard voltage

Tester Connection	Condition	Specified Condition
M19-1 (R+) - Body ground	Engine switch on (IG)	Below 1 V
M19-2 (R-) - Body ground	Engine switch on (IG)	Below 1 V

(c) Check for an open in the circuit.
  (1) Turn the engine switch off.
  (2) Disconnect the negative (-) terminal cable from the battery, and wait for at least 90 seconds.
  (3) Measure the resistance according to the value(s) in the table below.
  Standard resistance

Tester Connection	Condition	Specified Condition
M19-1 (R+) - M19-2 (R-)	Always	Below 1 Ω

(d) Check for a short to ground in the circuit.
  (1) Measure the resistance according to the value(s) in the table below.
  Standard resistance

Tester Connection	Condition	Specified Condition
M19-1 (R+) - Body ground	Always	1 MΩ or higher
M19-2 (R-) - Body ground	Always	1 MΩ or higher

(e) Check for a short in the circuit.
  (1) Release the activation prevention mechanism built into connector B (See page RS-37).
  (2) Measure the resistance according to the value(s) in the table below.
  Standard resistance

Tester Connection	Condition	Specified Condition
M19-1 (R+) - M19-2 (R-)	Always	1 MΩ or higher

NG → **REPAIR OR REPLACE FLOOR WIRE NO. 2**

OK

RS

4 CHECK CENTER AIRBAG SENSOR ASSEMBLY

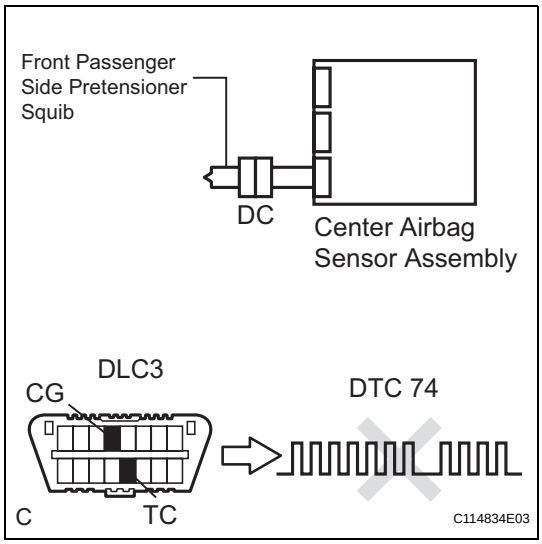

(a) Connect the connectors to the front seat outer belt assembly RH and the center airbag sensor assembly.
(b) Connect the negative (-) terminal cable to the battery, and wait for at least 2 seconds.
(c) Turn the engine switch on (IG), and wait for at least 60 seconds.
(d) Clear the DTCs stored in the memory (See page RS-49).
(e) Turn the engine switch off.
(f) Turn the engine switch on (IG), and wait for at least 60 seconds.
(g) Check the DTCs (See page RS-49).
OK:
DTC B1905, B1906, B1907, B1908, or 74 is not output.
HINT:
Codes other than DTC B1905, B1906, B1907, B1908, and 74 may be output at this time, but they are not related to this check.

NG → **REPLACE CENTER AIRBAG SENSOR ASSEMBLY (See page RS-468)**

OK

USE SIMULATION METHOD TO CHECK (See page RS-37)

DTC	B1920/77	Short in Rear Driver Side Pretensioner Squib Circuit

DTC	B1921/77	Open in Rear Pretensioner Squib RH Circuit

DTC	B1922/77	Short to GND in Rear Pretensioner Squib RH Circuit

DTC	B1923/77	Short to B+ in Rear Pretensioner Squib RH Circuit

DESCRIPTION

The rear driver side pretensioner squib circuit consists of the center airbag sensor assembly and the rear seat outer belt assembly LH.
This circuit instructs the SRS to deploy when deployment conditions are met.
These DTCs are recorded when a malfunction is detected in the rear driver side pretensioner squib circuit.

DTC No.	DTC Detection Condition	Trouble Area
B1920/77	• The center airbag sensor assembly receives a line short circuit signal 5 times in the rear driver side pretensioner squib circuit during primary check. • Rear driver side pretensioner squib malfunction • Center airbag sensor assembly malfunction	• Floor wire • Rear seat outer belt assembly LH (Rear driver side pretensioner squib) • Center airbag sensor assembly
B1921/77	• The center airbag sensor assembly receives an open circuit signal in the rear driver side pretensioner squib circuit for 2 seconds. • Rear driver side pretensioner squib malfunction • Center airbag sensor assembly malfunction	• Floor wire • Rear seat outer belt assembly LH (Rear driver side pretensioner squib) • Center airbag sensor assembly
B1922/77	• The center airbag sensor assembly receives a short circuit to ground signal in the rear driver side pretensioner squib circuit for 0.5 seconds. • Rear driver side pretensioner squib malfunction • Center airbag sensor assembly malfunction	• Floor wire • Rear seat outer belt assembly LH (Rear driver side pretensioner squib) • Center airbag sensor assembly
B1923/77	• The center airbag sensor assembly receives a short circuit to B+ signal in the rear driver side pretensioner squib circuit for 0.5 seconds. • Rear driver side pretensioner squib malfunction • Center airbag sensor assembly malfunction	• Floor wire • Rear seat outer belt assembly LH (Rear driver side pretensioner squib) • Center airbag sensor assembly

RS

WIRING DIAGRAM

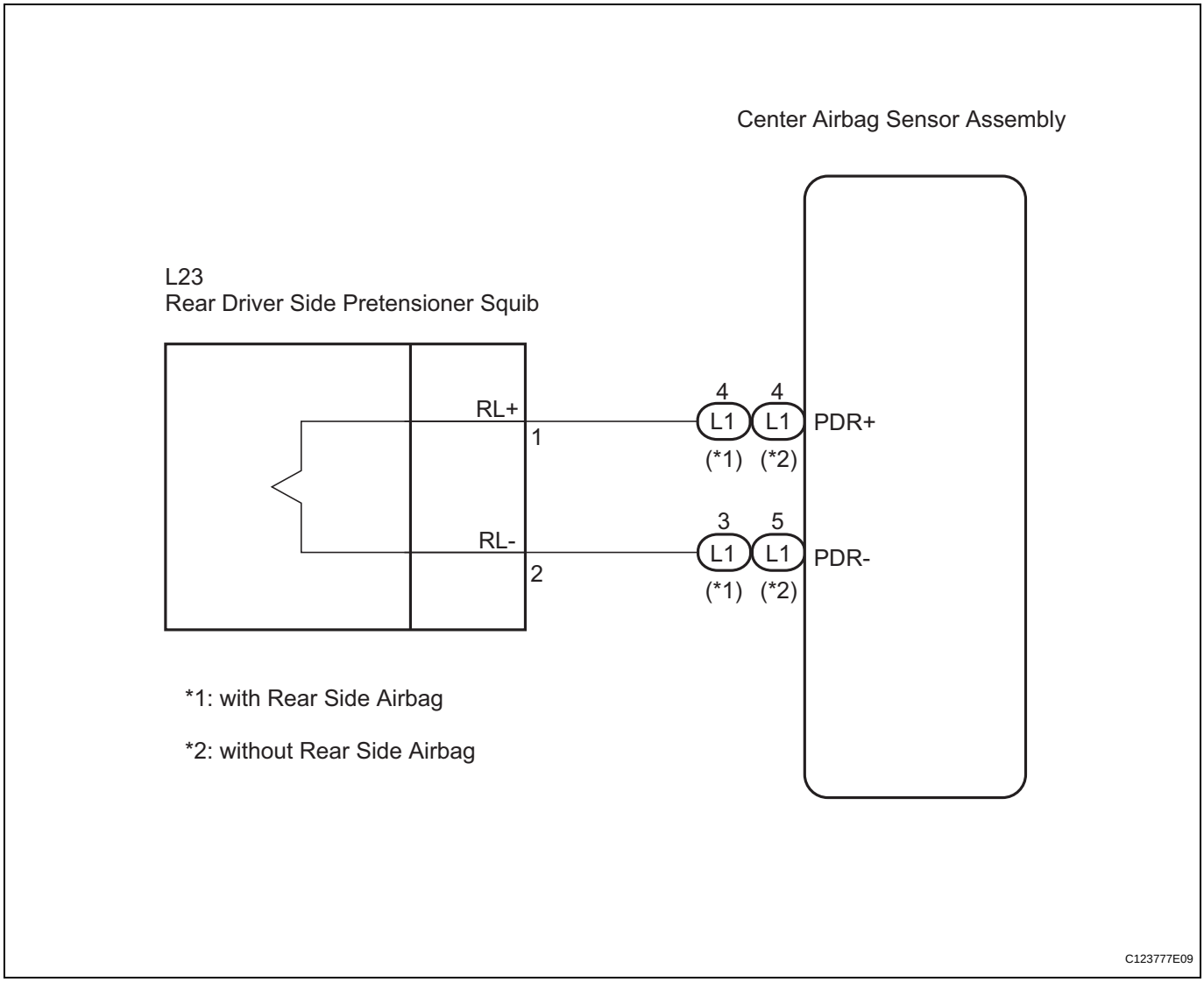

INSPECTION PROCEDURE

HINT:

- Perform the simulation method by selecting the "check mode" (signal check) with the intelligent tester (See page RS-52).
- After selecting the "check mode" (signal check), perform the simulation method by wiggling each connector of the airbag system or driving the vehicle on a city or rough road (See page RS-52).

RS

1	CHECK REAR SEAT OUTER BELT ASSEMBLY LH (REAR DRIVER SIDE PRETENSIONER SQUIB)

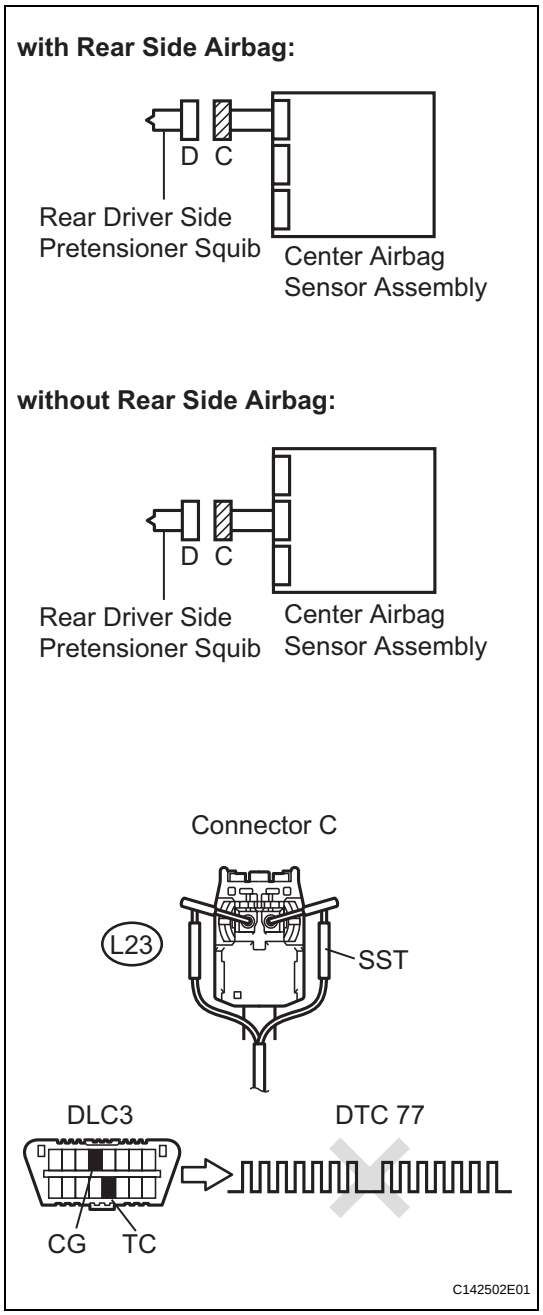

(a) Turn the engine switch off.
(b) Disconnect the negative (-) terminal cable from the battery, and wait for at least 90 seconds.
(c) Disconnect the connectors from the rear seat outer belt assembly LH.
(d) Connect the white wire side of SST (resistance 2.1 Ω) to connector C.
CAUTION:
Never connect a tester to the rear seat outer belt assembly LH (rear driver side pretensioner squib) for measurement, as this may lead to a serious injury due to airbag deployment.
NOTICE:
- **Do not forcibly insert the SST into the terminals of the connector when connecting the SST.**
- **Insert straight the SST into the terminals of the connector.**

SST 09843-18060

(e) Connect the negative (-) terminal cable to the battery, and wait for at least 2 seconds.
(f) Turn the engine switch on (IG), and wait for at least 60 seconds.
(g) Clear the DTCs stored in the memory (See page RS-49).
(h) Turn the engine switch off.
(i) Turn the engine switch on (IG), and wait for at least 60 seconds.
(j) Check the DTCs (See page RS-49).
OK:
DTC B1920, B1921, B1922, B1923, or 77 is not output.
HINT:
Codes other than DTC B1920, B1921, B1922, B1923, and 77 may be output at this time, but they are not related to this check.

NG → **REPLACE REAR SEAT OUTER BELT ASSEMBLY LH (See page SB-47)**

OK

2	CHECK CONNECTOR

(a) Turn the engine switch off.
(b) Disconnect the negative (-) terminal cable from the battery, and wait for at least 90 seconds.
(c) Disconnect the SST from connector C.
(d) Check that the floor wire connector (on the rear seat outer belt assembly LH side) is not damaged.

OK:
The lock button is not disengaged, or the claw of the lock is not deformed or damaged.

NG → **REPAIR OR REPLACE FLOOR WIRE**

RS

OK

3 CHECK FLOOR WIRE (REAR DRIVER SIDE PRETENSIONER SQUIB CIRCUIT)

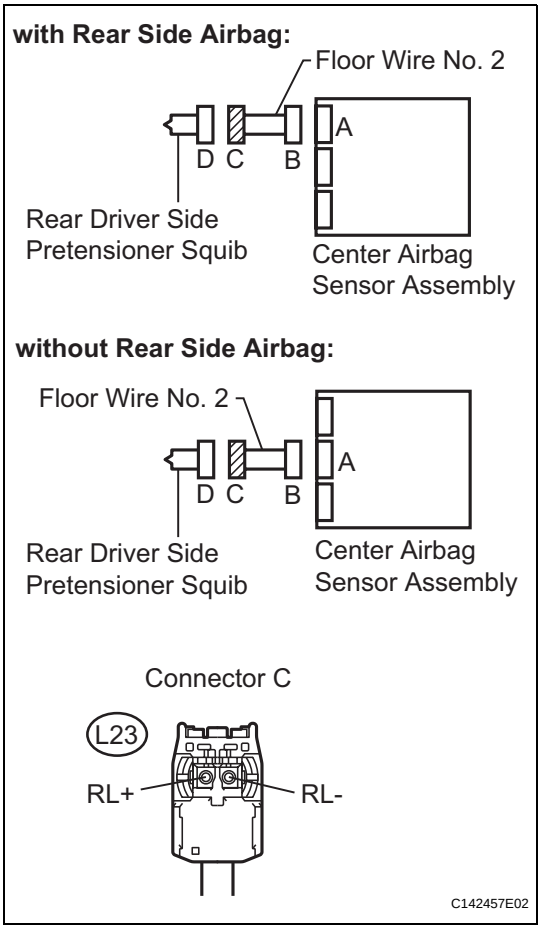

(a) Disconnect the connectors from the center airbag sensor assembly.

(b) Check for a short to B+ in the circuit.
  (1) Connect the negative (-) terminal cable to the battery, and wait for at least 2 seconds.
  (2) Turn the engine switch on (IG).
  (3) Measure the voltage according to the value(s) in the table below.
  Standard voltage

Tester Connection	Condition	Specified Condition
L23-1 (RL+) - Body ground	Engine switch on (IG)	Below 1 V
L23-2 (RL-) - Body ground	Engine switch on (IG)	Below 1 V

(c) Check for an open in the circuit.
  (1) Turn the engine switch off.
  (2) Disconnect the negative (-) terminal cable from the battery, and wait for at least 90 seconds.
  (3) Measure the resistance according to the value(s) in the table below.
  Standard resistance

Tester Connection	Condition	Specified Condition
L23-1 (RL+) - L23-2 (RL-)	Always	Below 1 Ω

(d) Check for a short to ground in the circuit.
  (1) Measure the resistance according to the value(s) in the table below.
  Standard resistance

Tester Connection	Condition	Specified Condition
L23-1 (RL+) - Body ground	Always	1 MΩ or higher
L23-2 (RL-) - Body ground	Always	1 MΩ or higher

(e) Check for a short in the circuit.
  (1) Release the activation prevention mechanism built into connector B (See page RS-37).
  (2) Measure the resistance according to the value(s) in the table below.
  Standard resistance

Tester Connection	Condition	Specified Condition
L23-1 (RL+) - L23-2 (RL-)	Always	1 MΩ or higher

NG → **REPAIR OR REPLACE FLOOR WIRE**

OK

4 CHECK CENTER AIRBAG SENSOR ASSEMBLY

RS

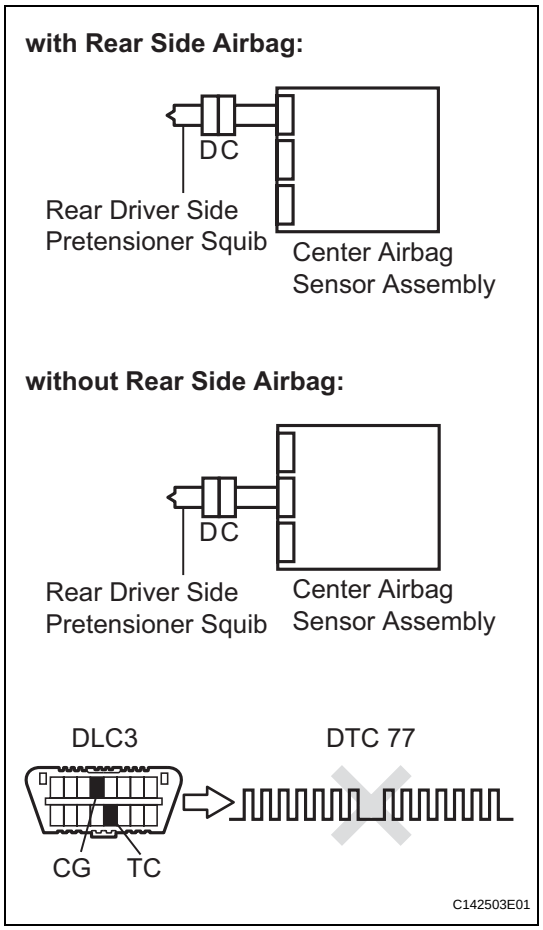

(a) Connect the connectors to the rear seat outer belt assembly LH and the center airbag sensor assembly.
(b) Connect the negative (-) terminal cable to the battery, and wait for at least 2 seconds.
(c) Turn the engine switch on (IG), and wait for at least 60 seconds.
(d) Clear the DTCs stored in the memory (See page RS-49).
(e) Turn the engine switch off.
(f) Turn the engine switch on (IG), and wait for at least 60 seconds.
(g) Check the DTCs (See page RS-49).
OK:
DTC B1920, B1921, B1922, B1923, or 77 is not output.
HINT:
Codes other than B1920, B1921, B1922, B1923, and 77 may be output at this time, but they are not related to this check.

NG → **REPLACE CENTER AIRBAG SENSOR ASSEMBLY (See page RS-468)**

OK

USE SIMULATION METHOD TO CHECK (See page RS-37)

DTC	**B1925/78**	**Short in Rear Passenger Side Pretensioner Squib Circuit**

DTC	**B1926/78**	**Open in Rear Passenger Side Pretensioner Squib Circuit**

DTC	**B1927/78**	**Short to GND in Rear Passenger Side Pretensioner Squib Circuit**

DTC	**B1928/78**	**Short to B+ in Rear Passenger Side Pretensioner Squib Circuit**

DESCRIPTION

The rear passenger side pretensioner squib circuit consists of the center airbag sensor assembly and the rear seat outer belt assembly RH.
This circuit instructs the SRS to deploy when deployment conditions are met.
These DTCs are recorded when a malfunction is detected in the rear passenger side pretensioner squib circuit.

DTC No.	DTC Detection Condition	Trouble Area
B1925/78	• The center airbag sensor assembly receives a line short circuit signal 5 times in the rear passenger side pretensioner squib circuit during primary check. • Rear passenger side pretensioner squib malfunction • Center airbag sensor assembly malfunction	• Floor wire No. 2 • Rear seat outer belt assembly RH (Rear passenger side pretensioner squib) • Center airbag sensor assembly
B1926/78	• The center airbag sensor assembly receives an open circuit signal in the rear passenger side pretensioner squib circuit for 2 seconds. • Rear passenger side pretensioner squib malfunction • Center airbag sensor assembly malfunction	• Floor wire No. 2 • Rear seat outer belt assembly RH (Rear passenger side pretensioner squib) • Center airbag sensor assembly
B1927/78	• The center airbag sensor assembly receives a short circuit to ground signal in the rear passenger side pretensioner squib circuit for 0.5 seconds. • Rear passenger side pretensioner squib malfunction • Center airbag sensor assembly malfunction	• Floor wire No. 2 • Rear seat outer belt assembly RH (Rear passenger side pretensioner squib) • Center airbag sensor assembly
B1928/78	• The center airbag sensor assembly receives a short circuit to B+ signal in the rear passenger side pretensioner squib circuit for 0.5 seconds. • Rear passenger side pretensioner squib malfunction • Center airbag sensor assembly malfunction	• Floor wire No. 2 • Rear seat outer belt assembly RH (rear passenger side pretensioner squib) • Center airbag sensor assembly

RS

WIRING DIAGRAM

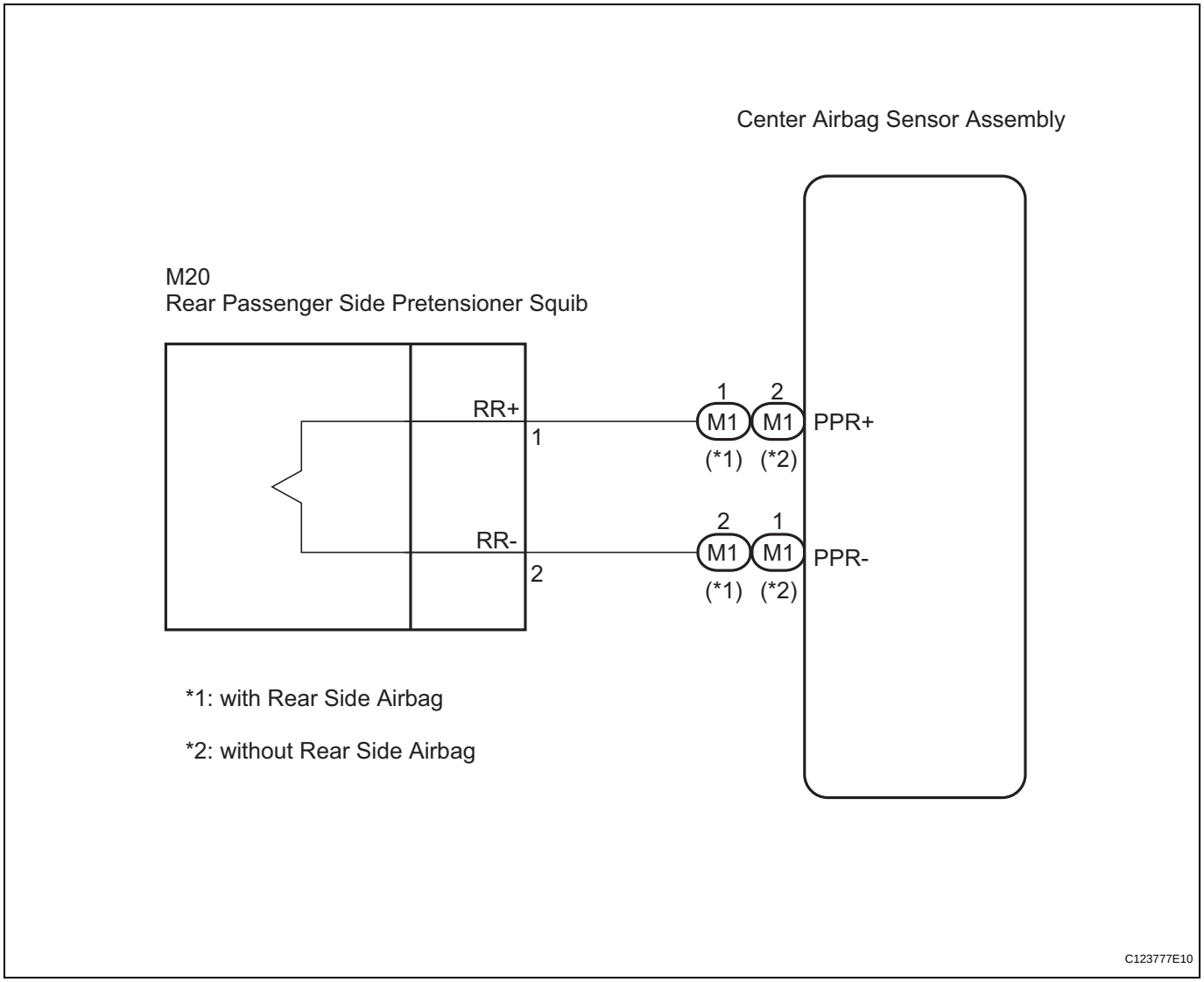

INSPECTION PROCEDURE

HINT:

- Perform the simulation method by selecting the "check mode" (signal check) with the intelligent tester (See page RS-52).
- After selecting the "check mode" (signal check), perform the simulation method by wiggling each connector of the airbag system or driving the vehicle on a city or rough road (See page RS-52).

RS

1	CHECK REAR SEAT OUTER BELT ASSEMBLY RH (REAR PASSENGER SIDE PRETENSIONER SQUIB)

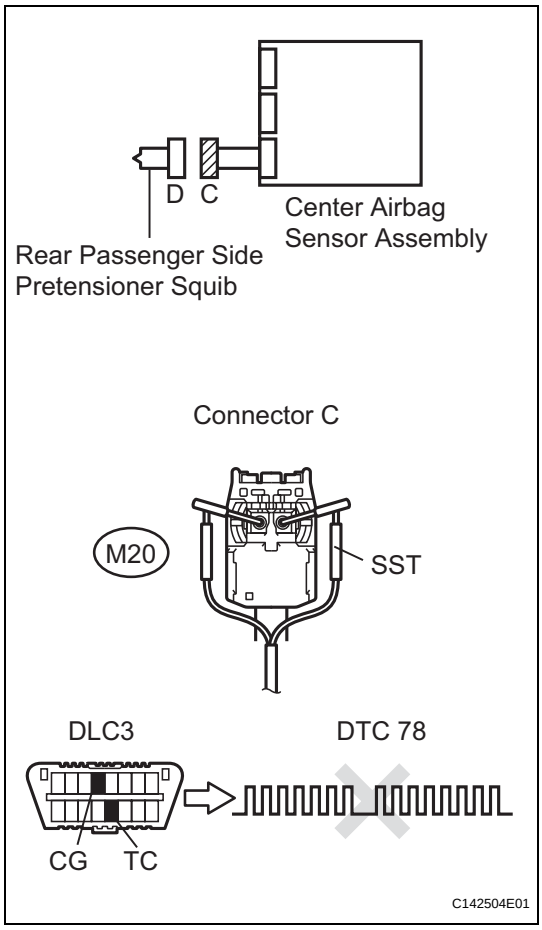

(a) Turn the engine switch off.
(b) Disconnect the negative (-) terminal cable from the battery, and wait for at least 90 seconds.
(c) Disconnect the connectors from the rear seat outer belt assembly RH.
(d) Connect the white wire side of SST (resistance 2.1 Ω) to connector C.
CAUTION:
Never connect a tester to the rear seat outer belt assembly RH (rear passenger side pretensioner squib) for measurement, as this may lead to a serious injury due to airbag deployment.
NOTICE:
- **Do not forcibly insert the SST into the terminals of the connector when connecting the SST.**
- **Insert straight the SST into the terminals of the connector.**

SST 09843-18060

(e) Connect the negative (-) terminal cable to the battery, and wait for at least 2 seconds.
(f) Turn the engine switch on (IG), and wait for at least 60 seconds.
(g) Clear the DTCs stored in the memory (See page RS-49).
(h) Turn the engine switch off.
(i) Turn the engine switch on (IG), and wait for at least 60 seconds.
(j) Check the DTCs (See page RS-49).
OK:
DTC B1925, B1926, B1927, B1928 or 78 is not output.
HINT:
Codes other than DTC B1925, B1926, B1927, B1928 and 78 may be output at this time, but they are not related to this check.

NG → **REPLACE REAR SEAT OUTER BELT ASSEMBLY RH (See page SB-47)**

OK

2	CHECK CONNECTOR

(a) Turn the engine switch off.
(b) Disconnect the negative (-) terminal cable from the battery, and wait for at least 90 seconds.
(c) Disconnect the SST from connector C.
(d) Check that the floor wire No. 2 connector (on the rear seat outer belt assembly RH side) is not damaged.

NG → **REPAIR OR REPLACE FLOOR WIRE NO. 2**

OK

3	CHECK FLOOR WIRE NO. 2 (REAR PASSENGER SIDE PRETENSIONER SQUIB CIRCUIT)

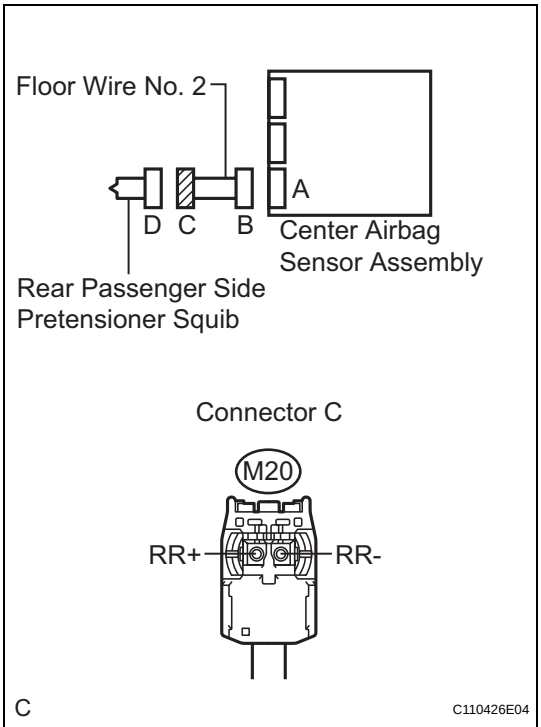

(a) Disconnect the connectors from the center airbag sensor assembly.

(b) Check for a short to B+ in the circuit.
  (1) Connect the negative (-) terminal cable to the battery, and wait for at least 2 seconds.
  (2) Turn the engine switch on (IG).
  (3) Measure the voltage according to the value(s) in the table below.
  Standard voltage

Tester Connection	Condition	Specified Condition
M20-1 (RR+) - Body ground	Engine switch on (IG)	Below 1 V
M20-2 (RR-) - Body ground	Engine switch on (IG)	Below 1 V

(c) Check for an open in the circuit.
  (1) Turn the engine switch off.
  (2) Disconnect the negative (-) terminal cable from the battery, and wait for at least 90 seconds.
  (3) Measure the resistance according to the value(s) in the table below.
  Standard resistance

Tester Connection	Condition	Specified Condition
M20-1 (RR+) - M20-2 (RR-)	Always	Below 1 Ω

(d) Check for a short to ground in the circuit.
  (1) Measure the resistance according to the value(s) in the table below.
  Standard resistance

Tester Connection	Condition	Specified Condition
M20-1 (RR+) - Body ground	Always	1 MΩ or higher
M20-2 (RR-) - Body ground	Always	1 MΩ or higher

(e) Check for a short in the circuit.
  (1) Release the activation prevention mechanism built into connector B (See page RS-49).
  (2) Measure the resistance according to the value(s) in the table below.
  Standard resistance

Tester Connection	Condition	Specified Condition
M20-1 (RR+) - M20-2 (RR-)	Always	1 MΩ or higher

NG → **REPAIR OR REPLACE FLOOR WIRE NO. 2**

OK

RS

4	CHECK CENTER AIRBAG SENSOR ASSEMBLY

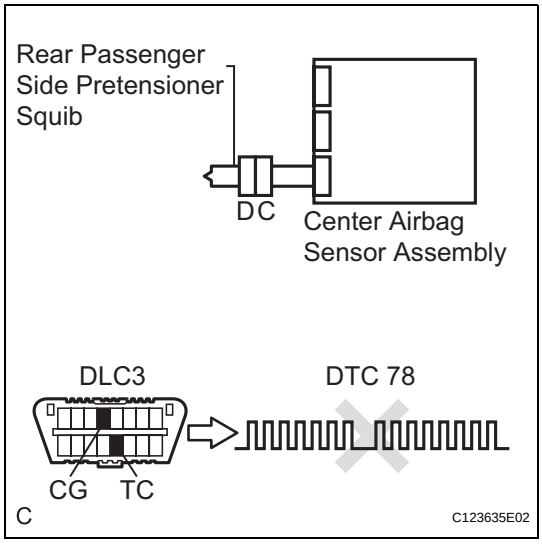

(a) Connect the connectors to the rear seat outer belt assembly RH and the center airbag sensor assembly.
(b) Connect the negative (-) terminal cable to the battery, and wait for at least 2 seconds.
(c) Turn the engine switch on (IG), and wait for at least 60 seconds.
(d) Clear the DTCs stored in the memory (See page RS-49).
(e) Turn the engine switch off.
(f) Turn the engine switch on (IG), and wait for at least 60 seconds.
(g) Check the DTCs (See page RS-49).
OK:
DTC B1925, B1926, B1927, B1928 or 78 is not output.
HINT:
Codes other than DTC B1925, B1926, B1927, B1928 and 78 may be output at this time, but they are not related to this check.

NG → **REPLACE CENTER AIRBAG SENSOR ASSEMBLY (See page RS-468)**

OK

USE SIMULATION METHOD TO CHECK (See page RS-37)

SRS Warning Light Remains ON

DESCRIPTION

The SRS warning light is located on the combination meter assembly.
When the SRS is normal, the SRS warning light comes on for approximately 6 seconds after the engine switch is turned from off to on (IG), and then goes off automatically.
If there is a malfunction in the SRS, the SRS warning light comes on to inform the driver of a problem.
When terminals TC and CG of the DLC3 are connected, the DTC is displayed by blinking of the SRS warning light.
The SRS is equipped with a voltage-increase circuit (DC-DC converter) in the center airbag sensor assembly in case the source voltage drops.
When the battery voltage drops, the voltage-increase circuit (DC-DC converter) functions to increase the voltage of the SRS to normal voltage.
A malfunction in this circuit is not recorded in the center airbag sensor assembly. The SRS warning light automatically goes off when the source voltage returns to normal.
The signal to illuminate the SRS warning light is transmitted from the center airbag sensor assembly to the combination meter assembly through the CAN communication system.

RS

WIRING DIAGRAM

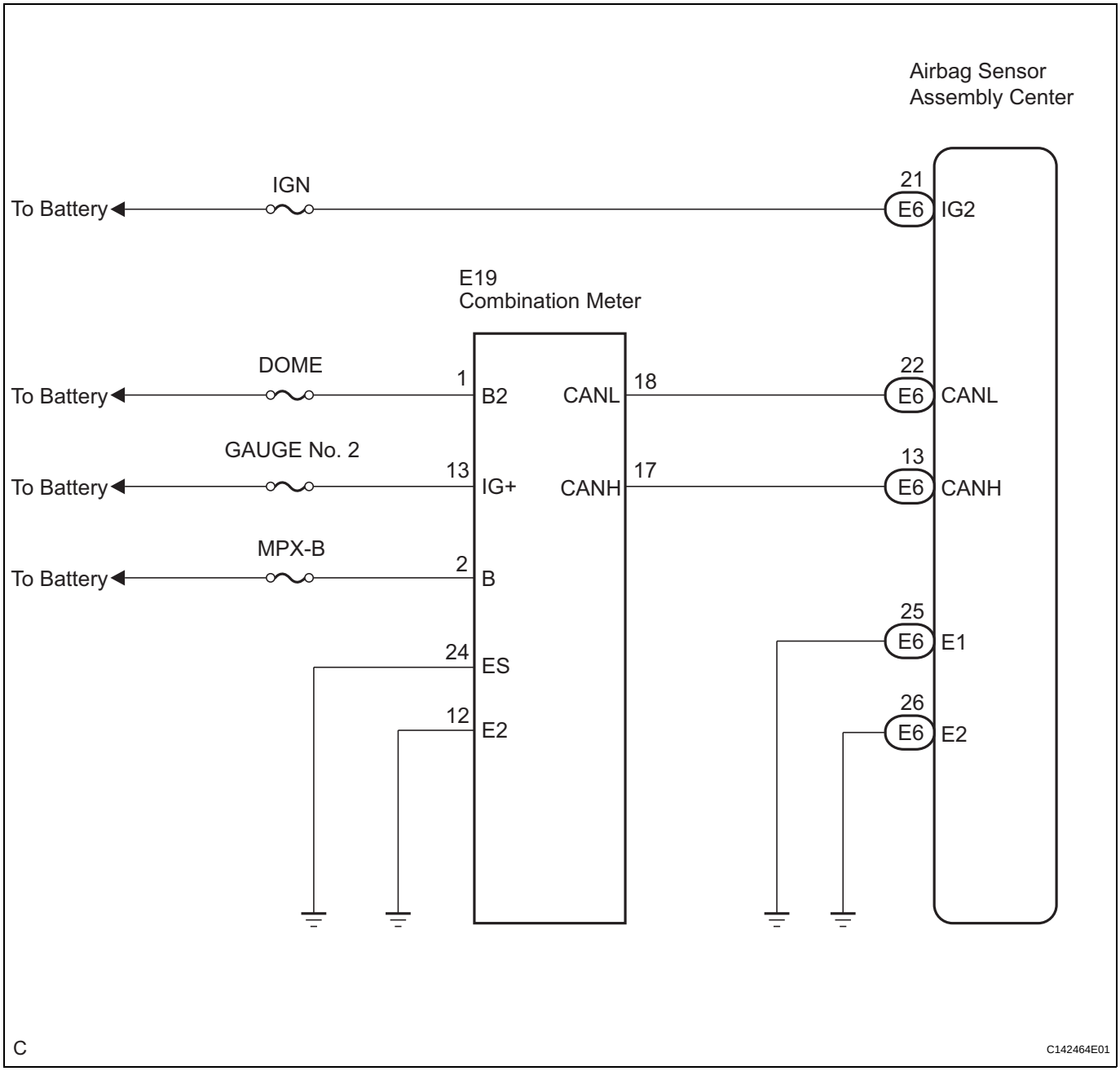

INSPECTION PROCEDURE

1	CHECK CAN COMMUNICATION SYSTEM

(a) Check if a CAN communication DTC is output (See page CA-41).

Result

Condition	Proceed to
DTC is not output	A
DTC is output	B

B → **REPAIR CIRCUITS INDICATED BY OUTPUT DTCS**

A

RS

2 CHECK BATTERY

(a) Measure the voltage of the battery.
Standard voltage:
11 to 14 V

NG → **CHECK AND REPLACE BATTERY OR CHARGING SYSTEM**

OK

3 CHECK CONNECTORS

(a) Turn the engine switch off.
(b) Disconnect the negative (-) terminal cable from the battery, and wait for at least 90 seconds.
(c) Check that the connectors are properly connected to the center airbag sensor assembly and combination meter assembly.
OK:
The connectors are properly connected.

NG → **CONNECT CONNECTORS PROPERLY**

OK

4 CHECK WIRE HARNESS (SOURCE VOLTAGE OF CENTER AIRBAG SENSOR ASSEMBLY)

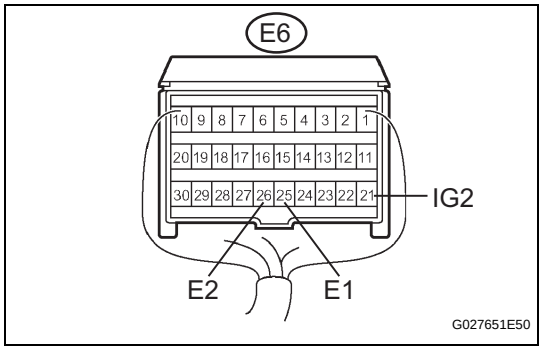

(a) Disconnect the connectors from the center airbag sensor assembly.
(b) Connect the negative (-) terminal cable to the battery, and wait for at least 2 seconds.
(c) Turn the engine switch on (IG).
(d) Operate all components of the electrical system (defogger, wipers, headlights, heater blower, etc.).
(e) Measure the voltage according to the value(s) in the table below.
Standard voltage

Tester Connection	Condition	Specified Condition
E6-21 (IG2) - E6-25 (E1)	Engine switch on (IG)	10 to 14 V
E6-21 (IG2) - E6-26 (E2)	Engine switch on (IG)	10 to 14 V

NG → **REPAIR OR REPLACE WIRE HARNESS**

OK

RS

5	CHECK WIRE HARNESS (SOURCE VOLTAGE OF COMBINATION METER ASSEMBLY)

Combination Meter Assembly Wire Harness View:

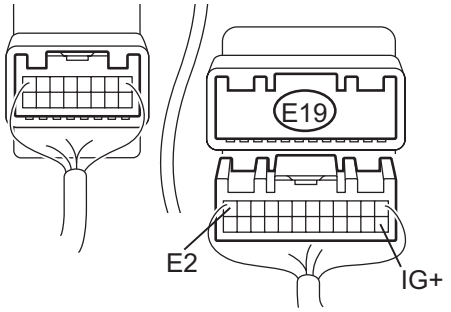

(a) Disconnect the negative (-) terminal cable from the battery, and wait for at least 90 seconds.
(b) Disconnect the E19 connector from the combination meter assembly.
(c) Connect the negative (-) terminal cable to the battery, and wait for at least 2 seconds.
(d) Turn the engine switch on (IG).
(e) Measure the voltage according to the value(s) in the table below.

Standard voltage

Tester Connection	Condition	Specified Condition
E19-13 (IG+) - E19-12 (E2)	Engine switch on (IG)	10 to 14 V

NG → **REPAIR OR REPLACE WIRE HARNESS**

OK

6	CHECK SRS WARNING LIGHT

(a) Turn the engine switch off.
(b) Disconnect the negative (-) terminal cable from the battery, and wait for at least 90 seconds.
(c) Connect the connector to the combination meter assembly.
(d) Connect the negative (-) terminal cable to the battery, and wait for at least 2 seconds.
(e) Turn the engine switch on (IG).
(f) Check the SRS warning light condition.

OK:

After the primary check period, SRS warning light goes off for approximately 10 seconds and remains on.

HINT:
The primary check period shows approximately 6 seconds after the engine switch is turned on (IG).

NG → **GO TO METER / GAUGE SYSTEM (See page ME-14)**

OK

REPLACE CENTER AIRBAG SENSOR ASSEMBLY (See page RS-468)

SRS Warning Light does not Come ON

DESCRIPTION

See page RS-294.

WIRING DIAGRAM

See page RS-295.

RS

INSPECTION PROCEDURE

1	CHECK BATTERY

(a) Measure the voltage of the battery.
Standard voltage:
11 to 14 V

NG → **CHECK AND REPLACE BATTERY OR CHARGING SYSTEM**

OK ↓

2	CHECK CONNECTOR

(a) Turn the engine switch off.
(b) Disconnect the negative (-) terminal cable from the battery, and wait for at least 90 seconds.
(c) Check that the connectors are properly connected to the combination meter assembly.
OK:
The connectors are properly connected.

NG → **CONNECT CONNECTOR PROPERLY**

OK ↓

RS

3 CHECK WIRE HARNESS (SOURCE VOLTAGE OF COMBINATION METER)

Combination Meter Assembly Wire Harness View:

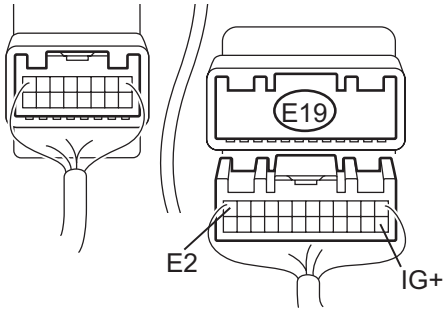

(a) Turn the engine switch off.
(b) Disconnect the negative (-) terminal cable from the battery, and wait for at least 90 seconds.
(c) Disconnect the E19 connector from the combination meter assembly.
(d) Connect the negative (-) terminal cable to the battery, and wait for at least 2 seconds.
(e) Turn the engine switch on (IG).
(f) Measure the voltage according to the value(s) in the table below.

Standard voltage

Tester Connection	Condition	Specified Condition
E19-13 (IG+) - E12-12 (E2)	Engine switch on (IG)	10 to 14 V

NG → **REPAIR OR REPLACE WIRE HARNESS**

OK

4 CHECK SRS WARNING LIGHT

(a) Turn the engine switch off.
(b) Disconnect the negative (-) terminal cable from the battery, and wait for at least 90 seconds.
(c) Connect the connector to the combination meter assembly.
(d) Connect the negative (-) terminal cable to the battery, and wait for at least 2 seconds.
(e) Turn the engine switch on (IG).
(f) Check the SRS warning light condition.

OK:

After the primary check period, SRS warning light goes off for approximately 10 seconds and remains on.

HINT:
The primary check period is approximately 6 seconds after the engine switch is turned on (IG).

NG → **GO TO METER / GAUGE SYSTEM (See page ME-14)**

OK

REPLACE CENTER AIRBAG SENSOR ASSEMBLY (See page RS-468)

Diagnosis Circuit

DESCRIPTION

DTC output mode is set by connecting terminals TC and CG of the DLC3.
DTCs are displayed by blinking of the SRS warning light.
HINT:

- When each warning light stays blinking, a ground short in the wiring of terminal TC of the DLC3 or an internal ground short in each ECU is suspected.
- A DTC output mode signal is transmitted through CAN communication system to each ECU including the center airbag sensor assembly. Thus when all systems do not enter DTC output mode, there may be an ECM malfunction.

WIRING DIAGRAM

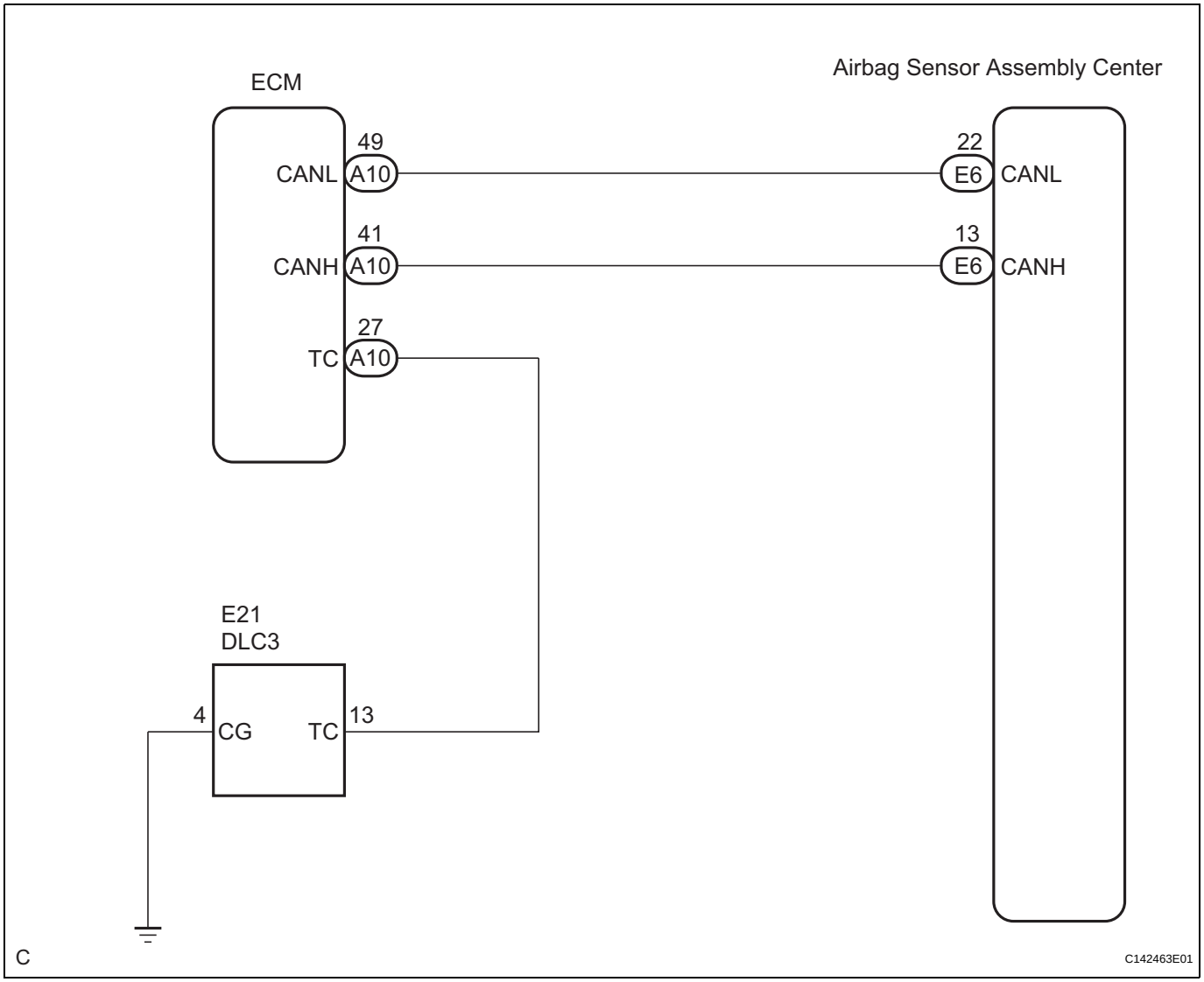

INSPECTION PROCEDURE

RS

1	CHECK CAN COMMUNICATION SYSTEM

(a) Check if a CAN communication system DTC is output (See page CA-41).

Result

Condition	Proceed to
DTC is not output	A
DTC is output	B

B → **REPAIR CIRCUITS INDICATED BY OUTPUT DTCS**

A

2	CHECK WIRE HARNESS (DLC3 - ECM)

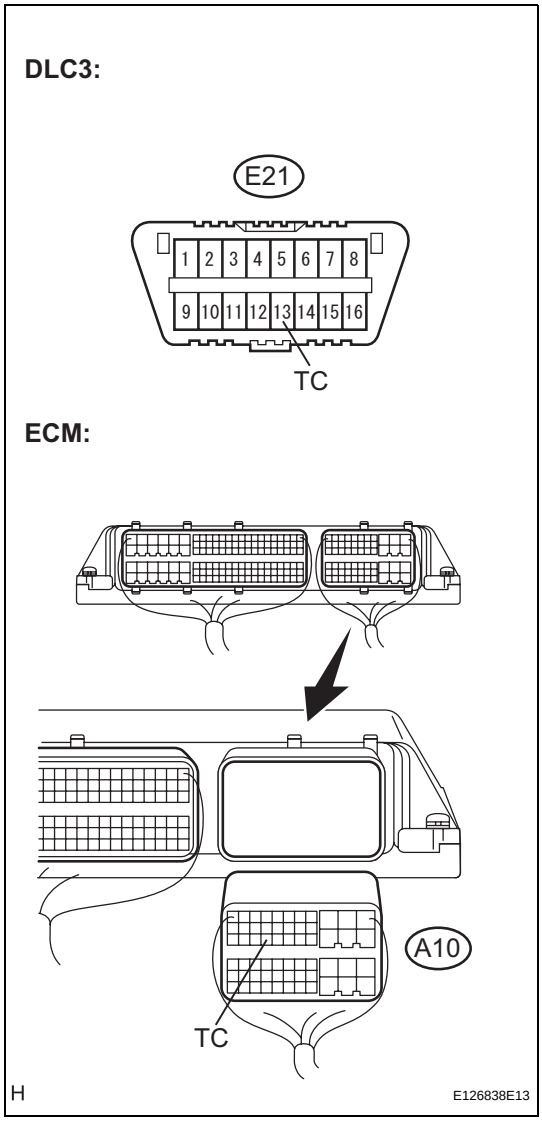

(a) Turn the engine switch off.
(b) Disconnect the A10 connector from the ECM.
(c) Measure the resistance according to the value(s) in the table below.

Standard resistance

Tester Connection	Condition	Specified Condition
E21-13 (TC) - A10-27 (TC)	Always	Below 1 Ω

NG → **REPAIR OR REPLACE WIRE HARNESS (TC OF DLC3 - TC OF ECM)**

OK

3 CHECK WIRE HARNESS (CG OF DLC3 - BODY GROUND)

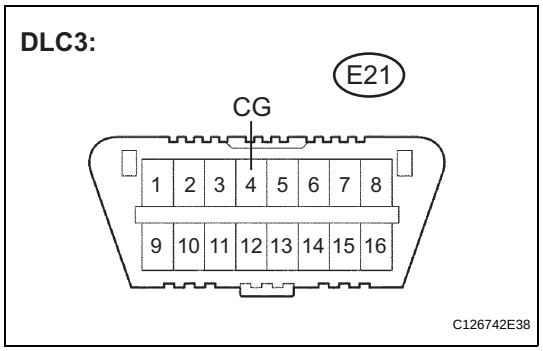

(a) Measure the resistance according to the value(s) in the table below.

Standard resistance

Tester Connection	Condition	Specified Condition
E21-4 (CG) - Body ground	Always	Below 1 Ω

NG → **REPAIR OR REPLACE WIRE HARNESS (CG OF DLC3 - BODY GROUND)**

OK

4 CHECK WIRE HARNESS (TC OF ECM - BODY GROUND)

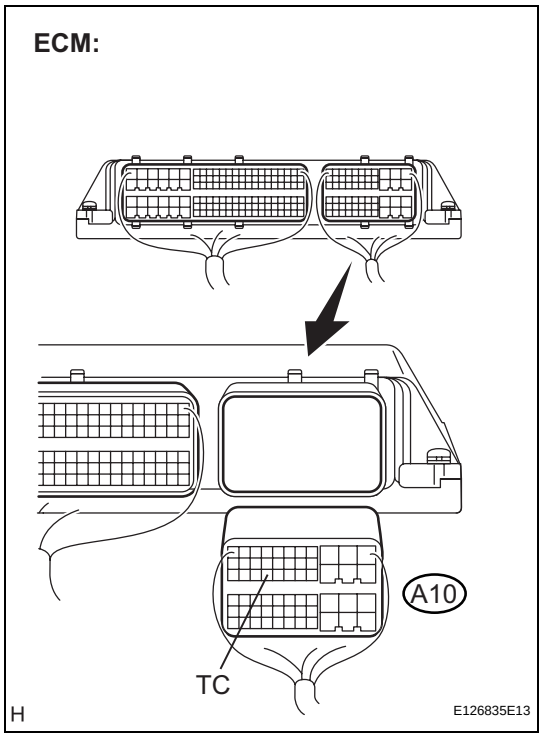

(a) Measure the resistance according to the value(s) in the table below.

Standard resistance

Tester Connection	Condition	Specified Condition
A10-27 (TC) - Body ground	Always	1 MΩ or higher

NG → **REPAIR OR REPLACE WIRE HARNESS OR EACH ECU**

OK

REPLACE CENTER AIRBAG SENSOR ASSEMBLY (See page RS-468)

SYSTEM DIAGRAM

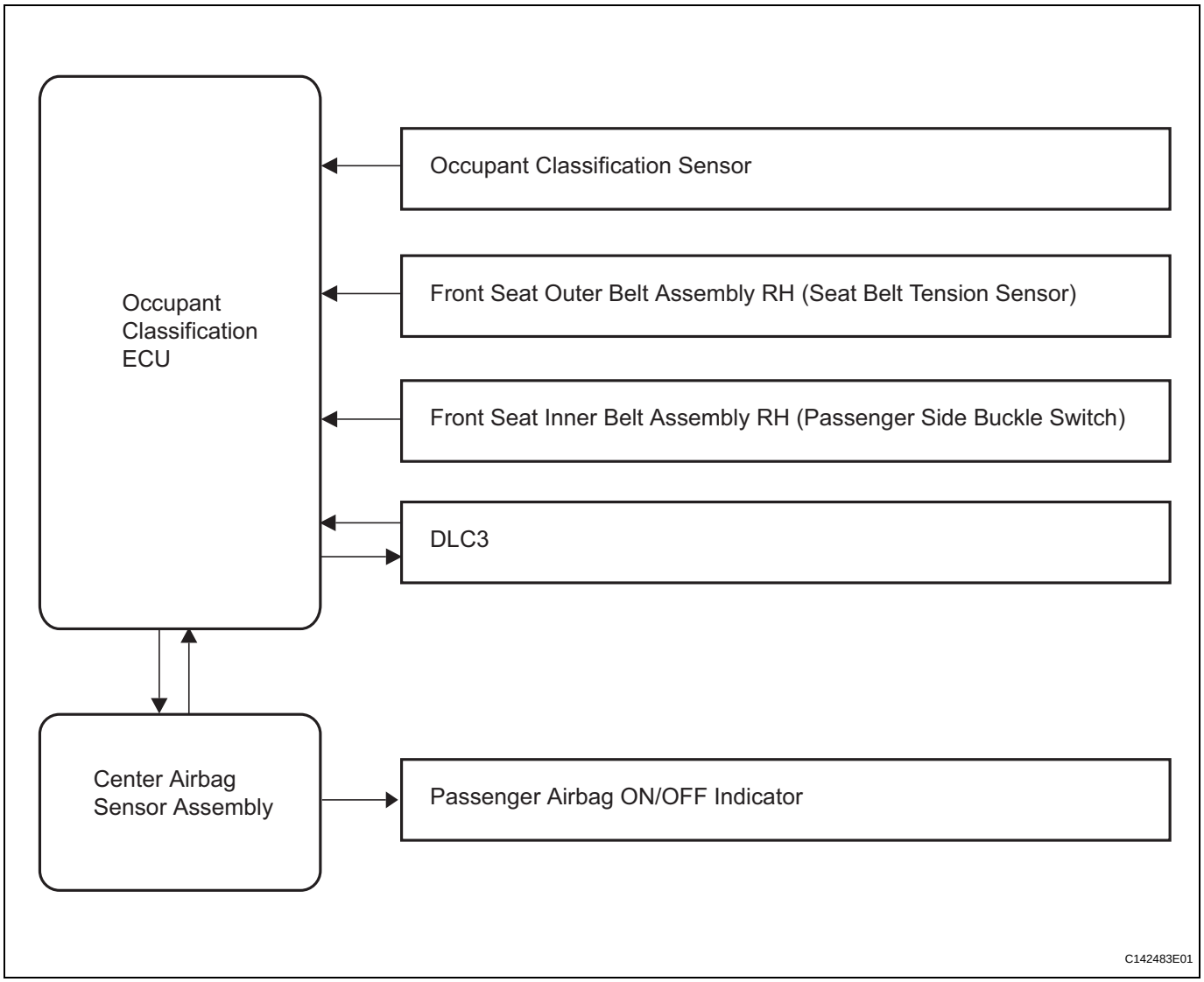

RS

SYSTEM DESCRIPTION

1. GENERAL DESCRIPTION

(a) In the occupant classification system, the occupant classification ECU calculates the weight of the front passenger based on a signal from the occupant classification sensor. This system judges the occupant to be a child when it detects a weight of less than 27.3 kg (60 lb), and disables the front passenger side airbag and front passenger side - side airbag.

(b) This system is mainly composed of the occupant classification sensor that detects the load on the front passenger seat. The occupant classification ECU controls the system, and the passenger airbag ON/OFF indicator indicates the ON/OFF condition of the front passenger airbag assembly and front passenger side - side airbag assembly.

2. OCCUPANT CLASSIFICATION SENSOR

(a) The occupant classification sensor consists of the bladder mat and the pressure sensor.
When weight is applied to the bladder mat, the pressure applied through the silicone to the pressure sensor changes. The pressure sensor converts these changes into voltages and transmits them to the occupant classification ECU.

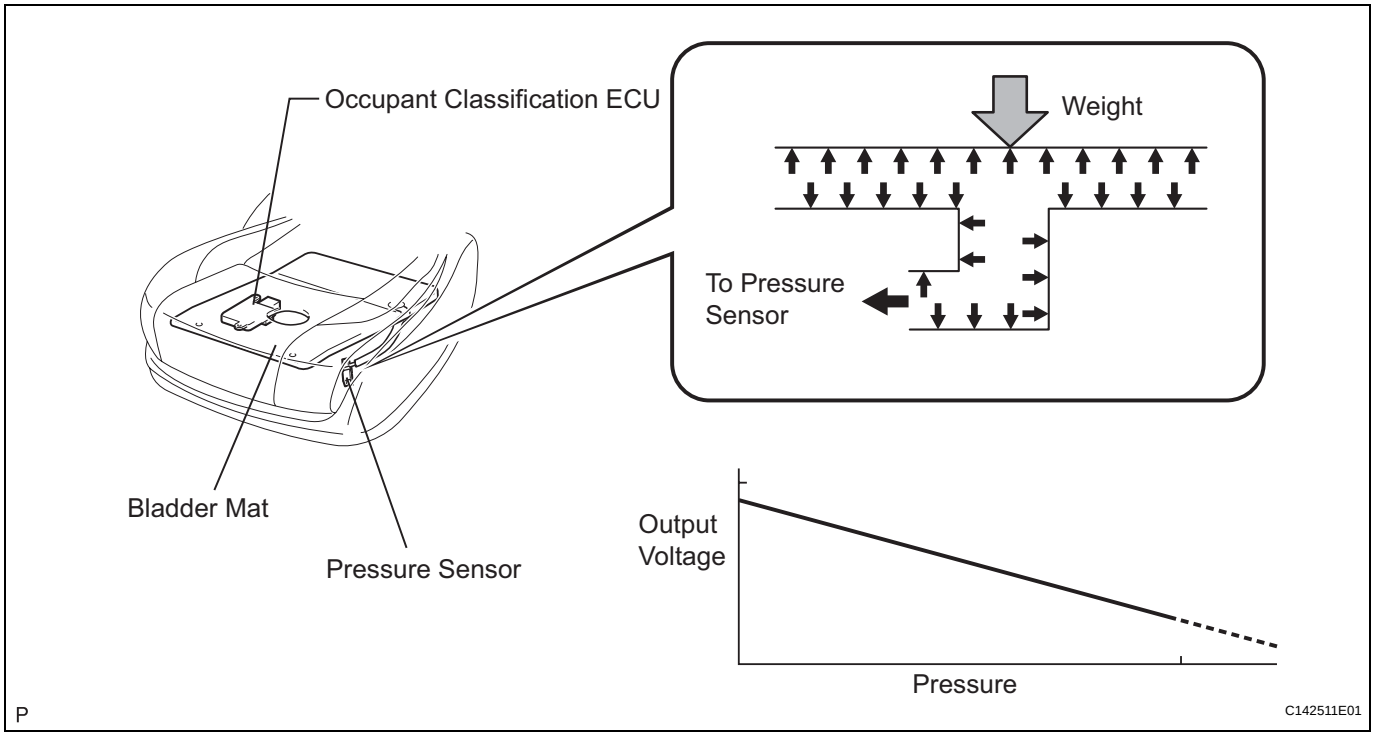

(b) The occupant classification sensor is installed between the seat cushion frame and seat cushion pad. The pressure sensor is installed on the seat frame.

(c) The pressure sensor detects the pressure applied to the front passenger seat as a seated passenger. The occupant classification ECU determines whether the front passenger side airbag and front passenger side - side airbag are deployed based on signals from the pressure sensor.

3. SEAT BELT TENSION SENSOR

(a) The seat belt tension sensor is installed on the front seat outer belt to detect a CRS (Child Restraint System).

RS

HOW TO PROCEED WITH TROUBLESHOOTING

HINT:
*: Use the intelligent tester.

1 VEHICLE BROUGHT TO WORKSHOP

NEXT

2 CUSTOMER PROBLEM ANALYSIS

(a) Confirm problem symptoms (See page IN-39).

NEXT

3 PASSENGER AIRBAG ON/OFF INDICATOR CHECK

NEXT

4 DTC CHECK (Present and Past DTCs)*

(a) Check for DTCs.
Result

Result	Proceed to
DTC is output.	A
DTC is not output.	B

B → **GO TO PROBLEM SYMPTOMS TABLE**

A

5 DTC CHART

NEXT

6 CIRCUIT INSPECTION*

NEXT

7 REPAIR

NEXT

RS

8	CLEAR DTCS (Present and Past DTCs)*

(a) Clear DTCs.

NEXT

9	DTCS CHECK (Present and Past DTCs)*

(a) Check for DTCs.
Result

Result	Proceed to
DTC is not output.	A
DTC is output.	B

B → Go to step 5

A

10	SYMPTOM SIMULATION

(a) Check the passenger airbag ON/OFF indicator condition.
Result

Result	Proceed to
Passenger airbag ON/OFF indicator operates normally.	A
Passenger airbag ON/OFF indicator ("OFF") and SRS warning light come on.	B

B → Go to step 5

A

11	CONFIRMATION TEST

NEXT

END

REGISTRATION

1. REGISTRATION

NOTICE:

- **If any DTCs related to the occupant classification ECU are output, troubleshoot those DTCs by referring to the DIAGNOSTIC TROUBLE CODE CHART.**
- **When ECU data saving or loading operations cannot be performed, replace the front seat cushion assembly (with occupant classification ECU and occupant classification sensor).**

HINT:

- When the occupant classification ECU is replaced, the previous ECU data must be saved in the intelligent tester and loaded into the new ECU by following the flowchart below.
- Until the data from the previous ECU are loaded into the new occupant classification ECU, these data are not erased even when the tester is turned off.
- ECU EXCHANGE PROCEDURE (Before Exchange) describes the procedure to save the data in the intelligent tester from the occupant classification ECU which has been installed on the vehicle. ECU EXCHANGE PROCEDURE (After Exchange) describes the procedure to load the data from the previous ECU, stored in the intelligent tester, into the new ECU.

(a) Connect the intelligent tester to the DLC3.

(b) Turn the engine switch on (IG).

(c) Store the occupant classification ECU data in the intelligent tester by following the prompts on the tester screen.

HINT:

If the ECU data cannot be stored in the intelligent tester, replace the front seat cushion assembly (with occupant classification ECU and occupant classification sensor).

(d) Turn the engine switch on (IG).

(e) Disconnect the negative (-) terminal cable from the battery, and wait for at least 90 seconds.

(f) Replace the occupant classification ECU (See page RS-501).

(g) Connect the negative (-) terminal cable to the battery.

(h) Turn the engine switch on (IG).

(i) Load the data from the previous ECU stored in the tester, into the newly installed ECU by following the prompts on the tester screen.

(j) Turn the engine switch off.

(k) Turn the engine switch on (IG).

(l) Clear the DTCs stored in the memory (See page RS-318).
HINT:
If DTCs are not cleared at this time, past DTCs will remain.

RS

ECU EXCHANGE PROCEDURE (Before Exchange):

1: DIAGNOSIS - 1: OBD/MOBD - MODEL YEAR - MODEL SELECTION - 9: OCCUPANT DETECT
Refer to the following screen flow.

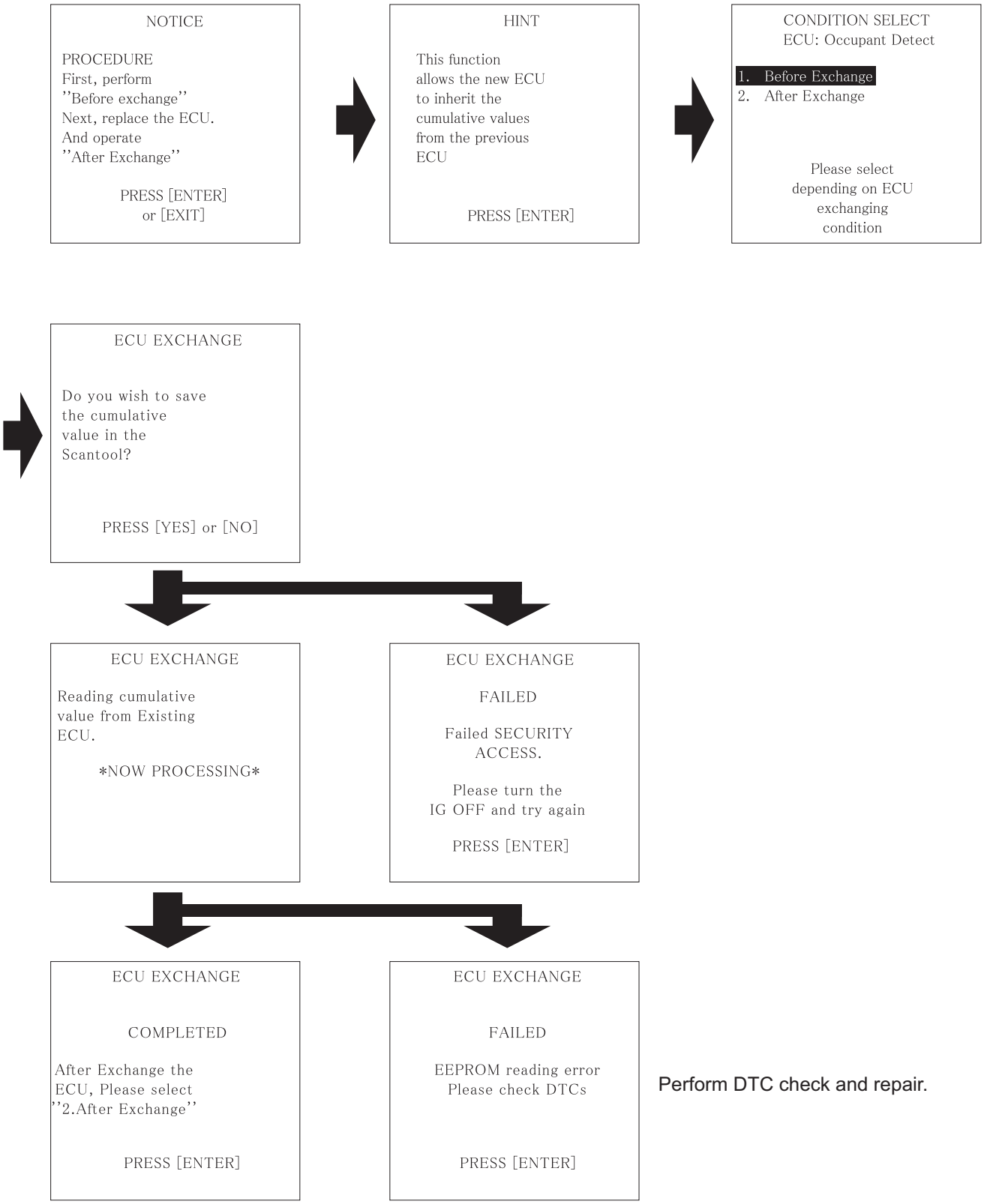

Perform DTC check and repair.

T

H101940E03

RS

ECU EXCHANGE PROCEDURE (After Exchange):

1: DIAGNOSIS - 1: OBD/MOBD - MODEL YEAR - MODEL SELECTION - 9: OCCUPANT DETECT
Refer to the following screen flow.

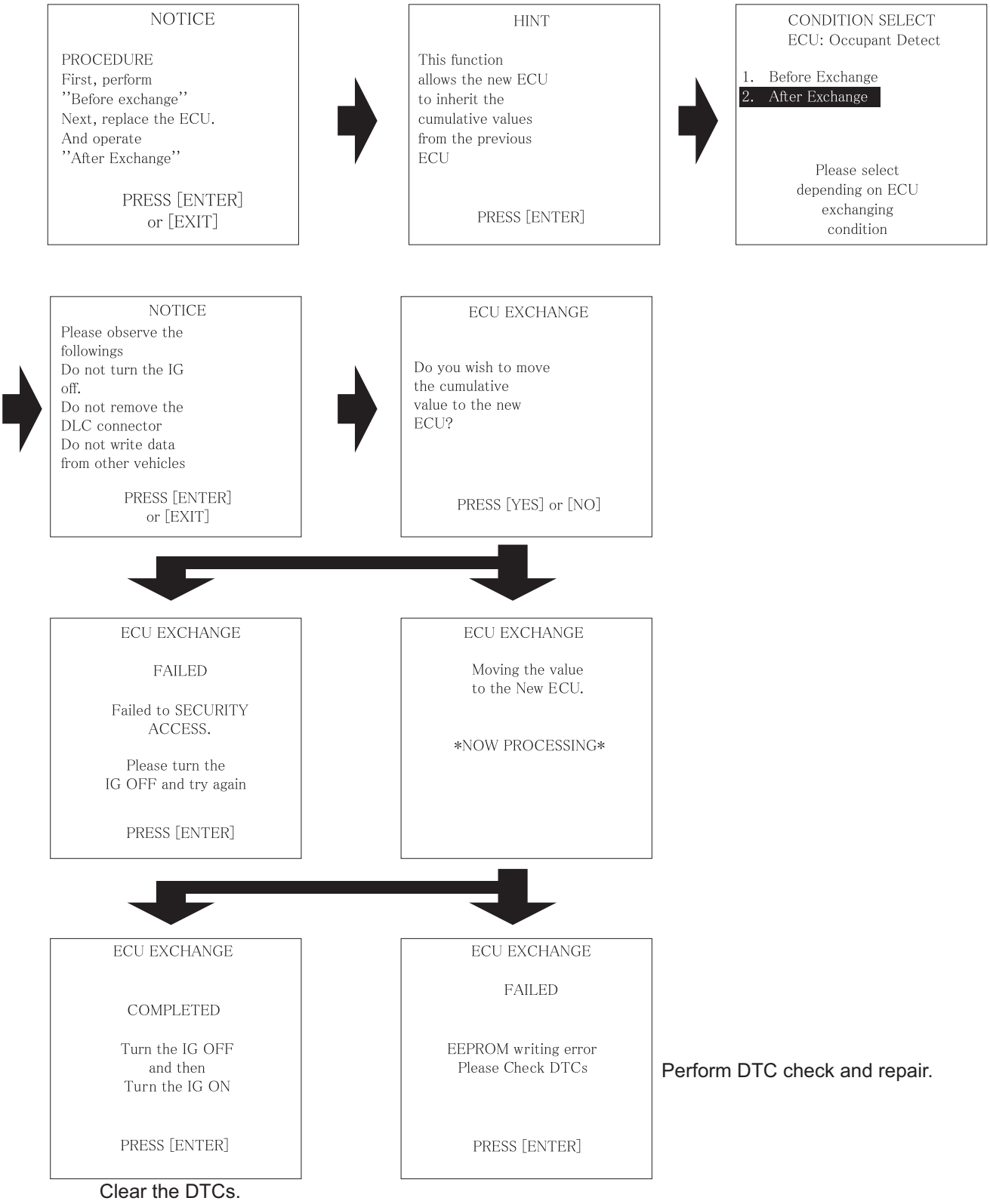

T

H101939E03

RS

INITIALIZATION

NOTICE:
Make sure that the front passenger seat is not occupied before performing the operation.
HINT:
Perform the zero point calibration if any of the following conditions is met:
- The occupant classification ECU is replaced.
- The passenger airbag ON/OFF indicator indicates OFF when the front passenger seat is not occupied.
- The vehicle is brought to the workshop for repair due to an accident or a collision.

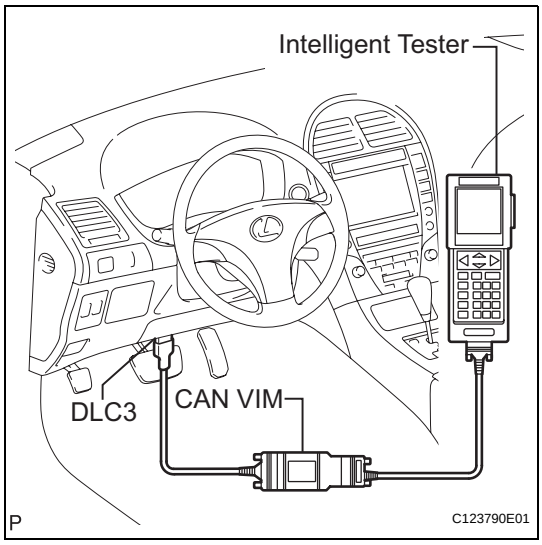

1. ZERO POINT CALIBRATION

(a) Zero point calibration procedures

(1) Check that all of the following conditions are met:
- The vehicle is parked on a flat surface.
- No objects are placed on the front passenger seat.
- The front passenger seat belt buckle switch is OFF.

(2) Adjust the seat position according to the table below.

Adjustment Item	Position
Slide Direction	Rearmost position
Reclining Angle	Upright position
Headrest Height	Lowest position
Lifter Height	Lowest position

(3) Connect the intelligent tester to the DLC3.

(4) Turn the engine switch on (IG).

(5) Perform the zero point calibration by following the prompts on the tester screen.
HINT:
- Refer to the intelligent tester operator's manual for further details.
- If the zero point calibration is performed when the calibration conditions are not satisfied, DTC B1797 is output.
- If the zero point calibration has failed, DTC B1797 is output.

RS

ZERO POINT CALIBRATION PROCEDURE:

1: DIAGNOSIS - 1: OBD/MOBD - MODEL YEAR - MODEL SELECTION - 9: OCCUPANT DETECT
Refer to the following screen flow.

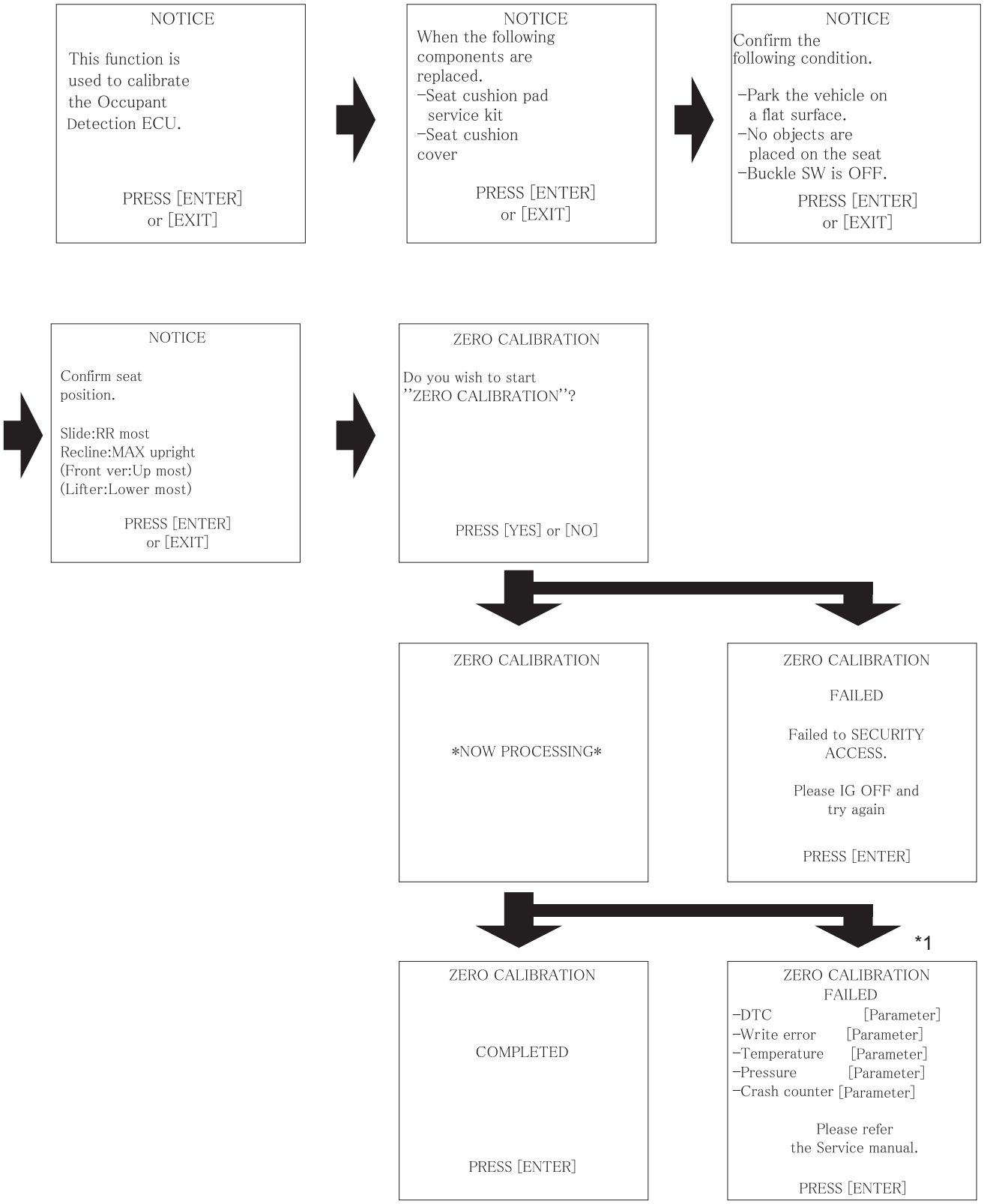

T

H101942E06

HINT:
*1: If After Exchange is selected before the previous ECU data are stored in the intelligent tester, the display screen returns to CONDITION SELECT ECU: Occupant Detect.

RS

Item	Procedure
DTC	Perform DTC check and repair
Write error	Replace front seat cushion assembly (with occupant classification ECU and occupant classification sensor)
Temperature	Check value of THERMISTOR TEMP in ECU DATA LIST
Pressure	Check value of FILTERED PRESS in ECU DATA LIST
Crash counter	-

2. SENSITIVITY CHECK

(a) Sensitivity check procedures

(1) Turn the engine switch off.

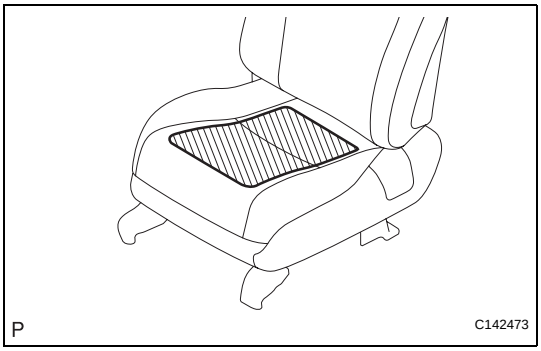

(2) Place a weight of 20 kg (44.0 lb) on the front passenger seat.
NOTICE:
- **Do not allow the weight to come into contact with the seatback when placing it on the seat cushion.**
- **Place the weight in the area shown in the illustration.**

(3) Turn the engine switch on (IG), and wait for at least 6 seconds.

(4) Check that the passenger airbag ON/OFF indicator indicates OFF.
OK:
The passenger airbag ON/OFF indicator indicates OFF.

(5) Add a weight of 30 kg (66.1 lb) to the front passenger seat (total 50 kg (110.2 lb)).
NOTICE:
- **Do not allow the weight to come into contact with the seatback when placing it on the seat cushion.**
- **Place the weight in the area shown in the illustration.**

(6) Check that the passenger airbag ON/OFF indicator indicates ON.
OK:
The passenger airbag ON/OFF indicator indicates ON.

PROBLEM SYMPTOMS TABLE

HINT:
Proceed to the troubleshooting for each circuit in the table below.

OCCUPANT CLASSIFICATION SYSTEM

Symptom	Suspected Area	See page
The front passenger seat condition differs from the indication by the passenger airbag ON/OFF indicator (DTC is not output).	Trouble in Passenger Airbag ON/OFF Indicator	RS-361

RS

TERMINALS OF ECU

1. OCCUPANT CLASSIFICATION ECU

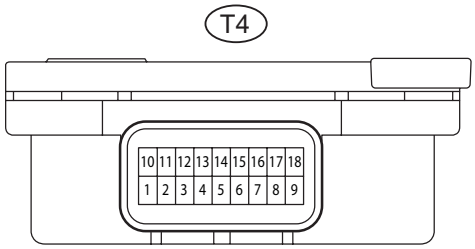

Y H101800E04

Terminal No. (Symbols)	Wiring Color	Terminal Description	Condition	Specified Condition
T4-5 (GND) - Body ground	W-B - Body ground	Occupant classification ECU ground line	Always	Below 1 V
T4-6 (PS) - T4-15 (GPS)	LG - W	Pressure sensor signal line	Engine switch on (IG)	0 to 5 V
T4-7 (VPS) - T4-5 (GND)	Y - W-B	Pressure sensor +B line	Engine switch on (IG)	4.75 to 5.25 V
T4-8 (GBT) - T4-5 (GND)	G - W-B	Belt tension sensor ground line	Always	Below 1 V
T4-9 (IG) - T4-5 (GND)	B - W-B	Occupant classification ECU +B line	Engine switch on (IG)	10 to 14 V
T4-10 (DIA) - T4-5 (GND)	W - W-B	Diagnosis (DLC3)	Engine switch on (IG)	Pulse generation
T4-11 (FSR+) - T4-12 (FSR-)	W - B	Center airbag sensor assembly communication line	Engine switch on (IG)	Pulse generation
T4-12 (FSR-) - T4-5 (GND)	B - W-B	Center airbag sensor assembly communication line (-)	Always	Below 1 V
T4-13 (BSW) - T4-14 (BGND)	B - GR	Passenger side buckle switch line	Engine switch on (IG)	Low: 4 to 7 mA Hi: 12 to 18 mA
T4-14 (BGND) - T4-5 (GND)	GR - W-B	Passenger side buckle switch ground line	Always	Below 1 V
T4-15 (GPS) - T4-5 (GND)	W - W-B	Pressure sensor ground line	Always	Below 1 V
T4-16 (BT) - T4-5 (GND)	R - W-B	Belt tension sensor signal line	Engine switch on (IG)	0 to 5 V
T4-17 (VBT) - T4-5 (GND)	P - W-B	Belt tension sensor +B line	Engine switch on (IG)	4.75 to 5.25 V

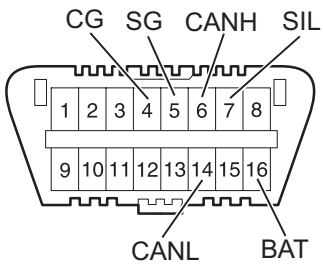

T H100769E16

DIAGNOSIS SYSTEM

1. CHECK DLC3

(a) The ECU uses ISO 15765-4 for communication. The terminal arrangement of the DLC3 complies with SAE J1962 and matches the ISO 15765-4 format.

Symbols (Terminal No.)	Terminal Description	Condition	Pulse condition
SIL (7) - SG (5)	Bus "+" Line	During transmission	Pulse generation
CG (4) - Body ground	Chassis Ground	Always	Below 1 Ω
SG (5) - Body ground	Signal ground	Always	Below 1 Ω

Symbols (Terminal No.)	Terminal Description	Condition	Pulse condition
BAT (16) - Body ground	Battery positive	Always	10 to 14 V
CANH (6) - CANL (14)	CAN bus line	Engine switch off (*)	54 to 69 Ω
CANH (6) - BAT (16)	HIGH-level CAN bus line	Engine switch off (*)	6 kΩ or higher
CANH (6) - CG (4)	HIGH-level CAN bus line	Engine switch off (*)	200 Ω or higher
CANL (14) - BAT (16)	LOW-level CAN bus line	Engine switch off (*)	6 kΩ or higher
CANL (14) - CG (4)	LOW-level CAN bus line	Engine switch off (*)	200 Ω or higher

NOTICE:
***: Before measuring the resistance, leave the vehicle as is for at least 1 minute and do not operate the engine switch, any other switches, or the door.**

If the result is not as specified, the DLC3 may have a malfunction. Repair or replace the harness and connector.

HINT:

If the display shows a communication error message when connecting the cable of the intelligent tester to the DLC3, turning the engine switch on (IG) and operating the intelligent tester, there is a problem on the vehicle side or tester side.

- If communication is normal when the tester is connected to another vehicle, inspect the DLC3 on the original vehicle.
- If communication is still not possible when the tester is connected to another vehicle, the problem is probably in the tester itself. Consult the Service Department listed in the tester's instruction manual.

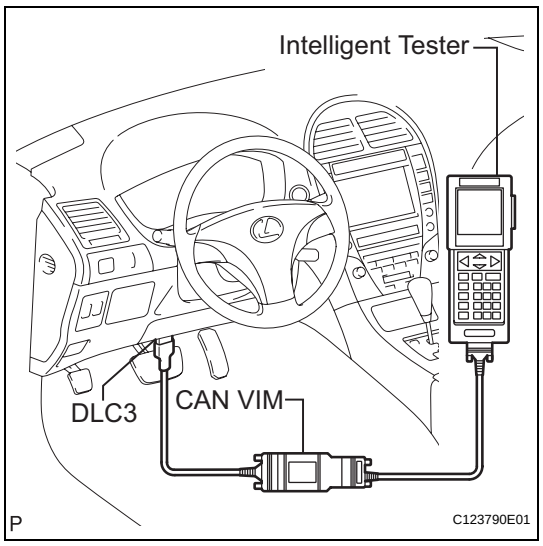

2. SYMPTOM SIMULATION

HINT:

The most difficult case in troubleshooting is when no symptoms occur. In such cases, a thorough customer problem analysis must be carried out. Then the same or similar conditions and the environment in which the problem occurred in the customer's vehicle should be simulated. No matter how experienced or skilled a technician may be, if he proceeds to troubleshooting without confirming the problem symptoms, he will likely overlook something important and make a wrong guess at some points in the repair operation.

This leads to a standstill in troubleshooting.

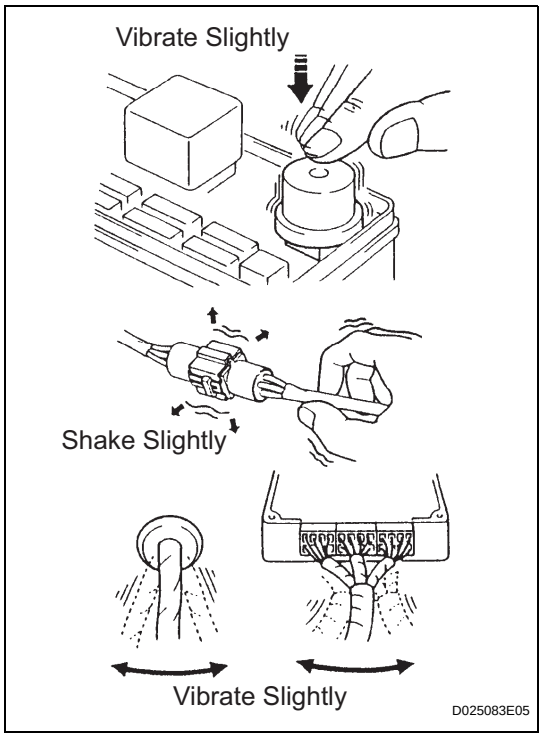

(a) Vibration method: When vibration seems to be the major cause.
HINT:
Perform the simulation method only during the primary check period (for approximately 6 seconds after the engine switch is turned on (IG)).
(1) Slightly vibrate the part of the sensor considered to be the problem cause with your fingers and check whether the malfunction occurs.
HINT:
Shaking the relays too strongly may result in open relays.
(2) Slightly shake the connector vertically and horizontally.
(3) Slightly shake the wire harness vertically and horizontally.
The connector joint and fulcrum of the vibration are the major areas to be checked thoroughly.

3. FUNCTION OF PASSENGER AIRBAG ON/OFF INDICATOR

(a) Initial check.
(1) Turn the engine switch on (IG).
(2) The passenger airbag ON/OFF indicator ("ON" and "OFF") comes on for approximately 4 seconds, then goes off for approximately 2 seconds.
(3) Approximately 6 seconds after the engine switch is turned on (IG), the passenger airbag ON/OFF indicator will show ON or OFF depending on the conditions listed below.

Condition	ON Indicator	OFF Indicator
Vacant	OFF	OFF
Adult is seated.	ON	OFF
Child is seated.	OFF	ON
Child restraint system is set.	OFF	ON
Occupant classification system failure	OFF	ON

HINT:
- The passenger airbag ON/OFF indicator is based on the timing chart below in order to check the indicator light circuit.
- When the occupant classification system has trouble, both the SRS warning light and the passenger airbag ON/OFF indicator ("OFF") come on. In this case, check the DTCs in "AIRBAG SYSTEM" first.

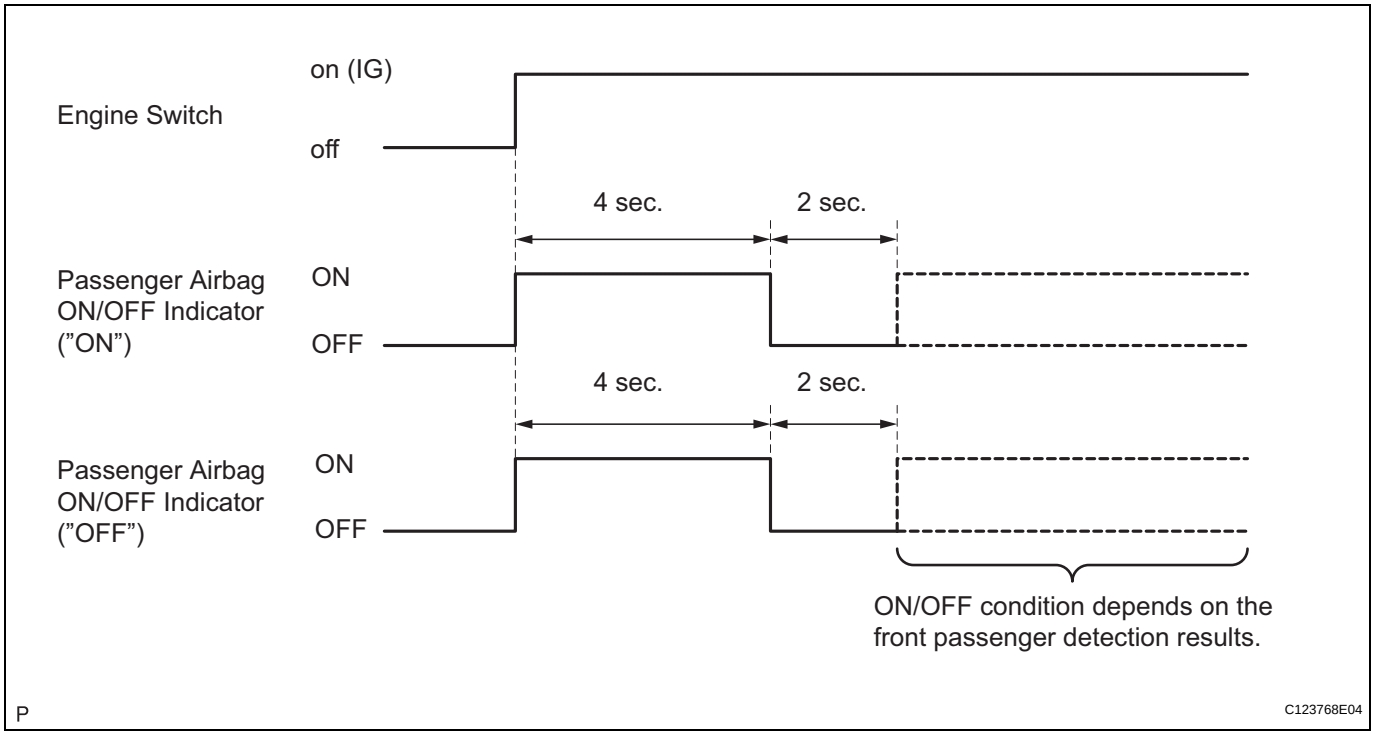

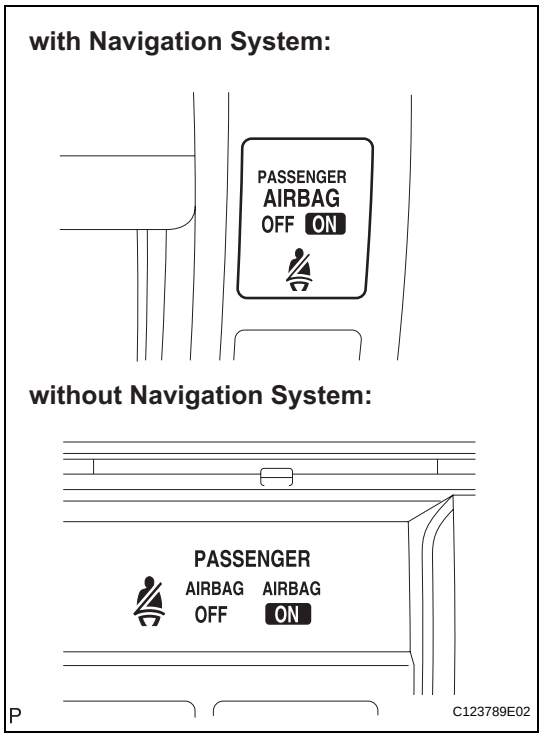

4. CHECK PASSENGER AIRBAG ON/OFF INDICATOR

(a) Turn the engine switch on (IG).

(b) Check that the passenger airbag ON/OFF indicator ("ON" and "OFF") comes on for approximately 4 seconds, then goes off for approximately 2 seconds.

HINT:

Refer to the table in the previous step regarding the passenger airbag ON/OFF indicator when the engine switch is turned on (IG) and approximately 6 seconds pass.

RS

DTC CHECK / CLEAR

1. DTC CHECK

HINT:

- When DTC B1650/32 is detected as a result of troubleshooting for AIRBAG SYSTEM, perform troubleshooting for the OCCUPANT CLASSIFICATION SYSTEM.
- Using the intelligent tester to read and clear DTCs, otherwise the DTCs cannot be read and cleared.

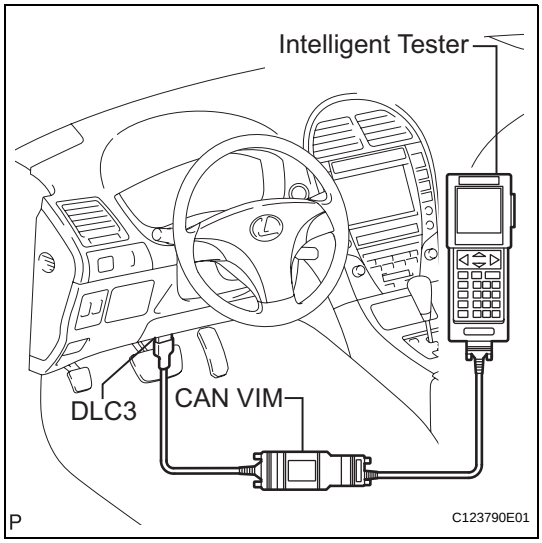

(a) Check for DTCs.
  (1) Connect the intelligent tester to the DLC3.
  (2) Turn the engine switch on (IG).
  (3) Check the DTCs by following the prompts on the tester screen.
  HINT:
  Refer to the intelligent tester operator's manual for further details.

(b) Clear DTCs.
  (1) Connect the intelligent tester to the DLC3.
  (2) Turn the engine switch on (IG).
  (3) Clear the DTCs by following the prompts on the tester screen.
  HINT:
  Refer to the intelligent tester operator's manual for further details.

DATA LIST / ACTIVE TEST

HINT:
By accessing the DATA LIST displayed on the intelligent tester, values of switches and sensors can be checked without removing any parts. Reading the DATA LIST as the first step of troubleshooting is one method to save diagnostic time.

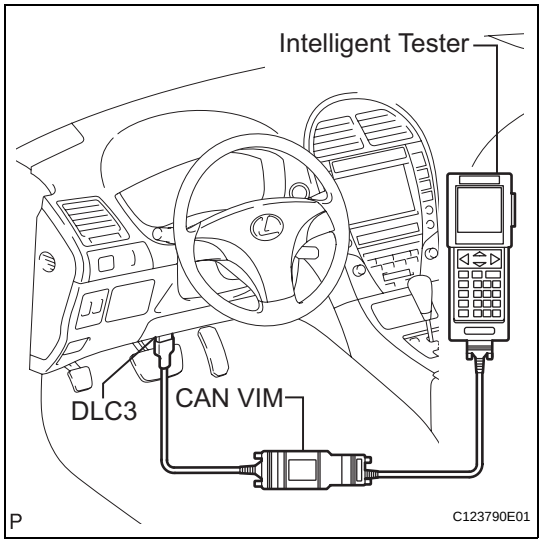

1. DATA LIST FOR OCCUPANT CLASSIFICATION ECU

(a) Connect the intelligent tester to the DLC3.
(b) Turn the engine switch on (IG).
(c) Turn the tester on.
(d) Enter the following menus: DIAGNOSIS / OBD/ MOBD / OCCUPANT DETECT / DATA LIST.
(e) Check the values by referring to the table below.
HINT:
The Specified Condition for Zero Point Calibration in the table below must be satisfied when the zero point calibration is performed.

DATA LIST:

Tester Display	Measurement Item/ Range	Normal Condition	Specified Condition for Zero Point Calibration	Diagnostic Note
PASSENGER CLASS	Passenger classification/ NG: Data is not determined AM50: Adult is seated and seat is in rear position AF05: Adult is seated and seat is in front position CHILD: Child is seated OFF: Vacant	AM50/AF05/CHILD/OFF	OFF	-
P BUCKLE SW	Buckle switch (Passenger side)/ SET: Passenger side seat belt is fastened UNSET: Passenger side seat belt is unfastened NG: Data is not determined	UNSET/SET	UNSET	-
RELATIVE PRESS	Pressure sensor output/ Min.: 0 Max.: 255	0 to 210	0 to 2	-
FILTERED PRESS	Filtered pressure sensor output/ Min.: 0 Max.: 255	38 to 240	38 to 75	If value is outside range of Specified Condition for Zero Point Calibration, check whether any objects placed on seat cushion and that seat cushion fitted correctly.
THERMISTOR TEMP	Thermistor temperature output/ Min.: -40°C (-40°F) Max.: 90°C (194°F)	-40° to 85°C (-40° to185°F)	3° to 40°C (36° to 104°F)	If value is outside range of Specified Condition for Zero Point Calibration, adjust temperature to proper range by using air conditioner, etc.
WEIGHT THRESH	Weight threshold/ Min.: 0 Max.: 255	36 to 67 (reference value)	36 to 67 (reference value)	-

Tester Display	Measurement Item/ Range	Normal Condition	Specified Condition for Zero Point Calibration	Diagnostic Note
FILTERED TENSION	Filtered belt tension output/ Min.: 0 Max.: 255	39 to 229	39 to 64 (no load)	-
EMPTY THRESH	Empty threshold value from seat factory/ Min.: 0 Max.: 255	38 to 75	38 to 75	-
ALLOW THRESH	Threshold value for adult passenger or not from seat factory/ Min.: 0 Max.: 255	43 to 64 (reference value)	43 to 64 (reference value)	-
#PRESENT CODES	Number of present trouble codes/ Min.: 0 Max.: 255	0	0	-
#PAST CODES	Number of past trouble codes/ Min.: 0 Max.: 255	0	0	-

DIAGNOSTIC TROUBLE CODE CHART

HINT:

- When DTC B1650/32 is detected as a result of troubleshooting for the AIRBAG SYSTEM, perform troubleshooting for the OCCUPANT CLASSIFICATION SYSTEM as shown in the chart below.
- Use the intelligent tester to read and clear the DTC of the occupant classification ECU, otherwise the DTCs cannot be read and cleared.

OCCUPANT CLASSIFICATION SYSTEM

DTC Code	Detection Item	Trouble Area	Passenger Airbag ON/ OFF Indicator (OFF Indicator)	See page
B1771	Passenger Side Buckle Switch Circuit Malfunction	1. Front seat wire RH 2. Front seat inner belt assembly RH (Passenger side buckle switch) 3. Occupant classification ECU	ON	RS-322
B1773	Belt Tension Sensor Circuit Malfunction	1. Front seat wire RH 2. Front seat outer belt assembly RH (Seat belt tension sensor) 3. Occupant classification ECU	ON	RS-329
B1774	Pressure Sensor Circuit Malfunction	1. Front seat wire RH 2. Occupant classification sensor 3. Occupant classification ECU	ON	RS-336
B1775	Pressure Sensor Power Source Circuit Malfunction	1. Front seat wire RH 2. Occupant classification sensor 3. Occupant classification ECU	ON	RS-336
B1776	Seat Belt Tension Sensor Power Source Circuit Malfunction	1. Front seat wire RH 2. Front seat outer belt assembly RH (Seat belt tension sensor) 3. Occupant classification ECU	ON	RS-329
B1790	Center Airbag Sensor Assembly Communication Circuit Malfunction	1. Floor wire No. 2 2. Front seat wire RH 3. Occupant classification ECU 4. Center airbag sensor assembly	ON	RS-343
B1795	Occupant Classification ECU Malfunction	Occupant classification ECU	ON	RS-355
B1797	Calibration Malfunction	There is no malfunction if this DTC is not output again after performing occupant classification system zero point calibration.	ON	RS-357

DTC	B1771	Passenger Side Buckle Switch Circuit Malfunction

DESCRIPTION

The passenger side buckle switch circuit consists of the occupant classification ECU and the front seat inner belt assembly RH.
DTC B1771 is recorded when a malfunction is detected in the passenger side buckle switch circuit.

DTC No.	DTC Detecting Condition	Trouble Area
B1771	• The occupant classification ECU receives a line short circuit signal, and open circuit signal, a short circuit to ground signal or a short circuit to B+ signal in passenger side buckle switch circuit for 2 seconds • Passenger side buckle switch malfunction • Occupant classification ECU malfunction	• Front seat wire RH • Front seat inner belt assembly RH (Passenger side buckle switch) • Occupant classification ECU

HINT:
When DTC B1650/32 is detected as a result of troubleshooting for the AIRBAG SYSTEM, check the DTCs stored in the occupant classification ECU. When DTC B1771 is output, perform troubleshooting for the DTC.

WIRING DIAGRAM

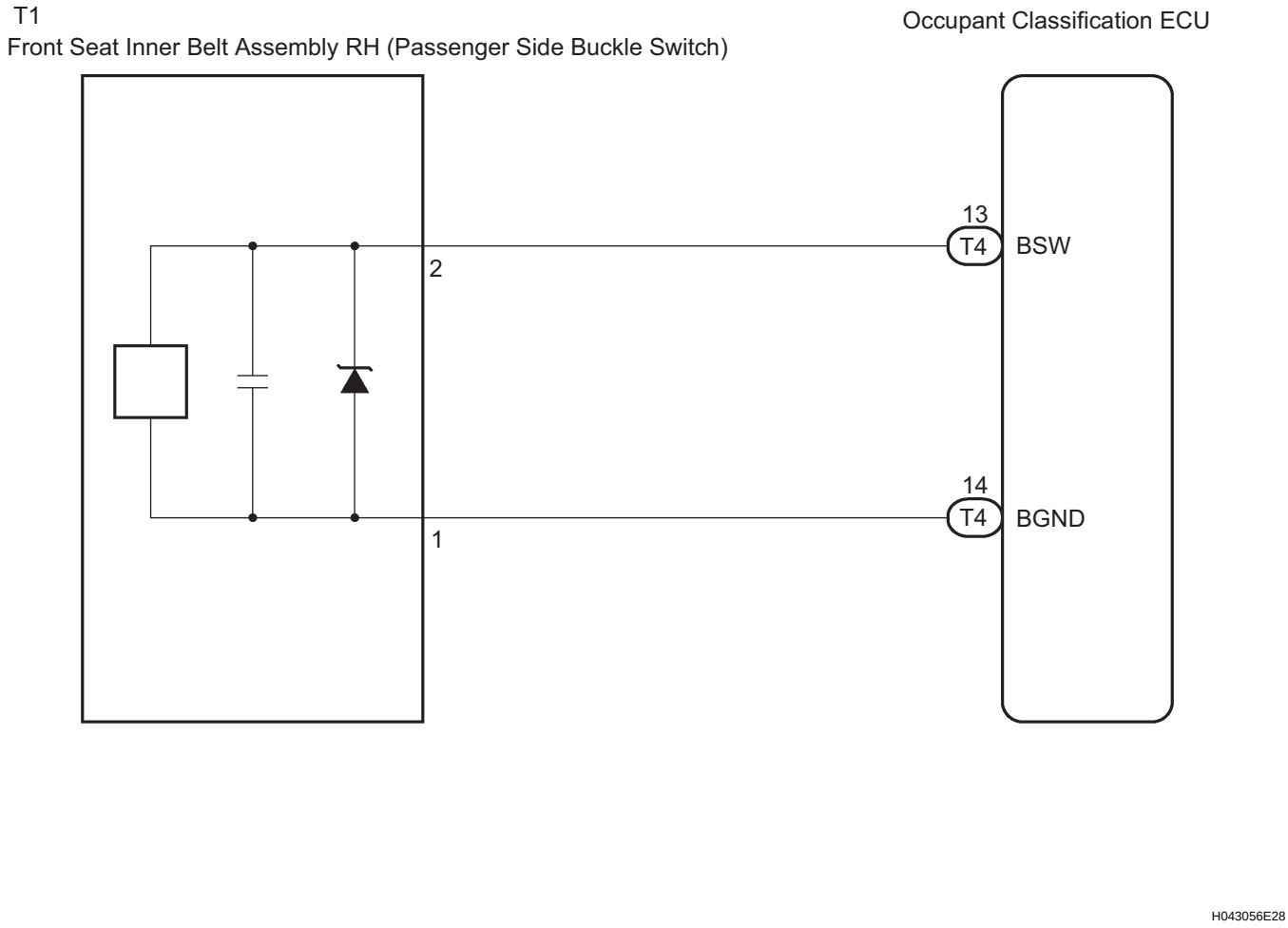

INSPECTION PROCEDURE

HINT:

- If troubleshooting (wire harness inspection) is difficult to perform, remove the front passenger seat installation bolts to see the undersurface of the seat cushion.
- In the above case, hold the seat so that it does not fall down. Holding the seat for a long period of time may cause a problem, such as seat rail deformation. Hold the seat only as necessary.

1	CHECK DTC

(a) Turn the engine switch on (IG).
(b) Clear the DTCs stored in the occupant classification ECU (See page RS-318).
(c) Clear the DTCs stored in the center airbag sensor assembly (See page RS-49).
(d) Turn the engine switch off.
(e) Turn the engine switch on (IG).
(f) Check the DTCs (See page RS-318).

RS

OK:

DTC B1771 is not output.

HINT:

Codes other than B1771 may be output at this time, but they are not related to this check.

OK → **USE SIMULATION METHOD TO CHECK (See page RS-37)**

NG

2 CHECK CONNECTION OF CONNECTORS

(a) Turn the engine switch off.

(b) Disconnect the negative (-) terminal cable from the battery, and wait for at least 90 seconds.

(c) Check that the connectors are properly connected to the occupant classification ECU and the front seat inner belt assembly RH.

OK:

The connectors are properly connected.

NG → **CONNECT CONNECTORS PROPERLY, THEN GO TO STEP 1**

OK

3 CHECK CONNECTORS

(a) Disconnect the connectors from the occupant classification ECU and front seat inner belt assembly RH.

(b) Check that the connectors (on the center airbag sensor assembly side and front seat inner belt assembly RH) are not damaged.

OK:

The connectors are not deformed or damaged.

HINT:

If the connectors are not connected securely, reconnect the connectors and proceed to the next inspection.

NG → **REPAIR OR REPLACE FRONT SEAT WIRE RH**

OK

RS

4 CHECK FRONT SEAT WIRE RH (SHORT TO B+)

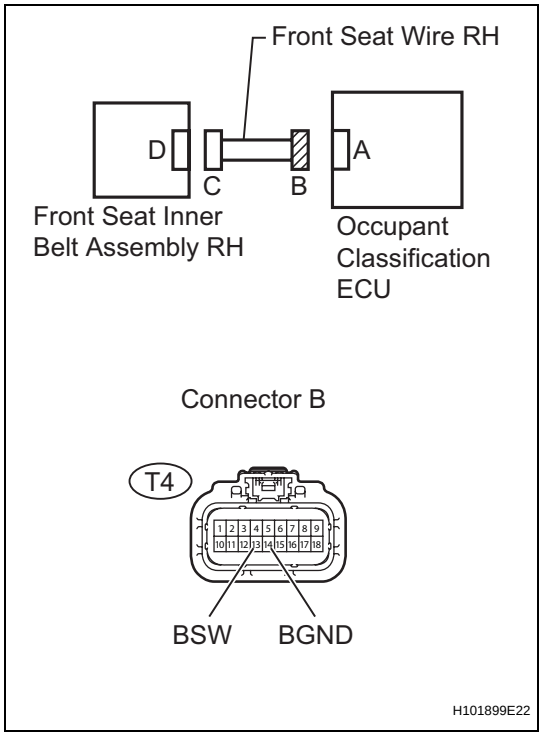

(a) Connect the negative (-) terminal cable to the battery.
(b) Turn the engine switch on (IG).
(c) Measure the voltage according to the value(s) in the table below.

Standard voltage

Tester connection	Condition	Specified condition
T4-13 (BSW) - Body ground	Engine switch on (IG)	Below 1 V
T4-14 (BGND) - Body ground	Engine switch on (IG)	Below 1 V

NG → **REPAIR OR REPLACE FRONT SEAT WIRE RH**

OK

5 CHECK FRONT SEAT WIRE RH (OPEN)

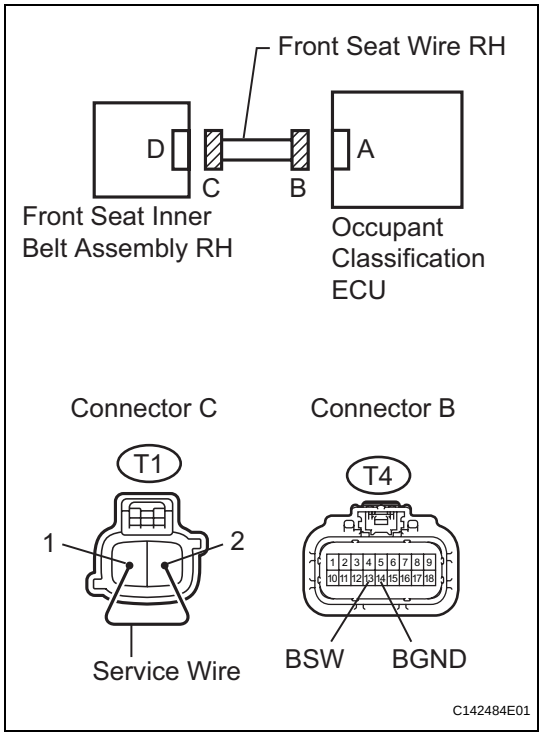

(a) Turn the engine switch off.
(b) Disconnect the negative (-) terminal cable from the battery, and wait for at least 90 seconds.
(c) Using a service wire, connect terminals 1 and 2 of connector C.

NOTICE:
Do not forcibly insert the service wire into the terminals of the connector when connecting the wire.

(d) Measure the resistance according to the value(s) in the table below.

Standard resistance

Tester connection	Condition	Specified condition
T4-13 (BSW) - T4-14 (BGND)	Always	Below 1 Ω

NG → **REPAIR OR REPLACE FRONT SEAT WIRE RH**

OK

RS

6 CHECK FRONT SEAT WIRE RH (SHORT TO GROUND)

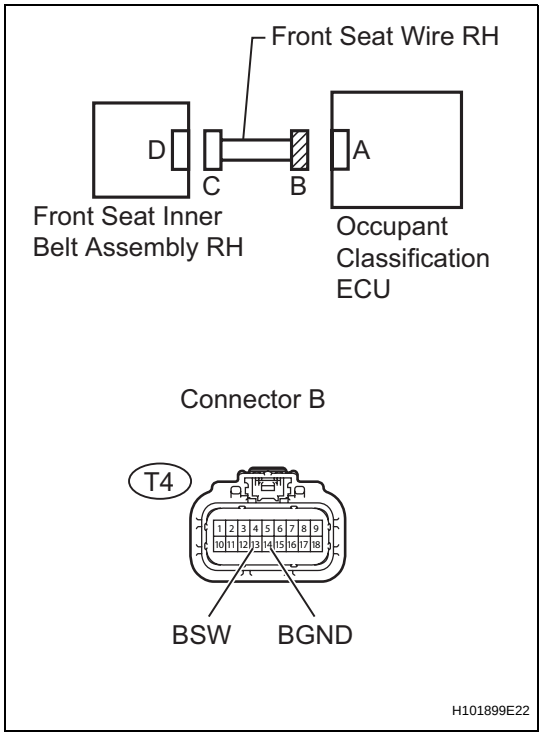

(a) Disconnect the service wire from connector C.
(b) Measure the resistance according to the value(s) in the table below.

Standard resistance

Tester connection	Condition	Specified condition
T4-13 (BSW) - Body ground	Always	1 MΩ or higher
T4-14 (BGND) - Body ground	Always	1 MΩ or higher

NG → **REPAIR OR REPLACE FRONT SEAT WIRE RH**

OK

7 CHECK FRONT SEAT WIRE RH (SHORT)

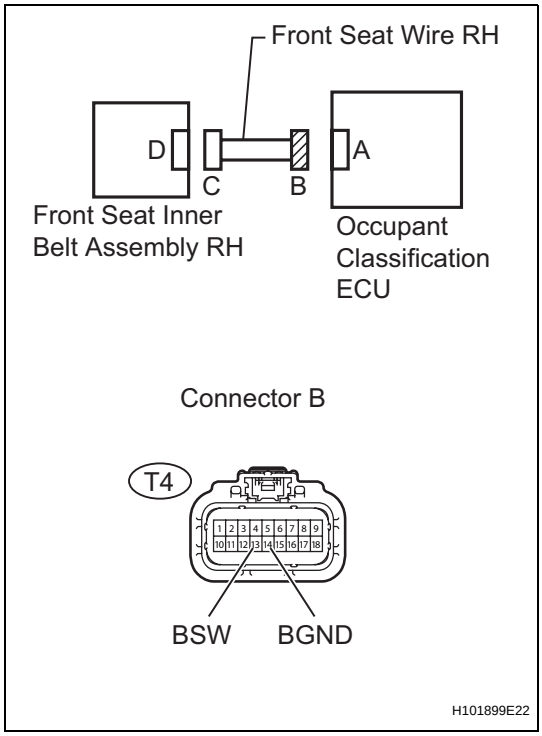

(a) Measure the resistance according to the value(s) in the table below.

Standard resistance

Tester connection	Condition	Specified condition
T4-13 (BSW) - T4-14 (BGND)	Always	1 MΩ or higher

NG → **REPAIR OR REPLACE FRONT SEAT WIRE RH**

OK

8	CHECK DTC

(a) Connect the connectors to the occupant classification ECU and the front seat inner belt assembly RH.
(b) Connect the negative (-) terminal cable to the battery.
(c) Turn the engine switch on (IG).
(d) Clear the DTCs stored in the occupant classification ECU (See page RS-318).
(e) Clear the DTCs stored in the center airbag sensor assembly (See page RS-49)
(f) Turn the engine switch off.
(g) Turn the engine switch on (IG).
(h) Check the DTCs (See page RS-318).
OK:
DTC B1771 is not output.
HINT:
Codes other than B1771 may be output at this time, but they are not related to this check.

OK → **USE SIMULATION METHOD TO CHECK (See page RS-37)**

NG ↓

9	REPLACE FRONT SEAT INNER BELT ASSEMBLY RH

(a) Turn the engine switch off.
(b) Disconnect the negative (-) terminal cable from the battery, and wait for at least 90 seconds.
(c) Replace the front seat inner belt assembly RH (See page SB-22).
HINT:
Perform the inspection using parts from a normal vehicle if possible.
(d) Connect the negative (-) terminal cable to the battery.
(e) Turn the engine switch on (IG).
(f) Clear the DTCs stored in the occupant classification ECU (See page RS-318).
(g) Clear the DTCs stored in the center airbag sensor assembly (See page RS-49)
(h) Turn the engine switch off.
(i) Turn the engine switch on (IG).
(j) Check the DTCs (See page RS-318).
OK:
DTC B1771 is not output.
HINT:
Codes other than B1771 may be output at this time, but they are not related to this check.

OK → **END**

NG ↓

RS

10	REPLACE OCCUPANT CLASSIFICATION ECU

(a) Connect the intelligent tester to the DLC3.
(b) Turn the engine switch on (IG).
(c) Using the intelligent tester, save the ECU data from the ECU which has been installed on the vehicle (See page RS-308).
(d) Turn the engine switch off.
(e) Disconnect the negative (-) terminal cable from the battery, and wait for at least 90 seconds.
(f) Replace the occupant classification ECU (See page RS-501).
(g) Connect the negative (-) terminal cable to the battery.
(h) Turn the engine switch on (IG).
(i) Using the intelligent tester, load the previous ECU data stored into the new ECU (See page RS-308).
(j) Turn the engine switch off.
(k) Turn the engine switch on (IG).
(l) Clear the DTCs stored in the memory (See page RS-318).
HINT:
If DTC is not cleared at this time, past DTC will remain.

NEXT

11	PERFORM SENSITIVITY CHECK

(a) Perform the sensitivity check (See page RS-312).

NEXT

END

DTC	B1773	Belt Tension Sensor Circuit Malfunction

DTC	B1776	Seat Belt Tension Sensor Power Source Circuit Malfunction

DESCRIPTION

The seat belt tension sensor circuit consists of the occupant classification ECU and the seat belt tension sensor.
The seat belt tension sensor sends the seat belt tension signal to the occupant classification ECU.
DTC B1773 and B1776 are recorded when a malfunction is detected in the seat belt tension sensor circuit.

DTC No.	DTC Detecting Condition	Trouble Area
B1773 B1776	• The occupant classification ECU receives line short circuit signal, and open circuit signal, a short circuit to ground signal or a short circuit to B+ signal in the seat belt tension sensor circuit for 2 seconds. • Seat belt tension sensor malfunction • Occupant classification ECU malfunction	• Front seat wire RH • Front seat outer belt assembly RH (Seat belt tension sensor) • Occupant classification ECU

HINT:
When DTC B1650/32 is detected as a result of troubleshooting for the AIRBAG SYSTEM, check the DTCs stored in the occupant classification ECU. When DTC B1773 and B1776 are output, perform troubleshooting for the DTC.

RS

WIRING DIAGRAM

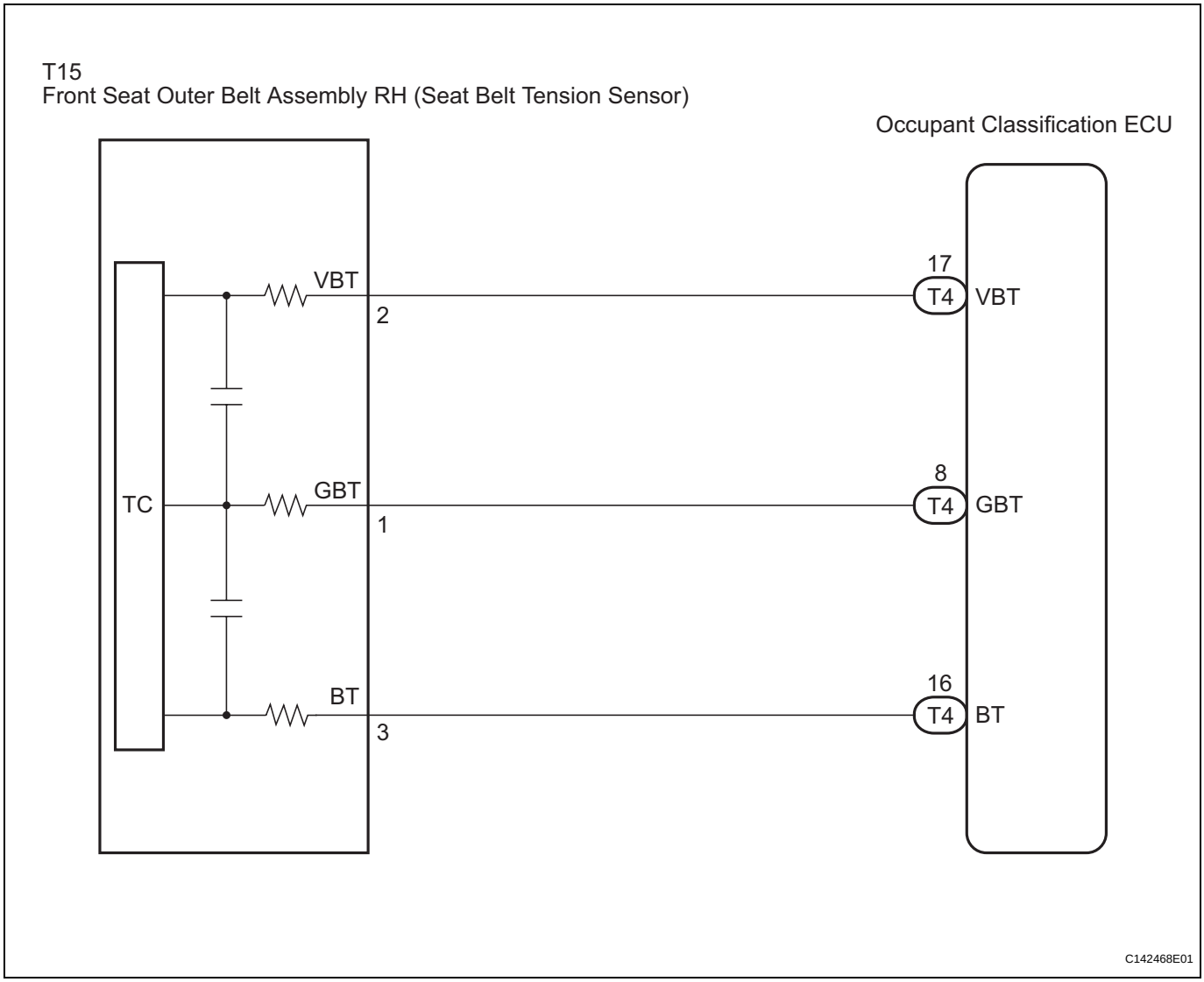

INSPECTION PROCEDURE

HINT:

- If troubleshooting (wire harness inspection) is difficult to perform, remove the passenger seat installation bolts to see the undersurface of the seat cushion.
- In the above case, hold the seat so that it does not fall down. Holding the seat for a long period of time may cause a problem, such as seat rail deformation. Hold the seat only as necessary.

1	CHECK DTC

(a) Turn the engine switch on (IG).
(b) Clear the DTCs stored in the occupant classification ECU (See page RS-318).
(c) Clear the DTCs stored in the center airbag sensor assembly (See page RS-49).
(d) Turn the engine switch off.
(e) Turn the engine switch on (IG).
(f) Check the DTCs (See page RS-318).

OK:

DTC B1773 and B1776 are not output.

HINT:

Codes other than B1773 and B1776 may be output at this time, but they are not related to this check.

OK → **USE SIMULATION METHOD TO CHECK (See page RS-37)**

NG

2 CHECK CONNECTION OF CONNECTORS

(a) Turn the engine switch off.

(b) Disconnect the negative (-) terminal cable from the battery, and wait for at least 90 seconds.

(c) Check that the connectors are properly connected to the occupant classification ECU and the seat belt tension sensor.

OK:

The connectors are properly connected.

NG → **CONNECT CONNECTORS PROPERLY, THEN GO TO STEP 1**

OK

3 CHECK CONNECTORS

(a) Disconnect the connectors from the occupant classification ECU and the belt tension sensor.

(b) Check that the connectors (on the center airbag sensor assembly side and seat belt tension sensor side) are not damaged.

OK:

The connectors are not deformed or damaged.

HINT:

If the connectors are not connected securely, reconnect the connectors and proceed to the next inspection.

NG → **REPAIR OR REPLACE FRONT SEAT WIRE RH**

OK

RS

4 CHECK FRONT SEAT WIRE RH (SHORT TO B+)

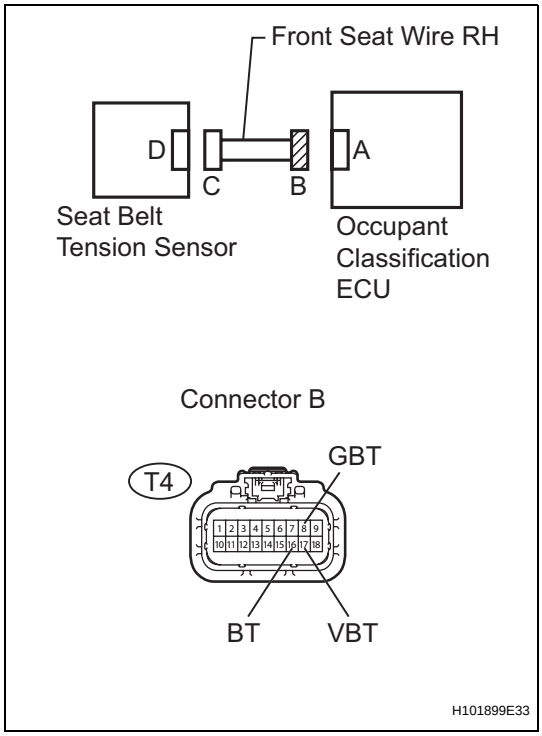

(a) Connect the negative (-) terminal cable to the battery.
(b) Turn the engine switch on (IG).
(c) Measure the voltage according to the value(s) in the table below.

Standard voltage

Tester Connection	Condition	Specified Condition
T4-8 (GBT) - Body ground	Engine switch on (IG)	Below 1 V
T4-16 (BT) - Body ground	Engine switch on (IG)	Below 1 V
T4-17 (VBT) - Body ground	Engine switch on (IG)	Below 1 V

NG → **REPAIR OR REPLACE FRONT SEAT WIRE RH**

OK

5 CHECK FRONT SEAT WIRE RH (OPEN)

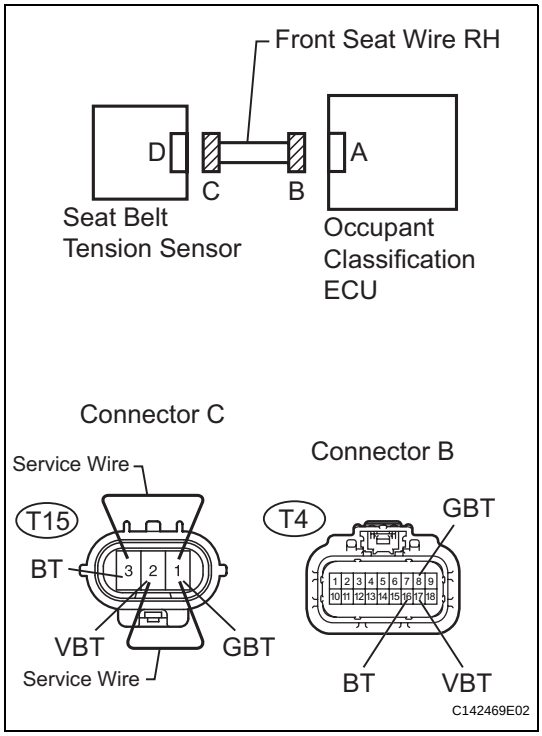

(a) Turn the engine switch off.
(b) Disconnect the negative (-) terminal cable from the battery, and wait for at least 90 seconds.
(c) Using a service wire, connect terminals 1 (GBT) and 3 (BT), and connect terminals 1 (GBT) and 2 (VBT) of connector C.

NOTICE:
Do not forcibly insert the service wire into the terminals of the connector when connecting the wire.

(d) Measure the resistance according to the value(s) in the table below.

Standard resistance

Tester Connection	Condition	Specified Condition
T4-16 (BT) - T4-8 (GBT)	Always	Below 1 Ω
T4-17 (VBT) - T4-8 (GBT)	Always	Below 1 Ω

NG → **REPAIR OR REPLACE FRONT SEAT WIRE RH**

OK

RS

6 CHECK FRONT SEAT WIRE RH (SHORT TO GROUND)

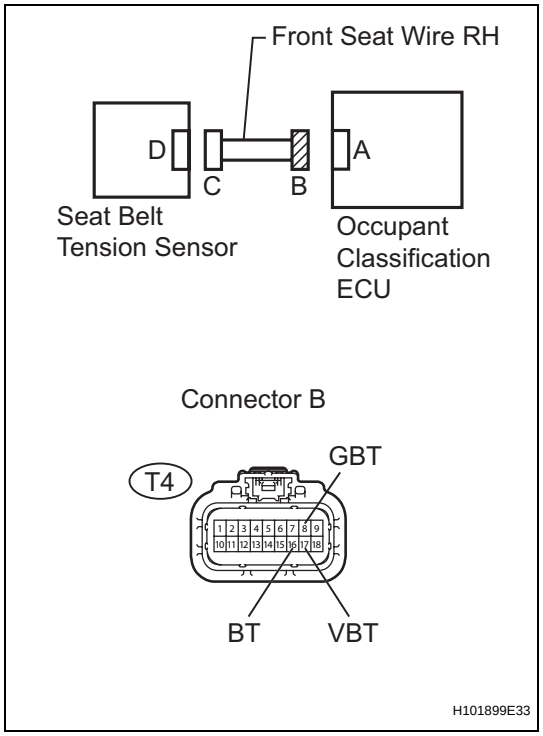

(a) Disconnect the service wire from connector C.
(b) Measure the resistance according to the value(s) in the table below.

Standard resistance

Tester Connection	Condition	Specified Condition
T4-8 (GBT) - Body ground	Always	1 MΩ or higher
T4-16 (BT) - Body ground	Always	1 MΩ or higher
T4-17 (VBT) - Body ground	Always	1 MΩ or higher

NG → **REPAIR OR REPLACE FRONT SEAT WIRE RH**

OK

7 CHECK FRONT SEAT WIRE RH (SHORT)

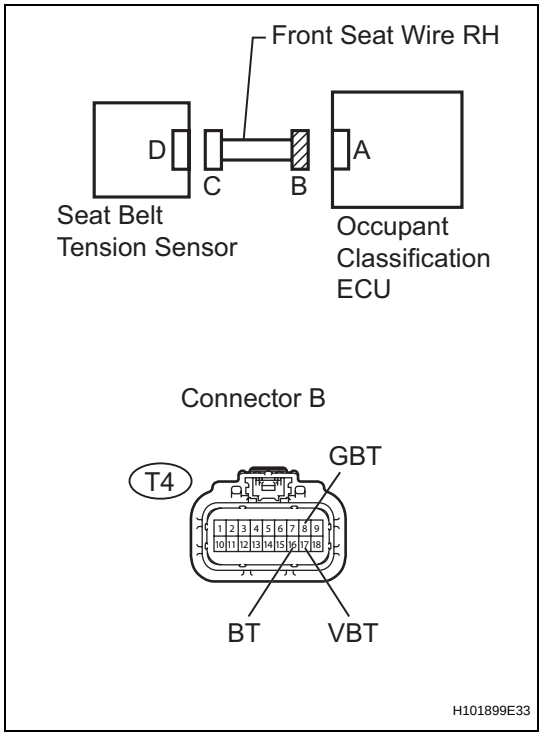

(a) Measure the resistance according to the value(s) in the table below.

Standard resistance

Tester Connection	Condition	Specified Condition
T4-16 (BT) - T4-8 (GBT)	Always	1 MΩ or higher
T4-17 (VBT) - T4-8 (GBT)	Always	1 MΩ or higher

NG → **REPAIR OR REPLACE FRONT SEAT WIRE RH**

OK

RS

8	CHECK DTC

(a) Connect the connectors to the occupant classification ECU and the seat belt tension sensor.
(b) Connect the negative (-) terminal cable to the battery.
(c) Turn the engine switch on (IG).
(d) Clear the DTCs stored in the occupant classification ECU (See page RS-318).
(e) Clear the DTCs stored in the center airbag sensor assembly (See page RS-49).
(f) Turn the engine switch off.
(g) Turn the engine switch on (IG).
(h) Check the DTCs (See page RS-318).
OK:
DTC B1773 and B1776 are not output.
HINT:
Codes other than B1773 and B1776 may be output at this time, but they are not related to this check.

OK → **USE SIMULATION METHOD TO CHECK (See page RS-37)**

NG

9	REPLACE FRONT SEAT OUTER BELT ASSEMBLY RH

(a) Turn the engine switch off.
(b) Disconnect the negative (-) terminal cable from the battery, and wait for at least 90 seconds.
(c) Replace the front seat outer belt assembly (See page SB-27).
HINT:
Perform the inspection using parts from a normal vehicle if possible.
(d) Connect the negative (-) terminal cable to the battery.
(e) Turn the engine switch on (IG).
(f) Clear the DTCs stored in the occupant classification ECU (See page RS-318).
(g) Clear the DTCs stored in the center airbag sensor assembly (See page RS-49).
(h) Turn the engine switch off.
(i) Turn the engine switch on (IG).
(j) Check the DTCs (See page RS-318).
OK:
DTC B1773 and B1776 are not output.
HINT:
Codes other than B1773 and B1776 may be output at this time, but they are not related to this check.

OK → **END**

NG

10	REPLACE OCCUPANT CLASSIFICATION ECU

(a) Connect the intelligent tester to the DLC3.
(b) Turn the engine switch on (IG).
(c) Using the intelligent tester, save the ECU data from the ECU which has been installed on the vehicle (See page RS-308).
(d) Turn the engine switch off.
(e) Disconnect the negative (-) terminal cable from the battery, and wait for at least 90 seconds.
(f) Replace the occupant classification ECU (See page RS-501).
(g) Connect the negative (-) terminal cable to the battery.
(h) Turn the engine switch on (IG).
(i) Using the intelligent tester, load the previous ECU data stored into the new ECU (See page RS-308).
(j) Turn the engine switch off.
(k) Turn the engine switch on (IG).
(l) Clear the DTCs stored in the memory (See page RS-318).
HINT:
If DTC is not cleared at this time, past DTC will remain.

NEXT

11	PERFORM SENSITIVITY CHECK

(a) Perform the sensitivity check (See page RS-312).

NEXT

END

DTC	B1774	Pressure Sensor Circuit Malfunction

DTC	B1775	Pressure Sensor Power Source Circuit Malfunction

DESCRIPTION

The pressure sensor circuit consists of the occupant classification ECU and the occupant classification sensor.
The occupant classification sensor sends the pressure signal to the occupant classification ECU.
DTC B1774 and B1775 are recorded when a malfunction is detected in the pressure sensor circuit.

DTC No.	DTC Detecting Condition	Trouble Area
B1774 B1775	• The occupant classification ECU receives a line short circuit signal, and open circuit signal, a short circuit to ground signal or a short circuit to B+ signal in the pressure sensor circuit for 2 seconds. • Occupant classification sensor malfunction • Occupant classification ECU malfunction	• Front seat wire RH • Occupant classification sensor • Occupant classification ECU

HINT:
When DTC B1650/32 is detected as a result of troubleshooting for the AIRBAG SYSTEM, check the DTCs stored in the occupant classification ECU. When DTC B1774 and B1775 are output, perform troubleshooting for the DTC.

RS

WIRING DIAGRAM

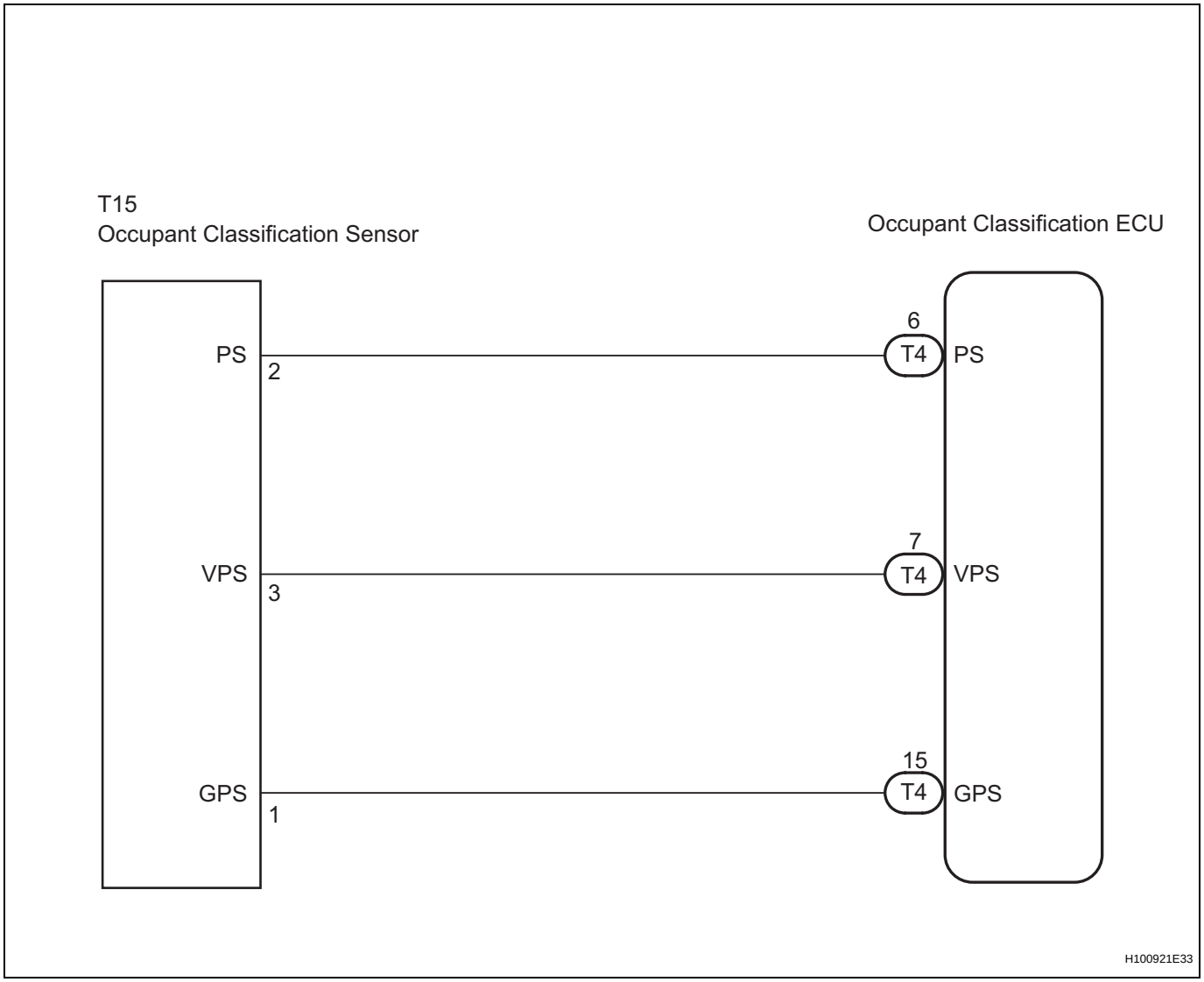

INSPECTION PROCEDURE

HINT:

- If troubleshooting (wire harness inspection) is difficult to perform, remove the passenger seat installation bolts to see the undersurface of the seat cushion.
- In the above case, hold the seat so that it does not fall down. Holding the seat for a long period of time may cause a problem, such as seat rail deformation. Hold the seat only as necessary.
- After performing the zero point calibration, check for DTCs to confirm that the calibration is completed normally. (If it fails, DTC B1797 will be output.)

1	CHECK DTC

(a) Turn the engine switch on (IG).
(b) Clear the DTCs stored in the occupant classification ECU (See page RS-318).
(c) Clear the DTCs stored in the center airbag sensor assembly (See page RS-49).
(d) Turn the engine switch off.
(e) Turn the engine switch on (IG).

RS

(f) Check the DTCs (See page RS-318).
OK:
DTC B1774 and B1775 are not output.
HINT:
Codes other than B1774 and B1775 may be output at this time, but they are not related to this check.

OK → **USE SIMULATION METHOD TO CHECK (See page RS-315)**

NG

2 CHECK CONNECTION OF CONNECTORS

(a) Turn the engine switch off.
(b) Disconnect the negative (-) terminal cable from the battery, and wait for at least 90 seconds.
(c) Check that the connectors are properly connected to the occupant classification ECU and the occupant classification sensor.
OK:
The connectors are properly connected.

NG → **CONNECT CONNECTORS PROPERLY, THEN GO TO STEP 1**

OK

3 CHECK CONNECTORS

(a) Disconnect the connectors from the occupant classification ECU and the occupant classification sensor.
(b) Check that the connectors (on the center airbag sensor assembly and occupant classification sensor side) are not damaged.
OK:
The connectors are not deformed or damaged.

NG → **REPAIR OR REPLACE FRONT SEAT WIRE RH**

OK

RS

4 CHECK FRONT SEAT WIRE RH (SHORT TO B+)

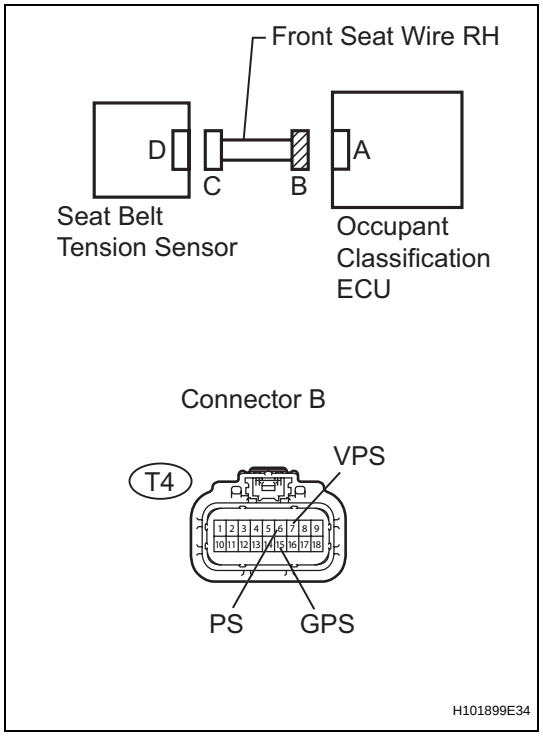

(a) Connect the negative (-) terminal cable to the battery.
(b) Turn the engine switch on (IG).
(c) Measure the voltage according to the value(s) in the table below.

Standard voltage

Tester Connection	Condition	Specified Condition
T4-6 (PS) - Body ground	Engine switch on (IG)	Below 1 V
T4-7 (VPS) - Body ground	Engine switch on (IG)	Below 1 V
T4-15 (GPS) - Body ground	Engine switch on (IG)	Below 1 V

NG → **REPAIR OR REPLACE FRONT SEAT WIRE RH**

OK

5 CHECK FRONT SEAT WIRE RH (OPEN)

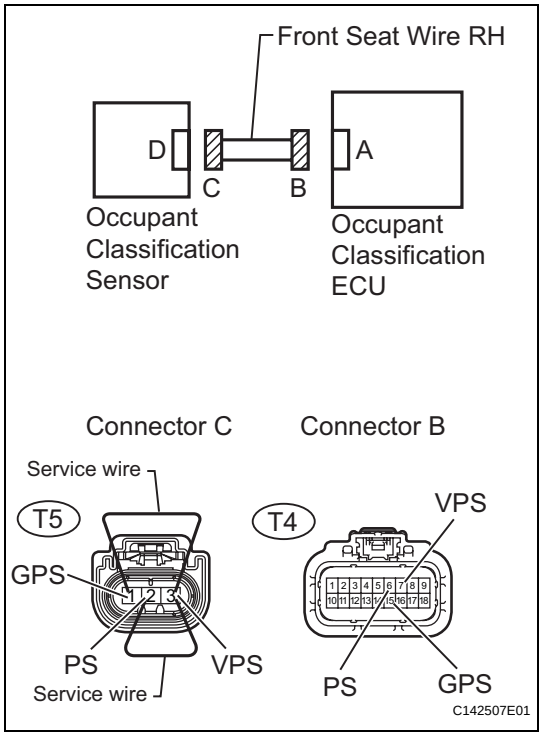

(a) Turn the engine switch off.
(b) Disconnect the negative (-) terminal cable from the battery, and wait for at least 90 seconds.
(c) Using a service wire, connect terminals 1 (GPS) and 3 (VPS), and connect terminals 2 (PS) and 3 (VPS) of connector C.

NOTICE:
Do not forcibly insert the service wire into the terminals of the connector when connecting the wire.

(d) Measure the resistance according to the value(s) in the table below.

Standard resistance

Tester Connection	Condition	Specified Condition
T4-6 (PS) - T4-7 (VPS)	Always	Below 1 Ω
T4-7 (VPS) - T4-15 (GPS)	Always	Below 1 Ω

NG → **REPAIR OR REPLACE FRONT SEAT WIRE RH**

OK

RS

6 CHECK FRONT SEAT WIRE RH (SHORT TO GROUND)

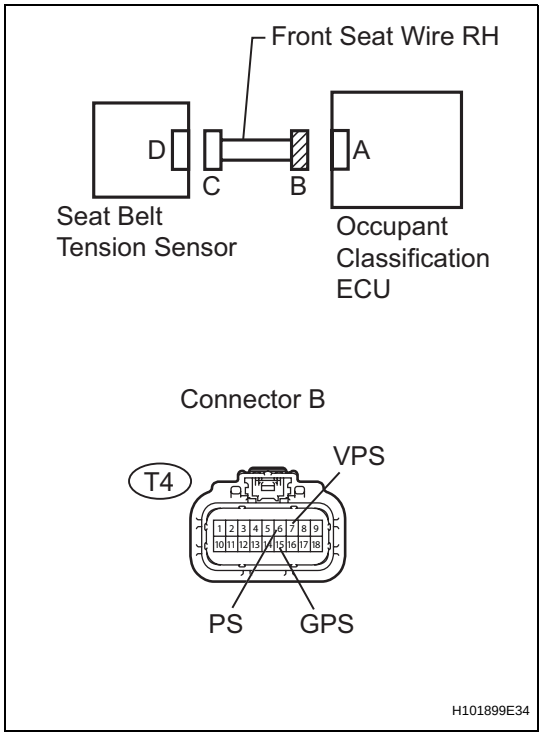

(a) Disconnect the service wire from connector C.
(b) Measure the resistance according to the value(s) in the table below.

Standard resistance

Tester Connection	Condition	Specified Condition
T4-6 (PS) - Body ground	Always	1 MΩ or higher
T4-7 (VPS) - Body ground	Always	1 MΩ or higher
T4-15 (GPS) - Body ground	Always	1 MΩ or higher

NG → **REPAIR OR REPLACE FRONT SEAT WIRE RH**

OK

7 CHECK FRONT SEAT WIRE RH (SHORT)

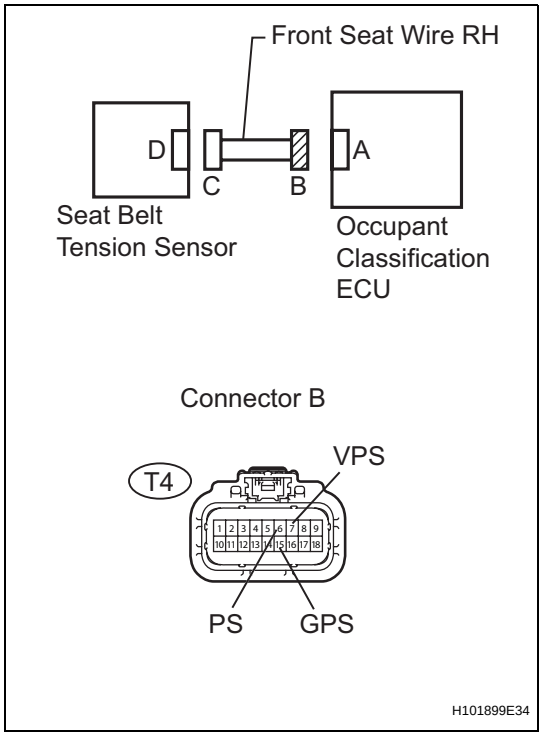

(a) Measure the resistance according to the value(s) in the table below.

Standard resistance

Tester Connection	Condition	Specified Condition
T4-6 (PS) - T4-15 (GPS)	Always	1 MΩ or higher
T4-7 (VPS) - T4-15 (GPS)	Always	1 MΩ or higher

NG → **REPAIR OR REPLACE FRONT SEAT WIRE RH**

OK

8	CHECK DTC

(a) Connect the connectors to the occupant classification ECU and the occupant classification sensor.
(b) Connect the negative (-) terminal cable to the battery.
(c) Turn the engine switch on (IG).
(d) Clear the DTCs stored in the occupant classification ECU (See page RS-318).
(e) Clear the DTCs stored in the center airbag sensor assembly (See page RS-49).
(f) Turn the engine switch off.
(g) Turn the engine switch on (IG).
(h) Check the DTCs (See page RS-318).
OK:
DTCs B1774 and B1775 are not output.
HINT:
Codes other than B1774 and B1775 may be output at this time, but they are not related to this check.

OK → **USE SIMULATION METHOD TO CHECK (See page RS-315)**

NG

9	REPLACE OCCUPANT CLASSIFICATION SENSOR (FRONT SEAT CUSHION ASSEMBLY)

(a) Turn the engine switch off.
(b) Disconnect the negative (-) terminal cable from the battery, and wait for at least 90 seconds.
(c) Replace the front seat cushion assembly (with occupant classification ECU and occupant classification sensor) (See page RS-501).
HINT:
Perform the inspection using parts from a normal vehicle if possible.
(d) Connect the negative (-) terminal cable to the battery.
(e) Turn the engine switch on (IG).
(f) Clear the DTCs stored in the occupant classification ECU (See page RS-318).
(g) Clear the DTCs stored in the center airbag sensor assembly (See page RS-49)
(h) Turn the engine switch off.
(i) Turn the engine switch on (IG).
(j) Check the DTCs (See page RS-318).
OK:
DTC B1774 and B1775 are not output.
HINT:
Codes other than B1774 and B1775 may be output at this time, but they are not related to this check.

NEXT

RS

10	PERFORM ZERO POINT CALIBRATION

(a) Connect the intelligent tester to the DLC3.
(b) Turn the engine switch on (IG).
(c) Using the intelligent tester, perform the zero point calibration (See page RS-312).
(d) Turn the engine switch off.
(e) Turn the engine switch on (IG).
(f) Clear the DTCs stored in the memory (See page RS-318).
HINT:
If DTC is not cleared at this time, past DTC will remain.

NEXT

11	CHECK DTC

HINT:
Check that the zero point calibration is completed normally. If any of the following conditions is met, DTC B1797 will be output (Refer to INITIALIZATION: See page RS-312):
- Zero point calibration is performed when the conditions for the calibration are not satisfied.
- Zero point calibration has failed.

(a) Turn the engine switch on (IG).
(b) Clear the DTCs stored in the occupant classification ECU (See page RS-318).
(c) Clear the DTCs stored in the center airbag sensor assembly (See page RS-49).
(d) Turn the engine switch off.
(e) Turn the engine switch on (IG).
(f) Check the DTCs (See page RS-49).
OK:
DTC B1797 is not output.

NG → **GO TO DTC B1797 (See page RS-357)**

OK

12	PERFORM SENSITIVITY CHECK

(a) Perform the sensitivity check (See page RS-312).

NEXT

END

DTC	B1790	Center Airbag Sensor Assembly Communication Circuit Malfunction

DESCRIPTION

The center airbag sensor assembly communication circuit consists of the occupant classification ECU and the center airbag sensor assembly.
DTC B1790 is recorded when a malfunction is detected in the center airbag sensor assembly communication circuit.

DTC No.	DTC Detecting Condition	Trouble Area
B1790	• The occupant classification ECU receives a line short circuit signal, an open circuit signal, a short circuit to ground signal or a short circuit to B+ signal in the center airbag sensor assembly communication circuit for 2 seconds. • Center airbag sensor assembly malfunction • Occupant classification ECU malfunction	• Floor wire No. 2 • Front seat wire RH (for Power seat) • Occupant classification ECU • Center airbag sensor assembly

HINT:
When DTC B1650/32 is detected as a result of troubleshooting for the AIRBAG SYSTEM, check the DTCs stored in the occupant classification ECU. When DTC B1790 is output, perform troubleshooting for the DTC.

RS

WIRING DIAGRAM

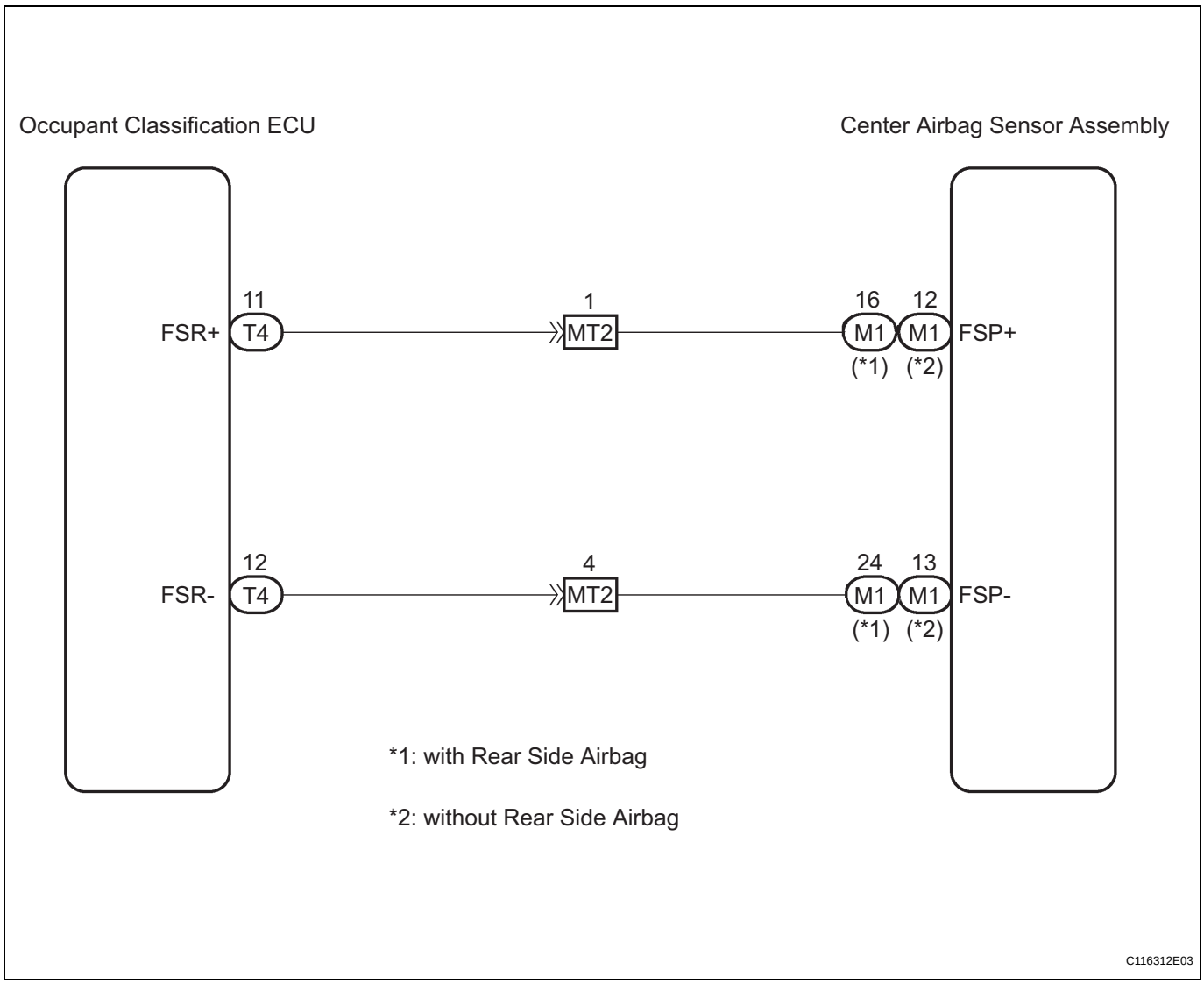

INSPECTION PROCEDURE

HINT:

- If troubleshooting (wire harness inspection) is difficult to perform, remove the front passenger seat installation bolts to see the undersurface of the seat cushion.
- In the above case, hold the seat so that it does not fall down. Holding the seat for a long period of time may cause a problem, such as seat rail deformation. Hold the seat only as necessary.

1	CHECK DTC

(a) Turn the engine switch on (IG).
(b) Clear the DTCs stored in the occupant classification ECU (See page RS-318).
(c) Clear the DTCs stored in the center airbag sensor assembly (See page RS-49).
(d) Turn the engine switch off.
(e) Turn the engine switch on (IG).
(f) Check the DTCs (See page RS-318).

OK:
DTC B1790 is not output.
HINT:
Codes other than DTC B1790 may be output at this time, but they are not related to this check.

OK → **USE SIMULATION METHOD TO CHECK (See page RS-37)**

NG

2 CHECK CONNECTION OF CONNECTORS

(a) Turn the engine switch off.
(b) Disconnect the negative (-) terminal cable from the battery.
(c) Check that the connectors are properly connected to the occupant classification ECU and the center airbag sensor assembly.
OK:
The connectors are properly connected.

NG → **CONNECT CONNECTORS PROPERLY, THEN GO TO STEP 1**

OK

3 CHECK CONNECTORS

(a) Disconnect the connectors from the center airbag sensor assembly and the occupant classification ECU.
(b) Check that the connectors (on the center airbag sensor assembly side and occupant classification ECU side) are not damaged.
OK:
The connectors are not deformed or damaged.

NG → **REPAIR OR REPLACE WIRE HARNESS**

OK

RS

4 CHECK OCCUPANT CLASSIFICATION SYSTEM CIRCUIT (SHORT TO B+)

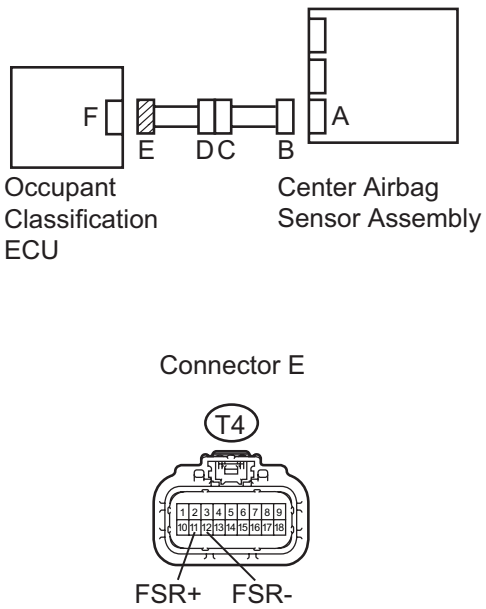

(a) Connect the negative (-) terminal cable to the battery.
(b) Turn the engine switch on (IG).
(c) Measure the voltage according to the value(s) in the table below.

Standard voltage

Tester connection	Condition	Specified condition
T4-11 (FSR+) - Body ground	Engine switch on (IG)	Below 1 V
T4-12 (FSR-) - Body ground	Engine switch on (IG)	Below 1 V

NG → **Go to step 13**

OK

RS

5 CHECK OCCUPANT CLASSIFICATION SYSTEM CIRCUIT (OPEN)

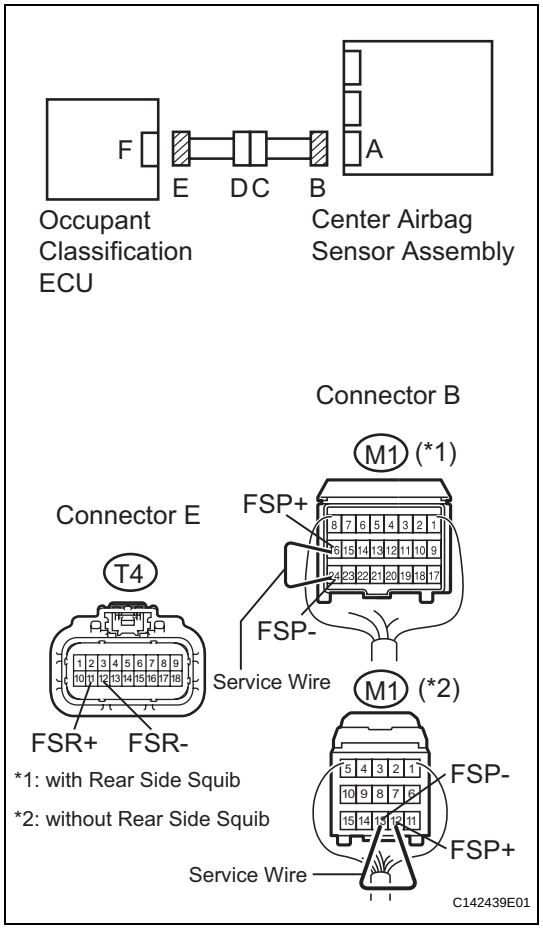

OK

(a) Turn the engine switch off.

(b) Disconnect the negative (-) terminal cable from the battery.

(c) with Rear side airbag:
Using a service wire, connect terminals 16 (FSP+) and 24 (FSP-) of connector B.
NOTICE:
Do not forcibly insert a service wire into the terminals of the connector when connecting the wire.

(d) without Rear side airbag:
Using a service wire, connect terminals 12 (FSP+) and 13 (FSP-) of connector B.
NOTICE:
Do not forcibly insert a service wire into the terminals of the connector when connecting the wire.

(e) Measure the resistance according to the value(s) in the table below.
Standard resistance

Tester connection	Condition	Specified condition
T4-11 (FSR+) - T4-12 (FSR-)	Always	Below 1 Ω

NG → **Go to step 14**

RS

6 CHECK OCCUPANT CLASSIFICATION SYSTEM CIRCUIT (SHORT)

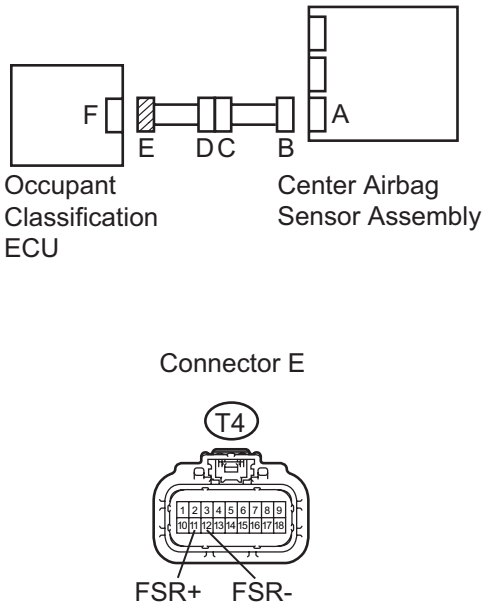

(a) Disconnect the service wire from connector B.
(b) Measure the resistance according to the value(s) in the table below.

Standard resistance

Tester connection	Condition	Specified condition
T4-11 (FSR+) - T4-12 (FSR-)	Always	1 MΩ or higher

NG → **Go to step 15**

OK

7 CHECK OCCUPANT CLASSIFICATION SYSTEM CIRCUIT (SHORT TO GROUND)

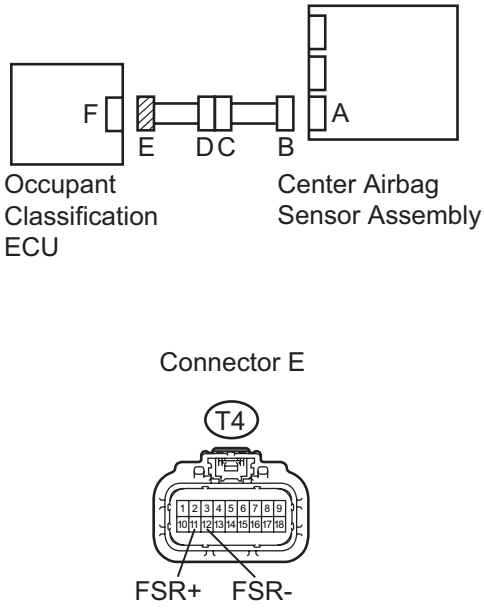

(a) Measure the resistance according to the value(s) in the table below.

Standard resistance

Tester connection	Condition	Specified condition
T4-11 (FSR+) - Body ground	Always	1 MΩ or higher
T4-12 (FSR-) - Body ground	Always	1 MΩ or higher

NG → **Go to step 16**

OK

8	RECHECK DTC

(a) Connect the connectors to the occupant classification ECU and the center airbag sensor assembly.
(b) Connect the intelligent tester to the DLC3.
(c) Connect the negative (-) terminal cable to the battery.
(d) Turn the engine switch on (IG).
(e) Clear the DTCs stored in the occupant classification ECU (See page RS-318).
(f) Clear the DTCs stored in the center airbag sensor assembly (See page RS-49).
(g) Turn the engine switch off.
(h) Turn the engine switch on (IG).
(i) Using the intelligent tester, check the DTCs of the occupant classification ECU (See page RS-318).
OK:
DTC B1790 is not output.
HINT:
Codes other than DTC B1790 may be output at this time, but they are not related to this check.

OK → **USE SIMULATION METHOD TO CHECK (See page RS-37)**

NG

9	REPLACE OCCUPANT CLASSIFICATION ECU

(a) Connect the intelligent tester to the DLC3.
(b) Turn the engine switch on (IG).
(c) Using the intelligent tester, save the ECU data from the ECU which has been installed on the vehicle (See page RS-308).
(d) Turn the engine switch off.
(e) Disconnect the negative (-) terminal cable from the battery, and wait for at least 90 seconds.
(f) Replace the occupant classification ECU (See page RS-501).
(g) Connect the negative (-) terminal cable to the battery.
(h) Turn the engine switch on (IG).
(i) Using the intelligent tester, load the previous ECU data stored into the new ECU (See page RS-308).
(j) Turn the engine switch off.
(k) Turn the engine switch on (IG).
(l) Clear the DTCs stored in the memory (See page RS-318).
HINT:
If the DTCs are not cleared at this time, past DTCs will remain.

NEXT

RS

10	RECHECK DTC

(a) Turn the engine switch on (IG).
(b) Clear the DTCs stored in the occupant classification ECU (See page RS-318).
(c) Clear the DTCs stored in the center airbag sensor assembly (See page RS-49).
(d) Turn the engine switch off.
(e) Turn the engine switch on (IG).
(f) Using the intelligent tester, check the DTCs of the occupant classification ECU (See page RS-318).
OK:
DTC B1790 is not output.
HINT:
Codes other than DTC B1790 may be output at this time, but they are not related to this check.

OK → **Go to step 12**

NG

11	REPLACE CENTER AIRBAG SENSOR ASSEMBLY

(a) Turn the engine switch off.
(b) Disconnect the negative (-) terminal cable from the battery, and wait for at least 90 seconds.
(c) Replace the center airbag sensor assembly (See page RS-468).

NEXT

12	PERFORM SENSITIVITY CHECK

(a) Perform the sensitivity check (See page RS-312).

NEXT

END

RS

13	CHECK FLOOR WIRE NO. 2 (SHORT TO B+)

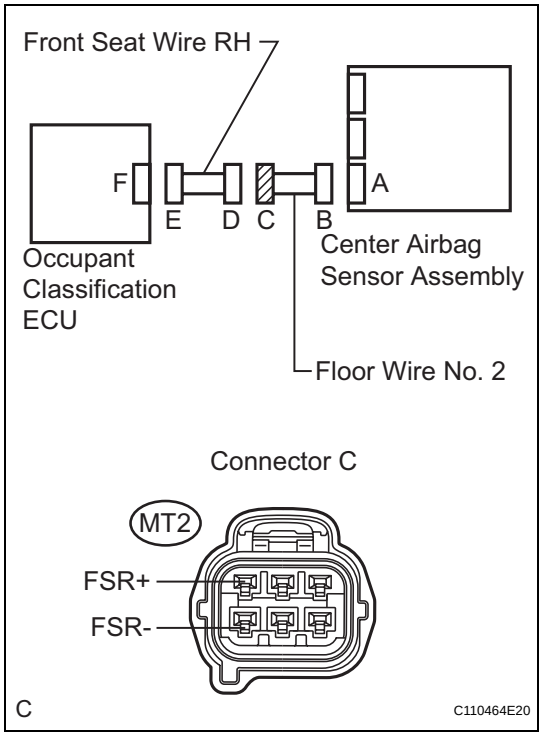

(a) Turn the engine switch off.
(b) Disconnect the negative (-) terminal cable from the battery, and wait for at least 90 seconds.
(c) Disconnect the front seat wire RH connector from the floor wire No. 2.
(d) Connect the negative (-) terminal cable to the battery, and wait for at least 2 seconds.
(e) Turn the engine switch on (IG).
(f) Measure the voltage according to the value(s) in the table below.

Standard voltage

Tester connection	Condition	Specified condition
MT2-1 (FSR+) - Body ground	Engine switch on (IG)	Below 1 V
MT2-4 (FSR-) - Body ground	Engine switch on (IG)	Below 1 V

NG → **REPAIR OR REPLACE FLOOR WIRE NO. 2**

OK

REPAIR OR REPLACE FRONT SEAT WIRE RH

RS

14	CHECK FLOOR WIRE NO. 2 (OPEN)

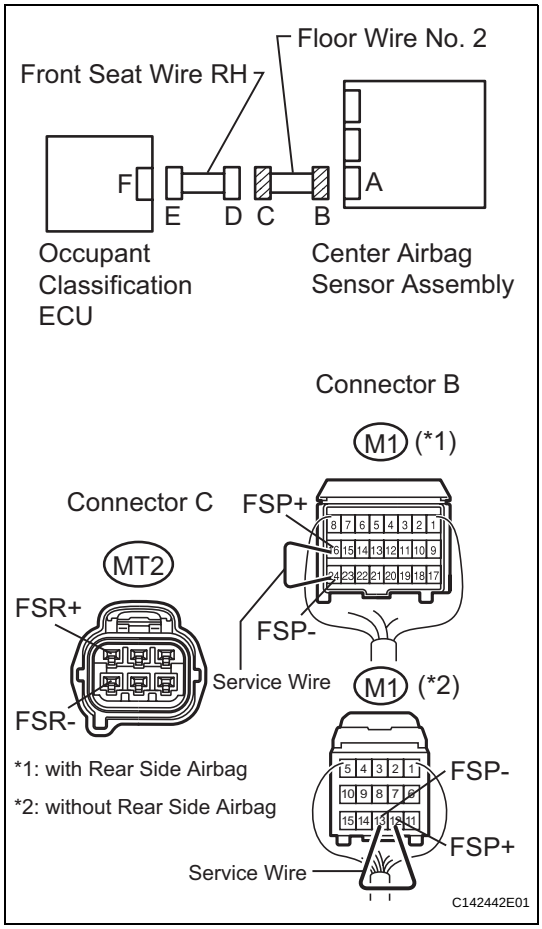

(a) Disconnect the front seat wire RH connector from the floor wire No. 2.
HINT:
The service wire has already been inserted into connector B.

(b) Measure the resistance according to the value(s) in the table below.
Standard resistance

Tester connection	Condition	Specified condition
MT2-1 (FSR+) - MT2-4 (FSR-)	Always	Below 1 Ω

NG → **REPAIR OR REPLACE FLOOR WIRE NO. 2**

OK

REPAIR OR REPLACE FRONT SEAT WIRE RH

15	CHECK FLOOR WIRE NO. 2 (SHORT)

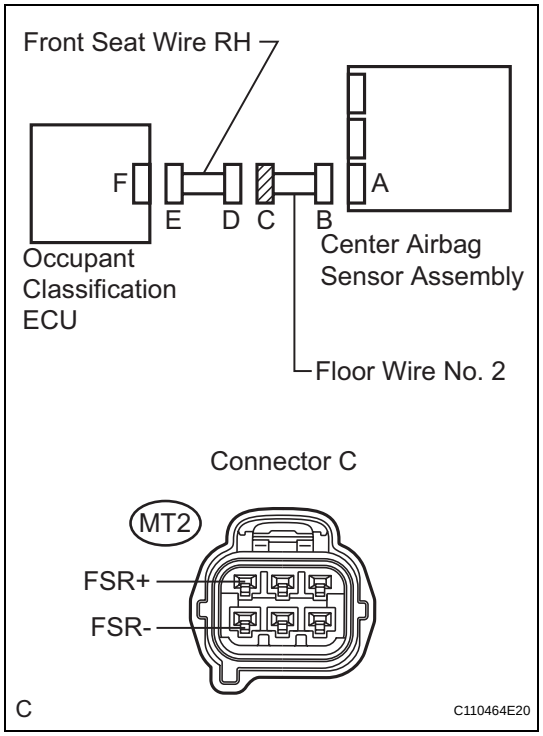

(a) Disconnect the front seat wire RH connector from the floor wire No. 2.

(b) Measure the resistance according to the value(s) in the table below.

Standard resistance

Tester connection	Condition	Specified condition
MT2-1 (FSR+) - MT2-4 (FSR-)	Always	1 MΩ or higher

NG → **REPAIR OR REPLACE FLOOR WIRE NO. 2**

OK

REPAIR OR REPLACE FRONT SEAT WIRE RH

RS

RS

16 CHECK FLOOR WIRE NO. 2 (SHORT TO GROUND)

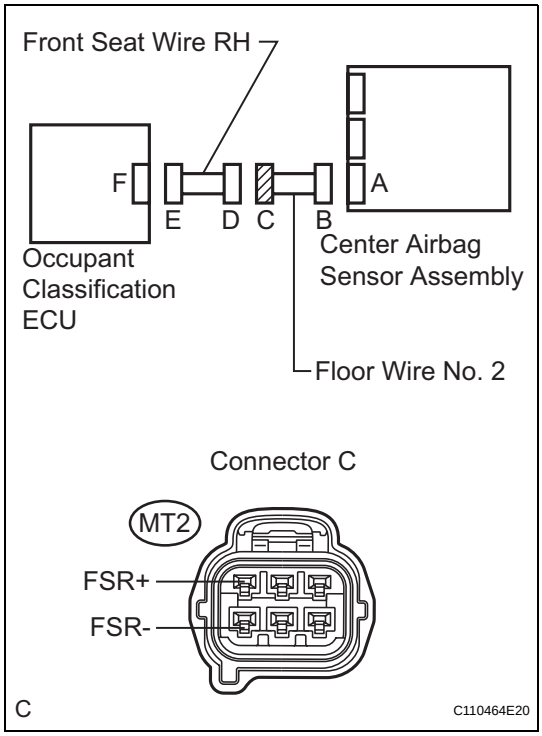

(a) Disconnect the front seat wire RH connector from the floor wire No. 2.

(b) Measure the resistance according to the value(s) in the table below.

Standard resistance

Tester connection	Condition	Specified condition
MT2-1 (FSR+) - Body ground	Always	1 MΩ or higher
MT2-4 (FSR-) - Body ground	Always	1 MΩ or higher

NG → **REPAIR OR REPLACE FLOOR WIRE NO. 2**

OK

REPAIR OR REPLACE FRONT SEAT WIRE RH

DTC	B1795	Occupant Classification ECU Malfunction

DESCRIPTION

DTC B1795 is recorded when a malfunction is detected in the occupant classification ECU.

DTC No.	DTC Detecting Condition	Trouble Area
B1795	Occupant classification ECU malfunction	Occupant classification ECU

HINT:
When DTC B1650/32 is detected as a result of troubleshooting for the AIRBAG SYSTEM, check the DTCs stored in the occupant classification ECU. When DTC B1795 is output, perform troubleshooting for the DTC.

INSPECTION PROCEDURE

HINT:
- If troubleshooting (wire harness inspection) is difficult to perform, remove the front passenger seat installation bolts to see the undersurface of the seat cushion.
- In the above case, hold the seat so that it does not fall down. Holding the seat for a long period of time may cause a problem, such as seat rail deformation. Hold the seat only as necessary.

1 CHECK DTC

(a) Turn the engine switch on (IG).
(b) Clear the DTCs stored in the occupant classification ECU (See page RS-318).
(c) Clear the DTCs stored in the center airbag sensor assembly (See page RS-49).
(d) Turn the engine switch off.
(e) Turn the engine switch on (IG), and wait for at least 10 seconds.
(f) Check the DTCs (See page RS-318).
OK:
DTC B1795 is not output.

HINT:
Codes other than B1795 may be output at this time, but they are not related to this check.

OK → **USE SIMULATION METHOD TO CHECK (See page RS-37)**

NG

2 REPLACE OCCUPANT CLASSIFICATION ECU

(a) Connect the intelligent tester to the DLC3.
(b) Turn the engine switch on (IG).
(c) Using the intelligent tester, save the ECU data from the ECU which has been installed on the vehicle (See page RS-308).
(d) Turn the engine switch off.
(e) Disconnect the negative (-) terminal cable from the battery, and wait for at least 90 seconds.

(f) Replace the occupant classification ECU (See page RS-501).
(g) Connect the negative (-) terminal cable to the battery.
(h) Turn the engine switch on (IG).
(i) Using the intelligent tester, load the previous ECU data stored into the new ECU (See page RS-308).
(j) Turn the engine switch off.
(k) Turn the engine switch on (IG).
(l) Clear the DTCs stored in the memory (See page RS-318).
HINT:
If DTC is not cleared at this time, past DTC will remain.

NEXT

3	PERFORM SENSITIVITY CHECK

(a) Perform the sensitivity check (See page RS-312).

NEXT

END

DTC B1797 Calibration Malfunction

DESCRIPTION

DTC B1797 is output when the following condition is met:

- Zero point calibration is performed when the conditions for the calibration are not satisfied.
- Zero point calibration has failed.

Condition for the zero point calibration:

Item	Condition
DTC	Not recorded
Front passenger seat occupant	Vacant
Front passenger side buckle switch	OFF (The seat belt is not fastened)
ECU temperature	0 to 46°C (32 to 114.8°F)
Filtered pressure	38 to 75 count

DTC No.	DTC Detecting Condition	Trouble Area
B1797	• Zero point calibration is performed when the conditions for the calibration are not satisfied. • Zero point calibration has failed.	• There is no malfunction if this DTC is not output again after performing occupant classification system zero point calibration. • Occupant classification sensor

HINT:
When DTC B1650/32 is detected as a result of troubleshooting for the AIRBAG SYSTEM, check the DTCs stored in the occupant classification ECU. When DTC B1797 is output, perform troubleshooting for the DTC.

INSPECTION PROCEDURE

1 CHECK DTC

(a) Turn the engine switch on (IG).
(b) Clear the DTCs stored in the occupant classification ECU (See page RS-318).
(c) Clear the DTCs stored in the center airbag sensor assembly (See page RS-49).
(d) Turn the engine switch off.
(e) Turn the engine switch on (IG), and wait for at least 10 seconds.
(f) Check the DTCs (See page RS-318).
OK:
DTC B1797 is not output.
HINT:
Codes other than B1797 may be output at this time, but they are not related to this check.

OK → **PERFORM ZERO POINT CALIBRATION**

NG

2 READ VALUE OF DATA LIST (SPECIFIED CONDITION FOR ZERO POINT CALIBRATION)

(a) Connect the intelligent tester to the DLC3.
(b) Turn the engine switch on (IG).

RS

(c) Using the intelligent tester, read the DATA LIST (See page RS-319).

Item	Measurement Item/ Range (Display)	Normal Condition	Specified Condition for Zero Point Calibration
RELATIVE PRESS	Pressure sensor output/ Min.: 0 Max.: 255	0 to 210 (reference value)	0 to 2
THERMISTOR TEMP	Thermistor temperature output/ Min.: -40°C (-40°F) Max.: 90°C (194°F)	-40 to 85°C (-40 to185°F)	3 to 40°C (36 to 104°F)
#PRESENT CODES	Number of present trouble codes/ Min.: 0 Max.: 255	0	0
#PAST CODES	Number of past trouble codes/ Min.: 0 Max.: 255	0	0

Result

Result	Proceed to
All items correspond to the range of specified condition for zero point calibration.	**A**
THERMISTOR TEMP does not correspond to the range of specified condition for zero point calibration.	**B**

B → **Go to step 6**

A

3 CHECK DTC

HINT:
Check that the zero point calibration is completed normally. If any of the following condition is met, DTC B1797 will be output (Refer to INITIALIZATION: See page RS-312).

- Zero point calibration is performed when the the calibration conditions are not satisfied.
- Zero point calibration has failed.

(a) Turn the engine switch on (IG).
(b) Clear the DTCs stored in the occupant classification ECU (See page RS-318).
(c) Clear the DTCs stored in the center airbag sensor assembly (See page RS-49).
(d) Turn the engine switch off.
(e) Turn the engine switch on (IG).
(f) Check the DTCs (See page RS-318).
OK:
DTC B1797 is not output.

NEXT

4 PERFORM ZERO POINT CALIBRATION

(a) Connect the intelligent tester to the DLC3.
(b) Turn the engine switch on (IG).
(c) Using the intelligent tester, perform the zero point calibration (See page RS-312).
(d) Turn the engine switch off.

(e) Turn the engine switch on (IG).
(f) Clear the DTCs stored in the memory (See page RS-318).
HINT:
If the DTCs are not cleared at this time, past DTCs will remain.

NEXT

5	CHECK DTC

(a) Turn the engine switch on (IG).
(b) Clear the DTCs stored in the occupant classification ECU (See page RS-318).
(c) Clear the DTCs stored in the center airbag sensor assembly (See page RS-49).
(d) Turn the engine switch off.
(e) Turn the engine switch on (IG).
(f) Check the DTCs (See page RS-318).
OK:
DTC B1797 is not output.
HINT:
Codes other than B1797 may be output at this time, but they are not related to this check.

NEXT

END

6	REPLACE OCCUPANT CLASSIFICATION SENSOR (FRONT SEAT CUSHION ASSEMBLY)

(a) Turn the engine switch off.
(b) Disconnect the negative (-) terminal cable from the battery, and wait for at least 90 seconds.
(c) Replace the front seat cushion assembly (with occupant classification ECU and occupant classification sensor) (See page RS-490).
(d) Connect the negative (-) terminal cable to the battery.
(e) Turn the engine switch on (IG).
(f) Clear the DTCs stored in the occupant classification ECU (See page RS-318).
(g) Clear the DTCs stored in the center airbag sensor assembly (See page RS-49).
(h) Turn the engine switch off.
(i) Turn the engine switch on (IG).
(j) Using the intelligent tester, check the DTCs of the occupant classification ECU (See page RS-318).
OK:
DTC is not output.

NEXT

RS

7	PERFORM ZERO POINT CALIBRATION

(a) Connect the intelligent tester to the DLC3.
(b) Turn the engine switch on (IG).
(c) Using the intelligent tester, perform the zero point calibration (See page RS-312).
(d) Turn the engine switch off.
(e) Turn the engine switch on (IG).
(f) Clear the DTCs stored in the occupant classification ECU (See page RS-318).
HINT:
If the DTCs are not cleared at this time, past DTCs will remain.

NEXT

8	CHECK DTC

(a) Turn the engine switch on (IG).
(b) Clear the DTCs stored in the occupant classification ECU (See page RS-318).
(c) Clear the DTCs stored in the center airbag sensor assembly (See page RS-49).
(d) Turn the engine switch off.
(e) Turn the engine switch on (IG).
(f) Check the DTCs (See page RS-318).
OK:
DTC B1797 is not output.

NEXT

9	PERFORM SENSITIVITY CHECK

(a) Perform the sensitivity check (See page RS-312).

NEXT

END

Trouble in Passenger Airbag ON / OFF Indicator

DESCRIPTION

The occupant classification system detects the front passenger seat condition. It then informs a passenger of the front passenger airbag assembly and front seat side airbag assembly condition (activated/not activated) by the passenger airbag ON/OFF indicator.

HINT:

Approximately 6 seconds after the engine switch is turned on (IG), the passenger airbag ON/OFF indicator will be ON/OFF depending on the conditions listed below.

Front passenger seat condition	Passenger Airbag ON/OFF Indicator		SRS Warning Light
	ON Indicator	OFF Indicator	
Adult is seated	ON	OFF	OFF
Child is seated	OFF	ON	OFF
Vacant	OFF	OFF	OFF
Occupant classification system failure	OFF	ON	ON

INSPECTION PROCEDURE

HINT:

If this trouble occurs, the SRS warning light is off. If it is on, a DTC is output. Troubleshoot for the output DTC.

1 CHECK DTC

(a) Turn the engine switch on (IG).
(b) Clear the DTCs stored in the occupant classification ECU (See page RS-318).
(c) Clear the DTCs stored in the center airbag sensor assembly (See page RS-49).
(d) Turn the engine switch off.
(e) Turn the engine switch on (IG).
(f) Check the DTCs of the occupant classification ECU (See page RS-318).

OK:

DTC is not output.

OK → **REPAIR CIRCUITS INDICATED BY OUTPUT DTCS**

NG

2 READ VALUE OF DATA LIST (PASSENGER SIDE BUCKLE SWITCH)

(a) Turn the engine switch on (IG).
(b) Using the intelligent tester, read the DATA LIST (See page RS-319).

(1) Read the the display when the passenger side buckle switch is operated.

Item	Measurement Item / Range (Display)	Normal Condition	Diagnostic Note
P BUCKLE SW	Buckle switch (Passenger side)/ UNSET: The seat belt is not fastened SET: The seat belt is fastened NG: Data is not determined	UNSET/SET	-

OK:
The tester display changes correctly in accordance with the operation of the buckle switch.

NG → **REPLACE FRONT SEAT INNER BELT ASSEMBLY RH (See page SB-22)**

OK

3 READ VALUE OF DATA LIST (SEAT BELT TENSION SENSOR)

(a) Fasten the passenger side seat belt.
(b) Turn the engine switch on (IG).
(c) Using the intelligent tester, read the value of the DATA LIST (See page RS-319).

Item	Measurement Item / Range (Display)	Normal Condition	Diagnostic Note
FILTERED TENSION	Filtered belt tension output/ Min.: 0 N Max.: 255 N	39 to 64 (no load)	-

OK:
When there is no tension on the belt, 39 to 64 is displayed on the tester.

NG → **REPLACE FRONT SEAT OUTER BELT ASSEMBLY RH (See page SB-27)**

OK

4 CHECK PASSENGER AIRBAG ON/OFF INDICATOR (PERFORM SENSITIVITY CHECK)

(a) Perform the sensitivity check (See page RS-312).

NG → **Go to step 7**

OK

5 PERFORM ZERO POINT CALIBRATION

(a) Connect the intelligent tester to the DLC3.
(b) Turn the engine switch on (IG).
(c) Using the intelligent tester, perform the zero point calibration (See page RS-312).

NEXT

6	CHECK DTC

(a) Turn the engine switch on (IG).
(b) Clear the DTCs stored in the occupant classification ECU (See page RS-318).
(c) Clear the DTCs stored in the center airbag sensor assembly (See page RS-49).
(d) Turn the engine switch off.
(e) Turn the engine switch on (IG).
(f) Check the DTCs of the occupant classification ECU (See page RS-318).
OK:
DTC B1797 is not output.

NG → **GO TO DTC B1797 (See page RS-357)**

OK

7	REPLACE FRONT SEAT CUSHION ASSEMBLY

(a) Turn the engine switch off.
(b) Disconnect the negative (-) terminal cable from the battery, and wait for at least 90 seconds.
(c) Replace the front seat cushion assembly (with occupant classification ECU and occupant classification sensor) (See page RS-490).
(d) Connect the negative (-) terminal cable to the battery.
(e) Turn the engine switch on (IG).
(f) Clear the DTCs stored in the occupant classification ECU (See page RS-318).
(g) Clear the DTCs stored in the center airbag sensor assembly (See page RS-49).
(h) Turn the engine switch off.
(i) Turn the engine switch on (IG).
(j) Check the DTCs (See page RS-318).
OK:
DTC is not output.

NG → **REPLACE CENTER AIRBAG SENSOR ASSEMBLY (See page RS-468)**

OK

8	PERFORM ZERO POINT CALIBRATION

(a) Connect the intelligent tester to the DLC3.
(b) Turn the engine switch on (IG).
(c) Using the intelligent tester, perform the zero point calibration (See page RS-312).
(d) Turn the engine switch off.
(e) Turn the engine switch on (IG).

(f) Clear the DTCs stored in the occupant classification ECU (See page RS-318).
HINT:
If the DTCs are not cleared at this time, past DTCs will remain.

RS

NEXT

9	CHECK DTC

(a) Turn the engine switch on (IG).
(b) Clear the DTCs stored in the occupant classification ECU (See page RS-318).
(c) Clear the DTCs stored in the center airbag sensor assembly (See page RS-49).
(d) Turn the engine switch off.
(e) Turn the engine switch on (IG).
(f) Check the DTCs of the occupant classification ECU (See page RS-318).
OK:
DTC B1797 is not output.

NEXT

10	PERFORM SENSITIVITY CHECK

(a) Perform the sensitivity check (See page RS-312).

NEXT

END

REMOVAL

1. **PRECAUTION**
   CAUTION:
   Be sure to read "PRECAUTION" thoroughly before servicing (See page RS-1).

2. **DISCONNECT CABLE FROM NEGATIVE BATTERY TERMINAL**
   CAUTION:
   Wait for 90 seconds after disconnecting the cable to prevent airbag deployment.

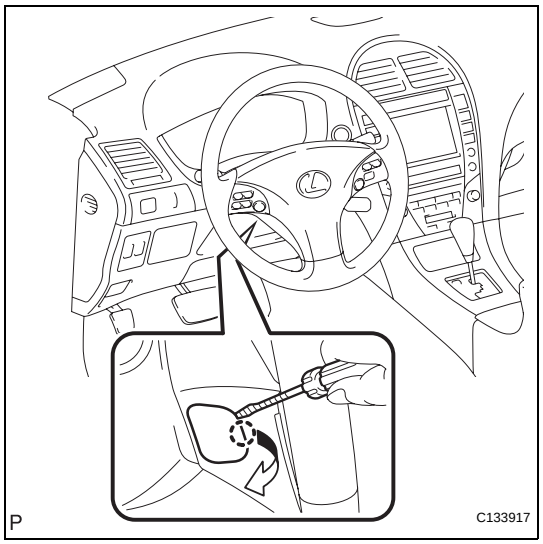

3. **REMOVE NO. 3 LOWER STEERING WHEEL COVER**
   (a) Using a screwdriver, remove the No. 3 lower steering wheel cover as shown in the illustration.
   HINT:
   Tape up the screwdriver tip before use.

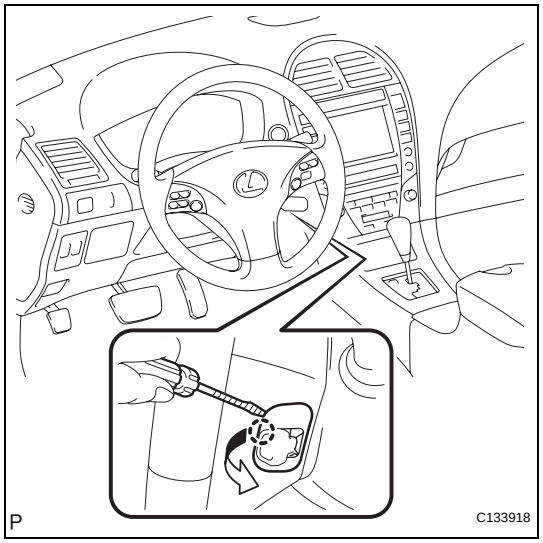

4. **REMOVE NO. 2 LOWER STEERING WHEEL COVER**
   (a) Using a screwdriver, remove the No. 2 lower steering wheel cover as shown in the illustration.
   HINT:
   Tape up the screwdriver tip before use.

RS

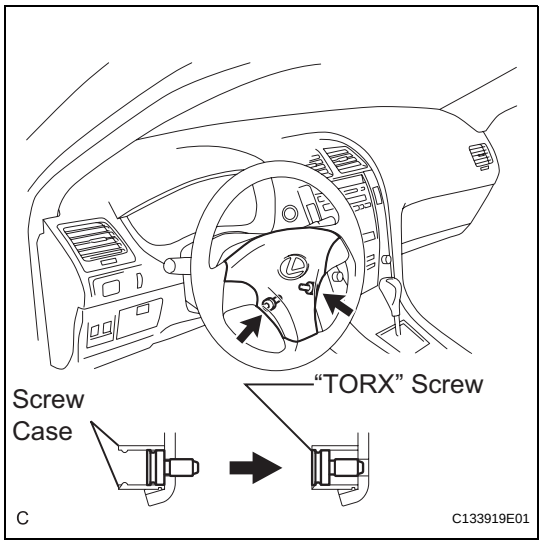

5. REMOVE STEERING PAD

(a) Using a "TORX" socket (T30), loosen the 2 "TORX" screws until the groove along the screw circumference catches on the screw case.

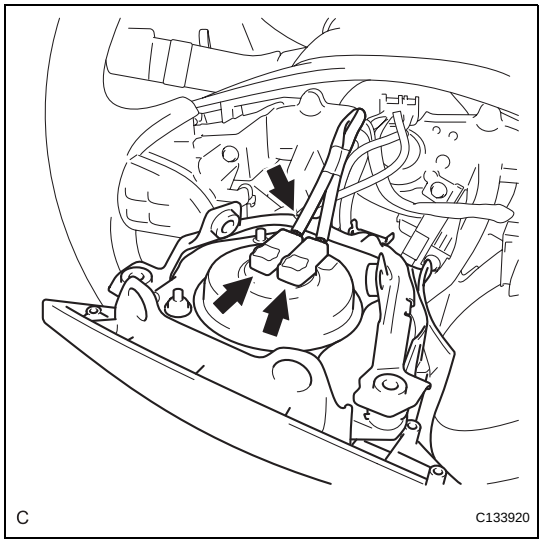

(b) Pull out the steering pad from the steering wheel assembly and support the steering pad with one hand.
NOTICE:
When removing the steering pad, do not pull the airbag wire harness.

(c) Disconnect the horn connector from the steering pad.

(d) Disconnect the 2 airbag connectors and remove the steering pad.
NOTICE:
When handling the airbag connector, take care not to damage the airbag wire harness.

(e) Remove the steering pad.

INSTALLATION

1. INSTALL STEERING PAD

(a) Check that the engine switch is off.

(b) Check that the battery negative (-) cable is disconnected.

CAUTION:
Wait for 90 seconds after disconnecting the cable to prevent airbag deployment.

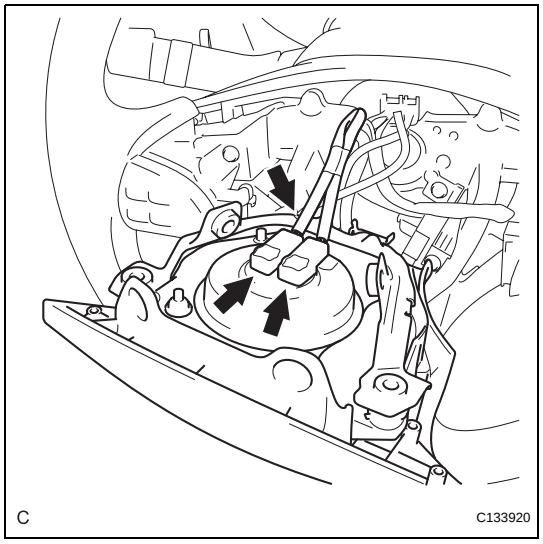

(c) Support the steering pad with one hand.

(d) Connect the 2 airbag connectors to the steering pad.

NOTICE:
When handling the airbag connector, take care not to damage the airbag wire harness.

(e) Connect the horn connector to the steering pad.

(f) Confirm that the circumference groove of the "TORX" screw fits in the screw case, and place the steering pad onto the steering wheel assembly.

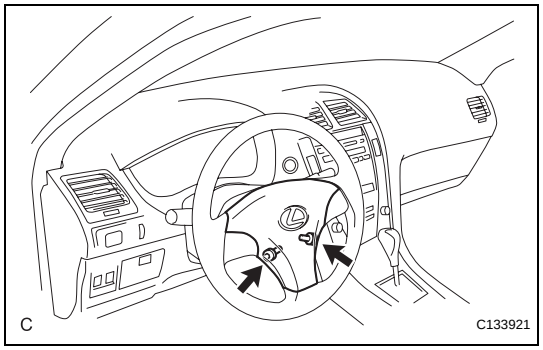

(g) Using a "TORX" socket (T30), tighten the 2 "TORX" screws.

Torque: 8.8 N*m (90 kgf*cm, 78 in.*lbf)

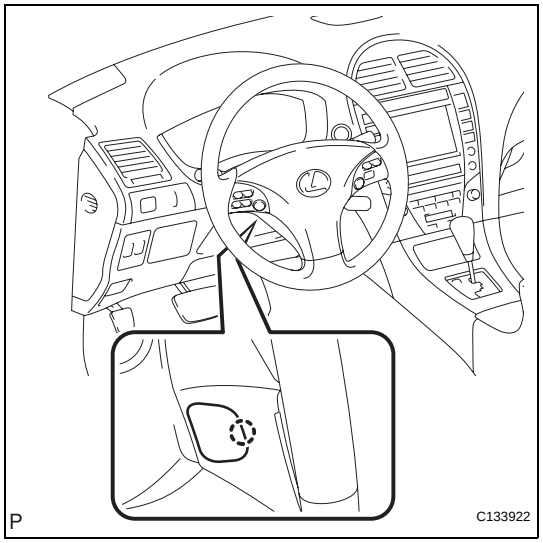

2. INSTALL NO. 3 LOWER STEERING WHEEL COVER

(a) Engage the claw and install the No. 3 lower steering wheel cover.

RS

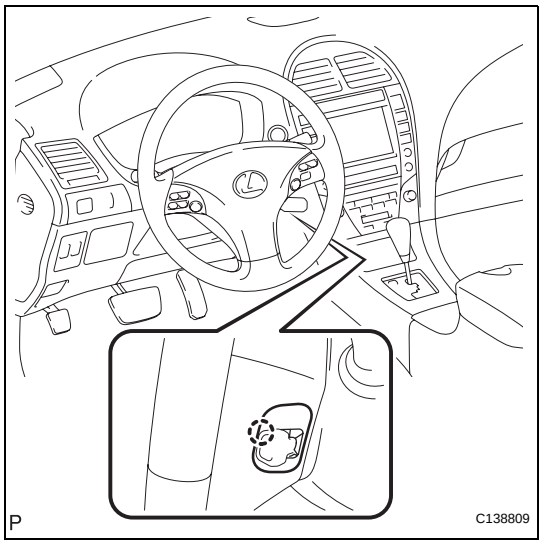

3. INSTALL NO. 2 LOWER STEERING WHEEL COVER

(a) Engage the claw and install the No. 2 lower steering wheel cover.

4. CONNECT CABLE TO NEGATIVE BATTERY TERMINAL

5. PERFORM INITIALIZATION

(a) Perform initialization (See page IN-33).
HINT:
Some systems need initialization after reconnecting the cable to the negative battery terminal.

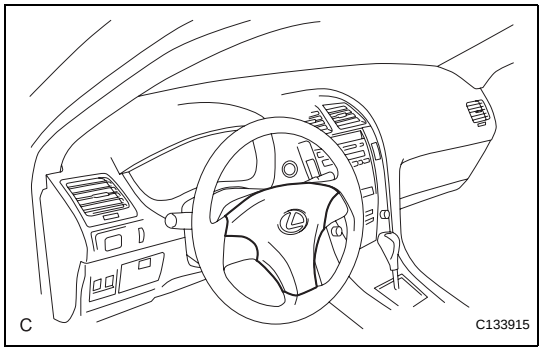

6. INSPECT STEERING PAD

(a) With the steering pad installed on the vehicle, perform a visual check. If there are any defects as mentioned below, replace the steering pad with a new one:
Cuts, minute cracks or marked discoloration on the steering pad top surface or in the grooved portion.

(b) Make sure that the horn sounds.
HINT:
If the horn does not sound, inspect the horn system (See page HO-3).

7. INSPECT SRS WARNING LIGHT

(a) Inspect the SRS warning light (See page RS-37).

DISPOSAL

HINT:
When scrapping a vehicle equipped with the SRS or disposing of the steering pad, be sure to deploy the airbag first in accordance with the procedure described below. If any abnormality occurs with the airbag deployment, contact the SERVICE DEPT. of TOYOTA MOTOR SALES, U.S.A., INC.

CAUTION:

- **Never dispose of a steering pad that has an undeployed airbag.**
- **The airbag produces an exploding sound when it is deployed, so perform the operation outdoors and where it will not create a nuisance to nearby residents.**
- **When deploying the airbag, always use the specified SST (SRS Airbag Deployment Tool). Perform the operation in a place away from electrical noise.**
- **When deploying the airbag, perform the operation at least 10 m (33 ft) away from the steering pad.**
- **The steering pad becomes extremely hot when the airbag is deployed, so do not touch it for at least 30 minutes after deployment.**
- **Use gloves and safety glasses when handling a steering pad with a deployed airbag.**
- **Do not apply water, etc. to a steering pad with a deployed airbag.**
- **Always wash your hands with water after completing the operation.**

1. DISPOSE OF STEERING PAD (WHEN INSTALLED IN VEHICLE)

HINT:
Prepare a battery as the power source to deploy the airbag.

(a) Check the function of the SST.
SST 09082-00700
CAUTION:
When deploying the airbag, always use the specified SST:
SRS Airbag Deployment Tool

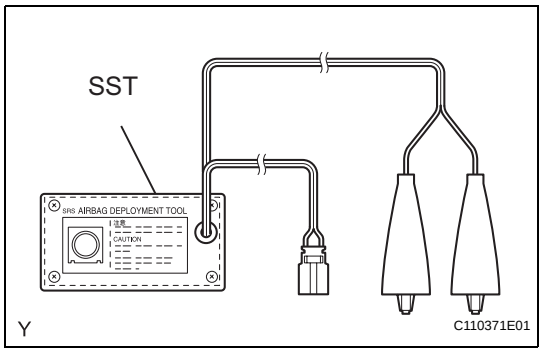

(1) Connect the SST to the battery.
Connect the red clip of the SST to the battery positive (+) terminal and the black clip of the SST to the negative (-) terminal.

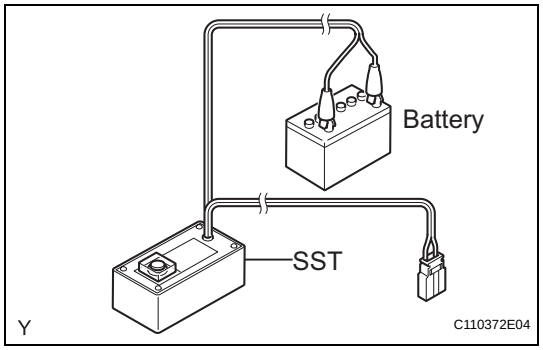

RS

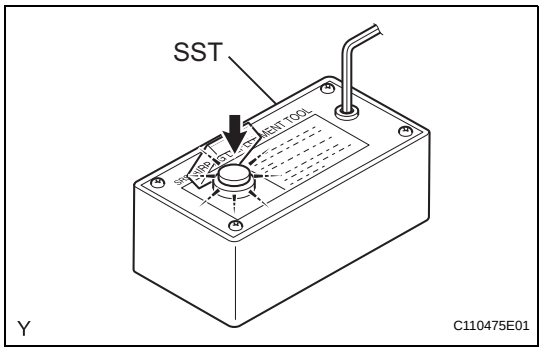

(2) Check the function of the SST.
Press the SST activation switch, and check that the LED of the SST activation switch comes on.
CAUTION:
- **Do not connect the SST connector (yellow colored one) to the airbag.**
- **If the LED comes on when the activation switch is not being pressed, SST malfunction is possible, so replace the SST with a new one.**

(3) Disconnect the SST from the battery.

(b) Refer to PRECAUTION (See page RS-1).

(c) Disconnect the cable from the negative battery terminal.
CAUTION:
Wait for 90 seconds after disconnecting the cable to prevent airbag deployment.

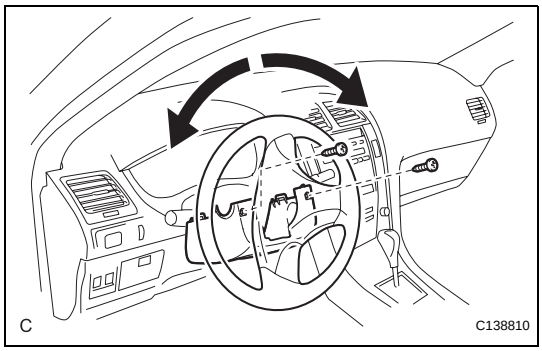

(d) Remove the steering column cover (lower).
(1) While turning the steering wheel assembly to the right and left, remove the 2 screws and steering column cover (lower).

(e) Install the SST.
CAUTION:
Check that there is no looseness in the steering wheel assembly and steering pad.
(1) Disconnect the airbag connector (yellow colored one) from the spiral cable.
NOTICE:
When handling the airbag connector, take care not to damage the airbag wire harness.

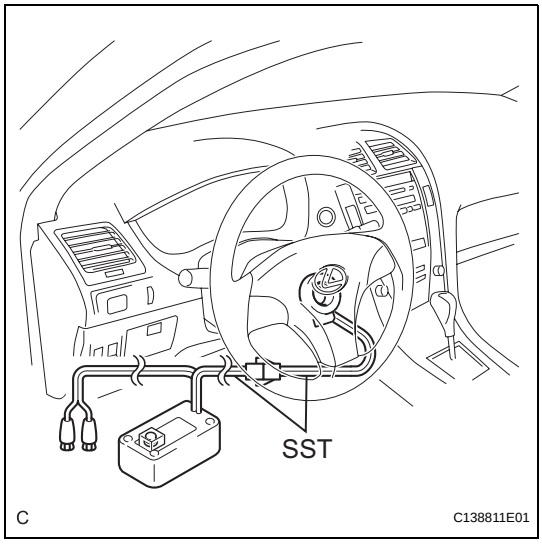

(2) Connect the SST connector to the airbag connector of the spiral cable.
SST 09082-00700, 09082-00780
NOTICE:
To avoid damaging the SST connector and wire harness, do not lock the secondary lock of the twin lock.

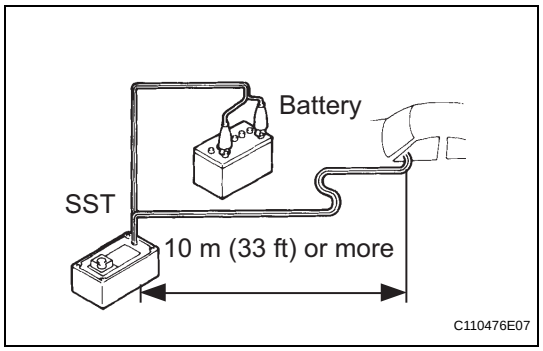

(3) Move the SST at least 10 m (33 ft) away from the vehicle front side window.

(4) Maintaining enough clearance for the SST wire harness in the front side window, close all doors and windows of the vehicle.
NOTICE:
Take care not to damage the SST wire harness.

(5) Connect the red clip of the SST to the battery positive (+) terminal and the black clip of the SST to the negative (-) terminal.

(f) Deploy the airbag.

(1) Check that no one is inside the vehicle or within a 10 m (33 ft) radius of the vehicle.

(2) Press the SST activation switch and deploy the airbag.
CAUTION:
- **When deploying the airbag, make sure that no one is near the vehicle.**
- **The steering pad becomes extremely hot when the airbag is deployed, so do not touch it for at least 30 minutes after deployment.**
- **Use gloves and safety glasses when handling a steering pad with a deployed airbag.**
- **Do not apply water, etc. to a steering pad with a deployed airbag.**
- **Always wash your hands with water after completing the operation.**

HINT:
The airbag is deployed as the LED of the SST activation switch comes on.

2. DISPOSE OF STEERING PAD (WHEN NOT INSTALLED IN VEHICLE)
NOTICE:
- **When disposing of the steering pad, never use the customer's vehicle to deploy the airbag.**
- **Be sure to follow the procedure detailed below when deploying the airbag.**

HINT:
Prepare a battery as the power source to deploy the airbag.

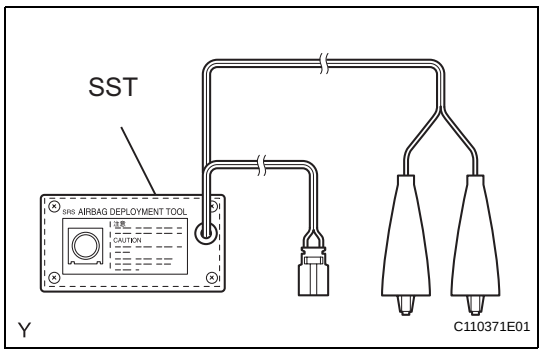

(a) Check the function of the SST.
SST 09082-00700
CAUTION:
When deploying the airbag, always use the specified SST:
SRS Airbag Deployment Tool

RS

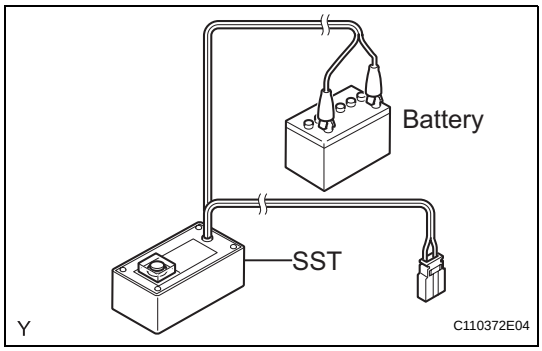

(1) Connect the SST to the battery.
Connect the red clip of the SST to the battery positive (+) terminal and the black clip of the SST to the negative (-) terminal.

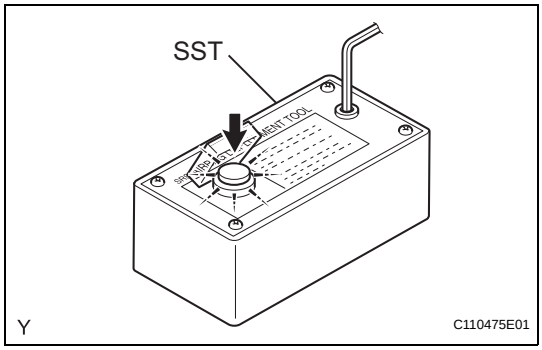

(2) Check the function of the SST.
Press the SST activation switch, and check that the LED of the SST activation switch comes on.
CAUTION:
- **Do not connect the SST connector (yellow colored one) to the airbag.**
- **If the LED comes on when the activation switch is not being pressed, SST malfunction is possible, so replace the SST with a new one.**

(3) Disconnect the SST from the battery.

(b) Remove the steering pad (See page RS-366).
CAUTION:
- **When removing the steering pad, work must be started 90 seconds after the engine switch is turned off and the negative (-) terminal cable is disconnected from the battery.**
- **When storing the steering pad, keep the airbag deployment side facing upward.**

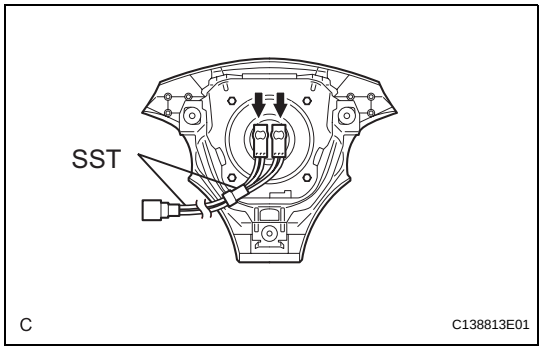

(c) After connecting the SST below to each other, connect them to the steering pad.
SST 09082-00802 (09082-10801, 09082-30801)

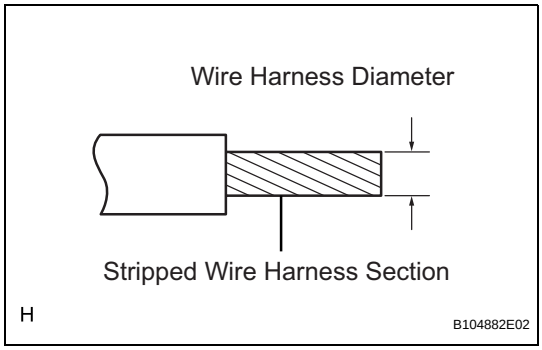

(d) Using a service-purpose wire harness for the vehicle, tie down the steering pad to the disc wheel.
Wire harness:
Stripped wire harness section
1.25 mm^2 or more (0.0019 in.^{2} or more)
CAUTION:
If the wire harness is too thin or an alternative object is used to tie down the steering pad, it may be snapped by the shock when the airbag is deployed. Always use a wire harness for vehicle use with an area of at least 1.25 mm^2 (0.0019 in.^{2}).

HINT:
To calculate the area of the stripped wire harness section:

Area = 3.14 x (Diameter)^2 divided by 4

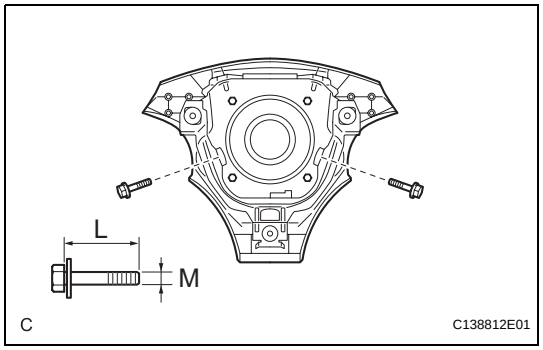

(1) Install the 2 bolts with washers into the 2 bolt holes on the steering pad.
Bolt:
L:
35.0 mm (1.378 in.)
M:
6.0 mm (0.236 in.)
Pitch:
1.0 mm (0.039 in.)
NOTICE:
- **Tighten the bolts by hand until they become difficult to turn.**
- **Do not tighten the bolts excessively.**

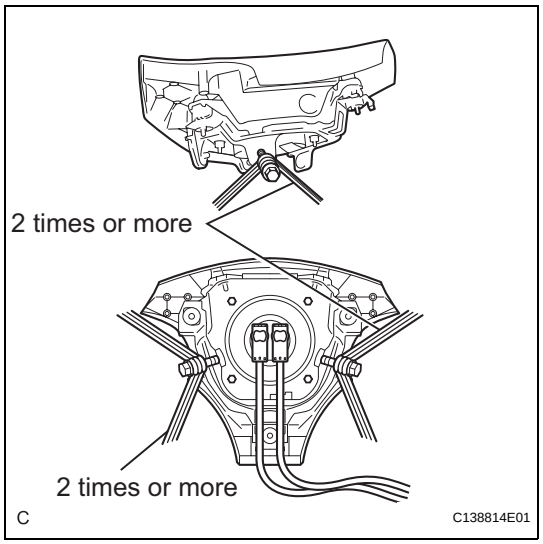

(2) Using 3 wire harnesses, wind wire harness at least 2 times each around each of the bolts installed on the left and right sides of the steering pad.
CAUTION:
- **Tightly wind the wire harness around the bolts so that there is no slack.**
- **Make sure that the wire harness is tight. If there is slack in the wire harness, the steering pad may become loose due to the shock when the airbag is deployed.**

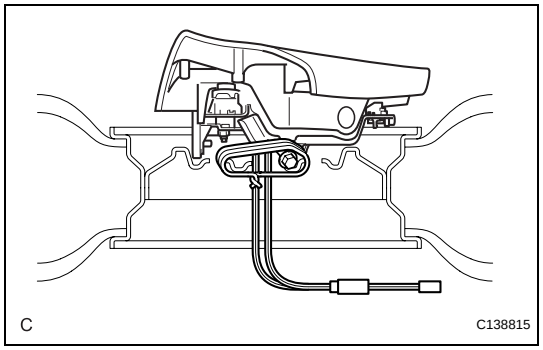

(3) Face the airbag deployment side of the steering pad upward on top of a tire and wheel set. Separately tie the left and right sides of the steering pad to the disc wheel through the hub nut holes. Position the SST connector so that it hangs downward through the hub hole of the disc wheel.
CAUTION:
- **Make sure that the wire harness is tight. If there is slack in the wire harness, the steering pad may become loose due to the shock when the airbag is deployed.**
- **Always tie down the steering pad with the airbag deployment side facing upward.**

NOTICE:
The disc wheel will be damaged by the airbag deployment, so use an extra disc wheel.

RS

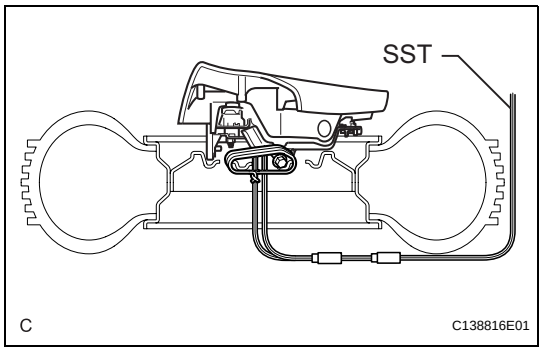

(e) Install the SST.
CAUTION:
Place the disc wheel on level ground.
(1) Connect the SST connector.
SST 09082-00700
NOTICE:
To avoid damaging the SST connector and wire harness, do not lock the secondary lock of the twin lock. Also, secure some slack for the SST wire harness inside the disc wheel.

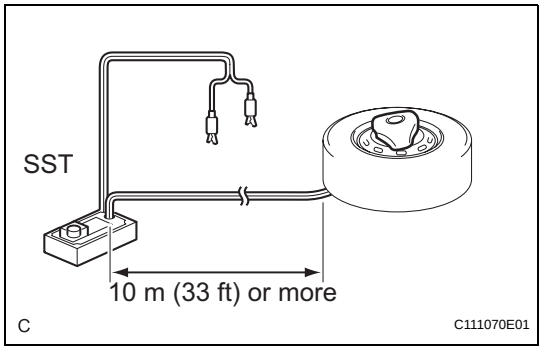

(2) Move the SST at least 10 m (33 ft) away from the airbag tied down to the disc wheel.

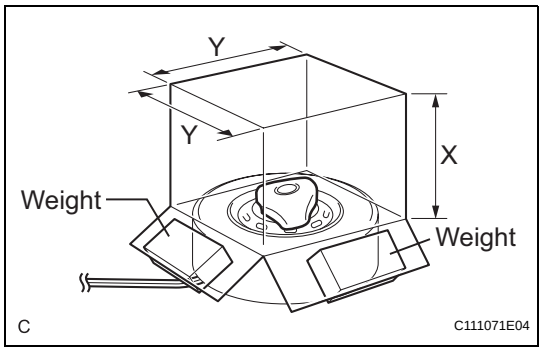

(f) Cover the steering pad (Using a cardboard box).
(1) Cover the steering pad with the cardboard box.
(2) Place weights on the cardboard box in 4 places totalling at least 190 N (19 kg, 43 lb).
Cardboard box size:
Must exceed the following dimensions
X:
460 mm (18.11 in.)
Y:
650 mm (25.59 in.)
NOTICE:
- **When dimension Y of the cardboard box exceeds the diameter of the disc wheel with tire which the steering pad is tied to, X should be the following size.**
  X = 460 mm (18.11 in.) + width of tire
- **If a cardboard box which is smaller than the specified size is used, the cardboard box will be broken by the shock from the airbag deployment.**

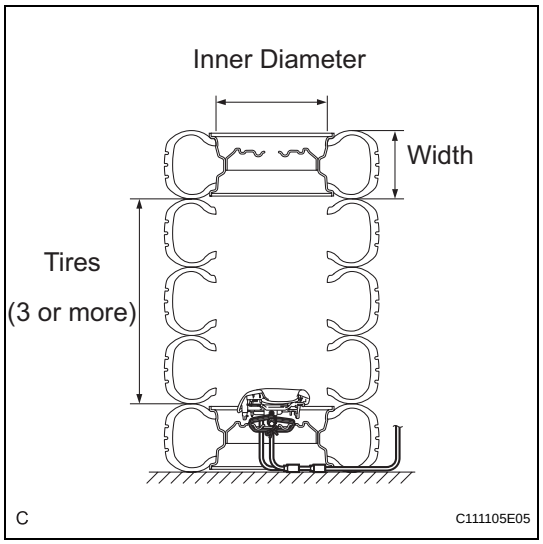

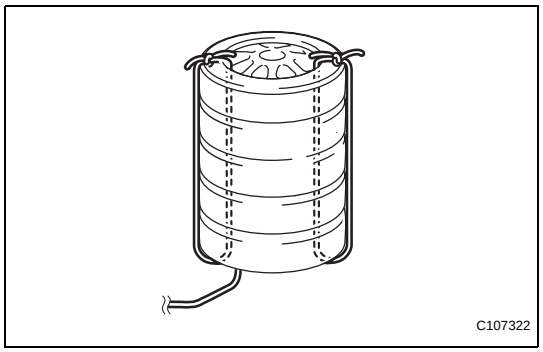

(g) Cover the steering pad (Using tires).

(1) Place at least 3 tires without disc wheels on the tire with disc wheel which the steering pad is tied to.

(2) Place the tire with a disc wheel on top of them.

Tire size:

Must exceed the following dimensions

Width:

185 mm (7.28 in.)

Inner diameter:

360 mm (14.17 in.)

CAUTION:

Do not use tires with disc wheels except for on the top and bottom.

NOTICE:

- **The tires may be damaged by the airbag deployment, so use an extra tire.**
- **Do not place the SST connector under the tire because it could be damaged.**

(3) Tie the tires together with 2 wire harnesses.

CAUTION:

Make sure that the wire harness is tight. Looseness in the wire harness results in the tires coming free due to the shock when the airbag is deployed.

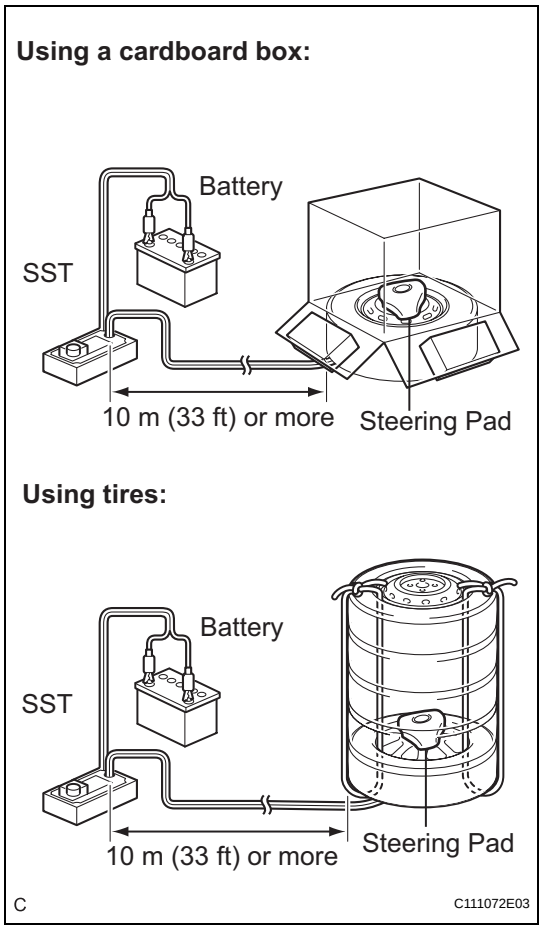

(h) Deploy the airbag.
  (1) Connect the red clip of the SST to the battery positive (+) terminal and the black clip of the SST to the negative (-) terminal.
  (2) Check that no one is within a 10 m (33 ft) radius of the disc wheel which the steering pad is tied to.
  (3) Press the SST activation switch and deploy the airbag.
  CAUTION:
  When deploying the airbag, make sure that no one is near the tire.
  HINT:
  The airbag is deployed as the LED of the SST activation switch comes on.

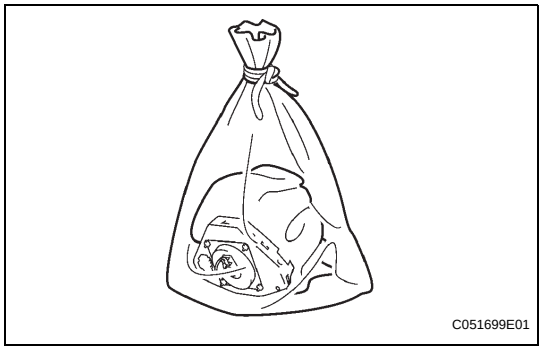

(i) Dispose of the steering pad.
  CAUTION:
  - **The steering pad becomes extremely hot when the airbag is deployed, so do not touch it for at least 30 minutes after deployment.**
  - **Use gloves and safety glasses when handling a steering pad with a deployed airbag.**
  - **Do not apply water, etc. to a steering pad with a deployed airbag.**
  - **Always wash your hands with water after completing the operation.**
  (1) Remove the steering pad from the disc wheel.
  (2) Place the steering pad in a plastic bag, tie it tightly and dispose of it as other general part disposal.

INSPECTION

1. INSPECT SPIRAL CABLE

(a) If there are any defects as mentioned below, replace the spiral cable with a new one:
Scratches, cracks, dents or chips on the connector or the spiral cable.

(b) Inspect the spiral cable.

(1) Measure the resistance according to the value(s) in the table below.

NOTICE:
To avoid breakage of the spiral cable, do not turn the spiral cable more than necessary.

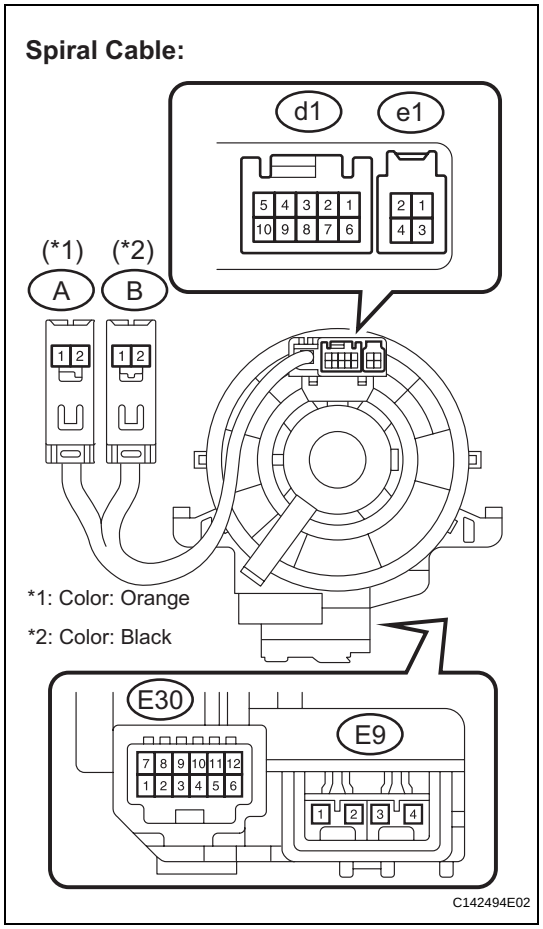

Standard resistance

Tester connection	Condition	Specified condition
d1-1 - e1-2	Center	Below 1 Ω
	2.5 rotations to the left	
	2.5 rotations to the right	
d1-1 - E30-8 (HO)	Center	Below 1 Ω
	2.5 rotations to the left	
	2.5 rotations to the right	
d1-4 - E30-11 (DIST)	Center	Below 1 Ω
	2.5 rotations to the left	
	2.5 rotations to the right	
d1-5 - E30-12 (IL+2)	Center	Below 1 Ω
	2.5 rotations to the left	
	2.5 rotations to the right	
d1-6 - e1-4	Center	Below 1 Ω
	2.5 rotations to the left	
	2.5 rotations to the right	
d1-6 - E30-2 (ECC)	Center	Below 1 Ω
	2.5 rotations to the left	
	2.5 rotations to the right	
d1-7 - E30-3 (DISP)	Center	Below 1 Ω
	2.5 rotations to the left	
	2.5 rotations to the right	
d1-8 - E30-4 (EAU)	Center	Below 1 Ω
	2.5 rotations to the left	
	2.5 rotations to the right	
d1-9 - E30-5 (AU2)	Center	Below 1 Ω
	2.5 rotations to the left	
	2.5 rotations to the right	
d1-10 - E30-6 (AU1)	Center	Below 1 Ω
	2.5 rotations to the left	
	2.5 rotations to the right	
e1-1 - E30-7 (R/N)	Center	Below 1 Ω
	2.5 rotations to the left	
	2.5 rotations to the right	
e1-2 - E30-8 (HO)	Center	Below 1 Ω
	2.5 rotations to the left	
	2.5 rotations to the right	

RS

Tester connection	Condition	Specified condition
e1-3 - E30-1 (CCS)	Center	Below 1 Ω
	2.5 rotations to the left	
	2.5 rotations to the right	
e1-4 - E30-2 (ECC)	Center	Below 1 Ω
	2.5 rotations to the left	
	2.5 rotations to the right	
A-1 (D-) - E9-2 (D-)	Center	Below 1 Ω
	2.5 rotations to the left	
	2.5 rotations to the right	
A-2 (D+) - E9-1 (D+)	Center	Below 1 Ω
	2.5 rotations to the left	
	2.5 rotations to the right	
B-1 (D2-) - E9-3 (D2-)	Center	Below 1 Ω
	2.5 rotations to the left	
	2.5 rotations to the right	
B-2 (D2+) - E9-4 (D2+)	Center	Below 1 Ω
	2.5 rotations to the left	
	2.5 rotations to the right	

If the value is not within the specified range, replace the spiral cable.

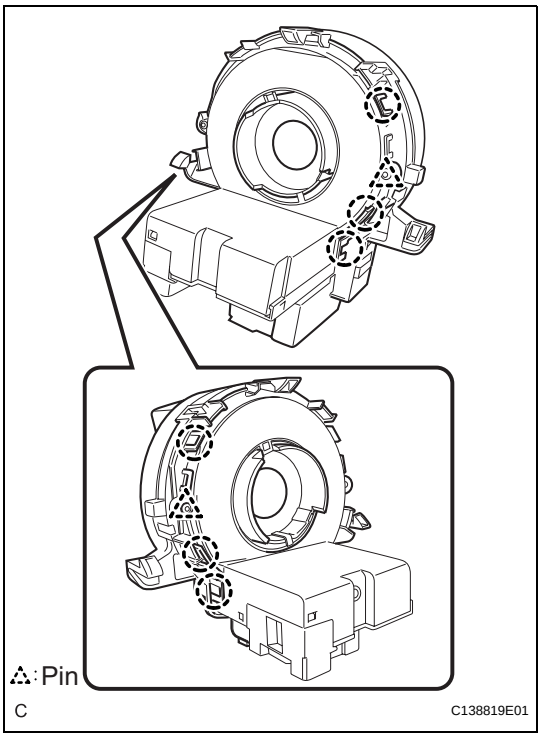

INSTALLATION

1. INSTALL SPIRAL CABLE

(a) Engage the 6 claws and 2 pins, and install the spiral cable to the steering angle sensor.

2. INSTALL SPIRAL CABLE WITH STEERING ANGLE SENSOR

(a) Check that the front wheels are facing straight ahead.

(b) Set the turn signal switch to the neutral position.

NOTICE:

If it is not in the neutral position, the pin of the turn signal switch may be snapped.

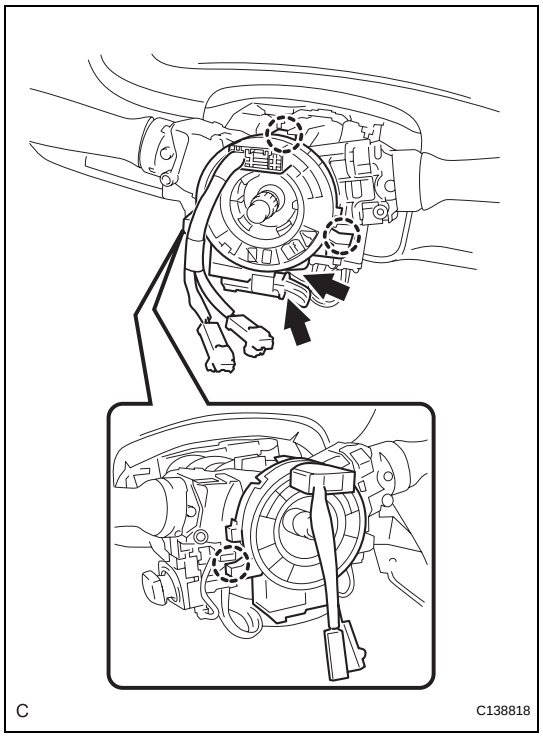

(c) Engage the 3 claws and install the spiral cable with steering angle sensor.
NOTICE:
When replacing the spiral cable with a new one, remove the lock pin before installing the steering wheel assembly.

(d) Connect the connectors to the spiral cable with steering angle sensor.
NOTICE:
When handling the airbag connector, take care not to damage the airbag wire harness.

3. INSTALL STEERING COLUMN COVER (See page SR-87)

4. ADJUST SPIRAL CABLE

(a) Check that the engine switch is off.

(b) Check that the battery negative (-) cable is disconnected.
CAUTION:
Wait for 90 seconds after disconnecting the cable to prevent airbag deployment.

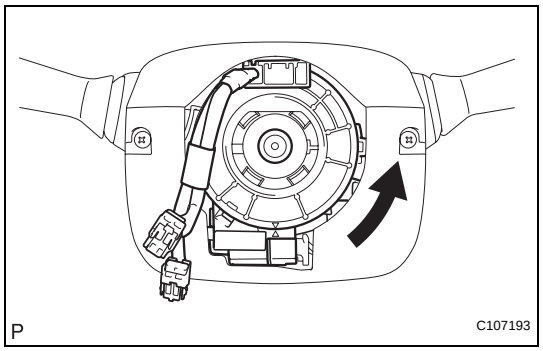

(c) Rotate the spiral cable counterclockwise slowly by hand until it feels firm.
NOTICE:
Do not turn the spiral cable by the airbag wire harness.

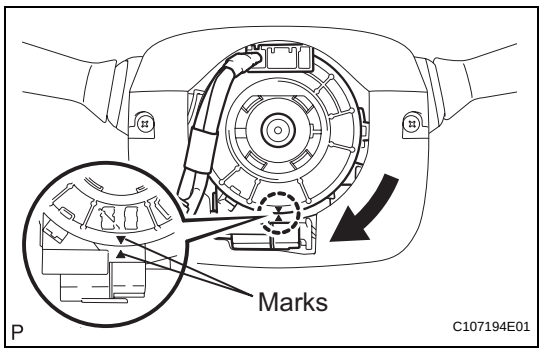

(d) Rotate the spiral cable clockwise approximately 2.5 turns to align the marks.
NOTICE:
Do not turn the spiral cable by the airbag wire harness.
HINT:
The spiral cable will rotate approximately 2.5 turns to both the left and right from the center.

5. INSTALL STEERING WHEEL ASSEMBLY (See page SR-87)

6. INSPECT STEERING WHEEL CENTER POINT

7. INSTALL STEERING PAD (See page RS-368)

8. INSTALL NO. 3 LOWER STEERING WHEEL COVER (See page RS-369)

9. INSTALL NO. 2 LOWER STEERING WHEEL COVER (See page RS-369)

10. CONNECT CABLE TO NEGATIVE BATTERY TERMINAL

11. PERFORM INITIALIZATION

(a) Perform initialization (See page IN-33).

HINT:

Some systems need initialization after reconnecting the cable to the negative battery terminal.

12. INSPECT STEERING PAD (See page RS-369)

13. INSPECT SRS WARNING LIGHT

(a) Inspect the SRS warning light (See page RS-37).

RS

REMOVAL

1. **PRECAUTION**
   CAUTION:
   Be sure to read "PRECAUTION" thoroughly before servicing (See page RS-1).

2. **DISCONNECT CABLE FROM NEGATIVE BATTERY TERMINAL**
   NOTICE:
   Wait for 90 seconds after disconnecting the cable to prevent airbag deployment.

3. **REMOVE FRONT DOOR SCUFF PLATE LH (See page IR-39)**

4. **REMOVE FRONT DOOR OPENING TRIM COVER LH (See page IR-39)**

5. **REMOVE SIDE INSTRUMENT PANEL LH (See page IP-12)**

6. **REMOVE INSTRUMENT PANEL FINISH PANEL END LH (See page IP-13)**

7. **REMOVE LOWER INSTRUMENT PANEL SUB-ASSEMBLY (See page IP-13)**

8. **REMOVE DRIVER SIDE KNEE AIRBAG ASSEMBLY**
   (a) Remove the 4 bolts.
   (b) Disconnect the driver side knee airbag connector.
   NOTICE:
   When handling the airbag connector, take care not to damage the airbag wire harness.

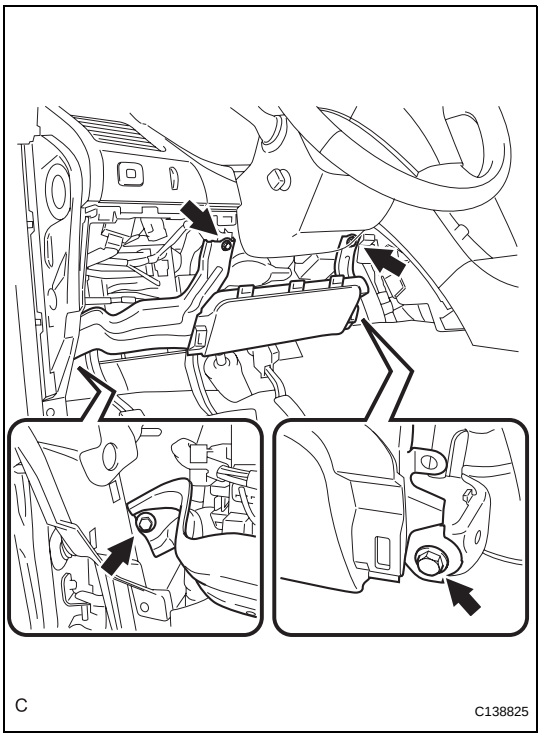

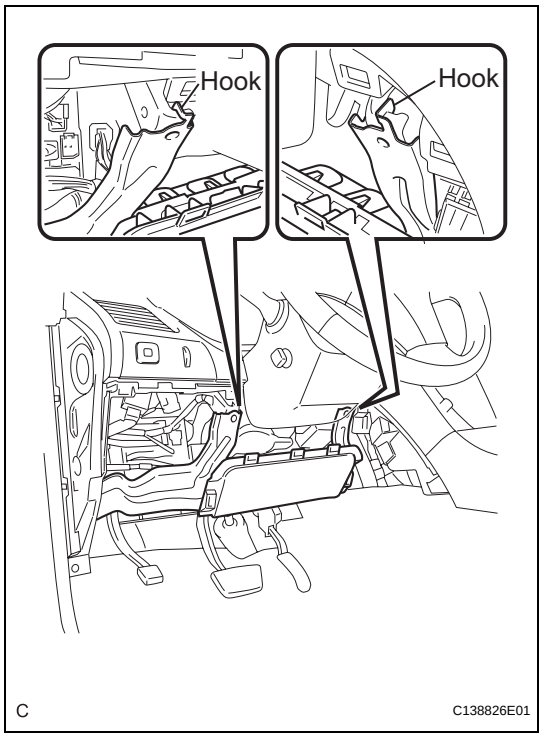

(c) Disengage the 2 hooks and separate the driver side knee airbag assembly.

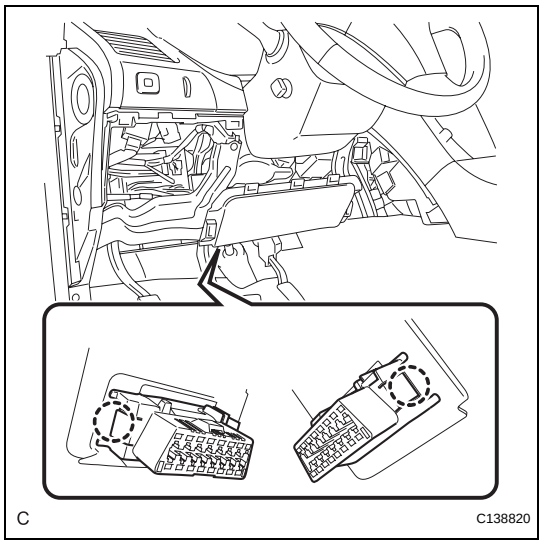

(d) Disengage the 2 claws and remove the DLC3, and remove the driver side knee airbag assembly.

RS

INSTALLATION

1. INSTALL DRIVER SIDE KNEE AIRBAG ASSEMBLY

(a) Check that the engine switch is off.

(b) Check that the battery negative (-) cable is disconnected.

CAUTION:
Wait for 90 seconds after disconnecting the cable to prevent airbag deployment.

(c) Temporarily install the driver side knee airbag assembly with the 2 hooks.

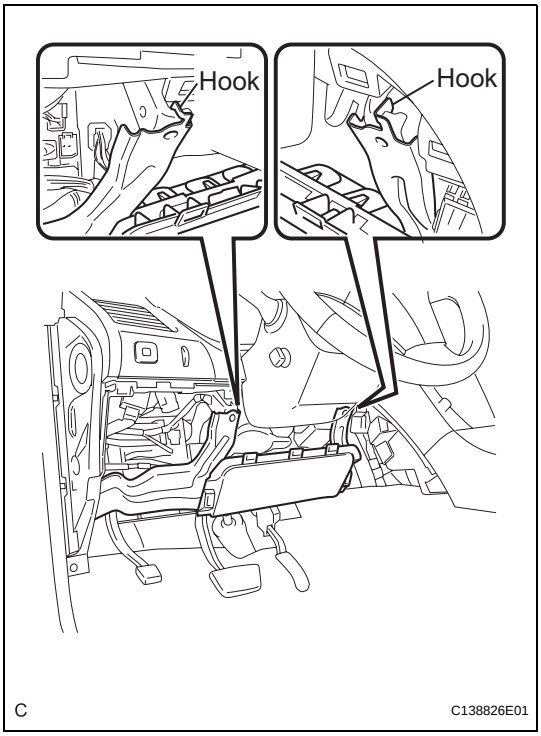

(d) Engage the 2 claws and install the DLC3.

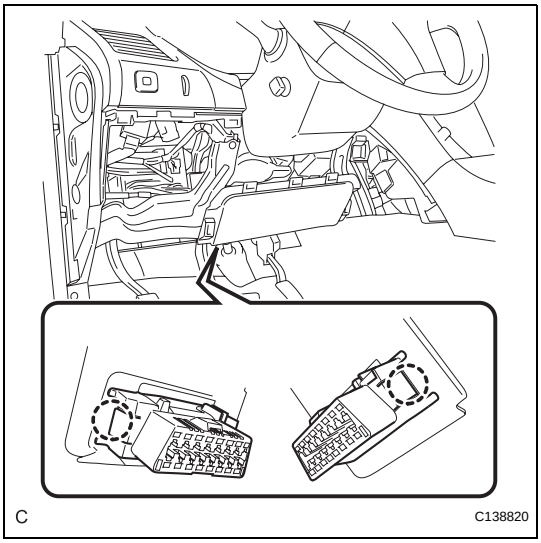

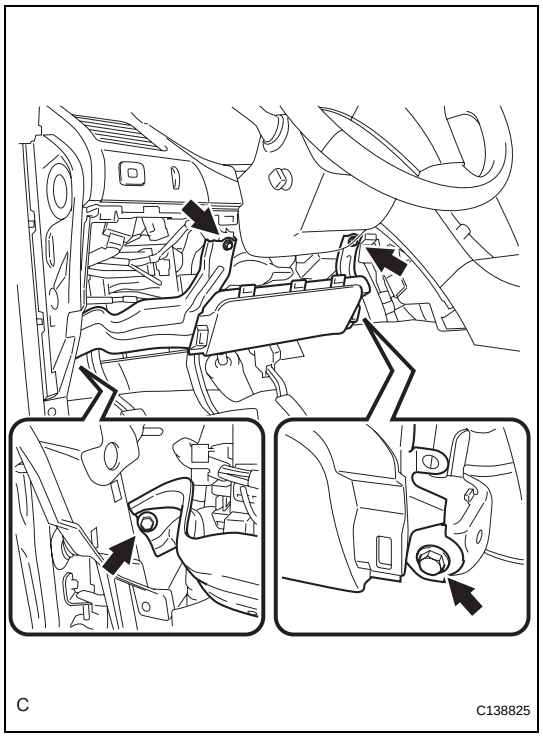

(e) Install the driver side knee airbag assembly with the 4 bolts.
Torque: 10 N*m (102 kgf*cm, 7 ft.*lbf)

(f) Connect the driver side knee airbag connector.
NOTICE:
When handling the airbag connector, take care not to damage the airbag wire harness.

RS

2. INSTALL LOWER INSTRUMENT PANEL SUB-ASSEMBLY (See page IP-46)

3. INSTALL INSTRUMENT PANEL FINISH PANEL END LH (See page IP-46)

4. INSTALL SIDE INSTRUMENT PANEL LH (See page IP-47)

5. INSTALL FRONT DOOR OPENING TRIM COVER LH (See page IR-64)

6. INSTALL FRONT DOOR SCUFF PLATE LH (See page IR-65)

7. CONNECT CABLE TO NEGATIVE BATTERY TERMINAL

8. PERFORM INITIALIZATION

(a) Perform initialization (See page IN-33).
HINT:
Some systems need initialization after reconnecting the cable to the negative battery terminal.

9. INSPECT DRIVER SIDE KNEE AIRBAG ASSEMBLY (See page RS-385)

10. INSPECT SRS WARNING LIGHT

(a) Inspect the SRS warning light (See page RS-37).

RS

DISPOSAL

HINT:
When scrapping a vehicle equipped with the SRS or disposing of the driver side knee airbag assembly, be sure to deploy the airbag first in accordance with the procedure described below. If any abnormality occurs with the airbag deployment, contact the SERVICE DEPT. of TOYOTA MOTOR SALES, U.S.A., INC.

CAUTION:

- **Never dispose of a driver side knee airbag assembly that has an undeployed airbag.**
- **The airbag produces an exploding sound when it is deployed, so perform the operation outdoors and where it will not create a nuisance to nearby residents.**
- **When deploying the airbag, always use the specified SST (SRS Airbag Deployment Tool). Perform the operation in a place away from electrical noise.**
- **When deploying the airbag, perform the operation at least 10 m (33 ft) away from the driver side knee airbag assembly.**
- **The driver side knee airbag assembly becomes extremely hot when the airbag is deployed, so do not touch it for at least 30 minutes after deployment.**
- **Use gloves and safety glasses when handling a driver side knee airbag assembly with a deployed airbag.**
- **Do not apply water, etc. to a driver side knee airbag assembly with a deployed airbag.**
- **Always wash your hands with water after completing the operation.**

1. DISPOSE OF DRIVER SIDE KNEE AIRBAG ASSEMBLY (WHEN INSTALLED IN VEHICLE)

HINT:
Prepare a battery as the power source to deploy the airbag.

(a) Check the function of the SST (See page RS-370).
(b) Refer to PRECAUTION (See page RS-1).
(c) Disconnect the cable from the negative battery terminal.
CAUTION:
Wait for 90 seconds after disconnecting the cable to prevent airbag deployment.
(d) Remove the driver side knee airbag assembly (See page RS-385).

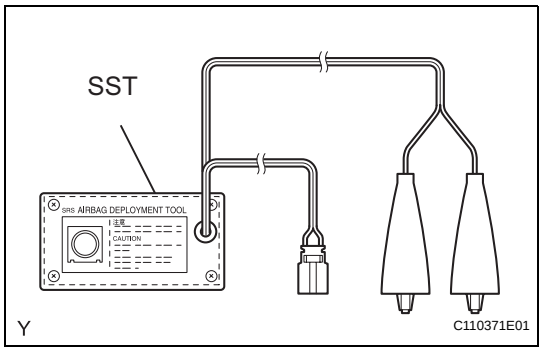

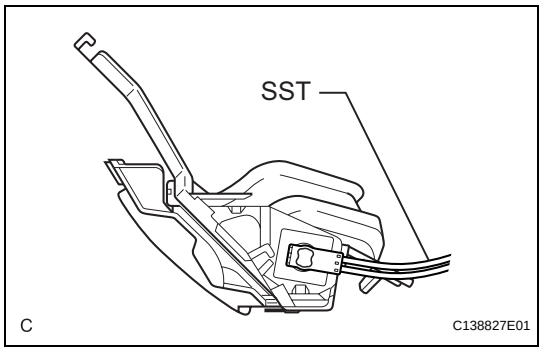

(e) Install the SST.

(1) Connect the SST connector to the driver side knee airbag assembly.
SST 09082-00700, 09082-00770
NOTICE:
To avoid damaging the SST connector and wire harness, do not lock the secondary lock of the twin lock.

(2) Install the driver side knee airbag assembly (See page RS-387).
NOTICE:
Take care not to damage the SST wire harness.

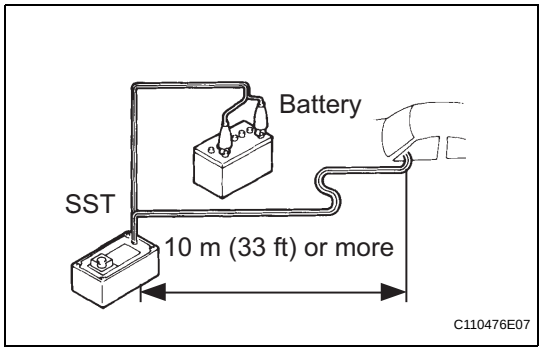

(3) Move the SST at least 10 m (33 ft) away from the vehicle front side window.

(4) Maintaining enough clearance for the SST wire harness in the front side window, close all doors and windows of the vehicle.
NOTICE:
Take care not to damage the SST wire harness.

(5) Connect the red clip of the SST to the battery positive (+) terminal and the black clip of the SST to the battery negative (-) terminal.

(f) Deploy the airbag.

(1) Check that no one is inside the vehicle or within a 10 m (33 ft) radius of the vehicle.

(2) Press the SST activation switch and deploy the airbag.
CAUTION:
- **When deploying the airbag, make sure that no one is near the vehicle.**
- **The driver side knee airbag assembly becomes extremely hot when the airbag is deployed, so do not touch it for at least 30 minutes after deployment.**
- **Use gloves and safety glasses when handling a driver side knee airbag assembly with a deployed airbag.**
- **Do not apply water, etc. to a driver side knee airbag assembly with a deployed airbag.**
- **Always wash your hands with water after completing the operation.**

HINT:
The airbag is deployed as the LED of the SST activation switch comes on.

2. DISPOSE OF DRIVER SIDE KNEE AIRBAG ASSEMBLY (WHEN NOT INSTALLED IN VEHICLE)
NOTICE:
- **When disposing of the driver side knee airbag assembly, never use the customer's vehicle to deploy the airbag.**

RS

- **Be sure to follow the procedure detailed below when deploying the airbag.**

HINT:
Prepare a battery as the power source to deploy the airbag.

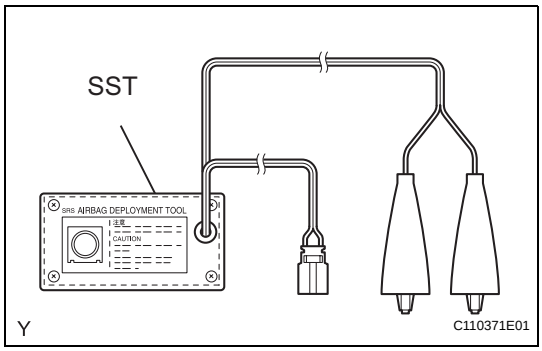

(a) Check the function of the SST (See page RS-372).
(b) Remove the driver side knee airbag assembly (See page RS-385).
CAUTION:
- **When removing the driver side knee airbag assembly, work must be started 90 seconds after the engine switch is turned off and the negative (-) terminal cable is disconnected from the battery.**
- **When storing the driver side knee airbag assembly, keep the airbag deployment side facing upward.**

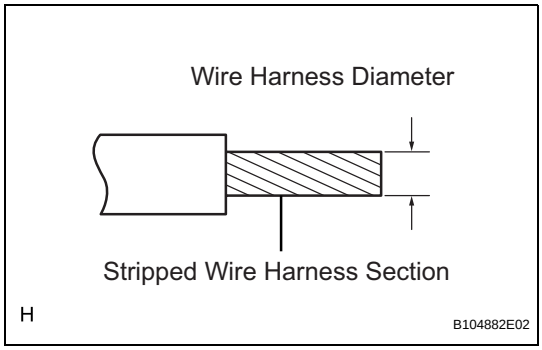

(c) Using a service-purpose wire harness for the vehicle, tie down the driver side knee airbag assembly to the tire.
Wire harness:
Stripped wire harness section
1.25 mm^2 or more (0.0019 in.^{2} or more)
CAUTION:
If the wire harness is too thin or an alternative object is used to tie down the driver side knee airbag assembly, it may be snapped by the shock when the airbag is deployed. Always use a wire harness for vehicle use with an area of at least 1.25 mm^2 (0.0019 in.^{2}).
HINT:
To calculate the area of the stripped wire harness section:
Area = 3.14 x (Diameter)^2 divided by 4
(1) Position the driver side knee airbag assembly inside the tire with the airbag deployment side facing inside.
Tire size:
Must exceed the following dimensions
Width:
185 mm (7.28 in.)
Inner diameter:
360 mm (14.17 in.)

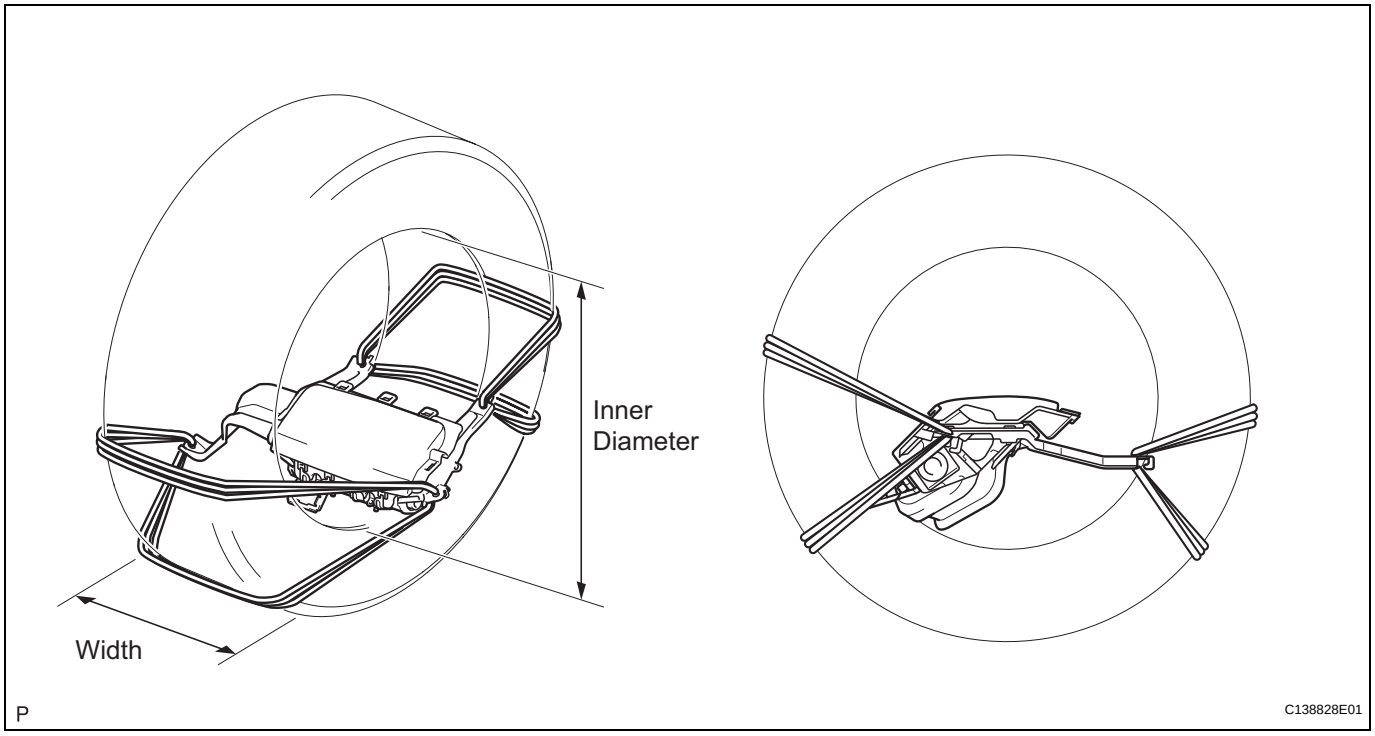

CAUTION:

- **Make sure that the wire harness is tight. If there is slack in the wire harness, the driver side knee airbag assembly may become loose due to the shock when the airbag is deployed.**
- **Always tie down the driver side knee airbag assembly with the airbag deployment side facing inside the tire.**

NOTICE:

The tire may be damaged by the airbag deployment, so use an extra tire.

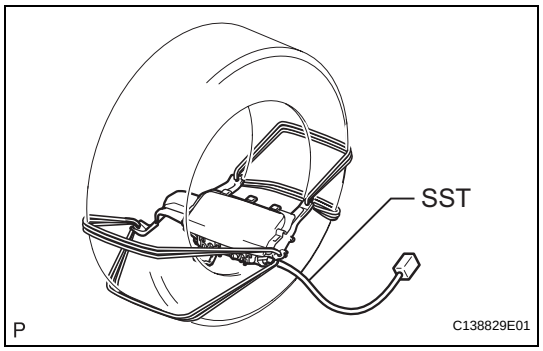

(d) Install the SST.

(1) Connect the SST connector to the driver side knee airbag assembly.

SST 09082-00770

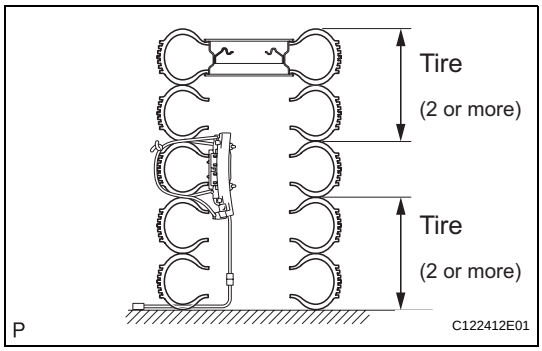

(e) Place the tires.
(1) Place at least 2 tires under the tire which the driver side knee airbag assembly is tied to.
(2) Place at least 2 tires over the tire which the driver side knee airbag assembly is tied to. The top tire should have the disc wheel installed.
NOTICE:
- **The tire may be damaged by the airbag deployment, so use an extra tire.**
- **Do not place the SST connector under the tire because it could be damaged.**

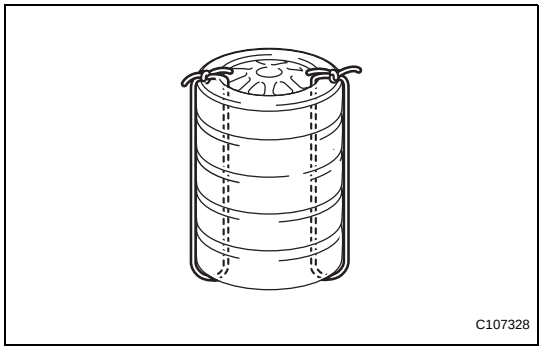

(3) Tie the tires together with 2 wire harnesses.
CAUTION:
Make sure that the wire harness is tight. Looseness in the wire harness results in the tires coming free due to the shock when the airbag is deployed.

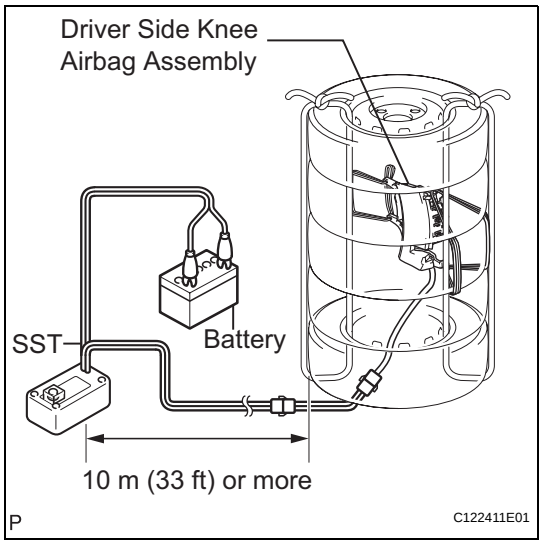

(f) Install the SST.
(1) Connect the SST connector.
SST 09082-00700
NOTICE:
To avoid damaging the SST connector and wire harness, do not lock the secondary lock of the twin lock. Also, secure some slack for the SST wire harness inside the tire.
(2) Move the SST at least 10 m (33 ft) away from the airbag tied down to the tire.

(g) Deploy the airbag.
(1) Connect the red clip of the SST to the battery positive (+) terminal and the black clip of the SST to the battery negative (-) terminal.
(2) Check that no one is within a 10 m (33 ft) radius of the tire which the driver side knee airbag assembly is tied to.
(3) Press the SST activation switch and deploy the airbag.
CAUTION:
When deploying the airbag, make sure that no one is near the tire.
HINT:
The airbag is deployed as the LED of the SST activation switch comes on.

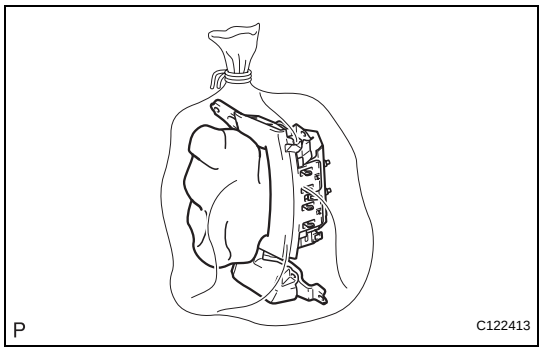

(h) Dispose of the driver side knee airbag assembly.

CAUTION:

- **The driver side knee airbag assembly becomes extremely hot when the airbag is deployed, so do not touch it for at least 30 minutes after deployment.**
- **Use gloves and safety glasses when handling a driver side knee airbag assembly with a deployed airbag.**
- **Do not apply water, etc. to a driver side knee airbag assembly with a deployed airbag.**
- **Always wash your hands with water after completing the operation.**

(1) Remove the driver side knee airbag assembly from the tire.

(2) Place the driver side knee airbag assembly in a plastic bag, tie it tightly and dispose of it as other general part disposal.

REMOVAL

1. **PRECAUTION**
   CAUTION:
   Be sure to read "PRECAUTION" thoroughly before servicing (See page RS-1).

2. **DISCONNECT CABLE FROM NEGATIVE BATTERY TERMINAL**
   NOTICE:
   Wait for 90 seconds after disconnecting the cable to prevent the airbag deployment.

3. **REMOVE FRONT DOOR SCUFF PLATE RH (See page IR-42)**

4. **REMOVE FRONT DOOR OPENING TRIM COVER RH (See page IR-42)**

5. **REMOVE SIDE INSTRUMENT PANEL RH (See page IP-15)**

6. **REMOVE INSTRUMENT PANEL FINISH PANEL END RH (See page IP-15)**

7. **REMOVE NO. 2 INSTRUMENT PANEL UNDER COVER SUB-ASSEMBLY (See page IP-15)**

8. **REMOVE FRONT PASSENGER SIDE KNEE AIRBAG ASSEMBLY**
   (a) Remove the 3 bolts.
   (b) Disconnect the front passenger side knee airbag connector.

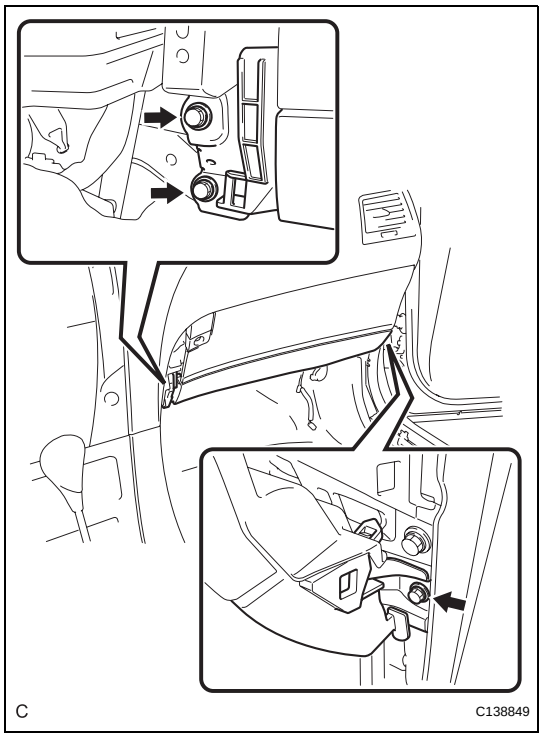

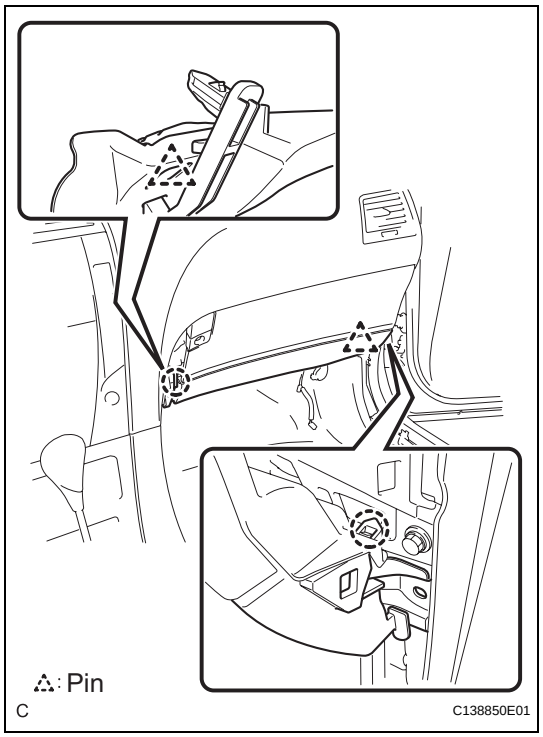

(c) Disengage the 2 claws and 2 pins, and remove the front passenger side knee airbag assembly.
NOTICE:
When handling the airbag connector, take care not to damage the airbag wire harness.

RS

INSTALLATION

1. INSTALL FRONT PASSENGER SIDE KNEE AIRBAG ASSEMBLY

(a) Check that the engine switch is off.

(b) Check that the battery negative (-) cable is disconnected.

CAUTION:
Wait for 90 seconds after disconnecting the cable to prevent airbag deployment.

(c) Connect the front passenger side knee airbag connector.

NOTICE:
When handling the airbag connector, take care not to damage the airbag wire harness.

(d) Engage the 2 claws and 2 pins.

HINT:
Make sure that the pins are securely installed in the front passenger side knee airbag assembly.

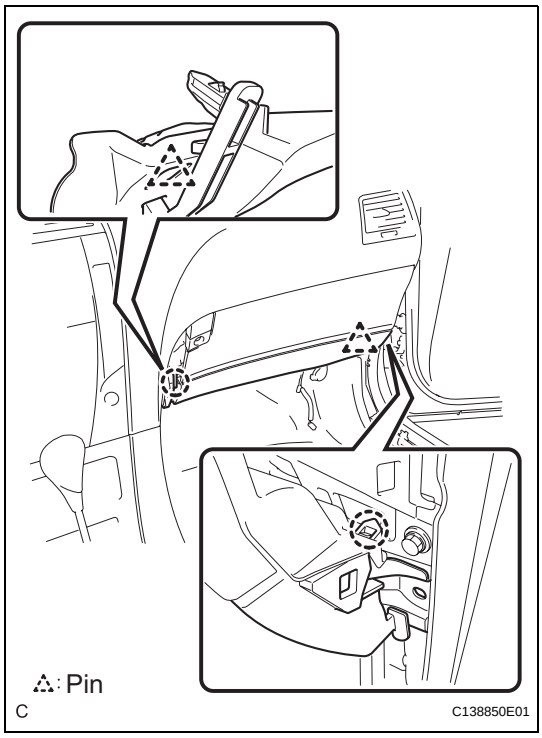

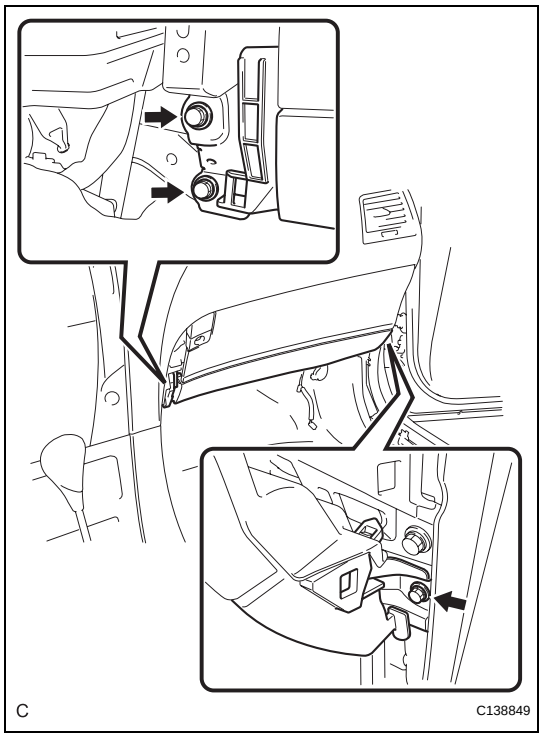

(e) Install the front passenger side knee airbag assembly with the 3 bolts.
Torque: 10 N*m (102 kgf*cm, 7 ft.*lbf)

2. **INSTALL NO. 2 INSTRUMENT PANEL UNDER COVER SUB-ASSEMBLY (See page IP-44)**

3. **INSTALL INSTRUMENT PANEL FINISH PANEL END RH (See page IP-44)**

4. **INSTALL SIDE INSTRUMENT PANEL RH (See page IP-43)**

5. **INSTALL FRONT DOOR OPENING TRIM COVER RH (See page IR-65)**

6. **INSTALL FRONT DOOR SCUFF PLATE RH (See page IR-65)**

7. **CONNECT CABLE TO NEGATIVE BATTERY TERMINAL**

8. **PERFORM INITIALIZATION**
   (a) Perform initialization (See page IN-33).
   HINT:
   Some systems need initialization after reconnecting the cable to the negative battery terminal.

9. **INSPECT FRONT PASSENGER SIDE KNEE AIRBAG ASSEMBLY (See page RS-395)**

10. **INSPECT SRS WARNING LIGHT**
    (a) Inspect the SRS warning light (See page RS-37).

RS

RS

DISPOSAL

HINT:
When scrapping a vehicle equipped with the SRS or disposing of the front passenger side knee airbag assembly, be sure to deploy the airbag first in accordance with the procedure described below. If any abnormality occurs with the airbag deployment, contact the SERVICE DEPT. of TOYOTA MOTOR SALES, U.S.A., INC.

CAUTION:

- **Never dispose of a front passenger side knee airbag assembly that has an undeployed airbag.**
- **The airbag produces an exploding sound when it is deployed, so perform the operation outdoors and where it will not create a nuisance to nearby residents.**
- **When deploying the airbag, always use the specified SST (SRS Airbag Deployment Tool). Perform the operation in a place away from electrical noise.**
- **When deploying the airbag, perform the operation at least 10 m (33 ft) away from the front passenger side knee airbag assembly.**
- **The front passenger side knee airbag assembly becomes extremely hot when the airbag is deployed, so do not touch it for at least 30 minutes after deployment.**
- **Use gloves and safety glasses when handling a front passenger side knee airbag assembly with a deployed airbag.**
- **Do not apply water, etc. to a front passenger side knee airbag assembly with a deployed airbag.**
- **Always wash your hands with water after completing the operation.**

1. DISPOSE OF FRONT PASSENGER SIDE KNEE AIRBAG ASSEMBLY (WHEN INSTALLED IN VEHICLE)

HINT:
Prepare a battery as the power source to deploy the airbag.

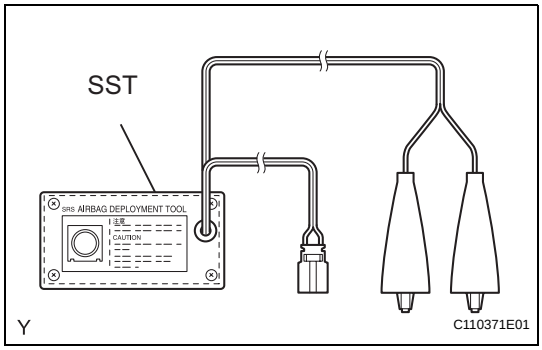

(a) Check the function of the SST (see page RS-370).
(b) Refer to PRECAUTION (see page RS-1).
(c) Disconnect the cable from the negative battery terminal.
CAUTION:
Wait for 90 seconds after disconnecting the cable to prevent airbag deployment.
(d) Remove the front passenger side knee airbag assembly (see page RS-395).

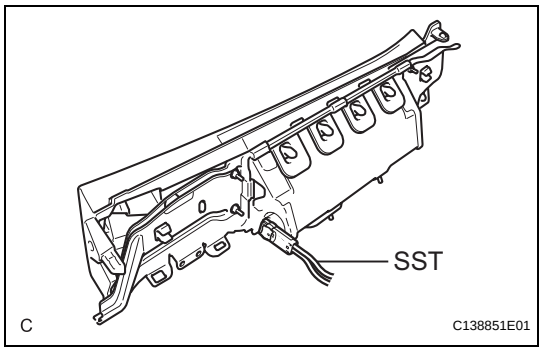

(e) Install the SST.

(1) Connect the SST connector to the front passenger side knee airbag assembly.
SST 09082-00700, 09082-00770
NOTICE:
To avoid damaging the SST connector and wire harness, do not lock the secondary lock of the twin lock.

(2) Install the front passenger side knee airbag assembly (see page RS-396).
NOTICE:
Take care not to damage the SST wire harness.

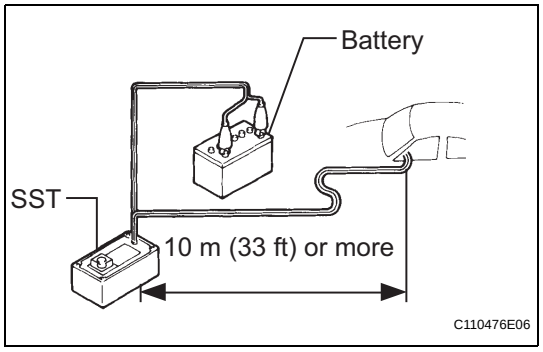

(3) Move the SST at least 10 m (33 ft) away from the vehicle front side window.

(4) Maintaining enough clearance for the SST wire harness in the front side window, close all doors and windows of the vehicle.
NOTICE:
Take care not to damage the SST wire harness.

(5) Connect the red clip of the SST to the battery positive (+) terminal and the black clip of the SST to the battery negative (-) terminal.

(f) Deploy the airbag.

(1) Check that no one is inside the vehicle or within a 10 m (33 ft) radius of the vehicle.

(2) Press the SST activation switch and deploy the airbag.
CAUTION:
- **When deploying the airbag, make sure that no one is near the vehicle.**
- **The front passenger side knee airbag assembly becomes extremely hot when the airbag is deployed, so do not touch it for at least 30 minutes after deployment.**
- **Use gloves and safety glasses when handling a front passenger side knee airbag assembly with a deployed airbag.**
- **Do not apply water, etc. to a front passenger side knee airbag assembly with a deployed airbag.**
- **Always wash your hands with water after completing the operation.**

HINT:
The airbag is deployed as the LED of the SST activation switch comes on.

2. DISPOSE OF FRONT PASSENGER SIDE KNEE AIRBAG ASSEMBLY (WHEN NOT INSTALLED IN VEHICLE)
NOTICE:
- **When disposing of the front passenger side knee airbag assembly, never use the customer's vehicle to deploy the airbag.**

RS

- **Be sure to follow the procedure detailed below when deploying the airbag.**

HINT:
Prepare a battery as the power source to deploy the airbag.

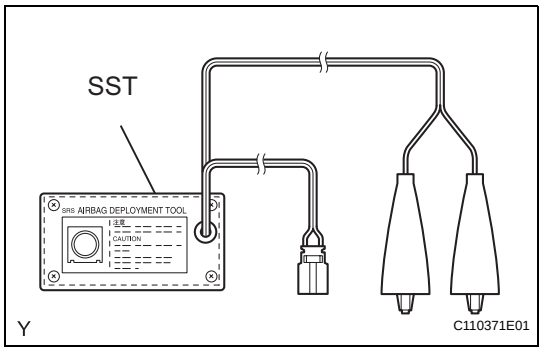

(a) Check the function of the SST (see page RS-372).
(b) Remove the front passenger side knee airbag assembly (see page RS-395).
CAUTION:
- **When removing the front passenger side knee airbag assembly, work must be started 90 seconds after the engine switch is turned off and the negative (-) terminal cable is disconnected from the battery.**
- **When storing the front passenger side knee airbag assembly, keep the airbag deployment side facing upward.**

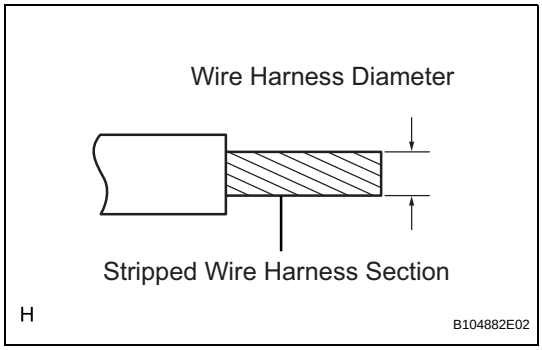

(c) Using a service-purpose wire harness for the vehicle, tie down the front passenger side knee airbag assembly to the tire.
Wire harness:
Stripped wire harness section
1.25 mm^2 or more (0.0019 in.^{2} or more)
CAUTION:
If the wire harness is too thin or an alternative object is used to tie down the front passenger side knee airbag assembly, it may be snapped by the shock when the airbag is deployed. Always use a wire harness for vehicle use with an area of at least 1.25 mm^2 (0.0019 in.^{2}).
HINT:
To calculate the area of the stripped wire harness section:
Area = 3.14 x (Diameter)^2 divided by 4
(1) Position the front passenger side knee airbag assembly inside the tire with the airbag deployment side facing inside.
Tire size:
Must exceed the following dimensions
Width:
185 mm (7.28 in.)
Inner diameter:
360 mm (14.17 in.)

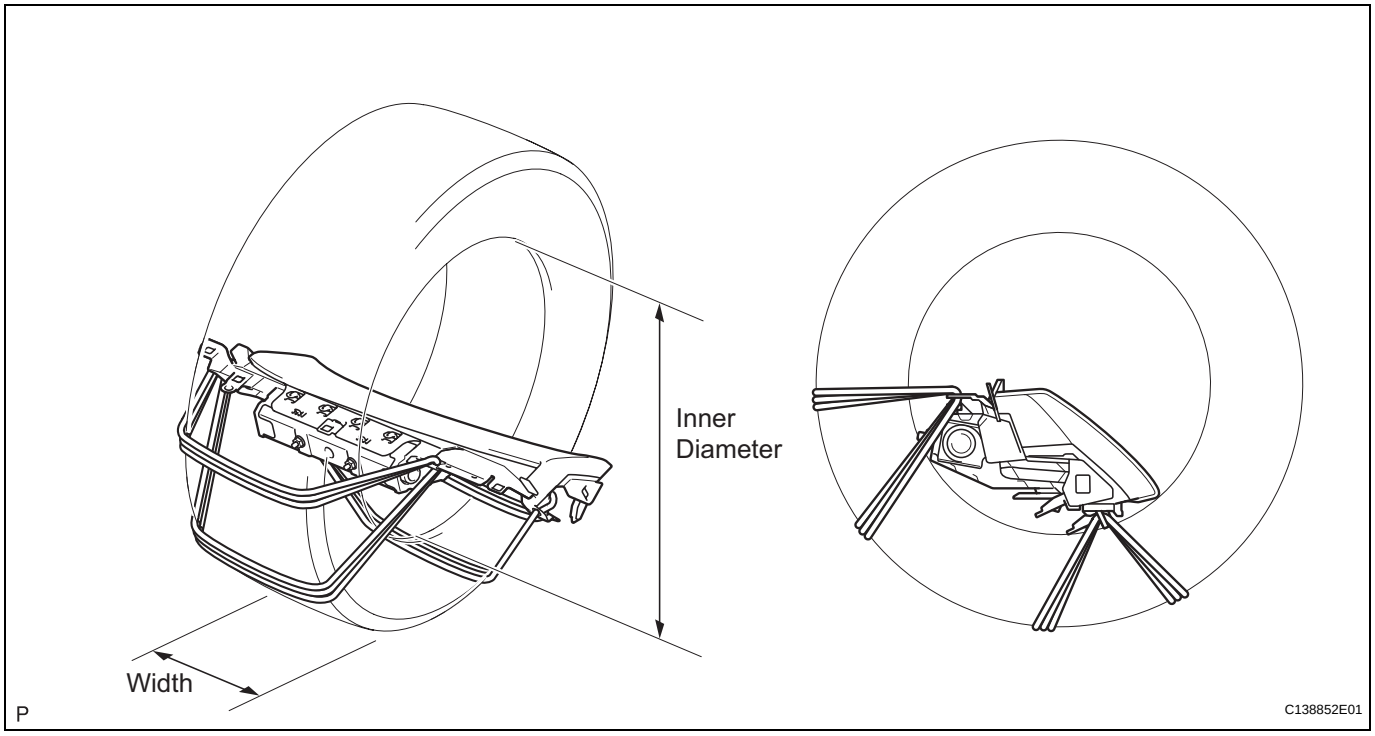

CAUTION:

- **Make sure that the wire harness is tight. If there is slack in wire harness, the front passenger side knee airbag assembly may become loose due to the shock when the airbag is deployed.**
- **Always tie down the front passenger side knee airbag assembly with the airbag deployment side facing inside the tire.**

NOTICE:

The tire may be damaged by the airbag deployment, so use an extra tire.

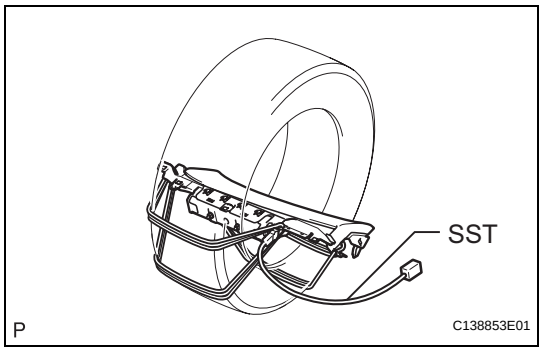

(d) Install the SST.

(1) Connect the SST connector to the front passenger side knee airbag assembly.
SST 09082-00770

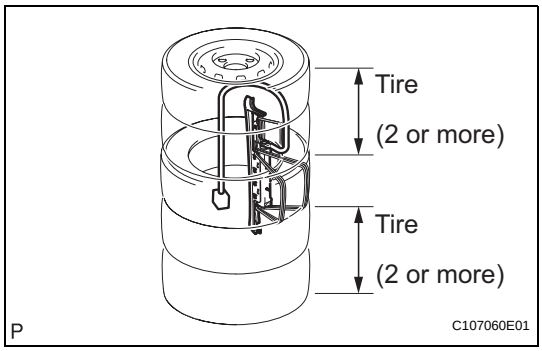

(e) Place the tires.
  (1) Place at least 2 tires under the tire which the front passenger side knee airbag assembly is tied to.
  (2) Place at least 2 tires over the tire which the front passenger side knee airbag assembly is tied to. The top tire should have the disc wheel installed.
  NOTICE:
  - **The tire may be damaged by the airbag deployment, so use an extra tire.**
  - **Do not place the SST connector under the tire because it could be damaged.**
  (3) Tie the tires together with 2 wire harnesses.
  CAUTION:
  Make sure that the wire harness is tight. Looseness in the wire harness results in the tires coming free due to the shock when the airbag is deployed.

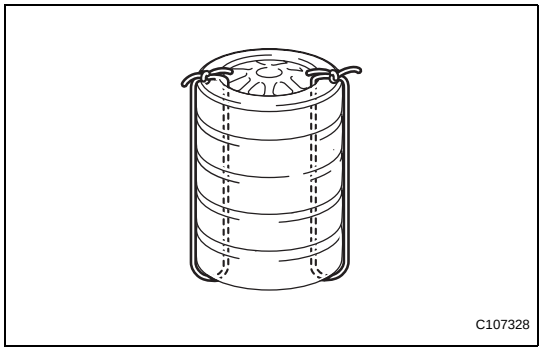

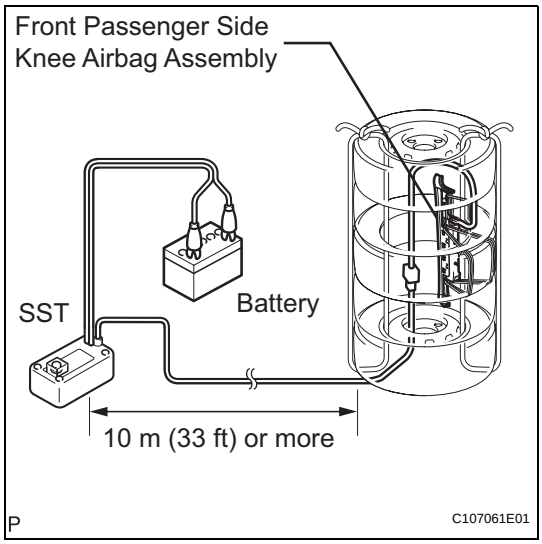

(f) Install the SST.
  (1) Connect the SST connector.
  SST 09082-00700
  NOTICE:
  To avoid damaging the SST connector and wire harness, do not lock the secondary lock of the twin lock. Also, secure some slack for the SST wire harness inside the tire.
  (2) Move the SST at least 10 m (33 ft) away from the airbag tied down to the tire.

(g) Deploy the airbag.
  (1) Connect the red clip of the SST to the battery positive (+) terminal and the black clip of the SST to the battery negative (-) terminal.
  (2) Check that no one is within a 10 m (33 ft) radius of the tire which the front passenger side knee airbag assembly is tied to.
  (3) Press the SST activation switch and deploy the airbag.
  CAUTION:
  When deploying the airbag, make sure that no one is near the tire.
  HINT:
  The airbag is deployed as the LED of the SST activation switch comes on.

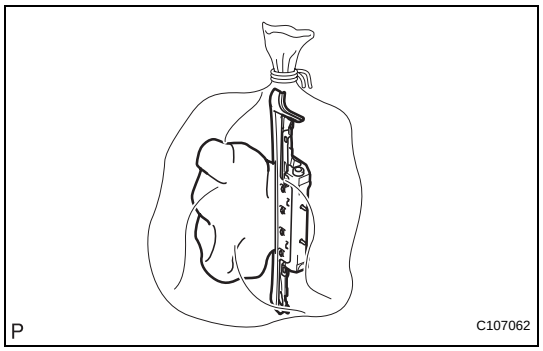

(h) Dispose of the front passenger side knee airbag assembly.

CAUTION:

- **The front passenger side knee airbag assembly becomes extremely hot when the airbag is deployed, so do not touch it for at least 30 minutes after deployment.**
- **Use gloves and safety glasses when handling a front passenger side knee airbag assembly with a deployed airbag.**
- **Do not apply water, etc. to a front passenger side knee airbag assembly with a deployed airbag.**
- **Always wash your hands with water after completing the operation.**

(1) Remove the front passenger side knee airbag assembly from the tire.

(2) Place the front passenger side knee airbag assembly in a plastic bag, tie it tightly and dispose of it as other general part disposal.

RS

ON-VEHICLE INSPECTION

1. INSPECT FRONT PASSENGER AIRBAG ASSEMBLY (VEHICLE NOT INVOLVED IN COLLISION)

(a) Perform a diagnostic system check (See page RS-37).

(b) With the front passenger airbag assembly installed on the vehicle, perform a visual check. If there are any defects as mentioned below, replace the instrument panel with a new one:
Cuts, minute cracks or marked discoloration on the instrument panel around the front passenger airbag assembly.

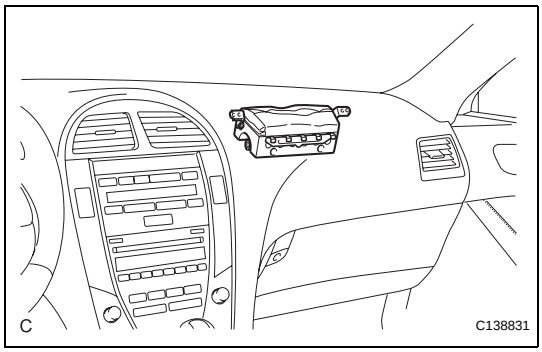

2. INSPECT FRONT PASSENGER AIRBAG ASSEMBLY (VEHICLE INVOLVED IN COLLISION AND AIRBAG HAS NOT DEPLOYED)

(a) Perform a diagnostic system check (See page RS-37).

(b) With the front passenger airbag assembly removed from the vehicle, perform a visual check. If there are any defects as mentioned below, replace the front passenger airbag assembly, instrument panel or instrument panel reinforcement with a new one:
- Cuts, minute cracks or marked discoloration on the front passenger airbag assembly.
- Cracks or other damage to the connectors.
- Deformation or cracks on the instrument panel or instrument panel reinforcement.

CAUTION:
Be sure to follow the correct removal and installation procedures.

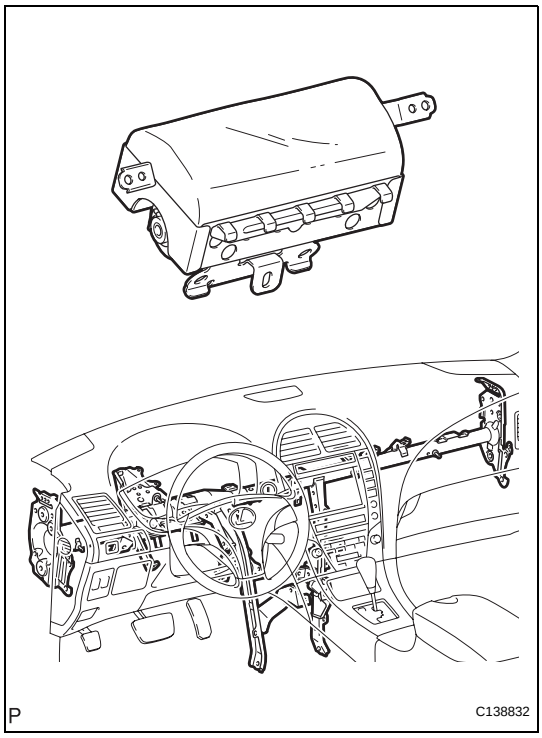

REMOVAL

1. **PRECAUTION**
   CAUTION:
   Be sure to read "PRECAUTION" thoroughly before servicing (See page RS-1).
2. **ALIGN FRONT WHEELS FACING STRAIGHT AHEAD**
3. **DISCONNECT CABLE FROM NEGATIVE BATTERY TERMINAL**
   CAUTION:
   Wait for 90 seconds after disconnecting the cable to prevent airbag deployment.
4. **REMOVE LOWER NO. 3 STEERING WHEEL COVER (See page RS-367)**
5. **REMOVE LOWER NO. 2 STEERING WHEEL COVER (See page RS-367)**
6. **REMOVE STEERING PAD (See page RS-367)**
7. **REMOVE STEERING WHEEL ASSEMBLY (See page SR-80)**
8. **REMOVE FRONT DOOR SCUFF PLATE LH (See page IR-39)**
9. **REMOVE FRONT DOOR OPENING TRIM COVER LH (See page IR-39)**
10. **REMOVE SIDE INSTRUMENT PANEL LH (See page IP-12)**
11. **REMOVE INSTRUMENT PANEL FINISH PANEL END LH (See page IP-13)**
12. **REMOVE LOWER INSTRUMENT PANEL SUB-ASSEMBLY (See page IP-13)**
13. **REMOVE STEERING COLUMN COVER (See page SR-80)**
14. **REMOVE TILT & TELESCOPIC SWITCH (See page SR-80)**
15. **REMOVE TURN SIGNAL SWITCH ASSEMBLY WITH SPIRAL CABLE SUB-ASSEMBLY (See page SR-80)**
16. **REMOVE INSTRUMENT CLUSTER FINISH PANEL SUB-ASSEMBLY (See page IP-14)**
17. **REMOVE COMBINATION METER ASSEMBLY (See page IP-14)**
18. **REMOVE NO. 1 SWITCH HOLE BASE (See page IP-14)**
19. **REMOVE INSTRUMENT PANEL FINISH PANEL END RH (See page IP-15)**
20. **REMOVE FRONT DOOR SCUFF PLATE RH (See page IR-42)**

21. **REMOVE FRONT DOOR OPENING TRIM COVER RH (See page IR-42)**
22. **REMOVE NO. 2 INSTRUMENT PANEL UNDER COVER SUB-ASSEMBLY (See page IP-15)**
23. **REMOVE SIDE INSTRUMENT PANEL RH (See page IP-15)**
24. **REMOVE FRONT PASSENGER SIDE KNEE AIRBAG ASSEMBLY (See page RS-396)**
25. **REMOVE LOWER INSTRUMENT PANEL RH (See page IP-16)**
26. **REMOVE SHIFT LEVER KNOB SUB-ASSEMBLY (See page IP-16)**
27. **REMOVE UPPER CONSOLE PANEL ASSEMBLY WITH FRONT ASH RECEPTACLE (See page IP-16)**
28. **REMOVE NO. 2 INSTRUMENT PANEL REGISTER ASSEMBLY (See page IP-17)**
29. **REMOVE INTEGRATION CONTROL PANEL WITH RADIO RECEIVER ASSEMBLY (w/o Navigation System) (See page AV-168)**
30. **REMOVE MULTI-DISPLAY WITH RADIO RECEIVER ASSEMBLY (w/ Navigation System) (See page AV-170)**
31. **REMOVE HEATER SEAT SWITCH CONSOLE BASE (w/o Seat Heater System) (See page IP-17)**
32. **REMOVE HEATER SEAT SWITCH CONSOLE BASE (w/ Seat Heater System) (See page IP-18)**
33. **REMOVE CONSOLE BOX POCKET (See page IP-18)**
34. **REMOVE CONSOLE BOX CARPET (See page IP-18)**
35. **REMOVE CONSOLE REAR END PANEL SUB-ASSEMBLY (See page IP-19)**
36. **REMOVE REAR CONSOLE BOX ASSEMBLY (See page IP-19)**
37. **REMOVE FRONT PILLAR GARNISH LH (See page IR-39)**
38. **REMOVE NO. 1 INSTRUMENT PANEL SPEAKER PANEL SUB-ASSEMBLY (See page IP-20)**
39. **REMOVE FRONT NO. 2 SPEAKER ASSEMBLY (for LH Side) (See page AV-184)**
40. **REMOVE NO. 1 INSTRUMENT PANEL REGISTER ASSEMBLY (See page IP-20)**
41. **REMOVE FRONT PILLAR GARNISH RH (See page IR-42)**
42. **REMOVE NO. 2 INSTRUMENT PANEL SPEAKER PANEL SUB-ASSEMBLY (See page IP-21)**

43. REMOVE FRONT NO. 2 SPEAKER ASSEMBLY (for RH Side) (See page IP-21)

44. REMOVE NO. 3 INSTRUMENT PANEL REGISTER ASSEMBLY (See page IP-21)

45. REMOVE NO. 1 SPEAKER HOLE COVER (See page IP-21)

46. REMOVE FRONT STEREO COMPONENT SPEAKER ASSEMBLY (See page AV-188)

47. REMOVE NO. 1 INSTRUMENT PANEL MOUNTING BRACKET (See page IP-22)

48. REMOVE PUSH START SWITCH (See page IP-22)

49. DISCONNECT INSTRUMENT PANEL WIRE ASSEMBLY

(a) Disconnect the instrument panel wire connector.

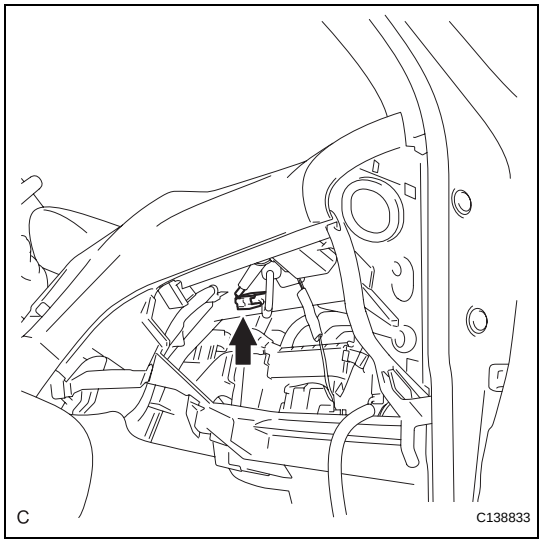

50. REMOVE ROOM TEMPERATURE SENSOR (See page AC-214)

51. REMOVE INSTRUMENT PANEL SAFETY PAD ASSEMBLY (w/o DVD Player) (See page IP-22)

52. REMOVE INSTRUMENT PANEL SAFETY PAD ASSEMBLY (w/ DVD Player) (See page IP-24)

53. REMOVE FRONT PASSENGER AIRBAG ASSEMBLY

(a) Remove the 2 screws.

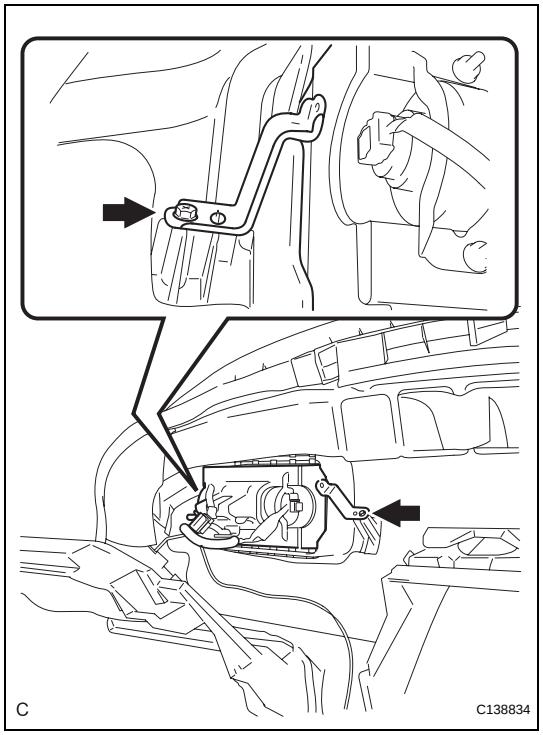

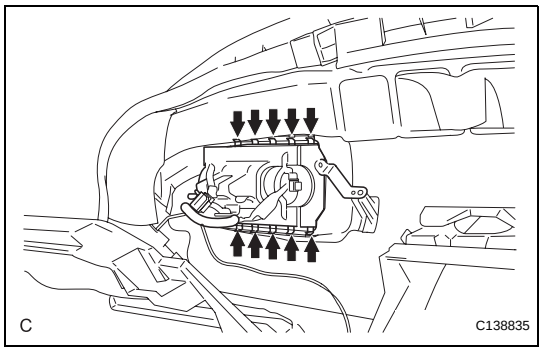

(b) Disengage the 10 hooks and remove the front passenger airbag assembly from the instrument panel.

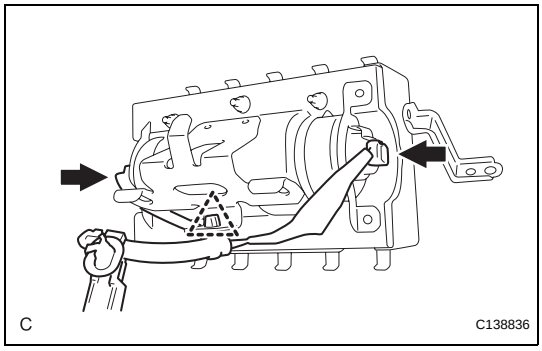

54. REMOVE INSTRUMENT PANEL WIRE ASSEMBLY

(a) Disconnect the 2 connectors.

(b) Remove the clamp and the instrument panel wire assembly from the front passenger airbag assembly.

NOTICE:

When handling the airbag connector, take care not to damage the airbag wire harness.

INSTALLATION

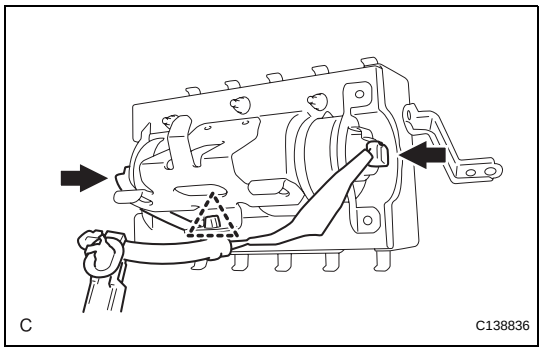

1. INSTALL INSTRUMENT PANEL WIRE ASSEMBLY

(a) Connect the 2 connectors.

(b) Install the clamp and the instrument panel wire assembly on the front passenger airbag assembly.

NOTICE:

When handling the airbag connector, take care not to damage the airbag wire harness.

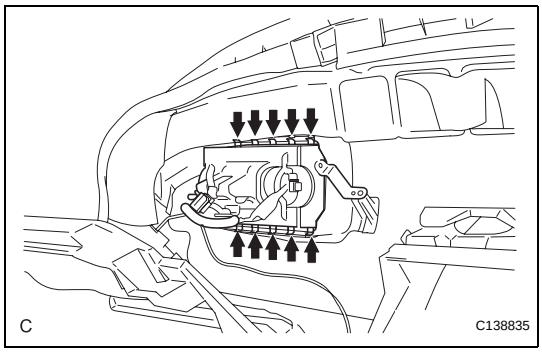

2. INSTALL FRONT PASSENGER AIRBAG ASSEMBLY

(a) Engage the 10 hooks and install the front passenger airbag assembly on the instrument panel.

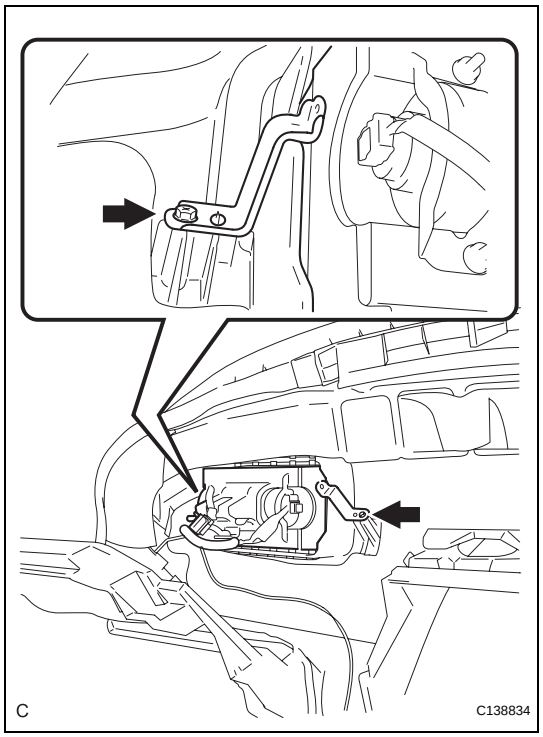

(b) Install the 2 screws.

3. **INSTALL INSTRUMENT PANEL SAFETY PAD ASSEMBLY (w/o DVD Player) (See page IP-33)**

4. **INSTALL INSTRUMENT PANEL SAFETY PAD ASSEMBLY (w/ DVD Player) (See page IP-35)**

5. **INSTALL ROOM TEMPERATURE SENSOR (See page AC-215)**

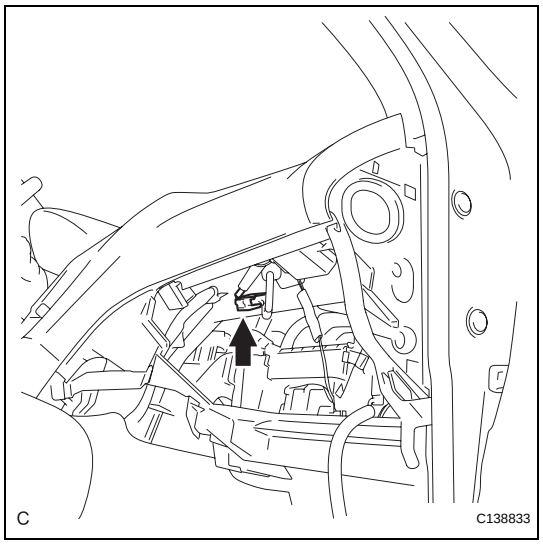

6. **CONNECT INSTRUMENT PANEL WIRE ASSEMBLY**
   (a) Connect the instrument panel wire connector.

7. **INSTALL PUSH START SWITCH (See page IP-37)**

8. **INSTALL NO. 1 INSTRUMENT PANEL MOUNTING BRACKET (See page IP-38)**

9. **INSTALL FRONT STEREO COMPONENT SPEAKER ASSEMBLY (See page AV-188)**

10. **INSTALL NO. 1 SPEAKER HOLE COVER (See page IP-38)**

11. **INSTALL NO. 1 INSTRUMENT PANEL REGISTER ASSEMBLY (See page IP-38)**

12. **INSTALL FRONT NO. 2 SPEAKER ASSEMBLY (for LH Side) (See page AV-185)**

13. **INSTALL NO. 1 INSTRUMENT PANEL SPEAKER PANEL SUB-ASSEMBLY (See page IP-39)**

14. **INSTALL FRONT PILLAR GARNISH LH (See page IR-64)**

15. **INSTALL NO. 3 INSTRUMENT PANEL REGISTER ASSEMBLY (See page IP-39)**

16. **INSTALL FRONT NO. 2 SPEAKER ASSEMBLY (for RH Side) (See page IP-39)**

17. **INSTALL NO. 2 INSTRUMENT PANEL SPEAKER PANEL SUB-ASSEMBLY (See page IP-39)**

18. **INSTALL FRONT PILLAR GARNISH RH (See page IR-65)**

19. **INSTALL REAR CONSOLE BOX ASSEMBLY (See page IP-39)**
20. **INSTALL CONSOLE REAR END PANEL SUB-ASSEMBLY (See page IP-40)**
21. **INSTALL CONSOLE BOX CARPET (See page IP-41)**
22. **INSTALL CONSOLE BOX POCKET (See page IP-41)**
23. **INSTALL HEATER SEAT SWITCH CONSOLE BASE (w/o Seat Heater System) (See page IP-41)**
24. **INSTALL HEATER SEAT SWITCH CONSOLE BASE (w/ Seat Heater System) (See page IP-41)**
25. **INSTALL INTEGRATION CONTROL PANEL WITH RADIO RECEIVER ASSEMBLY (w/o Navigation System) (See page AV-172)**
26. **INSTALL MULTI-DISPLAY WITH RADIO RECEIVER ASSEMBLY (w/ Navigation System) (See page AV-173)**
27. **INSTALL NO. 2 INSTRUMENT PANEL REGISTER ASSEMBLY (See page IP-41)**
28. **INSTALL UPPER CONSOLE PANEL ASSEMBLY WITH FRONT ASH RECEPTACLE (See page IP-42)**
29. **INSTALL SHIFT LEVER KNOB SUB-ASSEMBLY (See page IP-42)**
30. **INSTALL LOWER INSTRUMENT PANEL RH (See page IP-42)**
31. **INSTALL FRONT PASSENGER SIDE KNEE AIRBAG ASSEMBLY (See page RS-396)**
32. **INSTALL SIDE INSTRUMENT PANEL RH (See page IP-43)**
33. **INSTALL NO. 2 INSTRUMENT PANEL UNDER COVER SUB-ASSEMBLY (See page IP-44)**
34. **INSTALL FRONT DOOR OPENING TRIM COVER RH (See page IR-65)**
35. **INSTALL FRONT DOOR SCUFF PLATE RH (See page IR-65)**
36. **INSTALL INSTRUMENT PANEL FINISH PANEL END RH (See page IP-44)**
37. **INSTALL NO. 1 SWITCH HOLE BASE (See page IP-44)**
38. **INSTALL COMBINATION METER ASSEMBLY (See page IP-45)**
39. **INSTALL INSTRUMENT CLUSTER FINISH PANEL SUB-ASSEMBLY (See page IP-45)**
40. **INSTALL TURN SIGNAL SWITCH ASSEMBLY WITH SPIRAL CABLE SUB-ASSEMBLY (See page SR-86)**

41. INSTALL TILT & TELESCOPIC SWITCH (See page SR-86)

42. INSTALL STEERING COLUMN COVER (See page SR-87)

43. ADJUST SPIRAL CABLE (See page RS-382)

44. INSTALL LOWER INSTRUMENT PANEL SUB-ASSEMBLY (See page IP-46)

45. INSTALL INSTRUMENT PANEL FINISH PANEL END LH (See page IP-46)

46. INSTALL SIDE INSTRUMENT PANEL LH (See page IP-47)

47. INSTALL FRONT DOOR OPENING TRIM COVER LH (See page IR-64)

48. INSTALL FRONT DOOR SCUFF PLATE LH (See page IR-65)

49. INSTALL STEERING WHEEL ASSEMBLY (See page SR-87)

50. INSTALL STEERING PAD (See page RS-368)

51. INSTALL LOWER NO. 3 STEERING WHEEL COVER (See page RS-369)

52. INSTALL LOWER NO. 2 STEERING WHEEL COVER (See page RS-369)

53. CONNECT CABLE TO NEGATIVE BATTERY TERMINAL

54. PERFORM INITIALIZATION

(a) Perform initialization (See page IN-33).
HINT:
Some systems need initialization after reconnecting the cable to the negative battery terminal.

55. INSPECT STEERING PAD (See page RS-369)

56. INSPECT FRONT PASSENGER SIDE KNEE AIRBAG ASSEMBLY (See page RS-395)

57. INSPECT FRONT PASSENGER AIRBAG ASSEMBLY (See page RS-411)

58. INSPECT SRS WARNING LIGHT

(a) Inspect the SRS warning light (See page RS-37).

RS

DISPOSAL

HINT:
When scrapping a vehicle equipped with the SRS or disposing of the front passenger airbag assembly, be sure to deploy the airbag first in accordance with the procedure described below. If any abnormality occurs with the airbag deployment, contact the SERVICE DEPT. of the TOYOTA MOTOR SALES, U.S.A., INC.

CAUTION:

- **Never dispose of a front passenger airbag assembly that has an undeployed airbag.**
- **The airbag produces an exploding sound when it is deployed, so perform the operation outdoors and where it will not create a nuisance to nearby residents.**
- **When deploying the airbag, always use the specified SST (SRS Airbag Deployment Tool). Perform the operation in a place away from electrical noise.**
- **When deploying the airbag, perform the operation at least 10 m (33 ft) away from the front passenger airbag assembly.**
- **The front passenger airbag assembly becomes extremely hot when the airbag is deployed, so do not touch it for at least 30 minutes after deployment.**
- **Use gloves and safety glasses when handling a front passenger airbag assembly with a deployed airbag.**
- **Do not apply water, etc. to a front passenger airbag assembly with a deployed airbag.**
- **Always wash your hands with water after completing the operation.**

1. DISPOSE OF FRONT PASSENGER AIRBAG ASSEMBLY (WHEN INSTALLED IN VEHICLE)

HINT:
Prepare a battery as the power source to deploy the airbag.

(a) Check the function of the SST (See page RS-370).
(b) Refer to PRECAUTION (See page RS-1).
(c) Disconnect the cable from the negative battery terminal.
CAUTION:
Wait for 90 seconds after disconnecting the cable to prevent airbag deployment.
(d) Install the SST.
(1) Remove the lower instrument panel sub-assembly (See page IP-13).

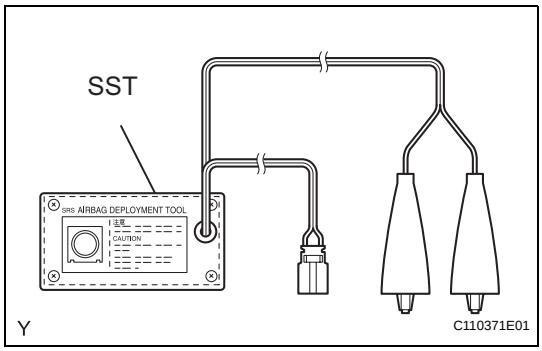

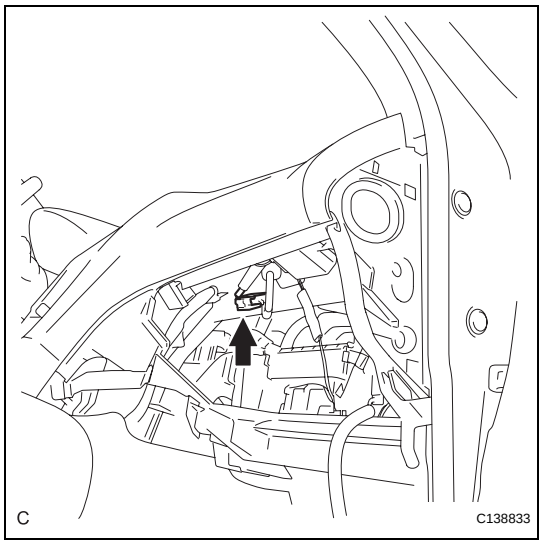

(2) Disconnect the connector.
NOTICE:
When handling the airbag connector, take care not to damage the airbag wire harness.

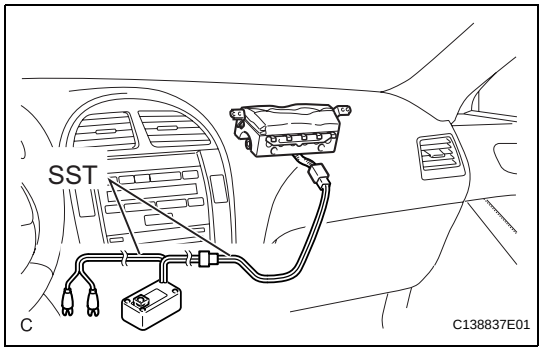

(3) Connect the SST connector to the instrument panel wire assembly.
SST 09082-00700, 09082-00780
NOTICE:
To avoid damaging the SST connector and wire harness, do not lock the secondary lock of the twin lock.

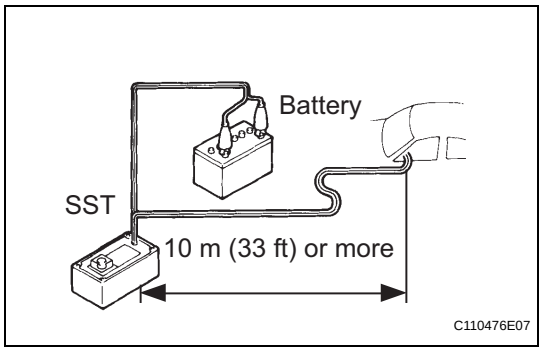

(4) Move the SST at least 10 m (33 ft) away from the vehicle front side window.
(5) Maintaining enough clearance for the SST wire harness in the front side window, close all doors and windows of the vehicle.
NOTICE:
Take care not to damage the SST wire harness.
(6) Connect the red clip of the SST to the battery positive (+) terminal and the black clip of the SST to the negative (-) terminal.

(e) Deploy the airbag.
(1) Check that no one is inside the vehicle or within a 10 m (33 ft) radius of the vehicle.
(2) Press the SST activation switch and deploy the airbag.
CAUTION:
- **When deploying the airbag, make sure that no one is near the vehicle.**
- **The front passenger airbag assembly becomes extremely hot when the airbag is deployed, so do not touch it for at least 30 minutes after deployment.**
- **Use gloves and safety glasses when handling a front passenger airbag assembly with a deployed airbag.**

RS

- **Do not apply water, etc. to a front passenger airbag assembly with a deployed airbag.**
- **Always wash your hands with water after completing the operation.**

HINT:
The airbag is deployed as the LED of the SST activation switch comes on.

2. DISPOSE OF FRONT PASSENGER AIRBAG ASSEMBLY (WHEN NOT INSTALLED IN VEHICLE)

NOTICE:

- **When disposing of the front passenger airbag assembly, never use the customer's vehicle to deploy the airbag.**
- **Be sure to follow the procedure detailed below when deploying the airbag.**

HINT:
Prepare a battery as the power source to deploy the airbag.

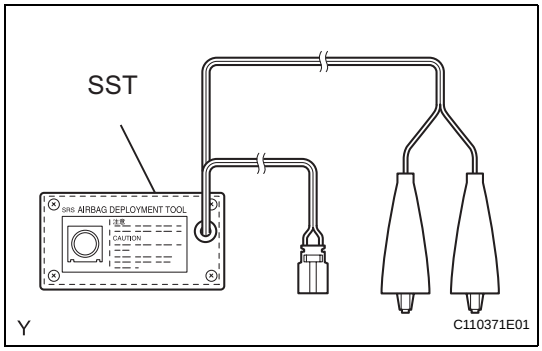

(a) Check the function of the SST (See page RS-372).

(b) Remove the front passenger airbag assembly (See page RS-412).

CAUTION:

- **When removing the front passenger airbag assembly, work must be started 90 seconds after the engine switch is turned off and the negative (-) terminal cable is disconnected from the battery.**
- **When storing the front passenger airbag assembly, keep the airbag deployment side facing upward.**

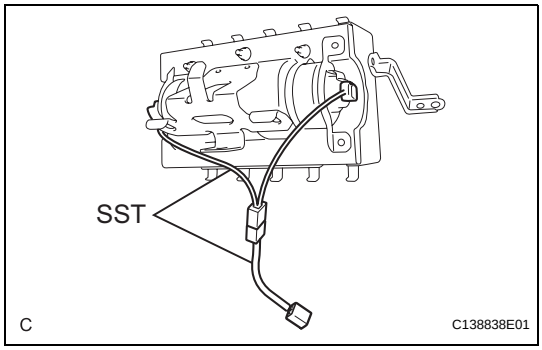

(c) Install the SST.

(1) After connecting the SST below to each other, connect them to the front passenger airbag assembly.

SST 09082-00802 (09082-10801, 09082-30801)

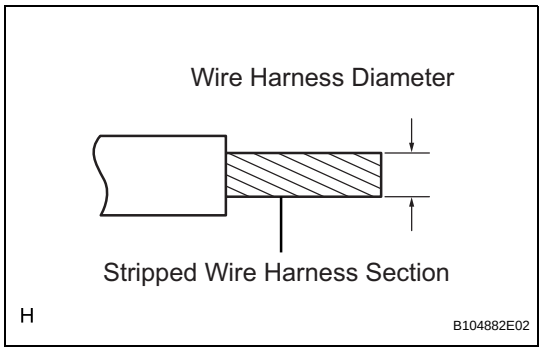

(d) Using a service-purpose wire harness for the vehicle, tie down the front passenger airbag assembly to the tire.

Wire harness:

Stripped wire harness section

1.25 mm^2 or more (0.0019 in.^{2} or more)

CAUTION:
If the wire harness is too thin or an alternative object is used to tie down the front passenger airbag assembly, it may be snapped by the shock when the airbag is deployed. Always use a wire harness for vehicle use with an area of at least 1.25 mm^2 (0.0019 in.^{2}).

HINT:
To calculate the area of the stripped wire harness section:

Area = 3.14 x (Diameter)^2 divided by 4

(1) Position the front passenger airbag assembly inside the tire with the airbag deployment side facing inside.
Tire size:
Must exceed the following dimensions
Width:
185 mm (7.28 in.)
Inner diameter:
360 mm (14.17 in.)

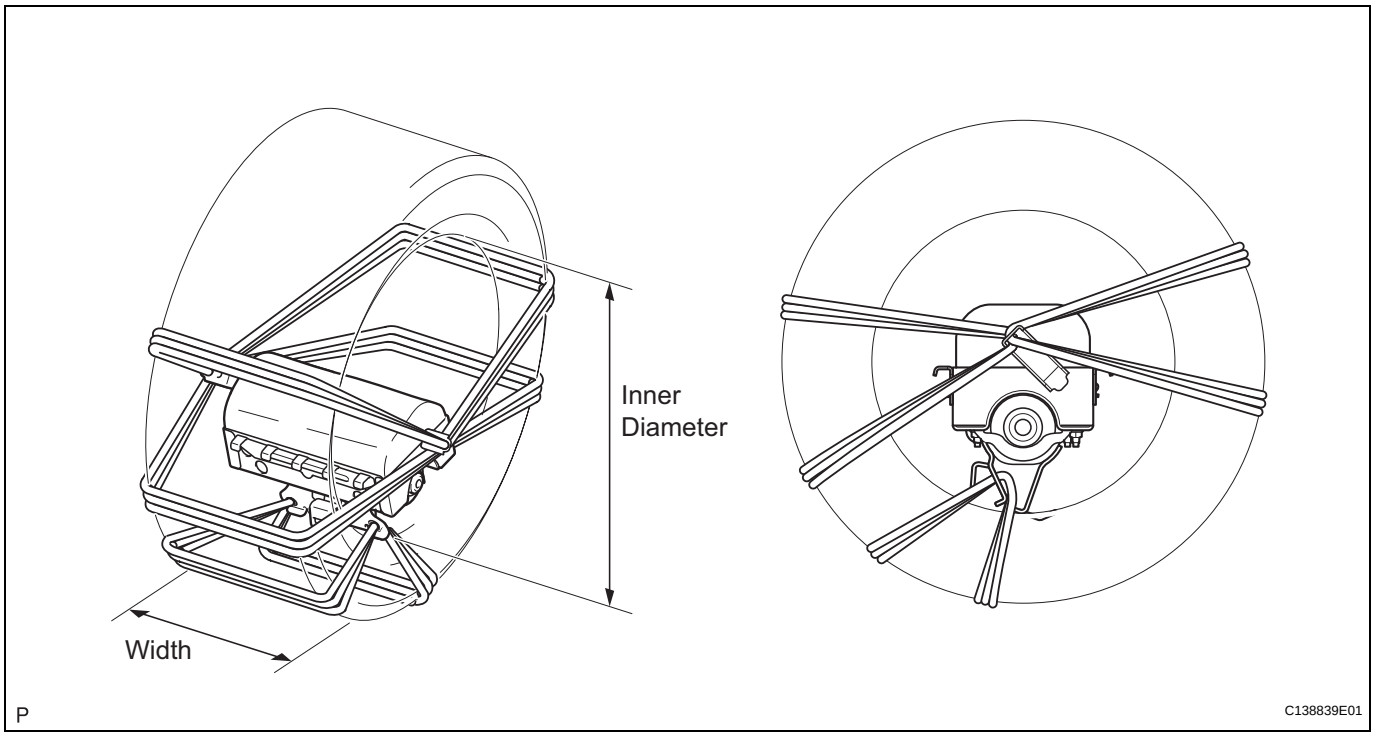

CAUTION:
- **Make sure that the wire harness is tight. If there is slack in the wire harness, the front passenger airbag assembly may become loose due to the shock when the airbag is deployed.**
- **Always tie down the front passenger airbag assembly with the airbag deployment side facing inside the tire.**

NOTICE:
The tire will be marked by the airbag deployment, so use an extra tire.

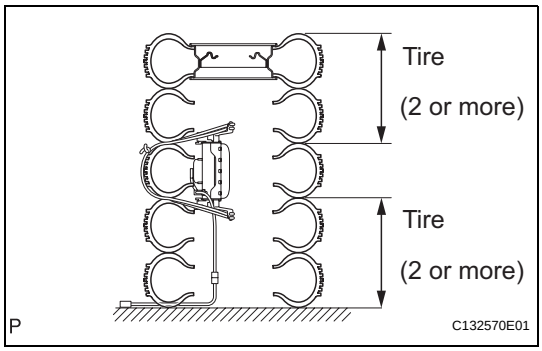

(e) Place the tires.
(1) Place at least 2 tires under the tire which the front passenger airbag assembly is tied to.
(2) Place at least 2 tires over the tire which the front passenger airbag assembly is tied to. The top tire should have a disc wheel installed.
NOTICE:
Do not place the SST connector under the tire because it could be damaged.

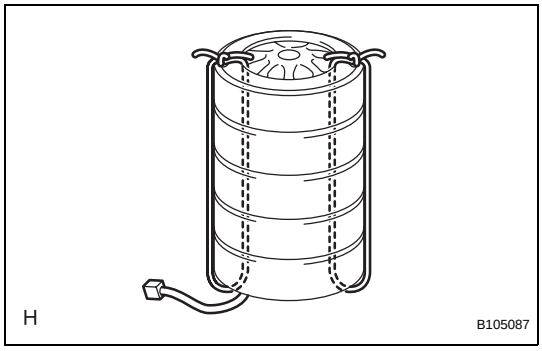

(3) Tie the tires together with 2 wire harnesses.
CAUTION:
Make sure that the wire harness is tight. Looseness in the wire harness results in the tires coming free due to the shock when the airbag is deployed.

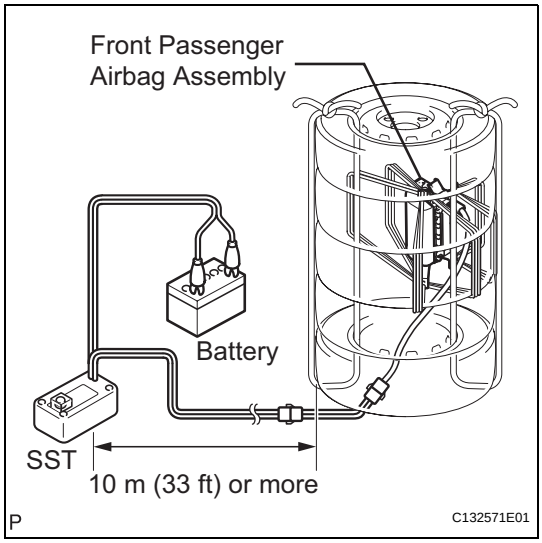

(f) Install the SST.
(1) Connect the SST connector.
SST 09082-00700
NOTICE:
To avoid damaging the SST connector and wire harness, do not lock the secondary lock of the twin lock. Also, secure some slack for the SST wire harness inside the tire.
(2) Move the SST at least 10 m (33 ft) away from the airbag tied down to the tire.

(g) Deploy the airbag.
(1) Connect the red clip of the SST to the battery positive (+) terminal and the black clip of the SST to the battery negative (-) terminal.
(2) Check that no one is within a 10 m (33 ft) radius of the tire which the front passenger airbag assembly is tied to.
(3) Press the SST activation switch and deploy the airbag.
CAUTION:
When deploying the airbag, make sure that no one is near the tire.
HINT:
The airbag is deployed as the LED of the SST activation switch comes on.

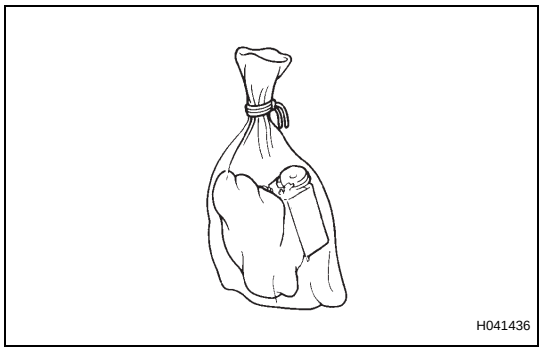

(h) Dispose of the front passenger airbag assembly.

CAUTION:

- **The front passenger airbag assembly becomes extremely hot when the airbag is deployed, so do not touch it for at least 30 minutes after deployment.**
- **Use gloves and safety glasses when handling a front passenger airbag assembly with a deployed airbag.**
- **Do not apply water, etc. to a front passenger airbag assembly with a deployed airbag.**
- **Always wash your hands with water after completing the operation.**

(1) Remove the front passenger airbag assembly from the tire.

(2) Place the front passenger airbag assembly in a plastic bag, tie it tightly and dispose of it as other general part disposal.

ON-VEHICLE INSPECTION

1. INSPECT CURTAIN SHIELD AIRBAG ASSEMBLY (VEHICLE NOT INVOLVED IN COLLISION)

(a) Perform a diagnostic system check (See page RS-37).

(b) With the curtain shield airbag assembly installed on the vehicle, perform a visual check. If there are any defects as mentioned below, replace the front pillar garnish or roof headlining assembly with a new one:

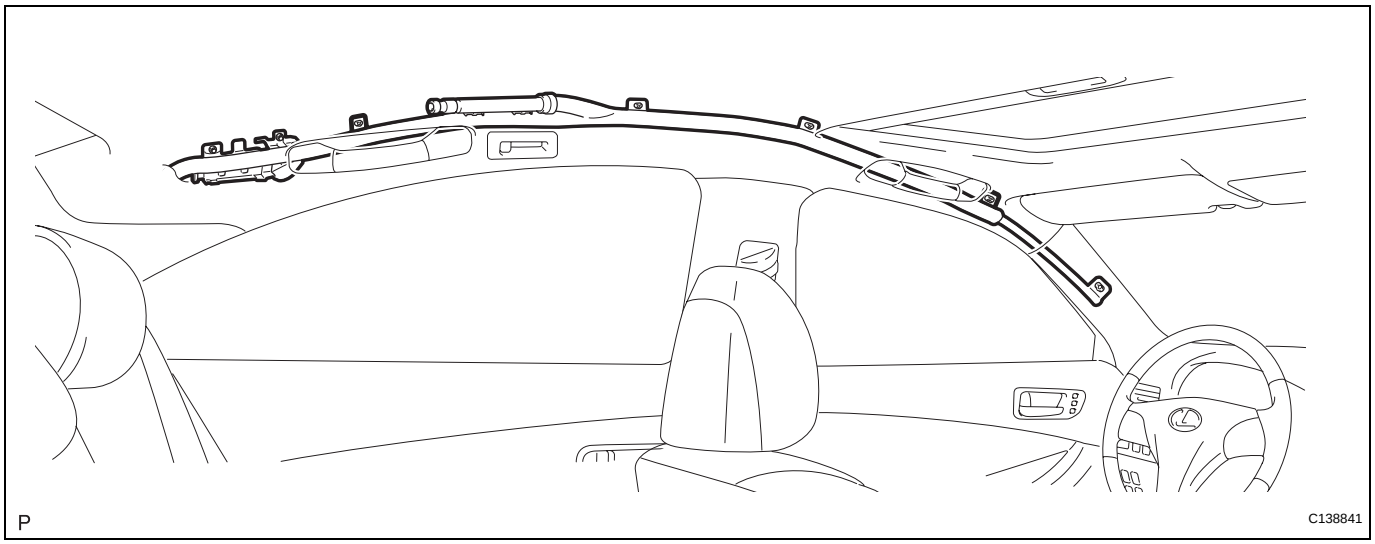

Cuts, minute cracks or marked discoloration on the front pillar garnish or roof headlining assembly around the curtain shield airbag assembly.

2. INSPECT CURTAIN SHIELD AIRBAG ASSEMBLY (VEHICLE INVOLVED IN COLLISION AND AIRBAG HAS NOT DEPLOYED)

(a) Perform a diagnostic system check (See page RS-37).

(b) With the curtain shield airbag assembly removed from the vehicle, perform a visual check. If there are any defects as mentioned below, replace the curtain shield airbag assembly with a new one:

- Cuts, minute cracks or marked discoloration on the curtain shield airbag assembly.
- Cracks or other damage to the connectors.

CAUTION:

Be sure to follow the correct removal and installation procedures.

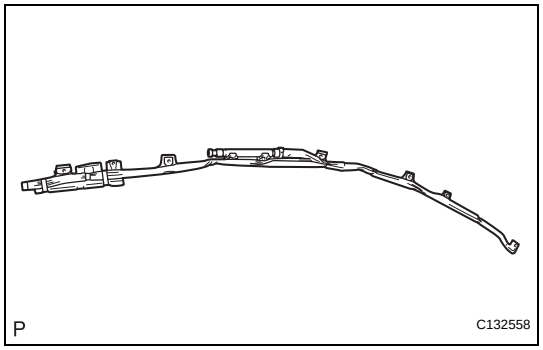

REMOVAL

HINT:
- Use the same procedure for the RH side and LH side.
- The procedure listed below are for the LH side.

1. **PRECAUTION**
   CAUTION:
   Be sure to read "PRECAUTION" thoroughly before servicing (See page RS-1).
2. **REMOVE REAR SEAT CUSHION ASSEMBLY (See page SE-113)**
3. **REMOVE REAR SEAT HEADREST ASSEMBLY**
4. **REMOVE REAR CENTER SEAT HEADREST ASSEMBLY**
5. **REMOVE REAR SEATBACK ASSEMBLY (See page SE-113)**
6. **REMOVE SEAT BELT ANCHOR COVER CAP LH (See page SB-27)**
7. **DISCONNECT FRONT SEAT OUTER BELT ASSEMBLY LH (See page SB-27)**
8. **REMOVE FRONT SEAT HEADREST ASSEMBLY (for Driver Seat)**
9. **REMOVE FRONT SEAT OUTER TRACK BRACKET COVER LH (See page SE-83)**
10. **REMOVE FRONT SEAT INNER TRACK BRACKET COVER LH (See page SE-83)**
11. **REMOVE FRONT SEAT REAR OUTER TRACK BRACKET COVER LH (See page SE-83)**
12. **REMOVE FRONT SEAT REAR INNER TRACK BRACKET COVER LH (See page SE-83)**
13. **REMOVE FRONT SEAT ASSEMBLY LH (See page SE-83)**
14. **REMOVE SEAT BELT ANCHOR COVER CAP RH (See page RS-490)**
15. **DISCONNECT FRONT SEAT OUTER BELT ASSEMBLY RH (See page RS-490)**
16. **REMOVE FRONT SEAT HEADREST ASSEMBLY (for Front Passenger Seat)**
17. **REMOVE FRONT SEAT OUTER TRACK BRACKET COVER RH (See page RS-490)**
18. **REMOVE FRONT SEAT INNER TRACK BRACKET COVER RH (See page RS-490)**
19. **REMOVE FRONT SEAT REAR OUTER TRACK BRACKET COVER RH (See page RS-490)**
20. **REMOVE FRONT SEAT REAR INNER TRACK BRACKET COVER RH (See page RS-490)**

21. **REMOVE FRONT SEAT ASSEMBLY RH (See page RS-491)**
22. **REMOVE FRONT DOOR SCUFF PLATE LH (See page IR-39)**
23. **REMOVE FRONT DOOR OPENING TRIM COVER LH (See page IR-39)**
24. **REMOVE SIDE INSTRUMENT PANEL LH (See page IP-12)**
25. **REMOVE FRONT PILLAR GARNISH LH (See page IR-39)**
26. **REMOVE REAR DOOR SCUFF PLATE LH (See page IR-40)**
27. **REMOVE LOWER CENTER PILLAR GARNISH LH (See page IR-40)**
28. **REMOVE UPPER CENTER PILLAR GARNISH LH (See page IR-41)**
29. **REMOVE REAR SEAT SIDE GARNISH LH (w/o Rear Seat Side Airbag) (See page IR-41)**
30. **REMOVE REAR SEAT SIDE AIRBAG ASSEMBLY LH (w/ Rear Seat Side Airbag) (See page RS-460)**
31. **REMOVE ROOF SIDE INNER GARNISH ASSEMBLY LH (See page IR-42)**
32. **REMOVE FRONT DOOR SCUFF PLATE RH (See page IR-42)**
33. **REMOVE FRONT DOOR OPENING TRIM COVER RH (See page IR-42)**
34. **REMOVE SIDE INSTRUMENT PANEL RH (See page IP-15)**
35. **REMOVE FRONT PILLAR GARNISH RH (See page IR-42)**
36. **REMOVE REAR DOOR SCUFF PLATE RH (See page IR-42)**
37. **REMOVE LOWER CENTER PILLAR GARNISH RH (See page IR-42)**
38. **REMOVE UPPER CENTER PILLAR GARNISH RH (See page IR-42)**
39. **REMOVE REAR SEAT SIDE GARNISH RH (w/o Rear Seat Side Airbag) (See page IR-43)**
40. **REMOVE REAR SEAT SIDE AIRBAG ASSEMBLY RH (w/ Rear Seat Side Airbag)**
    HINT:
    Use the same procedure for the RH side and the LH side.
41. **REMOVE ROOF SIDE INNER GARNISH ASSEMBLY RH (See page IR-43)**

42. **REMOVE INSTRUMENT PANEL FINISH PANEL END LH (See page IP-13)**
43. **REMOVE INSTRUMENT PANEL FINISH PANEL END RH (See page IP-15)**
44. **REMOVE SHIFT LEVER KNOB SUB-ASSEMBLY (See page IP-16)**
45. **REMOVE UPPER CONSOLE PANEL ASSEMBLY WITH FRONT ASH RECEPTACLE (See page IP-16)**
46. **REMOVE HEATER SEAT SWITCH CONSOLE BASE (w/o Seat Heater System) (See page IP-17)**
47. **REMOVE HEATER SEAT SWITCH CONSOLE BASE (w/ Seat Heater System) (See page IP-18)**
48. **REMOVE CONSOLE BOX POCKET (See page IP-18)**
49. **REMOVE CONSOLE BOX CARPET (See page IP-18)**
50. **REMOVE CONSOLE REAR END PANEL SUB-ASSEMBLY (See page IP-19)**
51. **REMOVE REAR CONSOLE BOX ASSEMBLY (See page IP-19)**
52. **REMOVE NO. 2 CONSOLE BOX DUCT (See page AC-149)**
53. **REMOVE NO. 3 CONSOLE BOX DUCT (See page AC-149)**
54. **DISCONNECT TRANSMISSION CONTROL CABLE ASSEMBLY (See page AX-232)**
55. **REMOVE SHIFT LEVER ASSEMBLY (See page AX-233)**
56. **REMOVE FLOOR CARPET BRACKET LH (See page PB-11)**
57. **REMOVE FLOOR CARPET BRACKET RH (See page PB-11)**
58. **REMOVE LUGGAGE COMPARTMENT FLOOR MAT (w/ DVD Player)**
59. **REMOVE SPARE WHEEL COVER TRAY (w/ DVD Player)**
60. **REMOVE LUGGAGE HOLD BELT STRIKER ASSEMBLY (w/ DVD Player) (See page ED-82)**
61. **REMOVE NO. 1 LUGGAGE COMPARTMENT TRIM HOOK (w/ DVD Player) (See page ED-83)**
62. **REMOVE REAR FLOOR FINISH PLATE (w/ DVD Player) (See page ED-83)**
63. **REMOVE LUGGAGE COMPARTMENT INNER TRIM COVER RH (w/ DVD Player) (See page ED-83)**

64. DISCONNECT STEREO COMPONENT AMPLIFIER ASSEMBLY CONNECTOR (w/ DVD Player) (See page IR-44)

65. REMOVE INNER REAR VIEW MIRROR STAY HOLDER COVER (See page MI-42)

66. REMOVE RAIN SENSOR COVER (w/ Rain Sensor) (See page WW-63)

67. REMOVE ROOF CONSOLE BOX ASSEMBLY (See page IR-44)

68. REMOVE VISOR BRACKET COVER (See page IR-45)

69. REMOVE VISOR ASSEMBLY LH (See page IR-45)

70. REMOVE VISOR ASSEMBLY RH (See page IR-45)

71. REMOVE VISOR HOLDER (See page IR-45)

72. REMOVE COAT HOOK (See page IR-45)

73. REMOVE SPOT LIGHT ASSEMBLY (for Standard) (See page IR-46)

74. REMOVE SPOT LIGHT ASSEMBLY (for Glass Roof) (See page IR-46)

75. REMOVE ASSIST GRIP SUB-ASSEMBLY (See page IR-47)

76. REMOVE ROOF HEADLINING ASSEMBLY (for Standard) (See page IR-47)

77. REMOVE ROOF HEADLINING ASSEMBLY (for Glass Roof) (See page IR-48)

78. REMOVE CURTAIN SHIELD AIRBAG ASSEMBLY

(a) Disconnect the curtain shield airbag connector.

NOTICE:
When handling the airbag connector, take care not to damage the airbag wire harness.

(b) Remove the 4 clips.
(1) Using a clip remover, remove the pin.

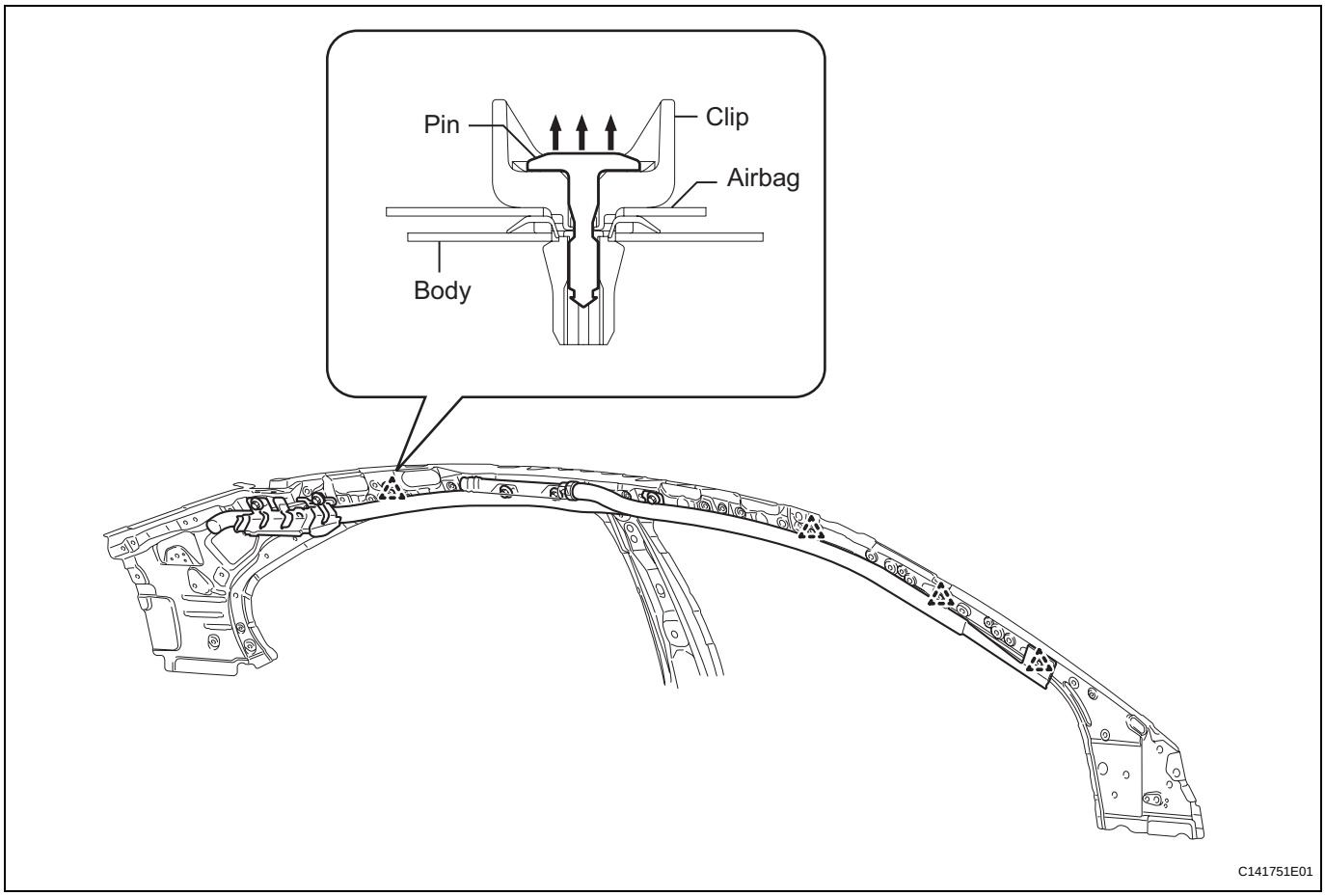

(2) Using needle-nose pliers, remove the clip and curtain shield airbag from the body as shown in the illustration.

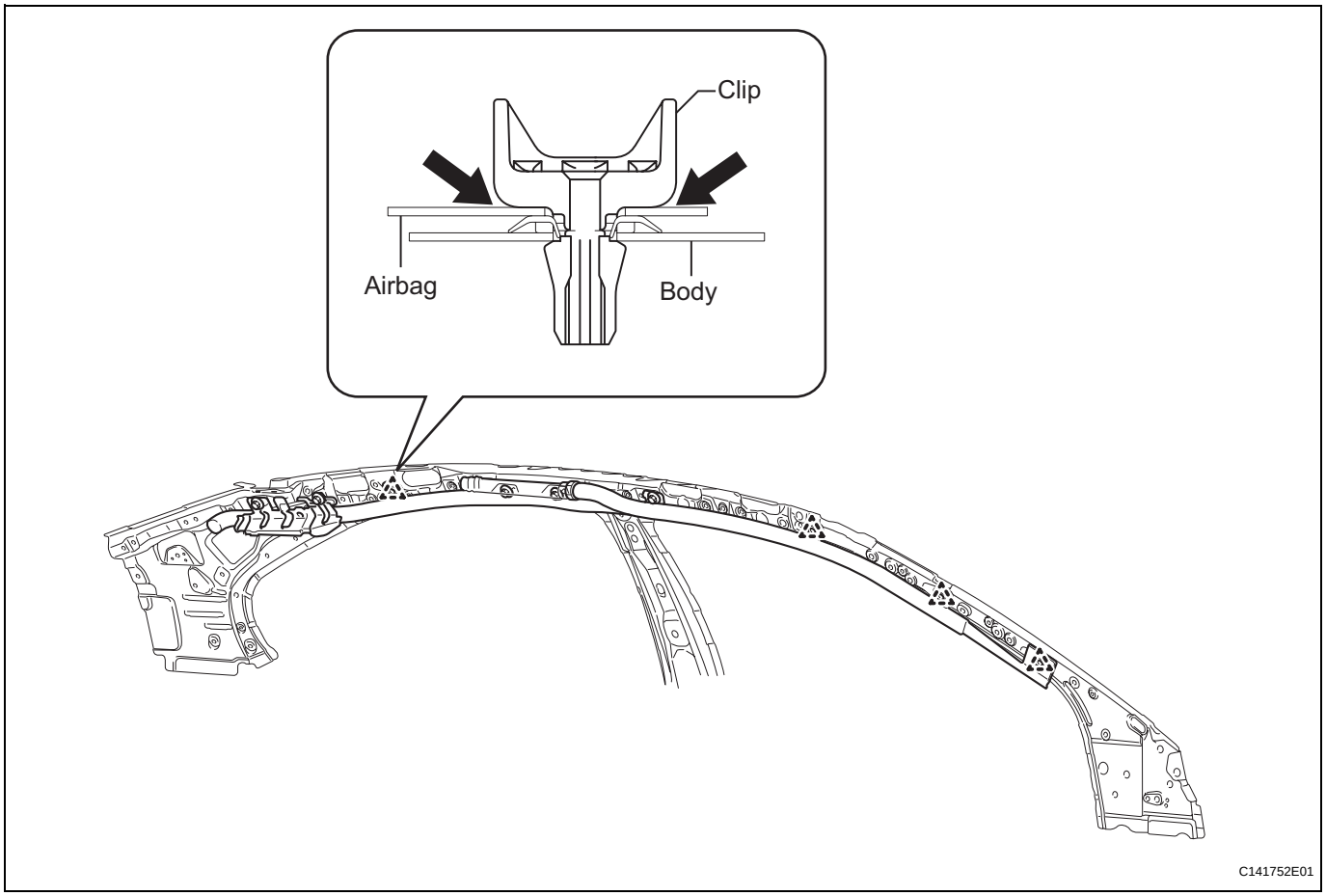

(c) Remove the 5 bolts and curtain shield airbag assembly.

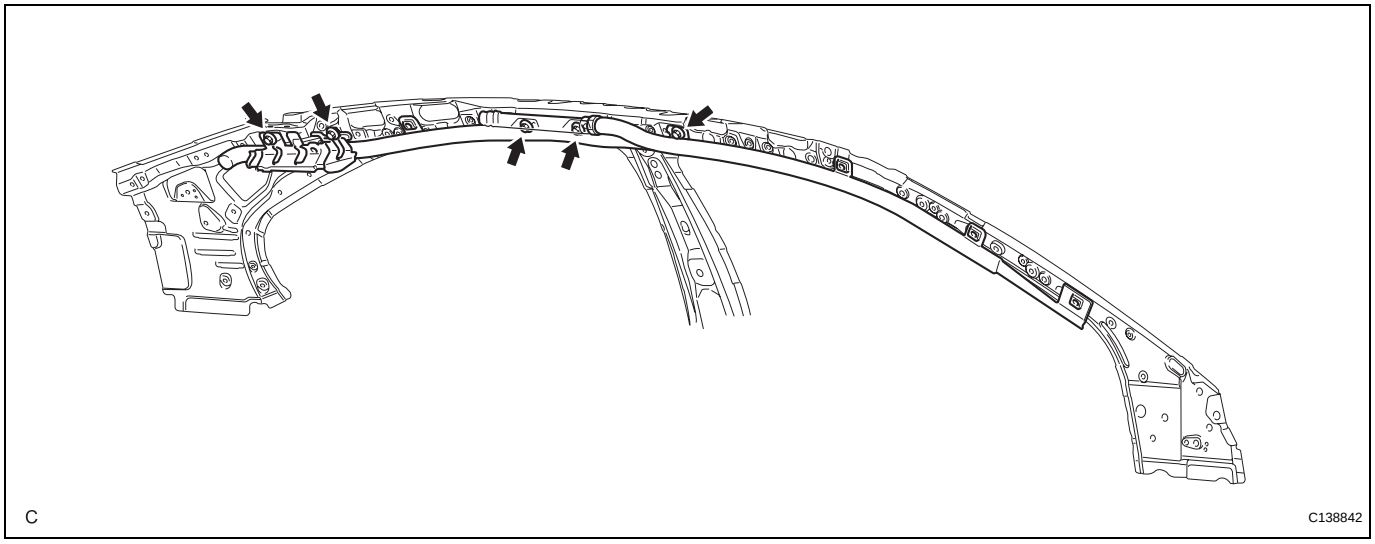

(d) Remove the 4 clips and 4 spacers from curtain shield airbag assembly.

NOTICE:

If clips and spacers are removed, always replace them with new ones even though they may not appear to be damaged.

RS

INSTALLATION

1. INSTALL CURTAIN SHIELD AIRBAG ASSEMBLY

(a) Check that the engine switch is off.

(b) Check that the battery negative (-) cable is disconnected.

CAUTION:
Wait for 90 seconds after disconnecting the cable to prevent airbag deployment.

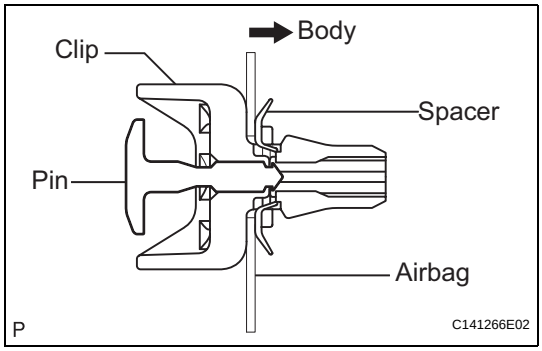

(c) Install 4 new clips and 4 new spacers to the curtain shield air bag assembly as shown in the illustration.

NOTICE:
- **Do not push in the pin.**
- **Make sure that the clips are installed in the correct direction.**
- **Make sure that the spacers are installed properly, in the correct direction, and that they are not damaged.**

(d) Install the curtain shield airbag assembly with 5 new bolts.

Torque: 11 N*m (112 kgf*cm, 8 ft.*lbf)

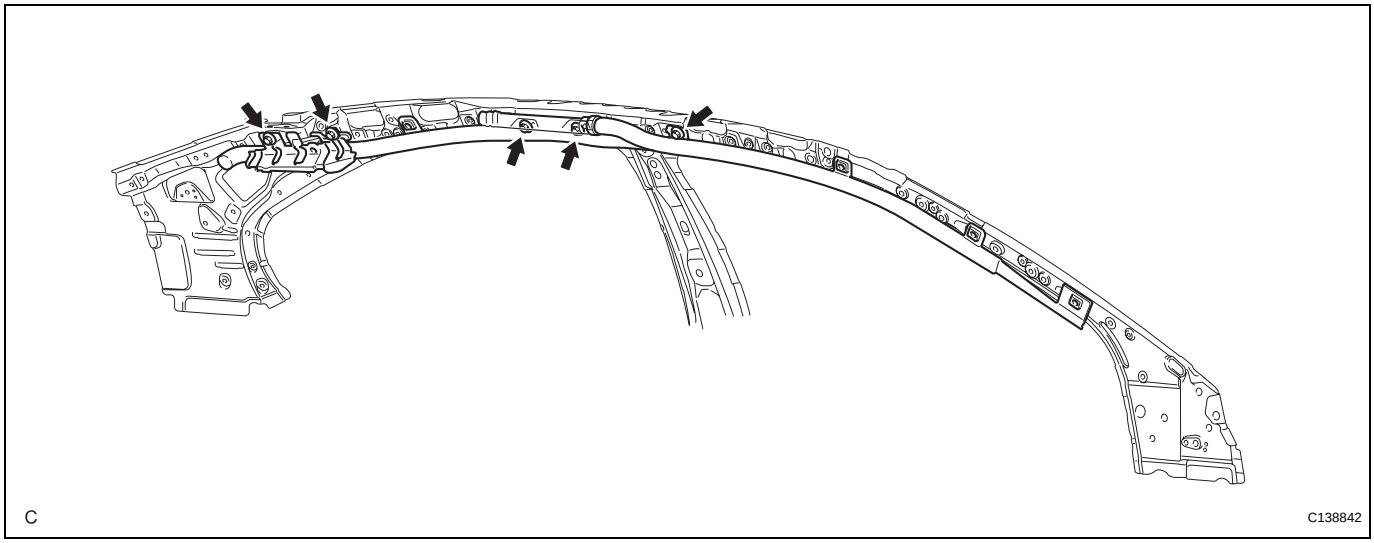

NOTICE:
Do not twist the curtain shield airbag assembly when installing it.

(e) Install the 4 clips with the curtain shield airbag assembly to the body panel as shown in the illustration.

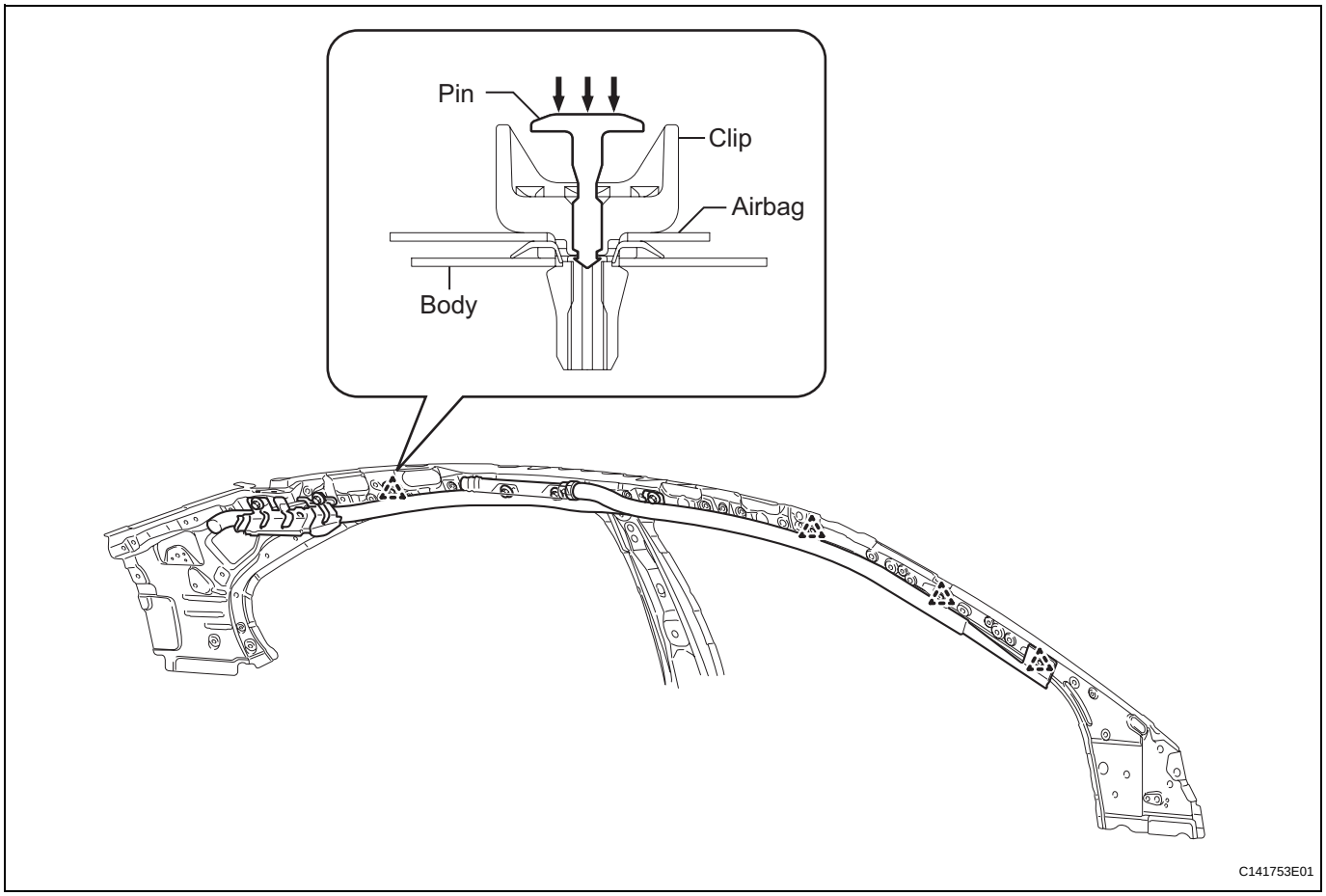

NOTICE:
Make sure that the pins of the clips are pushed in firmly.

(f) Mark the clips.
HINT:
Mark the clips to make sure that they are not reused.

(g) Connect the curtain shield airbag connector.
NOTICE:
When handling the airbag connector, take care not to damage the airbag wire harness.

2. **INSTALL ROOF HEADLINING ASSEMBLY (for Standard) (See page IR-56)**

3. **INSTALL ROOF HEADLINING ASSEMBLY (for Glass Roof) (See page IR-57)**

4. **INSTALL ASSIST GRIP SUB-ASSEMBLY (See page IR-58)**

5. **INSTALL SPOT LIGHT ASSEMBLY (for Standard) (See page IR-59)**

6. **INSTALL SPOT LIGHT ASSEMBLY (for Glass Roof) (See page IR-59)**

7. **INSTALL COAT HOOK (See page IR-60)**
8. **INSTALL VISOR HOLDER (See page IR-60)**
9. **INSTALL VISOR ASSEMBLY LH (See page IR-60)**
10. **INSTALL VISOR ASSEMBLY RH (See page IR-60)**
11. **INSTALL VISOR BRACKET COVER (See page IR-60)**
12. **INSTALL ROOF CONSOLE BOX ASSEMBLY (See page IR-60)**
13. **INSTALL RAIN SENSOR COVER (See page WW-65)**
14. **INSTALL INNER REAR VIEW MIRROR STAY HOLDER COVER (See page MI-44)**
15. **CONNECT STEREO COMPONENT AMPLIFIER ASSEMBLY CONNECTOR (w/ DVD Player) (See page IR-61)**
16. **INSTALL LUGGAGE COMPARTMENT INNER TRIM COVER RH (w/ DVD Player) (See page ED-88)**
17. **INSTALL REAR FLOOR FINISH PLATE (w/ DVD Player) (See page ED-88)**
18. **INSTALL NO. 1 LUGGAGE COMPARTMENT TRIM HOOK (w/ DVD Player) (See page ED-89)**
19. **INSTALL LUGGAGE HOLD BELT STRIKER ASSEMBLY (w/ DVD Player) (See page ED-89)**
20. **INSTALL SPARE WHEEL COVER TRAY (w/ DVD Player)**
21. **INSTALL LUGGAGE COMPARTMENT FLOOR MAT (w/ DVD Player)**
22. **INSTALL FLOOR CARPET BRACKET LH (See page PB-19)**
23. **INSTALL FLOOR CARPET BRACKET RH (See page PB-19)**
24. **INSTALL SHIFT LEVER ASSEMBLY (See page AX-240)**
25. **CONNECT TRANSMISSION CONTROL CABLE ASSEMBLY (See page AX-241)**
26. **INSTALL NO. 2 CONSOLE BOX DUCT (See page AC-163)**
27. **INSTALL NO. 3 CONSOLE BOX DUCT (See page AC-163)**
28. **INSTALL REAR CONSOLE BOX ASSEMBLY (See page IP-39)**
29. **INSTALL CONSOLE REAR END PANEL SUB-ASSEMBLY (See page IP-40)**
30. **INSTALL CONSOLE BOX CARPET (See page IP-41)**
31. **INSTALL CONSOLE BOX POCKET (See page IP-41)**

32. **INSTALL HEATER SEAT SWITCH CONSOLE BASE (w/o Seat Heater System) (See page IP-41)**
33. **INSTALL HEATER SEAT SWITCH CONSOLE BASE (w/ Seat Heater System) (See page IP-41)**
34. **INSTALL UPPER CONSOLE PANEL ASSEMBLY WITH FRONT ASH RECEPTACLE (See page IP-42)**
35. **INSTALL SHIFT LEVER KNOB SUB-ASSEMBLY (See page IP-42)**
36. **INSTALL INSTRUMENT PANEL FINISH PANEL END LH (See page IP-46)**
37. **INSTALL INSTRUMENT PANEL FINISH PANEL END RH (See page IP-44)**
38. **INSTALL ROOF SIDE INNER GARNISH ASSEMBLY LH (See page IR-62)**
39. **INSTALL REAR SEAT SIDE GARNISH LH (w/o Rear Seat Side Airbag) (See page IR-62)**
40. **INSTALL REAR SEAT SIDE AIRBAG ASSEMBLY LH (w/ Rear Seat Side Airbag) (See page RS-460)**
41. **INSTALL UPPER CENTER PILLAR GARNISH LH (See page IR-63)**
42. **INSTALL LOWER CENTER PILLAR GARNISH LH (See page IR-63)**
43. **INSTALL REAR DOOR SCUFF PLATE LH (See page IR-63)**
44. **INSTALL FRONT PILLAR GARNISH LH (See page IR-64)**
45. **INSTALL SIDE INSTRUMENT PANEL LH (See page IP-47)**
46. **INSTALL FRONT DOOR OPENING TRIM COVER LH (See page IR-64)**
47. **INSTALL FRONT DOOR SCUFF PLATE LH (See page IR-65)**
48. **INSTALL ROOF SIDE INNER GARNISH ASSEMBLY RH (See page IR-65)**
49. **INSTALL REAR SEAT SIDE GARNISH RH (w/o Rear Seat Side Airbag) (See page IR-65)**
50. **INSTALL REAR SEAT SIDE AIRBAG ASSEMBLY RH (w/ Rear Seat Side Airbag)**
    HINT:
    Use the same procedure for the RH side and the LH side.
51. **INSTALL UPPER CENTER PILLAR GARNISH RH (See page IR-65)**
52. **INSTALL LOWER CENTER PILLAR GARNISH RH (See page IR-65)**

53. **INSTALL REAR DOOR SCUFF PLATE RH (See page IR-65)**
54. **INSTALL FRONT PILLAR GARNISH RH (See page IR-65)**
55. **INSTALL SIDE INSTRUMENT PANEL RH (See page IP-43)**
56. **INSTALL FRONT DOOR OPENING TRIM COVER RH (See page IR-65)**
57. **INSTALL FRONT DOOR SCUFF PLATE RH (See page IR-65)**
58. **INSTALL FRONT SEAT ASSEMBLY LH (See page SE-109)**
59. **INSTALL FRONT SEAT REAR OUTER TRACK BRACKET COVER LH (See page SE-110)**
60. **INSTALL FRONT SEAT REAR INNER TRACK BRACKET COVER LH (See page SE-110)**
61. **INSTALL FRONT SEAT OUTER TRACK BRACKET COVER LH (See page SE-110)**
62. **INSTALL FRONT SEAT INNER TRACK BRACKET COVER LH (See page SE-110)**
63. **INSTALL FRONT SEAT HEADREST ASSEMBLY (for Driver Seat)**
64. **CONNECT FRONT SEAT OUTER BELT ASSEMBLY LH (See page SB-31)**
65. **INSTALL SEAT BELT ANCHOR COVER CAP LH (See page SB-31)**
66. **DISCONNECT CABLE FROM NEGATIVE BATTERY TERMINAL**
    CAUTION:
    Wait for 90 seconds after disconnecting the cable to prevent airbag deployment.
67. **INSTALL FRONT SEAT ASSEMBLY RH (See page RS-497)**
68. **INSTALL FRONT SEAT REAR OUTER TRACK BRACKET COVER RH (See page RS-498)**
69. **INSTALL FRONT SEAT REAR INNER TRACK BRACKET COVER RH (See page RS-498)**
70. **INSTALL FRONT SEAT OUTER TRACK BRACKET COVER RH (See page RS-498)**
71. **INSTALL FRONT SEAT INNER TRACK BRACKET COVER RH (See page RS-498)**
72. **INSTALL FRONT SEAT HEADREST ASSEMBLY (for Front Passenger Seat)**
73. **CONNECT FRONT SEAT OUTER BELT ASSEMBLY RH (See page RS-499)**

74. INSTALL SEAT BELT ANCHOR COVER CAP RH (See page RS-499)

75. INSTALL REAR SEATBACK ASSEMBLY (See page SE-121)

76. INSTALL REAR CENTER SEAT HEADREST ASSEMBLY

77. INSTALL REAR SEAT HEADREST ASSEMBLY

78. INSTALL REAR SEAT CUSHION ASSEMBLY (See page SE-121)

79. PERFORM INITIALIZATION

(a) Perform initialization (See page IN-33).
HINT:
Some systems need initialization after reconnecting the cable to the negative battery terminal.

80. INSPECT SHIFT LEVER POSITION (See page AX-200)

81. ADJUST SHIFT LEVER POSITION (See page AX-200)

82. INSPECT CURTAIN SHIELD AIRBAG ASSEMBLY (See page RS-434)

83. INSPECT FRONT SEAT ASSEMBLY (See page SE-110)

84. INSPECT SRS WARNING LIGHT

(a) Inspect the SRS warning light (See page RS-37).

RS

DISPOSAL

HINT:
When scrapping a vehicle equipped with the SRS or disposing of the curtain shield airbag assembly, be sure to deploy the airbag first in accordance with the procedure described below. If any abnormality occurs with the airbag deployment, contact the SERVICE DEPT. of TOYOTA MOTOR SALES, U.S.A., INC.

CAUTION:

- **Never dispose of a curtain shield airbag assembly that has an undeployed airbag.**
- **The airbag produces an exploding sound when it is deployed, so perform the operation outdoors and where it will not create a nuisance to nearby residents.**
- **When deploying the airbag, always use the specified SST (SRS Airbag Deployment Tool). Perform the operation in a place away from electrical noise.**
- **When deploying the airbag, perform the operation at least 10 m (33 ft) away from the curtain shield airbag assembly.**
- **The curtain shield airbag assembly becomes extremely hot when the airbag is deployed, so do not touch it for at least 30 minutes after deployment.**
- **Use gloves and safety glasses when handling a curtain shield airbag assembly with a deployed airbag.**
- **Do not apply water, etc. to a curtain shield airbag assembly with a deployed airbag.**
- **Always wash your hands with water after completing the operation.**

1. DISPOSE OF CURTAIN SHIELD AIRBAG ASSEMBLY (WHEN INSTALLED IN VEHICLE)

HINT:
Prepare a battery as the power source to deploy the airbag.

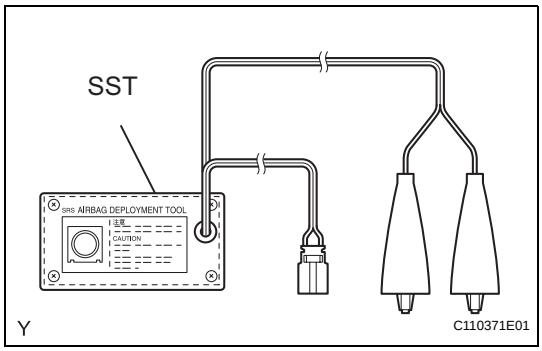

(a) Check the function of the SST (See page RS-370).
(b) Refer to PRECAUTION (See page RS-1).
(c) Disconnect the cable from the negative battery terminal.
CAUTION:
Wait for 90 seconds after disconnecting the cable to prevent airbag deployment.
(d) Remove the roof headlining assembly (See page IR-38).
(e) Install the SST.
(1) Disconnect the connector from the curtain shield airbag assembly.
NOTICE:
When handling the airbag connector, take care not to damage the airbag wire harness.

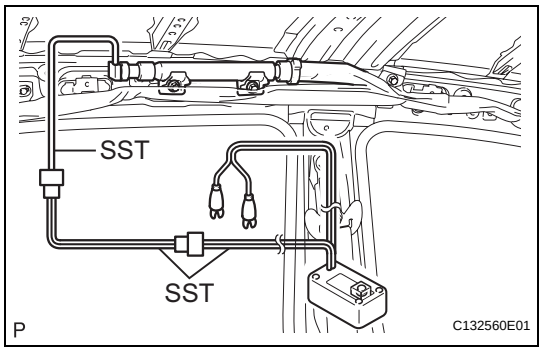

(2) After connecting the SST below to each other, connect them to the curtain shield airbag assembly.
SST 09082-00700, 09082-00802 (09082-10801, 09082-20801)
NOTICE:
To avoid damaging the SST connector and wire harness, do not lock the secondary lock of the twin lock.

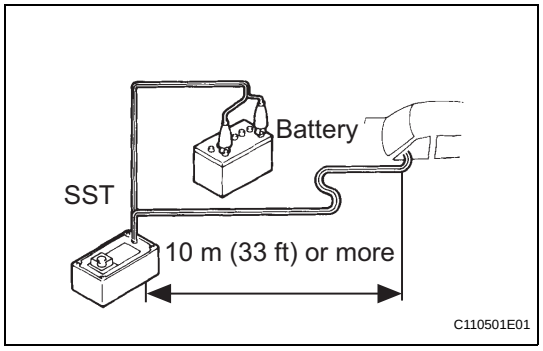

(3) Move the SST at least 10 m (33 ft) away from the vehicle rear side window.
(4) Maintaining enough clearance for the SST wire harness in the rear side window, close all doors and windows of the vehicle.
NOTICE:
Take care not to damage the SST wire harness.
(5) Connect the red clip of the SST to the battery positive (+) terminal and the black clip of the SST to the battery negative (-) terminal.

(f) Deploy the airbag.
(1) Check that no one is inside the vehicle or within a 10 m (33 ft) radius of the vehicle.
(2) Press the SST activation switch and deploy the airbag.
CAUTION:
- **When deploying the airbag, make sure that no one is near the vehicle.**
- **The curtain shield airbag assembly becomes extremely hot when the airbag is deployed, so do not touch it for at least 30 minutes after deployment.**
- **Use gloves and safety glasses when handling a curtain shield airbag assembly with a deployed airbag.**
- **Do not apply water, etc. to a curtain shield airbag assembly with a deployed airbag.**
- **Always wash your hands with water after completing the operation.**

HINT:
The airbag is deployed as the LED of the SST activation switch comes on.

2. DISPOSE OF CURTAIN SHIELD AIRBAG ASSEMBLY (WHEN NOT INSTALLED IN VEHICLE)
NOTICE:
- **When disposing of the curtain shield airbag assembly, never use the customer's vehicle to deploy the airbag.**
- **Be sure to follow the procedure detailed below when deploying the airbag.**

RS

RS

HINT:
Prepare a battery as the power source to deploy the airbag.

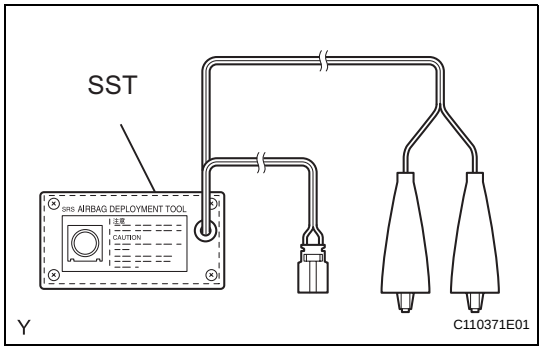

(a) Check the function of the SST (See page RS-372).
(b) Remove the curtain shield airbag assembly (See page RS-435).
CAUTION:
When removing the curtain shield airbag assembly, work must be started 90 seconds after the engine switch is turned off and the negative (-) terminal cable is disconnected from the battery.

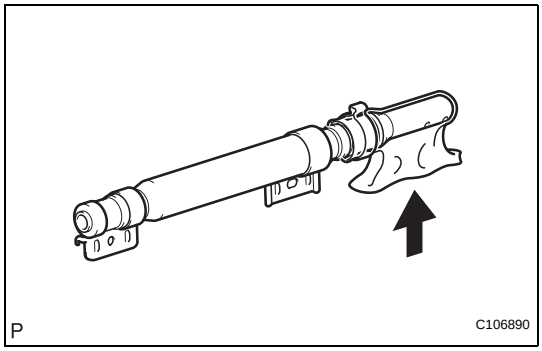

(c) Cut off the deployment section of the curtain shield airbag assembly.

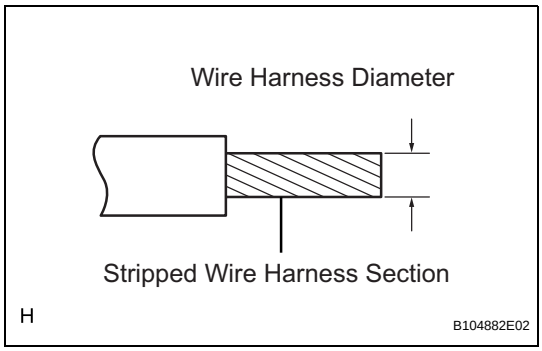

(d) Using a service-purpose wire harness for the vehicle, tie down the curtain shield airbag assembly to the tire.
Wire harness:
Stripped wire harness section
1.25 mm^2 or more (0.0019 in.^{2} or more)
CAUTION:
If the wire harness is too thin or an alternative object is used to tie down the curtain shield airbag assembly, it may be snapped by the shock when the airbag is deployed. Always use a wire harness for vehicle use with an area of at least 1.25 mm^2 (0.0019 in.^{2}).
HINT:
To calculate the area of the stripped wire harness section:
Area = 3.14 x (Diameter)^2 divided by 4

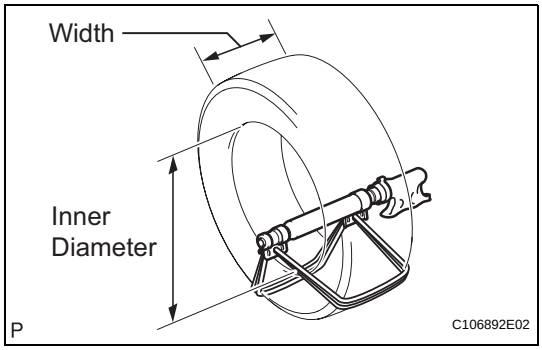

(1) Position the curtain shield airbag assembly inside the tire as shown in the illustration.
Tire size:
Must exceed the following dimensions
Width:
185 mm (7.28 in.)
Inner diameter:
360 mm (14.17 in.)

CAUTION:
Make sure that the wire harness is tight. If there is slack in the wire harness, the curtain shield airbag assembly may become loose due to the shock when the airbag is deployed.
NOTICE:
The tire may be damaged by the airbag deployment, so use an extra tire.

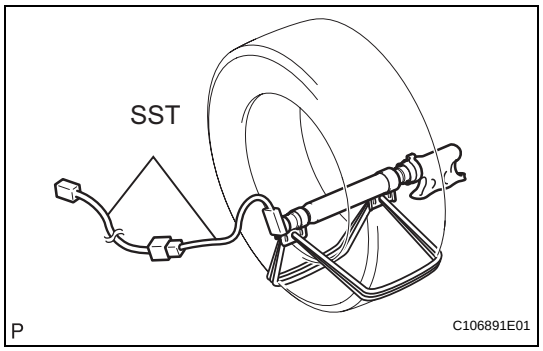

(e) Install the SST.
(1) After connecting the SST below to each other, connect them to the curtain shield airbag assembly.
SST 09082-00802 (09082-10801, 09082-20801)

(f) Place the tires.
CAUTION:
Do not place the deployment direction of the curtain shield airbag assembly facing toward the ground.

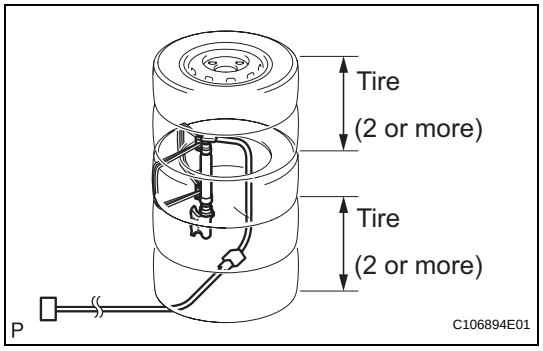

(1) Place at least 2 tires under the tire which the curtain shield airbag assembly is tied to.
(2) Place at least 2 tires over the tire which the curtain shield airbag assembly is tied to. The top tire should have the disc wheel installed.
NOTICE:
Do not place the SST connector under the tire because it could be damaged.

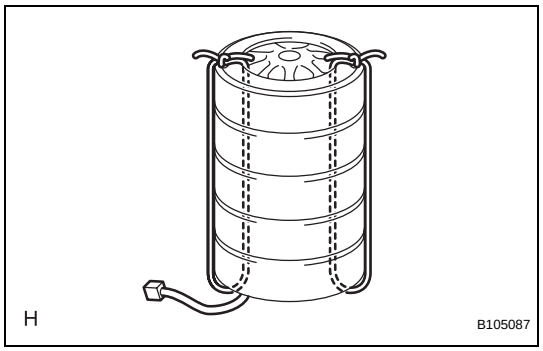

(3) Tie the tires together with 2 wire harnesses.
CAUTION:
Make sure that the wire harness is tight. Looseness in the wire harness results in the tires coming free due to the shock when the airbag is deployed.

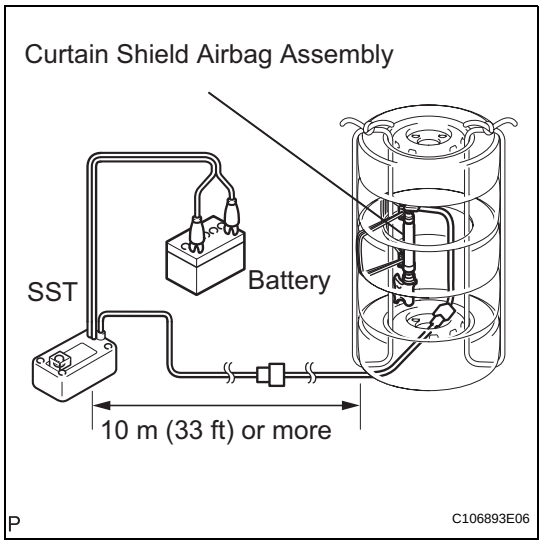

(g) Install the SST.
  (1) Connect the SST connector.
  SST 09082-00700
  NOTICE:
  To avoid damaging the SST connector and wire harness, do not lock the secondary lock of the twin lock. Also, secure some slack for the SST wire harness inside the tire.
  (2) Move the SST at least 10 m (33 ft) away from the airbag tied down to the tire.

(h) Deploy the airbag.
  (1) Connect the red clip of the SST to the battery positive (+) terminal and the black clip of the SST to the battery negative (-) terminal.
  (2) Check that no one is within a 10 m (33 ft) radius of the tire which the curtain shield airbag assembly is tied to.
  (3) Press the SST activation switch and deploy the airbag.
  CAUTION:
  When deploying the airbag, make sure that no one is near the tire.
  HINT:
  The airbag is deployed as the LED of the SST activation switch comes on.

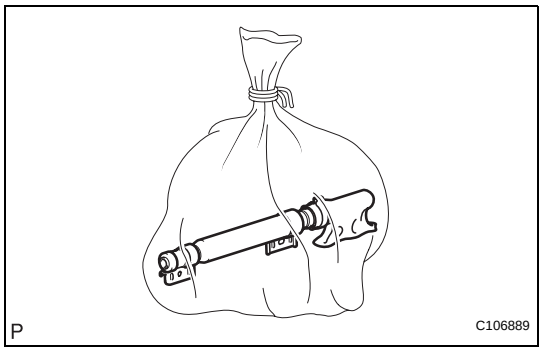

(i) Dispose of the curtain shield airbag assembly.
  CAUTION:
  - **The curtain shield airbag assembly becomes extremely hot when the airbag is deployed, so do not touch it for at least 30 minutes after deployment.**
  - **Use gloves and safety glasses when handling a curtain shield airbag assembly with a deployed airbag.**
  - **Do not apply water, etc. to a curtain shield airbag assembly with a deployed airbag.**
  - **Always wash your hands with water after completing the operation.**
  (1) Remove the curtain shield airbag assembly from the tire.
  (2) Place the curtain shield airbag assembly in a plastic bag, tie it tightly and dispose of it as other general part disposal.

REMOVAL

1. **DISCONNECT CABLE FROM NEGATIVE BATTERY TERMINAL (w/ Rear Seat Side Airbag)**
   CAUTION:
   Wait for 90 seconds after disconnecting the cable to prevent airbag deployment (See page RS-1).
2. **REMOVE REAR SEAT CUSHION ASSEMBLY (See page SE-113)**
3. **REMOVE REAR SEAT HEADREST ASSEMBLY**
4. **REMOVE REAR CENTER SEAT HEADREST ASSEMBLY**
5. **REMOVE REAR SEATBACK ASSEMBLY (See page SE-113)**
6. **REMOVE REAR DOOR SCUFF PLATE LH (See page IR-40)**
7. **REMOVE REAR DOOR SCUFF PLATE RH (See page IR-42)**
8. **REMOVE REAR SEAT SIDE GARNISH LH (w/o Rear Seat Side Airbag) (See page IR-41)**
9. **REMOVE REAR SEAT SIDE GARNISH RH (w/o Rear Seat Side Airbag) (See page IR-43)**
10. **REMOVE REAR SEAT SIDE AIRBAG ASSEMBLY LH (w/ Rear Seat Side Airbag) (See page RS-460)**
11. **REMOVE REAR SEAT SIDE AIRBAG ASSEMBLY RH (w/ Rear Seat Side Airbag)**
    HINT:
    Use the same procedure for the RH side and LH side.
12. **REMOVE ROOF SIDE INNER GARNISH ASSEMBLY LH (See page IR-42)**
13. **REMOVE ROOF SIDE INNER GARNISH ASSEMBLY RH (See page IR-43)**
14. **DISCONNECT REAR SEAT 3 POINT TYPE BELT ASSEMBLY LH (See page SB-40)**
15. **DISCONNECT REAR SEAT 3 POINT TYPE BELT ASSEMBLY RH (See page SB-40)**
16. **DISCONNECT REAR SEAT INNER WITH CENTER BELT ASSEMBLY RH (See page SB-40)**
17. **REMOVE REAR SEAT SHOULDER BELT HOLE COVER (See page SB-41)**
18. **REMOVE CENTER STOP LIGHT SET (w/o Rear Sunshade) (See page LI-159)**
19. **REMOVE PACKAGE TRAY TRIM PANEL ASSEMBLY (w/o Rear Sunshade) (See page SB-41)**
20. **REMOVE PACKAGE TRAY TRIM PANEL ASSEMBLY (w/ Rear Sunshade) (See page IR-20)**

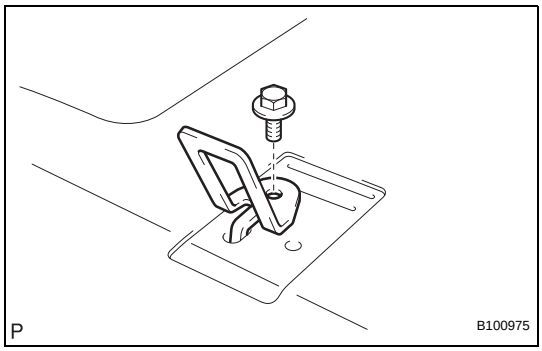

21. REMOVE CHILD RESTRAINT SEAT TETHER ANCHOR BRACKET

(a) Remove the 3 bolts and the 3 child restraint seat tether anchor brackets.

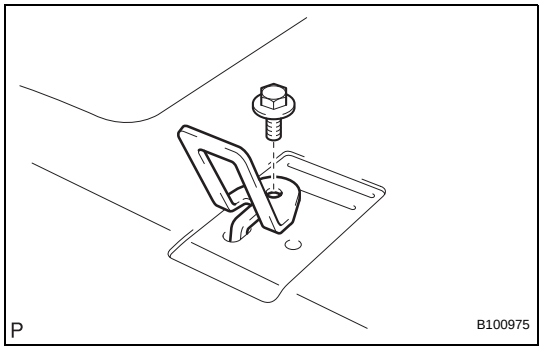

INSTALLATION

1. INSTALL CHILD RESTRAINT SEAT TETHER ANCHOR BRACKET

(a) Install the 3 child restraint seat tether anchor brackets with the 3 bolts.
Torque: 21 N*m (214 kgf*cm, 16 ft.*lbf)

2. INSTALL PACKAGE TRAY TRIM PANEL ASSEMBLY (w/o Rear Sunshade) (See page SB-42)

3. INSTALL PACKAGE TRAY TRIM PANEL ASSEMBLY (w/ Rear Sunshade) (See page IR-23)

4. INSTALL CENTER STOP LIGHT SET (w/o Rear Sunshade) (See page LI-159)

5. INSTALL REAR SEAT SHOULDER BELT HOLE COVER (See page SB-42)

6. CONNECT REAR SEAT INNER WITH CENTER BELT ASSEMBLY RH (See page SB-42)

7. CONNECT REAR SEAT 3 POINT TYPE BELT ASSEMBLY LH (See page SB-42)

8. CONNECT REAR SEAT 3 POINT TYPE BELT ASSEMBLY RH (See page SB-43)

9. INSTALL ROOF SIDE INNER GARNISH ASSEMBLY LH (See page IR-62)

10. INSTALL ROOF SIDE INNER GARNISH ASSEMBLY RH (See page IR-65)

11. INSTALL REAR SEAT SIDE AIRBAG ASSEMBLY LH (w/ Rear Seat Side Airbag) (See page RS-460)

12. INSTALL REAR SEAT SIDE AIRBAG ASSEMBLY RH (w/ Rear Seat Side Airbag)

HINT:
Use the same procedure for the RH side and LH side.

13. INSTALL REAR SEAT SIDE GARNISH LH (w/o Rear Seat Side Airbag) (See page IR-62)

14. INSTALL REAR SEAT SIDE GARNISH RH (w/o Rear Seat Side Airbag) (See page IR-65)

15. INSTALL REAR DOOR SCUFF PLATE LH (See page IR-63)

16. **INSTALL REAR DOOR SCUFF PLATE RH (See page IR-65)**
17. **INSTALL REAR SEATBACK ASSEMBLY (See page SE-121)**
18. **INSTALL REAR CENTER SEAT HEADREST ASSEMBLY**
19. **INSTALL REAR SEAT HEADREST ASSEMBLY**
20. **INSTALL REAR SEAT CUSHION ASSEMBLY (See page SE-121)**
21. **CONNECT CABLE TO NEGATIVE BATTERY TERMINAL (w/ Rear Seat Side Airbag)**
22. **PERFORM INITIALIZATION (w/ Rear Seat Side Airbag)**
    NOTICE:
    Some systems need initialization after reconnecting the cable to the negative battery terminal (See page IN-33).
23. **INSPECT SRS WARNING LIGHT (w/ Rear Seat Side Airbag)**
    (See page RS-37)

TD

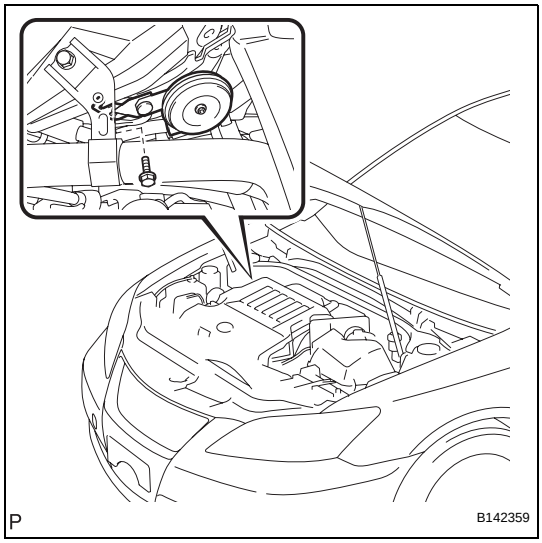

INSTALLATION

1. **INSTALL SECURITY HORN ASSEMBLY**
   (a) Connect the connector.
   (b) Install the security horn assembly with the bolt.
   Torque: 31 N*m (316 kgf*cm, 23 ft.*lbf)
2. **INSTALL FRONT SUSPENSION UPPER BRACE CENTER (See page BR-25)**
3. **INSTALL ENGINE ROOM SIDE COVER RH (See page WW-47)**
4. **INSTALL HOOD HINGE COVER RH (See page WW-47)**
5. **INSTALL ENGINE ROOM SIDE COVER LH (See page WW-47)**
6. **INSTALL HOOD HINGE COVER LH (See page WW-47)**
7. **INSTALL COOL AIR INTAKE DUCT SEAL (See page ET-14)**

STANDARD BOLT

HOW TO DETERMINE BOLT STRENGTH

Bolt Type

Hexagon Head Bolt			Stud Bolt	Weld Bolt	Class
Normal Recess Bolt		Deep Recess Bolt			
	No Mark	No Mark	No Mark	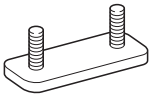	4T
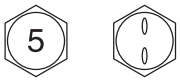					5T
	w/ Washer	w/ Washer			6T
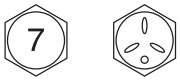		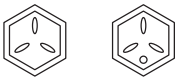			7T
					8T
					9T
					10T
					11T

SS

SS

SPECIFIED TORQUE FOR STANDARD BOLTS

Class	Diameter (mm)	Pitch (mm)	Specified torque					
			Hexagon head bolt			Hexagon flange bolt		
			N*m	kgf*cm	ft.*lbf	N*m	kgf*cm	ft.*lbf
4T	6	1	5	55	48 in.*lbf	6	60	52 in.*lbf
	8	1.25	12.5	130	9	14	145	10
	10	1.25	26	260	19	29	290	21
	12	1.25	47	480	35	53	540	39
	14	1.5	74	760	55	84	850	61
	16	1.5	115	1,150	83	-	-	-
5T	6	1	6.5	65	56 in.*lbf	7.5	75	65 in.*lbf
	8	1.25	15.5	160	12	17.5	175	13
	10	1.25	32	330	24	36	360	26
	12	1.25	59	600	43	65	670	48
	14	1.5	91	930	67	100	1,050	76
	16	1.5	140	1,400	101	-	-	-
6T	6	1	8	80	69 in.*lbf	9	90	78 in.*lbf
	8	1.25	19	195	14	21	210	15
	10	1.25	39	400	29	44	440	32
	12	1.25	71	730	53	80	810	59
	14	1.5	110	1,100	80	125	1,250	90
	16	1.5	170	1,750	127	-	-	-
7T	6	1	10.5	110	8	12	120	9
	8	1.25	25	260	19	28	290	21
	10	1.25	52	530	38	58	590	43
	12	1.25	95	970	70	105	1,050	76
	14	1.5	145	1,500	108	165	1,700	123
	16	1.5	230	2,300	166	-	-	-
8T	8	1.25	29	300	22	33	330	24
	10	1.25	61	620	45	68	690	50
	12	1.25	110	1,100	80	120	1,250	90
9T	8	1.25	34	340	25	37	380	27
	10	1.25	70	710	51	78	790	57
	12	1.25	125	1,300	94	140	1,450	105
10T	8	1.25	38	390	28	42	430	31
	10	1.25	78	800	58	88	890	64
	12	1.25	140	1,450	105	155	1,600	116
11T	8	1.25	42	430	31	47	480	35
	10	1.25	87	890	64	97	990	72
	12	1.25	155	1,600	116	175	1,800	130

2GR-FE ENGINE CONTROL SYSTEM

SERVICE DATA

Throttle body		
	Standard throttle valve opening percentage	60% or more
Camshaft timing oil control valve assembly		
Standard resistance	at 20°C (68°F)	6.9 to 7.9 Ω
Crankshaft position sensor		
Standard resistance	-10 to 50 °C (14 to 122 °F)	1,630 to 2,740 Ω
	50 to 100 °C (122 to 212 °F)	2,065 to 3,225 Ω
Throttle body		
Standard resistance	at 20°C (68°F)	
	2 (M+) - 1 (M-)	0.3 to 100 kΩ
	5 (VC) - 3 (E2)	1.2 to 3.2 kΩ
Engine coolant temperature sensor		
Standard resistance	Approx. 20°C (68°F)	2.32 to 2.59 kΩ
	Approx. 80°C (176°F)	0.310 to 0.326 kΩ
Knock sensor		
Standard resistance	at 20°C (68°F)	120 to 280 kΩ
Circuit opening relay (engine room R/B Unit D)		
Specified condition	1E-7 - 1E-13	10 kΩ or higher
	1E-7 - 1E-13	Below 1 Ω (when battery voltage is applied to terminals 1G-5 and 1H-9)
EFI relay (engine room R/B Unit D)		
Specified condition	1E-7 - 1E-12	10 kΩ or higher
	1E-7 - 1E-12	Below 1 Ω (when battery voltage is applied to terminals 1H-10 and 1H-2)
A/F relay (engine room R/B Unit D)		
Specified condition	1A-3 - 1A-4	10 kΩ or higher
	1A-3 - 1A-4	Below 1 Ω (when battery voltage is applied to terminals 1D-5 and 1H-2)
IG2 Relay		
Standard resistance	3 - 5	10 kΩ or higher
	3 - 5	Below 1 Ω (Battery voltage applied between terminals 1 and 2)
Acceleration pedal rod		
Standard voltage (ACCEL POS #1)	Released	0.5 to 1.1 V
	Depressed	2.5 to 4.5 V
Standard voltage (ACCEL POS #2)	Released	1.2 to 2.0 V
	Depressed	3.4 to 5.0 V
Active engine mounting		
Standard resistance	1 - 2	0.55 to 0.95 Ω

TORQUE SPECIFICATIONS

Part Tightened	N*m	kgf*cm	ft.*lbf
Knock sensor x Cylinder block sub-assembly	20	199	14
ECM x Body	8.0	82	71 in.*lbf
Accelerator pedal rod assembly x Body	5.4	55	48 in.*lbf
Camshaft timing oil control valve assembly x Cylinder head cover sub-assembly	10	102	7
VVT sensor x Cylinder head cover sub-assembly	10	102	7
Crankshaft position sensor x Cylinder block sub-assembly	10	102	7
Engine coolant temperature sensor x Cylinder head sub-assembly	20	204	15
Throttle body x Intake air surge tank	10	102	7
Engine mounting bracket FR x Earth cable	5.0	51	44 in.*lbf
Engine mounting bracket FR x Active engine mounting	87	887	64
Engine mounting bracket FR x Automatic transaxle	64	653	47
Active engine mounting x Front frame assembly	52	530	38
Active engine mounting x Acceleration sensor	8.0	82	71 in.*lbf

2GR-FE ENGINE MECHANICAL

SERVICE DATA

Ignition timing	Terminals TC and CG of DLC3 connected	8 to 12° BTDC at idle (Transmission in neutral)
	Terminals TC and CG of DLC3 disconnected	12 to 22° BTDC at idle (Transmission in neutral)
Idle speed		600 to 700 rpm (Transmission in neutral)
Compression	Compression pressure	1.4 MPa (14 kgf/cm^2, 199 psi) or more
	Minimum pressure	0.98 MPa (10 kgf/cm^2, 142 psi)
	Difference between each cylinder	0.1 MPa (1.0 kgf/cm^2, 15 psi) or less
Cylinder head set bolt		
Outside diameter	Standard	10.85 to 11.00 mm (0.4272 to 0.4331 in.)
	Minimum	10.70 mm (0.4213 in.)
Chain		
Elongation	Maximum	136.9 mm (5.390 in.)
No. 2 chain		
Elongation	Maximum	137.6 mm (5.417 in.)
Crankshaft timing gear		
Diameter (with chain)	Minimum	61.4 mm (2.417 in.)
Idle sprocket		
Diameter (with chain)	Minimum	61.4 mm (2.417 in.)
Idle gear shaft		
Idle gear shaft diameter		22.987 to 23.000 mm (0.9050 to 0.9055 in.)
Idle gear inside diameter		23.020 to 30.030 mm (0.9063 to 0.9067 in.)
Oil clearance	Standard	0.020 to 0.043 mm (0.0008 to 0.0017 in.)
	Maximum	0.093 mm (0.0037 in.)
Chain tensioner assembly No. 2		
Worn depth	Maximum	0.9 mm (0.035 in.)
Chain tensioner assembly No. 3		
Worn depth	Maximum	0.9 mm (0.035 in.)
Chain tensioner slipper		
Worn depth	Maximum	1.0 mm (0.039 in.)
Chain vibration damper No. 1		
Worn depth	Maximum	1.0 mm (0.039 in.)
Chain vibration damper No. 2		
Worn depth	Maximum	1.0 mm (0.039 in.)
Cylinder head sub-assembly		
	Cylinder head lower	0.05 mm (0.0020 in.)
	Intake	0.08 mm (0.0031 in.)
	Exhaust	0.08 mm (0.0031 in.)
Warpage	Maximum	0.10 mm (0.0039 in.)
Intake valve		
Valve stem diameter		5.470 to 5.485 mm (0.2154 to 0.2159 in.)
Margin thickness	Standard	1.0 mm (0.039 in.)
	Maximum	0.5 mm (0.0197 in.)
Overall length	Standard	105.85 mm (4.1673 in.)
	Maximum	105.35 mm (4.1476 in.)
Exhaust valve		
Valve stem diameter		5.465 to 5.480 mm (0.2152 to 0.2158 in.)

Margin thickness	Standard	1.0 mm (0.0394 in.)
	Maximum	0.5 mm (0.0197 in.)
Overall length	Standard	111.40 mm (4.3858 in.)
	Maximum	109.90 mm (4.3268 in.)
Inner compression spring		
Free length		45.46 mm (1.7898 in.)
Deviation	Maximum	1.0 mm (0.039 in.)
Angle (reference)	Maximum	2°
Intake valve guide bush		
Inside diameter		5.510 to 5.530 mm (0.2169 to 0.2177 in.)
Oil clearance	Standard	0.025 to 0.060 mm (0.0010 to 0.0024 in.)
	Maximum	0.08 mm (0.0031 in.)
Bush bore diameter	Use STD	10.285 to 10.306 mm (0.4049 to 0.4057 in.)
	Use O/S 0.05	10.335 to 10.356 mm (0.4069 to 0.4077 in.)
Protrusion height		9.3 to 9.7 mm (0.3661 to 0.3819 in.)
Exhaust valve guide bush		
Inside diameter		5.510 to 5.530 mm (0.2169 to 0.2177 in.)
Oil clearance	Standard	0.030 to 0.065 mm (0.0012 to 0.0026 in.)
	Maximum	0.10 mm (0.0039 in.)
Bush bore diameter	Use STD	10.285 to 10.306 mm (0.4049 to 0.4057 in.)
	Use O/S 0.05	10.335 to 10.356 mm (0.4069 to 0.4077 in.)
Protrusion height		9.30 to 9.70 mm (0.3661 to 0.3819 in.)
No. 1 camshaft		
Journal diameter	No. 1 journal	35.946 to 35.960 mm (1.4152 to 1.4157 in.)
	Other journals	25.959 to 25.975 mm (1.0220 to 1.0226 in.)
Circuit runout	Maximum	0.04 mm (0.0016 in.)
Cam lobe height	Standard	44.316 to 44.416 mm (1.7447 to 1.7487 in.)
	Maximum	44.166 mm (1.7388 in.)
Oil clearance	Standard No. 1 journal	0.040 to 0.079 mm (0.0016 to 0.0031 in.)
	Other journals	0.025 to 0.062 mm (0.0010 to 0.0024 in.)
	Maximum No. 1 journal	0.10 mm (0.0039 in.)
	Other journals	0.09 mm (0.0035 in.)
Thrust clearance	Standard	0.08 to 0.13 mm (0.0031 to 0.0051 in.)
	Maximum	0.15 mm
No. 2 camshaft		
Journal diameter	No. 1 journal	35.946 to 35.960 mm (1.4152 to 1.4157 in.)
	Other journals	25.959 to 25.975 mm (1.0220 to 1.0226 in.)
Circuit runout	Maximum	0.04 mm (0.0016 in.)
Cam lobe height	Standard	44.262 to 44.362 mm (1.7426 to 1.7465 in.)
	Maximum	44.112 mm (1.7367 in.)
Oil clearance	Standard No. 1 journal	0.040 to 0.079 mm (0.0016 to 0.0031 in.)
	Other journals	0.025 to 0.062 mm (0.0010 to 0.0024 in.)
	Maximum No. 1 journal	0.10 mm (0.0039 in.)
	Other journals	0.09 mm (0.0035 in.)
Thrust clearance	Standard	0.08 to 0.13 mm (0.0031 to 0.0051 in.)
	Maximum	0.15 mm
No. 3 camshaft		
Journal diameter	No. 1 journal	35.946 to 35.960 mm (1.4152 to 1.4157 in.)
	Other journals	25.959 to 25.975 mm (1.0220 to 1.0226 in.)
Circuit runout	Maximum	0.04 mm (0.0016 in.)

Cam lobe height	Standard	44.316 to 44.416 mm (1.7447 to 1.7487 in.)
	Maximum	44.166 mm (1.7388 in.)
Oil clearance	Standard No. 1 journal	0.040 to 0.079 mm (0.0016 to 0.0031 in.)
	Other journals	0.025 to 0.062 mm (0.0010 to 0.0024 in.)
	Maximum No. 1 journal	0.10 mm (0.0039 in.)
	Other journals	0.09 mm (0.0035 in.)
Thrust clearance	Standard	0.08 to 0.13 mm (0.0031 to 0.0051 in.)
	Maximum	0.15 mm
No. 4 camshaft		
Journal diameter	No. 1 journal	35.946 to 35.960 mm (1.4152 to 1.4157 in.)
	Other journals	25.959 to 25.975 mm (1.0220 to 1.0226 in.)
Circuit runout	Maximum	0.04 mm (0.0016 in.)
Cam lobe height	Standard	44.262 to 44.362 mm (1.7426 to 1.7465 in.)
	Maximum	44.112 mm (1.7367 in.)
Oil clearance	Standard No. 1 journal	0.040 to 0.079 mm (0.0016 to 0.0031 in.)
	Other journals	0.025 to 0.062 mm (0.0010 to 0.0024 in.)
	Maximum No. 1 journal	0.10 mm (0.0039 in.)
	Other journals	0.09 mm (0.0035 in.)
Thrust clearance	Standard	0.08 to 0.13 mm (0.0031 to 0.0051 in.)
	Maximum	0.15 mm
Ring pin for cylinder head sub-assembly		
Protrusion height		2.5 to 3.5 mm (0.098 to 0.138 in.)
Straight pin for cylinder head sub-assembly		
Protrusion height		17.5 to 19.5 mm (0.689 to 0.768 in.)
Connecting rod thrust clearance	Standard	0.15 to 0.40 mm (0.0059 to 0.0157 in.)
	Maximum	0.50 mm (0.020 in.)
Connecting rod oil clearance	Standard	0.045 to 0.067 mm (0.0018 to 0.0026 in.)
	Maximum	0.070 mm (0.0028 in.)
Crankshaft thrust clearance	Standard	0.04 to 0.24 mm (0.0016 to 0.0094 in.)
	Maximum	0.30 mm (0.0118 in.)
	Thrust washer thickness	2.43 to 2.48 mm (0.0957 to 0.0976 in.)
Cylinder block warpage	Maximum	0.07 mm (0.0028 in.)
Cylinder bore diameter	Standard	94.000 to 94.012 mm (3.7008 to 3.7013 in.)
	Maximum	94.200 mm (3.7087 in.)
Piston diameter	Distance	9.8 mm (0.3858 in.)
	Standard	93.960 to 93.980 mm (3.6992 to 3.7000 in.)
	Maximum	93.830 mm (3.6941 in.)
Oil clearance	Standard	0.02 to 0.052 mm (0.0008 to 0.0020 in.)
	Maximum	0.06 mm
Connecting rod out-of alignment	Maximum	0.05 mm (0.0020 in.) per 100 mm (3.94 in.)
Connecting rod twist	Maximum	0.15 mm (0.0059 in.) per 100 mm (3.94 in.)
Piston pin hole inside diameter		22.001 to 22.010 mm (0.8662 to 0.8665 in.)
Piston pin diameter		21.997 to 22.006 mm (0.8660 to 0.8664 in.)
Oil clearance	Standard	0.001 to 0.007 mm (0.00004 to 0.00028 in.)
	Maximum	0.015 mm (0.0006 in.)
Connecting rod bushing inside diameter		22.005 to 22.014 mm (0.8663 to 0.8667 in.)
Oil clearance	Standard	0.005 to 0.011 mm (0.0002 to 0.0004 in.)
	Maximum	0.03 mm (0.0012 in.)

Piston ring groove clearance	No. 1	0.020 to 0.070 mm (0.0008 to 0.0028 in.)
	No. 2	0.020 to 0.060 mm (0.0008 to 0.0024 in.)
	Oil	0.070 to 0.150 mm (0.0028 to 0.0059 in.)
Piston ring end gap	Standard No. 1	0.25 to 0.35 mm (0.0098 to 0.0138 in.)
	No. 2	0.50 to 0.60 mm (0.0197 to 0.0236 in.)
	Oil (Side rail)	0.10 to 0.40 mm (0.0039 to 0.0157 in.)
	Maximum No. 1	0.50 mm (0.0197 in.)
	No. 2	0.85 mm (0.0335 in.)
	Oil (Side rail)	0.60 mm (0.0236 in.)
Connecting rod bolt diameter	Standard	7.2 to 7.3 mm (0.283 to 0.287 in.)
	Maximum	7.0 mm (0.276 in.)
Crankshaft bearing cap set bolt diameter	Standard	10.8 to 11.0 mm (0.4252 to 0.4331 in.)
	Maximum	10.7 mm (0.4213 in.)
Crankshaft circle runout	Maximum	0.06 mm (0.0024 in.)
Main journal diameter		60.988 to 61.000 mm (2.4011 to 2.4016 in.)
Main journal taper and out-of-round	Maximum	0.02 mm (0.0008 in.)
Crank pin diameter		52.992 to 53.000 mm (2.0863 to 2.0866 in.)
Crank pin taper and out-of-round	Maximum	0.02 mm (0.0008 in.)
Crankshaft oil clearance	Standard	0.026 to 0.047 mm (0.0010 to 0.0019 in.)
	Maximum	0.050 mm (0.0020 in.)
Straight pin for cylinder block sub-assembly		
Protrusion height	Pin A	23 mm (0.906 in.)
	Pin B	6 mm (0.236 in.)
	Pin C	11 mm (0.433 in.)
	Pin D	9 mm (0.354 in.)

2GR-FE FUEL

SERVICE DATA

Fuel pressure		304 to 343 kPa (3.1 to 3.5 kgf/cm^2, 44.1 to 49.7 psi)
Fuel pressure : at fuel pressure remains for 5 minutes after engine has stopped		147 kPa (1.5 kgf/cm^2, 21 psi) or more
Fuel injector		
Resistance	at 20°C (68°F)	11.6 to 12.4 Ω
Injection volume		84 to 100 cm^3 (5.1 to 6.0 cu in.) per 15 seconds
Difference between each injector		16 cm^3 (0.98 cu in.) or less
Fuel drop		1 drop or less per 16 minutes
Fuel pump		
Resistance	at 20°C (68°F)	0.2 to 3.0 Ω

TORQUE SPECIFICATIONS

Part Tightened		N*m	kgf*cm	ft.*lbf
Fuel delivery pipe sub-assembly x Intake manifold		21	214	15
Intake air surge tank x Intake manifold	Bolt	18	184	13
	Nut	16	163	12
Intake air surge tank x Cylinder head		21	214	15
Vacuum hose clamp set bolt		5.4	55	48 in.*lbf
Fuel tank bent tube set plate x Fuel tank assembly		5.9	60	52 in.*lbf
Fuel main tube support x Fuel tank assembly		5.4	55	48 in.*lbf
Fuel tank band sub-assembly No. 1 x Body		39	400	29
Fuel tank protector lower center x Fuel tank assembly		5.4	55	48 in.*lbf
Parking brake cable assembly No. 2 x Body	Bolt	6.0	61	53 in.*lbf
	Nut	8.5	87	75 in.*lbf
Parking brake cable assembly No. 3 x Body	Bolt	6.0	61	53 in.*lbf
	Nut	8.5	87	75 in.*lbf
Stabilizer bar bracket x Suspension member		31	316	23
Front floor brace RH x Body		56	571	41
Front floor brace LH x Body		56	571	41

2GR-FE EMISSION CONTROL

SERVICE DATA

VSV for EVAP		
Resistance	1 - 2	26 to 30 Ω at 20°C (68°F)
	1 - Body ground	10 MΩ or higher
	2 - Body ground	10 MΩ or higher
Air fuel ratio sensor		
Resistance	1 (HT) - 2 (+B)	1.8 to 3.4 Ω at 20°C (68°F)
Oxygen sensor		
Resistance	1 (HT) - 2 (+B)	11 to 16 Ω at 20°C (68°F)

TORQUE SPECIFICATIONS

Part Tightened	N*m	kgf*cm	ft.*lbf
Charcoal canister assembly x Body	39	398	29
No. 1 Vacuum switching valve x Head cover	5.0	51	44 in.*lbf
Air fuel ratio sensor x Front pipe assembly	44	449	32
Oxygen sensor x Front pipe assembly	44	449	32

2GR-FE INTAKE

SERVICE DATA

Vacuum switching valve		
Resistance	1 - 2	37 to 44 Ω at 20°C (68°F)
	1 - Body ground	10 kΩ or higher
	2 - Body ground	10 kΩ or higher

2GR-FE EXHAUST

SERVICE DATA

Compression spring	Minimum length: 38.5 mm (1.515 in.)

TORQUE SPECIFICATIONS

2GR-FE:

Part Tightened	N*m	kgf*cm	ft.*lbf
Center exhaust pipe assembly x Tail pipe assembly	43	438	32
Front exhaust pipe assembly x Exhaust manifold RH	62	632	46
Front exhaust pipe assembly x Exhaust manifold LH	62	632	46
Front exhaust pipe assembly x Center exhaust pipe assembly	56	571	41
Exhaust pipe damper x Center exhaust pipe assembly	19	194	14
Exhaust pipe No. 1 support bracket x Body	33	337	24
Front exhaust pipe No. 1 support bracket x Body	33	337	24
Rear exhaust pipe No. 1 support bracket x Body	33	337	24
Exhaust pipe support No. 4 x Body	33	337	24
Exhaust pipe No. 4 support bracket sub-assembly x Body	39	398	29
Exhaust pipe No. 4 support bracket sub-assembly x Body	39	398	29
Heated oxygen sensor (Bank 1 Sensor 2) x Front exhaust pipe assembly	44	449	32
Heated oxygen sensor (Bank 2 Sensor 2) x Front exhaust pipe assembly	44	449	32

2GR-FE COOLING

SERVICE DATA

THERMOSTAT

Condition	Specified Condition
Standard valve opening temperature	80 to 84°C (176 to 183°F)
Standard valve lift	7.7 mm (0.3031 in.) or more at 95°C (203°F)

COOLING FAN MOTOR

Item	Condition	Specified Condition
Cooling fan motor (w/o Trailer hitch)	at 20°C (68°F)	6.8 to 9.8 A
Cooling fan motor (w/ Trailer towing system)	at 20°C (68°F)	11.8 to 14.8 A
No. 2 cooling fan motor (w/o Trailer hitch)	at 20°C (68°F)	6.8 to 9.8 A
No. 2 cooling fan motor (w/ Trailer hitch)	at 20°C (68°F)	6.8 to 9.8 A

COOLING FAN ECU

Item	Condition	Specified Condition
Cooling fan ECU	Ignition switch on (IG). Turn the ignition switch to the ON position.	9 to 14 V

COOLING FAN RELAY

Item	Tester Connection	Specified Condition
Cooling fan relay	3 - 5	10 Ω or higher
	3 - 5	Below 1 Ω (when battery voltage is applied to terminals 1 and 2)

RADIATOR

Item	Tester Connection	Specified Condition
Radiator reservoir cap	For brand-new cap	93.3 to 122.7 kPa (0.95 to 1.25 kgf/cm^2, 13.5 to 17.8 psi)
	After using cap	78.5 kPa (0.8 kgf/cm^2, 11.4 psi)

TORQUE SPECIFICATIONS

COOLANT

Part Tightened	N*m	kgf*cm	ft.*lbf
Cylinder block drain cock plug x Cylinder block	13	130	9

WATER PUMP

Part Tightened		N*m	kgf*cm	ft.*lbf
Water pump x Cylinder block	for bolt A	21	214	15
	for bolt B	9.1	93	81 in.*lbf
	for bolt C	9.1	93	81 in.*lbf
V-ribbed belt tensioner assembly x Cylinder block		43	438	32
No. 2 idler pulley sub-assembly x Cylinder block		43	438	32
Water pump pulley x Water pump		21	214	15
Water inlet housing x Cylinder block		10	102	7
Radiator reservoir tank x Body		5.0	51	44 in.*lbf

THERMOSTAT

Part Tightened	N*m	kgf*cm	ft.*lbf
Water inlet x Water inlet housing	10	102	7

RADIATOR

Part Tightened		N*m	kgf*cm	ft.*lbf
Oil cooler assembly x Cooler pipe	for Bolt A	15	150	11
	for Nut B	8.3	85	73 in.*lbf
Condenser assembly x Radiator assembly		5.0	51	44in.*lbf
Radiator support upper x Radiator support LH and RH		7.0	71	62 in.*lbf
Radiator support upper x Hood lock assembly		8.0	82	71 in.*lbf

2GR-FE LUBRICATION

SERVICE DATA

Oil pressure	at idle speed: 80 kPa (0.8 kgf/cm^2, 11.6 psi) or more at 6,000 rpm: 380 kPa (3.9 kgf/cm^2, 55.5 psi)
Oil pump	Standard tip clearance: 0.060 to 0.160 mm (0.0024 to 0.0063 in.) Maximum tip clearance: 0.16 mm (0.0063 in.) Standard body clearance: 0.250 to 0.325 mm (0.0098 to 0.0128 in.) Maximum body clearance: 0.325 mm (0.0128 in.) Standard side clearance: 0.030 to 0.090 mm (0.0012 to 0.0035 in.) Maximum side clearance: 0.090 mm (0.0035 in.)

TORQUE SPECIFICATIONS

Part Tightened		N*m	kgf*cm	ft.*lbf
Oil pressure switch x Oil pan		15	153	11
Oil filter cap x Oil pan		25	255	18
Oil filter drain plug x Oil filter cap		13	127	10
Oil pan drain plug x No. 2 oil pan		40	408	30
Oil pump cover x Timing chain cover		9.1	93	81 in.*lbf
Plug X Oil pump cover		49	500	37
Timing chain cover x Cylinder block, Cylinder head, Oil pan	Area 1, 2 Bolt	21	214	15
	Area 3 bolt, nut	21	214	15
	Area 4 Bolt A	43	438	32
	Area 4 except bolt A	21	214	15

2GR-FE IGNITION

SERVICE DATA

Spark plug	Standard electrode gap	1.0 to 1.1 mm (0.039 to 0.043 in.) for new spark plug
	Maximum electrode gap	1.4 mm (0.055 in.) for used spark plug

TORQUE SPECIFICATIONS

Part Tightened	N*m	kgf*cm	ft.*lbf
Spark plug x Cylinder head subassembly	18	184	13
Ignition coil assembly x Cylinder head cover	10	102	7

2GR-FE STARTING

SERVICE DATA

Starter assembly	Rated voltage and output power		12 V 1.7 kW
	Specified current		90 A or less at 11.5 V
Starter armature assembly	Standard depth		3.1 mm (0.122 in.)
	Minimum depth		3.8 mm (0.150 in.)
Brush length	Standard length		9.0 mm (0.354 in.)
	Minimum length		4.0 mm (0.157 in.)
Starter relay	Specified condition	1 - 2	Below 1 Ω
		3 - 5	10 kΩ or higher
Starter cut relay	Specified condition	1 - 2	Below 1 Ω
		3 - 5	10 kΩ or higher
No. 2 ignition relay	Specified condition	1 - 2	Below 1 Ω
		3 - 5	10 kΩ or higher
Engine switch	Resistance	Pushed: 7 (SS1) - 5 (GND)	Below 1 Ω
		Pushed: 2 (SS2) - 5 (GND)	
		Not pushed: 7 (SS1) - 5 (GND)	10 kΩ or higher
		Not pushed: 2 (SS2) - 5 (GND)	

TORQUE SPECIFICATIONS

Part Tightened		N*m	kgf*cm	ft*lbf
Starter x Engine	Bolt	37	380	28
	Terminal 30	9.8	100	87 in.*lbf
	Terminal C	10	102	7
Starter commutator end frame assembly x Starter yoke assembly	Bolt	6.0	61	53 in.*lbf
Magnetic switch x Starter drive housing	Screw	7.5	76	66 in.*lbf

2GR-FE CHARGING

SERVICE DATA

Charging circuit without load	Standard amperage: 10 A or less
	Standard voltage: 13.2 to 14.8 V
Charging circuit with load	Standard amperage: 30 A or more
Brush length	Standard exposed length: 9.5 to 11.5 mm (0.374 to 0.453 in.)
	Minimum exposed length: 4.5 mm (0.177 in.)
Generator rotor assembly	Slip rings resistance: 2.3 to 2.7 kΩ at 20°C (68°F)
	Standard slip ring diameter: 14.2 to 14.4 mm (0.559 to 0.567 in.)
	Minimum slip ring diameter: 14.0 mm (0.551 in.)

TORQUE SPECIFICATIONS

Part Tightened	N*m	kgf*cm	ft.*lbf
Bearing retainer plate x Generator drive end frame	2.3	23	20 in.*lbf
Generator coil assembly x Generator drive end frame	5.8	59	51 in.*lbf
Generator brush holder assembly x Generator coil assembly	1.8	18	16 in.*lbf
Generator rear end cover x Generator coil assembly	4.6	47	41 in.*lbf
Clutch pulley x Generator rotor assembly	111	1,125	81
Generator assembly x Generator bracket	20	204	15
Cylinder block x Generator bracket	20	204	15
Generator assembly x wire harness clamp stay	8.4	86	74 in.*lbf
Generator assembly x Cylinder block	43	438	32
Generator wire x Terminal B	9.8	100	87 in.*lbf

U660E AUTOMATIC TRANSAXLE

SERVICE DATA

Line pressure (Wheel locked)		
Engine idling	D position	372 to 412 kPa (3.8 to 4.2 kgf*cm^2, 54 to 60 psi)
	R position	672 to 742 kPa (6.8 to 7.5 kgf*cm^2, 97 to 108 psi)
AT stall (Throttle valve fully open)	D position	1,160 to 1,350 kPa (11.8 to 13.8 kgf*cm^2, 168 to 196 psi)
	R position	1,900 to 2,200 kPa (19.4 to 22.4 kgf*cm^2, 276 to 319 psi)
Engine stall revolution	D position	2,150 to 2,670 rpm
Time lag	N → D position	Less than 1.2 seconds
	N → R position	Less than 1.5 seconds
Engine idle speed (A/C OFF)	N position	600 to 700 rpm
Drive plate runout	Maximum	0.20 mm (0.0079 in.)
Torque converter runout	Maximum	0.30 mm (0.0118 in.)
Differential oil seal drive in depth	LH side	-0.5 to 0.5 mm (-0.020 to 0.020 in.)
	RH side	-0.5 to 0.5 mm (-0.020 to 0.020 in.)
Shift schedule		
D position		
Throttle valve fully open (Normal)	1 → 2	50 to 56 km/h (31 to 35 mph)
	2 → 3	93 to 103 km/h (58 to 64 mph)
	3 → 4	128 to 141 km/h (80 to 88 mph)
	4 → 5	174 to 193 km/h (108 to 120 mph)
	5 → 6	258 to 285 km/h (160 to 177 mph
	6 → 5	252 to 278 km/h (157 to 173 mph
	5 → 4	169 to 187 km/h (105 to 116 mph))
	4 → 3	121 to 134 km/h (75 to 83 mph))
	3 → 2	87 to 96km/h (54 to 60 mph)
	2 → 1	33 to 37 km/h (21 to 23 mph)
Throttle valve fully open (Cold)	1 → 2	37 to 41 km/h (23 to 25 mph)
	2 → 3	72 to 79 km/h (45 to 49 mph)
	3 → 4	110 to 122 km/h (68 to 76 mph)
	4 → 5	174 to 192 km/h (108 to 119 mph)
	5 → 6	258 to 285 km/h (160 to 177 mph
	6 → 5	252 to 278 km/h (157 to 173 mph
	5 → 4	169 to 187 km/h (105 to 116 mph))
	4 → 3	104 to 115 km/h (65 to 71 mph))
	3 → 2	65 to 72km/h (40 to 45 mph)
	2 → 1	33 to 37 km/h (21 to 23 mph)
Throttle valve fully open (Failure)	1 → 3	27 to 30 km/h (17 to 19 mph)
	3 → 1	6 to 8 km/h (4 to 5 mph)
Throttle valve fully closed (Normal)	4 → 5	48 to 54 km/h (30 to 34 mph)
	5 → 6	65 to 72 km/h (40 to 45 mph)
	6 → 5	58 to 65 km/h (36 to 40 mph)
	5 → 4	46 to 51 km/h (29 to 32 mph)
5, 4, 3, 2, 1 position		

Manual down shift speed	→ 5	252 to 278 km/h (157 to 173 mph)
	→ 4	169 to 187 km/h (105 to 116 mph)
	→ 3	121 to 134 km/h (75 to 83 mph)
	→ 2	87 to 96km/h (54 to 60 mph)
	→ 1	38 to 42 km/h (24 to 26 mph)
Lock-up schedule (Throttle valve opening 5%) D position		
6th gear	Lock-up ON	69 to 76 km/h (43 to 47 mph)
	Lock-up OFF	67 to 74 km/h (42 to 46 mph)
5th gear	Lock-up ON	59 to 66 km/h (37 to 41 mph)
	Lock-up OFF	57 to 63 km/h (35 to 39 mph)
4th gear	Lock-up ON	43 to 47 km/h (27 to 29 mph)
	Lock-up OFF	41 to 45 km/h (25 to 28 mph)
3rd gear	Lock-up ON	30 to 33 km/h (19 to 21 mph)
	Lock-up OFF	28 to 31 km/h (17 to 19 mph)
2nd gear	Lock-up ON	23 to 25 km/h (14 to 16 mph)
	Lock-up OFF	22 to 24 km/h (14 to 15 mph)
Flex lock-up schedule (Throttle valve opening 5%) D position		
6th gear	Lock-up ON	62 to 68 km/h (39 to 42 mph)
	Lock-up OFF	60 to 67 km/h (37 to 42 mph)
5th gear	Lock-up ON	50 to 55 km/h (31 to 34 mph)
	Lock-up OFF	50 to 55 km/h (31 to 34 mph)
4th gear	Lock-up ON	37 to 41 km/h (23 to 25 mph)
	Lock-up OFF	35 to 39 km/h (22 to 24 mph)
3rd gear	Lock-up ON	27 to 30 km/h (17 to 19 mph)
	Lock-up OFF	25 to 28 km/h (16 to 17 mph)
2nd gear	Lock-up ON	20 to 22 km/h (12 to 14 mph)
	Lock-up OFF	18 to 20 km/h (11 to 12 mph)
Oil pump		
Body clearance	STD	0.08 to 0.15 mm (0.0031 to 0.0059 in.)
	Maximum	0.15 mm (0.0059 in.)
Side clearance	STD	0.025 to 0.04 mm (0.0010 to 0.0016 in.)
	Maximum	0.04 mm (0.0016 in.)
Drive gear thickness		11.547 to 11.555 mm (0.4546 to 0.4549 in.)
		11.555 to 11.563 mm (0.4549 to 0.4552 in.)
		11.564 to 11.571 mm (0.4553 to 0.4556 in.)
		11.572 to 11.579 mm (0.4556 to 0.4559 in.)
		11.580 to 11.587 mm (0.4559 to 0.4562 in.)
Driven gear thickness		11.547 to 11.555 mm (0.4546 to 0.4549 in.)
		11.555 to 11.563 mm (0.4549 to 0.4552 in.)
		11.564 to 11.571 mm (0.4553 to 0.4556 in.)
		11.572 to 11.579 mm (0.4556 to 0.4559 in.)
		11.580 to 11.587 mm (0.4559 to 0.4562 in.)
Pump body bushing inside diameter	STD	43.113 to 43.138 mm (1.6974 to 1.6983 in.)
	Maximum	43.188 mm (1.7003 in.)
Stator shaft bushing inside diameter	STD	22.500 to 22.526 mm (0.8858 to 0.8868 in.)
	Maximum	22.57 mm (0.8886 in.)
Rear planetary sun gear		
Inside diameter	STD	25.580 to 25.601 mm (1.0071 to 1.0079 in.)
	Maximum	25.601 mm (1.0079 in.)

Under drive planetary gear		
Clearance		0.18 to 0.54 mm (0.0071 to 0.0213 in.)
Planetary sun gear		
Inside diameter	STD	25.525 to 25.546 mm (1.0049 to 1.0058 in.)
	Maximum	25.546 mm (1.0058 in.)
2nd brake piston return spring		
Return spring free length		23.85 mm (0.9390 in.)
Planetary gear		
Clearance	A point	0.23 to 0.59 mm (0.0091 to 0.0232 in.)
	B point	0.16 to 0.66 mm (0.0063 to 0.0260 in.)
1st and reverse brake return spring		
Return spring free length		15.79 mm (0.6217 in.)
No. 2 brake		
Piston stroke		0.884 to 1.196 mm (0.0348 to 0.0471 in.)
Flange thickness	Mark 40	4.0 mm (0.157 in.)
	Mark 41	4.1 mm (0.161 in.)
	Mark 42	4.2 mm (0.165 in.)
	Mark 43	4.3 mm (0.169 in.)
	Mark 44	4.4 mm (0.173 in.)
No. 1 brake		
Piston stroke		0.807 to 0.974 mm (0.0318 to 0.0383 in.)
Flange thickness	Mark 30	3.0 mm (0.118 in.)
	Mark 31	3.1 mm (0.122 in.)
	Mark 32	3.2 mm (0.126 in.)
	Mark 33	3.3 mm (0.130 in.)
	Mark 34	3.4 mm (0.134 in.)
	Mark 35	3.5 mm (0.138 in.)
No. 3 brake		
Clearance		0.599 to 0.761 mm (0.0024 to 0.0300 in.)
Flange thickness	Mark 38	3.8 mm (0.150 in.)
	Mark 39	3.9 mm (0.154 in.)
	Mark 40	4.0 mm (0.157 in.)
	Mark 41	4.1 mm (0.161 in.)
	Mark 42	4.2 mm (0.165 in.)
	Mark 43	4.3 mm (0.169 in.)
No. 1 clutch disc		
Piston stroke		0.806 to 0.974 mm (0.0317 to 0.0383 in.)
Flange thickness	Mark 30	3.0 mm (0.118 in.)
	Mark 31	3.1 mm (0.122 in.)
	Mark 32	3.2 mm (0.126 in.)
	Mark 33	3.3 mm (0.130 in.)
	Mark 34	3.4 mm (0.134 in.)
	Mark 35	3.5 mm (0.138 in.)
No. 2 clutch disc		
Pack clearance		0.544 to 0.744 mm (0.0214 to 0.0293 in.)

Flange thickness	Mark 30	3.0 mm (0.118 in.)
	Mark 31	3.1 mm (0.122 in.)
	Mark 32	3.2 mm (0.126 in.)
	Mark 33	3.3 mm (0.130 in.)
	Mark 34	3.4 mm (0.134 in.)
	Mark 35	3.5 mm (0.138 in.)
Input shaft		
End play		0.012 to 1.250 mm (0.0005 to 0.0492 in.)
Intermediate shaft		
End play		0.007 to 1.113 mm (0.0003 to 0.0438 in.)
Transaxle rear cover		
Bearing press fit depth		21.5 to 21.9 mm (0.8464 to 0.8622 in.)
Transmission valve body		
Valve body installation bolt length	A	25 mm (0.98 in.)
	B	30 mm (1.18 in.)
	C	35 mm (1.38 in.)
	D	45 mm (1.77 in.)
	E	55 mm (2.17 in.)
Manual valve lever shaft oil seal		
Oil seal drive in depth		-0.5 to 0.5 mm (-0.0197 to 0.0197 in.)
Front differential		
Backlash		0 to 0.15 mm (0 to 0.0059 in.)
Thrust washer thickness		1.50 mm (0.0591 in.)
		1.55 mm (0.0610 in.)
		1.60 mm (0..0630 in.)
		1.65 mm (0.0650 in.)
		1.70 mm (0.0669 in.)
		1.75 mm (0.0689 in.)
		1.80 mm (0.0709 in.)
		1.85 mm (0.0728 in.)
		1.90 mm (0.0748 in.)
Preload (at 10 rpm)		1.05 to 1.93 N*m (10.7 to 19.67 kgf*cm, 9.29 to 17.08 in.*lbf)

Shim thickness	2.000 mm (0.0787 in.)
	2.025 mm (0.0797 in.)
	2.050 mm (0.0807 in.)
	2.075 mm (0.0817 in.)
	2.100 mm (0.0827 in.)
	2.125 mm (0.0837 in.)
	2.150 mm (0.0847 in.)
	2.175 mm (0.0856 in.)
	2.200 mm (0.0866 in.)
	2.225 mm (0.0876 in.)
	2.250 mm (0.0886 in.)
	2.275 mm (0.0896 in.)
	2.300 mm (0.0906 in.)
	2.325 mm (0.0915 in.)
	2.350 mm (0.0925 in.)
	2.375 mm (0.0935 in.)
	2.400 mm (0.0945 in.)
	2.425 mm (0.0935 in.)
	2.450 mm (0.0965 in.)
	2.475 mm (0.0974 in.)
	2.500 mm (0.0984 in.)
	2.525 mm (0.0994 in.)
	2.550 mm (0.1004 in.)
	2.575 mm (0.1014 in.)
	2.600 mm (0.1024 in.)
	2.625 mm (0.1034 in.)
	2.650 mm (0.1043 in.)
	2.675 mm (0.1053 in.)
	2.700 mm (01063 in.)
	2.725 mm (0.1073 in.)
	2.750 mm (0.1083 in.)
	2.775 mm (0.1093 in.)
	2.800 mm (0.1102 in.)
	2.825 mm (0.1112 in.)
	2.850 mm (0.1122 in.)
	2.875 mm (0.1132 in.)
Counter driven gear	
Preload (at 10 rpm)	3.29 to 6.07 N*m (35.35 to 61.86 kgf*cm, 2.42 to 4.46 in.*lbf)

Shim thickness	2.000 mm (0.0787 in.)
	2.025 mm (0.0797 in.)
	2.050 mm (0.0807 in.)
	2.075 mm (0.0817 in.)
	2.100 mm (0.0827 in.)
	2.125 mm (0.0837 in.)
	2.150 mm (0.0847 in.)
	2.175 mm (0.0856 in.)
	2.200 mm (0.0866 in.)
	2.225 mm (0.0876 in.)
	2.250 mm (0.0886 in.)
	2.275 mm (0.0896 in.)
	2.300 mm (0.0906 in.)
	2.325 mm (0.0915 in.)
	2.350 mm (0.0925 in.)
	2.375 mm (0.0935 in.)
	2.400 mm (0.0945 in.)
	2.425 mm (0.0935 in.)
	2.450 mm (0.0965 in.)
	2.475 mm (0.0974 in.)
	2.500 mm (0.0984 in.)
	2.525 mm (0.0994 in.)
	2.550 mm (0.1004 in.)
	2.575 mm (0.1014 in.)
	2.600 mm (0.1024 in.)
	2.625 mm (0.1034 in.)
	2.650 mm (0.1043 in.)
	2.675 mm (0.1053 in.)
	2.700 mm (01063 in.)
	2.725 mm (0.1073 in.)
	2.750 mm (0.1083 in.)
	2.775 mm (0.1093 in.)
	2.800 mm (0.1102 in.)
	2.825 mm (0.1112 in.)
	2.850 mm (0.1122 in.)
	2.875 mm (0.1132 in.)
	2.900 mm (0.1141 in.)
	2.925 mm (0.1152 in.)
	2.950 mm (0.1161 in.)
	2.975 mm (0.1171 in.)
	3.000 mm (0.1181 in.)

DRIVE SHAFT

TORQUE SPECIFICATIONS

Part Tightened	N*m	kgf*cm	ft.*lbf
Front wheel set nut	103	1,050	76
Lower ball joint x Front suspension lower No. 1 arm	75	765	55
Tie rod end x Steering knuckle	49	500	36
Axle assembly x Front drive shaft	294	3,000	217
Front drive shaft center bearing set bolt	32	330	24
Front speed sensor set bolt	8.0	82	71 in.*lbf
Front flexible hose and speed sensor wire harness x Shock absorber	19	192	14
Front stabilizer link x Front shock absorber	74	755	55

AXLE

SERVICE DATA

Front axle hub bearing for looseness	Maximum: 0.05 mm (0.0020 in.)
Front axle hub for runout	Maximum: 0.05 mm (0.0020 in.)
Rear axle hub bearing for looseness	Maximum: 0.05 mm (0.0020 in.)
Rear axle hub for runout	Maximum: 0.07 mm (0.0027 in.)

TORQUE SPECIFICATIONS

Part Tightened	N*m	kgf*cm	ft.*lbf
Front wheel set nut	103	1,050	76
Front disc brake caliper x Steering knuckle	107	1,090	79
Front axle assembly x Front shock absorber	210	2,140	155
Axle assembly x Front drive shaft	294	3,000	217
Front disc brake dust cover x Steering knuckle	8.3	85	73 in.*lbf
Rear wheel set nut	103	1,050	76
Rear axle carrier x Rear disc brake caliper	62	630	46
Rear flexible hose x Rear shock absorber	19	192	14
Rear shock absorber x Rear axle carrier	180	1,836	133
Rear axle hub and bearing set bolt	80	816	59
Rear strut rod x Rear axle carrier	113	1,150	83
Rear No. 2 suspension arm x Rear axle carrier	100	1,020	74
Rear No. 1 suspension arm x Rear axle carrier	100	1,020	74

SUSPENSION

SERVICE DATA

Front wheel alignment	Toe-in (total)	
	A - B	0 +- 2 mm (0 - 0.08 in.)
	Rack end length difference	1.5 mm (0.059 in.) or less

Front wheel alignment	Vehicle height	
	Front A - B	126 mm (4.96 in.)
	Rear C - D	57 mm (2.24 in.)

Front wheel alignment	Wheel turning angle	
	Inside wheel	38°31'+-2° (38.52°+-2°)
	Outside wheel reference	33°43' (33.72°)

Front wheel alignment	Camber	
	Camber	-0°43'+-45' (-0.72°+-0.75°)
	Right-left difference	45' (0.75°) or less

Front wheel alignment	Caster	
	Caster	2°57'+-45' (2.95°+-0.75°)
	Right-left difference	45' (0.75°) or less

Front wheel alignment	Steering axis inclination	
	Steering axis inclination	12°20'+-45' (12.33°+-0.75°)

front lower ball joint	Lower ball joint turning torque	1.0 to 3.4 N*m (10 to 35 kgf*cm, 9 to 30 in.*lbf)
front stabilizer link assembly	Stabilizer link ball joint turning torque	0.05 to 2.0 N*m (0.5 to 20 kgf*cm, 0.4 to 18 in.*lbf)

Rear wheel alignment	Toe-in (total)	
	A +B	0° +- 24' (0° +- 0.4°)
	C - D	4 +- 2mm (0.16 +- 0.08 in.)
	Rack end length difference	1.5 mm (0.06 in.) or less

Rear wheel alignment	Camber	
	Camber	-1°21'+-45' (-1.35°+-0.75°)
	Right-left difference	45' (0.75°) or less

Rear stabilizer link assembly	Stabilizer link ball joint turning torque	0.05 to 1.0 N*m (0.5 to 10 kgf*cm, 0.4 to 8.9 in.*lbf)

TORQUE SPECIFICATIONS

FRONT:

Part tighten	N*m	kgf*cm	ft.*lbf
Suspension support x Body	85	867	63
Shock absorber x Axle	210	2,141	155
Speed sensor wire harness x Shock absorber	19	194	14
Piston rod x Suspension support	70	714	52
Stabilizer link x Shock absorber	74	755	55
Suspension lower No. 1 arm x Member	A 200 B 206	A 2,040 B 2,100	A 148 B 152
Engine mounting insulator x Member	87	887	64
Lower ball joint x Steering knuckle	123	1,250	91
Stabilizer bracket x Member	27	275	20
Stabilizer link x Stabilizer bar	74	755	55
Front wheel set nut	103	1,050	76
Tie rod end lock nut	74	755	55

REAR:

Part tighten	N*m	kgf*cm	ft.*lbf
Suspension support x Body	39	398	29
Shock absorber x Axle carrier	180	1,840	133
Piston rod x Suspension support	55	561	41
Speed sensor wire harness x Shock absorber	5.0	51	44 in.*lbf
Flexible hose x Shock absorber	19	194	14
Stabilizer link x Shock absorber	39	398	29
Strut rod x Axle carrier	113	1,152	83
Strut rod x Body	113	1,152	83
Parking brake No. 3 cable x Body	6.0	61	53 in.*lbf
Suspension No. 1 arm x Suspension member	100	1,020	74
Suspension No. 1 arm x Axle carrier	100	1,020	74
Suspension No. 2 arm x Suspension member	100	1,020	74
Suspension No. 2 arm x Axle carrier	100	1,020	74
Stabilizer bracket x Suspension member	31	316	23
Stabilizer link x Stabilizer bar	39	398	29
Suspension member x Suspension member lower stopper	A 55 B 38	A 561 B 388	A 41 B 28
Suspension member x Body	56	571	41
Rear wheel set nut	103	1,050	76
No. 2 Suspension arm lock nut	56	571	41

TIRE AND WHEEL

SERVICE DATA

Cold tire inflation pressure

Tire size	Front	Rear
P215/55R17 93V	210 kPa (2.1 kgf/cm^2, 31 psi)	210 kPa (2.1 kgf/cm^2, 31 psi)

When driving under the above vehicle conditions at sustained high speeds above 160 km/h (100 mph), in countries where such speeds are permitted bylaw, inflate the front and rear tires to 240 kPa (2.4 kgf*cm^2, 35 psi) provided that it does not exceed the maximum cold tire inflation pressure molded on the tire sidewall.

Tire runout	1.4 mm (0.055 in.) or less
Imbalance after adjustment	8.0 g (0.018 lb) or less

TORQUE SPECIFICATIONS

TIRE PRESSURE WARNING RECEIVER

Part tightened	N*m	kgf*cm	ft.*lbf
Tire pressure warning receiver set nuts	7.5	77	66 in.*lbf

TIRE PRESSURE WARNING VALVE AND TRANSMITTER

Part tightened	N*m	kgf*cm	ft.*lbf
Tire pressure warning valve and transmitter set nut	4.0	41	35 in.*lbf
Front wheel set nuts	103	1,050	76
Rear wheel set nuts	103	1,050	76

TIRE PRESSURE WARNING ECU

Part tightened	N*m	kgf*cm	ft.*lbf
Tire pressure warning ECU set nut	7.5	77	66 in.*lbf

BRAKE CONTROL

SERVICE DATA

Front speed sensor	LH	1 (FL+) - 2 (FL-)	Always	1.4 to 1.8 kΩ at 20 °C (68 °F)
		1 (FL+) - Body ground	Always	10 kΩ or higher
		2 (FL-) - Body ground	Always	10 kΩ or higher
	RH	1 (FR+) - 2 (FR-)	Always	1.4 to 1.8 kΩ at 20 °C (68 °F)
		1 (FR+) - Body ground	Always	10 kΩ or higher
		2 (FR-) - Body ground	Always	10 kΩ or higher
Skid control sensor	LH	2 (RL+) - 1 (RL-)	Always	0.9 to 2.1 kΩ
		2 (RL+) - Body ground	Always	10 kΩ or higher
		1 (RL-) - Body ground	Always	10 kΩ or higher
	RH	2 (RR+) - 1 (RR-)	Always	0.9 to 2.1 kΩ
		2 (RR+) - Body ground	Always	10 kΩ or higher
		1 (RR-) - Body ground	Always	10 kΩ or higher
VSC NO. 1 (Fail Safe) relay		Resistance 3 - 5	Always	10 kΩ or higher
		Resistance 3 - 5	Apply B+ between terminals 1 and 2	Below 1 Ω
VSC NO. 1 relay		Resistance 3 - 5	Always	10 kΩ or higher
		Resistance 3 - 5	Apply B+ between terminals 1 and 2	Below 1 Ω
Stop light control relay	with Dynamic radar cruise control system	Resistance 3 - 4	Always	Below 1 Ω
		Resistance 3 - 5	Always	10 kΩ or higher
		Resistance 3 - 4	When battery positive voltage is applied to terminal 1 and battery negative voltage to terminal 2	10 kΩ or higher
		Resistance 3 - 5	When battery positive voltage is applied to terminal 1 and battery negative voltage to terminal 2	Below 1 Ω

TORQUE SPECIFICATIONS

Part tightened	N*m	kgf*cm	ft.*lbf
Brake actuator x Brake actuator bracket	5.4	55	48 in.*lbf
Brake actuator bracket x Body	19	195	14
Brake actuator x Brake line	15 (14)	155 (143)	11 (10)
Front speed sensor x Knuckle	8.0	82	71 in.*lbf
Front speed sensor x Body	5.0	51	44 in.*lbf
Front speed sensor x Absorber	19	194	14
Yaw rate and acceleration sensor	13	133	10

( ): For use with SST

BRAKE

SERVICE DATA

Brake pedal height		129.9 to 139.9 mm (5.114 to 5.508 in.)
Standard stop light switch clearance		1.5 to 2.5 mm (0.059 to 0.098 in.)
Brake pedal free play		1.0 to 6.0 mm (0.039 to 0.236 in.)
Brake pedal reserve distance from dash panel at 500 N (51 kgf, 112 lbf)		61 mm (2.402 in.)
Front brake pad lining thickness	Standard	12.0 mm (0472 in.)
	Minimum	1.0 mm (0.039 in.)
Front brake disc thickness	Standard	28.0 mm (1.102 in.)
	Minimum	25.0 mm (0.983 in.)
Front brake disc runout	Maximum	0.05 mm (0.0020in.)
Rear disc brake pad lining thickness	Standard	11.0 mm (0.433 in.)
	Minimum	1.0 mm (0.039 in.)
Rear brake disc thickness	Standard	10.0 mm (0.390 in.)
	Minimum	8.5 mm (0.334 in.)
Rear brake disc runout	Maximum	0.15 mm (0.0059 in.)

TORQUE SPECIFICATIONS

Parts tightened	N*m	kgf*cm	ft.*lbf
Brake master cylinder x Brake tube	15 (14)	155 (143)	11 (10)
Brake booster clevis lock nut	26	265	19
Brake light switch	1.5	15	13 in.*lbf
Brake pedal support assembly x Instrument panel reinforcement assembly	19	194	14
brake pedal support assembly x Body	19	194	14
Brake master cylinder x Brake booster	13	133	10
Brake booster assembly x Brake pedal support assembly	13	133	10
Front brake cylinder mounting x Steering knuckle	107	1,090	79
Bleeder plug	8.3	85	73 in.*lbf
Front disc brake cylinder mounting x Front disc brake cylinder assembly	34	350	25
Front disc brake cylinder assembly x Flexible hose	29	300	21
Flexible hose x Tube	15 (14)	155 (143)	11 (10)
Front flexible hose x Absorber	19	194	14
Rear disc brake cylinder mounting set bolt	62	632	46
Rear disc brake cylinder mounting x Rear disc brake cylinder assembly	27	275	20
Rear disc brake cylinder assembly x Flexible hose	33	337	24
Rear flexible hose x Absorber	19	194	14

( ): For use with SST

PARKING BRAKE

SERVICE DATA

Parking brake pedal travel at 300 N (31 kgf, 68 lbf)		7 to 10 notches
Brake disc inside diameter	Standard	170 mm (6.69 in.)
	Maximum	171 mm (6.73 in.)
Parking brake shoe lining thickness	Standard	2.0 mm (0.079 in.)
	Maximum	1.0 mm (0.039 in.)
Clearance between parking brake shoe and parking brake she lever		Less than 0.35 mm (0.014 in.)

TORQUE SPECIFICATIONS

Parts tightened		N*m	kgf*cm	ft.*lbf
Wheel nut		103	1050	76
No. 1 wire adjusting nut x Lock nut		5.4	55	48 in.*lbf
Parking brake pedal assembly x Body		39	398	29
No. 1 parking brake cable assembly x Body	Bolt	15	153	11
	Nut	5.4	55	48 in.*lbf
No. 1 parking brake cable assembly x No. 4 parking brake cable assembly		5.4 (5.0)	55 (51)	48 in.*lbf (44 in.*lbf)
Floor shift lever assembly x Body		12	122	9
No. 3 parking brake cable assembly x Body	Bolt (A)	8.5	87	75 in.*lbf
	Bolt (B)	6.0	61	53 in.*lbf
	Nut (C)	6.0	61	53 in.*lbf
No. 3 parking brake assembly x Backing plate		8.0	82	71 in.*lbf
Rear disc brake caliper set bolt		62	632	46
Parking brake shoe guide plate set bolt		18	184	13

STEERING COLUMN

SERVICE DATA

Steering free play (Maximum)	30 mm (1.18 in.)

TORQUE SPECIFICATIONS

STEERING COLUMN ASSEMBLY

Part tightened	N*m	kgf*cm	ft.*lbf
Steering intermediate shaft assembly x Steering column assembly	35	360	26
Steering column assembly set nuts	21	214	16
Steering column assembly set bolt	21	214	16
Steering intermediate shaft assembly x Power steering link assembly	35	360	26
Front wheel LH set nuts	103	1,050	76
Lower steering column cover x Upper steering column cover	2.0	20	18 in.*lbf
Steering wheel assembly set nut	50	510	37
Multiplex tilt and telescopic ECU set screws	1.5	15	13 in.*lbf

POWER STEERING

SERVICE DATA

POWER STEERING FLUID

Fluid level rise (Maximum)	5 mm (0.20 in.)
Fluid pressure at idle speed with valve closed	7,800 to 8,300 kPa (79.5 to 84.6 kgf/cm^2, 1,131 to 1,204 psi)
Fluid pressure at idle speed with valve fully open and turn the steering wheel to the full lock position	7,800 to 8,300 kPa (79.5 to 84.6 kgf/cm^2, 1,131 to 1,204 psi)

STEERING WHEEL

Steering effort at idle speed (Reference)	6.0 N*m (61 kgf*cm, 53 in.*lbf)

VANE PUMP

Vane pump shaft and vane pump housing oil clearance (Maximum)	0.07 mm (0.0028 in.)
Vane plate thickness (Standard)	1.405 to 1.411 mm (0.05531 to 0.05555 in.)
Clearance between the rotor groove and plate (Maximum)	0.03 mm (0.0012 in.)
Compression spring free length (Minimum)	29.2 mm (1.150 in.)
Vane pump rotating torque	0.27 N*m (2.8 kgf*cm, 2.4 in.*lbf)

POWER STEERING LINK

Steering rack runout (Maximum)	0.3 mm (0.0118 in.)
Tie rod end sub-assembly stud bolt turning torque	0.98 to 3.92 N*m (10 to 40 kgf*cm, 8.7 to 34.7 in.*lbf)
Total preload (Control valve rotating torque)	1.5 N*m (15.3 kgf*cm, 13.3 in.*lbf) or less

TORQUE SPECIFICATIONS

VANE PUMP

Part tightened	N*m	kgf*cm	ft.*lbf
Vane pump rear housing x Vane pump front housing	22	224	16
Pressure port union x Vane pump front housing	69	704	51
Power steering fluid pressure switch x Vane pump assembly	21	214	16
Power steering suction port union x Vane pump assembly	12	122	9
Vane pump assembly set bolts	29 (43)	294 (439)	21 (32)
Pressure feed tube assembly clamp set bolt	9.8	100	87 in.*lbf
Pressure feed tube assembly x Vane pump assembly (union bolt)	50	510	37
Front wheel RH set nuts	103	1,050	76

( ): For use without SST

POWER STEERING LINK

Part tightened	N*m	kgf*cm	ft.*lbf
Power steering control valve housing x Rack housing	21	214	16
Control valve lock nut	25	250	18
Rack housing cap	54	546	40
Steering rack end sub-assembly	60 (84)	613 (852)	44 (62)
Right turn pressure tube x Power steering link assembly (union nut)	11 (13)	114 (128)	8 (9)
Left turn pressure tube x Power steering link assembly (union nut)	11 (13)	114 (128)	8 (9)
Power steering link assembly set bolts	70	714	52
Pressure feed tube assembly clamp set bolts	9.8	100	87 in.*lbf
Pressure feed tube assembly x Power steering link assembly (union nut)	22 (25)	227 (250)	16 (18)
Tie rod assembly x Steering knuckle	49	500	36
Steering intermediate shaft assembly x Power steering link assembly	35	360	26
Front wheels set nuts	103	1,050	76

( ): For use without SST

AIR CONDITIONING

SERVICE DATA

Refrigerant charge volume (Standard:)	470 to 530g (16.6 to 18.7 oz.)

Magnetic clutch clearance	0.26 to 0.60 mm (0.010 to 0.024 in.)

TORQUE SPECIFICATIONS

Part Tightened	N*m	kgf*cm	ft.*lbf
AIR CONDITIONING UNIT			
Air conditioning unit assembly x Body	9.8	100	87 in.*lbf
Instrument panel reinforcement assembly x Body (Collar)	6.0	61	53 in.*lbf
Instrument panel reinforcement assembly x Body (Passenger seat)	20	204	15
Instrument panel reinforcement assembly x Body (Driver seat)	17	175	13
Air conditioning tube assembly x Cooler expansion valve	3.5	35	30 in.*lbf
Suction pipe sub-assembly x Air conditioning tube assembly	9.8	100	87 in.*lbf
BLOWER UNIT			
Air conditioning unit assembly x Body	9.8	100	87 in.*lbf
Instrument panel reinforcement assembly x Body (Collar)	6.0	61	53 in.*lbf
Instrument panel reinforcement assembly x Body (Passenger seat)	20	204	15
Instrument panel reinforcement assembly x Body (Driver seat)	17	175	13
Suction pipe sub-assembly x Air conditioning tube assembly	9.8	100	87 in.*lbf
Blower assembly x Instrument panel reinforcement assembly	9.8	100	87 in.*lbf
COMPRESSOR AND MAGNETIC CLUTCH			
Compressor and magnetic clutch x Engine	25	255	18
No. 1 cooler refrigerant discharge hose x Compressor and magnetic clutch	9.8	100	87 in.*lbf
No. 1 cooler refrigerant suction hose x Compressor and magnetic clutch	9.8	100	87 in.*lbf
Magnet clutch hub x Cooler compressor assembly	18	184	13
CONDENSER			
Cooler condenser assembly x Radiator assembly	5.0	51	44 in.*lbf
Cooler refrigerant discharge pipe x Cooler condenser assembly	9.8	100	87 in.*lbf
Liquid tube sub-assembly x Cooler condenser assembly	9.8	100	87 in.*lbf
Cap x cooler condenser assembly	2.9	30	26 in.*lbf
SMOG VENTILATION SENSOR			
Smog ventilation sensor x Body	9.8	100	87 in.*lbf

SUPPLEMENTAL RESTRAINT SYSTEM

TORQUE SPECIFICATIONS

Part Tightened	N*m	kgf*cm	ft.*lbf
Steering pad x Steering wheel assembly	8.8	90	78 in.*lbf
Driver side knee airbag assembly x Instrument panel reinforcement	10	102	7
Front passenger side knee airbag assembly x Instrument panel reinforcement	10	102	7
Curtain shield airbag assembly x Body	11	112	8
Rear seat side airbag assembly x Body	8.0	82	71 in.*lbf
Center airbag sensor assembly x Body	18	184	13
Front airbag sensor x Body	18	184	13
Side airbag sensor x Body	9.0	92	80 in.*lbf
Rear airbag sensor x Body	9.0	92	80 in.*lbf
Seat position sensor x Front seat assembly	8.0	82	71 in.*lbf
Front seat assembly RH x Body	37	377	27
Front seat outer belt assembly RH x Front seat assembly RH	42	428	31
Occupant classification ECU x Front seat assembly RH	3.0	31	27 in.*lbf

SEAT BELT

TORQUE SPECIFICATIONS

Part Tightened	N*m	kgf*cm	ft.*lbf
FRONT SEAT INNER BELT ASSEMBLY			
Front seat inner belt assembly x Front seat assembly	42	428	31
Front seat outer belt assembly (Floor anchor) x Front seat assembly	42	428	31
FRONT SEAT OUTER BELT ASSEMBLY			
Front seat outer belt assembly (Floor anchor) x Front seat assembly	42	428	31
Front seat outer belt assembly (Shoulder anchor) x Front shoulder belt anchor adjuster assembly	42	428	31
Front shoulder belt anchor adjuster assembly x Body	42	428	31
Front seat outer belt assembly (For upper bolt) x Body	7.5	77	66 in.*lbf
Front seat outer belt assembly (For lower bolt) x Body	42	428	31
REAR SEAT INNER BELT ASSEMBLY			
Rear seat inner with center belt assembly LH x Body	42	428	31
Rear seat inner with center belt assembly RH (Floor anchor) x Body	42	428	31
Rear seat 3 point type belt assembly LH (Floor anchor) x Body	42	428	31
Rear seat 3 point type belt assembly RH (Floor anchor) x Body	42	428	31
Rear seat inner with center belt assembly RH x Body	42	428	31
REAR SEAT OUTER BELT ASSEMBLY			
Rear seat 3 point type belt assembly (For front bolt) x Body	7.5	77	66 in.*lbf
Rear seat 3 point type belt assembly (For rear bolt) x Body	42	428	31
CHILD RESTRAINT SEAT TETHER ANCHOR			
Child restraint seat tether anchor bracket x Body	21	214	16
CHILD RESTRAINT SEAT ANCHOR BRACKET			
Child restraint seat anchor bracket sub-assembly x Body	18	184	13
SEAT BELT CONTROL ECU			
Seat belt control ECU x Body	5.0	51	44 in.*lbf

THEFT DETERRENT SYSTEM

TORQUE SPECIFICATIONS

Part Tightened	N*m	kgf*cm	ft.*lbf
Security horn assembly x Body	31	316	23
Hood lock x Body	8.0	82	71in.*lbf

CRUISE CONTROL

TORQUE SPECIFICATIONS

Part Tightened	N*m	kgf*cm	ft.*lbf
Cruise control main switch x Steering wheel	2.4	24	21 in.*lbf
Distance control ECU x Body	5.0	51	44 in.*lbf
Millimeter wave radar sensor x Body	5.5	56	49 in.*lbf
Certification ECU with instrument panel wire x Body	8.0	82	71 in.*lbf

LIGHTING

TORQUE SPECIFICATIONS

Part Tightened	N*m	kgf*cm	ft.*lbf
HEADLIGHT ASSEMBLY			
Headlight assembly x Body	5.4	55	48 in.*lbf
REAR COMBINATION LIGHT ASSEMBLY			
Rear combination assembly x Body	5.4	55	48 in.*lbf
Rear light assembly x Body	5.4	55	48 in.*lbf
FRONT DOOR COURTESY SWITCH			
Front door courtesy switch assembly x Body	8.0	82	71 in.*lbf
REAR DOOR COURTESY SWITCH			
Rear door courtesy switch assembly x Body	8.0	82	71 in.*lbf
HEIGHT CONTROL SENSOR			
Height control sensor sub-assembly x Lower arm	5.4	55	48 in.*lbf
Height control sensor sub-assembly x Rear suspension member	8.0	82	71 in.*lbf

WIPER AND WASHER

TORQUE SPECIFICATIONS

Part Tightened	N*m	kgf*cm	ft.*lbf
FRONT WIPER MOTOR			
Front wiper arm and blade assembly LH x Windshield wiper motor and link assembly	22	224	16
Front wiper arm and blade assembly RH x Windshield wiper motor and link assembly	22	224	16
Windshield wiper motor and link assembly x Body	5.5	56	49 in.*lbf
Windshield wiper motor assembly x Windshield wiper link assembly	5.4	55	48 in.*lbf

DOOR LOCK

TORQUE SPECIFICATIONS

FRONT DOOR LOCK

Part Tightened	N*m	kgf*cm	ft*lbf
Front door lock assembly x Door panel	5.0	51	44 in.*lbf
Door outside handle x Door outside handle frame	4.0	41	35 in.*lbf

REAR DOOR LOCK

Part Tightened	N*m	kgf*cm	ft*lbf
Rear door lock assembly x Door panel	5.0	51	44 in.*lbf
Door outside handle x Door outside handle frame	4.0	41	35 in.*lbf

METER

TORQUE SPECIFICATIONS

Part Tightened	N*m	kgf*cm	ft.*lbf
Steering pad switch x Steering wheel	2.4	24	21 in.*lbf
Upper steering column cover x Lower steering column cover	2.0	20	18 in.*lbf

AUDIO / VISUAL

TORQUE SPECIFICATIONS

Part Tightened	N*m	kgf*cm	ft.*lbf
Amplifier antenna assembly x Body	7.0	71	62 in.*lbf
Steering pad switch assembly x Steering wheel assembly	2.4	25	21in.*lbf
Certification ECU with instrument Panel Wire x Body	8.0	82	71in.*lb

HORN

TORQUE SPECIFICATIONS

Part Tightened	N*m	kgf*cm	ft.*lbf
Low pitched horn x Body	20	204	15
High pitched horn x Body	20	204	15

WINDSHIELD / WINDOWGLASS

TORQUE SPECIFICATIONS

Part Tightened	N*m	kgf*cm	ft.*lbf
POWER WINDOW REGULATOR MOTOR			
Front power window regulator motor assembly x Front door window regulator sub-assembly	5.4	55	48 in.*lbf
Front door window regulator sub-assembly x Front door	11	112	8.1
Front door glass sub-assembly x Front door window regulator sub-assembly	5.5	56	49 in.*lbf
Rear power window regulator motor assembly x Rear door window regulator sub-assembly	5.4	55	48 in.*lbf
Rear door window regulator sub-assembly x Rear door	11	112	8.1
WINDSHIELD GLASS			
Inner rear view mirror assembly x Windshield glass	1.8	18	16 in.*lbf
No. 1 Slide roof glass sub-assembly x Body	2.0	20	18 in.*lbf
Sliding roof side garnish x Body	4.0	41	35 in.*lbf
Front wiper arm and blade assembly x Windshield wiper motor and link assembly	22	224	16
BACK WINDOW GLASS			
Rear seat inner with center belt assembly RH x Body	42	428	31
Rear seat 3 point type belt assembly x Body	42	428	31
Rear seat airbag x Body	8.0	82	71 in.*lbf
Rear seat back assembly x Body	18	184	13

MIRROR

TORQUE SPECIFICATIONS

Part Tightened	N*m	kgf*cm	ft.*lbf
Inner rear view mirror x Windshield glass	1.8	18	16 in.*lbf
Outer rear view mirror assembly x Door panel	5.5	56	49 in.*lbf

INSTRUMENT PANEL

TORQUE SPECIFICATIONS

Part Tightened	N*m	kgf*cm	ft.*lbf
Instrument panel reinforcement x Passenger airbag	20	204	15
Upper steering column cover x Lower steering column cover	2.0	20	18 in.*lbf
Instrument panel safety pad x No. 2 antenna cord sub-assembly	7.0	71	62 in.*lbf

SEAT

TORQUE SPECIFICATIONS

FRONT SEAT

Part Tightened	N*m	kgf*cm	ft.*lbf
Front seatback cover bracket x Front seat frame	5.0	51	44 in.*lbf
Front seat x Body	37	377	27

REAR SEAT

Part Tightened	N*m	kgf*cm	ft.*lbf
Rear center seat armrest assembly x Rear seatback	8.0	82	71 in.*lbf
Rear seatback assembly x Body	18	184	13

SEAT CLIMATE CONTROL BLOWER (for Seat Cushion)

Part Tightened	N*m	kgf*cm	ft.*lbf
Seat cushion climate control blower x seat cushion spring	2.6	27	23 in.*lbf

ENGINE HOOD / DOOR

TORQUE SPECIFICATIONS

Part Tightened	N*m	kgf*cm	ft.*lbf
HOOD			
Hood hinge x Hood panel	13	133	10
Hood lock x Body	8.0	82	71 in.*lbf
Hood stay bracket x Hood panel	22	224	16
FRONT DOOR			
Door check x Body	27	275	20
Door check x Door panel	8.0	82	71 in.*lbf
Door hinge x Body	26	265	19
Door hinge x Door panel	43	439	32
Door lock x Door panel	5.5	56	49 in.*lbf
Door lock striker x Body	23	235	17
Power window regulator motor x Window regulator	5.4	55	48 in.*lbf
Window regulator x Door panel	11	112	8.1
Door glass x Window regulator	5.5	56	49 in.*lbf
Outer rear view mirror x Door panel	5.5	56	49 in.*lbf
Door lock cylinder x Door outside handle frame	4.0	41	35 in.*lbf
Door outside handle x Door outside handle frame	4.0	41	35 in.*lbf
Door outside handle frame x Door panel	4.0	41	35 in.*lbf
REAR DOOR			
Door check x Body	27	275	20
Door check x Door panel	5.0	51	44 in.*lbf
Door hinge x Body	26	265	19
Door hinge x Door panel	43	439	32
Door lock x Door panel	5.5	56	49 in.*lbf
Door lock striker x Body	23	235	17
Power window regulator motor x Window regulator	5.4	55	48 in.*lbf
Window regulator x Door panel	11	112	8.1
Door outside handle cover x Door outside handle frame	4.0	41	35 in.*lbf
Door outside handle x Door outside handle frame	4.0	41	35 in.*lbf
Door outside handle frame x Door panel	4.0	41	35 in.*lbf
LUGGAGE DOOR			
Luggage door hinge x Door panel	8.0	82	71 in.*lbf
Luggage lock striker x Body	5.5	56	49 in.*lbf
Luggage lock x Door panel	5.5	56	49 in.*lbf
Fuel lid opener motor assembly x Body	5.5	56	49 in.*lbf

EXTERIOR

TORQUE SPECIFICATIONS

Part tightened		N*m	kgf*cm	ft.*lbf
Front bumper assembly set screw (A)		2.0	20	18 in.*lbf
Front bumper reinforcement x Body		72	734	53
Rear bumper assembly x Body	Bolt	5.5	56	49 in.*lbf
	Nut	2.0	20	18 in.*lbf
Rear bumper reinforcement x Body		68	693	50
Rear bumper side support x Body		2.0	20	18 in.*lbf

SLIDING ROOF

TORQUE SPECIFICATIONS

Part Tightened	N*m	kgf*cm	ft.*lbf
SLIDING ROOF HOUSING (for Glass Roof)			
No. 1 sliding roof glass sub-assembly x Sliding roof housing panel	2.0	20	18 in.*lbf
No. 2 sliding roof glass sub-assembly x Sliding roof housing panel	2.0	20	18 in.*lbf
Sliding roof side garnish LH x Sliding roof housing panel	4.0	41	35 in.*lbf
Sliding roof side garnish RH x Sliding roof housing panel	4.0	41	35 in.*lbf
Sliding roof housing assembly (Nut A) x Sliding roof housing panel	7.0	71	62 in.*lbf
Sliding roof housing assembly (Nut B) x Sliding roof housing panel	5.4	55	48 in.*lbf
Sliding roof housing assembly ("TORX" screw) x Sliding roof housing panel	4.0	41	35 in.*lbf
Front sliding roof housing mounting bracket LH (Bolt) x Body	8.0	82	71 in.*lbf
Front sliding roof housing mounting bracket LH (Nut) x Sliding roof housing panel	5.5	56	49 in.*lbf
Front sliding roof housing mounting bracket RH (Bolt) x Body	8.0	82	71 in.*lbf
Front sliding roof housing mounting bracket RH (Nut) x Sliding roof housing panel	5.5	56	49 in.*lbf
Center sliding roof housing mounting bracket LH (Bolt) x Body	8.0	82	71 in.*lbf
Center sliding roof housing mounting bracket LH (Nut) x Sliding roof housing panel	5.5	56	49 in.*lbf
Center sliding roof housing mounting bracket RH (Bolt) x Body	8.0	82	71 in.*lbf
Center sliding roof housing mounting bracket RH (Nut) x Sliding roof housing panel	5.5	56	49 in.*lbf
Rear sliding roof housing mounting bracket LH (Bolt) x Body	8.0	82	71 in.*lbf
Rear sliding roof housing mounting bracket LH (Nut) x Sliding roof housing panel	5.5	56	49 in.*lbf
Rear sliding roof housing mounting bracket RH (Bolt) x Body	8.0	82	71 in.*lbf
Rear sliding roof housing mounting bracket RH (Nut) x Sliding roof housing panel	5.5	56	49 in.*lbf
Sliding roof drive gear sub-assembly (Bolt and Nut) x Sliding roof housing sub-assembly	5.4	55	48 in.*lbf
Sliding roof housing panel x Body	5.5	56	49 in.*lbf
Sliding roof plate LH x Sliding roof housing assembly	4.0	41	35 in.*lbf
Sliding roof plate RH x Sliding roof housing assembly	4.0	41	35 in.*lbf
Front sliding roof sunshade stopper LH x Sliding roof housing assembly	4.0	41	35 in.*lbf
Front sliding roof sunshade stopper RH x Sliding roof housing assembly	4.0	41	35 in.*lbf
Rear sliding roof sunshade stopper LH x Sliding roof housing assembly	4.0	41	35 in.*lbf
Rear sliding roof sunshade stopper RH x Sliding roof housing assembly	4.0	41	35 in.*lbf
No. 3 sliding roof glass sub-assembly x Sliding roof housing panel	5.4	55	48 in.*lbf
SLIDING ROOF HOUSING (for Standard)			
Sliding roof glass sub-assembly x Sliding roof housing sub-assembly	5.5	56	49 in.*lbf
Sliding roof housing sub-assembly (Bolt) x Body	8.0	82	71 in.*lbf
Sliding roof housing sub-assembly (Nut) x Body	5.5	56	49 in.*lbf
Sliding roof drive gear sub-assembly x Sliding roof housing sub-assembly	5.4	55	48 in.*lbf
Sliding roof piece sub-assembly LH x Sliding roof housing sub-assembly	2.0	20	18 in.*lbf
Sliding roof piece sub-assembly RH x Sliding roof housing sub-assembly	2.0	20	18 in.*lbf
Sliding roof side stopper x Sliding roof housing sub-assembly	2.0	20	18 in.*lbf

DTC	B278A	Short to GND in Immobiliser System Power Source Circuit

DESCRIPTION

This DTC is output when the engine switch power source supply line is open or shorted.

DTC No.	DTC Detection Condition	Trouble Area
B278A	Engine switch power source supply line is open or shorted	• Wire harness • Engine switch • Certification ECU

EI

WIRING DIAGRAM

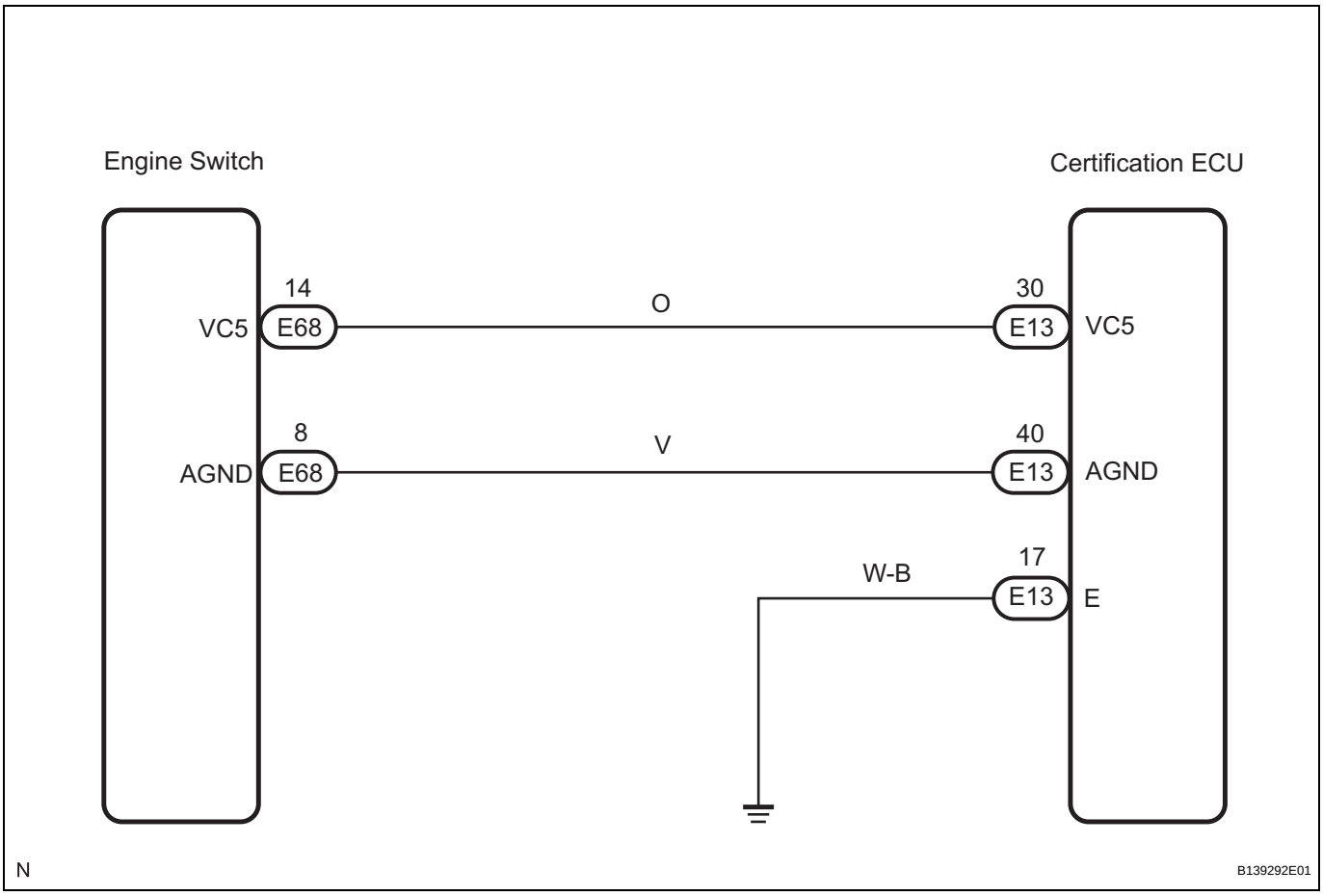

INSPECTION PROCEDURE

NOTICE:

If the certification ECU is replaced, register the key and ECU communication ID (See page EI-9).

1	CHECK DTC OUTPUT

(a) Delete the DTCs (See page EI-25).

(b) Recheck for DTCs (See page EI-25).

Result

Result	Proceed to
B278A output reoccurs	A
B278A output does not reoccur	B

B → **USE SIMULATION METHOD TO CHECK**

A

2 CHECK HARNESS AND CONNECTOR (CERTIFICATION ECU - ENGINE SWITCH)

Wire Harness Side Connector Front View:

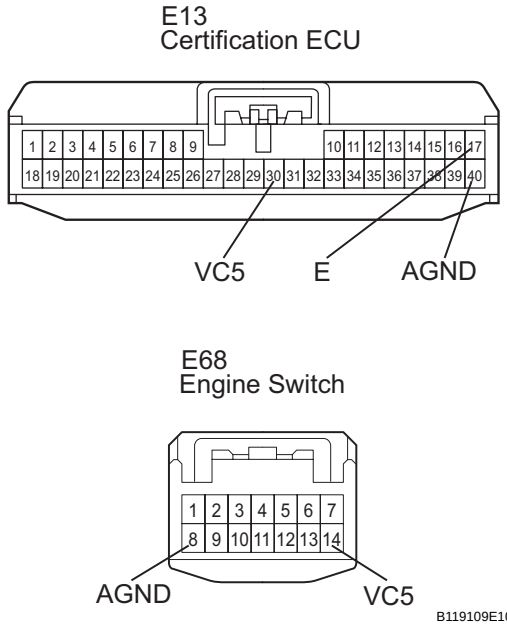

(a) Disconnect the E13 ECU and E68 switch connectors.
(b) Measure the resistance according to the value(s) in the table below.

Standard resistance

Tester Connection	Specified Condition
E13-30 (VC5) - E68-14 (VC5)	Below 1 Ω
E13-40 (AGND) - E68-8 (AGND)	
E13-17 (E) - Body ground	
E13-30 (VC5) - Body ground	10 kΩ or higher
E13-40 (AGND) - Body ground	

NG → **REPAIR OR REPLACE HARNESS OR CONNECTOR**

OK

3 CHECK HARNESS AND CONNECTOR (ENGINE SWITCH POWER SOURCE)

Wire Harness Side Connector Rear View:

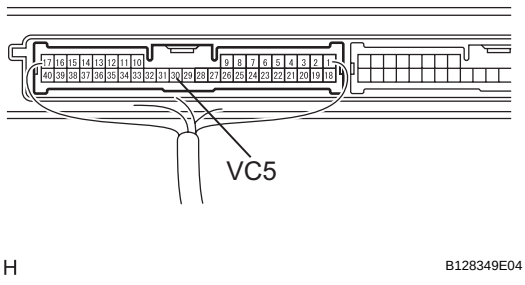

(a) Reconnect the E13 ECU and E68 switch connectors.
(b) Measure the voltage according to the value(s) in the table below.

Standard voltage

Tester Connection	Condition	Specified Condition
E13-30 (VC5) - Body ground	Key is not in cabin	Below 1 V
	Engine switch pressed	4.6 to 5.4 V

NG → **REPLACE CERTIFICATION ECU**

OK

EI

4	CHECK HARNESS AND CONNECTOR (ENGINE SWITCH BODY GROUND)

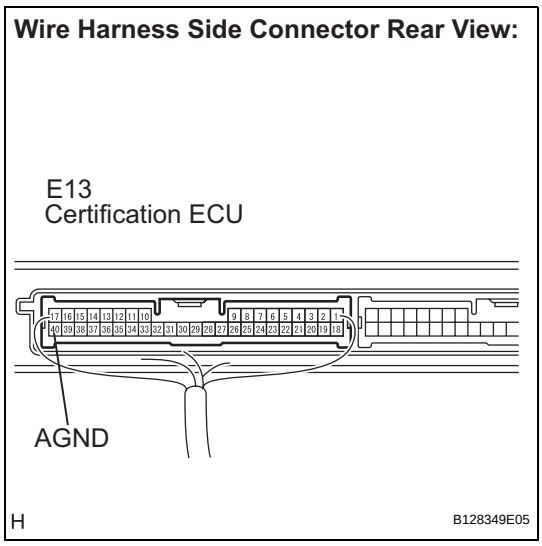

(a) Measure the resistance according to the value(s) in the table below.

Standard resistance

Tester Connection	Specified Condition
E13-40 (AGND) - Body ground	Below 1 Ω

NG → **REPLACE CERTIFICATION ECU**

OK

REPLACE ENGINE SWITCH (See page ST-158)

DTC	B2790	ID BOX EEPROM Malfunction

DESCRIPTION

This DTC is output when the ID code box detects an internal malfunction.

DTC No.	DTC Detection Condition	Trouble Area
B2790	ID code box detects internal malfunction	ID code box

INSPECTION PROCEDURE

NOTICE:

If the ID code box is replaced, register the key and ECU communication ID (See page EI-9).

1	REPLACE ID CODE BOX

NEXT

END

DTC	B2791	Communication Condition Failure between ECM

DESCRIPTION

This DTC is output when the ID code box does not respond to a verification request signal from the ECM.
HINT:

- If the engine switch is turned off immediately after the engine starts, DTC B2791 will be detected. If DTC B2791 is cleared, this DTC will not reoccur because it does not indicate a malfunction.
- If this DTC B2791 is detected simultaneously with DTC B2799, troubleshoot B2799 first.

DTC No.	DTC Detection Condition	Trouble Area
B2791	ID code box does not respond to a verification request signal from ECM • Perform this step when the engine switch is turned off immediately after the engine starts.	-

WIRING DIAGRAM

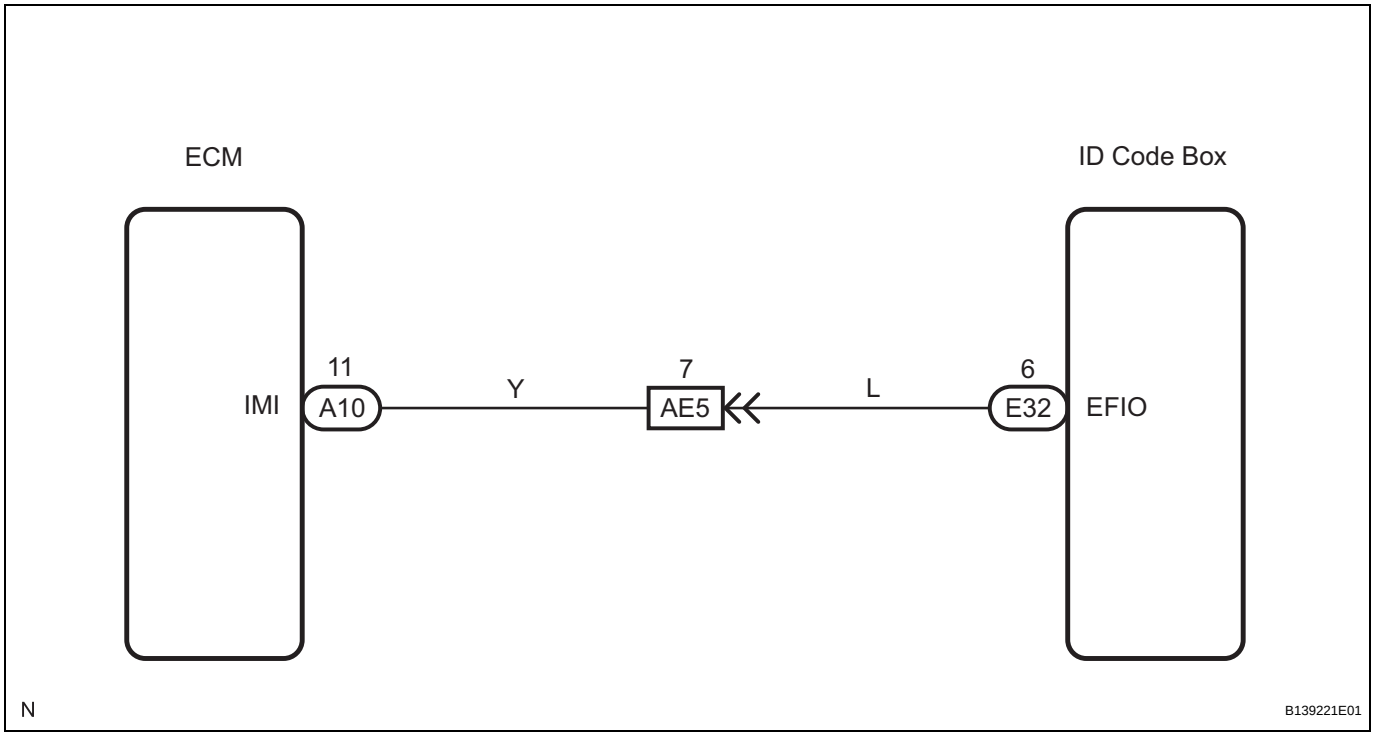

INSPECTION PROCEDURE

NOTICE:

If the engine can be started even when DTC B2791 is output, the ID code box can be considered normal. Be sure to recheck for DTCs after clearing the DTCs (See page EI-25).

1	CHECK ENGINE START

(a) Delete the DTCs (See page EI-25).
(b) Check that the engine starts.
Result

Result	Proceed to
Engine does not start	**A**

Result	Proceed to
Engine starts	B

HINT:
Perform this step when the engine switch is turned off immediately after the engine starts.

B → **END**

A

2 CHECK DTC OUTPUT

EI

(a) Recheck for DTCs (See page EI-25).
Result

Result	Proceed to
B2791 and other DTC output	A
No DTC output	B

HINT:
If the engine does not start, DTC B2791 will not be detected separately from other DTCs because DTC B2791 will be output together with other DTCs. Troubleshoot DTCs other than DTC B2791.

B → **GO TO SMART ACCESS SYSTEM WITH PUSH-BUTTON START (See page ST-17)**

A

REPAIR CIRCUITS INDICATED BY OUTPUT DTCS

DTC	B2799	Engine Immobiliser System Malfunction

DESCRIPTION

This DTC is output when one of the following occurs: 1) the ECM detects errors in its own communications with the ID code box; 2) the ECM detects errors in the communication lines; or 3) the ECU communication ID between the ID code box and ECM is different and an engine start is attempted. Before troubleshooting for this DTC, make sure no certification ECU DTCs are present. If present, troubleshoot the certification ECU DTCs first.

DTC No.	DTC Detection Condition	Trouble Area
B2799	One of following conditions is met: • Error in communication between ECM and ID code box • Error in communication lines • Communication ID is different between ID code box and ECM during communication	• Wire harness • ECM • ID code box

EI

WIRING DIAGRAM

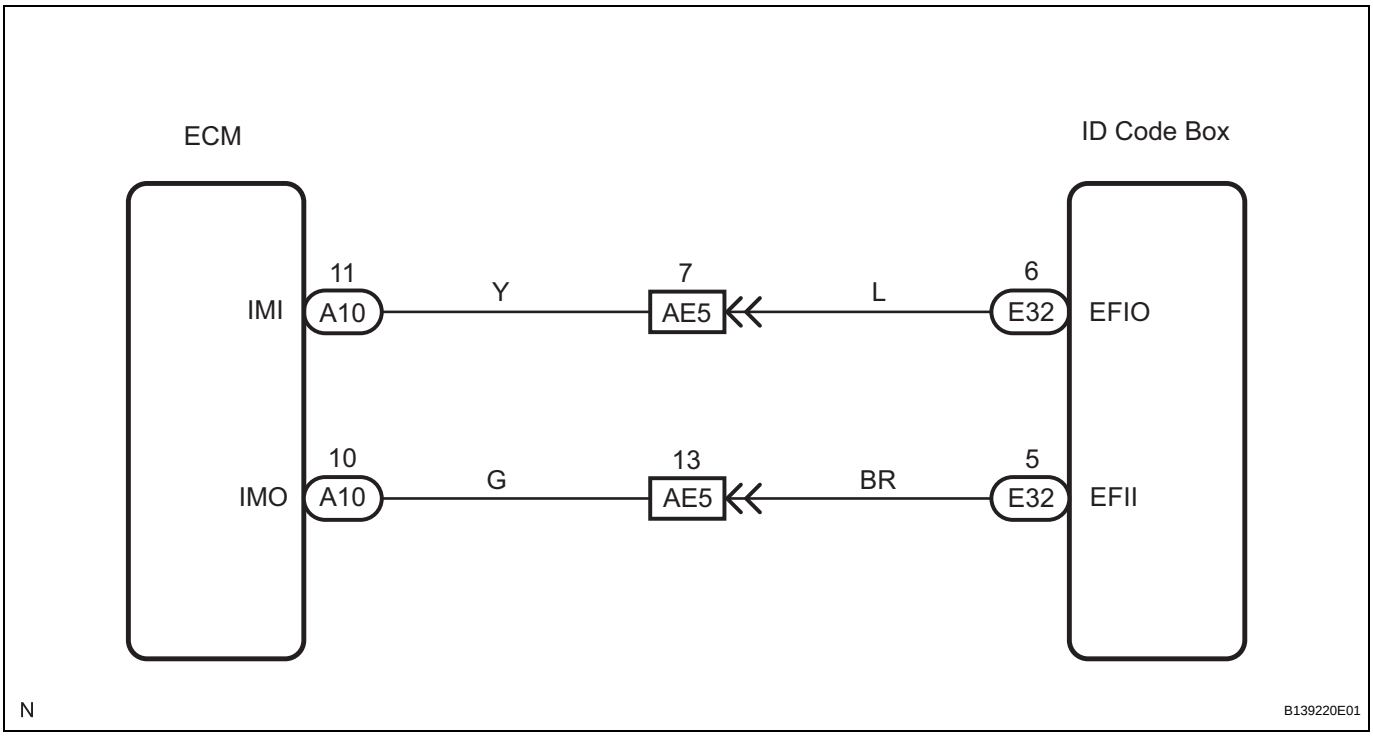

INSPECTION PROCEDURE

NOTICE:

- **If the ID code box is replaced, register the key and ECU communication ID (See page EI-9).**
- **If the ECM is replaced, register the ECU communication ID (See page EI-9).**

1	CHECK DTC OUTPUT

(a) Delete the DTCs (See page EI-25).
(b) Recheck for DTCs (See page EI-25).
Result

Result	Proceed to
B2799 output reoccurs	A

Result	Proceed to
B2799 output does not reoccur	B

B → **USE SIMULATION METHOD TO CHECK**

A

2 RE-REGISTER ECU COMMUNICATION ID

(a) Re-register the ECU communication ID (See page EI-9) between the ID code box and ECM.
(b) Check that the engine starts.
OK:
The engine starts.

OK → **END**

NG

3 CHECK HARNESS AND CONNECTOR (ID CODE BOX - ECM)

Wire Harness Side Connector Front View:

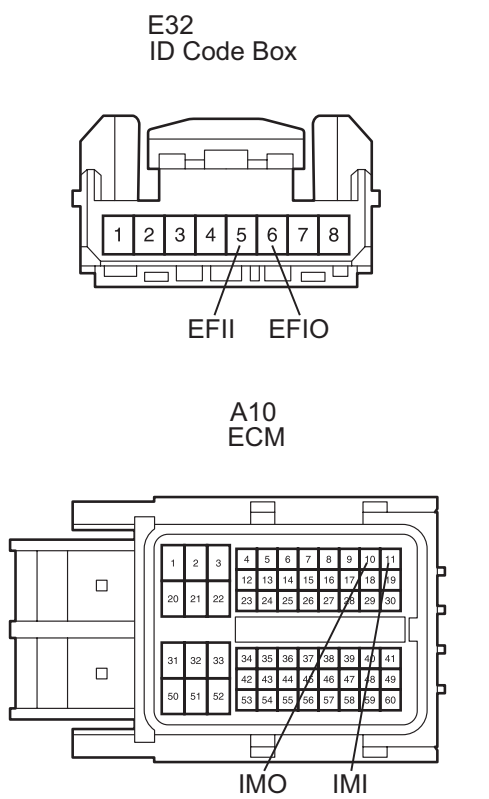

(a) Disconnect the E32 ID code box and A10 ECM connectors.
(b) Measure the resistance according to the value(s) in the table below.
Standard resistance

Tester Connection	Specified Condition
E32-5 (EFII) - A10-10 (IMO)	Below 1 Ω
E32-6 (EFIO) - A10-11 (IMI)	
E32-5 (EFII) - Body ground	10 kΩ or higher
E32-6 (EFIO) - Body ground	

NG → **REPAIR OR REPLACE HARNESS OR CONNECTOR**

OK

EI

4	REPLACE ECM

(a) Replace the ECM (See page ES-543).

NEXT

5	ECU COMMUNICATION ID REGISTRATION

(a) Register the ECU communication ID between the ID code box and ECM (See page EI-9).

EI

NEXT

6	CHECK DTC OUTPUT

(a) Delete the DTCs (See page EI-25).
(b) Recheck for DTCs (See page EI-25).
Result

Result	Proceed to
B2799 output reoccurs	A
B2799 output does not reoccur	B

B → END

A

REPLACE ID CODE BOX

ID Code Box Power Source Circuit

DESCRIPTION

This circuit provides power to operate the ID code box.

WIRING DIAGRAM

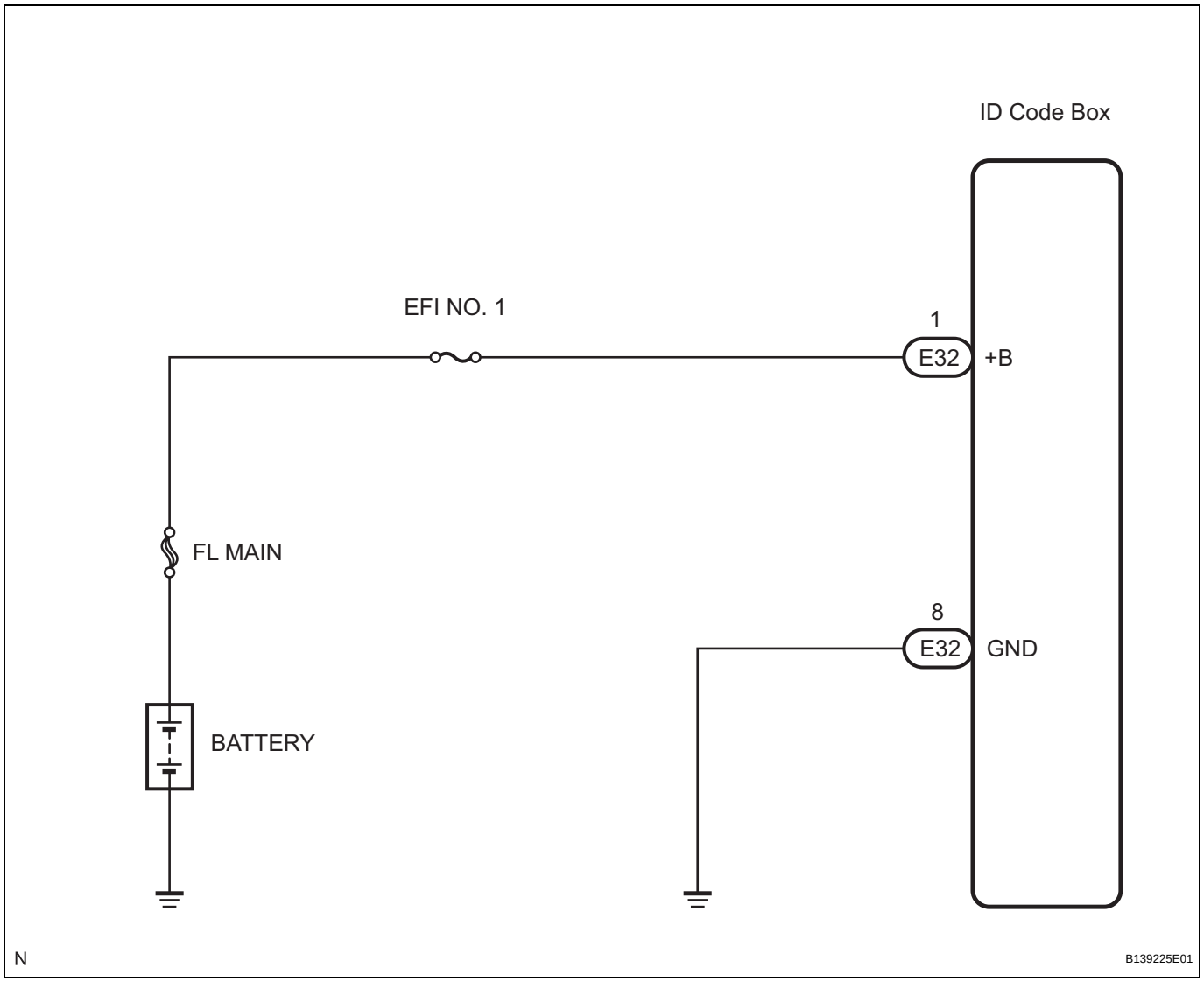

INSPECTION PROCEDURE

NOTICE:

If the ID code box is replaced, register the key and ECU communication ID (See page EI-9).

1	INSPECT FUSE (EFI NO. 1)

(a) Remove the EFI No. 1 fuse from the No. 1 engine room R/B.

(b) Measure the resistance of the fuse.

Standard resistance:

Below 1 Ω

NG → **REPLACE FUSE**

OK

2 CHECK HARNESS AND CONNECTOR (ID CODE BOX - BATTERY)

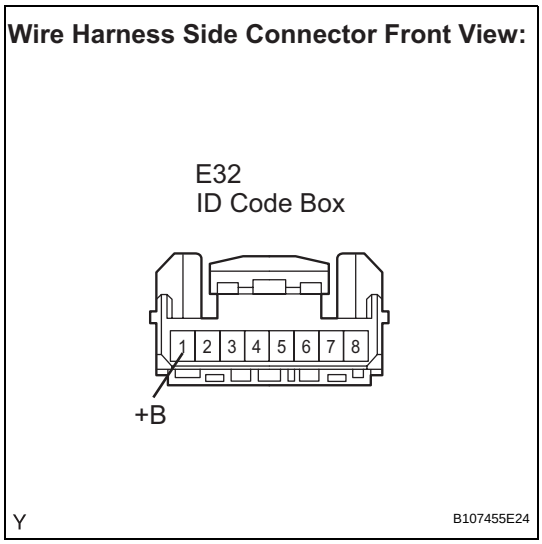

(a) Disconnect the E32 ID code box connector.
(b) Measure the voltage according to the value(s) in the table below.

Standard voltage

Tester Connection	Specified Condition
E32-1 (+B) - Body ground	10 to 14 V

NG → **REPAIR OR REPLACE HARNESS OR CONNECTOR**

OK

3 CHECK HARNESS AND CONNECTOR (ID CODE BOX - BODY GROUND)

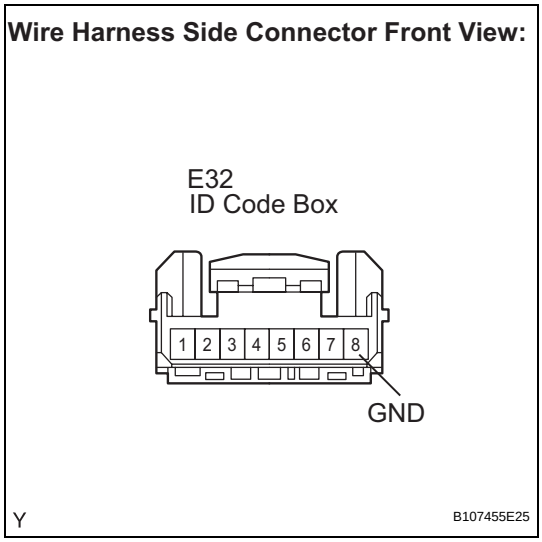

(a) Measure the resistance according to the value(s) in the table below.

Standard resistance

Tester Connection	Specified Condition
E32-8 (GND) - Body ground	Below 1 Ω

NG → **REPAIR OR REPLACE HARNESS OR CONNECTOR**

OK

PROCEED TO NEXT CIRCUIT INSPECTION SHOWN IN PROBLEM SYMPTOMS TABLE

Certification ECU Power Source Circuit

DESCRIPTION

This circuit provides power to operate the certification ECU.

WIRING DIAGRAM

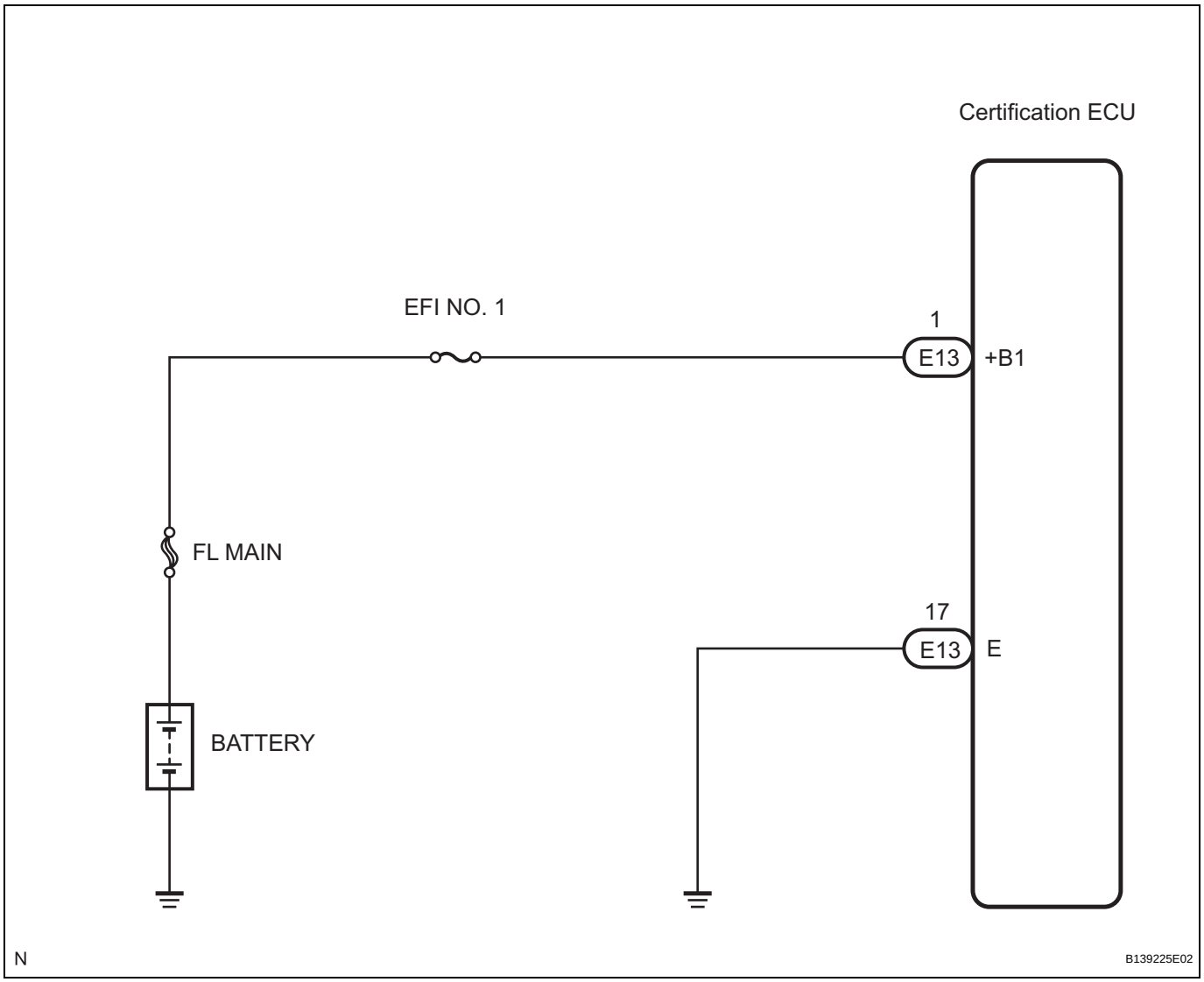

INSPECTION PROCEDURE

NOTICE:

If the certification ECU is replaced, register the key and ECU communication ID (See page EI-9).

1	INSPECT FUSE (EFI NO. 1)

(a) Remove the EFI No. 1 fuse from the No. 1 engine room R/B.

(b) Measure the resistance of the fuse.

Standard resistance:

Below 1 Ω

NG → **REPLACE FUSE**

OK

2 CHECK WIRE HARNESS (CERTIFICATION ECU - BATTERY)

Wire Harness Side Connector Front View:

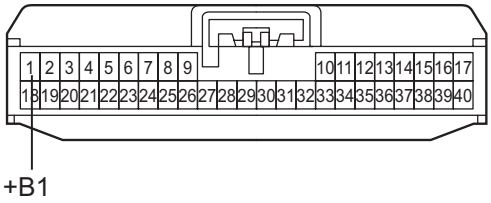

(a) Disconnect the E13 ECU connector.
(b) Measure the voltage according to the value(s) in the table below.
Standard voltage

Tester Connection	Specified Condition
E13-1 (+B1) - Body ground	10 to 14 V

NG → **REPAIR OR REPLACE HARNESS OR CONNECTOR**

OK

3 CHECK HARNESS AND CONNECTOR (CERTIFICATION ECU - BODY GROUND)

Wire Harness Side Connector Front View:

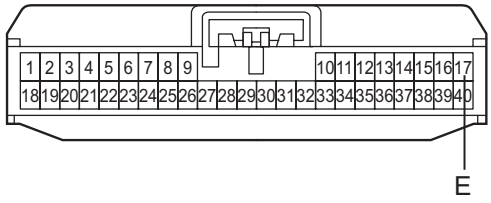

(a) Measure the resistance according to the value(s) in the table below.
Standard resistance

Tester Connection	Specified Condition
E13-17 (E) - Body ground	Below 1 Ω

NG → **REPAIR OR REPLACE HARNESS OR CONNECTOR**

OK

PROCEED TO NEXT CIRCUIT INSPECTION SHOWN IN PROBLEM SYMPTOMS TABLE

ROAD TEST

1. PROBLEM SYMPTOM CONFIRMATION

HINT:
The dynamic radar cruise control system has two cruise control modes: the constant speed control mode and vehicle-to-vehicle distance control mode.

- The vehicle-to-vehicle distance control mode is always selected when starting up the dynamic radar cruise control system.
- Operation of the constant speed control mode is the same as that for a conventional cruise control system.

CC

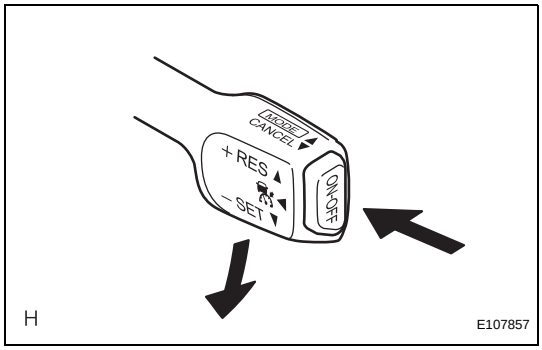

(a) Inspect the SET function.
  (1) Turn the main switch on.
  (2) Drive at the required speed between 45 km/h (27 mph) and 135 km/h (85 mph).
  (3) Push the cruise control main switch to - (COAST)/SET.
  (4) After releasing the switch, check that the vehicle cruises at the set speed.

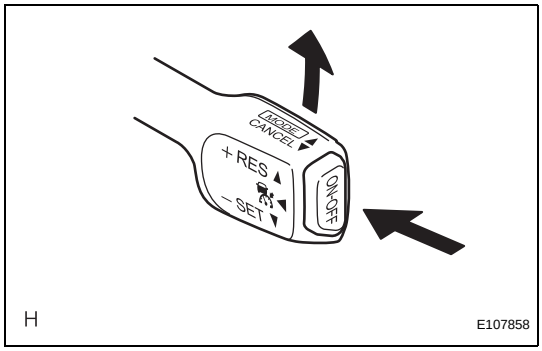

(b) Inspect the ACCELERATION function.
  (1) Turn the main switch on.
  (2) Drive at the required speed between 45 km/h (27 mph) and 135 km/h (85 mph).
  (3) Push the cruise control main switch to - (COAST)/SET.
  (4) Check that vehicle speed increases while the cruise control main switch is pushed to + (ACCEL)/RES (RESUME), and that the vehicle cruises at the newly set speed when the switch is released.
  (5) Push the cruise control main switch to + (ACCEL)/RES (RESUME) and then release it immediately. Check that vehicle speed increases* (tap-up control).
  HINT:
  *: Constant speed control mode: increases by 1.6 km/h (1.0 mph); vehicle-to-vehicle distance control mode: increases by 5 km/h (5 mph)

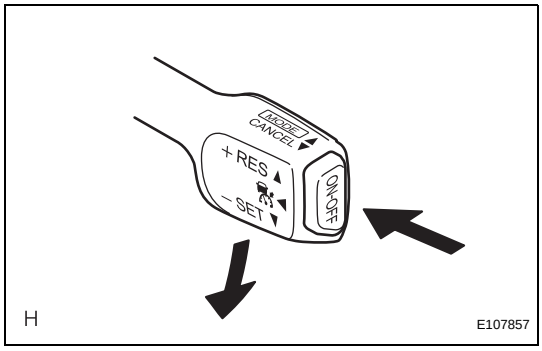

(c) Inspect the - (COAST) function.
  (1) Turn the main switch on.
  (2) Drive at the required speed between 45 km/h (27 mph) and 135 km/h (85 mph).
  (3) Push the cruise control main switch to - (COAST)/SET.
  (4) Check that vehicle speed decreases while the cruise control main switch is pushed to - (COAST)/SET, and the vehicle cruises at the newly set speed when the switch is released.

(5) Push the cruise control main switch to - (COAST)/SET, and then release it immediately. Check that vehicle speed decreases* (tap-down control).
HINT:
*: Constant speed control mode: decreases by 1.6 km/h (1.0 mph); vehicle-to-vehicle distance control mode: decreases by 5 km/h (5 mph).

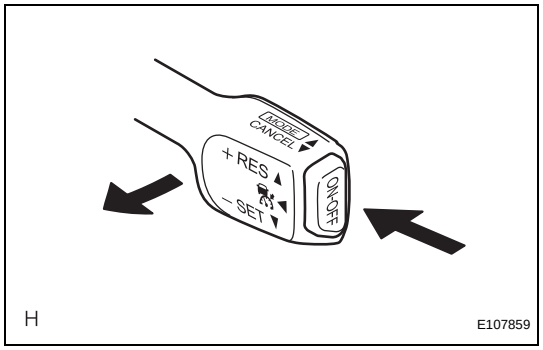

(d) Inspect the CANCEL function.
(1) Turn the main switch on.
(2) Drive at the required speed between 45 km/h (27 mph) and 135 km/h (85 mph).
(3) Push the cruise control main switch to - (COAST)/SET.
(4) When performing any one of the following, check that the cruise control system is canceled and that the normal driving mode is reset.
- Pulling the cruise control main switch to CANCEL
- Depressing the brake pedal
- The shift lever is moved from the D to the N position or the transmission is shifted to the 3rd, 2nd, or 1st gear with the shift lever in the S position
- Turning the main switch off

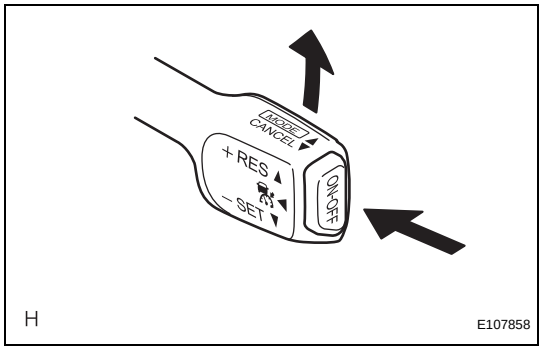

(e) Inspect the RES (RESUME) function.
(1) Turn the main switch on.
(2) Drive at the required speed between 45 km/h (27 mph) and 135 km/h (85 mph).
(3) Push the cruise control main switch to - (COAST)/SET.
(4) Cancel the cruise control system by performing any of the above operations (other than turning the main switch off).
(5) After pushing the cruise control main switch to + (ACCEL)/RES (RESUME) at a driving speed of more than 40 km/h (25 mph), check that the vehicle resumes the speed set prior to the cancellation.
HINT:
The stored vehicle speed is retained even if vehicle speed drops below 40 km/h (25 mph) once. The previously stored vehicle speed can be resumed by pushing the cruise control main switch to + (ACCEL)/RES (RESUME) when vehicle speed returned to approximately 40 km/h (25 mph) or more.

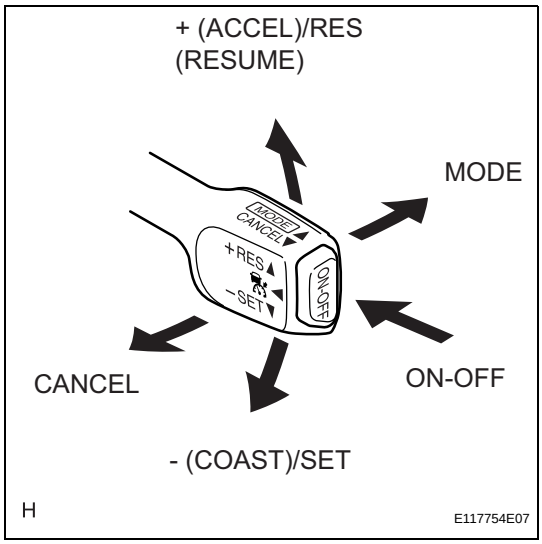

OPERATION CHECK

1. INPUT SIGNAL CHECK

(a) Connect the intelligent tester to the DLC3.

(b) Check the cruise control main switch using the DATA LIST function in the intelligent tester (ON-OFF, CANCEL, - (COAST)/SET, + (ACCEL)/RES (RESUME), and MODE).

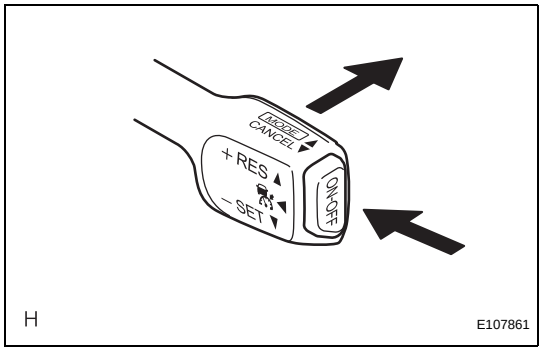

2. INSPECT MODE SWITCH

(a) Turn the engine switch on (IG).

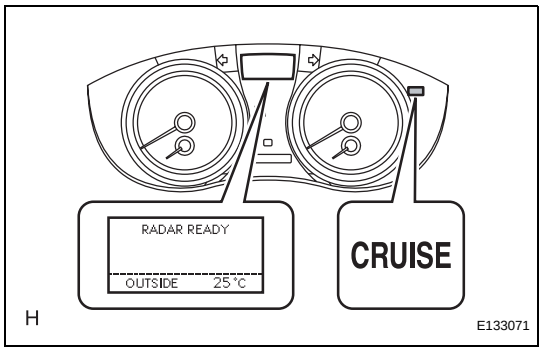

(b) Turn the cruise control main switch on. Then push the main switch to MODE for 1 second or more to change to the constant speed control mode.

NOTICE:

Do not push any other switches before pushing the main switch to MODE. If another switch is pushed, turn the main switch off and repeat the procedure above.

HINT:

If a malfunction is detected, turn the engine switch off and repeat the procedure above.

3. INSPECT STEERING PAD SWITCH ASSEMBLY

(a) Turn the engine switch on (IG).

(b) Turn the cruise control main switch on.

(c) Turn on the distance control switch of the steering pad switch.

(d) Check that the indication of the vehicle-to-vehicle distance, which is shown on the multi-information display on the combination meter, changes from long to middle to short in that order.

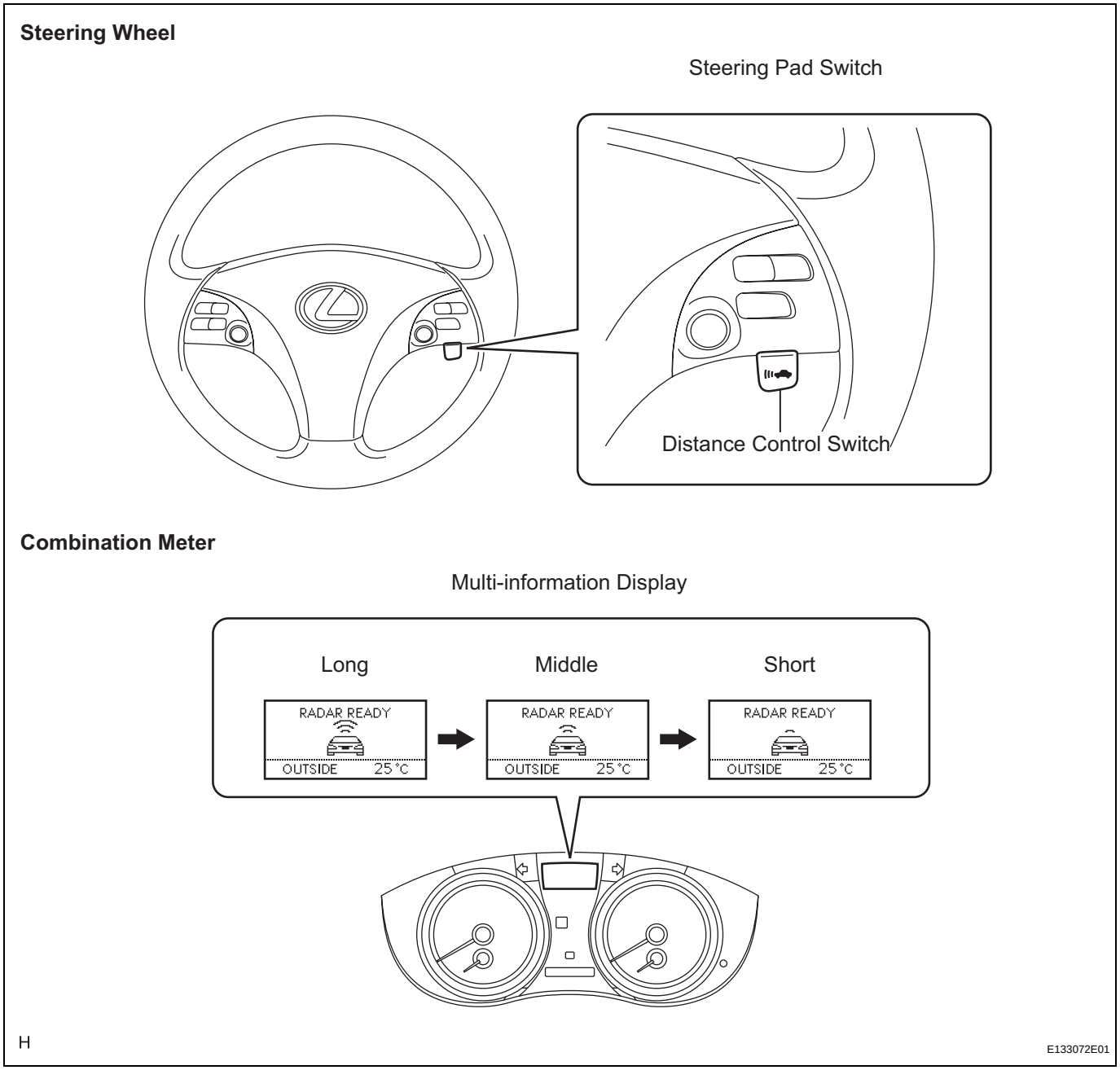

HINT:
The indication is automatically set to long each time the engine is started.

CC

PROBLEM SYMPTOMS TABLE

NOTICE:

- **When the distance control ECU and/or ECM are replaced with a new one, initialization must be performed.**
- **When the millimeter wave radar sensor is replaced with a new one, adjustment of the radar sensor beam axis must be performed.**

HINT:

- Use the table below to help determine the cause of the problem symptom. The potential causes of the symptoms are listed in order of probability in the "Suspected Area" column of the table. Check each symptom by checking the suspected areas in the order they are listed. Replace parts as necessary.
- Inspect the fuse and relay related to this system before inspecting the suspected areas below.

Dynamic Radar Cruise Control System

Symptom	Suspected Area	See page
Main switch cannot be turned ON. (CRUISE main indicator light on combination meter does not illuminate.)	1. Cruise control switch circuit	-
	2. CRUISE main indicator light circuit	-
	3. ECM	-
Vehicle speed setting cannot be done. (CRUISE main indicator light on combination meter illuminates when main switch is turned ON, but turns off when operating SET function.)	1. Cruise control switch circuit	-
	2. ECM	-
Vehicle speed setting cannot be done. (CRUISE main indicator light on combination meter illuminates when main switch is turned ON, and remains on when operating SET function.)	1. Cruise control switch circuit	-
	2. Stop light switch circuit	-
	3. Park/Neutral position switch circuit	-
	4. Vehicle speed sensor circuit	-
	5. Transmission control switch circuit	-
	6. Combination meter system	-
	7. ECM	-
While vehicle is driven with cruise control, the control is canceled. (CRUISE main indicator light remains on.)	1. Cruise control switch circuit	-
	2. Vehicle speed sensor circuit	-
	3. Stop light switch circuit	-
	4. Combination meter system	-
	5. Park/Neutral position switch circuit	-
	6. ECM	-
Hunting (Speed is not constant.)	1. Vehicle speed sensor circuit	-
	2. ECM	-
Vehicle speed setting cannot be canceled. (When coast, acceleration, resume, set speed change function is operated with control switch.)	1. Cruise control switch circuit	-
	2. ECM	-
Erroneous detection or lost sight of the vehicle ahead.	1. Clean radar sensor with soft cloth, etc.	-
	2. Improper aiming of sensor beam axis	-
Skid control buzzer does not sound.	1. Buzzer circuit	-
	2. VSC system	-
	3. Distance control ECU power source circuit	-
	4. Distance control ECU	-
	5. ECM	-

Symptom	Suspected Area	See page
Set distance cannot be changed.	1. Combination meter system	-
	2. Distance control switch circuit	-
	3. Distance control ECU	-
	4. ECM	-
No information on the display	1. Combination meter system	-
	2. ECM	-
No brake control (when decelerating)	1. VSC system	-
	2. Distance control ECU power source circuit	-
	3. Distance control ECU	-
	4. ECM	-
Constant speed mode cannot be turned on.	1. Cruise control switch circuit	-
	2. Combination meter system	-
	3. ECM	-
Vehicle speed cannot be canceled with wiper HI. (Including automatic wiper)	1. Wiper switch circuit	-
	2. Wiper signal circuit	-
	3. Washer signal circuit	-
	4. Distance control ECU	-
	5. ECM	-
When the washer is used, cruise control is canceled.	1. Washer motor circuit	-
	2. Washer signal circuit	-
	3. Distance control ECU	-
	4. ECM	-
Unable to adjust (complete) beam axis of millimeter wave radar sensor.	1. Check position, distance and angle of reflector	-
	2. Check installation of millimeter wave radar sensor	-
	3. Millimeter wave radar sensor	-
	4. Distance control ECU	-
	5. ECM	-
Cannot change from constant speed control mode to vehicle-to-vehicle distance control mode.	1. Cruise control switch circuit	-
	2. Millimeter wave radar sensor power source circuit	-
	3. Distance control ECU	-
	4. ECM	-
The CRUISE main indicator light remains blinking.	1. TC and CG terminal circuit	-
	2. If the symptoms still occur after the above area has been inspected and has proven to be normal, replace the ECM.	-

TERMINALS OF ECU

1. CHECK DISTANCE CONTROL ECU

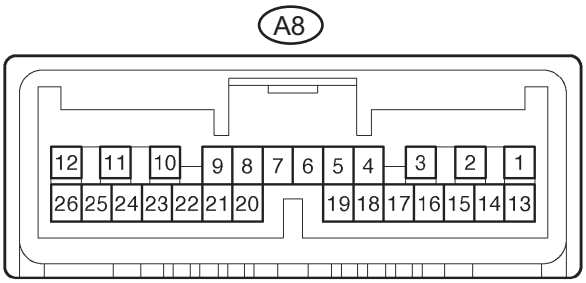

N I034896E13

CC

Symbols (Terminal No.)	Wiring Color	Terminal Description	Condition	Specified Condition
A8-1 (B) - A8-12 (GND)	P - GR	Battery	Always	10 to 14 V
A8-8 (CANH) - A8-12 (GND)	GR- GR	CAN communication signal	CAN communication circuit	Pulse generation
A8-9 (CANL) - A8-12 (GND)	BR - GR	CAN communication signal	CAN communication circuit	Pulse generation
A8-10 (SGND) - Body ground	W-B - Body ground	Ground	Always	Below 1 Ω
A8-12 (GND) - Body ground	GR - Body ground	Ground	Always	Below 1 Ω
A8-13 (IGB) - A8-12 (GND)	V - GR	Engine switch on signal	Engine switch off	Below 1 V
A8-13 (IGB) - A8-12 (GND)	V - GR	Engine switch on signal	Engine switch on (IG)	10 to 14 V
A8-22 (LRDD) - A8-10 (SGND)	L - W-B	Millimeter wave radar sensor input signal	Engine switch on (IG)	Pulse generation (see waveform 1)
A8-23 (LRRD) - A8-10 (SGND)	G - W-B	Millimeter wave radar sensor output signal	Engine switch on (IG)	Pulse generation (see waveform 2)
A8-16 (MODE) - A8-12 (GND)	Y - GR	Steering pad switch signal (Distance control switch signal)	Engine switch on (IG), Steering pad switch signal ON	0 to 2 V
A8-16 (MODE) - A8-12 (GND)	Y - GR	Steering pad switch signal (Distance control switch signal)	Engine switch on (IG), Steering pad switch signal OFF	10 to 14 V

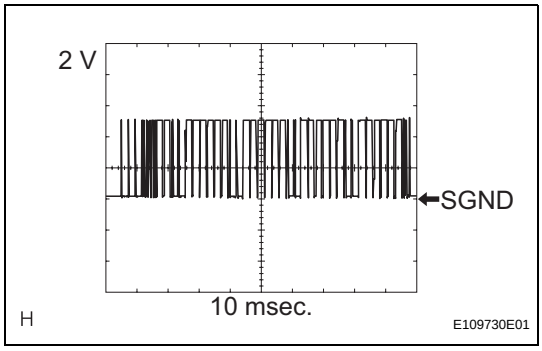

(a) Reference: waveform 1

Item	Contents
Terminal	LRDD - SGND
Tool setting	2 V/DIV., 10 msec./DIV.
Vehicle condition	Engine switch on (IG)

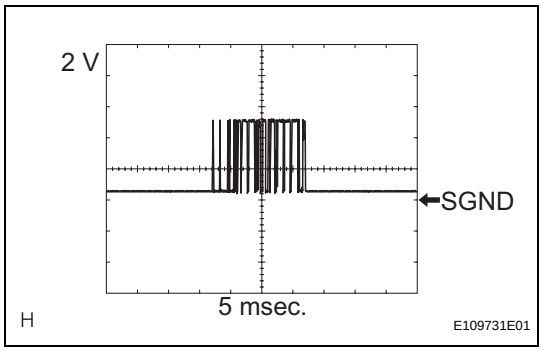

(b) Reference: waveform 2

Item	Contents
Terminal	LRRD - SGND
Tool setting	2 V/DIV., 5 msec./DIV.
Vehicle condition	Engine switch on (IG)

2. CHECK ECM

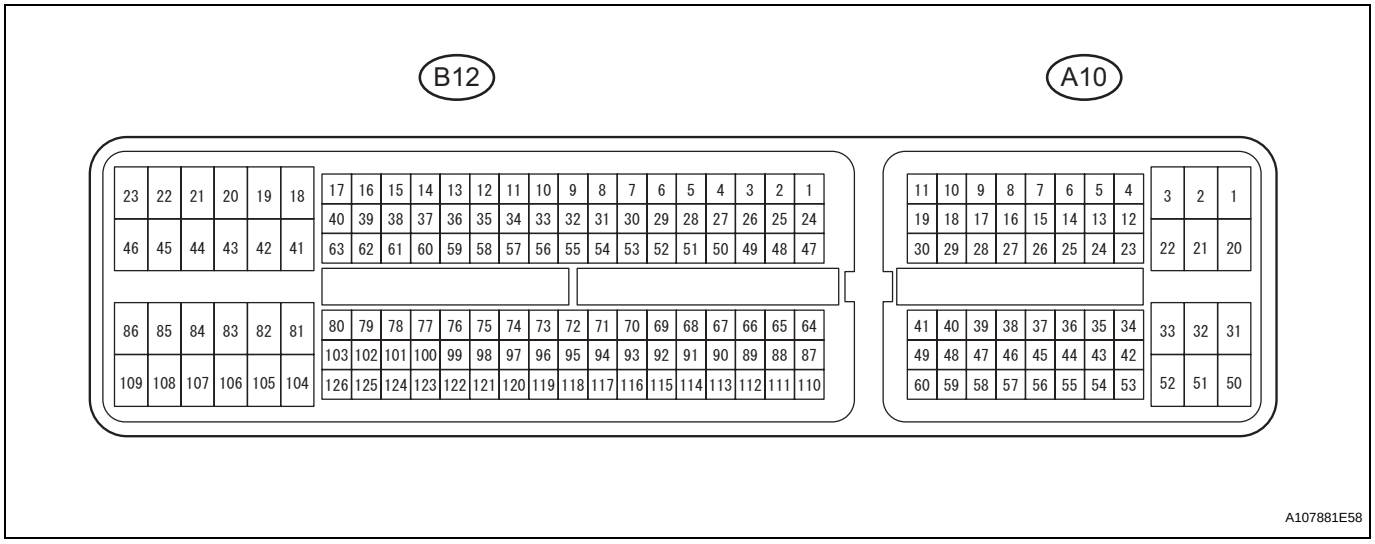

Symbols (Terminal No.)	Wiring Color	Terminal Description	Condition	Specified Condition
A10-27 (TC) - B12-81 (E1)	P - W-B	Ground	Engine switch on (IG)	10 to 14 V
A10-27 (TC) - B12-81 (E1)	P - W-B	Ground	Connect terminals TC and CG of DLC3	Below 1 V
A10-35 (ST1-) - B12-81 (E1)	GR - W-B	Stop light signal	Engine switch on (IG), Brake pedal depressed (Stop light switch on)	Below 1 V
A10-35 (ST1-) - B12-81 (E1)	GR - W-B	Stop light signal	Engine switch on (IG), Brake pedal released (Stop light switch off)	10 to 14 V
A10-36 (STP) - B12-81 (E1)	W - W-B	Stop light signal	Engine switch on (IG), Brake pedal released (Stop light switch off)	Below 1 V
A10-36 (STP) - B12-81 (E1)	W - W-B	Stop light signal	Engine switch on (IG), Brake pedal depressed (Stop light switch on)	10 to 14 V
A10-37 (CCHG) - B12-81 (E1)	R - W-B	Distance control switch signal	Engine switch on (IG), Cruise control main switch on, MODE switch on	Below 1 V
A10-37 (CCHG) - B12-81 (E1)	R - W-B	Distance control switch signal	Engine switch on (IG), Cruise control main switch on, MODE switch off	10 to 14 V
A10-38 (LGND) - Body ground	BR - Body ground	Ground	Always	Below 1 Ω
A10-40 (CCS) - B12-81 (E1)	W - W-B	Cruise control main switch signal	Engine switch on (IG)	10 to 14 V
A10-40 (CCS) - B12-81 (E1)	W - W-B	Cruise control main switch signal	Engine switch on (IG), CANCEL switch on	6.6 to 10.1 V
A10-40 (CCS) - B12-81 (E1)	W - W-B	Cruise control main switch signal	Engine switch on (IG), -(COAST)/SET switch on	4.5 to 7.1 V

Symbols (Terminal No.)	Wiring Color	Terminal Description	Condition	Specified Condition
A10-40 (CCS) - B12-81 (E1)	W - W-B	Cruise control main switch signal	Engine switch on (IG), + (ACCEL)/RES (RESUME) switch on	2.3 to 4.0 V
A10-40 (CCS) - B12-81 (E1)	W - W-B	Cruise control main switch signal	Engine switch on (IG), Main switch on	Below 1 V
B12-81 (E1) - Body ground	W-B - Body ground	Ground	Always	Below 1 Ω

If the value is not within the specified range, the ECM may have a malfunction.

3. CHECK MILLIMETER WAVE RADAR SENSOR

CC

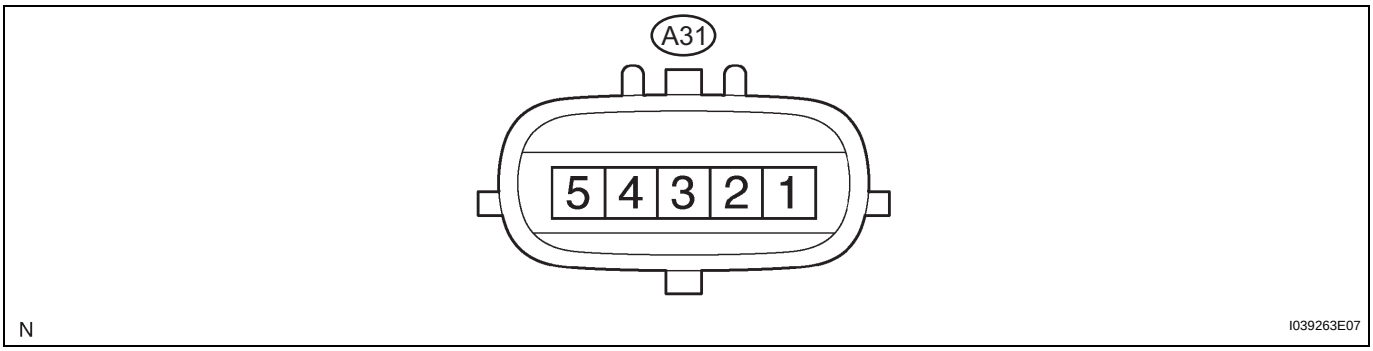

Symbols (Terminals No.)	Wiring Color	Terminal Description	Condition	Specified Condition
A31-1 (LGND) - Body ground	BR - Body ground	Ground (Distance signal)	Always	Below 1 Ω
A31-2 (SGND) - Body ground	BR - Body ground	Ground	Always	Below 1 Ω
A31-3 (LRDD) - A31-2 (SGND)	L - BR	Millimeter wave radar sensor output signal	Engine switch on (IG)	Pulse generation (see waveform 1)
A31-4 (LRRD) - A31-2 (SGND)	G - BR	Millimeter wave radar sensor input signal	Engine switch on (IG)	Pulse generation (see waveform 2)
A31-5 (IGB) - A31-2 (SGND)	V - BR	Power source	Engine switch on (IG)	10 to 14 V

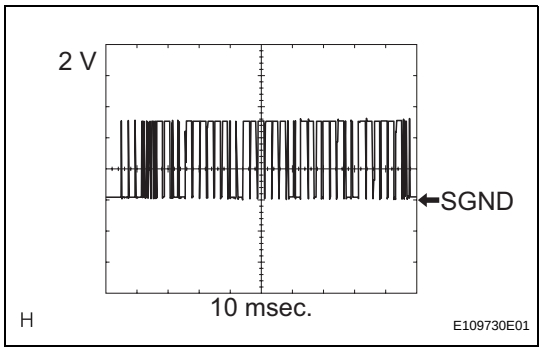

(a) Reference: waveform 1

Item	Contents
Terminal	LRDD - SGND
Tool setting	2 V/DIV., 10 msec./DIV.
Vehicle condition	Engine switch on (IG)

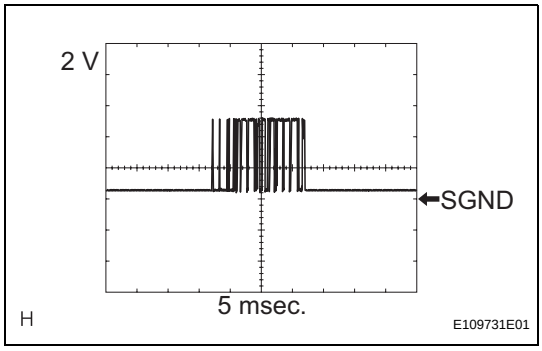

(b) Reference: waveform 2

Item	Contents
Terminal	LRDD - Body ground
Tool setting	2 V/DIV., 10 msec./DIV.
Vehicle condition	Engine switch on (IG)

DIAGNOSIS SYSTEM

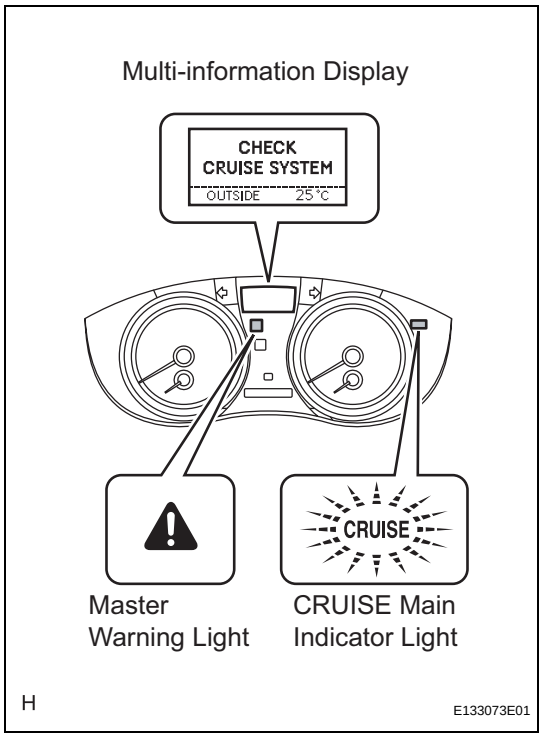

1. DIAGNOSIS FUNCTION

(a) The diagnosis function makes the master warning light and the multi-information display come on, and the CRUISE main indicator light blinks as shown in the illustration. When a malfunction occurs in the dynamic radar cruise control system, the DTCs are stored in the ECM.

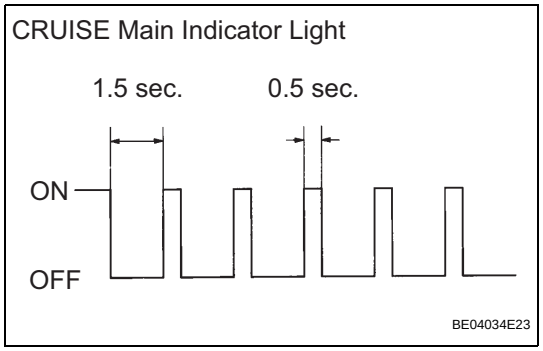

NOTICE:

- **The master warning light goes off if the system returns to normal condition.**
- **Since the stored data in the ECM is erased by disconnecting the EFI and ETCS fuses or the battery terminal, do not disconnect them until the inspection has been completed.**

2. DESCRIPTION

(a) The ECM controls the dynamic radar cruise control system of the vehicle. The data and DTCs relating to the dynamic radar cruise control system can be read from the DLC3 of the vehicle. If either DTC or CRUISE OK is not displayed on the multi-information display on the combination meter when checking for DTCs, there may be a problem with either the combination meter or the CAN communication systems. Use the intelligent tester to check and solve the problem.

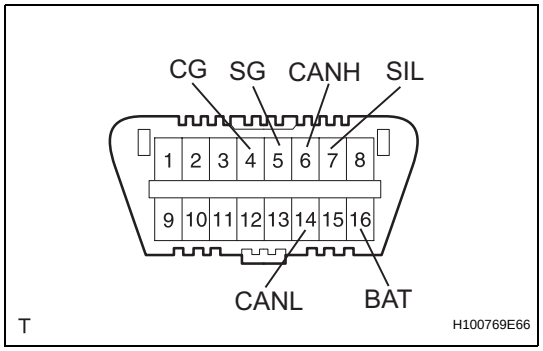

3. CHECK DLC3

(a) The ECM uses ISO 15765-4 for communication. The terminal arrangement of the DLC3 complies with SAE J1962 and matches the ISO 15765-4 format. If the result is not as specified, the DLC3 may have a malfunction. Repair or replace the harness or connector.

Symbols (Terminal No.)	Terminal Description	Condition	Specified Condition
SIL (7) - SG (5)	Bus "+" line	During transmission	Pulse generation
CG (4) - Body ground	Chassis ground	Always	Below 1 Ω

Symbols (Terminal No.)	Terminal Description	Condition	Specified Condition
SG (5) - Body ground	Signal ground	Always	Below 1 Ω
BAT (16) - Body ground	Battery positive	Always	11 to 14 V
CANH (6) - CANL (14)	CAN bus line	Engine switch off*	54 to 69 Ω
CANH (6) - CG (4)	HIGH-level CAN bus line	Engine switch off*	200 Ω or higher
CANL (14) - CG (4)	LOW-level CAN bus line	Engine switch off*	200 Ω or higher
CANH (6) - BAT (16)	HIGH-level CAN bus line	Engine switch off*	6 kΩ or higher
CANL (14) - BAT (16)	LOW-level CAN bus line	Engine switch off*	6 kΩ or higher

NOTICE:

***: Before measuring the resistance, leave the vehicle as is for at least 1 minute and do not operate the engine switch, any other switches or the doors.**

HINT:

Connect the cable of the intelligent tester to the DLC3, turn the engine switch on (IG) and attempt to use the tester. If the display indicates that a communication error has occurred, there is a problem either with the vehicle or with the tester.

- If communication is normal when the tester is connected to another vehicle, inspect the DLC3 of the original vehicle.
- If communication is still not possible when the tester is connected to another vehicle, the problem may be in the tester itself. Consult the Service Department listed in the tester's instruction manual.

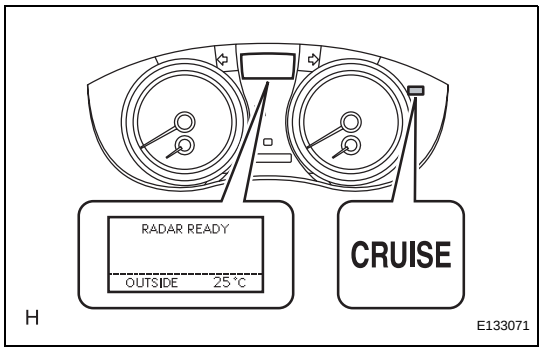

4. CHECK INDICATOR

(a) Turn the engine switch on (IG).

(b) Check that the CRUISE main indicator light and RADAR READY indicator come on when the main switch ON-OFF button is pushed on, and that the indicator light and the indicator go off when the ON-OFF button is pushed off.

HINT:

- If the indicator check result shows a problem, proceed to troubleshooting for the combination meter section (See page ME-14).
- If a malfunction occurs in the vehicle speed sensors, the stop light switch, or other related parts during cruise control driving, the ECU actuates AUTO CANCEL of the cruise control and blinks the CRUISE main indicator light. This indicator light informs the driver of the malfunction. At the same time, the malfunction is stored as a diagnostic trouble code.

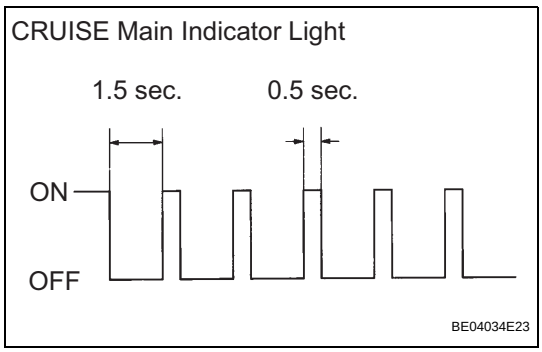

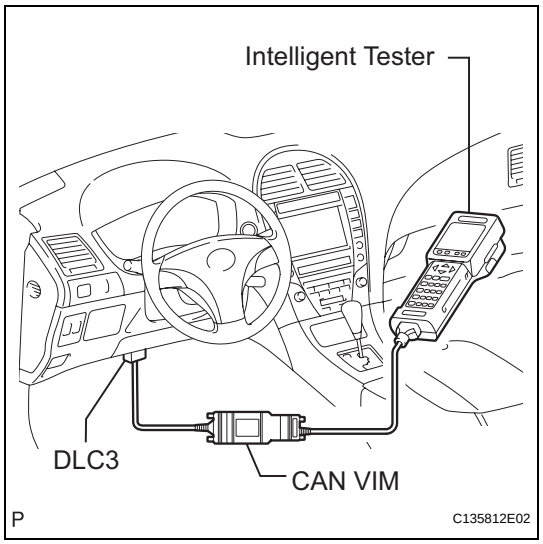

DTC CHECK / CLEAR

1. CHECK DTC

(a) Connect the intelligent tester to the DLC3.

(1) Connect the intelligent tester to the Controller Area Network Vehicle Interface Module (CAN VIM). Then connect the CAN VIM to the Data Link Connector 3 (DLC3).

(b) Turn the engine switch on (IG).

(c) Read the DTCs by following the prompts on the tester screen.

HINT:

Refer to the intelligent tester operator's manual for further details.

2. CLEAR DTC

(a) Connect the intelligent tester to the DLC3.

(b) Turn the engine switch on (IG).

(c) Operate the intelligent tester to erase the codes.

HINT:

Refer to the intelligent tester operator's manual for further details.

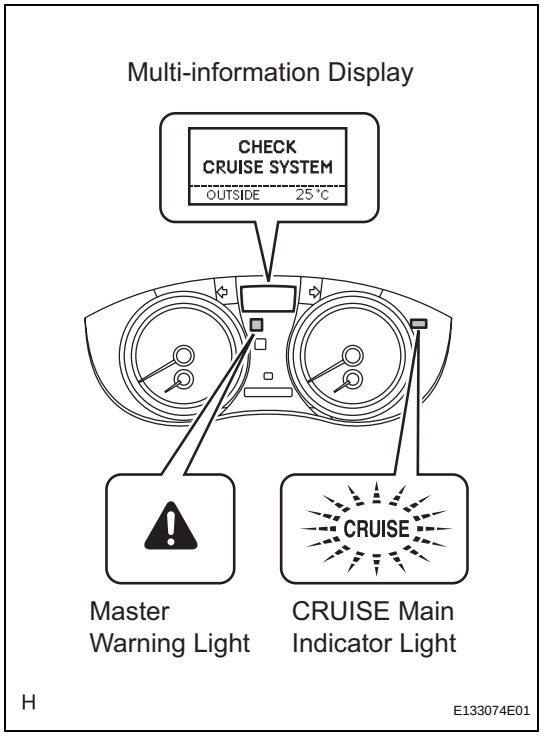

FAIL-SAFE CHART

1. Constant speed control mode and vehicle-to-vehicle distance control mode:

If the following conditions are detected while the dynamic radar cruise control system is in operation, the system clears the stored vehicle speed in the ECM and cancels the dynamic radar cruise control operation.

Vehicle Condition	Auto Cancel Condition	Fail-safe Deactivation Condition
• CRUISE main indicator light blinks • Master warning light comes on • "Check Cruise System" is displayed • "Pong" warning sound is heard	• Open or short in stop light switch circuit • Problem with vehicle speed signal • Problem with throttle position sensor and motor	Turn cruise control main switch ON again

CC

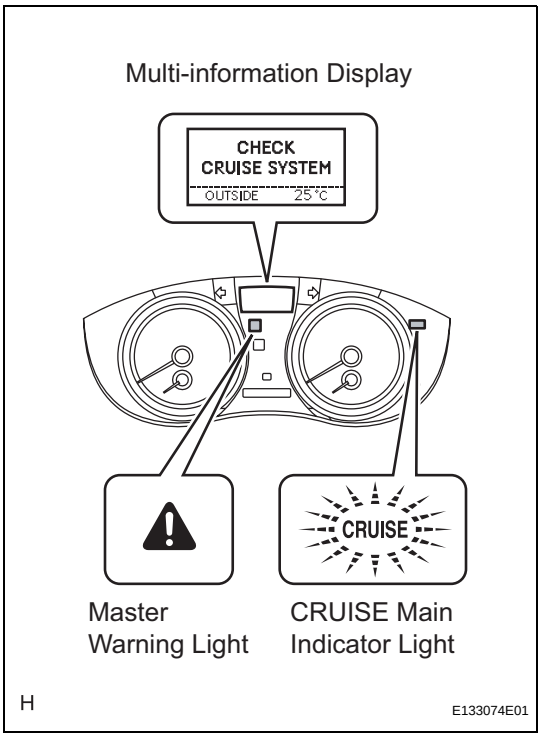

2. Vehicle-to-vehicle distance control mode:
If the following conditions are detected while the dynamic radar cruise control system is in operation, the system clears the stored vehicle speed in the ECM and cancels the dynamic radar cruise control operation.

Vehicle Condition	Auto Cancel Condition	Fail-safe Deactivation Condition
• CRUISE main indicator light blinks • Master warning light comes on • "Check Cruise System" is displayed • "Pong" warning sound is heard	• There is problem with millimeter wave radar sensor • Beam axis of millimeter wave radar sensor deviates	Engine switch on (IG) again

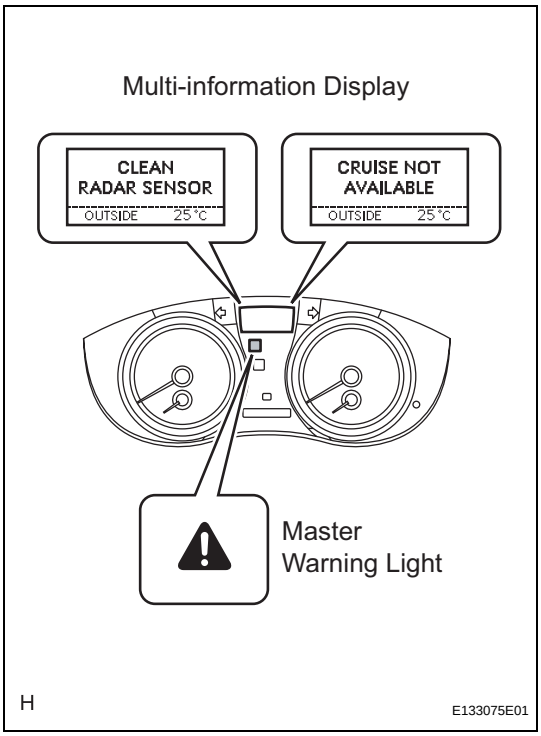

3. Vehicle-to-vehicle distance control mode:
If the following conditions are detected while the dynamic radar cruise control system is in operation, the system maintains the stored vehicle speed in the ECM and cancels the dynamic radar cruise control operation.

Vehicle Condition	Auto Cancel Condition	Fail-safe Deactivation Condition
• Master warning light comes on • "Clean Radar Sensor" is displayed • "Pong" warning sound is heard	There is dirt on millimeter wave radar sensor	Recover from condition on left (RESUME operation is possible after recovery)

Vehicle Condition	Auto Cancel Condition	Fail-safe Deactivation Condition
• Master warning light comes on • "Cruise not Available" is displayed • "Pong" warning sound is heard	• Wiper switch is in HI position • Millimeter wave radar sensor is least sensitive because of bad weather such as rain, fog, snow, and sandstorms	• Recover from condition on left (RESUME operation is possible after recovery) • Turn cruise control main switch ON again

4. Constant speed control mode and vehicle-to-vehicle distance control mode:

If the following conditions are detected while the dynamic radar cruise control system is in operation, the system clears the stored vehicle speed and cancels the dynamic radar cruise control operation.

Vehicle Condition	Auto Cancel Condition	Fail-safe Deactivation Condition
CRUISE main indicator light goes off	• Vehicle speed is lower than low speed limit (approx. 40 km/h (25 mph)) while running with cruise control on • Vehicle speed is lower than stored vehicle speed by 16 km/h (1.0 mph) or more while running with cruise control on	• Push the cruise control main switch to RESUME/ACCEL

DATA LIST / ACTIVE TEST

1. READ DATA LIST

HINT:
Using the intelligent tester's DATA LIST allows switch, sensor, actuator, and other item values to be read without removing any parts. Reading the DATA LIST early in troubleshooting is one way to save time.

(a) Connect the intelligent tester to the DLC3.
(b) Turn the engine switch on (IG).
(c) Read the DATA LIST according to the display on the tester.

ECM (Cruise control):

CC

Tester Display	Measurement Item/Range	Normal Condition	Diagnostic Note
ACCEL REQUEST	Accelerator request signal / min.: -2,621.44 k/h/s, max.: 2,621.36 k/h/s	No vehicle in front	-
VEHICLE DISTANC	Millimeter wave radar sensor / min.: 0 m (0 ft), max.: 255 m (836.65 ft)	Distance to vehicle in front	-
L/C OPTION FLAG	Dynamic radar cruise option flag / NO or YES	YES: Dynamic radar cruise control system can be used NO: Dynamic radar cruise control system cannot be used	-
DISTANCE TIME	Vehicle distance time setting condition / SHRT, MID, LONG, NO	Vehicle-to-vehicle distance selected by steering pad switch (distance control switch)	-
O/D CUT RQST	O/D cut request / NOT REQ or REQUEST	NOT REQ: Idling	-
3RD SHIFT DOWN	Shift down request to 3rd gear / NOT REQ or REQUEST	NOT REQ: Idling	-
4TH SHIFT DOWN	Shift down request to 4th gear / NOT REQ or REQUEST	NOT REQ: Idling	-
ALARM RQST	Alarm request signal / NOT REQ or REQUEST	REQUEST: When beeping NOT REQ: When not beeping	-
THROTTLE CLOSE	All throttle close request / NOT REQ or REQUEST	ON: REQUEST OFF: NOT REQUEST	-
BRAKE CTRL RQST	Brake control request / NOT REQ or REQUEST	ON: REQUEST OFF: NOT REQUEST	-
TARG DECL SLOPE	Cruise target deceleration slope / 0.03, 0.06, 0.11, 0.15	0.03, 0.06 0.11, 0.15	-
VEHICLE SPD	Vehicle speed sensor / min.: 0 km/h (0 mph), max.: 255 km/h (158 mph)	Actual vehicle speed	-
MEMORY SPD	Cruise control memorized speed / min.: 36 km/h (22.5 mph), max.: 200 km/h (125 mph)	Memorized speed: Cruise control activated	-
THROTTLE	Throttle opening angle / min.: 0°, max.: 125°	Actual demanded throttle angle	-
CRUISE CONTROL	Cruise control system active condition / ON or OFF	ON: Cruise control activated OFF: Cruise control deactivated	-
MAIN SW (MAIN)	Main switch signal (Main CPU) / ON or OFF	ON: Main switch on OFF: Main switch off	1
CCS READY M	Cruise control system standby condition (Main CPU) / ON or OFF	Each time main switch is pushed, ON/OFF changes	1
CCS INDICATOR M	Cruise indicator signal (Main CPU) / ON or OFF	ON: "CRUISE" on OFF: "CRUISE" off	3

Tester Display	Measurement Item/Range	Normal Condition	Diagnostic Note
CANCEL SW	CANCEL switch signal / ON or OFF	ON: CANCEL switch on OFF: CANCEL switch off	-
SET/COAST SW	SET/COAST switch signal / ON or OFF	ON: - (COAST)/SET switch on OFF: - (COAST)/SET switch off	-
RES/ACC SW	RES/ACC switch signal / ON or OFF	ON: + (ACCEL)/RES (RESUME) switch on OFF: + (ACCEL)/RES (RESUME) switch off	-
STP LIGHT SW M	Stop light switch signal (Main CPU) / ON or OFF	ON: Brake pedal depressed OFF: Brake pedal released	-
CCS OPER STATUS	Cruise control condition / ON or OFF	ON: Cruise control operated OFF: Cruise control operation stopped	-
VSC FAIL SAFE	VSC fail-safe flag / ON or OFF	-	-

HINT:
- 1 is OK, but 2 is NG → ECM failure
- 2 is OK, but 3 is NG → DTC output or ECM failure
- 1 is OK, but CRUISE main indicator light does not illuminate → Cruise main indicator light, wire harness, or ECM failure

2. ACTIVE TEST

HINT:
Performing the intelligent tester's ACTIVE TEST allows relays, VSVs, actuators, and other items to be operated without removing any parts. Performing the ACTIVE TEST early in troubleshooting is one way to save time. The DATA LIST can be displayed during the ACTIVE TEST.

(a) Connect the intelligent tester to the DLC3.
(b) Turn the engine switch on (IG).
(c) Perform the ACTIVE TEST according to the display on the tester.
HINT:
The engine switch must be turned on (IG) to proceed to the ACTIVE TEST using the intelligent tester.

combination meter (Meter ECU)

Tester Display	Test Part	Control Range	Control Range
CRUISE INDIC	Turns CRUISE main indicator light	ON / OFF	-

DIAGNOSTIC TROUBLE CODE CHART

If a trouble code is displayed during the DTC check, check the trouble areas listed for that code in the table below and proceed to the appropriate page.

NOTICE:

- **When the distance control ECU and/or ECM are replaced with a new one, initialization must be performed.**
- **When the millimeter wave radar sensor is replaced with a new one, adjustment of the radar sensor beam axis must be performed.**

Dynamic radar cruise control system

CC

DTC Code	Detection Item	Trouble Area	See page
P0500	Vehicle Speed Sensor Malfunction	-Vehicle speed sensor -Vehicle speed sensor signal circuit -Combination meter assembly -ECM	CC-68
P0503	Vehicle Speed Sensor "A" Intermittent / Erratic / High	-Vehicle speed sensor -Vehicle speed sensor signal circuit -Combination meter assembly -ECM	CC-68
P0571	Brake Switch "A" Circuit	-Stop light switch -Stop light switch circuit -ECM	CC-69
P0607	Control Module Performance	-ECM (This DTC indicates malfunction in ECM. When this DTC is output, it is necessary to replace ECM)	CC-72
P1570	Radar Sensor Malfunction	-Millimeter wave radar sensor	CC-73
P1572	Improper Aiming of Radar Sensor Beam Axis	-Millimeter wave radar sensor	CC-74
P1575	Warning Buzzer Malfunction	-Skid control buzzer -Skid control buzzer circuit -ABS & traction actuator (Skid control ECU)	CC-75
P1578	Brake System Malfunction	-VSC system	CC-76
P1615	Communication Error from Distance Control ECU to ECM	-Communication circuit -Distance control ECU -ECM	CC-77
P1616	Communication Error from ECM to Distance Control ECU	-Communication circuit -Distance control ECU -ECM	CC-78
P1617	Distance Control ECU Malfunction	-Distance control ECU	CC-79
P1630	Communication Error from VSC to ECM	-Communication circuit -ABS & traction actuator (Skid control ECU) -ECM	CC-81
P1631	Communication Error from ECM to VSC	-Communication circuit -ECM -ABS & traction actuator (Skid control ECU)	CC-82
U0100	Lost Communication with ECM/ PCM "A"	-Communication circuit -ECM -Distance control ECU	CC-78

DTC Code	Detection Item	Trouble Area	See page
U0100	Lost Communication with ECM/ PCM "A"	-Communication circuit -ECM -ABS & traction actuator (Skid control ECU)	CC-82
U0122	Lost Communication with Vehicle Dynamics Control Module	-Communication circuit -ABS & traction actuator (Skid control ECU) -ECM	CC-81
U0123	Communication Error of Yaw Rate Sensor	-Communication circuit -Yaw rate sensor -Distance control ECU -ECM	CC-83
U0126	Lost Communication with Steering Angle Sensor Module	-Communication circuit -Steering angle sensor -Distance control ECU -ECM	CC-84
U0235	Lost Communication with Cruise Control Front Distance Range Sensor	-Communication circuit -Millimeter wave radar sensor -Distance control ECU	CC-85
U1101	Lost Communication with Distance Control ECU	-Communication circuit -Distance control ECU -ECM	CC-77
U1102	Lost Communication with Radar Sensor	-Communication circuit -Millimeter wave radar sensor -Distance control ECU	CC-88

DTC	P0500	Vehicle Speed Sensor Malfunction

DTC	P0503	Vehicle Speed Sensor "A" Intermittent / Erratic / High

DESCRIPTION

Refer to DTC P0500 (See page ES-275).

DTC No.	DTC Detection Condition	Trouble Area
P0500	The vehicle speed signal from the vehicle speed sensor is cut for 0.14 sec. or more while cruise control is in operation	• Vehicle speed sensor • Vehicle speed sensor signal circuit • Combination meter assembly • ECM
P0503	Momentary interruption and noise are detected when a rapid change of vehicle speed occurs while cruise control is in operation	• Vehicle speed sensor • Vehicle speed sensor signal circuit • Combination meter assembly • ECM

WIRING DIAGRAM

Refer to DTC P0500 (See page ES-276).

INSPECTION PROCEDURE

NOTICE:

- **When the distance control ECU and/or ECM are replaced with a new one, initialization must be performed (See page CC-119).**
- **When the millimeter wave radar sensor is replaced with a new one, adjustment of the radar sensor beam axis must be performed (See page CC-122).**

Refer to DTC P0500 (2GR-FSE) (See page ES-276).

DTC	P0571	Brake Switch "A" Circuit

DESCRIPTION

When the brake pedal is depressed, the stop light switch sends a signal to the ECM. When the ECM receives this signal, it cancels the cruise control. The fail-safe function operates to enable normal driving even if there is a malfunction in the stop light signal circuit. The cancellation condition occurs when voltage is applied to terminal STP. When the brake is applied, voltage is normally applied to terminal STP of the ECM through the STOP SW fuse and the stop light switch, and the ECM turns the cruise control off.

DTC No.	DTC Detection Condition	Trouble Area
P0571	Voltage of STP terminal and that of ST1- terminal of ECM are less than 1 V for 0.5 sec. or more	• Stop light switch • Stop light switch circuit • ECM

CC

WIRING DIAGRAM

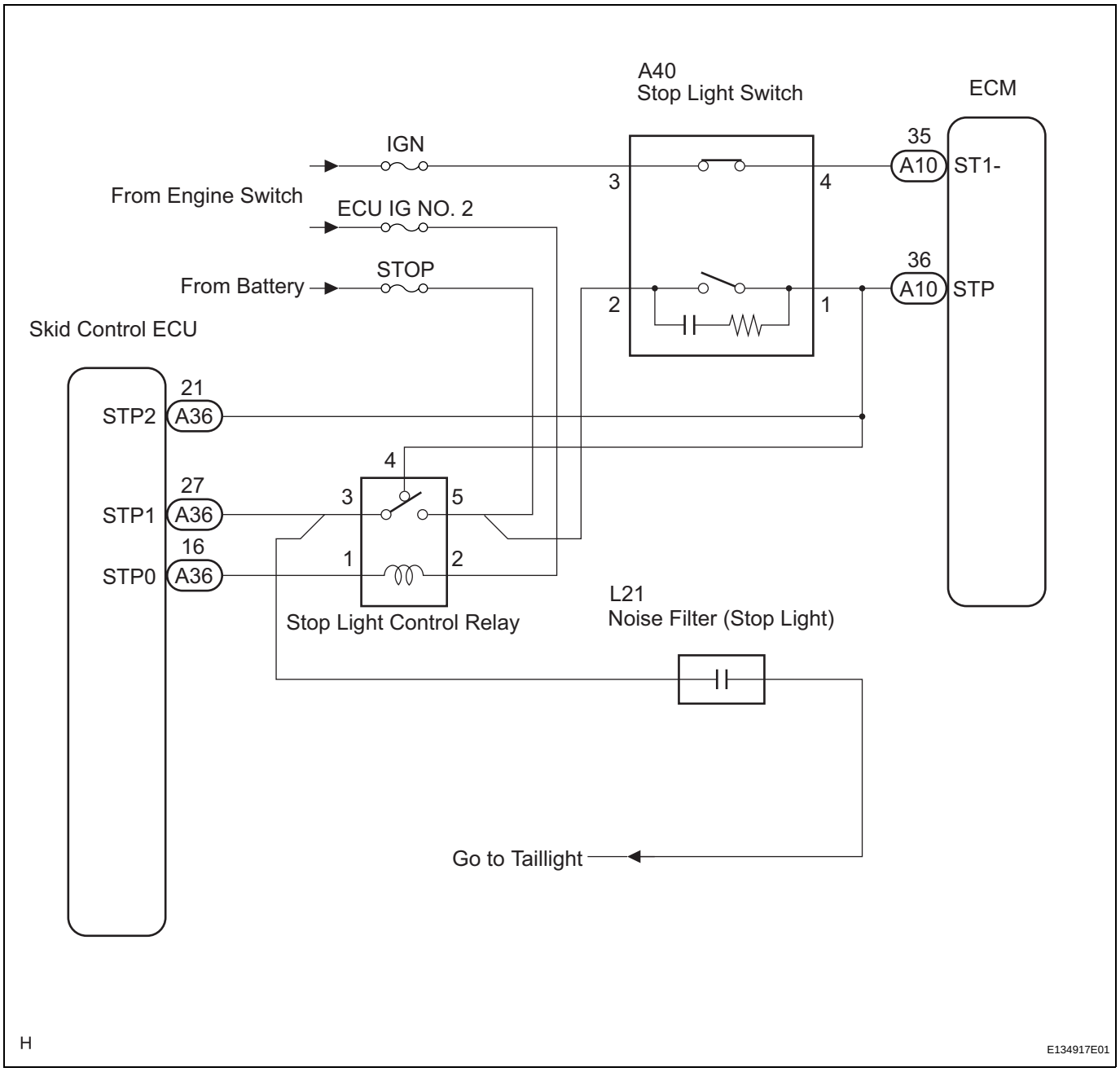

CC

INSPECTION PROCEDURE

NOTICE:

When the distance control ECU and/or ECM are replaced with a new one, initialization must be performed (See page CC-119).

1 CHECK DTC

(a) Check for a DTC (See page CC-61).

Result

Condition	Proceed to
DTC C1249 and/or C1380 are not output	A
DTC C1249 and/or C1380 are output	B

B → **GO TO ANTI-LOCK BRAKE SYSTEM (See page BC-17)**

A

2 READ VALUE ON INTELLIGENT TESTER

(a) Connect the intelligent tester to the DLC3.
(b) Turn the engine switch on (IG), and turn the intelligent tester main switch on.
(c) Check the DATA LIST for proper functioning of the stop light switch.

ECM (Cruise control):

Tester Display	Measurement Item/Range	Normal Condition	Diagnostic Note
STP LIGHT SW M	Stop light switch signal (Main CPU) / ON or OFF	ON: Brake pedal depressed OFF: Brake pedal released	-

OK:

When the brake pedal is operated, the display changes as shown above.

OK → **REPLACE ECM (See page ES-543)**

NG

3 INSPECT STOP LIGHT SWITCH

Stop Light Switch:

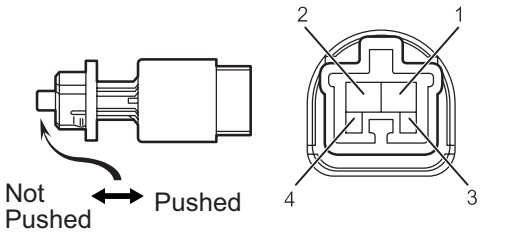

(a) Disconnect the stop light switch connector.
(b) Measure the resistance according to the value(s) in the table below.

Standard resistance

Tester Connection	Switch Condition	Specified Condition
1 - 2	Switch pin not pushed	Below 1 Ω
3 - 4	Switch pin not pushed	10 kΩ or higher
1 - 2	Switch pin pushed	10 kΩ or higher
3 - 4	Switch pin pushed	Below 1 Ω

NG → **REPLACE STOP LIGHT SWITCH (See page BR-59)**

OK

4 CHECK WIRE HARNESS (STOP LIGHT SWITCH - BATTERY)

Stop Light Switch Wire Harness Side Connector Front View:

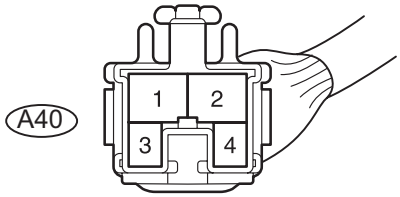

(a) Measure the voltage according to the value(s) in the table below.

Standard voltage

Tester Connection	Condition	Specified Condition
A40-2 - Body ground	Always	10 to 14 V
A40-3 - Body ground	Engine switch on (IG)	10 to 14 V

NG → **REPAIR OR REPLACE HARNESS OR CONNECTOR**

OK

5 CHECK ECM

ECM Wire Harness Side Connector Front Side View:

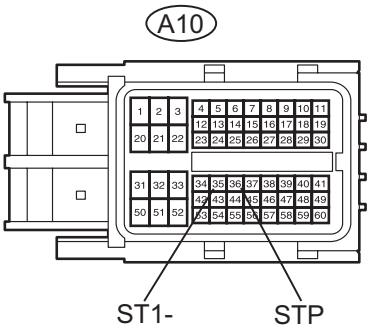

(a) Reconnect the stop light switch connector.
(b) Disconnect the A10 connector from the ECM.
(c) Turn the engine switch on (IG).
(d) Measure the voltage according to the value(s) in the table below.

Standard voltage

Tester Connection	Brake Pedal Condition	Specified Condition
A10-36 (STP) - Body ground	Depressed	10 to 14 V
A10-36 (STP) - Body ground	Released	Below 1 V
A10-35 (ST1-) - Body ground	Depressed	Below 1 V
A10-35 (ST1-) - Body ground	Released	10 to 14 V

NG → **REPAIR OR REPLACE HARNESS OR CONNECTOR (STOP LIGHT SWITCH - ECM)**

OK

REPLACE ECM (See page ES-543)

CC

DTC	P0607	Control Module Performance

DESCRIPTION

This DTC indicates a malfunction in the ECM.
HINT:
The ECM receives signals from each sensor to control all the functions of the cruise control with the microcomputer. When a malfunction is detected, fail-safe remains on until the engine switch is turned off.

DTC No.	DTC Detection Condition	Trouble Area
P0607	The ECM has a supervisory CPU and control ECU inside. When each input STP signal is different for 0.15 sec. or more, this trouble code is output. This trouble code is also output after 0.4 sec. has passed from the time a cruise cancel input signal (STP input) is input to the ECM.	ECM

INSPECTION PROCEDURE

NOTICE:
When the distance control ECU and/or ECM are replaced with a new one, initialization must be performed (See page CC-119).

1	REPLACE ECM

HINT:
(See page CC-119)

NEXT

END

DTC	P1570	Radar Sensor Malfunction

DESCRIPTION

The millimeter wave radar sensor emits radar beams towards an object in front and measures the distance and direction of the object by receiving the beam reflections. Based on the reflections, the sensor calculates the difference in speed between your own vehicle and an object in front. This data is transmitted to the distance control ECU.

DTC No.	DTC Detection Condition	Trouble Area
P1570	The ECM detects a radar sensor malfunction signal for 0.15 sec. or more while the dynamic radar cruise control is in operation	Millimeter wave radar sensor

HINT:
The millimeter wave radar sensor monitors the millimeter wave circuit activation by itself. This DTC is output when one of the following occurs: 1) the monitor is malfunctioning, 2) an EEPROM error is detected, 3) a voltage error is detected, and 4) the radar sensor is not adjusted. When raindrops or snowflakes strike the millimeter wave radar sensor face, the distance between the vehicle in front and your own vehicle cannot be measured correctly. The dynamic radar cruise control system functions by detecting the beam reflections from the vehicle directly in front. In the following cases, the system may not be able to detect the vehicle in front and may not properly maintain the correct vehicle-to-vehicle distance:

- The vehicle in front is a tall trailer.
- Emission from the vehicle in front or vehicle in other lanes are heavy.

INSPECTION PROCEDURE

NOTICE:

When the millimeter wave radar sensor is replaced with a new one, adjustment of the radar sensor beam axis must be performed (See page CC-119).

1	ADJUST MILLIMETER WAVE RADAR SENSOR

Refer to adjustment (See page CC-122).
HINT:
It is necessary to make the ECM recognize specification information (whether the vehicle is equipped with the dynamic radar cruise control system or not). When this procedure has not been carried out, this DTC may be output.

(a) Clear the DTCs and then recheck for DTCs.
OK:
DTC is not output

NG → **REPLACE MILLIMETER WAVE RADAR SENSOR (See page CC-122)**

OK

SYSTEM IS OK

DTC	P1572	Improper Aiming of Radar Sensor Beam Axis

DESCRIPTION

This DTC is output when the scanning angle of the millimeter wave radar sensor is incorrect. This DTC is also output when the millimeter wave radar sensor beam axis is determined to be in an incorrect position.

DTC No.	DTC Detection Condition	Trouble Area
P1572	The ECU detects that the millimeter wave radar sensor beam axis is in an incorrect position (0.15 sec. or more) while the dynamic radar cruise control is in operation	Millimeter wave radar sensor

INSPECTION PROCEDURE

NOTICE:

When the millimeter wave radar sensor is replaced with a new one, adjustment of the radar sensor beam axis must be performed (See page CC-122).

1	ADJUST MILLIMETER WAVE RADAR SENSOR

Refer to adjustment (See page CC-122).

HINT:

It is necessary to make the ECM recognize specification information (whether the vehicle is equipped with the dynamic radar cruise control system or not). If this procedure has not been carried out, this DTCs may be output.

(a) Clear the DTCs and then recheck for DTCs.

OK:

DTC is not output

NG → **REPLACE MILLIMETER WAVE RADAR SENSOR (See page CC-122)**

OK

SYSTEM IS OK

DTC	P1575	Warning Buzzer Malfunction

DESCRIPTION

The ABS & traction actuator (skid control ECU) receives an alarm demand signal from the ECU and operates the skid control buzzer. The buzzer sounds to warn that the distance between the vehicle in front and your own vehicle is decreasing.

DTC No.	DTC Detection Condition	Trouble Area
P1575	The ECM receives a buzzer abnormal signal for 0.2 sec. or more while the dynamic radar cruise control is in operation	• Skid control buzzer • Skid control buzzer circuit • ABS & traction actuator (Skid control ECU)

HINT:
If the vehicle ahead in the same lane significantly decreases its speed or another vehicle moves in front of your vehicle, adequate deceleration cannot be applied and the vehicle-to-vehicle distance will shorten. At this time, the system sounds the buzzer and the master warning light blinks to inform the driver. This circuit uses CAN communication. Therefore, if there are any malfunctions in the communication circuit, one or more DTCs in the CAN communication system are output.

WIRING DIAGRAM

Refer to the skid control buzzer circuit (See page BC-170).

INSPECTION PROCEDURE

Refer to the skid control buzzer circuit (See page BC-170).

DTC	P1578	Brake System Malfunction

DESCRIPTION

This DTC is output when the VSC system has a problem. Check the VSC system when this DTC is output.

DTC No.	DTC Detection Condition	Trouble Area
P1578	The ECM receives a brake system error signal for 0.2 sec. or more while the dynamic radar cruise control is in operation	VSC system

INSPECTION PROCEDURE

HINT:
This circuit uses CAN communication. Therefore, if there are any malfunctions in the communication circuit, one or more DTCs in the CAN communication system are output.

1	CHECK BRAKE SYSTEM

(a) Refer to HOW TO PROCEED WITH TROUBLESHOOTING (See page BC-17).

NEXT

END

DTC	P1615	Communication Error from Distance Control ECU to ECM

DTC	U1101	Lost Communication with Distance Control ECU

DESCRIPTION

The distance control ECU receives information about the area in front of the vehicle from the millimeter wave radar sensor and then sends a brake control demand signal (deceleration demand) and diagnosis signals, such as millimeter wave radar sensor grime signals or millimeter wave radar sensor malfunction signals, to the ECM.

DTC No.	DTC Detection Condition	Trouble Area
P1615	While the dynamic radar cruise control is either preparing for operation or operating, if communication data from the distance control ECU is logically inconsistent for a certain amount of time, the ECM records this logical error code	• Communication circuit • Distance control ECU • ECM
U1101	While the dynamic radar cruise control is either preparing for operation or operating, if communication data from the distance control ECU is invalid for a certain amount of time, the ECM records this communication cut off code	• Communication circuit • Distance control ECU • ECM

INSPECTION PROCEDURE

NOTICE:

When the distance control ECU and/or ECM are replaced with a new one, initialization must be performed (See page CC-119).

HINT:

This circuit uses CAN communication. Therefore, if there are any malfunctions in the communication circuit, one or more DTCs in the CAN communication system are output.

1	CHECK CAN COMMUNICATION SYSTEM

(a) Refer to HOW TO PROCEED WITH TROUBLESHOOTING (See page CA-11).

NEXT

END

DTC	P1616	Communication Error from ECM to Distance Control ECU

DTC	U0100	Lost Communication with ECM/PCM "A"

DESCRIPTION

The ECM receives signals from each sensor and ECU, then sends signals such as A/T signals, cruise control operation signals, low speed operation signals, brake control operation signals, and radar light emission prohibiting signals, to the distance control ECU. The ECM is the only component that has a function to record and output the DTCs in the dynamic radar cruise control system. Therefore, if the distance control ECU detects a communication error from the ECM, it sends a malfunction signal back to the ECM.

DTC No.	DTC Detection Condition	Trouble Area
P1616	While the dynamic radar cruise control is either preparing for operation or operating, if the ECM continuously receives a logical error signal from the distance control ECU for more than a specific amount of time, the ECM records this logical error code	• Communication circuit • ECM • Distance control ECU
U0100	While the dynamic radar cruise control is either preparing for operation or operating, if the ECM continuously receives a communication cut off signal from the distance control ECU for more than a specific amount of time, the ECM records this communication cut off code	• Communication circuit • ECM • Distance control ECU

INSPECTION PROCEDURE

NOTICE:

When the distance control ECU and/or are replaced with a new one, initialization must be performed (See page CC-119).

HINT:

This circuit uses CAN communication. Therefore, if there are any malfunctions in the communication circuit, one or more DTCs in the CAN communication system are output.

1	CHECK CAN COMMUNICATION SYSTEM

(a) Refer to HOW TO PROCEED WITH TROUBLESHOOTING (See page CA-11).

NEXT

END

DTC	P1617	Distance Control ECU Malfunction

DESCRIPTION

In the dynamic radar cruise control system, the ECM and the distance control ECU communicate with one another to control the system based on some designation information. If the designation information of the ECM and distance control ECU is different or the distance control ECU is malfunctioning, this DTC is recorded.

DTC No.	DTC Detection Condition	Trouble Area
P1617	While the dynamic radar cruise control is either preparing for operation or operating, if a designation signal from the ECM and a designation return signal from the distance control ECU do not match or the distance control ECU is malfunctioning for more than a specific amount of time, the ECM records this trouble code	Distance control ECU

INSPECTION PROCEDURE

NOTICE:

When the distance control ECU and/or ECM are replaced with a new one, initialization must be performed (See page CC-119).

1	CONFIRM DESIGNATION INFORMATION

(a) Confirm the designation information.
  (1) Turn the engine switch on (IG).
  (2) Turn the cruise control main switch on.
  (3) With the brake pedal depressed, push the cruise control main switch to + (ACCEL)/RES (RESUME) 3 times within 3 seconds. Check that the skid control buzzer sounds at this time.

OK:

The skid control buzzer sounds. (Initialization is performed.)

NOTICE:

- **Do not turn the light control switch on at this time because the beam axis automatic adjustment mode has already started, which could lead to incorrect beam axis. If the light control switch is turned on by mistake, readjust the beam axis (refer to page for beam axis adjustment) (See page CC-122).**
- **If initialization cannot be performed, first inspect the stop light switch circuit, cruise main switch circuit, and skid control buzzer circuit.**

NG → **REPLACE DISTANCE CONTROL ECU (See page CC-118)**

OK

2	CHECK DTC

(a) Clear the DTCs and then recheck for DTCs.
Result

Result	Proceed to
DTC is not output	A
DTC is output	B

HINT:
If DTC P1617 is still output after replacing the distance control ECU, replace the ECM.

B → **REPLACE DISTANCE CONTROL ECU (See page CC-118)**

A

END

DTC	P1630	Communication Error from VSC to ECM

DTC	U0122	Lost Communication with Vehicle Dynamics Control Module

DESCRIPTION

The skid control ECU sends signals such as cruise control cancel demand signals and brake operation demand from ECM response signals to the ECM when the dynamic radar cruise control system is in operation.

DTC No.	DTC Detection Condition	Trouble Area
P1630	While the dynamic radar cruise control is either preparing for operation or operating, if communication data from the skid control ECU is logically inconsistent for a certain amount of time, the ECM records this logical error code	• Communication circuit • ABS & traction actuator (Skid control ECU) • ECM
U0122	While dynamic radar cruise control is either preparing for operation or operating, if communication data from the skid control ECU is invalid for a certain amount of time, the ECM records this communication cut off code	• Communication circuit • ABS & traction actuator (Skid control ECU) • ECM

CC

INSPECTION PROCEDURE

NOTICE:

When the distance control ECU and/or ECM are replaced with a new one, initialization must be performed (See page CC-119).

HINT:

This circuit uses CAN communication. Therefore, if there are any malfunctions in the communication circuit, one or more DTCs in the CAN communication system are output.

1	CHECK CAN COMMUNICATION SYSTEM

(a) Refer to HOW TO PROCEED WITH TROUBLESHOOTING (See page CA-11).

NEXT

END

DTC	P1631	Communication Error from ECM to VSC

DTC	U0100	Lost Communication with ECM/PCM "A"

DESCRIPTION

The ECM sends signals such as A/T information signals, dynamic radar cruise control operation signals, brake operation demand signals, and buzzer operation demand signals to the skid control ECU when the dynamic radar cruise control is in operation. The ECM is the only component that has a function to record and output the DTCs in the dynamic radar cruise control system. Therefore, if the skid control ECU detects a communication error from the ECM, it sends a malfunction signal back to the ECM.

DTC No.	DTC Detection Condition	Trouble Area
P1631	While the dynamic radar cruise control is either preparing for operation or operating, if the ECM continuously receives a logical error signal from the skid control ECU for a certain amount of time, the ECM records this logical error code	• Communication circuit • ECM • ABS & traction actuator (Skid control ECU)
U0100	While the dynamic radar cruise control is either preparing for operation or operating, if the ECM continuously receives a communication cut off signal from the ABS & traction actuator (skid control ECU) for a certain amount of time, the ECM records this communication cut off code	• Communication circuit • ECM • ABS & traction actuator (Skid control ECU)

INSPECTION PROCEDURE

NOTICE:

When the distance control ECU and/or ECM are replaced with a new one, initialization must be performed (See page CC-119).

HINT:

This circuit uses CAN communication. Therefore, if there are any malfunctions in the communication circuit, one or more DTCs in the CAN communication system are output.

1	CHECK CAN COMMUNICATION SYSTEM

Refer to HOW TO PROCEED WITH TROUBLESHOOTING (See page CA-11).

NEXT

END

DTC	U0123	Communication Error of Yaw Rate Sensor

DESCRIPTION

This circuit detects the yaw rate of the vehicle and transmits its signal to the skid control ECU and distance control ECU.

DTC No.	DTC Detection Condition	Trouble Area
U0123	While the dynamic radar cruise control is either preparing for operation or operating, the ECM continuously receives a yaw rate sensor malfunction signal for a certain amount of time	• Communication circuit • Yaw rate sensor • Distance control ECU • ECM

INSPECTION PROCEDURE

NOTICE:

When the distance control ECU and/or ECM are replaced with a new one, initialization must be performed (See page CC-119).

HINT:

This circuit uses CAN communication. Therefore, if there are any malfunctions in the communication circuit, one or more DTCs in the CAN communication system are output.

1	CHECK CAN COMMUNICATION SYSTEM

(a) Refer to HOW TO PROCEED WITH TROUBLESHOOTING (See page CA-11).

NEXT

END

DTC	U0126	Lost Communication with Steering Angle Sensor Module

DESCRIPTION

This circuit detects the angle and direction of the steering wheel and automatically transmits a signal to the skid control ECU and distance control ECU.

DTC No.	DTC Detection Condition	Trouble Area
U0126	While the dynamic radar cruise control is either preparing for operation or operating, if the ECM continuously receives a steering sensor communication error signal for a certain amount of time, the distance control ECU sends a signal to the ECM to record this trouble code	• Communication circuit • Steering angle sensor • Distance control ECU • ECM

INSPECTION PROCEDURE

NOTICE:

When the distance control ECU and/or ECM are replaced with a new one, initialization must be performed (See page CC-119).

HINT:

This circuit uses CAN communication. Therefore, if there are any malfunctions in the communication circuit, one or more DTCs in the CAN communication system are output.

1	CHECK CAN COMMUNICATION SYSTEM

(a) Refer to HOW TO PROCEED WITH TROUBLESHOOTING (See page CA-11).

NEXT

END

DTC	U0235	Lost Communication with Cruise Control Front Distance Range Sensor

DESCRIPTION

The millimeter wave radar sensor and distance control ECU transmit the data for general vehicle control and diagnosis function along the communication line. The millimeter wave radar sensor transmits information about the vehicle in front to the distance control ECU.

DTC No.	DTC Detection Condition	Trouble Area
U0235	The ECM detects a communication error signal (from the millimeter wave radar sensor to the distance control ECU) for 0.15 sec. or more while the dynamic radar cruise control is in operation	• Communication circuit • Millimeter wave radar sensor • Distance control ECU

CC

WIRING DIAGRAM

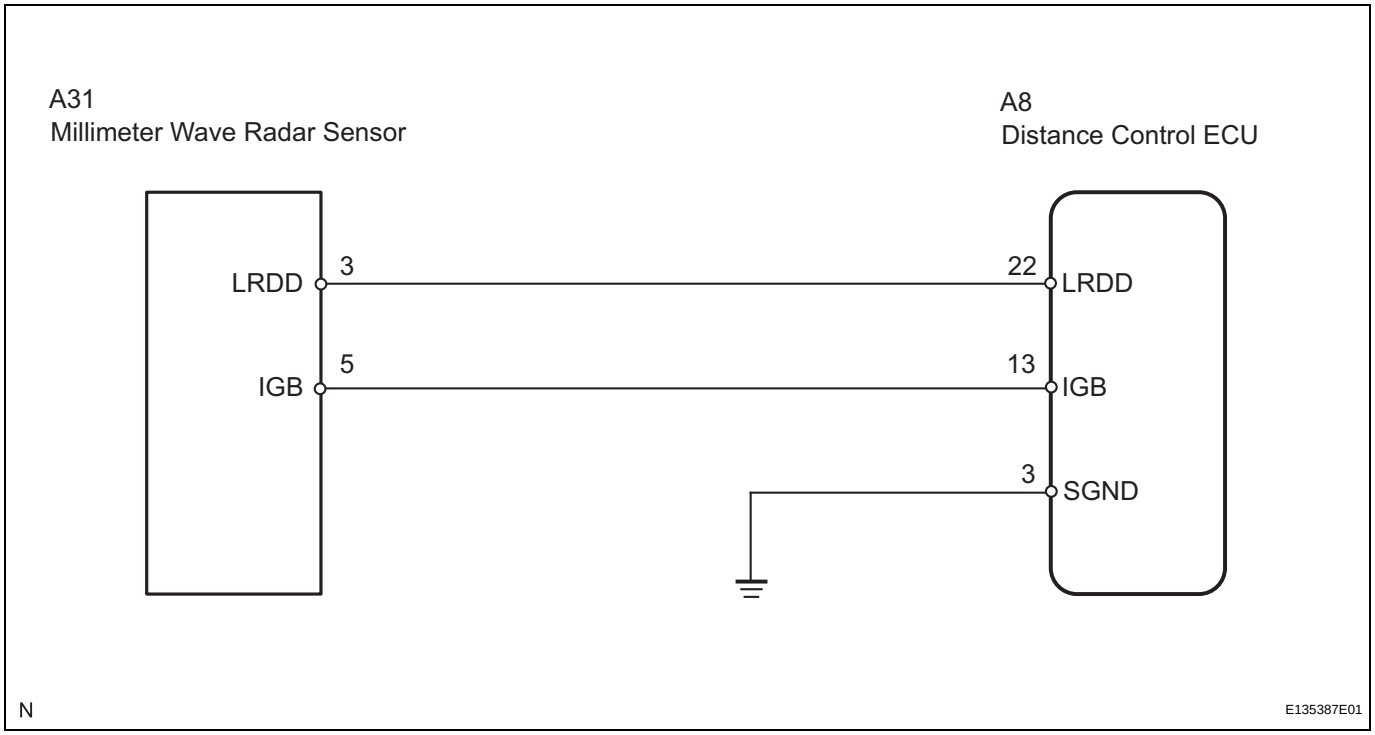

INSPECTION PROCEDURE

NOTICE:

- **When the distance control ECU and/or ECM are replaced with a new one, initialization must be performed (See page CC-119).**
- **When the millimeter wave radar sensor is replaced with a new one, adjustment of the radar sensor beam axis must be performed (See page CC-122).**

CC

1 CHECK HARNESS AND CONNECTOR (DISTANCE CONTROL ECU - MILLIMETER WAVE RADAR SENSOR)

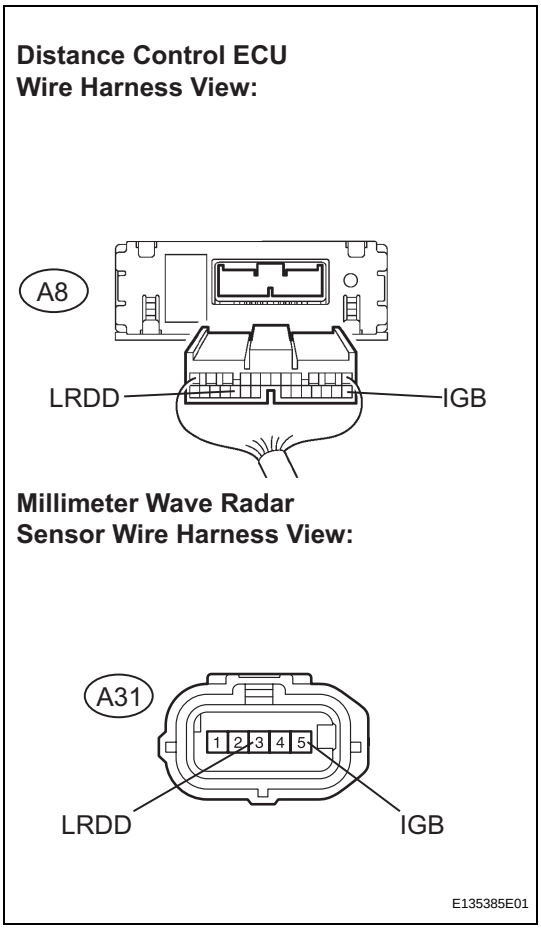

(a) Disconnect the distance control ECU and millimeter wave radar sensor connectors.

(b) Measure the resistance according to the value(s) in the table below.

Standard resistance

Tester Connection	Condition	Specified Condition
A8-22 (LRDD) - A31-3 (LRDD)	Always	Below 1 Ω
A8-13 (IGB) - A31-5 (IGB)	Always	Below 1 Ω
A8-22 (LRDD) - Body ground	Always	10 kΩ or higher
A8-13 (IGB) - Body ground	Always	10 kΩ or higher

NG → **REPAIR OR REPLACE HARNESS OR CONNECTOR**

OK

2 CHECK DISTANCE CONTROL ECU

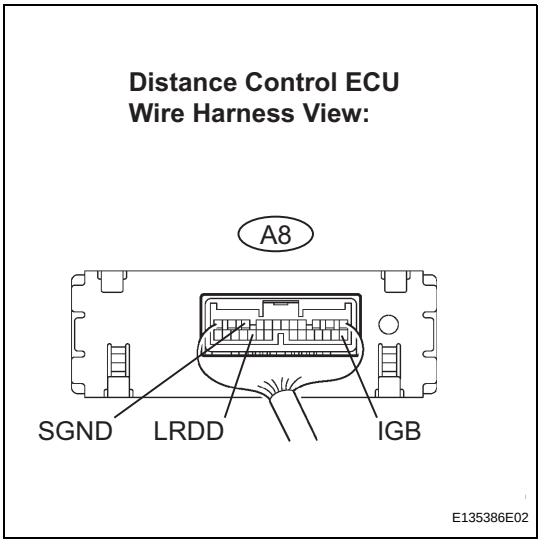

(a) Disconnect the millimeter wave radar sensor connector.

(b) Measure the voltage according to the value(s) in the table below.

Standard voltage

Tester Connection	Condition	Specified Condition
A8-13 (IGB) - Body ground	Engine switch on (IG)	10 to 14 V
A8-22 (LRDD) - A8-10 (SGND)	Engine switch on (IG)	4.5 to 5.5 V

NG → **REPLACE DISTANCE CONTROL ECU (See page CC-118)**

OK

3 CHECK MILLIMETER WAVE RADAR SENSOR

Millimeter Wave Radar Sensor Wire Harness Side Connector Front View:

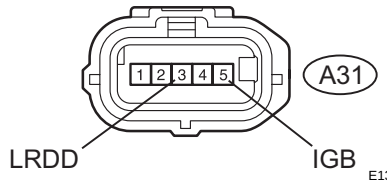

(a) Reconnect the millimeter wave radar sensor connector.

(b) Measure the voltage according to the value(s) in the table below.

Standard voltage

Tester connection	Condition	Specified Condition
A31-5 (IGB) - Body ground	**Engine switch on (IG)**	**10 to 14 V**

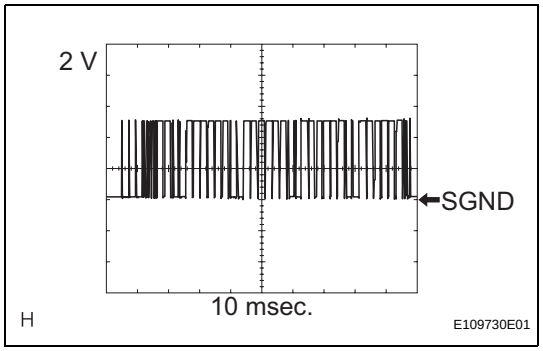

(c) Check the signal waveform.

Item	Contents
Terminal	A31-3 (LRDD) - Body ground
Tool setting	2 V/DIV., 10 msec./DIV.
Vehicle condition	Engine switch on (IG)

OK:

A waveform similar to that in the illustration on the left is output.

NG → **REPLACE MILLIMETER WAVE RADAR SENSOR (See page CC-122)**

OK

END (INTERMITTENT PROBLEM IS PRESENT)

CC

DTC	U1102	Lost Communication with Radar Sensor

DESCRIPTION

The millimeter wave radar sensor and distance control ECU transmit the data for general vehicle control and diagnosis function along the communication line. The distance control ECU determines the curve radius information based on signals from the steering wheel and yaw rate sensor. The distance control ECU transmits the current vehicle speed and curve radius information to the millimeter wave radar sensor.

DTC No.	DTC Detection Condition	Trouble Area
U1102	The ECM detects a communication error signal (from the distance control ECU to the millimeter wave radar sensor) for 0.15 sec. or more while the dynamic radar cruise control is in operation	• Communication circuit • Millimeter wave radar sensor • Distance control ECU

CC

WIRING DIAGRAM

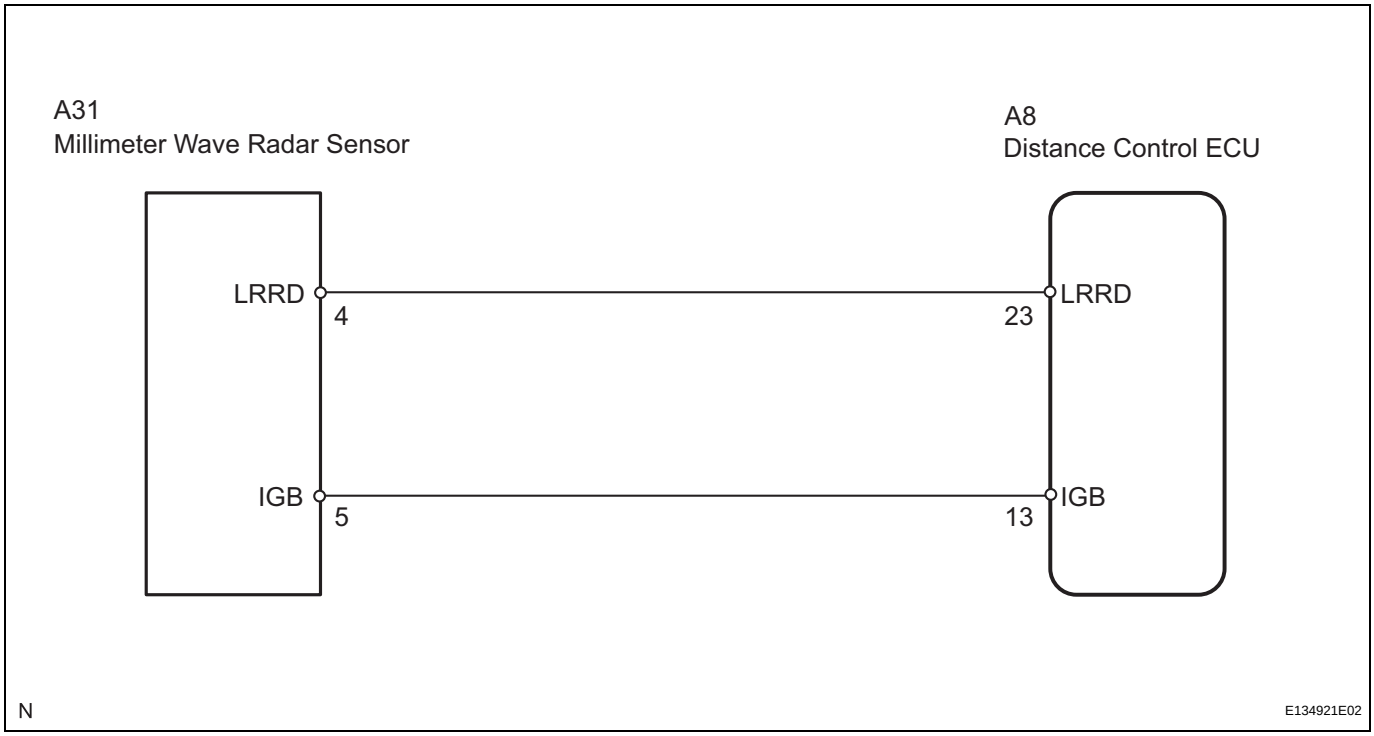

INSPECTION PROCEDURE

NOTICE:

- **When the distance control ECU and/or ECM are replaced with a new one, initialization must be performed (See page CC-119).**
- **When the millimeter wave radar sensor is replaced with a new one, adjustment of the radar sensor beam axis must be performed (See page CC-122).**

1 CHECK HARNESS AND CONNECTOR (DISTANCE CONTROL ECU - MILLIMETER WAVE RADAR SENSOR)

Distance Control ECU Wire Harness View:

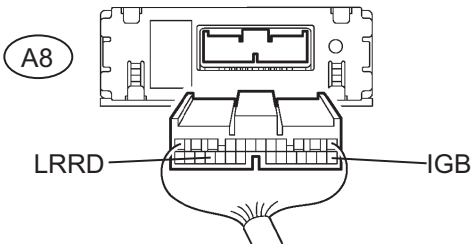

Millimeter Wave Radar Sensor Wire Harness View:

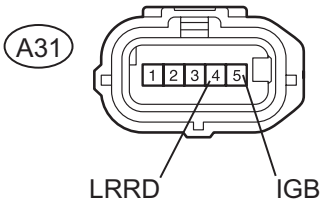

E135385E02

(a) Disconnect the distance control ECU and millimeter wave radar sensor connectors.

(b) Measure the resistance according to the value(s) in the table below.

Standard resistance

Tester Connection	Condition	Specified Condition
A8-23 (LRRD) - A31-4 (LRRD)	Always	Below 1 Ω
A8-13 (IGB) - A31-5 (IGB)	Always	Below 1 Ω
A8-23 (LRRD) - Body ground	Always	10 kΩ or higher
A8-13 (IGB) - Body ground	Always	10 kΩ or higher

NG → **REPAIR OR REPLACE HARNESS OR CONNECTOR**

OK

2 CHECK DISTANCE CONTROL ECU

Distance Control ECU Wire Harness View:

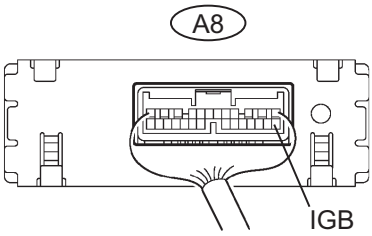

E135386E04

(a) Measure the voltage according to the value(s) in the table below.

Standard voltage

Tester Connection	Condition	Specified Condition
A8-13 (IGB) - Body ground	Engine switch on (IG)	10 to 14 V

NG → **REPLACE DISTANCE CONTROL ECU (See page CC-118)**

CC

OK

3 CHECK MILLIMETER WAVE RADAR SENSOR

Millimeter Wave Radar Sensor Wire Harness Side Connector Front View:

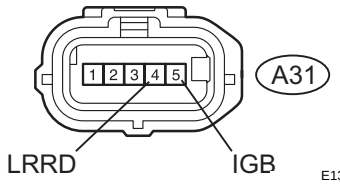

(a) Measure the voltage according to the value(s) in the table below.

Standard voltage

Tester Connection	Condition	Specified Condition
A31-5 (IGB) - Body ground	**Engine switch on (IG)**	**10 to 14 V**

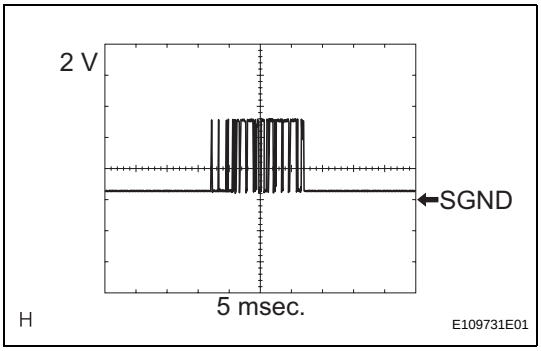

(b) Check the signal waveform.

Item	Contents
Terminal	A31-4 (LRRD) - Body ground
Tool setting	2 V/DIV., 10 msec./DIV.
Vehicle condition	Engine switch on (IG)

OK:

A waveform similar to that in the illustration on the left is output.

NG → **REPLACE MILLIMETER WAVE RADAR SENSOR (See page CC-122)**

OK

END (INTERMITTENT PROBLEM IS PRESENT)

CC

Cruise Control Switch Circuit

DESCRIPTION

The cruise control main switch operates 8 functions: SET, -(COAST), TAP-DOWN, RES (RESUME), + (ACCEL), TAP-UP, CANCEL, and MODE. The SET, TAP-DOWN, and - (COAST) functions, and the RES (RESUME), TAP-UP, and + (ACCEL) functions are operated with the same switch. The cruise control main switch is an automatic return type switch which turns on only while operating it in the direction of each arrow and turns off after releasing it. The internal contact point of the cruise control main switch is turned on with the switch operation. The ECM then reads the voltage value that has been changed by the switch operation to control MODE, SET, - (COAST), RES (RESUME), + (ACCEL), and CANCEL. The dynamic radar cruise control system has two cruise control modes: the constant speed control mode and vehicle-to-vehicle distance control mode.

- The vehicle-to-vehicle distance control mode is always selected when starting up the dynamic radar cruise control system.
- The operation of the constant speed control mode is the same as that for a conventional cruise control system.

CC

WIRING DIAGRAM

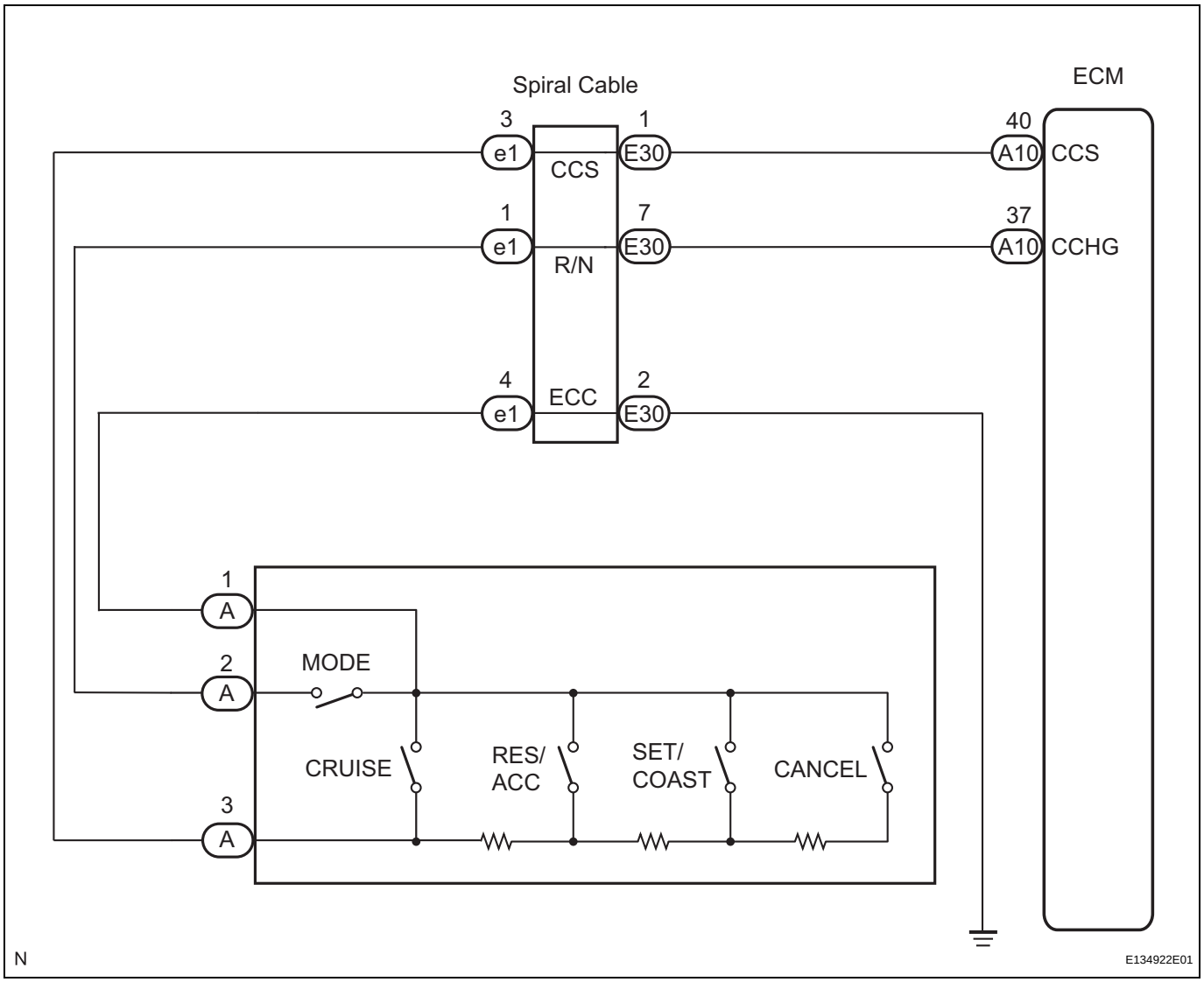

INSPECTION PROCEDURE

NOTICE:

When the distance control ECU and/or ECM are replaced with a new one, initialization must be performed (See page CC-119).

1	READ VALUE ON INTELLIGENT TESTER

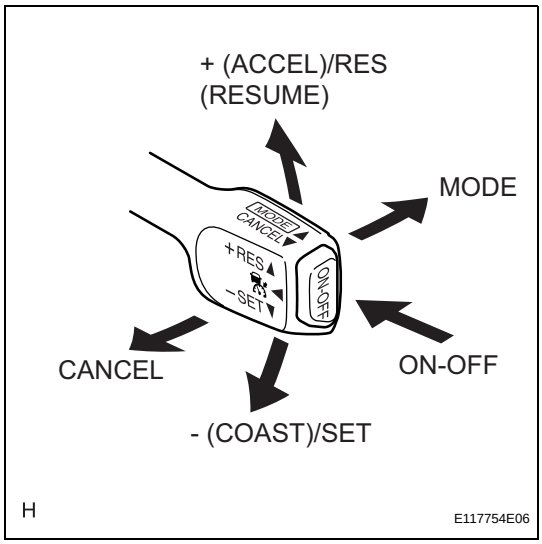

(a) Connect the intelligent tester to the DLC3.
(b) Turn the engine switch on (IG) and turn the intelligent tester main switch on.
(c) Check the DATA LIST for proper functioning of the cruise control main switch.

ECM (Cruise control):

Tester Display	Measurement Item/Range	Normal Condition	Diagnostic Note
MAIN SW (MAIN)	Main switch signal (Main CPU) / ON or OFF	ON: Main switch ON OFF: Main switch OFF	-
CANCEL SW	CANCEL switch signal / ON or OFF	ON: CANCEL switch ON OFF: CANCEL switch OFF	-
SET/COAST SW	SET/COAST switch signal / ON or OFF	ON: - (COAST)/SET switch ON OFF: - (COAST)/SET switch OFF	-
RES/ACC SW	RES/ACC switch signal / ON or OFF	ON: + (ACCEL)/RES (RESUME) switch ON OFF: + (ACCEL)/RES (RESUME) switch OFF	-

OK:

When the cruise control main switch is operated, the display changes as shown above.

Result

Result	Proceed to
OK	A
NG (all items are defective)	B
NG (1 to 3 items are defective)	C

A → **PROCEED TO NEXT CIRCUIT INSPECTION SHOWN IN PROBLEM SYMPTOMS TABLE**

C → **REPLACE CRUISE CONTROL MAIN SWITCH (See page CC-114)**

B

2	INSPECT CRUISE CONTROL MAIN SWITCH

(a) Disconnect the cruise control main switch connector.

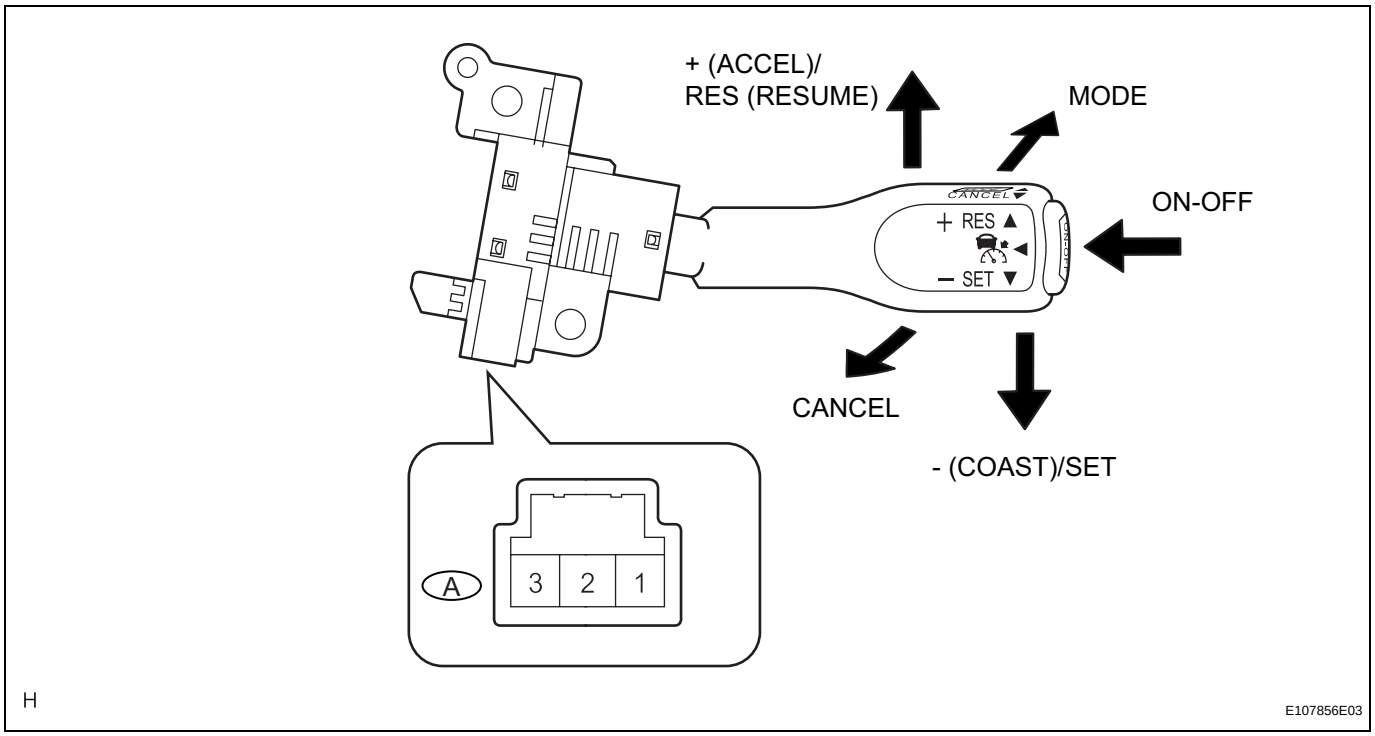

(b) Measure the resistance according to the value(s) in the table below.

Standard resistance

Tester Connection	Switch Condition	Specified Condition
A-1 (ECC) - A-2 (R/N), A-1 (ECC) - A-3 (CCS)	Neutral	10 kΩ or higher
A-1 (ECC) - A-3 (CCS)	+ (ACCEL)/RES (RESUME)	216 to 264 Ω
	- (COAST)/SET	567 to 693 Ω
	CANCEL	1,386 to 1,694 Ω
	Main Switch on	Below 1 Ω
A-1 (ECC) - A-2 (R/N)	Main Switch on and MODE Switch on	Below 1 Ω

NG → **REPLACE CRUISE CONTROL MAIN SWITCH (See page CC-114)**

OK

3	INSPECT SPIRAL CABLE

NOTICE:
The spiral cable is an important part of the SRS airbag system. Incorrect removal or installation of the spiral cable may cause airbag deployment. Be sure to read the page shown in the brackets.
HINT:
- Removal (See page RS-379)
- Installation (See page RS-382)

CC

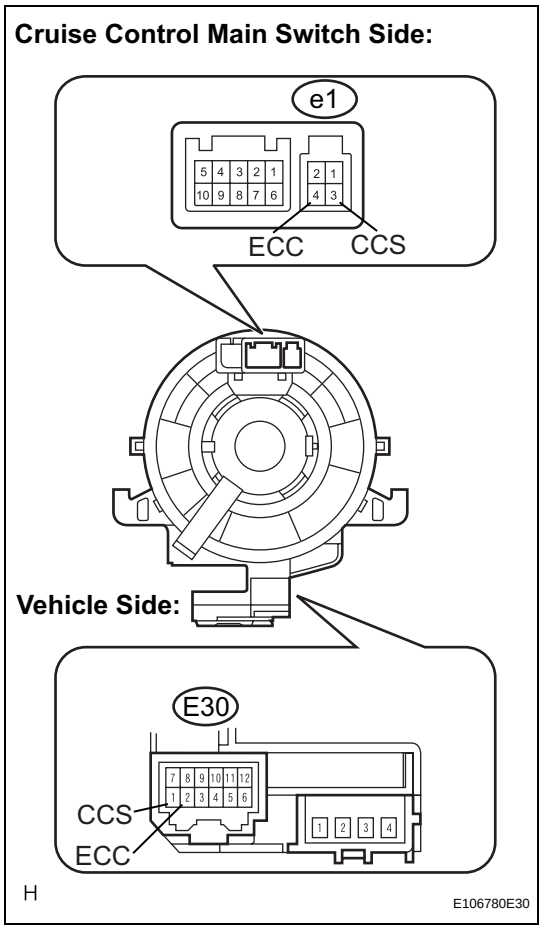

(a) Remove the spiral cable.

(b) Measure the resistance according to the value(s) in the table below.

Standard resistance

Tester Condition	Spiral Cable Position	Specified Condition
e1-1 - E30-7	Center	Below 1 Ω
	2.5 rotations to the left	
	2.5 rotations to the right	
e1-3 - E30-1	Center	Below 1 Ω
	2.5 rotations to the left	
	2.5 rotations to the right	
e1-4 - E30-2	Center	Below 1 Ω
	2.5 rotations to the left	
	2.5 rotations to the right	

HINT:
The spiral cable makes a maximum of approximately 5 rotations.

NG → **REPLACE SPIRAL CABLE (See page RS-379)**

OK

CC

4 CHECK WIRE HARNESS (SPIRAL CABLE - ECM)

Spiral Cable Vehicle Side Connector Front View:

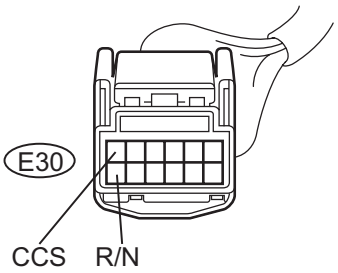

ECM Wire Harness Side Connector Front View:

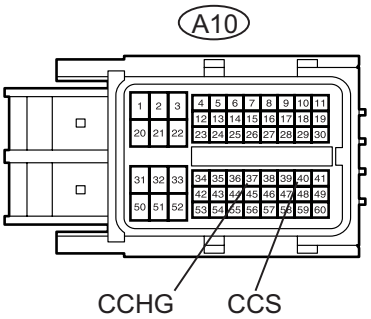

E135383E02

(a) Measure the resistance according to the value(s) in the table below.
Standard resistance

Tester Connection	Condition	Specified Condition
E30-1 (CCS) - A10-40 (CCS)	Always	Below 1 Ω
E30-7 (R/N) - A10-37 (CCHG)	Always	Below 1 Ω
E30-1 (CCS) - Body ground	Always	10 kΩ or higher
E30-7 (R/N) - Body ground	Always	10 kΩ or higher

NG → **REPAIR OR REPLACE HARNESS OR CONNECTOR**

OK

5 CHECK WIRE HARNESS (SPIRAL CABLE - BODY GROUND)

Vehicle Side Connector Front View:

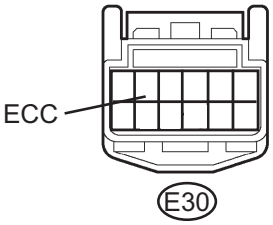

N

E107092E11

(a) Measure the resistance according to the value(s) in the table below.
Standard resistance

Tester Connection	Condition	Specified Condition
E30-2 - Body ground	Always	Below 1 Ω

NG → **REPAIR OR REPLACE HARNESS OR CONNECTOR**

OK

PROCEED TO NEXT CIRCUIT INSPECTION SHOWN IN PROBLEM SYMPTOMS TABLE

CC

CC

Distance Control ECU Power Source Circuit

DESCRIPTION

This circuit provides power to operate the distance control ECU. The distance control ECU determines information about the vehicle in front based on data from the radar sensor, and then decides how much acceleration and/or deceleration is needed to maintain the set distance. The distance control ECU also requests the skid control ECU to apply braking and to sound the buzzer.

WIRING DIAGRAM

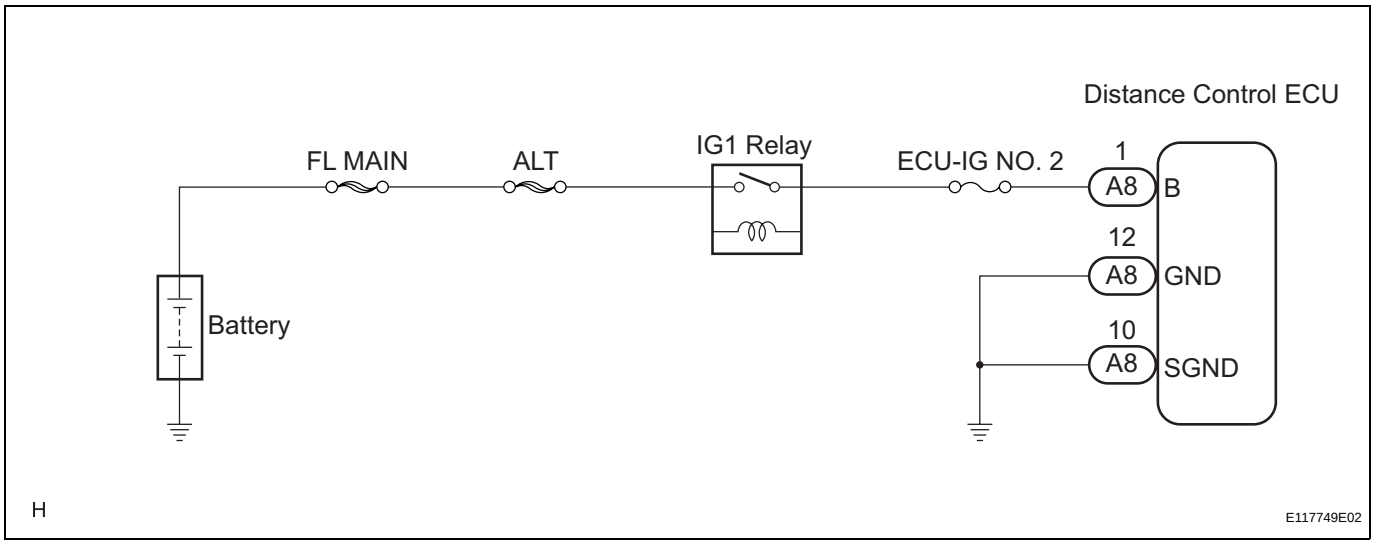

INSPECTION PROCEDURE

NOTICE:

When the distance control ECU and/or ECM are replaced with a new one, initialization must be performed (See page CC-119).

1	CHECK DISTANCE CONTROL ECU

Distance Control ECU Wire Harness View:

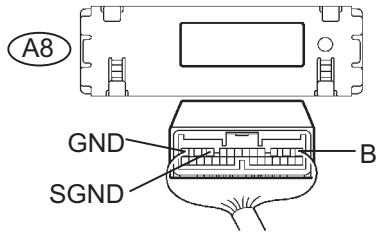

(a) Disconnect the distance control ECU connector.

(b) Measure the voltage according to the value(s) in the table below.

Standard voltage

Tester Connection	Condition	Specified Condition
A8-1 (B) - Body ground	Engine switch on (IG)	10 to 14 V

(c) Measure the resistance according to the value(s) in the table below.

Standard resistance

Tester Connection	Condition	Specified Condition
A8-10 (SGND) - Body ground	Always	Below 1 Ω
A8-12 (GND) - Body ground	Always	Below 1 Ω

NG → **REPAIR OR REPLACE HARNESS OR CONNECTOR**

OK

PROCEED TO NEXT CIRCUIT INSPECTION SHOWN IN PROBLEM SYMPTOMS TABLE

Millimeter Wave Radar Sensor Power Source Circuit

DESCRIPTION

This circuit provides power to the millimeter wave radar sensor. The millimeter wave radar sensor emits radio waves towards an object in front and measures the distance and direction of the object by receiving the wave reflections. Based on the reflections, the sensor calculates the difference in speed between the vehicle and the object in front. This data is transmitted to the distance control ECU. The ECU recognizes the millimeter wave radar sensor via terminals LGND. If an open circuit occurs in the wire harness between terminals LGND, the ECM cannot recognize the millimeter wave radar sensor. The ECM will stop the control of the vehicle-to-vehicle distance control mode and only the constant speed control mode can be used.

CC

WIRING DIAGRAM

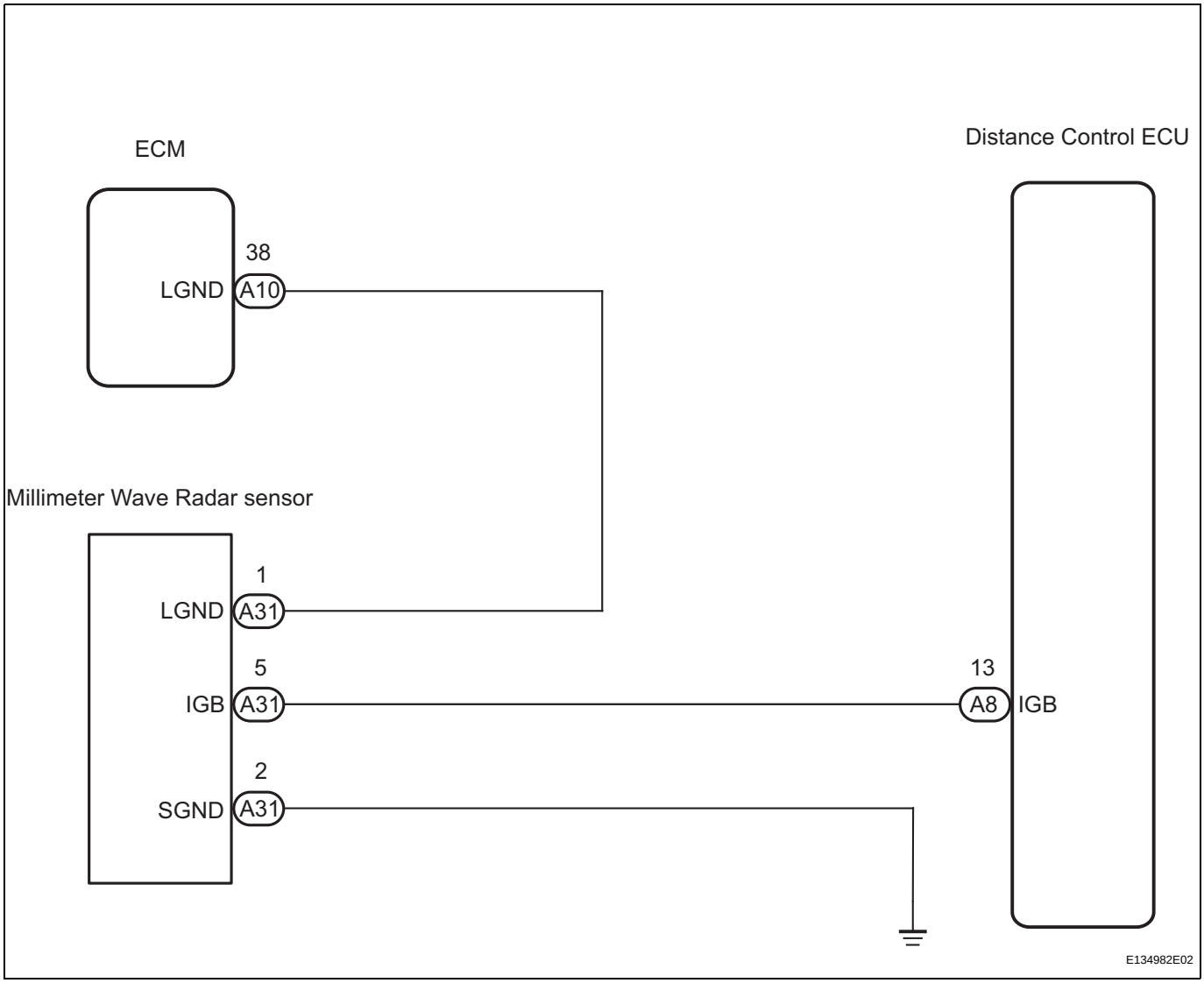

INSPECTION PROCEDURE

NOTICE:

- **When the distance control ECU and/or ECM are replaced with a new one, initialization must be performed (See page CC-119).**
- **When the millimeter wave radar sensor is replaced with a new one, adjustment of the radar sensor beam axis must be performed (See page CC-122).**

1 CHECK DISTANCE CONTROL ECU (IGB VOLTAGE)

Millimeter Wave Radar Sensor Wire Harness Side Connector Front View:

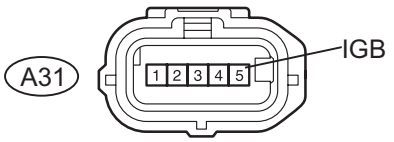

E135388E03

(a) Disconnect the A31 sensor connector.
(b) Measure the voltage according to the value(s) in the table below.

Standard voltage

Tester Connection	Condition	Specified Condition
A31-5 (IGB) - Body ground	Engine switch on (IG)	10 to 14 V

NG → **Go to step 3**

OK

2 CHECK WIRE HARNESS (MILLIMETER WAVE RADAR SENSOR - ECM AND BODY GROUND)

Millimeter Wave Radar Sensor Wire Harness Side Connector Front View:

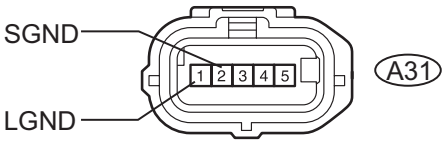

ECM Wire Harness Side Connector Front View:

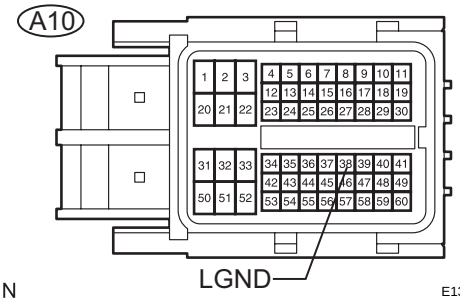

N

E133079E01

(a) Disconnect the A31 sensor connector.
(b) Disconnect the A10 ECM connector.
(c) Measure the resistance according to the value(s) in the table below.

Standard resistance

Tester Connection	Condition	Specified Condition
A10-38 (LGND) - A31-1 (LGND)	Always	Below 1 Ω
A31-1 (LGND) - Body ground	Always	10 kΩ or higher
A31-2 (SGND) - Body ground	Always	Below 1 Ω

NG → **REPAIR OR REPLACE HARNESS OR CONNECTOR**

OK

PROCEED TO NEXT CIRCUIT INSPECTION SHOWN IN PROBLEM SYMPTOMS TABLE

CC

3	CHECK WIRE HARNESS (MILLIMETER WAVE RADAR SENSOR - DISTANCE CONTROL ECU)

Millimeter Wave Radar Sensor Wire Harness Side Connector Front View:

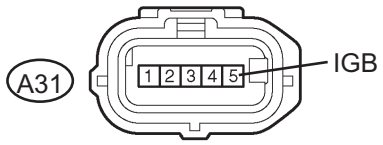

Distance Control ECU Wire Harness Side Connector Front View:

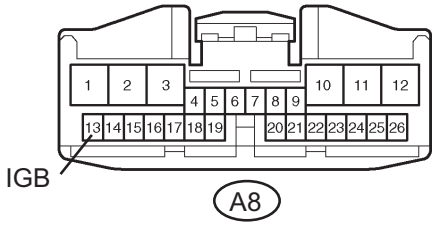

N

I044456E12

(a) Disconnect the A31 sensor connector.
(b) Disconnect the A8 ECU connector.
(c) Measure the resistance according to the value(s) in the table below

Standard resistance

Tester Connection	Condition	Specified Condition
A31-5 (IGB) - A8-13 (IGB)	Always	Below 1 Ω
A8-13 (IGB) - Body ground	Always	10 kΩ or higher

NG → **REPAIR OR REPLACE HARNESS OR CONNECTOR**

OK

REPLACE DISTANCE CONTROL ECU (See page CC-118)

Distance Control Switch Circuit

DESCRIPTION

The distance control switch sets the vehicle-to-vehicle distance control mode. The distance control switch is installed in the steering pad switch. The vehicle-to-vehicle distance set value can be changed by operating the steering pad switch (distance control switch) while the dynamic radar cruise control system is in operation.

WIRING DIAGRAM

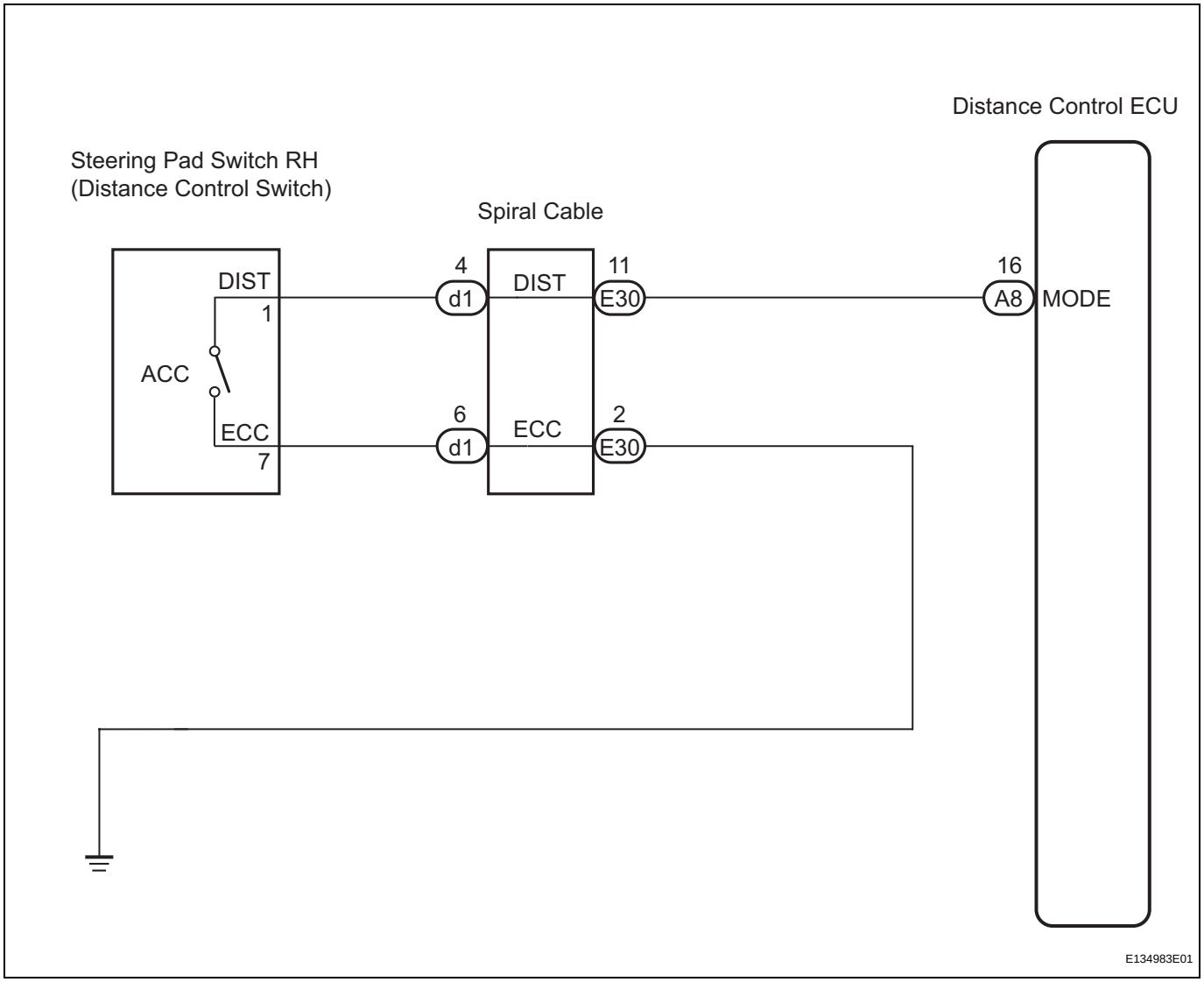

INSPECTION PROCEDURE

NOTICE:

When the distance control ECU and/or ECM are replaced with a new one, initialization must be performed (See page CC-119).

1 INSPECT DISTANCE CONTROL ECU

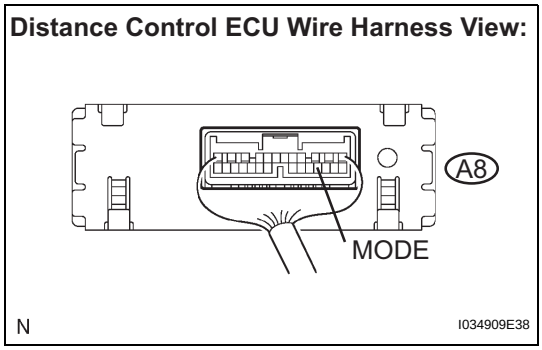

(a) Turn the engine switch on (IG).
(b) Measure the voltage according to the value(s) in the table below.

Standard voltage

Tester Connection	Condition	Specified Condition
A8-16 (MODE) - Body ground	Distance control switch ON (pushed)	0 to 2 V
	Distance control switch OFF (not pushed)	10 to 14 V

OK → **PROCEED TO NEXT CIRCUIT INSPECTION SHOWN IN PROBLEM SYMPTOMS TABLE**

NG

2 INSPECT DISTANCE CONTROL ECU CIRCUIT

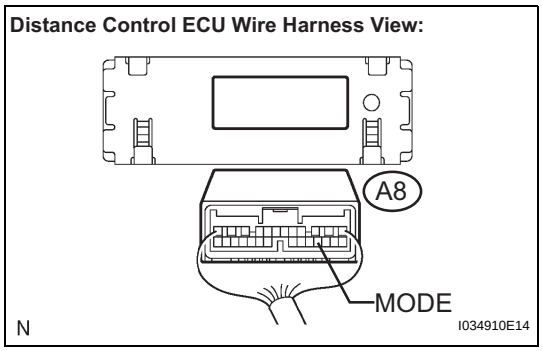

(a) Disconnect the A8 connector.
(b) Measure the resistance according to the value(s) in the table below.

Standard resistance

Tester connection	Condition	Specified condition
A8-16 (MODE) - Body ground	Distance control switch ON (pushed)	Below 1 Ω
	Distance control switch OFF (not pushed)	10 kΩ or higher

OK → **REPLACE DISTANCE CONTROL ECU (See page CC-118)**

NG

3 INSPECT STEERING PAD SWITCH ASSEMBLY

(a) Remove the steering pad (See page RS-366).

Steering Pad Switch:

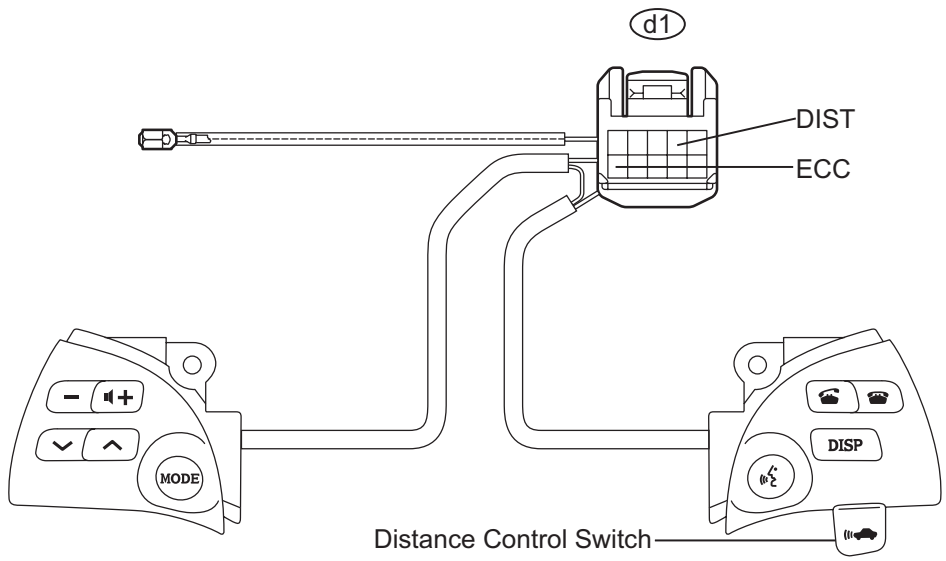

H

E133076E01

(b) Disconnect the d1 connector from the spiral cable.

(c) Measure the resistance according to the value(s) in the table below.

Standard resistance

Tester Connection	Condition	Specified Condition
d1-4 (DIST) - d1-6 (ECC)	Distance control switch ON (pushed)	Below 2.5 Ω
d1-4 (DIST) - d1-6 (ECC)	Distance control switch OFF (not pushed)	10 kΩ or higher

NG → **REPLACE STEERING PAD SWITCH (See page AV-247)**

OK

CC

4 CHECK HARNESS AND CONNECTOR (ECM - SPIRAL CABLE)

Distance Control ECU Connector Wire Harness View:

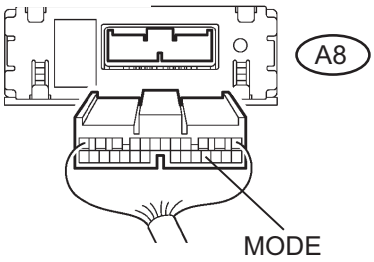

Spiral Cable Connector Wire Harness View:

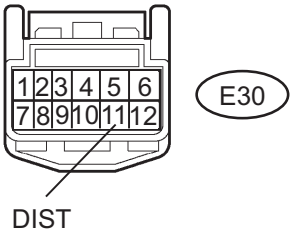

E109734E08

NOTICE:
The spiral cable is an important part of the SRS airbag system. Incorrect removal or installation of the spiral cable may cause airbag deployment. Be sure to read the page shown in the brackets.

HINT:
- Removal (See page RS-379)
- Installation (See page RS-382)

(a) Remove the spiral cable.
(b) Disconnect the A8 connector from the distance control ECU.
(c) Measure the resistance according to the value(s) in the table below.

Standard resistance

Tester Connection	Condition	Specified Condition
E30-11 (DIST) - A8-16 (MODE)	Always	Below 1 Ω
A8-16 (MODE) - Body ground	Distance control switch off	10 kΩ or higher
	Distance control switch on	Below 1 Ω

NG → **REPAIR OR REPLACE HARNESS OR CONNECTOR**

OK

REPLACE SPIRAL CABLE (See page RS-379)

Wiper Signal Circuit

DESCRIPTION

The distance control ECU detects HI mode wiper operation. If the windshield wiper operate in HI mode for 5 seconds or more, the cruise control will be cancelled and "CRUISE NOT AVAILABLE" will be displayed on the multi-information display in the combination meter. Operating the cruise main switch after HI mode wiper operation stop sill start the cruise control again.

WIRING DIAGRAM

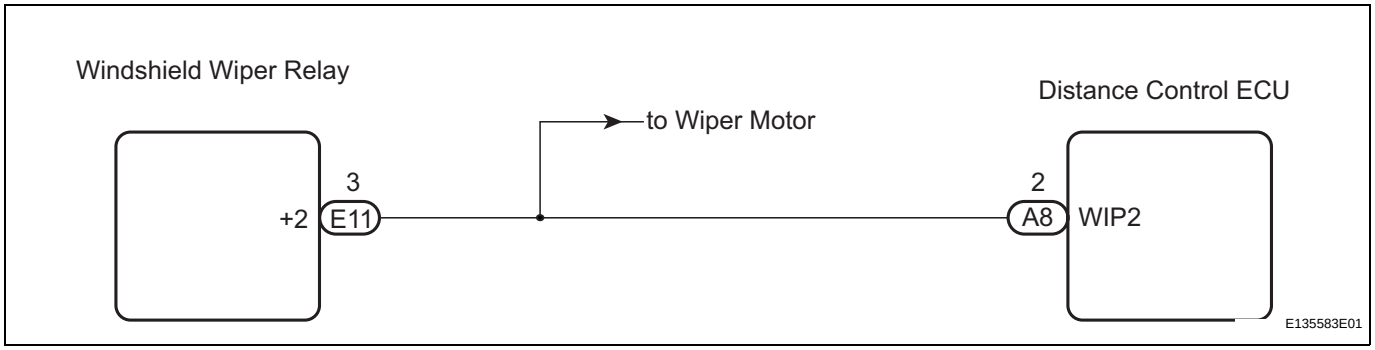

CC

INSPECTION PROCEDURE

NOTICE:

When the distance control ECU and/or ECM are replaced with a new one, initialization must be performed (See page CC-119).

1	INSPECT WIPER SYSTEM

Refer to HOW TO PROCEED WITH TROUBLESHOOTING (See page WW-7).

OK:

Wiper function is normal.

NG → **GO TO WIPER AND WASHER SYSTEM**

OK

2	CHECK HARNESS AND CONNECTOR

Distance Control ECU Wire Harness Side Connector Front Side View:

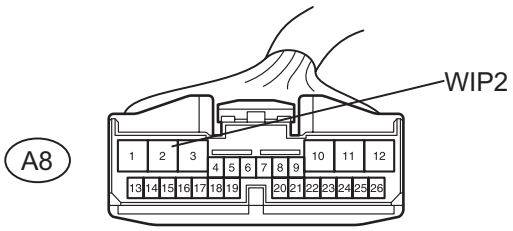

Windshield Wiper Relay Wire Harness Side Connector Front Side View:

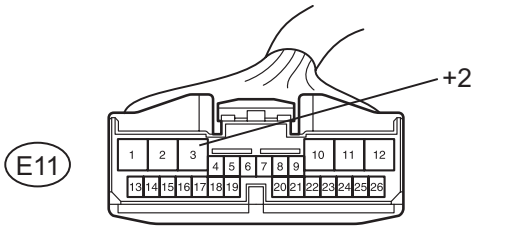

N E133077E01

(a) Disconnect the A8 and E11 connectors.
(b) Measure the resistance according to the value(s) in the table below.

Standard resistance

Tester Connection	Condition	Specified Condition
A8-2 (WIP2) - E11-3 (+2)	Always	Below 1 Ω
E11-3 (+2) - Body ground	Always	10 kΩ or higher

NG → **REPAIR OR REPLACE HARNESS OR CONNECTOR**

OK

PROCEED TO NEXT CIRCUIT INSPECTION SHOWN IN PROBLEM SYMPTOMS TABLE

CC

Washer Signal Circuit

DESCRIPTION

The distance control ECU detects washer operation. The cruise control will be cancelled by the distance control ECU if the windshield wipers operate in HI mode for 5 seconds or more. By detecting washer operation, the distance control ECU allows the cruise control to continue even when the windshield wipers operate in HI mode.

WIRING DIAGRAM

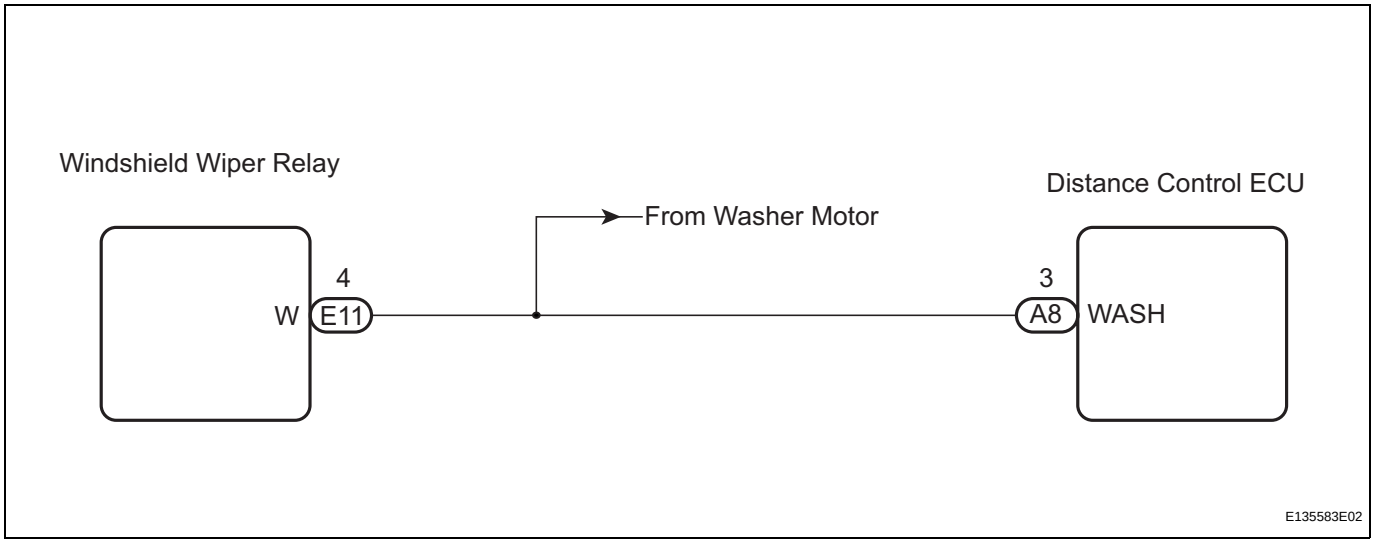

INSPECTION PROCEDURE

NOTICE:

When the distance control ECU and/or ECM are replaced with a new one, initialization must be performed (See page CC-119).

1	INSPECT WASHER SYSTEM

(a) Refer to HOW TO PROCEED WITH TROUBLESHOOTING (See page WW-7).

OK:

Washer function is normal.

NG → **GO TO WIPER AND WASHER SYSTEM (See page WW-7)**

OK

2	CHECK HARNESS AND CONNECTOR

Distance Control ECU Wire Harness Side Connector Front Side View:

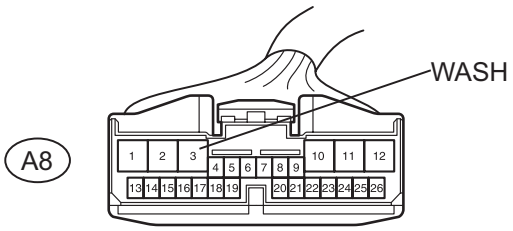

Windshield Wiper Relay Wire Harness Side Connector Front Side View:

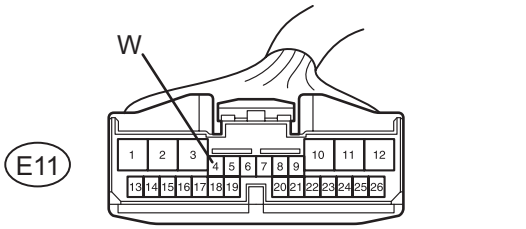

N E133077E02

(a) Disconnect the A8 and E11 connectors.
(b) Measure the resistance according to the value(s) in the table below.

Standard resistance

Tester Connection	Condition	Specified Condition
A8-3 (WASH) - E11-4	Always	Below 1 Ω
E11-4 (W) - Body ground	Always	10 kΩ or higher

NG → **REPAIR OR REPLACE HARNESS OR CONNECTOR**

OK

PROCEED TO NEXT CIRCUIT INSPECTION SHOWN IN PROBLEM SYMPTOMS TABLE

CC

Cruise Main Indicator Light Circuit

DESCRIPTION

When the cruise control main switch is on, the CRUISE main indicator light and RADAR READY indicator come on. This indicates the control condition (presence or absence of a vehicle in front, vehicle-to-vehicle distance, and set vehicle speed) and fail-safe state through the CAN communication system. The master warning light and CRUISE main indicator light come on and vehicle-to-vehicle distance information is displayed on the combination meter as the alarm buzzer sounds. Items such as "Clean Radar Sensor", "Cruise not Available", "Check Cruise System", and "Radar Ready" are displayed on the multi-information display on the combination meter when the ECM detects signals from each sensor and actuator and sends them to the combination meter via the CAN communication system.

HINT:

If the vehicle in front in the same lane significantly decreases vehicle speed or another vehicle moves in front of your vehicle, adequate deceleration cannot be applied and the vehicle-to-vehicle distance will shorten. At this time, the system sounds the buzzer and the master warning light blinks to warn the driver. Each indicator in the dynamic radar cruise control uses CAN for communication. Therefore, if there are any malfunctions in this circuit, check for DTCs in the CAN communication system before troubleshooting this circuit.

INSPECTION PROCEDURE

NOTICE:

When the distance control ECU and/or ECM are replaced with a new one, initialization must be performed (See page CC-119).

1 PERFORM ACTIVE TEST USING INTELLIGENT TESTER

(a) Connect the intelligent tester to the DLC3.
(b) Select the ACTIVE TEST, use the intelligent tester to generate a control command, and then check that the CRUISE main indicator light comes on.

Tester Display	Test Part	Control Range	Diagnostic Note
CRUISE INDIC	Turns CRUISE main indicator light	ON / OFF	-

OK:

Indicator light comes on.

NG → **REPLACE COMBINATION METER ASSEMBLY (See page ME-67)**

OK

2 READ VALUE ON INTELLIGENT TESTER

(a) Connect the intelligent tester to the DLC3.
(b) Turn the engine switch on (IG), and turn the intelligent tester main switch on.

(c) Check the DATA LIST for proper functioning of the CRUISE main indicator light.

ECM (Cruise control):

Tester Display	Measurement Item/Range	Normal Condition	Diagnostic Note
CCS READY M	Cruise control system standby condition (Main CPU) / ON or OFF	Each time main switch is pushed, ON/OFF changes	1
CCS INDICATOR M	Cruise indicator signal (Main CPU) / ON or OFF	ON : "CCS READY" ON OFF : "CCS READY" OFF	2

OK:

When the cruise control main switch is operated, the display changes as shown above.

HINT:

1 is OK, but 2 is NG → DTC output or ECM failure

NG → **REPLACE ECM (See page ES-543)**

OK

PROCEED TO NEXT CIRCUIT INSPECTION SHOWN IN PROBLEM SYMPTOMS TABLE

TC and CG Terminal Circuit

DESCRIPTION

Connecting terminals TC and CG of the DLC3 causes the system to enter the self-diagnostic mode. If a malfunction is present, DTCs will be output.
HINT:
When a particular warning light remains blinking, a ground short in the wiring of terminal TC of the DLC3 or an internal ground short in the relevant ECU is suspected.

WIRING DIAGRAM

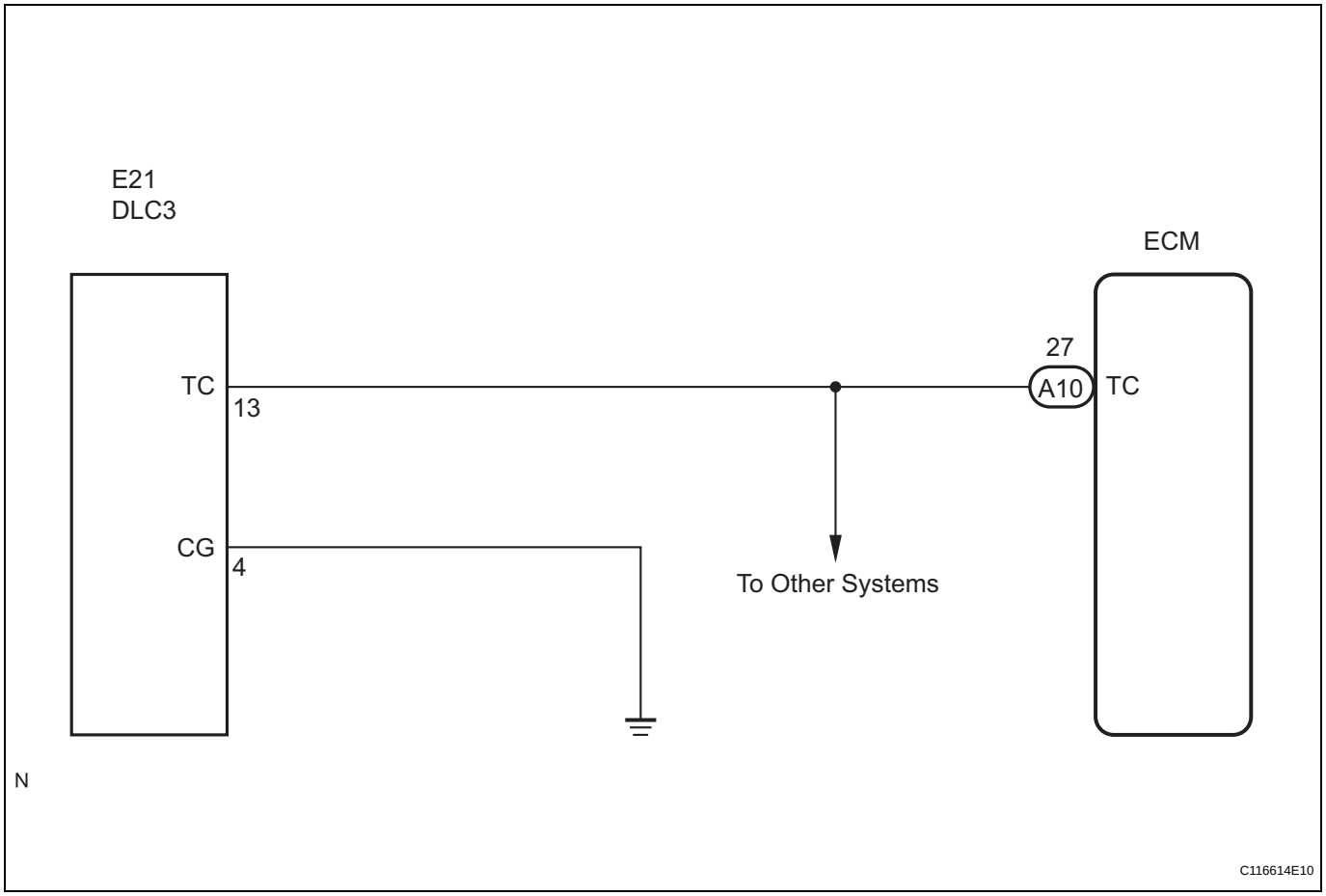

INSPECTION PROCEDURE

NOTICE:
When the distance control ECU and/or ECM are replaced with a new one, initialization must be performed (See page CC-119).

CC

1 CHECK WIRE HARNESS (TERMINAL TC of DLC3 - ECM)

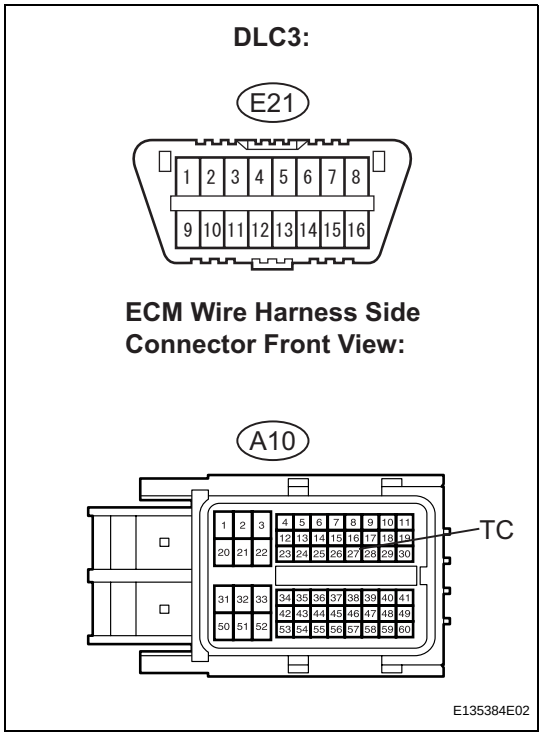

(a) Disconnect the A10 connector from the ECM.
(b) Measure the resistance according to the value(s) in the table below.

Standard resistance

Tester Connection	Condition	Specified Condition
A10-27 (TC) - E21-13 (TC)	Always	Below 1 Ω

NG → **REPAIR OR REPLACE HARNESS OR CONNECTOR (DLC3 - ECM)**

OK

2 CHECK WIRE HARNESS (TERMINAL CG of DLC3 - BODY GROUND)

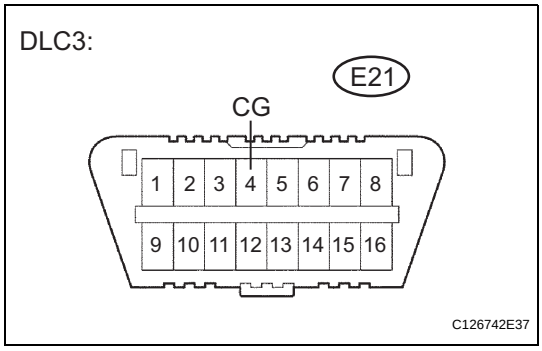

(a) Measure the resistance according to the value(s) in the table below.

Standard resistance

Tester Connection	Condition	Specified Condition
E21-4 (CG) - Body ground	Always	Below 1 Ω

NG → **REPAIR OR REPLACE HARNESS OR CONNECTOR (DLC3 - BODY GROUND)**

OK

3	CHECK WIRE HARNESS (TERMINAL TC of DLC3 - BODY GROUND)

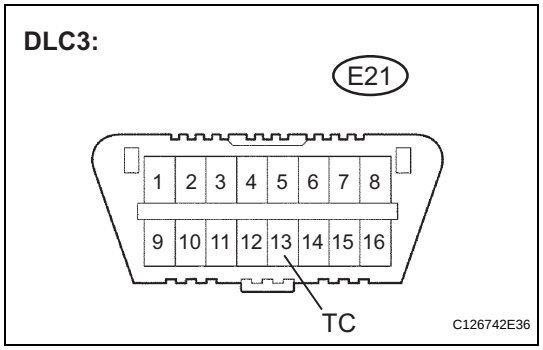

(a) Measure the resistance according to the value(s) in the table below.

Standard resistance

Tester Connection	Condition	Specified Condition
E21-13 (TC) - Body ground	Always	10 kΩ or higher

NG → **REPAIR OR REPLACE HARNESS OR CONNECTOR OR EACH ECU**

OK

PROCEED TO NEXT CIRCUIT INSPECTION SHOWN IN PROBLEM SYMPTOMS TABLE

CC

INSPECTION

1. INSPECT CRUISE CONTROL MAIN SWITCH

(a) Remove the cruise control main switch.

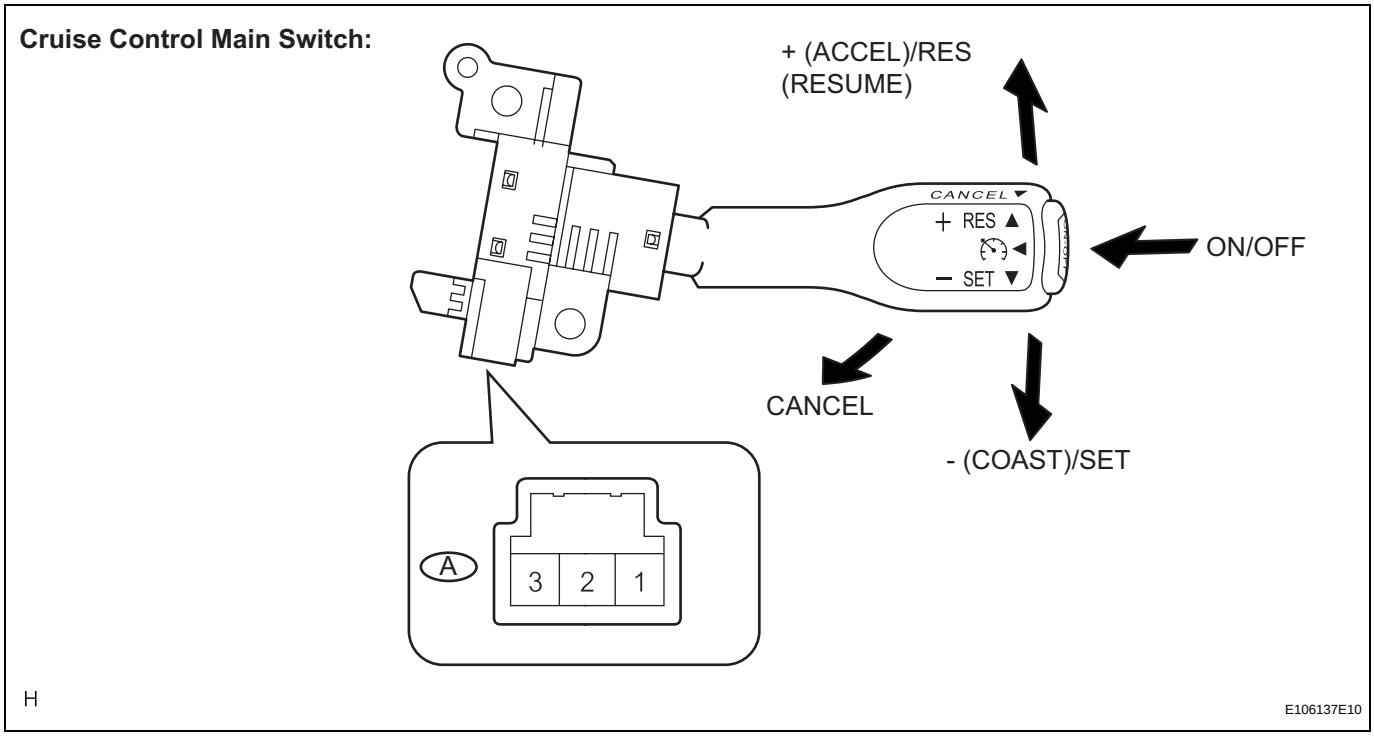

(b) Measure the resistance according to the value(s) in the table below.

Standard resistance

Tester Connection	Switch Condition	Specified Condition
A-1 (CCS) - A-3 (ECC)	Neutral	10 kΩ or higher
	+ (ACCEL) / RES (RESUME)	216 to 264 Ω
	- (COAST) / SET	567 to 693 Ω
	CANCEL	1,386 to 1,694 Ω
	Main Switch on	Below 1 Ω

If the result is not as specified, replace the cruise control main switch

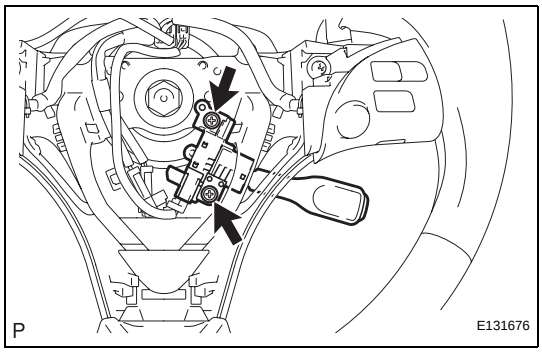

INSTALLATION

1. INSTALL CRUISE CONTROL MAIN SWITCH

(a) Install the cruise control main switch with the 2 screws.
Torque: 2.4 N*m (24 kgf*cm, 21 in.*lbf)

(b) Connect the connector.

2. INSTALL STEERING PAD (See page RS-368)

3. INSTALL LOWER NO. 2 STEERING WHEEL COVER (See page RS-369)

4. INSTALL LOWER NO. 3 STEERING WHEEL COVER (See page RS-369)

5. CONNECT CABLE TO NEGATIVE BATTERY TERMINAL

6. INSPECT STEERING PAD (See page RS-369)

7. **INSPECT SRS WARNING LIGHT**
   (See page RS-37)

8. **PERFORM INITIALIZATION**
   NOTICE:
   Some systems need initialization after reconnecting the cable to the negative battery terminal (See page IN-33).

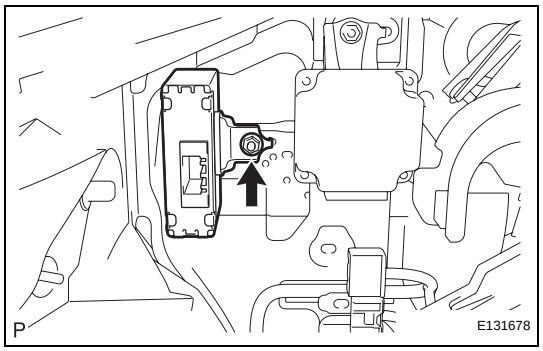

(d) Remove the nut and the distance control ECU assembly.

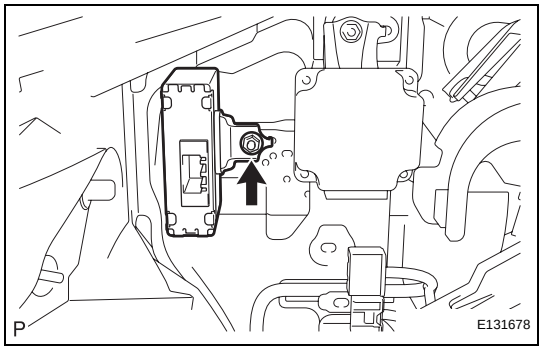

INSTALLATION

1. **INSTALL DISTANCE CONTROL ECU ASSEMBLY**
   (a) Install the distance control ECU assembly with the nut.
   Torque: 5.0 N*m (51 kgf*cm, 44 in.*lbf)
   NOTICE:
   Do not install the distance control ECU if it has been damaged or impacted in any way.
   (b) Connect the connector.

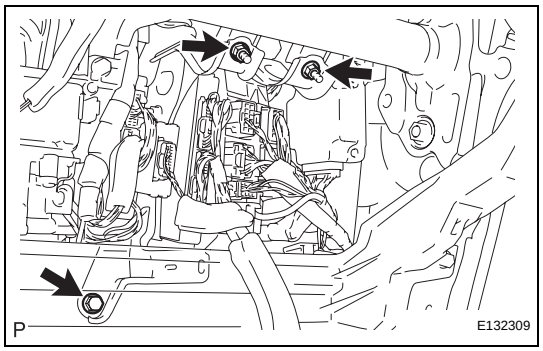

   (c) Install the certification ECU with instrument panel wire with the 2 nuts and bolt.
   Torque: 8.0 N*m (82 kgf*cm, 71 in.*lbf)
2. **INSTALL LOWER INSTRUMENT PANEL RH (See page IP-42)**
3. **INSTALL FRONT PASSENGER SIDE KNEE AIRBAG ASSEMBLY (See page RS-396)**
4. **INSTALL SIDE INSTRUMENT PANEL RH (See page IP-43)**
5. **INSTALL NO. 2 INSTRUMENT PANEL UNDER COVER SUB-ASSEMBLY (See page IP-44)**
6. **INSTALL FRONT DOOR OPENING TRIM COVER RH (See page IR-65)**
7. **INSTALL FRONT DOOR SCUFF PLATE RH (See page IR-65)**
8. **INSTALL INSTRUMENT PANEL FINISH PANEL END RH (See page IP-44)**
9. **CONNECT CABLE TO NEGATIVE BATTERY TERMINAL**
10. **INITIALIZE DISTANCE CONTROL ECU ASSEMBLY**
    NOTICE:
    After replacing the distance control ECU, it is necessary to initialize the distance control ECU so that the ECU can recognize the specification of the vehicle.
    (a) Be sure to perform the following procedures after replacing the distance control ECU.
    (1) Turn the engine switch on (IG).
    (2) Turn the cruise control main switch on.

CC

(3) With the brake pedal depressed, push the cruise control main switch to RES/ACC 3 times within 3 seconds. Check that the buzzer sounds at this time.
NOTICE:
Do not turn the headlight dimmer switch on at this time because the optical axis automatic adjustment mode has already started, which may lead to an incorrect optical axis setting. If the headlight dimmer switch is turned on by mistake, readjust the optical axis (See page CC-122).

11. PERFORM INITIALIZATION
NOTICE:
Some systems need initialization when disconnecting the cable from the negative battery terminal (See page IN-33).

12. INSPECT FRONT PASSENGER SIDE KNEE AIRBAG ASSEMBLY (See page RS-395)

13. INSPECT SRS WARNING LIGHT
(See page RS-37)

ADJUSTMENT

HINT:

- After replacing the ECM on vehicles with radar cruise control system, it is necessary to initialize the ECM so that the ECM can recognize the radar cruise control system (See page ES-544)
- After replacing the distance control ECU, it is necessary to initialize the distance control ECU so that ECU can recognize the specification of the vehicle (See page CC-119).
- There is a limitation on radar beam axis adjustment.
- Since the radar sensor is installed in the radiator support upper and hood lock support sub-assembly, it is important that the laser sensor, bumper reinforcement, and other related parts are installed properly.
- When the sensor is removed from the vehicle for trouble diagnosis or repair, it is necessary to adjust the radar beam axis after the operation.

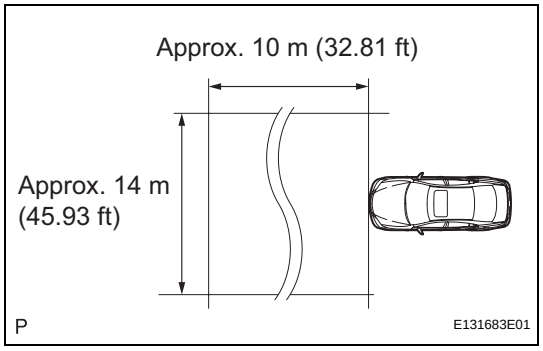

1. ADJUST MILLIMETER WAVE RADAR SENSOR

CAUTION:

Exposure to radio frequency emissions is hazardous to your health. It is hazardous to your health to be within 20 cm (7.9 in.) of the device's radio frequency aperture.

NOTICE:

- **This device complies with FCC radio frequency emission regulations.**
- **Perform measurements on a level surface.**
- **Make sure that no large pieces of metal are within a 10 m (32.81 ft) x 14 m (45.93 ft) area in front of the vehicle. If possible, the surrounding area should also be free of large metal objects.**

(a) Before adjusting the radar beam axis, prepare the vehicle as follows:

(1) Check the tire pressure and adjust it if necessary.

(2) Remove all excess weight from the vehicle (luggage, heavy objects, etc.).

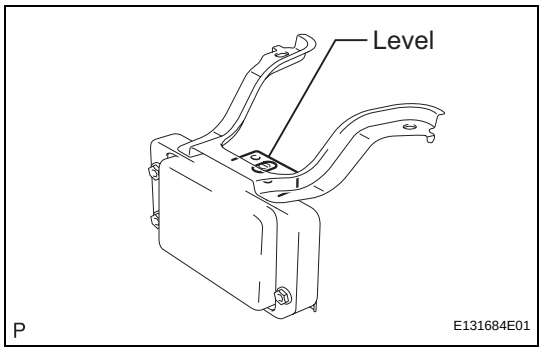

(b) Check and adjust the vertical direction of the radar sensor.

(1) Remove dust, oil, and foreign matter from the radar sensor's level rack.

(2) Set a level on the radar sensor's level rack.

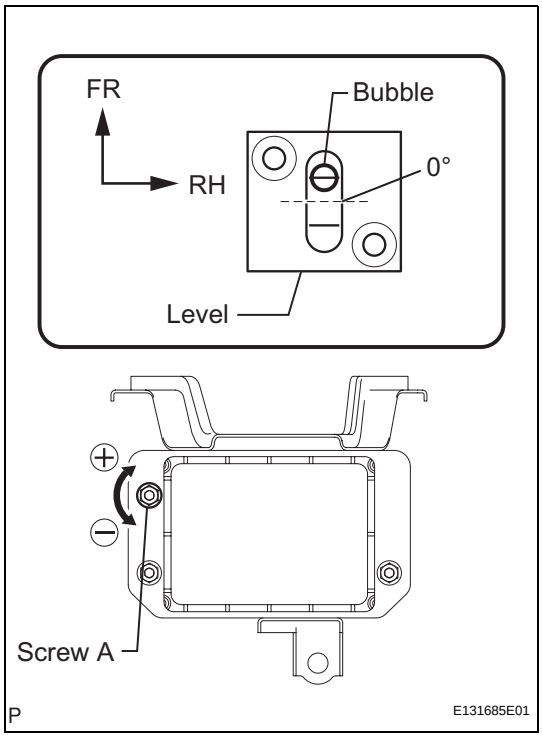

(3) Check that the air bubble is within the red frame on the level.

OK:

The air bubble is within the red frame on the level.
If the bubble is not indicated with the red frame, use a hexagon wrench to adjust screw A until the air bubble is within the red frame.

HINT:

- The adjustable range indicated with the red frame on the level is + - 0.2°.
- The target angle is +0.2° (upward angle of 0.2°).

CC

Result

Adjustment Direction	Adjustment Procedure	Adjustment Angle
Vertical adjustment	• **Upward direction: Turn screw A to negative (-) side** • **Downward direction: Turn screw A to positive (+) side**	**Approx. 1.0° per turn**

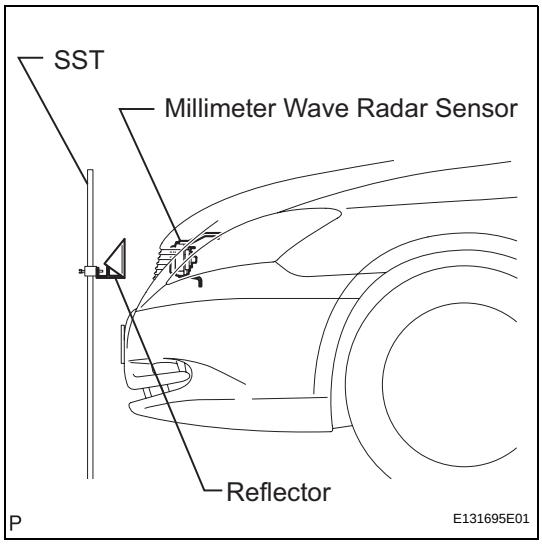

(c) Adjust the reflector height.

(1) Adjust the reflector so that the center of the SST reflector is the same height as the millimeter wave radar sensor.

SST 09870-60000 (09870-60010, 09870-60040)

HINT:

Prepare a 10 m (32.81 ft) string, a string with a sharp-pointed weight (plumb bob), and a 5 m (16.41 ft) tape measure.

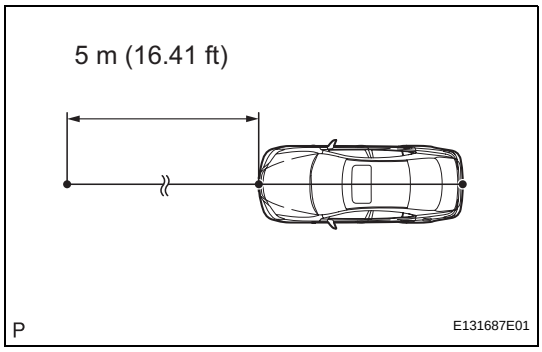

(d) Place the reflector.

(1) Hang the string (with weight) from the center of the vehicle's rear emblem. Mark the vehicle's rear center point on the ground. Repeat the same procedure for the front of the vehicle.

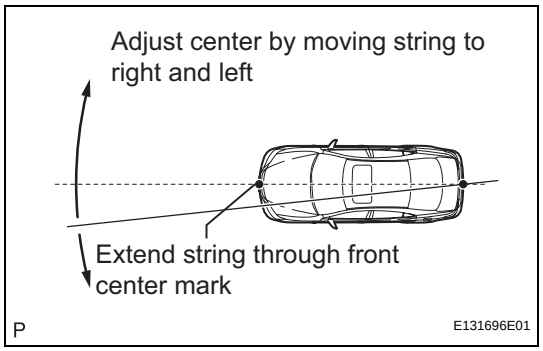

(2) Set one end of the 10 m (32.82 ft) string on the vehicle's rear center point. Run the string over the vehicle's front center point to a position 5 m (16.41 ft) beyond the vehicle front center point, as shown in the illustration. Mark the 5 m (16.41 ft) position.

(3) Using a tape measure, measure 12 mm (0.47 in.) to the left of the 5 m (16.41 ft) position. Place the reflector at that position.

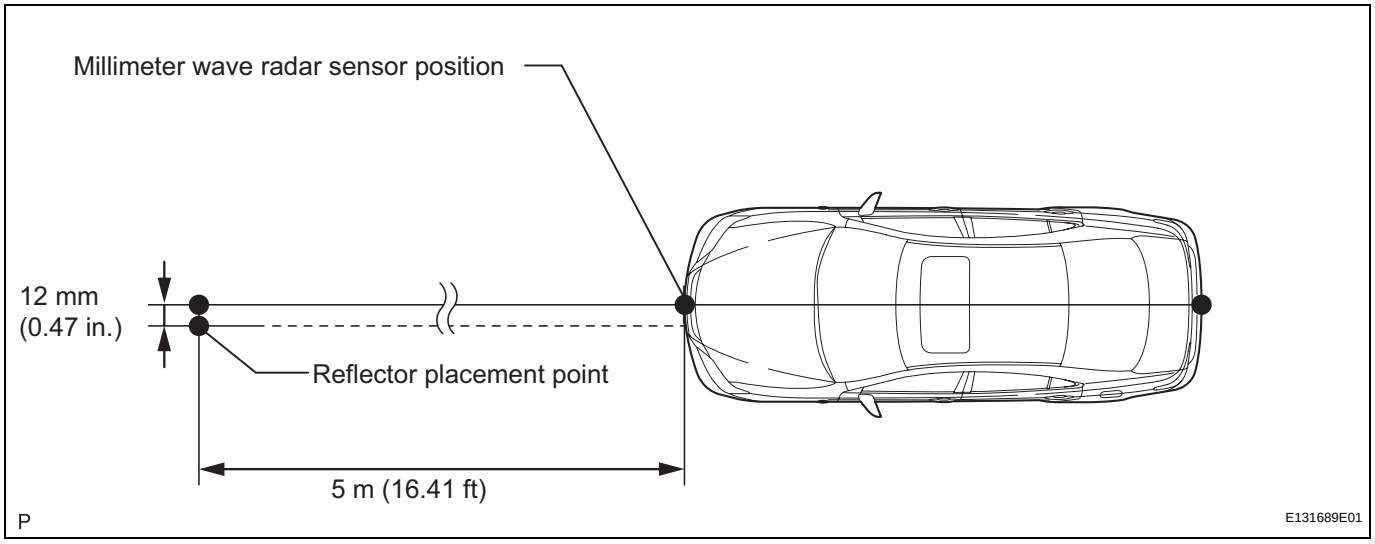

NOTICE:
Perform the operation as precisely as possible.

(e) Adjust the radar beam axis.

(1) Connect the intelligent tester to the Controller Area Network Vehicle Interface Module (CAN VIM). Then connect the CAN VIM to the Data Link Connectors 3 (DLC3).

(2) Turn the engine switch on (IG).

(3) Turn the intelligent tester main switch on, and turn the cruise control main switch on.

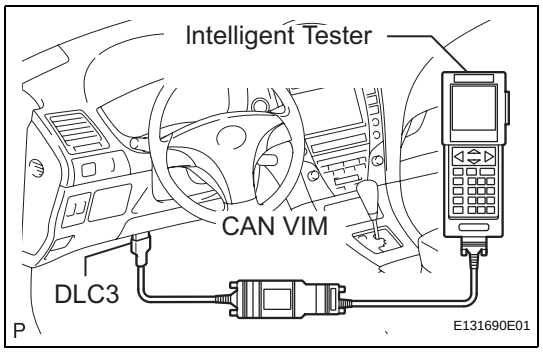

(4) Select "1: OBD/MOBD".

(5) Press the "ENTER" key.

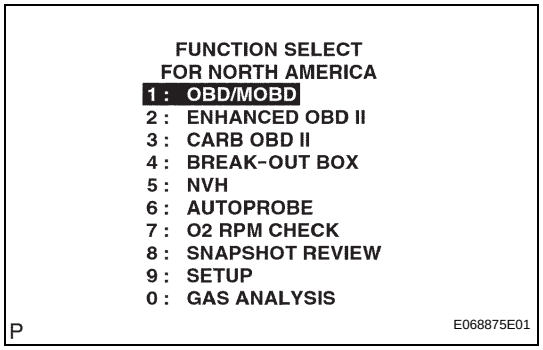

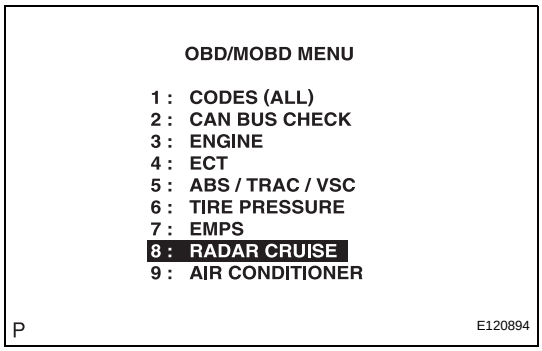

(6) Select "8: RADAR CRUISE".
(7) Press the "ENTER" key.

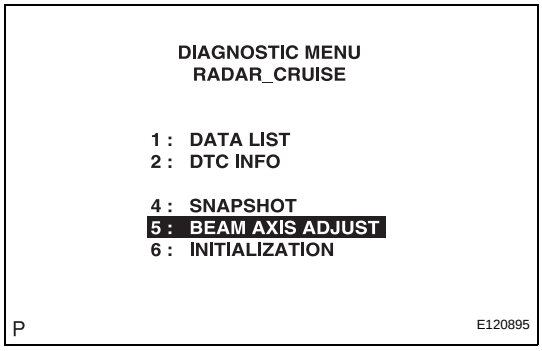

(8) Select "5: BEAM AXIS ADJUST".
(9) Press the "ENTER" key.
HINT:
- Pressing the "ENTER" key will make the ECM transfer to BEAM AXIS ADJUST MODE.
- If an error message is displayed on the screen, initialization of the distance control ECU may not be completed. Initialize the distance control ECU (See page CC-119).
- When the ECM transfers to BEAM AXIS ADJUST MODE, the buzzer sounds for 1 second.

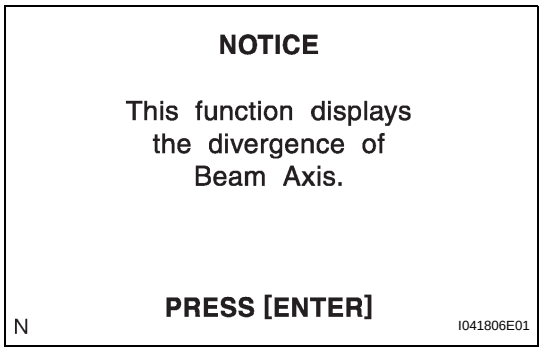

(10) Press the "ENTER" key.

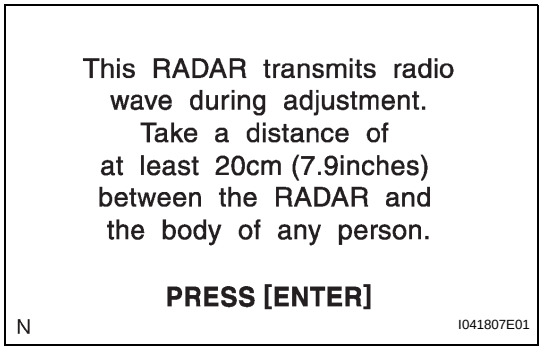

(11) Press the "ENTER" key.

CC

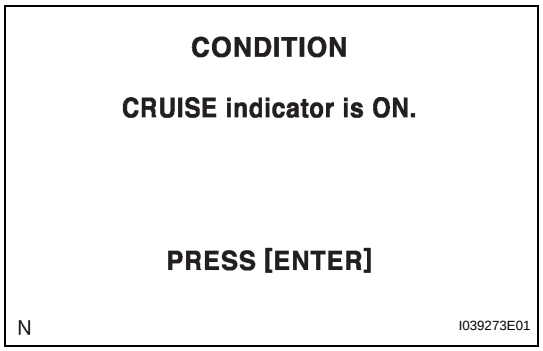

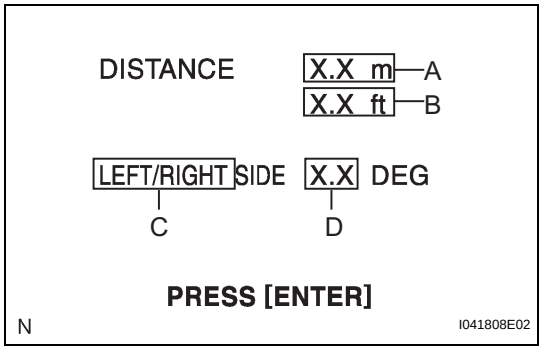

(12) After the CRUISE main indicator light comes on, press the "ENTER" key.

(13) Press the "ENTER" key.

(14) Check that a distance of 5 m (16.41 ft) is displayed on the tester.
HINT:
If the distance is 0 m (0 ft), the sensor cannot detect the target. Reconfirm that there is no metal around the vehicle.
1. Check that a value between 0.0 and 6.3 is displayed in the meter display, area A.
2. Check that a value between 0.0 and 20.67 is displayed in the feet display, area B.
3. Check that LEFT or RIGHT is displayed in area C.
4. Check that an angle value between 0.0 and 6.3 is displayed in area D.
While using the intelligent tester BEAM AXIS ADJUST MODE, the actual direction and angle of the radar sensor may be different from the intelligent tester's data. In such a case, the deviation is displayed on the combination meter's multi-information display.

(f) Check and adjust the horizontal direction of the radar sensor.

(1) Check that the divergence of the radar beam axis is 0° .
Standard:
0° (Both right and left)
If the axis is not as specified, use a hexagon wrench to adjust screw B until the divergence of the radar beam axis is 0°.

(2) Based on the measured divergence of the beam axis, turn and adjust screw B for horizontal adjustment of the millimeter wave radar sensor using a hexagon wrench.

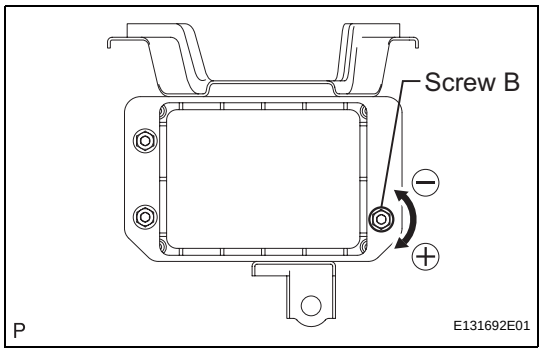

Result

Adjustment Direction	Adjustment Procedure	Adjustment Angle
Horizontal adjustment	• **Right direction: Turn screw B to positive (+) side.** • **Left direction: Turn screw B to negative (-) side.**	**Approx. 0.33° per turn**

CC

HINT:
- If "LEFT SIDE: 1.0°" is displayed, the divergence is 1.0° in the left direction. Turn screw B approximately 3 turns to the negative (-) side.
- If the value does not change to 0°, it is likely that the sensor is aiming at something different. Reconfirm that there are no reflective materials around the vehicle.

(3) Reset the radar sensor's driving learning values. Prepare a type of metal that can block radio waves, such as aluminum foil. Cover the radar sensor's left half with the metal for 10 seconds.
NOTICE:
Be sure to keep the reflector in place and make sure that there is nothing between the sensor's left half and the reflector.
HINT:
When the reset is completed, the buzzer sounds for 10 seconds.

(4) Disconnect the intelligent tester from the DLC3.

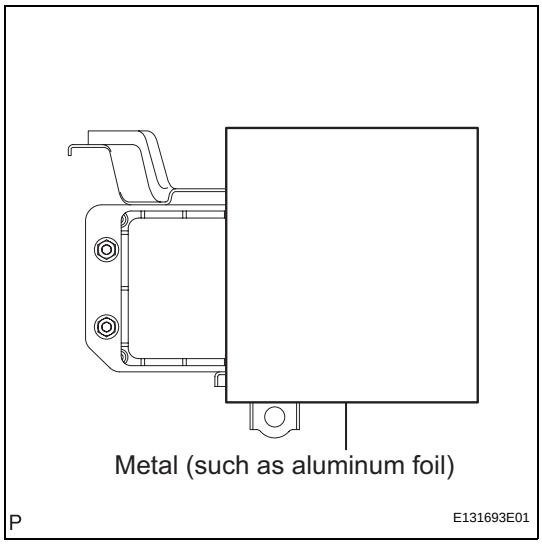

(g) Recheck and readjust the vertical direction of the radar sensor.
(1) Set a level on the radar sensor's level rack.

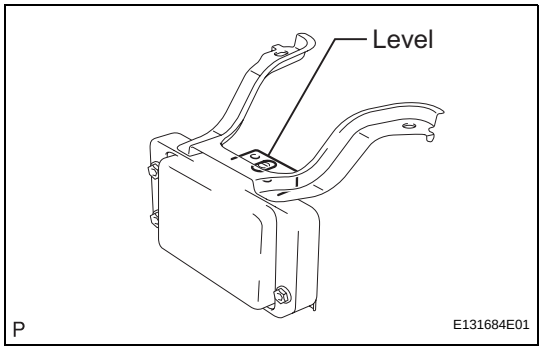

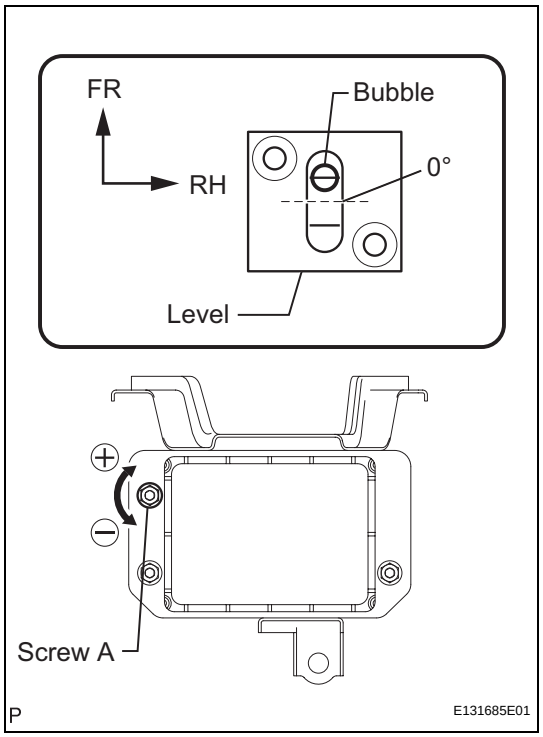

(2) Check that the level's air bubble is within the red frame.

OK:

Level's air bubble is within the red frame. If the bubble is not within the red frame, use a hexagon wrench to adjust screw A until the level's air bubble is within the red frame.

HINT:

- The adjustable range indicated with the red frame is + - 0.2°.
- The target angle is +0.2° (upward angle of 0.2°).

CC

Result

Adjustment Direction	Adjustment Procedure	Adjustment Angle
Vertical adjustment	• **Upward direction: Turn screw A to negative (-) side** • **Downward direction: Turn screw A to positive (+) side**	**Approx. 1.0° per turn**

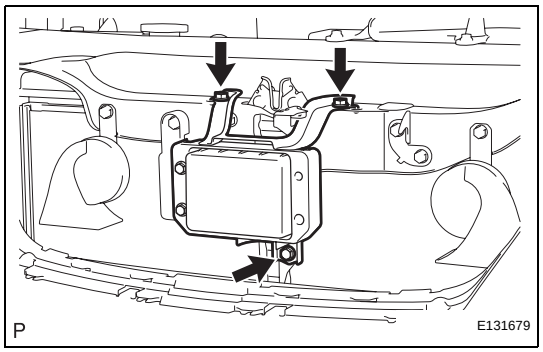

INSTALLATION

1. **INSTALL MILLIMETER WAVE RADAR SENSOR ASSEMBLY**
   (a) Install the millimeter wave radar sensor assembly with the 3 bolts.
   Torque: 5.5 N*m (56 kgf*cm, 49 in.*lbf)
   (b) Connect the connector.
2. **INSTALL FRONT BUMPER ASSEMBLY (See page ET-14)**
3. **INSTALL COOL AIR INTAKE DUCT SEAL (See page EM-50)**
4. **CONNECT CABLE TO NEGATIVE BATTERY TERMINAL**
5. **ADJUST MILLIMETER WAVE RADAR SENSOR (See page CC-122)**
6. **PERFORM INITIALIZATION**
   NOTICE:
   Some systems need initialization after reconnecting the cable to the negative battery terminal (See page IN-33).
7. **VEHICLE PREPARATION FOR FOG LIGHT AIM (See page LI-141)**

8. **PREPARATION FOR FOG LIGHT AIMING (See page LI-142)**
9. **FOG LIGHT AIMING INSPECTION (See page LI-143)**
10. **FOG LIGHT AIMING ADJUSTMENT (See page LI-144)**

DTC	B2410	Headlight Swivel Motor LH Communication Malfunction

DTC	B2411	Headlight Swivel Motor RH Communication Malfunction

DESCRIPTION

The AFS ECU receives a signal from the headlight swivel motor using LIN communication.

DTC No.	DTC Detecting Condition	Trouble Area
B2410	• Malfunction in headlight swivel motor LH • Open or short in headlight swivel motor LH communication circuit	• Headlight swivel motor LH • Harness or connector • AFS ECU
B2411	• Malfunction in headlight swivel motor RH • Open or short in headlight swivel motor RH communication circuit	• Headlight swivel motor RH • Harness or connector • AFS ECU

LI

WIRING DIAGRAM

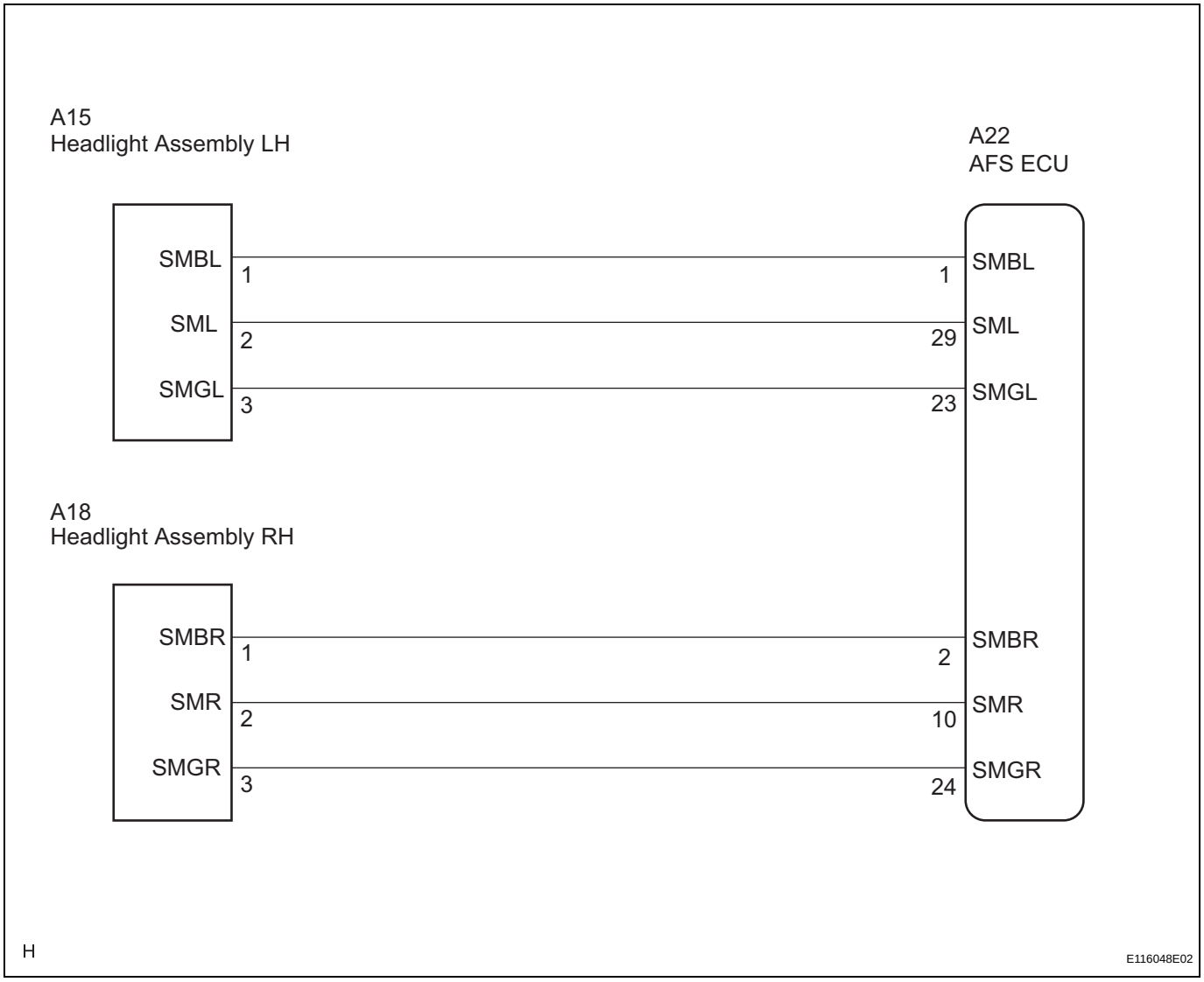

INSPECTION PROCEDURE

1	CHECK HARNESS AND CONNECTOR

(a) Disconnect the A22 AFS ECU connector.

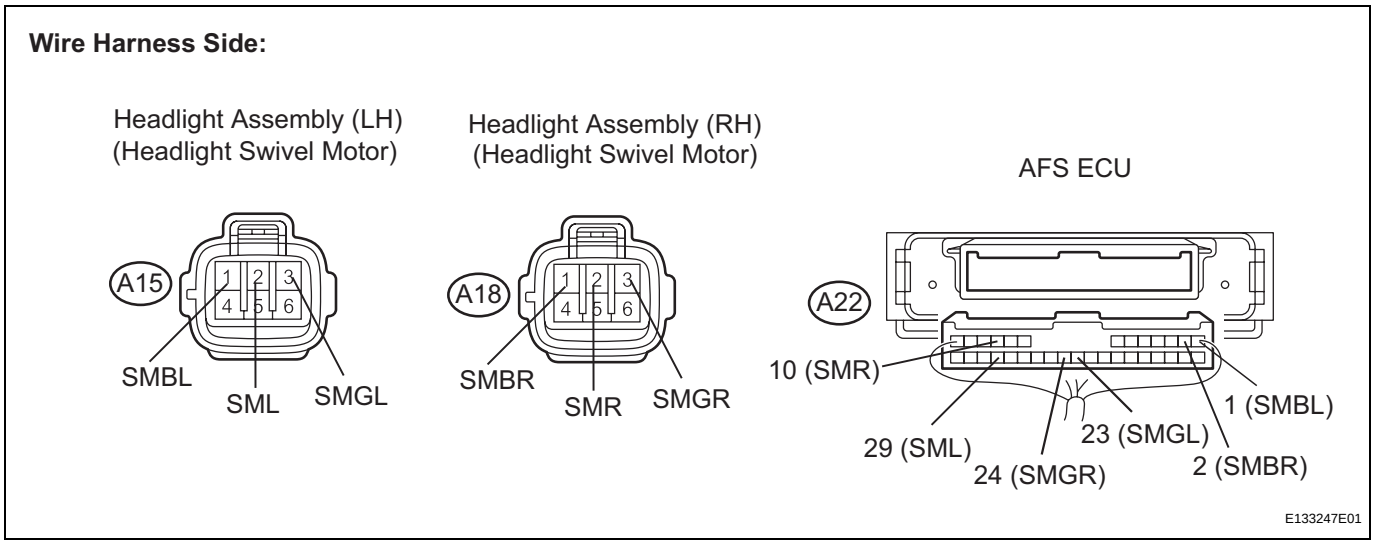

(b) Disconnect the A15 or A18 headlight assembly connector.

(c) Measure the resistance according to the value(s) in the table below.

Standard resistance:

LH Side (B2410)

Tester Connection	Condition	Specified Condition
A22-1 (SMBL) - A15-1 (SMBL)	Always	Below 1 Ω
A22-23 (SMGL) - A15-3 (SMGL)	Always	Below 1 Ω
A22-29 (SML) - A15-2 (SML)	Always	Below 1 Ω
A22-1 (SMBL) - Body ground	Always	10 kΩ or higher
A22-23 (SMGL) - Body ground	Always	10 kΩ or higher
A22-29 (SML) - Body ground	Always	10 kΩ or higher

RH Side (B2411)

Tester Connection	Condition	Specified Condition
A22-2 (SMBR) - A18-1 (SMBR)	Always	Below 1 Ω
A22-10 (SMR) - A18-2 (SMR)	Always	Below 1 Ω
A22-24 (SMGR) - A18-3 (SMGR)	Always	Below 1 Ω
A22-2 (SMBR) - Body ground	Always	10 kΩ or higher
A22-10 (SMR) - Body ground	Always	10 kΩ or higher
A22-24 (SMGR) - Body ground	Always	10 kΩ or higher

NG → **REPAIR OR REPLACE HARNESS OR CONNECTOR**

OK

2	**REPLACE HEADLIGHT REFLECTOR (HEADLIGHT SWIVEL MOTOR)**

OK:
Returns to normal operation.

NG → **REPLACE AFS ECU**

OK

END

DTC	B2412	Headlight Swivel Motor LH Malfunction

DTC	B2413	Headlight Swivel Motor RH Malfunction

DESCRIPTION

The swivel motor receives a signal from the AFS ECU to operate and sends a signal indicating the direction of the headlight and condition of the headlight swivel motor to the AFS ECU.

DTC No.	DTC Detecting Condition	Trouble Area
B2412	• Malfunction in headlight swivel motor LH • Open or short in headlight swivel motor LH circuit	• Headlight swivel motor LH • Harness or connector • AFS ECU
B2413	• Malfunction in headlight swivel motor RH • Open or short in headlight swivel motor RH circuit	• Headlight swivel motor RH • Harness or connector • AFS ECU

WIRING DIAGRAM

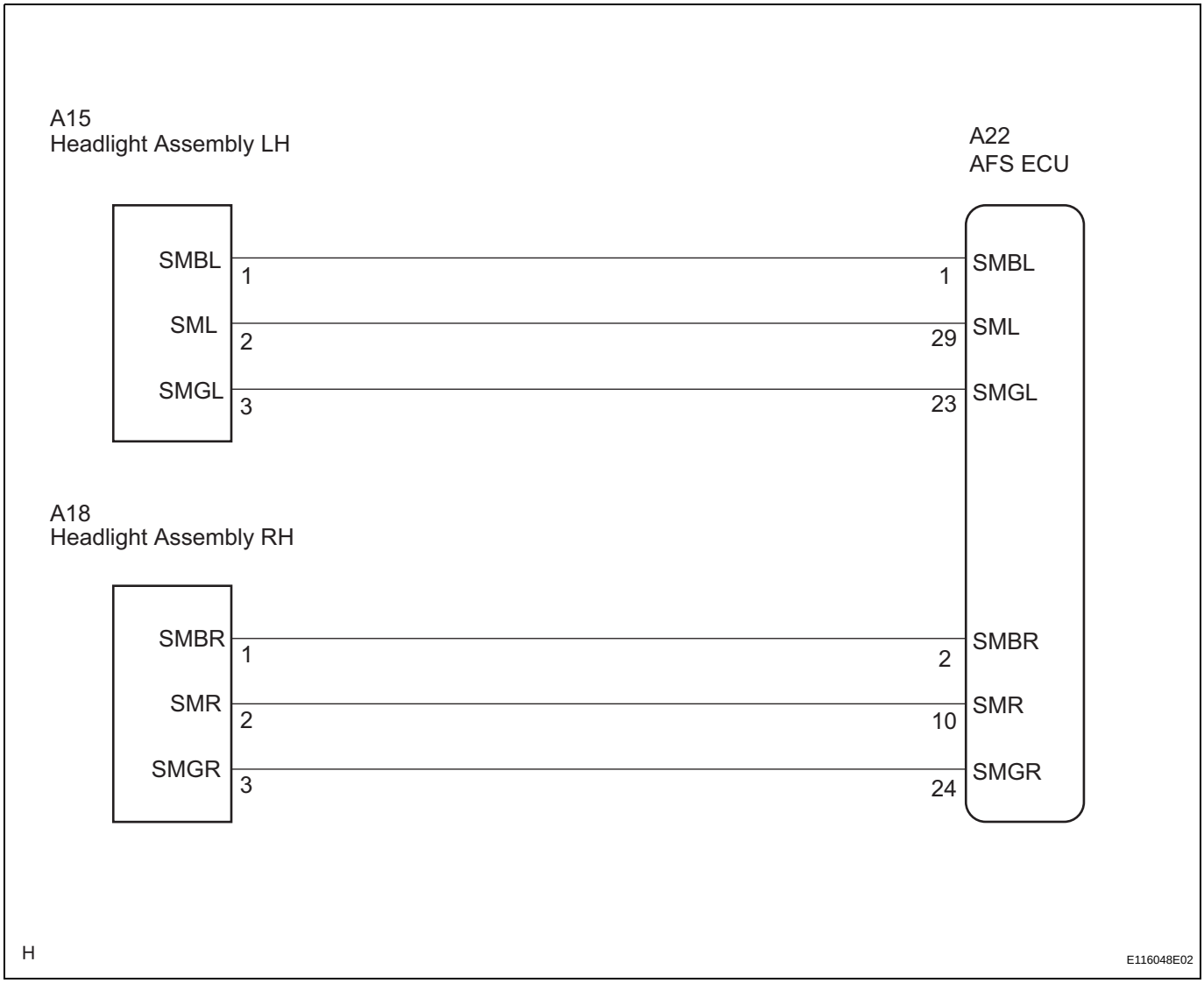

INSPECTION PROCEDURE

1	PERFORM ACTIVE TEST USING INTELLIGENT TESTER

(a) Connect the intelligent tester to the DLC3.
(b) Turn the engine switch on (IG) and turn the intelligent tester main switch on.
(c) Select the items below in the ACTIVE TEST and then check that the motor operates.

AFS (AFS ECU):

Tester Display	Test Part	Control Range	Diagnostic Note
SWIVEL MTR (RH)	Swivel motor RH	RIGHT / OFF	-
		LEFT / OFF	-
SWIVEL MTR (LH)	Swivel motor LH	RIGHT / OFF	-
		LEFT / OFF	-

OK:
Swivel motors operate normally.

NG → **Go to step 2**

OK

REPLACE AFS ECU

2	CHECK HARNESS AND CONNECTOR (POWER SOURCE CIRCUIT)

HINT:
(See page LI-116)

NG → **REPAIR OR REPLACE HARNESS OR CONNECTOR**

OK

3	CHECK HARNESS AND CONNECTOR (AFS ECU - HEADLIGHT ASSEMBLY)

(a) Disconnect the A22 AFS ECU connector.

LI

Wire Harness Side:

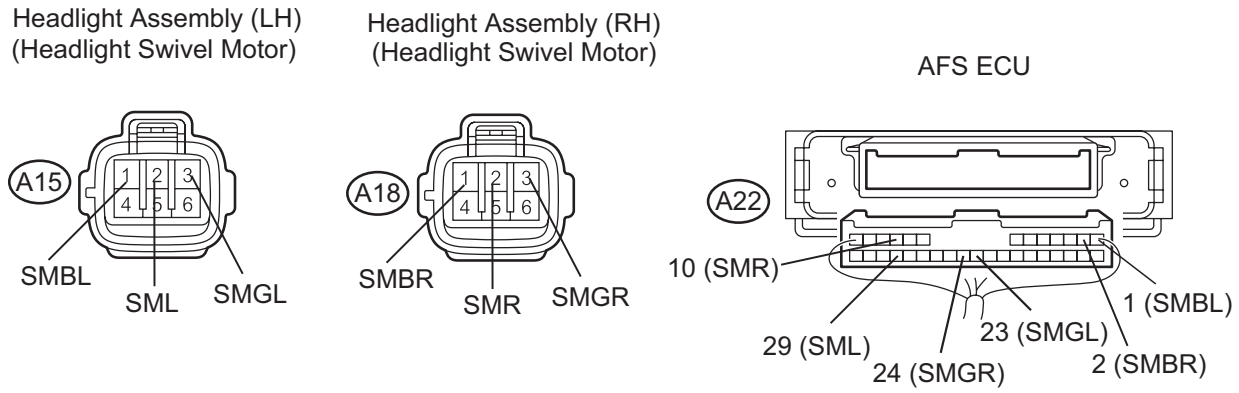

(b) Disconnect the A15 or A18 headlight assembly connector.

(c) Measure the resistance according to the value(s) in the table below.

Standard resistance:

LH Side (B2412)

Tester Connection	Condition	Specified Condition
A22-1 (SMBL) - A15-1 (SMBL)	Always	Below 1 Ω
A22-23 (SMGL) - A15-3 (SMGL)	Always	Below 1 Ω
A22-29 (SML) - A15-2 (SML)	Always	Below 1 Ω
A22-1 (SMBL) - Body ground	Always	10 kΩ or higher
A22-23 (SMGL) - Body ground	Always	10 kΩ or higher
A22-29 (SML) - Body ground	Always	10 kΩ or higher

RH Side (B2413)

Tester Connection	Condition	Specified Condition
A22-2 (SMBR) - A18-1 (SMBR)	Always	Below 1 Ω
A22-10 (SMR) - A18-2 (SMR)	Always	Below 1 Ω
A22-24 (SMGR) - A18-3 (SMGR)	Always	Below 1 Ω
A22-2 (SMBR) - Body ground	Always	10 kΩ or higher
A22-10 (SMR) - Body ground	Always	10 kΩ or higher
A22-24 (SMGR) - Body ground	Always	10 kΩ or higher

NG → **REPAIR OR REPLACE HARNESS OR CONNECTOR**

OK

4 INSPECT AFS ECU

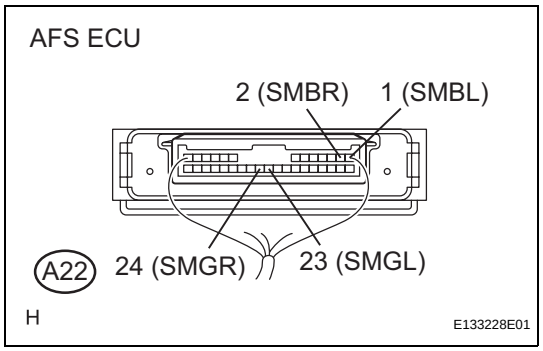

(a) Reconnect the A22 AFS ECU connector.
(b) Measure the voltage according to the value(s) in the table below.
Standard voltage:
LH Side (B2412)

Tester Connection	Condition	Specified Condition
A22-1 (SMBL) - A22-23 (SMGL)	Engine switch off	Below 1 V
	Engine switch on (IG)	10 to 14 V

RH Side (B2413)

Tester Connection	Condition	Specified Condition
A22-2 (SMBR) - A22-24 (SMGR)	Engine switch off	Below 1 V
	Engine switch on (IG)	10 to 14 V

NG → **REPLACE AFS ECU**

OK

5 REPLACE HEADLIGHT REFLECTOR (HEADLIGHT SWIVEL MOTOR)

OK:
Returns to normal operation.

NG → **REPLACE AFS ECU**

OK

END

LI

DTC	B2414	Steering Position Sensor Malfunction

DESCRIPTION

The AFS ECU receives signals indicating the swerve-angle from the steering angle sensor using CAN communication.

DTC No.	DTC Detecting Condition	Trouble Area
B2414	• Malfunction in steering angle sensor • AFS ECU	• Steering angle sensor • AFS ECU

WIRING DIAGRAM

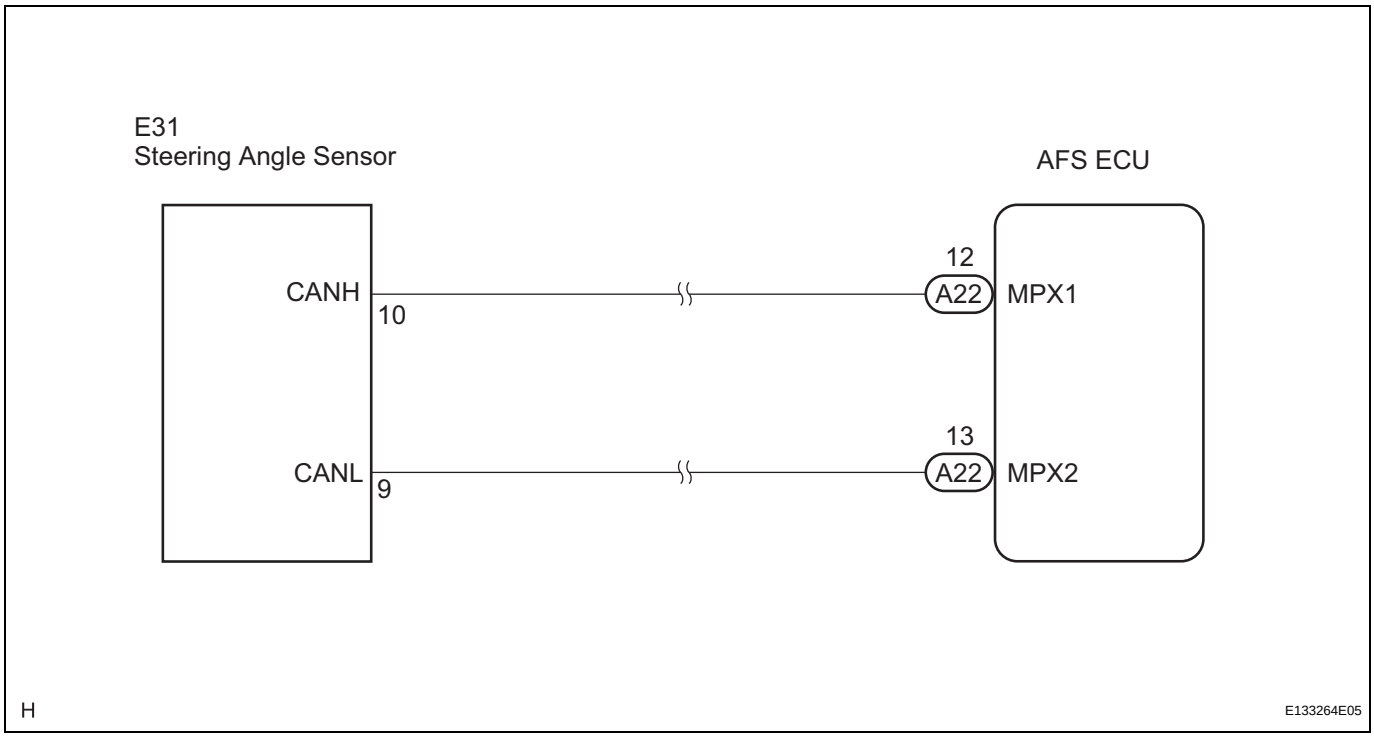

INSPECTION PROCEDURE

1	READ VALUE OF INTELLIGENT TESTER

(a) Connect the intelligent tester to the DLC3.
(b) Turn the engine switch on (IG) and turn the intelligent tester main switch on.
(c) Select the item below in the DATA LIST and read the display on the intelligent tester.

AFS (AFS ECU):

Tester Display	Measurement Item/Range	Normal Condition	Diagnostic Note
STEER SENS SIG	Steering angle sensor signal value / -382.5° to 382.5°	Approx. 0° (When steering wheel is centered)	-

OK:
Normal condition listed above is displayed.

NG → **Go to step 2**

OK

REPLACE AFS ECU

2	**CHECK DTC (CAN COMMUNICATION SYSTEM)**

HINT:
(See page CA-41)
OK:
Normal system code is output.

NG → **GO TO CAN COMMUNICATION SYSTEM**

OK

3	**CHECK DTC (VEHICLE STABILITY CONTROL SYSTEM)**

HINT:
(See page BC-43)
OK:
Normal system code is output.

NG → **GO TO VEHICLE STABILITY CONTROL SYSTEM**

OK

4	**REPLACE STEERING ANGLE SENSOR**

OK:
Returns to normal operation.

NG → **REPLACE AFS ECU**

OK

END

DTC	B2415	Vehicle Speed Sensor Malfunction

DESCRIPTION

The AFS ECU receives signals indicating the front wheel speed from the skid control ECU using CAN communication.

DTC No.	DTC Detecting Condition	Trouble Area
B2415	• Malfunction in skid control ECU • Malfunction in AFS ECU	• Skid control ECU • AFS ECU

WIRING DIAGRAM

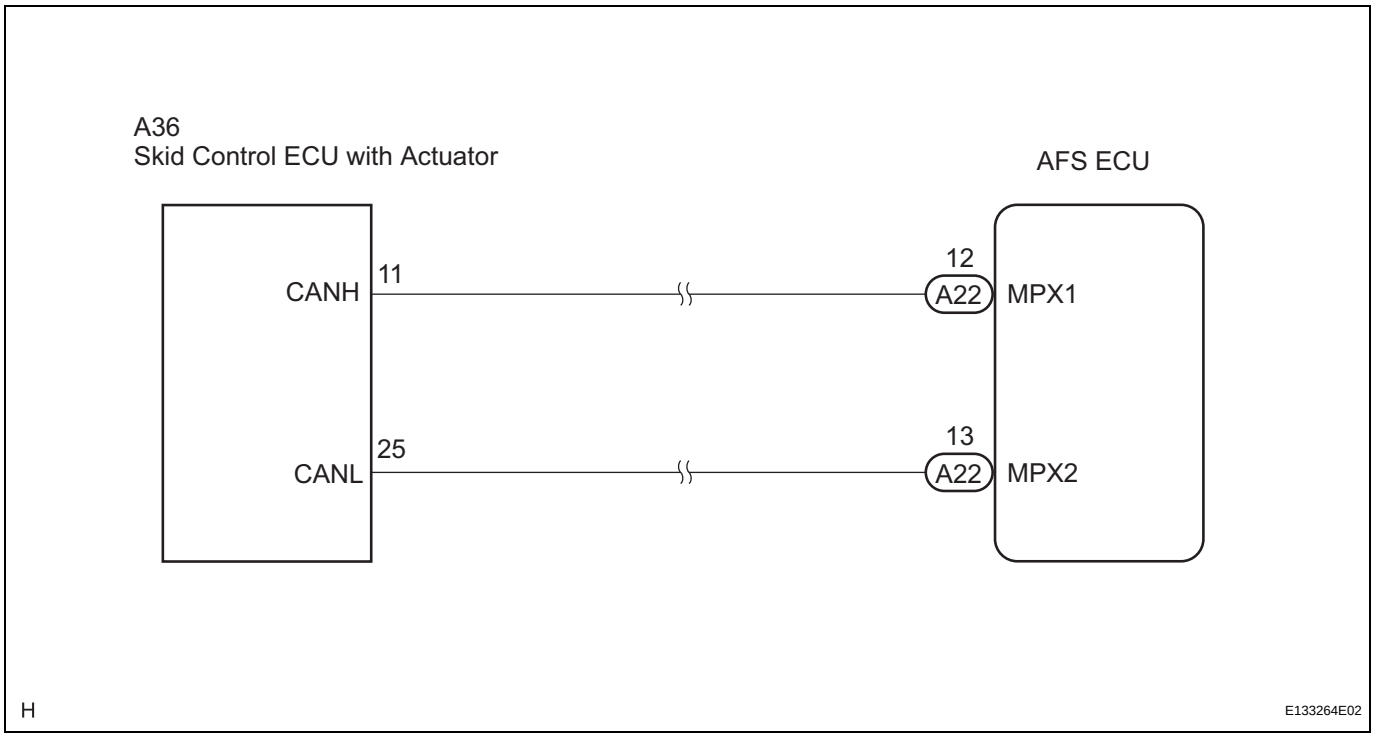

INSPECTION PROCEDURE

1	CHECK DTC (CAN COMMUNICATION SYSTEM)

HINT:
(See page CA-41)
OK:
Normal system code is output.

NG → **GO TO CAN COMMUNICATION**

OK

2	CHECK DTC (VEHICLE STABILITY SYSTEM)

HINT:
(See page BC-43)
OK:
Normal system code is output.

NG → **GO TO VEHICLE STABILITY CONTROL SYSTEM**

OK

3	**REPLACE SKID CONTROL ECU**

OK:
Returns to normal operation.

NG → **REPLACE AFS ECU**

OK

END

DTC	B2416	Height Control Sensor Malfunction

DESCRIPTION

The AFS ECU receives signals indicating the height of the vehicle from the rear height control sensor.

DTC No.	DTC Detecting Condition	Trouble Area
B2416	• Malfunction in rear height control sensor sub-assembly • Open or short in rear height control sensor circuit	• Rear height control sensor • Harness or connector • AFS ECU

WIRING DIAGRAM

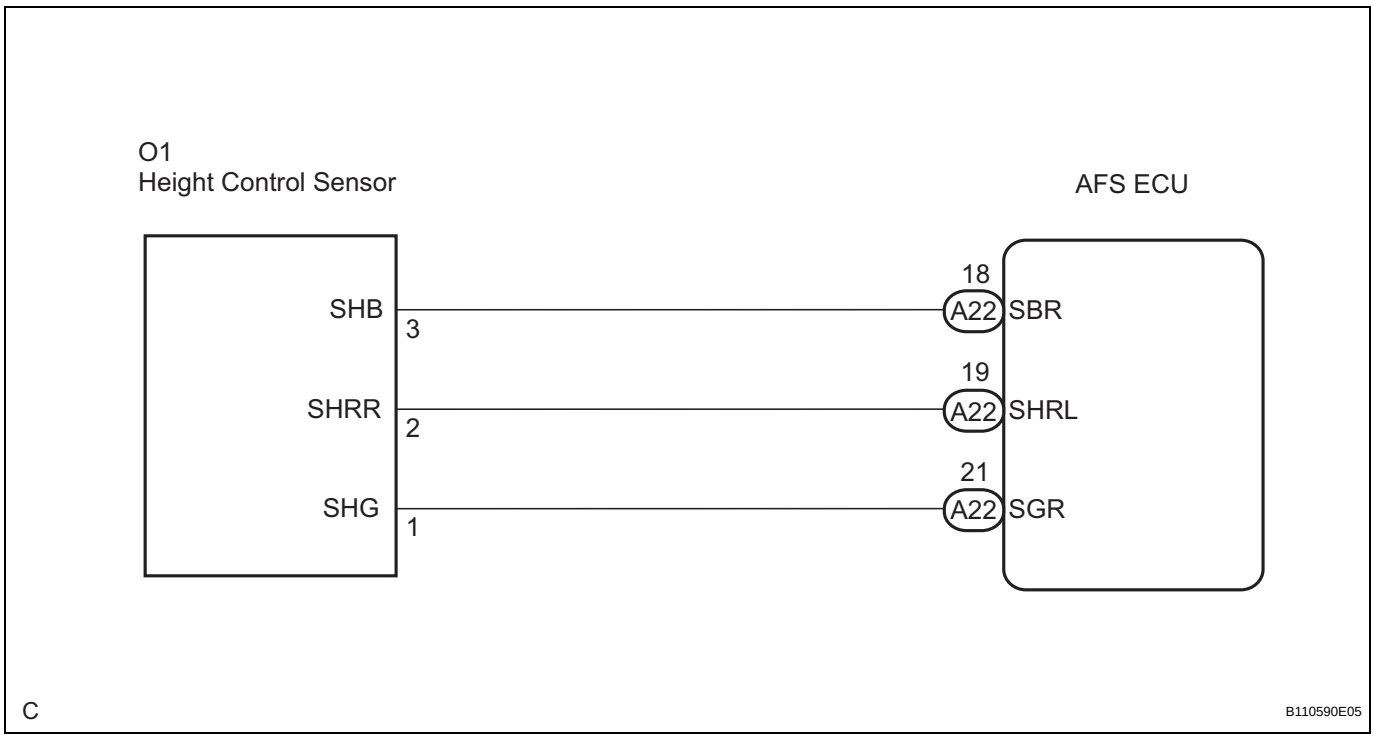

INSPECTION PROCEDURE

1	READ VALUE OF INTELLIGENT TESTER

(a) Connect the intelligent tester to the DLC3.
(b) Turn the engine switch on (IG) and turn the intelligent tester main switch on.
(c) Select the items below in the DATA LIST, and read the display on the intelligent tester.

AFS (AFS ECU):

Tester Display	Measurement Item/Range	Normal Condition	Diagnostic Note
RR HEIGHT SENS SENS	Rear height control sensor signal value / 0 to 5 V	Approx. 2.5 V	-
HEIGHT SENSE VAL	Rear height control sensor power supply value / 0 to 5 V	Approx. 5.0 V	-

OK:
Normal conditions listed above are displayed.

NG → **Go to step 2**

OK

REPLACE AFS ECU

2 CHECK HARNESS AND CONNECTOR (AFS ECU - REAR HEIGHT CONTROL SENSOR SUB-ASSEMBLY)

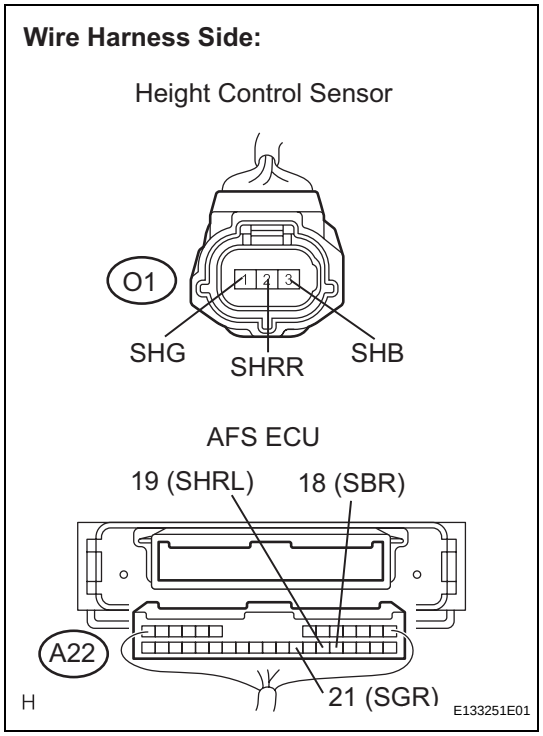

(a) Disconnect the A22 AFS ECU connector.
(b) Disconnect the O1 rear height control sensor sub-assembly connector.
(c) Measure the resistance according to the value(s) in the table below.

Standard resistance

Tester Connection	Condition	Specified Condition
A22-18 (SBR) - O1-3 (SHB)	Always	Below 1 Ω
A22-19 (SHRL) - O1-2 (SHRR)	Always	Below 1 Ω
A22-21 (SGR) - O1-1 (SHG)	Always	Below 1 Ω
A22-18 (SBR) - Body ground	Always	10 kΩ or higher
A22-19 (SHRL) - Body ground	Always	10 kΩ or higher
A22-21 (SGR) - Body ground	Always	10 kΩ or higher

NG → **REPAIR OR REPLACE HARNESS OR CONNECTOR**

OK

3 INSPECT AFS ECU

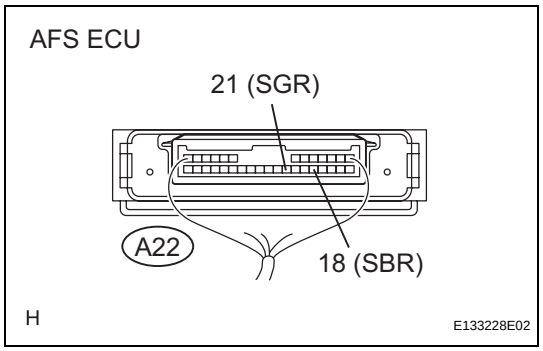

(a) Reconnect the A22 AFS ECU connector.
(b) Measure the voltage according to the value(s) in the table below.

Standard voltage

Tester Condition	Condition	Specified Condition
SBR (A22-18) - SGR (A22-21)	Engine switch on (IG)	4.5 to 5.5 V

NG → **REPLACE AFS ECU**

OK

LI

4	INSPECT REAR HEIGHT CONTROL SENSOR SUB-ASSEMBLY

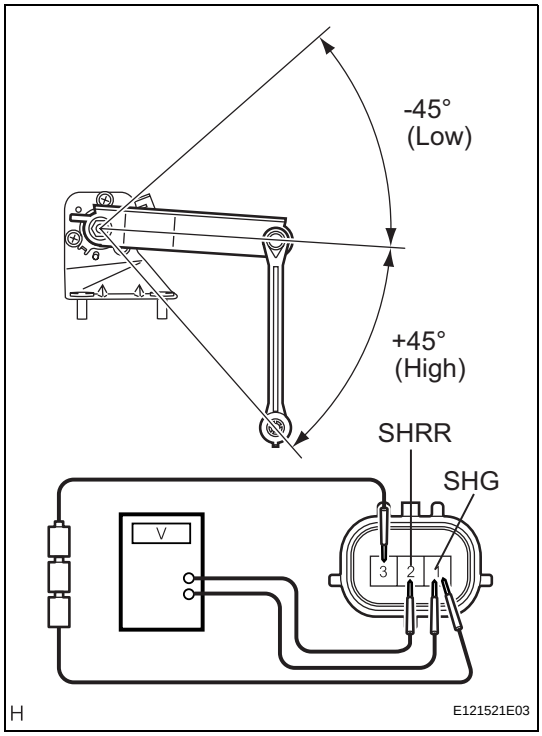

(a) Connect 3 dry cell batteries (1.5 V) in series.
(b) Remove the rear height control sensor sub-assembly.
(c) Connect the positive (+) lead from the battery to terminal 3, and the negative (-) lead from the battery to terminal 1.
(d) Measure the voltage between terminals 2 and 1 while slowly moving the link up and down.

Standard voltage

Tester Condition	Condition	Specified Condition
2 (SHRR) - 1 (SHG)	+45° (High)	Approx. 4.05 V
	0° (Normal)	Approx. 2.25 V
	-45° (Low)	Approx. 0.45 V

NG → **REPLACE REAR HEIGHT CONTROL SENSOR SUB-ASSEMBLY**

OK

REPLACE AFS ECU

LI

DTC	B2417	Headlight Beam Level Control Motor LH Malfunction

DTC	B2418	Headlight Beam Level Control Motor RH Malfunction

DESCRIPTION

The headlight leveling motor receives a signal from the AFS ECU to operate. The AFS ECU receives a signal indicating the operating conditions of the headlight leveling motor.

DTC No.	DTC Detecting Condition	Trouble Area
B2417	• Malfunction in headlight leveling motor LH • Open or short in headlight leveling motor LH circuit	• Headlight leveling motor LH • Harness or connector • AFS ECU
B2418	• Malfunction in headlight leveling motor RH • Open or short in headlight leveling motor RH circuit	• Headlight leveling motor RH • Harness or connector • AFS ECU

LI

WIRING DIAGRAM

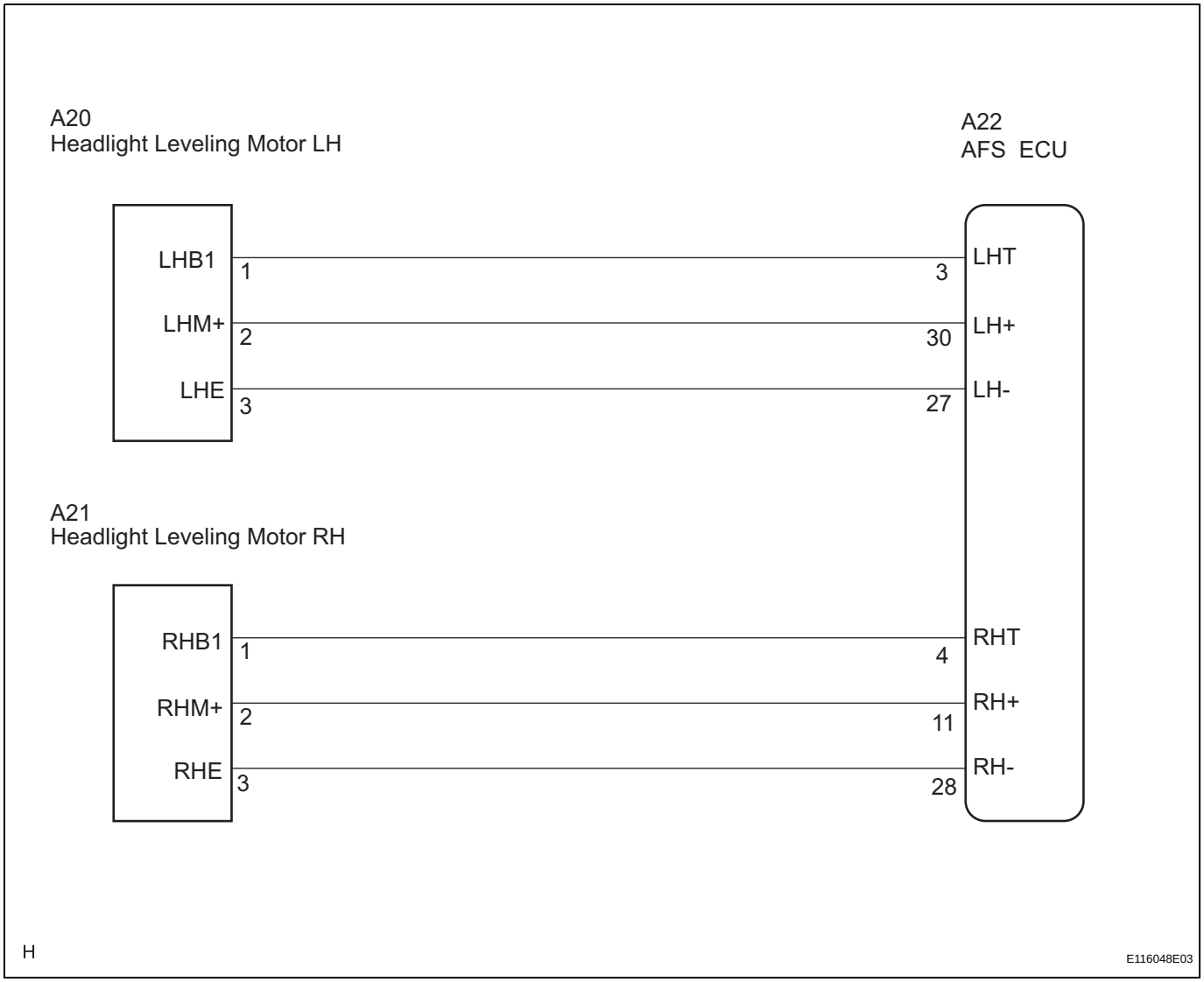

INSPECTION PROCEDURE

1	PERFORM ACTIVE TEST USING INTELLIGENT TESTER

(a) Connect the intelligent tester to the DLC3.
(b) Turn the engine switch on (IG) and turn the intelligent tester main switch on.
(c) Select the items below in the ACTIVE TEST and then check that the motor operates.

AFS (AFS ECU):

Tester Display	Test Part	Control Range	Diagnostic Note
LEVELING MTR	Leveling motor	UP / OFF	-
		DOWN / OFF	-

OK:
Headlight leveling motors operate normally.

NG → **Go to step 2**

OK

REPLACE AFS ECU

2	CHECK HARNESS AND CONNECTOR (POWER SOURCE CIRCUIT)

HINT:
(See page LI-116)

NG → **REPAIR OR REPLACE HARNESS OR CONNECTOR**

OK

3	CHECK HARNESS AND CONNECTOR (AFS ECU - HEADLIGHT LEVELING MOTOR)

(a) Disconnect the A22 AFS ECU connector.

Wire Harness Side:

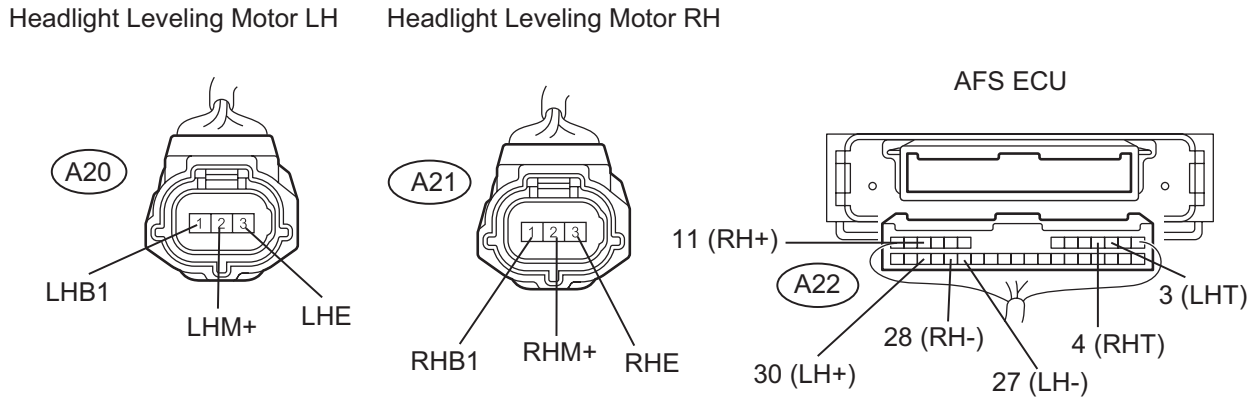

(b) Disconnect the A20 or A21 headlight leveling motor connector.

(c) Measure the resistance according to the value(s) in the table below.

Standard resistance:

LH Side (B2412)

Tester Connection	Condition	Specified Condition
A22-3 (LHT) - A20-1 (LHB1)	Always	Below 1 Ω
A22-27 (LH-) - A20-3 (LHE)	Always	Below 1 Ω
A22-30 (LH+) - A20-2 (LHM+)	Always	Below 1 Ω
A22-3 (LHT) - Body ground	Always	10 kΩ or higher
A22-27 (LH-) - Body ground	Always	10 kΩ or higher
A22-30 (LH+) - Body ground	Always	10 kΩ or higher

RH Side (B2413)

Tester Connection	Condition	Specified Condition
A22-4 (RHT) - A21-1 (RHB1)	Always	Below 1 Ω
A22-28 (RH-) - A21-3 (RHE)	Always	Below 1 Ω
A22-11 (RH+) - A21-2 (RHM+)	Always	Below 1 Ω
A22-4 (RHT) - Body ground	Always	10 kΩ or higher
A22-28 (RH-) - Body ground	Always	10 kΩ or higher
A22-11 (RH+) - Body ground	Always	10 kΩ or higher

NG → **REPAIR OR REPLACE HARNESS OR CONNECTOR**

OK

4 **REPLACE HEADLIGHT UNIT (HEADLIGHT LEVELING MOTOR)**

OK:

Returns to normal operation.

NG → **REPLACE AFS ECU**

OK

END

DTC	B2420	AFS ECU Malfunction

DESCRIPTION

When the AFS ECU detects a malfunction in itself, a DTC is output.

DTC No.	DTC Detecting Condition	Trouble Area
B2420	Malfunction of AFS ECU	AFS ECU

INSPECTION PROCEDURE

1	REPLACE AFS ECU

NEXT

END

DTC	B2424	Headlight Leveling Motor LH Communication Malfunction

DTC	B2425	Headlight Leveling Motor RH Communication Malfunction

DESCRIPTION

The AFS ECU receives a signal from the headlight swivel motor using LIN communication.

DTC No.	DTC Detecting Condition	Trouble Area
B2424	• Malfunction in headlight leveling motor LH • Open or short in headlight leveling motor LH communication circuit	• Headlight leveling motor LH • Harness or connector • AFS ECU
B2425	• Malfunction in headlight leveling motor RH • Open or short in headlight leveling motor RH communication circuit	• Headlight leveling motor RH • Harness or connector • AFS ECU

WIRING DIAGRAM

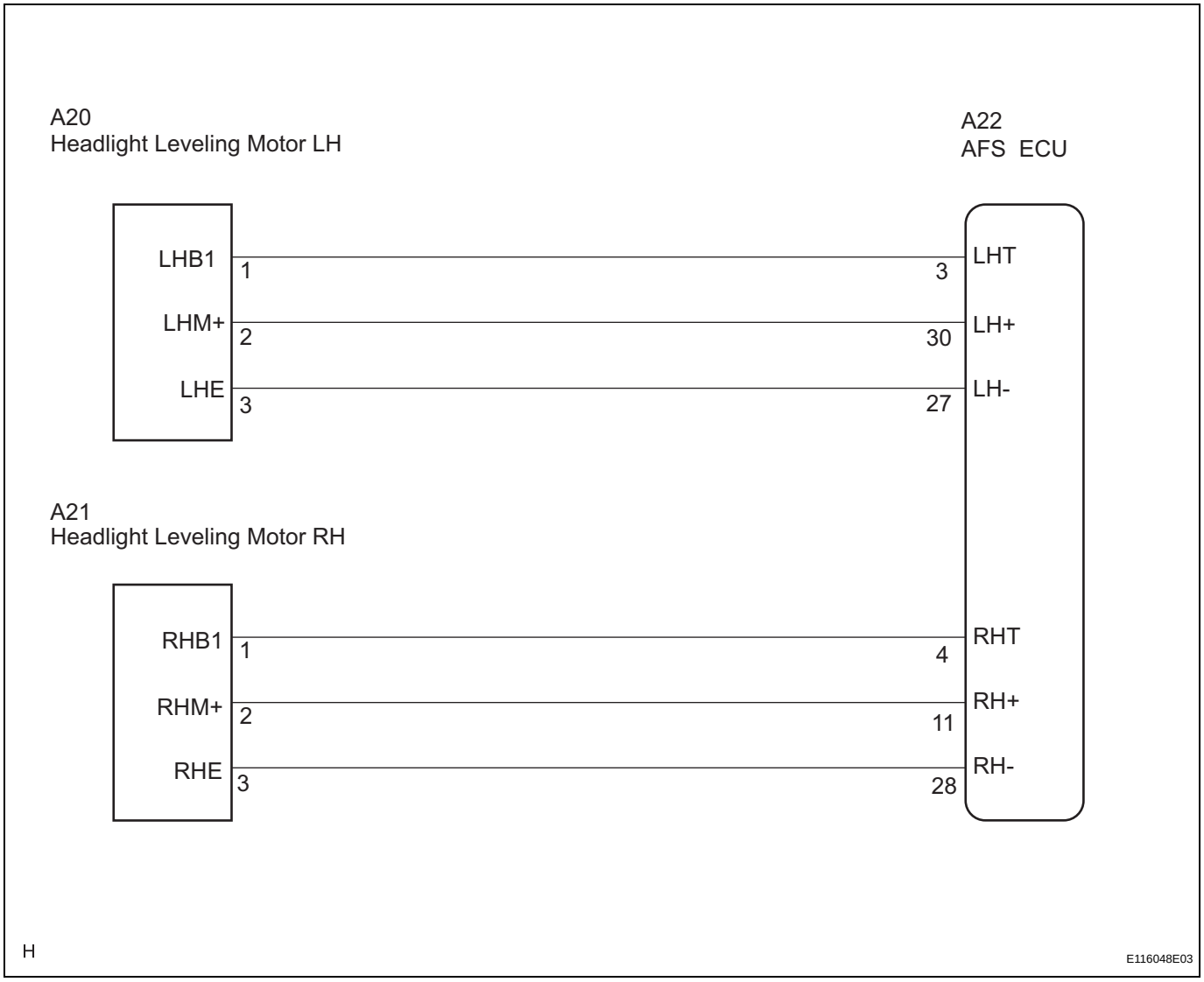

INSPECTION PROCEDURE

1	CHECK HARNESS AND CONNECTOR (AFS ECU - HEADLIGHT ASSEMBLY)

(a) Disconnect the A22 AFS ECU connector.

Wire Harness Side:

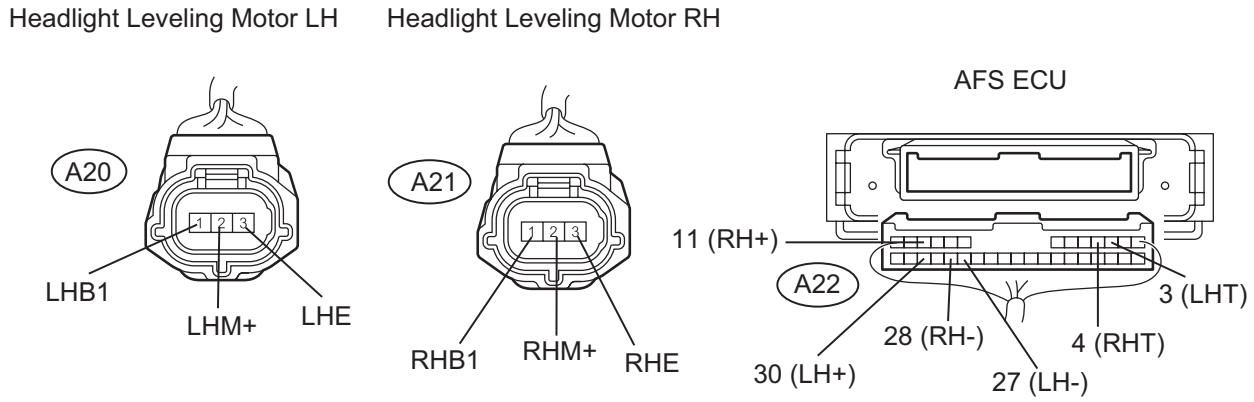

(b) Disconnect the A20 or A21 headlight leveling motor connector.

(c) Measure the resistance according to the value(s) in the table below.

Standard resistance:

LH Side (B2424)

Tester Connection	Condition	Specified Condition
A22-3 (LHT) - A20-1 (LHB1)	Always	Below 1 Ω
A22-27 (LH-) - A20-3 (LHE)	Always	Below 1 Ω
A22-30 (LH+) - A20-2 (LHM+)	Always	Below 1 Ω
A22-3 (LHT) - Body ground	Always	10 kΩ or higher
A22-27 (LH-) - Body ground	Always	10 kΩ or higher
A22-30 (LH+) - Body ground	Always	10 kΩ or higher

RH Side (B2425)

Tester Connection	Condition	Specified Condition
A22-4 (RHT) - A21-1 (RHB1)	Always	Below 1 Ω
A22-28 (RH-) - A21-3 (RHE)	Always	Below 1 Ω
A22-11 (RH+) - A21-2 (RHM+)	Always	Below 1 Ω
A22-4 (RHT) - Body ground	Always	10 kΩ or higher
A22-28 (RH-) - Body ground	Always	10 kΩ or higher
A22-11 (RH+) - Body ground	Always	10 kΩ or higher

NG → REPAIR OR REPLACE HARNESS OR CONNECTOR

OK

2	REPLACE HEADLIGHT UNIT (HEADLIGHT LEVELING MOTOR)

OK:
Returns to normal operation.

NG → REPLACE AFS ECU

OK

END

DTC	B2427	CAN Communication Malfunction

DESCRIPTION

- The AFS ECU receives an engine running status signal and shift position signal from the ECM using CAN communication.
- The AFS ECU receives front LH and RH speed sensor signals from the skid control ECU using CAN communication.
- The AFS ECU receives the headlight status signal from the main body ECU using CAN communication.
- The AFS ECU sends an AFS OFF indicator light ON or OFF demand signal to the combination meter ECU using CAN communication.

DTC No.	DTC Detecting Condition	Trouble Area
B2414	• Malfunction in CAN communication system • AFS ECU	• CAN communication system • AFS ECU

INSPECTION PROCEDURE

1	CHECK DTC (CAN COMMUNICATION SYSTEM)

HINT:
(See page CA-41)
OK:
Normal system code is output.

NG → **GO TO CAN COMMUNICATION SYSTEM**

OK

REPLACE AFS ECU

Headlight Relay Circuit

DESCRIPTION

The main body ECU receives a signal from the light control switch, and turns on the low beam headlights.
HINT:

- The headlight relays are installed in the power distributor, so unlike conventional relays, it cannot be removed for inspection.
- If only a low beam headlight bulb on one side does not illuminate, inspect the bulb, fuse, or wire harness that is related to the bulb.
- If both right and left low beam headlights do not illuminate when the light control switch is turned to the HEAD position, read the light control switch HEAD signal value in the data list and perform the headlight relay active test to determine if the malfunction exists on either the switch side or the relay side.

WIRING DIAGRAM

for Halogen Headlight:

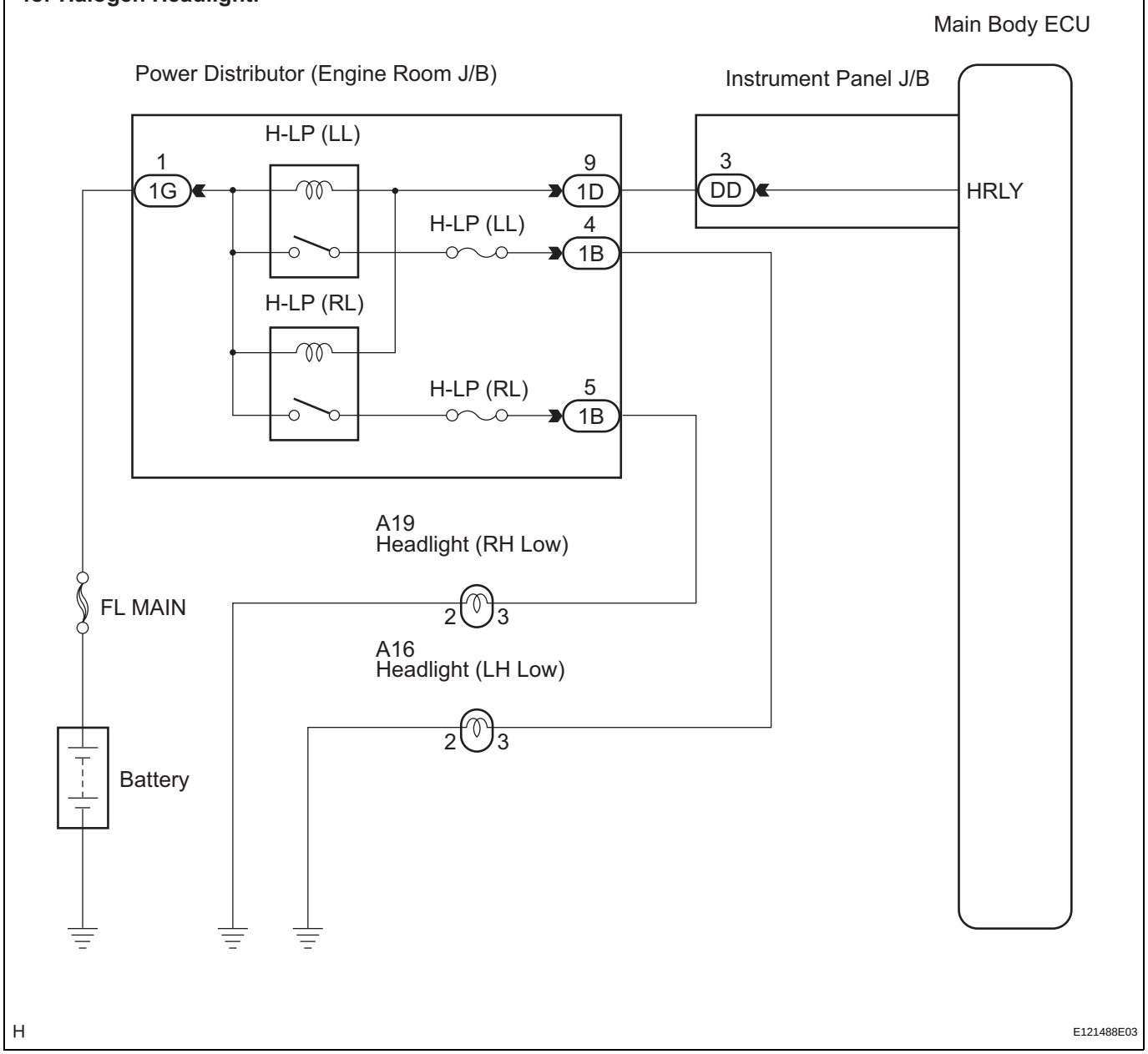

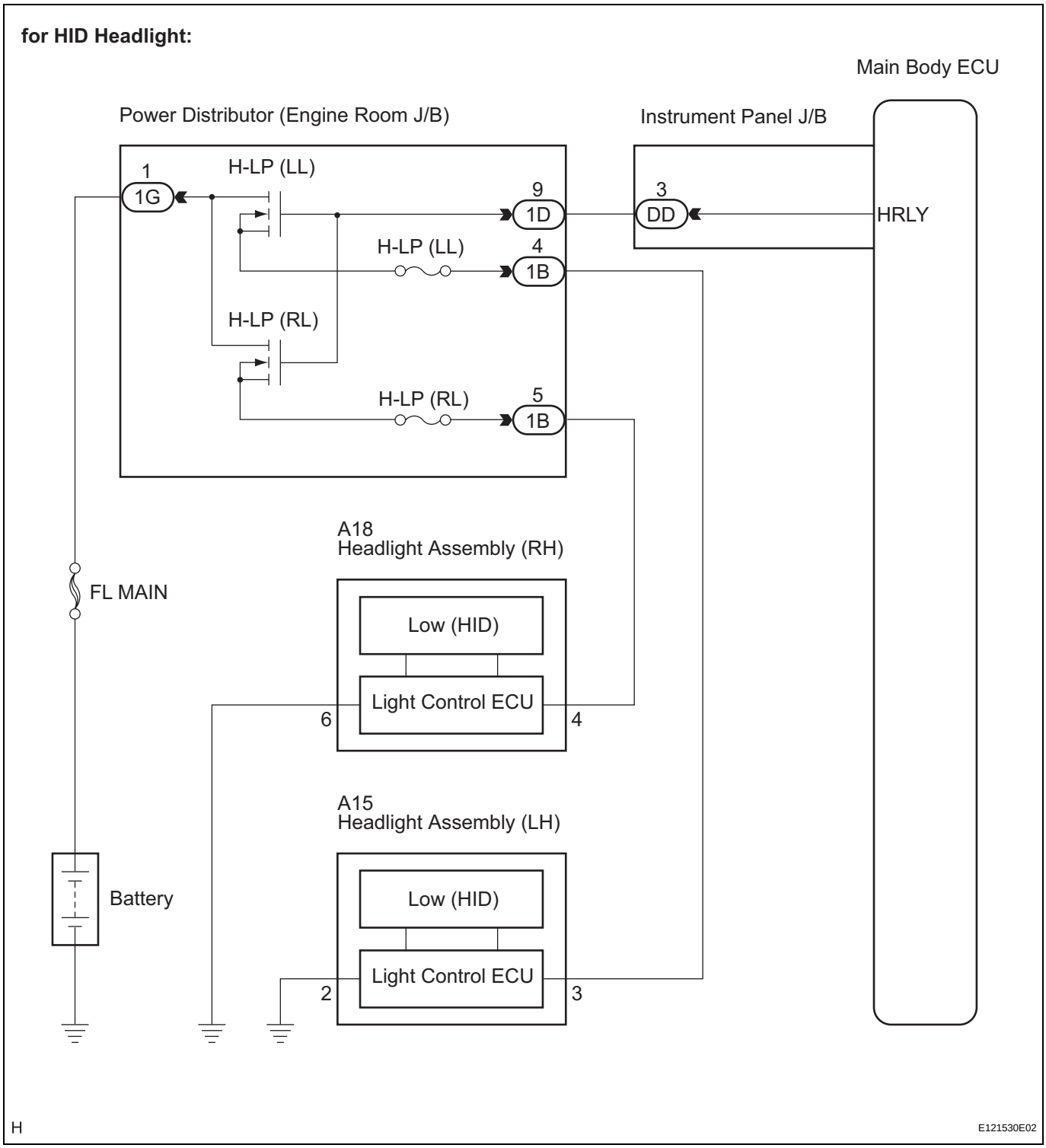

INSPECTION PROCEDURE

1	PERFORM ACTIVE TEST USING INTELLIGENT TESTER

(a) Connect the intelligent tester to the DLC3.
(b) Turn the engine switch on (IG) and turn the intelligent tester main switch on.

(c) Select the item below in the ACTIVE TEST and then check that the relay operates.

MAIN BODY (MAIN BODY ECU):

Tester Display	Test Part	Control Range	Diagnostic Note
HEAD LIGHT	Headlight relay	ON / OFF	-

OK:

Headlight relays operate. (Low beam headlights illuminate.)

OK → **PROCEED TO NEXT CIRCUIT INSPECTION SHOWN IN PROBLEM SYMPTOMS TABLE**

NG

2 INSPECT ENGINE ROOM JUNCTION BLOCK ASSEMBLY

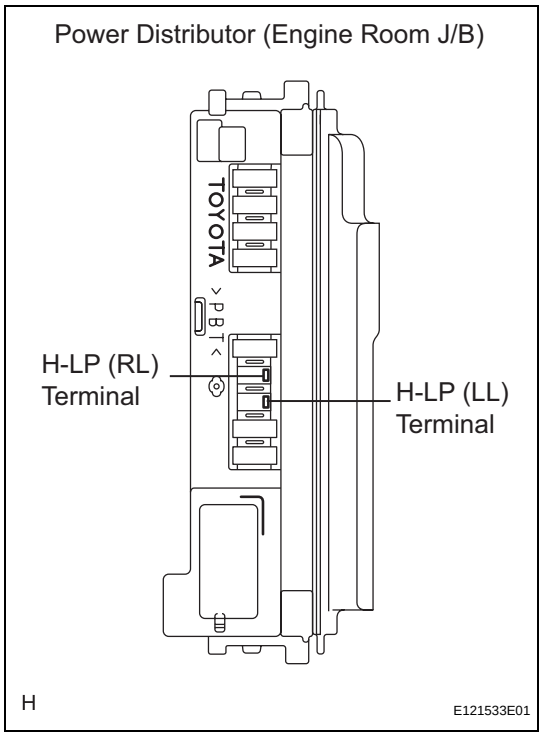

(a) Remove the H-LP (RL) fuse and H-LP (LL) fuse from the engine room junction block assembly.

(b) Measure the voltage between the loading slot of each fuse and body ground.

Standard voltage

Tester Connection	Condition	Specified Condition
H-LP (RL) Terminal - Body ground	Light control switch in HEAD	10 to 14 V
H-LP (LL) Terminal - Body ground	Light control switch in HEAD	10 to 14 V

OK → **REPAIR OR REPLACE HARNESS OR CONNECTOR (FUSE - BODY GROUND)**

NG

3 INSPECT INSTRUMENT PANEL JUNCTION BLOCK ASSEMBLY

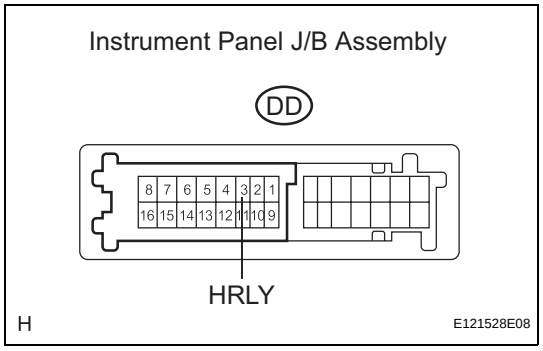

(a) Measure the voltage according to the value(s) in the table below.

Standard voltage

Tester Connection	Condition	Specified Condition
DD-3 (HRLY) - Body ground	Light control switch OFF → HEAD	10 to 14 V → Below 1 V

OK → **REPLACE ENGINE ROOM JUNCTION BLOCK ASSEMBLY**

LI

NG

4 INSPECT INSTRUMENT PANEL JUNCTION BLOCK ASSEMBLY

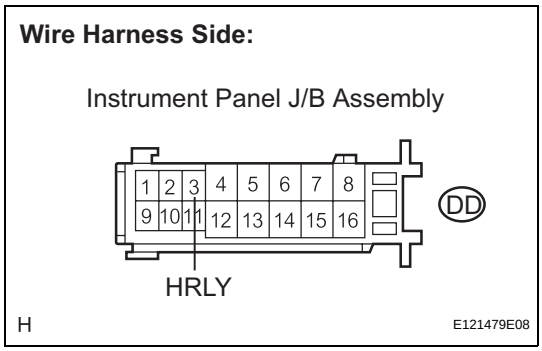

(a) Disconnect the DD instrument panel junction block assembly connector.
(b) Measure the voltage according to the value(s) in the table below.

Standard voltage

Tester Connection	Condition	Specified Condition
DD-3 (HRLY) - Body ground	Always	10 to 14 V

OK → **REPLACE INSTRUMENT PANEL JUNCTION BLOCK ASSEMBLY**

LI

NG

5 INSPECT ENGINE ROOM JUNCTION BLOCK LOCK ASSEMBLY

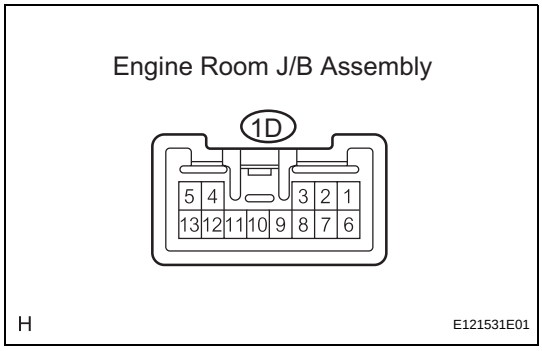

(a) Disconnect the 1D engine room J/B assembly connector.
(b) Measure the voltage according to the value(s) in the table below.

Standard voltage

Tester Connection	Condition	Specified Condition
1D-9 - Body ground	Always	10 to 14 V

OK → **REPAIR OR REPLACE HARNESS OR CONNECTOR (ENGINE ROOM J/B ASSEMBLY - INSTRUMENT PANEL J/B ASSEMBLY)**

NG

6 CHECK HARNESS AND CONNECTOR (BATTERY - ENGINE ROOM J/B ASSEMBLY)

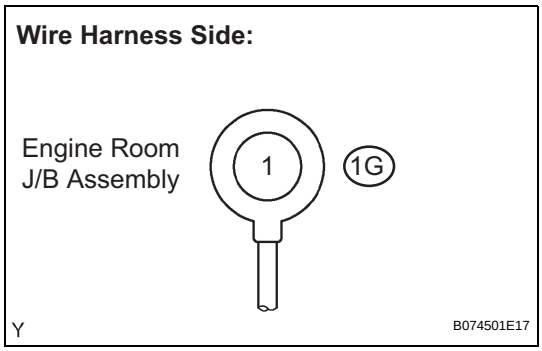

(a) Disconnect the 1G engine room junction block assembly connector.
(b) Measure the voltage according to the value(s) in the table below.

Standard voltage

Tester Connector	Condition	Specified Condition
1G-1 - Body ground	Always	10 to 14 V

NG → **REPAIR OR REPLACE HARNESS OR CONNECTOR**

OK

REPLACE ENGINE ROOM JUNCTION BLOCK ASSEMBLY

Headlight (HI-BEAM) Circuit

DESCRIPTION

When either of the following conditions is met, the high beam headlights come on.

- Dimmer switch in HIGH position and light control switch in HEAD position.
- Dimmer switch in HIGH position, light control switch in AUTO position, and low beam headlights are on.

HINT:

- The power distributor has a fail-safe function control. If a short circuit occurs between the power distributor and high beam headlight bulb, the power distributor stops the DRL relay operation.
- The DRL relay is built into the power distributor, so unlike conventional relays, it cannot be removed for inspection.
- If only a high beam headlight on one side does not illuminate, inspect the fuse, bulb, or wire harness that is related to the bulb.
- If both right and left high beam headlights do not illuminate, read the dimmer switch HIGH signal value in the data list, and perform the DRL relay active test to determine if the malfunction exists on either the switch side or the relay side.

WIRING DIAGRAM

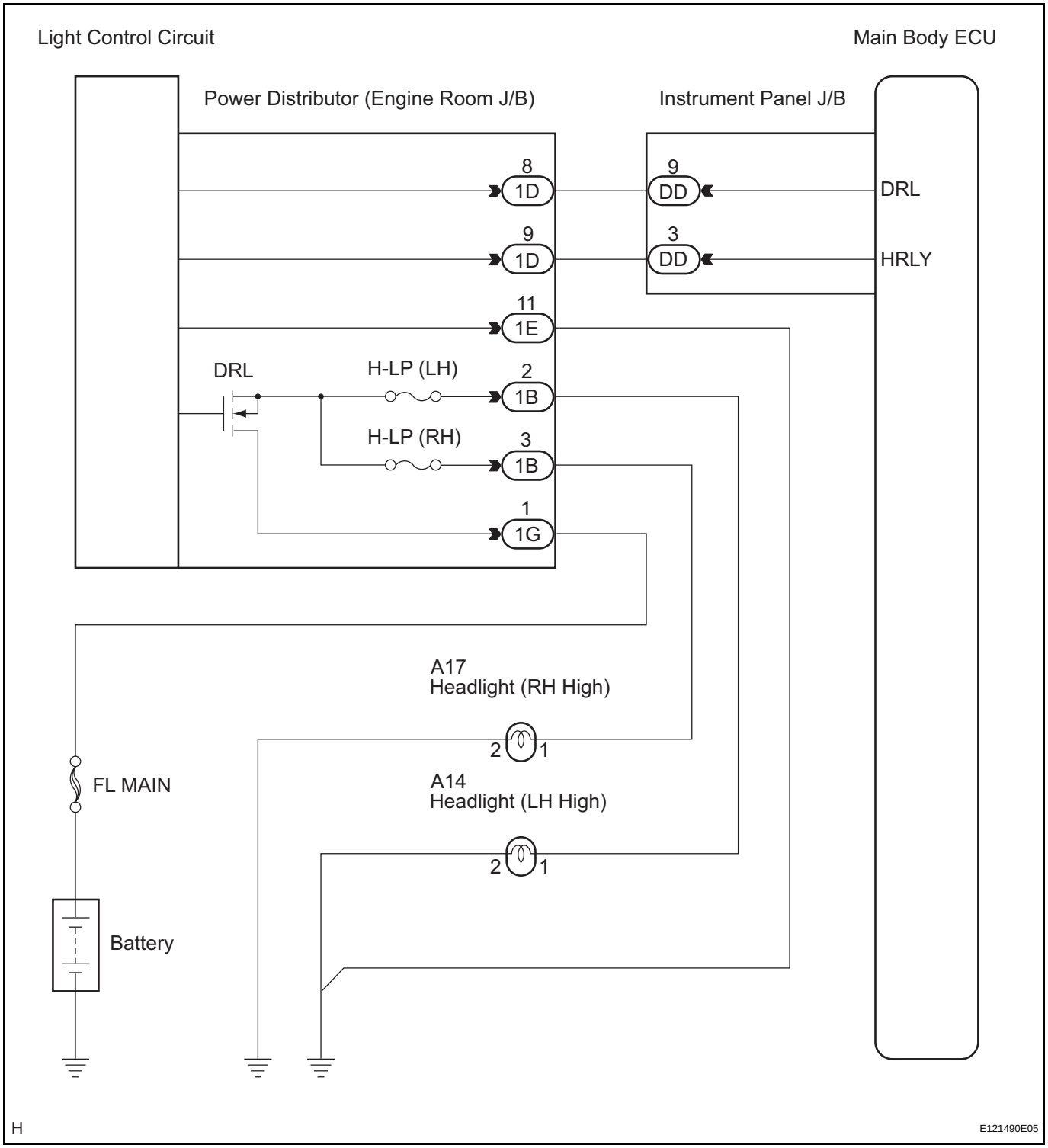

INSPECTION PROCEDURE

1	PERFORM ACTIVE TEST USING INTELLIGENT TESTER

(a) Connect the intelligent tester to the DLC3.
(b) Turn the engine switch on (IG) and turn the intelligent tester main switch on.

LI

(c) Select the item below in the ACTIVE TEST and then check that the relay operates.

MAIN BODY (MAIN BODY ECU):

Tester Display	Test Part	Control Range	Diagnostic Note
HEAD LIGHT (HI)	DRL relay	ON / OFF	-

OK:
Relay operates. (High beam headlights illuminate.)

OK → **PROCEED TO NEXT CIRCUIT INSPECTION SHOWN IN PROBLEM SYMPTOMS TABLE**

NG

LI

2 CHECK HARNESS AND CONNECTOR (SHORT IN RELAY-DRIVEN CIRCUIT)

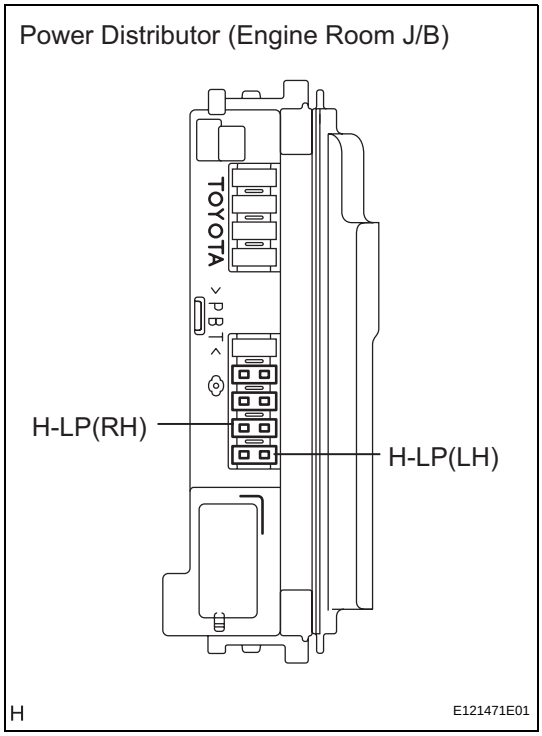

(a) Remove the H-LP (RH) fuse from the engine room junction block assembly.
(b) Turn the light control switch to the HEAD position and turn the dimmer switch to the HIGH position.
(c) Check if the high beam headlight LH illuminates.
(d) Turn the dimmer switch to the LOW position.
(e) Install the H-LP (RH) fuse and remove the H-LP (LH) fuse.
(f) Turn the dimmer switch to the HIGH position.
(g) Check if the high beam headlight RH illuminates.
OK:
Either high beam headlight LH or RH illuminates.

OK → **REPAIR OR REPLACE HARNESS OR CONNECTOR (SHORT CIRCUIT BETWEEN FUSE AND BULB)**

NG

3 INSPECT ENGINE ROOM JUNCTION BLOCK ASSEMBLY

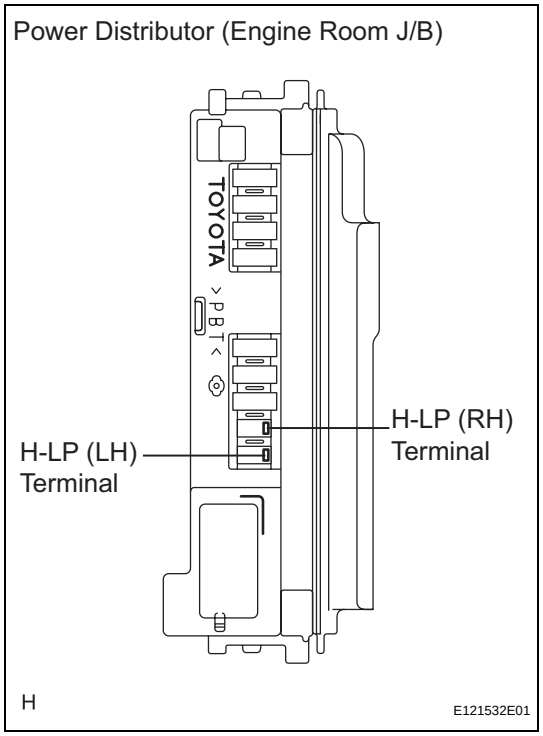

(a) Remove the H-LP (RH) fuse and H-LP (LH) fuse from the engine room junction block assembly.

(b) Measure the voltage between the loading slot of each fuse and body ground.

Standard voltage

Tester Connection	Condition	Specified Condition
H-LP (RH) terminal - Body ground	Light control switch in HEAD and dimmer switch in HIGH	10 to 14 V
H-LP (LH) terminal - Body ground	Light control switch in HEAD and dimmer switch in HIGH	10 to 14 V

OK → **REPAIR OR REPLACE HARNESS OR CONNECTOR (OPEN CIRCUIT BETWEEN FUSE AND BODY GROUND)**

NG

4 INSPECT INSTRUMENT PANEL JUNCTION BLOCK ASSEMBLY

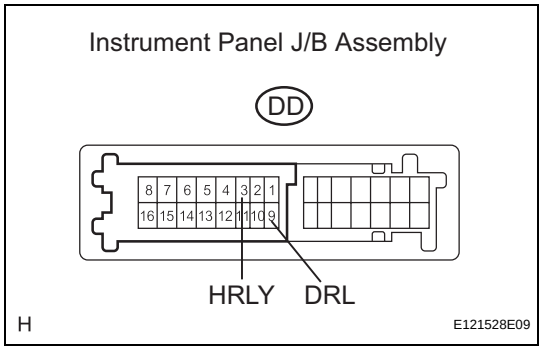

(a) Measure the voltage according to the value(s) in the table below.

Standard voltage

Tester Connection	Condition	Specified Condition
DD-3 (HRLY) - Body ground	Light control switch OFF → HEAD	10 to 14 V → Below 1 V
DD-9 (DRL) - Body ground	Light control switch in HEAD, dimmer switch LOW → HIGH	10 to 14 V → Below 1 V

OK → **REPLACE ENGINE ROOM JUNCTION BLOCK ASSEMBLY**

NG

LI

5 INSPECT INSTRUMENT PANEL JUNCTION BLOCK ASSEMBLY

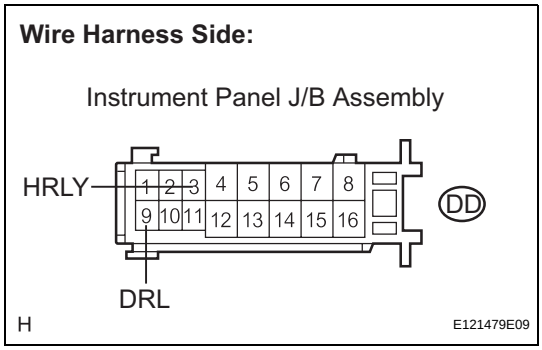

(a) Disconnect the DD instrument panel junction block connector.
(b) Measure the voltage according to the value(s) in the table below.
Standard voltage

Tester Connection	Condition	Specified Condition
DD-3 (HRLY) - Body ground	Always	10 to 14 V
DD-9 (DRL) - Body ground	Always	10 to 14 V

OK → **REPLACE INSTRUMENT PANEL JUNCTION BLOCK ASSEMBLY**

NG

6 INSPECT ENGINE ROOM JUNCTION BLOCK ASSEMBLY

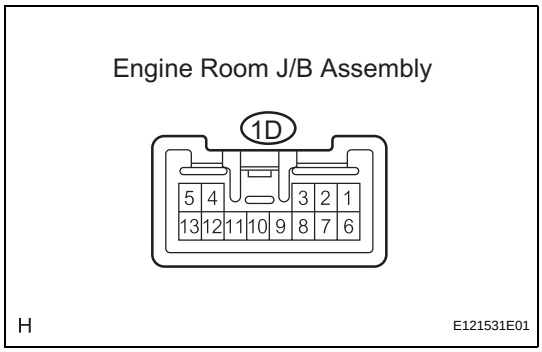

(a) Disconnect the 1D engine room junction block assembly connector.
(b) Measure the voltage according to the value(s) in the table below.
Standard voltage

Tester Connection	Condition	Specified Condition
1D-8 - Body ground	Always	10 to 14 V
1D-9 - Body ground	Always	10 to 14 V

OK → **REPAIR OR REPLACE HARNESS OR CONNECTOR (ENGINE ROOM J/B ASSEMBLY - INSTRUMENT PANEL J/B ASSEMBLY)**

NG

7 CHECK HARNESS AND CONNECTOR (ENGINE ROOM J/B ASSEMBLY - BATTERY AND BODY GROUND)

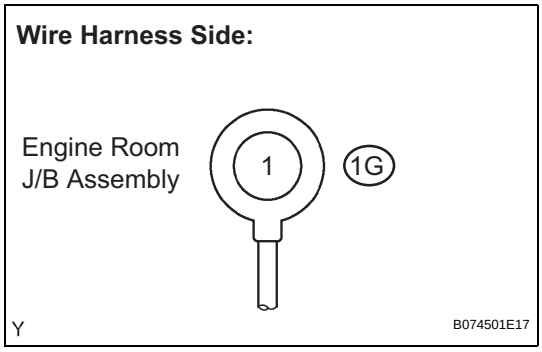

(a) Disconnect the 1G engine room junction block assembly connector.
(b) Measure the voltage according to the value(s) in the table below.
Standard voltage

Tester Connection	Condition	Specified Condition
1G-1 - Body ground	Always	10 to 14 V

Wire Harness Side:

Engine Room J/B Assembly

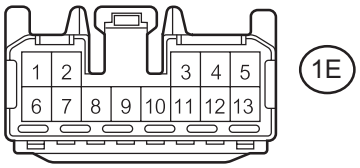

H E121481E01

(c) Disconnect the 1E engine room J/B assembly connector.

(d) Measure the resistance according to the value(s) in the table below.

Standard resistance

Tester Connection	Condition	Specified Condition
1E-11 - Body ground	Always	Below 1 Ω

OK → **REPLACE ENGINE ROOM JUNCTION BLOCK ASSEMBLY**

NG

REPAIR OR REPLACE HARNESS OR CONNECTOR

Front Fog Light Circuit

DESCRIPTION

When all of the following conditions are met, the front fog lights come on.
- Low beam headlights are ON.
- Front fog light switch is ON.
- High beam headlights are OFF.

When any of the following conditions is met, the front fog lights turn off.
- Front fog light switch is OFF.
- Low beam headlights are OFF.
- High beam headlights are ON.

HINT:
- Before performing troubleshooting of the front fog light system, check that the taillight system and headlight system are normal.
- If only a front fog light on one side does not illuminate, inspect the bulb or wire harness that is related to the bulb.
- If both right and left front fog lights do not illuminate, read the front fog light switch value in the data list and perform the front fog light relay active test to determine if the malfunction exists on either the switch side or the relay side.

WIRING DIAGRAM

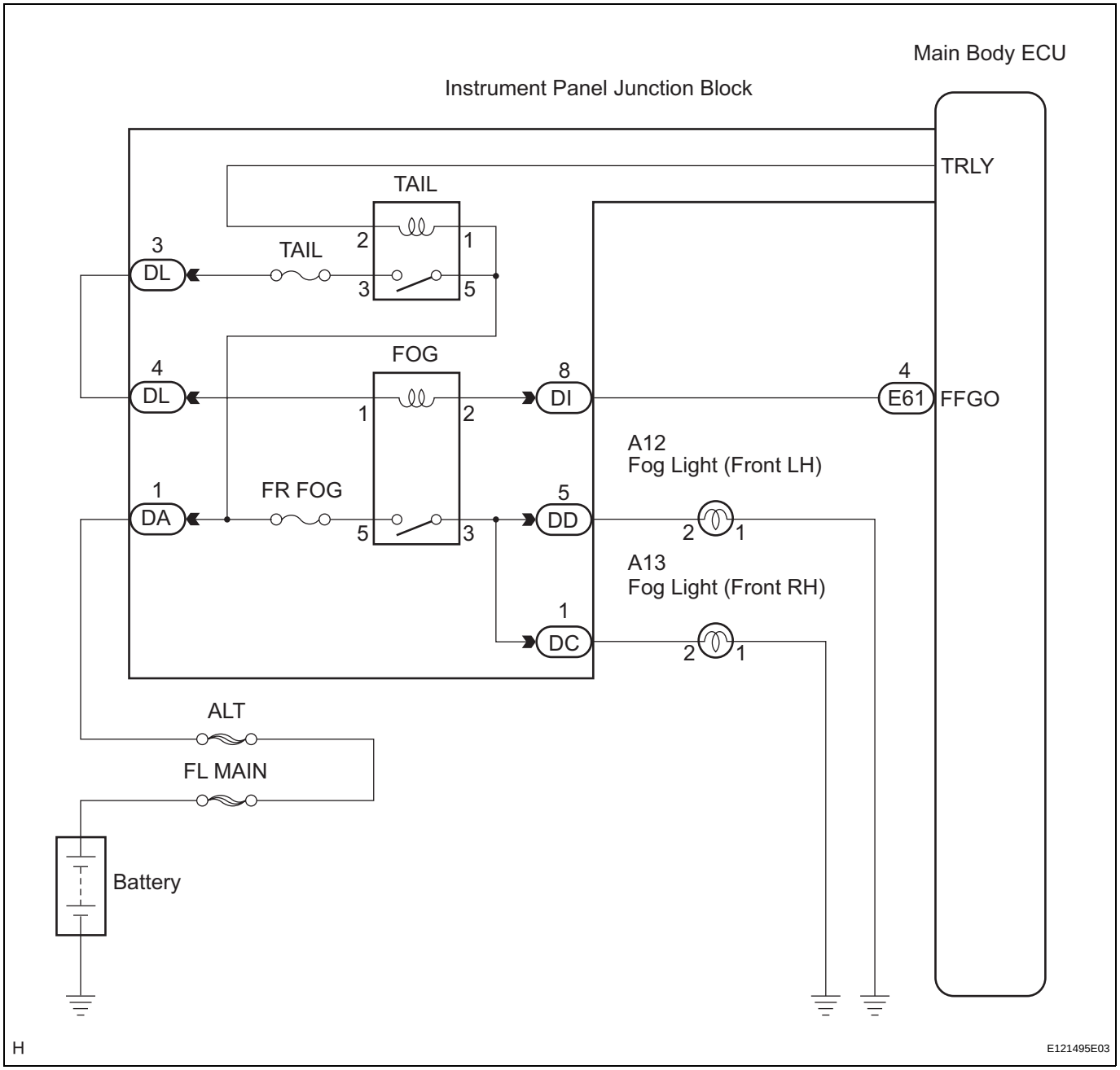

INSPECTION PROCEDURE

1	PERFORM ACTIVE TEST USING INTELLIGENT TESTER

(a) Connect the intelligent tester to the DLC3.
(b) Turn the engine switch on (IG) and turn the intelligent tester main switch on.
(c) Select the item below in the ACTIVE TEST and then check that the relay operates.

MAIN BODY (MAIN BODY ECU):

Tester Display	Test Part	Control Range	Diagnostic Note
F FOG LIGHT RLY	Front fog light relay (Taillights are ON)	ON / OFF	-

OK:
Front fog light relay operates. (Front fog lights come on.)

OK → **PROCEED TO NEXT CIRCUIT INSPECTION SHOWN IN PROBLEM SYMPTOMS TABLE**

NG

2 INSPECT FUSE (FR FOG)

(a) Remove the FR FOG fuse from the instrument panel J/B assembly.
(b) Measure the resistance of the fuse.
Standard resistance:
Below 1 Ω

NG → **REPLACE FUSE**

OK

3 INSPECT FOG LIGHT RELAY

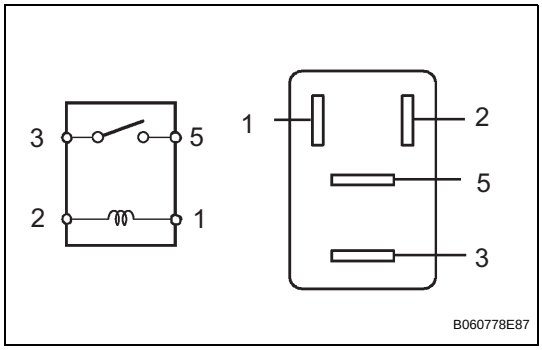

(a) Remove the front fog light relay from the instrument panel junction block assembly.
(b) Measure the resistance according to the value(s) in the table below.
Standard resistance

Tester Connection	Specified Condition
3 - 5	10 kΩ or higher
	Below 1 Ω (When battery voltage is applied to terminals 1 and 2)

NG → **REPLACE FOG LIGHT RELAY**

OK

4 INSPECT INSTRUMENT PANEL JUNCTION BLOCK ASSEMBLY

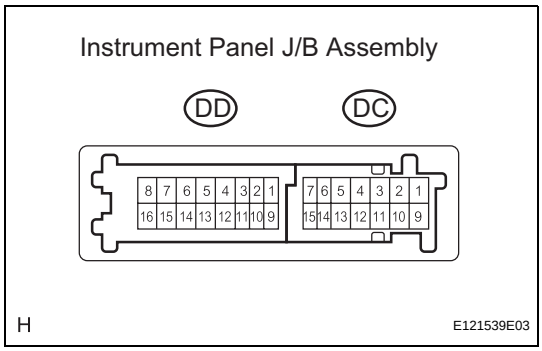

(a) Measure the voltage according to the value(s) in the table below.
Standard voltage

Tester Connection	Condition	Specified Condition
DC-1 - Body ground	Light control switch in HEAD, front fog light switch OFF → ON	Below 1 V → 10 to 14 V
DD-5 - Body ground	Light control switch in HEAD, front fog light switch OFF → ON	Below 1 V → 10 to 14 V

OK → **REPAIR OR REPLACE HARNESS OR CONNECTOR (INSTRUMENT PANEL J/B ASSEMBLY - BODY GROUND)**

NG

5 INSPECT INSTRUMENT PANEL JUNCTION BLOCK ASSEMBLY

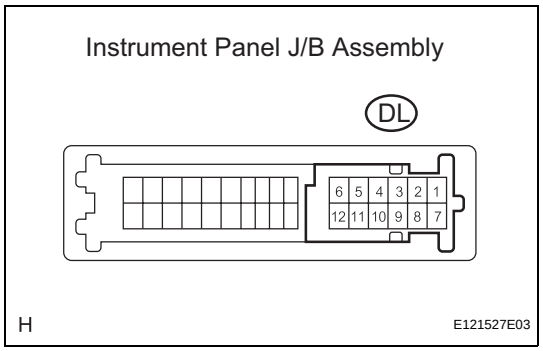

(a) Measure the voltage according to the value(s) in the table below.

Standard voltage

Tester Connection	Condition	Specified Condition
DL-3 - Body ground	Light control switch OFF → TAIL	Below 1 V → 10 to 14 V

NG → **REPLACE INSTRUMENT PANEL JUNCTION BLOCK ASSEMBLY**

OK

6 CHECK HARNESS AND CONNECTOR (BETWEEN CONNECTOR DL-3 AND CONNECTOR DL-4)

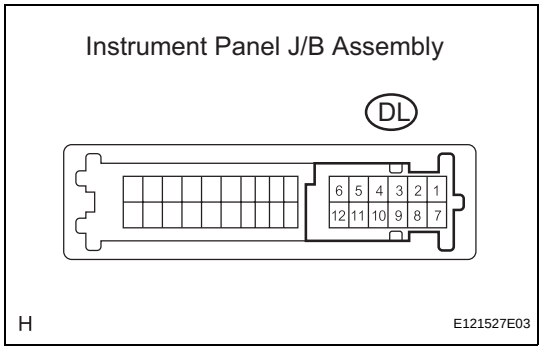

(a) Measure the voltage according to the value(s) in the table below.

Standard voltage

Tester Connection	Condition	Specified Condition
DL-4 - Body ground	Light control switch OFF → TAIL	Below 1 V → 10 to 14 V

NG → **REPAIR OR REPLACE HARNESS OR CONNECTOR**

OK

7 INSPECT INSTRUMENT PANEL JUNCTION BLOCK ASSEMBLY

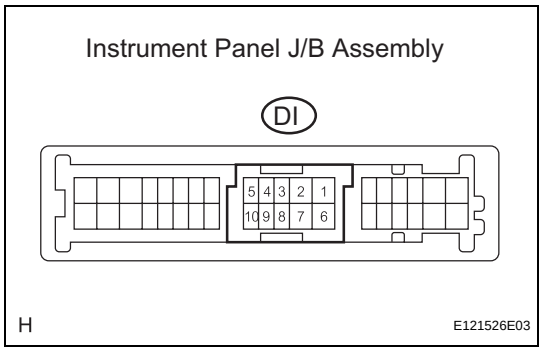

(a) Disconnect the DI instrument panel assembly connector.

(b) Measure the voltage according to the value(s) in the table below.

Standard voltage

Tester Connection	Condition	Specified Condition
DI-8 - Body ground	Light control switch OFF → TAIL	Below 1 V → 10 to 14 V

NG → **REPLACE INSTRUMENT PANEL JUNCTION BLOCK ASSEMBLY**

OK

8	**CHECK HARNESS AND CONNECTOR (BODY ECU - INSTRUMENT PANEL JUNCTION BLOCK ASSEMBLY)**

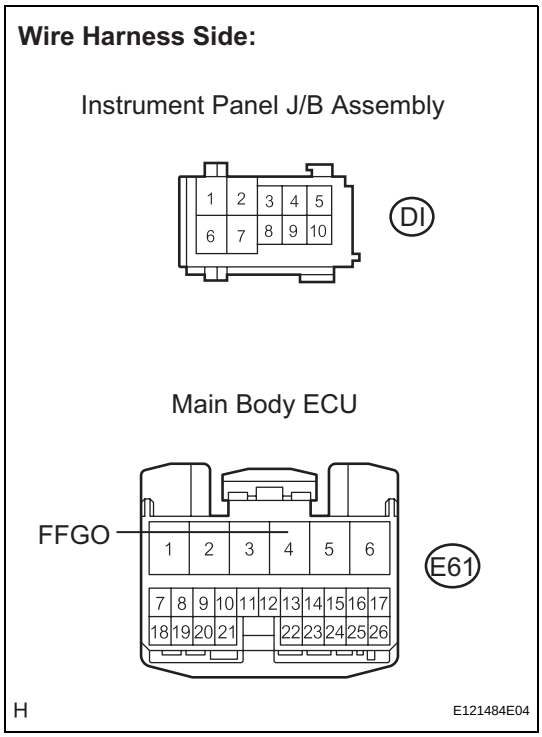

(a) Disconnect the E61 main body ECU connector.
(b) Measure the resistance according to the value(s) in the table below.
Standard resistance

Tester Connection	Condition	Specified Condition
E61-4 - DI-8	Always	Below 1 Ω

NG → **REPAIR OR REPLACE HARNESS OR CONNECTOR**

OK

REPLACE INSTRUMENT PANEL JUNCTION BLOCK ASSEMBLY

Light Control Switch Circuit

DESCRIPTION

The main body ECU receives the following signals:

- Light control switch TAIL, HEAD, or AUTO signal.
- Dimmer switch HIGH or HIGH FLASH (PASS) signal.
- Front fog light switch signal.
- Rear fog light switch signal.

HINT:

- When performing troubleshooting, inspect the switch that is related to the malfunction. For example, if both right and left low beam headlights do not illuminate, read the light control switch HEAD signal value only in the data list. If the value is normal, perform the headlight relay active test.

WIRING DIAGRAM

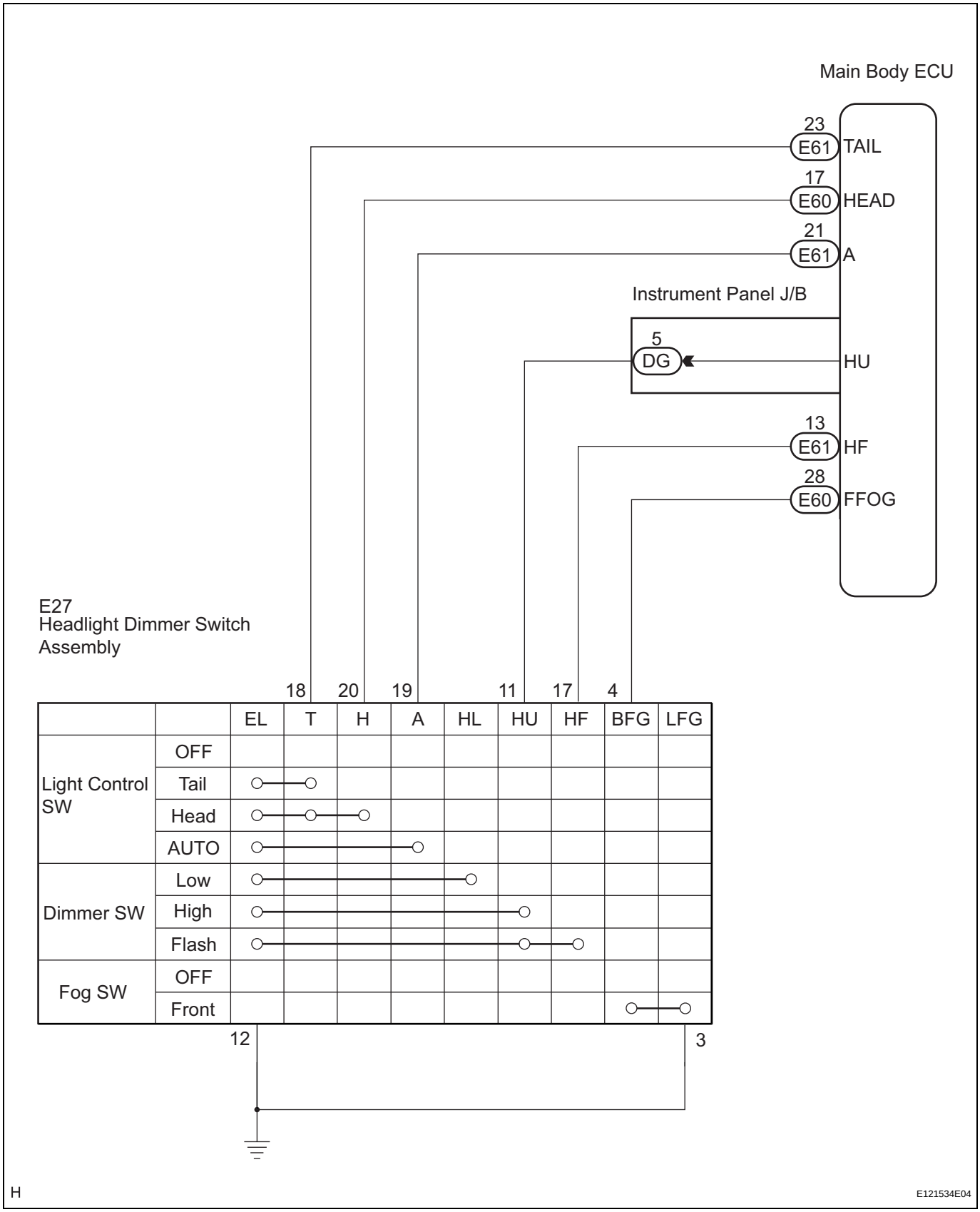

		EL	T	H	A	HL	HU	HF	BFG	LFG
Light Control SW	OFF									
	Tail	○	○							
	Head	○	○	○						
	AUTO	○			○					
Dimmer SW	Low	○				○				
	High	○					○			
	Flash	○					○	○		
Fog SW	OFF									
	Front								○	○

INSPECTION PROCEDURE

1	READ VALUE OF INTELLIGENT TESTER

(a) Connect the intelligent tester to the DLC3.
(b) Turn the engine switch on (IG) and turn the intelligent tester main switch on.
(c) Select the items below in the DATA LIST, and read the display on the intelligent tester.

MAIN BODY (MAIN BODY ECU):

Tester Display	Measurement Item/Range	Normal Condition	Diagnostic Note
DIMMER SW	Dimmer switch HIGH signal / ON or OFF	ON: Dimmer switch in HIGH or HIGH FLASH OFF: Dimmer switch in LOW	-
HIGH FLASHER SW	Dimmer switch HIGH FLASH signal / ON or OFF	ON: Dimmer switch in HIGH FLASH OFF: Dimmer switch not in HIGH FLASH	-
F FOG LIGHT SW	Fog light switch signal / ON or OFF	ON: Fog light switch ON OFF: Fog light switch OFF	-
AUTO LIGHT SW	Light control switch AUTO signal / ON or OFF	ON: Light control switch in AUTO OFF: Light control switch not in AUTO	-
HEAD LIGHT SW	Light control switch HEAD signal / ON or OFF	ON: Light control switch in HEAD OFF: Light control switch not in HEAD	-
TAIL LIGHT SW	Light control switch TAIL signal / ON or OFF	ON: Light control switch in TAIL or HEAD OFF: Light control switch in neither TAIL nor HEAD	-

OK:
Normal conditions listed above are displayed.

OK → **PROCEED TO NEXT CIRCUIT INSPECTION SHOWN IN PROBLEM SYMPTOMS TABLE**

NG

2	INSPECT HEADLIGHT DIMMER SWITCH ASSEMBLY

HINT:
(See page LI-189)
OK:
Headlight dimmer switch assembly is normal.

NG → **REPLACE HEADLIGHT DIMMER SWITCH ASSEMBLY**

OK

3	CHECK HARNESS AND CONNECTOR (INSTRUMENT PANEL J/B ASSEMBLY - SWITCH ASSEMBLY)

Wire Harness Side:

Headlight Dimmer Switch Assembly

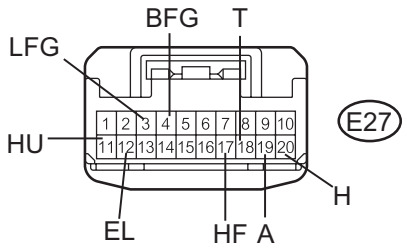

Main Body ECU

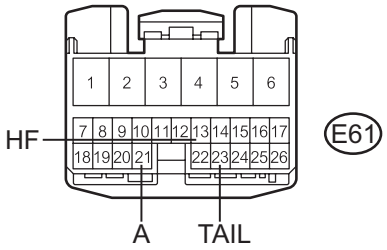

Main Body ECU

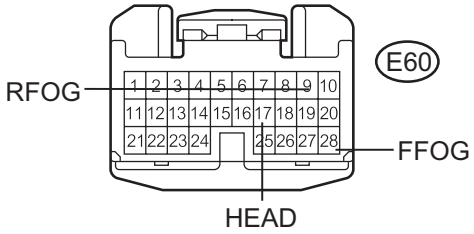

Instrument Panel J/B Assembly

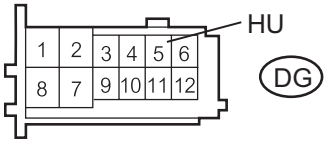

H E121507E06

(a) Disconnect the E27 headlight dimmer switch assembly connector.
(b) Disconnect the E60 and E61 main body ECU connectors.
(c) Disconnect the DG instrument panel J/B connector.
(d) Measure the resistance according to the value(s) in the table below.

Standard resistance

Tester Connection	Condition	Specified Condition
E27-4 (BFG) - E60-28 (FFOG)	Always	Below 1 Ω
E27-11 (HU) - DG-5 (HU)	Always	Below 1 Ω
E27-17 (HF) - E61-13 (HF)	Always	Below 1 Ω
E27-18 (T) - E61-23 (TAIL)	Always	Below 1 Ω
E27-19 (A) - E61-21 (A)	Always	Below 1 Ω
E27-20 (H) - E60-17 (HEAD)	Always	Below 1 Ω
E27-3 (LFG) - Body ground	Always	10 kΩ or higher
E27-4 (BFG) - Body ground	Always	10 kΩ or higher
E27-11 (HU) - Body ground	Always	10 kΩ or higher
E27-17 (HF) - Body ground	Always	10 kΩ or higher
E27-18 (T) - Body ground	Always	10 kΩ or higher
E27-19 (A) - Body ground	Always	10 kΩ or higher
E27-20 (H) - Body ground	Always	10 kΩ or higher
E27-12 (EL) - Body ground	Always	Below 1 Ω

NG → **REPAIR OR REPLACE HARNESS OR CONNECTOR**

OK

REPLACE INSTRUMENT PANEL JUNCTION BLOCK ASSEMBLY

Door Courtesy Switch Circuit

DESCRIPTION

The main body ECU detects the condition of the door courtesy switches.
HINT:

- The main body ECU receives driver side, passenger side, rear LH, and rear RH door courtesy switch signals to control the illuminated entry system.
- The main body ECU receives driver side, passenger side, rear LH, rear RH, and luggage compartment door courtesy switch signals to control the light auto turn off system.
- When performing troubleshooting, inspect the switch that is related to the malfunction only. For example, if the illuminated entry system does not operate when opening the passenger side door with the engine switch off, inspect the passenger side door courtesy switch circuit only.

WIRING DIAGRAM

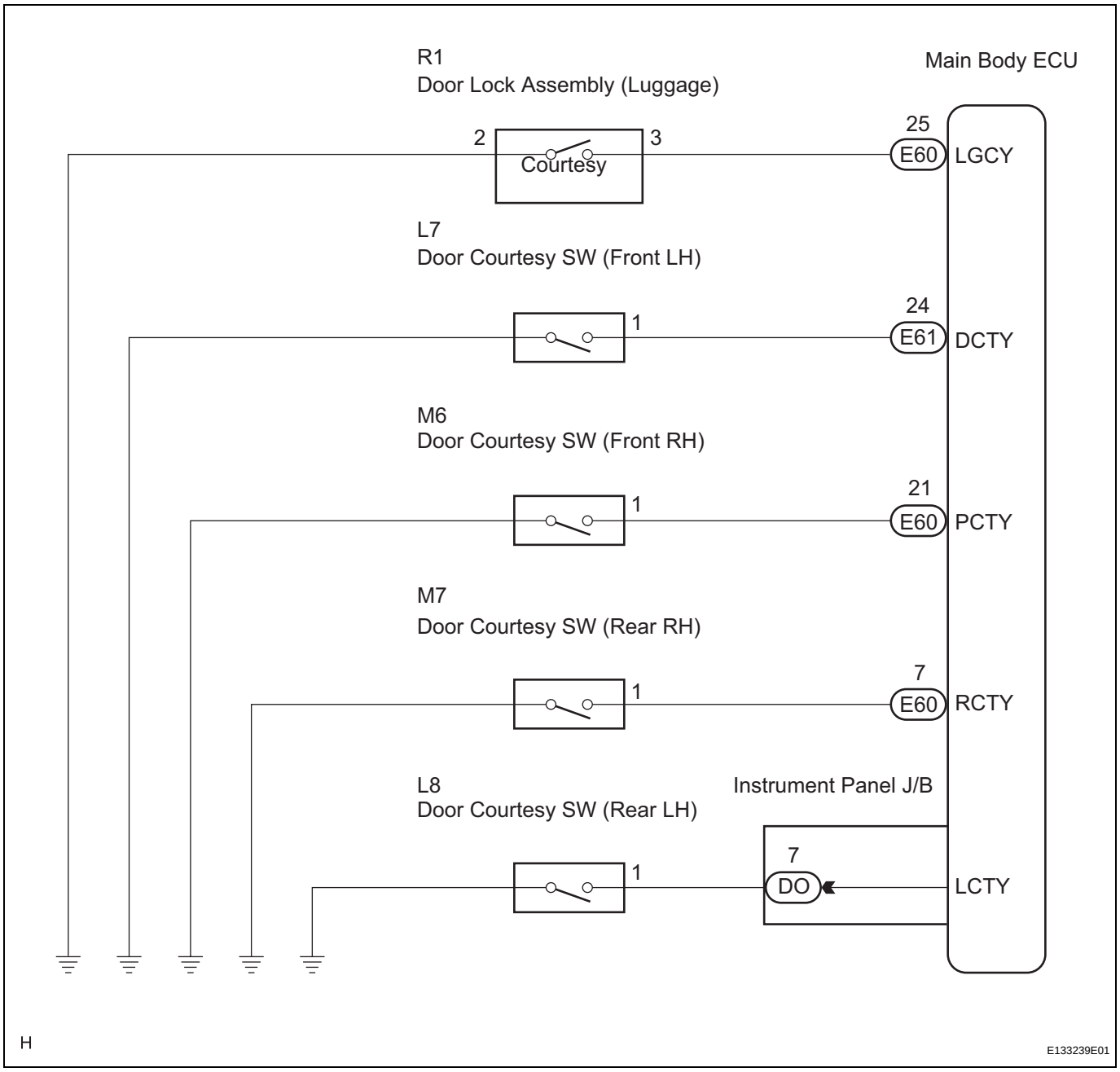

INSPECTION PROCEDURE

1	READ VALUE OF INTELLIGENT TESTER

(a) Connect the intelligent tester to the DLC3.
(b) Turn the engine switch on (IG) and turn the intelligent tester main switch on.
(c) Select the items below in the DATA LIST, and read the display on the intelligent tester.

MAIN BODY (MAIN BODY ECU):

Tester Display	Measurement Item/Range	Normal Condition	Diagnostic Note
D DOR CTY SW	Driver side door courtesy switch signal / ON or OFF	ON: Driver side door is open OFF: Driver side door is closed	-
P DOR CTY SW	Passenger side door courtesy switch signal / ON or OFF	ON: Passenger side door is open OFF: Passenger side door is closed	-
RR DOR CTY SW	Rear right door courtesy switch signal / ON or OFF	ON: Rear right door is open OFF: Rear right door is closed	-
RL DOR CTY SW	Rear left door courtesy switch signal / ON or OFF	ON: Rear left door is open OFF: Rear left door is closed	-
LUGG COURTSY SW	Luggage compartment door courtesy switch signal / ON or OFF	ON: Luggage compartment door is open OFF: Luggage compartment door is closed	-

OK:
Normal conditions listed above are displayed.

OK → **PROCEED TO NEXT CIRCUIT INSPECTION SHOWN IN PROBLEM SYMPTOMS TABLE**

NG

2	INSPECT DOOR COURTESY SWITCH

(a) Inspect the front door courtesy switch (See page LI-203).
(b) Inspect the rear door courtesy switch (See page LI-205).
(c) Inspect the luggage compartment door courtesy switch (See page LI-207).
OK:
Door courtesy switches are normal.

NG → **REPLACE DOOR COURTESY SWITCH**

OK

3	CHECK HARNESS AND CONNECTOR (MAIN BODY ECU - DOOR COURTESY SWITCH)

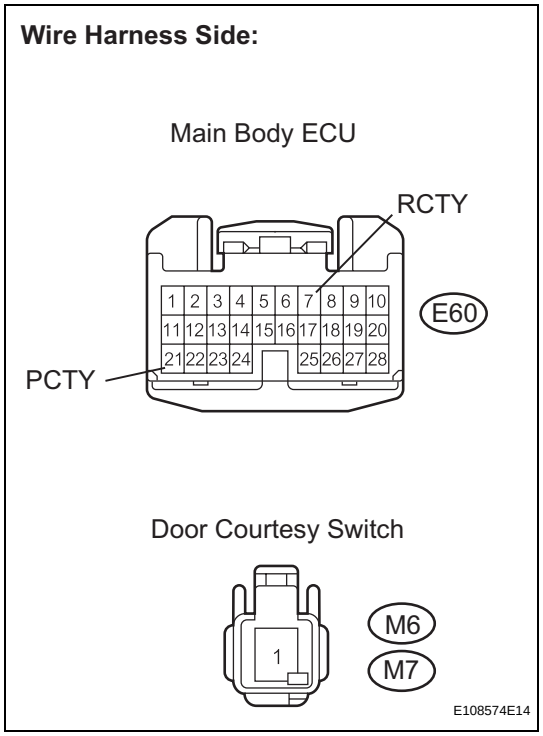

(a) Check the harness and connector between the main body ECU and door courtesy switches (passenger side and rear RH).
   (1) Disconnect the E60 main body ECU connector.
   (2) Disconnect the M6 and M7 switch connectors.
   (3) Measure the resistance according to the value(s) in the table below.
   Standard resistance

Tester Connection	Condition	Specified Condition
E60-7 (RCTY) - M7-1 (Rear RH)	Always	Below 1 Ω
E60-21 (PCTY) - M6-1 (Front passenger side)	Always	Below 1 Ω
E60-7 (RCTY) - Body ground	Always	10 kΩ or higher
E60-21 (PCTY) - Body ground	Always	10 kΩ or higher

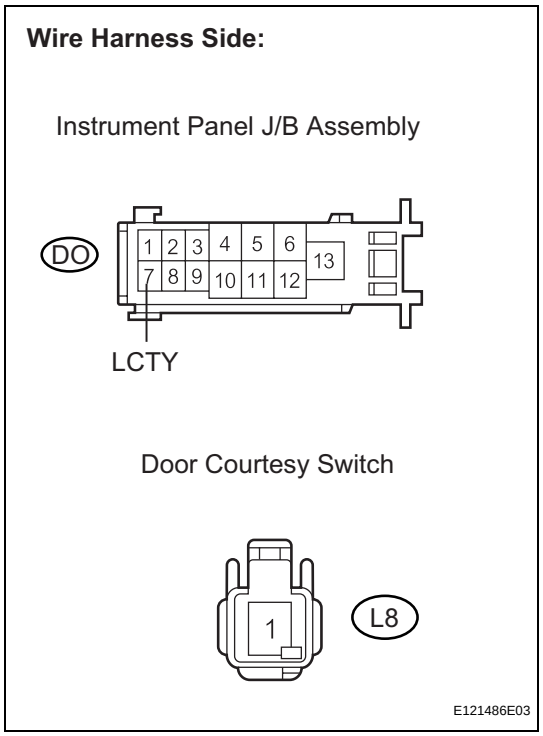

(b) Check the harness and connector between the instrument panel junction block assembly and rear LH door courtesy switch.
   (1) Disconnect the DO instrument panel J/B assembly connector.
   (2) Disconnect the L8 switch connector.
   (3) Measure the resistance according to the value(s) in the table below.
   Standard resistance

Tester Connection	Condition	Specified Condition
DO-7 (LCTY) - L8-1 (Rear LH)	Always	Below 1 Ω
DO-7 (LCTY) - Body ground	Always	10 kΩ or higher

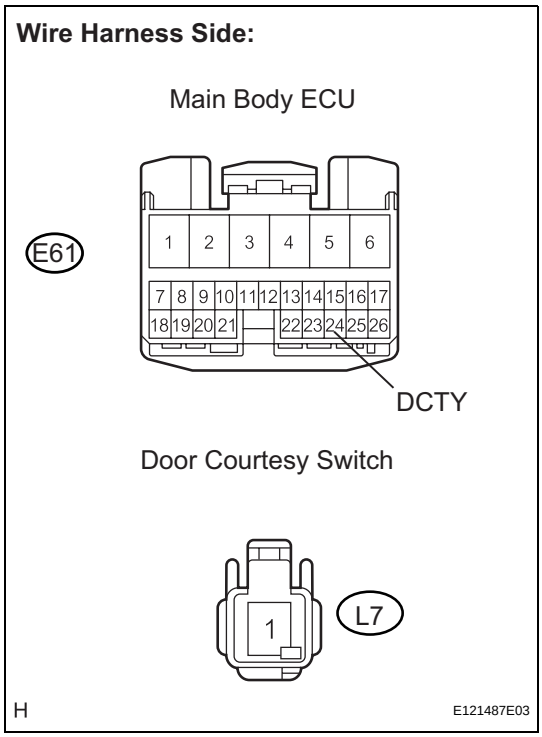

(c) Check the harness and connector between the main body ECU and driver side door courtesy switch.
(1) Disconnect the E61 main body ECU connector.
(2) Disconnect the L7 switch connector.
(3) Measure the resistance according to the value(s) in the table below.

Standard resistance

Tester Connection	Condition	Specified Condition
E61-24 (DCTY) - L7-1 (Driver side)	Always	Below 1 Ω
E61-24 (DCTY) - Body ground	Always	10 kΩ or higher

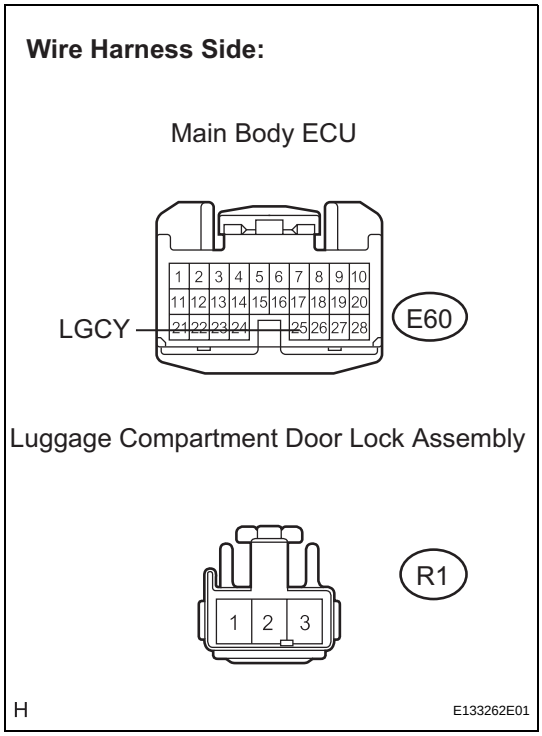

(d) Check the harness and connector between the main body ECU and luggage compartment door courtesy switch.
(1) Disconnect the E60 main body ECU connector.
(2) Disconnect the R1 switch connector.
(3) Measure the resistance according to the value(s) in the table below.

Standard resistance

Tester Connection	Condition	Specified Condition
E60-25 (LGCY) - R1-3 (Luggage door)	Always	Below 1 Ω
E60-25 (LGCY) - Body ground	Always	10 kΩ or higher

NG → **REPAIR OR REPLACE HARNESS OR CONNECTOR**

OK

REPLACE INSTRUMENT PANEL JUNCTION BLOCK ASSEMBLY

Door LOCK Position Circuit

DESCRIPTION

The main body ECU receives driver side, passenger side, rear LH side, and rear RH side door lock position switch signals to control the illuminated entry system and light auto turn off system.

WIRING DIAGRAM

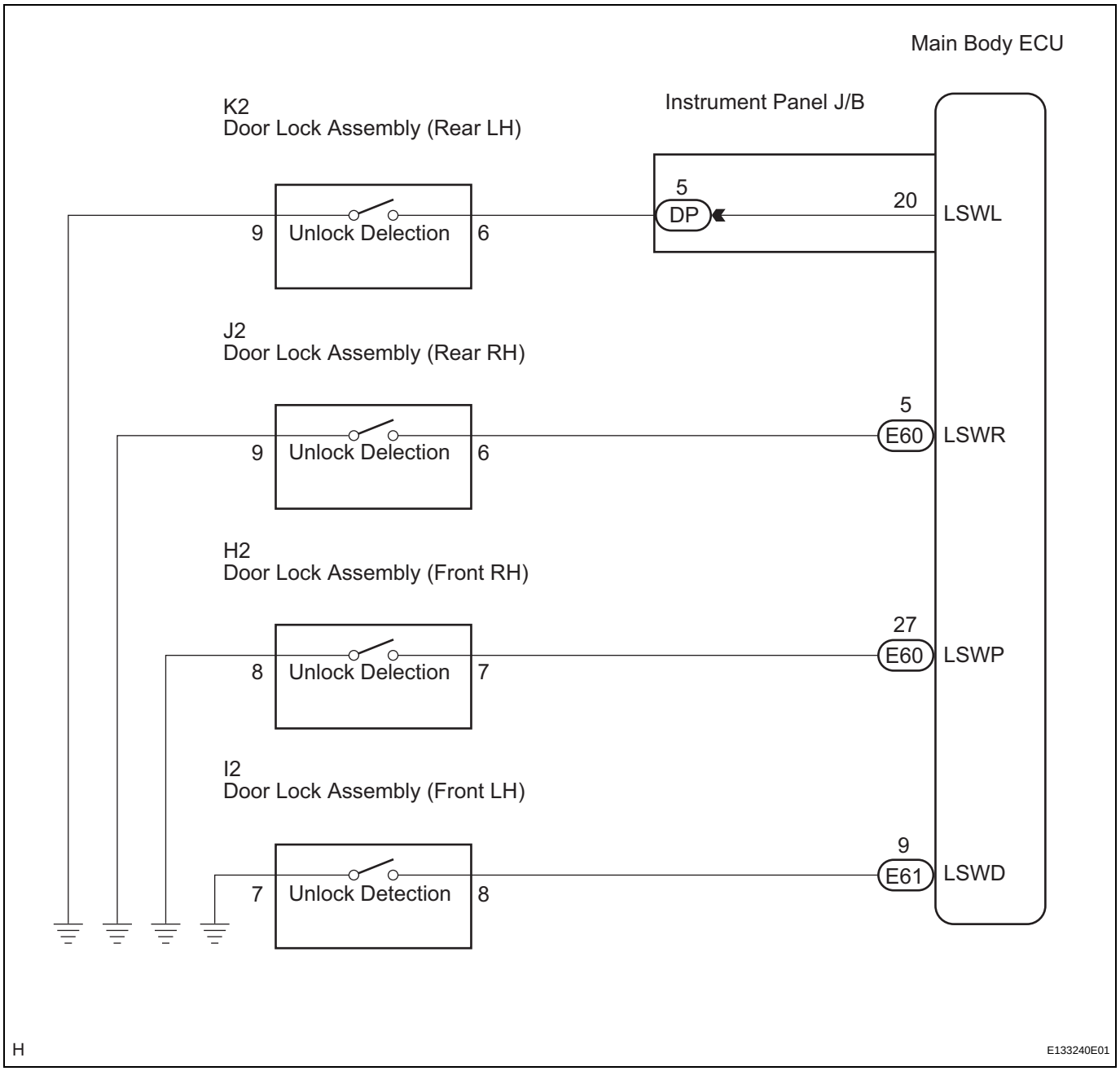

INSPECTION PROCEDURE

1	READ VALUE OF INTELLIGENT TESTER

(a) Connect the intelligent tester to the DLC3.

(b) Turn the engine switch on (IG) and turn the intelligent tester main switch on.
(c) Select the items below in the DATA LIST, and read the display on the intelligent tester.

MAIN BODY (MAIN BODY ECU):

Tester Display	Measurement Item/Range	Normal Condition	Diagnostic Note
D LOCK POS SW	Driver side door lock position switch signal / ON or OFF	ON: Driver side door is unlocked OFF: Driver side door is locked	-
P LOCK POS SW	Passenger side door lock position switch signal / ON or OFF	ON: Passenger side door is unlocked OFF: Passenger side door is locked	-
RR LOCK POS SW	Rear right door lock position switch signal / ON or OFF	ON: Rear right door is unlocked OFF: Rear right door is locked	-
RL LOCK POS SW	Rear left door lock position switch signal / ON or OFF	ON: Rear left door is unlocked OFF: Rear left door is locked	-

OK:
Normal conditions listed above are displayed.

NG → **GO TO POWER DOOR LOCK CONTROL SYSTEM**

OK

PROCEED TO NEXT CIRCUIT INSPECTION SHOWN IN PROBLEM SYMPTOMS TABLE

Interior Light Circuit

DESCRIPTION

The interior light control of the illuminated entry system is controlled by the main body ECU. The operation and condition of this control are described below.

Operation	Condition
Fade in	When any of the following conditions is met, the interior light, front seat illumination, rear seat illumination and rear door courtesy lights fade in. • The key enters any actuation area around the doors when the engine switch is off and all doors are closed. • Any door is opened. • Any door is unlocked when the engine switch is off and all doors are closed. • The engine switch is turned from on (ACC) to off when all doors are closed.
Fade out immediately	When either of the following conditions is met, the interior light, front seat illumination, rear seat illumination and rear door courtesy lights fade out. • The engine switch is turned from off to on (ACC or IG) when all doors are closed. • All doors are locked when the engine switch is off.
Illuminate for approximately 15 seconds, and then fade out	All doors are closed when the engine switch is off.

HINT:
When any of the lights do not illuminate, perform the inspection according to the PROBLEM SYMPTOMS TABLE. When all of the lights (interior light, front seat illumination, rear seat illumination, and rear door courtesy lights) do not illuminate, perform the ACTIVE TEST of the illuminated entry system. If it is normal, there may be a malfunction in the door courtesy switch circuit, door lock position switch circuit, or engine switch circuit.

WIRING DIAGRAM

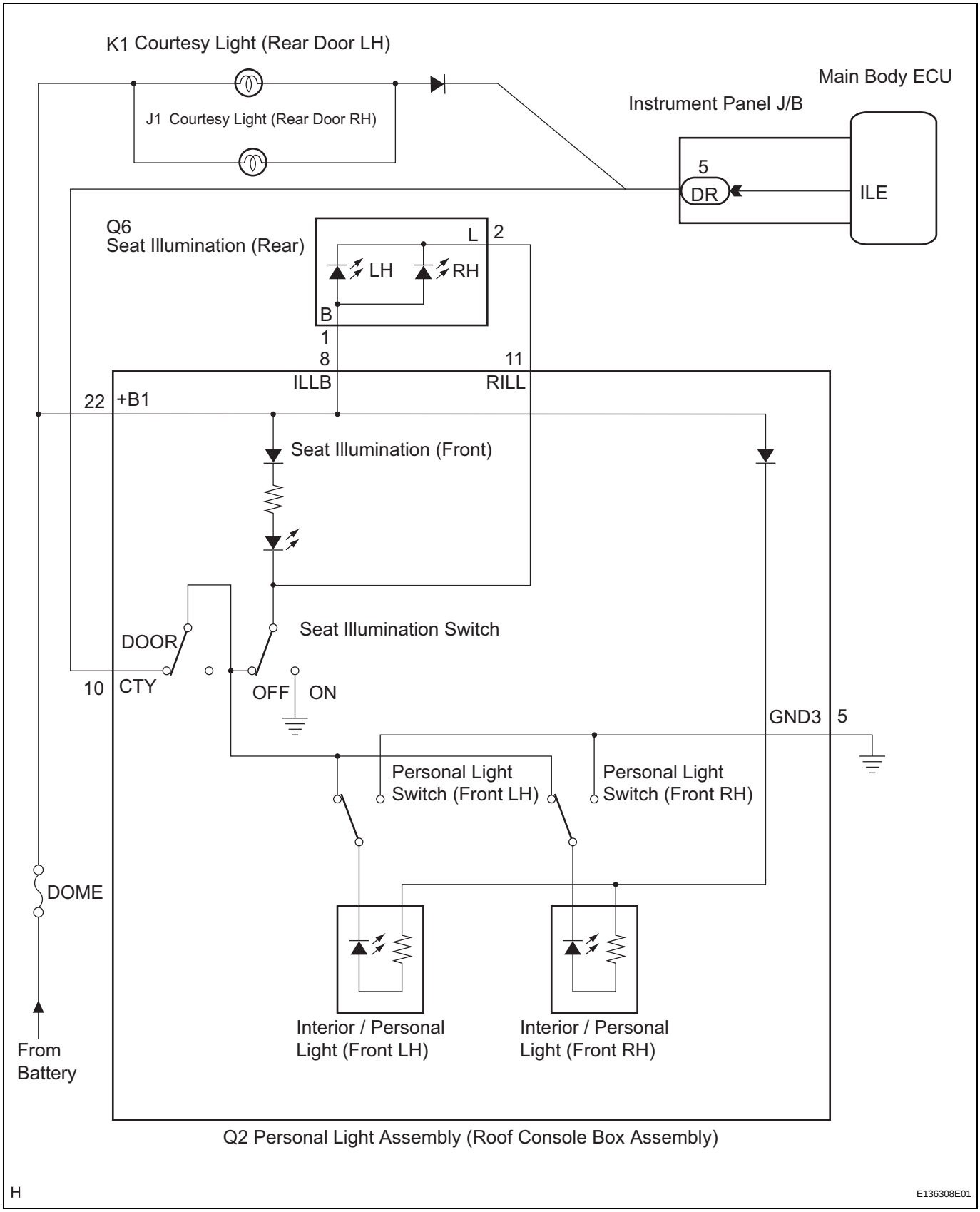

LI

INSPECTION PROCEDURE

1	PERFORM ACTIVE TEST USING INTELLIGENT TESTER

(a) Connect the intelligent tester to the DLC3.
(b) Turn the engine switch on (IG) and turn the intelligent tester main switch on.
(c) Select the item(s) below in the ACTIVE TEST, and check the operation.

MAIN BODY (MAIN BODY ECU):

Tester Display	Test Part	Control Range	Diagnostic Note
ILLUMI OUTPUT	Interior light, front seat illumination, rear seat illumination and rear door courtesy lights (Front personal switches are OFF, DOOR switch is ON, seat illumination switch is OFF, and all doors are closed)	ON / OFF	-

OK:
Each light illuminates.

OK → **PROCEED TO NEXT CIRCUIT INSPECTION SHOWN IN PROBLEM SYMPTOMS TABLE**

NG

2	CHECK HARNESS AND CONNECTOR (BATTERY - INSTRUMENT PANEL J/B AND BATTERY)

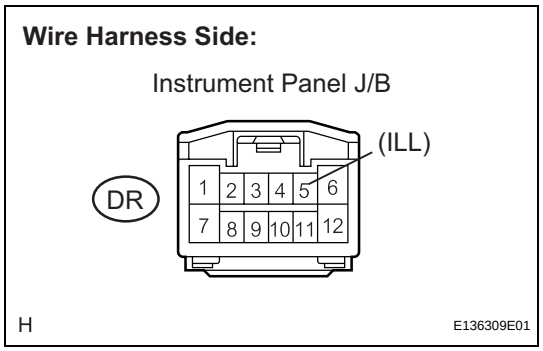

(a) Disconnect the DR instrument panel J/B connector.
(b) Measure the voltage according to the value(s) in the table below.
Standard voltage

Tester Connection	Condition	Specified Condition
DR-5 (ILL) - Body ground	Always	10 to 14 V

NG → **REPAIR OR REPLACE HARNESS OR CONNECTOR**

OK

REPLACE INSTRUMENT PANEL JUNCTION BLOCK ASSEMBLY

LI

Footwell Light Circuit

DESCRIPTION

The footwell illumination control is controlled by the main body ECU. The operation and condition of this control are described below.

Operation	Condition
Fade in	When any of the following conditions is met, the footwell illumination fades in. • Any door is opened. • Any door is unlocked when the engine switch is off and all doors are closed. • The engine switch is turned from off to on (IG) when all doors are closed.
Fade out immediately	When either of the following conditions is met, the footwell illumination fades out immediately. • All doors are closed when the engine switch is off and all doors are locked. • All doors are locked when the engine switch is off.
Illuminate for approximately 15 seconds, and then fade out	When either of the following conditions is met, the footwell illumination illuminates for approximately 15 seconds and then fade out. • The engine switch is turned from on (IG) to off when all door are closed. • All doors are closed when the engine switch is off.
Dim	When either of the following conditions is met, the footwell illumination dims. • The shift lever is adjusted to any position other than P when the footwell light is on, the engine switch is on (IG), and the shift lever is in the P position. • The engine switch is turned from off to on (IG) when the shift lever is in any position other than P.

LI

HINT:
- Before performing troubleshooting of the footwell illumination control, check that the interior light control of the illuminated entry system is normal.
- When one side footwell illumination does not come on, check the light or wire harness that is related to the light. When both right and left footwell lights do not come on, perform the ACTIVE TEST of the footwell illumination.

WIRING DIAGRAM

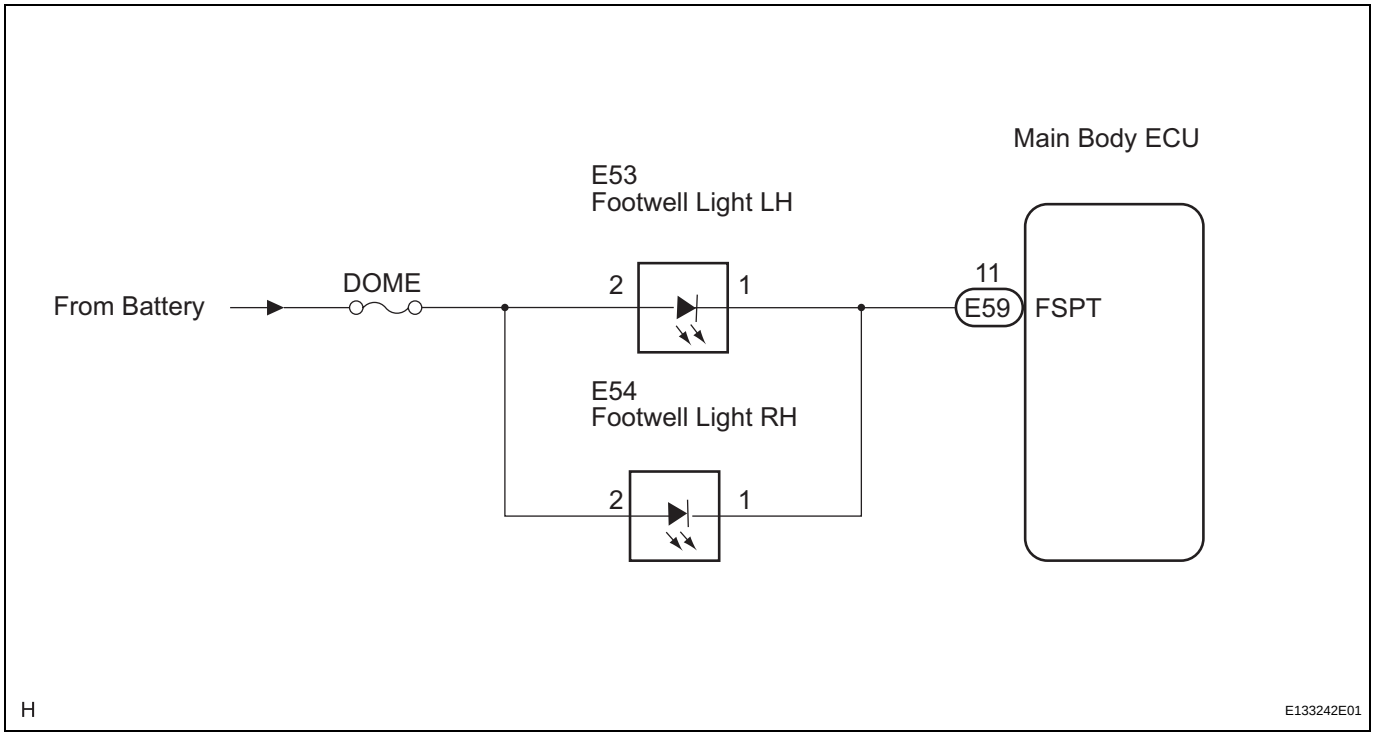

INSPECTION PROCEDURE

1	PERFORM ACTIVE TEST USING INTELLIGENT TESTER

(a) Connect the intelligent tester to the DLC3.
(b) Turn the engine switch on (IG).
(c) Turn the intelligent tester main switch on.
(d) Select the item(s) below in the ACTIVE TEST, and check the operation.

MAIN BODY (MAIN BODY ECU):

Tester Display	Test Part	Control Range	Diagnostic Note
STEP LIGHT	Footwell lights	ON / OFF	-

OK:
Footwell lights come on.

OK → **PROCEED TO NEXT CIRCUIT INSPECTION SHOWN IN PROBLEM SYMPTOMS TABLE**

NG

2	CHECK HARNESS AND CONNECTOR (MAIN BODY ECU - BATTERY)

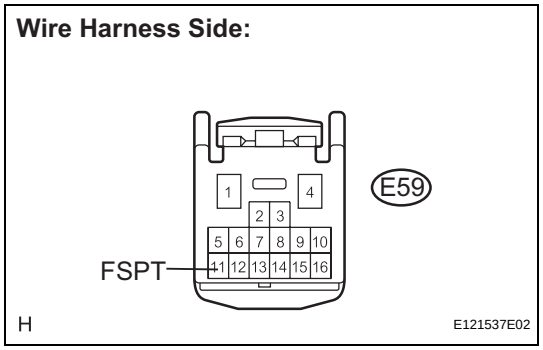

(a) Disconnect the E59 main body ECU connector.
(b) Measure the voltage according to the value(s) in the table.

Standard voltage

Tester Connection	Condition	Specified Condition
E59-11 (FSPT) - Body ground	Always	10 to 14 V

NG → **REPAIR OR REPLACE HARNESS OR CONNECTOR**

OK

REPLACE INSTRUMENT PANEL JUNCTION BLOCK ASSEMBLY

LI

Engine Switch Illumination Circuit

DESCRIPTION

The engine switch illumination is controlled by the main body ECU. The operation and condition of this control are described below (Light control switch is OFF).

Operation	Condition
Fade in	When any of the following conditions is met, the engine switch illumination fades in. • The key enters any actuation area around the doors when the engine switch is off and all doors are closed. • Any door is opened. • Any door is unlocked when the engine switch is off and all doors are closed. • The engine switch is turned from on (ACC) to off when all doors are closed.
Fade out immediately	When either of the following conditions is met, the engine switch illumination fades out. • The engine switch is turned from off to on (ACC or IG) when all doors are closed. • All doors are locked when the engine switch is off.
Illuminate for approximately 15 seconds, and then fade out	All doors are closed when the engine switch is off.

WIRING DIAGRAM

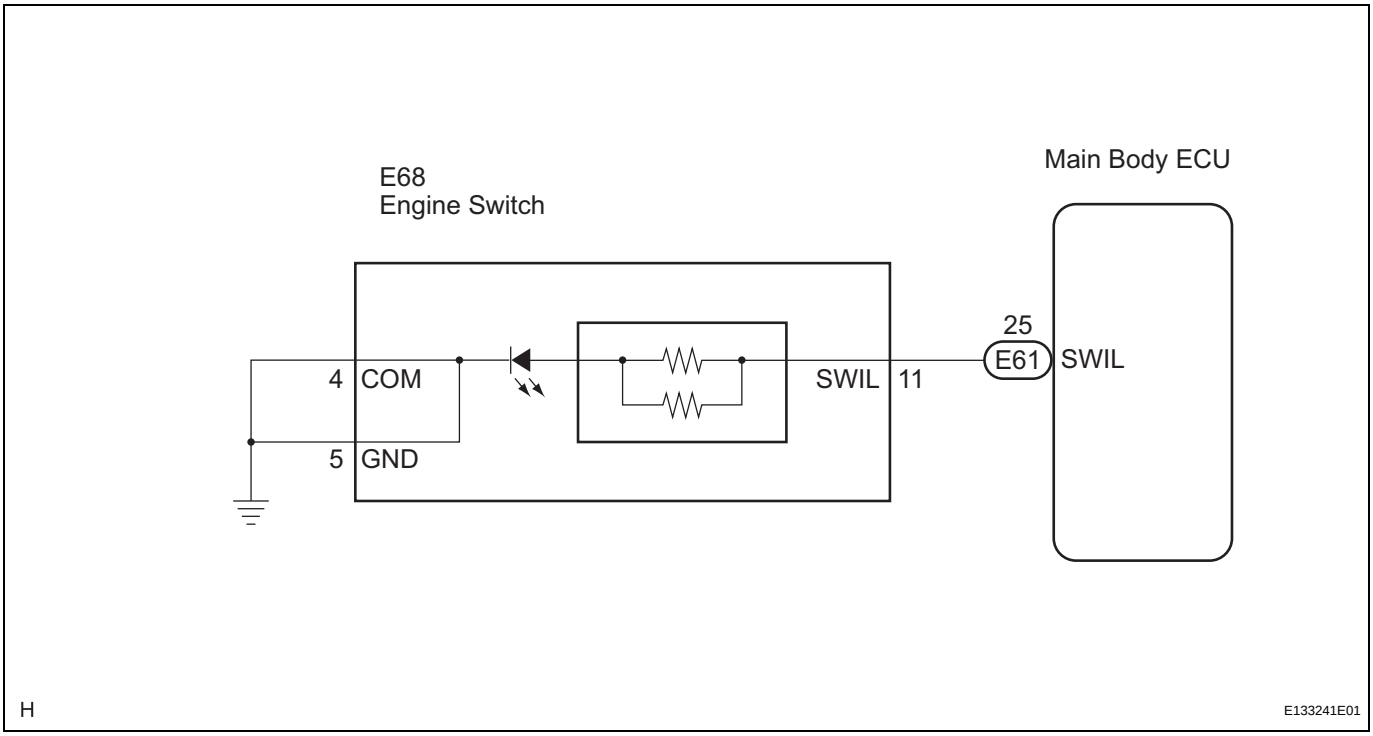

INSPECTION PROCEDURE

1	PERFORM ACTIVE TEST USING INTELLIGENT TESTER

(a) Connect the intelligent tester to the DLC3.
(b) Turn the engine switch on (IG).
(c) Turn the intelligent tester main switch on.

(d) Select the item(s) below in the ACTIVE TEST, and check the operation.

MAIN BODY (MAIN BODY ECU):

Tester Display	Test Part	Control Range	Diagnostic Note
LIGHTING IND	Engine switch illumination	ON / OFF	-

OK:

Engine switch illumination comes on.

OK → **PROCEED TO NEXT CIRCUIT INSPECTION SHOWN IN PROBLEM SYMPTOMS TABLE**

NG

2 INSPECT ENGINE SWITCH

(a) Remove the engine switch.

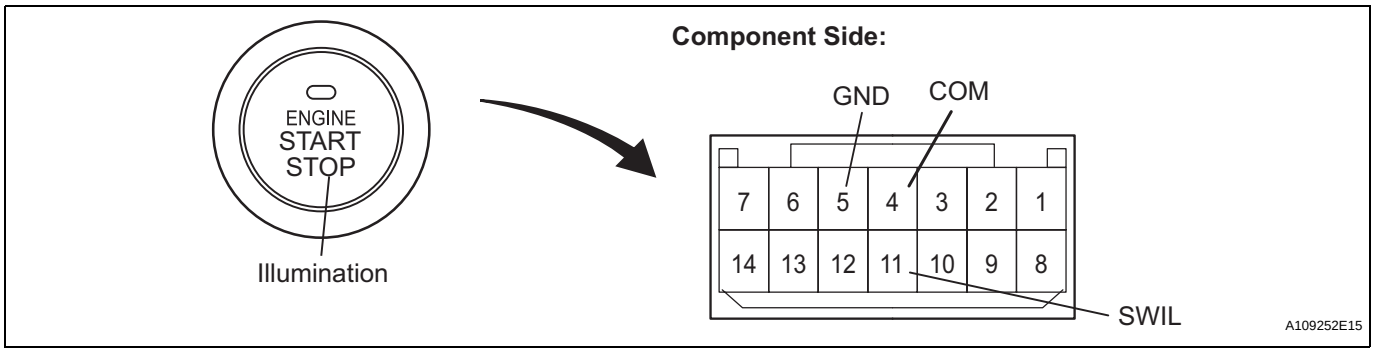

(b) Apply battery voltage to the engine switch.

(c) Check that the illumination comes on.

OK

Measurement Condition	Specified Condition
Battery positive (+) → Terminal 11 (SWIL) **Battery negative (-) → Terminal 5 (GND) or 4 (COM)**	**Engine switch illumination comes on**

NG → **REPLACE ENGINE SWITCH**

OK

3	**CHECK HARNESS AND CONNECTOR (ENGINE SWITCH - MAIN BODY ECU AND BODY GROUND)**

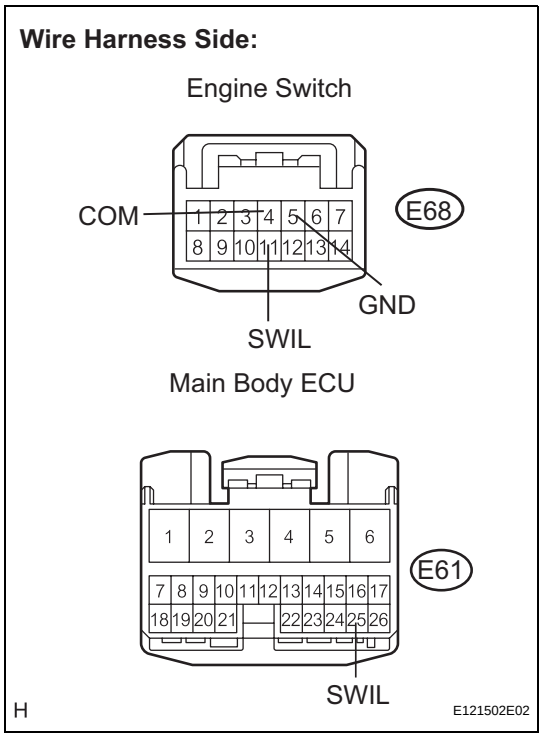

(a) Disconnect the E61 main body ECU connector.
(b) Disconnect the E68 engine switch connector.
(c) Measure the resistance according to the value(s) in the table below.

Standard resistance

Tester Connection	Condition	Specified Condition
E68-11 (SWIL) - E61-25 (SWIL)	Always	Below 1 Ω
E68-4 (COM) or E68-5 (GND) - Body ground	Always	Below 1 Ω
E68-11 (SWIL) - Body ground	Always	10 kΩ or higher

NG → **REPAIR OR REPLACE HARNESS OR CONNECTOR**

OK

REPLACE INSTRUMENT PANEL JUNCTION BLOCK ASSEMBLY

LI

Door Mirror Foot Light Circuit

DESCRIPTION

The door mirror foot light is controlled by the mirror ECU. The operation and condition of this control are described below.

Operation	Condition
Fade in (During 15 seconds)	When any of the following conditions is met, the door mirror foot light fades in. • The key enters any actuation area around the doors. • The driver or front passenger side door is opened when the footwell illumination is on. • Any door is unlocked when the shift lever is in the P position.
Fade out	When either of the following conditions is met, the door mirror foot light fades out. • The shift lever is put into any position other than P when the engine switch is on (IG) and the foot well illumination is on. • All doors are locked when the footwell illumination is on.

WIRING DIAGRAM

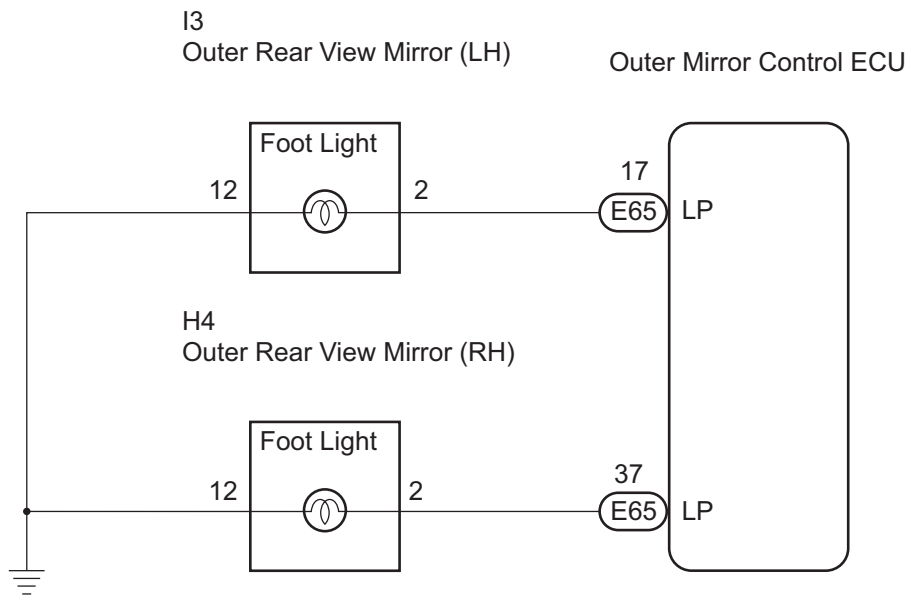

H

E133244E01

INSPECTION PROCEDURE

1	INSPECT OUTER REAR VIEW MIRROR ASSEMBLY (DOOR MIRROR FOOT LIGHT)

HINT:
(See page LI-185).

NG → **REPLACE OUTER REAR VIEW MIRROR ASSEMBLY**

OK

2	CHECK HARNESS AND CONNECTOR (OUTER REAR VIEW MIRROR - ECU AND BODY GROUND)

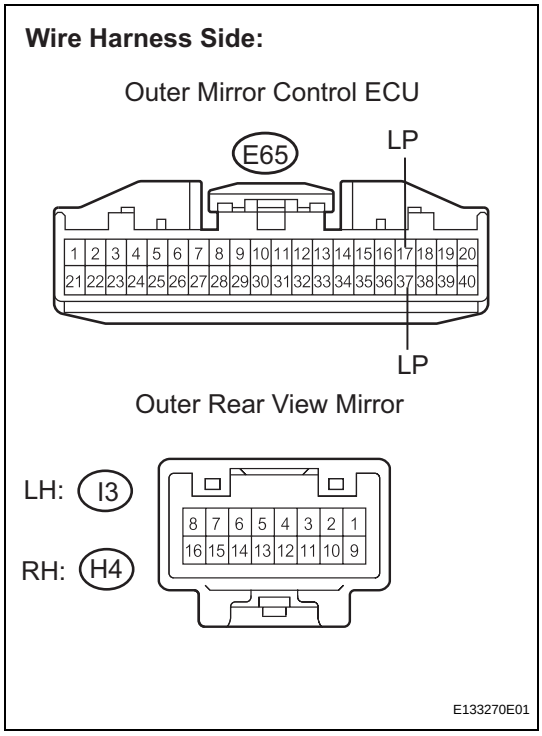

(a) Disconnect the E65 outer mirror control ECU connector.
(b) Disconnect the I3 or H4 outer rear view mirror connector.
(c) Measure the resistance according to the value(s) in the table.

Standard resistance:

LH Side

Tester Connection	Condition	Specified Condition
E65-17 (LP) - I3-2	Always	Below 1 Ω
I3-12 - Body ground	Always	Below 1 Ω
E65-17 (LP) - Body ground	Always	10 kΩor higher

RH Side

Tester Connection	Condition	Specified Condition
E65-37 (LP) - H4-2	Always	Below 1 Ω
H4-12 - Body ground	Always	Below 1 Ω
E65-37 (LP) - Body ground	Always	10 kΩor higher

NG → **REPAIR OR REPLACE HARNESS OR CONNECTOR**

OK

PROCEED TO NEXT CIRCUIT INSPECTION SHOWN IN PROBLEM SYMPTOMS TABLE

Parking Brake Switch Circuit

DESCRIPTION

The main body ECU receives a parking brake switch signal to control the daytime running light system.

WIRING DIAGRAM

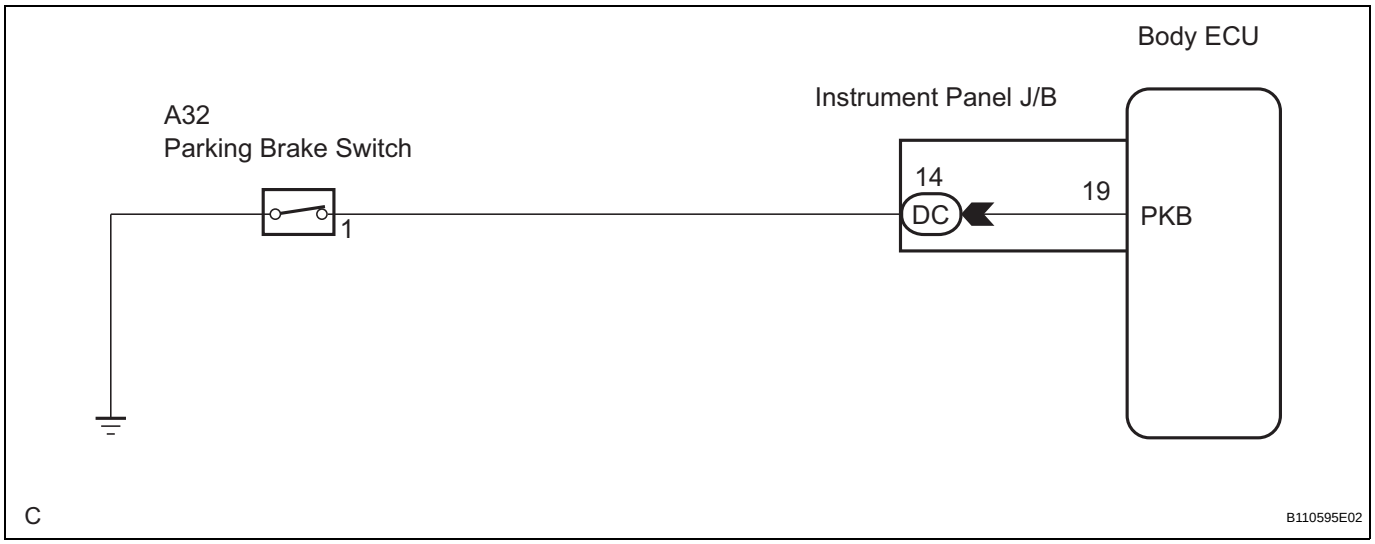

INSPECTION PROCEDURE

1	READ VALUE OF INTELLIGENT TESTER

(a) Connect the intelligent tester to the DLC3.
(b) Turn the engine switch on (IG) and turn the intelligent tester main switch on.
(c) Select the item below in the DATA LIST, and read the display on the intelligent tester.

MAIN BODY (MAIN BODY ECU):

Tester Display	Measurement Item/Range	Normal Condition	Diagnostic Note
PARKING BRAKE SW	Parking brake SW signal / ON or OFF	ON: Parking brake switch is ON OFF: Parking brake switch is OFF	-

OK:
Normal conditions listed above are displayed.

OK → **PROCEED TO NEXT CIRCUIT INSPECTION SHOWN IN PROBLEM SYMPTOMS TABLE**

NG

LI

2 INSPECT PARKING BRAKE SWITCH ASSEMBLY

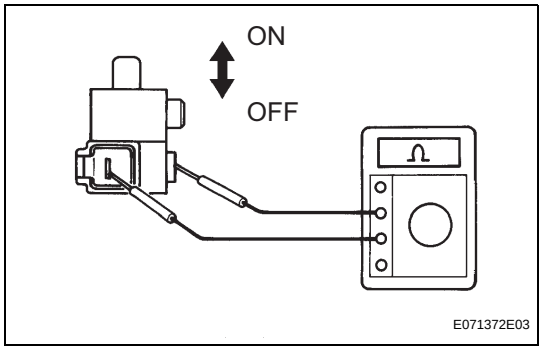

(a) Remove the parking brake switch assembly.
(b) Measure the resistance according to the value(s) in the table below.
Standard resistance

Tester Connection	Condition	Specified Condition
1 - Switch body	Shaft is pushed in (OFF)	10 kΩ or higher
1 - Switch body	Shaft is not pushed in (ON)	Below 1 Ω

NG → **REPLACE PARKING BRAKE SWITCH ASSEMBLY**

LI

OK

3 CHECK HARNESS AND CONNECTOR (SWITCH - INSTRUMENT PANEL J/B ASSEMBLY)

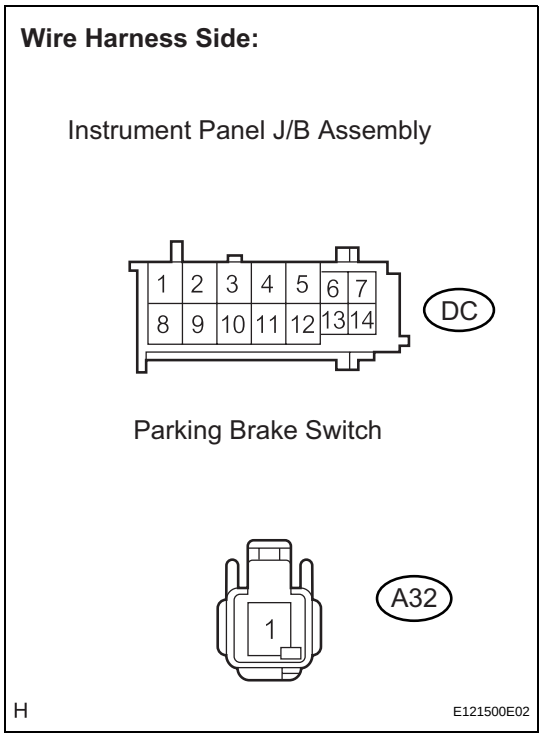

(a) Disconnect the DC instrument panel junction block assembly connector.
(b) Disconnect the A32 switch connector.
(c) Measure the resistance according to the value(s) in the table below.
Standard resistance

Tester Connection	Condition	Specified Condition
DC-14 - A32-1	Always	Below 1 Ω
DC-14 - Body ground	Always	10 kΩ or higher

NG → **REPAIR OR REPLACE HARNESS OR CONNECTOR**

OK

REPLACE INSTRUMENT PANEL JUNCTION BLOCK ASSEMBLY

Taillight Relay Circuit

DESCRIPTION

The main body ECU receives a signal from the light control switch, and turns the taillight relay on.
HINT:

- When any of the lights do not illuminate, check the bulb or wire harness that is related to the bulb.
- When all of the lights that are related to the TAIL relay do not illuminate and the TAIL fuse is normal, read the light control switch TAIL signal value in the data list and perform the taillight relay active test to determine if the malfunction exists on either the switch side or the relay side.

WIRING DIAGRAM

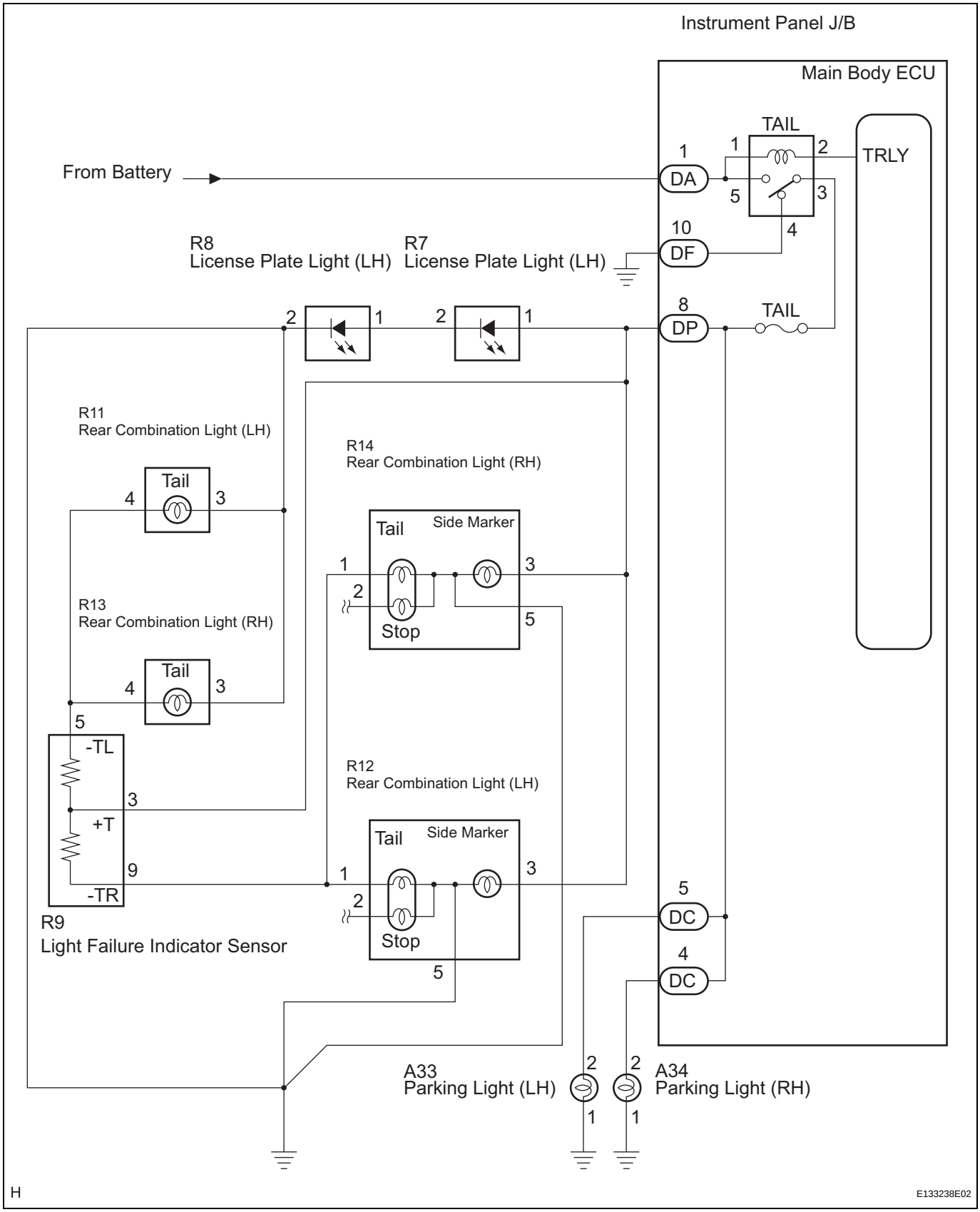

LI

INSPECTION PROCEDURE

1	PERFORM ACTIVE TEST USING INTELLIGENT TESTER

(a) Connect the intelligent tester to the DLC3.
(b) Turn the engine switch on (IG) and turn the intelligent tester main switch on.
(c) Select the item below in the ACTIVE TEST and then check that the relay operates.

MAIN BODY (MAIN BODY ECU):

Tester Display	Test Part	Control Range	Diagnostic Note
TAIL LIGHT	Taillight relay	ON / OFF	-

OK:
Taillight relay operates. (Taillights illuminate.)

OK → **PROCEED TO NEXT CIRCUIT INSPECTION SHOWN IN PROBLEM SYMPTOMS TABLE**

NG

2	INSPECT FUSE (TAIL)

(a) Remove the TAIL fuse from the instrument panel J/B assembly.
(b) Measure the resistance of the fuse.
Standard resistance:
Below 1 Ω

NG → **REPLACE FUSE**

OK

3	INSPECT TAILLIGHT RELAY

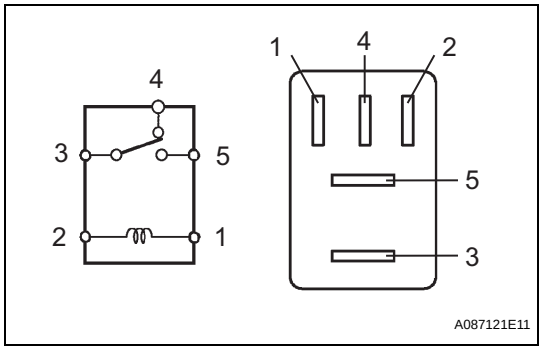

(a) Remove the taillight relay from the instrument panel J/B assembly.
(b) Measure the resistance according to the value(s) in the table below.
Standard resistance

Tester Connection	Specified Condition
3 - 5	10 kΩ or higher
	Below 1 Ω (When battery voltage is applied to terminals 1 and 2)
3 - 4	Below 1 Ω
	10 kΩ or higher (When battery voltage is applied to terminals 1 and 2)

NG → **REPLACE TAILLIGHT RELAY**

OK

4	INSPECT INSTRUMENT PANEL JUNCTION BLOCK ASSEMBLY

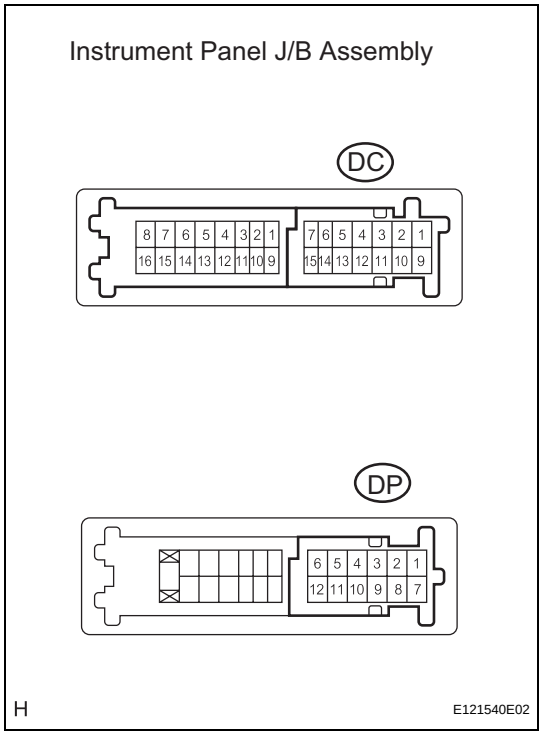

(a) Disconnect the DP and DC instrument panel J/B assembly connectors.
(b) Measure the voltage according to the value(s) in the table below.
Standard voltage

Tester Connection	Condition	Specified Condition
DC-4 - Body ground	Light control switch OFF → TAIL	Below 1 V → 10 to 14 V
DC-5 - Body ground	Light control switch OFF → TAIL	Below 1 V → 10 to 14 V
DP-8 - Body ground	Light control switch OFF → TAIL	Below 1 V → 10 to 14 V

OK → **REPAIR OR REPLACE HARNESS OR CONNECTOR (INSTRUMENT PANEL JUNCTION BLOCK ASSEMBLY - BODY GROUND)**

NG

5	CHECK HARNESS AND CONNECTOR (BATTERY - INSTRUMENT PANEL JUNCTION BLOCK ASSEMBLY)

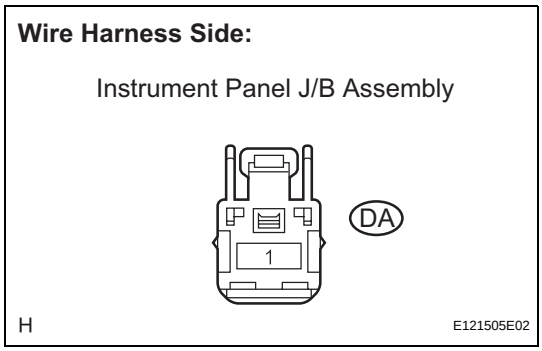

(a) Disconnect the DA instrument panel J/B assembly connector.
(b) Measure the voltage according to the value(s) in the table below.
Standard voltage

Tester Connection	Condition	Specified Condition
DA-1 - Body ground	Always	10 to 14 V

NG → **REPAIR OR REPLACE HARNESS OR CONNECTOR**

OK

REPLACE INSTRUMENT PANEL JUNCTION BLOCK ASSEMBLY

LI

AFS ECU Power Source Circuit

DESCRIPTION

This circuit detects the state of the engine switch. The AFS ECU receives it from the engine switch.

WIRING DIAGRAM

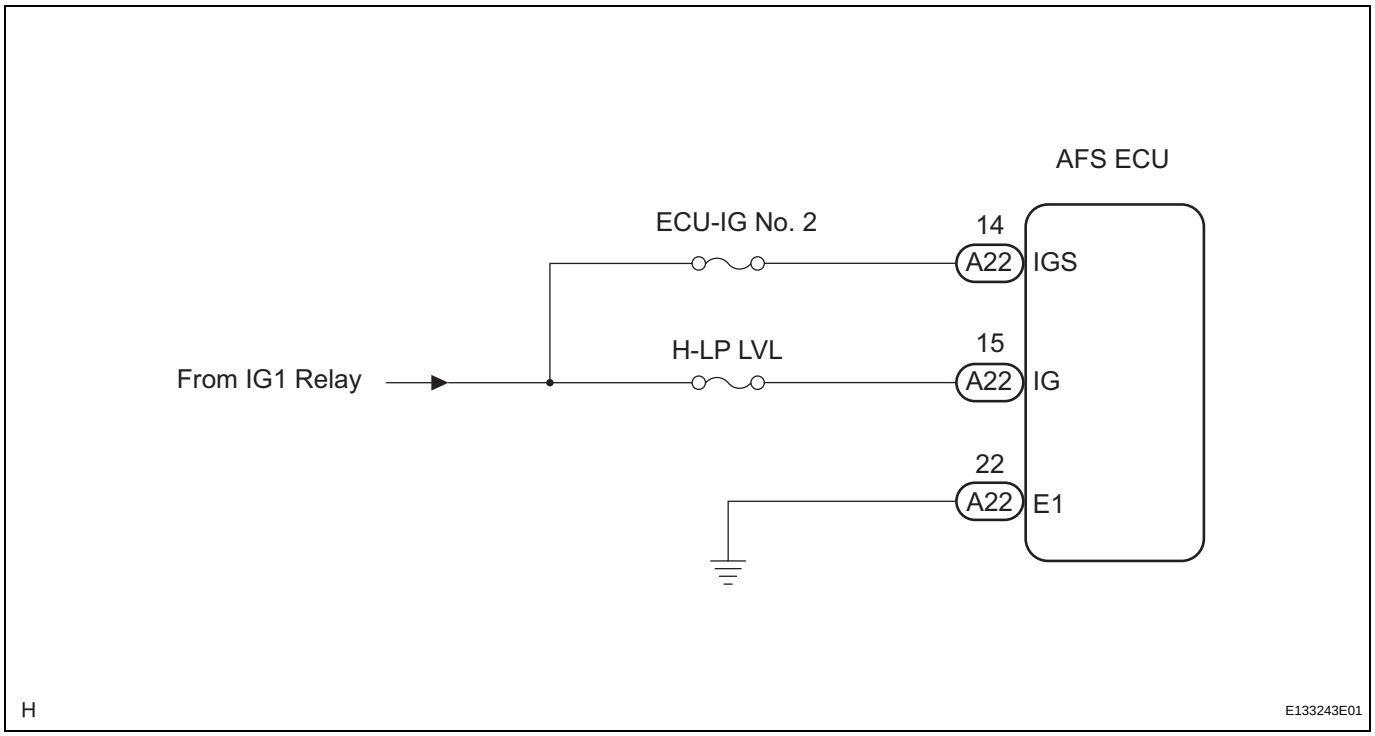

INSPECTION PROCEDURE

1	INSPECT FUSE (ECU-IG NO. 2 OR H-LP LVL)

(a) Remove the ECU-IG No. 2 fuse or H-LP LVL fuse from the instrument panel junction block assembly.

(b) Measure the resistance of the fuse.

Standard resistance:

Below 1 Ω

NG → **REPLACE FUSE**

OK

2 INSPECT AFS ECU

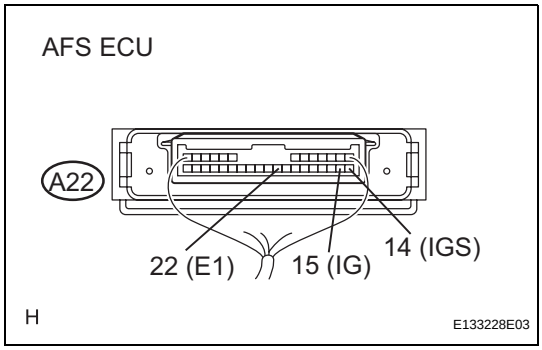

(a) Measure the voltage according to the value(s) in the table below.

Standard voltage

Tester Connection	Condition	Specified Condition
A22-14 (IGS) - A22-22 (E1)	Engine switch off	Below 1 V
A22-14 (IGS) - A22-22 (E1)	Engine switch on (IG)	10 to 14 V
A22-15 (IG) - A22-22 (E1)	Engine switch off	Below 1 V
A22-15 (IG) - A22-22 (E1)	Engine switch on (IG)	10 to 14 V

OK → **PROCEED TO NEXT CIRCUIT INSPECTION SHOWN IN PROBLEM SYMPTOMS TABLE**

NG ↓

3 CHECK WIRE HARNESS (AFS ECU - BATTERY AND BODY GROUND)

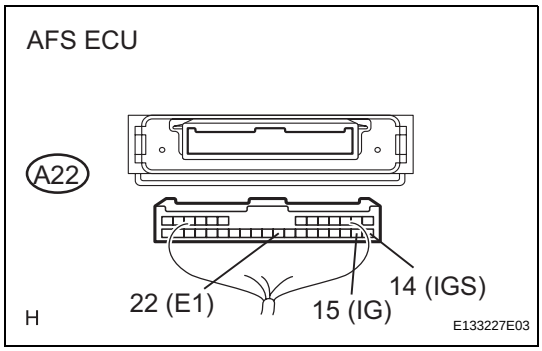

(a) Disconnect the A22 AFS ECU connector.

(b) Measure the voltage and resistance according to the value(s) in the table below.

Standard voltage

Tester Connection	Condition	Specified Condition
A22-14 (IGS) - Body ground	Engine switch on (IG)	10 to 14 V
A22-15 (IG) - Body ground	Engine switch on (IG)	10 to 14 V

Standard resistance

Tester Connection	Condition	Specified Condition
A22-22 (E1) - Body ground	Always	Below 1 Ω

NG → **REPAIR OR REPLACE HARNESS OR CONNECTOR**

OK ↓

REPLACE AFS ECU

AFS OFF Switch Circuit

DESCRIPTION

When the AFS switch is pushed (ON), the AFS ECU will cancel the intelligent AFS control and turns on the AFS OFF indicator light.

WIRING DIAGRAM

INSPECTION PROCEDURE

1	READ VALUE OF INTELLIGENT TESTER

(a) Connect the intelligent tester to the DLC3.
(b) Turn the engine switch on (IG).
(c) Turn the intelligent tester main switch on.
(d) Turn the clearance sonar main switch on.
(e) Select the item below in the DATA LIST, and read its value displayed on the intelligent tester.

AFS (AFS ECU)

Tester Display	Measurement Item/Range	Normal Condition	Diagnostic Note
AFS OFF SW	AFS OFF switch signal ON / OFF	ON: AFS OFF switch pushed (ON) OFF: AFS OFF switch not pushed (OFF)	-

OK → **PROCEED TO NEXT CIRCUIT INSPECTION SHOWN IN PROBLEM SYMPTOMS TABLE**

NG

2	INSPECT AFS OFF SWITCH

HINT:
(See page LI-198)

NG → **REPLACE AFS OFF SWITCH**

OK

3	CHECK HARNESS AND CONNECTOR (AFS OFF SWITCH - AFS ECU AND BODY GROUND)

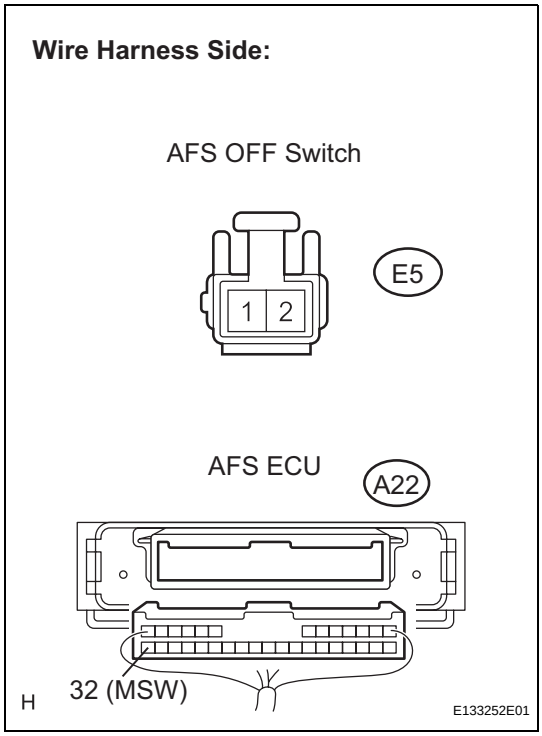

(a) Disconnect the A22 AFS ECU connector.
(b) Disconnect the E5 AFS OFF switch connector.
(c) Measure the resistance according to the value (s) in the table below.

Standard resistance

Tester Connection	Condition	Specified Condition
A22-32 (MSW) - E5-2	Always	Below 1 Ω
E5-1 - Body ground	Always	Below 1 Ω
A22-32 (MSW) - Body ground	Always	Below 1 Ω

NG → **REPAIR OR REPLACE HARNESS OR CONNECTOR**

OK

REPLACE AFS ECU

LVL Terminal Circuit

DESCRIPTION

By connecting terminals LVL and CG of the DLC3, the AFS ECU initializes the height control sensor signal.

WIRING DIAGRAM

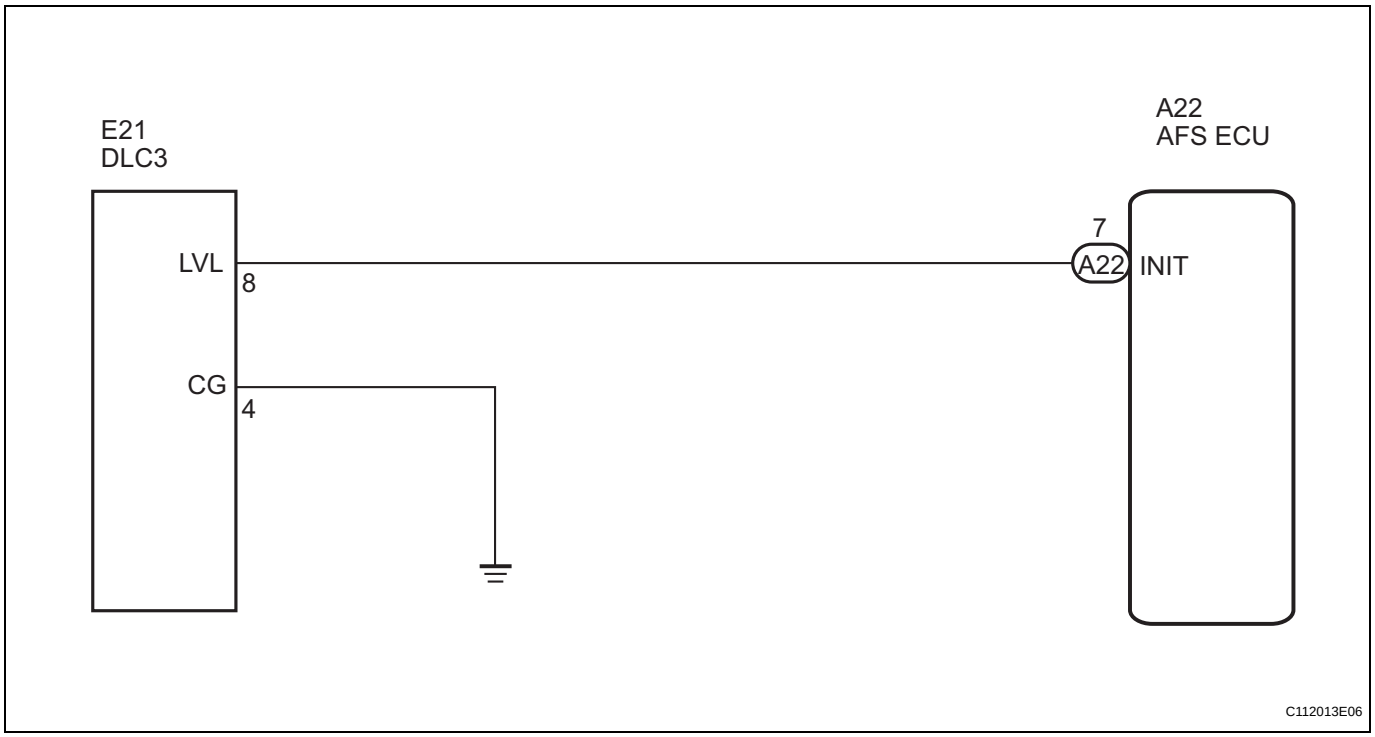

INSPECTION PROCEDURE

1	INSPECT DLC3 TERMINAL VOLTAGE

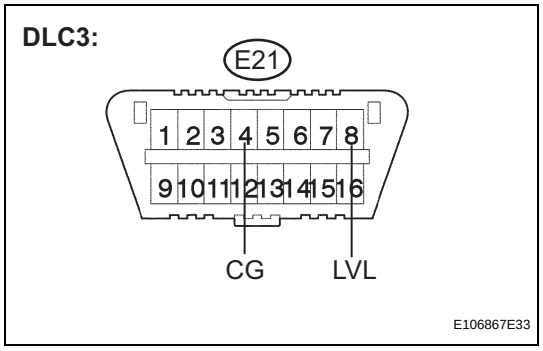

(a) Measure the voltage according to the value(s) in the table below.

Standard voltage

Tester Connection	Condition	Specified Condition
E21-4 (CG) - Body ground	Engine switch on (IG)	10 to 14 V
E21-4 (CG) - Body ground	Engine switch off	Below 1 V

OK → **PROCEED TO NEXT CIRCUIT INSPECTION SHOWN IN PROBLEM SYMPTOMS TABLE**

NG

2 CHECK HARNESS AND CONNECTOR (DLC3 - HEADLIGHT BEAM LEVEL CONTROL ECU)

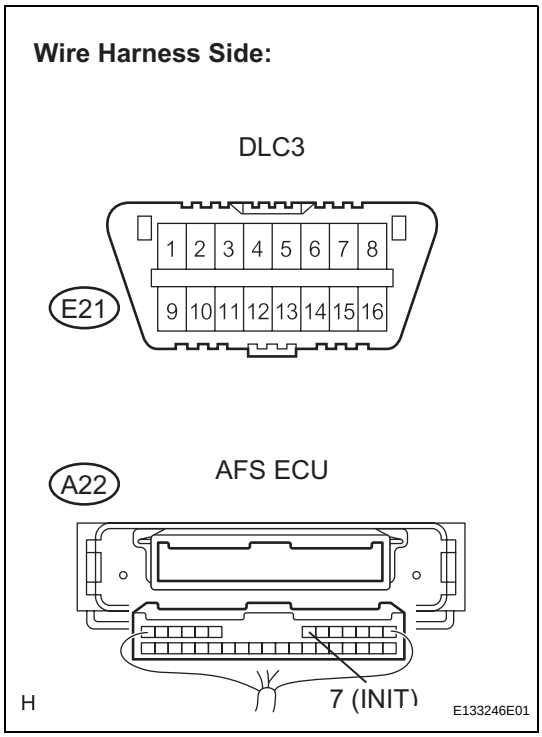

(a) Disconnect the A22 AFS ECU connector.
(b) Measure the resistance according to the value(s) in the table below.

Standard resistance

Tester Connection	Condition	Specified Condition
A22-7 (INIT) - E21-8 (LVL)	Always	Below 1 Ω
A22-7 (INIT) - Body ground	Always	10 kΩ or higher

NG → **REPAIR OR REPLACE HARNESS OR CONNECTOR**

OK

3 CHECK HARNESS AND CONNECTOR (DLC3 - BODY GROUND)

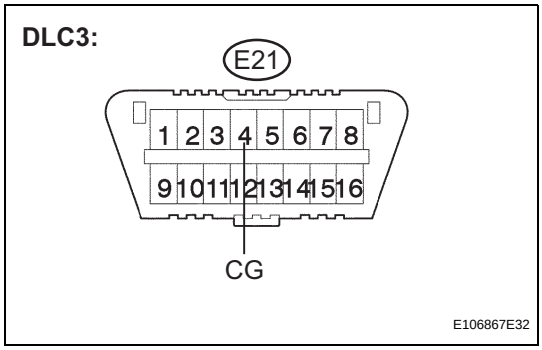

(a) Measure the resistance according to the value(s) in the table below.

Standard resistance

Tester Connection	Condition	Specified Condition
E21-4 (CG) - Body ground	Always	Below 1 Ω

NG → **REPAIR OR REPLACE HARNESS OR CONNECTOR**

OK

REPLACE AFS ECU

REMOVAL

1. **DISCONNECT CABLE FROM NEGATIVE BATTERY TERMINAL (for HID Headlight)**
2. **REMOVE COOL AIR INTAKE DUCT SEAL (See page ET-4)**
3. **REMOVE FRONT BUMPER ASSEMBLY (See page ET-5)**
4. **REMOVE HOOD HINGE COVER (See page WW-38)**
5. **REMOVE ENGINE ROOM SIDE COVER (See page WW-39)**
6. **REMOVE HOOD TO FRONT FENDER SEAL**
7. **REMOVE HEADLIGHT ASSEMBLY**
   (a) Remove the 3 bolts and screw.
   (b) Disconnect the connectors and remove the headlight assembly.

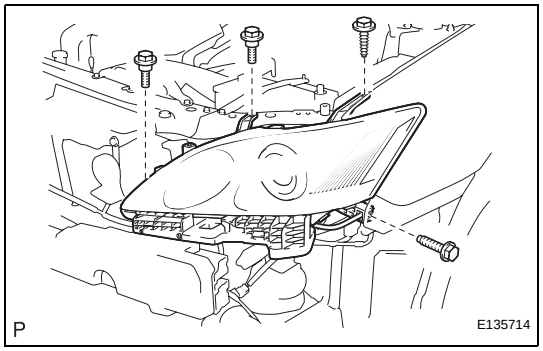

DISASSEMBLY

1. **REMOVE FRONT BUMPER SIDE SUPPORT**
   (a) Remove the 3 screws and the front bumper side support.

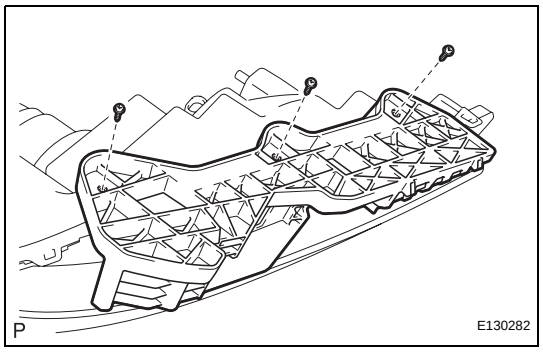

2. **REMOVE NO. 2 HEADLIGHT BULB**
   (a) Remove the No. 2 headlight bulb as shown in the illustration.

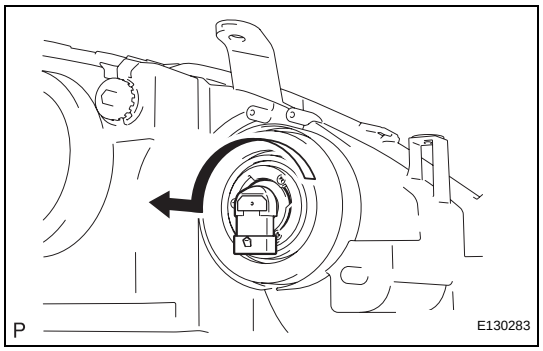

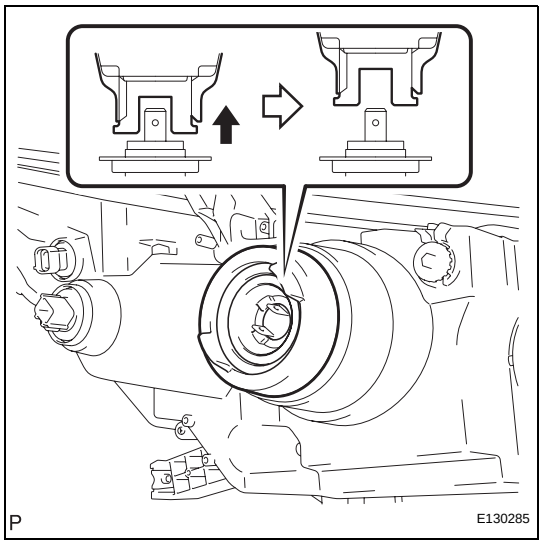

3. REMOVE ADAPTER ASSEMBLY (for Halogen Headlight)

(a) Remove the adapter assembly as shown in the illustration.

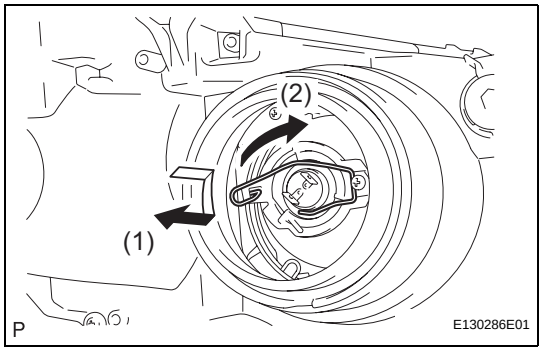

4. REMOVE NO. 1 HEADLIGHT BULB (for Halogen Headlight)

(a) Release the set spring and remove the No. 1 headlight bulb as shown in the illustration.

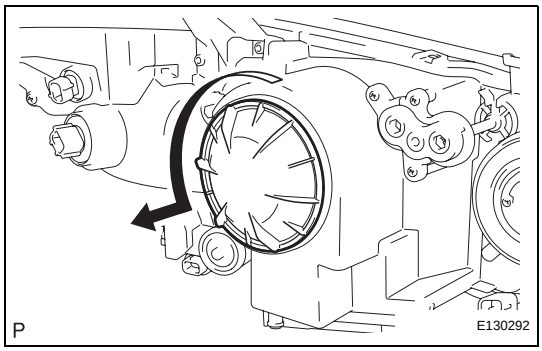

5. REMOVE HEADLIGHT SOCKET COVER (for HID Headlight)

(a) Remove the headlight socket cover as shown in the illustration.

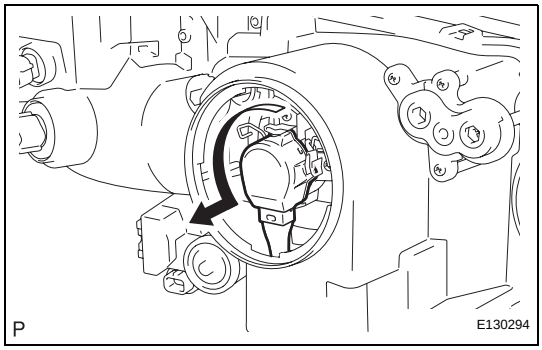

6. REMOVE DISCHARGE HEADLIGHT BULB (for HID Headlight)

(a) Separate the light control ECU socket as shown in the illustration.

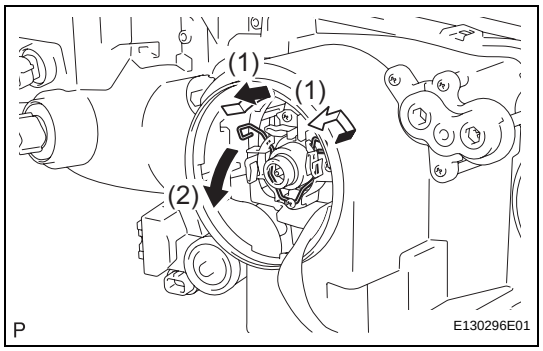

(b) Release the set spring and remove the discharge headlight bulb as shown in the illustration.

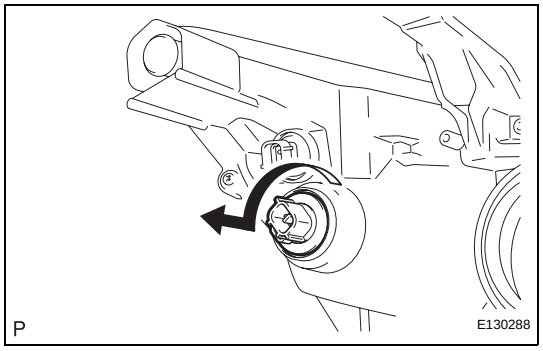

7. REMOVE FRONT TURN SIGNAL LIGHT BULB

(a) Turn the front turn signal light bulb and the front turn signal light socket in the direction indicated by the arrow and remove them as a unit.

(b) Remove the front turn signal light bulb from the front turn signal light socket.

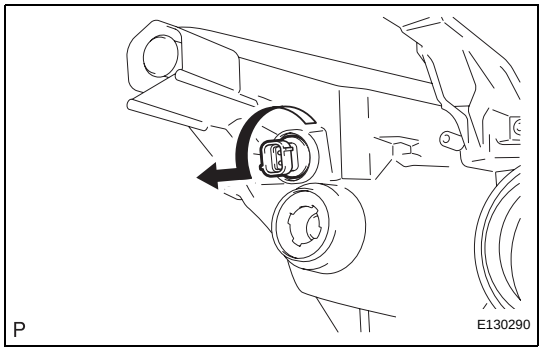

8. REMOVE CLEARANCE LIGHT BULB

(a) Turn the clearance light bulb and the clearance light socket in the direction indicated by the arrow and remove them as a unit.

(b) Remove the clearance light bulb from the clearance light socket.

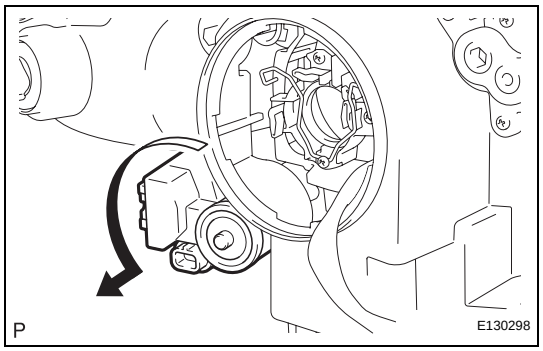

9. REMOVE HEADLIGHT LEVELING MOTOR (for HID Headlight)

(a) Align the notches of the headlight leveling motor and the housing, and pull out the headlight leveling motor slightly.

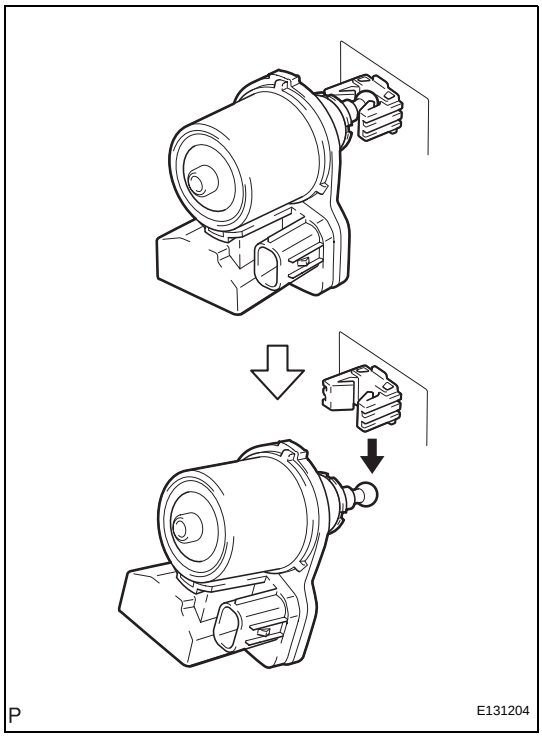

(b) Lower the tip of the headlight leveling motor to disengage it from the reflector and remove the headlight leveling motor.

10. REMOVE HEADLIGHT LEVELING MOTOR BASE PACKING (for HID Headlight)

(a) Remove the headlight leveling motor base packing.
NOTICE:
After the headlight leveling motor base packing is removed, be sure to replace it with a new one. Failure to do this may cause water ingress.

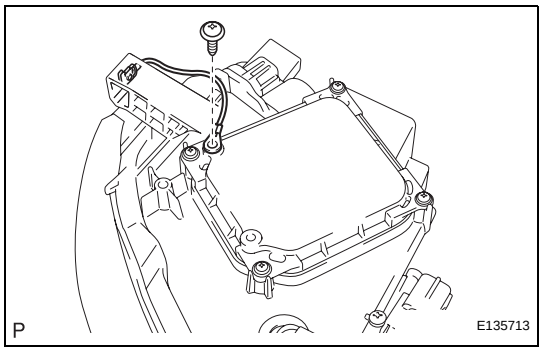

11. REMOVE HEADLIGHT PROTECTOR (for HID Headlight)

(a) Remove the screw and the headlight protector.

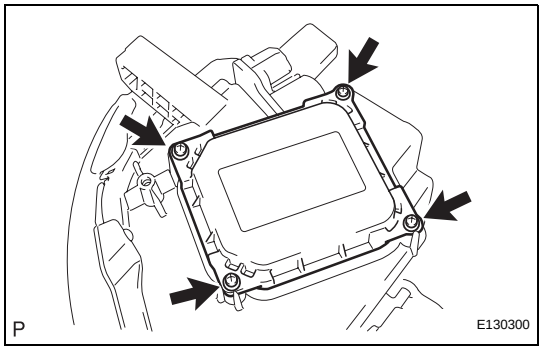

12. REMOVE LIGHT CONTROL ECU SUB-ASSEMBLY (for HID Headlight)

(a) Remove the 4 screws.

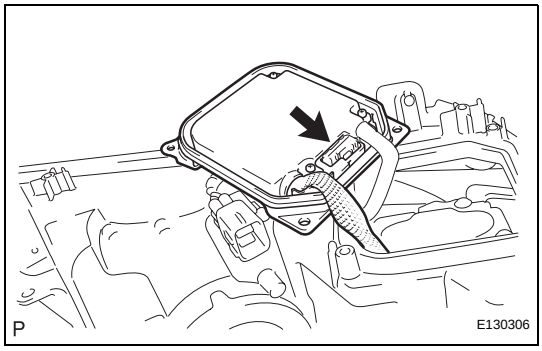

(b) Disconnect the connector and remove the light control ECU sub-assembly.

13. REMOVE HEADLIGHT GASKET (for HID Headlight)

(a) Remove the headlight gasket.
NOTICE:
After the headlight gasket is removed, be sure to replace it with a new one. Failure to do this may cause water ingress.

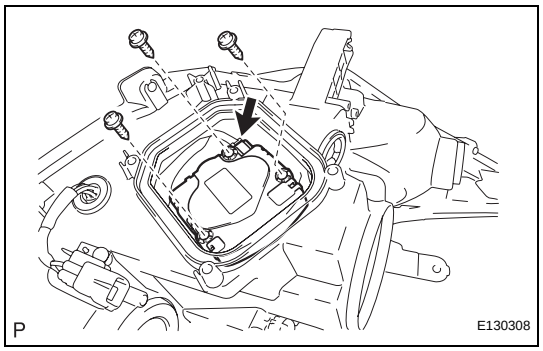

14. REMOVE HEADLIGHT SWIVEL MOTOR (for HID Headlight)

(a) Disconnect the connector.

(b) Remove the 3 screws and the headlight swivel motor.

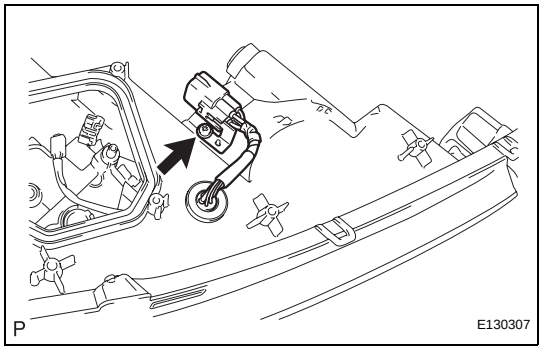

15. REMOVE HEADLIGHT CORD (for HID Headlight)

(a) Remove the screw and the headlight cord.

ADJUSTMENT

HINT:
It is possible that a bulb is incorrectly installed, affecting headlight aim. Bulb installation should be considered prior to performing the adjustment procedure.

1. VEHICLE PREPARATION FOR HEADLIGHT AIM ADJUSTMENT

(a) Prepare the vehicle according to the following conditions:
- Ensure there is no damage or deformation to the body around the headlights.
- Fill the fuel tank.
- Make sure that the oil is filled to the specified level.
- Make sure that the coolant is filled to the specified level.
- Inflate the tires to the appropriate pressure.
- Unload the trunk and vehicle, ensuring that the spare tire, tools, and jack are in their original positions.
- Sit a person of average weight (68 kg, 150 lb) in the driver's seat.
- Vehicles with height adjustable suspension should set the vehicle height to the lowest setting prior to adjusting the headlight aim.
- Vehicles with manually adjustable headlights should be adjusted to "0".

2. PREPARATION FOR HEADLIGHT AIMING (Using a headlight aim test machine)

(a) Adjust the headlight aim in accordance with the headlight aim test machine instructions.

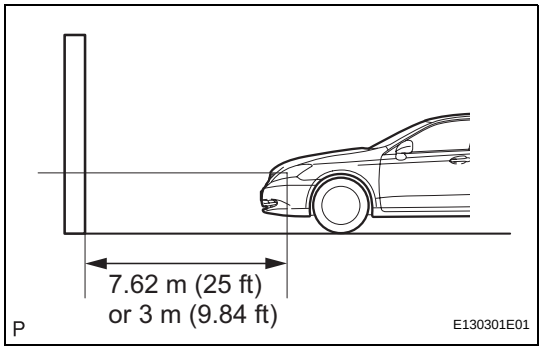

3. PREPARATION FOR HEADLIGHT AIMING (Using a Screen)

(a) Prepare the vehicle:
- Place the vehicle in a location that is dark enough to clearly observe the cutoff line. The cutoff line is a distinct line, below which light from the headlights can be observed and above which it cannot.
- Place the vehicle at a 90° angle to the wall.
- Create a 7.62 m (25 ft) distance between the vehicle (headlight bulb center) and the wall.
- Make sure that the vehicle is on a level surface.

- Bounce the vehicle up and down to settle the suspension.
  NOTICE:
  A distance of 7.62 m (25 ft) between the vehicle (headlight bulb center) and the wall is necessary for proper aim adjustment. If sufficient space is not available, secure a distance of exactly 3 m (9.84 ft) to allow for checking and adjustment of headlight aim. (The size of the target zone will change with the distance, so follow the instructions in the illustration.)

(b) Prepare a piece of thick white paper (approximately 2 m (6.6 ft) (height) x 4 m (13.1 ft) (width)) to use as a screen.

(c) Draw a vertical line down the center of the screen (V line).

(d) Set the screen as shown in the illustration.

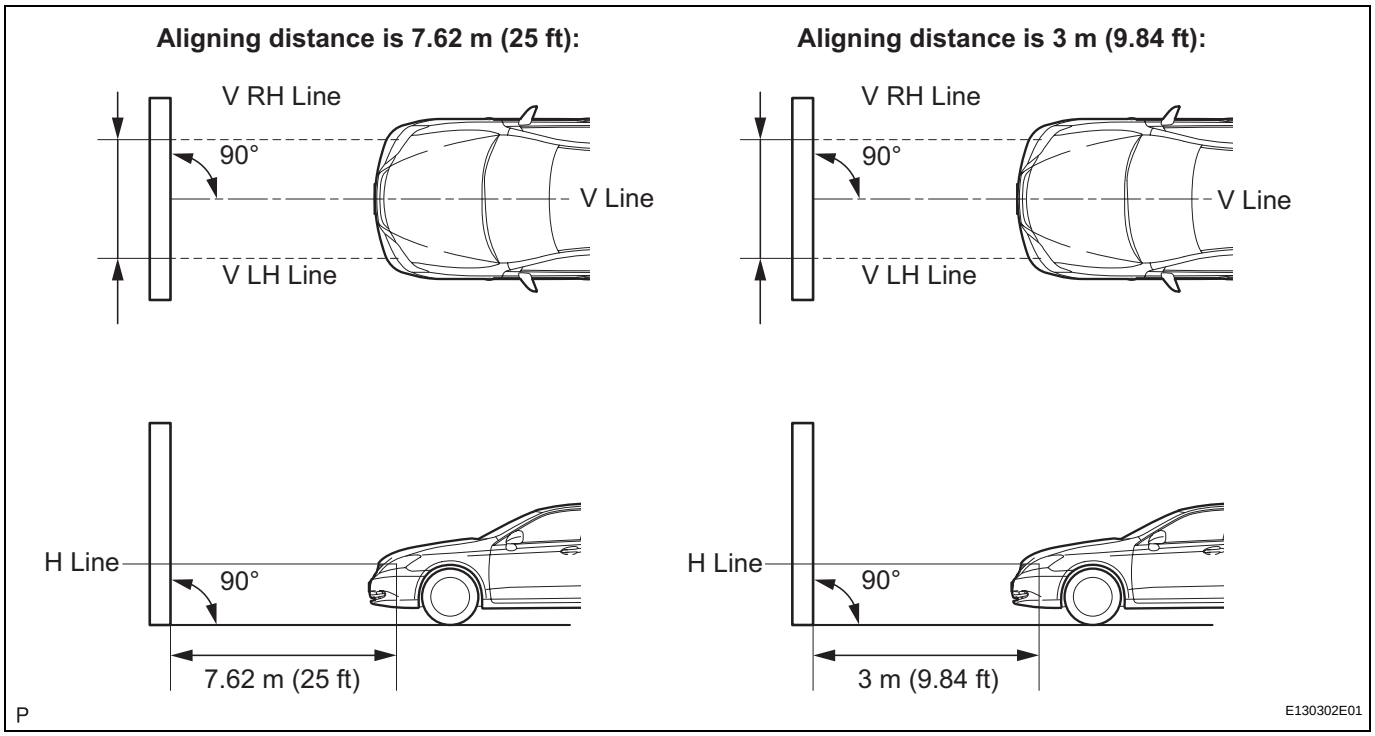

HINT:
- Stand the screen perpendicular to the ground.
- Align the V line on the screen with the center of the vehicle.

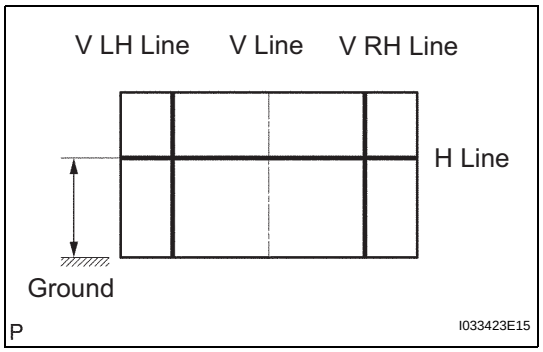

(e) Draw base lines (H, V LH, and V RH lines) on the screen as shown in the illustration.
HINT:
- The base lines differ for "low-beam inspection" and "high-beam inspection."
- Mark the headlight bulb center marks on the screen. If the center mark cannot be observed on the headlight, use the center of the headlight bulb or the manufacturer's name marked on the headlight as the center mark.

LI

(1) H Line (Headlight height):
Draw a horizontal line across the screen so that it passes through the center marks. The H line should be at the same height as the headlight bulb center marks of the low-beam headlights.

(2) V LH Line, V RH Line (Center mark position of left-hand (LH) and right-hand (RH) headlights):
Draw two vertical lines so that they intersect the H line at each center mark (aligned with the center of the low-beam headlight bulbs).

4. HEADLIGHT AIMING INSPECTION

(a) Cover the headlight or disconnect the connector of the headlight on the opposite side to prevent light from the headlight that is not being inspected from affecting the headlight aiming inspection.
NOTICE:
Do not keep the headlight covered for more than 3 minutes. The headlight lens is made of synthetic resin, which may melt or be damaged due to excessive heat.
HINT:
When checking the aim of the high-beam, cover the low-beam or disconnect the connector.

(b) Start the engine.

(c) Turn on the headlight and check if the cutoff line matches the preferred cutoff line in the following illustration.

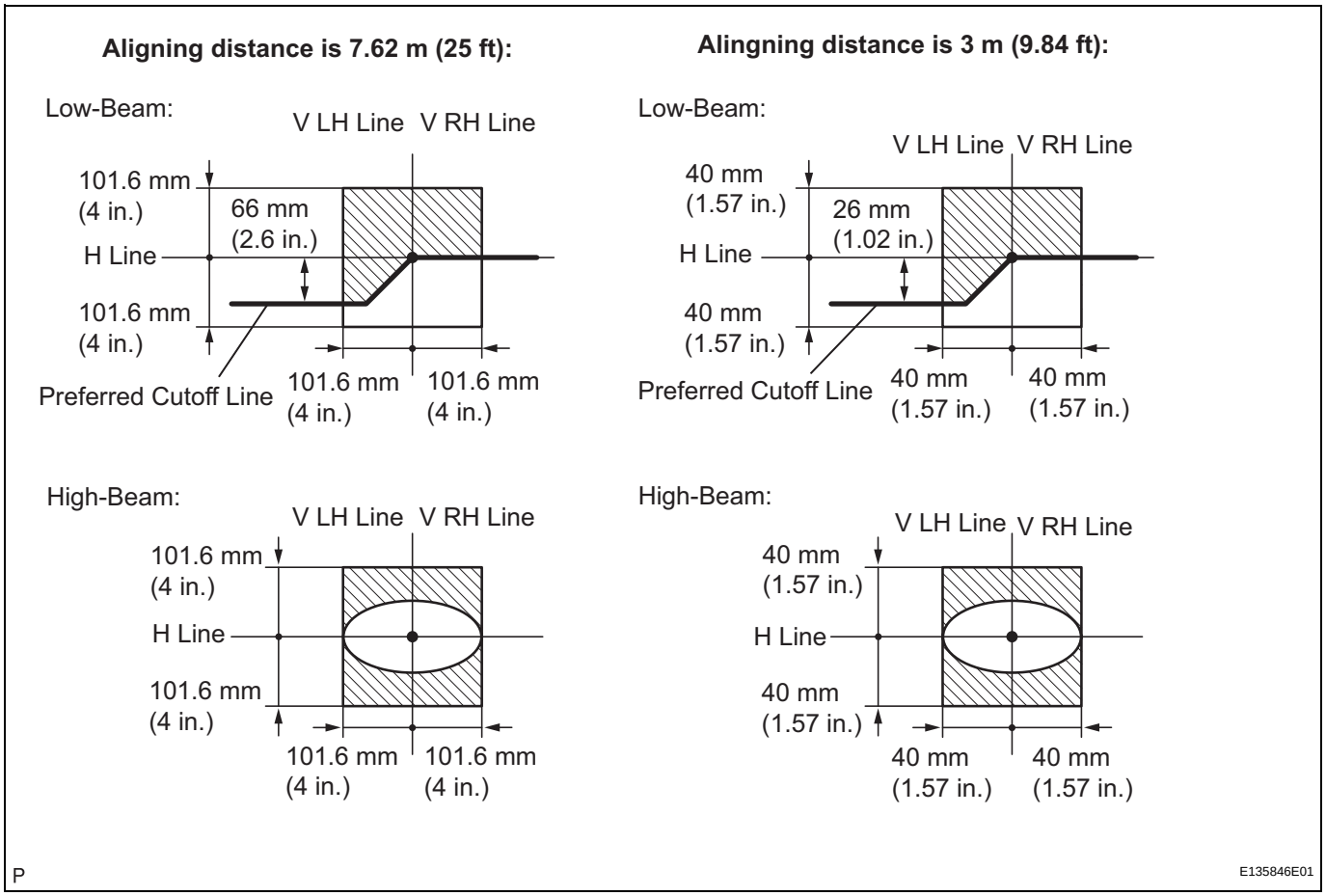

HINT:

- Since the low beam light and the high beam light on each side have separate reflectors, it is necessary to check and adjust the aim separately for both.
- If the alignment distance is 7.62 m (25 ft):
  The cutoff line should be within 101.6 mm (4 in.) above or below the H line as well as 101.6 mm (4 in.) left or right of the V line with low-beam (SAE J599).
- If the alignment distance is 3 m (9.84 ft):
  The low beam cutoff line should be within 40 mm (1.57 in.) above or below the H line as well as 40 mm (1.57 in.) left or right of the V line (SAE J599).
- If the alignment distance is 7.62 m (25 ft):
  The high beam center of intensity should be within 101.6 mm (4 in.) above or below the H line as well as 101.6 mm (4 in.) left or right of the V line (SAE J599).

- If the alignment distance is 3 m (9.84 ft):
  The high beam center of intensity should be within 40 mm (1.57 in.) above or below the H line as well as 40 mm (1.57 in.) left or right of the V line (SAE J599).
- If the alignment distance is 7.62 m (25 ft):
  The low beam cutoff line should be 66 mm (2.6 in.) below the H line (preferred cutoff line target).
- If the alignment distance is 3 m (9.84 ft):
  The low beam cutoff line should be 26 mm (1.02 in.) below the H line (preferred cutoff line target).

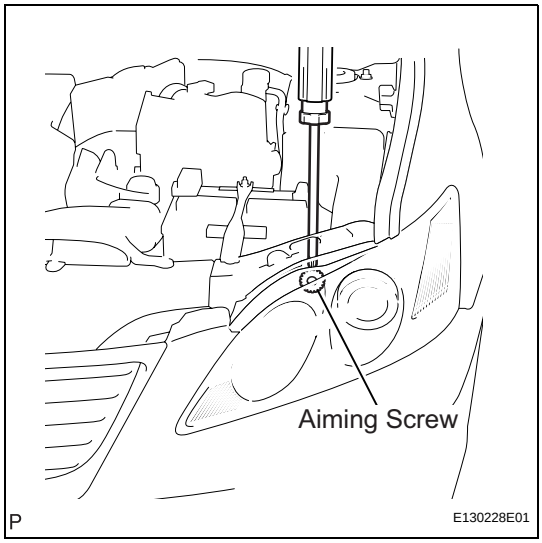

5. HEADLIGHT AIMING ADJUSTMENT

(a) Adjust the aim vertically:
Adjust the headlight aim into the specified range by turning the aiming screw with a screwdriver.
NOTICE:
The final turn of the aiming screw should be made in the clockwise direction. If the screw is tightened excessively, loosen it and then retighten it, so that the final turn of the screw is in the clockwise direction.
HINT:
- The low-beam light and the high-beam light are a unit. Adjusting the aim on the low-beam to the correct position should also result in the high-beam adjustment being correct.
- If it is not possible to correctly adjust headlight aim, check bulb, headlight unit, and headlight unit reflector installation.
- The headlight aim moves up when turning the aiming screw clockwise, and moves down when turning the aiming screw counterclockwise.

REASSEMBLY

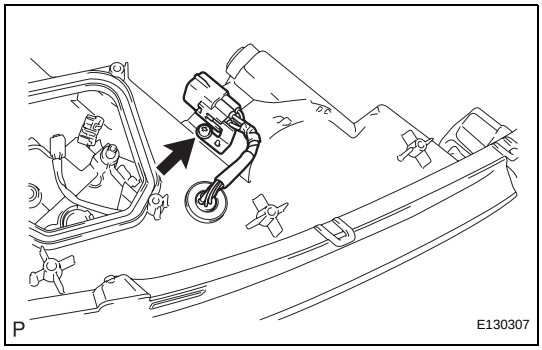

1. INSTALL HEADLIGHT CORD (for HID Headlight)

(a) Install the headlight cord with the screw.

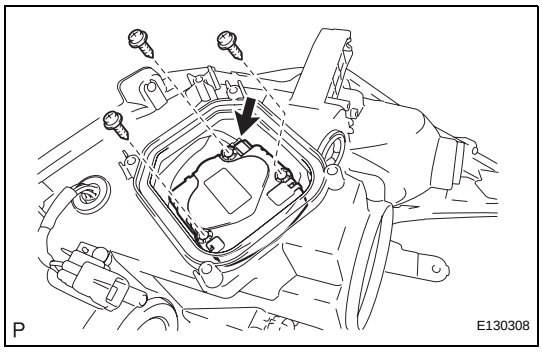

2. INSTALL HEADLIGHT SWIVEL MOTOR (for HID Headlight)

(a) Install the headlight swivel motor with the 3 screws.
(b) Connect the connector.

3. INSTALL HEADLIGHT GASKET (for HID Headlight)

(a) Install a new headlight gasket.
NOTICE:
After the headlight gasket is removed, be sure to replace it with a new one. Failure to do this may cause water ingress.

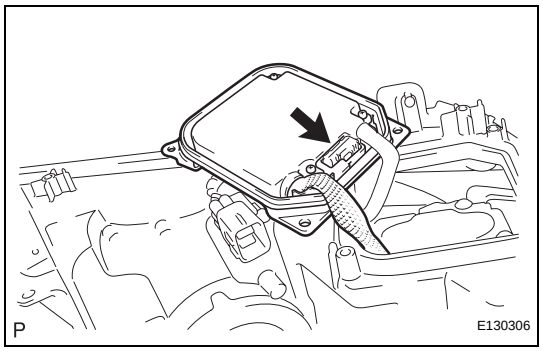

4. INSTALL LIGHT CONTROL ECU SUB-ASSEMBLY (for HID Headlight)

(a) Connect the connector.

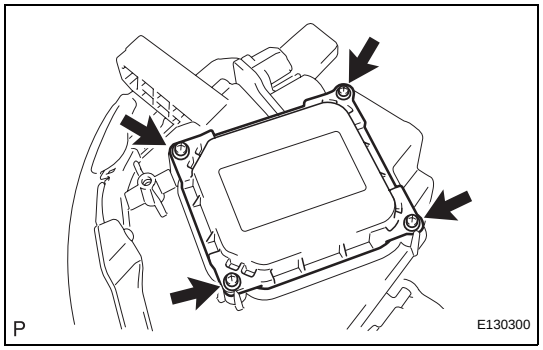

(b) Install the headlight control ECU sub-assembly with the 4 screws.

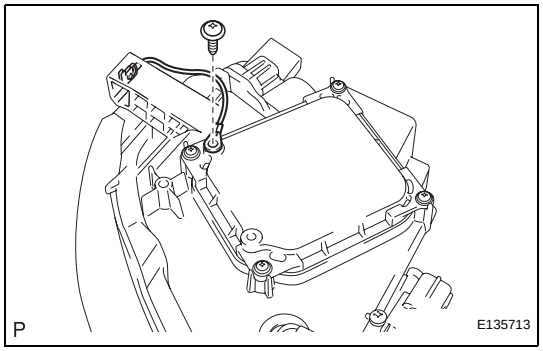

5. INSTALL HEADLIGHT PROTECTOR (for HID Headlight)

(a) Install the headlight protector with the screw.

6. INSTALL HEADLIGHT LEVELING MOTOR BASE PACKING (for HID Headlight)

(a) Install a new headlight leveling motor base packing.

NOTICE:

After the headlight leveling motor base packing is removed, be sure to replace it with a new one. Failure to do this may cause water ingress.

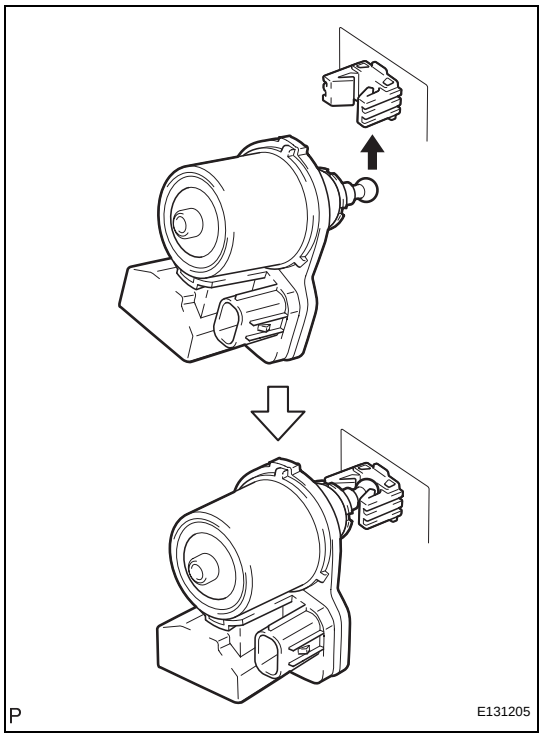

7. INSTALL HEADLIGHT LEVELING MOTOR (for HID Headlight)

(a) Engage the tip of the headlight leveling motor with the reflector.

LI

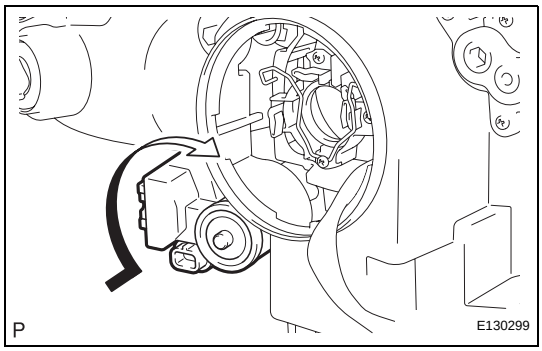

(b) Turn the headlight leveling motor to install it.

8. INSTALL CLEARANCE LIGHT BULB

(a) Install the clearance light bulb to the clearance light socket.

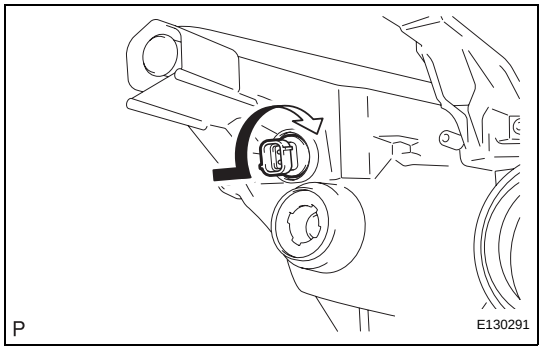

(b) Turn the clearance light bulb and clearance light socket in the direction indicated by the arrow and install them as a unit.

9. INSTALL FRONT TURN SIGNAL LIGHT BULB

(a) Install the front turn signal light bulb to the front turn signal light socket.

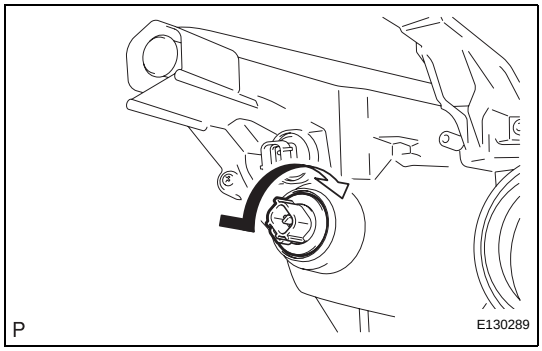

(b) Turn the front turn signal light bulb and front turn signal light socket in the direction indicated by the arrow and install them as a unit.

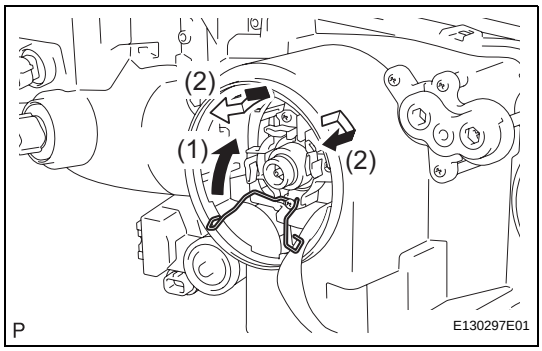

10. INSTALL DISCHARGE HEADLIGHT BULB (for HID Headlight)

(a) Lock the set spring to install the discharge headlight bulb as shown in the illustration.

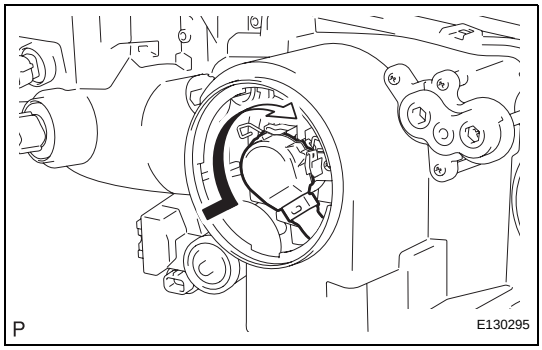

(b) Turn the socket of the light control ECU sub-assembly in the direction indicated by the arrow to connect the socket.

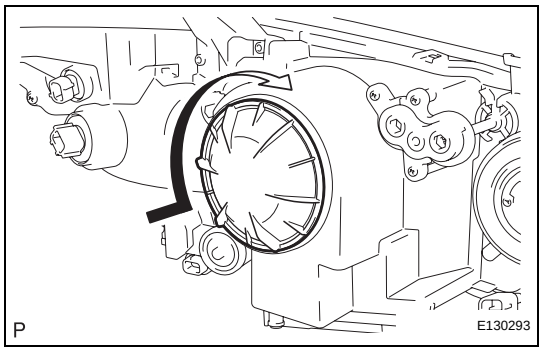

11. INSTALL HEADLIGHT SOCKET COVER (for HID Headlight)

(a) Install the headlight socket cover as shown in the illustration.

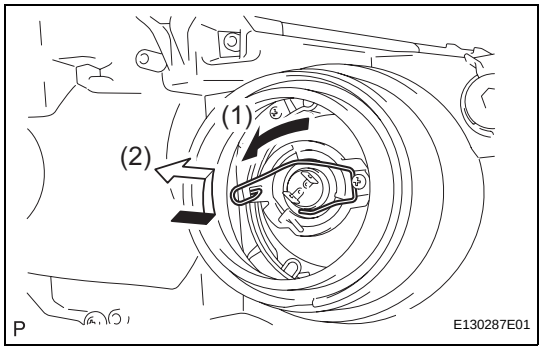

12. INSTALL NO. 1 HEADLIGHT BULB (for Halogen Headlight)

(a) Lock the set spring to install the No. 1 headlight bulb as shown in the illustration.

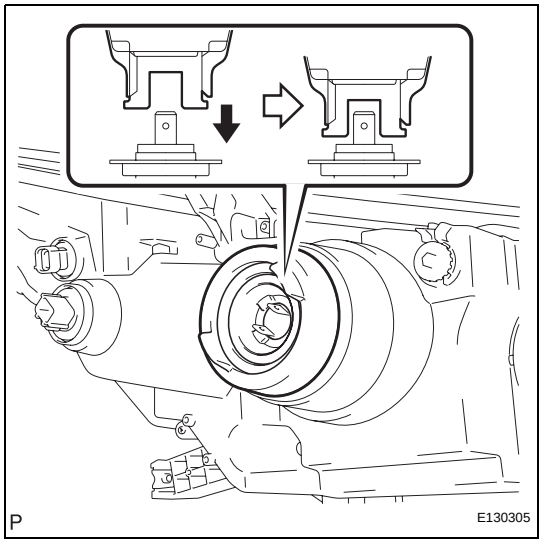

13. INSTALL ADAPTER ASSEMBLY (for Halogen Headlight)

(a) Install the adapter assembly as shown in the illustration.

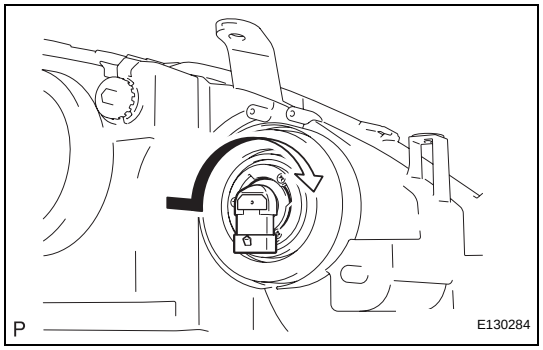

14. INSTALL NO. 2 HEADLIGHT BULB

(a) Install the No. 2 headlight bulb as shown in the illustration.

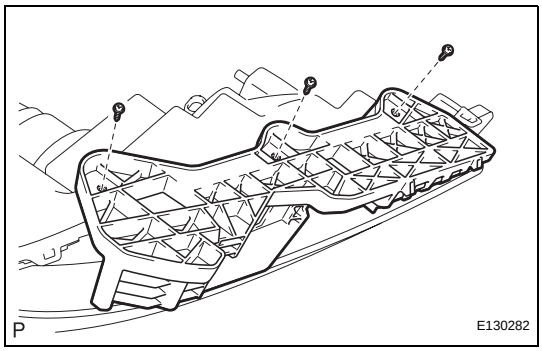

15. INSTALL FRONT BUMPER SIDE SUPPORT

(a) Install the front bumper side support with the 3 screws.

INSTALLATION

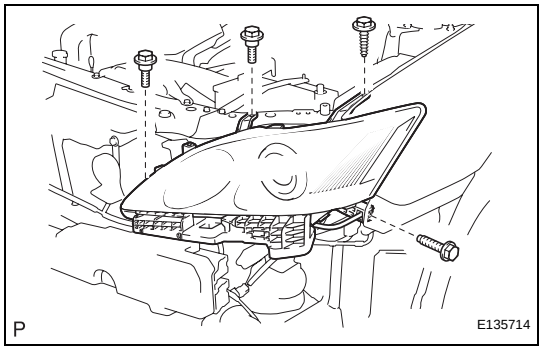

1. **INSTALL HEADLIGHT ASSEMBLY**
   (a) Connect the connectors.
   (b) Install the headlight assembly with the 3 bolts and screw.
   Torque: 5.4 N*m (55 kgf*cm, 48 in.*lbf)
2. **INSTALL HOOD TO FRONT FENDER SEAL**
3. **INSTALL ENGINE ROOM SIDE COVER (See page WW-47)**
4. **INSTALL HOOD HINGE COVER (See page WW-47)**
5. **INSTALL FRONT BUMPER ASSEMBLY (See page ET-14)**
6. **INSTALL COOL AIR INTAKE DUCT SEAL (See page ET-14)**
7. **CONNECT CABLE TO NEGATIVE BATTERY TERMINAL (for HID Headlight)**
8. **VEHICLE PREPARATION FOR HEADLIGHT AIM ADJUSTMENT (See page LI-129)**
9. **PREPARATION FOR HEADLIGHT AIMING (Using a headlight aim test machine) (See page LI-129)**
10. **PREPARATION FOR HEADLIGHT AIMING (Using a Screen) (See page LI-130)**
11. **HEADLIGHT AIMING INSPECTION (See page LI-131)**
12. **HEADLIGHT AIMING ADJUSTMENT (See page LI-133)**
13. **PERFORM INITIALIZATION (for HID Headlight)**
    NOTICE:
    Some systems need initialization after reconnecting the cable to the negative battery terminal (See page IN-33).

INSTALLATION

1. **INSTALL DISCHARGE HEADLIGHT BULB (See page LI-135)**
2. **INSTALL HEADLIGHT SOCKET COVER (See page LI-136)**
3. **INSTALL COOL AIR INTAKE DUCT SEAL (See page ET-14)**
4. **CONNECT CABLE TO NEGATIVE BATTERY TERMINAL**
5. **PERFORM INITIALIZATION**
   NOTICE:
   Some systems need initialization after reconnecting the cable to the negative battery terminal (See page IN-33).

ADJUSTMENT

HINT:
It is possible that a bulb is incorrectly installed, affecting fog light aim. Bulb installation should be considered prior to performing the adjustment procedure.

1. VEHICLE PREPARATION FOR FOG LIGHT AIM ADJUSTMENT

(a) Prepare the vehicle according to the following conditions:
- Ensure there is no damage or deformation to the body around the fog lights.
- Fill the fuel tank.
- Make sure that the oil is filled to the specified level.
- Make sure that the coolant is filled to the specified level.
- Inflate the tires to the appropriate pressure.
- Unload the trunk and vehicle, ensuring that the spare tire, tools, and jack are in their original positions.
- Sit a person of average weight (68 kg, 150 lb) in the driver's seat.
- Vehicles with height adjustable suspension should set the vehicle height to the lowest setting prior to adjusting the fog light aim.

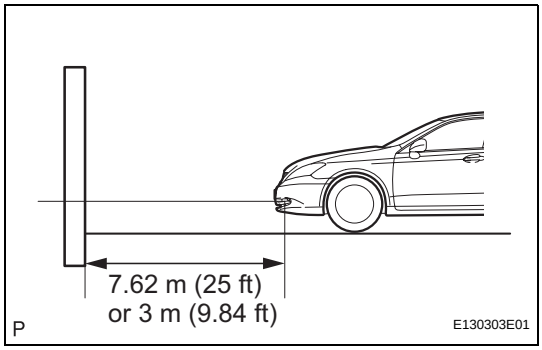

2. PREPARATION FOR FOG LIGHT AIMING

(a) Prepare the vehicle:
- Place the vehicle in a location that is dark enough to clearly observe the cutoff line. The cutoff line is a distinct line, below which light from the fog lights can be observed and above which it cannot.
- Place the vehicle at a 90° angle to the wall.
- Create a 7.62 m (25 ft) distance between the vehicle (fog light bulb center) and the wall.
- Make sure that the vehicle is on a level surface.
- Bounce the vehicle up and down to settle the suspension.

  NOTICE:
  A distance of 7.62 m (25 ft) between the vehicle (fog light bulb center) and the wall is necessary for proper aim adjustment. If unavailable, secure a distance of exactly 3 m (9.84 ft) for check and adjustment. (The target zone will change with the distance, so follow the instructions in the illustration.)

(b) Prepare a piece of thick white paper (approximately 2 m (6.6 ft) (height) x 4 m (13.1 ft) (width)) to use as a screen.

(c) Draw a vertical line down the center of screen (V line).

(d) Set the screen as shown in the illustration.

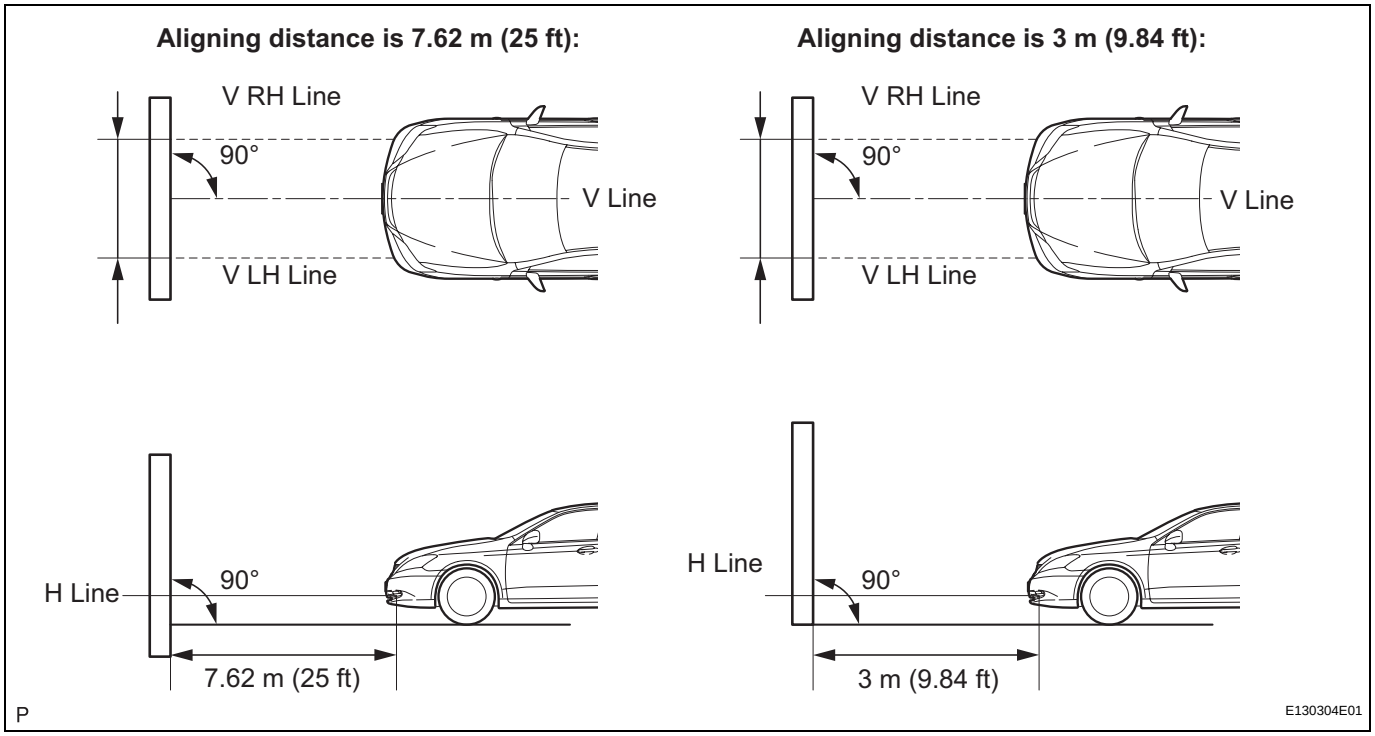

HINT:
- Stand the screen perpendicular to the ground.
- Align the V line on the screen with the center of the vehicle.

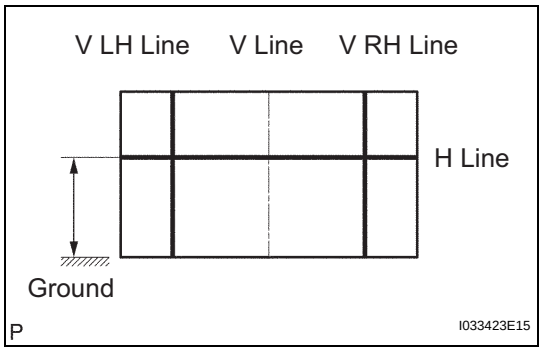

(e) Draw base lines (H, V LH, and V RH lines) on the screen as shown in the illustration.
HINT:
Mark the fog light bulb center marks on the screen. If the center mark cannot be observed on the fog light, use the center of the fog light bulb or the manufacturer's name marked on the fog light as the center mark.
(1) H Line (Fog light height):
Draw a horizontal line across the screen so that it passes through the center marks. The H line should be at the same height as the fog light bulb center marks of the low-beam fog lights.
(2) V LH Line, V RH Line (Center mark position of left-hand (LH) and right-hand (RH) fog lights):
Draw two vertical lines so that they intersect the H line at each center mark.

3. FOG LIGHT AIMING INSPECTION

(a) Cover the fog light or disconnect the connector of the fog light on the opposite side to prevent light from the fog light that is not being inspected from affecting the fog light aiming inspection.
NOTICE:
Do not keep the fog light covered for more than 3 minutes. The fog light lens is made of synthetic resin, which may melt or be damaged due to excessive heat.

LI

(b) Start the engine.
(c) Turn on the fog light and check if the cut off line falls within the specified area in the following illustration.

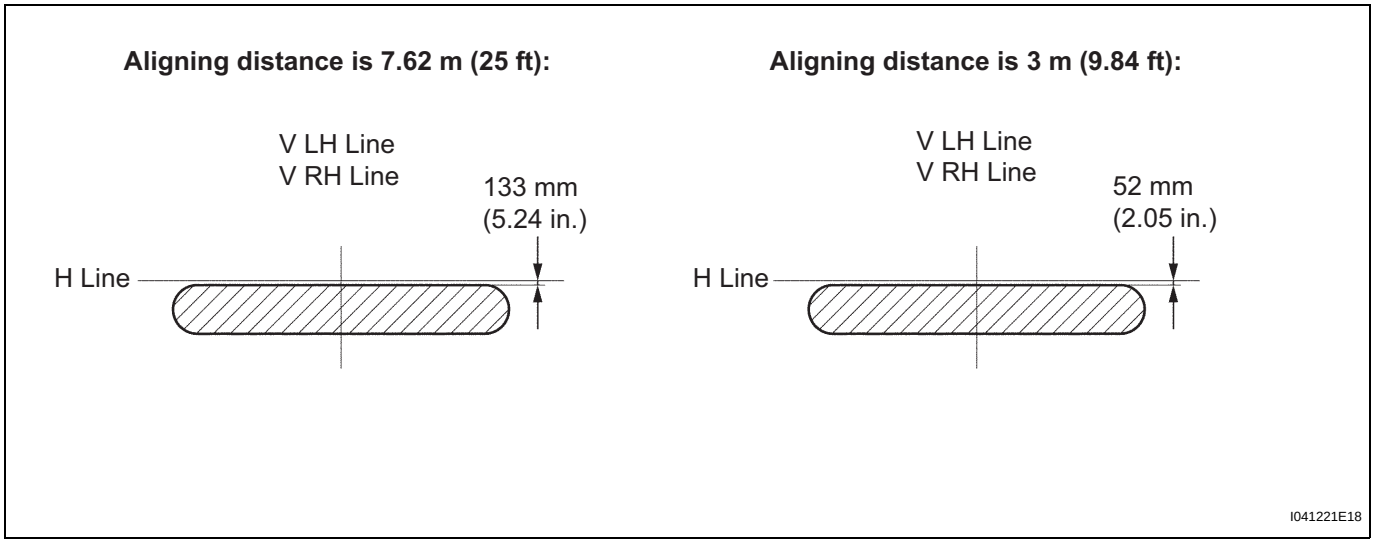

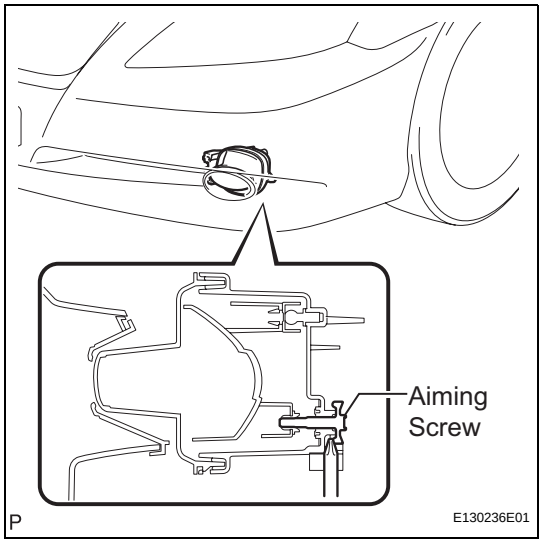

4. FOG LIGHT AIMING ADJUSTMENT

(a) Adjust the aim vertically:
Adjust the aim of each fog light to the specified range by turning each aiming screw with a screwdriver.
NOTICE:
The final turn of the aiming screw should be made in the clockwise direction. If the screw is tightened excessively, loosen it and then retighten it, so that the final turn of the screw is in the clockwise direction.
HINT:
If it is not possible to correctly adjust fog light aim, check bulb, fog light unit, and fog light unit reflector installation.

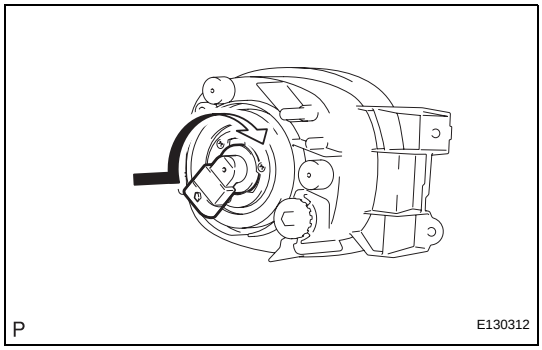

REASSEMBLY

1. INSTALL FOG LIGHT BULB

(a) Install the fog light bulb as shown in the illustration.

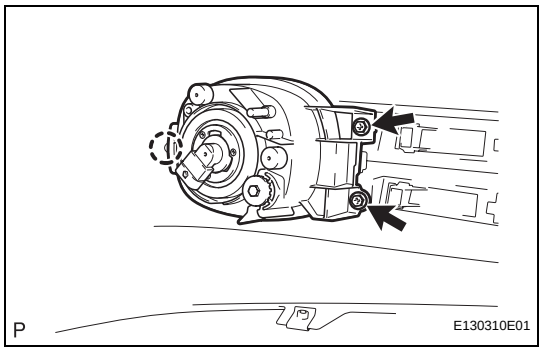

INSTALLATION

1. **INSTALL FOG LIGHT ASSEMBLY**
   (a) Engage the claw.
   (b) Install the fog light assembly with the 2 screws.
2. **INSTALL FRONT BUMPER ASSEMBLY (See page ET-14)**
3. **INSTALL COOL AIR INTAKE DUCT SEAL (See page ET-14)**
4. **VEHICLE PREPARATION FOR FOG LIGHT AIM ADJUSTMENT (See page LI-141)**
5. **PREPARATION FOR FOG LIGHT AIMING (See page LI-142)**
6. **FOG LIGHT AIMING INSPECTION (See page LI-143)**
7. **FOG LIGHT AIMING ADJUSTMENT (See page LI-144)**

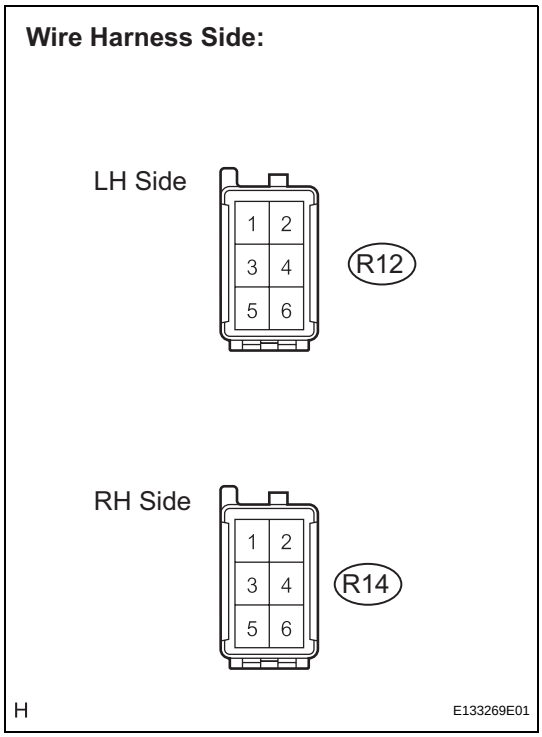

ON-VEHICLE INSPECTION

1. INSPECT REAR OUTER COMBINATION LIGHT ASSEMBLY

(a) Disconnect the connector from the rear outer combination light.

(b) Measure the voltage according to the value(s) in the table below.

Standard voltage:

LH Side

Tester Connection	Condition	Specified Condition
R12-2 - R12-5 (E)	Brake pedal released → depressed	Below 1 V → 10 to 14 V
R12-1 - R12-5 (E)	Light control switch OFF → TAIL	Below 1 V → 10 to 14 V
R12-1 - R12-5 (E)	Light control switch OFF → TAIL	Below 1 V → 10 to 14 V

RH Side

Tester Connection	Condition	Specified Condition
R14-2 - R14-5 (E)	Brake pedal released → depressed	Below 1 V → 10 to 14 V
R14-1 - R14-5 (E)	Light control switch OFF → TAIL	Below 1 V → 10 to 14 V
R14-1 - R14-5 (E)	Light control switch OFF → TAIL	Below 1 V → 10 to 14 V

If the result is not as specified, there is a malfunction on the wire harness side.

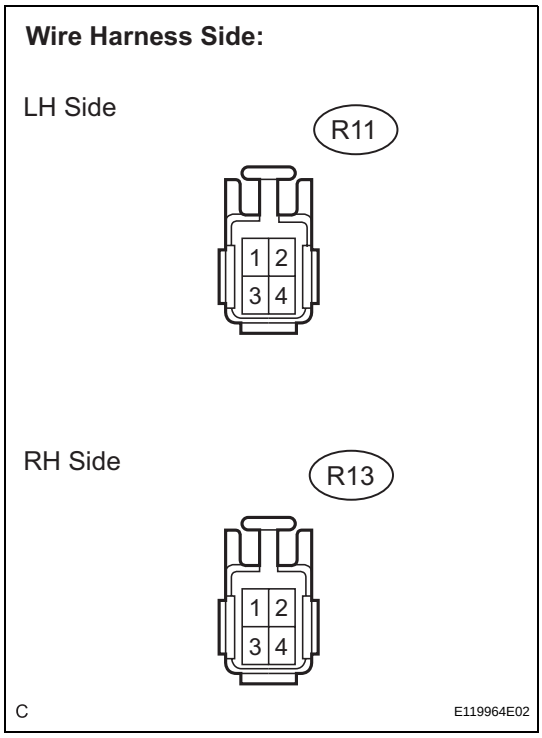

2. INSPECT REAR INNER COMBINATION LIGHT ASSEMBLY

(a) Disconnect the connector from the rear inner combination light.

(b) Measure the voltage according to the value(s) in the table below.

Standard voltage:

LH Side

Tester Connection	Condition	Specified Condition
R11-4 - R11-3	Light control switch OFF → TAIL	Below 1 V → 10 to 14 V

RH Side

Tester Connection	Condition	Specified Condition
R13-4 - R11-3	Light control switch OFF → TAIL	Below 1 V → 10 to 14 V

If the result is not as specified, there is a malfunction on the wire harness side.

REMOVAL

1. **REMOVE LUGGAGE COMPARTMENT FLOOR MAT**
2. **REMOVE NO. 2 SPARE WHEEL COVER**
3. **REMOVE SPARE WHEEL COVER TRAY**
4. **REMOVE LUGGAGE HOLD BELT STRIKER ASSEMBLY (See page ED-82)**
5. **REMOVE NO. 1 LUGGAGE COMPARTMENT TRIM HOOK (See page ED-83)**
6. **REMOVE REAR FLOOR FINISH PLATE (See page ED-83)**
7. **REMOVE LUGGAGE COMPARTMENT INNER TRIM COVER LH (See page ED-83)**
8. **REMOVE REAR BUMPER ASSEMBLY (w/o Intuitive Parking Assist System) (See page ET-18)**
9. **REMOVE LUGGAGE COMPARTMENT INNER TRIM COVER RH (w/ Intuitive Parking Assist System) (See page ED-83)**
10. **REMOVE REAR BUMPER ASSEMBLY (w/ Intuitive Parking Assist System) (See page ET-19)**
11. **REMOVE REAR COMBINATION LIGHT ASSEMBLY**
    (a) Disconnect the connector and clamp.

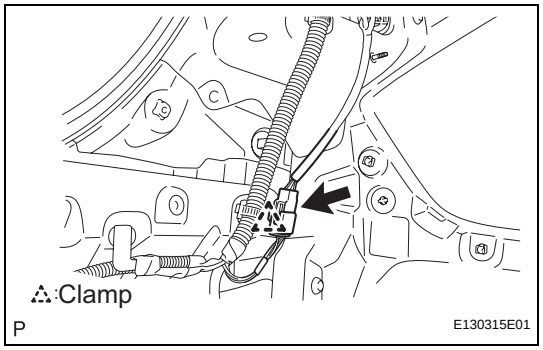

    (b) Remove the screw and 3 nuts.
    (c) Disengage the clip and remove the rear combination light assembly.

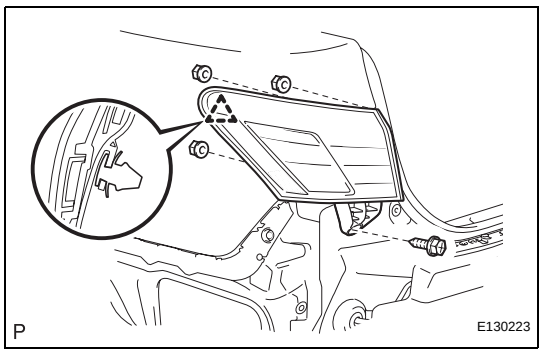

12. **REMOVE LUGGAGE COMPARTMENT DOOR ASSIST GRIP (See page ET-71)**
13. **REMOVE LUGGAGE LOCK CONTROL CABLE PLATE (See page ET-71)**
14. **REMOVE LUGGAGE COMPARTMENT DOOR INSIDE HANDLE (See page ET-71)**
15. **REMOVE LUGGAGE COMPARTMENT DOOR COVER (See page ET-72)**

LI

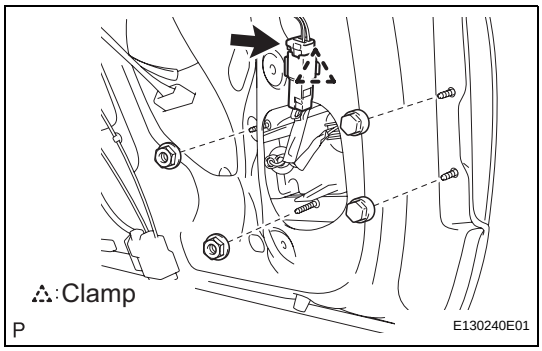

16. REMOVE REAR LIGHT ASSEMBLY

(a) Disconnect the connector and clamp.

(b) Remove the 4 nuts and remove the rear light assembly.

DISASSEMBLY

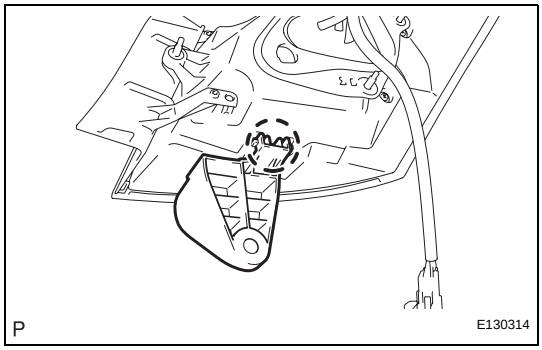

1. REMOVE REAR BUMPER RETAINER UPPER

(a) Disengage the claw and remove the rear bumper retainer upper.

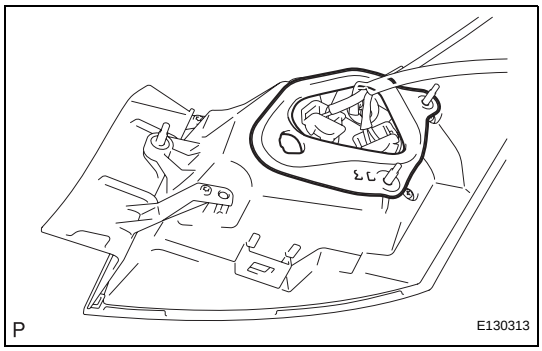

2. REMOVE REAR COMBINATION LIGHT GASKET

(a) Remove the rear combination light gasket.

NOTICE:

- **Be sure to remove all traces of the old gasket from the body.**
- **Do not reuse the removed gasket. Be sure to install a new rear combination light gasket to prevent water ingress.**

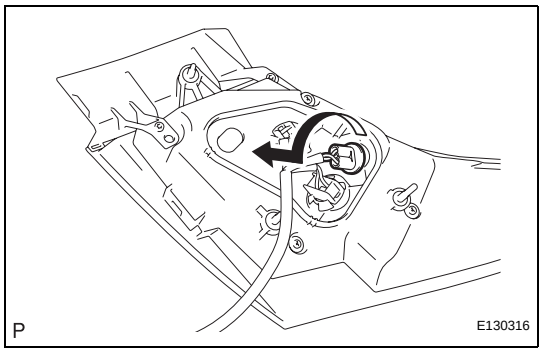

3. REMOVE REAR SIDE MARKER LIGHT BULB

(a) Turn the rear side marker light bulb and the rear combination light socket and wire sub-assembly in the direction indicated by the arrow and remove them as a unit.

(b) Remove the rear side marker light bulb from the rear combination light socket and wire sub-assembly.

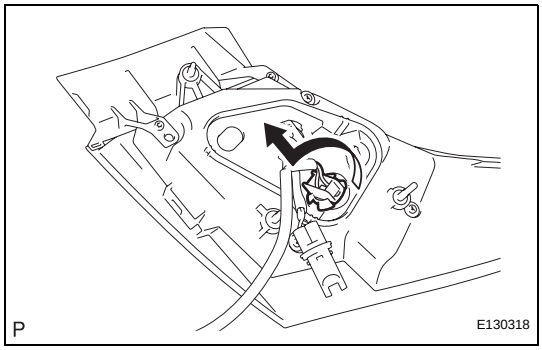

4. REMOVE REAR TURN SIGNAL LIGHT BULB

(a) Turn the rear turn signal light bulb and the rear combination light socket and wire sub-assembly in the direction indicated by the arrow and remove them as a unit.

(b) Remove the rear turn signal light bulb from the rear combination light socket and wire sub-assembly.

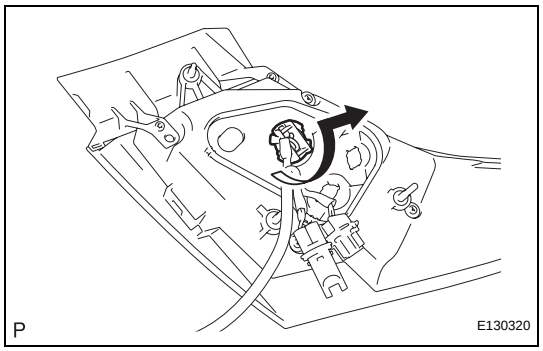

5. REMOVE TAIL AND STOP LIGHT BULB

(a) Turn the tail and stop light bulb and the rear combination light socket and wire sub-assembly in the direction indicated by the arrow and remove them as a unit.

(b) Remove the tail and stop light bulb from the rear combination light socket and wire sub-assembly.

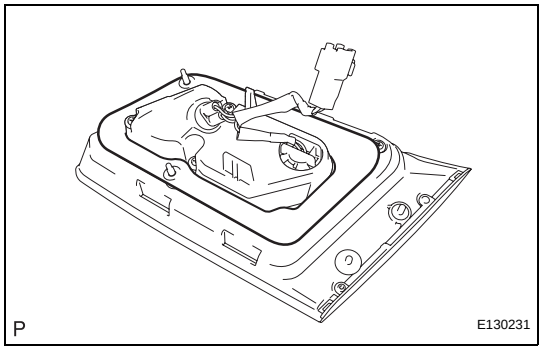

6. REMOVE REAR LIGHT GASKET

(a) Remove the rear light gasket.

NOTICE:

- **Be sure to remove all traces of the old gasket from the body.**
- **Do not reuse the removed gasket. Be sure to install a new rear light gasket to prevent water ingress.**

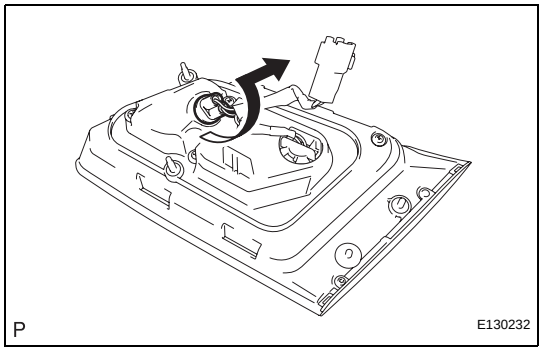

7. REMOVE BACK UP LIGHT BULB

(a) Turn the back up light bulb and the rear light socket and wire in the direction indicated by the arrow and remove them as a unit.

(b) Remove the back up light bulb from the rear light socket and wire.

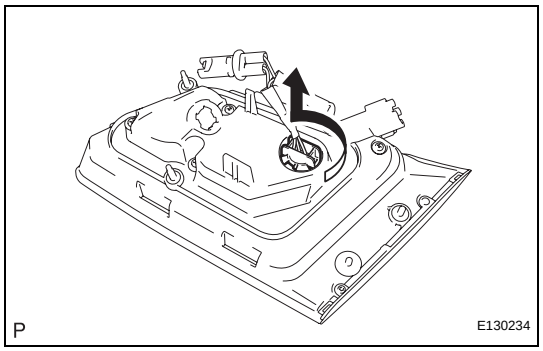

8. REMOVE TAIL LIGHT BULB

(a) Turn the tail light bulb and the rear light socket and wire in the direction indicated by the arrow and remove them as a unit.

(b) Remove the tail light bulb from the rear light socket and wire.

REASSEMBLY

1. INSTALL TAIL LIGHT BULB

(a) Install the tail light bulb to the tail and rear light socket and wire.

(b) Turn the tail light bulb and rear light socket and wire in the direction indicated by the arrow and install them as a unit.

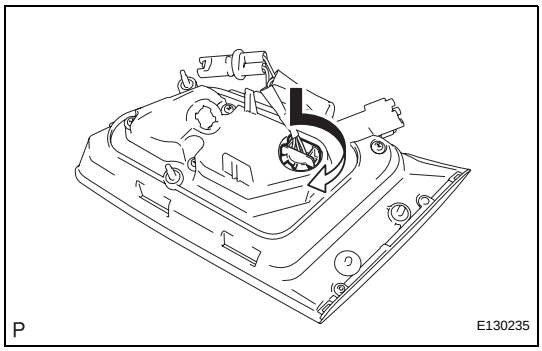

2. INSTALL BACK UP LIGHT BULB

(a) Install the back up light bulb to the rear light socket and wire.

(b) Turn the back up light bulb and rear light socket and wire in the direction indicated by the arrow and install them as a unit.

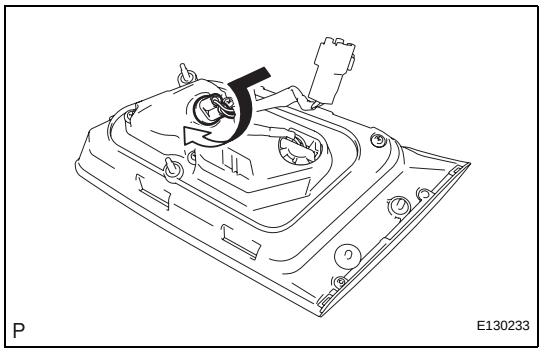

3. INSTALL REAR LIGHT GASKET

(a) Install a new rear light gasket.

NOTICE:

- **Be sure to remove all traces of the old gasket from the body.**
- **Do not reuse the removed gasket. Be sure to install a new rear light gasket to prevent water ingress.**

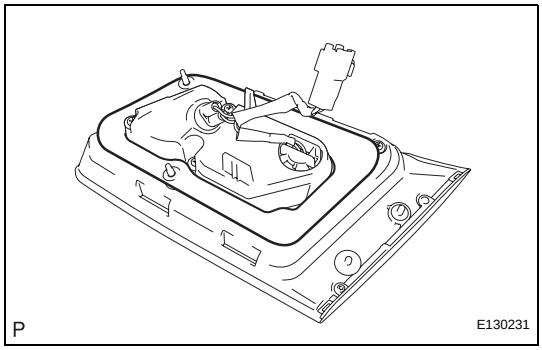

4. INSTALL TAIL AND STOP LIGHT BULB

(a) Install the tail and stop light bulb to the tail and rear combination light socket and wire sub-assembly.

(b) Turn the tail and stop light bulb and rear combination light socket and wire sub-assembly in the direction indicated by the arrow and install them as a unit.

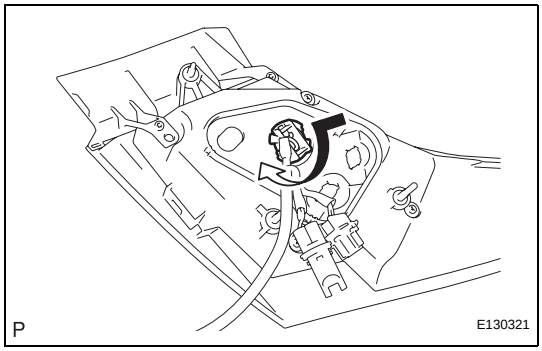

5. INSTALL REAR TURN SIGNAL LIGHT BULB

(a) Install the rear turn signal light bulb to the rear combination light socket and wire sub-assembly.

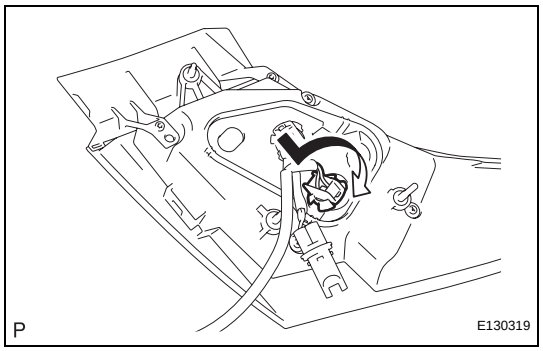

(b) Turn the rear turn signal light bulb and rear combination light socket and wire sub-assembly in the direction indicated by the arrow and install them as a unit.

6. INSTALL REAR SIDE MARKER LIGHT BULB

(a) Install the rear side marker light bulb to the rear combination light socket and wire sub-assembly.

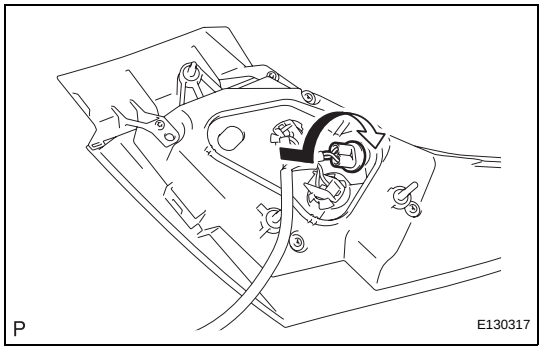

(b) Turn the rear side marker light bulb and rear combination light socket and wire sub-assembly in the direction indicated by the arrow and install them as a unit.

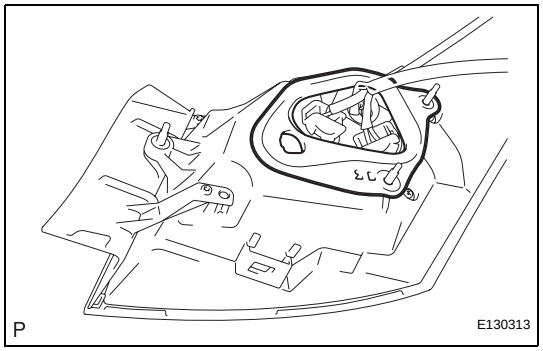

7. INSTALL REAR COMBINATION LIGHT GASKET

(a) Install a new rear combination light gasket.
NOTICE:
- **Be sure to remove all traces of the old gasket from the body.**
- **Do not reuse the removed gasket. Be sure to install a new rear combination light gasket to prevent water ingress.**

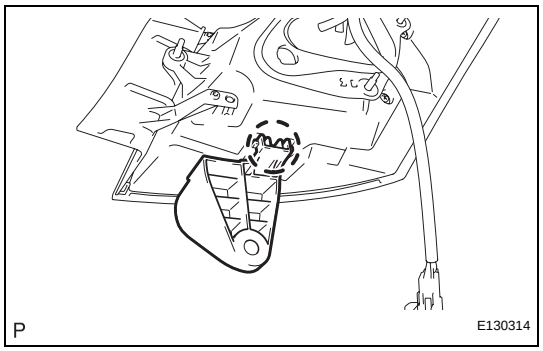

8. INSTALL REAR BUMPER RETAINER UPPER

(a) Engage the claw and install the rear bumper retainer upper.

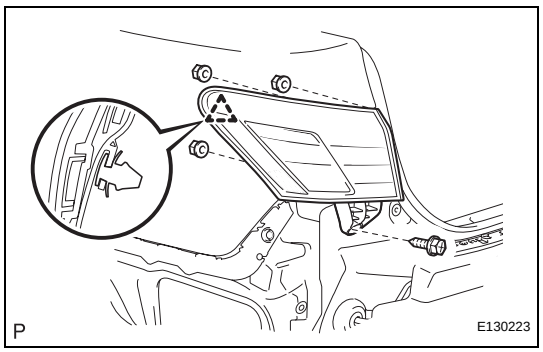

INSTALLATION

1. INSTALL REAR COMBINATION LIGHT ASSEMBLY

(a) Engage the clip and install the rear combination light assembly with the screw and 3 nuts.
Torque: 5.4 N*m (55 kgf*cm, 48 in.*lbf)

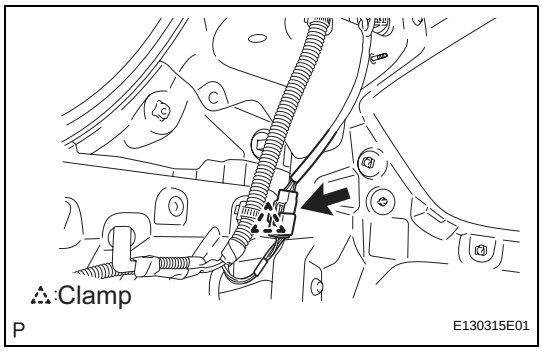

(b) Connect the connector and clamp.

2. **INSTALL REAR BUMPER ASSEMBLY (w/o Intuitive Parking Assist System) (See page ET-23)**
3. **INSTALL REAR BUMPER ASSEMBLY (w/ Intuitive Parking Assist System) (See page ET-23)**
4. **INSTALL LUGGAGE COMPARTMENT INNER TRIM COVER RH (w/ Intuitive Parking Assist System) (See page ED-88)**
5. **INSTALL LUGGAGE COMPARTMENT INNER TRIM COVER LH (See page ED-88)**
6. **INSTALL REAR FLOOR FINISH PLATE (See page ED-88)**
7. **INSTALL NO. 1 LUGGAGE COMPARTMENT TRIM HOOK (See page ED-89)**
8. **INSTALL LUGGAGE HOLD BELT STRIKER ASSEMBLY (See page ED-89)**
9. **INSTALL SPARE WHEEL COVER TRAY**
10. **INSTALL NO. 2 SPARE WHEEL COVER**
11. **INSTALL LUGGAGE COMPARTMENT FLOOR MAT**
12. **INSTALL REAR LIGHT ASSEMBLY**
    (a) Install the rear light assembly with the 4 nuts.
    Torque: 5.4 N*m (55 kgf*cm, 48 in.*lbf)
    (b) Connect the connector and clamp.
13. **INSTALL LUGGAGE COMPARTMENT DOOR COVER (See page ET-74)**
14. **INSTALL LUGGAGE COMPARTMENT DOOR INSIDE HANDLE (See page ET-74)**
15. **INSTALL LUGGAGE LOCK CONTROL CABLE PLATE (See page ET-75)**
16. **INSTALL LUGGAGE COMPARTMENT DOOR ASSIST GRIP (See page ET-75)**

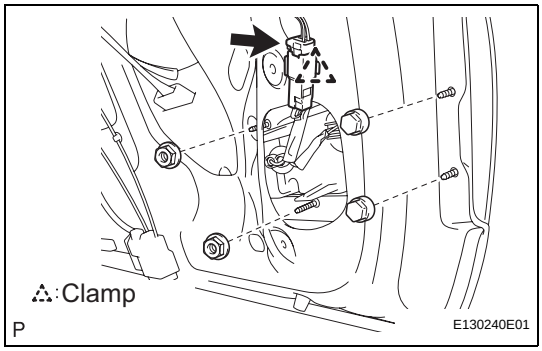

REMOVAL

1. **REMOVE LUGGAGE COMPARTMENT DOOR ASSIST GRIP (See page ET-71)**
2. **REMOVE LUGGAGE LOCK CONTROL CABLE PLATE (See page ET-71)**
3. **REMOVE LUGGAGE COMPARTMENT DOOR INSIDE HANDLE (See page ET-71)**
4. **REMOVE LUGGAGE COMPARTMENT DOOR COVER (See page ET-72)**
5. **REMOVE REAR LIGHT ASSEMBLY LH (See page LI-149)**
6. **REMOVE REAR LIGHT ASSEMBLY RH**
   HINT:
   Use the same procedures for the RH side and the LH side.
7. **REMOVE LUGGAGE DOOR OPENING SWITCH ASSEMBLY (See page DL-203)**
8. **REMOVE LUGGAGE COMPARTMENT DOOR OUTSIDE GARNISH SUB-ASSEMBLY (See page ET-72)**
9. **REMOVE TELEVISION CAMERA ASSEMBLY (w/ Rear View Monitor System) (See page PM-105)**
10. **REMOVE LUGGAGE COMPARTMENT DOOR OUTSIDE GARNISH SUB-ASSEMBLY (w/ Rear View Monitor System) (See page ET-73)**
11. **REMOVE LICENSE PLATE LIGHT ASSEMBLY**
    (a) Disconnect the connector.
    (b) Disengage the 2 claws and remove the license plate light assembly as shown in the illustration.

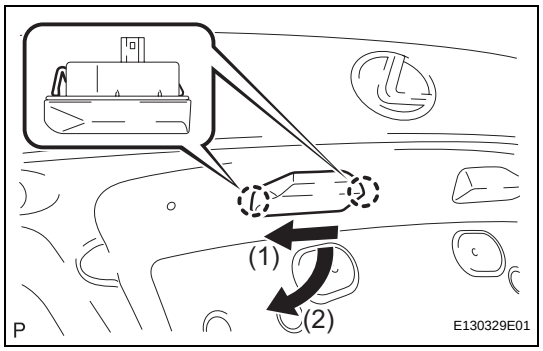

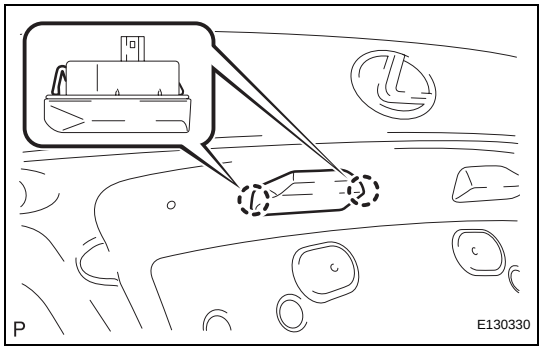

INSTALLATION

1. **INSTALL LICENSE PLATE LIGHT ASSEMBLY**
   (a) Engage the 2 claws and install the license plate light assembly.
   (b) Connect the connector.
2. **INSTALL LUGGAGE COMPARTMENT DOOR OUTSIDE GARNISH SUB-ASSEMBLY (See page ET-73)**

3. **INSTALL LUGGAGE COMPARTMENT DOOR OUTSIDE GARNISH SUB-ASSEMBLY (w/ Rear View Monitor System) (See page ET-74)**
4. **INSTALL TELEVISION CAMERA ASSEMBLY (w/ Rear View Monitor System) (See page PM-105)**
5. **INSTALL LUGGAGE DOOR OPENING SWITCH ASSEMBLY (See page DL-203)**
6. **INSTALL REAR LIGHT ASSEMBLY LH (See page LI-154)**
7. **INSTALL REAR LIGHT ASSEMBLY RH**
   HINT:
   Use the same procedures for the RH side and the LH side.
8. **INSTALL LUGGAGE COMPARTMENT DOOR COVER (See page ET-74)**
9. **INSTALL LUGGAGE COMPARTMENT DOOR INSIDE HANDLE (See page ET-74)**
10. **INSTALL LUGGAGE LOCK CONTROL CABLE PLATE (See page ET-75)**
11. **INSTALL LUGGAGE COMPARTMENT DOOR ASSIST GRIP (See page ET-75)**

INSTALLATION

1. INSTALL CENTER STOP LIGHT SET

(a) Connect the connector.

(b) Engage the 7 claws and install the center stop light set as shown in the illustration.

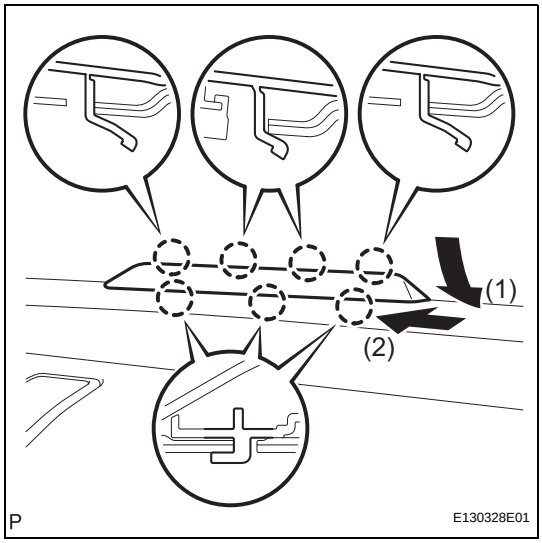

INSTALLATION

1. **INSTALL ROOF CONSOLE BOX ASSEMBLY (See page IR-60)**

INSTALLATION

1. **INSTALL SPOT LIGHT ASSEMBLY (for Standard) (See page IR-59)**
2. **INSTALL SPOT LIGHT ASSEMBLY (for Glass Roof) (See page IR-59)**

REMOVAL

1. **REMOVE COOL AIR INTAKE DUCT SEAL (See page ET-4)**

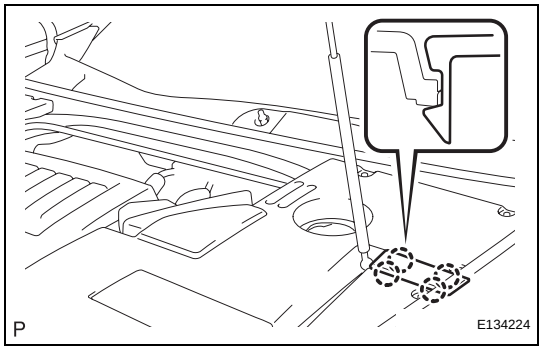

2. **REMOVE HOOD HINGE COVER (for LH Side)**
   (a) Disengage the 4 claws and remove the hood hinge cover.

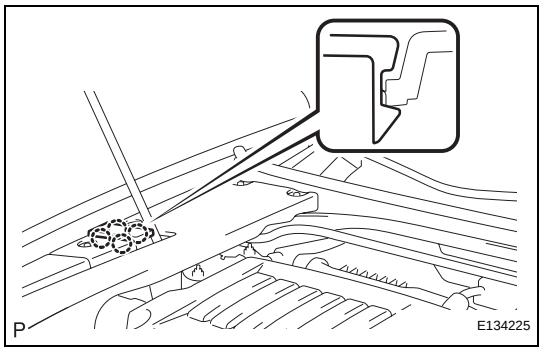

3. **REMOVE HOOD HINGE COVER (for RH Side)**
   (a) Disengage the 4 claws and remove the hood hinge cover.

WW

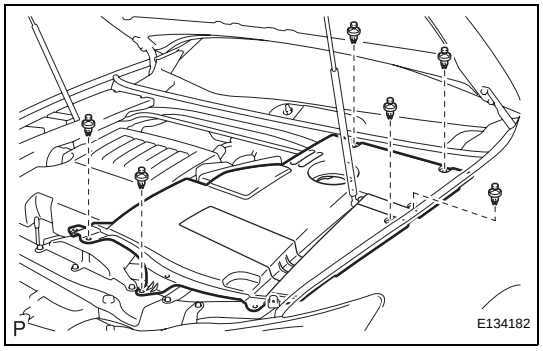

4. **REMOVE ENGINE ROOM SIDE COVER LH**
   (a) Remove the 6 clips, and the engine room side cover LH.

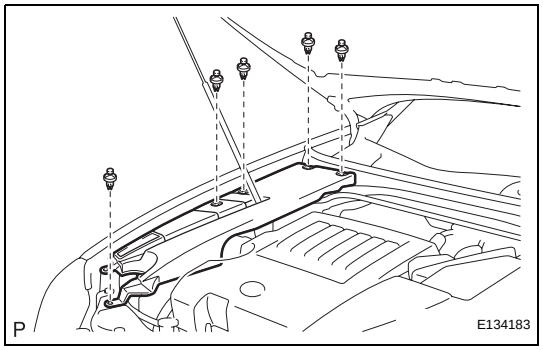

5. **REMOVE ENGINE ROOM SIDE COVER RH**
   (a) Remove the 5 clips, and the engine room side cover RH.

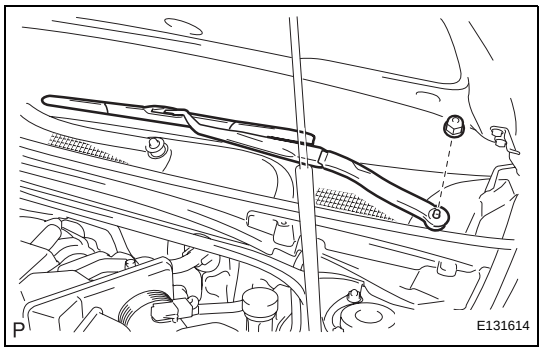

6. REMOVE FRONT WIPER ARM AND BLADE ASSEMBLY LH

(a) Remove the nut, and the front wiper arm and blade assembly LH.

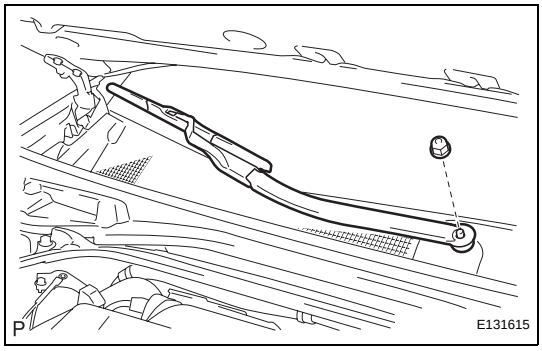

7. REMOVE FRONT WIPER ARM AND BLADE ASSEMBLY RH

(a) Remove the nut, and the front wiper arm and blade assembly RH.

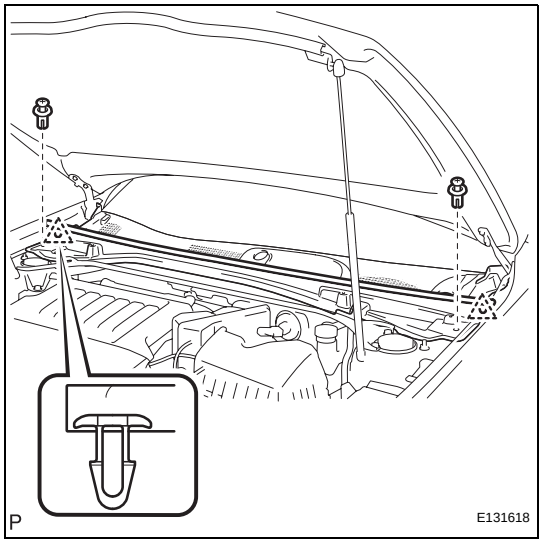

8. REMOVE COWL TOP VENTILATOR LOUVER SUB-ASSEMBLY

(a) Disengage the 2 clips and separate the hood to cowl top seal.

(b) Remove the 2 clips.

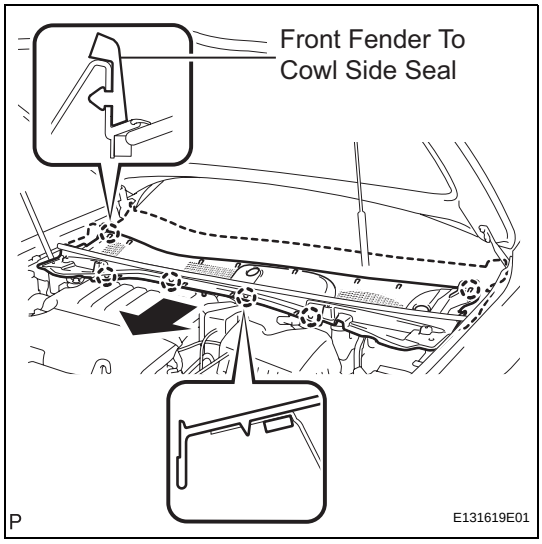

(c) Disengage the 6 claws and remove the cowl top ventilator louver sub-assembly as shown in the illustration.

NOTICE:

When removing the cowl top ventilator louver sub-assembly, hold the front fender to cowl side seals by hand to prevent them from coming off the windshield. The front fender to cowl side seals are attached to the windshield with double-sided tape. Once the front fender to cowl side seals come off, the adhesion of the tape is reduced. The double-sided tape is not available as a supply part. If the tape loses its adhesion, it is necessary to apply new high-heat resistant double-sided tape and install the front fender to cowl side seals to the windshield.

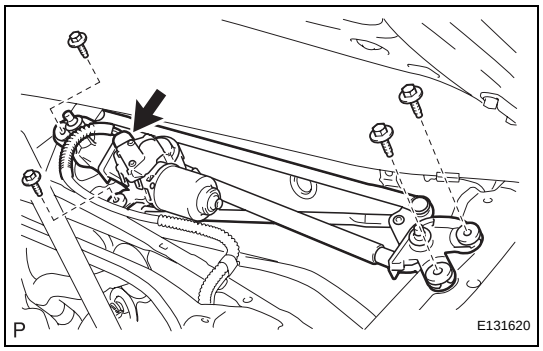

9. REMOVE WINDSHIELD WIPER MOTOR AND LINK ASSEMBLY

(a) Disconnect the connector.

(b) Remove the 4 bolts and the windshield wiper motor and link assembly.

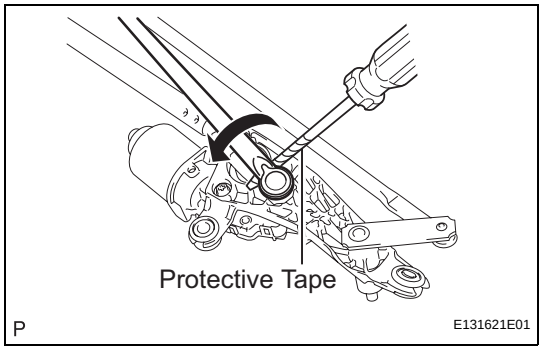

10. REMOVE WINDSHIELD WIPER MOTOR ASSEMBLY

(a) Using a screwdriver, separate the No. 2 windshield wiper link rod from the crank arm pivot of the front wiper motor assembly as shown in the illustration.
HINT:
Tape the screwdriver tip before use.

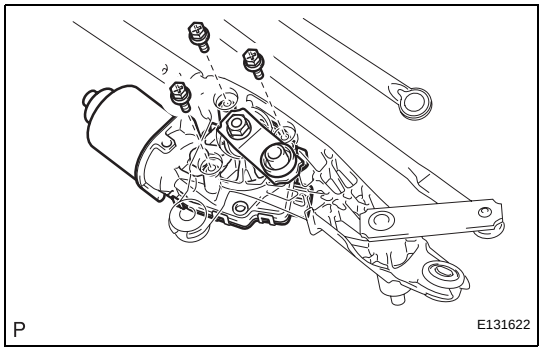

(b) Remove the 3 bolts and the windshield wiper motor assembly from the windshield wiper link assembly.

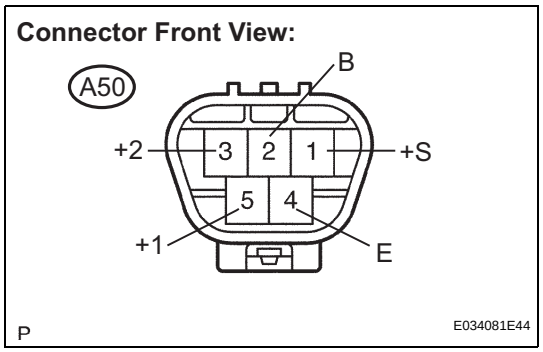

INSPECTION

1. INSPECT WINDSHIELD WIPER MOTOR ASSEMBLY

(a) LO Operation Check

(1) Connect a positive (+) battery lead to terminal A50-5 (+1) of the connector, and a negative (-) battery lead to terminal A50-4 (E), and check that the motor operates at a low speed (LO).

(b) HI Operation Check

(1) Connect a positive (+) lead to terminal A50-3 (+2) of the connector, and a negative (-) battery lead to terminal A50-4 (E), and check that the motor operates at a high speed (HI).

WW

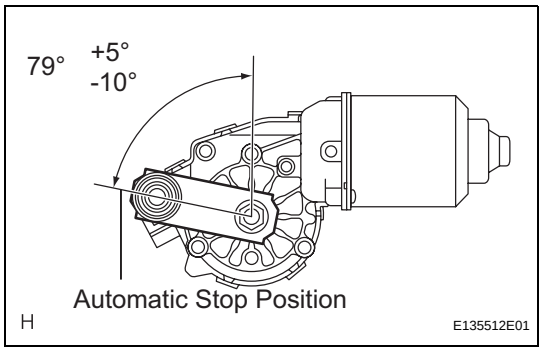

(c) Automatic Stop Operation Check

(1) Put matchmarks on the windshield wiper motor assembly. The matchmarks will be used to confirm the return of the motor shaft to the park position.

(2) Connect a positive (+) battery lead to terminal A50-5 (+1) of the connector on the wiper motor and connect a negative battery lead to terminal A50-4 (E) of the wiper motor. With the motor operating at a low speed (LO), disconnect terminal A50-5 (+1) to stop the wiper motor at a position where the matchmarks do not line up.
HINT:
In the following step, connections will be made at the wiper motor to allow verification of the operation of the park contacts that are operated by the cam in the wiper motor. After the connections have been made, when the motor is not in the park position, current will flow from terminal A50-2 (B) through the park contacts in the wiper motor, to terminal A50-1 (+S). The current will then flow through the jumper wire to terminal A50-5 (+1) through the motor to ground (causing it to operate). When the motor reaches the park position, the park contacts should open, stopping the operation of the wiper motor in the correct location. Terminals A50-2 (B) and A50-1 (+S) are connected by the internal cam in the wiper motor when the wiper motor is not in the park position. Terminals A50-1 (+S) and A50-4 (E) are connected by the internal cam in the wiper motor when the wiper motor is in the park position.

(3) With the ground wire still attached from the previous step, connect a jumper lead between terminal A50-1 (+S) and terminal A50-5 (+1). Next, connect a positive (+) battery lead to terminal A50-2 (B) to cause the wiper motor to operate at a low speed. If the wiper motor is operating correctly, the wiper will operate until it reaches the park position. When it reaches the park position, it will automatically stop.

(4) Verify that the matchmarks on the windshield wiper motor assembly are lined up.

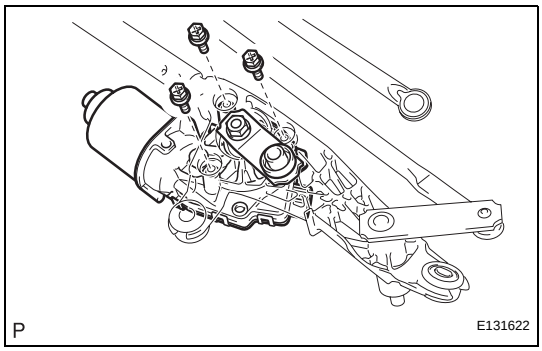

INSTALLATION

1. INSTALL WINDSHIELD WIPER MOTOR ASSEMBLY

(a) Install the windshield wiper motor assembly with the 3 bolts.
Torque: 5.4 N*m (55 kgf*cm, 48 in.*lbf)

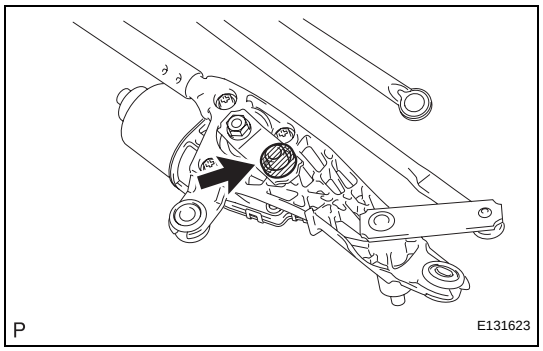

(b) Apply MP grease to the crank arm pivot of the windshield wiper motor assembly.

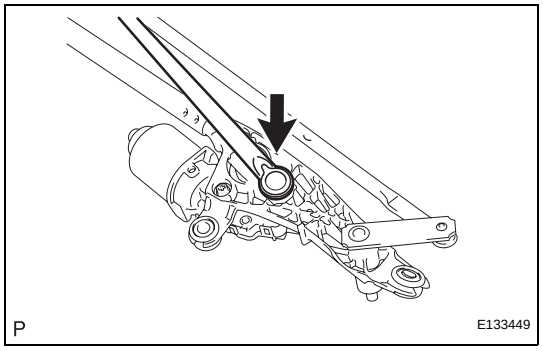

(c) Install the No. 2 windshield wiper link rod to the pivot of the windshield wiper motor assembly.

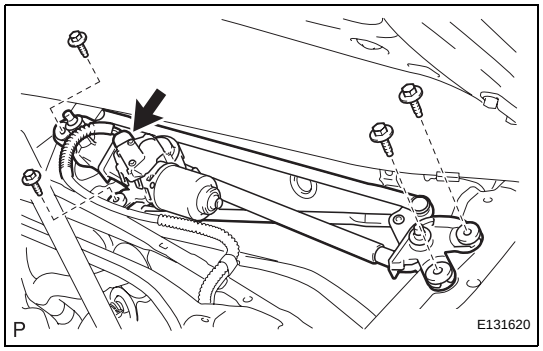

2. INSTALL WINDSHIELD WIPER MOTOR AND LINK ASSEMBLY

(a) Install the windshield wiper motor and link assembly with the 4 bolts.
Torque: 5.5 N*m (56 kgf*cm, 49 in.*lbf)

(b) Connect the connector.

3. INSTALL FRONT FENDER TO COWL SIDE SEAL RH

HINT:
In cases where double-sided tape cannot be reused.

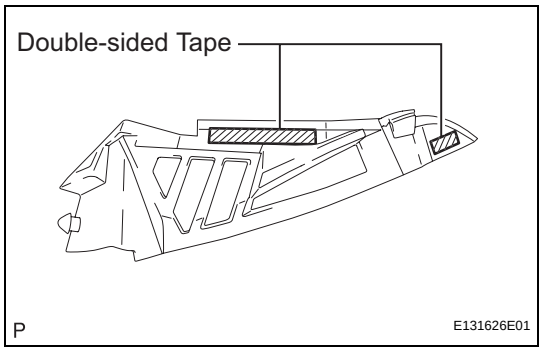

(a) Apply double-sided tape to locations as shown in the illustration.
HINT:
The double-sided tape is not available as a supply part. Use commercial high-heat resistant double-sided tape.

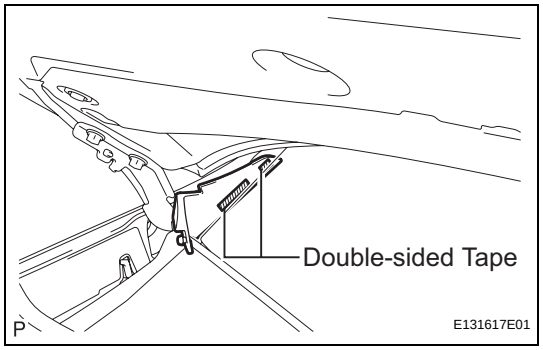

(b) Fix the double-sided tape to install the front fender to cowl side seal RH.

4. INSTALL FRONT FENDER TO COWL SIDE SEAL LH

HINT:
In cases where double-sided tape cannot be reused.

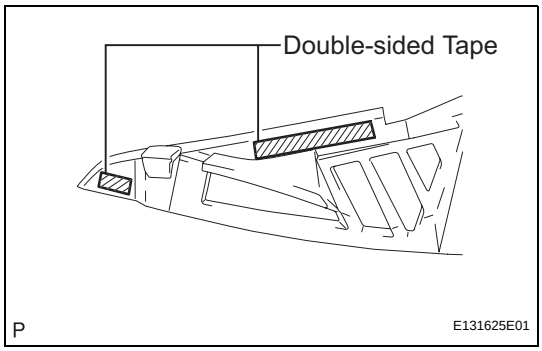

(a) Apply new double-sided tape to locations as shown in the illustration.
HINT:
The double-sided tape is not available as a supply part. Use commercial high-heat resistant double-sided tape.

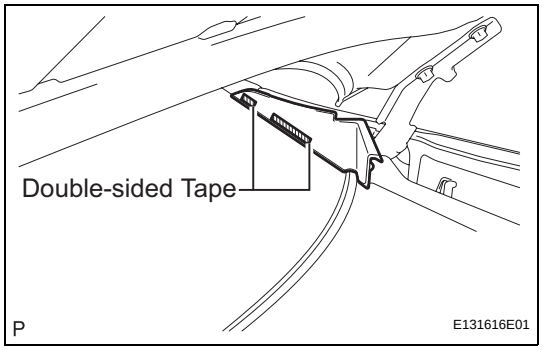

(b) Fix the double-sided tape to install the front fender to cowl side seal LH.

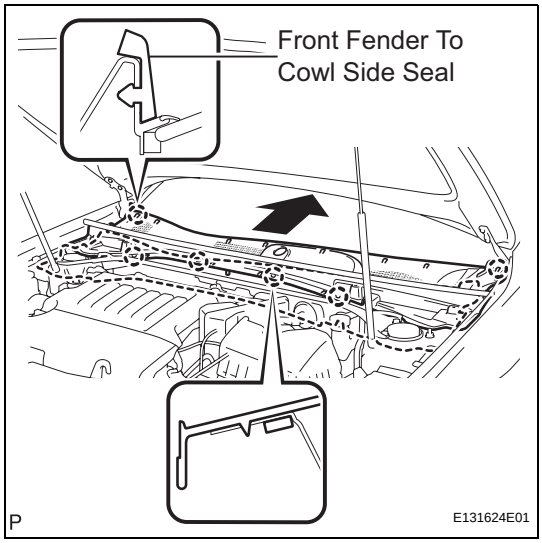

5. INSTALL COWL TOP VENTILATOR LOUVER SUB-ASSEMBLY

(a) Engage the 6 claws and install the cowl top ventilator louver sub-assembly as shown in the illustration.
NOTICE:
When installing the cowl top ventilator louver sub-assembly, hold the front fender to cowl side seals by hand to prevent them from coming off the windshield. The front fender to cowl side seals are attached to the windshield with double-sided tape. Once the front fender to cowl side seals come off, the adhesion of the tape is reduced. The double-sided tape is not available as a supply part. If the tape loses its adhesion, it is necessary to apply new high-heat resistant double-sided tape and install the front fender to cowl side seals to the windshield.

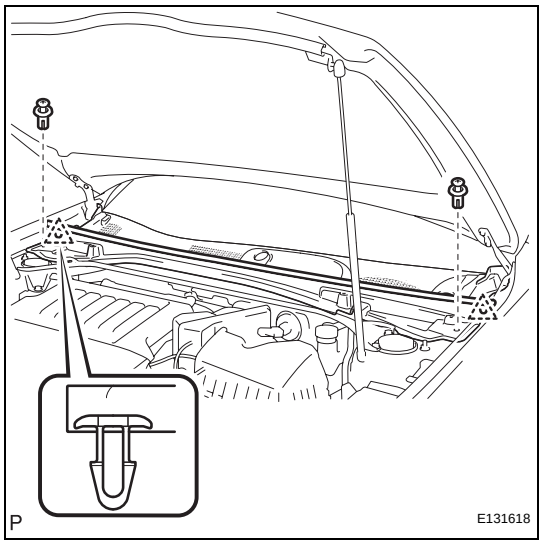

(b) Install the 2 clips.
(c) Engage the 2 clips and install the hood to cowl top seal.

6. INSTALL FRONT WIPER ARM AND BLADE ASSEMBLY LH

(a) Operate the wiper and stop the windshield wiper motor at the automatic stop position.

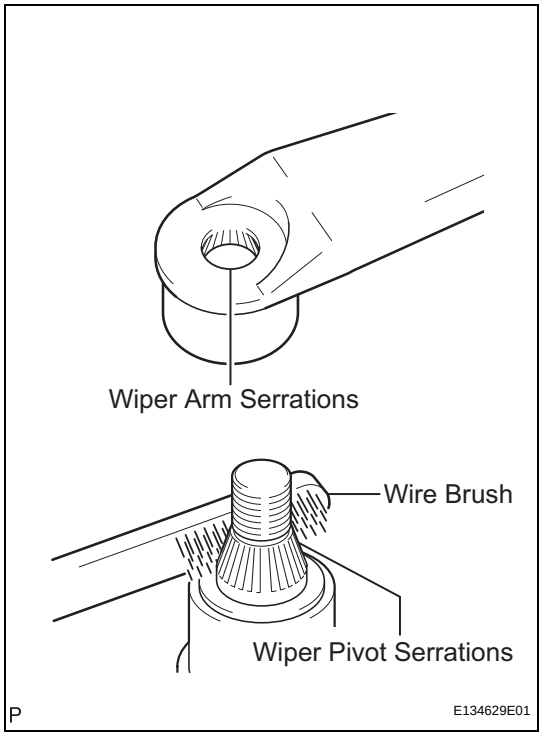

(b) Clean the wiper arm serrations.
(c) When reinstalling:
  (1) Clean the wiper pivot serrations with a wire brush.

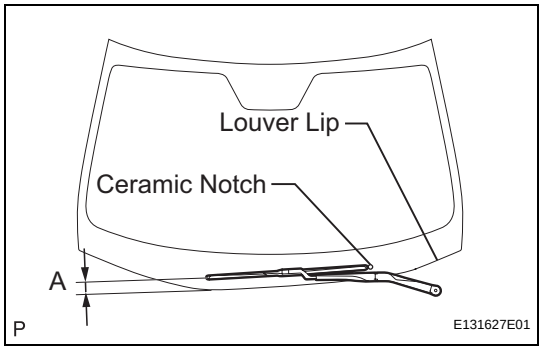

(d) Install the front wiper arm and blade assembly LH with the nut to the position shown in the illustration.
Torque: 22 N*m (224 kgf*cm, 16 ft.*lbf)
HINT:
Hold the arm hinge by hand to fasten the nut.

Area	Measurement
A	18 to 33 mm (0.71 to 1.30 in.)

7. INSTALL FRONT WIPER ARM AND BLADE ASSEMBLY RH

(a) Operate the wiper and stop the windshield wiper motor at the automatic stop position.

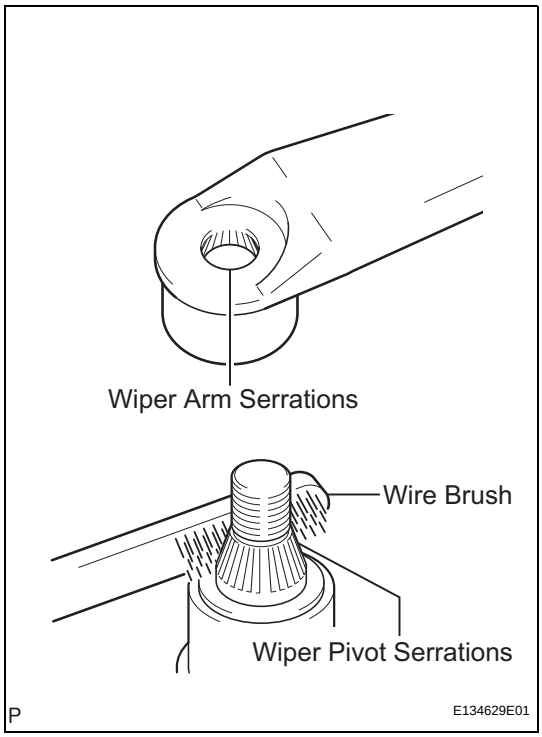

(b) Clean the wiper arm serrations.
(c) When reinstalling:
  (1) Clean the wiper pivot serrations with a wire brush.

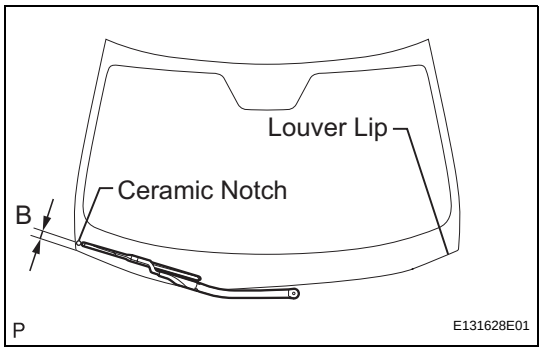

(d) Install the front wiper arm and blade assembly RH with the nut to the position shown in the illustration.
Torque: 22 N*m (224 kgf*cm, 16 ft.*lbf)
HINT:
Hold the arm hinge by hand to fasten the nut.

Area	Measurement
B	20 to 35 mm (0.79 to 1.38 in.)

(e) Operate the front wipers while spraying washer fluid on the windshield glass. Make sure that the front wipers function properly and the wipers do not come into contact with the vehicle body.

WW

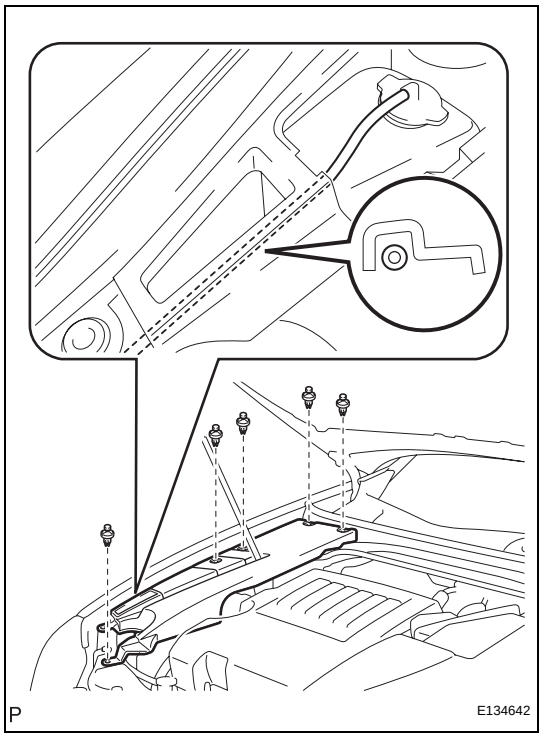

8. INSTALL ENGINE ROOM SIDE COVER RH

(a) Install the engine room side cover RH with the 5 clips.

NOTICE:

When installing the engine room side cover RH, make sure that the engine coolant reservoir hose is positioned as shown in the illustration.

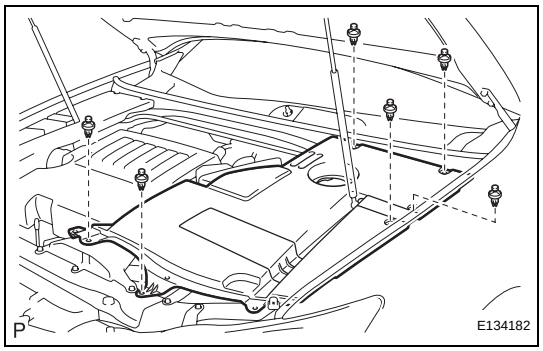

9. INSTALL ENGINE ROOM SIDE COVER LH

(a) Install the engine room side cover LH with the 6 clips.

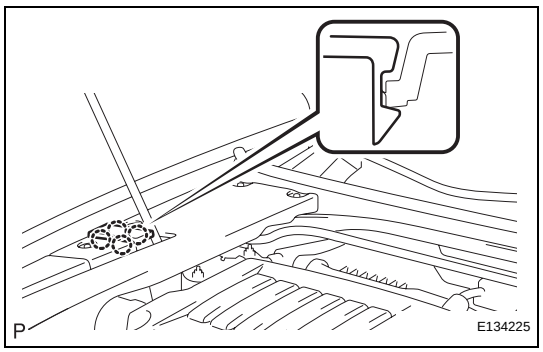

10. INSTALL HOOD HINGE COVER (for RH Side)

(a) Engage the 4 claws and install the hood hinge cover.

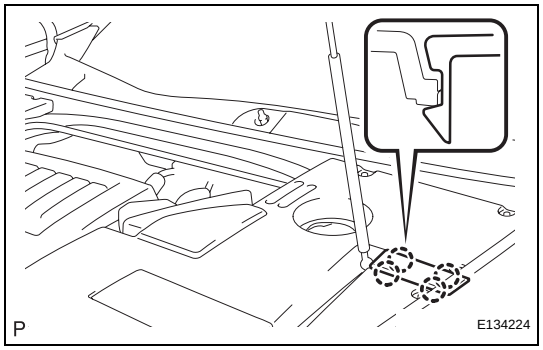

11. INSTALL HOOD HINGE COVER (for LH Side)

(a) Engage the 4 claws and install the hood hinge cover.

12. INSTALL COOL AIR INTAKE DUCT SEAL (See page ET-14)

WW

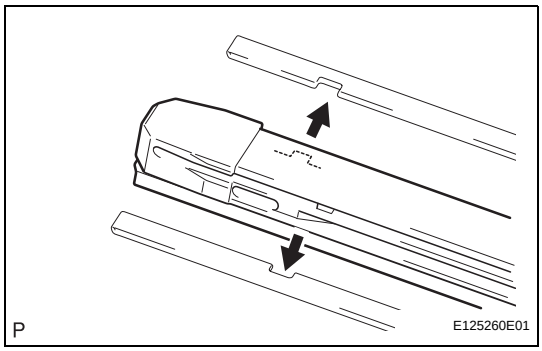

(b) Remove the 2 wiper rubber backing plates from the wiper rubber.

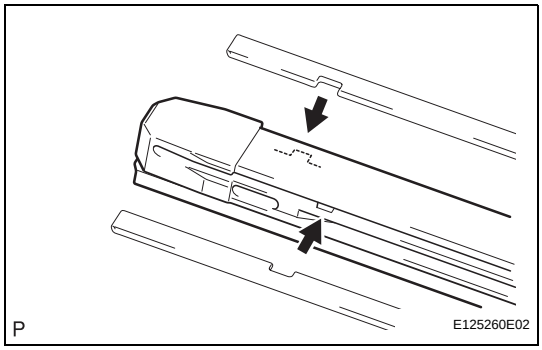

INSTALLATION

1. INSTALL WIPER RUBBER

(a) Install the 2 wiper rubber backing plates to the wiper rubber.

NOTICE:

- **Align the protrusions on the wiper rubber with the notches in the backing plates.**
- **Align the curves of the backing plates with the curve of the glass.**

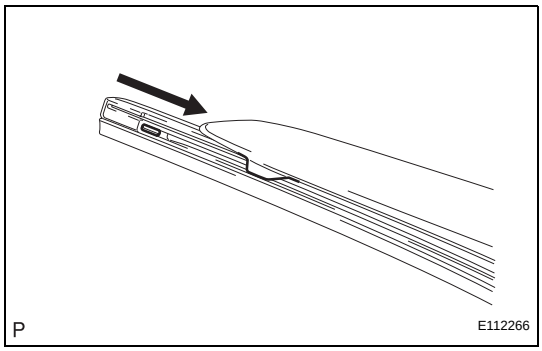

(b) Install the wiper rubber to the front wiper blade with the tip of the rubber (curved end) facing the axis of the wiper arm.

NOTICE:

Firmly push the wiper rubber into the wiper blade to securely engage them.

2. INSTALL FRONT WIPER BLADE

(a) Install the front wiper blade as shown in the illustration.

(b) Engage the holder of the front wiper blade.

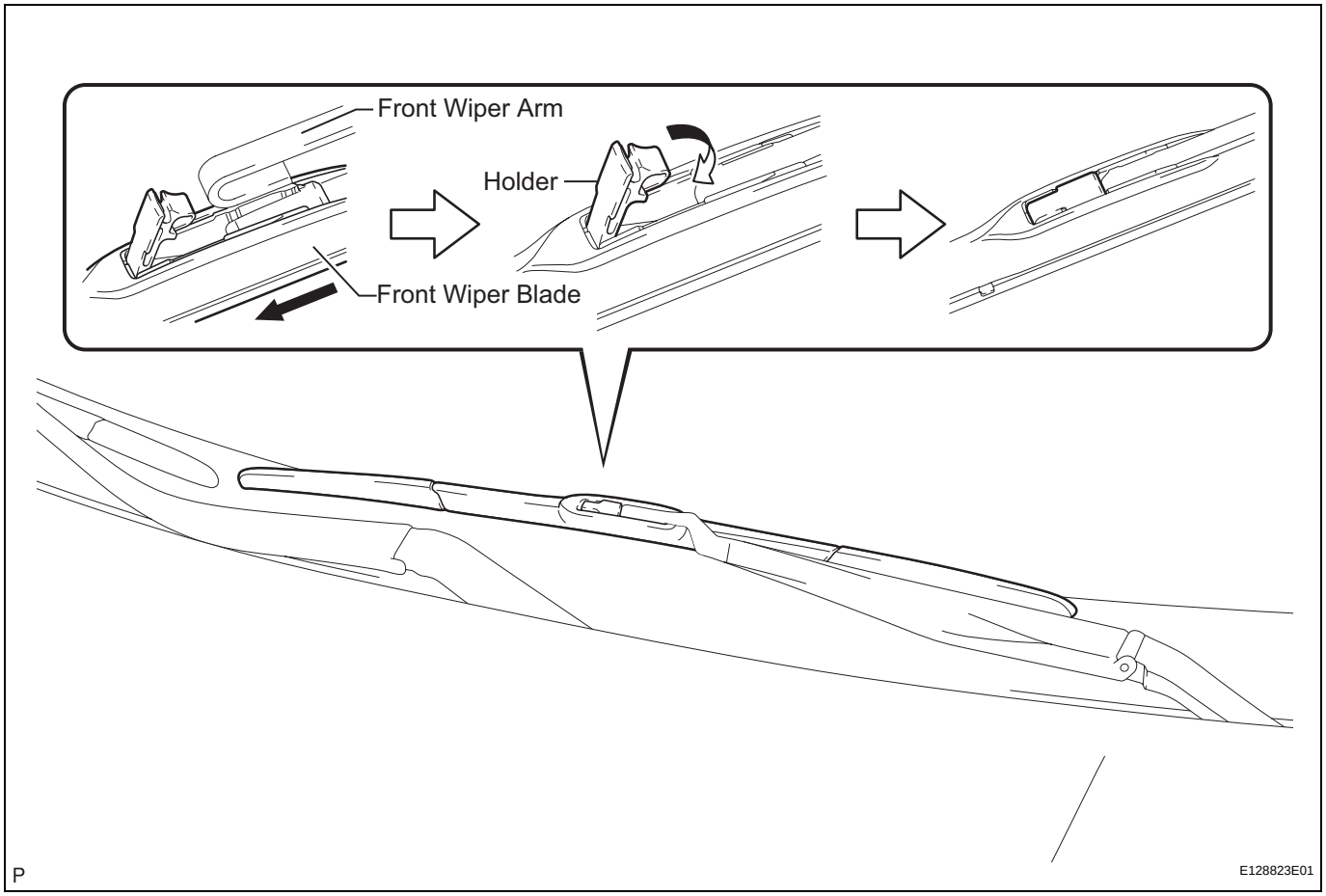

INSPECTION

1. INSPECT FRONT WASHER MOTOR

(a) Operation Check

(1) Fill the washer jar with washer fluid.

(2) Connect the positive battery (+) lead to terminal A49-1 of the windshield washer motor and pump assembly, and the negative battery (-) lead to terminal A49-2. Check that washer fluid flows from the washer jar.

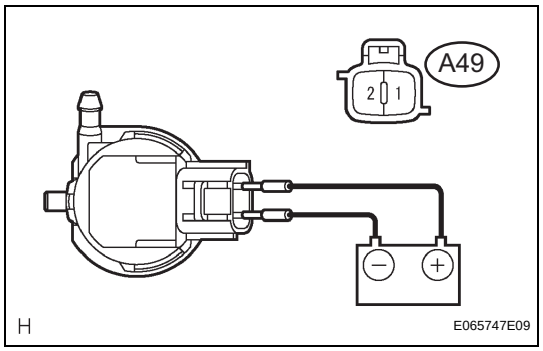

2. INSPECT WASHER FLUID LEVEL WARNING SWITCH ASSEMBLY

HINT:

The following check should be performed with the windshield washer motor and pump installed to the washer jar.

(a) Fill the washer jar with washer fluid.

(b) Disconnect the connector from the washer fluid level sensor.

(c) Measure the resistance according to the value(s) in the table below.

Standard resistance

Fluid Volume	Specified Condition
More than 900 ml	10 kΩ or higher
Less than 900 ml	Below 1 Ω

WW

INSTALLATION

1. INSTALL WINDSHIELD WASHER MOTOR AND PUMP ASSEMBLY

(a) Install the windshield washer motor and pump assembly.

(b) Connect the connector.

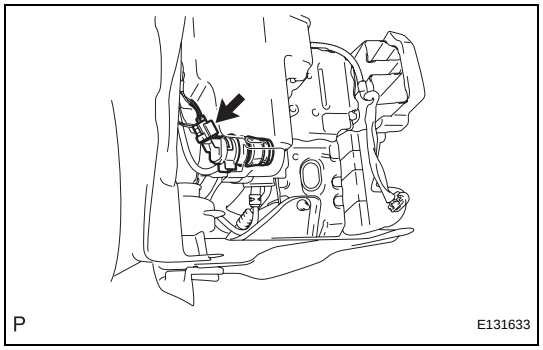

2. FILL WASHER JAR WITH WASHER FLUID

(a) Connect the washer hose to the windshield washer motor and pump assembly and fill the washer jar with washer fluid.

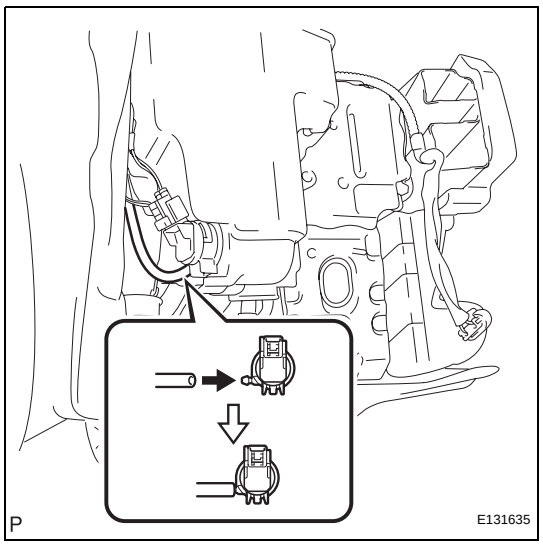

3. INSTALL FRONT BUMPER ASSEMBLY (See page ET-14)

4. INSTALL COOL AIR INTAKE DUCT SEAL (See page ET-14)

5. VEHICLE PREPARATION FOR FOG LIGHT AIM ADJUSTMENT (See page LI-141)

6. PREPARATION FOR FOG LIGHT AIMING (See page LI-142)

7. FOG LIGHT AIMING INSPECTION (See page LI-143)

8. FOG LIGHT AIMING ADJUSTMENT (See page LI-144)

INSTALLATION

1. INSTALL RAIN SENSOR TAPE

NOTICE:

The rain sensor tape can be reused, however, replace it with a new one if it is dirty or damaged.

HINT:

This step should be performed only when the rain sensor tape needs to be replaced.

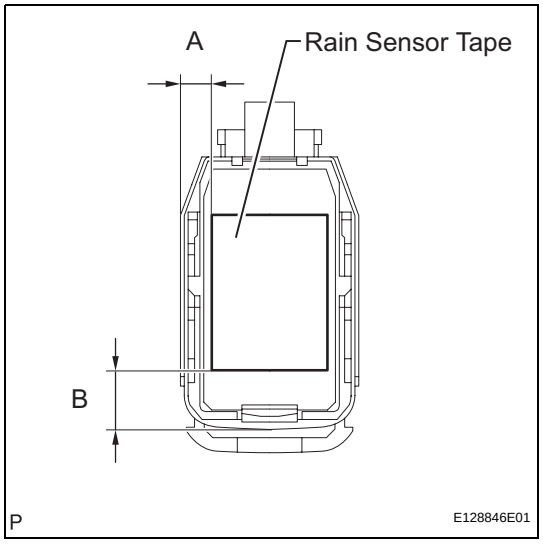

(a) Remove the releasing sheet (yellow side) from new rain sensor tape and apply the tape to the position indicated in the illustration (the sensor part of the rain sensor) while pushing out air bubbles with your fingers.

(b) Remove the releasing sheet (white side) from the rain sensor tape.

NOTICE:

- **Check that the old rain sensor tape is not left on the windshield glass. If the tape is still on the windshield glass, remove it before installing the rain sensor.**
- **Do not touch the sensor tape surface or the glass surface directly with your fingers.**
- **Clean up dirt on the glass with a cloth, etc.**

Area	Measurement
A	7.3 mm (0.287 in.)
B	13.5 mm (0.531 in.)

2. INSTALL RAIN SENSOR

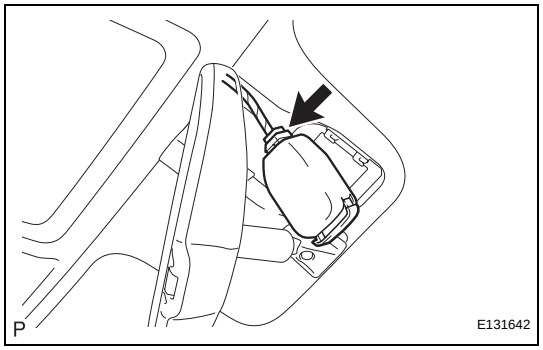

(a) Connect the connector.

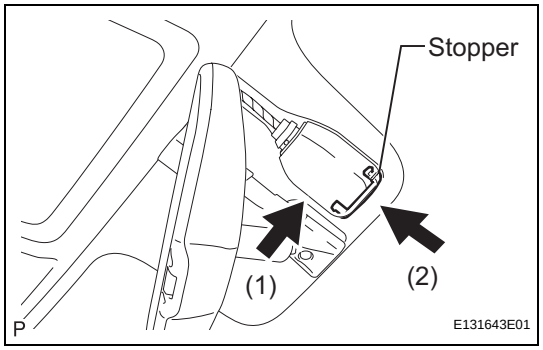

(b) Gradually attach the rain sensor to the glass surface to prevent air bubbles from forming between them.

(c) Push in the stopper.

NOTICE:

- **Do not touch the sensor tape surface or the glass surface directly with your fingers.**
- **Clean up dirt on the glass with a cloth, etc.**
- **After installing the rain sensor, there should be no air bubbles between the windshield glass and the rain sensor tape.**

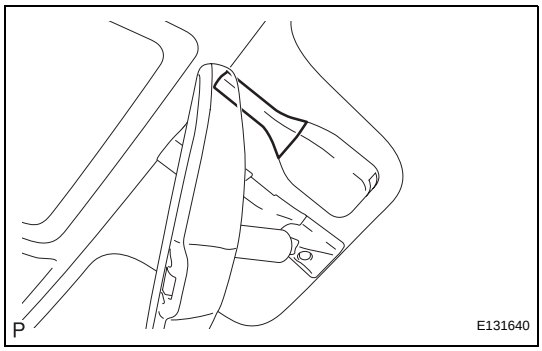

3. INSTALL RAIN SENSOR COVER

(a) Install the rain sensor cover.

Rear Door UNLOCK Detection Switch LH Circuit

DESCRIPTION

The rear left door unlock detection switch is built into the rear left door lock assembly. The switch turns on when the rear left door is locked and turns off when the door is unlocked.
The main body ECU is connected to the rear left door lock assembly via terminal LSWL and rear left door lock/unlock state signals are input to the ECU.
The main body ECU applies voltage to the door unlock detection switch via terminal LSWL. When the door unlock detection switch is on (there is continuity between the switch terminals), a lock state signal is input to the ECU. When the switch is off (there is no continuity between the switch terminals), an unlock state signal is input.

WIRING DIAGRAM

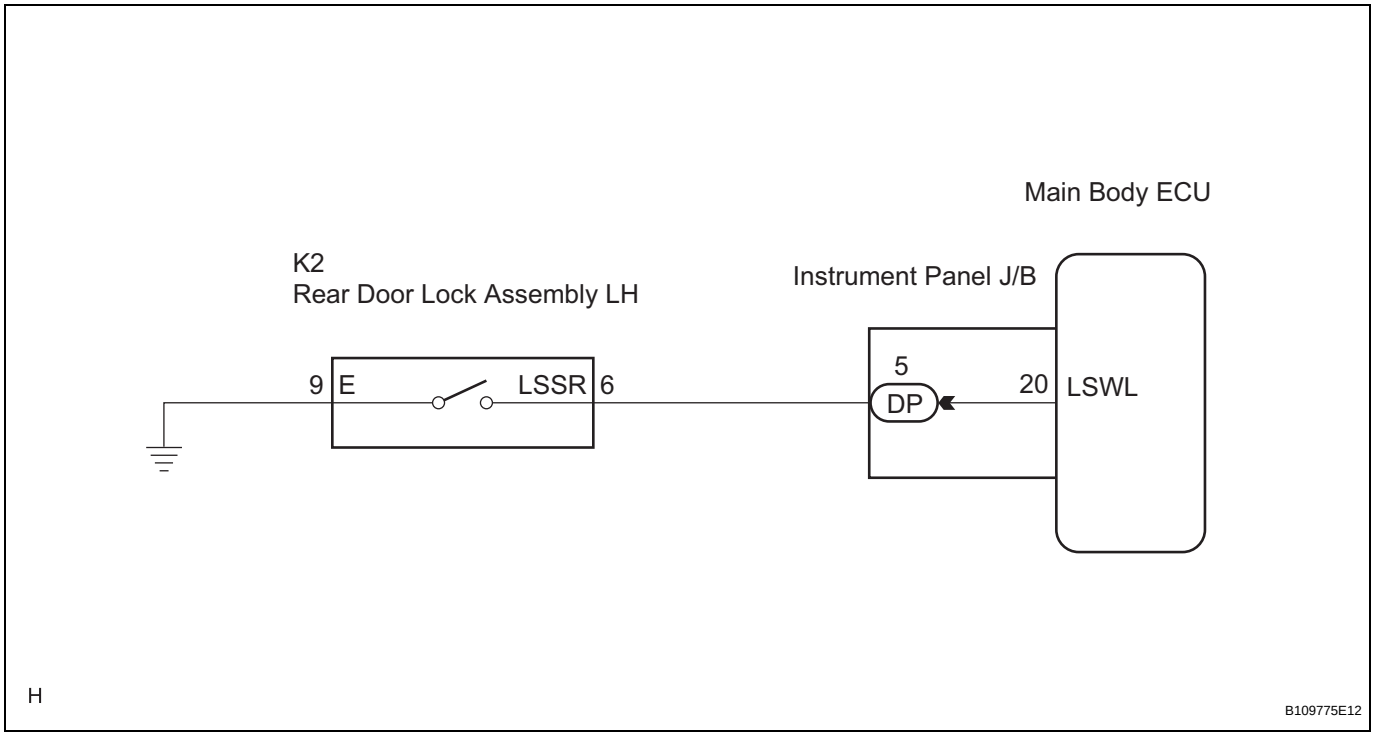

INSPECTION PROCEDURE

1	READ VALUE OF DATA LIST (UNLOCK DETECTION SWITCH)

(a) Check the DATA LIST to ensure proper function of the door unlock detection switch.

MAIN BODY:

Item	Measurement Item / Display (Range)	Normal Condition	Diagnostic Note
RL LOCK POS SW	Rear left door lock position switch signal / ON or OFF	ON: Rear left door lock is in UNLOCK position OFF: Rear left door lock is in LOCK position	-

OK:

The display is as specified in the normal condition column.

NG → **Go to step 2**

OK

PROCEED TO NEXT CIRCUIT INSPECTION SHOWN IN PROBLEM SYMPTOMS TABLE

2 INSPECT REAR DOOR LOCK ASSEMBLY (UNLOCK DETECTION SWITCH)

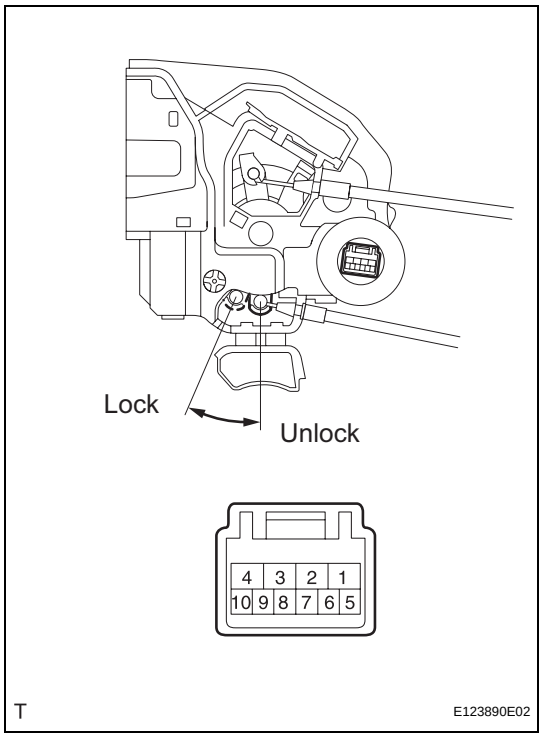

(a) Remove the rear door lock assembly LH.

(b) Measure the resistance according to the value(s) in the table below.

Standard resistance

Tester Connection	Measurement Condition	Door Lock Condition	Specified Condition
6 - 9	Battery positive (+) → Terminal 4 Battery negative (-) → Terminal 1	Lock	10 kΩ or higher
6 - 9	Battery positive (+) → Terminal 1 Battery negative (-) → Terminal 4	Unlock	Below 1 Ω

NG → **REPLACE REAR DOOR LOCK ASSEMBLY**

OK

3 CHECK WIRE HARNESS (REAR DOOR LOCK ASSEMBLY - MAIN BODY ECU)

(a) Disconnect the rear door lock assembly LH connector.

DL

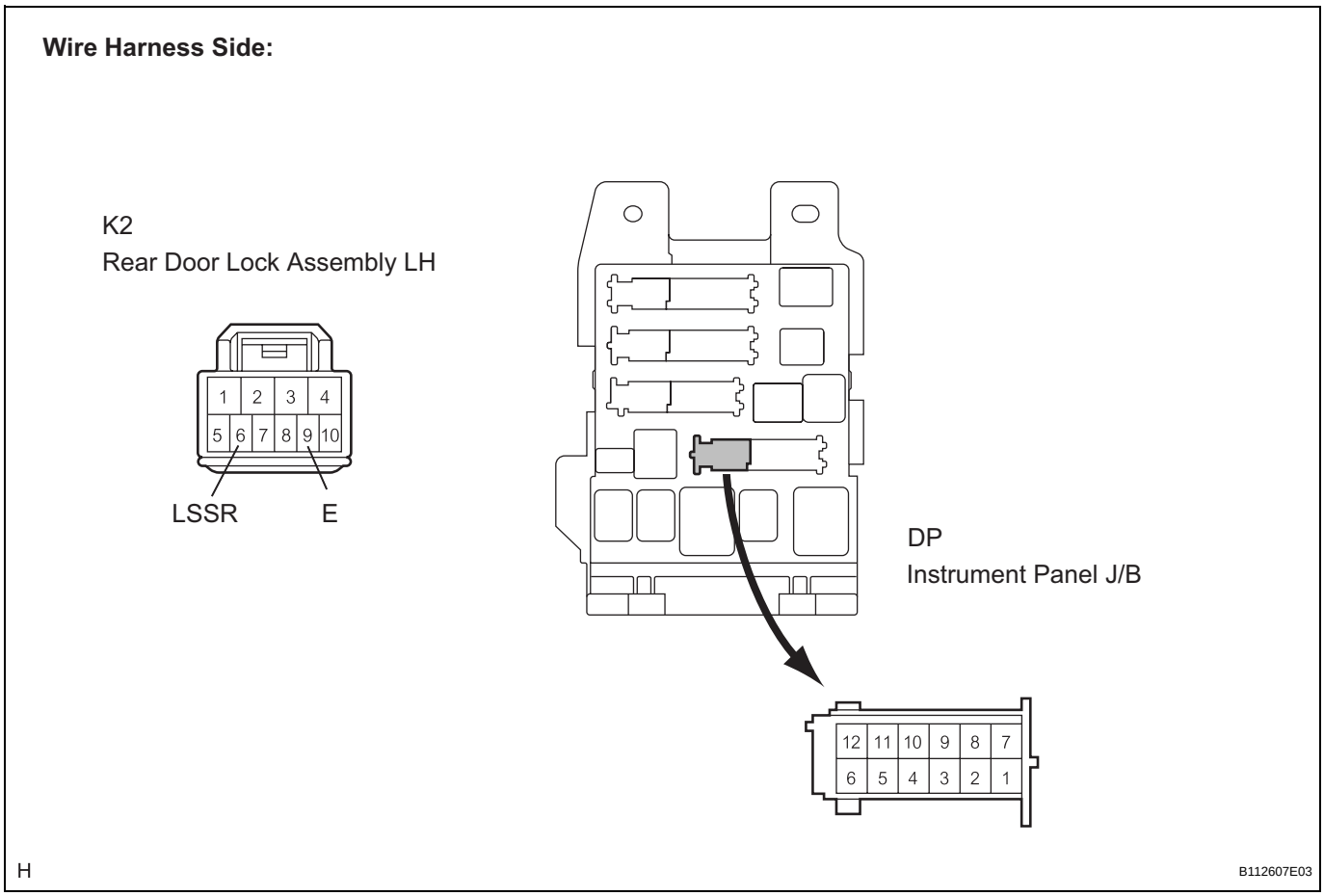

(b) Disconnect the ECU (instrument panel J/B) connector.
(c) Measure the resistance according to the value(s) in the table below.

Standard resistance

Tester Connection (Symbols)	Condition	Specified Condition
K2-6 (LSSR) - DP-5	Always	Below 1 Ω
K2-6 (LSSR) - Body ground	Always	10 kΩ or higher
K2-9 (E) - Body ground	Always	Below 1 Ω

NG → **REPAIR OR REPLACE HARNESS OR CONNECTOR**

OK

REPLACE MAIN BODY ECU (INSTRUMENT PANEL J/B)

DL

Rear Door UNLOCK Detection Switch RH Circuit

DESCRIPTION

The rear right door unlock detection switch is built into the rear right door lock assembly. The switch turns on when the rear right door is locked and turns off when the door is unlocked.
The main body ECU is connected to the rear right door lock assembly via terminal LSWR and rear right door lock/unlock state signals are input to the ECU.
The main body ECU applies voltage to the door unlock detection switch via terminal LSWR. When the door unlock detection switch is on (there is continuity between the switch terminals), a lock state signal is input to the ECU. When the switch is off (there is no continuity between the switch terminals), an unlock state signal is input.

WIRING DIAGRAM

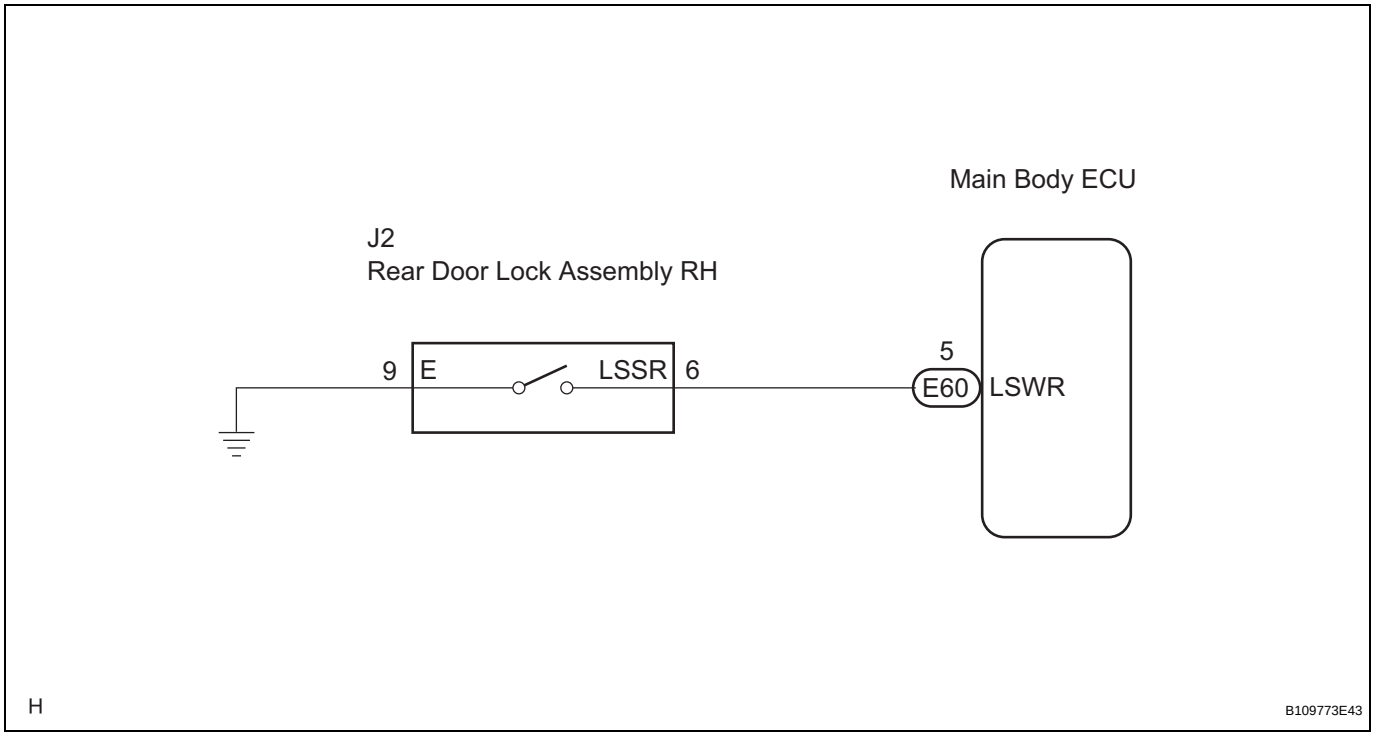

INSPECTION PROCEDURE

1	READ VALUE OF DATA LIST (UNLOCK DETECTION SWITCH)

(a) Check the DATA LIST to ensure proper function of the door unlock detection switch.

MAIN BODY:

Item	Measurement Item / Display (Range)	Normal Condition	Diagnostic Note
RR LOCK POS SW	Rear right door lock position switch signal / ON or OFF	ON: Rear right door lock is in UNLOCK position OFF: Rear right door lock is in LOCK position	-

OK:

The display is as specified in the normal condition column.

NG → **Go to step 2**

OK

PROCEED TO NEXT CIRCUIT INSPECTION SHOWN IN PROBLEM SYMPTOMS TABLE

2 INSPECT REAR DOOR LOCK ASSEMBLY (UNLOCK DETECTION SWITCH)

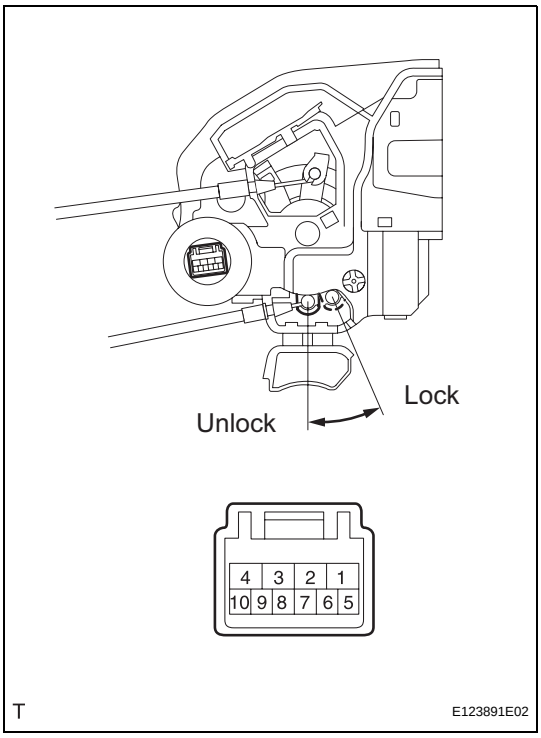

(a) Remove the rear door lock assembly RH.
(b) Measure the resistance according to the value(s) in the table below.

Standard resistance

Tester Connection	Measurement Condition	Door Lock Condition	Specified Condition
6 - 9	Battery positive (+) → Terminal 4 Battery negative (-) → Terminal 1	Lock	10 kΩ or higher
6 - 9	Battery positive (+) → Terminal 1 Battery negative (-) → Terminal 4	Unlock	Below 1 Ω

NG → **REPLACE REAR DOOR LOCK ASSEMBLY**

OK

3 CHECK WIRE HARNESS (REAR DOOR LOCK - MAIN BODY ECU (INSTRUMENT PANEL J/B))

(a) Disconnect the rear door lock assembly RH connector.

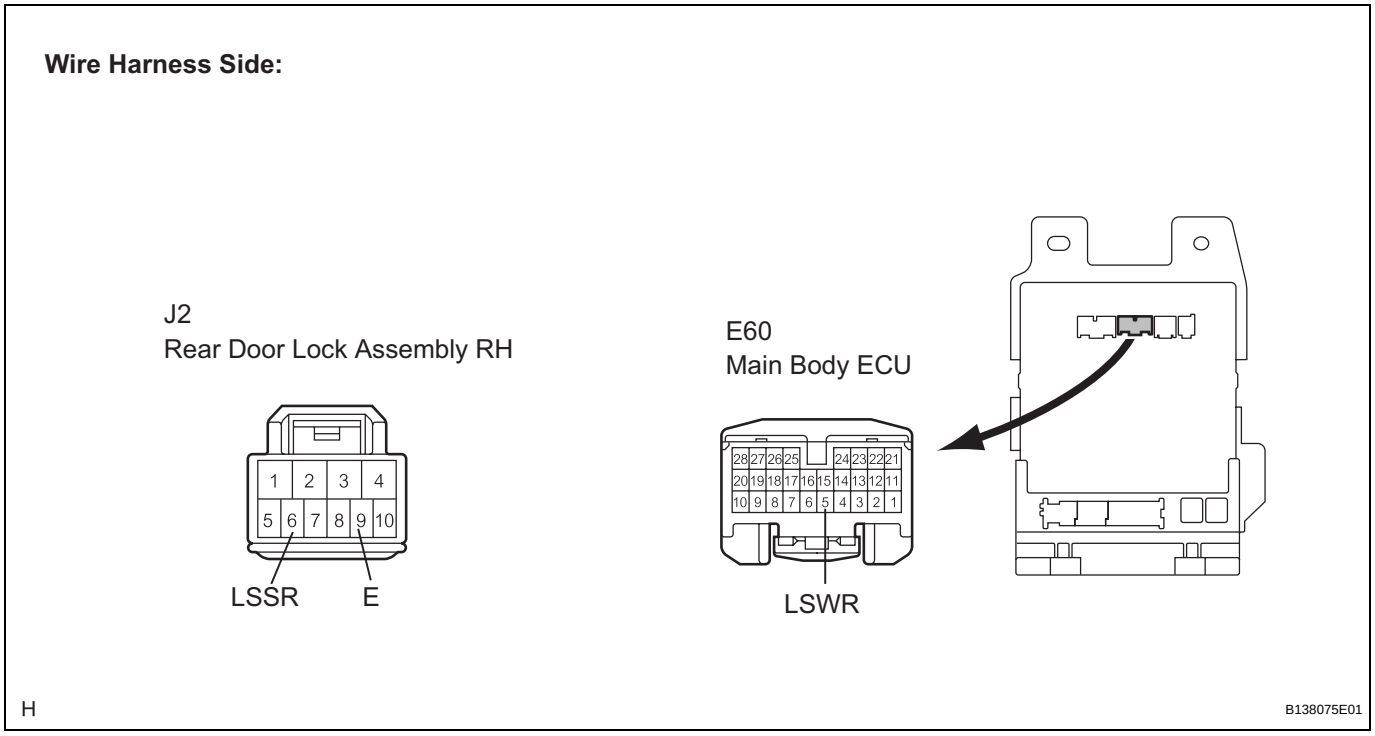

(b) Disconnect the ECU (instrument panel J/B) connector.

(c) Measure the resistance according to the value(s) in the table below.

Standard resistance

Tester Connection (Symbols)	Condition	Specified Condition
J2-6 (LSSR) - E60-5 (LSWR)	Always	Below 1 Ω
J2-6 (LSSR) - Body ground	Always	10 kΩ or higher
J2-9 (E) - Body ground	Always	Below 1 Ω

NG → **REPAIR OR REPLACE HARNESS OR CONNECTOR**

OK

REPLACE MAIN BODY ECU (INSTRUMENT PANEL J/B)

DL

Driver Side Door Lock Motor Circuit

DESCRIPTION

The driver's door lock motor is built into the driver's door lock assembly.
The main body ECU controls the driver's door lock motor to lock/unlock the driver's door. This ECU applies current from terminal ACT+ to terminal ACTD to operate the motor to lock the door. It reverses the direction of the current flow to operate the motor to unlock the door.

WIRING DIAGRAM

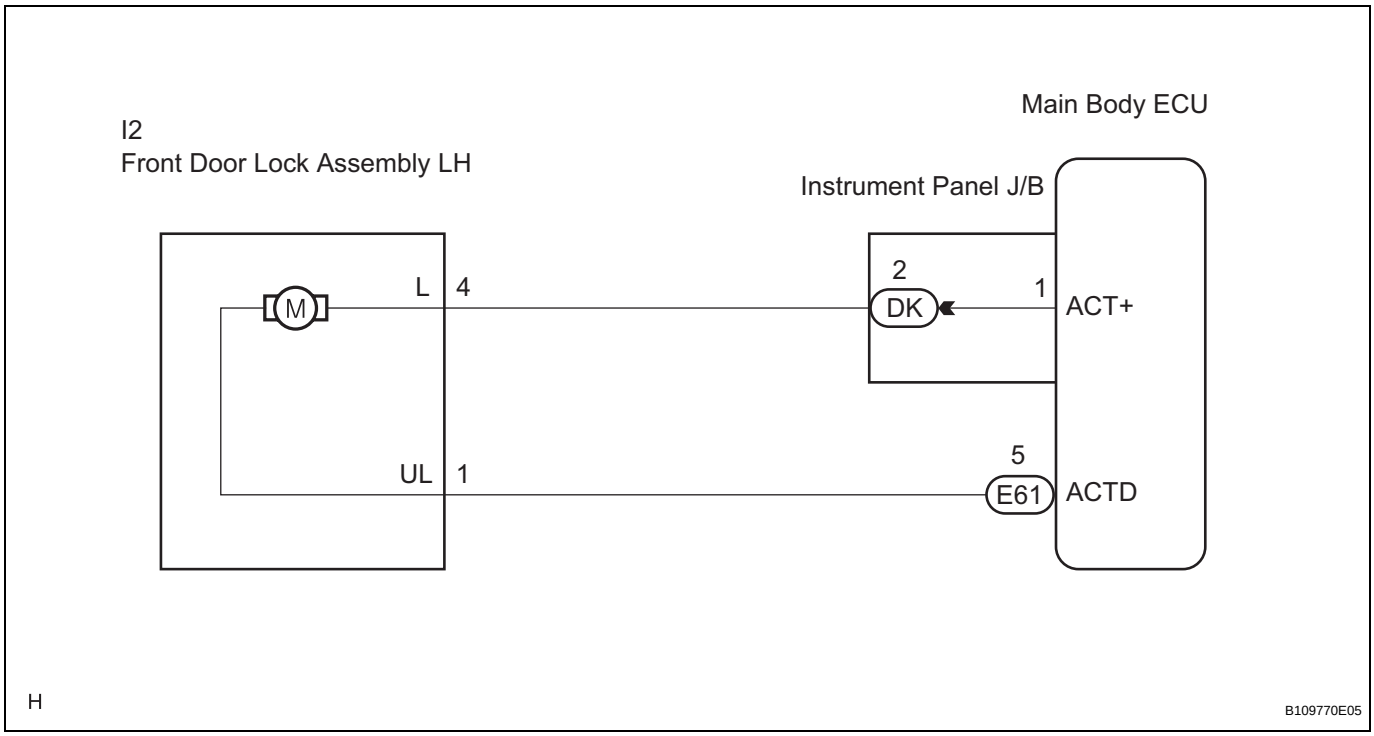

INSPECTION PROCEDURE

1	**INSPECT FRONT DOOR LOCK ASSEMBLY (DOOR LOCK MOTOR)**

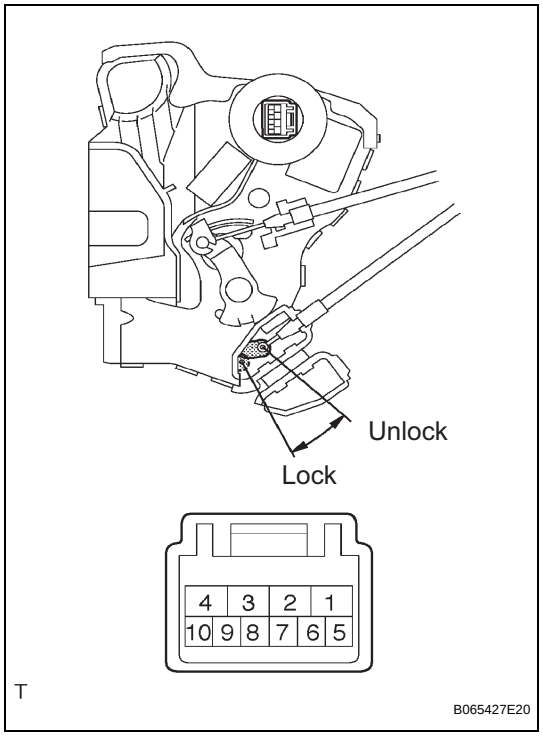

(a) Remove the front door lock assembly LH.
(b) Apply battery voltage and check operation of the door lock motor.
OK

Measurement Condition	Specified Condition
Battery positive (+) → Terminal 4 Battery negative (-) → Terminal 1	**Lock**
Battery positive (+) → Terminal 1 Battery negative (-) → Terminal 4	**Unlock**

NG → **REPLACE FRONT DOOR LOCK ASSEMBLY**

OK

2	**CHECK WIRE HARNESS (FRONT DOOR LOCK - MAIN BODY ECU (INSTRUMENT PANEL J/B))**

(a) Disconnect the front door lock assembly LH connector.

DL

Wire Harness Side:

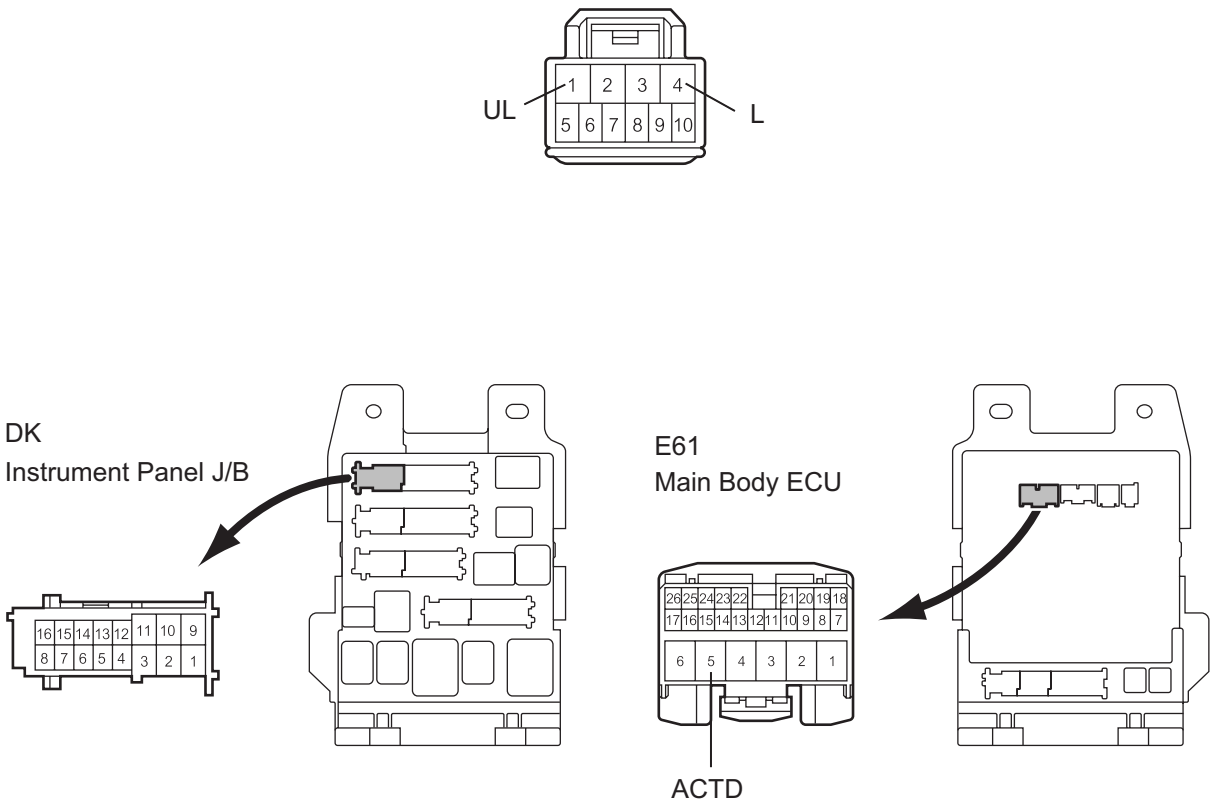

H B112609E04

(b) Disconnect the ECU (instrument panel J/B) connector.

(c) Measure the resistance according to the value(s) in the table below.

Standard resistance

Tester Connection (Symbols)	Condition	Specified Condition
I2-4 (L) - DK-2	Always	Below 1 Ω
I2-1 (UL) - E61-5 (ACTD)	Always	Below 1 Ω
DK-2 - Body ground	Always	10 kΩ or higher
E61-5 (ACTD) - Body ground	Always	10 kΩ or higher

NG → **REPAIR OR REPLACE HARNESS OR CONNECTOR**

OK

PROCEED TO NEXT CIRCUIT INSPECTION SHOWN IN PROBLEM SYMPTOMS TABLE

Front Passenger Side Door Lock Motor Circuit

DESCRIPTION

The front passenger door lock motor is built into the front passenger door lock assembly.
The main body ECU controls the front passenger door lock motor to lock/unlock the front passenger door. This ECU applies current from terminal ACT+ to terminal ACT- to operate the motor to lock the door. It reverses the direction of the current flow to operate the motor to unlock the door.

WIRING DIAGRAM

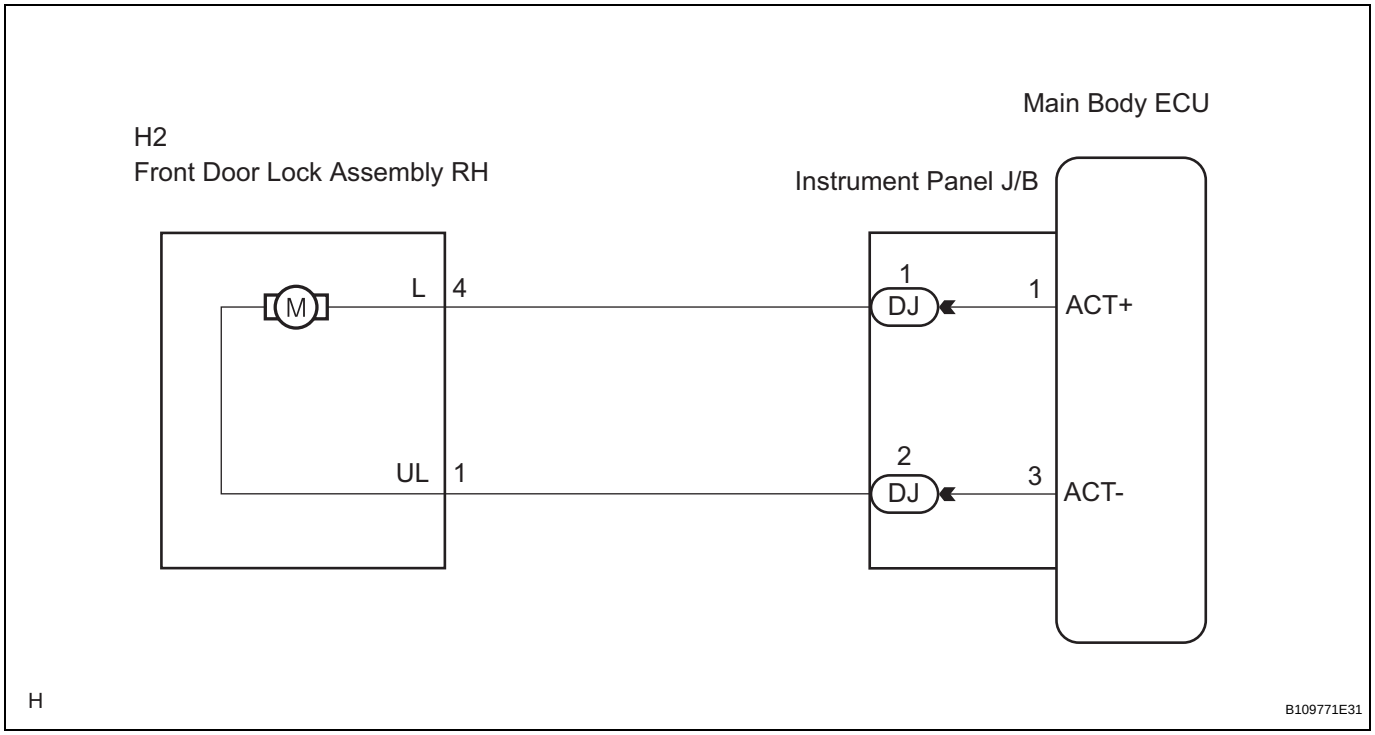

INSPECTION PROCEDURE

1	**INSPECT FRONT DOOR LOCK ASSEMBLY (DOOR LOCK MOTOR)**

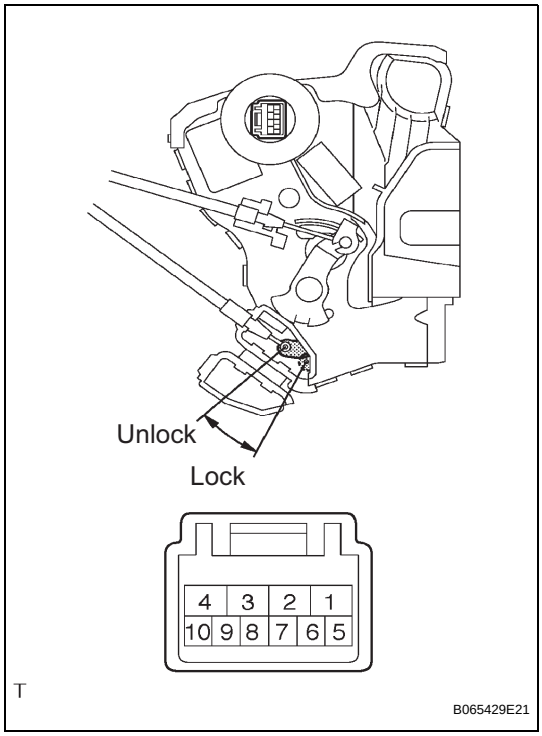

(a) Remove the front door lock assembly RH.
(b) Apply battery voltage and check operation of the door lock motor.
OK

Measurement Condition	Specified Condition
Battery positive (+) → Terminal 4 Battery negative (-) → Terminal 1	**Lock**
Battery positive (+) → Terminal 1 Battery negative (-) → Terminal 4	**Unlock**

NG → **REPLACE FRONT DOOR LOCK ASSEMBLY**

OK

2	**CHECK WIRE HARNESS (FRONT DOOR LOCK - MAIN BODY ECU (INSTRUMENT PANEL J/B))**

(a) Disconnect the front door lock assembly RH connector.

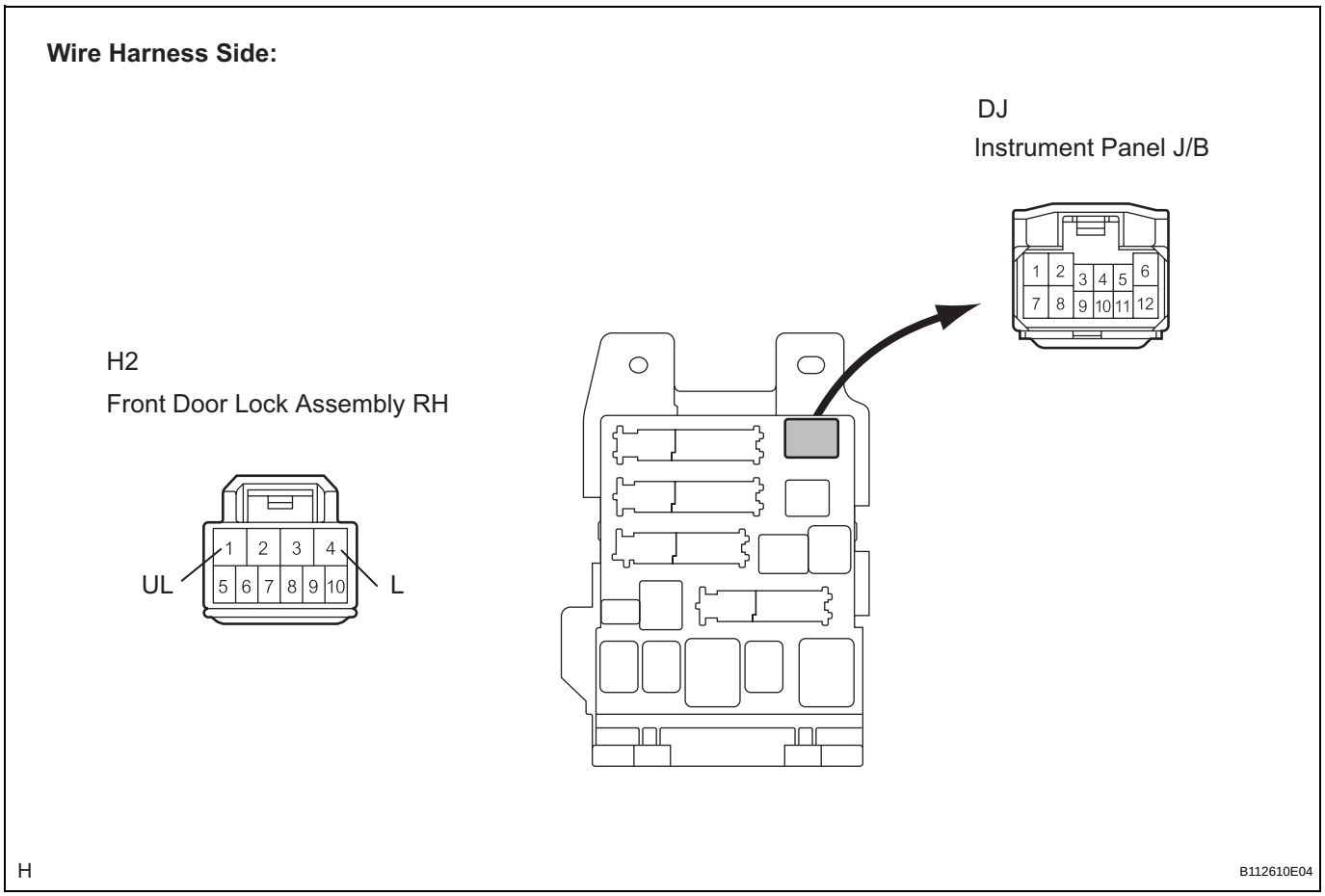

(b) Disconnect the ECU (instrument panel J/B) connector.

(c) Measure the resistance according to the value(s) in the table below.

Standard resistance

Tester Connection (Symbols)	Condition	Specified Condition
H2-4 (L) - DJ-1	Always	Below 1 Ω
H2-1 (UL) - DJ-2	Always	Below 1 Ω
DJ-1 - Body ground	Always	10 kΩ or higher
DJ-2 - Body ground	Always	10 kΩ or higher

NG → **REPAIR OR REPLACE HARNESS OR CONNECTOR**

OK

PROCEED TO NEXT CIRCUIT INSPECTION SHOWN IN PROBLEM SYMPTOMS TABLE

DL

Rear Door Lock Motor LH Circuit

DESCRIPTION

The rear left door lock motor is built into the rear left door lock assembly.
The main body ECU controls the rear left door lock motor to lock/unlock the rear left door. This ECU applies current from terminal ACT+ to terminal ACT- to operate the motor to lock the door. It reverses the direction of the current flow to operate the motor to unlock the door.

WIRING DIAGRAM

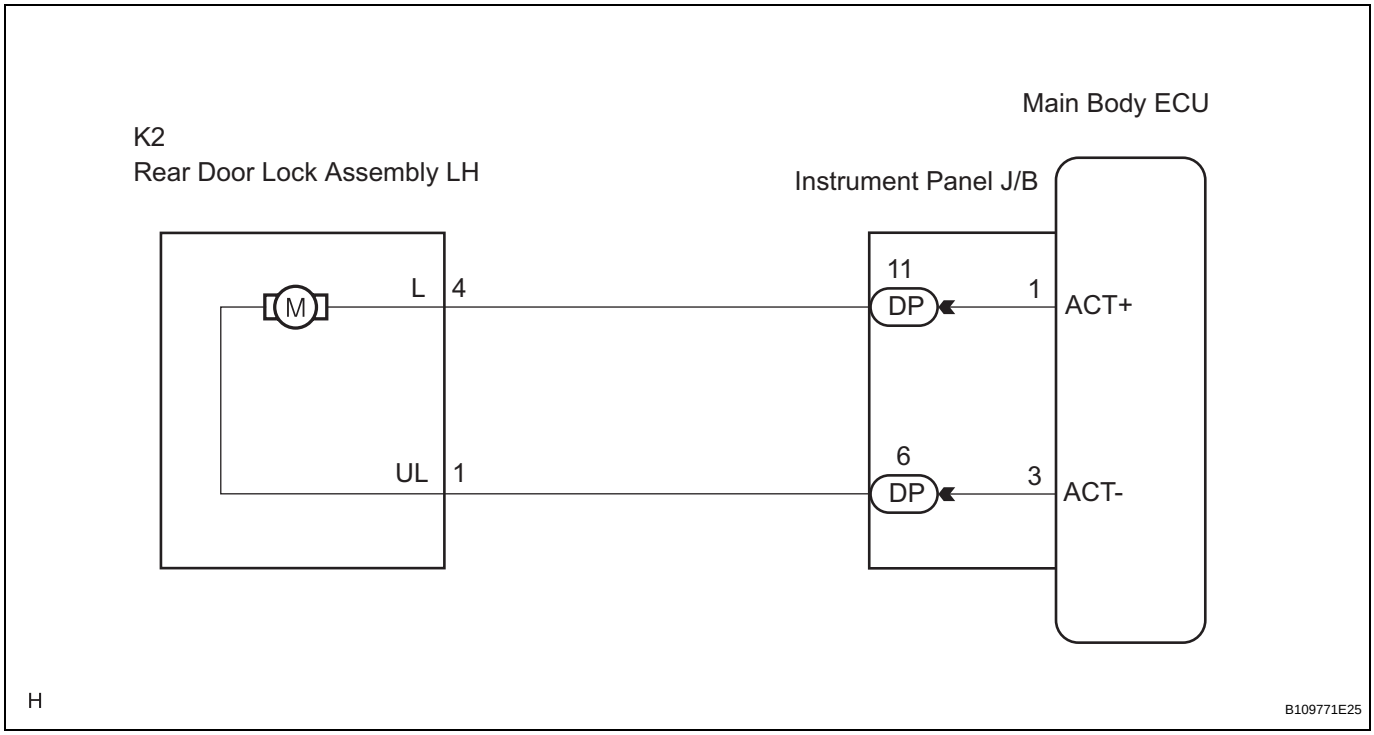

INSPECTION PROCEDURE

1	**INSPECT REAR DOOR LOCK ASSEMBLY**

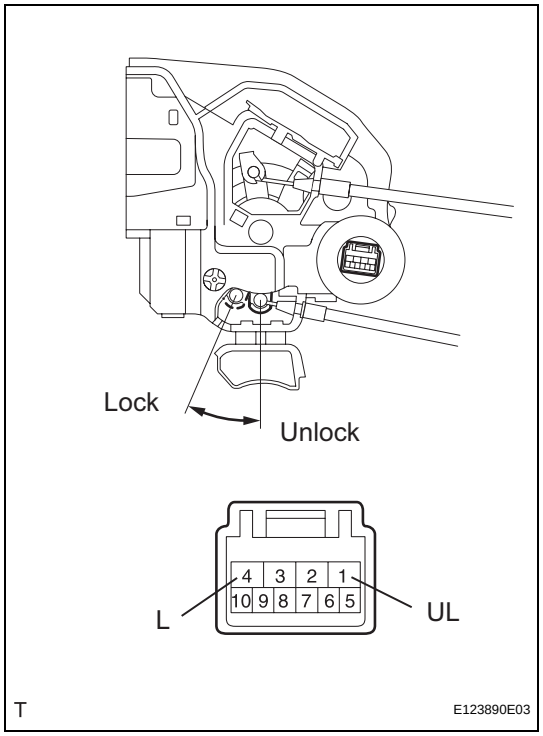

(a) Remove the rear door lock assembly LH.
(b) Apply battery voltage and check operation of the door lock motor.
OK

Measurement Condition	Specified Condition
Battery positive (+) → Terminal 4 Battery negative (-) → Terminal 1	**Lock**
Battery positive (+) → Terminal 1 Battery negative (-) → Terminal 4	**Unlock**

NG → **REPLACE REAR DOOR LOCK ASSEMBLY**

OK

2	**CHECK WIRE HARNESS (REAR DOOR LOCK - MAIN BODY ECU (INSTRUMENT PANEL J/B))**

(a) Disconnect the rear door lock assembly LH connector.

DL

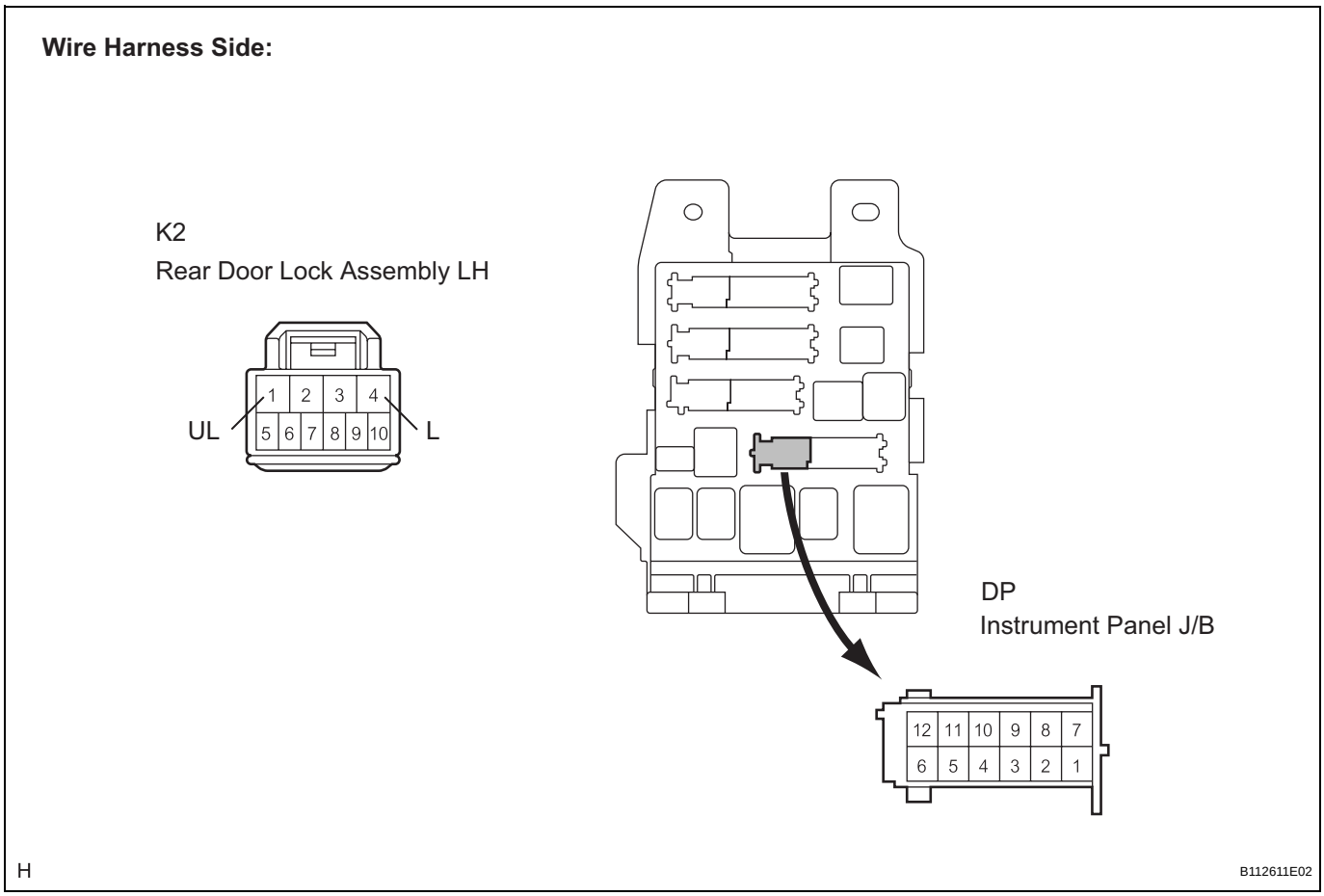

(b) Disconnect the ECU (instrument panel J/B) connector.
(c) Measure the resistance according to the value(s) in the table below.

Standard resistance

Tester Connection (Symbols)	Condition	Specified Condition
K2-4 (L) - DP-11	Always	Below 1 Ω
K2-1 (UL) - DP-6	Always	Below 1 Ω
DP-11 - Body ground	Always	10 kΩ or higher
DP-6 - Body ground	Always	10 kΩ or higher

NG → **REPAIR OR REPLACE HARNESS OR CONNECTOR**

OK

PROCEED TO NEXT CIRCUIT INSPECTION SHOWN IN PROBLEM SYMPTOMS TABLE

Rear Door Lock Motor RH Circuit

DESCRIPTION

The rear right door lock motor is built into the rear right door lock assembly.
The main body ECU controls the rear right door lock motor to lock/unlock the rear right door. This ECU applies current from terminal ACT+ to terminal ACT- to operate the motor to lock the door. It reverses the direction of the current flow to operate the motor to unlock the door.

WIRING DIAGRAM

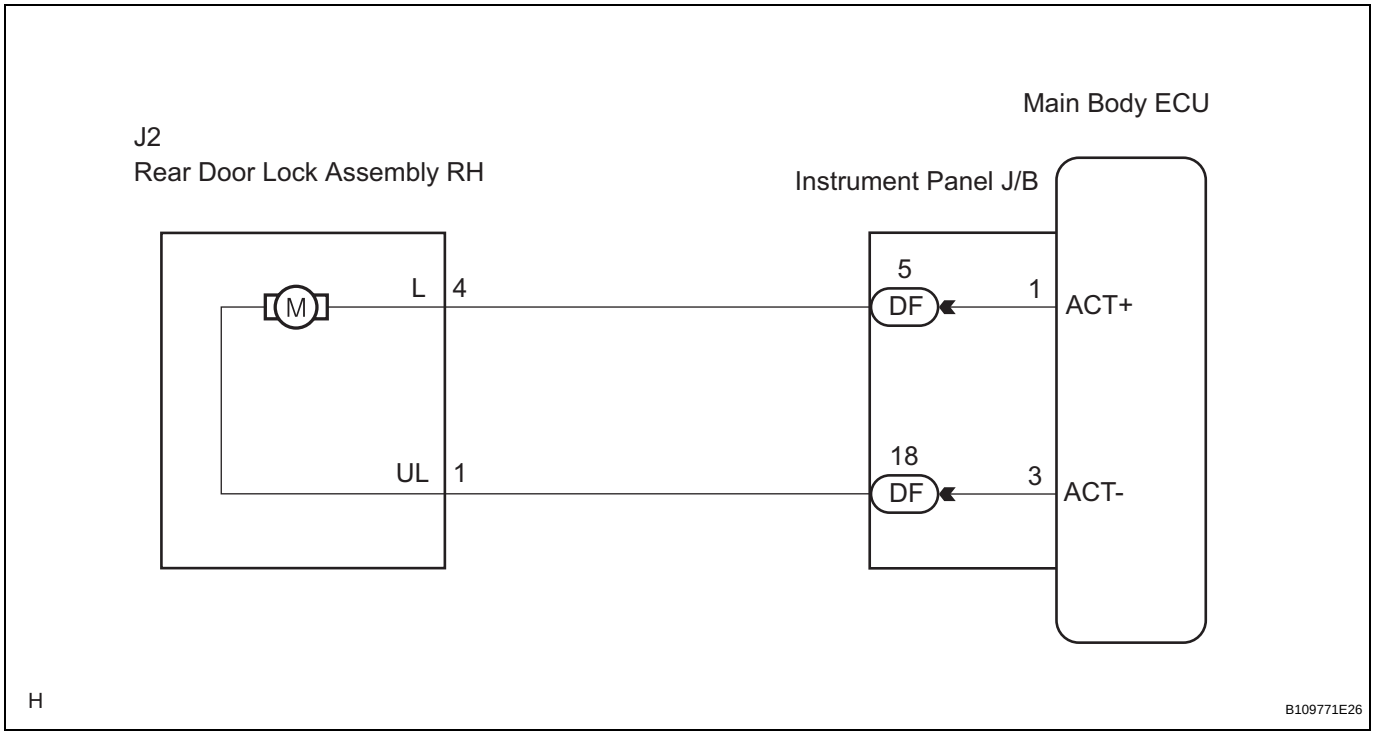

INSPECTION PROCEDURE

1	**INSPECT REAR DOOR LOCK ASSEMBLY**

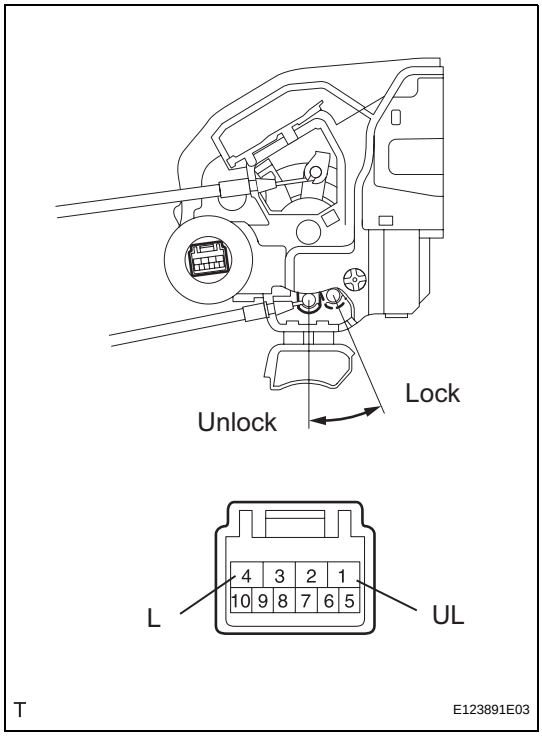

(a) Remove the rear door lock assembly RH.
(b) Apply battery voltage and check operation of the door lock motor.
OK

Measurement Condition	Specified Condition
Battery positive (+) → Terminal 4 Battery negative (-) → Terminal 1	**Lock**
Battery positive (+) → Terminal 1 Battery negative (-) → Terminal 4	**Unlock**

NG → **REPLACE REAR DOOR LOCK ASSEMBLY**

OK

2	**CHECK WIRE HARNESS (REAR DOOR LOCK - MAIN BODY ECU (INSTRUMENT PANEL J/B))**

(a) Disconnect the rear door lock assembly RH connector.

DL

Wire Harness Side:

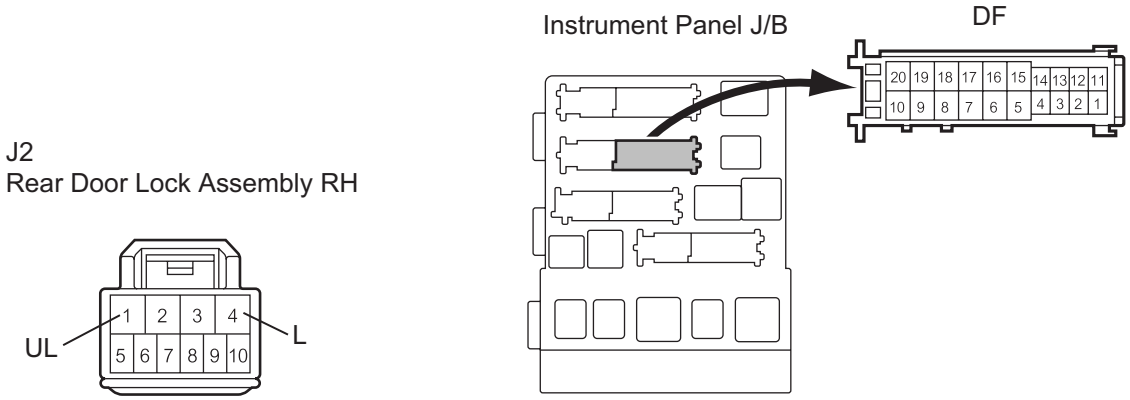

B138122E02

(b) Disconnect the ECU (instrument panel J/B) connector.

(c) Measure the resistance according to the value(s) in the table below.

Standard resistance

Tester Connection (Symbols)	Condition	Specified Condition
J2-4 (L) - DF-5	Always	Below 1 Ω
J2-1 (UL) - DF-18	Always	Below 1 Ω
DF-5 - Body ground	Always	10 kΩ or higher
DF-18 - Body ground	Always	10 kΩ or higher

NG → **REPAIR OR REPLACE HARNESS OR CONNECTOR**

OK

PROCEED TO NEXT CIRCUIT INSPECTION SHOWN IN PROBLEM SYMPTOMS TABLE

DL

Luggage Compartment Door Courtesy Switch Circuit

DESCRIPTION

The door courtesy switch turns on when the door is open and turns off when the door is closed.
The main body ECU detects the condition of the door courtesy switch.

WIRING DIAGRAM

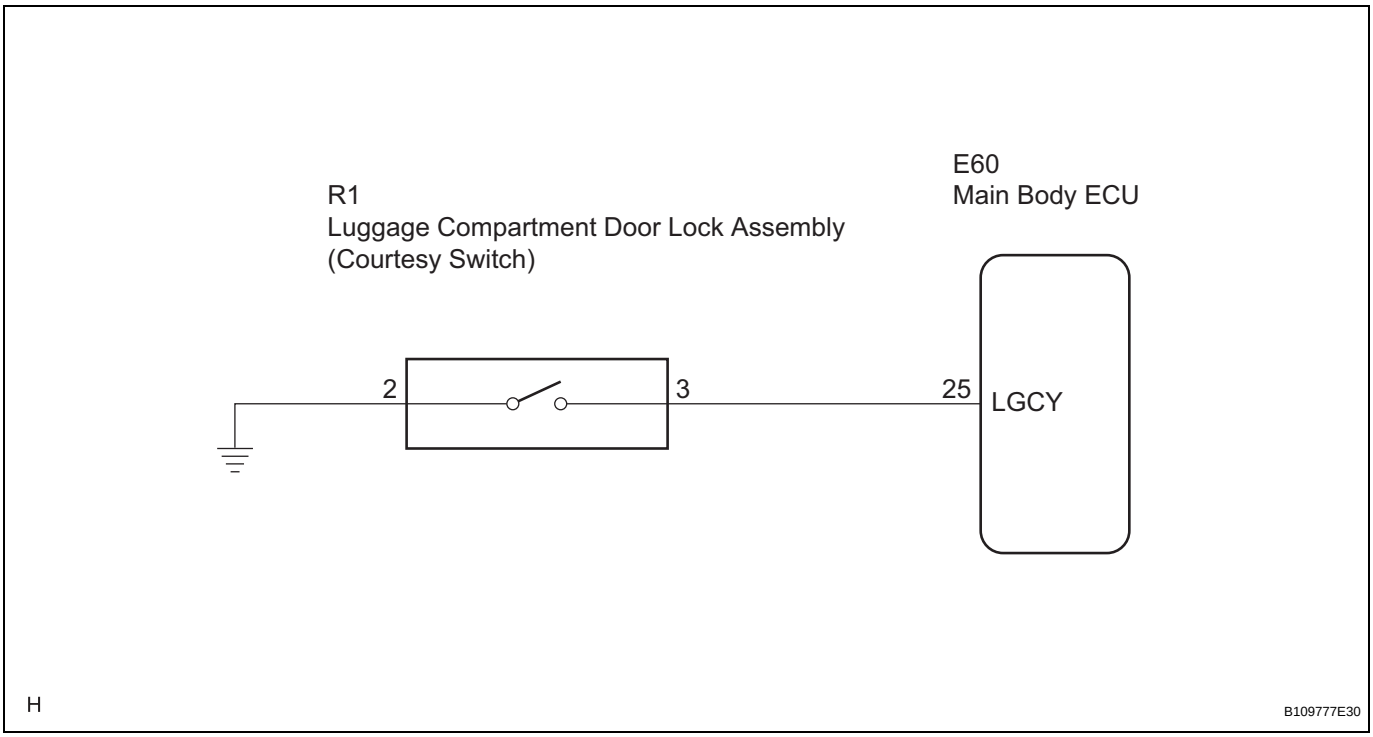

INSPECTION PROCEDURE

1	READ VALUE OF DATA LIST (DOOR COURTESY SWITCH)

(a) Check the DATA LIST for proper functioning of the door courtesy switch.

MAIN BODY:

Item	Measurement Item / Display (Range)	Normal Condition	Diagnostic Note
LUGG COURTSY SW	Luggage compartment door courtesy light switch signal / ON or OFF	ON: Luggage compartment door is OPEN OFF: Luggage compartment door is CLOSED	-

OK:
"ON" (door is open) and "OFF" (door is closed) appear on the screen.

NG → **Go to step 2**

OK

PROCEED TO NEXT CIRCUIT INSPECTION SHOWN IN PROBLEM SYMPTOMS TABLE

2 INSPECT LUGGAGE COMPARTMENT DOOR LOCK ASSEMBLY (DOOR COURTESY SWITCH)

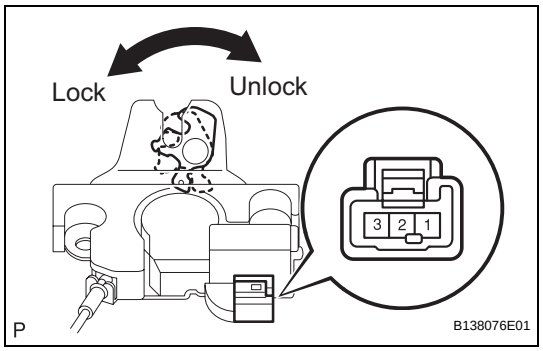

(a) Remove the luggage compartment door lock.
(b) Measure the resistance between the specified terminals of the switch.

Standard resistance

Tester Connection	Condition	Specified Condition
2 - 3	UNLOCK	Below 1 Ω
2 - 3	LOCK	10 kΩ or higher

NG → **REPLACE LUGGAGE COMPARTMENT DOOR LOCK ASSEMBLY**

OK

3 CHECK WIRE HARNESS (LUGGAGE COMPARTMENT DOOR LOCK - MAIN BODY ECU)

Wire Harness Side:

E60 Main Body ECU

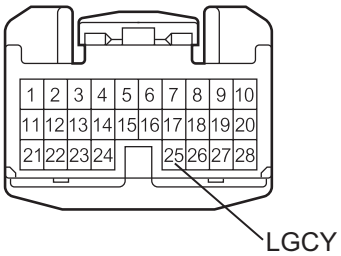

R1 Luggage Compartment Door Lock Assembly (Door Courtesy Switch)

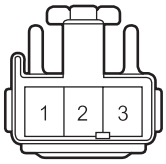

H B137940E02

(a) Disconnect the ECU connector.
(b) Measure the resistance according to the value(s) in the table below.

Standard resistance

Tester Connection (Symbols)	Condition	Specified Condition
R1-3 - E60-25 (LGCY)	Always	Below 1 Ω
R1-3 - Body ground	Always	10 kΩ or higher
R1-2 - Body ground	Always	Below 1 Ω

NG → **REPAIR OR REPLACE HARNESS OR CONNECTOR**

OK

PROCEED TO NEXT CIRCUIT INSPECTION SHOWN IN PROBLEM SYMPTOMS TABLE

DL

Luggage Compartment Door Lock Circuit

DESCRIPTION

The luggage compartment door unlock motor is built into the luggage compartment door lock assembly. The main body ECU receives a luggage compartment door unlock signal from the electrical key switch and operates the door lock motor.

WIRING DIAGRAM

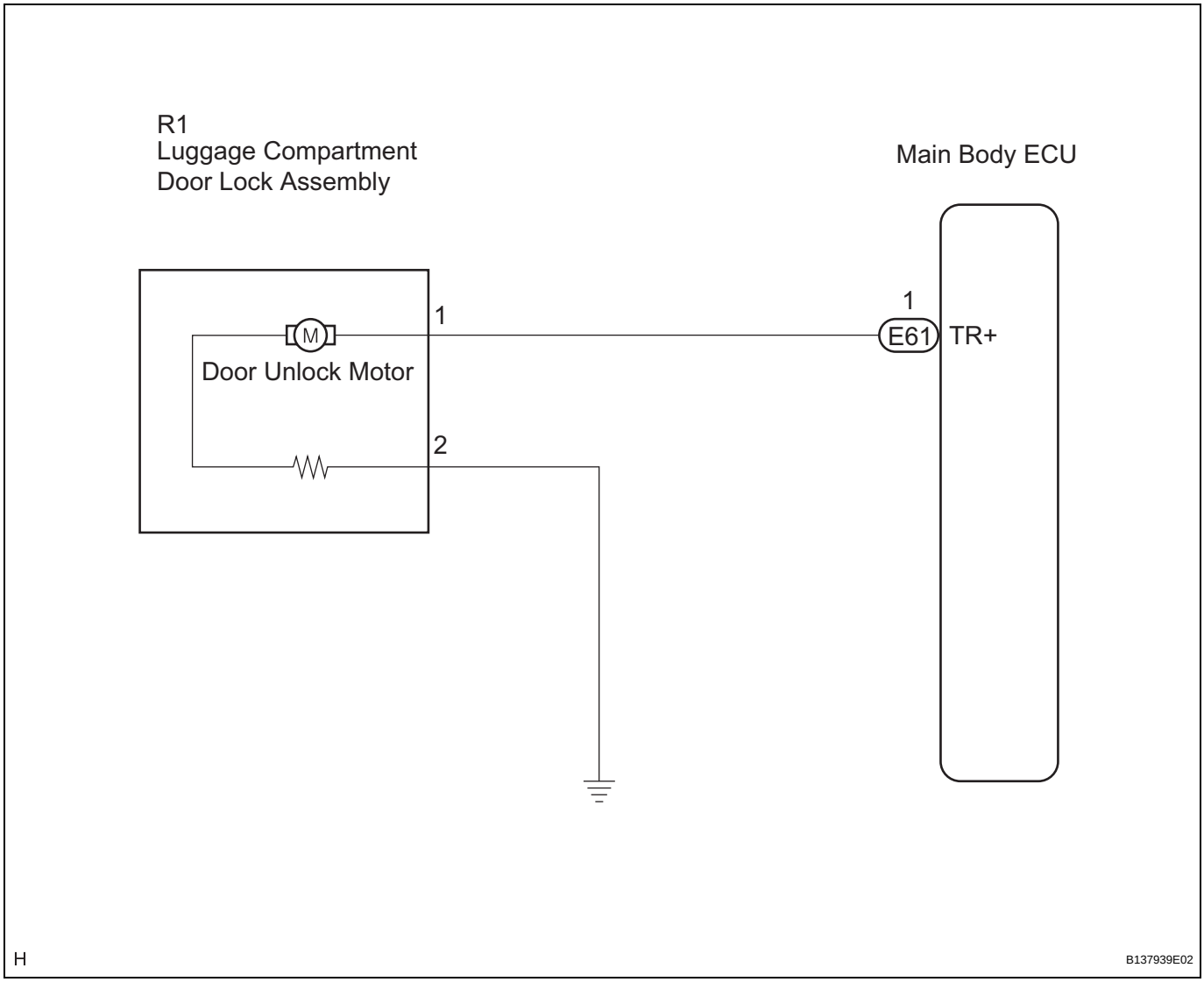

INSPECTION PROCEDURE

1	PERFORM ACTIVE TEST (LUGGAGE COMPARTMENT DOOR)

(a) Select the ACTIVE TEST, use the intelligent tester to generate a control command, and then check that the door lock operates.

MAIN BODY:

Item	Test Details	Diagnostic Note
TRUNK/BDOR OPEN	Operate luggage compartment door lock motor UNLOCK	-

OK:
Door lock is locked/unlocked.

NG → **Go to step 2**

OK

PROCEED TO NEXT CIRCUIT INSPECTION SHOWN IN PROBLEM SYMPTOMS TABLE

2 INSPECT LUGGAGE COMPARTMENT DOOR LOCK ASSEMBLY (DOOR UNLOCK MOTOR)

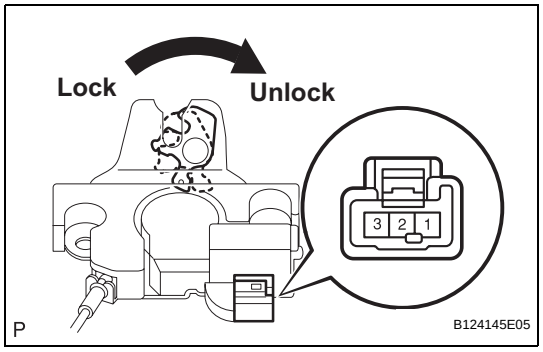

(a) Remove the luggage compartment door lock assembly.
(b) Move the luggage compartment door lock to the lock position.
(c) Apply battery voltage and check operation of the door lock motor.
OK

Measurement Condition	Specified Condition
Battery positive (+) → Terminal 1 Battery negative (-) → Terminal 2	Unlock

NG → **REPLACE LUGGAGE COMPARTMENT DOOR LOCK ASSEMBLY**

OK

DL

3	CHECK WIRE HARNESS (LUGGAGE COMPARTMENT DOOR LOCK - MAIN BODY ECU)

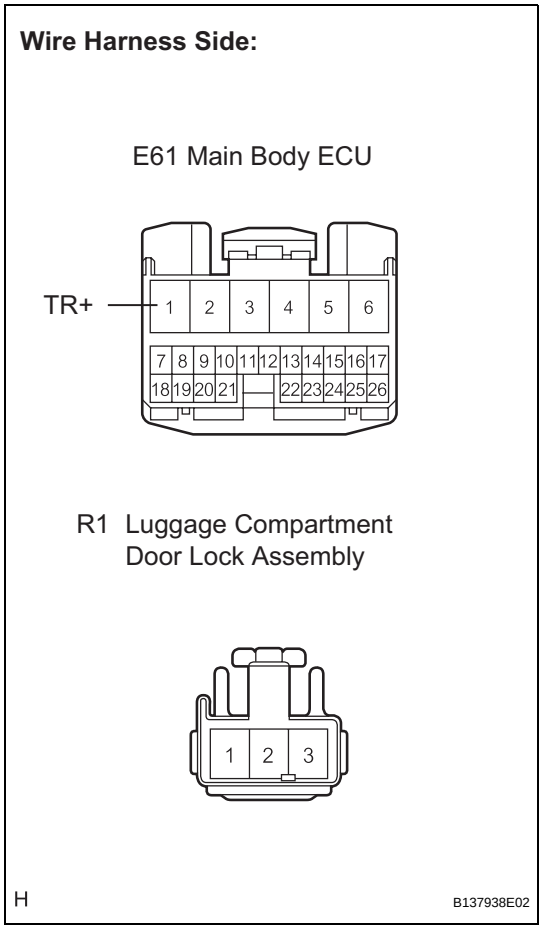

(a) Disconnect the ECU connector.
(b) Measure the resistance according to the value(s) in the table below.

Standard resistance

Tester Connection (Symbols)	Condition	Specified Condition
E61-1 (TR+) - R1-1	Always	Below 1 Ω
R1-1 - Body ground	Always	10 kΩ or higher
R1-2 - Body ground	Always	Below 1 Ω

NG → **REPAIR OR REPLACE HARNESS OR CONNECTOR**

OK

PROCEED TO NEXT CIRCUIT INSPECTION SHOWN IN PROBLEM SYMPTOMS TABLE

Driver Side Door Key Lock and Unlock Switch Circuit

DESCRIPTION

The driver's door key lock and unlock switch is built into the driver's door lock assembly.
When the driver's door key cylinder is turned to lock all the doors by mechanical key, there is continuity between terminals L and E of the key lock and unlock switch. When the cylinder is turned to unlock the door(s), there is continuity between terminals UL and E.
Terminals L2 and UL3 of the main body ECU are connected to the door lock assembly, and door lock/unlock request signals (by mechanical key) are input to the main body ECU.
The main body ECU constantly applies voltage to terminal L of the driver's door lock assembly via terminal L2. When the driver's door key cylinder is turned to lock all the doors by mechanical key, current flows from terminal L2 to terminal L.
The main body ECU also applies constant voltage to terminal UL of the door lock assembly via terminal UL3. When the door key cylinder is turned in the direction to unlock the door(s) by mechanical key, current flows from terminal UL3 to terminal UL.

WIRING DIAGRAM

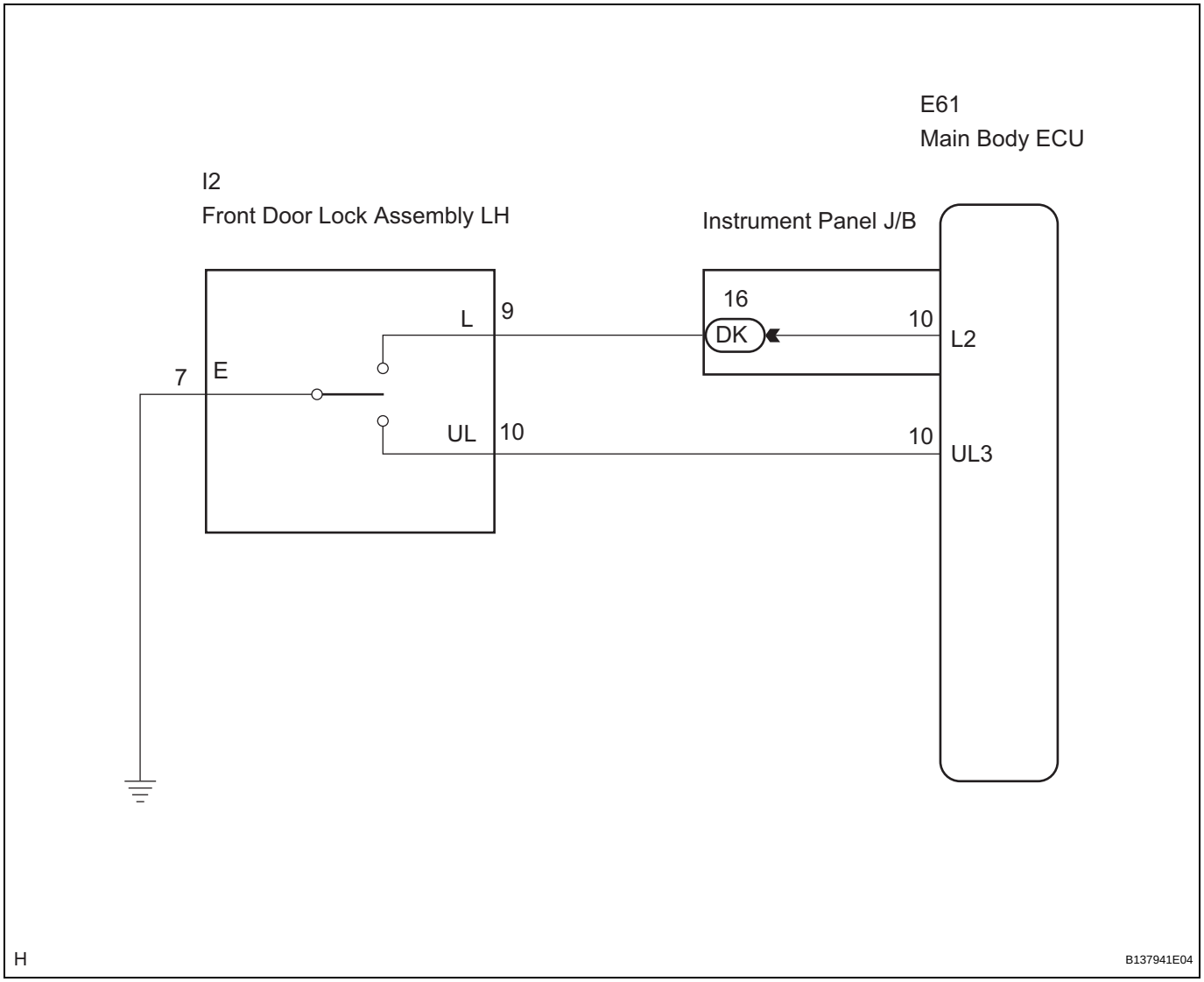

INSPECTION PROCEDURE

1	READ VALUE OF DATA LIST

(a) Check the DATA LIST to ensure proper function of the door unlock detection switch.

MAIN BODY:

Item	Measurement Item / Display (Range)	Normal Condition	Diagnostic Note
DOR KEY SW-LOCK	Driver door lock/unlock switch lock signal (key-linked lock switch) /ON or OFF	ON: Driver side door key cylinder is turned to LOCK OFF: Driver side door key cylinder is not turned to LOCK	-
DOR KEY SW-ULCK	Driver door lock/unlock switch unlock signal (key-linked unlock switch) /ON or OFF	ON: Driver side door key cylinder is turned to UNLOCK OFF: Driver side door key cylinder is not turned to UNLOCK	-

DL

OK:
The display is as specified in the normal condition column.

NG → **Go to step 2**

OK

PROCEED TO NEXT CIRCUIT INSPECTION SHOWN IN PROBLEM SYMPTOMS TABLE

2	INSPECT FRONT DOOR LOCK ASSEMBLY (DOOR KEY LOCK AND UNLOCK SWITCH)

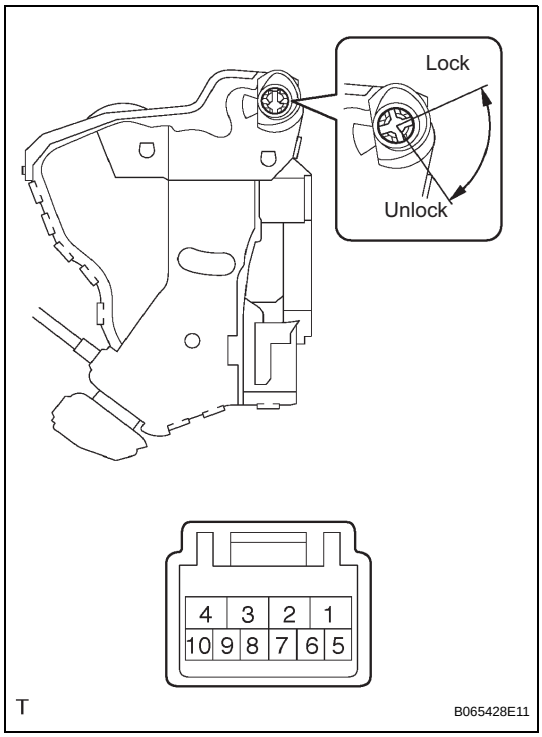

(a) Remove the front door lock assembly LH.
(b) Measure the resistance according to the value(s) in the table below.
Standard resistance

Tester Connection	Condition	Specified Condition
7 - 9	ON (Door lock set to LOCK)	Below 1 Ω
7 - 9 7 - 10	OFF (Free)	10 kΩ or higher
7 - 10	ON (Door lock set to UNLOCK)	Below 1 Ω

NG → **REPLACE FRONT DOOR LOCK ASSEMBLY**

OK

3	CHECK WIRE HARNESS (FRONT DOOR LOCK ASSEMBLY - MAIN BODY ECU)

(a) Disconnect the front door lock assembly LH connector.

Wire Harness Side:

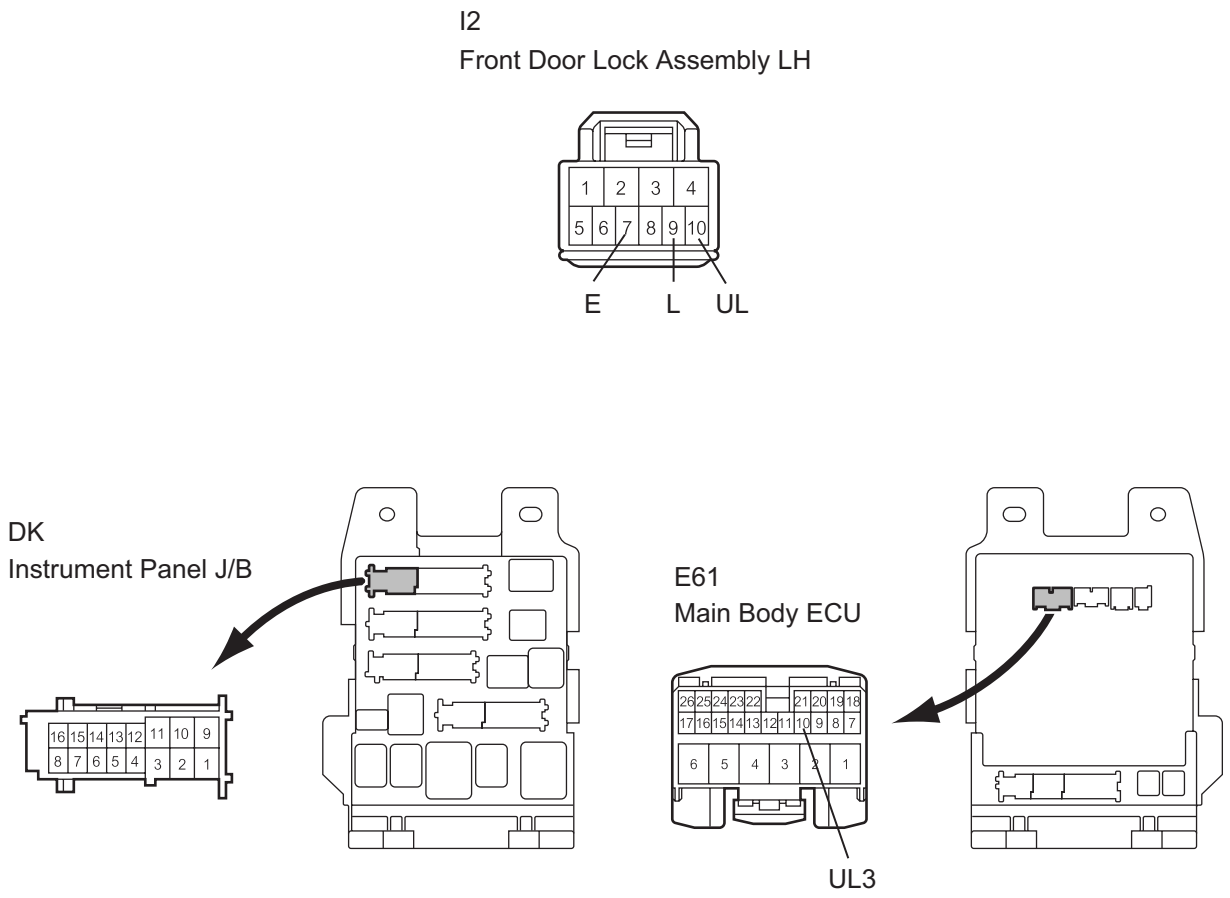

H B112609E05

(b) Disconnect the main body ECU connector.

(c) Measure the resistance according to the value(s) in the table below.

Standard resistance

Tester Connection (Symbols)	Condition	Specified Condition
I2-9 (L) - DK-16	Always	Below 1 Ω
I2-10 (UL) - E61-10 (UL3)	Always	Below 1 Ω
I2-7 (E) - Body ground	Always	Below 1 Ω
I2-9 (L) - Body ground	Always	10 kΩ or higher
I2-10 (UL) - Body ground	Always	10 kΩ or higher

NG → **REPAIR OR REPLACE HARNESS OR CONNECTOR**

DL

OK

REPLACE MAIN BODY ECU

Door Control Switch Circuit

DESCRIPTION

When the lock side of the door control switch is pressed, continuity is established between terminal 2 and terminal 3 of the switch. When the unlock side of the switch is pressed, continuity is established between terminal 4 and terminal 3.
Terminals L1 and UL1 of the main body ECU are connected to the door control switch and door lock/unlock request signals (by door control switch operation) are input to the ECU.
The main body ECU constantly applies voltage to terminal 2 of the door control switch via terminal L1. When the door control switch is operated to lock all doors, current flows from terminal L1 to terminal 2. The main body ECU determines that this is door lock request signal input.
The main body ECU also applies constant voltage to terminal 4 of the door control switch via terminal UL1. When the door control switch is operated to unlock the doors, current flows from terminal UL1 to terminal 4. The main body ECU determines that this is door unlock request signal input.

WIRING DIAGRAM

PASSENGER SIDE:

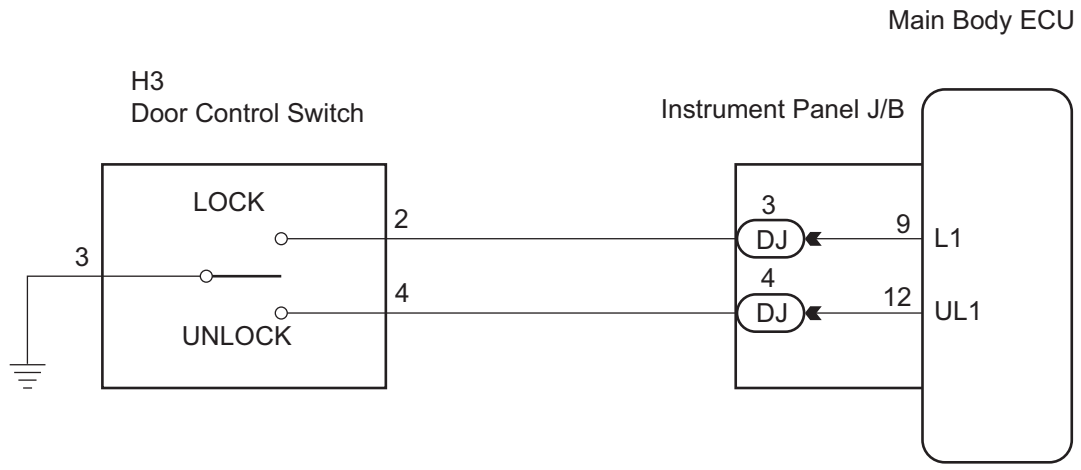

H

B109774E15

INSPECTION PROCEDURE

1	**INSPECT DOOR CONTROL SWITCH ASSEMBLY**

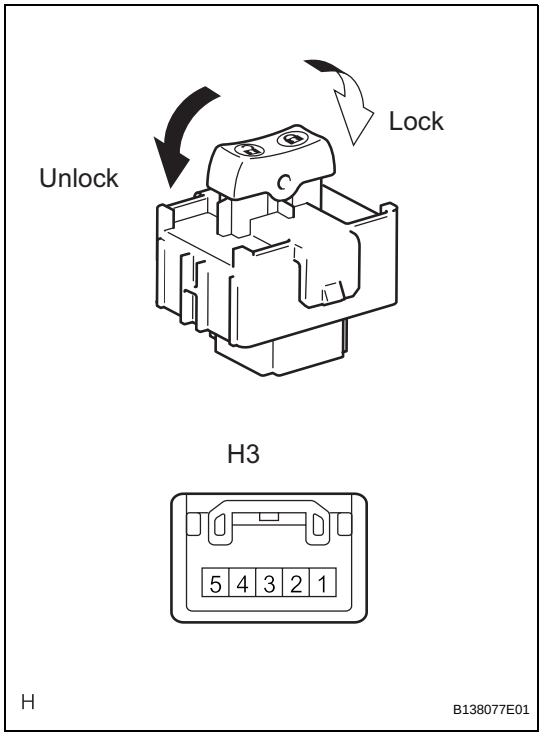

(a) Inspect passenger side.
  (1) Remove the door control switch assembly.
  (2) Measure the resistance according to the value(s) in the table below.
  Standard resistance

Tester Connection	Switch Condition	Specified Condition
H3-2 - H3-3	Lock	Below 1 Ω
H3-2 - H3-3 H3-4 - H3-3	OFF (Free)	10 kΩ or higher
H3-4 - H3-3	Unlock	Below 1 Ω

NG → **REPLACE DOOR CONTROL SWITCH**

OK

2	**CHECK WIRE HARNESS (DOOR CONTROL SWITCH - MAIN BODY ECU (INSTRUMENT PANEL J/B))**

(a) Disconnect the door control switch connector.

DL

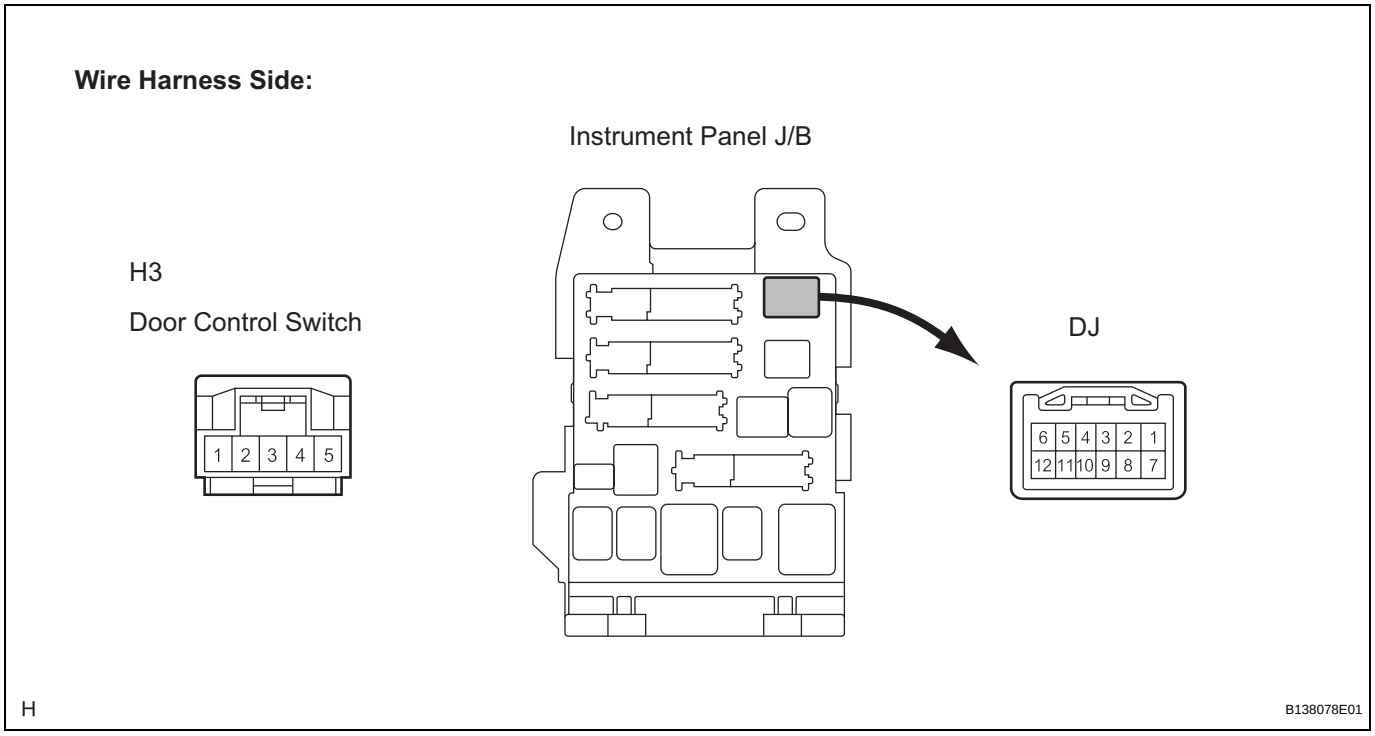

(b) Disconnect the ECU (instrument panel J/B) connector.

(c) Measure the resistance according to the value(s) in the table below.

Standard resistance

Tester Connection	Condition	Specified Condition
H3-2 - DJ-3	Always	Below 1 Ω
H3-4 - DJ-4	Always	Below 1 Ω
H3-3 - Body ground	Always	Below 1 Ω
DJ-3 - Body ground	Always	10 kΩ or higher
DJ-4 - Body ground	Always	10 kΩ or higher

NG → **REPAIR OR REPLACE HARNESS OR CONNECTOR**

OK

PROCEED TO NEXT CIRCUIT INSPECTION SHOWN IN PROBLEM SYMPTOMS TABLE

DL

SYSTEM DIAGRAM

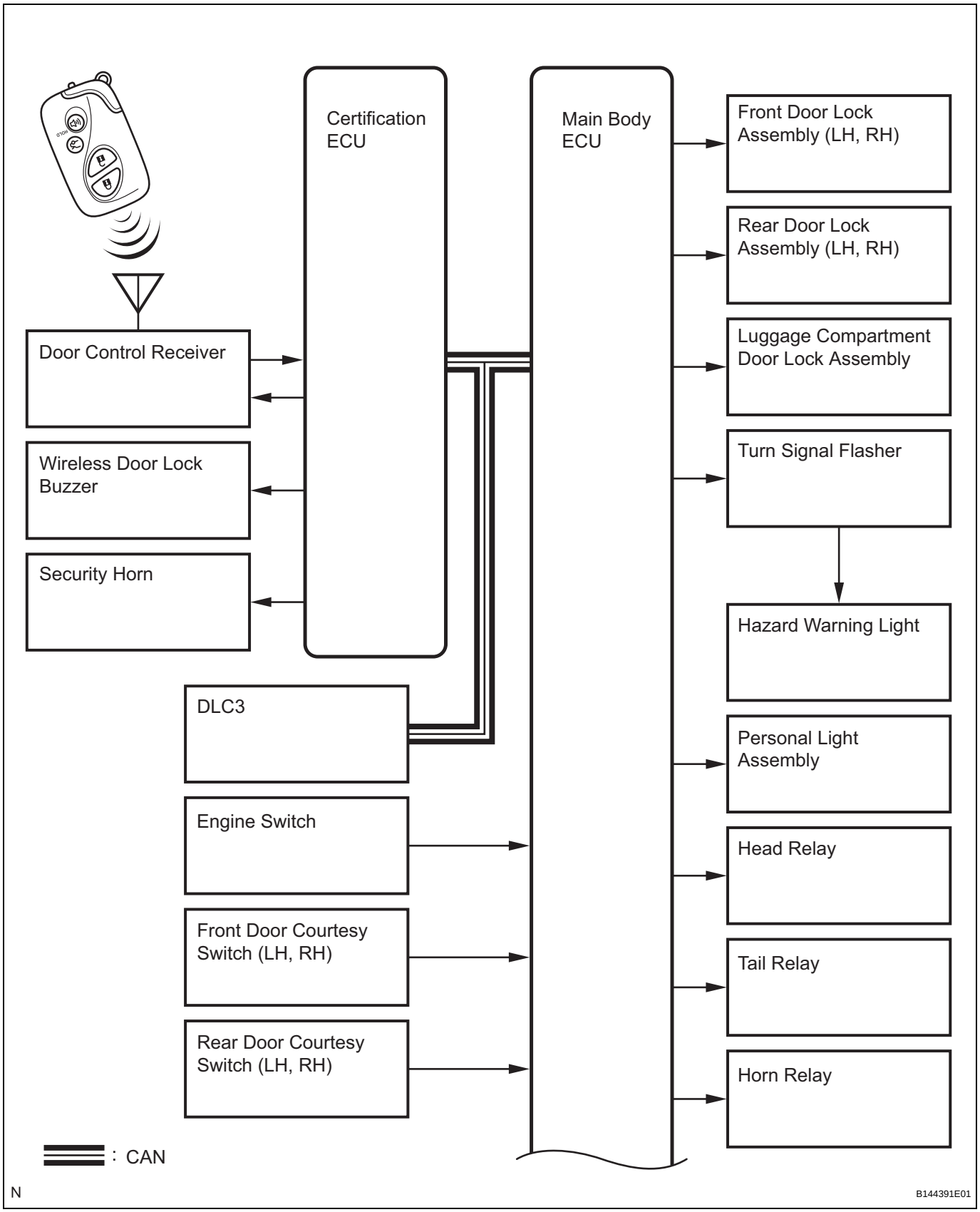

DL

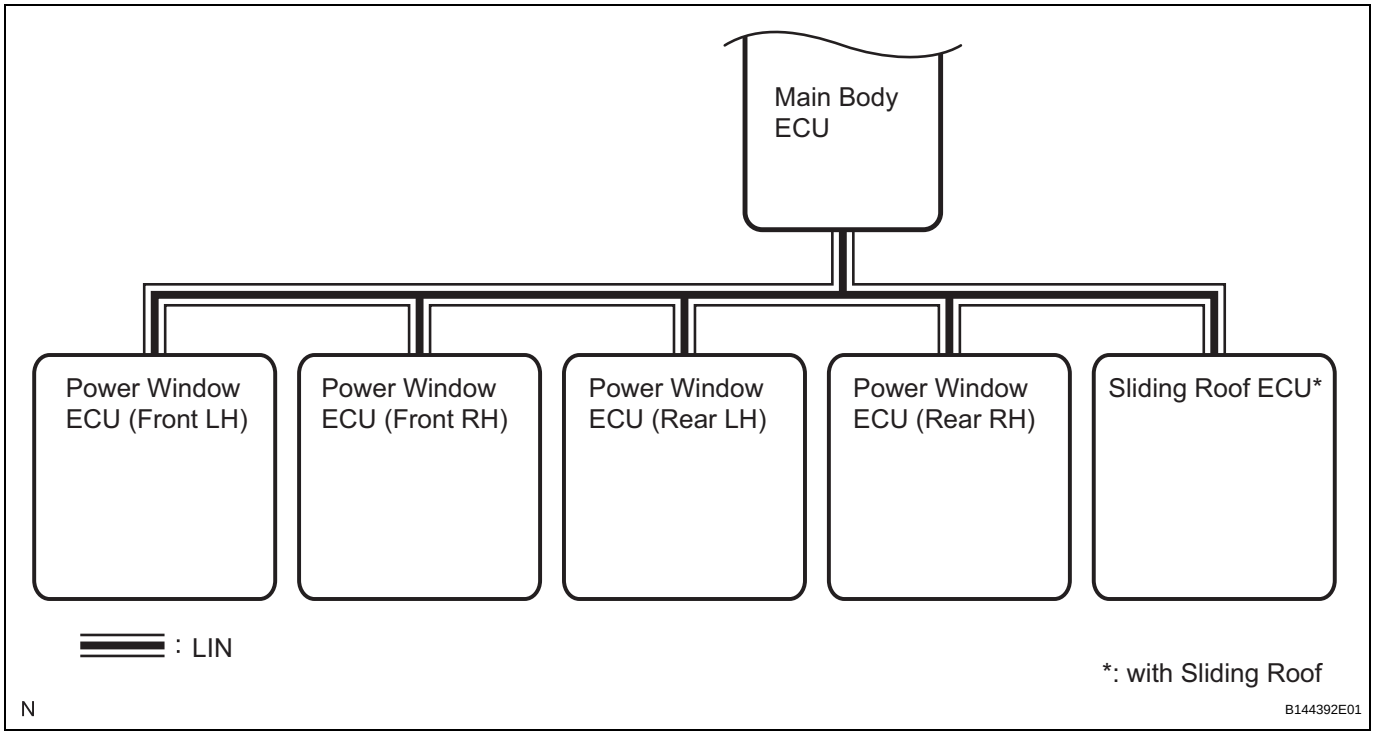

Transmitting ECU (Transmitter)	Receiving ECU (Receiver)	Signal	Line
Certification ECU	Main Body ECU	Wireless door lock signal	CAN
Main Body ECU	• Power Window ECU (Front LH) • Power Window ECU (Front RH) • Power Window ECU (Rear LH) • Power Window ECU (Rear RH)	Power window DOWN signal	LIN

SYSTEM DESCRIPTION

1. WIRELESS DOOR LOCK CONTROL SYSTEM

The wireless door lock control system functions to lock and unlock all the doors from a distance. The system is controlled by a hand-held transmitter which sends radio waves to the door control receiver. The certification ECU performs an ID code identification process and engages the door lock control.

2. FUNCTION OF MAIN COMPONENTS

Component	Function
Door control transmitter	• Has LOCK, UNLOCK, LUGGAGE OPEN, and PANIC switches. • Transmits weak radio waves (recognition codes and function codes) to the door control receiver.
Door control receiver	Receives weak radio waves from the door control transmitter and sends them to the certification ECU.
• Front door courtesy light switch • Rear door courtesy light switch • Luggage compartment door courtesy light switch	Turns on when a door is opened and turns off when it is closed. Outputs door status codes (open or closed) to the main body ECU.
Door lock position switch	Transmits the door lock positions of each door to the main body ECU.
Wireless door lock buzzer	Emits beep (answer back) when doors are locked or unlocked, or luggage compartment door is opened by wireless operation.
Certification ECU	Sends wireless door lock control signals in response to the code data from the door control receiver and signals from each ECU.

3. SYSTEM FUNCTION

The door control transmitter has the LOCK, UNLOCK, LUGGAGE OPEN, and PANIC switches. Operating these switches activates each function.

The wireless door lock control system has the following functions:

HINT:

The default settings of the following functions are ON. Part of these functions can be customized (See page DL-69).

Function	Operation
All door lock	Pressing the LOCK switch locks all doors.
All door unlock (2-step unlock)	Pressing the UNLOCK switch twice within 3 seconds unlocks all the doors after the driver's door is unlocked.
Automatic lock	If none of the doors is opened within 60 seconds after they are unlocked by the wireless door lock control, all the doors will lock again automatically.
Luggage compartment door open	Pressing the LUGGAGE OPEN switch of the transmitter opens the luggage compartment door.
Answer back	• When the doors are locked by wireless operation, the hazard warning lights flash once and the wireless door lock buzzer sounds once. • When the doors are unlocked by wireless operation, the hazard warning lights flash twice and the wireless door lock buzzer sounds twice. • When the luggage compartment door is opened by wireless operation, the wireless door lock buzzer sounds.
Panic alarm	Pressing the PANIC switch of the transmitter for longer than about 0.8 seconds causes the following alarms to activate: • Sounds the horn and security horn. • Flashes the hazard lights, headlights, and taillights. • Illuminates the front interior light (when the switch is in the DOOR position). While the panic alarm is operating, pressing any switch of the transmitter cancels the alarm operation.
Power window open	Pressing and holding the UNLOCK switch opens all windows.

Function	Operation
Door ajar warning	The buzzer sounds when the LOCK switch is pressed when any of the doors are ajar, and it sounds for 10 seconds continuously. The buzzer stops when all doors are closed or the UNLOCK switch is pressed.
Illuminated entry	When all the doors are locked, pressing the UNLOCK switch causes the interior light to come on simultaneously with the unlock operation.
Memory call	The function operates the memory system in accordance with the key ID.

HOW TO PROCEED WITH TROUBLESHOOTING

HINT:
The wireless door lock control system troubleshooting procedures are based on the premise that the power door lock control system is operating normally. Check the power door lock control system first before troubleshooting the wireless door lock control system.
Use this procedure to troubleshoot the wireless door lock control system.

1 VEHICLE BROUGHT TO WORKSHOP

NEXT

2 CUSTOMER PROBLEM ANALYSIS

DL

(a) Interview the customer to confirm the trouble (See page IN-39).

NEXT

3 INSPECT COMMUNICATION FUNCTION OF CAN COMMUNICATION SYSTEM

(a) Use the intelligent tester to check for normal function of the can communication system.
Result

Result	Proceed To
CAN DTC is not output	A
CAN DTC is output	See page CA-49

B → **Go to CAN communication system**

A

4 DTC CHECK

(a) Check for a DTC and note any codes that are output.
(b) Delete the DTC.
(c) Recheck for DTCs. Try to prompt the DTC by simulating the original activity that the DTC suggests.
Result

Result	Proceed To
DTC does not reoccur	A
DTC reoccurs	See page DL-77

B → **Go to DTC chart**

A

5	SYMPTOM SIMULATION

NEXT

6	PROBLEM SYMPTOMS TABLE

(a) If the fault is not listed in the problem symptoms table, proceed to A.
(b) If the fault is listed in the problem symptoms table, proceed to B.

B → **Go to step 8**

A

7	PERFORM TROUBLESHOOTING ACCORDING TO MALFUNCTION SYMPTOM

(a) Terminals of ECU (See page DL-73)
(b) DATA LIST/ACTIVE TEST (See page DL-77)

NEXT

8	ADJUST, REPAIR OR REPLACE

NEXT

9	CONFIRMATION TEST

NEXT

END

OPERATION CHECK

1. FUNCTIONS AND OPERATING CONDITIONS

(a) The wireless door LOCK/UNLOCK function:
This wireless door lock control function operates only when the following 4 conditions are met:
(1) There is no wireless transmitter in the cabin.
(2) All the doors are closed.
(3) The power door lock system is functioning normally.
(4) The function is not disabled by customization.
HINT:
The UNLOCK function operates even when any of the doors are open.

(b) The wireless transmitter operational range differs depending on the situation.
(1) The operational range differs depending on the user, the way the transmitter is held, and the location.
(2) In certain areas, the operational range will be reduced due to the vehicle body shape and the influence of the surrounding environment.
(3) Since the transmitter uses weak radio waves, the operational range may be reduced or the transmitter may not function if interference or stronger radio waves occur in the area where the transmitter is used.
(4) When the battery is low, the operational range is reduced and/or the transmitter may not function.
HINT:
If the transmitter has been left in a place that is exposed to direct sunlight, such as on the instrument panel, the battery may be weakened or other problems may occur.

2. CHECK WIRELESS DOOR LOCK CONTROL FUNCTIONS

HINT:
- The switches built into the door control transmitter send radio waves to the door lock control receiver.
- The operational range must be taken into account during checks.

(a) Establish conditions that allow the wireless control function to be operated successfully.

(b) Check these basic functions.
(1) Check that all the doors lock when the LOCK switch is pressed.
(2) Check that the driver's door unlocks when the UNLOCK switch is pressed once, and all doors unlock when pressed twice within 3 seconds.

(c) Check the automatic lock function.
(1) Check that if the driver's door or all doors are unlocked with the UNLOCK switch and none of the doors are opened or locked within approximately 60 seconds, the doors automatically re-lock.

(2) Check that if the driver's door or all doors are unlocked with the UNLOCK switch and a door is opened or locked within approximately 60 seconds, the automatic lock function does not operate.

(d) Check the interior light ON function.
HINT:
Turn the interior light switch to the DOOR position before the check.
(1) Check that the interior light comes on simultaneously with the unlocking operation when the UNLOCK switch has been pressed.
(2) Check that the interior light goes off in approximately 15 seconds if none of the doors is opened after the unlocking operation.

(e) Check the answer back function.
(1) When the doors are locked by wireless operation, the hazard warning lights flash once and the wireless door lock buzzer sounds once.
(2) When the doors are unlocked by wireless operation, the hazard warning lights flash twice and the wireless door lock buzzer sounds twice.
(3) When the luggage compartment door is opened by wireless operation, the wireless door lock buzzer sounds.

(f) Check the switch operation fail-safe function.
(1) Check that the doors cannot be locked by operating a switch while the wireless transmitter is in the cabin.
(2) Check that the doors cannot be locked or unlocked by operating a switch on the unregistered transmitter, and that the doors are locked and unlocked by operating a switch on the registered transmitter.

(g) Check the chattering prevention function.
(1) Check that the corresponding operation occurs only once, and does not repeat itself while the switch is kept pressed. Check that the corresponding operation is carried out when the switch is operated repeatedly at 1-second intervals.

(h) Check the luggage compartment door opener function.
(1) Check that the luggage compartment door opens when the LUGGAGE OPEN switch is held down for 0.8 seconds or more.

(i) Check the door ajar warning function.
(1) Check that the wireless door lock buzzer sounds for approximately 10 seconds when the LOCK switch is pressed with any of the doors ajar or open.

(j) Check the wireless interlock function.
(1) Check that the all power windows and sliding roof* start opening when the UNLOCK switch is pressed for 2.4 seconds or more, and they stop when the switch is released.
HINT:
*: with sliding roof

(k) Check the memory call function (See page SE-11).

CUSTOMIZE PARAMETERS

HINT:
The following items can be customized.

NOTICE:

- **After confirming whether the items requested by the customer are applicable or not for customization, perform customizing operations.**
- **Be sure to record the current settings before customization.**
- **When troubleshooting, make sure that the item in question is not set to "OFF" as a result of customization (Example: For the symptom, "the wireless function does not operate", first check that the wireless function is not set to "OFF", then perform troubleshooting).**

1. CUSTOMIZE

(a) Connect the intelligent tester (with CAN VIM) to the DLC3.
(b) Turn the engine switch on (IG).
(c) Enter the following menus: CUSTOMIZE / INDIVIDUAL CHANGE / WIRELESS D LOCK.

WIRELESS DOOR LOCK CONTROL SYSTEM

Display (item)	Default	Function	Setting
TRUNK LID OPER (Wireless trunk opener function setting)	0.8 s PR ON	This function changes operation method of transmitter to open luggage compartment door. 1 TIME: Push 1 time 2 TIMES: Push 2 times 0.8 s PR: Push and hold for 0.8 seconds OFF: Does not operate	1 TIME/2 TIMES/0.8 s PR/ OFF
WIRELESS OPER (Wireless door lock control function)	ON	Function that turns wireless door lock function ON/OFF	ON/OFF
TRUNK LID OPER (Wireless trunk opener function setting)	0.8 s PR ON	This function changes operation method of transmitter to open luggage compartment door. 1 TIME: Push 1 time 2 TIMES: Push 2 times 0.8 s PR: Push and hold for 0.8 seconds OFF: Does not operate	1 TIME/2 TIMES/0.8 s PR/ OFF
HAZARD ANS BACK (Hazard answer-back for wireless door lock control)	ON	• When the doors are locked by wireless operation, the hazard warning lights flash once. • When the doors are unlocked by wireless operation, the hazard warning lights flash twice.	ON/OFF
OPEN DOOR WARN (Door ajar warning)	ON	The buzzer sounds when LOCK is pressed when any of the doors are ajar.	ON/OFF
AUTO LOCK DELAY (Auto lock time)	60 s	This function regulates the interval between unlocking and automatic relocking of doors.	30 s/60 s
UNLOCK /2OPER (Wireless unlock operated twice)	ON	This function unlocks the driver's door when the UNLOCK switch is pressed once, and unlocks all doors when pressed twice within 3 seconds. If set to OFF, pressing UNLOCK once unlocks all doors.	ON/OFF
ALARM FUNCTION (Panic function)	ON	This function operates the theft deterrent system when PANIC is pressed and held for 0.8 seconds.	ON/OFF

Display (item)	Default	Function	Setting
WIRELS BUZZ VOL (Wireless buzzer volume)	LEVEL7	This function adjusts the volume of the wireless buzzer.	LEVEL0 to LEVEL7

PROBLEM SYMPTOMS TABLE

If a normal system code is displayed during the DTC check, but the problem still occurs, check the circuits for each problem symptom in the order given in the table below and proceed to the relevant troubleshooting page.

HINT:

- The following is the troubleshooting procedure for the wireless door lock control of a vehicle without the smart key system.
- Inspect the fuse and relay before investigating the suspected areas shown in the table below.
- Inspect each malfunction circuit in numerical order for its corresponding symptom.

WIRELESS DOOR LOCK CONTROL SYSTEM:

Symptom	Suspected Area	See page
The wireless door lock control system does not operate.	1. Perform the operation check	DL-67
	2. Check if the CAN communication DTC is output	CA-49
	3. Door control transmitter	DL-175
	4. Door courtesy switch circuit	LI-94
	5. Luggage compartment door courtesy switch	DL-47
	6. Power source circuit	DL-86
	7. Replace door control receiver	-
	8. Replace certification ECU	-
	9. If the symptom still occurs after the above areas have been inspected and proved to be normal, replace the main body ECU (Instrument panel J/B)	-
The automatic lock function does not operate normally.	1. Perform the operation check	DL-67
	2. Door courtesy switch circuit	LI-94
	3. If the symptom still occurs after the above areas have been inspected and proved to be normal, replace the main body ECU (Instrument panel J/B)	-
The illuminated entry function only does not operate.	1. Perform the operation check	DL-67
	2. Lighting system	LI-32
	3. If the symptom still occurs after the above areas have been inspected and proved to be normal, replace the main body ECU (Instrument panel J/B)	-
The answer back function does not operate (Wireless door lock buzzer).	1. Perform the operation check	DL-67
	2. Wireless door lock buzzer circuit	DL-83
	3. Replace certification ECU	-
	4. If the symptom still occurs after the above areas have been inspected and proved to be normal, replace the main body ECU (Instrument panel J/B)	-
The answer back function does not operate (Hazard warning light).	1. Perform the operation check	DL-67
	2. Wire harness	-
	3. Turn signal flasher assembly	LI-229
	4. If the symptom still occurs after the above areas have been inspected and proved to be normal, replace the main body ECU (Instrument panel J/B)	-
The door ajar warning function only does not operate.	1. Perform the operation check	DL-67
	2. Door courtesy switch circuit	LI-94
	3. If the symptom still occurs after the above areas have been inspected and proved to be normal, replace the main body ECU (Instrument panel J/B)	-

Symptom	Suspected Area	See page
The panic alarm function only does not operate.	1. Perform the operation check	DL-67
	2. Door control transmitter	DL-175
	3. If the symptom still occurs after the above areas have been inspected and proved to be normal, replace the main body ECU (Instrument panel J/B)	-
The panic alarm function does not operate (Vehicle horn).	1. Perform the operation check	DL-67
	2. Horn circuit	TD-26
	3. If the symptom still occurs after the above areas have been inspected and proved to be normal, replace the main body ECU (Instrument panel J/B)	-
The panic alarm function does not operate (Security horn).	1. Perform the operation check	DL-67
	2. Security horn circuit	TD-28
	3. Replace certification ECU	-
	4. If the symptom still occurs after the above areas have been inspected and proved to be normal, replace the main body ECU (Instrument panel J/B)	-
The panic alarm function does not operate (Hazard warning light).	1. Perform the operation check	DL-67
	2. Wire harness	-
	3. Turn signal flasher assembly	LI-229
	4. If the symptom still occurs after the above areas have been inspected and proved to be normal, replace the main body ECU (Instrument panel J/B)	-
The panic alarm function does not operate (Headlight or taillight).	1. Perform the operation check	DL-67
	2. Lighting system	LI-32
	3. If the symptom still occurs after the above areas have been inspected and proved to be normal, replace the main body ECU (Instrument panel J/B)	-

TERMINALS OF ECU

1. CHECK MAIN BODY ECU (INSTRUMENT PANEL J/B)

(a) Disconnect the main body ECU (instrument panel J/B) connectors.

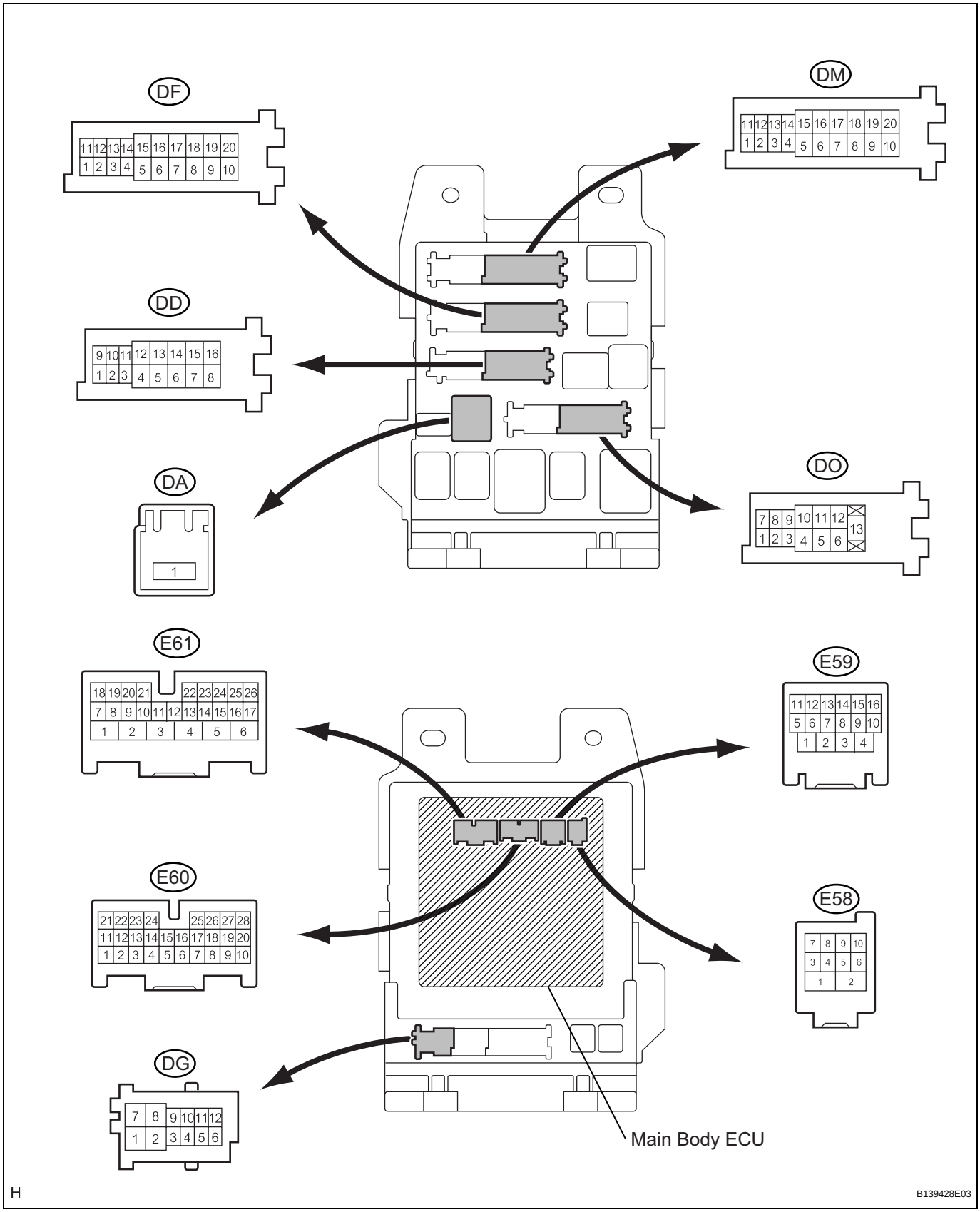

(b) Measure the resistance and voltage between each terminal of the wire harness side connectors and body ground.

Symbols (Terminal No.)	Wiring Color	Terminal Description	Condition	Specified Condition
GND3 (E59-1) - Body ground	W-B - Body ground	Ground	Always	Below 1 Ω
RCTY (E60-7) - Body ground	GR - Body ground	Rear courtesy light switch RH input	Rear door RH CLOSED (OFF) → OPEN (ON)	10 kΩ or higher → Below 1 Ω
PCTY (E60-21) - Body ground	G - Body ground	Passenger side courtesy light switch input	Passenger side door CLOSED (OFF) → OPEN (ON)	10 kΩ or higher → Below 1 Ω
LGCY (E60-25) - Body ground	W - Body ground	Luggage compartment door courtesy light switch input	Luggage compartment door CLOSED (OFF) → OPEN (ON)	10 kΩ or higher → Below 1 Ω
DCTY (E61-24) - Body ground	GR - Body ground	Driver side door courtesy light switch input	Driver side door CLOSED (OFF) → OPEN (ON)	10 kΩ or higher → Below 1 Ω
ACC (DA-1) - Body ground	W - Body ground	Ignition power supply (ACC signal)	Engine switch on (ACC) → off	10 to 14 V → Below 1 V
IG (DA-1) - Body ground	W - Body ground	Ignition power supply (IG signal)	Engine switch on (IG) → off	10 to 14 V → Below 1 V
BATB (DA-1) - Body ground	W - Body ground	+B (power battery system) power supply	Always	10 to 14 V
ALTB (DD-16) - Body ground	W - Body ground	+B (power system alternator system) power supply	Always	10 to 14 V
GND1 (DF-10) - Body ground	W-B - Body ground	Ground	Always	Below 1 Ω
LCTY (DO-7) - Body ground	B - Body ground	Rear courtesy light switch LH input	Rear door LH CLOSED (OFF) → OPEN (ON)	10 kΩ or higher → Below 1 Ω

If the result is not as specified, there may be a malfunction on the wire harness side.

(c) Reconnect the main body (instrument panel J/B) connectors.

(d) Measure the voltage between each terminal of the wire harness side connectors and body ground.

Symbols (Terminal No.)	Wiring Color	Terminal Description	Condition	Specified Condition
HAZ (E59-4) - Body ground	W - Body ground	Turn signal flasher relay signal	Any transmitter switch is pressed → not pressed	Below 1 V → 10 to 14 V*1
TR+ (E61-1) - Body ground	B - Body ground	Luggage compartment door opener motor input	Luggage compartment door CLOSED (LOCKED) → OPEN (UNLOCKED)	Below 1 V → 10 to 14 V*2

HINT:

- *1: When operating the answer back function.
- *2: When operating the motor.

2. CHECK CERTIFICATION ECU ASSEMBLY

(a) Disconnect the E13 ECU connector.

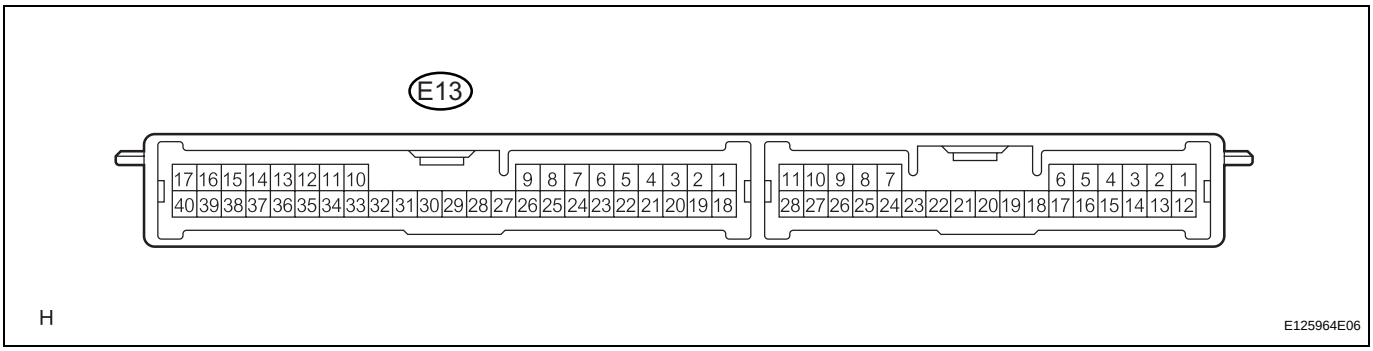

(b) Measure the voltage and resistance of the wire harness side connector.

Symbols (Terminal No.)	Wiring Color	Terminal Description	Condition	Specified Condition
+B1 (E13-1) - E (E13-17)	W - W-B	Battery power supply	Always	10 to 14 V
E (E13-17) - Body ground	W-B - Body ground	Ground	Always	Below 1 Ω
IG (E13-18) - E (E13-17)	B - W-B	IG power supply	Engine switch on (IG)	10 to 14 V
IG (E13-18) - E (E13-17)	B - W-B	IG power supply	Engine switch off	Below 1 V

If the result is not as specified, there may be a malfunction on the wire harness side.

(c) Reconnect the E13 ECU connector.

(d) Measure the voltage of the connector.

Symbols (Terminal No.)	Wiring Color	Terminal Description	Condition	Specified Condition
BZR (E13-21) - Body ground	O - Body ground	Wireless door lock buzzer	Wireless door lock buzzer OFF → ON	0 V → Pulse generation
RC0 (E13-29) - E (E13-17)	G - W-B	Door control receiver power supply	Engine switch off, all doors closed and transmitter switch not pressed	Below 1 V
RC0 (E13-29) - E (E13-17)	G - W-B	Door control receiver power supply	Engine switch off, all doors closed and transmitter switch pressed	4.6 to 5.4 V
RDA (E13-38) - E (E13-17)	Y - W-B	Door control receiver output signal	Engine switch off, all doors closed and transmitter switch not pressed	10 to 14 V
RDA (E13-38) - E (E13-17)	Y - W-B	Door control receiver output signal	Engine switch off, all doors closed and transmitter switch pressed	Pulse generation

If the result is not as specified, the ECU may have a malfunction.

DIAGNOSIS SYSTEM

1. DESCRIPTION

The main body ECU stores trouble codes when trouble occurs on the vehicle.
The diagnostic system allows for reading of the trouble codes from the DLC3.
Use the intelligent tester to check and solve the problem.

2. CHECK DLC3

(a) The main body ECU uses ISO 15765-4 for communication protocol. The terminal arrangement of the DLC3 complies with SAE J1962 and matches the ISO 15765-4 format.

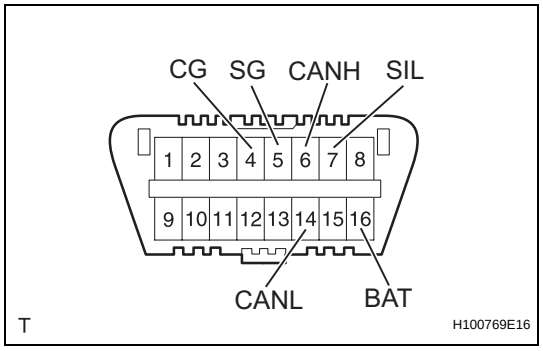

DL

Symbols (Terminal No.)	Terminal Description	Condition	Specified Condition
SIL (7) - SG (5)	Bus "+" line	During transmission	Pulse generation
CG (4) - Body ground	Chassis ground	Always	Below 1 Ω
SG (5) - Body ground	Signal ground	Always	Below 1 Ω
BAT (16) - Body ground	Battery positive	Always	11 to 14 V
CANH (6) - CANL (14)	CAN bus line	Engine switch off*	54 to 69 Ω
CANH (6) - CG (4)	HIGH-level CAN bus line	Engine switch off*	200 Ω or higher
CANL (14) - CG (4)	LOW-level CAN bus line	Engine switch off*	200 Ω or higher
CANH (6) - BAT (16)	HIGH-level CAN bus line	Engine switch off*	6 kΩ or higher
CANL (14) - BAT (16)	LOW-level CAN bus line	Engine switch off*	6 kΩ or higher

NOTICE:
***: Before measuring the resistance, leave the vehicle as is for at least 1 minute and do not operate the engine switch, any other switches or the doors.**
If the result is not as specified, the DLC3 may have a malfunction. Repair or replace the harness and connector.

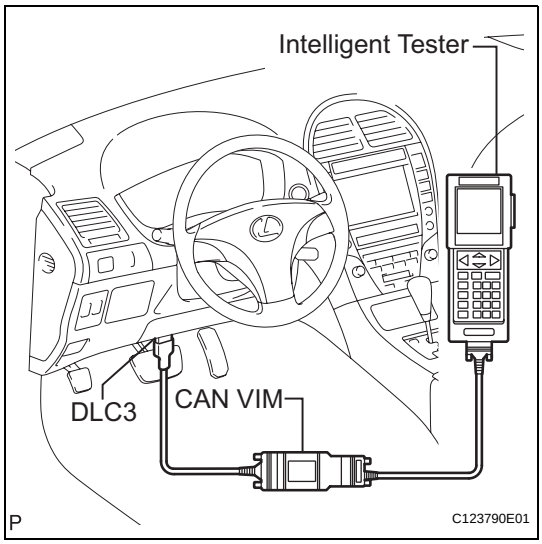

(b) Connect the cable of the intelligent tester (with CAN VIM) to the DLC3, turn the engine switch on (IG) and attempt to use the intelligent tester. If the screen displays a communication error message, a problem exists in the vehicle or in the tester.
- If communication is normal when the tool is connected to another vehicle, inspect the DLC3 on the original vehicle.
- If communication is still impossible when the tool is connected to another vehicle, the problem is probably in the tool itself. Consult the Service Department listed in the tool's instruction manual.

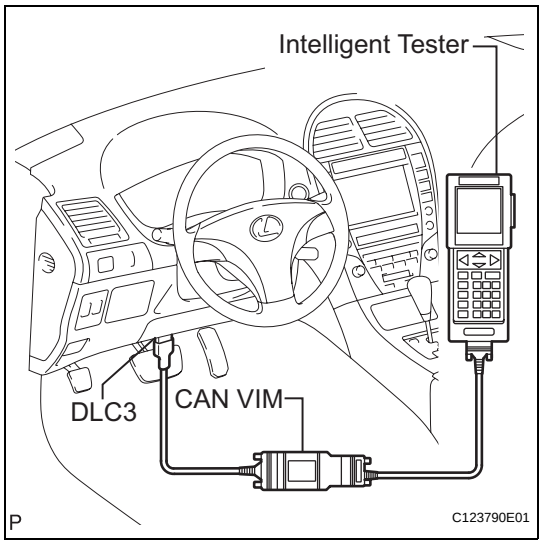

DL

DTC CHECK / CLEAR

1. CHECK DTC

(a) Connect the intelligent tester to the DLC3.
(b) Turn the engine switch on (IG).
(c) Enter the following menu items: DIAGNOSIS / ENHANCED OBD II / DTC INFO / CURRENT CODES.
(d) Read the DTC by following the prompts on the tester screen.
HINT:
Refer to the intelligent tester operator's manual for further details.

2. CLEAR DTC

(a) Connect the intelligent tester to the DLC3.
(b) Turn the engine switch on (IG).
(c) Enter the following menu items: DIAGNOSIS / ENHANCED OBD II / DTC INFO / CLEAR CODES.
(d) Erase the DTC by following the directions on the tester screen.

HINT:
Refer to the intelligent tester operator's manual for further details.

DATA LIST / ACTIVE TEST

1. DATA LIST

HINT:
Using the intelligent tester DATA LIST allows switch, sensor, actuator and other item values to be read without removing any parts. Reading the DATA LIST early in troubleshooting is one way to shorten labor time.

(a) Connect the intelligent tester (with CAN VIM) to the DLC3.
(b) Turn the engine switch on (IG).
(c) Enter the following menus: DIAGNOSIS / OBD/ MOBD / BODY or SMART / DATA LIST / DIAG&CUSTOMIZE.
(d) Read the DATA LIST according to the display on the tester.

MAIN BODY (Main body ECU):

Tester Display	Measurement Item/Range	Normal Condition	Diagnostic Note
WIRELESS OPER	Wireless door lock control function / ON or OFF	ON: Operating OFF: Not operating	-
HAZARD ANS BACK	Hazard answer-back of wireless / ON or OFF	ON: Operating OFF: Not operating	-
OPEN DOOR WARN	Open door warning / ON or OFF	ON: Operating OFF: Not operating	-
AUTO LOCK DELAY	Automatic lock time / 60 s or 30 s	60 s: 60 seconds 30 s: 30 seconds	-
UNLOCK /2OPER	2 times operation of wireless unlock / ON or OFF	ON: All doors unlock when UNLOCK is pressed twice OFF: All doors unlock when UNLOCK is pressed once	-
TRUNK LID OPER	Luggage compartment door open function type / 1 TIME/2 TIME/ 0.8 s PR/ OFF	1 TIME: Luggage compartment door opens when LUGGAGE OPEN switch is pressed once 2 TIME: Luggage compartment door opens when LUGGAGE OPEN switch is pressed twice 0.8 s PR: Luggage compartment door opens when LUGGAGE OPEN switch is pressed and held down for 0.8 seconds OFF: Not operating	-

SMART (Certification ECU):

Tester Display	Measurement Item/Range	Normal Condition	Diagnostic Note
ALARM FUNCTION	Panic function / ON or OFF	ON: Operating OFF: Not operating	-
WIRELS BUZZ VOL	Wireless buzzer volume / LEVEL0 to LEVEL7	LEVEL7: Biggest volume LEVEL6 LEVEL5 LEVEL4 LEVEL3 LEVEL2 LEVEL1 : Smallest volume LEVEL0: No sound	-

2. ACTIVE TEST

HINT:
Performing the intelligent tester ACTIVE TEST allows relay, VSV, actuator and other items to be operated without removing any parts. Performing the ACTIVE TEST early in troubleshooting is one way to shorten the labor time. The DATA LIST can be displayed during the ACTIVE TEST.

(a) Connect the intelligent tester (with CAN VIM) to the DLC3.
(b) Turn the engine switch on (IG).
(c) Enter the following menus: DIAGNOSIS / OBD/ MOBD / BODY or SMART / ACTIVE TEST.
(d) Perform the ACTIVE TEST according to the display on the tester.

MAIN BODY (Main body ECU):

Tester Display	Test Part	Control Range	Diagnostic Note
HAZARD	Turns the turn signal flasher relay	ON/OFF	Observe headlight and rear combination light for correct operation
VEHICLE HORN	Turns the vehicle horns	ON/OFF	-
TRUNK/BDOR OPEN	Turns the luggage compartment door opener motor	ON/OFF	Observe luggage compartment door

SMART (Certification ECU):

Tester Display	Test Part	Control Range	Diagnostic Note
WIRELESS BUZZER	Turns the wireless door lock buzzer	ON/OFF	-

DIAGNOSTIC TROUBLE CODE CHART

HINT:
If a trouble code is indicated during the DTC check, check the circuit listed for that code in the table below. Then proceed to the appropriate page.

WIRELESS DOOR LOCK CONTROL SYSTEM:

DTC Code	Detection Item	Trouble Area	See page
B1242	Wireless Door Lock Tuner Circuit Malfunction	1. Door control receiver 2. Wire harness 3. Certification ECU	DL-80

DTC	B1242	Wireless Door Lock Tuner Circuit Malfunction

DESCRIPTION

- The electrical key antenna is used to receive electric waves relating to the entry functions of the smart access system with push-button start. The certification ECU decodes the requested smart access system with push-button start operation by identifying a key code based on electric waves received via the electrical key antenna and the door control receiver.
- The door control receiver receives a signal from the wireless door control transmitter and sends signals to the main body ECU through the certification ECU.
- The certification ECU then sends a command, according to the requested operation, to each ECU. (e.g. If door lock operation is requested, the ECU sends a door lock command to the main body ECU.)

DTC No.	DTC Detection Condition	Trouble Area
B1242	The certification ECU detects that there is a short in the circuit between terminals RSSI, or between terminals DATA and RDA.	• Door control receiver • Wire harness • Certification ECU

DL

WIRING DIAGRAM

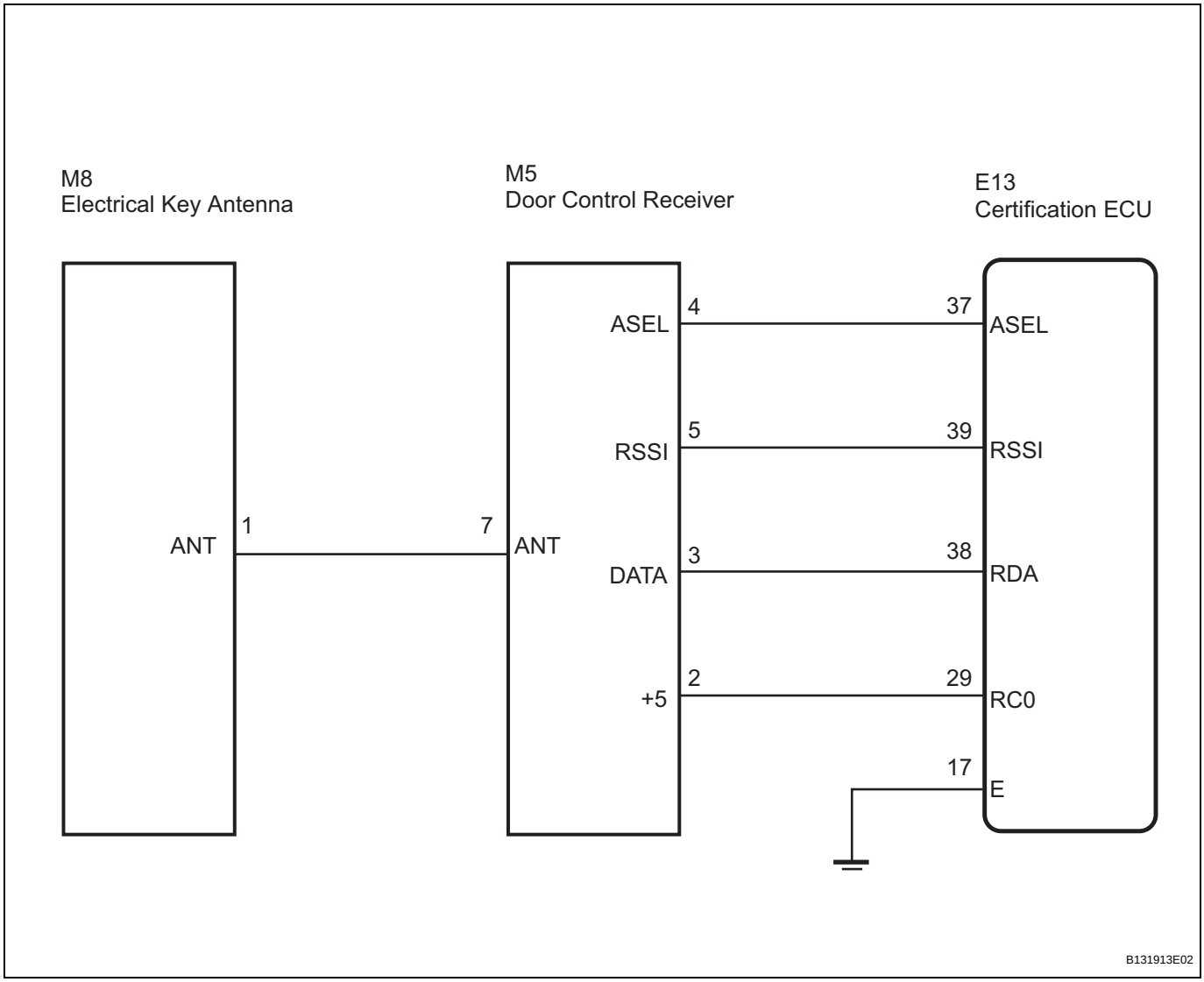

INSPECTION PROCEDURE

1 CHECK HARNESS AND CONNECTOR (CERTIFICATION ECU - DOOR CONTROL RECEIVER)

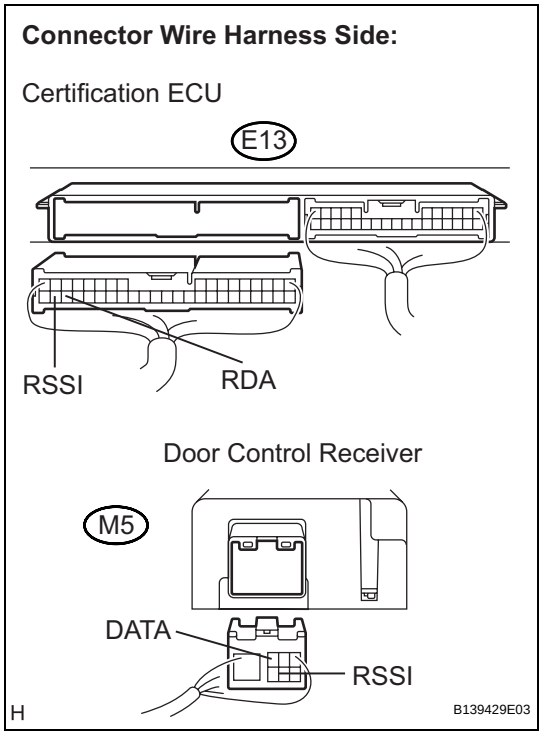

(a) Disconnect the E13 certification ECU connector and M5 door control receiver connector.
(b) Measure the resistance according to the value(s) in the table below.

Standard resistance

Symbol (Tester Connection)	Condition	Specified Condition
RSSI (E13-39) - RSSI (M5-5)	Always	Below 1 Ω
RDA (E13-38) - DATA (M5-3)	Always	Below 1 Ω
RSSI (E13-39) - RDA (E13-38)	Always	10 kΩ or higher
RSSI (E13-39) - Body ground	Always	10 kΩ or higher
RDA (E13-38) - Body ground	Always	10 kΩ or higher

NG → **REPAIR OR REPLACE HARNESS OR CONNECTOR**

OK

2 INSPECT CERTIFICATION ECU

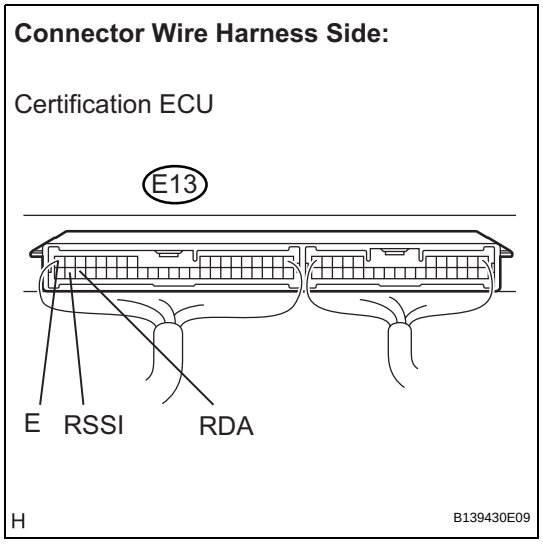

(a) Reconnect the E13 ECU connector.
(b) Measure the voltage according to the value(s) in the table below.

Standard voltage

Symbol (Tester Connection)	Condition	Specified Condition
RSSI (E13-39) - E (E13-17)	Engine switch OFF, all doors closed, the electrical key is not in the actuation area	Below 1 V
	Engine switch OFF, all doors closed, the electrical key is in the actuation area	4.6 to 5.4 V
RDA (E13-38) - E (E13-17)	Engine switch OFF, all doors closed and transmitter switch not pressed	Below 1 V
	Engine switch OFF, all doors closed and transmitter switch pressed	4.6 to 5.4 V

NG → **REPLACE CERTIFICATION ECU**

DL

OK

3	REPLACE DOOR CONTROL RECEIVER

(a) Replace the door control receiver with a normal one.
(b) Perform the registration procedure (See page EI-9).
OK:
The system returns to normal operation.

NG → **REPLACE CERTIFICATION ECU**

OK

END

Wireless Door Lock Buzzer Circuit

DESCRIPTION

The certification ECU activates the wireless door lock buzzer when detecting a lock/unlock signal from the door control transmitter.

WIRING DIAGRAM

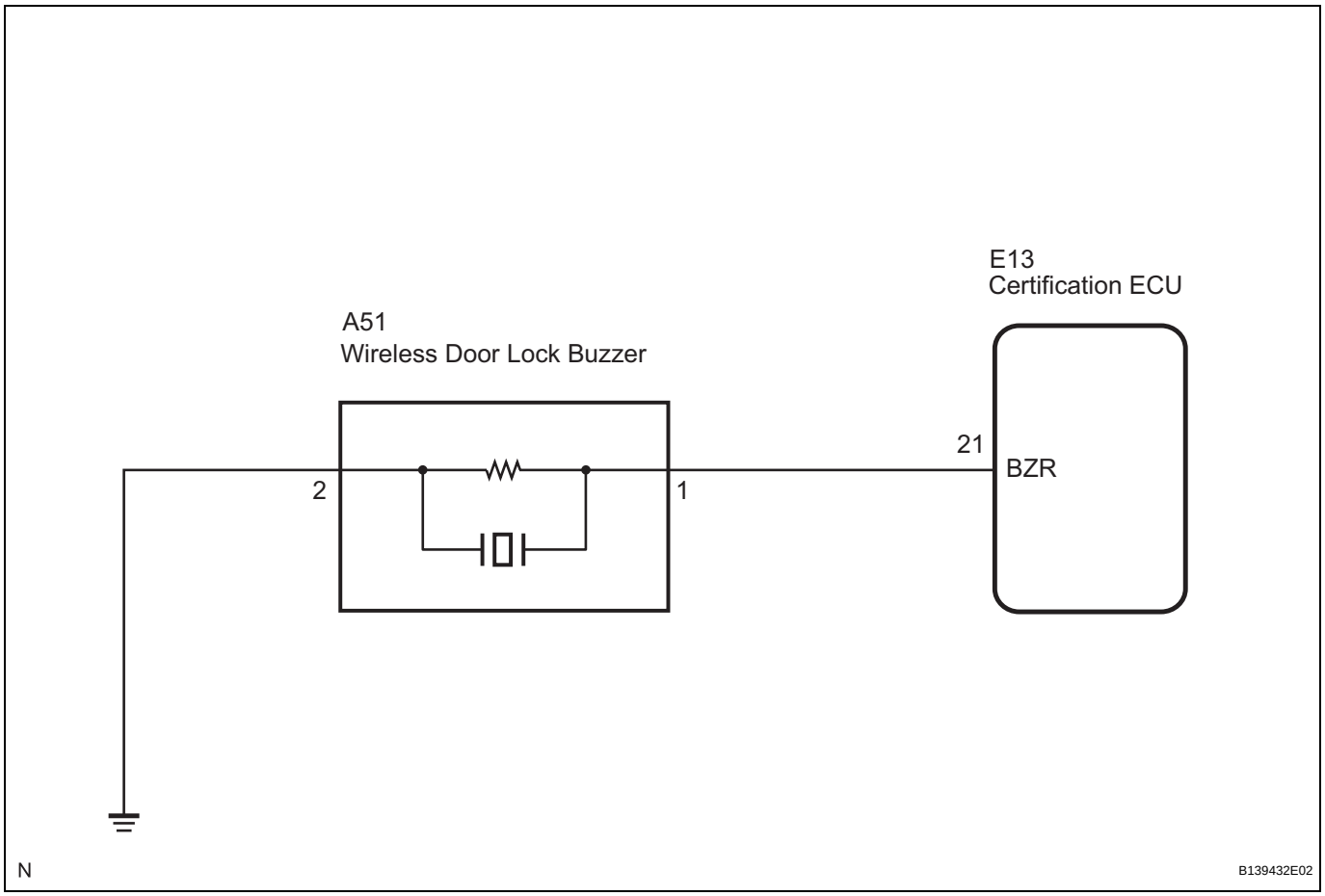

INSPECTION PROCEDURE

1	PERFORM ACTIVE TEST BY INTELLIGENT TESTER

(a) Connect the intelligent tester (with CAN VIM) to the DLC3.
(b) Turn the engine switch on (IG).
(c) Press the intelligent tester main switch on.
(d) Select the item below in the ACTIVE TEST and then check that the buzzer operates.

SMART (Certification ECU):

Item	Test Details	Diagnostic Note
WIRELESS BUZZER	Wireless door lock buzzer ON/OFF	-

OK:
The wireless door lock buzzer sounds or goes off correctly when operating it through the intelligent tester.

NG → **Go to step 2**

OK

PROCEED TO NEXT CIRCUIT INSPECTION SHOWN IN PROBLEM SYMPTOMS TABLE

2 CHECK HARNESS AND CONNECTOR (CERTIFICATION ECU - WIRELESS DOOR LOCK BUZZER - BODY GROUND)

Connector Wire Harness View:

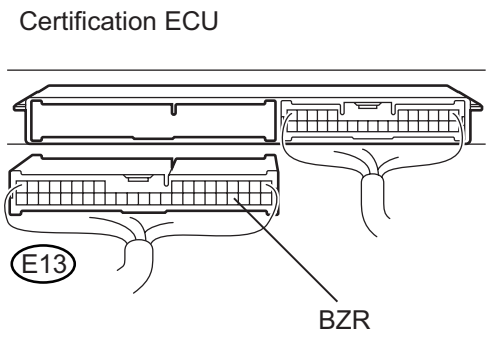

Wire Harness Side Connector Front View:

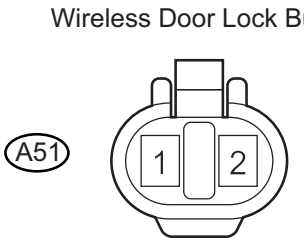

H B139431E02

(a) Disconnect the E13 certification ECU connector and A51 wireless door lock buzzer connector.
(b) Measure the resistance according to the value(s) in the table below.
Standard resistance

Symbol (Tester Connection)	Condition	Specified Condition
BZR (E13-21) - A51-1	Always	Below 1 Ω
BZR (E13-21) - Body ground	Always	10 kΩ or higher
A51-2 - Body ground	Always	Below 1 Ω

NG → **REPAIR OR REPLACE HARNESS OR CONNECTOR**

OK

3	INSPECT WIRELESS DOOR LOCK BUZZER

Wireless Door Lock Buzzer:

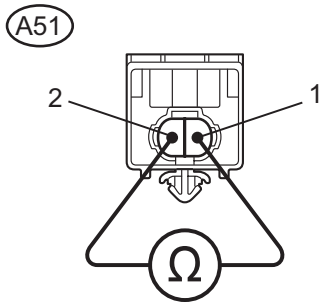

N B110079E10

(a) Measure the resistance according to the value(s) in the table below.
HINT:
The buzzer activation circuit is built into the ECU, not into the buzzer itself. When battery voltage is applied directly to the buzzer, the buzzer will not sound.

Standard resistance

Tester Connection	Condition	Specified Condition
A51-1 - A51-2	Always	Approx. 1 kΩ

NG → **REPLACE WIRELESS DOOR LOCK BUZZER**

OK

PROCEED TO NEXT CIRCUIT INSPECTION SHOWN IN PROBLEM SYMPTOMS TABLE

Power Source Circuit

DESCRIPTION

The certification ECU provides power for the door control receiver operation.

WIRING DIAGRAM

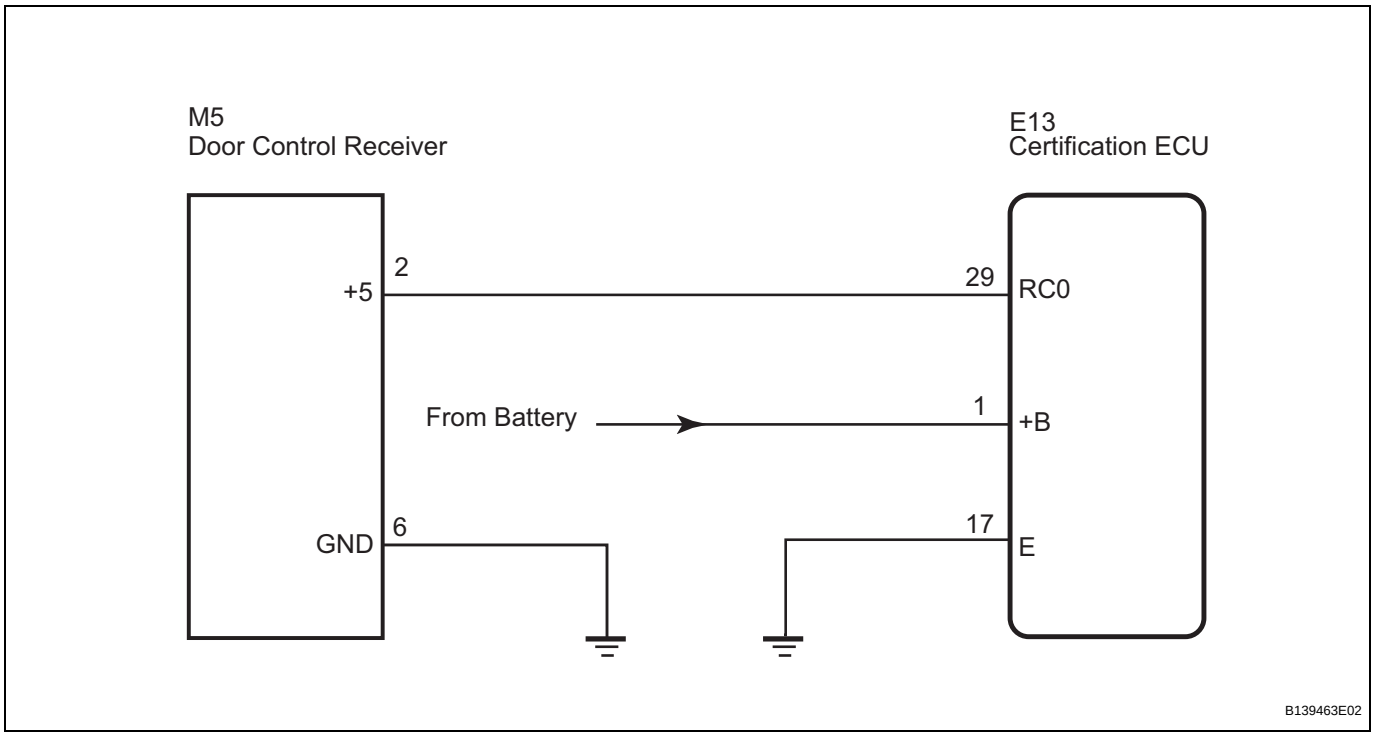

INSPECTION PROCEDURE

1	INSPECT CERTIFICATION ECU (+B TERMINAL)

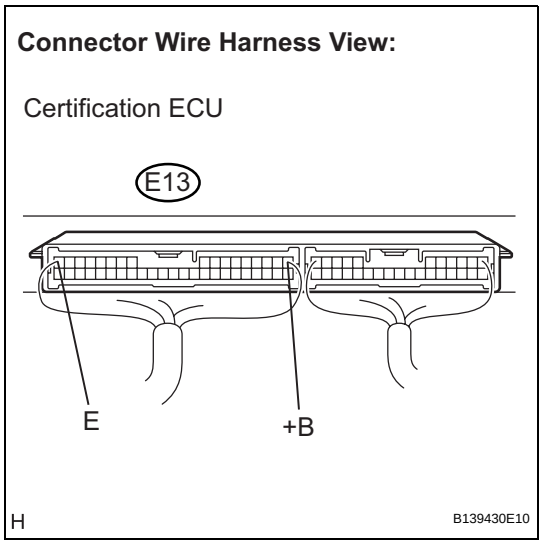

(a) Measure the voltage according to value(s) in the table below.

Standard voltage

Symbol (Tester Connection)	Condition	Specified Condition
+B (E13-1) - E (E13-17)	Always	10 to 14 V

NG → **REPAIR OR REPLACE HARNESS OR CONNECTOR**

OK

2 INSPECT CERTIFICATION ECU (RC0 TERMINAL)

Connector Wire Harness View:

Certification ECU

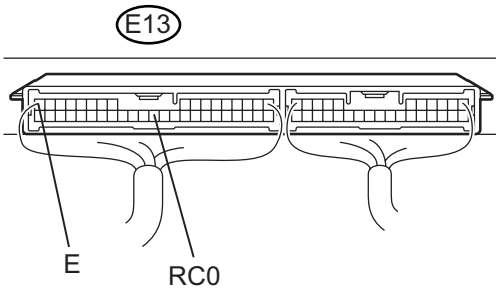

H B139430E11

(a) Measure the voltage according to the value(s) in the table below.
Standard voltage

Symbol (Tester Connection)	Condition	Specified Condition
RC0 (E13-29) - E (E13-17)	Engine switch off, all doors closed and transmitter switch not pressed	Below 1 V
	Engine switch off, all doors closed and transmitter switch pressed	4.6 to 5.4 V

OK → **Go to step 4**

NG

3 CHECK HARNESS AND CONNECTOR (CERTIFICATION ECU - BATTERY - BODY GROUND)

Connector Wire Harness Side:

Certification ECU

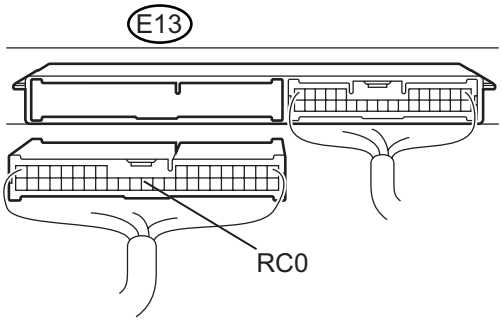

H E125974E11

(a) Disconnect the E13 certification ECU connector.
(b) Measure the voltage and resistance according to the value(s) in the table below.
Standard

Symbol (Tester Connection)	Condition	Specified Condition
RC0 (E13-29) - Body ground	Always	Below 1 V
	Always	10 kΩ or higher

NG → **REPAIR OR REPLACE HARNESS OR CONNECTOR**

OK

REPLACE CERTIFICATION ECU

DL

4 CHECK HARNESS AND CONNECTOR (CERTIFICATION ECU - DOOR CONTROL RECEIVER)

Connector Wire Harness View:

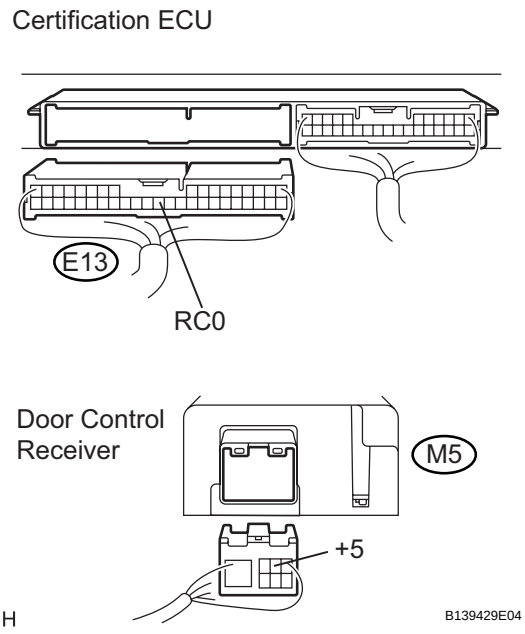

(a) Disconnect the M5 door control receiver connector.
(b) Measure the resistance according to the value(s) in the table below.

Standard resistance

Symbol (Tester Connection)	Condition	Specified Condition
RC0 (E13-29) - +5 (M5-2)	Always	Below 1 Ω

NG → **REPAIR OR REPLACE HARNESS OR CONNECTOR**

OK

5 CHECK HARNESS AND CONNECTOR (BODY GROUND)

Connector Wire Harness View:

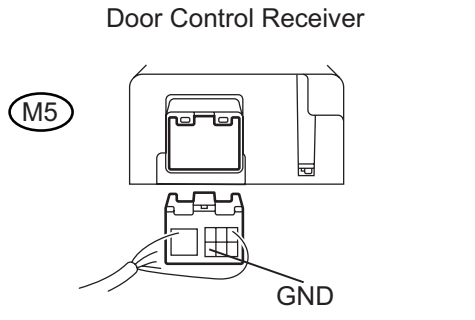

(a) Measure the resistance according to the value(s) in the table below.

Standard resistance

Symbol (Tester Connection)	Condition	Specified Condition
GND (M5-6) - Body ground	Always	Below 1 Ω

NG → **REPAIR OR REPLACE HARNESS OR CONNECTOR**

OK

PROCEED TO NEXT CIRCUIT INSPECTION SHOWN IN PROBLEM SYMPTOMS TABLE

PARTS LOCATION

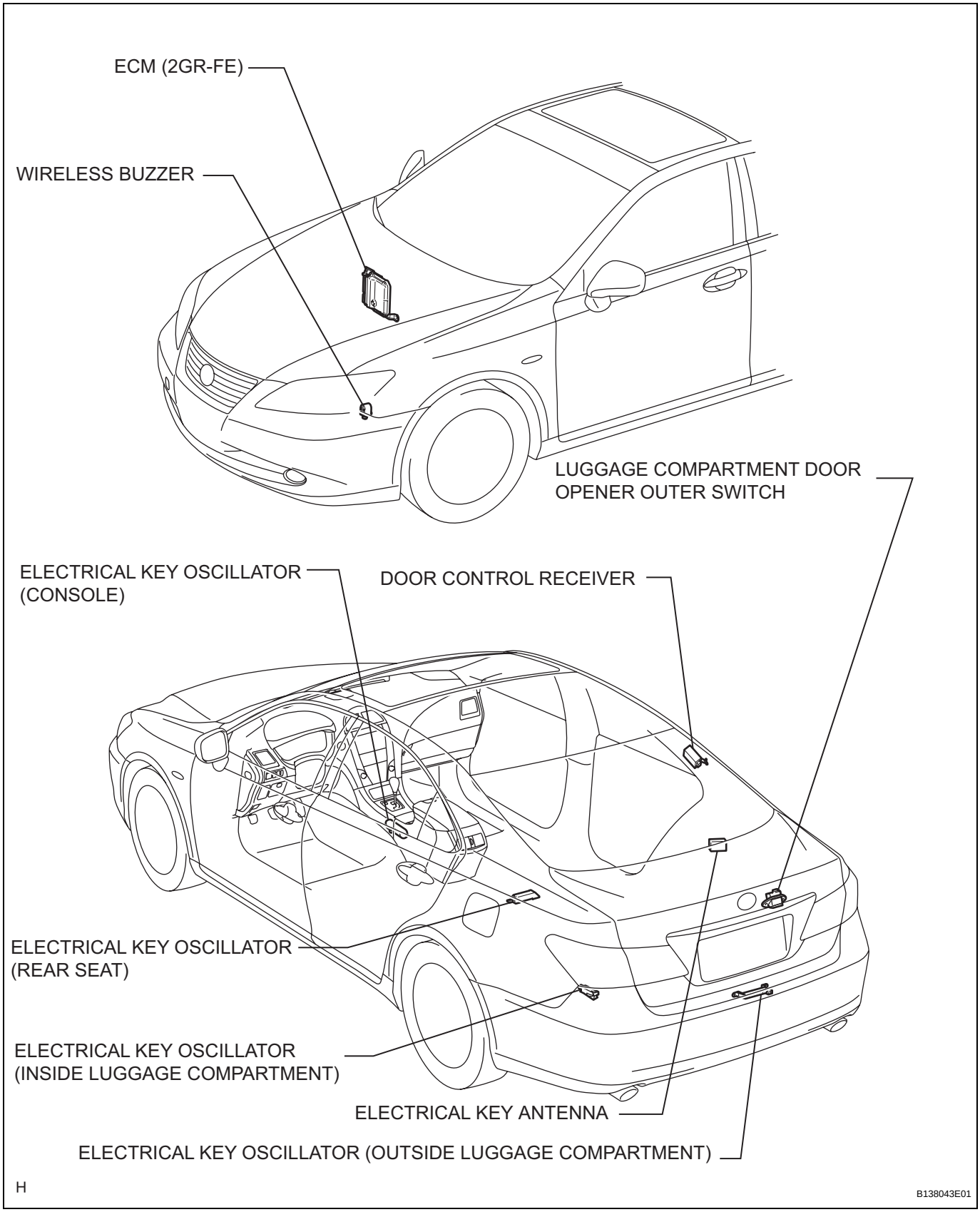

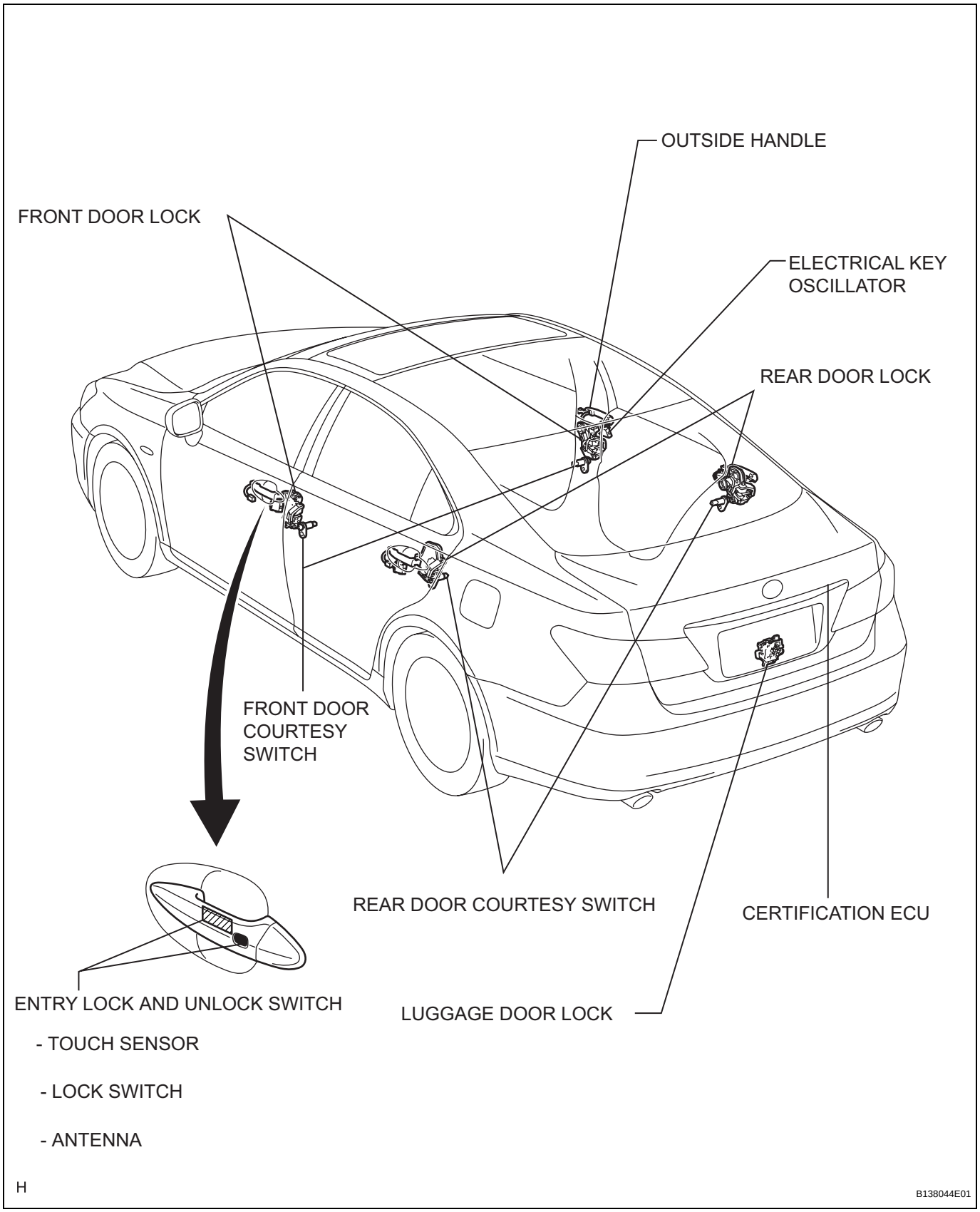
OUTSIDE HANDLE
FRONT DOOR LOCK
ELECTRICAL KEY OSCILLATOR
REAR DOOR LOCK
FRONT DOOR COURTESY SWITCH
REAR DOOR COURTESY SWITCH
CERTIFICATION ECU
ENTRY LOCK AND UNLOCK SWITCH
- TOUCH SENSOR
- LOCK SWITCH
- ANTENNA
LUGGAGE DOOR LOCK
H
B138044E01

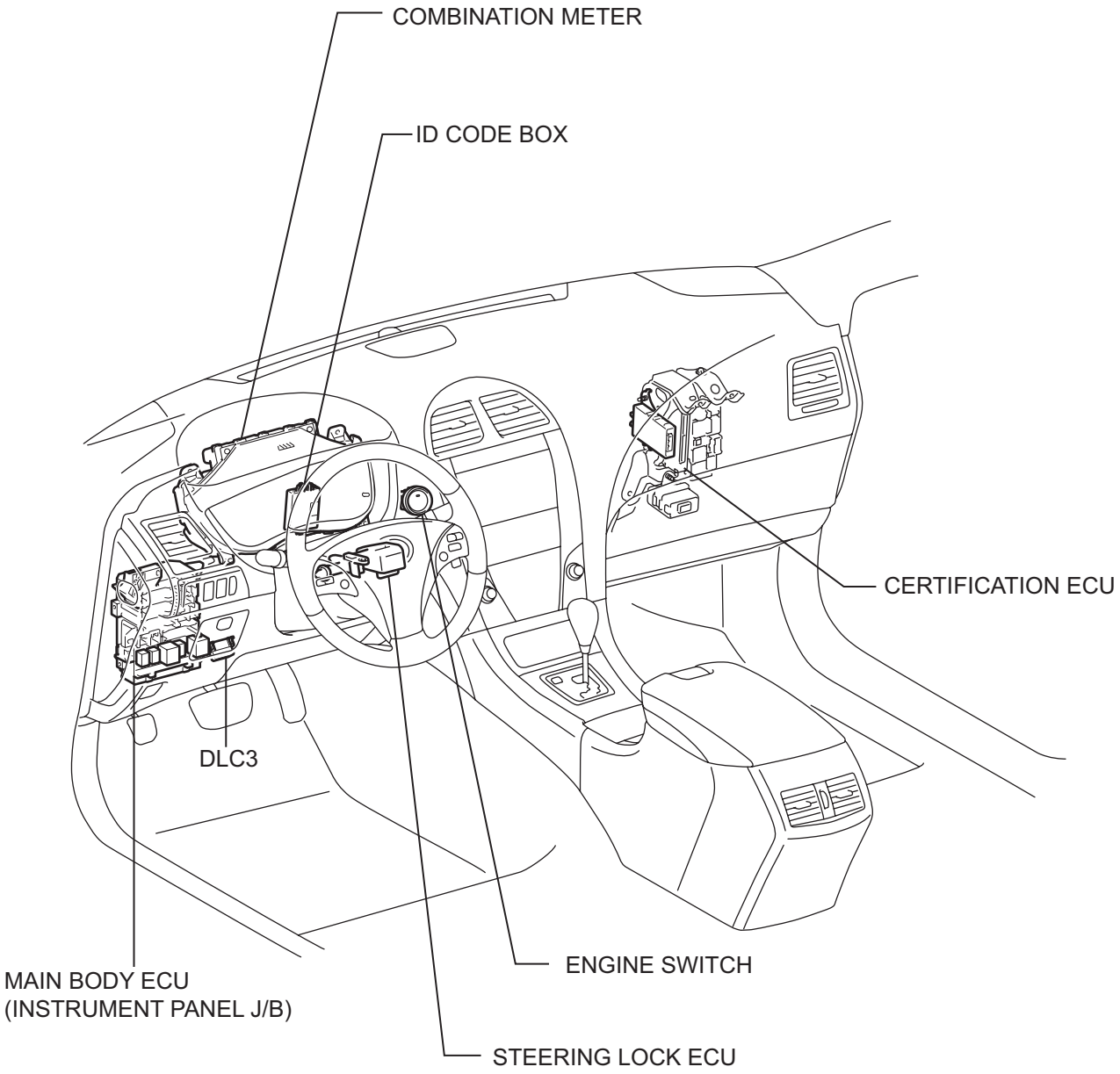

H

B138045E04

SYSTEM DIAGRAM

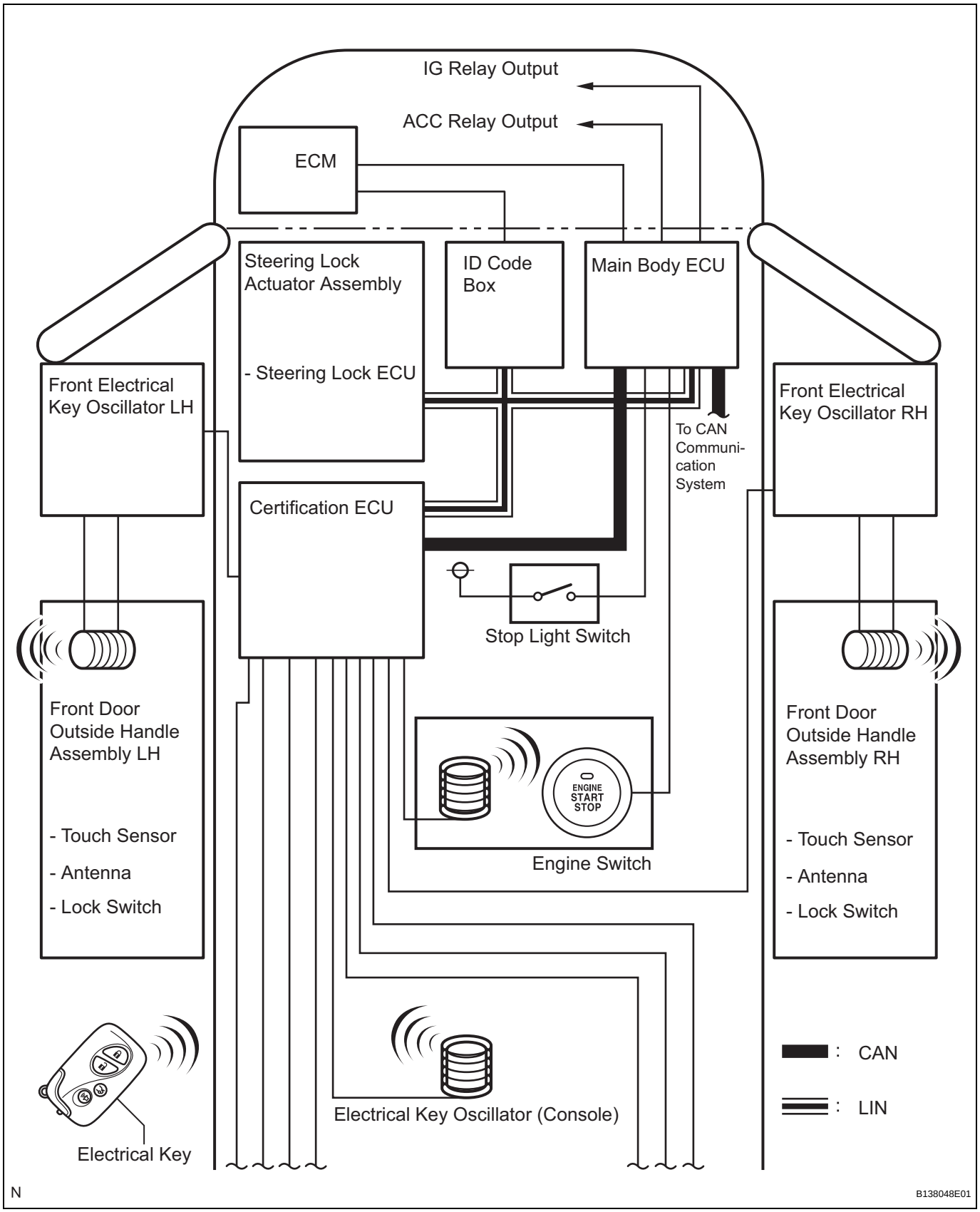

DL

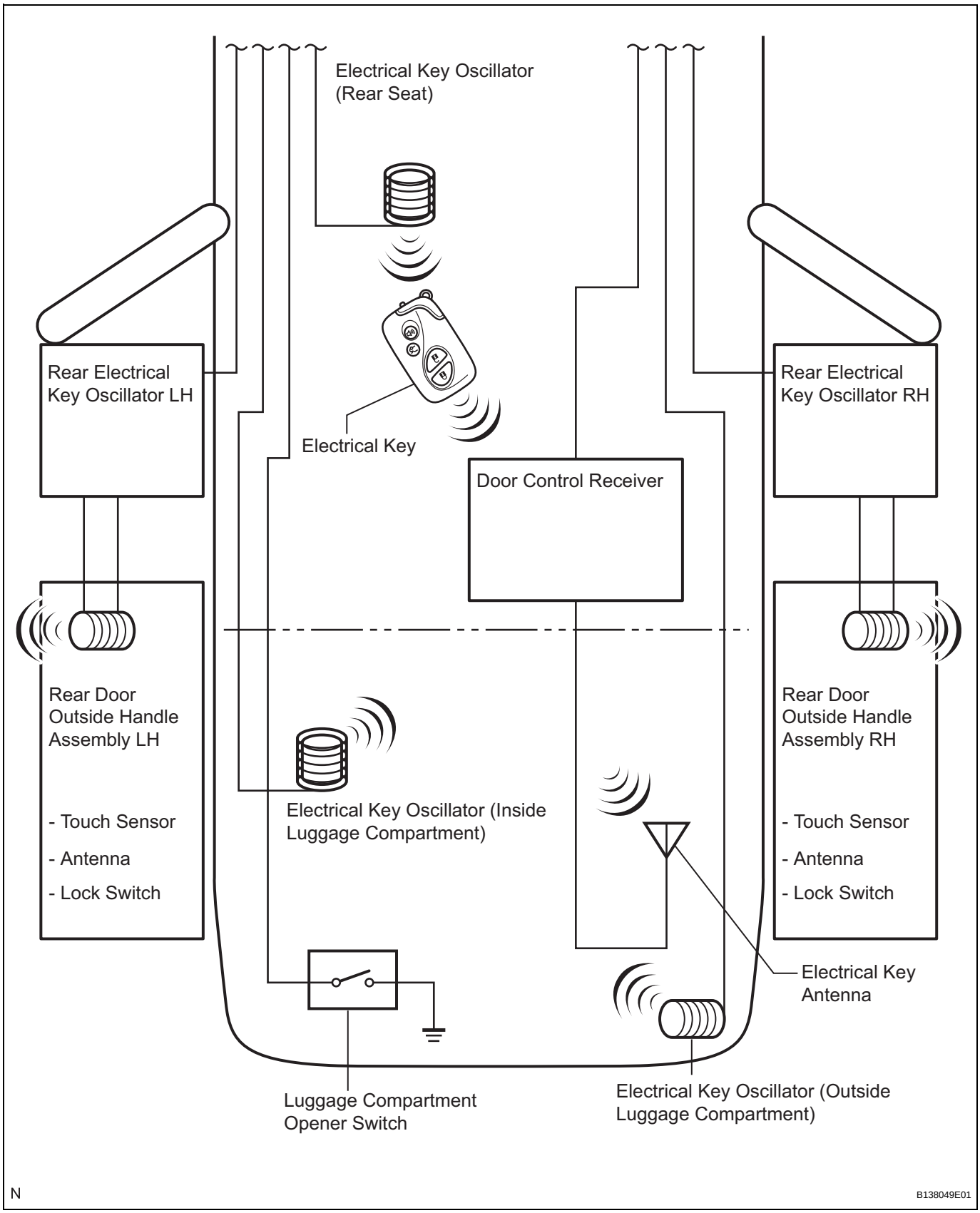
Electrical Key Oscillator
(Rear Seat)
Rear Electrical
Key Oscillator LH
Rear Electrical
Key Oscillator RH
Electrical Key
Door Control Receiver
Rear Door
Outside Handle
Assembly LH
- Touch Sensor
- Antenna
- Lock Switch
Rear Door
Outside Handle
Assembly RH
- Touch Sensor
- Antenna
- Lock Switch
Electrical Key Oscillator (Inside
Luggage Compartment)
Electrical Key
Antenna
Luggage Compartment
Opener Switch
Electrical Key Oscillator (Outside
Luggage Compartment)
N
B138049E01

DL

Transmitting ECU (Transmitter)	Receiving ECU	Signals	Communication method
Main body ECU	Certification ECU	Engine switch position signal	CAN
		Courtesy light switch signal	
		Door lock output signal	
		Luggage compartment door output request signal	
		Wireless door lock buzzer request signal	
		Door lock position switch signal	
		D/P door key operated switch signal	
		Luggage compartment door key operated switch signal	
Main body ECU	Combination meter	Wireless door lock buzzer request signal	CAN
Certification ECU	Main body ECU	Illumination light request signal	CAN
		Light answer back signal	
		Door lock/unlock request signal	
Certification ECU	Driver seat ECU	Memory call replay request signal	CAN
Certification ECU	Combination meter	Meter buzzer single-shot request signal	CAN
		Meter buzzer intermittence request signal	
		Meter buzzer continuation request signal	
		Door open display signal	
		Keyloss warning signal	
		Low key battery warning signal	
		Shift position warning signal	
		Steering lock abnormal warning	
		Steering lock unlock warning	
Combination meter	Certification ECU/Main body ECU	Vehicle speed signal	CAN
ID code box	Certification ECU	Matching request random number signal	LIN
		EEP ROM access malfunction	
		Model code matching signal	
		Model code mismatching signal	
		ECM code receiving status	
		Engine start permission request signal	
		Engine start permission response signal	
		S code matching result signal	
		S code registration status signal	
		S code registration mode signal	
		L code matching result signal	
		ECM communication signal	
		Registered key number response signal	
		Diagnosis mode switching signal	
		Registered key number signal	
Certification ECU	ID code box	3 bit code request signal	LIN
		ID code matching result signal	
		Registered key number signal	
		Vehicle type handle signal	
Certification ECU	• ID code box • Steering lock ECU	L code registration mode signal	LIN
		Diagnosis mode request signal	
		DTC clear request signal	
		L code registration status signal	

Transmitting ECU (Transmitter)	Receiving ECU	Signals	Communication method
Steering lock ECU	• Certification ECU • ID code box	Steering lock request signal	LIN
		Steering unlock signal	
		Steering lock confirmation signal	
		Steering unlock confirmation signal	
		Diagnosis response signal	
		Steering unlock drive relay signal	
		Steering lock drive relay signal	
		Steering lock motor operation signal	
Main body ECU	Certification ECU	Shift position P signal	LIN
		Engine starting status signal	
		ACC relay operating status signal	
		IG relay operating status signal	
Main body ECU	Steering lock ECU	Steering lock relay power supply status signal	LIN
Steering lock ECU	• Certification ECU • Main body ECU	Steering lock catching malfunction signal	LIN
		Push button start malfunction signal	
		Engine operation signal	

SYSTEM DESCRIPTION

CAUTION:
If using a pacemaker, be sure to read the manual of the pacemaker before using the electrical key, because the radio waves of the electrical key may affect the pacemaker.

1. SMART ACCESS SYSTEM WITH PUSH-BUTTON START DESCRIPTION

(a) In addition to conventional mechanical key and wireless door lock control functions, the smart access system with push-button start enables door locking/unlocking, steering lock releasing, engine starting and luggage compartment door opening without operating the electrical key. The only requirement is that the electrical key is in the user's possession.

- This system is controlled by the certification ECU. When the certification ECU detects the presence of the an electrical key in one of the detection areas, it identifies and checks the ID code, and outputs operation signals to the related ECU in accordance with their functions.
- The detection areas are formed by 8 oscillators (4 door oscillators, 2 luggage compartment oscillators, and 2 cabin oscillators).

2. DETECTION AREA

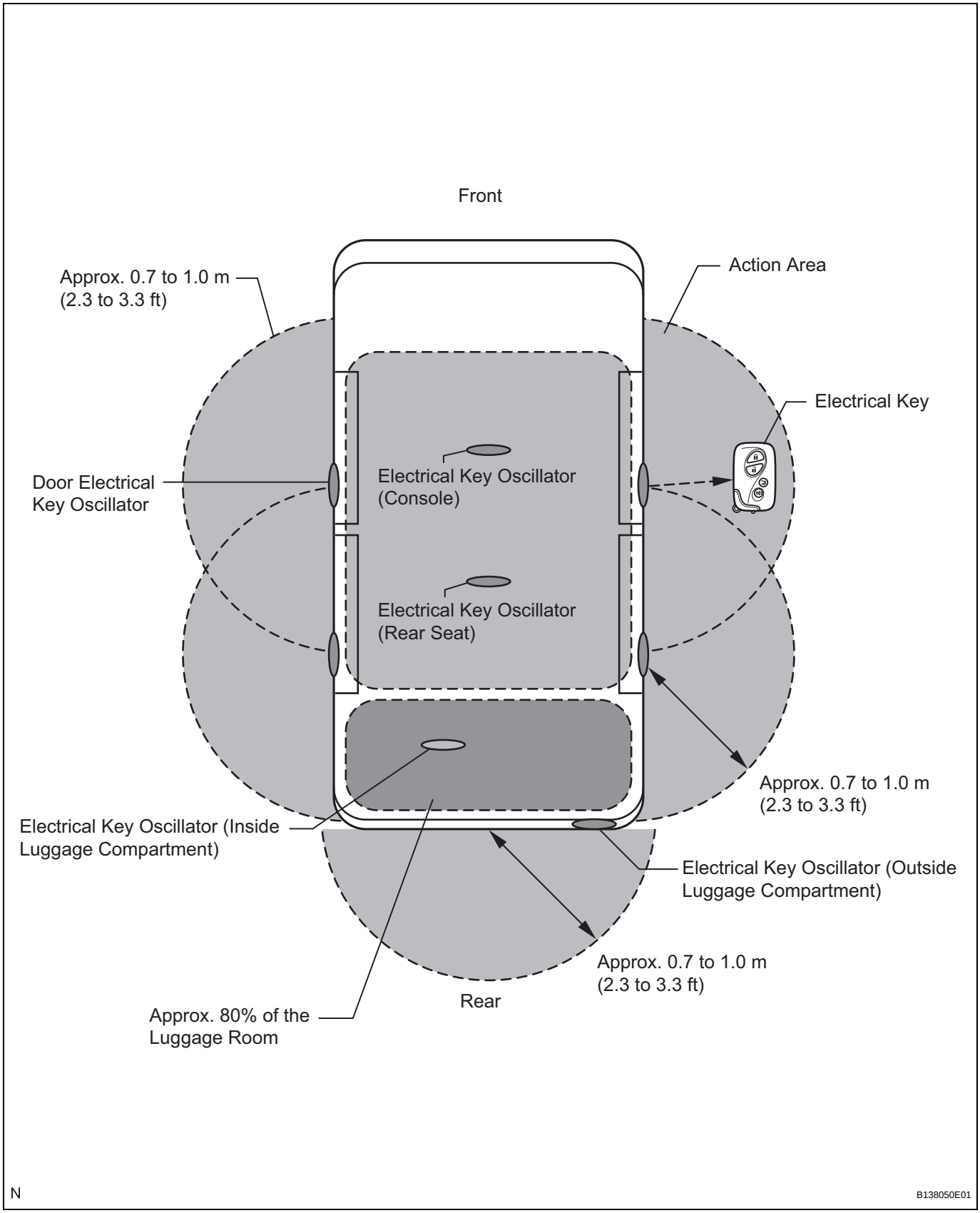

(a) Precautions for the entire system:
- Be sure to carry the electrical key during inspection of the smart access system with push-button start.

- As weak radio waves are used to detect the electrical key, the electrical key detection area may decrease, or the electrical key may not be detected correctly in the following situations:
  (a) The electrical key battery is depleted.
  (b) Any facilities that generate strong radio waves, such as a TV tower, power plant, broadcast station, or gas station, are located near the inspection site.
  (c) A wireless device, such as a cellular phone, is carried with the electrical key.
  (d) The electrical key is in contact with or covered with metal.
  (e) Another wireless door lock control function is operated near the vehicle.
  (f) The electrical key is located near a device that generates high voltage or noise.
- The electrical key may be difficult to operate for a reason relating to the vehicle body shape.
- The electrical key may not be detected correctly if it is around the vehicle's windows, the door handle, or the center of the bumper even when it is in the detection area outside the vehicle.
- The electrical key may not be detected correctly if it is on the instrument panel, rear package tray, floor, or in the glove box even when it is in the detection area inside the vehicle.
- The engine cannot be started even when the electrical key is in the detection area inside the luggage compartment.
- The electrical key may not operate if the electrical key is not held properly.
- The smart access system with push-button start does not operate in the following conditions:
  (a) The smart access system with push-button start is canceled.
  (b) The electrical key battery is completely depleted (the indicator does not blink when pushing any of the buttons on the electrical key).

3. FUNCTION OF MAIN COMPONENTS

Component	Function
Electrical Key	Consists of mechanical key, transmitter for wireless door lock control and transceiver for smart access system with push-button start
Certification ECU	Controls smart access system with push-button start in accordance with signals from each oscillator, various switches, ECUs, and electrical key • Judges and certifies ID code from door control receiver • Transmits engine immobiliser unset signal to ID code box • Transmits steering unlock signal to steering lock ECU

Component	Function
Main Body ECU (Instrument Panel J/B)	Controls push button start function in accordance with signals from various switches, ECUs, and combination meter • Transmits electrical key verification request signal to certification ECU in accordance with engine switch signal, and turns relays ON and OFF • Receives request signal from certification ECU and actuates door lock motor to unlock or lock door • Transmits each door condition signal to certification ECU
ID Code Box	Receives steering unlock or engine immobiliser unset signals from certification ECU, certifies them, and transmits unset signals to steering lock ECU or ECM
Outside Door Handle (driver, passenger, rear doors) (antenna)	Transmits request signals
Outside Door Handle (driver, passenger, rear doors) (touch sensor)	Detects that person touches inside of outside handle
Outside Door Handle (driver, passenger, rear doors) (lock switch)	Transmits door lock request signals to certification ECU
Door Electrical Key Oscillator (driver, passenger, rear doors)	Receives request signal from certification ECU, and forms detection area around each door
Indoor Electrical Key Oscillator (console and rear seat)	Receives request signal from certification ECU, and forms detection area in vehicle interior
Luggage Compartment Electrical Key Oscillator (inner)	Receives request signal from certification ECU, and forms detection area in luggage compartment
Luggage Compartment Electrical Key Oscillator (outer)	Receives request signal from certification ECU, and forms detection area around luggage compartment door
Door Control Receiver	• Receives ID code from electrical key in detection area and transmits it to certification ECU • Receives ID code from electrical key in luggage compartment and transmits it to certification ECU
Electrical Key Antenna	Receives ID code from electrical key and transmits it to door control receiver
Outside Rear View Mirror – Foot Light	When the key enters the exterior actuation area, the foot lights are illuminated in accordance with the request signals of the certification ECU
Luggage Compartment Opener Switch	Transmits luggage compartment door open request signal to certification ECU
Stop Light Switch	Outputs state of brake pedal to main body ECU
• Wireless Door Lock Buzzer • Combination Meter – Multi-information Display – Buzzer	When certification ECU detects human errors such as those below, it warns driver by sounding wireless door lock buzzer, displaying information and sounding a buzzer in combination meter in accordance with request signal from ECU Example: • Electrical key is taken out of vehicle • Driver leaves vehicle while engine is still running • Driver leaves vehicle while shift lever is in any position other than P

DL

4. CONSTRUCTION AND OPERATION

(a) Electrical Key

The electrical key consists of a mechanical key, a transmitter for the wireless door lock control, and a transceiver for the smart access system with push-button start.

- The transceiver for the smart access system with push-button start receives signals from the oscillators and sends the ID code to the tuner.
- The transmitter for the wireless door lock control has a LOCK switch, UNLOCK switch, LUGGAGE COMPARTMENT switch, and PANIC switch.
- This mechanical key works for the driver door, luggage compartment door, and glove box, but cannot start the engine.

A total of 7 electrical keys can be registered.

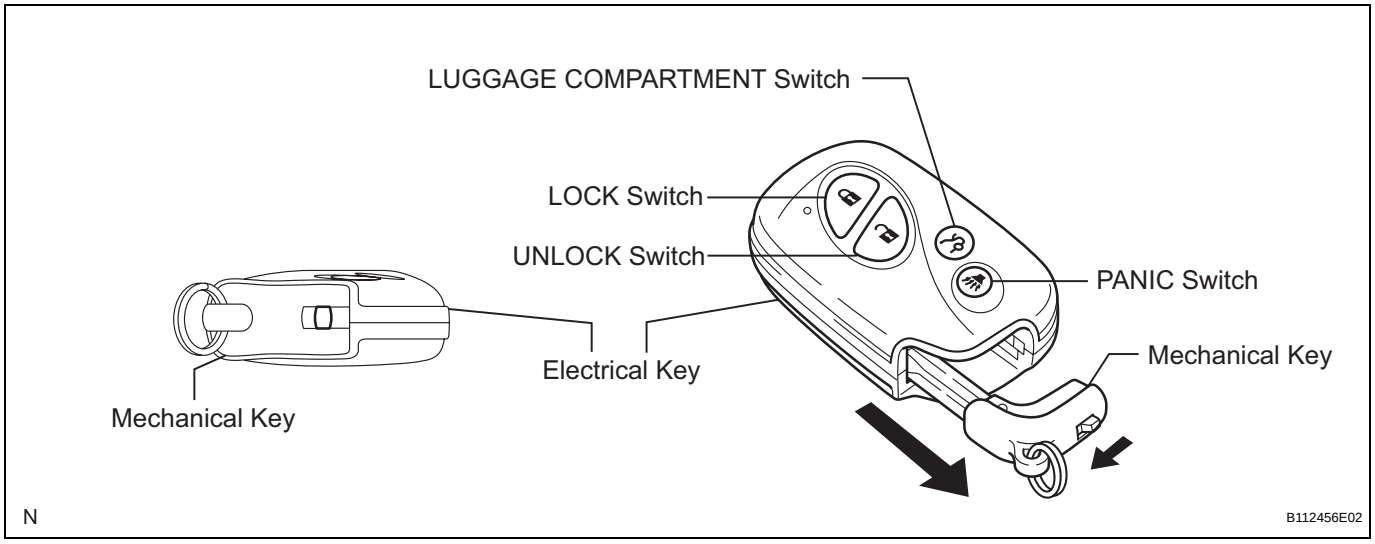

(b) Oscillator (each door oscillator, front and rear indoor oscillator, luggage compartment inner oscillator, luggage compartment outer oscillator)
Each oscillator transmits the request signal received from the certification ECU, and forms an electrical key detection area to detect the presence of an electrical key. The detection area formed by each door oscillator and luggage compartment outer oscillator is approximately 0.7 to 1.0 m (2.3 to 3.3 ft) from the outside handle of each door or the center of the rear bumper.

- The detection area of each door oscillator is formed by transmitting a request signal every 0.25 seconds while the engine switch is off and each door is locked. In this way, it detects the proximity of an electrical key. During entry lock, the detection area is formed with the lock switch on.
- The detection area of the luggage compartment outer oscillator is formed when the power luggage door open switch is on.
- The detection area of the indoor oscillator (front and rear) is formed when the driver door is opened or closed, entry luggage compartment open, electrical key lock-in prevention during start ignition, when a warning is activated, or when the lock switch is on.
- The detection area of the luggage compartment inner oscillator is formed when the luggage compartment door is closed, entry luggage compartment open, electrical key lock-in prevention the luggage compartment open switch or lock switch is pressed.

5. ENTRY FUNCTION OPERATION

(a) The smart access system with push-button start has the following functions:

Function	Outline
Mechanical Key	Operation is same as conventional mechanical key.
Wireless Door Lock Control	This function remotely locks and unlocks all doors or luggage compartment. Operation is same as wireless door lock control system. However, the receiver in certification ECU uses entry door control receiver to control locking and unlocking.
Entry Illumination	When person carrying electrical key enters detection area, door will enter unlock standby mode and front map light will illuminate.
Entry Unlock	When electrical key is located in detection area of door oscillator, door will unlock by touching inside of outside door handle.
Entry Unlock Mode Switching (See page DL-119)	Changes doors that can be unlocked with entry unlock function between 2 modes. • Driver door mode • All door mode
Entry Lock	When electrical key is located in detection area of door oscillator and engine switch is off, door can be locked by pressing lock switch on outside door handle.
Entry Luggage Compartment Open	When electrical key is in detection area of luggage compartment outer oscillator, luggage compartment opens by pressing luggage compartment open switch.
Window Close	With the electrical key in the action area of any door oscillators, all open windows are closed when the lock switch on the door outside handle is pressed for 3 seconds or more.
Memory Call	This function operates driving position memory system in accordance with electrical key ID code.
Electrical Key Lock-in Prevention	• Prevents confinement of electrical key if door is locked using outside door handle while electrical key is still inside vehicle. • If all doors are locked and luggage compartment door is closed while electrical key is still in luggage compartment, warning buzzer sounds. If luggage compartment open switch is operated, luggage compartment door can be opened.
Warning	When any of situations below occur, smart access system with push-button start causes certification ECU to sound buzzer in combination meter and wireless door lock buzzer, and display information in order to alert driver. • Exit warning if shift lever position is not P and power source mode is not off. • Exit warning if shift lever position is P and power source mode is not off. • Warning if occupant leaves with electrical key. • Warning if engine switch is operated while electrical key is outside actuation area. • Warning if entry lock is operated while electrical key is inside vehicle. • Warning if electrical key battery is weak. • The electrical key is left in the vehicle. • A door ajar. • The electrical key is left in the luggage compartment. • Steering lock does not release. • The steering lock mechanism is malfunctioning. • The main body ECU is malfunctioning. • An engine start method is displayed.
Battery Saving	If electrical key is constantly located within actuation area of door oscillator, system maintains periodic communication with electrical key. Therefore, if vehicle remains parked in that state for a long time, electrical key battery and vehicle battery could be drained.

Function	Outline
Key Cancel (See page DL-119)	Following electrical key functions can be cancelled by performing certain operations: • Entry Unlock/Lock • Memory Call • Entry Luggage Compartment Open • Electrical key Lock-in Prevention • Warning
Electrical Key Code Registration	The total number of electrical keys that can be registered is seven. Enables the registration (writing and storing) of transmitter recognition codes in the EEPROM that is contained in the certification ECU.

6. WIRELESS DOOR LOCK AND UNLOCK AND LUGGAGE COMPARTMENT OPEN FUNCTION

Push the LOCK/UNLOCK/PANIC/LUGGAGE COMPARTMENT switch on the electrical key to operate each function. For details, See page DL-67.

7. ENTRY UNLOCK FUNCTION

(a) The detection area is formed by communication between a door oscillator and door control receiver when the door is locked in order to detect access of the person carrying the electrical key.

(b) When the person carrying the electrical key enters the detection area around the vehicle, the matching of the ID codes for a door oscillator and electrical key will automatically be performed. After the matching is completed, the door will enter unlock standby mode.

(c) In unlock standby mode, the antenna built into the outside handle starts sensing. If the outside handle is held (the back side of the handle is touched), the door unlock operation will be performed. At this time, the hazard warning light blinks twice and the wireless door lock buzzer sounds twice.

(d) If any of the doors are not opened after a door unlock operation, all doors will automatically lock after 60 (only for U.S.A. and Canadian package models) or 30 (except U.S.A. and Canadian package models) seconds.

8. ENTRY LOCK FUNCTION

(a) After leaving the vehicle carrying the electrical key, push the lock switch on the outside handle when all the doors are closed.

(b) The certification ECU determines whether the electrical key is located inside or outside of the cabin based on the information from a door oscillator and room oscillator. Then matching of the ID codes is performed.

(c) When the matching result shows that the ID codes of the electrical key and indoor antenna do not match and the ID codes of the electrical key and door oscillator match, the door lock function will operate. At this time, the hazard warning lights blink once and the wireless door lock buzzer sounds once.

(d) If the electrical key is located inside of the cabin, the door lock function will not operate and the alarm buzzer (beep sound) will sound for 2 seconds.

9. ENTRY LUGGAGE COMPARTMENT OPEN FUNCTION

Stand in front of the luggage compartment with the electrical key and push the power luggage compartment opener switch to start the matching of the ID codes for the electrical key oscillator (outside luggage compartment). If the ID codes match, luggage compartment door open operation will be performed.

10. PREVENTION OF ELECTRICAL KEY CONFINEMENT FUNCTION

(a) If you attempt to lock the door through keyless operation (move the lock knob to the lock position and then close the door) with the electrical key in the cabin, the system determines that the electrical key is located in the cabin and unlocks the door.

(b) If the luggage compartment is closed with the electrical key in it, the alarm will sound and the luggage compartment can be opened only when all the doors are locked in order to prevent electrical key confinement in the vehicle.

11. ENTRY ILLUMINATION FUNCTION

When a person carrying the electrical key enters the detection area, the door will enter unlock standby mode and the front map light will illuminate.

HINT:

The entry illumination function operates when the electrical key enters the vehicle exterior detection area from out of the detection area. If the electrical key remains in the detection area for 3 seconds or more, the illumination function does not operate.

12. MEMORY CALL FUNCTION

When the engine switch is off and the driver side door is closed, opening the door will operate the memory call function (the door will move to a previously recorded driving position). Using the electrical key, memory call, electrical key registration and electrical key cancellation can be performed.

13. WARNING FUNCTION

(a) General

When any of the situations below occur, the smart access system with push-button start causes the certification ECU to sound the buzzer in the combination meter and the wireless door lock buzzer, and illuminate the combination meter's multi-information display in order to alert the driver.

Warning Function Operation Condition	Situation
Exit warning if shift lever position is not P and power source mode is not off.	A
Exit warning if shift lever position is P and power source mode is not off.	B
Warning if occupant leaves with electrical key.	C
Warning if engine switch is operated while electrical key is outside detection area.	D

Warning Function Operation Condition	Situation
Warning if entry lock is operated while electrical key is inside cabin.	E
Warning if electrical key battery is weak.	F
The electrical key is left in the vehicle.	G
A door is ajar.	H
The electrical key is left in the luggage compartment.	I
Steering lock does not release.	J
The steering lock mechanism is malfunctioning.	K
The main body ECU is malfunctioning.	L
An engine start method is displayed.	M

(b) Situation A

There are 2 patterns for situation A.

Pattern 1: In situation A, the door is opened and the user tries to leave the vehicle.

Pattern 2: Then the user holds the electrical key and tries to move away from the vehicle.

In these situations, the following control is performed:

- Pattern 1

Possible Effects without Warning	Sudden vehicle start, vehicle theft, vehicle roll-away
Warning Condition	Certification ECU gives warning when all following conditions are satisfied: • Shift lever position is not P • Engine switch is not off • Driver side door is opened • Vehicle speed is 5 km/h (3.1 mph)
Combination Meter • Buzzer	Warning: Continuous sound
Combination Meter • Multi-information Display	-
Wireless Door Lock Buzzer	Warning: Sounds 3 times
Warning Stop Condition	Warning is stopped when one of following conditions is met: • Engine switch is off • Shift lever position is P • Driver side door is closed • Vehicle speed is above 5 km/h (3.1 mph)

- Pattern 2

Possible Effects without Warning	Sudden vehicle start, vehicle theft, vehicle roll-away
Warning Condition	Certification ECU gives warning when all following conditions are satisfied: • Shift lever position is not P • Engine switch is not off • Driver side door is opened and closed • Vehicle speed is 0 km/h (0 mph) • Electrical key is not in cabin or luggage compartment
Combination Meter • Buzzer	Warning: Continuous sound Warning is stopped when one of following conditions is met: • Engine switch is off • Shift lever position is P • Electrical key is in cabin or luggage compartment • Vehicle speed is above 0 km/h (0 mph)

Possible Effects without Warning	Sudden vehicle start, vehicle theft, vehicle roll-away
Combination Meter • Multi-information Display	Warning: Information below is displayed alternately on combination meter: • "Shift to P Range" • "Key is not Detected" "Key is not detected" warning is stopped when of following conditions is met: • Engine switch is off • Electrical key is in vehicle "Shift to P range" warning is stopped when one of following conditions is met: • Engine switch is off • Vehicle speed is above 0 km/h (0 mph) • Shift lever position is P
Wireless Door Lock Buzzer	Warning: Continuous sound Warning is stopped when one of following conditions is met: • Engine switch is off • Shift lever position is P • Electrical key is in cabin or luggage compartment • Vehicle speed is above 0 km/h (0 mph)

(c) Situation B

There are 2 patterns for situation B.

Pattern 1: In situation B, the door is opened and the user tries to leave the vehicle.

Then the user holds the electrical key and tries to move away from the vehicle.

Pattern 2: Then the user tries to use the entry lock and presses the lock switch.

In these situations, the following control is performed:

- Pattern 1

Possible Effects without Warning	Vehicle theft, engine cannot be restarted
Warning Condition	Certification ECU gives warning when all following conditions are satisfied: • Shift lever position is P • Engine switch is not off • Driver side door is opened and closed • Electrical key is not in cabin or luggage compartment
Combination Meter • Buzzer	Warning: Sounds once
Combination Meter • Multi-information Display	Warning: Information below is displayed on combination meter: • "Key is not Detected" Warning is stopped when either of following conditions is met: • Engine switch is off • Electrical key is in cabin or luggage compartment
Wireless Door Lock Buzzer	Warning: Sounds 3 times Warning is stopped when either of following conditions is met: • Engine switch is off • Electrical key is in cabin or luggage compartment

- Pattern 2

Possible Effects without Warning	Vehicle theft
Warning Condition	Certification ECU gives warning when all following conditions are satisfied: • Shift lever position is P • Engine switch is not off • All doors are closed • Lock switch is "ON" • Electrical key is not in cabin or luggage compartment

Possible Effects without Warning	Vehicle theft
Combination Meter • Buzzer	-
Combination Meter • Multi-information Display	-
Wireless Door Lock Buzzer	-

(d) Situation C
In this situation, the following control is performed:

Possible Effects without Warning	Engine cannot be restarted
Warning Condition	Certification ECU gives warning when all following conditions are satisfied: • Engine switch is not off • Door other than driver side door is opened and closed • Vehicle speed is 0 km/h (0 mph) • Electrical key is not in cabin or luggage compartment
Combination Meter • Buzzer	Warning: Sounds once
Combination Meter • Multi-information Display	Warning: Information below is displayed on combination meter: • "Key is not Detected" Warning is stopped when one of following conditions is met: • Engine switch is off • Vehicle speed is above 0 km/h (0 mph) • Electrical key is in cabin or luggage compartment
Wireless Door Lock Buzzer	Warning: Sounds 3 times Warning is stopped when one of following conditions is met: • Engine switch is off • Vehicle speed is above 0 km/h (0 mph) • Electrical key is in cabin or luggage compartment

(e) Situation D
In this situation, the following control is performed:

Possible Effects without Warning	Confuses the user
Warning Condition	Certification ECU gives warning when both following conditions are satisfied: • Engine switch is not off • Electrical key is not in cabin
Combination Meter • Buzzer	Warning: Sounds once
Combination Meter • Multi-information Display	Warning: Information below is displayed on combination meter for 8 seconds (disappears after 8 seconds): • "Key is not Detected"
Wireless Door Lock Buzzer	-

(f) Situation E
In this situation, the following control is performed:

Possible Effects without Warning	Vehicle theft
Warning Condition	Certification ECU gives warning when all following conditions are satisfied: • Engine switch is off • All doors are closed • Lock switch is "ON" • Electrical key is in cabin
Combination Meter • Buzzer	-
Combination Meter • Multi-information Display	-

Possible Effects without Warning	Vehicle theft
Wireless Door Lock Buzzer	Warning: Sounds for 2 seconds

(g) Situation F
In this situation, the following control is performed:

Possible Effects without Warning	Smart access system with push-button start does not function
Warning Condition	Certification ECU gives warning when all following conditions are satisfied: • Engine switch is turned off after being left on (IG) for over 20 minutes • Electrical key battery voltage is low • Electrical key is in cabin or luggage compartment
Combination Meter • Buzzer	Warning: Sounds once
Combination Meter • Multi-information Display	Information below is displayed on combination meter: • "Low Key Battery"
Wireless Door Lock Buzzer	-

(h) Situation: G
There are two patterns for situation G.
- Pattern 1: When the driver's door is open, the driver changes the power source mode to ACC and attempts to leave the vehicle.
- Pattern 2: When the driver's door is open, the driver changes the power source mode from ON to OFF and attempts to leave the vehicle.

In these situations, the following control is performed:

Pattern 1. and Pattern 2.

Possible Effects without Warning	Vehicle theft
Warning Condition	The warning is activated when one of the following conditions is met: • Engine switch is on (ACC) and the driver door is opened. • Engine switch is off, the steering is unlocked, and the driver door is opened.
Combination Meter • Buzzer	Continues to sound at short and even intervals
Combination Meter • Multi-information Display	-
Wireless Door Lock Buzzer	-
Engine Switch Indicator Light	-
Warning Stop Condition	Warning is stopped when one of the following conditions is met: • Engine switch is not off. • Driver side door is closed. • Engine switch is off and the steering is locked

(i) Situation: H
The lock switch on the door outside handle is pressed to perform entry lock with a door open.
In this situation, the following control is performed:

Possible Effects without Warning	Vehicle theft
Warning Condition	The warning is activated when all of the following conditions are met: • Engine switch is off. • Any doors are opened. • Entry lock button on the outer door handle is operated.
Combination Meter • Buzzer	-
Combination Meter • Multi-information Display	-

Possible Effects without Warning	Vehicle theft
Wireless Door Lock Buzzer	Warning: Continuous sound
Engine Switch Indicator Light	-
Warning Stop Condition	Warning is stopped when one of the following conditions is met: • Engine switch is off • All doors are closed. • Wireless door lock remote function is unlocked. • Entry unlock is operated. • 10 seconds have elapsed since the wireless door lock buzzer was activated.

(j) Situation: I
The luggage compartment door is closed with the electrical key left in the luggage compartment.
In this situation, the following control is performed:

Possible Effects without Warning	Key Confinement
Warning Condition	The warning is activated when all of the following conditions are met: • Vehicle speed is 5 mph (3.1 km/h). • All doors are closed. • Entry luggage compartment open function is available.
Combination Meter • Buzzer	-
Combination Meter • Multi-information Display	-
Wireless Door Lock Buzzer	Sounds for 2 seconds
Warning Stop Condition	The luggage compartment is opened using the entry luggage compartment open function and the electrical key is removed from the luggage compartment.

(k) Situation: J
The steering lock cannot be released.
In this situation, the following control is performed:

Possible Effects without Warning	Steering usability function
Warning Condition	The steering lock cannot be released, thus the engine is prevented from starting.
Combination Meter • Buzzer	-
Combination Meter • Multi-information Display	Warning: Information below is displayed alternately on combination meter: Displayed for 15 seconds (and then automatically turned off) "S/T IS NOT UNLOCKED"
Combination Meter • Master Warning Light	Flash
Wireless Door Lock Buzzer	-
Engine Switch Indicator Light	The green indicator blinks at 1-second intervals (goes off automatically in 15 seconds).
Warning Stop Condition	The engine switch is pressed while the steering wheel is turned left and right, and the steering lock successfully disengages.

(l) Situation: K
A malfunction of the steering lock ECU is detected.
In this situation, the following control is performed:

Possible Effects without Warning	Malfunction detection
Warning Condition	A malfunction of the steering lock ECU is detected.
Combination Meter • Buzzer	-

Possible Effects without Warning	Malfunction detection
Combination Meter • Multi-information Display	Warning: Information below is displayed alternately on combination meter: "CHECK S/T OFF"
Combination Meter • Master Warning Light	Flash
Wireless Door Lock Buzzer	-
Engine Switch Indicator Light	The amber indicator blinks at 2-second intervals.
Warning Stop Condition	The steering lock ECU returns to normal.

(m) Situation: L
A malfunction of the main body ECU is detected.
In this situation, the following control is performed:

Possible Effects without Warning	Malfunction detection
Warning Condition	A malfunction in the main body ECU is detected.
Combination Meter • Buzzer	-
Combination Meter • Multi-information Display	-
Combination Meter • Master Warning Light	-
Wireless Door Lock Buzzer	-
Engine Switch Indicator Light	The amber indicator blinks at 2-second intervals.
Warning Stop Condition	The main body ECU returns to normal.

(n) Situation: M
A warning message appears on the meter when the driver does not follow the proper procedure to start the vehicle.
In this situation, the following control is performed:

Possible Effects without Warning	Usability function
Warning Condition	The warning is activated when all of the following conditions are met: • Power source is in a mode other than "ON". • Any doors are closed and opened. • The power source is changed from OFF to ACC more than once with the engine off and brake pedal not depressed.
Combination Meter • Buzzer	-
Combination Meter • Multi-information Display	Warning: Information below is displayed alternately on combination meter: "WHEN STARTING THE ENGINE DEPRESS THE BRAKE PEDAL"
Combination Meter • Master Warning Light	-
Wireless Door Lock Buzzer	-
Engine Switch Indicator Light	-
Warning Stop Condition	The warning is stopped when one of the following conditions is met: • 10 seconds have elapsed since a warning message was displayed. • The engine switch is pushed with the brake pedal depressed.

14. BATTERY SAVING

(a) Vehicle Battery Saving Function

In the smart access system with push-button start, signals are emitted outside of the vehicle at a prescribed interval (0.25 seconds) when the doors are locked. Therefore, the vehicle battery could be drained if the vehicle remains parked for a long time. For this reason, the controls listed below are carried out:

Condition	Control
Both conditions below are met for 5 days: • Electrical key is not in detection area • Touch sensor or lock switch operation is not performed	Signal transmission interval is extended from 0.25 to 0.75 seconds
Both conditions below are met for 14 days: • Electrical key is not in detection area • Touch sensor or lock switch operation is not performed	Automatically deactivates the smart access system with push-button start

Reinstatement Conditions

- A wireless door lock control signal (lock, unlock) is input and the ID code matches.
- A user carries the electrical key and pushes a lock switch on an outside door handle.
- A door is locked or unlocked by the mechanical key.

(b) Electrical Key Battery and Vehicle Battery Saving Function

In the smart access system with push-button start, if the electrical key is constantly located within the vehicle exterior detection area of the doors, the system maintains periodic communication with the electrical key. Therefore, if the vehicle remains parked in that state for a long time, the electrical key battery and the vehicle battery could be drained. For this reason, if this state continues longer than 10 minutes, the smart access system with push-button start automatically becomes deactivated.

Reinstatement Conditions

- A wireless door lock control signal (lock, unlock) is input and the ID code matches.
- A user carries the electrical key and pushes a lock switch on an outside door handle.
- A door is locked or unlocked by the mechanical key.

HOW TO PROCEED WITH TROUBLESHOOTING

HINT:
- Use the following procedure to troubleshoot the smart key system.
- The intelligent tester can be used in steps 4, 5 and 7.
- When troubleshooting the smart key system using the intelligent tester with the engine switch off, connect the intelligent tester to the vehicle and repeat turning any of the courtesy light switches on and off until communication between the tester and the vehicle begins (the interval between ON and OFF should be less than 1.5 sec.).

1	VEHICLE BROUGHT TO WORKSHOP

NEXT

2	CUSTOMER PROBLEM ANALYSIS CHECK

HINT:
- In troubleshooting, confirm that the problem symptoms have been accurately identified. Preconceptions should be discarded in order to make an accurate judgment. To clearly understand what the problem symptoms are, it is extremely important to ask the customer about the problem and the conditions at the time the malfunction occurred.
- Gather as much information as possible for reference. Past problems that seem unrelated may also help in some cases.
- The following 5 items are important points in the problem analysis:

What	Vehicle model, system name
When	Date, time, occurrence frequency
Where	Road conditions
Under what conditions?	Running conditions, driving conditions, weather conditions
How did it happen?	Problem symptoms

NEXT

3	INSPECT BATTERY VOLTAGE

Standard voltage:
11 to 14 V

If the voltage is below 11 V, recharge or replace the battery before proceeding to the next step.

NEXT

4 INSPECT COMMUNICATION FUNCTION OF CAN COMMUNICATION SYSTEM

(a) Use the intelligent tester to check if the CAN Communication System is functioning normally (See page CA-11).

Result

Result	Proceed to
CAN DTC is not output	A
CAN DTC is output	B

B → **GO TO CAN COMMUNICATION SYSTEM**

A

5 CHECK FOR DTC

(a) Check for DTCs and note any codes that are output (See page DL-131).
(b) Delete the DTCs.
(c) Recheck for DTCs.

Result

Result	Proceed to
DTC does not reoccur	A
DTC reoccurs	B

B → **GO TO DIAGNOSTIC TROUBLE CODE CHART**

A

6 PROBLEM SYMPTOMS TABLE

NEXT

7 OVERALL ANALYSIS AND TROUBLESHOOTING

(a) On-vehicle inspection (See page DL-135)
(b) DATA LIST/ACTIVE TEST (See page DL-131)
(c) Terminals of ECU (See page DL-124)

NEXT

8 REPAIR OR REPLACEMENT

NEXT

9	CONFIRMATION TEST

NEXT

END

CUSTOMIZE PARAMETERS

1. CUSTOMIZING FUNCTION WITH INTELLIGENT TESTER

HINT:
The items in the table below can be customized.

NOTICE:

- **When the customer requests a change in a function, first make sure that the function can be customized.**
- **Be sure to make a note of the current setting before customizing.**
- **When troubleshooting a function, first make sure that the function is set to the default setting.**

SMART:

Display (Item)	Default	Contents	Setting
PARK WAIT TIME (Wait time to permit opening door after locking)	2.5s	Function that sets waiting time to permit opening door after door is locked with entry lock function.	0.5s / 1.5s / 2.5s / 5.0s
IGNITION AREA (SMART ignition available area)	ALL	Function to choose the available area for electrical key to start E/G and cancel the steering lock.	FRONT / ALL
TRUNK OPEN MODE (Luggage compartment opening operation)	ON	Function to open a luggage compartment when the driver has the electrical key and presses the luggage open button.	ON / OFF

WIRELESS DOOR LOCK:

Display (Item)	Default	Contents	Setting
ALARM FUNCTION (Panic function)	ON	Function to operate the theft deterrent system by keeping pressing the lock button of the transmitter for 2.5 seconds. If there is a panic button, press the panic button instead of the lock button.	ON / OFF
WIRELS BUZZ VOL	Level 7	Function to adjust the volume of the wireless door lock buzzer.	Level 0 / 1 / 2 / 3 / 4 / 5 / 6 / 7

WARNING:

Display (Item)	Default	Contents	Setting
KEY LOW-BATT WRN	ON	Function to set a warning function for the time when a key battery becomes weak.	ON / OFF

2. Entry Unlock Mode Switching Function

(a) To change the vehicle to entry unlock mode switching function, make sure the vehicle power is off and simultaneously press and hold the electrical key's LOCK switch and another electrical key switch for 4.5 seconds.
When the switches are pressed and held for 4.5 seconds, the entry door unlock mode changes in the following order: driver door mode, all door mode.

NOTICE:
After pressing and holding the switches for 4.5 seconds, wait 4.5 seconds before performing the same procedure again.

- Driver door unlock mode:
  When the driver door's touch sensor is touched, only the driver door unlocks. When another touch sensor is touched, all doors unlock.

- All door unlock mode:
  When the touch sensor is touched, all doors unlock.

(b) The certification ECU receives this signal from the entry door control receiver and changes the smart access system with push-button start to the entry unlock mode.

(c) The certification ECU sounds the buzzers of the wireless door lock buzzer and combination meter to inform the user that the mode has been switched.

Mode	Wireless Door Lock Buzzer	Combination Meter		
		Multi-information Display		Buzzer
Driver Door (Default)	ON OFF Sounds 3 times	Displayed for 5 sec.	Driver door “open” indication	Sounds once
All Doors (Customized)	ON OFF Sounds 2 times	Displayed for 5 sec.	All door “open” indication	Sounds once

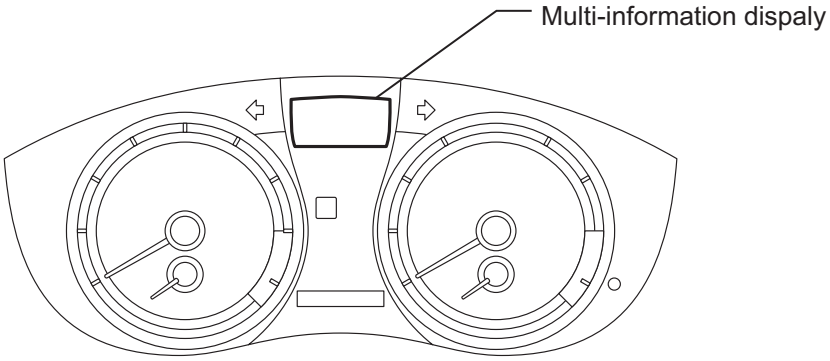

N B138051E01

HINT:
The function only changes the entry unlock mode of the smart access system with push-button start. It does not switch the unlocking of the wireless door lock control.

3. Electrical Key Cancel

The electrical key cancel operation disables the following functions:

- Entry Ignition
- Entry Unlock/Lock
- Entry Luggage Compartment Open
- Electrical Key Lock-in Prevention
- Warning
- Memory Call

(a) The operation procedures are as follows:
Precondition:
Engine switch off, driver side door closed and unlocked.

(1) Unlock the driver side door once with the UNLOCK switch of the electrical key.
(2) Open the driver door within 5 seconds.
(3) Unlock the driver side door twice with the UNLOCK switch of the electrical key within 5 seconds.
(4) Repeat open → close twice for the driver door within 30 seconds, and open again.
(Driver door: Open → Close → Open → Close → Open)
(5) Unlock the driver side door twice with the UNLOCK switch of the electrical key within 5 seconds.
(6) Repeat open → close once for the driver door within 30 seconds, and open again.
(Driver door: Open → Close → Open)
(7) Close the driver door within 5 seconds.
When electrical key cancel is activated, the wireless door lock buzzer sounds twice.
To return to the original condition, perform the procedures again. When the original condition is returned, the wireless door lock buzzer sounds once.

PROBLEM SYMPTOMS TABLE

HINT:

- Use the table below to help determine the cause of the problem symptoms. The potential causes of the symptoms are listed in order of probability in the "Suspected area" column of the table. Check each symptom by checking the suspected areas in the order they are listed. Replace parts as necessary.
- Inspect the fuses and relays related to this system before inspecting the suspected areas below.

SMART KEY SYSTEM (ENTRY):

Symptom	Suspected Area	See page
Entry lock/unlock does not operate.	1. Check for DTCs in the smart access system with push-button start (Starting function).	ST-28
	2. Refer to PROBLEM SYMPTOMS TABLE of the power door lock control system ("All doors cannot be locked/unlocked simultaneously by neither door control switch nor door key cylinder").	DL-12
	3. Courtesy light switch circuit	LI-94
	4. Lock position switch circuit	-
	- Driver door	DL-23
	- Front passenger door	DL-26
	- Rear passenger door LH	DL-29
	- Rear passenger door RH	DL-32
	5. Entry lock switch circuit	DL-149
	6. Touch sensor circuit	DL-154
	7. Antenna circuit	DL-160
	8. Refer to "ID code matching inside the cabin cannot be performed".	-
	9. Door oscillator circuit	DL-143
	10. Replace the main body ECU.	-
	11. Replace the certification ECU.	-
Luggage compartment does not open (when the electrical key is outside the vehicle).	1. Check for DTCs in the smart access system with push-button start (Starting function).	ST-28
	2. Check if any function is cancelled due to customization.	DL-119
	3. Refer to PROBLEM SYMPTOM TABLE of the luggage compartment door opener system ("Luggage compartment door opener does not operate").	ED-3
	4. Operate the luggage compartment opener switch on the electrical key to check the wireless function.	DL-67
	5. Refer to PROBLEM SYMPTOMS TABLE of the wireless door lock control system ("The wireless door lock control system does not operate").	DL-70
	6. Check operation of the cabin oscillator in ACTIVE TEST.	DL-131
	7. Luggage oscillator circuit	DL-162
	8. Luggage compartment door open switch circuit	DL-168
	9. Replace the main body ECU.	-
	10. Replace the certification ECU.	-
All entry function does not operate.	1. Registration of the key.	EI-9
	2. Certification ECU power source circuit	DL-170
	3. Replace certification ECU.	-

Symptom	Suspected Area	See page
Function to prevent electrical key confinement in the luggage compartment does not operate. (The luggage compartment does not open.)	1. Check for DTCs in the smart access system with push-button start (Starting function).	ST-28
	2. Power door lock control system	DL-12
	3. Courtesy light switch circuit	LI-94
	4. Lock position switch circuit	-
	- Driver door	DL-23
	- Front passenger door	DL-26
	- Rear passenger door LH	DL-29
	- Rear passenger door RH	DL-32
	5. Check if any function is not cancelled due to customization.	DL-119
	6. Operate the LOCK/UNLOCK switch on the key to check the wireless function.	DL-67
	7. Refer to PROBLEM SYMPTOMS TABLE of the wireless door lock control system ("The wireless door lock control system does not operate").	DL-70
	8. Check operation of the cabin oscillator in ACTIVE TEST.	DL-131
	9. Luggage oscillator circuit	DL-162
	10. Replace the main body ECU.	-
	11. Replace the certification ECU.	-
Function to prevent electrical key confinement in the luggage compartment does not operate. (The alarm does not sound.)	1. Check if the function to prevent electrical key confinement in the luggage compartment operates.	DL-135
	2. Check if answer back is performed when the wireless door lock is operated.	DL-67
	3. Replace the certification ECU.	-
The outside alarm of the answer back and entry systems does not sound.	1. Check if the function to prevent electrical key confinement in the luggage compartment operates.	DL-135
	2. Check that "WIRELESS BUZZER" and "HAZARD" in the ACTIVE TEST are YES. (If it is NO, go to wireless door lock system.)	DL-131
	3. Wireless door lock tuner circuit (DTC B1242)	DL-139
	4. Replace the certification ECU.	-
The inside alarm of the entry system does not sound.	1. Operate the LOCK/UNLOCK switch on the electrical key to check the wireless function.	DL-67
	2. Refer to PROBLEM SYMPTOMS TABLE of the wireless door lock control system ("Wireless door lock function").	DL-70
	3. Check if the electrical key reminder buzzer sounds.	DL-135
	4. Replace the certification ECU.	-
ID code matching inside the cabin cannot be performed.	1. Check if any function is cancelled due to customization.	DL-119
	2. Operate the LOCK/UNLOCK switch on the key to check the wireless function.	DL-67
	3. Refer to PROBLEM SYMPTOMS TABLE of the wireless door lock control system ("The wireless door lock control system does not operate").	DL-70
	4. Check the cabin oscillator operation in the ACTIVE TEST.	DL-131
	5. Room oscillator circuit	DL-165
	6. Luggage oscillator circuit	DL-162
	7. Replace the certification ECU.	-

Symptom	Suspected Area	See page
ID code matching outside the cabin cannot be performed.	1. Check if any function is cancelled due to customization.	DL-119
	2. Operate the LOCK/UNLOCK switch on the electrical key to check the wireless function.	DL-67
	3. Refer to PROBLEM SYMPTOMS TABLE of the wireless door lock control system ("The wireless door lock control system does not operate").	DL-70
	4. Check operation of each door oscillator in ACTIVE TEST.	DL-131
	5. Door oscillator circuit	DL-143
	6. Normal	-
Key reminder buzzer does not sound.	1. Perform ACTIVE TEST for the combination meter.	ME-29
	2. Check "COURTESY SW" in the DATA LIST of the door control system.	DL-17
	3. Check the key reminder buzzer when the engine switch is on (ACC) and the drivers door is opened.	-
	4. Check if the steering wheel is locked when all power supplies are OFF and the drivers door is opened.	-
	5. Refer to PROBLEM SYMPTOMS TABLE of the steering lock system ("Steering wheel cannot be locked").	SR-54
	6. Check that the "LCK BAR STUCK" item in the DATA LIST of the certification ECU displays OK.	SR-58
	7. Replace the steering lock ECU.	-
	8. Replace the certification ECU.	-

TERMINALS OF ECU

1. CHECK CERTIFICATION ECU

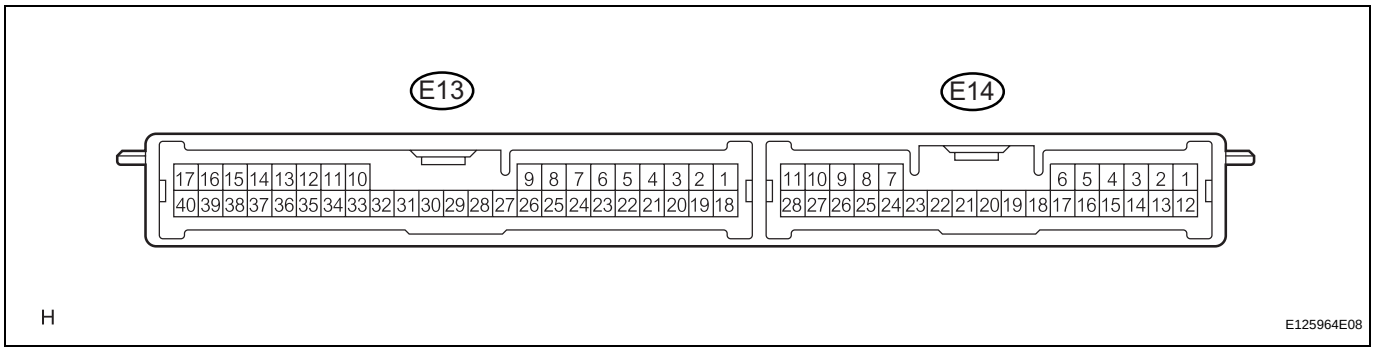

(a) Disconnect the E13 ECU connector.
(b) Measure the voltage and resistance according to the value(s) in the table below.

Symbols (Terminal No.)	Wiring Color	Terminal Description	Condition	Specified Condition
+B1 (E13-1) - Body ground	W - Body ground	+B power supply	Always	10 to 14 V
IG (E13-18) - Body ground	B - Body ground	Ignition power supply	Engine switch off	Below 1 V
IG (E13-18) - Body ground	B - Body ground	Ignition power supply	Engine switch on (IG)	10 to 14 V
E (E13-17) - Body ground	W-B - Body ground	Ground	Always	Below 1 Ω
ACC (E13-19) - Body ground	L - Body ground	ACC power supply	Engine switch off	Below 1 V
ACC (E13-19) - Body ground	L - Body ground	ACC power supply	Engine switch on (ACC)	10 to 14 V
TSW1 (E13-3) - Body ground	GR - Body ground	Entry lock switch signal	Front lock switch LH not pushed	10 kΩ or higher
TSW1 (E13-3) - Body ground	GR - Body ground	Entry lock switch signal	Front lock switch LH pushed	Below 1 Ω
TSW2 (E13-4) - Body ground	LG - Body ground	Entry lock switch signal	Front lock switch RH not pushed	10 kΩ or higher
TSW2 (E13-4) - Body ground	LG - Body ground	Entry lock switch signal	Front lock switch RH pushed	Below 1 Ω
TSW3 (E14-25) - Body ground	LG - Body ground	Entry lock switch signal	Rear lock switch LH not pushed	10 kΩ or higher
TSW3 (E14-25) - Body ground	LG - Body ground	Entry lock switch signal	Rear lock switch LH pushed	Below 1 Ω
TSW4 (E14-26) - Body ground	BR - Body ground	Entry lock switch signal	Rear lock switch RH not pushed	10 kΩ or higher
TSW4 (E14-26) - Body ground	BR - Body ground	Entry lock switch signal	Rear lock switch RH pushed	Below 1 Ω
LIN (E13-10) - Body ground	O - Body ground	LIN line	Always	10 kΩ or higher
CANH (E13-27) - Body ground	R - Body ground	CAN line	Always	10 kΩ or higher
CANL (E13-28) - Body ground	W - Body ground	CAN line	Always	10 kΩ or higher
AGND (E13-40) - Body ground	V - Body ground	Ground	Always	Below 1 Ω
TSW5 (E13-7) - Body ground	G - Body ground	Luggage compartment opener switch signal	Opener switch OFF	10 kΩ or higher
TSW5 (E13-7) - Body ground	G - Body ground	Luggage compartment opener switch signal	Opener switch ON	Below 1 Ω

If the result is not as specified, the wire harness side may have a malfunction.

(c) Reconnect the E13 ECU connector.

(d) Measure the voltage according to the value(s) in the table below.

Symbols (Terminal No.)	Wiring Color	Terminal Description	Condition	Specified Condition
CLG1 (E13-33) - CG1B (E13-34)	LG - L	Door electrical key oscillator (front LH) sensor signal	All doors closed, all doors locked and engine switch off	Alternating between 5 V and below 1 V
CLG1 (E13-33) - CG1B (E13-34)	LG - L	Door electrical key oscillator (front LH) sensor signal	Door unlocked or door open	Below 1 V
SEN1 (E13-22) - E (E13-17)	B - W-B	Touch sensor detection signal	Outside door handle touched	Below 1 V
SEN1 (E13-22) - E (E13-17)	B - W-B	Touch sensor detection signal	Outside door handle not touched (Have the electrical key outside the cabin)	10 to 14 V
SEL1 (E13-5) - E (E13-17)	V - W-B	Touch sensor activation control signal	Move the key more than 5 m (16.4 ft) away from the front door LH	10 to 14 V
SEL1 (E13-5) - E (E13-17)	V - W-B	Touch sensor activation control signal	Bring key to the outside handle	Below 1 V
CLG2 (E13-35) - CG2B (E13-36)	W - B	Door electrical key oscillator (front RH) sensor signal	All doors closed, all doors locked and engine switch off	Alternating between 5 V and below 1 V
CLG2 (E13-35) - CG2B (E13-36)	W - B	Door electrical key oscillator (front RH) sensor signal	Door unlocked or door open	Below 1 V
SEN2 (E13-23) - E (E13-17)	O - W-B	Touch sensor detection signal	Outside door handle touched	Below 1 V
SEN2 (E13-23) - E (E13-17)	O - W-B	Touch sensor detection signal	Outside door handle not touched (Have the electrical key outside the cabin)	10 to 14 V
SEL2 (E13-6) - E (E13-17)	P - W-B	Touch sensor activation control signal	Move the key more than 5 m (16.4 ft) away from the front door RH	10 to 14 V
SEL2 (E13-6) - E (E13-17)	P - W-B	Touch sensor activation control signal	Bring key to the outside handle	Below 1 V
CLG3 (E14-8) - CG3B (E14-9)	R - G	Door electrical key oscillator (rear LH) sensor signal	All door closed, all doors locked and engine switch off	Alternating between 5 V and below 1 V
CLG3 (E14-8) - CG3B (E14-9)	R - G	Door electrical key oscillator (rear LH) sensor signal	Door unlocked or door open	Below 1 V
SEN3 (E14-28) - E (E13-17)	O - W-B	Touch sensor detection signal	Outside door handle touched	Below 1 V
SEN3 (E14-28) - E (E13-17)	O - W-B	Touch sensor detection signal	Outside door handle not touched (Have the electrical key outside the cabin)	10 to 14 V
SEL3 (E14-1) - E (E13-17)	W - W-B	Touch sensor activation control signal	Make the key more than 5 m (16.4 ft) away from the rear door LH	10 to 14 V
SEL3 (E14-1) - E (E13-17)	W - W-B	Touch sensor activation control signal	Bring key to the outside handle	Below 1 V
CLG4 (E14-10) - CG4B (E14-11)	G - R	Door electrical key oscillator (rear RH) sensor signal	All door closed, all doors locked and engine switch off	Alternating between 5 V and below 1 V
CLG4 (E14-10) - CG4B (E14-11)	G - R	Door electrical key oscillator (rear RH) sensor signal	Door unlocked or door open	Below 1 V

Symbols (Terminal No.)	Wiring Color	Terminal Description	Condition	Specified Condition
SEN4 (E14-27) - E (E13-17)	G - W-B	Touch sensor detection signal	Outside door handle touched	Below 1 V
SEN4 (E14-27) - E (E13-17)	G - W-B	Touch sensor detection signal	Outside door handle not touched (Have the electrical key outside the cabin)	10 to 14 V
SEL4 (E14-2) - E (E13-17)	GR - W-B	Touch sensor activation control signal	Make the key more than 5 m (16.4 ft) away from the rear door RH	10 to 14 V
SEL4 (E14-2) - E (E13-17)	GR - W-B	Touch sensor activation control signal	Bring key to the outside handle	Below 1 V
CLG5 (E13-11) - CG5B (E13-12)	R - W	Indoor electrical key oscillator (front) sensor signal	Within 30 seconds driver side door opened and closed, engine switch off	Alternating between 5 V and below 1 V
CLG5 (E13-11) - CG5B (E13-12)	R - W	Indoor electrical key oscillator (front) sensor signal	Engine switch on (IG)	Below 1 V
CLG6 (E13-13) - CG6B (E13-14)	Y - B	Indoor electrical key oscillator (rear) sensor signal	Within 30 seconds after driver side door opened and closed, engine switch off	Alternating between 5 V and below 1 V
CLG6 (E13-13) - CG6B (E13-14)	Y - B	Indoor electrical key oscillator (rear) sensor signal	Engine switch on (IG)	Below 1 V
CLG7 (E13-15) - CG7B (E13-16)	G - R	Luggage electrical key oscillator (inner) sensor signal	Luggage compartment door opening switch ON	Alternating between 5 V and below 1 V
CLG7 (E13-15) - CG7B (E13-16)	G - R	Luggage electrical key oscillator (inner) sensor signal	Luggage compartment door opening switch OFF	Below 1 V
CLG8 (E13-31) - CG8B (E13-32)	LG - L	Luggage electrical key oscillator (outer) sensor signal	Luggage compartment door opening switch ON	Alternating between 5 V and below 1 V
CLG8 (E13-31) - CG8B (E13-32)	LG - L	Luggage electrical key oscillator (outer) sensor signal	Luggage compartment door opening switch OFF	Below 1 V
RC0 (E13-29) - E (E13-17)	G - W-B	Entry door control receiver power source	Engine switch off, all doors closed and electrical key switch on	4.5 to 5.5 V
RC0 (E13-29) - E (E13-17)	G - W-B	Entry door control receiver power source	Engine switch off, all doors closed and electrical key switch off	Below 1 V
RSSI (E13-39) - E (E13-17)	R - W-B	Entry door control receiver electric wave existence signal	Engine switch off, all doors closed, the electrical key is not in the action area	10 to 14 V
RSSI (E13-39) - E (E13-17)	R - W-B	Entry door control receiver electric wave existence signal	Engine switch off, all doors closed, the electrical key is in the action area	Below 1 V
RDA (E13-38) - E (E13-17)	Y - W-B	Entry door control receiver data input signal	Engine switch off, all doors closed and electrical key switch off	10 to 14 V (Pulse generation)
RDA (E13-38) - E (E13-17)	Y - W-B	Entry door control receiver data input signal	Engine switch off, all doors closed and electrical key switch on	Pulse generation
RDA (E13-38) - Body ground	Y - Body ground	Tuner input signal	Engine switch off, all doors closed, the electrical key is not in the action area	10 to 14 V (Pulse generation)
RDA (E13-38) - Body ground	Y - Body ground	Tuner input signal	The electrical key is in the action area.	Pulse generation

Symbols (Terminal No.)	Wiring Color	Terminal Description	Condition	Specified Condition
ASEL (E13-37) - Body ground	V - Body ground	Cabin / luggage receiver select signal	Engine switch off, luggage compartment door closed and the electrical key is in the luggage action area	4.6 to 6.0 V
ASEL (E13-37) - Body ground	V - Body ground	Cabin / luggage receiver select signal	Engine switch off, luggage compartment door open	Below 1 V
VC5 (E13-30) - Body ground	O - Body ground	Transponder key amplifier power supply	Electrical key is not in the cabin.	Below 1 V
VC5 (E13-30) - Body ground	O - Body ground	Transponder key amplifier power supply	Have the electrical key outside the cabin and open the driver's door.	4.5 to 5.5 V
TXCT (E13-8) - Body ground	GR - Body ground	Transponder key amplifier output signal	Electrical key is not in the cabin.	Below 1 V
TXCT (E13-8) - Body ground	GR - Body ground	Transponder key amplifier output signal	Have the electrical key outside the cabin and open the driver's door.	Pulse generation (see waveform 1)
CODE (E13-9) - Body ground	W - Body ground	Transponder key amplifier communication signal	Electrical key is not in the cabin.	Below 1 V
CODE (E13-9) - Body ground	W - Body ground	Transponder key amplifier communication signal	Have the electrical key outside the cabin and open the driver's door. Hold the electrical key close to the engine switch with the brake pedal depressed.	Pulse generation (see waveform 2)
BZR (E13-21) - Body ground	O - Body ground	Wireless door lock buzzer signal	Wireless door lock buzzer OFF	Below 1 V
BZR (E13-21) - Body ground	O - Body ground	Wireless door lock buzzer signal	Wireless door lock buzzer ON	Pulse generation

DL

If the result is not as specified, the ECU may have a malfunction.

(e) Inspect using an oscilloscope.
Waveform 1 (Reference):

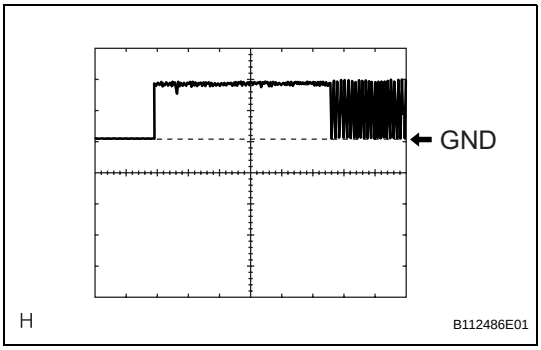

Terminal	TXCT - Body ground
Tool Setting	2 V/DIV., 10 ms./DIV.
Condition	Have the electrical key outside the cabin and open the driver's door.

(f) Inspect using an oscilloscope.
Waveform 2 (Reference):

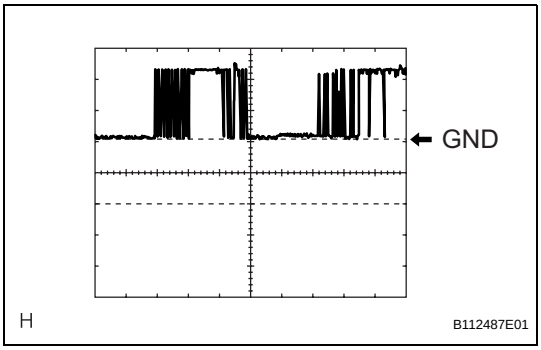

Terminal	CODE - Body ground
Tool Setting	2 V/DIV., 20 ms./DIV.
Condition	Have the electrical key outside the cabin and open the driver's door. Hold the electrical key close to the engine switch with the brake pedal depressed.

2. MAIN BODY ECU (INSTRUMENT PANEL JUNCTION BLOCK)

(a) Measure the voltage and resistance according to the value(s) in the table below.

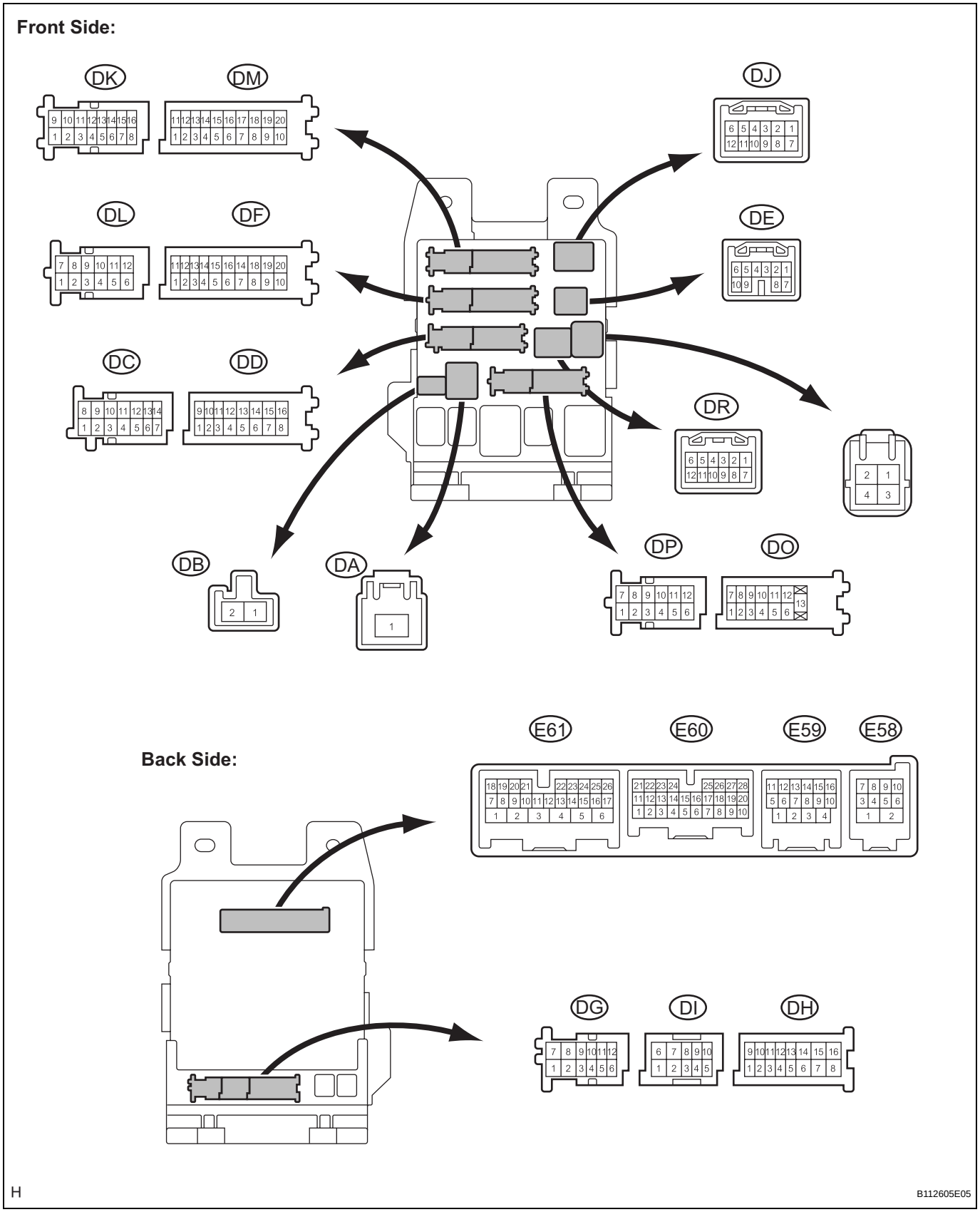

Symbols (Terminal No.)	Wiring Color	Terminal Description	Condition	Specified Condition
CANN (E59-15) - Body ground	W - Body ground	CAN Line	Always	10 kΩ or higher
CANP (E59-16) - Body ground	B - Body ground	CAN Line	Always	10 kΩ or higher
STP (DL-7) - Body ground	W - Body ground	Stop light switch signal	Brake pedal depressed	10 to 14 V
STP (DL-7) - Body ground	W - Body ground	Stop light switch signal	Brake pedal depressed	Below 1 V

If the result is not as specified, the junction block may have a malfunction.

DIAGNOSIS SYSTEM

1. DESCRIPTION

(a) Smart access system with push-button start data and the Diagnostic Trouble Codes (DTCs) can be read from the Data Link Connector 3 (DLC3) of the vehicle. When the system seems to be malfunctioning, use the intelligent tester to check for malfunctions and perform repairs.

2. CHECK DLC3

The ECU uses ISO 15765-4 for communication. The terminal arrangement of the DLC3 complies with SAE J1962 and matches the ISO 15765-4 format.

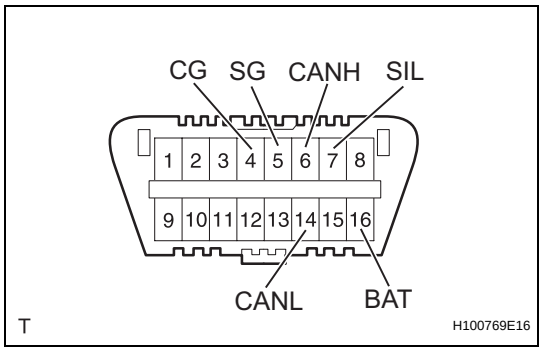

Symbols (Terminal No.)	Terminal Description	Condition	Specified Condition
SIL (7) - SG (5)	Bus "+" line	During transmission	Pulse generation
CG (4) - Body ground	Chassis ground	Always	Below 1 Ω
SG (5) - Body ground	Signal ground	Always	Below 1 Ω
BAT (16) - Body ground	Battery positive	Always	11 to 14 V
CANH (6) - CANL (14)	CAN bus line	Engine switch OFF*	54 to 69 Ω
CANH (6) - Battery positive (+)	HIGH-level CAN bus line	Engine switch OFF*	6 kΩ or higher
CANH (6) - CG (4)	HIGH-level CAN bus line	Engine switch OFF*	200 Ω or higher
CANL (14) - Battery positive (+)	LOW-level CAN bus line	Engine switch OFF*	6 kΩ or higher
CANL (14) - CG (4)	LOW-level CAN bus line	Engine switch OFF*	200 Ω or higher

NOTICE:

***: Before measuring the resistance, leave the vehicle as is for at least 1 minute and do not operate the engine switch, any other switches or the doors.**

If the result is not as specified, the DLC3 may have a malfunction. Repair or replace the harness and connector.

HINT:

Connect the cable of the intelligent tester (with CAN VIM) to the DLC3, turn the engine switch on (IG) and attempt to use the tester. If the display indicates that a communication error has occurred, there is a problem either with the vehicle or with the tester.

- If communication is normal when the tester is connected to another vehicle, inspect the DLC3 of the original vehicle.
- If communication is still not possible when the tester is connected to another vehicle, the problem may be in the tester itself. Consult the Service Department listed in the tester's instruction manual.

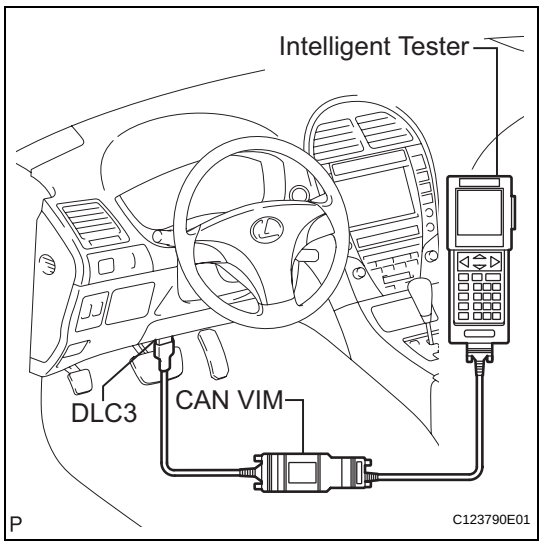

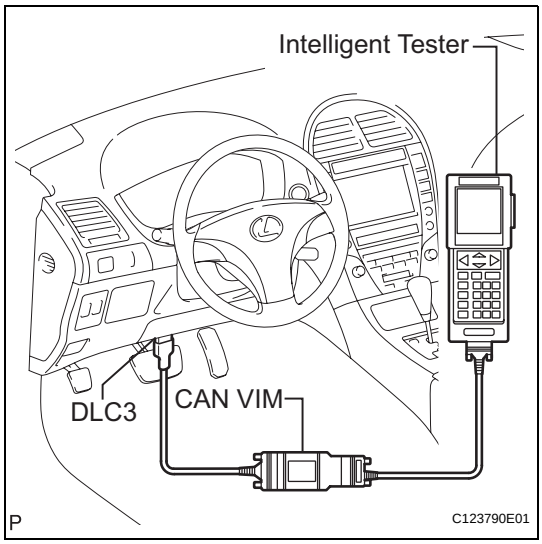

DTC CHECK / CLEAR

1. CHECK DTC

(a) Connect the intelligent tester to the DLC3.
(b) Turn the engine switch on (IG).
(c) Enter the following menu items: DIAGNOSIS / ENHANCED OBD II / DTC INFO / CURRENT CODES.
(d) Read the DTC by following the prompts on the tester screen.
HINT:
Refer to the intelligent tester operator's manual for further details.

2. CLEAR DTC

(a) Connect the intelligent tester to the DLC3.
(b) Turn the engine switch on (IG).
(c) Enter the following menu items: DIAGNOSIS / ENHANCED OBD II / DTC INFO / CLEAR CODES.
(d) Erase the DTC by following the directions on the tester screen.

HINT:
Refer to the intelligent tester operator's manual for further details.

DATA LIST / ACTIVE TEST

1. READ DATA LIST

HINT:
Using the intelligent tester's DATA LIST allows switch, sensor, actuator and other item values to be read without removing any parts. Reading the DATA LIST relay in troubleshooting is one way to save time.

(a) Connect the intelligent tester to the DLC3.
(b) Turn the engine switch on (IG). When the intelligent tester cannot be turned on due to a malfunction or other problem, refer to "precautions when using the intelligent tester" (See page DL-89).
(c) Enter the following menus: DIAGNOSIS / ENHANCED OBD II / DATA LIST.
(d) Read the DATA LIST according to the display on the tester.

SMART ACCESS (Certification ECU):

Tester Display	Measurement Item/Range	Normal Condition	Diagnostic Note
D TOUCH SENSOR	Driver side door touch sensor / ON or OFF	ON: Sensor is touched OFF: Sensor is not touched	-
P TOUCH SENSOR	Front passenger side door touch sensor / ON or OFF	ON: Sensor is touched OFF: Sensor is not touched	-
DR TOUCH SENSOR	Rear door touch sensor LH / ON or OFF	ON: Sensor is touched OFF: Sensor is not touched	-
PR TOUCH SENSOR	Rear door touch sensor RH / ON or OFF	ON: Sensor is touched OFF: Sensor is not touched	-
D TRIGGER SW	Driver side door lock switch / ON or OFF	ON: Switch is touched OFF: Switch is not touched	-
P TRIGGER SW	Front passenger side door lock switch / ON or OFF	ON: Switch is touched OFF: Switch is not touched	-
DR TRIGGER SW	Rear door lock switch LH / ON or OFF	ON: Switch is touched OFF: Switch is not touched	-
PR TRIGGER SW	Rear door lock switch RH / ON or OFF	ON: Switch is touched OFF: Switch is not touched	-
TR/B-DOOR UNLK	Luggage compartment door unlock switch / ON or OFF	ON: Switch is pushed OFF: Switch is not pushed	-
IG SW	Engine switch / ON or OFF	ON: Engine switch is on (IG) OFF: Engine switch is off	-
ACC SW	Engine switch / ON or OFF	ON: Engine switch is on (ACC) OFF: Engine switch is off	-
P/S 10-MIN	Power save counter - 10 minutes / Min: 0; Max: 255	Power save counter after door LOCK/UNLOCK-10 minutes	-
P/S 5-DAY	Power save counter - 5 days / Min: 0; Max: 255	Power save counter after door LOCK/UNLOCK-5 days	-
P/S 14-DAY	Power save counter - 14 days / Min: 0; Max: 255	Power save counter after door LOCK/UNLOCK-14 days	-
UNMATCH V-ID	Unmatched vehicle-ID / YES or NO	YES: Key ID matches vehicle NO: Key ID does not match vehicle	-
NO RESPONSE	No response / YES or NO	YES: Response from key NO: No response from key	-
UNMATCH FORMAT	Unmatched response code and format / YES or NO	YES: Key ID code matches NO: Key ID code does not match	-
LOW BATTERY	Key low battery / YES or NO	YES: Key battery voltage drops NO: Key battery voltage is normal	-

Tester Display	Measurement Item/Range	Normal Condition	Diagnostic Note
WRONG CODE	ID code difference / YES or NO	YES: Key ID code matches NO: Key ID code does not match	-
WRONG C CODE	Challenge code difference (Response) / YES or NO	YES: Key ID code matches NO: Key ID code does not match	-
WRONG ID CODE	ID code difference / YES or NO	YES: Key ID code matches NO: Key ID code does not match	-
WRONG ROL CODE	Rolling code difference / YES or NO	YES: Key rolling code matches NO: Key rolling code does not match	-
DOOR UNLOCK MOD	Door unlock mode / ALL, EACH, D_DOOR	Mode status is displayed	-
FUNCTION CANCEL	Entry door lock function cancel / ON or OFF	Mode status is displayed	-
MASTER KEY	Master key / MATCH or NO MATCH	MATCH: Key code is sent NO MATCH: Unmatched key code	-
SUB KEY	Sub key / MATCH or NO MATCH	MATCH: Key code is sent NO MATCH: Unmatched key code	-
BCC	Transponder chip data / OK or NG	OK: Correct data sensing NG: Incorrect data sensing	-
STATUS	Transponder chip data / OK or NG	OK: Data OK NG: Data error	-
ENCRYPT CODE	Transponder chip data / OK or NG	OK: Data OK NG: Data error	-
SERIAL NUMBER	Transponder chip data / OK or NG	OK: Data OK NG: Data error	-
FRAME	Transponder chip data / OK or NG	OK: Data OK NG: Data error	-
RESPONSE	Transponder chip data / OK or NG	OK: With no response NG: With a response	-
#CODES	Diagnostic trouble code / Min.: 0, Max.: 255	-	-
IGNITION AREA	Ignition available area / FRONT or ALL	Customization status is displayed	-
PARK WAIT TIME	Parking wait time / 0.5s, 1.5s, 2.5s, 5s	Customization status is displayed	-
TRUNK OPEN MODE	Luggage compartment door open mode with vehicle locked / ON or OFF	Customization status is displayed	-
WIRELS BUZZ VOL	Wireless buzzer volume / LEVEL 0, 1, 2, 3, 4, 5, 6, 7	Customization status is displayed	-
KEY LO-BATT WRN	Key low battery warning / ON or OFF	Customization status is displayed	-

MAIN BODY:

Tester Display	Measurement Item/Range	Normal Condition	Diagnostic Note
LUGG COURTESY SW	Luggage compartment door courtesy light switch signal / ON or OFF	ON: Luggage compartment door open OFF: Luggage compartment door closed	-
D DOR CTY SW	Driver side door courtesy light switch signal / ON or OFF	ON: Driver side door open OFF: Driver side door closed	-
P DOR CTY SW	Front passenger side door courtesy light switch signal / ON or OFF	ON: Front passenger side door open OFF: Front passenger side door closed	-
RL DOR CTY SW	Rear door courtesy light switch LH signal / ON or OFF	ON: Rear door open OFF: Rear door closed	-

Tester Display	Measurement Item/Range	Normal Condition	Diagnostic Note
RR DOR CTY SW	Rear door courtesy light switch RH signal / ON or OFF	ON: Rear door open OFF: Rear door closed	-
IG SW	Engine switch / ON or OFF	ON: Engine switch is on (IG) OFF: Engine switch is off	-
ACC SW	Engine switch / ON or OFF	ON: Engine switch is on (ACC) OFF: Engine switch is off	-

2. PERFORM ACTIVE TEST

HINT:

Performing the intelligent tester's ACTIVE TEST allows relay, VSV, actuator and other items to be operated without removing any parts. Performing the ACTIVE TEST early in troubleshooting is one way to save time. The DATA LIST can be displayed during the ACTIVE TEST.

(a) Connect the intelligent tester to the DLC3.
(b) Turn the engine switch on (IG).
(c) Enter the following menus: DIAGNOSIS / ENHANCED OBD II / ACTIVE TEST.
(d) Perform the ACTIVE TEST according to the display on the tester.

SMART ACCESS (Certification ECU):

Tester Display	Test Part	Control Range	Diagnostic Note
OVERHEAD TUNER	Door control receiver	ON / OFF	-
IN LUG TUNER	Luggage receiver	ON / OFF	-
D TRANSMITTER	Driver side electrical key oscillator	ON / OFF	-
P TRANSMITTER	Front passenger side electrical key oscillator	ON / OFF	-
DR TRANSMITTER	Rear door electrical key oscillator LH	ON / OFF	-
PR TRANSMITTER	Rear door electrical key oscillator RH	ON / OFF	-
FR TRANSMITTER	Indoor electrical key oscillator (console)	ON / OFF	-
RR TRANSMITTER	Indoor electrical key oscillator (rear seat)	ON / OFF	-
IN_BDR TRNSMTTR	Luggage compartment door inner oscillator	ON / OFF	-
BDOOR TRNSMTTR	Luggage compartment door outer oscillator	ON / OFF	-
D SELECT SIG	Driver side select	ON / OFF	-
P SELECT SIG	Front passenger side select	ON / OFF	-
DR SELECT SIG	Rear LH side select	ON / OFF	-
PR SELECT SIG	Rear RH side select	ON / OFF	-
BDOR SELECT SIG	Luggage compartment select	ON / OFF	-
WIRELESS BUZZER	Wireless buzzer	ON / OFF	-

MAIN BODY:

Tester Display	Test Part	Control Range	Diagnostic Note
TRNK/BDOR OPEN	Luggage compartment door open signal	ON / OFF	-
HAZARD	Hazard warning light	ON / OFF	-

DIAGNOSTIC TROUBLE CODE CHART

HINT:
If a trouble code is indicated during the DTC check, check the circuit listed for that code in the table below. Then proceed to the appropriate page.

Power door lock control system:

DTC Code	Detection Item	Trouble Area	See page
B1242	Wireless Door Lock Tuner Circuit Malfunction	1. Electrical key antenna 2. Door control receiver 3. Wire harness 4. Certification ECU	DL-139

ON-VEHICLE INSPECTION

1. SMART ACCESS SYSTEM WITH PUSH-BUTTON START OPERATION INSPECTION

HINT:
Refer to PROBLEM SYMPTOMS TABLE if the results of the following checks are not normal (See page DL-121).

(a) Check the entry unlock function.
  (1) Use the wireless lock operation to lock the doors. With the electrical key in your possession, touch a door's outside handle (touch sensor) and check that the door unlocks.

(b) Check the entry unlock operation's detection area.

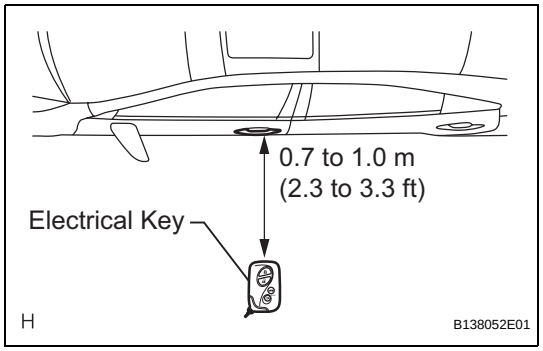

  (1) Step 1: Hold the electrical key at the same height as the door's outside handle (approximately 0.8 m (2.6 ft)). Pay attention to the direction of the electrical key in the illustration.
  (2) Step 2: When the electrical key is brought within 0.7 to 1.0 m (2.3 to 3.3 ft) of the vehicle, check that the system enters unlock standby mode.
  HINT:
  Unlock standby mode is signified by the electrical key's red LED illuminating.
  (3) Step 3: After the system enters unlock standby mode, touch the outside handle's sensor within 3 seconds. Check that the door unlocks.
  NOTICE:
  The electrical key cannot communicate with the system within a 0.2 m (0.6 ft) radius of each outside handle.

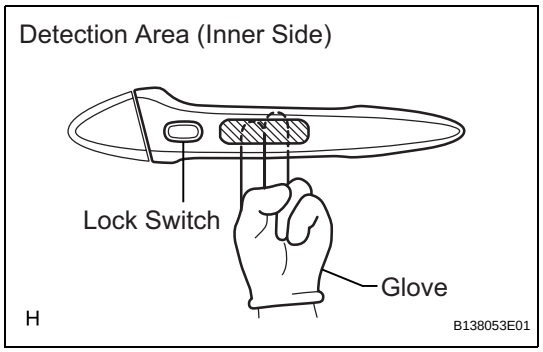

  (4) Step 4: Repeat steps 2 and 3 for the remaining doors.
  (5) Step 5: Inspect the door electrical key oscillator's response sensitivity. Wear protective gloves, set the system to unlock standby mode, and check that touching the inner side of the outside handle (the highlighted area in the illustration) with your finger causes the door to unlock.
  NOTICE:
  When touching the highlighted area, tapping too quickly or having extended contact may not trigger the sensor. In such a case, the door will not unlock.
  (6) Step 6: Repeat step 5 for the remaining doors.

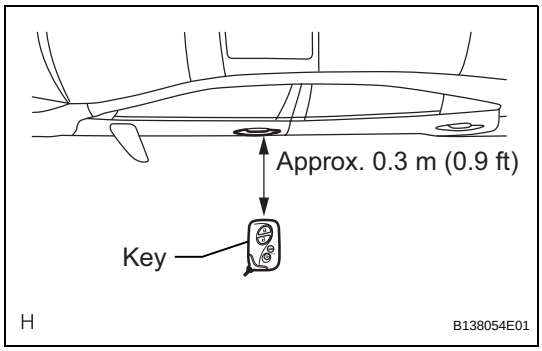

(c) Check the entry lock function.
  (1) Step 1: Close all of the vehicle's doors. With the electrical key in your possession outside the vehicle, check that pressing the lock switch locks the doors.
  (2) Step 2: Inspect the entry lock operation's detection area and the indoor electrical key antenna for wave leaks. Hold the electrical key at a height of 1 m (3.3 ft) (0.1 m (0.3 ft) above the lower edge of the window frame). Pay attention to the direction and position of the electrical key in the illustration. When the electrical key is approximately 0.3 m (0.9 ft) from the vehicle and the lock switch is pressed, check that the all doors lock and the warning buzzer (for when the electrical key is forgotten) does not sound. If the warning buzzer sounds, the indoor electrical key antenna may have a wave leak.
  HINT:
  Do not press the lock switch with the same hand that is holding the electrical key because the electrical key cannot communicate with the system within a 0.2 m (0.6 ft) radius of the outside handle. The doors will not lock.
  (3) Step 3: Repeat steps 1 and 2 for the remaining doors.

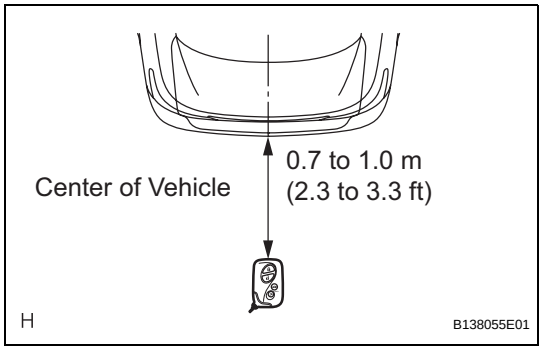

(d) Check the entry luggage compartment door open function.
  (1) Close the luggage compartment door. With the electrical key in your possession, check that pressing the power luggage door open switch opens the luggage compartment door.
  (2) Inspect the entry luggage compartment door open operation's detection area. Hold the electrical key at the same height as the power luggage door open switch (approximately 0.8 m (2.6 ft)) and align the key with the center of the rear of the vehicle. Pay attention to the direction of the electrical key shown in the illustration. When the electrical key is brought within 0.7 to 1.0 m (2.3 to 3.3 ft) of the vehicle, check that pressing the power luggage door open switch opens the luggage compartment door.

(e) Check the entry ignition function.
  (1) When the engine is off:
  With the electrical key in your possession and the brake pedal depressed, check that pressing the engine switch releases the steering wheel lock and starts the engine.
  HINT:
  The engine can be started only when the engine switch indicator illuminates in green.

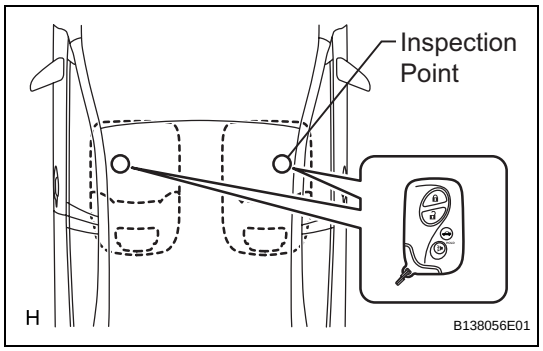

(2) When the engine is running:
With the electrical key in your possession, check that pressing the engine switch stops the engine.
HINT:
The shift position must be P to stop the engine.

(3) Inspect the entry ignition operation's detection area. Pay attention to the direction of the electrical key in the illustration. When the electrical key is in either of the 2 inspection points in the illustration, check that the engine can start.
NOTICE:
The engine cannot be started when the electrical key is on the instrument panel, rear package tray, or in the glove box.

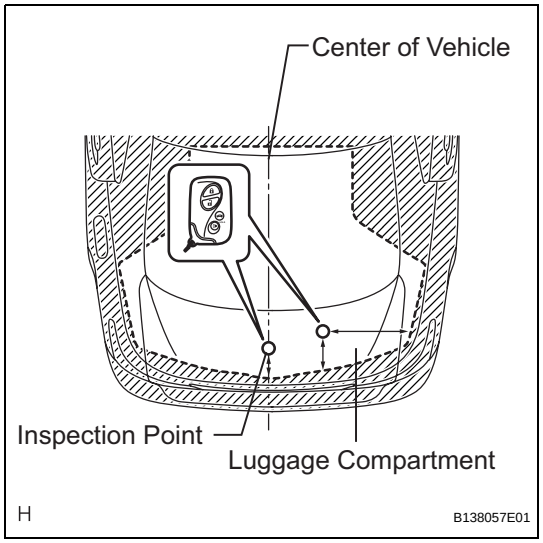

(f) Check the electrical key lock-in prevention function.

(1) Place the electrical key in the luggage compartment with all doors locked. Check that: 1) closing the luggage compartment door triggers the electrical key's wireless buzzer (which lasts approximately 2 seconds), and 2) pressing the power luggage door open switch opens the luggage compartment door.

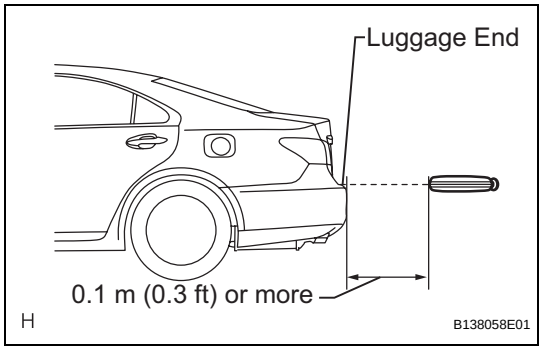

(2) Inspect the electrical key lock-in prevention's detection area. Pay attention to the direction of the electrical key shown in the illustration. When the electrical key is in either of the 2 inspection points in the illustration, check that: 1) closing the luggage compartment door sounds the electrical key's wireless buzzer, and 2) pressing the power luggage door open switch opens the luggage compartment door.
NOTICE:
If the electrical key is inside a metal storage item, such as a metal briefcase or metal box, the electrical key will not be detected by the system.

(3) Inspect the electrical key lock-in prevention's detection area and the entry door control receiver for wave leaks. Hold the electrical key at the same height as the lower edge of the luggage compartment door and align the key with the center of the rear of the vehicle. Pay attention to the direction and position of the electrical key shown in the illustration. When the electrical key is over 0.1 m (0.3 ft) from the vehicle's rear bumper, check that the electrical key's wireless buzzer does not sound.
If the warning buzzer sounds, the entry door control receiver may have a wave leak.

(g) Check the electrical key cancel function.
(1) While the engine switch is on (IG), check that the power luggage door open switch, entry ignition, electrical key lock-in prevention and warning are the only switch in the smart access system with push-button start that can be operated.
(2) While the electrical key cancel function (smart access system with push-button start cancel function) is ON, check that all functions in the smart access system with push-button start cannot be operated.

(h) Check the answer-back function (hazard warning light flashing and buzzer sounding).

Entry Operation	Hazard Warning Light	Buzzer
Entry Door Lock	Flashes once	Sounds once
Entry Door Unlock	Flashes twice	Sounds twice
Entry Luggage Compartment Door Open	Does not flash	Does not sound

(i) Check that the electrical key reminder warning buzzer sounds.
(1) Carry the electrical key in the vehicle and close the driver side door. Then turn the engine switch off or on (ACC). Turn the engine switch off and the steering lock is unlocked or engine switch is on (ACC).
(2) Open the driver side door and check that the buzzer sounds intermittently.

(j) Check that the electrical key reminder warning buzzer stops.
(1) When the buzzer is sounding, check that the buzzer stops sounding if either of the following is performed:
- Close the driver side door (front door courtesy light switch is off).
- Turn the engine switch on (IG, ACC) and lock the steering lock.

DTC	B1242	Wireless Door Lock Tuner Circuit Malfunction

DESCRIPTION

- The electrical key antenna and the door control receiver are used as antennas for the entry and wireless door lock functions of the smart access system with push-button start.
- The certification ECU decodes the requested smart access system with push-button start operation by identifying a key code based on electric waves received via the electrical key antenna and the door control receiver. The ECU then sends a command, according to the requested operation, to each ECU. (e.g. If door lock operation is requested, the ECU sends a door lock command to the main body ECU.)

DTC No.	DTC Detection Condition	Trouble Area
B1242	If the certification ECU detects that terminal RDA or RSSI is short-circuited, this DTC is stored.	• Electrical key antenna • Door control receiver • Wire harness • Certification ECU

WIRING DIAGRAM

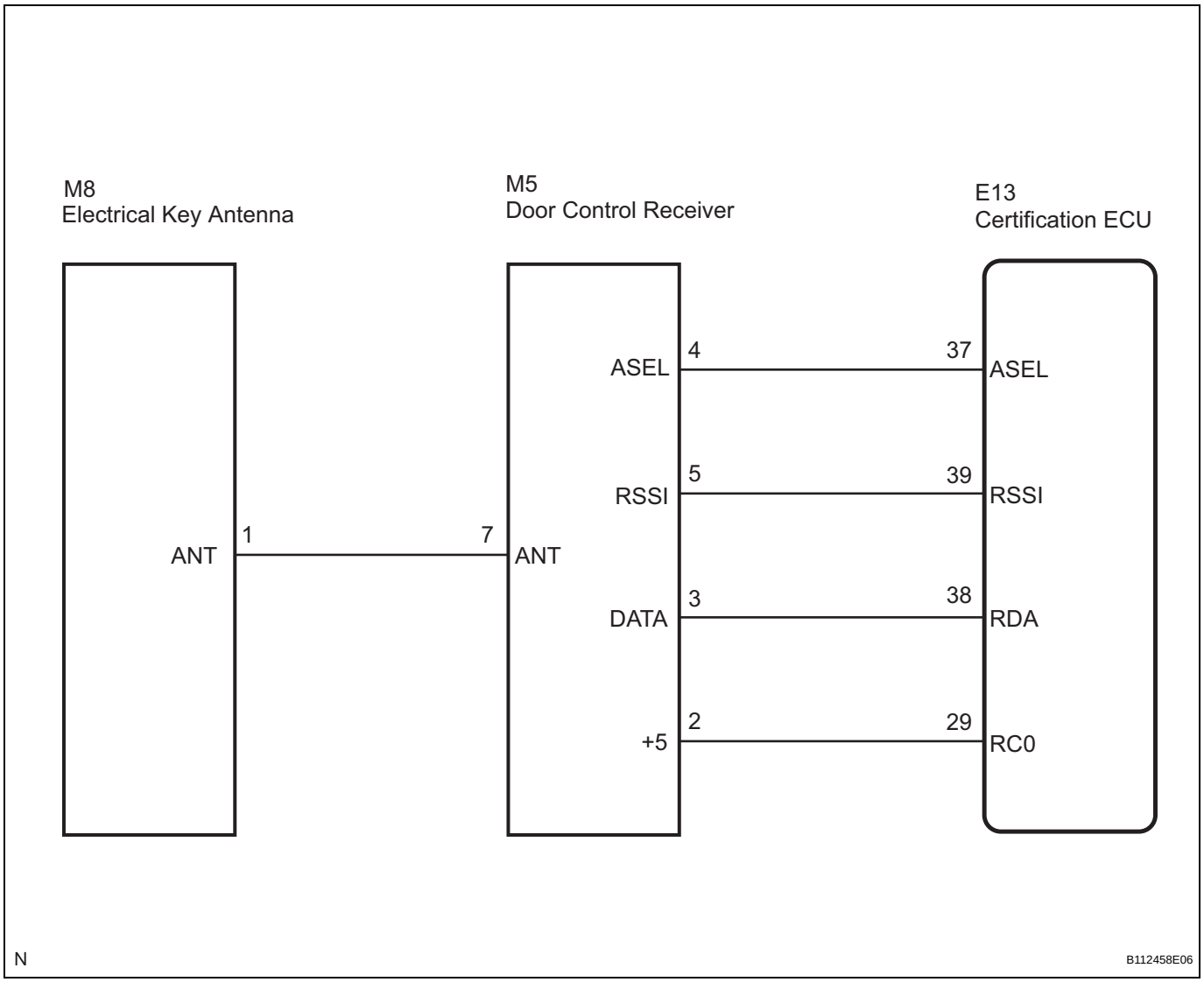

INSPECTION PROCEDURE

1	CHECK HARNESS AND CONNECTOR (CERTIFICATION ECU - DOOR CONTROL RECEIVER)

Certification ECU:

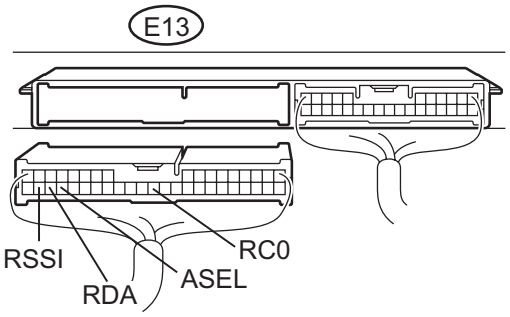

Door Control Receiver:

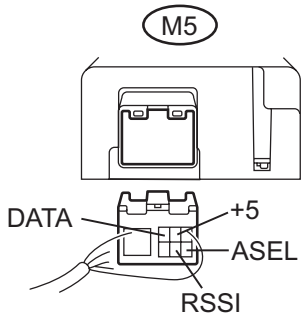

H B137962E02

(a) Disconnect the E13 ECU connector.
(b) Disconnect the M5 receiver connector.
(c) Measure the resistance according to the value(s) in the table below.

Standard resistance

Tester Connection (Symbols)	Condition	Specified Condition
E13-37 (ASEL) - M5-4 (ASEL)	Always	Below 1 Ω
E13-39 (RSSI) - M5-5 (RSSI)	Always	Below 1 Ω
E13-38 (RDA) - M5-3 (DATA)	Always	Below 1 Ω
E13-29 (RC0) - M5-2 (+5)	Always	Below 1 Ω
E13-37 (ASEL) - Body ground	Always	10 kΩ or higher
E13-39 (RSSI) - Body ground	Always	10 kΩ or higher
E13-38 (RDA) - Body ground	Always	10 kΩ or higher
E13-29 (RC0) - Body ground	Always	10 kΩ or higher

NG → **REPAIR OR REPLACE HARNESS OR CONNECTOR**

OK

DL

2 CHECK HARNESS AND CONNECTOR (DOOR CONTROL RECEIVER - ELECTRICAL KEY ANTENNA)

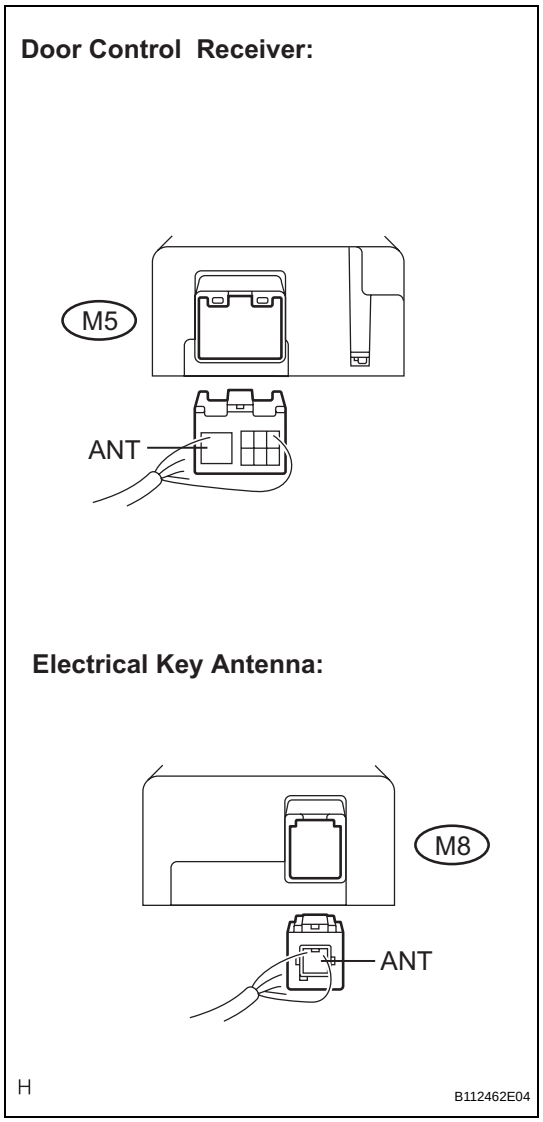

(a) Disconnect the M8 antenna connector.
(b) Measure the resistance according to the value(s) in the table below.
HINT:
Perform the measurement with the M5 receiver connector disconnected.

Standard resistance

Tester Connection (Symbols)	Condition	Specified Condition
M5-7 (ANT) - M8-1 (ANT)	Always	Below 1 Ω
M5-7 (ANT) - Body ground	Always	10 kΩ or higher

NG → **REPAIR OR REPLACE HARNESS OR CONNECTOR**

OK

3 CHECK AND REPLACE DOOR CONTROL RECEIVER (RECONFIRM DTC)

(a) Replace the receiver.
(b) Clear the DTCs and repeat the procedure to recheck for DTCs (See page DL-131).
OK:
DTC is not output.

OK → **END (RECEIVER IS DEFECTIVE)**

NG

DL

4	CHECK AND REPLACE ELECTRICAL KEY ANTENNA (RECONFIRM DTC)

(a) Replace the antenna.
(b) Clear the DTCs and repeat the procedure to recheck for DTCs (See page DL-131).
OK:
DTC is not output.

OK → **END (ANTENNA IS DEFECTIVE)**

NG

REPLACE CERTIFICATION ECU

Door Oscillator Circuit

DESCRIPTION

Door oscillators are built into each door. Each of them forms its own action area around its door and detects the presence of the electrical key.

WIRING DIAGRAM

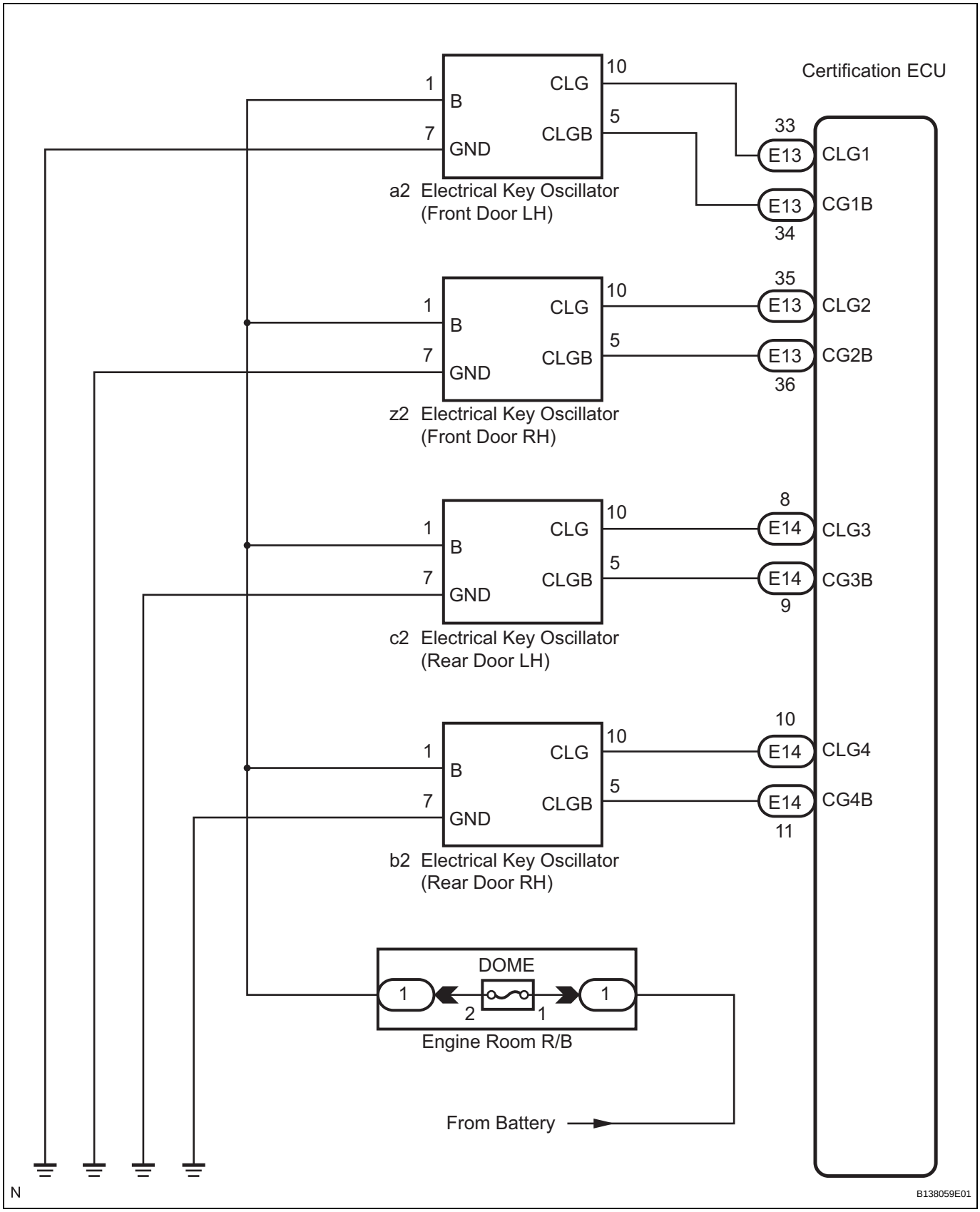

DL

INSPECTION PROCEDURE

1	INSPECT ELECTRICAL KEY OSCILLATOR

Electrical Key Oscillator:

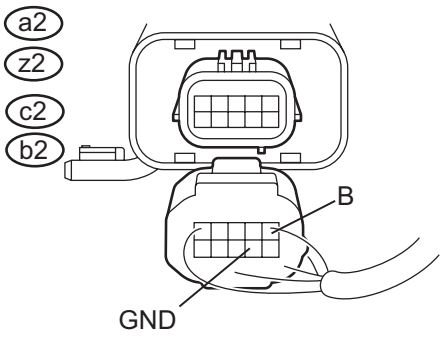

H B112463E05

(a) Disconnect the oscillator connectors.
(b) Measure the voltage according to the value(s) in the table below.

Standard voltage:

Front LH side

Tester Connection (Symbols)	Condition	Specified Condition
a2-1 (B) - a2-7 (GND)	Always	10 to 14 V

Front RH side

Tester Connection (Symbols)	Condition	Specified Condition
z2-1 (B) - z2-7 (GND)	Always	10 to 14 V

Rear LH side

Tester Connection (Symbols)	Condition	Specified Condition
c2-1 (B) - c2-7 (GND)	Always	10 to 14 V

Rear RH side

Tester Connection (Symbols)	Condition	Specified Condition
b2-1 (B) - b2-7 (GND)	Always	10 to 14 V

NG → **REPAIR OR REPLACE HARNESS OR CONNECTOR**

OK

DL

2	CHECK HARNESS AND CONNECTOR (ELECTRICAL KEY OSCILLATOR - CERTIFICATION ECU)

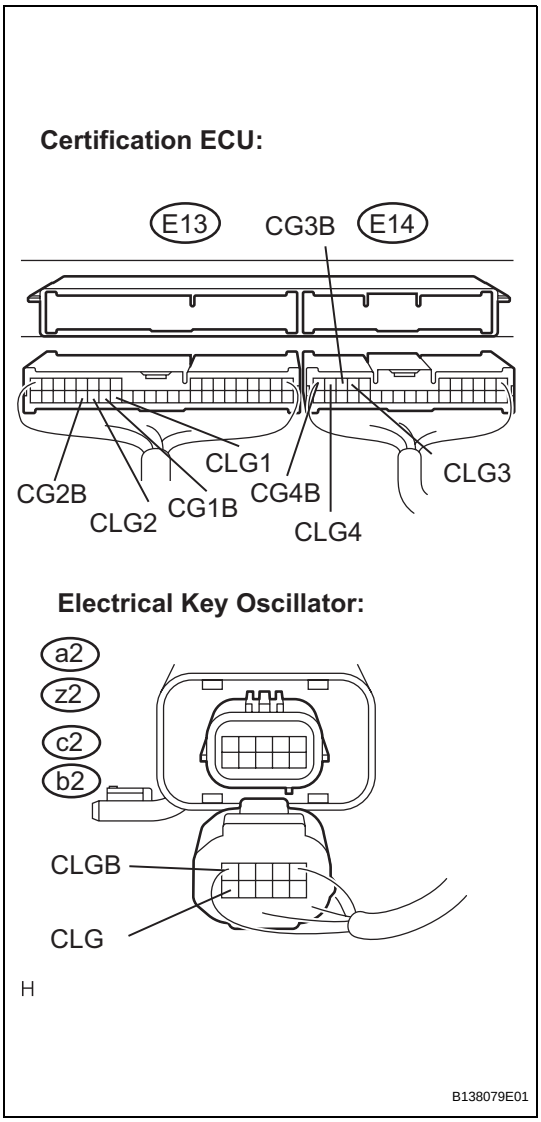

(a) Disconnect the E13 and E14 ECU connectors.
(b) Measure the resistance according to the value(s) in the table below.

Standard resistance:

Front LH side

Tester Connection (Symbols)	Condition	Specified Condition
E13-33 (CLG1) - a2-10 (CLG)	Always	Below 1 Ω
E13-34 (CG1B) - a2-5 (CLGB)	Always	Below 1 Ω
E13-33 (CLG1) - Body ground	Always	10 kΩ or higher
E13-34 (CG1B) - Body ground	Always	10 kΩ or higher

Front RH side

Tester Connection (Symbols)	Condition	Specified Condition
E13-35 (CLG2) - z2-10 (CLG)	Always	Below 1 Ω
E13-36 (CG2B) - z2-5 (CLGB)	Always	Below 1 Ω
E13-35 (CLG2) - Body ground	Always	10 kΩ or higher
E13-36 (CG2B) - Body ground	Always	10 kΩ or higher

Rear LH side

Tester Connection (Symbols)	Condition	Specified Condition
E14-8 (CLG3) - c2-10 (CLG)	Always	Below 1 Ω
E14-9 (CG3B) - c2-5 (CLGB)	Always	Below 1 Ω
E14-8 (CLG3) - Body ground	Always	10 kΩ or higher
E14-9 (CG3B) - Body ground	Always	10 kΩ or higher

Rear RH side

Tester Connection (Symbols)	Condition	Specified Condition
E14-10 (CLG4) - b2-10 (CLG)	Always	Below 1 Ω
E14-11 (CG4B) - b2-5 (CLGB)	Always	Below 1 Ω
E14-10 (CLG4) - Body ground	Always	10 kΩ or higher
E14-11 (CG4B) - Body ground	Always	10 kΩ or higher

NG → **REPAIR OR REPLACE HARNESS OR CONNECTOR**

OK

3	CHECK AND REPLACE ELECTRICAL KEY OSCILLATOR (CHECK OPERATION OF OSCILLATOR)

(a) Replace the door oscillator.

(b) Check that the entry LOCK/UNLOCK function operates normally.
OK:
Entry LOCK/UNLOCK function operates normally.

OK → **END (ELECTRICAL KEY OSCILLATOR IS DEFECTIVE)**

NG

4 PERFORM ACTIVE TEST BY INTELLIGENT TESTER (CERTIFICATION ECU OUTPUT SIGNAL)

Certification ECU:

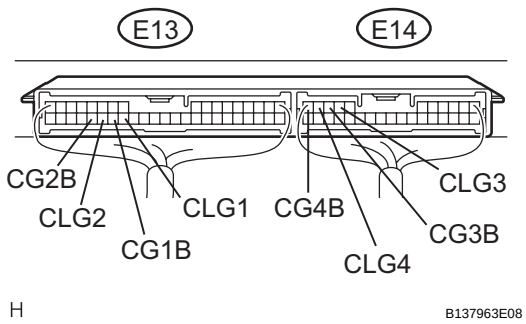

(a) Reconnect the ECU and the oscillator connectors.
(b) Connect the intelligent tester to the DLC3.
(c) Turn the engine switch on (IG).
(d) Enter the following menus: DIAGNOSIS / ENHANCED OBD II / ACTIVE TEST.
(e) Following the display on the tester, select the "ACTIVE TEST".
SMART ACCESS (Certification ECU):

Item	Vehicle Condition/Test Details
D TRANSMITTER	Door Oscillator ON/OFF
P TRANSMITTER	Door Oscillator ON/OFF
DR TRANSMITTER	Door Oscillator ON/OFF
PR TRANSMITTER	Door Oscillator ON/OFF

(f) Measure the frequency according to the value(s) in the table below.
Standard:
Front LH side

Tester Connection (Symbols)	Condition	Specified Condition
E13-33 (CLG1) - E13-34 (CG1B)	During ACTIVE TEST	Frequency is generated (higher than 0 Hz)

Front RH side

Tester Connection (Symbols)	Condition	Specified Condition
E13-35 (CLG2) - E13-36 (CG2B)	During ACTIVE TEST	Frequency is generated (higher than 0 Hz)

Rear LH side

Tester Connection (Symbols)	Condition	Specified Condition
E14-8 (CLG3) - E14-9 (CG3B)	During ACTIVE TEST	Frequency is generated (higher than 0 Hz)

Rear RH side

Tester Connection (Symbols)	Condition	Specified Condition
E14-10 (CLG4) - E14-11 (CG4B)	During ACTIVE TEST	Frequency is generated (higher than 0 Hz)

NG → **REPLACE CERTIFICATION ECU**

DL

OK

PROCEED TO NEXT CIRCUIT INSPECTION SHOWN IN PROBLEM SYMPTOMS TABLE

Entry Lock Switch Circuit

DESCRIPTION

The entry lock switches (trigger switch) are built into the door outside handles of the all doors. The certification ECU detects the conditions of each lock switch.

WIRING DIAGRAM

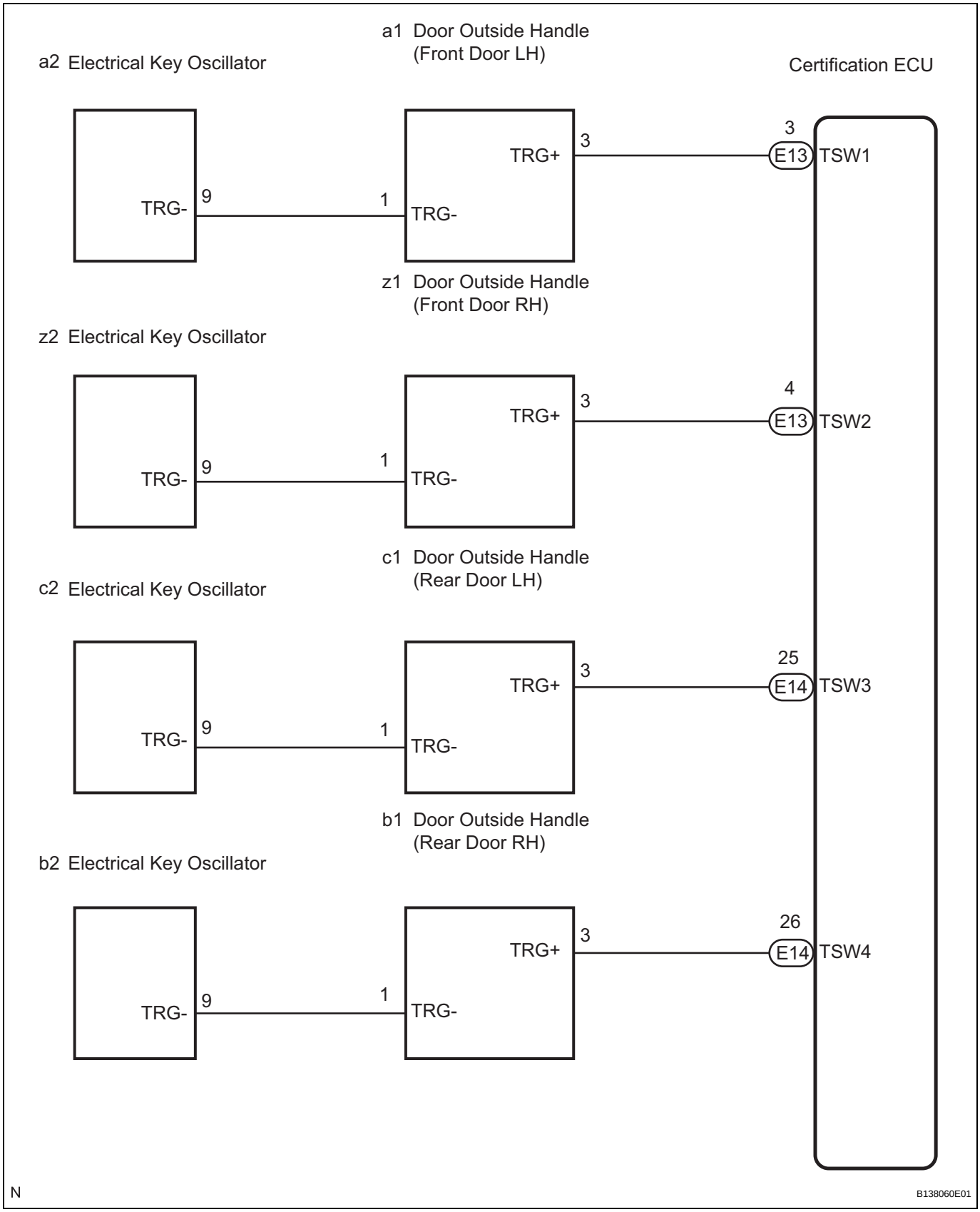

DL

INSPECTION PROCEDURE

1	INSPECT ENTRY LOCK SWITCH

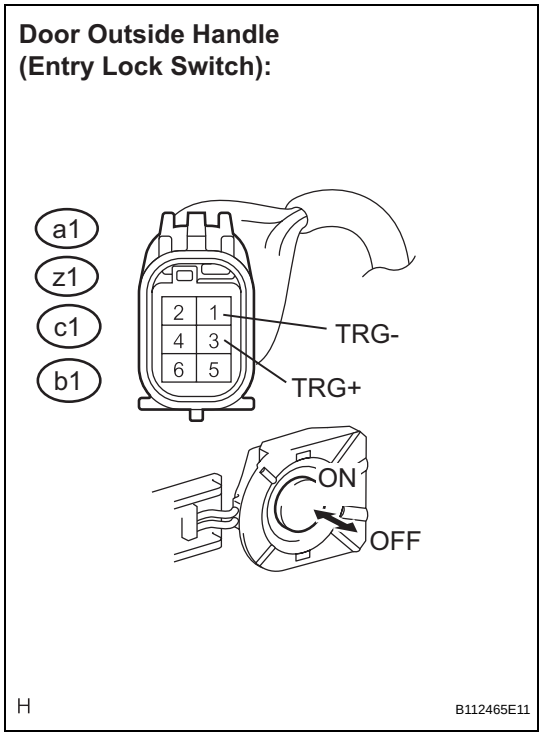

(a) Remove the outside handle.
(b) Disconnect the connectors.
(c) Measure the resistance according to the value(s) in the table below.

Standard resistance:

Front LH side

Tester Connection (Symbols)	Condition	Specified Condition
a1-1 (TRG-) - a1-3 (TRG+)	Lock switch not pushed	10 kΩ or higher
	Lock switch pushed	Below 1 Ω

Front RH side

Tester Connection (Symbols)	Condition	Specified Condition
z1-1 (TRG-) - z1-3 (TRG+)	Lock switch not pushed	10 kΩ or higher
	Lock switch pushed	Below 1 Ω

Rear LH side

Tester Connection (Symbols)	Condition	Specified Condition
c1-1 (TRG-) - c1-3 (TRG+)	Lock switch not pushed	10 kΩ or higher
	Lock switch pushed	Below 1 Ω

Rear RH side

Tester Connection (Symbols)	Condition	Specified Condition
b1-1 (TRG-) - b1-3 (TRG+)	Lock switch not pushed	10 kΩ or higher
	Lock switch pushed	Below 1 Ω

NG → **REPLACE OUTSIDE HANDLE ASSEMBLY**

OK

DL

2	CHECK HARNESS AND CONNECTOR (CERTIFICATION ECU - ENTRY LOCK SWITCH)

Certification ECU:

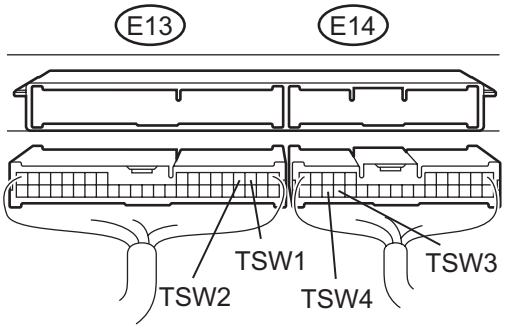

Door Outside Handle (Lock Switch) Wire Harness Side:

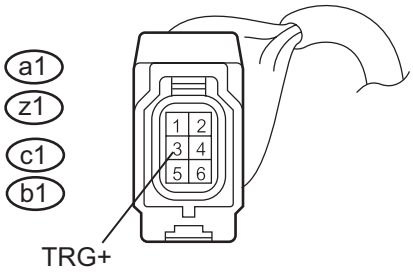

H

B138080E01

(a) Disconnect the E13 and E14 ECU connectors.

(b) Measure the resistance according to the value(s) in the table below.

Standard resistance:

Front LH side

Tester Connection (Symbols)	Condition	Specified Condition
E13-3 (TSW1) - a1-3 (TRG+)	Always	Below 1 Ω
E13-3 (TSW1) - Body ground	Always	10 kΩ or higher

Front RH side

Tester Connection (Symbols)	Condition	Specified Condition
E13-4 (TSW2) - z1-3 (TRG+)	Always	Below 1 Ω
E13-4 (TSW2) - Body ground	Always	10 kΩ or higher

Rear LH side

Tester Connection (Symbols)	Condition	Specified Condition
E14-25 (TSW3) - c1-3 (TRG+)	Always	Below 1 Ω
E14-25 (TSW3) - Body ground	Always	10 kΩ or higher

Rear RH side

Tester Connection (Symbols)	Condition	Specified Condition
E14-26 (TSW4) - b1-3 (TRG+)	Always	Below 1 Ω
E14-26 (TSW4) - Body ground	Always	10 kΩ or higher

NG → **REPAIR OR REPLACE HARNESS OR CONNECTOR**

OK

DL

3 CHECK HARNESS AND CONNECTOR (ELECTRICAL KEY OSCILLATOR - ENTRY LOCK SWITCH)

Door Outside Handle (Lock Switch) Wire Harness Side:

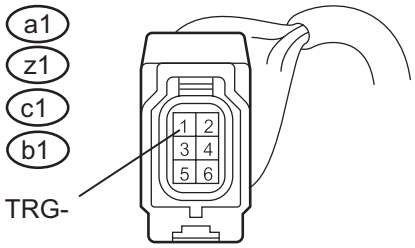

Electrical Key Oscillator:

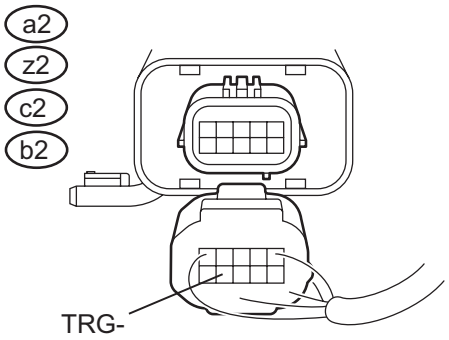

H B112467E10

(a) Disconnect the electrical key oscillator connector.
(b) Measure the resistance according to the value(s) in the table below.

Standard resistance:

Front LH side

Tester Connection (Symbols)	Condition	Specified Condition
a2-9 (TRG-) - a1-1 (TRG-)	Always	Below 1 Ω
a2-9 (TRG-) - Body ground	Always	10 kΩ or higher

Front RH side

Tester Connection (Symbols)	Condition	Specified Condition
z2-9 (TRG-) - z1-1 (TRG-)	Always	Below 1 Ω
z2-9 (TRG-) - Body ground	Always	10 kΩ or higher

Rear LH side

Tester Connection (Symbols)	Condition	Specified Condition
c2-9 (TRG-) - c1-1 (TRG-)	Always	Below 1 Ω
c2-9 (TRG-) - Body ground	Always	10 kΩ or higher

Rear RH side

Tester Connection (Symbols)	Condition	Specified Condition
b2-9 (TRG-) - b1-1 (TRG-)	Always	Below 1 Ω
b2-9 (TRG-) - Body ground	Always	10 kΩ or higher

NG → **REPAIR OR REPLACE HARNESS OR CONNECTOR**

OK

4 CHECK AND REPLACE ELECTRICAL KEY OSCILLATOR

(a) Replace the electrical key oscillator.
(b) Check that the entry LOCK/UNLOCK function operates normally.

OK:

Entry LOCK/UNLOCK function operates normally.

NG → **PROCEED TO NEXT CIRCUIT INSPECTION SHOWN IN PROBLEM SYMPTOMS TABLE**

OK

END (ELECTRICAL KEY OSCILLATOR IS DEFECTIVE)

DL

Touch Sensor Circuit

DESCRIPTION

The touch sensor are built into the door outside handles of the all doors. This circuit receives a signal indicating whether a touch sensor signal is detected.

WIRING DIAGRAM

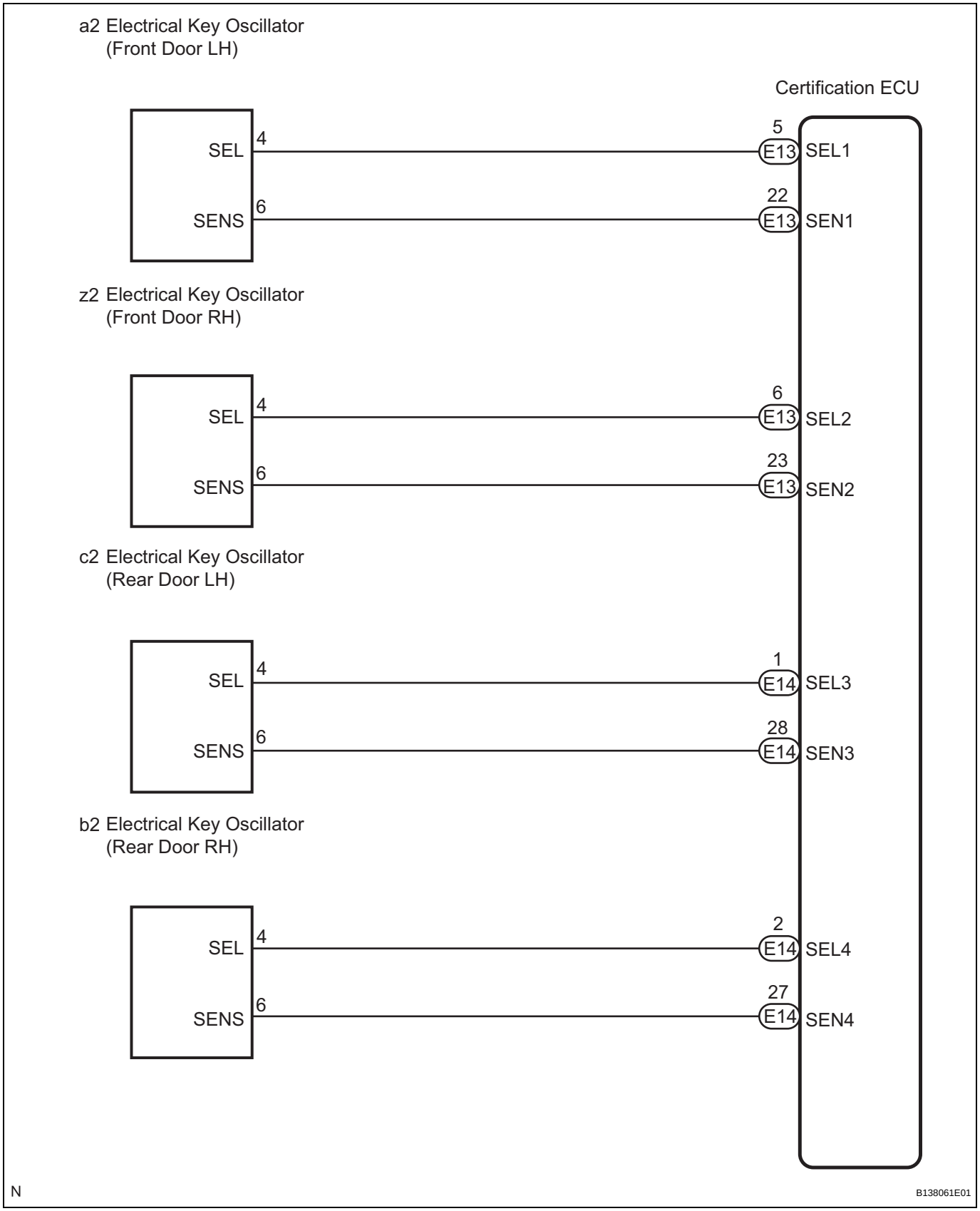

INSPECTION PROCEDURE

1	READ VALUE OF INTELLIGENT TESTER

(a) Connect the intelligent tester to the DLC3.
(b) Turn the engine switch on (IG).
(c) Following the display on the tester, select "DATA LIST".

SMART ACCESS (Certification ECU):

Item	Measurement Item/Range (Display)	Normal Condition	Diagnostic Note
D TOUCH SENSOR	Status of touch sensor front LH/ ON or OFF	ON: Touch sensor is touched OFF: Touch sensor is not touched	-
P TOUCH SENSOR	Status of touch sensor front RH/ ON or OFF	ON: Touch sensor is touched OFF: Touch sensor is not touched	-
DR TOUCH SENSOR	Rear door touch sensor LH/ON or OFF	ON: Sensor is touched OFF: Sensor is not touched	-
PR TOUCH SENSOR	Rear door touch sensor RH/ON or OFF	ON: Sensor is touched OFF: Sensor is not touched	-

DL

OK:
"ON" (screen is touched) or "OFF" (screen is not touched) appears on the tester screen.

OK → **PROCEED TO NEXT CIRCUIT INSPECTION SHOWN IN PROBLEM SYMPTOMS TABLE**

NG

2 CHECK HARNESS AND CONNECTOR (CERTIFICATION ECU - ELECTRICAL KEY OSCILLATOR)

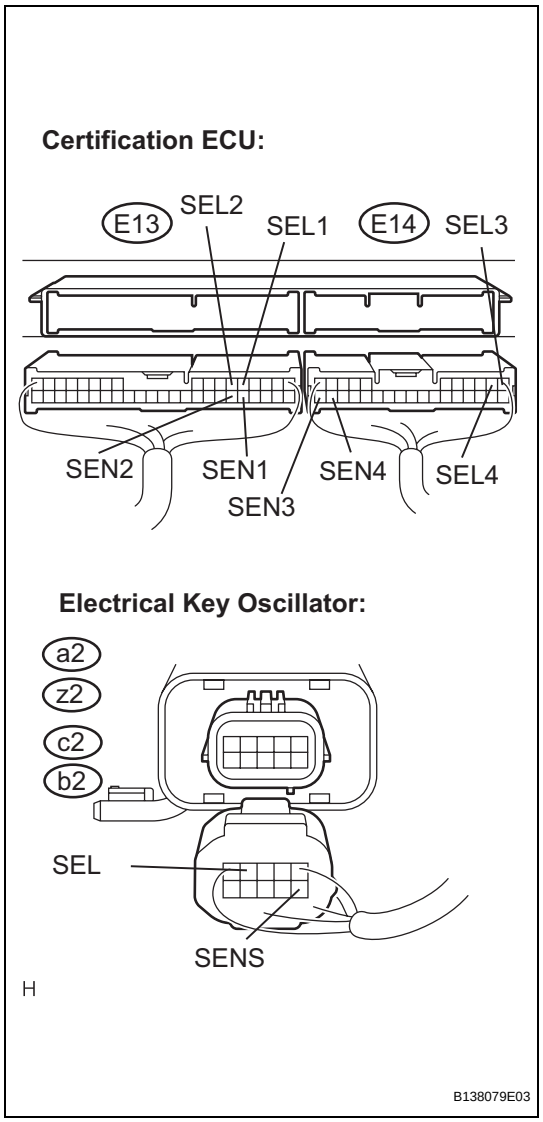

(a) Disconnect the E13 and E14 ECU connectors.
(b) Disconnect the oscillator connectors.
(c) Measure the resistance according to the value(s) in the table below.

Standard resistance:

Front LH side

Tester Connection (Symbols)	Condition	Specified Condition
E13-5 (SEL1) - a2-4 (SEL)	Always	Below 1 Ω
E13-22 (SEN1) - a2-6 (SENS)	Always	Below 1 Ω
E13-5 (SEL1) - Body ground	Always	10 kΩ or higher
E13-22 (SEN1) - Body ground	Always	10 kΩ or higher

Front RH side

Tester Connection (Symbols)	Condition	Specified Condition
E13-6 (SEL2) - z2-4 (SEL)	Always	Below 1 Ω
E13-23 (SEN2) - z2-6 (SENS)	Always	Below 1 Ω
E13-6 (SEL2) - Body ground	Always	10 kΩ or higher
E13-23 (SEN2) - Body ground	Always	10 kΩ or higher

Rear LH side

Tester Connection (Symbols)	Condition	Specified Condition
E14-1 (SEL3) - c2-4 (SEL)	Always	Below 1 Ω
E14-28 (SEN3) - c2-6 (SENS)	Always	Below 1 Ω
E14-1 (SEL3) - Body ground	Always	10 kΩ or higher
E14-28 (SEN3) - Body ground	Always	10 kΩ or higher

Rear RH side

Tester Connection (Symbols)	Condition	Specified Condition
E14-2 (SEL4) - b2-4 (SEL)	Always	Below 1 Ω
E14-27 (SEN4) - b2-6 (SENS)	Always	Below 1 Ω
E14-2 (SEL4) - Body ground	Always	10 kΩ or higher
E14-27 (SEN4) - Body ground	Always	10 kΩ or higher

NG → **REPAIR OR REPLACE HARNESS OR CONNECTOR**

OK

3 CHECK AND REPLACE ELECTRICAL KEY OSCILLATOR (CHECK OPERATION OF OSCILLATOR)

(a) Replace the electrical key oscillator.
(b) Check that the entry UNLOCK function operates normally.

OK:

Entry UNLOCK function operates normally.

OK → **END (ELECTRICAL KEY OSCILLATOR IS DEFECTIVE)**

NG

4 INSPECT CERTIFICATION ECU

Certification ECU:

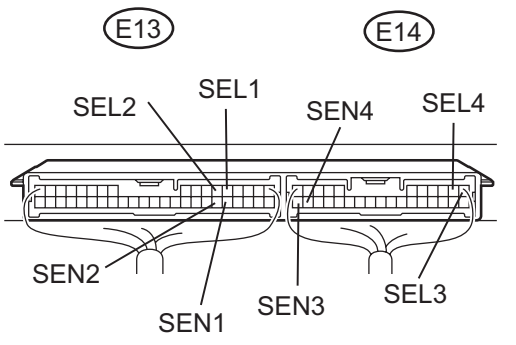

(a) Reconnect the ECU and the oscillator connectors.
(b) Connect the intelligent tester to the DLC3.
(c) Turn the engine switch on (IG).
(d) Measure the voltage according to the value(s) in the table below.

Standard voltage:

Front LH side

Tester Connection (Symbols)	Condition	Specified Condition
E13-5 (SEL1) - Body ground	Move the key more than 5 m (16.4 ft) away from the front door LH	10 to 14 V
E13-5 (SEL1) - Body ground	Bring key to the outside handle	Below 1 V
E13-22 (SEN1) - Body ground	Front door LH outside handle is not held (Bring the electrical key to the outside handle)	10 to 14 V
E13-22 (SEN1) - Body ground	Front door LH outside handle is held	Below 1 V

Front RH side

Tester Connection (Symbols)	Condition	Specified Condition
E13-6 (SEL2) - Body ground	Move the key more than 5 m (16.4 ft) away from the front door RH	10 to 14 V
E13-6 (SEL2) - Body ground	Bring key to the outside handle	Below 1 V
E13-23 (SEN2) - Body ground	Front door RH outside handle is not held (Bring the electrical key to the outside handle)	10 to 14 V
E13-23 (SEN2) - Body ground	Front door RH outside handle is held	Below 1 V

Rear LH side

Tester Connection (Symbols)	Condition	Specified Condition
E14-1 (SEL3) - Body ground	Move the key more than 5 m (16.4 ft) away from the rear door LH	10 to 14 V
E14-1 (SEL3) - Body ground	Bring key to the outside handle	Below 1 V
E14-28 (SEN3) - Body ground	Rear door LH outside handle is not held (Bring the electrical key outside the handle)	10 to 14 V
E14-28 (SEN3) - Body ground	Rear door LH outside handle is held	Below 1 V

Rear RH side

Tester Connection (Symbols)	Condition	Specified Condition
E14-2 (SEL4) - Body ground	Move the key more than 5 m (16.4 ft) away from the rear door RH	10 to 14 V
E14-2 (SEL4) - Body ground	Bring key to the outside handle	Below 1 V
E14-27 (SEN4) - Body ground	Rear door RH outside handle is not held (Bring the electrical key outside the handle)	10 to 14 V
E14-27 (SEN4) - Body ground	Rear door RH outside handle is held	Below 1 V

NG → **REPLACE CERTIFICATION ECU**

OK

PROCEED TO NEXT CIRCUIT INSPECTION SHOWN IN PROBLEM SYMPTOMS TABLE

Antenna Circuit

DESCRIPTION

The antenna are built into the door outside handles of the all doors. Terminals ANT1 and ANT2 of the antenna (door outside handle) detect if the electrical key is within the action area around the door outside handle.

WIRING DIAGRAM

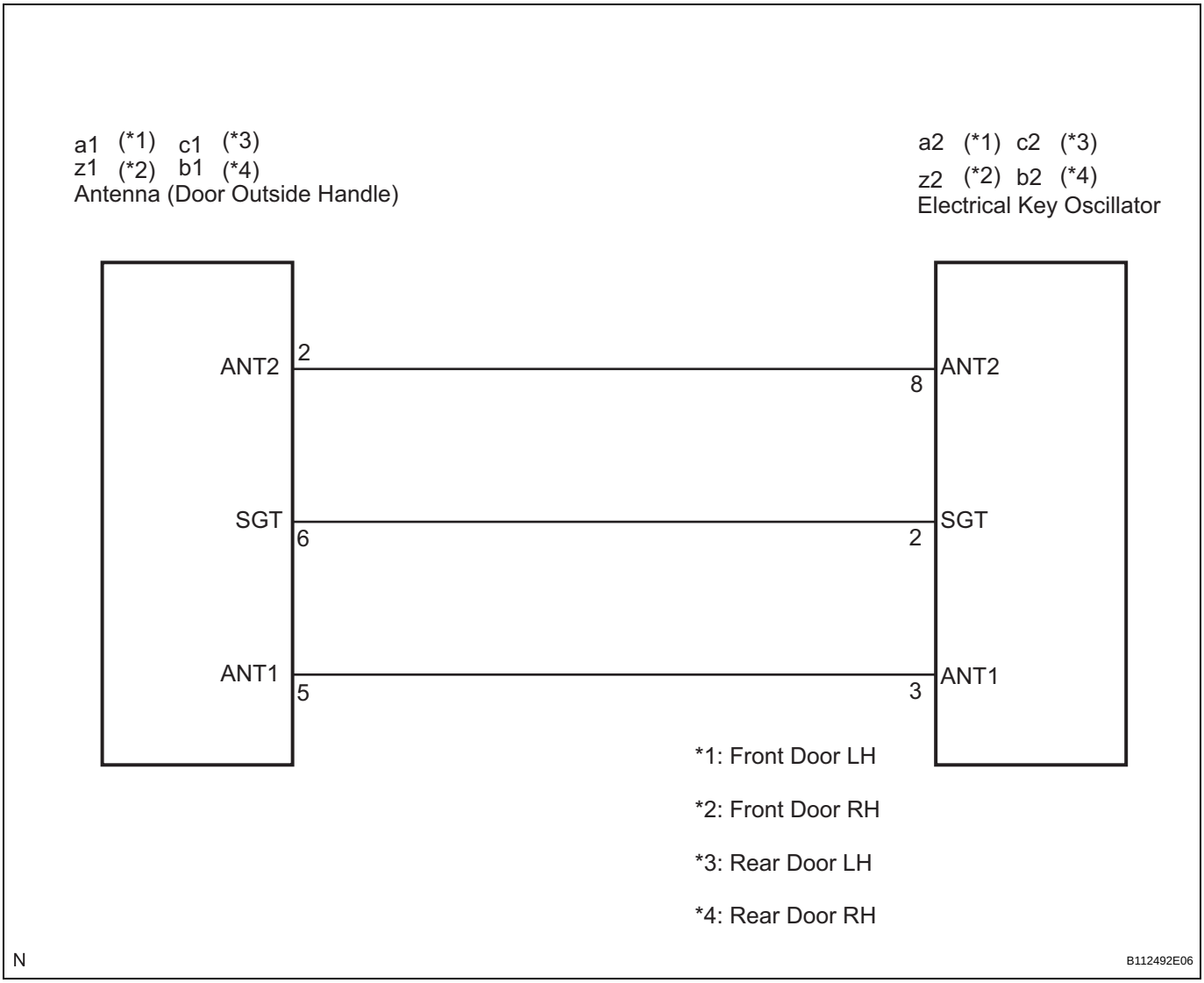

DL

INSPECTION PROCEDURE

1 CHECK HARNESS AND CONNECTOR (ELECTRICAL KEY OSCILLATOR - ANTENNA)

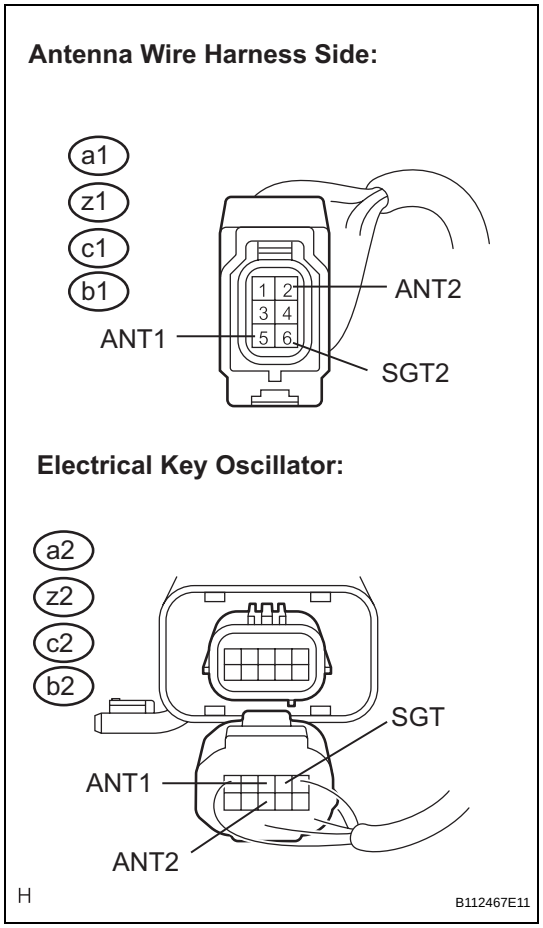

(a) Remove the outside handle.
(b) Disconnect the antenna and door oscillator connectors.
(c) Measure the resistance according to the value(s) in the table below.

Standard resistance

Tester Connection (Symbols)	Condition	Specified Condition
a1 (*1), z1 (*2), c1 (*3), b1 (*4)-2 (ANT2) - a2 (*1), z2 (*2), c2 (*3), b2 (*4)-8 (ANT2)	Always	Below 1 Ω
a1 (*1), z1 (*2), c1 (*3), b1 (*4)-6 (SGT) - a2 (*1), z2 (*2), c2 (*3), b2 (*4)-2 (SGT)	Always	Below 1 Ω
a1 (*1), z1 (*2), c1 (*3), b1 (*4)-5 (ANT1) - a2 (*1), z2 (*2), c2 (*3), b2 (*4)-3 (ANT1)	Always	Below 1 Ω
a1 (*1), z1 (*2), c1 (*3), b1 (*4)-2 (ANT2) - Body ground	Always	10 kΩ or higher
a1 (*1), z1 (*2), c1 (*3), b1 (*4)-6 (SGT) - Body ground	Always	10 kΩ or higher
a1 (*1), z1 (*2), c1 (*3), b1 (*4)-5 (ANT1) - Body ground	Always	10 kΩ or higher

*1: Front Door LH
*2: Front Door RH
*3: Rear Door LH
*4: Rear Door RH

NG → **REPAIR OR REPLACE HARNESS OR CONNECTOR**

OK

2 CHECK AND REPLACE DOOR OUTSIDE HANDLE

(a) Replace the door outside handle.
(b) Check that the entry LOCK/UNLOCK function operates normally.

OK:

Entry LOCK/UNLOCK function operates normally.

NG → **PROCEED TO NEXT CIRCUIT INSPECTION SHOWN IN PROBLEM SYMPTOMS TABLE**

OK

END (DOOR OUTSIDE HANDLE IS DEFECTIVE)

DL

Luggage Oscillator Circuit

DESCRIPTION

The certification ECU activates the inner and outer luggage compartment oscillators. The power is supplied from the certification ECU to both the inner and outer luggage compartment oscillators. The inner and outer luggage compartment oscillator circuits have the same wiring. If the entry luggage compartment function has a problem, check both the inner and outer luggage compartment oscillator circuits.

WIRING DIAGRAM

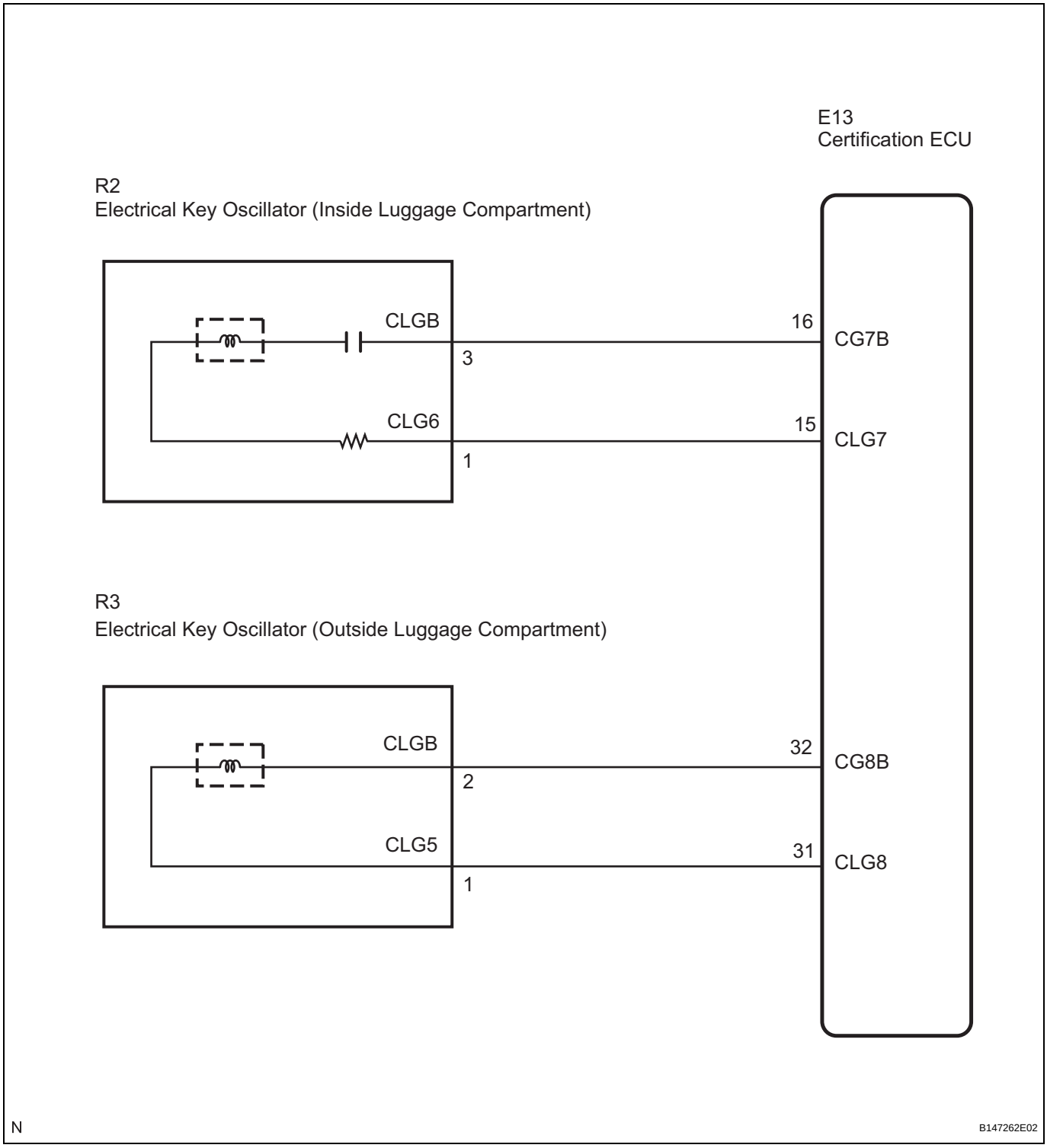

INSPECTION PROCEDURE

1	CHECK HARNESS AND CONNECTOR (CERTIFICATION ECU - ELECTRICAL KEY OSCILLATOR)

Certification ECU:

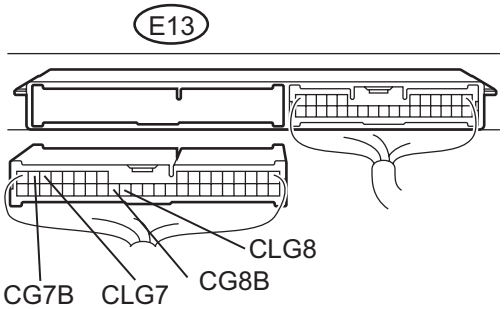

Electrical Key Oscillator

(Inside Luggage Compartment):

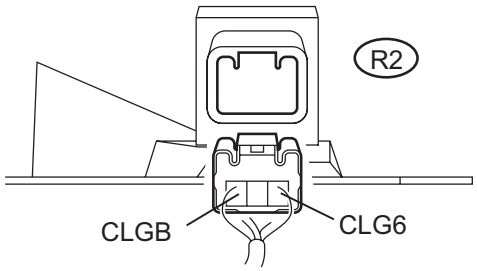

Electrical Key Oscillator

(Outside Luggage Compartment):

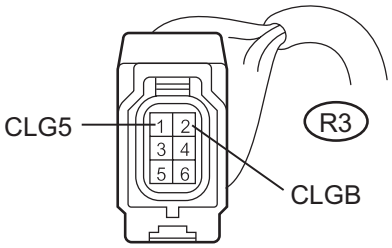

H B137965E02

(a) Disconnect the E13 ECU connector.
(b) Disconnect the oscillator connectors.
(c) Measure the resistance according to the value(s) in the table below.

Standard resistance:
Inside Luggage Compartment

Tester Connection (Symbols)	Condition	Specified Condition
E13-16 (CG7B) - R2-3 (CLGB)	Always	Below 1 Ω
E13-15 (CLG7) - R2-1 (CLG6)	Always	Below 1 Ω
E13-16 (CG7B) - Body ground	Always	10 kΩ or higher
E13-15 (CLG7) - Body ground	Always	10 kΩ or higher

Outside Luggage Compartment

Tester Connection (Symbols)	Condition	Specified Condition
E13-32 (CG8B) - R3-2 (CLGB)	Always	Below 1 Ω
E13-31 (CLG8) - R3-1 (CLG5)	Always	Below 1 Ω
E13-32 (CG8B) - Body ground	Always	10 kΩ or higher
E13-31 (CLG8) - Body ground	Always	10 kΩ or higher

NG → **REPAIR OR REPLACE HARNESS OR CONNECTOR**

OK

DL

2 CHECK AND REPLACE ELECTRICAL KEY OSCILLATOR

(a) Replace the electrical key oscillator.
(b) Check that the luggage compartment door entry LOCK/UNLOCK function operates normally.
OK:
Luggage compartment door entry LOCK/UNLOCK function operates normally.

OK → **END (ELECTRICAL KEY OSCILLATOR IS DEFECTIVE)**

NG

3 PERFORM ACTIVE TEST BY INTELLIGENT TESTER

DL

Certification ECU:

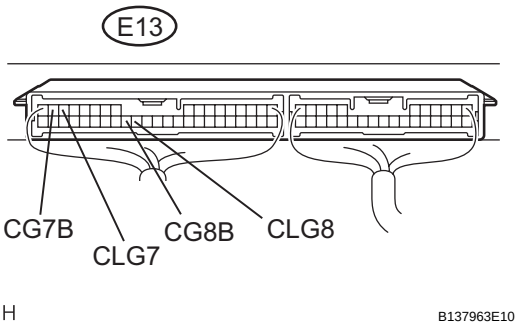

(a) Reconnect the oscillator and the ECU connectors.
(b) Connect the intelligent tester to the DLC3.
(c) Turn the engine switch on (IG).
(d) Following the display on the tester, select the "ACTIVE TEST".
SMART ACCESS (Certification ECU):

Item	Vehicle Condition/Test Details
IN-BDR TRNSMTTR	Electrical key oscillator (Luggage compartment inner) ON/OFF
BDOOR TRNSMTTR	Electrical key oscillator (Luggage compartment outer) ON/OFF

(e) Measure the frequency according to the value(s) in the table below.
Standard:
Inside Luggage Compartment

Tester Connection (Symbols)	Condition	Specified Condition
E13-16 (CG7B) - E13-15 (CLG7)	During ACTIVE TEST	Frequency is generated (higher than 0 Hz)

Outside Luggage Compartment

Tester Connection (Symbols)	Condition	Specified Condition
E13-32 (CG8B) - E13-31 (CLG8)	During ACTIVE TEST	Frequency is generated (higher than 0 Hz)

NG → **REPLACE CERTIFICATION ECU**

OK

PROCEED TO NEXT CIRCUIT INSPECTION SHOWN IN PROBLEM SYMPTOMS TABLE

Room Oscillator Circuit

DESCRIPTION

The certification ECU activates the electrical key oscillators (console and rear seat). The power is supplied from the certification ECU to both the electrical key oscillators (console and rear seat). The electrical key oscillators (console and rear seat) circuits have the same wiring. If the smart access system with push-button start does not operate properly inside the vehicle, check both the electrical key oscillators (console and rear seat) circuits.

WIRING DIAGRAM

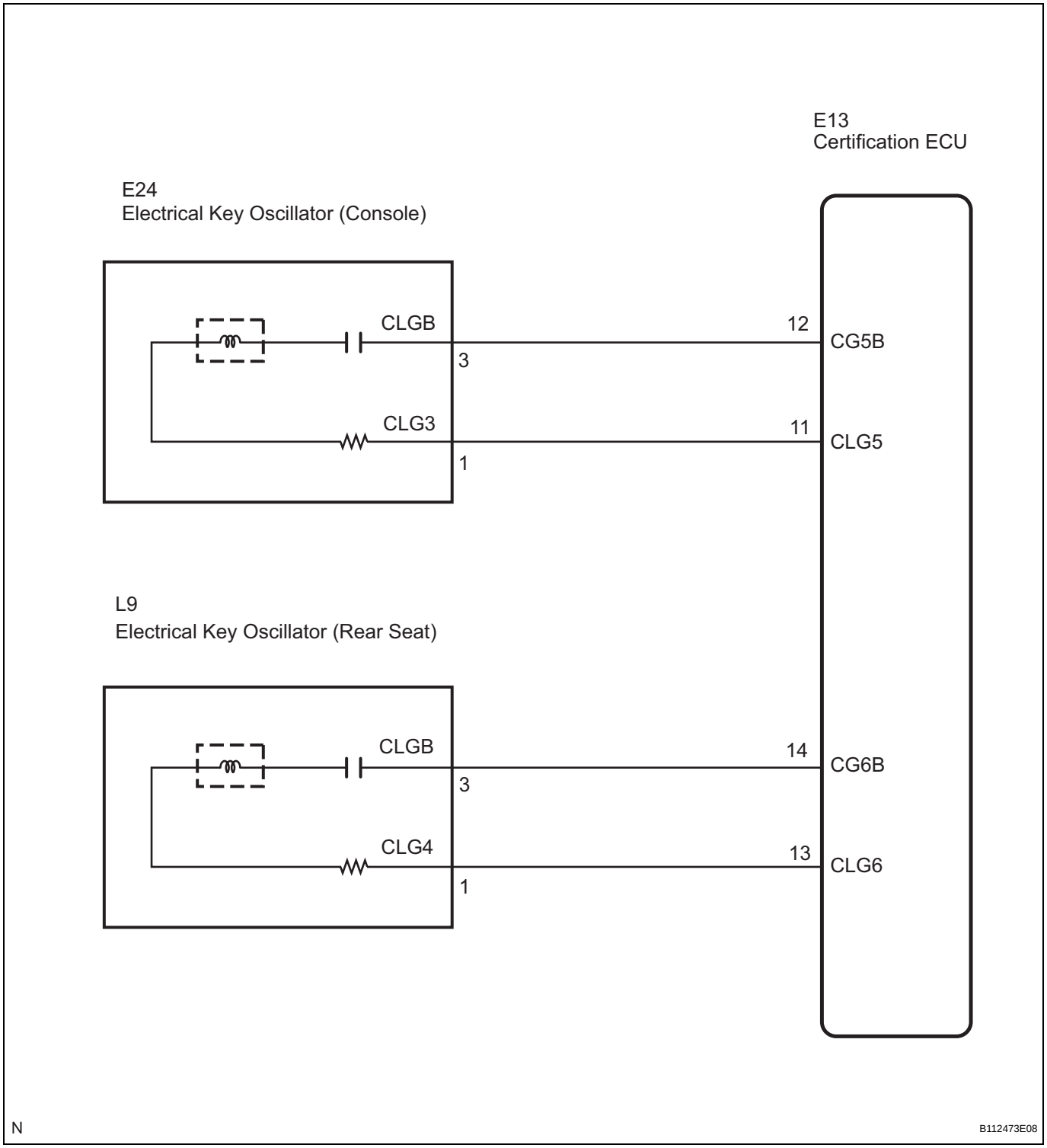

INSPECTION PROCEDURE

1	CHECK HARNESS AND CONNECTOR (CERTIFICATION ECU - ELECTRICAL KEY OSCILLATOR)

Certification ECU:

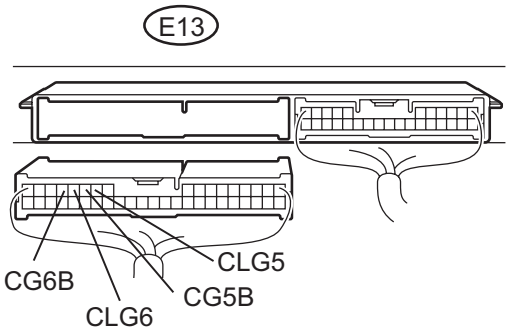

Electrical Key Oscillator (Console):

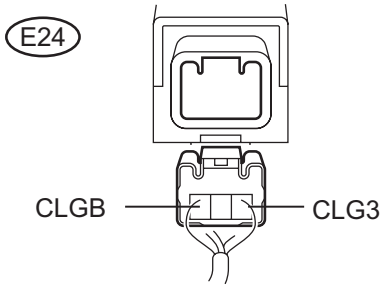

Electrical Key Oscillator (Rear Seat):

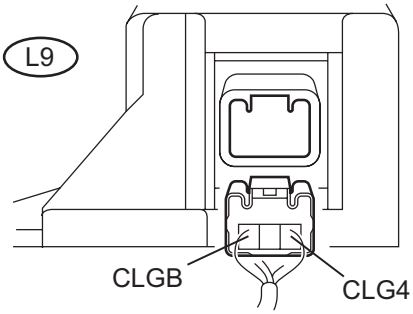

H B137966E02

(a) Disconnect the E13 ECU connector.
(b) Disconnect the oscillator connectors.
(c) Measure the resistance according to the value(s) in the table below.

Standard resistance:

Console

Tester Connection (Symbols)	Condition	Specified Condition
E13-12 (CG5B) - E24-3 (CLGB)	Always	Below 1 Ω
E13-11 (CLG5) - E24-1 (CLG3)	Always	Below 1 Ω
E13-12 (CG5B) - Body ground	Always	10 kΩ or higher
E13-11 (CLG5) - Body ground	Always	10 kΩ or higher

Rear Seat

Tester Connection (Symbols)	Condition	Specified Condition
E13-14 (CG6B) - L9-3 (CLGB)	Always	Below 1 Ω
E13-13 (CLG6) - L9-1 (CLG4)	Always	Below 1 Ω
E13-14 (CG6B) - Body ground	Always	10 kΩ or higher
E13-13 (CLG6) - Body ground	Always	10 kΩ or higher

NG → **REPAIR OR REPLACE HARNESS OR CONNECTOR**

OK

2	CHECK AND REPLACE ELECTRICAL KEY OSCILLATOR

(a) Replace the electrical key oscillator.
(b) Check that the entry LOCK/UNLOCK function operates normally.
OK:
Entry LOCK/UNLOCK function operates normally.

OK → **END (ELECTRICAL KEY OSCILLATOR IS DEFECTIVE)**

NG

3	PERFORM ACTIVE TEST BY INTELLIGENT TESTER (CERTIFICATION ECU OUTPUT SIGNAL)

Certification ECU:

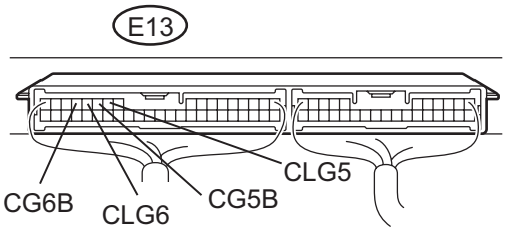

H B137963E11

(a) Reconnect the oscillator and the ECU connectors.
(b) Connect the intelligent tester to the DLC3.
(c) Turn the engine switch on (IG).
(d) Following the display on the tester, select the "ACTIVE TEST".
SMART ACCESS (Certification ECU):

Item	Vehicle Condition/Test Details
FR TRANSMITTER	Electrical key oscillator (console) ON/OFF
RR TRANSMITTER	Electrical key oscillator (rear seat) ON/OFF

(e) Measure the frequency according to the value(s) in the table below.
Standard:
Console

Tester Connection (Symbols)	Condition	Specified Condition
E13-12 (CG5B) - E13-11 (CLG5)	During ACTIVE TEST	Frequency is generated (higher than 0 Hz)

Rear Seat

Tester Connection (Symbols)	Condition	Specified Condition
E13-14 (CG6B) - E13-13 (CLG6)	During ACTIVE TEST	Frequency is generated (higher than 0 Hz)

NG → **REPLACE CERTIFICATION ECU**

OK

PROCEED TO NEXT CIRCUIT INSPECTION SHOWN IN PROBLEM SYMPTOMS TABLE

Luggage Compartment Door Open Switch Circuit

DESCRIPTION

If the certification ECU detects that the luggage compartment open switch is pressed when the driver is carrying the electrical key or when the electrical key is unlocked in the luggage compartment door, the certification ECU sends a luggage compartment door open motor drive request signal to the main body ECU.

WIRING DIAGRAM

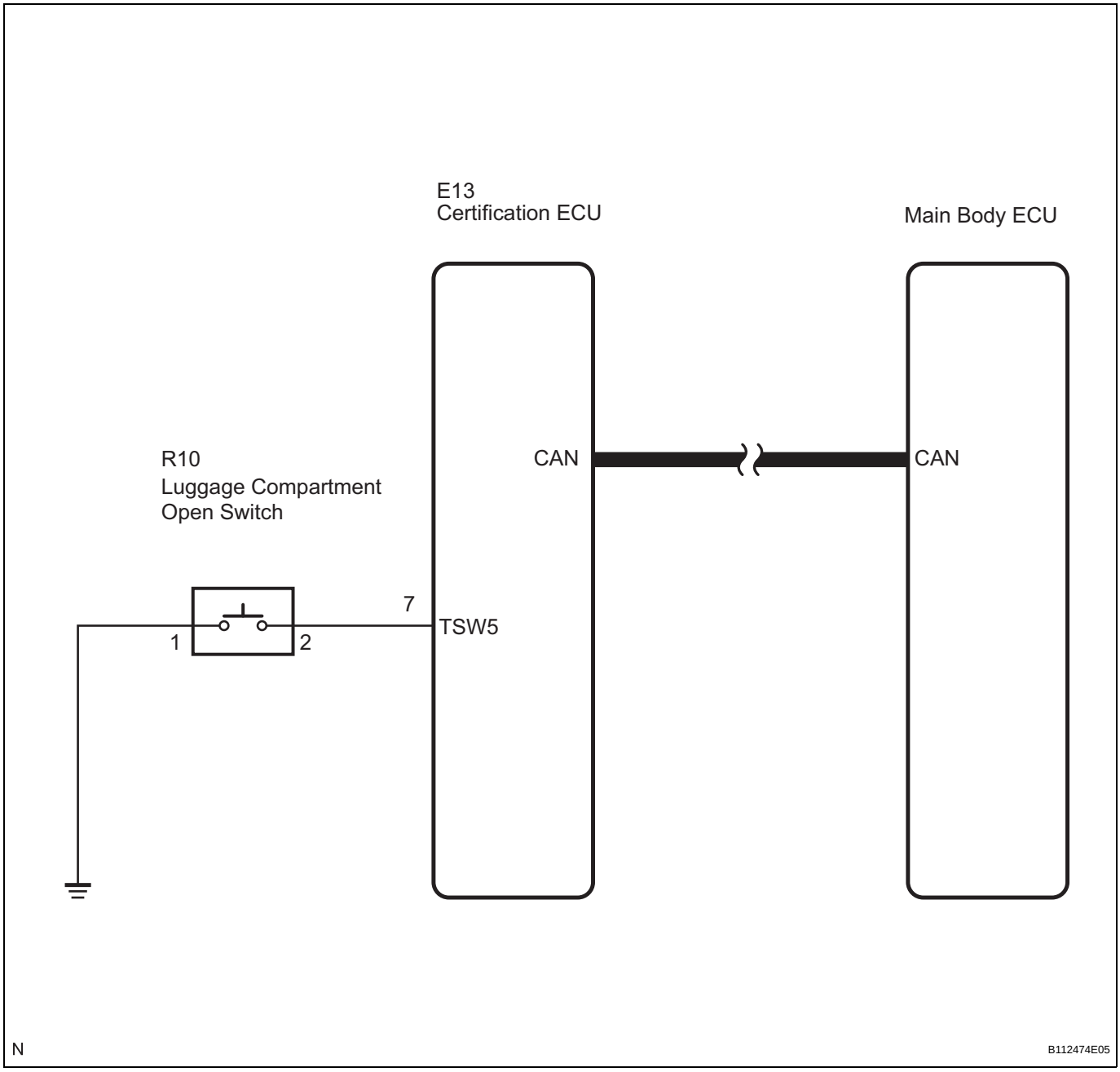

INSPECTION PROCEDURE

1 CHECK HARNESS AND CONNECTOR (CERTIFICATION ECU - LUGGAGE COMPARTMENT OPEN SWITCH)

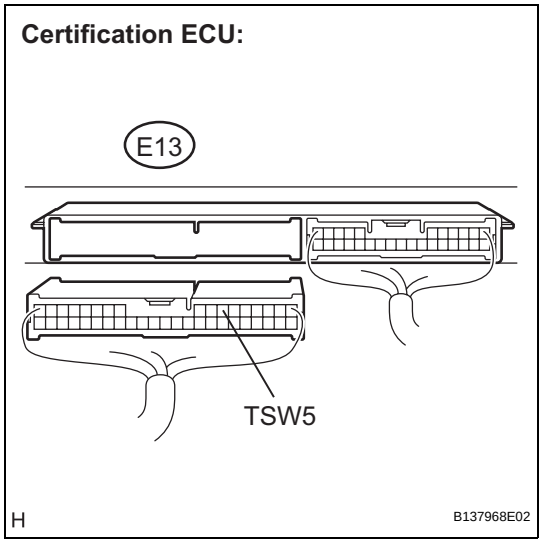

(a) Disconnect the E13 ECU connector.
(b) Measure the resistance according to the value(s) in the table below.

Standard resistance

Tester Connection (Symbols)	Condition	Specified Condition
E13-7 (TSW5) - Body ground	Luggage compartment open switch not pushed (OFF)	10 kΩ or higher
	Luggage compartment open switch pushed (ON)	Below 1 Ω

OK → **PROCEED TO NEXT CIRCUIT INSPECTION SHOWN IN PROBLEM SYMPTOMS TABLE**

NG

2 INSPECT LUGGAGE COMPARTMENT OPEN SWITCH

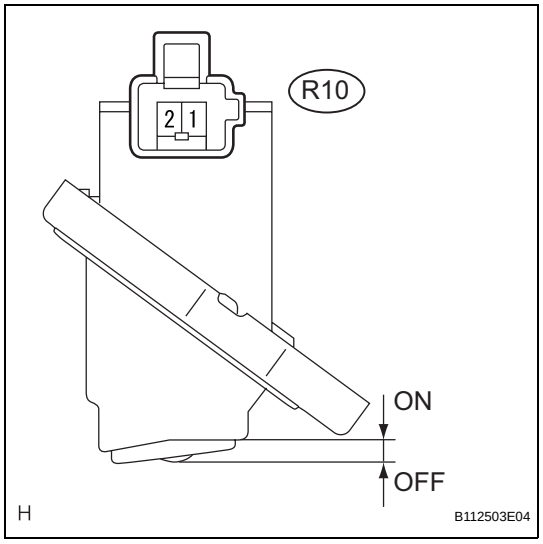

(a) Disconnect the switch connector.
(b) Measure the resistance according to the value(s) in the table below.

Standard resistance

Tester Connection	Condition	Specified Condition
R10-1 - R10-2	Luggage compartment open switch not pushed (OFF)	10 kΩ or higher
	Luggage compartment open switch pushed (ON)	Below 1 Ω

NG → **REPLACE LUGGAGE COMPARTMENT OPEN SWITCH**

OK

REPLACE CERTIFICATION ECU

DL

Certification ECU Power Source Circuit

DESCRIPTION

This is the power source circuit of the certification ECU.
The certification ECU controls the following:

- Electrical key verification confirmation
- Cabin and door oscillator control
- Entry door LOCK/UNLOCK request to the main body ECU
- Steering LOCK/UNLOCK request
- Immobiliser SET/UNSET request to the ID code box

WIRING DIAGRAM

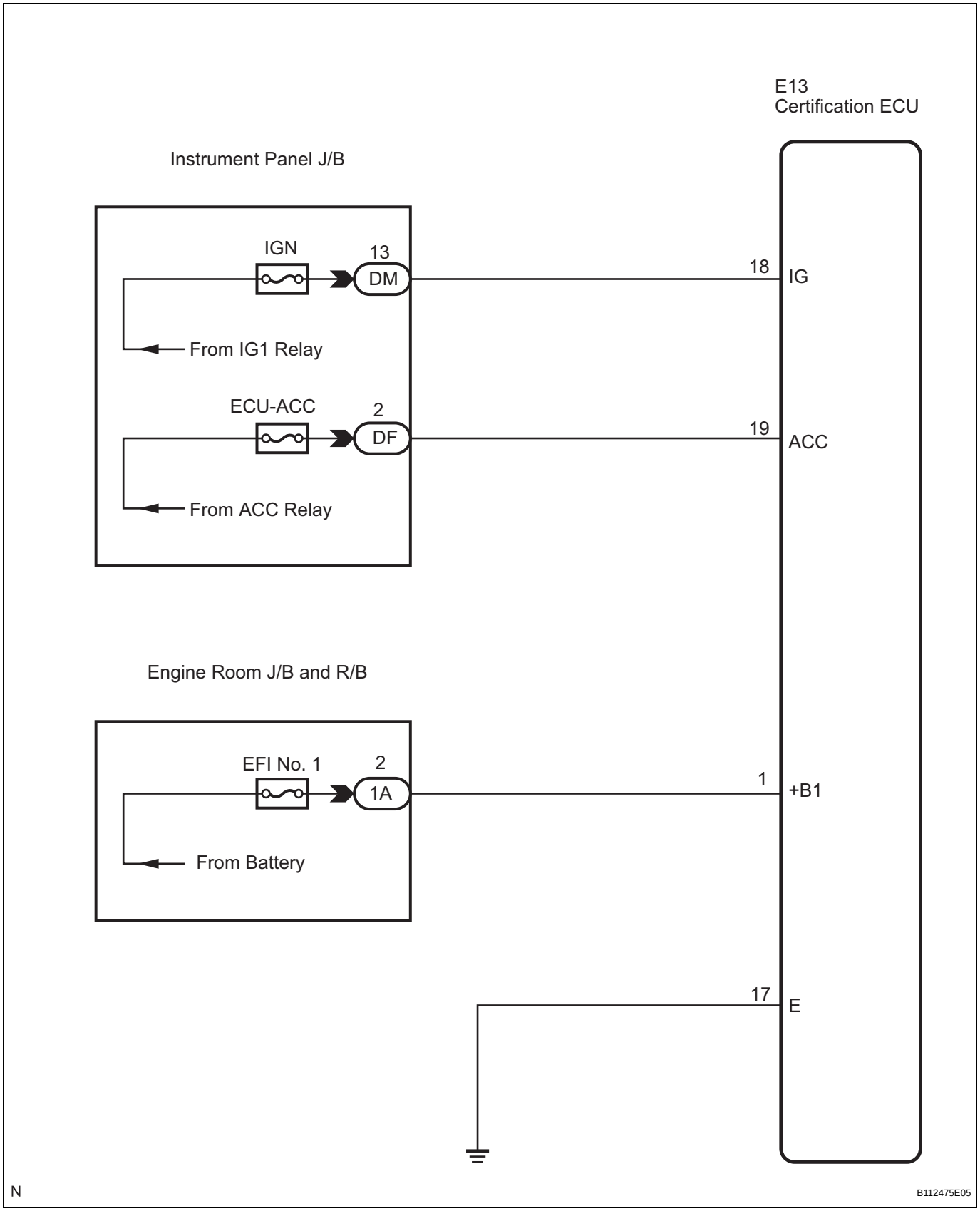

INSPECTION PROCEDURE

1	CHECK HARNESS AND CONNECTOR (POWER SOURCE CIRCUIT)

Certification ECU:

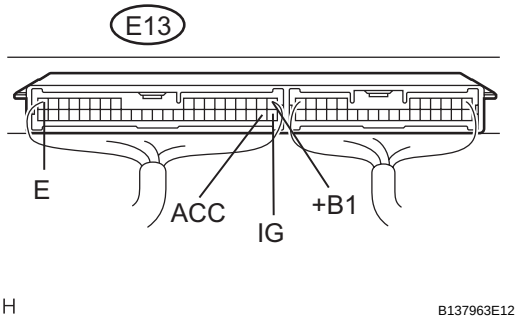

(a) Disconnect the E13 certification ECU connector.

(b) Measure the voltage according to the value(s) in the table below.

Standard voltage

Tester Connection (Symbols)	Condition	Specified Condition
E13-1 (+B1) - Body ground	Always	10 to 14 V
E13-18 (IG) - Body ground	Engine switch OFF	Below 1 V
	Engine switch ON (IG)	10 to 14 V
E13-19 (ACC) - Body ground	Engine switch OFF	Below 1 V
	Engine switch ON (ACC)	10 to 14 V

(c) Measure the resistance according to the value(s) in the table below.

Standard resistance

Tester Connection (Symbols)	Condition	Specified Condition
E13-17 (E) - Body ground	Always	Below 1 Ω

NG → **REPAIR OR REPLACE HARNESS OR CONNECTOR**

OK

PROCEED TO NEXT CIRCUIT INSPECTION SHOWN IN PROBLEM SYMPTOMS TABLE

INSPECTION

1. INSPECT DOOR CONTROL TRANSMITTER

(a) Inspect operation of the transmitter.

(1) Remove the battery (lithium battery) from the transmitter (See page DL-174).

(2) Install a new or non-depleted battery (lithium battery).
HINT:
When a new or non-depleted battery is not available, first connect 2 new 1.5 V batteries in series. Then connect leads to the batteries and use the leads to apply 3 V to the transmitter, as shown in the illustration.

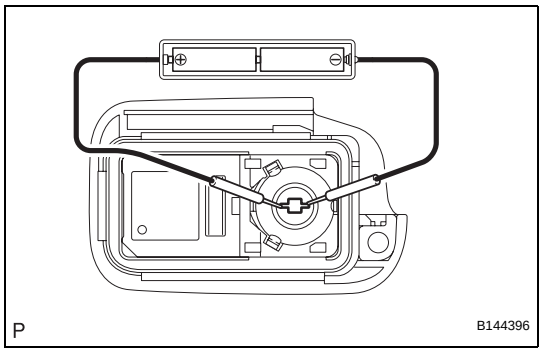

(3) In a location that is approximately 1 m (3.28 ft) away from the driver side outside door handle, test the transmitter by pointing it at the vehicle and pressing a transmitter's switch.
OK:
The door lock can be operated via the transmitter. The LED lights up more than once.
HINT:
- The operational area differs depending on the user, the way the transmitter is held and the location.
- The transmitter's faint electric waves may be affected if the area has strong electric waves or noise. The transmitter's operation area may be reduced or the transmitter may not function.

(b) Inspect the battery capacity.
HINT:
- When checking the amount of energy left in the battery (lithium battery), the battery must be checked while it is installed in the transmitter (a resistance of 1.2 kΩ is applied to the battery).
- If the transmitter is malfunctioning, the voltage reading of the energy left in the battery will be inaccurate.

(1) Remove the battery (lithium battery) from the transmitter (See page DL-174).

(2) Connect a wire to the negative (-) terminal of the transmitter and install the battery.

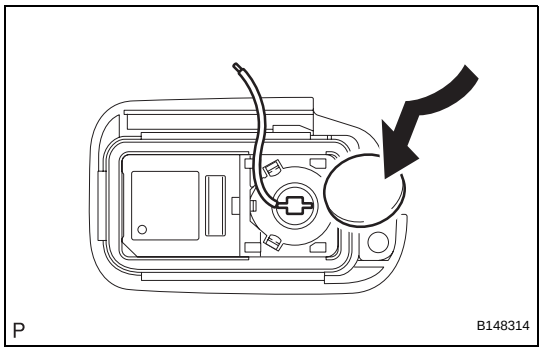

DL

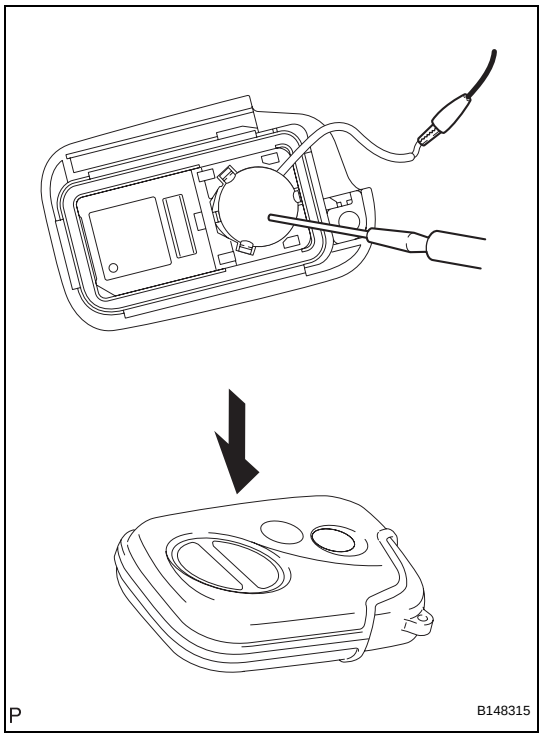

(3) Connect the tester's positive (+) lead to the battery (lithium battery) and the negative (-) battery lead to the wire.

(4) Press one of the switches on the transmitter for approximately 1 second.

(5) Press the switch on the transmitter again to check the voltage.

Standard voltage:
2.5 V or higher

HINT:

- When the temperature of the battery is low, the inspection will not be accurate. When the outcome of the test is less than 2.5 V, conduct the test again after leaving the battery in a place with a temperature of 18°C (64°F) for more than 30 minutes.
- Read the voltage immediately after the switch is pressed. When 0.8 seconds have passed after the switch is pressed, the automatic power-off function starts and resistance applied to the battery will cease. The voltage of the battery will be 2.5 V or more.
- Press the switch at least 3 times before reading the voltage. If the battery temperature has just returned to 18°C (64°F), the voltage may be unusually high for the first or second voltage reading.

INSTALLATION

1. INSTALL TRANSMITTER BATTERY

(a) Install a new battery (lithium battery) with the positive (+) side up as shown in the illustration.

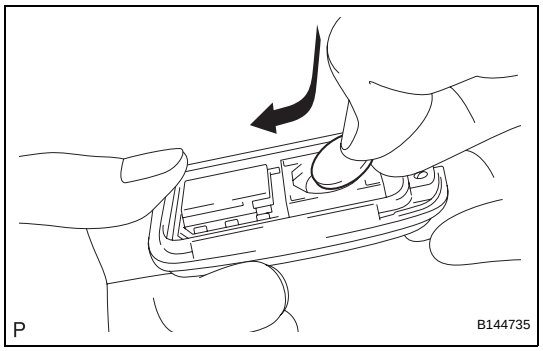

(b) Press down gently on the battery to set it in place.

NOTICE:

- **Be sure that the positive and negative sides of the transmitter battery are positioned correctly.**
- **Be careful not to bend the terminals of the transmitter battery during installation.**
- **Keep the interior of the transmitter case free of dust, water and oil.**

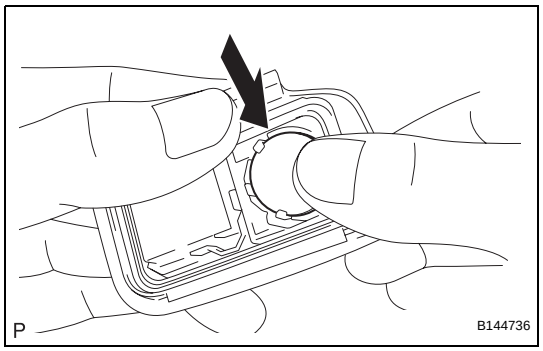

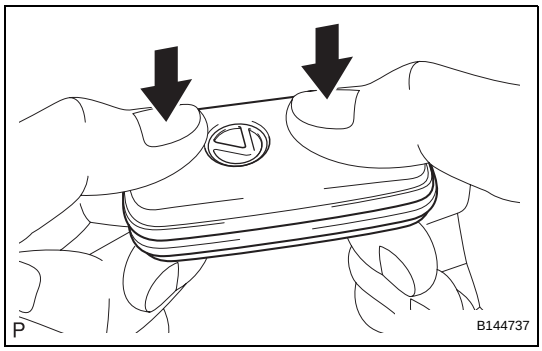

(c) Install the cover by pressing down on it as shown in the illustration.

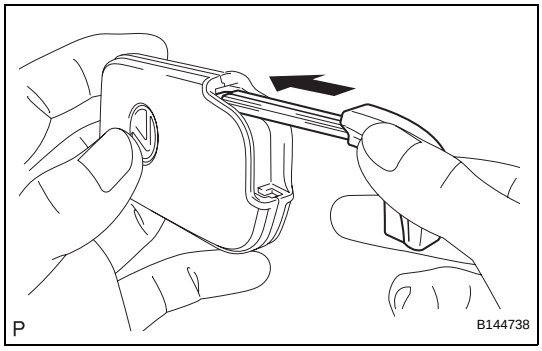

(d) Install the mechanical key.
HINT:
After the installation, press one of the transmitter's switches and check that the LED illuminates.

INSPECTION

1. INSPECT FRONT DOOR LOCK LH ASSEMBLY

(a) Remove the front door lock assembly LH.

(b) Check operation of the door lock motor.

(1) Apply battery voltage and check operation of the door lock motor.

OK

Measurement Condition	Specified Condition
Battery positive (+) → Terminal 4 Battery negative (-) → Terminal 1	Lock
Battery positive (+) → Terminal 1 Battery negative (-) → Terminal 4	Unlock

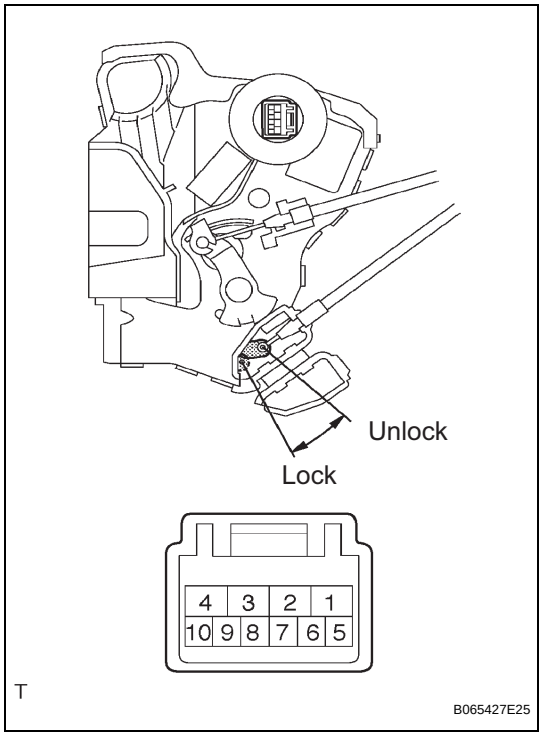

(c) Check operation of the door key lock and unlock switch.

(1) Measure the resistance according to the value(s) in the table below.

Standard resistance

Tester Connection	Condition	Specified Condition
7 - 9	ON (Door lock set to LOCK)	Below 1 Ω
7 - 9 7 - 10	OFF (Free)	10 kΩ or higher
7 - 10	ON (Door lock set to UNLOCK)	Below 1 Ω

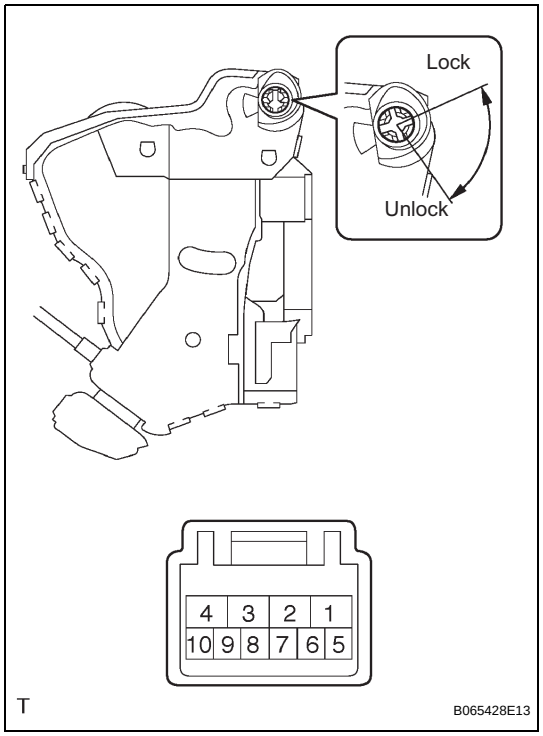

DL

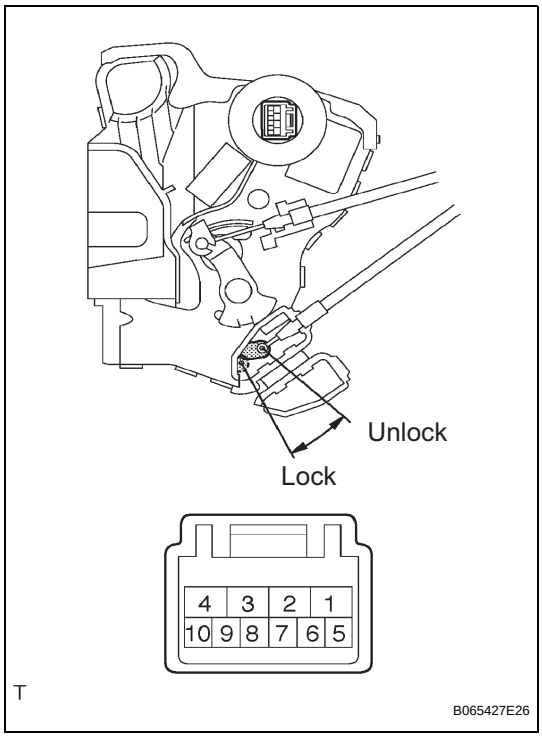

(d) Check operation of the door unlock detection switch.

(1) Measure the resistance according to the value(s) in the table below.

Standard resistance

Tester Connection	Measurement Condition	Door Lock Condition	Specified Condition
7 - 8	Battery positive (+) → Terminal 4 Battery negative (-) → Terminal 1	Lock	10 kΩ or higher
7 - 8	Battery positive (+) → Terminal 1 Battery negative (-) → Terminal 4	Unlock	Below 1 Ω

2. INSPECT FRONT DOOR LOCK RH ASSEMBLY

(a) Remove the front door lock assembly RH.

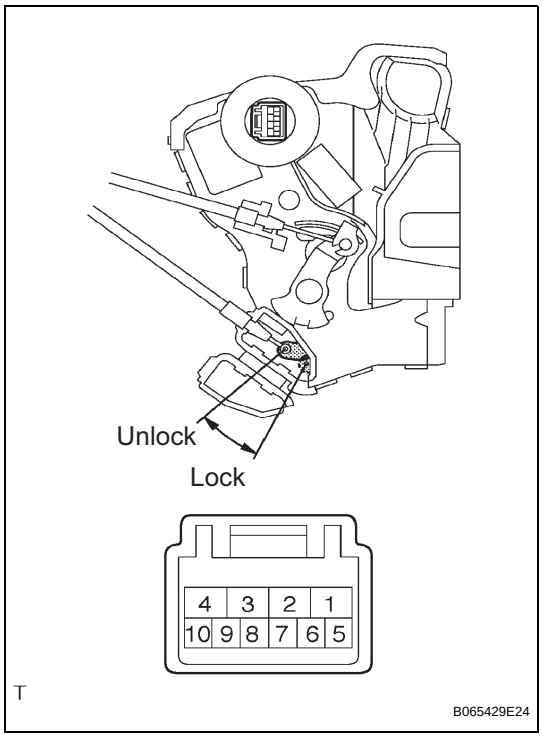

(b) Check operation of the door lock motor.

(1) Apply battery voltage and check operation of the door lock motor.

OK

Measurement Condition	Specified Condition
Battery positive (+) → Terminal 4 Battery negative (-) → Terminal 1	Lock
Battery positive (+) → Terminal 1 Battery negative (-) → Terminal 4	Unlock

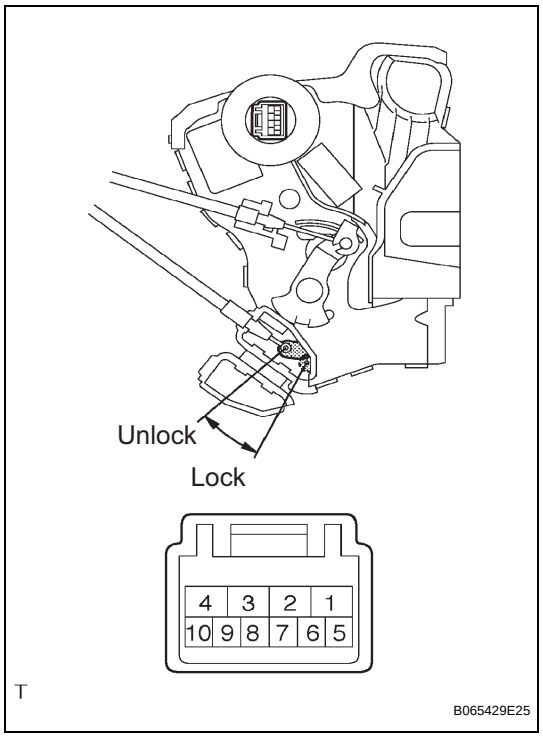

(c) Check operation of the door unlock detection switch.

(1) Measure the resistance according to the value(s) in the table below.

Standard resistance

Tester Connection	Measurement Condition	Door Lock Condition	(Specified Condition)
7 - 8	Battery positive (+) → Terminal 4 Battery negative (-) → Terminal 1	LOCK	10 kΩ or higher
7 - 8	Battery positive (+) → Terminal 1 Battery negative (-) → Terminal 4	UNLOCK	Below 1 Ω

INSTALLATION

1. INSTALL FRONT DOOR LOCK ASSEMBLY

NOTICE:

- **When reusing the removed front door lock assembly, replace the door lock wiring harness seal on the connector with a new one.**
- **Do not allow grease or dust to adhere to the door lock wiring harness seal surface of the connector.**
- **Reusing the door lock wiring harness seal or using a damaged door lock wiring harness seal may cause water intrusion to the connection. This may result in a malfunction of the front door lock assembly.**

(a) Install the front door inside locking cable assembly.

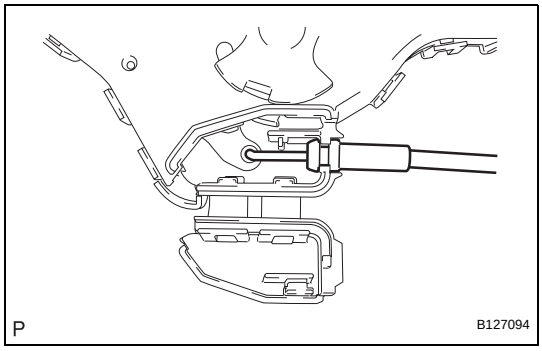

(b) Engage the 3 claws.

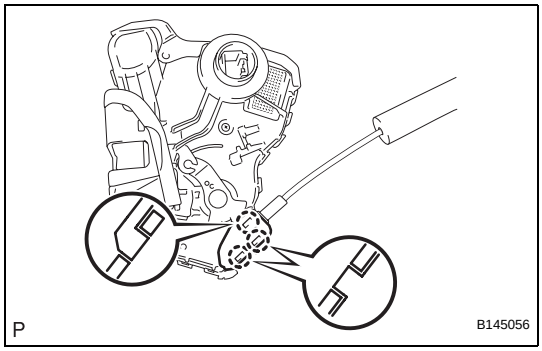

(c) Install the front door lock remote control cable assembly.

(d) Apply MP grease to the sliding parts of the front door lock assembly.

(e) Install a new door lock wiring harness seal to the front door lock assembly.

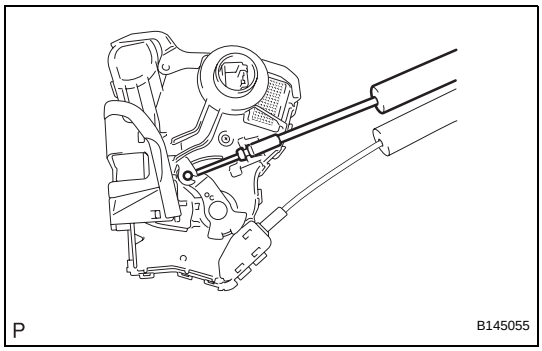

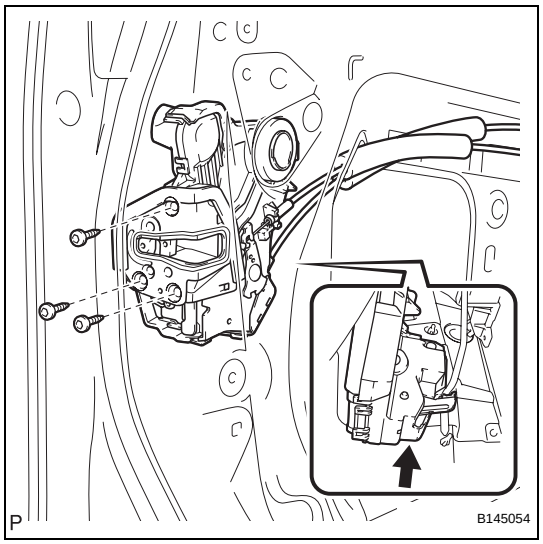

(f) Insert the front door lock open rod to the front door lock assembly, and set it to the front door outside handle frame.

(g) Make sure that the front door lock open rod is securely connected to the front door lock assembly.

(h) Using a "TORX" socket wrench (T30), install the front door lock assembly with the 3 screws.
Torque: 5.5 N*m (56 kgf*cm, 49 in.*lbf)

(i) Connect the connector.

2. **INSTALL FRONT DOOR OUTSIDE HANDLE COVER (See page ED-48)**
3. **INSTALL FRONT DOOR REAR LOWER FRAME SUB-ASSEMBLY (See page ED-49)**
4. **INSTALL FRONT DOOR GLASS SUB-ASSEMBLY (See page ED-50)**
5. **INSTALL FRONT DOOR SERVICE HOLE COVER (See page ED-50)**
6. **INSTALL FRONT NO. 1 DOOR TRIM BRACKET (See page ED-51)**
7. **INSTALL FRONT NO. 1 SPEAKER ASSEMBLY (See page AV-184)**
8. **INSTALL FRONT DOOR INNER GLASS WEATHERSTRIP (See page ED-52)**
9. **INSTALL FRONT DOOR TRIM BOARD SUB-ASSEMBLY (See page ED-52)**
10. **INSTALL DOOR ARMREST COVER (See page ED-53)**
11. **INSTALL COURTESY LIGHT ASSEMBLY (See page ED-53)**
12. **INSTALL FRONT DOOR ARMREST BASE PANEL ASSEMBLY (See page ED-53)**
13. **INSTALL FRONT DOOR INSIDE HANDLE BEZEL PLUG (See page ED-54)**

INSPECTION

1. INSPECT REAR DOOR LOCK LH ASSEMBLY

(a) Remove the rear door lock assembly LH.

(b) Check operation of the door lock motor.

(1) Apply battery voltage and check operation of the door lock motor.

OK

Measurement Condition	Specified Condition
Battery positive (+) → Terminal 4 Battery negative (-) → Terminal 1	**Lock**
Battery positive (+) → Terminal 1 Battery negative (-) → Terminal 4	**Unlock**

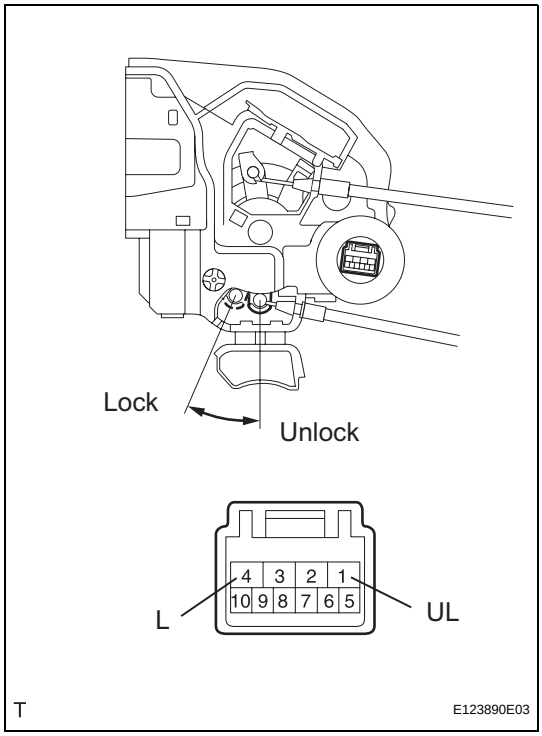

(c) Check operation of the unlock detection switch.

(1) Measure the resistance according to the value(s) in the table below.

Standard resistance

Tester Connection	Measurement Condition	Door Lock Condition	(Specified Condition)
6 - 9	**Battery positive (+) → Terminal 4 Battery negative (-) → Terminal 1**	**Lock**	**10 kΩ or higher**
6 - 9	**Battery positive (+) → Terminal 1 Battery negative (-) → Terminal 4**	**Unlock**	**Below 1 Ω**

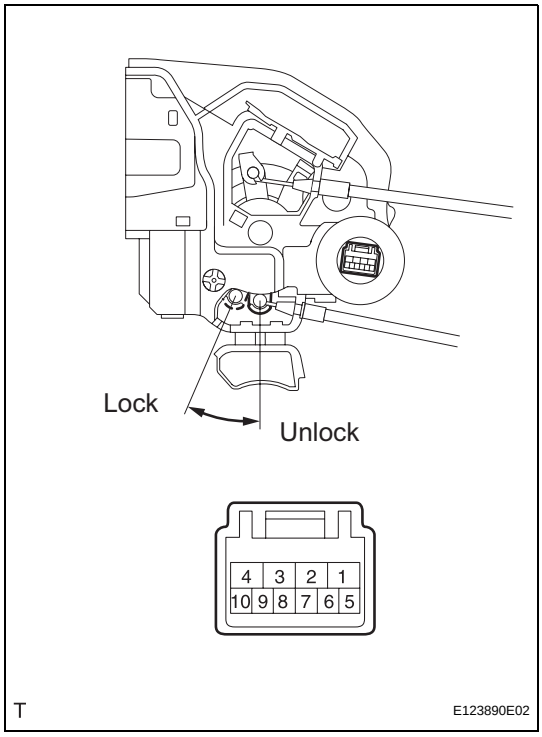

2. INSPECT REAR DOOR LOCK RH ASSEMBLY

(a) Remove the rear door lock assembly RH.

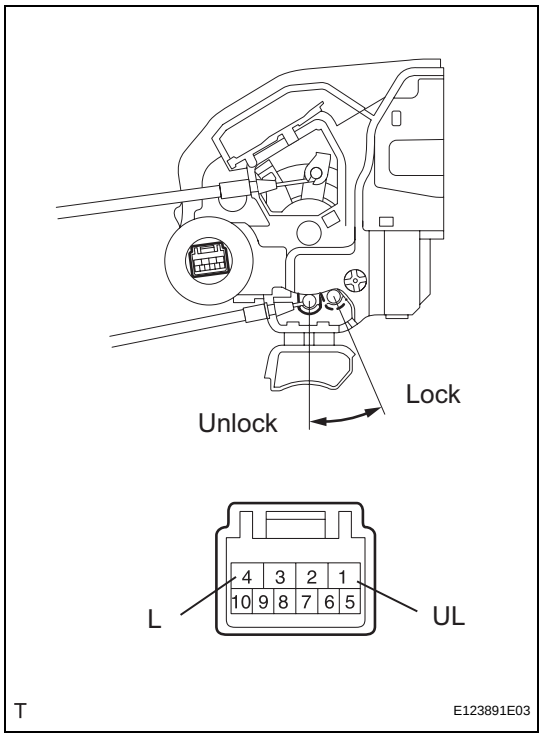

(b) Check operation of the door lock motor.

(1) Apply battery voltage and check operation of the door lock motor.

OK

Measurement Condition	Specified Condition
Battery positive (+) → Terminal 4 Battery negative (-) → Terminal 1	**Lock**
Battery positive (+) → Terminal 1 Battery negative (-) → Terminal 4	**Unlock**

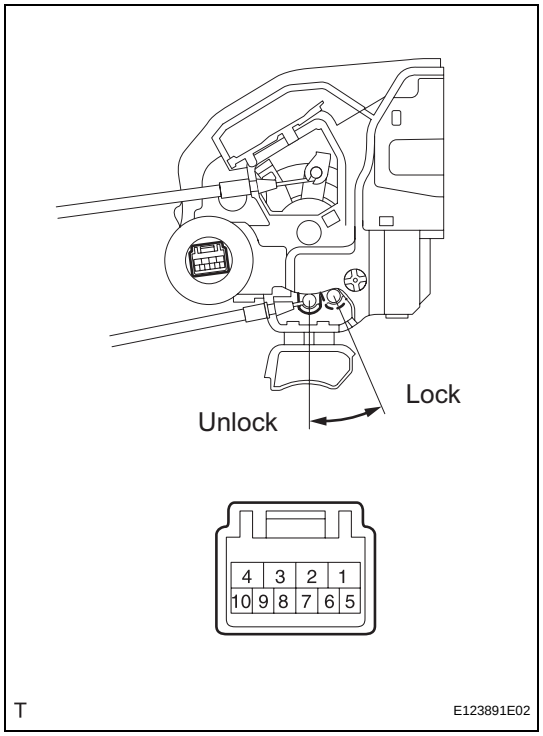

(c) Check operation of the unlock detection switch.

(1) Measure the resistance according to the value(s) in the table below.

Standard resistance

Tester Connection	Measurement Condition	Door Lock Condition	(Specified Condition)
6 - 9	**Battery positive (+) → Terminal 4 Battery negative (-) → Terminal 1**	**Lock**	**10 kΩ or higher**
6 - 9	**Battery positive (+) → Terminal 1 Battery negative (-) → Terminal 4**	**Unlock**	**Below 1 Ω**

INSTALLATION

1. INSTALL REAR DOOR LOCK ASSEMBLY

NOTICE:

- **When reusing the removed rear door lock assembly, replace the door lock wiring harness seal on the connector with a new one.**
- **Do not allow grease or dust to adhere to the door lock wiring harness seal surface of the connector.**
- **Reusing the door lock wiring harness seal or using a damaged door lock wiring harness seal may cause water intrusion to the connection. This may result in a malfunction of the rear door lock assembly.**

(a) Install the rear door inside locking cable assembly.

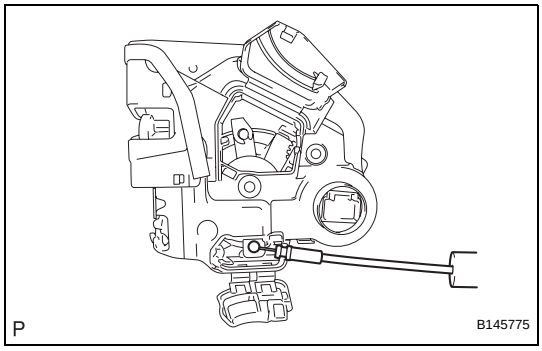

(b) Engage the 3 claws.

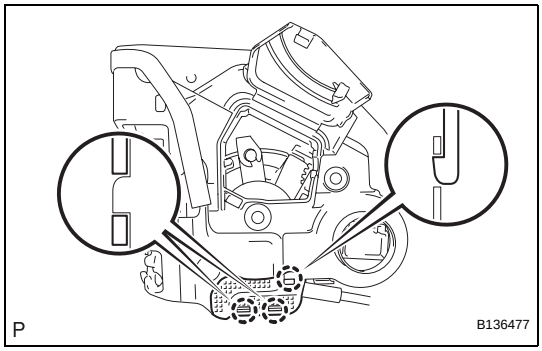

(c) Install the rear door lock remote control cable assembly.

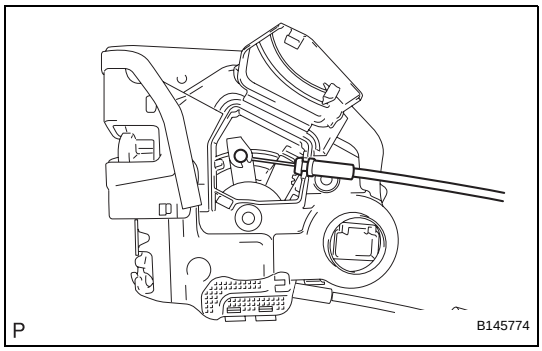

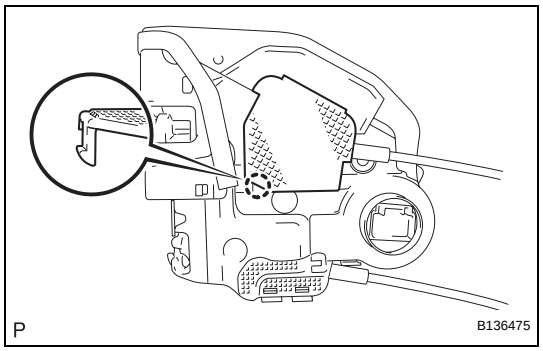

(d) Engage the claw.
(e) Apply MP grease to the sliding parts of the rear door lock assembly.
(f) Install a new door lock wiring harness seal to the rear door lock assembly.

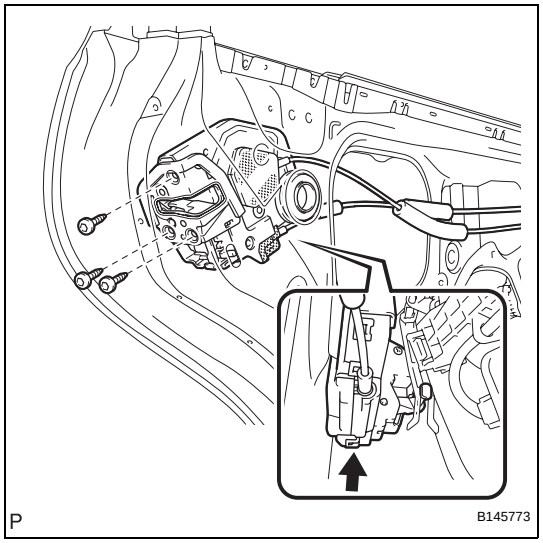

(g) Insert the rear door lock assembly to the rear door outside handle release plate, and set it to the rear door panel.
(h) Make sure that the rear door outside handle frame release plate is securely connected to the rear door lock assembly.
(i) Using a "TORX" socket wrench (T30), install the rear door lock assembly with the 3 screws.
Torque: 5.5 N*m (56 kgf*cm, 49 in.*lbf)
(j) Connect the connector.

2. **INSTALL REAR DOOR GLASS RUN (See page ED-73)**
3. **INSTALL REAR DOOR GLASS SUB-ASSEMBLY (See page ED-74)**
4. **INSTALL REAR DOOR QUARTER WINDOW GLASS (See page ED-74)**
5. **INSTALL REAR DOOR WINDOW DIVISION BAR SUB-ASSEMBLY (See page ED-74)**
6. **INSTALL REAR DOOR TRIM BRACKET (See page ED-75)**
7. **INSTALL REAR DOOR SERVICE HOLE COVER (See page ED-75)**
8. **INSTALL REAR DOOR INNER GLASS WEATHERSTRIP (See page ED-76)**
9. **INSTALL REAR DOOR TRIM BOARD SUB-ASSEMBLY (See page ED-76)**
10. **INSTALL REAR DOOR ARMREST COVER (See page ED-77)**
11. **INSTALL COURTESY LIGHT ASSEMBLY (See page ED-77)**
12. **INSTALL REAR DOOR ARMREST BASE PANEL ASSEMBLY (See page ED-78)**
13. **INSTALL REAR DOOR INSIDE HANDLE BEZEL PLUG (See page ED-78)**

DTC	U0129	Lost Communication with Skid Control ECU

DESCRIPTION

The combination meter assembly communicates with the ABS and traction actuator assembly (skid control ECU) via the CAN communication system (CAN No. 1 Bus).

DTC No.	DTC Detection Conditions	Trouble Areas
U0129	When either of following conditions detected: 1. 15 seconds have elapsed since engine started and IG voltage 10.5 V or more 2. No communication with ABS and traction actuator (skid control ECU) continues for 3 seconds or more (No communication with ECM or skid control ECU continues for 60 seconds or more)	• ABS and traction actuator (Skid control ECU) • CAN communication system

WIRING DIAGRAM

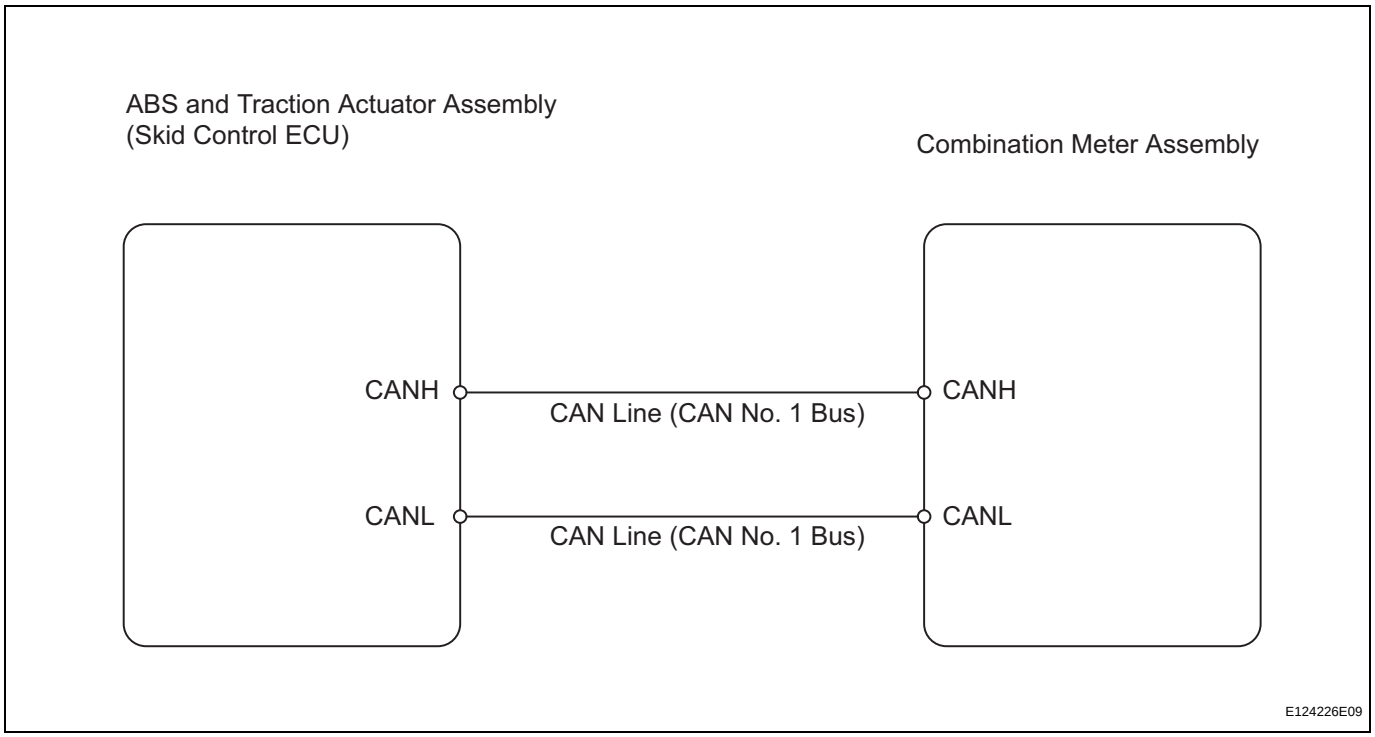

INSPECTION PROCEDURE

1	CONFIRM DTC OUTPUT

(a) Connect the intelligent tester to the DLC3.
(b) Turn the engine switch on (IG).
(c) Turn the tester on.
(d) Clear the stored DTCs by selecting the following menu items on the tester: DIAGNOSIS / OBD/MOBD / METER / DTC INFO / CLEAR CODES.
(e) Drive the vehicle at more than 5 km/h (3.1 mph) for at least 60 seconds.
(f) Stop the vehicle.
(g) Check for DTCs (See page CA-11).

Result

Result	Proceed to
DTC output	A (See page CA-49)
DTC not output	B

B → **USE SIMULATION METHOD TO CHECK**

A

GO TO CAN COMMUNICATION SYSTEM

Entire Combination Meter does not Operate

DESCRIPTION

This circuit is the power source circuit for the meter. This circuit provides two types of power sources; one is a constant power source mainly used as a backup power source, and the other is a power source mainly used for signal transmission. The constant power source is mainly used as a backup power source of the meter CPU, however, it is also used for communication. If a voltage of 12 V is not applied to terminal IG+ when the engine switch is on (IG), the indicator will not operate.

WIRING DIAGRAM

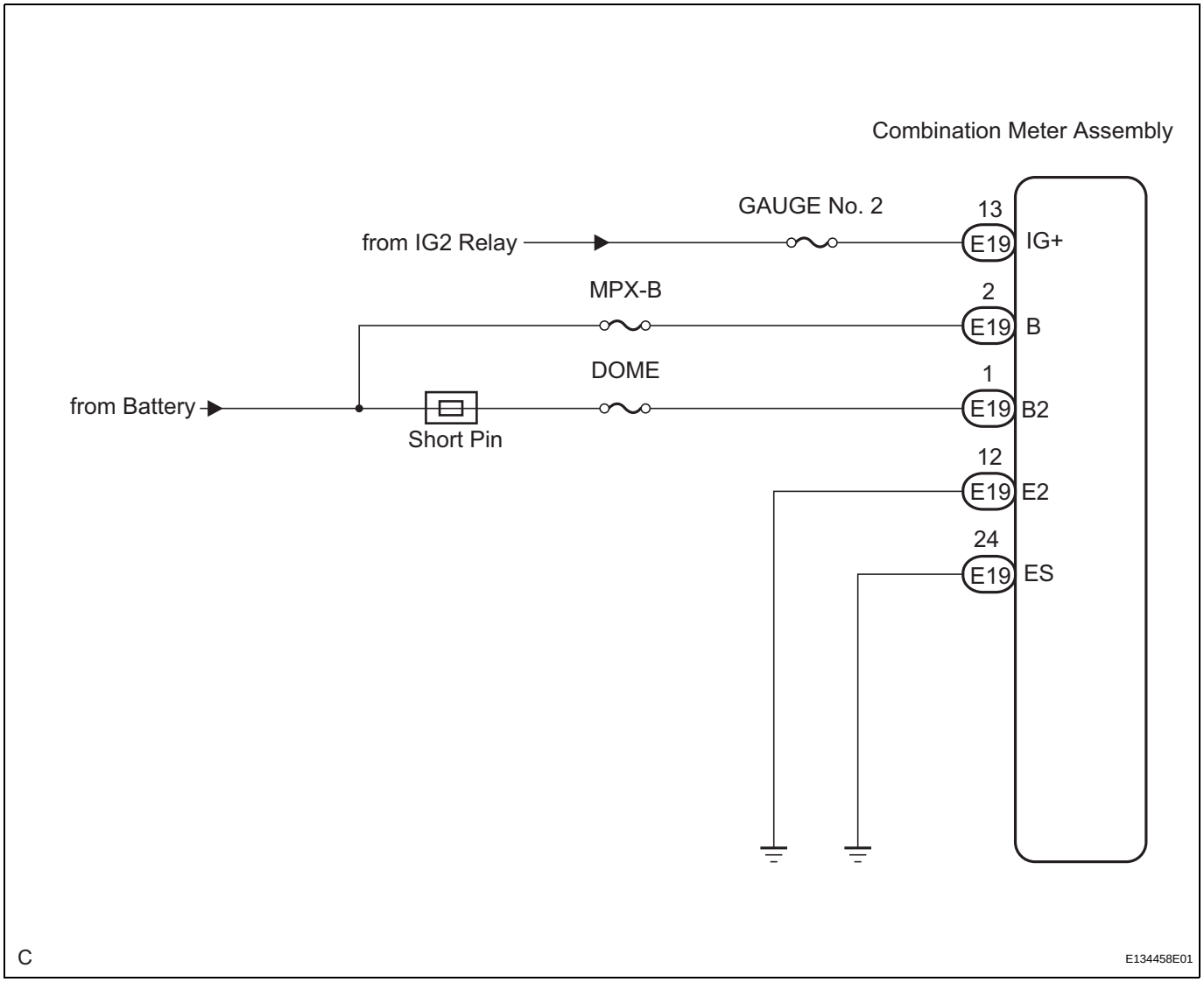

ME

INSPECTION PROCEDURE

1	INSPECT COMBINATION METER ASSEMBLY

Combination Meter Assembly Wire Harness View:

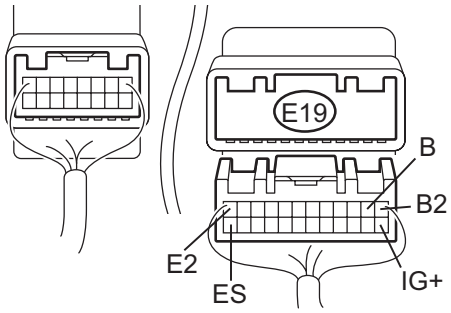

H

E132615E01

(a) Disconnect the E19 connector.

(b) Measure the resistance according to the value(s) in the table below.

Standard resistance

Tester Connection	Condition	Specified Condition
E19-12 (E2) - Body ground	Always	Below 1 Ω
E19-24 (ES) - Body ground	Always	Below 1 Ω

(c) Measure the voltage according to the value(s) in the table below.

Standard voltage

Tester Connection	Condition	Specified Condition
E19-13 (IG+) - Body ground	Turn the engine switch on (IG)	10 to 14 V
E19-1 (B2) - Body ground	Always	10 to 14 V
E19-2 (B) - Body ground	Always	10 to 14 V

NG → **REPAIR OR REPLACE HARNESS OR CONNECTOR**

OK

REPLACE COMBINATION METER ASSEMBLY

ME

Speedometer Malfunction

DESCRIPTION

The meter CPU receives vehicle speed signals from the skid control ECU via the CAN communication lines (CAN No. 1 Bus). The vehicle speed sensor detects the voltage that varies according to the vehicle speed. The skid control ECU supplies power to the vehicle speed sensor. The skid control ECU detects vehicle speed signals based on the pulses of the voltage.

WIRING DIAGRAM

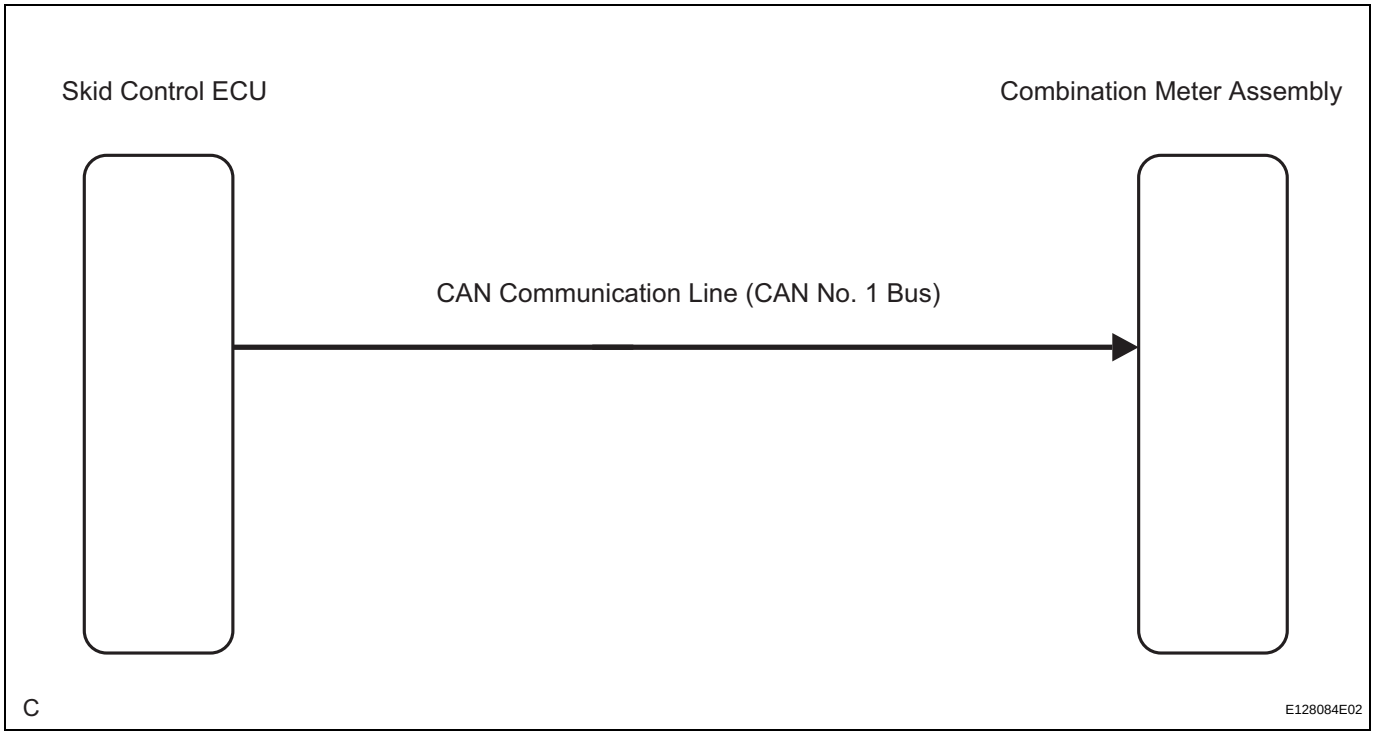

ME

INSPECTION PROCEDURE

1	CHECK CAN COMMUNICATION SYSTEM

(a) Check if CAN communication DTC is output (See page CA-11).

Result

Result	Proceed to
CAN communication DTC is not output.	A
CAN communication DTC is output.	B (See page CA-49)

B → **GO TO CAN COMMUNICATION SYSTEM**

A

2	PERFORM ACTIVE TEST BY INTELLIGENT TESTER

(a) Connect the intelligent tester to the DLC3.
(b) Turn the engine switch on (IG).

(c) Turn the tester ON.
(d) Enter the following menus: DIAGNOSIS / OBD/MOBD / METER / ACTIVE TEST.
(e) Check the operation by referring to the values in the table below.

METER:

Tester Display	Test Part	Control Range	Diagnostic Note
SPEED METER	Speedometer	0, 40, (24), 80 (48), 120 (72), 160 (96), 200 (120), 240 (149) km/h (mph)	-

OK:
Needle indication is normal.

NG → **REPLACE COMBINATION METER ASSEMBLY**

OK

3 READ VALUE OF INTELLIGENT TESTER

ME

(a) Connect the intelligent tester to the DLC3.
(b) Turn the engine switch on (IG).
(c) Turn the tester ON.
(d) Enter the following menus: DIAGNOSIS / OBD/MOBD / METER / DATA TEST.
(e) Check the values by referring to the values in the table below.

METER:

Tester Display	Measurement Item/Range	Normal Condition	Diagnostic Note
SPEED METER	Vehicle speed/Min.: 0 km/h (0 mph), Max.: 255 km/h (158 mph)	Almost same as actual speed (When driving)	-

OK:
Vehicle speed displayed on the tester is almost the same as the actual vehicle speed measured using a speedometer tester (calibrated chassis dynamometer).

NG → **Go to step 4**

OK

REPLACE COMBINATION METER ASSEMBLY

4 READ VALUE OF INTELLIGENT TESTER

(a) Connect the intelligent tester to the DLC3.
(b) Turn the engine switch on (IG).
(c) Turn the tester ON.
(d) Enter the following menus: DIAGNOSIS / OBD/MOBD / ABS/TRAC/VSC / DATA LIST.

(e) Check the values by referring to the table below.

ABS/TRAC/VSC:

Tester Display	Measurement Item/Range	Normal Condition	Diagnostic Note
(FL/FR/RL/RR) WHEEL SPD	Vehicle speed/Min.: 0 km/h (0 mph), Max.: 326 km/h (202 mph)	Almost same as actual speed (When driving)	-

OK:

Vehicle speed displayed on the tester is almost the same as the actual vehicle speed measured using a speedometer tester (calibrated chassis dynamometer).

NG → **GO TO BRAKE CONTROL SYSTEM**

OK

5 REPLACE SKID CONTROL ECU

(a) Replace the skid control ECU with a new or a normal one.

OK:

The operation of the speedometer returns to normal.

NG → **REPLACE COMBINATION METER ASSEMBLY**

OK

END

Tachometer Malfunction

DESCRIPTION

In this circuit, the meter CPU receives engine revolution signals from the ECM using the CAN communication lines (CAN No. 1 Bus). The meter CPU displays engine revolution data that is calculated based on the data received from the ECM.

WIRING DIAGRAM

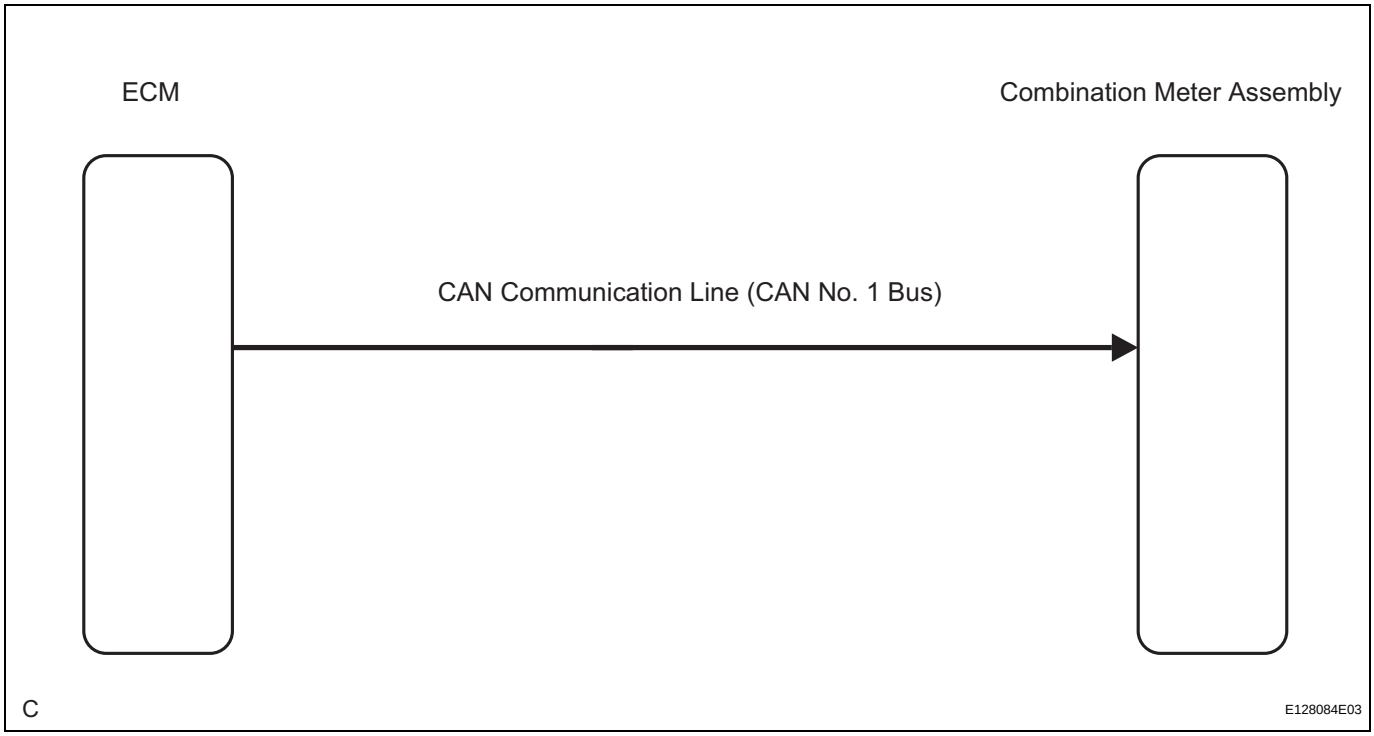

ME

INSPECTION PROCEDURE

1	CHECK CAN COMMUNICATION SYSTEM

(a) Check if CAN communication DTC is output (See page CA-11).

Result

Result	Proceed to
CAN communication DTC is not output.	A
CAN communication DTC is output.	B (See page CA-49)

B → GO TO CAN COMMUNICATION SYSTEM

A

2	PERFORM ACTIVE TEST BY INTELLIGENT TESTER

(a) Connect the intelligent tester to the DLC3.
(b) Turn the engine switch on (IG).
(c) Turn the tester ON.

(d) Enter the following menus: DIAGNOSIS / OBD/MOBD / METER / ACTIVE TEST.
(e) Check the operation by referring to the values in the table below.

METER:

Tester Display	Test Part	Control Range	Diagnostic Note
TACHO METER	Tachometer	0, 1,000, 2,000, 3,000, 4,000, 5,000, 6,000, 7,000 (rpm)	-

OK:
Needle indication is normal.

NG → **REPLACE COMBINATION METER ASSEMBLY**

OK

3 READ VALUE OF INTELLIGENT TESTER (ENGINE SPEED SIGNAL)

(a) Connect the intelligent tester to the DLC3.
(b) Turn the engine switch on (IG).
(c) Turn the tester ON.
(d) Enter the following menus: DIAGNOSIS / OBD/MOBD / METER / ACTIVE TEST.
(e) Check the values by referring to the values in the table below.

METER:

Tester Display	Measurement Item/Range	Normal Condition	Diagnostic Note
TACHO METER	Engine speed/Min.: 0 rpm, Max.: 12,750 rpm	Almost same as actual engine speed (When engine is running)	If data received from the ECM exceeds the range that can be displayed on the meter, the meter continues to display the maximum value of the range.

OK:
Engine speed displayed on the tester is almost the same as the actual engine speed.

NG → **Go to step 4**

OK

REPLACE COMBINATION METER ASSEMBLY

4 READ VALUE OF INTELLIGENT TESTER (ENGINE SPEED SIGNAL)

(a) Connect the intelligent tester to the DLC3.
(b) Turn the engine switch on (IG).
(c) Turn the tester ON.
(d) Enter the following menus: DIAGNOSIS / OBD/MOBD / ENGINE / DATA LIST.

(e) Check the values by referring to the table below.

ENGINE:

Tester Display	Measurement Item/Range	Normal Condition	Diagnostic Note
ENGINE SPD	Engine speed/Min.: 0 rpm, Max.: 16,383.75 rpm	Almost same as actual engine speed (When engine is running)	-

OK:
Engine speed displayed on the tester is almost the same as the actual engine speed.

NG → **GO TO SFI SYSTEM**

OK

5	REPLACE ECM

(a) Replace the ECM with a new or a normal one.

OK:
The operation of the tachometer returns to normal.

NG → **REPLACE COMBINATION METER ASSEMBLY**

OK

END

Fuel Receiver Gauge Malfunction

DESCRIPTION

The meter CPU uses the fuel sender gauge assembly to determine the level of the fuel in the fuel tank. The resistance of the fuel sender gauge will vary between approximately 15 Ω with the float at the full position, and 410 Ω with the float at the empty position. The meter outputs battery voltage through two 820 Ω resistors that are mounted in parallel inside the meter ECU. The meter CPU measures the voltage between the variable resistor in the fuel sender gauge and the two resistors mounted in parallel in the meter. Voltage measured at this point will vary as the float of the fuel sender gauge is moved. The highest voltage observed should be approximately half of battery voltage.
HINT:
The fuel level warning light will come on when the fuel level is below 10.5 liters.

WIRING DIAGRAM

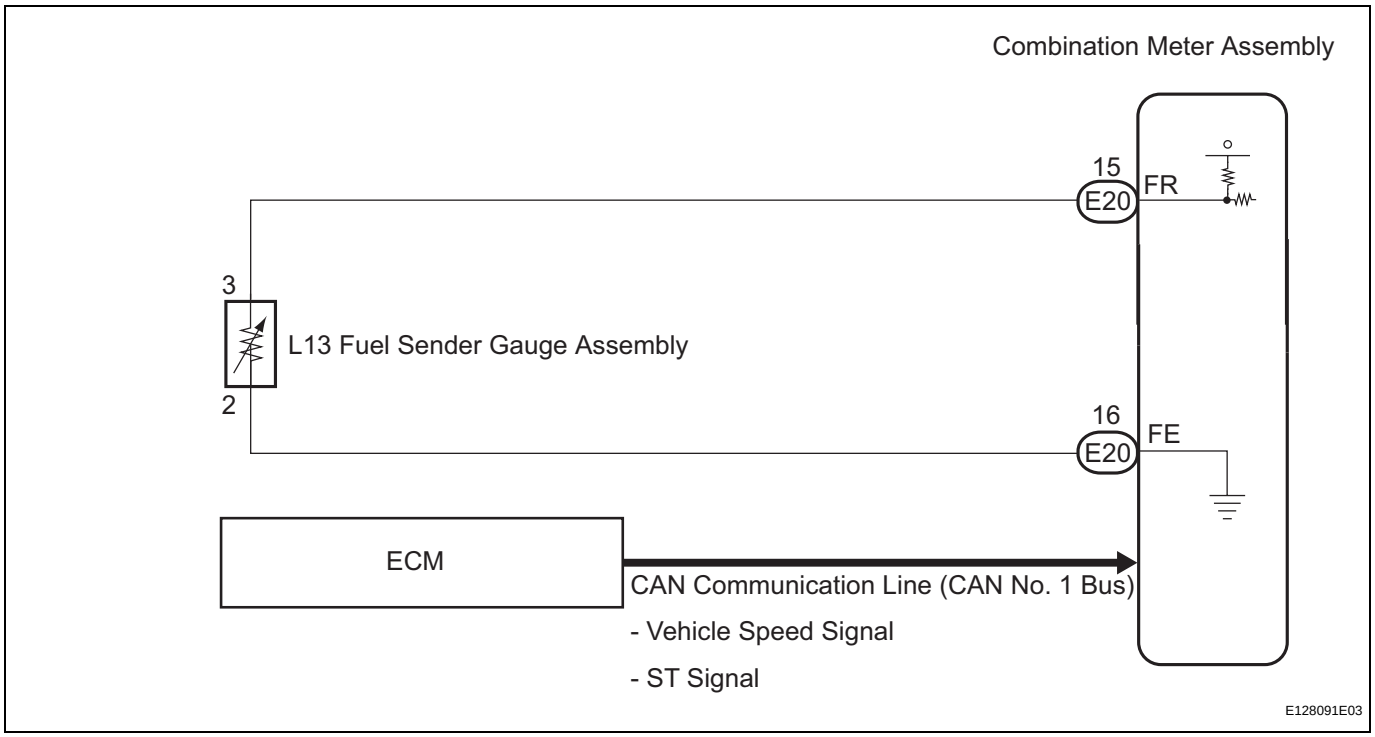

ME

INSPECTION PROCEDURE

1	CHECK CAN COMMUNICATION SYSTEM

(a) Check if CAN communication DTC is output (See page CA-11).

Result

Result	Proceed to
CAN communication DTC is not output	A
CAN communication DTC is output	B (See page CA-49)

B → GO TO CAN COMMUNICATION SYSTEM

A

2	PERFORM ACTIVE TEST BY INTELLIGENT TESTER

(a) Connect the intelligent tester to the DLC3.
(b) Turn the engine switch on (IG).
(c) Turn the tester ON.
(d) Enter following menus: DIAGNOSIS / OBD/MOBD / METER / ACTIVE TEST.
(e) Check the operation by referring to the table below.

METER:

Tester Display	Test Part	Control Range	Diagnostic Note
FUEL GAUGE	Fuel receiver gauge	EMPTY, 1/2, FULL	-

OK:
Needle indication is normal.

NG → **REPLACE COMBINATION METER ASSEMBLY**

OK

ME

3	READ VALUE OF INTELLIGENT TESTER

(a) Connect the intelligent tester to the DLC3.
(b) Turn the engine switch on (IG).
(c) Turn the tester ON.
(d) Enter following menus: DIAGNOSIS / OBD/MOBD / METER / DATA LIST.
(e) Check the values by referring to the table below.

METER:

Tester Display	Measurement Item/Range	Normal Condition	Diagnostic Note
FUEL GAUGE	Fuel input signal Min.: 0, Max.: 127.5 (L)	Fuel gauge indicates (E): 7.5 (L) Fuel gauge indicates (1/2): 35.0 (L) Fuel gauge indicates (F): 62.9 (L)	-

OK:
Fuel value signal displayed on the tester is almost the same as needle indication.

NG → **REPLACE COMBINATION METER ASSEMBLY**

OK

4	**CHECK HARNESS AND CONNECTOR (COMBINATION METER - FUEL SENDER GAUGE ASSEMBLY)**

Combination Meter Assembly Wire Harness View:

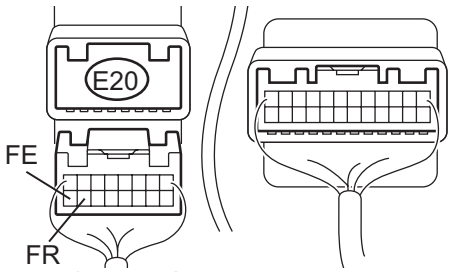

Fuel Sender Gauge Connector Front View:

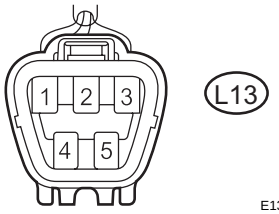

E132658E01

(a) Disconnect the E20 and L13 connectors.
(b) Measure the resistance according to the value(s) in the table below.

Standard resistance

Tester Connection	Condition	Specified Condition
E20-16 (FE) - L13-2	Always	Below 1 Ω
E20-15 (FR) - L13-3	Always	Below 1 Ω
L13-2 - Body ground	Always	10 kΩ or higher
E20-16 - Body ground	Always	10 kΩ or higher

NG → **REPAIR OR REPLACE HARNESS OR CONNECTOR**

OK

5	**INSPECT FUEL SENDER GAUGE ASSEMBLY**

Fuel Sender Gauge Assembly:

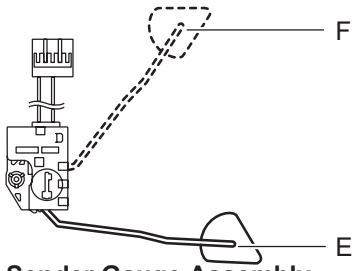

Fuel Sender Gauge Assembly Wire Harness View:

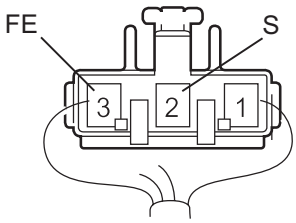

E132659E01

(a) Disconnect the fuel sender gauge connector.
(b) Remove the fuel sender gauge assembly.
(c) Check that the float moves smoothly between F and E.
(d) Measure the resistance between the terminals 2 (S) and 3 (FE) of the connector according to the value(s) in the table below.

Standard resistance

Float Level	Resistance (Ω)
F	13.5 to 16.5
Between E and F	13.5 to 414.5 (Gradually changes)
E	405.5 to 414.5

NG → **REPLACE FUEL SENDER GAUGE ASSEMBLY**

ME

OK

6	REPLACE COMBINATION METER ASSEMBLY

(a) Replace the combination meter assembly with a new one or a normal one.

OK:

The operation of the combination meter assembly returns to normal.

NG → **REPLACE ECM**

OK

END

Engine Coolant Temperature Receiver Gauge Malfunction

DESCRIPTION

- In this circuit, the meter CPU receives engine coolant temperature signals from the ECM using the CAN communication lines (CAN No. 1 Bus).
- The meter CPU displays engine coolant temperature that is calculated based on the data received from the ECM.

WIRING DIAGRAM

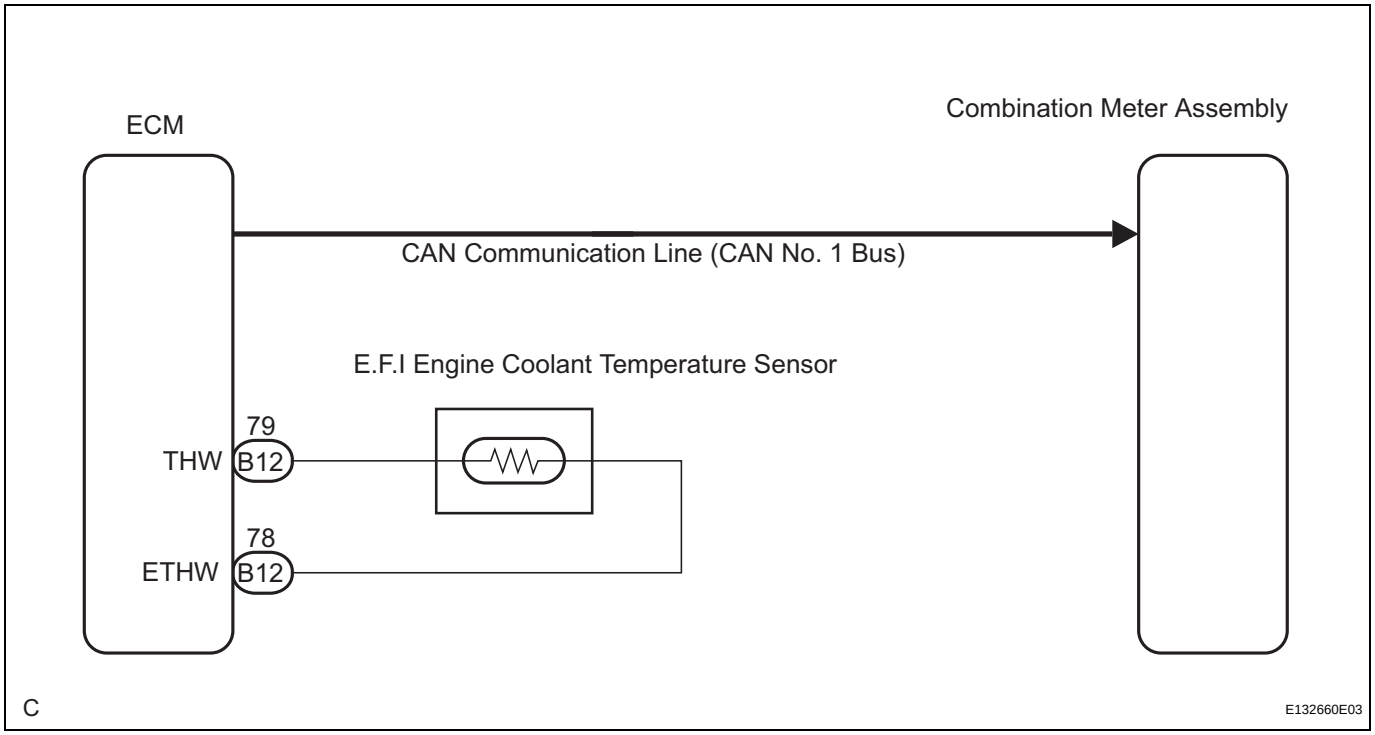

INSPECTION PROCEDURE

HINT:
If there is an open or short in the engine coolant temperature sensor circuit, the ECM outputs the DTCs. Perform troubleshooting with the "SFI System" (See page ES-41).

1	CHECK CAN COMMUNICATION SYSTEM

(a) Check if CAN communication DTC is output (See page CA-11).

Result

Result	Proceed to
CAN communication DTC is not output.	A
CAN communication DTC is output.	B (See page CA-49)

B → GO TO CAN COMMUNICATION SYSTEM

A

2	PERFORM ACTIVE TEST BY INTELLIGENT TESTER

(a) Connect the intelligent tester to the DLC3.
(b) Turn the engine switch on (IG).
(c) Turn the tester ON.
(d) Enter the following menus: DIAGNOSIS / OBD/MOBD / METER / ACTIVE TEST.
(e) Check the operation by referring to the values in the table below.

METER:

Tester Display	Test Part	Control Range	Diagnostic Note
COOLANT TEMP	Engine coolant temperature receiver gauge	LOW, NORMAL, HI	-

OK:
Needle indication is normal.

NG → **REPLACE COMBINATION METER ASSEMBLY**

ME

OK

3	READ VALUE OF INTELLIGENT TESTER

(a) Connect the intelligent tester to the DLC3.
(b) Turn the engine switch on (IG).
(c) Turn the tester ON.
(d) Enter the following menus: DIAGNOSIS / OBD/MOBD / METER / DATA LIST.

METER:

Tester Display	Measurement Item/Range	Normal Condition	Diagnostic Note
COOLANT TEMP	Engine coolant temperature/Min.: 0°C (32°F), Max.: 127.5°C (261.5°F)	After warming up: 80 to 95°C (176 to 203°F)	• If -40°C (-40°F): Sensor circuit open • If 140°C (284°F) or more: Sensor circuit shorted

OK:
Engine coolant temperature value displayed on the tester is almost the same as needle indication.

NG → **REPLACE COMBINATION METER ASSEMBLY**

OK

4	READ VALUE OF INTELLIGENT TESTER

(a) Connect the intelligent tester to the DLC3.
(b) Turn the engine switch on (IG).
(c) Turn the tester ON.
(d) Enter the following menus: DIAGNOSIS / OBD/MOBD / ENGINE / DATA LIST.

(e) Check the values by referring to the values in the table below.

ENGINE:

Tester Display	Measurement Item/Range	Normal Condition	Diagnostic Note
WATER TEMP	Engine coolant temperature/Min.: -40°C (-40°F), Max.: 140°C (284°F)	After warming up: 80 to 100°C (176 to 212°F)	-

OK:

Engine coolant temperature value displayed on the tester is almost the same as actual engine coolant temperature.

NG → **REPLACE ECM**

OK

5	**REPLACE COMBINATION METER ASSEMBLY**

(a) Replace the combination meter assembly with a new or a normal one.

OK:

The operation of the combination meter assembly returns to normal.

NG → **REPLACE ECM**

OK

END

Operating Light Control Rheostat does not Change Light Brightness

DESCRIPTION

The meter CPU receives signals for adjusting illumination on the meter this circuit. The meter CPU detects the illumination level selected by the user according to the position of the rheostat knob.
HINT:

- This model is equipped with an Optitron meter, therefore the meter illuminates even in the daytime.
- The meter illumination level can be adjusted by turning the rheostat.
- The meter illumination dims when the light control switch is turned to the TAIL or HEAD position at night.
- Turning the rheostat knob fully upwards cancels the above dimmer control.

WIRING DIAGRAM

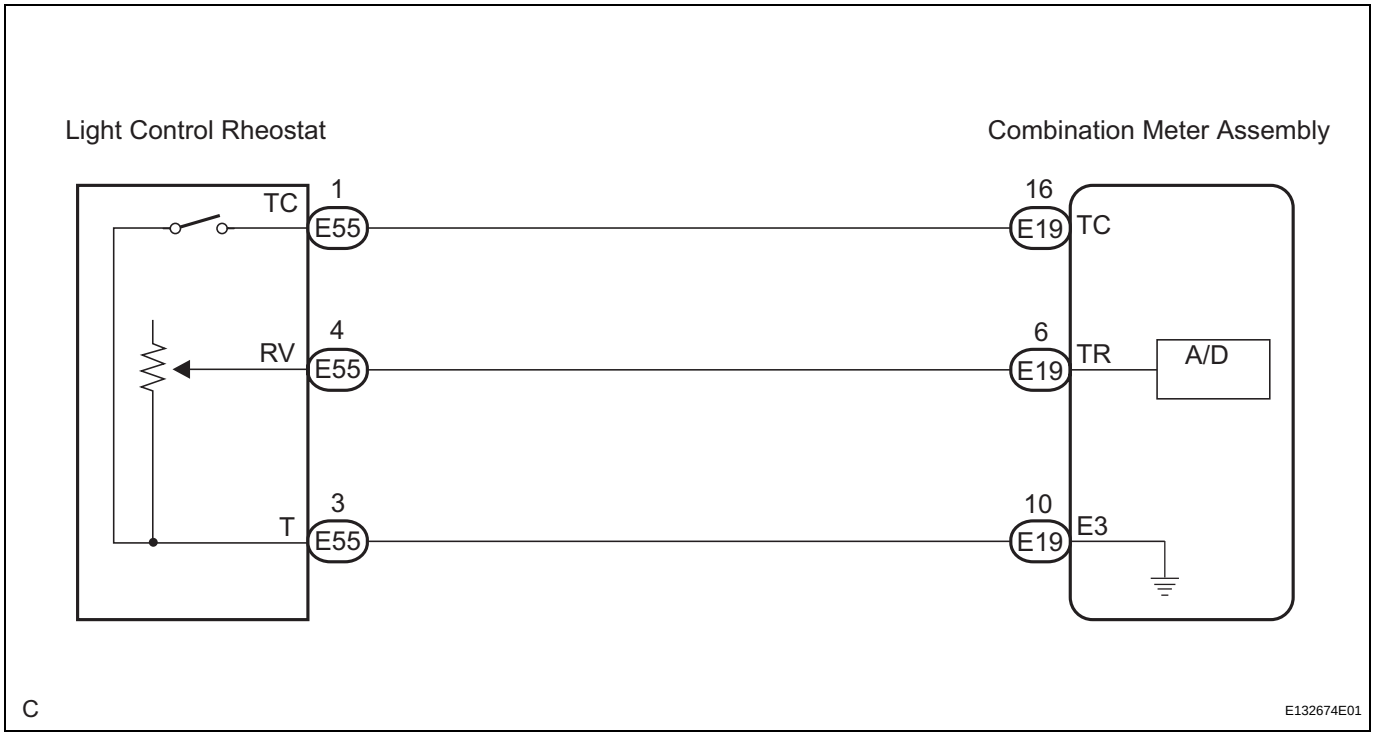

INSPECTION PROCEDURE

1	SYSTEM CHECK

(a) Turn the engine switch on (IG).
(b) Turn the light control rheostat knob fully upwards.
(c) Turn the light control rheostat knob fully downwards.
(d) Turn the light control rheostat knob fully upwards and light control switch is on TAIL/HEAD.
(e) Check the meter illumination.

Result

Result	Proceed to
Meter illumination does not change when operating the light control rheostat knob	A
Dimmer cancel does not operate (Meter illumination does not dim).	B

B → **Go to step 3**

A

2 READ VALUE OF INTELLIGENT TESTER (RHEOSTAT)

(a) Connect the intelligent tester to the DLC3.
(b) Turn the engine switch on (IG).
(c) Turn the tester ON.
(d) Enter the following menus: DIAGNOSIS / OBD/MOBD / METER / DATA LIST.
(e) Check the values by referring to the table below.

METER:

Tester Display	Measurement Item/Range	Normal Condition	Diagnostic Note
RHEOSTAT	Light control rheostat/Min.: 0%, Max.: 100%	Light control rheostat switch is Dark (0%) → Bright (100%)	-

OK:
The value displayed on the tester gradually changes as the actual rheostat operation.

NG → **Go to step 4**

ME

OK

3 READ VALUE OF INTELLIGENT TESTER (TAIL CANCEL SW)

(a) Connect the intelligent tester to the DLC3.
(b) Turn the engine switch on (IG).
(c) Turn the tester ON.
(d) Enter the following menus: DIAGNOSIS / OBD/MOBD / METER / DATA LIST.
(e) Check the values by referring to the table below.

METER:

Tester Display	Measurement Item/Range	Normal Condition	Diagnostic Note
TAIL CANCEL SW	Tail cancel switch is OFF/ON	OFF: Light control rheostat position is except above	-
		ON: Light control rheostat turns fully upwards	-

OK:
Condition displayed on the tester is the same as the actual rheostat position.

NG → **Go to step 6**

OK

REPLACE COMBINATION METER ASSEMBLY

4 INSPECT LIGHT CONTROL RHEOSTAT

Light Control Rheostat Component View:

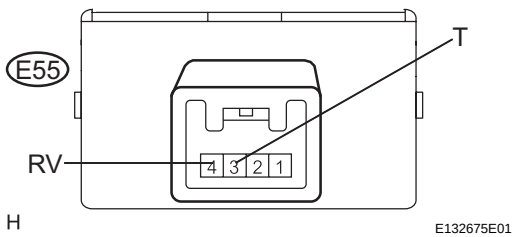

(a) Remove the light control rheostat.
(b) Measure the resistance according to the value(s) in the table below.

Standard resistance

Tester Connection	Condition	Specified Condition
E55-3 (T) - E55-4 (RV)	Turn the rheostat knob fully upwards	8 kΩ or higher
E55-3 (T) - E55-4 (RV)	Rheostat knob is between MIN. and MAX.	The value changes gradually (Between below 1 to 8 kΩ)
E55-3 (T) - E55-4 (RV)	Turn the rheostat knob fully downwards	Below 1 Ω

NG → **REPLACE LIGHT CONTROL RHEOSTAT**

OK

ME

5 CHECK HARNESS AND CONNECTOR (COMBINATION METER - LIGHT CONTROL RHEOSTAT)

Light Control Rheostat Wire Harness View:

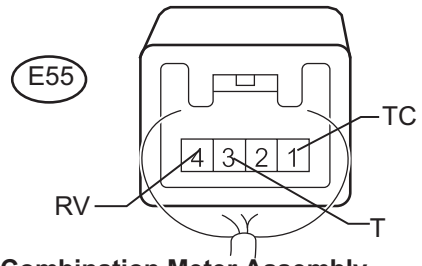

Combination Meter Assembly Wire Harness View:

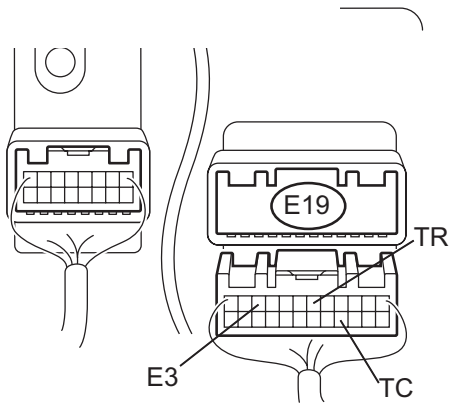

(a) Disconnect the E19 and E55 connectors.
(b) Measure the resistance according to the value(s) in the table below.

Standard resistance

Tester Connection	Condition	Specified Condition
E19-6 (TR) - E55-4 (RV)	Always	Below 1 Ω
E19-10 (E3) - E55-3 (T)	Always	Below 1 Ω
E19-16 (TC) - E55-1 (TC)	Always	Below 1 Ω
E55-1 (TC) - Body ground	Always	10 kΩ or higher
E55-3 (T) - Body ground	Always	10 kΩ or higher
E55-4 (RV) - Body ground	Always	10 kΩ or higher

NG → **REPAIR OR REPLACE HARNESS OR CONNECTOR**

OK

REPLACE COMBINATION METER ASSEMBLY

6 INSPECT LIGHT CONTROL RHEOSTAT

Light Control Rheostat Component View:

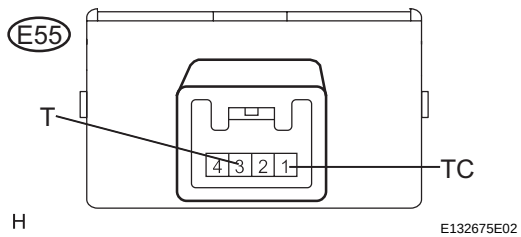

(a) Remove the light control rheostat with connector still connected.

(b) Measure the resistance according to the value(s) in the table below.

Standard resistance

Tester Connection	Condition	Specified Condition
E55-1 (TC) - E55-3 (T)	Turn the rheostat knob fully downwards	Below 1 Ω
E55-1 (TC) - E55-3 (T)	Turn the rheostat knob fully upwards	8 kΩ or higher

NG → **REPLACE LIGHT CONTROL RHEOSTAT**

ME

OK

7 CHECK HARNESS AND CONNECTOR (COMBINATION METER - LIGHT CONTROL RHEOSTAT)

Light Control Rheostat Wire Harness View:

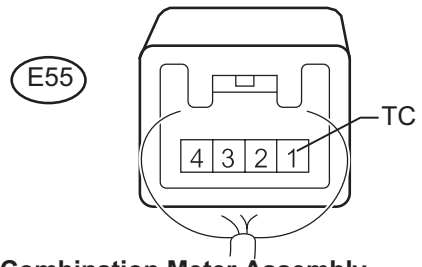

Combination Meter Assembly Wire Harness View:

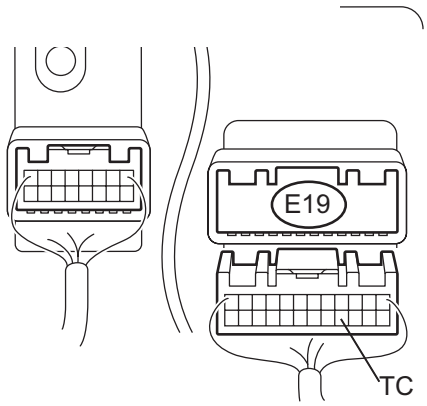

(a) Disconnect the E19 and E55 connectors.

(b) Measure the resistance according to the value(s) in the table below.

Standard resistance

Tester Connection	Condition	Specified Condition
E55-1 (TC) - E19-16 (TC)	Always	Below 1 Ω
E55-1 (TC) - Body ground	Always	10 kΩ or higher

NG → **REPAIR OR REPLACE HARNESS OR CONNECTOR**

OK

REPLACE COMBINATION METER ASSEMBLY

Meter Illumination is Always Dark

DESCRIPTION

In this circuit, the meter CPU receives auto dimmer signals from the main body ECU using the CAN communication lines (CAN MS Bus). When the meter CPU receives an auto dimmer signal, it dims the meter illumination. The main body ECU determines whether it is daytime, twilight, or nighttime based on the waveform transmitted from the automatic light control sensor. If the main body ECU determines that it is daytime, the ECU does not send auto dimmer signals. Therefore, the meter illumination (warning and indicator lights) will not dim even if the driver accidentally turns the light control switch to the TAIL or HEAD position in daytime.

HINT:

When the meter illumination is always dark, there may be a malfunction in automatic light control sensor, main body ECU, CAN communication system, wire harness or connector, or combination meter assembly.

WIRING DIAGRAM

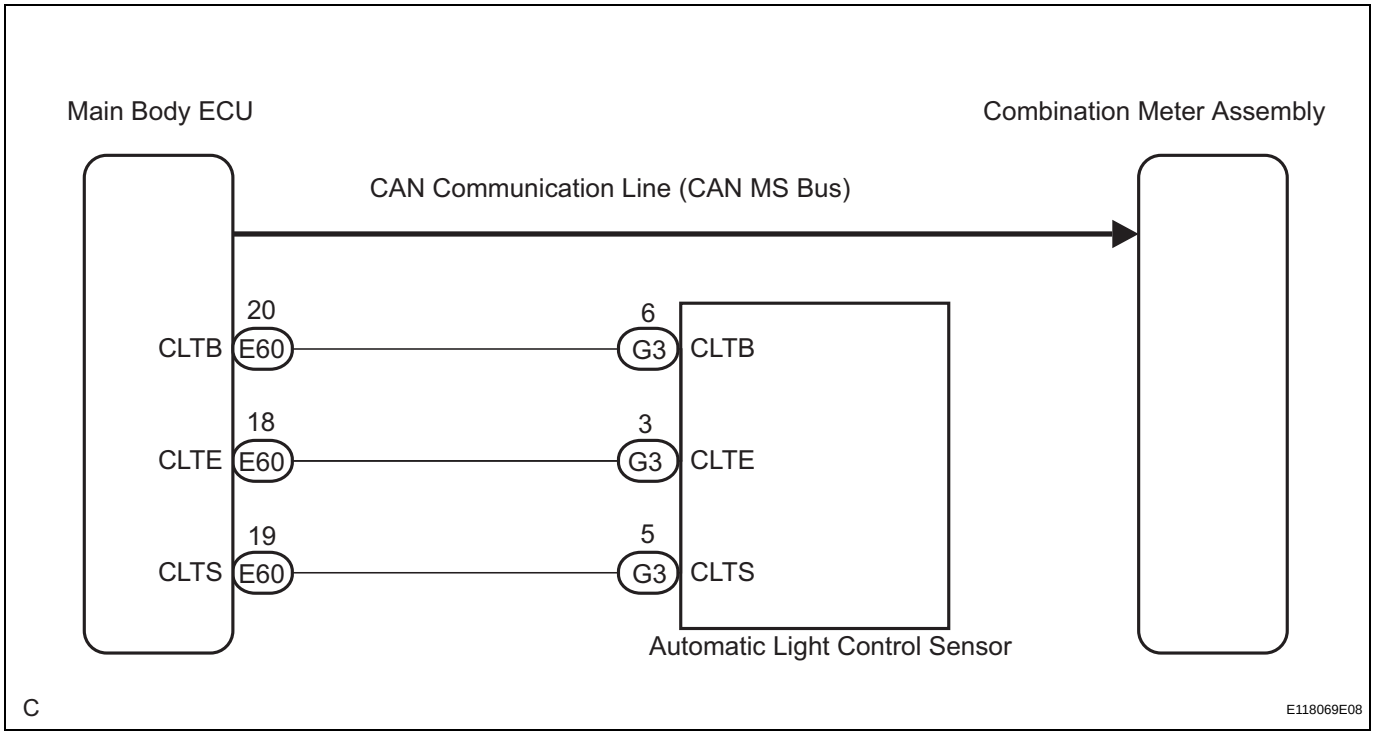

ME

INSPECTION PROCEDURE

1	CHECK CAN COMMUNICATION SYSTEM

(a) Check if CAN communication DTC is output (See page CA-11).

Result

Result	Proceed to
CAN communication DTC is not output.	A
CAN communication DTC is output.	B (See page CA-49)

B → GO TO CAN COMMUNICATION SYSTEM

A

2 CHECK DTC

(a) Check if DTC B1244 is output (See page LI-43).

Result

Result	Proceed to
B1244 is not output	A
B1244 is output	B (See page LI-49)

B → **GO TO LIGHTING SYSTEM**

A

3 PERFORM ACTIVE TEST BY INTELLIGENT TESTER

ME

(a) Connect the intelligent tester to the DLC3.
(b) Turn the engine switch on (IG).
(c) Turn the tester ON.
(d) Turn the light control rheostat to the TAIL/HEAD position.
(e) Enter the following menus: DIAGNOSIS / BODY / MAIN BODY / ACTIVE TEST.
(f) Check the meter illumination.

MAIN BODY:

Tester Display	Test Part	Control Range	Diagnostic Note
DIMMER SIG	Auto dimmer signal	Auto dimmer signal OFF/ON	-

OK:
The meter illumination is dimmed when the DIMMER SIG is ON.
HINT:
Refer to the sensitivity setting in the customization table of the automatic light control system (See page LI-29).

NG → **Go to step 4**

OK

CHECK LIGHTING SETTING

4 REPLACE COMBINATION METER ASSEMBLY

(a) Replace the combination meter assembly with a new or a normal one.

OK:
The operation of the combination meter assembly returns to normal.

NG → **REPLACE MAIN BODY ECU**

OK

END

Meter Illumination does not Dim at Night

DESCRIPTION

In this circuit, the meter CPU receives auto dimmer signals from the main body ECU using the CAN communication lines (CAN MS Bus). When the meter CPU receives an auto dimmer signal, it dims the meter illumination. The main body ECU determines whether it is daytime, twilight, or nighttime based on the waveform transmitted from the automatic light control sensor. If the main body ECU determines that it is daytime, the ECU does not send auto dimmer signals. Therefore, the meter illumination (warning and indicator lights) will not dim even if the driver accidentally turns the light control switch to the TAIL or HEAD position in daytime.

HINT:

When the meter illumination does not dim at night, the light control rheostat position is at the tail cancel position, or there may be a malfunction in automatic light control sensor, main body ECU, CAN communication system, wire harness or connector, or combination meter assembly.

WIRING DIAGRAM

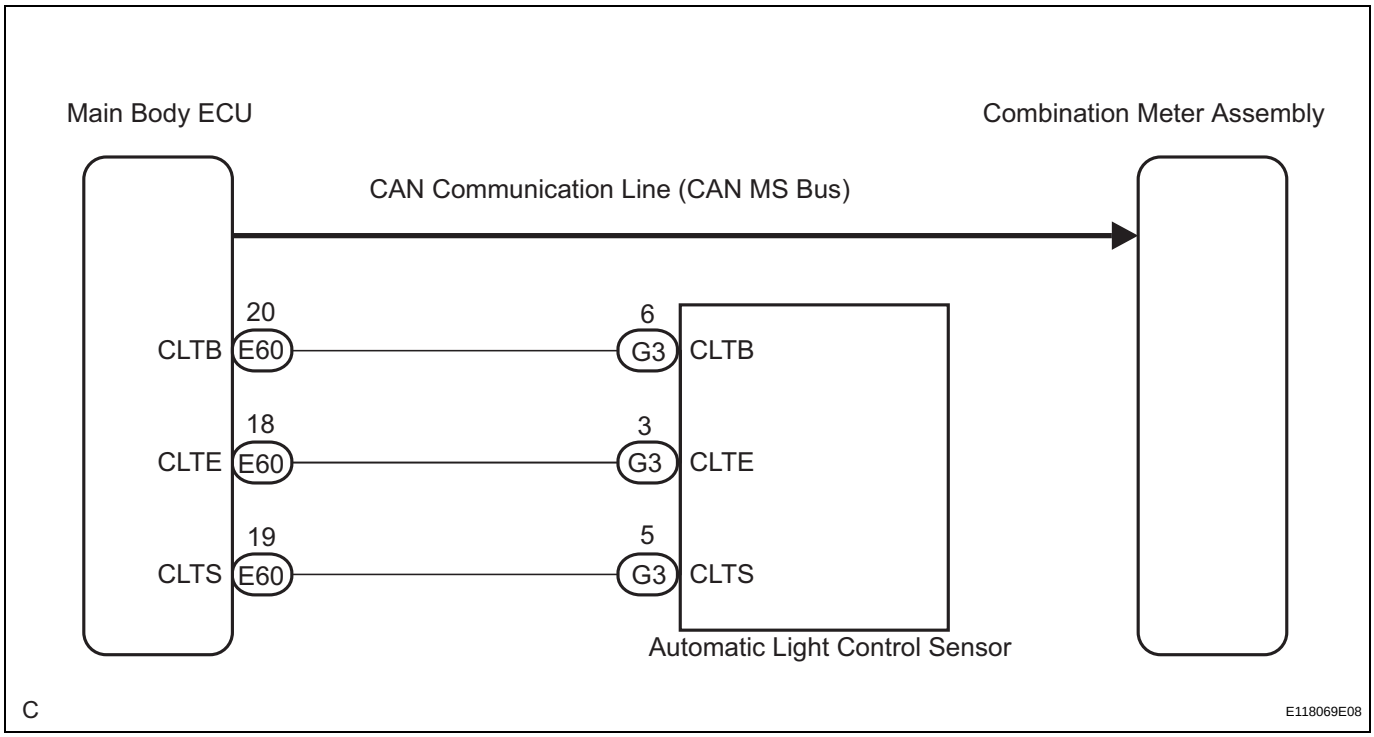

INSPECTION PROCEDURE

1	CHECK CAN COMMUNICATION SYSTEM

(a) Check if CAN communication DTC is output (See page CA-11).

Result

Result	Proceed to
CAN communication DTC is not output.	A
CAN communication DTC is output.	B (See page CA-49)

B → GO TO CAN COMMUNICATION SYSTEM

A

2 CHECK DTC

(a) Check if DTC B1244 is output (See page LI-43).

Result

Result	Proceed to
B1244 is not output	A
B1244 is output	B (See page LI-49)

B → **GO TO LIGHTING SYSTEM**

A

3 PERFORM ACTIVE TEST BY INTELLIGENT TESTER

(a) Connect the intelligent tester to the DLC3.
(b) Turn the engine switch on (IG).
(c) Turn the tester ON.
(d) Turn the light control rheostat to the TAIL/HEAD position.
(e) Enter the following menus: DIAGNOSIS / BODY / MAIN BODY / ACTIVE TEST.
(f) Check the meter illumination.

MAIN BODY:

Tester Display	Test Part	Control Range	Diagnostic Note
DIMMER SIG	Auto dimmer signal	Auto dimmer signal OFF/ON	-

OK:
The meter illumination is dimmed when the DIMMER SIG is ON.

HINT:
Refer to the sensitivity setting in the customization table of the automatic light control system (See page LI-29).

NG → **Go to step 4**

OK

CHECK LIGHTING SETTING

4 REPLACE COMBINATION METER ASSEMBLY

(a) Replace the combination meter assembly with a new or a normal one.

OK:
The operation of the combination meter assembly returns to normal.

NG → **REPLACE MAIN BODY ECU**

ME

OK

END

REMOVAL

1. **DISCONNECT CABLE FROM NEGATIVE BATTERY TERMINAL**
   CAUTION:
   Wait for 90 seconds after disconnecting the cable to prevent airbag deployment (See page RS-1).
2. **REMOVE FRONT DOOR SCUFF PLATE LH (See page IR-39)**
3. **REMOVE FRONT DOOR OPENING TRIM COVER LH (See page IR-39)**
4. **REMOVE SIDE INSTRUMENT PANEL LH (See page IP-12)**
5. **REMOVE INSTRUMENT PANEL FINISH PANEL END LH (See page IP-13)**
6. **REMOVE LOWER INSTRUMENT PANEL SUB-ASSEMBLY (See page IP-13)**
7. **REMOVE STEERING COLUMN COVER**
   (a) Turn the steering wheel assembly to the right and remove the screw as shown in the illustration.

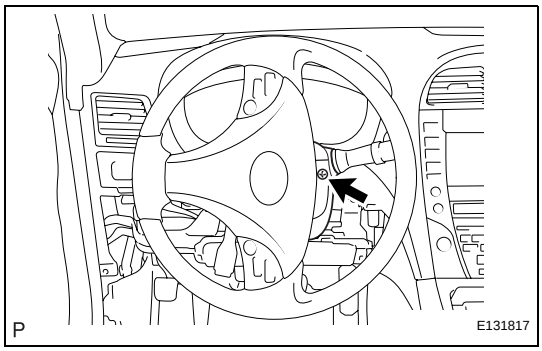

   (b) Turn the steering wheel assembly to the left and remove the screw as shown in the illustration.

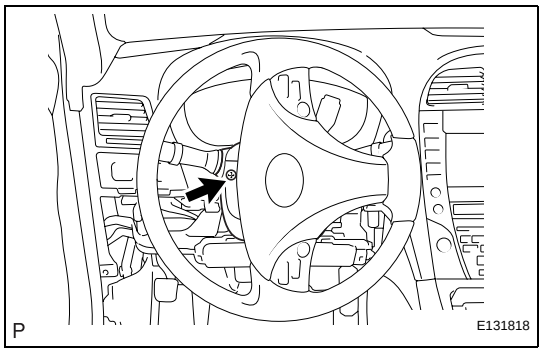

   (c) Disengage the 2 claws and remove the steering column cover lower.

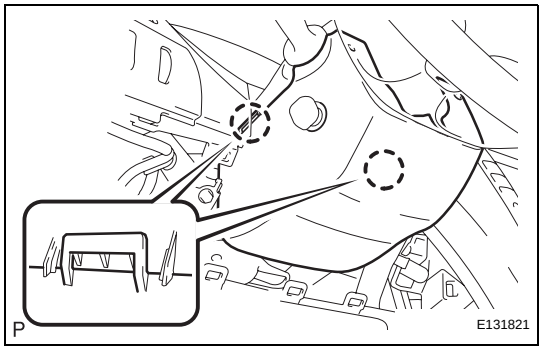

ME

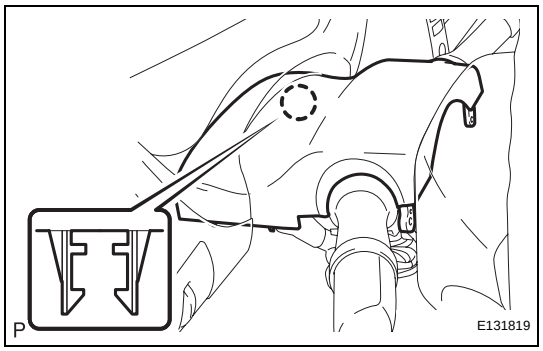

(d) Disengage the claw and remove the steering column cover upper.

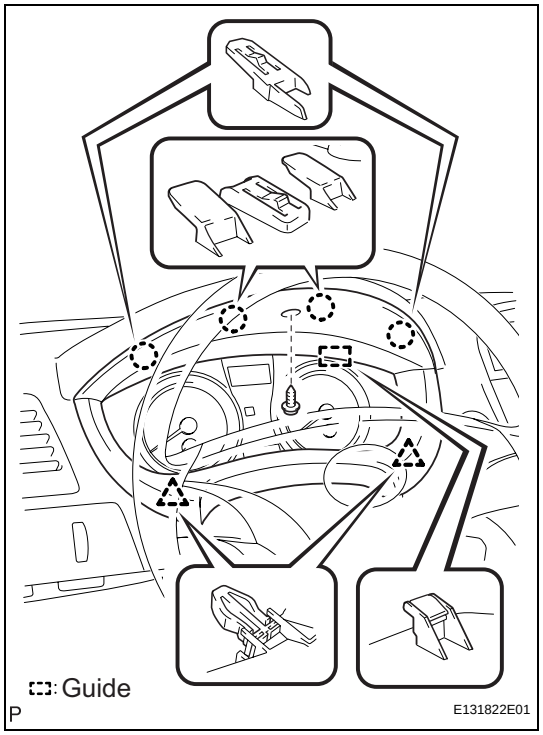

8. REMOVE INSTRUMENT CLUSTER FINISH PANEL SUB-ASSEMBLY

(a) Remove the screw.
(b) Disengage the 2 clips.
(c) Disengage the 4 claws and guide, and remove the instrument cluster finish panel sub-assembly.

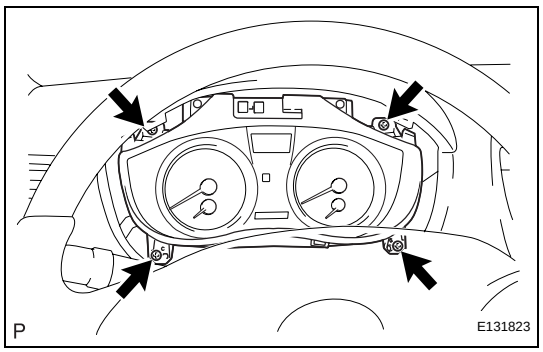

9. REMOVE COMBINATION METER ASSEMBLY

(a) Remove the 4 screws.

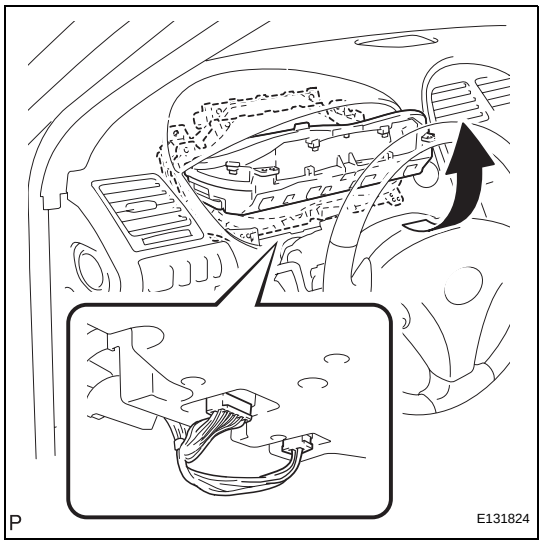

(b) Disconnect the 2 connectors as shown in the illustration.

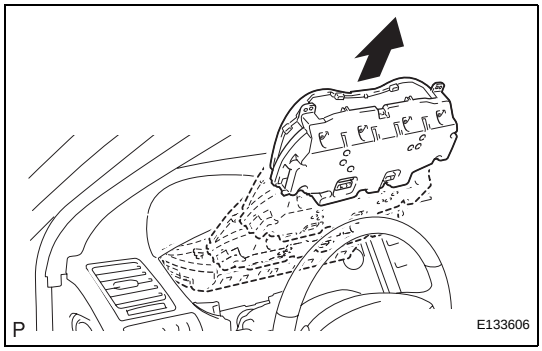

(c) Remove the combination meter assembly as shown in the illustration.

DISASSEMBLY

1. REMOVE COMBINATION METER GLASS

(a) Disengage the 8 claws and remove the combination meter glass.

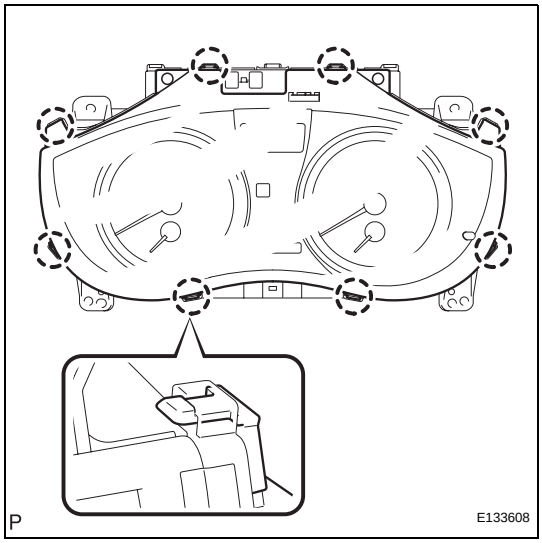

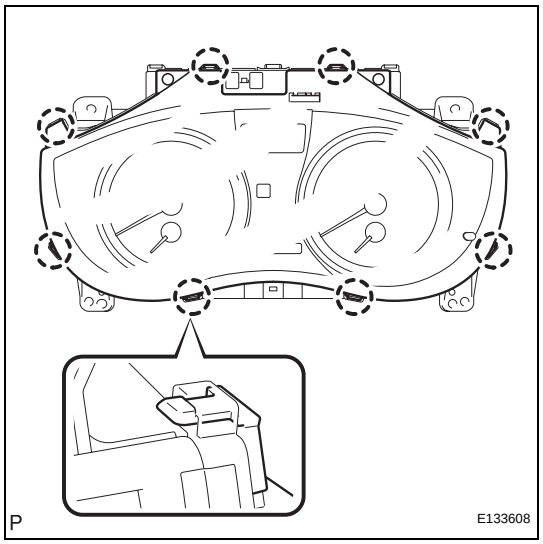

REASSEMBLY

1. INSTALL COMBINATION METER GLASS

(a) Engage the 8 claws and install the combination meter glass.

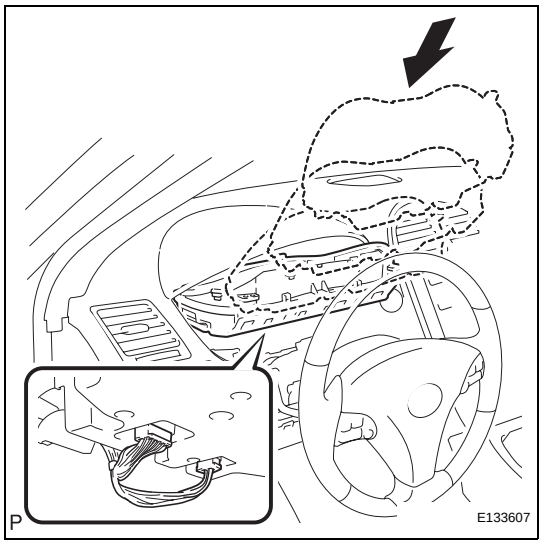

INSTALLATION

1. INSTALL COMBINATION METER ASSEMBLY

(a) Connect the 2 connectors as shown in the illustration.

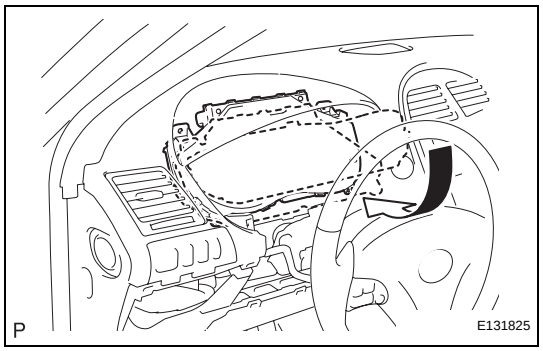

(b) Install the combination meter assembly as shown in the illustration.

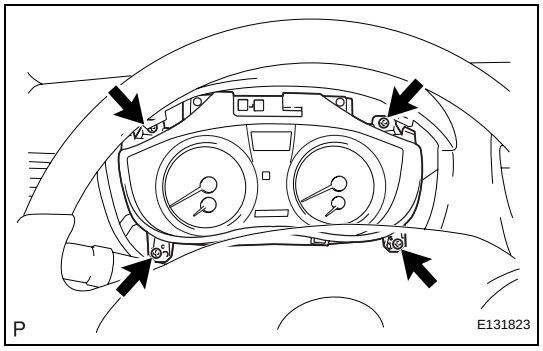

(c) Install the 4 screws.

ME

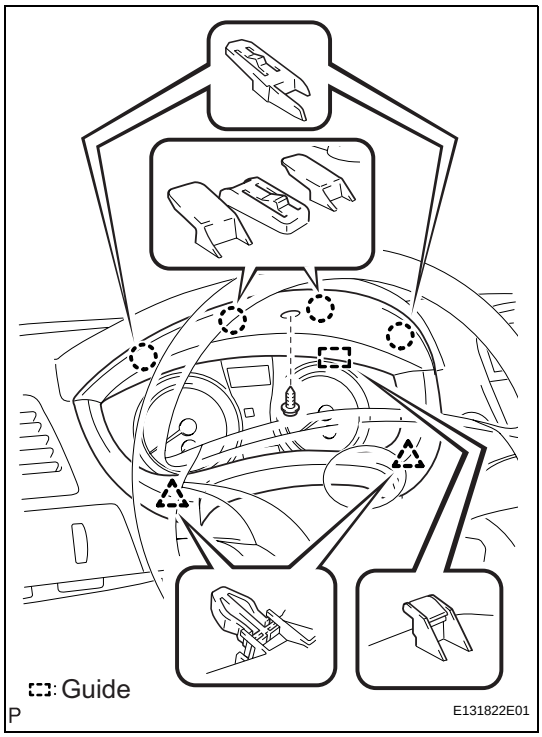

2. **INSTALL INSTRUMENT CLUSTER FINISH PANEL SUB-ASSEMBLY**
   (a) Engage the guide and 4 claws.
   (b) Engage the 2 clips.
   (c) Install the instrument cluster finish panel sub-assembly with the screw.

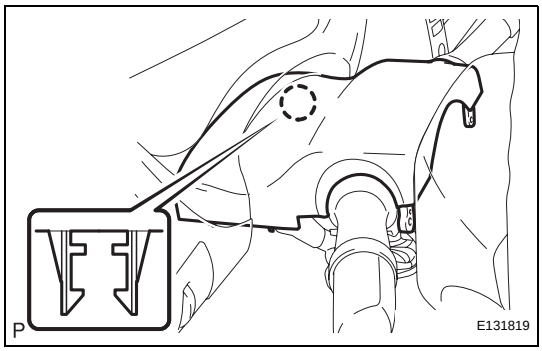

3. **INSTALL STEERING COLUMN COVER**
   (a) Engage the claw and install the upper steering column cover.

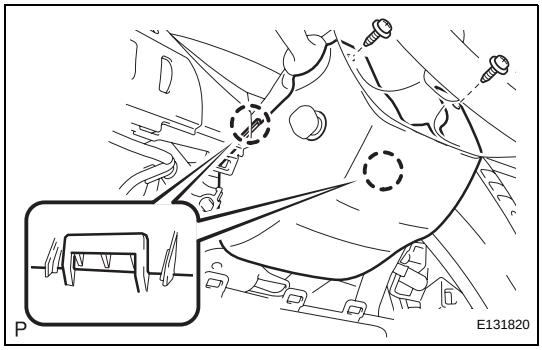

   (b) Engage the 2 claws.
   (c) Install the lower steering column cover with the 2 screws.
   Torque: 2.0 N*m (20 kgf*cm, 18 in.*lbf)

4. **INSTALL LOWER INSTRUMENT PANEL SUB-ASSEMBLY (See page IP-46)**

5. **INSTALL INSTRUMENT PANEL FINISH PANEL END LH (See page IP-46)**

6. **INSTALL SIDE INSTRUMENT PANEL LH (See page IP-47)**

7. **INSTALL FRONT DOOR OPENING TRIM COVER LH (See page IR-64)**

8. **INSTALL FRONT DOOR SCUFF PLATE LH (See page IR-65)**

9. **CONNECT CABLE TO NEGATIVE BATTERY TERMINAL**

10. PERFORM INITIALIZATION

NOTICE:

Some systems need initialization after reconnecting the cable to the negative battery terminal (See page IN-33).

INSTALLATION

1. **INSTALL FUEL SENDER GAUGE ASSEMBLY (See page FU-30)**
2. **INSTALL FUEL SUCTION TUBE ASSEMBLY WITH PUMP AND GAUGE (See page FU-31)**
3. **INSTALL FUEL TANK VENT TUBE SET PLATE (See page FU-31)**
4. **CONNECT FUEL PUMP TUBE SUB-ASSEMBLY (See page FU-31)**
5. **CONNECT CABLE TO NEGATIVE BATTERY TERMINAL**
6. **CHECK FOR FUEL LEAKS (See page FU-7)**
7. **INSTALL REAR FLOOR SERVICE HOLE COVER (See page FU-32)**
8. **INSTALL REAR SEAT CUSHION ASSEMBLY (See page SE-121)**
9. **PERFORM INITIALIZATION**
   NOTICE:
   Some systems need initialization after reconnecting the cable to the negative battery terminal (See page IN-33).

INSPECTION

1. INSPECT STEERING PAD SWITCH

(a) Remove the steering pad switch.

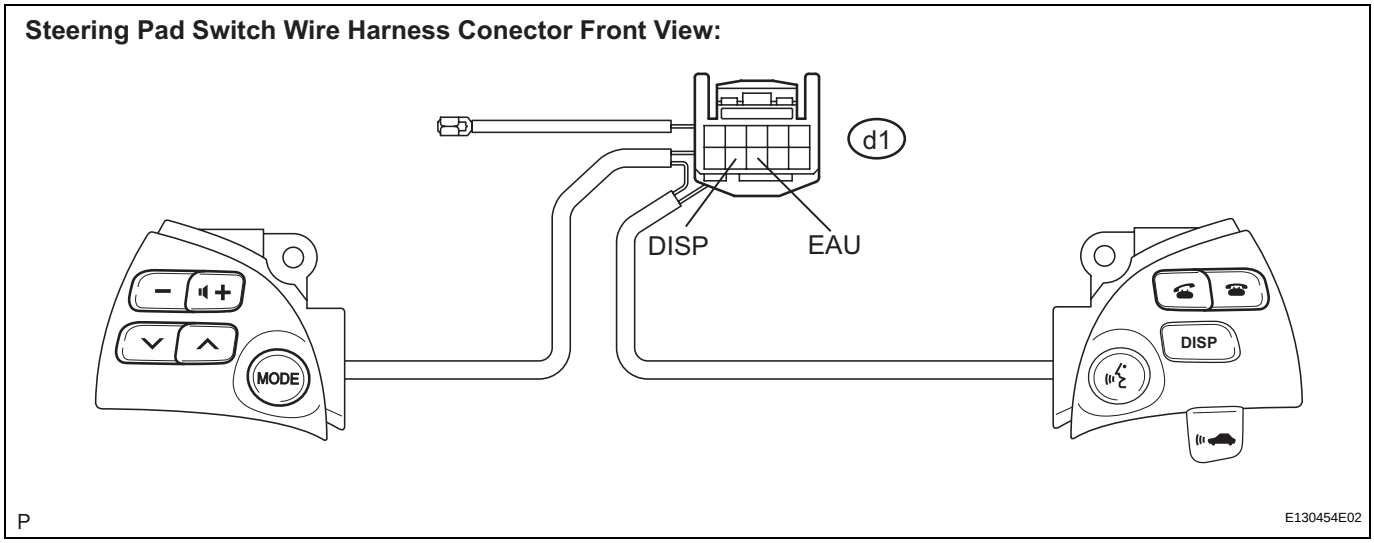

ME

(b) Measure the resistance according to the value(s) in the table below.

Standard resistance

Tester Connection	Condition	Specified Condition
d1-7 (DISP) - d1-8 (EAU)	DISP switch is not pushed in	10 kΩ or higher
d1-7 (DISP) - d1-8 (EAU)	DISP switch is pushed in	Below 1 Ω

HINT:
If the value is not as specified, replace the steering pad switch.

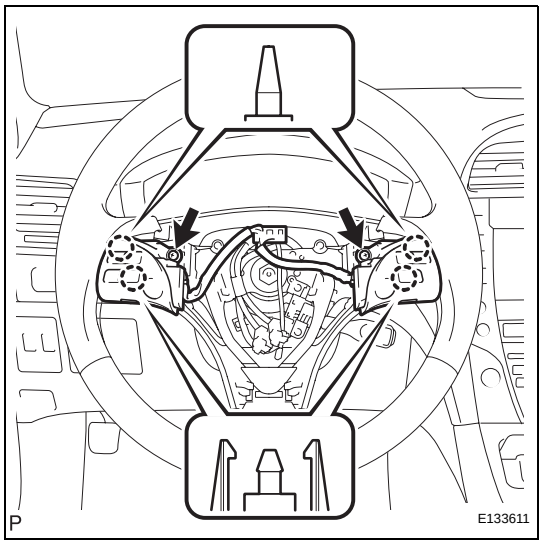

INSTALLATION

1. INSTALL STEERING PAD SWITCH ASSEMBLY

(a) Engage the 4 claws.

(b) Install the steering pad switch assembly with the 2 screws.
Torque: 2.4 N*m (25 kgf*cm, 21 in.*lbf)

(c) Connect the connector to the spiral cable.

2. INSTALL STEERING PAD (See page RS-368)

3. INSTALL LOWER NO. 3 STEERING WHEEL COVER (See page RS-369)

4. INSTALL LOWER NO. 2 STEERING WHEEL COVER (See page RS-369)

5. CONNECT CABLE TO NEGATIVE BATTERY TERMINAL

6. INSPECT SRS WARNING LIGHT (See page RS-369)

7. PERFORM INITIALIZATION
NOTICE:
Some systems need initialization after reconnecting the cable to the negative battery terminal (See page IN-33).

INSPECTION

1. INSPECT LIGHT CONTROL RHEOSTAT

(a) Disconnect the connector from the light control rheostat.

(b) Measure the resistance according to the value(s) in the table below.

Standard resistance

Tester Connection	Condition	Specified Condition
E55-1 (TC) - E55-3 (T)	Turn the light control rheostat knob fully downwards	Below 1 Ω
E55-1 (TC) - E55-3 (T)	Turn the light control rheostat knob fully upwards	8 kΩ or higher
E55-3 (T) - E55-4 (RV)	Turn the light control rheostat knob fully downwards	Below 1 Ω
E55-3 (T) - E55-4 (RV)	Turn the light control rheostat knob downwards to upwards	The value changes gradually (Between below 1 to 8 kΩ)
E55-3 (T) - E55-4 (RV)	Turn the light control rheostat knob fully upwards	8 to 12 kΩ

HINT:
If the value is not as specified, replace the light control rheostat.

Light Control Rheostat Component View:

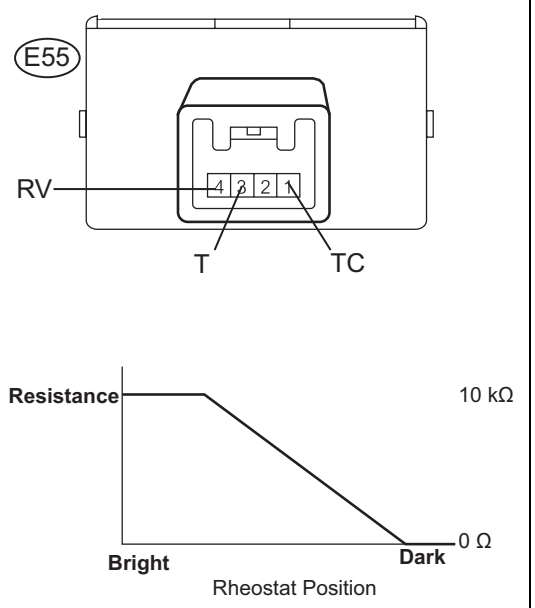

INSTALLATION

1. INSTALL LIGHT CONTROL RHEOSTAT

(a) Engage the 2 claws and install the light control rheostat.

2. INSTALL NO. 1 SWITCH HOLE BASE

(a) Connect each connector.

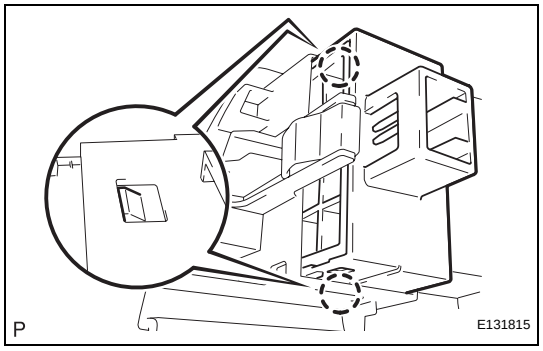

(b) Engage the 4 clips and install the No. 1 switch hole base.

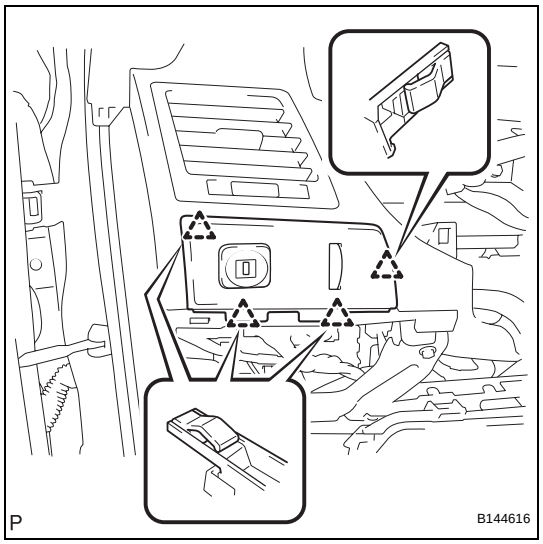

3. INSTALL LOWER INSTRUMENT PANEL SUB-ASSEMBLY (See page IP-46)

4. INSTALL INSTRUMENT PANEL FINISH PANEL END LH (See page IP-46)

5. INSTALL SIDE INSTRUMENT PANEL LH (See page IP-47)

6. INSTALL FRONT DOOR OPENING TRIM COVER LH (See page IR-64)

7. INSTALL FRONT DOOR SCUFF PLATE LH (See page IR-65)

ME

DTC	01-DF	Master Error

DESCRIPTION

DTC No.	DTC Detection Condition	Trouble Area
01-DF *1	The device with a display fails and the master is switched to the audio device. Also when a communication error between sub-master (audio) and master occurs, this code is stored.	• Radio receiver power source circuit • AVC-LAN circuit between the radio receiver and the component which has stored this code • Radio receiver • Component which has stored this code

HINT:
*1: When 210 seconds have elapsed after disconnecting the power supply connector of the master component with the engine switch on (ACC or IG), this code is stored.

NOTICE:

- **Before starting troubleshooting, be sure to clear DTCs to erase codes stored due to the reasons described in the HINT above. Then, check for DTCs and troubleshoot according to the output DTCs.**
- **The radio receiver is the master unit.**
- **Be sure to clear and recheck DTCs after the inspection is completed to confirm that no DTCs are output.**

INSPECTION PROCEDURE

AV

NOTICE:

Be sure to read DESCRIPTION before performing the following procedures.

1	CHECK RADIO RECEIVER POWER SOURCE CIRCUIT

Refer to the radio receiver power source circuit (See page AV-162).
If the power source circuit is operating normally, proceed to the next step.

NEXT

2	INSPECT RADIO RECEIVER

Wire Harness View:

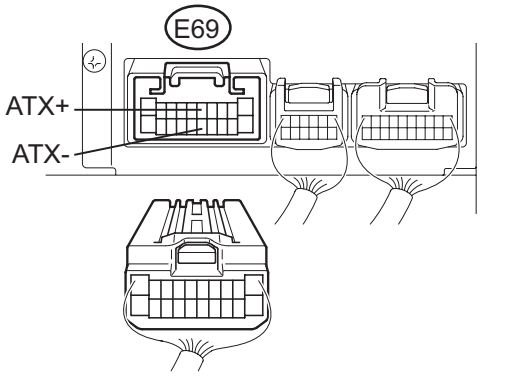

(a) Disconnect the radio receiver connectors.
(b) Measure the resistance according to the value(s) in the table below.

Standard resistance

Tester Connection	Condition	Specified Condition
ATX+ - ATX-	Always	60 to 80 Ω

NG → **CHECK HARNESS AND CONNECTOR (RADIO RECEIVER - COMPONENT WHICH HAS STORED THIS CODE)**

OK

3	IDENTIFY THE COMPONENT WHICH HAS STORED THIS CODE

(a) Enter the diagnostic mode.

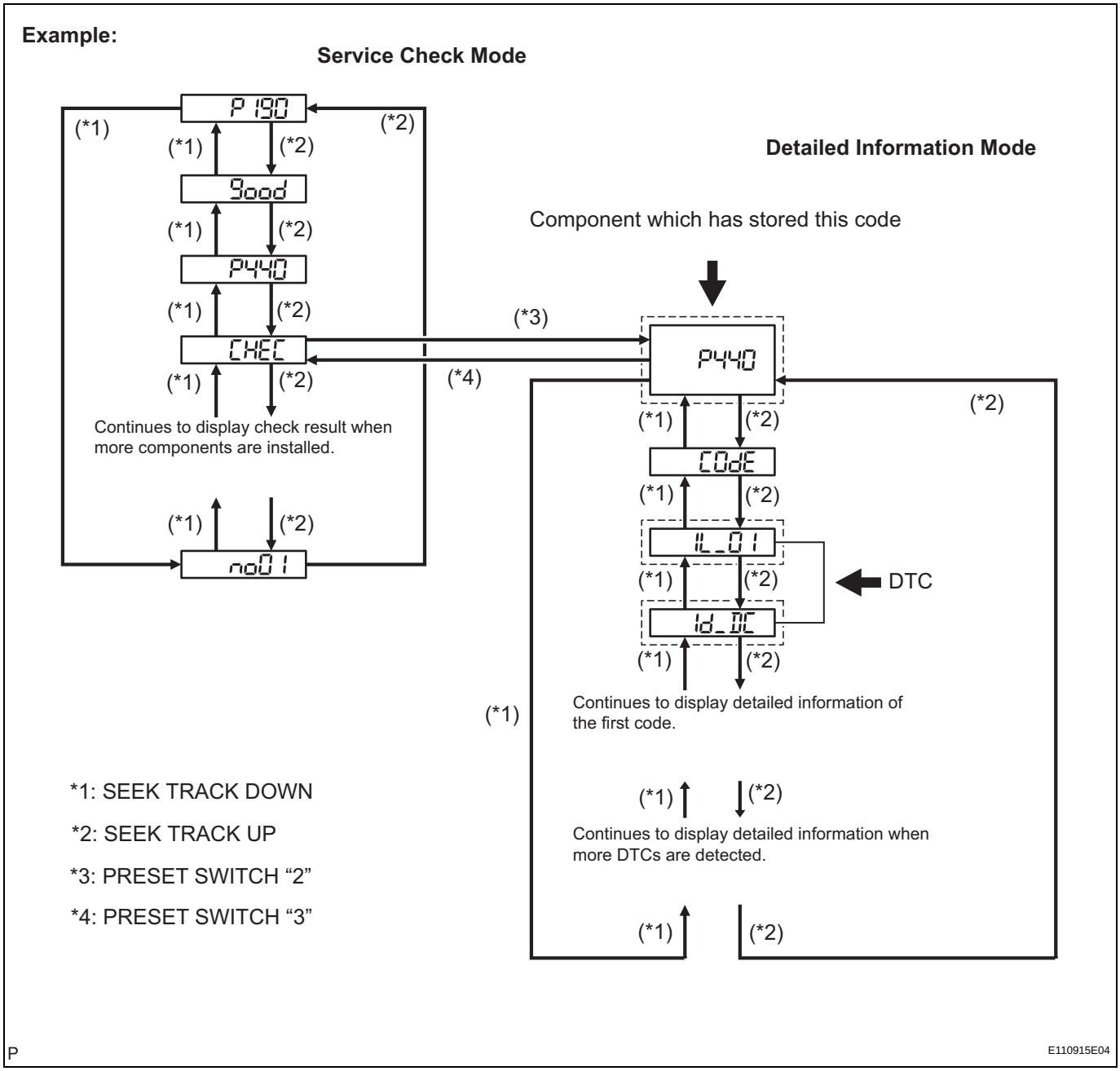

(b) Press the preset switch "3" to change to "Detailed Information Mode".

(c) Identify the component which has stored this code.

Component Table:

Component	Physical Address
Stereo component amplifier	440
"Bluetooth" handsfree module	19D

AV

HINT:
- "440 (stereo component amplifier)" is the component which has stored this code in the example shown in the illustration.
- For details of the DTC display, refer to the "DTC CHECK/ CLEAR" (See page AV-21).

NEXT

4	CHECK COMPONENT WHICH HAS STORED THIS CODE

(a) Select the component which has stored this code.
HINT:
The "Bluetooth" handsfree module is built into the radio receiver. If there is a problem between the "Bluetooth" handsfree module and radio receiver, replace the radio receiver.

Component Table:

Component	Proceed to
"Bluetooth" handsfree module	A
Except "Bluetooth" handsfree module	B

A → **REPLACE RADIO RECEIVER**

B

5	CHECK HARNESS AND CONNECTOR (RADIO RECEIVER - COMPONENT WHICH HAS STORED THIS CODE)

HINT:
For details of the connectors, refer to the "TERMINALS OF ECU" (See page AV-16).

(a) Referring to the AVC-LAN wiring diagram below, check the AVC-LAN circuit between the radio receiver and the component which has stored this code.
   (1) Disconnect all connectors between the radio receiver and the component which has stored this code.
   (2) Check for an open or short in the AVC-LAN circuit between the radio receiver and the component which has stored this code.
   OK:
   There is no open or short circuit.

AV

AVC-LAN WIRING DIAGRAM:

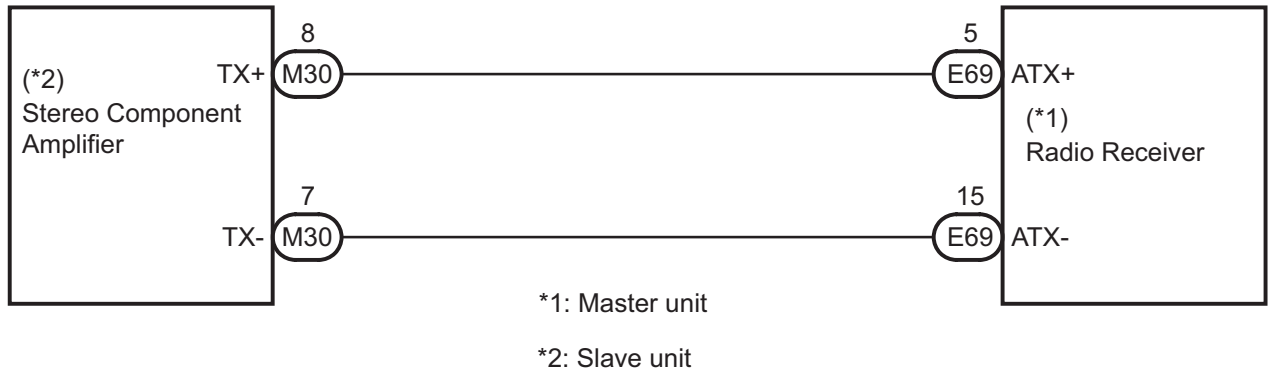

NG → **REPAIR OR REPLACE HARNESS OR CONNECTOR**

OK

AV

6	**REPLACE RADIO RECEIVER**

(a) Replace the radio receiver with a normal one and check if the same problem occurs again.
OK:
Same problem does not occur.

NG → **REPLACE COMPONENT WHICH HAS STORED THIS CODE**

OK

END

DTC	01-E0	Registration Complete Indication Error

DTC	01-E3	Registration Demand Transmission

DTC	01-E4	Multiple Frame Incomplete

DESCRIPTION

DTC No.	DTC Detection Condition	Trouble Area
01-E0	"Registration complete" signal from the master device cannot be received.	-
01-E3	The registration demand signal from the slave device is output. Or the registration demand signal is output by receiving connection confirmation signal from the sub-master device.	-
01-E4	The multiple frame transmission is incomplete.	-

HINT:
Even if no fault is present, this trouble code may be stored depending on the battery condition or engine start voltage.

INSPECTION PROCEDURE

HINT:
After the inspection is completed, clear the DTCs. These DTCs do not indicate a malfunction.

DTC	01-E2	ON / OFF Indication Parameter Error

DESCRIPTION

DTC No.	DTC Detection Condition	Trouble Area
01-E2	The command for ON/OFF control from the master device has a problem.	Radio receiver

INSPECTION PROCEDURE

HINT:
After the inspection is completed, clear the DTCs.

1	REPLACE RADIO RECEIVER

NEXT

END

DTC	57-47	Bluetooth Module Initialization Failed

DESCRIPTION

DTC No.	DTC Detection Condition	Trouble Area
57-47	• "Bluetooth" module is not installed. • Problem with "Bluetooth" module • Problem in communication line to "Bluetooth" module	Radio receiver

INSPECTION PROCEDURE

HINT:
After the inspection is completed, clear the DTCs.

1	REPLACE RADIO RECEIVER

NEXT

END

DTC	60-10	AM Tuner PLL does not Lock

DTC	60-11	FM Tuner PLL does not Lock

DESCRIPTION

DTC No.	DTC Detection Condition	Trouble Area
60-10	AM tuner PLL (phase locked loop) synchronization is impossible.	Radio receiver
60-11	FM tuner PLL (phase locked loop) synchronization is impossible.	

INSPECTION PROCEDURE

HINT:
After the inspection is completed, clear the DTCs.

1	REPLACE RADIO RECEIVER

NEXT

END

DTC	60-42	Tuner Power Source Error

DTC	60-43	AM Tuner Error

DTC	60-44	FM Tuner Error

DTC	60-50	Malfunction in Internal IC

DESCRIPTION

DTC No.	DTC Detection Condition	Trouble Area
60-42	The power source of the tuner is abnormal.	Radio receiver
60-43	The AM tuner is abnormal.	
60-44	The FM tuner is abnormal.	
60-50	A problem occurs in the IC inside the tuner unit and radio reception is not normal.	

INSPECTION PROCEDURE

HINT:
After the inspection is completed, clear the DTCs.

AV

1 CLEAR DTC

(a) Clear the DTCs (See page AV-21).

NEXT

2 RECHECK DTC

(a) Recheck for DTCs and check if the same trouble occurs again.
HINT:
If DTCs are detected frequently, replace the radio receiver.
OK:
Malfunction disappears.

NG → **REPLACE RADIO RECEIVER**

OK

END

DTC	63-10	CD Changer Mechanical Error

DTC	63-11	CD Insertion and Ejection Error

DTC	63-12	CD Reading Abnormal

DESCRIPTION

DTC No.	DTC Detection Condition	Trouble Area
63-10	A mechanical error in the CD changer is detected while the CD is not being inserted or ejected.	Radio receiver
63-11	CD insertion or ejection is failed.	
63-12	CD read problem occurs.	

INSPECTION PROCEDURE

HINT:
After the inspection is completed, clear the DTCs.

AV

1	REPLACE RADIO RECEIVER

NEXT

END

DTC	63-41	Wrong Disc

DTC	63-42	Disc cannot be Read

DESCRIPTION

DTC No.	DTC Detection Condition	Trouble Area
63-41	An unsuitable disc is inserted.	• CD • Radio receiver
63-42	The disc cannot be read.	

INSPECTION PROCEDURE

HINT:
After the inspection is completed, clear the DTCs.

1 CHECK DISC

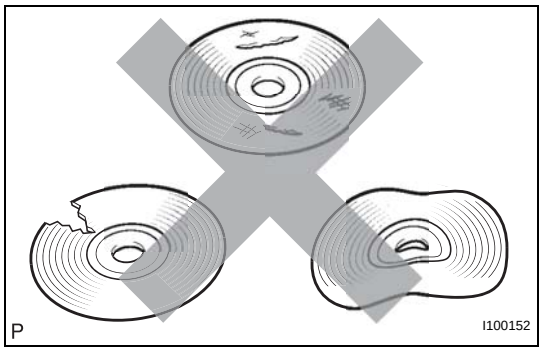

(a) Check that the disc is not deformed or cracked.
OK:
No deformation or cracks on the disc.

NG → **CHANGE DISC**

OK

2 DISC CLEANING

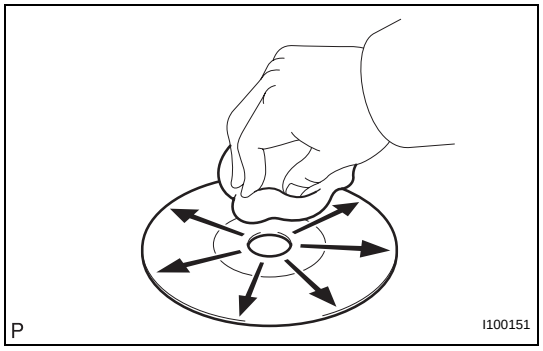

(a) Disc cleaning
(1) If dirt is on the disc surface, wipe it clean with a soft cloth from the inside to the outside in a radial direction.
NOTICE:
Do not use conventional record cleaner or anti-static preservative.

NEXT

3 CLEAR DTC

(a) Clear the DTCs (See page AV-21).

NEXT

AV

4	RECHECK DTC

(a) Recheck for DTCs and check if the same trouble occurs again.
OK:
Malfunction disappears.

OK → **END**

NG

5	REPLACE DISC WITH ANOTHER AND RECHECK

(a) Replace the disc with another and recheck.
(1) Replace the disc with another normal one.
(2) Clear the DTCs (See page AV-21).
(3) Recheck for DTCs and check if the same trouble occurs again.
OK:
Malfunction disappears.

NG → **REPLACE RADIO RECEIVER**

OK

END

DTC	63-43	CD-ROM Abnormal

DESCRIPTION

DTC No.	DTC Detection Condition	Trouble Area
63-43	CD-ROM operation is abnormal	• CD • Radio receiver

INSPECTION PROCEDURE

HINT:
After the inspection is completed, clear the DTCs.

1 CHECK IF A PROPER CD IS INSERTED

(a) Make sure that the CD is an audio CD or a CD with an MP3 or WMA file, and that it is not deformed, flawed, stained, burred, or otherwise defective.
OK:
Normal CD
HINT:
- Translucent or uniquely-shaped CDs cannot be played.
- CDs with adhesive paper labels should not be played.
- Commercial audio CDs can be played.
- CD-DA files on CD-ROMs, CD-Rs, and CD-RWs can be played.
- MP3 and WMA files on CD-ROMs, CD-Rs, and CD-RWs can be played.
- For details on playable CDs, refer to the Owner's Manual.

NG → **CD IS FAULTY**

OK ↓

2 REPLACE CD WITH ANOTHER AND RECHECK

(a) Replace the CD with another and recheck.
(1) Replace the CD with another normal one.
(2) Clear the DTCs (See page AV-21).
(3) Recheck for DTCs and check if the same trouble occurs again.
OK:
Malfunction disappears.

NG → **REPLACE RADIO RECEIVER**

OK ↓

END

AV

DTC	63-44	CD Abnormal

DTC	63-48	Excess Current

DTC	63-50	Tray Insertion / Ejection Error

DESCRIPTION

DTC No.	DTC Detection Condition	Trouble Area
63-44	Operation error in the CD mechanism	Radio receiver
63-48	Excess current is present in the CD changer.	
63-50	Malfunction in insertion/ejection system	

INSPECTION PROCEDURE

HINT:
After the inspection is completed, clear the DTCs.

AV

1 CLEAR DTC

(a) Clear the DTCs (See page AV-21).

NEXT

2 RECHECK DTC

(a) Recheck for DTCs and check if the same trouble occurs again.
HINT:
If DTCs are detected frequently, replace the radio receiver.
OK:
Malfunction disappears.

NG → **REPLACE RADIO RECEIVER**

OK

END

DTC	63-45	Eject Error

DTC	63-51	Elevator Error

DTC	63-52	Clamp Error

DESCRIPTION

DTC No.	DTC Detection Condition	Trouble Area
63-45	Magazine cannot be ejected.	Radio receiver
63-51	Mechanical error occurs during elevator operation.	
63-52	Error occurs in CD changer clamp.	

INSPECTION PROCEDURE

HINT:
After the inspection is completed, clear the DTCs.

1 CHECK RADIO RECEIVER

(a) Check if a disc can be changed, inserted, or ejected normally.
OK:
Malfunction disappears.

NG → **REPLACE RADIO RECEIVER**

OK

END

DTC	63-46	Scratched / Reversed Disc

DESCRIPTION

DTC No.	DTC Detection Condition	Trouble Area
63-46	Scratches or dirt is found on CD surface or CD is inserted upside down.	• CD • Radio receiver

INSPECTION PROCEDURE

HINT:
After the inspection is completed, clear the DTCs.

1 CHECK THAT CD IS INSERTED PROPERLY

(a) Check that the CD is not inserted upside down.
OK:
CD is properly inserted.

NG → **INSERT CD PROPERLY**

OK

AV

2 CHECK DISC

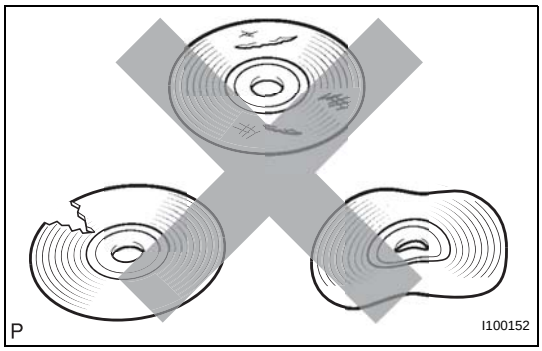

(a) Check that the disc is not deformed or cracked.
OK:
No deformation or cracks on the disc.

NG → **CHANGE DISC**

OK

3 DISC CLEANING

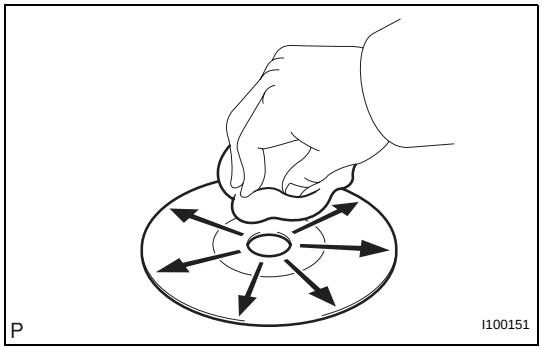

(a) Disc cleaning
(1) If dirt is on the disc surface, wipe it clean with a soft cloth from the inside to the outside in a radial direction.
NOTICE:
Do not use a conventional record cleaner or anti-static preservative.

NEXT

4	CLEAR DTC

(a) Clear the DTCs (See page AV-21).

NEXT

5	RECHECK DTC

(a) Recheck for DTCs and check if the same trouble occurs again.
OK:
Malfunction disappears.

OK → **END**

NG

6	REPLACE DISC WITH ANOTHER AND RECHECK

(a) Replace the disc with another and recheck.
(1) Replace the disc with another normal one.
(2) Clear the DTCs (See page AV-21).
(3) Recheck for DTCs and check if the same trouble occurs again.
OK:
Malfunction disappears.

NG → **REPLACE RADIO RECEIVER**

OK

END

DTC	63-47	High Temperature

DESCRIPTION

DTC No.	DTC Detection Condition	Trouble Area
63-47	Sensor detects that CD unit temperature is high (Over 80°C (176°F))	Radio receiver

INSPECTION PROCEDURE

HINT:
After the inspection is completed, clear the DTCs.

1 CHECK RADIO RECEIVER

(a) Park the vehicle in a cool place.
(b) Check that the temperature of the radio receiver becomes sufficiently low, then start the engine.
(c) Clear the DTCs and recheck for DTCs.
(d) Check if DTC 63-47 is output.
OK:
DTC 63-47 is not output.

NG → **REPLACE RADIO RECEIVER**

OK

END

DTC	63-78	DSP Error

DESCRIPTION

DTC No.	DTC Detection Condition	Trouble Area
63-78	An error occurs during the decode process (MP3/WMA)	Radio receiver

INSPECTION PROCEDURE

HINT:
After the inspection is completed, clear the DTCs.

NOTICE:

- **This code may be output even if there is no malfunction.**
- **If this code is output frequently, replace the radio receiver.**

1 CLEAR DTC

(a) Clear the DTCs (See page AV-21).

NEXT

2 RECHECK DTC

(a) Recheck for DTCs and check if the same trouble code occurs again.
OK:
Malfunction disappears.

NG → **REPLACE RADIO RECEIVER**

OK

END

AV

DTC	63-7D	Disc cannot be Played

DTC	63-7E	No Playable Files

DTC	63-7F	Copyright Protection Error

DESCRIPTION

DTC No.	DTC Detection Condition	Trouble Area
63-7D	• An incompatible MP3/WMA file is used. • Although the file has an extension of ".mp3" or ".wma", the header information cannot be read.	• CD • Radio receiver
63-7E	• A disc with no music data is used. • Playable files are not on the disc (MP3/WMA).	
63-7F	A copy-protected file, which cannot be played, is used.	

INSPECTION PROCEDURE

HINT:
After the inspection is completed, clear the DTCs.

AV

1	CHANGE DISC

(a) Insert a disc with a playable file and check if the disc can be played correctly.
HINT:
For details on playable files and discs, refer to the Owner's Manual.
OK:
The disc can be played correctly.

NG → **REPLACE RADIO RECEIVER**

OK

DISC IS FAULTY

DTC	74-40	Short in Speaker Circuit

DESCRIPTION

DTC No.	DTC Detection Condition	Trouble Area
74-40	A short is detected in the speaker output circuit.	• Wire harness • Speaker • Stereo component amplifier

This circuit has a fail-safe function.
- When a short in the speaker circuit is detected, all sound outputs are stopped.

WIRING DIAGRAM

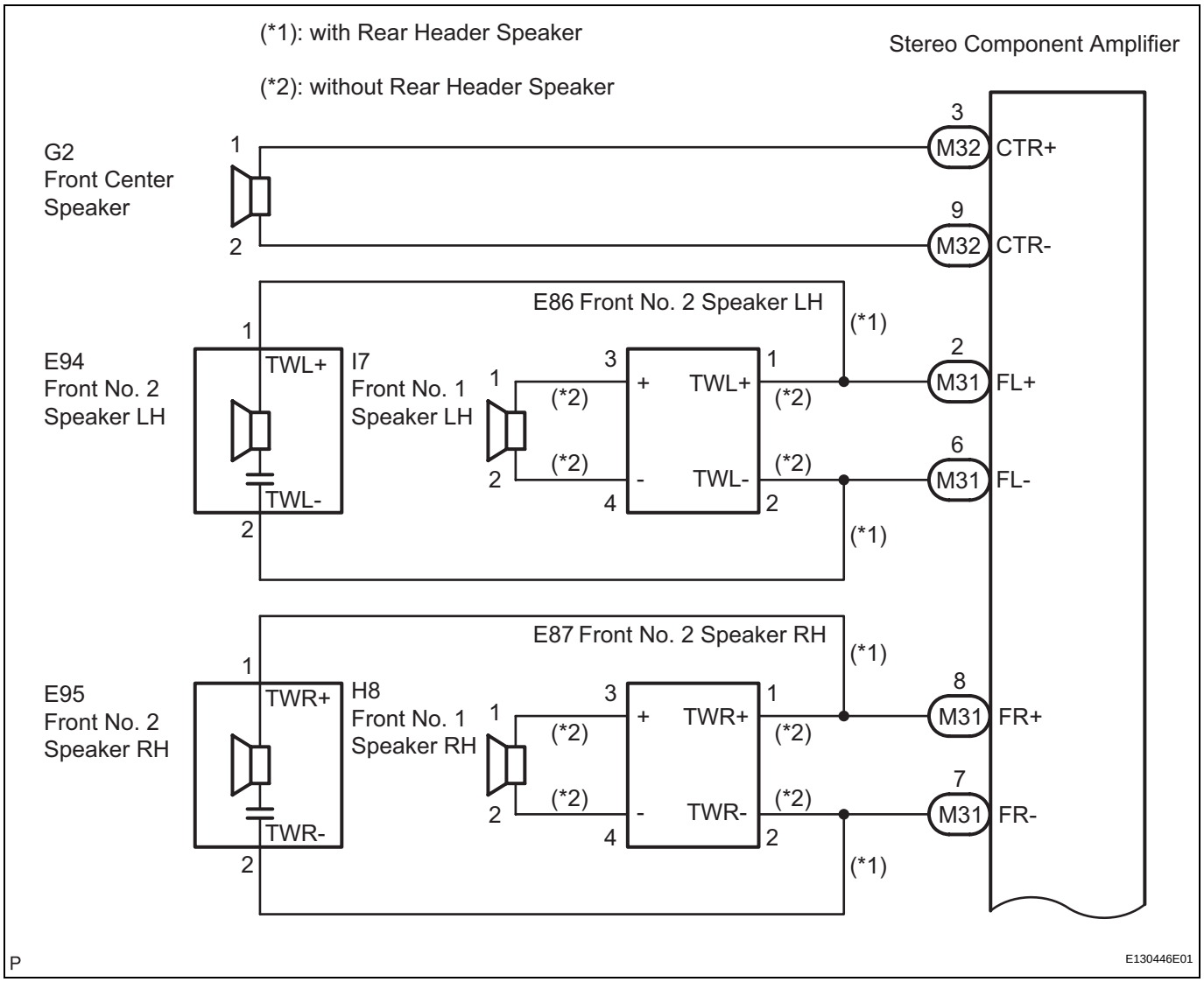

AV

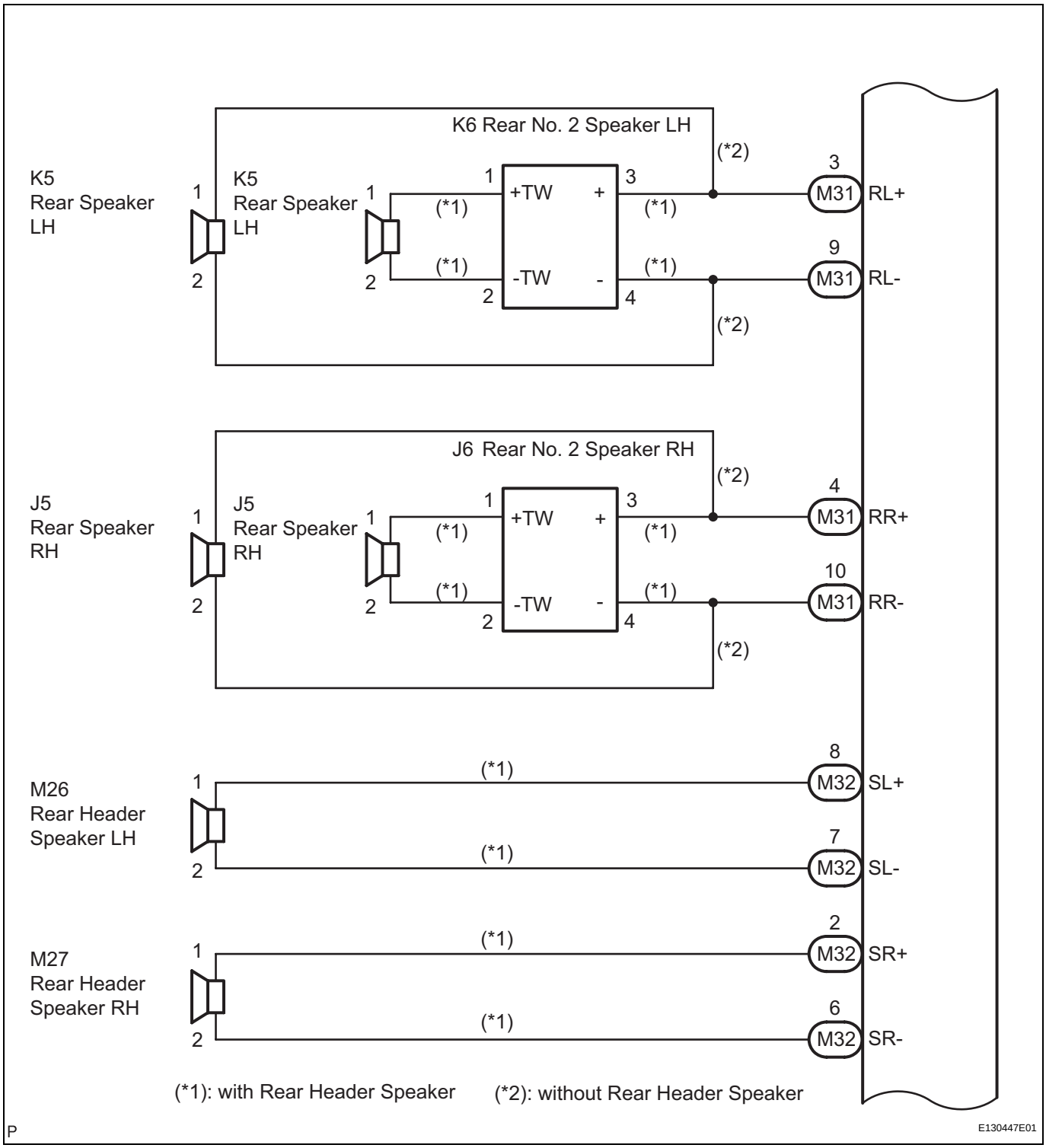
K6 Rear No. 2 Speaker LH
K5
Rear Speaker
LH
K5
Rear Speaker
LH
+TW
-TW
(*1)
(*2)
M31
RL+
RL-
J6 Rear No. 2 Speaker RH
J5
Rear Speaker
RH
J5
Rear Speaker
RH
RR+
RR-
M26
Rear Header
Speaker LH
M27
Rear Header
Speaker RH
M32
SL+
SL-
SR+
SR-
(*1): with Rear Header Speaker
(*2): without Rear Header Speaker
P
E130447E01

AV

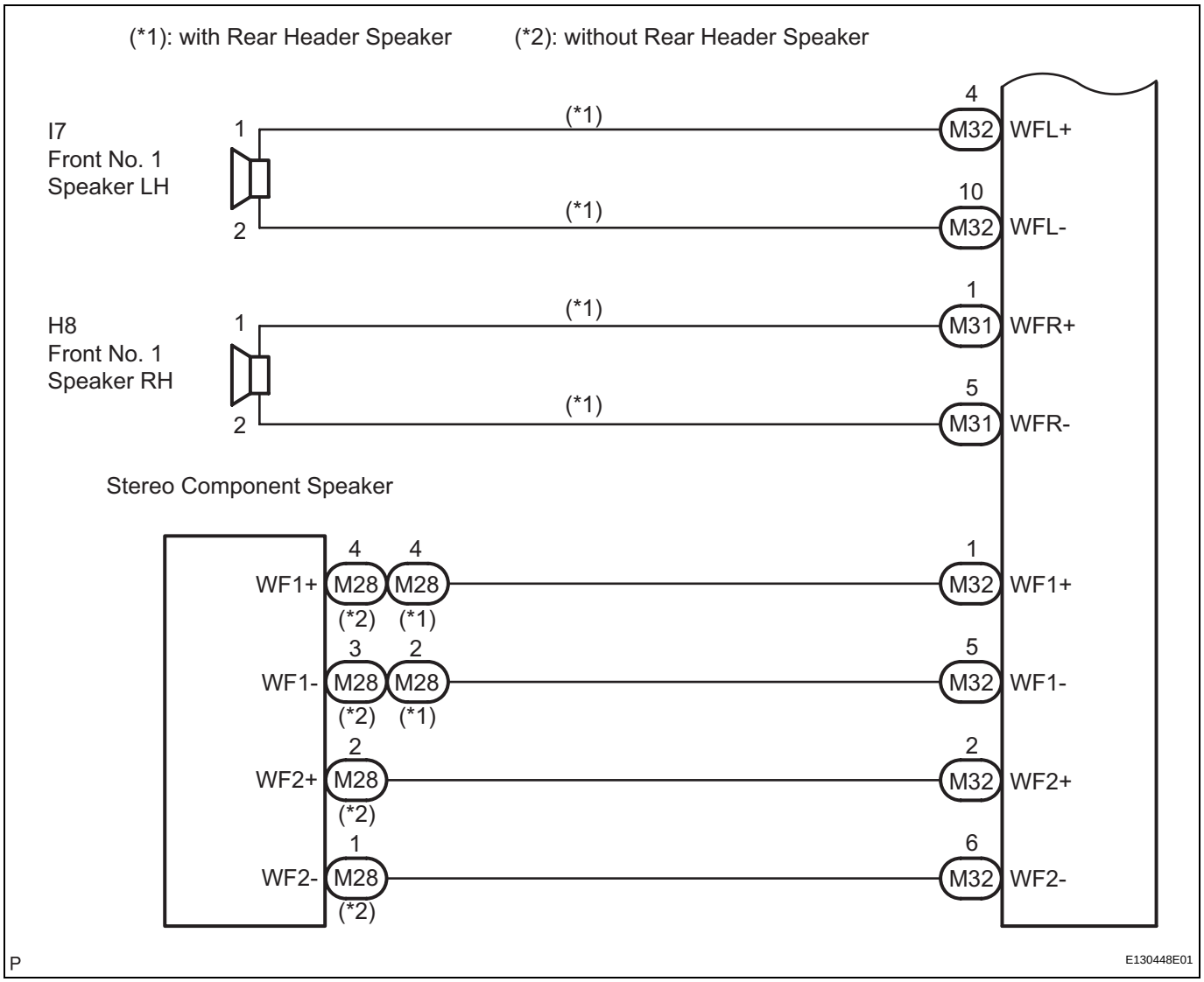

INSPECTION PROCEDURE

HINT:

After the inspection is completed, clear the DTCs.

1	**INSPECT STEREO COMPONENT AMPLIFIER**

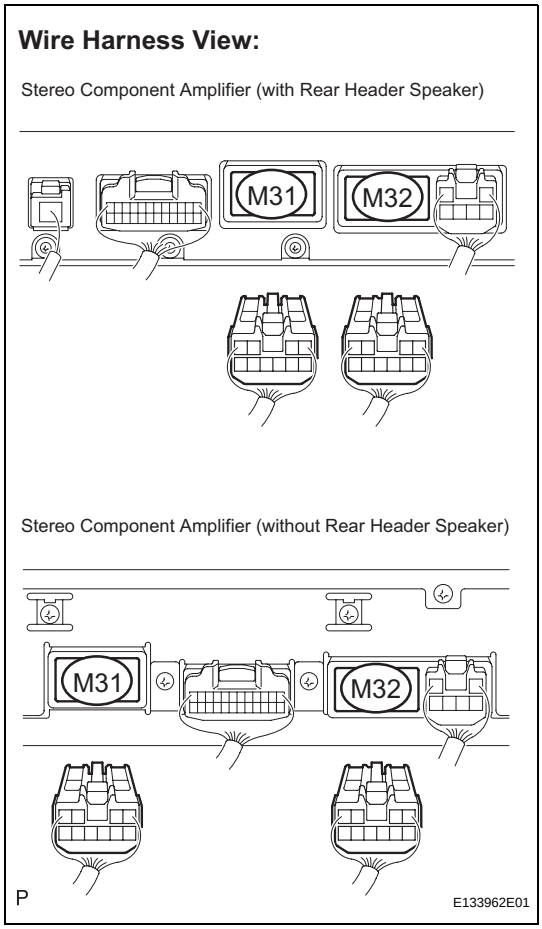

(a) Disconnect the stereo component amplifier connectors M31 and M32.
(b) Clear the DTCs and recheck for DTCs.
(c) Check if DTC 74-40 is output.
OK:
DTC 74-40 is not output.

NG → **REPLACE STEREO COMPONENT AMPLIFIER**

OK

2	**CHECK OPERATION**

(a) Reconnect the stereo component amplifier connector M31.
(b) Check if DTC 74-40 is output.
OK:
DTC 74-40 is not output.

NG → **Go to step 10**

OK

AV

3 CHECK HARNESS AND CONNECTOR

Wire Harness View:

Stereo Component Amplifier (with Rear Header Speaker)

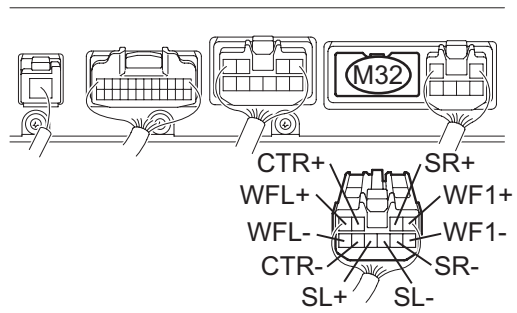

Stereo Component Amplifier (without Rear Header Speaker)

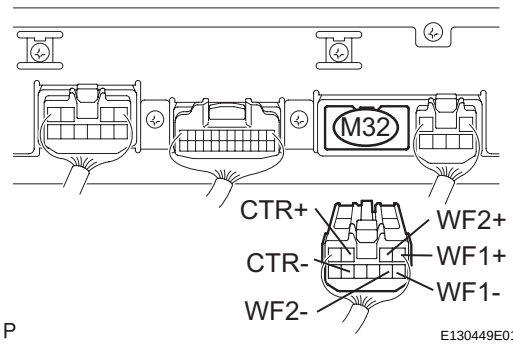

P E130449E01

(a) Disconnect the connectors shown in the illustration from the stereo component amplifier and speakers.

(b) Measure the resistance according to the value(s) in the table below.

Standard resistance

Tester Connection	Condition	Specified Condition
CTR+ - Body ground	Always	10 kΩ or higher
CTR- - Body ground	Always	10 kΩ or higher
SL+ - Body ground (*1)	Always	10 kΩ or higher
SL- - Body ground (*1)	Always	10 kΩ or higher
SR+ - Body ground (*1)	Always	10 kΩ or higher
SR- - Body ground (*1)	Always	10 kΩ or higher
WFL+ - Body ground (*1)	Always	10 kΩ or higher
WFL- - Body ground (*1)	Always	10 kΩ or higher
WF1+ - Body ground	Always	10 kΩ or higher
WF1- - Body ground	Always	10 kΩ or higher
WF2+ - Body ground (*2)	Always	10 kΩ or higher
WF2- - Body ground (*2)	Always	10 kΩ or higher

*1: with Rear Header Speaker
*2: without Rear Header Speaker

NG → **REPAIR OR REPLACE HARNESS OR CONNECTOR**

OK

4 CONFIRM MODEL

Result

Result	Proceed to
with Rear Header Speaker	A
without Rear Header Speaker	B

B → **Go to step 9**

A

5 INSPECT FRONT CENTER SPEAKER

(a) Resistance check.

(1) Measure the resistance between the terminals of the speaker.

Standard resistance:
Approximately 8 Ω

AV

NG → **REPLACE FRONT CENTER SPEAKER**

OK

6 INSPECT STEREO COMPONENT SPEAKER

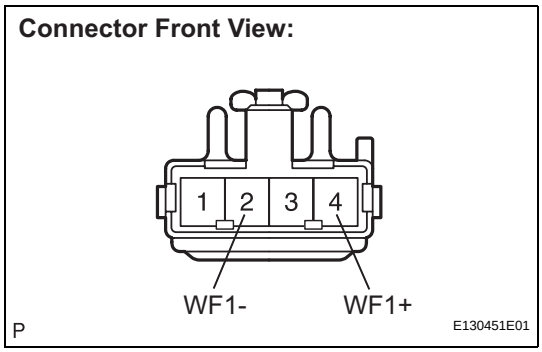

(a) Resistance check.
(1) Measure the resistance between the terminals of the speaker.
Standard resistance

Tester Connection	Condition	Specified Condition
WF1+ - WF1-	Always	Approximately 8 Ω

NG → **REPLACE STEREO COMPONENT SPEAKER**

OK

AV

7 INSPECT REAR HEADER SPEAKER (LEFT HAND)

(a) Resistance check.
(1) Measure the resistance between the terminals of the speaker.
Standard resistance:
Approximately 8 Ω

NG → **REPLACE REAR HEADER SPEAKER (LEFT HAND)**

OK

8 INSPECT REAR HEADER SPEAKER (RIGHT HAND)

(a) Resistance check.
(1) Measure the resistance between the terminals of the speaker.
Standard resistance:
Approximately 8 Ω

NG → **REPLACE REAR HEADER SPEAKER (RIGHT HAND)**

OK

REPLACE FRONT NO. 1 SPEAKER (LEFT HAND)

9 INSPECT FRONT CENTER SPEAKER

(a) Resistance check.

(1) Measure the resistance between the terminals of the speaker.
Standard resistance:
Approximately 10 Ω

NG → **REPLACE FRONT CENTER SPEAKER**

OK

REPLACE STEREO COMPONENT SPEAKER

10 CHECK HARNESS AND CONNECTOR

Wire Harness View:

Stereo Component Amplifier (with Rear Header Speaker)

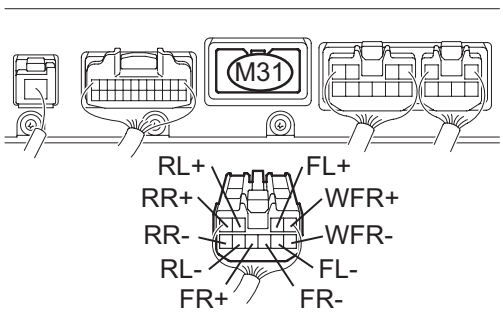

Stereo Component Amplifier (without Rear Header Speaker)

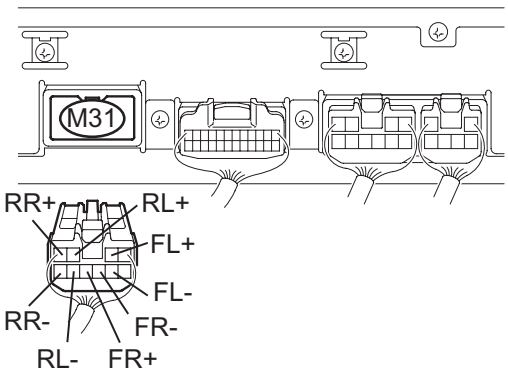

Connector Front View:

Rear No. 2 Speaker

Front No. 2 Speaker

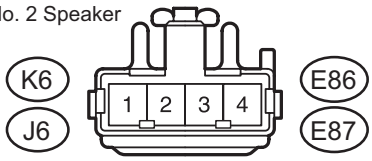

P

E130452E01

(a) Disconnect the connectors shown in the illustration from the stereo component amplifier and speakers.
(b) Measure the resistance according to the value(s) in the table below.
Standard resistance

Tester Connection	Condition	Specified Condition
FL+ - Body ground	Always	10 kΩ or higher
FL- - Body ground	Always	10 kΩ or higher
E86-3 - Body ground (*2)	Always	10 kΩ or higher
E86-4 - Body ground (*2)	Always	10 kΩ or higher
FR+ - Body ground	Always	10 kΩ or higher
FR- - Body ground	Always	10 kΩ or higher
E87-3 - Body ground (*2)	Always	10 kΩ or higher
E87-4 - Body ground (*2)	Always	10 kΩ or higher
RL+ - Body ground	Always	10 kΩ or higher
RL- - Body ground	Always	10 kΩ or higher
K6-3 - Body ground (*1)	Always	10 kΩ or higher
K6-4 - Body ground (*1)	Always	10 kΩ or higher
RR+ - Body ground	Always	10 kΩ or higher
RR- - Body ground	Always	10 kΩ or higher
J6-3 - Body ground (*1)	Always	10 kΩ or higher
J6-4 - Body ground (*1)	Always	10 kΩ or higher
WFR+ - Body ground (*1)	Always	10 kΩ or higher
WFR- - Body ground (*1)	Always	10 kΩ or higher

*1: with Rear Header Speaker
*2: without Rear Header Speaker

NG → **REPAIR OR REPLACE HARNESS OR CONNECTOR**

AV

OK

11	CONFIRM MODEL

Result

Result	Proceed to
with Rear Header Speaker	A
without Rear Header Speaker	B

B → **Go to step 18**

A

12	INSPECT FRONT NO. 2 SPEAKER (LEFT HAND)

(a) Reconnect the stereo component amplifier connector and front No. 2 speaker connector.
(b) Check that audio sound can be heard from the speaker.
OK:
Audio sound can be heard.

NG → **REPLACE FRONT NO. 2 SPEAKER (LEFT HAND)**

OK

13	INSPECT FRONT NO. 2 SPEAKER (RIGHT HAND)

(a) Reconnect the stereo component amplifier connector and front No. 2 speaker connector.
(b) Check that audio sound can be heard from the speaker.
OK:
Audio sound can be heard.

NG → **REPLACE FRONT NO. 2 SPEAKER (RIGHT HAND)**

OK

14	INSPECT REAR SPEAKER (LEFT HAND)

(a) Resistance check.
(1) Measure the resistance between the terminals of the speaker.
Standard resistance:
Approximately 8 Ω

NG → **REPLACE REAR SPEAKER (LEFT HAND)**

OK

AV

15	INSPECT REAR SPEAKER (RIGHT HAND)

(a) Resistance check.
(1) Measure the resistance between the terminals of the speaker.
Standard resistance:
Approximately 8 Ω

NG → **REPLACE REAR SPEAKER (RIGHT HAND)**

OK

16	INSPECT REAR NO. 2 SPEAKER (LEFT HAND)

(a) Reconnect the stereo component amplifier connector and rear No. 2 speaker connector.
(b) Check that audio sound can be heard from the speaker.
OK:
Audio sound can be heard.

NG → **REPLACE REAR NO. 2 SPEAKER (LEFT HAND)**

AV

OK

17	INSPECT REAR NO. 2 SPEAKER (RIGHT HAND)

(a) Reconnect the stereo component amplifier connector and rear No. 2 speaker connector.
(b) Check that audio sound can be heard from the speaker.
OK:
Audio sound can be heard.

NG → **REPLACE REAR NO. 2 SPEAKER (RIGHT HAND)**

OK

REPLACE FRONT NO. 1 SPEAKER (RIGHT HAND)

18	INSPECT FRONT NO. 1 SPEAKER (LEFT HAND)

(a) Resistance check.
(1) Measure the resistance between the terminals of the speaker.
Standard resistance:
Approximately 4 Ω

NG → **REPLACE FRONT NO. 1 SPEAKER (LEFT HAND)**

OK

19	**INSPECT FRONT NO. 1 SPEAKER (RIGHT HAND)**

(a) Resistance check.
(1) Measure the resistance between the terminals of the speaker.
Standard resistance:
Approximately 4 Ω

NG → **REPLACE FRONT NO. 1 SPEAKER (RIGHT HAND)**

OK

20	**INSPECT FRONT NO. 2 SPEAKER (LEFT HAND)**

(a) Reconnect the stereo component amplifier connector and front No. 2 speaker connector.
(b) Check that audio sound can be heard from the speaker.
OK:
Audio sound can be heard.

NG → **REPLACE FRONT NO. 2 SPEAKER (LEFT HAND)**

OK

21	**INSPECT FRONT NO. 2 SPEAKER (RIGHT HAND)**

(a) Reconnect the stereo component amplifier connector and front No. 2 speaker connector.
(b) Check that audio sound can be heard from the speaker.
OK:
Audio sound can be heard.

NG → **REPLACE FRONT NO. 2 SPEAKER (RIGHT HAND)**

OK

22	**INSPECT REAR SPEAKER (LEFT HAND)**

(a) Resistance check.
(1) Measure the resistance between the terminals of the speaker.
Standard resistance:
Approximately 4 Ω

NG → **REPLACE REAR SPEAKER (LEFT HAND)**

OK

REPLACE REAR SPEAKER (RIGHT HAND)

Noise Occurs

INSPECTION PROCEDURE

1 NOISE CONDITION

(a) Check in which direction the noise comes from (front left or right, or rear left or right).
(1) Check in which direction the noise comes from.
OK:
The location of the noise source can be determined.

NG → **Go to step 3**

OK ↓

2 CHECK SPEAKERS

(a) Check the installation conditions of the speaker units that are located near the noise source and that there are no cracks, scratches, deformation, or other failures.

Result

Condition	Proceed to
A speaker is installed incorrectly	A
Foreign objects are in the speaker	B
A speaker cone paper is broken	C
No malfunction is found	D

A → **REINSTALL SPEAKER**

B → **REMOVE FOREIGN OBJECT**

C → **REPLACE SPEAKER**

D ↓

3 CHECK NOISE CONDITIONS

(a) Check the noise condition.
HINT:
The radio has a noise prevention function to reduce noise when listening to the radio. If a loud noise occurs, check whether the ground at the antenna mounting base and the noise prevention unit are installed and wired correctly.

Conditions under which noise occurs	Noise Source
Noise increases when the accelerator pedal is depressed, but stops when the engine is stopped.	Generator
Noise occurs during A/C or heater operation.	Blower motor
Noise occurs when the vehicle accelerates rapidly on an unpaved road or after the engine switch is turned on (IG).	Fuel pump

Conditions under which noise occurs	Noise Source
Noise occurs when the horn switch is pressed and released or when pressed and held.	Horn
Noise occurs synchronously with the blink of the turn signal.	Flasher
Noise occurs during window washer operation.	Washer
Noise occurs while the engine is running, and continues even after the engine is stopped.	Engine coolant temperature sensor
Noise occurs during wiper operation.	Wiper
Noise occurs when the brake pedal is depressed.	Stop light switch
Others	Static electricity

HINT:

- In the chart's left column, find the situation that matches the customer's complaint. Then, in the right column, find the part that is causing the noise. Check the noise filter on or for the part.
- To save time and avoid a misdiagnosis, first make sure that the noise is not coming from outside the vehicle.
- Noise should be removed in descending order of loudness.
- Setting the radio to a frequency where no signal is received may make recognition of the noise problem easier.

OK:

The noise source can be determined.

NG → **REPAIR OR REPLACE NOISE SOURCE**

OK

PROCEED TO NEXT CIRCUIT INSPECTION SHOWN IN PROBLEM SYMPTOMS TABLE

Pressing Power Switch does not Turn on System

INSPECTION PROCEDURE

1	CHECK VEHICLE CONDITION

(a) Check that conditions in the cabin are not likely to cause condensation.
HINT:
This problem occurs when the cabin is humid and the temperature changes rapidly. This may produce condensation, resulting in a short circuit.
OK:
Condensation is not likely to be produced.

NG → **DRY OUT CABIN AND RECHECK CONDITION**

OK

PROCEED TO NEXT CIRCUIT INSPECTION SHOWN IN PROBLEM SYMPTOMS TABLE

No Sound can be Heard from Speakers

INSPECTION PROCEDURE

1	CHECK RADIO RECEIVER

(a) Check radio receiver setting.
  (1) Check that the volume is not set to "0".
  (2) Check that "MUTE" is off.
  OK:
  The volume is not set to "0" and "MUTE" is off.

OK → **END**

NG

PROCEED TO NEXT CIRCUIT INSPECTION SHOWN IN PROBLEM SYMPTOMS TABLE

Sound Quality is Bad Only when CD is Played (Volume is Too Low)

INSPECTION PROCEDURE

1	REPLACE CD WITH ANOTHER AND RECHECK

(a) Replace the CD with another one and recheck.
(1) Check if the problem recurs using another CD.
OK:
Malfunction disappears.

NG → **REPLACE RADIO RECEIVER**

OK

END

Cassette Tape cannot be Ejected

INSPECTION PROCEDURE

1	CHECK OPERATION

(a) Press the cassette tape EJECT switch of the radio receiver for 2 seconds or more and check that the cassette tape is ejected.
OK:
Cassette tape is ejected.

NG → **REPLACE RADIO RECEIVER**

OK ↓

2	CHECK CASSETTE TAPE

(a) Check that the ejected cassette tape does not have a peeling label, cassette body deformation or other problems.
OK:
No problems with cassette tape.

NG → **CASSETTE TAPE IS FAULTY**

OK ↓

3	REPLACE CASSETTE TAPE WITH ANOTHER AND RECHECK

(a) Replace the cassette tape with a normal one and check that the malfunction disappears.
OK:
Malfunction disappears.

NG → **REPLACE RADIO RECEIVER**

OK ↓

CASSETTE TAPE IS FAULTY

Cassette Tape cannot be Inserted or Played

INSPECTION PROCEDURE

1 CHECK FOR ANY FOREIGN OBJECT

(a) Check that the cassette tape player is free of foreign objects.
OK:
No foreign objects.

NG → **REMOVE FOREIGN OBJECT**

OK ↓

2 CHECK CASSETTE TAPE

(a) Check that the cassette tape is a normal tape for recording sounds.
OK:
Cassette tape is normal.

NG → **CASSETTE TAPE IS FAULTY**

OK ↓

3 CHECK RADIO RECEIVER

(a) Replace the cassette tape with a normal one and check that the malfunction disappears.
OK:
Malfunction disappears.

NG → **REPLACE RADIO RECEIVER**

OK ↓

CASSETTE TAPE IS FAULTY

CD cannot be Ejected

INSPECTION PROCEDURE

1 **CHECK OPERATION**

(a) Press the CD EJECT switch of the radio receiver for 2 seconds or more and check that the CD is ejected.
OK:
CD is ejected.

NG → **REPLACE RADIO RECEIVER**

OK

2 **REPLACE CD WITH ANOTHER AND RECHECK**

(a) Insert another CD and check if it is ejected.
OK:
CD is ejected.

NG → **REPLACE RADIO RECEIVER**

OK

END

CD cannot be Inserted / Played or CD is Ejected Right After Insertion

INSPECTION PROCEDURE

1 CHECK IF A PROPER CD IS INSERTED

(a) Make sure that the CD is an audio CD or a CD with an MP3 or WMA file, and that it is not deformed, flawed, stained, burred, or otherwise defective.
OK:
Normal CD.
HINT:
- Translucent or uniquely-shaped CDs cannot be played.
- CDs with adhesive paper labels should not be played.
- Commercial audio CDs can be played.
- CD-DA files on CD-ROMs, CD-Rs, and CD-RWs can be played.
- MP3 and WMA files on CD-ROMs, CD-Rs, and CD-RWs can be played.
- For details on playable CDs, refer to the Owner's Manual.

NG → **CHANGE DISC**

OK

2 CHECK THAT CD IS INSERTED PROPERLY

(a) Check whether or not the CD is inserted upside down.
OK:
CD is properly inserted.

NG → **INSERT CD PROPERLY**

OK

3 CHECK CD

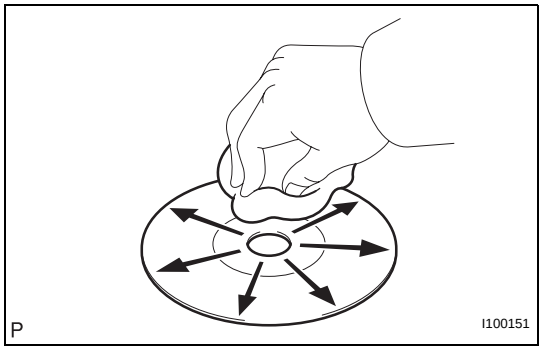

(a) Clean the disc by wiping it with a soft cloth from the inside to the outside in a radial direction.
OK:
Malfunction disappears.
NOTICE:
Do not use a conventional record cleaner or anti-static preservative.

NG → **Go to step 4**

AV

OK

END

4	**REPLACE CD WITH ANOTHER AND RECHECK**

(a) Replace the CD with a normal one and check that the malfunction disappears.
OK:
Malfunction disappears.

NG → **REPLACE RADIO RECEIVER**

OK

END

CD Sound Skips

INSPECTION PROCEDURE

1 CHECK CD

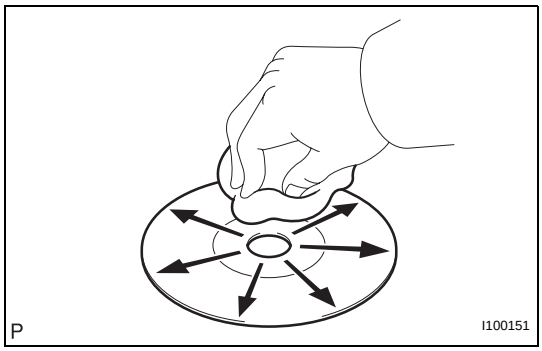

(a) Check the CD.
OK:
The CD is clean.
HINT:
If dirt is on the CD surface, wipe it clean with a soft cloth from the inside to the outside in a radial direction.
NOTICE:
Do not use a conventional record cleaner or anti-static preservative.

NG → **CLEAN CD**

OK

AV

2 CHECK CD

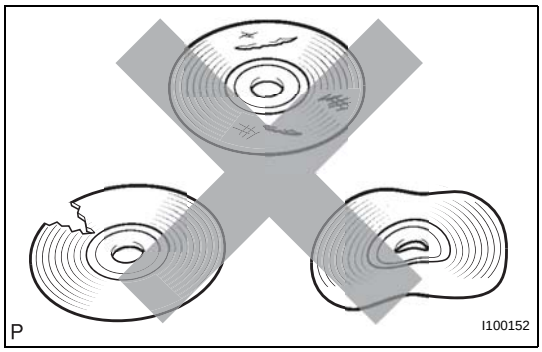

(a) Check that the CD is not deformed or cracked.
OK:
No deformation or cracks on the CD.

NG → **CHANGE DISC**

OK

3 CHECK OPERATION USING ANOTHER CD

(a) Check using another CD.
(1) Check if the problem recurs using another CD.
OK:
The problem does not occur.

OK → **END**

NG

4 CHECK RADIO RECEIVER

(a) Check the radio receiver installation condition.
(1) Check that the radio receiver is properly installed.
OK:
Radio receiver is properly installed.

NG → **REINSTALL RADIO RECEIVER PROPERLY**

OK

REPLACE RADIO RECEIVER

Radio Broadcast cannot be Received or Poor Reception

INSPECTION PROCEDURE

1 CHECK RADIO RECEIVER

(a) Check the radio's automatic station search function.
  (1) Move the vehicle to a location where radio wave reception is possible.
  (2) Check the radio's automatic station search function by activating it.
  OK:
  The radio's automatic station search function works properly.

OK → **REPLACE RADIO RECEIVER**

NG

2 INSPECT RADIO RECEIVER

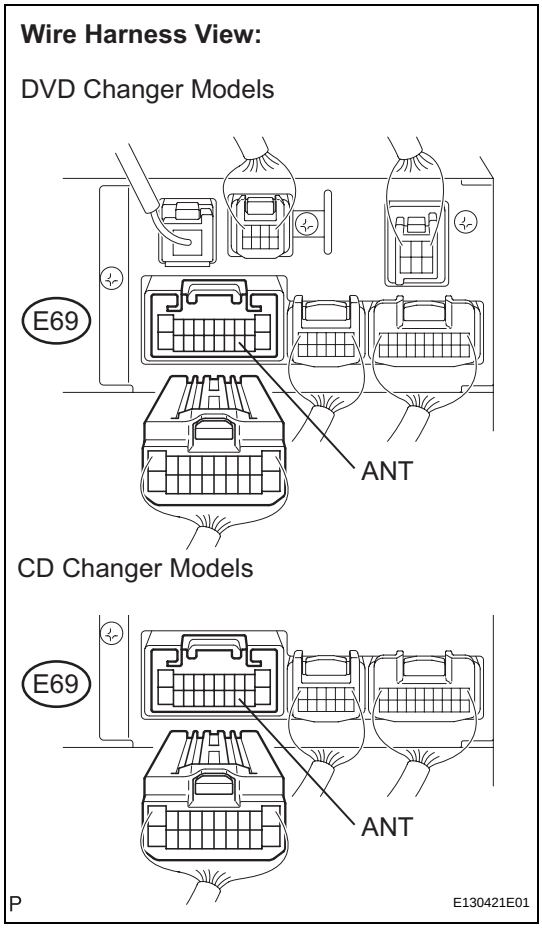

(a) Disconnect the radio receiver connector E69.
(b) Measure the voltage according to the value(s) in the table below.
Standard voltage

Tester Connection	Condition	Specified Condition
ANT - Body ground	Engine switch on (IG), Radio switch ON	10 to 14 V

NG → **REPLACE RADIO RECEIVER**

OK

3	CHECK OPTIONAL COMPONENTS

(a) Check optional components (sun-shade film, telephone antenna, etc.).
  (1) Check if any optional components, such as sun-shade film or telephone antenna that may decrease reception capacity, are installed.
  OK:
  Optional components are installed.
  NOTICE:
  Do not remove any optional components installed by the customer without his or her consent.

OK → **REMOVE OPTIONAL COMPONENTS AND CHECK AGAIN (SEE NOTICE ABOVE)**

NG

4	CHECK RADIO RECEIVER

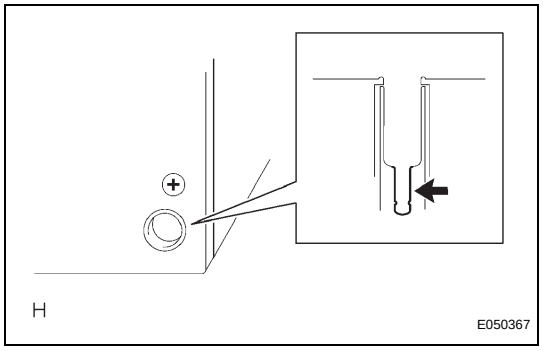

(a) Preparation for check
  (1) Remove the antenna plug from the radio receiver.
(b) Check for noise.
  (1) Turn the engine switch on (ACC) with the radio receiver connector connected.
  (2) Turn the radio on and put into AM mode.
  (3) Place a screwdriver, thin wire, or other metal object on the radio receiver's antenna jack and check that noise can be heard from the speaker.
  OK:
  Noise occurs.

NG → **REPLACE RADIO RECEIVER**

OK

AV

5	CHECK GLASS ANTENNA

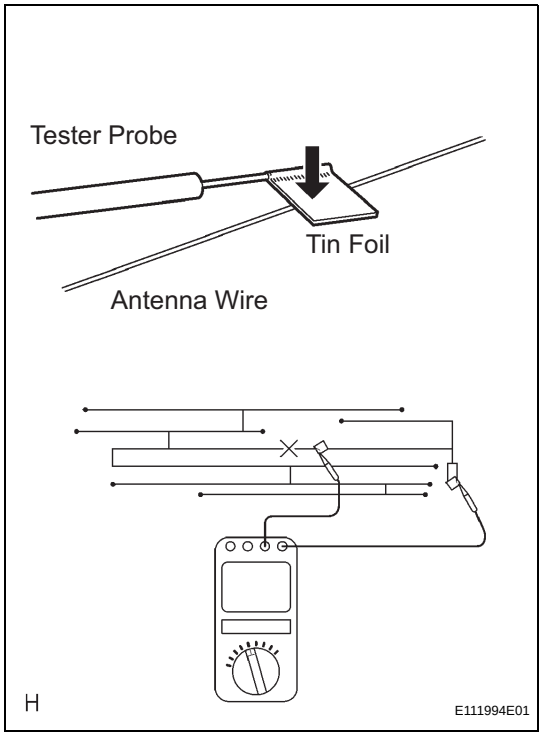

(a) Check for continuity of the antenna.
HINT:
Check for continuity at the center of each antenna wire as shown in the illustration.
NOTICE:
When cleaning the glass, wipe it in the direction of the wire with a soft dry cloth. Take care not to damage the wire. Do not use detergents or glass cleaners with abrasive ingredients. When measuring voltage, wrap a piece of tin foil around the tip of the negative probe and press the foil against the wire with your finger, as shown in the illustration.
OK:
There is continuity in the antenna.

NG → **REPAIR GLASS ANTENNA**

OK

6	CHECK ANTENNA CORD

(a) Remove the antenna plug of the radio receiver and antenna.
(b) Measure the resistance between the antenna cord's inner conductor and radio receiver to check for an open circuit in the antenna cord.
Standard resistance:
Below 1 Ω
(c) Measure the resistance between the antenna cord's inner conductor and body ground to check for a short circuit in the antenna cord.
Standard resistance:
10 kΩ or higher

NG → **REPLACE ANTENNA CORD**

OK

7	REPLACE AMPLIFIER ANTENNA

(a) Replace the amplifier antenna and check if radio broadcasts can be received normally.
OK:
Radio broadcasts can be received.

OK → **END**

NG

REPLACE RADIO RECEIVER

Sound Quality is Bad Only when Playing Tape

INSPECTION PROCEDURE

1 REPLACE CASSETTE TAPE WITH ANOTHER AND RECHECK

(a) Replace the cassette tape with another one and recheck.
  (1) Replace the cassette tape with another normal one to check if the same trouble occurs again.
  OK:
  Malfunction disappears.

OK → **CASSETTE TAPE IS FAULTY**

NG

2 CHECK FOR ANY FOREIGN OBJECT

(a) Check for foreign objects.
  (1) Check that there are no foreign objects or defects in the cassette tape player.
  OK:
  No foreign objects or defects.

NG → **REMOVE FOREIGN OBJECT**

OK

3 CLEAN HEAD AND CHECK OPERATION

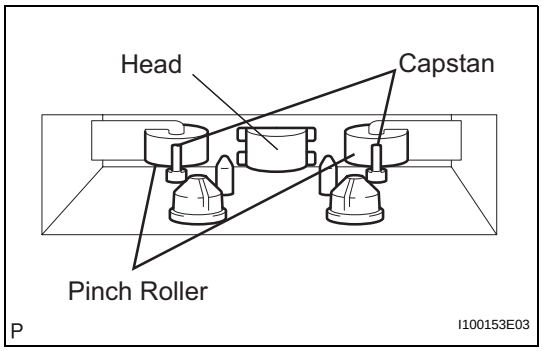

(a) Head cleaning
  (1) Raise the cassette door with your finger. Using a pencil or similar object, push in the guide.
  (2) Using a cleaning pen or cotton applicator soaked in cleaner, clean the head surface, pinch rollers and capstans.
  (3) Check if the same trouble occurs again.
  OK:
  Malfunction disappears.

NG → **REPLACE RADIO RECEIVER**

OK

HEAD IS DIRTY

Tape is Tangled due to Incorrect Tape Speed or Auto-Reverse Malfunction

INSPECTION PROCEDURE

1 CHECK FOR ANY FOREIGN OBJECT

(a) Check for any foreign objects.
(1) Check that there are no foreign objects or defects in the cassette tape player of the radio receiver.
OK:
No foreign objects or defects.

NG → **REMOVE FOREIGN OBJECT**

OK

2 REPLACE CASSETTE TAPE WITH ANOTHER (90 MIN. OR LESS) AND RECHECK

(a) Check the cassette tape player using a normal cassette tape.
(1) Replace the cassette tape with another normal one (90 minutes or less) to see if the same trouble occurs again.
OK:
Malfunction disappears.

OK → **CASSETTE TAPE IS FAULTY**

NG

3 CLEAN HEAD AND CHECK OPERATION

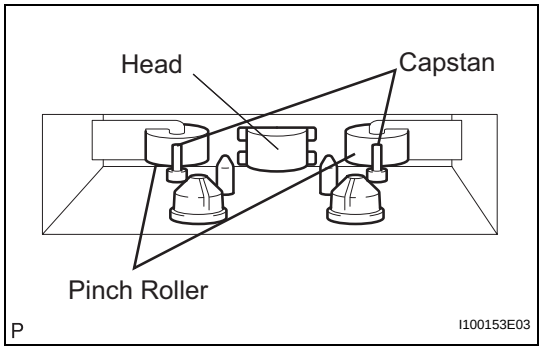

(a) Head cleaning
(1) Raise the cassette door with your finger. Using a pencil or similar object, push in the guide.
(2) Using a cleaning pen or cotton applicator soaked in cleaner, clean the head surface, pinch rollers and capstans.
(3) Check if the same trouble occurs again.
OK:
Malfunction disappears.

NG → **REPLACE RADIO RECEIVER**

OK

HEAD IS DIRTY

AV

Poor Sound Quality in All Modes (Low Volume)

INSPECTION PROCEDURE

1	CHECK AUDIO SETTINGS

(a) Set "BASS", "MID", and "TREB" to the initial values and check that sound is normal.
OK:
Malfunction disappears.

OK → **END**

NG

2	COMPARE WITH ANOTHER VEHICLE OF SAME MODEL

(a) Compare with another vehicle of the same model.
(1) Compare with another vehicle of the same model which does not have trouble to see if there is any difference in the sound quality.
OK:
No difference is found.

OK → **END**

NG

PROCEED TO NEXT CIRCUIT INSPECTION SHOWN IN PROBLEM SYMPTOMS TABLE

Cellular Phone Registration Failure, Phone Directory Transfer Failure

INSPECTION PROCEDURE

1 CHECK CURRENT CONDITIONS

(a) Proceed to the next step according to the table below.

Result

Conditions	Proceed to
Another "Bluetooth" compatible cellular phone is present.	A
Another "Bluetooth" compatible vehicle is present.	B
None of the above	C

B → **Go to step 3**

C → **Go to step 4**

A

2 CHECK USING ANOTHER CELLULAR PHONE

(a) Check if the system functions using another "Bluetooth" compatible cellular phone.
HINT:
- Confirm that either the same or a different version of another "Bluetooth" compatible cellular phone complies with the system.
- Depending on the version, some "Bluetooth" compatible cellular phones cannot be used.

OK:
The system functions.

NG → **REPLACE RADIO RECEIVER**

OK

USE A "BLUETOOTH" COMPATIBLE CELLULAR PHONE

3 CHECK USING ANOTHER "BLUETOOTH" COMPATIBLE VEHICLE

(a) Register the cellular phone with another vehicle and check if the system functions normally.
HINT:
Depending on the version, some "Bluetooth" compatible cellular phones cannot be used.

OK:
The system functions.

OK → **REPLACE RADIO RECEIVER**

NG

USE A "BLUETOOTH" COMPATIBLE CELLULAR PHONE

4	CHECK CELLULAR PHONE

(a) Check if the cellular phone is "Bluetooth" compatible.
HINT:
Some versions of "Bluetooth" compatible cellular phones may not function.
OK:
The phone is "Bluetooth" compatible.

NG → **USE A "BLUETOOTH" COMPATIBLE CELLULAR PHONE**

OK

5	CHECK CELLULAR PHONE

(a) Check if a call can be made from the cellular phone.
HINT:
When the battery is low, registration or directory transfer cannot be done.
OK:
A call can be made from the cellular phone.

NG → **REPAIR OR REPLACE CELLULAR PHONE**

OK

REPLACE RADIO RECEIVER

Cellular Phone cannot Send / Receive

INSPECTION PROCEDURE

1	CHECK "BLUETOOTH" SETTINGS

(a) Check if the "Bluetooth" settings are correct.
OK:
"Bluetooth" settings are correct.

NG → **SET SETTINGS CORRECTLY**

OK ↓

2	CHECK CELLULAR PHONE

(a) Check if the cellular phone is "Bluetooth" compatible.
HINT:
Some versions of "Bluetooth" compatible cellular phones may not function.
OK:
Phone is "Bluetooth" compatible.

NG → **END (ONLY A "BLUETOOTH" COMPATIBLE CELLULAR PHONE CAN BE USED)**

OK ↓

3	CHECK SETTINGS

(a) Check if the cellular phone functions.
HINT:
The cellular phone is unable to call under any of the following conditions.
- The cellular phone is locked.
- The directory is being transferred.
- The line is crossed.
- Transmission is regulated.
- The power is off.
- The cellular phone is not connected to "Bluetooth" ("BT" is displayed while connected).

OK:
None of the above conditions exist.

NG → **SET CORRECTLY**

OK ↓

4	CHECK CELLULAR PHONE

(a) Check if the cellular phone can make a call.

AV

HINT:
When the battery is low, calls cannot be made or received.
OK:
Cellular phone can make a call.

NG → **REPAIR OR REPLACE CELLULAR PHONE**

OK

5	CHECK RECEPTION

(a) Set the cellular phone so that it can receive calls.
(b) Place the cellular phone close to the radio receiver.
(c) Check if the cellular phone has reception according to the radio receiver.
OK:
Cellular phone has reception.

NG → **REPLACE RADIO RECEIVER**

OK

PROCEED TO NEXT CIRCUIT INSPECTION SHOWN IN PROBLEM SYMPTOMS TABLE

The Other Caller's Voice cannot be Heard, is too Quiet, or Distorted

INSPECTION PROCEDURE

1 CHECK CELLULAR PHONE

(a) Check if the voice on the other side can be heard using a cellular phone.
OK:
Voice can be heard.

NG → **REPAIR OR REPLACE CELLULAR PHONE**

OK ↓

2 CHECK AUDIO AND VISUAL SYSTEM

(a) Check that audio sound can be heard from the driver side speaker.
OK:
Audio sound can be heard.
HINT:
If audio sound cannot be heard, proceed to "No sound can be heard from speakers. (Audio is mute.)" in the PROBLEM SYMPTOMS TABLE (See page AV-14).

NG → **PROCEED TO NEXT CIRCUIT INSPECTION SHOWN IN PROBLEM SYMPTOMS TABLE**

OK ↓

3 CHECK SETTINGS

(a) Check that the received voice level setting on the cellular phone is not too low.
OK:
The received voice level setting is not too low.

NG → **SET VOLUME TO HIGH**

OK ↓

PROCEED TO NEXT CIRCUIT INSPECTION SHOWN IN PROBLEM SYMPTOMS TABLE

The Other Caller cannot Hear Your Voice, or Your Voice is too Quiet or Distorted

INSPECTION PROCEDURE

1	CHECK CELLULAR PHONE

(a) Check if the other side can hear your voice properly.
OK:
Your voice can be heard correctly.

NG → **REPLACE CELLULAR PHONE**

OK ↓

2	CHECK SETTINGS

(a) Check if the mute is set to ON.
OK:
Mute is not set to ON.

NG → **TURN MUTE OFF**

OK ↓

PROCEED TO NEXT CIRCUIT INSPECTION SHOWN IN PROBLEM SYMPTOMS TABLE

Steering Pad Switch Circuit

DESCRIPTION

This circuit sends an operation signal from the steering pad switch to the radio receiver.
If there is an open in the circuit, the audio system cannot be operated using the steering pad switch.
If there is a short in the circuit, the same condition as that when the switch is continuously depressed occurs.
Therefore, the radio receiver cannot be operated using the steering pad switch, and also the radio receiver itself cannot function.

WIRING DIAGRAM

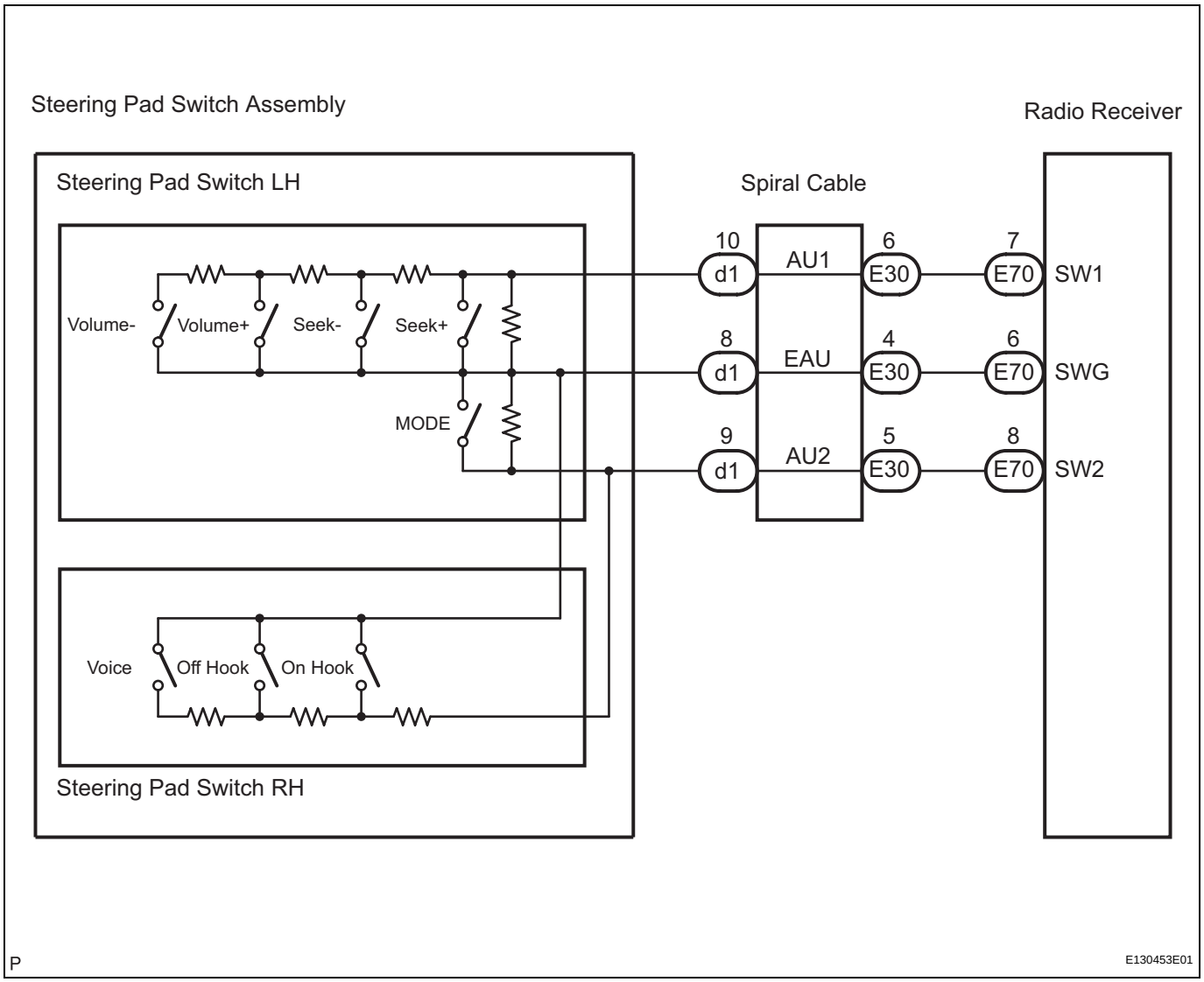

INSPECTION PROCEDURE

NOTICE:

The vehicle is equipped with an SRS (Supplemental Restraint System) which includes components such as airbags. Before servicing (including removal or installation of parts), be sure to read the precautionary notice for the Supplemental Restraint System (See page RS-1).

AV

1 INSPECT RADIO RECEIVER

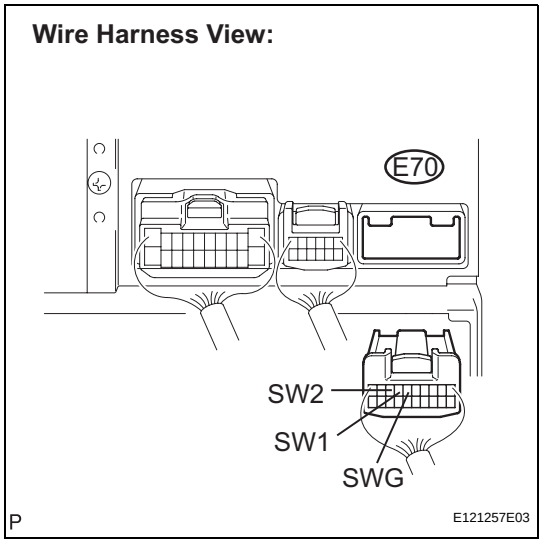

(a) Disconnect the radio receiver connector E70.
(b) Measure the resistance according to the value(s) in the table below.

Standard resistance

Tester Connection	Condition	Specified Condition
SW1 - SWG	No switch is pushed	Approx. 100 kΩ
SW1 - SWG	SEEK+ switch: push	0 to 2.5 Ω
SW1 - SWG	SEEK- switch: push	Approx. 0.3 kΩ
SW1 - SWG	VOL+ switch: push	Approx. 1 kΩ
SW1 - SWG	VOL- switch: push	Approx. 3.1 kΩ
SW2 - SWG	No switch is pushed	Approx. 100 kΩ
SW2 - SWG	MODE switch: push	0 to 2.5 Ω
SW2 - SWG	ON HOOK switch: push	Approx. 0.3 kΩ
SW2 - SWG	OFF HOOK switch: push	Approx. 1 kΩ

NG → **Go to step 2**

AV

OK

PROCEED TO NEXT CIRCUIT INSPECTION SHOWN IN PROBLEM SYMPTOMS TABLE

2 INSPECT STEERING PAD SWITCH ASSEMBLY

(a) Disconnect the steering pad switch assembly connector d1.

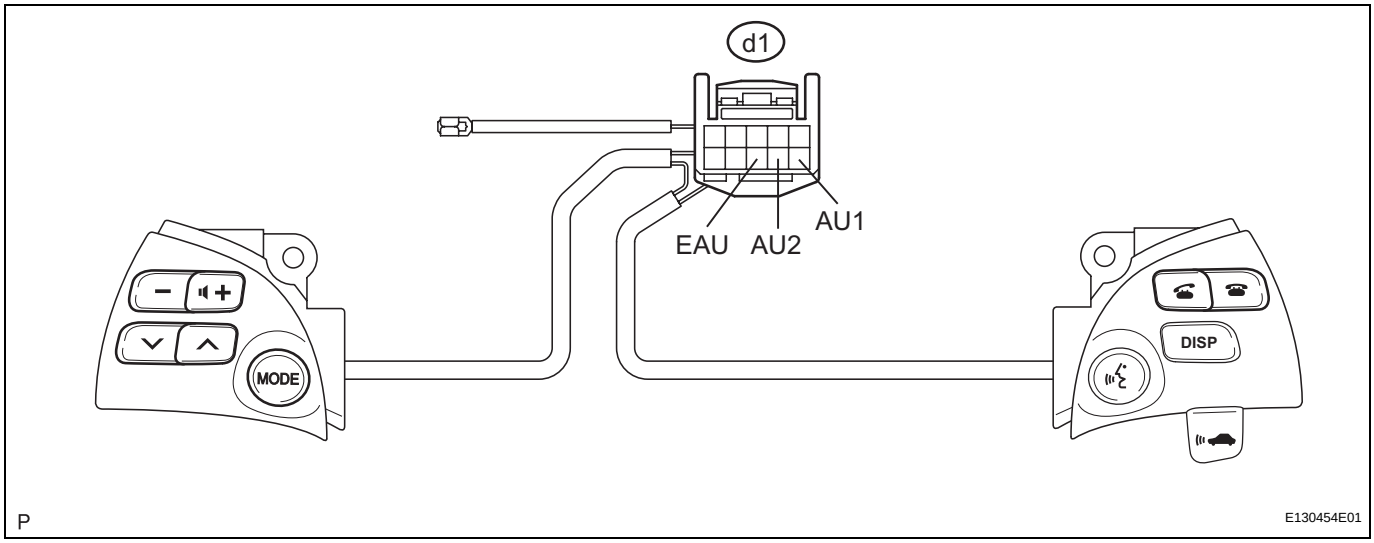

(b) Measure the resistance according to the values in the table below.

Standard resistance

Tester Connection	Condition	Specified Condition
AU1 - EAU	No switch is pushed	Approx. 100 kΩ
AU1 - EAU	SEEK+ switch: push	0 to 2.5 Ω

Tester Connection	Condition	Specified Condition
AU1 - EAU	SEEK- switch: push	Approx. 0.3 kΩ
AU1 - EAU	VOL+ switch: push	Approx. 1 kΩ
AU1 - EAU	VOL- switch: push	Approx. 3.1 kΩ
AU2 - EAU	No switch is pushed	Approx. 100 kΩ
AU2 - EAU	MODE switch: push	0 to 2.5 Ω
AU2 - EAU	ON HOOK switch: push	Approx. 0.3 kΩ
AU2 - EAU	OFF HOOK switch: push	Approx. 1 kΩ

NG → **REPLACE STEERING PAD SWITCH ASSEMBLY**

OK

3 INSPECT SPIRAL CABLE

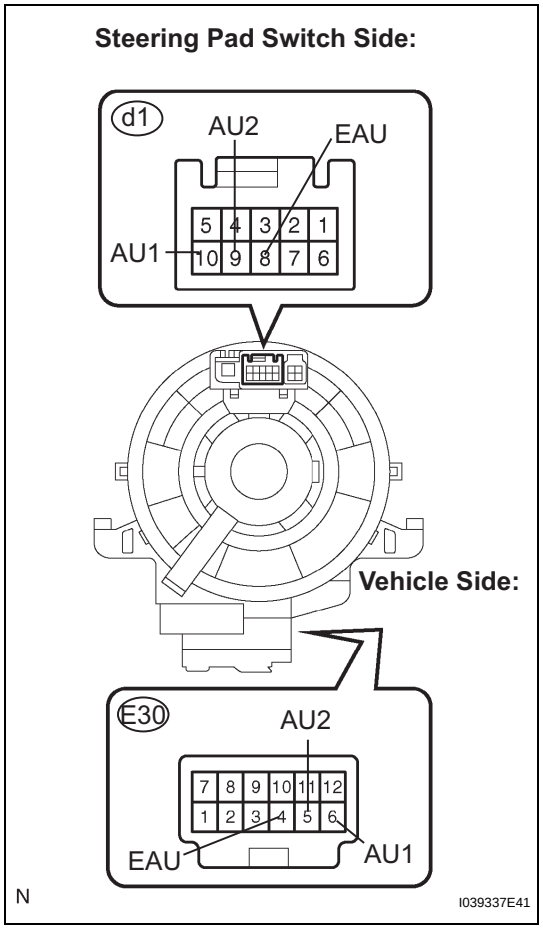

(a) Disconnect the steering pad switch assembly and spiral cable connectors.

(b) Measure the resistance according to the value(s) in the table below.

Standard resistance

Tester Connection	Spiral Cable Position	Specified Condition
EAU - EAU	Center	Below 1 Ω
	2.5 rotations to the left	
	2.5 rotations to the right	
AU1 - AU1	Center	Below 1 Ω
	2.5 rotations to the left	
	2.5 rotations to the right	
AU2 - AU2	Center	Below 1 Ω
	2.5 rotations to the left	
	2.5 rotations to the right	

NOTICE:
The spiral cable is an important part of the SRS airbag system. Incorrect removal or installation of the spiral cable may prevent the airbag from deploying. Be sure to read the page shown in the brackets.

HINT:
- Removal (See page RS-379)
- Installation (See page RS-382)

NG → **REPLACE SPIRAL CABLE**

OK

REPAIR OR REPLACE HARNESS OR CONNECTOR (SPIRAL CABLE - RADIO RECEIVER)

AV

Illumination Circuit

DESCRIPTION

Power is supplied to the radio receiver and steering pad switch assembly illumination when the light control switch is in the TAIL or HEAD position.

WIRING DIAGRAM

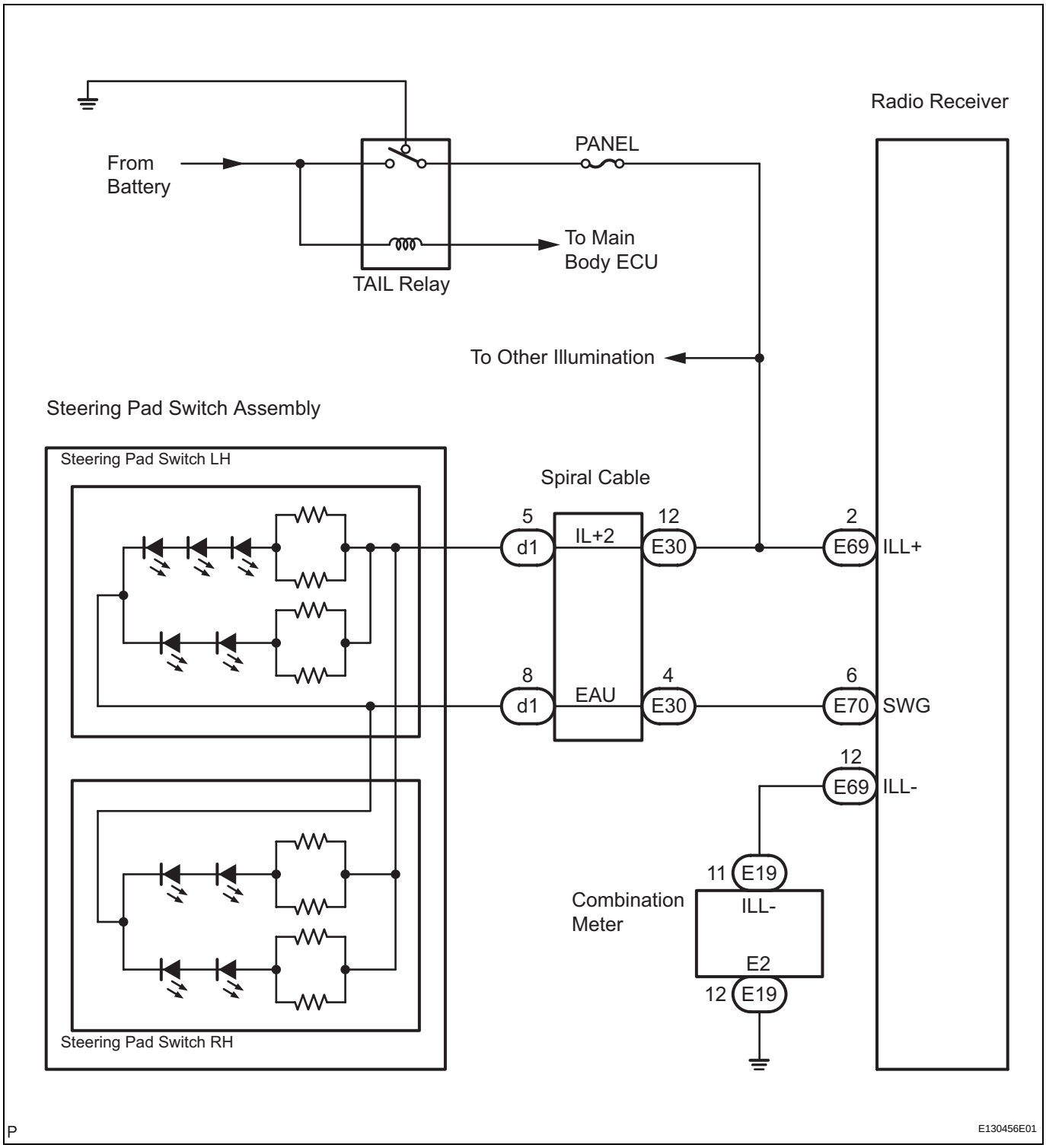

AV

INSPECTION PROCEDURE

NOTICE:

The vehicle is equipped with an SRS (Supplemental Restraint System) which includes components such as airbags. Before servicing (including removal or installation of parts), be sure to read the precautionary notice for the supplemental restraint system (See page RS-1).

1 CHECK ILLUMINATION

(a) Check if the illumination for the radio receiver, steering pad switch, cigarette lighter or others (seat heater switch, hazard switch, etc.) comes on when the light control switch is turned to the HEAD or TAIL position.

Result

Result	Proceed to
Illumination comes on for all components except steering pad switch.	A
Illumination comes on for all components except radio receiver.	B
No illumination comes on (radio receiver, hazard switch, cigarette lighter, etc.).	C
Illumination comes on only for glove box light and steering pad switch.	D

B → **Go to step 6**

C → **GO TO LIGHTING SYSTEM (See page LI-28)**

D → **GO TO METER / GAUGE SYSTEM (See page ME-14)**

A

2 CHECK HARNESS AND CONNECTOR (BATTERY - SPIRAL CABLE)

Spiral Cable Connector Front View:

(a) Disconnect the spiral cable connector.

(b) Measure the voltage according to the value(s) in the table below.

Standard voltage

Tester Connection	Condition	Specified Condition
IL+2 - Body ground	Light control switch TAIL or HEAD	10 to 14 V

NG → **REPAIR OR REPLACE HARNESS OR CONNECTOR**

OK

3 INSPECT STEERING PAD SWITCH ASSEMBLY

(a) Disconnect the steering pad switch assembly connector.

(b) Connect the positive (+) lead to terminal IL+2 and the negative (-) lead to terminal EAU of the steering pad switch assembly connector.

AV

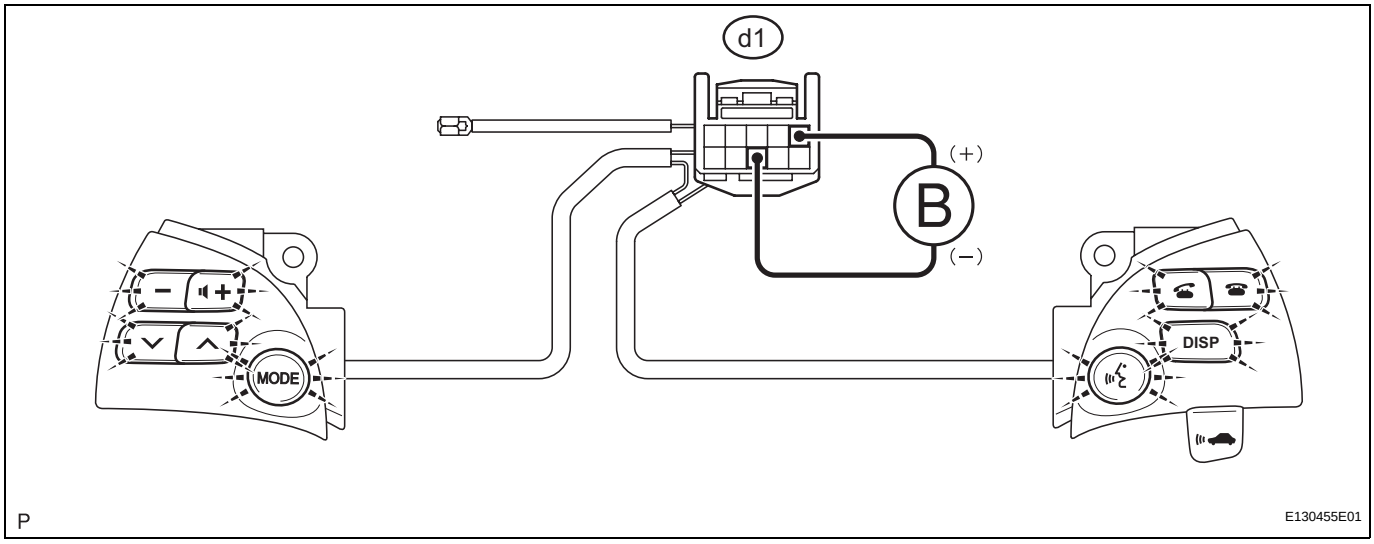

(c) Check if the illumination for the steering pad switch assembly comes on.

OK:

Illumination for the steering pad switch assembly comes on.

NG → **REPLACE STEERING PAD SWITCH ASSEMBLY**

OK

4 INSPECT SPIRAL CABLE

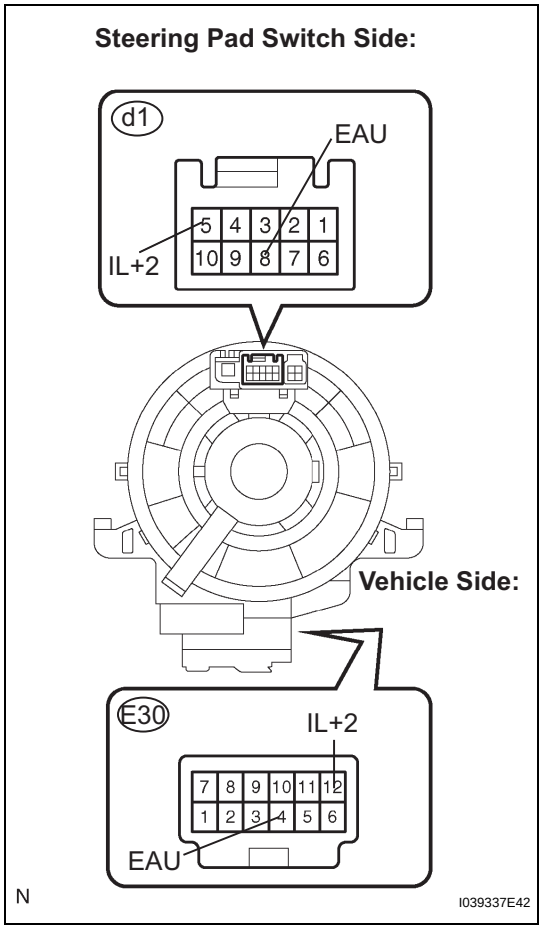

(a) Disconnect the steering pad switch assembly and spiral cable connectors.

(b) Measure the resistance according to the value(s) in the table below.

Standard resistance

Tester Connection	Spiral Cable Position	Specified Condition
EAU - EAU	Center	Below 1 Ω
	2.5 rotations to the left	
	2.5 rotations to the right	
IL+2 - IL+2	Center	Below 1 Ω
	2.5 rotations to the left	
	2.5 rotations to the right	

NOTICE:
The spiral cable is an important part of the SRS airbag system. Incorrect removal or installation of the spiral cable may prevent the airbag from deploying. Be sure to read the page shown in the brackets.

HINT:
- Removal (See page RS-379)
- Installation (See page RS-382)

NG → **REPLACE SPIRAL CABLE**

OK

AV

5	CHECK HARNESS AND CONNECTOR (SPIRAL CABLE - RADIO RECEIVER)

Radio Receiver Wire Harness View:

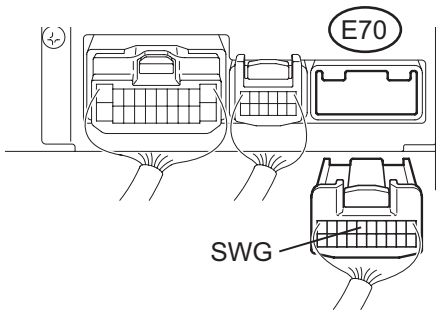

Spiral Cable Connector Front View:

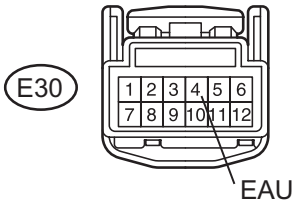

P E130422E01

(a) Disconnect the connectors from the radio receiver and spiral cable.

(b) Measure the resistance according to the value(s) in the table below.

Standard resistance

Tester Connection	Condition	Specified Condition
SWG - EAU	Always	Below 1 Ω
SWG - Body ground	Always	10 kΩ or higher

NG → **REPAIR OR REPLACE HARNESS OR CONNECTOR**

OK

REPLACE RADIO RECEIVER

AV

6 CHECK HARNESS AND CONNECTOR (BATTERY - RADIO RECEIVER)

Wire Harness View:

DVD Changer Models

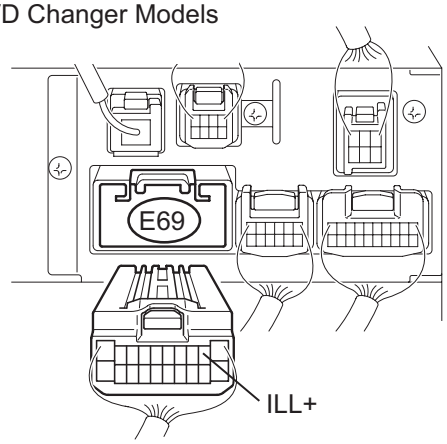

CD Changer Models

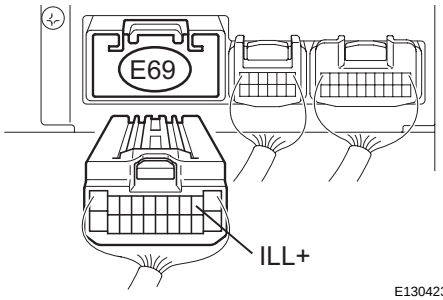

P E130423E01

(a) Disconnect the radio receiver connector E69.

(b) Measure the voltage according to the value(s) in the table below.

Standard voltage

Tester Connection	Condition	Specified Condition
ILL+ - Body ground	Light control switch TAIL or HEAD	10 to 14 V

NG → **REPAIR OR REPLACE HARNESS OR CONNECTOR**

OK

AV

7	CHECK HARNESS AND CONNECTOR (RADIO RECEIVER - COMBINATION METER)

Wire Harness View:

Radio Receiver (DVD Changer Models)

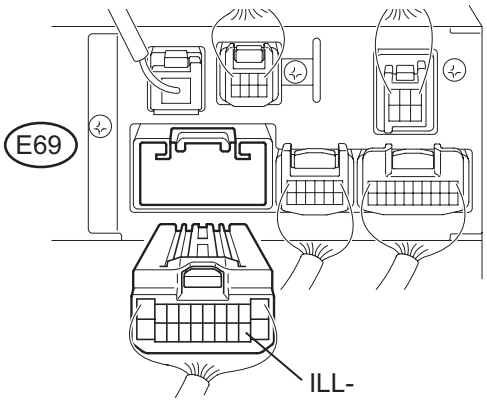

Radio Receiver (CD Changer Models)

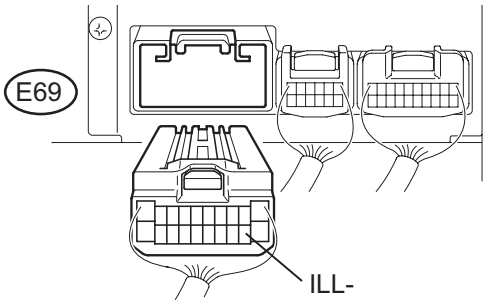

Combination Meter

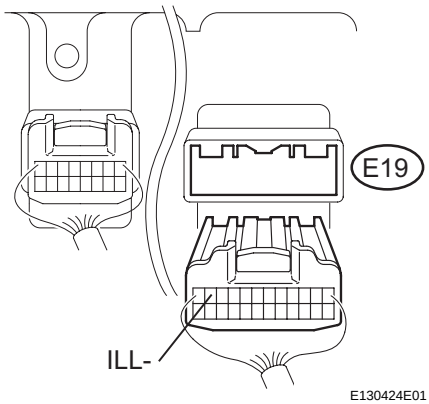

P E130424E01

(a) Disconnect the radio receiver connector and combination meter connector.

(b) Measure the resistance according to the value(s) in the table below.

Standard resistance

Tester Connection	Condition	Specified Condition
ILL- - ILL-	Always	Below 1 Ω
ILL- - Body ground	Always	10 kΩ or higher

NG → **REPAIR OR REPLACE HARNESS OR CONNECTOR**

OK

REPLACE RADIO RECEIVER

AV

Speaker Circuit

DESCRIPTION

The sound signal that has been amplified by the stereo component amplifier is sent to the speakers from the stereo component amplifier through this circuit.
If there is a short in this circuit, the stereo component amplifier detects it and stops output to the speakers. Thus, sound cannot be heard from the speakers even if there is no malfunction in the stereo component amplifier or speakers.

WIRING DIAGRAM

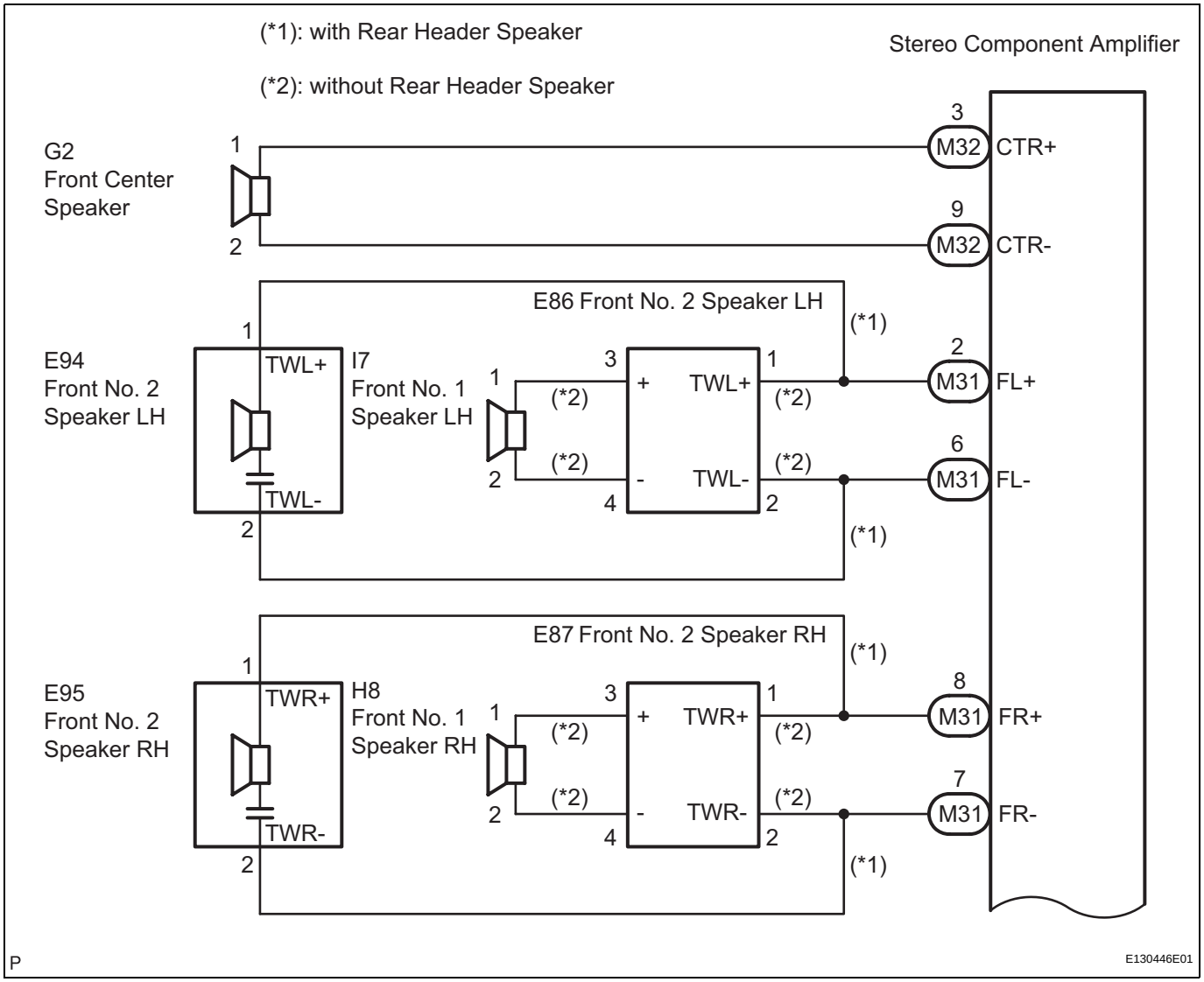

AV

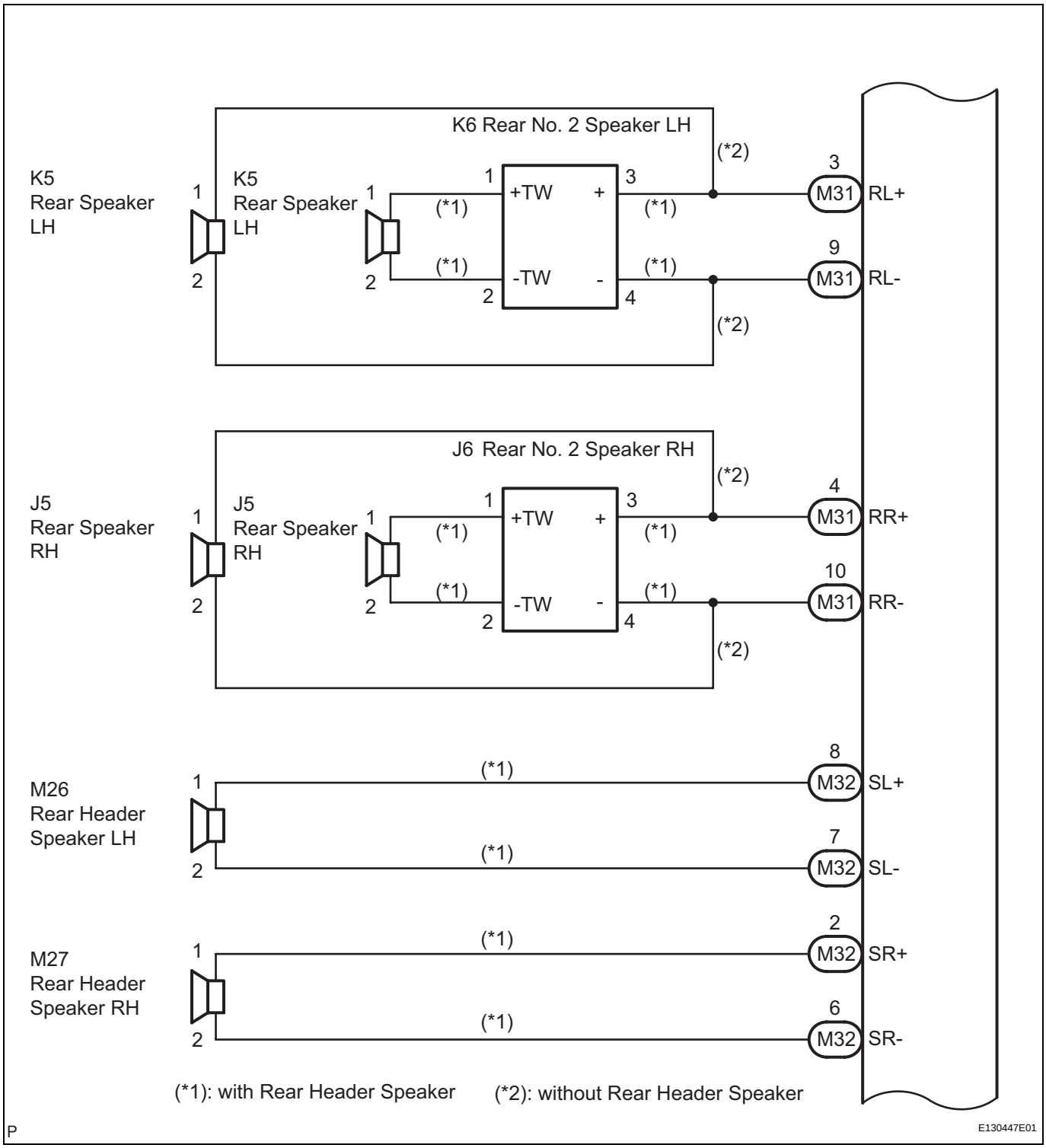
K6 Rear No. 2 Speaker LH
K5
Rear Speaker
LH
K5
Rear Speaker
LH
+TW
-TW
(*1)
(*2)
M31
RL+
RL-
J6 Rear No. 2 Speaker RH
J5
Rear Speaker
RH
J5
Rear Speaker
RH
RR+
RR-
M26
Rear Header
Speaker LH
M27
Rear Header
Speaker RH
M32
SL+
SL-
SR+
SR-
(*1): with Rear Header Speaker
(*2): without Rear Header Speaker
P
E130447E01

AV

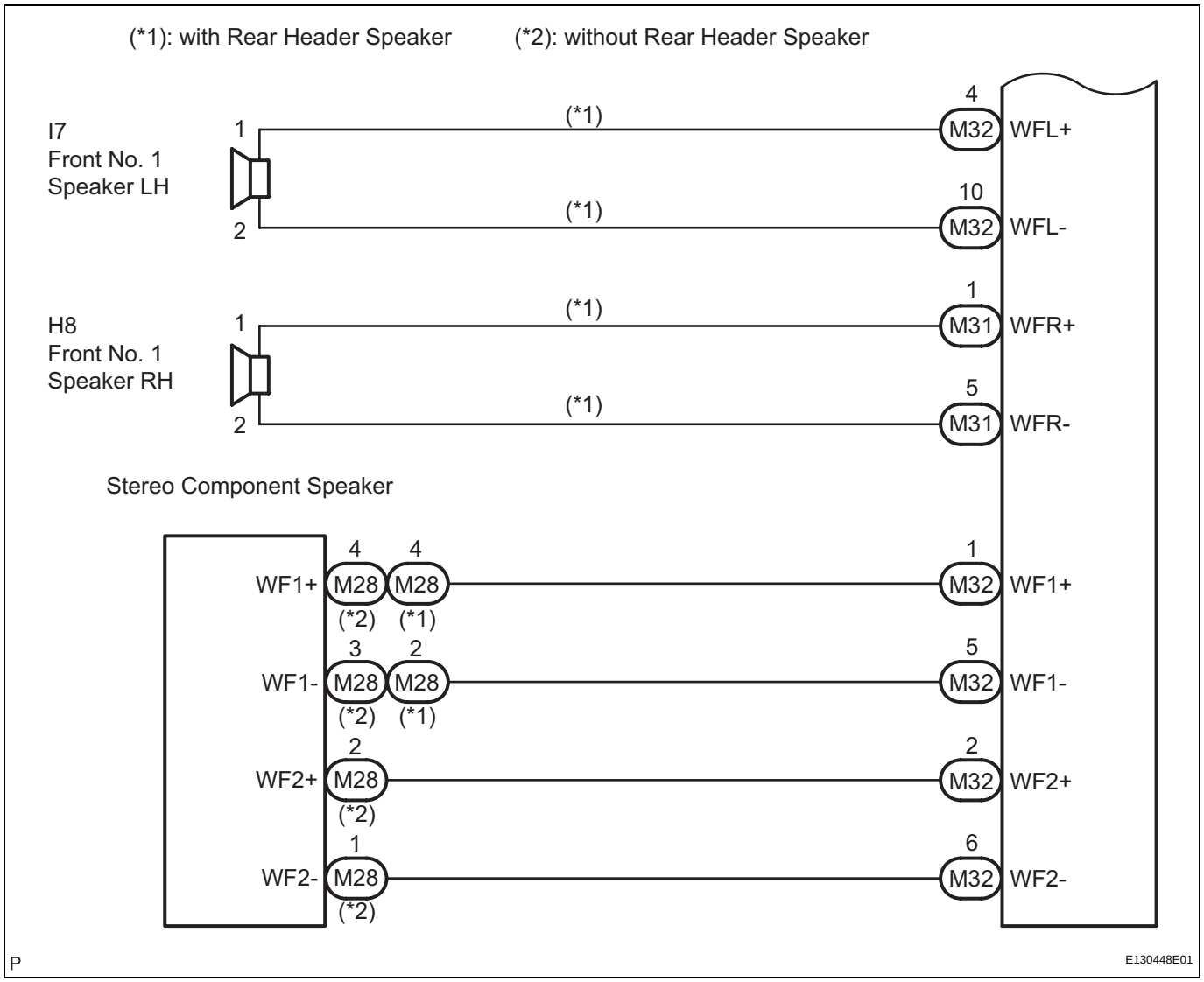
(*1): with Rear Header Speaker
(*2): without Rear Header Speaker
I7
Front No. 1
Speaker LH
1
2
(*1)
(*1)
4
M32
WFL+
10
M32
WFL-
H8
Front No. 1
Speaker RH
1
2
(*1)
(*1)
1
M31
WFR+
5
M31
WFR-
Stereo Component Speaker
WF1+
WF1-
WF2+
WF2-
4
4
3
2
2
1
M28
(*2)
(*1)
1
5
2
6
M32
WF1+
WF1-
WF2+
WF2-
P
E130448E01

AV

INSPECTION PROCEDURE

1	CHECK HARNESS AND CONNECTOR

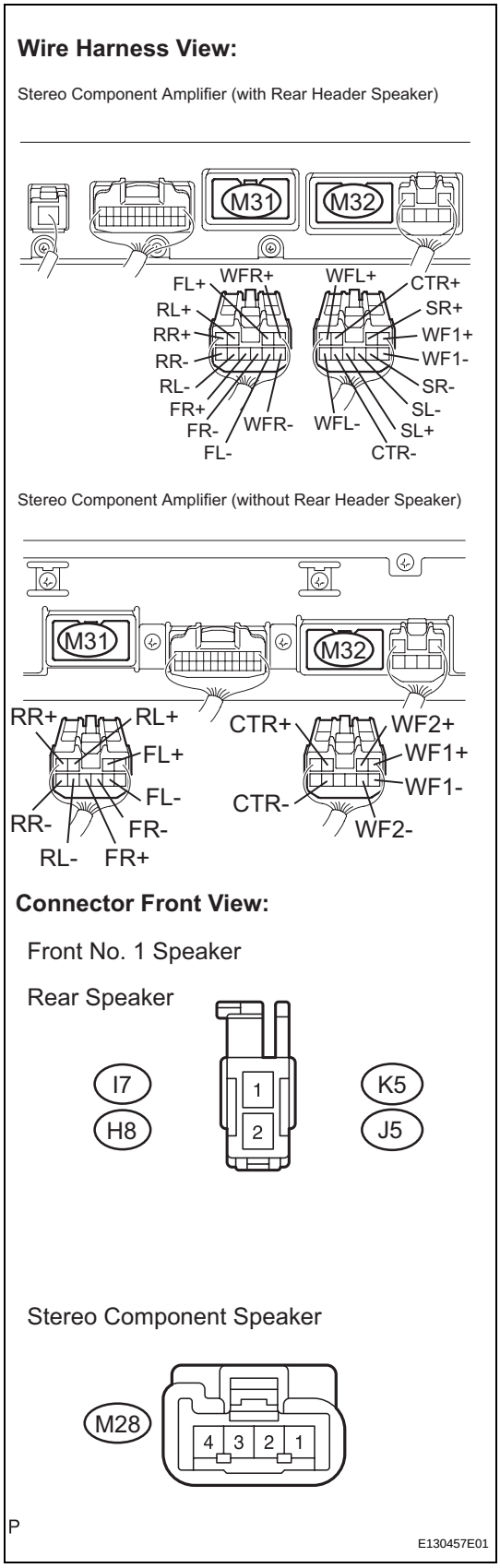

(a) Disconnect the connectors shown in the illustration from the stereo component amplifier and speakers.

(b) Measure the resistance between the front center speaker and the stereo component amplifier to check for an open circuit in the wire harness.
Standard resistance:
Below 1 Ω

(c) Measure the resistance between the front No. 2 speakers and stereo component amplifier to check for an open circuit in the wire harness.
Standard resistance:
Below 1 Ω

(d) without Rear Header Speaker:
Measure the resistance between the front No. 2 speakers and front No. 1 speakers to check for an open circuit in the wire harness.
Standard resistance:
Below 1 Ω

(e) without Rear Header Speaker:
Measure the resistance between the rear speakers and stereo component amplifier to check for an open circuit in the wire harness.
Standard resistance:
Below 1 Ω

(f) with Rear Header Speaker:
Measure the resistance between the rear No. 2 speakers and stereo component amplifier to check for an open circuit in the wire harness.
Standard resistance:
Below 1 Ω

AV

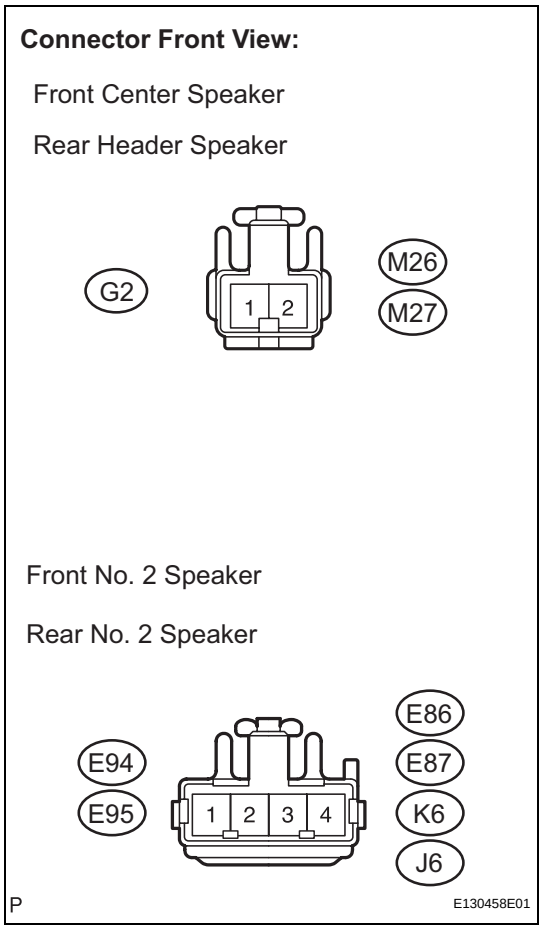

(g) with Rear Header Speaker:
Measure the resistance between the rear No. 2 speakers and rear speakers to check for an open circuit in the wire harness.
Standard resistance:
Below 1 Ω

(h) with Rear Header Speaker:
Measure the resistance between the rear header speakers and stereo component amplifier to check for an open circuit in the wire harness.
Standard resistance:
Below 1 Ω

(i) with Rear Header Speaker:
Measure the resistance between the front No. 1 speakers and stereo component amplifier to check for an open circuit in the wire harness.
Standard resistance:
Below 1 Ω

(j) Measure the resistance between the stereo component speaker and stereo component amplifier to check for an open circuit in the wire harness.
Standard resistance:
Below 1 Ω

NG → **REPAIR OR REPLACE HARNESS OR CONNECTOR**

OK

2 CONFIRM MODEL

Result

Result	Proceed to
with Rear Header Speaker	A
without Rear Header Speaker	B

B → **Go to step 10**

A

3 INSPECT FRONT CENTER SPEAKER

(a) Resistance check.
(1) Measure the resistance between the terminals of the speaker.
Standard resistance:
Approximately 8 Ω

NG → **REPLACE FRONT CENTER SPEAKER**

OK

AV

4	**INSPECT FRONT NO. 1 SPEAKER**

(a) Resistance check.
(1) Measure the resistance between the terminals of the speaker.
Standard resistance:
Approximately 8 Ω

NG → **REPLACE FRONT NO. 1 SPEAKER**

OK

5	**INSPECT FRONT NO. 2 SPEAKER**

(a) Check that the malfunction disappears when another speaker in good condition is installed.
OK:
Malfunction disappears.
HINT:
- Connect all the connectors to the front No. 2 speaker.
- When there is a possibility that either the right or left front speaker is detective, inspect by interchanging the right one with the left one.
- Perform the above inspection on both LH and RH sides.

NG → **REPLACE FRONT NO. 2 SPEAKER**

OK

6	**INSPECT REAR SPEAKER**

(a) Resistance check.
(1) Measure the resistance between the terminals of the speaker.
Standard resistance:
Approximately 8 Ω

NG → **REPLACE REAR SPEAKER**

OK

7	**INSPECT REAR NO. 2 SPEAKER**

(a) Check that the malfunction disappears when another speaker in good condition is installed.
OK:
Malfunction disappears.
HINT:
- Connect all the connectors to the rear No. 2 speaker.

- When there is a possibility that either the right or left rear speaker is detective, inspect by interchanging the right one with the left one.
- Perform the above inspection on both LH and RH sides.

NG → **REPLACE REAR NO. 2 SPEAKER**

OK

8 INSPECT REAR HEADER SPEAKER

(a) Resistance check.
(1) Measure the resistance between the terminals of the speaker.
Standard resistance:
Approximately 8 Ω

NG → **REPLACE REAR HEADER SPEAKER**

OK

9 INSPECT STEREO COMPONENT SPEAKER

Connector Front View:

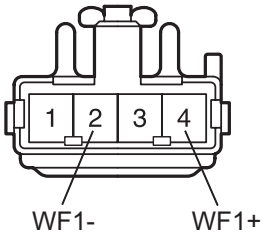

(a) Resistance check.
(1) Measure the resistance between the terminals of the speaker.
Standard resistance

Tester Connection	Condition	Specified Condition
WF1+ - WF1-	Always	Approximately 8 Ω

NG → **REPLACE STEREO COMPONENT SPEAKER**

OK

PROCEED TO NEXT CIRCUIT INSPECTION SHOWN IN PROBLEM SYMPTOMS TABLE

10 INSPECT FRONT CENTER SPEAKER

(a) Resistance check.
(1) Measure the resistance between the terminals of the speaker.
Standard resistance:
Approximately 10 Ω

NG → **REPLACE FRONT CENTER SPEAKER**

OK

11	INSPECT FRONT NO. 1 SPEAKER

(a) Resistance check.
(1) Measure the resistance between the terminals of the speaker.
Standard resistance:
Approximately 4 Ω

NG → **REPLACE FRONT NO. 1 SPEAKER**

OK

12	INSPECT FRONT NO. 2 SPEAKER

(a) Check that the malfunction disappears when another speaker in good condition is installed.
Standard:
Malfunction disappears.
HINT:
- Connect all the connectors to the front No. 2 speaker.
- When there is a possibility that either the right or left front speaker is detective, inspect by interchanging the right one with the left one.
- Perform the above inspection on both LH and RH sides.

NG → **REPLACE FRONT NO. 2 SPEAKER**

OK

13	INSPECT REAR SPEAKER

(a) Resistance check.
(1) Measure the resistance between the terminals of the speaker.
Standard resistance:
Approximately 4 Ω

NG → **REPLACE REAR SPEAKER**

OK

14 INSPECT STEREO COMPONENT SPEAKER

Connector Front View:

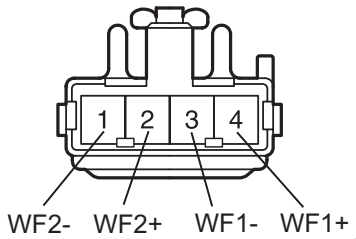

(a) Resistance check.
(1) Measure the resistance between the terminals of the speaker.
Standard resistance

Tester Connection	Condition	Specified Condition
WF1+ - WF1-	Always	Approximately 2.5 Ω
WF2+ - WF2-	Always	Approximately 2.5 Ω

NG → **REPLACE STEREO COMPONENT SPEAKER**

OK

PROCEED TO NEXT CIRCUIT INSPECTION SHOWN IN PROBLEM SYMPTOMS TABLE

AV

Sound Signal Circuit between Radio Receiver and Stereo Component Amplifier

DESCRIPTION

The radio receiver sends a sound signal to the stereo component amplifier through this circuit.
The sound signal that has been sent is amplified by the stereo component amplifier, and then is sent to the speakers.
If there is an open or short in the circuit, sound cannot be heard from the speakers even if there is no malfunction in the stereo component amplifier or speakers.

WIRING DIAGRAM

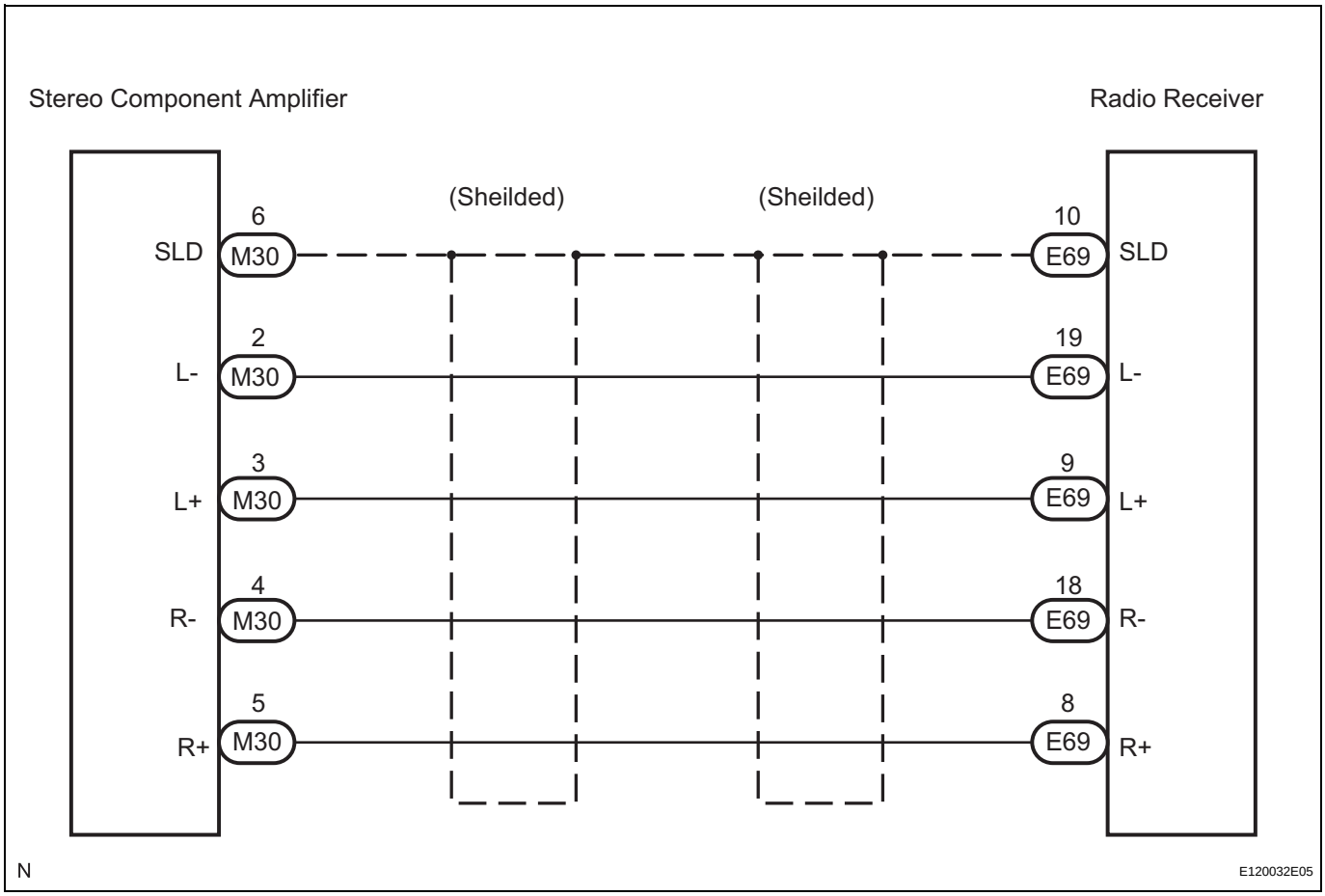

AV

INSPECTION PROCEDURE

1	**CHECK HARNESS AND CONNECTOR (RADIO RECEIVER - STEREO COMPONENT AMPLIFIER)**

Wire Harness View:

Radio Receiver (DVD Changer Models)

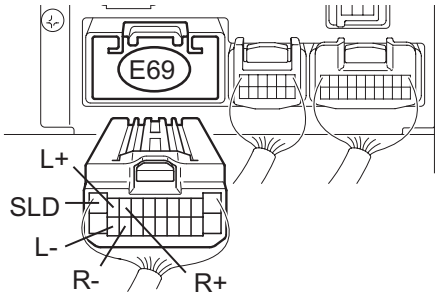

Radio Receiver (CD Changer Models)

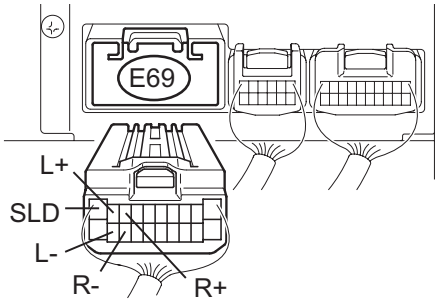

Stereo Component Amplifier
(with Rear Header Speaker)

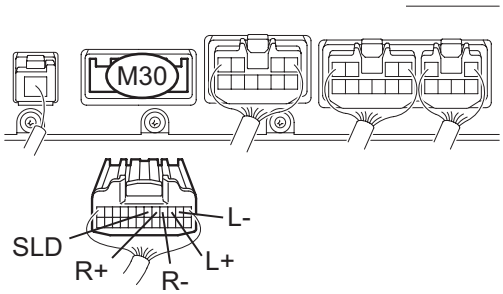

Stereo Component Amplifier
(without Rear Header Speaker)

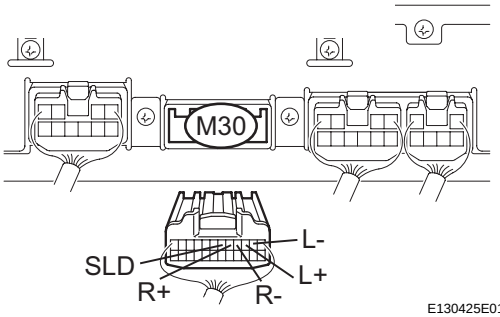

P E130425E01

(a) Disconnect the connectors from the radio receiver and stereo component amplifier.

(b) Measure the resistance according to the value(s) in the table below.

Standard resistance

Tester Connection	Condition	Specified Condition
L+ - L+	Always	Below 1 Ω
L- - L-	Always	Below 1 Ω
R+ - R+	Always	Below 1 Ω
R- - R-	Always	Below 1 Ω
SLD - SLD	Always	Below 1 Ω
L+ - Body ground	Always	10 kΩ or higher
L- - Body ground	Always	10 kΩ or higher
R+ - Body ground	Always	10 kΩ or higher
R- - Body ground	Always	10 kΩ or higher
SLD - Body ground	Always	10 kΩ or higher

AV

NG → **REPAIR OR REPLACE HARNESS OR CONNECTOR**

OK

PROCEED TO NEXT CIRCUIT INSPECTION SHOWN IN PROBLEM SYMPTOMS TABLE

Sound Signal Circuit between Radio Receiver and Stereo Jack Adapter

DESCRIPTION

The stereo jack adapter (audio terminal) sends an external device sound signal to the radio receiver through this circuit.
The sound signal that has been sent is amplified by the stereo component amplifier, and then is sent to the speakers.
If there is an open or short in the circuit, sound cannot be heard from the speakers even if there is no malfunction in the stereo component amplifier, radio receiver, or speakers.

WIRING DIAGRAM

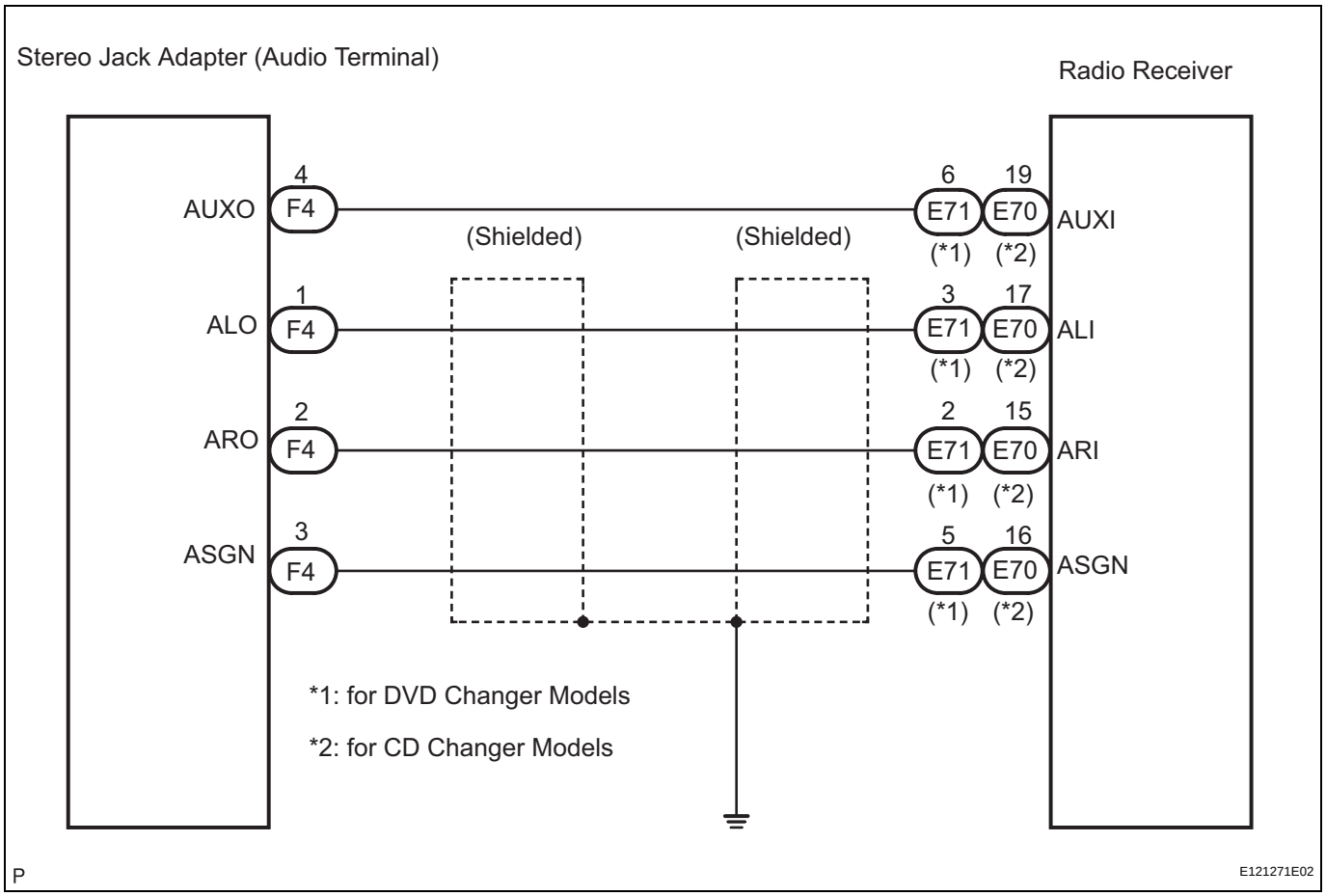

AV

INSPECTION PROCEDURE

1	**CHECK HARNESS AND CONNECTOR (RADIO RECEIVER - STEREO JACK ADAPTER (AUDIO TERMINAL))**

Wire Harness View:

Radio Receiver (CD Changer Models)

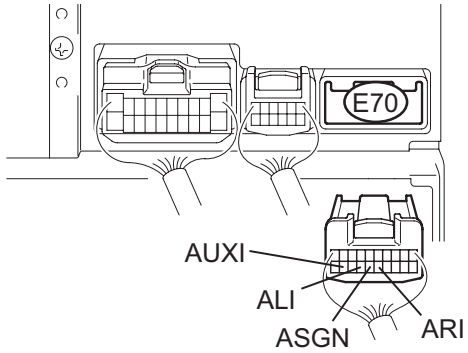

Radio Receiver (DVD Changer Models)

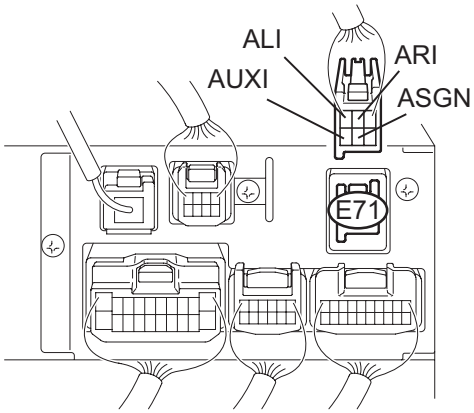

Connector Front View:

Stereo Jack Adapter (Audio Terminal)

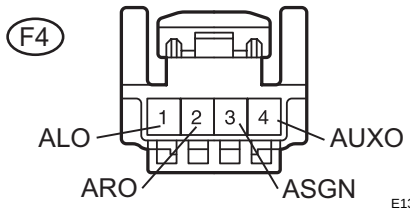

P E130459E01

(a) Disconnect the connectors from the stereo jack adapter (audio terminal) and radio receiver.

(b) Measure the resistance according to the value(s) in the table below.

Standard resistance

Tester Connection	Condition	Specified Condition
AUXO - AUXI	Always	Below 1 Ω
ASGN - ASGN	Always	Below 1 Ω
ARO - ARI	Always	Below 1 Ω
ALO - ALI	Always	Below 1 Ω
AUXO - Body ground	Always	10 kΩ or higher
ARO - Body ground	Always	10 kΩ or higher
ALO - Body ground	Always	10 kΩ or higher

NG → **REPAIR OR REPLACE HARNESS OR CONNECTOR**

OK

PROCEED TO NEXT CIRCUIT INSPECTION SHOWN IN PROBLEM SYMPTOMS TABLE

AV

Mute Signal Circuit between Radio Receiver and Stereo Component Amplifier

DESCRIPTION

This circuit sends a signal to the stereo component amplifier to mute noise. Because of that, the noise produced by changing the sound source ceases.
If there is an open in the circuit, noise can be heard from the speakers when changing the sound source.
If there is a short in the circuit, even though the stereo component amplifier is normal, no sound, or only an extremely small sound, can be produced.

WIRING DIAGRAM

INSPECTION PROCEDURE

1	**INSPECT STEREO COMPONENT AMPLIFIER**

Wire Harness View:

with Rear Header Speaker

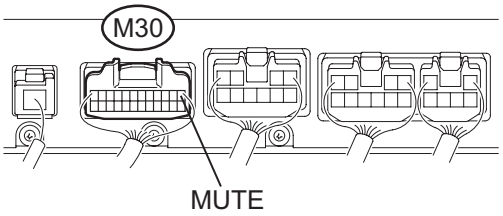

without Rear Header Speaker

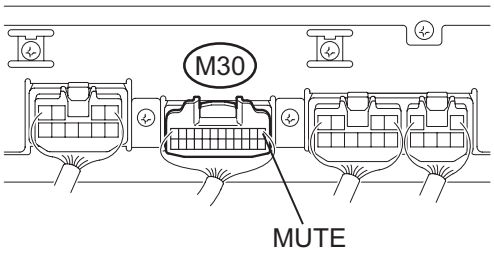

P E130426E01

(a) Measure the voltage according to the value(s) in the table below.

Standard voltage

Tester Connection	Condition	Specified Condition
MUTE - Body ground	Turn engine switch on (ACC), Audio system is playing → Changing	Above 3.5 V → Below 1 V

OK → **PROCEED TO NEXT CIRCUIT INSPECTION SHOWN IN PROBLEM SYMPTOMS TABLE**

NG

AV

2	**CHECK HARNESS AND CONNECTOR (RADIO RECEIVER - STEREO COMPONENT AMPLIFIER)**

Wire Harness View:

Radio Receiver (DVD Changer Models)

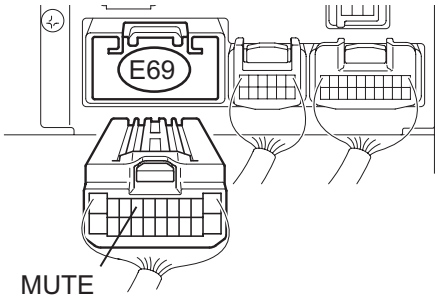

Radio Receiver (CD Changer Models)

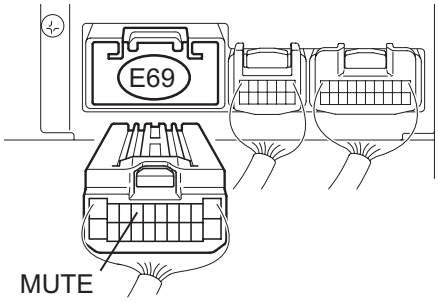

Stereo Component Amplifier
(with Rear Header Speaker)

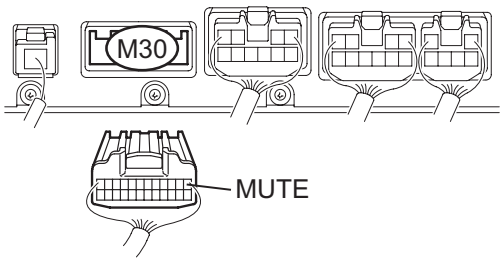

Stereo Component Amplifier
(without Rear Header Speaker)

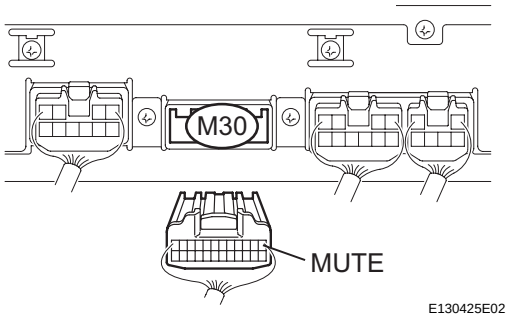

P E130425E02

(a) Disconnect the radio receiver connector E69 and stereo component amplifier connector M30.

(b) Measure the resistance according to the values in the table below.

Standard resistance

Tester Connection	Condition	Specified Condition
MUTE - MUTE	Always	Below 1 Ω
MUTE - Body ground	Always	10 kΩ or higher

NG → **REPAIR OR REPLACE HARNESS OR CONNECTOR**

AV

OK

3	INSPECT STEREO COMPONENT AMPLIFIER

Wire Harness View:

Radio Receiver (DVD Changer Models)

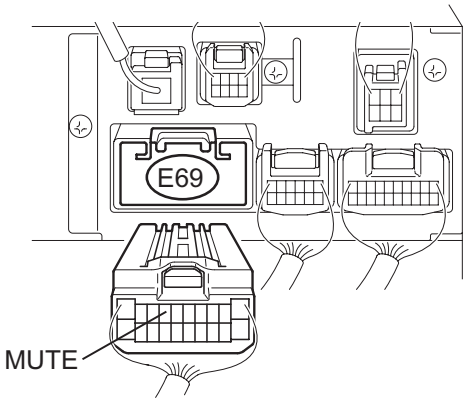

Radio Receiver (CD Changer Models)

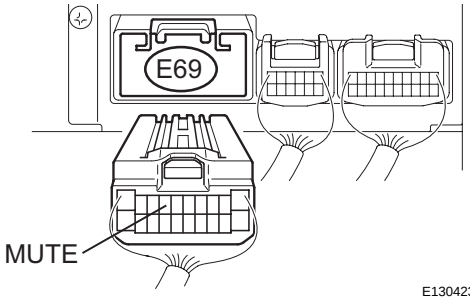

P E130423E02

(a) Reconnect the stereo component amplifier connector M30.

(b) Measure the voltage according to the value(s) in the table below.

Standard voltage

Tester Connection	Condition	Specified Condition
MUTE - Body ground	Turn engine switch on (ACC), Audio system is playing	Above 3.5 V

NG → **REPLACE STEREO COMPONENT AMPLIFIER**

OK

REPLACE RADIO RECEIVER

AV

AVC-LAN Circuit

DESCRIPTION

Each unit of the audio system connected to the AVC-LAN (communication bus) transfers the signal of each switch by communication.
When a short to +B or short to ground occurs in this AVC-LAN, the audio system will not function normally as the communication is discontinued.

INSPECTION PROCEDURE

1 INSPECT RADIO RECEIVER

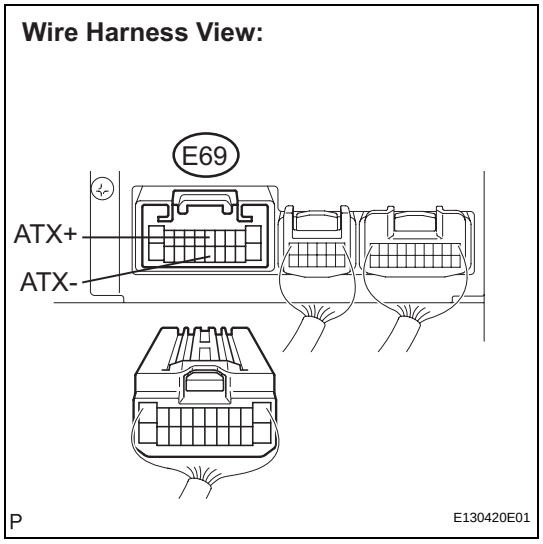

(a) Disconnect the radio receiver connectors.
(b) Measure the resistance according to the value(s) in the table below.
Standard resistance

Tester Connection	Condition	Specified Condition
ATX+ - ATX-	Always	60 to 80 Ω

NG → **REPLACE RADIO RECEIVER**

OK

2 CHECK HARNESS AND CONNECTOR

HINT:
For details of the connectors, refer to the "TERMINALS OF ECU" (See page AV-16).
(a) Referring to the AVC-LAN wiring diagram below, check all AVC-LAN circuits.
  (1) Disconnect all connectors in all AVC-LAN circuits.
  (2) Check for an open or short in all AVC-LAN circuits.
  OK:
  There is no open or short circuit.

AV

AVC-LAN WIRING DIAGRAM:

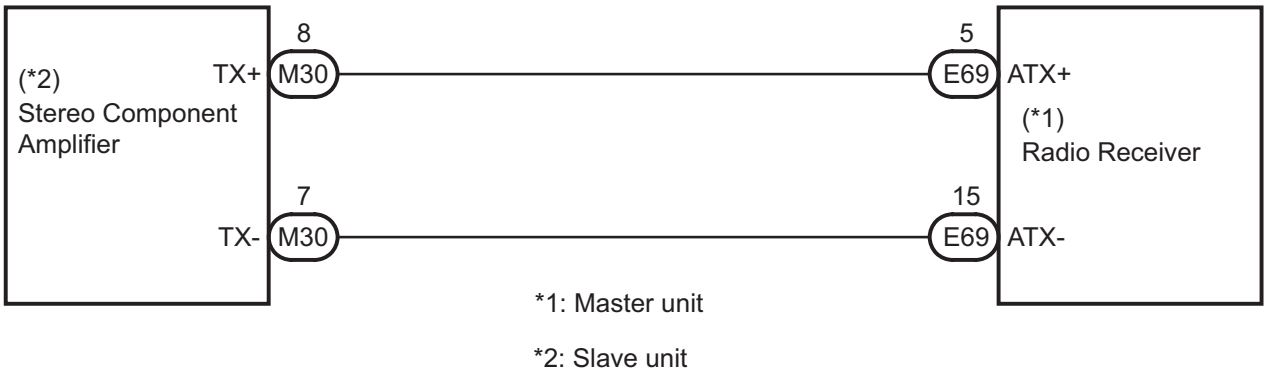

*1: Master unit

*2: Slave unit

P

E130419E01

NG → **REPAIR OR REPLACE HARNESS OR CONNECTOR**

OK

AV

PROCEED TO NEXT CIRCUIT INSPECTION SHOWN IN PROBLEM SYMPTOMS TABLE

Vehicle Speed Signal Circuit between Stereo Component Amplifier and Combination Meter

DESCRIPTION

This circuit is necessary for the ASL (Auto Sound Leveliser) built into the stereo component amplifier. Speed signals are received from the combination meter and used for the ASL.
The ASL function automatically adjusts the sound data in order to enable hearing the clear audio sound even when vehicle noise increases (as vehicle noise increases, the volume is turned up etc.).
HINT:

- A voltage of 12 V or 5 V is output from each ECU and then input to the combination meter. The signal is changed to a pulse signal at the transistor in the combination meter. Each ECU controls the respective system based on the pulse signal.
- If a short occurs in an ECU, all systems in the diagram below will not operate normally.

WIRING DIAGRAM

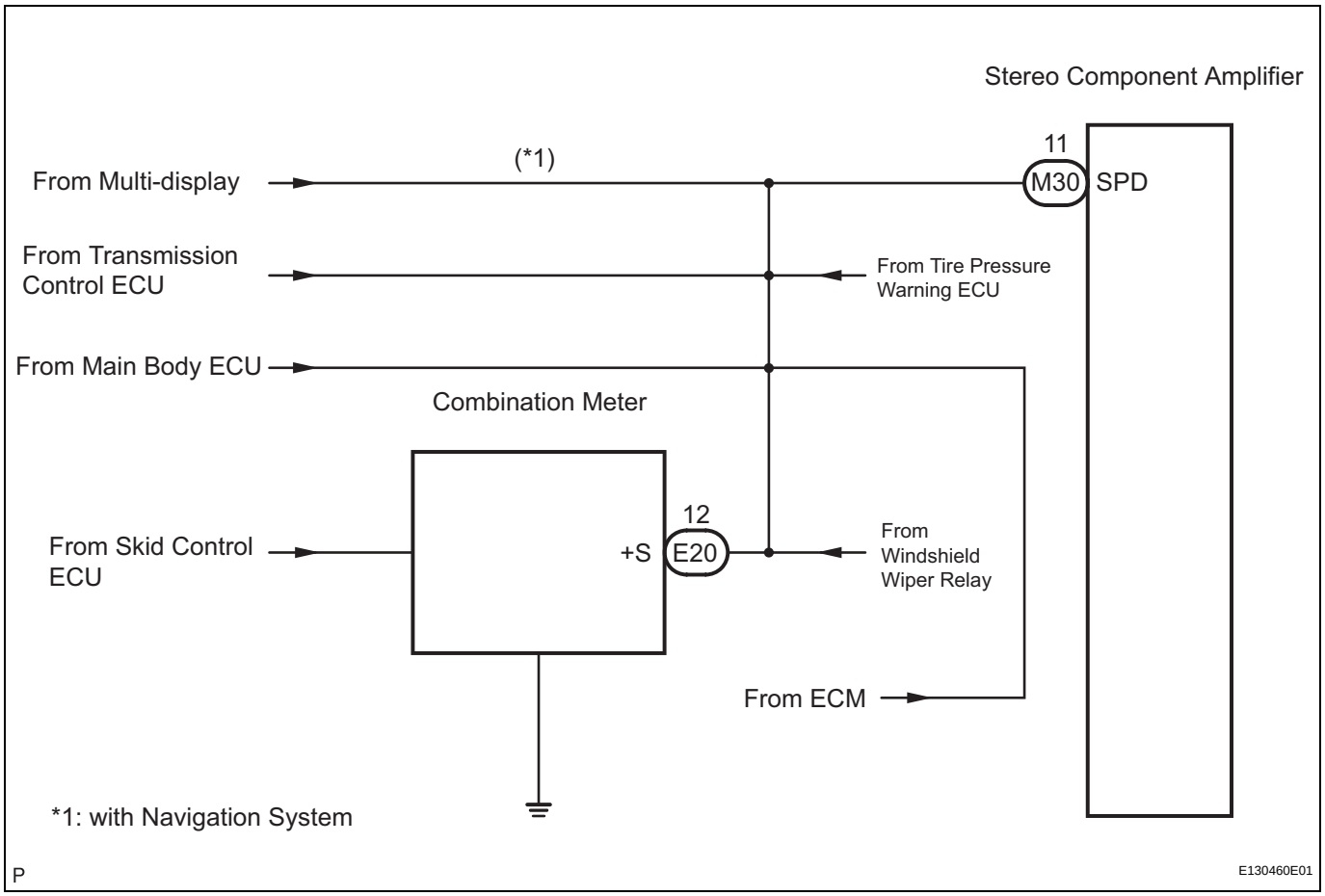

INSPECTION PROCEDURE

1	OPERATION OF SPEEDOMETER

(a) Drive the vehicle and check if the function of the speedometer on the combination meter is normal.

AV

OK:

Actual vehicle speed and the speed indicated on the speedometer are the same.

HINT:

The vehicle speed sensor is functioning normally when the indication on the speedometer is normal.

NG → **CHECK COMBINATION METER**

OK

2	**INSPECT STEREO COMPONENT AMPLIFIER**

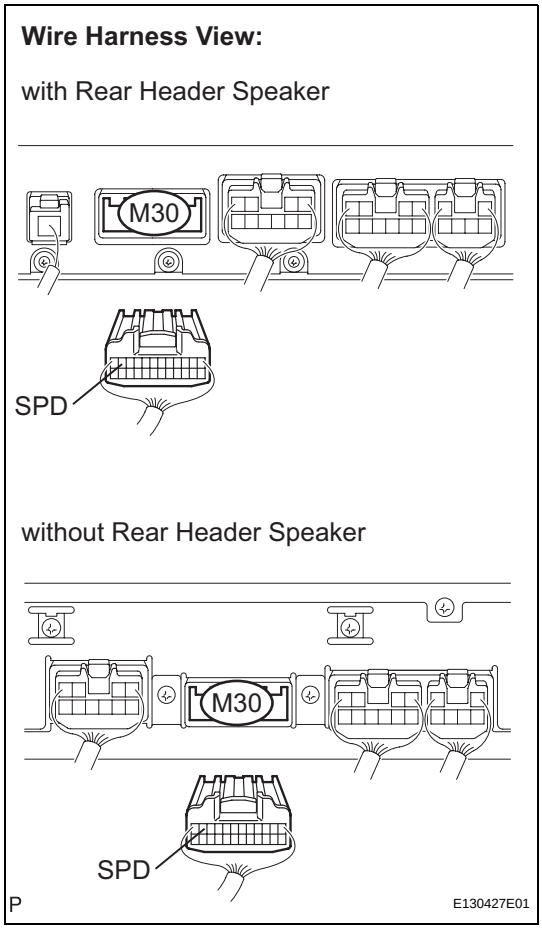

(a) Disconnect the stereo component amplifier connector M30.

(b) Measure the voltage.
  (1) Jack up either one of the drive wheels.
  (2) Move the shift lever to the neutral position.
  (3) Turn the engine switch on (IG).

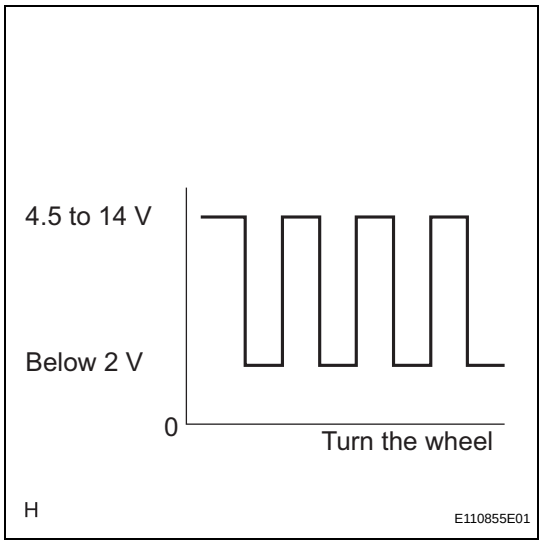

(4) Measure the voltage between terminal SPD of the wire harness connector and body ground when the drive wheels are turned slowly.
OK:
Voltage pulses as shown in the illustration.

NG → **Go to step 3**

OK

REPLACE STEREO COMPONENT AMPLIFIER

3	**CHECK HARNESS AND CONNECTOR (COMBINATION METER - STEREO COMPONENT AMPLIFIER)**

Wire Harness View:

Stereo Component Amplifier
(with Rear Header Speaker)

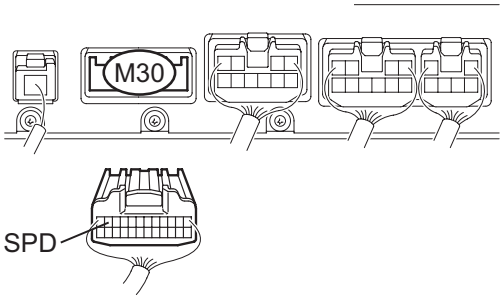

Stereo Component Amplifier
(without Rear Header Speaker)

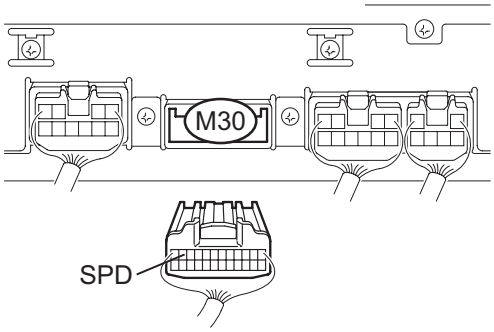

Combination Meter

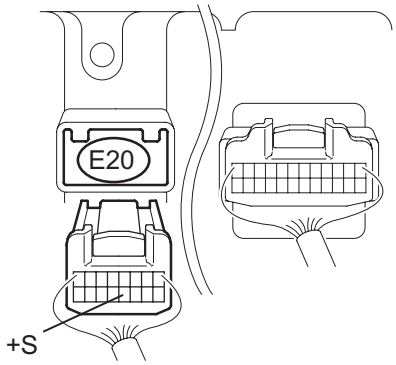

P E130428E01

(a) Disconnect the stereo component amplifier connector M30 and combination meter connector E20.
(b) Measure the resistance according to the value(s) in the table below.

Standard resistance

Tester Connection	Condition	Specified Condition
SPD - +S	Engine switch off	Below 1 Ω

NG → **REPAIR OR REPLACE HARNESS OR CONNECTOR**

OK

AV

4	**CHECK HARNESS AND CONNECTOR (COMBINATION METER - STEREO COMPONENT AMPLIFIER)**

Wire Harness View:

Stereo Component Amplifier
(with Rear Header Speaker)

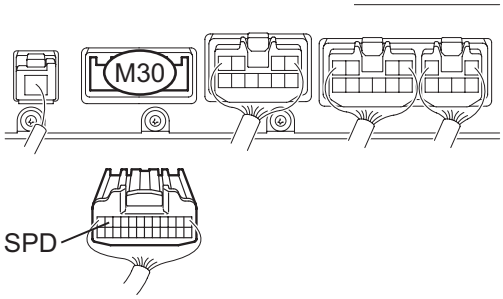

Stereo Component Amplifier
(without Rear Header Speaker)

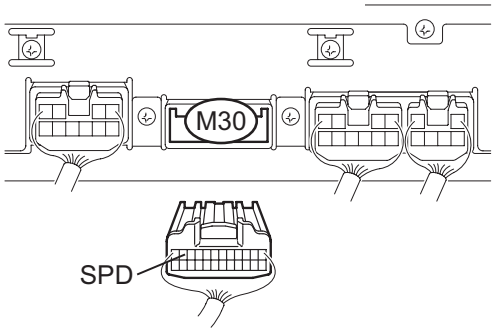

Combination Meter

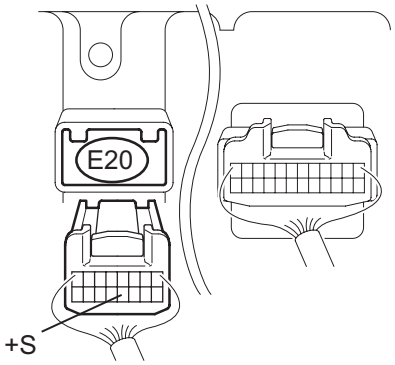

P E130428E01

(a) Disconnect the stereo component amplifier connector M30 and combination meter connector E20.

(b) Measure the resistance according to the value(s) in the table below.

Standard resistance

Tester Connection	Condition	Specified Condition
SPD - Body ground	Engine switch off	10 kΩ or higher

HINT:
If the resistance between terminal SPD and body ground is less than 10 kΩ, there may be a short in a wire harness, connector, or an ECU that is connected to the SPD signal wire.

NG → **REPAIR OR REPLACE HARNESS OR CONNECTOR OR CHECK EACH ECU**

AV

OK

REPLACE COMBINATION METER

Cellular Phone Voice Circuit between Radio Receiver and Stereo Component Amplifier

SYSTEM DESCRIPTION

This circuit is used when the cellular phone voice in the "Bluetooth" handsfree system is on.

WIRING DIAGRAM

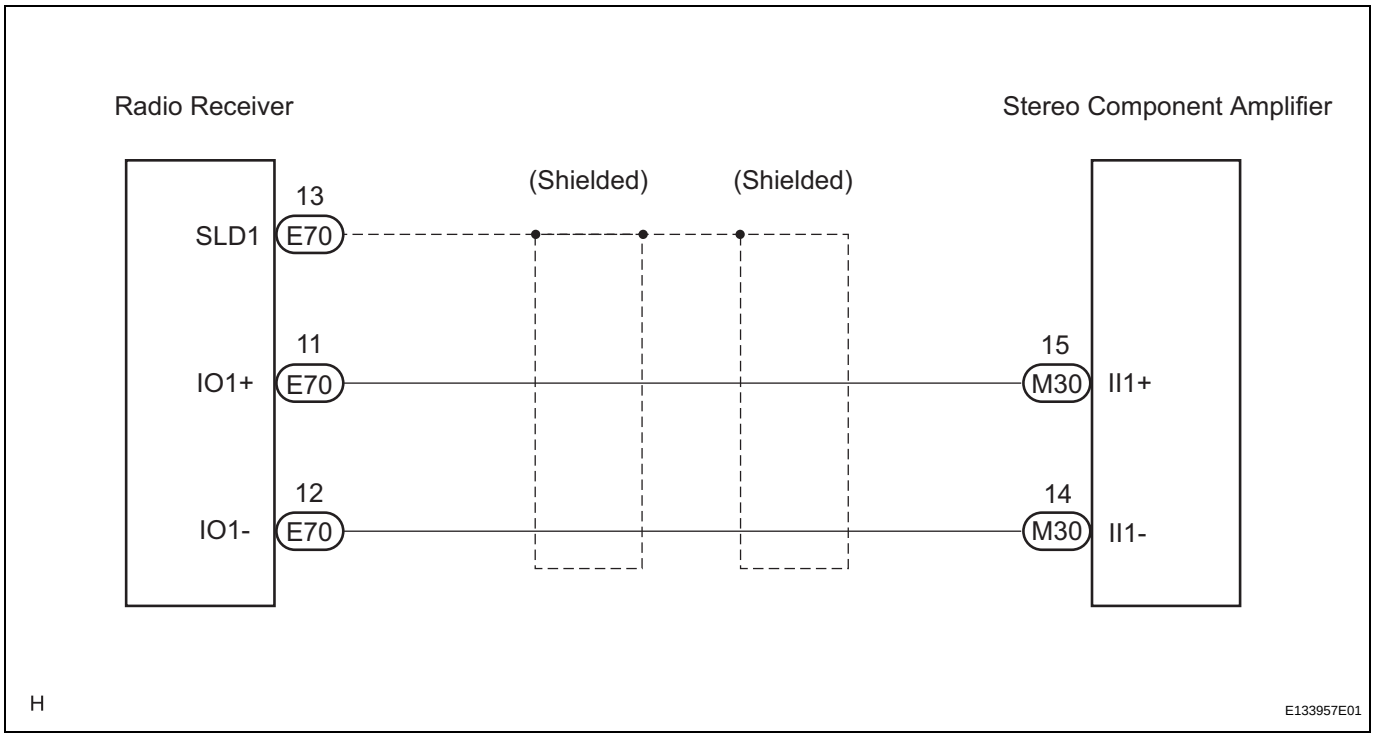

INSPECTION PROCEDURE

1	**CHECK HARNESS AND CONNECTOR (RADIO RECEIVER - STEREO COMPONENT AMPLIFIER)**

Wire Harness View:

Stereo Component Amplifier
(with Rear Header Speaker)

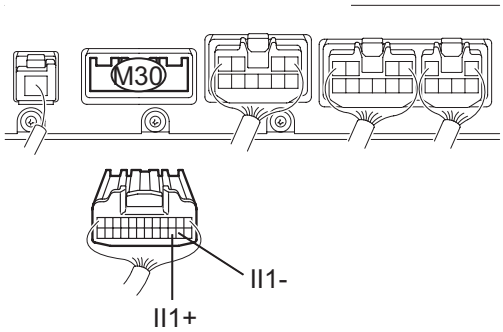

Stereo Component Amplifier
(without Rear Header Speaker)

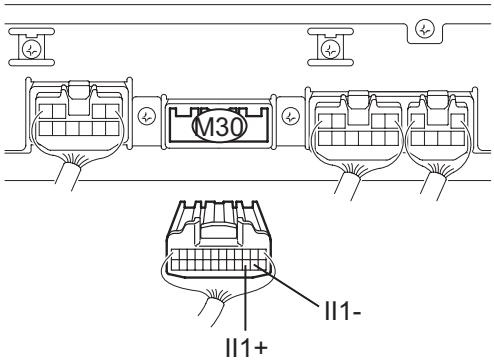

Radio Receiver

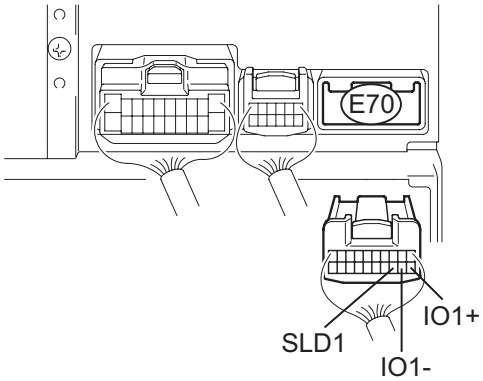

P E133958E01

(a) Disconnect the radio receiver connector E70 and stereo component amplifier connector M30.

(b) Measure the resistance according to the value(s) in the table below.

Standard resistance

Tester connection	Condition	Specified condition
IO1+ - II1+	Always	Below 1 Ω
IO1- - II1-	Always	Below 1 Ω
IO1+ - Body ground	Always	10 kΩ or higher
IO1- - Body ground	Always	10 kΩ or higher

NG → **REPAIR OR REPLACE HARNESS OR CONNECTOR**

OK

PROCEED TO NEXT CIRCUIT INSPECTION SHOWN IN PROBLEM SYMPTOMS TABLE

AV

Microphone Circuit between Microphone and Radio Receiver

DESCRIPTION

This circuit sends a microphone signal from the microphone to the radio receiver.
It also supplies power from the radio receiver to the microphone.

WIRING DIAGRAM

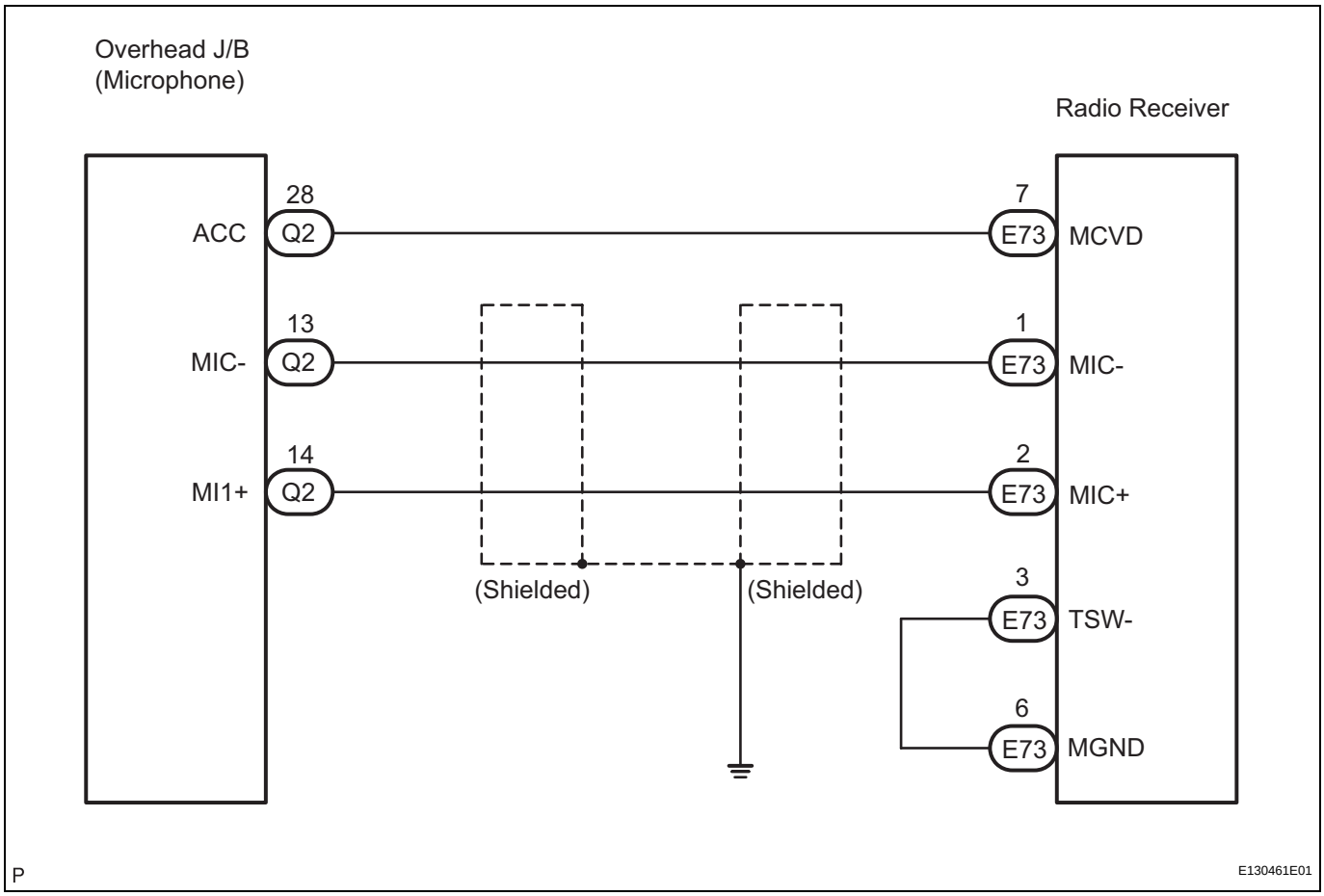

INSPECTION PROCEDURE

1 INSPECT RADIO RECEIVER

Wire Harness View:

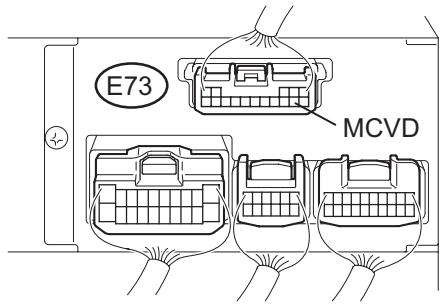

P E130429E01

(a) Measure the voltage according to the value(s) in the table below.
Standard voltage

Tester Connection	Condition	Specified Condition
MCVD - Body ground	Engine switch on (ACC)	4 to 6 V

NG → **REPLACE RADIO RECEIVER**

OK

2 CHECK HARNESS AND CONNECTOR (RADIO RECEIVER - BODY GROUND)

Wire Harness View:

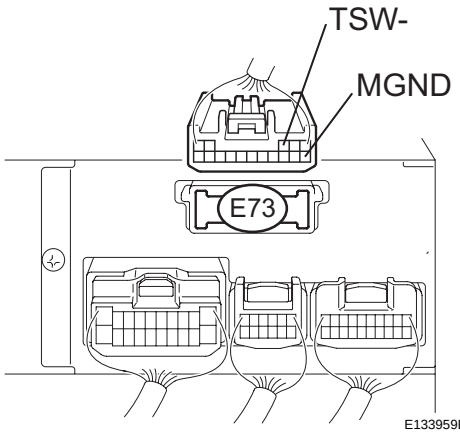

E133959E01

(a) Disconnect the radio receiver connector.
(b) Measure the resistance according to the value(s) in the table below.
Standard resistance

Tester Connection	Condition	Specified Condition
TSW- - MGND	Always	Below 1 Ω
TSW- - Body ground	Always	10 kΩ or higher

NG → **REPAIR OR REPLACE HARNESS OR CONNECTOR**

OK

AV

3	CHECK HARNESS AND CONNECTOR (OVERHEAD J/B (MICROPHONE) - RADIO RECEIVER)

Overhead J/B (Microphone) Connector Front View:

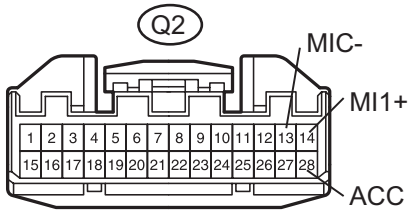

Radio Receiver Wire Harness View:

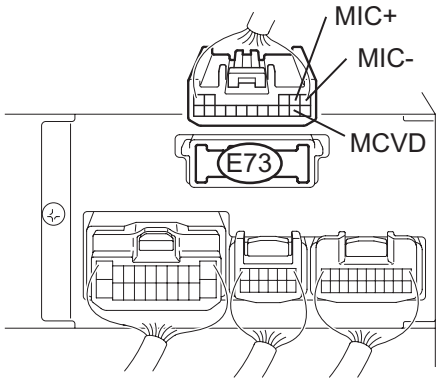

P E130462E01

(a) Disconnect the overhead J/B (microphone) connector.
(b) Measure the resistance according to the value(s) in the table below.

Standard resistance

Tester Connection	Condition	Specified Condition
MCVD - ACC	Always	Below 1 Ω
MI1+ - MIC+	Always	Below 1 Ω
MIC- - MIC-	Always	Below 1 Ω
ACC - Body ground	Always	10 kΩ or higher
MIC+ - Body ground	Always	10 kΩ or higher
MIC- - Body ground	Always	10 kΩ or higher

NG → **REPAIR OR REPLACE HARNESS OR CONNECTOR**

OK

PROCEED TO NEXT CIRCUIT INSPECTION SHOWN IN PROBLEM SYMPTOMS TABLE

AV

Dimmer Signal Circuit

DESCRIPTION

The main body ECU sends a panel illumination signal to the radio receiver through this circuit.
The main body ECU determines the ambient brightness based on the light level detected by the automatic light control sensor and performs dim control.

WIRING DIAGRAM

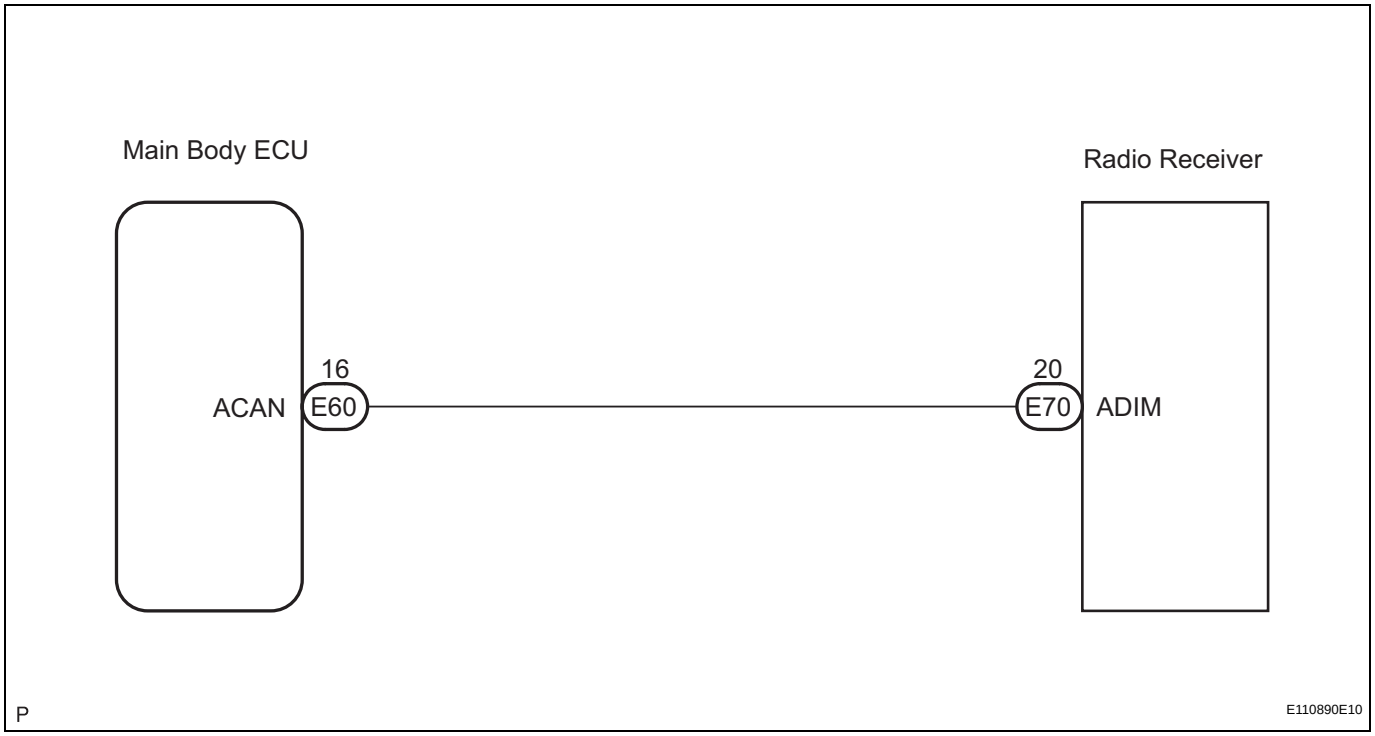

INSPECTION PROCEDURE

1	CHECK HARNESS AND CONNECTOR (RADIO RECEIVER - BODY ECU)

Wire Harness View:

Radio Receiver (DVD Changer Models)

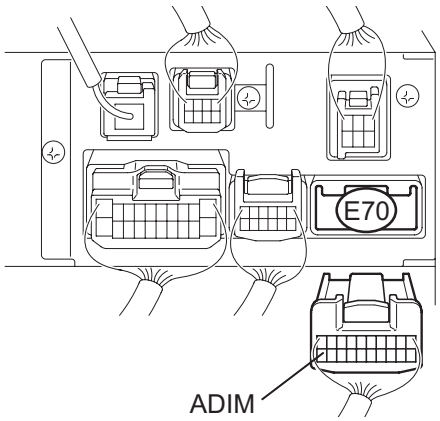

Radio Receiver (CD Changer Models)

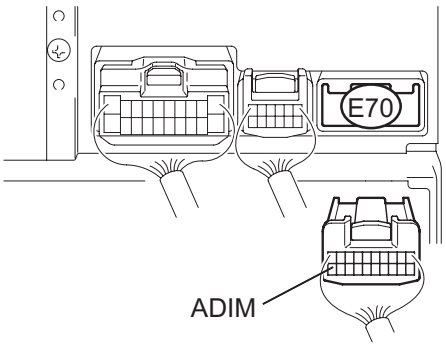

Main Body ECU

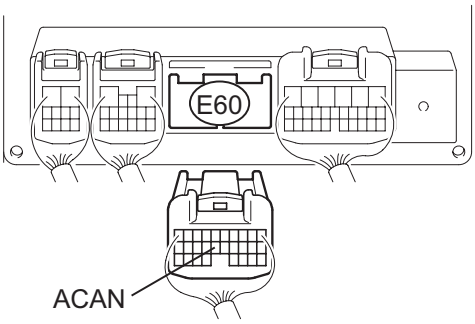

P

E133960E01

(a) Disconnect the radio receiver connector E70 and main body ECU connector E60.

(b) Measure the resistance according to the values in the table below.

Standard resistance

Tester connection	Condition	Specified condition
ADIM - ACAN	Always	Below 1 Ω
ADIM - Body ground	Always	10 kΩ or higher

NG → **REPAIR OR REPLACE HARNESS OR CONNECTOR**

OK

AV

2 INSPECT RADIO RECEIVER

Wire Harness View:

Radio Receiver (DVD Changer Models)

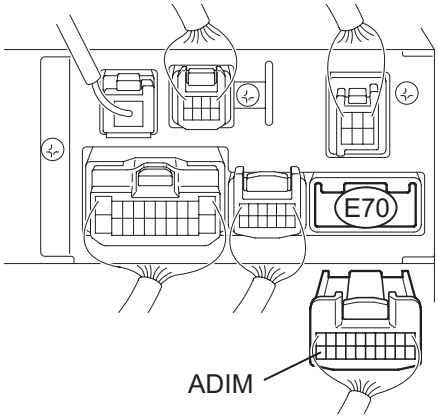

Radio Receiver (CD Changer Models)

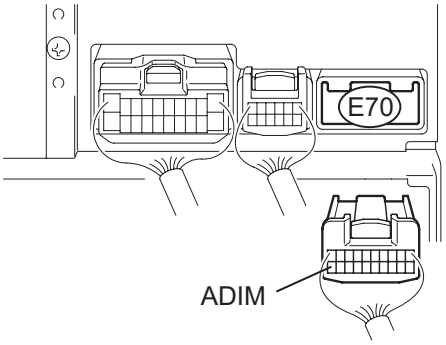

P E133961E01

(a) Connect the main body ECU connector.
(b) Turn the engine switch on (IG).
(c) Turn the light control switch to the TAIL or HEAD position.
(d) Measure the voltage according to the value(s) in the table below.

Standard voltage

Tester connection	Condition	Specified condition
ADIM - Body ground	Light control switch in TAIL or HEAD	10 to 14 V

NG → **GO TO LIGHTING SYSTEM (See page LI-28)**

OK

PROCEED TO NEXT CIRCUIT INSPECTION SHOWN IN PROBLEM SYMPTOMS TABLE

AV

DVD Sound Signal Circuit between Radio Receiver and Stereo Component Amplifier

DESCRIPTION

The radio receiver sends only DVD sound signal to the stereo component amplifier through this circuit. The sound signal that has been sent is amplified by the stereo component amplifier, and then is sent to the speakers.
If there is an open or short in the circuit, only DVD sound cannot be heard from the speakers even if there is no malfunction in the stereo component amplifier or speakers.

WIRING DIAGRAM

INSPECTION PROCEDURE

1	**CHECK HARNESS AND CONNECTOR (RADIO RECEIVER - STEREO COMPONENT AMPLIFIER)**

Radio Receiver Wire Harness View:

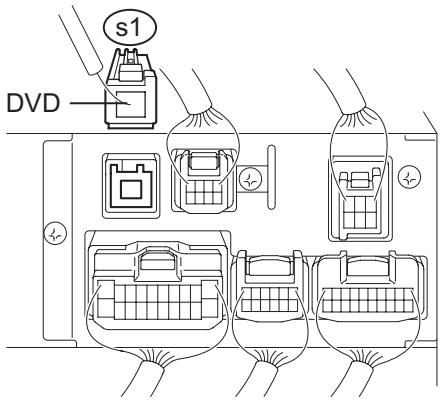

Stereo Component Amplifier Wire Harness View:

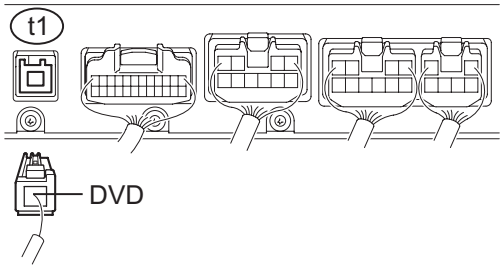

P E121266E01

(a) Disconnect the connectors from the radio receiver and stereo component amplifier.

(b) Measure the resistance according to the value(s) in the table below.

Standard resistance

Tester Connection	Condition	Specified Condition
DVD - DVD	Always	Below 1 Ω
DVD - Body ground	Always	10 kΩ or higher

NG → **REPAIR OR REPLACE HARNESS OR CONNECTOR**

OK

PROCEED TO NEXT CIRCUIT INSPECTION SHOWN IN PROBLEM SYMPTOMS TABLE

AV

Radio Receiver Communication Error

INSPECTION PROCEDURE

1	IDENTIFY THE COMPONENT SHOWN BY SUB-CODE

(a) Enter the diagnostic mode.

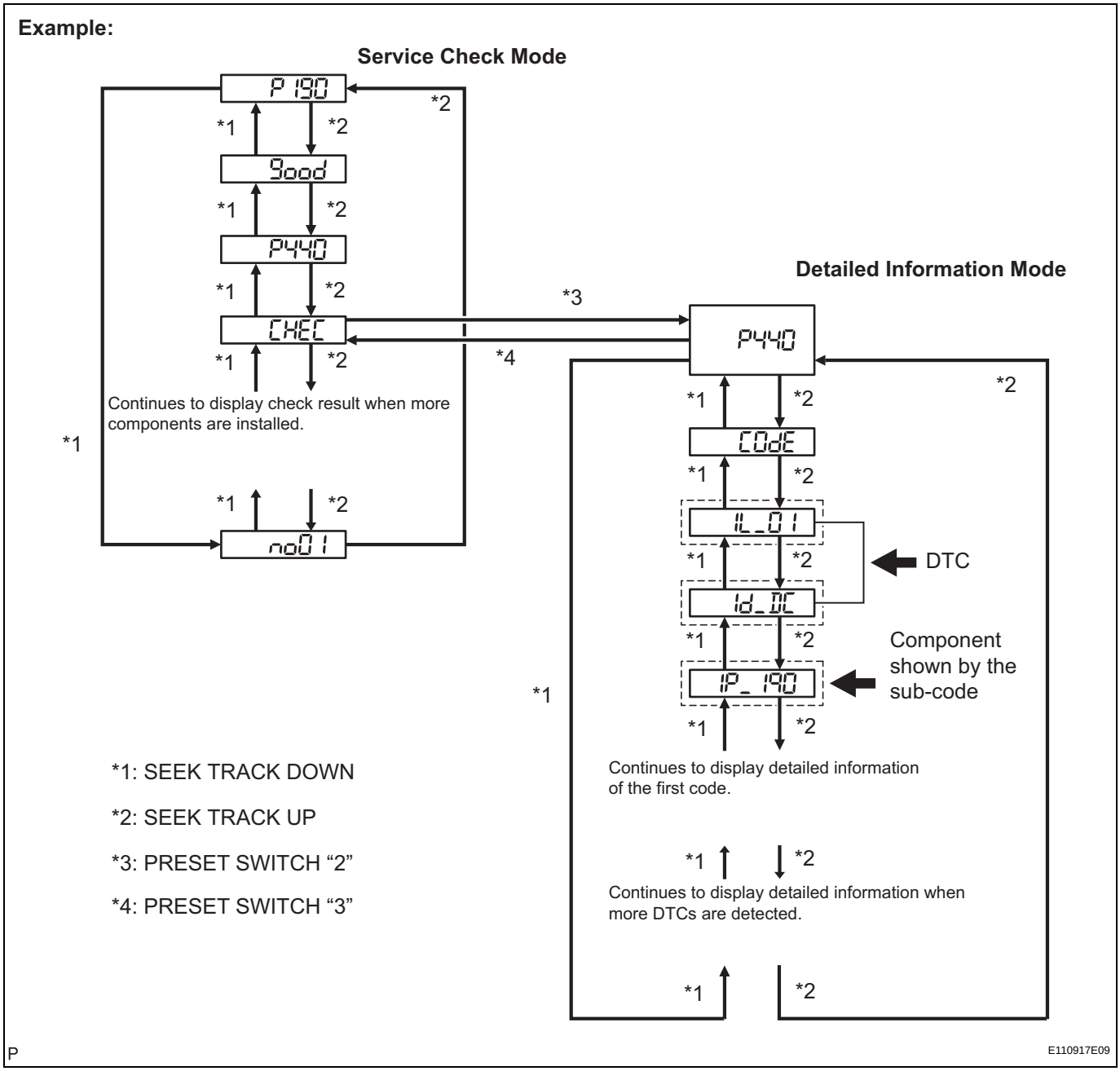

(b) Press the preset switch "3" to change to "Detailed Information Mode".

(c) Identify the component shown by the sub-code.

HINT:

- "190 (radio receiver)" is the component shown by the sub-code in the example shown in the illustration.

- For details of the DTC display, refer to "DTC CHECK/ CLEAR" (See page AV-21).

NEXT

2 CHECK COMPONENT SHOWN BY SUB-CODE

(a) Select the component shown by sub-code.
HINT:
The "Bluetooth" handsfree module is built into the radio receiver. If there is a problem between the "Bluetooth" handsfree module and radio receiver, replace the radio receiver.

Component Table:

Component	Proceed to
"Bluetooth" handsfree module (19D)	A
Except "Bluetooth" handsfree module	B

A → **REPLACE RADIO RECEIVER**

B

3 CHECK POWER SOURCE CIRCUIT OF COMPONENT SHOWN BY SUB-CODE

(a) Inspect the power source circuit of the component shown by the sub-code.
If the power source circuit is operating normally, proceed to the next step.

Component Table:

Component	Proceed to
Stereo component amplifier (440)	Stereo component amplifier power source circuit (See page AV-164)

NEXT

4 INSPECT RADIO RECEIVER

Wire Harness View:

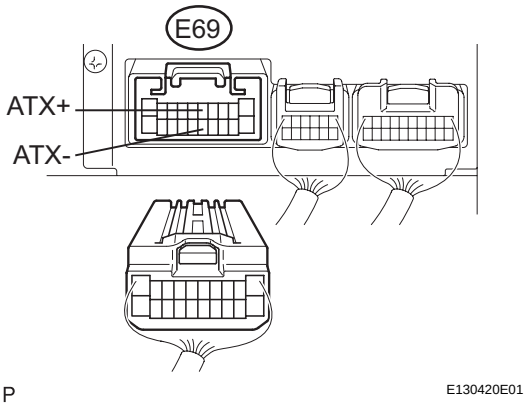

(a) Disconnect the radio receiver connectors.
(b) Measure the resistance according to the value(s) in the table below.

Standard resistance

Tester Connection	Condition	Specified Condition
ATX+ - ATX-	Always	60 to 80 Ω

NG → **REPLACE RADIO RECEIVER**

AV

OK

5	CHECK HARNESS AND CONNECTOR (RADIO RECEIVER - COMPONENT SHOWN BY SUB-CODE)

HINT:
- Start the check from the circuit that is near the component shown by the sub-code first.
- For details of the connectors, refer to the "TERMINALS OF ECU" (See page AV-16).

(a) Referring to the AVC-LAN wiring diagram below, check the AVC-LAN circuit between the radio receiver and the component shown by the sub-code.
  (1) Disconnect all connectors between the radio receiver and the component shown by sub-code.
  (2) Check for an open or short in the AVC-LAN circuit between the radio receiver and the component shown by the sub-code.
  OK:
  There is no open or short circuit.

AV

AVC-LAN WIRING DIAGRAM:

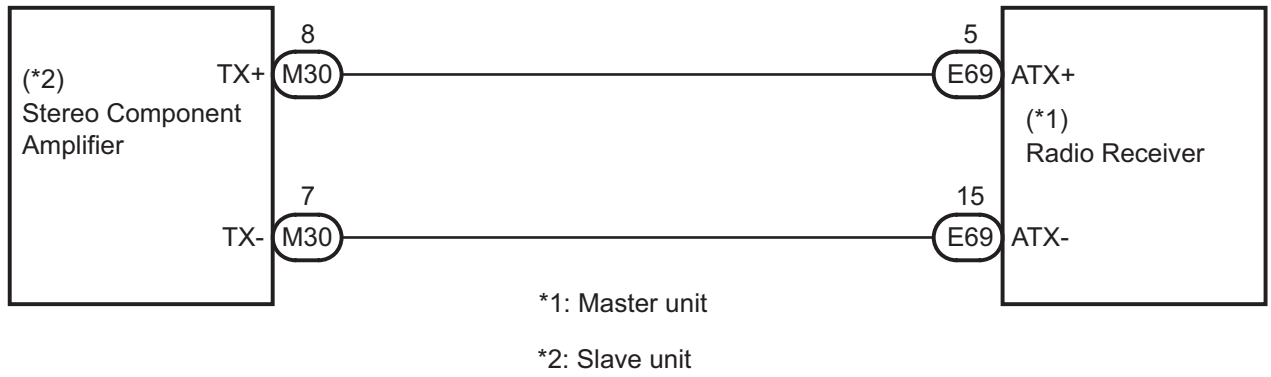

NG → **REPAIR OR REPLACE HARNESS OR CONNECTOR**

OK

6	REPLACE COMPONENT SHOWN BY SUB-CODE

(a) Replace the component shown by the sub-code with a normal one and check if the same problem occurs again.
  OK:
  Same problem does not occur.

NG → **REPLACE RADIO RECEIVER**

OK

END

Stereo Component Amplifier Communication Error

INSPECTION PROCEDURE

1	IDENTIFY THE COMPONENT SHOWN BY SUB-CODE

(a) Enter the diagnostic mode.

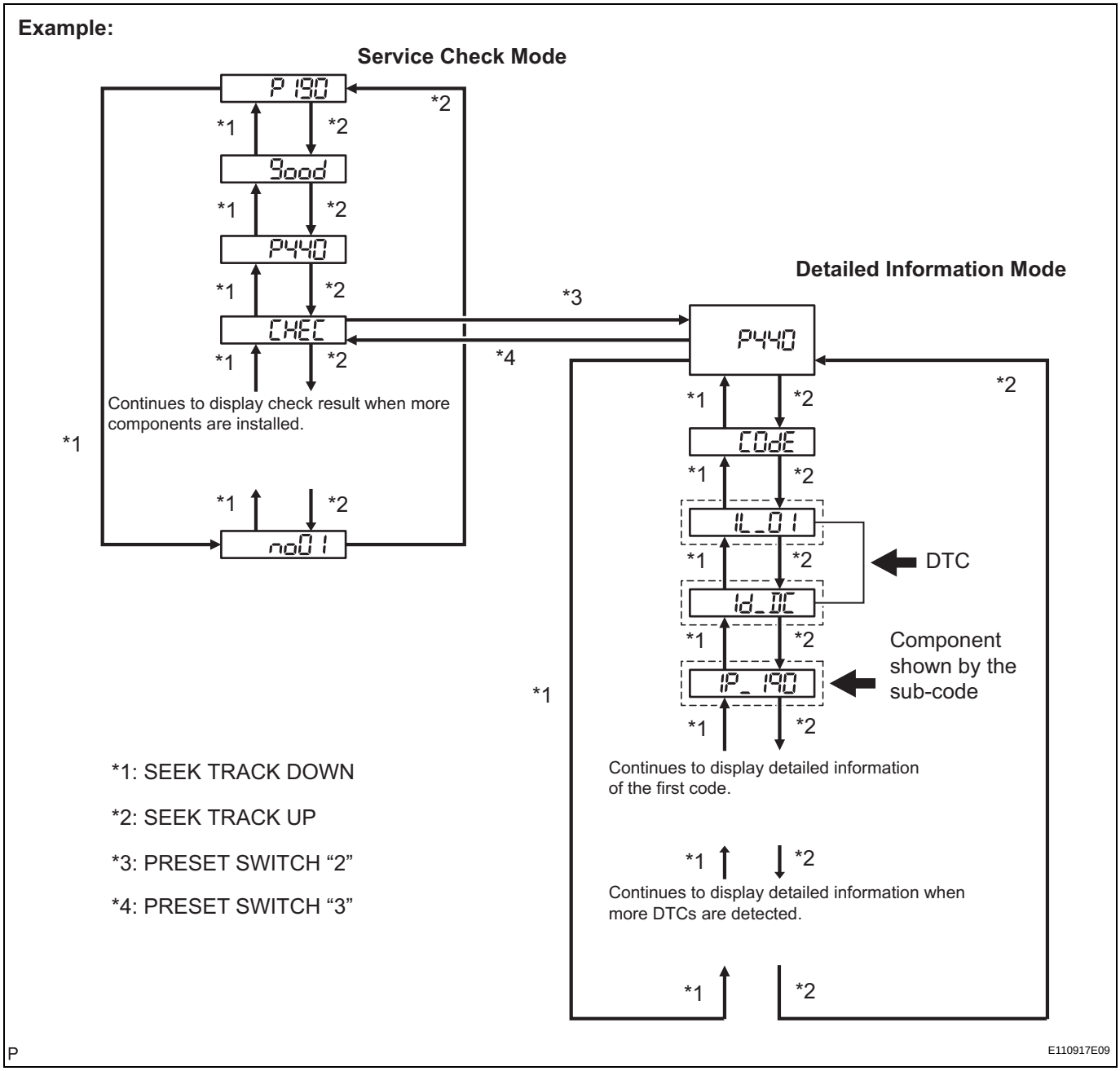

(b) Press the preset switch "3" to change to "Detailed Information Mode".

(c) Identify the component shown by the sub-code.

HINT:

- "190 (radio receiver)" is the component shown by the sub-code in the example shown in the illustration.

AV

- For details of the DTC display, refer to "DTC CHECK/ CLEAR" (See page AV-21).

NEXT

2 CHECK COMPONENT SHOWN BY SUB-CODE

(a) Select the component shown by sub-code.
HINT:
The "Bluetooth" handsfree module is built into the radio receiver. If there is a problem between the "Bluetooth" handsfree module and radio receiver, replace the radio receiver.

Component Table:

Component	Proceed to
"Bluetooth" handsfree module (19D)	A
Except "Bluetooth" handsfree module	B

A → **REPLACE RADIO RECEIVER**

B

3 CHECK POWER SOURCE CIRCUIT OF COMPONENT SHOWN BY SUB-CODE

(a) Inspect the power source circuit of the component shown by the sub-code.
If the power source circuit is operating normally, proceed to the next step.

Component Table:

Component	Proceed to
Radio receiver (190)	Radio receiver power source circuit (See page AV-162)

NEXT

4 INSPECT RADIO RECEIVER

Wire Harness View:

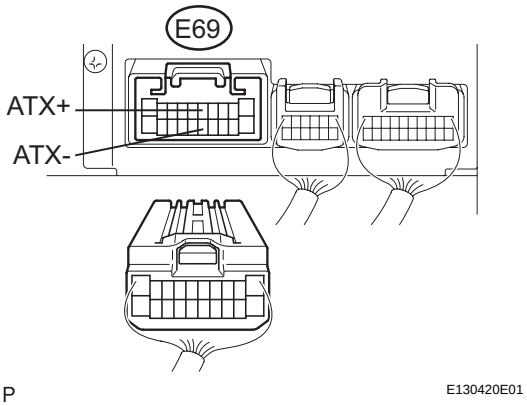

(a) Disconnect the radio receiver connectors.
(b) Measure the resistance according to the value(s) in the table below.

Standard resistance

Tester Connection	Condition	Specified Condition
ATX+ - ATX-	Always	60 to 80 Ω

NG → **REPLACE RADIO RECEIVER**

AV

OK

5	CHECK HARNESS AND CONNECTOR (STEREO COMPONENT AMPLIFIER - COMPONENT SHOWN BY SUB-CODE)

HINT:
- Start the check from the circuit that is near the component shown by the sub-code first.
- For details of the connectors, refer to the "TERMINALS OF ECU" (See page AV-16).

(a) Referring to the AVC-LAN wiring diagram below, check the AVC-LAN circuit between the stereo component amplifier and the component shown by the sub-code.
  (1) Disconnect all connectors between the stereo component amplifier and the component shown by sub-code.
  (2) Check for an open or short in the AVC-LAN circuit between the stereo component amplifier and the component shown by the sub-code.
  OK:
  There is no open or short circuit.

AV

AVC-LAN WIRING DIAGRAM:

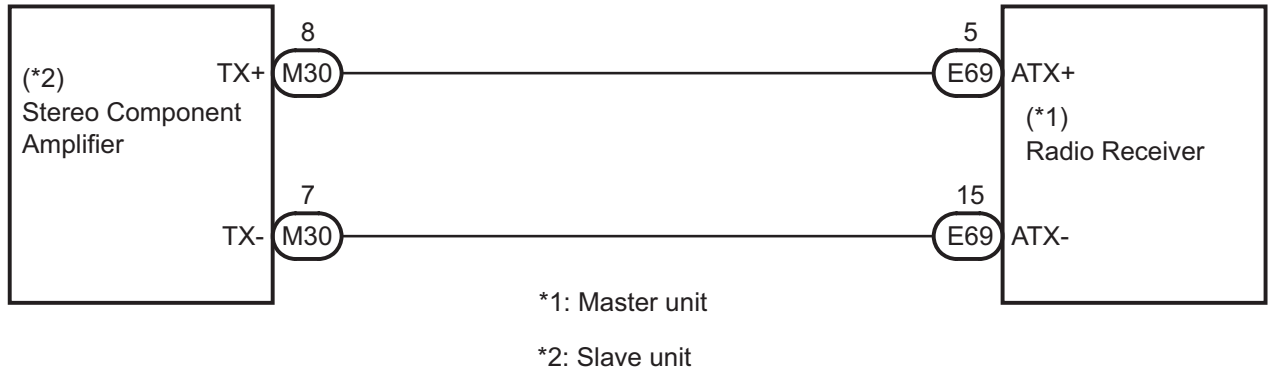

NG → **REPAIR OR REPLACE HARNESS OR CONNECTOR**

OK

6	REPLACE COMPONENT SHOWN BY SUB-CODE

(a) Replace the component shown by the sub-code with a normal one and check if the same problem occurs again.
  OK:
  Same problem does not occur.

NG → **REPLACE STEREO COMPONENT AMPLIFIER**

OK

END

Bluetooth Handsfree Module Communication Error

INSPECTION PROCEDURE

1	IDENTIFY THE COMPONENT SHOWN BY SUB-CODE

(a) Enter the diagnostic mode.

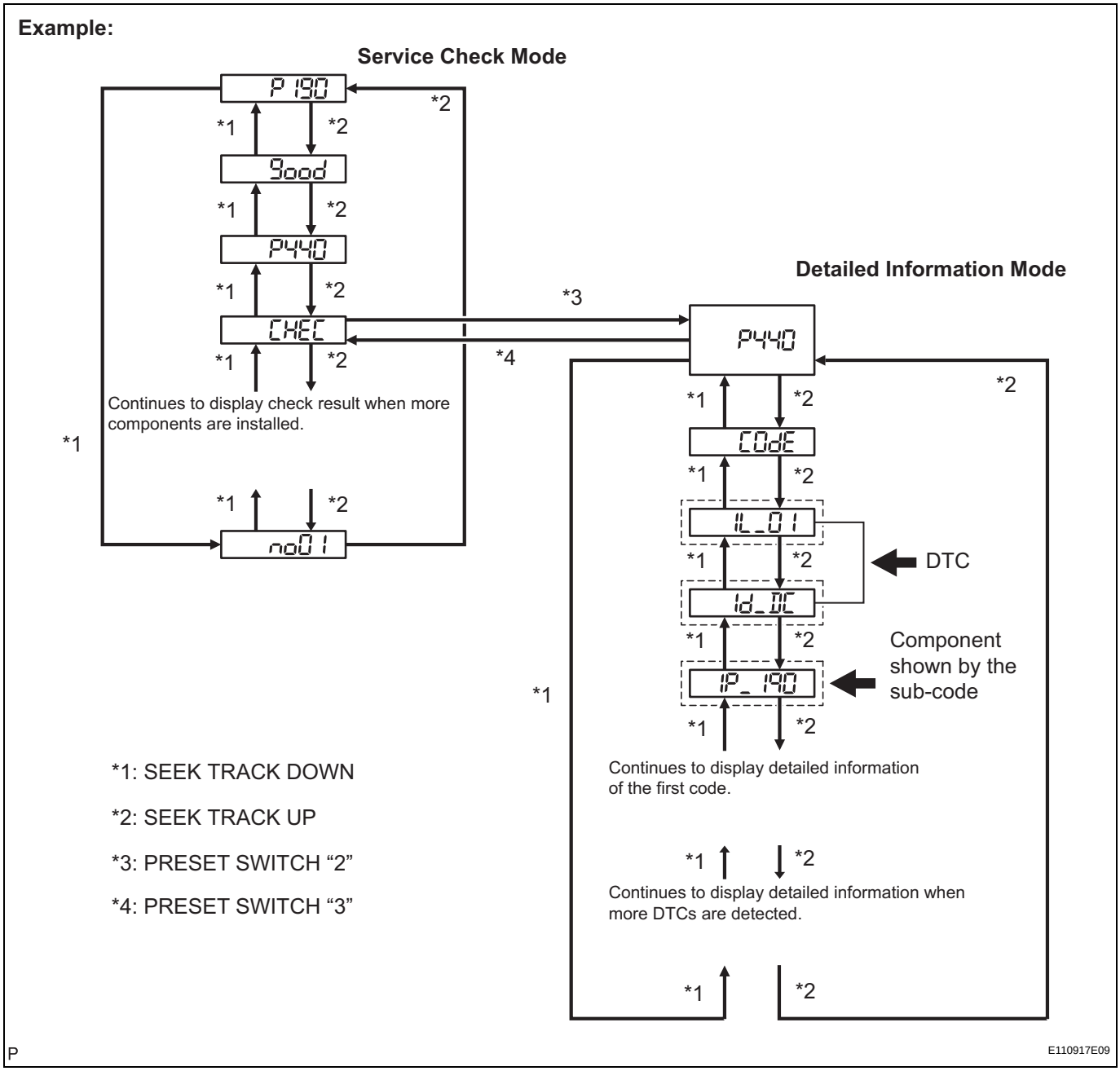

(b) Press the preset switch "3" to change to "Detailed Information Mode".

(c) Identify the component shown by the sub-code.

HINT:

- "190 (radio receiver)" is the component shown by the sub-code in the example shown in the illustration.

AV

- For details of the DTC display, refer to "DTC CHECK/ CLEAR" (See page AV-21).

NEXT

2 CHECK COMPONENT SHOWN BY SUB-CODE

(a) Select the component shown by sub-code.
HINT:
The "Bluetooth" handsfree module is built into the radio receiver. If there is a problem between the "Bluetooth" handsfree module and radio receiver, replace the radio receiver.

Component Table:

Component	Proceed to
Radio Receiver (190)	A
Except Radio Receiver	B

A → **REPLACE RADIO RECEIVER**

B

3 CHECK POWER SOURCE CIRCUIT OF COMPONENT SHOWN BY SUB-CODE

(a) Inspect the power source circuit of the component shown by the sub-code.
If the power source circuit is operating normally, proceed to the next step.

Component Table:

Component	Proceed to
Stereo component amplifier (440)	Stereo component amplifier power source circuit (See page AV-164)

NEXT

4 INSPECT RADIO RECEIVER

Wire Harness View:

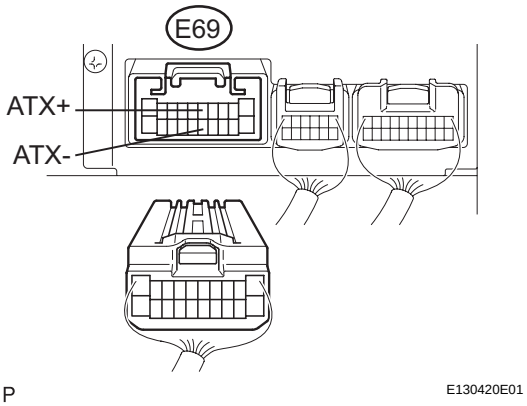

(a) Disconnect the radio receiver connector.
(b) Measure the resistance according to the value(s) in the table below.

Standard resistance

Tester connection	Condition	Specified condition
ATX+ (E69-5) - ATX- (E69-15)	Always	60 to 80 Ω

NG → **REPLACE RADIO RECEIVER**

AV

OK

5	CHECK HARNESS AND CONNECTOR ("BLUETOOTH" HANDSFREE MODULE - COMPONENT SHOWN BY SUB-CODE)

HINT:
- Start the check from the circuit that is near the component shown by the sub-code first.
- For details of the connectors, refer to the "TERMINALS OF ECU" (See page AV-16).

(a) Referring to the AVC-LAN wiring diagram below, check the AVC-LAN circuit between the "Bluetooth" handsfree module and the component shown by the sub-code.
  (1) Disconnect all connectors between the "Bluetooth" handsfree module and the component shown by the sub-code.
  (2) Check for an open or short in the AVC-LAN circuit between the "Bluetooth" handsfree module and the component shown by the sub-code.
  OK:
  There is no open or short circuit.

AV

AVC-LAN WIRING DIAGRAM:

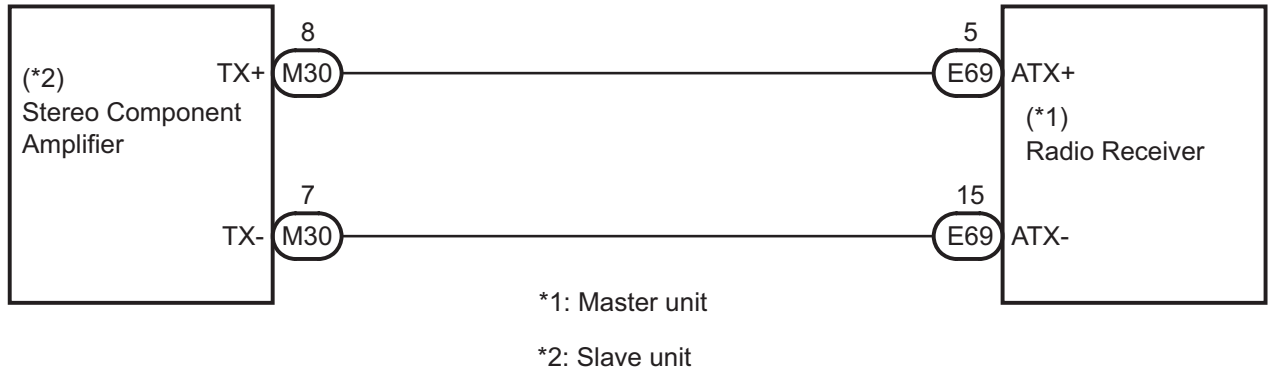

NG → **REPAIR OR REPLACE HARNESS OR CONNECTOR**

OK

6	REPLACE COMPONENT SHOWN BY SUB-CODE

(a) Replace the component shown by the sub-code with a normal one and check if the same problem occurs again.
  OK:
  Same problem does not occur.

NG → **REPLACE RADIO RECEIVER (BUILT-IN "BLUETOOTH" HANDSFREE MODULE)**

OK

END

Radio Receiver Power Source Circuit

DESCRIPTION

This circuit provides power to the radio receiver.

WIRING DIAGRAM

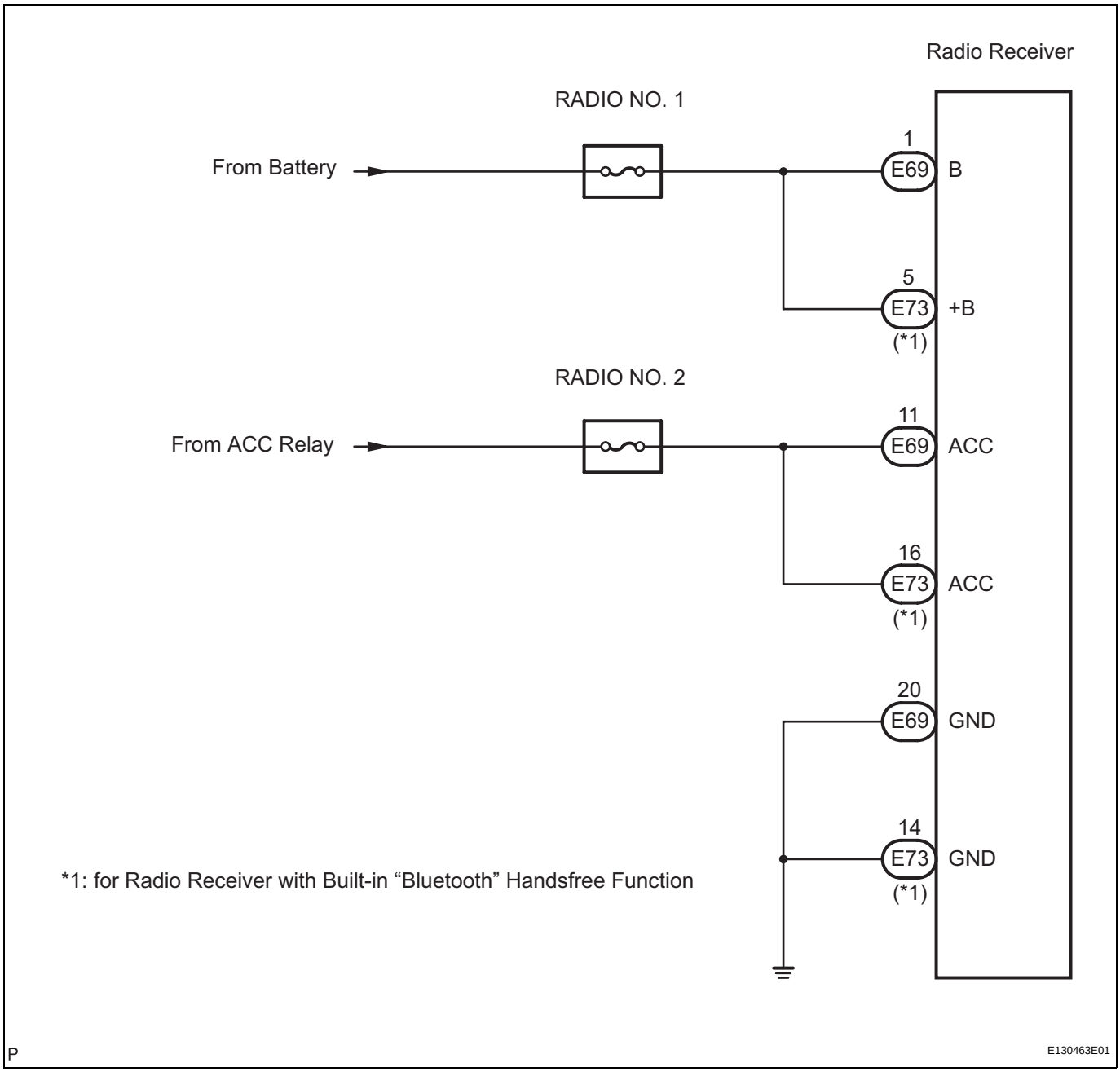

INSPECTION PROCEDURE

1	**INSPECT RADIO RECEIVER**

Wire Harness View:

Radio Receiver (DVD Changer Models)

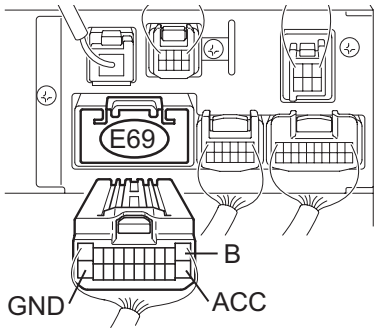

Radio Receiver (CD Changer Models)

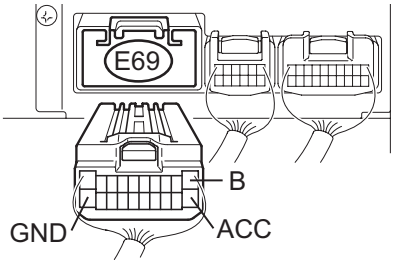

Radio Receiver (with “Bluetooth” Handsfree Module)

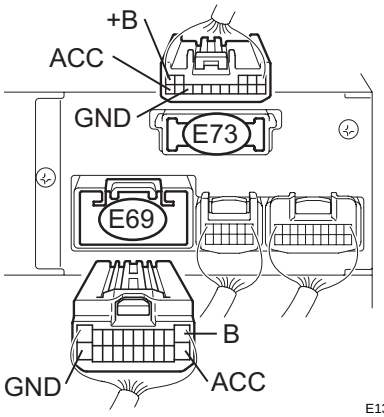

P E130464E01

(a) Disconnect the radio receiver connectors E69 and E73.

(b) Measure the resistance according to the value in the table below.

Standard resistance

Tester Connection	Condition	Specified Condition
GND - Body ground	Always	Below 1 Ω

(c) Measure the voltage according to the values in the table below.

Standard voltage

Tester Connection	Condition	Specified Condition
B - GND	Always	10 to 14 V
+B - GND (*1)	Always	10 to 14 V
ACC - GND	Engine switch on (ACC)	10 to 14 V

*1: for Radio Receiver with Built-in "Bluetooth" Handsfree Function

NG → **REPAIR OR REPLACE HARNESS OR CONNECTOR**

OK

PROCEED TO NEXT CIRCUIT INSPECTION SHOWN IN PROBLEM SYMPTOMS TABLE

AV

Stereo Component Amplifier Power Source Circuit

DESCRIPTION

This circuit provides power to the stereo component amplifier.

WIRING DIAGRAM

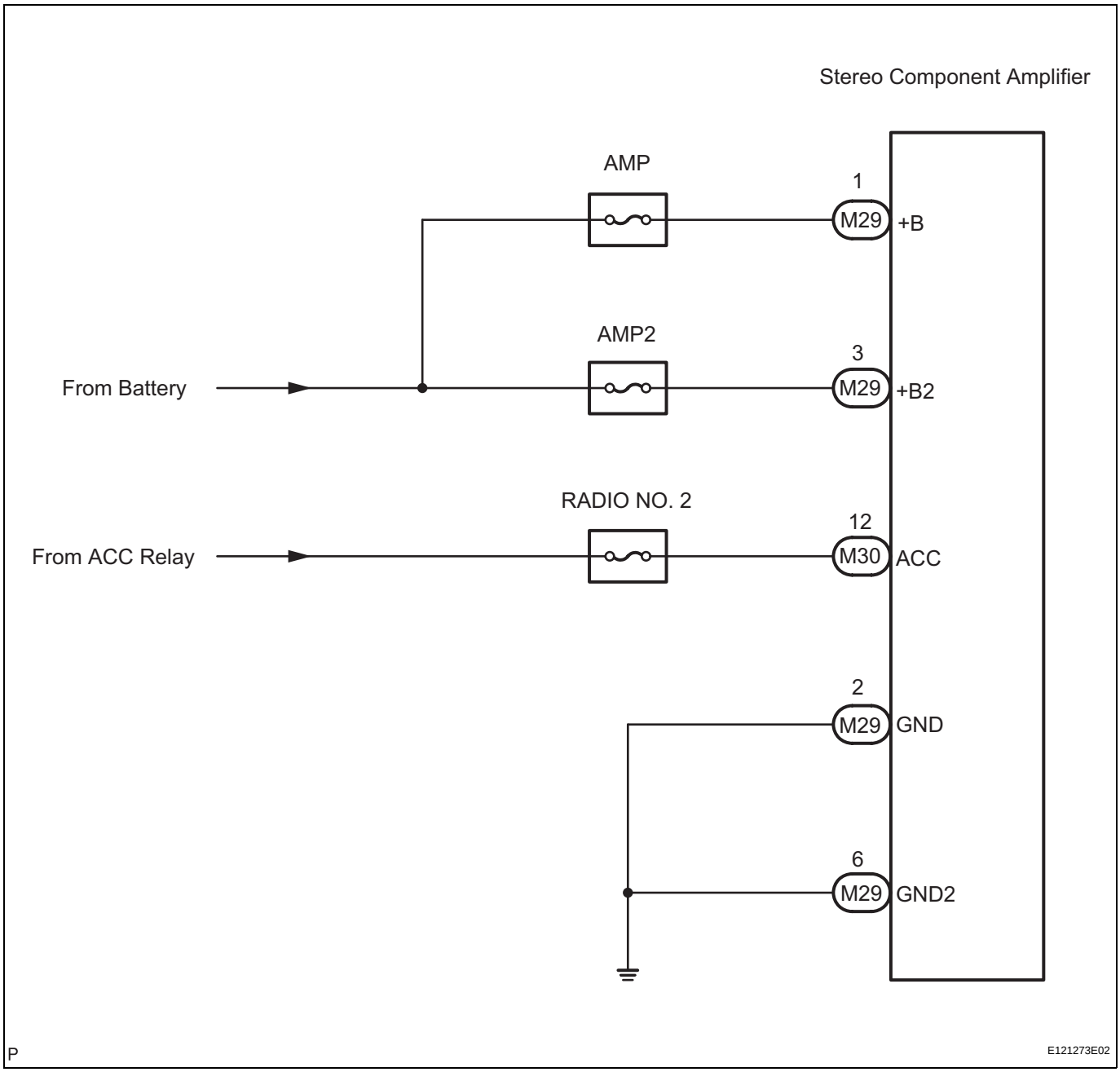

INSPECTION PROCEDURE

1	**INSPECT STEREO COMPONENT AMPLIFIER**

Wire Harness View:

with Rear Header Speaker

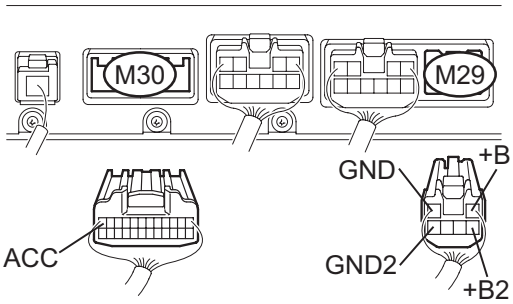

without Rear Header Speaker

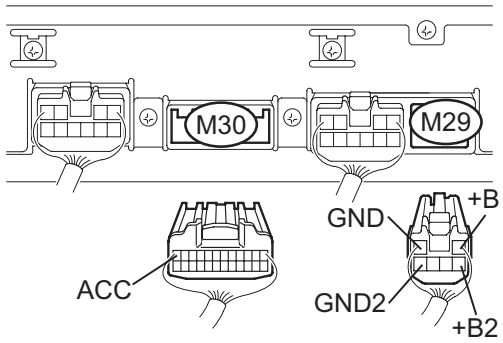

P E130430E01

(a) Disconnect the stereo component amplifier connectors.

(b) Measure the resistance according to the values in the table below.

Standard resistance

Tester Connection	Condition	Specified Condition
GND - Body ground	Always	Below 1 Ω
GND2 - Body ground	Always	Below 1 Ω

(c) Measure the voltage according to the values in the table below.

Standard voltage

Tester Connection	Condition	Specified Condition
+B - GND	Always	10 to 14 V
+B2 - GND	Always	10 to 14 V
ACC - GND	Engine switch on (ACC)	10 to 14 V

NG → **REPAIR OR REPLACE HARNESS OR CONNECTOR**

AV

OK

PROCEED TO NEXT CIRCUIT INSPECTION SHOWN IN PROBLEM SYMPTOMS TABLE

REMOVAL

1. **REMOVE SHIFT LEVER KNOB SUB-ASSEMBLY (See page IP-16)**
2. **REMOVE UPPER CONSOLE PANEL ASSEMBLY WITH FRONT ASH RECEPTACLE (See page IP-16)**
3. **REMOVE INSTRUMENT PANEL FINISH PANEL END LH (See page IP-13)**
4. **REMOVE INSTRUMENT PANEL FINISH PANEL END RH (See page IP-15)**
5. **REMOVE NO. 2 INSTRUMENT PANEL REGISTER ASSEMBLY (See page IP-17)**
6. **REMOVE INTEGRATION CONTROL PANEL WITH RADIO RECEIVER ASSEMBLY (w/o Navigation System)**
   (a) Remove the 4 bolts.
   (b) Pull the integration control panel with radio receiver assembly toward the rear of the vehicle and disengage the 2 clips.
   (c) Disconnect each connector and remove the integration control panel with radio receiver assembly.

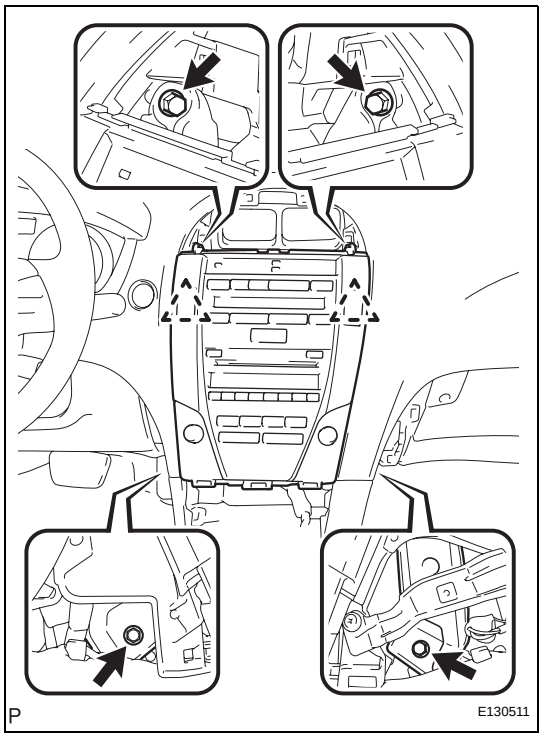

7. **REMOVE NO. 1 RADIO BRACKET (w/o Navigation System)**
   (a) Remove the 4 bolts, screw, and No. 1 radio bracket.

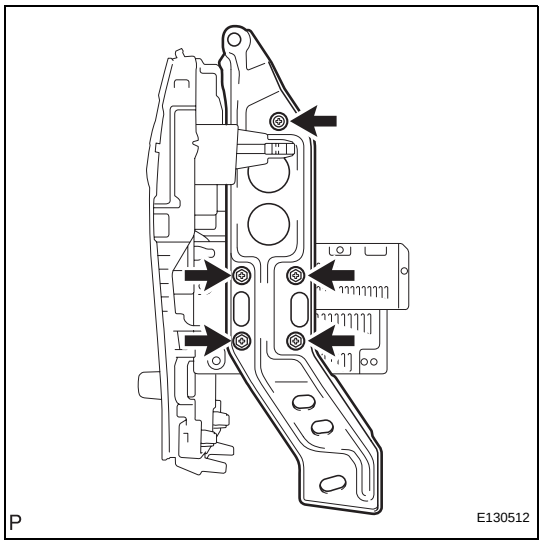

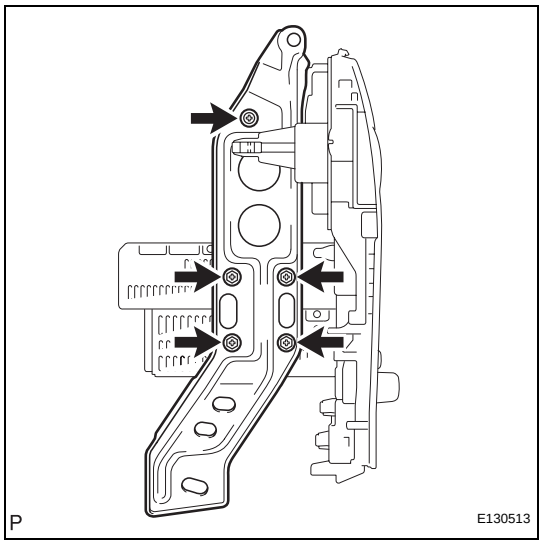

8. REMOVE NO. 2 RADIO BRACKET (w/o Navigation System)

(a) Remove the 4 bolts, screw, and No. 2 radio bracket.

9. REMOVE RADIO RECEIVER ASSEMBLY (w/o Navigation System)

(a) Disengage the 2 claws and 6 clips.

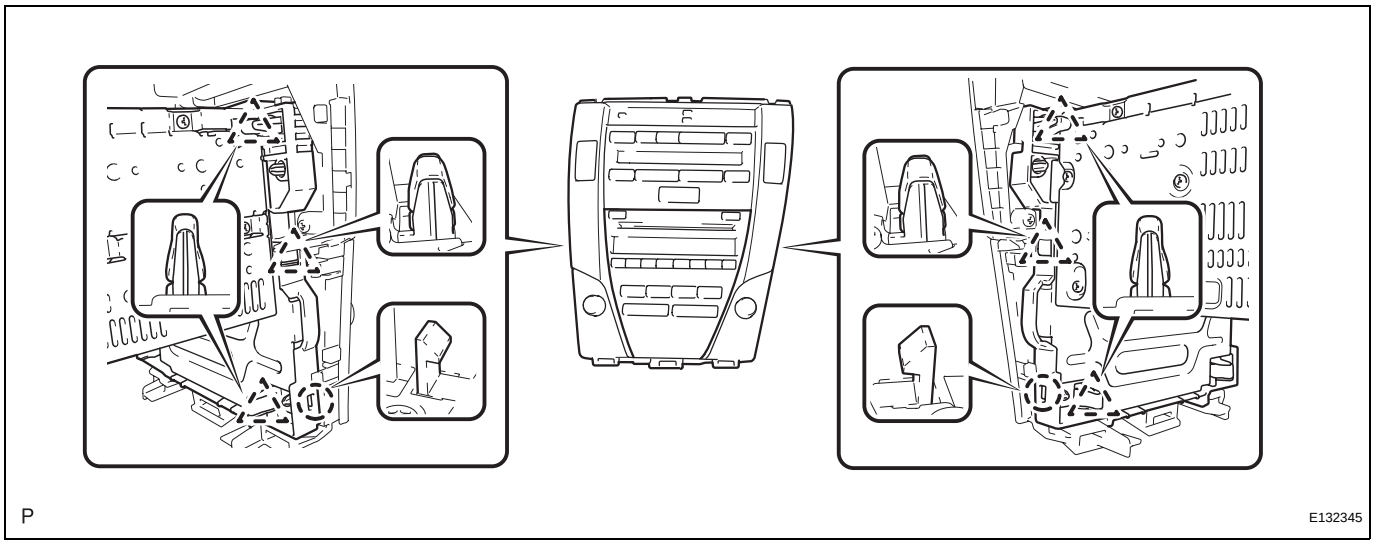

(b) Remove the radio receiver assembly.

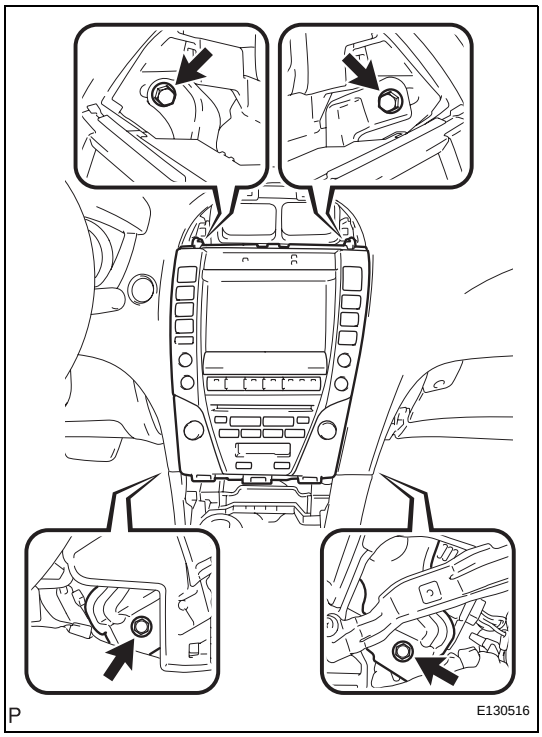

10. REMOVE MULTI-DISPLAY WITH RADIO RECEIVER ASSEMBLY (w/ Navigation System)

(a) Remove the 4 bolts.

(b) Pull the multi-display with radio receiver assembly toward the rear of the vehicle and disengage the 2 clips.

(c) Disconnect each connector and remove the multi-display with radio receiver assembly.

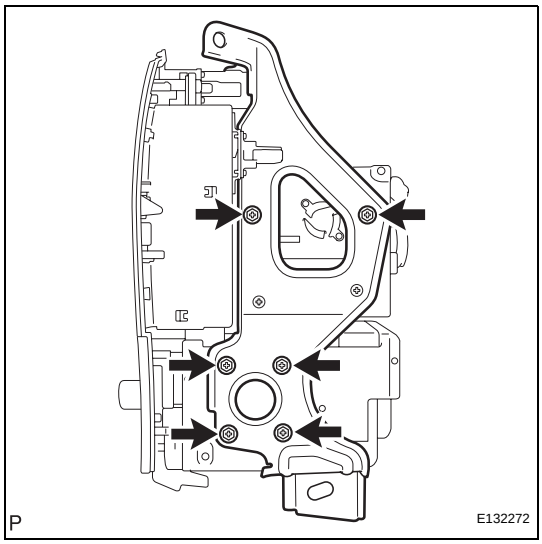

11. REMOVE NO. 1 RADIO BRACKET (w/ Navigation System)

(a) Remove the 6 bolts and No. 1 radio bracket.

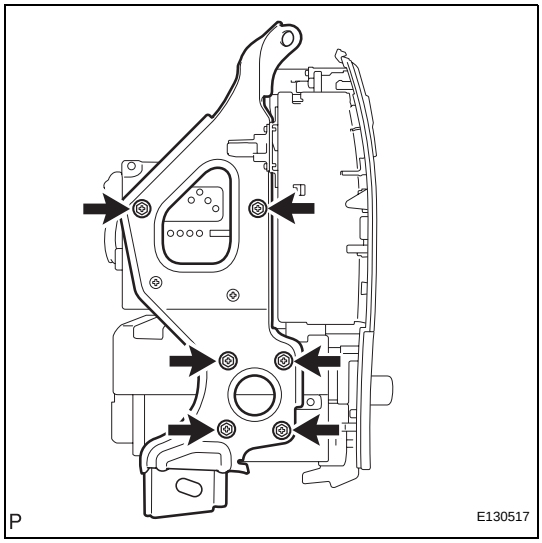

12. REMOVE NO. 2 RADIO BRACKET (w/ Navigation System)

(a) Remove the 6 bolts and No. 2 radio bracket.

13. REMOVE RADIO RECEIVER ASSEMBLY (w/ Navigation System)

(a) Disengage the 2 claws and 4 clips.

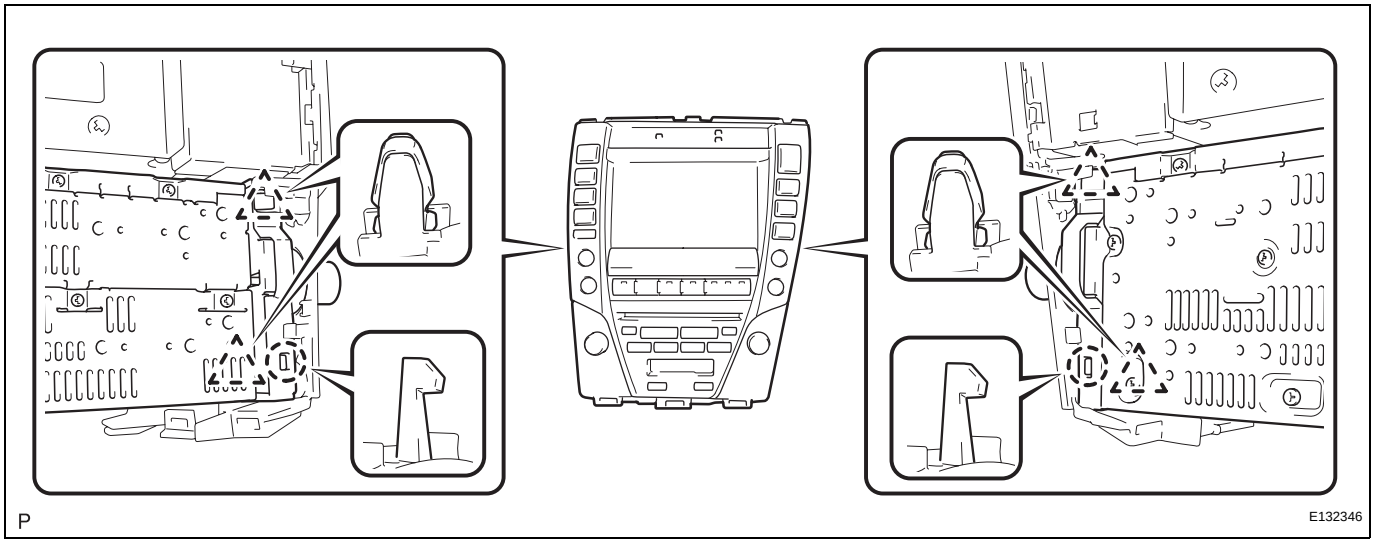

(b) Remove the radio receiver assembly.

INSTALLATION

1. **INSTALL RADIO RECEIVER ASSEMBLY (w/o Navigation System)**
   (a) Engage the 2 claws and 6 clips and install the radio receiver assembly.

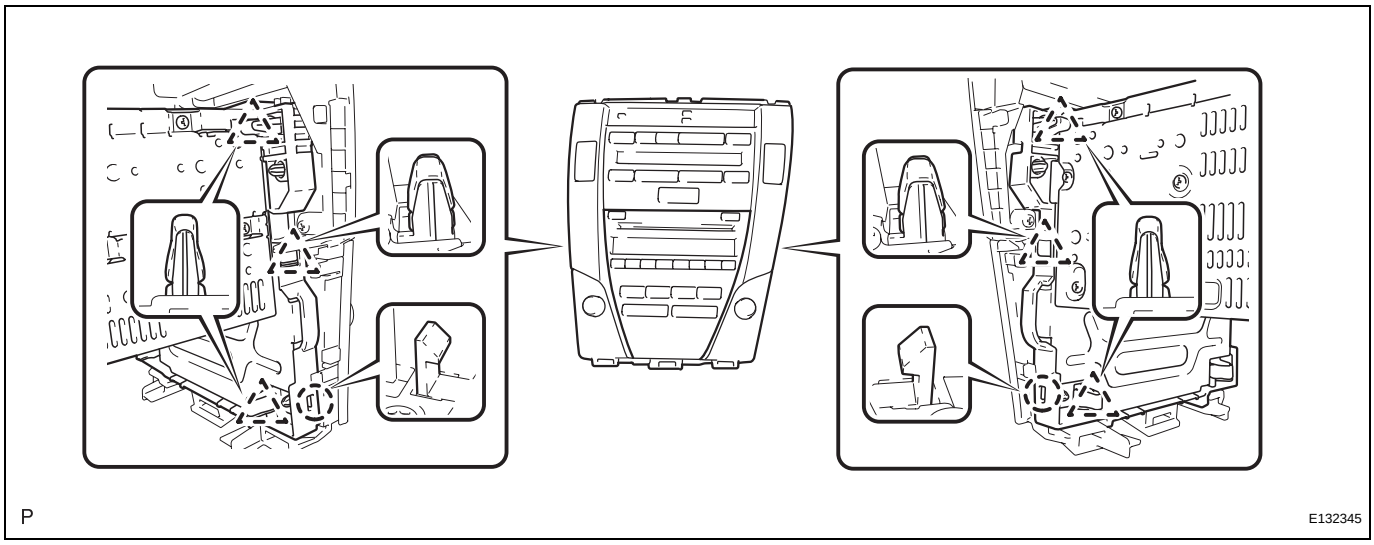

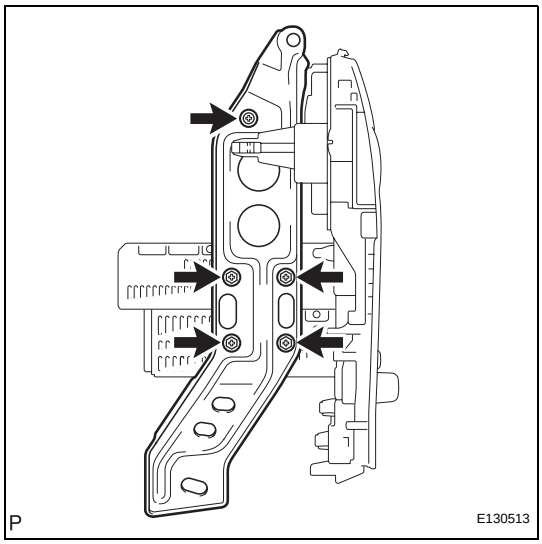

2. **INSTALL NO. 2 RADIO BRACKET (w/o Navigation System)**
   (a) Install the No. 2 radio bracket with the 4 bolts and screw.

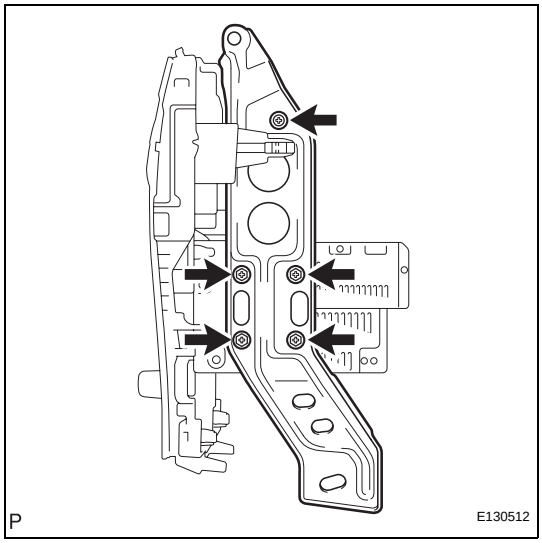

3. **INSTALL NO. 1 RADIO BRACKET (w/o Navigation System)**
   (a) Install the No. 1 radio bracket with the 4 bolts and screw.

4. **INSTALL INTEGRATION CONTROL PANEL WITH RADIO RECEIVER ASSEMBLY (w/o Navigation System)**
   (a) Connect each connector.

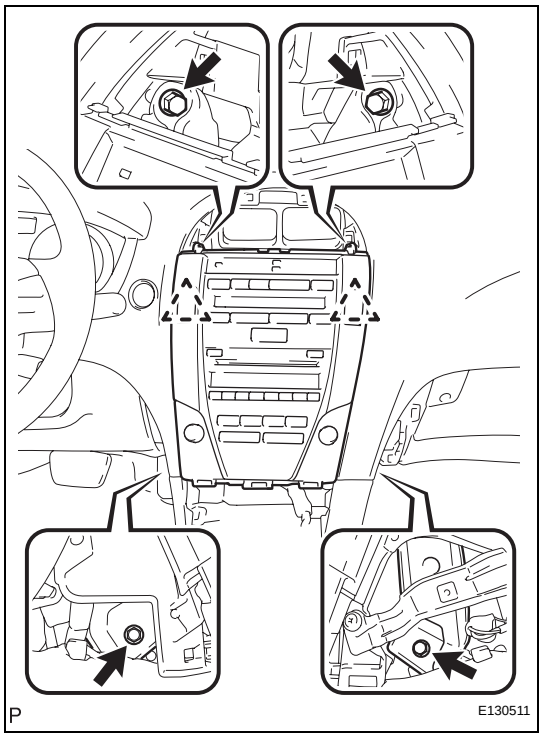

(b) Engage the 2 clips.
(c) Install the integration control panel with radio receiver assembly with the 4 bolts.

5. INSTALL RADIO RECEIVER ASSEMBLY (w/ Navigation System)

(a) Engage the 2 claws and 4 clips and install the radio receiver assembly.

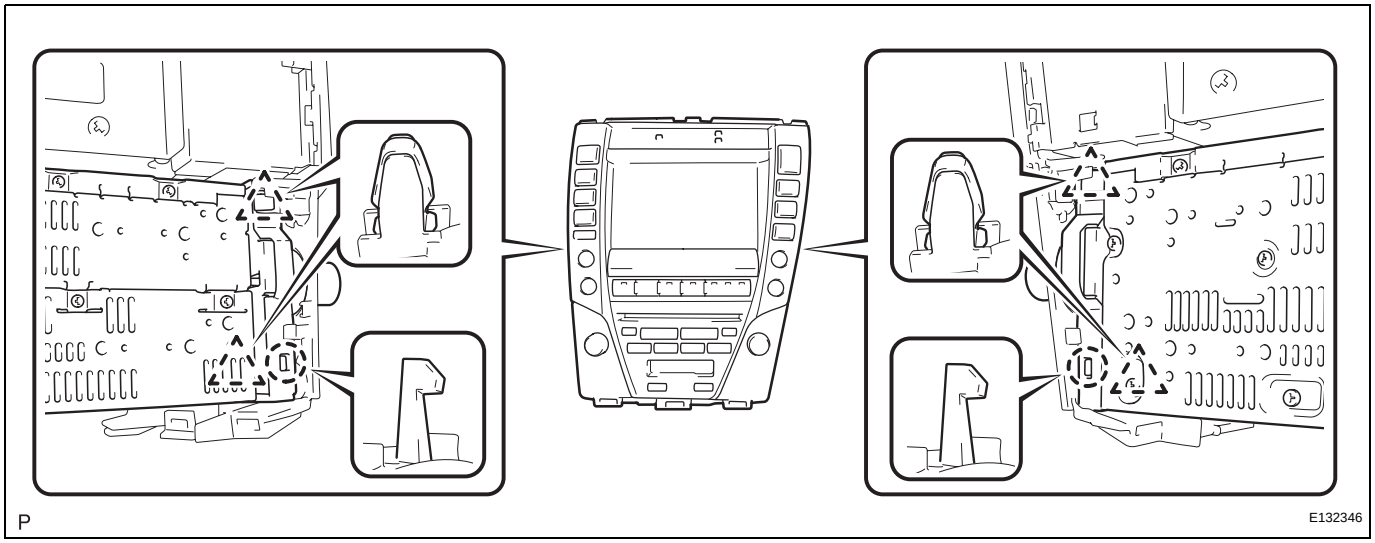

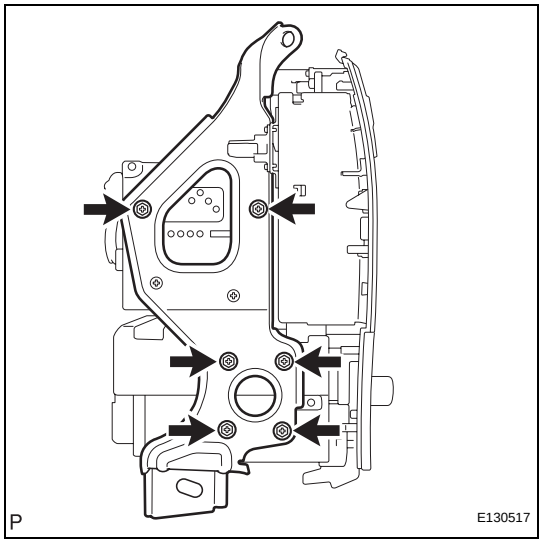

6. INSTALL NO. 2 RADIO BRACKET (w/ Navigation System)

(a) Install the No. 2 radio bracket with the 6 bolts.

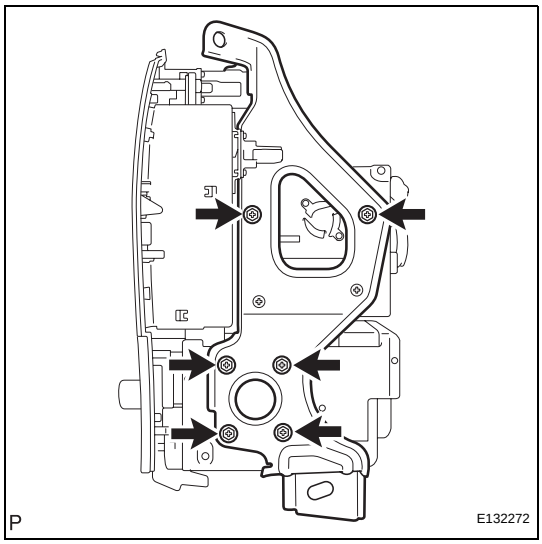

7. **INSTALL NO. 1 RADIO BRACKET (w/ Navigation System)**
   (a) Install the No. 1 radio bracket with the 6 bolts.

8. **INSTALL MULTI-DISPLAY WITH RADIO RECEIVER ASSEMBLY (w/ Navigation System)**
   (a) Connect each connector.

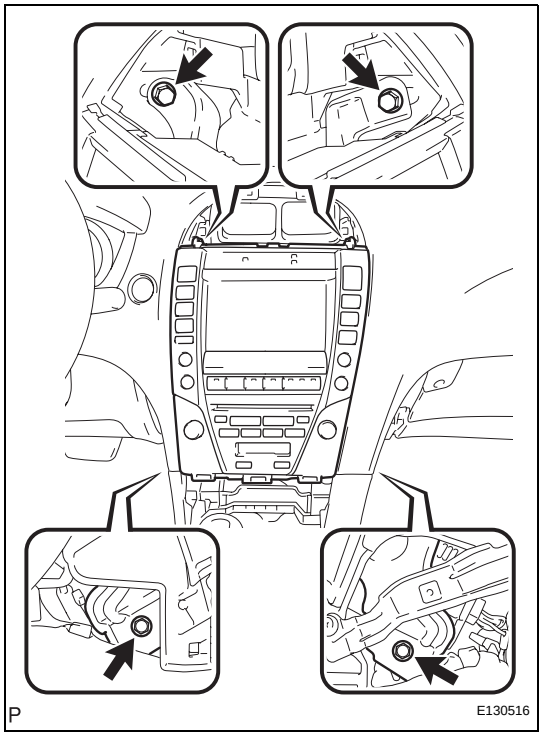

   (b) Engage the 2 clips.
   (c) Install the multi-display with radio receiver assembly with the 4 bolts.

9. **INSTALL INSTRUMENT PANEL FINISH PANEL END LH (See page IP-46)**

10. **INSTALL INSTRUMENT PANEL FINISH PANEL END RH (See page IP-44)**

11. **INSTALL UPPER CONSOLE PANEL ASSEMBLY WITH FRONT ASH RECEPTACLE (See page IP-42)**

12. **INSTALL NO. 2 INSTRUMENT PANEL REGISTER ASSEMBLY (See page IP-41)**

13. **INSTALL SHIFT LEVER KNOB SUB-ASSEMBLY (See page IP-42)**

14. **ADJUST CLOCK**

REMOVAL

1. **REMOVE LUGGAGE COMPARTMENT FLOOR MAT**
2. **REMOVE SPARE WHEEL COVER TRAY**
3. **REMOVE LUGGAGE HOLD BELT STRIKER ASSEMBLY (See page ED-82)**
4. **REMOVE NO. 1 LUGGAGE COMPARTMENT TRIM HOOK (See page ED-83)**
5. **REMOVE REAR FLOOR FINISH PLATE (See page ED-83)**
6. **REMOVE LUGGAGE COMPARTMENT INNER TRIM COVER RH**
   (a) Remove the 3 clips and the luggage compartment inner trim cover RH.
7. **REMOVE CLEARANCE WARNING ECU ASSEMBLY (w/ Intuitive Parking Assist System) (See page PM-93)**
8. **REMOVE SEAT BELT CONTROL ECU (w/ Pre-collision System) (See page SB-65)**
9. **REMOVE STEREO COMPONENT AMPLIFIER ASSEMBLY WITH BRACKET**
   (a) Disconnect each connector.
   (b) Remove the 3 nuts and the stereo component amplifier assembly with bracket.

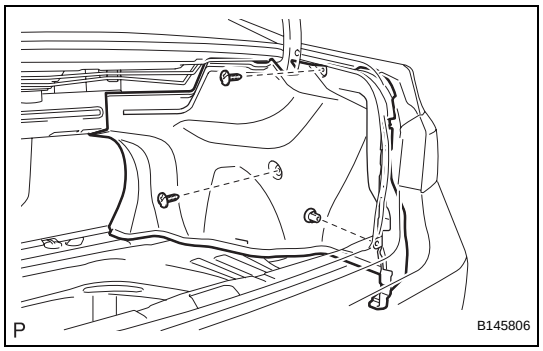

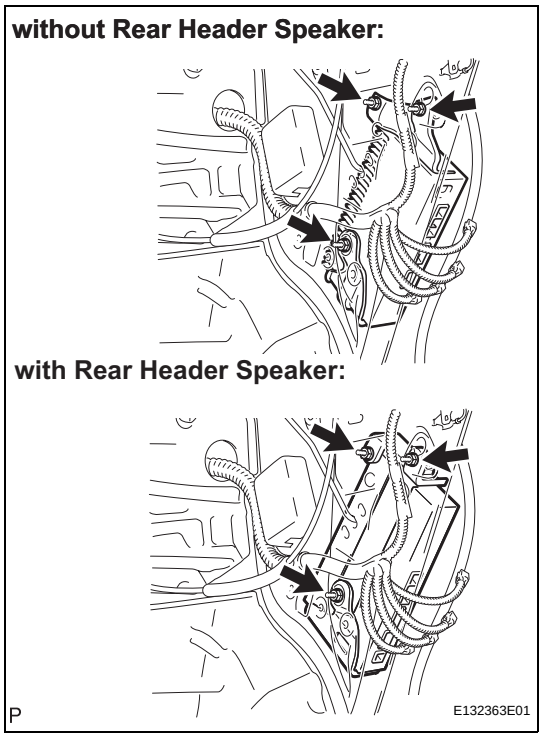

AV

without Rear Header Speaker:

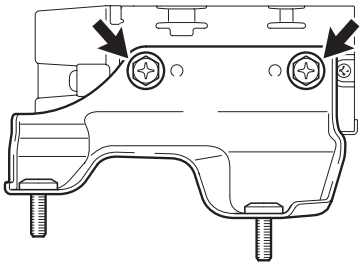

with Rear Header Speaker:

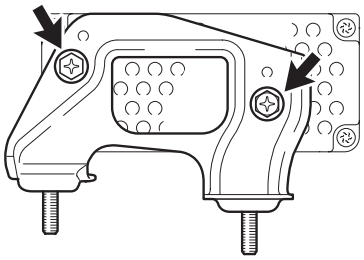

P E132279E01

10. REMOVE NO. 1 AMPLIFIER BRACKET

(a) Remove the 2 bolts and the No. 1 amplifier bracket.

AV

without Rear Header Speaker:

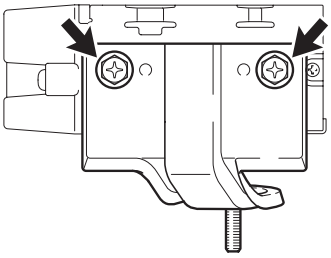

with Rear Header Speaker:

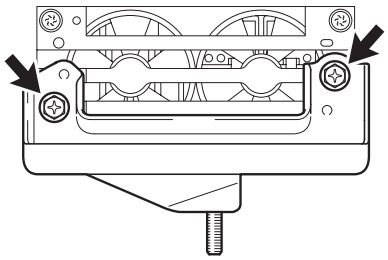

P E132280E01

11. REMOVE NO. 2 AMPLIFIER BRACKET

(a) Remove the 2 bolts and the No. 2 amplifier bracket.

12. REMOVE STEREO COMPONENT AMPLIFIER ASSEMBLY

INSTALLATION

1. INSTALL STEREO COMPONENT AMPLIFIER ASSEMBLY

2. INSTALL NO. 2 AMPLIFIER BRACKET

(a) Install the No. 2 amplifier bracket with the 2 bolts.

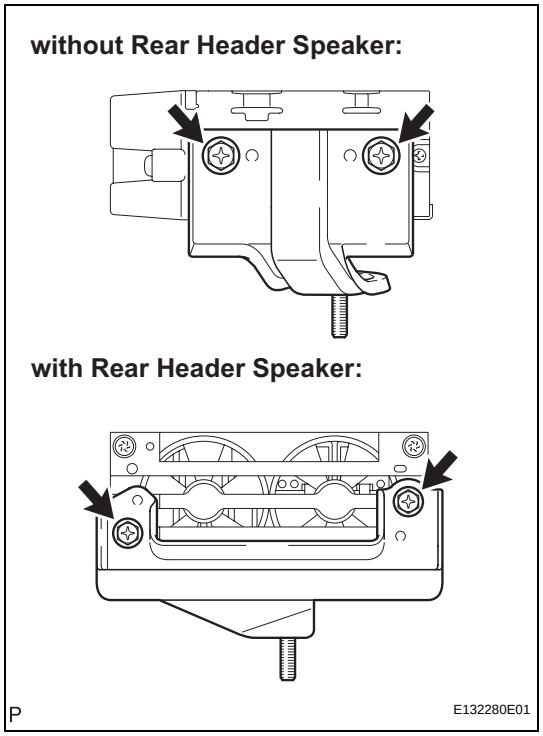

3. INSTALL NO. 1 AMPLIFIER BRACKET

(a) Install the No. 1 amplifier bracket with the 2 bolts.

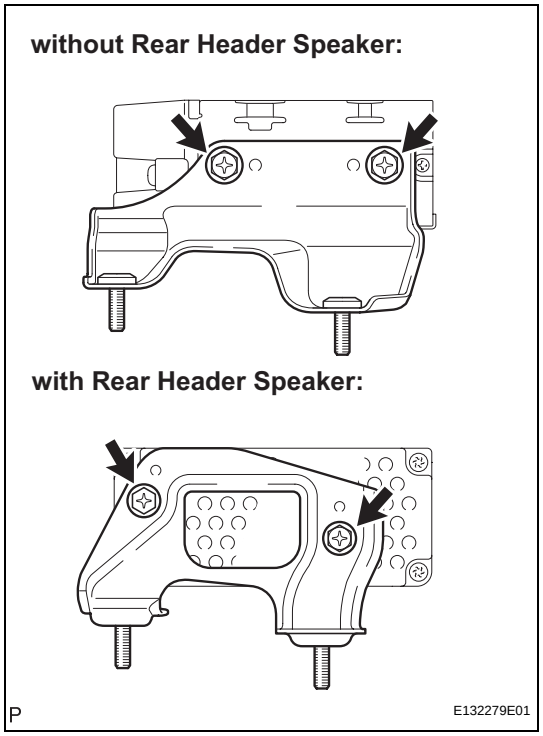

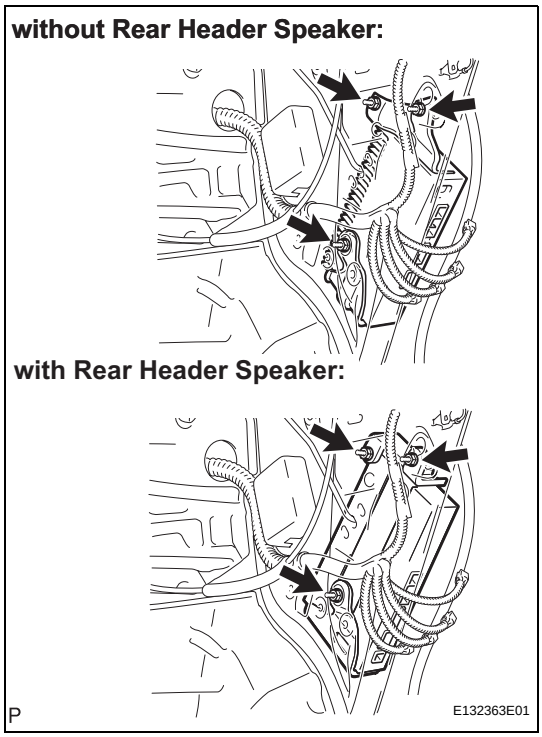

4. **INSTALL STEREO COMPONENT AMPLIFIER ASSEMBLY WITH BRACKET**
   (a) Install the stereo component amplifier assembly with bracket with the 3 nuts.
   (b) Connect each connector.

5. **INSTALL SEAT BELT CONTROL ECU (w/ Pre-collision System) (See page SB-65)**

6. **INSTALL CLEARANCE WARNING ECU ASSEMBLY (w/ Intuitive Parking Assist System) (See page PM-93)**

AV

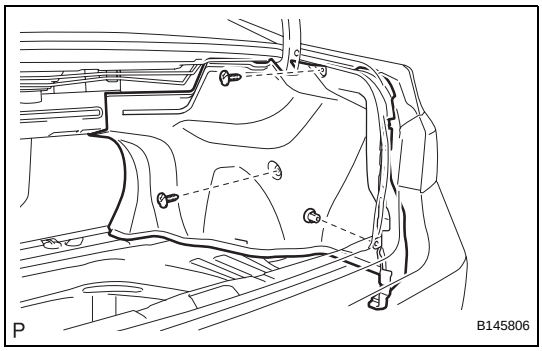

7. **INSTALL LUGGAGE COMPARTMENT INNER TRIM COVER RH**
   (a) Install the luggage compartment inner trim cover RH with the 3 clips.

8. **INSTALL REAR FLOOR FINISH PLATE (See page ED-88)**

9. **INSTALL NO. 1 LUGGAGE COMPARTMENT TRIM HOOK (See page ED-89)**

10. **INSTALL LUGGAGE HOLD BELT STRIKER ASSEMBLY (See page ED-89)**

11. **INSTALL SPARE WHEEL COVER TRAY**

12. **INSTALL LUGGAGE COMPARTMENT FLOOR MAT**

ON-VEHICLE INSPECTION

1. INSPECT FRONT NO. 1 SPEAKER

HINT:
Remove interior parts so that the front No. 1 speaker can be seen.

(a) Check the speaker installation.
OK:
The speaker is securely installed.
If the result is not as specified, reinstall the front No. 1 speaker.

(b) Visually check the speaker.
OK:
The cone paper of the speaker is not torn.
If the result is not as specified, replace the front No. 1 speaker.

(c) Speaker resistance check
(1) Disconnect the front No. 1 speaker connector.
(2) Measure the resistance between the terminals of the speaker.
Standard resistance:
Approximately 4 Ω
If the result is not as specified, replace the front No. 1 speaker.

2. INSPECT FRONT NO. 2 SPEAKER

HINT:
Remove interior parts so that the front No. 2 speaker can be seen.

(a) Check the speaker installation.
OK:
The speaker is securely installed.
If the result is not as specified, reinstall the front No. 2 speaker.

(b) Visually check the speaker.
OK:
The cone paper of the speaker is not torn.
If the result is not as specified, replace the front No. 2 speaker.

REMOVAL

1. **REMOVE FRONT DOOR INSIDE HANDLE BEZEL PLUG (See page ED-32)**
2. **REMOVE FRONT DOOR ARMREST BASE PANEL ASSEMBLY (See page ED-33)**
3. **REMOVE COURTESY LIGHT ASSEMBLY (See page ED-34)**
4. **REMOVE DOOR ARMREST COVER (See page ED-34)**
5. **REMOVE FRONT DOOR TRIM BOARD SUB-ASSEMBLY (See page ED-34)**
6. **REMOVE FRONT DOOR INNER GLASS WEATHERSTRIP (See page ED-35)**
7. **REMOVE FRONT NO. 1 SPEAKER ASSEMBLY**
   (a) Disconnect the connector.
   (b) Remove the 4 screws and front No. 1 speaker assembly.
   NOTICE:
   Do not touch the cone part of the speaker.

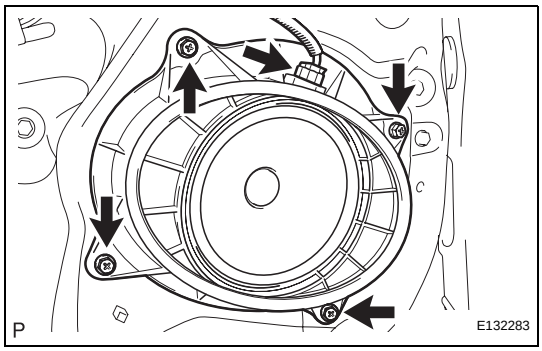

8. **REMOVE FRONT DOOR SCUFF PLATE (See page IR-39)**
9. **REMOVE FRONT DOOR OPENING TRIM COVER (See page IR-39)**
10. **REMOVE SIDE INSTRUMENT PANEL (See page IP-12)**
11. **REMOVE FRONT PILLAR GARNISH (See page IR-39)**
12. **REMOVE NO. 1 INSTRUMENT PANEL SPEAKER PANEL SUB-ASSEMBLY**
    (a) Using a screwdriver, disengage the 2 clips.
    HINT:
    Tape the screwdriver tip before use.
    (b) Disengage the 2 guides and remove the No. 1 instrument panel speaker panel sub-assembly.

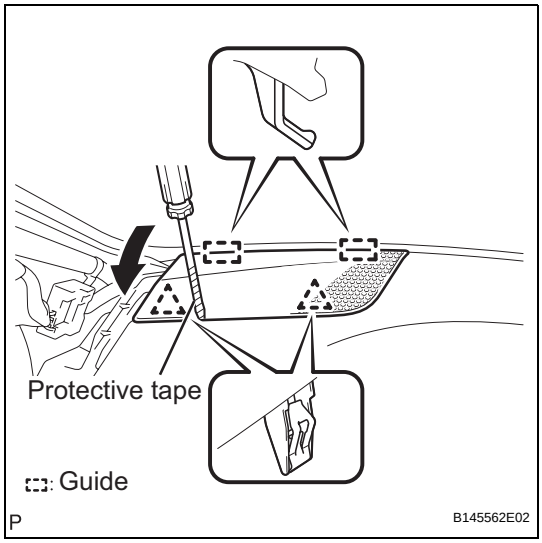

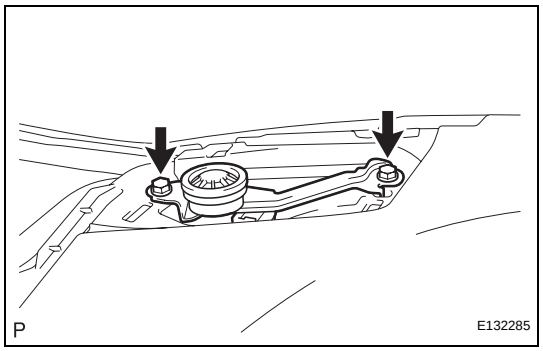

13. REMOVE FRONT NO. 2 SPEAKER ASSEMBLY

(a) Remove the 2 bolts and front No. 2 speaker assembly.

(b) Lift the front No. 2 speaker assembly and disconnect the connector to remove the front No. 2 speaker assembly.

NOTICE:

Do not touch the cone part of the speaker.

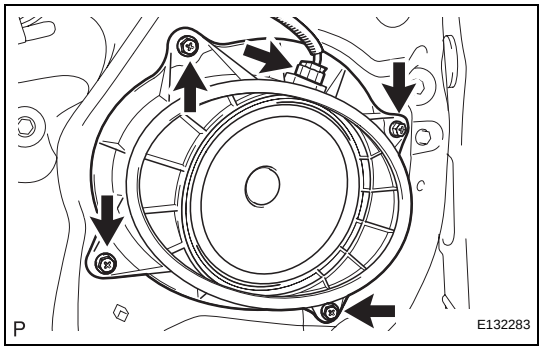

INSTALLATION

1. INSTALL FRONT NO. 1 SPEAKER ASSEMBLY

(a) Install the front No. 1 speaker assembly with the 4 screws.

(b) Connect the connector.

2. INSTALL FRONT DOOR INNER GLASS WEATHERSTRIP (See page ED-52)

3. INSTALL FRONT DOOR TRIM BOARD SUB-ASSEMBLY (See page ED-52)

4. INSTALL COURTESY LIGHT ASSEMBLY (See page ED-53)

5. INSTALL DOOR ARMREST COVER (See page ED-53)

6. INSTALL FRONT DOOR ARMREST BASE PANEL ASSEMBLY (See page ED-53)

7. INSTALL FRONT DOOR INSIDE HANDLE BEZEL PLUG (See page ED-54)

8. INSTALL FRONT NO. 2 SPEAKER ASSEMBLY

(a) Connect the connector.

(b) Install the front No. 2 speaker assembly with the 2 bolts.

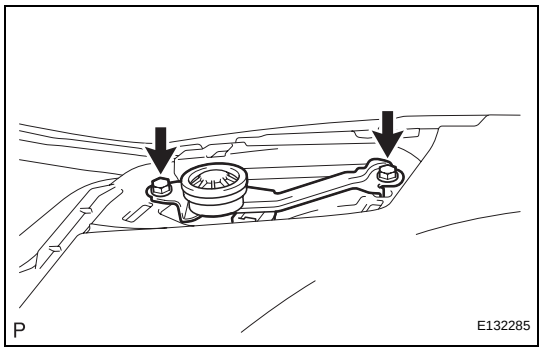

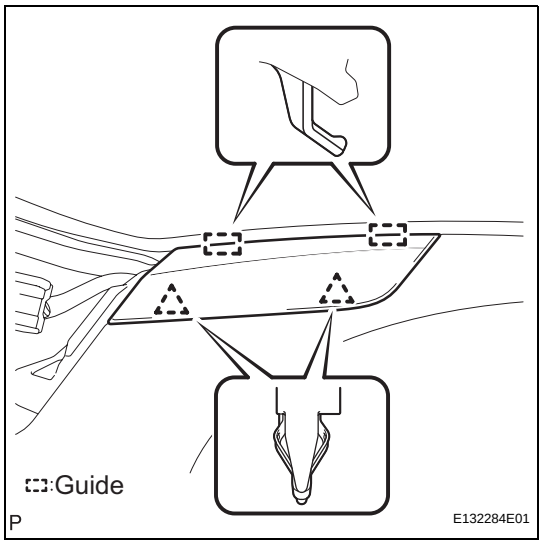

9. INSTALL NO. 1 INSTRUMENT PANEL SPEAKER PANEL SUB-ASSEMBLY

(a) Engage the 2 guides.

(b) Engage the 2 clips and install the No. 1 instrument panel speaker panel sub-assembly.

10. INSTALL FRONT PILLAR GARNISH (See page IR-64)

11. INSTALL SIDE INSTRUMENT PANEL (See page IP-47)

12. INSTALL FRONT DOOR OPENING TRIM COVER (See page IR-64)

13. INSTALL FRONT DOOR SCUFF PLATE (See page IR-65)

INSTALLATION

1. INSTALL FRONT STEREO COMPONENT SPEAKER ASSEMBLY

(a) Connect the connector.

(b) Install the front stereo component speaker assembly with the 2 bolts.

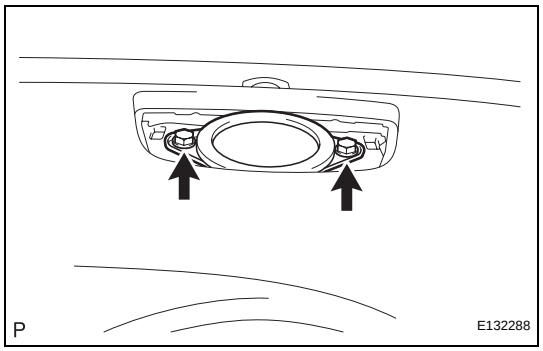

2. INSTALL NO. 1 SPEAKER HOLE COVER

(a) Engage the 4 clips and install the No. 1 speaker hole cover.

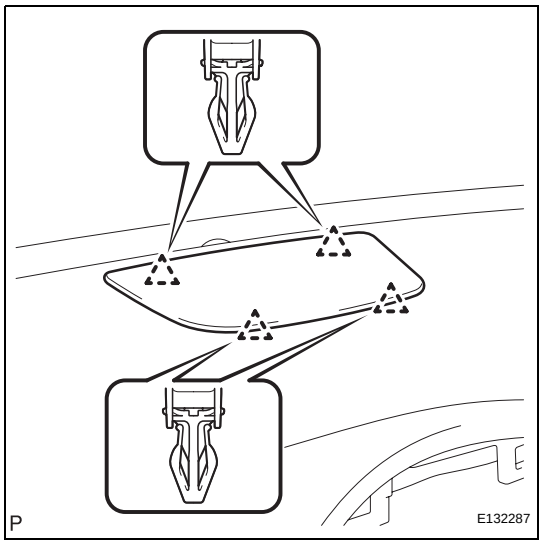

REMOVAL

1. **REMOVE REAR DOOR INSIDE HANDLE BEZEL PLUG (See page ED-58)**
2. **REMOVE REAR DOOR ARMREST BASE PANEL ASSEMBLY (See page ED-59)**
3. **REMOVE REAR DOOR ARMREST COVER (See page ED-59)**
4. **REMOVE COURTESY LIGHT ASSEMBLY (See page ED-59)**
5. **REMOVE REAR DOOR TRIM BOARD SUB-ASSEMBLY (See page ED-60)**
6. **REMOVE REAR DOOR INNER GLASS WEATHERSTRIP (See page ED-61)**
7. **REMOVE REAR SPEAKER ASSEMBLY**
   (a) Disconnect the connector.
   (b) Remove the 3 screws and the rear speaker assembly.
   NOTICE:
   Do not touch the cone part of the speaker.

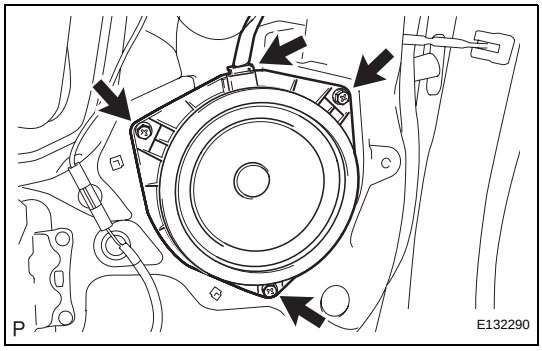

8. **REMOVE REAR NO. 2 SPEAKER ASSEMBLY (w/ Rear Header Speaker)**
   (a) Remove the 2 screws and the rear No. 2 speaker assembly.
   NOTICE:
   Do not touch the cone part of the speaker.

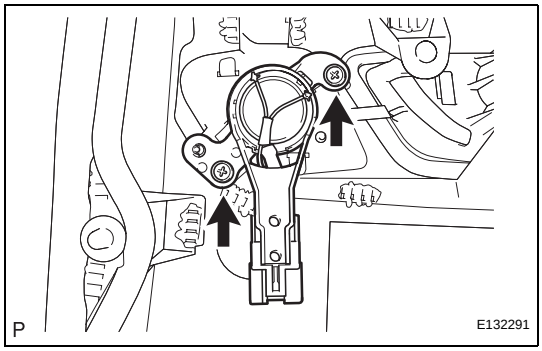

INSTALLATION

1. **INSTALL REAR SPEAKER ASSEMBLY**
   (a) Install the rear speaker assembly with the 3 screws.
   (b) Connect the connector.

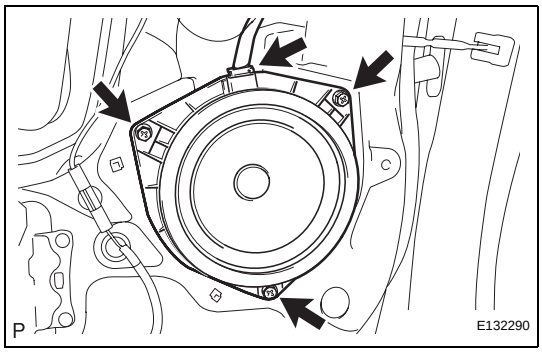

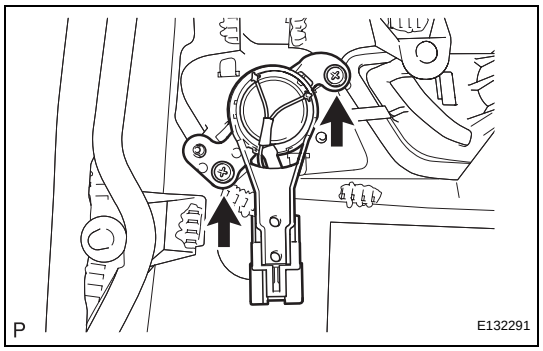

2. **INSTALL REAR NO. 2 SPEAKER ASSEMBLY (w/ Rear Header Speaker)**
   (a) Install the rear No. 2 speaker assembly with the 2 screws.
3. **INSTALL REAR DOOR INNER GLASS WEATHERSTRIP (See page ED-76)**
4. **INSTALL REAR DOOR TRIM BOARD SUB-ASSEMBLY (See page ED-76)**
5. **INSTALL COURTESY LIGHT ASSEMBLY (See page ED-77)**
6. **INSTALL REAR DOOR ARMREST COVER (See page ED-77)**
7. **INSTALL REAR DOOR ARMREST BASE PANEL ASSEMBLY (See page ED-78)**
8. **INSTALL REAR DOOR INSIDE HANDLE BEZEL PLUG (See page ED-78)**

ON-VEHICLE INSPECTION

1. INSPECT STEREO COMPONENT SPEAKER

HINT:
Remove interior parts so that the stereo component speaker can be seen.

(a) Check the speaker installation.
OK:
The speaker is securely installed.
If the result is not as specified, reinstall the stereo component speaker.

(b) Visually check the speaker.
OK:
The cone paper of the speaker is not torn.
If the result is not as specified, replace the stereo component speaker.

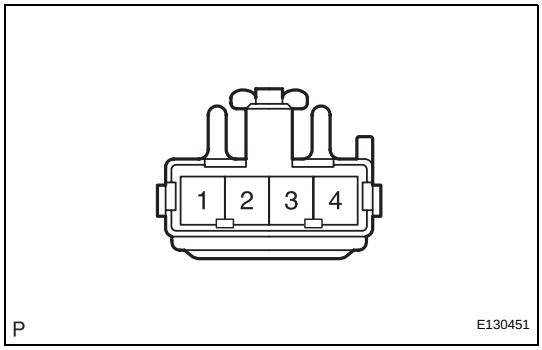

(c) Speaker resistance check
(1) Disconnect the stereo component speaker connector.
(2) Measure the resistance between the terminals of the speaker.
NOTICE:
The speaker should not be removed for checking.
Standard resistance:
With Rear Header Speaker

Tester connection	Condition	Specified condition
2 - 4	Always	Approximately 8 Ω

Without Rear Header Speaker

Tester connection	Condition	Specified condition
1 - 2	Always	Approximately 2.5 Ω
3 - 4	Always	Approximately 2.5 Ω

If the result is not as specified, replace the stereo component speaker.

2. INSPECT REAR HEADER SPEAKER

HINT:
Remove interior parts so that the rear header speaker can be seen.

(a) Check the speaker installation.
OK:
The speaker is securely installed.
If the result is not as specified, reinstall the rear header speaker.

(b) Visually check the speaker.
OK:
The cone paper of the speaker is not torn.
If the result is not as specified, replace the rear header speaker.

(c) Speaker resistance check
(1) Disconnect the rear header speaker connector.

AV

(2) Measure the resistance between the terminals of the speaker.
Standard resistance:
Approximately 8 Ω
If the result is not as specified, replace the rear header speaker.

REMOVAL

1. **DISCONNECT CABLE FROM NEGATIVE BATTERY TERMINAL (w/ Rear Seat Side Airbag)**
   CAUTION:
   Wait for 90 seconds after disconnecting the cable to prevent airbag deployment (See page RS-1).
2. **REMOVE REAR SEAT CUSHION ASSEMBLY (See page SE-113)**
3. **REMOVE REAR SEAT HEADREST ASSEMBLY**
4. **REMOVE REAR CENTER SEAT HEADREST ASSEMBLY**
5. **REMOVE REAR SEATBACK ASSEMBLY (See page SE-113)**
6. **REMOVE REAR DOOR SCUFF PLATE LH (See page IR-40)**
7. **REMOVE REAR DOOR SCUFF PLATE RH (See page IR-42)**
8. **REMOVE REAR SEAT SIDE GARNISH LH (w/o Rear Seat Side Airbag) (See page IR-41)**
9. **REMOVE REAR SEAT SIDE AIRBAG ASSEMBLY LH (w/ Rear Seat Side Airbag) (See page RS-460)**
10. **REMOVE REAR SEAT SIDE GARNISH RH (w/o Rear Seat Side Airbag) (See page IR-43)**
11. **REMOVE REAR SEAT SIDE AIRBAG ASSEMBLY RH (w/ Rear Seat Side Airbag) (See page IR-43)**
12. **REMOVE ROOF SIDE INNER GARNISH ASSEMBLY LH (See page IR-42)**
13. **REMOVE ROOF SIDE INNER GARNISH ASSEMBLY RH (See page IR-43)**
14. **REMOVE REAR SEAT SHOULDER BELT HOLE COVER (See page SB-41)**
15. **DISCONNECT REAR SEAT 3 POINT TYPE BELT ASSEMBLY LH (See page SB-40)**
16. **DISCONNECT REAR SEAT 3 POINT TYPE BELT ASSEMBLY RH (See page SB-40)**
17. **DISCONNECT REAR SEAT INNER WITH CENTER BELT ASSEMBLY RH (See page SB-40)**
18. **REMOVE CENTER STOP LIGHT SET (See page LI-159)**
19. **REMOVE PACKAGE TRAY TRIM PANEL ASSEMBLY (w/o Rear Sunshade) (See page SB-41)**
20. **REMOVE PACKAGE TRAY TRIM PANEL ASSEMBLY (w/ Rear Sunshade) (See page IR-20)**
21. **REMOVE NO. 2 PACKAGE TRAY TRIM PANEL ASSEMBLY (w/ Rear Sunshade) (See page IR-21)**

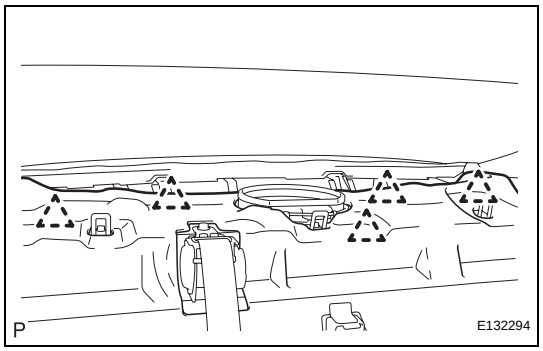

22. REMOVE STEREO COMPONENT SPEAKER ASSEMBLY

(a) Remove the 5 clips and turn back the carpet toward the front of the vehicle.

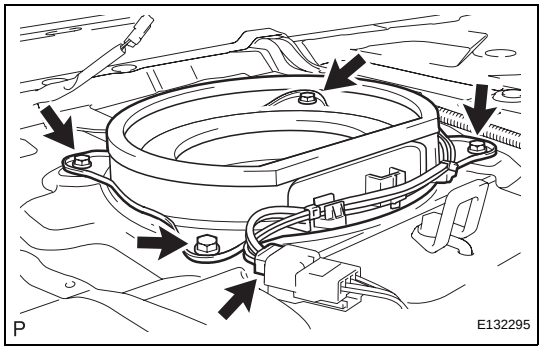

(b) Disconnect the connector.

(c) Remove the 4 bolts and stereo component speaker assembly.

NOTICE:

Do not touch the cone part of the speaker.

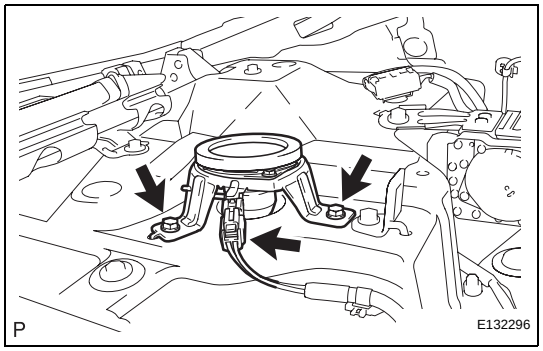

23. REMOVE REAR HEADER SPEAKER ASSEMBLY (w/ Rear Header Speaker)

(a) Disconnect the connector.

(b) Remove the 2 bolts and the rear header speaker assembly.

NOTICE:

Do not touch the cone part of the speaker.

INSTALLATION

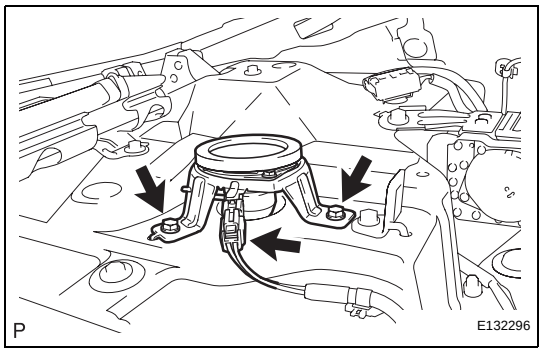

1. INSTALL REAR HEADER SPEAKER ASSEMBLY (w/ Rear Header Speaker)

(a) Install the rear header speaker assembly with the 2 bolts.

(b) Connect the connector.

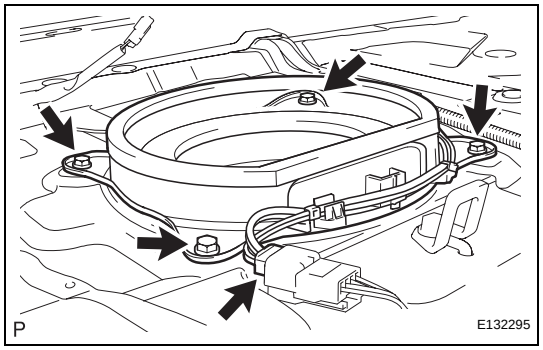

2. INSTALL STEREO COMPONENT SPEAKER ASSEMBLY

(a) Install the stereo component speaker assembly with the 4 bolts.

(b) Connect the connector.

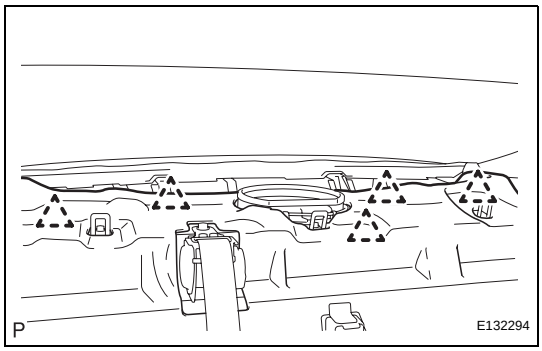

(c) Install the carpet with the 5 clips.

3. **INSTALL PACKAGE TRAY TRIM PANEL ASSEMBLY (w/o Rear Sunshade) (See page SB-42)**
4. **INSTALL NO. 2 PACKAGE TRAY TRIM PANEL ASSEMBLY (w/ Rear Sunshade) (See page IR-22)**
5. **INSTALL PACKAGE TRAY TRIM PANEL ASSEMBLY (w/ Rear Sunshade) (See page IR-23)**
6. **INSTALL CENTER STOP LIGHT SET (See page LI-159)**
7. **INSTALL REAR SEAT SHOULDER BELT HOLE COVER (See page SB-42)**
8. **CONNECT REAR SEAT INNER WITH CENTER BELT ASSEMBLY RH (See page SB-42)**
9. **CONNECT REAR SEAT 3 POINT TYPE BELT ASSEMBLY LH (See page SB-42)**
10. **CONNECT REAR SEAT 3 POINT TYPE BELT ASSEMBLY RH (See page SB-43)**
11. **INSTALL ROOF SIDE INNER GARNISH ASSEMBLY LH (See page IR-62)**
12. **INSTALL ROOF SIDE INNER GARNISH ASSEMBLY RH (See page IR-65)**
13. **INSTALL REAR SEAT SIDE GARNISH LH (w/o Rear Seat Side Airbag) (See page IR-62)**
14. **INSTALL REAR SEAT SIDE AIRBAG ASSEMBLY LH (w/ Rear Seat Side Airbag) (See page RS-460)**
15. **INSTALL REAR SEAT SIDE GARNISH RH (w/o Rear Seat Side Airbag) (See page IR-65)**
16. **INSTALL REAR SEAT SIDE AIRBAG ASSEMBLY RH (w/ Rear Seat Side Airbag) (See page IR-65)**
17. **INSTALL REAR DOOR SCUFF PLATE LH (See page IR-63)**
18. **INSTALL REAR DOOR SCUFF PLATE RH (See page IR-65)**
19. **INSTALL REAR SEATBACK ASSEMBLY (See page SE-121)**
20. **INSTALL REAR CENTER SEAT HEADREST ASSEMBLY**
21. **INSTALL REAR SEAT HEADREST ASSEMBLY**
22. **INSTALL REAR SEAT CUSHION ASSEMBLY (See page SE-121)**
23. **CONNECT CABLE TO NEGATIVE BATTERY TERMINAL (w/ Rear Seat Side Airbag)**

24. PERFORM INITIALIZATION (w/ Rear Seat Side Airbag)
NOTICE:
Some systems need initialization after reconnecting the cable to the negative battery terminal (See page IN-33).

25. INSPECT SRS WARNING LIGHT (w/ Rear Seat Side Airbag)
(See page RS-37)

REMOVAL

1. **PRECAUTION**
   (See page IP-1)
2. **ALIGN FRONT WHEELS FACING STRAIGHT AHEAD**
3. **REMOVE SEAT BELT ANCHOR COVER CAP LH (See page SB-22)**
4. **DISCONNECT FRONT SEAT OUTER BELT ASSEMBLY LH (See page SB-22)**
5. **REMOVE FRONT SEAT HEADREST ASSEMBLY (for Driver Seat)**
6. **REMOVE FRONT SEAT OUTER TRACK BRACKET COVER LH (See page SE-83)**
7. **REMOVE FRONT SEAT INNER TRACK BRACKET COVER LH (See page SE-83)**
8. **REMOVE FRONT SEAT REAR OUTER TRACK BRACKET COVER LH (See page SE-83)**
9. **REMOVE FRONT SEAT REAR INNER TRACK BRACKET COVER LH (See page SE-83)**
10. **REMOVE FRONT SEAT ASSEMBLY LH (See page SE-83)**
11. **REMOVE SEAT BELT ANCHOR COVER CAP RH (See page RS-490)**
12. **DISCONNECT FRONT SEAT OUTER BELT ASSEMBLY RH (See page RS-490)**
13. **REMOVE FRONT SEAT HEADREST ASSEMBLY (for Front Passenger Seat)**
14. **REMOVE FRONT SEAT OUTER TRACK BRACKET COVER RH (See page RS-490)**
15. **REMOVE FRONT SEAT INNER TRACK BRACKET COVER RH (See page RS-490)**
16. **REMOVE FRONT SEAT REAR OUTER TRACK BRACKET COVER RH (See page RS-490)**
17. **REMOVE FRONT SEAT REAR INNER TRACK BRACKET COVER RH (See page RS-490)**
18. **REMOVE FRONT SEAT ASSEMBLY RH (See page RS-491)**
19. **REMOVE LOWER NO. 3 STEERING WHEEL COVER (See page RS-367)**
20. **REMOVE LOWER NO. 2 STEERING WHEEL COVER (See page RS-367)**
21. **REMOVE STEERING PAD (See page RS-367)**
22. **REMOVE STEERING WHEEL ASSEMBLY (See page SR-80)**

23. **REMOVE FRONT DOOR SCUFF PLATE LH (See page IR-39)**
24. **REMOVE FRONT DOOR OPENING TRIM COVER LH (See page IR-39)**
25. **REMOVE SIDE INSTRUMENT PANEL LH (See page IP-12)**
26. **REMOVE INSTRUMENT PANEL FINISH PANEL END LH (See page IP-13)**
27. **REMOVE LOWER INSTRUMENT PANEL SUB-ASSEMBLY (See page IP-13)**
28. **REMOVE STEERING COLUMN COVER (See page IP-13)**
29. **REMOVE TILT AND TELESCOPIC SWITCH (See page SR-80)**
30. **REMOVE TURN SIGNAL SWITCH ASSEMBLY WITH SPIRAL CABLE SUB-ASSEMBLY (See page SR-80)**
31. **REMOVE INSTRUMENT CLUSTER FINISH PANEL SUB-ASSEMBLY (See page IP-14)**
32. **REMOVE COMBINATION METER ASSEMBLY (See page IP-14)**
33. **REMOVE NO. 1 SWITCH HOLE BASE (See page IP-14)**
34. **REMOVE INSTRUMENT PANEL FINISH PANEL END RH (See page IP-15)**
35. **REMOVE FRONT DOOR SCUFF PLATE RH (See page IR-42)**
36. **REMOVE FRONT DOOR OPENING TRIM COVER RH (See page IR-42)**
37. **REMOVE NO. 2 INSTRUMENT PANEL UNDER COVER SUB-ASSEMBLY (See page IP-15)**
38. **REMOVE SIDE INSTRUMENT PANEL RH (See page IP-15)**
39. **REMOVE FRONT PASSENGER SIDE KNEE AIRBAG ASSEMBLY (See page RS-396)**
40. **REMOVE LOWER INSTRUMENT PANEL RH (See page IP-16)**
41. **REMOVE SHIFT LEVER KNOB SUB-ASSEMBLY (See page IP-16)**
42. **REMOVE UPPER CONSOLE PANEL ASSEMBLY WITH FRONT ASH RECEPTACLE (See page IP-16)**
43. **REMOVE NO. 2 INSTRUMENT PANEL REGISTER ASSEMBLY (See page IP-17)**
44. **REMOVE INTEGRATION CONTROL PANEL WITH RADIO RECEIVER ASSEMBLY (w/o Navigation System) (See page AV-168)**

45. **REMOVE MULTI-DISPLAY WITH RADIO RECEIVER ASSEMBLY (w/ Navigation System) (See page AV-170)**
46. **REMOVE HEATER SEAT SWITCH CONSOLE BASE (w/o Seat Heater System) (See page IP-17)**
47. **REMOVE HEATER SEAT SWITCH CONSOLE BASE (w/ Seat Heater System) (See page IP-18)**
48. **REMOVE CONSOLE BOX POCKET (See page IP-18)**
49. **REMOVE CONSOLE BOX CARPET (See page IP-18)**
50. **REMOVE CONSOLE REAR END PANEL SUB-ASSEMBLY (See page IP-19)**
51. **REMOVE REAR CONSOLE BOX ASSEMBLY (See page IP-19)**
52. **REMOVE FRONT PILLAR GARNISH LH (See page IR-39)**
53. **REMOVE NO. 1 INSTRUMENT PANEL SPEAKER PANEL SUB-ASSEMBLY (See page IP-20)**
54. **REMOVE FRONT NO. 2 SPEAKER ASSEMBLY (for LH Side) (See page AV-184)**
55. **REMOVE NO. 1 INSTRUMENT PANEL REGISTER ASSEMBLY (See page IP-20)**
56. **REMOVE FRONT PILLAR GARNISH RH (See page IR-42)**
57. **REMOVE NO. 2 INSTRUMENT PANEL SPEAKER PANEL SUB-ASSEMBLY (See page IP-21)**
58. **REMOVE FRONT NO. 2 SPEAKER ASSEMBLY (for RH Side) (See page IP-21)**
59. **REMOVE NO. 3 INSTRUMENT PANEL REGISTER ASSEMBLY (See page IP-21)**
60. **REMOVE NO. 1 SPEAKER HOLE COVER (See page IP-21)**
61. **REMOVE FRONT STEREO COMPONENT SPEAKER ASSEMBLY (See page AV-188)**
62. **REMOVE NO. 1 INSTRUMENT PANEL MOUNTING BRACKET (See page IP-22)**
63. **REMOVE PUSH START SWITCH (See page IP-22)**
64. **DISCONNECT INSTRUMENT PANEL WIRE ASSEMBLY (See page RS-414)**
65. **REMOVE ROOM TEMPERATURE SENSOR (See page AC-214)**
66. **REMOVE INSTRUMENT PANEL SAFETY PAD ASSEMBLY (w/o DVD Player) (See page IP-22)**
67. **REMOVE INSTRUMENT PANEL SAFETY PAD ASSEMBLY (w/ DVD Player) (See page IP-24)**

68. **REMOVE SIDE NO. 1 DEFROSTER NOZZLE DUCT (See page IP-27)**

69. **REMOVE SIDE NO. 2 DEFROSTER NOZZLE DUCT (See page IP-28)**

70. **REMOVE DEFROSTER NOZZLE ASSEMBLY (See page IP-28)**

71. **REMOVE NO. 1 HEATER TO REGISTER DUCT (See page IP-28)**

72. **REMOVE NO. 2 HEATER TO REGISTER DUCT (See page IP-28)**

73. **REMOVE NO. 2 ANTENNA CORD SUB-ASSEMBLY**
    (a) Disengage the 5 clamps and remove the No. 2 antenna cord sub-assembly.

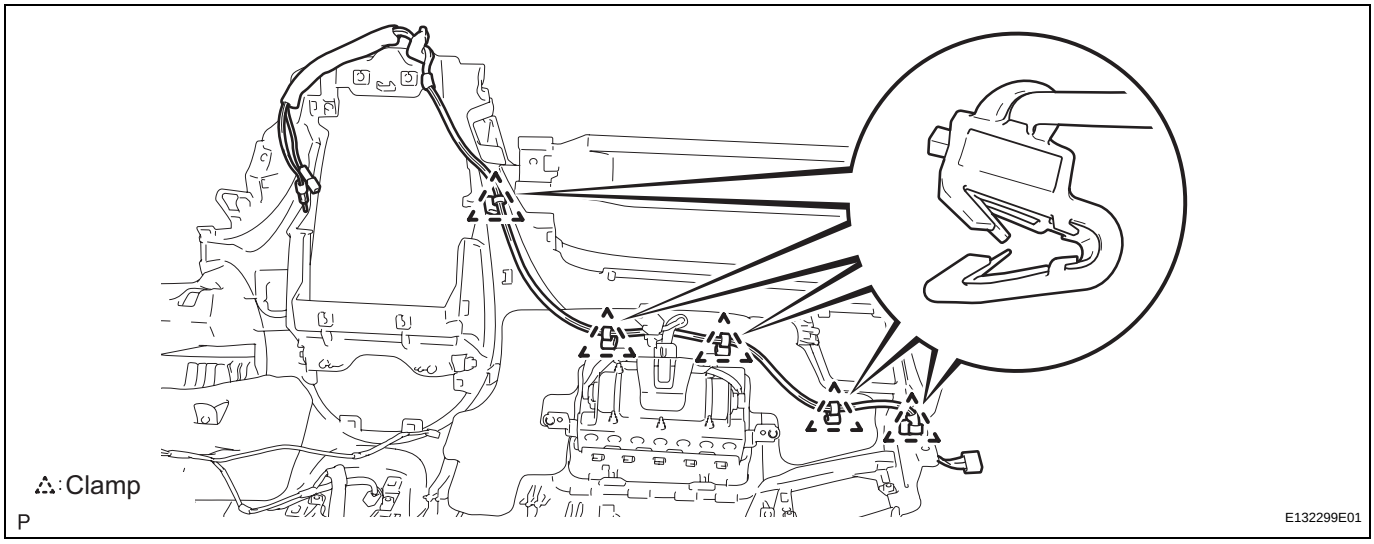

74. **REMOVE REAR SEAT CUSHION ASSEMBLY (See page SE-113)**

75. **REMOVE REAR SEAT HEADREST ASSEMBLY**

76. **REMOVE REAR CENTER SEAT HEADREST ASSEMBLY**

77. **REMOVE REAR SEATBACK ASSEMBLY (See page SE-113)**

78. **REMOVE REAR DOOR SCUFF PLATE LH (See page IR-39)**

79. **REMOVE LOWER CENTER PILLAR GARNISH LH (See page IR-40)**

80. **REMOVE UPPER CENTER PILLAR GARNISH LH (See page IR-41)**

81. **REMOVE REAR SEAT SIDE GARNISH LH (w/o Rear Seat Side Airbag) (See page IR-41)**

82. **REMOVE REAR SEAT SIDE AIRBAG ASSEMBLY LH (w/ Rear Seat Side Airbag) (See page RS-460)**

83. **REMOVE ROOF SIDE INNER GARNISH ASSEMBLY LH (See page IR-42)**
84. **REMOVE REAR DOOR SCUFF PLATE RH (See page IR-42)**
85. **REMOVE LOWER CENTER PILLAR GARNISH RH (See page IR-42)**
86. **REMOVE UPPER CENTER PILLAR GARNISH RH (See page IR-42)**
87. **REMOVE REAR SEAT SIDE GARNISH RH (w/o Rear Seat Side Airbag) (See page IR-43)**
88. **REMOVE REAR SEAT SIDE AIRBAG ASSEMBLY RH (w/ Rear Seat Side Airbag) (See page IR-43)**
89. **REMOVE ROOF SIDE INNER GARNISH ASSEMBLY RH (See page IR-43)**
90. **REMOVE NO. 2 CONSOLE BOX DUCT (See page AC-149)**
91. **REMOVE NO. 3 CONSOLE BOX DUCT (See page AC-149)**
92. **DISCONNECT TRANSMISSION CONTROL CABLE ASSEMBLY (See page AX-232)**
93. **REMOVE SHIFT LEVER ASSEMBLY (See page AX-233)**
94. **REMOVE FLOOR CARPET BRACKET LH (See page AC-148)**
95. **REMOVE FLOOR CARPET BRACKET RH (See page AC-148)**
96. **REMOVE LUGGAGE COMPARTMENT FLOOR MAT (w/ DVD Player)**
97. **REMOVE SPARE WHEEL COVER TRAY (w/ DVD Player)**
98. **REMOVE LUGGAGE HOLD BELT STRIKER ASSEMBLY (w/ DVD Player) (See page ED-82)**
99. **REMOVE NO. 1 LUGGAGE COMPARTMENT TRIM HOOK (w/ DVD Player) (See page ED-83)**
100. **REMOVE REAR FLOOR FINISH PLATE (w/ DVD Player) (See page ED-83)**
101. **REMOVE LUGGAGE COMPARTMENT INNER TRIM COVER RH (w/ DVD Player) (See page ED-83)**
102. **DISCONNECT STEREO COMPONENT AMPLIFIER ASSEMBLY CONNECTOR (w/ DVD Player) (See page IR-44)**
103. **REMOVE INNER REAR VIEW MIRROR STAY HOLDER COVER (See page MI-42)**
104. **REMOVE RAIN SENSOR COVER (w/ Rain Sensor) (See page WW-63)**

105. REMOVE ROOF CONSOLE BOX ASSEMBLY (See page IR-44)

106. REMOVE VISOR BRACKET COVER (See page IR-45)

107. REMOVE VISOR ASSEMBLY LH (See page IR-45)

108. REMOVE VISOR ASSEMBLY RH (See page IR-45)

109. REMOVE VISOR HOLDER (See page IR-45)

110. REMOVE COAT HOOK (See page IR-45)

111. REMOVE SPOT LIGHT ASSEMBLY (for Standard) (See page IR-46)

112. REMOVE SPOT LIGHT ASSEMBLY (for Glass Roof) (See page IR-46)

113. REMOVE ASSIST GRIP SUB-ASSEMBLY (See page IR-47)

114. REMOVE ROOF HEADLINING ASSEMBLY (for Standard) (See page IR-47)

115. REMOVE ROOF HEADLINING ASSEMBLY (for Glass Roof) (See page IR-48)

116. REMOVE ANTENNA CORD SUB-ASSEMBLY

(a) Peel the strips of the tape used to secure the antenna cord only to the extent that allows removal of the antenna cord.
HINT:
Tape is not available as a supply part. Try to leave as much tape as possible on the roof headlining so that the tape can be reused.

(b) Remove the antenna cord from the roof headlining.

for Standard:

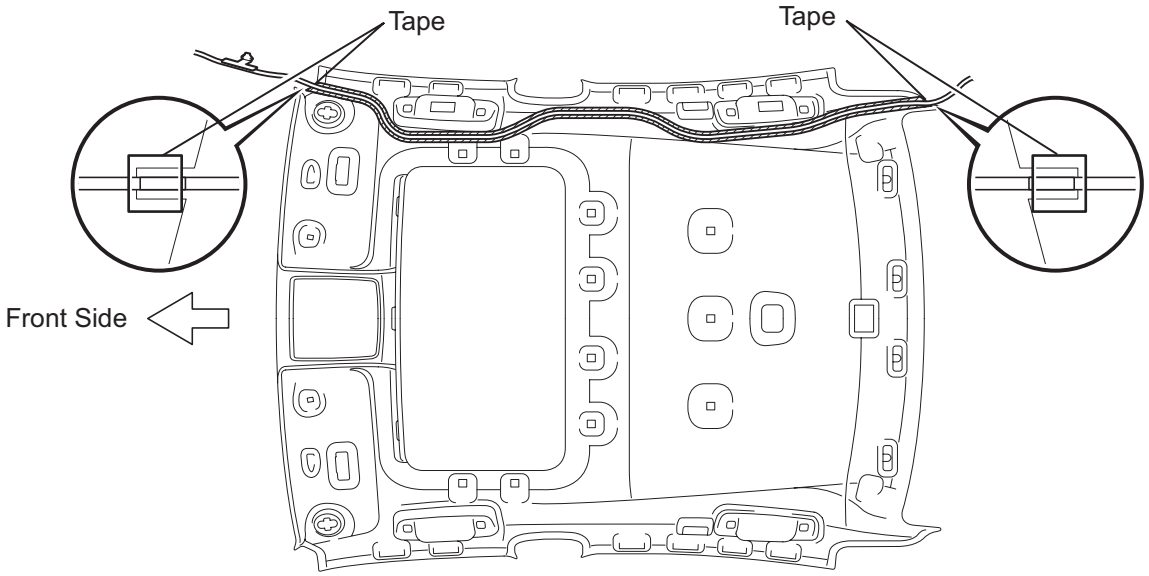

for Glass Roof:

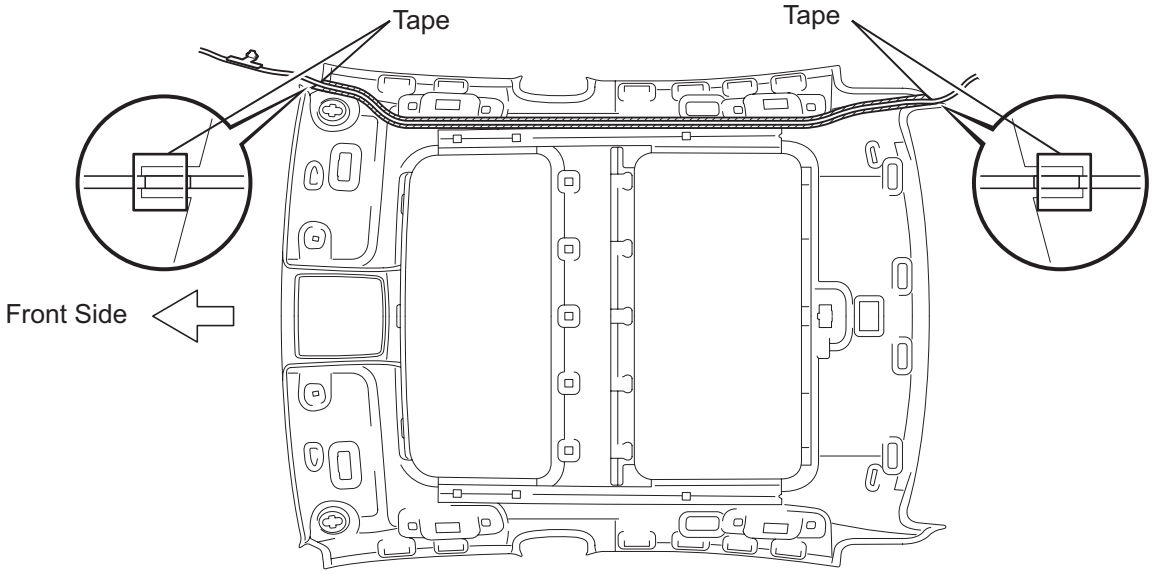

▨: Double-sided Tape

P

E132300E02

INSTALLATION

1. INSTALL ANTENNA CORD SUB-ASSEMBLY

HINT:

The double-sided tape and tape are not available as supply parts. If these tapes still have enough adhesion to secure the roof headlining and antenna cord, reuse the tapes. If the roof headlining has been replaced with a new one, or if the tape and/or the double-sided tape is no longer sticky, apply new tape following the procedures below.

(a) Apply new double-sided tape.

for Standard:

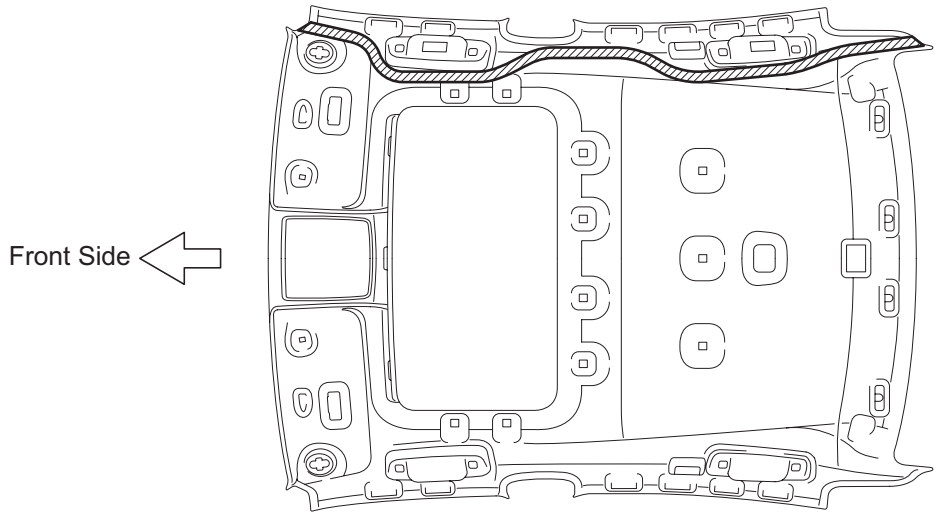

for Glass Roof:

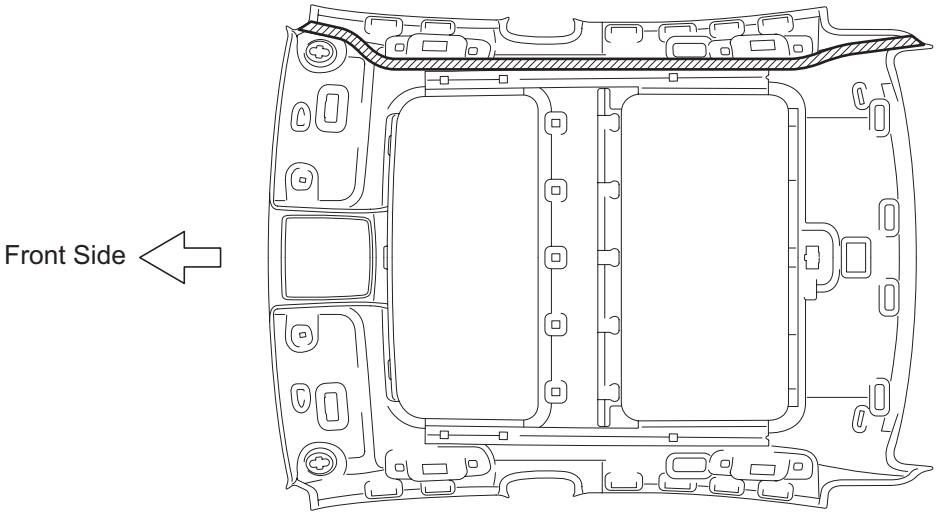

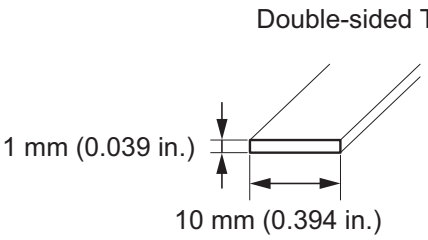

▨: Double-sided Tape

P

E132302E01

(1) Remove the double-sided tape from the roof headlining assembly.

(2) Peel off the appropriate amount of new double-sided tape. Be careful not to touch the adhesive surface.
(3) Apply the double-sided tape to the roof headlining while aligning the tape with the markings on the roof headlining assembly.
(4) Peel off the backing sheet from the double-sided tape.

(b) Install the antenna cord to the roof headlining assembly from the front of the vehicle.

for Standard:

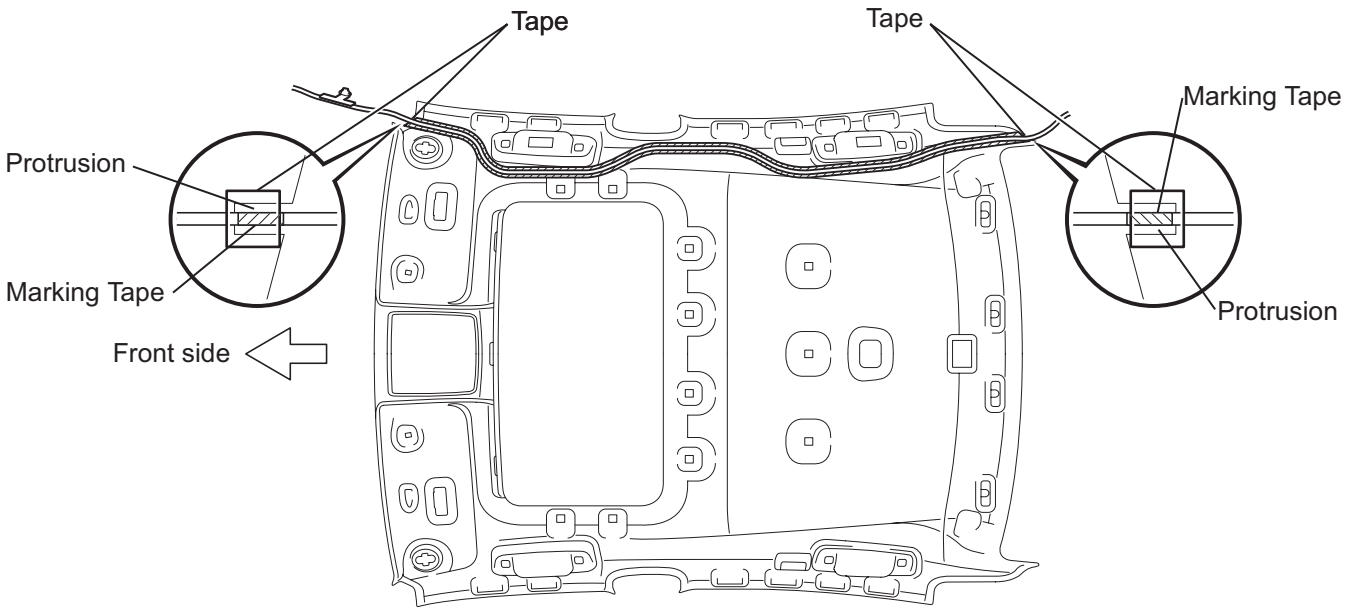

for Glass Roof:

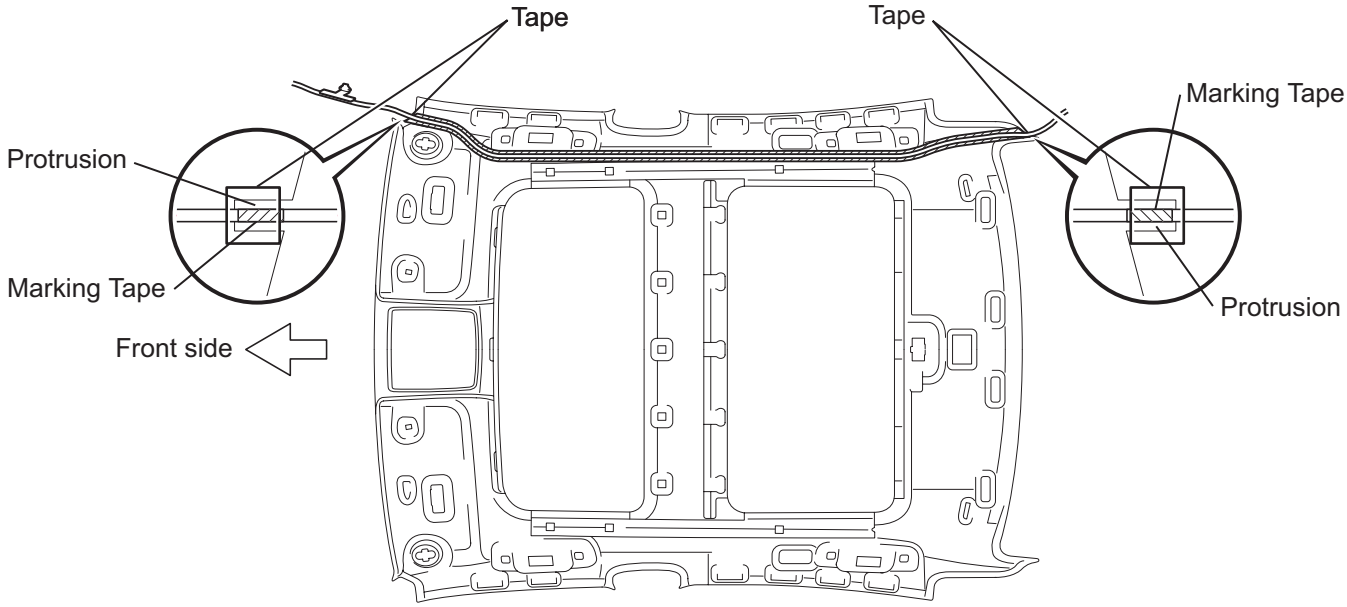

▨: Double-sided Tape

P

E132301E01

AV

(c) Put the strips of the tape back to the positions shown in the illustration in order to secure the antenna cord to the roof headlining assembly.
HINT:
- If the tape is no longer sticky, use other tape, such as packing tape, that has enough adhesion to secure the antenna cord to the roof headlining assembly.
- For the right front corner of the roof headlining assembly, align the marking tape on the antenna cord with the protrusion of the roof headlining, and wrap tape around the antenna cord and roof headlining assembly once or twice to securely hold them.
- For the right rear corner of the roof headlining assembly, align the marking tape on the antenna cord with the rear edge of the roof headlining, and secure the antenna cord to the roof headlining assembly with tape.

2. **INSTALL ROOF HEADLINING ASSEMBLY (for Standard) (See page IR-56)**
3. **INSTALL ROOF HEADLINING ASSEMBLY (for Glass Roof) (See page IR-57)**
4. **INSTALL ASSIST GRIP SUB-ASSEMBLY (See page IR-58)**
5. **INSTALL SPOT LIGHT ASSEMBLY (for Standard) (See page IR-59)**
6. **INSTALL SPOT LIGHT ASSEMBLY (for Glass Roof) (See page IR-59)**
7. **INSTALL COAT HOOK (See page IR-60)**
8. **INSTALL VISOR HOLDER (See page IR-60)**
9. **INSTALL VISOR ASSEMBLY LH (See page IR-60)**
10. **INSTALL VISOR ASSEMBLY RH (See page IR-60)**
11. **INSTALL VISOR BRACKET COVER (See page IR-60)**
12. **INSTALL ROOF CONSOLE BOX ASSEMBLY (See page IR-60)**
13. **INSTALL RAIN SENSOR COVER (w/ Rain Sensor) (See page WW-65)**
14. **INSTALL INNER REAR VIEW MIRROR STAY HOLDER COVER (See page MI-44)**
15. **CONNECT STEREO COMPONENT AMPLIFIER ASSEMBLY CONNECTOR (w/ DVD Player) (See page IR-61)**
16. **INSTALL LUGGAGE COMPARTMENT INNER TRIM COVER RH (w/ DVD Player) (See page ED-88)**
17. **INSTALL REAR FLOOR FINISH PLATE (w/ DVD Player) (See page ED-88)**

18. **INSTALL NO. 1 LUGGAGE COMPARTMENT TRIM HOOK (w/ DVD Player) (See page ED-89)**
19. **INSTALL LUGGAGE HOLD BELT STRIKER ASSEMBLY (w/ DVD Player) (See page ED-89)**
20. **INSTALL SPARE WHEEL COVER TRAY (w/ DVD Player)**
21. **INSTALL LUGGAGE COMPARTMENT FLOOR MAT (w/ DVD Player)**
22. **INSTALL FLOOR CARPET BRACKET LH**
23. **INSTALL FLOOR CARPET BRACKET RH**
24. **INSTALL SHIFT LEVER ASSEMBLY (See page AX-240)**
25. **CONNECT TRANSMISSION CONTROL CABLE ASSEMBLY (See page AX-241)**
26. **INSTALL NO. 2 CONSOLE BOX DUCT (See page AC-163)**
27. **INSTALL NO. 3 CONSOLE BOX DUCT (See page AC-163)**
28. **INSTALL ROOF SIDE INNER GARNISH ASSEMBLY LH (See page IR-62)**
29. **INSTALL REAR SEAT SIDE GARNISH LH (w/o Rear Seat Side Airbag) (See page IR-62)**
30. **INSTALL REAR SEAT SIDE AIRBAG ASSEMBLY LH (w/ Rear Seat Side Airbag) (See page RS-460)**
31. **INSTALL UPPER CENTER PILLAR GARNISH LH (See page IR-63)**
32. **INSTALL LOWER CENTER PILLAR GARNISH LH (See page IR-63)**
33. **INSTALL REAR DOOR SCUFF PLATE LH (See page IR-63)**
34. **INSTALL ROOF SIDE INNER GARNISH ASSEMBLY RH (See page IR-65)**
35. **INSTALL REAR SEAT SIDE GARNISH RH (w/o Rear Seat Side Airbag) (See page IR-65)**
36. **INSTALL REAR SEAT SIDE AIRBAG ASSEMBLY RH (w/ Rear Seat Side Airbag) (See page IR-65)**
37. **INSTALL UPPER CENTER PILLAR GARNISH RH (See page IR-65)**
38. **INSTALL LOWER CENTER PILLAR GARNISH RH (See page IR-65)**
39. **INSTALL REAR DOOR SCUFF PLATE RH (See page IR-65)**
40. **INSTALL REAR SEATBACK ASSEMBLY (See page SE-121)**

41. **INSTALL REAR CENTER SEAT HEADREST ASSEMBLY**

42. **INSTALL REAR SEAT HEADREST ASSEMBLY**

43. **INSTALL REAR SEAT CUSHION ASSEMBLY (See page SE-121)**

44. **INSTALL NO. 2 ANTENNA CORD SUB-ASSEMBLY**
    (a) Engage the 5 clamps and install the No. 2 antenna cord sub-assembly.

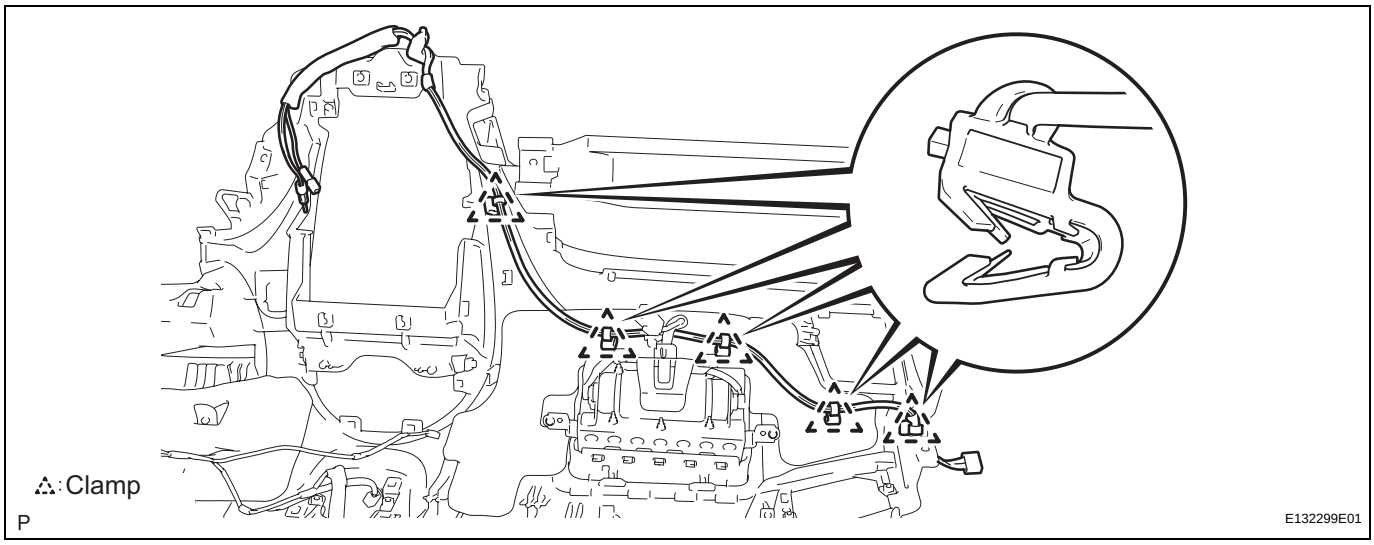

45. **INSTALL NO. 2 HEATER TO REGISTER DUCT (See page IP-32)**

46. **INSTALL NO. 1 HEATER TO REGISTER DUCT (See page IP-32)**

47. **INSTALL DEFROSTER NOZZLE ASSEMBLY (See page IP-32)**

48. **INSTALL SIDE NO. 2 DEFROSTER NOZZLE DUCT (See page IP-32)**

49. **INSTALL SIDE NO. 1 DEFROSTER NOZZLE DUCT (See page IP-32)**

50. **INSTALL INSTRUMENT PANEL SAFETY PAD ASSEMBLY (w/o DVD Player) (See page IP-33)**

51. **INSTALL INSTRUMENT PANEL SAFETY PAD ASSEMBLY (w/ DVD Player) (See page IP-35)**

52. **INSTALL ROOM TEMPERATURE SENSOR (See page AC-215)**

53. **CONNECT INSTRUMENT PANEL WIRE ASSEMBLY (See page RS-416)**

54. **INSTALL PUSH START SWITCH (See page IP-37)**

55. **INSTALL NO. 1 INSTRUMENT PANEL MOUNTING BRACKET (See page IP-38)**

56. **INSTALL FRONT STEREO COMPONENT SPEAKER ASSEMBLY (See page AV-188)**

57. **INSTALL NO. 1 SPEAKER HOLE COVER (See page IP-38)**
58. **INSTALL NO. 1 INSTRUMENT PANEL REGISTER ASSEMBLY (See page IP-38)**
59. **INSTALL FRONT NO. 2 SPEAKER ASSEMBLY (for LH Side) (See page AV-185)**
60. **INSTALL NO. 1 INSTRUMENT PANEL SPEAKER PANEL SUB-ASSEMBLY (See page IP-39)**
61. **INSTALL FRONT PILLAR GARNISH LH (See page IR-64)**
62. **INSTALL NO. 3 INSTRUMENT PANEL REGISTER ASSEMBLY (See page IP-39)**
63. **INSTALL FRONT NO. 2 SPEAKER ASSEMBLY (for RH Side) (See page IP-39)**
64. **INSTALL NO. 2 INSTRUMENT PANEL SPEAKER PANEL SUB-ASSEMBLY (See page IP-39)**
65. **INSTALL FRONT PILLAR GARNISH RH (See page IR-65)**
66. **INSTALL REAR CONSOLE BOX ASSEMBLY (See page IP-39)**
67. **INSTALL CONSOLE REAR END PANEL SUB-ASSEMBLY (See page IP-40)**
68. **INSTALL CONSOLE BOX CARPET (See page IP-41)**
69. **INSTALL CONSOLE BOX POCKET (See page IP-41)**
70. **INSTALL HEATER SEAT SWITCH CONSOLE BASE (w/o Seat Heater System) (See page IP-41)**
71. **INSTALL HEATER SEAT SWITCH CONSOLE BASE (w/ Seat Heater System) (See page IP-41)**
72. **INSTALL INTEGRATION CONTROL PANEL WITH RADIO RECEIVER ASSEMBLY (w/o Navigation System) (See page AV-172)**
73. **INSTALL MULTI-DISPLAY WITH RADIO RECEIVER ASSEMBLY (w/ Navigation System) (See page AV-173)**
74. **INSTALL NO. 2 INSTRUMENT PANEL REGISTER ASSEMBLY (See page IP-41)**
75. **INSTALL UPPER CONSOLE PANEL ASSEMBLY WITH FRONT ASH RECEPTACLE (See page IP-42)**
76. **INSTALL SHIFT LEVER KNOB SUB-ASSEMBLY (See page IP-42)**
77. **INSTALL LOWER INSTRUMENT PANEL RH (See page IP-42)**
78. **INSTALL FRONT PASSENGER SIDE KNEE AIRBAG ASSEMBLY (See page RS-396)**

79. **INSTALL SIDE INSTRUMENT PANEL RH (See page IP-43)**
80. **INSTALL NO. 2 INSTRUMENT PANEL UNDER COVER SUB-ASSEMBLY (See page IP-44)**
81. **INSTALL FRONT DOOR OPENING TRIM COVER RH (See page IR-65)**
82. **INSTALL FRONT DOOR SCUFF PLATE RH (See page IR-65)**
83. **INSTALL INSTRUMENT PANEL FINISH PANEL END RH (See page IP-44)**
84. **INSTALL NO. 1 SWITCH HOLE BASE (See page IP-44)**
85. **INSTALL COMBINATION METER ASSEMBLY (See page IP-45)**
86. **INSTALL INSTRUMENT CLUSTER FINISH PANEL SUB-ASSEMBLY (See page IP-45)**
87. **INSTALL TURN SIGNAL SWITCH ASSEMBLY WITH SPIRAL CABLE SUB-ASSEMBLY (See page SR-86)**
88. **INSTALL TILT AND TELESCOPIC SWITCH (See page SR-86)**
89. **INSTALL STEERING COLUMN COVER (See page IP-46)**
90. **ADJUST SPIRAL CABLE SUB-ASSEMBLY (See page RS-382)**
91. **INSTALL LOWER INSTRUMENT PANEL SUB-ASSEMBLY (See page IP-46)**
92. **INSTALL INSTRUMENT PANEL FINISH PANEL END LH (See page IP-46)**
93. **INSTALL SIDE INSTRUMENT PANEL LH (See page IP-47)**
94. **INSTALL FRONT DOOR OPENING TRIM COVER LH (See page IR-64)**
95. **INSTALL FRONT DOOR SCUFF PLATE LH (See page IR-65)**
96. **INSTALL STEERING WHEEL ASSEMBLY (See page SR-87)**
97. **INSTALL STEERING PAD (See page RS-368)**
98. **INSTALL LOWER NO. 3 STEERING WHEEL COVER (See page RS-369)**
99. **INSTALL LOWER NO. 2 STEERING WHEEL COVER (See page RS-369)**
100. **INSTALL FRONT SEAT ASSEMBLY LH (See page SE-109)**

101. INSTALL FRONT SEAT REAR OUTER TRACK BRACKET COVER LH (See page SE-110)

102. INSTALL FRONT SEAT REAR INNER TRACK BRACKET COVER LH (See page SE-110)

103. INSTALL FRONT SEAT OUTER TRACK BRACKET COVER LH (See page SE-110)

104. INSTALL FRONT SEAT INNER TRACK BRACKET COVER LH (See page SE-110)

105. INSTALL FRONT SEAT HEADREST ASSEMBLY (for Driver Seat)

106. CONNECT FRONT SEAT OUTER BELT ASSEMBLY LH (See page SB-25)

107. INSTALL SEAT BELT ANCHOR COVER CAP LH (See page SB-25)

108. INSTALL FRONT SEAT ASSEMBLY RH (See page RS-497)

109. INSTALL FRONT SEAT REAR OUTER TRACK BRACKET COVER RH (See page RS-498)

110. INSTALL FRONT SEAT REAR INNER TRACK BRACKET COVER RH (See page RS-498)

111. INSTALL FRONT SEAT OUTER TRACK BRACKET COVER RH (See page RS-498)

112. INSTALL FRONT SEAT INNER TRACK BRACKET COVER RH (See page RS-498)

113. INSTALL FRONT SEAT HEADREST ASSEMBLY (for Front Passenger Seat)

114. CONNECT FRONT SEAT OUTER BELT ASSEMBLY RH (See page RS-499)

115. INSTALL SEAT BELT ANCHOR COVER CAP RH (See page RS-499)

116. PERFORM INITIALIZATION
NOTICE:
Some systems need initialization after reconnecting the cable to the negative battery terminal (See page IN-33).

117. INSPECT SHIFT LEVER POSITION (See page AX-200)

118. ADJUST SHIFT LEVER POSITION (See page AX-200)

119. INSPECT FRONT SEAT ASSEMBLY (See page SE-110)

120. INSPECT STEERING PAD (See page RS-369)

121. INSPECT FRONT PASSENGER SIDE KNEE AIRBAG ASSEMBLY (See page RS-395)

122. INSPECT SRS WARNING LIGHT
(See page RS-37)

REMOVAL

1. **DISCONNECT CABLE FROM NEGATIVE BATTERY TERMINAL (w/ Rear Seat Side Airbag)**
   CAUTION:
   Wait for 90 seconds after disconnecting the cable to prevent airbag deployment (See page RS-1).
2. **REMOVE REAR SEAT CUSHION ASSEMBLY (See page SE-113)**
3. **REMOVE REAR SEAT HEADREST ASSEMBLY**
4. **REMOVE REAR CENTER SEAT HEADREST ASSEMBLY**
5. **REMOVE REAR SEATBACK ASSEMBLY (See page SE-113)**
6. **REMOVE REAR DOOR SCUFF PLATE LH (See page IR-40)**
7. **REMOVE REAR DOOR SCUFF PLATE RH (See page IR-42)**
8. **REMOVE REAR SEAT SIDE GARNISH LH (w/o Rear Seat Side Airbag) (See page IR-41)**
9. **REMOVE REAR SEAT SIDE AIRBAG ASSEMBLY LH (w/ Rear Seat Side Airbag) (See page RS-460)**
10. **REMOVE REAR SEAT SIDE GARNISH RH (w/o Rear Seat Side Airbag) (See page IR-43)**
11. **REMOVE REAR SEAT SIDE AIRBAG ASSEMBLY RH (w/ Rear Seat Side Airbag) (See page IR-43)**
12. **REMOVE ROOF SIDE INNER GARNISH ASSEMBLY LH (See page IR-42)**
13. **REMOVE ROOF SIDE INNER GARNISH ASSEMBLY RH (See page IR-43)**
14. **DISCONNECT REAR SEAT 3 POINT TYPE BELT ASSEMBLY LH (See page SB-40)**
15. **DISCONNECT REAR SEAT 3 POINT TYPE BELT ASSEMBLY RH (See page SB-40)**
16. **DISCONNECT REAR SEAT INNER WITH CENTER BELT ASSEMBLY RH (See page SB-40)**
17. **REMOVE REAR SEAT SHOULDER BELT HOLE COVER (See page SB-41)**
18. **REMOVE CENTER STOP LIGHT SET (See page LI-159)**
19. **REMOVE PACKAGE TRAY TRIM PANEL ASSEMBLY (w/o Rear Sunshade) (See page SB-41)**
20. **REMOVE PACKAGE TRAY TRIM PANEL ASSEMBLY (w/ Rear Sunshade) (See page IR-20)**
21. **REMOVE NO. 2 PACKAGE TRAY TRIM PANEL ASSEMBLY (w/ Rear Sunshade) (See page IR-21)**

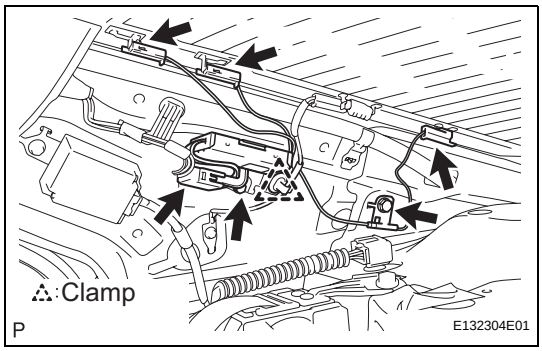

22. REMOVE AMPLIFIER ANTENNA ASSEMBLY

(a) Disconnect each connector.

(b) Remove the 2 bolts and the amplifier antenna assembly.

NOTICE:

If reusing the removed amplifier antenna assembly, do not touch the contact terminals.

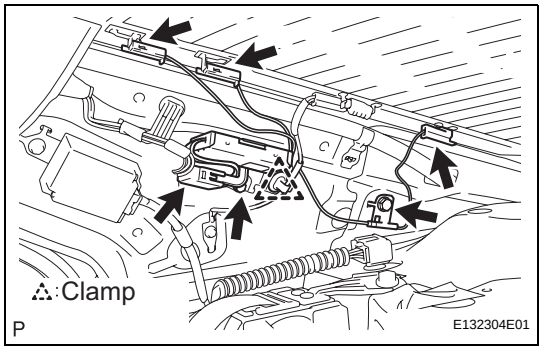

INSTALLATION

1. INSTALL AMPLIFIER ANTENNA ASSEMBLY

(a) Install the 2 bolts and the amplifier antenna assembly.

Torque: 7.0 N*m (71 kgf*cm, 62 in.*lbf)

NOTICE:

- **Clean the antenna conductors on the rear window with a non-residue solvent where the contact terminals touch.**
- **When installing a new amplifier antenna assembly, do not remove the protective cover before installation.**
- **Do not touch the contact terminals.**

(b) Connect each connector.

2. INSTALL PACKAGE TRAY TRIM PANEL ASSEMBLY (w/o Rear Sunshade) (See page SB-42)

3. INSTALL NO. 2 PACKAGE TRAY TRIM PANEL ASSEMBLY (w/ Rear Sunshade) (See page IR-22)

4. INSTALL PACKAGE TRAY TRIM PANEL ASSEMBLY (w/ Rear Sunshade) (See page IR-23)

5. INSTALL CENTER STOP LIGHT SET (See page LI-159)

6. INSTALL REAR SEAT SHOULDER BELT HOLE COVER (See page SB-42)

7. CONNECT REAR SEAT INNER WITH CENTER BELT ASSEMBLY RH (See page SB-42)

8. CONNECT REAR SEAT 3 POINT TYPE BELT ASSEMBLY LH (See page SB-42)

9. CONNECT REAR SEAT 3 POINT TYPE BELT ASSEMBLY RH (See page SB-43)

10. INSTALL ROOF SIDE INNER GARNISH ASSEMBLY LH (See page IR-62)

11. INSTALL ROOF SIDE INNER GARNISH ASSEMBLY RH (See page IR-65)

12. INSTALL REAR SEAT SIDE GARNISH LH (w/o Rear Seat Side Airbag) (See page IR-62)

13. INSTALL REAR SEAT SIDE AIRBAG ASSEMBLY LH (w/ Rear Seat Side Airbag) (See page RS-460)

14. **INSTALL REAR SEAT SIDE GARNISH RH (w/o Rear Seat Side Airbag) (See page IR-65)**
15. **INSTALL REAR SEAT SIDE AIRBAG ASSEMBLY RH (w/ Rear Seat Side Airbag) (See page RS-460)**
16. **INSTALL REAR DOOR SCUFF PLATE LH (See page IR-63)**
17. **INSTALL REAR DOOR SCUFF PLATE RH (See page IR-65)**
18. **INSTALL REAR SEATBACK ASSEMBLY (See page SE-121)**
19. **INSTALL REAR CENTER SEAT HEADREST ASSEMBLY**
20. **INSTALL REAR SEAT HEADREST ASSEMBLY**
21. **INSTALL REAR SEAT CUSHION ASSEMBLY (See page SE-121)**
22. **CONNECT CABLE TO NEGATIVE BATTERY TERMINAL (w/ Rear Seat Side Airbag)**
23. **PERFORM INITIALIZATION (w/ Rear Seat Side Airbag)**
    NOTICE:
    Some systems need initialization after reconnecting the cable to the negative battery terminal (See page IN-33).
24. **INSPECT SRS WARNING LIGHT (w/ Rear Seat Side Airbag)**
    (See page RS-37)

DTC	01-D6	No Master

DTC	01-D7	Connection Check Error

DESCRIPTION

DTC No.	DTC Detection Condition	Trouble Area
01-D6 *1	When either of the following conditions is met: • The component which has stored the code has (had) been disconnected when the engine switch is on (ACC or IG). • The master device has (had) been disconnected when this code is stored.	• Multi-display power source circuit • Power source circuit of the component which has stored this code • AVC-LAN circuit between the multi-display and the component which has stored this code • Component which has stored this code • Multi-display
01-D7 *2	When either of the following conditions is met: • The component which has stored the code has (had) been disconnected after the engine starts (started). • The master device has (had) been disconnected when this code is (was) stored.	

HINT:
- *1: Even if no fault is present, this trouble code may be stored depending on the battery condition or engine start voltage.
- *2: When 210 seconds have elapsed after disconnecting the power supply connector of the master component with the engine switch on (ACC or IG), this code is stored.

NOTICE:
- **Before starting troubleshooting, be sure to clear DTCs to erase codes stored due to the reasons described in the HINT above. Then, check for DTCs and troubleshoot according to the output DTCs.**
- **The multi-display is the master unit.**
- **Be sure to clear and recheck for DTCs after the inspection is completed to confirm that no DTCs are output.**

NS

INSPECTION PROCEDURE

NOTICE:
Be sure to read DESCRIPTION before performing the following procedures.

1	CHECK MULTI-DISPLAY POWER SOURCE CIRCUIT

Refer to the multi-display power source circuit (See page NS-228).
If the power source circuit is operating normally, proceed to the next step.

NEXT

2 IDENTIFY THE COMPONENT WHICH HAS STORED THIS CODE

Example:

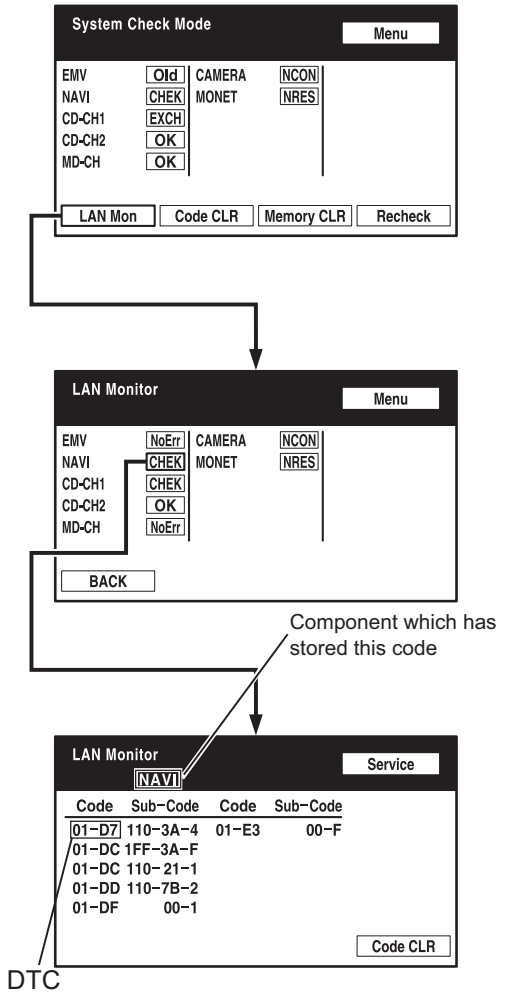

P E121199E01

(a) Enter the diagnostic mode.
(b) Press the "LAN Mon" switch to change to "LAN Monitor" mode.
(c) Identify the component which has stored this code.

Component Table:

Display	Component
AUDIO H/U	Radio receiver
DSP-AMP	Stereo component amplifier
NAVI	Navigation ECU

HINT:
"NAVI" is the component which has stored this code in the example shown in the illustration.

NS

NEXT

3 CHECK POWER SOURCE CIRCUIT OF COMPONENT WHICH HAS STORED THIS CODE

(a) Inspect the power source circuit of the component which has stored this code.
If the power source circuit is operating normally, proceed to the next step.

Component Table:

Component	Proceed to
Radio receiver (AUDIO H/U)	Radio receiver power source circuit (See page AV-162)
Stereo component amplifier (DSP-AMP)	Stereo component amplifier power source circuit (See page AV-164)
Navigation ECU (NAVI)	Navigation ECU power source circuit (See page NS-230)

NEXT

4	CHECK RADIO RECEIVER

DVD Changer Models
Wire Harness View:

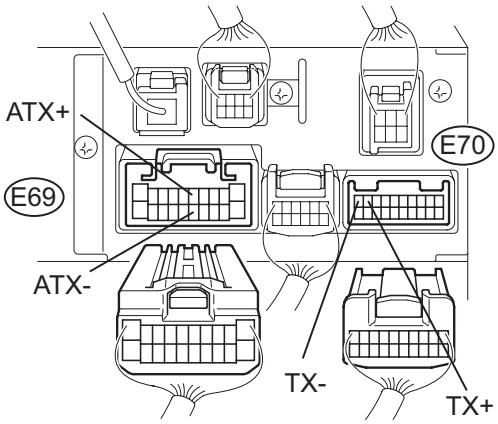

CD Changer Models
Wire Harness View:

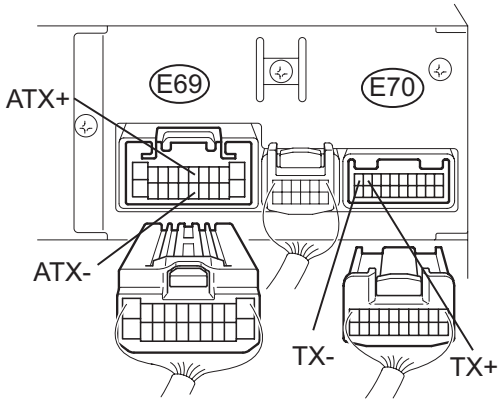

P E124056E03

(a) Disconnect the radio receiver connectors.
(b) Measure the resistance according to the value(s) in the table below.

Standard resistance

Tester Connection	Condition	Specified Condition
ATX+ (E69-5) - ATX- (E69-15)	Always	60 to 80 Ω
TX+ (E70-9) - TX- (E70-10)	Always	60 to 80 Ω

NG → **REPLACE RADIO RECEIVER**

OK

5	CHECK HARNESS AND CONNECTOR (MULTI-DISPLAY - COMPONENT WHICH HAS STORED THIS CODE)

HINT:
For details of the connectors, refer to "TERMINALS OF ECU" (See page NS-44).

(a) Referring to the AVC-LAN wiring diagram below, check the AVC-LAN circuit between the multi-display and the component which has stored this code.
  (1) Disconnect all connectors between the multi-display and the component which has stored this code.
  (2) Check for an open or short in the AVC-LAN circuit between the multi-display and the component which has stored this code.

NS

OK:
There is no open or short circuit.

AVC-LAN WIRING DIAGRAM:

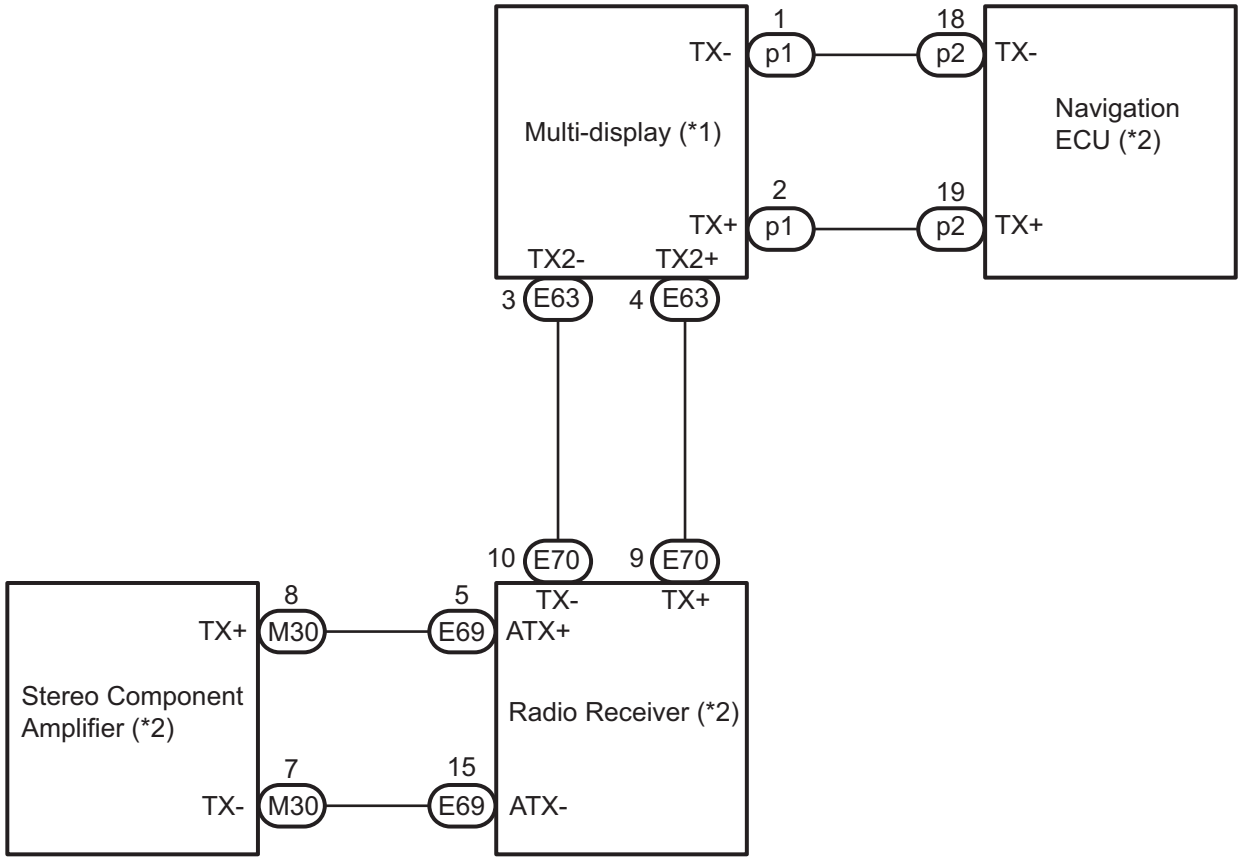

*1: Master Unit

*2: Slave Unit

P

E134675E01

NG → **REPAIR OR REPLACE HARNESS OR CONNECTOR**

OK

6	REPLACE COMPONENT WHICH HAS STORED THIS CODE

(a) Replace the component which has stored this code with a normal one and check if the same problem occurs again.
OK:
Same problem does not occur.

NS

NG → **REPLACE MULTI-DISPLAY**

OK

END

DTC 01-DC Transmission Error

DESCRIPTION

DTC No.	DTC Detection Condition	Trouble Area
01-DC	Transmission to component shown by sub-code failed. (Detecting this DTC does not always mean actual failure.)	If the same sub-code is recorded in other components, check harness for power supply and communication system of all components shown by code

NOTICE:
- **The multi-display is the master unit.**
- **Be sure to clear and recheck for DTCs after the inspection is completed to confirm that no DTCs are output.**

INSPECTION PROCEDURE

NOTICE:
Be sure to read DESCRIPTION before performing the following procedures.

1 CHECK FOR DTC OF OTHER COMPONENTS

(a) Check if the component shown by the sub-code is displayed in the check result of the other components.
(1) Check if "01-DC" is output for the other components.
(2) If "01-DC" is output for any other components, check if the same physical address is displayed.
HINT:
For the list of the components shown by sub-codes, refer to the table in step 2.
Result

Result	Proceed to
"01-DC" is output and the same physical address is displayed	**A**
"01-DC" is not output or the same physical address is not displayed	**B**

B → **Go to step 4**

A

NS

2 IDENTIFY THE COMPONENT WHICH HAS STORED THIS CODE

Example:

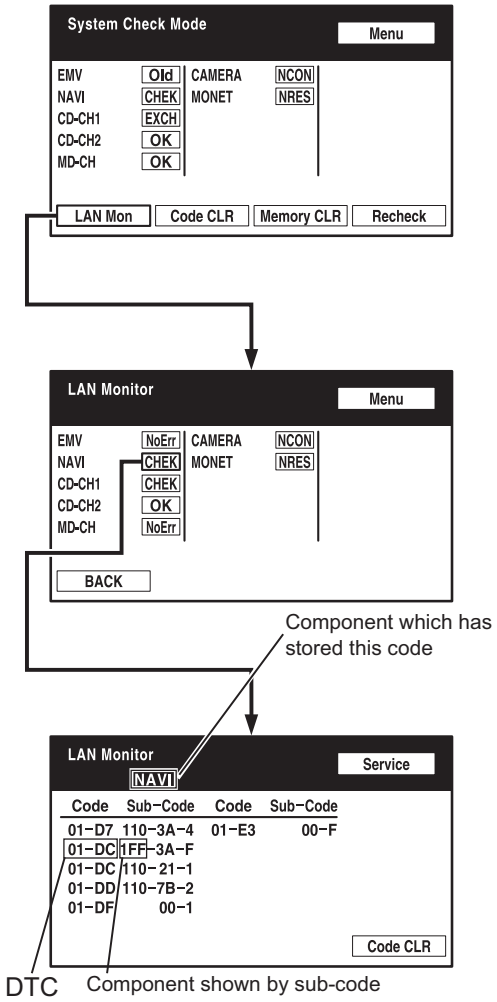

(a) Enter the diagnostic mode.
(b) Press the "LAN Mon" switch to change to "LAN Monitor" mode.
(c) Identify the component which has stored this code.

Component Table:

Display	Component
AUDIO H/U (190)	Radio receiver
DSP-AMP (440)	Stereo component amplifier
NAVI (178)	Navigation ECU
EMV (110)	Multi-display

HINT:
"NAVI" is the component which has stored this code in the example shown in the illustration.

NS

NEXT

3 CHECK COMPONENT WHICH HAS STORED THIS CODE

(a) Select the component which has stored this code.

Component Table:

Component	Proceed to
Radio receiver (AUDIO H/U)	Radio receiver communication error (See page NS-212)
Stereo component amplifier (DSP-AMP)	Stereo component amplifier communication error (See page NS-216)
Navigation ECU (NAVI)	Navigation ECU communication error (See page NS-224)
Multi-display (EMV)	Multi-display communication error (See page NS-220)

NEXT

END

4	**CLEAR DTC**

(a) Clear the DTCs (See page NS-48).
HINT:
If "01-DC" is output for only one component, this may not indicate a malfunction.

NEXT

5	**RECHECK FOR DTC**

(a) Recheck for DTCs and check if the same trouble occurs again.

OK:
Malfunction disappears.

NG → **Go to step 3**

OK

END

DTC	01-DD	Master Reset

DTC	01-E1	Voice Processing Device ON Error

DESCRIPTION

DTC No.	DTC Detection Condition	Trouble Area
01-DD	The device that should be the master has been disconnected after the engine starts.	• Multi-display power source circuit • AVC-LAN circuit between the multi-display and the component which has stored this code • Multi-display • Component which has stored this code
01-E1 *1	The AMP device records that the AMP output does not function even while the source device is operating.	

HINT:
*1: Even if no fault is present, this trouble code may be stored depending on the battery condition or engine start voltage.

NOTICE:

- **Before starting troubleshooting, be sure to clear DTCs to erase codes stored due to the reasons described in the HINT above. Then, check for DTCs and troubleshoot according to the output DTCs.**
- **The multi-display is the master unit.**
- **Be sure to clear and recheck for DTCs after the inspection is completed to confirm that no DTCs are output.**

NS

INSPECTION PROCEDURE

NOTICE:

Be sure to read DESCRIPTION before performing the following procedures.

1	CHECK MULTI-DISPLAY POWER SOURCE CIRCUIT

Refer to the multi-display power source circuit (See page NS-228).
If the power source circuit is operating normally, proceed to the next step.

NEXT

2	**INSPECT RADIO RECEIVER**

DVD Changer Models
Wire Harness View:

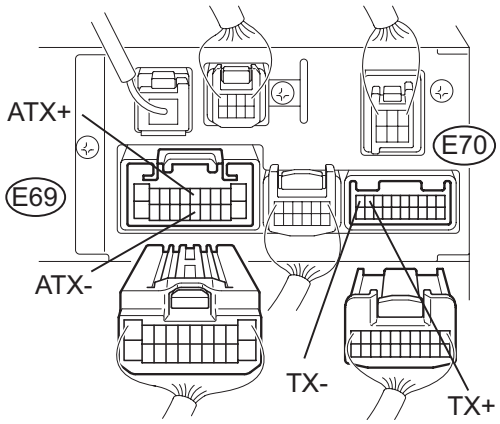

CD Changer Models
Wire Harness View:

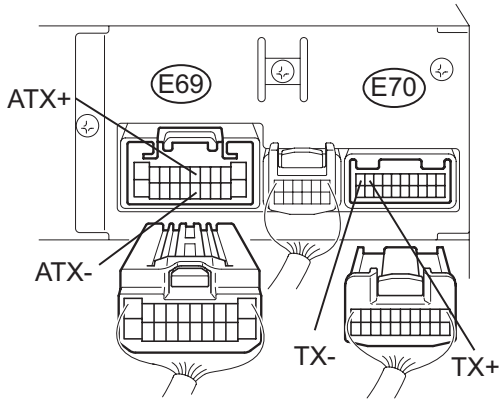

P E124056E03

(a) Disconnect the radio receiver connectors.
(b) Measure the resistance according to the value(s) in the table below.

Standard resistance

Tester Connection	Condition	Specified Condition
ATX+ (E69-5) - ATX- (E69-15)	Always	60 to 80 Ω
TX+ (E70-9) - TX- (E70-10)	Always	60 to 80 Ω

NG → **REPLACE RADIO RECEIVER**

OK

NS

3 IDENTIFY THE COMPONENT WHICH HAS STORED THIS CODE

Example:

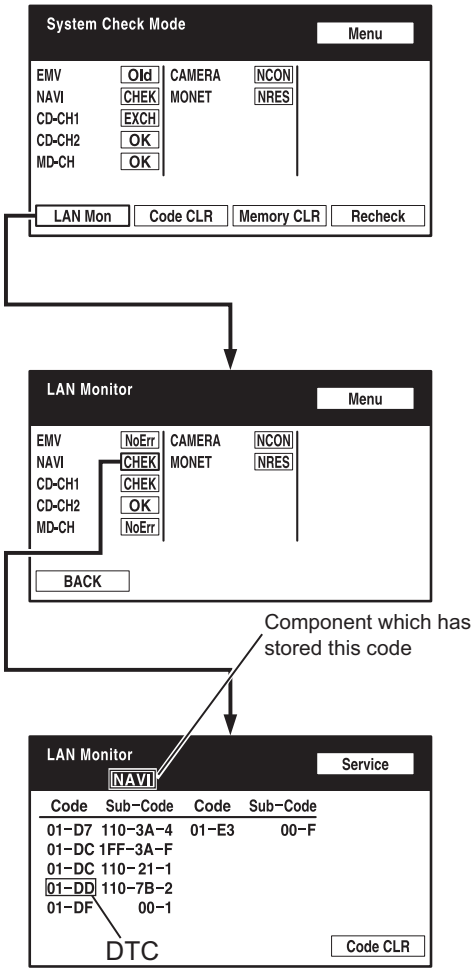

P E121199E03

(a) Enter the diagnostic mode.
(b) Press the "LAN Mon" switch to change to "LAN Monitor" mode.
(c) Identify the component which has stored this code.

Component Table:

Display	Component
AUDIO H/U	Radio receiver
DSP-AMP	Stereo component amplifier
NAVI	Navigation ECU

HINT:
"NAVI" is the component which has stored this code in the example shown in the illustration.

NS

NEXT

4 CHECK HARNESS AND CONNECTOR (MULTI-DISPLAY - COMPONENT WHICH HAS STORED THIS CODE)

HINT:
For details of the connectors, refer to "TERMINALS OF ECU" (See page NS-44).

(a) Referring to the AVC-LAN wiring diagram below, check the AVC-LAN circuit between the multi-display and the component which has stored this code.
  (1) Disconnect all connectors between the multi-display and the component which has stored this code.
  (2) Check for an open or short in the AVC-LAN circuit between the multi-display and the component which has stored this code.

OK:
There is no open or short circuit.

AVC-LAN WIRING DIAGRAM:

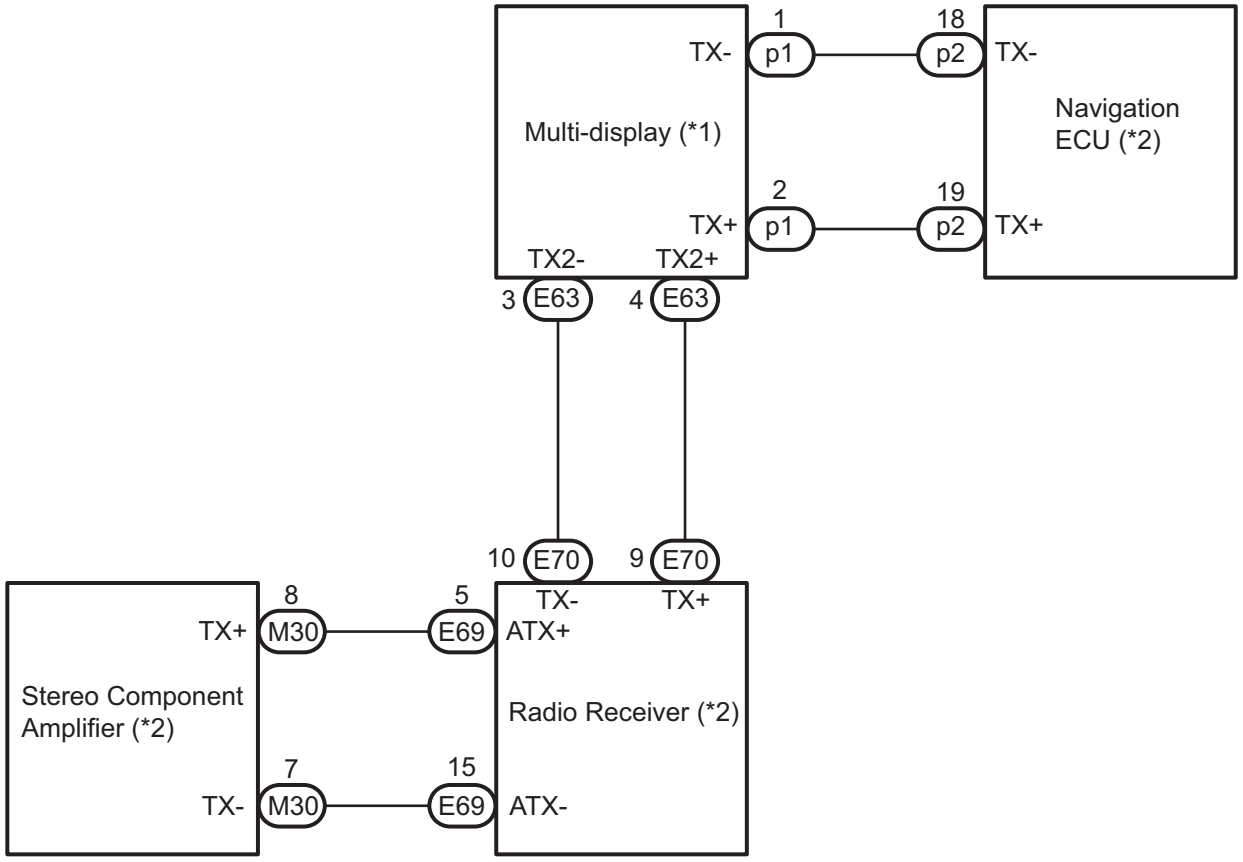

*1: Master Unit

*2: Slave Unit

P

E134675E01

NG → **REPAIR OR REPLACE HARNESS OR CONNECTOR**

OK

5	**REPLACE MULTI-DISPLAY**

(a) Replace the multi-display with a normal one and check if the same problem occurs again.
OK:
Same problem does not occur.

NS

NG → **REPLACE COMPONENT WHICH HAS STORED THIS CODE**

OK

END

DTC	01-DF	Master Error

DESCRIPTION

DTC No.	DTC Detection Condition	Trouble Area
01-DF *1	• The device with a display fails and the master is switched to the audio device. • A communication error between sub-master (radio receiver) and master occurs.	• Multi-display power source circuit • AVC-LAN circuit between the multi-display and the component which has stored this code • AVC-LAN circuit between the multi-display and the radio receiver • Multi-display • Component which has stored this code

HINT:
*1: When 210 seconds have elapsed after disconnecting the power supply connector of the master component with the engine switch on (ACC or IG), this code is stored.

NOTICE:

- **Before starting troubleshooting, be sure to clear DTCs to erase codes stored due to the reasons described in the HINT above. Then, check for DTCs and troubleshoot according to the output DTCs.**
- **The multi-display is the master unit.**
- **Be sure to clear and recheck for DTCs after the inspection is completed to confirm that no DTCs are output.**

NS

INSPECTION PROCEDURE

NOTICE:

Be sure to read DESCRIPTION before performing the following procedures.

1	CHECK MULTI-DISPLAY POWER SOURCE CIRCUIT

Refer to the multi-display power source circuit (See page NS-228).
If the power source circuit is operating normally, proceed to the next step.

NEXT

2 INSPECT RADIO RECEIVER

DVD Changer Models
Wire Harness View:

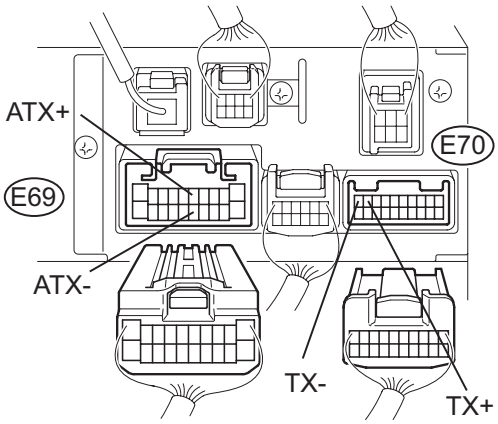

CD Changer Models
Wire Harness View:

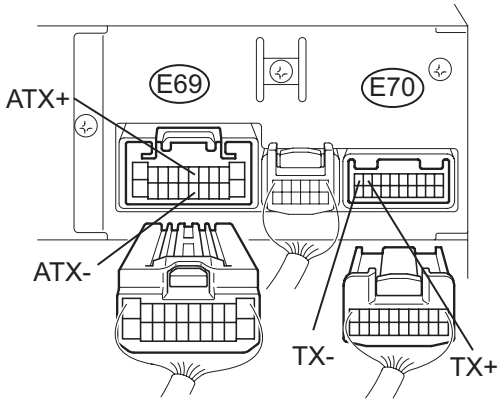

P E124056E03

(a) Disconnect the radio receiver connectors.
(b) Measure the resistance according to the value(s) in the table below.

Standard resistance

Tester Connection	Condition	Specified Condition
ATX+ (E69-5) - ATX- (E69-15)	Always	60 to 80 Ω
TX+ (E70-9) - TX- (E70-10)	Always	60 to 80 Ω

NG → **REPLACE RADIO RECEIVER**

OK

NS

3	IDENTIFY THE COMPONENT WHICH HAS STORED THIS CODE

Example:

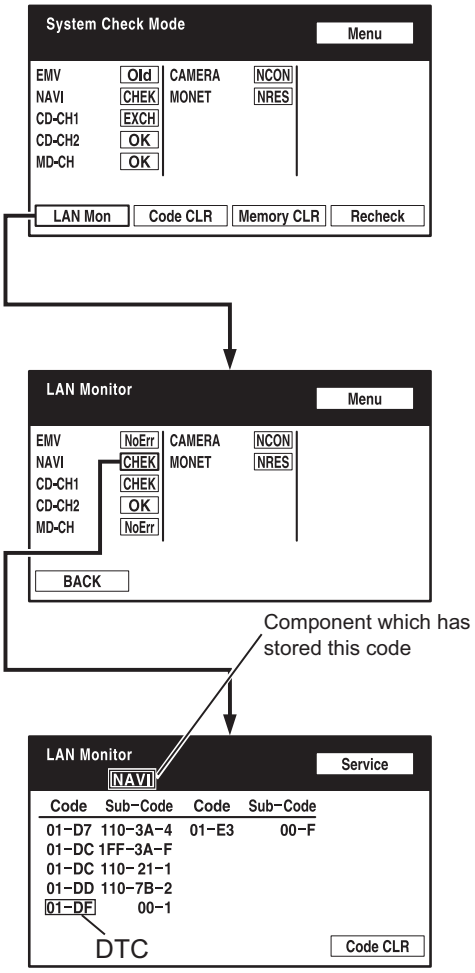

P E121199E04

(a) Enter the diagnostic mode.
(b) Press the "LAN Mon" switch to change to "LAN Monitor" mode.
(c) Identify the component which has stored this code.

Component Table:

Display	Component
AUDIO H/U	Radio receiver
DSP-AMP	Stereo component amplifier
NAVI	Navigation ECU

HINT:
"NAVI" is the component which has stored this code in the example shown in the illustration.

NS

NEXT

4	CHECK HARNESS AND CONNECTOR (MULTI-DISPLAY - COMPONENT WHICH HAS STORED THIS CODE)

HINT:
For details of the connectors, refer to "TERMINALS OF ECU" (See page NS-44).

(a) Referring to the AVC-LAN wiring diagram below, check the AVC-LAN circuit between the multi-display and the component which has stored this code.
  (1) Disconnect all connectors between the multi-display and the component which has stored this code.
  (2) Check for an open or short in the AVC-LAN circuit between the multi-display and the component which has stored this code.

OK:
There is no open or short circuit.

AVC-LAN WIRING DIAGRAM:

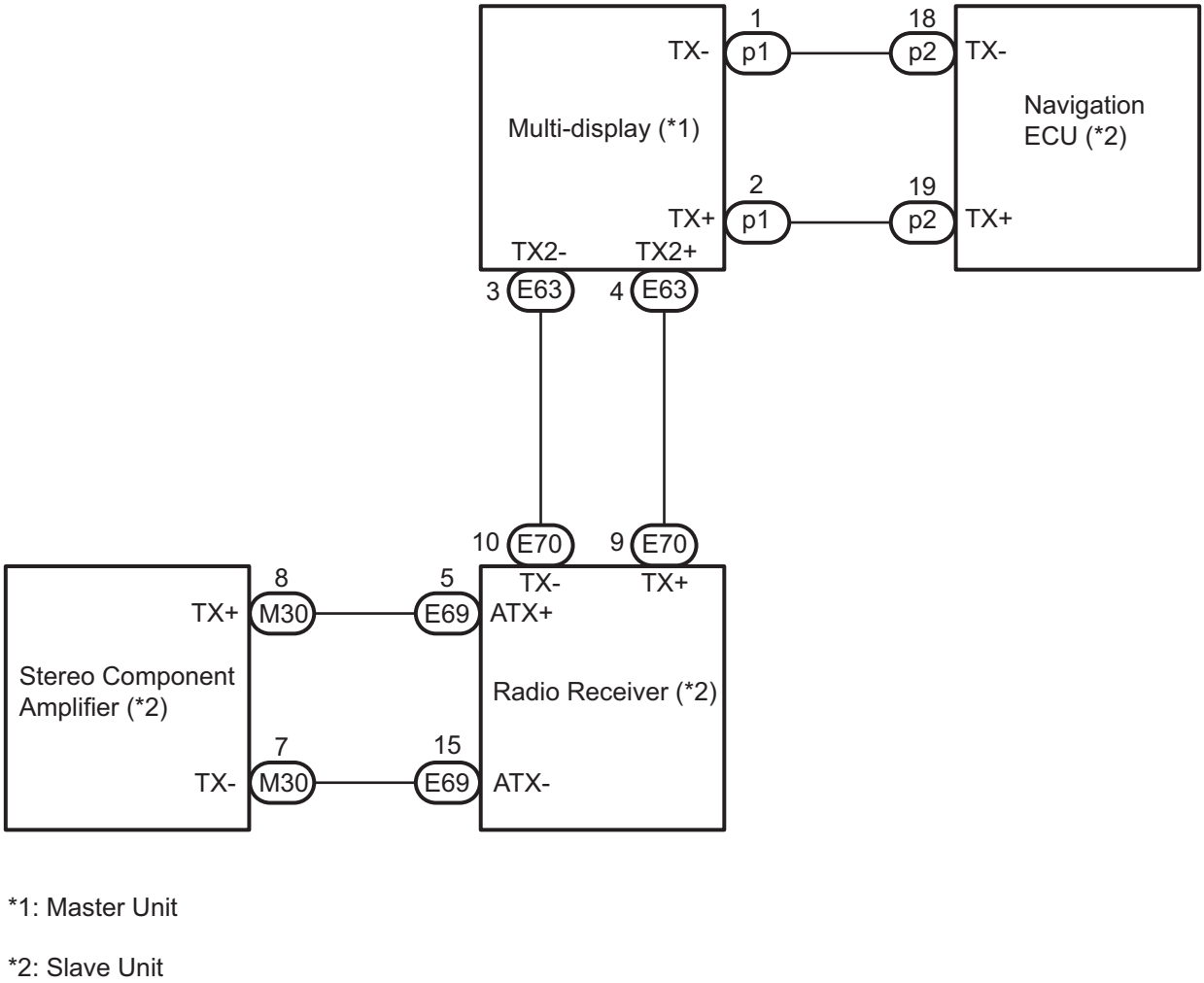

NG → **REPAIR OR REPLACE HARNESS OR CONNECTOR**

OK

5	CHECK HARNESS AND CONNECTOR (MULTI-DISPLAY - RADIO RECEIVER)

HINT:
For details of the connectors, refer to "TERMINALS OF ECU" (See page NS-44).

(a) Referring to the AVC-LAN wiring diagram below, check the AVC-LAN circuit between the multi-display and the radio receiver.

NS

(1) Disconnect all connectors between the multi-display and the radio receiver.
(2) Check for an open or short in the AVC-LAN circuit between the multi-display and the radio receiver.
OK:
There is no open or short circuit.

AVC-LAN WIRING DIAGRAM

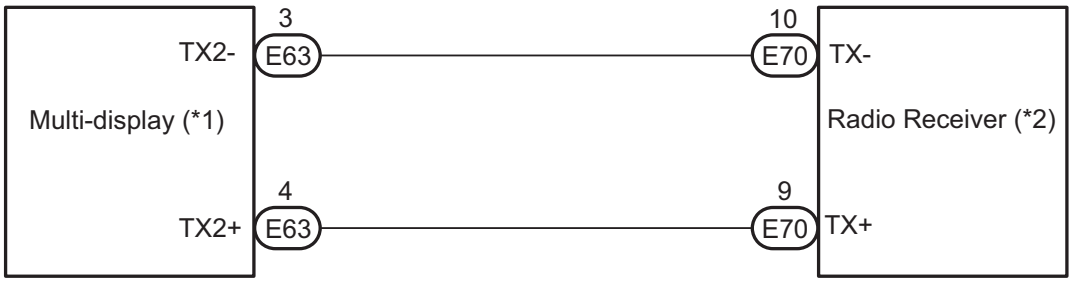

*1: Master Unit

*2: Slave Unit

P

E111831E17

NS

NG → **REPAIR OR REPLACE HARNESS OR CONNECTOR**

OK

6	REPLACE MULTI-DISPLAY

(a) Replace the multi-display with a normal one and check if the same problem occurs again.
OK:
Same problem does not occur.

NG → **REPLACE COMPONENT WHICH HAS STORED THIS CODE**

OK

END

DTC	01-E0	Registration Complete Indication Error

DTC	01-E3	Registration Demand Transmission

DTC	01-E4	Multiple Frame Incomplete

DESCRIPTION

DTC No.	DTC Detection Condition	Trouble Area
01-E0	"Registration complete" signal from the master device cannot be received.	-
01-E3	The registration demand signal from the slave device is output. Or the registration demand signal is output by receiving connection confirmation signal from the sub-master device.	-
01-E4	The multiple frame transmission is incomplete.	-

HINT:
Even if no fault is present, this trouble code may be stored depending on the battery condition or engine start voltage.

INSPECTION PROCEDURE

HINT:
- After the inspection is completed, clear the DTCs.
- These DTCs do not indicate a malfunction.

DTC	01-E2	ON / OFF Indication Parameter Error

DESCRIPTION

DTC No.	DTC Detection Condition	Trouble Area
01-E2	The signal for ON/OFF control from the master device has a problem.	Multi-display

INSPECTION PROCEDURE

HINT:
After the inspection is completed, clear the DTCs.

1	REPLACE MULTI-DISPLAY

NEXT

END

DTC	21-10	Panel Switch Error

DTC	21-11	Touch Switch Error

DTC	23-10	Panel Switch Error

DTC	23-11	Touch Switch Error

DTC	24-10	Panel Switch Error

DTC	24-11	Touch Switch Error

DTC	25-10	Panel Switch Error

DTC	25-11	Touch Switch Error

DESCRIPTION

DTC No.	DTC Detection Condition	Trouble Area
21-10	The panel switch detection circuit has a problem.	Multi-display
21-11	The touch panel switch has a problem.	
23-10	The panel switch detection circuit has a problem.	
23-11	The touch panel switch has a problem.	
24-10	The panel switch detection circuit has a problem.	
24-11	The touch panel switch has a problem.	
25-10	The panel switch detection circuit has a problem.	
25-11	The touch panel switch has a problem.	

INSPECTION PROCEDURE

HINT:
After the inspection is completed, clear the DTCs.

1	REPLACE MULTI-DISPLAY

NEXT

END

DTC	34-10	Error in Picture Circuit

DTC	34-11	No Current in Back-light

DTC	34-12	Excess Current in Back-light

DESCRIPTION

DTC No.	DTC Detection Condition	Trouble Area
34-10	Error in power supply system for picture circuit	Multi-display
34-11	Decline in power output from inverter circuit for back-light	
34-12	Excess power output from inverter circuit for back-light	

INSPECTION PROCEDURE

HINT:
After the inspection is completed, clear the DTCs.

1	REPLACE MULTI-DISPLAY

NS

NEXT

END

DTC	45-10	DVD Changer Mechanical Error

DTC	45-11	DVD Insertion and Ejection Error

DTC	45-12	DVD Reading Abnormal

DESCRIPTION

DTC No.	DTC Detection Condition	Trouble Area
45-10	A mechanical error in the DVD changer is detected while the DVD is not being inserted or ejected.	Radio receiver
45-11	DVD insertion or ejection is failed.	
45-12	DVD read problem occurs.	

INSPECTION PROCEDURE

HINT:
After the inspection is completed, clear the DTCs.

1	REPLACE RADIO RECEIVER

NEXT

END

DTC	45-41	Wrong Disc

DTC	45-42	Disc cannot be Read

DESCRIPTION

DTC No.	DTC Detection Condition	Trouble Area
45-41	An unsuitable disc is inserted.	• DVD • Radio receiver
45-42	The disc cannot be read.	

INSPECTION PROCEDURE

HINT:
After the inspection is completed, clear the DTCs.

1 CHECK DISC

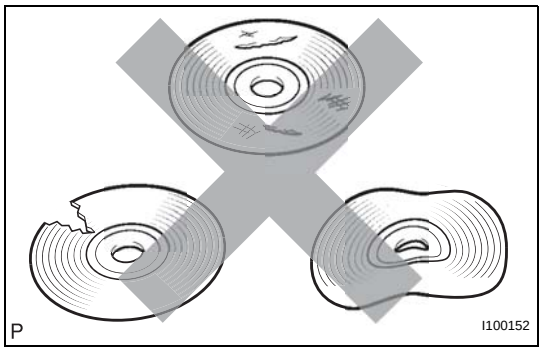

(a) Check that the disc is not deformed or cracked.
OK:
No deformation or cracks on the disc.

NG → **CHANGE DISC**

NS

OK

2 DISC CLEANING

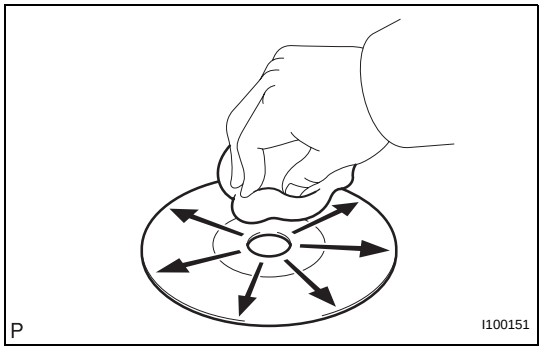

(a) Disc cleaning
(1) If dirt is on the disc surface, wipe it clean with a soft cloth from the inside to the outside in a radial direction.
NOTICE:
Do not use a conventional record cleaner or antistatic preservative.

NEXT

3 CLEAR DTC

(a) Clear the DTC (See page NS-48).

NEXT

4	RECHECK FOR DTC

(a) Recheck for DTCs and check if the same trouble occurs again.
OK:
Malfunction disappears.

OK → **END**

NG

5	REPLACE DISC WITH ANOTHER AND RECHECK

(a) Replace the disc with another and recheck.
(1) Replace the disc with another normal one.
(2) Clear the DTCs (See page NS-48).
(3) Recheck for DTCs and check if the same trouble occurs again.
OK:
Malfunction disappears.

NG → **REPLACE RADIO RECEIVER**

OK

END

DTC	45-43	DVD-ROM Abnormal

DESCRIPTION

DTC No.	DTC Detection Condition	Trouble Area
45-43	DVD-ROM operation is abnormal.	• DVD • Radio receiver

INSPECTION PROCEDURE

HINT:
After the inspection is completed, clear the DTCs.

1 CHECK IF A PROPER DVD IS INSERTED

(a) Make sure that the DVD is a video DVD or a CD with an MP3 or WMA file, and that it is not deformed, flawed, stained, burred, or otherwise defective.
OK:
Normal DVD or CD
HINT:
- Translucent or uniquely-shaped DVDs or CDs cannot be played.
- For details on playable DVDs or CDs, refer to the Owner's Manual.

NG → **DISC IS FAULTY**

OK ↓

2 CHANGE DISC

(a) Replace the disc with another and recheck.
(1) Replace the disc with another normal one.
(2) Clear the DTCs (See page NS-48).
(3) Recheck for DTCs and check if the same trouble occurs again.
OK:
Malfunction disappears.

NG → **REPLACE RADIO RECEIVER**

OK ↓

END

NS

DTC	45-44	DVD Malfunction

DTC	45-48	Excess Current

DTC	45-50	Tray Insertion / Ejection Error

DESCRIPTION

DTC No.	DTC Detection Condition	Trouble Area
45-44	Operation error in the DVD mechanism	Radio receiver
45-48	Excess current is present in the DVD changer.	
45-50	Malfunction in insertion/ejection system	

INSPECTION PROCEDURE

HINT:
After the inspection is completed, clear the DTCs.

1 CLEAR DTC

(a) Clear the DTCs (See page NS-48).

NS

NEXT

2 RECHECK FOR DTC

(a) Recheck for DTCs and check if the same trouble occurs again.
HINT:
If DTCs are detected frequently, replace the radio receiver.
OK:
Malfunction disappears.

NG → **REPLACE RADIO RECEIVER**

OK

END

DTC	45-45	Eject Error

DTC	45-51	Elevator Error

DTC	45-52	Clamp Error

DESCRIPTION

DTC No.	DTC Detection Condition	Trouble Area
45-45	Disc cannot be ejected.	Radio receiver
45-51	Mechanical error occurs during elevator operation.	
45-52	Error occurs in DVD changer clamp.	

INSPECTION PROCEDURE

HINT:
After the inspection is completed, clear the DTCs.

1 CHECK RADIO RECEIVER

(a) Check if a disc can be changed, inserted, or ejected normally.
OK:
Malfunction disappears.

NG → **REPLACE RADIO RECEIVER**

OK

END

DTC	45-46	Scratched/Reversed Disc

DESCRIPTION

DTC No.	DTC Detection Condition	Trouble Area
45-46	Scratches or dirt is found on DVD surface or DVD is inserted upside down.	• DVD • Radio receiver

INSPECTION PROCEDURE

HINT:
After the inspection is completed, clear the DTCs.

1 CHECK THAT CD IS INSERTED PROPERLY

(a) Check whether or not the disc is inserted upside down.
OK:
Disc is properly inserted.

NG → **INSERT DISC PROPERLY**

OK

2 CHECK DISC

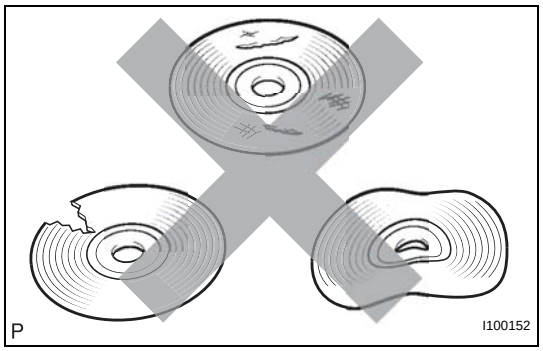

(a) Check that the disc is not deformed or cracked.
OK:
No deformation or cracks on the disc.

NG → **CHANGE DISC**

OK

3 DISC CLEANING

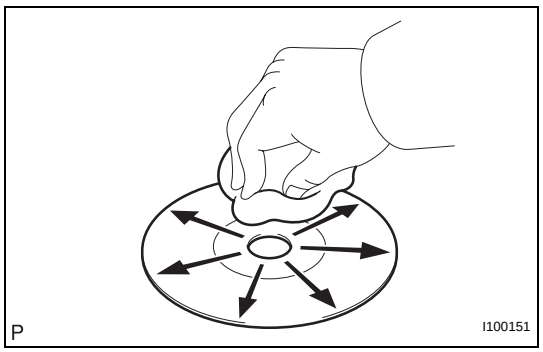

(a) Disc cleaning
(1) If dirt is on the disc surface, wipe it clean with a soft cloth from the inside to the outside in a radial direction.
NOTICE:
Do not use a conventional record cleaner or antistatic preservative.

NEXT

NS

4	CLEAR DTC

(a) Clear the DTC (See page NS-48).

NEXT

5	RECHECK FOR DTC

(a) Recheck for DTCs and check if the same trouble occurs again.
OK:
Malfunction disappears.

OK → **END**

NG

6	REPLACE DISC WITH ANOTHER AND RECHECK

(a) Replace the disc with another and recheck.
(1) Replace the disc with another normal one.
(2) Clear the DTCs (See page NS-48).
(3) Recheck for DTCs and check if the same trouble occurs again.
OK:
Malfunction disappears.

NG → **REPLACE RADIO RECEIVER**

OK

END

DTC	45-47	High Temperature

DESCRIPTION

DTC No.	DTC Detection Condition	Trouble Area
45-47	Sensor detects that DVD unit temperature is high. (Over 80°C (176°F))	Radio receiver

INSPECTION PROCEDURE

HINT:
After the inspection is completed, clear the DTCs.

1 CHECK RADIO RECEIVER

(a) Park the vehicle in a cool place.
(b) Check that the temperature of the radio receiver has become sufficiently low, and start the engine. Check that the malfunction disappears.
OK:
Malfunction disappears.

NG → **REPLACE RADIO RECEIVER**

OK

END

DTC	45-78	DSP Error

DESCRIPTION

DTC No.	DTC Detection Condition	Trouble Area
45-78	An error occurs during the decode process (MP3 / WMA).	Radio receiver

INSPECTION PROCEDURE

HINT:
After the inspection is completed, clear the DTCs.

NOTICE:

- **This code may be output even if there is no malfunction.**
- **If this code is output frequently, replace the radio receiver.**

1 CLEAR DTC

(a) Clear the DTCs (See page NS-48).

NEXT

2 RECHECK FOR DTC

(a) Recheck for DTCs and check if the same trouble code occurs again.
OK:
Malfunction disappears.

NG → **REPLACE RADIO RECEIVER**

OK

END

DTC	45-7D	Disc cannot be Played

DTC	45-7E	No Playable Files

DTC	45-7F	Copyright Protection Error

DESCRIPTION

DTC No.	DTC Detection Condition	Trouble Area
45-7D	• An incompatible MP3 - WMA file is used. • Although the file has an extension of ".mp3" or ".wma", the header information cannot be read.	• DVD • Radio receiver
45-7E	• A disc with no music data is used. • Playable files are not on the disc (MP3 - WMA).	
45-7F	A copy-protected file, which cannot be played, is used.	

INSPECTION PROCEDURE

HINT:
After the inspection is completed, clear the DTCs.

1	CHANGE DISC

NS

(a) Insert a disc with a playable file and check if the disc can be played correctly.
HINT:
For details on playable files and discs, refer to the Owner's Manual.
OK:
The disc can be played correctly.

NG → **REPLACE RADIO RECEIVER**

OK

DISC IS FAULTY

DTC	57-47	Bluetooth Module Initialization Failed

DESCRIPTION

DTC No.	DTC Detection Condition	Trouble Area
57-47	• Bluetooth module is not installed. • Problem with Bluetooth module • Problem in communication line to Bluetooth module	Multi-display

INSPECTION PROCEDURE

HINT:
After the inspection is completed, clear the DTCs.

1	REPLACE MULTI-DISPLAY

NEXT

END

DTC	58-10	Gyro Error

DTC	80-10	Gyro Error

DESCRIPTION

DTC No.	DTC Detection Condition	Trouble Area
58-10	Ground short, power supply short, or open circuit in the gyro signal	• Gyro sensor • Navigation ECU
80-10	Ground short, power supply short, or open circuit in the gyro signal	

INSPECTION PROCEDURE

HINT:
After the inspection is completed, clear the DTCs.

1 CHECK VEHICLE SENSOR (NAVIGATION CHECK MODE)

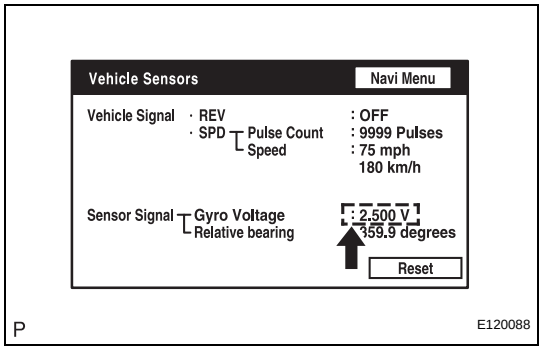

(a) Enter the "Navigation Check" mode (Vehicle Sensors) (See page NS-27).
(b) Check the gyro voltage.
Standard voltage:
0.1 to 4.5 V

NG → **REPLACE NAVIGATION ECU**

OK

2 CLEAR DTC

(a) Clear the DTCs (See page NS-48).

NEXT

3 RECHECK FOR DTC

(a) Recheck for DTCs and check if the same trouble occurs again.
HINT:
If DTCs are detected frequently, replace the navigation ECU.
OK:
Malfunction disappears.

NG → **REPLACE NAVIGATION ECU**

NS

OK

END

DTC	58-11	GPS Receiver Error

DTC	80-11	GPS Receiver Error

DESCRIPTION

DTC No.	DTC Detection Condition	Trouble Area
58-11	• RTC, ROM, and RAM of the GPS receiver and TCXO error • GPS receiver is failed.	Navigation ECU
80-11	• RTC, ROM, and RAM of the GPS receiver and TCXO error • GPS receiver is failed.	

INSPECTION PROCEDURE

HINT:
After the inspection is completed, clear the DTCs.

1	REPLACE NAVIGATION ECU

NEXT

NS

END

DTC	58-40	GPS Antenna Error

DTC	58-41	GPS Antenna Power Source Error

DTC	80-40	GPS Antenna Error

DTC	80-41	GPS Antenna Power Source Error

DESCRIPTION

DTC No.	DTC Detection Condition	Trouble Area
58-40	GPS antenna error	• Wire harness • GPS antenna • Navigation ECU
58-41	Error of the power source to the GPS antenna	
80-40	GPS antenna error	
80-41	Error of the power source to the GPS antenna	

INSPECTION PROCEDURE

HINT:
After the inspection is completed, clear the DTCs.

NS

1 CHECK HARNESS AND CONNECTOR (GPS ANTENNA - NAVIGATION ECU)

(a) Check that the GPS antenna cord is securely connected to the navigation ECU connector.
OK:
The cord is securely connected.

NG → **REPAIR OR REPLACE HARNESS OR CONNECTOR**

OK

2 REPLACE GPS ANTENNA

(a) Replace the GPS antenna with a normal one and check if the same problem occurs again.
(1) Clear the DTCs (See page NS-48).
(2) Recheck for DTCs and check if the same trouble occurs again.
OK:
Same problem does not occur.

NG → **REPLACE NAVIGATION ECU**

OK

END

DTC	58-42	Map Disc Read Error

DTC	80-42	Map Disc Read Error

DESCRIPTION

DTC No.	DTC Detection Condition	Trouble Area
58-42	• Player error • Scratches or dirt on the disc • Access to an invalid address due to software error	• Map disc • Navigation ECU
80-42	• Player error • Scratches or dirt on the disc • Access to an invalid address due to software error	

INSPECTION PROCEDURE

HINT:
After the inspection is completed, clear the DTCs.

1	CHECK MAP DISC

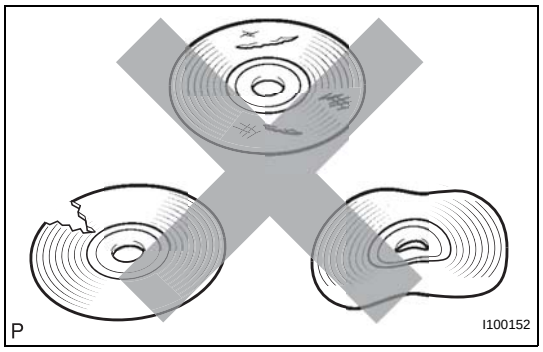

(a) Check that the map disc is not deformed or cracked.
OK:
No deformations or cracks on the map disc.

NG → **Go to step 4**

OK

2	DISC CLEANING

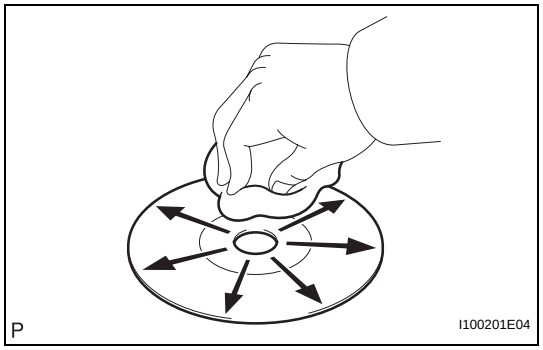

(a) Disc cleaning
(1) If dirt is on the disc surface, wipe it clean with a soft cloth from the inside to the outside in a radial direction.
NOTICE:
Do not use a conventional record cleaner or anti-static preservative.

NEXT

3	DTC CLEAR AND RECHECK

(a) Clear the DTCs (See page NS-48).

NS

(b) Recheck for DTCs and check if the same trouble occurs again.
OK:
Same problem does not occur.

OK → **END**

NG

4	REPLACE MAP DISC

(a) Replace the map disc.
(b) Clear the DTCs and recheck for DTCs.
(c) Check if the same trouble occurs again.
OK:
Same problem does not occur.

OK → **END**

NG

REPLACE NAVIGATION ECU

DTC	58-43	SPD Signal Error

DTC	80-43	SPD Signal Error

DESCRIPTION

DTC No.	DTC Detection Condition	Trouble Area
58-43	A difference between the GPS speed and SPD pulse is detected.	• Speed signal circuit • Navigation ECU
80-43	A difference between the GPS speed and SPD pulse is detected.	

INSPECTION PROCEDURE

HINT:
After the inspection is completed, clear the DTCs.

1	CHECK VEHICLE SENSOR (NAVIGATION CHECK MODE)

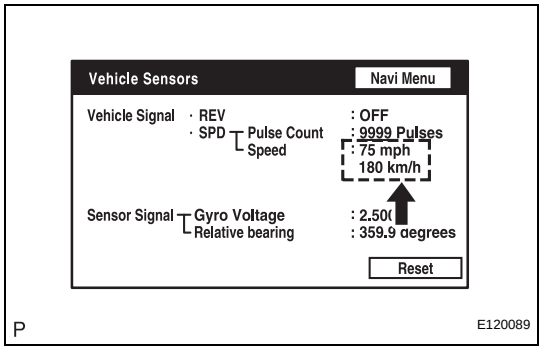

(a) Enter the "Navigation Check" mode (Vehicle Sensors) (See page NS-27).

(b) While driving the vehicle, compare the "SPD" indicator to the reading on the speedometer. Check if these readings are almost equal.

OK:

The readings are almost equal.

OK → **REPLACE NAVIGATION ECU**

NG

2	PROCEED TO NEXT CIRCUIT INSPECTION SHOWN IN PROBLEM SYMPTOMS TABLE

Refer to "Speed signal does not change in the navigation check mode" in the problem symptoms table (See page NS-41).

NEXT

END

NS

DTC	58-44	Player Error

DTC	80-44	Player Error

DESCRIPTION

DTC No.	DTC Detection Condition	Trouble Area
58-44	Map player error is detected.	Navigation ECU
80-44	Map player error is detected.	

INSPECTION PROCEDURE

HINT:
After the inspection is completed, clear the DTCs.

1 CHECK NAVIGATION ECU

(a) Check if a disc can be inserted or ejected normally.
OK:
A disc can be inserted or ejected normally.

NG → **REPLACE NAVIGATION ECU**

NS

OK

2 DTC CLEAR AND RECHECK

(a) Clear the DTCs (See page NS-48).
(b) Recheck for DTCs and check if the same trouble occurs again.
OK:
Same problem does not occur.

OK → **END**

NG

REPLACE NAVIGATION ECU

DTC	58-45	High Temperature

DTC	80-45	High Temperature

DESCRIPTION

DTC No.	DTC Detection Condition	Trouble Area
58-45	High map disc player temperature is detected. (Over 80°C (176°F))	Navigation ECU
80-45	High map disc player temperature is detected. (Over 80°C (176°F))	

INSPECTION PROCEDURE

HINT:
After the inspection is completed, clear the DTCs.

1	CHECK NAVIGATION ECU

(a) Park the vehicle in a cool place.
(b) Check that the temperature of the navigation ECU has become sufficiently low, then start the engine to verify the malfunction symptom.
OK:
Same problem does not occur.

NG → **REPLACE NAVIGATION ECU**

OK

END

NS

DTC	5C-40	Camera Picture Error

DESCRIPTION

DTC No.	DTC Detection Condition	Trouble Area
5C-40	Synchronous signal from the camera cannot be transmitted.	• Wire harness • Television camera assembly • Multi-display

WIRING DIAGRAM

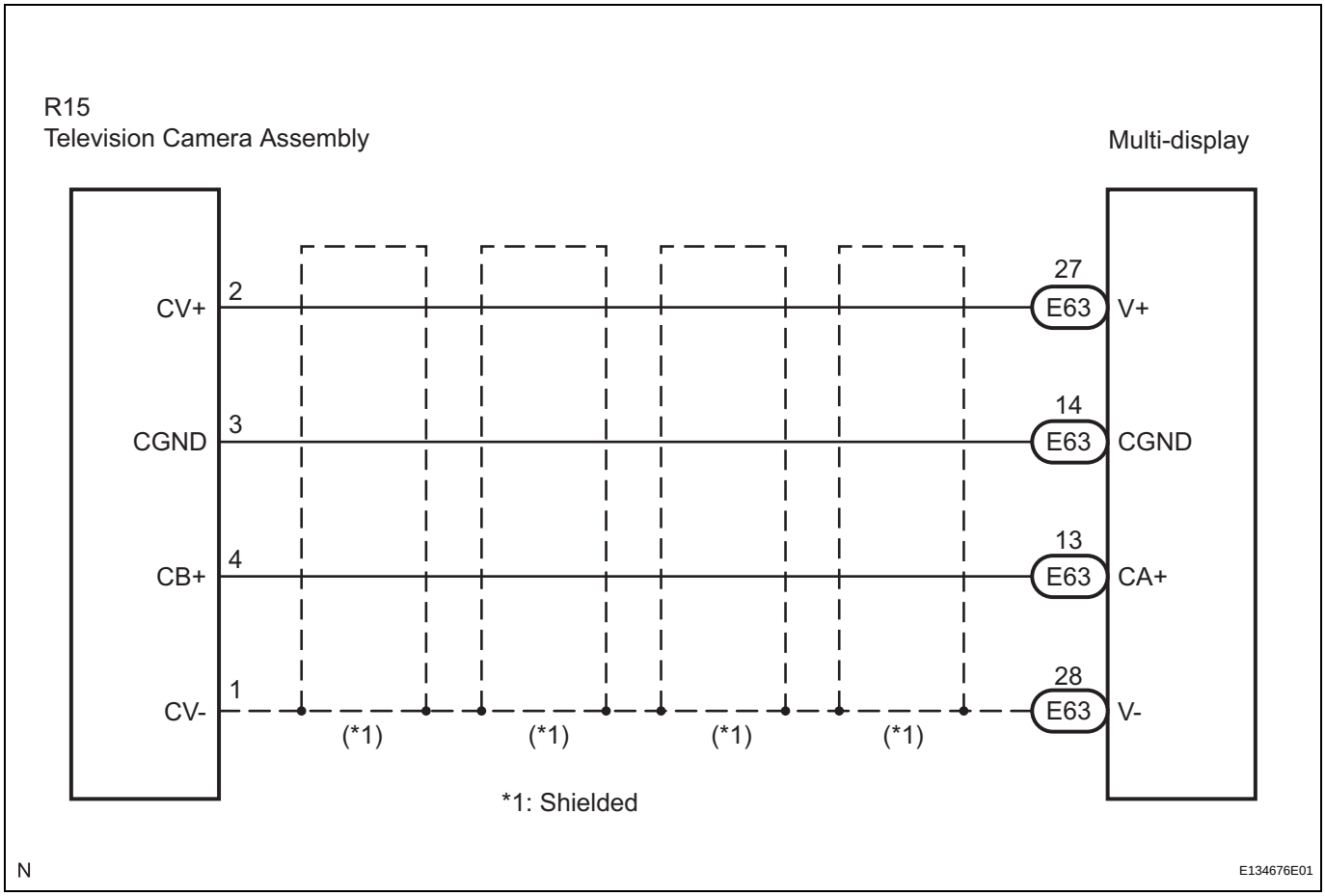

INSPECTION PROCEDURE

HINT:
After the inspection is completed, clear the DTCs.

1	CHECK HARNESS AND CONNECTOR (MULTI-DISPLAY - TELEVISION CAMERA ASSEMBLY)

(a) Disconnect the E63 connector from the multi-display.
(b) Disconnect the R15 connector from the television camera assembly.

NS

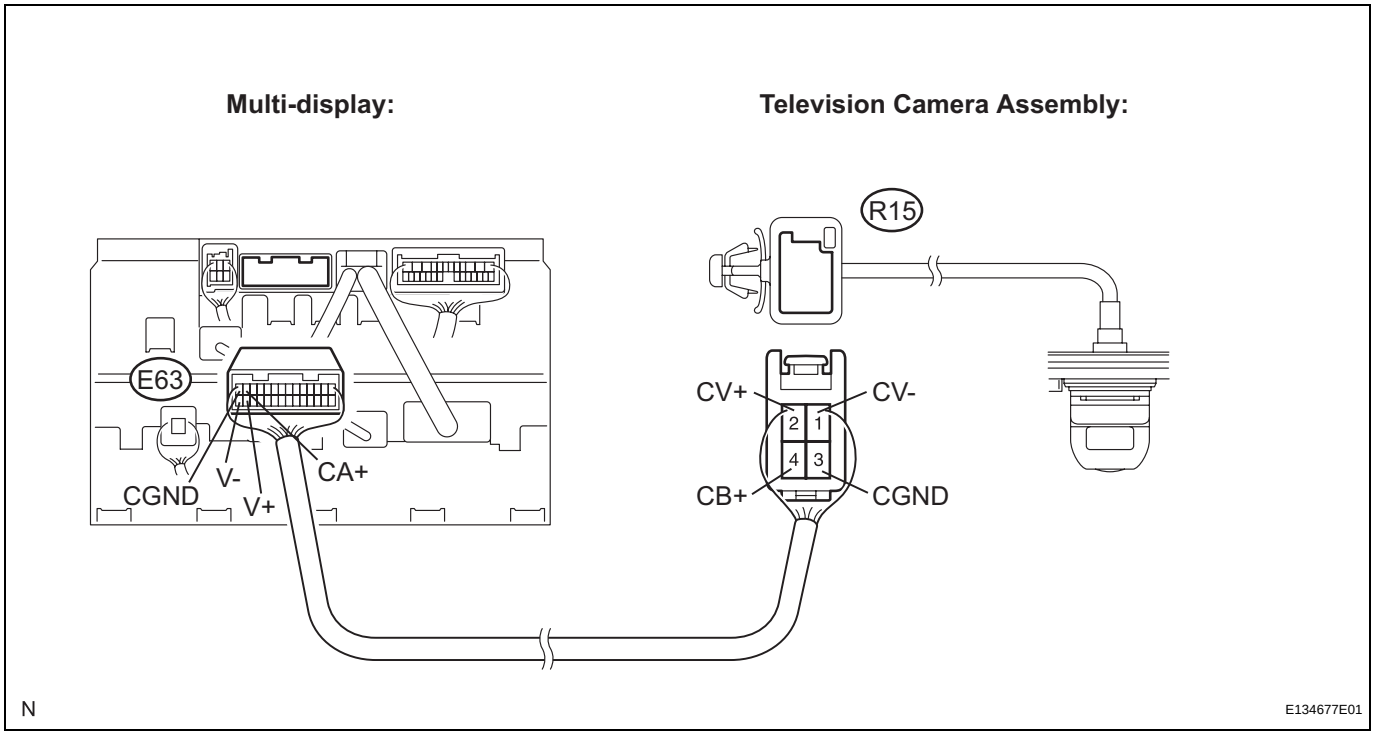

(c) Measure the resistance according to the value(s) in the table below.

NS

Standard resistance

Tester Connection (Terminal No.)	Condition	Specified Condition
CB+ (R15-4) - CA+ (E63-13)	Always	Below 1 Ω
CGND (R15-3) - CGND (E63-14)	Always	Below 1 Ω
CV+ (R15-2) - V+ (E63-27)	Always	Below 1 Ω
CV- (R15-1) - V- (E63-28)	Always	Below 1 Ω
CB+ (R15-4) - Body ground	Always	10 kΩ or higher
CGND (R15-3) - Body ground	Always	10 kΩ or higher
CV+ (R15-2) - Body ground	Always	10 kΩ or higher
CV- (R15-1) - Body ground	Always	10 kΩ or higher

NG → **REPAIR OR REPLACE HARNESS OR CONNECTOR**

OK

2	INSPECT MULTI-DISPLAY

(a) Reconnect the multi-display E63 connector.

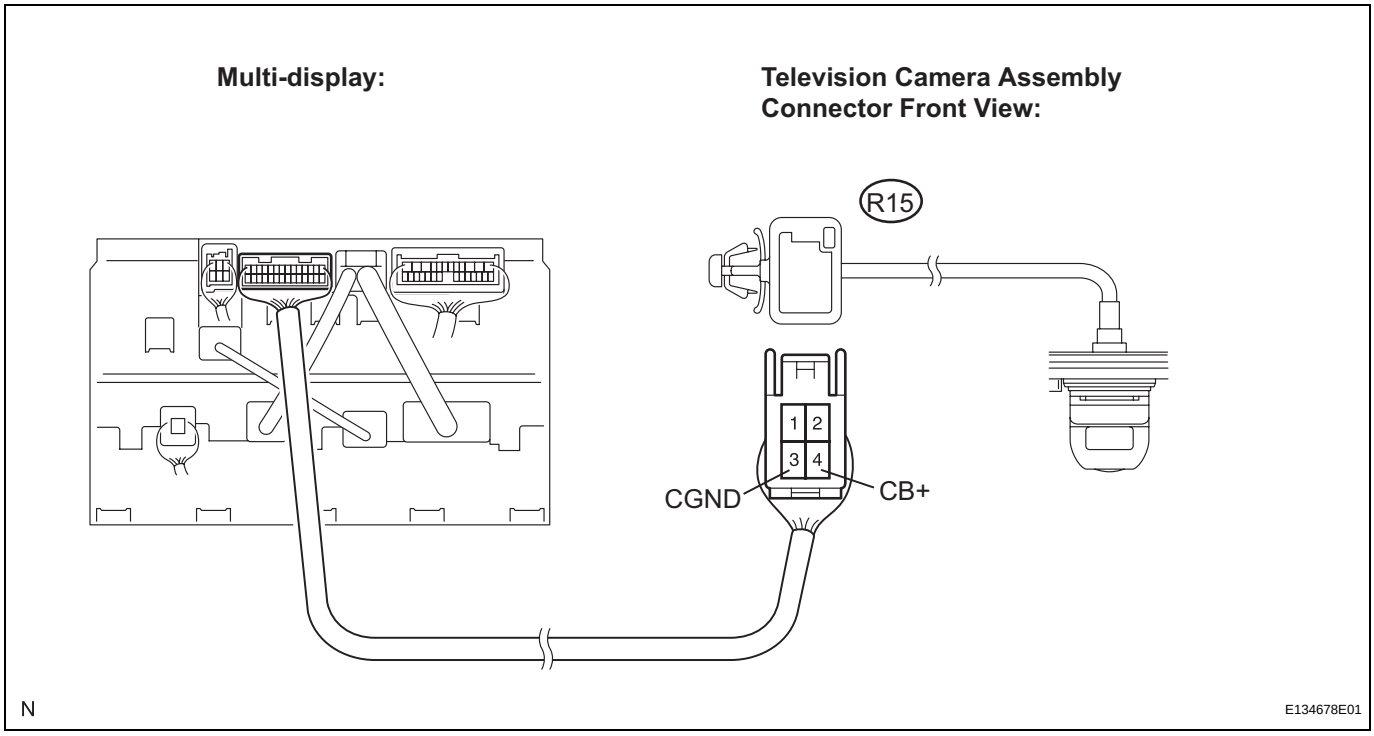

(b) Measure the voltage according to the value(s) in the table below.

NS

Standard voltage

Tester Connection (Terminal No.)	Condition	Specified Condition
CB+ (R15-4) - CGND (R15-3)	Engine switch on (IG), shift lever R position	Approx. 6 V

NG → **REPLACE MULTI-DISPLAY**

OK

REPLACE TELEVISION CAMERA ASSEMBLY

DTC	60-10	AM Tuner PLL does not Lock

DTC	60-11	FM Tuner PLL does not Lock

DESCRIPTION

DTC No.	DTC Detection Condition	Trouble Area
60-10	AM tuner PLL (phase locked loop) synchronization is impossible.	Radio receiver
60-11	FM tuner PLL (phase locked loop) synchronization is impossible.	

INSPECTION PROCEDURE

HINT:
After the inspection is completed, clear the DTCs.

1	REPLACE RADIO RECEIVER

NEXT

END

DTC	60-42	Tuner Power Source Error

DTC	60-43	AM Tuner Error

DTC	60-44	FM Tuner Error

DTC	60-50	Malfunction in Internal IC

DESCRIPTION

DTC No.	DTC Detection Condition	Trouble Area
60-42	The power source of the tuner is abnormal.	Radio receiver
60-43	The AM tuner is abnormal.	
60-44	The FM tuner is abnormal.	
60-50	A problem occurs in the IC inside the tuner unit and radio reception is not normal.	

INSPECTION PROCEDURE

HINT:
After the inspection is completed, clear the DTCs.

NS

1 CLEAR DTC

(a) Clear the DTCs (See page NS-48).

NEXT

2 RECHECK FOR DTC

(a) Recheck for DTCs and check if the same trouble occurs again.
HINT:
If DTCs are detected frequently, replace the radio receiver.
OK:
Malfunction disappears.

NG → **REPLACE RADIO RECEIVER**

OK

END

DTC	61-40	Mechanical Error of Media

DTC	61-41	Eject Error

DTC	61-42	Tape Tangling

DESCRIPTION

DTC No.	DTC Detection Condition	Trouble Area
61-40	A malfunction due to mechanical problem has occurred, or cassette tape is cut or entangled.	• Cassette tape • Radio receiver
61-41	A malfunction due to mechanical problem	
61-42	Cassette tape is tangled.	

INSPECTION PROCEDURE

HINT:
After the inspection is completed, clear the DTCs.

1 CHECK OPERATION

(a) Press the cassette tape EJECT switch of the radio receiver for 2 seconds or more and check that the cassette tape is ejected.
OK:
Cassette tape is ejected.

NG → **REPLACE RADIO RECEIVER**

OK

2 CHECK CASSETTE TAPE

(a) Check that the ejected cassette tape does not have a peeling label, cassette body deformation or other problems.
OK:
No problem with cassette tape.

NG → **CASSETTE TAPE IS FAULTY**

OK

3 REPLACE CASSETTE TAPE

(a) Replace the cassette tape with a normal one and check if the same problem occurs again.
(1) Clear the DTCs (See page NS-48).
(2) Recheck for DTCs and check if the same trouble occurs again.
OK:
Malfunction disappears.

NS

NG → **REPLACE RADIO RECEIVER**

OK

CASSETTE TAPE IS FAULTY

DTC	63-10	CD Changer Mechanical Error

DTC	63-11	CD Insertion and Ejection Error

DTC	63-12	CD Reading Abnormal

DESCRIPTION

DTC No.	DTC Detection Condition	Trouble Area
63-10	A mechanical error in the CD changer is detected while the CD is not being inserted or ejected.	Radio receiver
63-11	CD insertion or ejection is failed.	
63-12	CD read problem occurs.	

INSPECTION PROCEDURE

HINT:
After the inspection is completed, clear the DTCs.

1	REPLACE RADIO RECEIVER

NEXT

END

DTC	63-41	Wrong Disc

DTC	63-42	Disc cannot be Read

DESCRIPTION

DTC No.	DTC Detection Condition	Trouble Area
63-41	An unsuitable disc is inserted.	• CD • Radio receiver
63-42	The disc cannot be read.	

INSPECTION PROCEDURE

HINT:
After the inspection is completed, clear the DTCs.

1 CHECK DISC

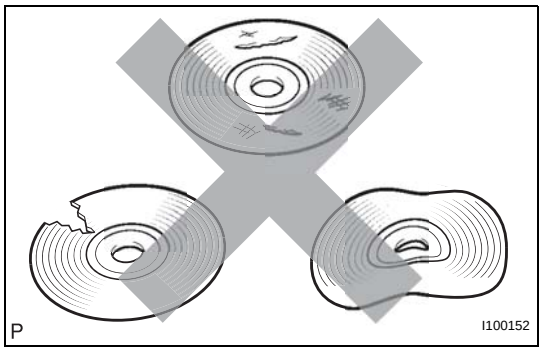

(a) Check that the disc is not deformed or cracked.
OK:
No deformations or cracks on the disc.

NG → **CHANGE DISC**

OK

2 DISC CLEANING

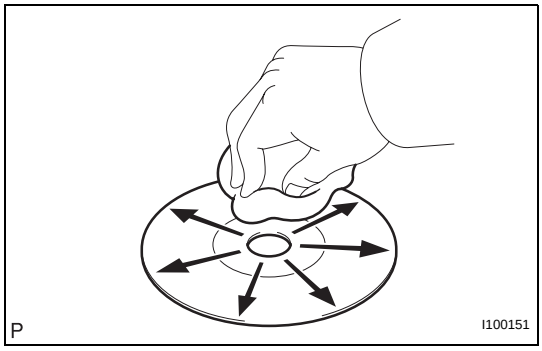

(a) Disc cleaning
(1) If dirt is on the disc surface, wipe it clean with a soft cloth from the inside to the outside in a radial direction.
NOTICE:
Do not use a conventional record cleaner or anti-static preservative.

NEXT

3 CLEAR DTC

(a) Clear the DTCs (See page NS-48).

NEXT

NS

4	RECHECK FOR DTC

(a) Recheck for DTCs and check if the same trouble occurs again.
OK:
Malfunction disappears.

OK → **END**

NG

5	REPLACE DISC WITH ANOTHER AND RECHECK

(a) Replace the disc with another and recheck.
(1) Replace the disc with another normal one.
(2) Clear the DTCs (See page NS-48).
(3) Recheck for DTCs and check if the same trouble occurs again.
OK:
Malfunction disappears.

NG → **REPLACE RADIO RECEIVER**

OK

END

DTC	63-43	CD-ROM Abnormal

DESCRIPTION

DTC No.	DTC Detection Condition	Trouble Area
63-43	CD-ROM operation is abnormal.	• CD • Radio receiver

INSPECTION PROCEDURE

HINT:
After the inspection is completed, clear the DTCs.

1 CHECK IF A PROPER CD IS INSERTED

(a) Make sure that the CD is an audio CD or a CD with an MP3 or WMA file, and that it is not deformed, flawed, stained, burred, or otherwise defective.
OK:
Normal CD
HINT:
- Translucent or uniquely-shaped CDs cannot be played.
- CD with adhesive paper labels should not be played.
- Commercial audio CDs can be played.
- CD-DA files on CD-ROMs, CD-Rs, and CD-RWs can be played.
- MP3 and WMA files on CD-ROMs, CD-Rs, and CD-RWs can be played.
- For details on playable CDs, refer to the Owner's Manual.

NG → **CD IS FAULTY**

OK

2 REPLACE CD WITH ANOTHER AND RECHECK

(a) Replace the CD with another and recheck.
(1) Replace the CD with another normal one.
(2) Clear the DTCs (See page NS-48).
(3) Recheck for DTCs and check if the same trouble occurs again.
OK:
Malfunction disappears.

NG → **REPLACE RADIO RECEIVER**

OK

END

DTC	63-44	CD Abnormal

DTC	63-48	Excess Current

DTC	63-50	Tray Insertion / Ejection Error

DESCRIPTION

DTC No.	DTC Detection Condition	Trouble Area
63-44	Operation error in the CD mechanism	Radio receiver
63-48	Excess current is present in the CD changer.	
63-50	Malfunction in insertion/ejection system	

INSPECTION PROCEDURE

HINT:
After the inspection is completed, clear the DTCs.

1 CLEAR DTC

(a) Clear the DTCs (See page NS-48).

NS

NEXT

2 RECHECK FOR DTC

(a) Recheck for DTCs and check if the same trouble occurs again.
HINT:
If DTCs are detected frequently, replace the radio receiver.
OK:
Malfunction disappears.

NG → **REPLACE RADIO RECEIVER**

OK

END

DTC	63-45	Eject Error

DTC	63-51	Elevator Error

DTC	63-52	Clamp Error

DESCRIPTION

DTC No.	DTC Detection Condition	Trouble Area
63-45	Magazine cannot be ejected.	Radio receiver
63-51	Mechanical error occurs during elevator operation.	
63-52	Error occurs in CD changer clamp.	

INSPECTION PROCEDURE

HINT:
After the inspection is completed, clear the DTCs.

1	CHECK RADIO RECEIVER

(a) Check if a disc can be changed, inserted, or ejected normally.
OK:
Malfunction disappears.

NG → **REPLACE RADIO RECEIVER**

OK

END

DTC	63-46	Scratched / Reversed Disc

DESCRIPTION

DTC No.	DTC Detection Condition	Trouble Area
63-46	Scratches or dirt is found on CD surface or CD is inserted upside down.	• CD • Radio receiver

INSPECTION PROCEDURE

HINT:
After the inspection is completed, clear the DTCs.

1 CHECK THAT CD IS INSERTED PROPERLY

(a) Check that the CD is not inserted upside down.
OK:
CD is properly inserted.

NG → **INSERT CD PROPERLY**

OK

2 CHECK DISC

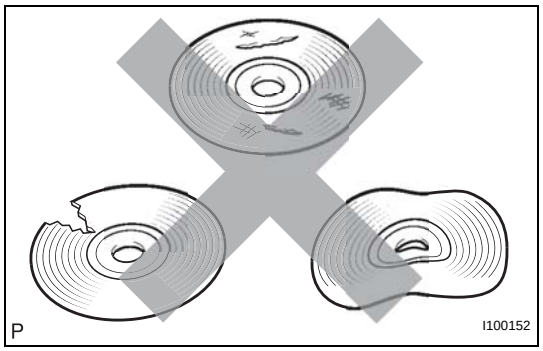

(a) Check that the disc is not deformed or cracked.
OK:
No deformations or cracks on the disc.

NG → **CHANGE DISC**

OK

3 DISC CLEANING

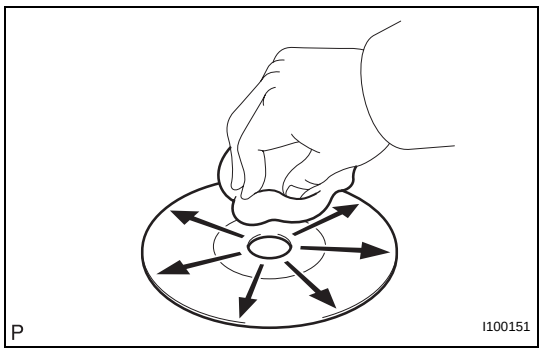

(a) Disc cleaning
(1) If dirt is on the disc surface, wipe it clean with a soft cloth from the inside to the outside in a radial direction.
NOTICE:
Do not use a conventional record cleaner or anti-static preservative.

NEXT

NS

4	CLEAR DTC

(a) Clear the DTCs (See page NS-48).

NEXT

5	RECHECK FOR DTC

(a) Recheck for DTCs and check if the same trouble occurs again.
OK:
Malfunction disappears.

OK → **END**

NG

6	REPLACE DISC WITH ANOTHER AND RECHECK

(a) Replace the disc with another and recheck.
(1) Replace the disc with another normal one.
(2) Clear the DTCs (See page NS-48).
(3) Recheck for DTCs and check if the same trouble occurs again.
OK:
Malfunction disappears.

NG → **REPLACE RADIO RECEIVER**

OK

END

DTC	63-47	High Temperature

DESCRIPTION

DTC No.	DTC Detection Condition	Trouble Area
63-47	Sensor detects that CD unit temperature is high. (Over 80°C (176°F))	Radio receiver

INSPECTION PROCEDURE

HINT:
After the inspection is completed, clear the DTCs.

1 CHECK RADIO RECEIVER

(a) Park the vehicle in a cool place.
(b) Check that the temperature of the radio receiver has become sufficiently low, then start the engine. Check that the malfunction disappears.
OK:
Malfunction disappears.

NG → **REPLACE RADIO RECEIVER**

OK

END

DTC	63-78	DSP Error

DESCRIPTION

DTC No.	DTC Detection Condition	Trouble Area
63-78	An error occurs during the decode process (MP3 / WMA).	Radio receiver

INSPECTION PROCEDURE

HINT:
After the inspection is completed, clear the DTCs.

NOTICE:

- **This code may be output even if there is no malfunction.**
- **If this code is output frequently, replace the radio receiver.**

1 CLEAR DTC

(a) Clear the DTCs (See page NS-48).

NEXT

2 RECHECK FOR DTC

(a) Recheck for DTCs and check if the same trouble occurs again.
OK:
Malfunction disappears.

NG → **REPLACE RADIO RECEIVER**

OK

END

DTC	63-7D	Disc cannot be Played

DTC	63-7E	No Playable Files

DTC	63-7F	Copyright Protection Error

DESCRIPTION

DTC No.	DTC Detection Condition	Trouble Area
63-7D	• An incompatible MP3 - WMA file is used. • Although the file has an extension of ".mp3" or ".wma", the header information cannot be read.	• CD • Radio receiver
63-7E	• A disc with no music data is used. • Playable files are not on the disc (MP3 - WMA).	
63-7F	A copy-protected file, which cannot be played, is used.	

INSPECTION PROCEDURE

HINT:
After the inspection is completed, clear the DTCs.

1	CHANGE DISC

NS

(a) Insert a disc with a playable file and check if the disc can be played correctly.
HINT:
For details on playable files and discs, refer to the Owner's Manual.
OK:
The disc can be played correctly.

NG → **REPLACE RADIO RECEIVER**

OK

DISC IS FAULTY

DTC	74-40	Short in Speaker Circuit

DESCRIPTION

DTC No.	DTC Detection Condition	Trouble Area
74-40	A short is detected in the speaker output circuit.	• Wire harness • Speaker • Stereo component amplifier

This circuit has a fail-safe function.
- When a short in the speaker circuit is detected, all sound outputs are stopped.

WIRING DIAGRAM

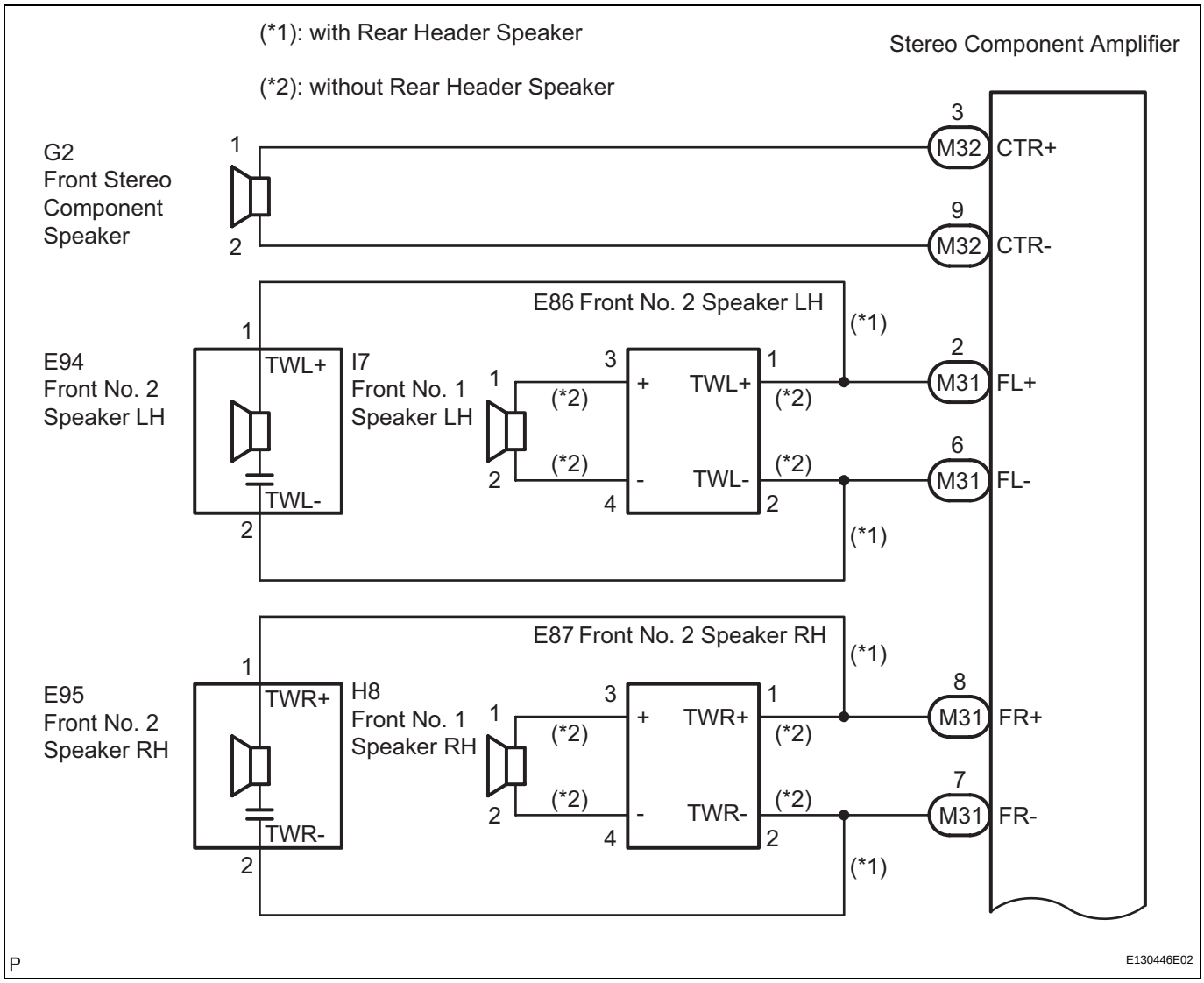

NS

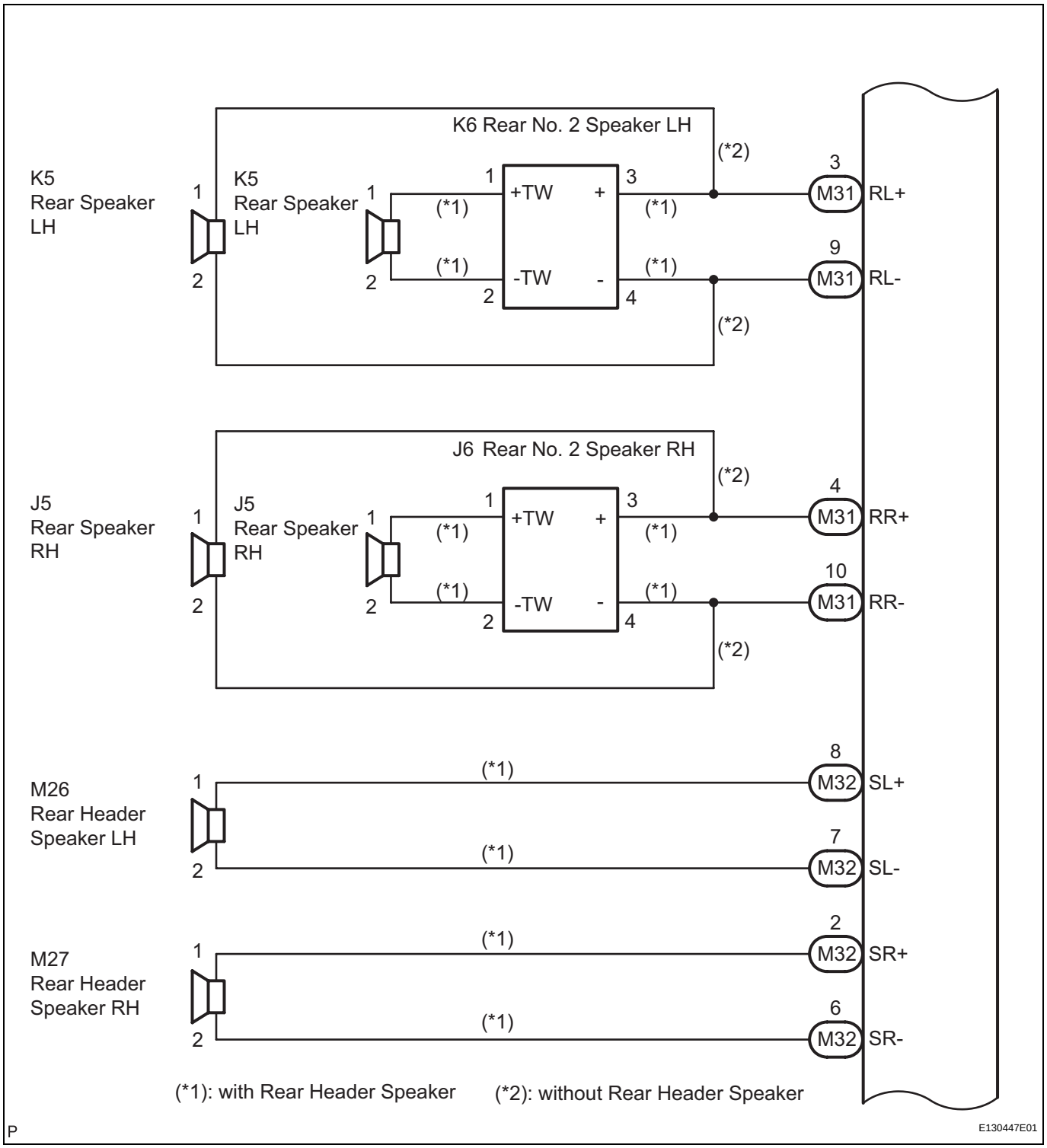
K6 Rear No. 2 Speaker LH
K5
Rear Speaker
LH
K5
Rear Speaker
LH
+TW
-TW
(*1)
(*2)
M31
RL+
RL-
J6 Rear No. 2 Speaker RH
J5
Rear Speaker
RH
J5
Rear Speaker
RH
RR+
RR-
M26
Rear Header
Speaker LH
M27
Rear Header
Speaker RH
M32
SL+
SL-
SR+
SR-
(*1): with Rear Header Speaker
(*2): without Rear Header Speaker
P
E130447E01

NS

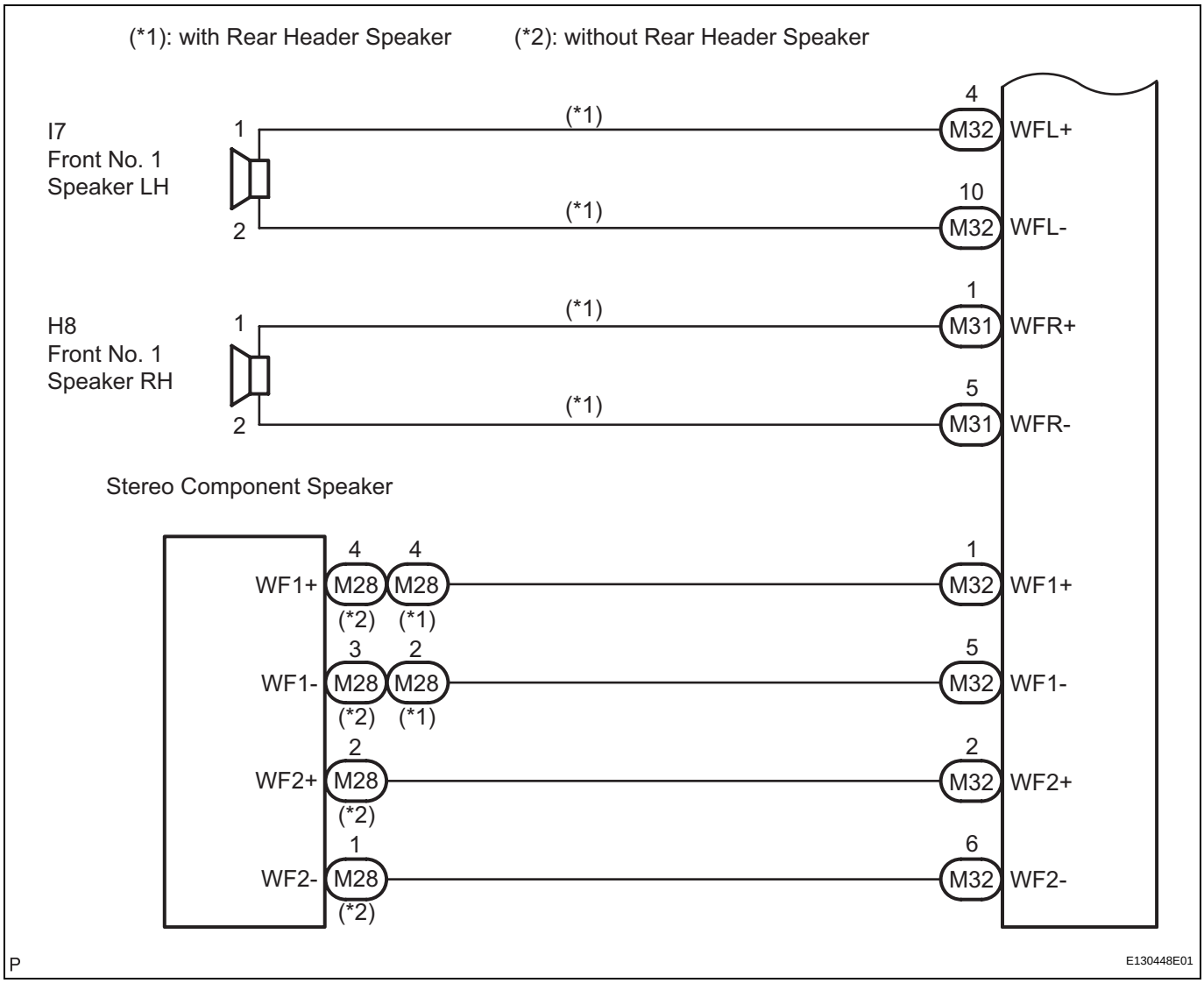

INSPECTION PROCEDURE

HINT:

After the inspection is completed, clear the DTCs.

1	INSPECT STEREO COMPONENT AMPLIFIER

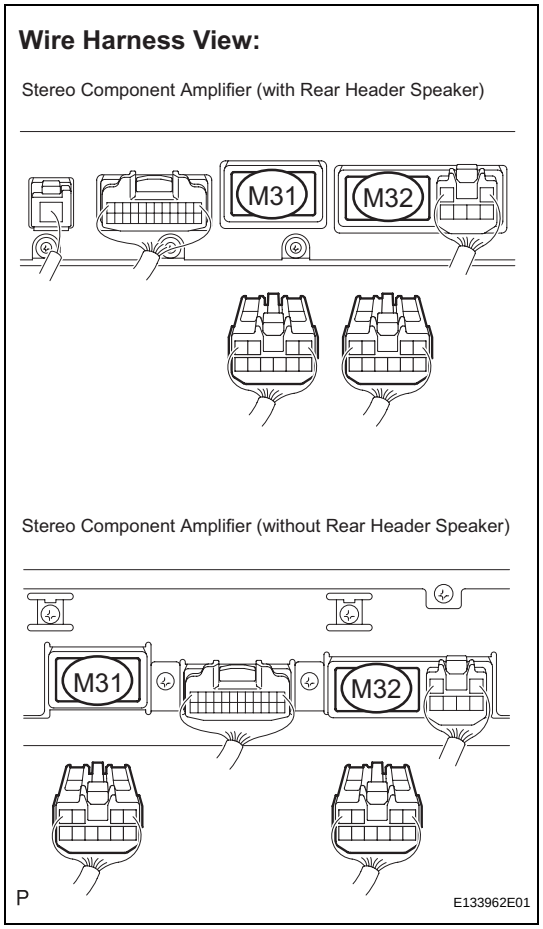

(a) Disconnect the stereo component amplifier connectors M31 and M32.
(b) Clear the DTCs and recheck for DTCs.
(c) Check if DTC 74-40 is output.
OK:
DTC 74-40 is not output.

NG → **REPLACE STEREO COMPONENT AMPLIFIER**

OK

2	CHECK OPERATION

(a) Reconnect the stereo component amplifier connector M31.
(b) Check if DTC 74-40 is output.
OK:
DTC 74-40 is not output.

NG → **Go to step 10**

OK

NS

3 CHECK HARNESS AND CONNECTOR

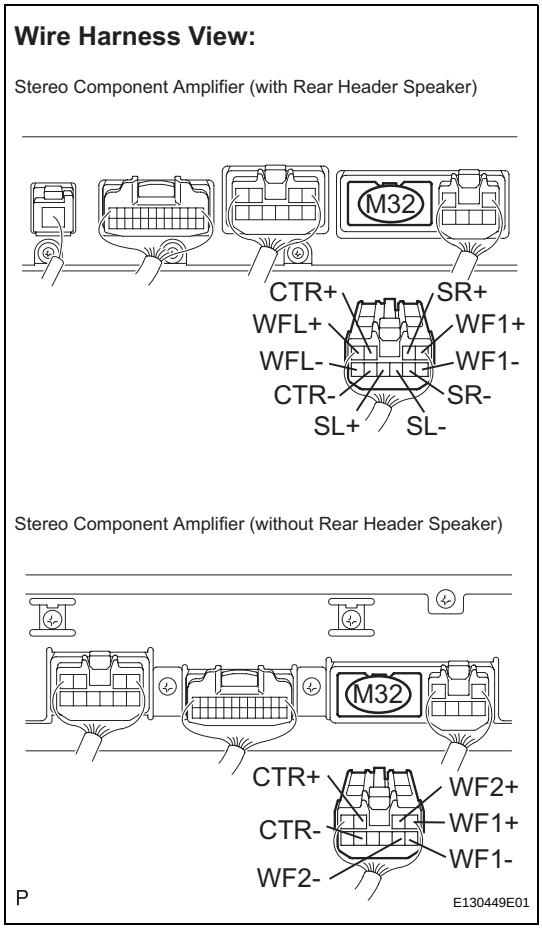

(a) Disconnect the connectors shown in the illustration from the stereo component amplifier and speakers.

(b) Measure the resistance according to the value(s) in the table below.

Standard resistance

Tester Connection	Condition	Specified Condition
CTR+ - Body ground	Always	10 kΩ or higher
CTR- - Body ground	Always	10 kΩ or higher
SL+ - Body ground (*1)	Always	10 kΩ or higher
SL- - Body ground (*1)	Always	10 kΩ or higher
SR+ - Body ground (*1)	Always	10 kΩ or higher
SR- - Body ground (*1)	Always	10 kΩ or higher
WFL+ - Body ground (*1)	Always	10 kΩ or higher
WFL- - Body ground (*1)	Always	10 kΩ or higher
WF1+ - Body ground	Always	10 kΩ or higher
WF1- - Body ground	Always	10 kΩ or higher
WF2+ - Body ground (*2)	Always	10 kΩ or higher
WF2- - Body ground (*2)	Always	10 kΩ or higher

*1: with Rear Header Speaker
*2: without Rear Header Speaker

NG → **REPAIR OR REPLACE HARNESS OR CONNECTOR**

OK

4 CONFIRM MODEL

Result

Result	Proceed to
with Rear Header Speaker	A
without Rear Header Speaker	B

B → **Go to step 9**

A

5 INSPECT FRONT STEREO COMPONENT SPEAKER

(a) Resistance check.

(1) Measure the resistance between the terminals of the speaker.

Standard resistance:
Approximately 8 Ω

NS

NG → **REPLACE FRONT STEREO COMPONENT SPEAKER**

OK

6 INSPECT STEREO COMPONENT SPEAKER

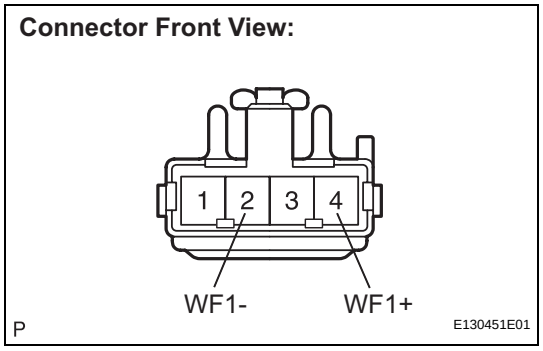

(a) Resistance check.
(1) Measure the resistance between the terminals of the speaker.
Standard resistance

Tester Connection	Condition	Specified Condition
WF1+ - WF1-	Always	Approximately 8 Ω

NG → **REPLACE STEREO COMPONENT SPEAKER**

OK

7 INSPECT REAR HEADER SPEAKER (LEFT HAND)

(a) Resistance check.
(1) Measure the resistance between the terminals of the speaker.
Standard resistance:
Approximately 8 Ω

NG → **REPLACE REAR HEADER SPEAKER (LEFT HAND)**

OK

8 INSPECT REAR HEADER SPEAKER (RIGHT HAND)

(a) Resistance check.
(1) Measure the resistance between the terminals of the speaker.
Standard resistance:
Approximately 8 Ω

NG → **REPLACE REAR HEADER SPEAKER (RIGHT HAND)**

OK

REPLACE FRONT NO. 1 SPEAKER (LEFT HAND)

9 INSPECT FRONT STEREO COMPONENT SPEAKER

(a) Resistance check.

NS

(1) Measure the resistance between the terminals of the speaker.
Standard resistance:
Approximately 10 Ω

NG → **REPLACE FRONT STEREO COMPONENT SPEAKER**

OK

REPLACE STEREO COMPONENT SPEAKER

10 CHECK HARNESS AND CONNECTOR

Wire Harness View:

Stereo Component Amplifier (with Rear Header Speaker)

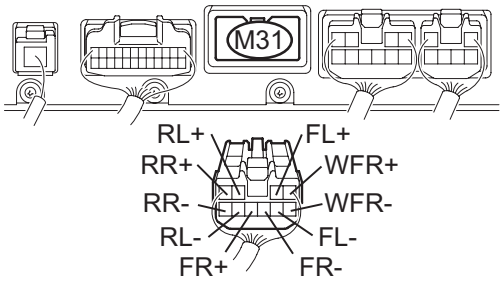

Stereo Component Amplifier (without Rear Header Speaker)

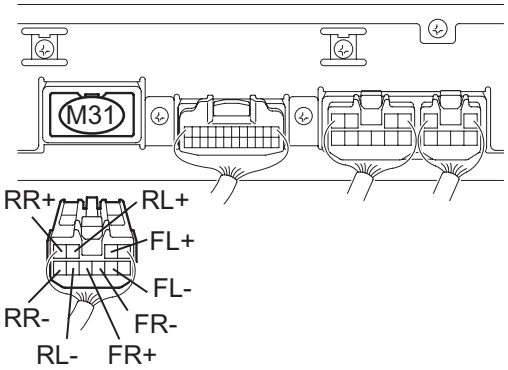

Connector Front View:

Rear No. 2 Speaker

Front No. 2 Speaker

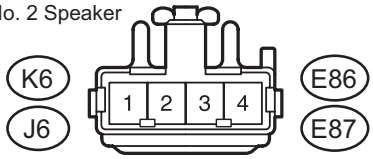

P

E130452E01

(a) Disconnect the connectors shown in the illustration from the stereo component amplifier and speakers.
(b) Measure the resistance according to the value(s) in the table below.
Standard resistance

Tester Connection	Condition	Specified Condition
FL+ - Body ground	Always	10 kΩ or higher
FL- - Body ground	Always	10 kΩ or higher
E86-3 - Body ground (*2)	Always	10 kΩ or higher
E86-4 - Body ground (*2)	Always	10 kΩ or higher
FR+ - Body ground	Always	10 kΩ or higher
FR- - Body ground	Always	10 kΩ or higher
E87-3 - Body ground (*2)	Always	10 kΩ or higher
E87-4 - Body ground (*2)	Always	10 kΩ or higher
RL+ - Body ground	Always	10 kΩ or higher
RL- - Body ground	Always	10 kΩ or higher
K6-3 - Body ground (*1)	Always	10 kΩ or higher
K6-4 - Body ground (*1)	Always	10 kΩ or higher
RR+ - Body ground	Always	10 kΩ or higher
RR- - Body ground	Always	10 kΩ or higher
J6-3 - Body ground (*1)	Always	10 kΩ or higher
J6-4 - Body ground (*1)	Always	10 kΩ or higher
WFR+ - Body ground (*1)	Always	10 kΩ or higher
WFR- - Body ground (*1)	Always	10 kΩ or higher

*1: with Rear Header Speaker
*2: without Rear Header Speaker

NG → **REPAIR OR REPLACE HARNESS OR CONNECTOR**

NS

OK

11	CONFIRM MODEL

Result

Result	Proceed to
with Rear Header Speaker	A
without Rear Header Speaker	B

B → **Go to step 18**

A

12	INSPECT FRONT NO. 2 SPEAKER (LEFT HAND)

(a) Reconnect the stereo component amplifier connector and front No. 2 speaker connector.
(b) Check that audio sound can be heard from the speaker.
OK:
Audio sound can be heard.

NG → **REPLACE FRONT NO. 2 SPEAKER (LEFT HAND)**

NS

OK

13	INSPECT FRONT NO. 2 SPEAKER (RIGHT HAND)

(a) Reconnect the stereo component amplifier connector and front No. 2 speaker connector.
(b) Check that audio sound can be heard from the speaker.
OK:
Audio sound can be heard.

NG → **REPLACE FRONT NO. 2 SPEAKER (RIGHT HAND)**

OK

14	INSPECT REAR SPEAKER (LEFT HAND)

(a) Resistance check.
(1) Measure the resistance between the terminals of the speaker.
Standard resistance:
Approximately 8 Ω

NG → **REPLACE REAR SPEAKER (LEFT HAND)**

OK

15	INSPECT REAR SPEAKER (RIGHT HAND)

(a) Resistance check.
(1) Measure the resistance between the terminals of the speaker.
Standard resistance:
Approximately 8 Ω

NG → **REPLACE REAR SPEAKER (RIGHT HAND)**

OK

16	INSPECT REAR NO. 2 SPEAKER (LEFT HAND)

(a) Reconnect the stereo component amplifier connector and rear No. 2 speaker connector.
(b) Check that audio sound can be heard from the speaker.
OK:
Audio sound can be heard.

NG → **REPLACE REAR NO. 2 SPEAKER (LEFT HAND)**

NS

OK

17	INSPECT REAR NO. 2 SPEAKER (RIGHT HAND)

(a) Reconnect the stereo component amplifier connector and rear No. 2 speaker connector.
(b) Check that audio sound can be heard from the speaker.
OK:
Audio sound can be heard.

NG → **REPLACE REAR NO. 2 SPEAKER (RIGHT HAND)**

OK

REPLACE FRONT NO. 1 SPEAKER (RIGHT HAND)

18	INSPECT FRONT NO. 1 SPEAKER (LEFT HAND)

(a) Resistance check.
(1) Measure the resistance between the terminals of the speaker.
Standard resistance:
Approximately 4 Ω

NG → **REPLACE FRONT NO. 1 SPEAKER (LEFT HAND)**

OK

19	INSPECT FRONT NO. 1 SPEAKER (RIGHT HAND)

(a) Resistance check.
(1) Measure the resistance between the terminals of the speaker.
Standard resistance:
Approximately 4 Ω

NG → **REPLACE FRONT NO. 1 SPEAKER (RIGHT HAND)**

OK

20	INSPECT FRONT NO. 2 SPEAKER (LEFT HAND)

(a) Reconnect the stereo component amplifier connector and front No. 2 speaker connector.
(b) Check that audio sound can be heard from the speaker.
OK:
Audio sound can be heard.

NG → **REPLACE FRONT NO. 2 SPEAKER (LEFT HAND)**

NS

OK

21	INSPECT FRONT NO. 2 SPEAKER (RIGHT HAND)

(a) Reconnect the stereo component amplifier connector and front No. 2 speaker connector.
(b) Check that audio sound can be heard from the speaker.
OK:
Audio sound can be heard.

NG → **REPLACE FRONT NO. 2 SPEAKER (RIGHT HAND)**

OK

22	INSPECT REAR SPEAKER (LEFT HAND)

(a) Resistance check.
(1) Measure the resistance between the terminals of the speaker.
Standard resistance:
Approximately 4 Ω

NG → **REPLACE REAR SPEAKER (LEFT HAND)**

OK

REPLACE REAR SPEAKER (RIGHT HAND)

Pressing Power Switch does not Turn on System

INSPECTION PROCEDURE

1	CHECK CABIN

(a) Check that conditions in the cabin are not likely to cause condensation.
HINT:
This problem occurs when the cabin is humid and the temperature rapidly changes. This condition may produce condensation, resulting in a short circuit.
OK:
Condensation is not likely to occur.

NG → **DRY CABIN AND RECHECK CONDITIONS**

OK

PROCEED TO NEXT CIRCUIT INSPECTION SHOWN IN PROBLEM SYMPTOMS TABLE

No Image Appears on Multi-display

INSPECTION PROCEDURE

1	CHECK DISPLAY SETTING

(a) Check that the display is not in "Screen OFF" mode.
OK:
The display setting is not in "Screen OFF" mode.

NG → **CHANGE SCREEN TO "SCREEN ON" MODE**

OK

2	CHECK IMAGE QUALITY SETTING

(a) Check that the screen color quality can be set.
OK:
Setting is possible.

NG → **Go to step 3**

NS

OK

PRESS PANEL SWITCH "DISPLAY" AND SET SCREEN COLOR QUALITY TO NORMAL

3	CHECK CABIN

(a) Check that condensation is not likely to occur in the cabin, and that the temperature is not high or extremely low in the cabin.
HINT:
- A humid cabin and a rapid change in temperature may lead to condensation, resulting in a short circuit.
- The appropriate cabin temperature is 20 to 30°C (68 to 86°F).

OK:
Condensation is not likely and temperature is not high or extremely low.

NG → **SET CABIN TO APPROPRIATE TEMPERATURE**

OK

PROCEED TO NEXT CIRCUIT INSPECTION SHOWN IN PROBLEM SYMPTOMS TABLE

Illumination for Panel Switch does not Come on with Tail Switch ON

INSPECTION PROCEDURE

1 CHECK VEHICLE SIGNAL (DISPLAY CHECK MODE)

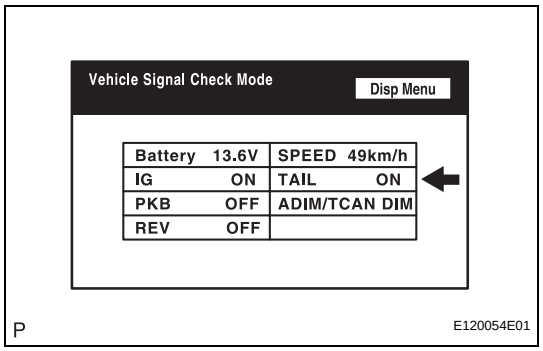

(a) Enter the "Display Check" mode (Vehicle Signal Check Mode) (See page NS-21).

(b) Check that the display changes between ON and OFF according to the light control switch operation.

OK

Light Control Switch	Display
TAIL or ON	ON
OFF	OFF

HINT:
This display is updated once per second. As a result, it is normal for the display to lag behind the actual change in the switch.

NG → **PROCEED TO NEXT CIRCUIT INSPECTION SHOWN IN PROBLEM SYMPTOMS TABLE**

OK

REPLACE MULTI-DISPLAY

NS

Display does not Dim when Light Control Switch is Turned ON

INSPECTION PROCEDURE

1 CHECK IMAGE QUALITY SETTING

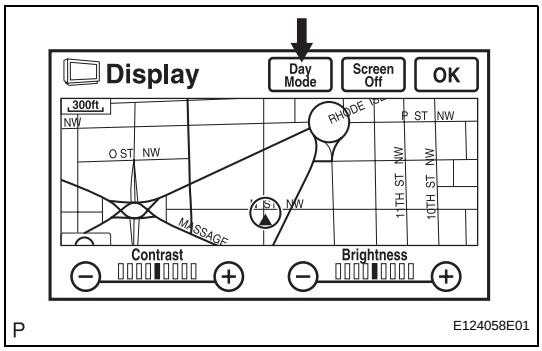

(a) Enter the display adjustment screen by pressing the "DISP" switch.
(b) Turn the light control switch to the TAIL position.
(c) Check if "DAY MODE" on the display is ON.
OK:
"DAY MODE" is ON.

NG → **Go to step 2**

OK

TURN "DAY MODE" SETTING OFF

NS

2 CHECK VEHICLE SIGNAL (DISPLAY CHECK MODE)

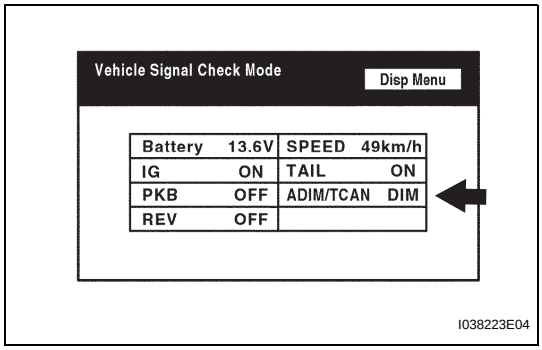

(a) Enter the "Display Check" mode (Vehicle Signal Check) (See page NS-21).
(b) Check that the display changes between DIM and BRIGHT according to the light control switch operation.
OK

Light Control Switch	Display
TAIL or HEAD	DIM
OFF	BRIGHT

HINT:
The display is updated once per second. It is normal for the display to lag behind the actual switch operation.

NG → **PROCEED TO NEXT CIRCUIT INSPECTION SHOWN IN PROBLEM SYMPTOMS TABLE**

OK

REPLACE MULTI-DISPLAY

Panel Switches do not Function

INSPECTION PROCEDURE

1 CHECK PANEL SWITCH

(a) Check for foreign matter around the switches that might prevent operation.
OK:
No foreign matter is found.

NG → **REMOVE ANY FOREIGN MATTER FOUND**

OK

2 CHECK PANEL SWITCH (DISPLAY CHECK MODE)

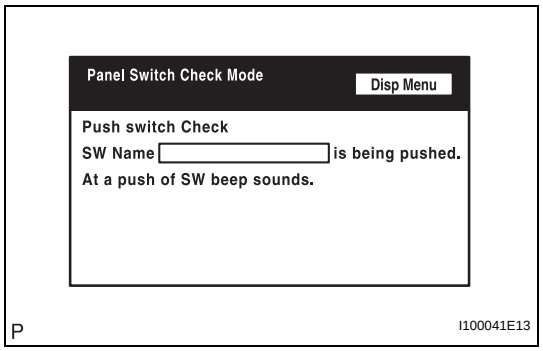

(a) Enter the "Display Check" mode (Panel Switch Check) (See page NS-21).
(b) Operate the abnormal switch and check if the switch name and status are correctly displayed.
OK:
The switch name and status are correctly displayed as operated.

NG → **PROCEED TO NEXT CIRCUIT INSPECTION SHOWN IN PROBLEM SYMPTOMS TABLE**

OK

REPLACE MULTI-DISPLAY

NS

Touch Panel Switch does not Function

INSPECTION PROCEDURE

1	CHECK TOUCH PANEL

(a) Check for foreign matter on the display.
OK:
The display is clean.

NG → **CLEAN DISPLAY AND RECHECK TOUCH PANEL**

OK

2	CHECK TOUCH SWITCH (DISPLAY CHECK MODE)

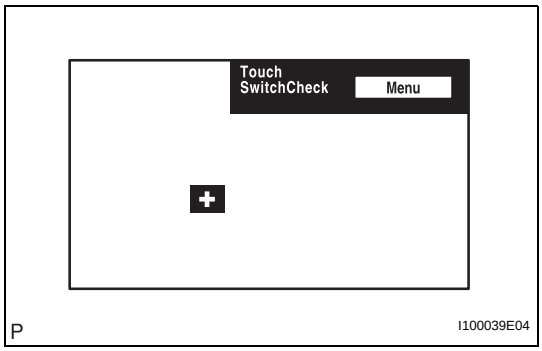

(a) Enter the "Display Check" mode (Touch Switch Check) (See page NS-21).
(b) Touch the display in the area where the switch malfunction occurs.
OK:
A "+" mark appears at the touched position.

NG → **PROCEED TO NEXT CIRCUIT INSPECTION SHOWN IN PROBLEM SYMPTOMS TABLE**

OK

REPLACE MULTI-DISPLAY

NS

Screen Flicker or Color Distortion

INSPECTION PROCEDURE

1 CHECK DISPLAY SETTING

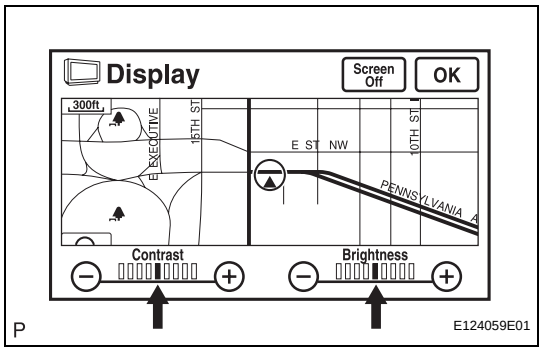

(a) Enter the display adjustment screen by pressing the "DISP" switch.

(b) Reset display settings (contrast, brightness) and check that the screen appears normal.

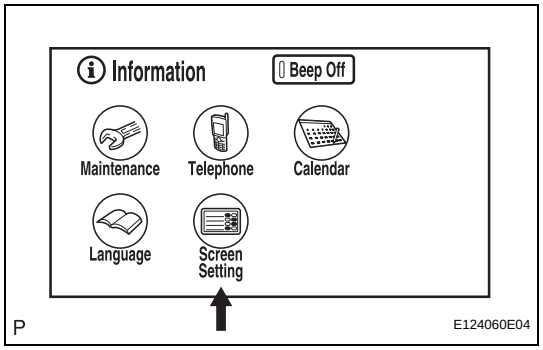

(c) Press the "INFO" switch and then select "Screen Setting."

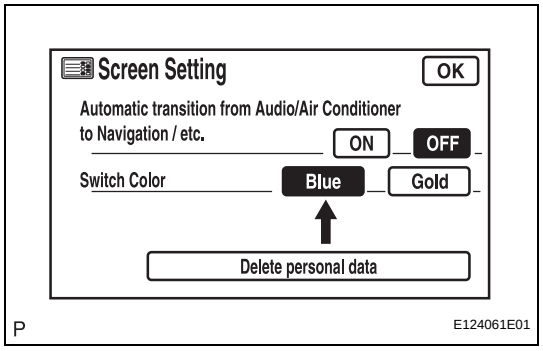

(d) Set the "Switch Color" to "Blue" (initial setting) and check if the display returns to normal.

OK:

Returns to normal.

NG → **Go to step 2**

OK

END

2 CHECK CABIN

(a) Check that the cabin temperature is warmer than -20°C (-4.0°F).

OK:

Cabin is warmer than -20°C (-4.0°F).

NG → **HEAT CABIN AND RECHECK TEMPERATURE**

NS

OK

3	CHECK COLOR BAR (DISPLAY CHECK MODE)

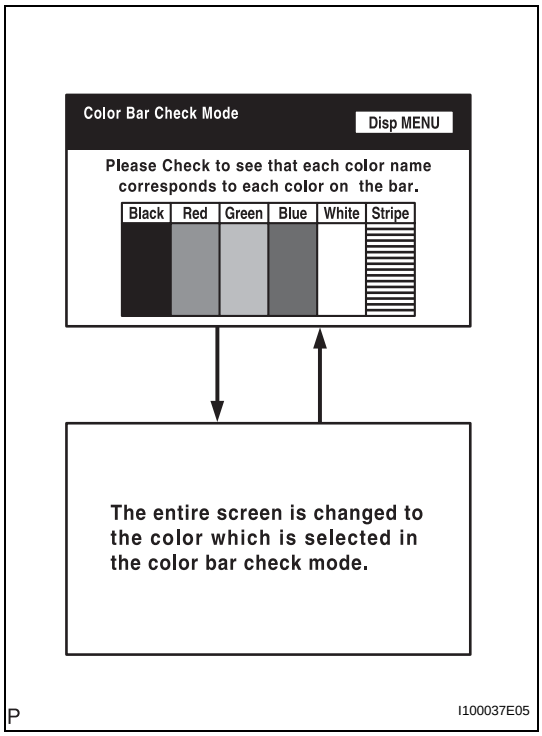

(a) Enter the "Display Check" mode (Color Bar Check) (See page NS-21).
(b) Check that the color bars match the displayed names.
OK:
Color bars match the displayed names.

NG → **REPLACE MULTI-DISPLAY**

OK

4	CHECK NAVI COLOR BAR (NAVIGATION CHECK MODE)

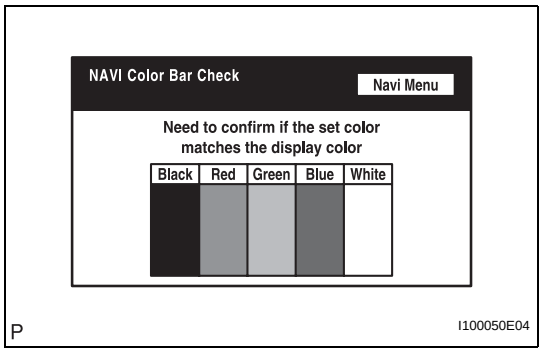

(a) Enter the "Navigation Check" mode (NAVI Color Bar Check) (See page NS-27).
(b) Check that the color bars match the displayed names.
OK:
Color bars match the displayed names.

OK → **REPLACE MULTI-DISPLAY**

NG

PROCEED TO NEXT CIRCUIT INSPECTION SHOWN IN PROBLEM SYMPTOMS TABLE

MAP Disc cannot be Inserted

INSPECTION PROCEDURE

1	CHECK MAP DISC

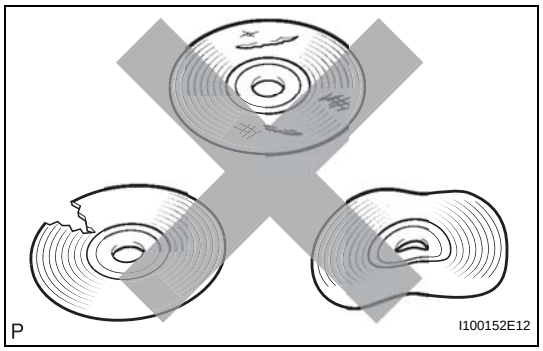

(a) Check that the map disc is not deformed or cracked.
OK:
No deformations or cracks on the map disc.

NG → **REPLACE MAP DISC**

OK

PROCEED TO NEXT CIRCUIT INSPECTION SHOWN IN PROBLEM SYMPTOMS TABLE

MAP Disc cannot be Ejected

INSPECTION PROCEDURE

1	CHECK MULTI-DISPLAY

(a) Turn the engine switch on (ACC).
(b) Keep pressing the MAP eject switch for 5 seconds and check if the disc is ejected by forced ejection.
OK:
The disc is ejected.

NG → **PROCEED TO NEXT CIRCUIT INSPECTION SHOWN IN PROBLEM SYMPTOMS TABLE**

OK

2	CHECK MAP DISC

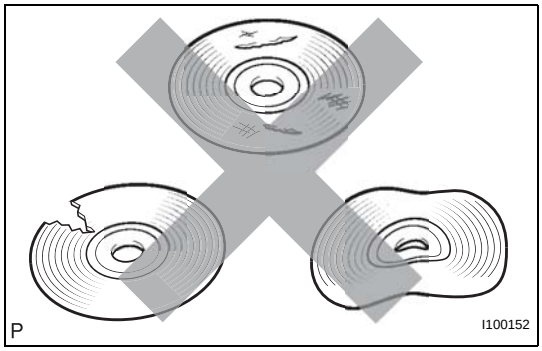

(a) Check that the map disc is not deformed or cracked.
OK:
No deformations or cracks on the map disc.

NG → **REPLACE MAP DISC**

OK

END

NS

Vehicle Position Mark Deviates Greatly

INSPECTION PROCEDURE

1 CHECK GPS MARK

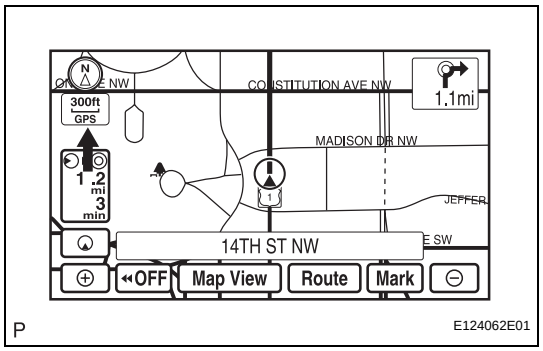

(a) Check that the GPS mark is displayed.
OK:
GPS mark is displayed.

NG → **GO TO "GPS MARK IS NOT DISPLAYED" IN PROBLEM SYMPTOMS TABLE**

OK

2 CHECK VEHICLE SENSOR (NAVIGATION CHECK MODE)

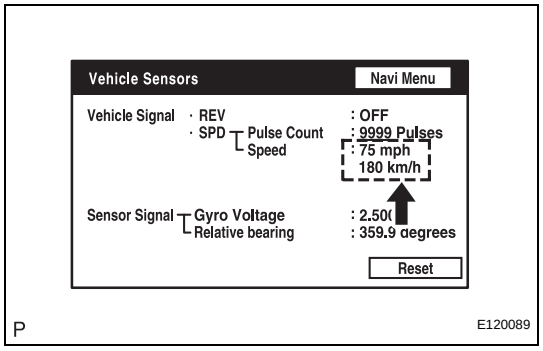

(a) Enter the "Navigation Check" mode (Vehicle Sensors) (See page NS-27).
(b) While driving the vehicle, compare the "Speed" indicator to the reading on the speedometer. Check that these readings are almost equal.
OK:
The readings are almost equal.

NG → **GO TO "SPEED SIGNAL DOES NOT CHANGE IN NAVIGATION CHECK MODE" IN PROBLEM SYMPTOMS TABLE**

OK

3 CHECK VEHICLE SENSOR (NAVIGATION CHECK MODE)

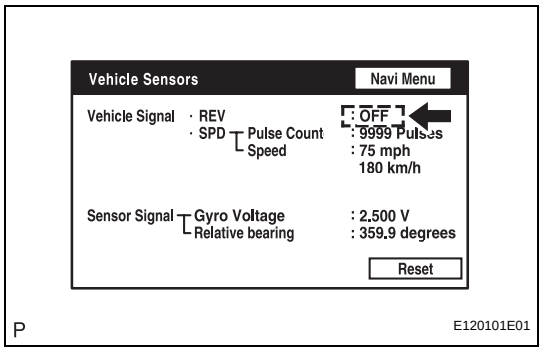

(a) Check that the display changes between ON and OFF according to the shift lever operation (P and R).
OK

Shift Lever Position	Display
P (A/T)	OFF
Reverse position	ON

HINT:
The display is updated once per second. It is normal for the display to lag behind the actual switch operation.

NG → **GO TO "REVERSE SIGNAL DOES NOT CHANGE IN NAVIGATION CHECK MODE" IN PROBLEM SYMPTOMS TABLE**

NS

OK

PROCEED TO NEXT CIRCUIT INSPECTION SHOWN IN PROBLEM SYMPTOMS TABLE

Cursor or MAP Rotates when Vehicle Stopped

INSPECTION PROCEDURE

1	CHECK CONDITION

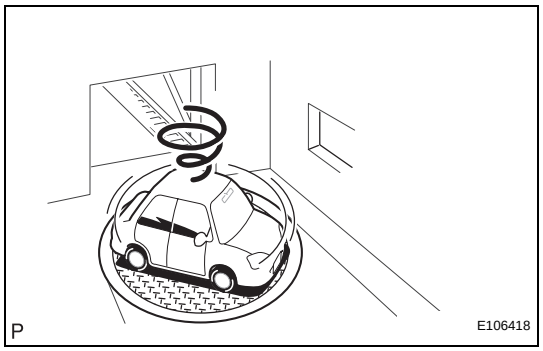

(a) Check with the customer if the vehicle has been turned by a turntable.

OK:

Vehicle has not been turned by turntable.

HINT:

If the vehicle is turned on a turntable with the engine switch on (IG), the system may store the angular velocity. As a result, the vehicle position cursor may deviate.

NG → **TURN ENGINE SWITCH ON (IG) WHEN VEHICLE IS COMPLETELY STOPPED**

OK

PROCEED TO NEXT CIRCUIT INSPECTION SHOWN IN PROBLEM SYMPTOMS TABLE

Vehicle Position Mark is not Updated

INSPECTION PROCEDURE

1 CHECK MAP DISC

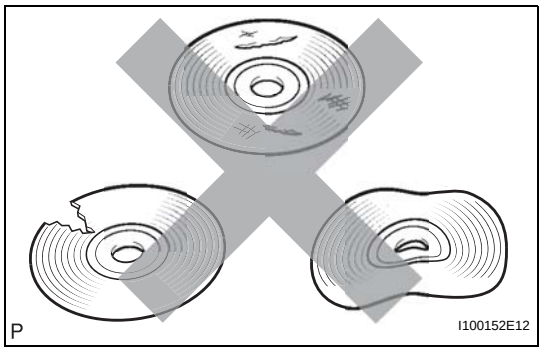

(a) Check that the map disc is not deformed or cracked.
OK:
No deformations or cracks on map disc.

NG → **REPLACE MAP DISC**

OK

2 CHECK NAVIGATION DISPLAY

NS

(a) Check if a touch scroll can be performed on the map display.
OK:
Touch scroll can be performed.

NG → **PROCEED TO NEXT CIRCUIT INSPECTION SHOWN IN PROBLEM SYMPTOMS TABLE**

OK

3 CHECK VEHICLE SENSOR (NAVIGATION CHECK MODE)

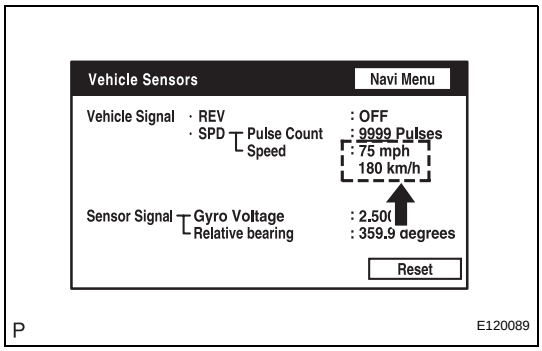

(a) Enter the "Navigation Check" mode (Vehicle Sensors) (See page NS-27).
(b) While driving the vehicle, compare the "Speed" indicator to the reading on the speedometer. Check if these readings are almost equal.
OK:
The readings are almost equal.

NG → **GO TO "SPEED SIGNAL DOES NOT CHANGE IN NAVIGATION CHECK MODE" IN PROBLEM SYMPTOMS TABLE**

OK

PROCEED TO NEXT CIRCUIT INSPECTION SHOWN IN PROBLEM SYMPTOMS TABLE

Current Position Display does not Appear

INSPECTION PROCEDURE

1	CHECK MAP DISC

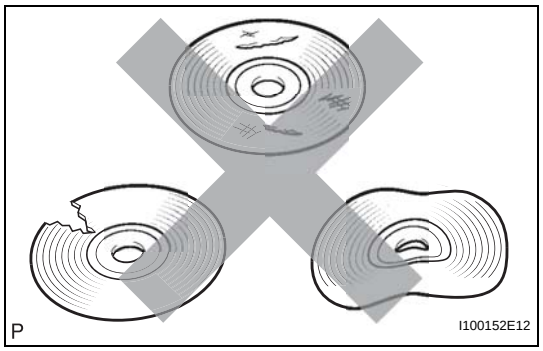

(a) Check that the map disc is not deformed or cracked.
OK:
No deformations or cracks on the map disc.

NG → **REPLACE MAP DISC**

OK

PROCEED TO NEXT CIRCUIT INSPECTION SHOWN IN PROBLEM SYMPTOMS TABLE

GPS Mark is not Displayed

INSPECTION PROCEDURE

1	CHECK CABIN

(a) Check the cabin for any object that might interrupt radio reception on the instrument panel. If such an object exists, remove it and check if the GPS mark reappears.
HINT:
The GPS uses extremely faint radio waves originating from satellites. If the signal is interrupted by obstructions or other radio waves, the GPS may not be able to properly receive the signal.
OK:
Mark appears.

NG → **Go to step 2**

OK

NORMAL OPERATION

2	CHECK SURROUNDINGS

(a) Check if the vehicle is in a location where GPS signal reception is poor. If the vehicle is in such a place, relocate the vehicle and check if the GPS mark reappears.
HINT:
The GPS uses 24 satellites in 6 orbits. At any point in time, 4 satellites should be able to pinpoint your vehicle. However, GPS signals may not reach the vehicle due to influence from the surroundings, vehicle direction, and time. For illustrated examples, see below.

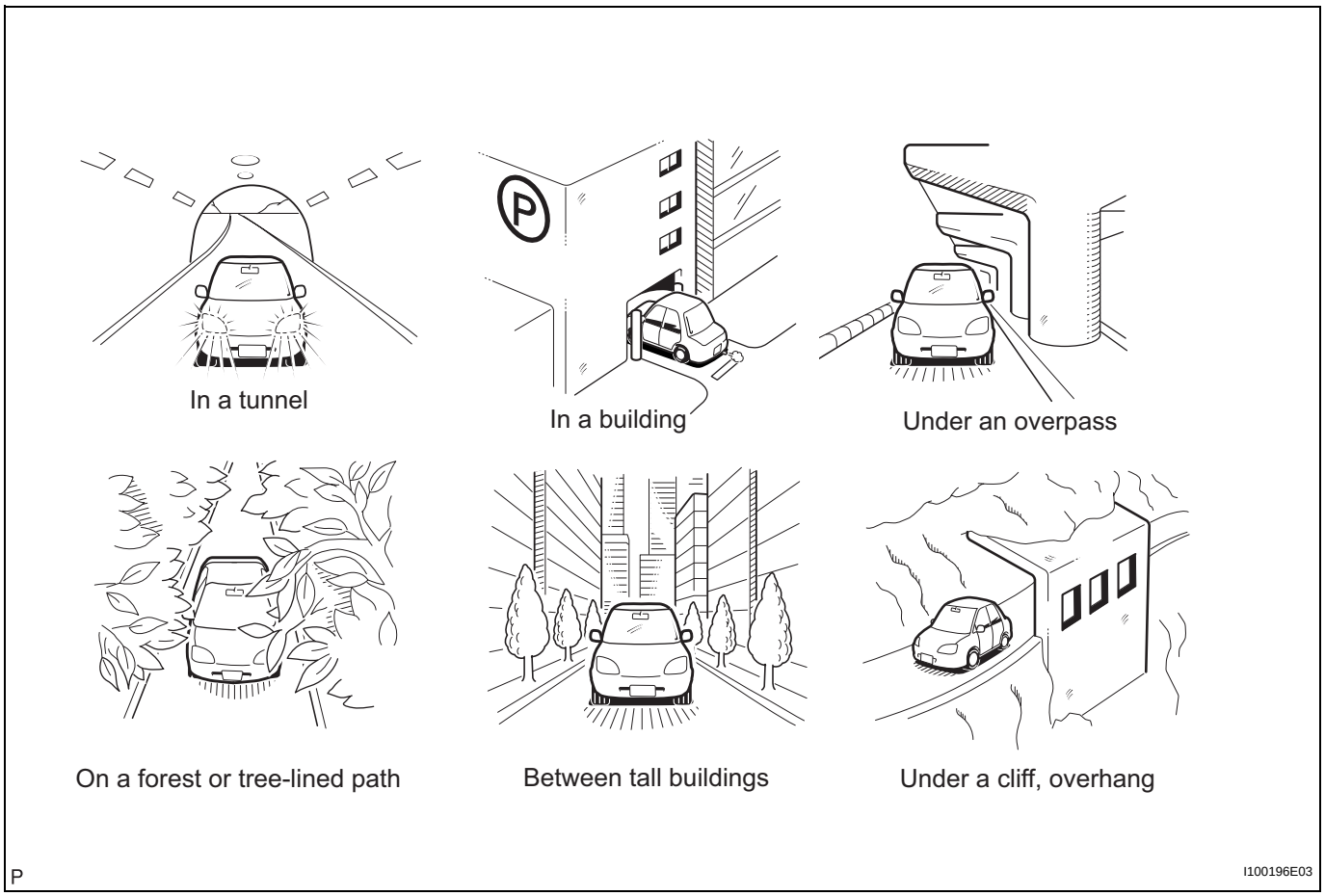

OK:
GPS mark is displayed.

NG → **Go to step 3**

OK

SYSTEM RETURN TO NORMAL

3 CHECK GPS INFORMATION (NAVIGATION CHECK MODE)

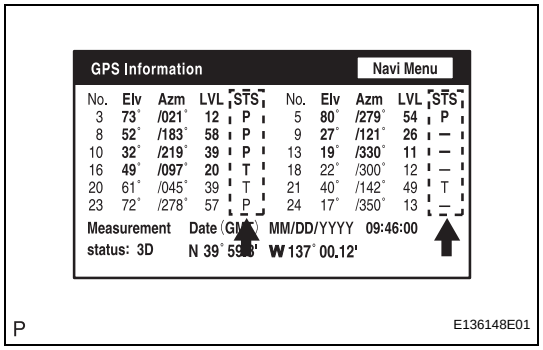

(a) Enter the "Navigation Check" mode (GPS Information) (See page NS-27).

(b) Check how many of the following codes appear in the "STS" column.

For DENSO Made:
T, P

For AISIN AW Made:
08H, 04H

OK:
At least 3 codes appear.

NG → **PROCEED TO NEXT CIRCUIT INSPECTION SHOWN IN PROBLEM SYMPTOMS TABLE**

NS

OK

REPLACE NAVIGATION ECU

Voice Guidance does not Function

INSPECTION PROCEDURE

1 CHECK NAVIGATION SYSTEM SETTING

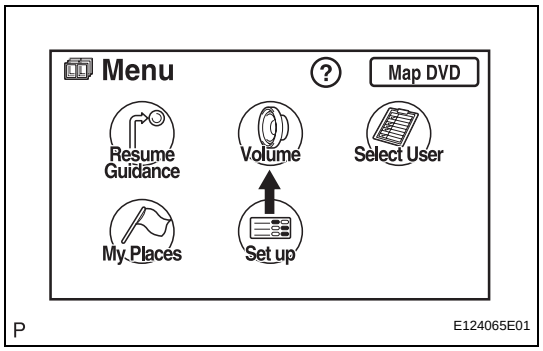

(a) Enter the "Menu" screen by pressing the "MENU" switch.
(b) Select "Volume".

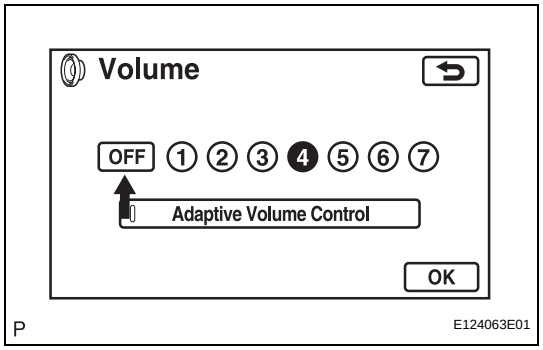

(c) Check that "OFF" is not selected.
OK:
"OFF" is not selected.

NG → **TURN VOICE GUIDANCE VOLUME UP TO 4 USING VOICE ADJUSTMENT SWITCHES**

OK

2 CHECK NAVIGATION SETTING

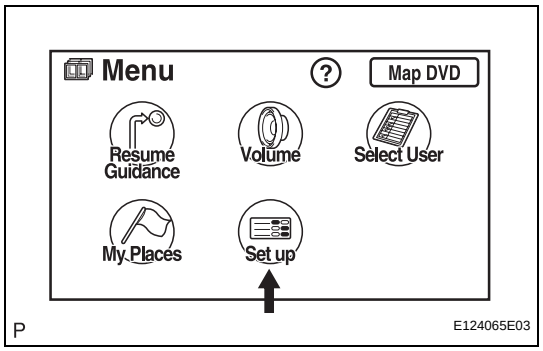

(a) Enter the "Menu" screen by pressing the "MENU" switch.
(b) Select "Set up".

NS

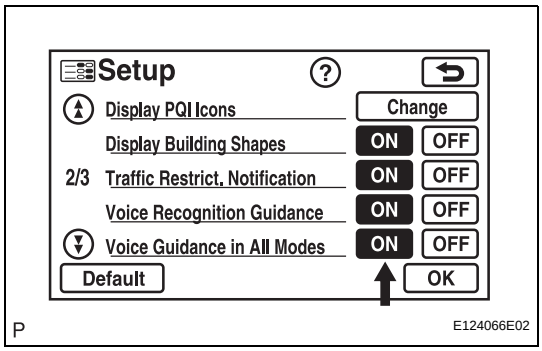

(c) Check that "Voice Guidance in All Modes" is not OFF.
OK:
Voice guidance in all modes is not OFF.

NG → **TURN VOICE GUIDANCE IN ALL MODES "ON"**

OK

3 CHECK NAVIGATION SETTING

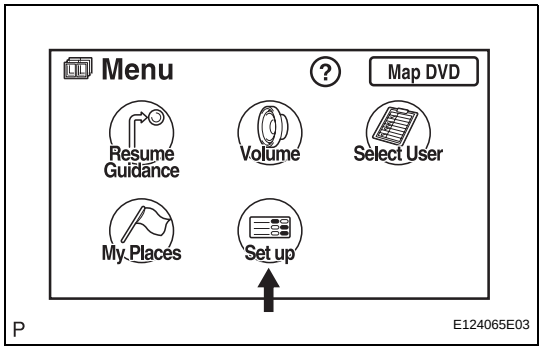

(a) Enter the "Menu" screen by pressing the "MENU" switch.
(b) Select "Set up".

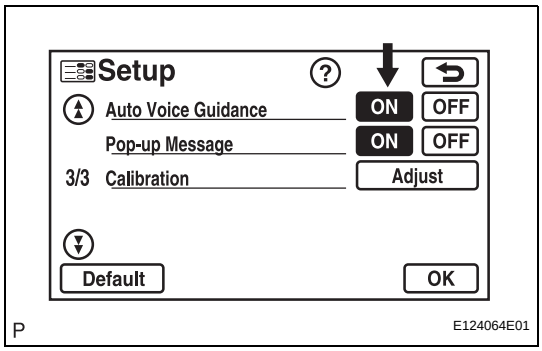

(c) Check that "Auto Voice Guidance" is not OFF.
OK:
Auto voice guidance is not OFF.

NG → **TURN AUTO VOICE GUIDANCE "ON"**

OK

4 CHECK MAP DISC

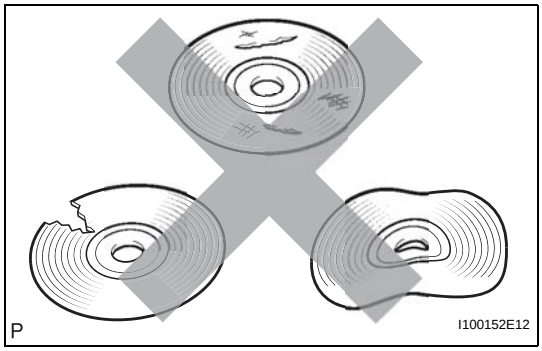

(a) Check that the map disc is not deformed or cracked.
OK:
No deformations or cracks on map disc.

NG → **REPLACE MAP DISC**

NS

OK

5	CHECK RADIO RECEIVER

(a) Check that audio sound can be heard from the driver side speaker.
OK:
Audio sound can be heard.

OK → **PROCEED TO NEXT CIRCUIT INSPECTION SHOWN IN PROBLEM SYMPTOMS TABLE**

NG

GO TO AUDIO AND VISUAL SYSTEM

MAP Display Incomplete

INSPECTION PROCEDURE

1	CHECK MAP DISC

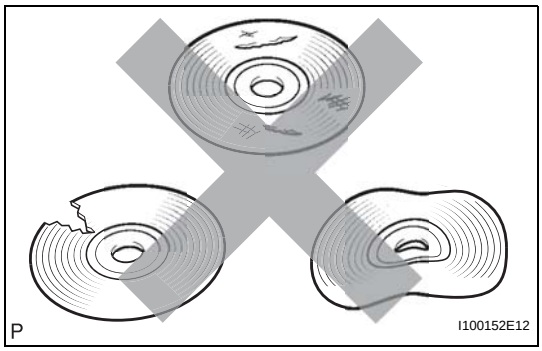

(a) Check that the map disc is not deformed or cracked.
OK:
No deformations or cracks on map disc.

NG → **REPLACE MAP DISC**

OK

2	CHECK NAVIGATION DISPLAY

NS

(a) Check that displays other than the navigation display are complete.
OK:
No other incomplete displays are found.

NG → **PROCEED TO NEXT CIRCUIT INSPECTION SHOWN IN PROBLEM SYMPTOMS TABLE**

OK

REPLACE NAVIGATION ECU

Route cannot be Calculated

INSPECTION PROCEDURE

1 CHECK MAP DISC

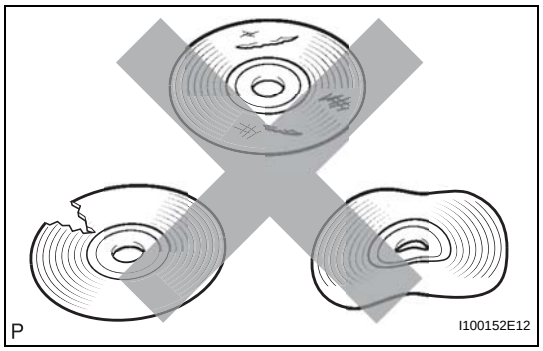

(a) Check that the map disc is not deformed or cracked.
OK:
No deformations or cracks on map disc.

NG → **REPLACE MAP DISC**

OK

2 SET DESTINATION

(a) Set another destination and check if the system can calculate the route correctly.
OK:
Route can be correctly calculated.

NG → **PROCEED TO NEXT CIRCUIT INSPECTION SHOWN IN PROBLEM SYMPTOMS TABLE**

OK

NORMAL OPERATION

NS

Voice Recognition Difficulty

INSPECTION PROCEDURE

1	CHECK CONDITION

(a) Check if the system's voice recognition level is low by using only one particular voice.
OK:
System's voice recognition level is low with any voice.
HINT:
System's voice recognition level varies depending on voice and pronunciation. This is not a malfunction.

NG → **END**

OK

2	CHECK MAP DISC

NS

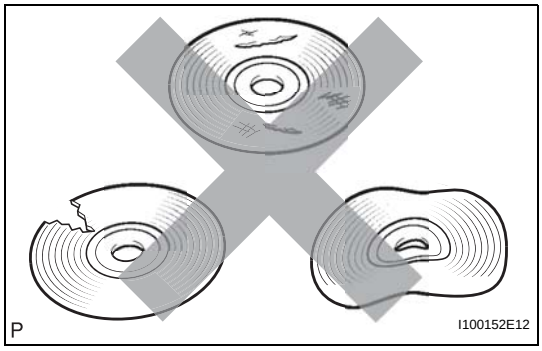

(a) Check that the map disc is not deformed or cracked.
OK:
No deformations or cracks on map disc.

NG → **REPLACE MAP DISC**

OK

3	CHECK MAP DISC

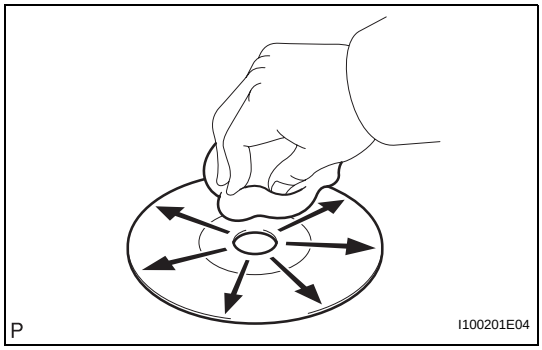

(a) Check for dirt on the map disc surface.
OK:
No dirt is on map disc surface.
NOTICE:
Do not use a conventional record cleaner or anti-static preservative.
HINT:
If the disc is dirty, clean the disc by wiping the disc surface radially with a soft cloth.

NG → **CLEAN MAP DISC**

OK

4	CHECK MICROPHONE (NAVIGATION CHECK MODE)

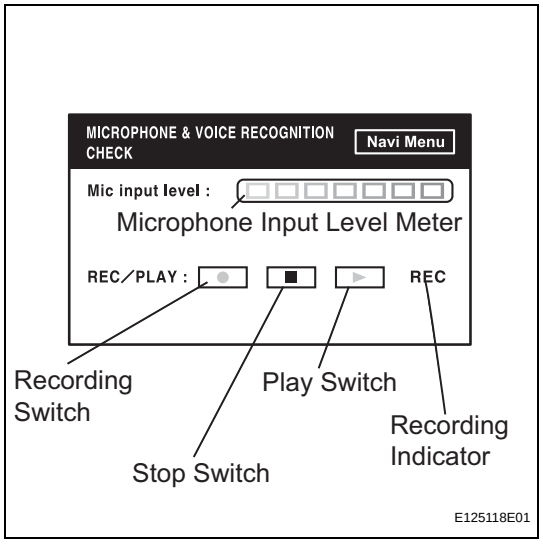

(a) Enter the "MICROPHONE & VOICE RECOGNITION CHECK" mode (See page NS-27).

(b) When voice is input into the microphone, check that the microphone input level meter changes according to the input voice.

(c) Push the recording switch and perform voice recording.
HINT:
Voice can be recorded up to 5 seconds.

(d) Check that the recording indicator remains on while recording and that the recorded voice is played normally without noise or distortion.
OK:
All check results are normal.

NG → **PROCEED TO NEXT CIRCUIT INSPECTION SHOWN IN PROBLEM SYMPTOMS TABLE**

OK

END

NS

Voice is not Recognized

INSPECTION PROCEDURE

1 CHECK NAVIGATION SETTINGS

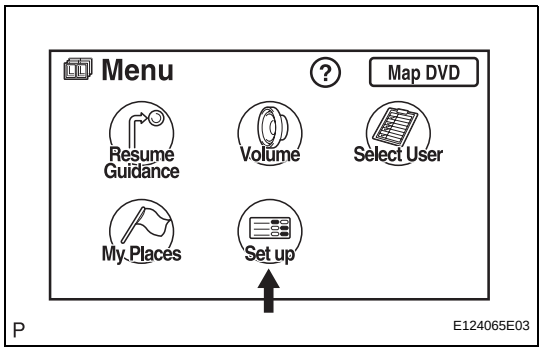

(a) Enter the "Menu" screen by pressing the "MENU" switch.
(b) Select "Set up".

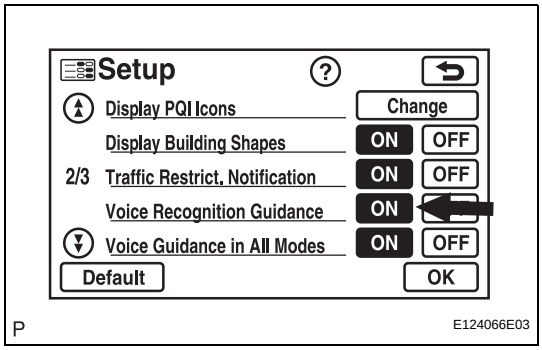

(c) Check that "Voice Recognition Guidance" is not OFF.
OK:
Voice Recognition Guidance is not OFF.

NG → **TURN VOICE RECOGNITION GUIDANCE "ON"**

OK

2 CHECK MAP DISC

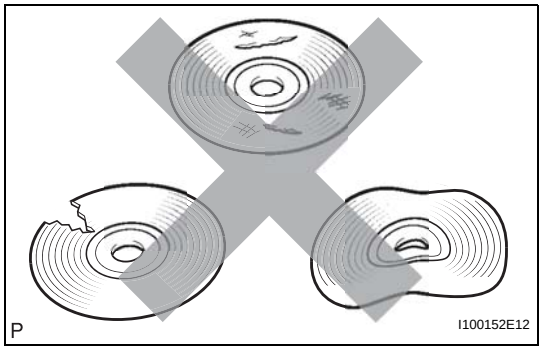

(a) Check that the map disc is not deformed or cracked.
OK:
No deformations or cracks on map disc.

NG → **REPLACE MAP DISC**

OK

NS

3 CHECK MAP DISC

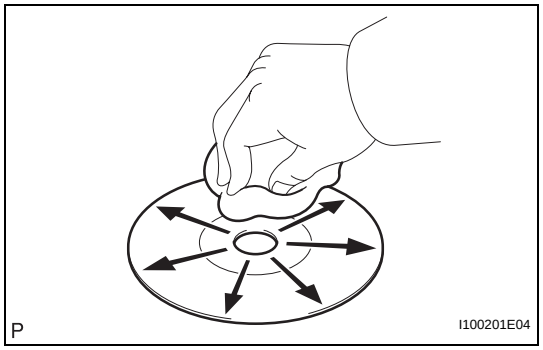

(a) Check for dirt on the map disc surface.
OK:
No dirt is on the map disc surface.
NOTICE:
Do not use a conventional record cleaner or anti-static preservative.
HINT:
If the disc is dirty, clean the disc by wiping the disc surface radially with a soft cloth.

NG → **CLEAN MAP DISC**

OK

4 CHECK MICROPHONE (NAVIGATION CHECK MODE)

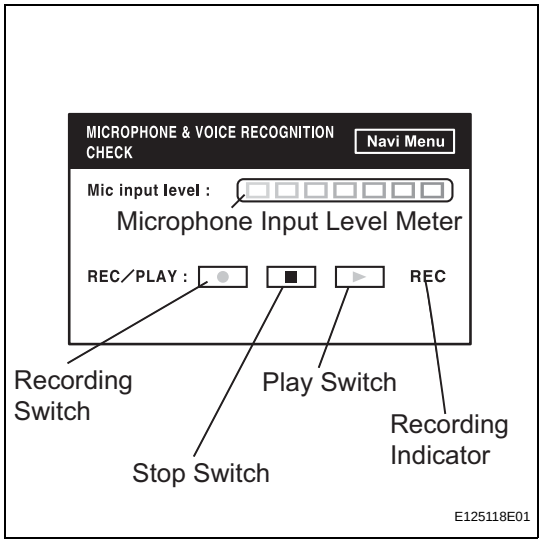

(a) Enter the "MICROPHONE & VOICE RECOGNITION CHECK" mode (See page NS-27).
(b) When voice is input into the microphone, check that the microphone input level meter changes according to the input voice.
(c) Push the recording switch and perform voice recording.
HINT:
Voice can be recorded up to 5 seconds.
(d) Check that the recording indicator remains on while recording and that the recorded voice is played normally without noise or distortion.
OK:
All check results are normal.

OK → **REPLACE NAVIGATION ECU**

NG

NS

5	CHECK MICROPHONE (DISPLAY CHECK MODE)

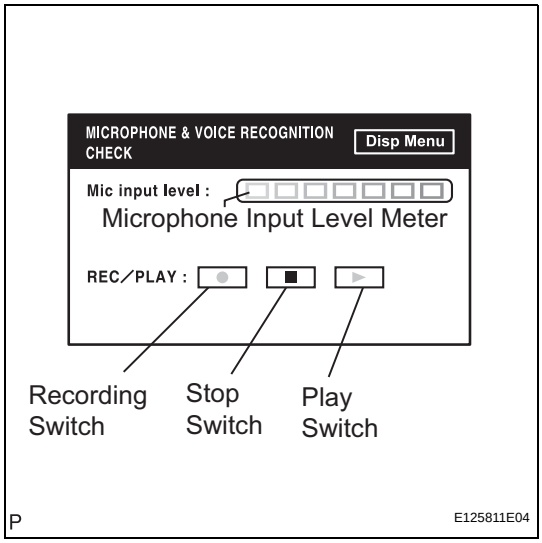

(a) Enter the "MICROPHONE & VOICE RECOGNITION CHECK" mode (See page NS-21).

(b) When voice is input into the microphone, check that the microphone input level meter changes according to the input voice.

(c) Push the recording switch and perform voice recording.
HINT:
Voice can be recorded up to 5 seconds.

(d) Check that the recorded voice is played normally without noise or distortion.
OK:
All check results are normal.

NG → **PROCEED TO NEXT CIRCUIT INSPECTION SHOWN IN PROBLEM SYMPTOMS TABLE**

OK

NS

END

Cellular Phone Registration Failure, Phone Directory Transfer Failure

INSPECTION PROCEDURE

1 CHECK CURRENT CONDITIONS

(a) Proceed to the next step according to the table below.

Result

Conditions	Proceed to
Another "Bluetooth" compatible cellular phone is present.	A
Another "Bluetooth" compatible vehicle is present.	B
None of the above	C

B → **Go to step 3**

C → **Go to step 4**

A

2 CHECK USING ANOTHER CELLULAR PHONE

(a) Check if the system functions using another "Bluetooth" compatible cellular phone.
HINT:
- Confirm that either the same or a different version of another "Bluetooth" compatible cellular phone complies with the system.
- Depending on the version, some "Bluetooth" compatible cellular phones cannot be used.

OK:
The system functions.

NG → **REPLACE MULTI-DISPLAY**

OK

USE A "BLUETOOTH" COMPATIBLE CELLULAR PHONE

3 CHECK USING ANOTHER "BLUETOOTH" COMPATIBLE VEHICLE

(a) Register the cellular phone with another vehicle and check if the system functions normally.
HINT:
Depending on the version, some "Bluetooth" compatible cellular phones cannot be used.

OK:
The system functions.

OK → **REPLACE MULTI-DISPLAY**

NG

USE A "BLUETOOTH" COMPATIBLE CELLULAR PHONE

4	CHECK CELLULAR PHONE

(a) Check if the cellular phone is "Bluetooth" compatible.
HINT:
Some versions of "Bluetooth" compatible cellular phones may not function.
OK:
The phone is "Bluetooth" compatible.

NG → **USE A "BLUETOOTH" COMPATIBLE CELLULAR PHONE**

OK

5	CHECK CELLULAR PHONE

NS

(a) Check if a call can be made from the cellular phone.
HINT:
When the battery is low, registration or directory transfer cannot be done.
OK:
A call can be made from the cellular phone.

NG → **REPAIR OR REPLACE CELLULAR PHONE**

OK

REPLACE MULTI-DISPLAY

Cellular Phone cannot Send / Receive

INSPECTION PROCEDURE

1 CHECK "BLUETOOTH" SETTINGS

(a) Check if the "Bluetooth" settings are correct.
OK:
"Bluetooth" settings are correct.

NG → **SET SETTINGS CORRECTLY**

OK

2 CHECK CELLULAR PHONE

(a) Check if the cellular phone is "Bluetooth" compatible.
HINT:
Some versions of "Bluetooth" compatible cellular phones may not function.
OK:
Phone is "Bluetooth" compatible.

NG → **END (ONLY A "BLUETOOTH" COMPATIBLE CELLULAR PHONE CAN BE USED)**

OK

3 CHECK SETTINGS

(a) Check if the cellular phone functions.
HINT:
The cellular phone is unable to call under any of the following conditions.
- The cellular phone is locked.
- The directory is being transferred.
- The line is crossed.
- Transmission is regulated.
- The power is off.
- The cellular phone is not connected to "Bluetooth" ("BT" is displayed while connected).

OK:
None of the above conditions exist.

NG → **SET SETTINGS CORRECTLY**

OK

4 CHECK CELLULAR PHONE

(a) Check if the cellular phone can make a call.

NS

HINT:
When the battery is low, calls cannot be made or received.
OK:
Cellular phone can make a call.

NG → **REPAIR OR REPLACE CELLULAR PHONE**

OK

5	CHECK RECEPTION

(a) Set the cellular phone so that it can receive calls.
(b) Place the cellular phone close to the multi-display.
(c) Check if the cellular phone has reception according to the multi-display.
OK:
Cellular phone has reception.

NG → **REPLACE MULTI-DISPLAY**

OK

PROCEED TO NEXT CIRCUIT INSPECTION SHOWN IN PROBLEM SYMPTOMS TABLE

Cannot Call in a Certain Place

INSPECTION PROCEDURE

1 CHECK SURROUNDING CONDITIONS

(a) Check if the cellular phone can make calls in a certain place.
OK:
It can make calls.

NG → **END (CELLULAR PHONES CAN ONLY FUNCTION IN CELLULAR SERVICE AREAS)**

OK

2 CHECK RECEPTION

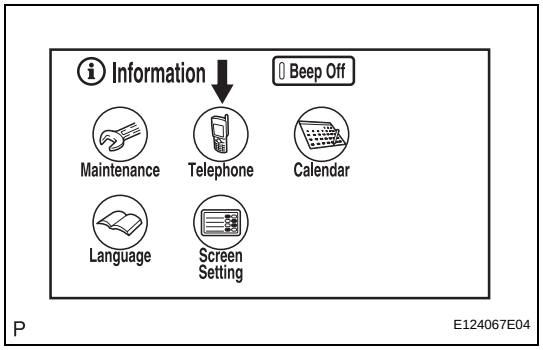

(a) Enter the "Information" screen by pressing the "INFO" switch.
(b) Select "Telephone".

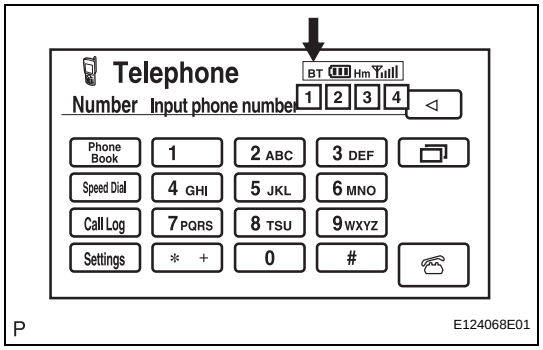

(c) Check the "Bluetooth" connection indicator (BT indicator).

Result

Condition	Procedure
Yellow color	Bring the cellular phone to a location where the BT mark turns blue.
Blue color	Replace multi-display.
No connection mark is displayed	Select a registered cellular phone or register a "Bluetooth" compatible phone.

NEXT

END

NS

The Other Caller's Voice cannot be Heard, is too Quiet, or Distorted

INSPECTION PROCEDURE

1 CHECK CELLULAR PHONE

(a) Check if the voice on the other side can be heard using a cellular phone.
OK:
Voice can be heard.

NG → **REPAIR OR REPLACE CELLULAR PHONE**

OK

2 CHECK NAVIGATION SYSTEM

(a) Check that voice guidance can be heard from the driver side speaker.
OK:
Voice guidance can be heard.

NG → **GO TO "VOICE GUIDANCE DOES NOT FUNCTION" IN PROBLEM SYMPTOMS TABLE**

OK

3 CHECK SETTINGS

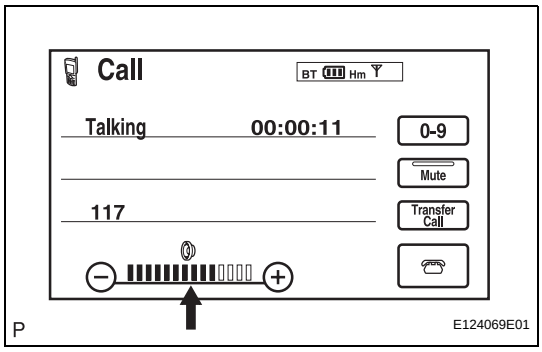

(a) Check if the volume level is set to low on the CALL screen.
OK:
The level is not set to low.

NG → **SET VOLUME TO HIGH**

OK

NS

4	CHECK SETTINGS

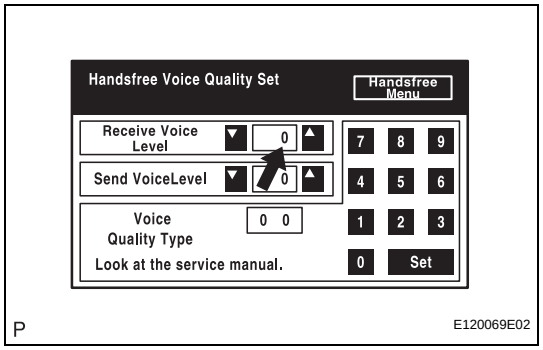

(a) Enter the "Handsfree Voice Quality Set" mode (See page NS-24).

(b) Check if the Receive Voice Level is set to "0".
HINT:
The Receive Voice Level can be set to 11 different levels, -5 to +5, with a 3 dB difference.

(c) Check if the Receive Voice Level is set to the minimum or maximum level.
HINT:
When the Receive Voice Level is set to the minimum or maximum level, the sound may be distorted.
NOTICE:
"Voice Quality Type" should not be changed.
OK:
The Receive Voice Level is set to "0".

NG → **SET RECEIVE VOICE LEVEL TO "0"**

OK

PROCEED TO NEXT CIRCUIT INSPECTION SHOWN IN PROBLEM SYMPTOMS TABLE

NS

The Other Caller cannot Hear Your Voice, or Your Voice is too Quiet or Distorted

INSPECTION PROCEDURE

1 CHECK CELLULAR PHONE

(a) Check if the other side can hear your voice properly.
OK:
Your voice can be heard correctly.

NG → **REPLACE CELLULAR PHONE**

OK

2 CHECK SETTINGS

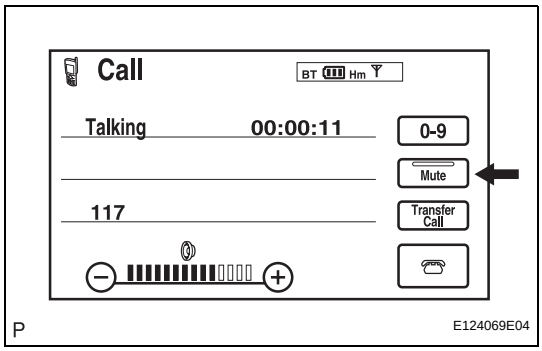

(a) Check if the mute switch is set to ON.
OK:
Mute switch is not set to ON.

NG → **TURN MUTE SWITCH OFF**

OK

3 CHECK SETTINGS

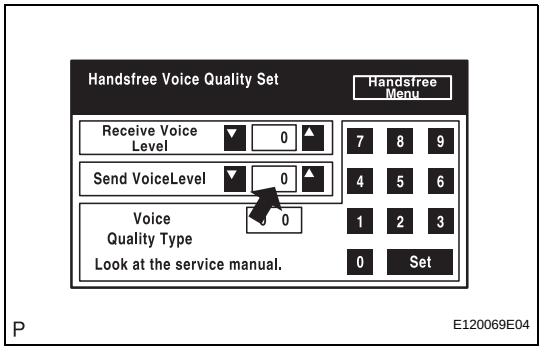

(a) Enter the "Handsfree Voice Quality Set" mode (See page NS-24).
(b) Check if the Send Voice Level is set to "0".
HINT:
The Send Voice Level can be set to 11 different levels, -5 to +5, with a 3 dB difference.
(c) Check if the Send Voice Level is set to the minimum or maximum level.
HINT:
When the Send Voice Level is set to the minimum or maximum level, the sound may be distorted.
NOTICE:
"Voice Quality Type" should not be changed.
OK:
The Send Voice Level is set to "0".

NG → **SET SEND VOICE LEVEL TO "0"**

OK

NS

4	CHECK MICROPHONE (DISPLAY CHECK MODE)

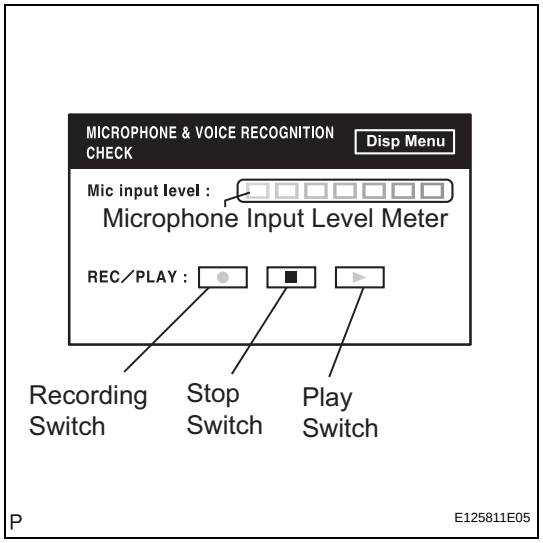

(a) Enter the "MICROPHONE & VOICE RECOGNITION CHECK" mode (See page NS-21).

(b) When voice is input into the microphone, check that the microphone input level meter changes according to the input voice.

(c) Push the recording switch and perform voice recording.
HINT:
Voice can be recorded up to 5 seconds.

(d) Check that the recorded voice is played normally without noise or distortion.
OK:
All check results are normal.

NG → **PROCEED TO NEXT CIRCUIT INSPECTION SHOWN IN PROBLEM SYMPTOMS TABLE**

OK

REPLACE MULTI-DISPLAY

Vehicle Speed Signal Circuit between Navigation ECU and Multi-Display

DESCRIPTION

The navigation ECU receives a vehicle speed signal from the multi-display and information about the GPS antenna, and then adjusts vehicle position.
HINT:

- A voltage of 12 V or 5 V is output from each ECU and then input to the combination meter. The signal is changed to a pulse signal at the transistor in the combination meter. Each ECU controls the respective system based on the pulse signal.
- If a short occurs in an ECU, all systems in the diagram below will not operate normally.

WIRING DIAGRAM

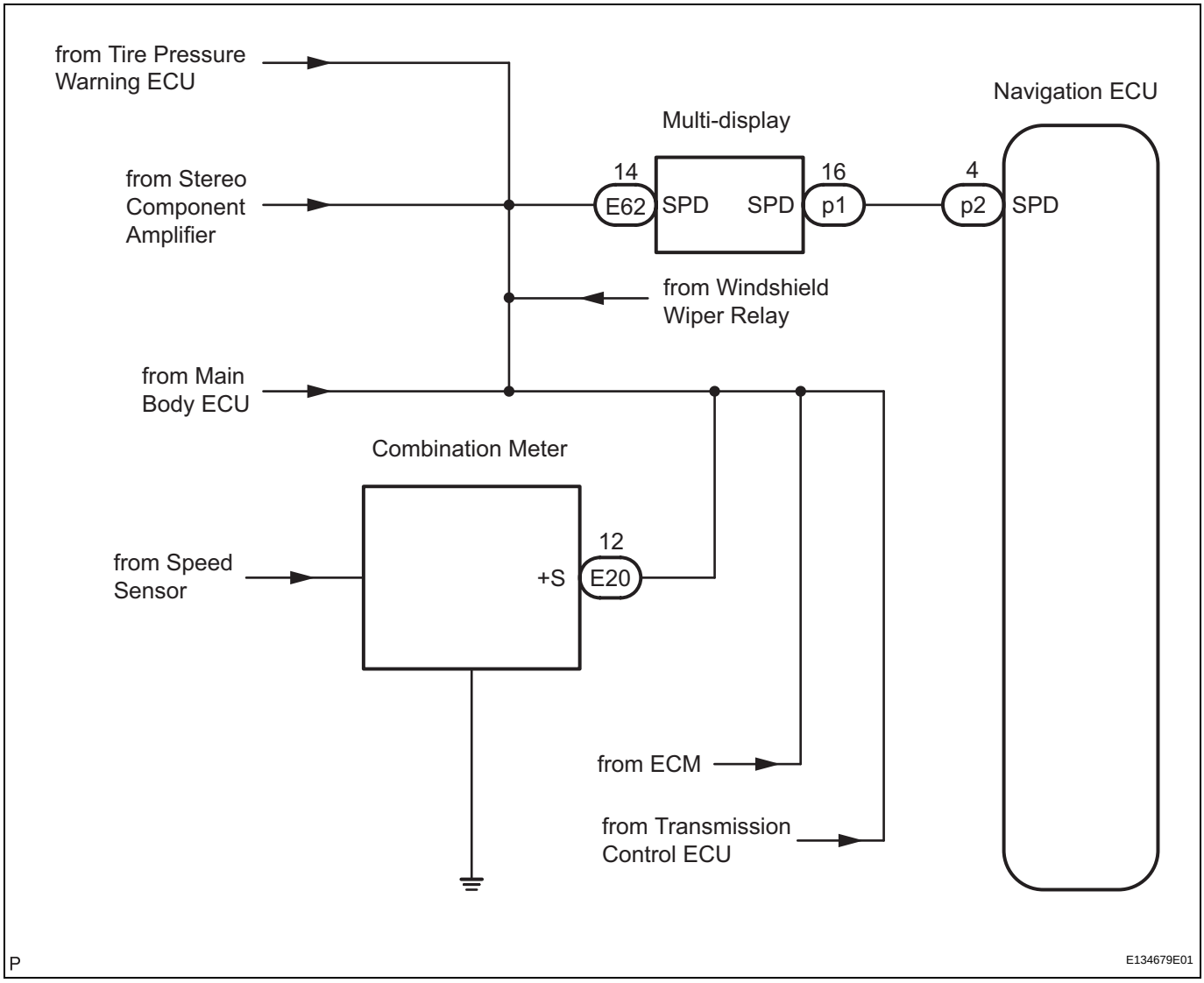

INSPECTION PROCEDURE

1 CHECK VEHICLE SIGNAL (DISPLAY CHECK MODE)

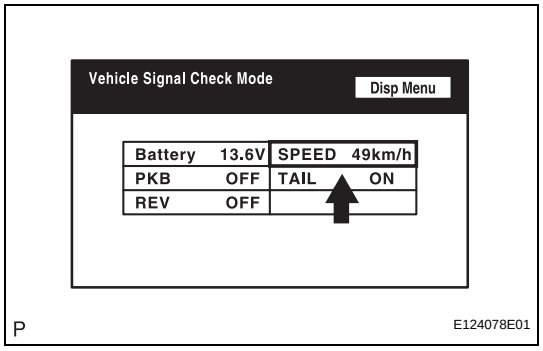

(a) Enter the "Display Check Mode (Vehicle Signal Check)" (See page NS-21).

(b) While driving, compare the "Speed" indicator to the reading on the speedometer. Check if these readings are almost the same.

OK:

The readings are almost the same.

NG → **GO TO "VEHICLE SPEED SIGNAL CIRCUIT BETWEEN MULTI-DISPLAY AND COMBINATION METER"**

OK

2 INSPECT NAVIGATION ECU

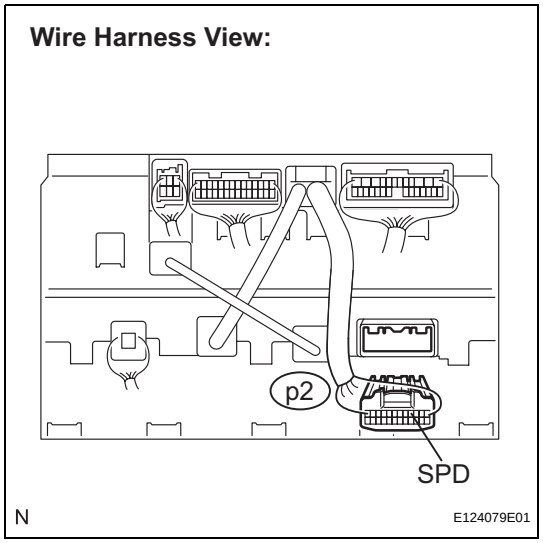

(a) Disconnect the navigation ECU connector p2.

(b) Measure voltage.

(1) Jack up either one of the drive wheels.

(2) Move the shift lever to the neutral position.

(3) Turn the engine switch on (IG).

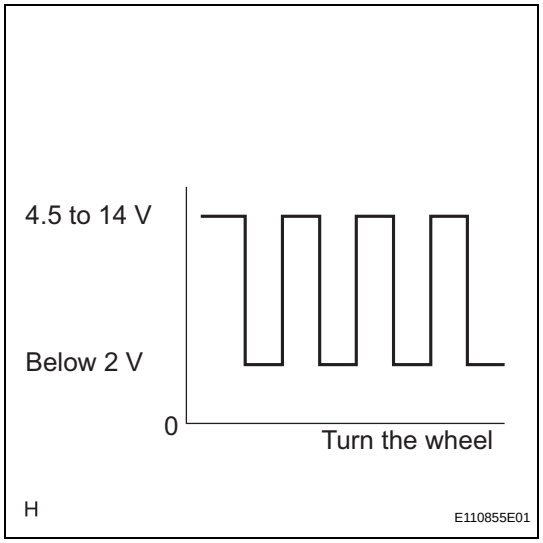

(4) Measure the voltage between terminal SPD of the navigation ECU and body ground when the drive wheels are turned slowly.

OK:

Voltage pulses as shown in the illustration.

OK → **REPLACE NAVIGATION ECU**

NS

NG

3	CHECK HARNESS AND CONNECTOR (NAVIGATION ECU - MULTI-DISPLAY)

Wire Harness View:

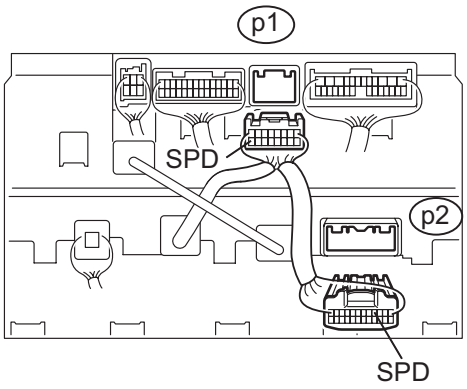

N E124093E09

(a) Disconnect the multi-display connector p1 and navigation ECU connector p2.

(b) Measure the resistance according to the value(s) in the table below.

Standard resistance

Tester Connection	Condition	Specified Condition
SPD - SPD	Always	Below 1 Ω
SPD - Body ground	Always	10 kΩ or higher

NG → **REPAIR OR REPLACE HARNESS OR CONNECTOR**

OK

REPLACE MULTI-DISPLAY

NS

Steering Pad Switch Circuit

DESCRIPTION

This circuit sends an operation signal from the steering pad switch to the radio receiver.
If there is an open in the circuit, the audio or navigation system cannot be operated using the steering pad switch.
If there is a short in the circuit, the resulting condition is the same as if the switch were continuously depressed. Therefore, the radio receiver or multi-display cannot be operated using the steering pad switch, and the radio receiver or multi-display itself cannot function.

WIRING DIAGRAM

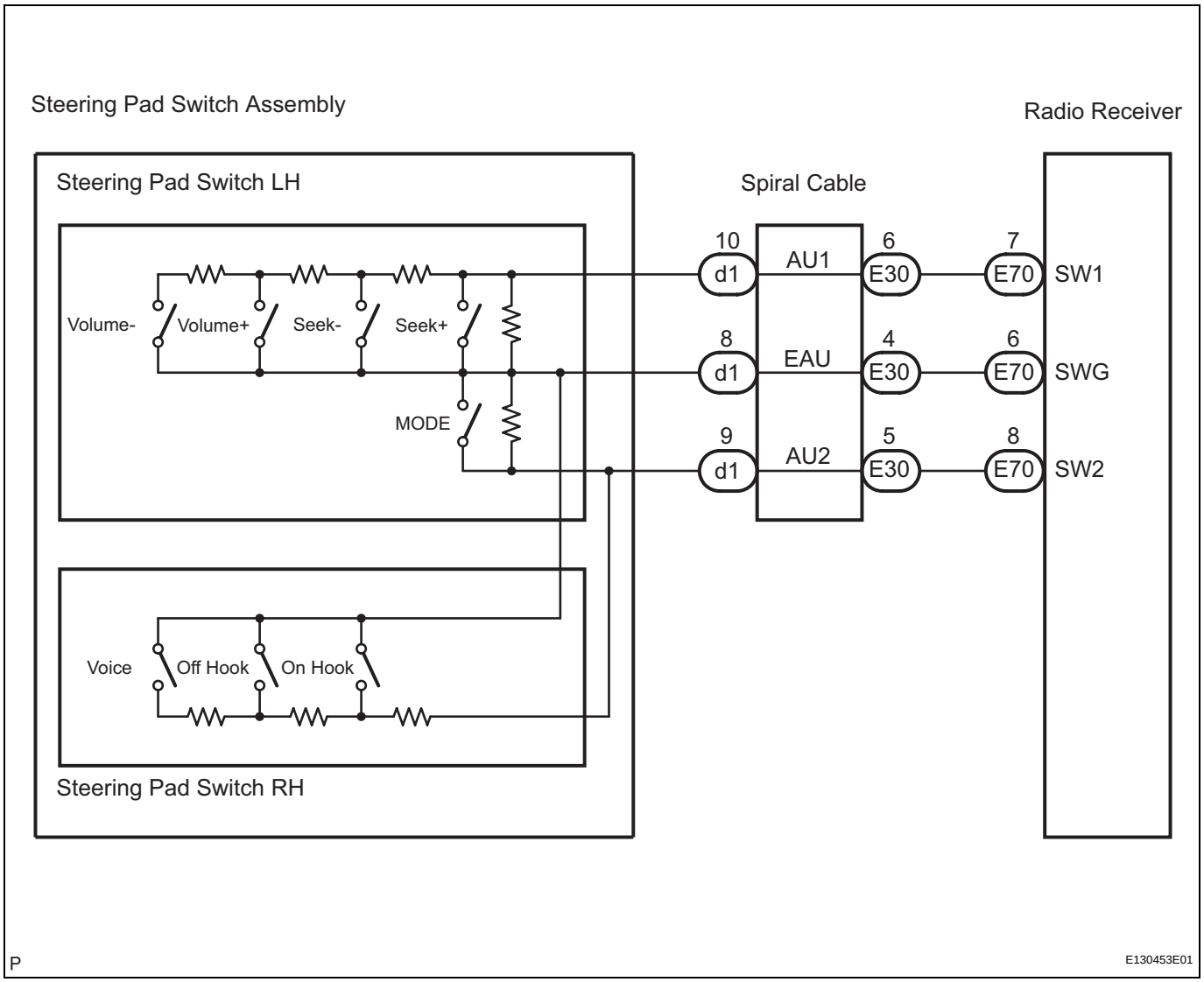

INSPECTION PROCEDURE

NOTICE:

The vehicle is equipped with an SRS (Supplemental Restraint System) which includes components such as airbags. Before servicing (including removal or installation of parts), be sure to read the precautionary notice for the Supplemental Restraint System (See page RS-1).

NS

1 INSPECT RADIO RECEIVER

Wire Harness View (DVD Changer Model):

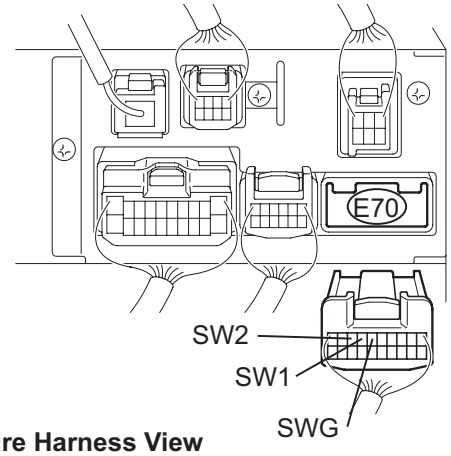

Wire Harness View (CD Changer Model):

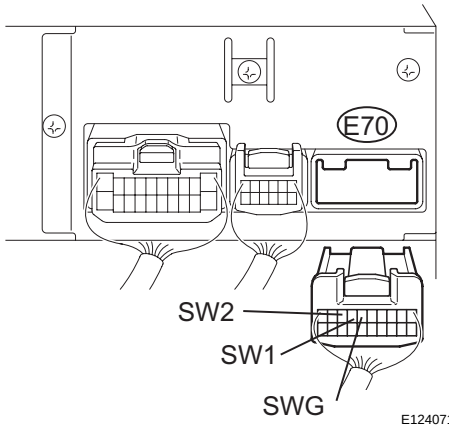

(a) Disconnect the radio receiver connector E70.
(b) Measure the resistance according to the value(s) in the table below.

Standard resistance

Tester Connection	Condition	Specified Condition
SW1 - SWG	No switch is pushed	Approx. 100 kΩ
SW1 - SWG	SEEK+ switch: push	Approx. 0 Ω
SW1 - SWG	SEEK- switch: push	Approx. 0.3 kΩ
SW1 - SWG	VOL+ switch: push	Approx. 1 kΩ
SW1 - SWG	VOL- switch: push	Approx. 3.1 kΩ
SW2 - SWG	No switch is pushed	Approx. 100 kΩ
SW2 - SWG	MODE switch: push	Approx. 0 Ω
SW2 - SWG	VOICE switch: push	Approx. 3.1 kΩ
SW2 - SWG	ON HOOK switch: push	Approx. 0.3 kΩ
SW2 - SWG	OFF HOOK switch: push	Approx. 1 kΩ

NG → **Go to step 2**

NS

OK

PROCEED TO NEXT CIRCUIT INSPECTION SHOWN IN PROBLEM SYMPTOMS TABLE

2 INSPECT STEERING PAD SWITCH ASSEMBLY

(a) Disconnect the steering pad switch assembly connector d1.

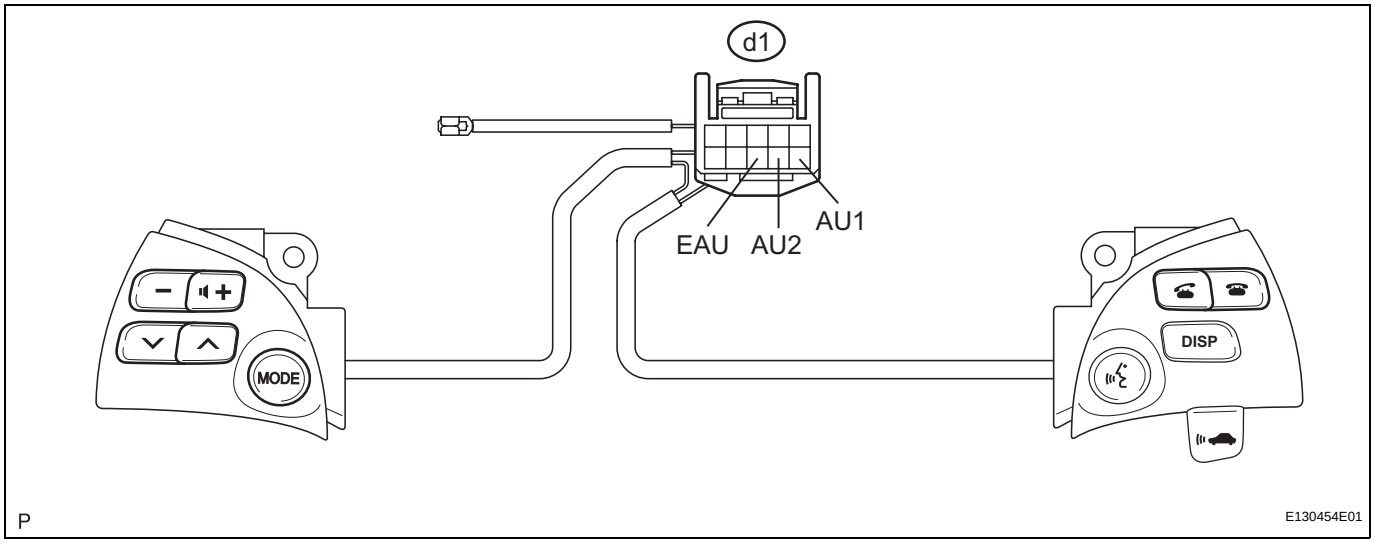

(b) Measure the resistance according to the value(s) in the table below.

Standard resistance

Tester Connection	Condition	Specified Condition
AU1 - EAU	No switch is pushed	Approx. 100 kΩ
AU1 - EAU	SEEK+ switch: push	Approx. 0 Ω
AU1 - EAU	SEEK- switch: push	Approx. 0.3 kΩ
AU1 - EAU	VOL+ switch: push	Approx. 1 kΩ
AU1 - EAU	VOL- switch: push	Approx. 3.1 kΩ
AU2 - EAU	No switch is pushed	Approx. 100 kΩ
AU2 - EAU	MODE switch: push	Approx. 0 Ω
AU2 - EAU	VOICE switch: push	Approx. 3.1 kΩ
AU2 - EAU	ON HOOK switch: push	Approx. 0.3 kΩ
AU2 - EAU	OFF HOOK switch: push	Approx. 1 kΩ

NG → **REPLACE STEERING PAD SWITCH ASSEMBLY**

OK

NS

3	INSPECT SPIRAL CABLE

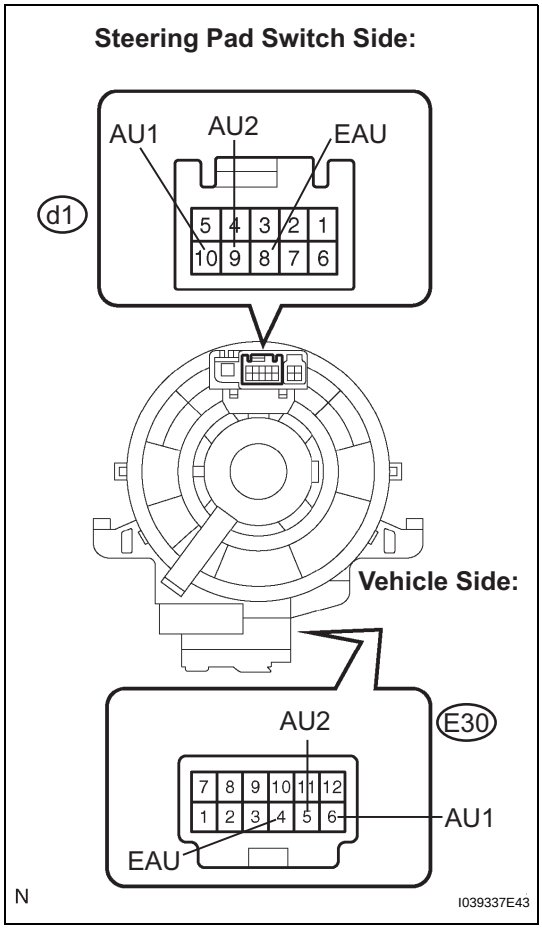

(a) Disconnect the steering pad switch assembly and spiral cable connectors.

(b) Measure the resistance according to the value(s) in the table below.

Standard resistance

Tester Connection	Spiral Cable Position	Specified Condition
EAU - EAU	Center	Below 1 Ω
	2.5 rotations to the left	
	2.5 rotations to the right	
AU1 - AU1	Center	Below 1 Ω
	2.5 rotations to the left	
	2.5 rotations to the right	
AU2 - AU2	Center	Below 1 Ω
	2.5 rotations to the left	
	2.5 rotations to the right	

NOTICE:
The spiral cable is an important part of the SRS airbag system. Incorrect removal or installation of the spiral cable may cause airbag deployment. Be sure to read the page shown in the brackets.

HINT:
- Removal (See page RS-379)
- Installation (See page RS-382)

NG → **REPLACE SPIRAL CABLE**

OK

REPAIR OR REPLACE HARNESS OR CONNECTOR (SPIRAL CABLE - RADIO RECEIVER)

NS

Illumination Circuit

DESCRIPTION

Power is supplied to the multi-display and steering pad switch assembly illumination when the light control switch is in the TAIL or HEAD position.

WIRING DIAGRAM

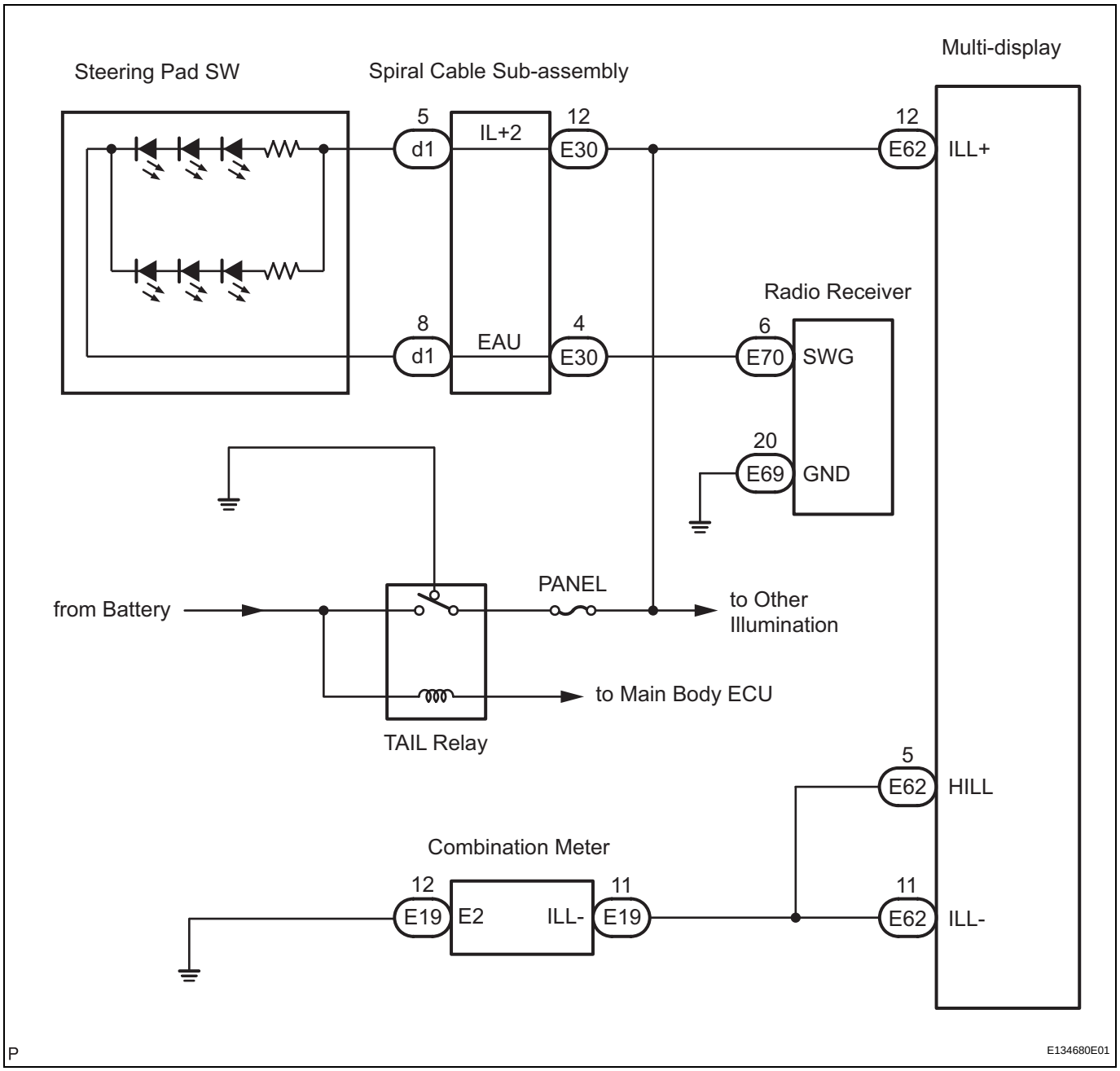

INSPECTION PROCEDURE

NOTICE:

The vehicle is equipped with an SRS (Supplemental Restraint System) which includes components such as airbags. Before servicing (including removal or installation of parts), be sure to read the precautionary notice for the Supplemental Restraint System (See page RS-1).

NS

1 CHECK ILLUMINATION

(a) Check if the illumination for the multi-display, steering pad switch assembly, glove box light, cigarette lighter, or others (seat heater switch, clock, etc.) comes on when the light control switch is turned to the HEAD or TAIL position.

Result

Condition	Proceed to
Illumination comes on for all components except steering pad switch.	A
Illumination comes on for all components except multi-display.	B
No illumination comes on (radio receiver, multi-display, glove box light, clock, cigarette lighter, etc.)	C
Illumination comes on only for glove box lighter, console light, and steering pad switch.	D

B → **Go to step 6**

C → **GO TO LIGHTING SYSTEM**

D → **GO TO COMBINATION METER SYSTEM**

NS

A

2 CHECK HARNESS AND CONNECTOR (BATTERY - SPIRAL CABLE)

Spiral Cable Connector Front View:

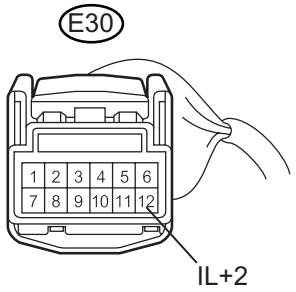

H E120026E14

(a) Disconnect the spiral cable connector.
(b) Measure the voltage according to the value(s) in the table below.

Standard voltage

Tester Connection	Condition	Specified Condition
IL+2 - Body ground	Light control SW TAIL or HEAD	10 to 14 V

NG → **REPAIR OR REPLACE HARNESS OR CONNECTOR**

OK

3 CHECK STEERING PAD SWITCH ASSEMBLY

(a) Disconnect the steering pad switch assembly connector.

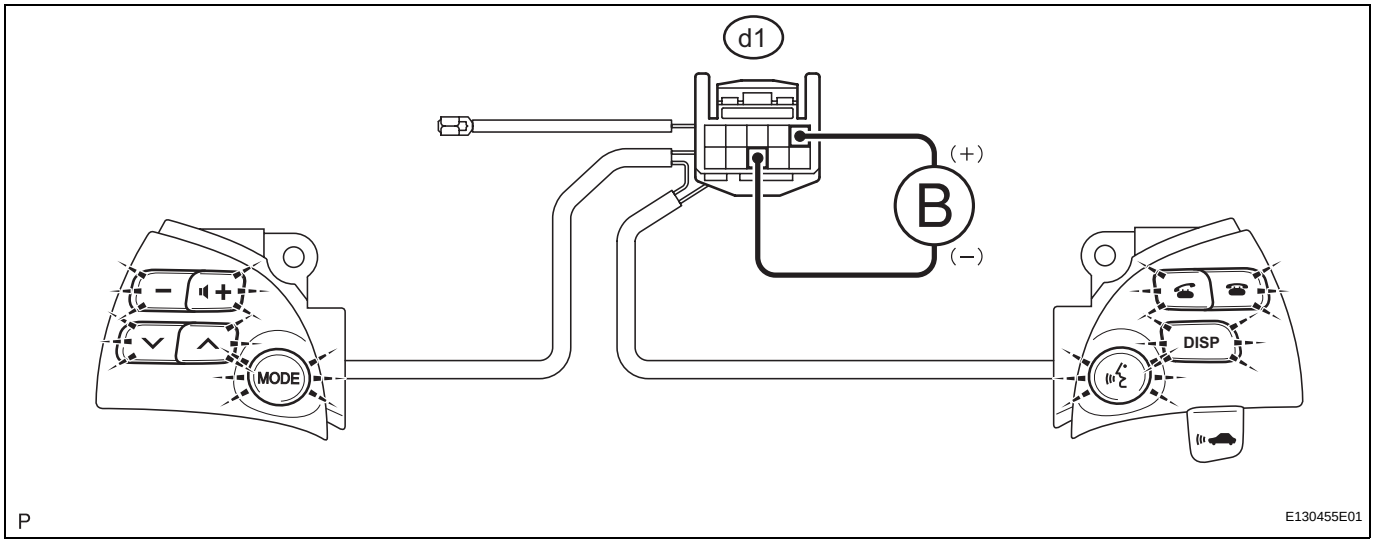

(b) Connect the positive (+) lead to terminal IL+2 and the negative (-) lead to terminal EAU of the steering pad switch assembly connector.

(c) Check if the illumination for the steering pad switch assembly comes on.

OK:

Illumination for the steering pad switch assembly comes on.

NS

NG → **REPLACE STEERING PAD SWITCH ASSEMBLY**

OK

4	INSPECT SPIRAL CABLE

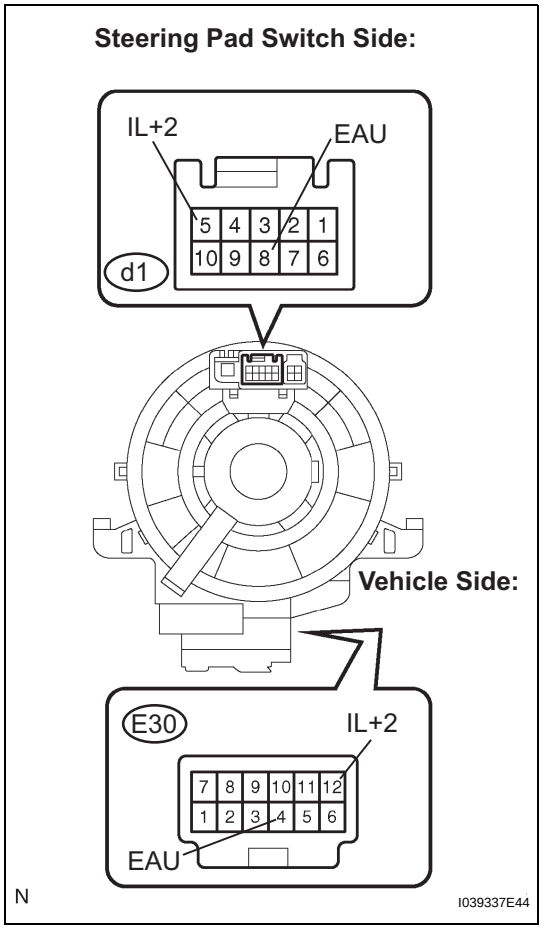

(a) Disconnect the steering pad switch assembly and spiral cable connectors.

(b) Measure the resistance according to the value(s) in the table below.

Standard resistance

Tester Connection	Spiral Cable Position	Specified Condition
EAU - EAU	Center	Below 1 Ω
	2.5 rotations to the left	
	2.5 rotations to the right	
IL+2 - IL+2	Center	Below 1 Ω
	2.5 rotations to the left	
	2.5 rotations to the right	

NOTICE:
The spiral cable is an important part of the SRS airbag system. Incorrect removal or installation of the spiral cable may cause airbag deployment. Be sure to read the page shown in the brackets.

HINT:
- Removal (See page RS-379)
- Installation (See page RS-382)

NG → **REPLACE SPIRAL CABLE**

OK

NS

5	CHECK HARNESS AND CONNECTOR (SPIRAL CABLE - RADIO RECEIVER)

Radio Receiver (DVD Changer Models) Wire Harness View:

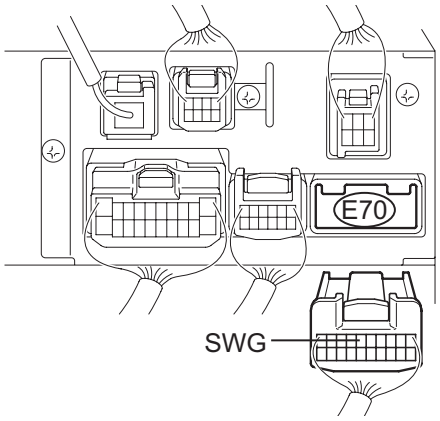

Radio Receiver (CD Changer Models) Wire Harness View:

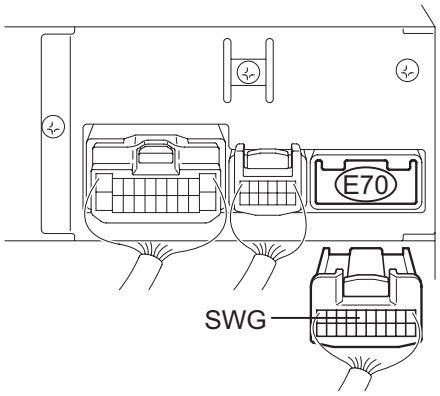

Spiral Cable Connector Front View:

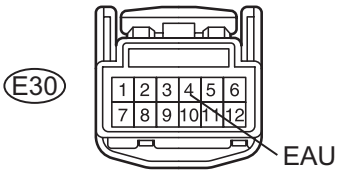

P E124074E05

(a) Disconnect the radio receiver and spiral cable connectors.

(b) Measure the resistance according to the value(s) in the table below.

Standard resistance

Tester Connection	Condition	Specified Condition
SWG - EAU	Always	Below 1 Ω
SWG - Body ground	Always	10 kΩ or higher

NG → **REPAIR OR REPLACE HARNESS OR CONNECTOR**

OK

REPLACE RADIO RECEIVER

NS

6 CHECK HARNESS AND CONNECTOR (BATTERY - MULTI-DISPLAY)

Wire Harness View:

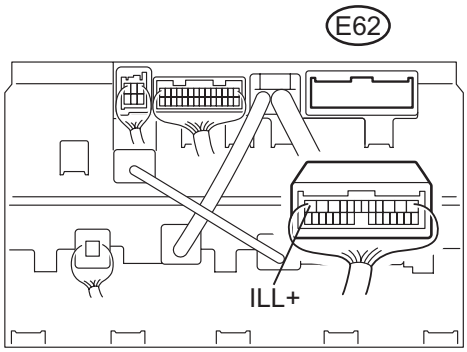

N E119725E10

(a) Disconnect the multi-display connector E62.
(b) Measure the voltage according to the value(s) in the table below.

Standard voltage

Tester Connection	Condition	Specified Condition
ILL+ - Body ground	Light control switch TAIL or HEAD	10 to 14 V

NG → **REPAIR OR REPLACE HARNESS OR CONNECTOR**

OK

NS

7 CHECK HARNESS AND CONNECTOR (MULTI-DISPLAY - COMBINATION METER)

Multi-display Wire Harness View:

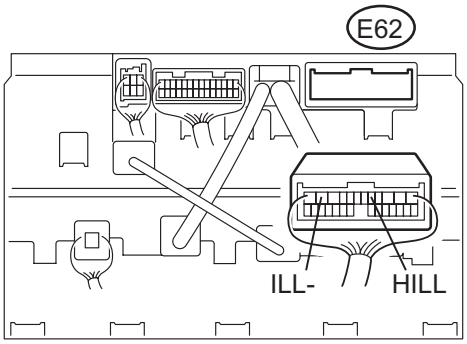

Combination Meter Wire Harness View:

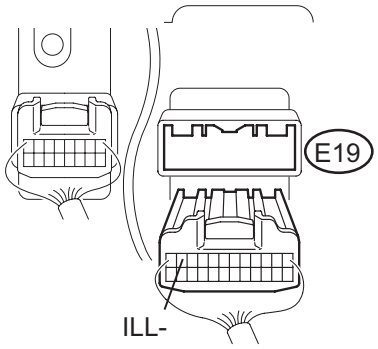

N E134681E01

(a) Disconnect the multi-display and combination meter connectors.
(b) Measure the resistance according to the value(s) in the table below.

Standard resistance

Tester Connection	Condition	Specified Condition
ILL- - ILL-	Always	Below 1 Ω
ILL- - HILL	Always	Below 1 Ω
ILL- - Body ground	Always	10 kΩ or higher
HILL - Body ground	Always	10 kΩ or higher

NG → **REPAIR OR REPLACE HARNESS OR CONNECTOR**

OK

PROCEED TO NEXT CIRCUIT INSPECTION SHOWN IN PROBLEM SYMPTOMS TABLE

Parking Brake Switch Circuit

DESCRIPTION

This circuit is from the parking brake switch to the multi-display.

WIRING DIAGRAM

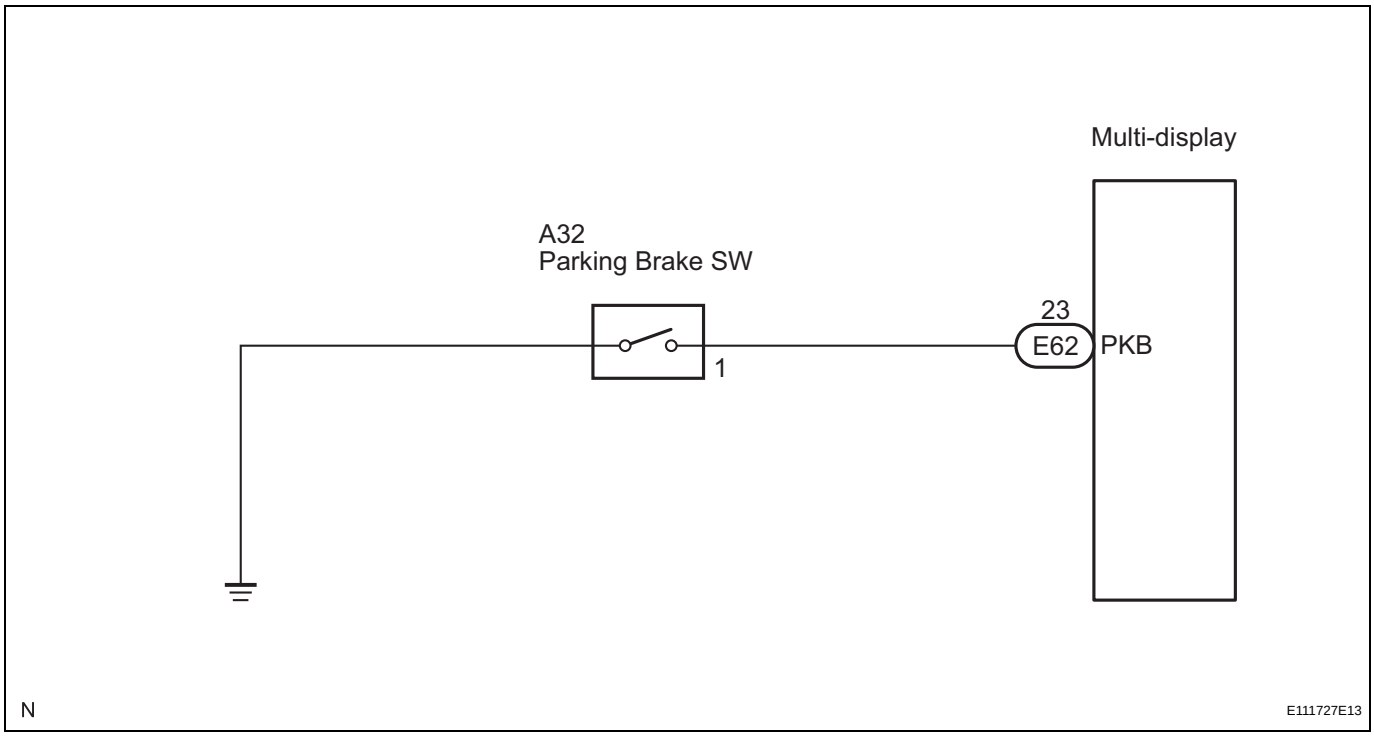

INSPECTION PROCEDURE

1	CHECK BRAKE WARNING LIGHT

(a) Check that the brake warning light comes on when the parking brake is applied and goes off when the parking brake is released.

OK:

The brake warning light operates as specified above.

OK → **Go to step 3**

NG

2 INSPECT PARKING BRAKE SWITCH

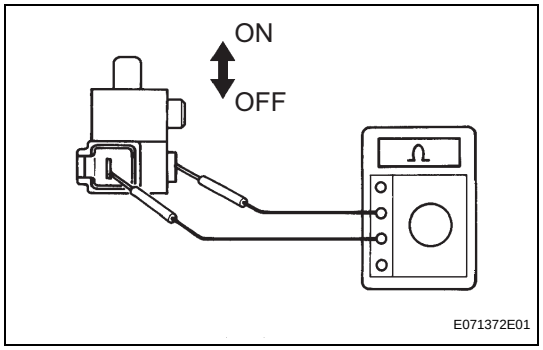

(a) Remove the parking brake switch.
(b) Measure the resistance according to the value(s) in the table below.

Standard resistance

Tester Connection	Condition	Specified Condition
Switch connector - Switch body	ON (When shaft is not pressed)	Below 1 Ω
Switch connector - Switch body	OFF (When shaft is pressed)	10 kΩ or higher

NG → **REPLACE PARKING BRAKE SWITCH**

OK

3 CHECK HARNESS AND CONNECTOR (MULTI-DISPLAY - PARKING BRAKE SWITCH)

Multi-display Wire Harness View:

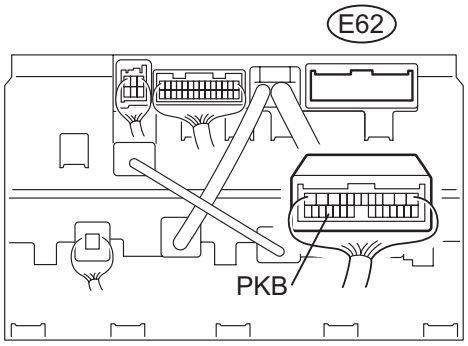

Parking Brake Switch Connector Front View:

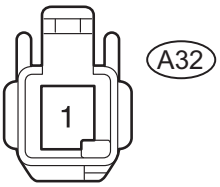

N E124076E02

(a) Disconnect the multi-display connector E62 and parking brake switch connector A32.
(b) Measure the resistance according to the value(s) in the table below.

Standard resistance

Tester Connection	Condition	Specified Condition
PKB - A32-1	Always	Below 1 Ω
PKB - Body ground	Always	10 kΩ or higher

NG → **REPAIR OR REPLACE HARNESS OR CONNECTOR**

OK

PROCEED TO NEXT CIRCUIT INSPECTION SHOWN IN PROBLEM SYMPTOMS TABLE

NS

AVC-LAN Circuit

DESCRIPTION

Each unit of the navigation system connected to the AVC-LAN (communication bus) transfers the signal of each switch by communication.
When a short to +B or short to ground occurs in this AVC-LAN, the navigation system will not function normally as the communication is discontinued.

INSPECTION PROCEDURE

1 INSPECT RADIO RECEIVER

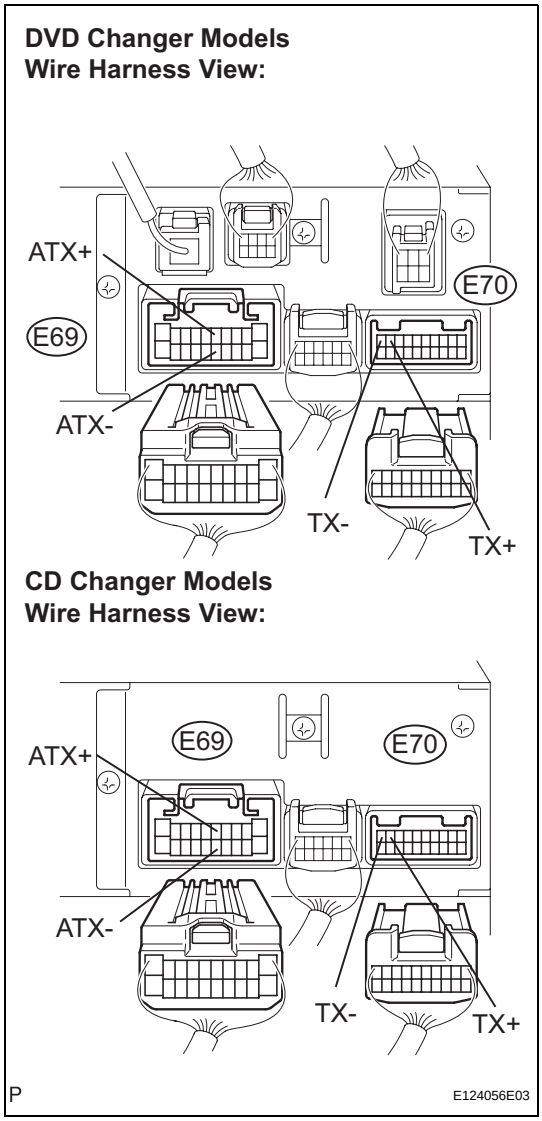

(a) Disconnect the radio receiver connectors.
(b) Measure the resistance according to the value(s) in the table below.

Standard resistance

Tester Connection	Condition	Specified Condition
ATX+ (E69-5) - ATX- (E69-15)	Always	60 to 80 Ω
TX+ (E70-9) - TX- (E70-10)	Always	60 to 80 Ω

NG → **REPLACE RADIO RECEIVER**

OK

2 CHECK HARNESS AND CONNECTOR

HINT:
For details of the connectors, refer to "TERMINALS OF ECU" (See page NS-44).

(a) Referring to the AVC-LAN wiring diagram below, check all AVC-LAN circuits.
  (1) Disconnect all connectors in all AVC-LAN circuits.
  (2) Check for an open or short in all AVC-LAN circuits.
  OK:
  There is no open or short circuit.

AVC-LAN WIRING DIAGRAM:

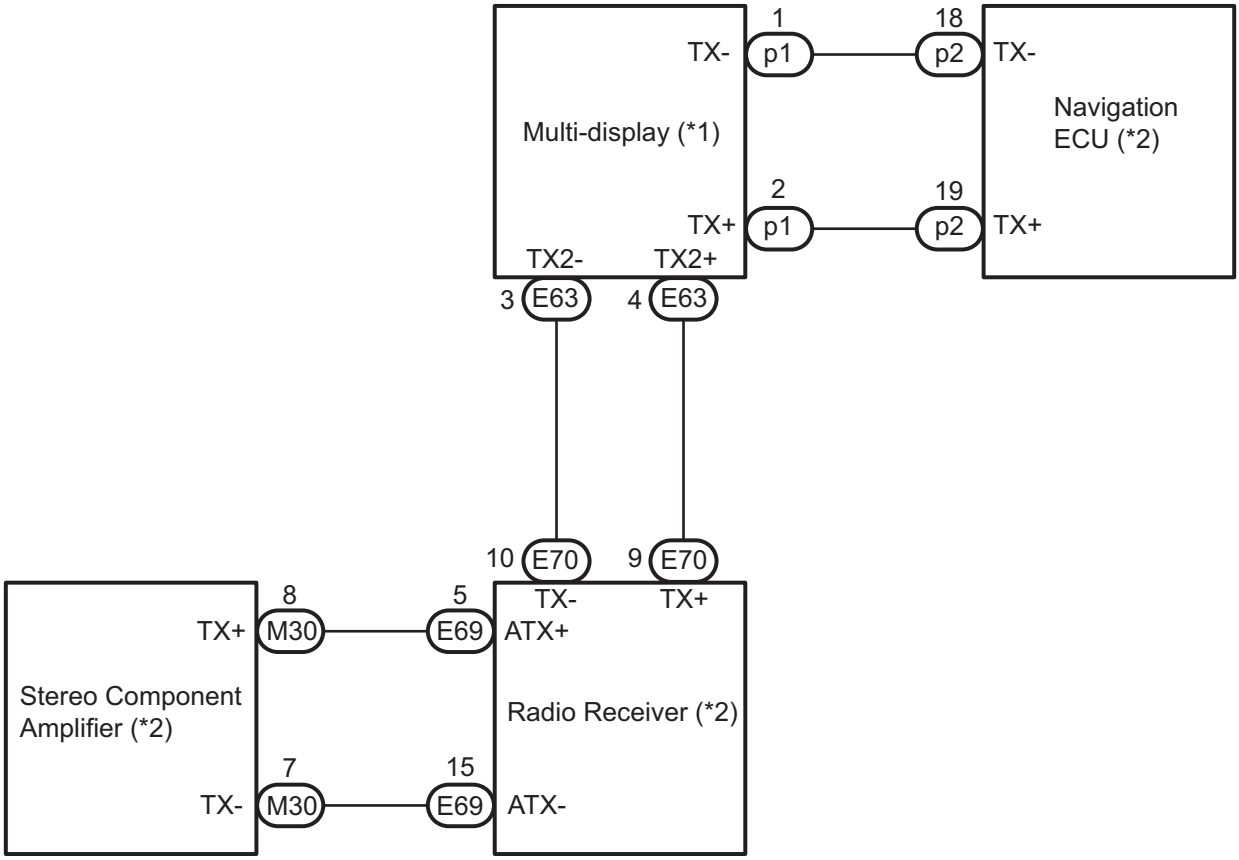

*1: Master Unit

*2: Slave Unit

P

E134675E01

NG → **REPAIR OR REPLACE HARNESS OR CONNECTOR**

OK

PROCEED TO NEXT CIRCUIT INSPECTION SHOWN IN PROBLEM SYMPTOMS TABLE

NS

Vehicle Speed Signal Circuit between Multi-display and Combination Meter

DESCRIPTION

The multi-display performs switch operation control during driving by receiving a vehicle speed signal from the combination meter.
HINT:

- A voltage of 12 V or 5 V is output from each ECU and then input to the combination meter. The signal is changed to a pulse signal at the transistor in the combination meter. Each ECU controls the respective system based on the pulse signal.
- If a short occurs in an ECU, all systems in the diagram below will not operate normally.

WIRING DIAGRAM

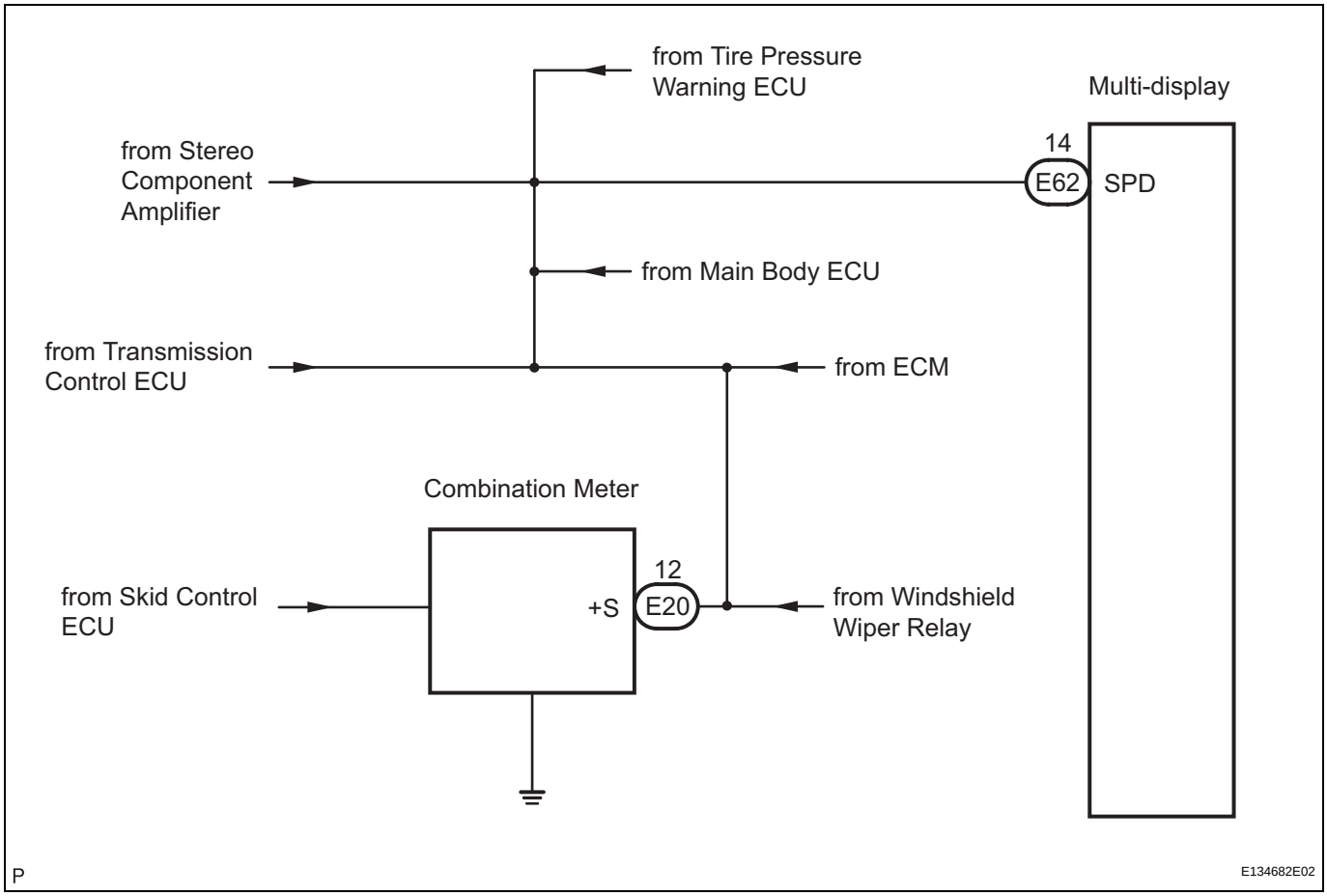

INSPECTION PROCEDURE

1	CHECK OPERATION OF SPEEDOMETER

(a) Drive the vehicle and check if the function of the speedometer in the combination meter is normal.
OK:
Actual vehicle speed and the speed indicated on the speedometer are the same.

HINT:
The vehicle speed sensor is functioning normally when the indication on the speedometer is normal.

NG → **GO TO COMBINATION METER SYSTEM**

OK

2 INSPECT MULTI-DISPLAY

Multi-display Wire Harness View:

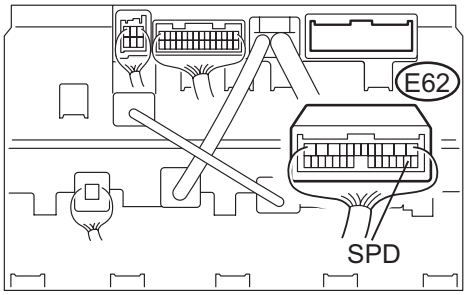

N E119725E11

(a) Disconnect the multi-display connector E62.
(b) Measure voltage.
  (1) Jack up either one of the drive wheels.
  (2) Move the shift lever to the neutral position.
  (3) Turn the engine switch on (IG).

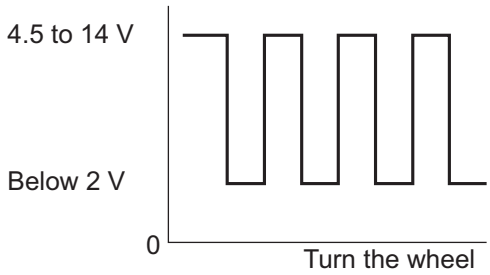

H E110855E01

(4) Measure the voltage between terminal SPD of the multi-display and body ground when the drive wheels are turned slowly.
OK:
Voltage pulses as shown in the illustration.

OK → **REPLACE MULTI-DISPLAY**

NG

NS

3 CHECK HARNESS AND CONNECTOR (COMBINATION METER - MULTI-DISPLAY)

Multi-display Wire Harness View:

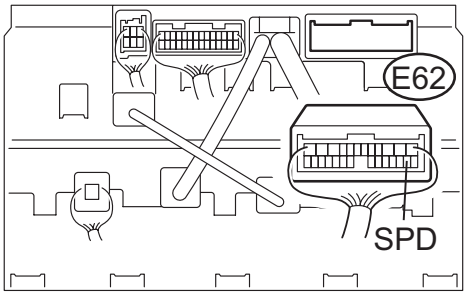

Combination Meter Wire Harness View:

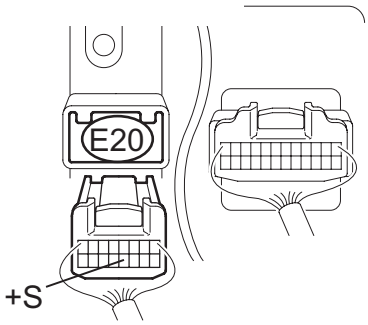

N E134683E01

(a) Disconnect the multi-display connector E62 and combination meter connector E20.
(b) Measure the resistance according to the value(s) in the table below.

Standard resistance

Tester Connection	Condition	Specified Condition
SPD - +S	Engine switch off	Below 1 Ω

NG → **REPAIR OR REPLACE HARNESS OR CONNECTOR**

OK

4 CHECK HARNESS AND CONNECTOR (MULTI-DISPLAY - BODY GROUND)

Multi-display Wire Harness View:

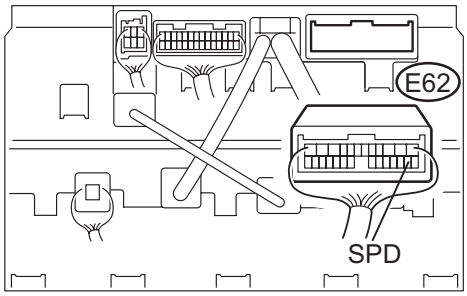

N E119725E11

(a) Measure the resistance according to the value(s) in the table below.

Standard resistance

Tester Connection	Condition	Specified Condition
SPD - Body ground	Engine switch off	10 kΩ or higher

HINT:
If the resistance between terminal SPD and body ground is less than 10 kΩ, there may be a short in a wire harness, connector, or an ECU that is connected to the SPD signal wire.

NG → **REPAIR OR REPLACE HARNESS OR CONNECTOR OR EACH ECU**

NS

OK

REPLACE COMBINATION METER

Reverse Signal Circuit

DESCRIPTION

The navigation ECU receives a reverse signal from the multi-display and information about the GPS antenna, and then adjusts vehicle position.

WIRING DIAGRAM

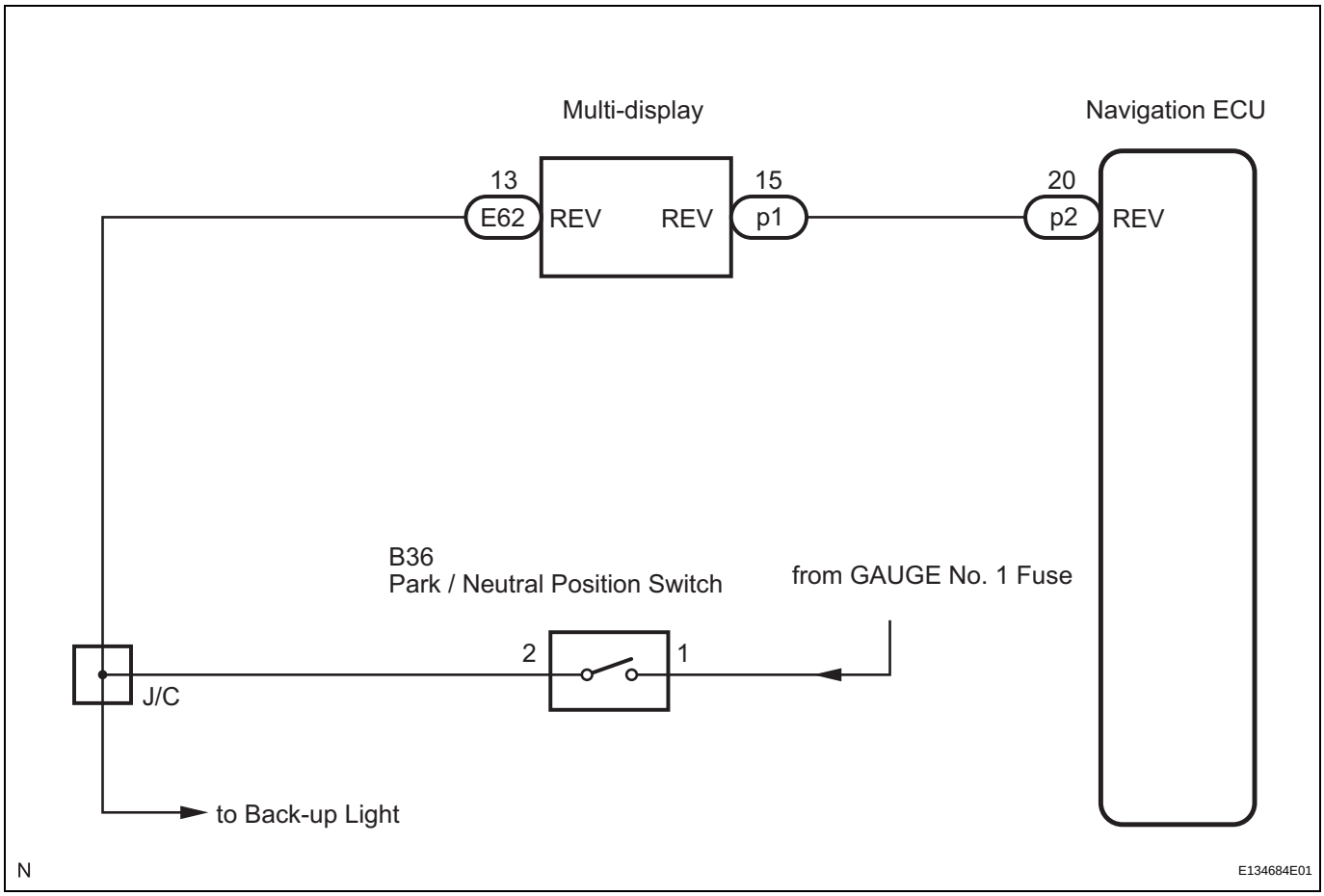

INSPECTION PROCEDURE

1	CHECK BACK-UP LIGHT

(a) Move the shift lever to the R position and check if the back-up lights come on.
OK:
The back-up lights come on.

NG → **GO TO LIGHTING SYSTEM**

OK

2 CHECK VEHICLE SIGNAL (DISPLAY CHECK MODE)

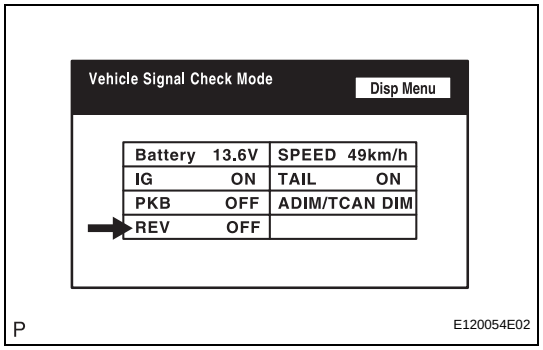

(a) Enter the "Display Check" mode (Vehicle Signal Check Mode) (See page NS-21).

(b) Check that the display changes between ON and OFF according to the shift lever operation (P and R).

OK

Shift Lever Position	Display
Reverse	ON
Except Reverse	OFF

HINT:
This display is updated once per second. As a result, it is normal for the display to lag behind the actual change in the switch.

NG → **Go to step 5**

OK

3 CHECK HARNESS AND CONNECTOR (NAVIGATION ECU - MULTI-DISPLAY)

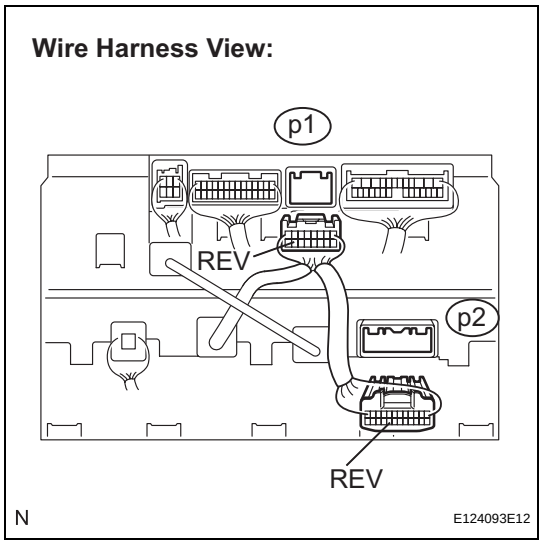

(a) Disconnect multi-display connector p1 and navigation ECU connector p2.

(b) Measure the resistance according to the value(s) in the table below.

Standard resistance

Tester Connection	Condition	Specified Condition
REV - REV	Always	Below 1 Ω
REV - Body ground	Always	10 kΩ or higher

NG → **REPAIR OR REPLACE HARNESS OR CONNECTOR**

OK

NS

4 INSPECT NAVIGATION ECU

Wire Harness View:

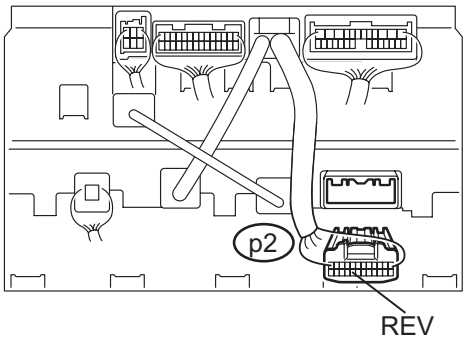

N E124079E04

(a) Reconnect the multi-display connector p1.
(b) Measure the voltage according to the value(s) in the table below.

Standard voltage

Tester Connection	Condition	Specified Condition
REV - Body ground	Engine switch is on (IG). Shift lever is moved to Reverse position.	10 to 14 V
REV - Body ground	Engine switch is on (IG). Shift lever is moved to any position except Reverse.	Below 1 V

NG → **REPLACE MULTI-DISPLAY**

OK

REPLACE NAVIGATION ECU

NS

5 INSPECT MULTI-DISPLAY

Wire Harness View:

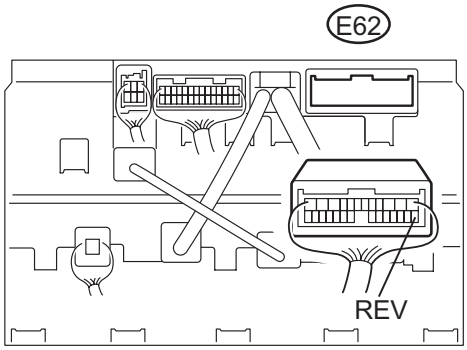

N E119725E12

(a) Disconnect the multi-display connector E62.
(b) Measure the voltage according to the value(s) in the table below.

Standard voltage

Tester Connection	Condition	Specified Condition
REV - Body ground	Engine switch is on (IG). Shift lever is moved to Reverse position.	10 to 14 V
REV - Body ground	Engine switch is on (IG). Shift lever is moved to any position except Reverse.	Below 1 V

OK → **REPLACE MULTI-DISPLAY**

NG

REPAIR OR REPLACE HARNESS OR CONNECTOR (MULTI-DISPLAY - PARK/NEUTRAL POSITION SWITCH)

Navigation Voice Circuit

DESCRIPTION

This circuit is used when the voice guidance in the navigation system is on.

WIRING DIAGRAM

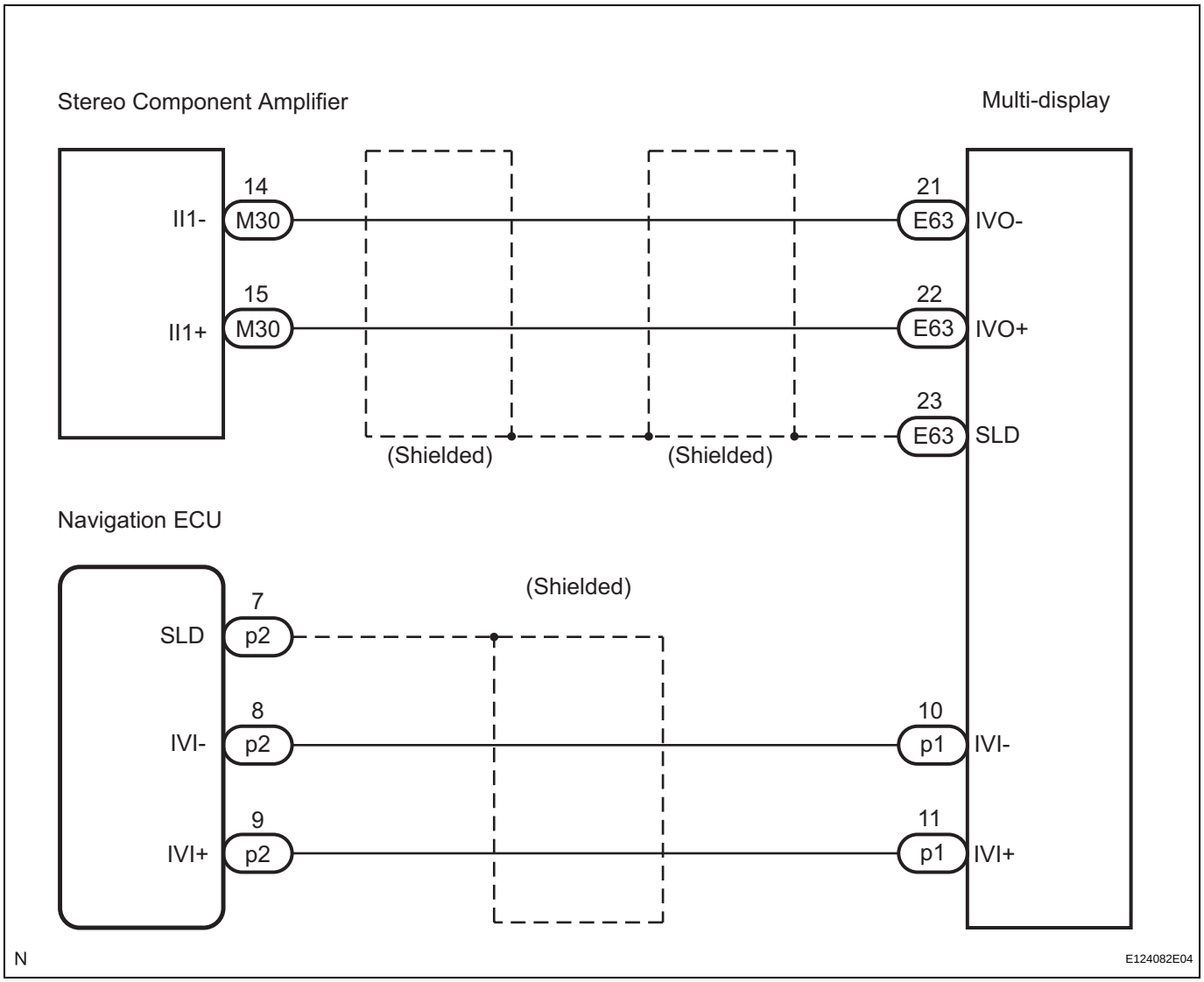

NS

INSPECTION PROCEDURE

1	CHECK HARNESS AND CONNECTOR (MULTI-DISPLAY - NAVIGATION ECU)

Wire Harness View:

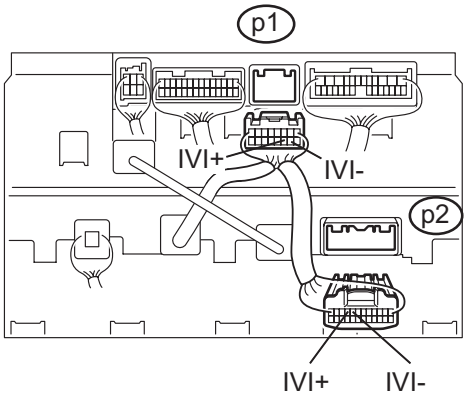

N E124093E11

(a) Disconnect the multi-display connector p1 and the navigation ECU connector p2.

(b) Measure the resistance according to the value(s) in the table below.

Standard resistance

Tester Connection	Condition	Specified Condition
IVI- - IVI-	Always	Below 1Ω
IVI+ - IVI+	Always	Below 1Ω
IVI- - Body ground	Always	10 kΩ or higher
IVI+ - Body ground	Always	10 kΩ or higher

NG → **REPAIR OR REPLACE HARNESS OR CONNECTOR**

OK

NS

2	CHECK HARNESS AND CONNECTOR (MULTI-DISPLAY - STEREO COMPONENT AMPLIFIER)

Multi-display Wire Harness View:

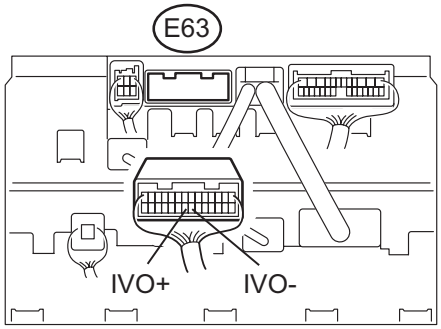

Stereo Component Amplifier (with Rear Header Speaker System) Wire Harness View:

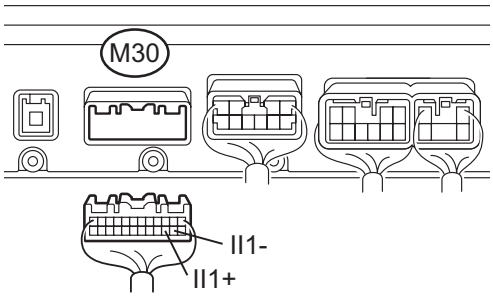

Stereo Component Amplifier (without Rear Header Speaker System) Wire Harness View:

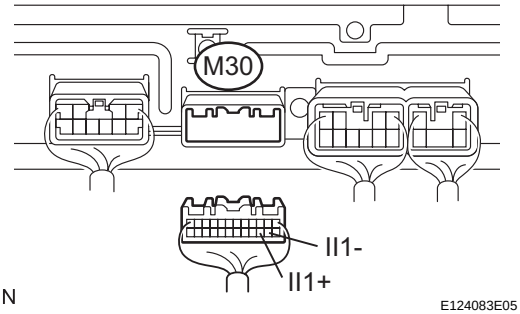

N

E124083E05

(a) Disconnect the multi-display connector E63 and stereo component amplifier connector M30.

(b) Measure the resistance according to the value(s) in the table below.

Standard resistance

Tester Connection	Condition	Specified Condition
IVO+ - II1+	Always	Below 1Ω
IVO- - II1-	Always	Below 1Ω
IVO+ - Body ground	Always	10 kΩ or higher
IVO- - Body ground	Always	10 kΩ or higher

NG → **REPAIR OR REPLACE HARNESS OR CONNECTOR**

OK

PROCEED TO NEXT CIRCUIT INSPECTION SHOWN IN PROBLEM SYMPTOMS TABLE

NS

Display Signal Circuit between Navigation ECU and Multi-display

DESCRIPTION

This is the display signal circuit from the navigation ECU to the multi-display.

WIRING DIAGRAM

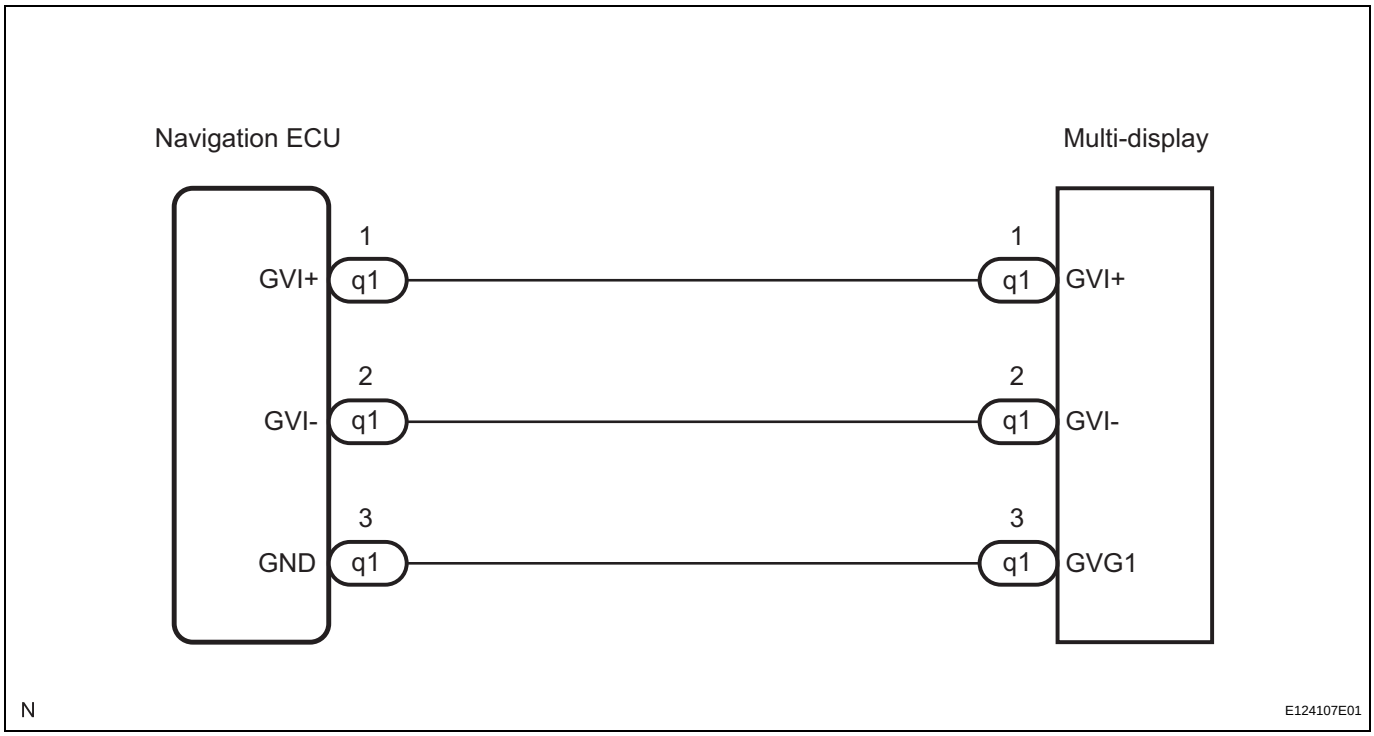

INSPECTION PROCEDURE

1	CHECK HARNESS AND CONNECTOR (NAVIGATION ECU - MULTI-DISPLAY)

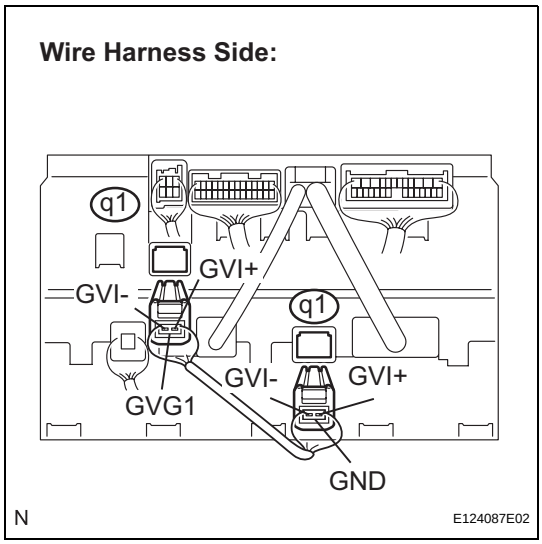

(a) Disconnect the navigation ECU connector q1 and multi-display connector q1.

(b) Measure the resistance according to the value(s) in the table below.

Standard resistance

Tester Connection	Condition	Specified Condition
GVI+ - GVI+	Always	Below 1 Ω
GVI- - GVI-	Always	Below 1 Ω
GVG1 - GND	Always	Below 1 Ω
GVI+ - Body ground	Always	10 kΩ or higher
GVI- - Body ground	Always	10 kΩ or higher

NG → **REPAIR OR REPLACE HARNESS OR CONNECTOR**

OK

PROCEED TO NEXT CIRCUIT INSPECTION SHOWN IN PROBLEM SYMPTOMS TABLE

Display Signal Circuit between Multi-display and Radio Receiver

DESCRIPTION

This is the DVD display signal circuit from the radio receiver to the multi-display.

WIRING DIAGRAM

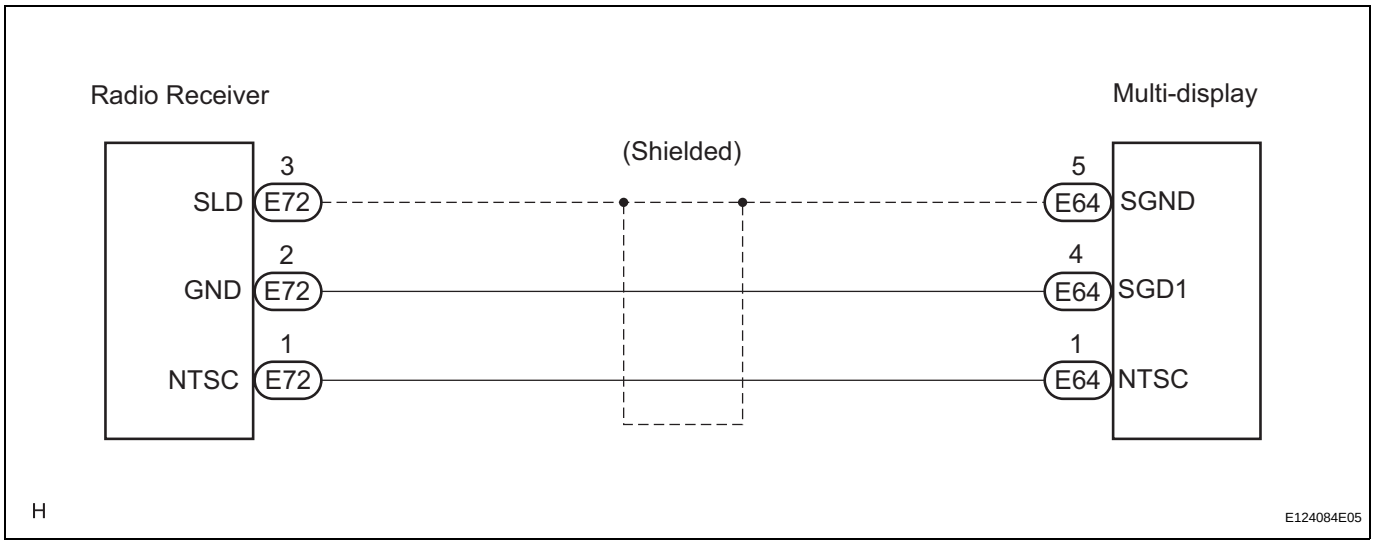

INSPECTION PROCEDURE

1 CHECK HARNESS AND CONNECTOR (RADIO RECEIVER - MULTI-DISPLAY)

Multi-display Wire Harness View:

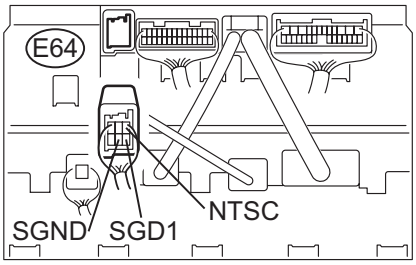

Radio Receiver Wire Harness View:

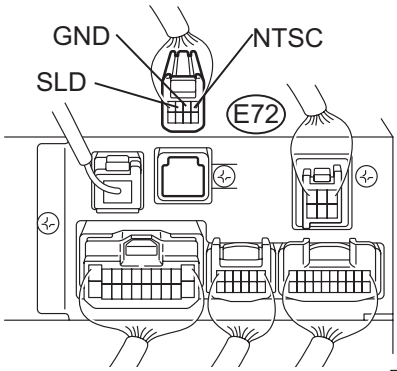

N E124085E02

(a) Disconnect the multi-display connector E64 and radio receiver E72 connector.

(b) Measure the resistance according to the value(s) in the table below.

Standard resistance

Tester Connection	Condition	Specified Condition
GND - SGD1	Always	Below 1 Ω
NTSC - NTSC	Always	Below 1 Ω
SLD - SGND	Always	Below 1 Ω
NTSC - Body ground	Always	10 kΩ or higher
GND - Body ground	Always	10 kΩ or higher

NG → **REPAIR OR REPLACE HARNESS OR CONNECTOR**

OK

2 INSPECT RADIO RECEIVER (OUTPUT SIGNAL)

Multi-display Wire Harness View:

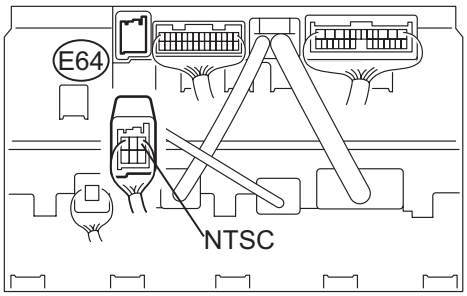

N E119727E02

(a) Reconnect the radio receiver connector E72.

NS

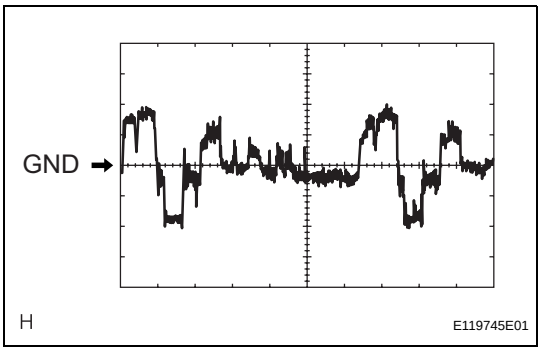

(b) Measure the waveform according to the table below.
OK

Tester Connection	Condition	Specified Condition
NTSC - Body ground	**DVD display is ON**	**A waveform synchronized with display signals is output**

HINT:
The waveform pattern may differ from that shown in the illustration below due to differences in oscilloscope settings. A normal radio receiver operating condition can be determined if any waveform is output.
Oscilloscope wave
Terminal: NTSC - Body ground
Setting: 200 mV/DIV. 10 μs/DIV.
Condition: DVD display is on.

NG → **REPLACE RADIO RECEIVER**

OK

PROCEED TO NEXT CIRCUIT INSPECTION SHOWN IN PROBLEM SYMPTOMS TABLE

Microphone Circuit between Overhead J/B and Multi-display

DESCRIPTION

This circuit sends a microphone signal from the overhead J/B to the multi-display. It also supplies power from the multi-display to the overhead J/B.

WIRING DIAGRAM

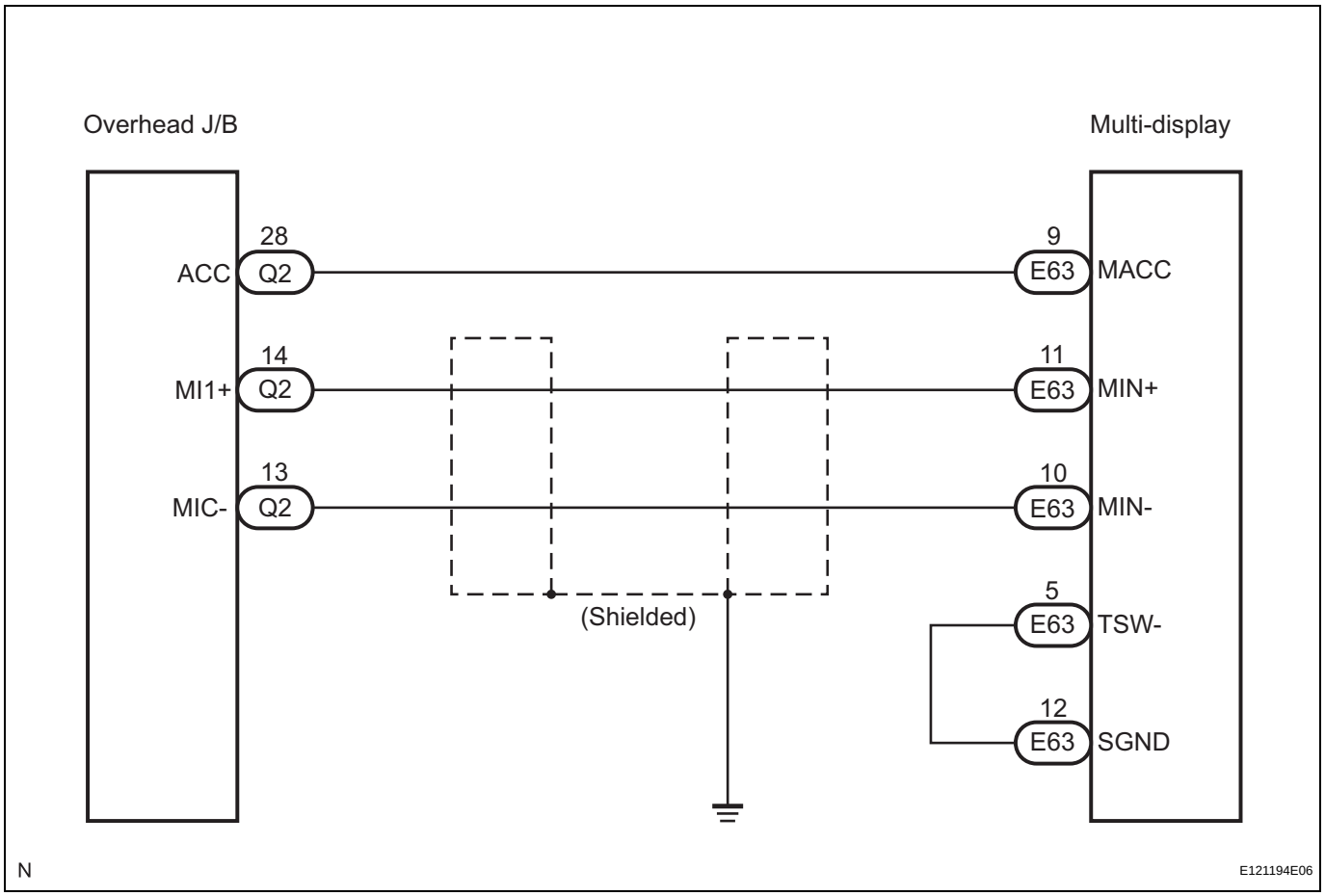

INSPECTION PROCEDURE

1 CHECK HARNESS AND CONNECTOR (OVERHEAD J/B - MULTI-DISPLAY)

Overhead J/B Wire Harness View:

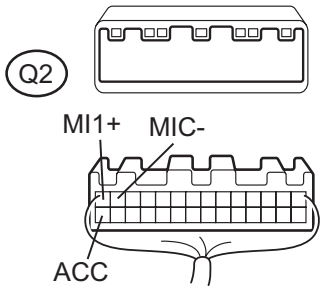

Multi-display Wire Harness View:

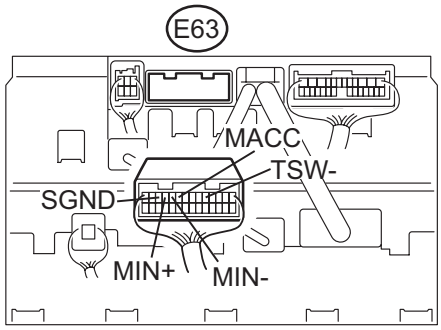

N E134685E01

(a) Disconnect the overhead J/B connector Q2 and multi-display connector E63.
(b) Measure the resistance according to the value(s) in the table below.

Standard resistance

Tester Connection	Condition	Specified Condition
ACC - MACC	Always	Below 1 Ω
MI1+ - MIN+	Always	Below 1 Ω
MIC- - MIN-	Always	Below 1 Ω
TSW- - SGND	Always	Below 1 Ω
ACC - Body ground	Always	10 kΩ or higher
MI1+ - Body ground	Always	10 kΩ or higher
MIC- - Body ground	Always	10 kΩ or higher

NG → **REPAIR OR REPLACE HARNESS OR CONNECTOR**

OK

2 INSPECT MULTI-DISPLAY

Wire Harness View:

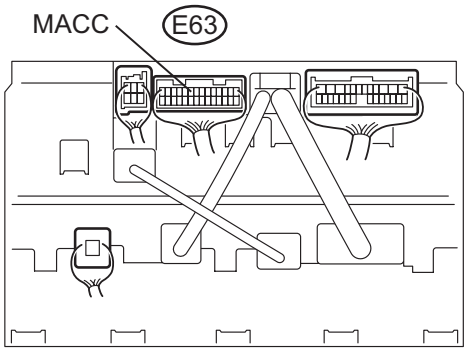

N E119733E02

(a) Reconnect the multi-display connector E63.
(b) Measure the voltage according to the value(s) in the table below.

Standard voltage

Tester Connection	Condition	Specified Condition
MACC - Body ground	Engine switch on (ACC)	4 to 6 V

NG → **REPLACE MULTI-DISPLAY**

NS

OK

PROCEED TO NEXT CIRCUIT INSPECTION SHOWN IN PROBLEM SYMPTOMS TABLE

Microphone Circuit between Multi-display and Navigation ECU

DESCRIPTION

This circuit sends a microphone signal from the multi-display to the navigation ECU.

WIRING DIAGRAM

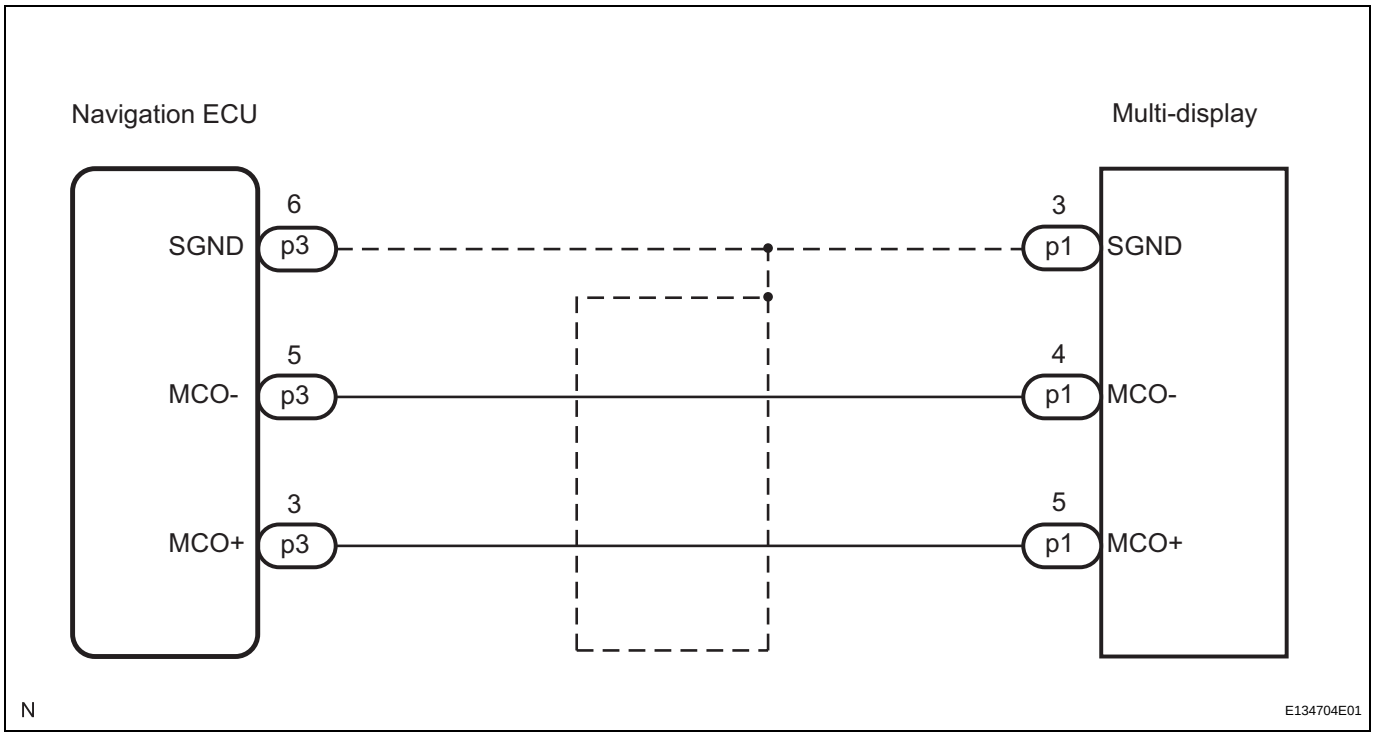

NS

INSPECTION PROCEDURE

1	CHECK HARNESS AND CONNECTOR (MULTI-DISPLAY - NAVIGATION ECU)

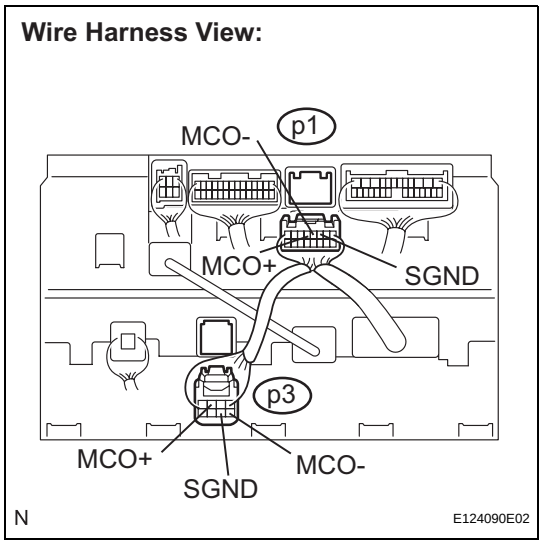

(a) Disconnect the multi-display connector p1 and navigation ECU connector p3.

(b) Measure the resistance according to the value(s) in the table below.

Standard resistance

Tester Connection	Condition	Specified Condition
MCO+ - MCO+	Always	Below 1 Ω
MCO- - MCO-	Always	Below 1 Ω
SGND - SGND	Always	Below 1 Ω
MCO+ - Body ground	Always	10 kΩ or higher
MCO- - Body ground	Always	10 kΩ or higher

NG → **REPAIR OR REPLACE HARNESS OR CONNECTOR**

OK

PROCEED TO NEXT CIRCUIT INSPECTION SHOWN IN PROBLEM SYMPTOMS TABLE

Dimmer Signal Circuit

DESCRIPTION

The multi-display dims the display and panel switches by receiving a TAIL cancel signal from the main body ECU.

WIRING DIAGRAM

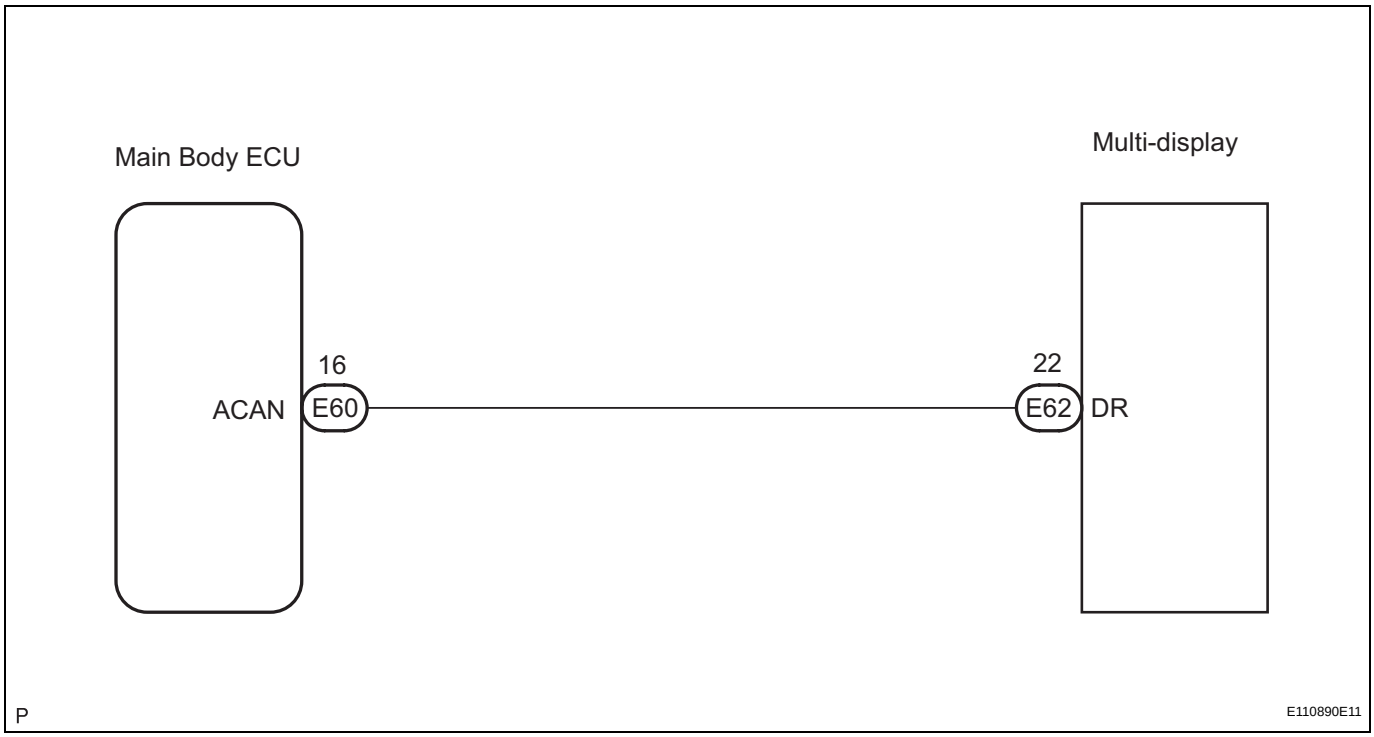

INSPECTION PROCEDURE

1 CHECK HARNESS AND CONNECTOR (MAIN BODY ECU - MULTI-DISPLAY)

Multi-display Wire Harness View:

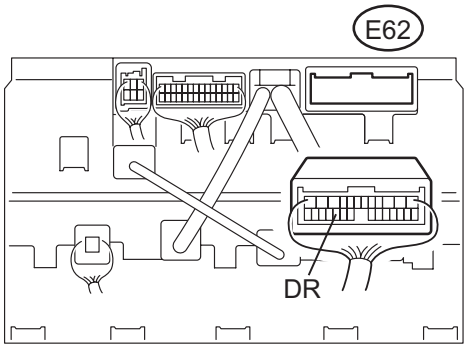

Main Body ECU Wire Harness View:

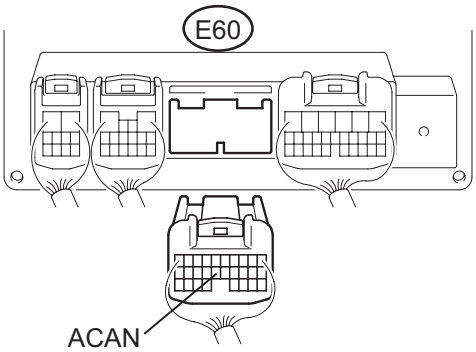

E134686E01

(a) Disconnect the main body ECU connector E60 and multi-display connector E62.
(b) Measure the resistance according to the value(s) in the table below.
Standard resistance

Tester Connection	Condition	Specified Condition
DR - ACAN	Always	Below 1 Ω
DR - Body ground	Always	10 kΩ or higher

NG → **REPAIR OR REPLACE HARNESS OR CONNECTOR**

OK

2 INSPECT MAIN BODY ECU (OUTPUT SIGNAL)

Multi-display Wire Harness View:

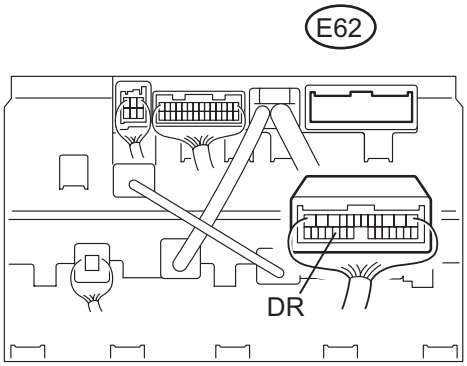

N E119725E13

(a) Reconnect the main body ECU connector.
(b) Turn the engine switch on (IG).
(c) Turn the light control switch to the TAIL or HEAD position.
(d) Measure the voltage according to the value(s) in the table below.
Standard voltage

Tester Connection	Condition	Specified Condition
DR - Body ground	Automatic light control sensor is covered.	Above 9 V

NG → **GO TO LIGHTING SYSTEM**

NS

OK

PROCEED TO NEXT CIRCUIT INSPECTION SHOWN IN PROBLEM SYMPTOMS TABLE

Radio Receiver Communication Error

INSPECTION PROCEDURE

1 IDENTIFY THE COMPONENT SHOWN BY SUB-CODE

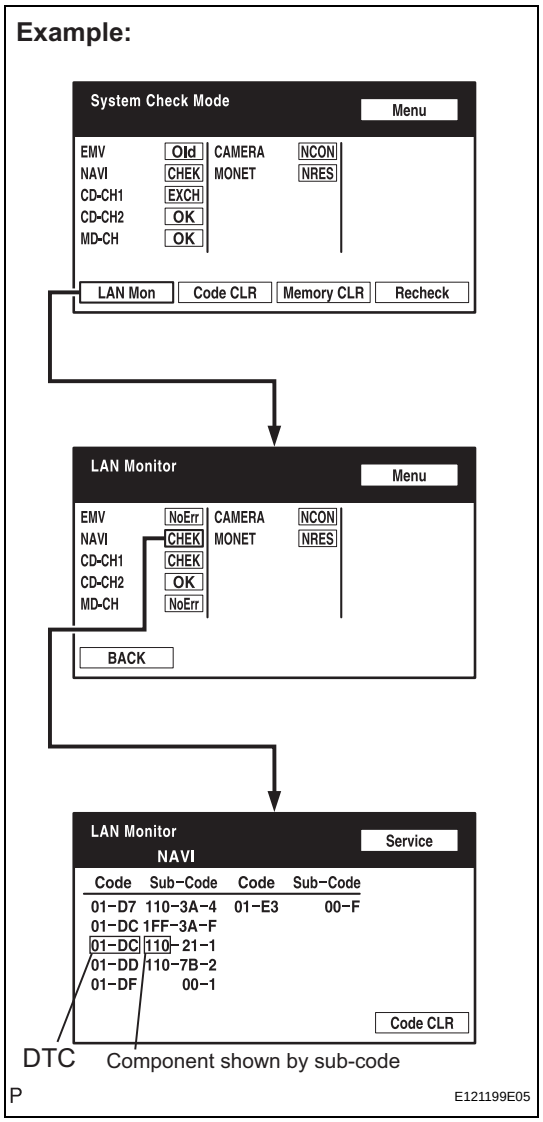

(a) Enter the diagnostic mode.
(b) Press the "LAN Mon" switch to change to "LAN Monitor" mode.
(c) Identify the component shown by the sub-code.
HINT:
- "110 (multi-display)" is the component shown by the sub-code in the example shown in the illustration.
- The sub-code will be indicated by its physical address.
- For the component list, refer to "DIAGNOSIS DISPLAY DETAILED DESCRIPTION" (See page NS-30).

NS

NEXT

2 CHECK POWER SOURCE CIRCUIT OF COMPONENT SHOWN BY SUB-CODE

(a) Inspect the power source circuit of the component shown by the sub-code.
If the power source circuit is operating normally, proceed to the next step.

Component Table:

Component	Proceed to
Stereo component amplifier (440)	Stereo component amplifier power source circuit (See page AV-164)
Multi-display (110)	Multi-display power source circuit (See page NS-228)

Component	Proceed to
Navigation ECU (178)	Navigation ECU power source circuit (See page NS-230)

NEXT

3 INSPECT RADIO RECEIVER

DVD Changer Models
Wire Harness View:

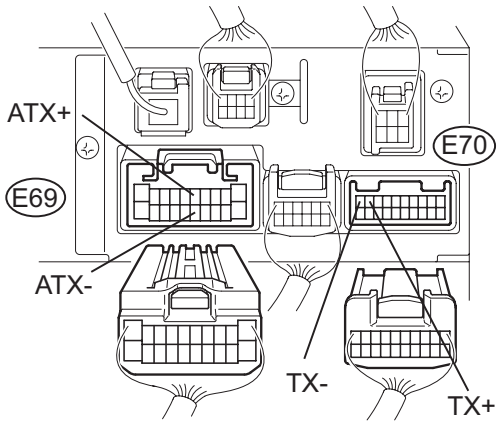

CD Changer Models
Wire Harness View:

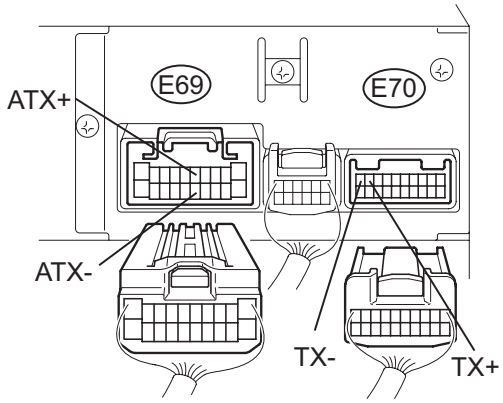

P E124056E03

(a) Disconnect the radio receiver connectors.
(b) Measure the resistance according to the value(s) in the table below.
Standard resistance

Tester Connection	Condition	Specified Condition
ATX+ (E69-5) - ATX- (E69-15)	Always	60 to 80 Ω
TX+ (E70-9) - TX- (E70-10)	Always	60 to 80 Ω

NG → **REPLACE RADIO RECEIVER**

OK

4 CHECK HARNESS AND CONNECTOR (RADIO RECEIVER - COMPONENT SHOWN BY SUB-CODE)

HINT:
- Start the check from the circuit that is near the component shown by the sub-code first.
- For details of the connectors, refer to "TERMINALS OF ECU" (See page NS-44).

(a) Referring to the AVC-LAN wiring diagram below, check the AVC-LAN circuit between the radio receiver and the component shown by the sub-code.

NS

(1) Disconnect all connectors between the radio receiver and the component shown by sub-code.
(2) Check for an open or short in the AVC-LAN circuit between the radio receiver and the component shown by the sub-code.
OK:
There is no open or short circuit.

AVC-LAN WIRING DIAGRAM:

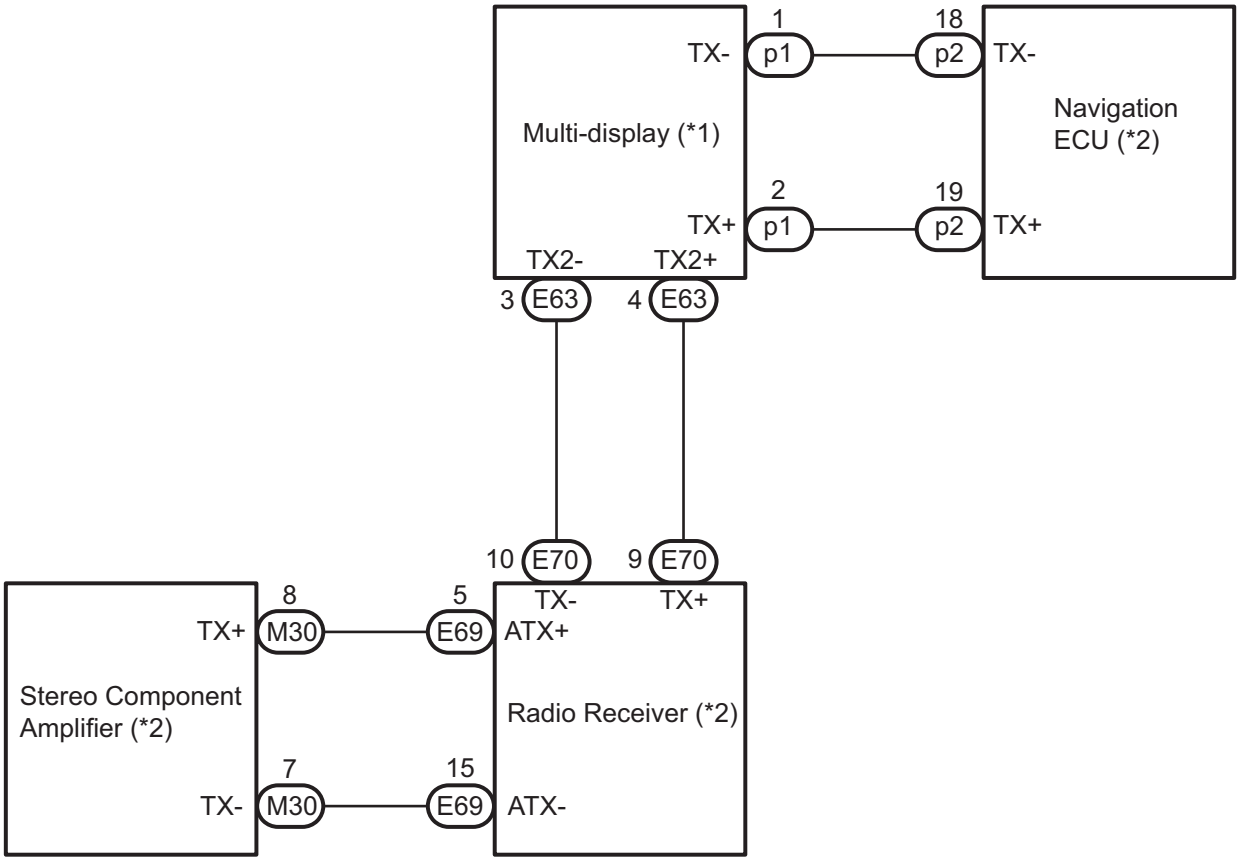

*1: Master Unit

*2: Slave Unit

P

E134675E01

NG → **REPAIR OR REPLACE HARNESS OR CONNECTOR**

OK

NS

5	REPLACE COMPONENT SHOWN BY SUB-CODE

(a) Replace the component shown by the sub-code with a normal one and check if the same problem occurs again.
OK:
Same problem does not occur.

NG → **REPLACE RADIO RECEIVER**

OK

END

Stereo Component Amplifier Communication Error

INSPECTION PROCEDURE

1 IDENTIFY THE COMPONENT SHOWN BY SUB-CODE

Example:

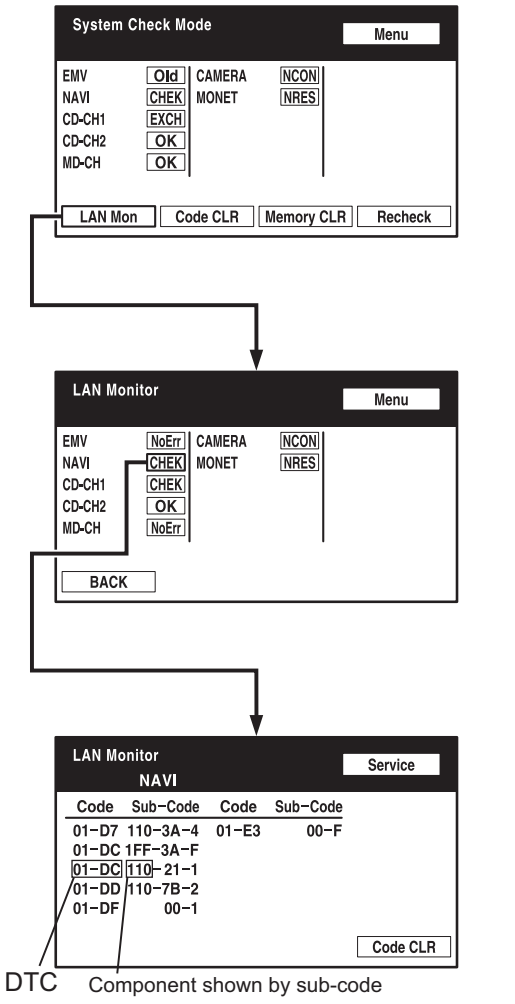

(a) Enter the diagnostic mode.
(b) Press the "LAN Mon" switch to change to "LAN Monitor" mode.
(c) Identify the component shown by the sub-code.
HINT:
- "110 (multi-display)" is the component shown by the sub-code in the example shown in the illustration.
- The sub-code will be indicated by its physical address.
- For the component list, refer to "DIAGNOSIS DISPLAY DETAILED DESCRIPTION" (See page NS-30).

NS

NEXT

2 CHECK POWER SOURCE CIRCUIT OF COMPONENT SHOWN BY SUB-CODE

(a) Inspect the power source circuit of the component shown by the sub-code.
If the power source circuit is operating normally, proceed to the next step.

Component Table:

Component	Proceed to
Radio receiver (190)	Radio receiver power source circuit (See page AV-162)
Multi-display (110)	Multi-display power source circuit (See page NS-228)

Component	Proceed to
Navigation ECU (178)	Navigation ECU power source circuit (See page NS-230)

NEXT

3 INSPECT RADIO RECEIVER

DVD Changer Models
Wire Harness View:

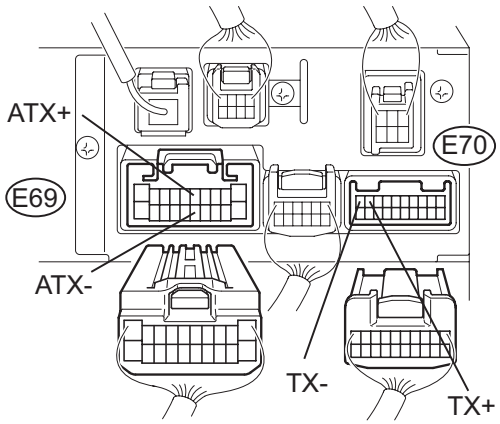

CD Changer Models
Wire Harness View:

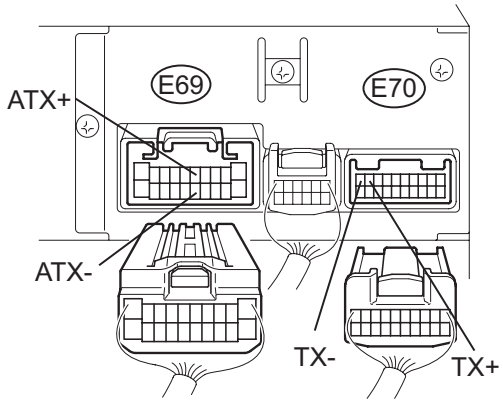

P E124056E03

(a) Disconnect the radio receiver connectors.
(b) Measure the resistance according to the value(s) in the table below.
Standard resistance

Tester Connection	Condition	Specified Condition
ATX+ (E69-5) - ATX- (E69-15)	Always	60 to 80 Ω
TX+ (E70-9) - TX- (E70-10)	Always	60 to 80 Ω

NG → **REPLACE RADIO RECEIVER**

OK

4 CHECK HARNESS AND CONNECTOR (STEREO COMPONENT AMPLIFIER - COMPONENT SHOWN BY SUB-CODE)

HINT:
- Start the check from the circuit that is near the component shown by the sub-code first.
- For details of the connectors, refer to "TERMINALS OF ECU" (See page NS-44).

(a) Referring to the AVC-LAN wiring diagram below, check the AVC-LAN circuit between the stereo component amplifier and the component shown by the sub-code.

NS

(1) Disconnect all connectors between the stereo component amplifier and the component shown by sub-code.
(2) Check for an open or short in the AVC-LAN circuit between the stereo component amplifier and the component shown by the sub-code.
OK:
There is no open or short circuit.

AVC-LAN WIRING DIAGRAM:

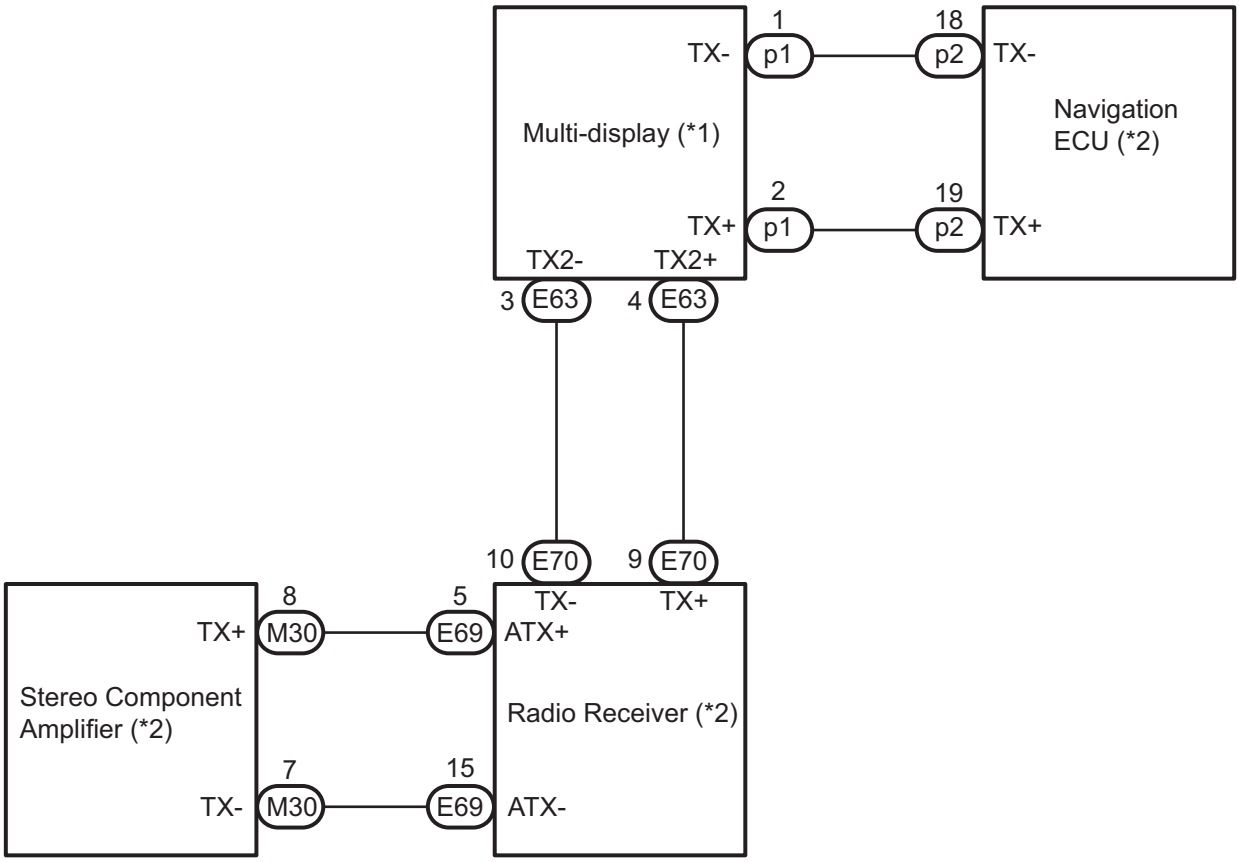

*1: Master Unit

*2: Slave Unit

P

E134675E01

NG → **REPAIR OR REPLACE HARNESS OR CONNECTOR**

OK

NS

5	REPLACE COMPONENT SHOWN BY SUB-CODE

(a) Replace the component shown by the sub-code with a normal one and check if the same problem occurs again.
OK:
Same problem does not occur.

NG → **REPLACE STEREO COMPONENT AMPLIFIER**

OK

END

Multi-display Communication Error

INSPECTION PROCEDURE

1 IDENTIFY THE COMPONENT SHOWN BY SUB-CODE

Example:

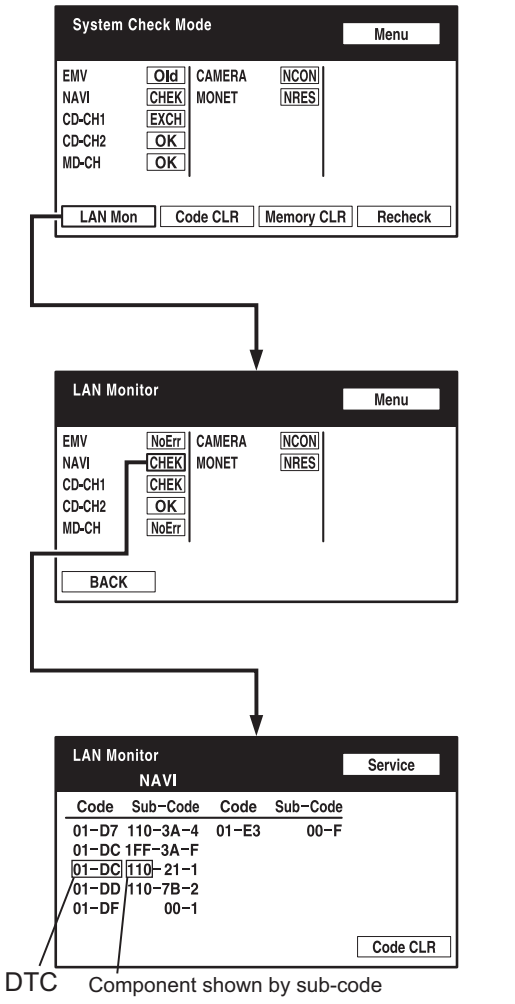

(a) Enter the diagnostic mode.
(b) Press the "LAN Mon" switch to change to "LAN Monitor" mode.
(c) Identify the component shown by the sub-code.
HINT:
- "110 (multi-display)" is the component shown by the sub-code in the example shown in the illustration.
- The sub-code will be indicated by its physical address.
- For the component list, refer to "DIAGNOSIS DISPLAY DETAILED DESCRIPTION" (See page NS-30).

NS

NEXT

2 CHECK POWER SOURCE CIRCUIT OF COMPONENT SHOWN BY SUB-CODE

(a) Inspect the power source circuit of the component shown by the sub-code.
If the power source circuit is operating normally, proceed to the next step.

Component Table:

Component	Proceed to
Radio receiver (190)	Radio receiver power source circuit (See page AV-162)
Stereo component amplifier (440)	Stereo component amplifier power source circuit (See page AV-164)

Component	Proceed to
Navigation ECU (178)	Navigation ECU power source circuit (See page NS-230)

NEXT

3 INSPECT RADIO RECEIVER

DVD Changer Models
Wire Harness View:

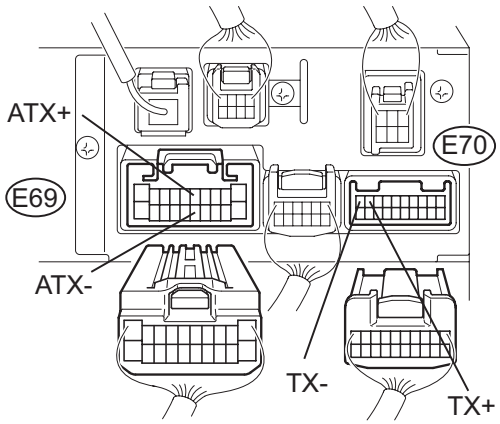

CD Changer Models
Wire Harness View:

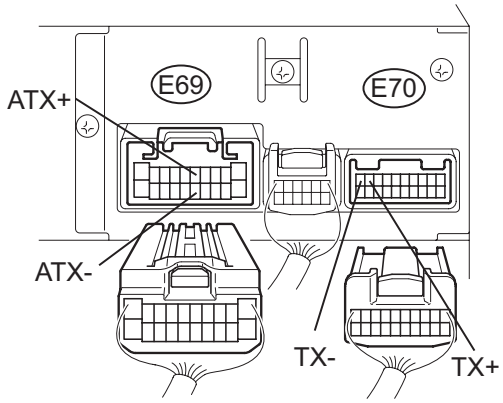

P E124056E03

(a) Disconnect the radio receiver connectors.
(b) Measure the resistance according to the value(s) in the table below.
Standard resistance

Tester Connection	Condition	Specified Condition
ATX+ (E69-5) - ATX- (E69-15)	Always	60 to 80 Ω
TX+ (E70-9) - TX- (E70-10)	Always	60 to 80 Ω

NG → **REPLACE RADIO RECEIVER**

OK

4 CHECK HARNESS AND CONNECTOR (MULTI-DISPLAY - COMPONENT SHOWN BY SUB-CODE)

HINT:
- Start the check from the circuit that is near the component shown by the sub-code first.
- For details of the connectors, refer to "TERMINALS OF ECU" (See page NS-44).

(a) Referring to the AVC-LAN wiring diagram below, check the AVC-LAN circuit between the multi-display and the component shown by the sub-code.

NS

(1) Disconnect all connectors between the multi-display and the component shown by sub-code.
(2) Check for an open or short in the AVC-LAN circuit between the multi-display and the component shown by the sub-code.
OK:
There is no open or short circuit.

AVC-LAN WIRING DIAGRAM:

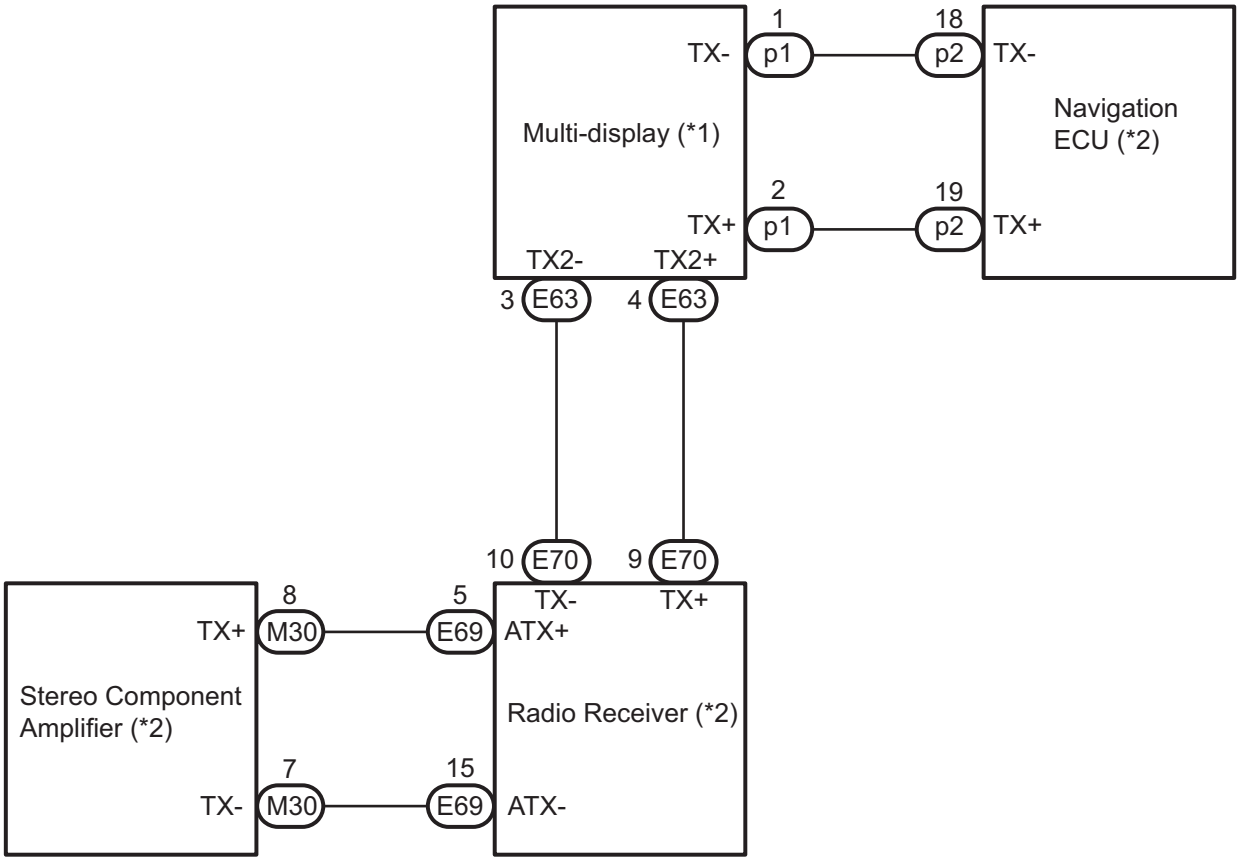

*1: Master Unit

*2: Slave Unit

P

E134675E01

NG → **REPAIR OR REPLACE HARNESS OR CONNECTOR**

OK

NS

5	REPLACE COMPONENT SHOWN BY SUB-CODE

(a) Replace the component shown by the sub-code with a normal one and check if the same problem occurs again.
OK:
Same problem does not occur.

NG → **REPLACE MULTI-DISPLAY**

OK

END

Navigation ECU Communication Error

INSPECTION PROCEDURE

1 IDENTIFY THE COMPONENT SHOWN BY SUB-CODE

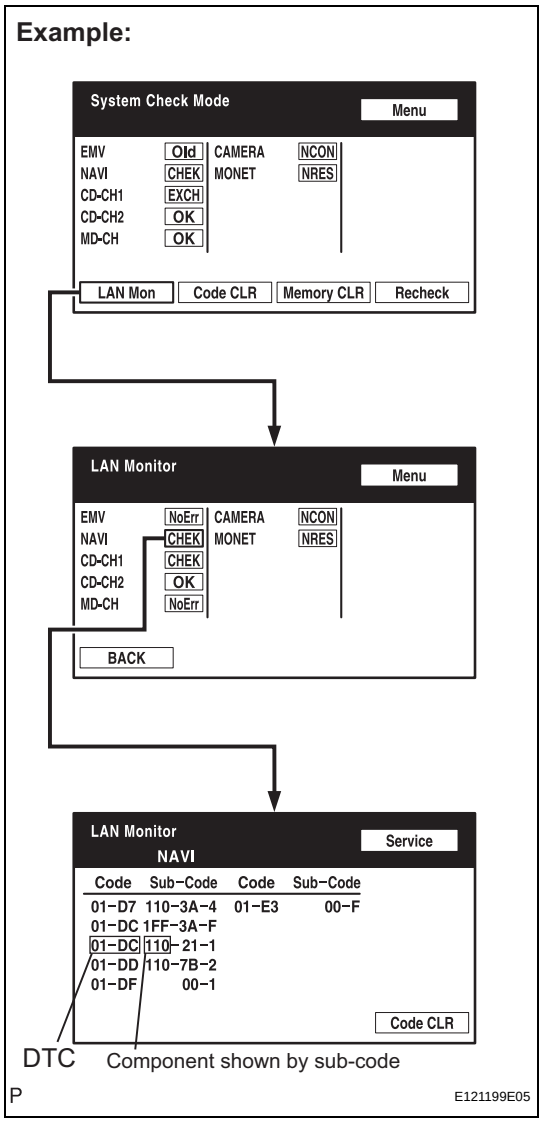

(a) Enter the diagnostic mode.
(b) Press the "LAN Mon" switch to change to "LAN Monitor" mode.
(c) Identify the component shown by the sub-code.
HINT:
- "110 (multi-display)" is the component shown by the sub-code in the example shown in the illustration.
- The sub-code will be indicated by its physical address.
- For the component list, refer to "DIAGNOSIS DISPLAY DETAILED DESCRIPTION" (See page NS-30).

NS

NEXT

2 CHECK POWER SOURCE CIRCUIT OF COMPONENT SHOWN BY SUB-CODE

(a) Inspect the power source circuit of the component shown by the sub-code.
If the power source circuit is operating normally, proceed to the next step.

Component Table:

Component	Proceed to
Radio receiver (190)	Radio receiver power source circuit (See page AV-162)
Stereo component amplifier (440)	Stereo component amplifier power source circuit (See page AV-164)

Component	Proceed to
Multi-display (110)	Multi-display power source circuit (See page NS-228)

NEXT

3 INSPECT RADIO RECEIVER

DVD Changer Models
Wire Harness View:

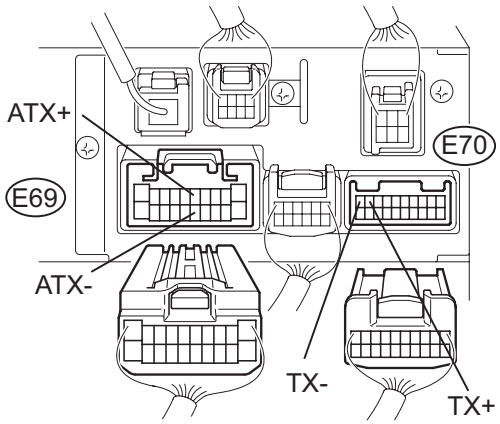

CD Changer Models
Wire Harness View:

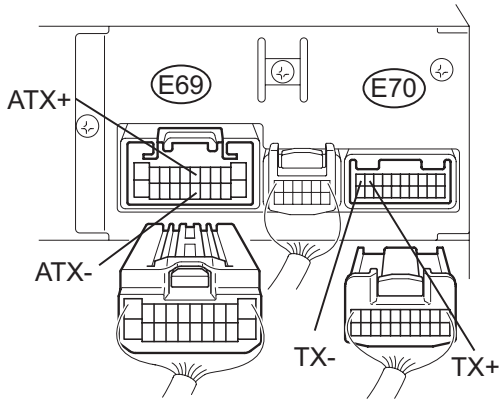

P E124056E03

(a) Disconnect the radio receiver connectors.
(b) Measure the resistance according to the value(s) in the table below.
Standard resistance

Tester Connection	Condition	Specified Condition
ATX+ (E69-5) - ATX- (E69-15)	Always	60 to 80 Ω
TX+ (E70-9) - TX- (E70-10)	Always	60 to 80 Ω

NG → **REPLACE RADIO RECEIVER**

OK

4 CHECK HARNESS AND CONNECTOR (NAVIGATION ECU - COMPONENT SHOWN BY SUB-CODE)

HINT:
- Start the check from the circuit that is near the component shown by the sub-code first.
- For details of the connectors, refer to "TERMINALS OF ECU" (See page NS-44).

(a) Referring to the AVC-LAN wiring diagram below, check the AVC-LAN circuit between the navigation ECU and the component shown by the sub-code.

NS

(1) Disconnect all connectors between the navigation ECU and the component shown by sub-code.
(2) Check for an open or short in the AVC-LAN circuit between the navigation ECU and the component shown by the sub-code.
OK:
There is no open or short circuit.

AVC-LAN WIRING DIAGRAM:

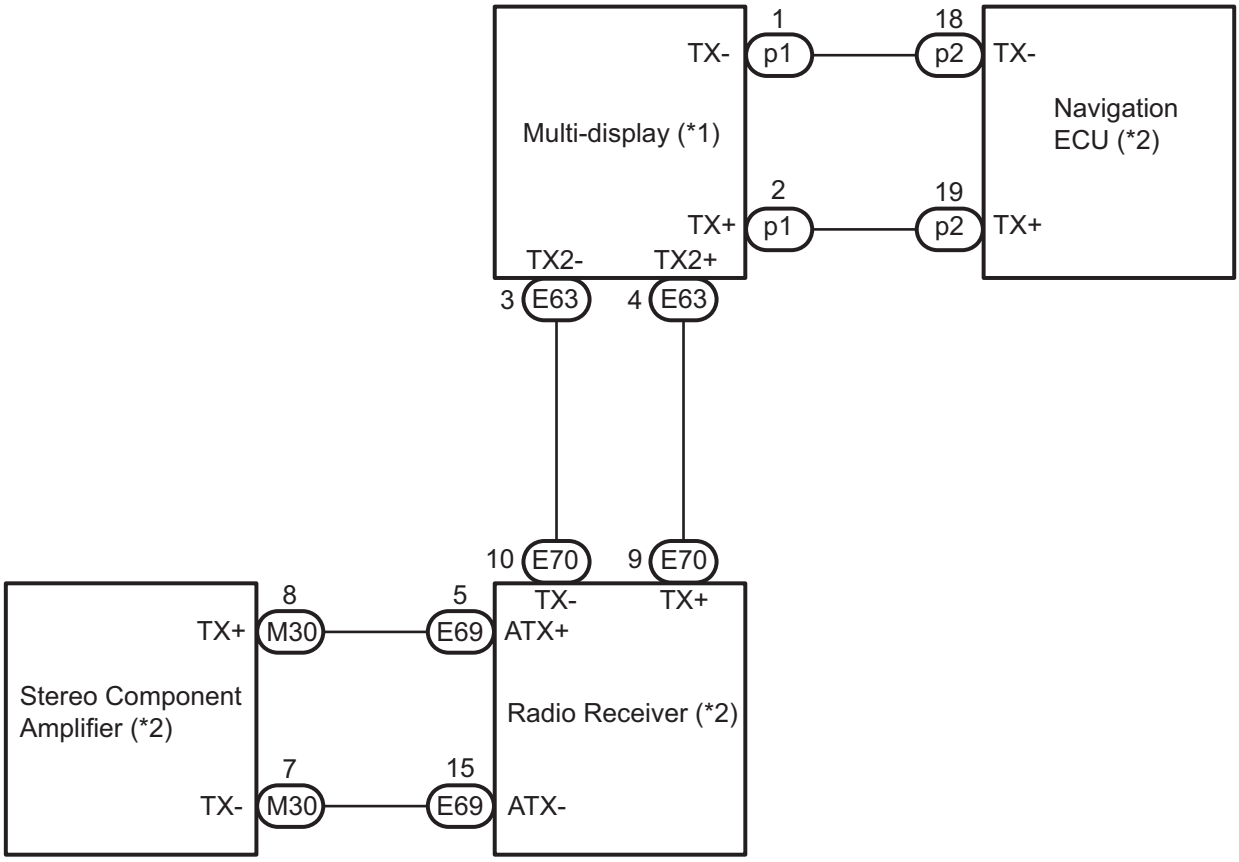

*1: Master Unit

*2: Slave Unit

P

E134675E01

NG → **REPAIR OR REPLACE HARNESS OR CONNECTOR**

OK

NS

5	REPLACE COMPONENT SHOWN BY SUB-CODE

(a) Replace the component shown by the sub-code with a normal one and check if the same problem occurs again.
OK:
Same problem does not occur.

NG → **REPLACE NAVIGATION ECU**

OK

END

Multi-display Power Source Circuit

DESCRIPTION

This is the power source circuit to operate the multi-display.

WIRING DIAGRAM

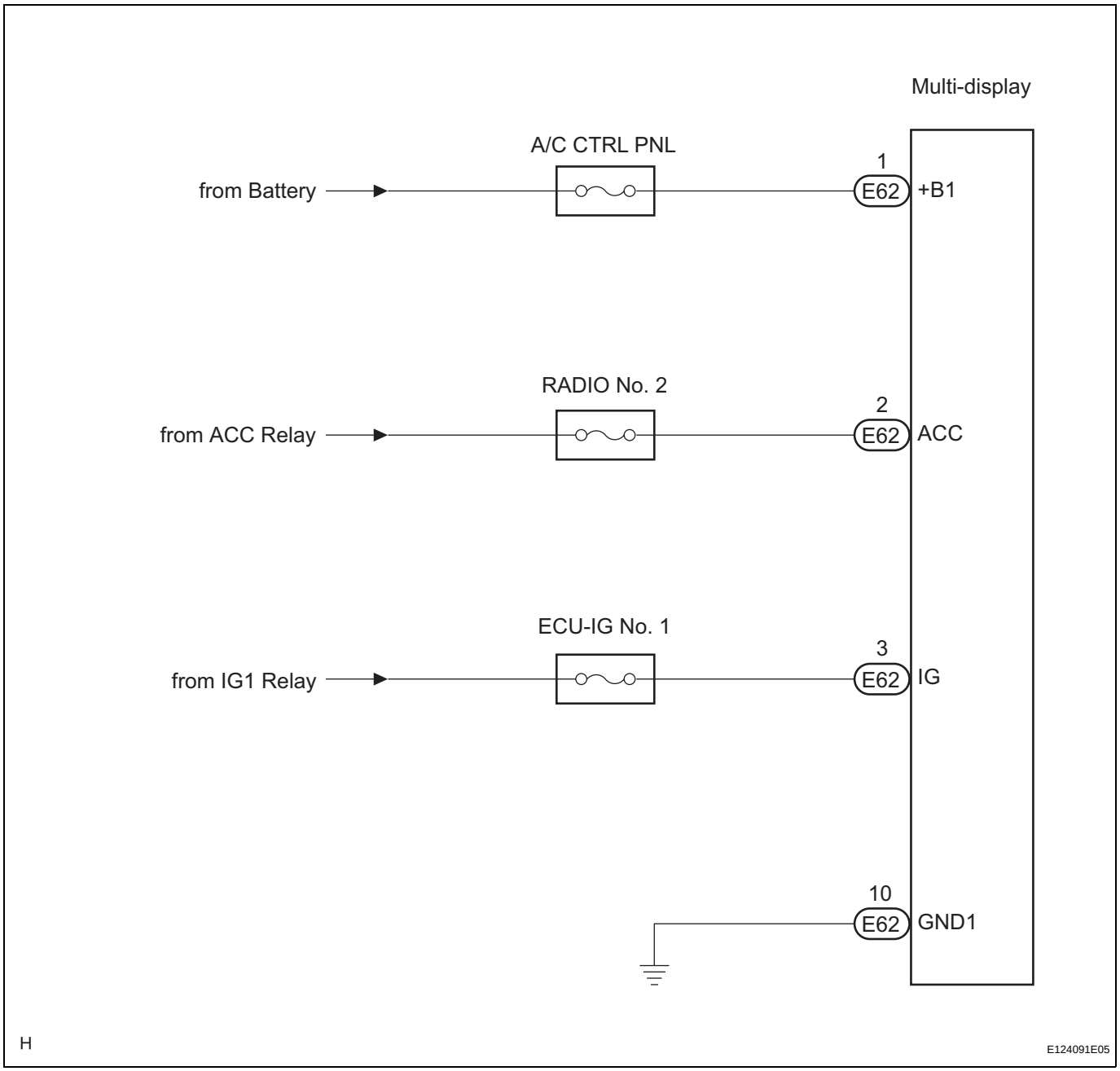

INSPECTION PROCEDURE

1	INSPECT MULTI-DISPLAY

Wire Harness View:

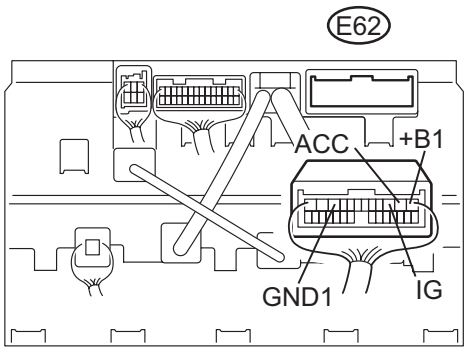

N E119725E14

(a) Disconnect the multi-display connector E62.
(b) Measure the resistance according to the value(s) in the table below.
Standard resistance

Tester Connection	Condition	Specified Condition
GND1 - Body ground	Always	Below 1 Ω

(c) Measure the voltage according to the value(s) in the table below.
Standard voltage

Tester Connection	Condition	Specified Condition
+B1 - GND1	Always	10 to 14 V
ACC - GND1	Engine switch on (ACC)	10 to 14 V
IG - GND1	Engine switch on (IG)	10 to 14 V

NG → **REPAIR OR REPLACE HARNESS OR CONNECTOR**

NS

OK

PROCEED TO NEXT CIRCUIT INSPECTION SHOWN IN PROBLEM SYMPTOMS TABLE

Navigation ECU Power Source Circuit

DESCRIPTION

This is the power source circuit to operate the navigation ECU.
The power is sent from the battery to the navigation ECU through the multi-display.

WIRING DIAGRAM

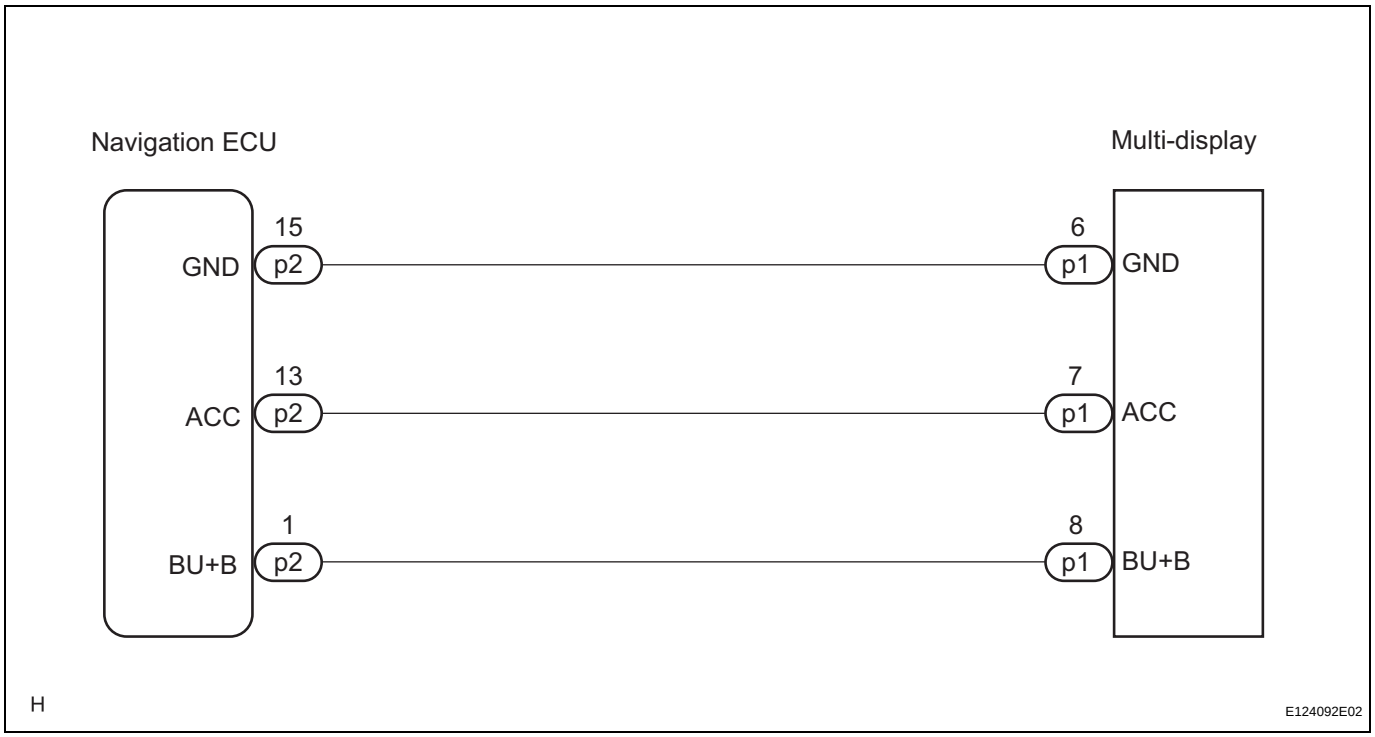

INSPECTION PROCEDURE

1	INSPECT NAVIGATION ECU

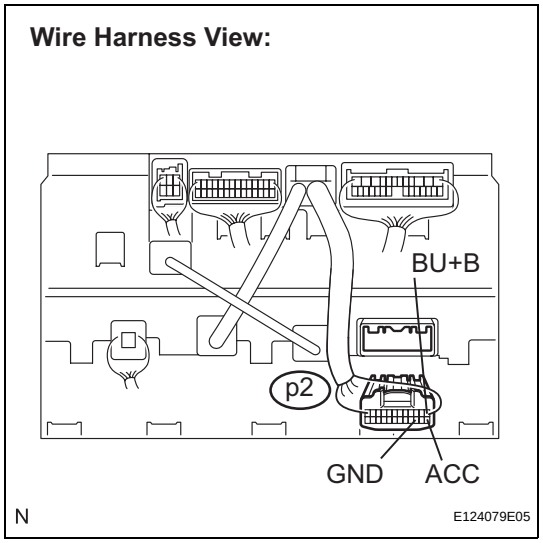

(a) Disconnect the navigation ECU connector p2.
(b) Measure the resistance according to the value(s) in the table below.
Standard resistance

Tester Connection	Condition	Specified Condition
GND - Body ground	Always	Below 1 Ω

(c) Measure the voltage according to the value(s) in the table below.
Standard voltage

Tester Connection	Condition	Specified Condition
BU+B - GND	Always	10 to 14 V
ACC - GND	Engine switch on (ACC)	10 to 14 V

NG → **Go to step 2**

NS

OK

PROCEED TO NEXT CIRCUIT INSPECTION SHOWN IN PROBLEM SYMPTOMS TABLE

2 CHECK HARNESS AND CONNECTOR (NAVIGATION ECU - MULTI-DISPLAY)

Wire Harness View:

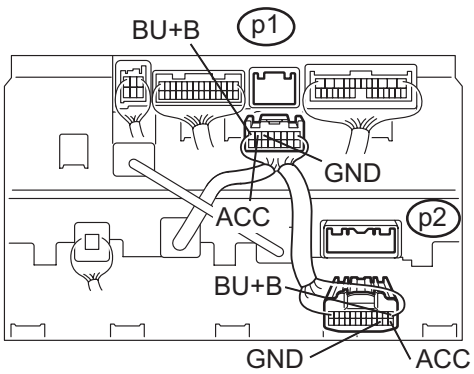

N E124093E10

(a) Disconnect the navigation ECU connector p2 and multi-display connector p1.

(b) Measure the resistance according to the value(s) in the table below.

Standard resistance

Tester Connection	Condition	Specified Condition
GND - GND	Always	Below 1 Ω
ACC - ACC	Always	Below 1 Ω
BU+B - BU+B	Always	Below 1 Ω
GND - Body ground	Always	10 kΩ or higher
ACC - Body ground	Always	10 kΩ or higher
BU+B - Body ground	Always	10 kΩ or higher

NG → **REPAIR OR REPLACE HARNESS OR CONNECTOR**

NS

OK

REPLACE MULTI-DISPLAY

REMOVAL

1. **EJECT MAP DISC (See page NS-238)**
2. **REMOVE SHIFT LEVER KNOB SUB-ASSEMBLY (See page IP-16)**
3. **REMOVE UPPER CONSOLE PANEL ASSEMBLY WITH FRONT ASH RECEPTACLE (See page IP-16)**
4. **REMOVE INSTRUMENT PANEL FINISH PANEL END LH (See page IP-13)**
5. **REMOVE INSTRUMENT PANEL FINISH PANEL END RH (See page IP-15)**
6. **REMOVE NO. 2 INSTRUMENT PANEL REGISTER ASSEMBLY (See page IP-17)**
7. **REMOVE MULTI-DISPLAY WITH RADIO RECEIVER ASSEMBLY (See page AV-170)**
8. **REMOVE NO. 1 RADIO BRACKET (See page AV-170)**
9. **REMOVE NO. 2 RADIO BRACKET (See page AV-170)**
10. **REMOVE MULTI-DISPLAY ASSEMBLY**
    (a) Disengage the 2 claws and 4 clips.

NS

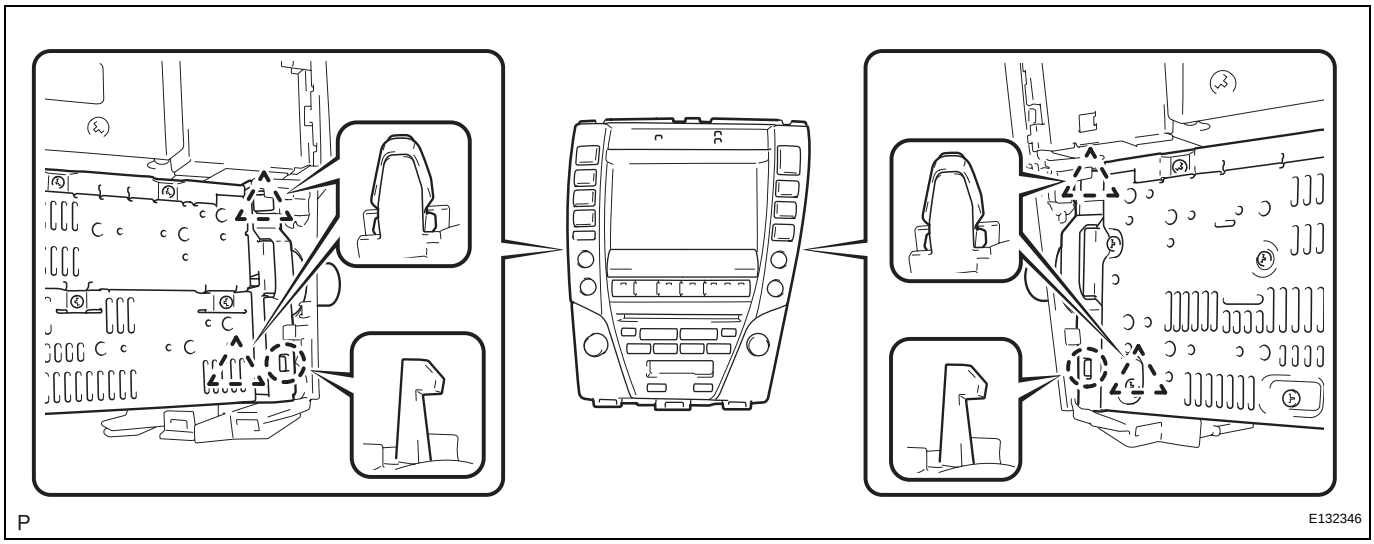

(b) Remove the multi-display assembly.

INSTALLATION

1. **INSTALL MULTI-DISPLAY ASSEMBLY**
   (a) Engage the 2 claws and 4 clips and install the multi-display assembly.

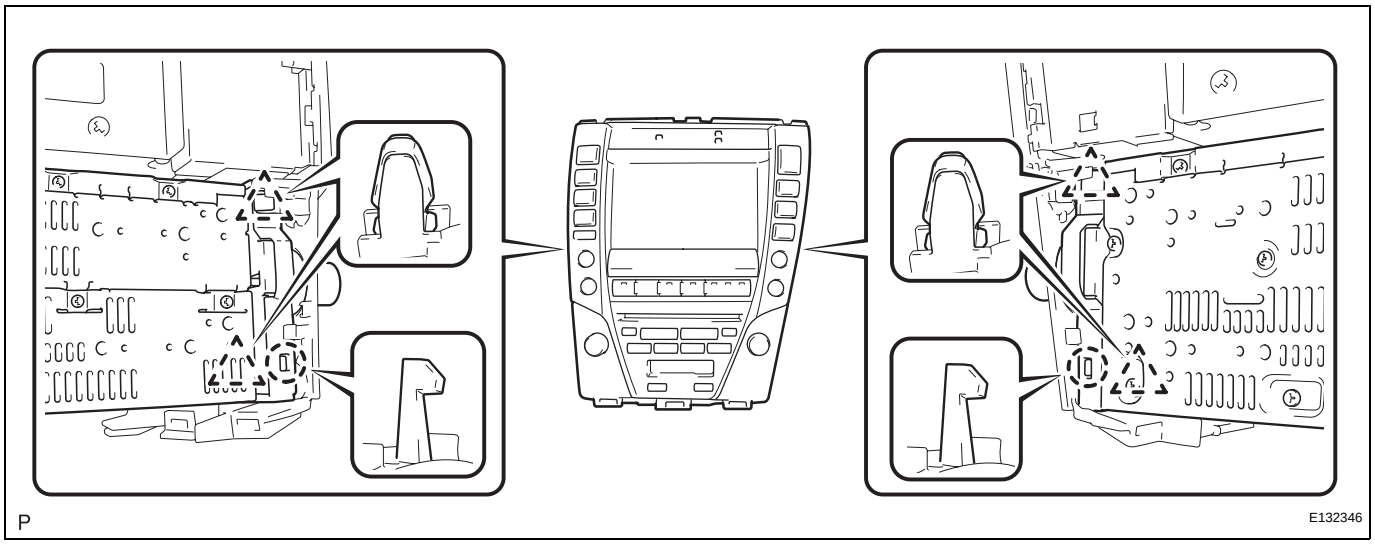

2. **INSTALL NO. 2 RADIO BRACKET (See page AV-173)**
3. **INSTALL NO. 1 RADIO BRACKET (See page AV-173)**
4. **INSTALL MULTI-DISPLAY WITH RADIO RECEIVER ASSEMBLY (See page AV-173)**
5. **INSTALL NO. 2 INSTRUMENT PANEL REGISTER ASSEMBLY (See page IP-41)**
6. **INSTALL INSTRUMENT PANEL FINISH PANEL END RH (See page IP-44)**
7. **INSTALL INSTRUMENT PANEL FINISH PANEL END LH (See page IP-46)**
8. **INSTALL UPPER CONSOLE PANEL ASSEMBLY WITH FRONT ASH RECEPTACLE (See page IP-42)**
9. **INSTALL SHIFT LEVER KNOB SUB-ASSEMBLY (See page IP-42)**
10. **INSERT MAP DISC (See page NS-241)**
11. **ADJUST CLOCK**

REMOVAL

1. EJECT MAP DISC

(a) Disengage the 8 claws and remove the cover as shown in the illustration.

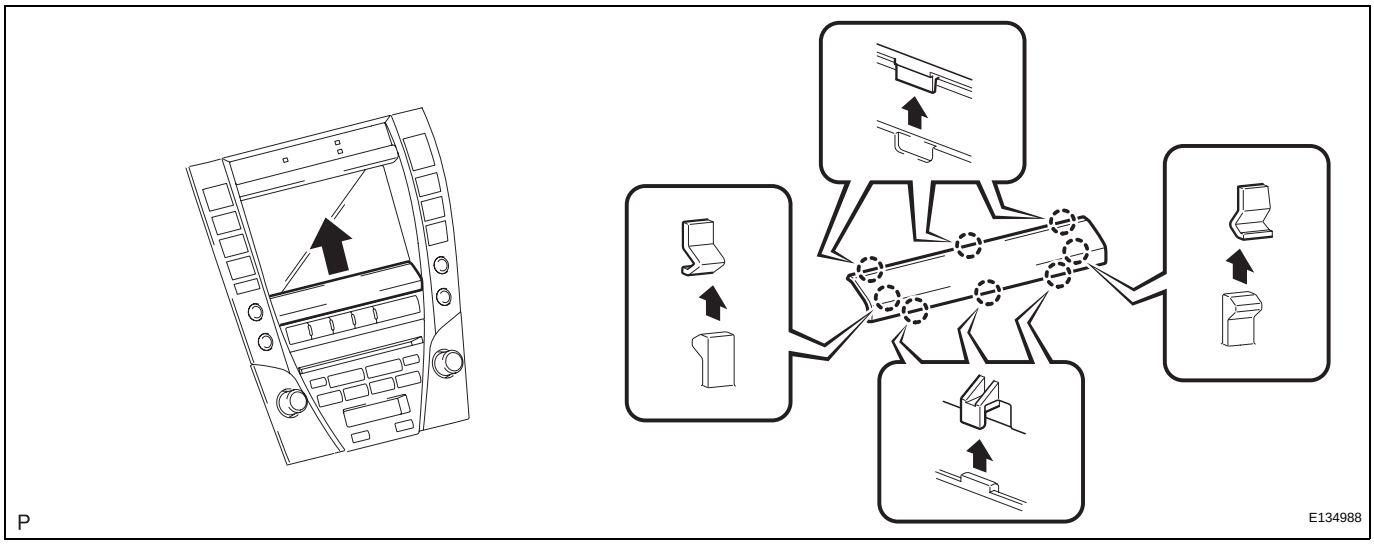

(b) Turn the engine switch on (ACC).
(c) Push the "MENU" button.
(d) Touch "Map DVD" on the navigation screen.
(e) Touch "EJECT DVD" on the navigation screen to eject the map disc.
(f) Turn the engine switch off.

2. REMOVE SHIFT LEVER KNOB SUB-ASSEMBLY (See page IP-16)

3. REMOVE UPPER CONSOLE PANEL ASSEMBLY WITH FRONT ASH RECEPTACLE (See page IP-16)

4. REMOVE INSTRUMENT PANEL FINISH PANEL END LH (See page IP-13)

5. REMOVE INSTRUMENT PANEL FINISH PANEL END RH (See page IP-15)

6. REMOVE NO. 2 INSTRUMENT PANEL REGISTER ASSEMBLY (See page IP-17)

7. REMOVE MULTI-DISPLAY WITH RADIO RECEIVER ASSEMBLY (See page AV-170)

8. REMOVE NO. 1 RADIO BRACKET (See page AV-170)

9. REMOVE NO. 2 RADIO BRACKET (See page AV-170)

10. REMOVE MULTI-DISPLAY ASSEMBLY

(a) Disengage the 2 claws and 4 clips.

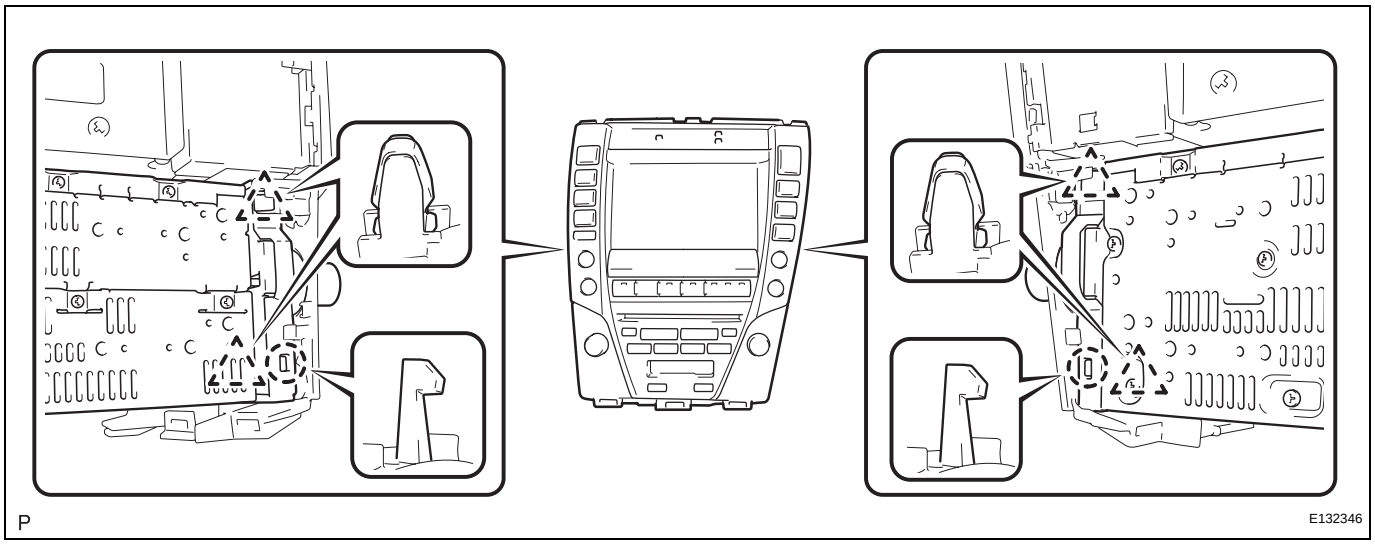

(b) Remove the multi-display assembly.

11. REMOVE NAVIGATION ECU

(a) Disconnect each connector.

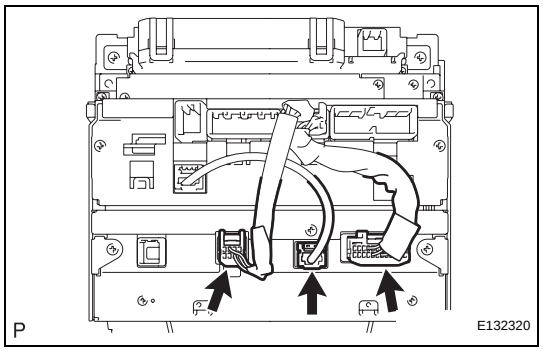

(b) Remove the 2 screws.

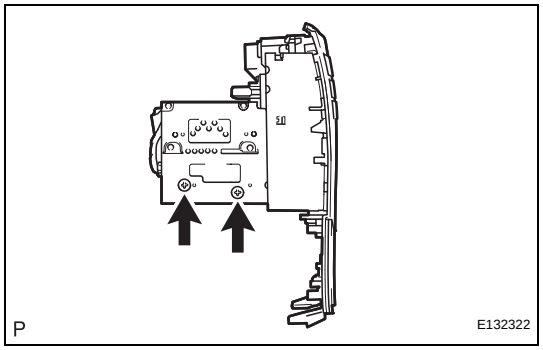

(c) Remove the 2 screws.

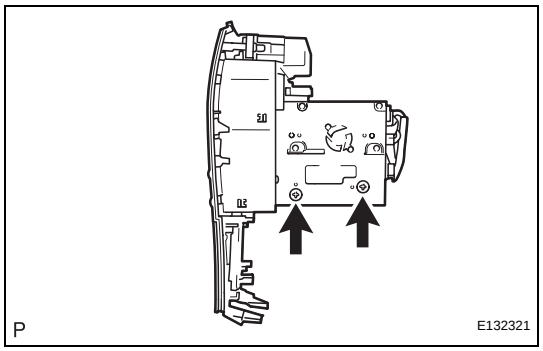

NS

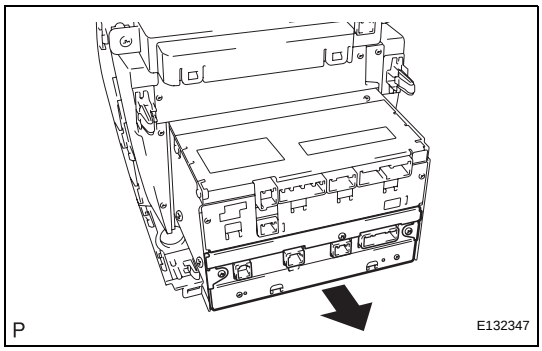

(d) Remove the navigation ECU as shown in the illustration.

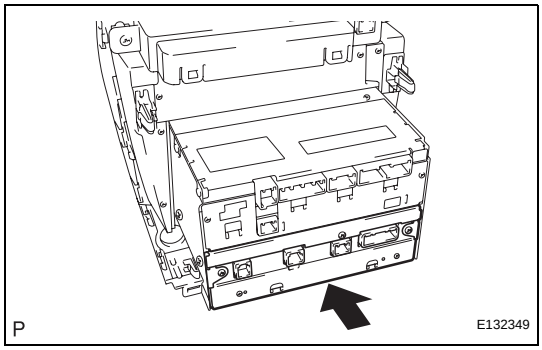

INSTALLATION

1. INSTALL NAVIGATION ECU

(a) Install the navigation ECU as shown in the illustration.

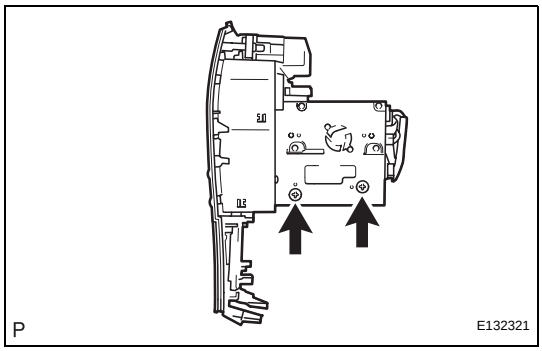

(b) Install the 2 screws.

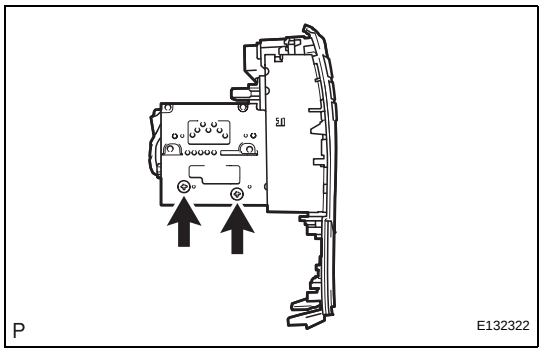

(c) Install the 2 screws.

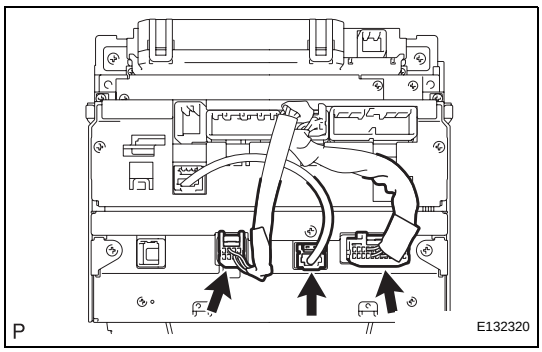

(d) Connect each connector.

2. INSTALL MULTI-DISPLAY ASSEMBLY

(a) Engage the 2 claws and 4 clips and install the multi-display assembly.

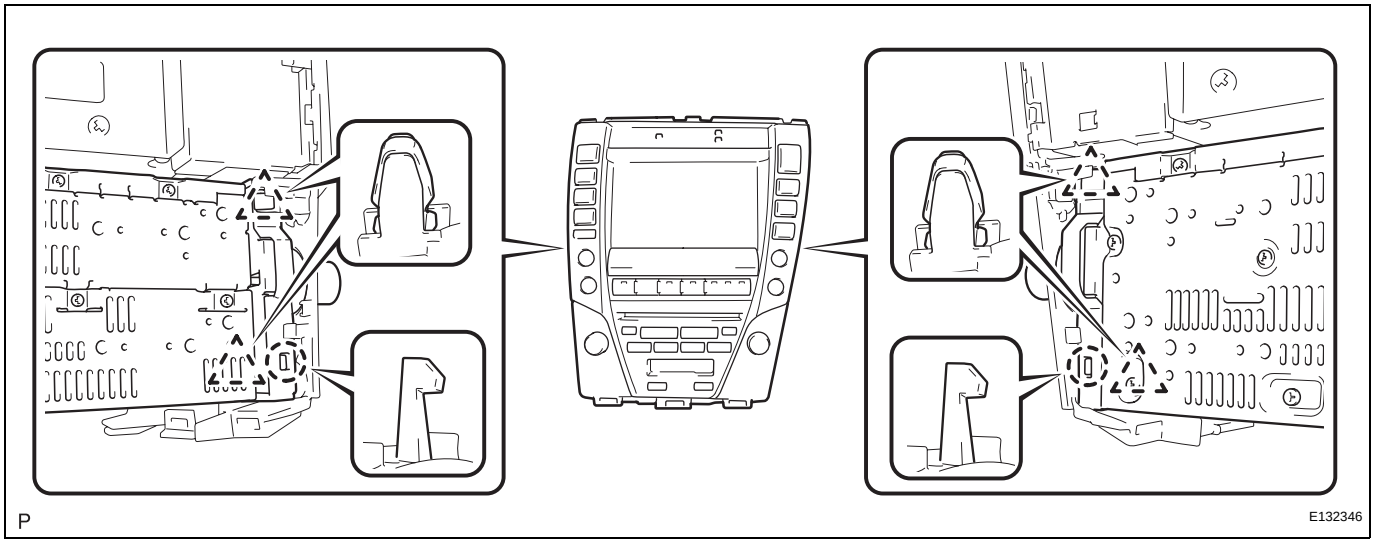

3. INSTALL NO. 2 RADIO BRACKET (See page AV-173)

4. INSTALL NO. 1 RADIO BRACKET (See page AV-173)

5. INSTALL MULTI-DISPLAY WITH RADIO RECEIVER ASSEMBLY (See page AV-173)

6. INSTALL INSTRUMENT PANEL FINISH PANEL END LH (See page IP-46)

7. INSTALL INSTRUMENT PANEL FINISH PANEL END RH (See page IP-44)

8. INSTALL UPPER CONSOLE PANEL ASSEMBLY WITH FRONT ASH RECEPTACLE (See page IP-42)

9. INSTALL NO. 2 INSTRUMENT PANEL REGISTER ASSEMBLY (See page IP-41)

10. INSTALL SHIFT LEVER KNOB SUB-ASSEMBLY (See page IP-42)

11. INSERT MAP DISC

(a) Turn the engine switch on (ACC).

(b) Insert the map disc.

(c) Engage the 8 claws and install the cover as shown in the illustration.

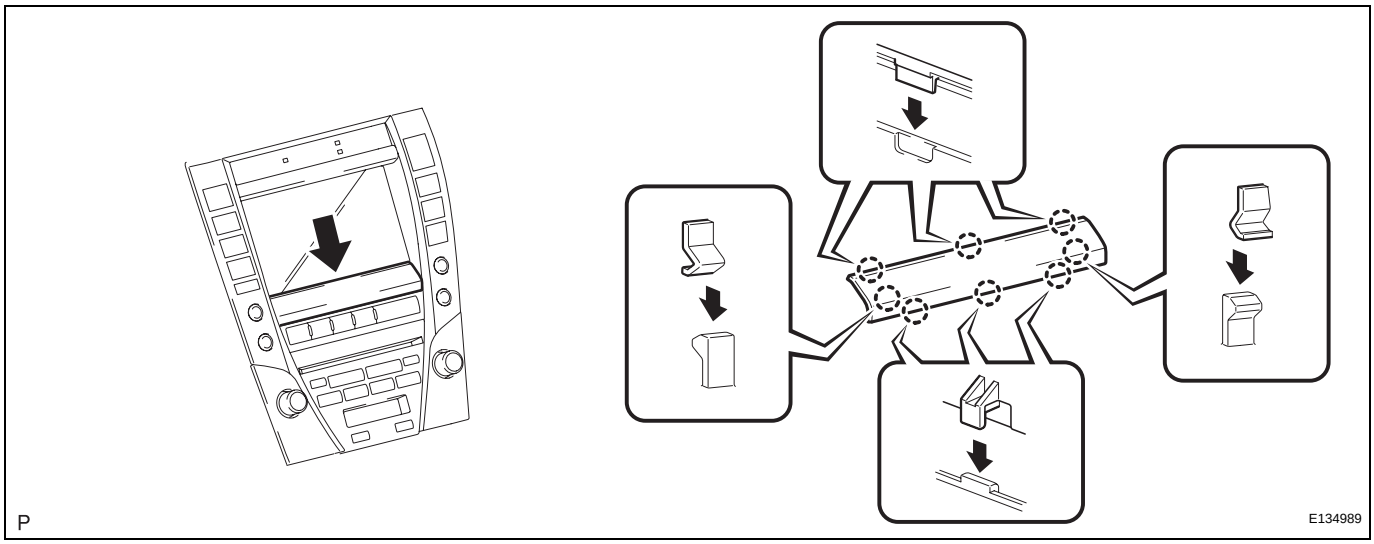

(d) Turn the engine switch off.

12. ADJUST CLOCK

REMOVAL

1. **PRECAUTION**
   (See page IP-1)
2. **TURN FRONT WHEELS TO FACE STRAIGHT AHEAD**
3. **DISCONNECT CABLE FROM NEGATIVE BATTERY TERMINAL**
   CAUTION:
   Waif for 90 seconds after disconnecting the cable to prevent airbag deployment (See page RS-1).
4. **REMOVE LOWER NO. 3 STEERING WHEEL COVER (See page RS-367)**
5. **REMOVE LOWER NO. 2 STEERING WHEEL COVER (See page RS-367)**
6. **REMOVE STEERING PAD (See page RS-367)**
7. **REMOVE STEERING WHEEL ASSEMBLY (See page SR-80)**
8. **REMOVE FRONT DOOR SCUFF PLATE LH (See page IR-39)**
9. **REMOVE FRONT DOOR OPENING TRIM COVER LH (See page IR-39)**
10. **REMOVE SIDE INSTRUMENT PANEL LH (See page IP-12)**
11. **REMOVE INSTRUMENT PANEL FINISH PANEL END LH (See page IP-13)**
12. **REMOVE LOWER INSTRUMENT PANEL SUB-ASSEMBLY (See page IP-13)**
13. **REMOVE STEERING COLUMN COVER (See page IP-13)**
14. **REMOVE TURN SIGNAL SWITCH ASSEMBLY WITH SPIRAL CABLE SUB-ASSEMBLY (See page SR-80)**
15. **REMOVE TILT AND TELESCOPIC SWITCH (See page SR-80)**
16. **REMOVE INSTRUMENT CLUSTER FINISH PANEL SUB-ASSEMBLY (See page IP-14)**
17. **REMOVE COMBINATION METER ASSEMBLY (See page IP-14)**
18. **REMOVE NO. 1 SWITCH HOLE BASE (See page IP-14)**
19. **REMOVE INSTRUMENT PANEL FINISH PANEL END RH (See page IP-15)**
20. **REMOVE FRONT DOOR SCUFF PLATE RH (See page IR-42)**
21. **REMOVE FRONT DOOR OPENING TRIM COVER RH (See page IR-42)**

22. **REMOVE NO. 2 INSTRUMENT PANEL UNDER COVER SUB-ASSEMBLY (See page IP-15)**
23. **REMOVE SIDE INSTRUMENT PANEL RH (See page IP-15)**
24. **REMOVE FRONT PASSENGER SIDE KNEE AIRBAG ASSEMBLY (See page RS-396)**
25. **REMOVE LOWER INSTRUMENT PANEL RH (See page IP-16)**
26. **REMOVE SHIFT LEVER KNOB SUB-ASSEMBLY (See page IP-16)**
27. **REMOVE UPPER CONSOLE PANEL ASSEMBLY WITH FRONT ASH RECEPTACLE (See page IP-16)**
28. **REMOVE NO. 2 INSTRUMENT PANEL REGISTER ASSEMBLY (See page IP-17)**
29. **REMOVE MULTI-DISPLAY WITH RADIO RECEIVER ASSEMBLY (See page AV-170)**
30. **REMOVE HEATER SEAT SWITCH CONSOLE BASE (w/o Seat Heater System) (See page IP-17)**
31. **REMOVE HEATER SEAT SWITCH CONSOLE BASE (w/ Seat Heater System) (See page IP-18)**
32. **REMOVE CONSOLE BOX POCKET (See page IP-18)**
33. **REMOVE CONSOLE BOX CARPET (See page IP-18)**
34. **REMOVE CONSOLE REAR END PANEL SUB-ASSEMBLY (See page IP-19)**
35. **REMOVE REAR CONSOLE BOX ASSEMBLY (See page IP-19)**
36. **REMOVE FRONT PILLAR GARNISH LH (See page IR-39)**
37. **REMOVE NO. 1 INSTRUMENT PANEL SPEAKER PANEL SUB-ASSEMBLY (See page IP-20)**
38. **REMOVE FRONT NO. 2 SPEAKER ASSEMBLY (for LH Side) (See page AV-184)**
39. **REMOVE NO. 1 INSTRUMENT PANEL REGISTER ASSEMBLY (See page IP-20)**
40. **REMOVE FRONT PILLAR GARNISH RH (See page IR-42)**
41. **REMOVE NO. 2 INSTRUMENT PANEL SPEAKER PANEL SUB-ASSEMBLY (See page IP-21)**
42. **REMOVE FRONT NO. 2 SPEAKER ASSEMBLY (for RH Side) (See page IP-21)**
43. **REMOVE NO. 3 INSTRUMENT PANEL REGISTER ASSEMBLY (See page IP-21)**
44. **REMOVE NO. 1 SPEAKER HOLE COVER (See page IP-21)**

45. **REMOVE FRONT STEREO COMPONENT SPEAKER ASSEMBLY (See page AV-188)**

46. **REMOVE NO. 1 INSTRUMENT PANEL MOUNTING BRACKET (See page IP-22)**

47. **REMOVE PUSH START SWITCH (See page IP-22)**

48. **DISCONNECT INSTRUMENT PANEL WIRE ASSEMBLY (See page RS-414)**

49. **REMOVE ROOM TEMPERATURE SENSOR (See page AC-214)**

50. **REMOVE INSTRUMENT PANEL SAFETY PAD ASSEMBLY (w/o DVD Player) (See page IP-22)**

51. **REMOVE INSTRUMENT PANEL SAFETY PAD ASSEMBLY (w/ DVD Player) (See page IP-24)**

52. **REMOVE SIDE NO. 1 DEFROSTER NOZZLE DUCT (See page IP-27)**

53. **REMOVE SIDE NO. 2 DEFROSTER NOZZLE DUCT (See page IP-28)**

54. **REMOVE DEFROSTER NOZZLE ASSEMBLY (See page IP-28)**

55. **REMOVE NO. 1 HEATER TO REGISTER DUCT (See page IP-28)**

56. **REMOVE NO. 2 HEATER TO REGISTER DUCT (See page IP-28)**

57. **REMOVE NAVIGATION ANTENNA ASSEMBLY**
    (a) Disengage the 2 clamps.
    (b) Remove the 2 screws and navigation antenna assembly.

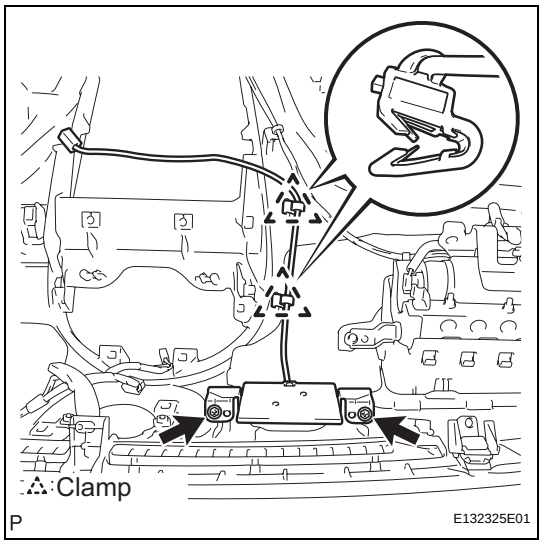

NS

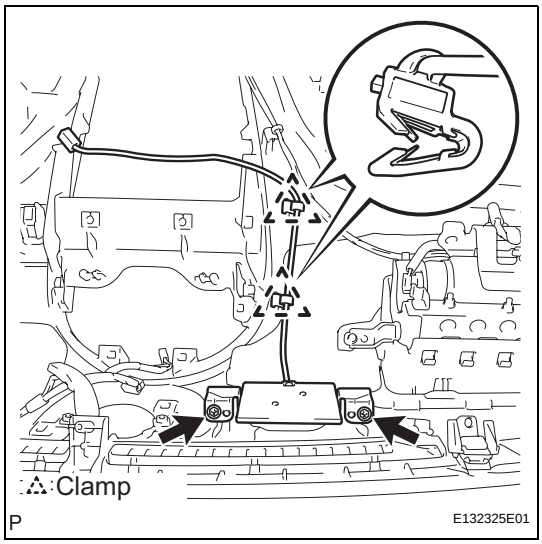

INSTALLATION

1. **INSTALL NAVIGATION ANTENNA ASSEMBLY**
   (a) Install the navigation antenna assembly with the 2 screws.
   (b) Engage the 2 clamps.
2. **INSTALL NO. 2 HEATER TO REGISTER DUCT (See page IP-32)**
3. **INSTALL NO. 1 HEATER TO REGISTER DUCT (See page IP-32)**
4. **INSTALL DEFROSTER NOZZLE ASSEMBLY (See page IP-32)**
5. **INSTALL SIDE NO. 2 DEFROSTER NOZZLE DUCT (See page IP-32)**
6. **INSTALL SIDE NO. 1 DEFROSTER NOZZLE DUCT (See page IP-32)**
7. **INSTALL INSTRUMENT PANEL SAFETY PAD ASSEMBLY (w/o DVD Player) (See page IP-33)**
8. **INSTALL INSTRUMENT PANEL SAFETY PAD ASSEMBLY (w/ DVD Player) (See page IP-35)**
9. **INSTALL ROOM TEMPERATURE SENSOR (See page AC-215)**
10. **CONNECT INSTRUMENT PANEL WIRE ASSEMBLY (See page RS-416)**
11. **INSTALL PUSH START SWITCH (See page IP-37)**
12. **INSTALL NO. 1 INSTRUMENT PANEL MOUNTING BRACKET (See page IP-38)**
13. **INSTALL FRONT STEREO COMPONENT SPEAKER ASSEMBLY (See page AV-188)**
14. **INSTALL NO. 1 SPEAKER HOLE COVER (See page IP-38)**
15. **INSTALL NO. 3 INSTRUMENT PANEL REGISTER ASSEMBLY (See page IP-39)**
16. **INSTALL FRONT NO. 2 SPEAKER ASSEMBLY (for RH Side) (See page IP-39)**
17. **INSTALL NO. 2 INSTRUMENT PANEL SPEAKER PANEL SUB-ASSEMBLY (See page IP-39)**
18. **INSTALL FRONT PILLAR GARNISH RH (See page IR-65)**
19. **INSTALL NO. 1 INSTRUMENT PANEL REGISTER ASSEMBLY (See page IP-38)**
20. **INSTALL FRONT NO. 2 SPEAKER ASSEMBLY (for LH Side) (See page AV-185)**
21. **INSTALL NO. 1 INSTRUMENT PANEL SPEAKER PANEL SUB-ASSEMBLY (See page IP-39)**

22. **INSTALL FRONT PILLAR GARNISH LH (See page IR-64)**
23. **INSTALL REAR CONSOLE BOX ASSEMBLY (See page IP-39)**
24. **INSTALL CONSOLE REAR END PANEL SUB-ASSEMBLY (See page IP-40)**
25. **INSTALL CONSOLE BOX CARPET (See page IP-41)**
26. **INSTALL CONSOLE BOX POCKET (See page IP-41)**
27. **INSTALL HEATER SEAT SWITCH CONSOLE BASE (w/o Seat Heater System) (See page IP-41)**
28. **INSTALL HEATER SEAT SWITCH CONSOLE BASE (w/ Seat Heater System) (See page IP-41)**
29. **INSTALL MULTI-DISPLAY WITH RADIO RECEIVER ASSEMBLY (See page AV-173)**
30. **INSTALL NO. 2 INSTRUMENT PANEL REGISTER ASSEMBLY (See page IP-41)**
31. **INSTALL UPPER CONSOLE PANEL ASSEMBLY WITH FRONT ASH RECEPTACLE (See page IP-42)**
32. **INSTALL SHIFT LEVER KNOB SUB-ASSEMBLY (See page IP-42)**
33. **INSTALL LOWER INSTRUMENT PANEL RH (See page IP-42)**
34. **INSTALL FRONT PASSENGER SIDE KNEE AIRBAG ASSEMBLY (See page RS-396)**
35. **INSTALL SIDE INSTRUMENT PANEL RH (See page IP-43)**
36. **INSTALL NO. 2 INSTRUMENT PANEL UNDER COVER SUB-ASSEMBLY (See page IP-44)**
37. **INSTALL FRONT DOOR OPENING TRIM COVER RH (See page IR-65)**
38. **INSTALL FRONT DOOR SCUFF PLATE RH (See page IR-65)**
39. **INSTALL INSTRUMENT PANEL FINISH PANEL END RH (See page IP-44)**
40. **INSTALL NO. 1 SWITCH HOLE BASE (See page IP-44)**
41. **INSTALL COMBINATION METER ASSEMBLY (See page IP-45)**
42. **INSTALL INSTRUMENT CLUSTER FINISH PANEL SUB-ASSEMBLY (See page IP-45)**
43. **INSTALL TURN SIGNAL SWITCH ASSEMBLY WITH SPIRAL CABLE SUB-ASSEMBLY (See page SR-86)**
44. **INSTALL TILT AND TELESCOPIC SWITCH (See page SR-86)**

45. **INSTALL STEERING COLUMN COVER (See page IP-46)**
46. **ADJUST SPIRAL CABLE SUB-ASSEMBLY (See page RS-382)**
47. **INSTALL LOWER INSTRUMENT PANEL SUB-ASSEMBLY (See page IP-46)**
48. **INSTALL INSTRUMENT PANEL FINISH PANEL END LH (See page IP-46)**
49. **INSTALL SIDE INSTRUMENT PANEL LH (See page IP-47)**
50. **INSTALL FRONT DOOR OPENING TRIM COVER LH (See page IR-64)**
51. **INSTALL FRONT DOOR SCUFF PLATE LH (See page IR-65)**
52. **INSTALL STEERING WHEEL ASSEMBLY (See page SR-87)**
53. **INSTALL STEERING PAD (See page RS-368)**
54. **INSTALL LOWER NO. 2 STEERING WHEEL COVER (See page RS-369)**
55. **INSTALL LOWER NO. 3 STEERING WHEEL COVER (See page RS-369)**
56. **CONNECT CABLE TO NEGATIVE BATTERY TERMINAL**
57. **PERFORM INITIALIZATION**
    NOTICE:
    Some systems need initialization after reconnecting the cable to the negative battery terminal (See page IN-33).
58. **INSPECT STEERING PAD (See page RS-369)**
59. **INSPECT FRONT PASSENGER SIDE KNEE AIRBAG ASSEMBLY (See page RS-395)**
60. **INSPECT SRS WARNING LIGHT**
    (See page RS-37)

DTC	C1AE9	Rear Right Sensor Malfunction

DESCRIPTION

The No. 1 ultrasonic sensor (rear right sensor) is installed on the front bumper. The clearance warning ECU detects obstacles based on signals received from the rear right sensor. If the rear right sensor has an open or other malfunction, it will not function normally.

DTC No.	DTC Detection Condition	Trouble Area
C1AE9	Malfunction of No. 1 ultrasonic sensor (rear right sensor)	• No. 1 ultrasonic sensor (rear right sensor) • Clearance warning ECU assembly

INSPECTION PROCEDURE

1 CHECK DTC OUTPUT

(a) Delete the DTCs (See page PM-28).
(b) Recheck for DTCs (See page PM-28).
Result

Result	Proceed to
DTC C1AE9 is output	A
No DTC is output	B

B → USE SIMULATION METHOD TO CHECK

PM

A

2 REPLACE NO. 1 ULTRASONIC SENSOR (REAR RIGHT SENSOR)

No. 1 Ultrasonic Sensor:

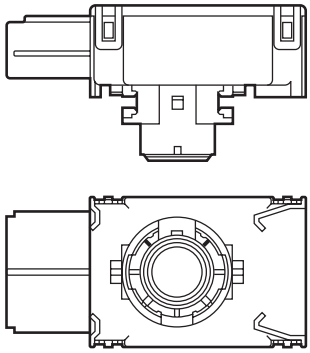

H B139273E01

(a) Replace the ultrasonic sensor (See page PM-99) with a normally functioning sensor.

NEXT

3 CHECK DTC OUTPUT

(a) Delete the DTCs (See page PM-28).
(b) Recheck for DTCs (See page PM-28).

Result

Result	Proceed to
DTC C1AE9 is output	A
No DTC is output	B

B → END

A

REPLACE CLEARANCE WARNING ECU ASSEMBLY (See page PM-93)

DTC	C1AEC	Front Sensor Communication Malfunction

DESCRIPTION

This DTC is stored when there is an open or short circuit in the communication line between the front sensors and the clearance warning ECU, or when there is a malfunction in a front sensor.

DTC Combination Table

DTC NO.	C1AEC	C1AE1	C1AE4	Trouble Area
DTC Detection Condition	○	○	○	1. Front left sensor malfunction 2. Front right sensor malfunction 3. Open or short in wire harness between front left sensor and clearance warning ECU 4. Open or short in wire harness between front left sensor and front right sensor 5. Clearance warning ECU malfunction
	-	○	○	

○: DTC is output
-: DTC is not output

Front No. 1 Ultrasonic Sensor Position:

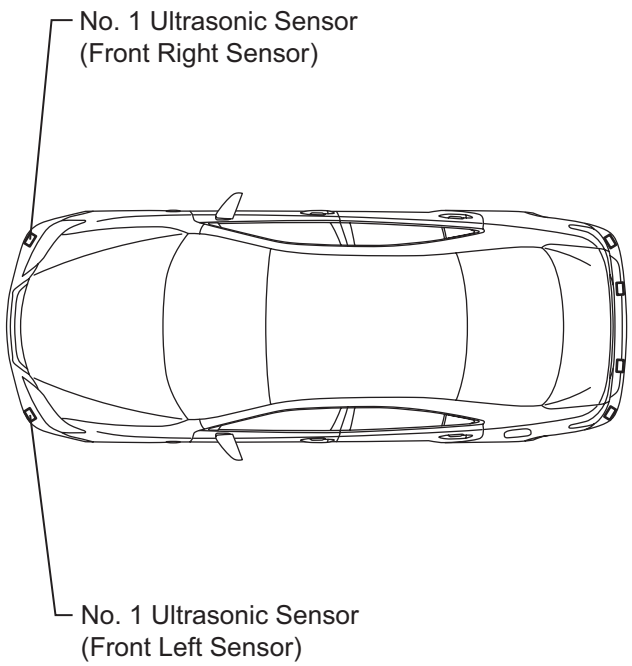

H

B139270E02

DTC No.	DTC Detection Condition	Trouble Area
C1AEC	Malfunctions of all front sensors are detected during initialization mode after the engine switch is turned on (IG)	• Front No. 1 ultrasonic sensor circuit • Clearance warning ECU assembly

PM

WIRING DIAGRAM

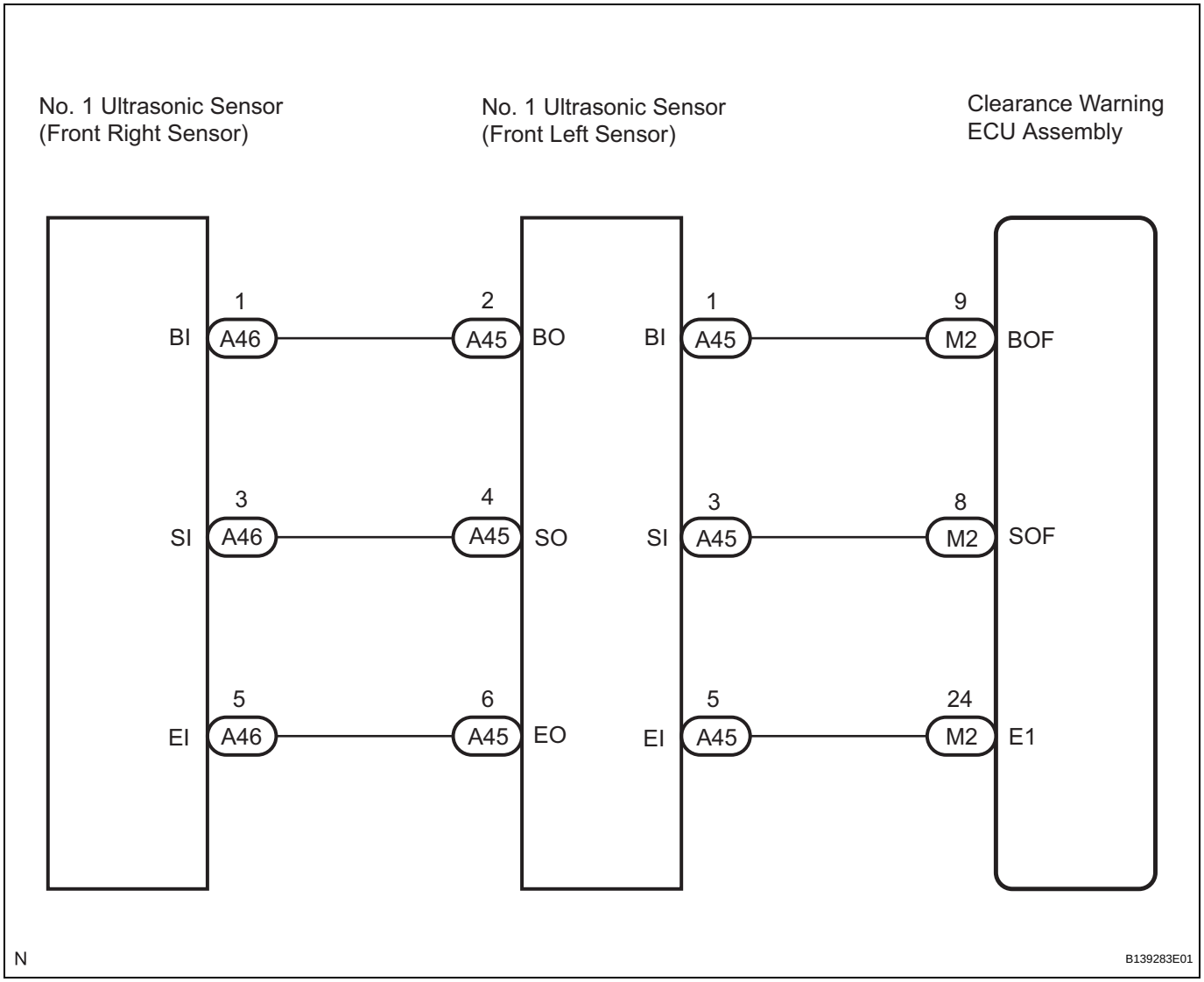

INSPECTION PROCEDURE

1	CHECK DTC OUTPUT

(a) Delete the DTCs (See page PM-28).
(b) Turn the engine switch off.
(c) Turn the engine switch on (IG).
(d) Recheck for DTCs (See page PM-28).

Result

Result	Proceed to
DTCs C1AE1, C1AE4 and C1AEC are output	A
No DTCs are output	B

B → USE SIMULATION METHOD TO CHECK

A

PM

2 CHECK HARNESS AND CONNECTOR (CLEARANCE WARNING ECU - FRONT LEFT SENSOR)

Wire Harness Side Connector Rear View:

M2
Clearance Warning ECU Assembly

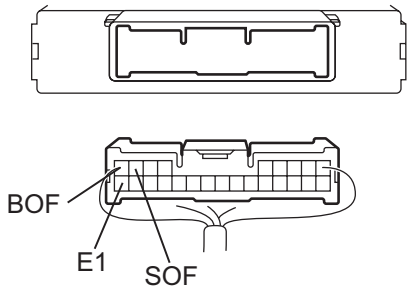

Wire Harness Side Connector Front View:

A45
No. 1 Ultrasonic Sensor (Front Left Sensor)

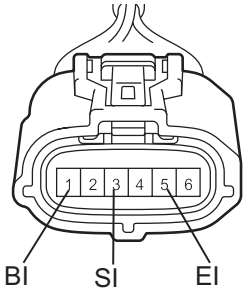

H B139274E01

(a) Disconnect the M2 ECU connector.
(b) Disconnect the A45 sensor connector.
(c) Measure the resistance according to the value(s) in the table below.

Standard resistance

Tester Connection	Condition	Specified Condition
M2-9 (BOF) - A45-1 (BI)	Always	Below 1 Ω
M2-8 (SOF) - A45-3 (SI)		
M2-24 (E1) - A45-5 (EI)		
M2-9 (BOF) - Body ground		10 kΩ or higher
M2-8 (SOF) - Body ground		
M2-24 (E1) - Body ground		

NG → **REPAIR OR REPLACE HARNESS OR CONNECTOR**

OK

3 CHECK CLEARANCE WARNING ECU ASSEMBLY

Wire Harness Side Connector Rear View:

M2
Clearance Warning ECU Assembly

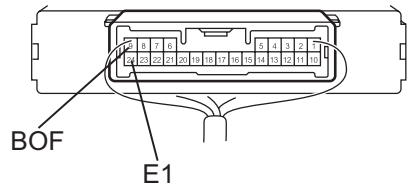

H B139288E01

(a) Reconnect the M2 ECU connector.
(b) Measure the resistance according to the value(s) in the table below.

Standard resistance

Tester Connection	Condition	Specified Condition
M2-24 (E1) - Body ground	Always	Below 1 Ω

(c) Measure the voltage according to the value(s) in the table below.

Standard voltage

Tester Connection	Condition	Specified Condition
M2-9 (BOF) - Body ground	Engine switch on (IG)	7 to 9 V

NG → **REPLACE CLEARANCE WARNING ECU ASSEMBLY (See page PM-93)**

PM

OK

4	REPLACE NO. 1 ULTRASONIC SENSOR (FRONT LEFT SENSOR)

No. 1 Ultrasonic Sensor:

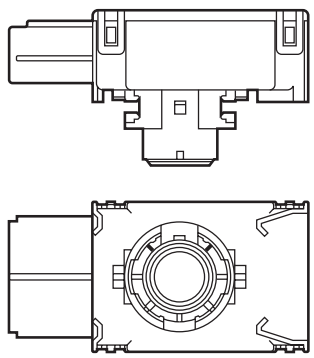

H B139273E01

(a) Replace the ultrasonic sensor (See page PM-99) with a normally functioning sensor.

NEXT

5	CHECK DTC OUTPUT

PM

(a) Delete the DTCs (See page PM-28).
(b) Recheck for DTCs (See page PM-28).
Result

Result	Proceed to
DTCs C1AE1, C1AE4 and C1AEC are output	A
No DTCs are output	B

B → END

A

6 CHECK HARNESS AND CONNECTOR (FRONT LEFT SENSOR - FRONT RIGHT SENSOR)

Wire Harness Side Connector Front View:

A45
No. 1 Ultrasonic Sensor (Front Left Sensor)

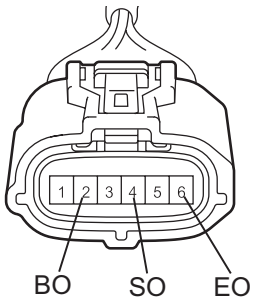

A46
No. 1 Ultrasonic Sensor (Front Right Sensor)

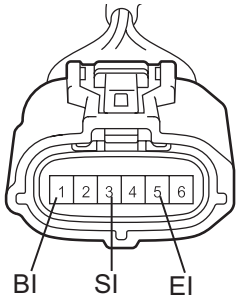

H B139278E01

(a) Disconnect the A45 and A46 sensor connectors.
(b) Measure the resistance according to the value(s) in the table below.

Standard resistance

Tester Connection	Condition	Specified Condition
A45-2 (BO) - A46-1 (BI)	Always	Below 1 Ω
A45-4 (SO) - A46-3 (SI)		
A45-6 (EO) - A46-5 (EI)		
A45-2 (BO) - Body ground		10 kΩ or higher
A45-4 (SO) - Body ground		
A45-6 (EO) - Body ground		

NG → **REPAIR OR REPLACE HARNESS OR CONNECTOR**

OK

7 REPLACE NO. 1 ULTRASONIC SENSOR (FRONT RIGHT SENSOR)

No. 1 Ultrasonic Sensor:

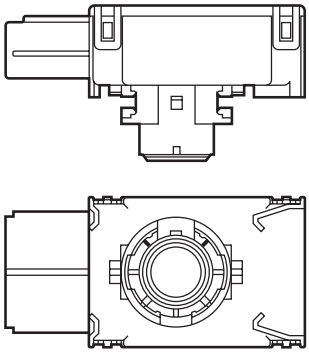

H B139273E01

(a) Replace the ultrasonic sensor (See page PM-99) with a normally functioning sensor.

NEXT

PM

8	CHECK DTC OUTPUT

(a) Delete the DTCs (See page PM-28).
(b) Recheck for DTCs (See page PM-28).
Result

Result	Proceed to
DTCs C1AE1, C1AE4 and C1AEC are output	A
No DTCs are output	B

B → END

A

REPLACE CLEARANCE WARNING ECU ASSEMBLY (See page PM-93)

DTC	C1AED	Rear Sensor Communication Malfunction

DESCRIPTION

This DTC is stored when there is an open or short circuit in the communication line between the rear sensors and the clearance warning ECU, or when there is a malfunction in a rear sensor.

DTC Combination Table

DTC NO.	C1AED	C1AE6	C1AE7	C1AE8	C1AE9	Trouble Area
DTC Detection Condition	○	○	○	○	○	1. Rear right senor malfunction 2. Rear right center senor malfunction 3. Rear left center senor malfunction 4. Rear left senor malfunction 5. Open or short in wire harness between rear right sensor and clearance warning ECU 6. Open or short in wire harness between rear right sensor and rear right center sensor 7. Open or short in wire harness between rear right center sensor and rear left center sensor 8. Open or short in wire harness between rear left center sensor and rear left sensor 9. Clearance warning ECU malfunction
	-	○	○	○	○	

○: DTC is output
-: DTC is not output

PM

Rear No. 1 Ultrasonic Sensor Position:

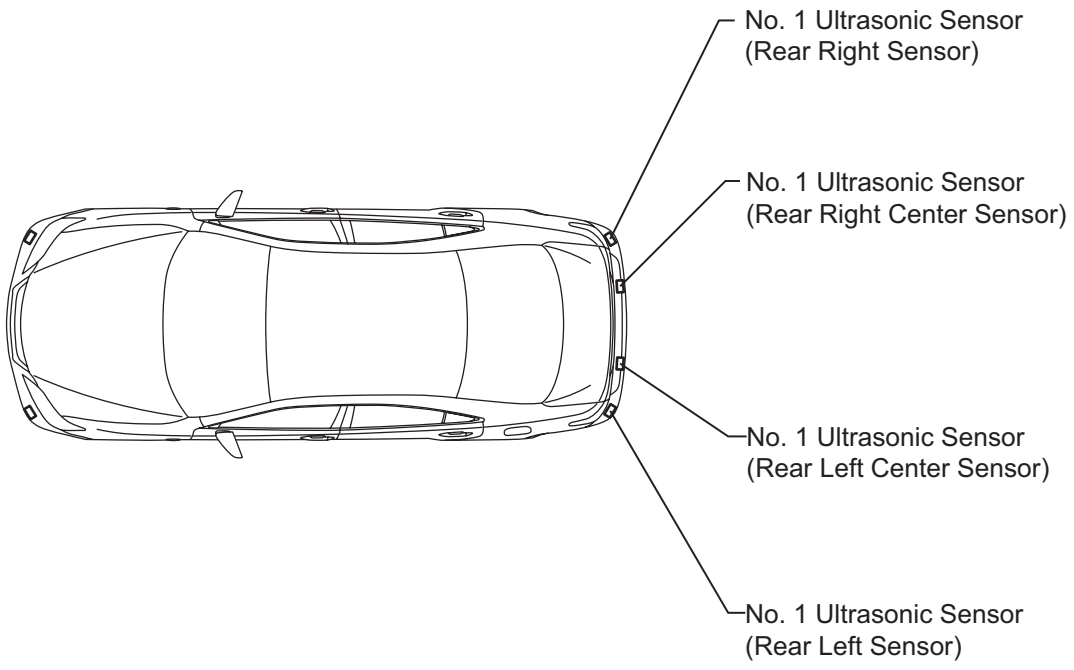

H

B139270E03

DTC No.	DTC Detection Condition	Trouble Area
C1AED	Malfunctions of all rear sensors are detected during initialization mode after the engine switch is turned on (IG)	• Rear No.1 ultrasonic sensor circuit • Clearance warning ECU

WIRING DIAGRAM

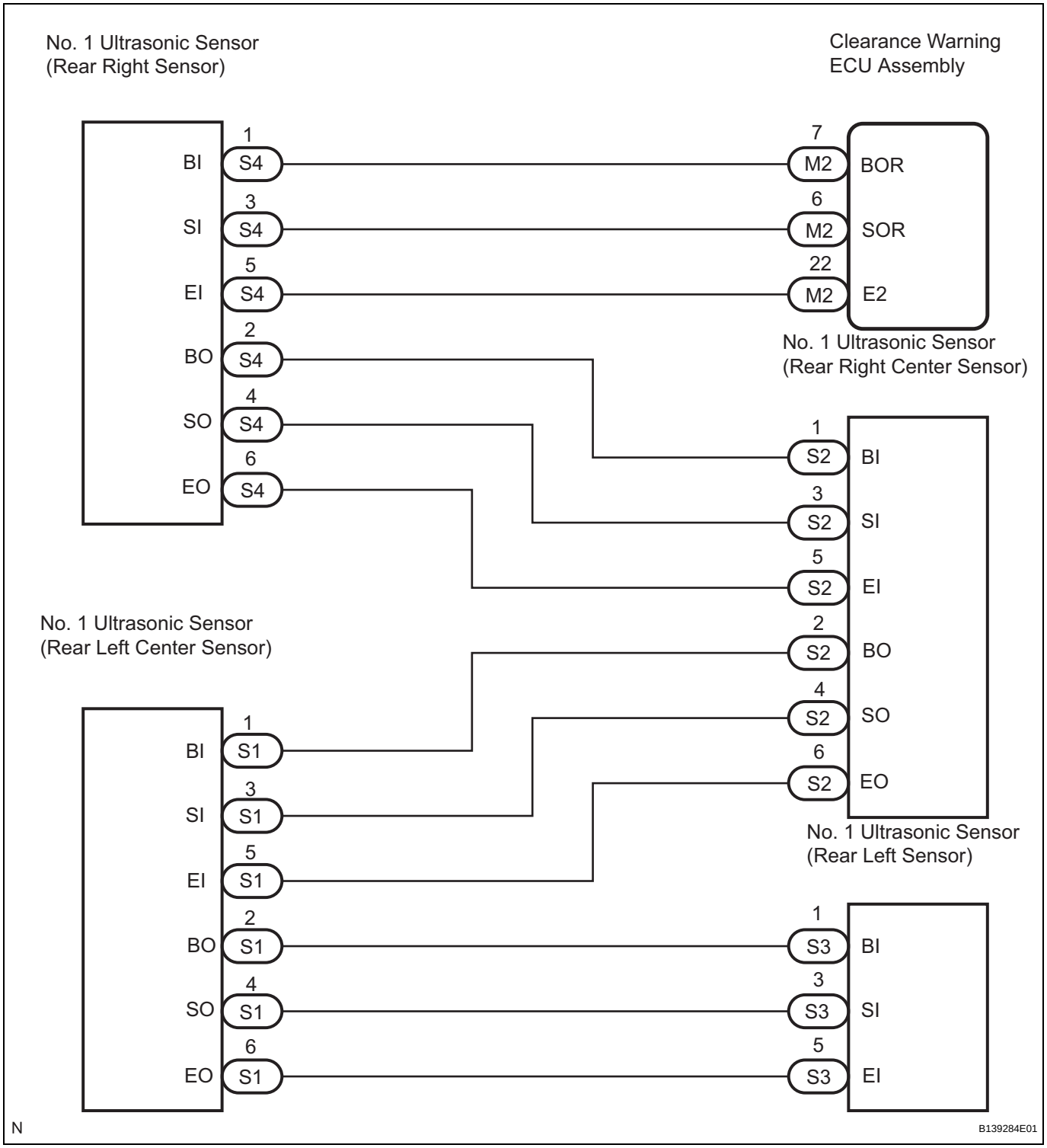

INSPECTION PROCEDURE

1	CHECK DTC OUTPUT

(a) Delete the DTCs (See page PM-28).
(b) Turn the engine switch off.
(c) Turn the engine switch on (IG).

PM

(d) Recheck for DTCs (See page PM-28).
Result

Result	Proceed to
DTCs C1AE6, C1AE7, C1AE8, C1AE9 and C1AED are output	A
No DTCs are output	B

B → **USE SIMULATION METHOD TO CHECK**

A

2 CHECK HARNESS AND CONNECTOR (CLEARANCE WARNING ECU - REAR RIGHT SENSOR)

Wire Harness Side Connector Rear View:

M2
Clearance Warning ECU Assembly

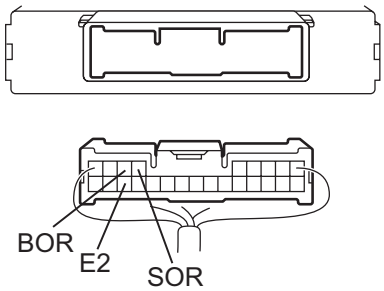

Wire Harness Side Connector Front View:

S4
No. 1 Ultrasonic Sensor (Rear Right Sensor)

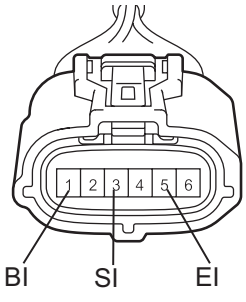

H

B139274E02

(a) Disconnect the M2 ECU connector.
(b) Disconnect the S4 sensor connector.
(c) Measure the resistance according to the value(s) in the table below.
Standard resistance

Tester Connection	Condition	Specified Condition
M2-7 (BOR) - S4-1 (BI)	Always	Below 1 Ω
M2-6 (SOR) - S4-3 (SI)		
M2-22 (E2) - S4-5 (EI)		
M2-7 (BOR) - Body ground		10 kΩ or higher
M2-6 (SOR) - Body ground		
M2-22 (E2) - Body ground		

NG → **REPAIR OR REPLACE HARNESS OR CONNECTOR**

OK

PM

3 CHECK CLEARANCE WARNING ECU ASSEMBLY

Wire Harness Side Connector Rear View:

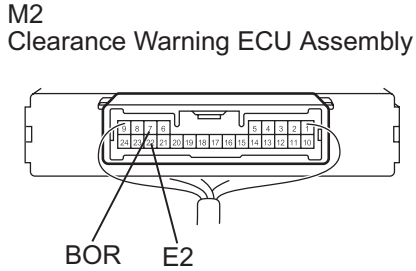

(a) Reconnect the M2 ECU connector.
(b) Measure the resistance according to the value(s) in the table below.
Standard resistance

Tester Connection	Condition	Specified Condition
M2-22 (E2) - Body ground	Always	Below 1 Ω

(c) Measure the voltage according to the value(s) in the table below.
Standard voltage

Tester Connection	Condition	Specified Condition
M2-7 (BOR) - Body ground	Engine switch on (IG)	7 to 9 V

NG → **REPLACE CLEARANCE WARNING ECU ASSEMBLY (See page PM-93)**

OK

4 REPLACE NO. 1 ULTRASONIC SENSOR (REAR RIGHT SENSOR)

PM

No. 1 Ultrasonic Sensor:

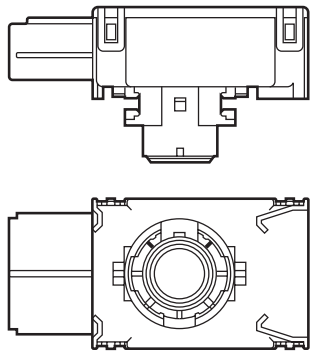

(a) Replace the ultrasonic sensor (See page PM-99) with a normally functioning sensor.

NEXT

5 CHECK DTC OUTPUT

(a) Delete the DTCs (See page PM-28).
(b) Recheck for DTCs (See page PM-28).
Result

Result	Proceed to
DTCs C1AE6, C1AE7, C1AE8, C1AE9 and C1AED are output	A

Result	Proceed to
No DTCs are output	B

B → **END**

A

6 CHECK HARNESS AND CONNECTOR (REAR RIGHT SENSOR - REAR RIGHT CENTER SENSOR)

Wire Harness Side Connector Front View:

S4
No. 1 Ultrasonic Sensor (Rear Right Sensor)

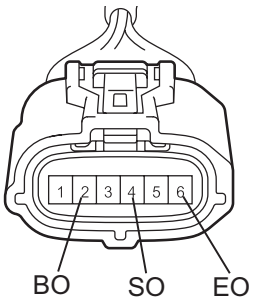

S2
No. 1 Ultrasonic Sensor
(Rear Right Center Sensor)

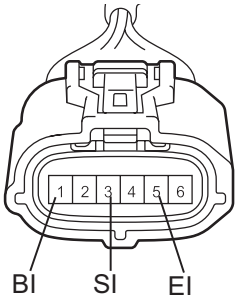

H

B139278E02

(a) Disconnect the S4 and S2 sensor connectors.
(b) Measure the resistance according to the value(s) in the table below.

Standard resistance

Tester Connection	Condition	Specified Condition
S4-2 (BO) - S2-1 (BI)	Always	Below 1 Ω
S4-4 (SO) - S2-3 (SI)		
S4-6 (EO) - S2-5 (EI)		
S4-2 (BO) - Body ground		10 kΩ or higher
S4-4 (SO) - Body ground		
S4-6 (EO) - Body ground		

NG → **REPAIR OR REPLACE HARNESS OR CONNECTOR**

OK

PM

7	REPLACE NO. 1 ULTRASONIC SENSOR (REAR RIGHT CENTER SENSOR)

No. 1 Ultrasonic Sensor:

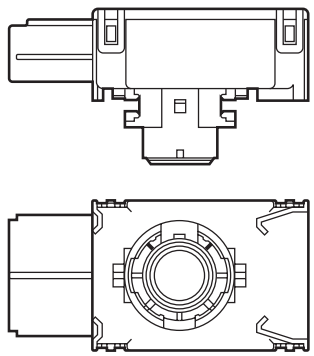

H B139273E01

(a) Replace the ultrasonic sensor (See page PM-99) with a normally functioning sensor.

NEXT

8	CHECK DTC OUTPUT

(a) Delete the DTCs (See page PM-28).
(b) Recheck for DTCs (See page PM-28).

Result

Result	Proceed to
DTCs C1AE6, C1AE7, C1AE8, C1AE9 and C1AED are output	A
No DTCs are output	B

B → END

A

PM

9 CHECK HARNESS AND CONNECTOR (REAR RIGHT CENTER SENSOR - REAR LEFT CENTER SENSOR)

Wire Harness Side Connector Front View:

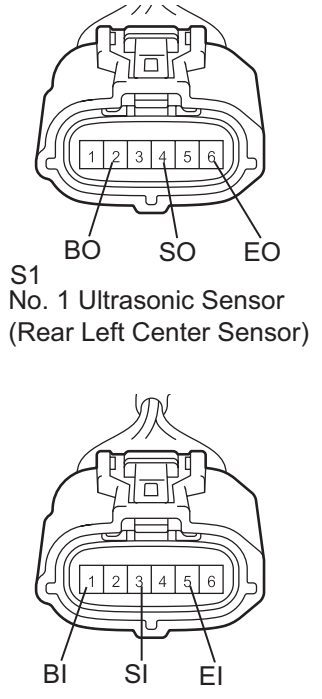

(a) Disconnect the S2 and S1 sensor connectors.
(b) Measure the resistance according to the value(s) in the table below.

Standard resistance

Tester Connection	Condition	Specified Condition
S2-2 (BO) - S1-1 (BI)	Always	Below 1 Ω
S2-4 (SO) - S1-3 (SI)		
S2-6 (EO) - S1-5 (EI)		
S2-2 (BO) - Body ground		10 kΩ or higher
S2-4 (SO) - Body ground		
S2-6 (EO) - Body ground		

NG → **REPAIR OR REPLACE HARNESS OR CONNECTOR**

OK

10 REPLACE NO. 1 ULTRASONIC SENSOR (REAR LEFT CENTER SENSOR)

No. 1 Ultrasonic Sensor:

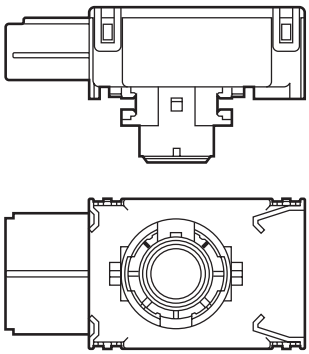

(a) Replace the ultrasonic sensor (See page PM-99) with a normally functioning sensor.

PM

NEXT

11 CHECK DTC OUTPUT

(a) Delete the DTCs (See page PM-28).
(b) Recheck for DTCs (See page PM-28).
Result

Result	Proceed to
DTCs C1AE6, C1AE7, C1AE8, C1AE9 and C1AED are output	A
No DTCs are output	B

B → **END**

A

12 CHECK HARNESS AND CONNECTOR (REAR LEFT CENTER SENSOR - REAR LEFT SENSOR)

Wire Harness Side Connector Front View:

S1
No. 1 Ultrasonic Sensor
(Rear Left Center Sensor)

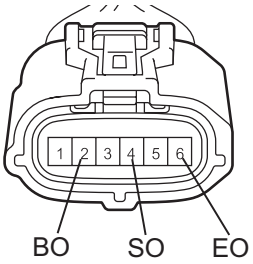

S3
No. 1 Ultrasonic Sensor (Rear Left Sensor)

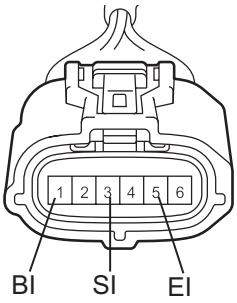

H

B139278E04

(a) Disconnect the S1 and S3 sensor connectors.
(b) Measure the resistance according to the value(s) in the table below.
Standard resistance

Tester Connection	Condition	Specified Condition
S1-2 (BO) - S3-1 (BI)	Always	Below 1 Ω
S1-4 (SO) - S3-3 (SI)		
S1-6 (EO) - S3-5 (EI)		
S1-2 (BO) - Body ground		10 kΩ or higher
S1-4 (SO) - Body ground		
S1-6 (EO) - Body ground		

NG → **REPAIR OR REPLACE HARNESS OR CONNECTOR**

OK

PM

13	REPLACE NO. 1 ULTRASONIC SENSOR (REAR LEFT SENSOR)

No. 1 Ultrasonic Sensor:

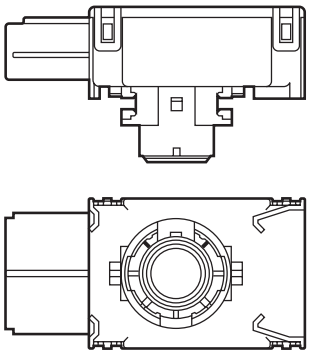

H B139273E01

(a) Replace the ultrasonic sensor (See page PM-99) with a normally functioning sensor.

NEXT

14	CHECK DTC OUTPUT

PM

(a) Delete the DTCs (See page PM-28).
(b) Recheck for DTCs (See page PM-28).
Result

Result	Proceed to
DTCs C1AE6, C1AE7, C1AE8, C1AE9 and C1AED are output	A
No DTCs are output	B

B → **END**

A

REPLACE CLEARANCE WARNING ECU ASSEMBLY (See page PM-93)

Clearance Sonar Main Switch Circuit

DESCRIPTION

When the clearance sonar main switch is turned on, an ON signal is sent to the clearance warning ECU and the indicator on the switch comes on. The intuitive parking assist system starts operating according to this signal.

WIRING DIAGRAM

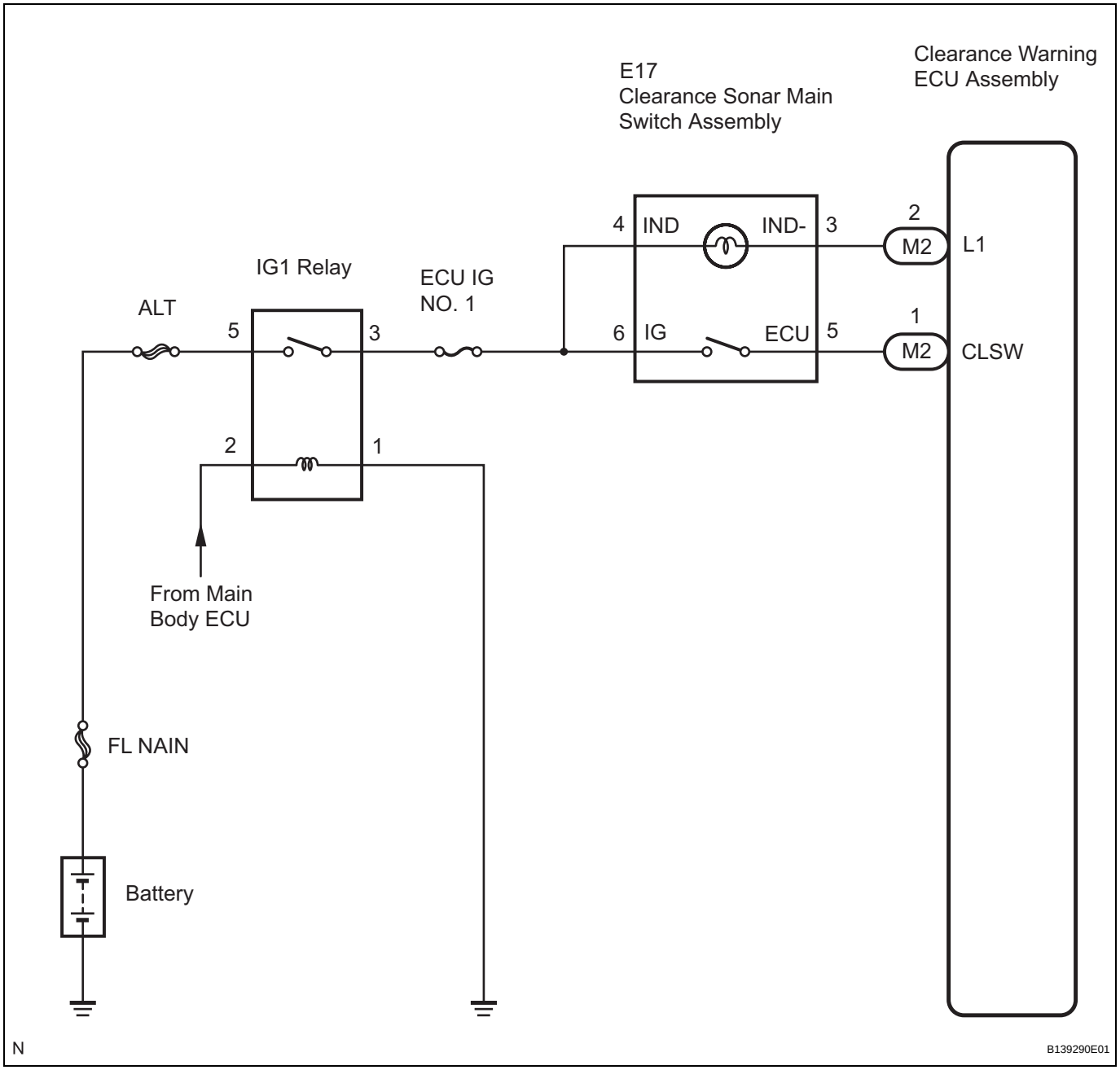

INSPECTION PROCEDURE

1 CHECK INTUITIVE PARKING ASSIST SYSTEM

(a) Check the operation of the intuitive parking assist system (See page PM-11).

Result

Result	Proceed to
Even if the clearance sonar main switch is turned on, the system does not operate.	**A**
The indicator on the switch does not come on even though the system starts operating.	**B**

B → **Go to step 6**

A

2 READ VALUE OF INTELLIGENT TESTER

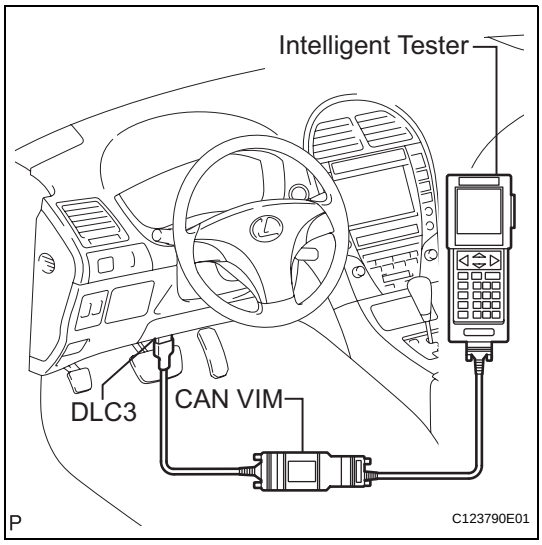

(a) Connect the intelligent tester to the DLC3.
(b) Turn the engine switch on (IG).
(c) Turn the intelligent tester main switch on.
(d) Turn the clearance sonar main switch on.
(e) Select the item below in the Data List, and read its value displayed on the intelligent tester to check the clearance sonar main switch.

Clearance warning ECU:

Tester Display	Measurement Item/ Range	Normal Condition	Diagnostic Note
MAIN SW	Clearance sonar main switch / OFF or ON	OFF: Clearance sonar main switch OFF ON: Clearance sonar main switch ON	-

OK:

ON (Clearance sonar main switch is pressed) appears on the tester.

OK → **PROCEED TO NEXT CIRCUIT INSPECTION SHOWN IN PROBLEM SYMPTOMS TABLE**

NG

PM

3 INSPECT CLEARANCE SONAR MAIN SWITCH ASSEMBLY

Clearance Sonar Main Switch Assembly:

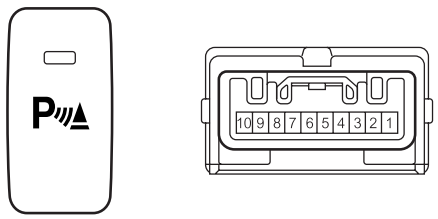

H B139271E01

(a) Remove the clearance sonar main switch assembly.
(b) Measure the resistance according to the value(s) in the table below.

Standard resistance

Tester Connection	Condition	Specified Condition
5 - 6	Switch free (OFF)	10 kΩ or higher
	Switch pushed (ON)	Below 1 Ω

NG → **REPLACE CLEARANCE SONAR MAIN SWITCH ASSEMBLY**

OK

4 CHECK HARNESS AND CONNECTOR (CLEARANCE SONAR MAIN SWITCH - BATTERY)

Wire Harness Side Connector Rear View:

E17
Clearance Sonar Main Switch A ssembly

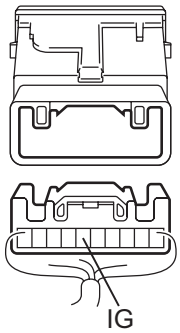

H B139276E01

(a) Measure the voltage according to the value(s) in the table below.

Standard voltage

Tester Connection	Condition	Specified Condition
E17-6 (IG) - Body ground	Engine switch on (IG)	10 to 14 V

NG → **REPAIR OR REPLACE HARNESS OR CONNECTOR**

OK

PM

5	CHECK HARNESS AND CONNECTOR (CLEARANCE WARNING ECU - CLEARANCE SONAR MAIN SWITCH)

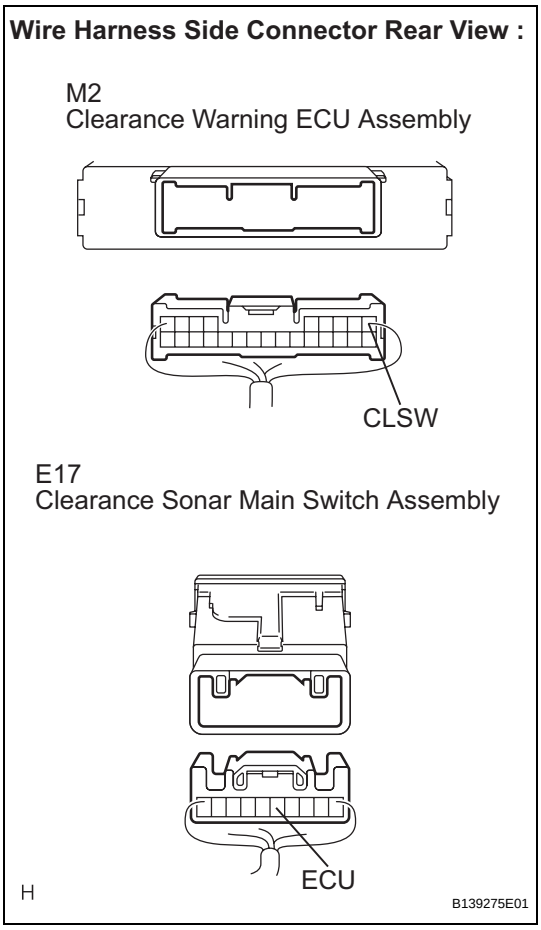

(a) Disconnect the M2 ECU connector.
(b) Measure the resistance according to the value(s) in the table below.

Standard resistance

Tester Connection	Condition	Specified Condition
M2-1 (CLSW) - E17-5 (ECU)	Always	Below 1 Ω
M2-1 (CLSW) - Body ground		10 kΩ or higher

NG → **REPAIR OR REPLACE HARNESS OR CONNECTOR**

OK

PROCEED TO NEXT CIRCUIT INSPECTION SHOWN IN PROBLEM SYMPTOMS TABLE

PM

6 INSPECT CLEARANCE SONAR MAIN SWITCH ASSEMBLY

Clearance Sonar Main Switch Assembly:

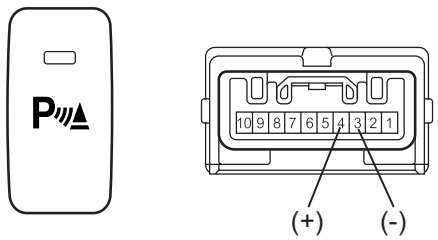

H B139271E02

(a) Remove the clearance sonar main switch.
(b) Apply battery voltage and check operation of the main switch, as shown in the table below.
OK

Measurement Condition	Specified Condition
Battery positive (+) → Terminal 4 Battery negative (-) → Terminal 3	Indicator light comes on

NG → **REPLACE CLEARANCE SONAR MAIN SWITCH ASSEMBLY**

OK

7 CHECK HARNESS AND CONNECTOR (CLEARANCE SONAR MAIN SWITCH - BATTERY)

Wire Harness Side Connector Rear View:

E17
Clearance Sonar Main Switch Assembly

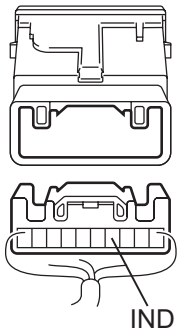

H B139276E03

(a) Measure the voltage according to the value(s) in the table below.
Standard voltage

Tester Connection	Condition	Specified Condition
E17-4 (IND) - Body ground	Engine switch on (IG)	10 to 14 V

NG → **REPAIR OR REPLACE HARNESS OR CONNECTOR**

OK

PM

8	CHECK HARNESS AND CONNECTOR (CLEARANCE WARNING ECU - CLEARANCE SONAR MAIN SWITCH)

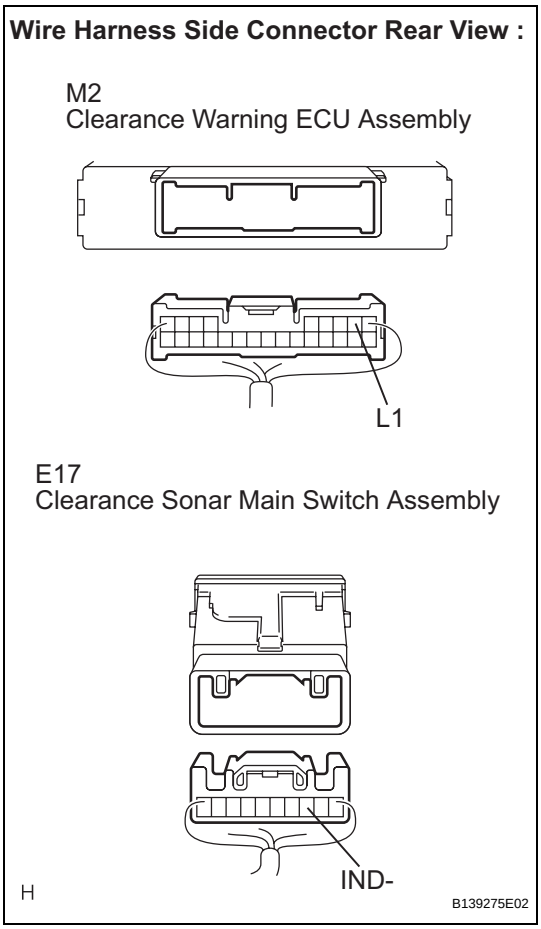

(a) Disconnect the M2 ECU connector.
(b) Measure the resistance according to the value(s) in the table below.

Standard resistance

Tester Connection	Condition	Specified Condition
M2-2 (L1) - E17-3 (IND-)	Always	Below 1 Ω
M2-2 (L1) - Body ground		10 kΩ or higher

NG → **REPAIR OR REPLACE HARNESS OR CONNECTOR**

OK

PROCEED TO NEXT CIRCUIT INSPECTION SHOWN IN PROBLEM SYMPTOMS TABLE

PM

Clearance Warning Buzzer Circuit

DESCRIPTION

The clearance warning buzzer sounds using by pulse signals sent from the clearance warning ECU assembly. The buzzer sounds to alert the driver and the buzzer frequency changes depending on the distance to an obstacle.

WIRING DIAGRAM

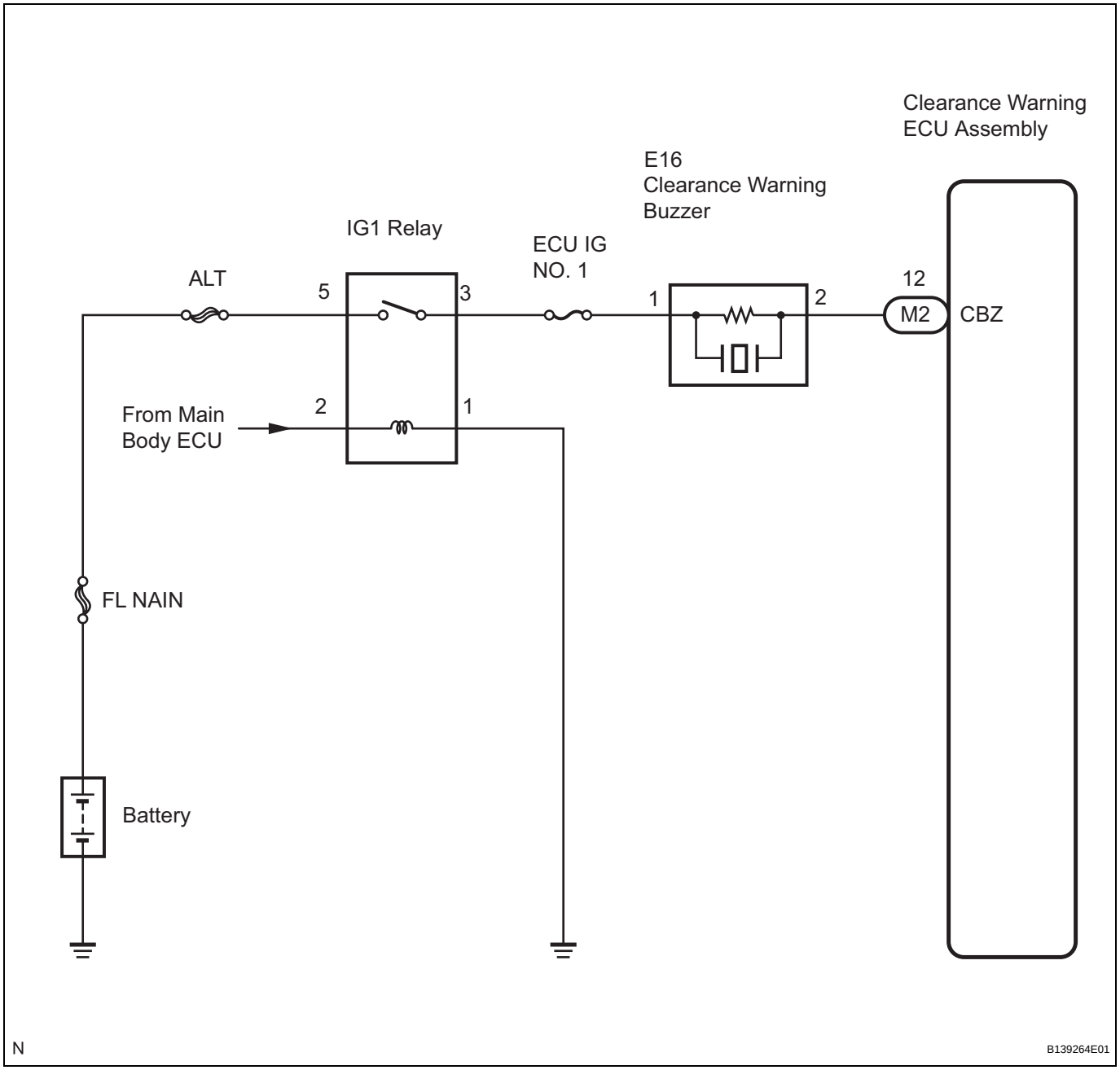

INSPECTION PROCEDURE

1 PERFORM ACTIVE TEST BY INTELLIGENT TESTER

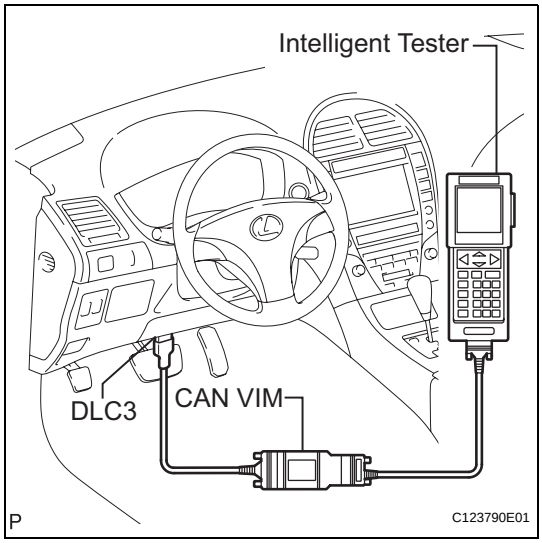

(a) Connect the intelligent tester to the DLC3.
(b) Turn the engine switch on (IG).
(c) Turn the intelligent tester main switch on.
(d) Turn the clearance sonar main switch on.
(e) Select the Active Test, use the intelligent tester to generate a control command, and then check that the buzzer operates.

Clearance warning ECU:

Tester Display	Test Part	Control Range	Diagnostic Note
REAR BUZZER	Rear buzzer (Clearance warning buzzer)	STOP or OPERATE	-

PM

OK:
Clearance warning buzzer sounds.

OK → **PROCEED TO NEXT CIRCUIT INSPECTION SHOWN IN PROBLEM SYMPTOMS TABLE**

NG

2 INSPECT CLEARANCE WARNING BUZZER

Clearance Warning Buzzer:

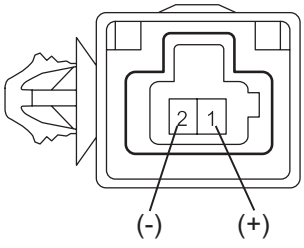

(a) Remove the clearance warning buzzer (See page PM-95).
(b) Apply battery voltage and check operation of the warning buzzer, as shown in the table below.
OK

Measurement Condition	Specified Condition
Battery positive (+) → Terminal 1 **Battery negative (-) → Terminal 2**	**Operating sound occurs**

HINT:
The clearance warning buzzer does not sound when battery voltage is not applied because the buzzer is a separately-excited type.

NG → **REPLACE CLEARANCE WARNING BUZZER (See page PM-95)**

OK

3	CHECK HARNESS AND CONNECTOR (CLEARANCE WARNING BUZZER - BATTERY)

Wire Harness Side Connector Rear View:

E16
Clearance Warning Buzzer

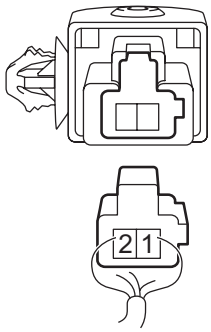

H B139280E01

(a) Measure the voltage according to the value(s) in the table below.

Standard voltage

Tester Connection	Condition	Specified Condition
E16-1 - Body ground	Engine switch on (IG)	10 to 14 V

NG → **REPAIR OR REPLACE HARNESS OR CONNECTOR**

OK

4	CHECK HARNESS AND CONNECTOR (CLEARANCE WARNING ECU - CLEARANCE WARNING BUZZER)

PM

Wire Harness Side Connector Rear View:

M2
Clearance Warning ECU Assembly

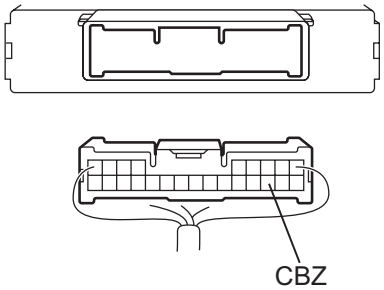

E16
Clearance Warning Buzzer

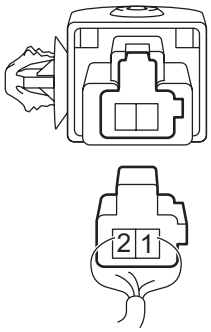

H B139279E04

(a) Disconnect the M2 ECU connector.
(b) Measure the resistance according to the value(s) in the table below.

Standard resistance

Tester Connection	Condition	Specified Condition
M2-12 (CBZ) - E16-2	Always	Below 1 Ω
M2-12 (CBZ) - Body ground		10 kΩ or higher

NG → **REPAIR OR REPLACE HARNESS OR CONNECTOR**

OK

PROCEED TO NEXT CIRCUIT INSPECTION SHOWN IN PROBLEM SYMPTOMS TABLE

Clearance Warning ECU Power Source Circuit

DESCRIPTION

This circuit provides power to operate the clearance warning ECU.

WIRING DIAGRAM

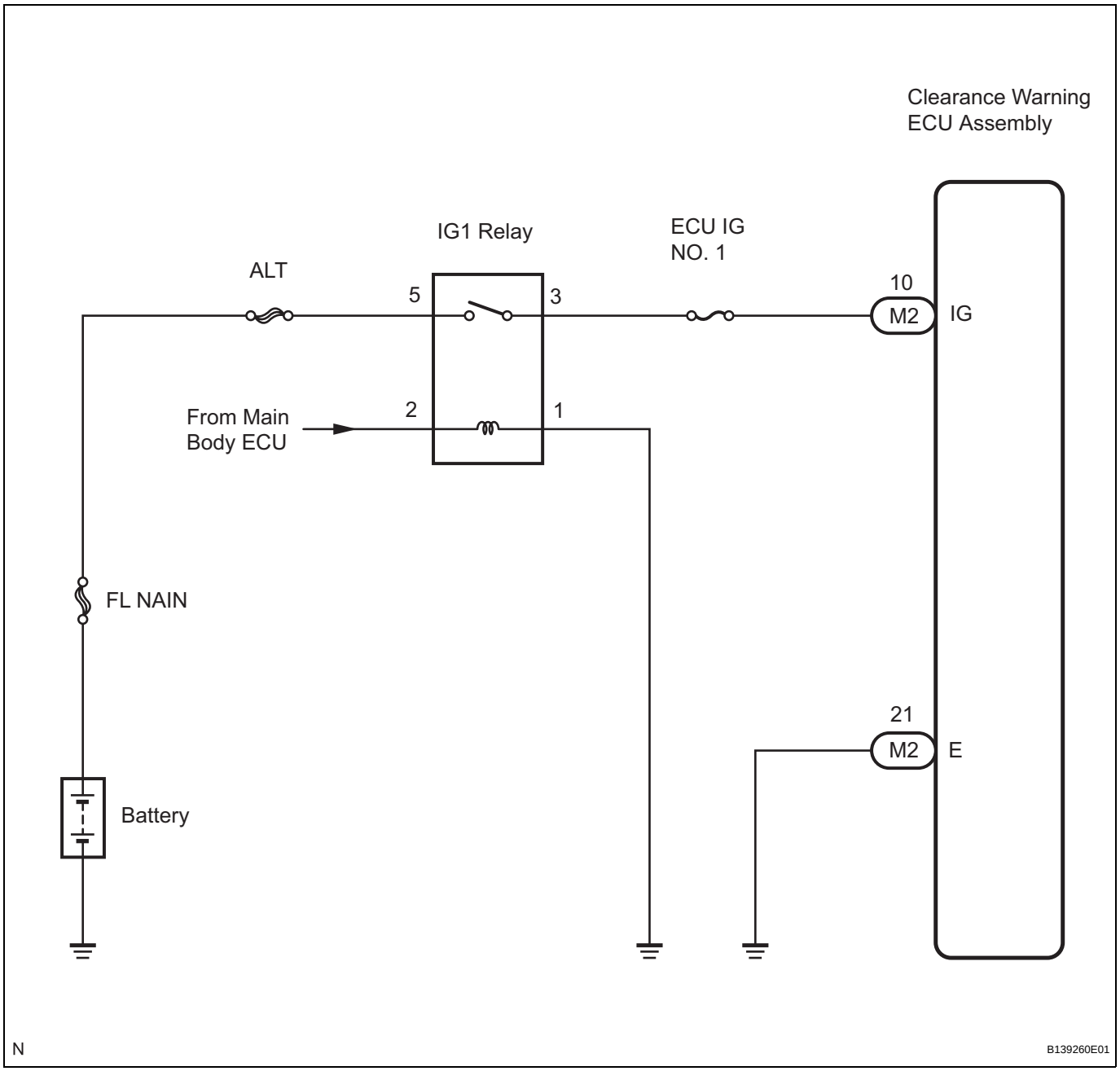

INSPECTION PROCEDURE

1	INSPECT FUSE (ECU IG NO. 1)

(a) Remove the ECU IG No. 1 fuse from the instrument panel junction block.
(b) Measure the resistance of the ECU IG No. 1 fuse.

PM

Standard resistance:
Below 1 Ω

NG → **REPLACE FUSE (ECU IG NO. 1)**

OK

2 CHECK HARNESS AND CONNECTOR (CLEARANCE WARNING ECU - BATTERY)

Wire Harness Side Connector Rear View:

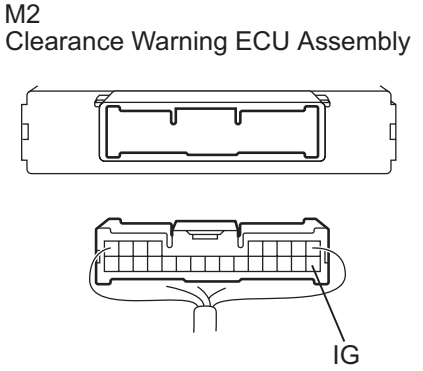

(a) Disconnect the M2 ECU connector.
(b) Measure the voltage according to the value(s) in the table below.
Standard voltage

Tester Connection	Condition	Specified Condition
M2-10 (IG) - Body ground	Engine switch on (IG)	10 to 14 V

NG → **REPAIR OR REPLACE HARNESS OR CONNECTOR**

PM

OK

3 CHECK HARNESS AND CONNECTOR (CLEARANCE WARNING ECU - BODY GROUND)

Wire Harness Side Connector Rear View:

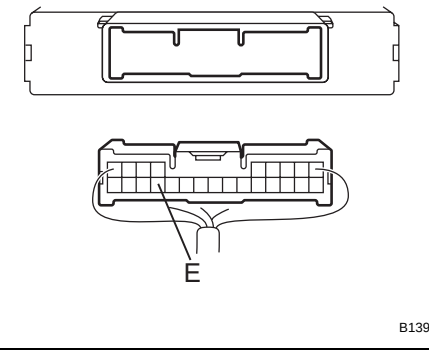

(a) Measure the resistance according to the value(s) in the table below.
Standard resistance

Tester Connection	Condition	Specified Condition
M2-21 (E) - Body ground	Always	Below 1 Ω

NG → **REPAIR OR REPLACE HARNESS OR CONNECTOR**

OK

PROCEED TO NEXT CIRCUIT INSPECTION SHOWN IN PROBLEM SYMPTOMS TABLE

SYSTEM DIAGRAM

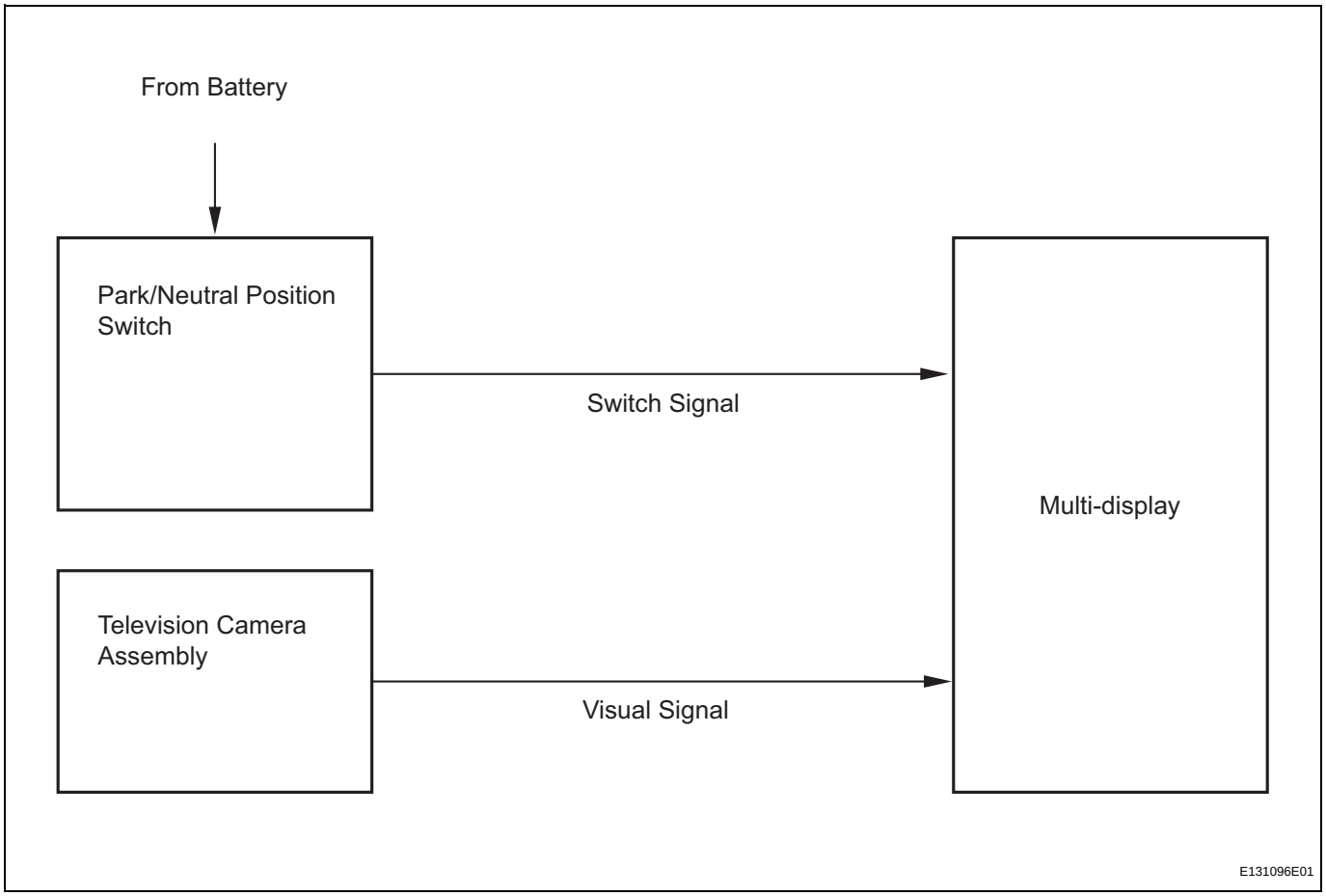

SYSTEM DESCRIPTION

1. GENERAL

(a) To assist the driver in parking the vehicle by displaying an image of the area behind the vehicle, this system has a television camera mounted on the luggage compartment door. The system displays the image on the multi-display.

(b) This system consists of the following components:
(1) Multi-display
(2) Television camera assembly
(3) Park/Neutral Position Switch

2. FUNCTION OF COMPONENTS

(a) The multi-display controls the system by using information from the following components:

Item	Function
Television Camera Assembly	• Mounted on the luggage compartment door to transmit an image of the area behind the vehicle to the multi-display. • A color video camera that uses a CCD (Charge Coupled Device) and a wide-angle lens.
Multi-display	• Receives video signals, which contain an image of the area behind the vehicle taken with the television camera assembly. • Effects control of the system by receiving a shift position signal from the park/neutral position switch. • Displays the rear view monitor image on the display panel.
Park/Neutral Position Switch	Transmits a reverse shift position signal to the multi-display.

3. OPERATION EXPLANATION

(a) The park/neutral position switch outputs the R position signal to the multi-display when the shift lever is moved to the R position. After receiving the R position signal, the multi-display switches from the navigation system to the rear view monitor system.

4. NOTES FOR REAR VIEW MONITOR

(a) Notes for the rear view monitor.
(1) The rear view monitor may not function properly if subjected to a severe blow by any hard object.
(2) Do not "scrub" the lens of the camera because it is made of resin. Scrubbing it may scratch the cover and affect the image. Prevent organic solvents, waxes, bond removing solvents, or glass coating from adhering to the cover. Clean it off immediately, and wash with water.
(3) Exposing the camera to a sudden temperature change may affect proper functioning of the camera.
(4) A clear image may not appear if the camera is dirty with snow, mud, etc. In this case, wash it with water and wipe off the lens. Use a detergent to remove dirt if necessary.

(b) Images are difficult to discern even in normal conditions if:
(1) The camera lens is frosted over (the image immediately after turning the engine switch on (IG) may be blurred or darker than normal).

(2) A strong beam of light, such as a sunbeam or headlight, hits the camera.
(3) It is too dark around the camera (at night, etc.).
(4) The ambient temperature around the camera is either too high or too low.
HINT:
When a strong light, such as a sunbeam reflected off the vehicle's body, hits the camera, the image may be blurred. This is called the "SMEAR" phenomenon, peculiar to the CCD camera.

HOW TO PROCEED WITH TROUBLESHOOTING

1	VEHICLE BROUGHT TO WORKSHOP

NEXT

2	CUSTOMER PROBLEM ANALYSIS

NEXT

3	CHECK DTC OF NAVIGATION SYSTEM

(a) Refer to the diagnostic check/clear of the navigation system (See page NS-48).

- **DTC IS OUTPUT (Go to navigation system)**
- **DTC IS NOT OUTPUT (Go to step 4)**

PM

4	PROBLEM SYMPTOM CONFIRMATION

- **SYMPTOM DOES NOT OCCUR (Go to step 5)**
- **SYMPTOM OCCURS (Go to step 6)**

5	SYMPTOM SIMULATION

NEXT

6	CHECK IF THE SAME SYMPTOM APPEARS IN THE NAVIGATION SYSTEM

(a) Refer to the navigation system (See page NS-41).

- **THE SYMPTOM APPEARS (FOLLOW THE NAVIGATION SYMPTOM CHART TO PERFORM TROUBLESHOOTING)**
- **THE SYMPTOM DOES NOT APPEAR (Go to step 7)**

7	PROBLEM SYMPTOMS TABLE

(a) Refer to the problem symptoms table (See page PM-25).

THE CORRESPONDING SYMPTOM EXISTS (Go to step 9)

THE CORRESPONDING SYMPTOM DOES NOT EXIST (Go to step 8)

8	**BASED ON THE MALFUNCTION SYMPTOM, PERFORM TROUBLESHOOTING BELOW**

(a) Terminals of ECU (See page PM-26).

NEXT

9	**ADJUST, REPAIR OR REPLACE**

NEXT

10	**CONFIRMATION TEST**

NEXT

END

PROBLEM SYMPTOMS TABLE

HINT:

- Before inspecting the suspected areas listed in the table below, check the fuses and relays.
- Before inspecting the suspected areas listed in the table below, check for DTCs.
- Methods used to verify the cause of the problem are listed in order of probability in the suspected area column.

REAR VIEW MONITOR SYSTEM

Symptom	Suspected Area	See page
When shift lever is in R position, rear view monitor image is not displayed	1. Reverse signal circuit	PM-86
	2. Proceed to "Display Signal Circuit between Multi-display and Television Camera Assembly	PM-88
	3. Multi-display	NS-233
When shift lever is in R position, rear view monitor image is not displayed	1. Multi-display power source circuit	NS-228
	2. Proceed to "Display Signal Circuit between Multi-display and Television Camera Assembly	PM-88
	3. Multi-display	NS-233
When shift lever is not in R position, rear view monitor image is displayed.	1. Proceed to "Display Signal Circuit between Multi-display and Television Camera Assembly	PM-88
	2. Multi-display	NS-233
	3. Television Camera Assembly	PM-104
Problem with the rear view monitor image (color, disorder of picture).	1. Proceed to "Display Signal Circuit between Multi-display and Television Camera Assembly	PM-88
	2. Multi-display	NS-233
	3. Television Camera Assembly	PM-104

TERMINALS OF ECU

1. TELEVISION CAMERA ASSEMBLY

(a) Disconnect the R15 camera connector.

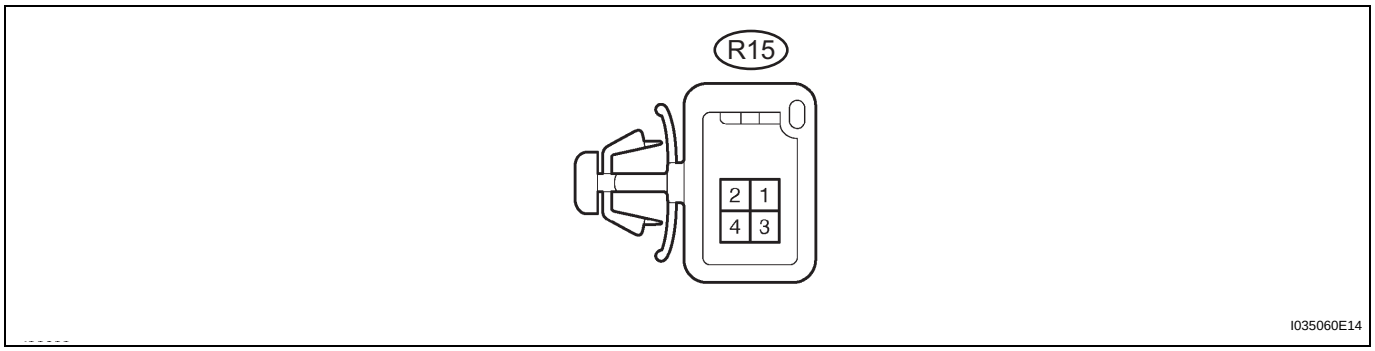

(b) Measure the voltage and resistance between each terminal of the wire harness side connector.

Symbols (Terminal No.)	Wiring Color	Terminal Description	Condition	Specified Value
CGND (R15-3) - Body ground	W - Body ground	Ground	Always	Below 1 Ω
CB+ (R15-4) - CGND (R15-3)	B - W	Power source	Engine switch on (IG), shift lever R position	Approx. 6 V

If the result is not as specified, there may be a malfunction on the wire harness side.

(c) Reconnect the R15 camera connector.

(d) Measure the voltage and frequency between each terminal of the connector.

Symbols (Terminal No.)	Wiring Color	Terminal Description	Condition	Specified Value
CV+ (R15-2) - CV- (R15-1)	R - Shielded	Display signal	Engine switch on (IG), shift lever R position	See waveform 1

If the result is not as specified, the camera may have a malfunction.

(e) Reference:
Oscilloscope waveform
(1) Waveform 1

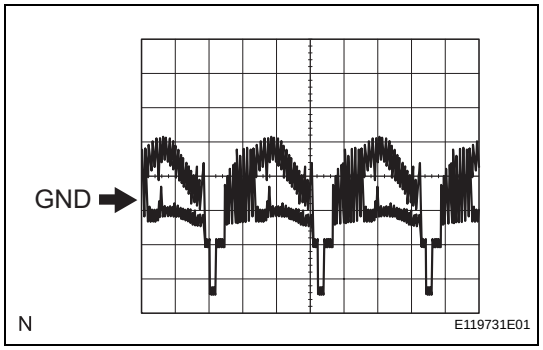

Item	Content
Measurement terminal	CV+ - CV-
Measurement setting	0.2 V/DIV., 0.2 μS/DIV.
Condition	Engine switch on (IG), Shift lever R position

2. MULTI-DISPLAY (See page NS-44)

PM

Reverse Signal Circuit

DESCRIPTION

The multi-display receives a reverse signal from the park/neutral position switch.

WIRING DIAGRAM

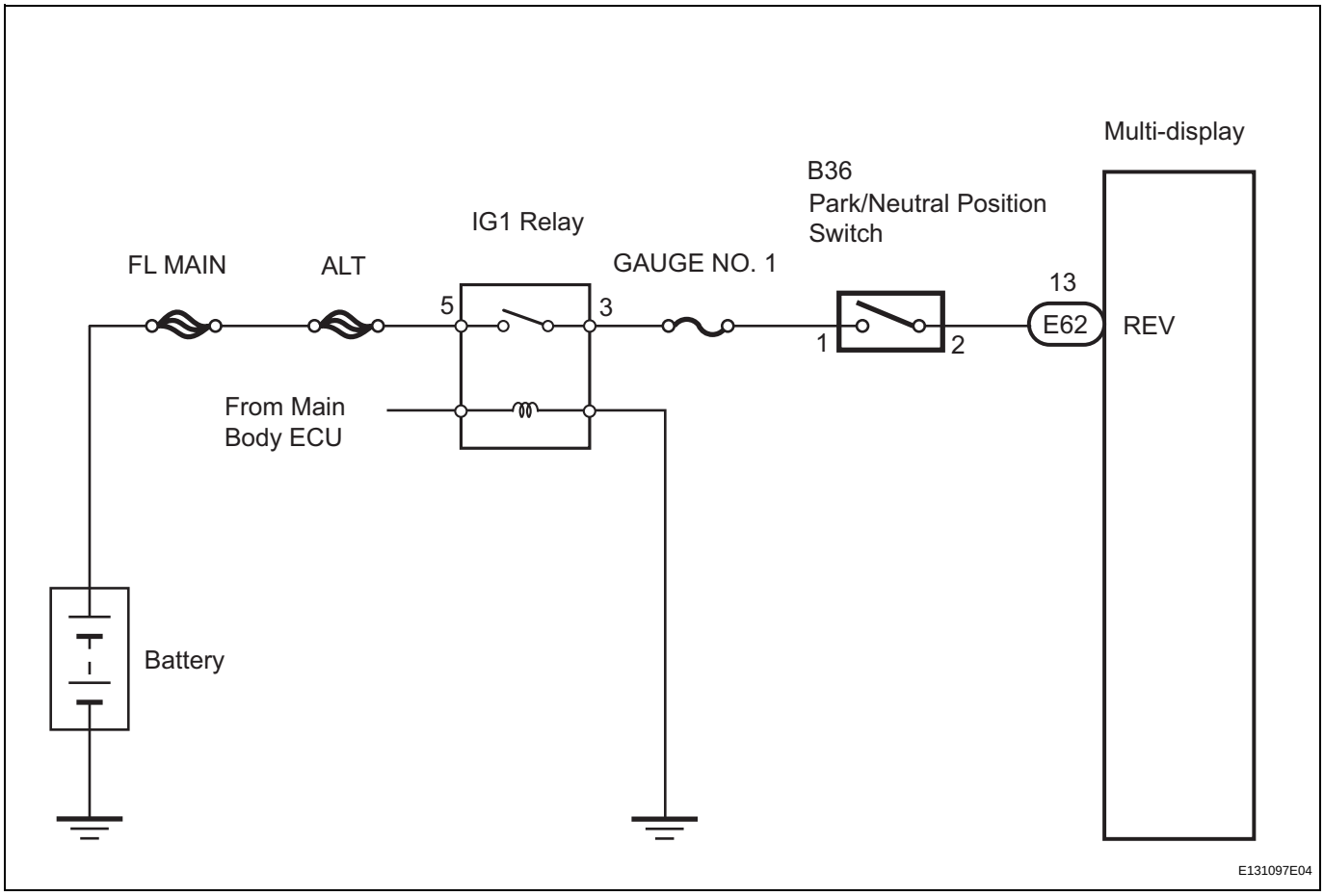

INSPECTION PROCEDURE

1	CHECK BACK-UP LIGHT

(a) Move the shift lever to the R position and check if the back-up light comes on.
OK:
The back-up light comes on.

NG → **GO TO LIGHTING SYSTEM**

OK

2 CHECK VEHICLE SIGNAL (DISPLAY CHECK MODE)

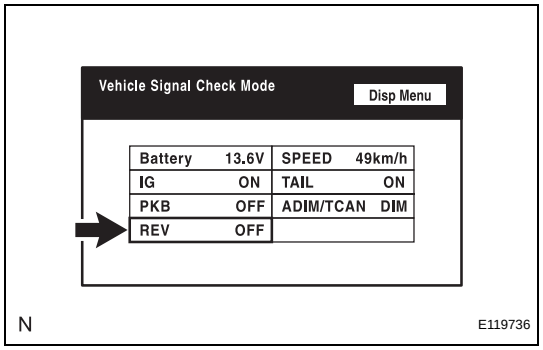

(a) Enter the "Display Check" mode (Vehicle Signal Check Mode) (See page NS-21).

(b) Check that the display changes between ON and OFF according to the shift lever operation (P and R).

OK

Shift Lever Position	Display
R	ON
Except R	OFF

HINT:
This display is updated once per second. As a result, it is normal for the display to lag behind the actual change in the switch.

OK → **PROCEED TO NEXT CIRCUIT INSPECTION SHOWN IN PROBLEM SYMPTOMS TABLE**

NG

3 INSPECT MULTI-DISPLAY

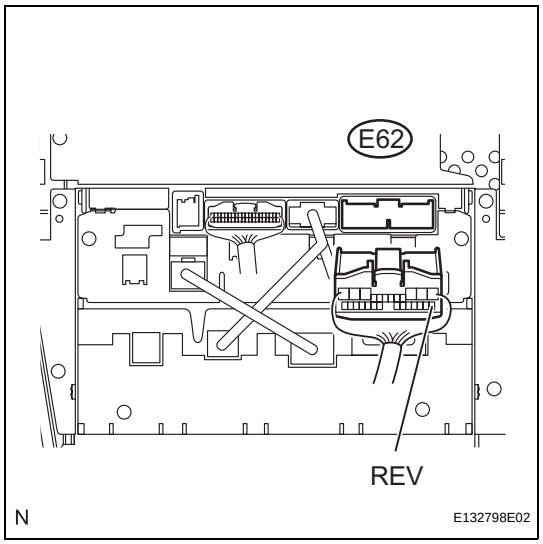

(a) Disconnect the multi-display connector E62.

(b) Measure the voltage according to the value(s) in the table below.

Standard voltage

Tester connection	Condition	Specified condition
REV (E62-13) - Body ground	Engine switch is on (IG). Shift lever is moved to R position.	10 to 14 V
REV (E62-13) - Body ground	Engine switch is on (IG). Shift lever is moved to any position except R.	Below 1 V

OK → **REPLACE MULTI-DISPLAY**

NG

CHECK AND REPLACE HARNESS AND CONNECTOR (MULTI-DISPLAY - PARK/NEUTRAL POSITION SWITCH)

PM

Display Signal Circuit between Multi-display and Television Camera Assembly

DESCRIPTION

This is the display signal circuit of the television camera assembly.

WIRING DIAGRAM

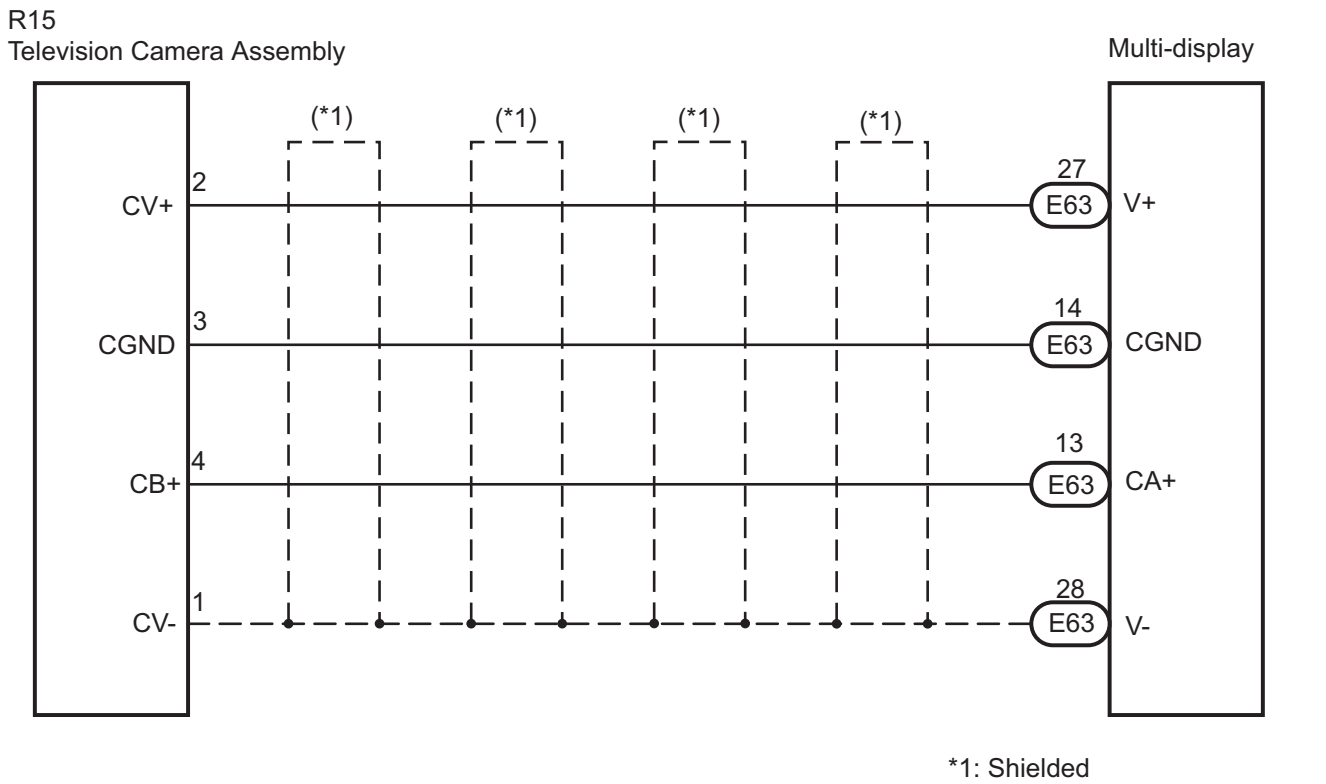

INSPECTION PROCEDURE

1	**CHECK HARNESS AND CONNECTOR (MULTI-DISPLAY - TELEVISION CAMERA ASSEMBLY)**

(a) Disconnect the E63 connector from the multi-display.
(b) Disconnect the R15 connector from the television camera assembly.

PM

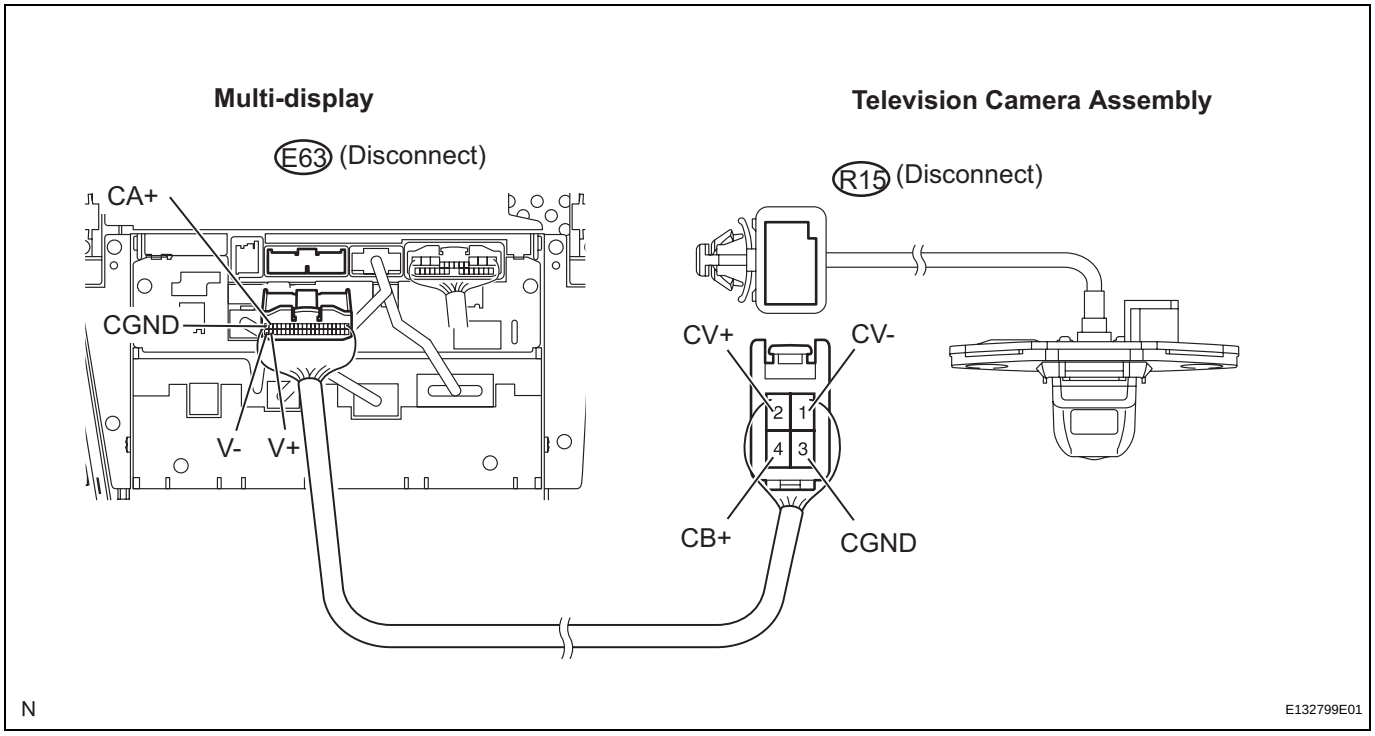

(c) Measure the resistance according to the value(s) in the table below.

Standard resistance

Tester connection (Terminal No.)	Condition	Specified condition
CB+ (R15-4) - CA+ (E63-13)	Always	Below 1 Ω
CGND (R15-3) - CGND (E63-14)	Always	Below 1 Ω
CV+ (R15-2) - V+ (E63-27)	Always	Below 1 Ω
CV- (R15-1) - V- (E63-28)	Always	Below 1 Ω
CB+ (R15-4) - Body ground	Always	10 kΩ or higher
CGND (R15-3) - Body ground	Always	10 kΩ or higher
CV+ (R15-2) - Body ground	Always	10 kΩ or higher
CV- (R15-1) - Body ground	Always	10 kΩ or higher

NG → **REPAIR OR REPLACE HARNESS OR CONNECTOR**

OK

2	INSPECT MULTI-DISPLAY

(a) Reconnect the multi-display E63 connector.

PM

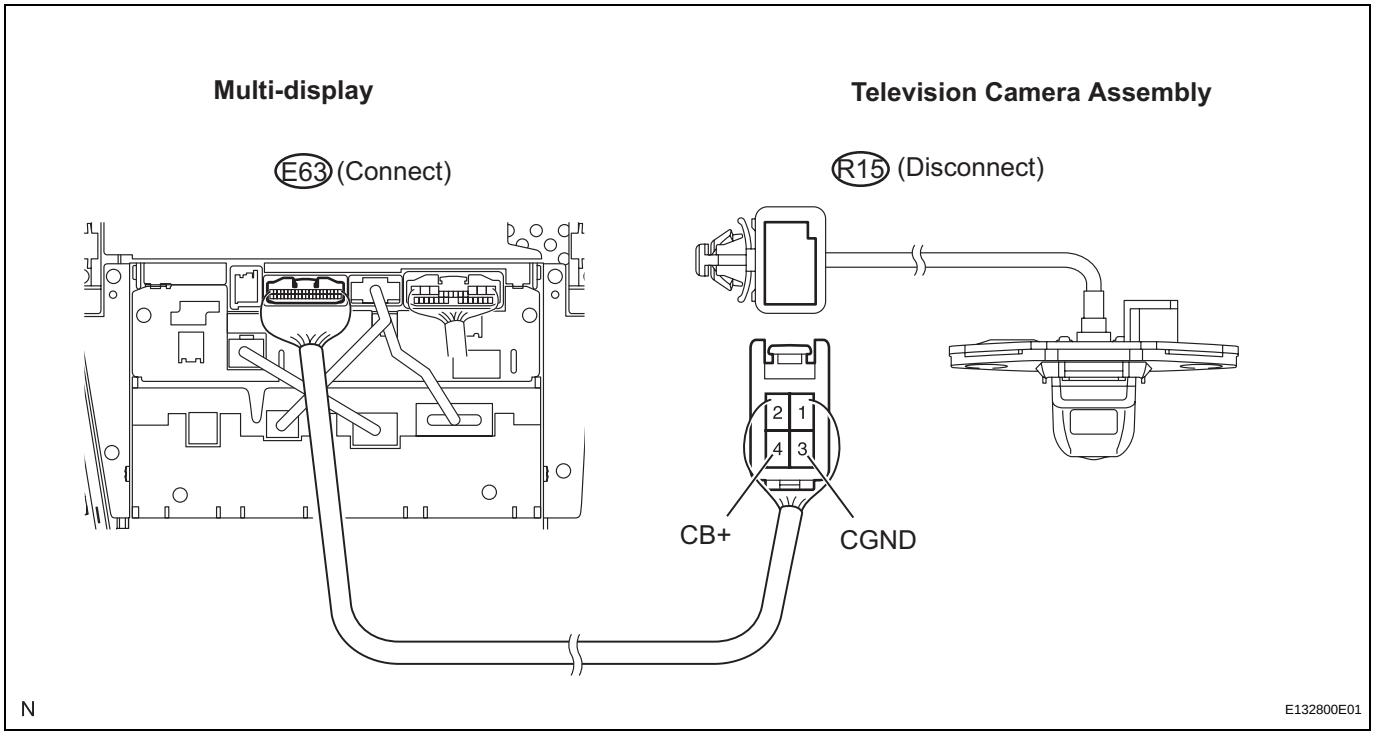

(b) Measure the voltage according to the value(s) in the table below.

Standard voltage

Tester connection	Condition	Specified condition
CB+ (R15-4) - CGND (R15-3)	Engine switch on (IG) Shift lever R position	Approx. 6 V

NG → **REPLACE MULTI-DISPLAY**

OK

3	INSPECT TELEVISION CAMERA ASSEMBLY

(a) Reconnect the television camera assembly R15 connector.

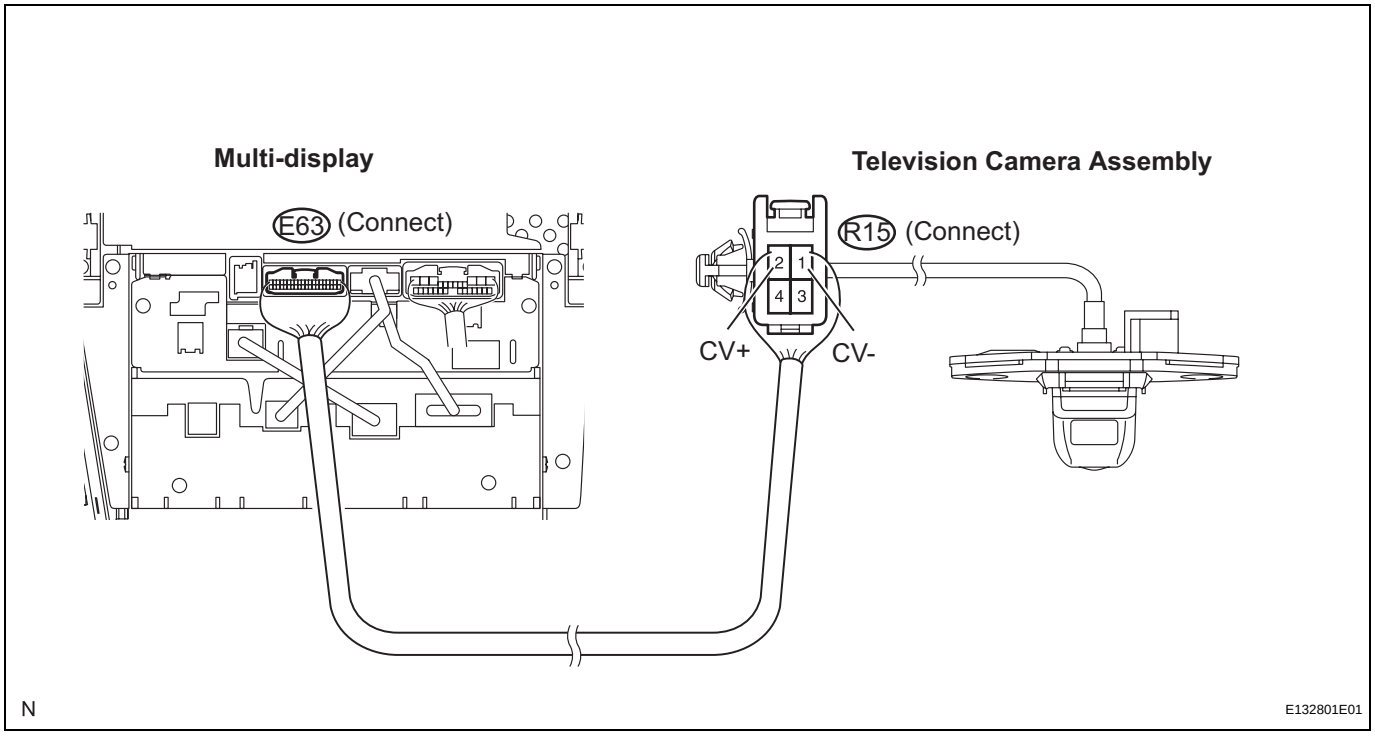

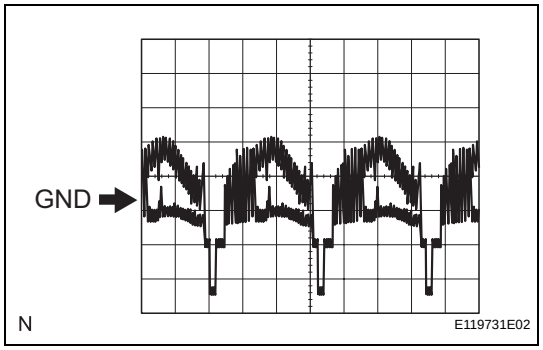

(b) Check the waveform of the television camera assembly using an oscilloscope.

PM

Standard waveform

Tester connection	Condition	Specified condition
CV+ (R15-2) - CV- (R15-1)	Engine switch on (IG) Shift lever R position	Shown in the illustration

NG → **REPLACE TELEVISION CAMERA ASSEMBLY**

OK

PROCEED TO NEXT CIRCUIT INSPECTION SHOWN IN PROBLEM SYMPTOMS TABLE

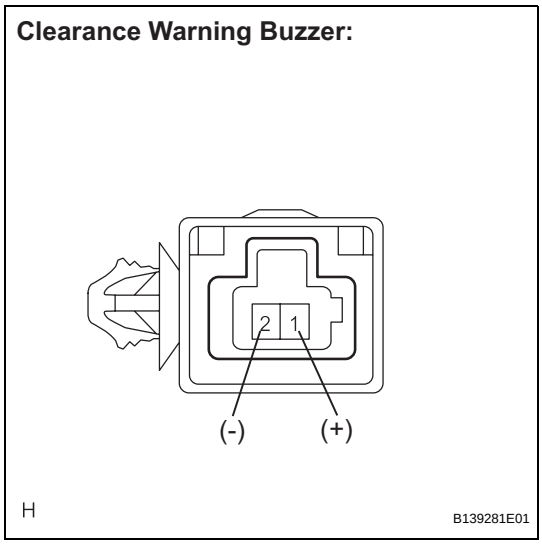

INSPECTION

1. INSPECT CLEARANCE WARNING BUZZER

(a) Apply battery voltage and check operation of the warning buzzer, as shown in the table below.

Result

Measurement Condition	Specified Condition
Battery voltage (+) → 1 Battery voltage (-) → 2	Operating sound occurs

HINT:
The clearance warning buzzer does not sound without battery voltage applied because the buzzer is a separately-excited type.

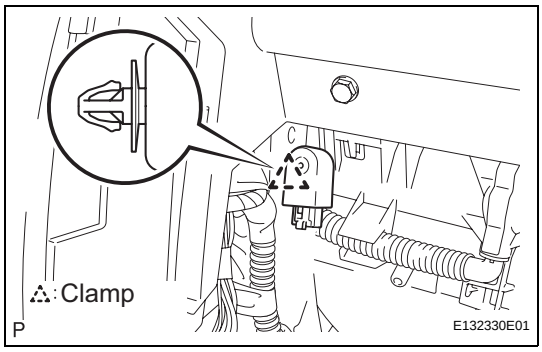

INSTALLATION

1. INSTALL CLEARANCE WARNING BUZZER

(a) Engage the clamp and install the clearance warning buzzer.

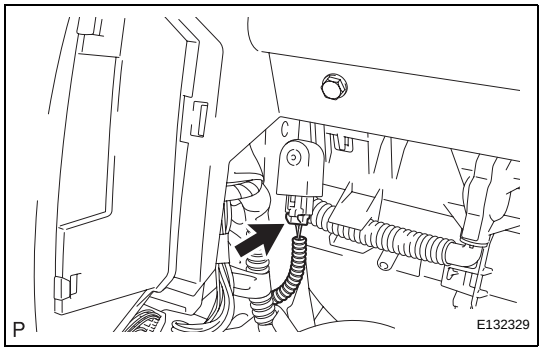

(b) Connect the connector.

2. INSTALL INTEGRATION CONTROL PANEL WITH RADIO RECEIVER ASSEMBLY (w/o Navigation System) (See page AV-172)

3. INSTALL MULTI-DISPLAY WITH RADIO RECEIVER ASSEMBLY (w/ Navigation System) (See page AV-173)

4. INSTALL INSTRUMENT PANEL FINISH PANEL END LH (See page IP-46)

5. INSTALL INSTRUMENT PANEL FINISH PANEL END RH (See page IP-44)

6. INSTALL UPPER CONSOLE PANEL ASSEMBLY WITH FRONT ASH RECEPTACLE (See page IP-42)

7. INSTALL NO. 2 INSTRUMENT PANEL REGISTER ASSEMBLY (See page IP-41)

8. INSTALL SHIFT LEVER KNOB SUB-ASSEMBLY (See page IP-42)

9. ADJUST CLOCK

REMOVAL

1. **REMOVE COOL AIR INTAKE DUCT SEAL (for Front Side) (See page ET-4)**
2. **REMOVE FRONT BUMPER ASSEMBLY (for Front Side) (See page ET-5)**
3. **REMOVE NO. 1 ULTRASONIC SENSOR (for Front Side)**
   (a) Disconnect the No. 1 ultrasonic sensor connector.
   (b) Remove the No. 2 ultrasonic sensor retainer as shown in the illustration.

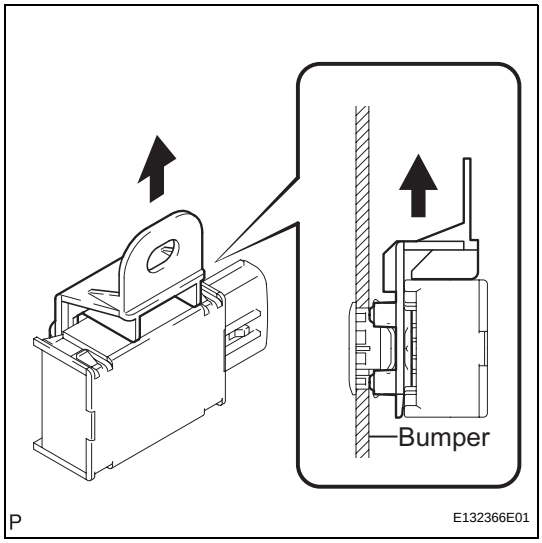

   (c) Remove the No. 1 ultrasonic sensor from the No. 1 ultrasonic sensor retainer.

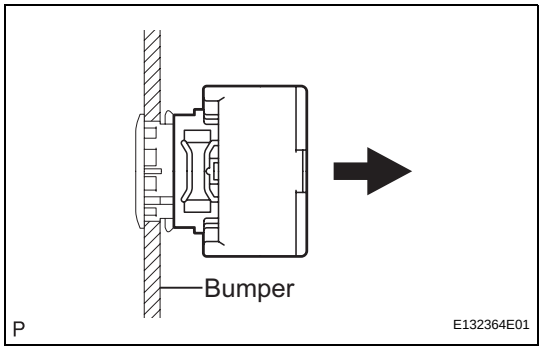

4. **REMOVE NO. 1 ULTRASONIC SENSOR RETAINER (for Front Side)**
   (a) Disengage the 2 claws and remove the No. 1 ultrasonic sensor retainer from the front bumper assembly.

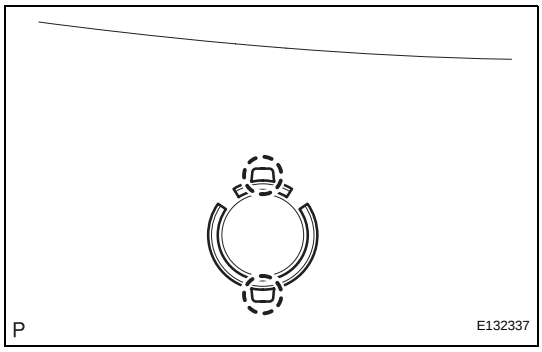

5. **REMOVE LUGGAGE COMPARTMENT FLOOR MAT (for Rear Side)**
6. **REMOVE SPARE WHEEL COVER TRAY (for Rear Side)**
7. **REMOVE LUGGAGE HOLD BELT STRIKER ASSEMBLY (for Rear Side) (See page ED-82)**
8. **REMOVE NO. 1 LUGGAGE COMPARTMENT TRIM HOOK (for Rear Side) (See page ED-83)**
9. **REMOVE REAR FLOOR FINISH PLATE (for Rear Side) (See page ED-83)**

10. REMOVE LUGGAGE COMPARTMENT INNER TRIM COVER RH (for Rear Side) (See page ED-83)

11. REMOVE REAR BUMPER ASSEMBLY (for Rear Side) (See page ET-19)

12. REMOVE NO. 1 ULTRASONIC SENSOR (for Rear Side)

(a) Disconnect the No. 1 ultrasonic sensor connector.

(b) Disengage the clamp.

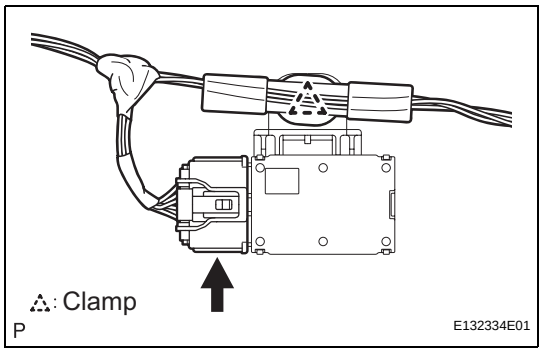

(c) Remove the No. 2 ultrasonic sensor retainer as shown in the illustration.

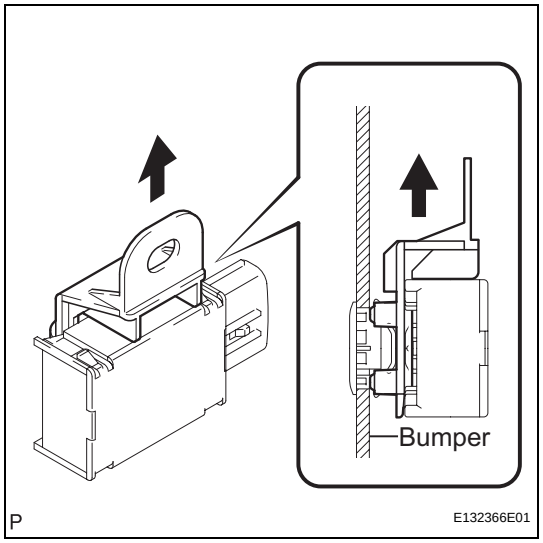

(d) Remove the No. 1 ultrasonic sensor from the No. 1 ultrasonic sensor retainer.

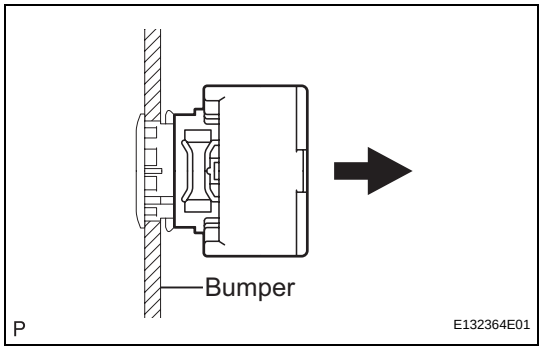

13. REMOVE NO. 1 ULTRASONIC SENSOR RETAINER (for Rear Side)

(a) Disengage the 2 claws and remove the No. 1 ultrasonic sensor retainer from the rear bumper assembly.

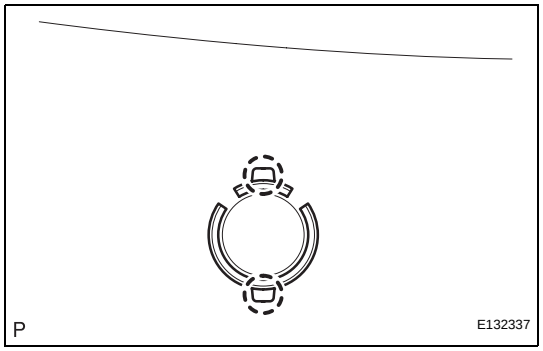

INSTALLATION

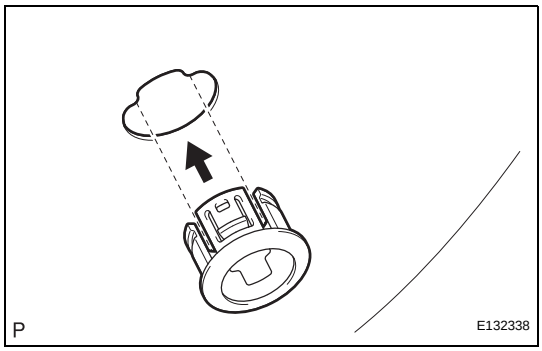

1. INSTALL NO. 1 ULTRASONIC SENSOR RETAINER (for Rear Side)

(a) Install the No. 1 ultrasonic sensor retainer as shown in the illustration.
HINT:
Align the protrusions on the bumper hole with the slits of the No. 1 ultrasonic sensor retainer and install the No. 1 ultrasonic sensor.

2. INSTALL NO. 1 ULTRASONIC SENSOR (for Rear Side)
NOTICE:
Do not apply excessive force to the No. 1 ultrasonic sensor while performing the following procedures.

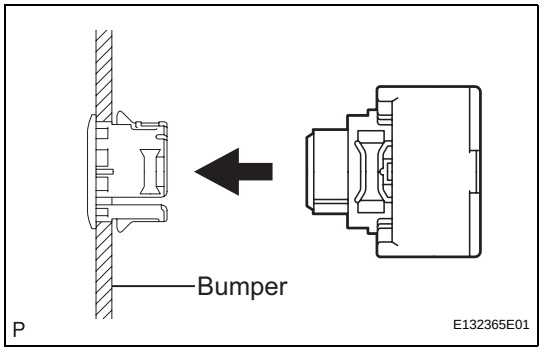

(a) Install the No. 1 ultrasonic sensor to the No. 1 ultrasonic sensor retainer.

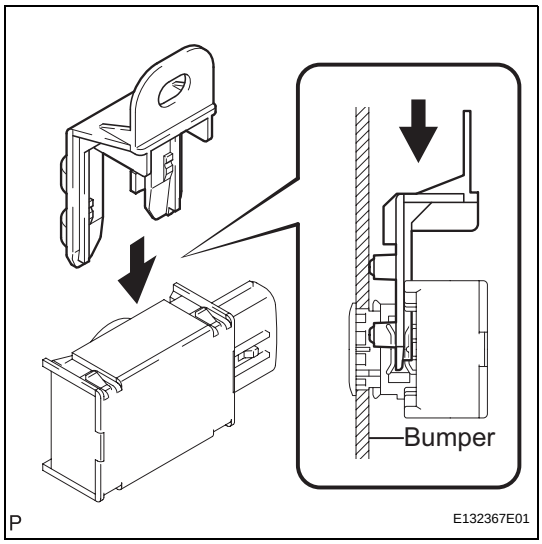

(b) Install the No. 2 ultrasonic sensor retainer as shown in the illustration.

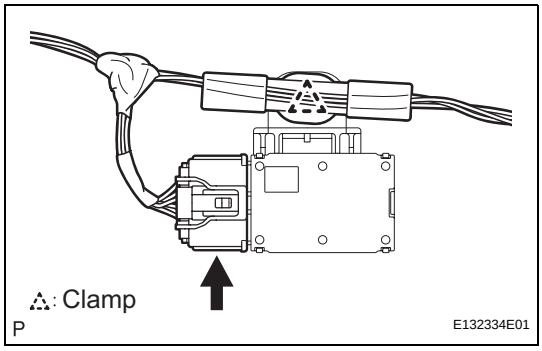

(c) Connect the No. 2 ultrasonic sensor connector and engage the clamp.

3. INSTALL REAR BUMPER ASSEMBLY (for Rear Side) (See page ET-23)

4. INSTALL LUGGAGE COMPARTMENT INNER TRIM COVER RH (for Rear Side) (See page ED-88)

5. INSTALL REAR FLOOR FINISH PLATE (for Rear Side) (See page ED-88)

6. INSTALL NO. 1 LUGGAGE COMPARTMENT TRIM HOOK (for Rear Side) (See page ED-89)

7. **INSTALL LUGGAGE HOLD BELT STRIKER ASSEMBLY (for Rear Side) (See page ED-89)**

8. **INSTALL SPARE WHEEL COVER TRAY (for Rear Side)**

9. **INSTALL LUGGAGE COMPARTMENT FLOOR MAT (for Rear Side)**

10. **INSTALL NO. 1 ULTRASONIC SENSOR RETAINER (for Front Side)**
    (a) Install the No. 1 ultrasonic sensor retainer as shown in the illustration.
    HINT:
    Align the protrusions on the bumper hole with the slits of the No. 1 ultrasonic sensor retainer and install the No. 1 ultrasonic sensor.

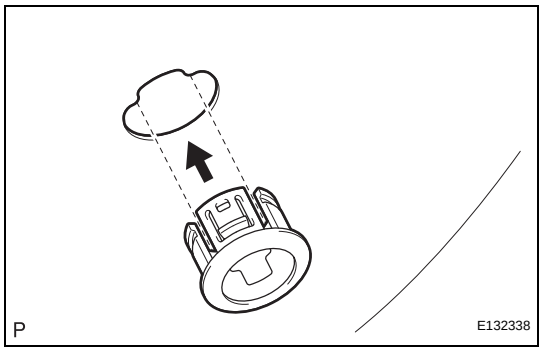

11. **INSTALL NO. 1 ULTRASONIC SENSOR (for Front Side)**
    NOTICE:
    Do not apply excessive force to the No. 1 ultrasonic sensor while performing the following procedures.
    (a) Install the No. 1 ultrasonic sensor to the No. 1 ultrasonic sensor retainer.

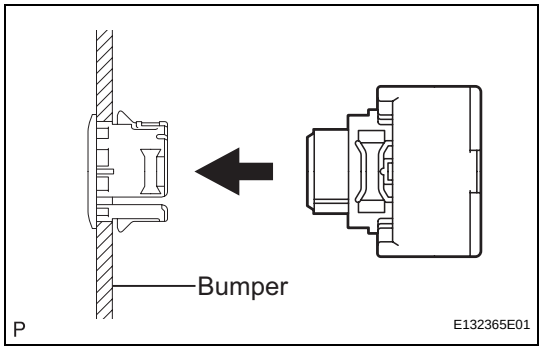

    (b) Install the No. 2 ultrasonic sensor retainer as shown in the illustration.

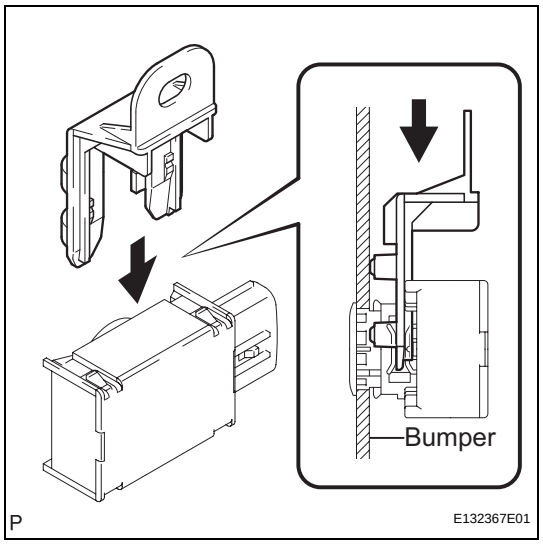

12. **INSTALL FRONT BUMPER ASSEMBLY (for Front Side) (See page ET-14)**

13. **INSTALL COOL AIR INTAKE DUCT SEAL (for Front Side) (See page ET-14)**

14. **VEHICLE PREPARATION FOR FOG LIGHT AIM ADJUSTMENT (See page LI-141)**

15. **PREPARATION FOR FOG LIGHT AIMING (See page LI-142)**

16. **FOG LIGHT AIMING INSPECTION (See page LI-143)**

17. **FOG LIGHT AIMING ADJUSTMENT (See page LI-144)**

OUTSIDE VEHICLE

GENERAL MAINTENANCE

Check the parts of the vehicle described below on a daily basis. Performing maintenance checks on the vehicle is the owner's responsibility. The owner may take the vehicle to a service center but it is recommended that the owner perform the checks.
In most cases, special tools are not required.
The procedures for general maintenance are as follows.

1. GENERAL NOTES
- Maintenance requirements vary depending on the country.
- Check the maintenance schedule in the owner's manual supplement.
- Following the maintenance schedule is mandatory.
- Determine the appropriate time to service the vehicle using either miles driven or time (months) elapsed, whichever reaches the specification first.
- Failing to check each vehicle part could lead to poor engine performance and increase exhaust emissions.

2. TIRES
(a) Check the tire pressure with a gauge. Make adjustments if necessary.
(b) Check the surfaces of tires for cuts, damage or excessive wear.

3. WHEEL NUTS
(a) Check for nuts that are loose or missing. Tighten them if necessary.

4. TIRE ROTATION
Check the maintenance schedule in the owner's manual supplement.

5. WINDSHIELD WIPER BLADES
(a) Check the blades for wear or cracks when they are unable to wipe the windshield clean. Replace them if necessary.

6. FLUID LEAKS
(a) Check under the vehicle for leaking fuel, oil, water and other fluids.
NOTICE:
If you smell gasoline fumes or notice any leaks, locate the cause and repair it.

7. DOORS AND ENGINE HOOD
(a) Check that all of the doors operate smoothly, and that all the latches lock securely.
(b) When the primary latch is released, check that the engine hood secondary latch prevents the hood from opening.

INSIDE VEHICLE

GENERAL MAINTENANCE

Check the parts of the vehicle described below on a daily basis. Performing maintenance checks on the vehicle is the owner's responsibility. The owner may take the vehicle to a service center but it is recommended that the owner perform the checks.
In most cases, special tools are not required.
The procedures for general maintenance are as follows.

1. GENERAL NOTES
- Maintenance requirements vary depending on the country.
- Check the maintenance schedule in the owner's manual supplement.
- Determine the appropriate time to service the vehicle using either miles driven or time (months) elapsed, whichever reaches the specification first.
- Maintain similar intervals between periodic maintenance unless noted.
- Failing to check each vehicle part could lead to poor engine performance and increase exhaust emissions.

2. LIGHTS
(a) Check that the headlights, stop lights, taillights, turn signal lights, and other lights illuminate or blink. Also, check that they have enough brightness.

3. WARNING LIGHTS AND BUZZERS
(a) Check that all the warning lights and buzzers are working.

4. HORNS
(a) Check that the horn is working.

5. WINDSHIELD GLASS
(a) Check for scratches, pits or abrasions.

6. WINDSHIELD WIPER AND WASHER
(a) Check that the washers are aimed properly. Also, check that the washer fluid hits the center of the operating range of each wiper on the windshield.
(b) Check that the wipers streak or not. Replace the wiper if necessary.

7. WINDSHIELD DEFROSTER
(a) When the heater or air conditioner is on the defroster setting, check that air comes out of the defroster outlet.

8. REAR VIEW MIRROR
(a) Check that the rear view mirror is securely mounted.

9. SUN VISORS
(a) Check that the sun visors move freely and are securely mounted.

10. STEERING WHEEL

(a) Check that the steering wheel has the proper free play. Also check for steering difficulty, unusual noises (See page SR-2).

11. SEATS

(a) Check that the seat adjusters, seatback recliner and other front seat controls operate smoothly.
(b) Check that all the latches lock securely in all positions.
(c) Check that the locks hold securely in all positions.
(d) Check that the headrests move up and down smoothly and that the locks hold securely in all latched positions.
(e) When the rear seatbacks are folded down, check that the latches lock securely.

12. SEAT BELTS

(a) Check that the seat belt system such as the buckles, retractors and anchors operate properly and smoothly.
(b) Check that the belt webbing is not cut, frayed, worn or damaged.

13. ACCELERATOR PEDAL

(a) Check that the pedal operates smoothly. In other words, check that the pedal does not have uneven pedal resistance or become stuck in certain positions.

14. BRAKE PEDAL

(a) Check that the pedal has the proper reserve distance and free play (See page BR-16).
(b) Start the engine and check the brake booster function.

15. BRAKES

(a) In a safe place, check that the vehicle remains straight when applying the brakes.

16. PARKING BRAKE

(a) Check that the pedal has the proper range of motion (See page PB-1).
(b) On a low incline, check that the parking brake alone can stabilize the vehicle.

17. AUTOMATIC TRANSAXLE "PARK" MECHANISM

(a) Check the lock release button of the shift lever for proper and smooth operation.
(b) When the shift lever is in the P position and all brakes are released on a low incline, check that the vehicle is stable.

MA

UNDER HOOD

GENERAL MAINTENANCE

1. GENERAL NOTES

- Maintenance requirements vary depending on the country.
- Check the maintenance schedule in the owner's manual supplement.
- Following the maintenance schedule is mandatory.
- Determine the appropriate time to service the vehicle using either miles driven or time elapsed, whichever reaches the specification first.
- Maintain similar intervals between periodic maintenance unless noted.
- Failing to check each vehicle part could lead to poor engine performance and increase exhaust emissions.

2. WINDSHIELD WASHER FLUID

(a) Check that there is sufficient fluid in the tank.

3. ENGINE COOLANT LEVEL

(a) Check that the coolant level is between the "FULL" and "LOW" lines on the see-through reservoir.

4. RADIATOR AND HOSES

(a) Check that the front of the radiator is clean and free of leaves, dirt and bugs.

(b) Check the hoses for cracks, kinks, rotting or loose connections.

5. BATTERY ELECTROLYTE LEVEL

(a) Check that the electrolyte level of all the battery cells is between the upper and lower lines on the case.
HINT:
If the electrolyte level is difficult to see, lightly shake the vehicle.

6. BRAKE FLUID LEVEL

(a) Check that the brake fluid levels are near the upper level line on the see-through reservoirs.

7. ENGINE DRIVE BELT

(a) Check the drive belt for fraying, cracks, wear or oiliness.

8. POWER STEERING FLUID LEVEL

(a) Check the fluid level in the fluid reservoir.
HINT:
If the fluid is hot, check that the fluid level is within the HOT range on the fluid reservoir. If the fluid is cold, check that the fluid level is within the COLD range.

9. ENGINE OIL LEVEL

(a) Check that the level of engine oil is between "F" and "L" on the dipstick with the engine turned off.

10. AUTOMATIC TRANSAXLE FLUID LEVEL

HINT:

See page AX-176

11. EXHAUST SYSTEM

(a) Check for unusual exhaust sounds or abnormal exhaust fumes. Locate the cause and repair it.

MA

ENGINE

GENERAL MAINTENANCE

HINT:
Inspect these items on a cooled down engine.

1. INSPECT DRIVE BELT
HINT:
See page EM-6

2. REPLACE ENGINE OIL AND OIL FILTER
HINT:
See page LU-3

3. REPLACE ENGINE COOLANT
HINT:
See page CO-5

4. INSPECT EXHAUST PIPES AND MOUNTINGS
(a) Visually check the pipes, hangers and connections for severe corrosion, leaks or damage.

5. INSPECT SPARK PLUGS
HINT:
See page IG-5

6. INSPECT BATTERY
HINT:
See page CH-4

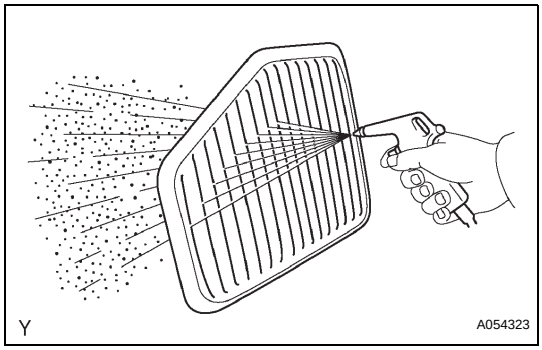

7. INSPECT AIR CLEANER FILTER
(a) Remove the air filter.
(b) Visually check that the air filter is not excessively damaged or oily. If necessary, replace the air filter.
(c) Reinstall the air filter.

8. REPLACE AIR CLEANER FILTER
(a) Replace the air filter with a new one.

9. INSPECT FUEL TANK CAP GASKET
HINT:
See page EC-7

10. INSPECT FUEL LINES AND CONNECTIONS AND FUEL TANK VAPOR VENT SYSTEM HOSES AND FUEL TANK BANDS
(a) Visually check the fuel lines for cracks, leakage, loose connections, deformation or tank band looseness.

11. INSPECT CHARCOAL CANISTER
HINT:
See page EC-9

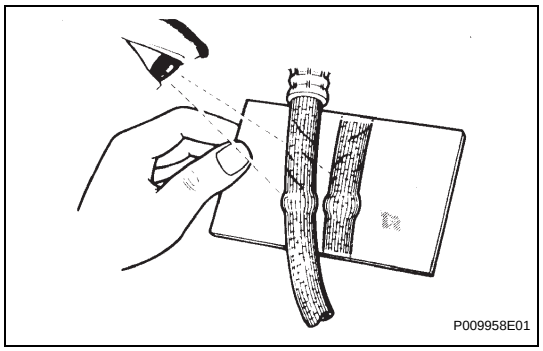

BRAKE

GENERAL MAINTENANCE

1. INSPECT BRAKE LINE PIPES AND HOSES

HINT:
Work in a well-lighted area. Turn the front wheels fully to the right or left before beginning the inspection.

(a) Using a mirror, check the entire circumference and length of the brake lines and hoses for:
- Damage
- Wear
- Deformation
- Cracks
- Corrosion
- Leaks
- Bends
- Twists

(b) Check all the clamps for tightness and the connections for leakage.

(c) Check that the hoses and lines are not near sharp edges, moving parts or the exhaust system.

(d) Check that the lines are installed properly and pass through the center of the grommets.

2. INSPECT BRAKE PEDAL

HINT:
See page BR-16

3. INSPECT PARKING BRAKE

HINT:
See page PB-1

4. INSPECT BRAKE LININGS

(a) Check the brake linings. Also check the brake linings of parking brake.

5. INSPECT FRONT BRAKE

(a) Check the front brake pads and discs (See page BR-37).

6. INSPECT REAR BRAKE

(a) Check the rear brake pads, discs linings and drums (See page BR-49).

7. INSPECT OR CHANGE BRAKE FLUID

HINT:
See page BR-6

Fluid:
SAE J1703 or FMVSS No. 116 DOT3

MA

MA

CHASSIS

GENERAL MAINTENANCE

1. INSPECT STEERING LINKAGE & GEAR HOUSING

(a) Check the steering wheel free play (See page SR-2).

(b) Check the steering linkage for looseness or damage.

(1) Check that the tie rod ends do not have excessive play.

(2) Check that the dust seals and boots are not damaged.

(3) Check that the boot clamps are not loose.

(4) Check that the steering gear housing is not damaged.

(5) Check that the connector are properly connected to the steering gear housing.

2. INSPECT BALL JOINT AND DUST COVER

(a) Inspect the ball joints for excessive looseness.

(1) Jack up the front of the vehicle and place wooden blocks with a height of 180 to 200 mm (7.09 to 7.87 in.) under the front tires.

(2) Lower the vehicle until the front coil spring has about half its ordinary load. Place stands under the vehicle for safety.

(3) Check that the front wheels are pointing straight ahead. Use wheel chocks on all 4 wheels.

(4) Using a lever, pry up the end of the lower arm. Check the amount of play.

Maximum ball joint vertical play:
0 mm (0 in.)

If there is any play, replace the ball joint.

(b) Check the dust cover for damage.

3. INSPECT DRIVE SHAFT BOOTS

(a) Check the drive shaft boots for loose clamps, grease leakage, kinks or damage.

4. CHECK AUTOMATIC TRANSAXLE FLUID

(a) Visually check the transaxle for fluid leakage. If oil is leaking, find the cause and repair it.

5. INSPECT FRONT AND REAR SUSPENSION

Type	See procedures
Front Suspension	See page SP-4
Rear Suspension	See page SP-11

BODY

GENERAL MAINTENANCE

1. TIGHTEN BOLTS AND NUTS ON CHASSIS AND BODY

(a) Where necessary, tighten all the parts of the chassis.
- Front axle and suspension
- Drive train
- Rear axle and suspension
- Brake system
- Engine mounting, etc.

(b) Where necessary, tighten all the parts of the body.
- Seat belt system
- Seat
- Doors and hood
- Body mountings
- Fuel tank
- Exhaust pipe system, etc.

2. REPLACE AIR CONDITIONING FILTER

(a) Remove the glove compartment assembly.
(b) Remove the filter case from the filter outlet.
(c) Remove the filter from the filter case.
(d) Replace the filter with a new one.
(e) Installation is in the reverse order.

3. ROAD TEST

(a) Check the engine and chassis for abnormal noises.
(b) Check that the vehicle does not wander or pull to one side.
(c) Check that the brakes work properly and do not drag.
(d) Do setting of the parking brake shoes.

4. BODY INSPECTION

(a) Check the body exterior for dents, scratches and rust.
(b) Check the underbody for rust and damage.
If necessary, replace or repair.

5. FINAL INSPECTION

(a) Check the operation of the body parts.
(1) Hood
- Auxiliary catch operates properly.
- Hood locks securely when closed.

(2) Front and rear doors
- Door locks operate properly.
- Doors close properly.

(3) Back door
- Door lock operates properly.

(4) Seats
- Seat adjusts easily and locks securely in any position.
- Front seatback locks securely in any position.

- Folding-down rear seatbacks lock securely.

(5) Be sure to deliver a clean car. Especially check:
- Steering wheel
- Shift lever knob
- All switch knobs
- Door handles
- Seats

Rear Power Window Switch LH Circuit

DESCRIPTION

This circuit supplies power to operate the power window regulator switch assembly (Rear LH).

WIRING DIAGRAM

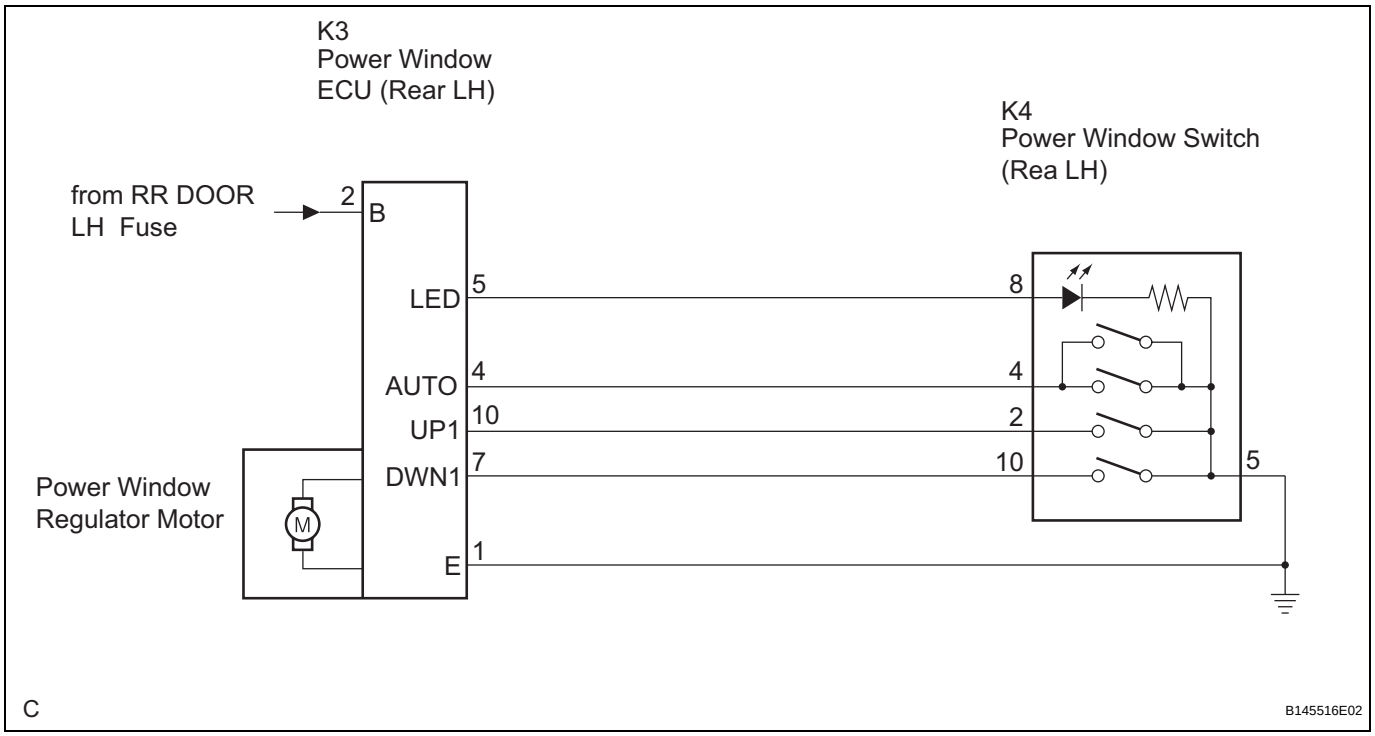

INSPECTION PROCEDURE

WS

1	INSPECT POWER WINDOW REGULATOR SWITCH

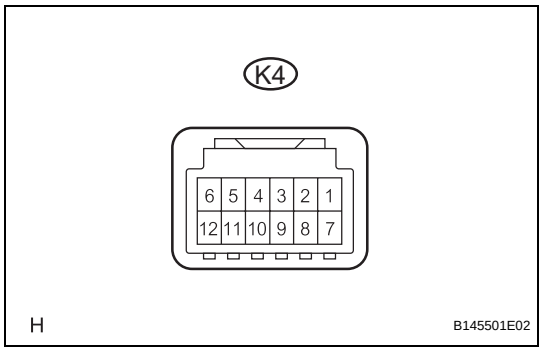

(a) Disconnect the K4 connector.
(b) Measure the resistance according to the value(s) in the table below.

Standard resistance

Tester Connection	Condition	Specified Condition
2 (E) - 4 (A) - 5 (E)	Auto UP	Below 1 Ω
2 (U) - 5 (E)	Manual UP	Below 1 Ω
5 (E) - 10 (D)	Manual DOWN	Below 1 Ω
4 (A) - 10 (D) - 5 (E)	Auto DOWN	Below 1 Ω

NG → **REPLACE POWER WINDOW REGULATOR SWITCH**

OK

2	CHECK WIRE HARNESS (POWER WINDOW REGULATOR SWITCH - POWER WINDOW ECU)

Power Window Switch:

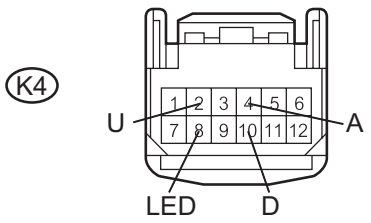

Power Window ECU:

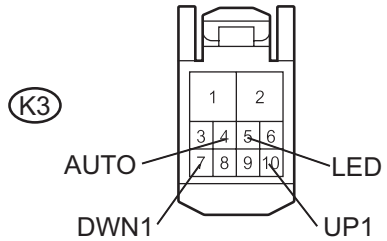

H B145499E02

(a) Disconnect the K3 and K4 connectors.
(b) Measure the resistance according to the value(s) in the table below.

Standard resistance

Tester Connection	Condition	Specified Condition
K3-4 (AUTO) - K4-4 (A)	Always	Below 1 Ω
K3-5 (LED) - K4-8 (LED)	Always	Below 1 Ω
K3-7 (DWN1) - K4-2 (U)	Always	Below 1 Ω
K3-10 (UP1) - K4-10 (D)	Always	Below 1 Ω
K3-4 (AUTO) - Body ground	Always	10 kΩ or higher
K3-5 (LED) - Body ground	Always	10 kΩ or higher
K3-7 (DWN1) - Body ground	Always	10 kΩ or higher
K3-10 (UP1) - Body ground	Always	10 kΩ or higher

NG → **REPAIR OR REPLACE HARNESS OR CONNECTOR**

OK

END

WS

Rear Power Window Switch RH Circuit

DESCRIPTION

This circuit supplies power to operate the power window regulator switch (Rear RH).

WIRING DIAGRAM

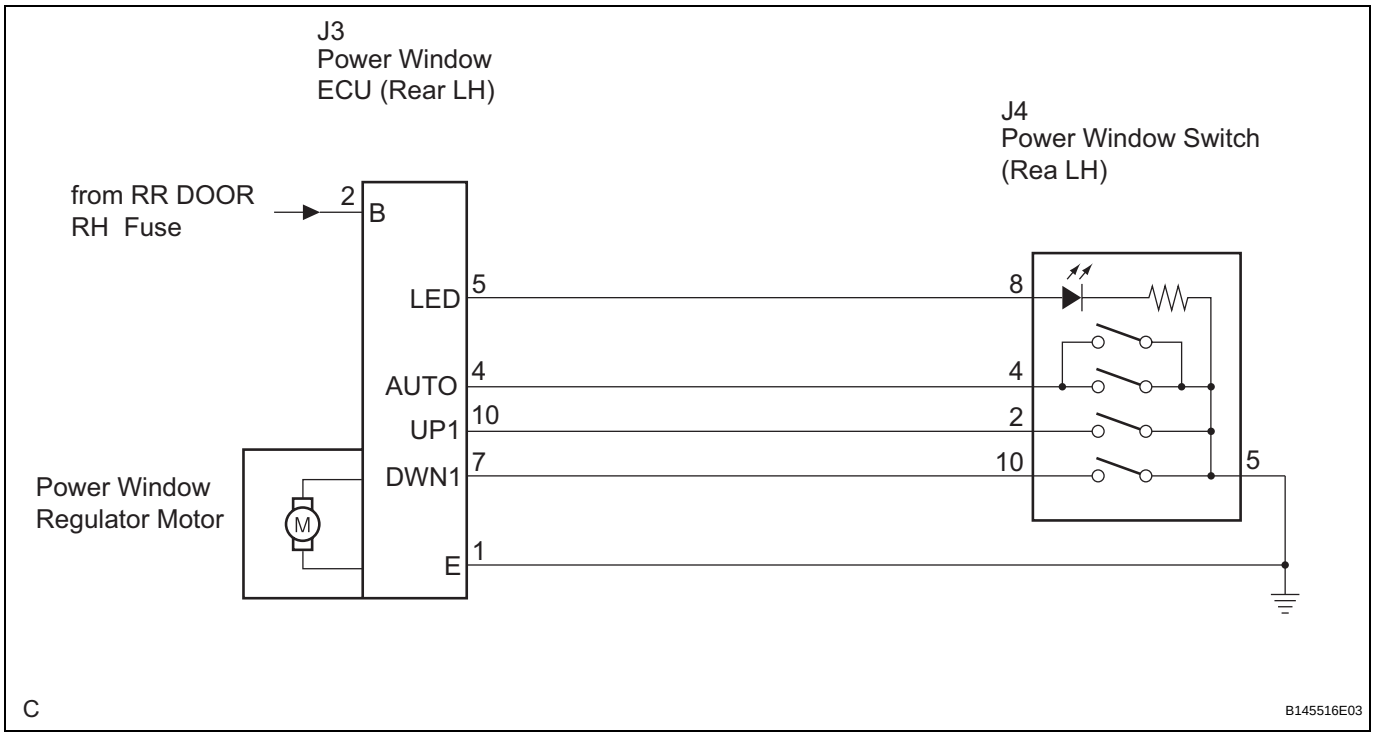

INSPECTION PROCEDURE

WS

1	INSPECT POWER WINDOW REGULATOR SWITCH

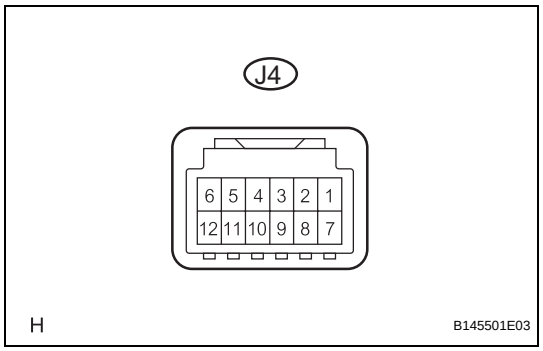

(a) Disconnect the J4 connector.
(b) Measure the resistance according to the value(s) in the table below.

Standard resistance

Tester Connection	Condition	Specified Condition
2 (E) - 4 (A) - 5 (E)	Auto UP	Below 1 Ω
2 (U) - 5 (E)	Manual UP	Below 1 Ω
5 (E) - 10 (D)	Manual DOWN	Below 1 Ω
4 (A) - 10 (D) - 5 (E)	Auto DOWN	Below 1 Ω

NG → **REPLACE POWER WINDOW REGULATOR SWITCH**

OK

2	CHECK WIRE HARNESS (POWER WINDOW REGULATOR SWITCH - POWER WINDOW ECU)

Power Window Switch:

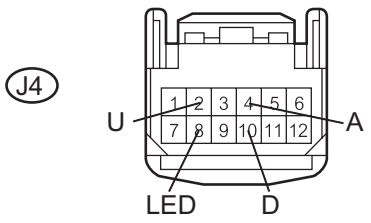

Power Window ECU:

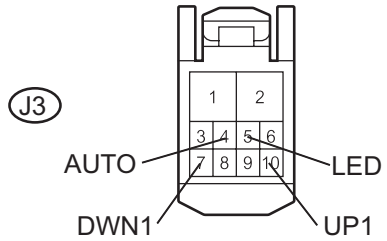

H B145499E03

(a) Disconnect the J3 and J4 connectors.
(b) Measure the resistance according to the value(s) in the table below.

Standard resistance

Tester Connection	Condition	Specified Condition
J3-4 (AUTO) - J4-4 (A)	Always	Below 1 Ω
J3-5 (LED) - J4-8 (LED)	Always	Below 1 Ω
J3-7 (DWN1) - J4-2 (U)	Always	Below 1 Ω
J3-10 (UP1) - J4-10 (D)	Always	Below 1 Ω
J3-4 (AUTO) - Body ground	Always	10 kΩ or higher
J3-5 (LED) - Body ground	Always	10 kΩ or higher
J3-7 (DWN1) - Body ground	Always	10 kΩ or higher
J3-10 (UP1) - Body ground	Always	10 kΩ or higher

NG → **REPAIR OR REPLACE HARNESS OR CONNECTOR**

OK

END

WS

ECU Power Source Circuit

DESCRIPTION

This circuit supplies to operate the power window ECU (Driver side, Front passenger side, Rear LH and Rear RH).

WIRING DIAGRAM

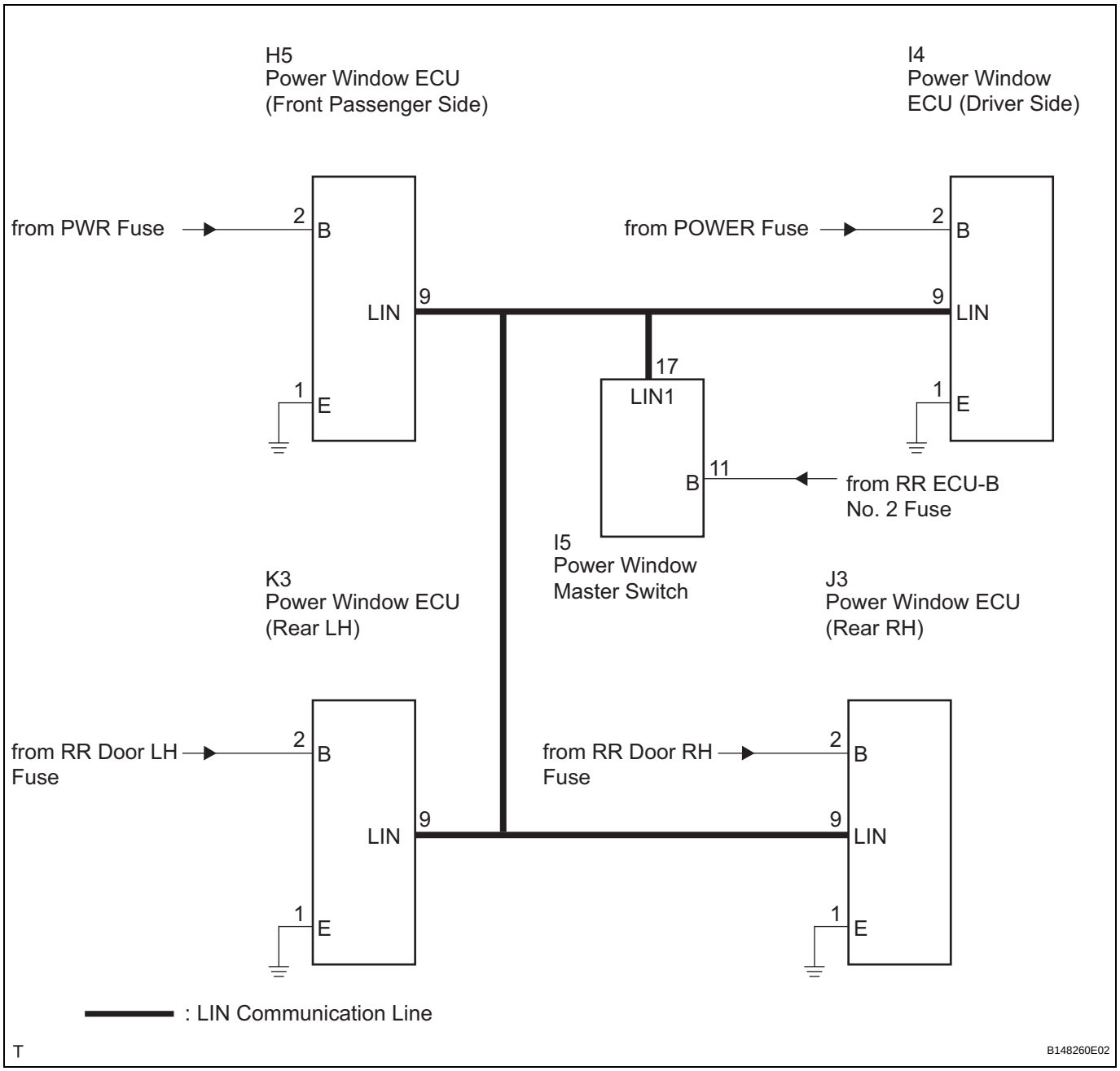

WS

INSPECTION PROCEDURE

1	CHECK WIRE HARNESS (POWER WINDOW ECU - BATTERY AND BODY GROUND)

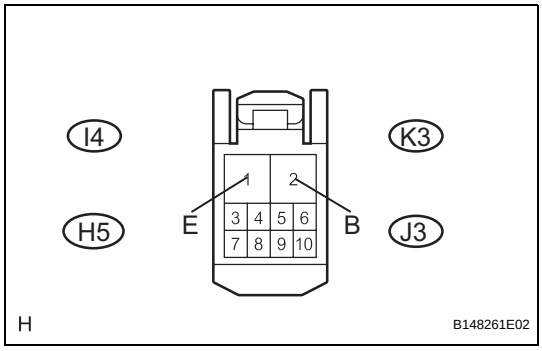

(a) Disconnect the power window ECU connector.
(b) Measure the voltage and resistance according to the value(s) in the table below.

Standard voltage

Tester Connection	Condition	Specified Condition
2 (B) - Body ground	Engine switch on (IG)	10 to 14 V

Standard resistance

Tester Connection	Condition	Specified Condition
1 (E) - Body ground	Always	Below 1 Ω

NG → **REPAIR OR REPLACE FUSE, HARNESS OR CONNECTOR**

OK

PROCEED TO NEXT CIRCUIT INSPECTION SHOWN IN PROBLEM SYMPTOMS TABLE

INSTALLATION

1. **INSTALL POWER WINDOW REGULATOR MASTER SWITCH ASSEMBLY (See page ED-53)**
2. **INSTALL FRONT DOOR ARMREST BASE PANEL ASSEMBLY (See page ED-53)**
3. **INITIALIZE POWER WINDOW CONTROL SYSTEM** (See page WS-10)

INSTALLATION

1. **REMOVE POWER WINDOW REGULATOR SWITCH ASSEMBLY (See page ED-53)**
2. **INSTALL FRONT DOOR ARMREST BASE PANEL ASSEMBLY (See page ED-53)**
3. **INITIALIZE POWER WINDOW CONTROL SYSTEM** (See page WS-10)

INSTALLATION

1. **INSTALL REAR POWER WINDOW REGULATOR SWITCH ASSEMBLY (See page ED-78)**
2. **INSTALL REAR DOOR ARMREST BASE PANEL ASSEMBLY (See page ED-78)**
3. **INITIALIZATION POWER WINDOW CONTROL SYSTEM**
   (See page WS-10)

REMOVAL

1. **REMOVE FRONT DOOR INSIDE HANDLE BEZEL PLUG (See page ED-32)**
2. **REMOVE FRONT DOOR ARMREST BASE PANEL ASSEMBLY (See page ED-33)**
3. **REMOVE COURTESY LIGHT ASSEMBLY (See page ED-34)**
4. **REMOVE DOOR ARMREST COVER (See page ED-34)**
5. **REMOVE FRONT DOOR TRIM BOARD SUB-ASSEMBLY (See page ED-34)**
6. **REMOVE FRONT DOOR INNER GLASS WEATHERSTRIP (See page ED-35)**
7. **REMOVE DOOR FRAME GARNISH (See page ED-35)**
8. **REMOVE OUTER MIRROR PROTECTOR (See page ED-35)**
9. **REMOVE FRONT NO. 1 SPEAKER ASSEMBLY (See page AV-184)**
10. **REMOVE FRONT NO. 1 DOOR TRIM BRACKET (See page ED-36)**
11. **REMOVE FRONT DOOR SERVICE HOLE COVER (See page ED-36)**
12. **REMOVE FRONT DOOR GLASS SUB-ASSEMBLY (See page ED-36)**
13. **REMOVE FRONT DOOR WINDOW REGULATOR SUB-ASSEMBLY (See page ED-36)**
14. **REMOVE FRONT POWER WINDOW REGULATOR MOTOR ASSEMBLY (See page ED-37)**
15. **REMOVE REAR DOOR INSIDE HANDLE BEZEL PLUG (See page ED-58)**
16. **REMOVE REAR DOOR ARMREST BASE PANEL ASSEMBLY (See page ED-59)**
17. **REMOVE COURTESY LIGHT ASSEMBLY (See page ED-59)**
18. **REMOVE REAR DOOR ARMREST COVER (See page ED-59)**
19. **REMOVE REAR DOOR TRIM BOARD SUB-ASSEMBLY (See page ED-60)**
20. **REMOVE REAR DOOR INNER GLASS WEATHERSTRIP (See page ED-61)**
21. **REMOVE REAR DOOR FRAME GARNISH (See page ED-61)**
22. **REMOVE REAR DOOR SERVICE HOLE COVER (See page ED-61)**

23. **REMOVE REAR DOOR TRIM BRACKET (See page ED-62)**

24. **REMOVE REAR DOOR GLASS RUN (See page ED-63)**

25. **REMOVE REAR DOOR WINDOW DIVISION BAR SUB-ASSEMBLY (See page ED-63)**

26. **REMOVE REAR DOOR QUARTER WINDOW GLASS (See page ED-63)**

27. **REMOVE REAR DOOR GLASS SUB-ASSEMBLY (See page ED-63)**

28. **REMOVE REAR DOOR WINDOW REGULATOR SUB-ASSEMBLY (See page ED-64)**

29. **REMOVE REAR POWER WINDOW REGULATOR MOTOR ASSEMBLY (See page ED-64)**

INSPECTION

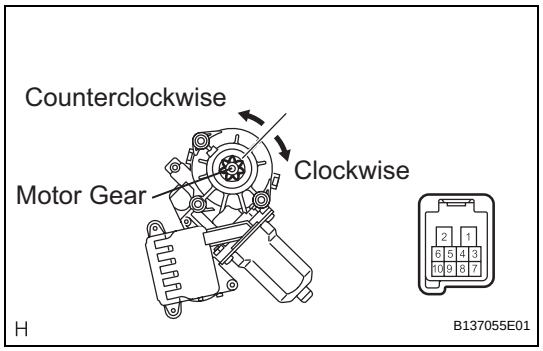

1. **INSPECT POWER WINDOW REGULATOR MOTOR FRONT RH**
   (a) Apply battery voltage to the motor connector according to the table below.
   NOTICE:
   Do not apply battery voltage to any terminals except terminals 1, 2, 4, 7 and 10.
   Standard

Switch Condition	Measurement Condition	Specified Condition
Manual Operation	Battery positive (+) → Terminal 2 (B) Battery negative (-) → Terminal 1 (E), 7 (DWN1)	Motor gear rotates counterclockwise
	Battery positive (+) → Terminal 2 (B) Battery negative (-) → Terminal 1 (E), 10 (UP1)	Motor gear rotates clockwise
Auto Operation	Battery positive (+) → Terminal 2 (B) Battery negative (-) → Terminal 1 (E), 4 (AUTO), 7 (DWN1)	Motor gear rotates counterclockwise
	Battery positive (+) → Terminal 2 (B) Battery negative (-) → Terminal 1 (E), 4 (AUTO) 10 (UP1)	Motor gear rotates clockwise

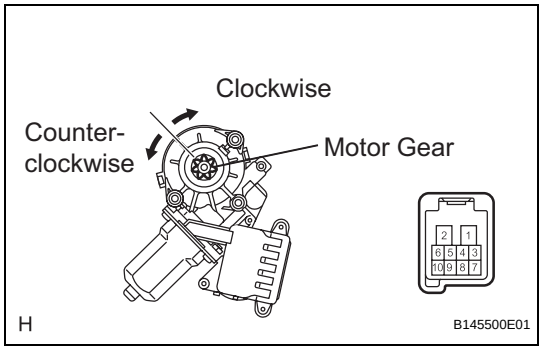

2. **INSPECT POWER WINDOW REGULATOR MOTOR FRONT LH**
   (a) Apply battery voltage to the motor connector according to the table below.
   NOTICE:
   Do not apply battery voltage to any terminals except terminals 1, 2, 4, 7 and 10.

WS

Standard

Switch Condition	Measurement Condition	Specified Condition
Manual Operation	Battery positive (+) → Terminal 2 (B) Battery negative (-) → Terminal 1 (E), 7 (DWN1)	Motor gear rotates counterclockwise
	Battery positive (+) → Terminal 2 (B) Battery negative (-) → Terminal 1 (E), 10 (UP1)	Motor gear rotates clockwise
Auto Operation	Battery positive (+) → Terminal 2 (B) Battery negative (-) → Terminal 1 (E), 4 (AUTO), 7 (DWN1)	Motor gear rotates counterclockwise
	Battery positive (+) → Terminal 2 (B) Battery negative (-) → Terminal 1 (E), 4 (AUTO) 10 (UP1)	Motor gear rotates clockwise

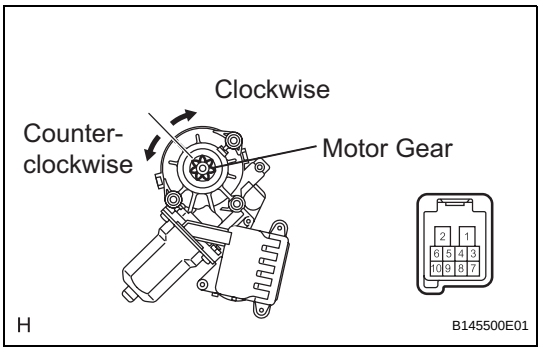

3. INSPECT POWER WINDOW REGULATOR MOTOR REAR RH

(a) Apply battery voltage to the motor connector according to the table below.

NOTICE:

Do not apply battery voltage to any terminals except terminals 1, 2, 4, 7 and 10.

Standard

Switch Condition	Measurement Condition	Specified Condition
Manual Operation	Battery positive (+) → Terminal 2 (B) Battery negative (-) → Terminal 1 (E), 7 (DWN1)	Motor gear rotates counterclockwise
	Battery positive (+) → Terminal 2 (B) Battery negative (-) → Terminal 1 (E), 10 (UP1)	Motor gear rotates clockwise
Auto Operation	Battery positive (+) → Terminal 2 (B) Battery negative (-) → Terminal 1 (E), 4 (AUTO), 7 (DWN1)	Motor gear rotates counterclockwise
	Battery positive (+) → Terminal 2 (B) Battery negative (-) → Terminal 1 (E), 4 (AUTO) 10 (UP1)	Motor gear rotates clockwise

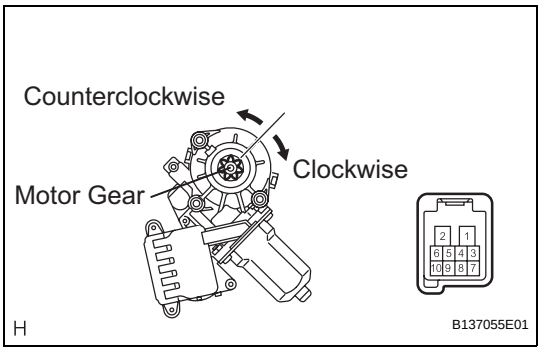

4. INSPECT POWER WINDOW REGULATOR MOTOR REAR LH

(a) Apply battery voltage to the motor connector according to the table below.

NOTICE:

Do not apply battery voltage to any terminals except terminals 1, 2, 4, 7 and 10.

Standard

Switch Condition	Measurement Condition	Specified Condition
Manual Operation	Battery positive (+) → Terminal 2 (B) Battery negative (-) → Terminal 1 (E), 7 (DWN1)	Motor gear rotates counterclockwise
	Battery positive (+) → Terminal 2 (B) Battery negative (-) → Terminal 1 (E), 10 (UP1)	Motor gear rotates clockwise
Auto Operation	Battery positive (+) → Terminal 2 (B) Battery negative (-) → Terminal 1 (E), 4 (AUTO), 7 (DWN1)	Motor gear rotates counterclockwise
	Battery positive (+) → Terminal 2 (B) Battery negative (-) → Terminal 1 (E), 4 (AUTO) 10 (UP1)	Motor gear rotates clockwise

INSTALLATION

1. **INSTALL REAR POWER WINDOW REGULATOR MOTOR ASSEMBLY (See page ED-72)**
2. **INSTALL REAR DOOR WINDOW REGULATOR SUB-ASSEMBLY (See page ED-73)**
3. **INSTALL REAR DOOR GLASS RUN (See page ED-73)**
4. **INSTALL REAR DOOR GLASS SUB-ASSEMBLY (See page ED-74)**
5. **INSTALL REAR DOOR QUARTER WINDOW GLASS (See page ED-74)**
6. **INSTALL REAR DOOR WINDOW DIVISION BAR SUB-ASSEMBLY (See page ED-74)**
7. **INSTALL REAR DOOR TRIM BRACKET (See page ED-75)**
8. **INSTALL REAR DOOR SERVICE HOLE COVER (See page ED-75)**
9. **INSTALL REAR DOOR FRAME GARNISH (See page ED-76)**
10. **INSTALL REAR DOOR INNER GLASS WEATHERSTRIP (See page ED-76)**
11. **INSTALL REAR DOOR TRIM BOARD SUB-ASSEMBLY (See page ED-76)**
12. **INSTALL REAR DOOR ARMREST COVER (See page ED-77)**
13. **INSTALL COURTESY LIGHT ASSEMBLY (See page ED-77)**
14. **INSTALL REAR DOOR ARMREST BASE PANEL ASSEMBLY (See page ED-78)**
15. **INSTALL REAR DOOR INSIDE HANDLE BEZEL PLUG (See page ED-78)**
16. **INITIALIZATION POWER WINDOW CONTROL SYSTEM**
    (See page WS-10)
17. **INSTALL FRONT POWER WINDOW REGULATOR MOTOR ASSEMBLY (See page ED-49)**
18. **INSTALL FRONT DOOR WINDOW REGULATOR SUB-ASSEMBLY (See page ED-50)**
19. **INSTALL FRONT DOOR GLASS SUB-ASSEMBLY (See page ED-50)**
20. **INSTALL FRONT DOOR SERVICE HOLE COVER (See page ED-50)**
21. **INSTALL FRONT NO. 1 DOOR TRIM BRACKET (See page ED-51)**

22. **INSTALL FRONT NO. 1 SPEAKER ASSEMBLY (See page AV-184)**
23. **INSTALL OUTER MIRROR PROTECTOR (See page ED-51)**
24. **INSTALL DOOR FRAME GARNISH (See page ED-51)**
25. **INSTALL FRONT DOOR INNER GLASS WEATHERSTRIP (See page ED-52)**
26. **INSTALL FRONT DOOR TRIM BOARD SUB-ASSEMBLY (See page ED-52)**
27. **INSTALL DOOR ARMREST COVER (See page ED-53)**
28. **INSTALL COURTESY LIGHT ASSEMBLY (See page ED-53)**
29. **INSTALL FRONT DOOR ARMREST BASE PANEL ASSEMBLY (See page ED-53)**
30. **INSTALL FRONT DOOR INSIDE HANDLE BEZEL PLUG (See page ED-54)**
31. **INITIALIZE POWER WINDOW CONTROL SYSTEM** (See page WS-10)

REMOVAL

1. **REMOVE COOL AIR INTAKE DUCT SEAL (See page ET-4)**
2. **REMOVE HOOD HINGE COVER (for LH Side) (See page WW-38)**
3. **REMOVE HOOD HINGE COVER (for RH Side) (See page WW-39)**
4. **REMOVE ENGINE ROOM SIDE COVER LH (See page WW-39)**
5. **REMOVE ENGINE ROOM SIDE COVER RH (See page WW-39)**
6. **REMOVE FRONT WIPER ARM AND BLADE ASSEMBLY LH (See page WW-39)**
7. **REMOVE FRONT WIPER ARM AND BLADE ASSEMBLY RH (See page WW-39)**
8. **REMOVE COWL TOP VENTILATOR LOUVER SUB-ASSEMBLY**
   NOTICE:
   When removing the cowl top ventilator louver sub-assembly, hold the front fender to cowl side seals by hand to prevent them from coming off the windshield. The front fender to cowl side seals are attached to the windshield with double-sided tape. Once the front fender to cowl side seals come off, the adhesion of the tape is reduced. The double-sided tape is not available as a supply part. If the tape loses its adhesion, it is necessary to apply new high-heat resistant double-sided tape and install the front fender to cowl side seals to the windshield (see page WW-40).
9. **REMOVE SLIDING ROOF SIDE GARNISH LH (for Glass Roof) (See page RF-46)**
10. **REMOVE SLIDING ROOF SIDE GARNISH RH (for Glass Roof) (See page RF-46)**
11. **REMOVE NO. 1 SLIDING ROOF GLASS SUB-ASSEMBLY (for Glass Roof) (See page RF-47)**
12. **DISCONNECT CABLE FROM NEGATIVE BATTERY TERMINAL**
13. **REMOVE INNER REAR VIEW MIRROR STAY HOLDER COVER (See page MI-42)**
14. **REMOVE INNER REAR VIEW MIRROR ASSEMBLY (See page MI-42)**
15. **REMOVE RAIN SENSOR COVER (w/ Rain Sensor) (See page WW-63)**
16. **REMOVE RAIN SENSOR (w/ Rain Sensor) (See page WW-63)**

17. **REMOVE RAIN SENSOR TAPE (w/ Rain Sensor)**
    HINT:
    This step should be performed only when the rain sensor tape needs to be replaced (see page WW-64).
18. **REMOVE FRONT DOOR SCUFF PLATE LH (See page IR-39)**
19. **REMOVE FRONT DOOR OPENING TRIM COVER LH (See page IR-39)**
20. **REMOVE SIDE INSTRUMENT PANEL LH (See page IP-12)**
21. **REMOVE FRONT PILLAR GARNISH LH (See page IR-39)**
22. **REMOVE FRONT DOOR SCUFF PLATE RH (See page IR-42)**
23. **REMOVE FRONT DOOR OPENING TRIM COVER RH (See page IR-42)**
24. **REMOVE SIDE INSTRUMENT PANEL RH (See page IP-15)**
25. **REMOVE FRONT PILLAR GARNISH RH (See page IR-42)**
26. **REMOVE ROOF CONSOLE BOX ASSEMBLY (See page IR-44)**
27. **REMOVE VISOR BRACKET COVER (See page IR-45)**
28. **REMOVE VISOR ASSEMBLY LH (See page IR-45)**
29. **REMOVE VISOR ASSEMBLY RH (See page IR-45)**
30. **REMOVE VISOR HOLDER (See page IR-45)**
31. **REMOVE ASSIST GRIP SUB-ASSEMBLY (See page IR-47)**
32. **REMOVE ROOF HEADLINING ASSEMBLY (for Standard)**
    It is not necessary to completely remove the roof headlining assembly. Slightly lower the front section of the roof headlining assembly so that the windshield glass can be removed (See page IR-47).
33. **REMOVE ROOF HEADLINING ASSEMBLY (for Glass Roof)**
    It is not necessary to completely remove the roof headlining assembly. Slightly lower the front section of the roof headlining assembly so that the windshield glass can be removed (See page IR-48).

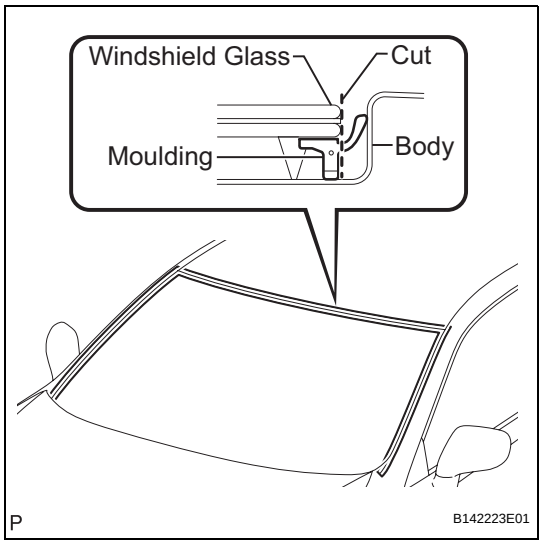

34. REMOVE WINDSHIELD MOULDING OUTSIDE (for Standard)

(a) Using a knife, cut off the moulding, as shown in the illustration.

NOTICE:

- **Do not damage the vehicle body with the knife.**
- **If the vehicle body is damaged, repair the damaged portion by applying an anti-rust coating after removing the windshield glass.**

(b) Remove the remaining moulding from the windshield glass.

HINT:

When removing the moulding, make a partial cut, then pull and remove it by hand.

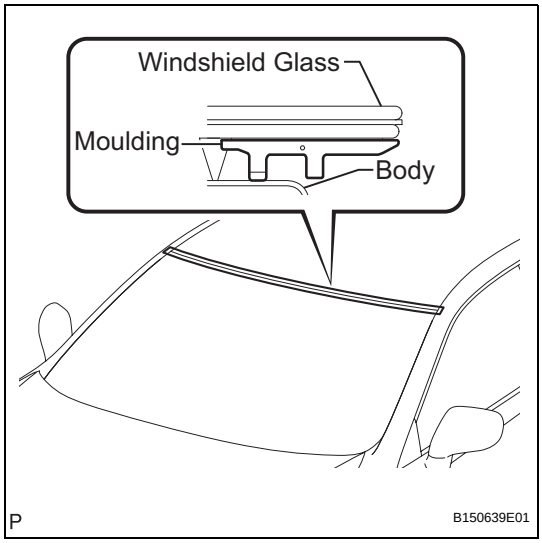

35. REMOVE WINDSHIELD MOULDING OUTSIDE UPPER (for Glass Roof)

(a) Using a knife, cut off the moulding, as shown in the illustration.

NOTICE:

- **Do not damage the vehicle body with the knife.**
- **If the vehicle body is damaged, repair the damaged portion by applying an anti-rust coating after removing the windshield glass.**

(b) Remove the remaining moulding from the windshield glass.

HINT:

When removing the moulding, make a partial cut, then pull and remove it by hand.

WS

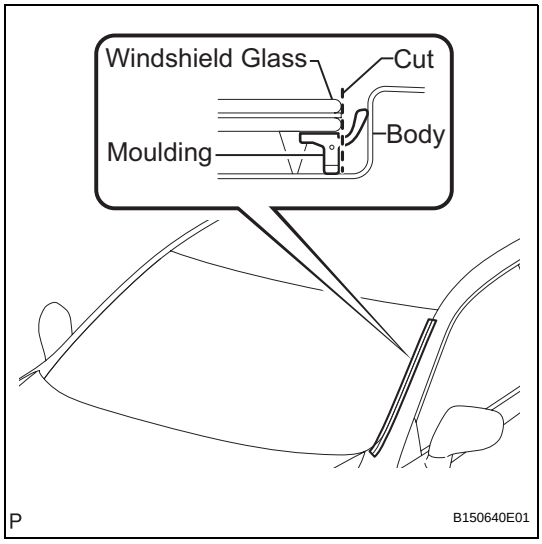

36. REMOVE WINDSHIELD MOULDING OUTSIDE LH (for Glass Roof)

(a) Using a knife, cut off the moulding, as shown in the illustration.

NOTICE:

- **Do not damage the vehicle body with the knife.**
- **If the vehicle body is damaged, repair the damaged portion by applying an anti-rust coating after removing the windshield glass.**

(b) Remove the remaining moulding from the windshield glass.

HINT:

When removing the moulding, make a partial cut, then pull and remove it by hand.

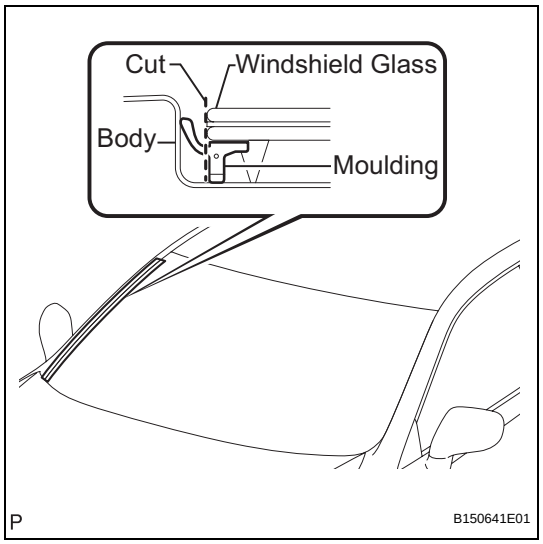

37. REMOVE WINDSHIELD MOULDING OUTSIDE RH (for Glass Roof)

(a) Using a knife, cut off the moulding, as shown in the illustration.

NOTICE:

- **Do not damage the vehicle body with the knife.**
- **If the vehicle body is damaged, repair the damaged portion by applying an anti-rust coating after removing the windshield glass.**

(b) Remove the remaining moulding from the windshield glass.

HINT:

When removing the moulding, make a partial cut, then pull and remove it by hand.

38. REMOVE WINDSHIELD GLASS ASSEMBLY

NOTICE:

- **There are No. 1 and No. 2 stoppers on the windshield glass as shown in the illustration. Be careful not to damage the windshield glass when cutting off the adhesive.**
- **To prevent the windshield glass from dropping when performing this operation, be sure to hold the windshield glass using suction cups.**

HINT:

Depending on vehicles, a 1-piece or 2-piece type stopper is used.

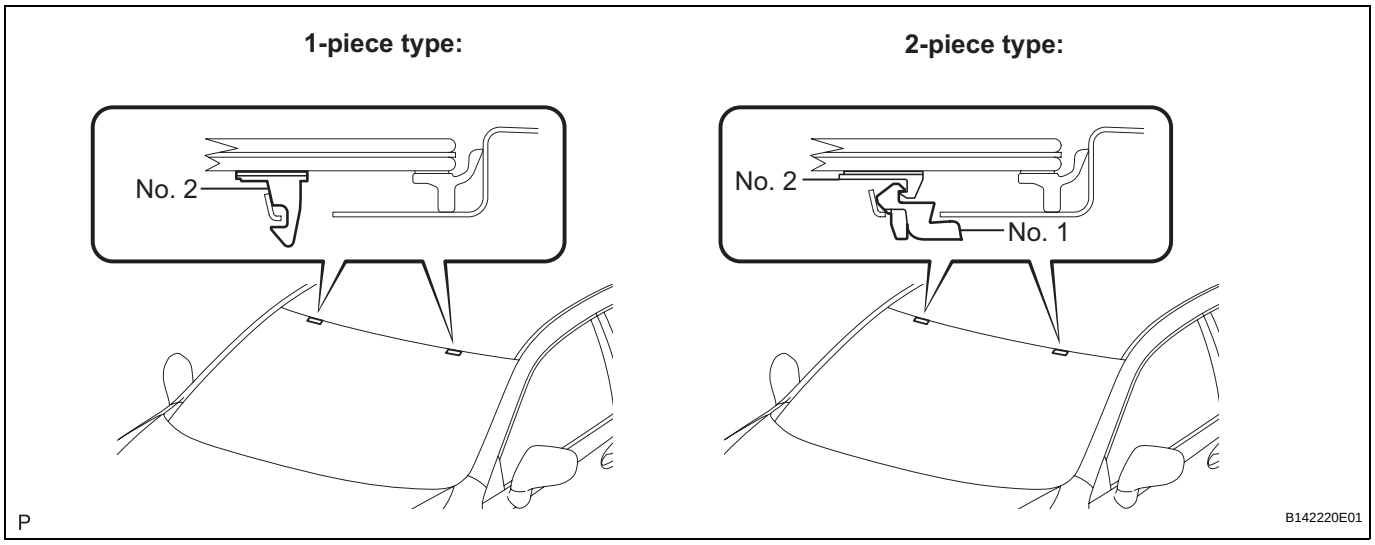

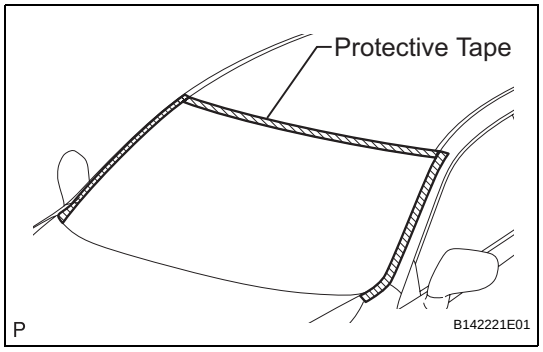

(a) Apply protective tape to the installation position of the windshield glass assembly on the vehicle body.

HINT:

Apply protective tape to the installation surface to prevent it from being scratched.

WS

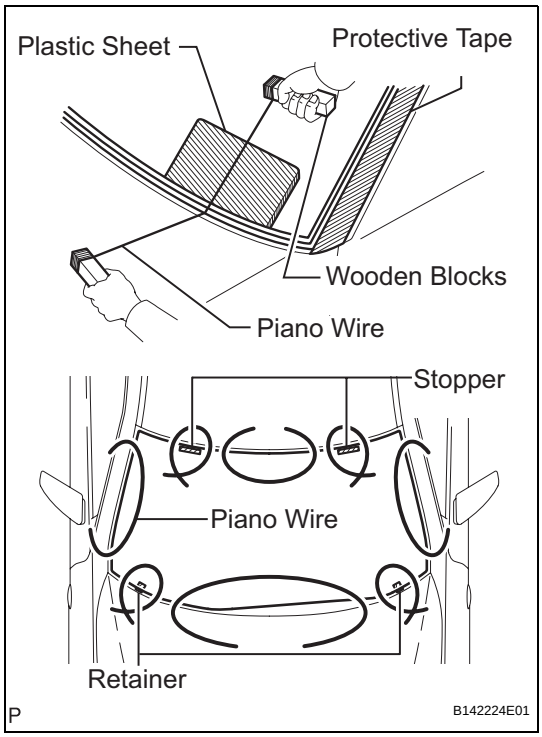

(b) Pass a piano wire between the vehicle body and glass from the interior.
(c) Tie both wire ends to wooden blocks or similar objects.
(d) Cut off the adhesive by pulling the piano wire around the windshield glass.
NOTICE:
- **When separating the windshield glass, take care not to damage the paint or the interior and exterior ornaments.**
- **To prevent the safety pad from being scratched when removing the windshield glass, place a plastic sheet between the piano wire and safety pad.**

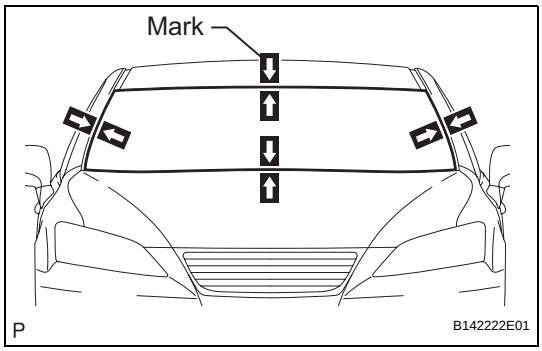

(e) Place matchmarks on the windshield glass and vehicle body on the locations indicated in the illustration.
HINT:
Matchmarks do not need to be placed if the windshield glass is not going to be reused.
(f) Using a suction cup, remove the windshield glass assembly.
NOTICE:
- **Be careful not to drop the windshield glass.**
- **Leave as much adhesive on the vehicle body as possible when removing the windshield glass.**

39. REMOVE WINDOW GLASS ADHESIVE DAM
(a) Using a scraper, remove the adhesive dam.
NOTICE:
- **Be careful not to damage the windshield glass.**
- **Be sure to replace the adhesive dam with a new one.**

40. REMOVE NO. 2 WINDSHIELD GLASS STOPPER
(a) Using a scraper, remove the 2 No. 2 stoppers.
NOTICE:
- **Be careful not to damage the windshield glass.**
- **Be sure to replace the No. 2 stoppers with new ones.**

41. REMOVE WINDSHIELD GLASS RETAINER

(a) Using a scraper, remove the 2 retainers.

NOTICE:

- **Be careful not to damage the windshield glass.**
- **Be sure to replace the retainers with new ones.**

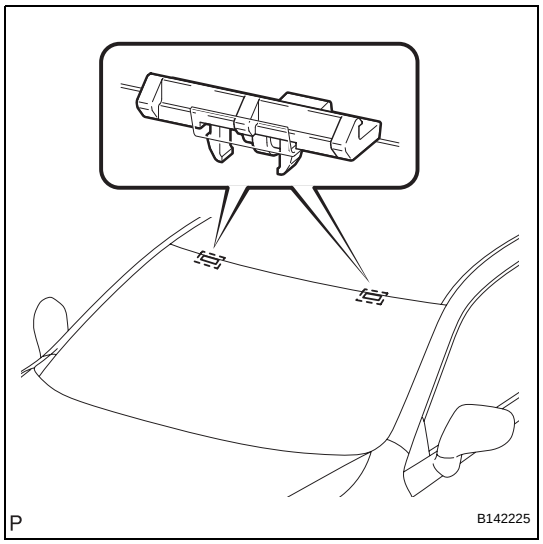

42. REMOVE NO. 1 WINDSHIELD GLASS STOPPER (for 2-piece Type)

(a) Remove the 2 No. 1 stoppers.

NOTICE:

Be sure to replace the No. 1 stoppers with new ones.

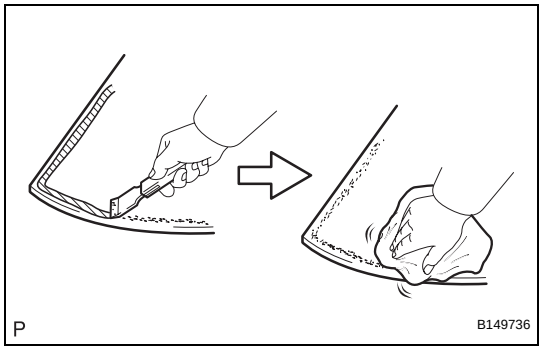

43. CLEAN WINDSHIELD GLASS

(a) Using a scraper, remove the adhesive tape and adhesive sticking to the windshield glass.

NOTICE:

Be careful not to damage the windshield glass.

(b) Clean the outer circumference of the windshield glass with a non-residue solvent.

NOTICE:

- **Do not touch the windshield glass surface after cleaning it.**
- **Even if using a new windshield glass, clean the windshield glass with a non-residue solvent.**

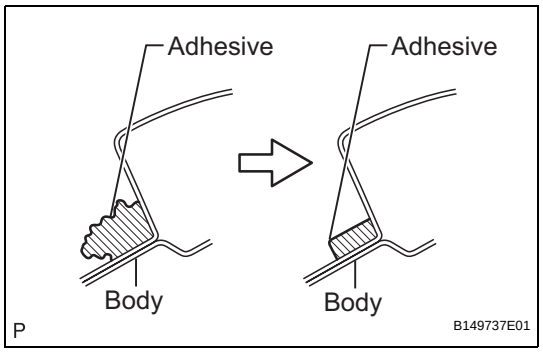

44. CLEAN VEHICLE BODY

(a) Clean and shape the contact surface of the vehicle body.

(1) Using a knife, cut away any rough adhesive on the contact surface of the vehicle body to ensure the appropriate surface shape.

NOTICE:

Be careful not to damage the vehicle body.

HINT:

Leave as much adhesive on the vehicle body as possible.

(2) Clean the contact surface of the vehicle body with a piece of cloth saturated with cleaner.

HINT:

Even if all the adhesive has been removed, clean the vehicle body.

INSTALLATION

1. INSTALL NO. 2 WINDSHIELD GLASS STOPPER

(a) Using a brush or sponge, coat the application area of the No. 2 stoppers with Primer G.

NOTICE:

- **Do not apply too much primer.**
- **Allow the primer coating to dry for 3 minutes or more.**
- **Do not keep any of the opened Primer G for later use.**

HINT:
If an area other than that specified is coated by accident, wipe off the primer with a clean piece of cloth before it dries.

(b) Install 2 new No. 2 stoppers onto the windshield glass, as shown in the illustration.

HINT:
Only 2-piece type No. 2 stoppers are supplied. Use the 2-piece type stoppers even if a 1-piece type was used.

Standard dimension

Area	Dimension
A	40 mm (1.574 in.)
B	20.9 mm (0.822 in.)
C	10.2 mm (0.401 in.)
D	23.5 mm (0.925 in.)
E	12.8 mm (0.503 in.)
F	10.9 mm (0.429 in.)
G	19.3 mm (0.759 in.)
H	47.3 mm (1.862 in.)
I	17.0 mm (0.669 in.)
J	42.6 mm (1.677 in.)
K	12.3 mm (0.484 in.)

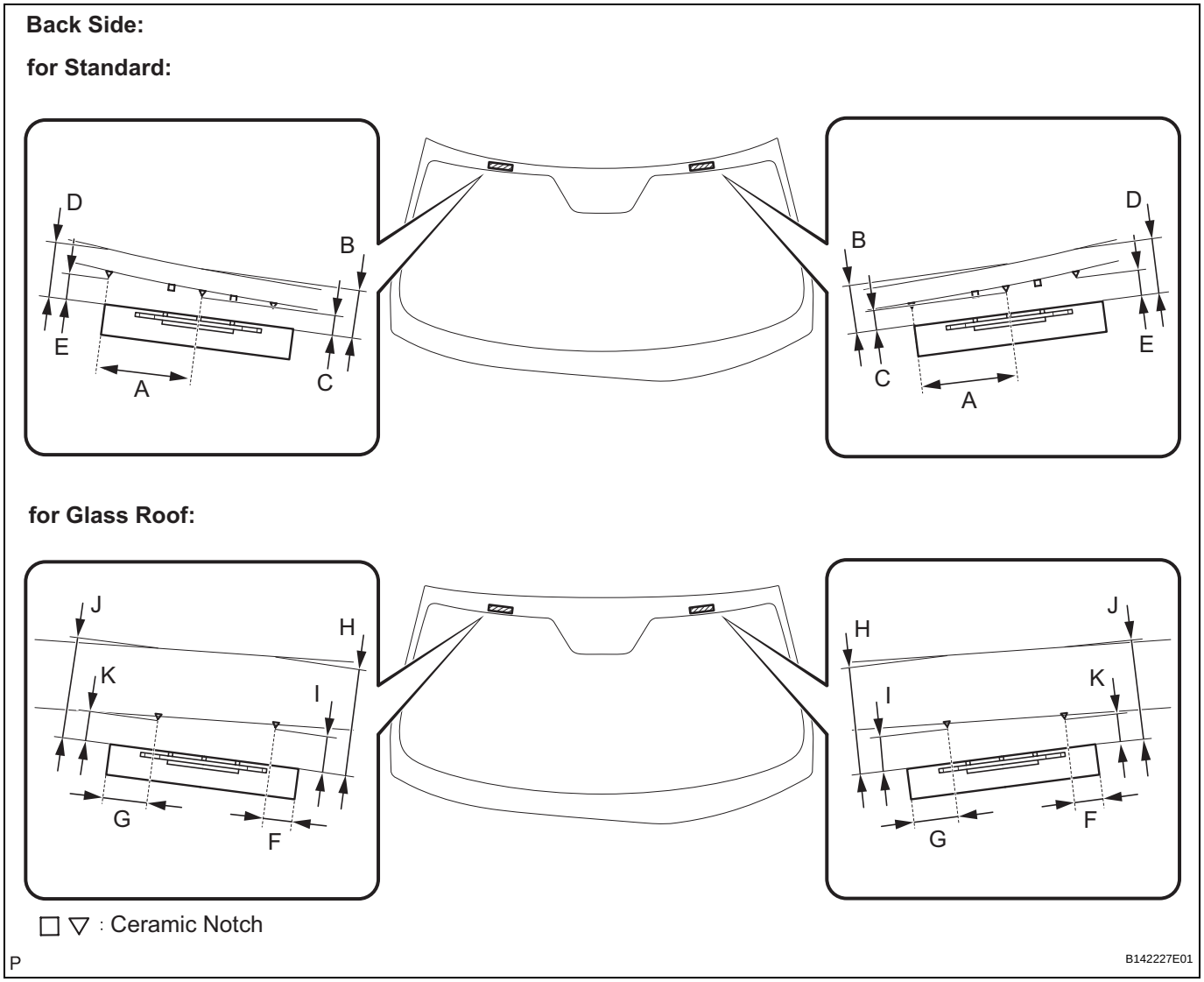

2. INSTALL WINDSHIELD GLASS RETAINER

(a) Using a brush or sponge, coat the application area of the retainers with Primer G.

NOTICE:

- **Do not apply too much primer.**
- **Allow the primer coating to dry for 3 minutes or more.**
- **Do not keep any of the opened Primer G for later use.**

HINT:

If an area other than that specified is coated by accident, wipe off the primer with a clean piece of cloth before it dries.

(b) Install 2 new retainers onto the windshield glass, as shown in the illustration.

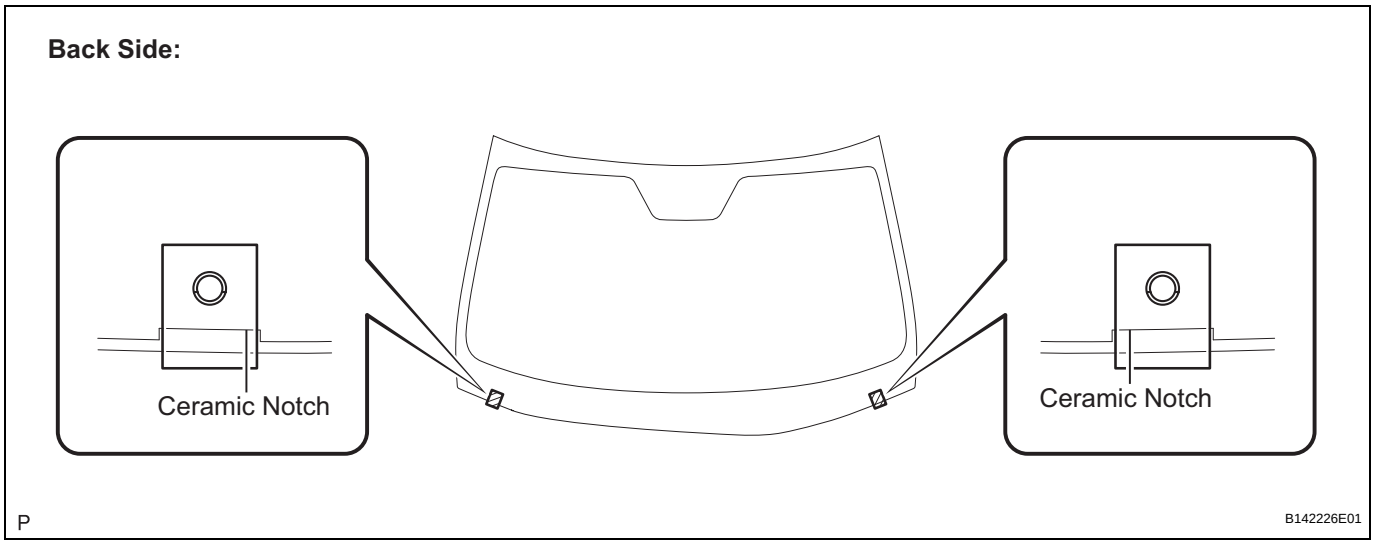

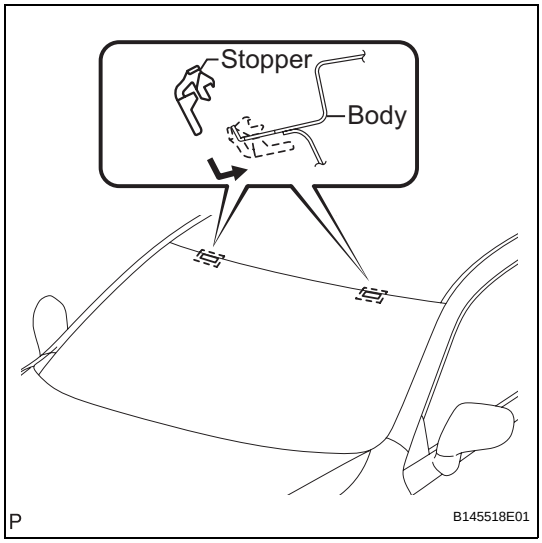

3. INSTALL NO. 1 WINDSHIELD GLASS STOPPER

(a) Install 2 new No. 1 stoppers to the vehicle body, as shown in the illustration.

HINT:

Only 2-piece type No. 1 stoppers are supplied. Use the 2-piece type stoppers even if a 1-piece type was used.

4. INSTALL WINDSHIELD MOULDING OUTSIDE (for Standard)

(a) Using a brush or sponge, coat the application area of moulding with Primer G.

NOTICE:

- **Do not apply too much primer.**
- **Allow the primer coating to dry for 3 minutes or more.**
- **Do not keep any of the opened Primer G for later use.**

HINT:

If an area other than that specified is coated by accident, wipe off the primer with a clean piece of cloth before it dries.

(b) Install a new moulding onto the windshield glass, as shown in the illustration.

Standard dimension

Area	Dimension
A	6.4 mm (0.252 in.)

WS

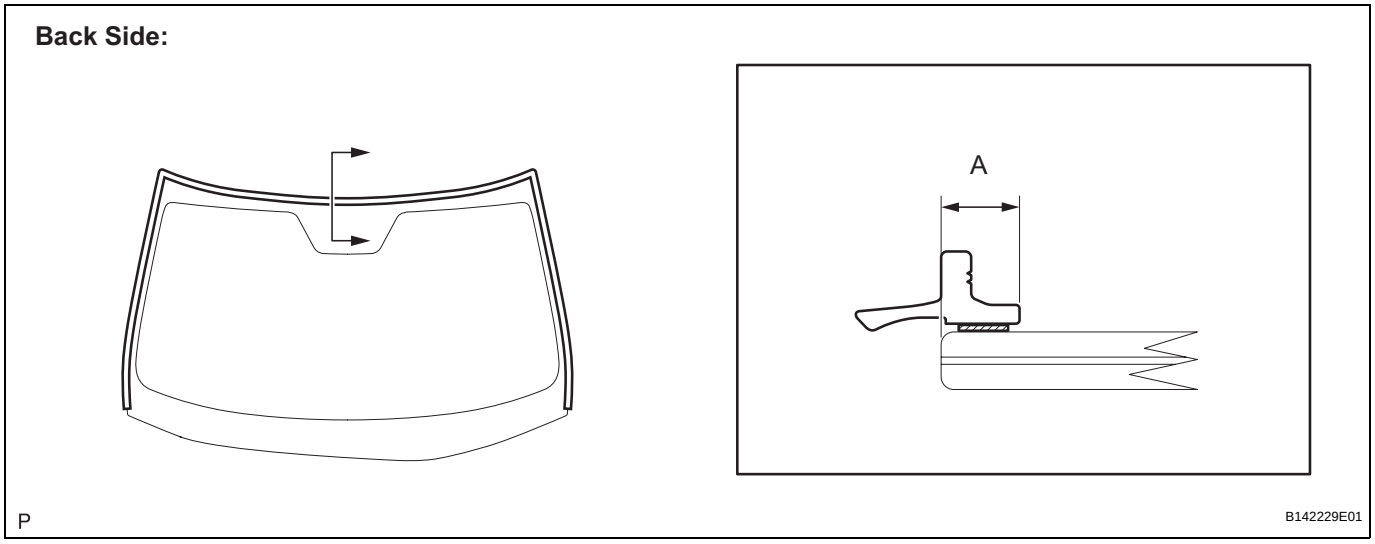

5. INSTALL WINDSHIELD MOULDING OUTSIDE UPPER (for Glass Roof)

(a) Using a brush or sponge, coat the application area of moulding with Primer G.

NOTICE:

- **Do not apply too much primer.**
- **Allow the primer coating to dry for 3 minutes or more.**
- **Do not keep any of the opened Primer G for later use.**

HINT:

If an area other than that specified is coated by accident, wipe off the primer with a clean piece of cloth before it dries.

(b) Install a new moulding onto the windshield glass, as shown in the illustration.

Standard dimension

Area	Dimension
A	25.9 mm (1.019 in.)

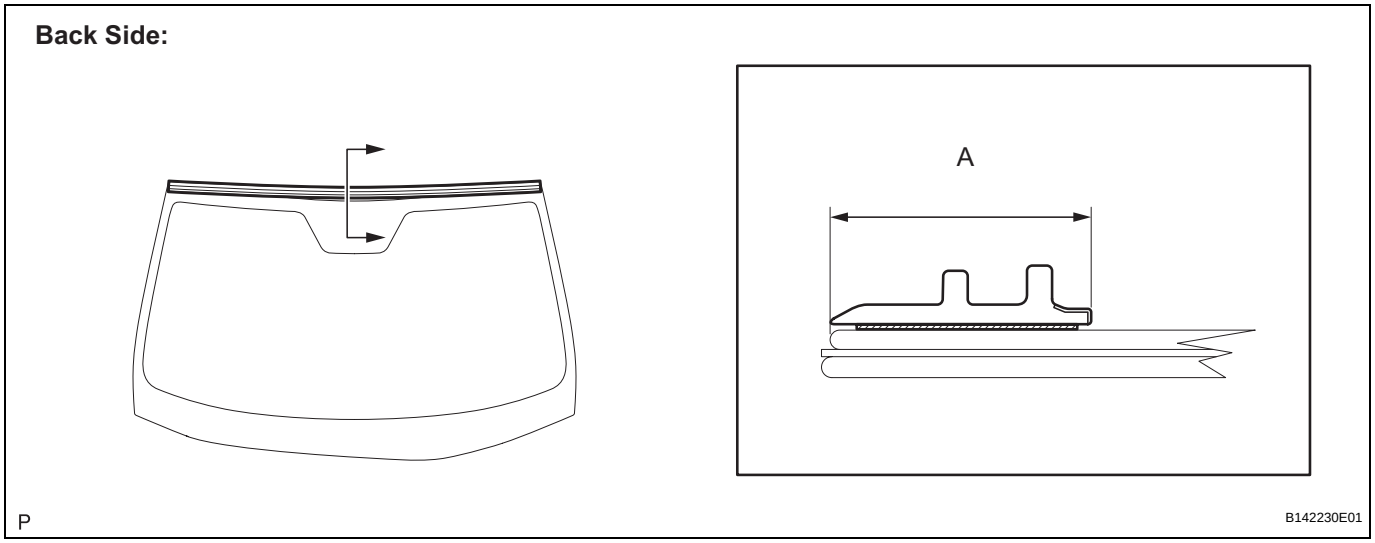

6. INSTALL WINDSHIELD MOULDING OUTSIDE LH (for Glass Roof)

(a) Using a brush or sponge, coat the application area of moulding with Primer G.

NOTICE:

- **Do not apply too much primer.**
- **Allow the primer coating to dry for 3 minutes or more.**
- **Do not keep any of the opened Primer G for later use.**

HINT:

If an area other than that specified is coated by accident, wipe off the primer with a clean piece of cloth before it dries.

(b) Install a new moulding onto the windshield glass, as shown in the illustration.

Standard dimension

Area	Dimension
A	6.4 mm (0.252 in.)

Back Side:

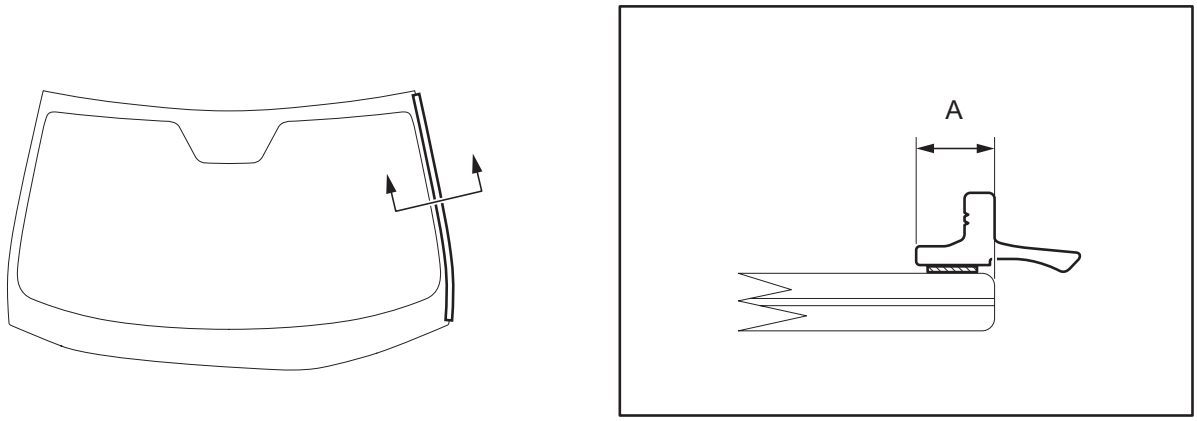

P

B142231E01

7. INSTALL WINDSHIELD MOULDING OUTSIDE RH (for Glass Roof)

HINT:

Use the same procedures for the RH side and LH side.

8. INSTALL WINDOW GLASS ADHESIVE DAM

(a) Using a brush or sponge, coat the application area of adhesive dam with Primer G.

NOTICE:

- **Do not apply too much primer.**
- **Allow the primer coating to dry for 3 minutes or more.**
- **Do not keep any of the opened Primer G for later use.**

HINT:

If an area other than that specified is coated by accident, wipe off the primer with a clean piece of cloth before it dries.

(b) Install a new adhesive dam onto the windshield glass, as shown in the illustration.

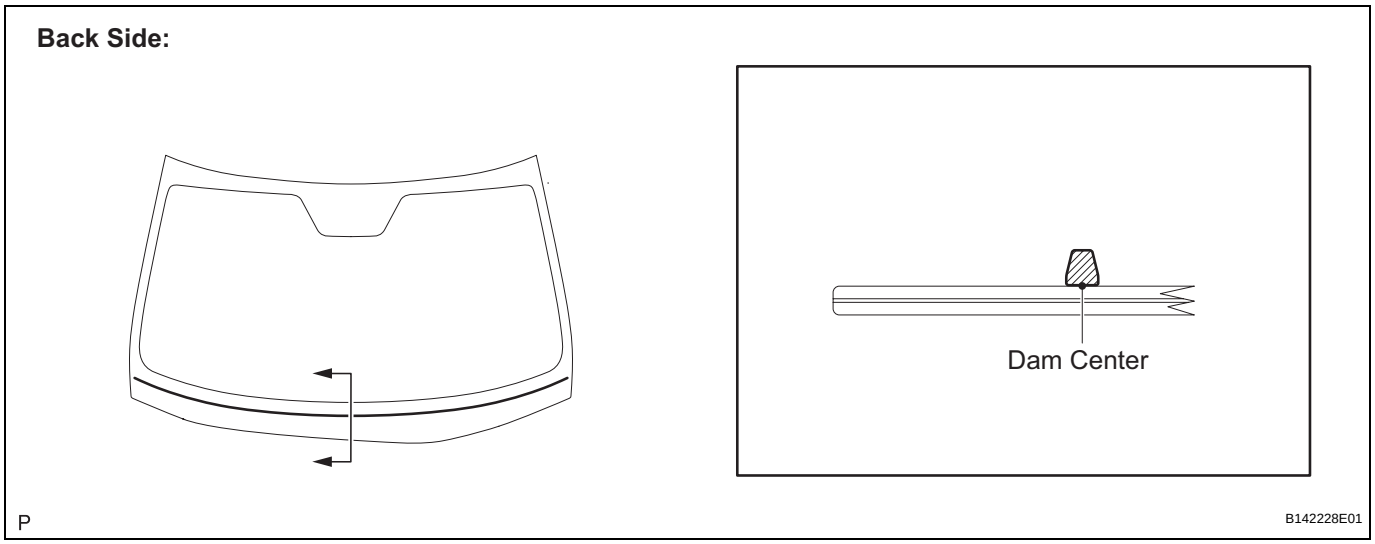

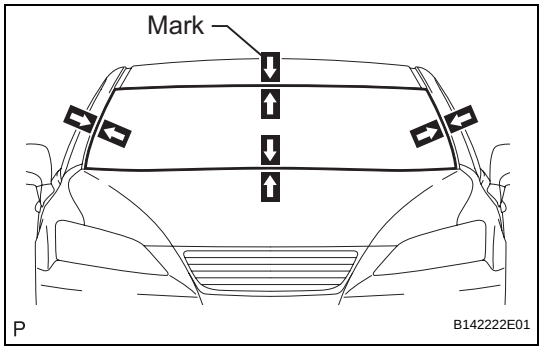

9. INSTALL WINDSHIELD GLASS ASSEMBLY

(a) Position the windshield glass assembly.

(1) Using a suction cup, place the windshield glass assembly in the correct position.

(2) Check that the whole contact surface of the windshield glass rim is perfectly even.

(3) Align the matchmarks on the windshield glass and vehicle body.

NOTICE:

Check that the windshield glass stoppers are attached to the vehicle body correctly.

(4) Remove the windshield glass assembly.

(b) Using a brush, coat the installation surface on the vehicle body with Primer M.

NOTICE:

- **Do not coat the adhesive with Primer M.**
- **Do not apply too much primer.**
- **Allow the primer coating to dry for 3 minutes or more.**
- **Do not keep any of the opened Primer M for later use.**

HINT:

If an area other than that specified is coated by accident, wipe off the primer with a clean piece of cloth before it dries.

Standard dimension

Area	Dimension
A	20.0 mm (0.787 in.)
B	43.7 mm (1.720 in.)
C	70.2 mm (2.763 in.)

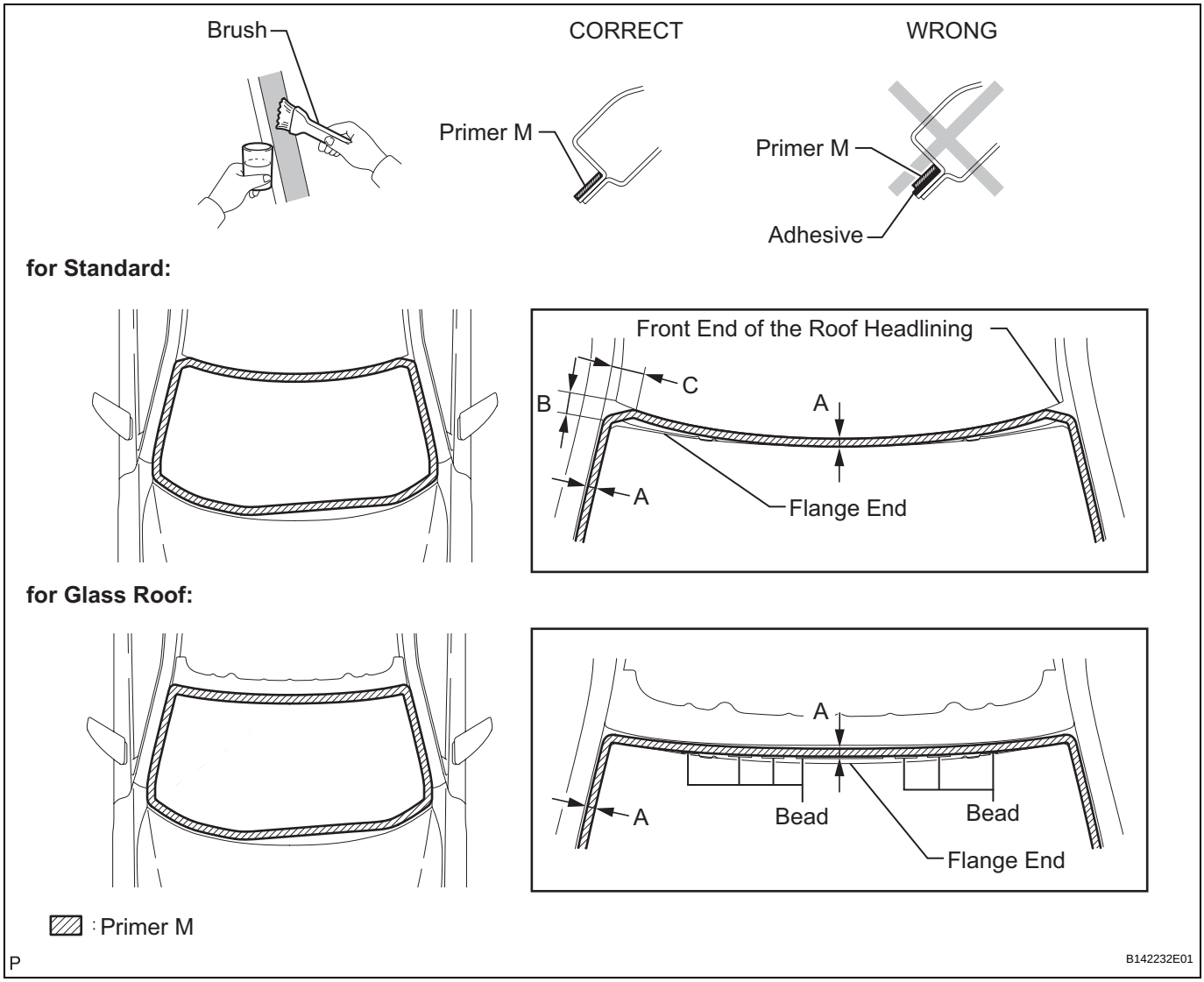

(c) Using a brush or sponge, coat the application area of adhesive with Primer G.

NOTICE:

- **Do not apply too much primer.**
- **Allow the primer coating to dry for 3 minutes or more.**
- **Do not keep any of the opened Primer G for later use.**

HINT:

If an area other than that specified is coated by accident, wipe off the primer with a clean piece of cloth before it dries.

Standard dimension

Area	Dimension
a	8.7 mm (0.342 in.)
b	12.0 mm (0.472 in.)
c	28.6 mm (1.126 in.)
d	12.0 mm (0.472 in.)
e	8.7 mm (0.342 in.)
f	12.0 mm (0.472 in.)

Area	Dimension
g	12.0 mm (0.472 in.)
h	6.4 mm (0.252 in.)

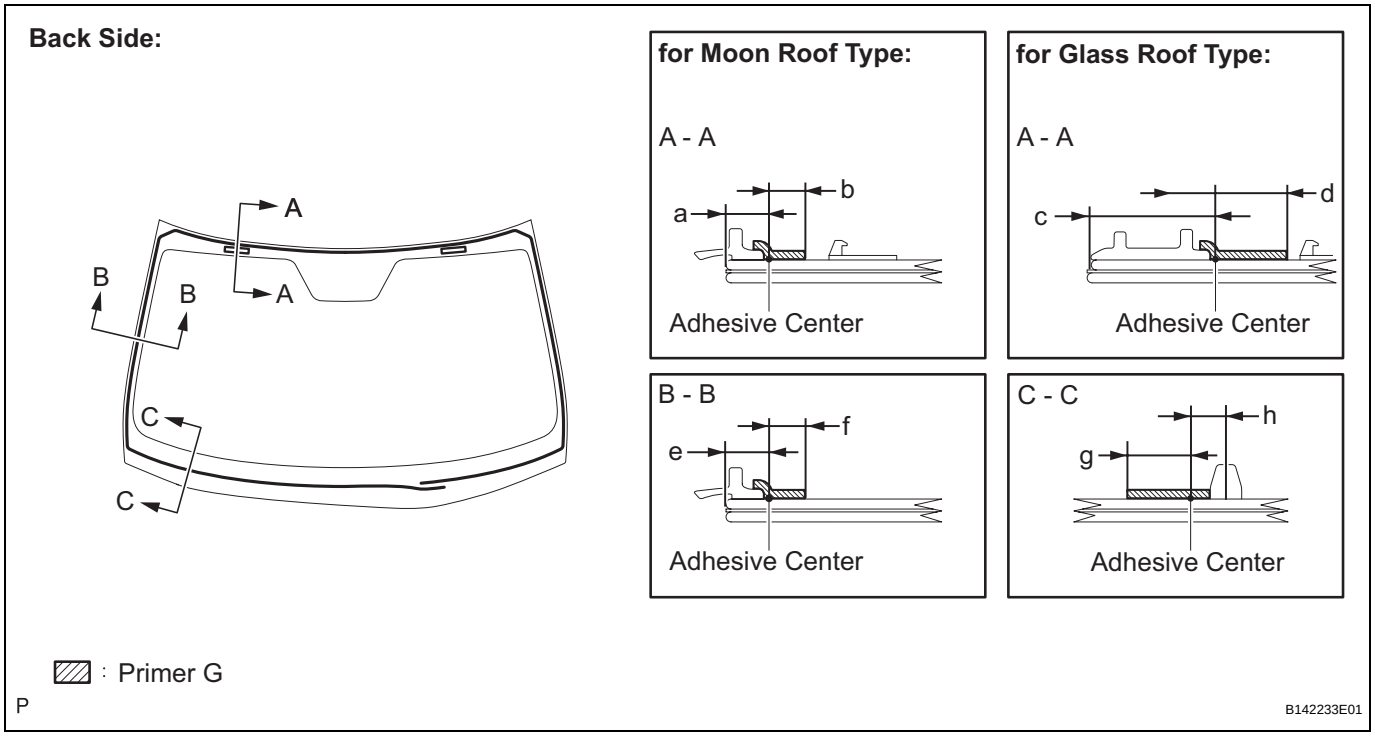

(d) Apply adhesive (Adhesive: TOYOTA genuine windshield glass adhesive or equivalent).

(1) Cut off the tip of the cartridge nozzle, as shown in the illustration.

HINT:

After cutting off the tip, use all adhesive within the time described in the table below.

Usage time frame

Temperature	Tack-free Time
35°C (95°F)	15 minutes
20°C (68°F)	1 hour and 40 minutes
5°C (41°F)	8 hours

(2) Load the sealer gun with cartridge.

(3) Apply adhesive to the windshield glass, as shown in the illustration.

Standard dimension

Area	Dimension
a	8.7 mm (0.342 in.)
b	28.6 mm (1.126 in.)
c	8.7 mm (0.342 in.)
d	6.4 mm (0.252 in.)
e	12.0 mm (0.472 in.)
f	8.0 mm (0.315 in.)

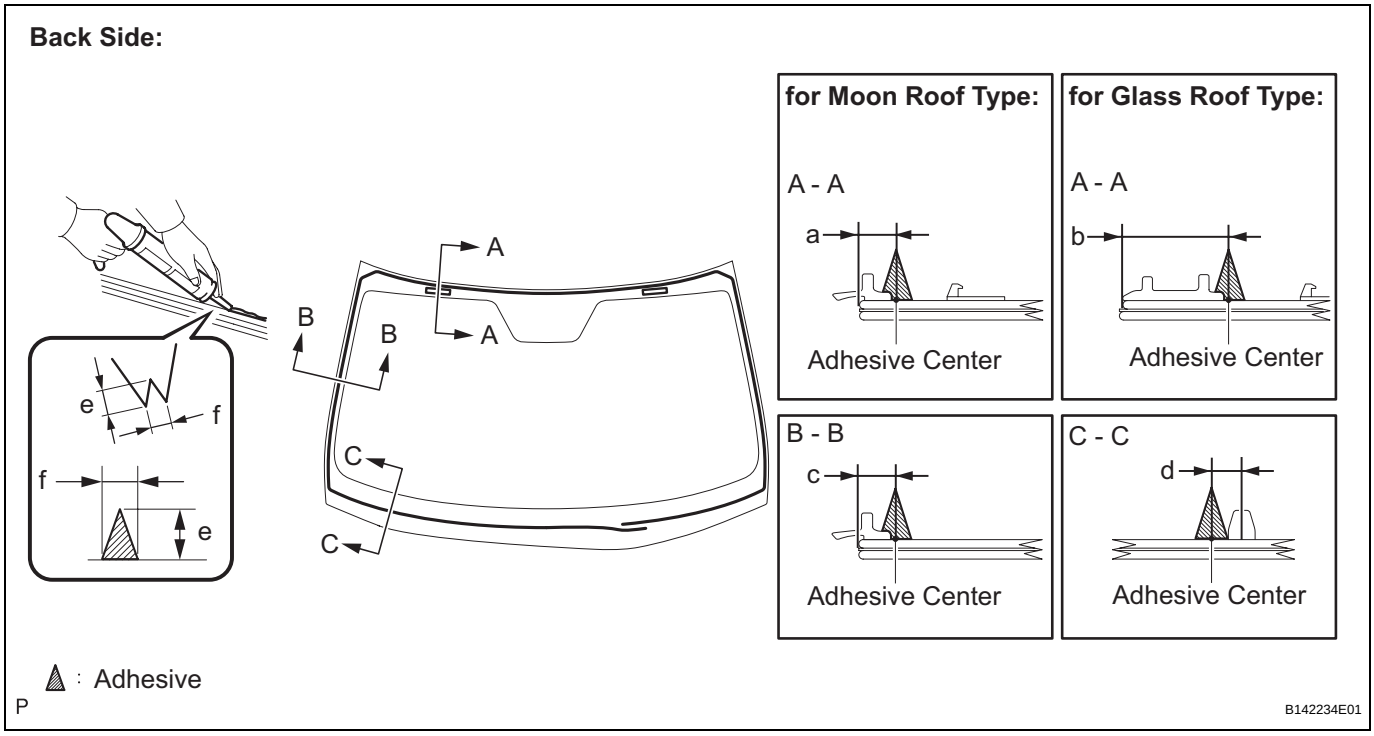

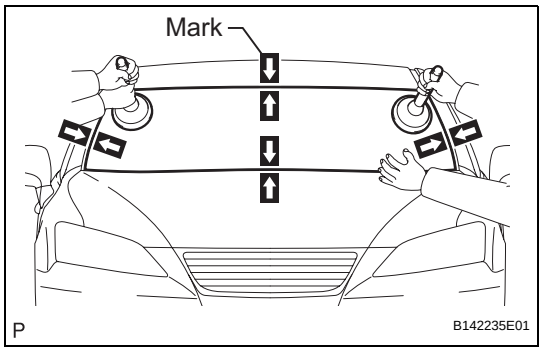

(e) Install the windshield glass assembly.

(1) Using a suction cup, position the windshield glass so that the matchmarks are aligned, and press it in gently along the rim.

NOTICE:

- **Check that the windshield glass stoppers are attached to the vehicle body correctly.**
- **Check the clearance between the vehicle body and windshield glass.**

(2) Lightly press the front surface of the windshield glass to ensure a close fit.

HINT:

Press the glass with force of 98 N (10 kgf, 22 lb) or more.

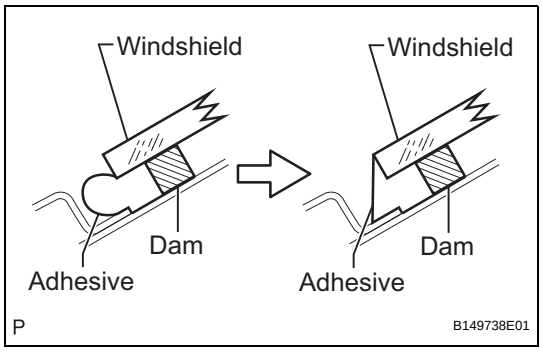

(3) If necessary, use a scraper to correct the level or position of adhesive that has been applied.

HINT:

Apply adhesive onto the windshield glass rim.

(4) Hold the windshield glass using protective tape until applied adhesive becomes hard.

NOTICE:

Do not drive the vehicle for the time described in the table below.

Minimum time

Temperature	Minimum time prior to driving vehicle
35°C (95°F)	1 hour and 30 minutes
20°C (68°F)	5 hours
5°C (41°F)	24 hours

WS

10. CHECK FOR LEAKS AND REPAIR

(a) After the adhesive has hardened, apply water from the outside of the vehicle. Check that no water leaks into the cabin.

(b) If water leaks into the cabin, allow the water to dry and add adhesive.

(c) Remove the protective tape.

11. INSTALL ROOF HEADLINING ASSEMBLY (for Standard)

Return the front section of the roof headlining assembly to the original position (See page IR-56).

12. INSTALL ROOF HEADLINING ASSEMBLY (for Glass Roof)

Return the front section of the roof headlining assembly to the original position (See page IR-57).

13. INSTALL ASSIST GRIP SUB-ASSEMBLY (See page IR-58)

14. INSTALL VISOR HOLDER (See page IR-60)

15. INSTALL VISOR ASSEMBLY LH (See page IR-60)

16. INSTALL VISOR ASSEMBLY RH (See page IR-60)

17. INSTALL VISOR BRACKET COVER (See page IR-60)

18. INSTALL ROOF CONSOLE BOX ASSEMBLY (See page IR-60)

19. INSTALL FRONT PILLAR GARNISH LH (See page IR-64)

20. INSTALL SIDE INSTRUMENT PANEL LH (See page IP-47)

21. INSTALL FRONT DOOR OPENING TRIM COVER LH (See page IR-64)

22. INSTALL FRONT DOOR SCUFF PLATE LH (See page IR-65)

23. INSTALL FRONT PILLAR GARNISH RH (See page IR-65)

24. INSTALL SIDE INSTRUMENT PANEL RH (See page IP-43)

25. INSTALL FRONT DOOR OPENING TRIM COVER RH (See page IR-65)

26. INSTALL FRONT DOOR SCUFF PLATE RH (See page IR-65)

27. INSTALL RAIN SENSOR TAPE (w/ Rain Sensor)

HINT:

This step should be performed only when the rain sensor tape needs to be replaced (see page WW-64).

28. INSTALL RAIN SENSOR (w/ Rain Sensor) (See page WW-64)

29. INSTALL RAIN SENSOR COVER (w/ Rain Sensor) (See page WW-65)

30. INSTALL INNER REAR VIEW MIRROR ASSEMBLY (See page MI-43)

31. INSTALL INNER REAR VIEW MIRROR STAY HOLDER COVER (See page MI-44)

32. TEMPORARILY TIGHTEN NO. 1 SLIDING ROOF GLASS SUB-ASSEMBLY (for Glass Roof) (See page RF-64)

33. CONNECT CABLE TO NEGATIVE BATTERY TERMINAL

34. ADJUST NO. 1 SLIDING ROOF GLASS SUB-ASSEMBLY (for Glass Roof) (See page RF-65)

35. INSTALL SLIDING ROOF SIDE GARNISH LH (for Glass Roof) (See page RF-66)

36. INSTALL SLIDING ROOF SIDE GARNISH RH (for Glass Roof) (See page RF-66)

37. CHECK FOR WATER LEAKS (for Glass Roof) (See page RF-66)

38. INSTALL FRONT FENDER TO COWL SIDE SEAL RH
HINT:
In cases where double-sided tape cannot be reused (see page WW-43).

39. INSTALL FRONT FENDER TO COWL SIDE SEAL LH
HINT:
In cases where double-sided tape cannot be reused (see page WW-43).

WS

40. INSTALL COWL TOP VENTILATOR LOUVER SUB-ASSEMBLY
NOTICE:
When installing the cowl top ventilator louver sub-assembly, hold the front fender to cowl side seals by hand to prevent them from coming off the windshield. The front fender to cowl side seals are attached to the windshield with double-sided tape. Once the front fender to cowl side seals come off, the adhesion of the tape is reduced. The double-sided tape is not available as a supply part. If the tape loses its adhesion, it is necessary to apply new high-heat resistant double-sided tape and install the front fender to cowl side seals to the windshield (see page WW-44).

41. INSTALL FRONT WIPER ARM AND BLADE ASSEMBLY LH (See page WW-44)

42. INSTALL FRONT WIPER ARM AND BLADE ASSEMBLY RH (See page WW-45)

43. INSTALL ENGINE ROOM SIDE COVER RH (See page WW-47)

44. **INSTALL ENGINE ROOM SIDE COVER LH (See page WW-47)**
45. **INSTALL HOOD HINGE COVER (for RH Side) (See page WW-47)**
46. **INSTALL HOOD HINGE COVER (for LH Side) (See page WW-47)**
47. **INSTALL COOL AIR INTAKE DUCT SEAL (See page ET-14)**
48. **PERFORM INITIALIZATION**
    NOTICE:
    Some systems need initialization after reconnecting the cable to the negative battery terminal (See page IN-33).
49. **CHECK SLIDING ROOF SYSTEM (for Glass Roof)**
    (See page RF-12)
50. **INSPECT SRS WARNING LIGHT**
    (See page RS-37)

REMOVAL

1. DISCONNECT CABLE FROM NEGATIVE BATTERY TERMINAL
2. REMOVE REAR SEAT CUSHION ASSEMBLY (See page SE-113)
3. REMOVE REAR SEAT HEADREST ASSEMBLY
4. REMOVE REAR CENTER SEAT HEADREST ASSEMBLY
5. REMOVE REAR SEATBACK ASSEMBLY (See page SE-113)
6. REMOVE REAR DOOR SCUFF PLATE LH (See page IR-40)
7. REMOVE REAR SEAT SIDE GARNISH LH (w/o Rear Seat Side Airbag) (See page IR-41)
8. REMOVE REAR SEAT SIDE AIRBAG ASSEMBLY LH (w/ Rear Seat Side Airbag) (See page RS-460)
9. REMOVE ROOF SIDE INNER GARNISH ASSEMBLY LH (See page IR-42)
10. REMOVE REAR DOOR SCUFF PLATE RH (See page IR-42)
11. REMOVE REAR SEAT SIDE GARNISH RH (w/o Rear Seat Side Airbag) (See page IR-43)
12. REMOVE REAR SEAT SIDE AIRBAG ASSEMBLY RH (w/ Rear Seat Side Airbag) (See page SB-40)
13. REMOVE ROOF SIDE INNER GARNISH ASSEMBLY RH (See page IR-43)
14. DISCONNECT REAR SEAT 3 POINT TYPE BELT ASSEMBLY LH (See page SB-40)
15. DISCONNECT REAR SEAT 3 POINT TYPE BELT ASSEMBLY RH (See page SB-40)
16. DISCONNECT REAR SEAT INNER WITH CENTER BELT ASSEMBLY RH (See page SB-40)
17. REMOVE REAR SEAT SHOULDER BELT HOLE COVER (See page SB-41)
18. REMOVE PACKAGE TRAY TRIM PANEL ASSEMBLY (w/o Rear Sunshade) (See page SB-41)
19. REMOVE PACKAGE TRAY TRIM PANEL ASSEMBLY (w/ Rear Sunshade) (See page IR-20)
20. REMOVE CENTER STOP LIGHT SET (See page LI-159)
21. REMOVE NO. 2 PACKAGE TRAY TRIM PANEL ASSEMBLY (w/ Rear Sunshade) (See page IR-21)
22. REMOVE COAT HOOK (See page IR-45)

23. REMOVE SPOT LIGHT ASSEMBLY (for Standard) (See page IR-46)

24. REMOVE SPOT LIGHT ASSEMBLY (for Glass Roof) (See page IR-46)

25. REMOVE ASSIST GRIP SUB-ASSEMBLY (See page IR-47)

26. REMOVE ROOF HEADLINING ASSEMBLY (for Standard)

It is not necessary to completely remove the roof headlining. Slightly lower the rear section of the roof headlining so that the back window glass can be removed (See page IR-47).

27. REMOVE ROOF HEADLINING ASSEMBLY (for Glass Roof)

It is not necessary to completely remove the roof headlining. Slightly lower the rear section of the roof headlining so that the back window glass can be removed (See page IR-48).

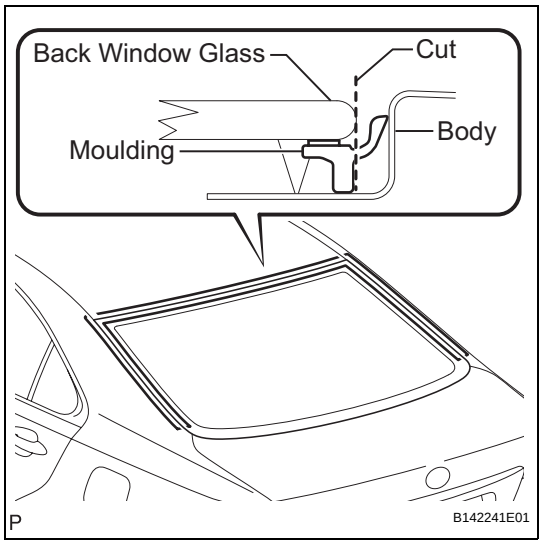

28. REMOVE BACK WINDOW MOULDING

(a) Using a knife, cut off the moulding, as shown in the illustration.

NOTICE:

- **Do not damage the vehicle body with the knife.**
- **If the vehicle body is damaged, repair the damaged portion by applying an anti-rust coating after removing the back window glass.**

(b) Remove the remaining moulding from the back window glass.

HINT:

When removing the moulding, make a partial cut, then pull and remove it by hand.

29. REMOVE BACK WINDOW GLASS ASSEMBLY

NOTICE:

- **There are No. 1 and No. 2 stoppers on the back window glass as shown in the illustration. Be careful not to damage the back window glass when cutting off the adhesive.**
- **To prevent the back window glass from dropping when performing this operation, be sure to hold the back window glass using suction cups.**

HINT:

Depending on vehicles, a 1-piece or 2-piece type stopper is used.

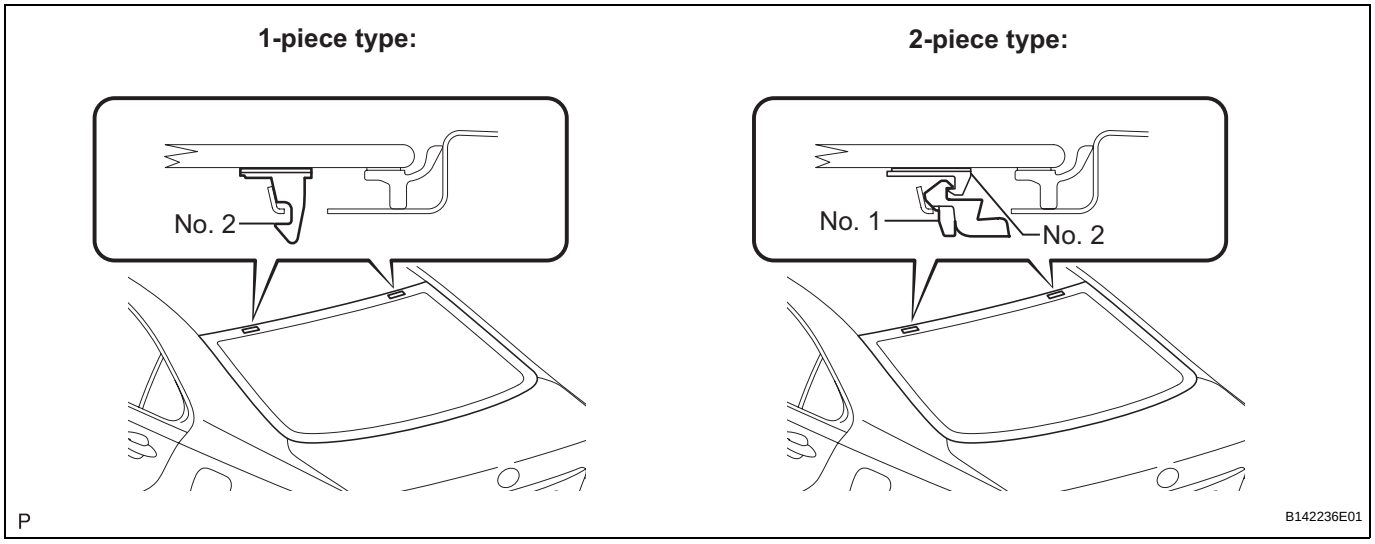

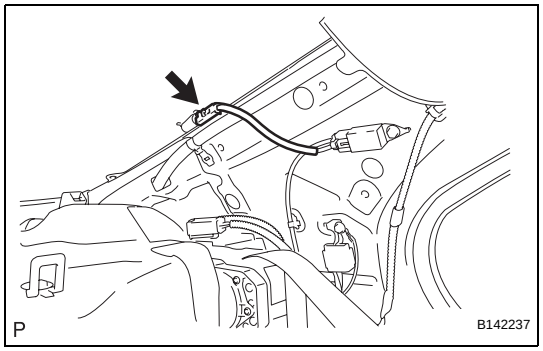

(a) Disconnect the connector.

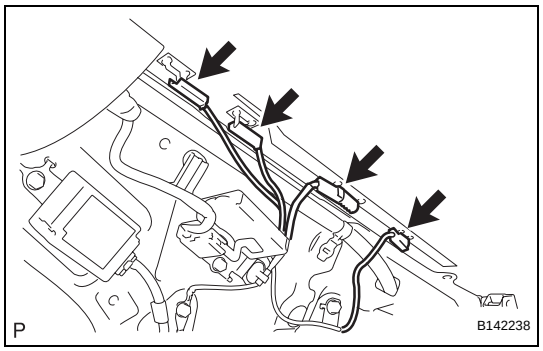

(b) Disconnect the connectors.

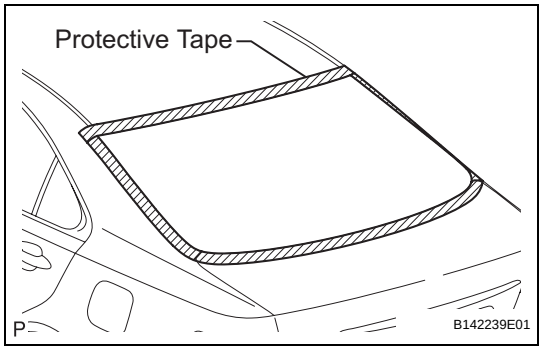

(c) Apply protective tape to the installation position of the back window glass assembly on the vehicle body.
HINT:
Apply protective tape to the installation surface to prevent it from being scratched.

WS

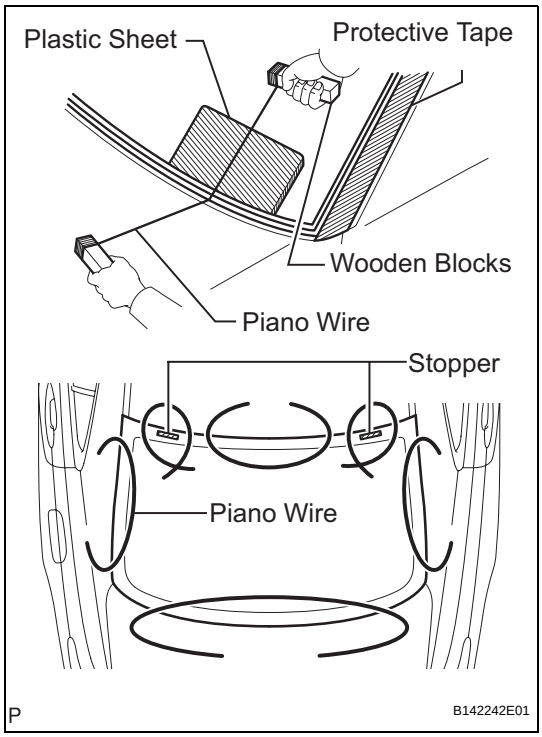

(d) Pass a piano wire between the vehicle body and glass from the interior.
(e) Tie both wire ends to wooden blocks or similar objects.
(f) Cut off the adhesive by pulling the piano wire around the back window glass.
NOTICE:
- **When separating the back window glass, take care not to damage the paint or the interior and exterior ornaments.**
- **To prevent the package tray from being scratched when removing the back window glass, place a plastic sheet between the piano wire and package tray.**

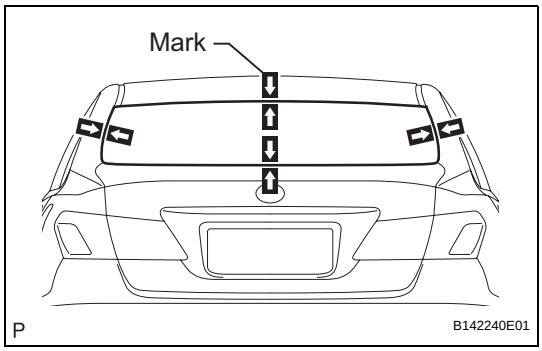

(g) Place matchmarks on the back window glass and vehicle body on the locations indicated in the illustration.
HINT:
Matchmarks do not need to be placed if the back window glass is not going to be reused.
(h) Using a suction cup, remove the back window glass assembly.
NOTICE:
- **Be careful not to drop the back window glass.**
- **Leave as much adhesive on the vehicle body as possible when removing the back window glass.**

30. REMOVE WINDSHIELD GLASS ADHESIVE DAM
(a) Using a scraper, remove the adhesive dam.
NOTICE:
- **Be careful not to damage the windshield glass.**
- **Be sure to replace the adhesive dam with a new one.**

31. REMOVE NO. 2 BACK WINDOW GLASS STOPPER
(a) Using a scraper, remove the 2 No. 2 stoppers.
NOTICE:
- **Be careful not to damage the back window glass.**
- **Be sure to replace the No. 2 stoppers with new ones.**

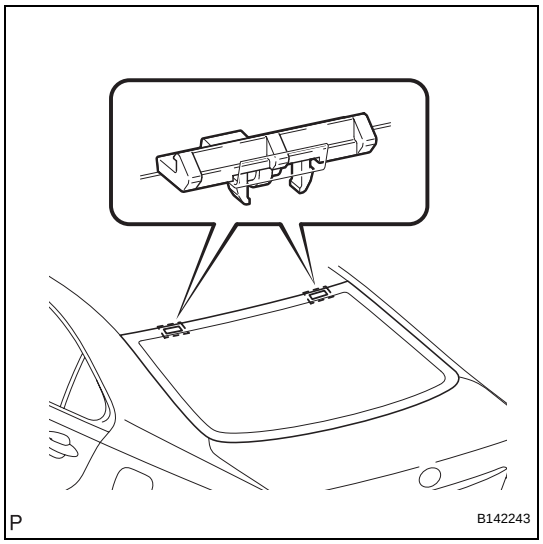

32. REMOVE NO. 1 BACK WINDOW GLASS STOPPER (for 2-piece Type)

(a) Remove the 2 No. 1 stoppers.

NOTICE:

Be sure to replace the No. 1 stoppers with new ones.

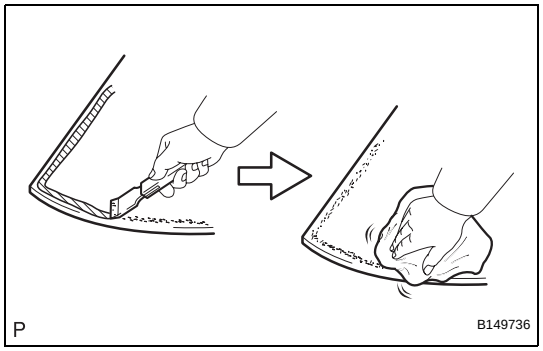

33. CLEAN BACK WINDOW GLASS

(a) Using a scraper, remove the adhesive tape and adhesive sticking to the back window glass.

NOTICE:

Be careful not to damage the back window glass.

(b) Clean the outer circumference of the back window glass with a non-residue solvent.

NOTICE:

- **Do not touch the back window glass surface after cleaning it.**
- **Even if using a new back window glass, clean the back window glass with a non-residue solvent.**

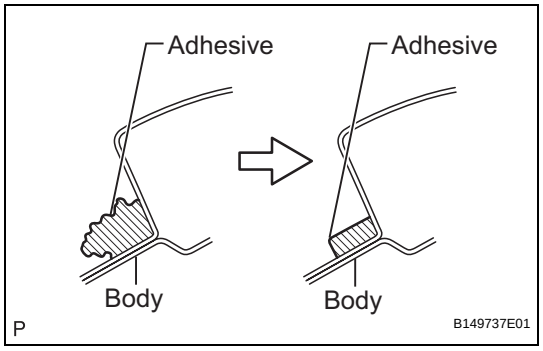

34. CLEAN VEHICLE BODY

(a) Clean and shape the contact surface of the vehicle body.

(1) Using a knife, cut away any rough adhesive on the contact surface of the vehicle body to ensure the appropriate surface shape.

NOTICE:

Be careful not to damage the vehicle body.

HINT:

Leave as much adhesive on the vehicle body as possible.

(2) Clean the contact surface of the vehicle body with a piece of cloth saturated with cleaner.

HINT:

Even if all the adhesive has been removed, clean the vehicle body.

INSTALLATION

1. INSTALL NO. 2 BACK WINDOW GLASS STOPPER

(a) Using a brush or sponge, coat the application area of the No. 2 stoppers with Primer G.

NOTICE:

- **Do not apply too much primer.**
- **Allow the primer coating to dry for 3 minutes or more.**
- **Do not keep any of the opened Primer G for later use.**

HINT:
If an area other than that specified is coated by accident, wipe off the primer with a clean piece of cloth before it dries.

(b) Install 2 new No. 2 stoppers onto the back window glass, as shown in the illustration.

HINT:
Only 2-piece type No. 2 stoppers are supplied. Use the 2-piece type stoppers even if a 1-piece type was used.

Standard dimension

Area	Dimension
A	15.5 mm (0.610 in.)

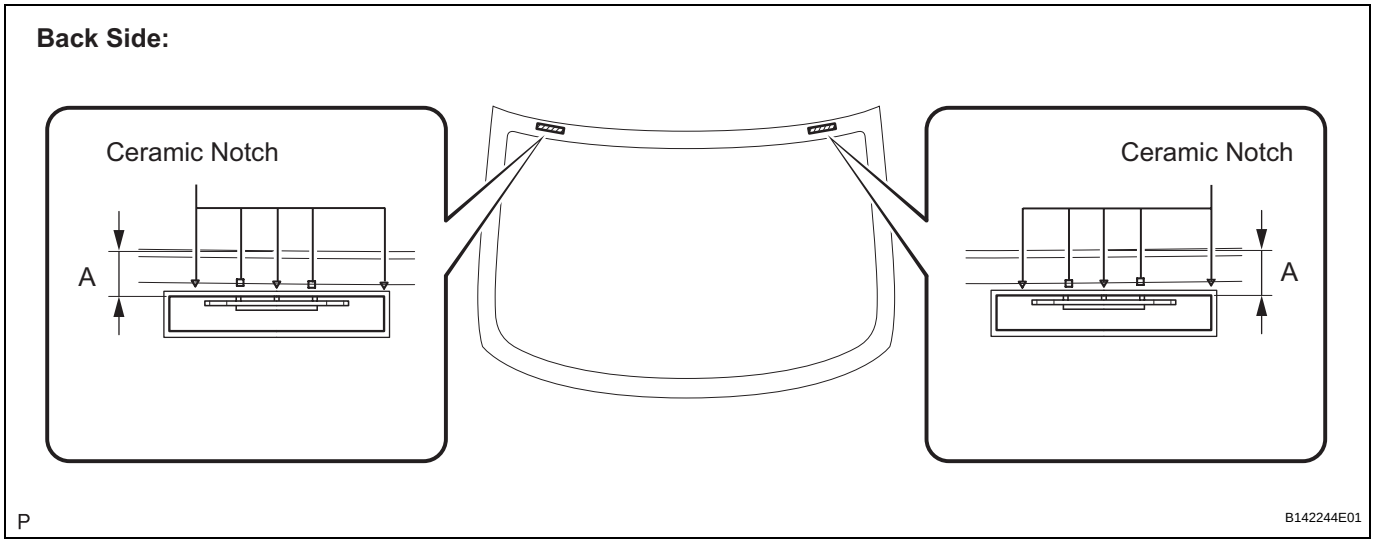

WS

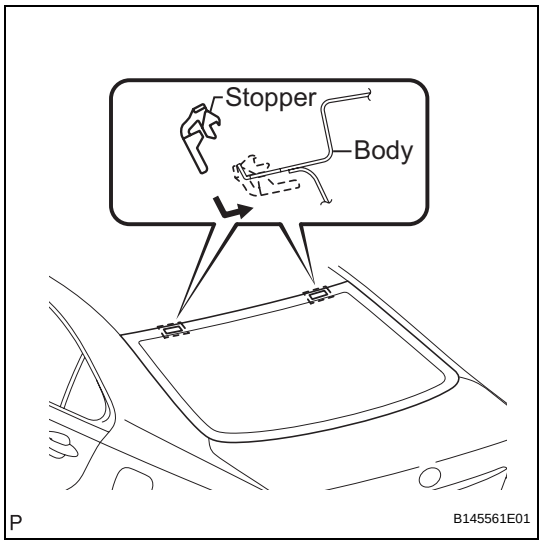

2. INSTALL NO. 1 BACK WINDOW GLASS STOPPER

(a) Install 2 new No. 1 stoppers to the vehicle body, as shown in the illustration.
HINT:
Only 2-piece type No. 1 stoppers are supplied. Use the 2-piece type stoppers even if a 1-piece type was used.

3. INSTALL BACK WINDOW MOULDING

(a) Using a brush or sponge, coat the application area of moulding with Primer G.
NOTICE:
- **Do not apply too much primer.**
- **Allow the primer coating to dry for 3 minutes or more.**
- **Do not keep any of the opened Primer G for later use.**

HINT:
If an area other than that specified is coated by accident, wipe off the primer with a clean piece of cloth before it dries.

(b) Install a new moulding onto the back window glass, as shown in the illustration.
Standard dimension

Area	Dimension
A	6.4 mm (0.252 in.)

Back Side:

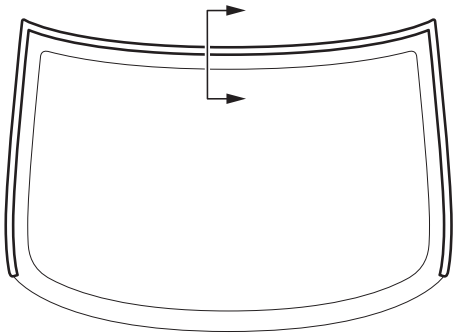

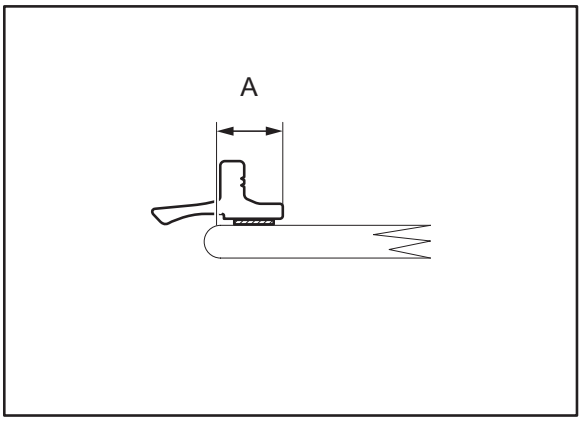

P B142246E01

4. INSTALL WINDSHIELD GLASS ADHESIVE DAM

(a) Using a brush or sponge, coat the application area of adhesive dam with Primer G.
NOTICE:
- **Do not apply too much primer.**
- **Allow the primer coating to dry for 3 minutes or more.**
- **Do not keep any of the opened Primer G for later use.**

WS

HINT:
If an area other than that specified is coated by accident, wipe off the primer with a clean piece of cloth before it dries.

(b) Install a new adhesive dam onto the windshield glass, as shown in the illustration.

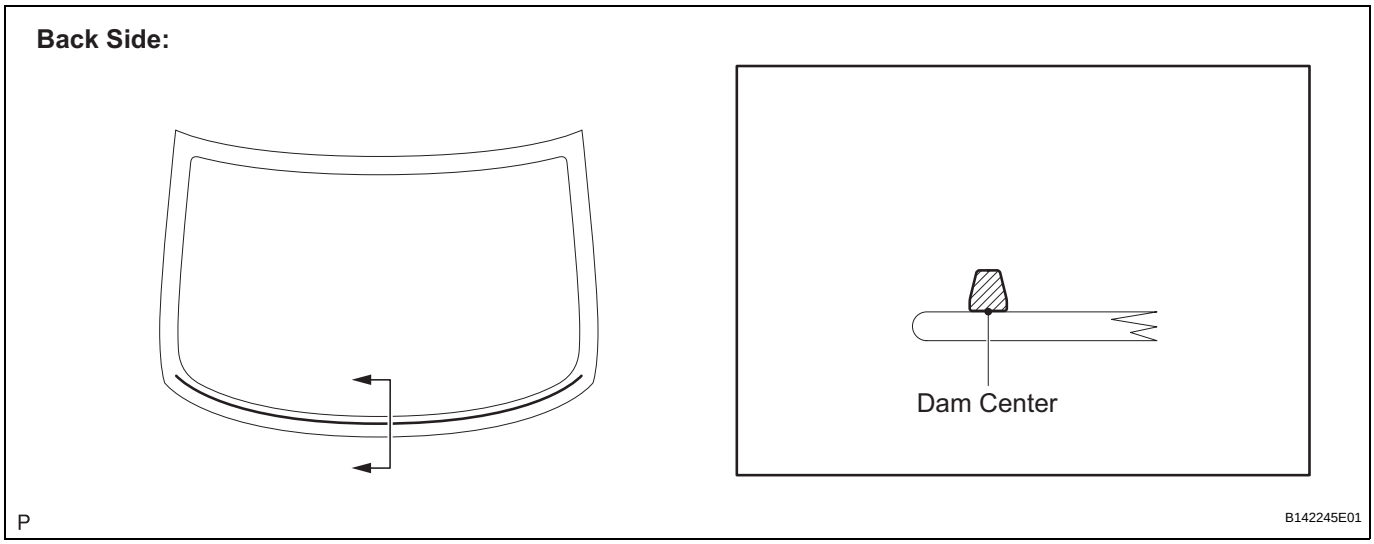

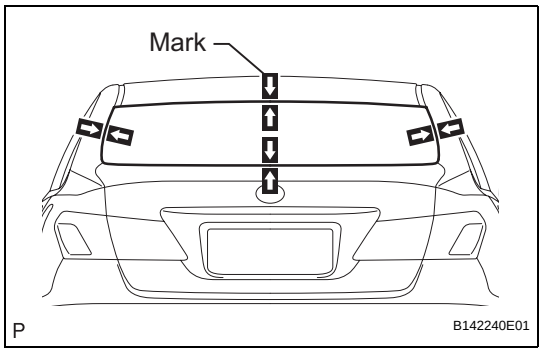

5. INSTALL BACK WINDOW GLASS ASSEMBLY

(a) Position the back window glass assembly.
  (1) Using a suction cup, place the back window glass assembly in the correct position.
  (2) Check that the whole contact surface of the back window glass rim is perfectly even.
  (3) Align the matchmarks on the back window glass and vehicle body.
  NOTICE:
  Check that the back window glass stoppers are attached to the vehicle body correctly.
  (4) Remove the back window glass assembly.

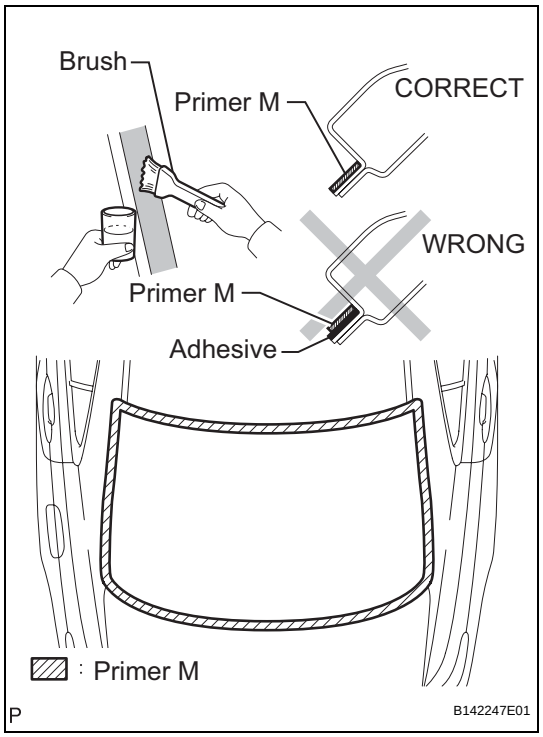

(b) Using a brush, coat the installation surface on the vehicle body with Primer M.

NOTICE:

- **Do not coat the adhesive with Primer M.**
- **Do not apply too much primer.**
- **Allow the primer coating to dry for 3 minutes or more.**
- **Do not keep any of the opened Primer M for later use.**

HINT:

If an area other than that specified is coated by accident, wipe off the primer with a clean piece of cloth before it dries.

(c) Using a brush or sponge, coat the application area of adhesive with Primer G.

NOTICE:

- **Do not apply too much primer.**
- **Allow the primer coating to dry for 3 minutes or more.**
- **Do not keep any of the opened Primer G for later use.**

HINT:

If an area other than that specified is coated by accident, wipe off the primer with a clean piece of cloth before it dries.

Standard dimension

Area	Dimension
a	9.6 mm (0.378 in.)
b	15.5 mm (0.610 in.)
c	10.1 mm (0.397 in.)
d	10.0 mm (0.393 in.)
e	6.5 mm (0.255 in.)
f	10.0 mm (0.393 in.)

WS

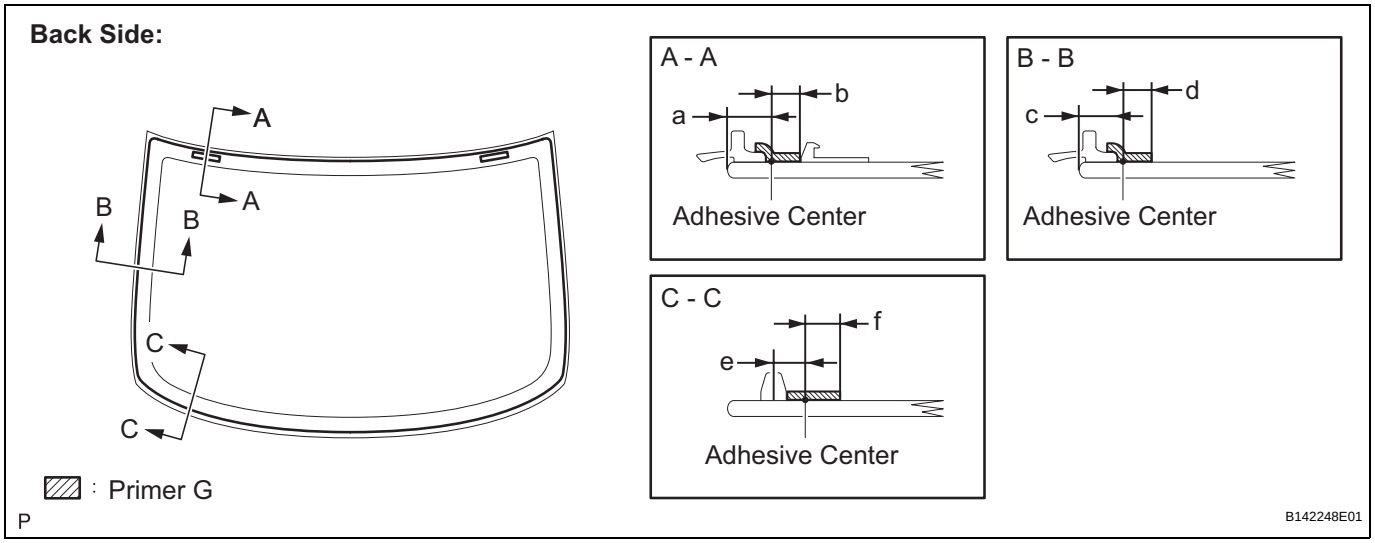

(d) Apply adhesive (Adhesive: TOYOTA genuine windshield glass adhesive or equivalent).

(1) Cut off the tip of the cartridge nozzle, as shown in the illustration.
HINT:
After cutting off the tip, use all adhesive within the time described in the table below.
Usage time frame

Temperature	Tack-free Time
35°C (95°F)	15 minutes
20°C (68°F)	1 hour and 40 minutes
5°C (41°F)	8 hours

(2) Load the sealer gun with cartridge.

(3) Apply adhesive to the back window glass, as shown in the illustration.
Standard dimension

Area	Dimension
a	9.6 mm (0.378 in.)
b	10.1 mm (0.397 in.)
c	6.5 mm (0.255 in.)
d	12.0 mm (0.472 in.)
e	8.0 mm (0.315 in.)

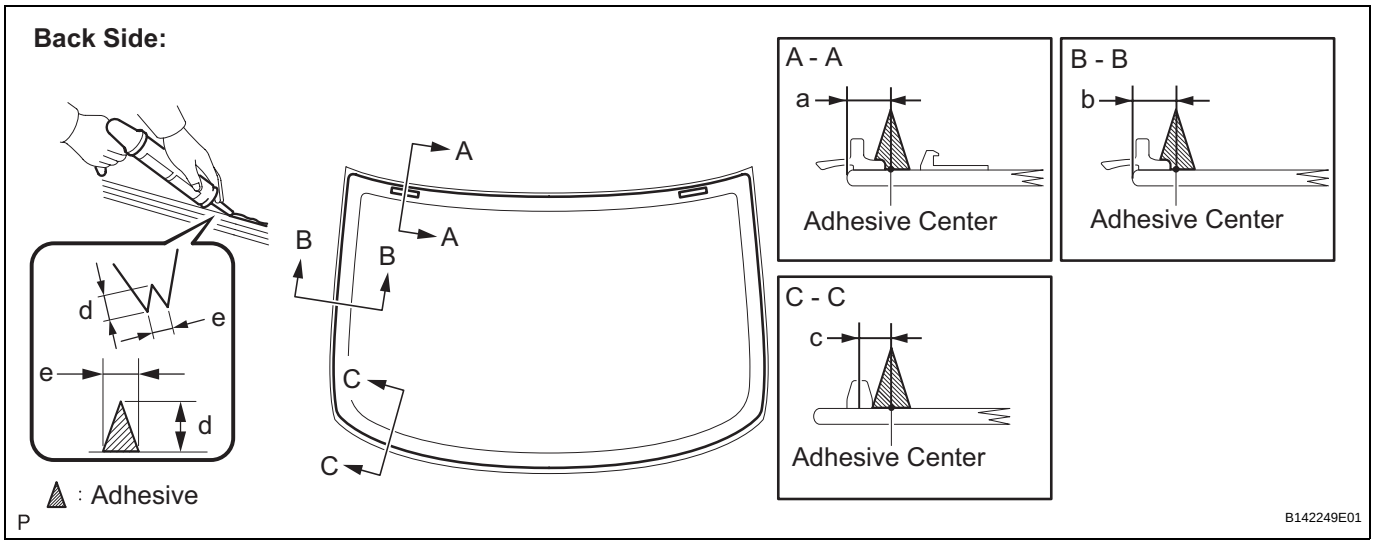

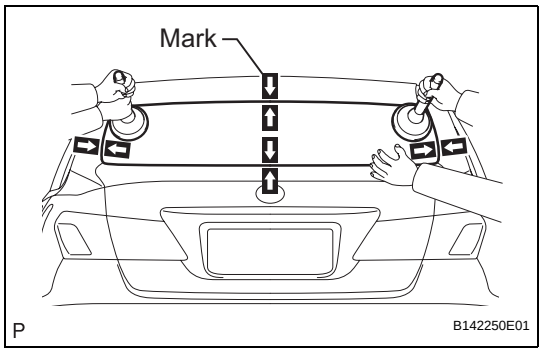

(e) Install the back window glass assembly.

(1) Using a suction cup, position the back window glass so that the matchmarks are aligned, and press it in gently along the rim.
NOTICE:
- **Check that the back window glass stoppers are attached to the vehicle body correctly.**
- **Check the clearance between the vehicle body and back window glass.**

WS

(2) Lightly press the front surface of the back window glass to ensure a close fit.
HINT:
Press the glass with force of 98 N (10 kgf, 22 lb) or more.

(3) Hold the back window glass using protective tape until applied adhesive becomes hard.
NOTICE:
Do not drive the vehicle for the time described in the table below.
Minimum time

Temperature	Minimum time prior to driving vehicle
35°C (95°F)	1 hour and 30 minutes
20°C (68°F)	5 hours
5°C (41°F)	24 hours

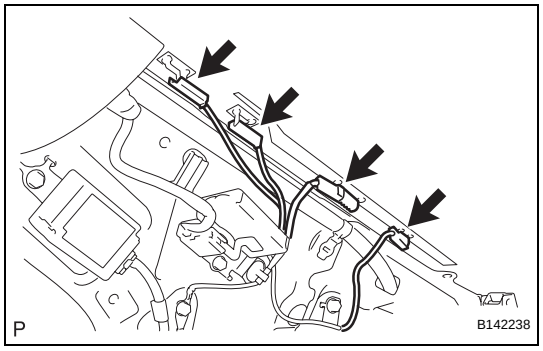

(f) Connect the connectors.

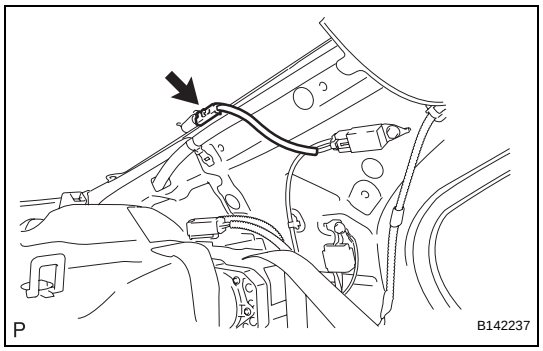

(g) Connect the connector.

6. CHECK FOR LEAKS AND REPAIR

(a) After the adhesive has hardened, apply water from the outside of the vehicle. Check that no water leaks into the cabin.

(b) If water leaks into the cabin, allow the water to dry and add adhesive.

(c) Remove the protective tape.

7. INSTALL ROOF HEADLINING ASSEMBLY (for Standard)

Return the rear section of the roof headlining assembly to the original position (See page IR-56).

8. INSTALL ROOF HEADLINING ASSEMBLY (for Glass Roof)

Return the rear section of the roof headlining assembly to the original position (See page IR-57).

9. INSTALL ASSIST GRIP SUB-ASSEMBLY (See page IR-58)

10. INSTALL SPOT LIGHT ASSEMBLY (for Standard) (See page IR-59)

11. INSTALL SPOT LIGHT ASSEMBLY (for Glass Roof) (See page IR-59)

12. INSTALL COAT HOOK (See page IR-60)

13. **INSTALL NO. 2 PACKAGE TRAY TRIM PANEL ASSEMBLY (w/ Rear Sunshade) (See page IR-22)**
14. **INSTALL CENTER STOP LIGHT SET (See page LI-159)**
15. **INSTALL PACKAGE TRAY TRIM PANEL ASSEMBLY (w/o Rear Sunshade) (See page SB-42)**
16. **INSTALL PACKAGE TRAY TRIM PANEL ASSEMBLY (w/ Rear Sunshade) (See page IR-23)**
17. **INSTALL REAR SEAT SHOULDER BELT HOLE COVER (See page SB-42)**
18. **INSTALL REAR SEAT INNER WITH CENTER BELT ASSEMBLY RH (See page SB-42)**
19. **INSTALL REAR SEAT 3 POINT TYPE BELT ASSEMBLY LH (See page SB-42)**
20. **INSTALL REAR SEAT 3 POINT TYPE BELT ASSEMBLY RH (See page SB-43)**
21. **INSTALL ROOF SIDE INNER GARNISH ASSEMBLY LH (See page IR-62)**
22. **INSTALL ROOF SIDE INNER GARNISH ASSEMBLY RH (See page IR-65)**
23. **INSTALL REAR SEAT SIDE GARNISH LH (w/o Rear Seat Side Airbag) (See page IR-62)**
24. **INSTALL REAR SEAT SIDE AIRBAG ASSEMBLY LH (w/ Rear Seat Side Airbag) (See page RS-460)**
25. **INSTALL REAR SEAT SIDE GARNISH RH (w/o Rear Seat Side Airbag) (See page IR-65)**
26. **INSTALL REAR SEAT SIDE AIRBAG ASSEMBLY RH (w/ Rear Seat Side Airbag) (See page SB-43)**
27. **INSTALL REAR DOOR SCUFF PLATE LH (See page IR-63)**
28. **INSTALL REAR DOOR SCUFF PLATE RH (See page IR-65)**
29. **INSTALL REAR SEATBACK ASSEMBLY (See page SE-121)**
30. **INSTALL REAR CENTER SEAT HEADREST ASSEMBLY**
31. **INSTALL REAR SEAT HEADREST ASSEMBLY**
32. **INSTALL REAR SEAT CUSHION ASSEMBLY (See page SE-121)**
33. **CONNECT CABLE TO NEGATIVE BATTERY TERMINAL**

34. PERFORM INITIALIZATION
NOTICE:
Some systems need initialization after reconnecting the cable to the negative battery terminal (See page IN-33).

35. INSPECT SRS WARNING LIGHT
(See page RS-37)

SYSTEM DIAGRAM

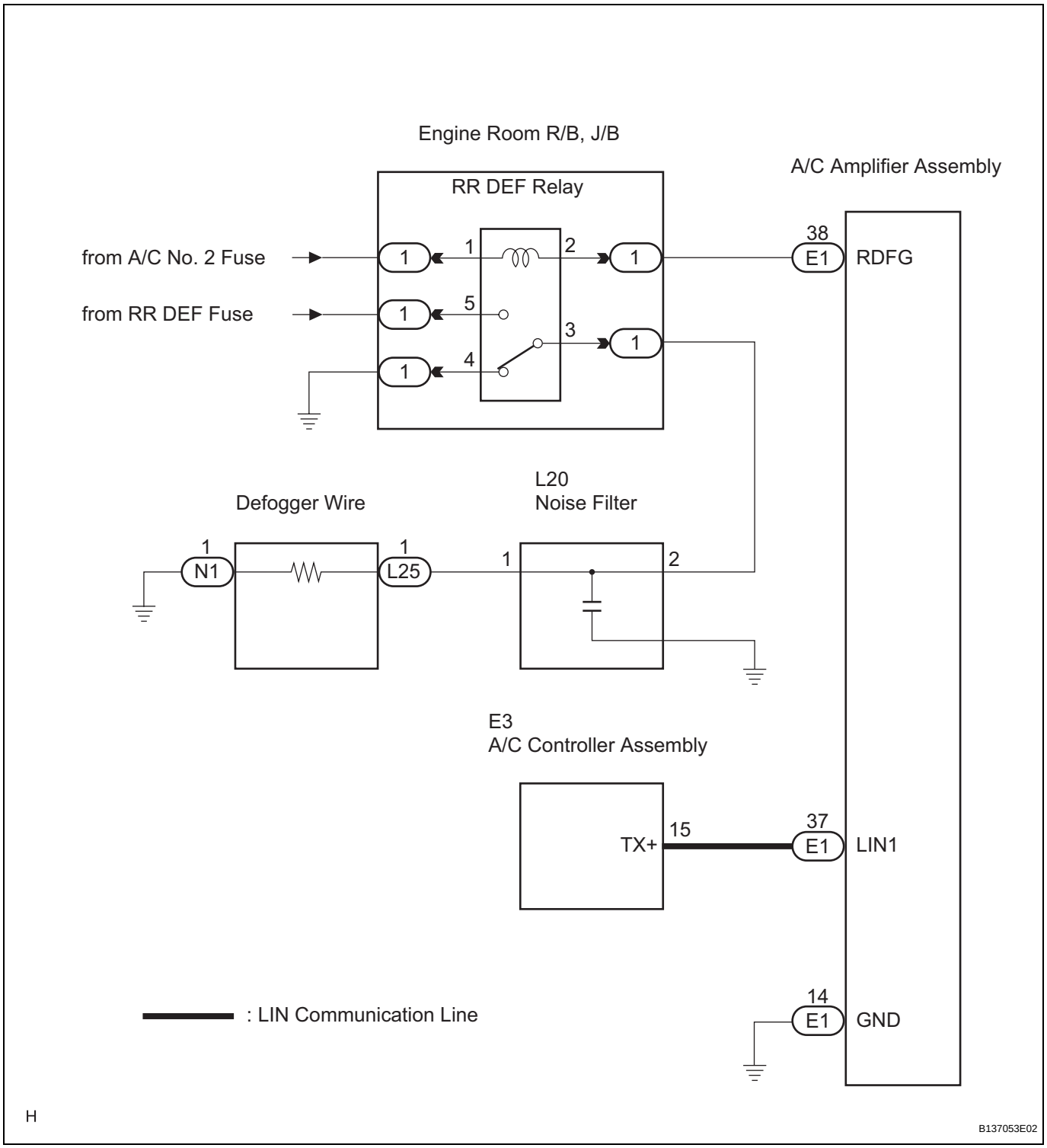

WS

SYSTEM DESCRIPTION

1. GENERAL

The defogger system's thin heater wires are attached to the inside of the rear window and defog the window surface quickly. The indicator light illuminates while the system is operating. The system automatically turns off after approximately 15 minutes.

HINT:

The rear window defogger is linked with the mirror defogger.

2. FUNCTION OF MAIN COMPONENT

Component	Outline
RR DEF Relay	Receives rear defogger activation request signals from A/C amplifier assembly (A/C ECU) and supplies power to rear window defogger.
Rear Window Defogger	Receives power from RR DEF relay and heats defogger wire.

3. DESCRIPTION

Function	Outline
Defogs the rear window surface	• Receives rear defogger activation request signals from A/C amplifier assembly (A/C ECU) and supplies power to rear window defogger. • Receives power from RR DEF relay and heats defogger wire.

HOW TO PROCEED WITH TROUBLESHOOTING

HINT:
- Use the following procedure to troubleshoot the defogger system.
- The intelligent tester should be used in step 4.

1	VEHICLE BROUGHT TO WORKSHOP

NEXT

2	INSPECT BATTERY VOLTAGE

Standard voltage:
11 to 14 V
If the voltage is below 11 V, recharge or replace the battery before proceeding to the next step.

NEXT

3	PROBLEM SYMPTOMS TABLE

HINT:
(See page WS-97)

NEXT

4	OVERALL ANALYSIS AND TROUBLESHOOTING

(a) Terminals of ECU (See page WS-97)
(b) Data List/Active Test (See page WS-99)
(c) On-vehicle inspection (See page WS-99)

NEXT

5	REPAIR OR REPLACE

NEXT

6	CONFIRMATION TEST

NEXT

END

PROBLEM SYMPTOMS TABLE

WINDOW DEFOGGER SYSTEM:

Symptom	Suspected Area	See page
Rear window defogger does not operate	1. A/C No. 2 fuse	-
	2. RR DEF fuse	-
	3. RR DEF relay	WS-102
	4. A/C controller assembly	WS-102
	5. A/C amplifier assembly	WS-102
	6. Rear window defogger wire	WS-99
	7. Wire harness	-

TERMINALS OF ECU

1. CHECK A/C AMPLIFIER ASSEMBLY

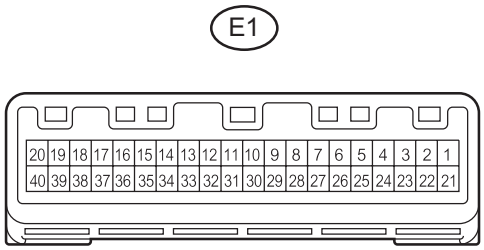

(a) Measure the voltage and resistance of each terminal of the connectors.

Standard voltage

Symbols (Terminal No.)	Wiring Color	Terminal Description	Condition	Specified Condition
RDFG (E1-38) - GND (E1-14)	G - W-B	Rear Defogger Signal	Engine switch on (IG), Rear defogger switch OFF	10 to 14 V

Standard resistance

Symbols (Terminal No.)	Wiring Color	Terminal Description	Condition	Specified Condition
GND (E1-14) - Body ground	W-B - Body ground	Ground	Always	Below 1 Ω

DIAGNOSIS SYSTEM

1. DESCRIPTION

(a) The defogger system data can be read from the Data Link Connector 3 (DLC3) of the vehicle. When the system seems to be malfunctioning, use the intelligent tester to check for malfunctions and perform repairs.

2. CHECK DLC3

(a) The ECU uses ISO 15765-4 communication protocol. The terminal arrangement of the DLC3 complies with SAE J 1962 and matches the ISO 15765-4 format.

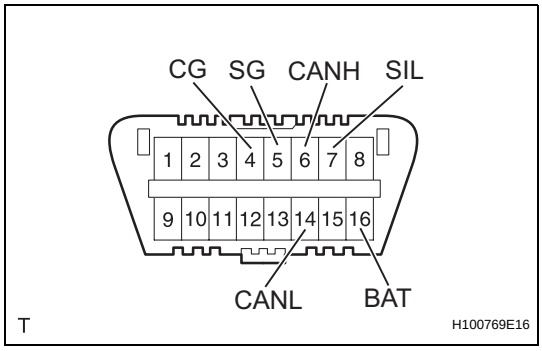

Symbols (Terminal No.)	Terminal Description	Condition	Specified Condition
SIL (7) - SG (5)	Bus "+" line	During transmission	Pulse generation
CG (4) - Body ground	Chassis ground	Always	Below 1 Ω
SG (5) - Body ground	Signal ground	Always	Below 1 Ω
BAT (16) - Body ground	Battery positive	Always	10 to 14 V
CANH (6) - CANL (14)	CAN bus line	Engine switch OFF*	54 to 69 Ω
CANH (6) - CG (4)	HIGH-level CAN bus line	Engine switch OFF*	200 Ω or more
CANL (14) - CG (4)	LOW-level CAN bus line	Engine switch OFF*	200 Ω or more
CANH (6) - BAT (16)	HIGH-level CAN bus line	Engine switch OFF*	6 kΩ or more
CANL (14) - BAT (16)	LOW-level CAN bus line	Engine switch OFF*	6 kΩ or more

WS

NOTICE:

***: Before measuring the resistance, leave the vehicle as is for at least 1 minute and do not operate the engine switch, any other switches or the door.**

If the result is not as specified, the DLC3 may have a malfunction. Repair or replace the harness and connector.

HINT:

Connect the cable of the intelligent tester to the DLC3, turn the engine switch on (IG) and attempt to use the tester. If the display indicates that a communication error has occurred, there is a problem either with the vehicle or with the tester.

- If communication is normal when the tester is connected to another vehicle, inspect the DLC3 of the original vehicle.
- If communication is still not possible when the tester is connected to another vehicle, the problem may be in the tester itself. Consult the Service Department listed in the tester's instruction manual.

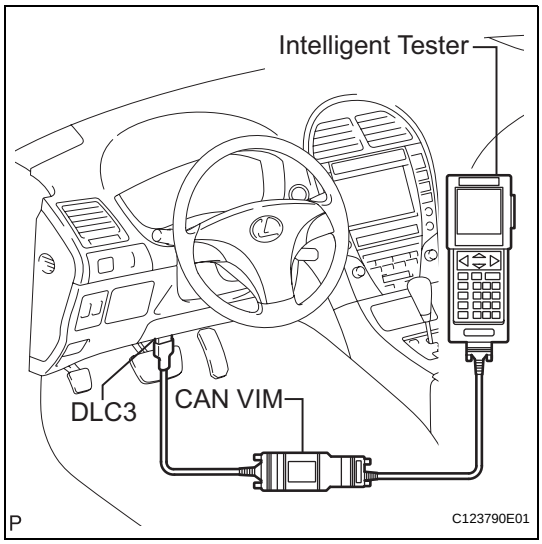

DATA LIST / ACTIVE TEST

1. PERFORM ACTIVE TEST

HINT:
Performing the intelligent tester's ACTIVE TEST allows a relay, VSV, actuator and other items to be operated without removing any parts. Performing the ACTIVE TEST early in troubleshooting is one way to save time. The DATA LIST can be displayed during the ACTIVE TEST.

(a) Connect the intelligent tester (with CAN VIM) to the DLC3.
(b) Turn the engine switch on (IG).
(c) Perform the ACTIVE TEST according to the display on the tester.

Air Conditioner:

Tester Display	Measurement Item/Range	Normal Condition
Defogger Relay (Rear)	Turns rear window defogger OFF/ON	-

ON-VEHICLE INSPECTION

1. CHECK REAR WINDOW DEFOGGER SYSTEM OPERATION

(a) When the engine switch is turned on (IG) and the defogger switch is pressed, check that the rear window defogger operates.
HINT:
After 15 minutes, check that the defogger automatically turns off.

2. INSPECT BACK WINDOW (DEFOGGER WIRE)
NOTICE:

- **When cleaning the glass, wipe the glass along the wire using a soft and dry cloth. Take care not to damage the wires.**
- **Do not use detergents or glass cleaners that have abrasive ingredients.**

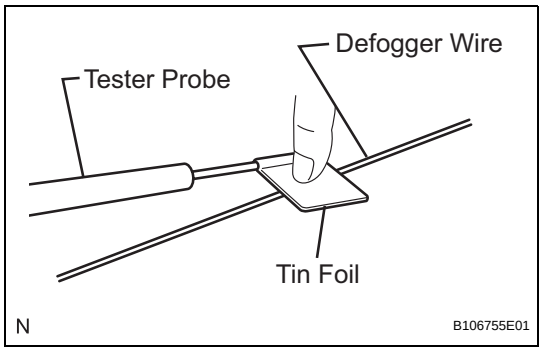

- **When measuring voltage, wrap a piece of tin foil around the tip of the negative tester probe and press the foil against the wire with your finger, as shown in the illustration.**

(a) Turn the engine switch on (IG).
(b) Turn the defogger switch on.

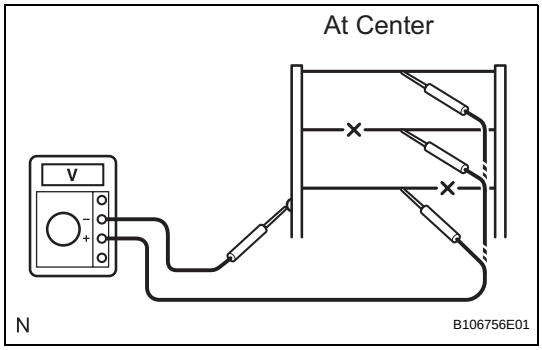

WS

(c) Check the voltage at the center of each defogger wire, as shown in the illustration.
Standard voltage

Voltage	Criteria
Approx. 5 V	Wire is not broken
Approx. 10 or 0 V	Wire is broken

HINT:
If there is approximately 10 V, the wire may be faulty between the center of the wire and the wire end on the battery side. If there is no voltage, the wire may be faulty between the center of the wire and the wire end on the ground side.

(d) Place the voltmeter's positive (+) lead against the defogger wire on the battery side.
(e) Place the voltmeter's negative (-) lead with the foil strip against the wire on the ground side.
(f) Slide the positive (+) lead from the battery side to the ground side.

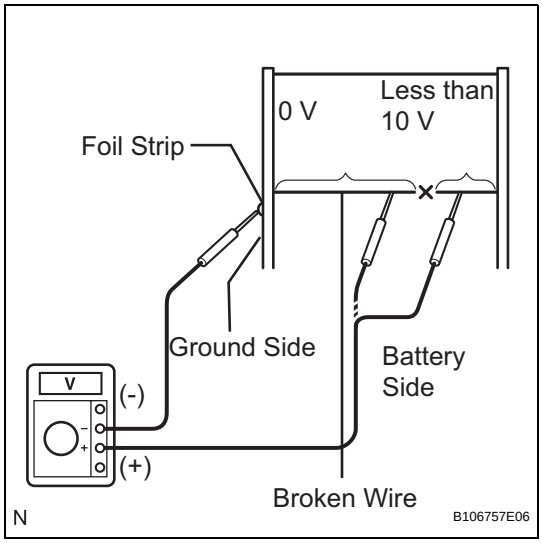

(g) The point where the voltage drops from approximately 10 V to 0 V is the place where the defogger wire is broken.
HINT:
If the defogger wire is not broken, the voltmeter should indicate 0 V at the positive (+) end of the defogger wire but gradually increase to approximately 12 V as the meter probe moves to the other end.

REPAIR

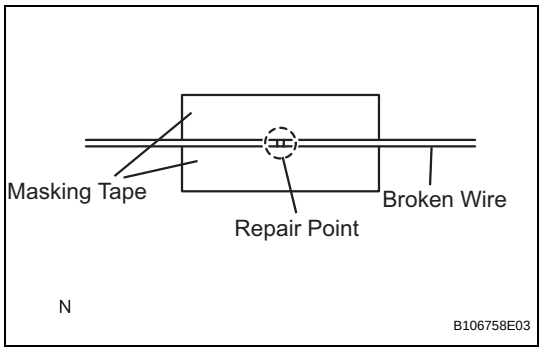

1. REPAIR WINDOW DEFOGGER WIRE

(a) Clean the broken wire tips with a grease, wax and silicone remover.

(b) Place the masking tape along both sides of the wire.

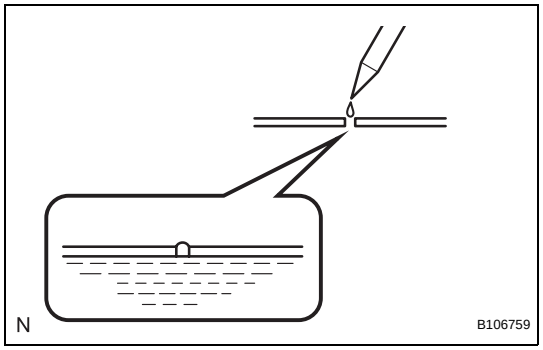

(c) Thoroughly mix the repair agent (Dupont paste No. 4817 or equivalent).

(d) Using a fine tip brush, apply a small amount of the agent to the wire.

(e) After a few minutes, remove the masking tape.
NOTICE:
Do not repair the defogger wire again for at least 24 hours.

Rear Window Defogger System does not Operate

DESCRIPTION

When the rear window defogger switch, which is built into the heater control assembly, is operated, the operation signals are transmitted to the A/C amplifier assembly through LIN. When the A/C amplifier assembly receives the signals, it turns on the RR DEF relay to operate the rear window defogger.

WIRING DIAGRAM

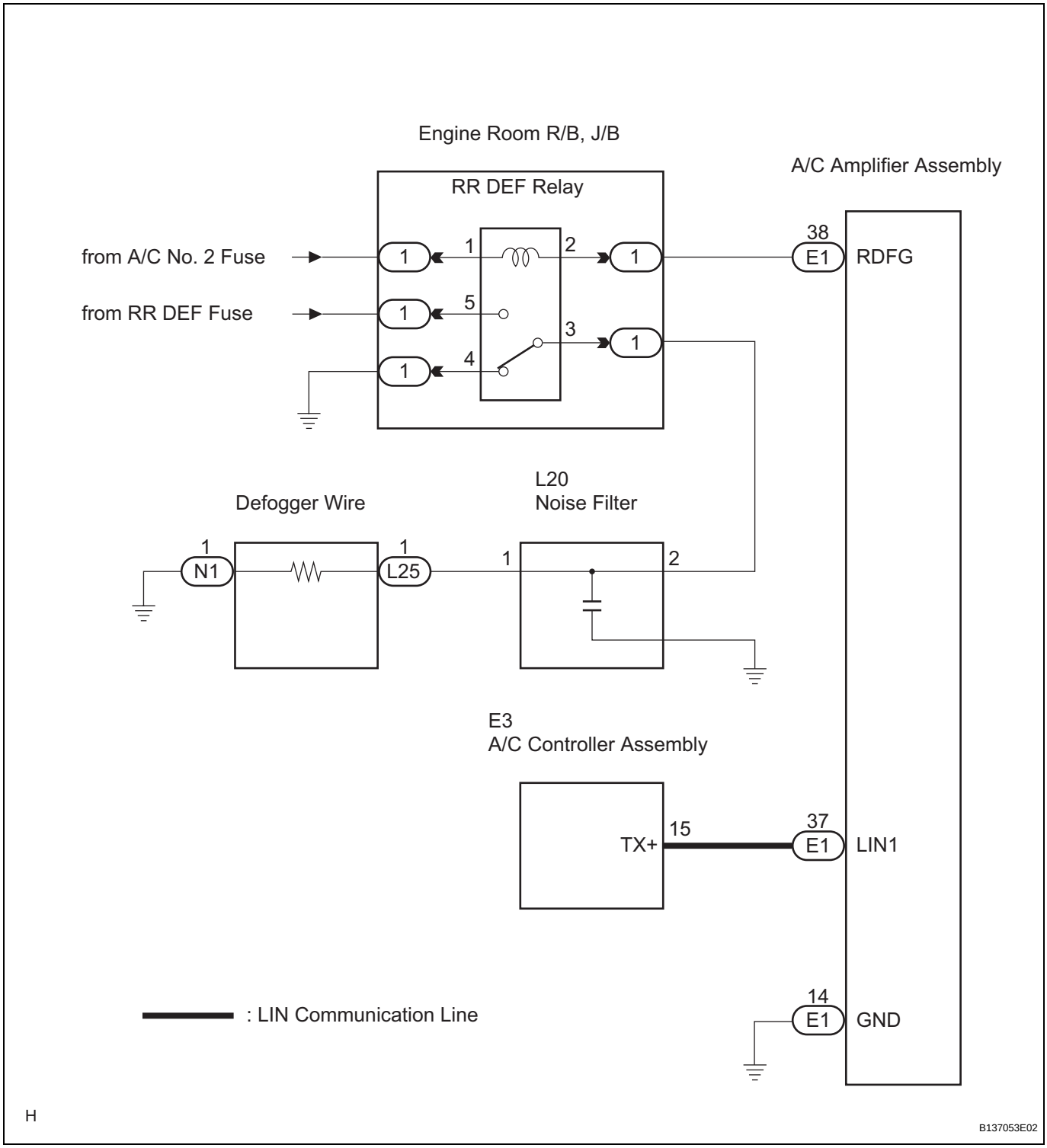

WS

INSPECTION PROCEDURE

1 CHECK FOR DTCs

(a) Select the DTC check on the intelligent tester to check for communication errors.

Result

Result	Proceed to
No DTC is output	A
DTC are output (LIN communication)	B

B → **GO TO MULTIPLEX COMMUNICATION SYSTEM**

A

2 PERFORM ACTIVE TEST BY INTELLIGENT TESTER

(a) Select the ACTIVE TEST, use the intelligent tester to issue a control command, and then check the window defogger operation.

Air Conditioner

Item	Test Details
Defogger Relay (Rear)	Turns rear window defogger OFF/ON

OK → **Go to step 5**

NG

3 REPLACE AIR CONDITIONER CONTROL ASSEMBLY

(a) Replace the air conditioner control assembly.

NEXT

4 CONFIRM REAR WINDOW DEFOGGER OPERATION

(a) Turn the engine switch on (IG), press the defogger switch, and check that the window defogger operates.

NG → **REPLACE A/C AMPLIFIER ASSEMBLY**

OK

END

5 PERFORM ACTIVE TEST BY INTELLIGENT TESTER

(a) Select the ACTIVE TEST, use the intelligent tester to issue a control command, and then check the DEFOG relay operation.
(b) Check that operation sound of the RR DEF relay is heard.

Result	Proceed to
Relay operating sound is heard	OK
Relay operating sound is not heard	NG

OK → **Go to step 9**

NG

6 INSPECT RR DEF RELAY

See page WS-108.

NG → **REPLACE RR DEF RELAY**

OK

7 CHECK WIRE HARNESS (RR DEF RELAY - BATTERY POSITIVE)

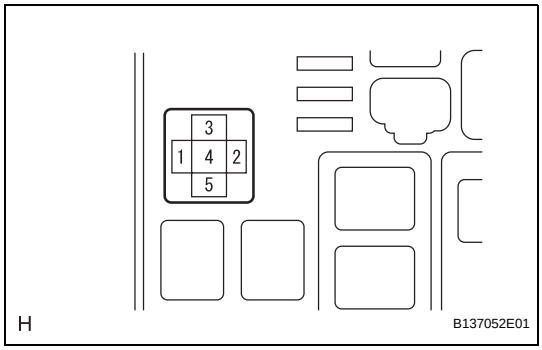

(a) Disconnect the RR DEF relay.
(b) Measure the voltage according to the value(s) in the table below.
Standard voltage:
Engine room R/B, J/B

Tester Connection	Condition	Specified Condition
1 - Body ground	Engine switch on (IG)	10 to 14 V

NG → **REPAIR OR REPLACE A/C NO. 2 FUSE, HARNESS OR CONNECTOR**

OK

WS

8 CHECK WIRE HARNESS (RR DEF RELAY - A/C AMPLIFIER ASSEMBLY)

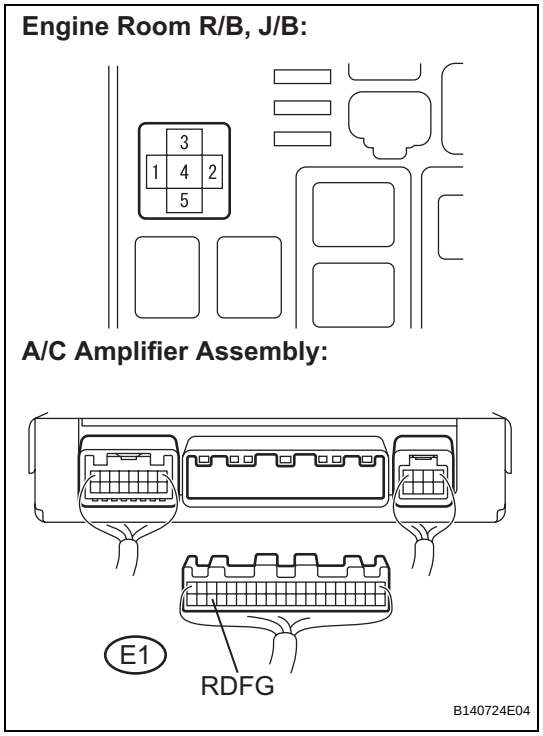

(a) Disconnect the RR DEF relay and A/C amplifier assembly connector.
(b) Measure the resistance according to the value(s) in the table below.

Standard resistance

Tester Connection	Condition	Specified Condition
2 - E1-38	Always	Below 1 Ω
2 - Body ground	Always	10 kΩ or higher

NG → **REPAIR OR REPLACE HARNESS OR CONNECTOR**

OK

REPLACE A/C AMPLIFIER ASSEMBLY

9 INSPECT RR DEF RELAY

WS

See page WS-108.

NG → **REPLACE RR DEF RELAY**

OK

10 CHECK WIRE HARNESS (RR DEF RELAY - BATTERY POSITIVE AND BODY GROUND)

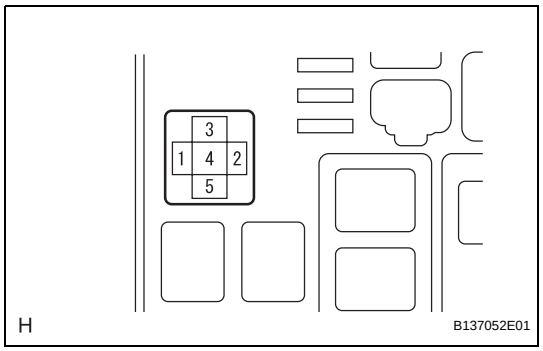

(a) Disconnect the RR DEF relay.
(b) Measure the voltage and resistance according to the value(s) in the table below.

Standard resistance:
Engine room R/B, J/B

Tester Connection	Condition	Specified Condition
4 - Body ground	Always	Below 1 Ω

Standard voltage:
Engine room R/B, J/B

Tester Connection	Condition	Specified Condition
5 - Body ground	Always	10 to 14 V

NG → **REPAIR OR REPLACE RR DEF FUSE, HARNESS OR CONNECTOR**

OK

11 INSPECT NOISE FILTER

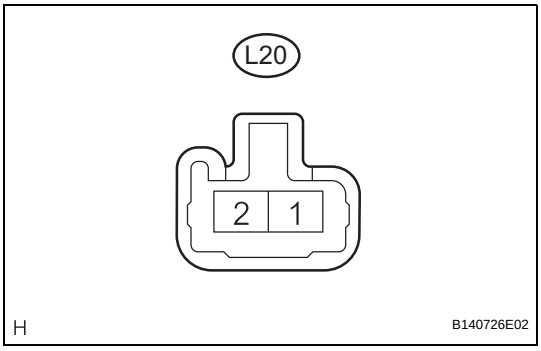

(a) Disconnect the noise filter connector.
(b) Measure the resistance according to the value(s) in the table below.

Standard resistance

Tester Connection	Condition	Specified Condition
L20-1 - L20-2	Always	Below 1 Ω
L20-1 - Body ground	Always	10 kΩ or higher

NG → **REPLACE NOISE FILTER**

OK

12 CHECK WIRE HARNESS (RR DEF RELAY - NOISE FILTER)

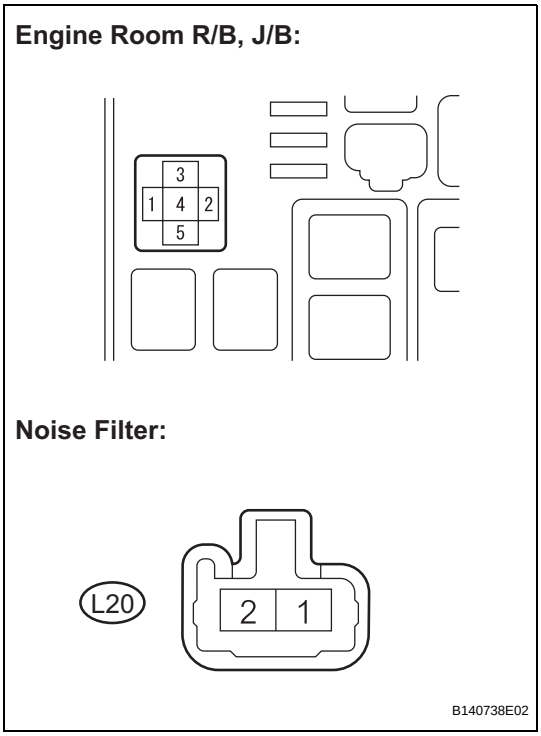

(a) Disconnect the RR DEF relay and defogger wire connectors.
(b) Measure the resistance according to the value(s) in the table below.

Standard resistance

Tester Connection	Condition	Specified Condition
3 - L20-2	Always	Below 1 Ω
3 - Body ground	Always	10 kΩ or higher

NG → **REPAIR OR REPLACE HARNESS OR CONNECTOR**

OK

WS

13 CHECK WIRE HARNESS (NOISE FILTER - DEFOGGER WIRE CONNECTOR)

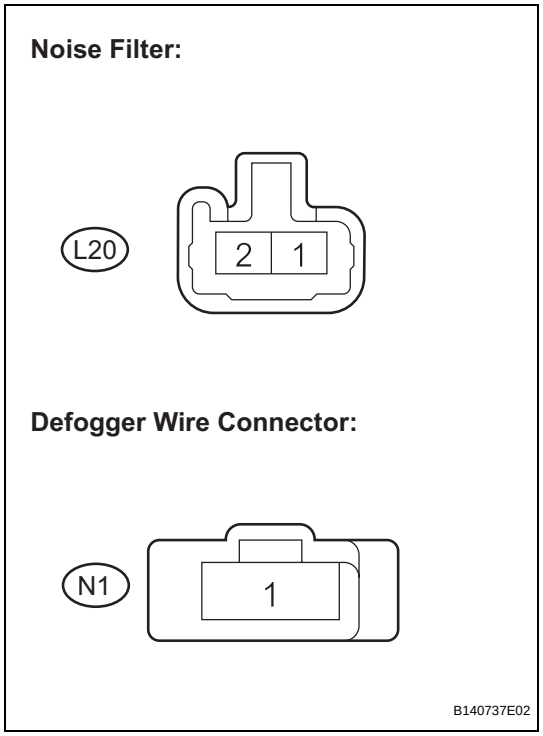

(a) Measure the resistance according to the value(s) in the table below.
Standard resistance

Tester Connection	Condition	Specified Condition
L20-1 - N1-1	Always	Below 1 Ω
L20-1 - Body ground	Always	10 kΩ or higher

NG → **REPAIR OR REPLACE HARNESS OR CONNECTOR**

OK

14 CHECK WIRE HARNESS (DEFOGGER WIRE CONNECTOR - BODY GROUND)

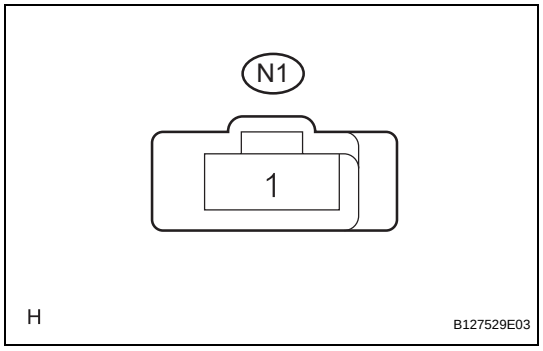

(a) Measure the resistance according to the value(s) in the table below.
Standard resistance

Tester Connection	Condition	Specified Condition
N1-1 - Body ground	Always	Below 1 Ω

NG → **REPAIR OR REPLACE HARNESS OR CONNECTOR**

OK

REPAIR OR REPLACE REAR WINDOW DEFOGGER WIRE

SYSTEM DIAGRAM

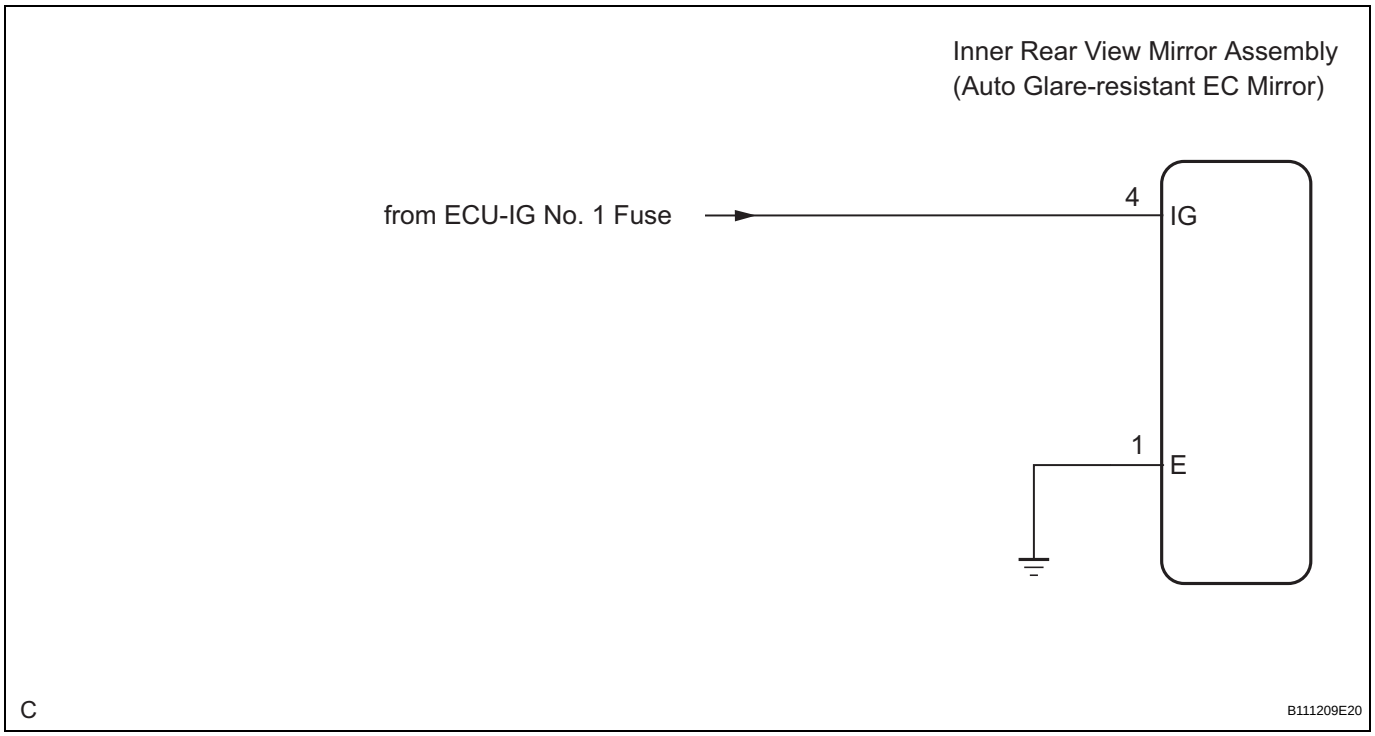

CALIBRATION

1. SELECT COMPASS DISPLAY MODE

(a) The COMP switch allows you to select the Display or Non-display mode of the compass.

2. SET ZONE

(a) Deviation between the "magnetic north" and "actual north" differs depending on the location. Therefore, adjustment of the magnetism is required. Since the magnetic condition differs depending on the area where the vehicle is used, it is necessary for each user to set the zone (Refer to Compass Zone Map). The zone setting can be changed using the COMP switch of the inner mirror.

3. PERFORM CALIBRATION

(a) Because each vehicle has its own magnetic field, calibration should be performed for each vehicle. This compass function is used when storing the record of the vehicle's magnetic field.

4. WHEN COMPASS IS MAGNETIZED

(a) A compass could be magnetized during shipping by vessels or freight cars. Therefore, make sure to perform calibration and ensure that calibration is performed properly before delivery. If it cannot be done (cannot be completed in spite of driving around several times), it may be caused by magnetization. Demagnetize the vehicle using a demagnetizer and perform calibration again.

5. SET COMPASS

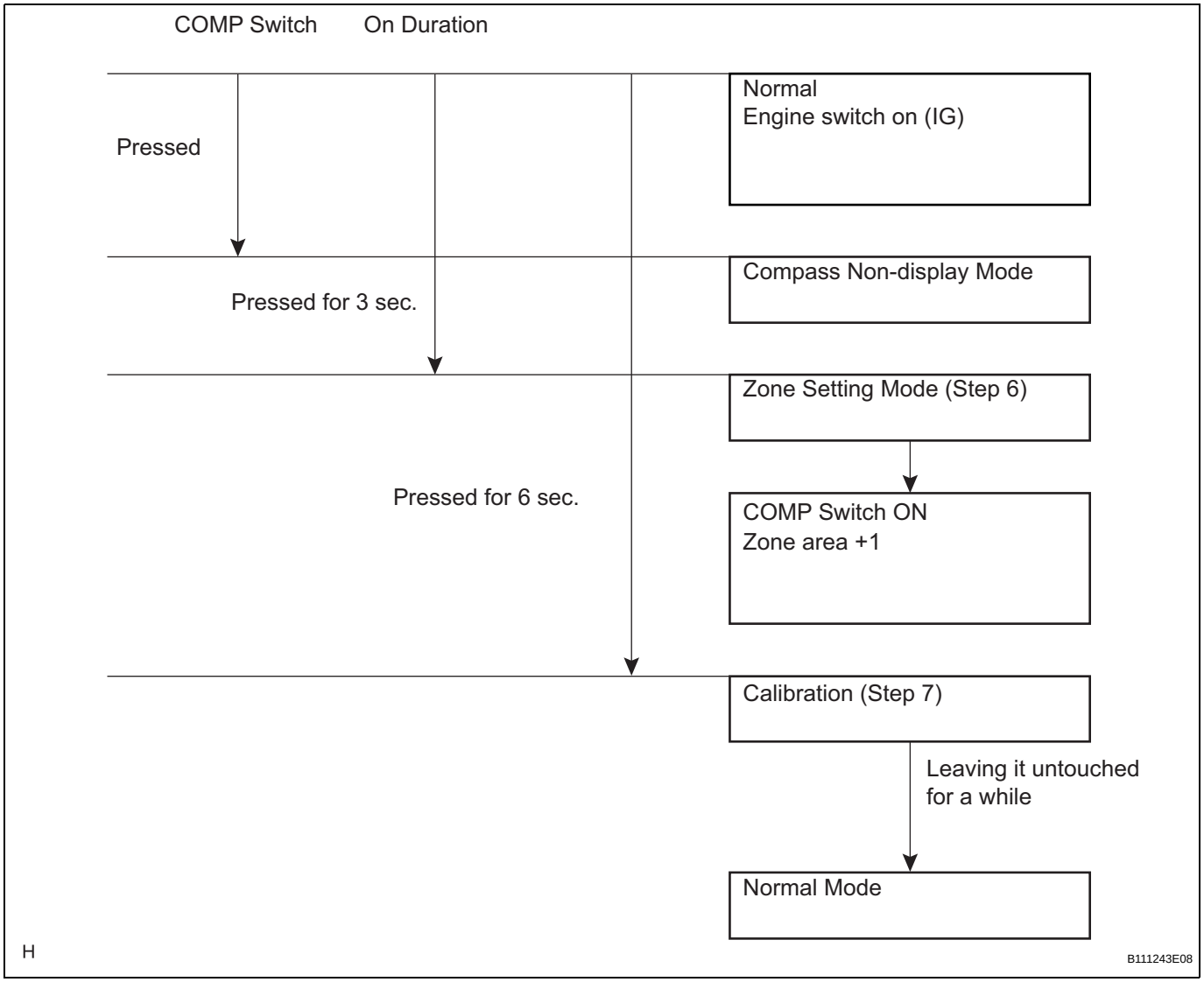

6. ZONE SETTING MODE

(a) Pressing the COMP switch for 3 seconds in the normal mode will activate the zone setting mode. A number (1 to 15) is displayed on the compass display.
NOTICE:
In the initial state, "8" is displayed.

(b) The displayed number increases by 1 every time the COMP switch is pressed. Referring to the map, check the number for the area where the vehicle will be used and set the zone number.

(c) Leave it untouched for several seconds after setting and check that the compass display shows an azimuthal direction (N, NE, E, SE, S, SW, W or NW) or "C".

7. CALIBRATION SETTING MODE

(a) Pressing the COMP switch for 6 seconds in the normal mode will activate the calibration setting mode.

(b) Drive the vehicle at a slow speed of 8 km/h (5 mph) or less in the circular direction.

(c) Driving around the circle 1 to 3 times will display the azimuthal direction on the display, completing the calibration.

NOTICE:

After the calibration is completed, it is not necessary to perform the above procedures unless the magnetic field strength is drastically changed. If this happens, the azimuthal display will be changed to "C".

Zone Setting Map:

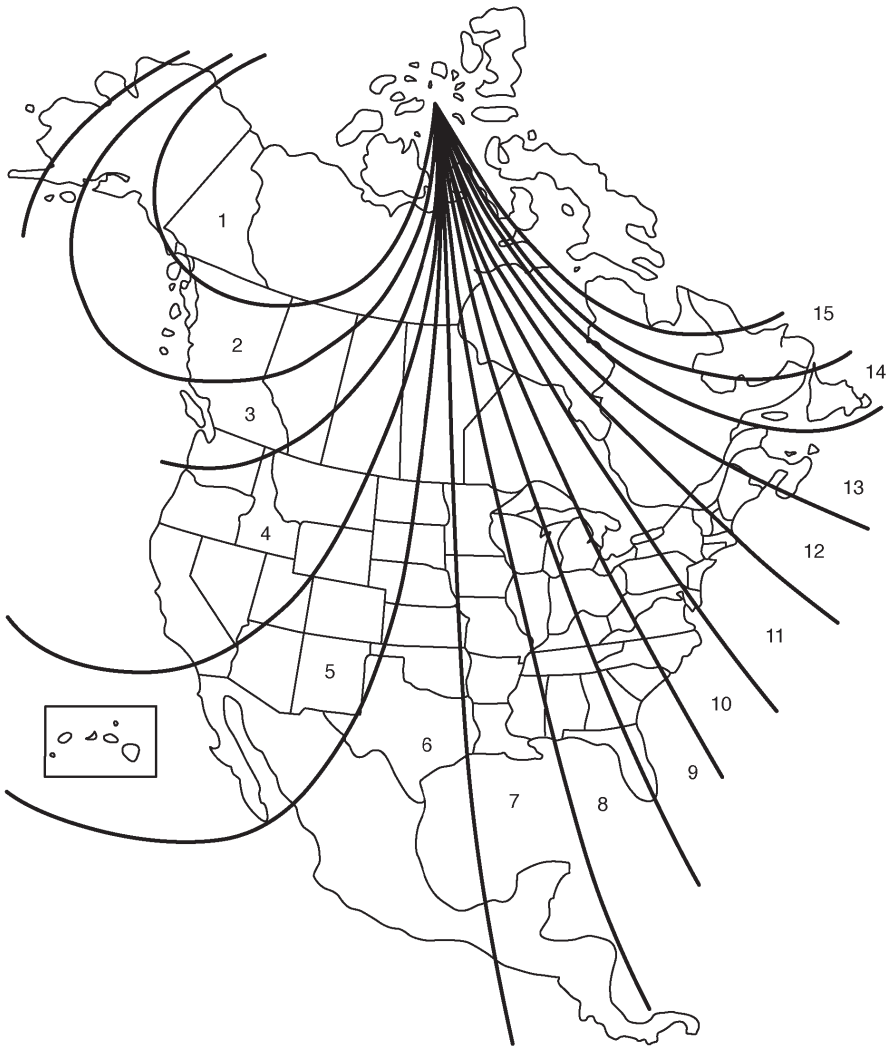

T

B057087E01

PROBLEM SYMPTOMS TABLE

AUTOMATIC GLARE-RESISTANT EC MIRROR

Symptom	Suspected Area	See page
Auto glare-resistant EC mirror does not operate	1. ECU-IG fuse	-
	2. Inner rear view mirror	MI-43
	3. Wire harness	-

REMOVAL

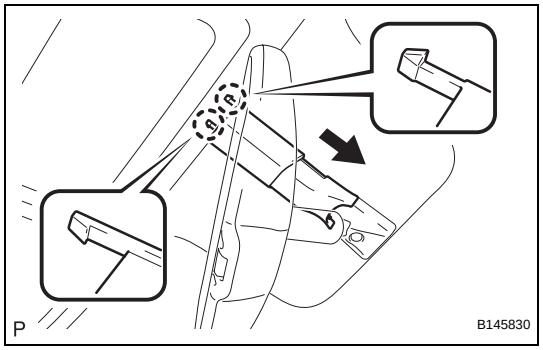

1. REMOVE INNER REAR VIEW MIRROR STAY HOLDER COVER

(a) Disengage the 2 claws and slide the inner rear view mirror stay holder cover as shown in the illustration.

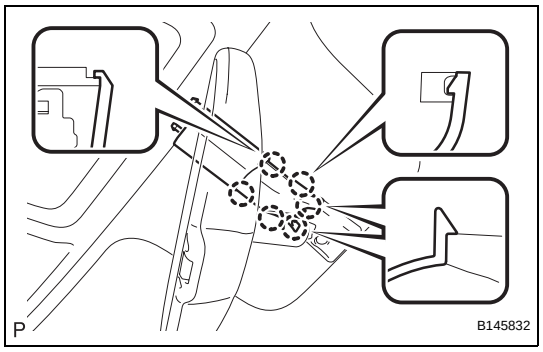

(b) Disengage the 6 claws and remove the inner rear view mirror stay holder cover.

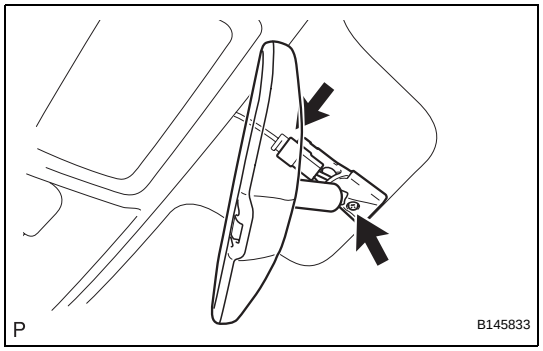

2. REMOVE INNER REAR VIEW MIRROR ASSEMBLY

(a) Disconnect the connector.

(b) Using a "TORX" socket wrench (T20), remove the screw and the inner rear view mirror.

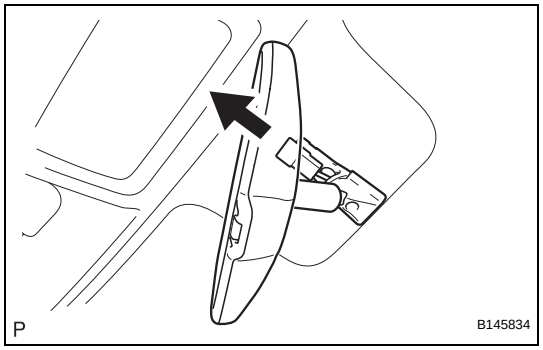

(c) Slide the inner rear view mirror assembly in the direction indicated by the arrow shown in the illustration to remove it.

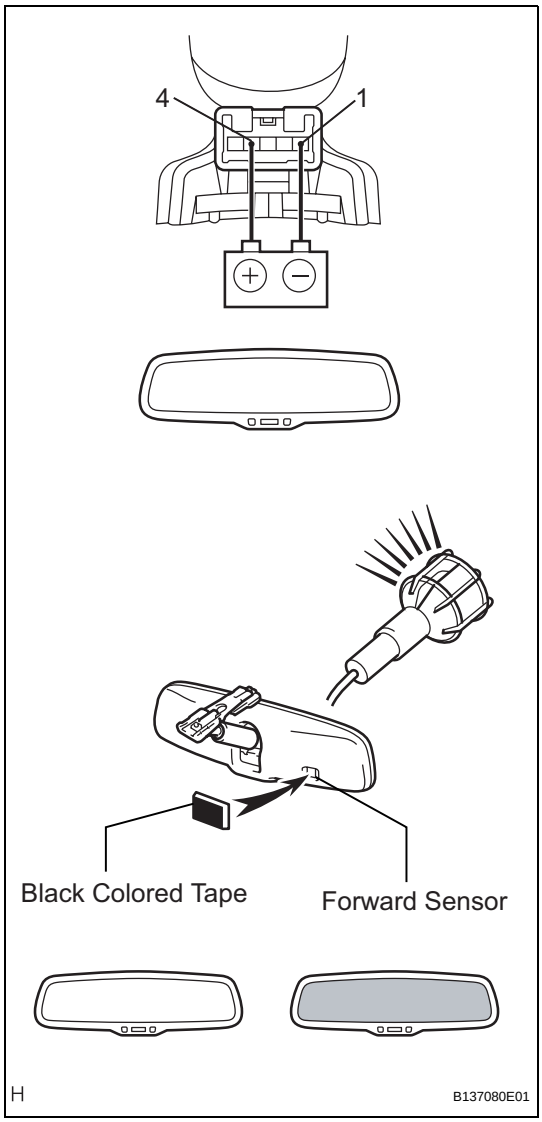

INSPECTION

1. INSPECT INNER REAR VIEW MIRROR ASSEMBLY

(a) Inspect operation of the electrochromic inner mirror.

(1) Connect the positive (+) lead from the battery to terminal 4 and the negative (-) lead to terminal 1.

(2) Attach black colored tape to the forward sensor to prevent it from sensing.

(3) Light up the mirror with an electric light, and check that the mirror surface changes from bright to dark.

Standard:

Mirror surface changes from bright to dark.

If the result is not as specified, replace the mirror assembly.

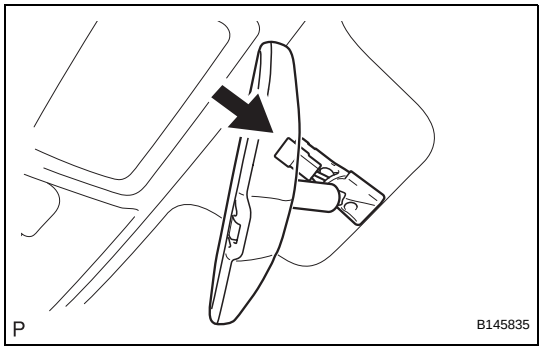

INSTALLATION

1. INSTALL INNER REAR VIEW MIRROR ASSEMBLY

(a) Slide the inner rear view mirror assembly in the direction indicated by the arrow shown in the illustration to install it.

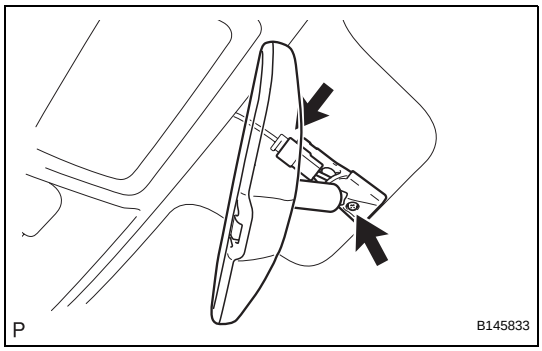

(b) Using a "TORX" socket wrench (T20), install the inner rear view mirror with the screw.

Torque: 1.8 N*m (18 kgf*cm, 16 in.*lbf)

(c) Connect the connector.

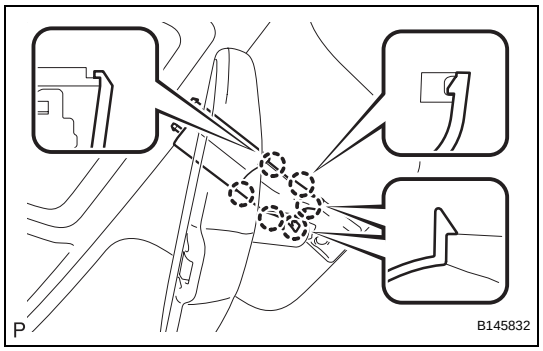

2. INSTALL INNER REAR VIEW MIRROR STAY HOLDER COVER

(a) Engage the 6 claws and install the inner rear view mirror stay holder cover.

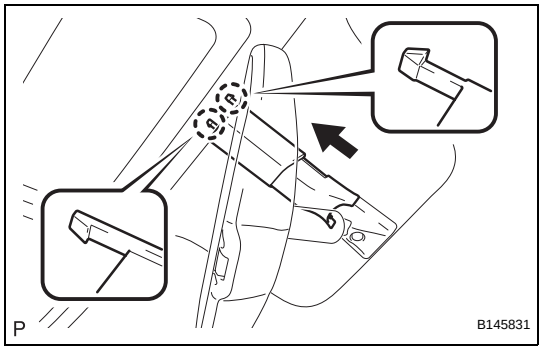

(b) Engage the 2 claws and install the inner rear view mirror stay holder cover as shown in the illustration.

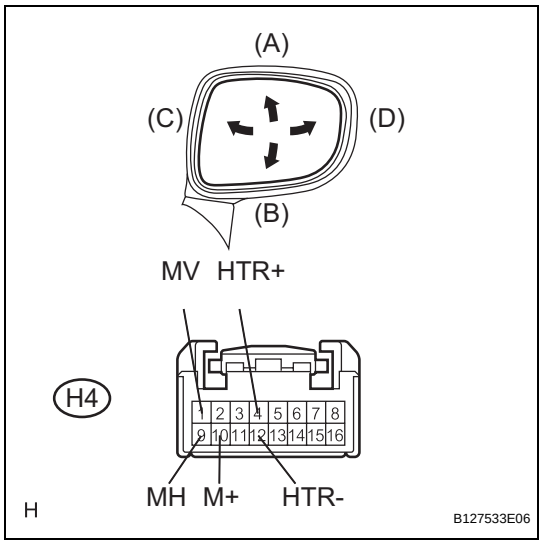

INSPECTION

1. INSPECT OUTER REAR VIEW MIRROR ASSEMBLY RH

(a) Inspect outer mirror motor operation.

(1) Apply battery voltage and check operation of the mirror face, as shown in the table and illustration.

Standard

Measurement Condition	Specified Condition
Battery positive (+) → Terminal 1 (MV) Battery negative (-) → Terminal 10 (M+)	**Turns upward (A)**
Battery positive (+) → Terminal 10 (M+) Battery negative (-) → Terminal 1 (MV)	**Turns downward (B)**
Battery positive (+) → Terminal 9 (MH) Battery negative (-) → Terminal 10 (M+)	**Turns left (C)**
Battery positive (+) → Terminal 10 (M+) Battery negative (-) → Terminal 9 (MH)	**Turns right (D)**

(b) Inspect outer mirror heater operation.

(1) Apply battery voltage and check operation of the mirror face, as shown in the table below.

Standard

Measurement Condition	Specified Condition
Battery positive (+) → Terminal 4 (HTR+) Battery negative (-) → Terminal 12 (HTR-)	**Mirror surface temperature becomes higher**

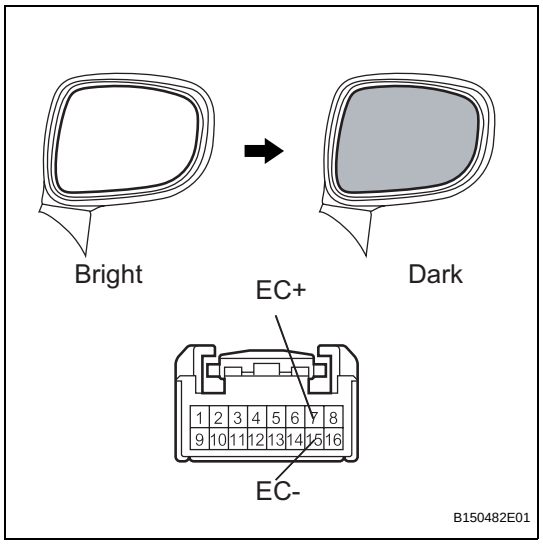

(c) Inspect electrochromic outer mirror operation.

(1) Apply battery voltage and check operation of the mirror face, as shown in the table and illustration.

Standard

Measurement Condition	Specified Condition
Battery positive (+) → Terminal 7 (EC+) Battery negative (-) → Terminal 15 (EC-)	**Mirror surface changes to dark**

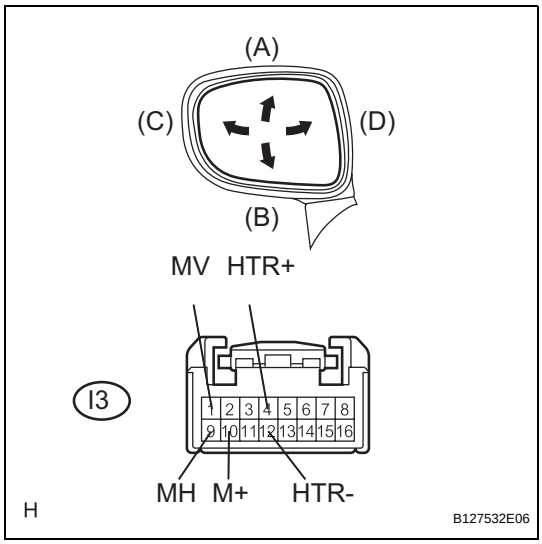

2. INSPECT OUTER REAR VIEW MIRROR ASSEMBLY LH

(a) Inspect outer mirror motor operation.

(1) Remove the outer rear view mirror assembly.

(2) Apply battery voltage and check operation of the mirror face, as shown in the table and illustration.

Standard

Measurement Condition	Specified Condition
Battery positive (+) → Terminal 1 (MV) Battery negative (-) → Terminal 10 (M+)	**Turns upward (A)**
Battery positive (+) → Terminal 10 (M+) Battery negative (-) → Terminal 1 (MV)	**Turns downward (B)**
Battery positive (+) → Terminal 9 (MH) Battery negative (-) → Terminal 10 (M+)	**Turns left (C)**
Battery positive (+) → Terminal 10 (M+) Battery negative (-) → Terminal 9 (MH)	**Turns right (D)**

(b) Inspect outer mirror heater operation.

(1) Apply battery voltage and check operation of the mirror face, as shown in the table below.

Standard

Measurement Condition	Specified Condition
Battery positive (+) → Terminal 4 (HTR+) Battery negative (-) → Terminal 12 (HTR-)	**Mirror surface temperature becomes higher**

(c) Inspect electrochromic outer mirror operation.

(1) Apply battery voltage and check operation of the mirror face, as shown in the table and illustration.

Standard

Measurement Condition	Specified Condition
Battery positive (+) → Terminal 7 (EC+) Battery negative (-) → Terminal 15 (EC-)	**Mirror surface changes to dark**

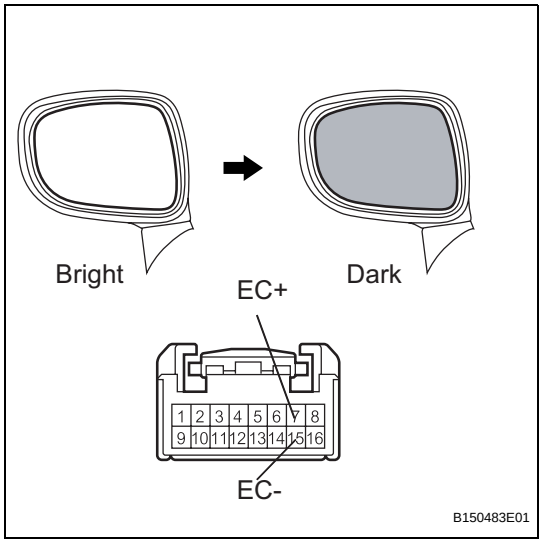

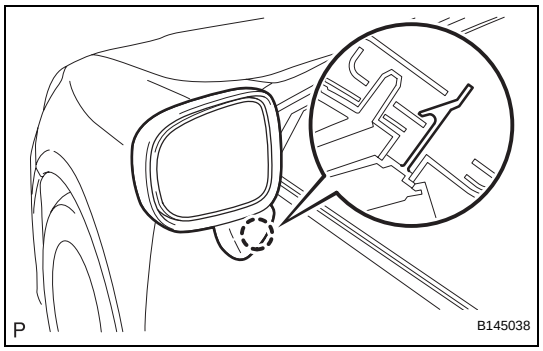

INSTALLATION

1. INSTALL OUTER REAR VIEW MIRROR ASSEMBLY

(a) Engage the claw to install the outer rear view mirror assembly.

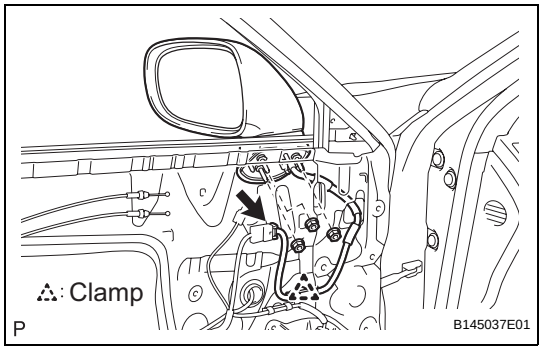

(b) Install the outer rear view mirror assembly with the 3 nuts.
Torque: 5.5 N*m (56 kgf*cm, 49 in.*lbf)

(c) Engage the clamp.

(d) Connect the connector.

2. INSTALL OUTER MIRROR PROTECTOR (See page ED-51)

3. INSTALL DOOR FRAME GARNISH (See page ED-51)

4. INSTALL FRONT DOOR INNER GLASS WEATHERSTRIP (See page ED-52)

5. INSTALL FRONT DOOR TRIM BOARD SUB-ASSEMBLY (See page ED-52)

6. INSTALL DOOR ARMREST COVER (See page ED-53)

7. INSTALL COURTESY LIGHT ASSEMBLY (See page ED-53)

8. INSTALL FRONT DOOR ARMREST BASE PANEL ASSEMBLY (See page ED-53)

9. INSTALL FRONT DOOR INSIDE HANDLE BEZEL PLUG (See page ED-54)

Driver Side ECU Power Source Circuit

DESCRIPTION

The driver side position control ECU is contained in the front power seat switch LH.
During manual operation, only one switch signal is accepted. If signals are input from 2 or more switches simultaneously, all of them are ignored, except when signals are input from the front vertical switch and lifter switch simultaneously. In this case, the signal from the lifter switch will be accepted.
During automatic operation, a manual switch input will override any other operations, i.e. automatic operations will stop and the manual input operation only will be performed. For example, if a manual switch input is activated during a seat store/restore operation, the previous operation will cease and manual operation will be performed. After the manual operation is performed, the previous automatic operation will not resume.
The power mirror store/restore operation is not affected by manual switch inputs.
The front power seat switch does not allow the restore operation of the power seat when the system detects that the voltage of terminal SYSB is less than 8.0 +- 0.5 V for 3 sec. or more than 10 +- 0.5 V for 3 sec.
This circuit is the power source circuit for the front power seat switch LH (position control ECU).
HINT:

- Manual adjustment of the slide, reclining, or lumbar can be performed even when the front power seat switch LH is not functional if current is allowed to flow into terminals +B and SYSB.
- Lumbar support operation and leg support operation can be performed at all times.

WIRING DIAGRAM

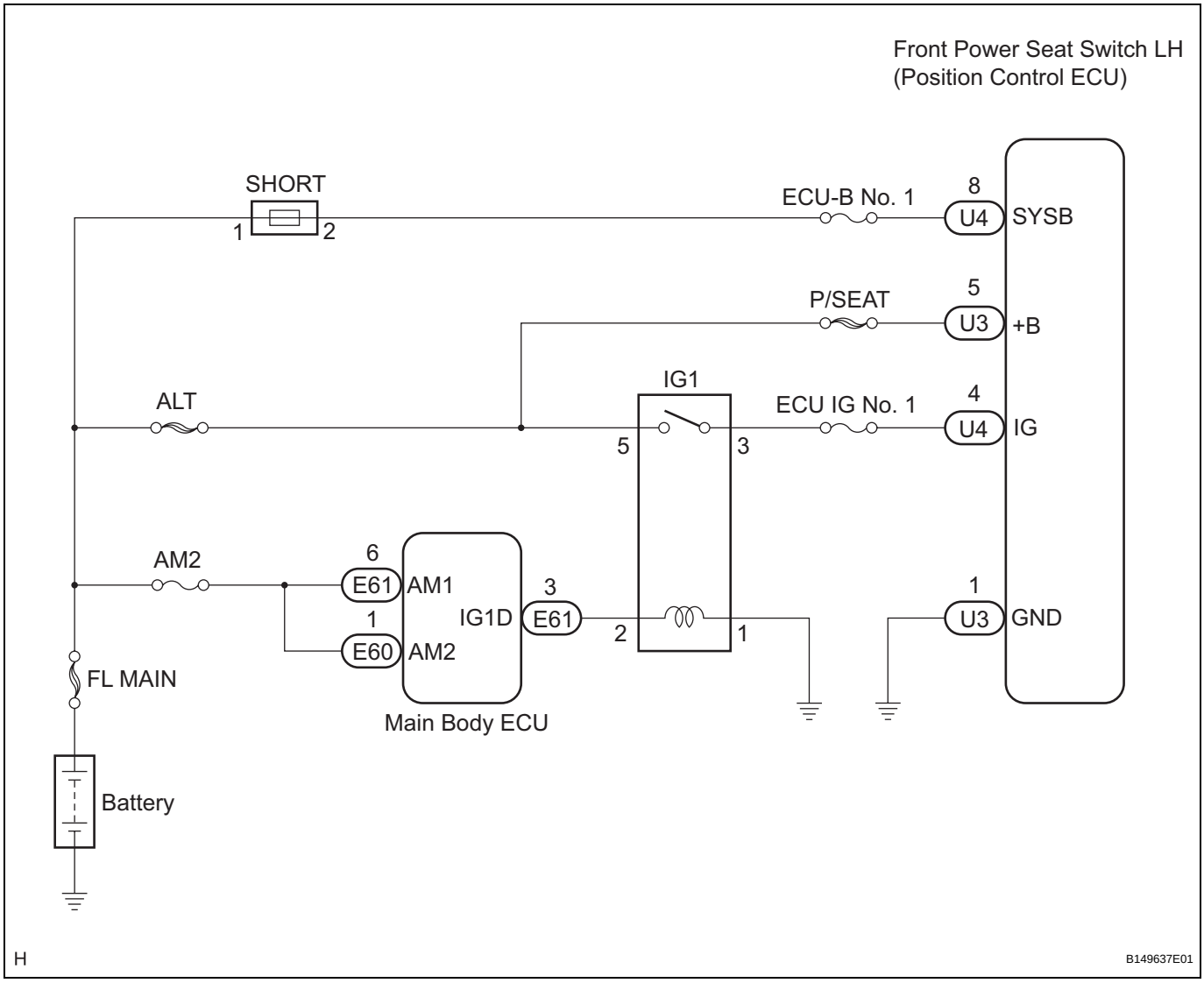

INSPECTION PROCEDURE

1	**INSPECT FRONT POWER SEAT SWITCH LH (POSITION CONTROL ECU POWER SOURCE CIRCUIT)**

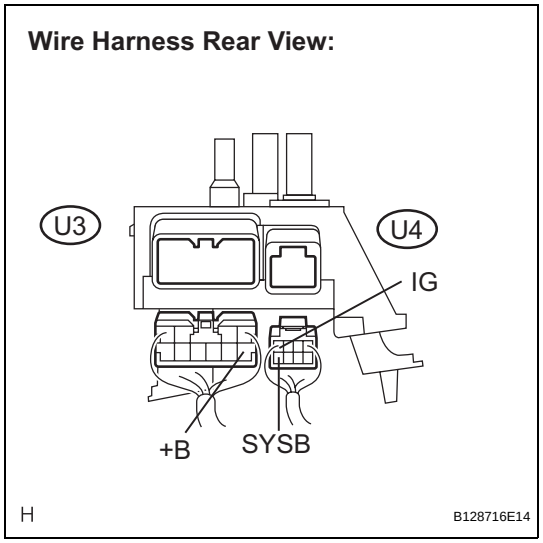

(a) Disconnect the front power seat switch LH (position control ECU) connectors.

(b) Measure the voltage according to the value(s) in the table below.

Standard voltage

Tester Connection	Condition	Specified Condition
U3-5 (+B) - Body ground	Always	10 to 14 V
U4-4 (IG) - Body ground	Engine switch on (IG)	10 to 14 V
U4-8 (SYSB) - Body ground	Always	10 to 14 V

NG → **REPAIR OR REPLACE HARNESS OR CONNECTOR (POWER SOURCE CIRCUIT)**

OK

2	**INSPECT FRONT POWER SEAT SWITCH LH (POSITION CONTROL ECU GROUND CIRCUIT)**

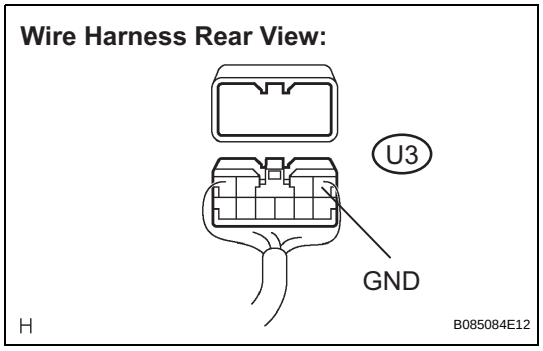

(a) Measure the resistance according to the value(s) in the table below.

Standard resistance

Tester Connection	Condition	Specified Condition
U3-1 (GND) - Body ground	Always	Below 1 Ω

NG → **REPAIR OR REPLACE HARNESS OR CONNECTOR (GROUND CIRCUIT)**

OK

PROCEED TO NEXT CIRCUIT INSPECTION SHOWN IN PROBLEM SYMPTOMS TABLE

Front Passenger Side ECU Power Source Circuit

DESCRIPTION

The front passenger side position control ECU is contained in the front power seat switch RH.
During manual operation, only one switch signal is accepted. If signals are input from 2 or more switches simultaneously, all of them are ignored, except when signals are input from the front vertical switch and lifter switch simultaneously. In this case, the signal from the lifter switch will be accepted.
During automatic operation, a manual switch input will override any other operations, i.e. automatic operations will stop and the manual input operation only will be performed. For example, if a manual switch input is activated during a seat store/restore operation, the previous operation will cease and manual operation will be performed. After the manual operation is performed, the previous automatic operation will not resume.
The power mirror store/restore operation is not affected by manual switch inputs.
The front power seat switch RH does not allow the restore operation of the power seat when the system detects that the voltage of terminal SYSB is less than 8.0 +- 0.5 V for 3 sec. or more than 10 +- 0.5 V for 3 sec.
This circuit is the power source circuit for the front power seat switch RH (position control ECU).
HINT:

- Manual adjustment of the slide, reclining, or lumbar can be performed even when the front power seat switch RH is not functional if current is allowed to flow into terminals +B and SYSB.
- Lumbar support operation can be performed at all times.

WIRING DIAGRAM

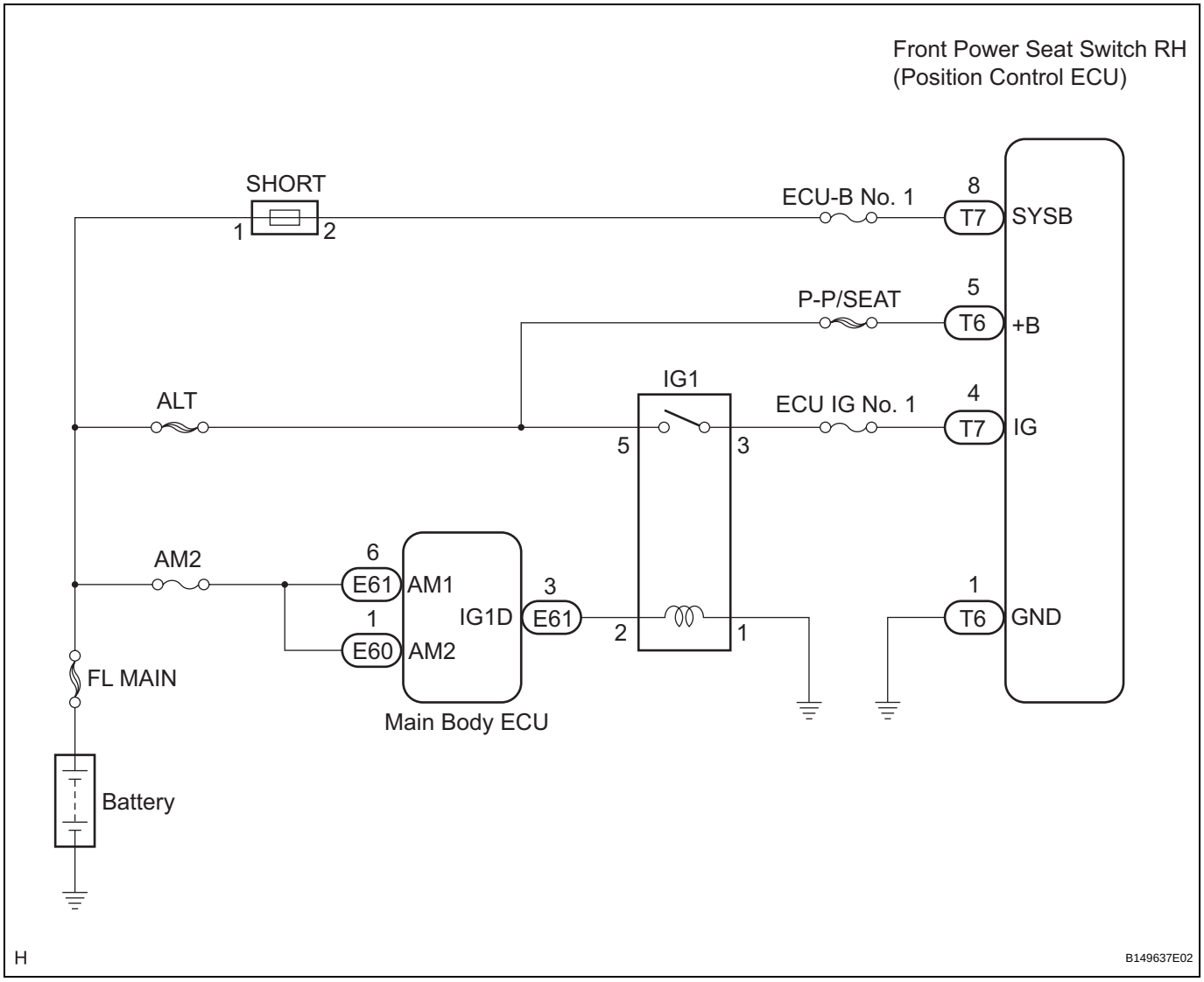

SE

INSPECTION PROCEDURE

1	INSPECT FRONT POWER SEAT SWITCH RH (POSITION CONTROL ECU POWER SOURCE CIRCUIT)

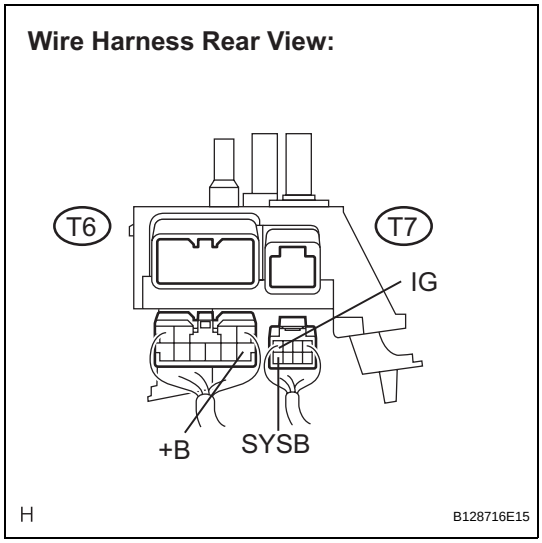

(a) Disconnect the front power seat switch RH (position control ECU) connectors.

(b) Measure the voltage according to the value(s) in the table below.

Standard voltage

Tester Connection	Condition	Specified Condition
T6-5 (+B) - Body ground	Always	10 to 14 V
T7-4 (IG) - Body ground	Engine switch on (IG)	10 to 14 V
T7-8 (SYSB) - Body ground	Always	10 to 14 V

NG → **REPAIR OR REPLACE HARNESS OR CONNECTOR (POWER SOURCE CIRCUIT)**

OK

2	INSPECT FRONT POWER SEAT SWITCH RH (POSITION CONTROL ECU GROUND CIRCUIT)

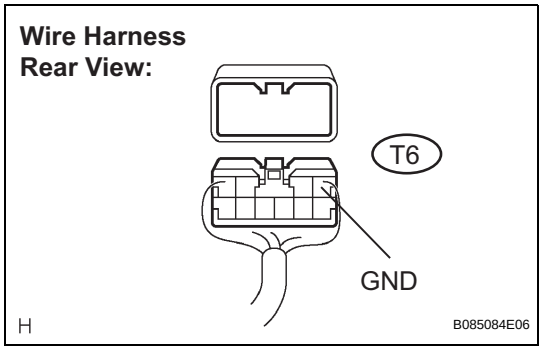

(a) Measure the resistance according to the value(s) in the table below.

Standard resistance

Tester Connection	Condition	Specified Condition
T6-1 (GND) - Body ground	Always	Below 1 Ω

NG → **REPAIR OR REPLACE HARNESS OR CONNECTOR (GROUND CIRCUIT)**

OK

PROCEED TO NEXT CIRCUIT INSPECTION SHOWN IN PROBLEM SYMPTOMS TABLE

SYSTEM DIAGRAM

Driver Side:

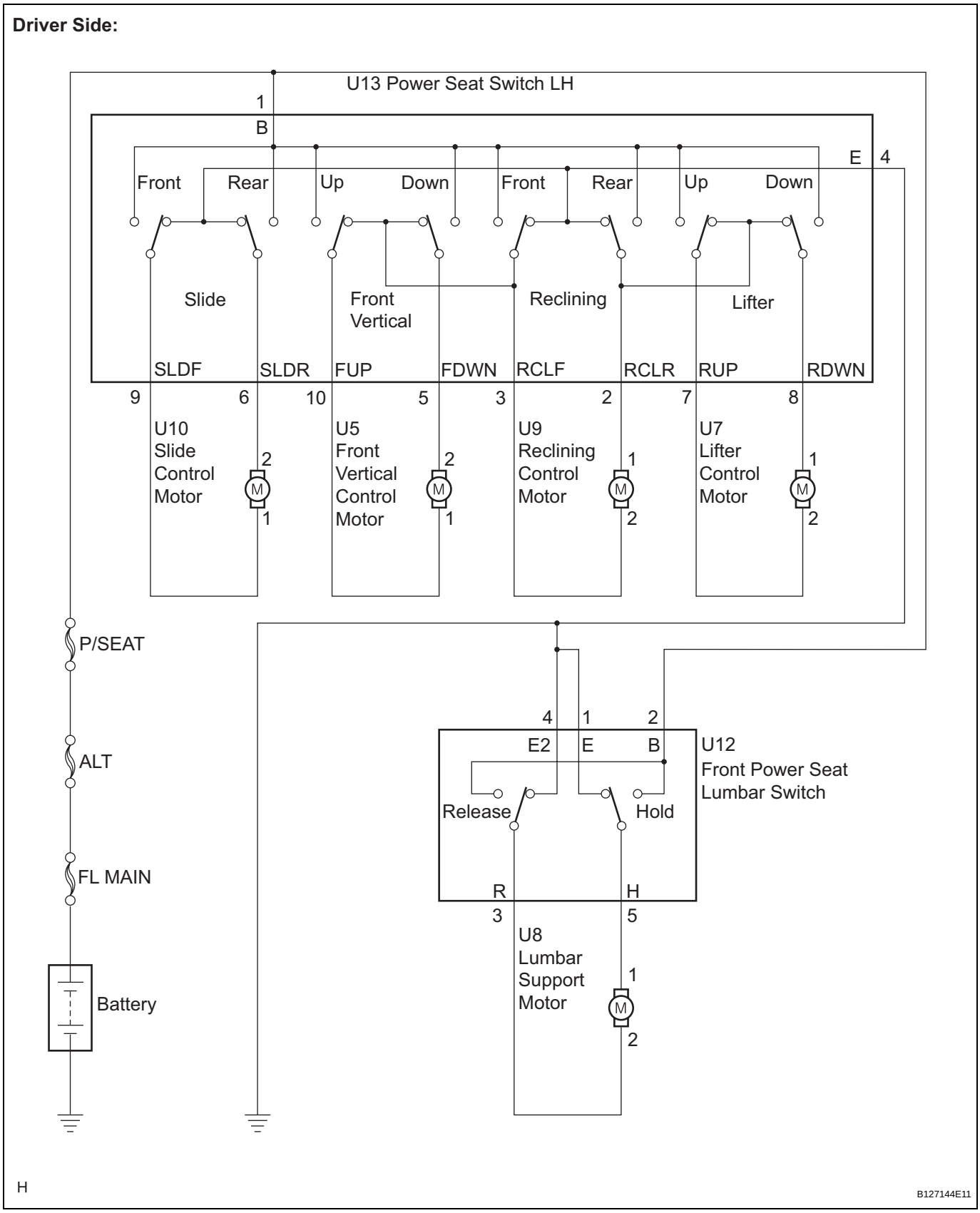

SE

Passenger Side:

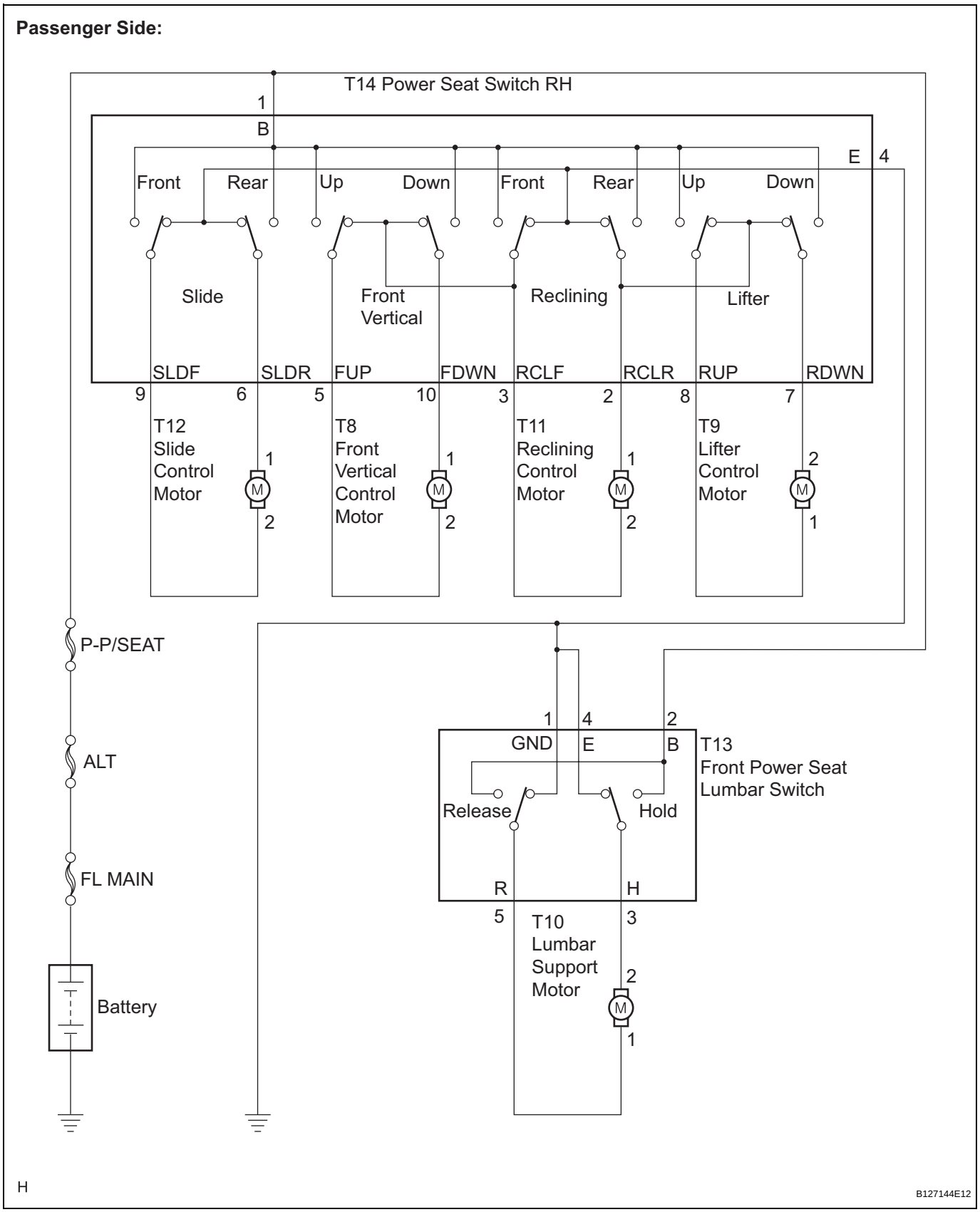

SE

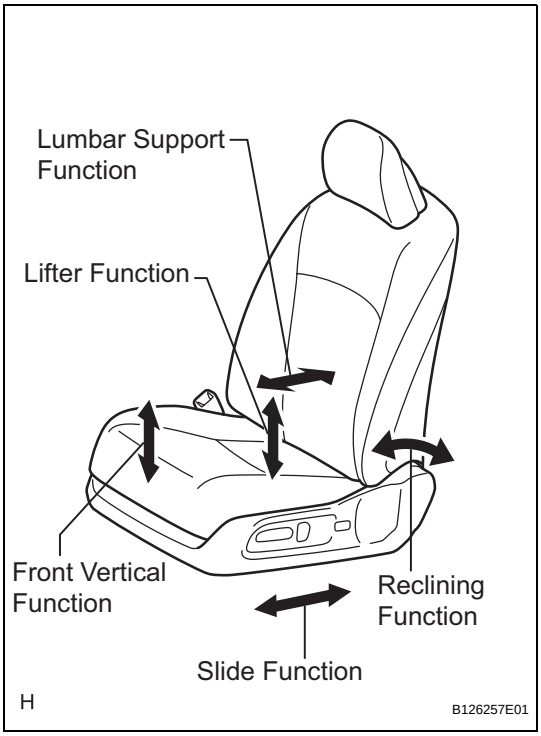

OPERATION CHECK

1. CHECK POWER SEAT FUNCTION

(a) Check the basic functions.

(1) Operate the power seat switches and check to make sure each seat function works:

- Sliding
- Front vertical
- Lifter
- Reclining
- Lumbar support

PROBLEM SYMPTOMS TABLE

HINT:
- Inspect the fuses and relays before inspecting the suspected areas in the table below.
- Inspect each suspected area in numerical order for the corresponding symptom.

Front Power Seat Control System (Driver Side):

Symptom	Suspected Area	See page
Power seat does not operate (slide, front vertical, lifter, reclining).	1. P/SEAT fuse	-
	2. Power seat switch LH	SE-130
	3. Wire harness or connector	-
Only slide operation function does not operate.	1. Power seat switch LH	SE-130
	2. Slide motor	SE-95
	3. Wire harness or connector	-
Only front vertical operation function does not operate.	1. Power seat switch LH	SE-130
	2. Front vertical motor	SE-95
	3. Wire harness or connector	-
Only lifter operation function does not operate.	1. Power seat switch LH	SE-130
	2. Lifter motor	SE-128
	3. Wire harness or connector	-
Only reclining operation function does not operate.	1. Power seat switch LH	SE-130
	2. Reclining motor	SE-95
	3. Wire harness or connector	-
Only lumbar support operation function does not operate.	1. Front power seat lumbar switch LH	SE-138
	2. Lumbar support adjuster assembly LH	SE-144
	3. Wire harness or connector	-

Front Power Seat Control System (Passenger Side):

Symptom	Suspected Area	See page
Power seat does not operate (slide, front vertical, lifter, reclining).	1. P-P/SEAT fuse	-
	2. Power seat switch RH	SE-133
	3. Wire harness or connector	-
Only slide operation function does not operate.	1. Power seat switch RH	SE-133
	2. Slide motor	SE-96
	3. Wire harness or connector	-
Only front vertical operation function does not operate.	1. Power seat switch RH	SE-133
	2. Front vertical motor	SE-96
	3. Wire harness or connector	-
Only lifter operation function does not operate.	1. Power seat switch RH	SE-133
	2. Lifter motor	SE-96
	3. Wire harness or connector	-
Only reclining operation function does not operate.	1. Power seat switch RH	SE-133
	2. Reclining motor	SE-96
	3. Wire harness or connector	-
Only lumbar support operation function does not operate.	1. Front power seat lumbar switch RH	SE-139
	2. Lumbar support adjuster assembly RH	SE-144
	3. Wire harness or connector	-

SYSTEM DIAGRAM

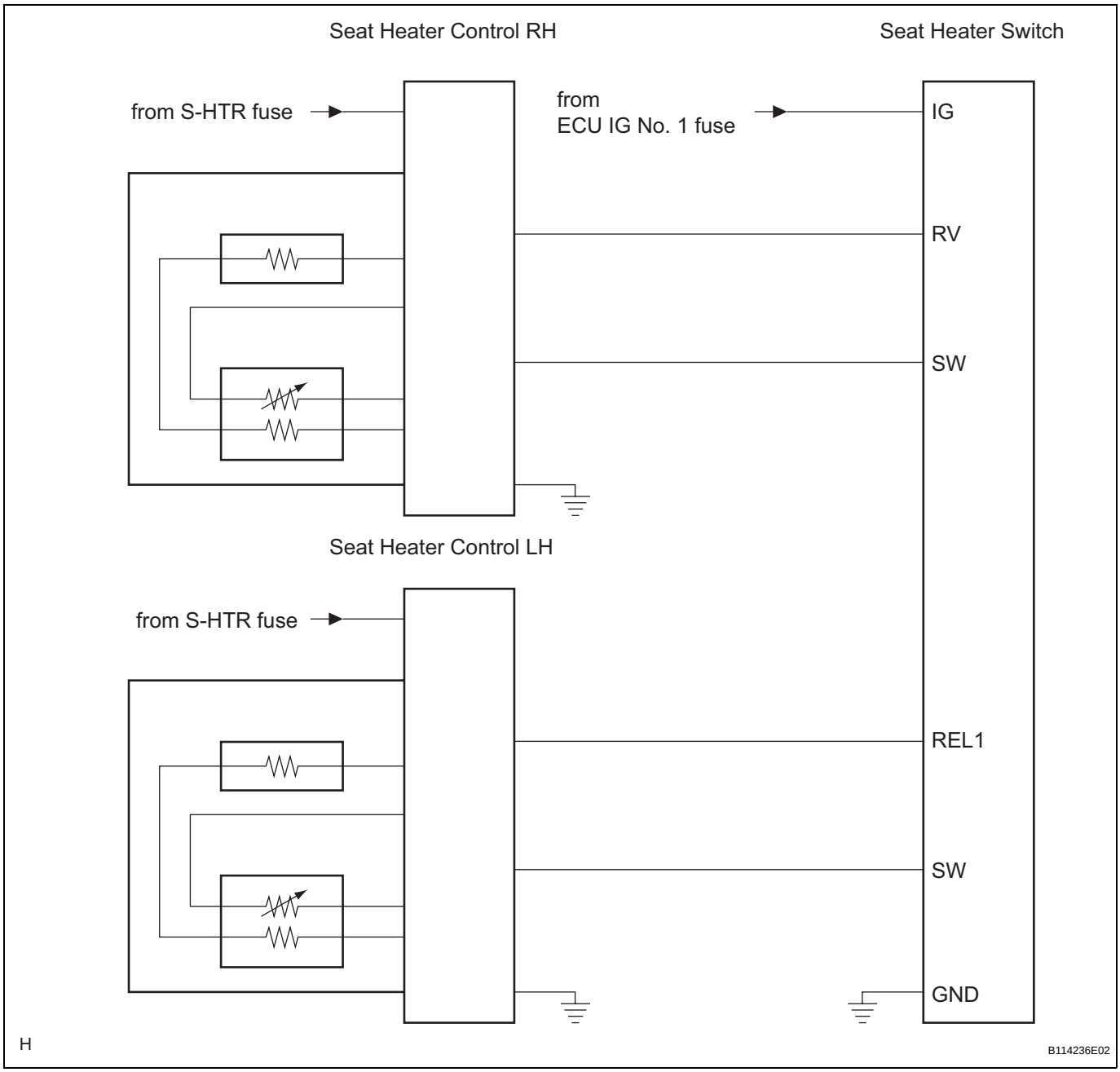

SYSTEM DESCRIPTION

1. GENERAL DESCRIPTION

(a) By operating the seat heater switch, which is located in the console box, the temperature can be controlled within the range of 30 to 40°C (86 to 104°F).

(b) The seat heater switch indicator light provides seat heater on/off status.

(c) The seat heaters of both seats are controlled by the seat heater controls, which are located under the respective seat.

PROBLEM SYMPTOMS TABLE

SEAT HEATER SYSTEM

Symptom	Suspected Area	See page
Seat heater does not operate. (Front LH side)	1. ECU IG No. 1 fuse	-
	2. S-HTR fuse	-
	3. Seat heater switch	SE-161
	4. Front seat cushion heater	SE-171
	5. Front seatback heater	SE-166
	6. Seat heater control	SE-174
	7. Wire harness	-
Seat heater does not operate. (Front RH side)	1. ECU IG No. 1 fuse	-
	2. S-HTR fuse	-
	3. Seat heater switch	SE-161
	4. Front seat cushion heater	SE-171
	5. Front seatback heater	SE-166
	6. Seat heater control	SE-174
	7. Wire harness	-
Temperature of seat heater cannot be adjusted.	Seat heater switch	SE-161

SYSTEM DIAGRAM

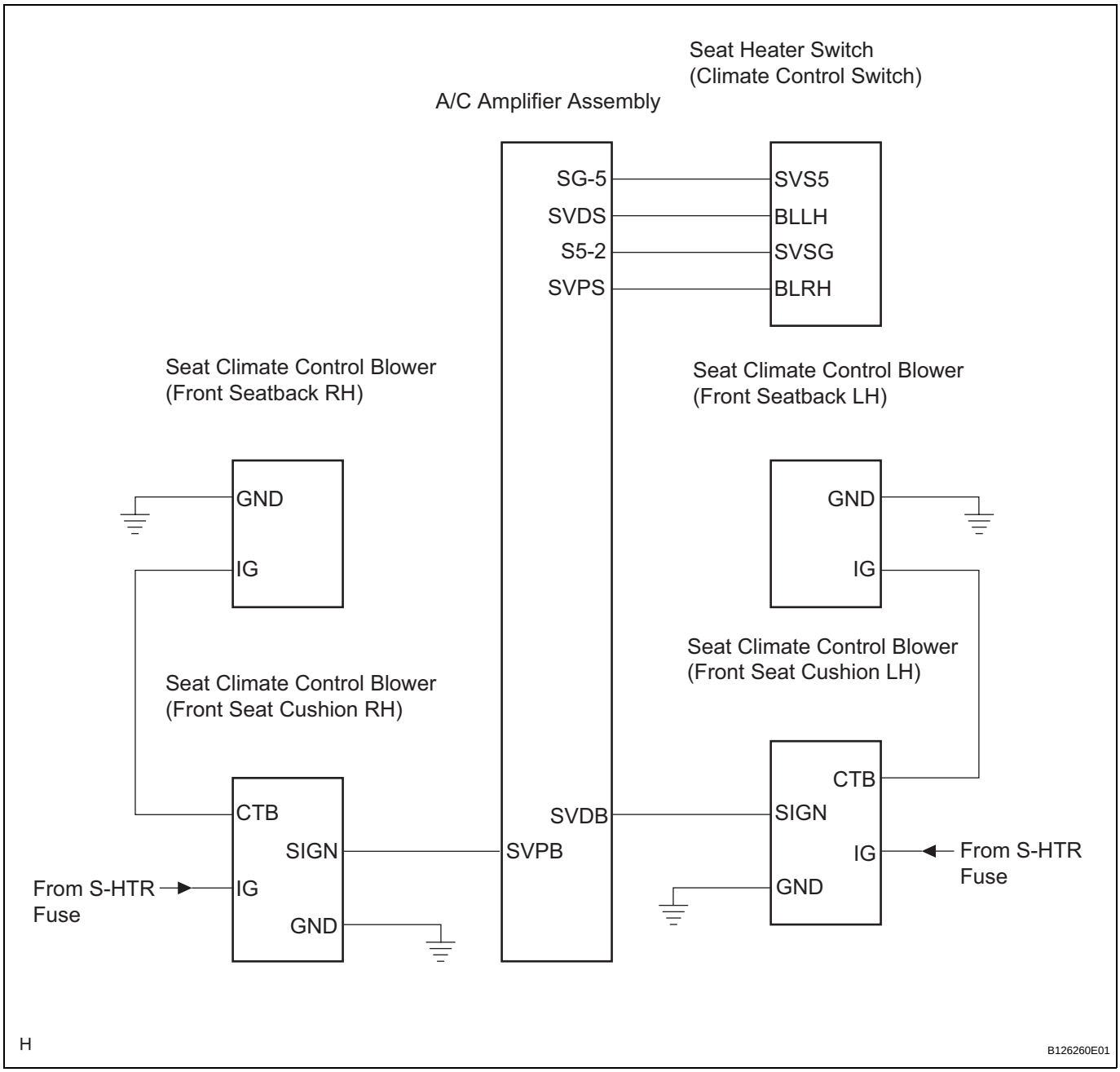

SE

SYSTEM DESCRIPTION

1. GENERAL

(a) The blower volume has 4 levels controlled by operating the dial-type climate control seat switch, which is located in the console box.

(b) Whether the blower is ON or OFF can be determined by checking if the climate control seat switch indicator light is ON or OFF.

(c) The blowers of both seats are controlled by the air conditioning amplifier assembly (A/C ECU).

HOW TO PROCEED WITH TROUBLESHOOTING

HINT:
- Use the following procedure to troubleshoot the climate control seat system.
- The intelligent tester should be used in step 4.

1	VEHICLE BROUGHT TO WORKSHOP

NEXT

2	CUSTOMER PROBLEM ANALYSIS CHECK AND SYMPTOM CHECK

NEXT

3	PROBLEM SYMPTOMS TABLE

HINT:
See page SE-61.

NEXT

4	OVERALL ANALYSIS AND TROUBLESHOOTING

(a) Circuit inspection
(b) Terminal of ECU
HINT:
See page SE-62.

NEXT

5	ADJUST, REPAIR OR REPLACE

NEXT

END

PROBLEM SYMPTOMS TABLE

CLIMATE CONTROL SYSTEM

Symptom	Suspected Area	See page
Climate control seat system does not operate.	1. ECU IG No. 1 fuse	SE-64
	2. S-HTR fuse	SE-64
	3. Seat heater switch	SE-64
	4. Seat climate blower	SE-64
	5. Seatback blower	SE-64
	6. A/C amplifier assembly	-

TERMINALS OF ECU

1. A/C AMPLIFIER ASSEMBLY

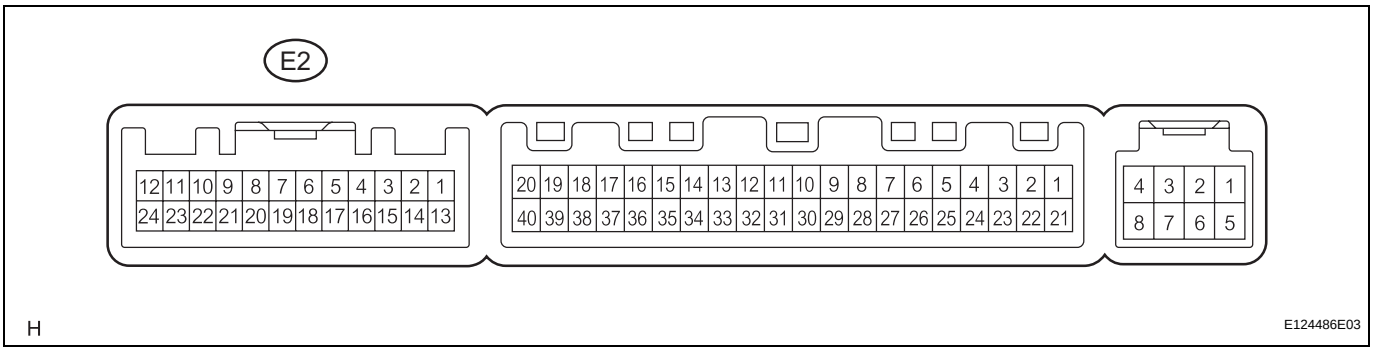

(a) Measure the voltage according to the value(s) in the table below.

Standard voltage

Symbols (Terminal No.)	Wiring Color	Terminal Description	Condition	Specified Condition
SG-5 (E2-6) - Body ground	R - Body ground	GND	Engine switch on (IG)	4 to 6 V
S5-2 (E2-8) - Body ground	Y - Body ground	Power supply	Always	10 to 14 V
SVDS (E2-15) - Body ground	L - Body ground	Input climate control signal (Driver side)	Always	10 to 14 V
SVPS (E2-16) - Body ground	G - Body ground	Input climate control signal (Front passenger side)	Always	10 to 14 V

Standard

Symbols (Terminal No.)	Wiring Color	Terminal Description	Condition	Specified Condition
SVDB (E2-9) - Body ground	LG - Body ground	Output climate control signal (Driver side)	Engine switch on (IG)	Pulse generation
SVPB (E2-10) - Body ground	O - Body ground	Output climate control signal (Front passenger side)	Engine switch on (IG)	Pulse generation

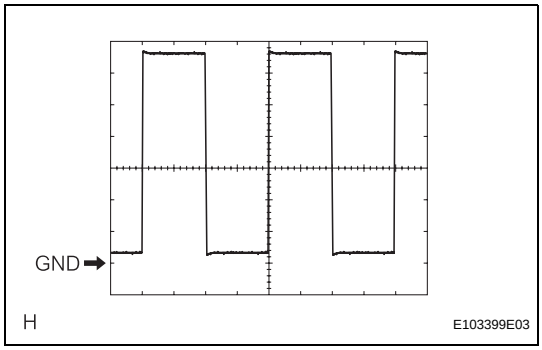

(1) Waveform (Reference): Using an oscilloscope:

Item	Condition
Tool setting	2 V/DIV., 500 μsec/DIV.
Vehicle condition	Engine switch on (IG)

SE

ON-VEHICLE INSPECTION

1. CHECK FRONT SEATBACK CLIMATE CONTROL BLOWER LH

(a) Turn the engine switch on (IG).
(b) Set the seat heater switch blower side volume to level 3 (maximum).
(c) Check that the fan motor turns smoothly.

2. CHECK FRONT SEAT CUSHION CLIMATE CONTROL BLOWER LH

(a) Turn the engine switch on (IG).
(b) Set the seat heater switch blower side volume to level 3 (maximum).
(c) Check that the fan motor turns smoothly.

3. CHECK FRONT SEATBACK CLIMATE CONTROL BLOWER RH

(a) Turn the engine switch on (IG).
(b) Set the seat heater switch blower side volume to level 3 (maximum).
(c) Check that the fan motor turns smoothly.

4. CHECK FRONT SEAT CUSHION CLIMATE CONTROL BLOWER RH

(a) Turn the engine switch on (IG).
(b) Set the seat heater switch blower side volume to level 3 (maximum).
(c) Check that the fan motor turns smoothly.

Climate Control Seat System does not Operate

DESCRIPTION

The A/C amplifier assembly receives seat position signals when the engine switch is on (IG), and then transmits airflow amount signals to each seat climate blower.

WIRING DIAGRAM

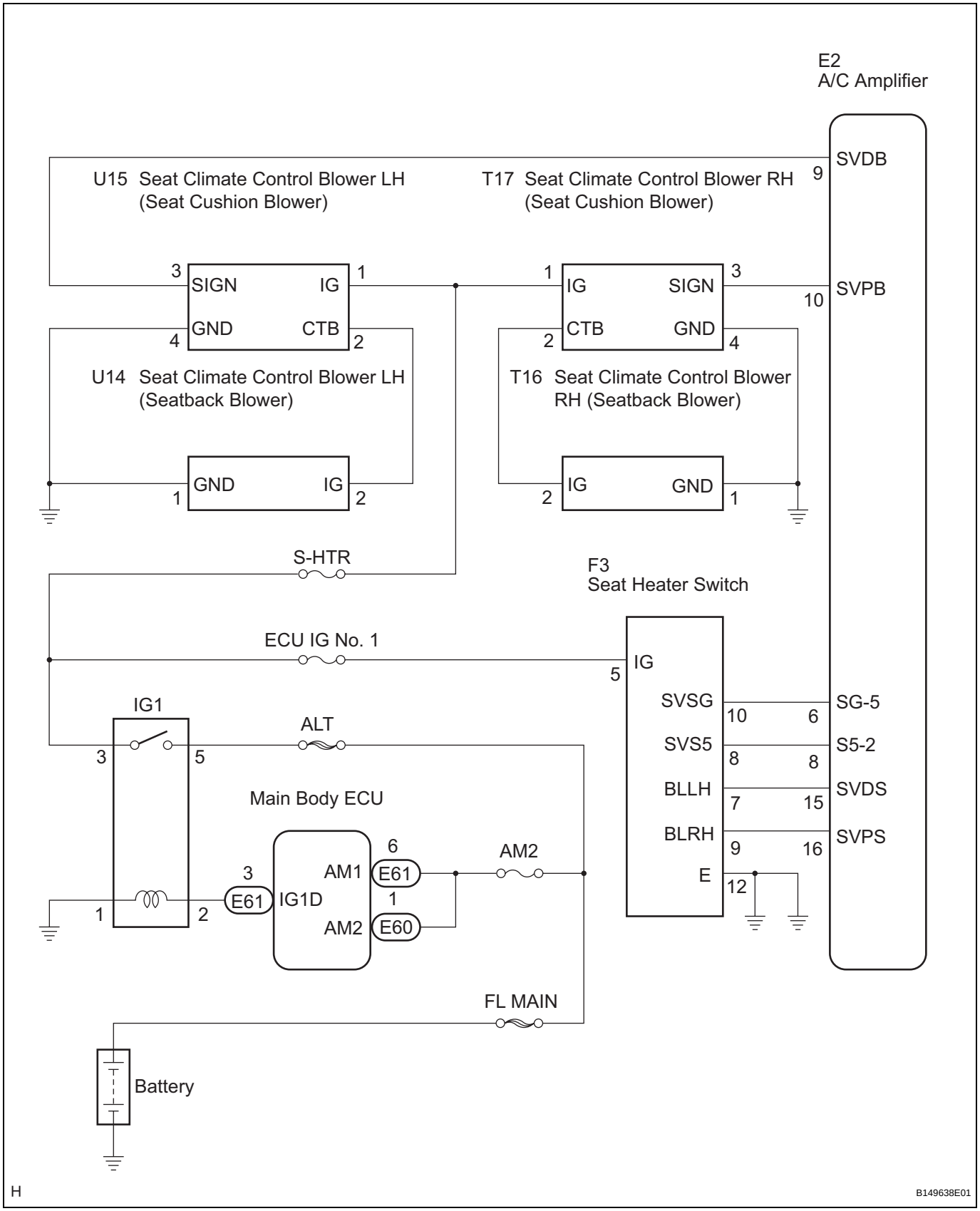

SE

INSPECTION PROCEDURE

1 SYSTEM CHECK

(a) Check if the climate control seat system operates normally.
Result

Result	Proceed to
Climate control does not operate on driver side	A
Climate control does not operate on front passenger side	B
Climate control does not operate on both driver and front passenger sides	C

B → **Go to step 8**

C → **Go to step 14**

A

2 CHECK WIRE HARNESS

Seat Cushion Blower:

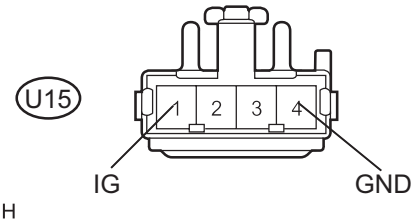

(a) Disconnect the U15 connector.
(b) Measure the voltage and resistance according to the value(s) in the table below.
Standard resistance

Tester Connection	Condition	Specified Condition
U15-4 (GND) - Body ground	Always	Below 1 Ω

Standard voltage

Tester Connection	Condition	Specified Condition
U15-1 (IG) - Body ground	Engine switch on (IG)	10 to 14 V

(c) Reconnect the U15 connector.
(d) Disconnect the U14 connector.
(e) Measure the voltage and resistance according to the value(s) in the table below.
Standard resistance

Tester Connection	Condition	Specified Condition
U14-1 (GND) - Body ground	Always	Below 1 Ω

Standard voltage

Tester Connection	Condition	Specified Condition
U14-2 (IG) - Body ground	Engine switch on (IG)	10 to 14 V

SE

Seatback Blower:

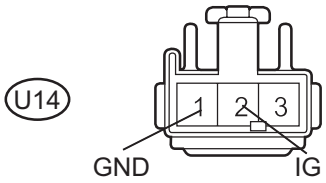

NG → **REPAIR OR REPLACE WIRE HARNESS**

OK

3 INSPECT SEAT CLIMATE CONTROL BLOWER

Seat Cushion Blower:

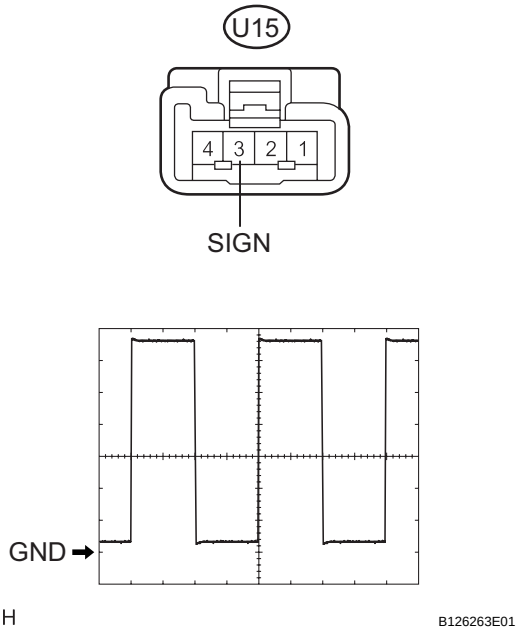

(a) Check the input signal waveform.
  (1) Connect an oscilloscope to terminal U15-3 (SIGN) and body ground with the climate control blower connector still connected.
  (2) Check the signal waveform according to the condition(s) in the table below.

Item	Condition
Tool setting	2 V/DIV., 500 μsec/DIV.
Vehicle condition	Engine switch on (IG), seat heater switch ON

OK:
The waveform is displayed as shown in the illustration.

Result

Result	Proceed to
NG	A
OK (Seat cushion blower side)	B
OK (Seatback blower side)	C

B → **REPLACE SEAT CUSHION BLOWER**

C → **REPLACE SEATBACK BLOWER**

A

4 CHECK WIRE HARNESS (A/C AMPLIFIER ASSEMBLY - SEAT CLIMATE CONTROL BLOWER)

A/C Amplifier Assembly:

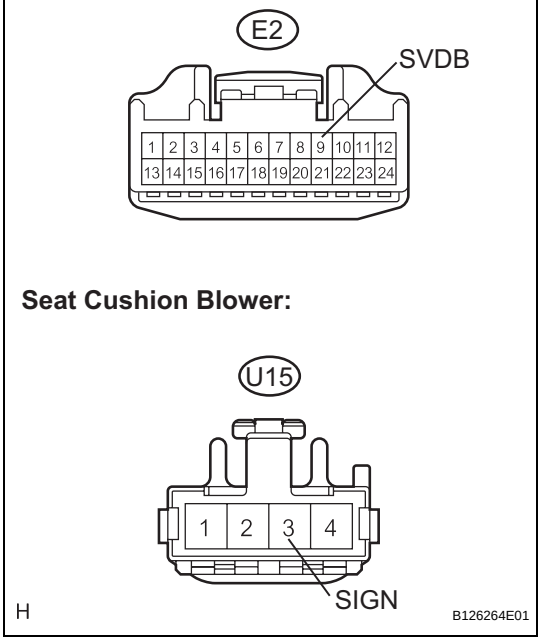

(a) Disconnect the E2 and U15 connectors.
(b) Measure the resistance according to the value(s) in the table below.

Standard resistance

Tester Connection	Condition	Specified Condition
E2-9 (SVDB) - U15-3 (SIGN)	Always	Below 1 Ω
E2-9 (SVDB) - Body ground	Always	10 kΩ or higher

NG → **REPAIR OR REPLACE WIRE HARNESS**

SE

OK

5 CHECK WIRE HARNESS (SEAT HEATER SWITCH)

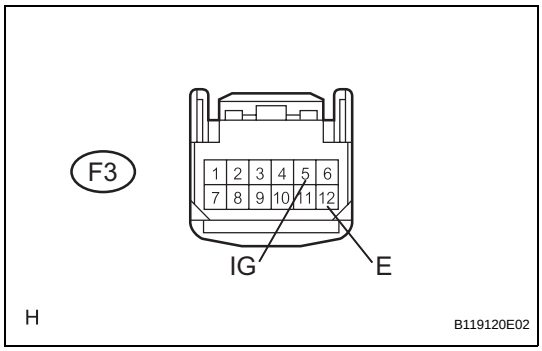

(a) Disconnect the F3 connector.
(b) Measure the voltage and resistance according to the value(s) in the table below.

Standard resistance

Tester Connection	Condition	Specified Condition
F3-12 (E) - Body ground	Always	Below 1 Ω

Standard voltage

Tester Connection	Condition	Specified Condition
F3-5 (IG) - Body ground	Engine switch on (IG)	10 to 14 V

NG → **REPAIR OR REPLACE WIRE HARNESS**

OK

6 INSPECT SEAT HEATER SWITCH

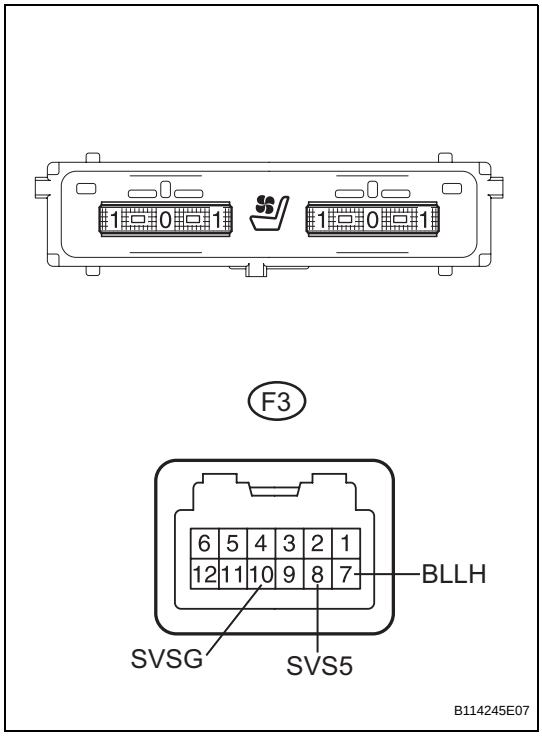

(a) Measure the resistance according to the value(s) in the table below.

Standard resistance

Tester Connection	Condition	Specified Condition
F3-7 (BLLH) - F3-10 (SVSG)	Blower switch OFF	Below 1.1 kΩ
	Blower switch ON (Vol: 3)	Below 111 Ω
F3-8 (SVS5) - F3-10 (SVSG)	Always	Below 1 kΩ

NG → **REPLACE SEAT HEATER SWITCH**

OK

7 CHECK WIRE HARNESS (SEAT HEATER SWITCH - A/C AMPLIFIER ASSEMBLY)

Seat Heater Switch:

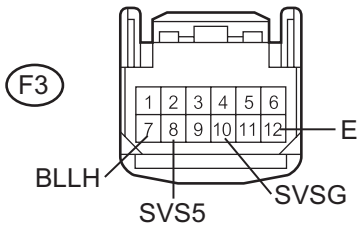

A/C Amplifier Assembly:

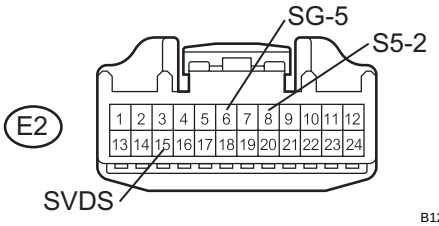

(a) Measure the resistance according to the value(s) in the table below.

Standard resistance

Tester Connection	Condition	Specified Condition
F3-7 (BLLH) - E2-15 (SVDS)	Always	Below 1 Ω
F3-8 (SVS5) - E2-6 (SG-5)	Always	Below 1 Ω
F3-10 (SVSG) - E2-8 (S5-2)	Always	Below 1 Ω
F3-12 (E) - Body ground	Always	Below 1 Ω
F3-7 (BLLH) - Body ground	Always	10 kΩ or higher
F3-8 (SVS5) - Body ground	Always	10 kΩ or higher
F3-10 (SVSG) - Body ground	Always	10 kΩ or higher

NG → **REPAIR OR REPLACE WIRE HARNESS**

OK

REPLACE A/C AMPLIFIER ASSEMBLY

8 CHECK WIRE HARNESS

Seat Cushion Blower:

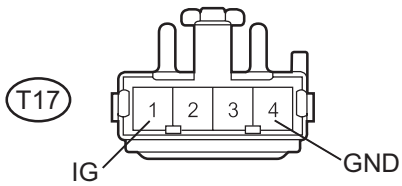

(a) Disconnect the T17 connector.

(b) Measure the voltage and resistance according to the value(s) in the table below.

Standard resistance

Tester Connection	Condition	Specified Condition
T17-4 (GND) - Body ground	Always	Below 1 Ω

Standard voltage

Tester Connection	Condition	Specified Condition
T17-1 (IG) - Body ground	Engine switch on (IG)	10 to 14 V

(c) Reconnect the T17 connector.

SE

Seatback Blower:

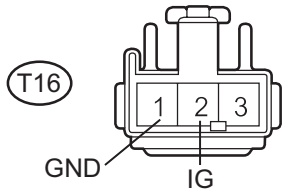

B118674E05

(d) Disconnect the T16 connector.
(e) Measure the voltage and resistance according to the value(s) in the table below.

Standard resistance

Tester Connection	Condition	Specified Condition
T16-1 (GND) - Body ground	Always	Below 1 Ω

Standard voltage

Tester Connection	Condition	Specified Condition
T16-2 (IG) - Body ground	Engine switch on (IG)	10 to 14 V

NG → **REPAIR OR REPLACE WIRE HARNESS**

OK

9 INSPECT SEAT CLIMATE CONTROL BLOWER

Seat Cushion Blower:

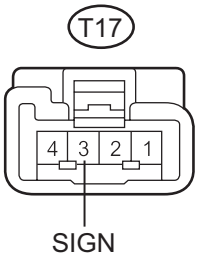

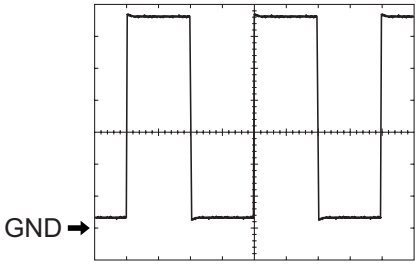

B126263E02

(a) Check the input signal waveform.
  (1) Connect an oscilloscope to terminal T17-3 (SIGN) and body ground with the climate control blower connector still connected.
  (2) Check the signal waveform according to the condition(s) in the table below.

Item	Condition
Tool setting	2 V/DIV., 500 μsec/DIV.
Vehicle condition	Engine switch on (IG), seat heater switch ON

OK:
The waveform is displayed as shown in the illustration.

Result

Result	Proceed to
NG	A
OK (Seat cushion blower side)	B
OK (Seatback blower side)	C

B → **REPLACE SEAT CUSHION BLOWER**

C → **REPLACE SEATBACK BLOWER**

A

SE

10 CHECK WIRE HARNESS (A/C AMPLIFIER ASSEMBLY - SEAT CLIMATE CONTROL BLOWER)

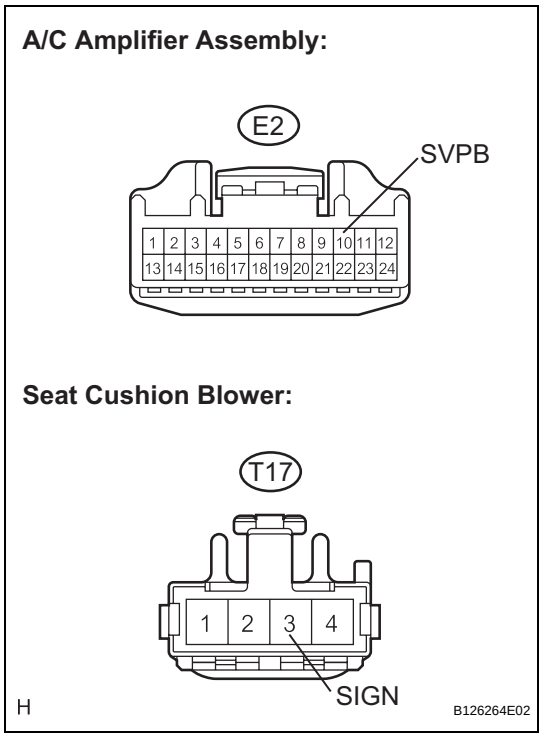

(a) Disconnect the E2 and T17 connectors.
(b) Measure the resistance according to the value(s) in the table below.

Standard resistance

Tester Connection	Condition	Specified Condition
E2-10 (SVPB) - T17-3 (SIGN)	Always	Below 1 Ω
E2-10 (SVPB) - Body ground	Always	10 kΩ or higher

NG → **REPAIR OR REPLACE WIRE HARNESS**

OK

11 CHECK WIRE HARNESS (SEAT HEATER SWITCH)

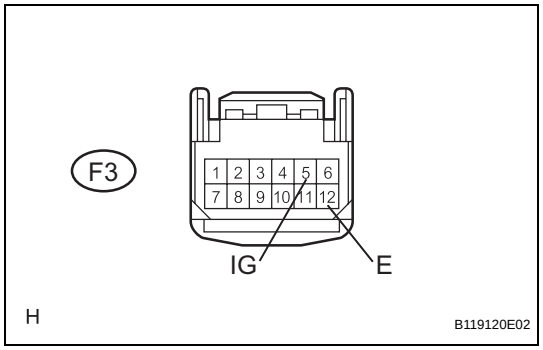

(a) Disconnect the F3 connector.
(b) Measure the voltage and resistance according to the value(s) in the table below.

Standard resistance

Tester Connection	Condition	Specified Condition
F3-12 (E) - Body ground	Always	Below 1 Ω

Standard voltage

Tester Connection	Condition	Specified Condition
F3-5 (IG) - Body ground	Engine switch on (IG)	10 to 14 V

NG → **REPAIR OR REPLACE WIRE HARNESS**

OK

SE

12 INSPECT SEAT HEATER SWITCH

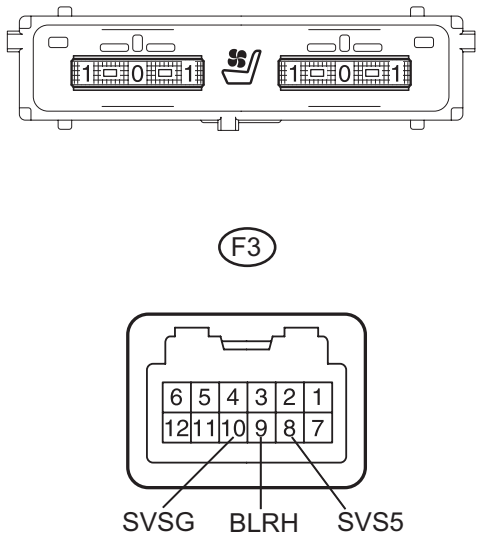

(a) Measure the resistance according to the value(s) in the table below.
Standard resistance

Tester Connection	Condition	Specified Condition
F3-8 (SVS5) - F3-9 (BLRH)	Blower switch OFF	Below 1.1 kΩ
	Blower switch ON (Vol: 3)	Below 111 Ω
F3-8 (SVS5) - F3-10 (SVSG)	Always	Below 1 kΩ

NG → **REPLACE SEAT HEATER SWITCH**

OK

13 CHECK WIRE HARNESS (SEAT HEATER SWITCH - A/C AMPLIFIER ASSEMBLY)

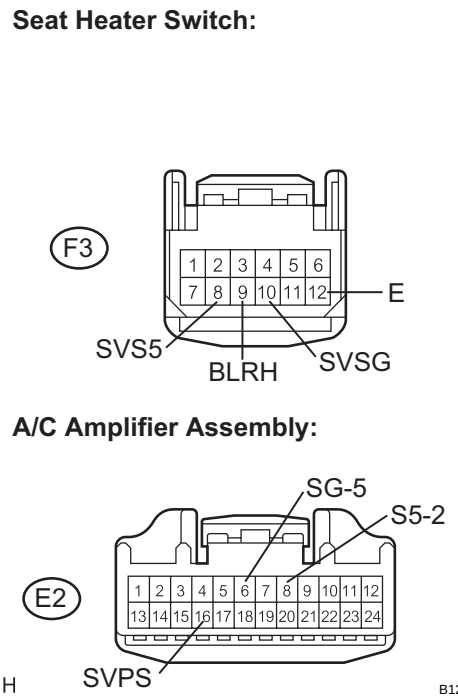

(a) Measure the resistance according to the value(s) in the table below.
Standard resistance

Tester Connection	Condition	Specified Condition
F3-8 (SVS5) - E2-6 (SG-5)	Always	Below 1 Ω
F3-9 (BLRH) - E2-16 (SVPS)	Always	Below 1 Ω
F3-10 (SVSG) - E2-8 (S5-2)	Always	Below 1 Ω
F3-12 (E) - Body ground	Always	Below 1 Ω
F3-8 (SVS5) - Body ground	Always	10 kΩ or higher
F3-9 (BLRH) - Body ground	Always	10 kΩ or higher
F3-10 (SVSG) - Body ground	Always	10 kΩ or higher

NG → **REPAIR OR REPLACE WIRE HARNESS**

OK

REPLACE A/C AMPLIFIER ASSEMBLY

14 CHECK WIRE HARNESS

Seat Cushion Blower:

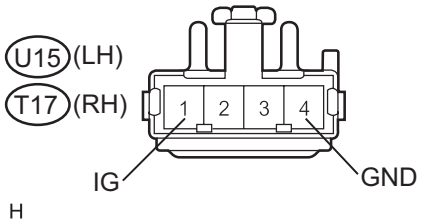

(a) Disconnect the U15 and T17 connectors.
(b) Measure the voltage and resistance according to the value(s) in the table below.

Standard resistance:
Front LH

Tester Connection	Condition	Specified Condition
U15-4 (GND) - Body ground	Always	Below 1 Ω

Front RH

Tester Connection	Condition	Specified Condition
T17-4 (GND) - Body ground	Always	Below 1 Ω

Standard voltage:
Front LH

Tester Connection	Condition	Specified Condition
U15-1 (IG) - Body ground	Engine switch on (IG)	10 to 14 V

Front RH

Tester Connection	Condition	Specified Condition
T17-1 (IG) - Body ground	Engine switch on (IG)	10 to 14 V

Seatback Blower:

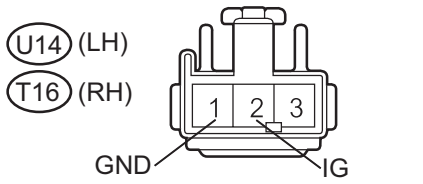

(c) Reconnect the U15 and T17 connectors.
(d) Disconnect the U14 and T16 connectors.
(e) Measure the voltage and resistance according to the value(s) in the table below.

Standard resistance:
Front LH

Tester Connection	Condition	Specified Condition
U14-1 (GND) - Body ground	Always	Below 1 Ω

Front RH

Tester Connection	Condition	Specified Condition
T16-1 (GND) - Body ground	Always	Below 1 Ω

Standard voltage:
Front LH

Tester Connection	Condition	Specified Condition
U14-2 (IG) - Body ground	Engine switch on (IG)	10 to 14 V

Front RH

Tester Connection	Condition	Specified Condition
U16-2 (IG) - Body ground	Engine switch on (IG)	10 to 14 V

NG → **REPAIR OR REPLACE WIRE HARNESS**

OK

15 INSPECT SEAT CLIMATE CONTROL BLOWER

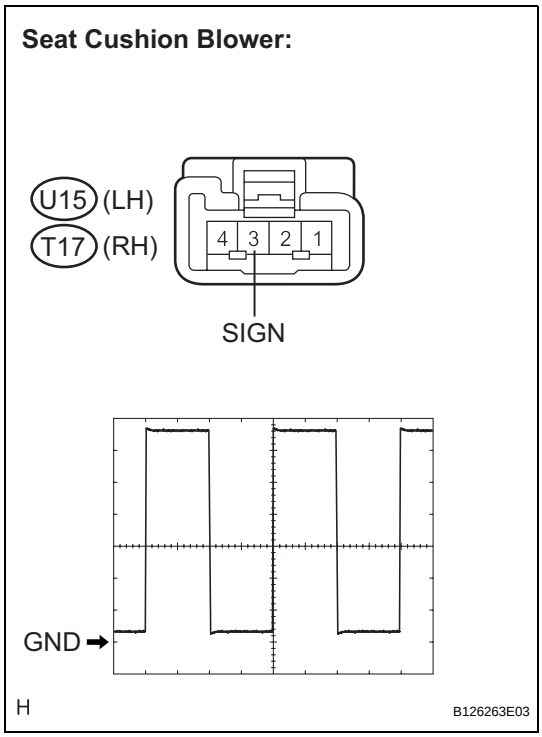

(a) Check the input signal waveform.
  (1) Connect an oscilloscope to terminal 3 and body ground with the climate control blower connector still connected.
  (2) Check the signal waveform according to the condition(s) in the table below.

Item	Condition
Tool setting	2 V/DIV., 500 μsec/DIV.
Vehicle condition	Engine switch on (IG), seat heater switch ON

OK:
The waveform is displayed as shown in the illustration.

Result

Result	Proceed to
NG	A
OK (Seat cushion blower side)	B
OK (Seatback blower side)	C

B → **REPLACE SEAT CUSHION BLOWER**

C → **REPLACE SEATBACK BLOWER**

A

16 CHECK WIRE HARNESS (A/C AMPLIFIER ASSEMBLY - SEAT CLIMATE CONTROL BLOWER)

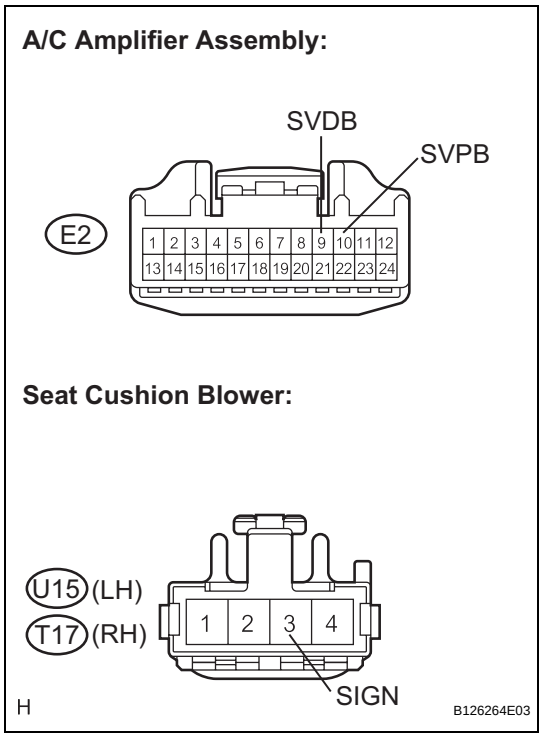

(a) Disconnect the E2, U15 and T17 connectors.
(b) Measure the resistance according to the value(s) in the table below.

Standard resistance:

Front LH

Tester Connection	Condition	Specified Condition
E2-9 (SVDB) - U15-3 (SIGN)	Always	Below 1 Ω
E2-9 (SVDB) - Body ground	Always	10 kΩ or higher

Front RH

Tester Connection	Condition	Specified Condition
E2-10 (SVPB) - T17-3 (SIGN)	Always	Below 1 Ω
E2-10 (SVPB) - Body ground	Always	10 kΩ or higher

NG → **REPAIR OR REPLACE WIRE HARNESS**

OK

17 CHECK WIRE HARNESS (SEAT HEATER SWITCH)

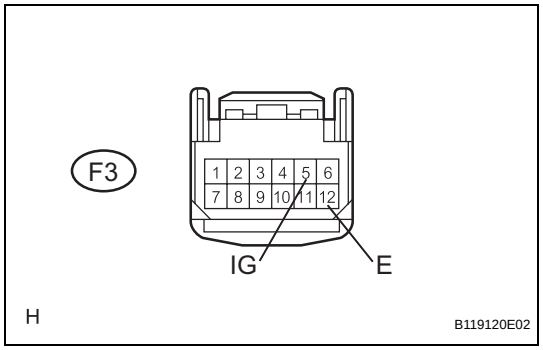

(a) Disconnect the F3 connector.
(b) Measure the voltage and resistance according to the value(s) in the table below.

Standard resistance

Tester Connection	Condition	Specified Condition
F3-12 (E) - Body ground	Always	Below 1 Ω

Standard voltage

Tester Connection	Condition	Specified Condition
F3-5 (IG) - Body ground	Engine switch on (IG)	10 to 14 V

NG → **REPAIR OR REPLACE WIRE HARNESS**

OK

SE

18 INSPECT SEAT HEATER SWITCH

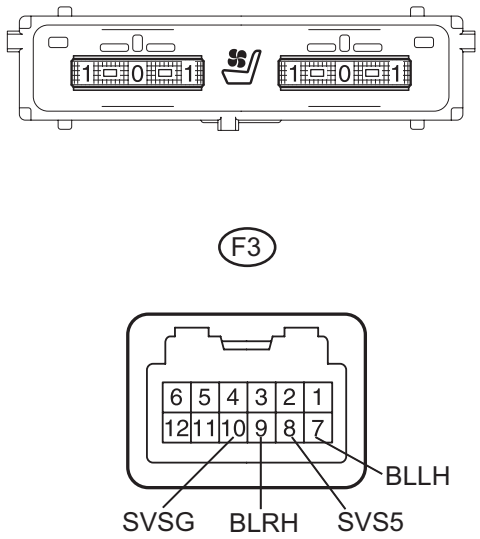

(a) Measure the resistance according to the value(s) in the table below.

Standard resistance:

Front LH

Tester Connection	Condition	Specified Condition
F3-7 (BLLH) - F3-10 (SVSG)	Blower switch OFF	Below 1.1 kΩ
	Blower switch ON (Vol: 3)	Below 111 Ω
F3-8 (SVS5) - F3-10 (SVSG)	Always	Below 1 kΩ

Front RH

Tester Connection	Condition	Specified Condition
F3-8 (SVS5) - F3-9 (BLRH)	Blower switch OFF	Below 1.1 kΩ
	Blower switch ON (Vol: 3)	Below 111 Ω
F3-8 (SVS5) - F3-10 (SVSG)	Always	Below 1 kΩ

NG → **REPLACE SEAT HEATER SWITCH**

OK

19 CHECK WIRE HARNESS (SEAT HEATER SWITCH - A/C AMPLIFIER ASSEMBLY)

Seat Heater Switch:

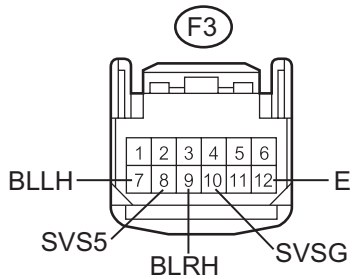

A/C Amplifier Assembly:

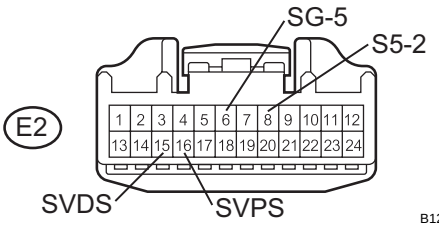

(a) Measure the resistance according to the value(s) in the table below.

Standard resistance:

Front LH

Tester Connection	Condition	Specified Condition
F3-7 (BLLH) - E2-15 (SVDS)	Always	Below 1 Ω
F3-8 (SVS5) - E2-8 (S5-2)	Always	Below 1 Ω
F3-10 (SVSG) - E2-6 (SG-5)	Always	Below 1 Ω
F3-12 (E) - Body ground	Always	Below 1 Ω
F3-7 (BLLH) - Body ground	Always	10 kΩ or higher
F3-8 (SVS5) - Body ground	Always	10 kΩ or higher
F3-10 (SVSG) - Body ground	Always	10 kΩ or higher

Front RH

Tester Connection	Condition	Specified Condition
F3-8 (SVS5) - E2-8 (S5-2)	Always	Below 1 Ω
F3-9 (BLRH) - E2-16 (SVPS)	Always	Below 1 Ω

SE

Tester Connection	Condition	Specified Condition
F3-10 (SVSG) - E2-6 (SG-5)	Always	Below 1 Ω
F3-12 (E) - Body ground	Always	Below 1 Ω
F3-8 (SVS5) - Body ground	Always	10 kΩ or higher
F3-9 (BLRH) - Body ground	Always	10 kΩ or higher
F3-10 (SVSG) - Body ground	Always	10 kΩ or higher

NG → **REPAIR OR REPLACE WIRE HARNESS**

OK

REPLACE A/C AMPLIFIER ASSEMBLY

REMOVAL

1. REMOVE SEAT BELT ANCHOR COVER CAP (See page SB-22)

2. DISCONNECT FRONT SEAT OUTER BELT ASSEMBLY (See page SB-22)

3. REMOVE FRONT SEAT HEADREST ASSEMBLY

4. REMOVE FRONT SEAT OUTER TRACK BRACKET COVER

(a) Move the front seat assembly to the rearmost position by operating the slide and vertical power seat switch knob.

(b) Using a screwdriver, disengage the 2 claws and remove the front seat outer track bracket cover.
HINT:
Tape the screwdriver tip before use.

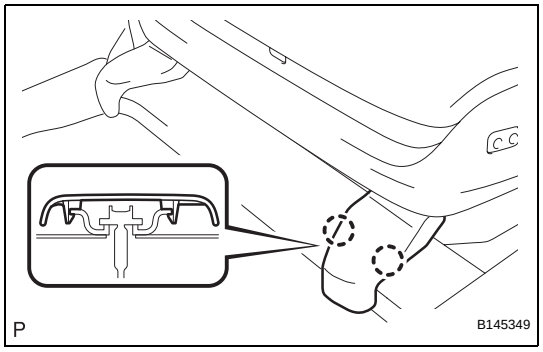

5. REMOVE FRONT SEAT INNER TRACK BRACKET COVER

(a) Using a screwdriver, disengage the 2 claws and remove the front seat inner track bracket cover.
HINT:
Tape the screwdriver tip before use.

6. REMOVE FRONT SEAT REAR OUTER TRACK BRACKET COVER

(a) Move the front seat assembly fully forward by operating the slide and vertical power seat switch knob.

(b) Using a screwdriver, disengage the 4 claws and remove the front seat rear outer track bracket cover.
HINT:
Tape the screwdriver tip before use.

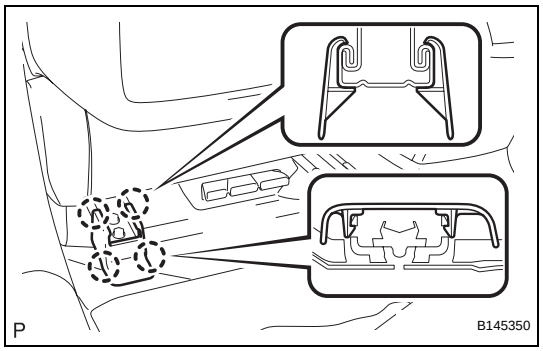

7. REMOVE FRONT SEAT REAR INNER TRACK BRACKET COVER

(a) Using a screwdriver, disengage the 4 claws and remove the front seat rear inner track bracket cover.
HINT:
Tape the screwdriver tip before use.

8. REMOVE FRONT SEAT ASSEMBLY

(a) Operate the power seat switch knob and move the seat to its rearmost position.

(b) Remove the 2 bolts on the front seat track bracket.

(c) Operate the power seat switch knob and move the seat to the position farthest forward.

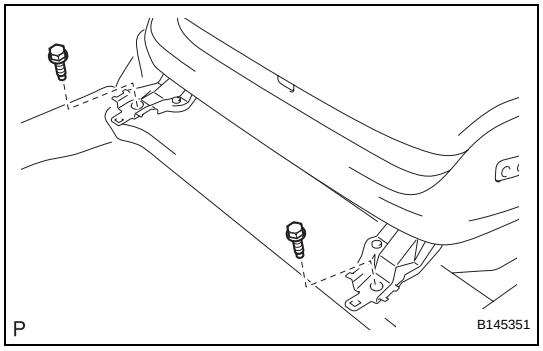

SE

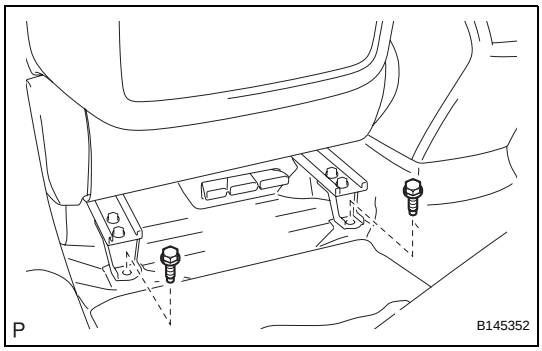

(d) Remove the 2 bolts on the rear seat track bracket.

(e) Disconnect the negative (-) battery terminal.
CAUTION:
Wait at least 90 seconds after disconnecting the negative (-) battery terminal to prevent the airbag and seat belt pretensioner from deploying (See page RS-1).

(f) Disconnect the connectors under the seat. Then remove the front seat assembly.

DISASSEMBLY

1. **REMOVE FRONT SEAT INNER BELT ASSEMBLY (See page SB-23)**

2. **REMOVE OCCUPANT DETECTION ECU (See page RS-502)**

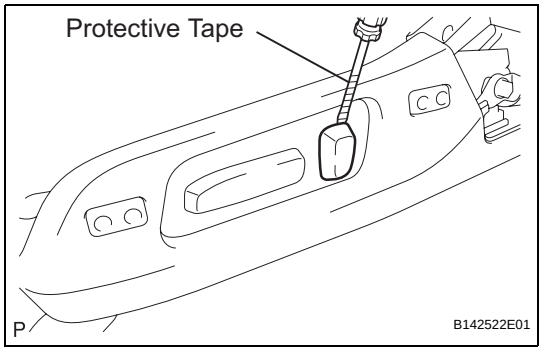

3. **REMOVE RECLINING POWER SEAT SWITCH KNOB**
   (a) Using a screwdriver, remove the reclining power seat switch knob.
   HINT:
   Tape the screwdriver tip before use.

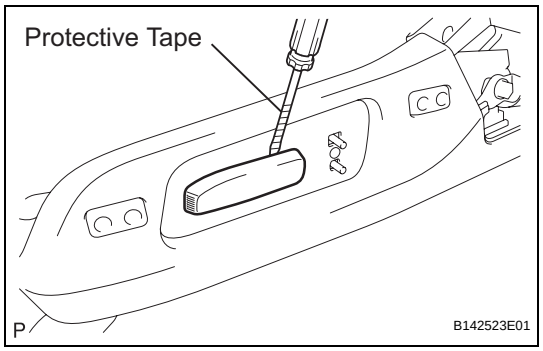

4. **REMOVE SLIDE AND VERTICAL POWER SEAT SWITCH KNOB**
   (a) Using a screwdriver, remove the slide and vertical power seat switch knob.
   HINT:
   Tape the screwdriver tip before use.

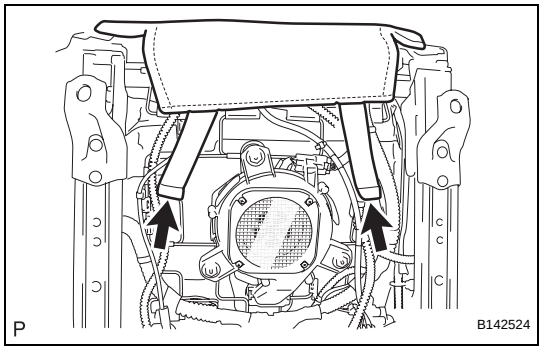

5. **REMOVE FRONT SEAT CUSHION SHIELD ASSEMBLY**
   (a) Release the 2 rubber bands on the backside of the front seatback board sub-assembly.

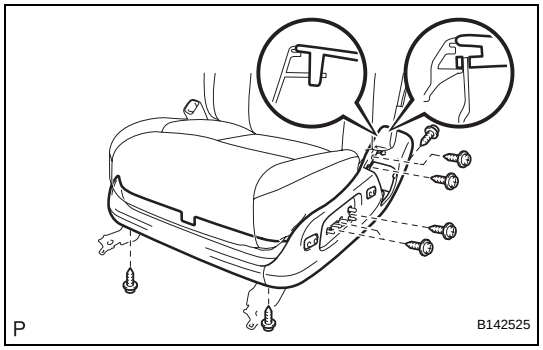

   (b) Remove the 8 screws.
   (c) Disengage the 2 claws and separate the front seat cushion shield assembly.

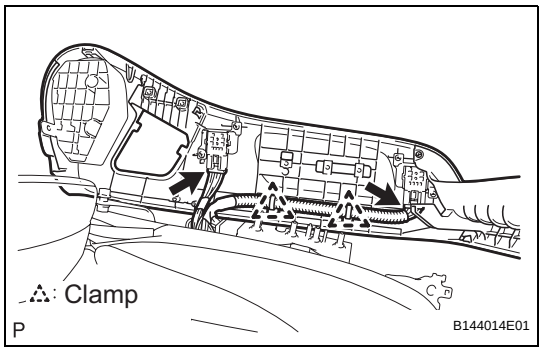

(d) Disconnect the 2 clamps and 2 connectors, and then remove the front seat cushion shield assembly.

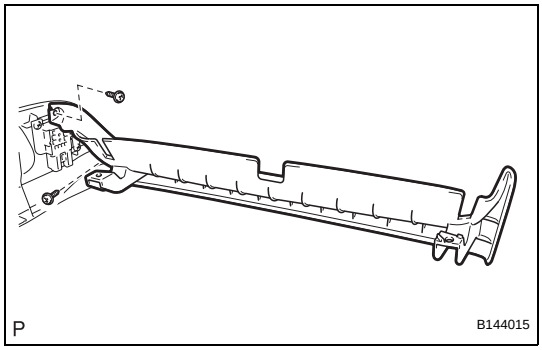

6. REMOVE FRONT INNER NO. 1 SEAT CUSHION SHIELD

(a) Remove the 2 screws and front inner No. 1 seat cushion shield.

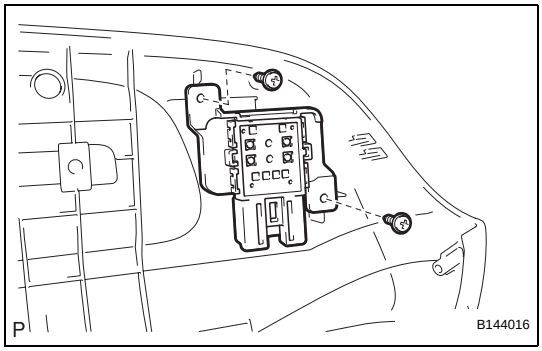

7. REMOVE SEAT VARIABLE CUSHION SWITCH (w/ Seat Cushion Front Edge Adjustment Function)

(a) Remove the 2 screws and seat variable cushion switch.

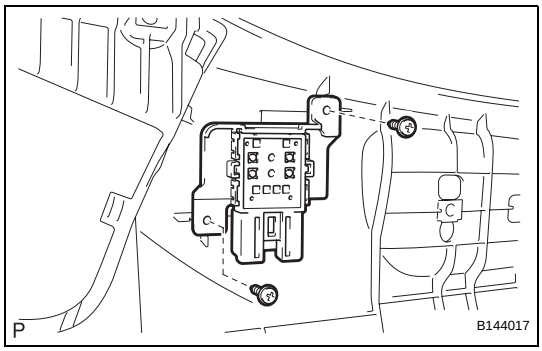

8. REMOVE FRONT POWER SEAT LUMBAR SWITCH

(a) Remove the 2 screws and front power seat lumbar switch.

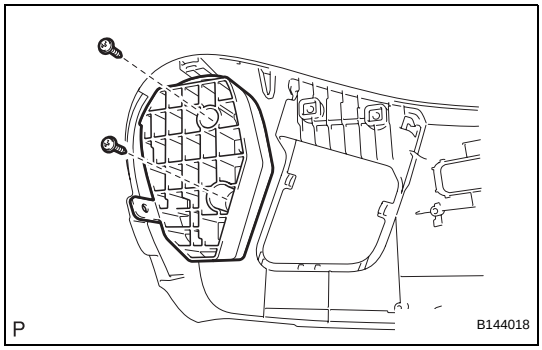

9. REMOVE LOWER NO. 3 SEAT TRACK SPACER

(a) Remove the 2 screws and lower No. 3 seat track spacer.

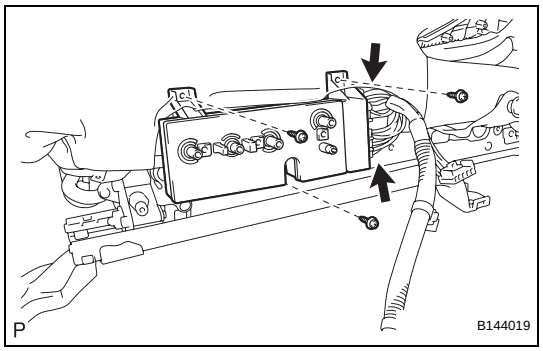

10. REMOVE FRONT POWER SEAT SWITCH (w/ Seat Position Memory System)
(a) Disconnect the 2 connectors.
(b) Remove the 3 screws and front power seat switch.

11. REMOVE FRONT POWER SEAT SWITCH (w/o Seat Position Memory System)
(a) Disconnect the connector.
(b) Remove the 3 screws and power seat switch.

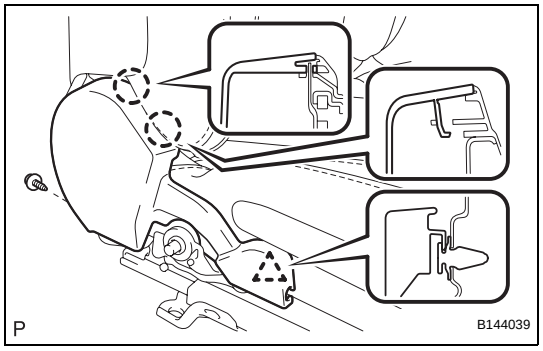

12. REMOVE FRONT SEAT INNER CUSHION SHIELD
(a) Remove the screw.
(b) Disengage the 2 claws and clip, and then remove the front seat inner cushion shield.

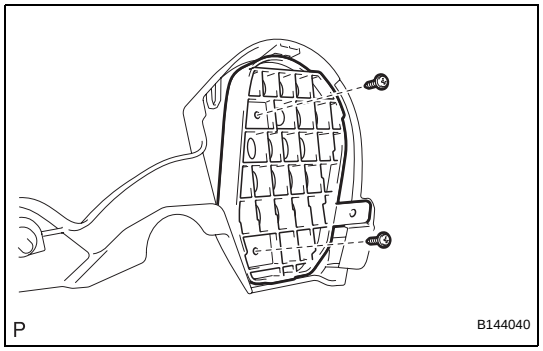

13. REMOVE LOWER NO. 4 SEAT TRACK SPACER
(a) Remove the 2 screws and lower No. 4 seat track spacer.

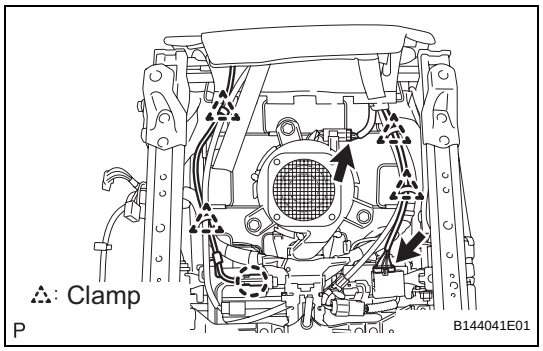

14. REMOVE FRONT SEPARATE TYPE SEAT CUSHION COVER WITH PAD (w/o Seat Cushion Front Edge Adjustment Function)
(a) Disconnect the 2 connectors.
(b) Disengage the 4 clamps and claw.

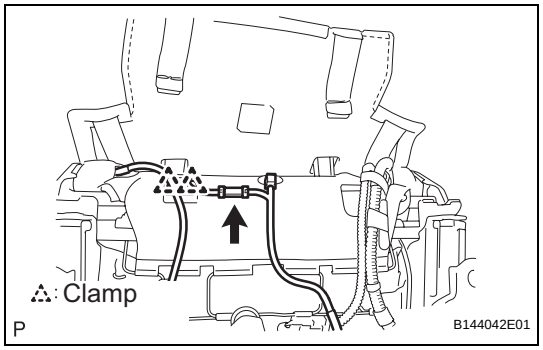

(c) Disconnect the connector and detach the 2 clamps.

SE

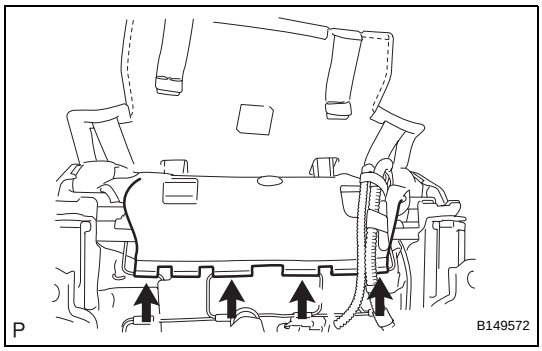

(d) Disengage the 4 clamps.

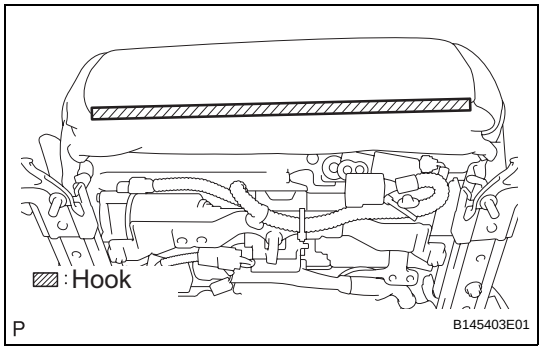

(e) Using a screwdriver, detach the hook.

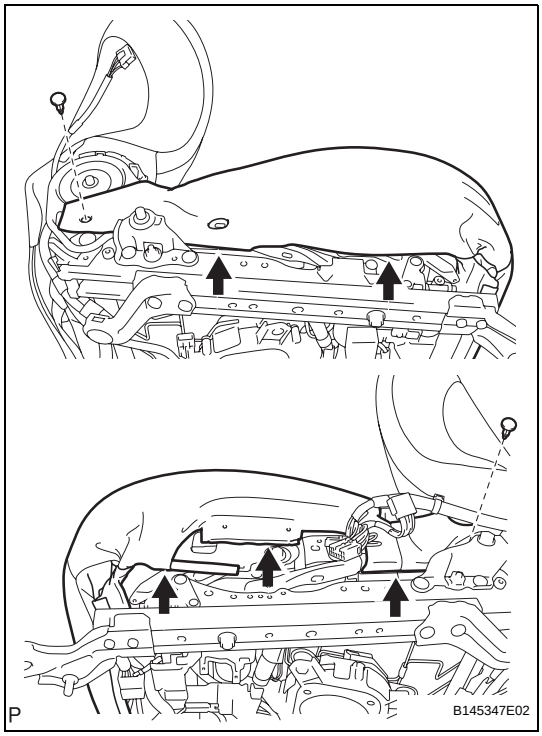

(f) Remove the 2 clips.
(g) Disengage the hooks and remove the front separate type seat cushion cover with pad.

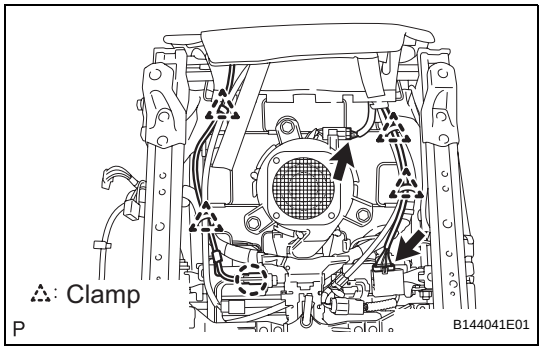

15. REMOVE FRONT SEPARATE TYPE SEAT CUSHION COVER WITH PAD (w/ Seat Cushion Front Edge Adjustment Function)

(a) Disconnect the 2 connectors.
(b) Disengage the 4 clamps and claw.

SE

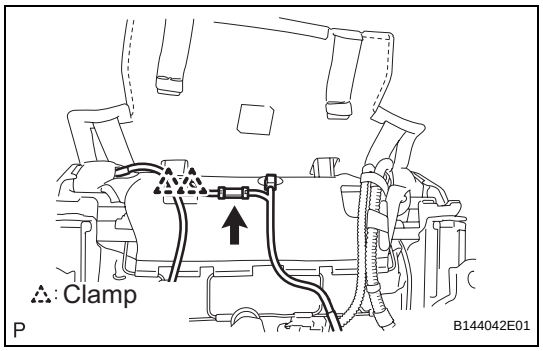

(c) Disconnect the connector and detach the 2 clamps.

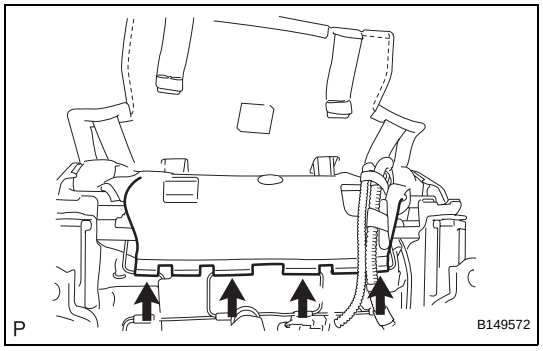

(d) Disengage the 4 clamps.

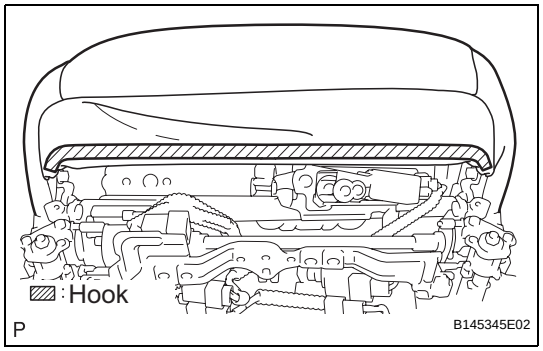

(e) Using a screwdriver, detach the hook.

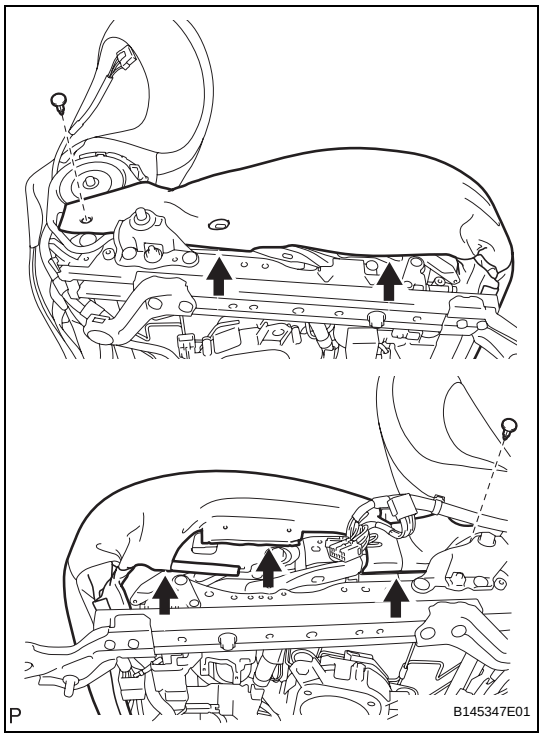

(f) Remove the 2 clips.
(g) Disengage the hooks and clamp.

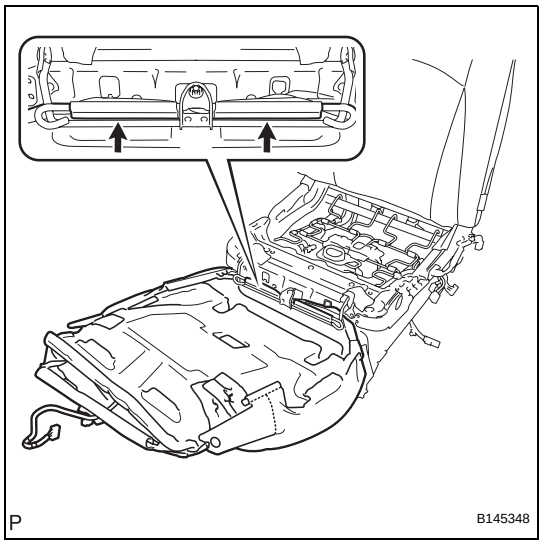

(h) Disengage the 2 hooks and remove the front separate type seat cushion cover with pad.

16. REMOVE FRONT SEAT CUSHION ASSEMBLY (See page RS-494)

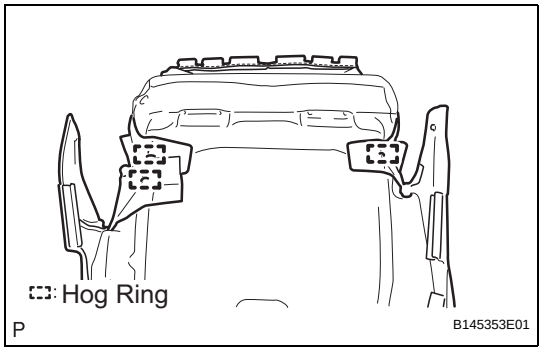

17. REMOVE FRONT SEPARATE TYPE SEAT CUSHION COVER (w/o Seat Cushion Front Edge Adjustment Function)

(a) Remove the 3 hog rings.

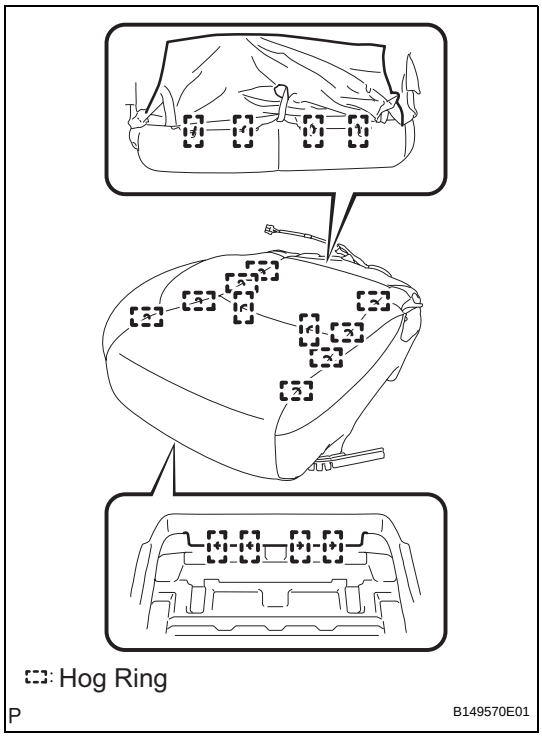

(b) Remove the 18 hog rings and front separate type front seat cushion cover.

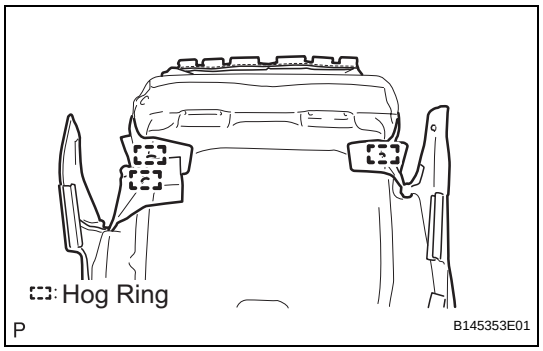

18. REMOVE FRONT SEPARATE TYPE SEAT CUSHION COVER (w/ Seat Cushion Front Edge Adjustment Function)

(a) Remove the 3 hog rings.

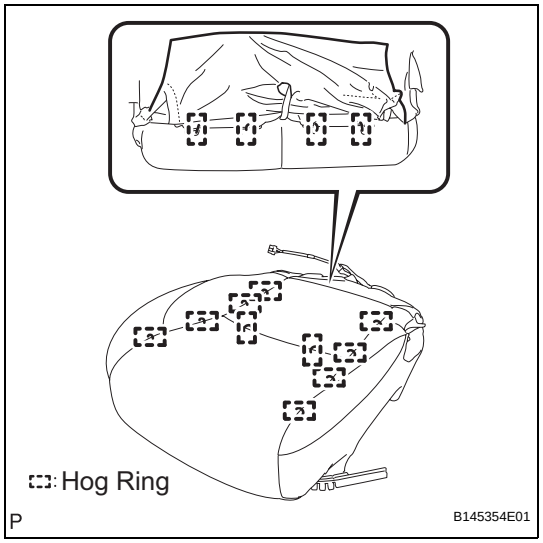

(b) Remove the 14 hog rings and front separate type front seat cushion cover.

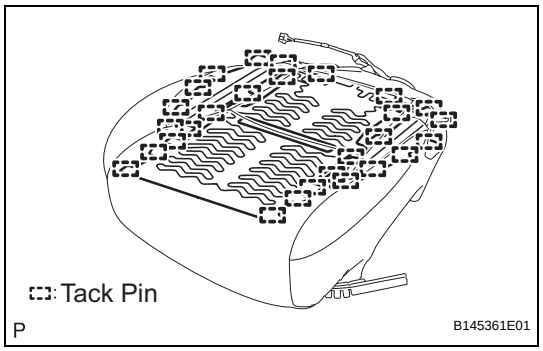

19. REMOVE FRONT SEAT CUSHION HEATER ASSEMBLY (w/ Climate Control Seat System)

(a) Cut off the tack pins that fasten the seat heater, and then remove the front seat cushion heater from the front separate type seat cushion cover.

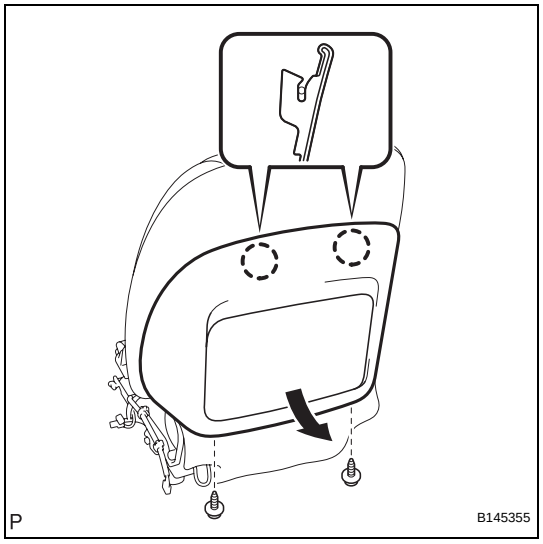

20. REMOVE FRONT SEATBACK BOARD SUB-ASSEMBLY

(a) Open the front seatback board cover sub-assembly of the front seatback board sub-assembly. Then remove the 2 screws.

(b) Pull the seatback board in the direction indicated by the arrow in the illustration to disengage the 2 claws. Then remove the front seatback board sub-assembly.

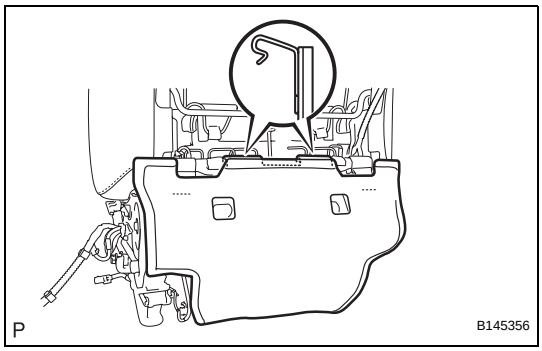

21. REMOVE FRONT SEATBACK BOARD COVER SUB-ASSEMBLY

(a) Disengage the hooks and front seatback board cover sub-assembly.

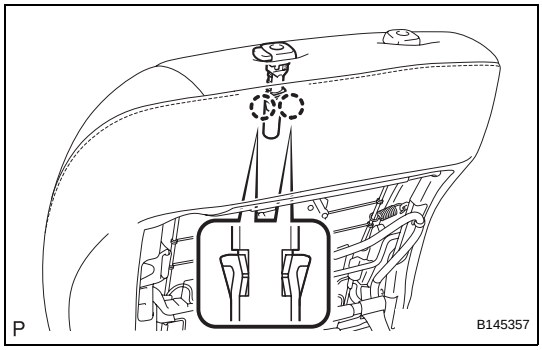

22. REMOVE FRONT SEAT HEADREST SUPPORT

(a) Disengage the 2 claws to remove the front seat headrest support.

23. REMOVE FRONT SEAT HEADREST SUPPORT

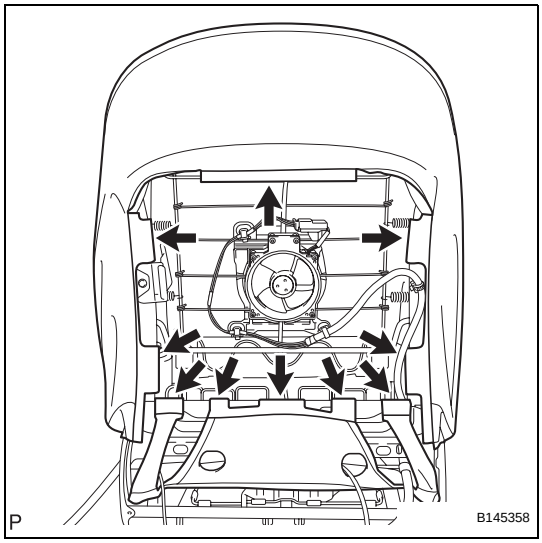

24. REMOVE FRONT SEPARATE TYPE SEATBACK COVER WITH PAD

(a) Disengage the hooks.

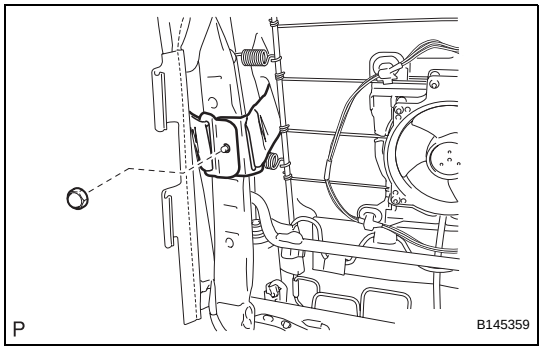

(b) Remove the nut and separate the bracket.

(c) Remove the front separate type seatback cover with pad.

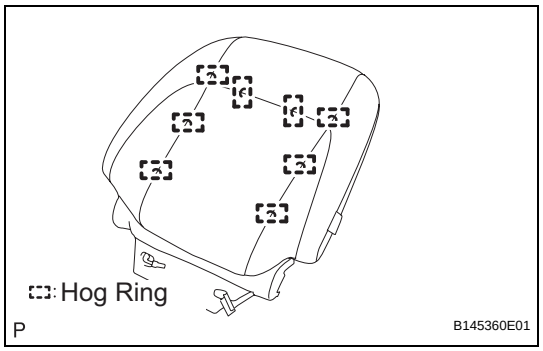

25. REMOVE FRONT SEPARATE TYPE SEATBACK COVER

(a) Remove the 8 hog rings and the front separate type seatback cover.

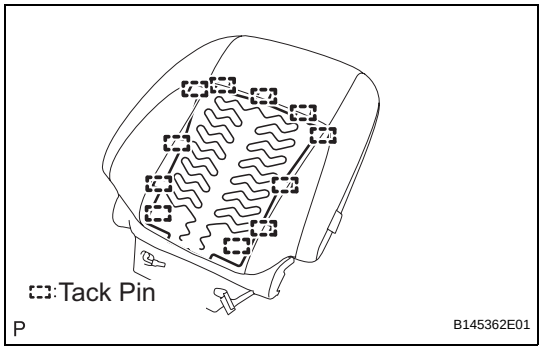

26. REMOVE FRONT SEATBACK HEATER ASSEMBLY (w/ Climate Control Seat System)

(a) Cut off the tack pins that fasten the seat heater, and then remove the front seatback heater assembly from the separate type front seatback cover.

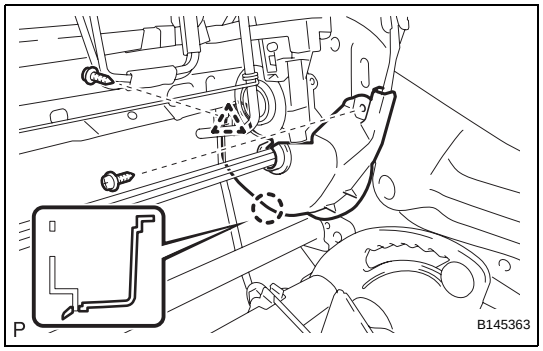

27. REMOVE SEAT RECLINING ADJUSTER INSIDE COVER LH

(a) Remove the 2 screws.
(b) Disengage the clamp.
(c) Disengage the claw and remove the seat reclining adjuster inside cover LH.

28. REMOVE SEAT RECLINING ADJUSTER INSIDE COVER RH

HINT:
Use the same procedure for the RH side and the LH side.

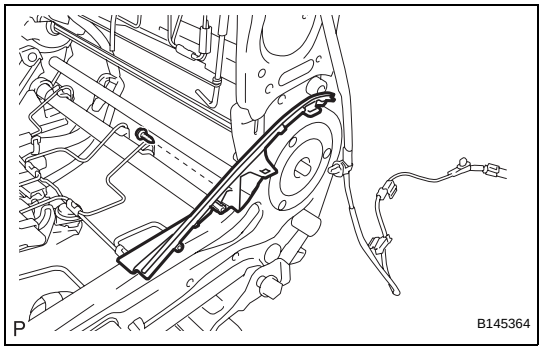

29. REMOVE RECLINING ADJUSTER INSIDE COVER LH

(a) Remove the screw.
(b) Remove the reclining adjuster inside cover LH.

30. REMOVE RECLINING ADJUSTER INSIDE COVER RH

HINT:
Use the same procedure for the RH side and the LH side.

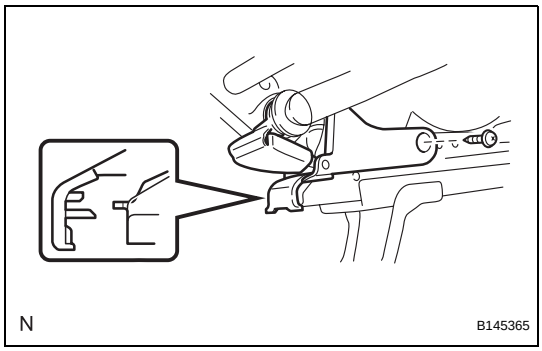

31. REMOVE FRONT SEAT LOWER CUSHION SHIELD LH

(a) Remove the screw.

(b) Disengage the hook to remove the front seat lower cushion shield LH as shown in the illustration.

32. REMOVE FRONT SEAT LOWER CUSHION SHIELD RH

HINT:

Use the same procedure for the RH side and the LH side.

33. REMOVE SEAT POSITION SENSOR (for Driver Side) (See page RS-485)

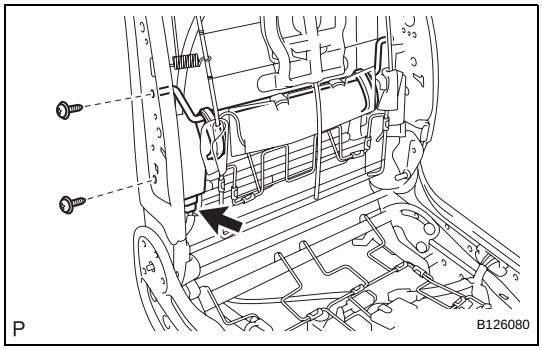

34. REMOVE LUMBAR SUPPORT ADJUSTER ASSEMBLY

(a) Disconnect the connector.

(b) Remove the 2 screws and lumbar support adjuster assembly.

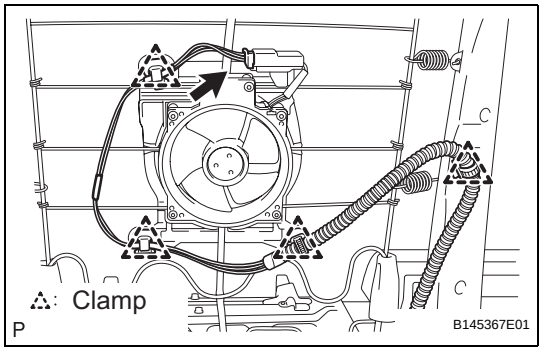

35. REMOVE SEATBACK CLIMATE CONTROL BLOWER (w/ Climate Control Seat System)

(a) Disconnect the connector and detach the 4 clamps.

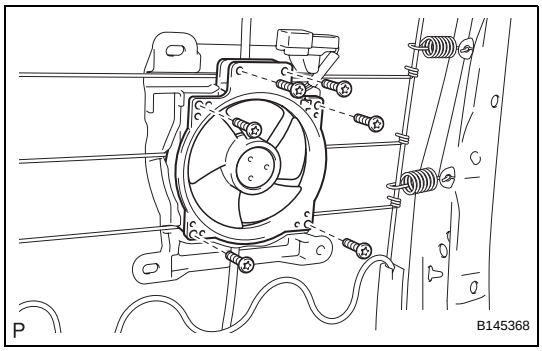

(b) Using a T30 "TORX" socket, remove the 6 "TORX" bolts and remove the seatback climate control blower.

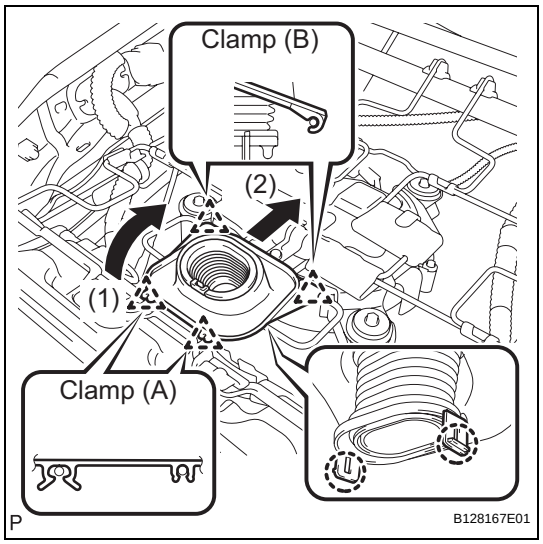

36. REMOVE SEAT CUSHION CLIMATE CONTROL DUCT (w/ Climate Control Seat System)

(a) Separate the 2 clamps (A) in the direction indicated by the arrow (1).

(b) Separate the 2 clamps (B) in the direction indicated by the arrow (2).

(c) Disengage the 2 claws, and remove the seat cushion climate control duct.

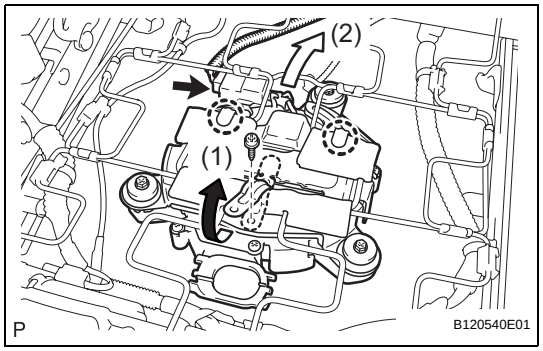

37. REMOVE SEAT CUSHION CLIMATE CONTROL BLOWER (w/ Climate Control Seat System)

(a) Disconnect the connector.

(b) Remove the screw, detach the claw and remove the seat cushion climate control blower.

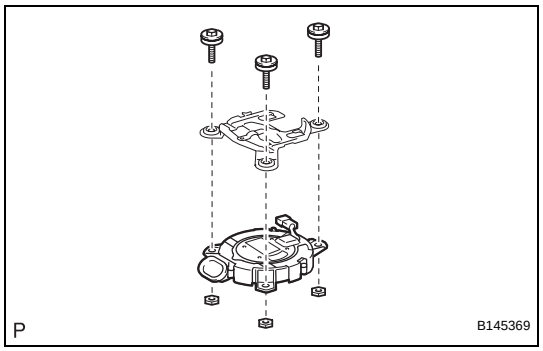

38. REMOVE SEAT CLIMATE CONTROL BLOWER

(a) Remove the 3 bolts, 3 nuts, bracket, and seat climate control blower.

39. REMOVE SEAT HEATER CONTROL (See page SE-174)

40. REMOVE FRONT SEAT WIRE

(a) Disengage the clamps.

(b) Disconnect the connectors and remove the front seat wire.

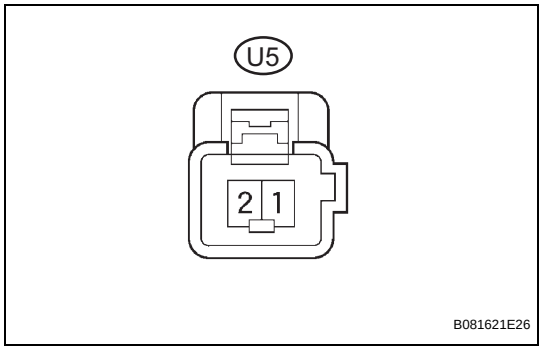

INSPECTION

1. INSPECT FRONT SEAT FRAME WITH ADJUSTER LH

(a) Check operation of the front vertical motor.

(1) Check if the seat frame moves smoothly when the battery is connected to the front vertical motor connector terminals.

OK

Measurement Condition	Operational Direction
Battery positive (+) → U5-1 Battery negative (-) → U5-2	**Upward**
Battery positive (+) → U5-2 Battery negative (-) → U5-1	**Downward**

SE

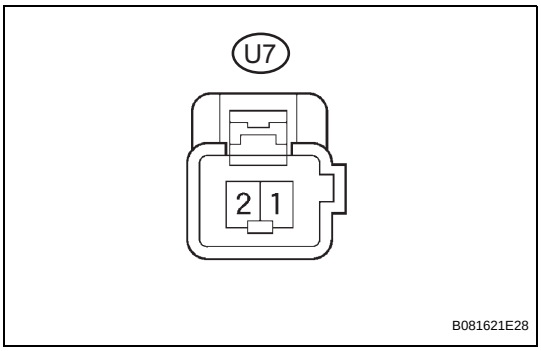

(b) Check operation of the reclining motor.
(1) Check if the seat frame moves smoothly when the battery is connected to the reclining motor connector terminals.
OK

Measurement Condition	Operational Direction
Battery positive (+) → U7-2 Battery negative (-) → U7-1	**Forward**
Battery positive (+) → U7-1 Battery negative (-) → U7-2	**Backward**

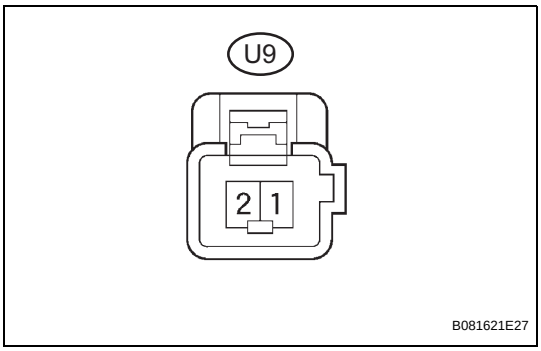

(c) Check operation of the lifter motor.
(1) Check if the seat frame moves smoothly when the battery is connected to the lifter motor connector terminals.
OK

Measurement Condition	Operational Direction
Battery positive (+) → U9-2 Battery negative (-) → U9-1	**Upward**
Battery positive (+) → U9-1 Battery negative (-) → U9-2	**Downward**

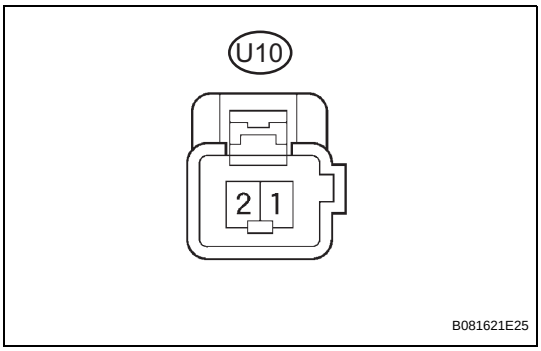

(d) Check operation of the slide motor.
(1) Check if the seat frame moves smoothly when the battery is connected to the slide motor connector terminals.
OK

Measurement Condition	Operational Direction
Battery positive (+) → U10-1 Battery negative (-) → U10-2	**Forward**
Battery positive (+) → U10-2 Battery negative (-) → U10-1	**Backward**

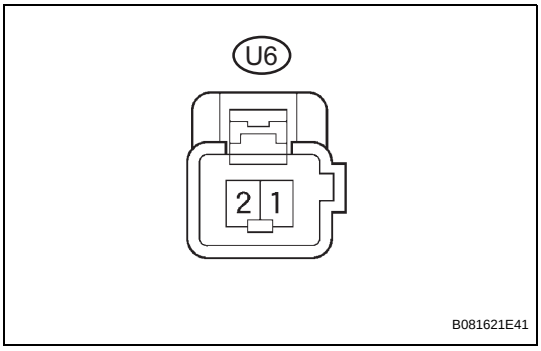

(e) Check operation of the leg support motor (with Seat Position Memory System).
(1) Check if the seat frame moves smoothly when the battery is connected to the leg support motor connector terminals.
OK

Measurement Condition	Operational Direction
Battery positive (+) → U6-1 Battery negative (-) → U6-2	**Forward**
Battery positive (+) → U6-2 Battery negative (-) → U6-1	**Backward**

If the result is not as specified, replace the seat frame with adjuster LH.

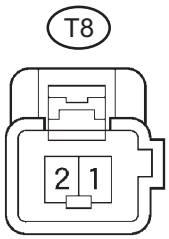

B081621E30

2. INSPECT FRONT SEAT FRAME WITH ADJUSTER RH

(a) Check operation of the front vertical motor.

(1) Check if the seat frame moves smoothly when the battery is connected to the front vertical motor connector terminals.

OK

Measurement Condition	Operational Direction
Battery positive (+) → T8-2 Battery negative (-) → T8-1	**Upward**
Battery positive (+) → T8-1 Battery negative (-) → T8-2	**Downward**

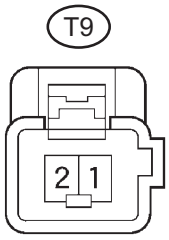

B081621E31

(b) Check operation of the lifter motor.

(1) Check if the seat frame moves smoothly when the battery is connected to the lifter motor connector terminals.

OK

Measurement Condition	Operational Direction
Battery positive (+) → T9-1 Battery negative (-) → T9-2	**Upward**
Battery positive (+) → T9-2 Battery negative (-) → T9-1	**Downward**

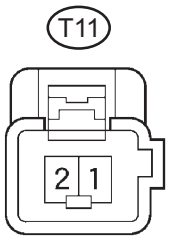

B081621E32

(c) Check operation of the reclining motor.

(1) Check if the seat frame moves smoothly when the battery is connected to the reclining motor connector terminals.

OK

Measurement Condition	Operational Direction
Battery positive (+) → T11-2 Battery negative (-) → T11-1	**Forward**
Battery positive (+) → T11-1 Battery negative (-) → T11-2	**Backward**

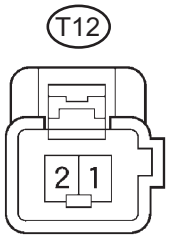

B081621E29

(d) Check operation of the slide motor.

(1) Check if the seat frame moves smoothly when the battery is connected to the slide motor connector terminals.

OK

Measurement Condition	Operational Direction
Battery positive (+) → T12-2 Battery negative (-) → T12-1	**Forward**
Battery positive (+) → T12-1 Battery negative (-) → T12-2	**Backward**

If the result is not as specified, replace the seat frame with adjuster RH.

REASSEMBLY

1. INSTALL FRONT SEAT WIRE
(a) Connect the connectors.
(b) Engage the clamps to install the front seat wire.

2. INSTALL SEAT HEATER CONTROL (See page SE-175)

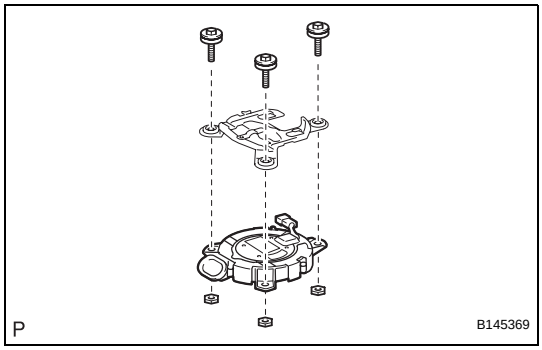

3. INSTALL SEAT CLIMATE CONTROL BLOWER (w/ Climate Control Seat System)
(a) Install the seat climate control blower and bracket with the 3 bolts and 3 nuts.

4. INSTALL SEAT CUSHION CLIMATE CONTROL BLOWER (w/ Climate Control Seat System)
(a) Engage the 2 claws to install the seat cushion climate control blower.

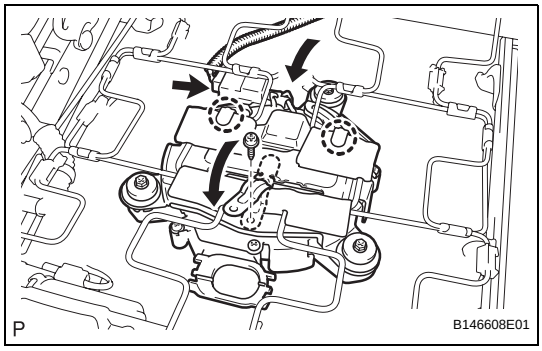

(b) Install the seat cushion climate control blower with the screw.
Torque: 2.6 N*m (27 kgf*cm, 23 in.*lbf)
(c) Connect the connector.

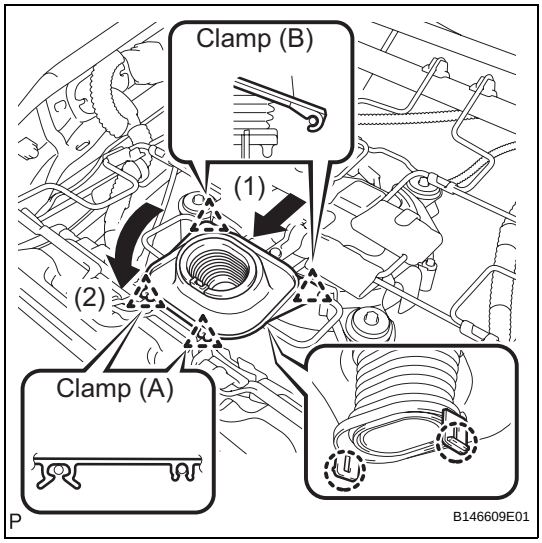

5. INSTALL SEAT CUSHION CLIMATE CONTROL DUCT (w/ Climate Control Seat System)
(a) Engage the 2 claws to install the seat cushion climate control duct.
(b) Engage the 2 clamps (B).
(c) Engage the 2 clamps (A).

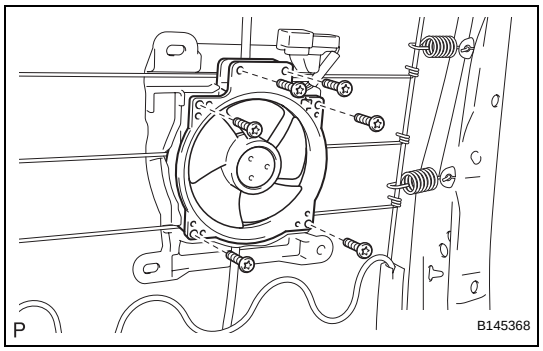

6. INSTALL SEATBACK CLIMATE CONTROL BLOWER (w/ Climate Control Seat System)

(a) Using a T30 "TORX" socket, install the seatback climate control blower with the 6 "TORX" bolts.

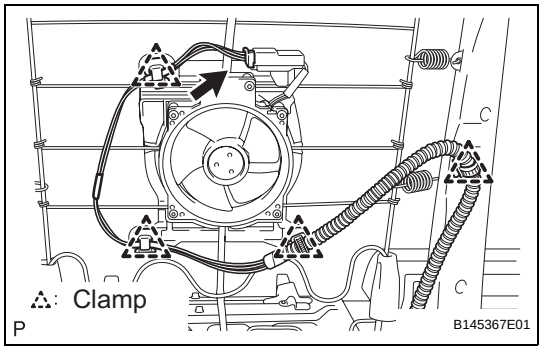

(b) Connect the 4 clamps and connector.

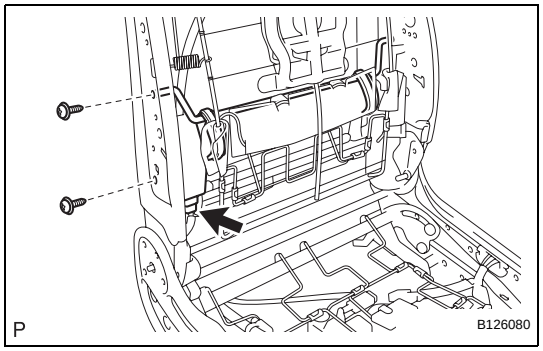

7. INSTALL LUMBAR SUPPORT ADJUSTER ASSEMBLY

(a) Install the lumbar support adjuster with the 2 screws.

(b) Connect the connector.

8. INSTALL SEAT POSITION SENSOR (for Driver Side) (See page RS-485)

9. INSTALL SEAT SLIDE POSITION SENSOR PROTECTOR

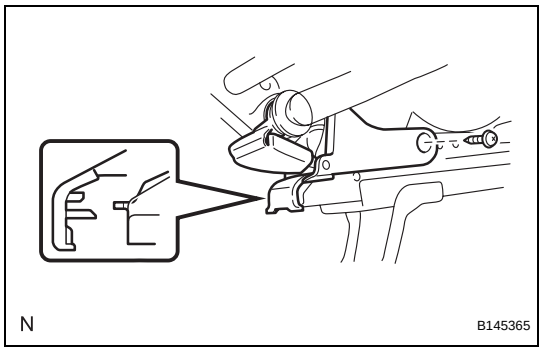

10. INSTALL FRONT SEAT LOWER CUSHION SHIELD LH

(a) Engage the hook.

(b) Install the front seat lower cushion shield LH with the screw.

11. INSTALL FRONT SEAT LOWER CUSHION SHIELD RH

HINT:

Use the same procedure for the RH side and the LH side.

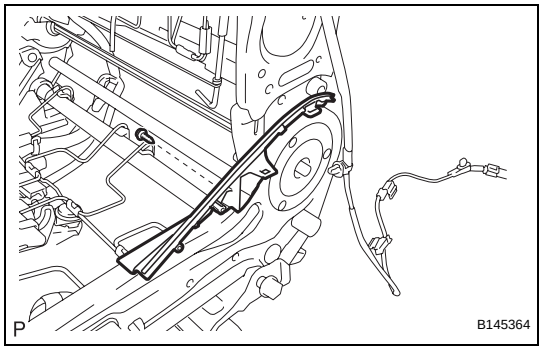

12. INSTALL RECLINING ADJUSTER INSIDE COVER LH

(a) Install the reclining adjuster inside cover LH with the screw.

13. INSTALL RECLINING ADJUSTER INSIDE COVER RH

HINT:

Use the same procedure for the RH side and the LH side.

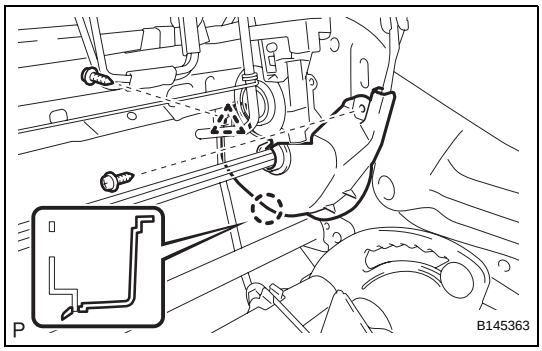

14. INSTALL SEAT RECLINING ADJUSTER INSIDE COVER LH

(a) Engage the claw and clamp.

(b) Install the reclining adjuster inside cover LH with the 2 screws.

15. INSTALL SEAT RECLINING ADJUSTER INSIDE COVER RH

HINT:

Use the same procedure for the RH side and the LH side.

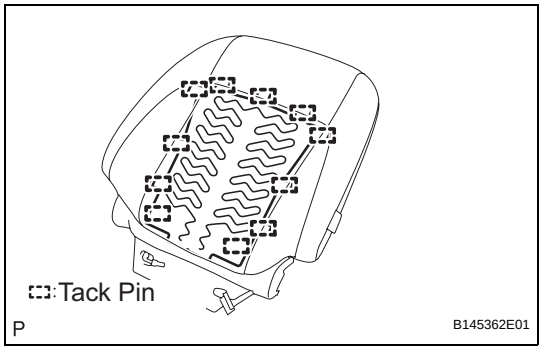

16. INSTALL FRONT SEATBACK HEATER ASSEMBLY (w/ Climate Control Seat System)

(a) Using a tracker, install the front seatback heater to the end of the seat cover with the 11 new tack pins.

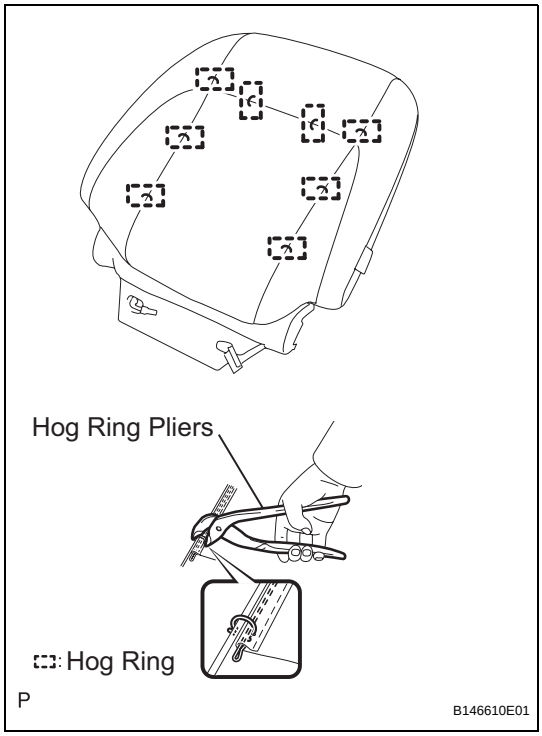

17. INSTALL FRONT SEPARATE TYPE SEATBACK COVER

(a) Using hog ring pliers, install the front separate type seatback cover with 8 new hog rings.

NOTICE:

- **Be careful not to damage the cover.**
- **When installing the hog rings, take care to minimize wrinkles as much as possible.**

18. INSTALL FRONT SEPARATE TYPE SEATBACK COVER WITH PAD

(a) Install the front separate type seatback cover with pad to the front seatback spring assembly.

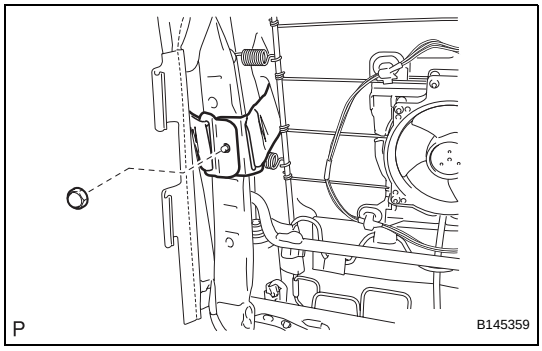

(b) Install the front seatback cover bracket with the nut.

Torque: 5.0 N*m (51 kgf*cm, 44 in.*lbf)

NOTICE:

- **For vehicles with side airbags, the side airbags may not be activated normally unless the front seatback cover is securely installed.**
- **Check that the strap is not twisted after installing the bracket.**
- **Install the bracket securely.**

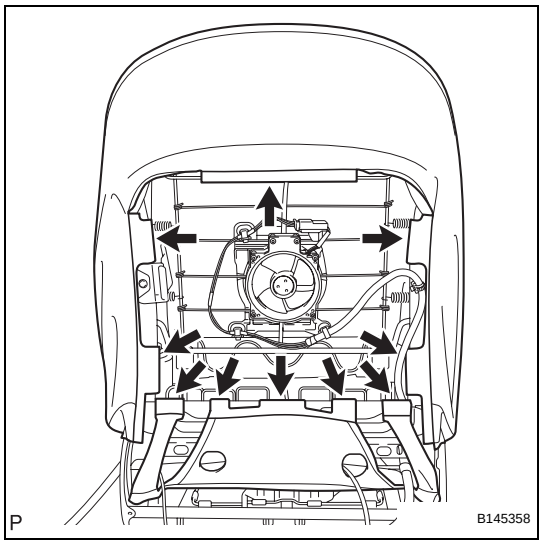

(c) Engage the hooks.

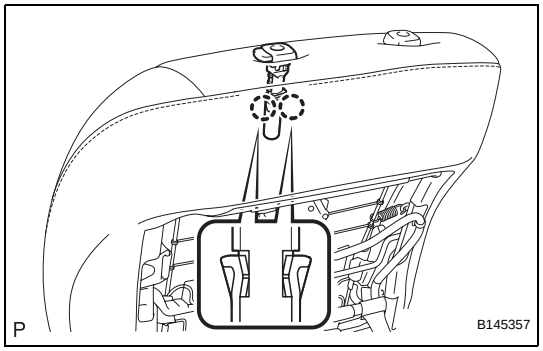

19. INSTALL FRONT SEAT HEADREST SUPPORT

(a) Engage the 2 claws to install the front seat headrest support.

20. INSTALL FRONT SEAT HEADREST SUPPORT

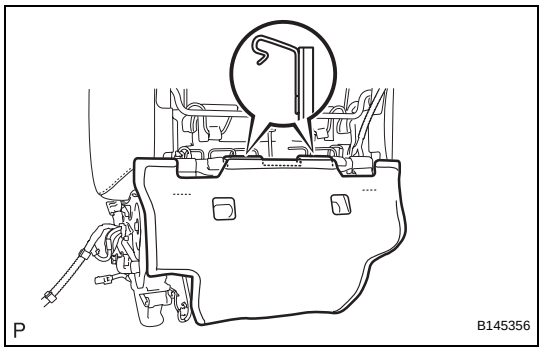

21. INSTALL FRONT SEATBACK BOARD COVER SUB-ASSEMBLY

(a) Engage the 2 hooks and install the front seatback board cover sub-assembly.

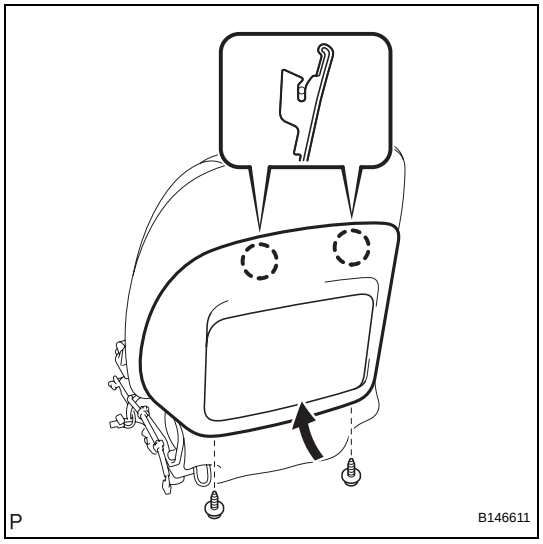

22. INSTALL FRONT SEATBACK BOARD SUB-ASSEMBLY

(a) Engage the 2 claws.

(b) Install the front seatback board sub-assembly with the 2 screws.

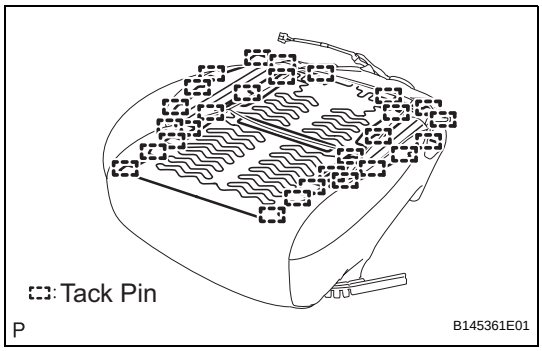

23. INSTALL FRONT SEAT CUSHION HEATER ASSEMBLY (w/ Climate Control Seat System)

(a) Using a tacker, install the front seat cushion heater to the end of the seat cover with the 28 new tack pins.

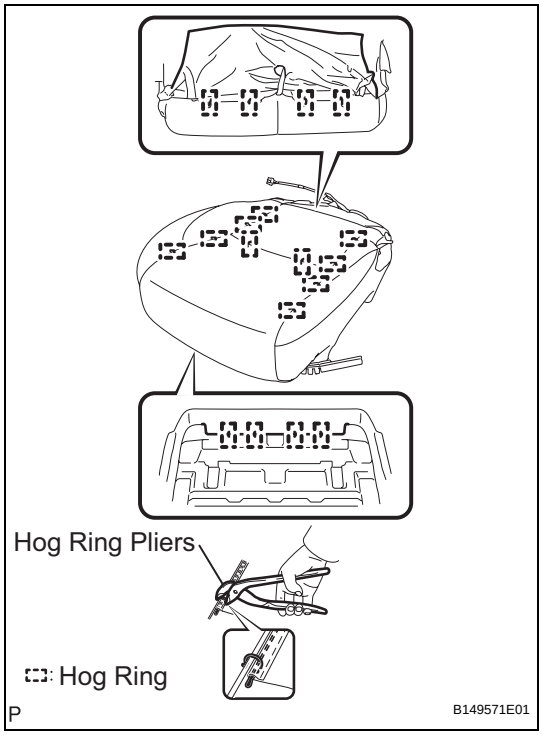

24. INSTALL FRONT SEPARATE TYPE SEAT CUSHION COVER (w/o Seat Cushion Front Edge Adjustment Function)

(a) Using hog ring pliers, install 18 new hog rings.
NOTICE:
- **Be careful not to damage the cover.**
- **When installing the hog rings, take care to minimize wrinkles as much as possible.**

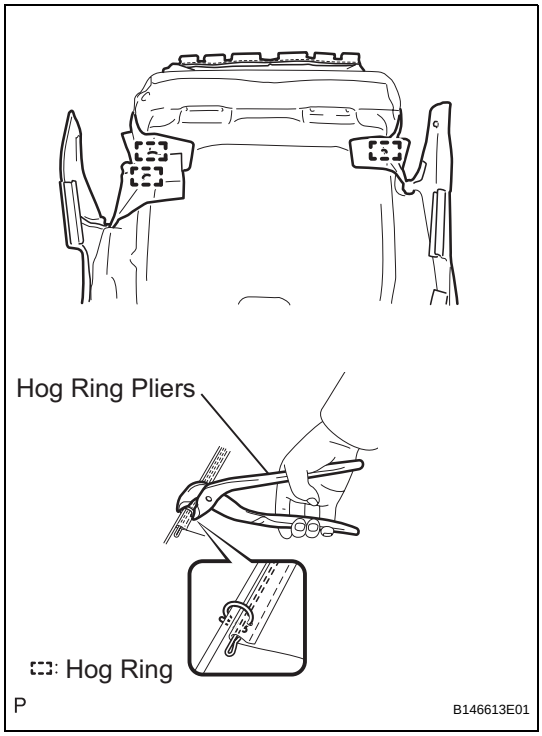

(b) Using hog ring pliers, install 3 new hog rings.
NOTICE:
- **Be careful not to damage the cover.**
- **When installing the hog rings, take care to minimize wrinkles as much as possible.**

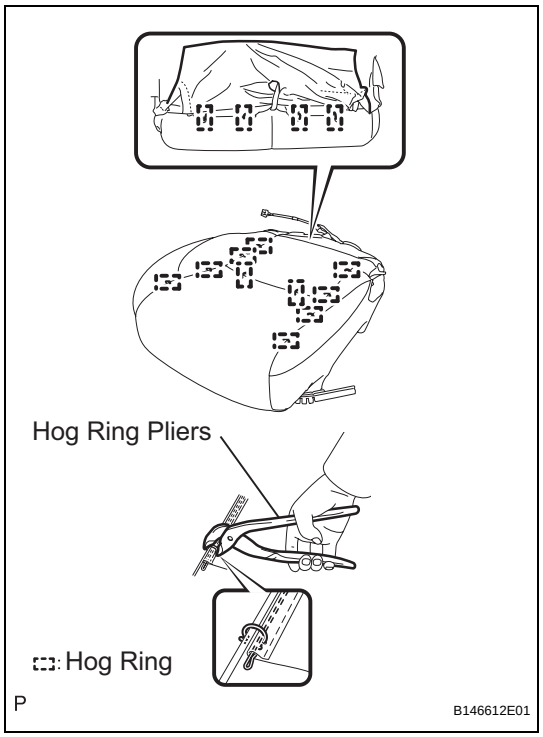

25. INSTALL FRONT SEPARATE TYPE SEAT CUSHION COVER (w/ Seat Cushion Front Edge Adjustment Function)

(a) Using hog ring pliers, install 14 new hog rings.
NOTICE:
- **Be careful not to damage the cover.**
- **When installing the hog rings, take care to minimize wrinkles as much as possible.**

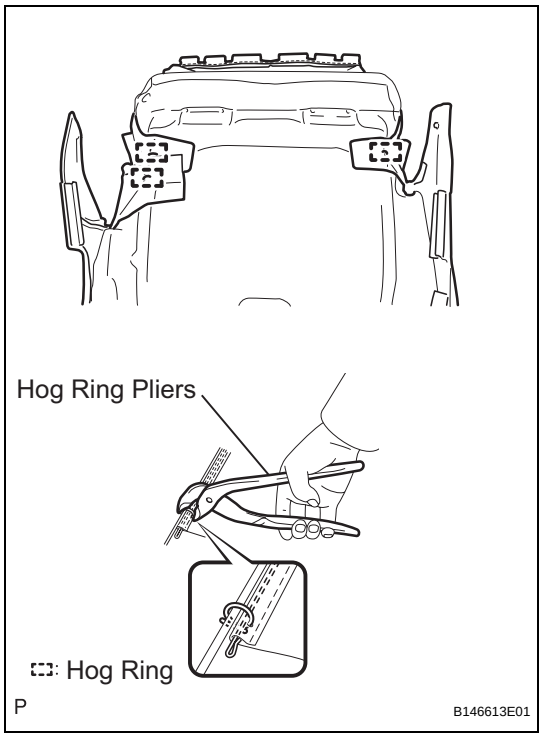

(b) Using hog ring pliers, install 3 new hog rings.
NOTICE:
- **Be careful not to damage the cover.**
- **When installing the hog rings, take care to minimize wrinkles as much as possible.**

26. INSTALL FRONT SEAT CUSHION ASSEMBLY (See page RS-495)

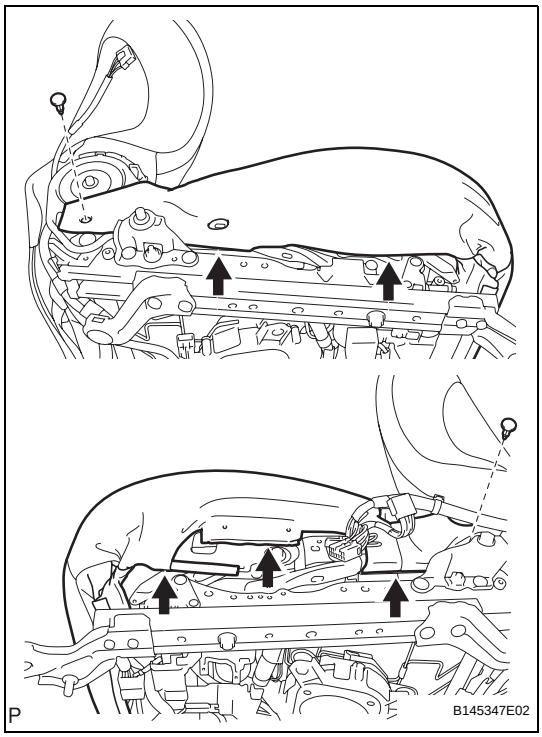

27. INSTALL FRONT SEPARATE TYPE SEAT CUSHION COVER WITH PAD (w/o Seat Cushion Front Edge Adjustment Function)

(a) Engage the hooks.

(b) Install the 2 clips.

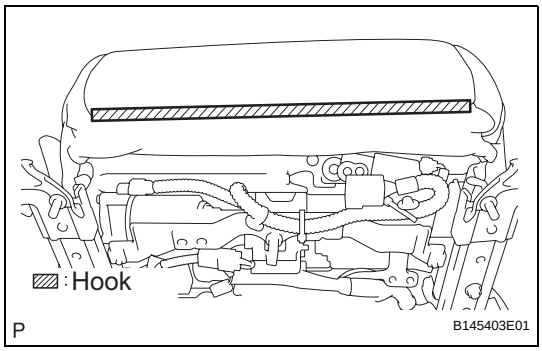

(c) Engage the hook.

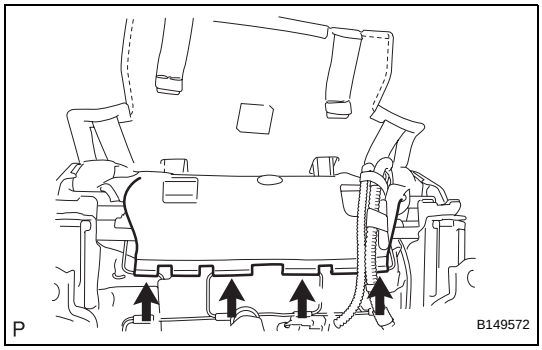

(d) Engage the 4 clamps.

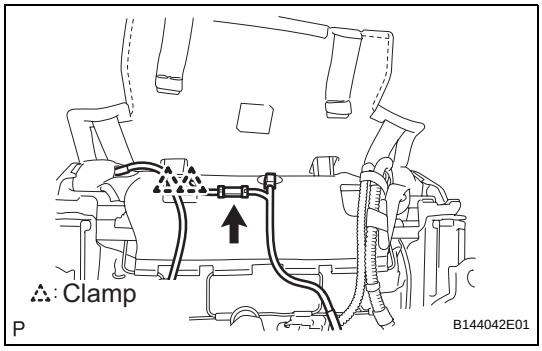

(e) Connect the connector and engage the 2 clamps.

SE

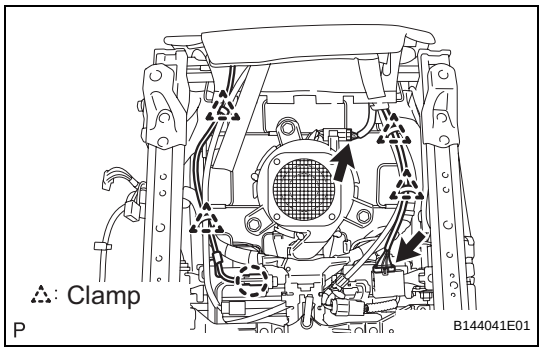

(f) Engage the 4 clamps and claw.
(g) Connect the 2 connectors.

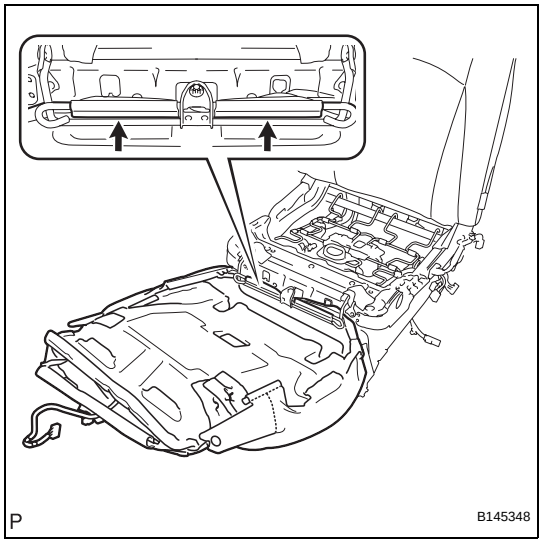

28. INSTALL FRONT SEPARATE TYPE SEAT CUSHION COVER WITH PAD (w/ Seat Cushion Front Edge Adjustment Function)

(a) Engage the 2 hooks to install the front separate type seat cushion cover with pad.
NOTICE:
- **Be careful not to damage the cover.**
- **When installing the hog rings, take care to minimize wrinkles as much as possible.**

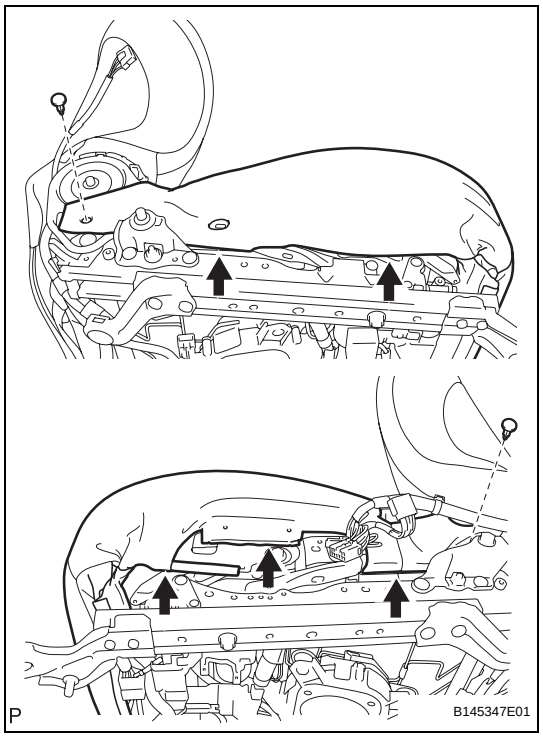

(b) Engage the hooks.
(c) Install the 2 clips.

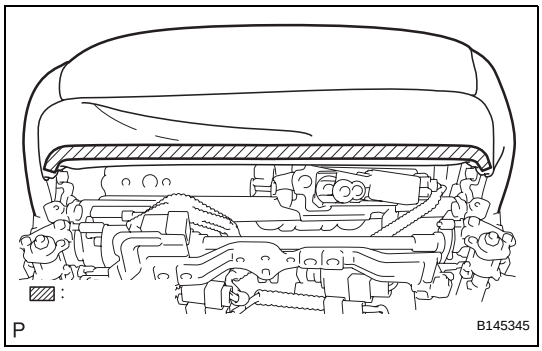

(d) Engage the hook.

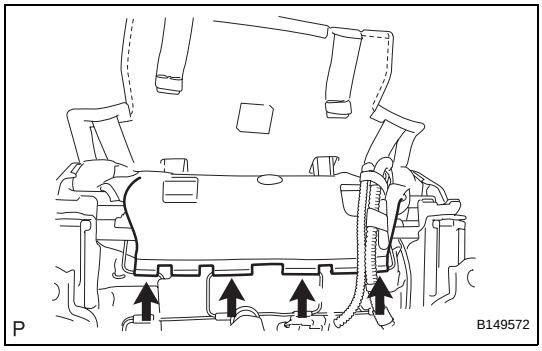

(e) Engage the 4 clamps.

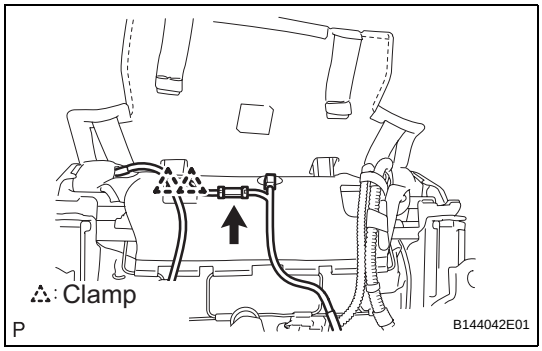

(f) Connect the connector and engage the 2 clamps.

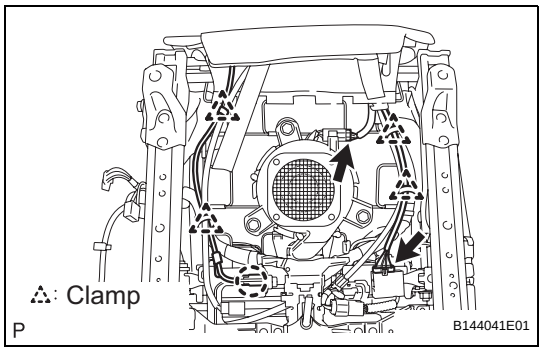

(g) Engage the 4 clamps and claw.
(h) Connect the 2 connectors.

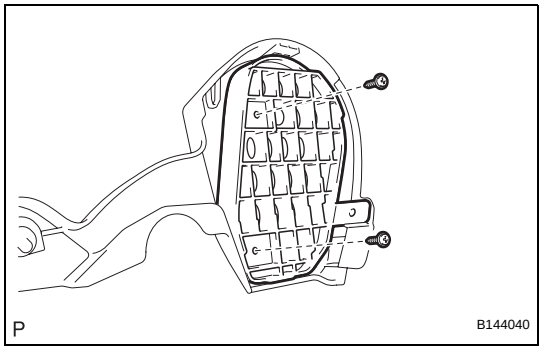

29. INSTALL LOWER NO. 4 SEAT TRACK SPACER

(a) Install the lower No. 4 seat track spacer with the 2 screws.

SE

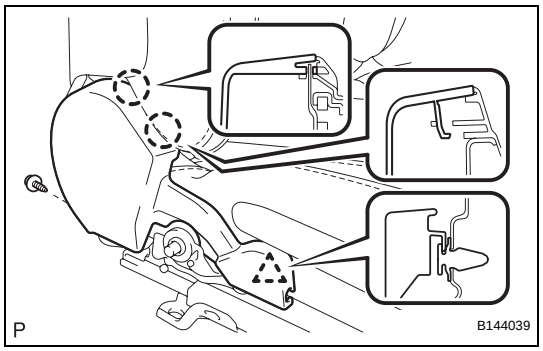

30. INSTALL FRONT SEAT INNER CUSHION SHIELD
(a) Engage the 2 claws and clip.
(b) Install the front seat inner cushion shield with the screw.

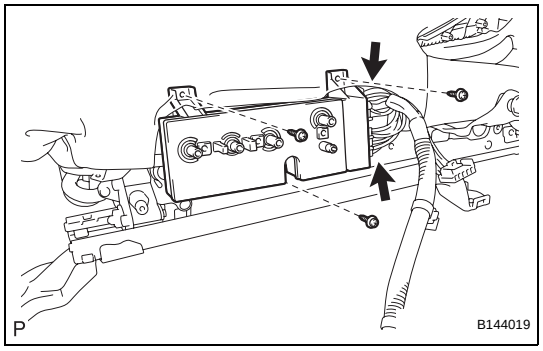

31. INSTALL FRONT POWER SEAT SWITCH (w/ Seat Position Memory System)
(a) Install the power seat switch with the 3 screws.
(b) Connect the 2 connectors.

32. INSTALL FRONT POWER SEAT SWITCH (w/o Seat Position Memory System)
(a) Install the power seat switch with the 3 screws.
(b) Connect the connector.

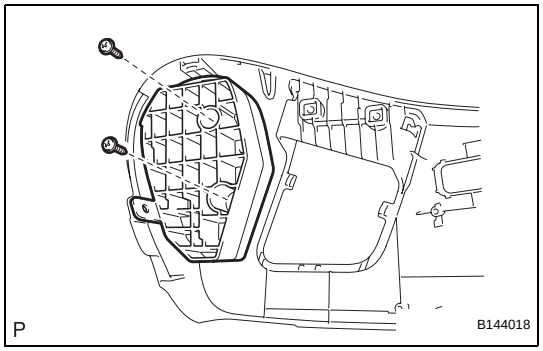

33. INSTALL LOWER NO. 3 SEAT TRACK SPACER
(a) Install the lower No. 3 seat track spacer with the 2 screws.

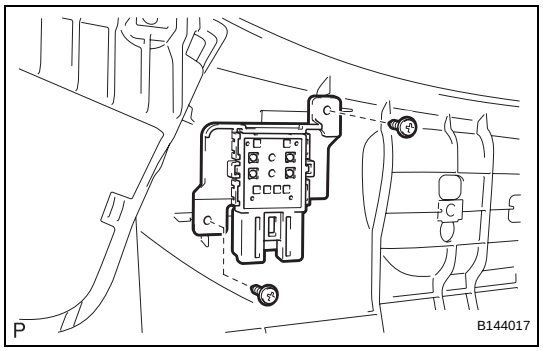

34. INSTALL FRONT POWER SEAT LUMBAR SWITCH
(a) Install the front power seat lumbar switch with the 2 screws.

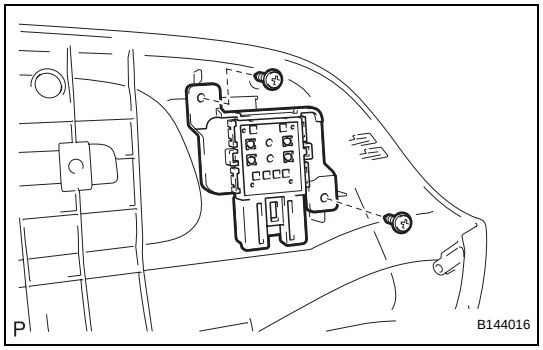

35. INSTALL SEAT VARIABLE CUSHION SWITCH (w/ Seat Cushion Front Edge Adjustment Function)
(a) Install the seat variable cushion switch with the 2 screws.

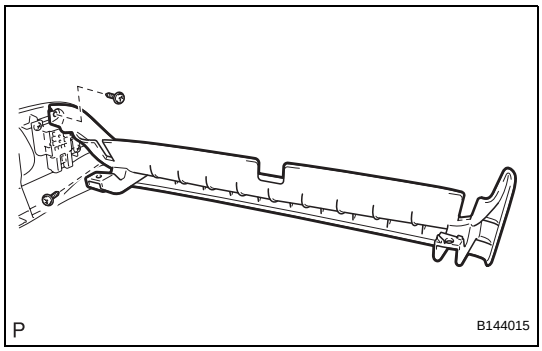

36. INSTALL FRONT INNER NO. 1 SEAT CUSHION SHIELD

(a) Install the front inner No. 1 seat cushion shield with the 2 screws.

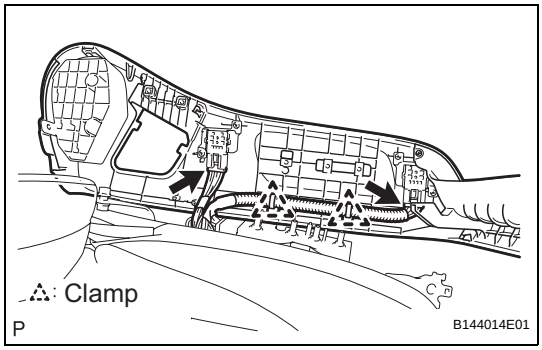

37. INSTALL FRONT SEAT CUSHION SHIELD ASSEMBLY

(a) Connect the 2 clamps and 2 connectors.

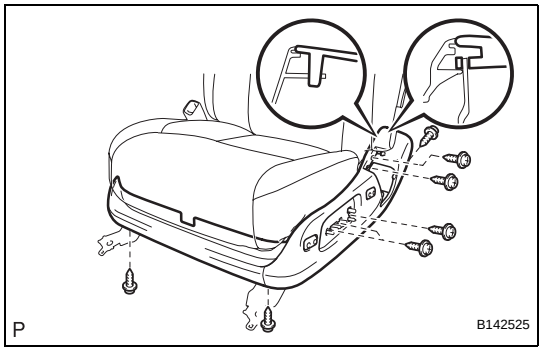

(b) Engage the 2 claws.

(c) Install the front seat cushion shield assembly with the 8 screws.

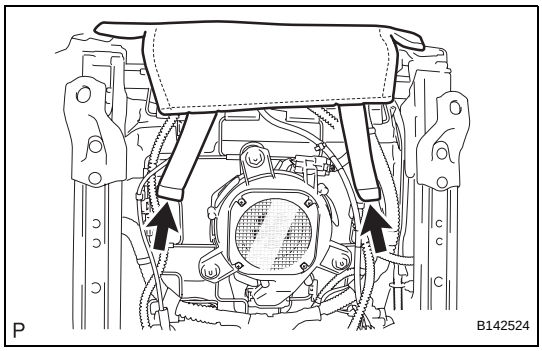

(d) Install the 2 rubber bands on the backside of the front seatback board sub-assembly.

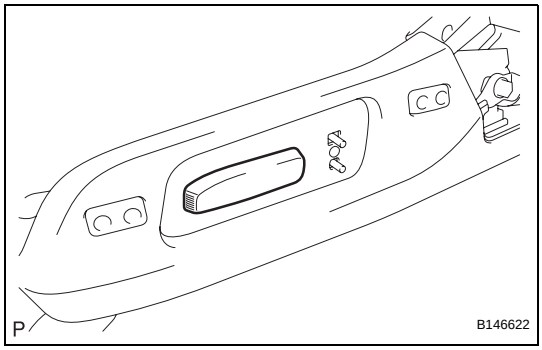

38. INSTALL SLIDE AND VERTICAL POWER SEAT SWITCH KNOB

(a) Install the slide and vertical power seat switch knob.

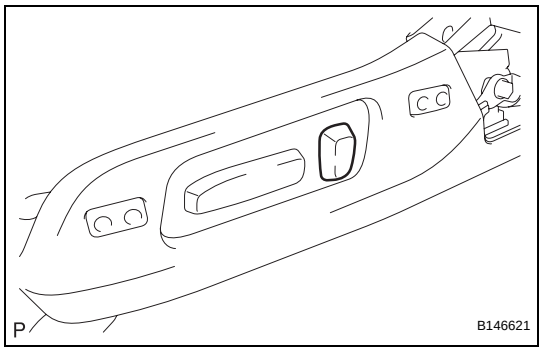

39. INSTALL RECLINING POWER SEAT SWITCH KNOB

(a) Install the reclining power seat switch knob.

40. INSTALL OCCUPANT DETECTION ECU (See page RS-502)

41. INSTALL FRONT SEAT INNER BELT ASSEMBLY (See page SB-24)

INSTALLATION

1. INSTALL FRONT SEAT ASSEMBLY

(a) Place the seat in the cabin.
(b) Connect the connectors under the seat.
(c) Connect the negative (-) battery terminal.
(d) Move the front seat assembly fully forward by operating the slide and vertical power seat switch knob.
NOTICE:
Check that the seat is locked.

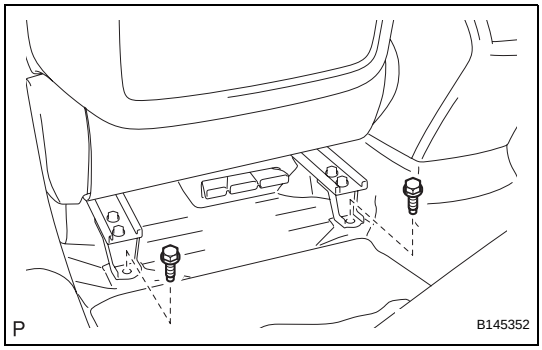

(e) Temporarily install the front side of the front seat assembly with the 2 bolts.
(f) Move the front seat assembly fully forward by operating the slide and vertical power seat switch knob.
NOTICE:
Check that the seat is locked.

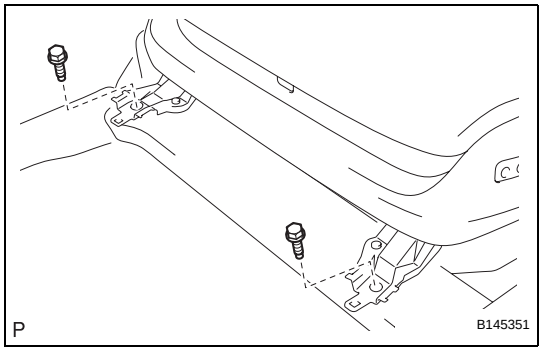

(g) Temporarily install the rear side of the front seat assembly with the 2 bolts.
(h) Move the front seat assembly to the rearmost position by operating the slide and vertical power seat switch knob.
NOTICE:
Check that the seat is locked.
(i) Fully tighten the 2 bolts on the front side of the front seat assembly in the order of the inner side bolt and then the outer side bolt.
Torque: 37 N*m (377 kgf*cm, 27 ft.*lbf)
(j) Move the front seat assembly fully forward by operating the slide and vertical power seat switch knob.
NOTICE:
Check that the seat is locked.
(k) Fully tighten the 2 bolts on the rear side of the front seat assembly in the order of the inner side bolt and then the outer side bolt.
Torque: 37 N*m (377 kgf*cm, 27 ft.*lbf)

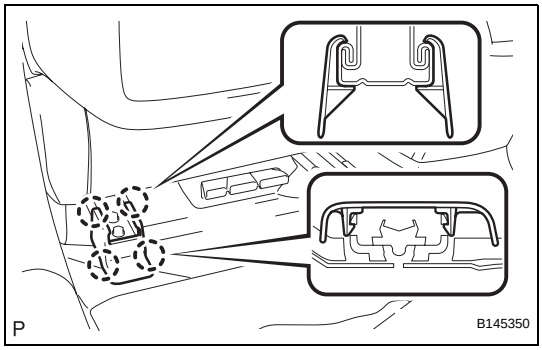

2. INSTALL FRONT SEAT REAR OUTER TRACK BRACKET COVER

(a) Engage the 4 claws and install the front seat rear outer track cover.

3. INSTALL FRONT SEAT REAR INNER TRACK BRACKET COVER

(a) Engage the 4 claws and install the inner seat track bracket cover.

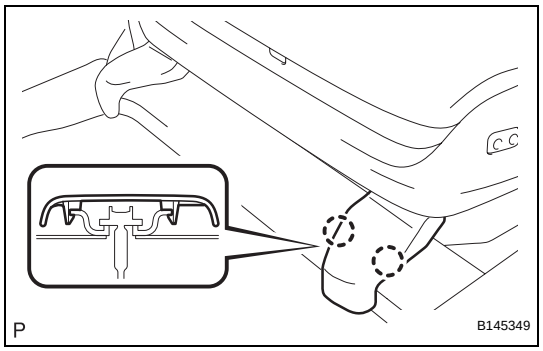

4. INSTALL FRONT SEAT OUTER TRACK BRACKET COVER

(a) Move the front seat assembly to the rearmost position by operating the slide and vertical power seat switch knob.

(b) Engage the 2 claws and install the front seat outer track bracket cover.

5. INSTALL FRONT SEAT INNER TRACK BRACKET COVER

(a) Engage the 2 claws and install the front seat inner track bracket cover.

6. INSTALL FRONT SEAT HEADREST ASSEMBLY

7. CONNECT FRONT SEAT OUTER BELT ASSEMBLY (See page SB-31)

8. INSTALL SEAT BELT ANCHOR COVER CAP (See page SB-31)

9. PERFORM INITIALIZATION

NOTICE:

Some systems need initialization after reconnecting the negative battery cable (See page IN-33).

10. INSPECT FRONT SEAT ASSEMBLY

(a) Check the power seat operation.

(b) Check the seat heater operation (with seat heater system).

(1) Turn the engine switch on (IG).

(2) Turn the seat heater switch ON.

(3) Wait 5 minutes or more and confirm that the seat surface becomes warm.

11. INSPECT SRS WARNING LIGHT

(See page RS-37)

DISASSEMBLY

1. REMOVE REAR BENCH TYPE SEAT CUSHION COVER

(a) Remove the 33 hog rings.

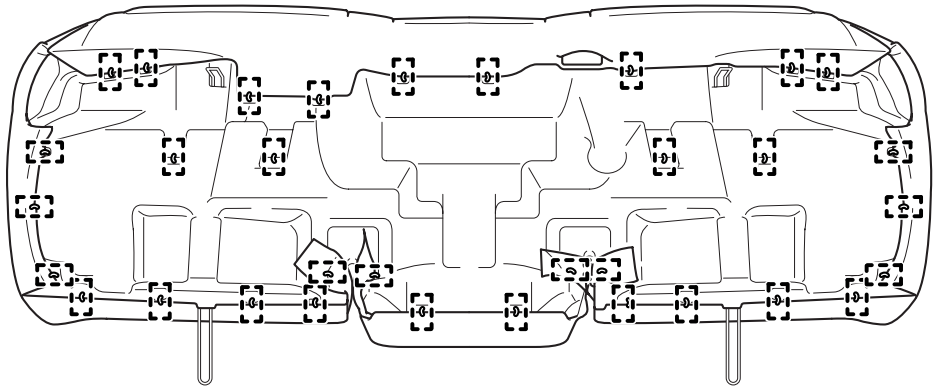

: Hog Ring

P

B145373E01

(b) Remove the 20 hog rings and seat cushion cover from the seat cushion frame (with pad).

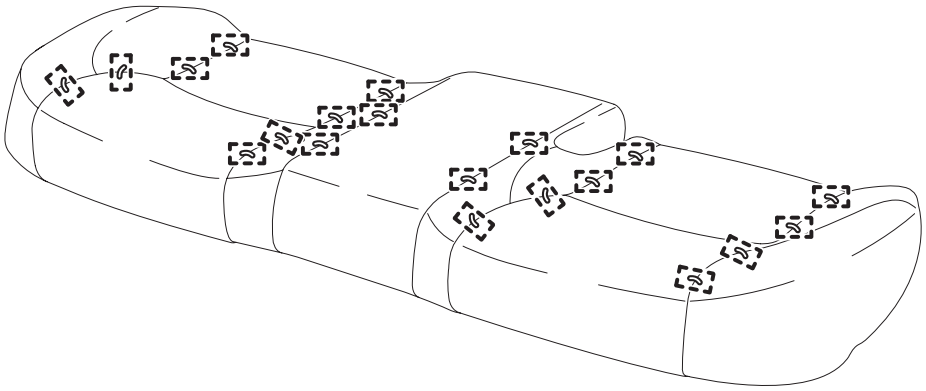

: Hog Ring

P

B145374E01

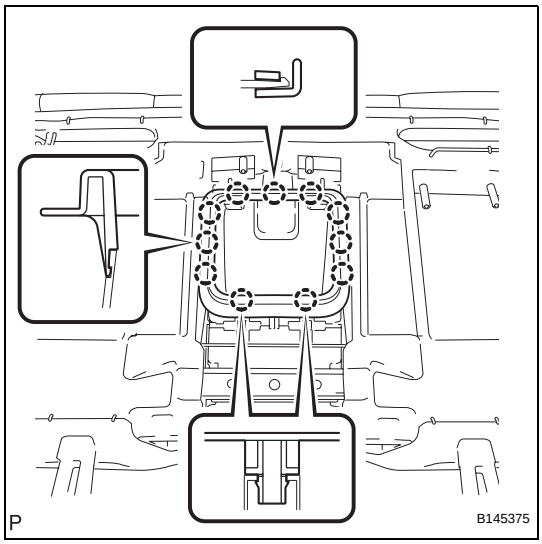

2. REMOVE INNER CENTER SEAT ARMREST PLATE

(a) Disengage the 11 claws and remove the inner center seat armrest plate.

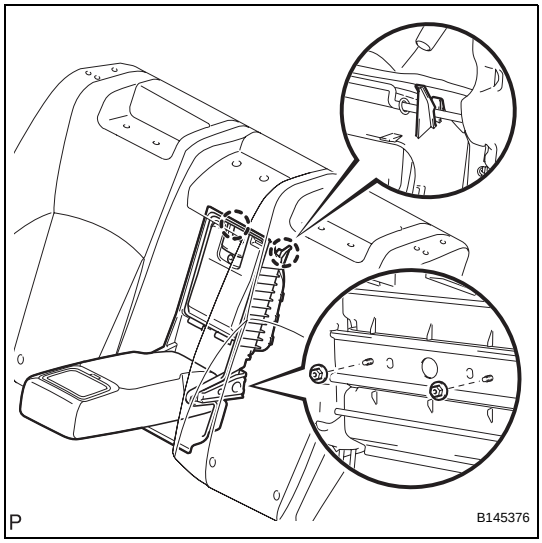

3. REMOVE REAR CENTER SEAT ARMREST ASSEMBLY

(a) Remove the 2 nuts.

(b) Disengage the 2 claws and remove the rear center seat armrest assembly.

4. REMOVE REAR SEAT HEADREST SUPPORT

(a) Disengage the 6 claws and remove the 3 rear seat headrest supports.

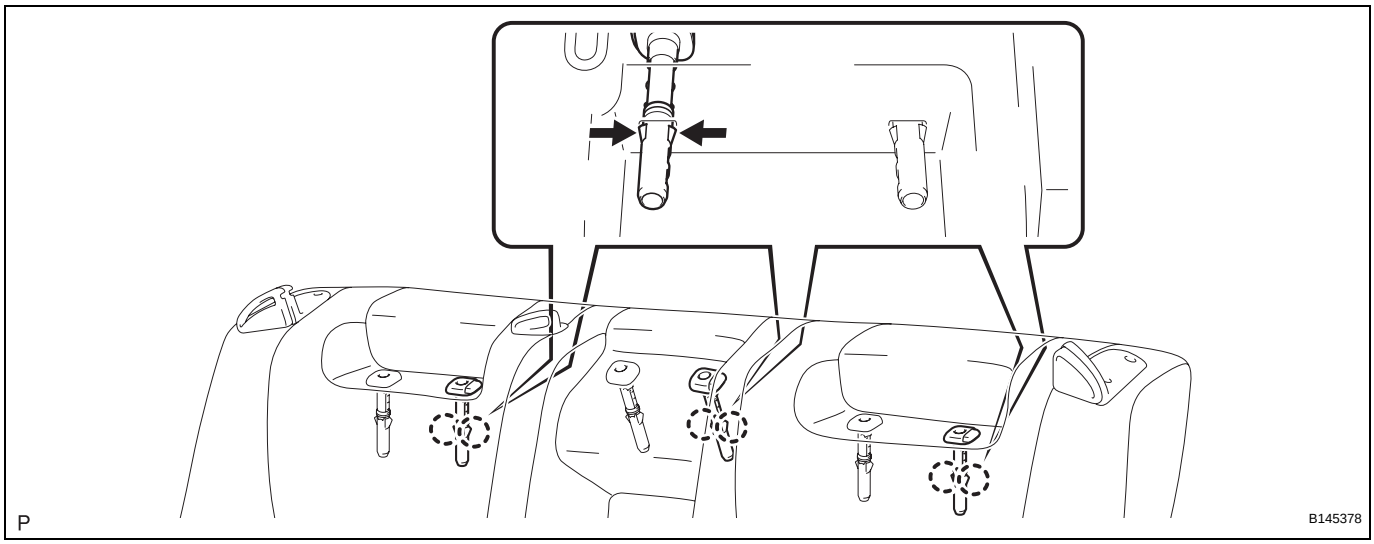

5. REMOVE REAR SEAT HEADREST SUPPORT

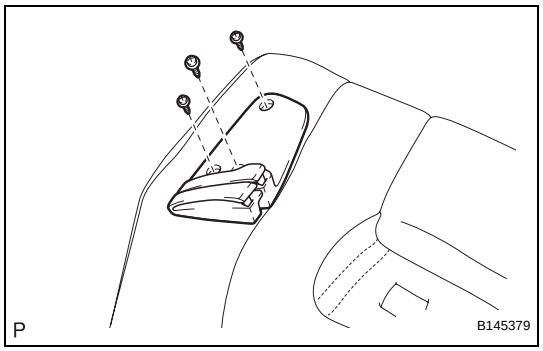

6. REMOVE REAR SEAT SHOULDER BELT GUIDE RH

(a) Remove the 3 screws and rear seat shoulder belt guide RH.

7. REMOVE REAR SEAT SHOULDER BELT GUIDE LH

HINT:
Use the same procedure for the RH side and LH side.

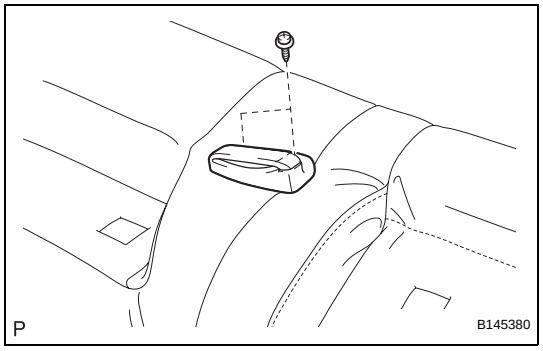

8. REMOVE REAR SEAT CENTER SHOULDER BELT GUIDE

(a) Remove the 2 screws and rear seat center shoulder belt guide.

9. REMOVE REAR BENCH TYPE SEATBACK COVER

(a) Remove the 55 hog rings.

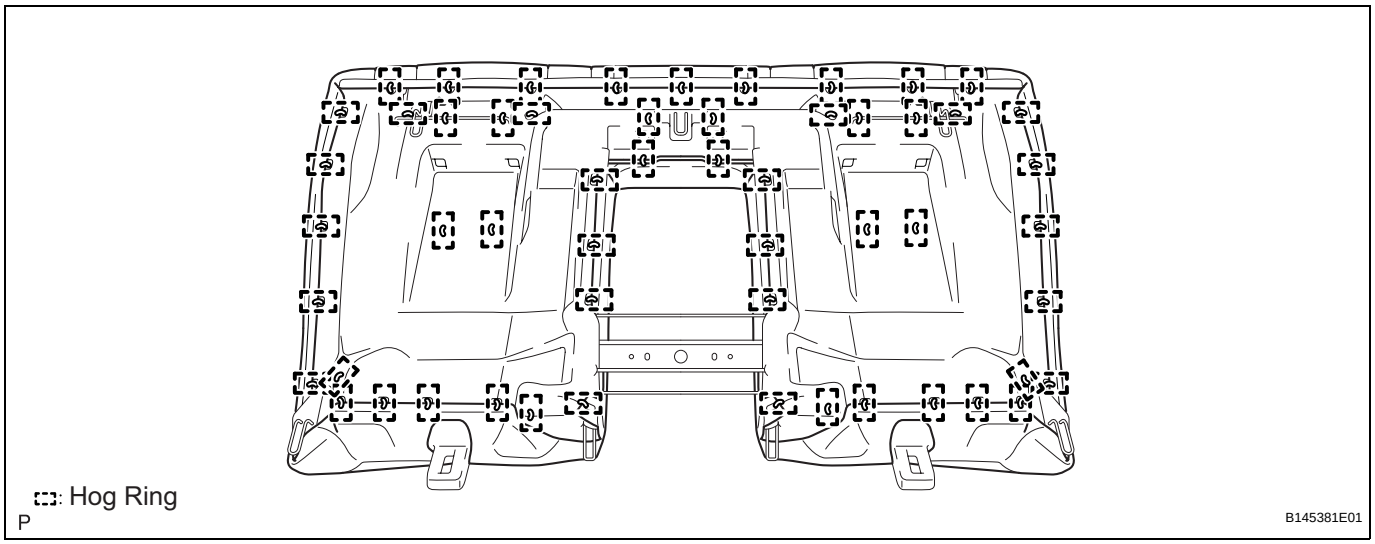

(b) Remove the 20 hog rings and rear bench type seatback cover from the seatback frame (with pad).

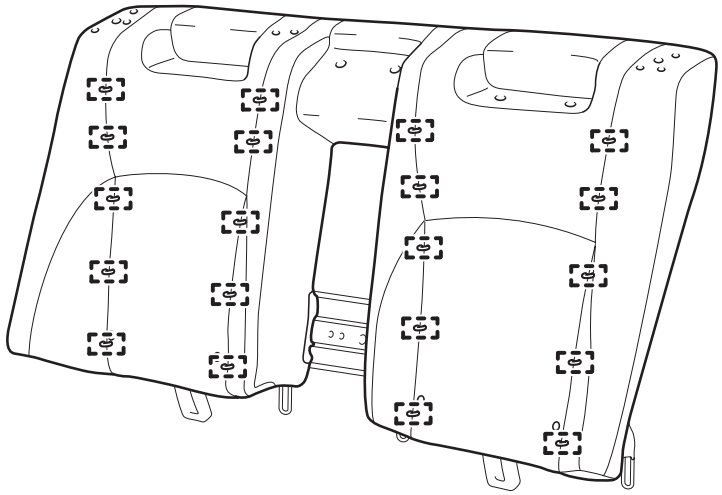
Hog Ring
P
B145383E01

REASSEMBLY

1. INSTALL REAR BENCH TYPE SEATBACK COVER

(a) Using hog ring pliers, install 20 new hog rings.

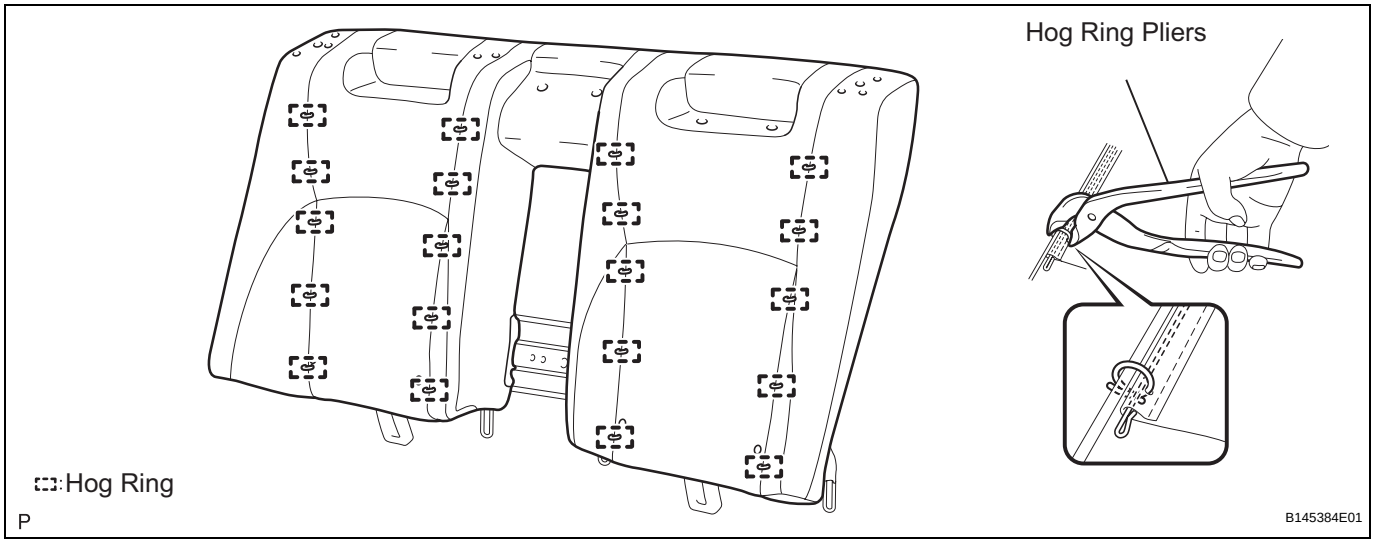

NOTICE:

- **Be careful not to damage the cover.**
- **When installing the hog rings, take care to minimize wrinkles as much as possible.**

(b) Using hog ring pliers, install the rear bench type seatback cover to the seatback frame (with pad) with 55 new hog rings.

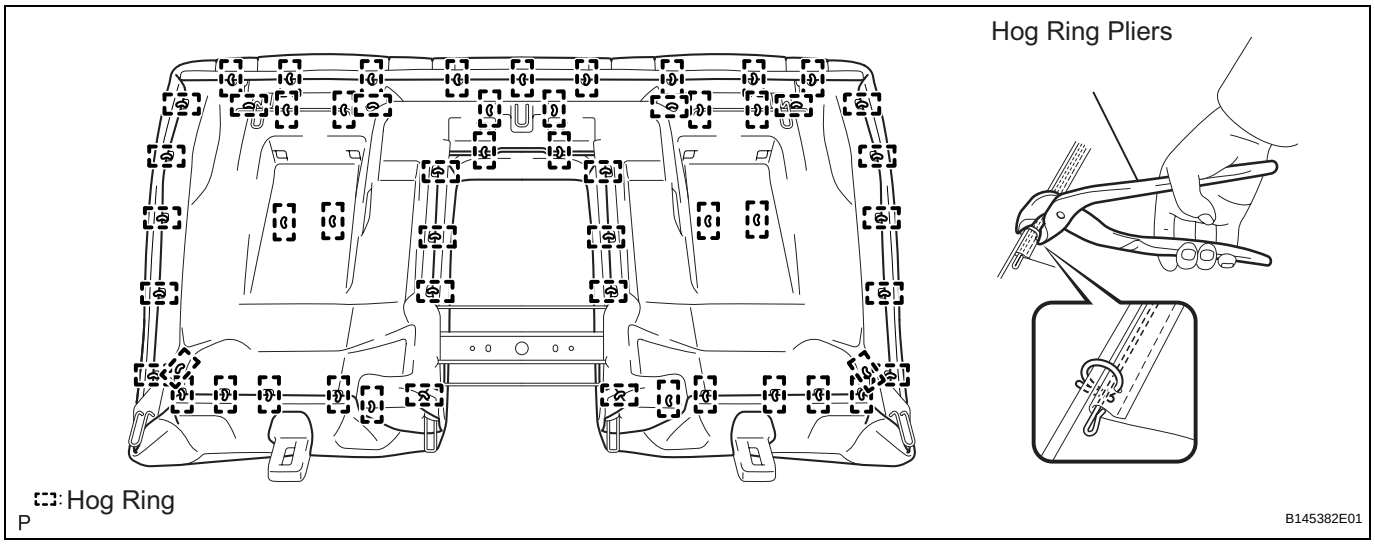

NOTICE:

- **Be careful not to damage the cover.**
- **When installing the hog rings, take care to minimize wrinkles as much as possible.**

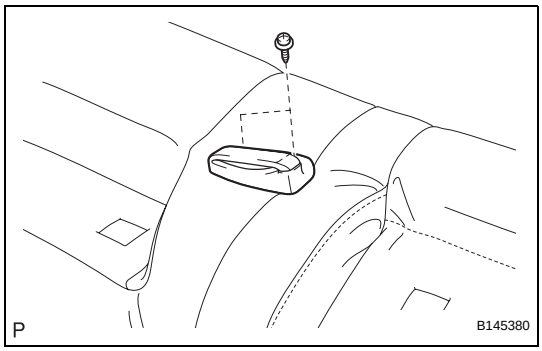

2. INSTALL REAR SEAT CENTER SHOULDER BELT GUIDE

(a) Install the rear seat center shoulder belt guide with the 2 screws.

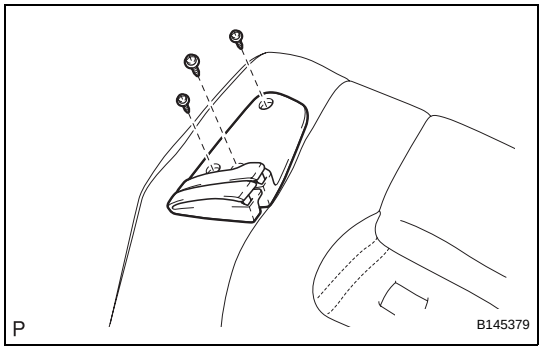

3. INSTALL REAR SEAT SHOULDER BELT GUIDE RH

(a) Install the rear seat shoulder belt guide RH with the 3 screws.

4. INSTALL REAR SEAT SHOULDER BELT GUIDE LH

HINT:
Use the same procedure for the RH and LH side.

5. INSTALL REAR SEAT HEADREST SUPPORT

(a) Engage the 6 claws and install the 3 rear seat headrest supports.

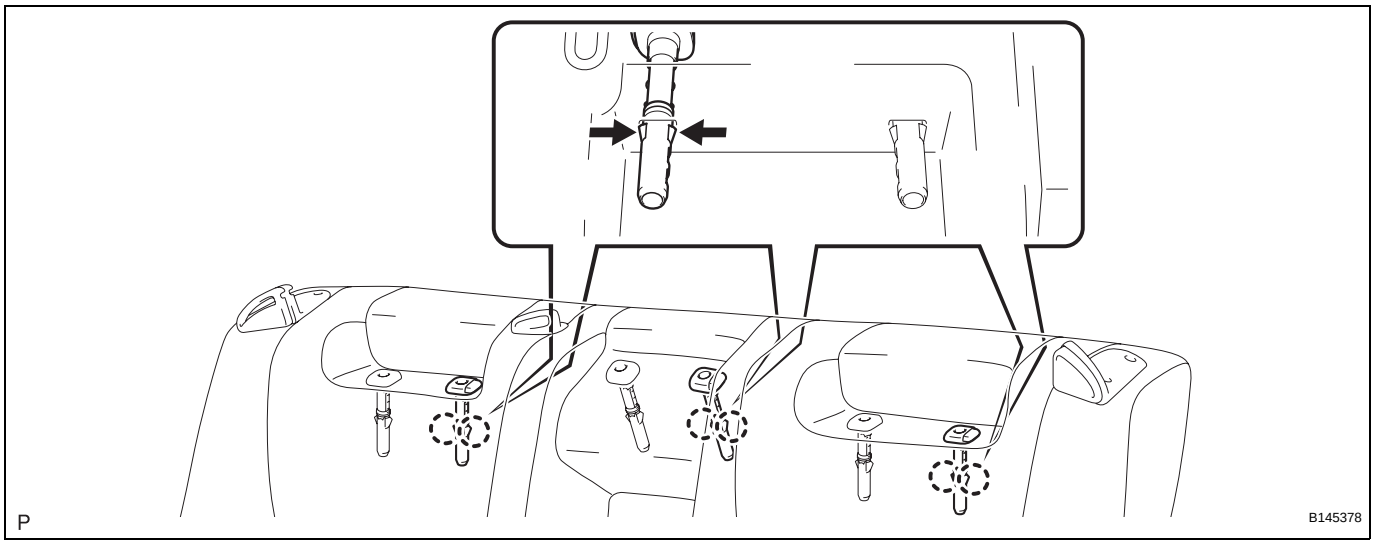

SE

6. INSTALL REAR SEAT HEADREST SUPPORT

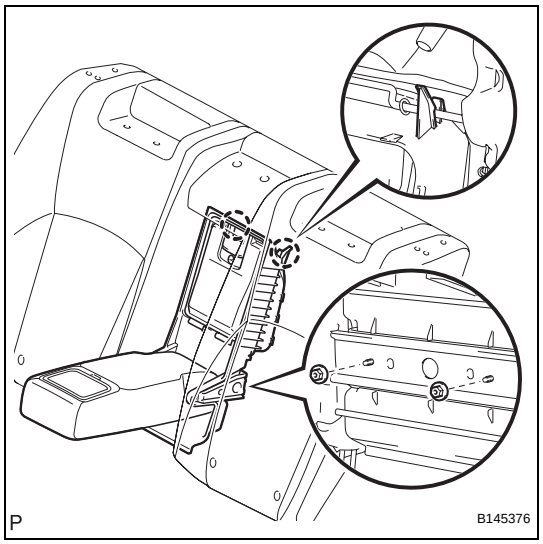

7. INSTALL REAR CENTER SEAT ARMREST ASSEMBLY

(a) Engage the 2 claws and install the rear center seat armrest assembly with the 2 nuts.
Torque: 8.0 N*m (82 kgf*cm, 71 in.*lbf)

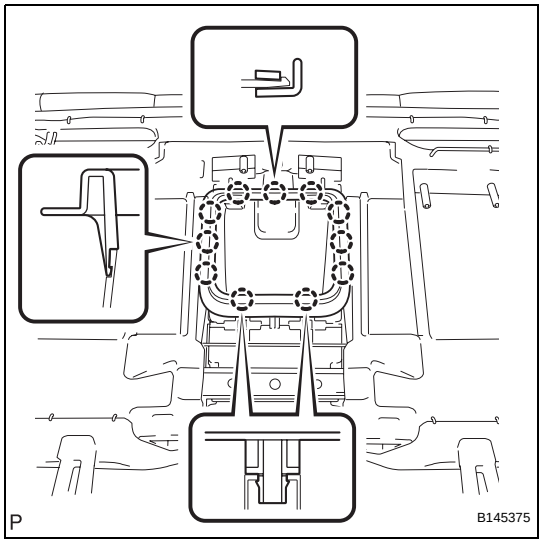

8. INSTALL INNER CENTER SEAT ARMREST PLATE

(a) Engage the 11 claws and install the inner center seat armrest plate.

9. INSTALL REAR BENCH TYPE SEAT CUSHION COVER

(a) Using hog ring pliers, install the rear bench type seat cushion cover to the seat cushion frame (with pad) with 20 new hog rings.

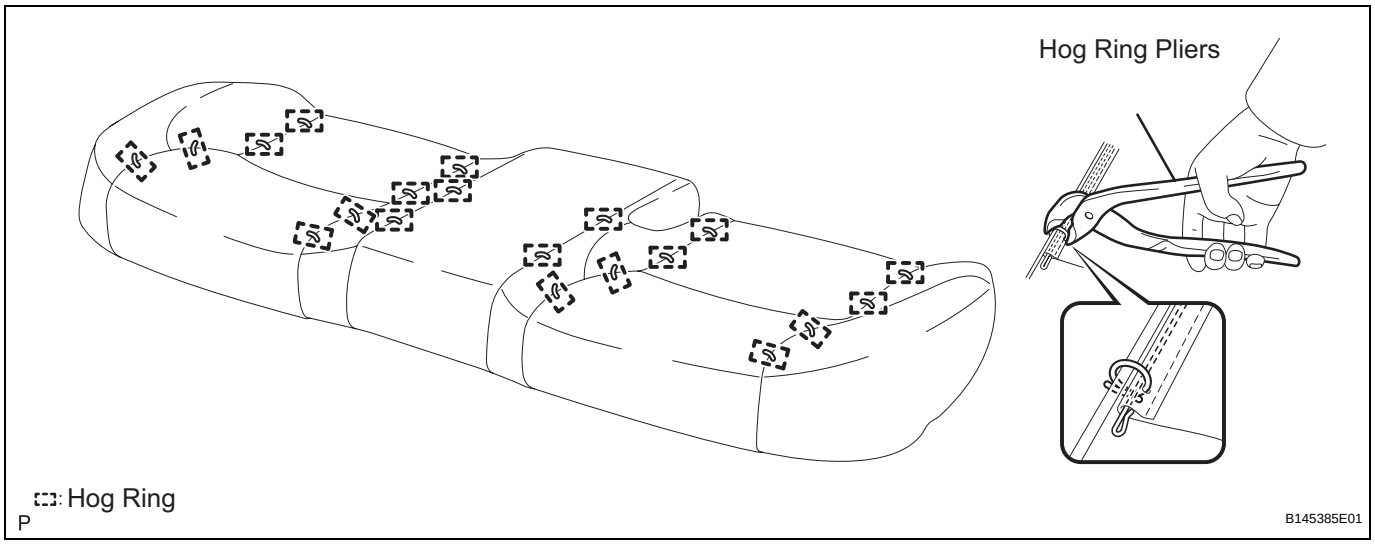

NOTICE:

- **Be careful not to damage the cover.**
- **When installing the hog rings, avoid wrinkling the cover.**

SE

(b) Using hog ring pliers, install the rear bench type seat cushion cover to the seat cushion frame (with pad) with 33 new hog rings.

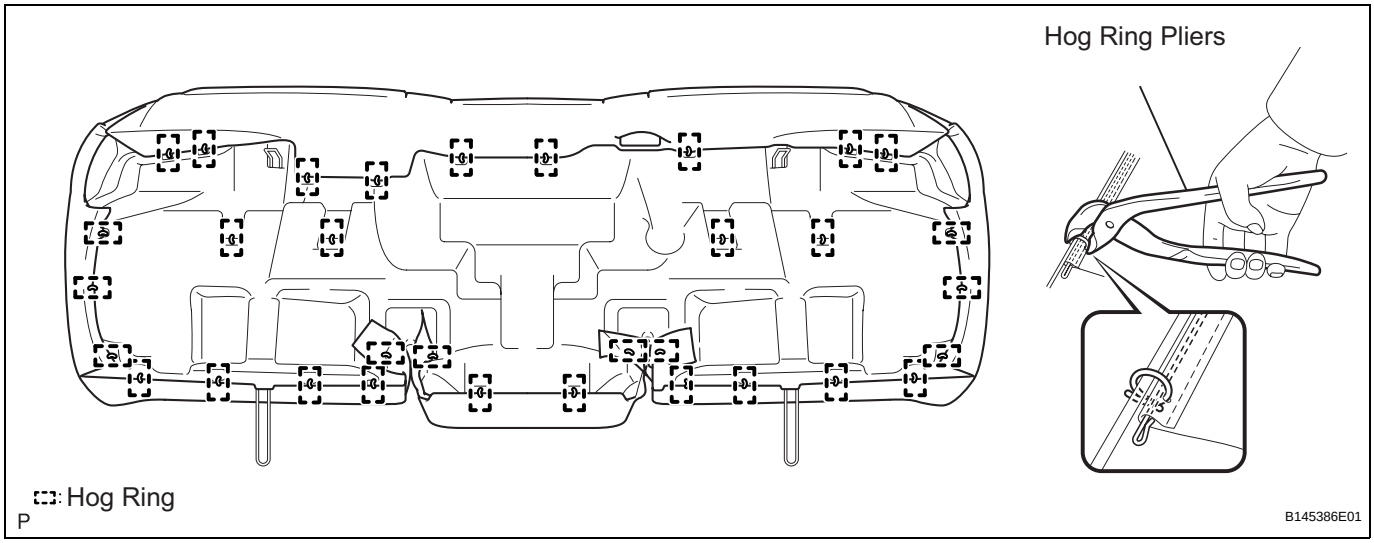

NOTICE:
- **Be careful not to damage the cover.**
- **When installing the hog rings, avoid wrinkling the cover.**

INSTALLATION

1. INSTALL REAR SEATBACK ASSEMBLY

(a) Place the rear seatback assembly in the cabin.
NOTICE:
Be careful not to damage the vehicle body.

(b) Install the rear seatback assembly with the 4 bolts.
Torque: 18 N*m (184 kgf*cm, 13 ft.*lbf)

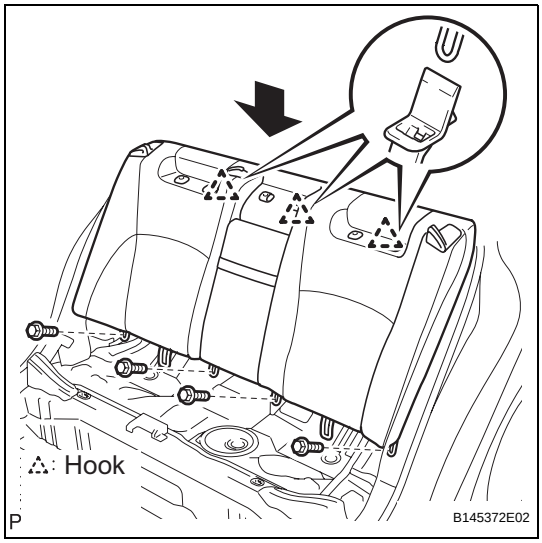

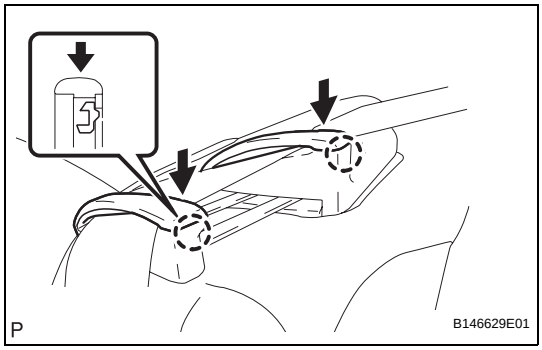

(c) Install the rear seat shoulder belt guide RH with the 3 screws.

(d) Pass the seat belt through and close the caps of the rear seat shoulder belt guide RH.
HINT:
Use the same procedure for the LH side and RH side.

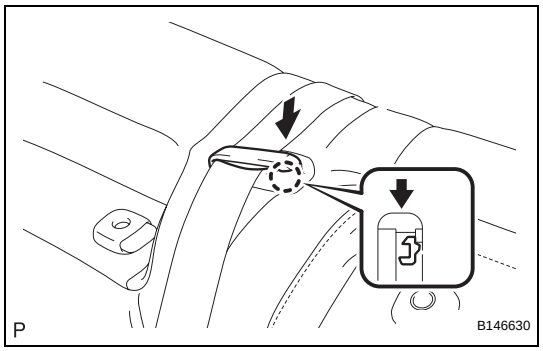

(e) Install the rear seat center shoulder belt guide with the 2 screws.
(f) Pass the seat belt through and close the cap of the rear seat center shoulder belt guide.

2. INSTALL REAR SEAT CENTER HEADREST ASSEMBLY

3. INSTALL REAR SEAT HEADREST ASSEMBLY

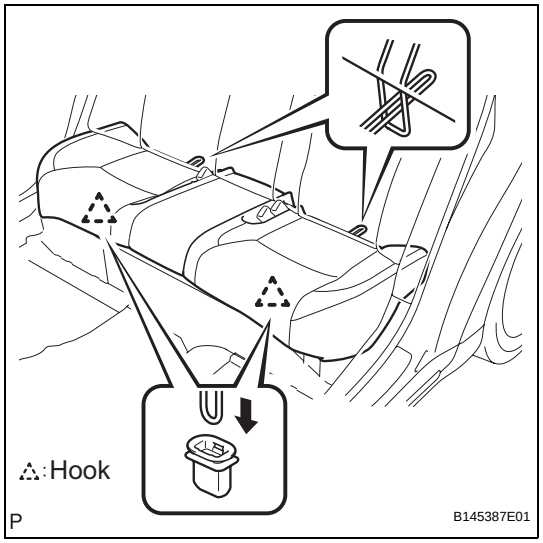

4. INSTALL REAR SEAT CUSHION ASSEMBLY

(a) Attach the 2 rear hooks of the seat cushion to the seatback.
(b) Attach the 2 front hooks of the seat cushion to the vehicle body.
(c) Confirm that the seat cushion is firmly installed.
NOTICE:
When installing the seat cushion, make sure the seat belt buckle is not under the seat cushion.
HINT:
After installing the seat cushion, vertically (up and down) rock the area around the rear seat cushion lock hooks. Make sure that there is no abnormal noise. If abnormal noise is heard, replace the rear seat cushion lock hooks with new ones.

Seat Memory Switch LH:

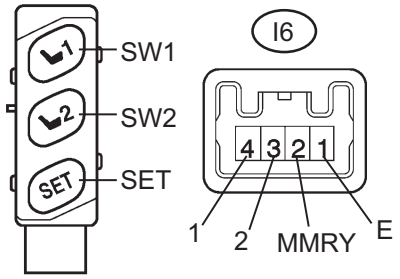

B149663E02

INSPECTION

1. INSPECT SEAT MEMORY SWITCH LH

(a) Measure the resistance according to the value(s) in the table below.

Standard resistance

Tester Connection	Switch Position	Specified Condition
I6-1 (E) - I6-2 (MMRY)	SET switch is pressed	Below 1 Ω
	SET switch is not pressed	10 kΩ or higher
I6-1 (E) - I6-3 (2)	M2 switch is pressed	Below 1 Ω
	M2 switch is not pressed	10 kΩ or higher
I6-1 (E) - I6-4 (1)	M1 switch is pressed	Below 1 Ω
	M1 switch is not pressed	10 kΩ or higher

If the result is not as specified, replace the switch.

Seat Memory Switch RH:

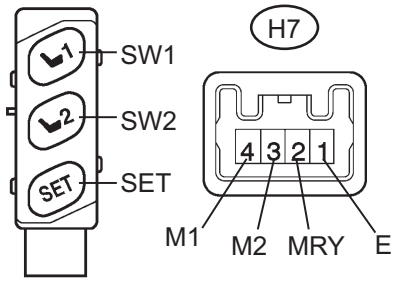

B149663E03

2. INSPECT SEAT MEMORY SWITCH RH

(a) Measure the resistance according to the value(s) in the table below.

Standard resistance

Tester Connection	Switch Position	Specified Condition
H7-1 (E) - H7-2 (MRY)	SET switch is pressed	Below 1 Ω
	SET switch is not pressed	10 kΩ or higher
H7-1 (E) - H7-3 (M2)	M2 switch is pressed	Below 1 Ω
	M2 switch is not pressed	10 kΩ or higher
H7-1 (E) - H7-4 (M1)	M1 switch is pressed	Below 1 Ω
	M1 switch is not pressed	10 kΩ or higher

If the result is not as specified, replace the switch.

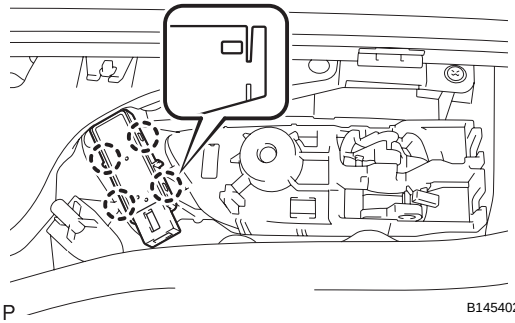

B145402

INSTALLATION

1. INSTALL SEAT MEMORY SWITCH

(a) Install the seat memory switch to the inside handle.

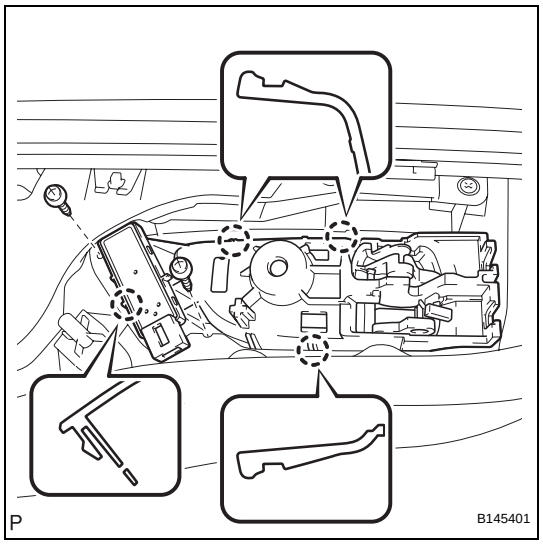

(b) Engage the 4 claws and install the inside handle.
(c) Install the 2 screws.

2. **INSTALL FRONT DOOR INNER GLASS WEATHERSTRIP (See page ED-52)**
3. **INSTALL FRONT DOOR TRIM BOARD SUB-ASSEMBLY (See page ED-52)**
4. **INSTALL DOOR ARMREST COVER (See page ED-53)**
5. **INSTALL COURTESY LIGHT ASSEMBLY (See page ED-53)**
6. **INSTALL FRONT DOOR ARMREST BASE PANEL ASSEMBLY (See page ED-53)**
7. **INSTALL FRONT DOOR INSIDE HANDLE BEZEL PLUG (See page ED-54)**

REMOVAL

1. **REMOVE SEAT BELT ANCHOR COVER CAP (See page SB-22)**
2. **DISCONNECT FRONT SEAT OUTER BELT ASSEMBLY (See page SB-22)**
3. **REMOVE FRONT SEAT HEADREST ASSEMBLY**
4. **REMOVE FRONT SEAT OUTER TRACK BRACKET COVER (See page SE-83)**
5. **REMOVE FRONT SEAT INNER TRACK BRACKET COVER (See page SE-83)**
6. **REMOVE FRONT SEAT REAR OUTER TRACK BRACKET COVER (See page SE-83)**
7. **REMOVE FRONT SEAT REAR INNER TRACK BRACKET COVER (See page SE-83)**
8. **REMOVE FRONT SEAT ASSEMBLY (See page SE-83)**
9. **REMOVE RECLINING POWER SEAT SWITCH KNOB (See page SE-84)**
10. **REMOVE SLIDE AND VERTICAL POWER SEAT SWITCH KNOB (See page SE-84)**
11. **REMOVE FRONT SEAT CUSHION SHIELD ASSEMBLY (See page SE-84)**
12. **REMOVE FRONT POWER SEAT SWITCH (w/ Seat Position Memory System)**
    (a) Disconnect the 2 connectors.
    (b) Remove the 3 screws and front power seat switch.
13. **REMOVE FRONT POWER SEAT SWITCH (w/o Seat Position Memory System)**
    (a) Disconnect the connector.
    (b) Remove the 3 screws and power seat switch.

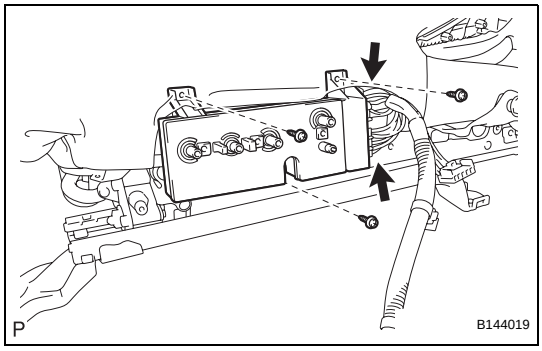

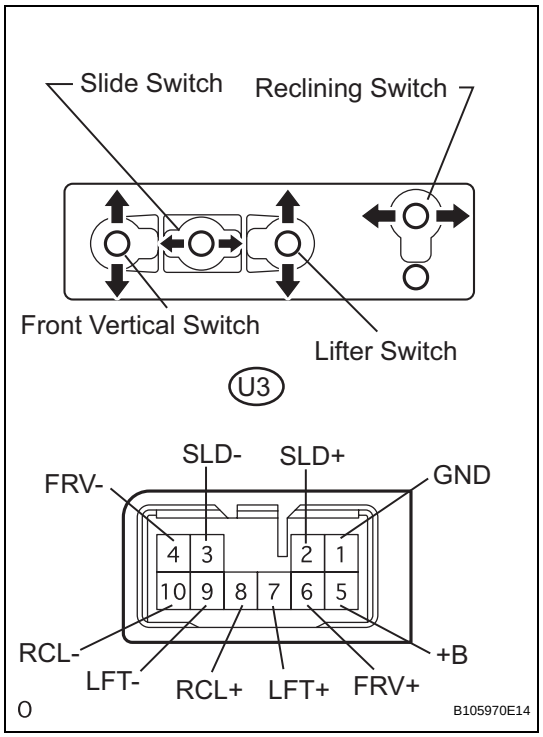

INSPECTION

1. INSPECT FRONT POWER SEAT SWITCH LH (w/ Seat Position Memory System)

(a) Measure the resistance between the specified terminals when each switch is operated.

Standard resistance (Slide switch)

Tester Connection	Switch Condition	Specified Condition
U3-5 (+B) - U3-2 (SLD+)	FRONT	Below 1 Ω
U3-1 (GND) - U3-3 (SLD-)	FRONT	Below 1 Ω
U3-5 (+B) - U3-3 (SLD-)	FRONT	10 kΩ or higher
U3-1 (GND) - U3-2 (SLD+)	FRONT	10 kΩ or higher
U3-1 (GND) - U3-2 (SLD+)	OFF	Below 1 Ω
U3-1 (GND) - U3-3 (SLD-)	OFF	Below 1 Ω
U3-5 (+B) - U3-2 (SLD+)	OFF	10 kΩ or higher
U3-5 (+B) - U3-3 (SLD-)	OFF	10 kΩ or higher
U3-5 (+B) - U3-3 (SLD-)	REAR	Below 1 Ω
U3-1 (GND) - U3-2 (SLD+)	REAR	Below 1 Ω
U3-5 (+B) - U3-2 (SLD+)	REAR	10 kΩ or higher
U3-1 (GND) - U3-3 (SLD-)	REAR	10 kΩ or higher

Standard resistance (Front vertical switch)

Tester Connection	Switch Condition	Specified Condition
U3-5 (+B) - U3-6 (FRV+)	UP	Below 1 Ω
U3-1 (GND) - U3-4 (FRV-)	UP	Below 1 Ω
U3-5 (+B) - U3-4 (FRV-)	UP	10 kΩ or higher
U3-1 (GND) - U3-6 (FRV+)	UP	10 kΩ or higher
U3-1 (GND) - U3-6 (FRV+)	OFF	Below 1 Ω
U3-1 (GND) - U3-4 (FRV-)	OFF	Below 1 Ω
U3-5 (+B) - U3-6 (FRV+)	OFF	10 kΩ or higher
U3-5 (+B) - U3-4 (FRV-)	OFF	10 kΩ or higher
U3-5 (+B) - U3-4 (FRV-)	DOWN	Below 1 Ω
U3-1 (GND) - U3-6 (FRV+)	DOWN	Below 1 Ω
U3-5 (+B) - U3-6 (FRV+)	DOWN	10 kΩ or higher
U3-1 (GND) - U3-4 (FRV-)	DOWN	10 kΩ or higher

Standard resistance (Lifter switch)

Tester Connection	Switch Condition	Specified Condition
U3-5 (+B) - U3-7 (LFT+)	UP	Below 1 Ω
U3-1 (GND) - U3-9 (LFT-)	UP	Below 1 Ω
U3-5 (+B) - U3-9 (LFT-)	UP	10 kΩ or higher
U3-1 (GND) - U3-7 (LFT+)	UP	10 kΩ or higher

Tester Connection	Switch Condition	Specified Condition
U3-1 (GND) - U3-7 (LFT+)	OFF	Below 1 Ω
U3-1 (GND) - U3-9 (LFT-)	OFF	Below 1 Ω
U3-5 (+B) - U3-7 (LFT+)	OFF	10 kΩ or higher
U3-5 (+B) - U3-9 (LFT-)	OFF	10 kΩ or higher
U3-5 (+B) - U3-9 (LFT-)	DOWN	Below 1 Ω
U3-1 (GND) - U3-7 (LFT+)	DOWN	Below 1 Ω
U3-5 (+B) - U3-7 (LFT+)	DOWN	10 kΩ or higher
U3-1 (GND) - U3-9 (LFT-)	DOWN	10 kΩ or higher

Standard resistance (Reclining switch)

Tester Connection	Switch Condition	Specified Condition
U3-5 (+B) - U3-8 (RCL+)	FRONT	Below 1 Ω
U3-1 (GND) - U3-10 (RCL-)	FRONT	Below 1 Ω
U3-5 (+B) - U3-10 (RCL-)	FRONT	10 kΩ or higher
U3-1 (GND) - U3-8 (RCL+)	FRONT	10 kΩ or higher
U3-1 (GND) - U3-8 (RCL+)	OFF	Below 1 Ω
U3-1 (GND) - U3-10 (RCL-)	OFF	Below 1 Ω
U3-5 (+B) - U3-8 (RCL+)	OFF	10 kΩ or higher
U3-5 (+B) - U3-10 (RCL-)	OFF	10 kΩ or higher
U3-5 (+B) - U3-10 (RCL-)	REAR	Below 1 Ω
U3-1 (GND) - U3-8 (RCL+)	REAR	Below 1 Ω
U3-5 (+B) - U3-8 (RCL+)	REAR	10 kΩ or higher
U3-1 (GND) - U3-10 (RCL-)	REAR	10 kΩ or higher

If the result is not as specified, replace the front power seat switch LH.

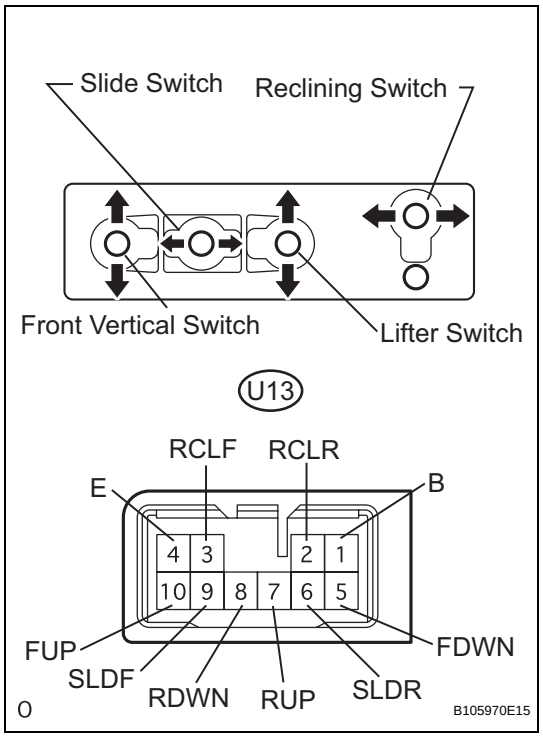

2. INSPECT FRONT POWER SEAT SWITCH LH (w/o Seat Position Memory System)

(a) Measure the resistance between the specified terminals when each switch is operated.

Standard resistance (Slide switch)

Tester Connection	Switch Condition	Specified Condition
U13-1 (B) - U13-9 (SLDF)	FRONT	Below 1 Ω
U13-4 (E) - U13-6 (SLDR)	FRONT	Below 1 Ω
U13-1 (B) - U13-6 (SLDR)	FRONT	10 kΩ or higher
U13-4 (E) - U13-9 (SLDF)	FRONT	10 kΩ or higher
U13-4 (E) - U13-6 (SLDR)	OFF	Below 1 Ω
U13-4 (E) - U13-9 (SLDF)	OFF	Below 1 Ω
U13-1 (B) - U13-6 (SLDR)	OFF	10 kΩ or higher
U13-1 (B) - U13-9 (SLDF)	OFF	10 kΩ or higher
U13-1 (B) - U13-6 (SLDR)	REAR	Below 1 Ω
U13-4 (E) - U13-9 (SLDF)	REAR	Below 1 Ω
U13-1 (B) - U13-9 (SLDF)	REAR	10 kΩ or higher
U13-4 (E) - U13-6 (SLDR)	REAR	10 kΩ or higher

Standard resistance (Front vertical switch)

Tester Connection	Switch Condition	Specified Condition
U13-1 (B) - U13-10 (FUP)	UP	Below 1 Ω
U13-4 (E) - U13-5 (FDWN)	UP	Below 1 Ω
U13-1 (B) - U13-5 (FDWN)	UP	10 kΩ or higher
U13-4 (E) - U13-10 (FUP)	UP	10 kΩ or higher
U13-4 (E) - U13-5 (FDWN)	OFF	Below 1 Ω
U13-4 (E) - U13-10 (FUP)	OFF	Below 1 Ω
U13-1 (B) - U13-5 (FDWN)	OFF	10 kΩ or higher
U13-1 (B) - U13-10 (FUP)	OFF	10 kΩ or higher
U13-1 (B) - U13-5 (FDWN)	DOWN	Below 1 Ω
U13-4 (E) - U13-10 (FUP)	DOWN	Below 1 Ω
U13-1 (B) - U13-10 (FUP)	DOWN	10 kΩ or higher
U13-4 (E) - U13-5 (FDWN)	DOWN	10 kΩ or higher

Standard resistance (Lifter switch)

Tester Connection	Switch Condition	Specified Condition
U13-1 (B) - U13-7 (RUP)	UP	Below 1 Ω
U13-4 (E) - U13-8 (RDWN)	UP	Below 1 Ω
U13-1 (B) - U13-8 (RDWN)	UP	10 kΩ or higher

Tester Connection	Switch Condition	Specified Condition
U13-4 (E) - U13-7 (RUP)	UP	10 kΩ or higher
U13-4 (E) - U13-7 (RUP)	OFF	Below 1 Ω
U13-4 (E) - U13-8 (RDWN)	OFF	Below 1 Ω
U13-1 (B) - U13-7 (RUP)	OFF	10 kΩ or higher
U13-1 (B) - U13-8 (RDWN)	OFF	10 kΩ or higher
U13-1 (B) - U13-8 (RDWN)	DOWN	Below 1 Ω
U13-4 (E) - U13-7 (RUP)	DOWN	Below 1 Ω
U13-1 (B) - U13-7 (RUP)	DOWN	10 kΩ or higher
U13-4 (E) - U13-8 (RDWN)	DOWN	10 kΩ or higher

Standard resistance (Reclining switch)

Tester Connection	Switch Condition	Specified Condition
U13-1 (B) - U13-3 (RCLF)	FRONT	Below 1 Ω
U13-4 (E) - U13-2 (RCLR)	FRONT	Below 1 Ω
U13-1 (B) - U13-2 (RCLR)	FRONT	10 kΩ or higher
U13-4 (E) - U13-3 (RCLF)	FRONT	10 kΩ or higher
U13-4 (E) - U13-2 (RCLR)	OFF	Below 1 Ω
U13-4 (E) - U13-3 (RCLF)	OFF	Below 1 Ω
U13-1 (B) - U13-3 (RCLF)	OFF	10 kΩ or higher
U13-1 (B) - U13-2 (RCLR)	OFF	10 kΩ or higher
U13-1 (B) - U13-2 (RCLR)	REAR	Below 1 Ω
U13-4 (E) - U13-3 (RCLF)	REAR	Below 1 Ω
U13-1 (B) - U13-3 (RCLF)	REAR	10 kΩ or higher
U13-4 (E) - U13-2 (RCLR)	REAR	10 kΩ or higher

If the result is not as specified, replace the front power seat switch LH.

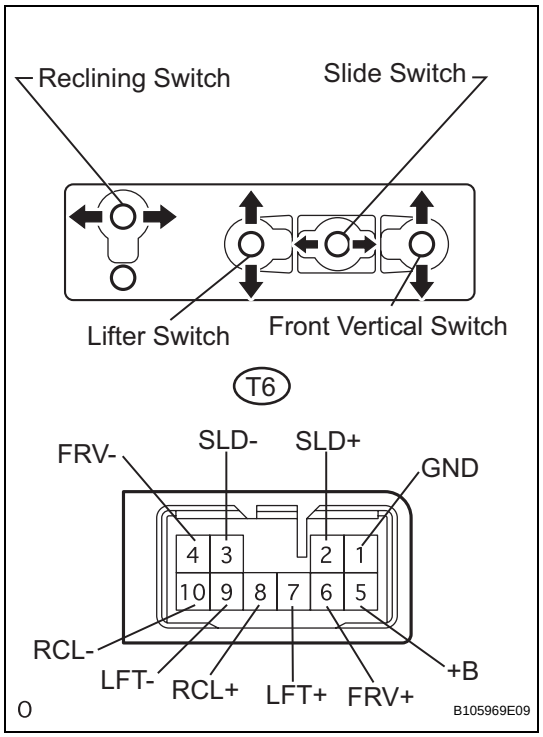

3. INSPECT FRONT POWER SEAT SWITCH RH (w/ Seat Position Memory System)

(a) Measure the resistance between the specified terminals when each switch is operated.

Standard resistance (Slide switch)

Tester Connection	Switch Condition	Specified Condition
T6-5 (+B) - T6-2 (SLD+)	FRONT	Below 1 Ω
T6-1 (GND) - T6-3 (SLD-)	FRONT	Below 1 Ω
T6-5 (+B) - T6-3 (SLD-)	FRONT	10 kΩ or higher
T6-1 (GND) - T6-2 (SLD+)	FRONT	10 kΩ or higher
T6-1 (GND) - T6-2 (SLD+)	OFF	Below 1 Ω
T6-1 (GND) - T6-3 (SLD-)	OFF	Below 1 Ω
T6-5 (+B) - T6-2 (SLD+)	OFF	10 kΩ or higher
T6-5 (+B) - T6-3 (SLD-)	OFF	10 kΩ or higher
T6-5 (+B) - T6-3 (SLD-)	REAR	Below 1 Ω
T6-1 (GND) - T6-2 (SLD+)	REAR	Below 1 Ω
T6-5 (+B) - T6-2 (SLD+)	REAR	10 kΩ or higher
T6-1 (GND) - T6-3 (SLD-)	REAR	10 kΩ or higher

Standard resistance (Front vertical switch)

Tester Connection	Switch Condition	Specified Condition
T6-5 (+B) - T6-6 (FRV+)	UP	Below 1 Ω
T6-1 (GND) - T6-4 (FRV-)	UP	Below 1 Ω
T6-5 (+B) - T6-4 (FRV-)	UP	10 kΩ or higher
T6-1 (GND) - T6-6 (FRV+)	UP	10 kΩ or higher
T6-1 (GND) - T6-6 (FRV+)	OFF	Below 1 Ω
T6-1 (GND) - T6-4 (FRV-)	OFF	Below 1 Ω
T6-5 (+B) - T6-6 (FRV+)	OFF	10 kΩ or higher
T6-5 (+B) - T6-4 (FRV-)	OFF	10 kΩ or higher
T6-5 (+B) - T6-4 (FRV-)	DOWN	Below 1 Ω
T6-1 (GND) - T6-6 (FRV+)	DOWN	Below 1 Ω
T6-5 (+B) - T6-6 (FRV+)	DOWN	10 kΩ or higher
T6-1 (GND) - T6-4 (FRV-)	DOWN	10 kΩ or higher

Standard resistance (Lifter switch)

Tester Connection	Switch Condition	Specified Condition
T6-5 (+B) - T6-7 (LFT+)	UP	Below 1 Ω
T6-1 (GND) - T6-9 (LFT-)	UP	Below 1 Ω
T6-5 (+B) - T6-9 (LFT-)	UP	10 kΩ or higher
T6-1 (GND) - T6-7 (LFT+)	UP	10 kΩ or higher
T6-1 (GND) - T6-7 (LFT+)	OFF	Below 1 Ω
T6-1 (GND) - T6-9 (LFT-)	OFF	Below 1 Ω
T6-5 (+B) - T6-7 (LFT+)	OFF	10 kΩ or higher
T6-5 (+B) - T6-9 (LFT-)	OFF	10 kΩ or higher
T6-5 (+B) - T6-9 (LFT-)	DOWN	Below 1 Ω
T6-1 (GND) - T6-7 (LFT+)	DOWN	Below 1 Ω
T6-5 (+B) - T6-7 (LFT+)	DOWN	10 kΩ or higher

Tester Connection	Switch Condition	Specified Condition
T6-1 (GND) - T6-9 (LFT-)	DOWN	10 kΩ or higher

Standard resistance (Reclining switch)

Tester Connection	Switch Condition	Specified Condition
T6-5 (+B) - T6-8 (RCL+)	FRONT	Below 1 Ω
T6-1 (GND) - T6-10 (RCL-)	FRONT	Below 1 Ω
T6-5 (+B) - T6-10 (RCL-)	FRONT	10 kΩ or higher
T6-1 (GND) - T6-8 (RCL+)	FRONT	10 kΩ or higher
T6-1 (GND) - T6-8 (RCL+)	OFF	Below 1 Ω
T6-1 (GND) - T6-10 (RCL-)	OFF	Below 1 Ω
T6-5 (+B) - T6-8 (RCL+)	OFF	10 kΩ or higher
T6-5 (+B) - T6-10 (RCL-)	OFF	10 kΩ or higher
T6-5 (+B) - T6-10 (RCL-)	REAR	Below 1 Ω
T6-1 (GND) - T6-8 (RCL+)	REAR	Below 1 Ω
T6-5 (+B) - T6-8 (RCL+)	REAR	10 kΩ or higher
T6-1 (GND) - T6-10 (RCL-)	REAR	10 kΩ or higher

If the result is not as specified, replace the front power seat switch RH.

4. INSPECT FRONT POWER SEAT SWITCH RH (w/o Seat Position Memory System)

(a) Measure the resistance between the specified terminals when each switch is operated.

Standard resistance (Slide switch)

Tester Connection	Switch Condition	Specified Condition
T14-1 (B) - T14-9 (SLDF)	FRONT	Below 1 Ω
T14-4 (E) - T14-6 (SLDR)	FRONT	Below 1 Ω
T14-1 (B) - T14-6 (SLDR)	FRONT	10 kΩ or higher
T14-4 (E) - T14-9 (SLDF)	FRONT	10 kΩ or higher
T14-4 (E) - T14-6 (SLDR)	OFF	Below 1 Ω
T14-4 (E) - T14-9 (SLDF)	OFF	Below 1 Ω
T14-1 (B) - T14-6 (SLDR)	OFF	10 kΩ or higher
T14-1 (B) - T14-9 (SLDF)	OFF	10 kΩ or higher
T14-1 (B) - T14-6 (SLDR)	REAR	Below 1 Ω
T14-4 (E) - T14-9 (SLDF)	REAR	Below 1 Ω
T14-1 (B) - T14-9 (SLDF)	REAR	10 kΩ or higher
T14-4 (E) - T14-6 (SLDR)	REAR	10 kΩ or higher

Standard resistance (Front vertical switch)

Tester Connection	Switch Condition	Specified Condition
T14-1 (B) - T14-5 (FUP)	UP	Below 1 Ω
T14-4 (E) - T14-10 (FDWN)	UP	Below 1 Ω
T14-1 (B) - T14-10 (FDWN)	UP	10 kΩ or higher
T14-4 (E) - T14-5 (FUP)	UP	10 kΩ or higher

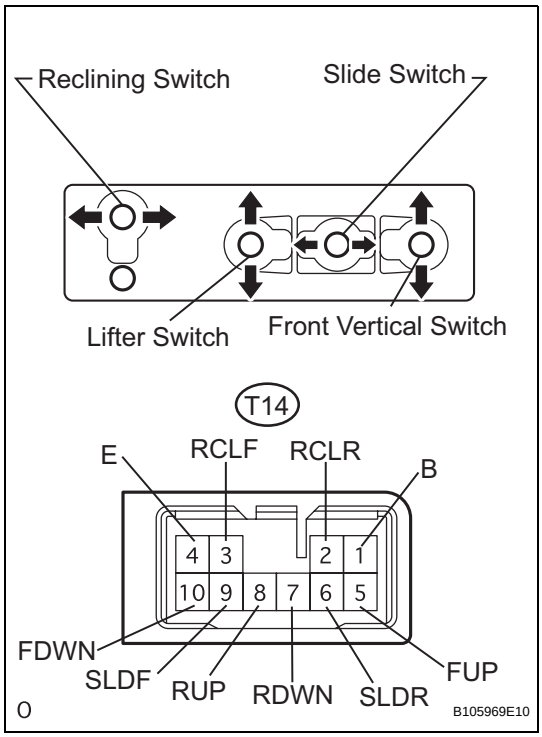

SE

Tester Connection	Switch Condition	Specified Condition
T14-4 (E) - T14-10 (FDWN)	OFF	Below 1 Ω
T14-4 (E) - T14-5 (FUP)	OFF	Below 1 Ω
T14-1 (B) - T14-10 (FDWN)	OFF	10 kΩ or higher
T14-1 (B) - T14-5 (FUP)	OFF	10 kΩ or higher
T14-1 (B) - T14-10 (FDWN)	DOWN	Below 1 Ω
T14-4 (E) - T14-5 (FUP)	DOWN	Below 1 Ω
T14-1 (B) - T14-5 (FUP)	DOWN	10 kΩ or higher
T14-4 (E) - T14-10 (FDWN)	DOWN	10 kΩ or higher

Standard resistance (Lifter switch)

Tester Connection	Switch Condition	Specified Condition
T14-1 (B) - T14-8 (RUP)	UP	Below 1 Ω
T14-4 (E) - T14-7 (RDWN)	UP	Below 1 Ω
T14-1 (B) - T14-7 (RDWN)	UP	10 kΩ or higher
T14-4 (E) - T14-8 (RUP)	UP	10 kΩ or higher
T14-4 (E) - T14-8 (RUP)	OFF	Below 1 Ω
T14-4 (E) - T14-7 (RDWN)	OFF	Below 1 Ω
T14-1 (B) - T14-8 (RUP)	OFF	10 kΩ or higher
T14-1 (B) - T14-7 (RDWN)	OFF	10 kΩ or higher
T14-1 (B) - T14-7 (RDWN)	DOWN	Below 1 Ω
T14-4 (E) - T14-8 (RUP)	DOWN	Below 1 Ω
T14-1 (B) - T14-8 (RUP)	DOWN	10 kΩ or higher
T14-4 (E) - T14-7 (RDWN)	DOWN	10 kΩ or higher

Standard resistance (Reclining switch)

Tester Connection	Switch Condition	Specified Condition
T14-1 (B) - T14-3 (RCLF)	FRONT	Below 1 Ω
T14-4 (E) - T14-2 (RCLR)	FRONT	Below 1 Ω
T14-1 (B) - T14-2 (RCLR)	FRONT	10 kΩ or higher
T14-4 (E) - T14-3 (RCLF)	FRONT	10 kΩ or higher
T14-4 (E) - T14-2 (RCLR)	OFF	Below 1 Ω
T14-4 (E) - T14-3 (RCLF)	OFF	Below 1 Ω
T14-1 (B) - T14-3 (RCLF)	OFF	10 kΩ or higher
T14-1 (B) - T14-2 (RCLR)	OFF	10 kΩ or higher
T14-1 (B) - T14-2 (RCLR)	REAR	Below 1 Ω
T14-4 (E) - T14-3 (RCLF)	REAR	Below 1 Ω
T14-1 (B) - T14-3 (RCLF)	REAR	10 kΩ or higher
T14-4 (E) - T14-2 (RCLR)	REAR	10 kΩ or higher

If the result is not as specified, replace the front power seat switch RH.

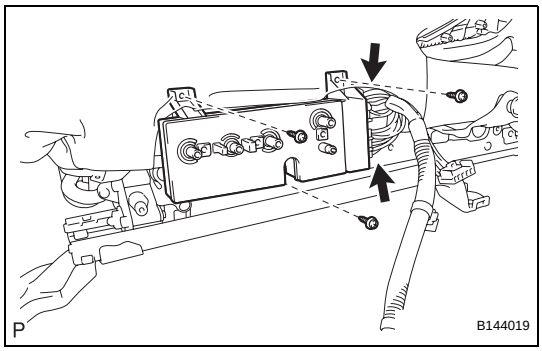

INSTALLATION

1. **INSTALL FRONT POWER SEAT SWITCH (w/ Seat Position Memory System)**
   (a) Install the power seat switch with the 3 screws.
   (b) Connect the 2 connectors.
2. **INSTALL FRONT POWER SEAT SWITCH (w/o Seat Position Memory System)**
   (a) Install the power seat switch with the 3 screws.
   (b) Connect the connector.
3. **INSTALL FRONT SEAT CUSHION SHIELD ASSEMBLY (See page SE-108)**
4. **INSTALL SLIDE AND VERTICAL POWER SEAT SWITCH KNOB (See page SE-108)**
5. **INSTALL RECLINING POWER SEAT SWITCH KNOB (See page SE-109)**
6. **INSTALL FRONT SEAT ASSEMBLY (See page SE-109)**
7. **INSTALL FRONT SEAT REAR OUTER TRACK BRACKET COVER (See page SE-110)**
8. **INSTALL FRONT SEAT REAR INNER TRACK BRACKET COVER (See page SE-110)**
9. **INSTALL FRONT SEAT OUTER TRACK BRACKET COVER (See page SE-110)**
10. **INSTALL FRONT SEAT INNER TRACK BRACKET COVER (See page SE-110)**
11. **INSTALL FRONT SEAT HEADREST ASSEMBLY**
12. **CONNECT FRONT SEAT OUTER BELT ASSEMBLY (See page SB-31)**
13. **INSTALL SEAT BELT ANCHOR COVER CAP (See page SB-31)**
14. **PERFORM INITIALIZATION**
    NOTICE:
    Some systems need initialization after reconnecting the negative battery cable (See Page IN-33)
15. **INSPECT FRONT SEAT ASSEMBLY (See page SE-110)**
16. **INSPECT SRS WARNING LIGHT**
    Check the SRS warning light. (See Page RS-37)

REMOVAL

1. **REMOVE SEAT BELT ANCHOR COVER CAP (See page SB-22)**
2. **DISCONNECT FRONT SEAT OUTER BELT ASSEMBLY (See page SB-22)**
3. **REMOVE FRONT SEAT HEADREST ASSEMBLY**
4. **REMOVE FRONT SEAT OUTER TRACK BRACKET COVER (See page SE-83)**
5. **REMOVE FRONT SEAT INNER TRACK BRACKET COVER (See page SE-83)**
6. **REMOVE FRONT SEAT REAR OUTER TRACK BRACKET COVER (See page SE-83)**
7. **REMOVE FRONT SEAT REAR INNER TRACK BRACKET COVER (See page SE-83)**
8. **REMOVE FRONT SEAT ASSEMBLY (See page SE-83)**
9. **REMOVE RECLINING POWER SEAT SWITCH KNOB (See page SE-84)**
10. **REMOVE SLIDE AND VERTICAL POWER SEAT SWITCH KNOB (See page SE-84)**
11. **REMOVE FRONT SEAT CUSHION SHIELD ASSEMBLY (See page SE-84)**
12. **REMOVE FRONT POWER SEAT LUMBAR SWITCH**
    (a) Remove the 2 screws and front power seat lumbar switch.

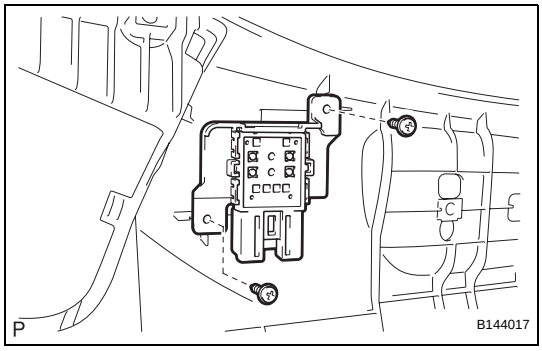

SE

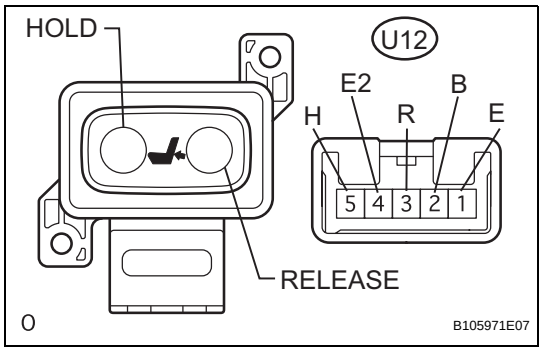

INSPECTION

1. **INSPECT FRONT POWER SEAT LUMBAR SWITCH LH**
   (a) Measure the resistance between the terminals when the switch is operated.
   Standard resistance

Tester Connection	Switch Condition	Specified Condition
U12-4 (E2) - U12-3 (R)	HOLD	Below 1 Ω
U12-2 (B) - U12-5 (H)	HOLD	Below 1 Ω
U12-4 (E2) - U12-5 (H)	HOLD	10 Ω or higher
U12-2 (B) - U12-3 (R)	HOLD	10 Ω or higher
U12-4 (E2) - U12-3 (R)	OFF	Below 1 Ω
U12-5 (H) - U12-1 (E)	OFF	Below 1 Ω
U12-4 (E2) - U12-1 (E)	OFF	10 Ω or higher
U12-5 (H) - U12-3 (R)	OFF	10 Ω or higher
U12-2 (B) - U12-3 (R)	RELEASE	Below 1 Ω

Tester Connection	Switch Condition	Specified Condition
U12-5 (H) - U12-1 (E)	RELEASE	Below 1 Ω
U12-2 (B) - U12-1 (E)	RELEASE	10 Ω or higher
U12-5 (H) - U12-3 (R)	RELEASE	10 Ω or higher

If the result is not as specified, replace the switch.

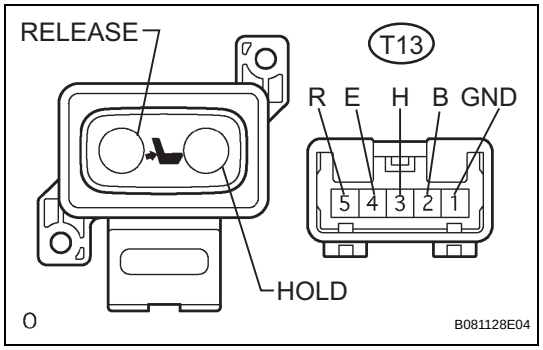

2. INSPECT FRONT POWER SEAT LUMBAR SWITCH RH

(a) Measure the resistance between the terminals when the switch is operated.

Standard resistance

Tester Connection	Switch Condition	Specified Condition
T13-1 (GND) - T13-5 (R)	HOLD	Below 1 Ω
T13-2 (B) - T13-3 (H)	HOLD	Below 1 Ω
T13-1 (GND) - T13-3 (H)	HOLD	10 Ω or higher
T13-2 (B) - T13-5 (R)	HOLD	10 Ω or higher
T13-1 (GND) - T13-5 (R)	OFF	Below 1 Ω
T13-3 (H) - T13-4 (E)	OFF	Below 1 Ω
T13-1 (GND) - T13-4 (E)	OFF	10 Ω or higher
T13-3 (H) - T13-5 (R)	OFF	10 Ω or higher
T13-2 (B) - T13-5 (R)	RELEASE	Below 1 Ω
T13-3 (H) - T13-4 (E)	RELEASE	Below 1 Ω
T13-2 (B) - T13-4 (E)	RELEASE	10 Ω or higher
T13-3 (H) - T13-5 (R)	RELEASE	10 Ω or higher

If the result is not as specified, replace the switch.

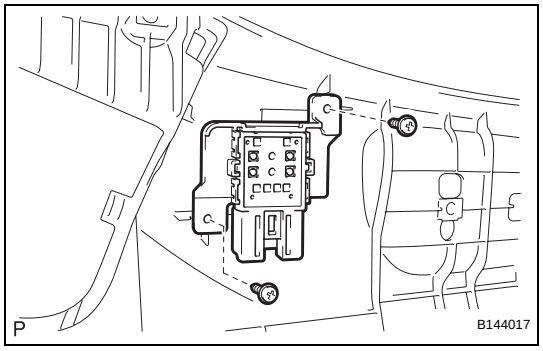

INSTALLATION

1. INSTALL FRONT POWER SEAT LUMBAR SWITCH

(a) Install the front power seat lumbar switch with the 2 screws.

2. INSTALL FRONT SEAT CUSHION SHIELD ASSEMBLY (See page SE-108)

3. INSTALL SLIDE AND VERTICAL POWER SEAT SWITCH KNOB (See page SE-108)

4. INSTALL RECLINING POWER SEAT SWITCH KNOB (See page SE-109)

5. INSTALL FRONT SEAT ASSEMBLY (See page SE-109)

6. INSTALL FRONT SEAT REAR OUTER TRACK BRACKET COVER (See page SE-110)

7. INSTALL FRONT SEAT REAR INNER TRACK BRACKET COVER (See page SE-110)

8. INSTALL FRONT SEAT OUTER TRACK BRACKET COVER (See page SE-110)

9. INSTALL FRONT SEAT INNER TRACK BRACKET COVER (See page SE-110)

10. INSTALL FRONT SEAT HEADREST ASSEMBLY

11. **CONNECT FRONT SEAT OUTER BELT ASSEMBLY (See page SB-31)**
12. **INSTALL SEAT BELT ANCHOR COVER CAP (See page SB-31)**
13. **PERFORM INITIALIZATION**
    NOTICE:
    Some systems need initialization after reconnecting the negative battery cable (See Page IN-33)
14. **INSTALL FRONT SEAT ASSEMBLY (See page SE-110)**
15. **INSPECT SRS WARNING LIGHT**
    Check the SRS warning light. (See Page RS-37)

ON-VEHICLE INSPECTION

1. INSPECT REAR DOOR PANEL SUB-ASSEMBLY

(a) Check that the clearance measurements of areas A through L are within each standard range.

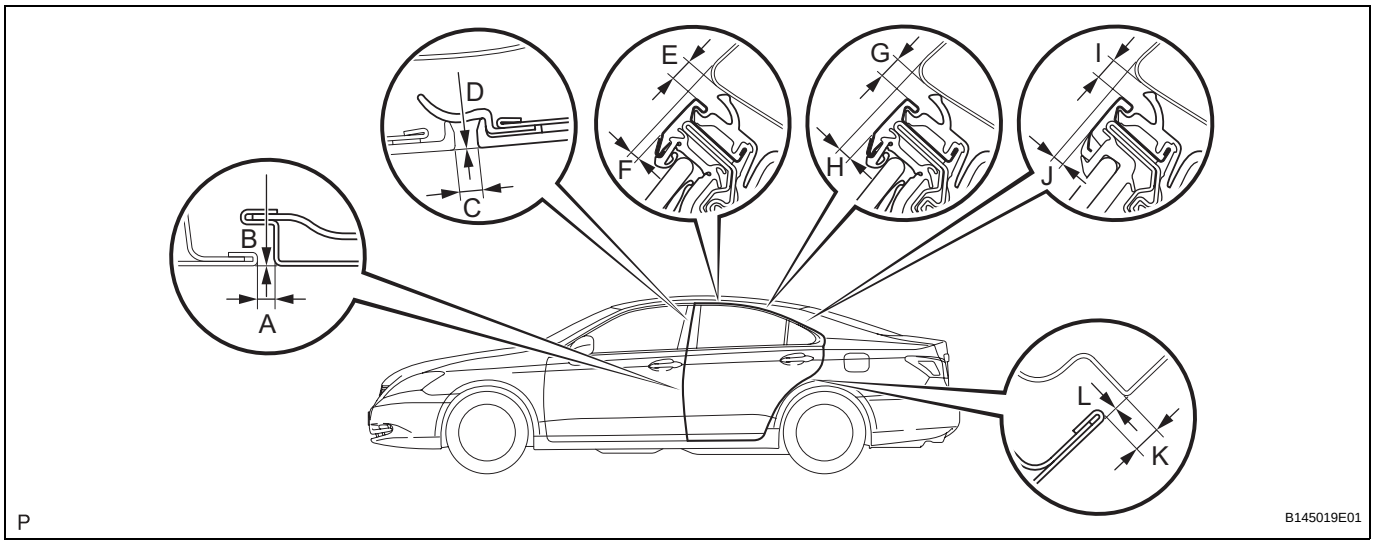

Standard clearance

Area	Measurement	Area	Measurement
A	2.5 to 5.5 mm (0.098 to 0.217 in.)	G	3.4 to 6.4 mm (0.134 to 0.252 in.)
B	-1.5 to 1.5 mm (-0.059 to 0.059 in.)	H	-0.4 to 2.6 mm (-0.016 to 0.102 in.)
C	2.9 to 5.9 mm (0.114 to 0.232 in.)	I	3.4 to 6.4 mm (0.134 to 0.252 in.)
D	-1.5 to 1.5 mm (-0.059 to 0.059 in.)	J	0 to 3.0 mm (0 to 0.118 in.)
E	3.3 to 6.3 mm (0.130 to 0.248 in.)	K	2.5 to 5.5 mm (0.098 to 0.217 in.)
F	0.3 to 3.3 mm (0.012 to 0.130 in.)	L	-1.5 to 1.5 mm (-0.059 to 0.059 in.)

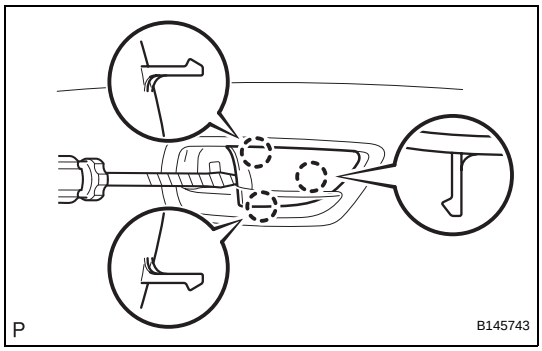

DISASSEMBLY

1. REMOVE REAR DOOR INSIDE HANDLE BEZEL PLUG

(a) Using a screwdriver with the tip wrapped with protective tape, disengage the 3 claws and remove the rear door inside handle bezel plug.

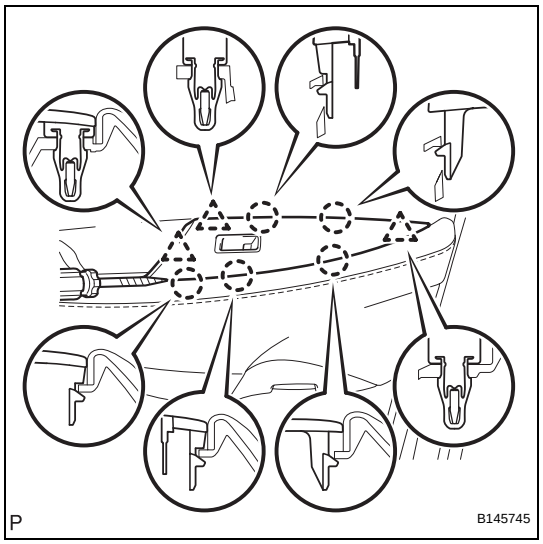

2. REMOVE REAR DOOR ARMREST BASE PANEL ASSEMBLY

(a) Using a screwdriver with the tip wrapped with protective tape, disengage the 5 claws and 3 clips, and remove the rear door armrest base panel assembly.

(b) Disconnect the connector.

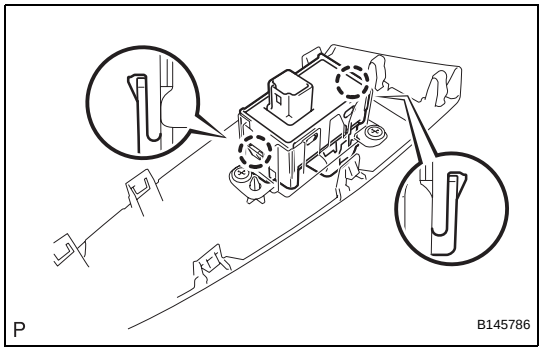

3. REMOVE REAR POWER WINDOW REGULATOR SWITCH ASSEMBLY

(a) Disengage the 2 claws and remove the rear power window regulator switch assembly.

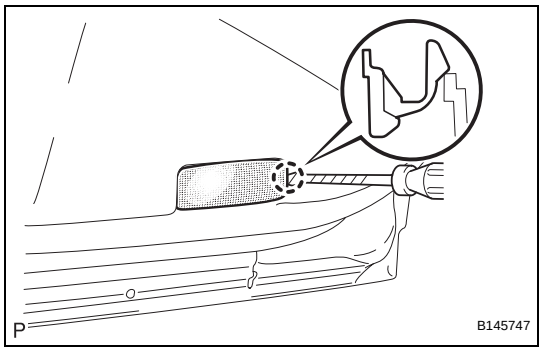

4. REMOVE COURTESY LIGHT ASSEMBLY

(a) Using a screwdriver with the tip wrapped with protective tape, disengage the claw and remove the courtesy light assembly.

(b) Disconnect the connector.

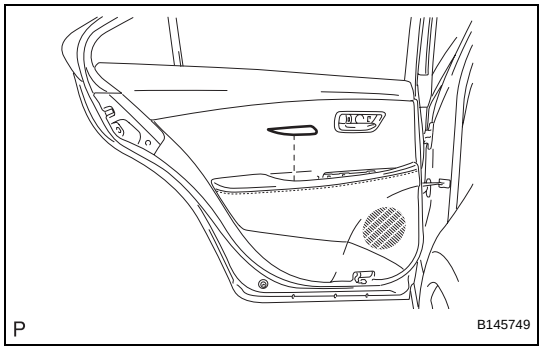

5. REMOVE REAR DOOR ARMREST COVER

(a) Remove the rear door armrest cover.

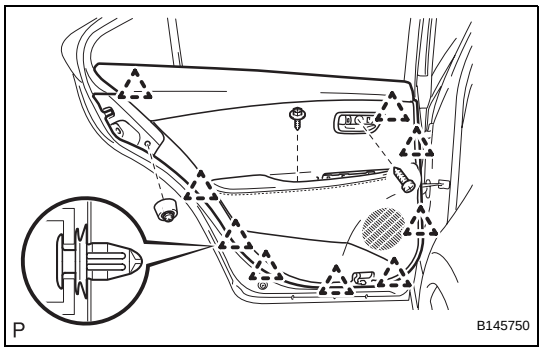

6. REMOVE REAR DOOR TRIM BOARD SUB-ASSEMBLY

(a) Remove the 3 screws.

(b) Using a clip remover, disengage the 9 clips.

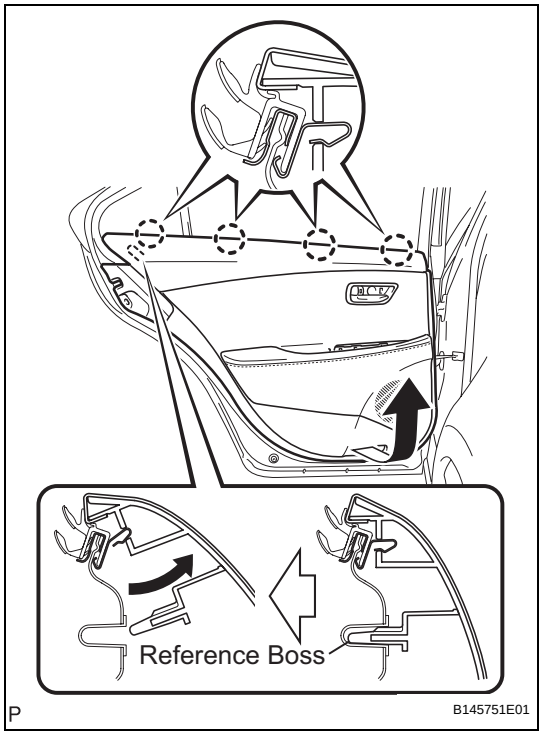

(c) Pull up the rear door trim board in the direction indicated by the arrow.

(d) Disengage the reference bosses from the rear door panel.

(e) Raise the rear door trim board to disengage the 4 claws and remove the rear door trim board together with the rear door inner glass weatherstrip.

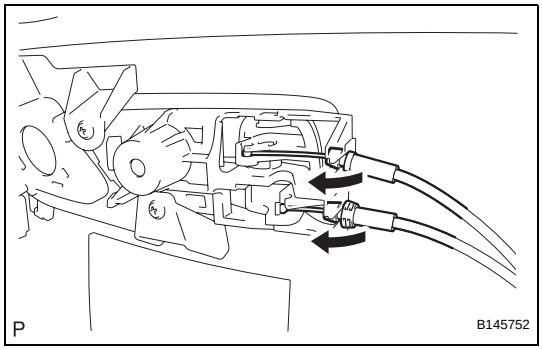

(f) Disconnect the cables and each connector from the back side of the inside handle and the rear door trim board sub-assembly, and remove the rear door trim board sub-assembly.

7. REMOVE REAR NO. 2 SPEAKER ASSEMBLY (w/ Rear Header Speaker) (See page AV-191)

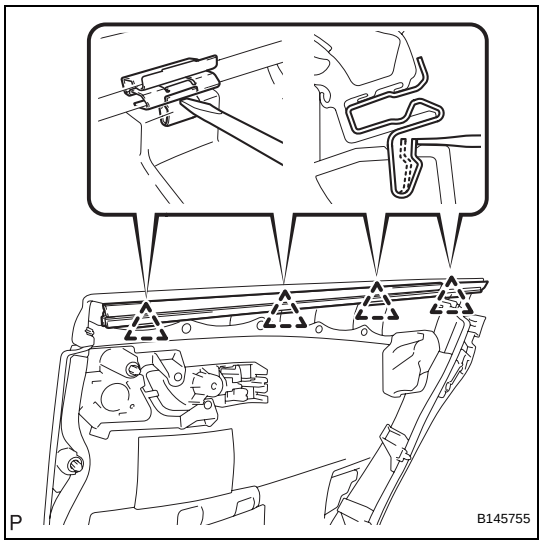

8. REMOVE REAR DOOR INNER GLASS WEATHERSTRIP

(a) Disengage the 4 clips as shown in the illustration and remove the rear door inner glass weatherstrip from the rear door trim board.

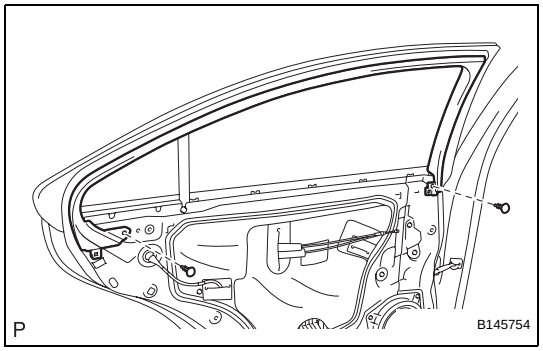

9. REMOVE REAR DOOR FRAME GARNISH

(a) Using a clip remover, remove the 2 clips and rear door frame garnish.

10. REMOVE REAR SPEAKER ASSEMBLY (See page AV-191)

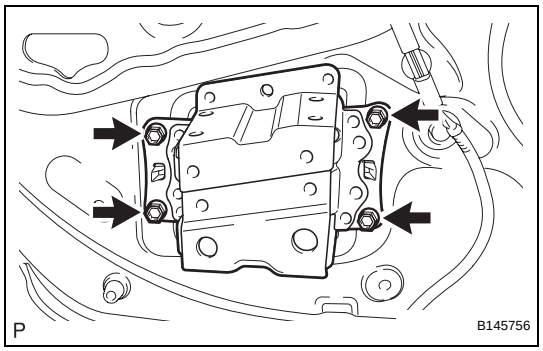

11. REMOVE REAR DOOR INSIDE PANEL REINFORCE

(a) Remove the 4 screws and the rear door inside panel reinforce.

(b) Remove the 4 grommets.

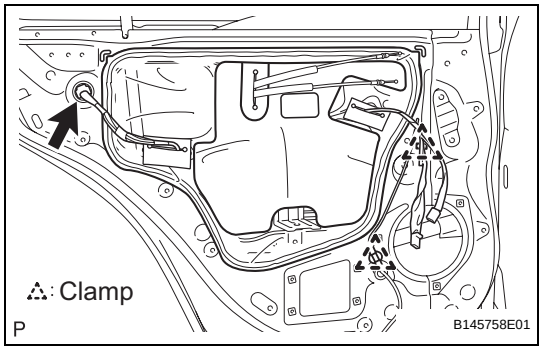

12. REMOVE REAR DOOR SERVICE HOLE COVER

(a) Disconnect the connector and 2 clamps.

(b) Remove the rear door service hole cover.

HINT:

Remove the remaining tape on the door side.

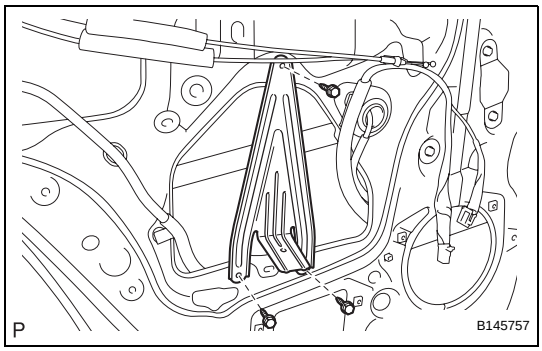

13. REMOVE REAR DOOR TRIM BRACKET

(a) Remove the 3 screws and the rear door trim bracket.

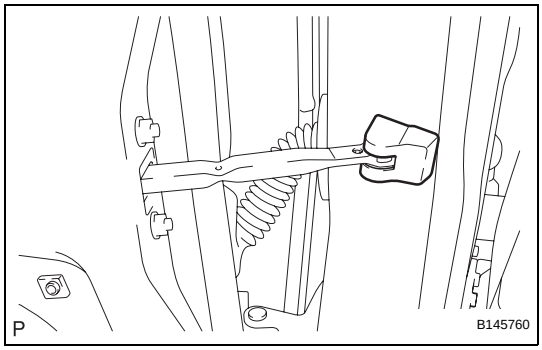

14. REMOVE REAR DOOR CHECK COVER

(a) Remove the rear door check cover.

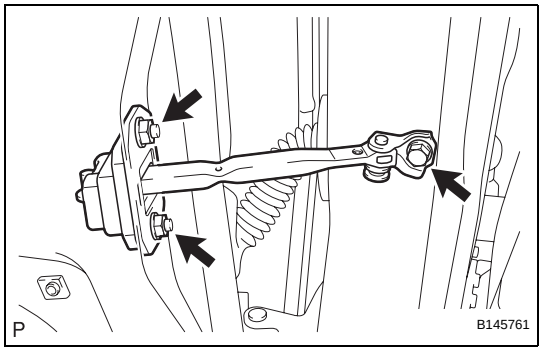

15. REMOVE REAR DOOR CHECK ASSEMBLY

(a) Remove the bolt, 2 nuts, and the rear door check assembly.

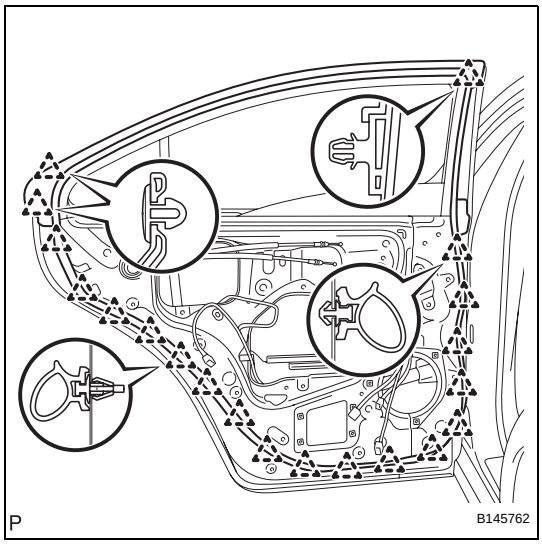

16. REMOVE REAR DOOR WEATHERSTRIP

(a) Using a clip remover, disengage the 20 clips and remove the rear door weatherstrip.

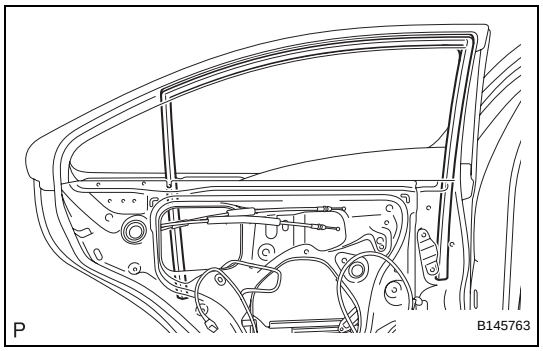

17. REMOVE REAR DOOR GLASS RUN

(a) Remove the rear door glass run.

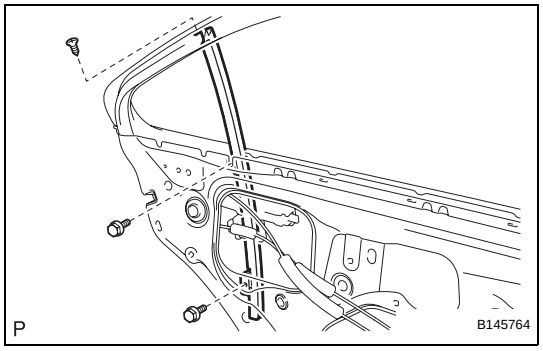

18. REMOVE REAR DOOR WINDOW DIVISION BAR SUB-ASSEMBLY

(a) Remove the 2 bolts, the screw, and the rear door window division bar sub-assembly.

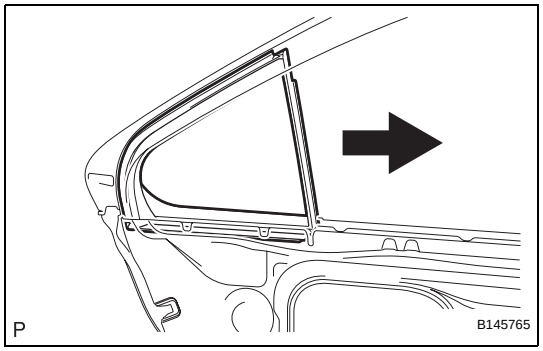

19. REMOVE REAR DOOR QUARTER WINDOW GLASS

(a) Remove the rear door quarter window glass and the rear door quarter window weatherstrip as a unit as shown in the illustration.

(b) Remove the rear door quarter window glass from the rear door quarter window weatherstrip.

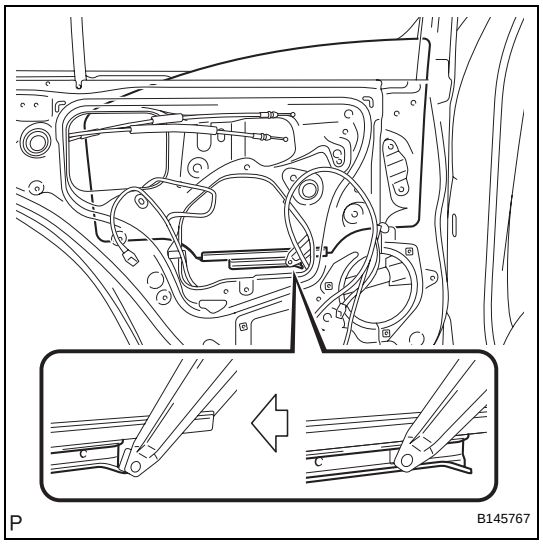

20. REMOVE REAR DOOR GLASS SUB-ASSEMBLY

(a) Remove the rear door glass sub-assembly from the rear door window regulator sub-assembly as shown in the illustration.

NOTICE:

Do not damage the door glass.

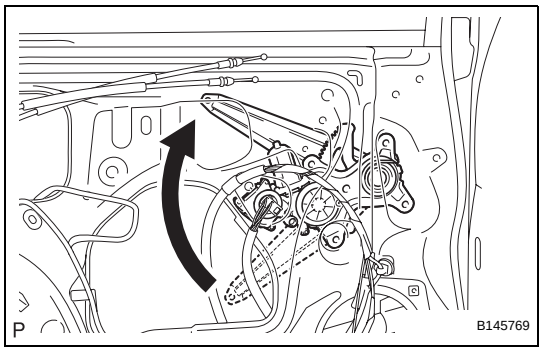

21. REMOVE REAR DOOR WINDOW REGULATOR SUB-ASSEMBLY

(a) Connect the rear power window regulator switch assembly and move the lift arm to the position shown in the illustration.

(b) Remove the rear power window regulator switch assembly.

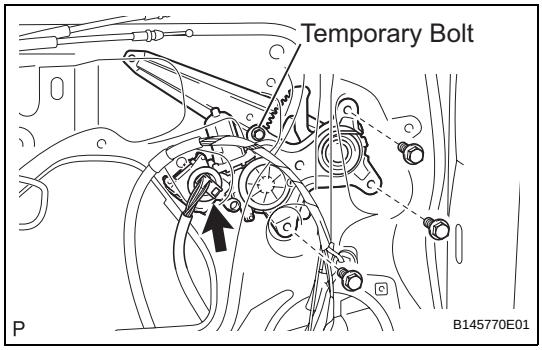

(c) Disconnect the connector.

(d) Loosen the temporary bolt.

NOTICE:

Do not remove the temporary bolt. If the temporary bolt is removed, the rear door window regulator may fall, causing damage.

(e) Remove the 3 bolts.

(f) Remove the rear door window regulator sub-assembly and the rear power window regulator motor assembly as a unit.

(g) Remove the temporary bolt from the rear door window regulator.

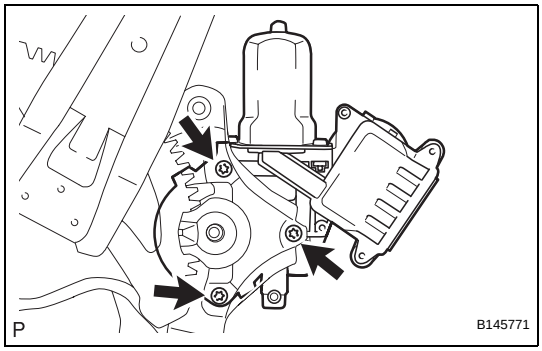

22. REMOVE REAR POWER WINDOW REGULATOR MOTOR ASSEMBLY

(a) Using a "TORX" driver (T25), remove the 3 screws and the rear power window regulator motor assembly.

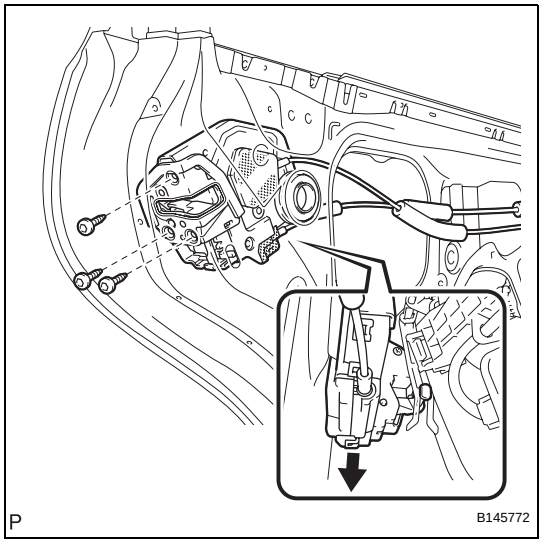

23. REMOVE REAR DOOR LOCK ASSEMBLY

(a) Using a "TORX" socket wrench (T30), remove the 3 screws.

(b) Move the rear door lock assembly downward and pull the release plate out of the rear door outside handle frame.

(c) Remove the door lock wiring harness seal from the rear door lock assembly.

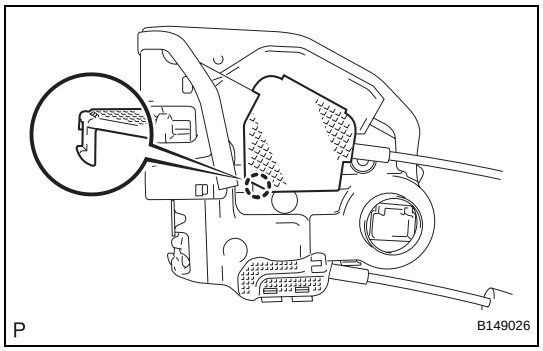

24. REMOVE REAR DOOR LOCK REMOTE CONTROL CABLE ASSEMBLY

(a) Using a screwdriver, disengage the claw.
HINT:
Tape the screwdriver tip before use.

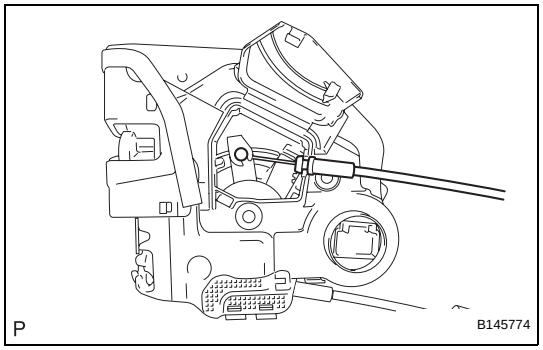

(b) Remove the rear door lock remote control cable assembly.

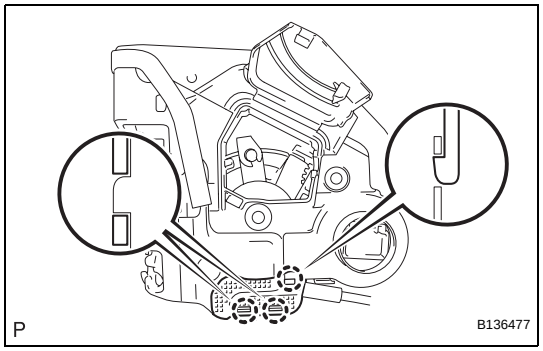

25. REMOVE REAR DOOR INSIDE LOCKING CABLE ASSEMBLY

(a) Using a screwdriver, disengage the 3 claws.
HINT:
Tape the screwdriver tip before use.

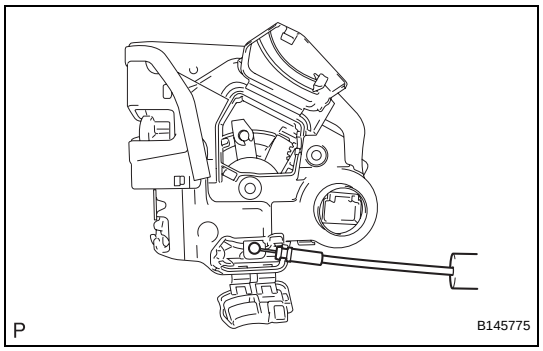

(b) Remove the rear door inside locking cable assembly.

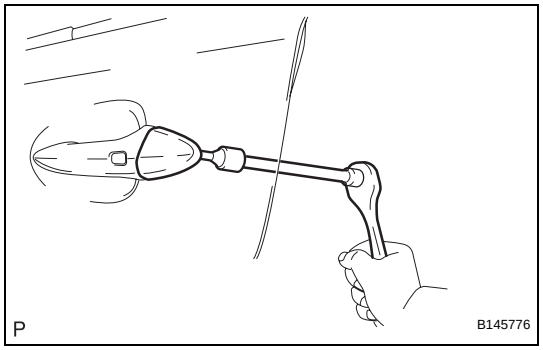

26. REMOVE REAR DOOR OUTSIDE HANDLE COVER

(a) Using a "TORX" socket wrench (T30), loosen the screw.
HINT:
The screw cannot be removed because it is integrated into the rear door outside handle frame sub-assembly.

(b) Remove the rear door outside handle cover.

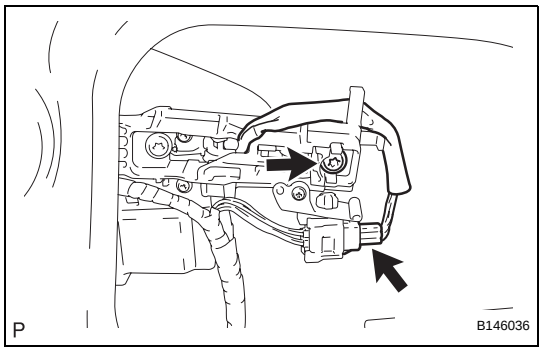

27. REMOVE REAR DOOR OUTSIDE HANDLE ASSEMBLY

(a) Disconnect the connector.

(b) Using a "TORX" socket wrench (T30), loosen the screw.

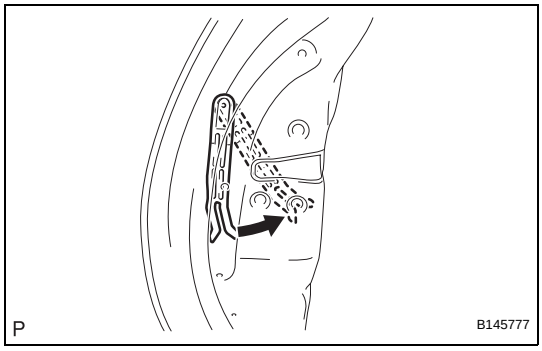

(c) Pull and hold the release plate of the outside handle frame as shown in the illustration.

NOTICE:

The release plate may interfere with the outside handle and may be damaged when removing the handle, unless the release plate of the outside handle frame is pulled and held.

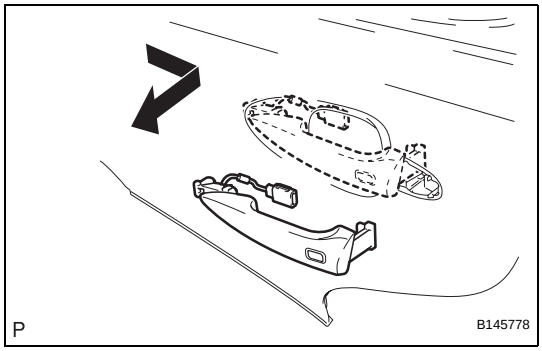

(d) Remove the rear door outside handle assembly as shown in the illustration.

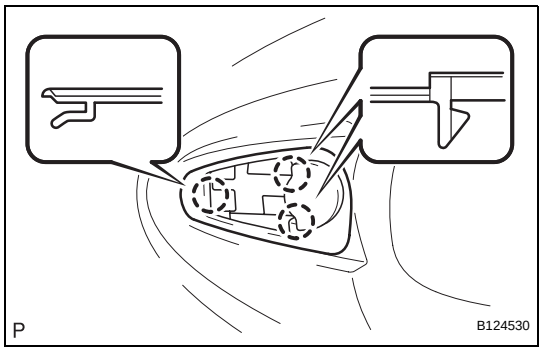

28. REMOVE REAR DOOR FRONT OUTSIDE HANDLE PAD

(a) Disengage the 3 claws and remove the rear door front outside handle pad.

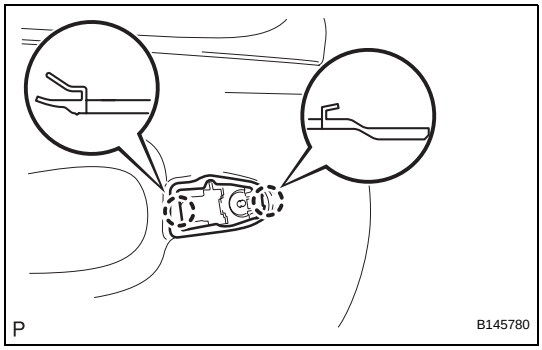

29. REMOVE REAR DOOR REAR OUTSIDE HANDLE PAD

(a) Disengage the 2 claws and remove the rear door rear outside handle pad.

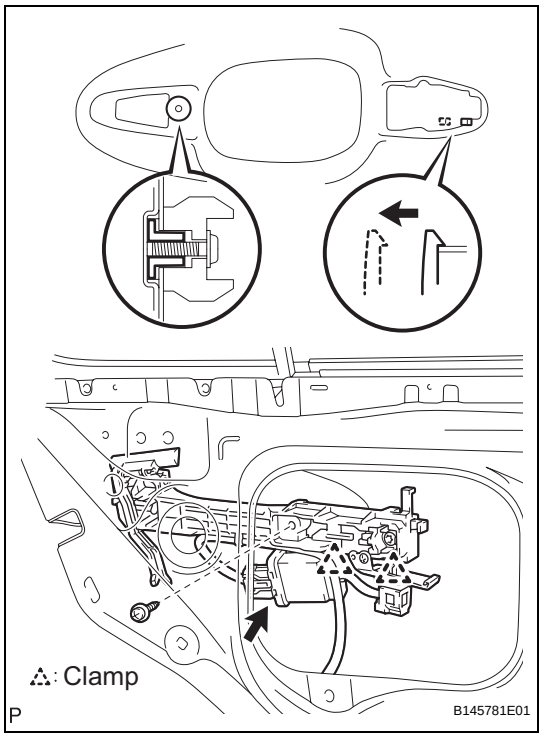

30. REMOVE REAR DOOR OUTSIDE HANDLE FRAME SUB-ASSEMBLY

(a) Using a "TORX" socket wrench (T30), loosen the screw.
HINT:
The screw cannot be removed because it is integrated into the rear door outside handle frame sub-assembly.

(b) Disconnect the connector.

(c) Disengage the 2 clamps.

(d) Disengage the claw and remove the rear door outside handle frame sub-assembly.

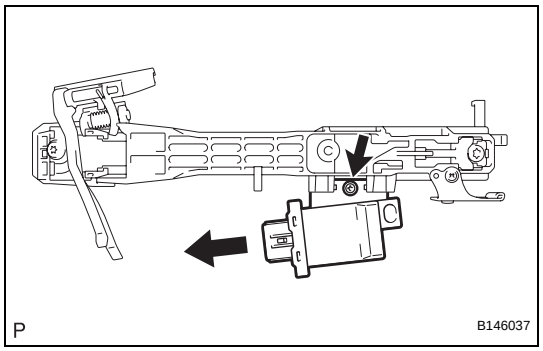

31. REMOVE DOOR ELECTRICAL KEY OSCILLATOR

(a) Remove the screw and the door electrical key oscillator.

32. REMOVE REAR DOOR BELT MOULDING ASSEMBLY (See page ET-34)

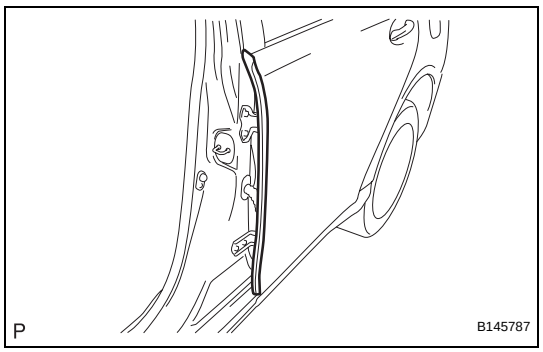

33. REMOVE REAR NO. 3 DOOR WEATHERSTRIP

(a) Remove the rear No. 3 door weatherstrip.

34. REMOVE REAR DOOR FRONT WINDOW FRAME MOULDING (See page ET-64)

35. REMOVE REAR DOOR WINDOW FRAME MOULDING SUB-ASSEMBLY (See page ET-65)

36. REMOVE REAR DOOR LOWER OUTSIDE MOULDING (See page ET-42)

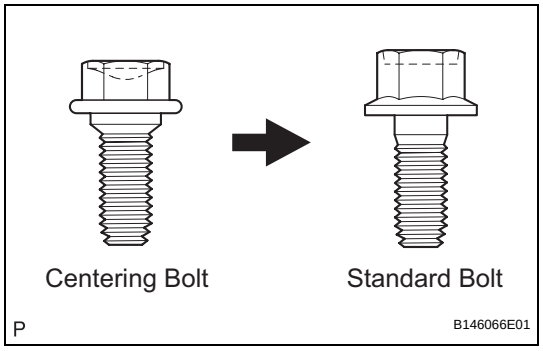

ADJUSTMENT

HINT:

- Before adjusting the door positions of vehicles equipped with side airbags and curtain shield airbags, be sure to disconnect the battery. After adjustment, inspect the SRS warning light, the side airbag system, and the curtain shield airbag system for normal operation. Then initialize both airbag systems.
- Use the same procedures for the RH side and LH side.
- The procedures listed below are for the LH side.

- Centering bolts are used to mount the door hinge to the vehicle body and door. The door cannot be adjusted with the centering bolts installed on it. Substitute the centering bolts with standard bolts (with washers) when making adjustments.
- A bolt without a torque specification is shown in the standard bolt chart (See page SS-2).

1. DISCONNECT NEGATIVE BATTERY TERMINAL
CAUTION:
Wait for 90 seconds after disconnecting the terminal to prevent airbag deployment (See page RS-1).

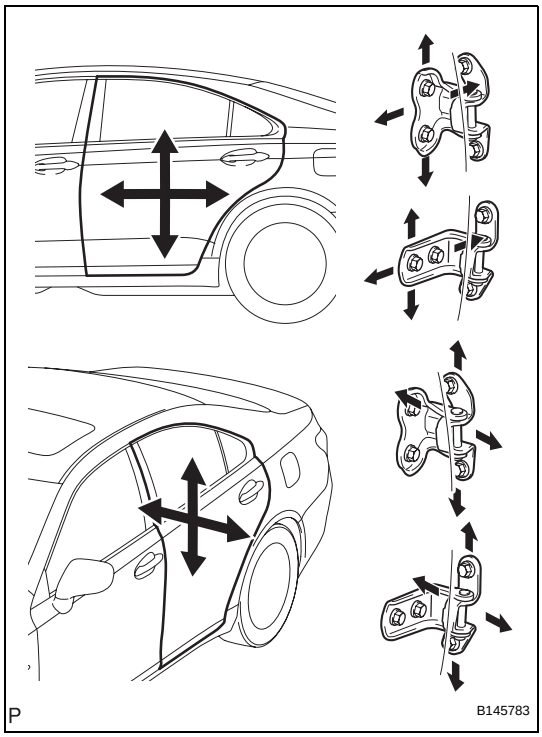

2. ADJUST REAR DOOR

(a) Loosen the hinge bolts on the vehicle body and adjust the door position.
SST 09812-00010

(b) Tighten the hinge bolts on the vehicle body after the adjustment.
Torque: 26 N*m (265 kgf*cm, 19 ft.*lbf)

(c) Loosen the hinge bolts on the door and adjust the door position.

(d) Tighten the hinge bolts on the door after the adjustment.
Torque: 43 N*m (439 kgf*cm, 32 ft.*lbf)

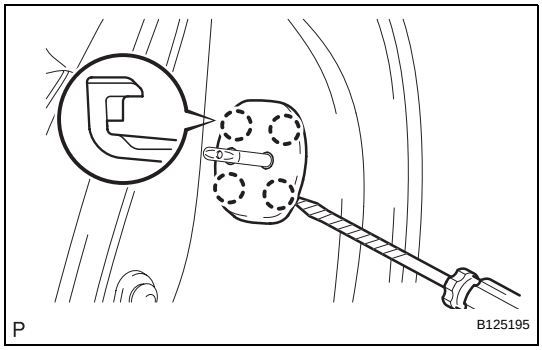

(e) Using a screwdriver, detach the 4 claws and remove the cover.
HINT:
Tape the screwdriver tip before use.

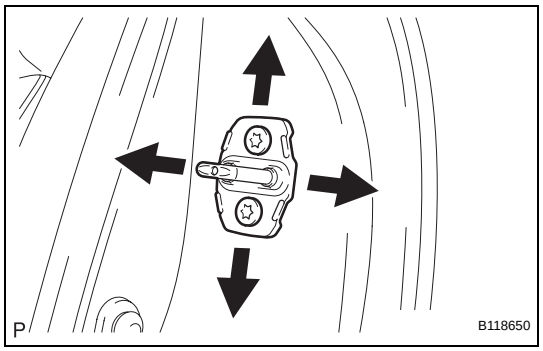

(f) Adjust the striker position by slightly loosening the striker mounting screws with a "TORX" socket wrench (T40) and hitting the striker with a plastic hammer.

(g) Using a "TORX" socket wrench (T40), tighten the striker mounting screws after the adjustment.
Torque: 23 N*m (235 kgf*cm, 17 ft.*lbf)

3. CONNECT NEGATIVE BATTERY TERMINAL

4. PERFORM INITIALIZATION
NOTICE:
Some systems need initialization after reconnecting the cable to the negative battery terminal (See page IN-33).

5. INSPECT SRS WARNING LIGHT
(See page RS-37)

REASSEMBLY

1. **INSTALL REAR DOOR LOWER OUTSIDE MOULDING (See page ET-43)**
2. **INSTALL REAR DOOR WINDOW FRAME MOULDING SUB-ASSEMBLY (See page ET-66)**
3. **INSTALL REAR DOOR FRONT WINDOW FRAME MOULDING (See page ET-67)**
4. **INSTALL REAR NO. 3 DOOR WEATHERSTRIP**
   (a) Install a new rear No. 3 door weatherstrip with double-sided tape.
5. **INSTALL REAR DOOR BELT MOULDING ASSEMBLY (See page ET-34)**

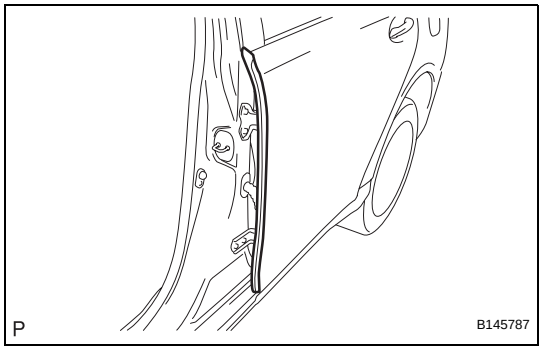

6. **INSTALL DOOR ELECTRICAL KEY OSCILLATOR**
   (a) Install the door electrical key oscillator with the screw.
7. **INSTALL REAR DOOR OUTSIDE HANDLE FRAME SUB-ASSEMBLY**
   (a) Apply MP grease to the sliding parts of the rear door outside handle frame sub-assembly.

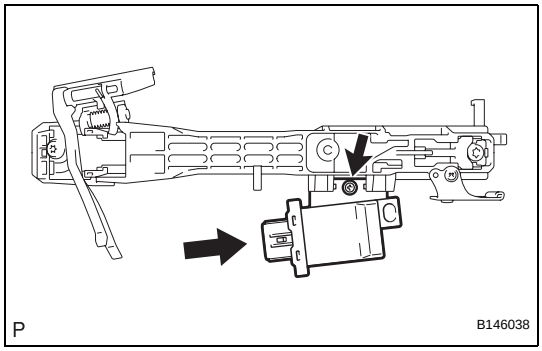

   (b) Engage the claw to install the rear door outside handle frame sub-assembly.
   (c) Using a "TORX" socket wrench (T30), install the rear door outside handle frame sub-assembly with the screw.
   Torque: 4.0 N*m (41 kgf*cm, 35 in.*lbf)
   (d) Engage the 2 clamps.
   (e) Connect the connector.

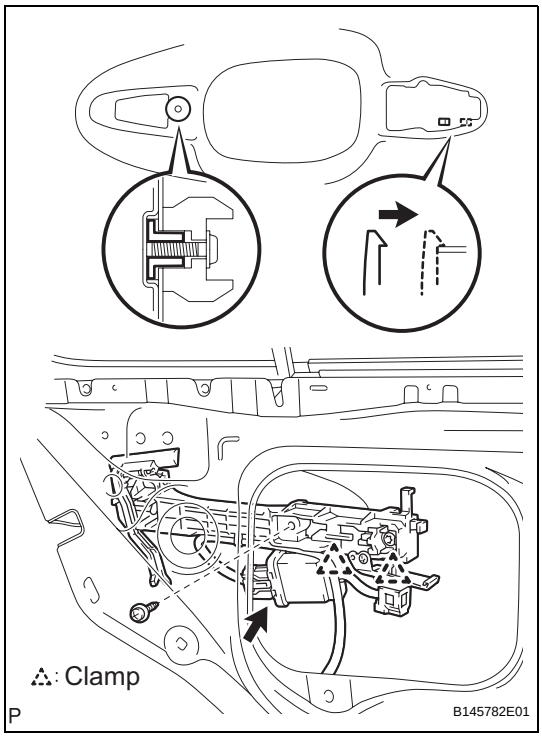

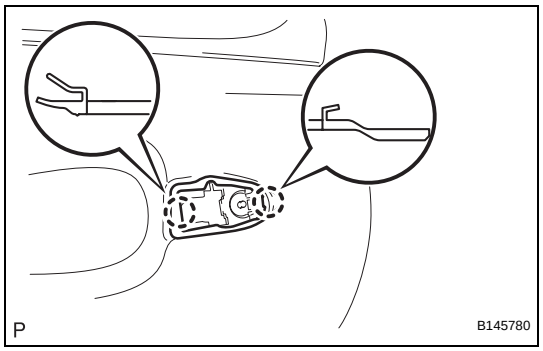

8. INSTALL REAR DOOR REAR OUTSIDE HANDLE PAD

(a) Engage the 2 claws to install the rear door rear outside handle pad.

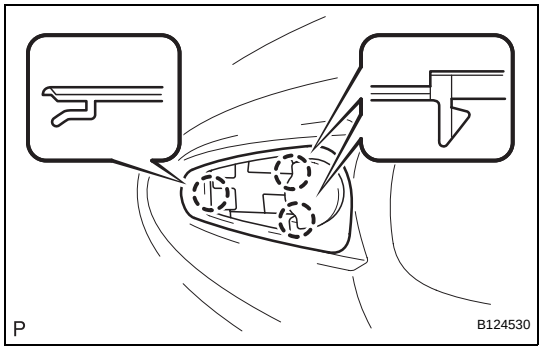

9. INSTALL REAR DOOR FRONT OUTSIDE HANDLE PAD

(a) Engage the 3 claws to install the rear door front outside handle pad.

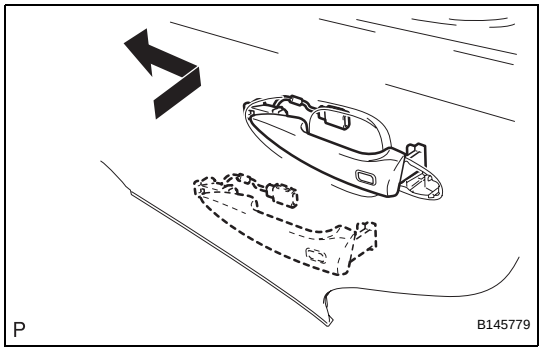

10. INSTALL REAR DOOR OUTSIDE HANDLE ASSEMBLY

(a) Insert the front end of the rear door outside handle assembly into the rear door outside handle frame.
NOTICE:
If the bellcrank lever is not pulled and held when installing the outside handle, the bellcrank lever will interfere with the outside handle and the release plate will be damaged.

(b) Insert the rear end of the rear door outside handle assembly into the rear door outside handle frame. Next, slide the rear door outside handle assembly toward the front of the vehicle to install it.

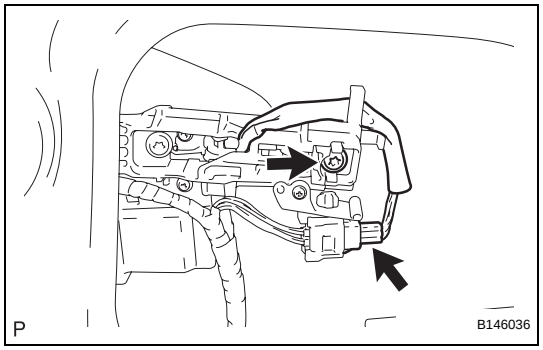

(c) Using a "TORX" socket wrench (T30), install the rear door outside handle assembly with the screw.
Torque: 4.0 N*m (41 kgf*cm, 35 in.*lbf)

(d) Connect the connector.

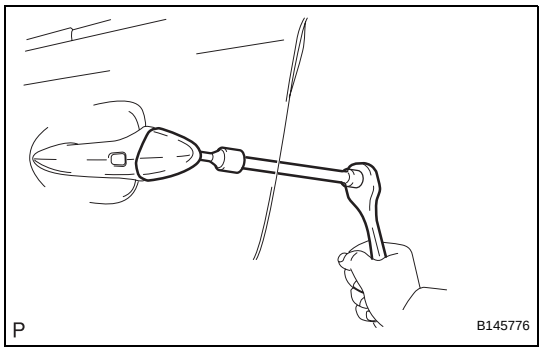

11. INSTALL REAR DOOR OUTSIDE HANDLE COVER

(a) Using a "TORX" socket wrench (T30), install the rear door outside handle cover with the screw.
Torque: 4.0 N*m (41 kgf*cm, 35 in.*lbf)

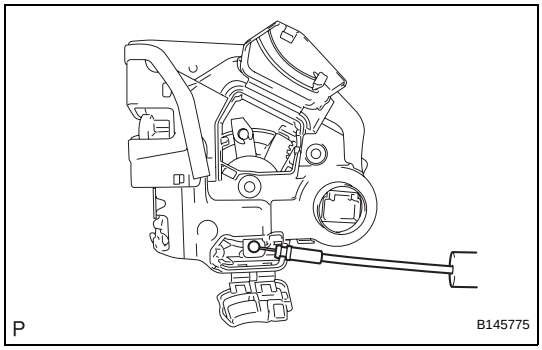

12. INSTALL REAR DOOR INSIDE LOCKING CABLE ASSEMBLY

(a) Install the rear door inside locking cable assembly.

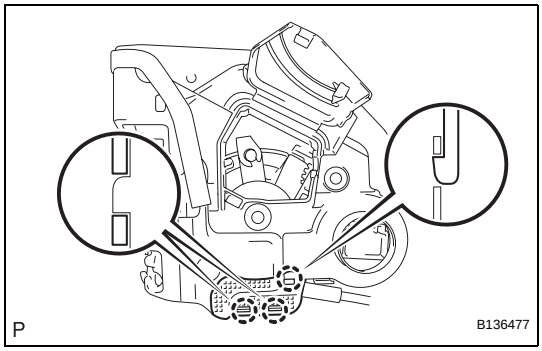

(b) Engage the 3 claws.

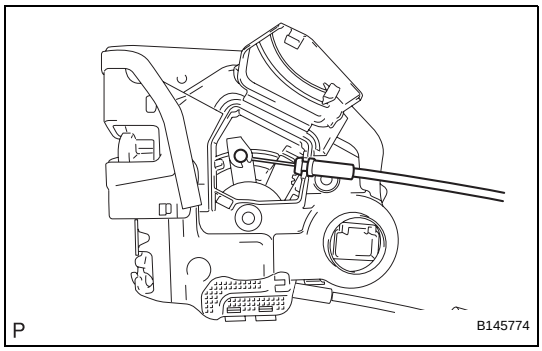

13. INSTALL REAR DOOR LOCK REMOTE CONTROL CABLE ASSEMBLY

(a) Install the rear door lock remote control cable assembly.

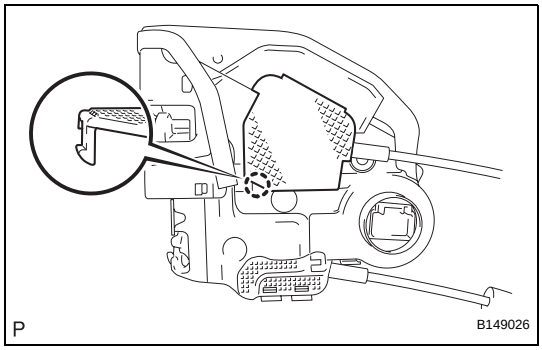

(b) Engage the claw.

14. INSTALL REAR DOOR LOCK ASSEMBLY

NOTICE:

- **When reusing the removed rear door lock assembly, replace the door lock wiring harness seal on the connector with a new one.**
- **Do not allow grease or dust to adhere to the door lock wiring harness seal surface of the connector.**

- **Reusing the door lock wiring harness seal or using a damaged door lock wiring harness seal may cause water intrusion to the connection. This may result in a malfunction of the rear door lock assembly.**

(a) Apply MP grease to the sliding parts of the rear door lock assembly.
(b) Install a new door lock wiring harness seal to the rear door lock assembly.
(c) Insert the rear door lock assembly to the rear door outside handle release plate, and set it to the rear door panel.
(d) Make sure that the rear door outside handle frame release plate is securely connected to the rear door lock assembly.
(e) Using a "TORX" socket wrench (T30), install the rear door lock assembly with the 3 screws.
Torque: 5.5 N*m (56 kgf*cm, 49 in.*lbf)
(f) Connect the connector.

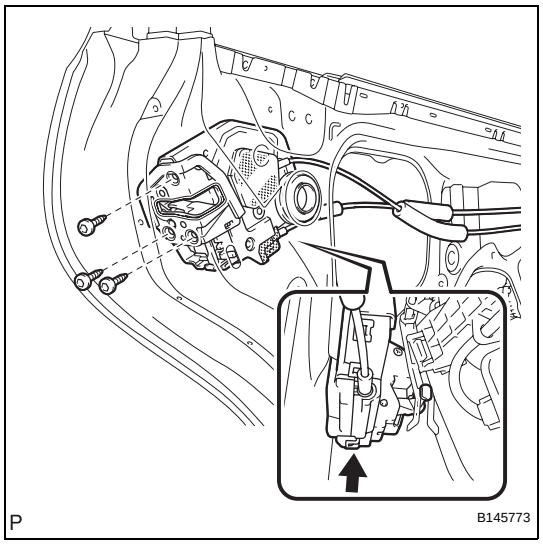

15. INSTALL REAR POWER WINDOW REGULATOR MOTOR ASSEMBLY
NOTICE:
The regulator arm must be below the intermediate position when installing the power window regulator motor.

(a) Using a "TORX" driver (T25), install the power window regulator motor assembly with the 3 screws.
Torque: 5.4 N*m (55 kgf*cm, 48 in.*lbf)
HINT:
The new rear window regulator adopts a self-tapping method. The installation position of the regulator will be threaded when the self-tapping screw is inserted.

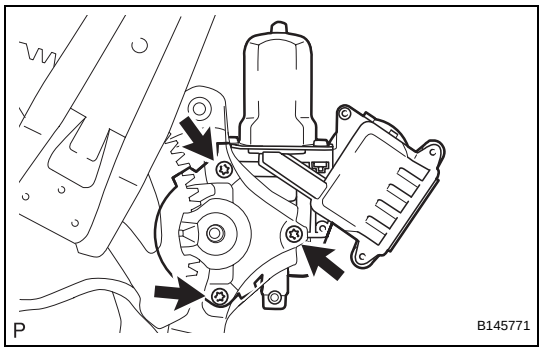

16. INSTALL REAR DOOR WINDOW REGULATOR SUB-ASSEMBLY
(a) Apply MP grease to the sliding parts of the rear door window regulator sub-assembly.
(b) Install the temporary bolt to the rear door window regulator sub-assembly.
(c) Temporarily install the window regulator.
(d) Tighten the 4 bolts in the order shown in the illustration to install the rear door window regulator.
Torque: 11 N*m (112 kgf*cm, 8.1 ft.*lbf)
(e) Connect the connector.

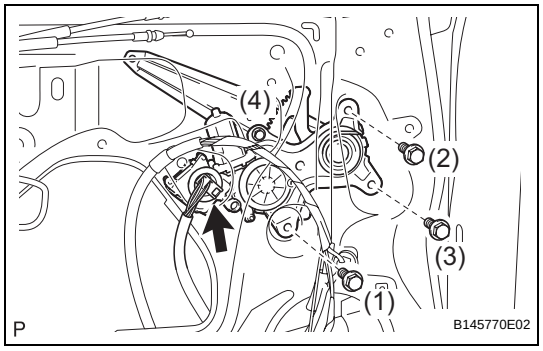

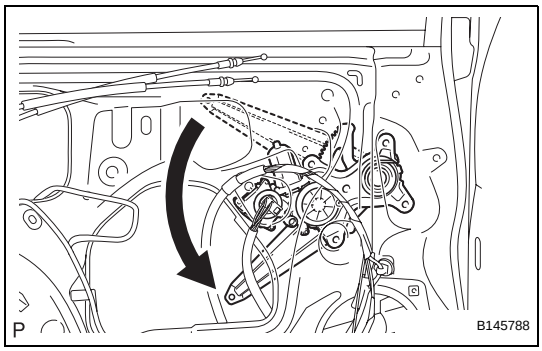

(f) Connect the rear power window regulator switch assembly and move the lift arm to the position shown in the illustration.
(g) Remove the rear power window regulator switch assembly.

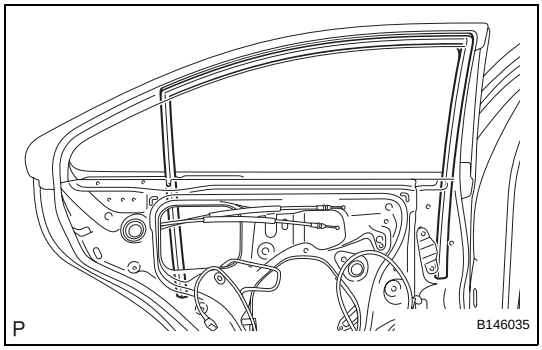

17. INSTALL REAR DOOR GLASS RUN
(a) Install the rear door glass run.

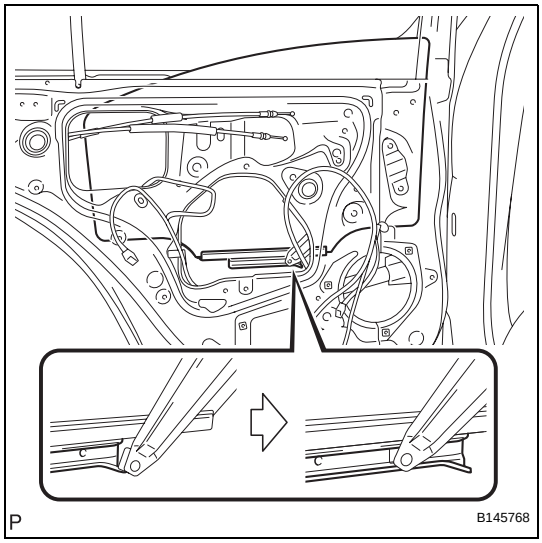

18. INSTALL REAR DOOR GLASS SUB-ASSEMBLY
(a) Slide the rear door glass sub-assembly to install it as shown in the illustration.

19. INSTALL REAR DOOR QUARTER WINDOW GLASS
(a) Install the rear door quarter window glass to the rear door quarter window weatherstrip.

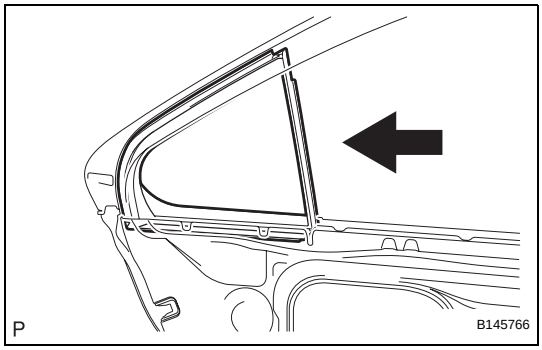

(b) Install the rear door quarter window glass together with the rear door quarter window weatherstrip in the direction indicated by the arrow in the illustration.

20. INSTALL REAR DOOR WINDOW DIVISION BAR SUB-ASSEMBLY
(a) Insert the rear door window division bar sub-assembly from above.
(b) Install the rear door glass run to the rear door window division bar sub-assembly.

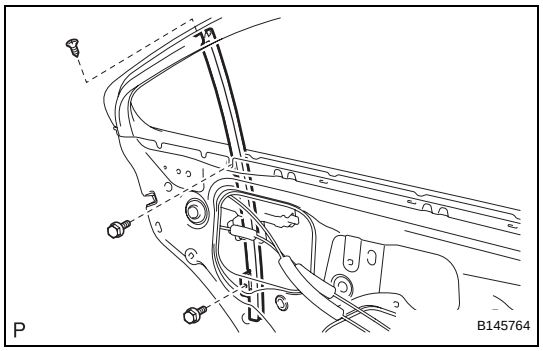

(c) Install the rear door window division bar sub-assembly with the 2 bolts and screw.

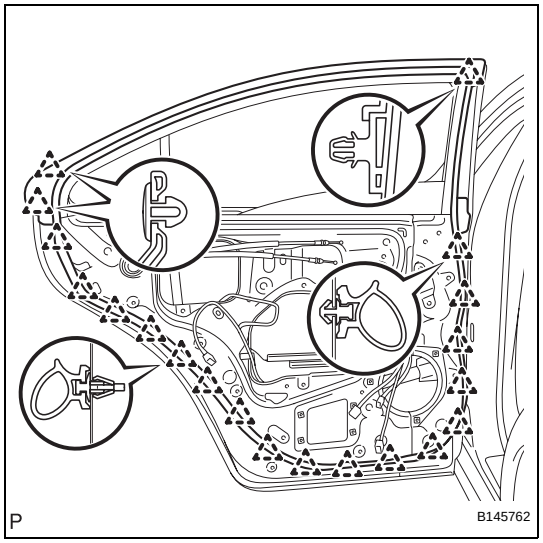

21. INSTALL REAR DOOR WEATHERSTRIP

(a) Engage the 20 clips and install a new rear door weatherstrip.

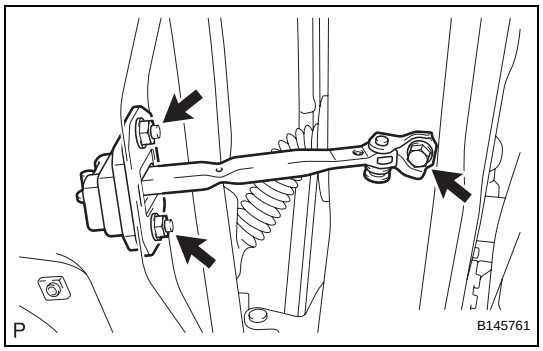

22. INSTALL REAR DOOR CHECK ASSEMBLY

(a) Install the rear door check assembly with the bolt and the 2 nuts.

Torque: Bolt
27 N*m (275 kgf*cm, 20 ft.*lbf)
Nut
5.0 N*m (51 kgf*cm, 44 in.*lbf)

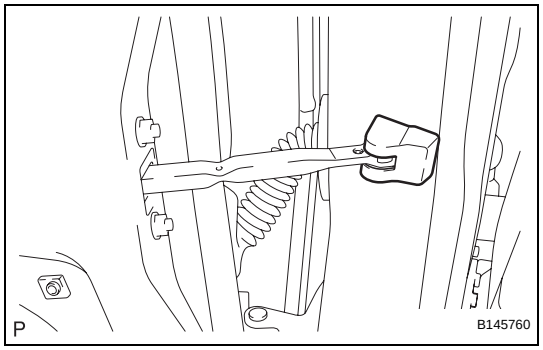

23. INSTALL REAR DOOR CHECK COVER

(a) Install the rear door check cover.

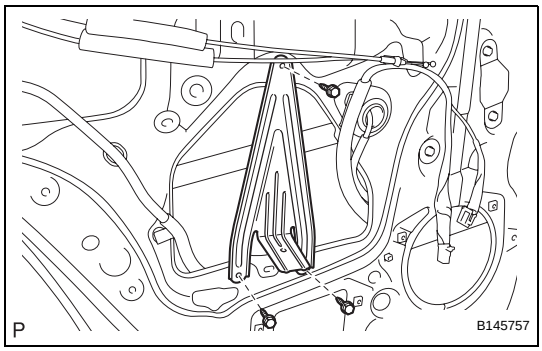

24. INSTALL REAR DOOR TRIM BRACKET

(a) Install the rear door trim bracket with the 3 screws.

25. INSTALL REAR DOOR SERVICE HOLE COVER

(a) Apply butyl tape to the rear door panel.

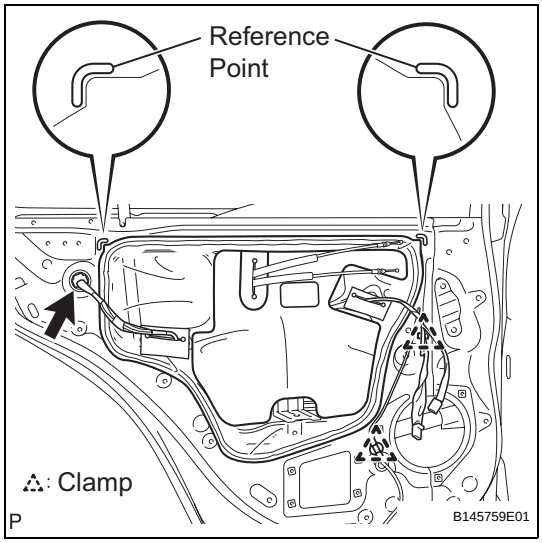

(b) Pass the rear door lock remote control cable, rear door inside locking cable and each connector through a new rear door service hole cover.

(c) Install the new rear door service hole cover.

NOTICE:

Securely install the rear door service hole cover avoiding wrinkles and air bubbles.

(d) Connect the connector and 2 clamps.

26. INSTALL REAR DOOR INSIDE PANEL REINFORCE

(a) Install 4 new grommets.

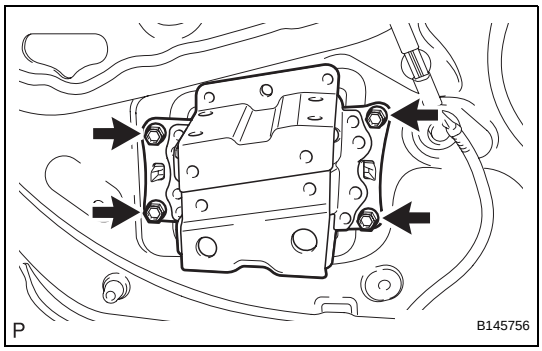

(b) Install a new rear door inside panel reinforce with the 4 screws.

27. INSTALL REAR SPEAKER ASSEMBLY (See page AV-192)

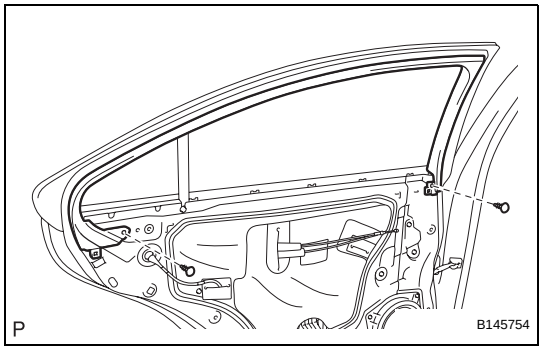

28. INSTALL REAR DOOR FRAME GARNISH

(a) Install the door frame garnish with the 2 clips.

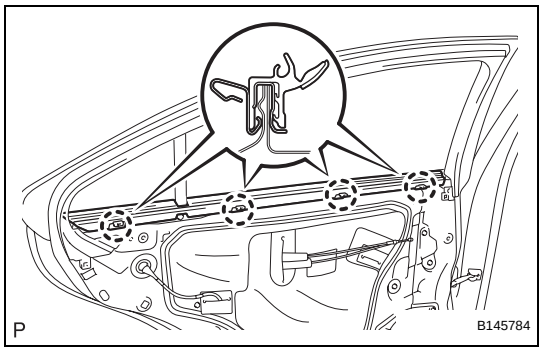

29. INSTALL REAR DOOR INNER GLASS WEATHERSTRIP

(a) Engage the 4 claws to install the rear door inner glass weatherstrip.

30. INSTALL REAR NO. 2 SPEAKER ASSEMBLY (w/ Rear Header Speaker) (See page AV-192)

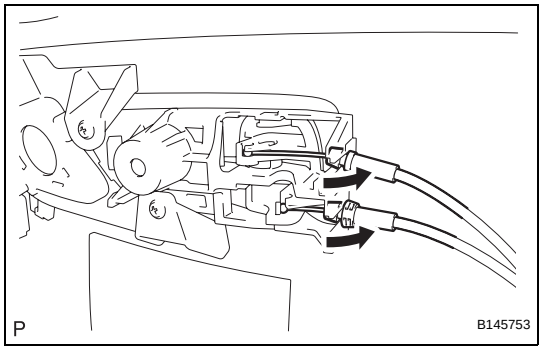

31. INSTALL REAR DOOR TRIM BOARD SUB-ASSEMBLY

(a) Connect the rear door lock remote control cable and rear door inside locking cable to the rear inside handle.

(b) Connect each connector.

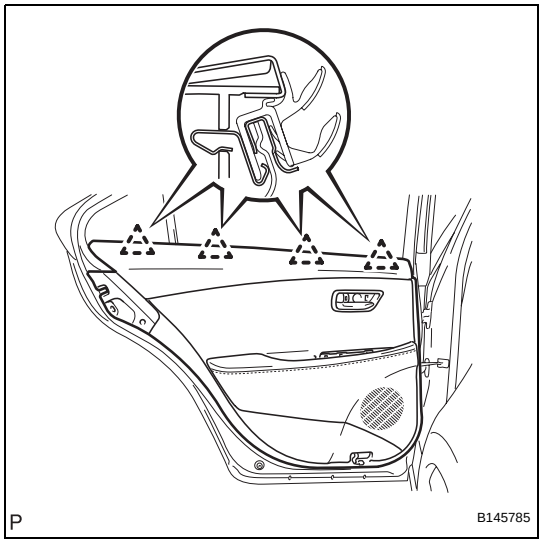

(c) Engage the rear door trim board with the 4 clips of the rear door inner glass weatherstrip.

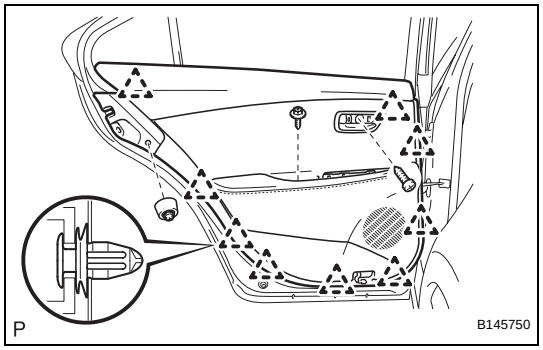

(d) Engage the 9 clips to install the rear door trim board to the rear door panel.

NOTICE:

Only when installing the rear door trim LH, be careful not to allow the wire harness for the courtesy light to get caught between the trim board and the door panel.

(e) Install the 3 screws.

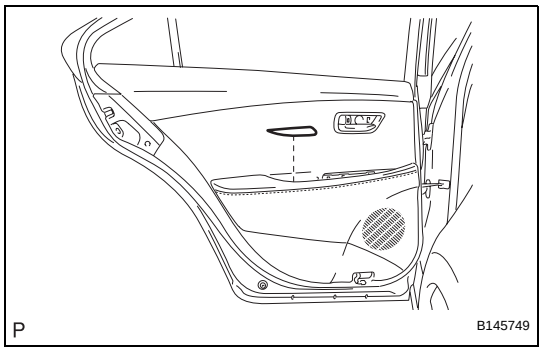

32. INSTALL REAR DOOR ARMREST COVER

(a) Install the rear door armrest cover.

33. INSTALL COURTESY LIGHT ASSEMBLY

(a) Connect the connector.

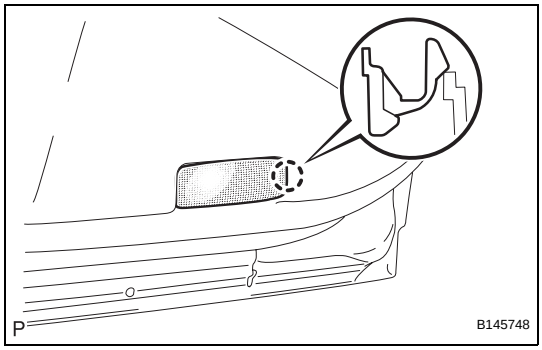

(b) Engage the claw and install the courtesy light assembly.

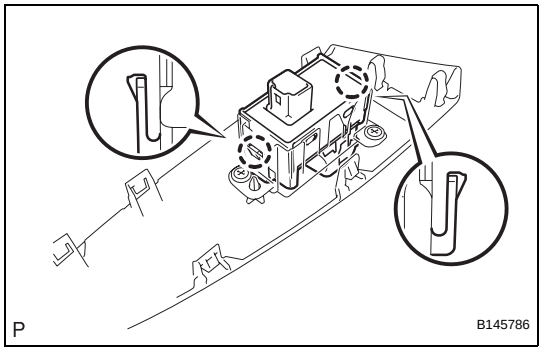

34. INSTALL REAR POWER WINDOW REGULATOR SWITCH ASSEMBLY

(a) Engage the 2 claws and install the rear power window regulator switch assembly.

35. INSTALL REAR DOOR ARMREST BASE PANEL ASSEMBLY

(a) Connect the connector.

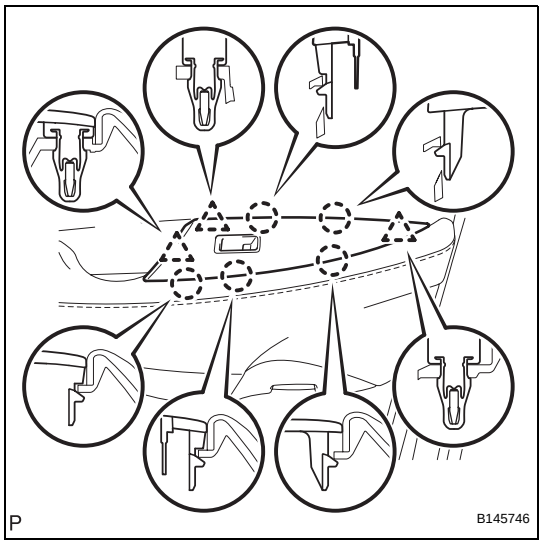

(b) Engage the 5 claws and 3 clips, and install the rear power window regulator switch assembly with rear door armrest base panel.

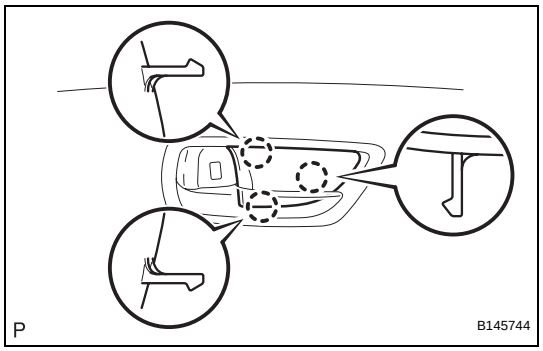

36. INSTALL REAR DOOR INSIDE HANDLE BEZEL PLUG

(a) Engage the 3 claws to install the rear door inside handle bezel plug.

37. INITIALIZE POWER WINDOW CONTROL SYSTEM

(See page WS-10)

ON-VEHICLE INSPECTION

1. INSPECT LUGGAGE COMPARTMENT DOOR PANEL SUB-ASSEMBLY

(a) Check that the clearance measurements of areas A through E are within each standard range.

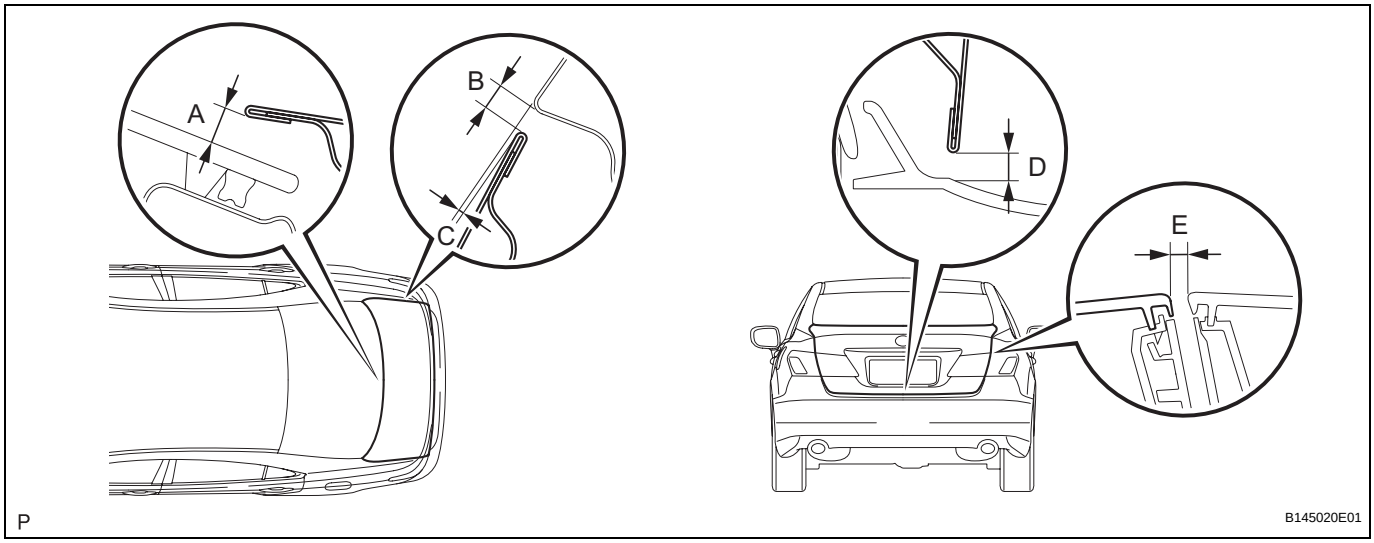

Standard clearance

Area	Measurement	Area	Measurement
A	5.1 to 7.9 mm (0.201 to 0.311 in.)	D	4.3 to 7.3 mm (0.169 to 0.287 in.)
B	2.0 to 5.0 mm (0.079 to 0.197 in.)	E	2.5 to 5.5 mm (0.098 to 0.217 in.)
C	-1.3 to 1.7 mm (-0.051 to 0.067 in.)	-	-

DISASSEMBLY

1. REMOVE LUGGAGE COMPARTMENT FLOOR MAT

2. REMOVE NO. 2 SPARE WHEEL COVER

3. REMOVE SPARE WHEEL COVER TRAY

4. REMOVE LUGGAGE HOLD BELT STRIKER ASSEMBLY

(a) Remove the 2 bolts and the 2 luggage hold belt striker assemblies.

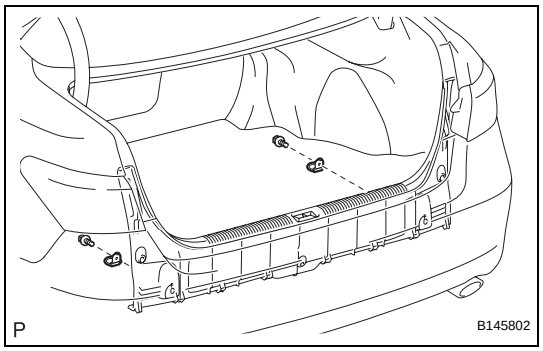

5. REMOVE NO. 1 LUGGAGE COMPARTMENT TRIM HOOK

(a) Remove the 2 screws and the 2 No. 1 luggage compartment trim hooks.

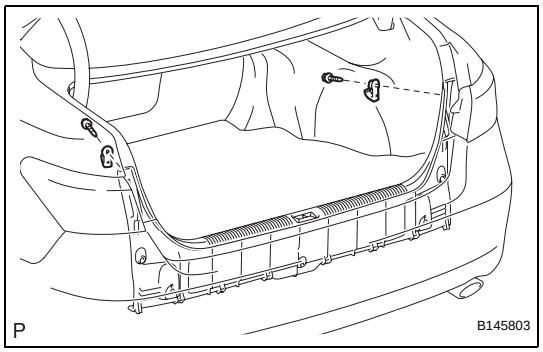

6. REMOVE REAR FLOOR FINISH PLATE

(a) Remove the 3 clips.

(b) Disengage the 4 clips and remove the rear floor finish plate.

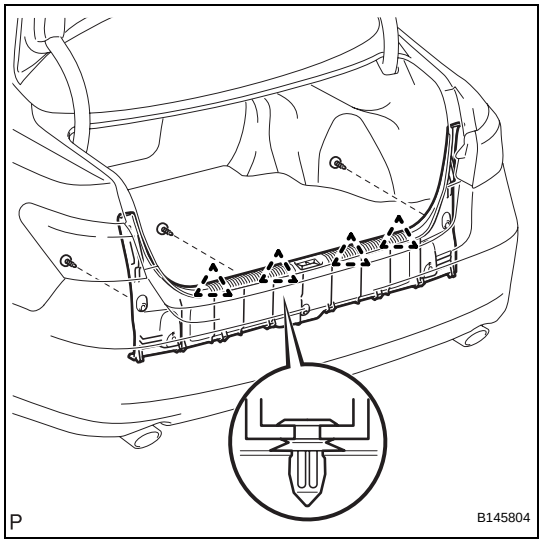

7. REMOVE LUGGAGE COMPARTMENT INNER TRIM COVER LH

(a) Remove the 3 clips and the luggage compartment inner trim cover LH.

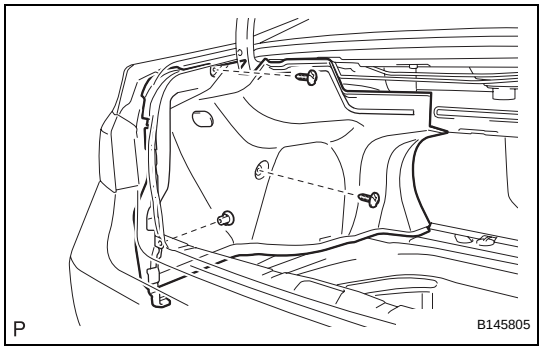

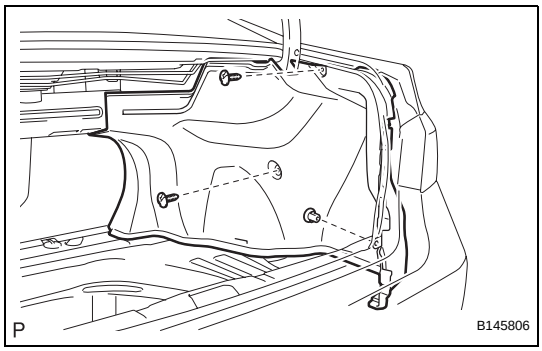

8. REMOVE LUGGAGE COMPARTMENT INNER TRIM COVER RH

(a) Remove the 3 clips and the luggage compartment inner trim cover RH.

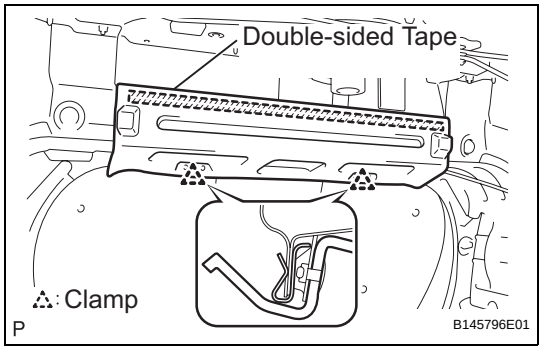

9. REMOVE LUGGAGE COMPARTMENT FRONT TRIM COVER

(a) Disengage the 2 clamps.

(b) Remove the double-sided tape and the luggage compartment front trim cover.

10. REMOVE LUGGAGE COMPARTMENT DOOR ASSIST GRIP (See page ET-71)

11. REMOVE LUGGAGE LOCK CONTROL CABLE PLATE (See page ET-71)

12. REMOVE LUGGAGE COMPARTMENT DOOR INSIDE HANDLE (See page ET-71)

13. REMOVE LUGGAGE COMPARTMENT DOOR COVER (See page ET-72)

14. REMOVE LUGGAGE COMPARTMENT DOOR LOCK ASSEMBLY (See page ED-91)

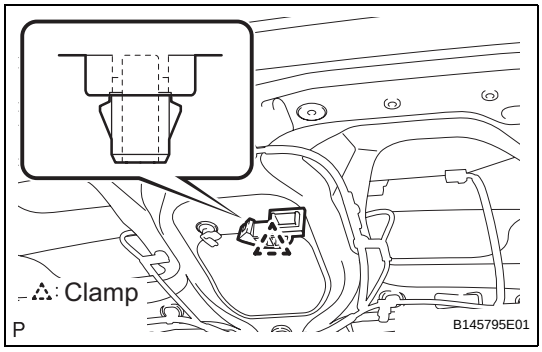

15. REMOVE LUGGAGE LOCK CONTROL CABLE CLAMP

(a) Disengage the clamp and remove the luggage lock control cable clamp.

ED

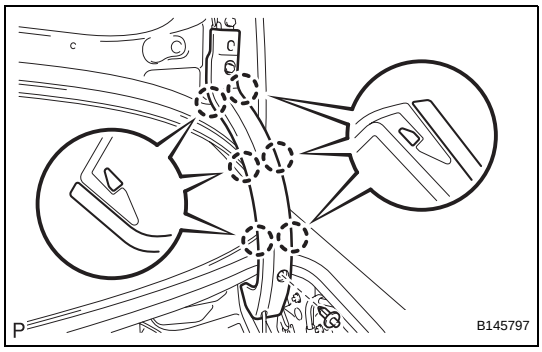

16. REMOVE LUGGAGE COMPARTMENT DOOR HINGE COVER RH

(a) Remove the clip.

(b) Disengage the 6 claws and remove the luggage compartment door hinge cover RH.

17. REMOVE LUGGAGE DOOR HINGE ARM PLATE RH

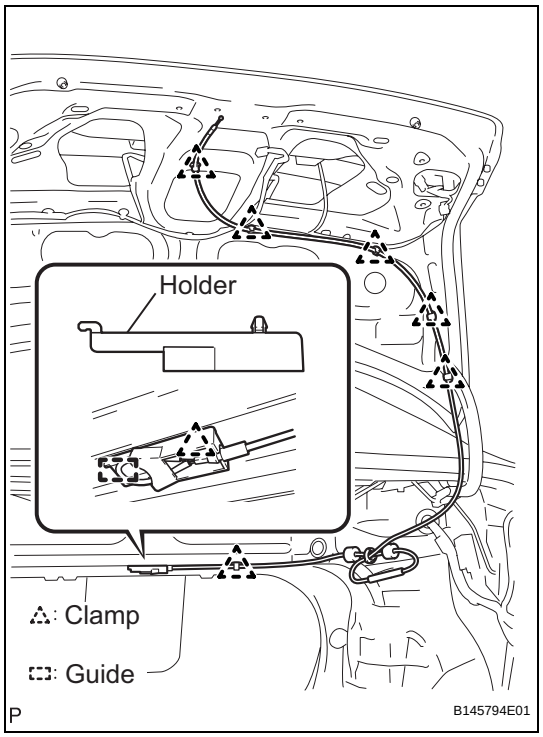

18. **REMOVE LUGGAGE DOOR LOCK CONTROL CABLE SUB-ASSEMBLY**
    (a) Disengage the clamp and guide, and separate the holder.
    (b) Disengage the 6 clamps and remove the luggage door lock control cable sub-assembly.
19. **REMOVE REAR LIGHT ASSEMBLY LH (See page LI-149)**
20. **REMOVE REAR LIGHT ASSEMBLY RH**
21. **REMOVE LUGGAGE DOOR OPENING SWITCH ASSEMBLY (See page DL-203)**
22. **REMOVE LUGGAGE COMPARTMENT OUTSIDE DOOR GARNISH SUB-ASSEMBLY (w/o Rear View Monitor System) (See page ET-72)**
23. **REMOVE TELEVISION CAMERA ASSEMBLY (w/ Rear View Monitor System) (See page PM-105)**
24. **REMOVE LUGGAGE COMPARTMENT OUTSIDE DOOR GARNISH SUB-ASSEMBLY (w/ Rear View Monitor System) (See page ET-73)**
25. **REMOVE LICENSE PLATE LIGHT ASSEMBLY LH (See page LI-157)**
26. **REMOVE LICENSE PLATE LIGHT ASSEMBLY RH**

ADJUSTMENT

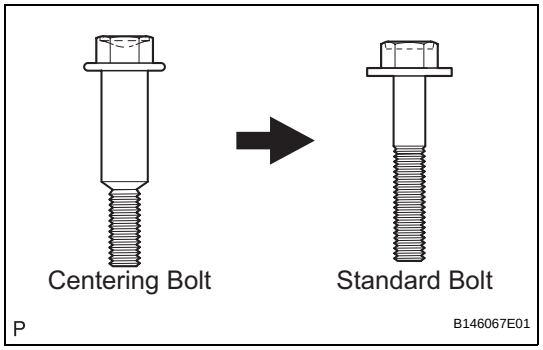

HINT:
- Centering bolts are used to mount the door hinge to the door. The door cannot be adjusted with the centering bolts on. Substitute the centering bolts with standard bolts (with washers) when making adjustments.
- A bolt without a torque specification is shown in the standard bolt chart (See page SS-2).

1. **REMOVE LUGGAGE COMPARTMENT DOOR ASSIST GRIP (See page ET-71)**
2. **REMOVE LUGGAGE LOCK CONTROL CABLE PLATE (See page ET-71)**
3. **REMOVE LUGGAGE COMPARTMENT DOOR INSIDE HANDLE (See page ET-71)**
4. **REMOVE LUGGAGE COMPARTMENT DOOR COVER (See page ET-72)**
5. **REMOVE LUGGAGE COMPARTMENT FLOOR MAT**
6. **REMOVE NO. 2 SPARE WHEEL COVER**
7. **REMOVE SPARE WHEEL COVER TRAY**
8. **REMOVE LUGGAGE HOLD BELT STRIKER ASSEMBLY (See page ED-82)**
9. **REMOVE NO. 1 LUGGAGE COMPARTMENT TRIM HOOK (See page ED-83)**

10. REMOVE REAR FLOOR FINISH PLATE (See page ED-83)

11. ADJUST LUGGAGE COMPARTMENT DOOR

(a) Loosen the door side hinge bolts to adjust the door horizontally and vertically.
Torque: 8.0 N*m (82 kgf*cm, 71 in.*lbf)

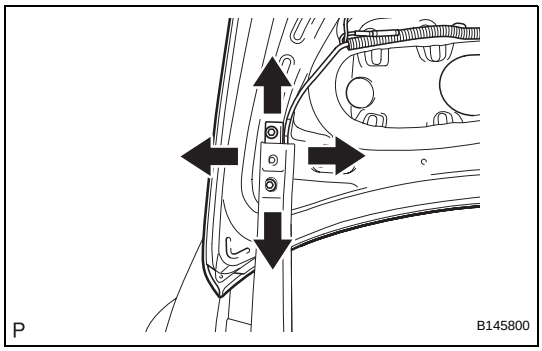

(b) Adjust the striker position by slightly loosening the striker mounting screws and hitting the striker with a plastic hammer.

(c) Tighten the striker mounting screws after the adjustment.
Torque: 5.5 N*m (56 kgf*cm, 49 in.*lbf)

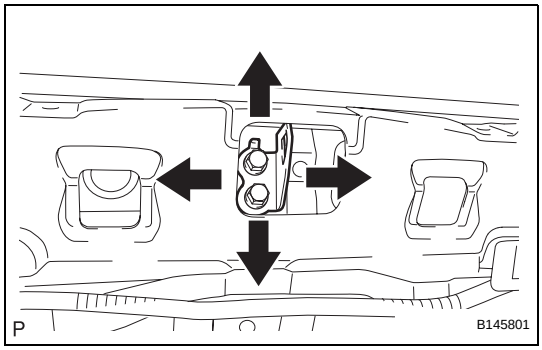

12. INSTALL REAR FLOOR FINISH PLATE (See page ED-88)

13. INSTALL NO. 1 LUGGAGE COMPARTMENT TRIM HOOK (See page ED-89)

14. INSTALL LUGGAGE HOLD BELT STRIKER ASSEMBLY (See page ED-89)

15. INSTALL SPARE WHEEL COVER TRAY

16. INSTALL NO. 2 SPARE WHEEL COVER

17. INSTALL LUGGAGE COMPARTMENT FLOOR MAT

18. INSTALL LUGGAGE COMPARTMENT DOOR COVER (See page ET-74)

19. INSTALL LUGGAGE COMPARTMENT DOOR INSIDE HANDLE (See page ET-74)

20. INSTALL LUGGAGE LOCK CONTROL CABLE PLATE (See page ET-75)

21. INSTALL LUGGAGE COMPARTMENT DOOR ASSIST GRIP (See page ET-75)

REASSEMBLY

1. **INSTALL LICENSE PLATE LIGHT ASSEMBLY LH (See page LI-157)**
2. **INSTALL LICENSE PLATE LIGHT ASSEMBLY RH**
3. **INSTALL LUGGAGE COMPARTMENT OUTSIDE DOOR GARNISH SUB-ASSEMBLY (w/o Rear View Monitor System) (See page ET-73)**
4. **INSTALL LUGGAGE COMPARTMENT OUTSIDE DOOR GARNISH SUB-ASSEMBLY (w/ Rear View Monitor System) (See page ET-74)**
5. **INSTALL TELEVISION CAMERA ASSEMBLY (w/ Rear View Monitor System) (See page PM-105)**
6. **INSTALL LUGGAGE DOOR OPENING SWITCH ASSEMBLY (See page DL-203)**
7. **INSTALL REAR LIGHT ASSEMBLY LH (See page LI-154)**
8. **INSTALL REAR LIGHT ASSEMBLY RH**
9. **INSTALL LUGGAGE DOOR LOCK CONTROL CABLE SUB-ASSEMBLY**
   (a) Engage the clamp and guide, and connect the holder.
   (b) Engage the 6 clamps and install the luggage door lock control cable sub-assembly.
10. **INSTALL LUGGAGE DOOR HINGE ARM PLATE RH**

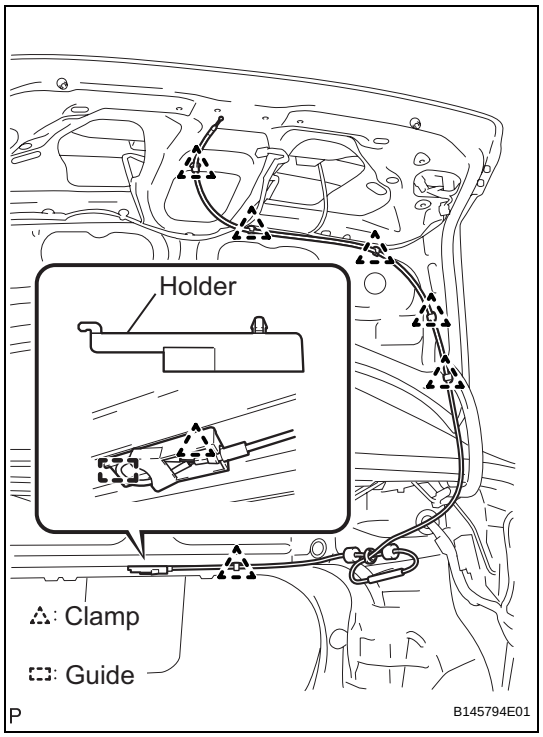

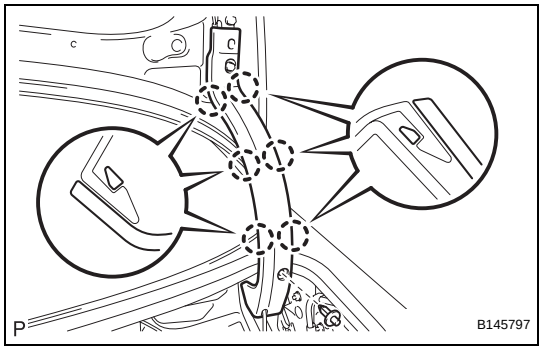

11. **INSTALL LUGGAGE COMPARTMENT DOOR HINGE COVER RH**
    (a) Engage the 6 claws and install the luggage compartment door hinge cover RH.
    (b) Install the clip.

ED

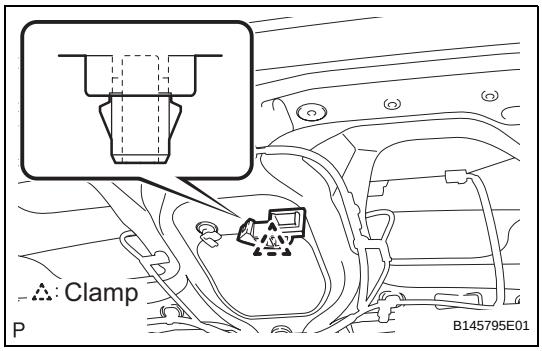

12. INSTALL LUGGAGE LOCK CONTROL CABLE CLAMP

(a) Engage the clamp and install the luggage lock control cable clamp.

13. INSTALL LUGGAGE COMPARTMENT DOOR LOCK ASSEMBLY (See page ED-91)

14. INSTALL LUGGAGE COMPARTMENT DOOR COVER (See page ET-74)

15. INSTALL LUGGAGE COMPARTMENT DOOR INSIDE HANDLE (See page ET-74)

16. INSTALL LUGGAGE LOCK CONTROL CABLE PLATE (See page ET-75)

17. INSTALL LUGGAGE COMPARTMENT DOOR ASSIST GRIP (See page ET-75)

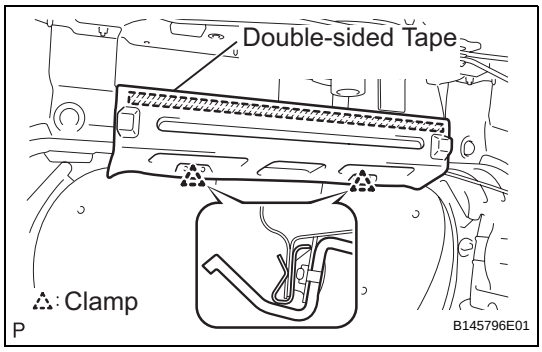

18. INSTALL LUGGAGE COMPARTMENT FRONT TRIM COVER

(a) Engage the 2 clamps.

(b) Install the luggage compartment front trim cover with double-sided tape.

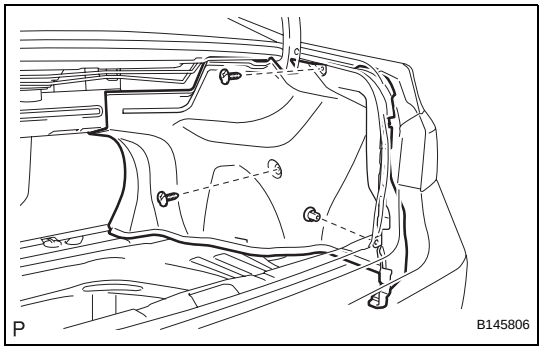

19. INSTALL LUGGAGE COMPARTMENT INNER TRIM COVER RH

(a) Install the luggage compartment inner trim cover RH with the 3 clips.

ED

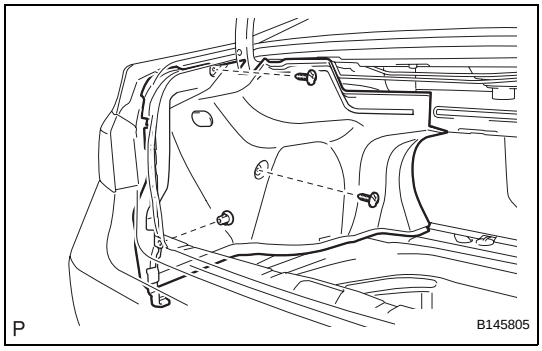

20. INSTALL LUGGAGE COMPARTMENT INNER TRIM COVER LH

(a) Install the luggage compartment inner trim cover LH with the 3 clips.

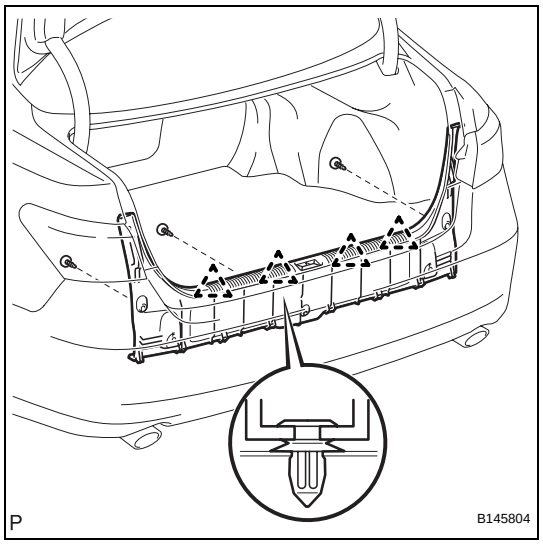

21. INSTALL REAR FLOOR FINISH PLATE

(a) Engage the 4 clips and install the rear floor finish plate.

(b) Install the 3 clips.

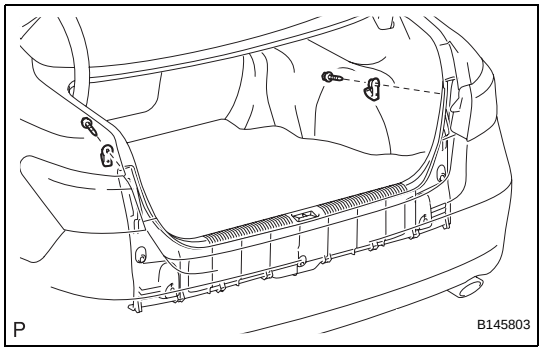

22. INSTALL NO. 1 LUGGAGE COMPARTMENT TRIM HOOK

(a) Install the 2 No. 1 luggage compartment trim hooks with the 2 screws.

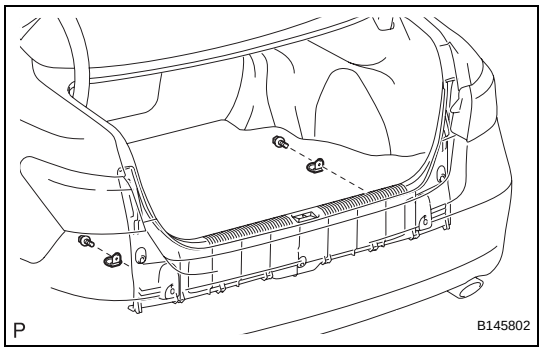

23. INSTALL LUGGAGE HOLD BELT STRIKER ASSEMBLY

(a) Install the 2 luggage hold belt striker assemblies with the 2 bolts.

24. INSTALL SPARE WHEEL COVER TRAY

25. INSTALL NO. 2 SPARE WHEEL COVER

26. INSTALL LUGGAGE COMPARTMENT FLOOR MAT

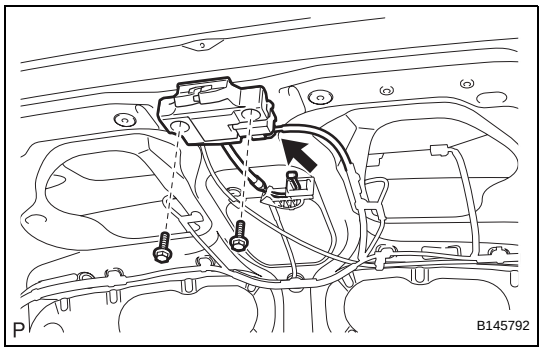

INSTALLATION

1. **INSTALL LUGGAGE COMPARTMENT DOOR LOCK ASSEMBLY**
   (a) Install the luggage compartment door lock assembly with the 2 bolts.
   Torque: 5.5 N*m (56 kgf*cm, 49 in.*lbf)
   (b) Connect the connector and cable.

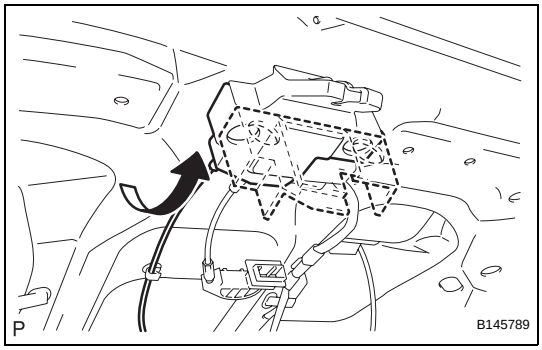

   (c) Raise the cover of the luggage compartment door lock as shown in the illustration.
   (d) Connect the luggage door lock control cable sub-assembly.
   (e) Return the cover of the luggage compartment door lock to its original position.
2. **INSTALL LUGGAGE COMPARTMENT DOOR COVER (See page ET-74)**
3. **INSTALL LUGGAGE COMPARTMENT DOOR INSIDE HANDLE (See page ET-74)**
4. **INSTALL LUGGAGE LOCK CONTROL CABLE PLATE (See page ET-75)**
5. **INSTALL LUGGAGE COMPARTMENT DOOR ASSIST GRIP (See page ET-75)**

Sliding Roof ECU Power Source Circuit

DESCRIPTION

The sliding roof drive gear sub-assembly (sliding roof control ECU) receives signals from the sliding roof switch and activates the sliding roof. However, malfunctions in the fuse, wire harness or sliding roof drive gear sub-assembly (sliding roof control ECU) may cause the sliding roof system to stop operating.

WIRING DIAGRAM

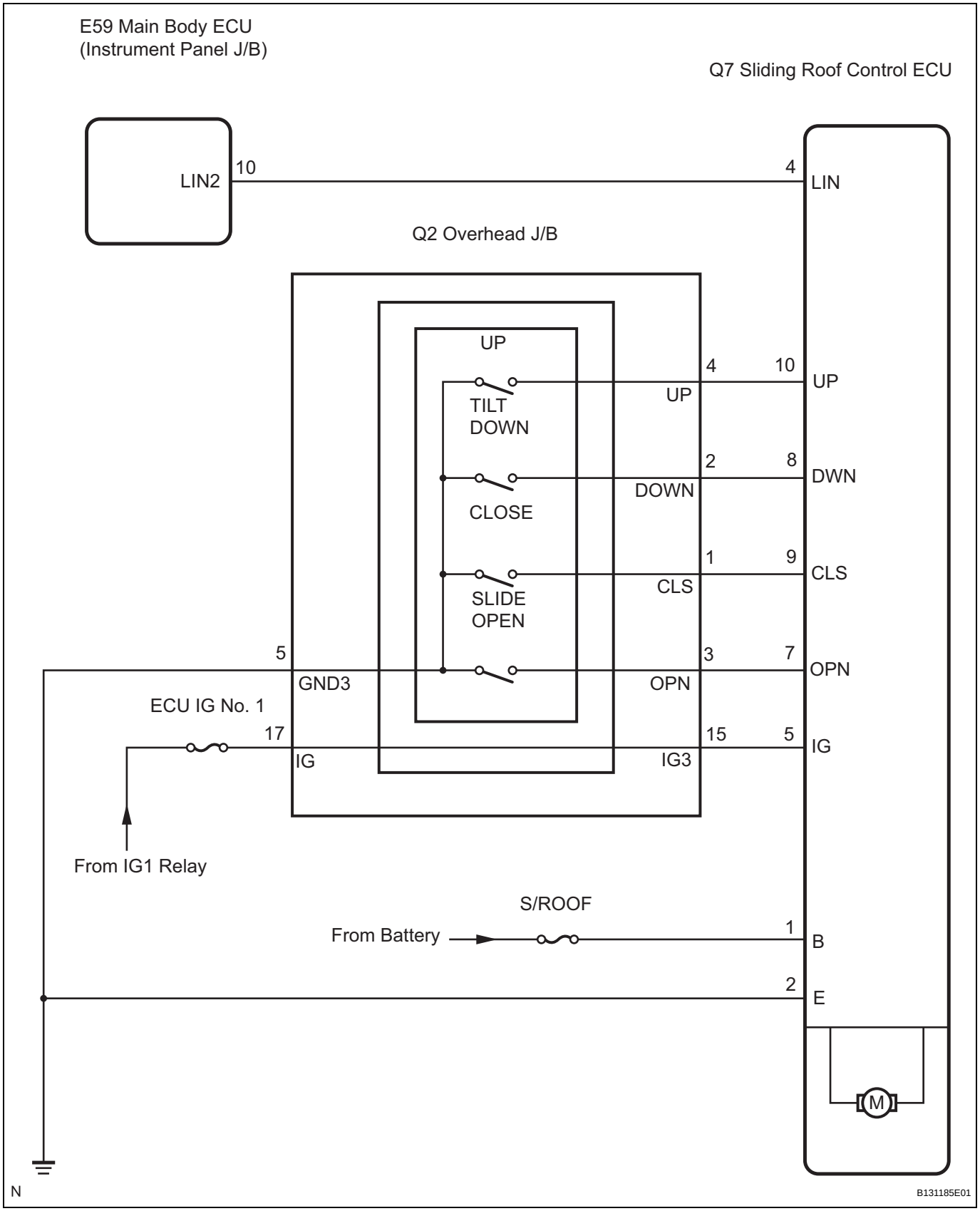

RF

INSPECTION PROCEDURE

1	PERFORM ACTIVE TEST BY INTELLIGENT TESTER (SLIDING ROOF OPERATION)

(a) Select the ACTIVE TEST, use the intelligent tester to generate a control command, and then check that the sliding roof slides open/close and tilts up/down.

SLIDE ROOF

Tester Display	Test Part	Control Range	Diagnostic Note
SLIDE ROOF	Operate sliding roof SLIDE CLOSE/TILT UP	CLOS/UP: Sliding roof SLIDE CLOSE or TILT UP operation occurs OFF: Sliding roof is not operating	-
SLIDE ROOF	Operate sliding roof SLIDE OPEN/TILT DOWN	OPN/DWN: Sliding roof SLIDE OPEN or TILT DOWN operation occurs OFF: Sliding roof is not operating	-

OK:
Sliding roof operates normally.

NG → **Go to step 2**

OK

REPLACE SLIDING ROOF DRIVE GEAR SUB-ASSEMBLY (SLIDING ROOF CONTROL ECU)

2	INSPECT FUSE (S/ROOF, ECU IG NO. 1)

(a) Remove the S/ROOF and ECU IG No. 1 fuses from the instrument panel J/B.
(b) Measure the resistance of the fuses.
Standard resistance:
Below 1 Ω

NG → **REPLACE FUSE**

OK

3	CHECK WIRE HARNESS (SLIDING ROOF CONTROL ECU - BATTERY AND BODY GROUND)

Sliding Roof Control ECU Connector:

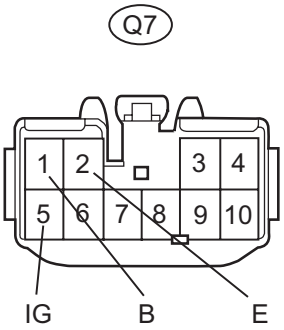

B130117E06

(a) Disconnect the Q7 connector.
(b) Measure the voltage and resistance according to the value(s) in the table below.

Standard voltage

Tester Connection	Condition	Specified Condition
B (Q7-1) - Body ground	Always	10 to 14 V
IG (Q7-5) - Body ground	Engine switch on (IG)	10 to 14 V
IG (Q7-5) - Body ground	Engine switch off	Below 1 V

Standard resistance

Tester Connection	Specified Condition
E (Q7-2) - Body ground	Below 1 Ω

NG → **REPAIR OR REPLACE HARNESS OR CONNECTOR**

OK

REPLACE SLIDING ROOF DRIVE GEAR SUB-ASSEMBLY (SLIDING ROOF CONTROL ECU)

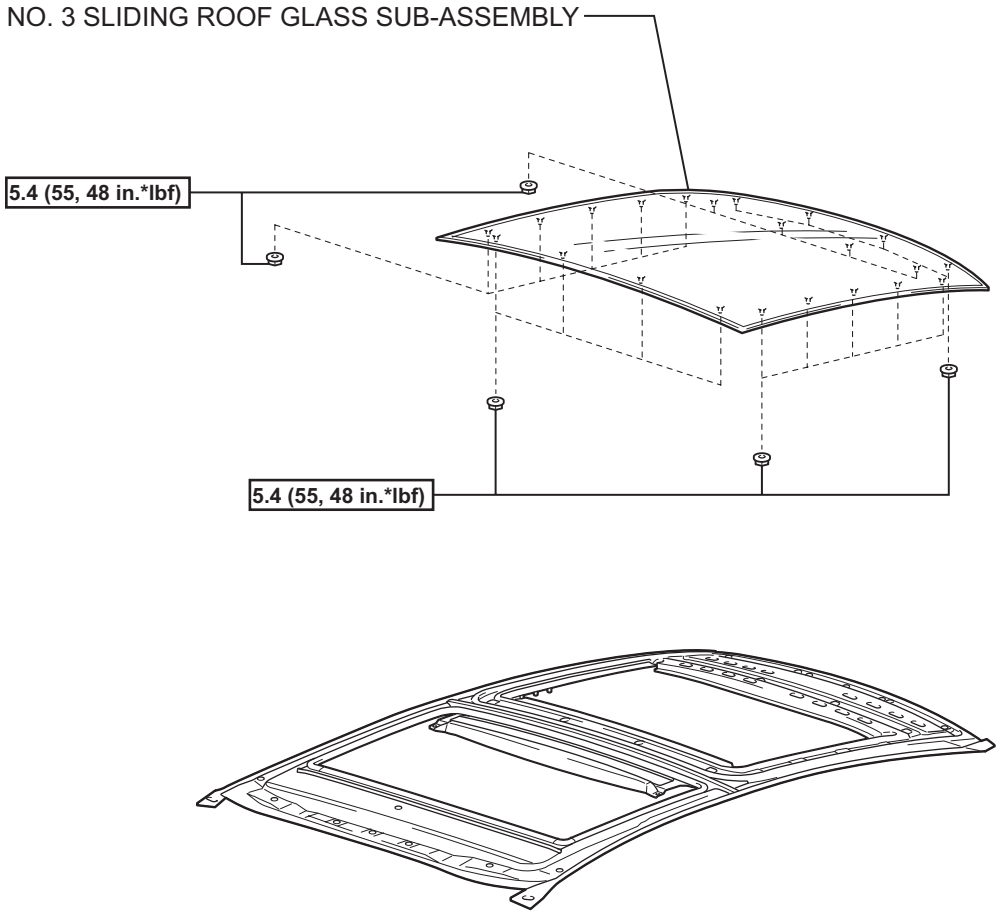

N*m (kgf*cm, ft.*lbf) : Specified torque

P B142804E01

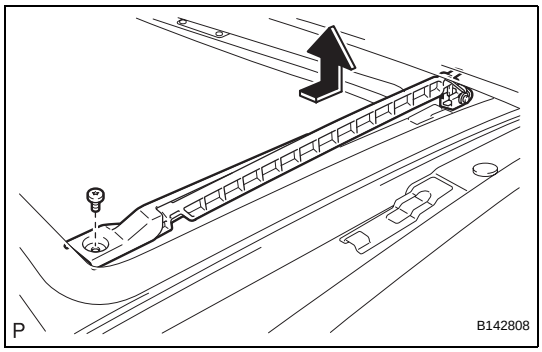

REMOVAL

1. REMOVE SLIDING ROOF SIDE GARNISH LH

(a) Fully open the No. 2 sliding roof glass sub-assembly.

(b) Using a T25 "TORX" driver, remove the screw and sliding roof side garnish LH as shown in the illustration.

2. REMOVE SLIDING ROOF SIDE GARNISH RH

HINT:
Use the same procedure for the RH side and the LH side.

RF

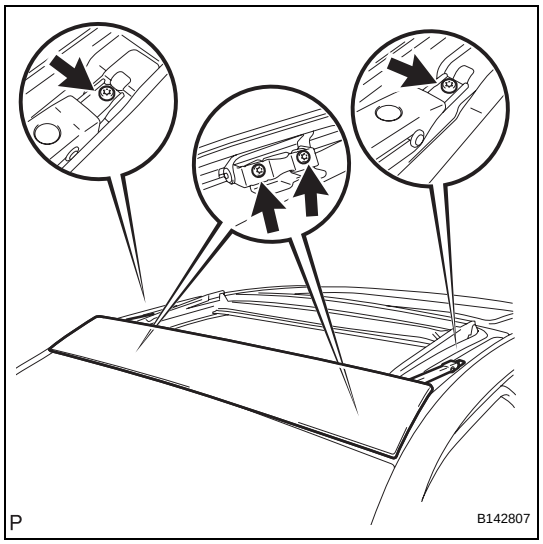

3. REMOVE NO. 1 SLIDING ROOF GLASS SUB-ASSEMBLY

(a) Using a T20 "TORX" driver, remove the 6 screws and No. 1 sliding roof glass sub-assembly.

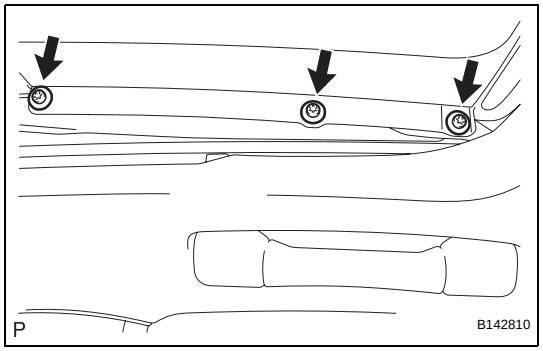

4. REMOVE NO. 2 SLIDING ROOF GLASS SUB-ASSEMBLY

(a) Fully close the No. 2 sliding roof glass sub-assembly.

(b) Using a T25 "TORX" driver, remove the 3 screws.
HINT:
Use the same procedure for the RH side and the LH side.

(c) Remove the No. 2 sliding roof glass sub-assembly.

5. REMOVE REAR SEAT CUSHION ASSEMBLY (See page SE-113)

6. REMOVE REAR SEAT HEADREST ASSEMBLY

7. REMOVE REAR CENTER SEAT HEADREST ASSEMBLY

8. REMOVE REAR SEATBACK ASSEMBLY (See page SE-113)

9. REMOVE SEAT BELT ANCHOR COVER CAP LH (See page SB-22)

10. DISCONNECT FRONT SEAT OUTER BELT ASSEMBLY LH (See page SB-22)

11. REMOVE FRONT SEAT HEADREST ASSEMBLY (for Driver Seat)

12. REMOVE FRONT SEAT OUTER TRACK BRACKET COVER LH (See page SE-83)

13. REMOVE FRONT SEAT INNER TRACK BRACKET COVER LH (See page SE-83)

14. REMOVE FRONT SEAT REAR OUTER TRACK BRACKET COVER LH (See page SE-83)

15. REMOVE FRONT SEAT REAR INNER TRACK BRACKET COVER LH (See page SE-83)

16. REMOVE FRONT SEAT ASSEMBLY LH (See page SE-83)

17. **REMOVE SEAT BELT ANCHOR COVER CAP RH (See page RS-490)**
18. **DISCONNECT FRONT SEAT OUTER BELT ASSEMBLY RH (See page RS-490)**
19. **REMOVE FRONT SEAT HEADREST ASSEMBLY (for Front Passenger Seat)**
20. **REMOVE FRONT SEAT OUTER TRACK BRACKET COVER RH (See page RS-490)**
21. **REMOVE FRONT SEAT INNER TRACK BRACKET COVER RH (See page RS-490)**
22. **REMOVE FRONT SEAT REAR OUTER TRACK BRACKET COVER RH (See page RS-490)**
23. **REMOVE FRONT SEAT REAR INNER TRACK BRACKET COVER RH (See page RS-490)**
24. **REMOVE FRONT SEAT ASSEMBLY RH (See page RS-491)**
25. **REMOVE FRONT DOOR SCUFF PLATE LH (See page IR-39)**
26. **REMOVE FRONT DOOR OPENING TRIM COVER LH (See page IR-39)**
27. **REMOVE SIDE INSTRUMENT PANEL LH (See page IP-12)**
28. **REMOVE FRONT PILLAR GARNISH LH (See page IR-39)**
29. **REMOVE REAR DOOR SCUFF PLATE LH (See page IR-40)**
30. **REMOVE LOWER CENTER PILLAR GARNISH LH (See page IR-40)**
31. **REMOVE UPPER CENTER PILLAR GARNISH LH (See page IR-41)**
32. **REMOVE REAR SEAT SIDE GARNISH LH (w/o Rear Seat Side Airbag) (See page IR-41)**
33. **REMOVE REAR SEAT SIDE AIRBAG ASSEMBLY LH (w/ Rear Seat Side Airbag) (See page RS-460)**
34. **REMOVE ROOF SIDE INNER GARNISH ASSEMBLY LH (See page IR-42)**
35. **REMOVE FRONT DOOR SCUFF PLATE RH (See page IR-42)**
36. **REMOVE FRONT DOOR OPENING TRIM COVER RH (See page IR-42)**
37. **REMOVE SIDE INSTRUMENT PANEL RH (See page IP-15)**
38. **REMOVE FRONT PILLAR GARNISH RH (See page IR-42)**

39. **REMOVE REAR DOOR SCUFF PLATE RH (See page IR-42)**
40. **REMOVE LOWER CENTER PILLAR GARNISH RH (See page IR-42)**
41. **REMOVE UPPER CENTER PILLAR GARNISH RH (See page IR-42)**
42. **REMOVE REAR SEAT SIDE GARNISH RH (w/o Rear Seat Side Airbag) (See page IR-43)**
43. **REMOVE REAR SEAT SIDE AIRBAG ASSEMBLY RH (w/ Rear Seat Side Airbag) (See page IR-43)**
44. **REMOVE ROOF SIDE INNER GARNISH ASSEMBLY RH (See page IR-43)**
45. **REMOVE INSTRUMENT PANEL FINISH PANEL END LH (See page IP-13)**
46. **REMOVE INSTRUMENT PANEL FINISH PANEL END RH (See page IP-15)**
47. **REMOVE SHIFT LEVER KNOB SUB-ASSEMBLY (See page IP-16)**
48. **REMOVE UPPER CONSOLE PANEL ASSEMBLY WITH FRONT ASH RECEPTACLE (See page IP-16)**
49. **REMOVE HEATER SEAT SWITCH CONSOLE BASE (w/o Seat Heater System) (See page IP-17)**
50. **REMOVE HEATER SEAT SWITCH CONSOLE BASE (w/ Seat Heater System) (See page IP-18)**
51. **REMOVE CONSOLE BOX POCKET (See page IP-52)**
52. **REMOVE CONSOLE BOX CARPET (See page IP-52)**
53. **REMOVE CONSOLE REAR END PANEL SUB-ASSEMBLY (See page IP-53)**
54. **REMOVE REAR CONSOLE BOX ASSEMBLY (See page IP-53)**
55. **REMOVE NO. 2 CONSOLE BOX DUCT (See page AC-149)**
56. **REMOVE NO. 3 CONSOLE BOX DUCT (See page AC-149)**
57. **DISCONNECT TRANSMISSION CONTROL CABLE ASSEMBLY (See page AX-232)**
58. **REMOVE SHIFT LEVER ASSEMBLY (See page AX-233)**
59. **REMOVE FLOOR CARPET BRACKET LH (See page AC-148)**
60. **REMOVE FLOOR CARPET BRACKET RH (See page AC-148)**
61. **REMOVE LUGGAGE COMPARTMENT FLOOR MAT (w/ DVD Player)**

62. REMOVE SPARE WHEEL COVER TRAY (w/ DVD Player)

63. REMOVE LUGGAGE HOLD BELT STRIKER ASSEMBLY (w/ DVD Player) (See page ED-82)

64. REMOVE NO. 1 LUGGAGE COMPARTMENT TRIM HOOK (w/ DVD Player) (See page ED-83)

65. REMOVE REAR FLOOR FINISH PLATE (w/ DVD Player) (See page ED-83)

66. REMOVE LUGGAGE COMPARTMENT INNER TRIM COVER RH (w/ DVD Player) (See page ED-83)

67. DISCONNECT STEREO COMPONENT AMPLIFIER ASSEMBLY CONNECTOR (w/ DVD Player) (See page IR-44)

68. REMOVE INNER REAR VIEW MIRROR STAY HOLDER COVER (See page MI-42)

69. REMOVE RAIN SENSOR COVER (See page WW-63)

70. REMOVE ROOF CONSOLE BOX ASSEMBLY (See page IR-44)

71. REMOVE VISOR BRACKET COVER (See page IR-45)

72. REMOVE VISOR ASSEMBLY LH (See page IR-45)

73. REMOVE VISOR ASSEMBLY RH (See page IR-45)

74. REMOVE VISOR HOLDER (See page IR-45)

75. REMOVE COAT HOOK (See page IR-45)

76. REMOVE SPOT LIGHT ASSEMBLY (See page IR-46)

77. REMOVE ASSIST GRIP SUB-ASSEMBLY (See page IR-47)

78. REMOVE ROOF HEADLINING ASSEMBLY (See page IR-48)

79. REMOVE CURTAIN SHIELD AIRBAG ASSEMBLY LH (See page RS-439)

80. REMOVE CURTAIN SHIELD AIRBAG ASSEMBLY RH
HINT:
Use the same procedure for the RH side and the LH side.

81. REMOVE SLIDING ROOF DRIVE GEAR SUB-ASSEMBLY
(a) Remove the 2 bolts, nut, sliding roof drive gear sub-assembly, and room light bracket.

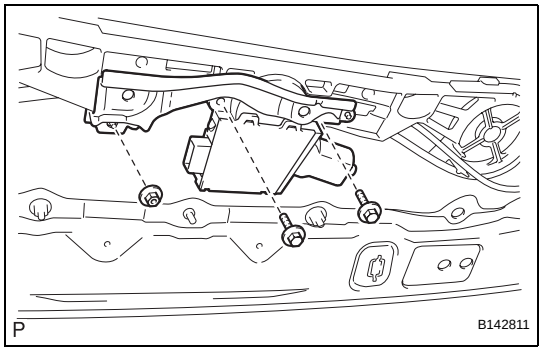

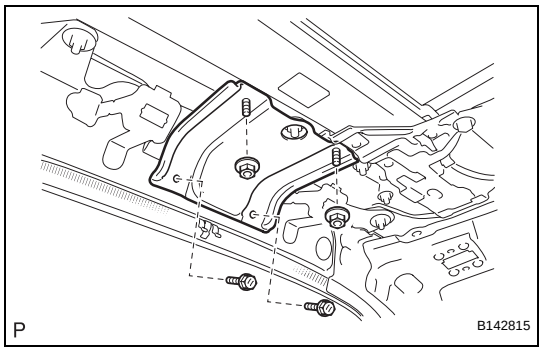

82. REMOVE FRONT SLIDING ROOF HOUSING MOUNTING BRACKET LH

(a) Remove the 2 bolts, 2 nuts, and front sliding roof housing mounting bracket LH.

83. REMOVE FRONT SLIDING ROOF HOUSING MOUNTING BRACKET RH

HINT:
Use the same procedure for the RH side and the LH side.

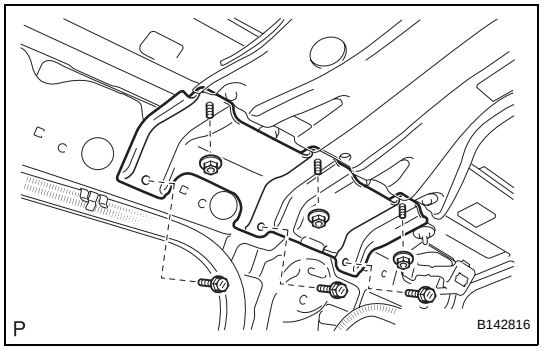

84. REMOVE CENTER SLIDING ROOF HOUSING MOUNTING BRACKET LH

(a) Remove the 3 bolts, 3 nuts, and center sliding roof housing mounting bracket LH.

85. REMOVE CENTER SLIDING ROOF HOUSING MOUNTING BRACKET RH

HINT:
Use the same procedure for the RH side and the LH side.

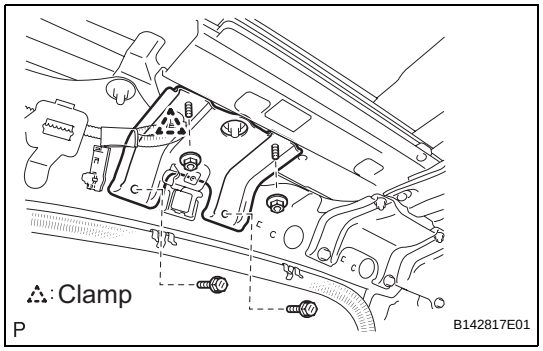

86. REMOVE REAR SLIDING ROOF HOUSING MOUNTING BRACKET LH

(a) Disengage the clamp.
(b) Remove the 2 bolts, 2 nuts, and rear sliding roof housing mounting bracket LH.

87. REMOVE REAR SLIDING ROOF HOUSING MOUNTING BRACKET RH

HINT:
Use the same procedure for the RH side and the LH side.

88. REMOVE SLIDING ROOF HOUSING ASSEMBLY

(a) Using a T25 "TORX" driver, remove the 4 screws.

(b) Remove the 16 nuts and sliding roof housing assembly.

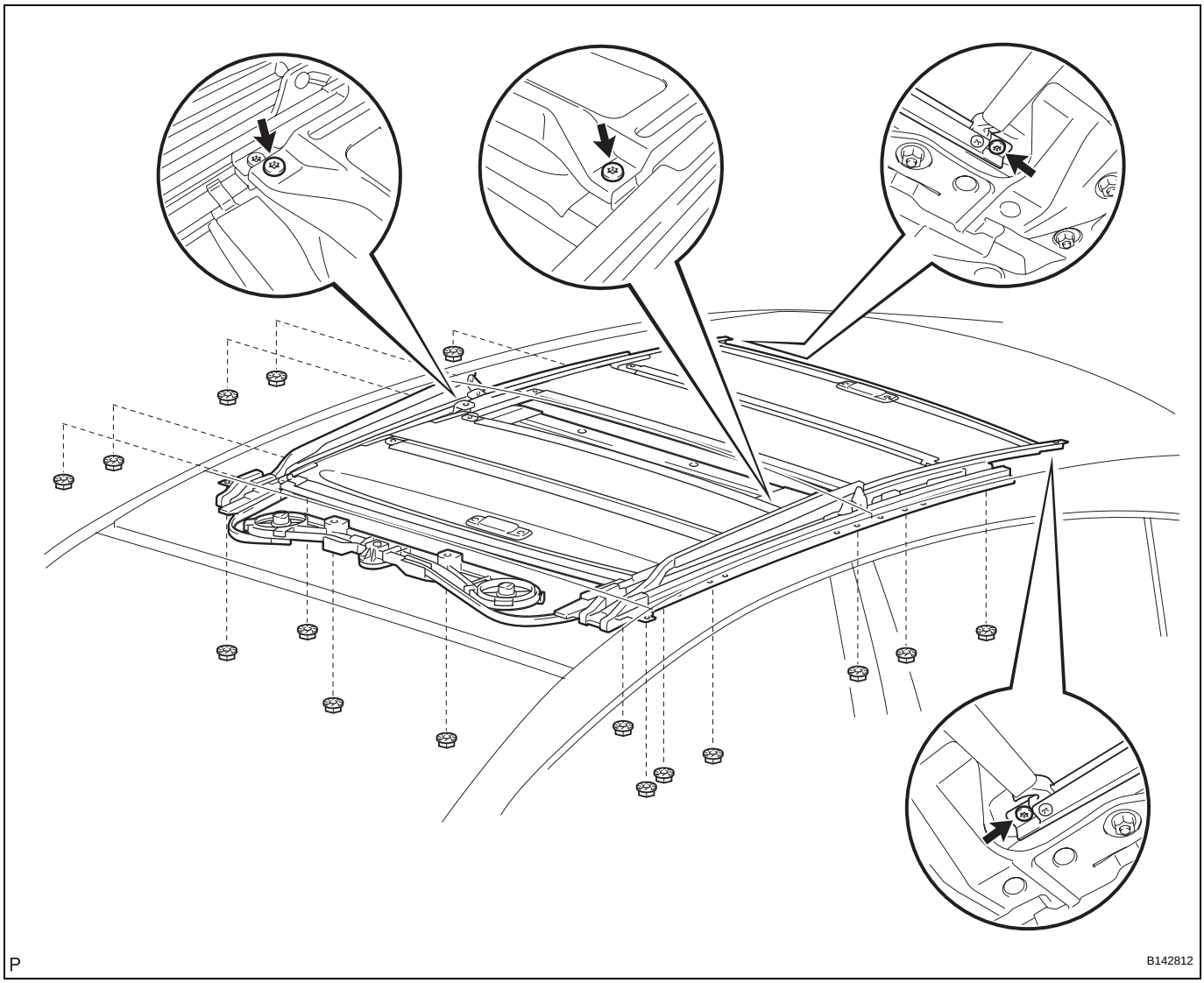

89. REMOVE SLIDING ROOF HOUSING PANEL

(a) Remove the 20 nuts and sliding roof housing panel.

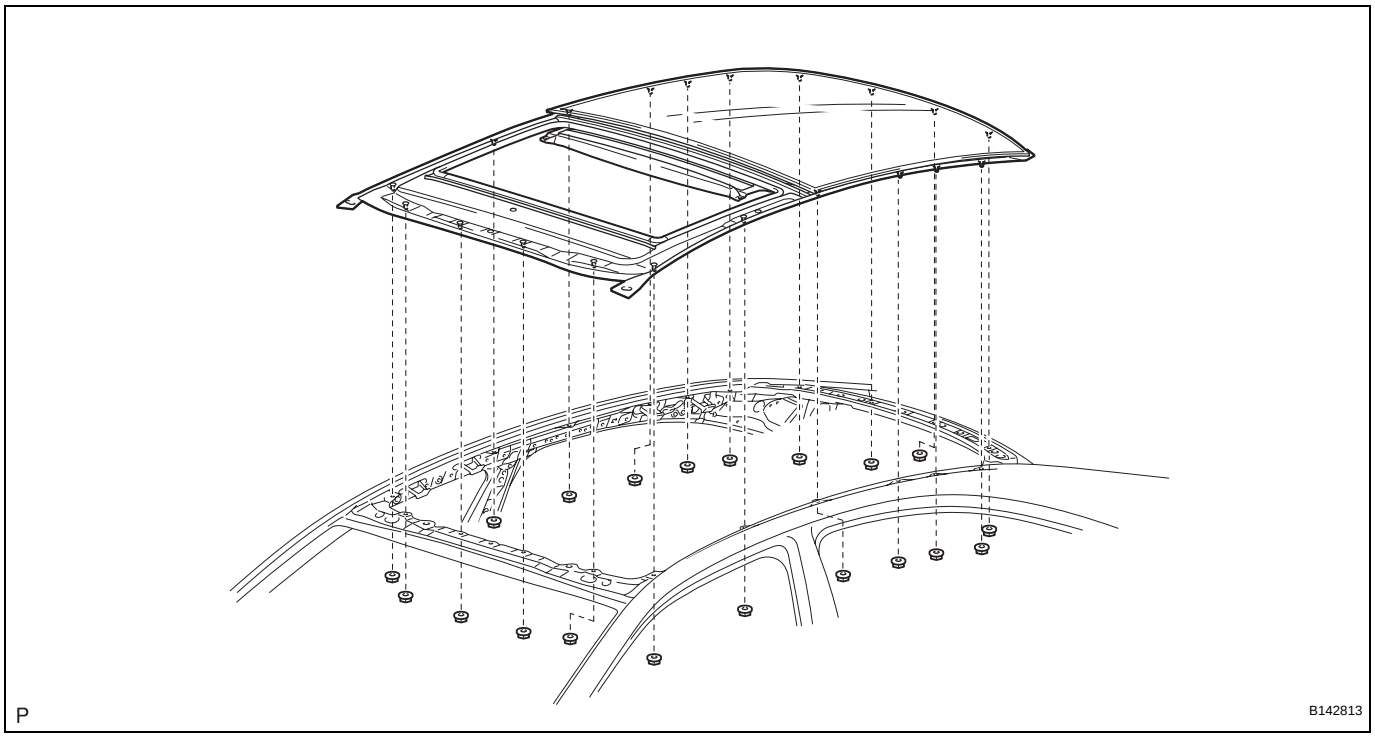

NOTICE:

- **When removing the panel, be careful not to damage the vehicle.**
- **Perform this step with 2 or more technicians.**

DISASSEMBLY

1. REMOVE NO. 3 SUNSHADE TRIM SUB-ASSEMBLY

(a) Remove the screw and rear sliding roof sunshade stopper LH.
HINT:
Use the same procedure for the RH side and the LH side.

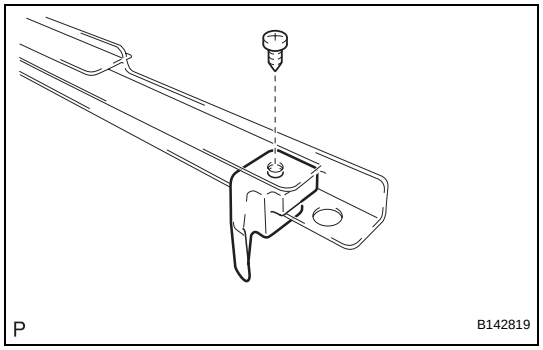

(b) Remove the screw and front sliding roof sunshade stopper LH.
HINT:
- Use the same procedures for the other 2 stoppers.
- Use the same procedure for the RH side and the LH side.

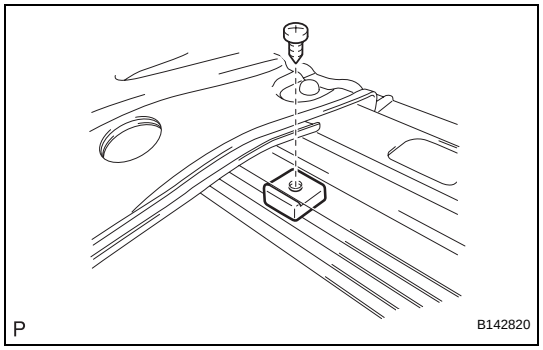

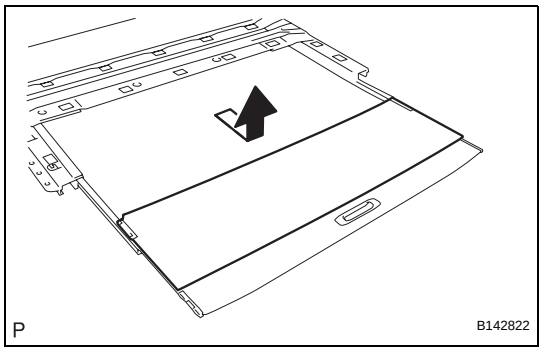

(c) Slide and remove the No. 3 sunshade trim sub-assembly.

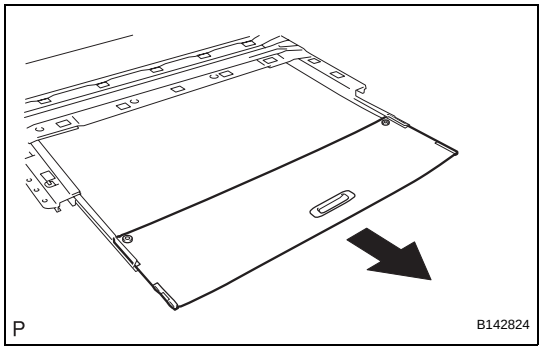

2. REMOVE NO. 4 SUNSHADE TRIM SUB-ASSEMBLY

(a) Slide and remove the No. 4 sunshade trim sub-assembly.

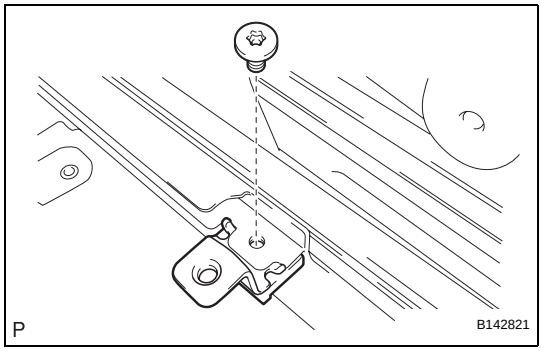

3. REMOVE NO. 2 SUNSHADE TRIM SUB-ASSEMBLY

(a) Using a T25 "TORX" driver, remove the screw and sliding roof plate LH.
HINT:
Use the same procedure for the RH side and the LH side.

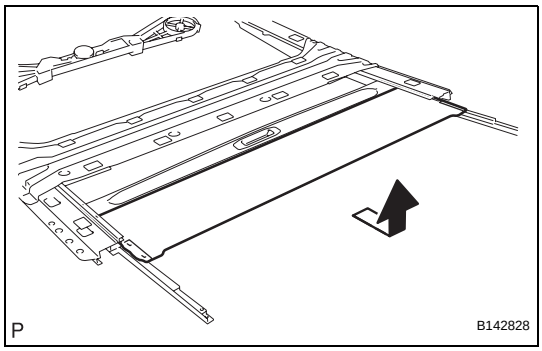

(b) Slide and remove the No. 2 sunshade trim sub-assembly.

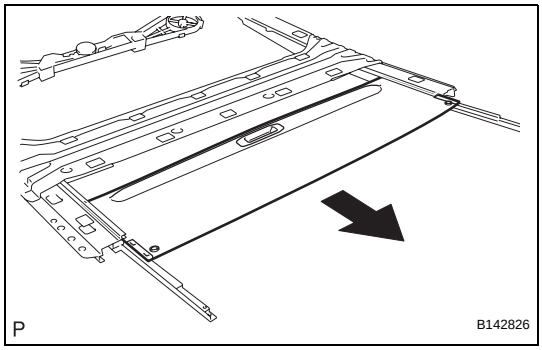

4. REMOVE NO. 1 SUNSHADE TRIM SUB-ASSEMBLY

(a) Slide and remove the No. 1 sunshade trim sub-assembly.

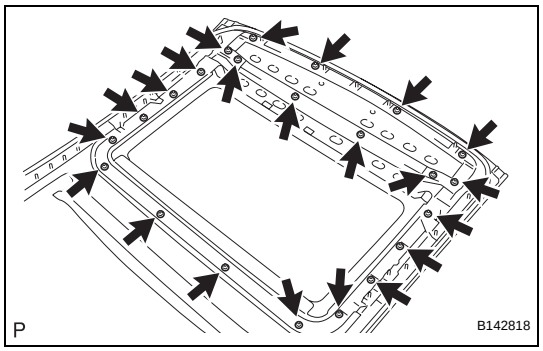

5. REMOVE NO. 3 SLIDING ROOF GLASS SUB-ASSEMBLY

(a) Remove the 22 nuts and No. 3 sliding roof glass sub-assembly.

REASSEMBLY

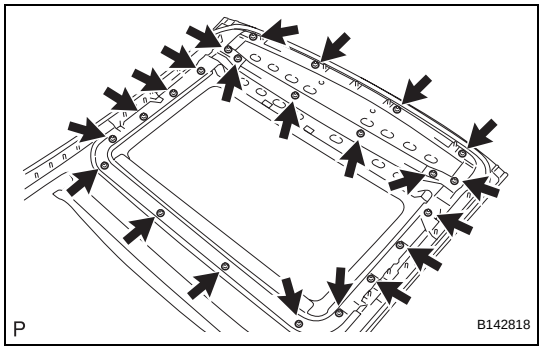

1. INSTALL NO. 3 SLIDING ROOF GLASS SUB-ASSEMBLY

(a) Install the No. 3 sliding roof glass sub-assembly with the 22 nuts.
Torque: 5.4 N*m (55 kgf*cm, 48 in.*lbf)

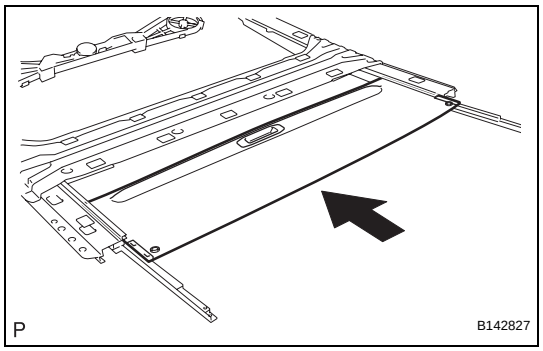

2. INSTALL NO. 1 SUNSHADE TRIM SUB-ASSEMBLY

(a) Slide and install the No. 1 sunshade trim sub-assembly.

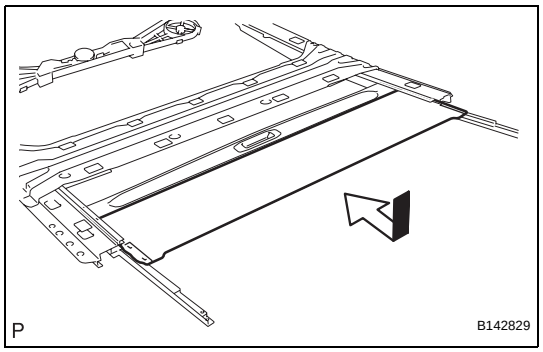

3. INSTALL NO. 2 SUNSHADE TRIM SUB-ASSEMBLY

(a) Slide and install the No. 2 sunshade trim sub-assembly.

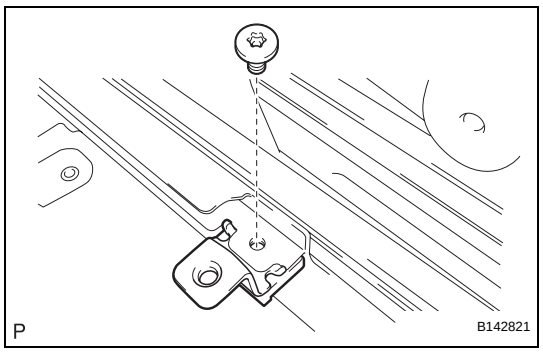

(b) Using a T25 "TORX" driver, install the sliding roof plate LH with the screw.
Torque: 4.0 N*m (41 kgf*cm, 35 in.*lbf)
HINT:
Use the same procedure for the RH side and the LH side.

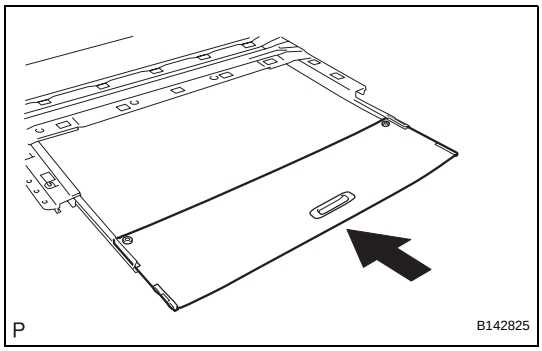

4. INSTALL NO. 4 SUNSHADE TRIM SUB-ASSEMBLY

(a) Slide and install the No. 4 sunshade trim sub-assembly.

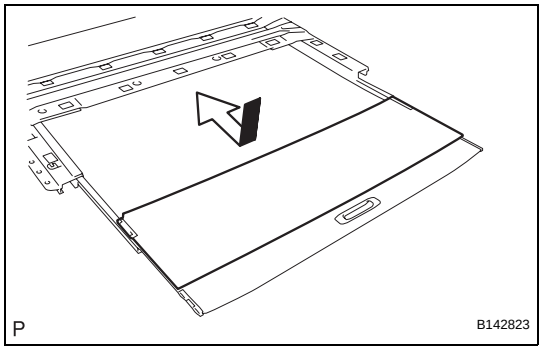

5. INSTALL NO. 3 SUNSHADE TRIM SUB-ASSEMBLY

(a) Slide and install the No. 3 sunshade trim sub-assembly.

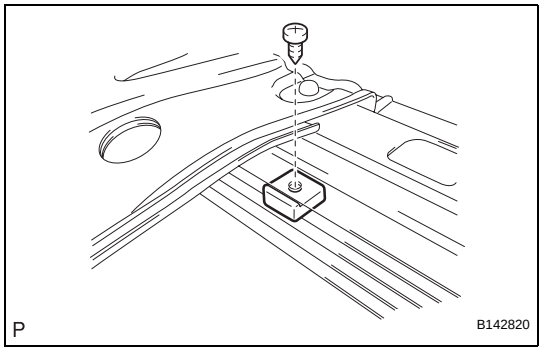

(b) Install the front sliding roof sunshade stopper LH with the screw.
Torque: 4.0 N*m (41 kgf*cm, 35 in.*lbf)
HINT:
- Use the same procedure for the other 2 stoppers.
- Use the same procedure for the RH side and the LH side.

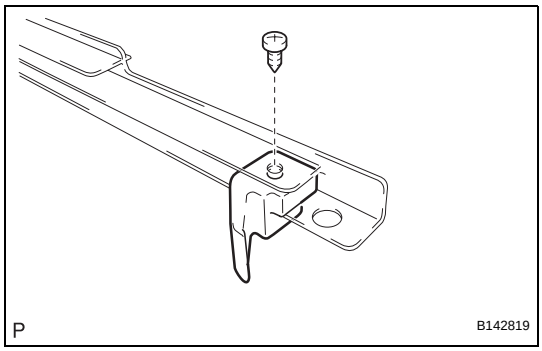

(c) Install the rear sliding roof sunshade stopper LH with the screw.
Torque: 4.0 N*m (41 kgf*cm, 35 in.*lbf)
HINT:
Use the same procedure for the RH side and the LH side.

INSTALLATION

1. TEMPORARILY TIGHTEN SLIDING ROOF HOUSING PANEL

(a) Temporarily install the sliding roof housing panel with the 20 nuts.

NOTICE:

- **When installing the panel to the vehicle, first install the panel center front and center rear alignment bolts to the vehicle front and rear alignment bolt installation points, as shown in the illustration.**
- **Align the end of weatherstrip with the vehicle body and position the weatherstrip so that its front edge comes to the location.**
- **When installing the panel, be careful not to damage the vehicle.**
- **Perform this step with 2 or more technicians.**

(b) Check that the alignment bolts are firmly installed.

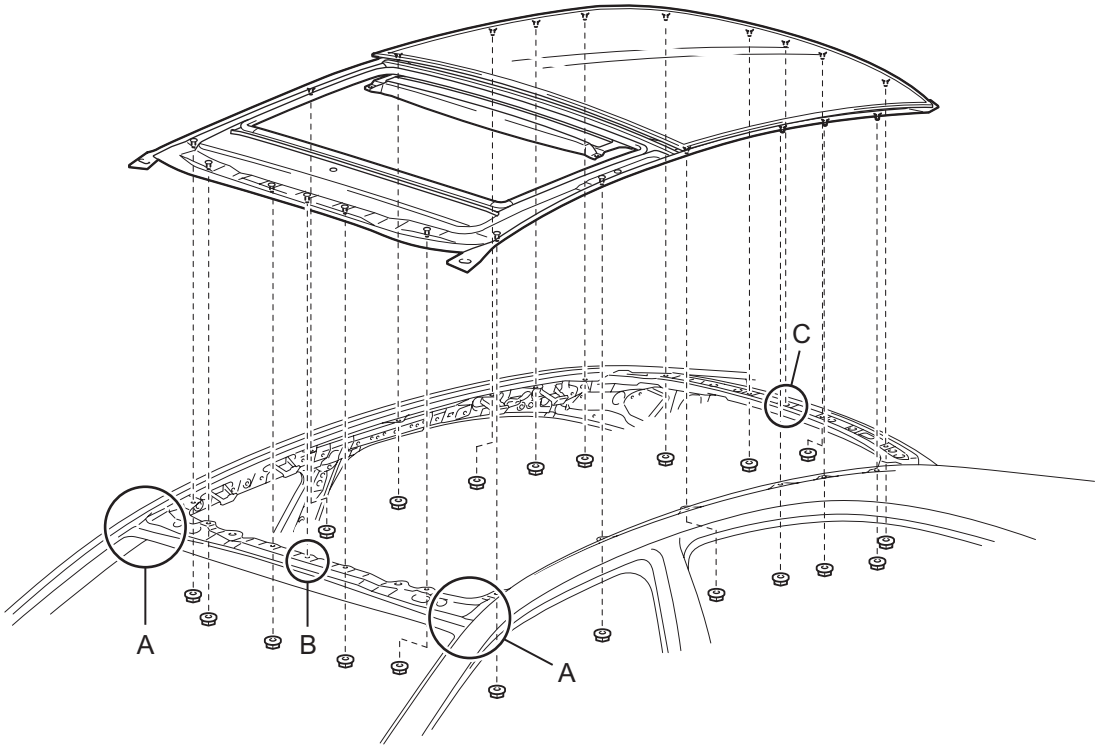

Align the end of the weatherstrip with the vehicle body and position the weatherstrip so that its front edge comes to the location

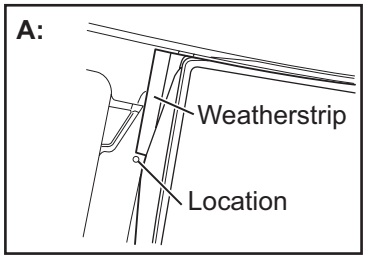

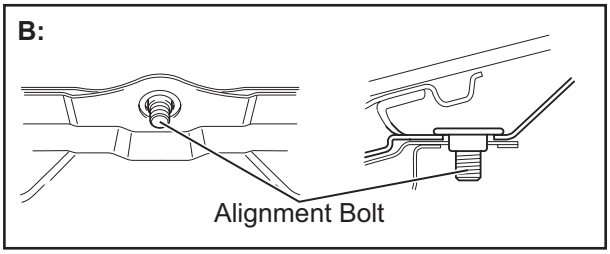

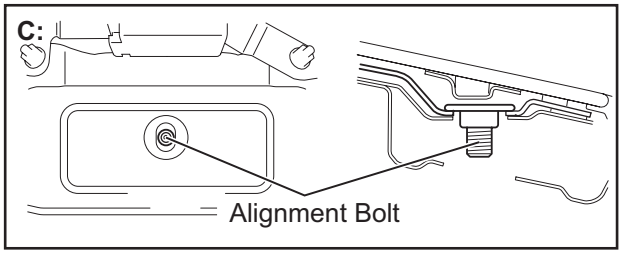

P

B142814E01

RF

NOTICE:
When the bolts are not firmly installed, water leaks and malfunctions will occur.

2. ADJUST SLIDING ROOF HOUSING PANEL

(a) The sliding roof glass does not have adjusting screws. Instead, change the position of the No. 3 sliding roof glass sub-assembly so that the measurements are within the standard values shown in the illustration.

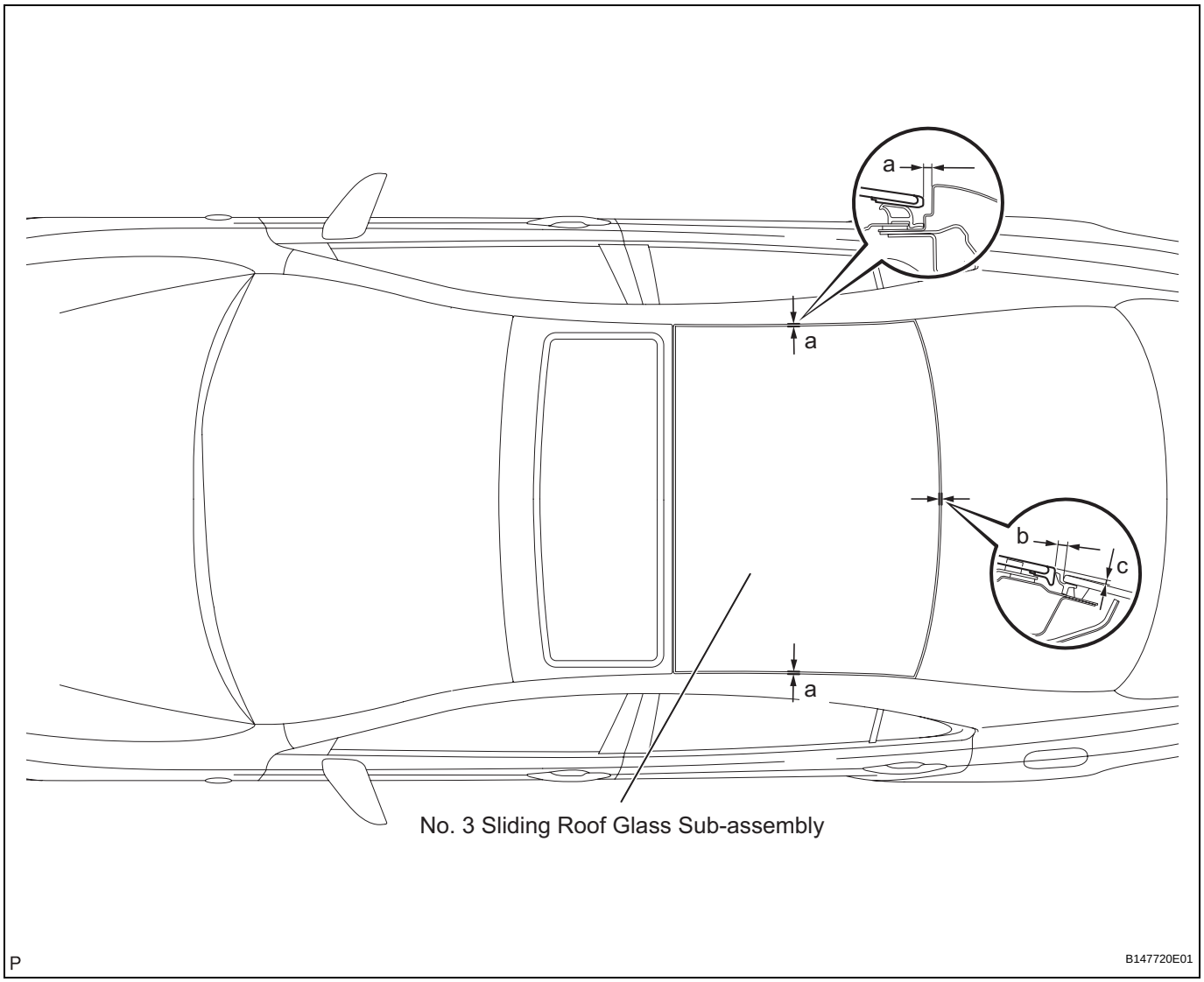

Standard

Area	Measurement
a	4.0 mm + 2.0 mm (0.158 in. + 0.079 in.) 4.0 mm - 2.0 mm (0.158 in. - 0.079 in.)
b	4.5 mm + 1.5 mm (0.177 in. + 0.059 in.) 4.5 mm - 1.5 mm (0.177 in. - 0.059 in.)
c	2.0 mm + 1.5 mm (0.079 in. + 0.059 in.) 2.0 mm - 1.5 mm (0.079 in. - 0.059 in.)

HINT:
"+" represents the condition that the glass is above the panel level. "-" represents the condition that the glass is below the panel level.

(b) After adjusting the No. 3 sliding roof glass sub-assembly, fully tighten the 20 nuts to install the sliding roof housing panel.
Torque: 5.5 N*m (56 kgf*cm, 49 in.*lbf)

3. INSTALL SLIDING ROOF HOUSING ASSEMBLY

(a) Install the sliding roof housing assembly with the 16 nuts.

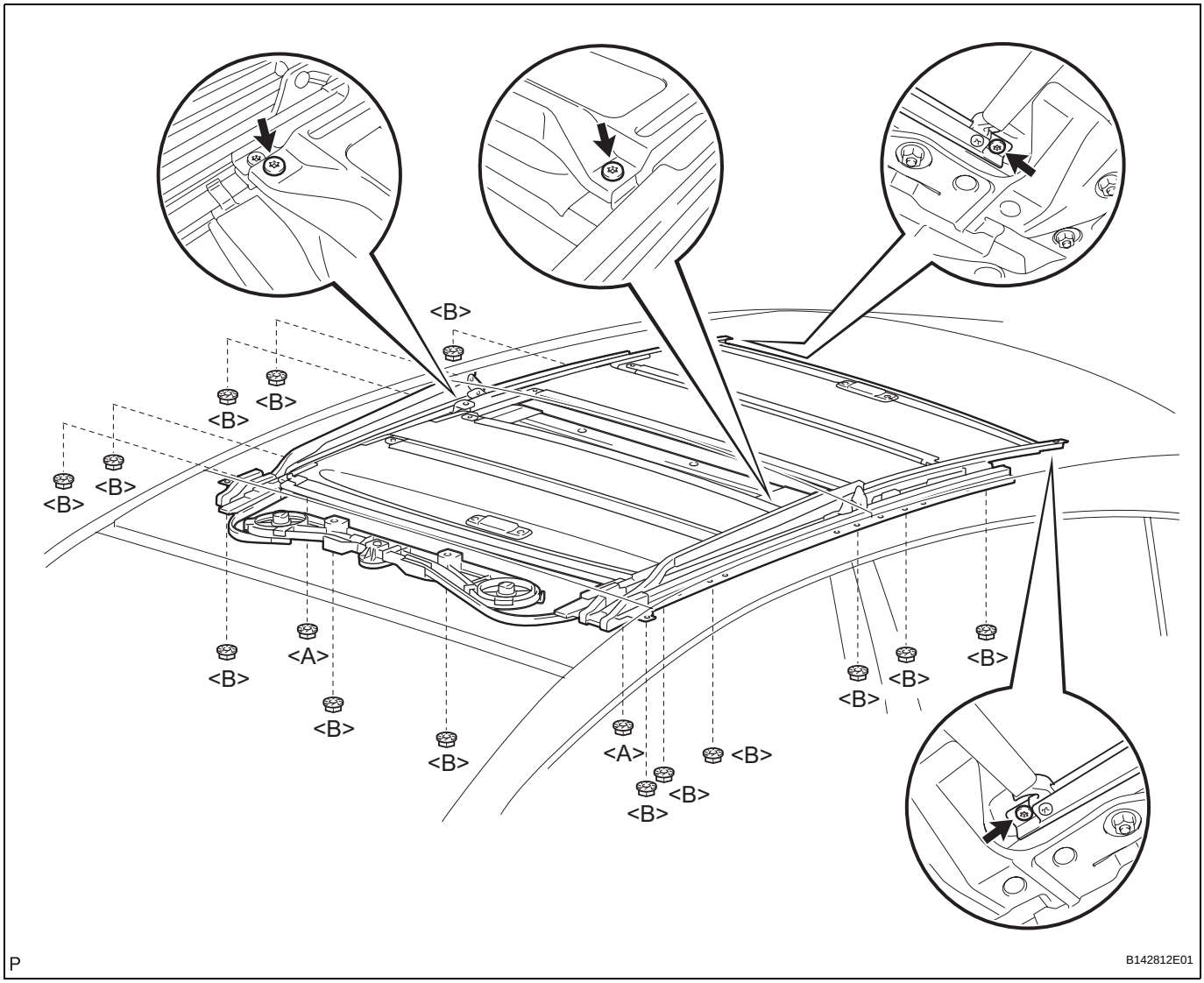

Torque: Nut <A>
7.0 N*m (71 kgf*cm, 62 in.*lbf)
Nut <B>
5.4 N*m (55 kgf*cm, 48 in.*lbf)

(b) Using a T25 "TORX" driver, install the 4 screws.
Torque: 4.0 N*m (41 kgf*cm, 35 in.*lbf)

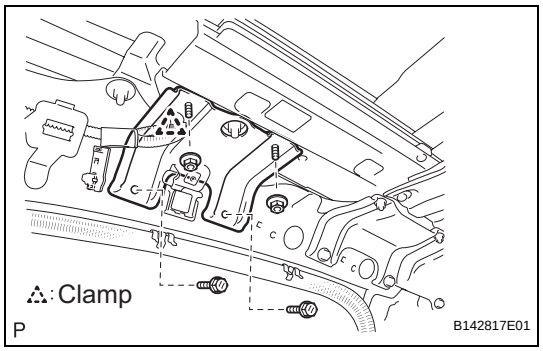

4. INSTALL REAR SLIDING ROOF HOUSING MOUNTING BRACKET LH

(a) Install the rear sliding roof housing mounting bracket LH with the 2 bolts and 2 nuts.

Torque: Bolt
8.0 N*m (82 kgf*cm, 71 in.*lbf)
Nut
5.5 N*m (56 kgf*cm, 49 in.*lbf)

(b) Engage the clamp.

5. INSTALL REAR SLIDING ROOF HOUSING MOUNTING BRACKET RH

HINT:
Use the same procedure for the RH side and the LH side.

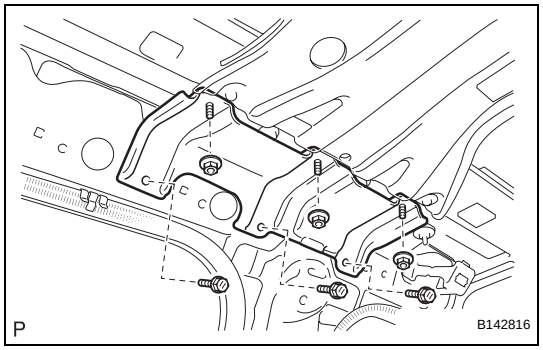

6. INSTALL CENTER SLIDING ROOF HOUSING MOUNTING BRACKET LH

(a) Install the center sliding roof housing mounting bracket LH with the 3 bolts and 3 nuts.

Torque: Bolt
8.0 N*m (82 kgf*cm, 71 in.*lbf)
Nut
5.5 N*m (56 kgf*cm, 49 in.*lbf)

7. INSTALL CENTER SLIDING ROOF HOUSING MOUNTING BRACKET RH

HINT:
Use the same procedure for the RH side and the LH side.

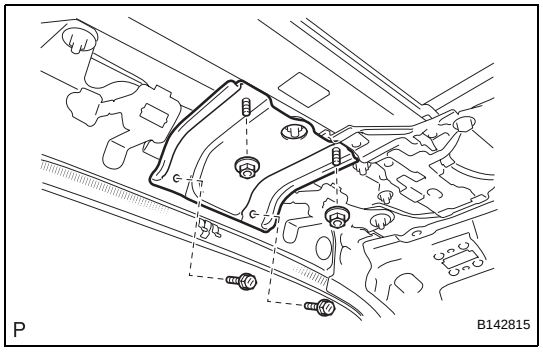

8. INSTALL FRONT SLIDING ROOF HOUSING MOUNTING BRACKET LH

(a) Install the front sliding roof housing mounting bracket LH with the 2 bolts and 2 nuts.

Torque: Bolt
8.0 N*m (82 kgf*cm, 71 in.*lbf)
Nut
5.5 N*m (56 kgf*cm, 49 in.*lbf)

9. INSTALL FRONT SLIDING ROOF HOUSING MOUNTING BRACKET RH

HINT:
Use the same procedure for the RH side and the LH side.

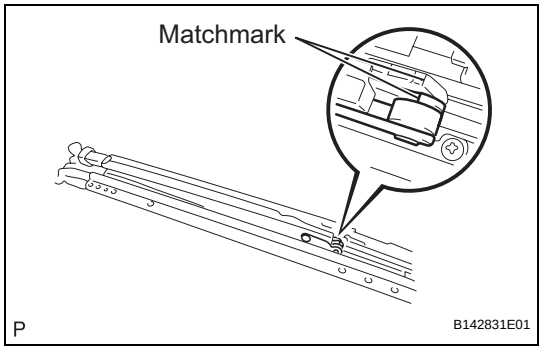

10. ADJUST FULLY CLOSED POSITION

(a) Using a screwdriver, slide the sliding roof drive cable to align the matchmarks.
HINT:
Tape the screwdriver tip before use.

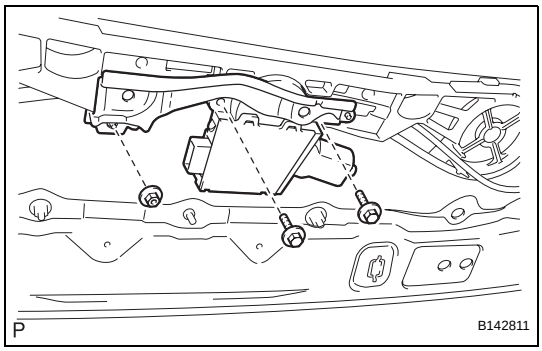

11. INSTALL SLIDING ROOF DRIVE GEAR SUB-ASSEMBLY

(a) Install the sliding roof drive gear sub-assembly and room light bracket with the 2 bolts and nut.
Torque: 5.4 N*m (55 kgf*cm, 48 in.*lbf)

12. INSTALL CURTAIN SHIELD AIRBAG ASSEMBLY LH (See page RS-441)

13. INSTALL CURTAIN SHIELD AIRBAG ASSEMBLY RH

HINT:
Use the same procedure for the RH side and the LH side.

14. INSTALL ROOF HEADLINING ASSEMBLY (See page IR-57)

15. INSTALL ASSIST GRIP SUB-ASSEMBLY (See page IR-58)

16. INSTALL SPOT LIGHT ASSEMBLY (See page IR-59)

17. INSTALL COAT HOOK (See page IR-60)

18. INSTALL VISOR HOLDER (See page IR-60)

19. INSTALL VISOR ASSEMBLY LH (See page IR-60)

20. INSTALL VISOR ASSEMBLY RH (See page IR-60)

21. INSTALL VISOR BRACKET COVER (See page IR-60)

22. INSTALL ROOF CONSOLE BOX ASSEMBLY (See page IR-60)

23. INSTALL RAIN SENSOR COVER (See page WW-65)

24. INSTALL INNER REAR VIEW MIRROR STAY HOLDER COVER (See page MI-44)

25. CONNECT STEREO COMPONENT AMPLIFIER ASSEMBLY CONNECTOR (w/ DVD Player) (See page IR-61)

26. INSTALL LUGGAGE COMPARTMENT INNER TRIM COVER RH (w/ DVD Player) (See page ED-88)

27. INSTALL REAR FLOOR FINISH PLATE (w/ DVD Player) (See page ED-88)

28. INSTALL NO. 1 LUGGAGE COMPARTMENT TRIM HOOK (w/ DVD Player) (See page ED-89)

29. INSTALL LUGGAGE HOLD BELT STRIKER ASSEMBLY (w/ DVD Player) (See page ED-89)

30. INSTALL SPARE WHEEL COVER TRAY (w/ DVD Player)

31. INSTALL LUGGAGE COMPARTMENT FLOOR MAT (w/ DVD Player)

32. INSTALL FLOOR CARPET BRACKET LH

33. INSTALL FLOOR CARPET BRACKET RH

34. **INSTALL SHIFT LEVER ASSEMBLY (See page AX-240)**
35. **CONNECT TRANSMISSION CONTROL CABLE ASSEMBLY (See page AX-241)**
36. **INSTALL NO. 2 CONSOLE BOX DUCT (See page AC-163)**
37. **INSTALL NO. 3 CONSOLE BOX DUCT (See page AC-163)**
38. **INSTALL REAR CONSOLE BOX ASSEMBLY (See page IP-39)**
39. **INSTALL CONSOLE REAR END PANEL SUB-ASSEMBLY (See page IP-40)**
40. **INSTALL CONSOLE BOX CARPET (See page IP-41)**
41. **INSTALL CONSOLE BOX POCKET (See page IP-41)**
42. **INSTALL HEATER SEAT SWITCH CONSOLE BASE (w/o Seat Heater System) (See page IP-41)**
43. **INSTALL HEATER SEAT SWITCH CONSOLE BASE (w/ Seat Heater System) (See page IP-41)**
44. **INSTALL UPPER CONSOLE PANEL ASSEMBLY WITH FRONT ASH RECEPTACLE (See page IP-42)**
45. **INSTALL SHIFT LEVER KNOB SUB-ASSEMBLY (See page IP-42)**
46. **INSTALL INSTRUMENT PANEL FINISH PANEL END LH (See page IP-46)**
47. **INSTALL INSTRUMENT PANEL FINISH PANEL END RH (See page IP-44)**
48. **INSTALL ROOF SIDE INNER GARNISH ASSEMBLY LH (See page IR-62)**
49. **INSTALL REAR SEAT SIDE GARNISH LH (w/o Rear Seat Side Airbag) (See page IR-62)**
50. **INSTALL REAR SEAT SIDE AIRBAG ASSEMBLY LH (w/ Rear Seat Side Airbag) (See page RS-460)**
51. **INSTALL UPPER CENTER PILLAR GARNISH LH (See page IR-63)**
52. **INSTALL LOWER CENTER PILLAR GARNISH LH (See page IR-63)**
53. **INSTALL REAR DOOR SCUFF PLATE LH (See page IR-63)**
54. **INSTALL FRONT PILLAR GARNISH LH (See page IR-64)**
55. **INSTALL SIDE INSTRUMENT PANEL LH (See page IP-47)**
56. **INSTALL FRONT DOOR OPENING TRIM COVER LH (See page IR-64)**

57. **INSTALL FRONT DOOR SCUFF PLATE LH (See page IR-65)**
58. **INSTALL ROOF SIDE INNER GARNISH ASSEMBLY RH (See page IR-65)**
59. **INSTALL REAR SEAT SIDE GARNISH RH (w/o Rear Seat Side Airbag) (See page IR-65)**
60. **INSTALL REAR SEAT SIDE AIRBAG ASSEMBLY RH (w/ Rear Seat Side Airbag) (See page IR-65)**
61. **INSTALL UPPER CENTER PILLAR GARNISH RH (See page IR-65)**
62. **INSTALL LOWER CENTER PILLAR GARNISH RH (See page IR-65)**
63. **INSTALL REAR DOOR SCUFF PLATE RH (See page IR-65)**
64. **INSTALL FRONT PILLAR GARNISH RH (See page IR-65)**
65. **INSTALL SIDE INSTRUMENT PANEL RH (See page IP-43)**
66. **INSTALL FRONT DOOR OPENING TRIM COVER RH (See page IR-65)**
67. **INSTALL FRONT DOOR SCUFF PLATE RH (See page IR-65)**
68. **INSTALL FRONT SEAT ASSEMBLY LH (See page SE-109)**
69. **INSTALL FRONT SEAT REAR OUTER TRACK BRACKET COVER LH (See page SE-110)**
70. **INSTALL FRONT SEAT REAR INNER TRACK BRACKET COVER LH (See page SE-110)**
71. **INSTALL FRONT SEAT OUTER TRACK BRACKET COVER LH (See page SE-110)**
72. **INSTALL FRONT SEAT INNER TRACK BRACKET COVER LH (See page SE-110)**
73. **CONNECT FRONT SEAT OUTER BELT ASSEMBLY LH (See page SB-25)**
74. **INSTALL SEAT BELT ANCHOR COVER CAP LH (See page SB-25)**
75. **INSTALL FRONT SEAT HEADREST ASSEMBLY (for Driver Seat)**
76. **INSTALL FRONT SEAT ASSEMBLY RH (See page RS-497)**
77. **INSTALL FRONT SEAT REAR OUTER TRACK BRACKET COVER RH (See page RS-498)**
78. **INSTALL FRONT SEAT REAR INNER TRACK BRACKET COVER RH (See page RS-498)**

79. INSTALL FRONT SEAT OUTER TRACK BRACKET COVER RH (See page RS-498)

80. INSTALL FRONT SEAT INNER TRACK BRACKET COVER RH (See page RS-498)

81. CONNECT FRONT SEAT OUTER BELT ASSEMBLY RH (See page RS-499)

82. INSTALL SEAT BELT ANCHOR COVER CAP RH (See page RS-499)

83. INSTALL FRONT SEAT HEADREST ASSEMBLY (for Front Passenger Seat)

84. INSTALL REAR SEATBACK ASSEMBLY (See page SE-121)

85. INSTALL REAR CENTER SEAT HEADREST ASSEMBLY

86. INSTALL REAR SEAT HEADREST ASSEMBLY

87. INSTALL REAR SEAT CUSHION ASSEMBLY (See page SE-121)

88. TEMPORARILY TIGHTEN NO. 2 SLIDING ROOF GLASS SUB-ASSEMBLY

(a) Fully close the No. 2 sliding roof glass sub-assembly.

(b) Using a T25 "TORX" driver, install the 3 screws.
HINT:
Use the same procedure for the RH side and the LH side.

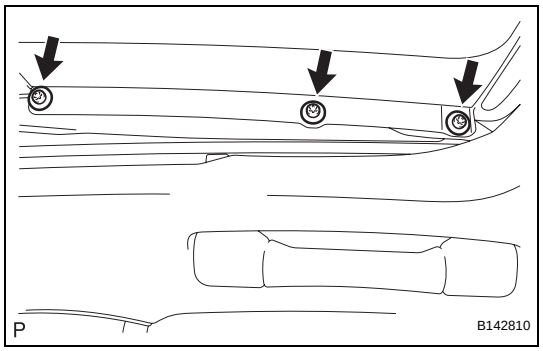

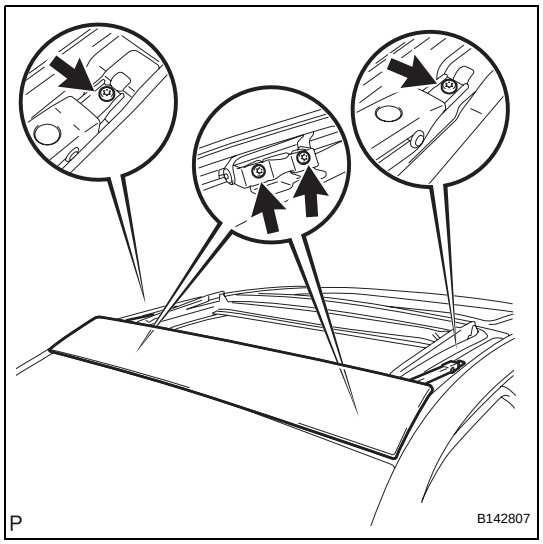

89. TEMPORARILY TIGHTEN NO. 1 SLIDING ROOF GLASS SUB-ASSEMBLY

(a) Fully open the No. 2 sliding roof glass sub-assembly.

(b) Using a T20 "TORX" driver, install the No. 1 sliding roof glass sub-assembly with the 6 screws.

90. ADJUST SLIDING ROOF GLASS SUB-ASSEMBLY (NO. 1, NO. 2)

(a) Adjust the No. 2 sliding roof glass sub-assembly:

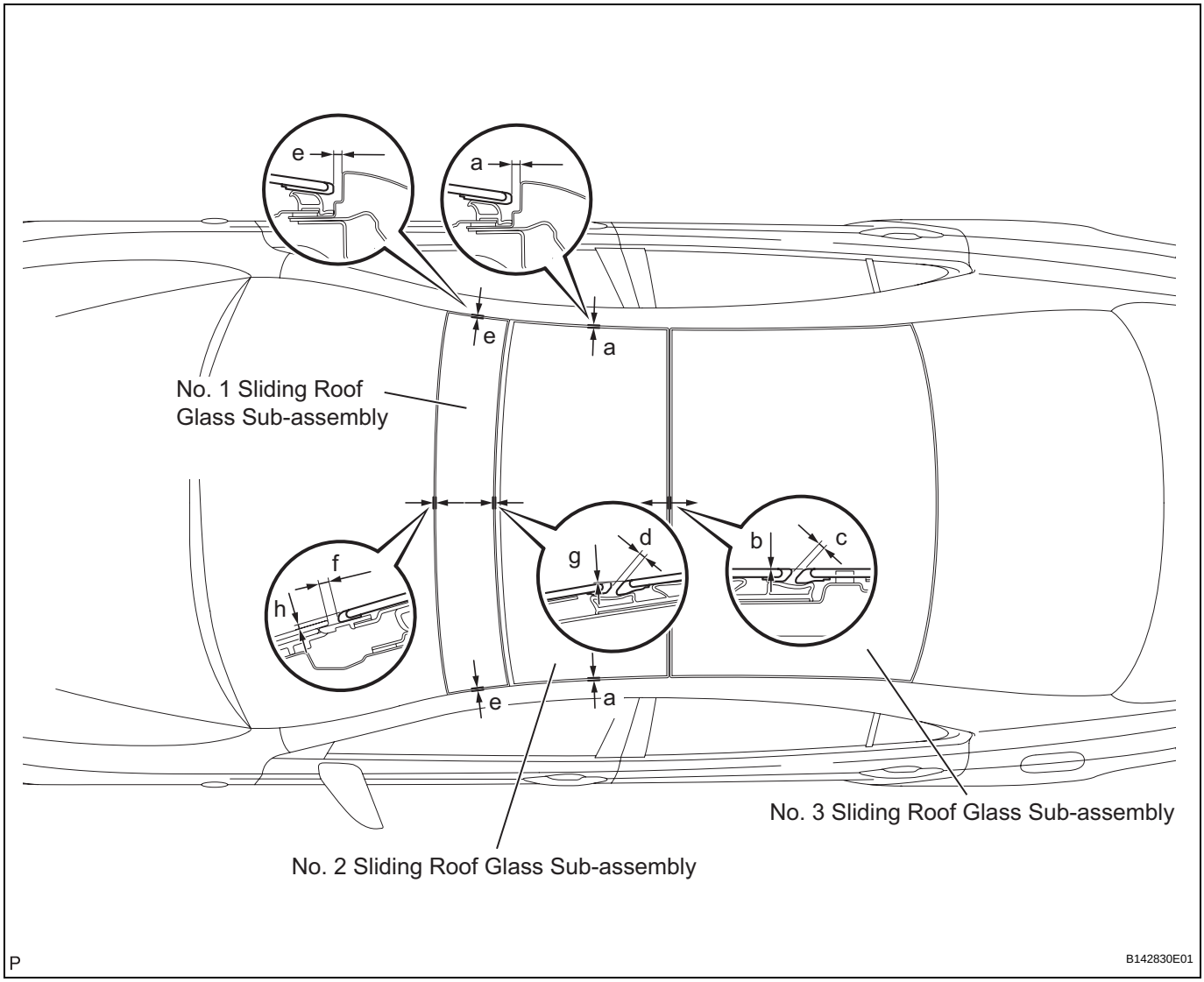

(1) Adjust the position of the No. 2 sliding roof glass sub-assembly so that the measurements are within the standard values shown in the illustration.

Standard

Area	Measurement
a	4.0 mm + 2.0 mm (0.158 in. + 0.079 in.) 4.0 mm - 2.0 mm (0.158 in. - 0.079 in.)
b	0 + 1.5 mm (0 + 0.059 in.) 0 - 0.5 mm (0 - 0.020 in.)
c	3.0 mm
d	3.0 mm

HINT:
"+" represents the condition that the glass is above the panel level. "-" represents the condition that the glass is below the panel level.

(2) After adjusting the No. 2 sliding roof glass sub-assembly, using a T25 "TORX" driver, fully tighten the 6 screws to install the No. 2 sliding roof glass sub-assembly.
Torque: 4.0 N*m (41 kgf*cm, 35 in.*lbf)

(b) Adjust the No. 1 sliding roof glass sub-assembly:

(1) Adjust the position of the No. 1 sliding roof glass sub-assembly so that the measurements are within the standard values shown in the illustration.
Standard

Area	Measurement
e	4.0 mm + 2.0 mm (0.158 in. + 0.079 in.) 4.0 mm - 2.0 mm (0.158 in. - 0.079 in.)
f	5.1 mm + 1.7 mm (0.201 in. + 0.067 in.) 5.1 mm - 1.7 mm (0.201 in. - 0.067 in.)
g	0 + 1.5 mm (0 + 0.059 in.) 0 - 0.5 mm (0 - 0.020 in.)
h	2.0 mm

HINT:
"+" represents the condition that the glass is above the panel level. "-" represents the condition that the glass is below the panel level.

(2) After adjusting the No. 1 sliding roof glass sub-assembly, using a T20 "TORX" driver, fully tighten the 6 screws to install the No. 1 sliding roof glass sub-assembly.
Torque: 2.0 N*m (20 kgf*cm, 18 in.*lbf)

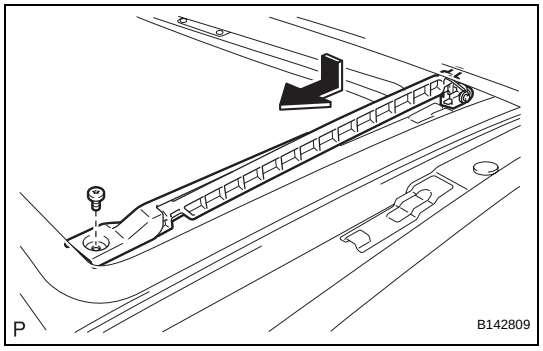

91. INSTALL SLIDING ROOF SIDE GARNISH LH

(a) Temporarily install the sliding roof side garnish LH as shown in the illustration.

(b) Using a T20 "TORX" driver, install the sliding roof side garnish LH with the screw.
Torque: 4.0 N*m (41 kgf*cm, 35 in.*lbf)

92. INSTALL SLIDING ROOF SIDE GARNISH RH

HINT:
Use the same procedure for the RH side and the LH side.

93. INSPECT FOR WATER LEAKS

(a) After adjusting the sliding roof glass sub-assembly, inspect for water leaks.

(b) If there are any leaks, readjust the sliding roof glass sub-assembly.

94. PERFORM INITIALIZATION

NOTICE:
Some systems need initialization after reconnecting the cable to the negative battery terminal (See page IN-33).

95. RESET SLIDING ROOF DRIVE GEAR SUB-ASSEMBLY

(See page RF-6)

96. **INSPECT SLIDING ROOF SYSTEM**
(See page RF-12)

97. **INSPECT SHIFT LEVER POSITION (See page AX-200)**

98. **ADJUST SHIFT LEVER POSITION (See page AX-200)**

99. **INSPECT FRONT SEAT ASSEMBLY (See page SE-110)**

100. **INSPECT SRS WARNING LIGHT**
(See page RS-37)

REMOVAL

1. **REMOVE REAR SEAT CUSHION ASSEMBLY (See page SE-113)**
2. **REMOVE REAR SEAT HEADREST ASSEMBLY**
3. **REMOVE REAR CENTER SEAT HEADREST ASSEMBLY**
4. **REMOVE REAR SEATBACK ASSEMBLY (See page SE-113)**
5. **REMOVE SEAT BELT ANCHOR COVER CAP LH (See page SB-22)**
6. **DISCONNECT FRONT SEAT OUTER BELT ASSEMBLY LH (See page SB-22)**
7. **REMOVE FRONT SEAT HEADREST ASSEMBLY (for Driver Seat)**
8. **REMOVE FRONT SEAT OUTER TRACK BRACKET COVER LH (See page SE-83)**
9. **REMOVE FRONT SEAT INNER TRACK BRACKET COVER LH (See page SE-83)**
10. **REMOVE FRONT SEAT REAR OUTER TRACK BRACKET COVER LH (See page SE-83)**
11. **REMOVE FRONT SEAT REAR INNER TRACK BRACKET COVER LH (See page SE-83)**
12. **REMOVE FRONT SEAT ASSEMBLY LH (See page SE-83)**
13. **REMOVE SEAT BELT ANCHOR COVER CAP RH (See page RS-490)**
14. **DISCONNECT FRONT SEAT OUTER BELT ASSEMBLY RH (See page RS-490)**
15. **REMOVE FRONT SEAT HEADREST ASSEMBLY (for Front Passenger Seat)**
16. **REMOVE FRONT SEAT OUTER TRACK BRACKET COVER RH (See page RS-490)**
17. **REMOVE FRONT SEAT INNER TRACK BRACKET COVER RH (See page RS-490)**
18. **REMOVE FRONT SEAT REAR OUTER TRACK BRACKET COVER RH (See page RS-490)**
19. **REMOVE FRONT SEAT REAR INNER TRACK BRACKET COVER RH (See page RS-490)**
20. **REMOVE FRONT SEAT ASSEMBLY RH (See page RS-491)**
21. **REMOVE FRONT DOOR SCUFF PLATE LH (See page IR-39)**
22. **REMOVE FRONT DOOR OPENING TRIM COVER LH (See page IR-39)**

23. **REMOVE SIDE INSTRUMENT PANEL LH (See page IP-12)**
24. **REMOVE FRONT PILLAR GARNISH LH (See page IR-39)**
25. **REMOVE REAR DOOR SCUFF PLATE LH (See page IR-40)**
26. **REMOVE LOWER CENTER PILLAR GARNISH LH (See page IR-40)**
27. **REMOVE UPPER CENTER PILLAR GARNISH LH (See page IR-41)**
28. **REMOVE REAR SEAT SIDE GARNISH LH (w/o Rear Seat Side Airbag) (See page IR-41)**
29. **REMOVE REAR SEAT SIDE AIRBAG ASSEMBLY LH (w/ Rear Seat Side Airbag) (See page RS-460)**
30. **REMOVE ROOF SIDE INNER GARNISH ASSEMBLY LH (See page IR-42)**
31. **REMOVE FRONT DOOR SCUFF PLATE RH (See page IR-42)**
32. **REMOVE FRONT DOOR OPENING TRIM COVER RH (See page IR-42)**
33. **REMOVE SIDE INSTRUMENT PANEL RH (See page IP-15)**
34. **REMOVE FRONT PILLAR GARNISH RH (See page IR-42)**
35. **REMOVE REAR DOOR SCUFF PLATE RH (See page IR-42)**
36. **REMOVE LOWER CENTER PILLAR GARNISH RH (See page IR-42)**
37. **REMOVE UPPER CENTER PILLAR GARNISH RH (See page IR-42)**
38. **REMOVE REAR SEAT SIDE GARNISH RH (w/o Rear Seat Side Airbag) (See page IR-43)**
39. **REMOVE REAR SEAT SIDE AIRBAG ASSEMBLY RH (w/ Rear Seat Side Airbag) (See page IR-43)**
40. **REMOVE ROOF SIDE INNER GARNISH ASSEMBLY RH (See page IR-43)**
41. **REMOVE INSTRUMENT PANEL FINISH PANEL END LH (See page IP-13)**
42. **REMOVE INSTRUMENT PANEL FINISH PANEL END RH (See page IP-15)**
43. **REMOVE SHIFT LEVER KNOB SUB-ASSEMBLY (See page IP-16)**
44. **REMOVE UPPER CONSOLE PANEL ASSEMBLY WITH FRONT ASH RECEPTACLE (See page IP-16)**

45. **REMOVE HEATER SEAT SWITCH CONSOLE BASE (w/o Seat Heater System) (See page IP-17)**
46. **REMOVE HEATER SEAT SWITCH CONSOLE BASE (w/ Seat Heater System) (See page IP-18)**
47. **REMOVE CONSOLE BOX POCKET (See page IP-52)**
48. **REMOVE CONSOLE BOX CARPET (See page IP-52)**
49. **REMOVE CONSOLE REAR END PANEL SUB-ASSEMBLY (See page IP-53)**
50. **REMOVE REAR CONSOLE BOX ASSEMBLY (See page IP-53)**
51. **REMOVE NO. 2 CONSOLE BOX DUCT (See page AC-149)**
52. **REMOVE NO. 3 CONSOLE BOX DUCT (See page AC-149)**
53. **DISCONNECT TRANSMISSION CONTROL CABLE ASSEMBLY (See page AX-232)**
54. **REMOVE SHIFT LEVER ASSEMBLY (See page AX-233)**
55. **REMOVE FLOOR CARPET BRACKET LH (See page AC-148)**
56. **REMOVE FLOOR CARPET BRACKET RH (See page AC-148)**
57. **REMOVE LUGGAGE COMPARTMENT FLOOR MAT (w/ DVD Player)**
58. **REMOVE SPARE WHEEL COVER TRAY (w/ DVD Player)**
59. **REMOVE LUGGAGE HOLD BELT STRIKER ASSEMBLY (w/ DVD Player) (See page ED-82)**
60. **REMOVE NO. 1 LUGGAGE COMPARTMENT TRIM HOOK (w/ DVD Player) (See page ED-83)**
61. **REMOVE REAR FLOOR FINISH PLATE (w/ DVD Player) (See page ED-83)**
62. **REMOVE LUGGAGE COMPARTMENT INNER TRIM COVER RH (w/ DVD Player) (See page ED-83)**
63. **DISCONNECT STEREO COMPONENT AMPLIFIER ASSEMBLY CONNECTOR (w/ DVD Player) (See page IR-44)**
64. **REMOVE INNER REAR VIEW MIRROR STAY HOLDER COVER (See page MI-42)**
65. **REMOVE RAIN SENSOR COVER (w/ Rain Sensor) (See page WW-63)**
66. **REMOVE ROOF CONSOLE BOX ASSEMBLY (See page IR-44)**
67. **REMOVE VISOR BRACKET COVER (See page IR-45)**

68. REMOVE VISOR ASSEMBLY LH (See page IR-45)

69. REMOVE VISOR ASSEMBLY RH (See page IR-45)

70. REMOVE VISOR HOLDER (See page IR-45)

71. REMOVE COAT HOOK (See page IR-45)

72. REMOVE SPOT LIGHT ASSEMBLY (See page IR-46)

73. REMOVE ASSIST GRIP SUB-ASSEMBLY (See page IR-47)

74. REMOVE ROOF HEADLINING ASSEMBLY (See page IR-47)

75. REMOVE CURTAIN SHIELD AIRBAG ASSEMBLY LH (See page RS-439)

76. REMOVE CURTAIN SHIELD AIRBAG ASSEMBLY RH
HINT:
Use the same procedure for the RH side and the LH side.

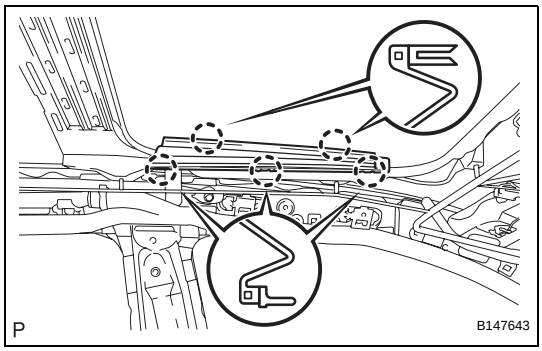

77. REMOVE SLIDING ROOF SIDE GARNISH LH
(a) Disengage the 5 claws and remove the sliding roof side garnish LH.

78. REMOVE SLIDING ROOF SIDE GARNISH RH
HINT:
Use the same procedure for the RH side and the LH side.

79. REMOVE SLIDING ROOF GLASS SUB-ASSEMBLY
(a) Using a T25 "TORX" driver, remove the 4 screws and sliding roof glass sub-assembly.

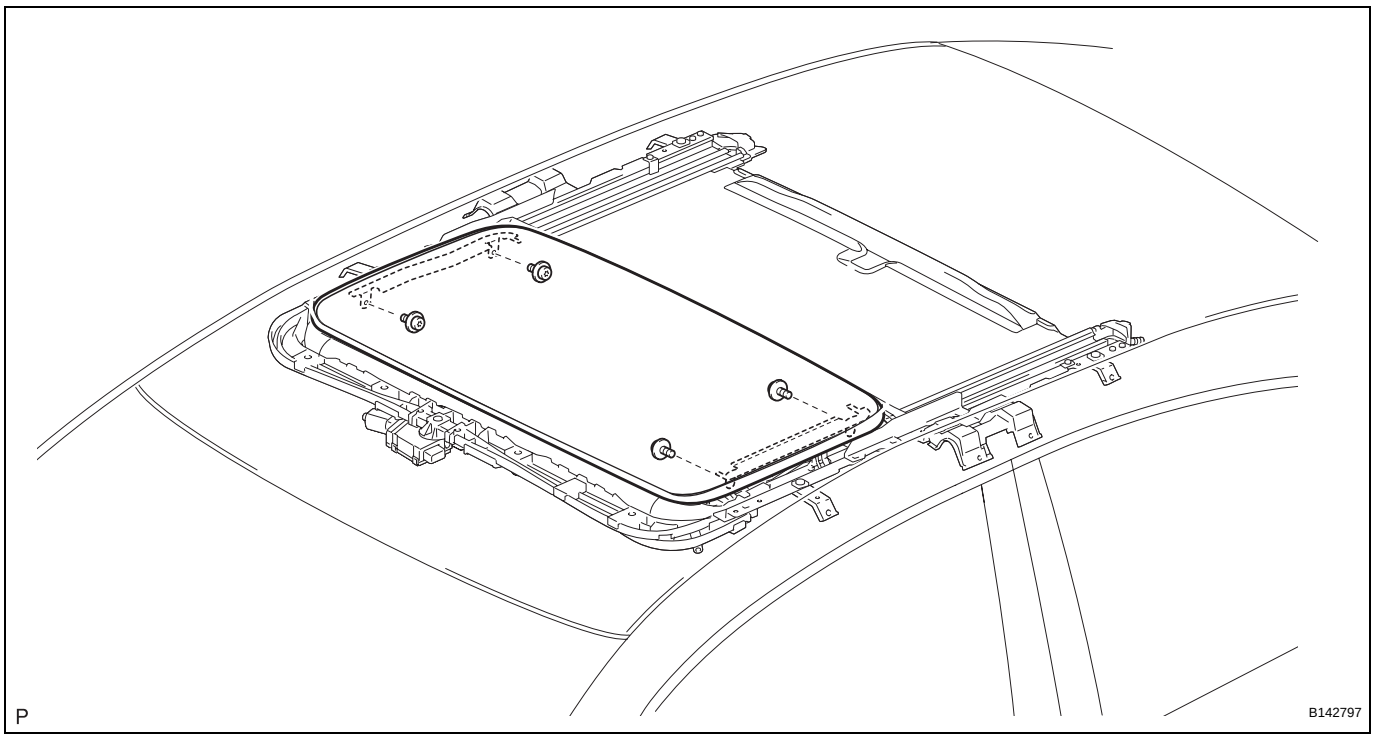

80. REMOVE SLIDING ROOF HOUSING SUB-ASSEMBLY
(a) Disconnect the 4 sliding roof drain hoses.

(b) Remove the 8 bolts, 8 nuts, and sliding roof housing sub-assembly.

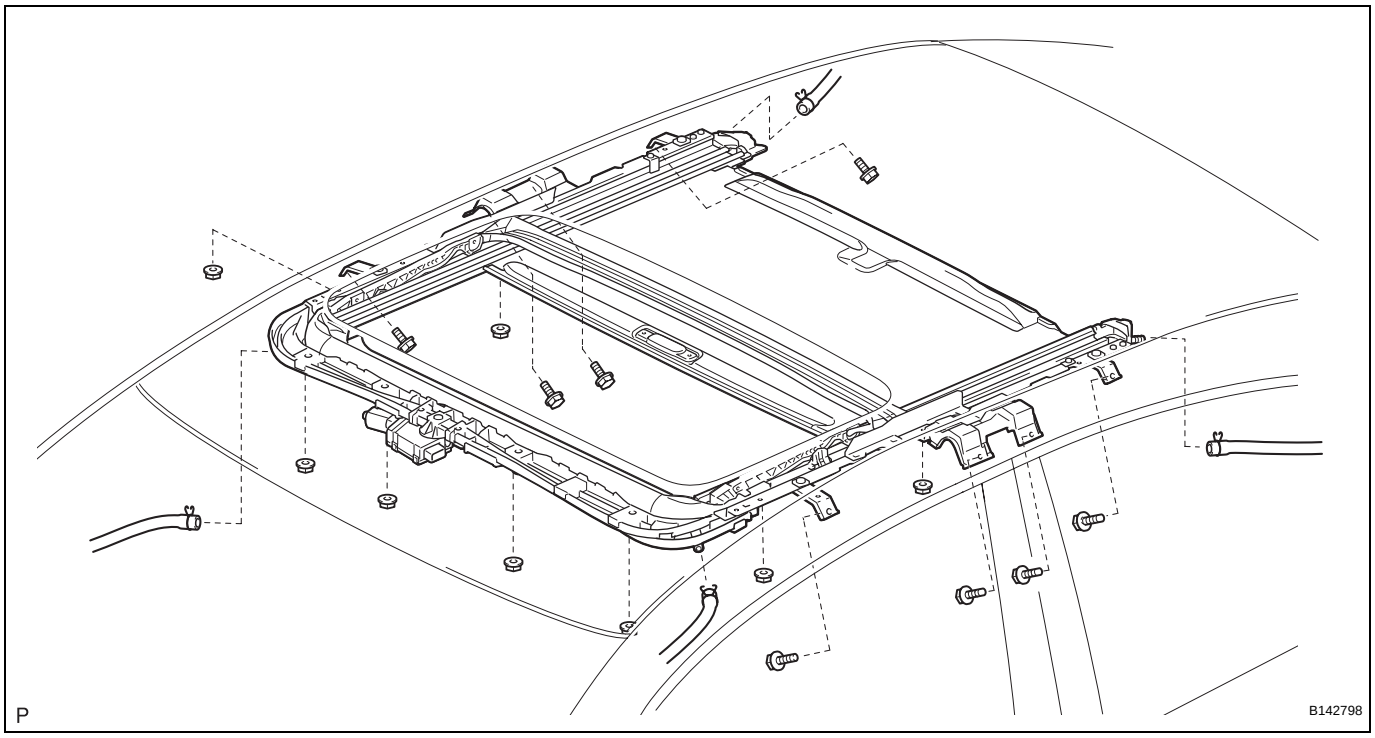

81. REMOVE SLIDING ROOF WEATHERSTRIP

(a) Remove the sliding roof weatherstrip from the sliding roof glass sub-assembly.

DISASSEMBLY

1. REMOVE SLIDING ROOF DRIVE GEAR SUB-ASSEMBLY

(a) Disengage the claw and remove the sliding roof room light bracket.

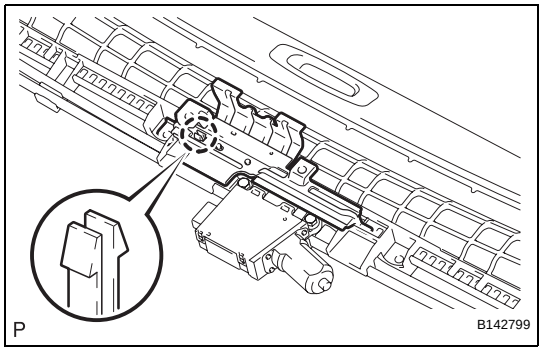

(b) Remove the 2 bolts and sliding roof drive gear sub-assembly.

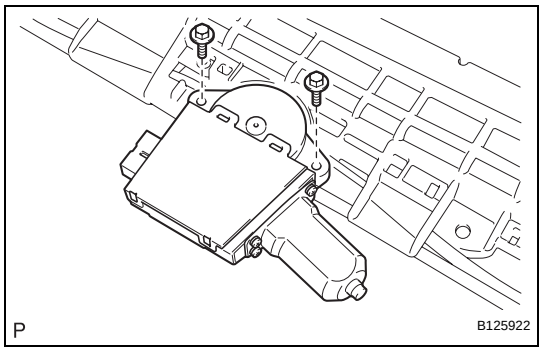

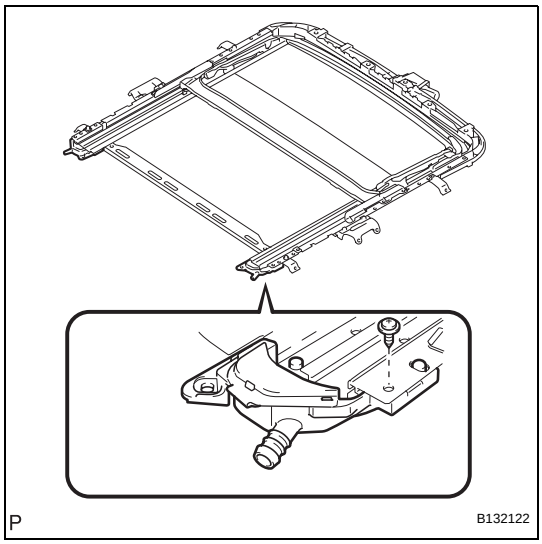

2. REMOVE SUNSHADE TRIM SUB-ASSEMBLY

(a) Remove the screw and sliding roof piece sub-assembly LH.
HINT:
Use the same procedure for the RH side and the LH side.

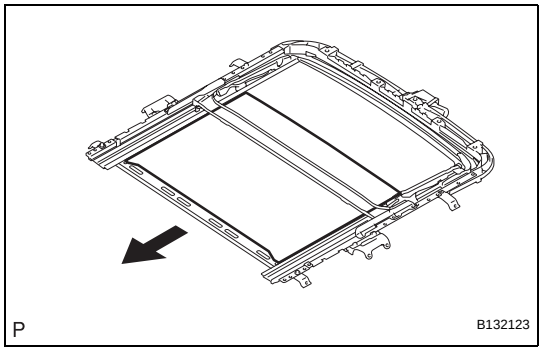

(b) Slide and remove the sunshade trim sub-assembly.

3. REMOVE SLIDING ROOF DRIVE CABLE SUB-ASSEMBLY
NOTICE:
Do not remove the sliding roof drive cable sub-assembly except when replacing it.

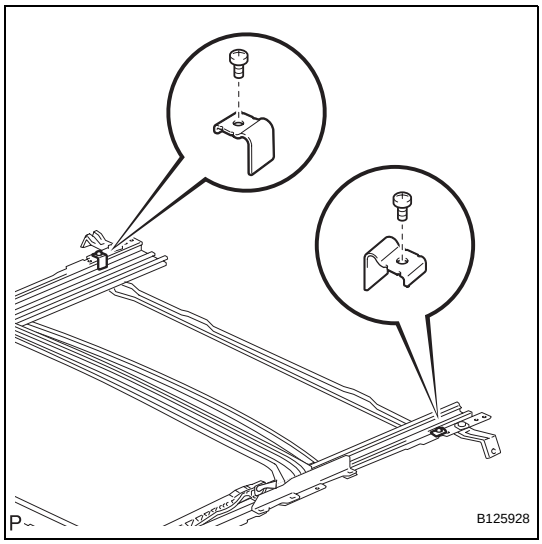

(a) Remove the 2 screws and sliding roof side stoppers.

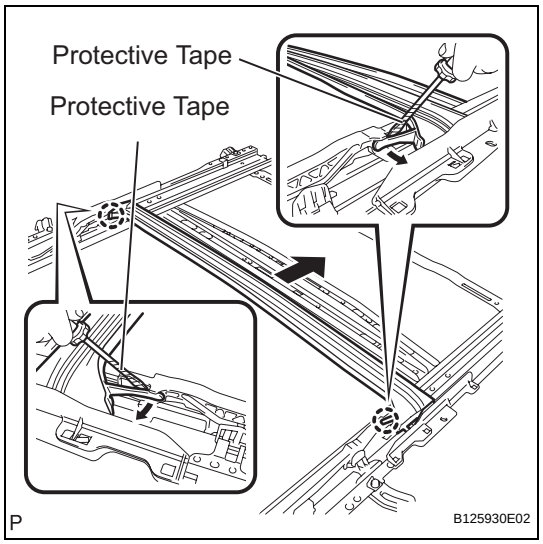

(b) Using a screwdriver, disengage the 2 claws. Then slide the sliding roof drip channel rearward to remove it.
HINT:
Tape the screwdriver tip before use.

(c) Using a screwdriver, slide the sliding roof drive cable sub-assembly in the direction indicated by the arrow in the illustration to remove it.

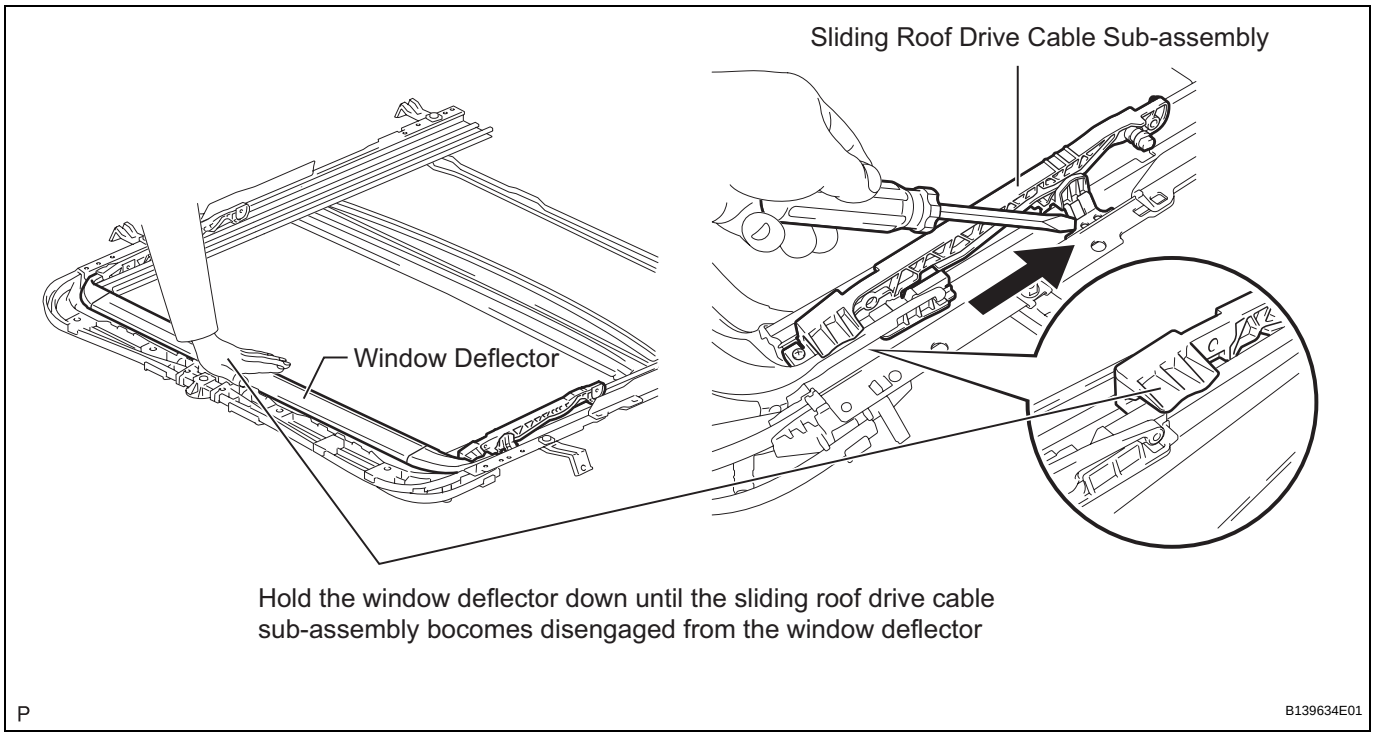

HINT:
Hold the window deflector down, as shown in the illustration, until the sliding roof drive cable sub-assembly becomes disengaged from the window deflector.

REASSEMBLY

1. INSTALL SLIDING ROOF DRIVE CABLE SUB-ASSEMBLY

(a) Using a screwdriver, slide the sliding roof drive cable sub-assembly in the direction indicated by the arrow in the illustration to install it.

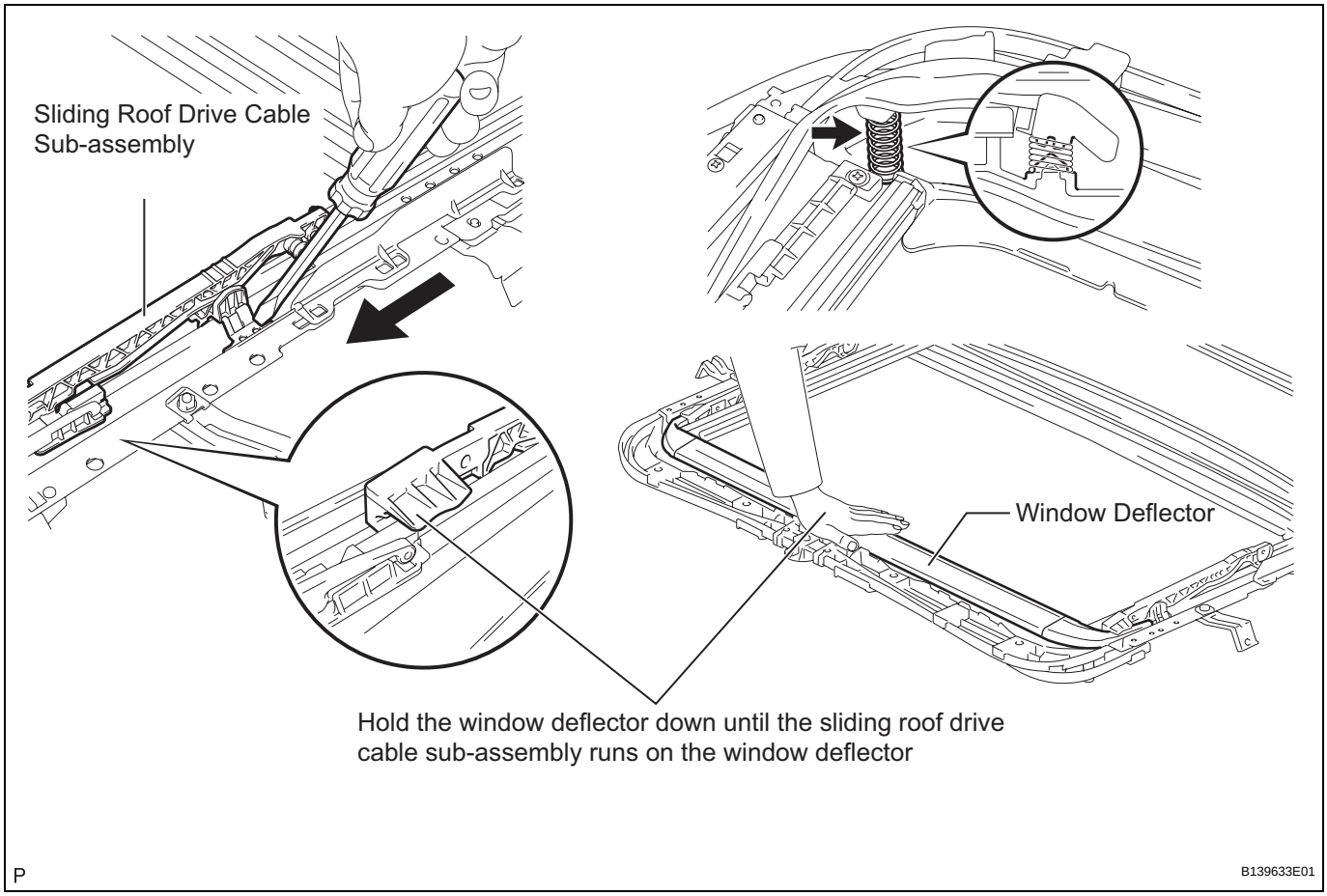

NOTICE:
Make sure that the spring indicated by the arrow in the illustration is securely installed.

HINT:
Hold the window deflector down, as shown in the illustration, until the sliding roof drive cable sub-assembly runs on the window deflector.

(b) Using a screwdriver, slide the sliding roof drive cable sub-assembly in the direction indicated by the arrow in the illustration to install it.

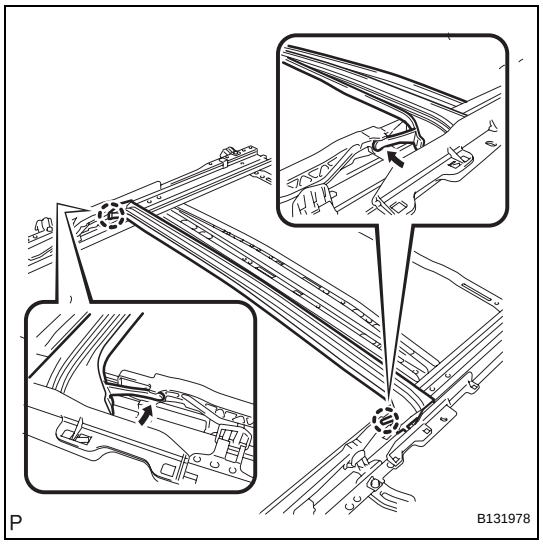

(c) Engage the 2 claws and install the sliding roof drip channel.

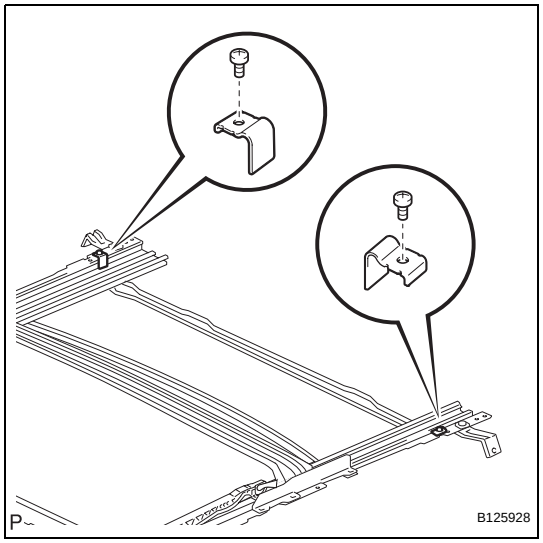

(d) Install the 2 sliding roof side stoppers with the 2 screws.
Torque: 2.0 N*m (20 kgf*cm, 18 in.*lbf)

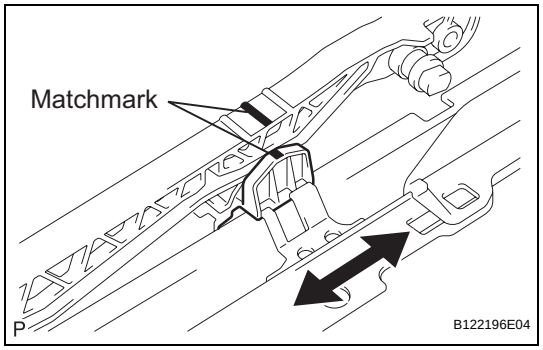

2. ADJUST FULLY CLOSED POSITION

(a) Using a screwdriver, slide the sliding roof drive cable sub-assembly in either direction as indicated by the arrows in the illustration and align the matchmarks.
HINT:
Tape the screwdriver tip before use.

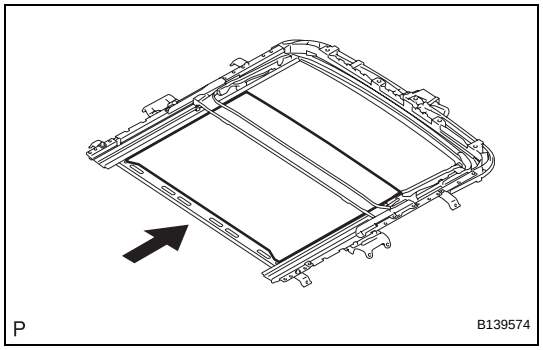

3. INSTALL SUNSHADE TRIM SUB-ASSEMBLY

(a) Insert the sunshade trim into the sliding roof housing sub-assembly.

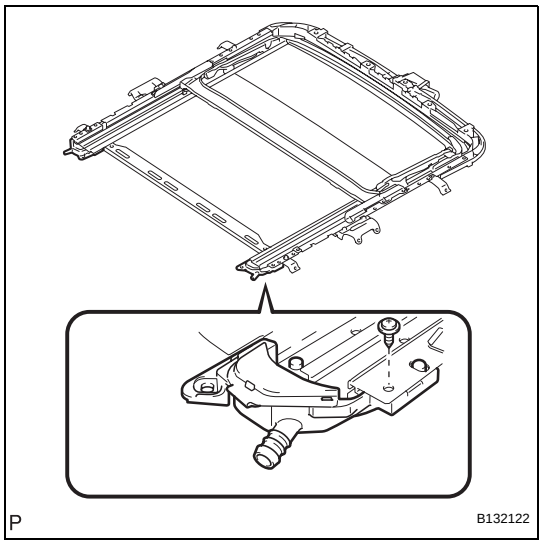

(b) Install the sliding roof piece sub-assembly LH with the screw.
Torque: 2.0 N*m (20 kgf*cm, 18 in.*lbf)
HINT:
Use the same procedure for the RH side and the LH side.

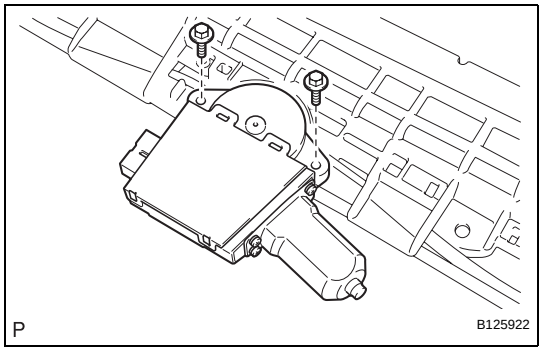

4. INSTALL SLIDING ROOF DRIVE GEAR SUB-ASSEMBLY

(a) Install the sliding roof drive gear sub-assembly with the 2 bolts.
Torque: 5.4 N*m (55 kgf*cm, 48 in.*lbf)

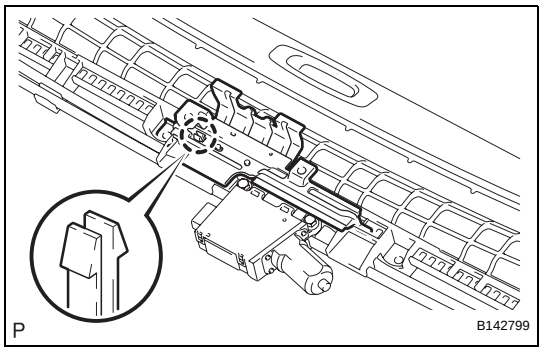

(b) Engage the claw and install the sliding roof room light bracket.

INSTALLATION

1. INSTALL SLIDING ROOF WEATHERSTRIP

(a) Install the sliding roof weatherstrip as follows:

(1) Position the joint of the weatherstrip at the rear center.

(2) Align the marks on the weatherstrip with the middle marks at the corners of the plastic on the edge of the sliding roof panel and install the weatherstrip. Make sure that the marks on the weatherstrip are positioned within the area indicated by the marks at the corners of the plastic on the edge of the sliding roof panel.

(3) Install the lip of the weatherstrip firmly.

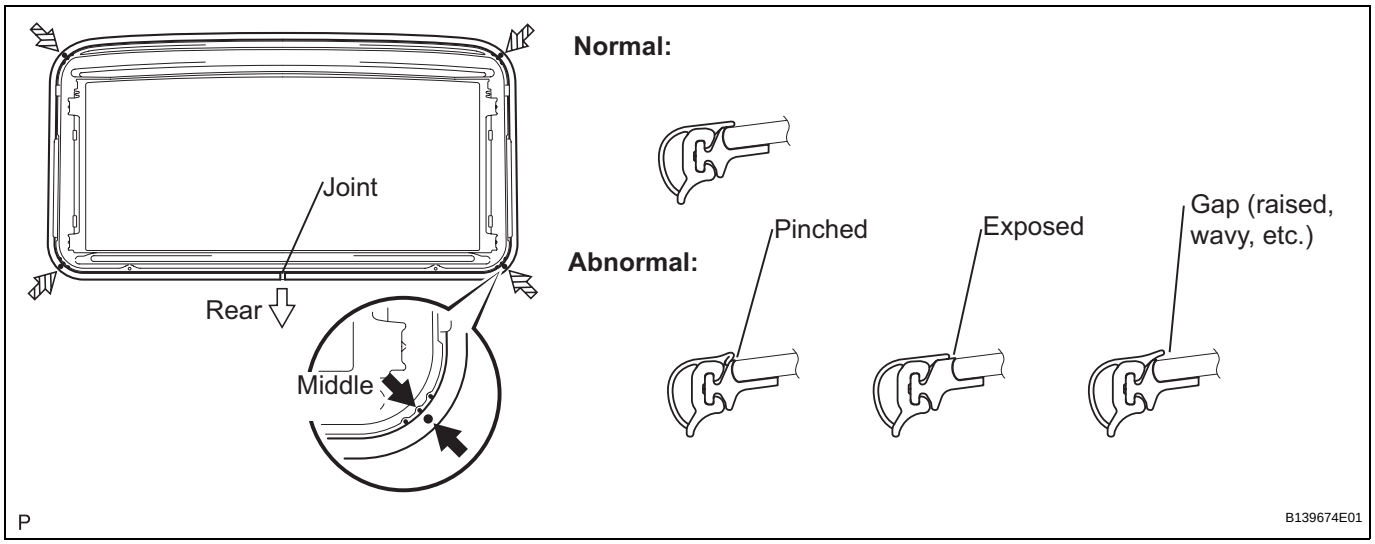

2. INSTALL SLIDING ROOF HOUSING SUB-ASSEMBLY

(a) Install the sliding roof housing sub-assembly with the 8 bolts and 8 nuts.

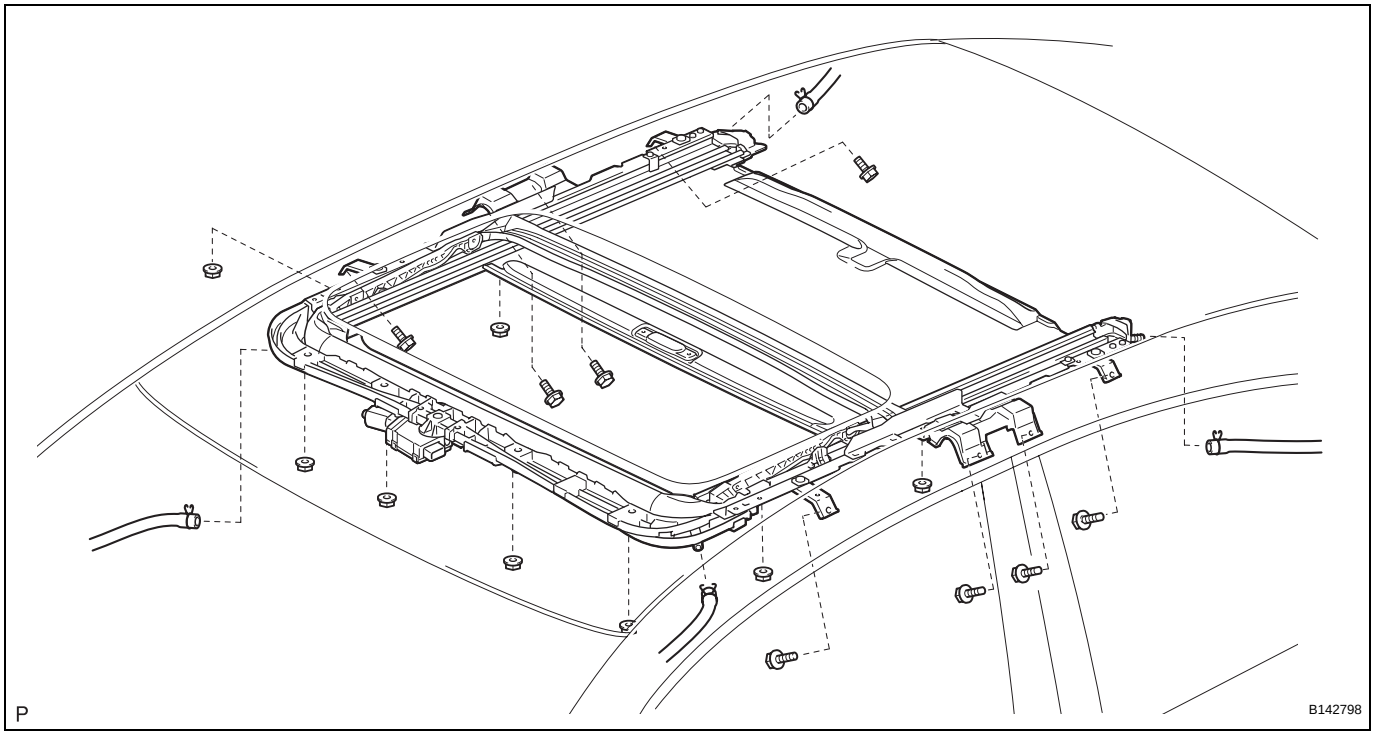

Torque: Nut
5.5 N*m (56 kgf*cm, 49 in.*lbf)
Bolt
8.0 N*m (82 kgf*cm, 71 in.*lbf)

(b) Connect the 4 sliding roof drain hoses.

NOTICE:
The clip must face toward the outside of the vehicle and also be above the lower surface of the sliding roof housing when installing the drain hoses.

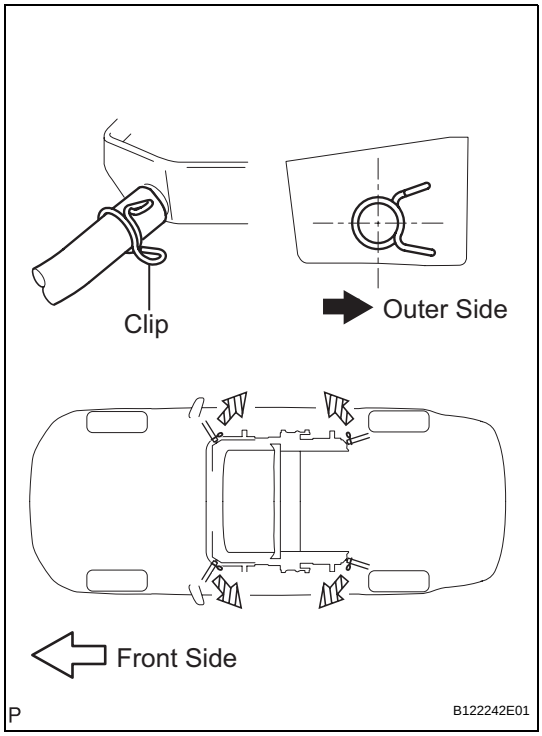

3. INSTALL SLIDING ROOF GLASS SUB-ASSEMBLY

(a) Using a T25 "TORX" driver, temporarily install the sliding roof glass sub-assembly with the 4 screws.

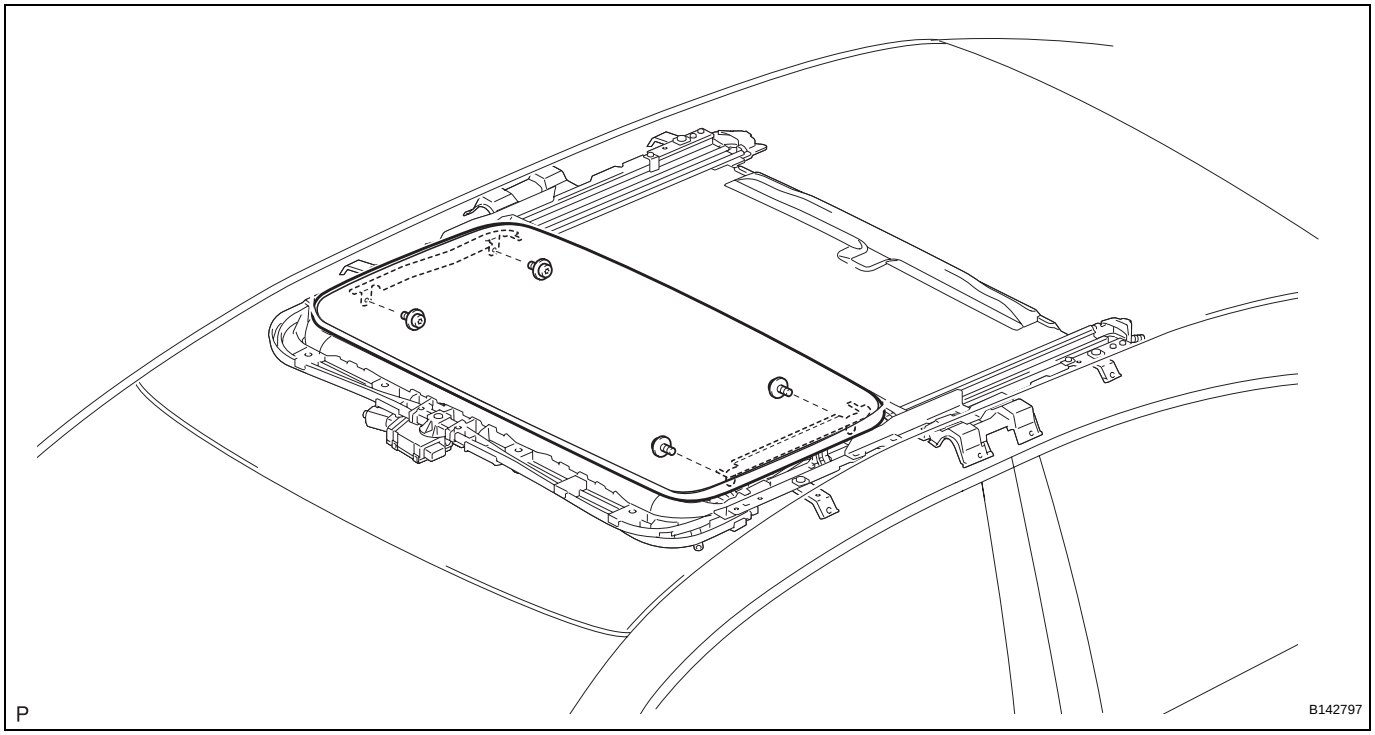

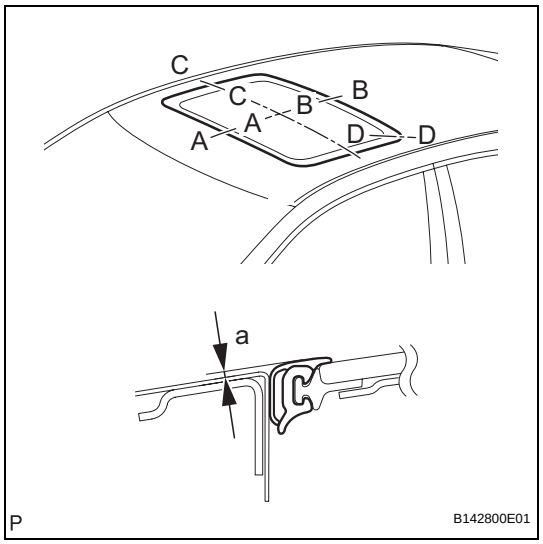

(b) Perform a level check.

(1) Check the difference in level at "a", between the roof panel and the upper surface of the weatherstrip, when the sliding roof glass is fully closed.

Standard

Area	Measurement
A - A	**0 + 1.0 mm (0 + 0.039 in.) 0 - 2.0 mm (0 - 0.079 in.)**
B - B	**0 + 2.0 mm (0 + 0.079 in.) 0 - 1.0 mm (0 - 0.039 in.)**
C - C	**0 + 1.5 mm (0 + 0.059 in.) 0 - 1.5 mm (0 - 0.059 in.)**
D - D	**0 + 1.5 mm (0 + 0.059 in.) 0 - 1.0 mm (0 - 0.039 in.)**

HINT:
"+" represents the condition that the glass is above the panel level. "-" represents the condition that the glass is below the panel level.

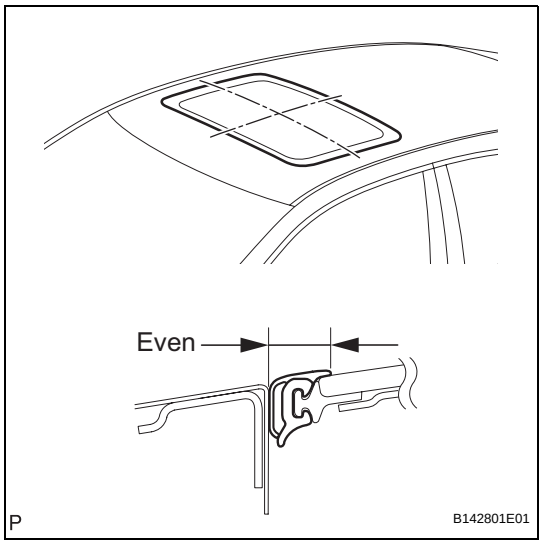

(c) Perform a gap check.
  (1) Check the gap between the roof panel and roof glass.
  NOTICE:
  The gap must be even all around.
(d) After adjusting the sliding roof glass, using a T25 "TORX" driver, install the sliding roof glass sub-assembly with the 4 screws.
  Torque: 5.5 N*m (56 kgf*cm, 49 in.*lbf)

4. INSPECT FOR WATER LEAKS
(a) After adjusting the sliding roof glass sub-assembly, inspect for water leaks.
(b) If there are any leaks, readjust the sliding roof glass sub-assembly.

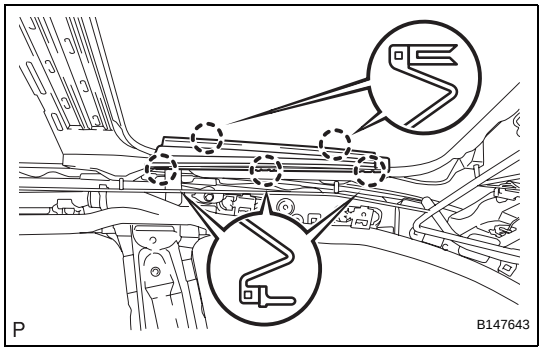

5. INSTALL SLIDING ROOF SIDE GARNISH LH
(a) Engage the 5 claws and install the sliding roof side garnish LH.

6. INSTALL SLIDING ROOF SIDE GARNISH RH
HINT:
Use the same procedure for the RH side and the LH side.

7. INSTALL CURTAIN SHIELD AIRBAG ASSEMBLY LH (See page RS-441)

8. INSTALL CURTAIN SHIELD AIRBAG ASSEMBLY RH
HINT:
Use the same procedure for the RH side and the LH side.

9. INSTALL ROOF HEADLINING ASSEMBLY (See page IR-56)

10. INSTALL ASSIST GRIP SUB-ASSEMBLY (See page IR-58)

11. INSTALL SPOT LIGHT ASSEMBLY (See page IR-59)

12. INSTALL COAT HOOK (See page IR-60)

13. INSTALL VISOR HOLDER (See page IR-60)

14. INSTALL VISOR ASSEMBLY LH (See page IR-60)

15. INSTALL VISOR ASSEMBLY RH (See page IR-60)

16. INSTALL VISOR BRACKET COVER (See page IR-60)

17. INSTALL ROOF CONSOLE BOX ASSEMBLY (See page IR-60)

18. INSTALL RAIN SENSOR COVER (w/ Rain Sensor) (See page WW-65)

19. INSTALL INNER REAR VIEW MIRROR STAY HOLDER COVER (See page MI-44)

20. **CONNECT STEREO COMPONENT AMPLIFIER ASSEMBLY CONNECTOR (w/ DVD Player) (See page IR-61)**
21. **INSTALL LUGGAGE COMPARTMENT INNER TRIM COVER RH (w/ DVD Player) (See page ED-88)**
22. **INSTALL REAR FLOOR FINISH PLATE (w/ DVD Player) (See page ED-88)**
23. **INSTALL NO. 1 LUGGAGE COMPARTMENT TRIM HOOK (w/ DVD Player) (See page ED-89)**
24. **INSTALL LUGGAGE HOLD BELT STRIKER ASSEMBLY (w/ DVD Player) (See page ED-89)**
25. **INSTALL SPARE WHEEL COVER TRAY**
26. **INSTALL LUGGAGE COMPARTMENT FLOOR MAT**
27. **INSTALL FLOOR CARPET BRACKET LH**
28. **INSTALL FLOOR CARPET BRACKET RH**
29. **INSTALL SHIFT LEVER ASSEMBLY (See page AX-240)**
30. **CONNECT TRANSMISSION CONTROL CABLE ASSEMBLY (See page AX-241)**
31. **INSTALL NO. 2 CONSOLE BOX DUCT (See page AC-163)**
32. **INSTALL NO. 3 CONSOLE BOX DUCT (See page AC-163)**
33. **INSTALL REAR CONSOLE BOX ASSEMBLY (See page IP-39)**
34. **INSTALL CONSOLE REAR END PANEL SUB-ASSEMBLY (See page IP-40)**
35. **INSTALL CONSOLE BOX CARPET (See page IP-41)**
36. **INSTALL CONSOLE BOX POCKET (See page IP-41)**
37. **INSTALL HEATER SEAT SWITCH CONSOLE BASE (w/o Seat Heater System) (See page IP-41)**
38. **INSTALL HEATER SEAT SWITCH CONSOLE BASE (w/ Seat Heater System) (See page IP-41)**
39. **INSTALL UPPER CONSOLE PANEL ASSEMBLY WITH FRONT ASH RECEPTACLE (See page IP-42)**
40. **INSTALL SHIFT LEVER KNOB SUB-ASSEMBLY (See page IP-42)**
41. **INSTALL INSTRUMENT PANEL FINISH PANEL END LH (See page IP-46)**
42. **INSTALL INSTRUMENT PANEL FINISH PANEL END RH (See page IP-44)**
43. **INSTALL ROOF SIDE INNER GARNISH ASSEMBLY LH (See page IR-62)**

44. **INSTALL REAR SEAT SIDE GARNISH LH (w/o Rear Seat Side Airbag) (See page IR-62)**
45. **INSTALL REAR SEAT SIDE AIRBAG ASSEMBLY LH (w/ Rear Seat Side Airbag) (See page RS-460)**
46. **INSTALL UPPER CENTER PILLAR GARNISH LH (See page IR-63)**
47. **INSTALL LOWER CENTER PILLAR GARNISH LH (See page IR-63)**
48. **INSTALL REAR DOOR SCUFF PLATE LH (See page IR-63)**
49. **INSTALL FRONT PILLAR GARNISH LH (See page IR-64)**
50. **INSTALL SIDE INSTRUMENT PANEL LH (See page IP-47)**
51. **INSTALL FRONT DOOR OPENING TRIM COVER LH (See page IR-64)**
52. **INSTALL FRONT DOOR SCUFF PLATE LH (See page IR-65)**
53. **INSTALL ROOF SIDE INNER GARNISH ASSEMBLY RH (See page IR-65)**
54. **INSTALL REAR SEAT SIDE GARNISH RH (w/o Rear Seat Side Airbag) (See page IR-65)**
55. **INSTALL REAR SEAT SIDE AIRBAG ASSEMBLY RH (w/ Rear Seat Side Airbag) (See page IR-65)**
56. **INSTALL UPPER CENTER PILLAR GARNISH RH (See page IR-65)**
57. **INSTALL LOWER CENTER PILLAR GARNISH RH (See page IR-65)**
58. **INSTALL REAR DOOR SCUFF PLATE RH (See page IR-65)**
59. **INSTALL FRONT PILLAR GARNISH RH (See page IR-65)**
60. **INSTALL SIDE INSTRUMENT PANEL RH (See page IP-43)**
61. **INSTALL FRONT DOOR OPENING TRIM COVER RH (See page IR-65)**
62. **INSTALL FRONT DOOR SCUFF PLATE RH (See page IR-65)**
63. **INSTALL FRONT SEAT ASSEMBLY LH (See page SE-109)**
64. **INSTALL FRONT SEAT REAR OUTER TRACK BRACKET COVER LH (See page SE-110)**
65. **INSTALL FRONT SEAT REAR INNER TRACK BRACKET COVER LH (See page SE-110)**

66. **INSTALL FRONT SEAT OUTER TRACK BRACKET COVER LH (See page SE-110)**
67. **INSTALL FRONT SEAT INNER TRACK BRACKET COVER LH (See page SE-110)**
68. **CONNECT FRONT SEAT OUTER BELT ASSEMBLY LH (See page SB-25)**
69. **INSTALL SEAT BELT ANCHOR COVER CAP LH (See page SB-25)**
70. **INSTALL FRONT SEAT HEADREST ASSEMBLY (for Driver Seat)**
71. **INSTALL FRONT SEAT ASSEMBLY RH (See page RS-497)**
72. **INSTALL FRONT SEAT REAR OUTER TRACK BRACKET COVER RH (See page RS-498)**
73. **INSTALL FRONT SEAT REAR INNER TRACK BRACKET COVER RH (See page RS-498)**
74. **INSTALL FRONT SEAT OUTER TRACK BRACKET COVER RH (See page RS-498)**
75. **INSTALL FRONT SEAT INNER TRACK BRACKET COVER RH (See page RS-498)**
76. **CONNECT FRONT SEAT OUTER BELT ASSEMBLY RH (See page RS-499)**
77. **INSTALL SEAT BELT ANCHOR COVER CAP RH (See page RS-499)**
78. **INSTALL FRONT SEAT HEADREST ASSEMBLY (for Front Passenger Seat)**
79. **INSTALL REAR SEATBACK ASSEMBLY (See page SE-121)**
80. **INSTALL REAR CENTER SEAT HEADREST ASSEMBLY**
81. **INSTALL REAR SEAT HEADREST ASSEMBLY**
82. **INSTALL REAR SEAT CUSHION ASSEMBLY (See page SE-121)**
83. **PERFORM INITIALIZATION**
    NOTICE:
    Some systems need initialization after reconnecting the cable to the negative battery terminal (See page IN-33).
84. **RESET SLIDING ROOF DRIVE GEAR SUB-ASSEMBLY**
    (See page RF-6)
85. **INSPECT SLIDING ROOF SYSTEM**
    (See page RF-12)
86. **INSPECT SHIFT LEVER POSITION (See page AX-200)**
87. **ADJUST SHIFT LEVER POSITION (See page AX-200)**

88. INSPECT FRONT SEAT ASSEMBLY (See page SE-110)

89. INSPECT SRS WARNING LIGHT
(See page RS-37)

SFI SYSTEM

PRECAUTION

NOTICE:

- **Some systems need to be initialized after reconnecting the negative (-) battery terminal (See page IN-33).**
- **Perform the RESET MEMORY (AT) initialization operation after replacing the automatic transmission assembly, engine assembly or ECM (See page AX-24).**
- **Perform REGISTRATION (VIN registration) when replacing the ECM (See page ES-15).**

DEFINITION OF TERMS

Terms	Definition
Monitor Description	Description of what ECM monitors and how to detect malfunctions (monitoring purpose and its details).
Related DTCs	A group of diagnostic trouble codes that are output by ECM based on the same malfunction detection logic.
Typical Enabling Condition	Preconditions that allow ECM to detect malfunctions. With all preconditions satisfied, ECM sets DTC when monitored value(s) exceeds malfunction threshold(s).
Sequence of Operation	Order of monitor priority, applied if multiple sensors and components are involved in single malfunction detection process. Each sensor and component monitored in turn and not monitored until previous detection operation is completed.
Required Sensor/Components	Sensors and components used by ECM to detect each malfunction.
Frequency of Operation	Number of times ECM checks for each malfunction during each driving cycle. "Once per driving cycle" means that ECM checks for malfunctions only once in single driving cycle. "Continuous" means that ECM checks for malfunctions whenever enabling conditions are met.
Duration	Minimum time for which ECM must detect continuous deviation in monitored value(s) in order to set DTC. Timing begins when Typical Enabling Conditions are met.
Malfunction Thresholds	Value, beyond which, ECM determines malfunctions exist and sets DTCs.
MIL Operation	Timing of MIL illumination after a malfunction is detected. "Immediate" means that ECM illuminates MIL as soon as a malfunction is detected. "2 driving cycle" means that ECM illuminates MIL if the same malfunction is detected twice during next sequential driving cycle.

ACTIVE CONTROL ENGINE MOUNT SYSTEM

PRECAUTION

NOTICE:
Some systems need to be initialized after reconnecting the negative (-) battery terminal (See page IN-33)

PARTS LOCATION

ES

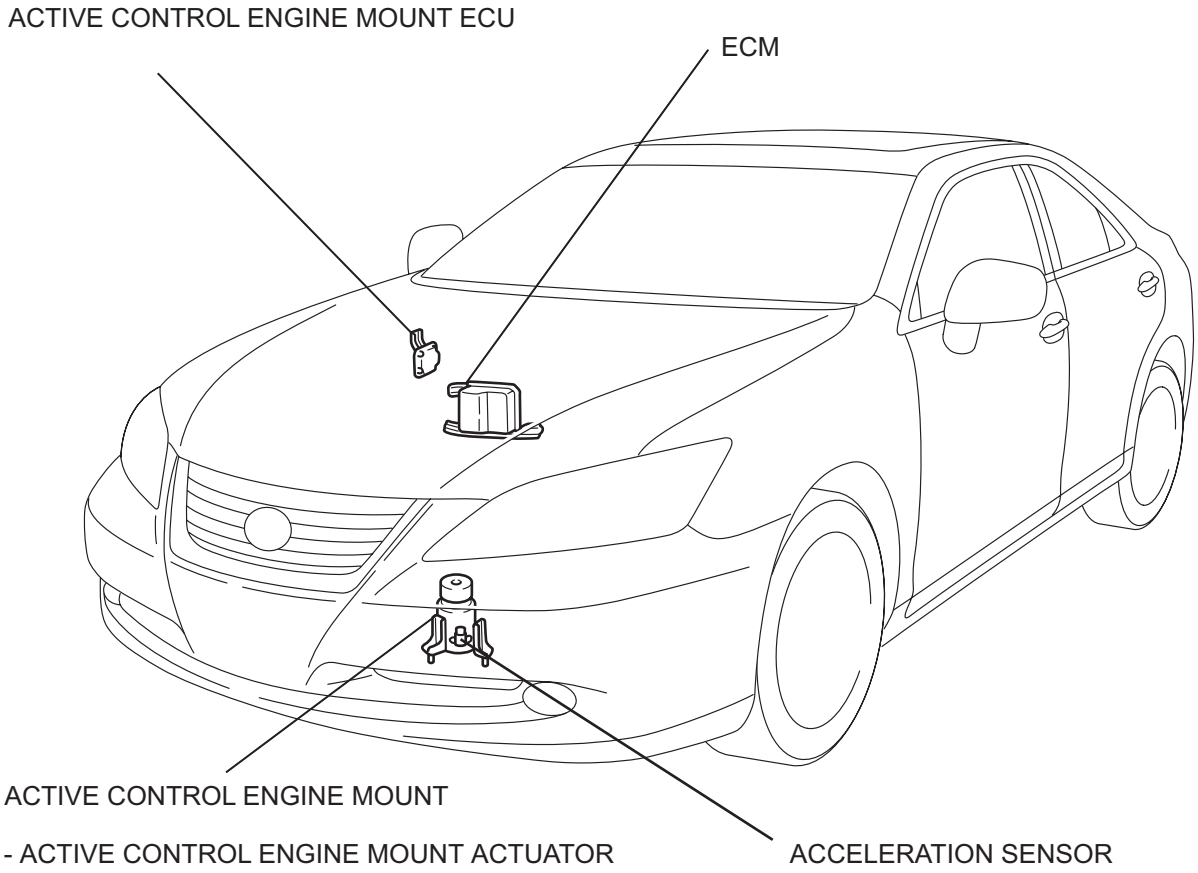

N

A140949E04

MASS AIR FLOW METER

COMPONENTS

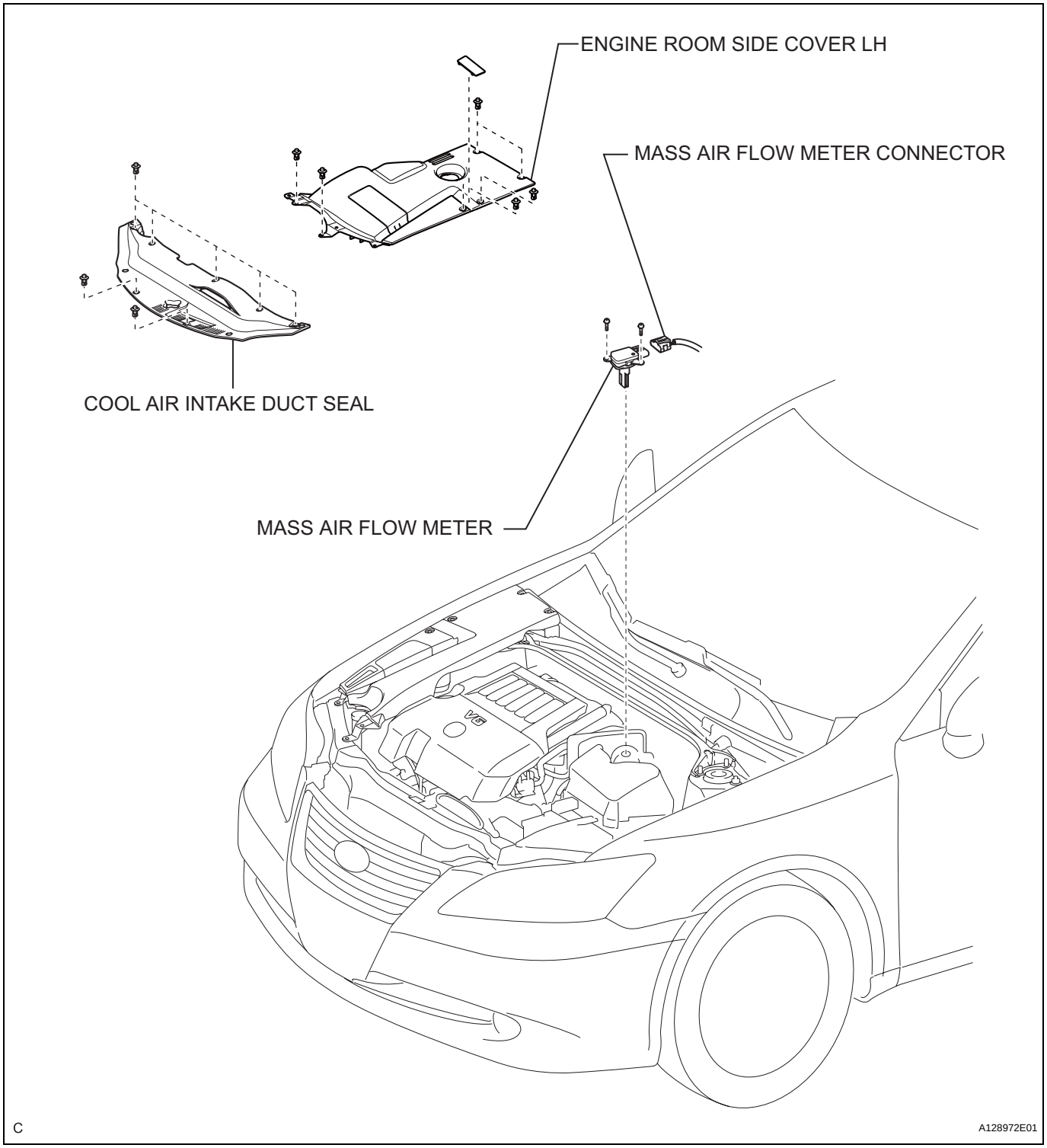

ON-VEHICLE INSPECTION

1. CHECK MASS AIR FLOW METER

NOTICE:

- **Perform the MAF meter inspection by following the procedures below.**
- **Only replace the MAF meter when both the LONG FT#1 value and MAF value in the DATA LIST (with the engine stopped) are not within the normal operating range.**

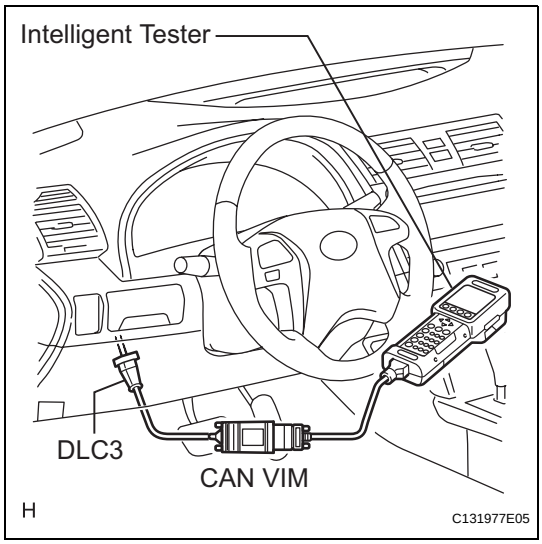

(a) Perform confirmation driving pattern.
  (1) Connect the intelligent tester to the DLC3.
  (2) Turn the engine switch on (IG).
  (3) Turn the tester on.
  (4) Clear the DTCs (See page ES-41).
  (5) Start the engine and warm it up with all accessory switches off (until the engine coolant temperature is 75°C (167°F) or more).
  (6) Drive the vehicle at 31 mph (50 km/h) or more for 3 minutes or more (*1).
  (7) Allow the engine to idle (accelerator pedal fulley released) for 2 minutes or more (*2).
  (8) Perform steps (*1) and (*2) at least 3 times or more.

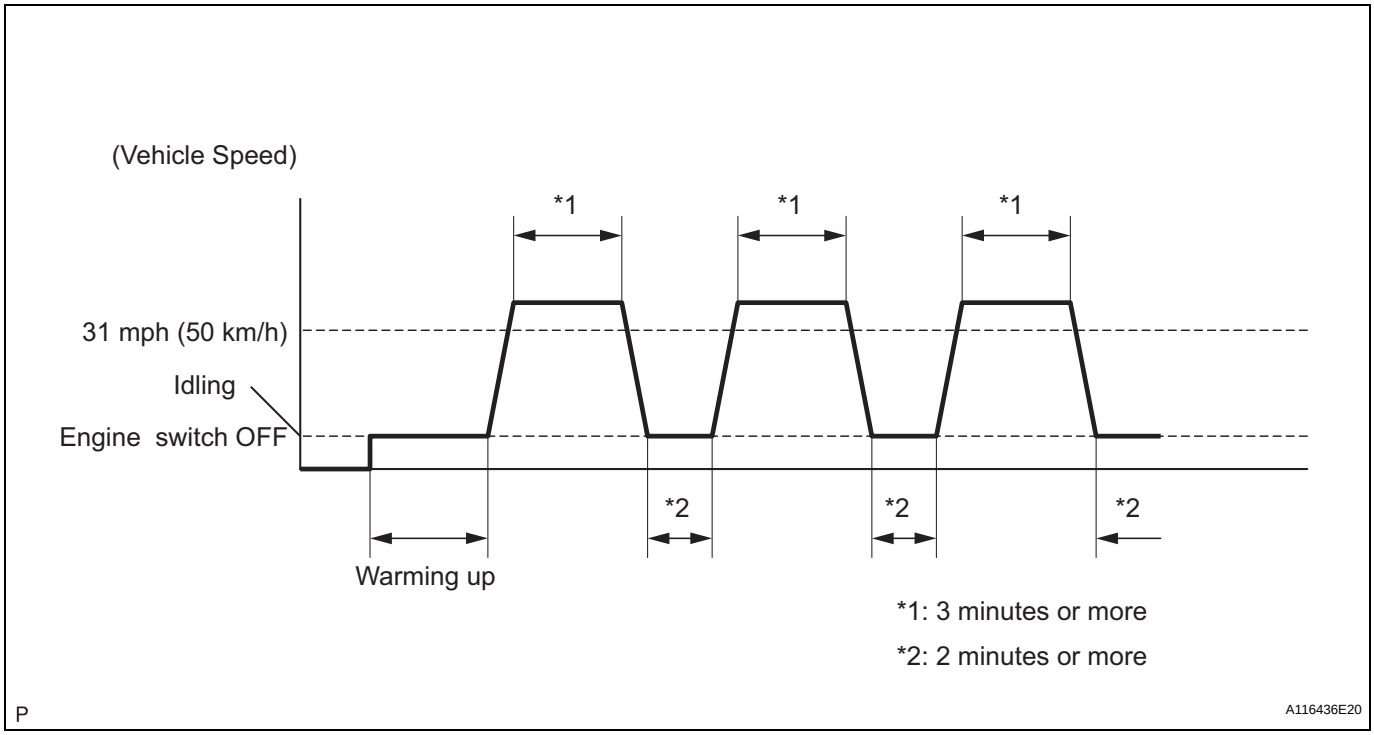

(b) Read values using the intelligent tester (LONG FT#1).
  (1) Select the following menu items: DIAGNOSIS / ENHANCED OBD II / DATA LIST / PRIMARY / LONG FT#1.

(2) Read the values displayed on the tester.
Standard value:
Within -15 to +15 %
If the result is not within the specified range, perform the inspection below.

(c) Read values using the intelligent tester (MAF).
NOTICE:
- **Turn off the engine.**
- **Perform the inspection with the vehicle indoors and on a level surface.**
- **Perform the inspection of the MAF meter while it is installed to the air cleaner case (installed to the vehicle).**
- **During the test, do not use the exhaust air duct to perform suction on the exhaust pipe.**

(1) Turn off the engine (do not run the engine).
(2) Turn the engine switch on (IG).
(3) Turn the tester on.
(4) Select the following menu items: DIAGNOSIS / ENHANCED OBD II / DATA LIST / PRIMARY / MAF.
(5) Wait 30 seconds, and read the values on the intelligent tester.
Standard condition:
Less than 0.56 g/sec
- If the result is not as specified, replace the MAF meter.
- If the result is within the specified range, inspect the cause of the extremely rich or lean air fuel ratio.

CAMSHAFT TIMING OIL CONTROL VALVE ASSEMBLY

COMPONENTS

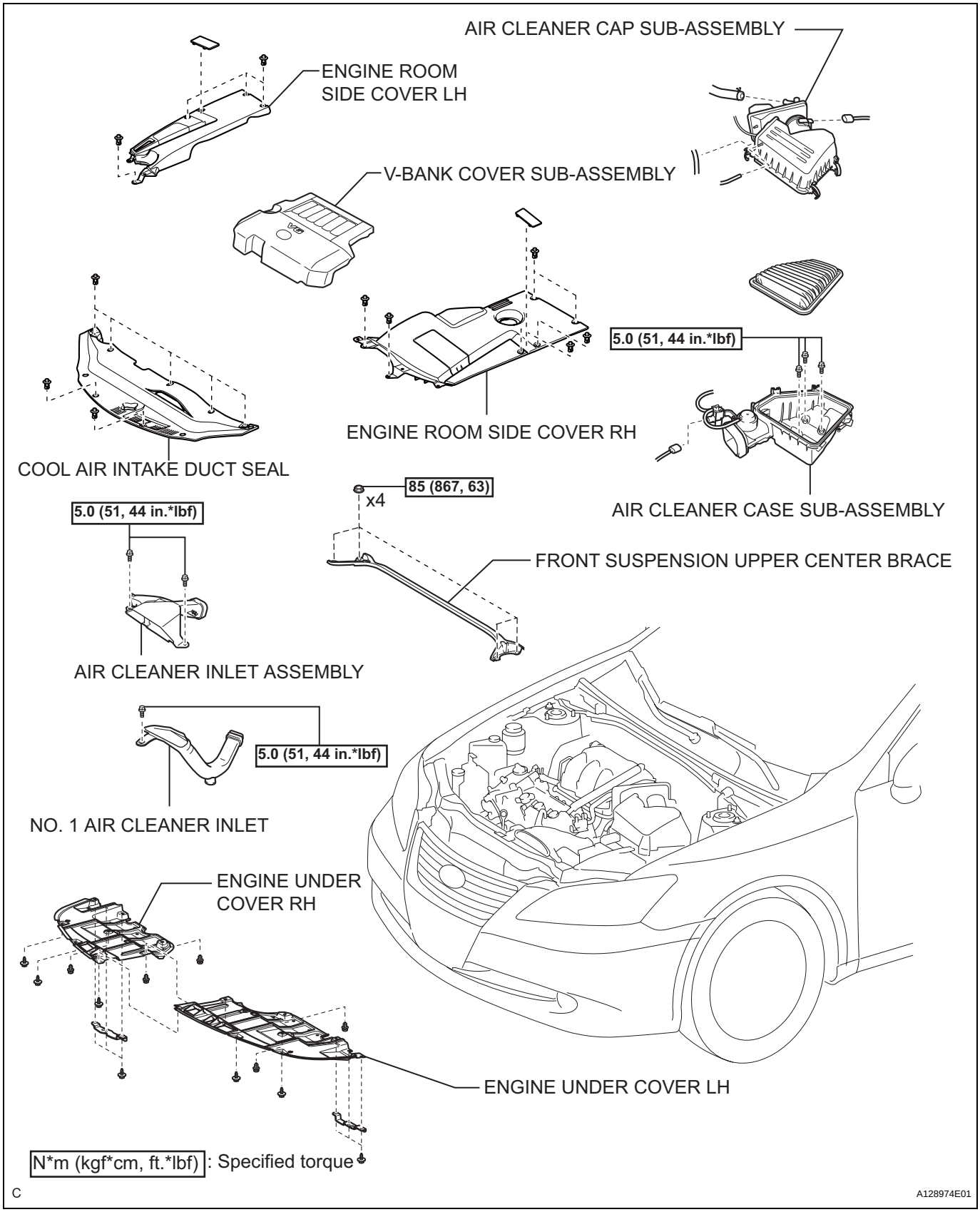

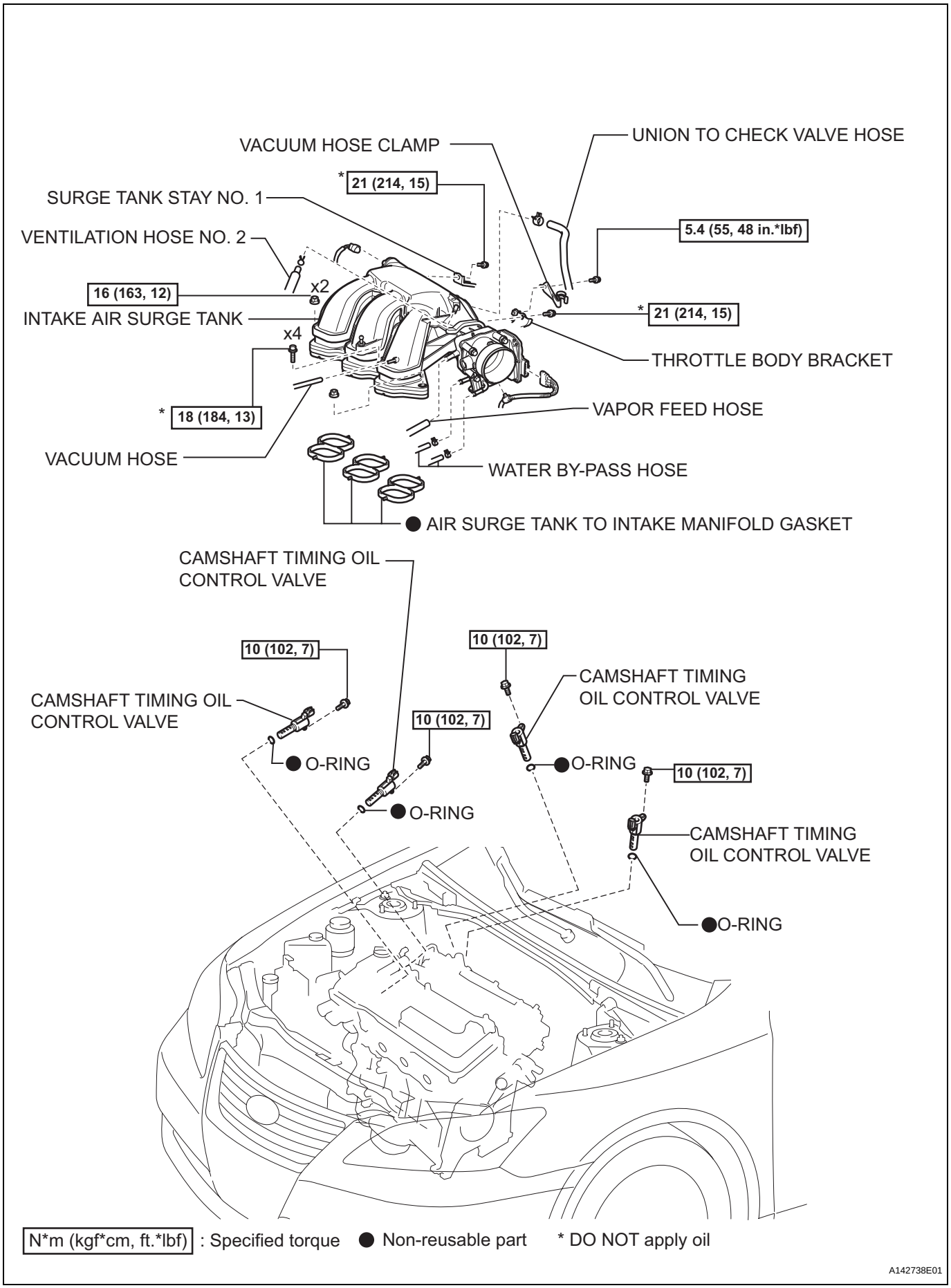
VACUUM HOSE CLAMP
UNION TO CHECK VALVE HOSE
* 21 (214, 15)
SURGE TANK STAY NO. 1
VENTILATION HOSE NO. 2
5.4 (55, 48 in.*lbf)
16 (163, 12)
x2
INTAKE AIR SURGE TANK
* 21 (214, 15)
x4
THROTTLE BODY BRACKET
* 18 (184, 13)
VAPOR FEED HOSE
VACUUM HOSE
WATER BY-PASS HOSE
● AIR SURGE TANK TO INTAKE MANIFOLD GASKET
CAMSHAFT TIMING OIL CONTROL VALVE
10 (102, 7)
10 (102, 7)
CAMSHAFT TIMING OIL CONTROL VALVE
CAMSHAFT TIMING OIL CONTROL VALVE
10 (102, 7)
● O-RING
● O-RING
10 (102, 7)
● O-RING
CAMSHAFT TIMING OIL CONTROL VALVE
●O-RING
N*m (kgf*cm, ft.*lbf) : Specified torque
● Non-reusable part
* DO NOT apply oil
A142738E01

ES

VVT SENSOR

COMPONENTS

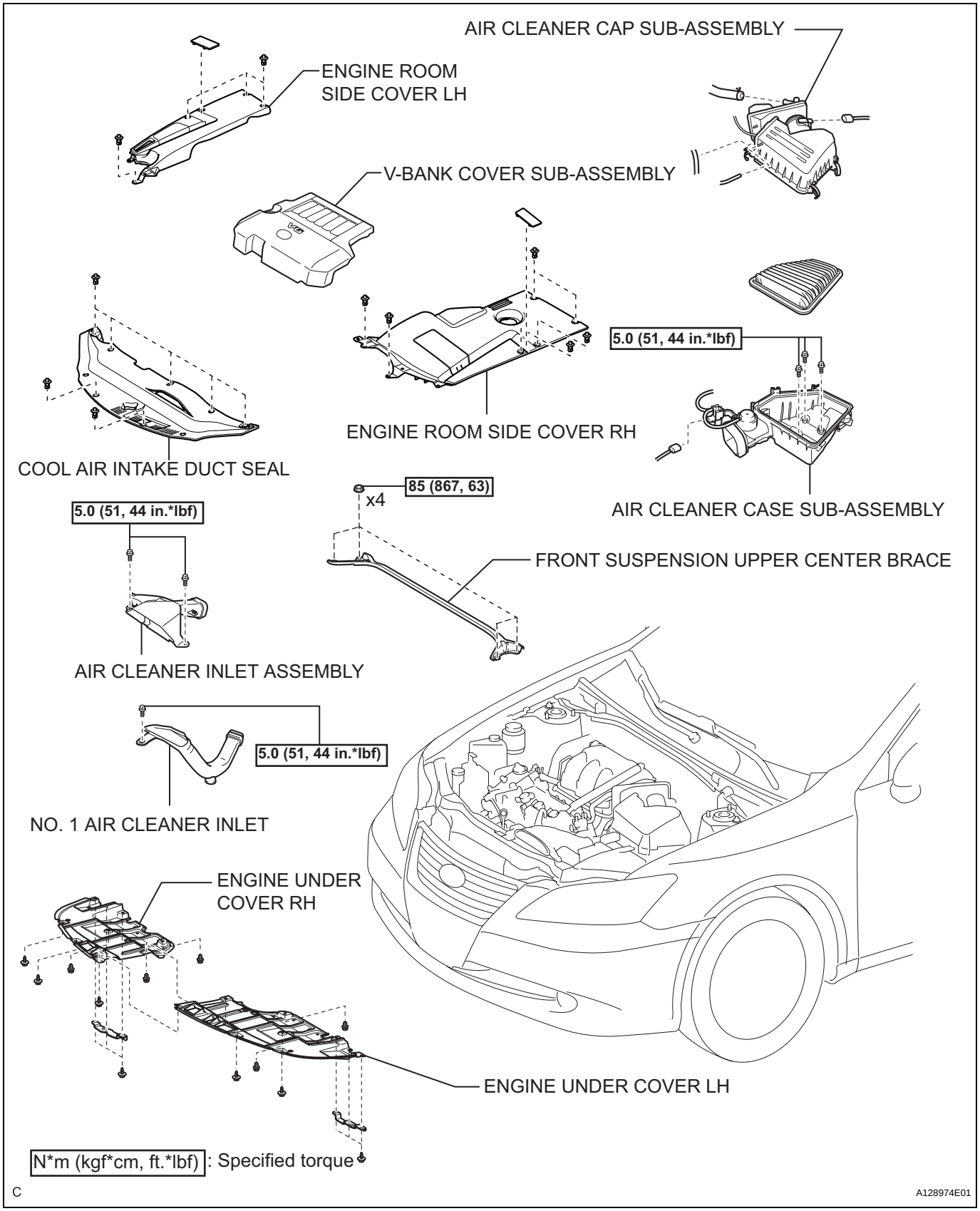

ES

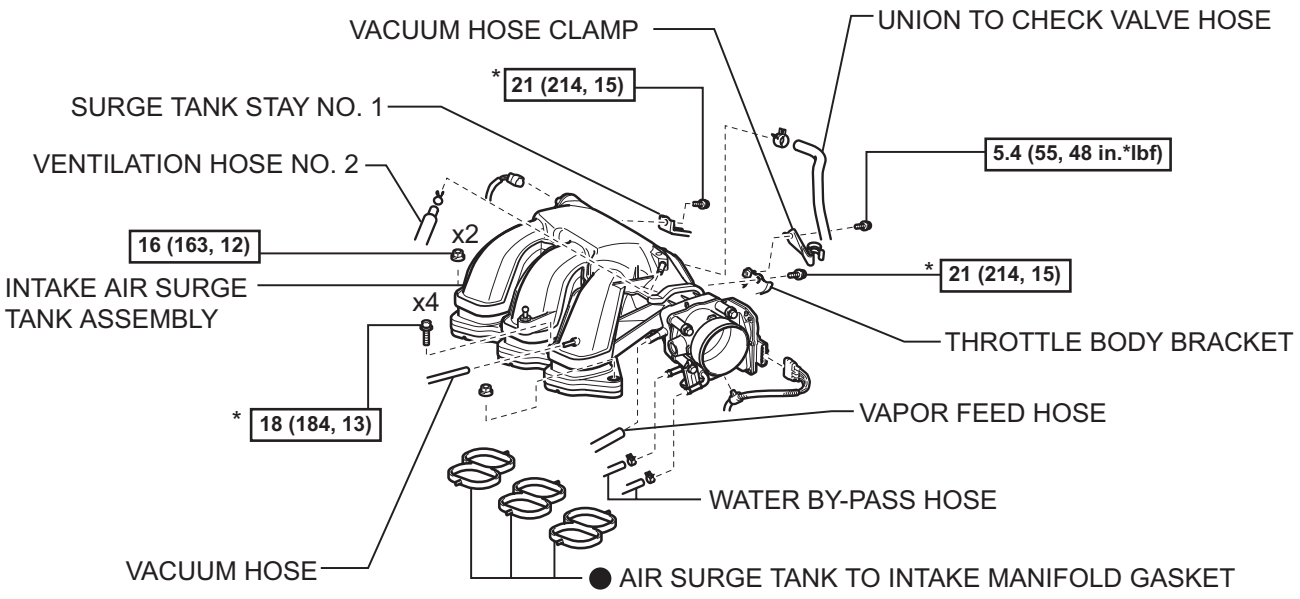

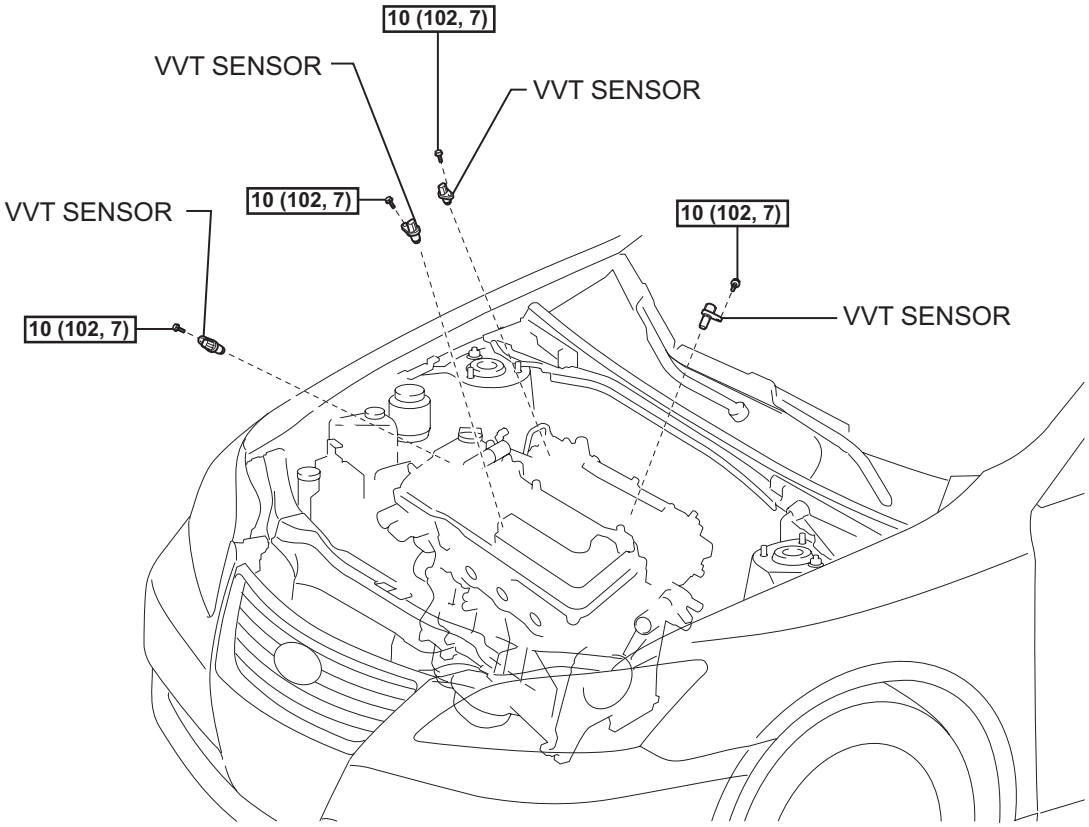

N*m (kgf*cm, ft.*lbf) : Specified torque ● Non-reusable part * DO NOT apply oil

A142739E01

ES

CRANKSHAFT POSITION SENSOR

COMPONENTS

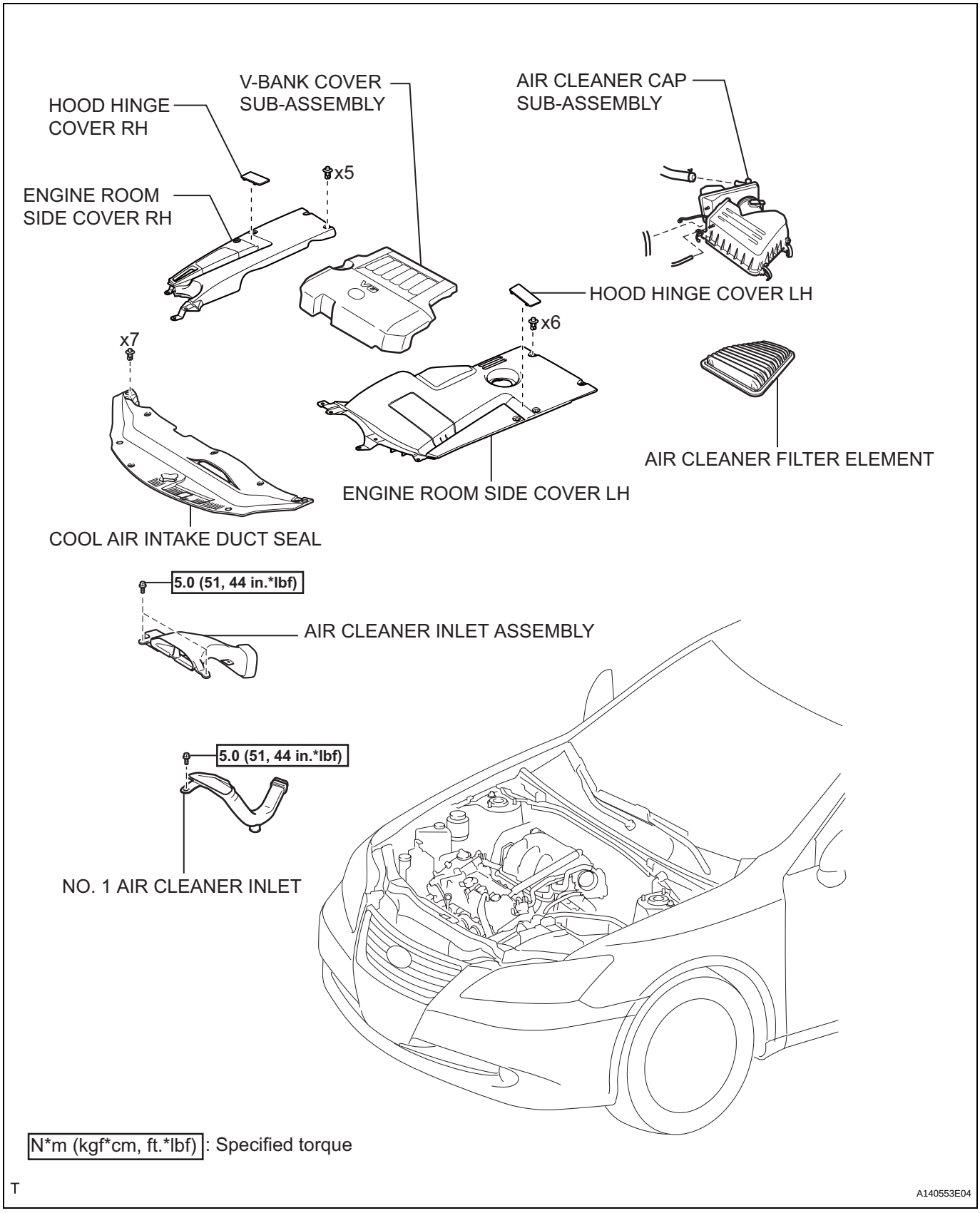

N*m (kgf*cm, ft.*lbf) : Specified torque

T

A140553E04

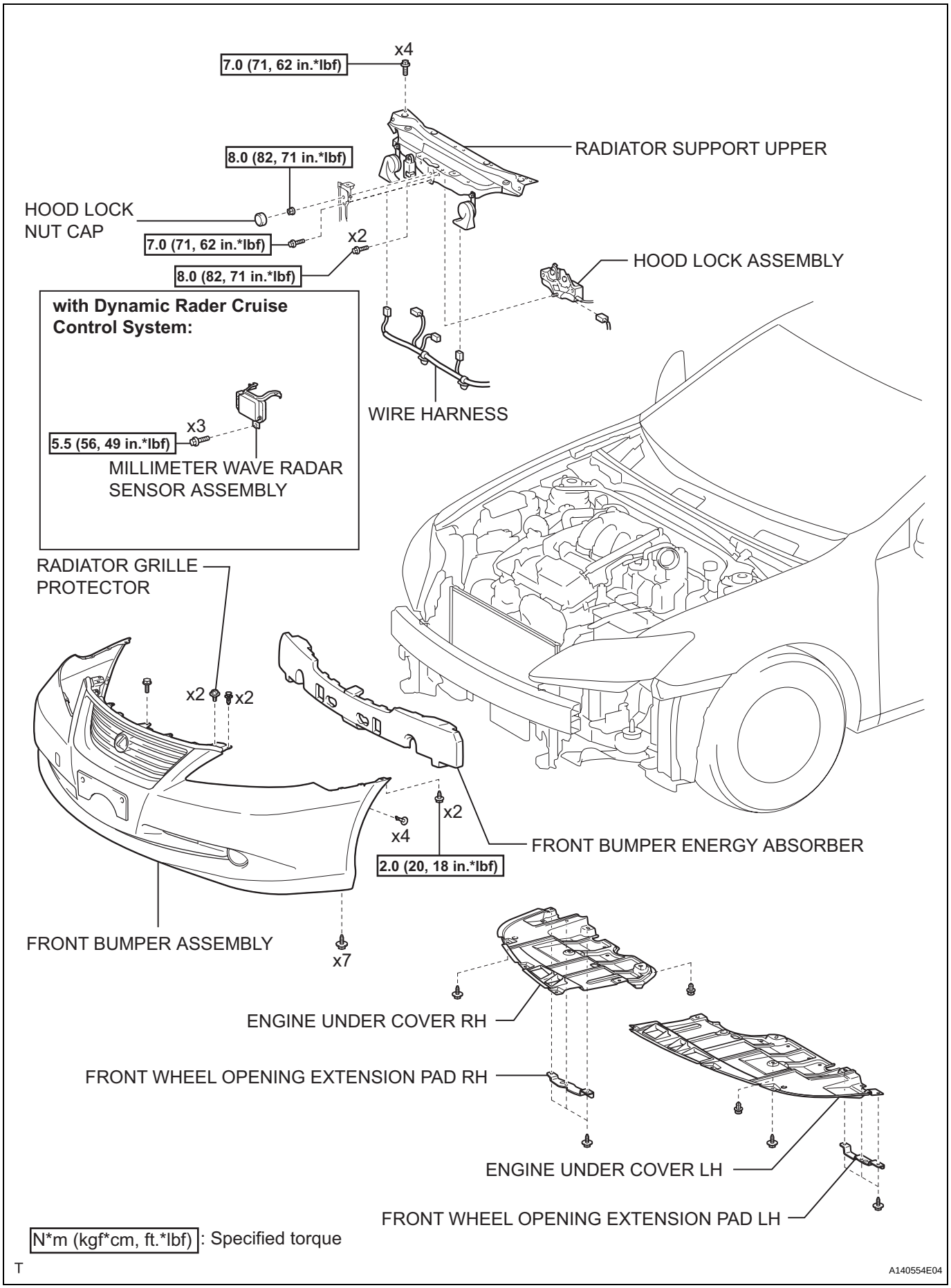
7.0 (71, 62 in.*lbf)
x4
RADIATOR SUPPORT UPPER
8.0 (82, 71 in.*lbf)
HOOD LOCK NUT CAP
7.0 (71, 62 in.*lbf)
x2
8.0 (82, 71 in.*lbf)
HOOD LOCK ASSEMBLY
with Dynamic Rader Cruise Control System:
x3
5.5 (56, 49 in.*lbf)
MILLIMETER WAVE RADAR SENSOR ASSEMBLY
WIRE HARNESS
RADIATOR GRILLE PROTECTOR
x2
x2
x2
x4
2.0 (20, 18 in.*lbf)
FRONT BUMPER ENERGY ABSORBER
FRONT BUMPER ASSEMBLY
x7
ENGINE UNDER COVER RH
FRONT WHEEL OPENING EXTENSION PAD RH
ENGINE UNDER COVER LH
FRONT WHEEL OPENING EXTENSION PAD LH
N*m (kgf*cm, ft.*lbf): Specified torque
T
A140554E04

ES

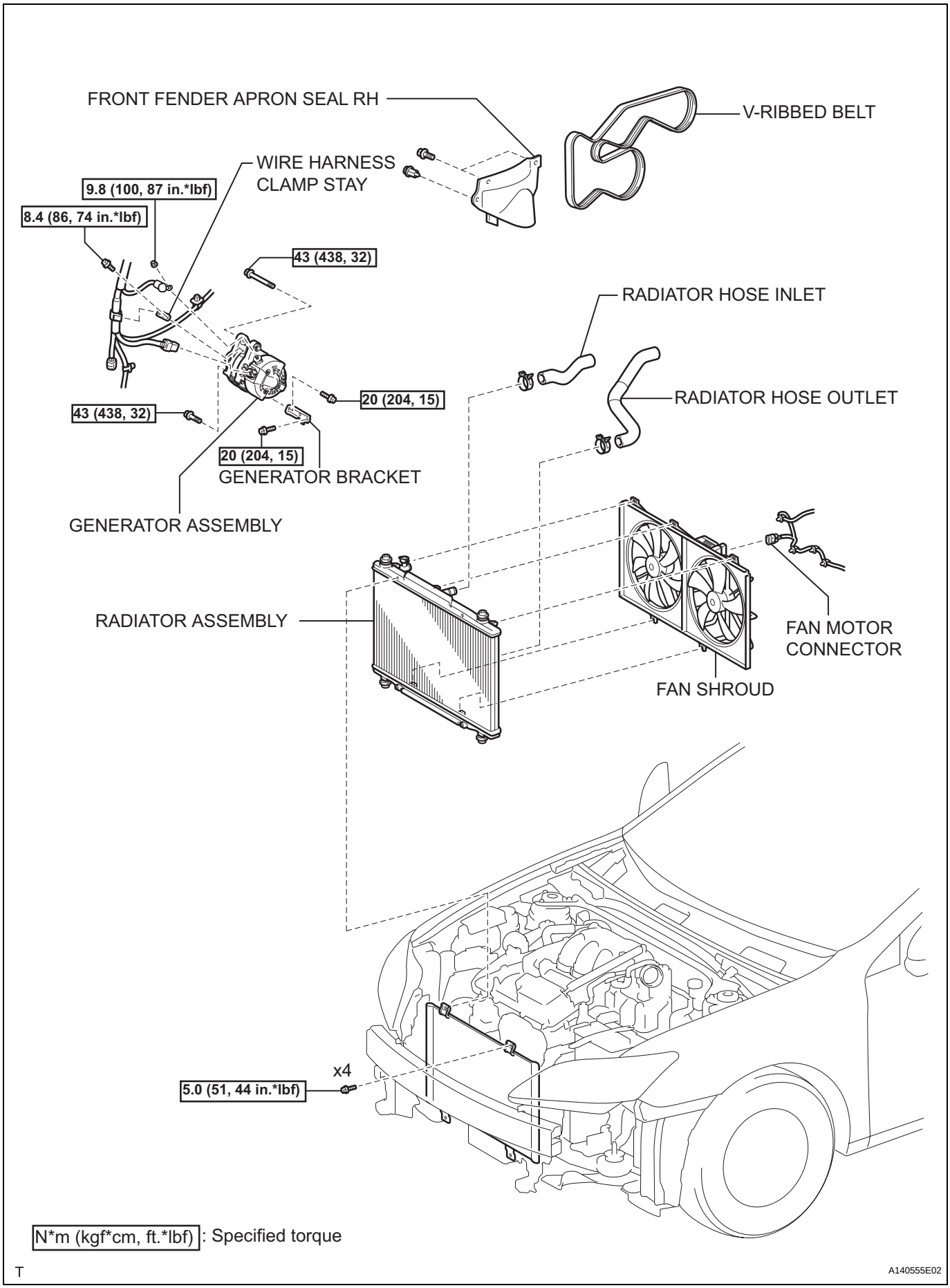
FRONT FENDER APRON SEAL RH
V-RIBBED BELT
WIRE HARNESS CLAMP STAY
9.8 (100, 87 in.*lbf)
8.4 (86, 74 in.*lbf)
43 (438, 32)
RADIATOR HOSE INLET
RADIATOR HOSE OUTLET
20 (204, 15)
43 (438, 32)
20 (204, 15)
GENERATOR BRACKET
GENERATOR ASSEMBLY
RADIATOR ASSEMBLY
FAN MOTOR CONNECTOR
FAN SHROUD
x4
5.0 (51, 44 in.*lbf)
N*m (kgf*cm, ft.*lbf) : Specified torque
T
A140555E02

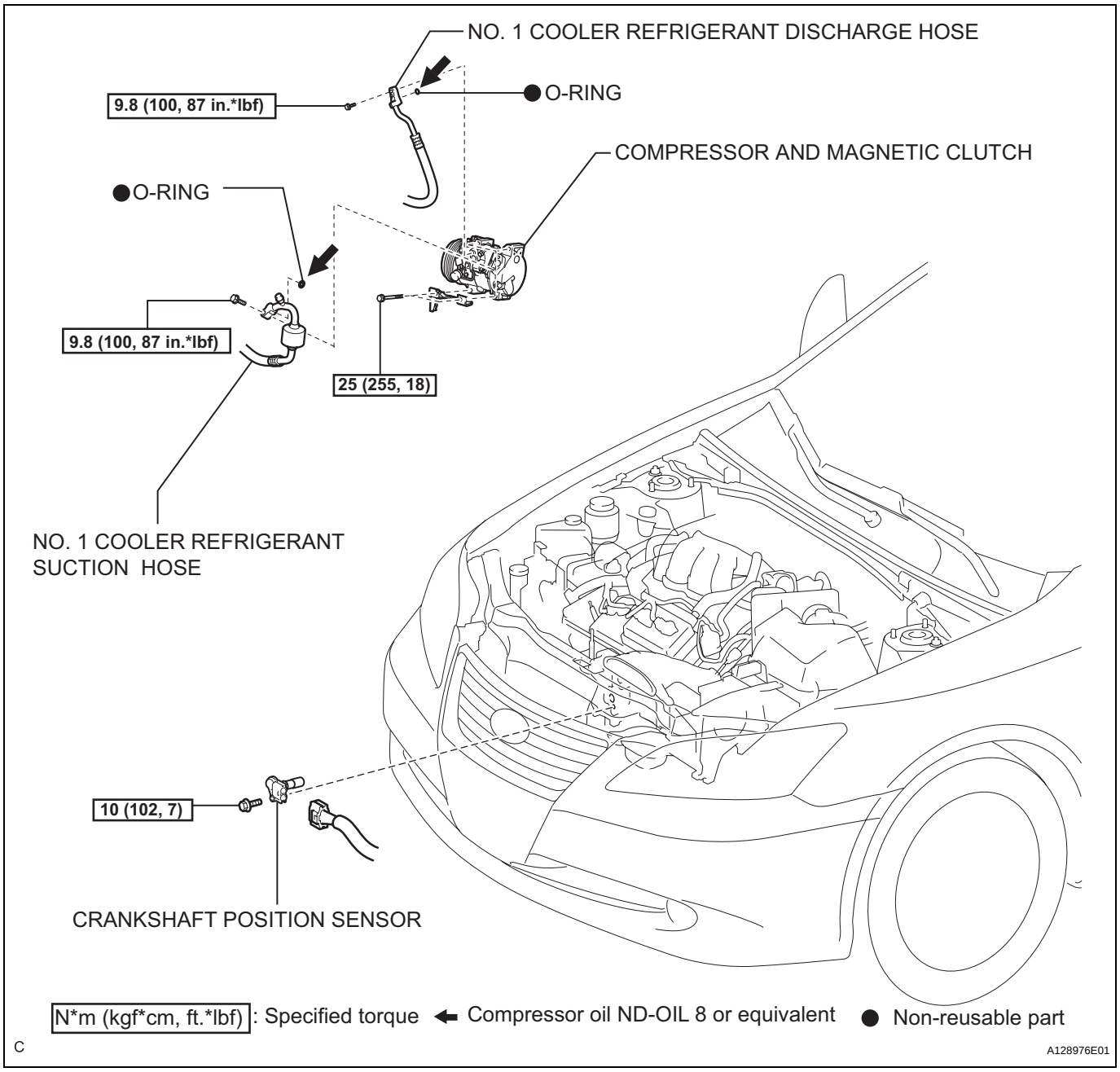
NO. 1 COOLER REFRIGERANT DISCHARGE HOSE
9.8 (100, 87 in.*lbf)
O-RING
COMPRESSOR AND MAGNETIC CLUTCH
O-RING
9.8 (100, 87 in.*lbf)
25 (255, 18)
NO. 1 COOLER REFRIGERANT SUCTION HOSE
10 (102, 7)
CRANKSHAFT POSITION SENSOR
N*m (kgf*cm, ft.*lbf) : Specified torque
Compressor oil ND-OIL 8 or equivalent
Non-reusable part
C
A128976E01

ES

ENGINE COOLANT TEMPERATURE SENSOR

COMPONENTS

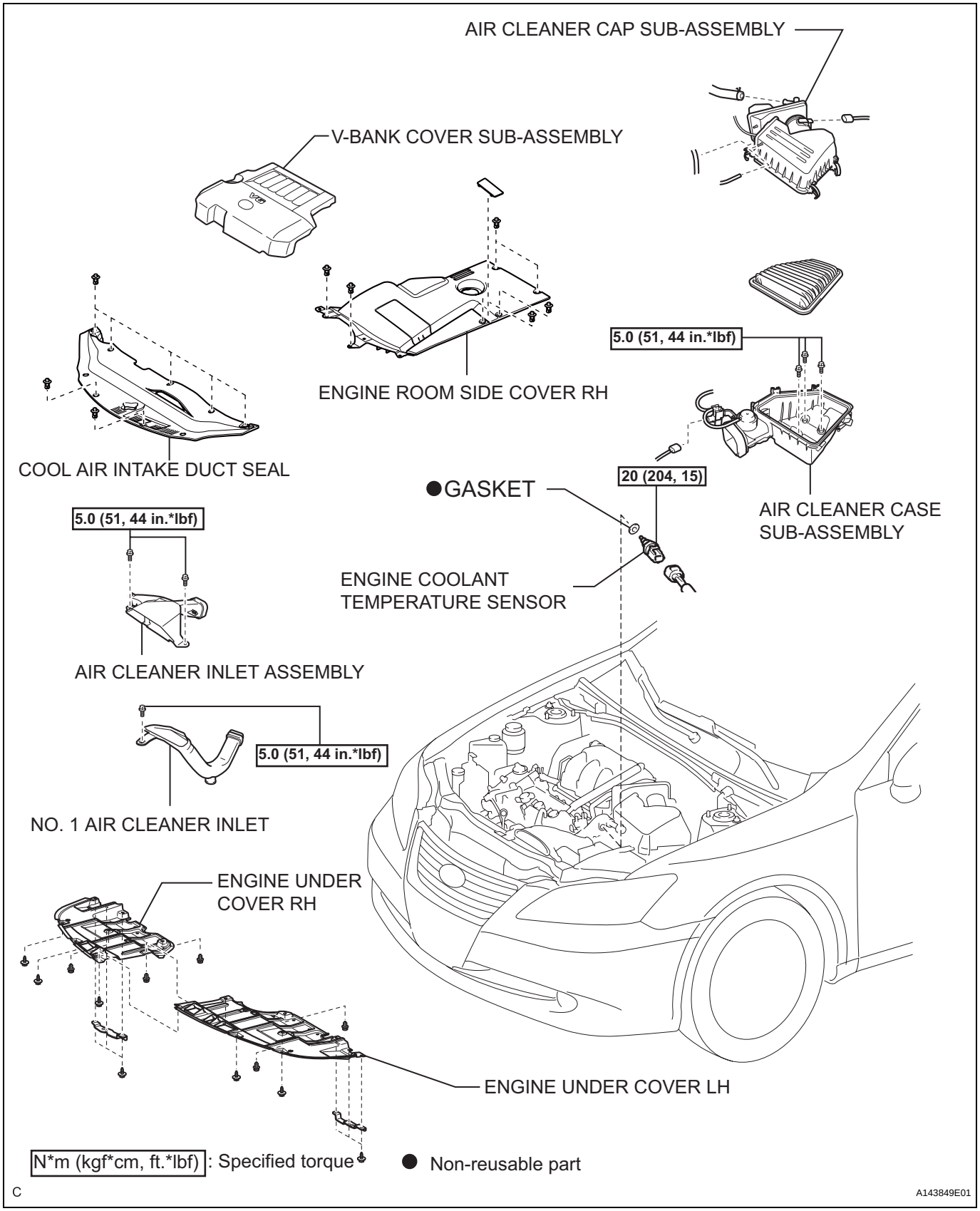

ES

ES

REMOVAL

1. **REMOVE ENGINE UNDER COVER LH**
2. **REMOVE ENGINE UNDER COVER RH**
3. **DRAIN ENGINE COOLANT (See page CO-5)**
4. **REMOVE V-BANK COVER SUB-ASSEMBLY (See page EM-23)**
5. **REMOVE COOL AIR INTAKE DUCT SEAL (See page EM-22)**
6. **REMOVE ENGINE ROOM SIDE COVER LH (See page EM-22)**
7. **REMOVE AIR CLEANER INLET ASSEMBLY (See page EM-23)**
8. **REMOVE AIR CLEANER CAP SUB-ASSEMBLY (See page ES-519)**
9. **REMOVE AIR CLEANER CASE SUB-ASSEMBLY (See page EM-23)**
10. **REMOVE NO. 1 AIR CLEANER INLET (See page EM-23)**
11. **REMOVE ENGINE COOLANT TEMPERATURE SENSOR**
    (a) Remove the engine coolant temperature sensor connector.
    (b) Remove the engine coolant temperature sensor.
    (c) Remove the gasket from the engine coolant temperature sensor.

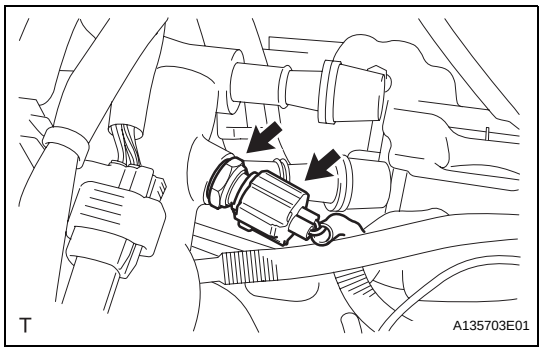

THROTTLE BODY

COMPONENTS

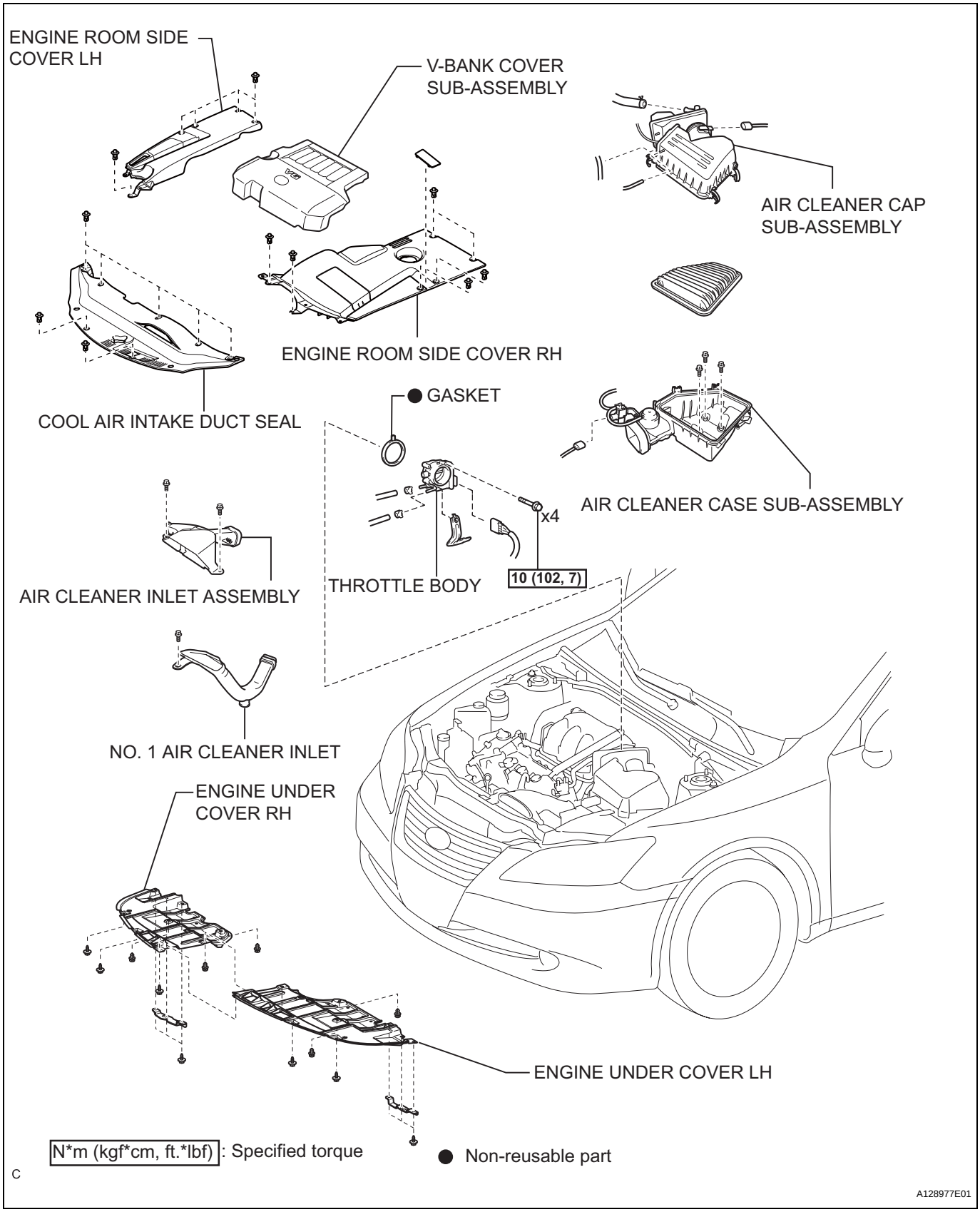

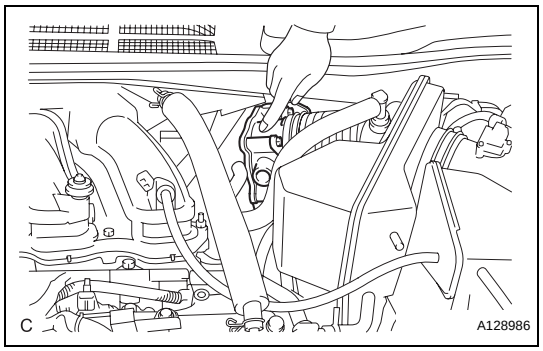

ON-VEHICLE INSPECTION

1. INSPECTION THROTTLE BODY

(a) Inspect the throttle control motor for operating sounds.

(1) Turn the engine switch on (IG).

(2) When turning the accelerator pedal position sensor lever, check for running sounds of the motor. The motor should be running smoothly without friction sounds.
If operation is not as specified, check the throttle control motor, wiring and ECM (See page ES-521).

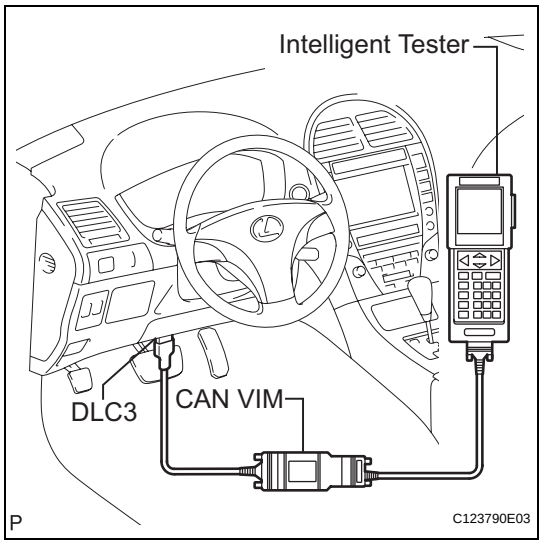

(b) Inspect the throttle position sensor.

(1) Connect the intelligent tester (with CAN VIM) to the DLC3.

(2) Turn the engine switch on (IG).

(3) Check that the MIL is off.

(4) Check that, under the CURRENT DATA, THROTTLE POS (throttle valve opening percentage) is within the standard range below.
Standard throttle valve opening percentage: 60 % or more
If operation is not as specified, check the throttle position sensor, wiring and ECM (See page ES-521).

ES

KNOCK SENSOR

COMPONENTS

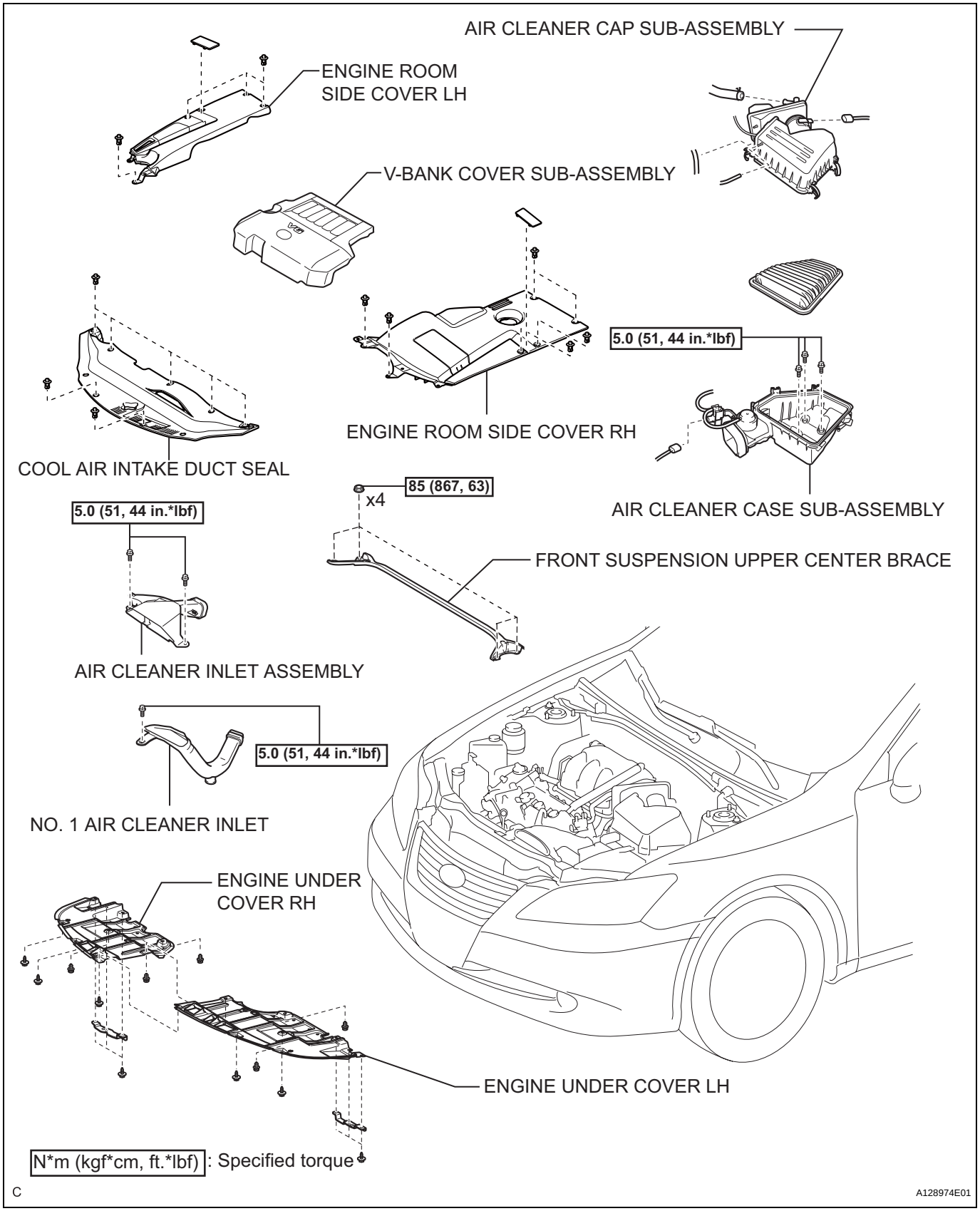

ES

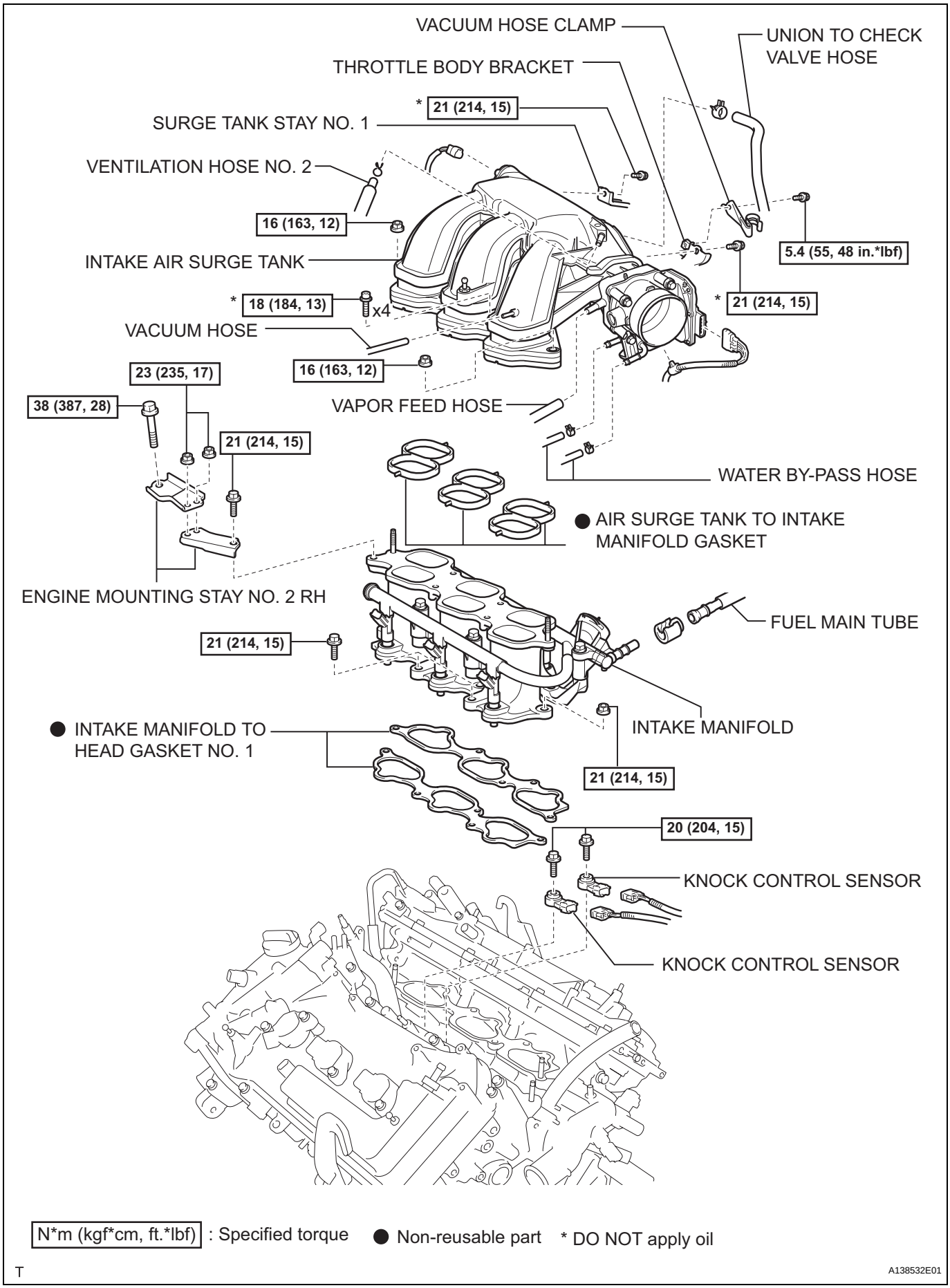
VACUUM HOSE CLAMP
UNION TO CHECK VALVE HOSE
THROTTLE BODY BRACKET
* 21 (214, 15)
SURGE TANK STAY NO. 1
VENTILATION HOSE NO. 2
16 (163, 12)
INTAKE AIR SURGE TANK
5.4 (55, 48 in.*lbf)
* 18 (184, 13)
x4
* 21 (214, 15)
VACUUM HOSE
16 (163, 12)
23 (235, 17)
38 (387, 28)
VAPOR FEED HOSE
21 (214, 15)
WATER BY-PASS HOSE
● AIR SURGE TANK TO INTAKE MANIFOLD GASKET
ENGINE MOUNTING STAY NO. 2 RH
FUEL MAIN TUBE
21 (214, 15)
INTAKE MANIFOLD
● INTAKE MANIFOLD TO HEAD GASKET NO. 1
21 (214, 15)
20 (204, 15)
KNOCK CONTROL SENSOR
KNOCK CONTROL SENSOR
N*m (kgf*cm, ft.*lbf) : Specified torque
● Non-reusable part
* DO NOT apply oil
T
A138532E01

ES

ACTIVE CONTROL ENGINE MOUNT

COMPONENTS

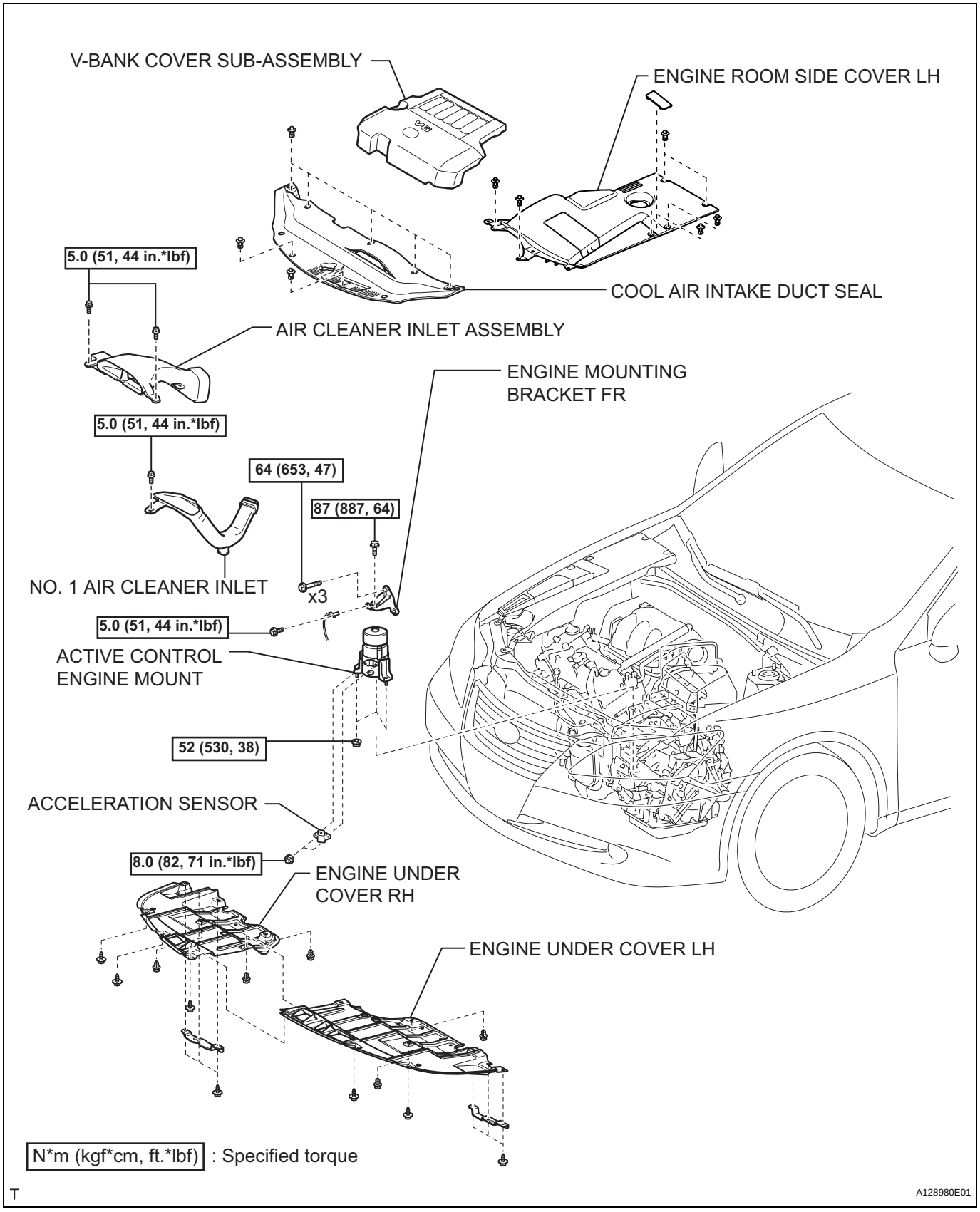

ES

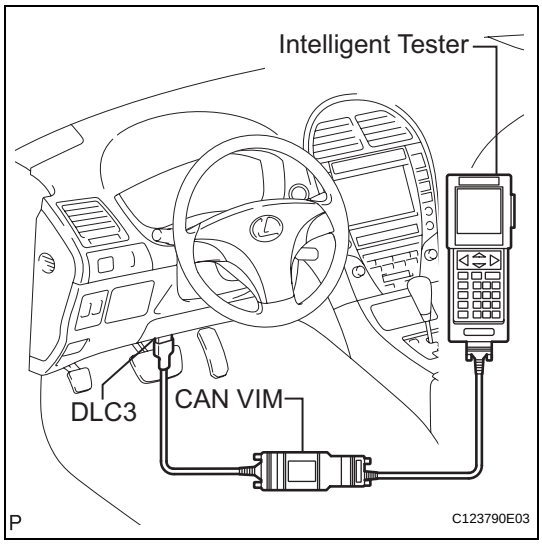

ON-VEHICLE INSPECTION

1. INSPECT ACTIVE ENGINE MOUNTING

(a) Inspect the active engine mounting.

(1) Connect the intelligent tester to DLC3.

(2) Start the engine and turn the intelligent tester on.

(3) Enter the following menus: DIAGNOSIS / OBD/ MOBD / E-ACM / ACTIVE TEST.

Item	Test Detailes	Diagnostic Note
CHECK THE E-ACM	[Tester Details] Operate the E-ACM actuator [Vehicle Condition] Engine running	-

(4) Check if the active mount control operates.

Standard:

The active mount control operates normally.

ACCELERATION SENSOR

COMPONENTS

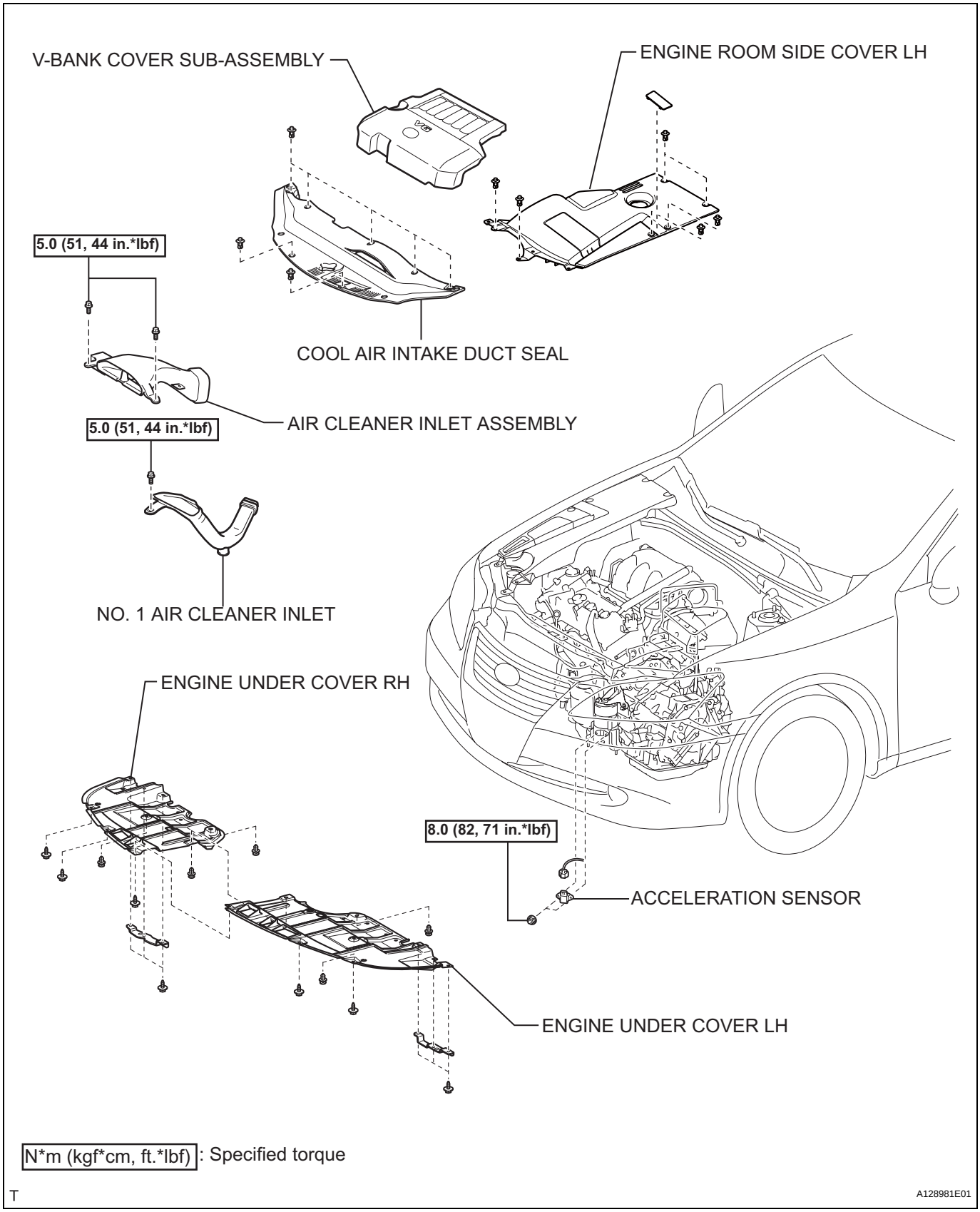

ES

REMOVAL

1. **DISCONNECT CABLE FROM NEGATIVE BATTERY TERMINAL**
2. **REMOVE ENGINE UNDER COVER LH**
3. **REMOVE ENGINE UNDER COVER RH**
4. **REMOVE COOL AIR INTAKE DUCT SEAL (See page EM-22)**
5. **REMOVE ENGINE ROOM SIDE COVER LH (See page EM-22)**
6. **REMOVE V-BANK COVER SUB-ASSEMBLY (See page EM-23)**
7. **REMOVE AIR CLEANER INLET ASSEMBLY (See page EM-23)**
8. **REMOVE NO. 1 AIR CLEANER INLET (See page EM-23)**
9. **REMOVE ACCELERATION SENSOR**
   (a) Disconnect the acceleration sensor connector and clamp.

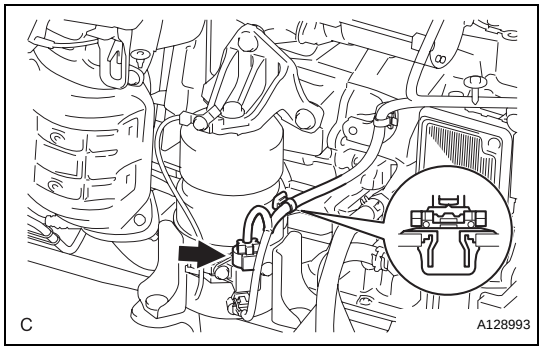

   (b) Remove the 2 nuts and acceleration sensor.

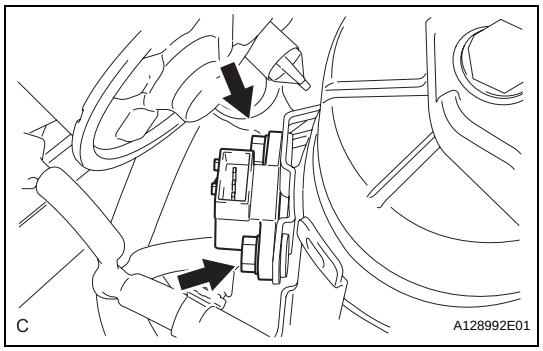

INSTALLATION

1. **INSTALL ACCELERATION SENSOR**
   (a) Install the acceleration sensor with the 2 nuts.
   Torque: 8.0 N*m (82 kgf*cm, 71 in.*lbf)

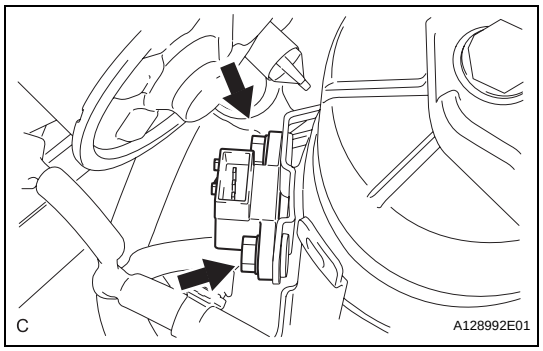

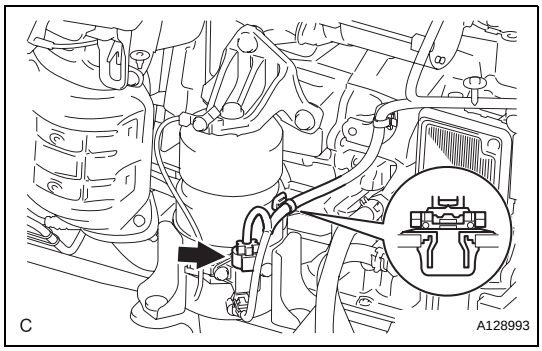

(b) Connect the acceleration sensor connector and clamp.

2. INSTALL NO. 1 AIR CLEANER INLET (See page EM-48)

3. INSTALL AIR CLEANER INLET ASSEMBLY (See page EM-48)

4. INSTALL V-BANK COVER SUB-ASSEMBLY (See page EM-49)

5. INSTALL ENGINE ROOM SIDE COVER LH (See page EM-49)

6. INSTALL COOL AIR INTAKE DUCT SEAL (See page EM-50)

7. INSTALL ENGINE UNDER COVER RH

8. INSTALL ENGINE UNDER COVER LH

9. CONNECT CABLE TO NEGATIVE BATTERY TERMINAL

10. PERFORM INITIALIZATION

(a) Perform initialization procedure (See page IN-33).
NOTICE:
Some vehicle systems require initialization after reconnecting the cable to the negative battery terminal.

ES

ACTIVE CONTROL ENGINE MOUNT ECU

COMPONENTS

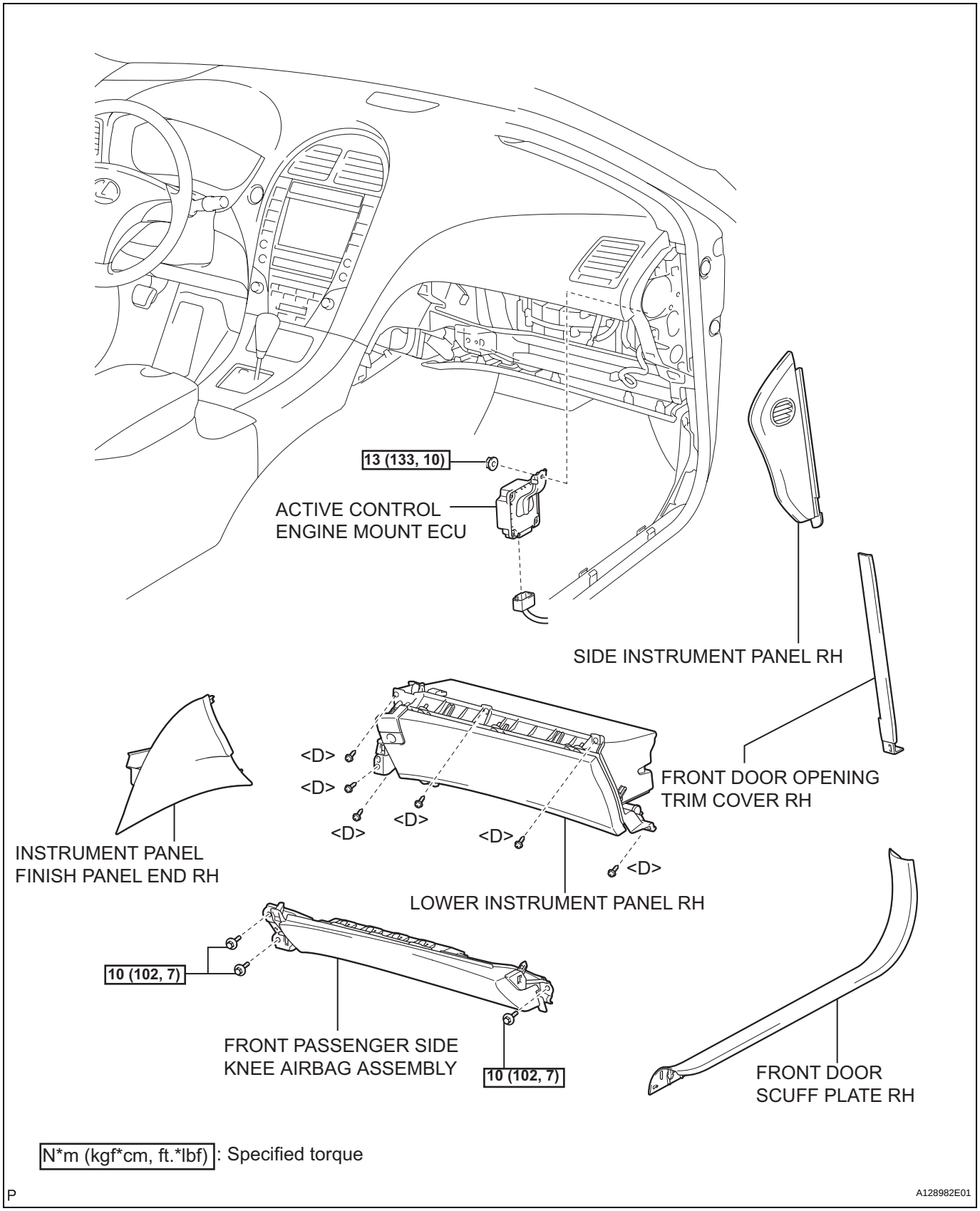

ES

ES

REMOVAL

1. **PRECAUTION**
   CAUTION:
   Be sure to read "PRECAUTION" thoroughly before servicing (See page IP-1).

2. **DISCONNECT CABLE FROM NEGATIVE BATTERY TERMINAL**
   CAUTION:
   Wait for 90 seconds after disconnecting the cable to prevent airbag deployment (See page RS-1).

3. **REMOVE SIDE INSTRUMENT PANEL RH (See page IP-15)**

4. **REMOVE INSTRUMENT PANEL FINISH PANEL END RH (See page IP-15)**

5. **REMOVE FRONT DOOR SCUFF PLATE RH (See page IR-42)**

6. **REMOVE FRONT DOOR OPENING TRIM COVER RH (See page IR-42)**

7. **REMOVE FRONT PASSENGER SIDE KNEE AIRBAG ASSEMBLY (See page RS-396)**

8. **REMOVE LOWER INSTRUMENT PANEL RH (See page IP-16)**

9. **REMOVE ACTIVE CONTROL ENGINE MOUNT ECU**
   (a) Disconnect the connector.

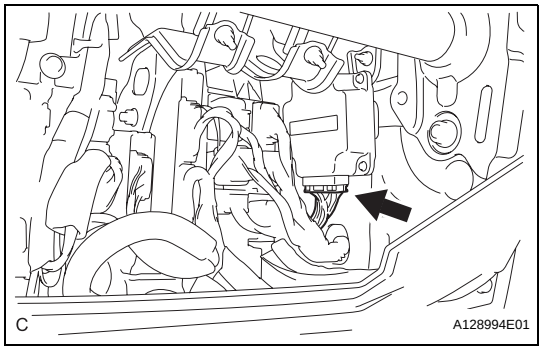

   (b) Remove the nut and active control engine mount ECU.

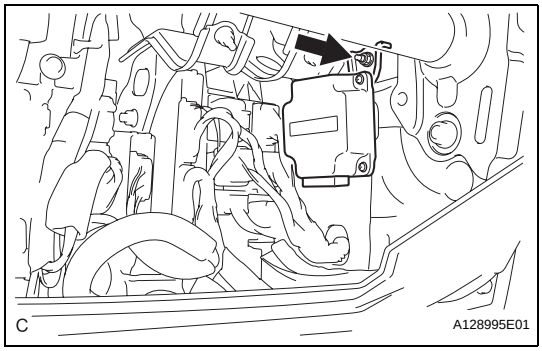

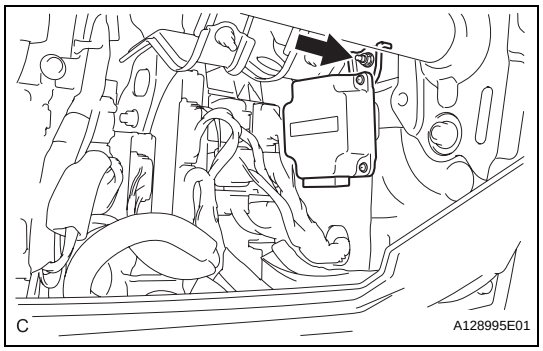

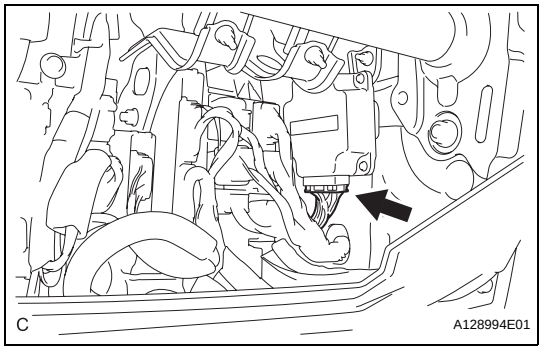

INSTALLATION

1. **INSTALL ACTIVE CONTROL ENGINE MOUNT ECU**
   (a) Install the active control engine mount ECU with the nut.
   Torque: 13 N*m (133 kgf*cm, 10 ft.*lbf)

   (b) Connect the connector.

2. **INSTALL LOWER INSTRUMENT PANEL RH (See page IP-42)**
3. **INSTALL FRONT PASSENGER SIDE KNEE AIRBAG ASSEMBLY (See page RS-395)**
4. **INSTALL FRONT DOOR OPENING TRIM COVER RH (See page IR-64)**
5. **INSTALL FRONT DOOR SCUFF PLATE RH (See page IR-65)**
6. **INSTALL INSTRUMENT PANEL FINISH PANEL END RH (See page IP-46)**
7. **INSTALL SIDE INSTRUMENT PANEL RH (See page IP-47)**
8. **CONNECT CABLE FROM NEGATIVE BATTERY TERMINAL**
9. **INSPECT FRONT PASSENGER SIDE KNEE AIRBAG ASSEMBLY (See page RS-395)**
10. **INSPECT SRS WARNING LIGHT (See page RS-395)**
11. **PERFORM INITIALIZATION**
    (a) Perform initialization procedure (See page IN-33).
    NOTICE:
    Some vehicle systems require initialization after reconnecting the cable to the negative battery terminal.

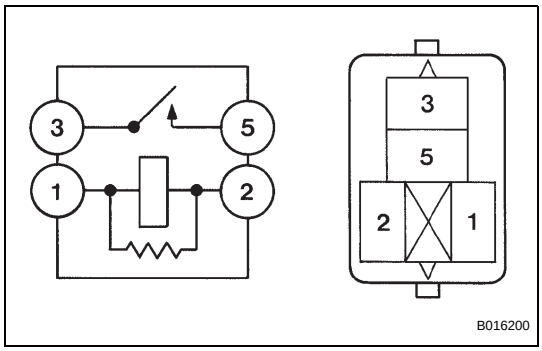

IG2 RELAY

INSPECTION

1. INSPECT IG2 RELAY

(a) Using an ohmmeter, measure the resistance according to the value(s) in the table below.

Standard resistance

Tester Connection	Specified Condition
3 - 5	10 kΩ or higher
3 - 5	Below 1 Ω (Battery voltage applied between terminals 1 and 2)

If the result is not as specified, replace the relay.

Engine Room R/B Unit D:

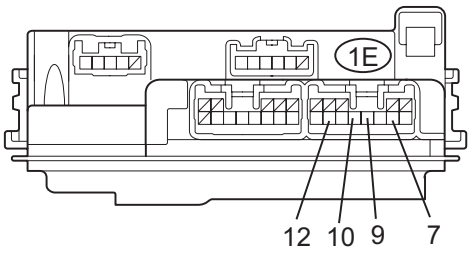

A137364E01

EFI RELAY

INSPECTION

1. INSPECT EFI RELAY

(a) Using an ohmmeter, measure the resistance according to the value(s) in the table below.

Standard resistance

Tester connection	Specified Condition
1E-7 - 1E-12	10 kΩ or higher
1E-7 - 1E-12	Below 1 Ω (Battery voltage applied between terminals 1E-9 and 1E-10)

Engine Room R/B Unit D:

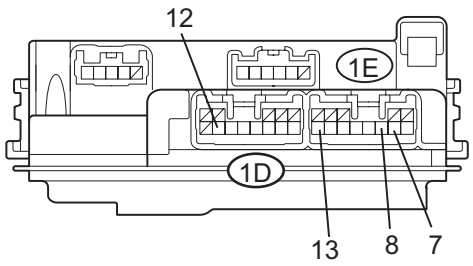

A137364E04

CIRCUIT OPENING RELAY

INSPECTION

1. INSPECT CIRCUIT OPENING RELAY

(a) Using an ohmmeter, measure the resistance according to the value(s) in the table below.

Standard resistance

Tester connection	Specified Condition
1E-7 - 1E-13	10 kΩ or higher
1E-7 - 1E-13	Below 1 Ω (Battery voltage applied between terminals 1E-8 and 1D-12)

ES

Engine Room R/B Unit D:

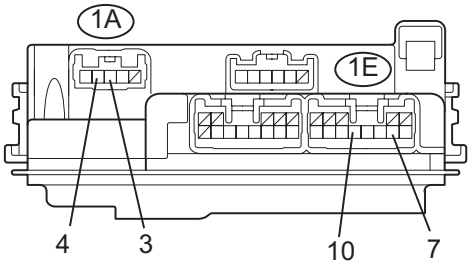

A137364E03

AIR FUEL RATIO SENSOR RELAY

INSPECTION

1. INSPECT AIR FUEL RATIO SENSOR RELAY

(a) Using an ohmmeter, measure the resistance according to the value(s) in the table below.

Standard resistance

Tester connection	Specified Condition
1A-3 - 1A-4	10 kΩ or higher
1A-3 - 1A-4	Below 1 Ω (Battery voltage applied between terminals 1E-7 and 1E-10)

ES

ECM

COMPONENTS

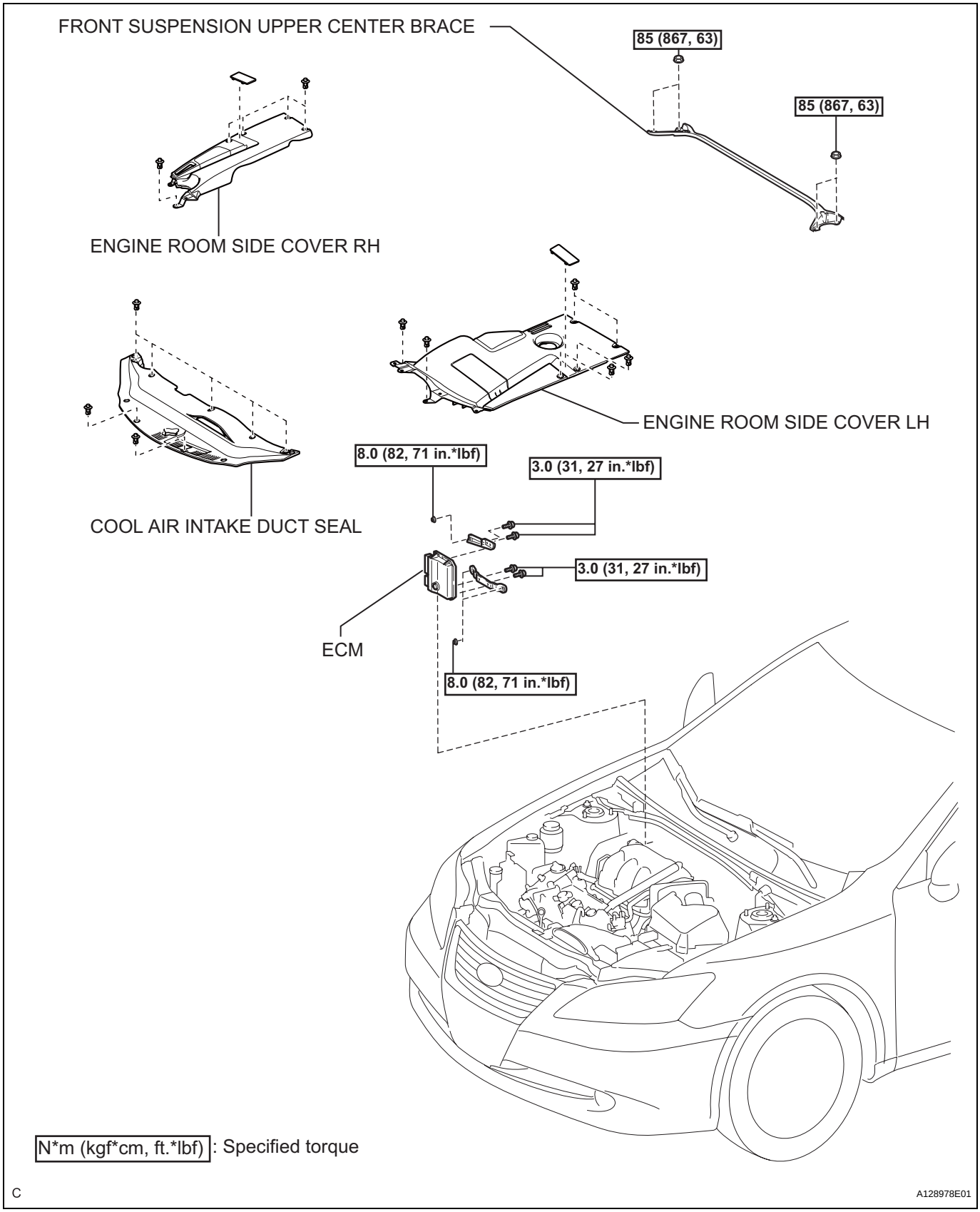

ES

REMOVAL

1. **DISCONNECT CABLE TO NEGATIVE BATTERY TERMINAL**
2. **REMOVE COOL AIR INTAKE DUCT SEAL (See page EM-22)**
3. **REMOVE ENGINE ROOM SIDE COVER LH (See page EM-22)**
4. **REMOVE ENGINE ROOM SIDE COVER RH (See page EM-22)**
5. **REMOVE FRONT SUSPENSION UPPER CENTER BRACE (See page BR-22)**
6. **REMOVE ECM**
   (a) Remove the 3 nuts.

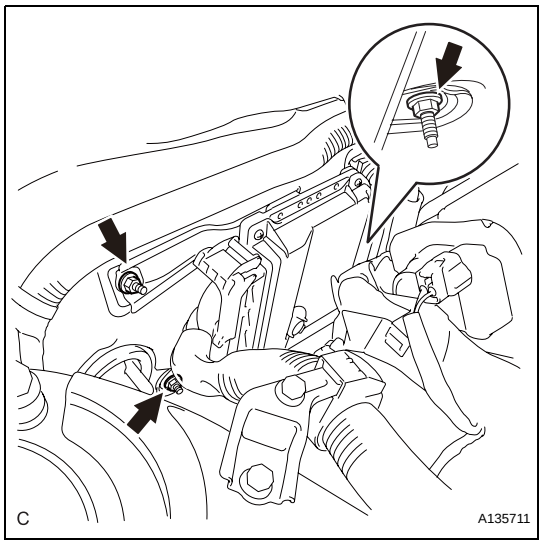

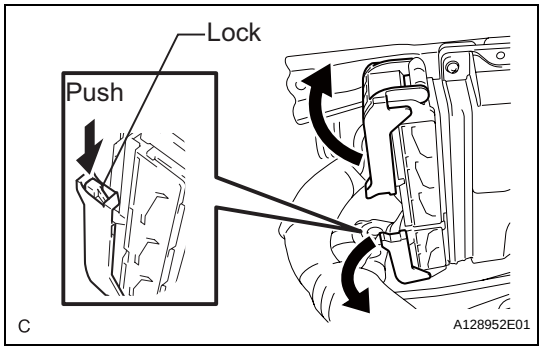

(b) Disconnect the 2 ECM connectors and remove the ECM.
   (1) Raise the 2 levers while pushing the locks on the 2 levers, and disconnect the 2 ECM connectors.
   NOTICE:
   After disconnecting the connector, make sure that dirt, water and other foreign matter do not contact the connecting part of the connector.
   (2) Remove the ECM.

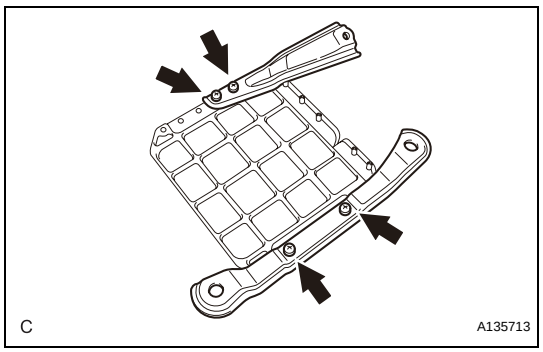

(c) Remove the 4 screws and 2 ECM brackets.

ES

ACCELERATOR PEDAL

COMPONENTS

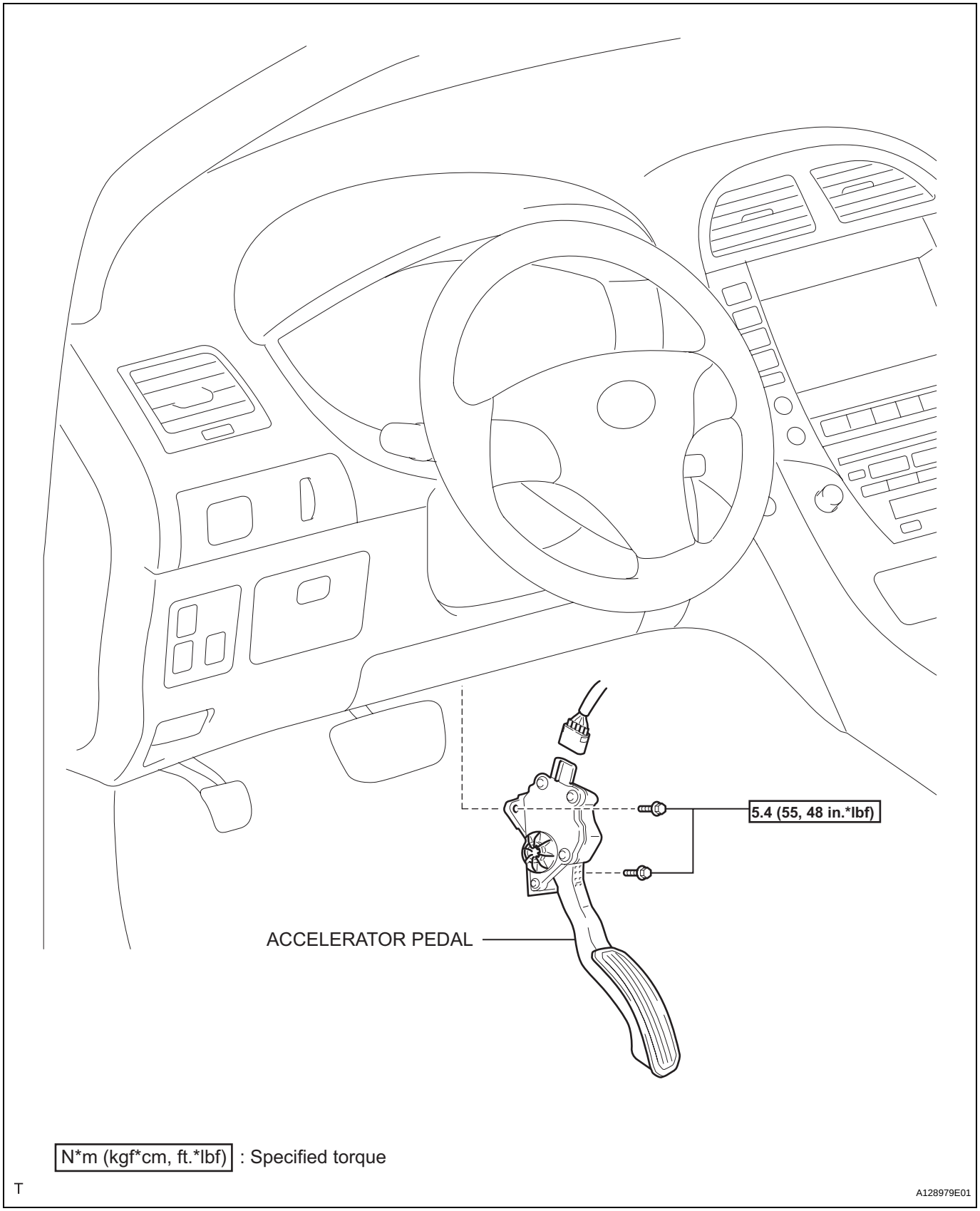

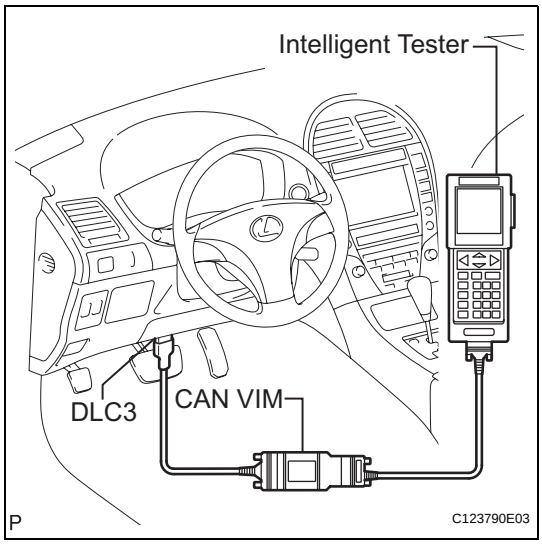

ON-VEHICLE INSPECTION

1. CHECK ACCELERATOR PEDAL ROD

(a) Measure the voltage.

(1) Connect the intelligent tester to the DLC3.

(2) Turn the engine switch on (IG).

(3) Turn the intelligent tester on.

(4) Select the menu items: DIAGNOSIS / ENHANCED OBD II / DATA LIST / ALL / ACCEL POS #1, ACCEL POS #2.

(5) Operate the accelerator pedal, and then check that the ACCEL POS #1 and ACCEL POS #2 values are within the specifications.

Standard voltage (ACCEL POS #1)

Accelerator Pedal Condition	Specified Condition
Released	**0.5 to 1.1 V**
Depressed	**2.5 to 4.5 V**

Standard voltage (ACCEL POS #2)

Accelerator Pedal Condition	Specified Condition
Released	**1.2 to 2.0 V**
Depressed	**3.4 to 5.0 V**

If the result is not as specified, check the accelerator pedal rod, wire harness or ECM.

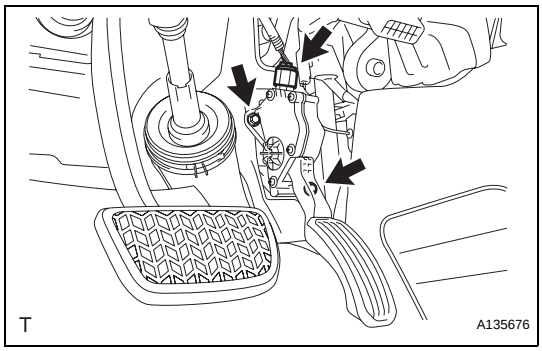

REMOVAL

1. REMOVE ACCELERATOR PEDAL

(a) Disconnect the accelerator pedal connector.

(b) Remove the 2 bolts and the accelerator pedal assembly.

DTC	B1289	Passenger Seat ECU Communication Stop

DESCRIPTION

The main body ECU will store this DTC when no signals can be received from the seat position control ECU (front RH side) while the CAN MS main bus is normal.

DTC No.	DTC Detection Condition	Trouble Area
B1289	No communication from seat position control ECU (Front RH side)	1. Open or short in CAN No. 3 J/C and seat position control ECU (Front RH side) 2. Seat position control ECU (Front RH side) power source circuit 3. Seat position control ECU (Front RH side) 4. Wire harness or connector

WIRING DIAGRAM

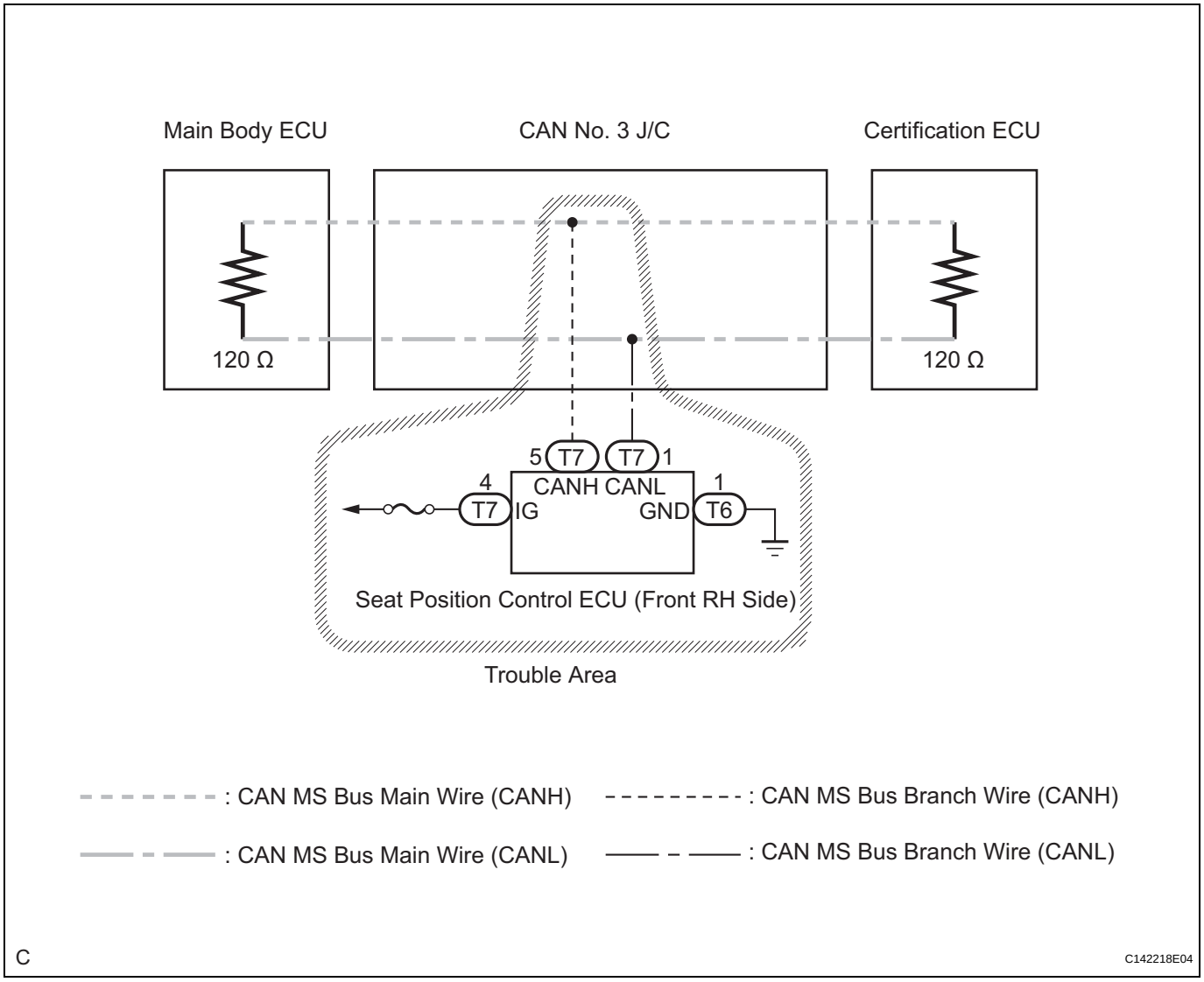

INSPECTION PROCEDURE

NOTICE:

- **Turn the engine switch off before measuring the resistances of CAN bus main wires and CAN bus branch wires.**

- **After the engine switch is turned off, check that the key reminder warning system and light reminder warning system are not in operation.**
- **Before measuring the resistance, leave the vehicle as is for at least 1 minute and do not operate the engine switch, any other switches, or the doors. If any doors need to be opened in order to check connectors, open the doors and leave them open.**

HINT:
Operating the engine switch, any switches, or any doors triggers related ECU and sensor communication on the CAN. This communication will cause the resistance value to change.

1 CHECK DTC

(a) Check for DTCs.
HINT:
If CAN MS bus communication error DTC B2326 is output, troubleshoot for B2326 and check for malfunctions in the CAN MS main bus circuit (See page CA-70).

Result

Result	Proceed to
B2326 is not output	A
B2326 is output	B

B → **GO TO DTC CHART (See page CA-49)**

A

2 CHECK CAN MS BUS WIRE (SEAT POSITION CONTROL ECU FOR FRONT RH SIDE)

Seat Position Control ECU (Wire Harness Side):

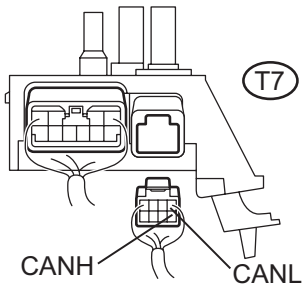

H C142228E02

(a) Turn the engine switch off.
(b) Disconnect connector T7 from the seat position control ECU for the front RH side.
(c) Measure the resistance according to the value(s) in the table below.

Standard resistance

Tester Connection	Condition	Specified Value
T7-5 (CANH) - T7-1 (CANL)	Engine switch OFF	54 to 69 Ω

NG → **REPAIR OR REPLACE CAN MS BUS BRANCH WIRE OR CONNECTOR (SEAT POSITION CONTROL ECU FOR FRONT RH SIDE)**

OK

3 CHECK HARNESS AND CONNECTOR (IG, GND)

Seat Position Control ECU (Wire Harness Side):

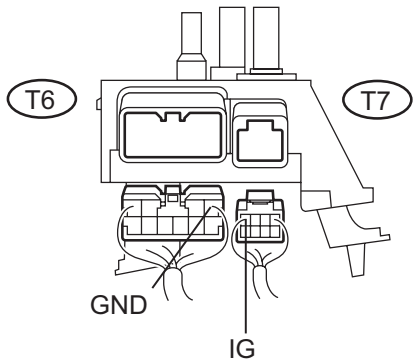

(a) Disconnect connector T7 from the seat position control ECU for the front RH side.

(b) Measure the resistance according to the value(s) in the table below.

Standard resistance

Tester Connection	Condition	Specified Value
T6-1 (GND) - Body ground	Always	Below 1 Ω

(c) Measure the voltage according to the value(s) in the table below.

Standard voltage

Tester Connection	Condition	Specified Value
T7-4 (IG) - Body ground	Engine switch on (IG)	10 to 14 V

NG → **REPAIR OR REPLACE HARNESS OR CONNECTOR**

OK

REPLACE SEAT POSITION CONTROL ECU (FRONT RH SIDE) (See page SE-127)

DTC	B1297	Clearance Sonar ECU Communication Stop

DESCRIPTION

The main body ECU will store this DTC when no signals can be received from the clearance warning ECU while the CAN MS main bus is normal.

DTC No.	DTC Detection Condition	Trouble Area
B1297	No communication from clearance warning ECU	1. Open or short in CAN No. 3 J/C and clearance warning ECU 2. Clearance warning ECU power source circuit 3. Clearance warning ECU 4. Wire harness or connector

WIRING DIAGRAM

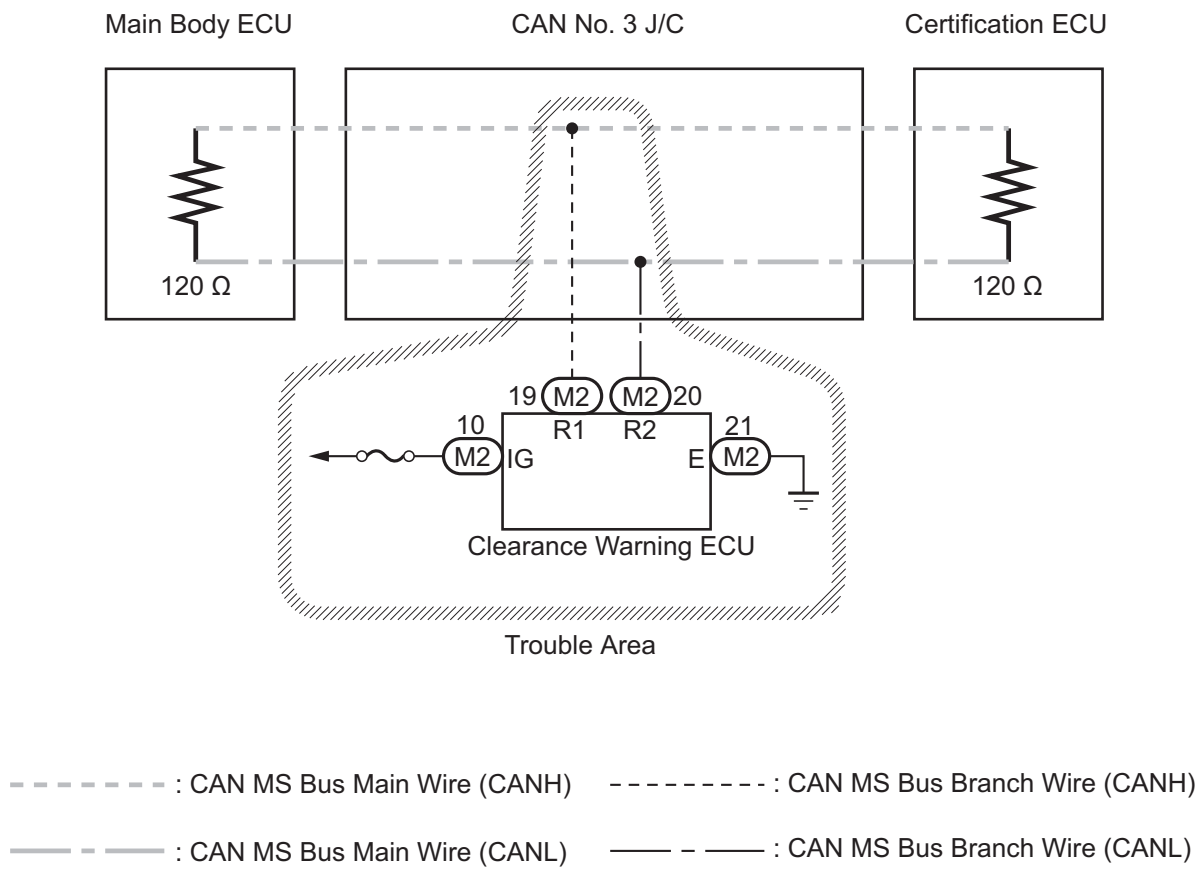

INSPECTION PROCEDURE

NOTICE:

- **Turn the engine switch off before measuring the resistances of CAN bus main wires and CAN bus branch wires.**
- **After the engine switch is turned off, check that the key reminder warning system and light reminder warning system are not in operation.**

- **Before measuring the resistance, leave the vehicle as is for at least 1 minute and do not operate the engine switch, any other switches, or the doors. If any doors need to be opened in order to check connectors, open the doors and leave them open.**

HINT:
Operating the engine switch, any switches, or any doors triggers related ECU and sensor communication on the CAN. This communication will cause the resistance value to change.

1 CHECK DTC

(a) Check for DTCs.
HINT:
If CAN MS bus communication error DTC B2326 is output, troubleshoot for B2326 and check for malfunctions in the CAN MS main bus circuit (See page CA-70).

Result

Result	Proceed to
B2326 is not output	A
B2326 is output	B

B → **GO TO DTC CHART (See page CA-49)**

A

2 CHECK CAN MS BUS WIRE (CLEARANCE WARNING ECU)

Clearance Warning ECU (Wire Harness Side):

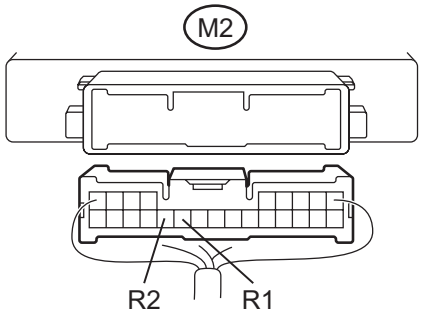

C142213E01

(a) Turn the engine switch off.
(b) Disconnect connector M2 from the clearance warning ECU.
(c) Measure the resistance according to the value(s) in the table below.

Standard resistance

Tester Connection	Condition	Specified Value
M2-19 (R1) - M2-20 (R2)	Engine switch OFF	54 to 69 Ω

NG → **REPAIR OR REPLACE CAN MS BUS BRANCH WIRE OR CONNECTOR (CLEARANCE WARNING ECU)**

OK

3 CHECK HARNESS AND CONNECTOR (IG, E)

Clearance Warning ECU (Wire Harness Side):

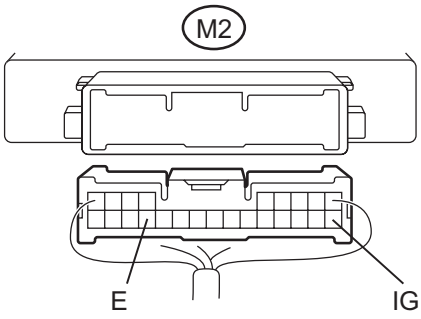

C142213E02

(a) Measure the resistance according to the value(s) in the table below.

Standard resistance

Tester Connection	Condition	Specified Value
M2-21 (E) - Body ground	Always	Below 1 Ω

(b) Measure the voltage according to the value(s) in the table below.

Standard voltage

Tester Connection	Condition	Specified Value
M2-10 (IG) - Body ground	Engine switch on (IG)	10 to 14 V

NG → **REPAIR OR REPLACE HARNESS OR CONNECTOR**

OK

REPLACE CLEARANCE WARNING ECU (See page PM-93)

DTC	B2326	CAN MS Bus Line Communication Malfunction

DESCRIPTION

- The main body ECU will store this DTC when no signals can be received from the ECUs that have been memorized as those that are connected to the CAN MS bus.
- When the main body ECU receives response signals from the ECUs connected to the CAN MS bus, the main body ECU recognizes and memorizes that the ECUs are connected to the CAN MS bus. Based on this memorized data, the main body ECU monitors for malfunctions in the ECUs connected to the CAN MS bus when communicating with those ECUs. If the main body ECU cannot receive response signals from the ECUs that have been memorized as those connected to the CAN MS bus, the main body ECU determines that a malfunction exists.

DTC No.	DTC Detection Condition	Trouble Area
B2326	Main body ECU cannot receive signals from all ECUs that have been memorized as those connected to the CAN MS bus.	1. Open or short in MS bus main wire 2. Open or short in MS bus branch wire 3. Wire harness or connector 4. Certification ECU 5. Multiplex tilt and telescopic ECU 6. Seat position control ECU (Front LH side) 7. Seat position control ECU (Front RH side) 8. Outer mirror control ECU 9. Clearance warning ECU 10. Main body ECU 11. CAN No. 3 J/C

WIRING DIAGRAM

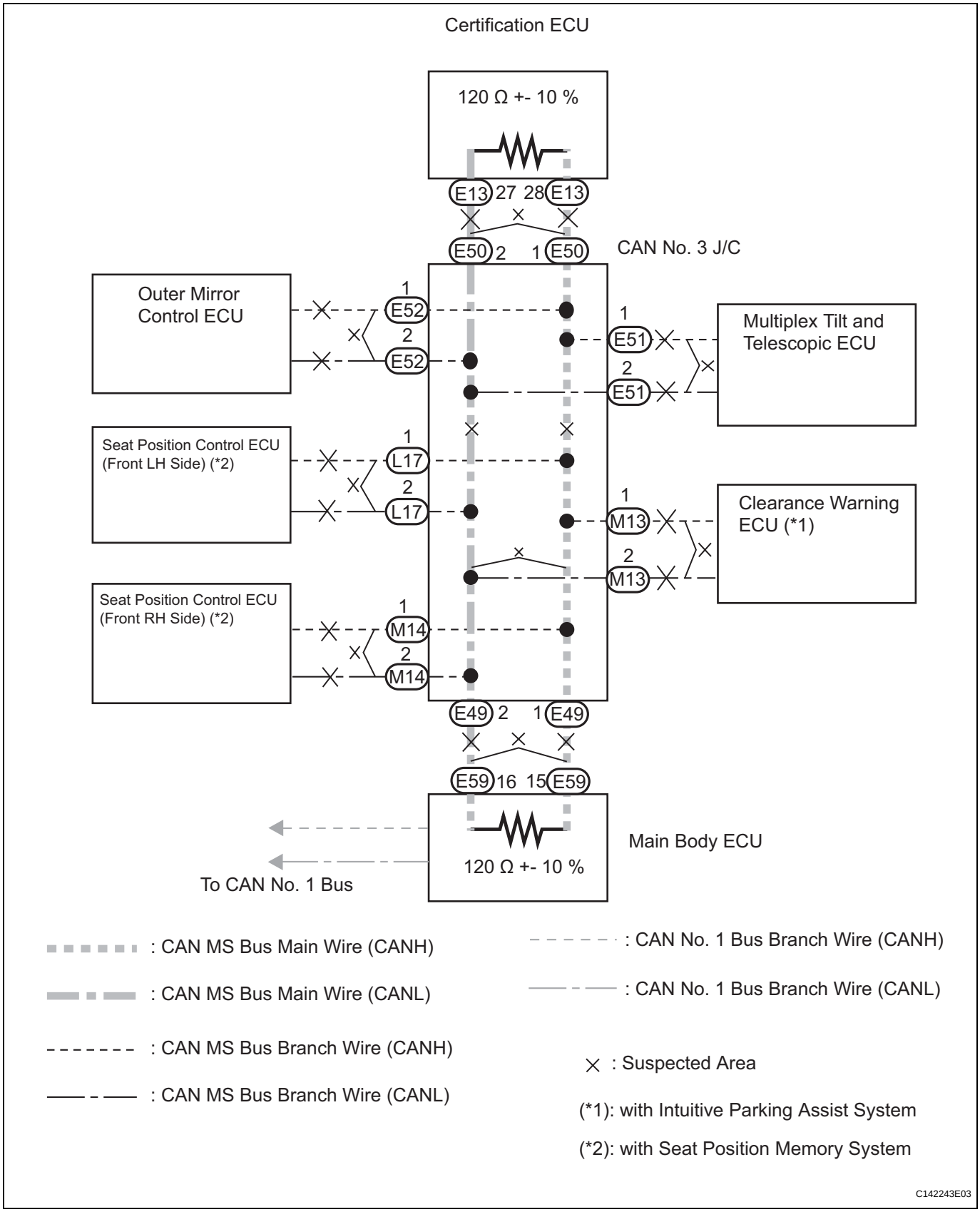

INSPECTION PROCEDURE

NOTICE:

- **Turn the engine switch off before measuring the resistances of CAN bus main wires and CAN bus branch wires.**
- **After the engine switch is turned off, check that the key reminder warning system and light reminder warning system are not in operation.**
- **Before measuring the resistance, leave the vehicle as is for at least 1 minute and do not operate the engine switch, any other switches, or the doors. If any doors need to be opened in order to check connectors, open the doors and leave them open.**

HINT:

- Operating the engine switch, any switches, or any doors triggers related ECU and sensor communication on the CAN. This communication will cause the resistance value to change.
- Even after DTCs are cleared, if a DTC is stored again after driving the vehicle for a while, the malfunction may be occurring due to vibration of the vehicle. In such a case, wiggling the ECUs or wire harness while performing the inspection below will help determine the cause of the malfunction.

1 CHECK CAN MS BUS WIRE

CAN No. 3 J/C "A" Side (without Earth Terminal) Wire Harness View:

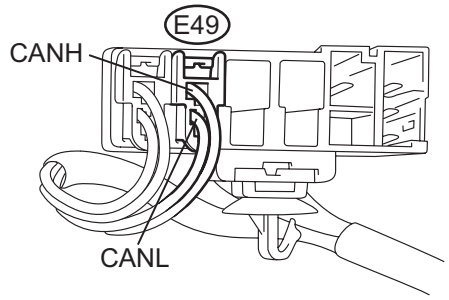

N C142230E01

(a) Turn the engine switch off.
(b) Measure the resistance according to the value(s) in the table below.

Result

Tester Connection	Color	Condition	Specified Value	Proceed to
E49-1 (CANH) - E49-2 (CANL)	B - W	Engine switch off	54 to 69 Ω	A
E49-1 (CANH) - E49-2 (CANL)	B - W	Engine switch off	69 Ω or higher	B
E49-1 (CANH) - E49-2 (CANL)	B - W	Engine switch off	Less than 54 Ω	C

B → **Go to step 5**

C → **Go to step 9**

A

2 CHECK FOR SHORT TO +B IN CAN MS BUS WIRE

CAN No. 3 J/C "A" Side (without Earth Terminal) Wire Harness View:

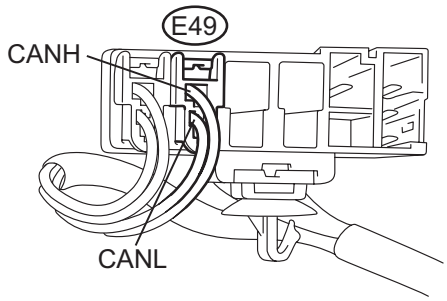

DLC3:

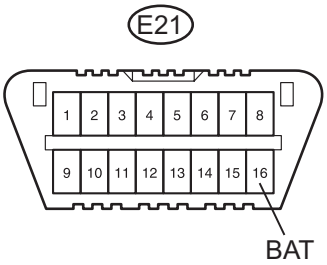

N C142233E01

(a) Measure the resistance according to the value(s) in the table below.

Standard resistance

Tester Connection	Color	Condition	Specified Value
E49-1 (CANH) - E21-16 (BAT)	B - O	Engine switch off	6 kΩ or higher
E49-2 (CANL) - E21-16 (BAT)	W - O	Engine switch off	6 kΩ or higher

NG → **Go to step 14**

OK

3 CHECK FOR SHORT TO GND IN CAN MS BUS WIRE

CAN No. 3 J/C "A" Side (without Earth Terminal) Wire Harness View:

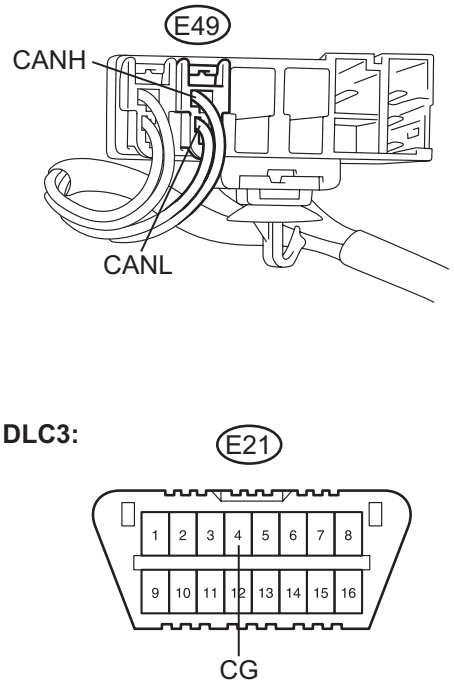

(a) Measure the resistance according to the value(s) in the table below.

Standard resistance

Tester Connection	Color	Condition	Specified Value
E49-1 (CANH) - E21-4 (CG)	B - W-B	Engine switch off	200 Ω or higher
E49-2 (CANL) - E21-4 (CG)	W - W-B	Engine switch off	200 Ω or higher

NG → **Go to step 17**

OK

4 CHECK CAN MS BUS BRANCH WIRE

(a) Check for an open in the branch wires of all ECUs connected to the CAN MS bus.
  (1) Check the outer mirror control ECU branch wire (See page CA-61).
  (2) Check the multiplex tilt and telescopic ECU branch wire (See page CA-55).
  (3) Check the seat position control ECU (front LH side) branch wire (See page CA-58).
  (4) Check the seat position control ECU (front RH side) branch wire (See page CA-64).
  (5) Check the clearance warning ECU branch wire (See page CA-67).

Result

Result	Proceed to
OK	A
NG	B

B → **REPAIR OR REPLACE MALFUNCTIONING PART**

A

REPLACE INSTRUMENT PANEL J/B (MAIN BODY ECU)

5 CHECK FOR OPEN IN CAN MS BUS MAIN WIRE (CERTIFICATION ECU MAIN WIRE)

CAN No. 3 J/C "A" Side (without Earth Terminal) Wire Harness View:

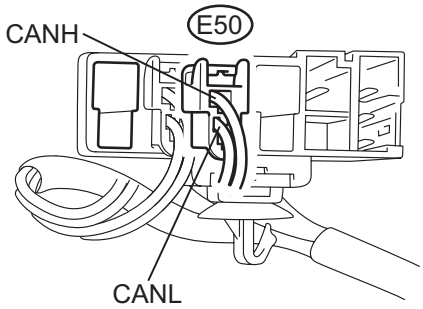

N C142231E01

(a) Disconnect certification ECU main wire connector E50 from the CAN No. 3 J/C.
HINT:
- Before disconnecting the connector, make a note of where it is connected.
- Reconnect the connector to its original position.

(b) Measure the resistance according to the value(s) in the table below.

Standard resistance

Tester Connection	Color	Condition	Specified Value
E50-1 (CANH) - E50-2 (CANL)	R - W	Engine switch off	108 to 132 Ω

OK → **Go to step 7**

NG

6 CHECK FOR OPEN IN CAN MS BUS MAIN WIRE (CERTIFICATION ECU - CAN NO. 3 J/C)

Certification ECU (Component Side):

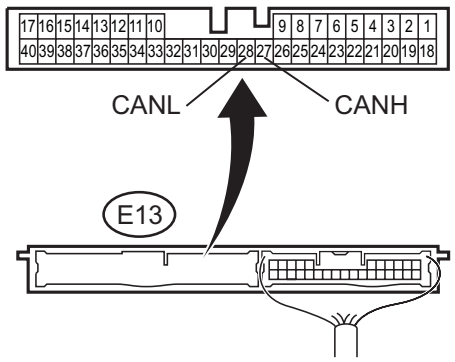

C C142197E01

(a) Reconnect certification ECU main wire connector E50 to the CAN No. 3 J/C.
(b) Disconnect connector E13 from the certification ECU.
(c) Measure the resistance according to the value(s) in the table below.

Standard resistance

Tester Connection	Condition	Specified Value
E13-27 (CANH) - E13-28 (CANL)	Engine switch off	108 to 132 Ω

NG → **REPLACE CERTIFICATION ECU**

OK

REPAIR OR REPLACE CAN MS BUS MAIN WIRE OR CONNECTOR (CERTIFICATION ECU - CAN NO. 3 J/C)

7 CHECK FOR OPEN IN CAN MS BUS MAIN WIRE (MAIN BODY ECU MAIN WIRE)

CAN No. 3 J/C "A" Side (without Earth Terminal) Wire Harness View:

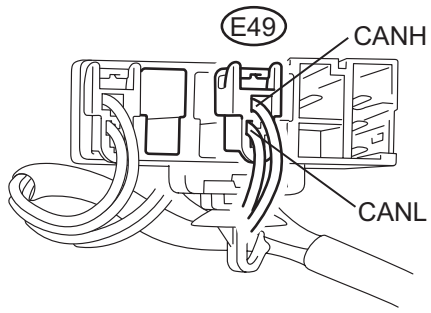

N C142229E01

(a) Reconnect certification ECU main wire connector E50 to the CAN No. 3 J/C.

(b) Disconnect main body ECU main wire connector E49 from the CAN No. 3 J/C.
HINT:
- Before disconnecting the connector, make a note of where it is connected.
- Reconnect the connector to its original position.

(c) Measure the resistance according to the value(s) in the table below.
Standard resistance

Tester Connection	Color	Condition	Specified Value
E49-1 (CANH) - E49-2 (CANL)	B - W	Engine switch off	108 to 132 Ω

OK → **REPLACE CAN NO. 3 J/C**

NG

8 CHECK FOR OPEN IN CAN MS BUS MAIN WIRE (MAIN BODY ECU - CAN NO. 3 J/C)

(a) Reconnect main body ECU main wire connector E49 to the CAN No. 3 J/C.

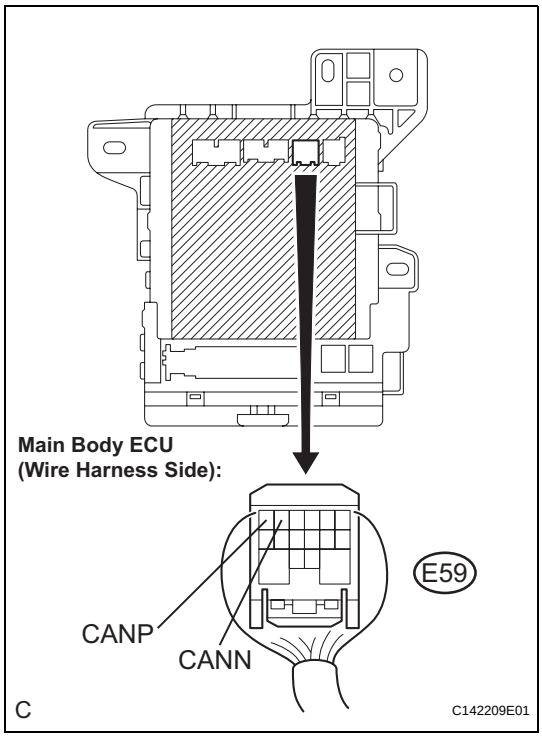

(b) Disconnect connector E59 from the main body ECU.
(c) Measure the resistance according to the value(s) in the table below.

Standard resistance

Tester Connection	Condition	Specified Value
E59-16 (CANP) - E59-15 (CANN)	Engine switch off	108 to 132 Ω

NG → **REPAIR OR REPLACE CAN MS BUS MAIN WIRE OR CONNECTOR (CAN NO. 3 J/C - MAIN BODY ECU)**

OK

REPLACE INSTRUMENT PANEL J/B (MAIN BODY ECU)

9 CHECK FOR SHORT IN CAN MS BUS WIRES (CAN NO. 3 J/C BRANCH WIRE)

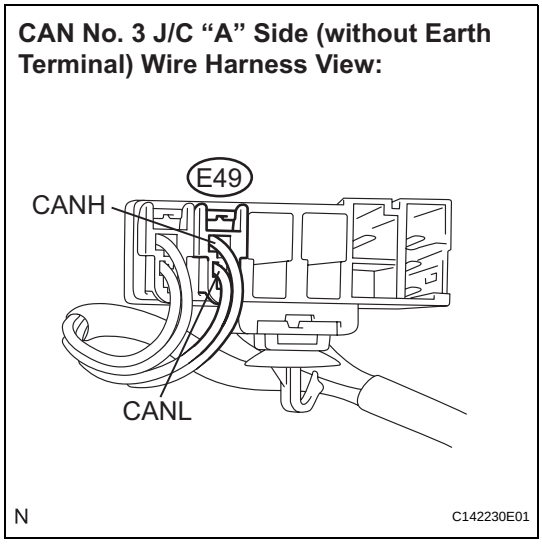

(a) Connect the probes of an ohmmeter to terminals 1 (CANH) and 2 (CANL) of main body ECU main wire connector E49.
(b) While observing the resistance value shown on the tester, disconnect connectors E51, E52, M13, M14, and L17 from the CAN No. 3 J/C one by one until the resistance becomes normal (between 54 and 69 Ω).
HINT:
Disconnect the branch wire connectors only.

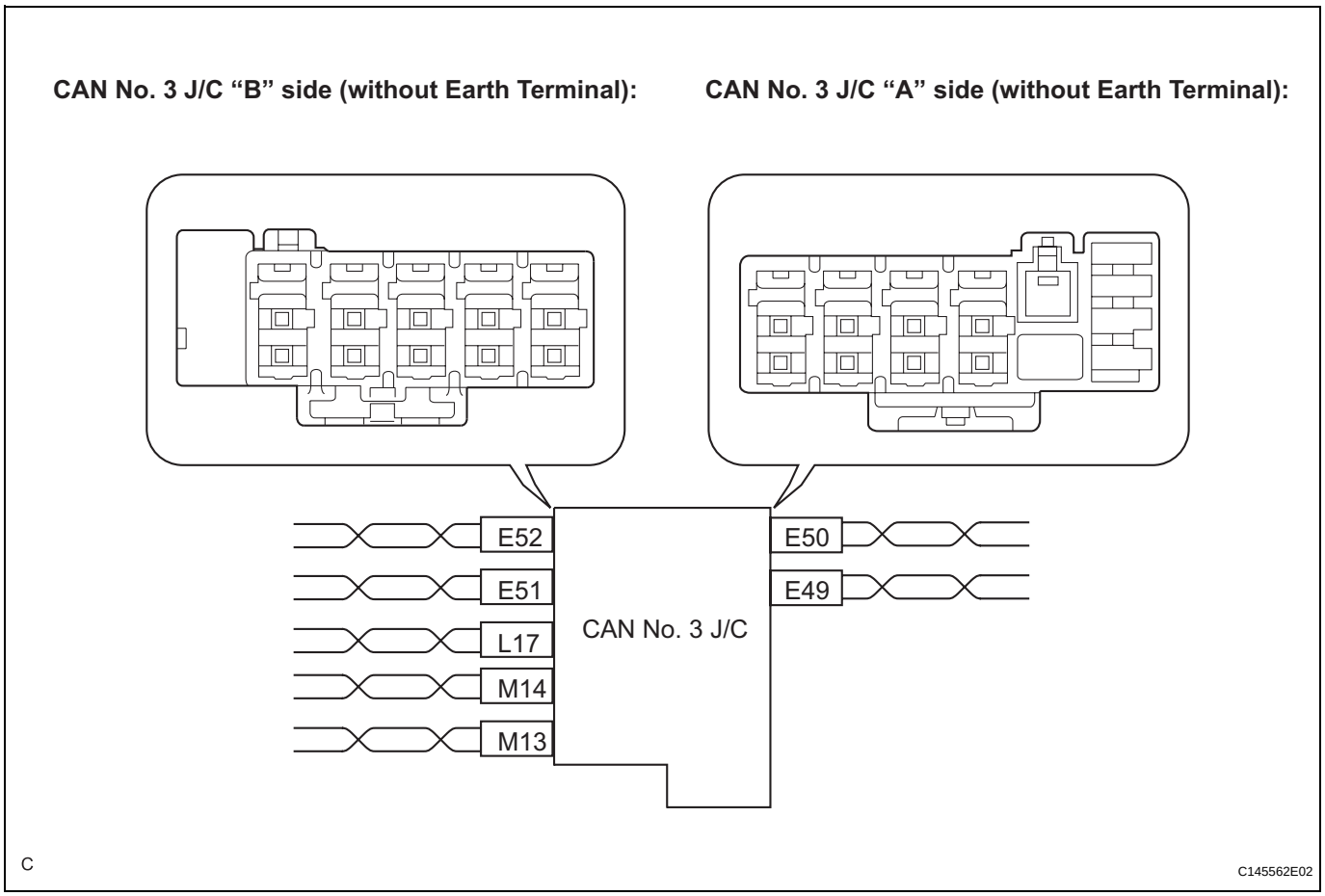

Wiring color:

CAN No. 3 J/C Connector ("B" side, without earth terminal)	Connector Color	Color (CAN-H Side)	Color (CAN-L Side)
Outer Mirror Control ECU (E52)	White	O	P
Multiplex Tilt and Telescopic ECU (E51)	White	BR	GR
Seat Position Control ECU (Front LH Side) (L17)(*1)	Blue	LG	L
Clearance Warning ECU (M13)(*2)	Gray	Y	L
Seat Position Control ECU (Front RH Side) (M14)(*1)	Black	V	P

NOTICE:
Do not reconnect the disconnected connectors until this inspection is complete because there may be a short in 2 or more branch wires.
HINT:
- (*1) : with seat position memory system
- (*2) : with intuitive parking assist system

Result

Symptom	Proceed to
The resistance is still below 54 Ω when all the specified connectors are disconnected. (There are no shorts in the branch wires.)	**A**
The resistance becomes normal (between 54 and 69 Ω) when a connector is disconnected. (There is a short in one or more of the branch wires.)	**B**

(c) When there is a short in one or more of the branch wires:

(1) Reconnect all of the connectors to the CAN No. 3 J/C, except for the one that was disconnected last (the short-circuited bus wire). Check that the resistance shown on the tester is normal (between 54 and 69 Ω) to confirm that there is a short in one branch wire only.
HINT:
- The connectors connected to the CAN No. 3 J/C can be distinguished according to the color of the communication bus wires and the shape of the connectors.
- Reconnecting the connectors to non-specified positions on the CAN No. 3 J/C does not affect system operation. However, it is preferred to reconnect the connectors to their specified positions to avoid negative effects on the wiring such as tension on the wiring harnesses, and to make future maintenance easier.

B → **Go to step 20**

A

10 CHECK FOR SHORT IN CAN MS BUS WIRES (CERTIFICATION ECU MAIN WIRE)

CAN No. 3 J/C "A" Side (without Earth Terminal) Wire Harness View:

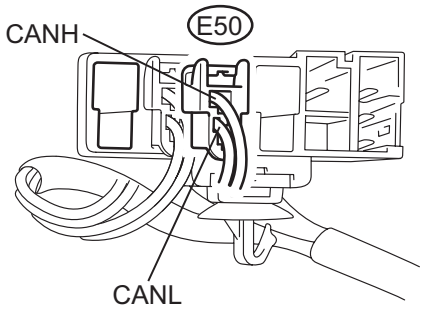

N C142231E01

(a) Disconnect certification ECU main wire connector E50 from the CAN No. 3 J/C.
HINT:
- Before disconnecting the connector, make a note of where it is connected.
- Reconnect the connector to its original position.

(b) Measure the resistance according to the value(s) in the table below.
Standard resistance

Tester Connection	Color	Condition	Specified Value
E50-1 (CANH) - E50-2 (CANL)	R - W	Engine switch off	108 to 132 Ω

OK → **Go to step 12**

NG

11 CHECK FOR SHORT IN CAN MS BUS WIRES (CERTIFICATION ECU - CAN NO. 3 J/C)

Certification ECU (Component Side):

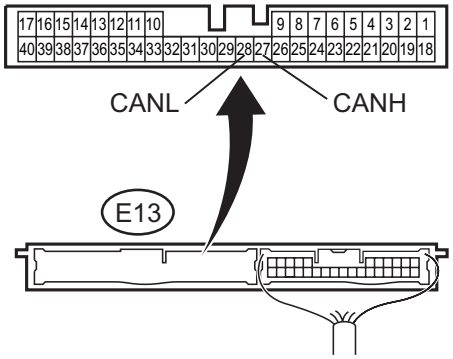

(a) Disconnect connector E13 from the certification ECU.
(b) Measure the resistance according to the value(s) in the table below.
Standard resistance

Tester Connection	Condition	Specified Value
E13-27 (CANH) - E13-28 (CANL)	Engine switch off	108 to 132 Ω

NG → **REPLACE CERTIFICATION ECU**

OK

REPAIR OR REPLACE CAN MS BUS MAIN WIRE OR CONNECTOR (CERTIFICATION ECU - CAN NO. 3 J/C)

12 CHECK FOR SHORT IN CAN MS BUS WIRES (MAIN BODY ECU MAIN WIRE)

CAN No. 3 J/C "A" Side (without Earth Terminal) Wire Harness View:

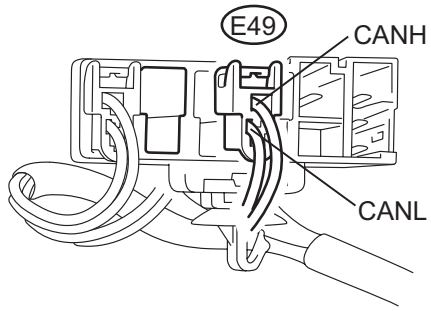

(a) Reconnect certification ECU main wire connector E50 to the CAN No. 3 J/C.
(b) Disconnect main body ECU main wire connector E49 from the CAN No. 3 J/C.
HINT:
- Before disconnecting the connector, make a note of where it is connected.
- Reconnect the connector to its original position.

(c) Measure the resistance according to the value(s) in the table below.
Standard resistance

Tester Connection	Color	Condition	Specified Value
E49-1 (CANH) - E49-2 (CANL)	B - W	Engine switch off	108 to 132 Ω

OK → **REPLACE CAN NO. 3 J/C**

NG

13 CHECK FOR SHORT IN CAN MS BUS WIRES (MAIN BODY ECU - CAN NO. 3 J/C)

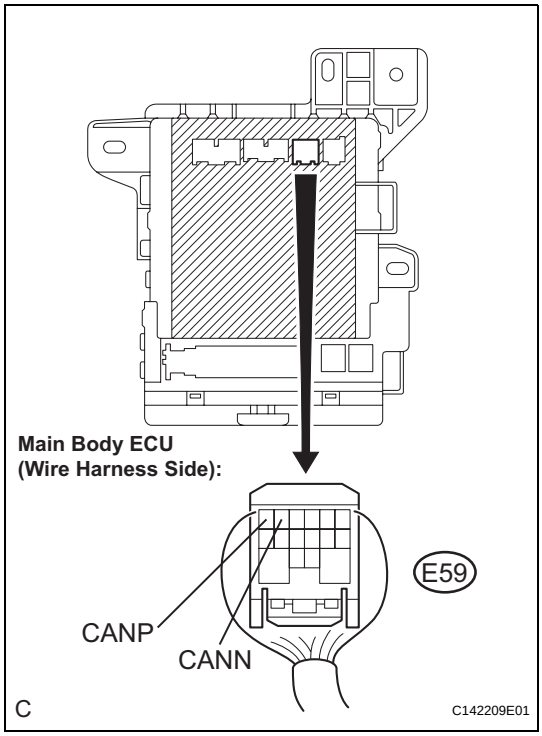

(a) Disconnect connector E59 from the main body ECU.
(b) Measure the resistance according to the value(s) in the table below.

Standard resistance

Tester Connection	Condition	Specified Value
E59-16 (CANP) - E59-15 (CANN)	Engine switch off	1 MΩ or higher

NG → **REPAIR OR REPLACE CAN MS BUS MAIN WIRE OR CONNECTOR (CAN NO. 3 J/C - MAIN BODY ECU)**

OK

REPLACE INSTRUMENT PANEL J/B (MAIN BODY ECU)

14	CHECK FOR SHORT TO +B IN CAN MS BUS WIRE (CAN NO. 3 J/C BRANCH WIRE)

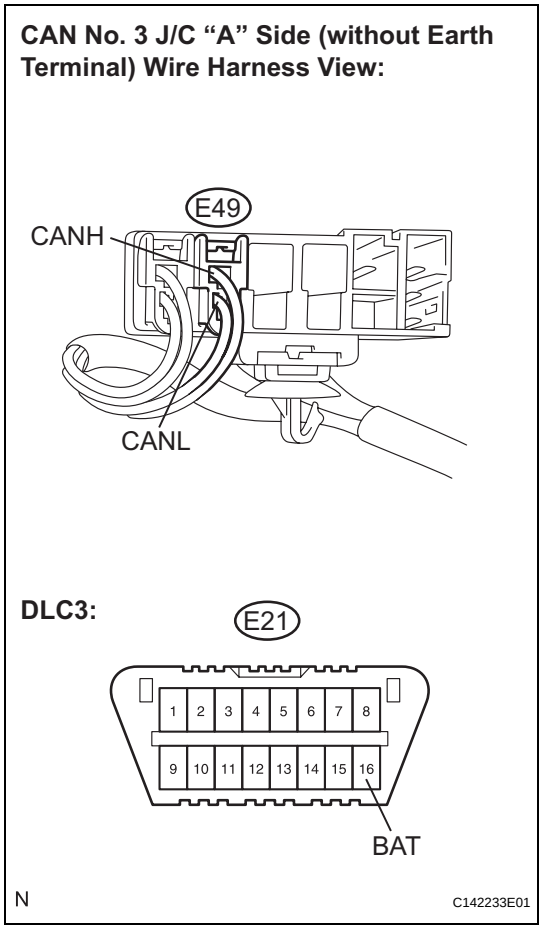

(a) Disconnect connectors from the CAN No. 3 J/C one at a time.
NOTICE:
Disconnect the ECU and sensor connectors other than main body ECU main wire connector E49.

(b) Using an ohmmeter, measure the resistance between terminal 1 (CANH) of main body ECU main wire connector E49 and terminal 16 (BAT) of the DLC3, and between terminal 2 (CANL) of main body ECU main wire connector E49 and terminal 16 (BAT) of the DLC3 each time a connector is disconnected.

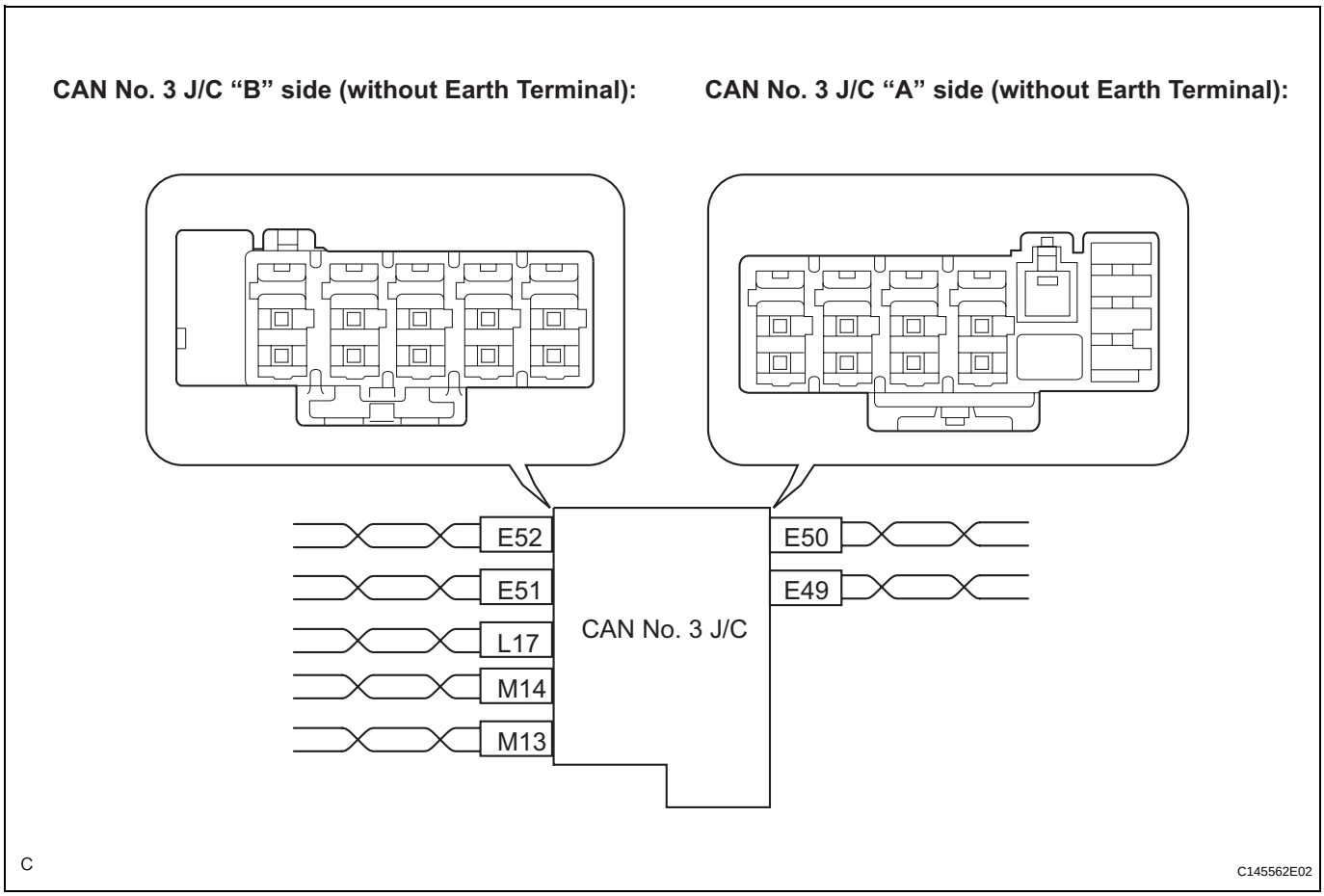

Wiring color:

CAN No. 3 J/C Connector ("A" side, without earth terminal)	Connector Color	Color (CAN-H Side)	Color (CAN-L Side)
Certification ECU (E50)	White	R	W

Wiring color:

CAN No. 3 J/C Connector ("B" side, without earth terminal)	Connector Color	Color (CAN-H Side)	Color (CAN-L Side)
Outer Mirror Control ECU (E52)	White	O	P
Multiplex Tilt and Telescopic ECU (E51)	White	BR	GR
Seat Position Control ECU (Front LH Side) (L17)(*1)	Blue	LG	L
Clearance Warning ECU (M13)(*2)	Gray	Y	L
Seat Position Control ECU (Front RH Side) (M14)(*1)	Black	V	P

NOTICE:
Do not reconnect the disconnected connectors until this inspection is complete because there may be a short to B+ in 2 or more CAN MS bus wires.

HINT:
- (*1) : with seat position memory system
- (*2) : with intuitive parking assist system

CA

Result

Symptom	Proceed to
The resistance between terminals 1 (CANH) and E21-16 (BAT), or the resistance between terminals 2 (CANL) and E21-16 (BAT) is still below 6 kΩ when all the specified connectors are disconnected from the CAN No. 3 J/C. (There is a short to B+ in the CAN MS bus main wires between the CAN No. 3 J/C and the main body ECU.)	**A**

Symptom	Proceed to
The resistance between terminals 6 (CANH) and E21-16 (BAT), or the resistance between terminals 14 (CANL) and E21-16 (BAT) becomes normal (6 kΩ or more) when a connector is disconnected from the CAN No. 3 J/C. (There is a short to B+ in one of the areas that relate to one or more of the disconnected bus wires.)	**B**

(c) When there is a short to B+ in one or more of the bus wires that connect to an ECU (or sensor):

(1) Reconnect all of the connectors to the CAN No. 3 J/C, except for the one that was disconnected last (the bus wire that is shorted to B+). Check that the resistance shown on the tester is normal (6 kΩ or more) to confirm that there is a short to B+ in one bus wire only.

HINT:

- The connectors connected to the CAN No. 3 J/C can be distinguished according to the color of the communication bus wires and the shape of the connectors.
- Reconnecting the connectors to non-specified positions on the CAN No. 3 J/C does not affect system operation. However, it is preferred to reconnect the connectors to their specified positions to avoid negative effects on the wiring such as tension on the wiring harnesses, and to make future maintenance easier.

B → **Go to step 20**

A

15 CHECK FOR SHORT TO +B IN CAN MS BUS WIRE (MAIN BODY ECU MAIN WIRE)

CAN No. 3 J/C "A" Side (without Earth Terminal) Wire Harness View:

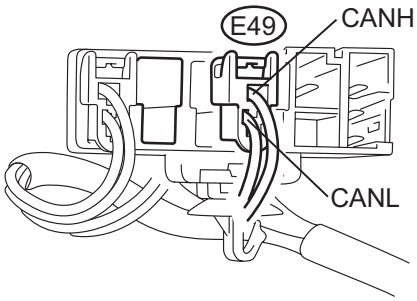

DLC3:

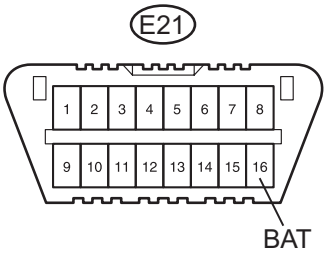

N C142232E01

(a) Disconnect main body ECU main wire connector E49 from the CAN No. 3 J/C.
HINT:
- Before disconnecting the connector, make a note of where it is connected.
- Reconnect the connector to its original position.

(b) Measure the resistance according to the value(s) in the table below.
Standard resistance

Tester Connection	Color	Condition	Specified Value
E49-1 (CANH) - E21-16 (BAT)	B - O	Engine switch off	6 kΩ or higher
E49-2 (CANL) - E21-16 (BAT)	W - O	Engine switch off	6 kΩ or higher

OK → **REPLACE CAN NO. 3 J/C**

NG

16	CHECK FOR SHORT TO +B IN CAN MS BUS WIRE (MAIN BODY ECU - CAN NO. 3 J/C)

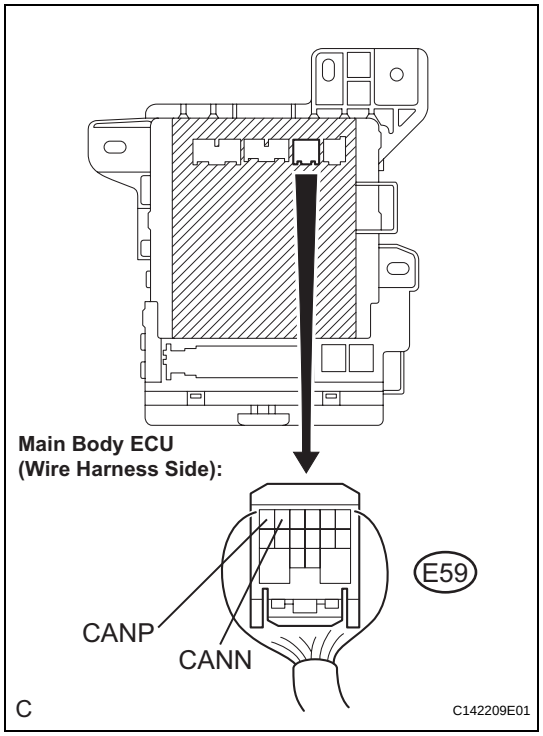

(a) Disconnect connector E59 from the main body ECU.
(b) Measure the resistance according to the value(s) in the table below.

Standard resistance

Tester Connection	Condition	Specified Value
E59-16 (CANP) - E21-16 (BAT)	Engine switch off	6 kΩ or higher
E59-15 (CANN) - E21-16 (BAT)	Engine switch off	6 kΩ or higher

NG → **REPAIR OR REPLACE CAN MS BUS MAIN WIRE OR CONNECTOR (CAN NO. 3 J/C - MAIN BODY ECU)**

OK

REPLACE INSTRUMENT PANEL J/B (MAIN BODY ECU)

17	CHECK FOR SHORT TO GND IN CAN MS BUS WIRE (CAN NO. 3 J/C BRANCH WIRE)

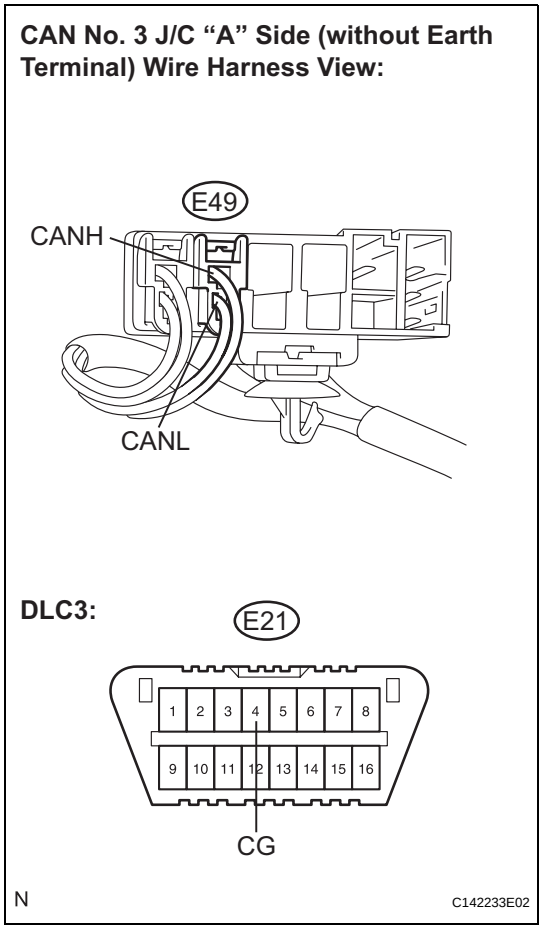

(a) Disconnect connectors from the CAN No. 3 J/C one at a time.
NOTICE:
Disconnect the ECU and sensor connectors other than main body ECU main wire connector E49.

(b) Using an ohmmeter, measure the resistance between terminal 1 (CANH) of main body ECU main wire connector E49 and terminal 4 (CG) of the DLC3, and between terminal 2 (CANL) of main body ECU main wire connector E49 and terminal 4 (CG) of the DLC3 each time a connector is disconnected.

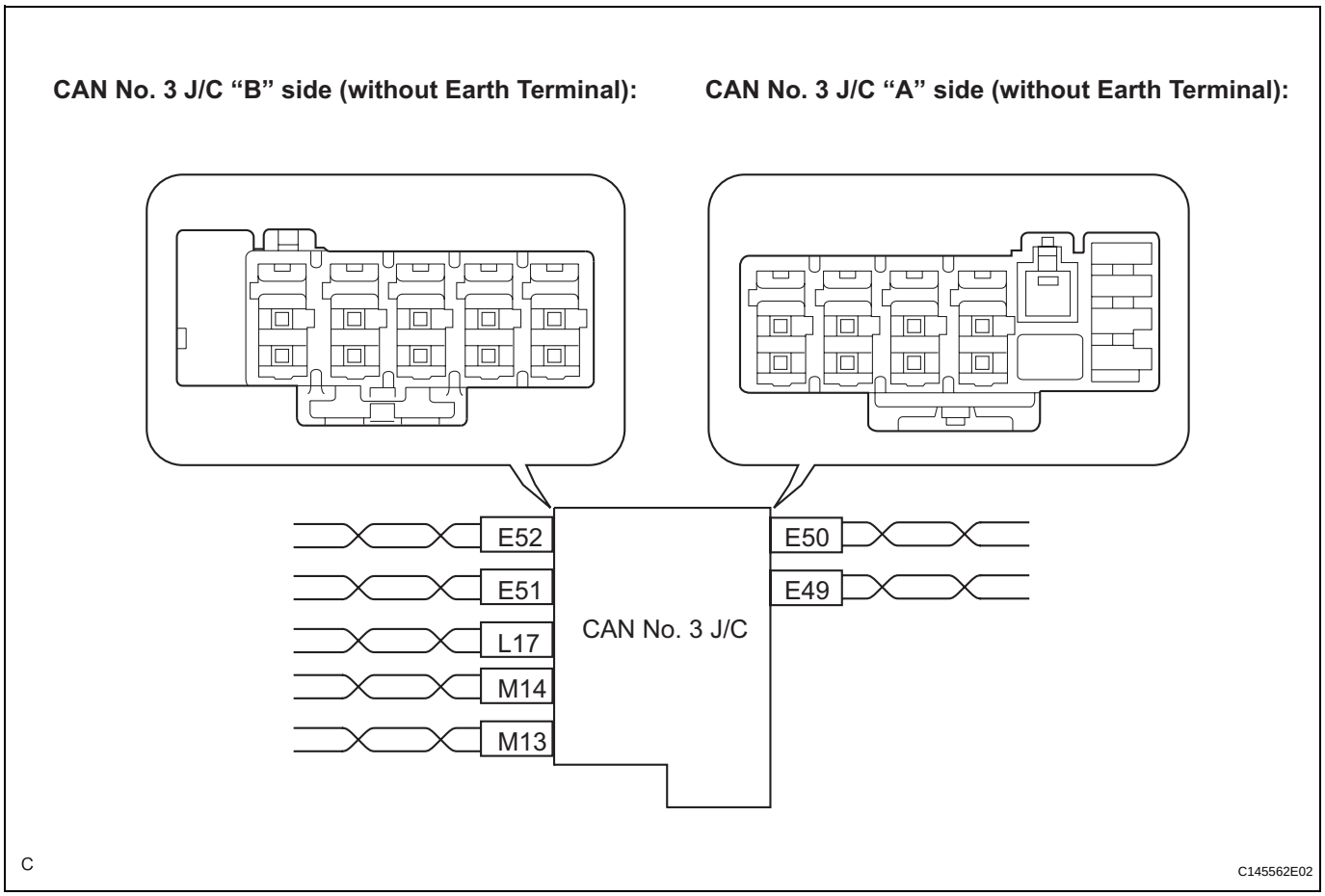

Wiring color:

CAN No. 3 J/C Connector ("A" side, without earth terminal)	Connector Color	Color (CAN-H Side)	Color (CAN-L Side)
Certification ECU (E50)	White	R	W

Wiring color:

CAN No. 3 J/C Connector ("B" side, without earth terminal)	Connector Color	Color (CAN-H Side)	Color (CAN-L Side)
Outer Mirror Control ECU (E52)	White	O	P
Multiplex Tilt and Telescopic ECU (E51)	White	BR	GR
Seat Position Control ECU (Front LH Side) (L17)(*1)	Blue	LG	L
Clearance Warning ECU (M13)(*2)	Gray	Y	L
Seat Position Control ECU (Front RH Side) (M14)(*1)	Black	V	P

NOTICE:
Do not reconnect the disconnected connectors until this inspection is complete because there may be a short to GND in 2 or more CAN MS bus wires.

HINT:
- (*1) : with seat position memory system
- (*2) : with intuitive parking assist system

Result

Symptom	Proceed to
The resistance between terminals 6 (CANH) and E21-4 (CG), or the resistance between terminals 14 (CANL) and E21-4 (CG) is still below 200 Ω when all the specified connectors are disconnected from the CAN No. 3 J/C. (There is a short to GND in the CAN MS bus main wires between the CAN No. 3 J/C and the main body ECU.)	**A**

Symptom	Proceed to
The resistance between terminals 6 (CANH) and E21-4 (CG), or the resistance between terminals 14 (CANL) and E21-4 (CG) becomes normal (200 Ω or more) when a connector is disconnected from the CAN No. 3 J/C. (There is a short to GND in one of the areas that relate to the disconnected bus wires.)	**B**

(c) When there is a short to GND in one or more of the bus wires that connect to an ECU (or sensor):

(1) Reconnect all of the connectors to the CAN No. 3 J/C, except for the one that was disconnected last (the bus wire that is shorted to GND). Check that the resistance shown on the tester is normal (200 Ω or more) to confirm that there is a short to GND in one bus wire only.

HINT:

- The connectors connected to the CAN No. 3 J/C can be distinguished according to the color of the communication bus wires and the shape of the connectors.
- Reconnecting the connectors to non-specified positions on the CAN No. 3 J/C does not affect system operation. However, it is preferred to reconnect the connectors to their specified positions to avoid negative effects on the wiring such as tension on the wiring harnesses, and to make future maintenance easier.

B → **Go to step 20**

A

18 CHECK FOR SHORT TO GND IN CAN MS BUS WIRE (MAIN BODY ECU MAIN WIRE)

CAN No. 3 J/C "A" Side (without Earth Terminal) Wire Harness View:

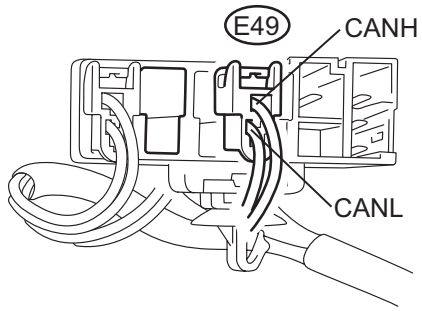

DLC3:

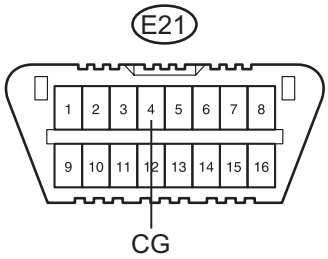

N C142232E02

(a) Disconnect main body ECU main wire connector E49 from the CAN No. 3 J/C.
HINT:
- Before disconnecting the connector, make a note of where it is connected.
- Reconnect the connector to its original position.

(b) Measure the resistance according to the value(s) in the table below.

Standard resistance

Tester Connection	Color	Condition	Specified Value
E49-1 (CANH) - E21-4 (CG)	B - W-B	Engine switch off	200 Ω or higher
E49-2 (CANL) - E21-4 (CG)	W - W-B	Engine switch off	200 Ω or higher

OK → **REPLACE CAN NO. 3 J/C**

NG

19 CHECK FOR SHORT TO GND IN CAN MS BUS WIRE (MAIN BODY ECU - CAN NO. 3 J/C)

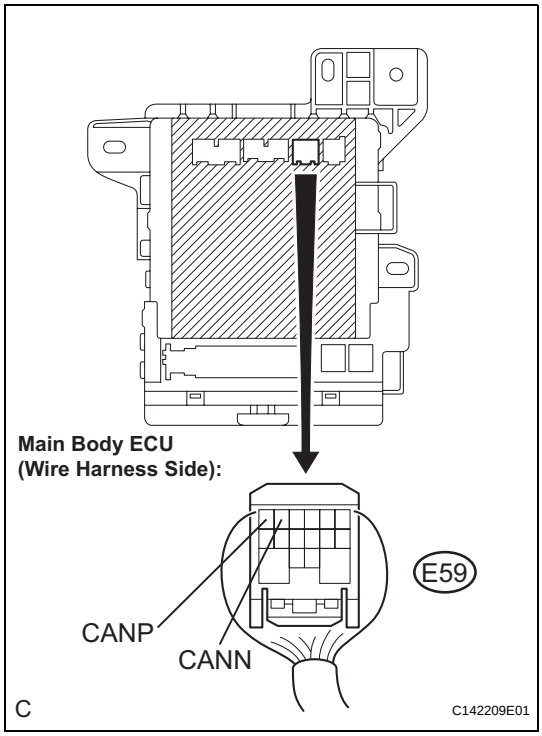

(a) Disconnect connector E59 from the main body ECU.
(b) Measure the resistance according to the value(s) in the table below.
Standard resistance

Tester Connection	Condition	Specified Value
E59-16 (CANP) - E21-4 (CG)	Engine switch off	200 Ω or higher
E59-15 (CANN) - E21-4 (CG)	Engine switch off	200 Ω or higher

NG → **REPAIR OR REPLACE CAN MS BUS MAIN WIRE OR CONNECTOR (CAN NO. 3 J/C - MAIN BODY ECU)**

OK

REPLACE INSTRUMENT PANEL J/B (MAIN BODY ECU)

20 RECONNECT CONNECTOR

(a) Reconnect the connector for the short-circuited main or branch wire to the CAN No. 3 J/C (the connector that caused the bus wire resistance to become normal when it was disconnected).

NEXT

21 CHECK FOR SHORT IN CAN MS BUS WIRES

(a) Disconnect the connector of the ECU that is connected to the short-circuited main or branch wire from the ECU.
(b) Recheck the short-circuited wire with the connector disconnected from the ECU.
Standard:
The wire is not short-circuited.
HINT:
If the short-circuited wire returns to normal after being disconnected from the ECU, an internal ECU short-circuit is suspected.

NG → **REPAIR OR REPLACE CORRESPONDING ECU OR SENSOR BRANCH WIRE OR CONNECTOR**

OK

REPLACE CORRESPONDING ECU OR SENSOR

DTC	U0182	Lost Communication with AFS ECU

DESCRIPTION

The gateway ECU will store this DTC when no signals can be received from the AFS ECU while the CAN No. 2 main bus is normal.

DTC No.	DTC Detection Condition	Trouble Area
U0182	No communication from AFS ECU	1. Open or short in CAN No. 1 J/C and AFS ECU 2. AFS ECU power source circuit 3. AFS ECU 4. Wire harness or connector

WIRING DIAGRAM

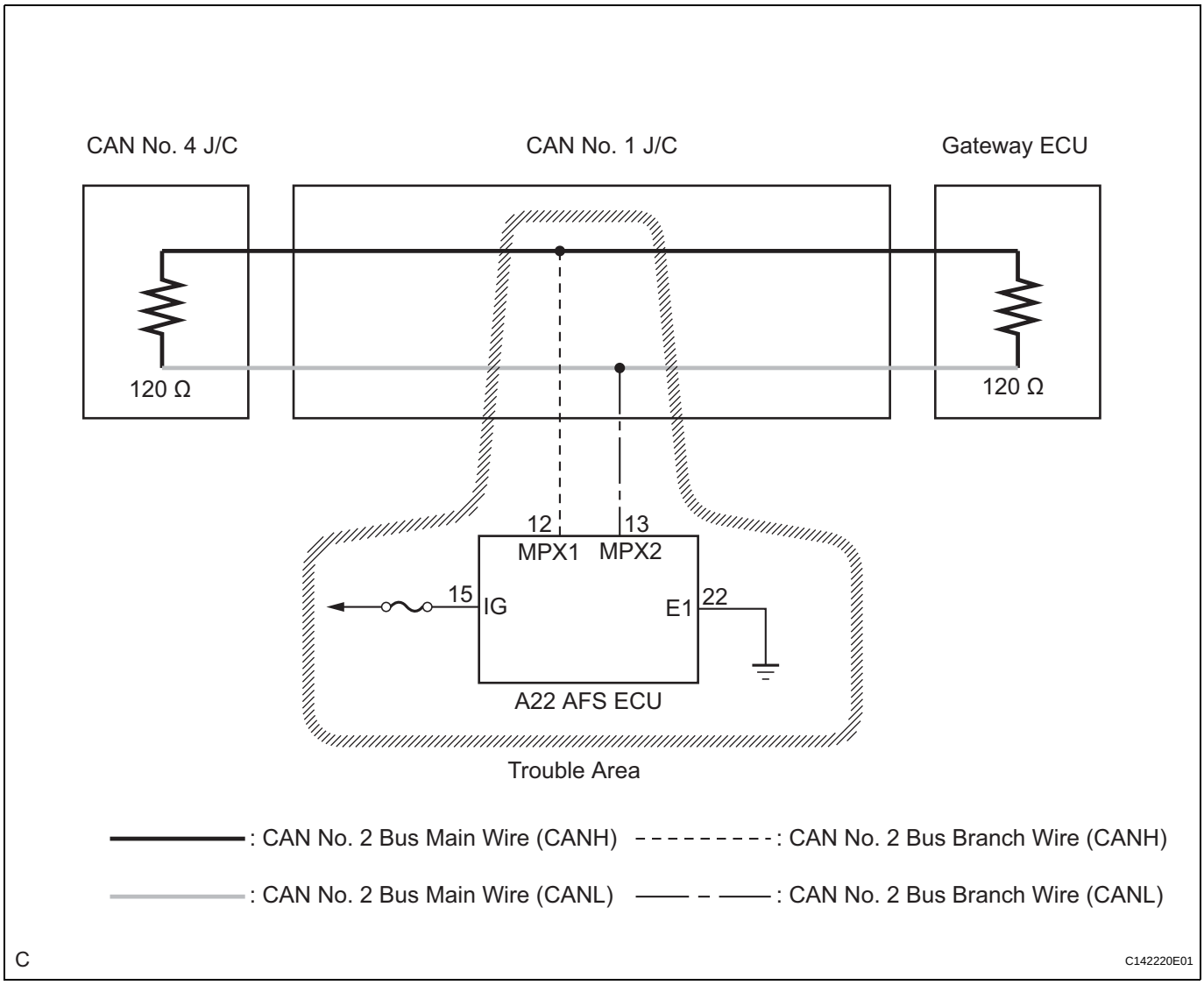

CA

INSPECTION PROCEDURE

NOTICE:

- **Turn the engine switch off before measuring the resistances of CAN bus main wires and CAN bus branch wires.**
- **After the engine switch is turned off, check that the key reminder warning system and light reminder warning system are not in operation.**

- **Before measuring the resistance, leave the vehicle as is for at least 1 minute and do not operate the engine switch, any other switches, or the doors. If any doors need to be opened in order to check connectors, open the doors and leave them open.**

1 CHECK DTC

(a) Check for DTCs.
HINT:
If CAN No. 2 bus DTC U1002 is output, troubleshoot for U1002 and check for malfunctions in the CAN MS main bus circuit.
Result

Result	Proceed to
U1002 is not output	A
U1002 is output	B

B → **GO TO DTC CHART (See page CA-49)**

A

2 CHECK CAN NO. 2 BUS WIRE (AFS ECU)

AFS ECU (Wire Harness Side):

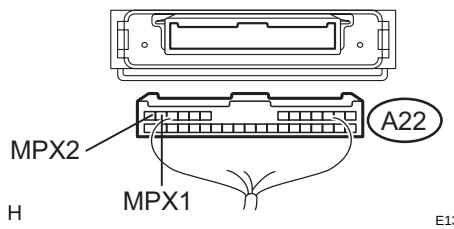

(a) Turn the engine switch off.
(b) Disconnect connector A22 from the AFS ECU.
(c) Measure the resistance according to the value(s) in the table below.
Standard resistance

Tester Connection	Condition	Specified Value
A22-12 (MPX1) - A22-13 (MPX2)	Engine switch off	54 to 69 Ω

NG → **REPAIR OR REPLACE CAN NO. 2 BUS BRANCH WIRE OR CONNECTOR (AFS ECU BRANCH WIRE)**

OK

3 CHECK HARNESS AND CONNECTOR (IG, E1)

AFS ECU (Wire Harness Side):

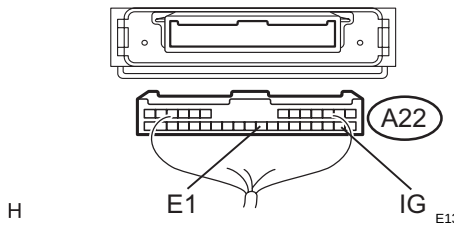

(a) Measure the resistance according to the value(s) in the table below.
Standard resistance

Tester Connection	Condition	Specified Value
A22-22 (E1) - Body ground	Always	Below 1 Ω

(b) Measure the voltage according to the value(s) in the table below.
Standard voltage

Tester Connection	Condition	Specified Value
A22-15 (IG) - Body ground	Engine switch on (IG)	10 to 14 V

NG → **REPAIR OR REPLACE HARNESS OR CONNECTOR**

OK

REPLACE AFS ECU (See page LI-227)

DTC	U1002	Lost Communication with Gateway Module

DESCRIPTION

- The gateway ECU will store this DTC when no signals can be received from the ECUs that have been memorized as those that are connected to the CAN No. 2 bus.
- When the gateway ECU receives response signals from the ECUs connected to the CAN No. 2 bus, the gateway ECU recognizes and memorizes that the ECUs are connected to the CAN No. 2 bus. Based on this memorized data, the gateway ECU monitors for malfunctions in the ECUs connected to the CAN No. 2 bus when communicating with those ECUs. If the gateway ECU cannot receive response signals from the ECUs that have been memorized as those connected to the CAN No. 2 bus, the gateway ECU determines that a malfunction exists.

DTC No.	DTC Detection Condition	Trouble Area
U1002	Gateway ECU cannot receive signals from all ECUs that have been memorized as those connected to the CAN No. 2 bus.	1. Open or short in CAN No. 2 bus main wire 2. Open or short in CAN No. 2 bus branch wire 3. Wire harness or connector 4. AFS ECU 5. Distance control ECU 6. Seat belt control ECU 7. Gateway ECU 8. CAN No. 1 J/C 9. CAN No. 4 J/C

WIRING DIAGRAM

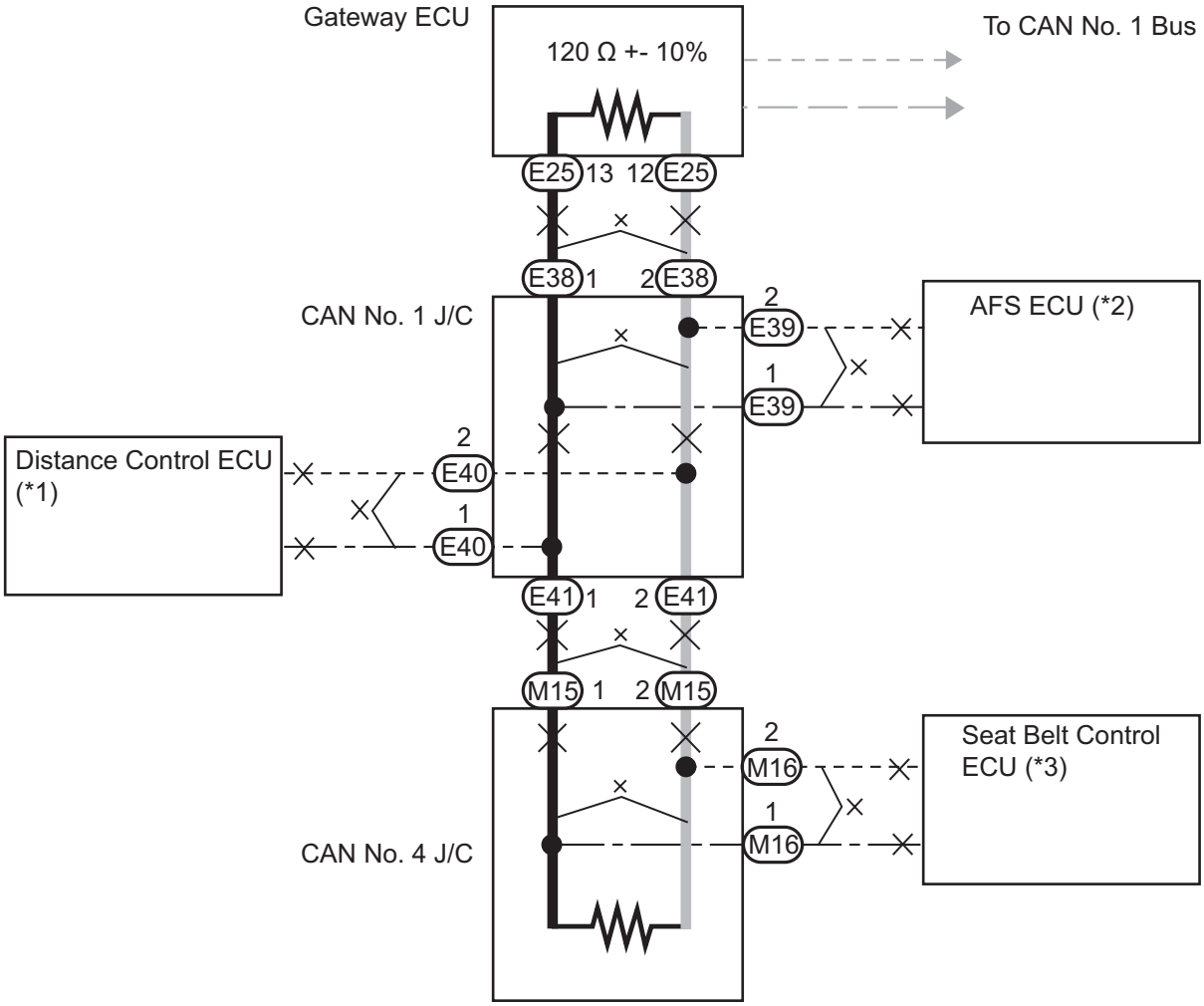

: CAN No. 2 Bus Main Wire (CANH)

: CAN No. 2 Bus Main Wire (CANL)

: CAN No. 2 Bus Branch Wire (CANH)

: CAN No. 2 Bus Branch Wire (CANL)

: CAN No. 1 Bus Branch Wire (CANH)

: CAN No. 1 Bus Branch Wire (CANL)

(*1): with Dynamic Radar Cruise System

(*2): with AFS

(*3): with Pre-collision System

× : Suspected Area

CA

C

C142244E02

INSPECTION PROCEDURE

NOTICE:

- **Turn the engine switch off before measuring the resistances of CAN bus main wires and CAN bus branch wires.**
- **After the engine switch is turned off, check that the key reminder warning system and light reminder warning system are not in operation.**
- **Before measuring the resistance, leave the vehicle as is for at least 1 minute and do not operate the engine switch, any other switches, or the doors. If any doors need to be opened in order to check connectors, open the doors and leave them open.**

HINT:

- Operating the engine switch, any switches, or any doors triggers related ECU and sensor communication on the CAN. This communication will cause the resistance value to change.
- Even after DTCs are cleared, if a DTC is stored again after driving the vehicle for a while, the malfunction may be occurring due to vibration of the vehicle. In such a case, wiggling the ECUs or wire harness while performing the inspection below will help to determine the cause of the malfunction.

1 CHECK CAN NO. 2 BUS WIRE

CAN No. 1 J/C "A" Side (without Earth Terminal) Wire Harness View:

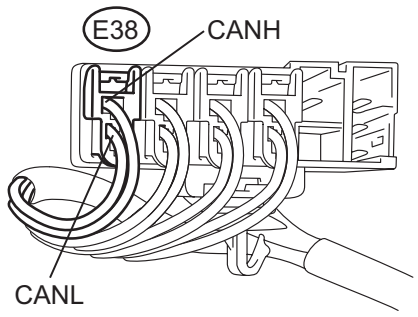

N C142234E01

(a) Turn the engine switch off.
(b) Measure the resistance according to the value(s) in the table below.

Result

Tester Connection	Color	Condition	Specified Value	Proceed to
E38-1 (CANH) - E38-2 (CANL)	B - W	Engine switch off	54 to 69 Ω	A
E38-1 (CANH) - E38-2 (CANL)	B - W	Engine switch off	69 Ω or higher	B
E38-1 (CANH) - E38-2 (CANL)	B - W	Engine switch off	Less than 54 Ω	C

B → **Go to step 5**

C → **Go to step 9**

A

CA

2 CHECK FOR SHORT TO B+ IN CAN NO. 2 BUS WIRE

CAN No. 1 J/C "A" Side (without Earth Terminal) Wire Harness View:

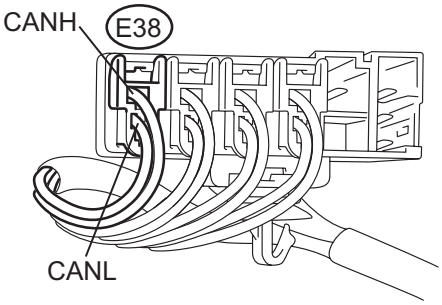

DLC3:

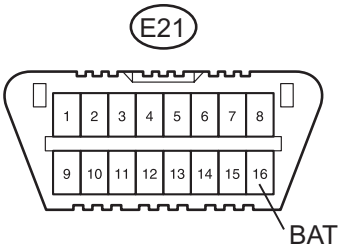

N C142235E01

OK

(a) Measure the resistance according to the value(s) in the table below.

Standard resistance

Tester Connection	Color	Condition	Specified Value
E38-1 (CANH) - E21-16 (BAT)	B - O	Engine switch off	6 kΩ or higher
E38-2 (CANL) - E21-16 (BAT)	W - O	Engine switch off	6 kΩ or higher

NG → **Go to step 15**

3 CHECK FOR SHORT TO GND IN CAN NO. 2 BUS WIRE

CAN No. 1 J/C "A" Side (without Earth Terminal) Wire Harness View:

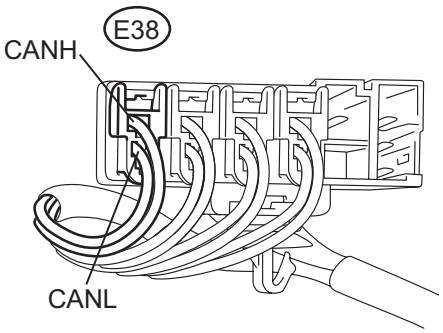

DLC3:

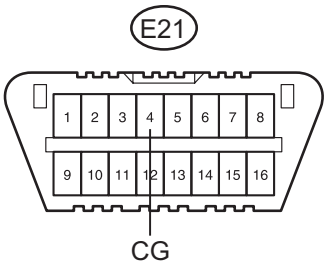

N C142235E02

(a) Measure the resistance according to the value(s) in the table below.

Standard resistance

Tester Connection	Color	Condition	Specified Value
E38-1 (CANH) - E21-4 (CG)	B - W-B	Engine switch off	200 Ω or higher
E38-2 (CANL) - E21-4 (CG)	W - W-B	Engine switch off	200 Ω or higher

NG → **Go to step 19**

OK

4 CHECK CAN NO. 2 BUS BRANCH WIRE

(a) Check for an open in the branch wires of all ECUs connected to the CAN No. 2 bus.
   (1) Check the AFS ECU branch wire (See page CA-93).
   (2) Check the distance control ECU branch wire (See page CA-123).
   (3) Check the seat belt control ECU branch wire (See page CA-119).

Result

Result	Proceed to
OK	A
NG	B

B → **REPAIR OR REPLACE MALFUNCTIONING PART**

CA

A

REPLACE GATEWAY ECU

5 CHECK FOR OPEN IN CAN NO. 2 BUS MAIN WIRE (GATEWAY ECU MAIN WIRE)

CAN No. 1 J/C "A" Side (without Earth Terminal) Wire Harness View:

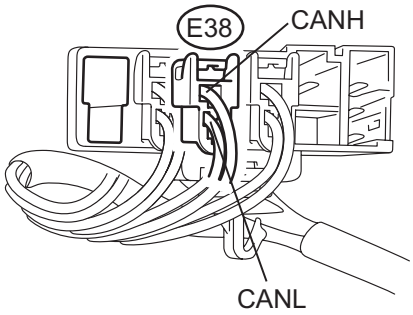

N C142236E01

(a) Disconnect gateway ECU main wire connector E38 from the CAN No. 1 J/C.
HINT:
- Before disconnecting the connector, make a note of where it is connected.
- Reconnect the connector to its original position.

(b) Measure the resistance according to the value(s) in the table below.
Standard resistance

Tester Connection	Color	Condition	Specified Value
E38-1 (CANH) - E38-2 (CANL)	B - W	Engine switch off	108 to 132 Ω

OK → **Go to step 7**

NG

6 CHECK FOR OPEN IN CAN NO. 2 BUS MAIN WIRE (GATEWAY ECU - CAN NO. 1 J/C)

Gateway ECU (Wire Harness Side):

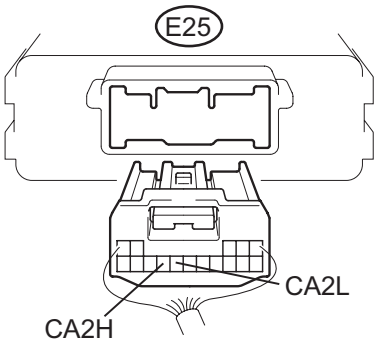

P C142190E04

(a) Reconnect gateway ECU main wire connector E38.
(b) Disconnect connector E25 from the gateway ECU.
(c) Measure the resistance according to the value(s) in the table below.
Standard resistance

Tester Connection	Condition	Specified Value
E25-13 (CA2H) - E25-12 (CA2L)	Engine switch off	108 to 132 Ω

NG → **REPAIR OR REPLACE CAN BUS MAIN WIRE OR CONNECTOR (GATEWAY ECU - CAN NO. 1 J/C)**

CA

OK

REPLACE GATEWAY ECU

7 CHECK FOR OPEN IN CAN NO. 2 BUS MAIN WIRE (CAN NO. 4 J/C)

CAN No. 1 J/C "A" Side (without Earth Terminal) Wire Harness View:

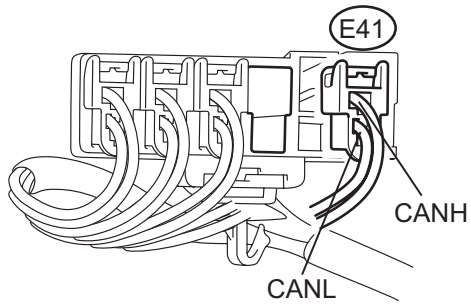

N C142237E01

(a) Reconnect gateway ECU main wire connector E38.
(b) Disconnect CAN No. 4 J/C main wire connector E41.
HINT:
- Before disconnecting the connector, make a note of where it is connected.
- Reconnect the connector to its original position.

(c) Measure the resistance according to the value(s) in the table below.
Standard resistance

Tester Connection	Color	Condition	Specified Value
E41-1 (CANH) - E41-2 (CANL)	LG - P	Engine switch off	108 to 132 Ω

OK → **REPLACE CAN NO. 1 J/C**

NG

8 CHECK FOR OPEN IN CAN NO. 2 BUS MAIN WIRE (CAN NO. 1 J/C - CAN NO. 4 J/C)

CAN No. 4 J/C "A" Side (with Earth Terminal) Wire Harness View:

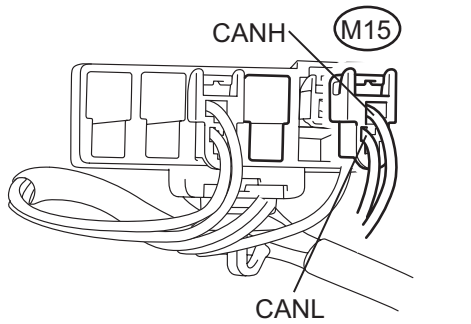

N C142239E01

(a) Reconnect CAN No. 4 J/C main wire connector E41 to the CAN No. 1 J/C.
(b) Disconnect CAN No. 1 J/C main wire connector M15 from the CAN No. 4 J/C.
HINT:
- Before disconnecting the connector, make a note of where it is connected.
- Reconnect the connector to its original position.

(c) Measure the resistance according to the value(s) in the table below.
Standard resistance

Tester Connection	Color	Condition	Specified Value
M15-1 (CANH) - M15-2 (CANL)	LG - P	Engine switch off	108 to 132 Ω

NG → **REPAIR OR REPLACE CAN BUS MAIN WIRE OR CONNECTOR (CAN NO. 1 J/C - CAN NO. 4 J/C)**

OK

REPLACE CAN NO. 4 J/C

9 CHECK FOR SHORT IN CAN NO. 2 BUS WIRE (CAN NO. 1 J/C)

CAN No. 1 J/C "A" Side (without Earth Terminal) Wire Harness View:

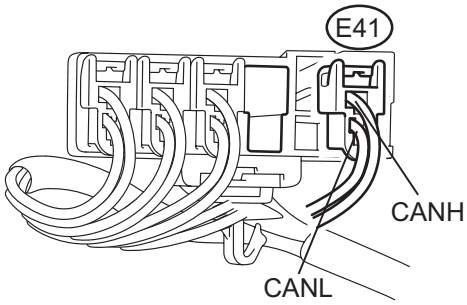

N C142237E01

(a) Disconnect CAN No. 4 J/C main wire connector E41.
HINT:
- Before disconnecting the connector, make a note of where it is connected.
- Reconnect the connector to its original position.

(b) Measure the resistance according to the value(s) in the table below.

Standard resistance

Tester Connection	Color	Condition	Specified Value
E41-1 (CANH) - E41-2 (CANL)	LG - P	Engine switch off	108 to 132 Ω

OK → **Go to step 12**

NG

10 CHECK FOR SHORT IN CAN NO. 2 BUS WIRE (CAN NO. 4 J/C MAIN WIRE)

CAN No. 4 J/C "A" Side (with Earth Terminal) Wire Harness View:

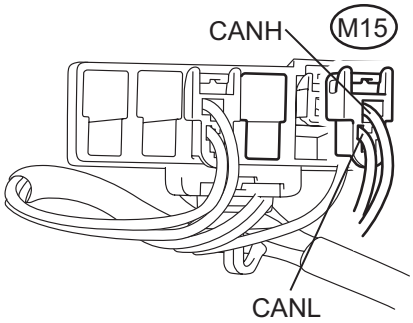

N C142239E01

(a) Reconnect CAN No. 4 J/C main wire connector E41 to the CAN No. 1 J/C.

(b) Disconnect CAN No. 1 J/C main wire connector M15 from the CAN No. 4 J/C.

(c) Measure the resistance according to the value(s) in the table below.

Standard resistance

Tester Connection	Color	Condition	Specified Value
M15-1 (CANH) - M15-2 (CANL)	LG - P	Engine switch off	108 to 132 Ω

Result

Result	Proceed to
OK (with Pre-collision system)	A
OK (without Pre-collision system)	B
NG	C

B → **REPLACE CAN NO. 4 J/C**

C → **REPAIR OR REPLACE CAN BUS MAIN WIRE OR CONNECTOR (CAN NO. 1 J/C - CAN NO. 4 J/C)**

A

11 CHECK FOR SHORT IN CAN NO. 2 BUS WIRE (SEAT BELT ECU BRANCH WIRE)

CAN No. 4 J/C "A" Side (with Earth Terminal) Wire Harness View:

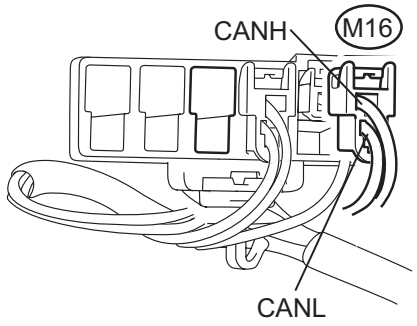

C142245E01

(a) Disconnect seat belt control ECU branch wire connector M16.

(b) Measure the resistance according to the value(s) in the table below.

Standard resistance

Tester Connection	Color	Condition	Specified Value
M16-1 (CANH) - M16-2 (CANL)	L - Y	Engine switch off	More than 1 Ω

NG → **Go to step 23**

OK

REPLACE CAN NO. 4 J/C

12 CHECK FOR SHORT IN CAN NO. 2 BUS WIRE (CAN NO. 1 J/C WIRE)

CAN No. 1 J/C "A" Side (without Earth Terminal) Wire Harness View:

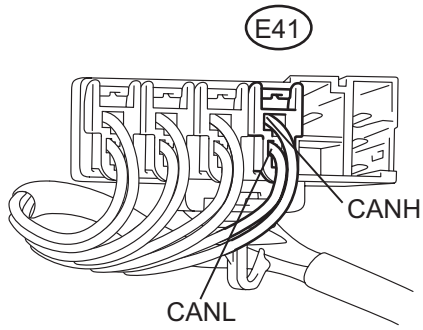

N C142238E01

(a) Reconnect CAN No. 4 J/C main wire connector E41.

(b) Connect the probes of an ohmmeter to terminals 1 (CANH) and 2 (CANL) of CAN No. 4 J/C main wire connector E41.

(c) While observing the resistance value shown on the tester, disconnect connectors E39 and E40 from the CAN No. 1 J/C one by one until the resistance becomes normal (between 54 and 69 Ω).

HINT:

Disconnect the branch wire connectors only.

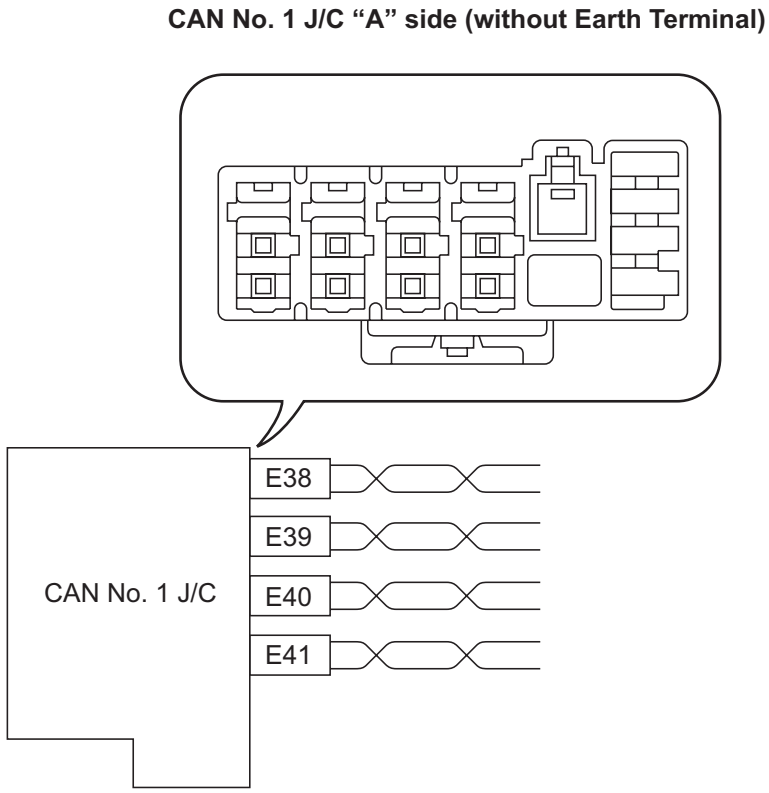

Wiring color:

CAN No. 1 J/C Connector ("A" Side, without earth terminal)	Connector Color	Color (CAN-H Side)	Color (CAN-L Side)
AFS ECU (E39)(*1)	White	L	Y
Distance Control ECU (E40)(*2)	White	GR	BR

NOTICE:
Do not reconnect the disconnected connectors until this inspection is complete because there may be a short in 2 or more branch wires.
HINT:
- (*1) : with AFS
- (*2) : with dynamic radar cruise control system

Result

Symptom	Proceed to
The resistance is still below 54 Ω when all the specified connectors are disconnected. (There are no shorts in the branch wires.)	**A**
The resistance becomes normal (between 54 and 69 Ω) when a connector is disconnected. (There is a short in one or more of the branch wires.)	**B**

CA

(d) When there is a short in one or more of the branch wires:
(1) Reconnect all of the connectors to the CAN No. 1 J/C, except for the one that was disconnected last (the short-circuited bus wire). Check that the resistance shown on the tester is normal (between 54 and 69 Ω) to confirm that there is a short in one branch wire only.

HINT:
- The connectors connected to the CAN No. 1 J/C can be distinguished according to the color of the communication bus wires and the shape of the connectors.
- Reconnecting the connectors to non-specified positions on the CAN No. 1 J/C does not affect system operation. However, it is preferred to reconnect the connectors to their specified positions to avoid negative effects on the wiring such as tension on the wiring harnesses, and to make future maintenance easier.

B → **Go to step 23**

A

13 CHECK FOR SHORT IN CAN NO. 2 BUS WIRE (CAN NO. 1 J/C)

CAN No. 1 J/C "A" Side (without Earth Terminal) Wire Harness View:

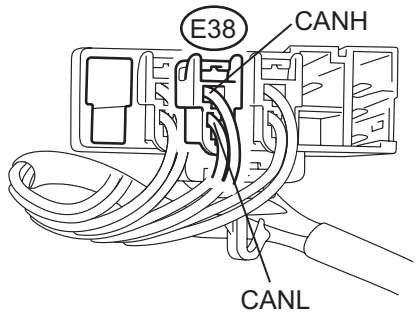

N C142236E01

(a) Disconnect gateway ECU main wire connector E38 from the CAN No. 1 J/C.
HINT:
- Before disconnecting the connector, make a note of where it is connected.
- Reconnect the connector to its original position.

(b) Measure the resistance according to the value(s) in the table below.
Standard resistance

Tester Connection	Color	Condition	Specified Value
E38-1 (CANH) - E38-2 (CANL)	B - W	Engine switch off	108 to 132 Ω

OK → **REPLACE CAN NO. 1 J/C**

NG

14	CHECK FOR SHORT IN CAN NO. 2 BUS WIRE (CAN NO. 1 J/C - GATEWAY ECU)

Gateway ECU (Wire Harness Side):

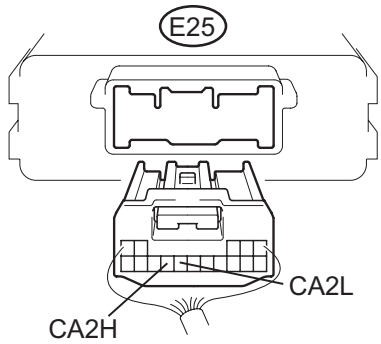

P C142190E04

(a) Disconnect connector E25 from the gateway ECU.
(b) Measure the resistance according to the value(s) in the table below.

Standard resistance

Tester Connection	Condition	Specified Value
E25-13 (CA2H) - E25-12 (CA2L)	Engine switch off	1 MΩ or higher

NG → **REPAIR OR REPLACE CAN BUS MAIN WIRE OR CONNECTOR (GATEWAY ECU - CAN NO. 1 J/C)**

OK

REPLACE GATEWAY ECU

15 CHECK FOR SHORT TO B+ IN CAN NO. 2 BUS WIRE (CAN NO. 4 J/C - GATEWAY ECU)

CAN No. 1 J/C "A" Side (without Earth Terminal) Wire Harness View:

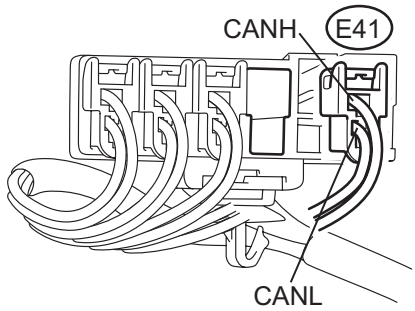

DLC3:

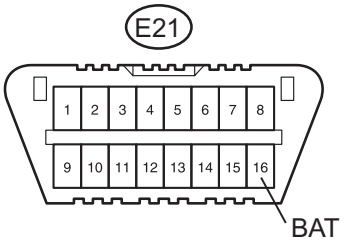

N C142241E01

(a) Disconnect CAN No. 4 J/C main wire connector E41.
HINT:
- Before disconnecting the connector, make a note of where it is connected.
- Reconnect the connector to its original position.

(b) Measure the resistance according to the value(s) in the table below.

Standard resistance

Tester Connection	Color	Condition	Specified Value
E41-1 (CANH) - E21-16 (BAT)	LG - O	Engine switch off	6 kΩ or higher
E41-2 (CANL) - E21-16 (BAT)	P - O	Engine switch off	6 kΩ or higher

OK → **Go to step 18**

NG

16 CHECK FOR SHORT TO B+ IN CAN NO. 2 BUS WIRE (CAN NO. 4 MAIN WIRE)

(a) Reconnect CAN No. 4 J/C main wire connector E41 to the CAN No. 1 J/C.

CAN No. 4 J/C "A" Side (with Earth Terminal) Wire Harness View:

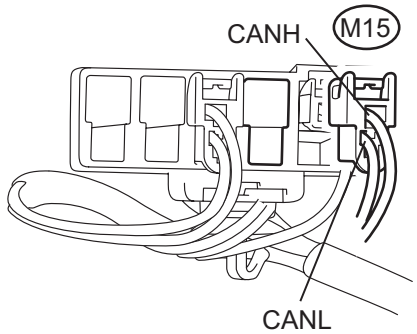

DLC3:

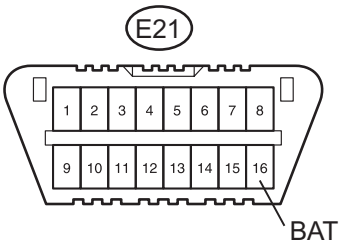

N

C142242E01

(b) Disconnect CAN No. 1 J/C main wire connector M15 from the CAN No. 4 J/C.

(c) Measure the resistance according to the value(s) in the table below.

Standard resistance

Tester Connection	Color	Condition	Specified Value
M15-1 (CANH) - E21-16 (BAT)	LG - O	Engine switch off	6 kΩ or higher
M15-2 (CANL) - E21-16 (BAT)	P - O	Engine switch off	6 kΩ or higher

Result

Result	Proceed to
OK (with Pre-collision system)	A
OK (without Pre-collision system)	B
NG	C

B → **REPLACE CAN NO. 4 J/C**

C → **REPAIR OR REPLACE CAN BUS MAIN WIRE OR CONNECTOR (CAN NO. 1 J/C - CAN NO. 4 J/C)**

A

17 CHECK FOR SHORT TO B+ IN CAN NO. 2 BUS WIRE (SEAT BELT ECU BRANCH WIRE)

(a) Disconnect seat belt control ECU branch wire connector M16.

CAN No. 4 J/C "A" Side (with Earth Terminal) Wire Harness View:

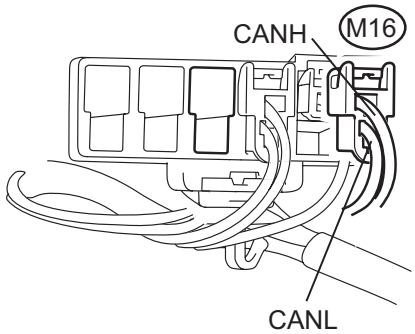

DLC3:

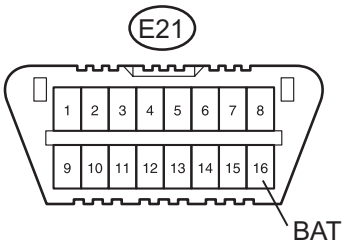

C142246E01

(b) Measure the resistance according to the value(s) in the table below.

Standard resistance

Tester Connection	Color	Condition	Specified Value
M16-1 (CANH) - E21-16 (BAT)	L - O	Engine switch off	6 kΩ or higher
M16-2 (CANL) - E21-16 (BAT)	Y- O	Engine switch off	6 kΩ or higher

NG → **Go to step 23**

OK

REPLACE CAN NO. 4 J/C

18 CHECK FOR SHORT TO B+ IN CAN NO. 2 BUS WIRE (CAN NO. 1 BRANCH WIRE)

(a) Reconnect CAN No. 4 J/C main wire connector E41.

CAN No. 1 J/C "A" Side (without Earth Terminal) Wire Harness View:

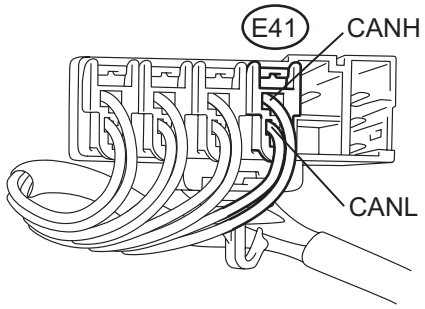

DLC3:

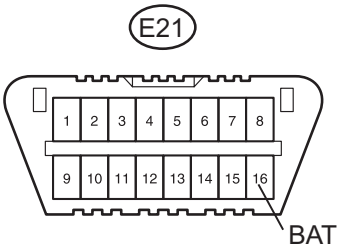

N

C142240E01

(b) Disconnect connectors from the CAN No. 1 J/C one at a time.
HINT:
Disconnect the ECU and sensor connectors other than CAN No. 4 J/C main wire connector E41.

(c) Using an ohmmeter, measure the resistance between terminal 1 (CANH) of CAN No. 4 J/C main wire connector E41 and terminal 16 (BAT) of the DLC3, and between terminal 2 (CANL) of CAN No. 4 J/C main wire connector E41 and terminal 16 (BAT) of the DLC3 each time a connector is disconnected.

CAN No. 1 J/C "A" side (without Earth Terminal)

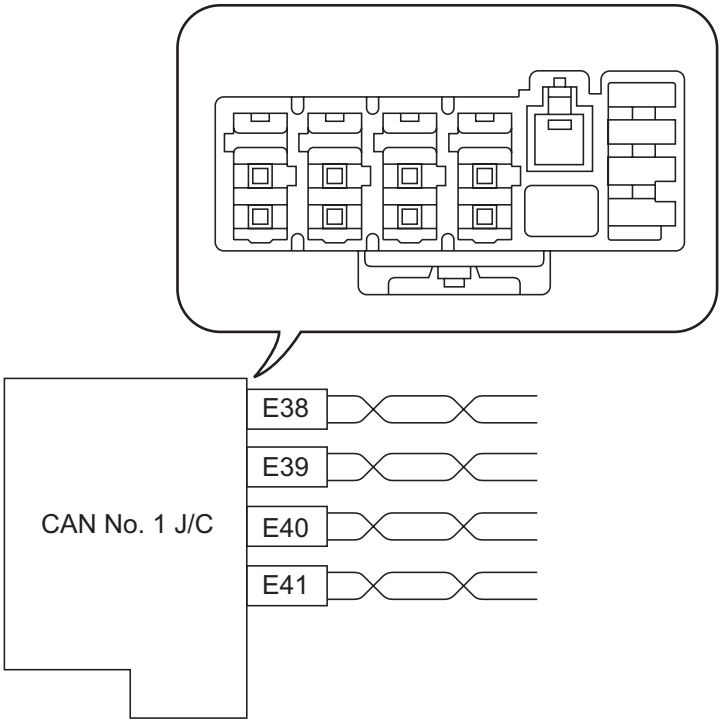

C

C142194E01

Wiring color:

CAN No. 1 J/C Connector ("A" Side, without earth terminal)	Connector Color	Color (CAN-H Side)	Color (CAN-L Side)
Gateway ECU (E38)	White	B	W
AFS ECU (E39)(*1)	White	L	Y
Distance Control ECU (E40)(*2)	White	GR	BR

NOTICE:
Do not reconnect the disconnected connectors until this inspection is complete because there may be a short to B+ in 2 or more CAN No. 2 bus wires.
HINT:
- (*1) : with AFS
- (*2) : with dynamic radar cruise control system

Result

Symptom	Proceed to
The resistance between terminals 1 (CANH) and E21-16 (BAT), or the resistance between terminals 2 (CANL) and E21-16 (BAT) is still below 6 kΩ when all the specified connectors are disconnected from the CAN No. 1 J/C. (There is a short to B+ in the CAN main bus wires between the CAN No. 1 J/C and the CAN No. 4 J/C.)	**A**
The resistance between terminals 6 (CANH) and E21-16 (BAT), or the resistance between terminals 14 (CANL) and E21-16 (BAT) becomes normal (6 kΩ or more) when a connector is disconnected from the CAN No. 1 J/C. (There is a short to B+ in one of the areas that relate to one or more of the disconnected bus wires.)	**B**

(d) When there is a short to B+ in one or more of the bus wires that connect to an ECU (or sensor):
(1) Reconnect all of the connectors to the CAN No. 1 J/C, except for the one that was disconnected last (the bus wire that is shorted to B+). Check that the resistance shown on the tester is normal (6 kΩ or more) to confirm that there is a short to B+ in one bus wire only.
HINT:
- The connectors connected to the CAN No. 1 J/C can be distinguished according to the color of the communication bus wires and the shape of the connectors.
- Reconnecting the connectors to non-specified positions on the CAN No. 1 J/C does not affect system operation. However, it is preferred to reconnect the connectors to their specified positions to avoid negative effects on the wiring such as tension on the wiring harnesses, and to make future maintenance easier.

B → **Go to step 23**

A

REPLACE CAN NO. 1 J/C

19 CHECK FOR SHORT TO GND IN CAN NO. 2 BUS WIRE (CAN NO. 4 - GATEWAY ECU)

CAN No. 1 J/C "A" Side (without Earth Terminal) Wire Harness View:

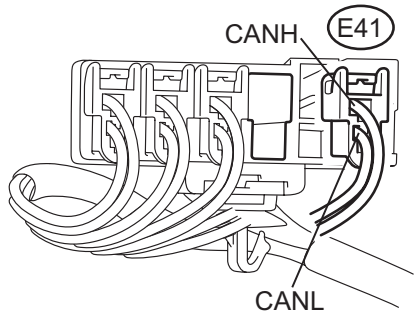

DLC3:

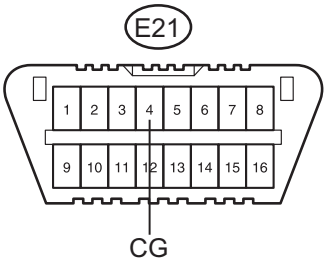

N

C142241E02

(a) Disconnect CAN No. 4 J/C main wire connector E41.
HINT:
- Before disconnecting the connector, make a note of where it is connected.
- Reconnect the connector to its original position.

(b) Measure the resistance according to the value(s) in the table below.

Standard resistance

Tester Connection	Color	Condition	Specified Value
E41-1 (CANH) - E21-4 (CG)	LG - W-B	Engine switch off	200 Ω or higher
E41-2 (CANL) - E21-4 (CG)	P- W-B	Engine switch off	200 Ω or higher

OK → **Go to step 22**

NG

20 CHECK FOR SHORT TO GND IN CAN NO. 2 BUS WIRE (CAN NO. 4 MAIN WIRE)

(a) Reconnect CAN No. 4 J/C main wire connector E41 to the CAN No. 1 J/C.

CAN No. 4 J/C "A" Side (with Earth Terminal) Wire Harness View:

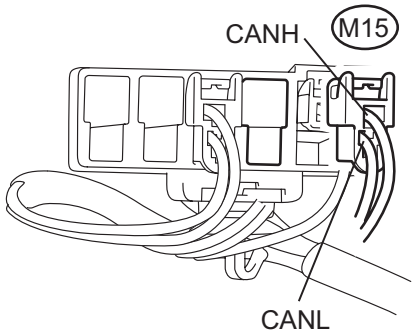

DLC3:

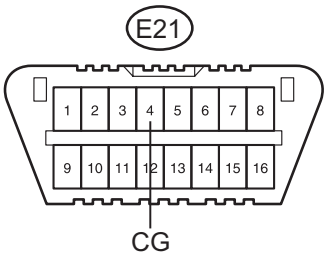

N

C142242E02

(b) Disconnect CAN No. 1 J/C main wire connector M15 from the CAN No. 4 J/C.

(c) Measure the resistance according to the value(s) in the table below.

Standard resistance

Tester Connection	Color	Condition	Specified Value
M15-1 (CANH) - E21-4 (CG)	LG - W-B	Engine switch off	200 Ω or higher
M15-2 (CANL) - E21-4 (CG)	P- W-B	Engine switch off	200 Ω or higher

Result

Result	Proceed to
OK (with Pre-collision system)	A
OK (without Pre-collision system)	B
NG	C

B → **REPLACE CAN NO. 4 J/C**

C → **REPAIR OR REPLACE CAN BUS MAIN WIRE OR CONNECTOR (CAN NO. 1 J/C - CAN NO. 4 J/C)**

A

21 CHECK FOR SHORT TO GND IN CAN NO. 2 BUS WIRE (SEAT BELT ECU BRANCH WIRE)

(a) Disconnect seat belt control ECU branch wire connector M16.

CAN No. 4 J/C "A" Side (with Earth Terminal) Wire Harness View:

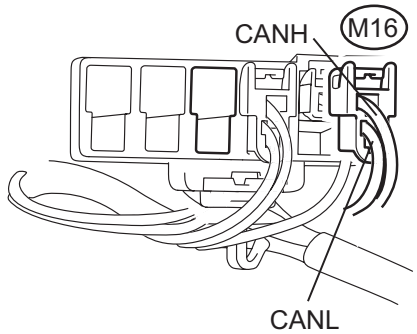

DLC3:

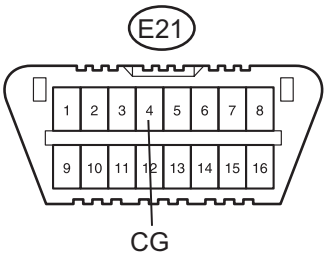

C142246E03

(b) Measure the resistance according to the value(s) in the table below.

Standard resistance

Tester Connection	Color	Condition	Specified Value
M16-1 (CANH) - E21-4 (CG)	L - W-B	Engine switch off	200 Ω or higher
M16-2 (CANL) - E21-4 (CG)	Y - W-B	Engine switch off	200 Ω or higher

NG → **Go to step 23**

OK

REPLACE CAN NO. 4 J/C

22 CHECK FOR SHORT TO GND IN CAN NO. 2 BUS WIRE (CAN NO. 1 J/C BRANCH WIRE)

(a) Reconnect CAN No. 4 J/C main wire connector E41.

CAN No. 1 J/C "A" Side (without Earth Terminal) Wire Harness View:

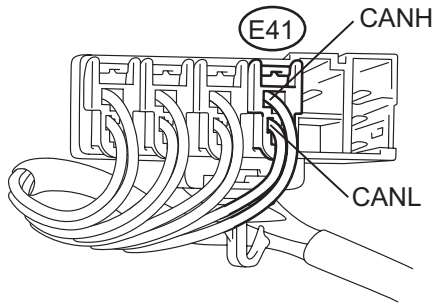

DLC3:

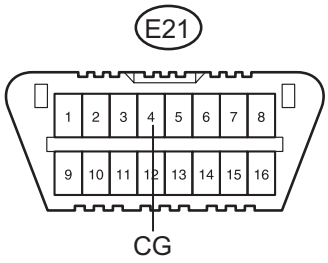

N C142240E02

(b) Disconnect connectors from the CAN No. 1 J/C one at a time.
HINT:
Disconnect the ECU and sensor connectors other than CAN No. 4 J/C main wire connector E41.

(c) Using an ohmmeter, measure the resistance between terminal 1 (CANH) of CAN No. 4 J/C main wire connector E41 and terminal 4 (CG) of the DLC3, and between terminal 2 (CANL) of CAN No. 4 J/C main wire connector E41 and terminal 4 (CG) of the DLC3 each time a connector is disconnected.

CAN No. 1 J/C "A" side (without Earth Terminal)

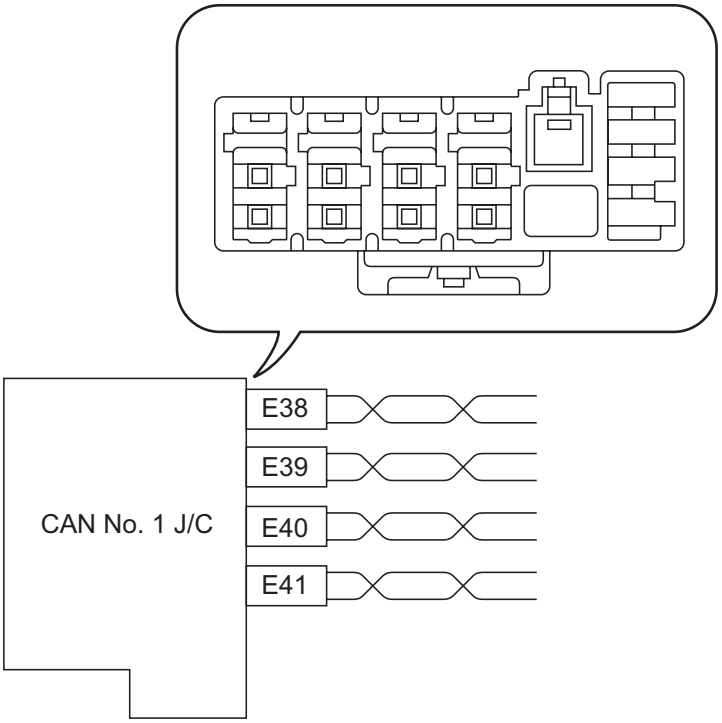

C C142194E01

CA

Wiring color:

CAN No. 1 J/C Connector ("A" Side, without earth terminal)	Connector Color	Color (CAN-H Side)	Color (CAN-L Side)
Gateway ECU (E38)	White	B	W
AFS ECU (E39)(*1)	White	L	Y
Distance Control ECU (E40)(*2)	White	GR	BR

NOTICE:
Do not reconnect the disconnected connectors until this inspection is complete because there may be a short to GND in 2 or more CAN No. 2 bus wires.
HINT:
- (*1) : with AFS
- (*2) : with dynamic radar cruise control system

Result

Symptom	Proceed to
The resistance between terminals 6 (CANH) and E21-4 (CG), or the resistance between terminals 14 (CANL) and E21-4 (CG) is still below 200 Ω when all the specified connectors are disconnected from the CAN No. 1 J/C. (There is a short to GND in the CAN main bus wires between the CAN No. 1 J/C and the CAN No. 4 J/C.	**A**
The resistance between terminals 6 (CANH) and E21-4 (CG), or the resistance between terminals 14 (CANL) and E21-4 (CG) becomes normal (200 Ω or more) when a connector is disconnected from the CAN No. 1 J/C. (There is a short to GND in one of the areas that relate to the disconnected bus wires.)	**B**

(d) When there is a short to GND in one or more of the bus wires that connect to an ECU (or sensor):
(1) Reconnect all of the connectors to the CAN No. 1 J/C, except for the one that was disconnected last (the bus wire that is shorted to GND). Check that the resistance shown on the tester is normal (200 Ω or more) to confirm that there is a short to GND in one bus wire.
HINT:
- The connectors connected to the CAN No. 1 J/C can be distinguished according to the color of the communication bus wires and the shape of the connectors.
- Reconnecting the connectors to non-specified positions on the CAN No. 1 J/C does not affect system operation. However, it is preferred to reconnect the connectors to their specified positions to avoid negative effects on the wiring such as tension on the wiring harnesses, and to make future maintenance easier.

A → **REPLACE CAN NO. 1 J/C**

CA

B

23	RECONNECT CONNECTOR

(a) Reconnect the connector for the short-circuited main or branch wire to the CAN No. 1 J/C or CAN No. 4 J/C (the connector that caused the bus wire resistance to become normal when it was disconnected).

NEXT

24	CHECK FOR SHORT IN CAN NO. 2 BUS WIRE

(a) Disconnect the connector of the ECU that is connected to the short-circuited main or branch wire from the ECU.

(b) Recheck the short-circuited wire with the connector disconnected from the ECU.

OK:

The wire is not short-circuited.

HINT:

If the short-circuited wire returns to normal after being disconnected from the ECU, an internal short in the ECU is suspected.

NG → **REPAIR OR REPLACE CORRESPONDING ECU OR SENSOR BRANCH WIRE OR CONNECTOR**

OK

REPLACE CORRESPONDING ECU OR SENSOR

DTC	U1100	Lost Communication with Seat Belt Control ECU

DESCRIPTION

The gateway ECU will store this DTC when no signals can be received from the seat belt control ECU while the CAN No. 2 main bus is normal.

DTC No.	DTC Detection Condition	Trouble Area
U1100	No communication from seat belt control ECU	1. Open or short in CAN No. 1 J/C and seat belt control ECU 2. Open in one side of CAN bus main wire (Between CAN No. 1 J/C and CAN No. 4 J/C) 3. Seat belt control ECU power source circuit 4. Seat belt control ECU 5. CAN No. 4 J/C 6. Wire harness or connector

WIRING DIAGRAM

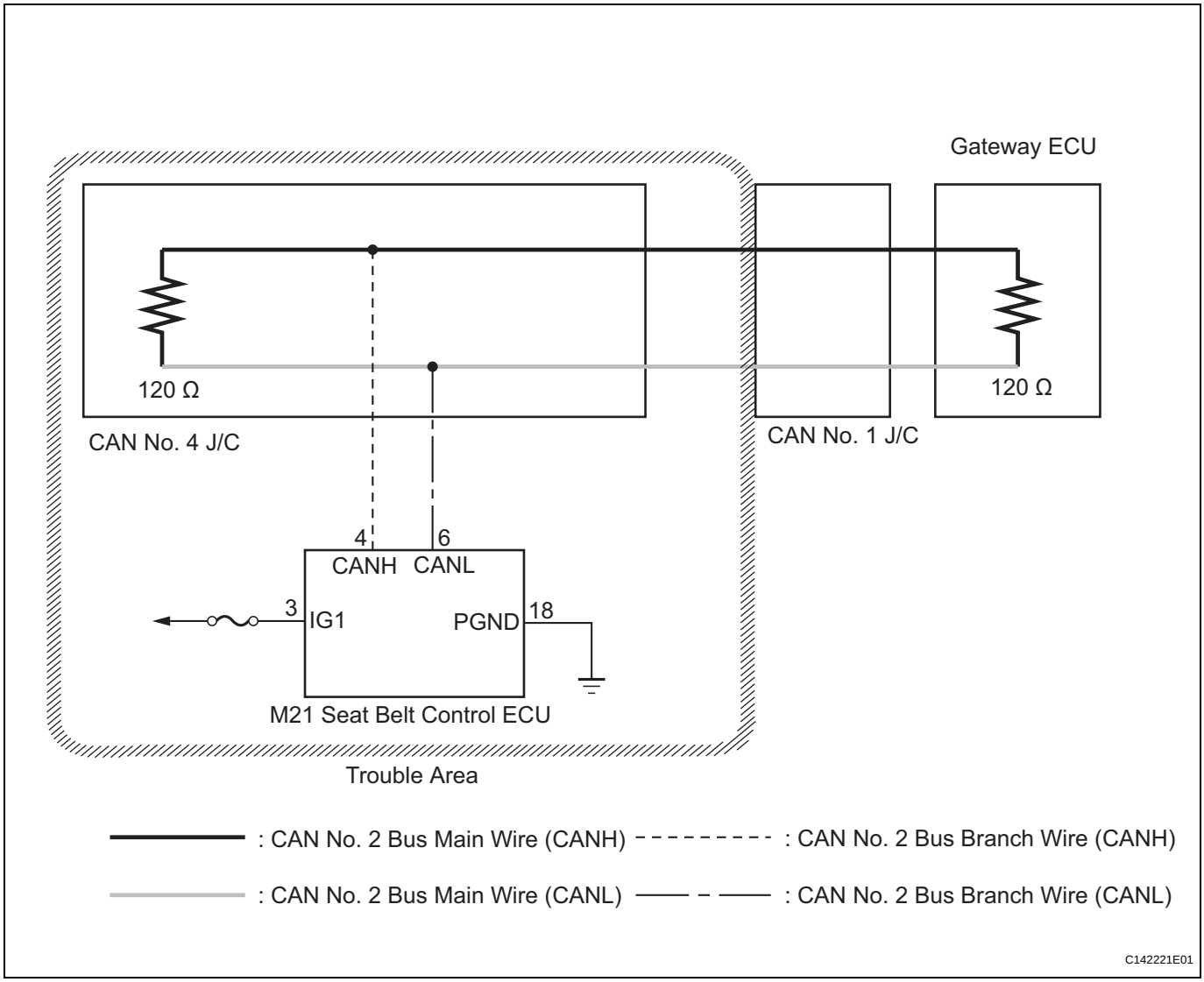

CA

INSPECTION PROCEDURE

NOTICE:

- **Turn the engine switch off before measuring the resistances of CAN bus main wires and CAN bus branch wires.**
- **After the engine switch is turned off, check that the key reminder warning system and light reminder warning system are not in operation.**
- **Before measuring the resistance, leave the vehicle as is for at least 1 minute and do not operate the engine switch, any other switches, or the doors. If any doors need to be opened in order to check connectors, open the doors and leave them open.**

1 CHECK DTC

(a) Check for DTCs.
HINT:
If CAN No. 2 bus DTC U1002 is output, troubleshoot for U1002 and check for malfunctions in the CAN MS main bus circuit.

Result

Result	Proceed to
U1002 is not output	A
U1002 is output	B

B → **GO TO DTC CHART (See page CA-49)**

A

2 CHECK CAN NO. 2 BUS WIRE (SEAT BELT CONTROL ECU)

Seat Belt Control ECU (Wire Harness Side):

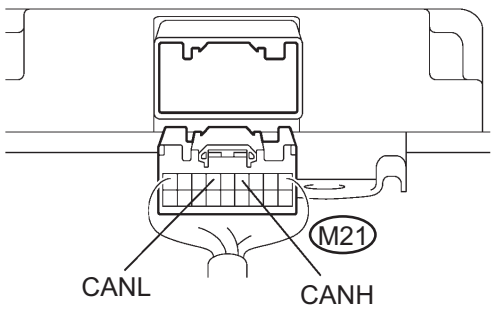

C110546E07

(a) Turn the engine switch off.
(b) Disconnect connector M21 from the seat belt control ECU.
(c) Measure the resistance according to the value(s) in the table below.

Standard resistance

Tester Connection	Condition	Specified Value
M21-4 (CANH) - M21-6 (CANL)	Engine switch OFF	54 to 69 Ω

NG → **Go to step 4**

OK

3 CHECK HARNESS AND CONNECTOR (IG1, PGND)

Seat Belt Control ECU (Wire Harness Side):

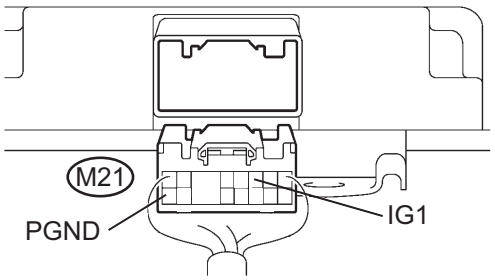

C110546E08

(a) Measure the resistance according to the value(s) in the table below.
Standard resistance

Tester Connection	Condition	Specified Value
M21-18 (PGND) - Body ground	Always	Below 1 Ω

(b) Measure the voltage according to the value(s) in the table below.
Standard voltage

Tester Connection	Condition	Specified Value
M21-3 (IG1) - Body ground	Engine switch on (IG)	10 to 14 V

NG → **REPAIR OR REPLACE HARNESS OR CONNECTOR**

OK

REPLACE SEAT BELT CONTROL ECU (See page SB-64)

4 CHECK CAN NO. 2 BUS BRANCH WIRE (SEAT BELT CONTROL ECU)

CAN No. 4 J/C "A" Side (with Earth Terminal) Wire Harness View:

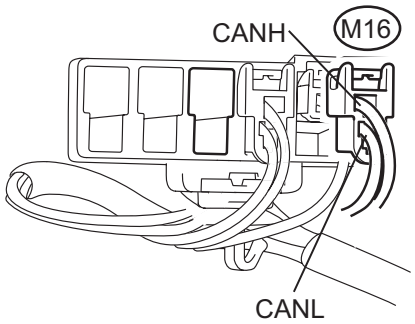

C142245E01

(a) Disconnect the seat belt control ECU branch wire connector M16.
(b) Measure the resistance according to the value(s) in the table below.
Standard resistance

Tester Connection	Color	Condition	Specified Value
M16-1 (CANH) - M16-2 (CANL)	L - Y	Engine switch OFF	1 MΩ or higher

NG → **REPAIR OR REPLACE CAN NO. 2 BUS BRANCH WIRE OR CONNECTOR (SEAT BELT CONTROL ECU BRANCH WIRE)**

OK

5	CHECK CAN NO. 2 BUS MAIN WIRE (CAN NO. 1 J/C - CAN NO. 4 J/C)

CAN No. 4 J/C "A" Side (with Earth Terminal) Wire Harness View:

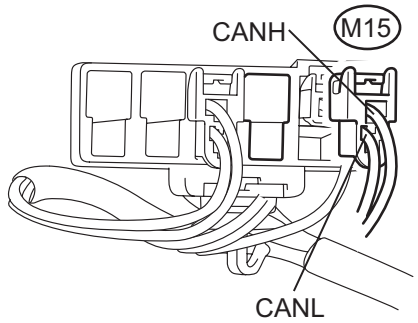

N C142239E01

(a) Disconnect CAN No. 1 J/C main wire connector M15 from the CAN No. 4 J/C.

(b) Measure the resistance according to the value(s) in the table below.

Standard resistance

Tester Connection	Color	Condition	Specified Value
M15-1 (CANH) - M15-2 (CANL)	LG - P	Engine switch OFF	108 to 132 Ω

NG → **REPAIR OR REPLACE CAN NO. 1 BUS MAIN WIRE OR CONNECTOR (CAN NO. 1 J/C - CAN NO. 4 J/C)**

OK

REPLACE CAN NO. 4 J/C

DTC	U1102	Lost Communication with Radar Sensor

DESCRIPTION

The gateway ECU will store this DTC when no signals can be received from the distance control ECU while the CAN No. 2 main bus is normal.

DTC No.	DTC Detection Condition	Trouble Area
U1102	No communication from distance control ECU	1. Open or short in CAN No. 1 J/C and distance control ECU 2. Distance control ECU power source circuit 3. Distance control ECU 4. Wire harness or connector

WIRING DIAGRAM

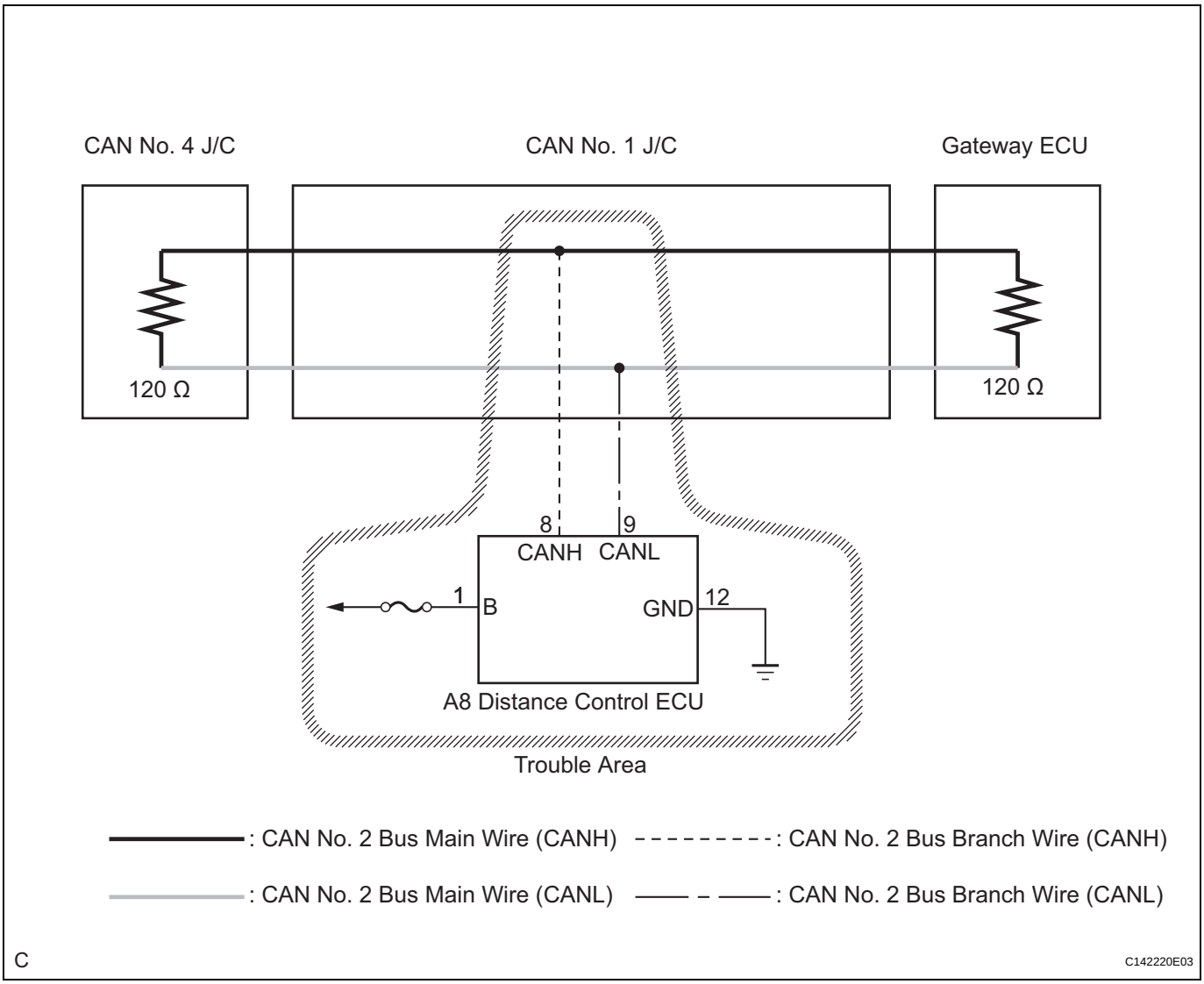

INSPECTION PROCEDURE

NOTICE:

- **Turn the engine switch off before measuring the resistances of CAN bus main wires and CAN bus branch wires.**
- **After the engine switch is turned off, check that the key reminder warning system and light reminder warning system are not in operation.**

- **Before measuring the resistance, leave the vehicle as is for at least 1 minute and do not operate the engine switch, any other switches, or the doors. If any doors need to be opened in order to check connectors, open the doors and leave them open.**

1 CHECK DTC

(a) Check for DTCs.
HINT:
If CAN No. 2 bus DTC U1002 is output, troubleshoot for U1002 and check for malfunctions in the CAN MS main bus circuit.
Result

Result	Proceed to
U1002 is not output	A
U1002 is output	B

B → **GO TO DTC CHART (See page CA-49)**

A

2 CHECK CAN NO. 2 BUS WIRE (DISTANCE CONTROL ECU)

Distance Control ECU (Wire Harness Side):

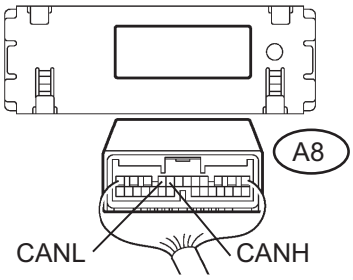

(a) Turn the engine switch off.
(b) Disconnect connector J17 from the distance control ECU.
(c) Measure the resistance according to the value(s) in the table below.
Standard resistance

Tester Connection	Condition	Specified Value
A8-8 (CANH) - A8-9 (CANL)	Engine switch OFF	54 to 69 Ω

NG → **REPAIR OR REPLACE CAN NO. 2 BUS BRANCH WIRE OR CONNECTOR (DISTANCE CONTROL ECU BRANCH WIRE)**

OK

3 CHECK HARNESS AND CONNECTOR (B, GND)

Distance Control ECU (Wire Harness Side):

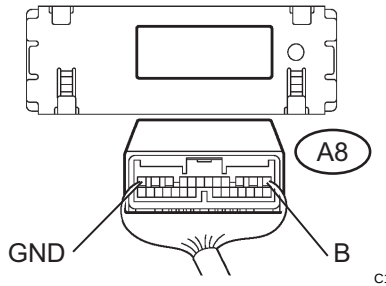

(a) Measure the resistance according to the value(s) in the table below.

Standard resistance

Tester Connection	Condition	Specified Value
A8-12 (GND) - Body ground	Always	Below 1 Ω

(b) Measure the voltage according to the value(s) in the table below.

Standard voltage

Tester Connection	Condition	Specified Value
A8-1 (B) - Body ground	Engine switch on (IG)	10 to 14 V

NG → **REPAIR OR REPLACE HARNESS OR CONNECTOR**

OK

GO TO DYNAMIC RADAR CRUISE CONTROL SYSTEM (See page CC-48)

Skid Control ECU Communication Stop Mode

DESCRIPTION

Detection Item	Symptom	Trouble Area
Skid Control ECU Communication Stop Mode	• "ABS/VSC/TRAC" is not displayed on the "BUS CHECK" screen of the intelligent tester • Applies to "Skid Control ECU Communication Stop Mode" in the "DTC COMBINATION TABLE"	1. Power source circuit of the skid control ECU 2. Skid control ECU branch wire or connector 3. Skid control ECU

HINT:
"ABS/VSC/TRAC" refers to the circuit that includes the skid control ECU.

WIRING DIAGRAM

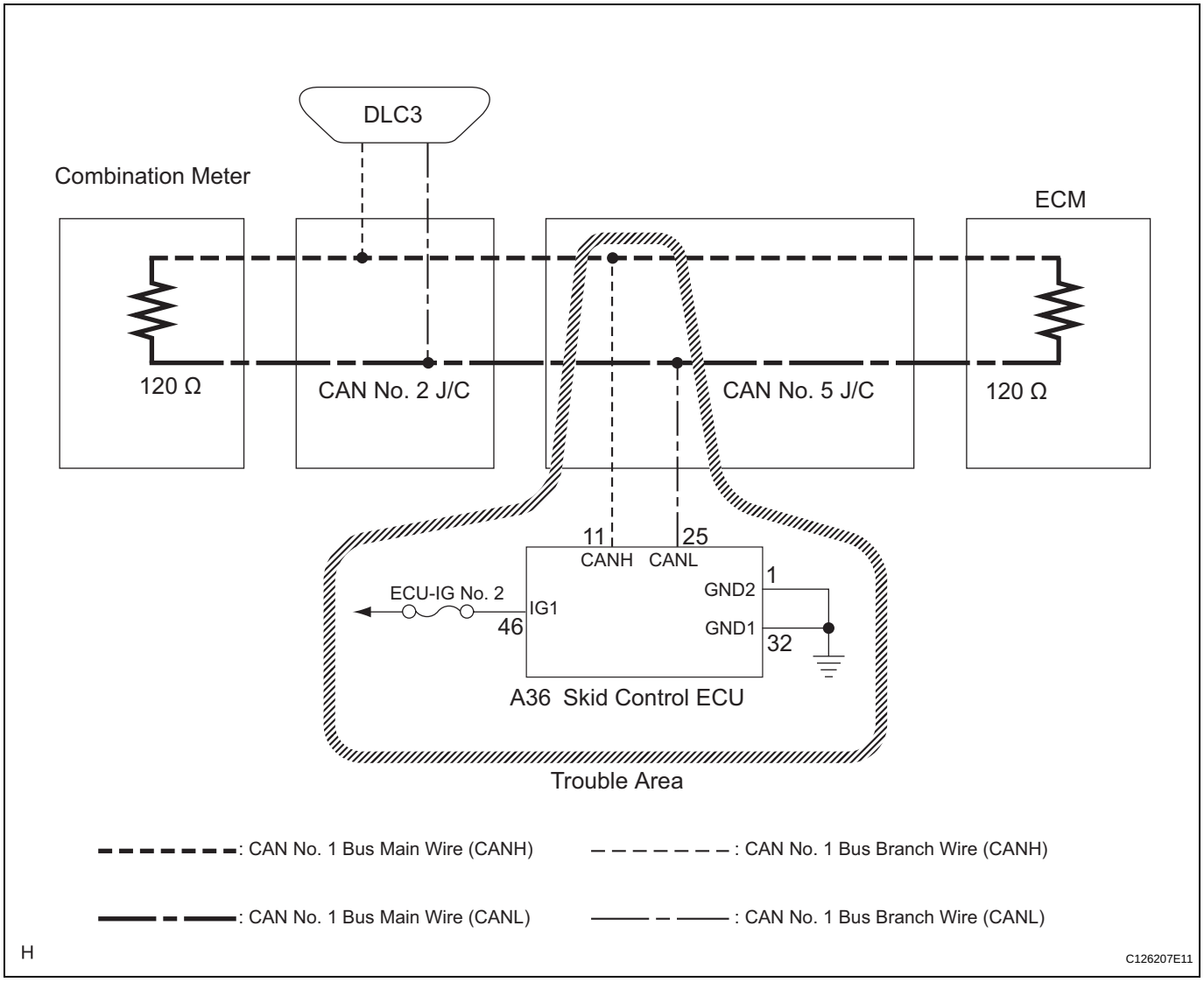

INSPECTION PROCEDURE

NOTICE:

- **Turn the engine switch off before measuring the resistances of CAN bus main wire and CAN bus branch wires.**

CA

- **After the engine switch is turned off, check that the key reminder warning system and light reminder warning system are not in operation.**
- **Before measuring the resistance, leave the vehicle as is for at least 1 minute and do not operate the engine switch, any other switches, or the doors. If any doors need to be opened in order to check connectors, open the doors and leave them open.**

1 CHECK OPEN IN CAN NO. 1 BUS WIRE (SKID CONTROL ECU BRANCH WIRE)

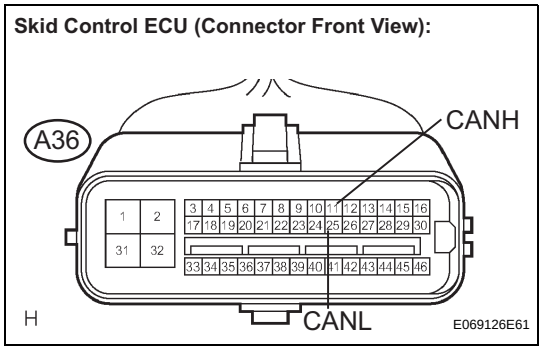

(a) Turn the engine switch off.
(b) Disconnect the skid control ECU connector.
(c) Measure the resistance according to the value(s) in the table below.

Standard resistance

Tester Connection	Condition	Specified Value
A36-11 (CANH) - A36-25 (CANL)	Engine switch off	54 to 69 Ω

NG → **REPAIR OR REPLACE CAN NO. 1 BUS BRANCH WIRE OR CONNECTOR (SKID CONTROL ECU)**

OK

2 CHECK WIRE HARNESS (IG1, GND1, GND2)

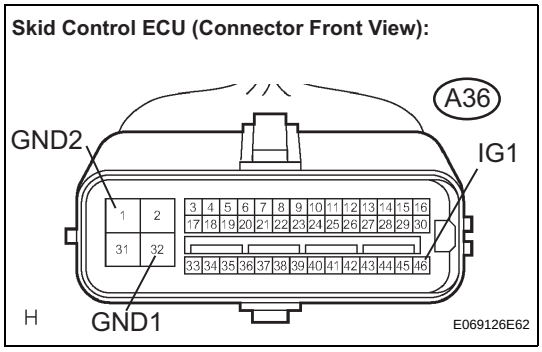

(a) Measure the resistance according to the value(s) in the table below.

Standard resistance

Tester Connection	Condition	Specified Value
A36-32 (GND1) - Body ground	Always	Below 1 Ω
A36-1 (GND2) - Body ground	Always	Below 1 Ω

(b) Measure the voltage according to the value(s) in the table below.

Standard voltage

Tester Connection	Condition	Specified Value
A36-46 (IG1) - Body ground	Engine switch on (IG)	10 to 14 V

NG → **REPAIR OR REPLACE HARNESS OR CONNECTOR**

OK

REPLACE BRAKE ACTUATOR (See page BC-181)

Air Conditioning Amplifier Communication Stop Mode

DESCRIPTION

Detection Item	Symptom	Trouble Area
Air Conditioning Amplifier Communication Stop Mode	• "A/C" is not displayed on the "BUS CHECK" screen of the intelligent tester • Applies to "Air Conditioning Amplifier Communication Stop Mode" in the "DTC COMBINATION TABLE"	1. Power source circuit of the air conditioning amplifier 2. Air conditioning amplifier branch wire or connector 3. Air conditioning amplifier

HINT:
"A/C" refers to the circuit that includes the air conditioning amplifier.

WIRING DIAGRAM

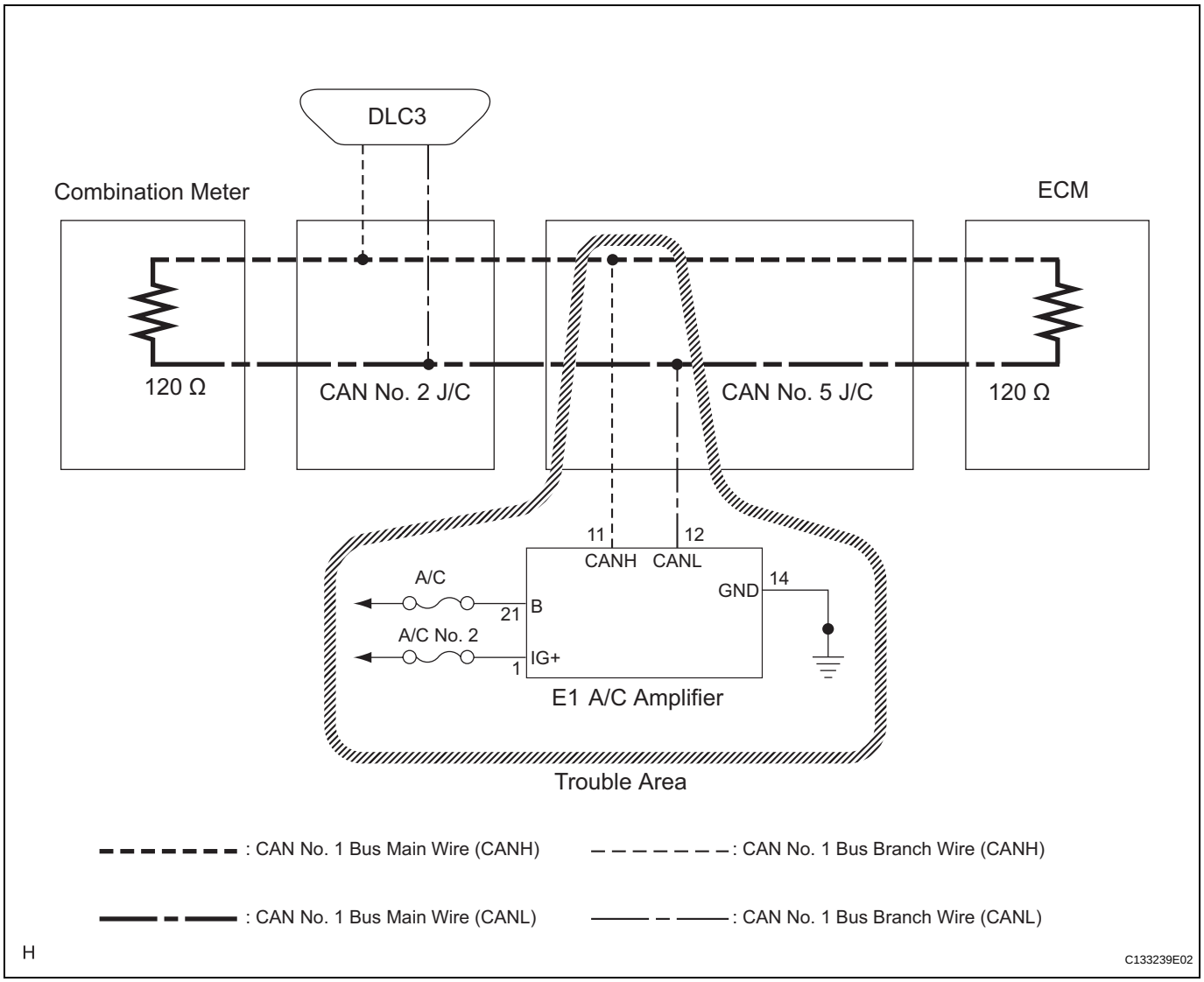

INSPECTION PROCEDURE

NOTICE:

- **Turn the engine switch off before measuring the resistances of CAN bus main wires and CAN bus branch wires.**
- **After the engine switch is turned off, check that the key reminder warning system and light reminder warning system are not in operation.**

- **Before measuring the resistance, leave the vehicle as is for at least 1 minute and do not operate the engine switch, any other switches, or the doors. If any doors need to be opened in order to check connectors, open the doors and leave them open.**

HINT:
Operating the engine switch, any switches, or any doors triggers related ECU and sensor communication on the CAN. This communication will cause the resistance value to change.

1 CHECK FOR OPEN IN CAN NO. 1 BUS WIRE (AIR CONDITIONING AMPLIFIER BRANCH WIRE)

Air Conditioning Amplifier (Wire Harness Side):

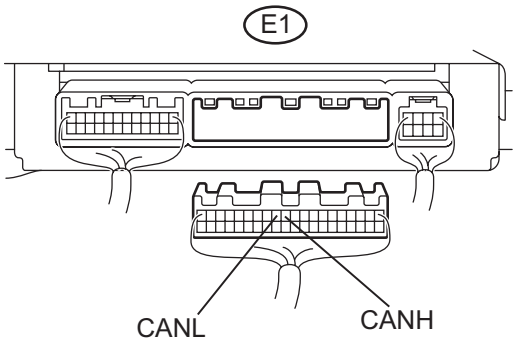

H E124470E50

(a) Turn the engine switch off.
(b) Disconnect the air conditioning amplifier connector.
(c) Measure the resistance according to the value(s) in the table below.

Standard resistance

Tester Connection	Condition	Specified Value
E1-11 (CANH) - E1-12 (CANL)	Engine switch off	54 to 69 Ω

NG → **REPAIR OR REPLACE CAN NO. 1 BUS BRANCH WIRE OR CONNECTOR (AIR CONDITIONING AMPLIFIER)**

OK

2 CHECK HARNESS AND CONNECTOR (IG+, B, GND)

Air Conditioning Amplifier (Wire Harness Side):

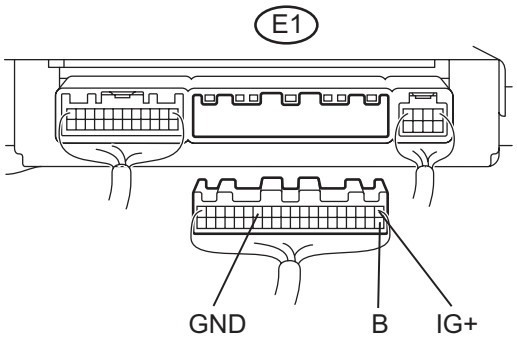

H E124470E51

(a) Disconnect the air conditioning amplifier connector.
(b) Measure the resistance according to the value(s) in the table below.

Standard resistance

Tester Connection	Condition	Specified Value
E1-14 (GND) - Body Ground	Always	Below 1 Ω

(c) Measure the voltage according to the value(s) in the table below.

Standard voltage

Tester Connection	Condition	Specified Value
E1-1 (IG+) - Body Ground	Engine switch on (IG)	10 to 14 V
E1-21 (B) - Body Ground	Always	10 to 14 V

NG → **REPAIR OR REPLACE HARNESS OR CONNECTOR**

OK

REPLACE AIR CONDITIONING AMPLIFIER (See page AC-232)

Gateway ECU Communication Stop Mode

DESCRIPTION

Detection Item	Symptom	Trouble Area
Gateway ECU Communication Stop Mode	• "GATEWAY" is not displayed on the "BUS CHECK" screen of the intelligent tester • Applies to "Gateway ECU Communication Stop Mode" in the "DTC COMBINATION TABLE"	1. Power source circuit of the gateway ECU 2. Gateway ECU branch wire or connector 3. Gateway ECU

HINT:
"GATEWAY" refers to the circuit that includes the gateway ECU.

WIRING DIAGRAM

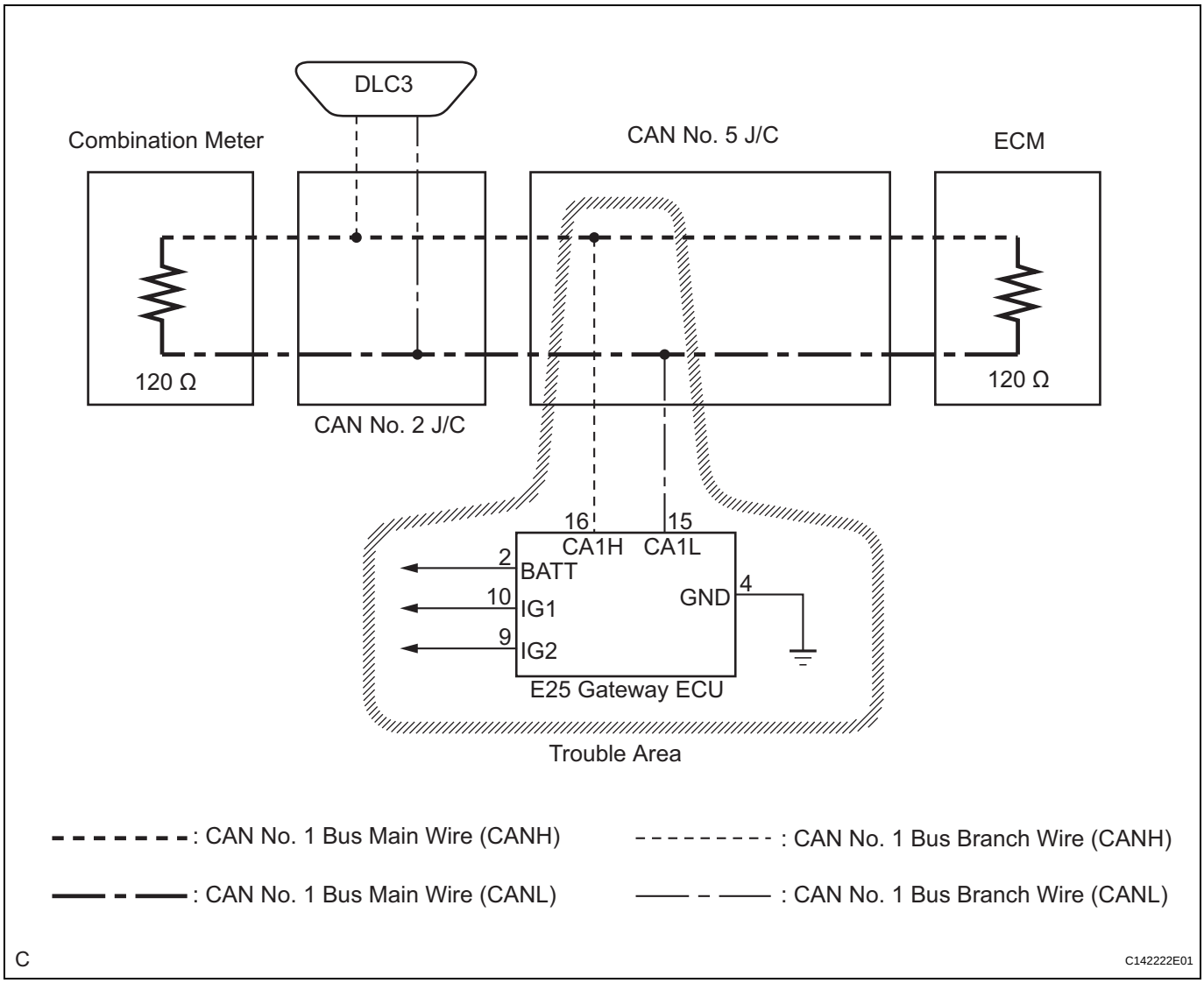

INSPECTION PROCEDURE

NOTICE:

- **Turn the engine switch off before measuring the resistances of CAN bus main wires and CAN bus branch wires.**
- **After the engine switch is turned off, check that the key reminder warning system and light reminder warning system are not in operation.**

- **Before measuring the resistance, leave the vehicle as is for at least 1 minute and do not operate the engine switch, any other switches, or the doors. If any doors need to be opened in order to check connectors, open the doors and leave them open.**

1 CHECK OPEN IN CAN NO. 1 BUS WIRE (GATEWAY ECU BRANCH WIRE)

Gateway ECU (Wire Harness Side):

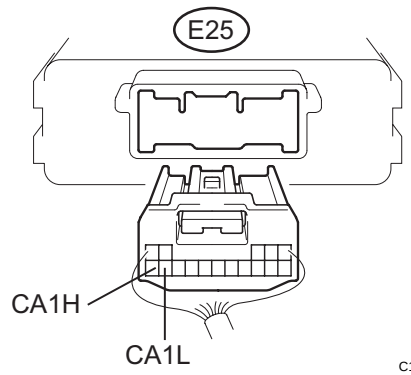

(a) Turn the engine switch off.
(b) Disconnect gateway ECU connector E25.
(c) Measure the resistance according to the value(s) in the table below.

Standard resistance

Tester Connection	Condition	Specified Value
E25-16 (CA1H) - E25-15 (CA1L)	Engine switch on (IG)	54 to 69 Ω

NG → **REPAIR OR REPLACE CAN NO. 1 BUS BRANCH WIRE OR CONNECTOR (GATEWAY ECU)**

OK

2 CHECK HARNESS AND CONNECTOR (BATT, IG1, IG2, GND)

Gateway ECU (Wire Harness Side):

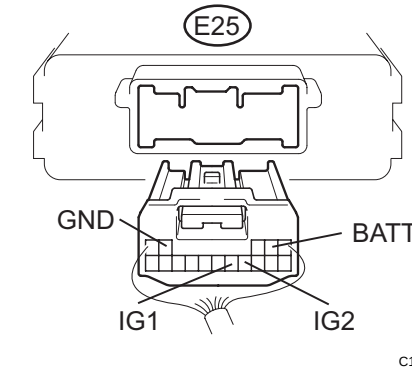

(a) Measure the resistance according to the value(s) in the table below.

Standard resistance

Tester Connection	Condition	Specified Value
E25-4 (GND) - Body ground	Always	Below 1 Ω

(b) Measure the voltage according to the value(s) in the table below.

Standard voltage

Tester Connection	Condition	Specified Value
E25-2 (BATT) - Body ground	Always	10 to 14 V
E25-10 (IG1) - Body ground	Engine switch on (IG)	10 to 14 V
E25-9 (IG2) - Body ground	Engine switch on (IG)	10 to 14 V

NG → **REPAIR OR REPLACE HARNESS OR CONNECTOR**

OK

REPLACE GATEWAY ECU

Steering Angle Sensor Communication Stop Mode

DESCRIPTION

Detection Item	Symptom	Trouble Area
Steering Angle Sensor Communication Stop Mode	• "STEERING SENSOR" is not displayed on the "BUS CHECK" screen of the intelligent tester • Applies to "Steering Angle Sensor Communication Stop Mode" in the "DTC COMBINATION TABLE"	1. Power source circuit of the steering angle sensor 2. Steering angle sensor branch wire or connector 3. Steering angle sensor

HINT:
"STEERING SENSOR" refers to the circuit that includes the steering angle sensor.

WIRING DIAGRAM

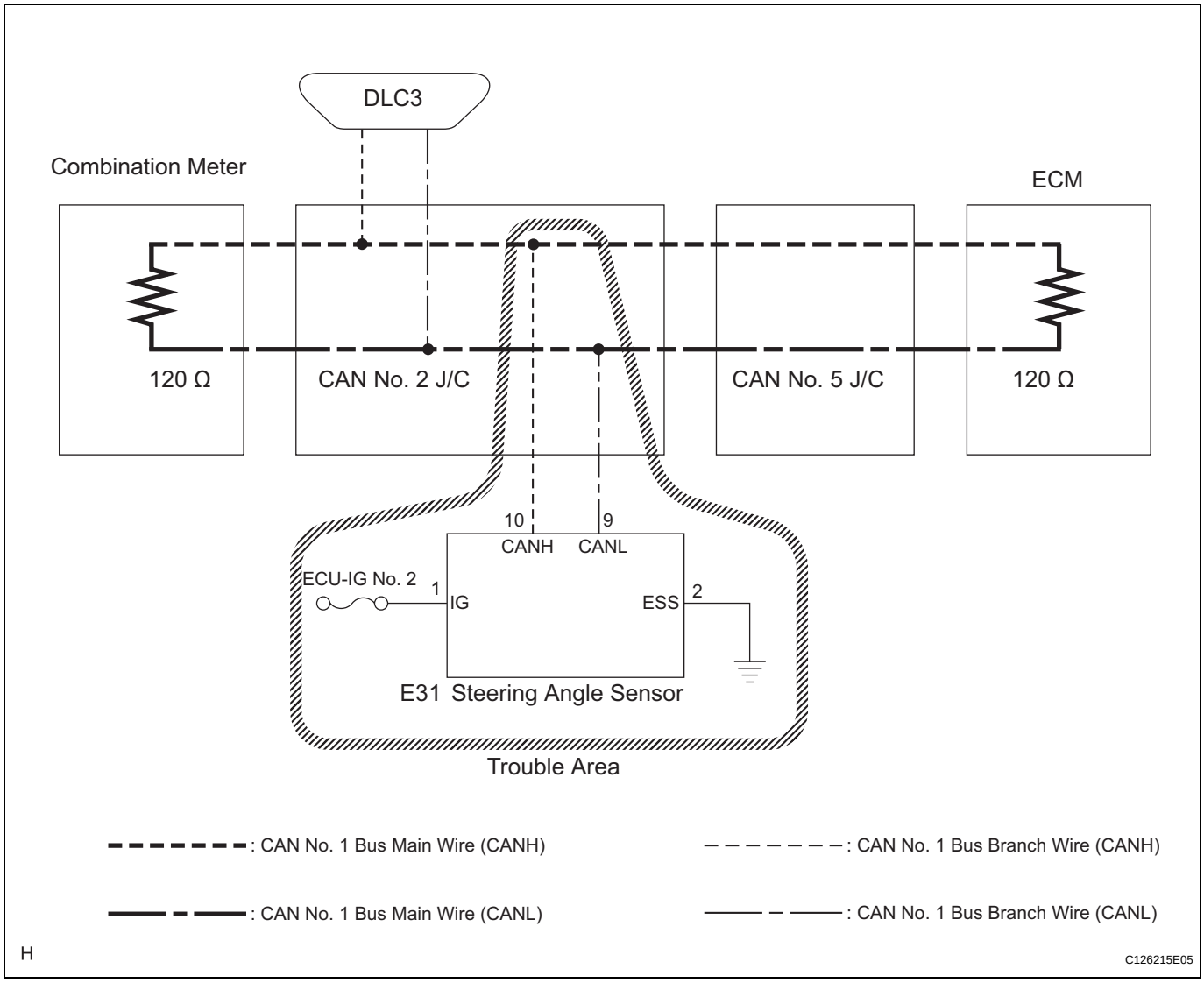

INSPECTION PROCEDURE

NOTICE:

- **Turn the engine switch off before measuring the resistances of CAN bus main wires and CAN bus branch wires.**

- **After the engine switch is turned off, check that the key reminder warning system and light reminder warning system are not in operation.**
- **Before measuring the resistance, leave the vehicle as is for at least 1 minute and do not operate the engine switch, any other switches, or the doors. If any doors need to be opened in order to check connectors, open the doors and leave them open.**

1 CHECK FOR OPEN IN CAN NO. 1 BUS WIRE (STEERING ANGLE SENSOR BRANCH WIRE)

Steering Angle Sensor Connector (Wire Harness Side):

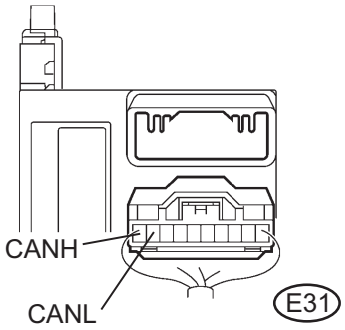

G030155E42

(a) Turn the engine switch off.
(b) Disconnect the steering angle sensor connector.
(c) Measure the resistance according to the value(s) in the table below.

Standard resistance

Tester Connection	Condition	Specified Value
E31-10 (CANH) - E31-9 (CANL)	Engine switch off	54 to 69 Ω

NG → **REPAIR OR REPLACE CAN NO. 1 BUS BRANCH WIRE OR CONNECTOR (STEERING ANGLE SENSOR)**

OK

2 CHECK WIRE HARNESS (IG, ESS)

Steering Angle Sensor Connector (Wire Harness Side):

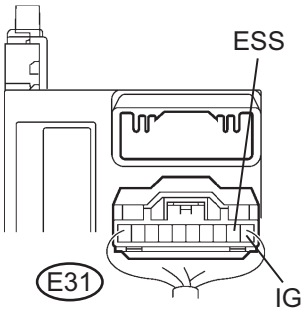

G030155E43

(a) Measure the resistance according to the value(s) in the table below.

Standard resistance

Tester Connection	Condition	Specified Value
E31-2 (ESS) - Body ground	Always	Below 1 Ω

(b) Measure the voltage according to the value(s) in the table below.

Standard voltage

Tester Connection	Condition	Specified Value
E31-1 (IG) - Body ground	Engine switch on (IG)	10 to 14 V

NG → **REPAIR OR REPLACE HARNESS OR CONNECTOR**

OK

REPLACE STEERING ANGLE SENSOR (See page BC-199)

CA

Yaw Rate Sensor Communication Stop Mode

DESCRIPTION

Detection Item	Symptom	Trouble Area
Yaw Rate Sensor Communication Stop Mode	• "YAW/DECELERAT" is not displayed on the "Communication Bus Check" screen of the intelligent tester • Applies to "Yaw Rate Sensor Communication Stop Mode" in the "DTC COMBINATION TABLE"	1. Power source circuit of the yaw rate sensor 2. Yaw rate sensor branch wire or connector 3. Yaw rate sensor

HINT:
"YAW/DECELERAT" refers to the circuit that includes the yaw rate sensor.

WIRING DIAGRAM

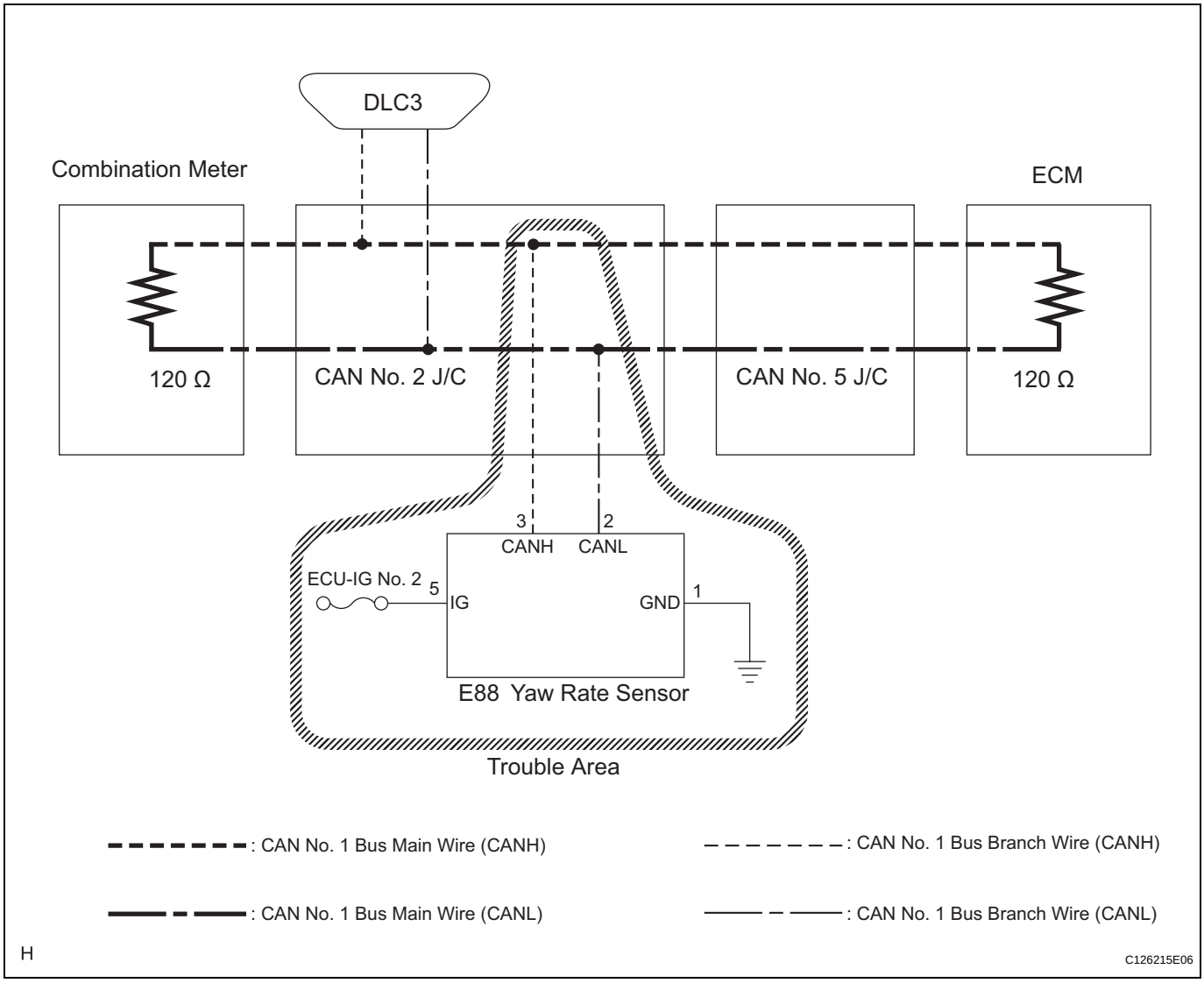

INSPECTION PROCEDURE

NOTICE:

- **Turn the engine switch off before measuring the resistances of CAN bus main wires and CAN bus branch wires.**

- **After the engine switch is turned off, check that the key reminder warning system and light reminder warning system are not in operation.**
- **Before measuring the resistance, leave the vehicle as is for at least 1 minute and do not operate the engine switch, any other switches, or the doors. If any doors need to be opened in order to check connectors, open the doors and leave them open.**

1 CHECK FOR OPEN IN CAN NO. 1 BUS WIRE (YAW RATE SENSOR BRANCH WIRE)

Yaw Rate Sensor (Connector Front View):

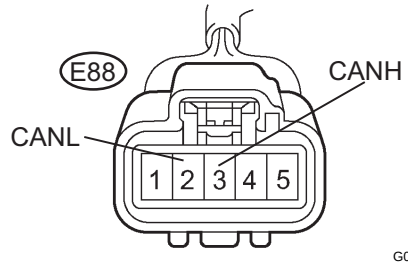

(a) Turn the engine switch off.
(b) Disconnect the yaw rate sensor connector.
(c) Measure the resistance according to the value(s) in the table below.

Standard resistance

Tester Connection	Condition	Specified Value
E88-3 (CANH) - E88-2 (CANL)	Engine switch off	54 to 69 Ω

NG → **REPAIR OR REPLACE CAN NO. 1 BUS BRANCH WIRE OR CONNECTOR (YAW RATE SENSOR)**

OK

2 CHECK WIRE HARNESS (IG, GND)

Yaw Rate Sensor (Connector Front View):

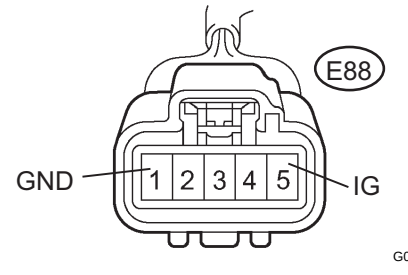

(a) Measure the resistance according to the value(s) in the table below.

Standard resistance

Tester Connection	Condition	Specified Value
E88-1 (GND) - Body ground	Always	Below 1 Ω

(b) Measure the voltage according to the value(s) in the table below.

Standard voltage

Tester Connection	Condition	Specified Value
E88-5 (IG) - Body ground	Engine switch on (IG)	10 to 14 V

NG → **REPAIR OR REPLACE HARNESS OR CONNECTOR**

OK

REPLACE YAW RATE SENSOR (See page BC-196)

ECM Communication Stop Mode

DESCRIPTION

Detection Item	Symptom	Trouble Area
ECM Communication Stop Mode	• "ENGINE" and "ECT" are not displayed on the "BUS CHECK" screen of the intelligent tester • Applies to "ECM Communication Stop Mode" in the "DTC COMBINATION TABLE"	1. Power source circuit of the ECM 2. ECM

HINT:
"ENGINE" and "ECT" refer to the circuit that includes the ECM.

WIRING DIAGRAM

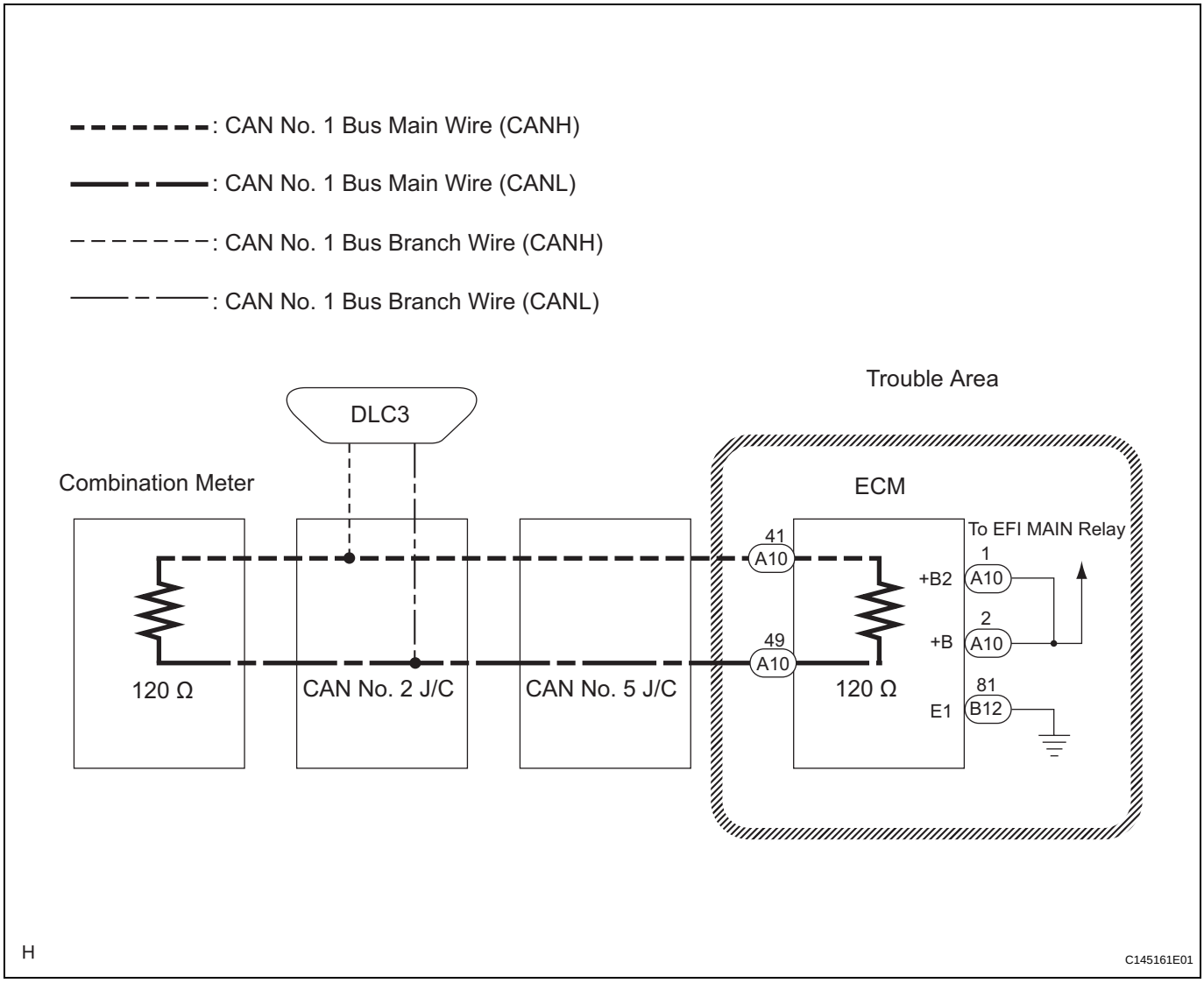

INSPECTION PROCEDURE

NOTICE:

- **Turn the engine switch off before measuring the resistances of CAN bus main wires and CAN bus branch wire.**

- **After the engine switch is turned off, check that the key reminder warning system and light reminder warning system are not in operation.**
- **Before measuring the resistance, leave the vehicle as is for at least 1 minute and do not operate the engine switch, any other switches, or the doors. If any doors need to be opened in order to check connectors, open the doors and leave them open.**

1 CHECK OPEN IN CAN NO. 1 BUS MAIN WIRE (ECM MAIN WIRE)

ECM (Wire Harness Side):

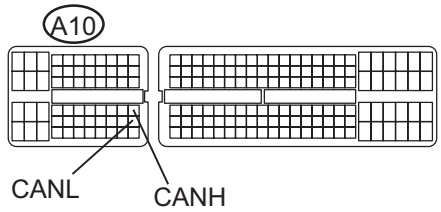

C136709E14

(a) Turn the engine switch off.
(b) Disconnect ECM connectors A10.
(c) Measure the resistance according to the value(s) in the table below.

Standard resistance

Tester Connection	Condition	Specified Value
A10-41 (CANH) - A10-49 (CANL)	Engine switch off	108 to 132 Ω

NG → **REPAIR OR REPLACE CAN NO. 1 BUS MAIN WIRE OR CONNECTOR (ECM)**

OK

2 CHECK WIRE HARNESS (+B, +B2, E1)

ECM (Wire Harness Side):

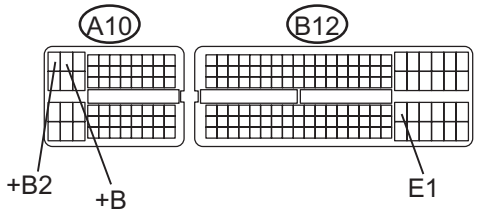

C136709E11

(a) Disconnect ECM connector B12.
(b) Measure the resistance according to the value(s) in the table below.

Standard resistance

Tester Connection	Condition	Specified Value
B12-81 (E1) - Body ground	Always	Below 1 Ω

(c) Measure the voltage according to the value(s) in the table below.

Standard voltage

Tester Connection	Condition	Specified Value
A10-1 (+B2) - Body ground	Engine switch off	10 to 14 V
A10-2 (+B) - Body ground	Engine switch off	10 to 14 V

NG → **REPAIR OR REPLACE HARNESS OR CONNECTOR**

OK

REPLACE ECM (See page ES-543)

Main Body ECU Communication Stop Mode

DESCRIPTION

Detection Item	Symptom	Trouble Area
Main Body ECU Communication Stop Mode	• "MAIN BODY" is not displayed on the "BUS CHECK" screen of the intelligent tester • Applies to "Main Body ECU Communication Stop Mode" in the "DTC COMBINATION TABLE"	1. Power source circuit of the main body ECU 2. Main body ECU branch wire or connector 3. Main body ECU

HINT:
"MAIN BODY" refers to the circuit that includes the main body ECU.

WIRING DIAGRAM

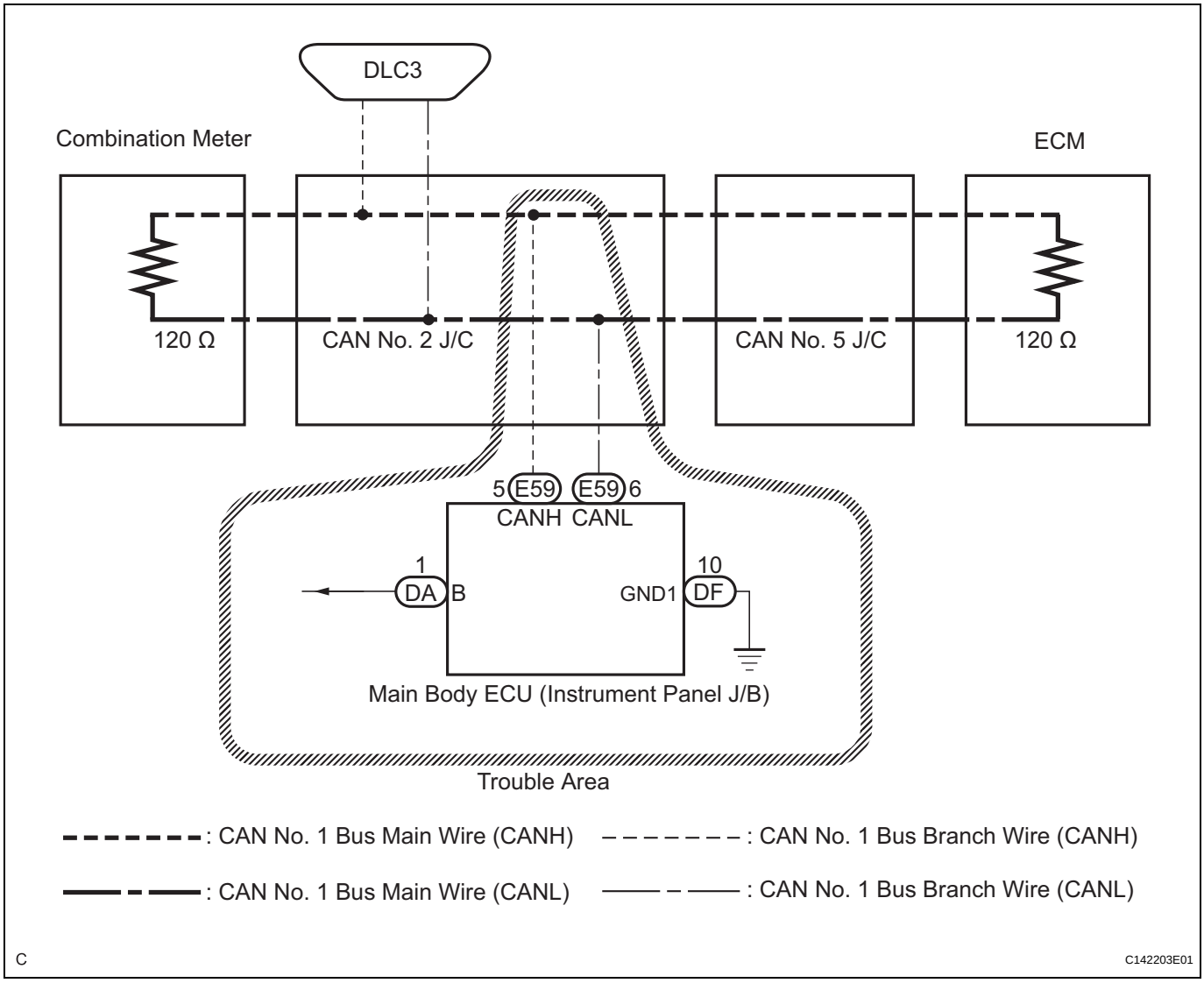

INSPECTION PROCEDURE

NOTICE:

- **Turn the engine switch off before measuring the resistances of CAN bus main wires and CAN bus branch wires.**

- **After the engine switch is turned off, check that the key reminder warning system and light reminder warning system are not in operation.**
- **Before measuring the resistance, leave the vehicle as is for at least 1 minute and do not operate the engine switch, any other switches, or the doors. If any doors need to be opened in order to check connectors, open the doors and leave them open.**

1 CHECK OPEN IN CAN NO. 1 BUS WIRE (MAIN BODY ECU BRANCH WIRE)

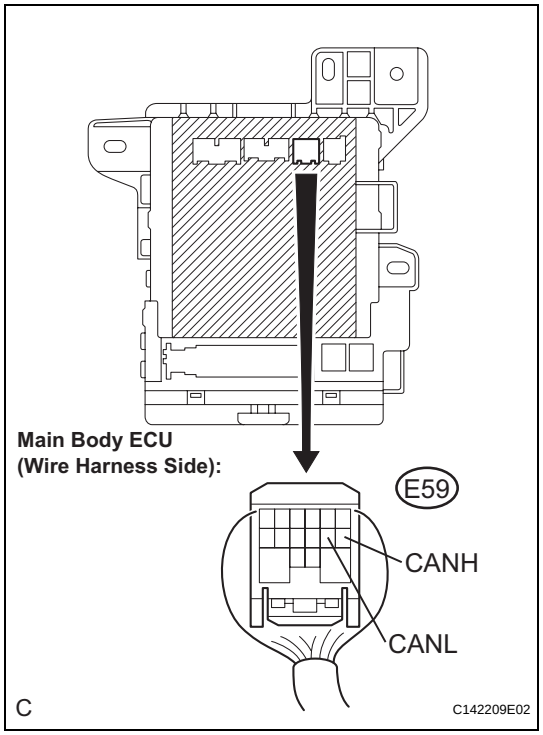

(a) Turn the engine switch off.
(b) Disconnect the main body ECU connector.
(c) Measure the resistance according to the value(s) in the table below.

Standard resistance

Tester Connection	Condition	Specified Value
E59-5 (CANH) - E59-6 (CANL)	Engine switch off	54 to 69 Ω

NG → **REPAIR OR REPLACE CAN NO. 1 BUS BRANCH WIRE OR CONNECTOR (MAIN BODY ECU)**

OK

2 CHECK HARNESS AND CONNECTOR (IG, GND1)

Instrument Panel J/B (Wire Harness Side):

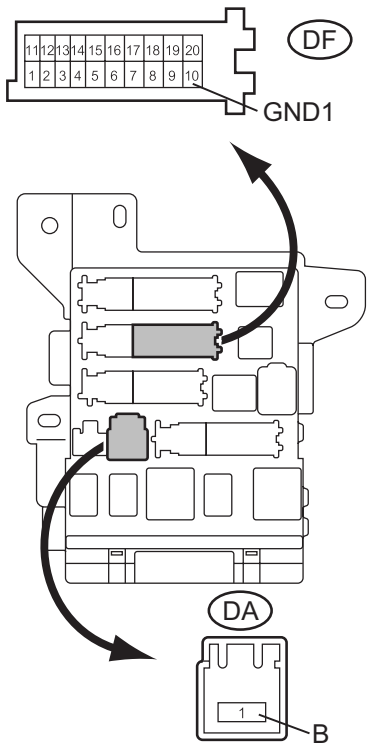

(a) Disconnect connectors DF and DA from the instrument panel J/B.

(b) Measure the resistance according to the value(s) in the table below.

Standard resistance

Tester Connection	Condition	Specified Value
DF-10 (GND1) - Body ground	Always	Below 1 Ω

(c) Measure the voltage according to the value(s) in the table below.

Standard voltage

Tester Connection	Condition	Specified Value
DA-1 (B) - Body ground	Always	10 to 14 V

NG → **REPAIR OR REPLACE HARNESS OR CONNECTOR**

OK

REPLACE MAIN BODY ECU

Combination Meter ECU Communication Stop Mode

DESCRIPTION

Detection Item	Symptom	Trouble Area
Combination Meter ECU Communication Stop Mode	• "METER" is not displayed on the "BUS CHECK" screen of the intelligent tester • Applies to "Combination Meter ECU Communication Stop Mode" in the "DTC COMBINATION TABLE"	1. Power source circuit of the combination meter 2. Combination meter main wire or connector 3. Combination meter

HINT:
"METER" refers to the circuit that includes the combination meter.

WIRING DIAGRAM

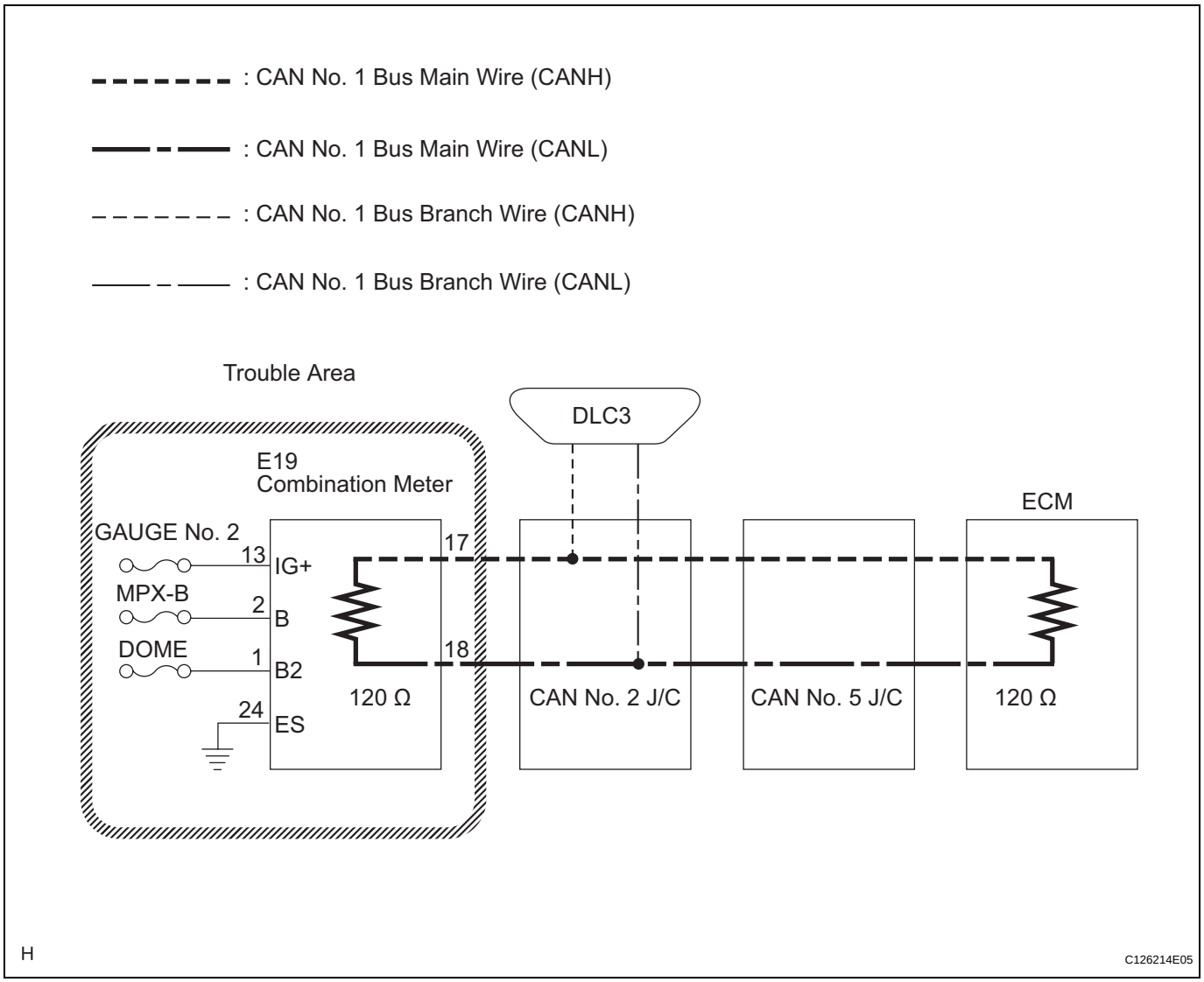

INSPECTION PROCEDURE

NOTICE:

- **Turn the engine switch off before measuring the resistances of CAN bus main wires and CAN bus branch wires.**
- **After the engine switch is turned off, check that the key reminder warning system and light reminder warning system are not in operation.**

CA

- **Before measuring the resistance, leave the vehicle as is for at least 1 minute and do not operate the engine switch, any other switches, or the doors. If any doors need to be opened in order to check connectors, open the doors and leave them open.**

1 CHECK OPEN IN CAN NO. 1 BUS MAIN WIRE (COMBINATION METER MAIN BUS WIRE)

Combination Meter Assembly (Wire Harness Side):

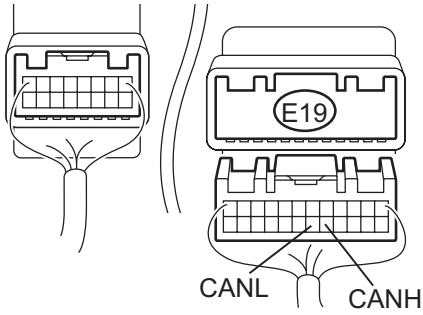

(a) Turn the engine switch off.
(b) Disconnect the combination meter connector.
(c) Measure the resistance according to the value(s) in the table below.

Standard resistance

Tester Connection	Condition	Specified Value
E19-17 (CANH) - E19-18 (CANL)	Engine switch off	108 to 132 Ω

NG → **REPAIR OR REPLACE CAN NO. 1 BUS MAIN WIRE OR CONNECTOR (COMBINATION METER)**

OK

2 CHECK HARNESS AND CONNECTOR (ES, IG+, B, B2)

Combination Meter Assembly (Wire Harness Side):

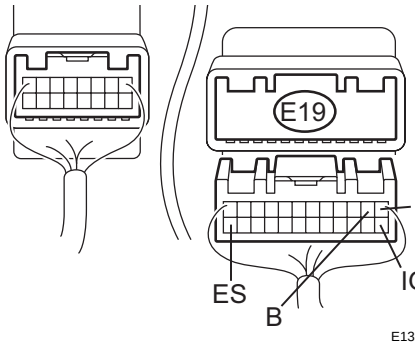

(a) Disconnect the combination meter connector.
(b) Measure the resistance according to the value(s) in the table below.

Standard resistance

Tester Connection	Condition	Specified Value
E19-24 (ES) - Body ground	Always	Below 1 Ω

(c) Measure the voltage according to the value(s) in the table below.

Standard voltage

Tester Connection	Condition	Specified Value
E19-13 (IG+) - Body ground	Engine switch on (IG)	10 to 14 V
E19-2 (B) - Body ground	Always	10 to 14 V
E19-1 (B2) - Body ground	Always	10 to 14 V

NG → **REPAIR OR REPLACE HARNESS OR CONNECTOR**

OK

REPLACE COMBINATION METER (See page ME-67)

Center Airbag Sensor Communication Stop Mode

DESCRIPTION

Detection Item	Symptom	Trouble Area
Center Airbag Sensor Communication Stop Mode	• "SRS AIRBAG" is not displayed on the "BUS CHECK" screen of the intelligent tester • Applies to "Center Airbag Sensor Communication Stop Mode" in the "DTC COMBINATION TABLE"	1. Power source circuit of the center airbag sensor 2. Center airbag sensor branch wire or connector 3. Center airbag sensor

HINT:
"SRS AIRBAG" refers to the circuit that includes the center airbag sensor.

WIRING DIAGRAM

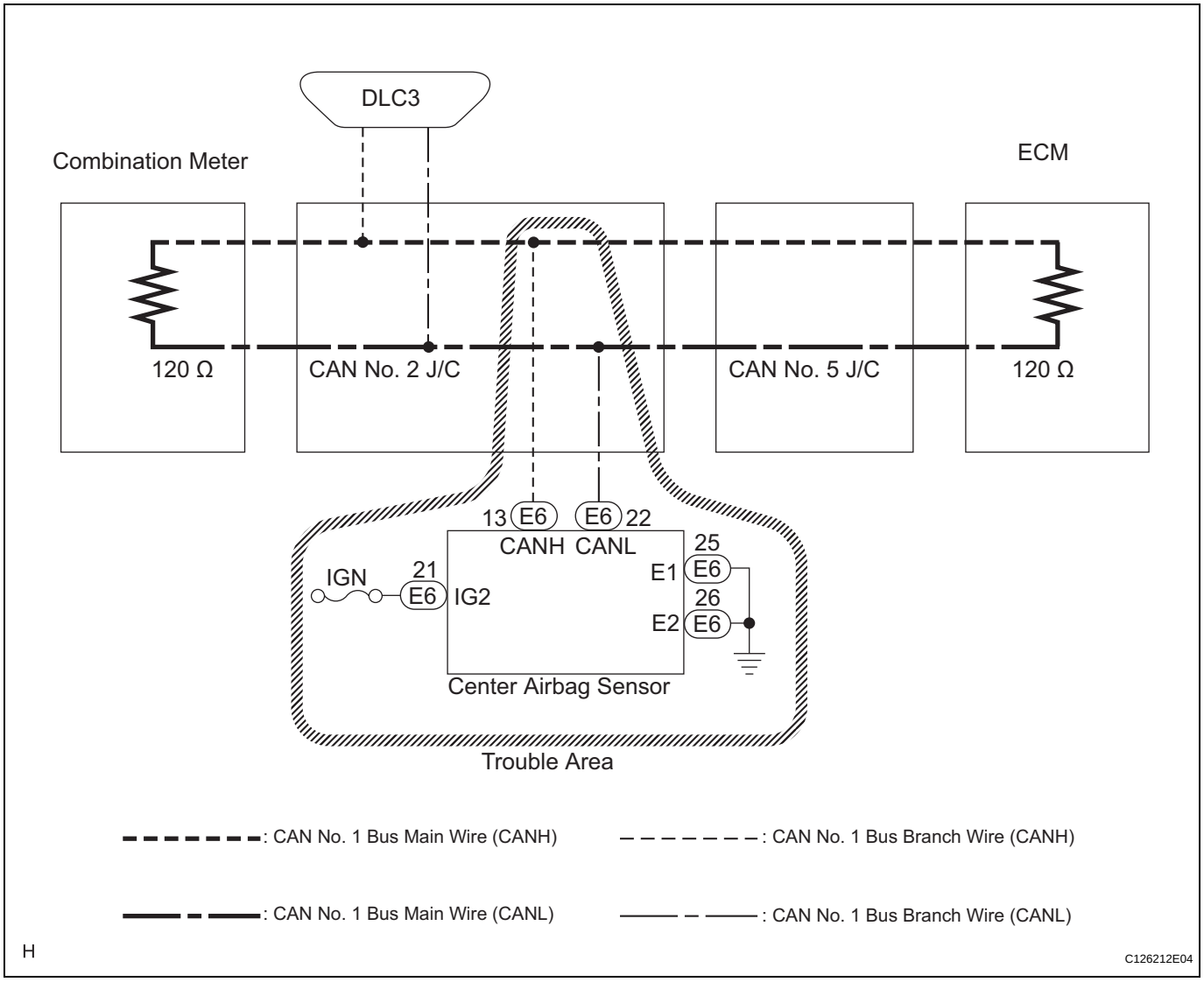

INSPECTION PROCEDURE

NOTICE:

- **Turn the engine switch off before measuring the resistances of CAN bus main wires and CAN bus branch wires.**

CA

- **After the engine switch is turned off, check that the key reminder warning system and light reminder warning system are not in operation.**
- **Before measuring the resistance, leave the vehicle as is for at least 1 minute and do not operate the engine switch, any other switches, or the doors. If any doors need to be opened in order to check connectors, open the doors and leave them open.**

1 CHECK CAN NO. 1 BUS WIRE (CENTER AIRBAG SENSOR BRANCH WIRE)

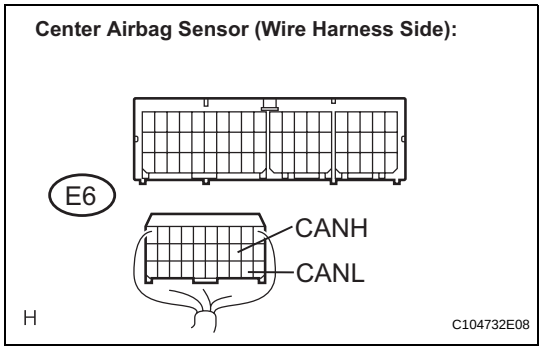

(a) Turn the engine switch off.
(b) Disconnect the center airbag sensor connector.
(c) Measure the resistance according to the value(s) in the table below.

Standard resistance

Tester Connection	Condition	Specified Value
E6-13 (CANH) - E6-22 (CANL)	Engine switch off	54 to 69 Ω

NG → **REPAIR OR REPLACE CAN NO. 1 BUS BRANCH WIRE OR CONNECTOR (CENTER AIRBAG SENSOR)**

OK

2 CHECK WIRE HARNESS (IG2, E1, E2)

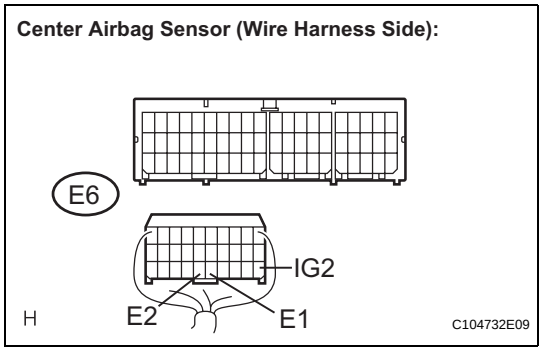

(a) Measure the resistance according to the value(s) in the table below.

Standard resistance

Tester Connection	Condition	Specified Value
E6-25 (E1) - Body ground	Always	Below 1 Ω
E6-26 (E2) - Body ground	Always	Below 1 Ω

(b) Measure the voltage according to the value(s) in the table below.

Standard voltage

Tester Connection	Condition	Specified Value
E6-21 (IG2) - Body ground	Engine switch on (IG)	10 to 14 V

NG → **REPAIR OR REPLACE HARNESS OR CONNECTOR**

OK

REPLACE CENTER AIRBAG SENSOR (See page RS-468)

Navigation ECU Communication Stop Mode

DESCRIPTION

Detection Item	Symptom	Trouble Area
Navigation ECU Communication Stop Mode	• "AVN" is not displayed on the "BUS CHECK" screen of the intelligent tester • Applies to "Navigation Control ECU Communication Stop Mode" in the "DTC COMBINATION TABLE"	1. Power source circuit of the multi-display 2. Navigation ECU branch wire or connector 3. Multi-display

HINT:
"AVN" refers to the circuit that includes the multi-display.

WIRING DIAGRAM

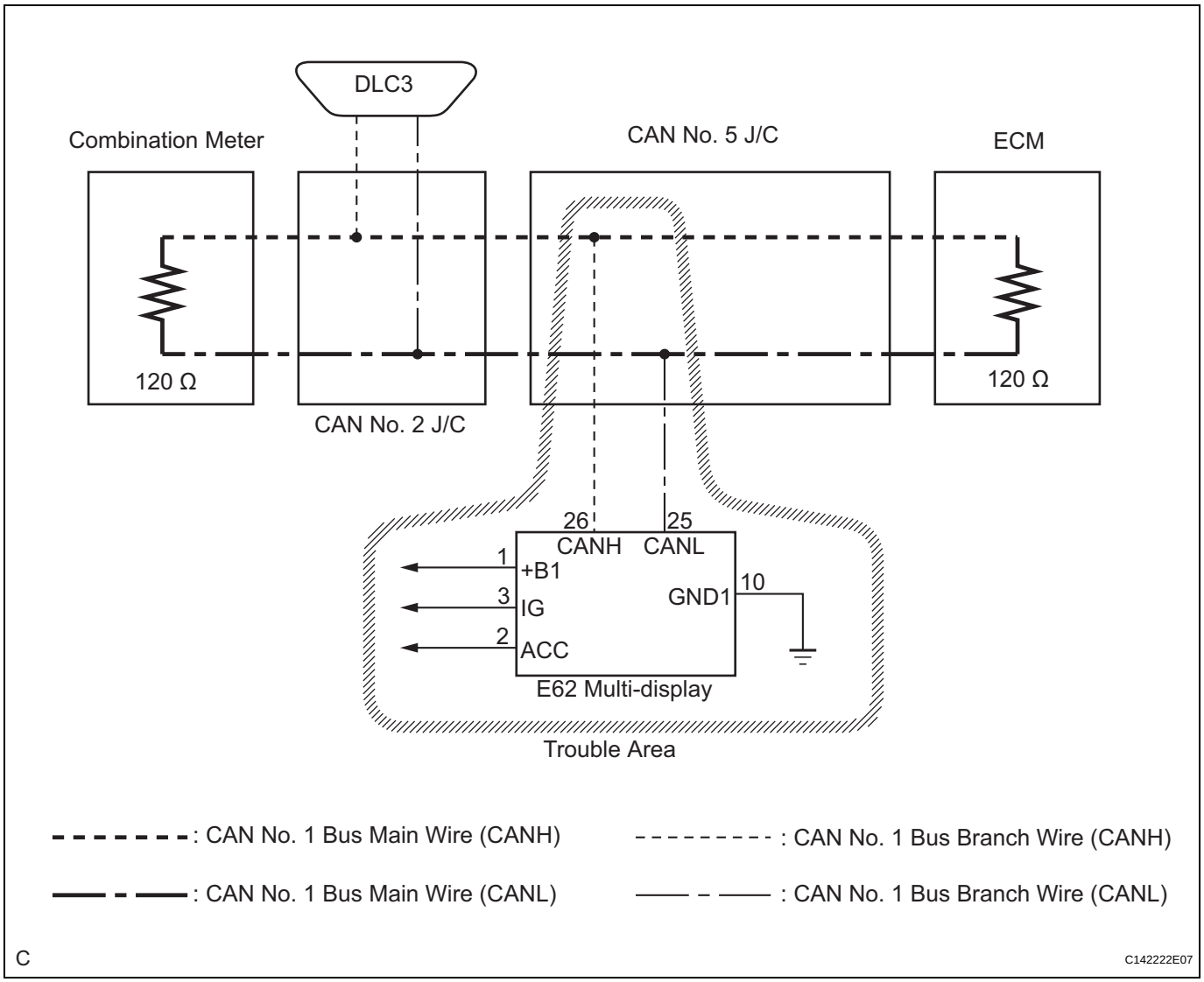

INSPECTION PROCEDURE

NOTICE:

- **Turn the engine switch off before measuring the resistances of CAN bus main wires and CAN bus branch wires.**
- **After the engine switch is turned off, check that the key reminder warning system and light reminder warning system are not in operation.**

- **Before measuring the resistance, leave the vehicle as is for at least 1 minute and do not operate the engine switch, any other switches, or the doors. If any doors need to be opened in order to check connectors, open the doors and leave them open.**

1 CHECK OPEN IN CAN NO. 1 BUS WIRE (NAVIGATION ECU BRANCH WIRE)

Multi-display (Wire Harness Side):

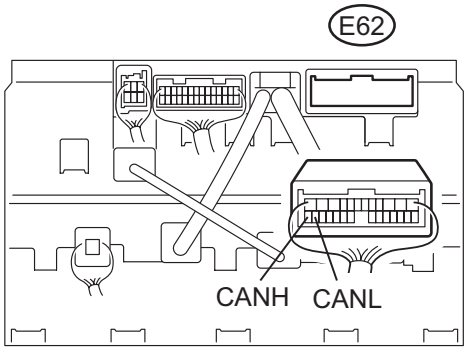

N E119725E08

(a) Turn the engine switch off.
(b) Disconnect the multi-display connector.
(c) Measure the resistance according to the value(s) in the table below.

Standard resistance

Tester Connection	Condition	Specified Value
E62-26 (CANH) - E62-25 (CANL)	Engine switch off	54 to 69 Ω

NG → **REPAIR OR REPLACE CAN NO. 1 BUS BRANCH WIRE OR CONNECTOR (MULTI-DISPLAY)**

OK

2 CHECK HARNESS AND CONNECTOR (+B, IG, ACC, GND)

Multi-display (Wire Harness Side):

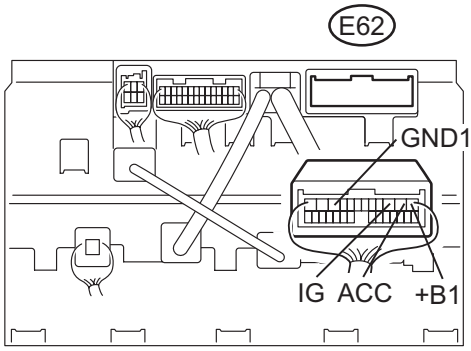

N E119725E15

(a) Measure the resistance according to the value(s) in the table below.

Standard resistance

Tester Connection	Condition	Specified Value
E62-10 (GND1) - Body Ground	Always	Below 1 Ω

(b) Measure the voltage according to the value(s) in the table below.

Standard voltage

Tester Connection	Condition	Specified Value
E62-1 (+B) - Body Ground	Always	10 to 14 V
E62-3 (IG) - Body Ground	Engine switch on (IG)	10 to 14 V
E62-2 (ACC) - Body Ground	Engine switch on (ACC)	10 to 14 V

NG → **REPAIR OR REPLACE HARNESS OR CONNECTOR**

OK

REPLACE MULTI-DISPLAY (See page NS-233)

Active Control Engine Mount ECU Communication Stop Mode

DESCRIPTION

Detection Item	Symptom	Trouble Area
Active Control Engine Mount ECU Communication Stop Mode	• "E-ACM" is not displayed on the "BUS CHECK" screen of the intelligent tester • Applies to "Active Control Engine Mount ECU Communication Stop Mode" in the "DTC COMBINATION TABLE"	1. Power source circuit of the active control engine mount ECU 2. Active control engine mount ECU branch wire or connector 3. Active control engine mount ECU

HINT:
"E-ACM" refers to the circuit that includes the active control engine mount ECU.

WIRING DIAGRAM

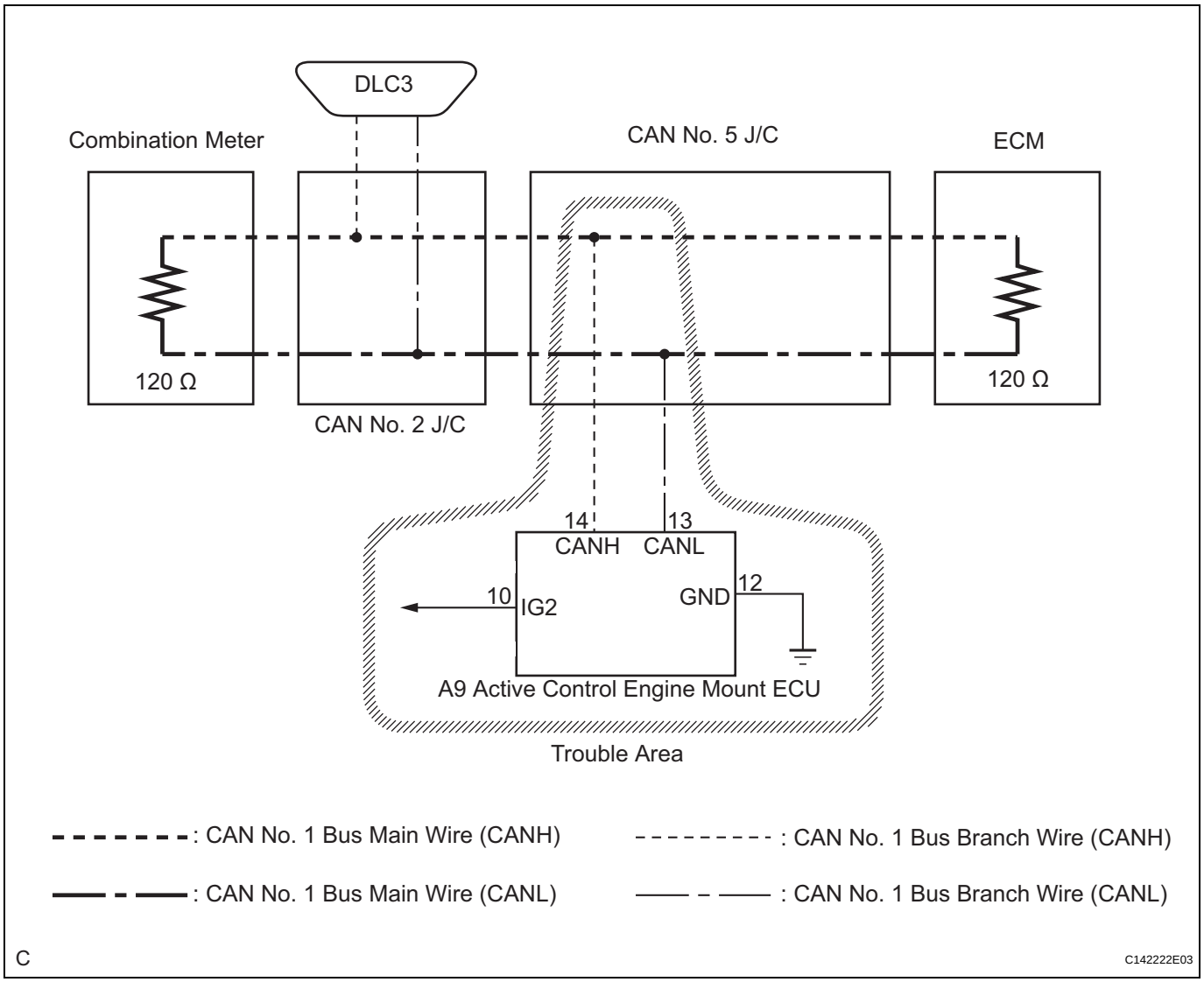

INSPECTION PROCEDURE

NOTICE:

- **Turn the engine switch off before measuring the resistances of CAN bus main wires and CAN bus branch wires.**
- **After the engine switch is turned off, check that the key reminder warning system and light reminder warning system are not in operation.**

- **Before measuring the resistance, leave the vehicle as is for at least 1 minute and do not operate the engine switch, any other switches, or the doors. If any doors need to be opened in order to check connectors, open the doors and leave them open.**

HINT:
Operating the engine switch, any switches, or any doors triggers related ECU and sensor communication with the CAN. This communication will cause the resistance value to change.

1 CHECK OPEN IN CAN NO. 1 BUS WIRE (ACTIVE CONTROL ENGINE MOUNT ECU BRANCH WIRE)

Active Control Engine Mount ECU (Wire Harness Side):

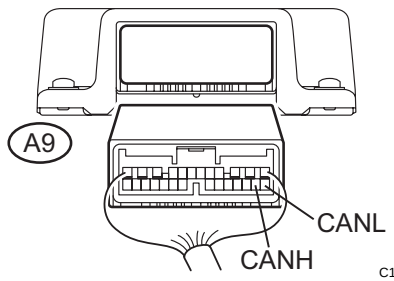

(a) Turn the engine switch off.
(b) Disconnect connector A9 from the active control engine mount ECU.
(c) Measure the resistance according to the value(s) in the table below.
Standard resistance

Tester Connection	Condition	Specified Value
A9-14 (CANH) - A9-13 (CANL)	Engine Switch off	54 to 69 Ω

NG → **REPAIR OR REPLACE CAN NO. 1 BUS BRANCH WIRE OR CONNECTOR (ACTIVE CONTROL ENGINE MOUNT ECU)**

OK

2 CHECK HARNESS AND CONNECTOR (IG2, GND)

Active Control Engine Mount ECU (Wire Harness Side):

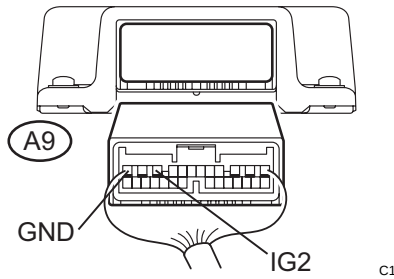

(a) Measure the resistance according to the value(s) in the table below.
Standard resistance

Tester Connection	Condition	Specified Value
A9-12 (GND) - Body Ground	Engine Switch off	Below 1 Ω

(b) Measure the voltage according to the value(s) in the table below.
Standard voltage

Tester Connection	Condition	Specified Value
A9-10 (IG2) - Body Ground	Engine Switch on (IG)	10 to 14 V

NG → **REPAIR OR REPLACE HARNESS OR CONNECTOR**

OK

REPLACE ACTIVE CONTROL ENGINE MOUNT ECU (See page ES-528)

CAN Bus Line

DESCRIPTION

When all DTCs and sensors connected to the CAN communication system are not displayed on the intelligent tester's "BUS CHECK" screen via CAN VIM, first measure the resistance between the terminals of the DLC3 to specify the trouble area.

WIRING DIAGRAM

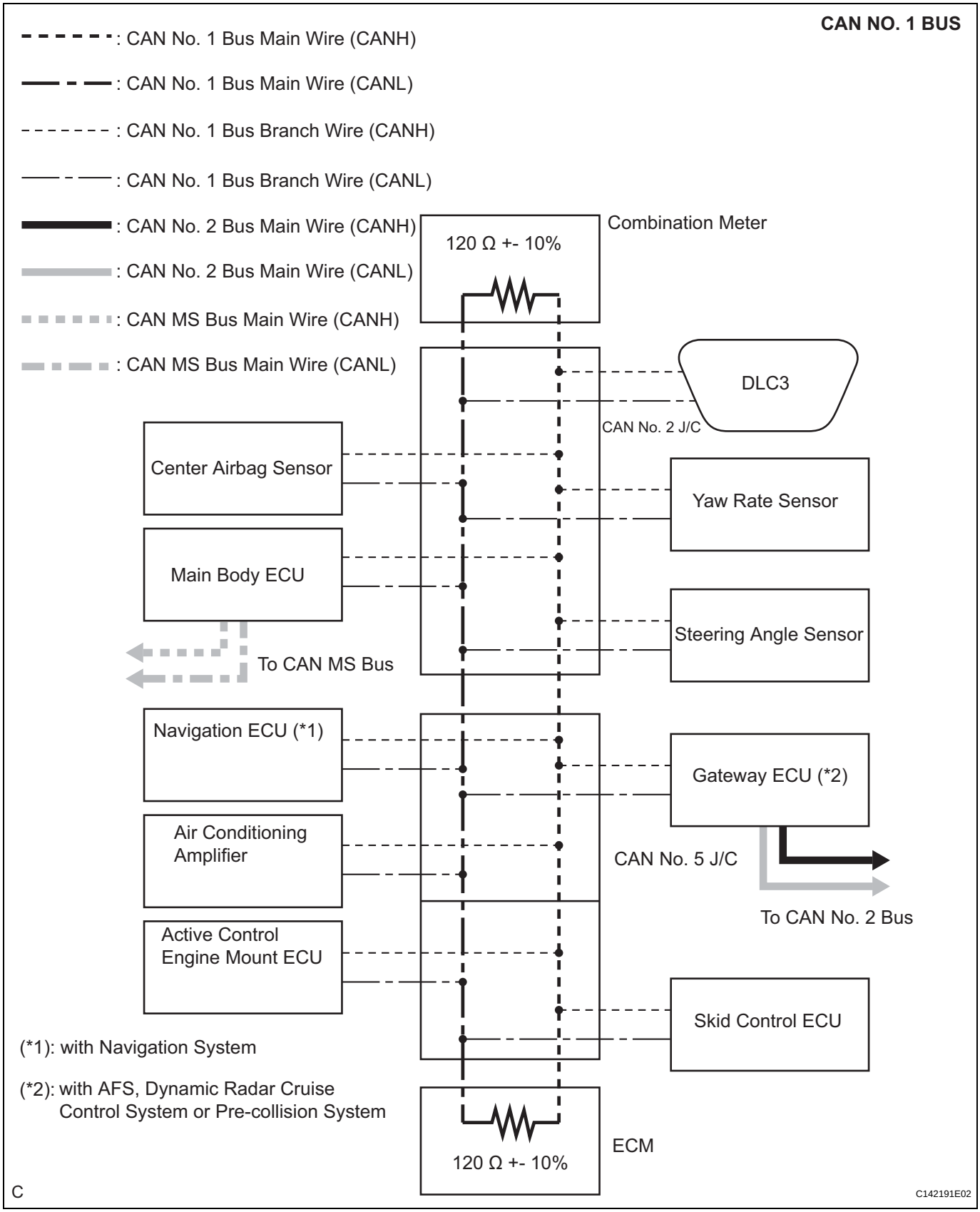

CA

INSPECTION PROCEDURE

NOTICE:

Before measuring the resistance, leave the vehicle as is for at least 1 minute and do not operate the engine switch, any other switches, or the doors. If any doors need to be opened in order to check connectors, open the doors and leave them open.

1 CHECK CAN NO. 1 BUS WIRE

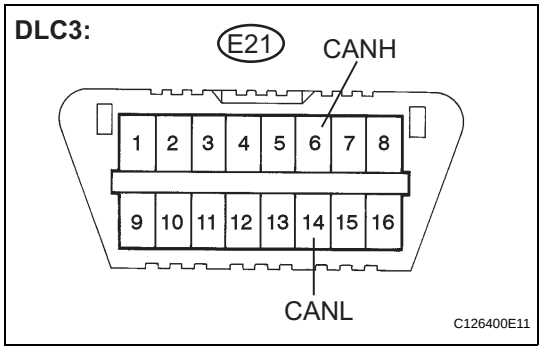

(a) Measure the resistance according to the value(s) in the table below.

Standard resistance

Tester Connection	Condition	Specified Value
E21-6 (CANH) - E21-14 (CANL)	Engine switch off	54 to 69 Ω

Result

Result	Proceed to
OK	A
69 Ω or higher	B
Below 54 Ω	C

B → **OPEN IN CAN NO. 1 BUS MAIN WIRE (See page CA-154)**

C → **SHORT IN CAN NO. 1 BUS WIRE (See page CA-159)**

A

2 CHECK CAN NO. 1 BUS WIRE (SHORT TO B+ IN CAN BUS WIRE)

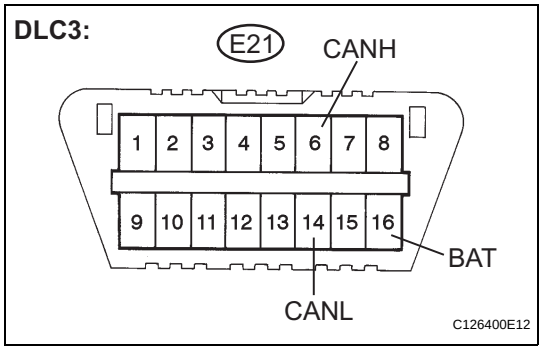

(a) Measure the resistance according to the value(s) in the table below.

Standard resistance

Tester Connection	Condition	Specified Value
E21-6 (CANH) - E21-16 (BAT)	Engine switch off	6 kΩ or higher
E21-14 (CANL) - E21-16 (BAT)	Engine switch off	6 kΩ or higher

NG → **SHORT TO B+ IN CAN NO. 1 BUS WIRE (See page CA-174)**

OK

3	CHECK CAN NO. 1 BUS WIRE (SHORT TO GND IN CAN BUS WIRE)

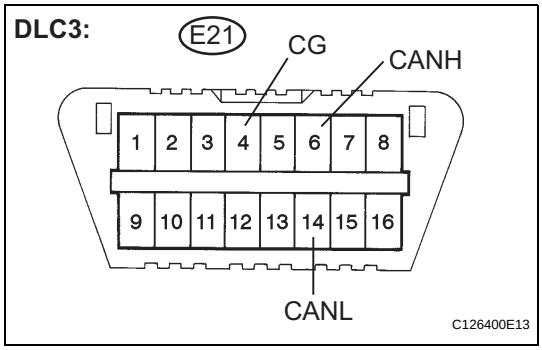

(a) Measure the resistance according to the value(s) in the table below.

Standard resistance

Tester Connection	Condition	Specified Value
E21-4 (CG) - E21-6 (CANH)	Engine switch off	200 Ω or higher
E21-4 (CG) - E21-14 (CANL)	Engine switch off	200 Ω or higher

NG → **SHORT TO GND IN CAN NO. 1 BUS WIRE (See page CA-186)**

OK

GO TO "HOW TO PROCEED WITH TROUBLESHOOTING" (See page CA-11)

Open in CAN Main Bus Line

DESCRIPTION

There may be an open circuit in the CAN No. 1 main bus wire and/or the DLC3 branch wire when the resistance between terminals 6 (CANH) and 14 (CANL) of the DLC3 is 69 Ω or more.

Symptom	Trouble Area
Resistance between terminals 6 (CANH) and 14 (CANL) of the DLC3 is 69 Ω or more.	1. CAN No. 1 main bus wire or connector 2. CAN No. 2 J/C 3. CAN No. 5 J/C 4. DLC3 branch wire or connector 5. Combination meter 6. ECM

WIRING DIAGRAM

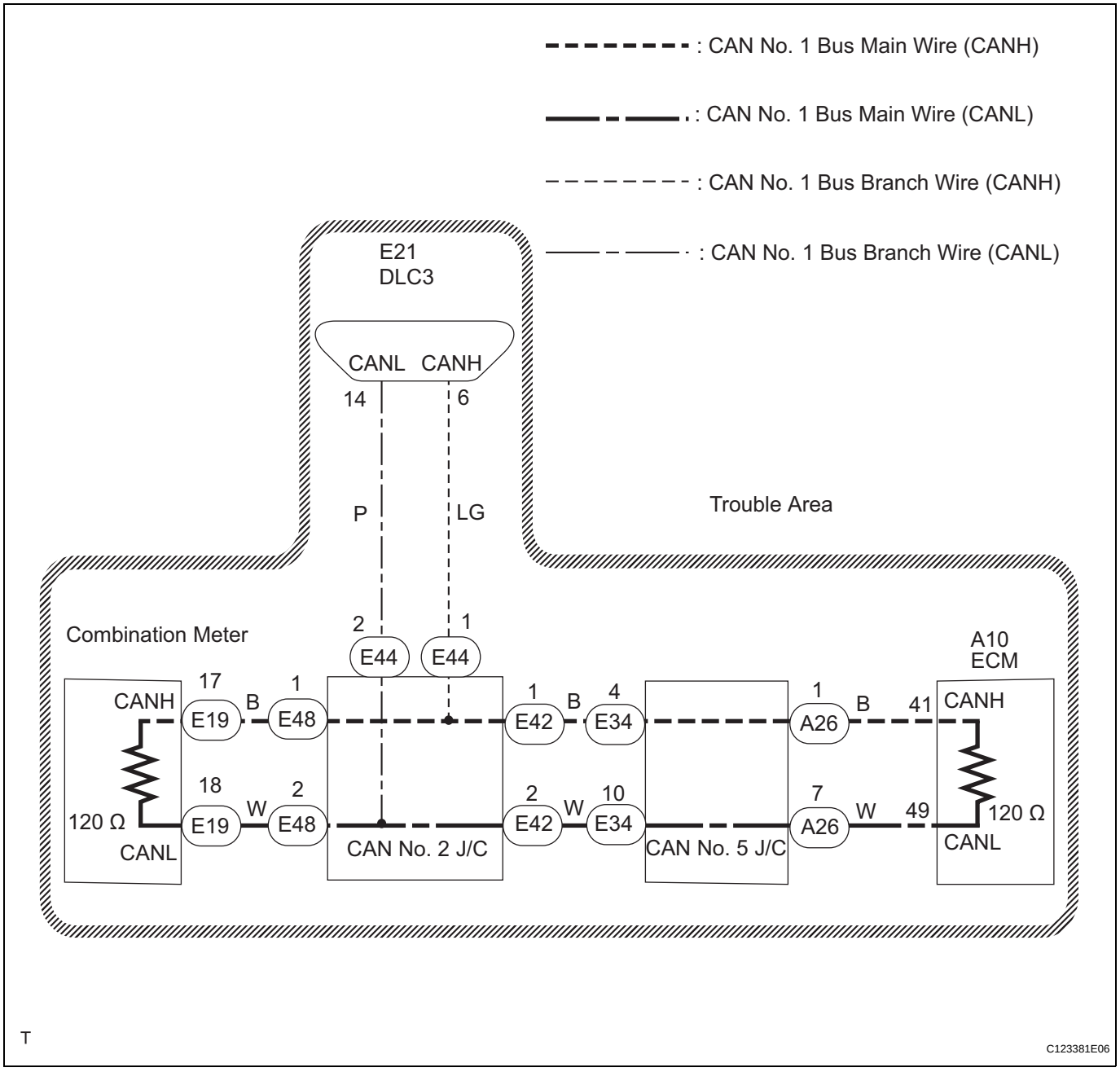

CA

INSPECTION PROCEDURE

NOTICE:

Before measuring the resistance, leave the vehicle as is for at least 1 minute and do not operate the engine switch, any other switches, or the doors. If any doors need to be opened in order to check connectors, open the doors and leave them open.

1 CHECK DLC3

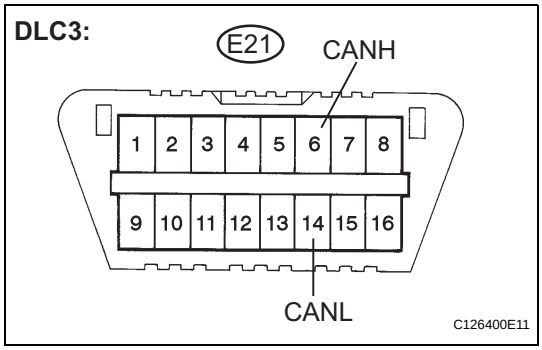

(a) Turn the engine switch off.

(b) Measure the resistance according to the value(s) in the table below.

Result

Tester Connection	Condition	Specified Value	Result
E21-6 (CANH) - E21-14 (CANL)	Engine switch off	108 to 132 Ω	A
E21-6 (CANH) - E21-14 (CANL)	Engine switch off	132 Ω or higher	B

NOTICE:

When the measured value is 132 Ω or higher and a CAN communication system diagnostic trouble code is output, there may be a fault besides disconnection of the DLC3 branch wire. For that reason, troubleshooting should be performed again from "HOW TO PROCEED WITH TROUBLESHOOTING" (See page CA-11) after repairing the trouble area.

B → **REPAIR OR REPLACE DLC3 BRANCH WIRE OR CONNECTOR**

A

2 CHECK FOR OPEN IN CAN NO. 1 BUS MAIN WIRE (COMBINATION METER MAIN BUS WIRE)

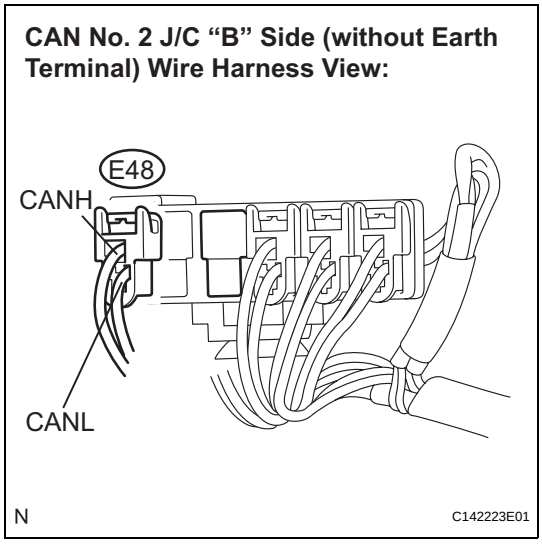

(a) Disconnect CAN main bus wire connector E48 from the CAN No. 2 J/C "B" side (without earth terminal).

NOTICE:

- **Before disconnecting the connector, make a note of where it is connected.**
- **Reconnect the connector to its original position.**

(b) Measure the resistance according to the value(s) in the table below.

Standard resistance

Tester Connection	Condition	Specified Value
E48-1 (CANH) - E48-2 (CANL)	Engine switch off	108 to 132 Ω

NG → **Go to step 7**

OK

CA

3 CHECK FOR OPEN IN CAN NO. 1 BUS MAIN WIRE (CAN NO. 2 J/C)

CAN No. 2 J/C "A" Side (without Earth Terminal) Wire Harness View:

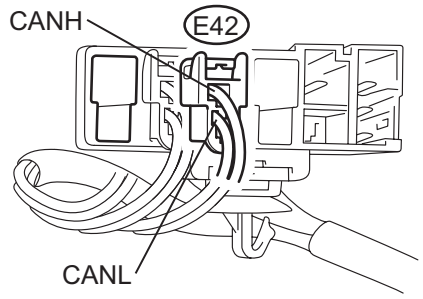

N C142224E01

(a) Reconnect CAN main bus wire connector E48 to the CAN No. 2 J/C "B" side (without earth terminal).

(b) Disconnect CAN main bus wire connector E42 from the CAN No. 2 J/C "A" side (without earth terminal).

NOTICE:

- **Before disconnecting the connector, make a note of where it is connected.**
- **Reconnect the connector to its original position.**

(c) Measure the resistance according to the value(s) in the table below.

Standard resistance

Tester Connection	Condition	Specified Value
E42-1 (CANH) - E42-2 (CANL)	Engine switch off	108 to 132 Ω

OK → **REPLACE CAN NO. 2 J/C**

NG

4 CHECK FOR OPEN IN CAN NO. 1 BUS MAIN WIRE (CAN NO. 2 J/C - CAN NO. 5 J/C)

CAN No. 5 J/C Connector (Rear of the Vehicle) Wire Harness Side View:

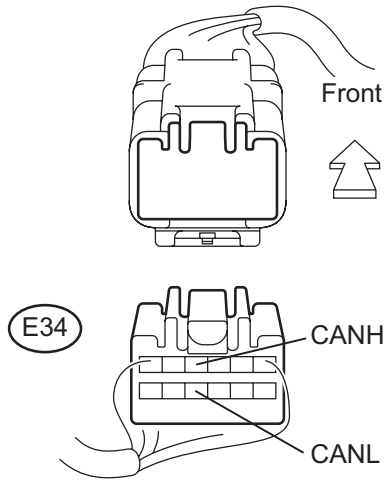

C133246E08

(a) Reconnect CAN main bus wire connector E42 to the CAN No. 2 J/C "A" side (without earth terminal).

(b) Disconnect CAN main bus wire connector E34 from the CAN No. 5 J/C (rear side of the vehicle).

(c) Measure the resistance according to the value(s) in the table below.

Standard resistance

Tester Connection	Condition	Specified Value
E34-4 (CANH) - E34-10 (CANL)	Engine switch off	108 to 132 Ω

NG → **REPAIR OR REPLACE CAN NO. 1 BUS MAIN WIRE OR CONNECTOR (CAN NO. 2 J/C - CAN NO. 5 J/C)**

OK

5 CHECK FOR OPEN IN CAN NO. 1 BUS MAIN WIRE (CAN NO. 5 J/C)

CAN No. 5 J/C Connector (Front of the Vehicle) Wire Harness Side View:

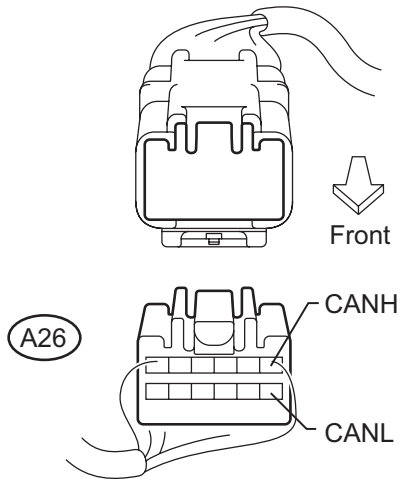

C133245E07

(a) Reconnect CAN main bus wire connector E34 to the CAN No. 5 J/C (rear side of the vehicle).
(b) Disconnect CAN main bus wire connector A26 from the CAN No. 5 J/C (front side of the vehicle).
(c) Measure the resistance according to the value(s) in the table below.

Standard resistance

Tester Connection	Condition	Specified Value
A26-1 (CANH) - A26-7 (CANL)	Engine switch off	108 to 132 Ω

OK → **REPLACE CAN NO. 5 J/C**

NG

6 CHECK FOR OPEN IN CAN NO. 1 BUS MAIN WIRE (ECM CAN MAIN BUS LINE)

ECM (Connector Front View):

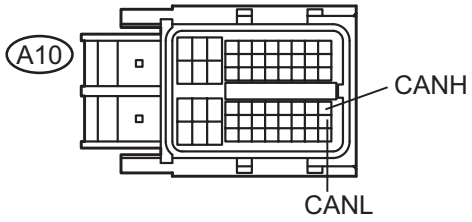

G100098E15

(a) Reconnect CAN main bus wire connector A26 to the CAN No. 5 J/C (front side of the vehicle).
(b) Disconnect the ECM connector.
(c) Measure the resistance according to the value(s) in the table below.

Standard resistance

Tester Connection	Condition	Specified Value
A10-41 (CANH) - A10-49 (CANL)	Engine switch off	108 to 132 Ω

OK → **REPLACE ECM (See page ES-542)**

NG

REPAIR OR REPLACE CAN NO. 1 BUS MAIN WIRE OR CONNECTOR (CAN NO. 5 J/C - ECM)

7	CHECK FOR OPEN IN CAN NO. 1 BUS MAIN WIRE (COMBINATION METER - CAN NO. 2 J/C)

Combination Meter Assembly (Wire Harness Side):

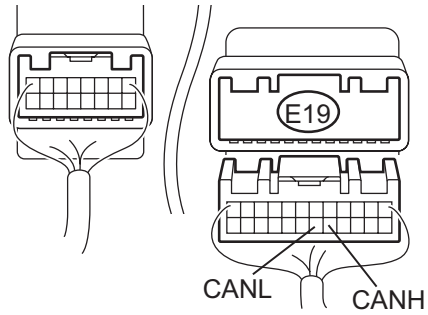

H

E132615E02

(a) Reconnect CAN main bus wire connector E48 to the CAN No. 2 J/C B side (without earth terminal).
(b) Disconnect combination meter connector E19.
(c) Measure the resistance according to the value(s) in the table below.

Standard resistance

Tester Connection	Condition	Specified Value
E19-17 (CANH) - E19-18 (CANL)	Engine switch off	108 to 132 Ω

OK → **REPLACE COMBINATION METER (See page ME-66)**

NG

REPAIR OR REPLACE CAN NO. 1 BUS MAIN WIRE OR CONNECTOR (CAN NO. 2 J/C - COMBINATION METER)

Short in CAN Bus Lines

DESCRIPTION

The CAN bus wires are considered to be shorted when the resistance between terminals 6 (CANH) and 14 (CANL) of the DLC3 is below 54 Ω.

Symptom	Trouble Area
Resistance between terminals 6 (CANH) and 14 (CANL) of the DLC3 is below 54 Ω.	1. Short in CAN bus wires 2. Skid control ECU 3. Steering angle sensor 4. Yaw rate sensor 5. ECM 6. Combination meter 7. Main body ECU 8. A/C amplifier 9. Center airbag sensor 10. Gateway ECU 11. Active control engine mount ECU 12. Multi-display 13. CAN No. 2 J/C 14. CAN No. 5 J/C

WIRING DIAGRAM

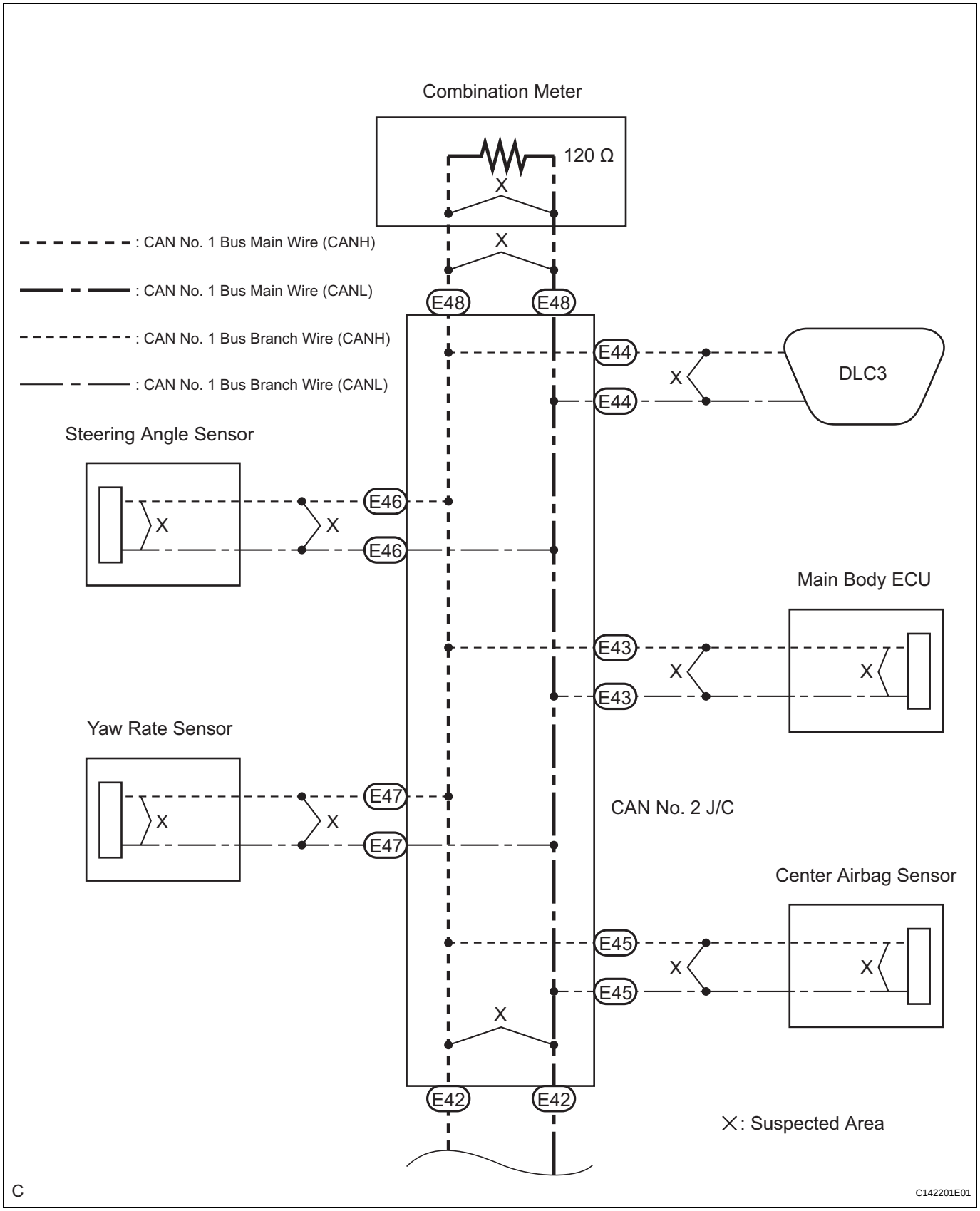

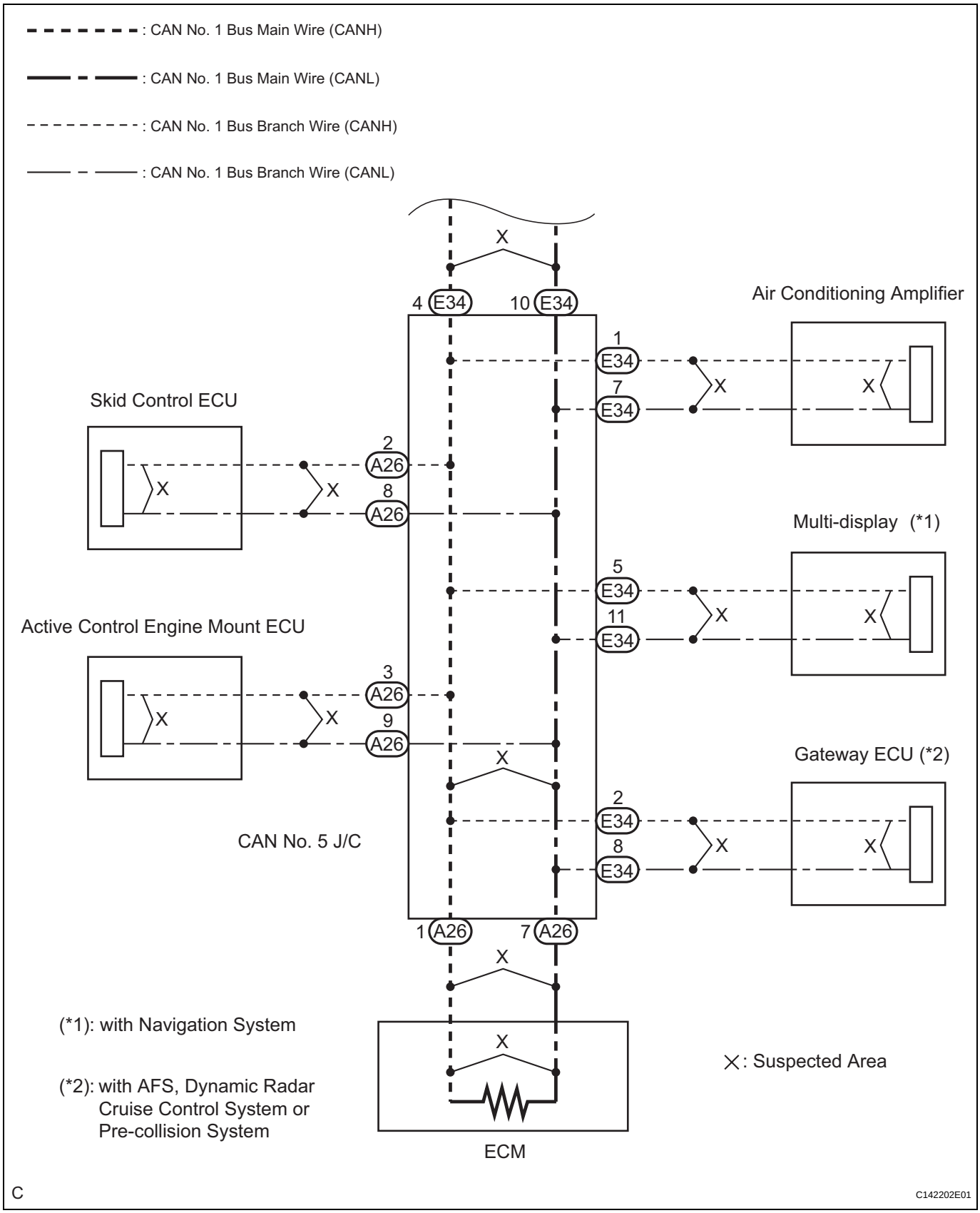
: CAN No. 1 Bus Main Wire (CANH)
: CAN No. 1 Bus Main Wire (CANL)
: CAN No. 1 Bus Branch Wire (CANH)
: CAN No. 1 Bus Branch Wire (CANL)
X
4 E34
10 E34
Air Conditioning Amplifier
1 E34
7 E34
Skid Control ECU
2 A26
8 A26
Multi-display (*1)
5 E34
11 E34
Active Control Engine Mount ECU
3 A26
9 A26
Gateway ECU (*2)
2 E34
8 E34
CAN No. 5 J/C
1 A26
7 A26
ECM
(*1): with Navigation System
(*2): with AFS, Dynamic Radar Cruise Control System or Pre-collision System
X: Suspected Area
C
C142202E01

INSPECTION PROCEDURE

NOTICE:

Before measuring the resistance, leave the vehicle as is for at least 1 minute and do not operate the engine switch, any other switches, or the doors. If any doors need to be opened in order to check connectors, open the doors and leave them open.

1	CHECK FOR SHORT IN CAN NO. 1 BUS WIRE (DLC3 BRANCH WIRE)

CAN No. 2 J/C "A" Side (without Earth Terminal) Wire Harness View:

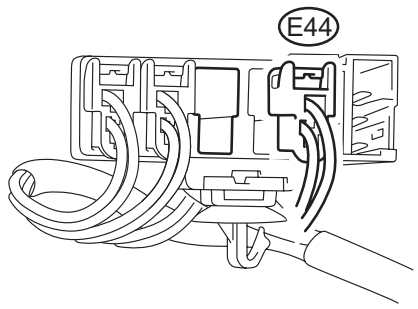

N C142225E01

(a) Turn the engine switch off.

(b) Disconnect DLC3 branch wire connector E44 from the CAN No. 2 J/C "A" side (without earth terminal).

NOTICE:

- **Before disconnecting the connector, make a note of where it is connected.**
- **Reconnect the connector to its original position.**

DLC3:

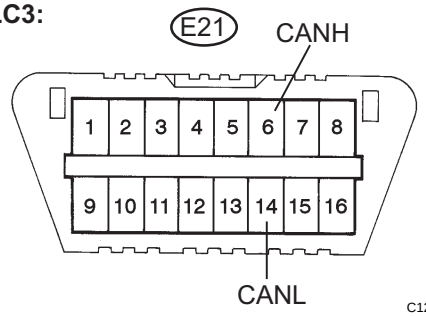

C126400E11

(c) Measure the resistance according to the value(s) in the table below.

Standard resistance

Tester Connection	Condition	Specified Value
E21-6 (CANH) - E21-14 (CANL)	Engine switch off	1 MΩ or higher

(d) Reconnect DLC3 branch wire connector E62 to the CAN No. 2 J/C "A" side (without earth terminal).

NG → **REPAIR OR REPLACE DLC3 BRANCH WIRE OR CONNECTOR**

OK

2 CHECK FOR SHORT IN CAN NO. 1 BUS WIRE (CAN NO. 2 J/C SIDE)

CAN No. 2 J/C “A” Side (without Earth Terminal) Wire Harness View:

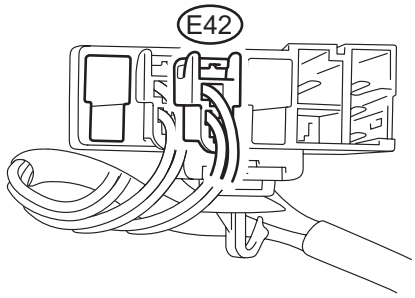

N C142224E02

(a) Disconnect CAN main bus wire connector E42 from the CAN No. 2 J/C "A" side (without earth terminal).

DLC3:

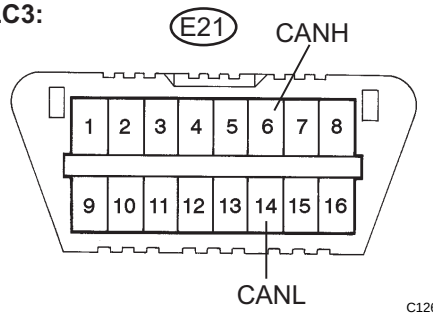

C126400E11

(b) Connect the probes of an ohmmeter to terminals 6 (CANH) and 14 (CANL) of the DLC3.
(c) Measure the resistance according to the value(s) in the table below.

Standard resistance

Tester Connection	Condition	Specified Value
E21-6 (CANH) - E21-14 (CANL)	Engine switch off	108 to 132 Ω

OK → **Go to step 7**

NG

3 CHECK FOR SHORT IN CAN NO. 1 BUS WIRE (CAN NO. 2 J/C BRANCH WIRE)

DLC3:

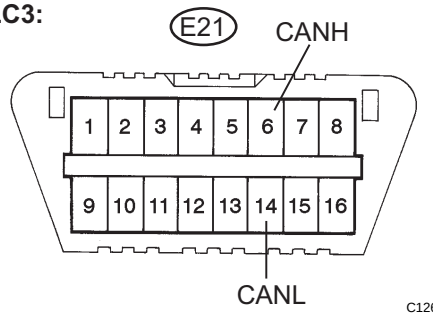

C126400E11

(a) Reconnect CAN main bus wire connector E42 to the CAN No. 2 J/C "A" side (without earth terminal).
(b) Connect the probes of an ohmmeter to terminals 6 (CANH) and 14 (CANL) of the DLC3.
(c) While observing the resistance value shown on the tester, disconnect connectors E43, E45, E46, and E47 from the CAN No. 2 J/C one by one until the resistance becomes normal (between 54 and 69 Ω).
HINT:
Disconnect the branch wire connectors other than those of the DLC3.

CAN No. 1 Bus:

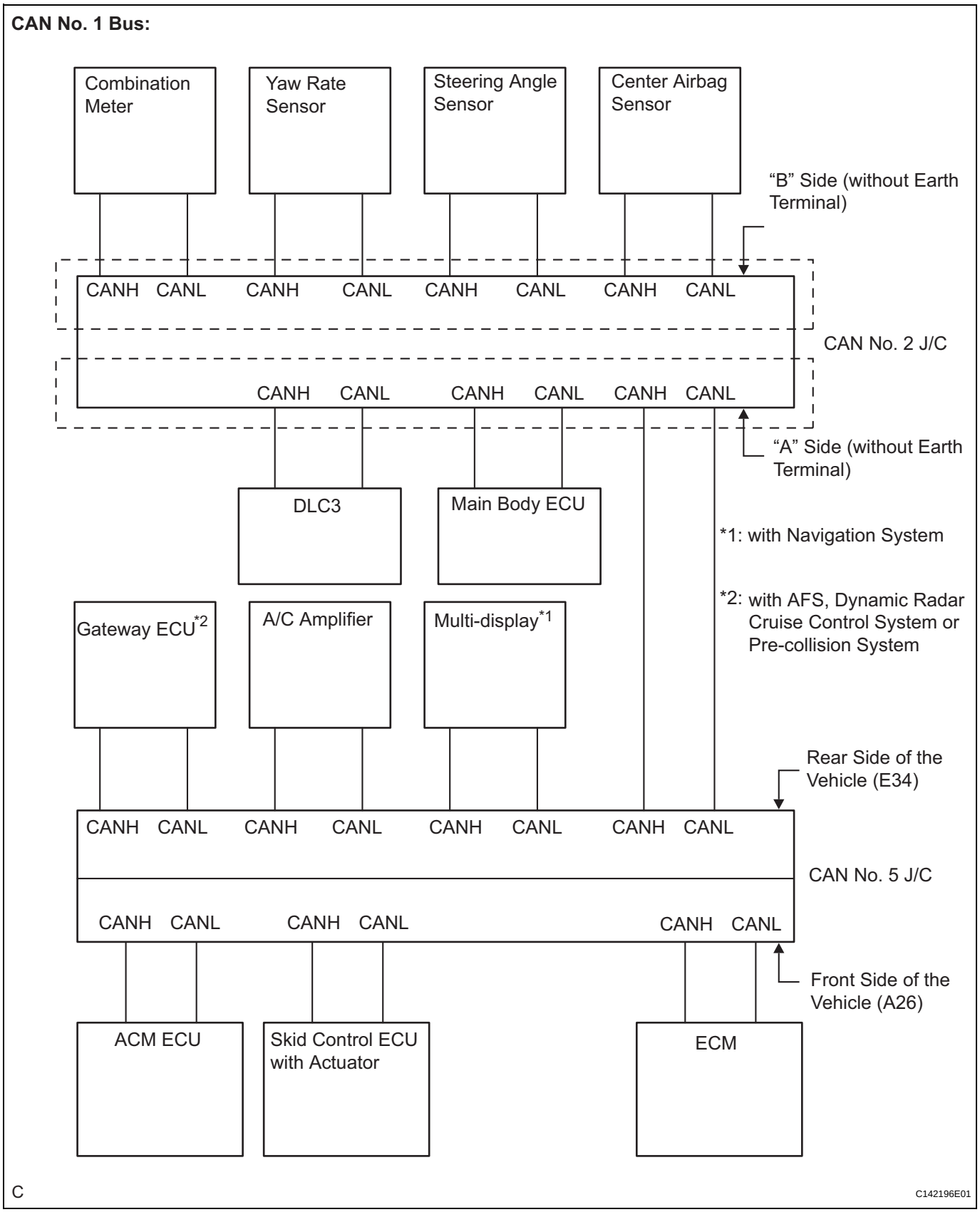

CA

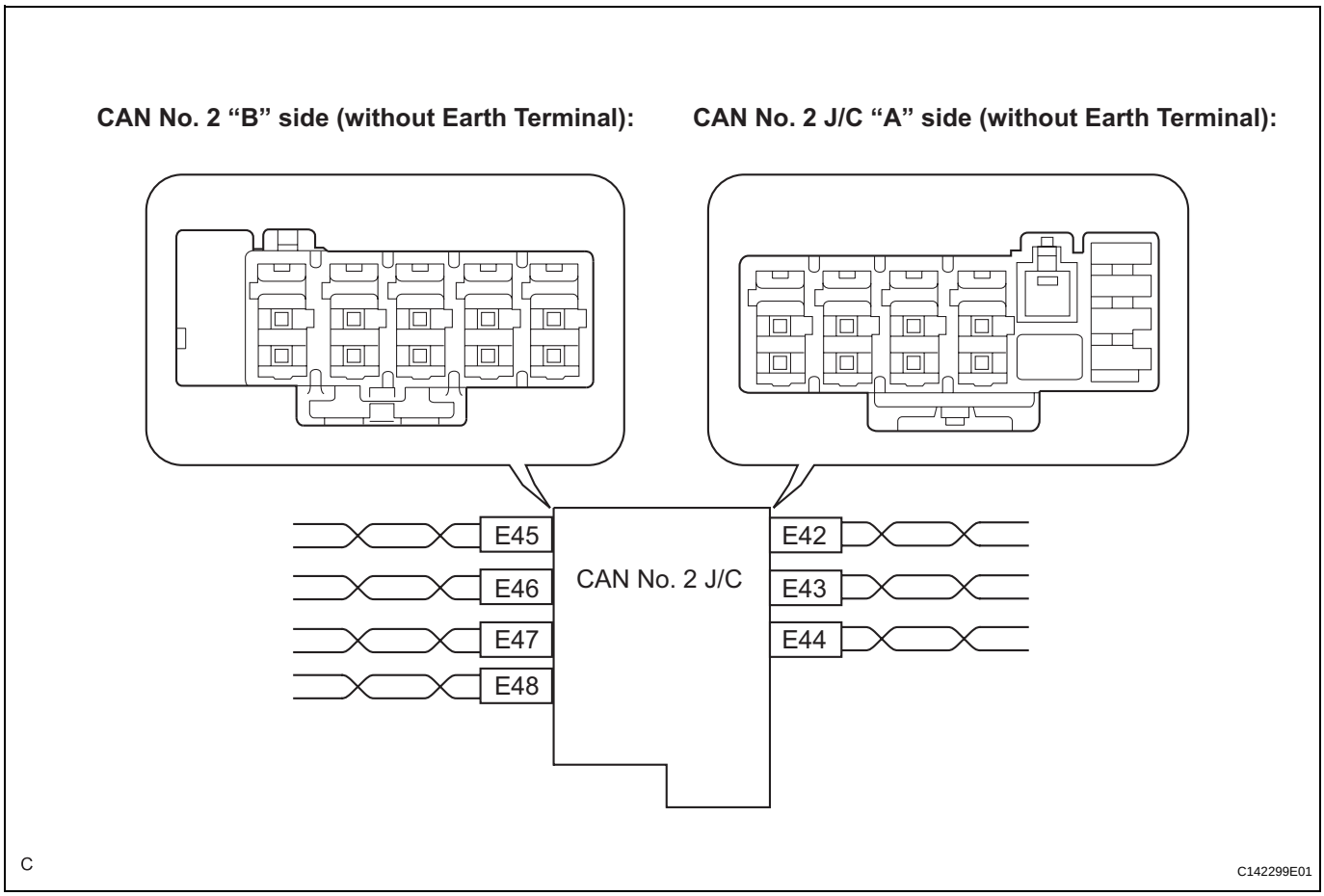

CAN No. 2 J/C Connector ("A" side, without earth terminal)	Connector Color	Color (CAN-H Side)	Color (CAN-L Side)
CAN No. 1 Bus Wire (E42)	White	B	W
Main Body ECU (E43)	White	BR	GR
DLC3 (E44)	White	LG	P

CAN No. 2 J/C Connector ("B" side, without earth terminal)	Connector Color	Color (CAN-H Side)	Color (CAN-L Side)
Yaw Rate Sensor (E47)	White	O	P
Center Airbag Sensor (E45)	White	G	Y
Steering Angle Sensor (E46)	White	V	P
Combination Meter (E48)	White	B	W

NOTICE:
Do not reconnect the disconnected connectors until this inspection is complete because there may be a short in 2 or more branch wires.

Result

CA

Symptom	Proceed to
The resistance is still below 54 Ω when all the specified connectors are disconnected. (There are no shorts in the branch wires.)	**A**
The resistance becomes normal (between 54 and 69 Ω) when a connector is disconnected. (There is a short in one or more of the branch wires.)	**B**

(d) When there is a short in one or more of the branch wires:

(1) Reconnect all of the connectors to the CAN No. 2 J/C, except for the one that was disconnected last (the short-circuited bus wire). Check that the resistance shown on the tester is normal (between 54 and 69 Ω) to confirm that there is a short in one branch wire only.
HINT:
- The connectors connected to the CAN No. 2 J/C can be distinguished according to the color of the communication bus wires and the shape of the connectors.
- Reconnecting the connectors to non-specified positions on the CAN No. 2 J/C does not affect system operation. However, it is preferred to reconnect the connectors to their specified positions to avoid negative effects on the wiring such as tension on the wiring harnesses, and to make future maintenance easier.

B → **Go to step 12**

A

4 CHECK FOR SHORT IN CAN NO. 1 BUS WIRE (COMBINATION METER ECU MAIN BUS WIRE)

CAN No. 2 J/C "B" Side (without Earth Terminal) Wire Harness View:

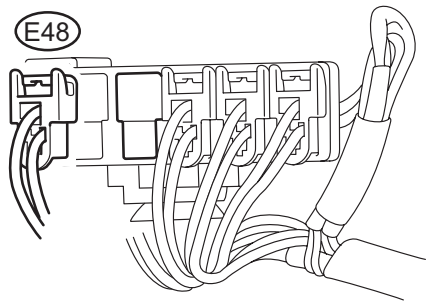

N C142223E02

(a) Disconnect combination meter main bus wire connector E48 from the CAN No. 2 J/C "B" side (without earth terminal).
NOTICE:
- **Before disconnecting the connector, make a note of where it is connected.**
- **Reconnect the connector to its original position.**

DLC3:

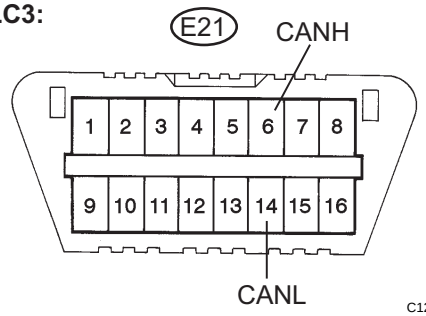

C126400E11

(b) Measure the resistance according to the value(s) in the table below.
Standard resistance

Tester Connection	Condition	Specified Value
E21-6 (CANH) - E21-14 (CANL)	Engine switch off	108 to 132 Ω

NG → **REPLACE CAN NO. 2 J/C**

CA

OK

5	RECONNECT CONNECTOR

(a) Reconnect combination meter main bus wire connector E48 to the CAN No. 2 J/C "B" side (without earth terminal).

NEXT

6	CHECK FOR SHORT IN CAN NO. 1 BUS WIRE (COMBINATION METER)

Combination Meter (Wire Harness Side):

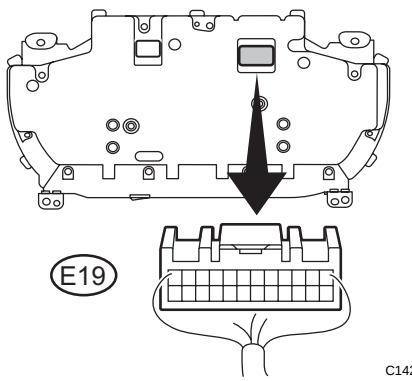

(a) Disconnect combination meter connectoE19.

DLC3:

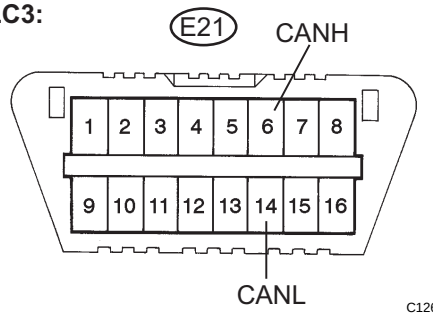

(b) Measure the resistance according to the value(s) in the table below.

Standard resistance

Tester Connection	Condition	Specified Value
E21-6 (CANH) - E21-14 (CANL)	Engine switch off	108 to 132 Ω

HINT:
If the resistance changes to 1 MΩ or more when the connector is disconnected, there may be a short in the ECM.

NG → **REPAIR OR REPLACE CAN NO. 1 BUS MAIN WIRE OR CONNECTOR (COMBINATION METER MAIN BUS WIRE)**

OK

CA

REPLACE COMBINATION METER (See page ME-66)

7	CHECK FOR SHORT IN CAN NO. 1 BUS WIRE (CAN NO. 5 J/C - CAN NO. 2 J/C)

(a) Reconnect CAN No. 2 J/C connector E42.

CAN No. 5 J/C Connector (Rear of the Vehicle) Wire Harness Side View:

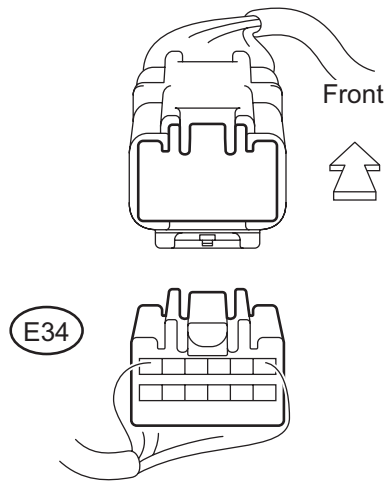

C133246E09

(b) Disconnect CAN No. 5 J/C connector E34.

DLC3:

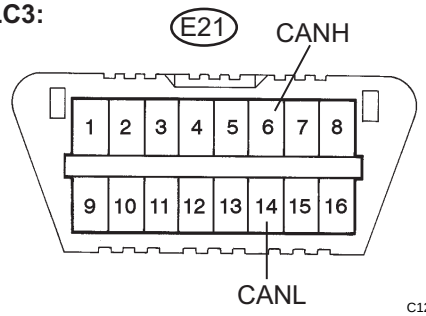

C126400E11

(c) Measure the resistance according to the value(s) in the table below.

Standard resistance

Tester Connection	Condition	Specified Value
E21-6 (CANH) - E21-14 (CANL)	Engine switch off	108 to 132 Ω

NG → **REPAIR OR REPLACE CAN NO. 1 BUS MAIN WIRE OR CONNECTOR (CAN NO. 2 J/C - CAN NO. 5 J/C)**

OK

8	CEHCK FOR SHORT IN CAN NO. 1 BUS WIRE (CAN NO. 5 J/C - CAN NO. 2 J/C)

(a) Reconnect CAN No. 5 J/C connector E34.

CAN No. 5 J/C Connector (Front of the Vehicle) Wire Harness Side View:

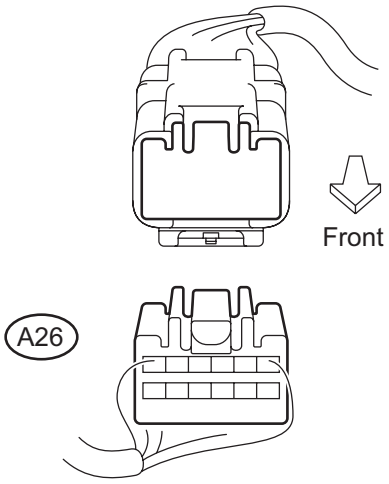

(b) Disconnect CAN No. 5 J/C connector A26.

DLC3:

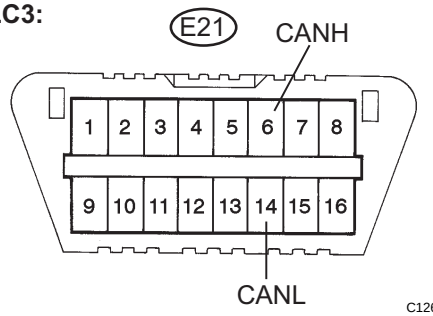

(c) Measure the resistance according to the value(s) in the table below.

Standard resistance

Tester Connection	Condition	Specified Value
E21-6 (CANH) - E21-14 (CANL)	Engine switch off	108 to 132 Ω

OK → **Go to step 10**

NG

9	CHECK FOR SHORT IN CAN NO. 1 BUS WIRE (CAN NO. 5 J/C WIRE)

(a) Reconnect CAN No. 5 J/C connector A26.
(b) Disconnect CAN No. 5 J/C connector E34.

CAN No. 5 J/C (Rear Side of the Vehicle) Wire Harness View:

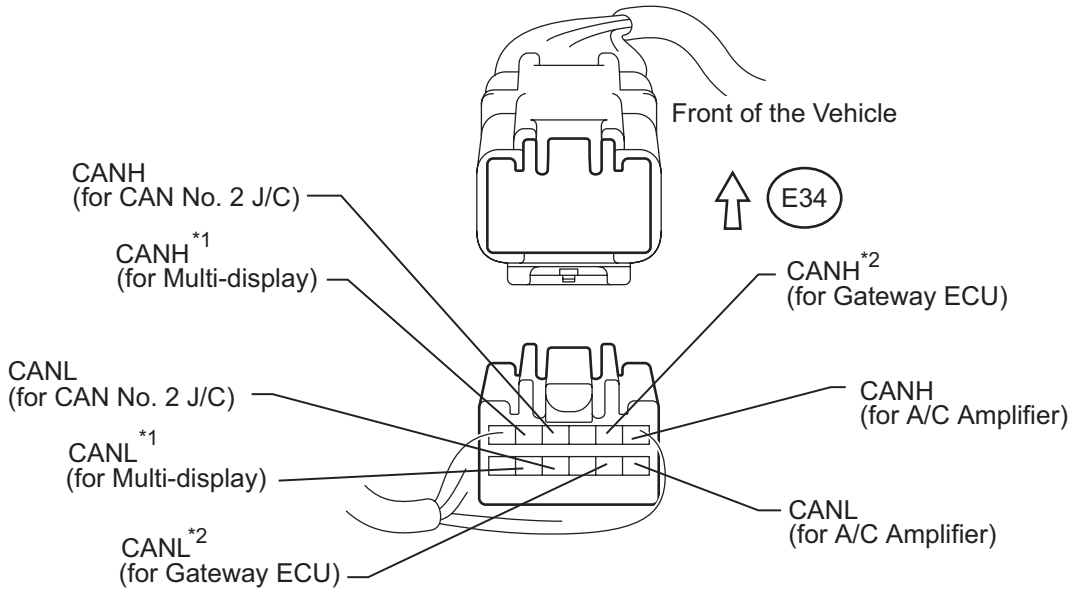

(c) Measure the resistance according to the value(s) in the table below.

Standard resistance

Tester Connection	Destination	Condition	Specified Value
E34-1 (CANH) - E34-7 (CANL)	A/C amplifier	Engine switch off	More than 1 Ω
E34-2 (CANH)*2 - E34-8 (CANL)*2	Gateway ECU*2	Engine switch off	More than 1 Ω
E34-5*1 (CANH) - E34-11*1 (CANL)	Multi-display*1	Engine switch off	More than 1 Ω

HINT:
- *1: with Navigation system
- *2: with AFS, dynamic radar cruise control system or pre-collision system

NG → **Go to step 12**

OK

REPLACE CAN NO. 5 J/C

10 CHECK FOR SHORT IN CAN NO. 1 BUS WIRE (CAN NO. 5 J/C WIRE)

(a) Disconnect CAN No. 5 J/C connector A26.

CAN No. 5 J/C (Front Side of the Vehicle) Wire Harness View:

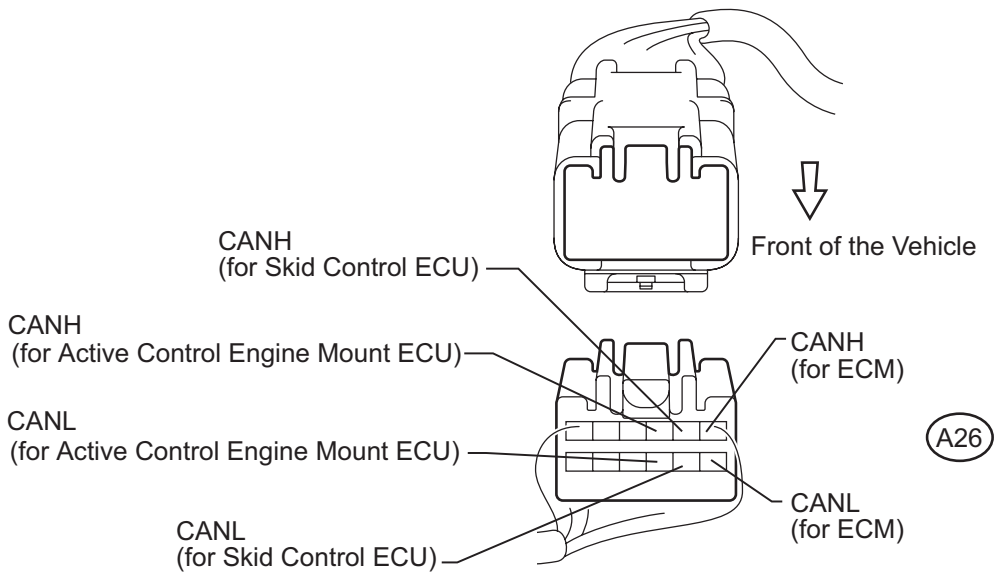

(b) Measure the resistance according to the value(s) in the table below.

Standard resistance

Tester Connection	Destination	Condition	Specified Value
A26-1 (CANH) - A26-7 (CANL)	ECM	Engine switch off	108 to 132 Ω
A26-2 (CANH) - A26-8 (CANL)	Skid control ECU	Engine switch off	More than 1 Ω
A26-3 (CANH) - A26-9 (CANL)	Active control engine mount ECU	Engine switch off	More than 1 Ω

Result

Result	Proceed to
OK	A
NG (Short in wires other than those connected to the ECM)	B
NG (Short in wires connected to the ECM)	C

A → **REPLACE CAN NO. 5 J/C**

B → **Go to step 12**

C

11 CHECK FOR SHORT IN CAN NO. 1 BUS WIRE (ECM MAIN BUS WIRE)

CAN No. 5 J/C Connector (Front of the Vehicle) Wire Harness Side View:

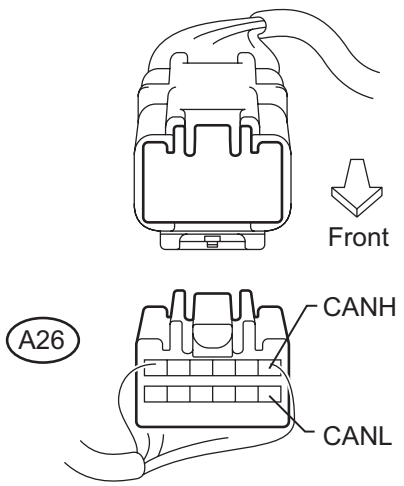

C133245E07

(a) Disconnect ECM connector A10.
(b) Measure the resistance according to the value(s) in the table below.

Standard resistance

Tester Connection	Condition	Specified Value
A26-1 (CANH) - A26-7 (CANL)	Engine switch off	1 MΩ or higher

HINT:
Measure the resistance with CAN No. 5 J/C connector A26 disconnected.

NG → **REPAIR OR REPLACE CAN NO. 1 BUS MAIN WIRE OR CONNECTOR (ECM - CAN NO. 5 J/C)**

OK

REPLACE ECM (See page ES-542)

12 RECONNECT CONNECTOR

(a) Reconnect the connector for the short-circuited branch wire to the CAN No. 2 J/C or CAN No. 5 J/C (the connector that caused the bus wire resistance to become normal (between 54 and 69 Ω) when it was disconnected).

NEXT

13 CHECK FOR SHORT IN CAN NO. 1 BUS WIRE

DLC3:

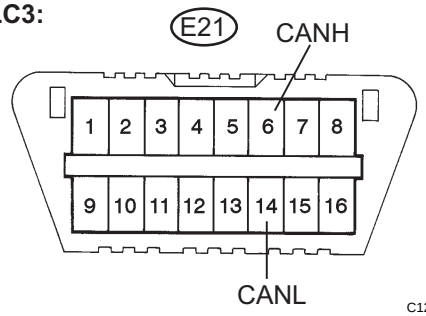

C126400E11

(a) Disconnect the connector that includes terminals CANH and CANL from the ECU (or sensor) to which the short-circuited branch wire is connected. (See page CA-15)
(b) Measure the resistance according to the value(s) in the table below.

Standard resistance

Tester Connection	Condition	Specified Value
E21-6 (CANH) - E21-14 (CANL)	Engine switch off	1 MΩ or higher

HINT:
If the resistance becomes normal (between 54 and 69 Ω) when the connector is disconnected from the ECU (or sensor), there may be a short in the ECU (or sensor).

NG → **REPAIR OR REPLACE CORRESPONDING ECU OR SENSOR BRANCH WIRE OR CONNECTOR**

OK

REPLACE CORRESPONDING ECU OR SENSOR

Short to B+ in CAN Bus Line

DESCRIPTION

A short to B+ is suspected in the CAN bus wire when the resistance between terminals 6 (CANH) and 16 (BAT), or terminals 14 (CANL) and 16 (BAT) of the DLC3 is below 6 kΩ.

Symptom	Trouble Area
The resistance between terminals 6 (CANH) and 16 (BAT), or terminals 14 (CANL) and 16 (BAT) of the DLC3 is below 6 kΩ.	1. Short to B+ in CAN bus wire 2. Skid control ECU 3. Steering angle sensor 4. Yaw rate sensor 5. ECM 6. Combination meter 7. Main body ECU 8. A/C amplifier 9. Gateway ECU 10. Active control engine mount ECU 11. Multi-display 12. Center airbag sensor 13. CAN No. 2 J/C 14. CAN No. 5 J/C

WIRING DIAGRAM

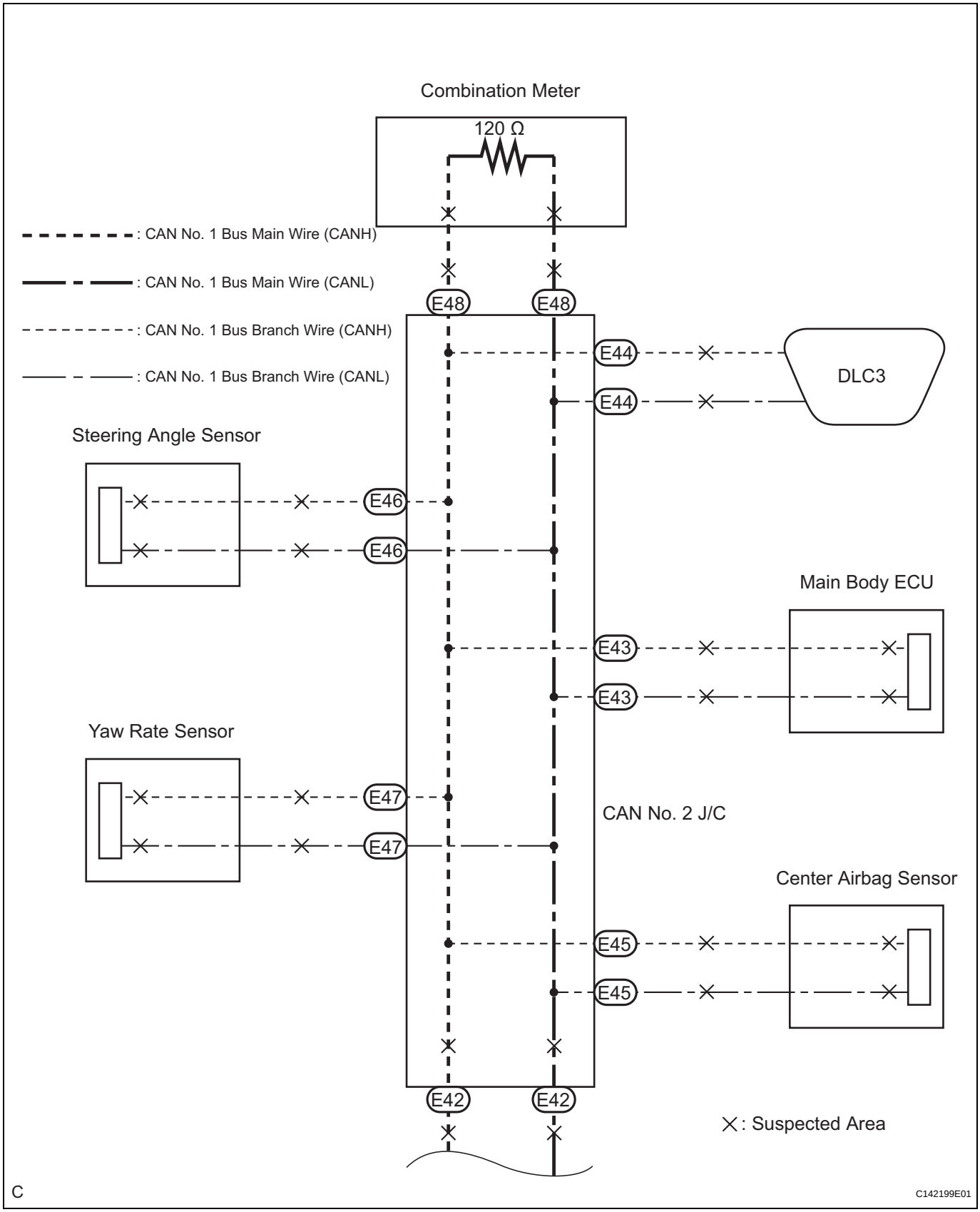

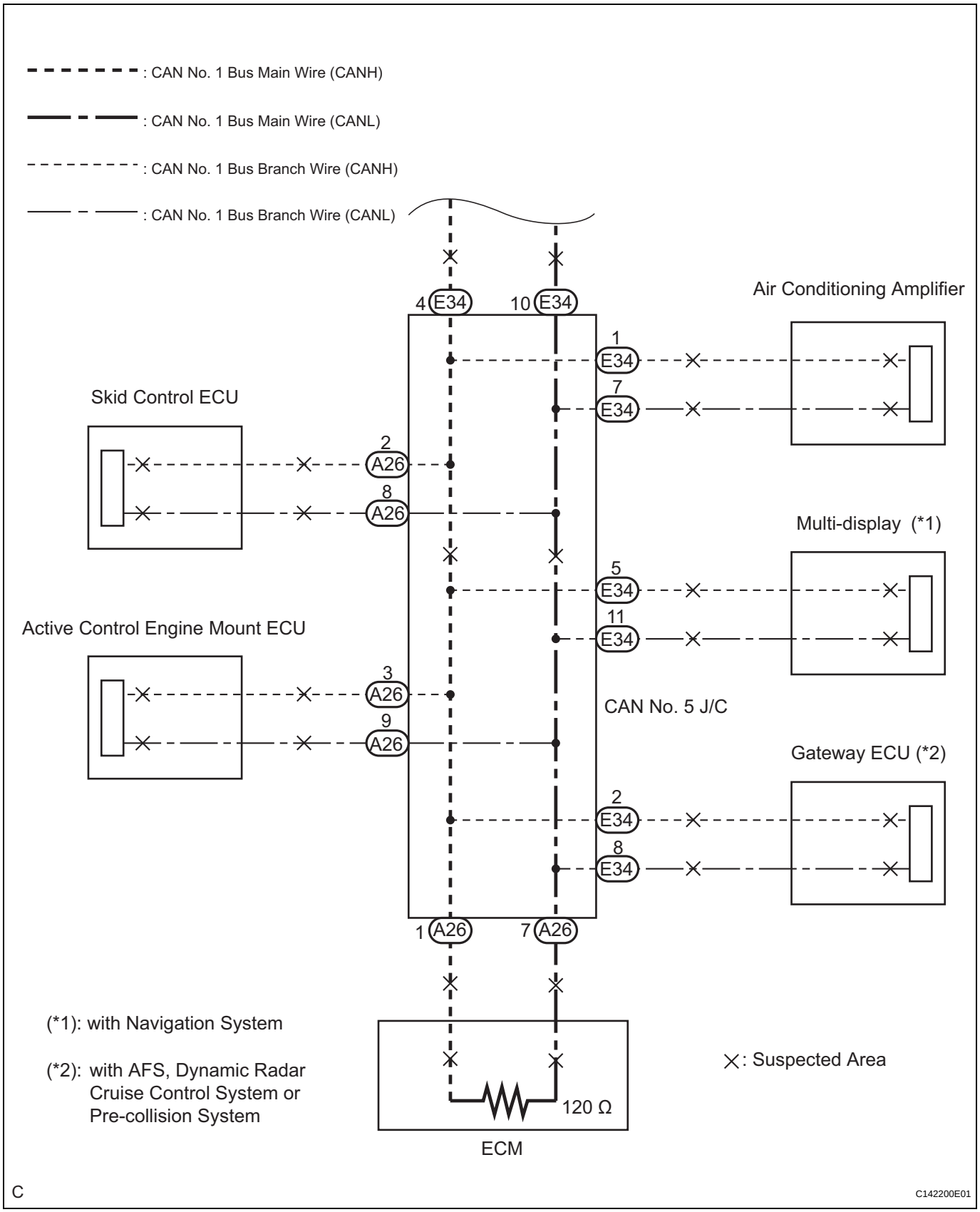
: CAN No. 1 Bus Main Wire (CANH)
: CAN No. 1 Bus Main Wire (CANL)
: CAN No. 1 Bus Branch Wire (CANH)
: CAN No. 1 Bus Branch Wire (CANL)
Air Conditioning Amplifier
Skid Control ECU
Multi-display (*1)
Active Control Engine Mount ECU
CAN No. 5 J/C
Gateway ECU (*2)
4 E34
10 E34
1 E34
7 E34
2 A26
8 A26
5 E34
11 E34
3 A26
9 A26
2 E34
8 E34
1 A26
7 A26
(*1): with Navigation System
(*2): with AFS, Dynamic Radar Cruise Control System or Pre-collision System
: Suspected Area
120 Ω
ECM
C
C142200E01

CA

INSPECTION PROCEDURE

NOTICE:

Before measuring the resistance, leave the vehicle as is for at least 1 minute and do not operate the engine switch, any other switches, or the doors. If any doors need to be opened in order to check connectors, open the doors and leave them open.

1	CHECK FOR SHORT TO B+ IN CAN NO. 1 BUS WIRE (DLC3 BRANCH WIRE)

CAN No. 2 J/C “A” Side (without Earth Terminal) Wire Harness View:

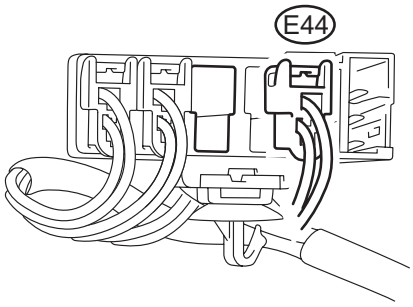

N C142225E01

(a) Turn the engine switch off.

(b) Disconnect DLC3 branch wire connector E44 from the CAN No. 2 J/C "A" side (without earth terminal).

NOTICE:

- **Before disconnecting the connector, make a note of where it is connected.**
- **Reconnect the connector to its original position.**

DLC3:

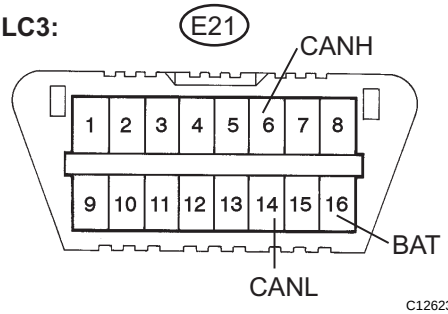

C126231E16

(c) Measure the resistance according to the value(s) in the table below.

Standard resistance

Tester Connection	Condition	Specified Value
E21-6 (CANH) - E21-16 (BAT)	Engine switch off	6 kΩ or higher
E21-14 (CANL) - E21-16 (BAT)	Engine switch off	6 kΩ or higher

(d) Reconnect DLC3 branch wire connector E44 to the CAN No. 2 J/C "A" side (without earth terminal).

NG → **REPAIR OR REPLACE DLC3 BRANCH WIRE OR CONNECTOR**

OK

2 CHECK FOR SHORT TO B+ IN CAN NO. 1 BUS WIRE (CAN NO. 2 J/C SIDE)

CAN No. 2 J/C "A" Side (without Earth Terminal) Wire Harness View:

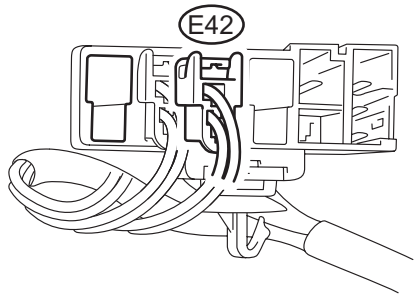

N C142224E02

(a) Disconnect CAN main bus wire connector E42 from the CAN No. 2 J/C "A" side (without earth terminal).

DLC3:

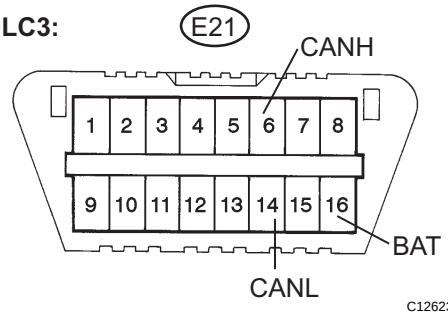

C126231E16

(b) Using an ohmmeter, measure the resistance between terminals 6 (CANH) and 16 (BAT), and between terminals 14 (CANL) and 16 (BAT) of the DLC3 each time a connector is disconnected.

Standard resistance

Tester Connection	Condition	Specified Value
E21-6 (CANH) - E21-16 (BAT)	Engine switch off	6 kΩ or higher
E21-14 (CANL) - E21-16 (BAT)	Engine switch off	6 kΩ or higher

OK → **Go to step 4**

NG

3 CHECK FOR SHORT TO B+ IN CAN NO. 1 BUS WIRE

DLC3:

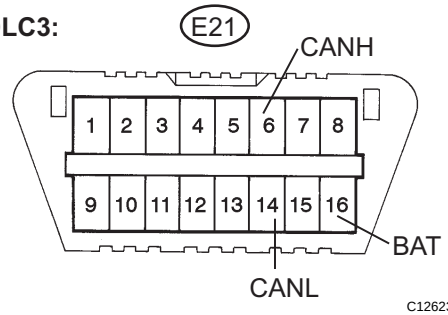

C126231E16

(a) Disconnect connectors from the CAN No. 2 J/C one at a time.
HINT:
Disconnect the ECU and sensor connectors other than the DLC3 branch wires and CAN main bus wires between the CAN No. 2 J/C and CAN No. 5 J/C.

(b) Using an ohmmeter, measure the resistance between terminals 6 (CANH) and 16 (BAT), and between terminals 14 (CANL) and 16 (BAT) of the DLC3 each time a connector is disconnected.

CAN No. 1 Bus:

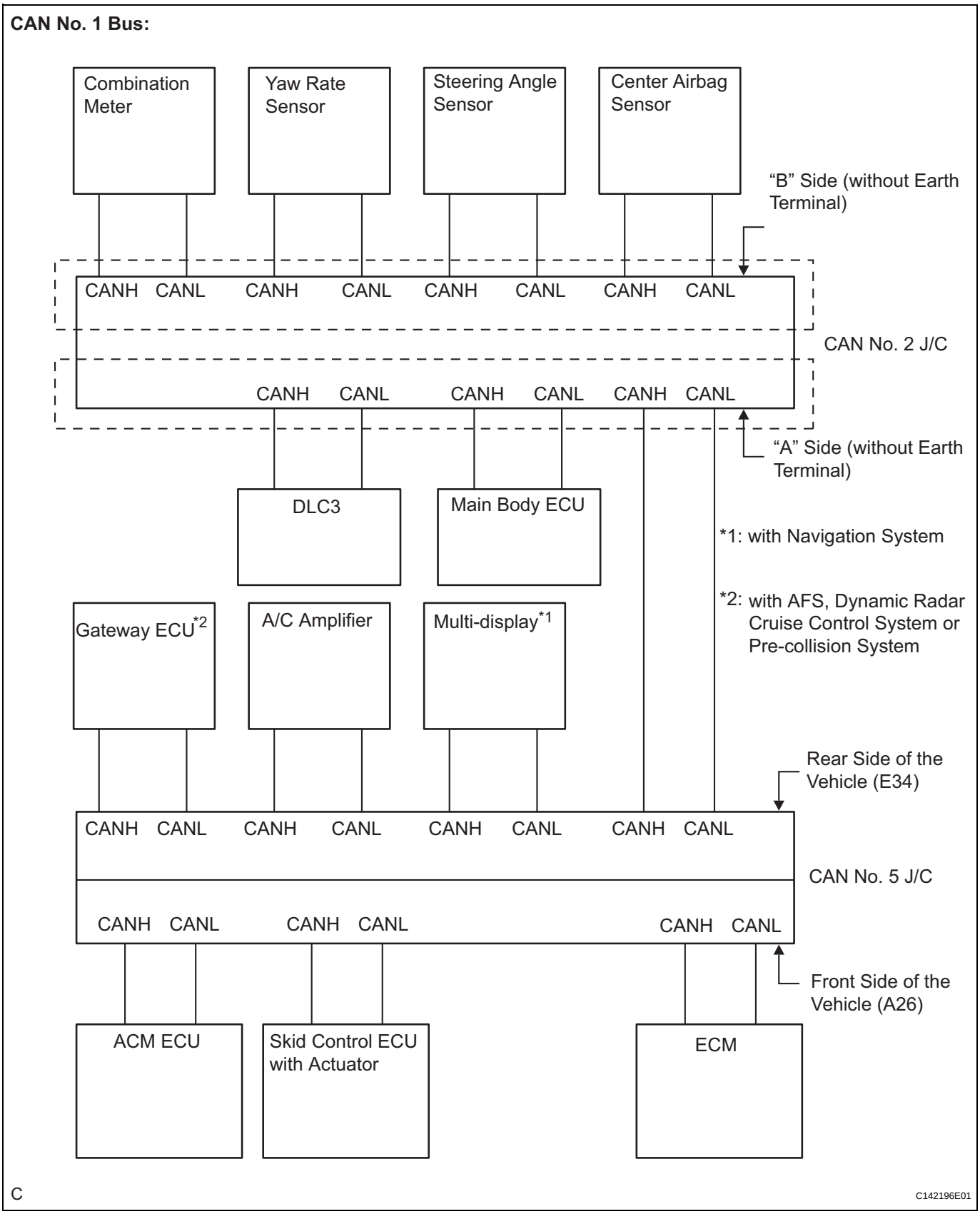
Combination Meter
Yaw Rate Sensor
Steering Angle Sensor
Center Airbag Sensor
"B" Side (without Earth Terminal)
CANH CANL CANH CANL CANH CANL CANH CANL
CAN No. 2 J/C
CANH CANL CANH CANL CANH CANL
"A" Side (without Earth Terminal)
DLC3
Main Body ECU
*1: with Navigation System
*2: with AFS, Dynamic Radar Cruise Control System or Pre-collision System
Gateway ECU*2
A/C Amplifier
Multi-display*1
Rear Side of the Vehicle (E34)
CANH CANL CANH CANL CANH CANL CANH CANL
CAN No. 5 J/C
CANH CANL CANH CANL CANH CANL
Front Side of the Vehicle (A26)
ACM ECU
Skid Control ECU with Actuator
ECM
C
C142196E01

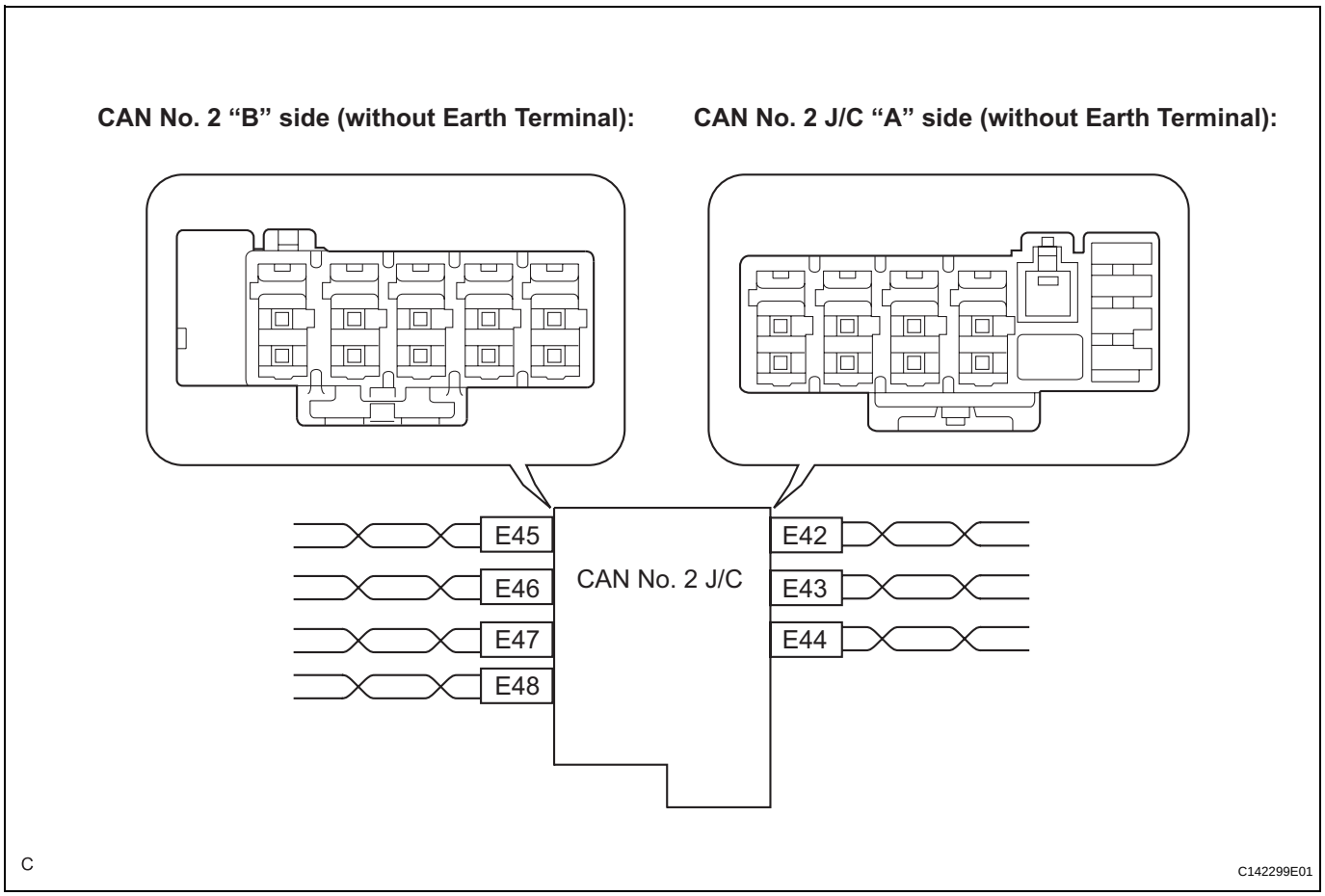

CAN No. 2 J/C Connector ("A" side, without earth terminal)	Connector Color	Color (CAN-H Side)	Color (CAN-L Side)
CAN No. 1 Bus Wire (E42)	White	B	W
Main Body ECU (E43)	White	BR	GR
DLC3 (E44)	White	LG	P

CAN No. 2 J/C Connector ("B" side, without earth terminal)	Connector Color	Color (CAN-H Side)	Color (CAN-L Side)
Yaw Rate Sensor (E47)	White	O	P
Center Airbag Sensor (E45)	White	G	Y
Steering Angle Sensor (E46)	White	V	P
Combination Meter (E48)	White	B	W

NOTICE:
Do not reconnect the disconnected connectors until this inspection is complete because there may be a short to B+ in 2 or more CAN bus wires.

Result

Symptom	Proceed to
The resistance between terminals 6 (CANH) and 16 (BAT), or the resistance between terminals 14 (CANL) and 16 (BAT) is still below 6 kΩ when all the specified connectors are disconnected from the CAN No. 2 J/C. (There is a short to B+ in the CAN No. 2 J/C.)	**A**
The resistance between terminals 6 (CANH) and 16 (BAT), or the resistance between terminals 14 (CANL) and 16 (BAT) becomes normal (6 kΩ or higher) when a connector is disconnected from the CAN No. 2 J/C. (There is a short to B+ in one of the areas that relate to one or more of the disconnected bus wires.)	**B**

(c) When there is a short to B+ in one or more of the bus wires that connect to an ECU (or sensor):
  (1) Reconnect all of the connectors to the CAN No. 2 J/C, except for the one that was disconnected last (the bus wire that is shorted to B+). Check that the resistance shown on the tester is normal (6 kΩ or higher) to confirm that there is a short to B+ in one bus wire only.
  HINT:
  - The connectors connected to the CAN No. 2 J/C can be distinguished according to the color of the communication bus wires and the shape of the connectors.
  - Reconnecting the connectors to non-specified positions on the CAN No. 2 J/C does not affect system operation. However, it is preferred to reconnect the connectors to their specified positions to avoid negative effects on the wiring such as tension on the wiring harnesses, and to make future maintenance easier.

B → **Go to step 7**

A

REPLACE CAN NO. 2 J/C

4	CHECK FOR SHORT TO B+ IN CAN NO. 1 BUS WIRE

CAN No. 5 J/C Connector (Front of the Vehicle) Wire Harness Side View:

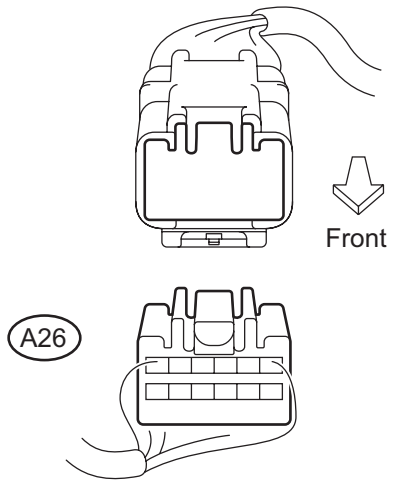

(a) Disconnect CAN No. 5 J/C connector A26.

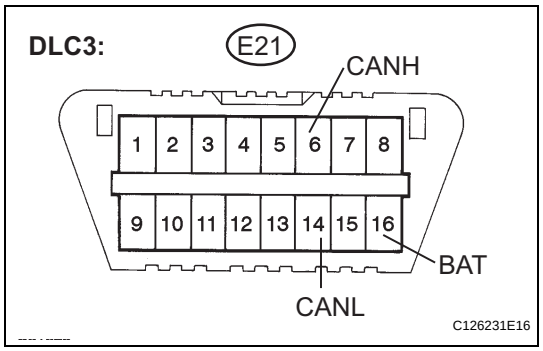

(b) Measure the resistance according to the value(s) in the table below.

Standard resistance

Tester Connection	Condition	Specified Value
E21-6 (CANH) - E21-16 (BAT)	Engine switch off	6 kΩ or higher
E21-14 (CANL) - E21-16 (BAT)	Engine switch off	6 kΩ or higher

OK → **Go to step 6**

NG

5 CHECK FOR SHORT TO B+ IN CAN NO. 1 BUS WIRE (CAN NO. 5 J/C WIRE)

(a) Reconnect CAN No. 5 J/C connector A26.
(b) Disconnect CAN No. 5 J/C connector E34.

CAN No. 5 J/C (Rear Side of the Vehicle) Wire Harness View:

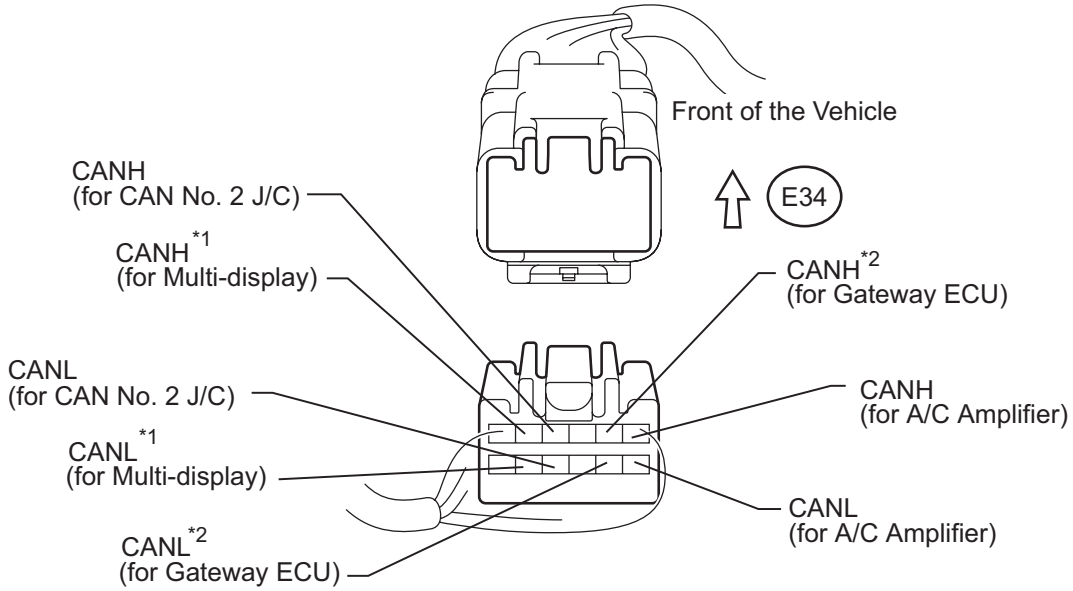

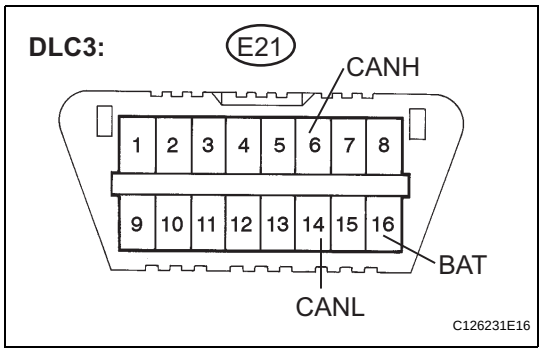

(c) Measure the resistance according to the value(s) in the table below.

Standard resistance

Tester Connection	Destination	Condition	Specified Value
E34-1 (CANH) - E21-16 (BAT)	A/C amplifier	Engine switch off	6 kΩ or higher
E34-7 (CANL) - E21-16 (BAT)			

CA

Tester Connection	Destination	Condition	Specified Value
E34-2 (CANH)*2 - E21-16 (BAT)	Gateway ECU*2	Engine switch off	6 kΩ or higher
E34-8 (CANL)*2 - E21-16 (BAT)			
E34-4 (CANH) - E21-16 (BAT)	CAN No. 2 J/C	Engine switch off	6 kΩ or higher
E34-10 (CANL) - E21-16 (BAT)			
E34-5*1 (CANH) - E21-16 (BAT)	Multi-display*1	Engine switch off	6 kΩ or higher
E34-11*1 (CANL) - E21-16 (BAT)			

HINT:
- *1: with Navigation system
- *2: with AFS, dynamic radar cruise control system or pre-collision system

Result

Result	Proceed to
OK	A
NG (B+ short in wires other than those connected to CAN No. 2 J/C)	B
NG (B+ short in wires connected to CAN No. 2 J/C)	C

B → **Go to step 7**

C → **REPAIR OR REPLACE CAN NO. 1 BUS MAIN WIRE OR CONNECTOR (CAN NO. 2 J/C - CAN NO. 5 J/C)**

A

REPLACE CAN NO. 5 J/C

6 CHECK FOR SHORT TO B+ IN CAN NO. 1 BUS WIRE (CAN NO. 5 J/C WIRE)

(a) Disconnect CAN No. 5 J/C connector A26.

CAN No. 5 J/C (Front Side of the Vehicle) Wire Harness View:

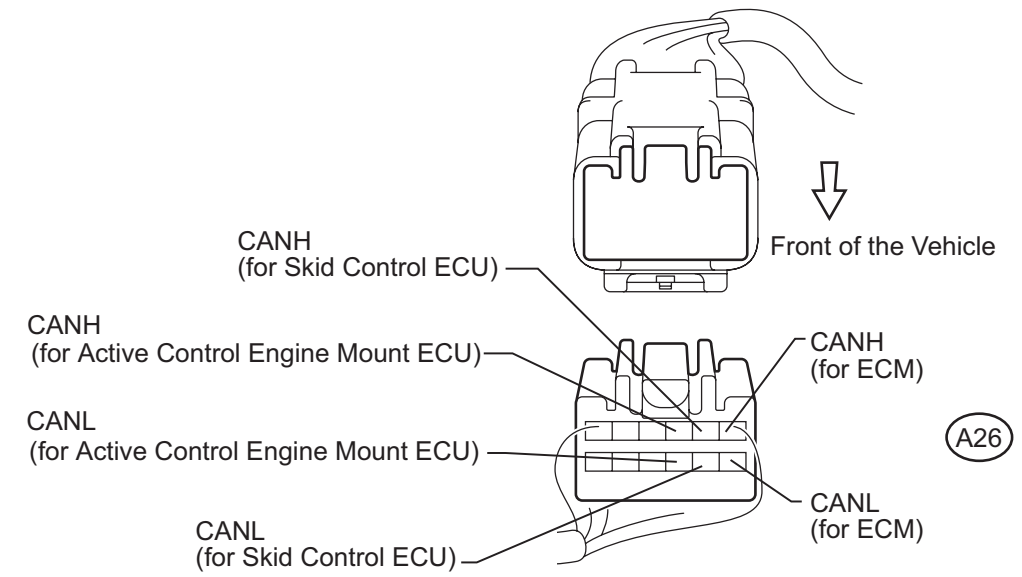

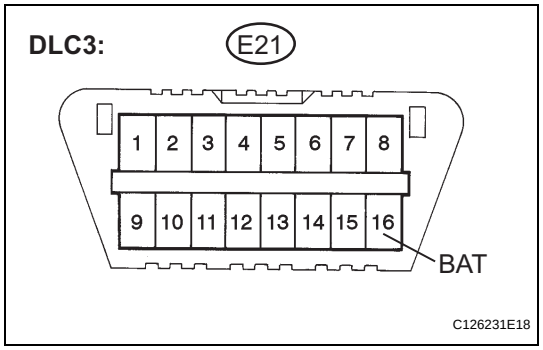

(b) Measure the resistance according to the value(s) in the table below.

Standard resistance

Tester Connection	Destination	Condition	Specified Value
A26-1 (CANH) - E21-16 (BAT)	ECM	Engine switch off	6 kΩ or higher
A26-7 (CANL) - E21-16 (BAT)			
A26-2 (CANH) - E21-16 (BAT)	Skid control ECU	Engine switch off	6 kΩ or higher
A26-8 (CANL) - E21-16 (BAT)			
A26-3 (CANH) - E21-16 (BAT)	Active control engine mount ECU	Engine switch off	6 kΩ or higher
A26-9 (CANL) - E21-16 (BAT)			

OK → **REPLACE CAN NO. 5 J/C**

NG

7	RECONNECT CONNECTOR

(a) Reconnect the connector of the bus wire that is shorted to B+ to the CAN No. 2 J/C or CAN No. 5 J/C (the connector that caused the bus wire resistance to change to 6 kΩ or more when it was disconnected).

NEXT

8	CHECK FOR SHORT TO B+ IN CAN NO. 1 BUS WIRE

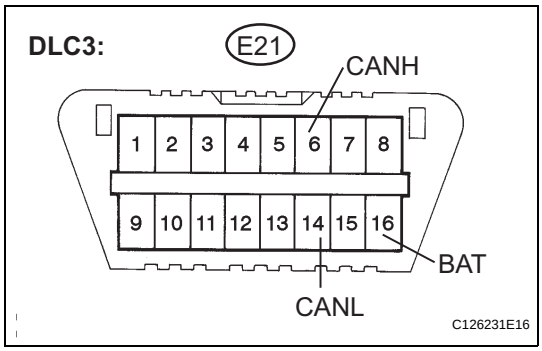

(a) Disconnect the connector that includes terminals CANH and CANL from the ECU (or sensor) to which the bus wire shorted to B+ is connected. (See page CA-15)

(b) Measure the resistance according to the value(s) in the table below.

Standard resistance

Tester Connection	Condition	Specified Value
E21-6 (CANH) - E21-16 (BAT)	Engine switch off	6 kΩ or higher
E21-14 (CANL) - E21-16 (BAT)	Engine switch off	6 kΩ or higher

HINT:
If the resistance changes to 6 kΩ or higher when the connector is disconnected from the ECU (or sensor), there may be a short in the ECU (or sensor).

NG → **REPAIR OR REPLACE CORRESPONDING ECU OR SENSOR BRANCH WIRE OR CONNECTOR**

OK

REPLACE CORRESPONDING ECU OR SENSOR

Short to GND in CAN Bus Line

DESCRIPTION

A short to GND is suspected in the CAN bus wire when the resistance between terminals 4 (CG) and 6 (CANH), or terminals 4 (CG) and 14 (CANL) of the DLC3 is below 200 Ω.

Symptoms	Trouble Area
The resistance between terminals 6 (CANH) and 4 (CG), or terminals 14 (CANL) and 4 (CG) of the DLC3 is below 200 Ω.	1. Short to GND in CAN bus wire 2. ECM 3. Combination meter 4. Skid control ECU 5. Steering angle sensor 6. Yaw rate sensor 7. Main Body ECU 8. A/C amplifier 9. Center airbag sensor 10. Gateway ECU 11. Active control engine mount ECU 12. Multi-display 13. CAN No. 2 J/C 14. CAN No. 5 J/C

WIRING DIAGRAM

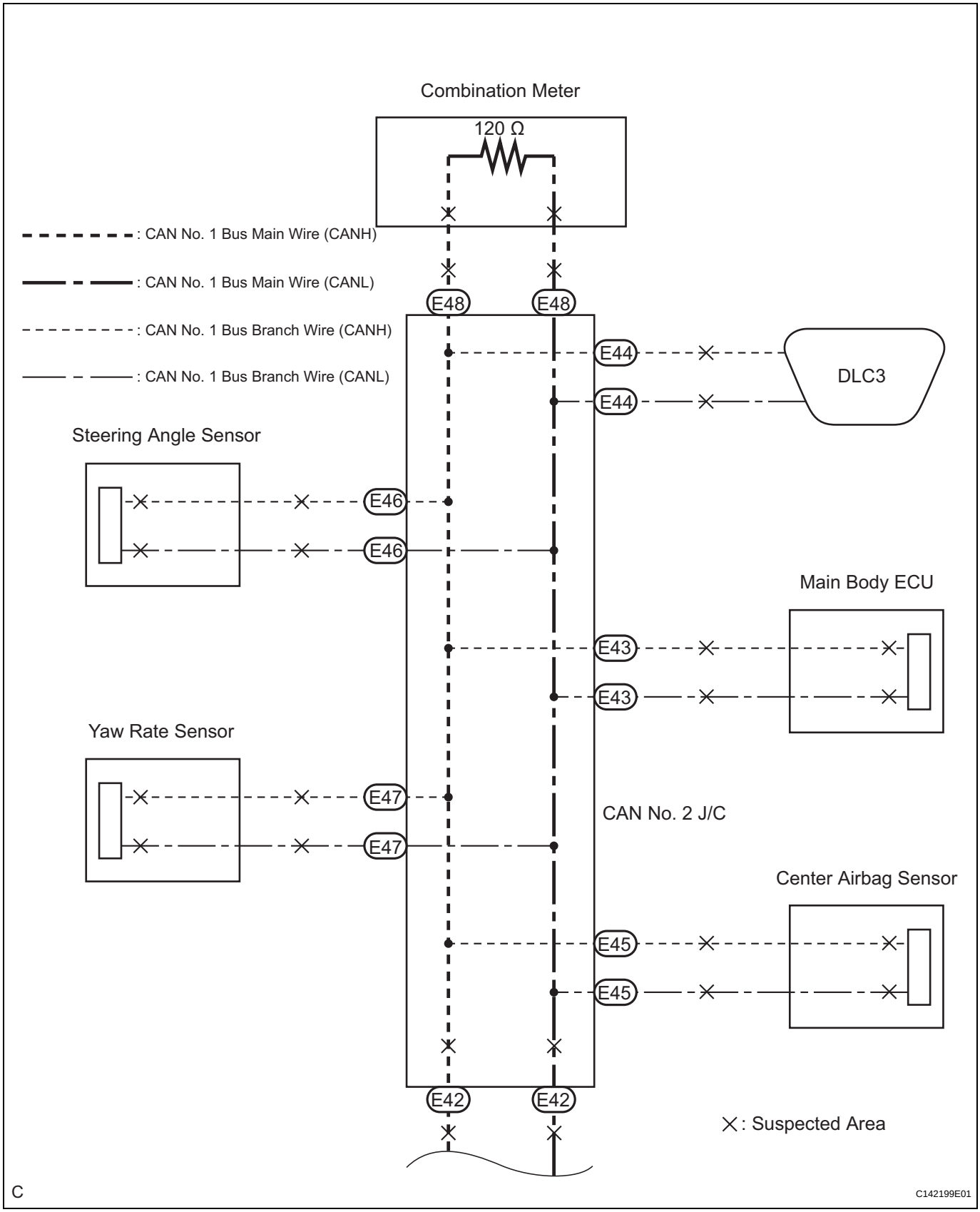

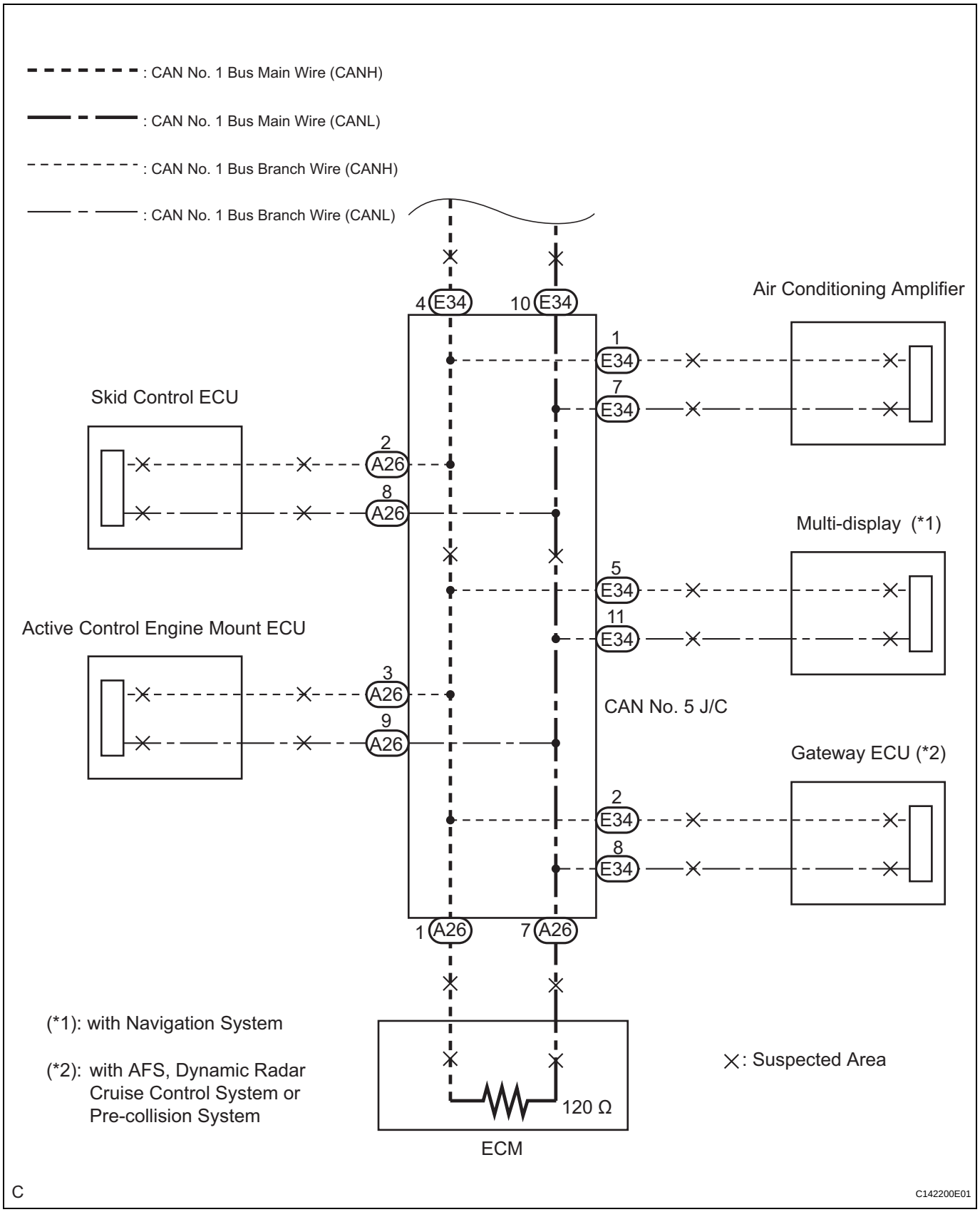
: CAN No. 1 Bus Main Wire (CANH)
: CAN No. 1 Bus Main Wire (CANL)
: CAN No. 1 Bus Branch Wire (CANH)
: CAN No. 1 Bus Branch Wire (CANL)
Air Conditioning Amplifier
Skid Control ECU
Multi-display (*1)
Active Control Engine Mount ECU
CAN No. 5 J/C
Gateway ECU (*2)
4 E34
10 E34
1 E34
7 E34
2 A26
8 A26
5 E34
11 E34
3 A26
9 A26
2 E34
8 E34
1 A26
7 A26
(*1): with Navigation System
(*2): with AFS, Dynamic Radar Cruise Control System or Pre-collision System
: Suspected Area
120 Ω
ECM
C
C142200E01

CA

INSPECTION PROCEDURE

NOTICE:

Before measuring the resistance, leave the vehicle as is for at least 1 minute and do not operate the engine switch, any other switches, or the doors. If any doors need to be opened in order to check connectors, open the doors and leave them open.

1	CHECK FOR SHORT TO GND IN CAN NO. 1 BUS WIRE (DLC3 BRANCH WIRE)

CAN No. 2 J/C "A" Side (without Earth Terminal) Wire Harness View:

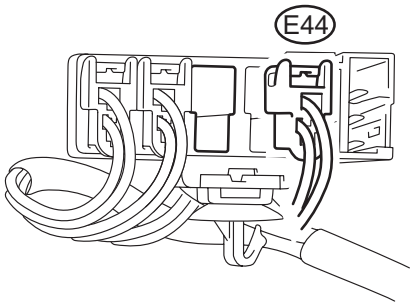

N C142225E01

(a) Turn the engine switch off.

(b) Disconnect DLC3 branch wire connector E44 from the CAN No. 2 J/C "A" side (without earth terminal).

NOTICE:

- **Before disconnecting the connector, make a note of where it is connected.**
- **Reconnect the connector to its original position.**

DLC3:

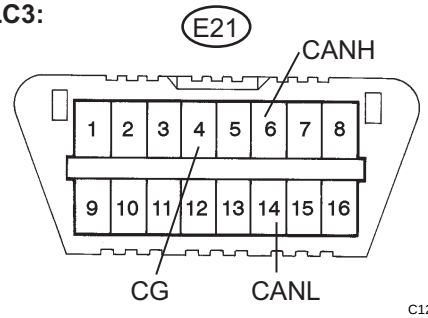

C126231E17

(c) Measure the resistance according to the value(s) in the table below.

Standard resistance

Tester Connection	Condition	Specified Value
E21-6 (CANH) - E21-4 (CG)	Engine switch off	200 Ω or higher
E21-14 (CANL) - E21-4 (CG)	Engine switch off	200 Ω or higher

(d) Reconnect DLC3 branch wire connector E44 to the CAN No. 2 J/C "A" side (without earth terminal).

NG → **REPAIR OR REPLACE DLC3 BRANCH WIRE OR CONNECTOR**

OK

2 CHECK FOR SHORT TO GND IN CAN NO. 1 BUS WIRE (CAN NO. 2 J/C SIDE)

CAN No. 2 J/C "A" Side (without Earth Terminal) Wire Harness View:

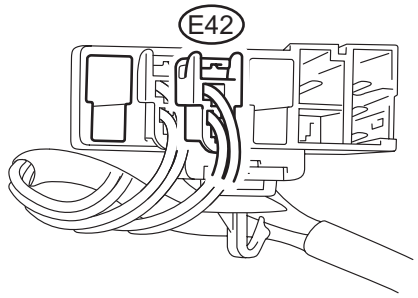

N C142224E02

(a) Disconnect CAN main bus wire connector E42 from the CAN No. 2 J/C "A" side (without earth terminal).

DLC3:

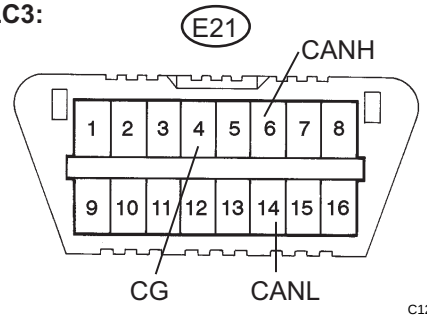

C126231E17

(b) Using an ohmmeter, measure the resistance between terminals 6 (CANH) and 4 (CG), and between terminals 14 (CANL) and 4 (CG) of the DLC3 each time a connector is disconnected.

Standard resistance

Tester Connection	Condition	Specified Value
E21-6 (CANH) - E21-4 (CG)	Engine switch off	200 Ω or higher
E21-14 (CANL) - E21-4 (CG)	Engine switch off	200 Ω or higher

OK → **Go to step 4**

NG

3 CHECK FOR SHORT TO GND IN CAN NO. 1 BUS WIRE

DLC3:

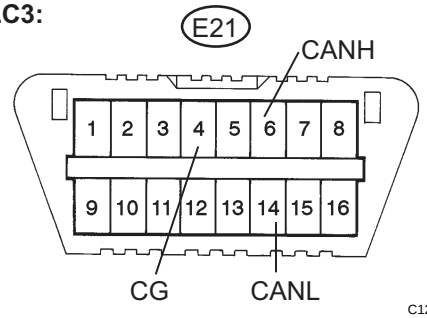

C126231E17

(a) Disconnect connectors from the CAN No. 2 J/C one at a time.
HINT:
Disconnect the ECU and sensor connectors other than the DLC3 branch wires and CAN main bus wires between the CAN No. 2 J/C and CAN No. 5 J/C.

(b) Using an ohmmeter, measure the resistance between terminals 6 (CANH) and 4 (CG), and between terminals 14 (CANL) and 4 (CG) of the DLC3 each time a connector is disconnected.

CAN No. 1 Bus:

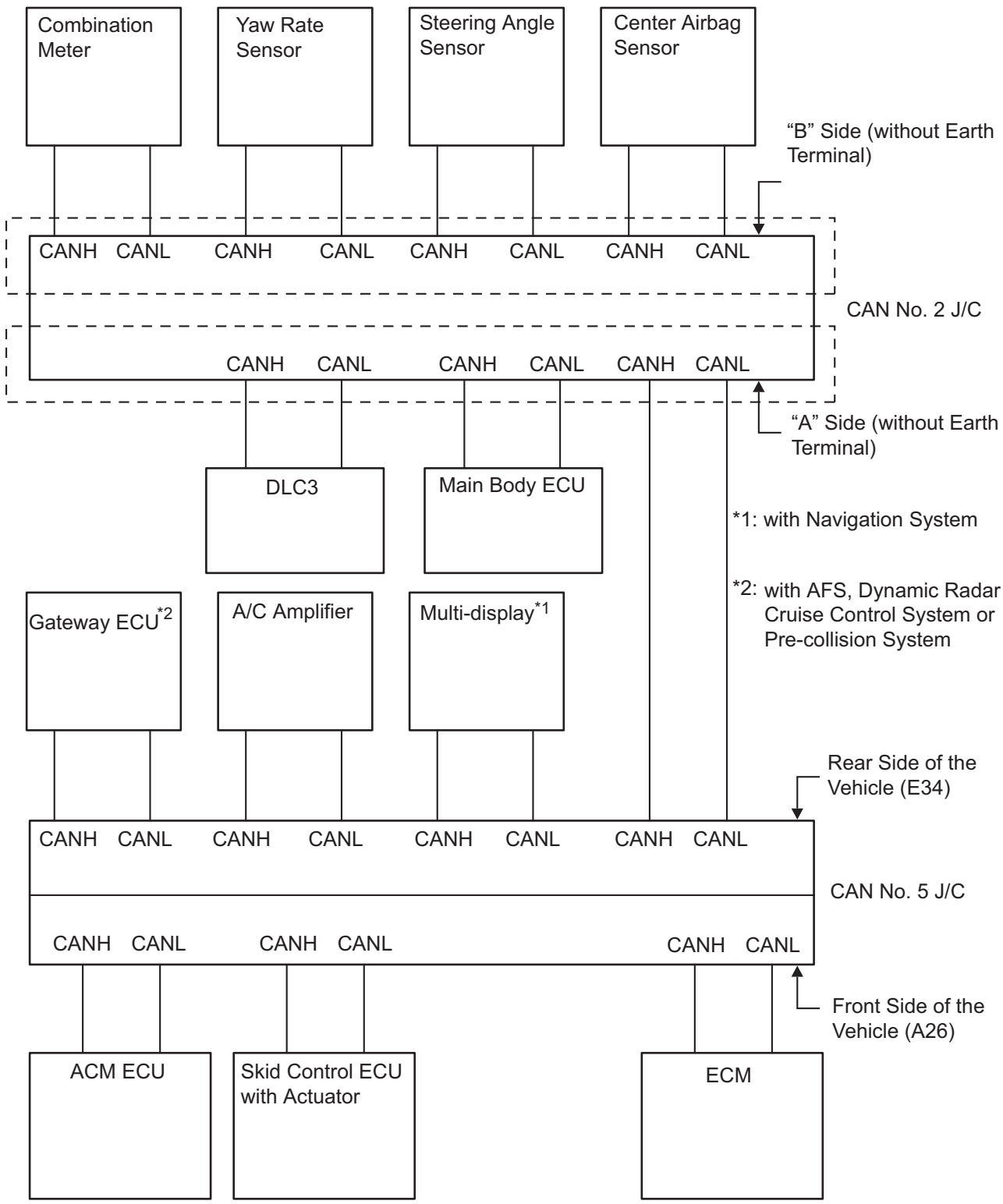

C

C142196E01

CA

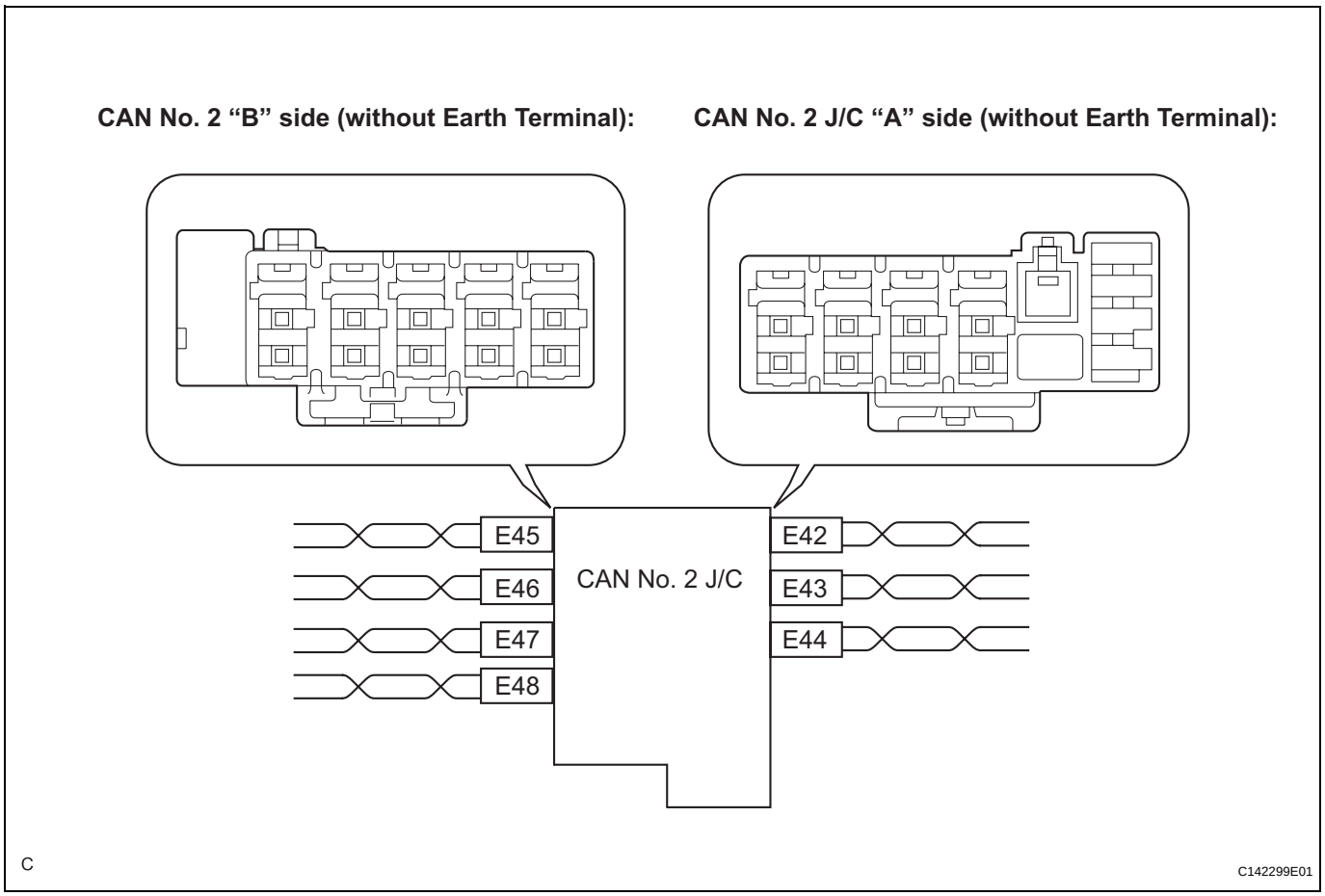

CAN No. 2 J/C Connector ("A" side, without earth terminal)	Connector Color	Color (CAN-H Side)	Color (CAN-L Side)
CAN No. 1 Bus Wire (E42)	White	B	W
Main Body ECU (E43)	White	BR	GR
DLC3 (E44)	White	LG	P

CAN No. 2 J/C Connector ("B" side, without earth terminal)	Connector Color	Color (CAN-H Side)	Color (CAN-L Side)
Yaw Rate Sensor (E47)	White	O	P
Center Airbag Sensor (E45)	White	G	Y
Steering Angle Sensor (E46)	White	V	P
Combination Meter (E48)	White	B	W

NOTICE:
Do not reconnect the disconnected connectors until this inspection is complete because there may be a short to GND in 2 or more CAN bus wires.

Result

Symptom	Proceed to
The resistance between terminals 6 (CANH) and 4 (CG), or the resistance between terminals 14 (CANL) and 4 (CG) is still below 200 Ω when all the specified connectors are disconnected from the CAN No. 2 J/C. (There is a short to GND in the CAN No. 2 J/C.)	**A**
The resistance between terminals 6 (CANH) and 4 (CG), or the resistance between terminals 14 (CANL) and 4 (CG) becomes normal (200 Ω or higher) when a connector is disconnected from the CAN J/C. (There is a short to GND in one of the areas that relate to the disconnected bus wires.)	**B**

(c) When there is a short to GND in one or more of the bus wires that connect to an ECU (or sensor):
  (1) Reconnect all of the connectors to the CAN No. 2 J/C, except for the one that was disconnected last (the bus wire that is shorted to GND). Check that the resistance shown on the tester is normal (200 Ω or higher) to confirm that there is a short to GND in one bus wire only.
  HINT:
  - The connectors connected to the CAN No. 2 J/C can be distinguished according to the color of the communication bus wires and the shape of the connectors.
  - Reconnecting the connectors to non-specified positions on the CAN No. 2 J/C does not affect system operation. However, it is preferred to reconnect the connectors to their specified positions to avoid negative effects on the wiring such as tension on the wiring harnesses, and to make future maintenance easier.

B → **Go to step 7**

A

REPLACE CAN NO. 2 J/C

4	CHECK FOR SHORT TO GND IN CAN NO. 1 BUS WIRE

CAN No. 5 J/C Connector (Front of the Vehicle) Wire Harness Side View:

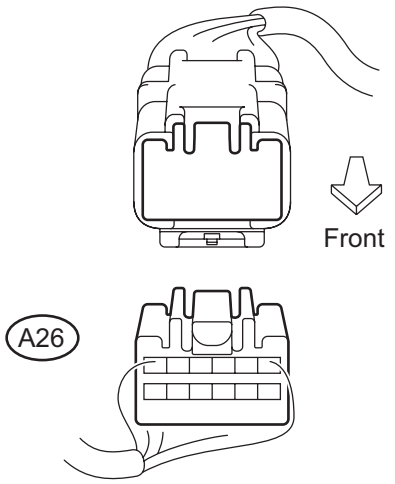

(a) Disconnect CAN No. 5 J/C connector A26.

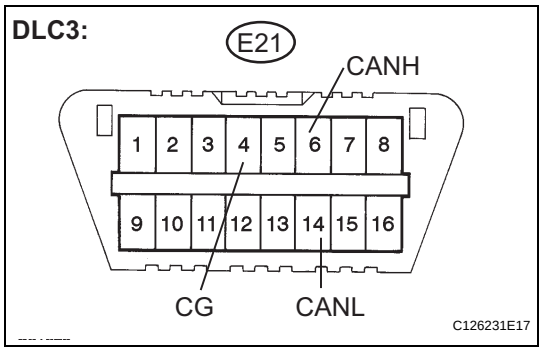

(b) Measure the resistance according to the value(s) in the table below.

Standard resistance

Tester Connection	Condition	Specified Value
E21-6 (CANH) - E21-4 (CG)	Engine switch off	200 Ω or higher
E21-14 (CANL) - E21-4 (CG)	Engine switch off	200 Ω or higher

OK → **Go to step 6**

NG

5 CHECK FOR SHORT TO GND IN CAN NO. 1 BUS WIRE (CAN NO. 5 J/C WIRE)

(a) Reconnect CAN No. 5 J/C connector A26.
(b) Disconnect CAN No. 5 J/C connector E34.

CAN No. 5 J/C (Rear Side of the Vehicle) Wire Harness View:

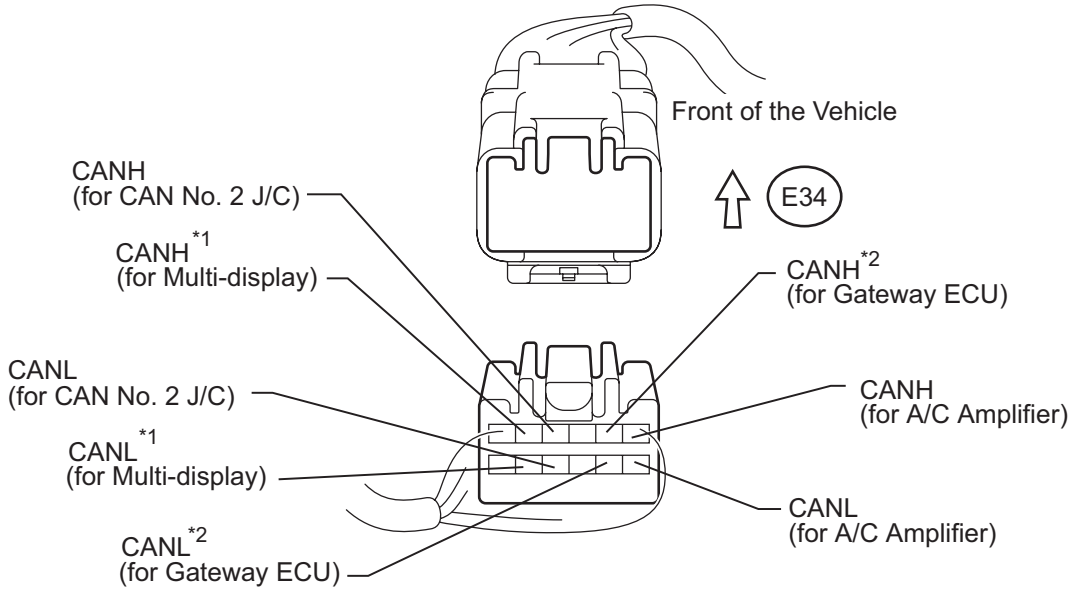

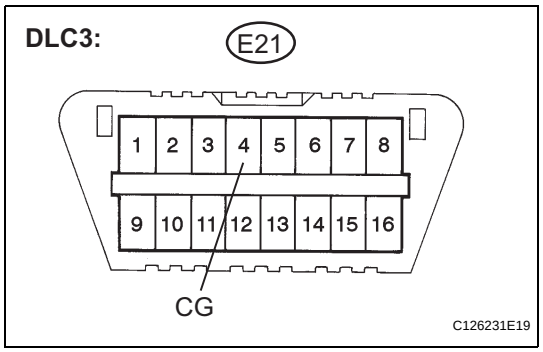

(c) Measure the resistance according to the value(s) in the table below.

Standard resistance

Tester Connection	Destination	Condition	Specified Value
E34-1 (CANH) - E21-4 (CG)	A/C amplifier	Engine switch off	200 Ω or higher
E34-7 (CANL) - E21-4 (CG)			

CA

Tester Connection	Destination	Condition	Specified Value
E34-2 (CANH)*2 - E21-4 (CG)	Gateway ECU*2	Engine switch off	200 Ω or higher
E34-8 (CANL)*2 - E21-4 (CG)			
E34-4 (CANH) - E21-4 (CG)	CAN No. 2 J/C	Engine switch off	200 Ω or higher
E34-10 (CANL) - E21-4 (CG)			
E34-5*1 (CANH) - E21-4 (CG)	Multi-display*1	Engine switch off	200 Ω or higher
E34-11*1 (CANL) - E21-4 (CG)			

Result

Result	Proceed to
OK	A
NG (GND short in wires other than those connected to CAN No. 2 J/C)	B
NG (GND short in wires connected to CAN No. 2 J/C)	C

HINT:
- *1: with Navigation system
- *2: with AFS, dynamic radar cruise control system or pre-collision system

B → **Go to step 7**

C → **REPAIR OR REPLACE CAN NO. 1 BUS MAIN WIRE OR CONNECTOR (CAN NO. 2 J/C - CAN NO. 5 J/C)**

A

REPLACE CAN NO. 5 J/C

6 CHECK FOR SHORT TO GND IN CAN NO. 1 BUS WIRE (CAN NO. 5 WIRE)

(a) Disconnect CAN No. 5 J/C connector A26.

CAN No. 5 J/C (Front Side of the Vehicle) Wire Harness View:

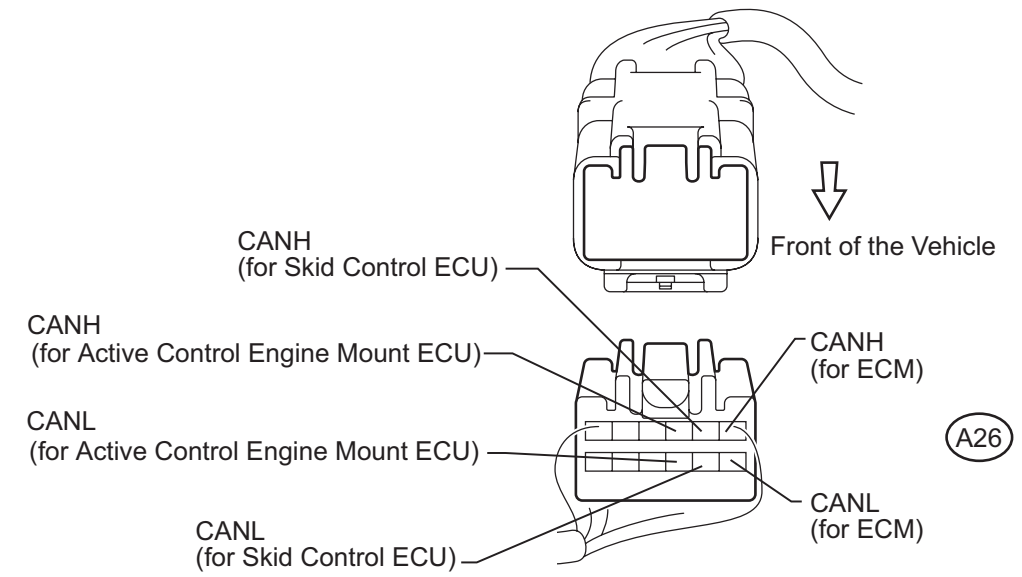

DLC3:

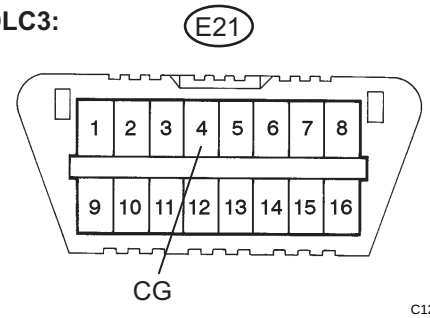

(b) Measure the resistance according to the value(s) in the table below.

Standard resistance

Tester Connection	Destination	Condition	Specified Value
A26-1 (CANH) - E21-4 (CG)	ECM	Engine switch off	200 Ω or higher
A26-7 (CANL) - E21-4 (CG)			
A26-2 (CANH) - E21-4 (CG)	Skid control ECU	Engine switch off	200 Ω or higher
A26-8 (CANL) - E21-4 (CG)			
A26-3 (CANH) - E21-4 (CG)	Active control engine mount ECU	Engine switch off	200 Ω or higher
A26-9 (CANL) - E21-4 (CG)			

OK → **REPLACE CAN NO. 5 J/C**

NG

7	RECONNECT CONNECTOR

(a) Reconnect the connector of the bus wire that is shorted to GND to the CAN No. 2 J/C or CAN No. 5 J/C (the connector that caused the bus wire resistance to change to 200 Ω or more when it was disconnected).

NEXT

8	CHECK FOR SHORT TO GND IN CAN NO. 1 BUS WIRE

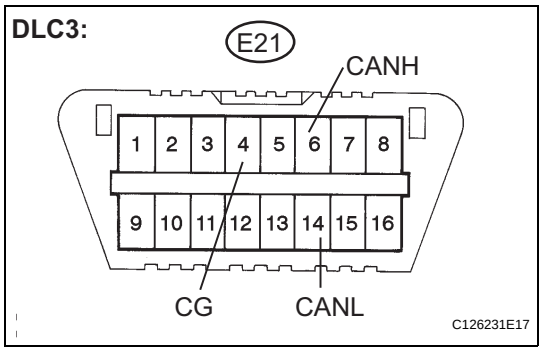

(a) Disconnect the connector that includes terminals CANH and CANL from the ECU (or sensor) to which the bus wire shorted to GND is connected. (See page CA-15)

(b) Measure the resistance according to the value(s) in the table below.

Standard resistance

Tester Connection	Condition	Specified Value
E21-6 (CANH) - E21-4 (CG)	Engine switch off	200 Ω or higher
E21-14 (CANL) - E21-4 (CG)	Engine switch off	200 Ω or higher

HINT:
If the resistance changes to 200 Ω or higher when the connector is disconnected from the ECU (or sensor), there may be a short in the ECU (or sensor).

NG → **REPAIR OR REPLACE CORRESPONDING ECU OR SENSOR BRANCH WIRE OR CONNECTOR**

OK

REPLACE CORRESPONDING ECU OR SENSOR

Open in One Side of CAN Branch Line

DESCRIPTION

If some ECUs and sensors are not displayed on the "BUS CHECK" screen of the intelligent tester and some ECUs and sensors repeatedly appear and disappear from the screen when the CAN main bus wires are normal (there is no open, short, short to B+, or short to GND in the main bus wires), there may be an open circuit in either of the CAN branch wires.

HINT:

If some ECUs and sensors repeatedly appear and disappear from the "BUS CHECK" screen, communication between the normal ECUs (sensors) and intelligent tester may be affected by the incomplete signals that are output from the ECU that has an open circuit in either of its CAN branch wires. In this case, the CAN branch wires for the ECUs and sensors that repeatedly appear and disappear from the screen are normal and the ECU that is not displayed on the screen may be the main cause of the problem (this ECU may have an open circuit in either of its CAN branch wires).

Symptom	Trouble Area
2 or more ECUs and/or sensors do not appear on the intelligent tester "BUS CHECK" screen via the CAN VIM.	One side of the CAN branch wire is open 1. Skid control ECU 2. Steering angle sensor 3. Yaw rate sensor 4. ECM 5. Gateway ECU 6. Combination meter 7. A/C amplifier 8. Active control engine mount ECU 9. Main body ECU 10. Center airbag sensor 11. Multi-display

WIRING DIAGRAM

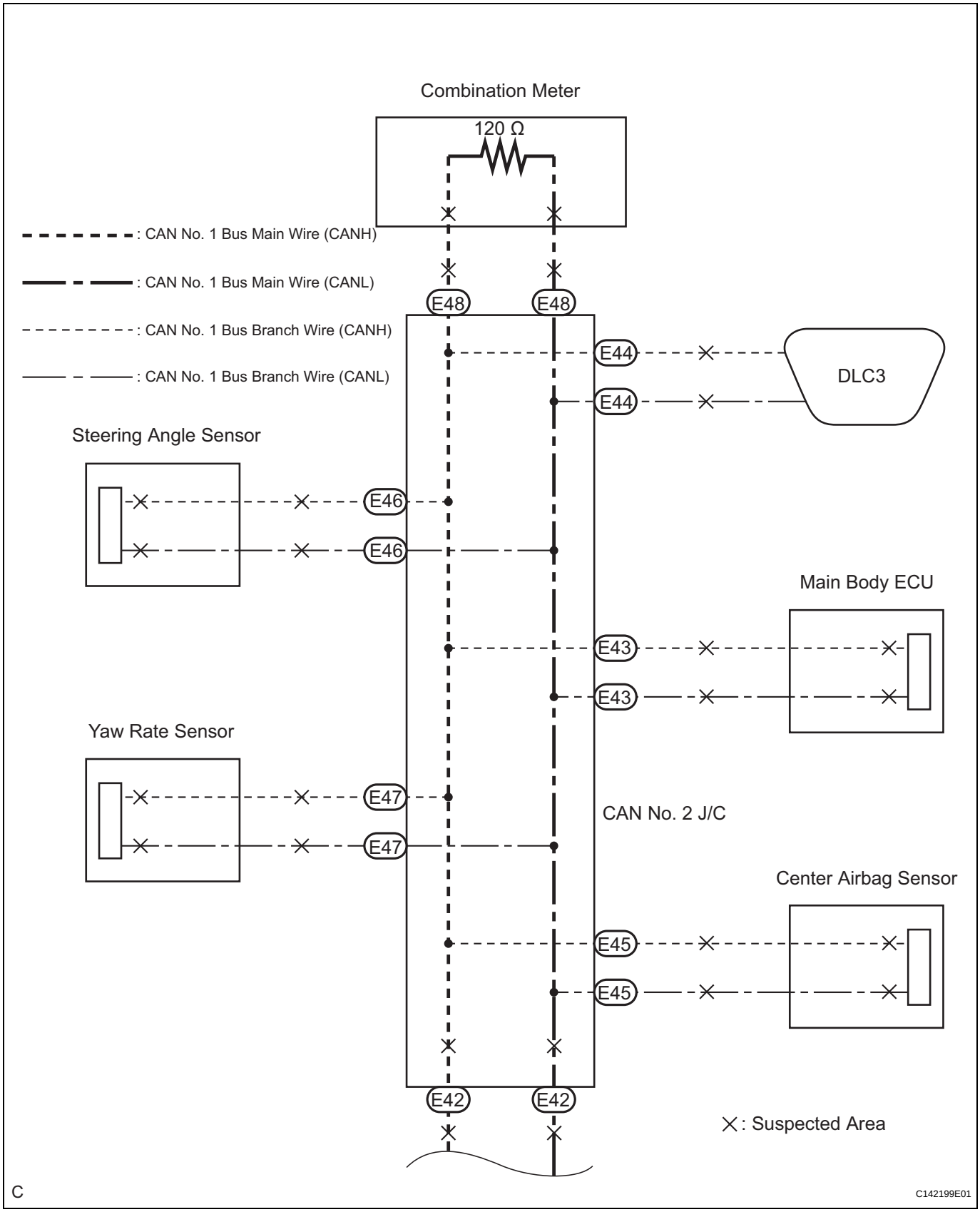

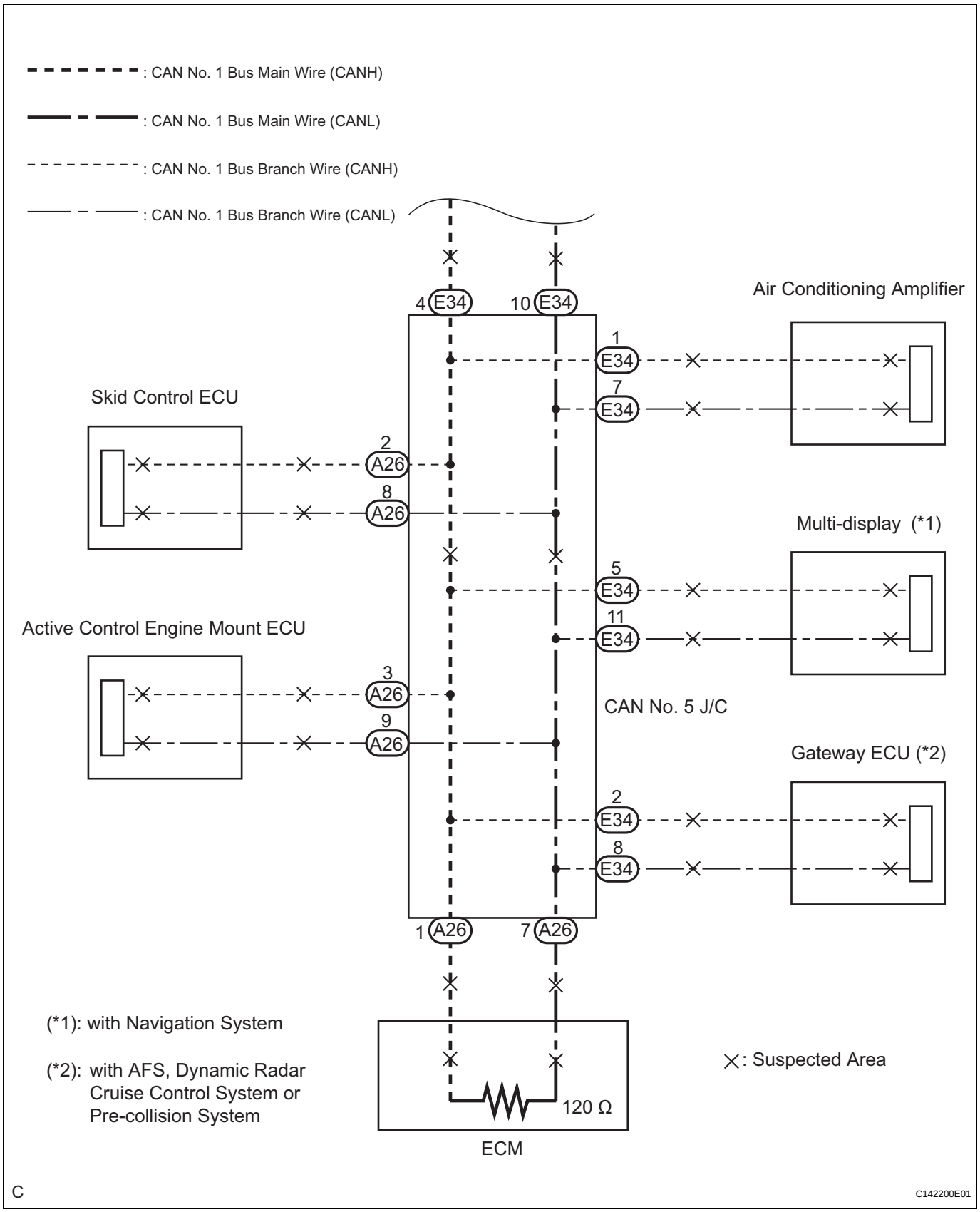
: CAN No. 1 Bus Main Wire (CANH)
: CAN No. 1 Bus Main Wire (CANL)
: CAN No. 1 Bus Branch Wire (CANH)
: CAN No. 1 Bus Branch Wire (CANL)
Air Conditioning Amplifier
Skid Control ECU
Multi-display (*1)
Active Control Engine Mount ECU
CAN No. 5 J/C
Gateway ECU (*2)
4 E34
10 E34
1 E34
7 E34
2 A26
8 A26
5 E34
11 E34
3 A26
9 A26
2 E34
8 E34
1 A26
7 A26
(*1): with Navigation System
(*2): with AFS, Dynamic Radar Cruise Control System or Pre-collision System
: Suspected Area
120 Ω
ECM
C
C142200E01

CA

INSPECTION PROCEDURE

NOTICE:

Before measuring the resistance, leave the vehicle as is for at least 1 minute and do not operate the engine switch, any other switches, or the doors. If any doors need to be opened in order to check connectors, open the doors and leave them open.

1	CHECK FOR OPEN IN ONE SIDE OF CAN NO. 1 BUS BRANCH WIRE

(a) Confirm the systems (ECUs and sensors), which use CAN communication, equipped on the vehicle. (See page CA-41)

(b) Using the intelligent tester, select and perform "BUS CHECK". (See page CA-41)

(c) Observe the screen for approximately 1 minute to check the ECUs and sensors that are not displayed on the screen and also those that repeatedly appear and disappear from the screen.

(d) Disconnect the branch wire connectors, which are connected to the ECUs or sensors that never appear on the screen, from the CAN J/C.

CAN No. 1 Bus:

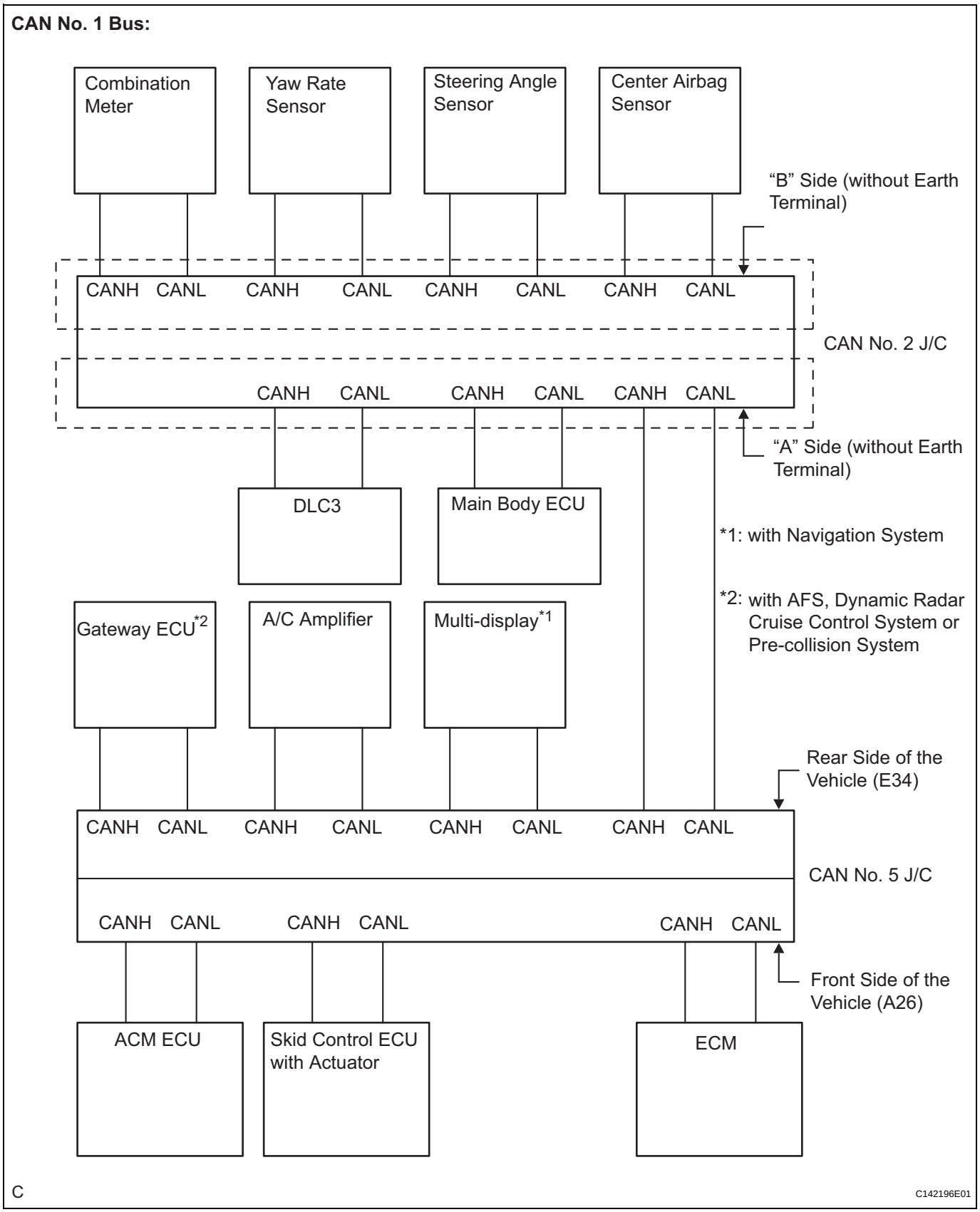

CA

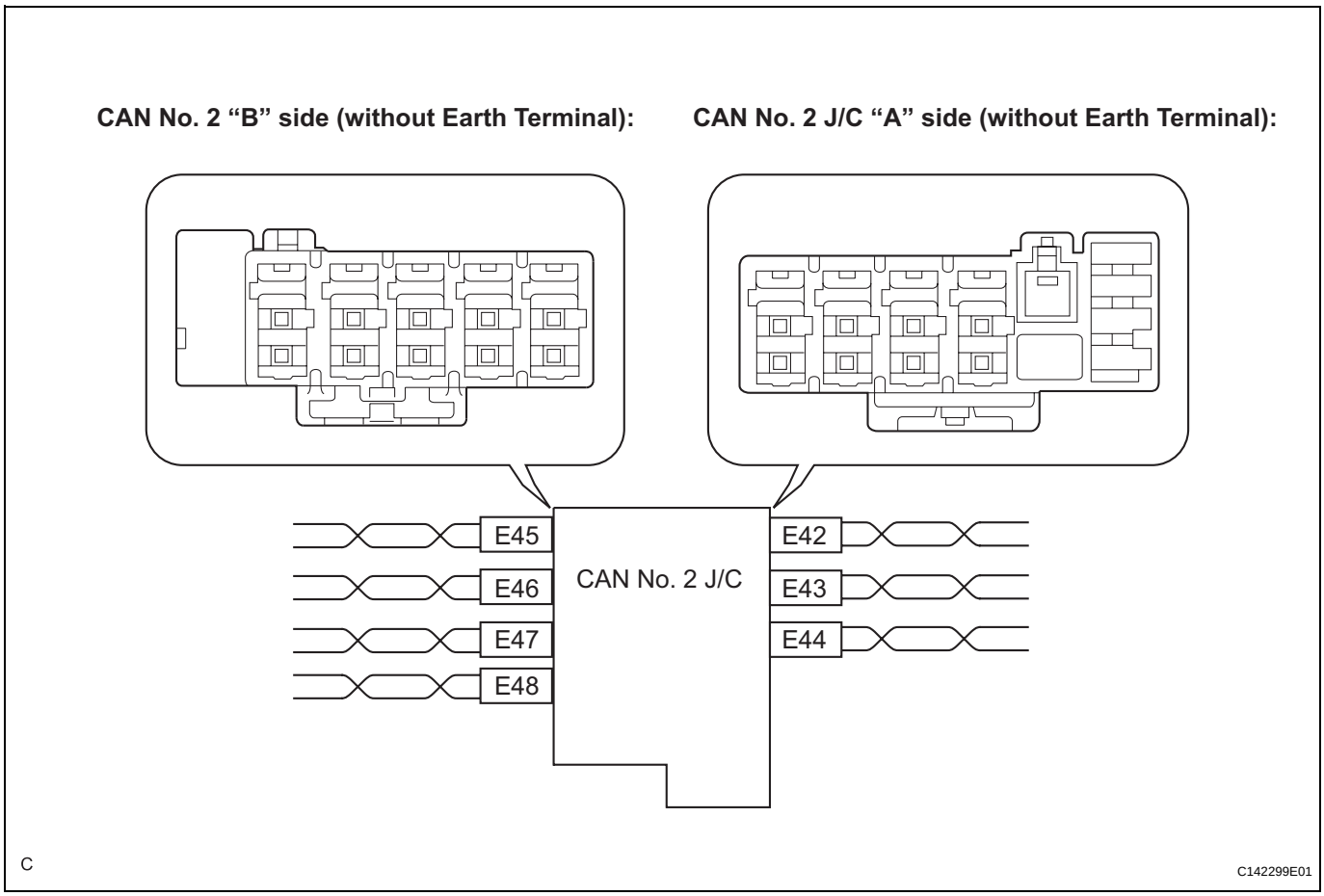

CAN No. 2 J/C Connector ("A" side, with earth terminal)	Connector Color	Color (CAN-H Side)	Color (CAN-L Side)
CAN No. 1 Bus Wire (E42)	White	B	W
Main Body ECU (E43)	White	BR	GR
DLC3 (E44)	White	LG	P

CAN No. 2 J/C Connector ("B" side, with earth terminal)	Connector Color	Color (CAN-H Side)	Color (CAN-L Side)
Yaw Rate Sensor (E47)	White	O	P
Center Airbag Sensor (E45)	White	G	Y
Steering Angle Sensor (E46)	White	V	P
Combination Meter (E48)	White	B	W

CAN No. 5 J/C (Front Side of the Vehicle) Wire Harness View:

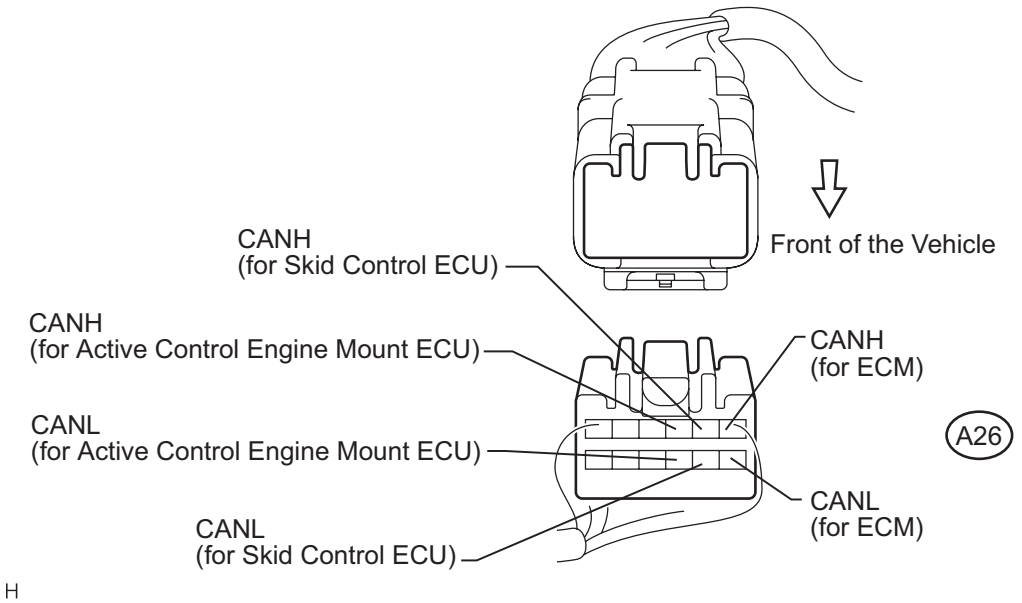

Terminal	Wiring Color	Destination
A26-1 (CANH)	B	ECM (CANH)
A26-7 (CANL)	W	ECM (CANL)
A26-2 (CANH)	L	Skid Control ECU (CANH)
A26-8 (CANL)	LG	Skid Control ECU (CANL)
A26-3 (CANH)	G	Active Control Engine Mount ECU (CANH)
A26-9 (CANL)	R	Active Control Engine Mount ECU (CANL)

CAN No. 5 J/C (Rear Side of the Vehicle) Wire Harness View:

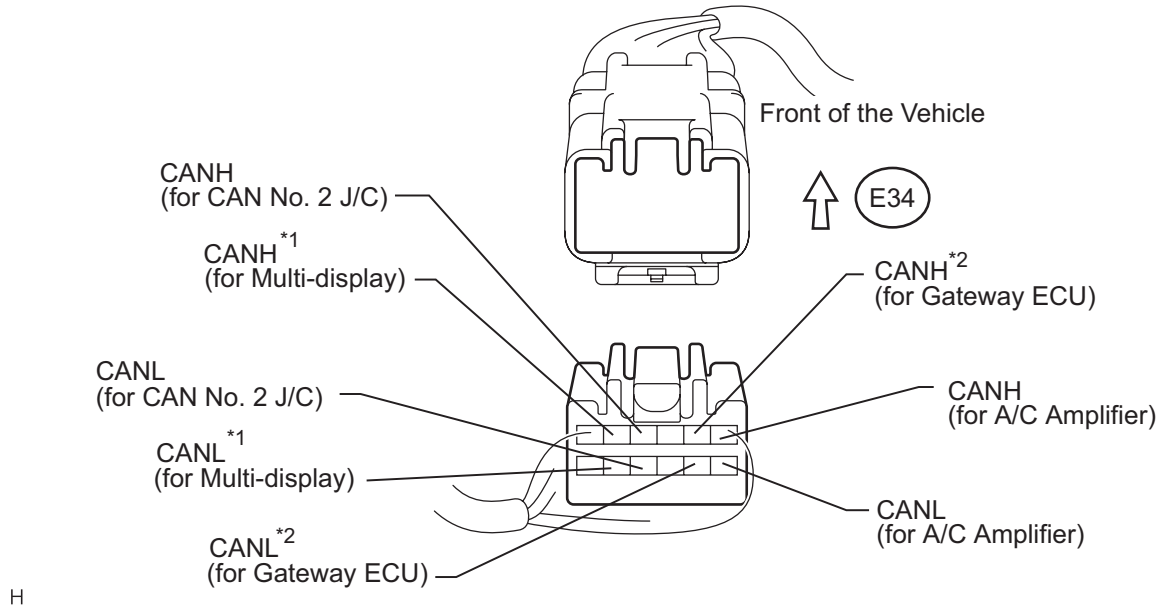

Terminal	Wiring Color	Destination
E34-1 (CANH)	GR	A/C Amplifier (CANH)

CA

Terminal	Wiring Color	Destination
E34-7 (CANL)	BR	A/C Amplifier (CANL)
E34-2 (CANH)*2	P	Gateway ECU (CANH)
E34-8 (CANL)*2	O	Gateway ECU (CANL)
B34-4 (CANH)	B	CAN No. 2 J/C (CANH)
B34-10 (CANL)	W	CAN No. 2 J/C (CANL)
B34-5 (CANH)*1	L	Multi-display (CANH)
B34-11 (CANL)*1	Y	Multi-display (CANL)

HINT:
- *1: with Navigation system
- *2: with AFS, dynamic radar cruise control system or pre-collision system
- Connecting locations of the connectors shown in the above tables are those of a vehicle whose connector locations have never been changed.
- If the connector locations differ from those shown in the above tables, identify each connector according to the color of the bus wires.

(e) Check that the ECUs and sensors, which repeatedly appeared and disappeared from the "BUS CHECK" screen, are constantly displayed.

(f) Perform the communication stop mode check for the ECUs and sensors which correspond to the disconnected branch wire connectors (See page CA-41).
HINT:
If any of the following conditions are met, an open in the CAN bus main wire is suspected. Refer to "Open in CAN Main Bus Line" (See page CA-154).
- Only ECM is not displayed for 1 minute.
- Only combination meter is not displayed for 1 minute.
- All ECUs and sensors connected to the CAN No. 5 J/C are not displayed for 1 minute.

NEXT

GO TO CORRESPONDING COMMUNICATION STOP MODE

ENGINE

ON-VEHICLE INSPECTION

1. INSPECT ENGINE COOLANT

(a) Inspect the engine coolant (See page CO-6).

2. INSPECT ENGINE OIL

(a) Inspect the engine oil (See page LU-1).

3. INSPECT BATTERY

(a) Inspect the battery (See page CH-4).

4. INSPECT SPARK PLUGS

(a) Inspect the spark plugs (See page IG-5).

5. INSPECT AIR CLEANER FILTER ELEMENT SUB-ASSEMBLY

(a) Remove the air cleaner filter element sub-assembly.

(b) Visually check that there is no dirt, blockage, and/or damage to the air cleaner filter element.
HINT:
- If there is any dirt or a blockage in the air cleaner filter element, clean it with compressed air.
- If any dirt or a blockage remains even after cleaning the air cleaner filter element with compressed air, replace it.

6. INSPECT VALVE LASH ADJUSTER NOISE

(a) Rev up the engine several times. Check that the engine does not emit unusual noises.
If unusual noises occur, warm up the engine and idle it for over 30 minutes. Then repeat this procedure.
HINT:
If any defects or problems are found during the inspection above, perform lash adjuster inspection (See page EM-85).

7. INSPECT IGNITION TIMING

(a) Warm up the engine.

(b) When using the intelligent tester:
Check the ignition timing.
(1) Connect the intelligent tester to the DLC3.
(2) Enter DATA LIST mode with the intelligent tester.
Ignition timing:
8 to 12° BTDC at idle
HINT:
Refer to the intelligent tester operator's manual for help when selecting the DATA LIST.

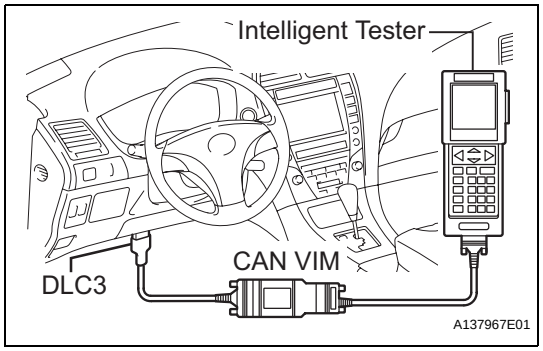

EM

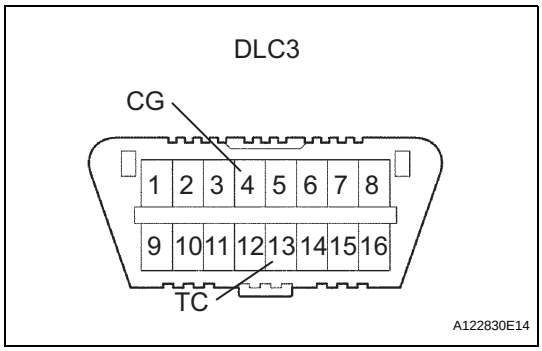

(c) When not using the intelligent tester:
Check the ignition timing.

(1) Using SST, connect terminals 13 (TC) and 4 (CG) of the DLC3.
SST 09843-18040
NOTICE:
- **Confirm the terminal numbers before connecting them. Connection with a wrong terminal can damage the engine.**
- **Turn off all electrical systems before connecting the terminals.**
- **Perform this inspection after the cooling fan motor is turned off.**

(2) Remove the cool air intake duct seal. (See page EM-22)

(3) Remove the engine room side cover LH. (See page EM-22)

(4) Remove the engine room side cover RH. (See page EM-22)

(5) Remove the V-bank cover. (See page EM-23)

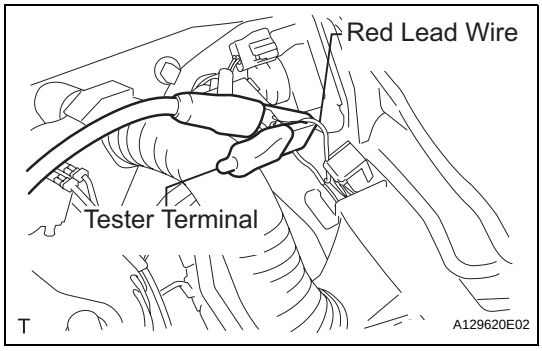

(6) Pull out the red lead wire harness.

(7) Connect the tester terminal of the timing light to the red lead wire as shown in the illustration.
NOTICE:
Use a timing light which can detect the first signal.

(8) Check the ignition timing at idle.
Ignition timing:
8 to 12° BTDC at idle
NOTICE:
When checking the ignition timing, the transmission should be in neutral.
HINT:
Run the engine at 1,000 to 1,300 rpm for 5 seconds, and then check that the engine rpm returns to idle speed.

(9) Disconnect terminals 13 (TC) and 4 (CG) of the DLC3.

(10) Check the ignition timing at idle.
Ignition timing:
12 to 22° BTDC at idle

(11) Confirm that the ignition timing moves to the advanced angle side when the engine rpm is increased.

(12) Remove the timing light.

8. INSPECT ENGINE IDLE SPEED

(a) Warm up the engine.

EM

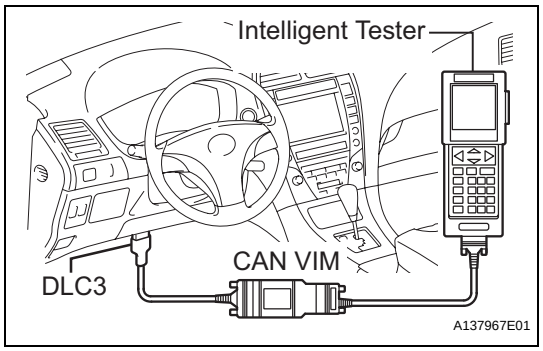

(b) When using the intelligent tester:
Check the idle speed.
(1) Connect the intelligent tester to the DLC3.
(2) Enter DATA LIST mode with the intelligent tester.
Idle speed:
600 to 700 rpm
NOTICE:
- **When checking the idle speed, the transmission should be in neutral.**
- **Check the idle speed with the cooling fan off.**
- **Switch off all accessories and air conditioning before connecting the intelligent tester.**

HINT:
Refer to the intelligent tester operator's manual for further details.

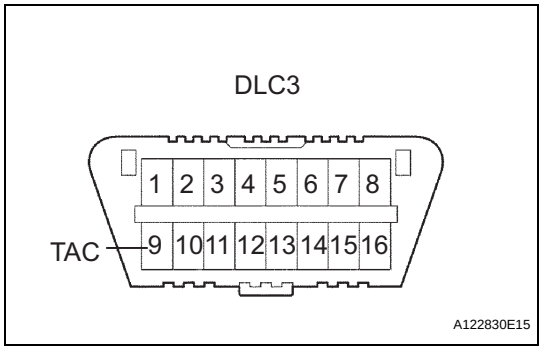

(c) When not using the intelligent tester:
Check the idle speed.
(1) Using SST, connect the tachometer test probe to terminal 9 (TAC) of the DLC3.
SST 09843-18030
(2) Check the idle speed.
Idle speed:
600 to 700 rpm

9. INSPECT COMPRESSION
(a) Warm up and stop the engine.
(b) Disconnect the injector connectors.
(c) Remove the intake air surge tank (See page FU-12).
(d) Remove the 6 ignition coils.
(e) Remove the 6 spark plugs.

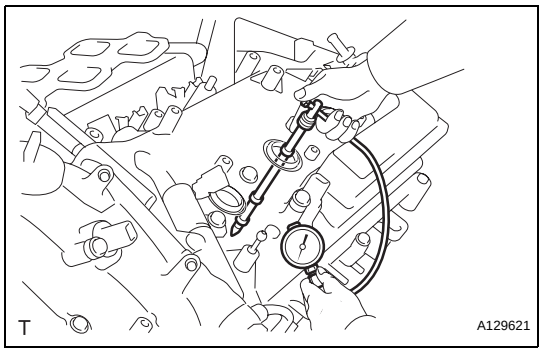

(f) Check the cylinder compression pressure.
(1) Insert a compression gauge into the spark plug hole.
(2) While cranking the engine, measure the compression pressure.
Compression pressure:
1.4 MPa (14 kgf/cm^2, 199 psi)
Minimum pressure:
0.98 MPa (10 kgf/cm^2, 142 psi)
Difference between each cylinder:
0.1 MPa (1.0 kgf/cm^2, 15 psi)
NOTICE:
- **Always use a fully charged battery to obtain an engine speed of 250 rpm or more.**
- **Check the other cylinders' compression pressure in the same way.**
- **This measurement must be done as quickly as possible.**

EM

(3) If the cylinder compression is low, pour a small amount of engine oil into the cylinder through the spark plug hole and inspect again.
HINT:
- If adding oil increases the compression, the piston rings and/or cylinder bore may be worn or damaged.
- If pressure stays low, a valve may be stuck or seated improperly, or there may be leakage in the gasket.

(g) Install the 6 spark plugs.
Torque: 18 N*m (184 kgf*cm, 13 ft.*lbf)

(h) Install the 6 ignition coils.
Torque: 10 N*m (102 kgf*cm, 7 ft.*lbf)

(i) Install the intake air surge tank. (See page FU-16)

10. INSPECT CO/HC

(a) Start the engine.

(b) Run the engine at 2,500 rpm for approximately 180 seconds.

(c) Insert the CO/HC meter testing probe at least 40 cm (1.3 ft) into the tailpipe during idling.

(d) Check CO/HC concentration at idle and/or 2,500 rpm.
HINT:
Check regulations and restrictions in your area when performing 2 mode CO/HC concentration testing (engine check at both idle speed and at 2,500 rpm).
If the CO/HC concentration does not comply with regulations, perform troubleshooting in the order given below.

(1) Check A/F sensor and heated oxygen sensor operation.

(2) See the table below for possible causes, and then inspect and repair.

CO	HC	Problems	Causes
Normal	High	Rough idle	1. Faulty ignitions: – Incorrect timing – Fouled, shorted or improperly gapped plugs 2. Incorrect valve clearance 3. Leaks in intake and exhaust valves 4. Leaks in cylinders
Low	High	Rough idle (fluctuating HC reading)	1. Vacuum leaks: – PCV hoses – Intake manifold – Throttle body – Brake booster line 2. Lean mixture causing misfire
High	High	Rough idle (black smoke from exhaust)	1. Restricted air filter 2. Plugged PCV valve 3. Faulty SFI system: – Faulty fuel pressure regulator – Defective ECT sensor – Defective MAF meter – Faulty ECM – Faulty injectors – Faulty throttle position sensor

DRIVE BELT

COMPONENTS

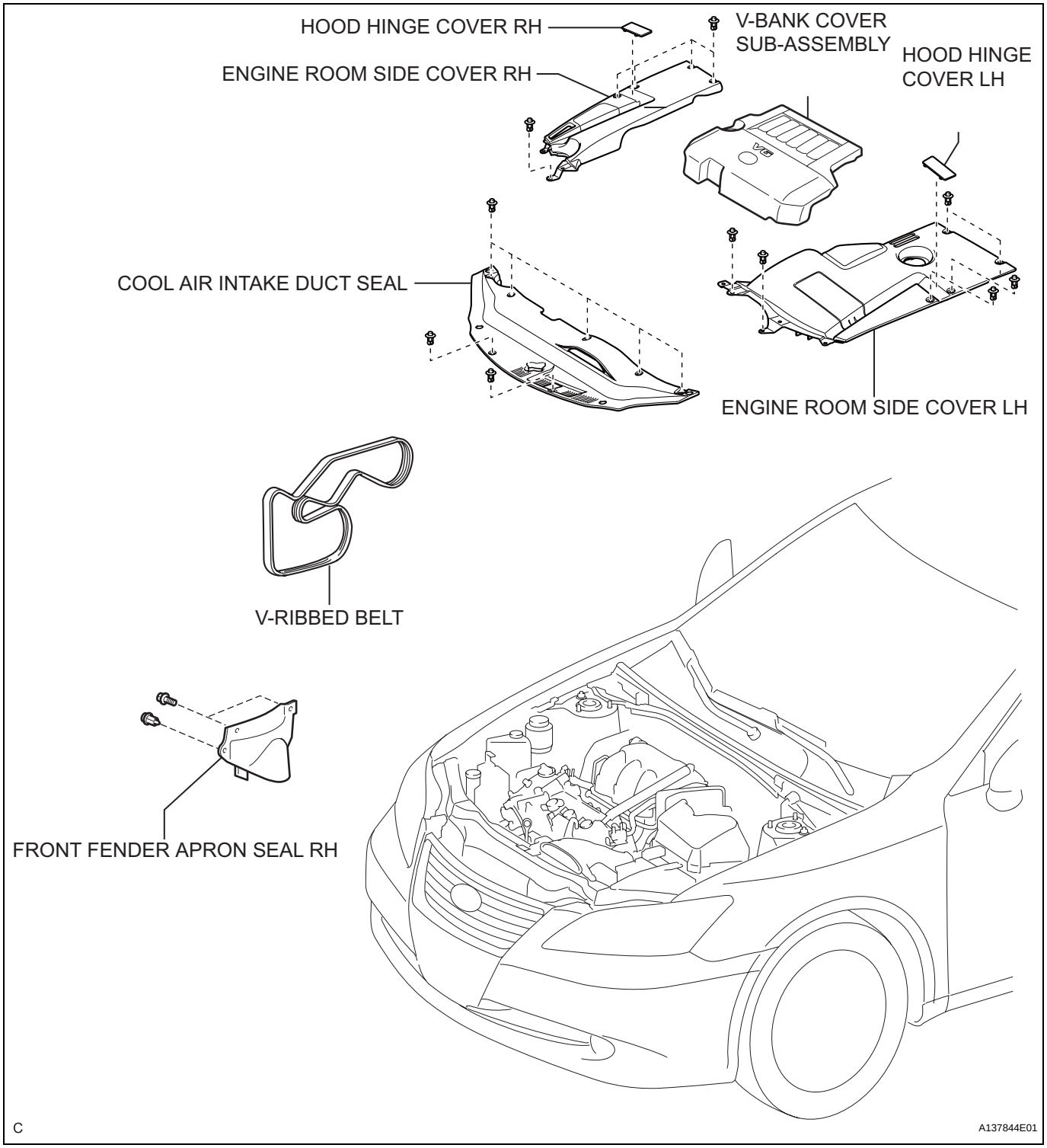

EM

EM

REMOVAL

1. **REMOVE FRONT WHEEL RH**
2. **REMOVE FRONT FENDER APRON SEAL RH**
3. **REMOVE COOL AIR INTAKE DUCT SEAL (See page EM-22)**
4. **REMOVE ENGINE ROOM SIDE COVER LH (See page EM-22)**
5. **REMOVE ENGINE ROOM SIDE COVER RH (See page EM-22)**
6. **REMOVE V-BANK COVER SUB-ASSEMBLY (See page EM-23)**
7. **REMOVE V-RIBBED BELT**
   (a) While releasing the belt tension by turning the belt tensioner counterclockwise, remove the V-ribbed belt from the belt tensioner.
   (b) While turning the belt tensioner counterclockwise, align with its holes, and then insert the 5 mm bi-hexagon wrench into the holes to fix the V-ribbed belt tensioner.

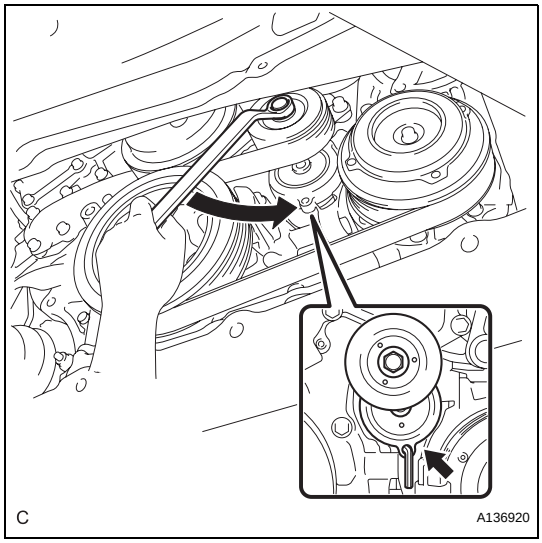

INSPECTION

1. **INSPECT V-RIBBED BELT**
   (a) Visually check the V-ribbed belt for excessive wear, frayed cords, etc.
   If any defect has been found, replace the V-ribbed belt.
   HINT:
   Cracks on the rib side of a V-ribbed belt are considered acceptable.
   If the drive belt has chunks missing from its ribs, it should be replaced.
   HINT:
   - A "new belt" is a belt which has been used for less than 5 minutes with the engine running.
   - A "used belt" is a belt which has been used for 5 minutes or more with the engine running.

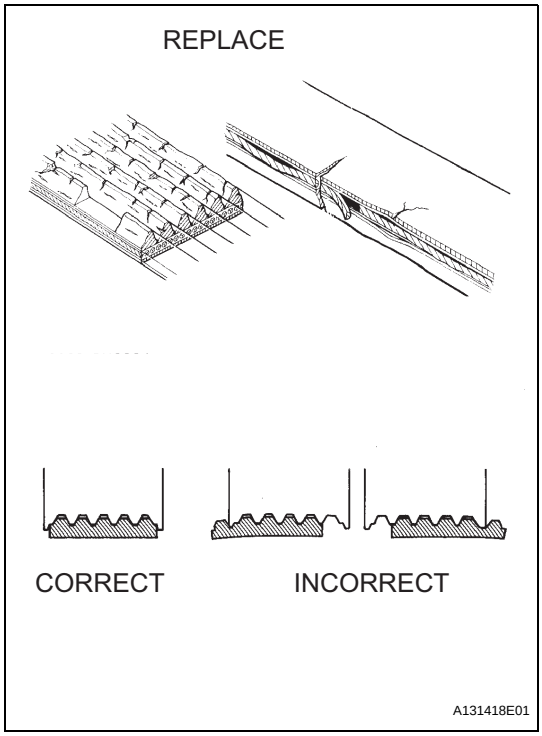

2. **INSPECT V-RIBBED BELT TENSIONER ASSEMBLY**
   (a) Check that nothing gets caught in the tensioner by turning it clockwise and counterclockwise.
   If a malfunction exitsts, replace the tensioner.

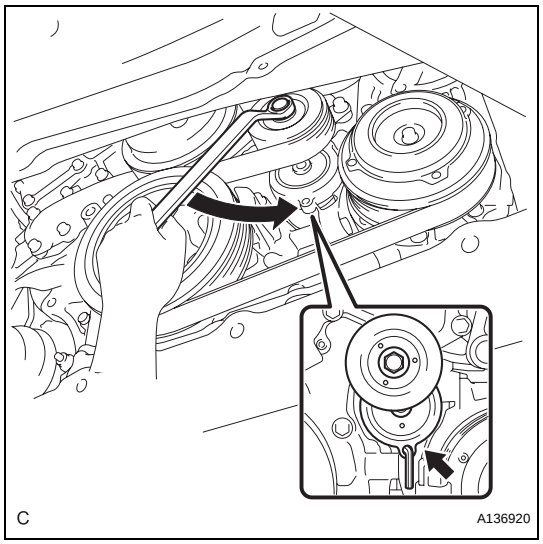

INSTALLATION

1. INSTALL V-RIBBED BELT

(a) Install the V-ribbed belt.

(b) While turning the belt tensioner counterclockwise, remove the bar.

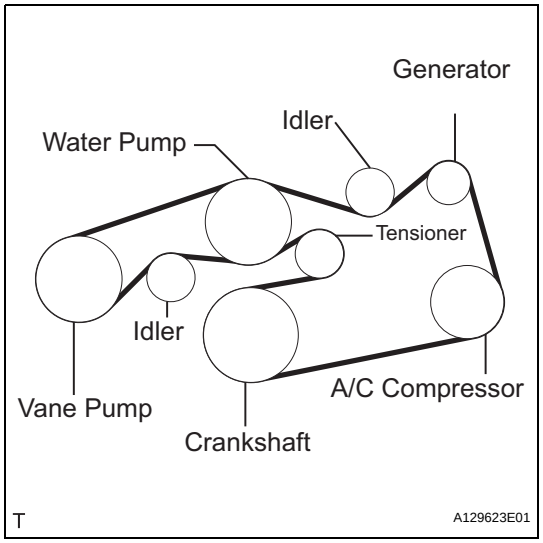

(c) If it is difficult to install the V-ribbed belt, perform the following procedure:

(1) Put the V-ribbed belt on every pulley except the tensioner pulley as shown in the illustration.

(2) While releasing the belt tension by turning the belt tensioner counterclockwise, put the V-ribbed belt on the tensioner pulley.

NOTICE:

- **Put the backside of the V-ribbed belt on the tensioner pulley and idler pulley.**
- **Check that the V-ribbed belt is properly set to each pulley.**

(d) After installing the V-ribbed belt, check that it fits properly in the ribbed grooves. Confirm that the belt has not slipped out of the grooves on the bottom of the crank pulley by hand.

2. INSTALL V-BANK COVER SUB-ASSEMBLY (See page EM-49)

3. INSTALL ENGINE ROOM SIDE COVER RH (See page EM-50)

4. INSTALL ENGINE ROOM SIDE COVER LH (See page EM-50)

5. INSTALL COOL AIR INTAKE DUCT SEAL (See page EM-50)

6. INSTALL FRONT FENDER APRON SEAL RH

7. INSTALL FRONT WHEEL RH
Torque: 103 N*m (1,050 kgf*cm, 76 ft.*lbf)

ENGINE FRONT OIL SEAL

COMPONENTS

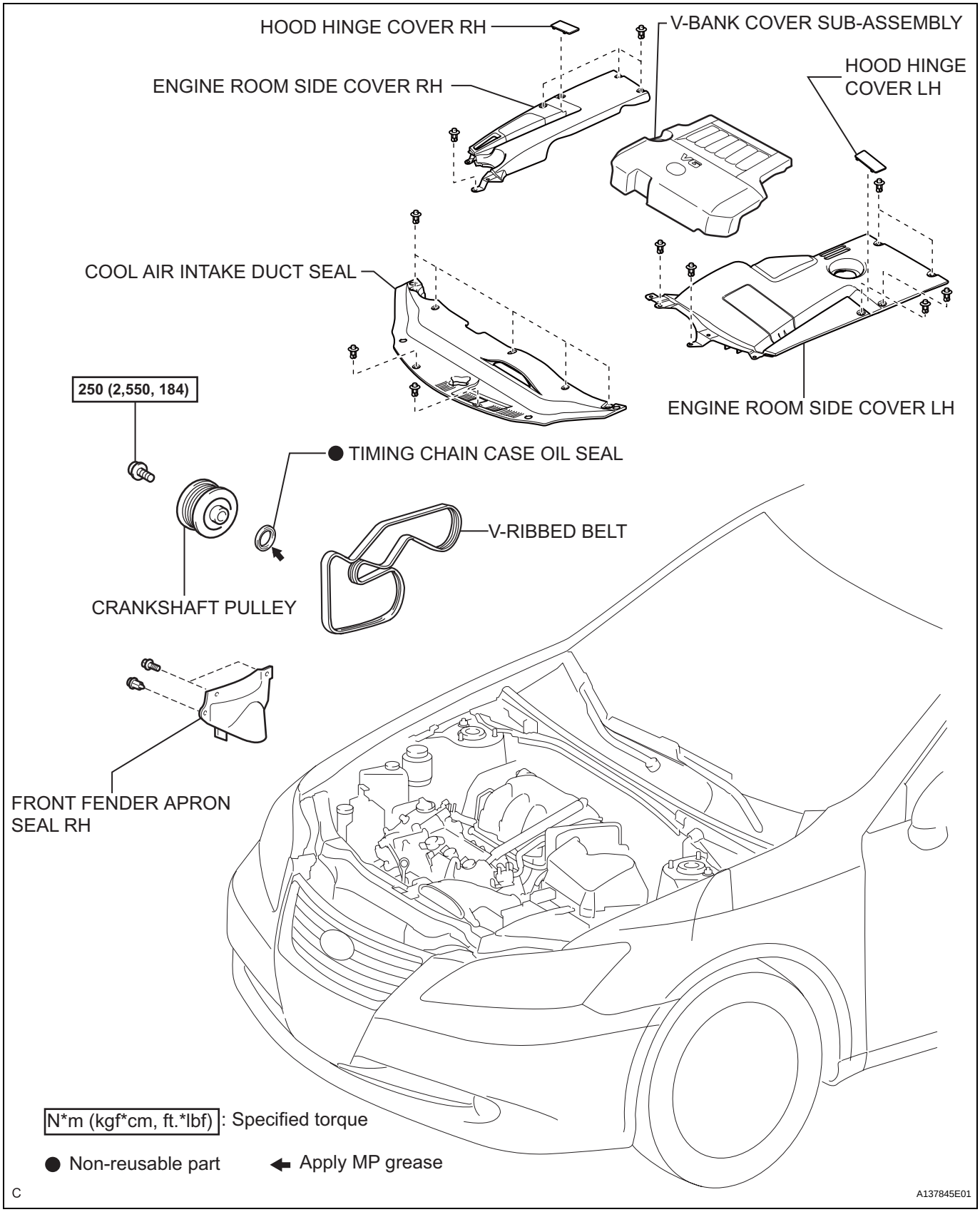

REMOVAL

1. **REMOVE FRONT WHEEL RH**
2. **REMOVE FRONT FENDER APRON SEAL RH**
3. **REMOVE COOL AIR INTAKE DUCT SEAL (See page EM-22)**
4. **REMOVE ENGINE ROOM SIDE COVER LH (See page EM-22)**
5. **REMOVE ENGINE ROOM SIDE COVER RH (See page EM-22)**
6. **REMOVE V-BANK COVER SUB-ASSEMBLY (See page EM-23)**
7. **REMOVE V-RIBBED BELT (See page EM-6)**
8. **REMOVE CRANKSHAFT PULLEY**
   (a) Using SST, loosen the crankshaft pulley bolt.
   SST 09213-70011 (09213-70020), 09330-00021

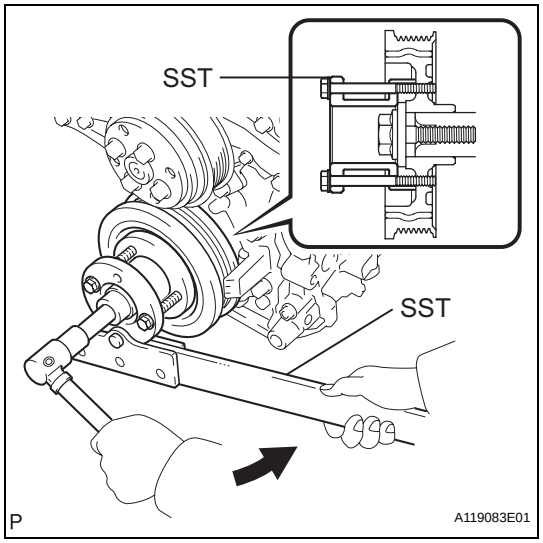

   (b) Using SST, remove the crankshaft pulley bolt and crankshaft pulley.
   SST 09950-50013 (09951-05010, 09952-05010, 09953-05020, 09954-05021)

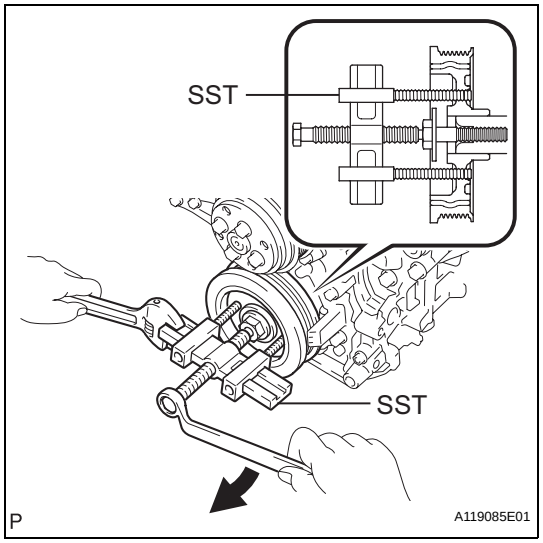

9. **REMOVE TIMING CHAIN CASE OIL SEAL**
   (a) Using a knife, cut off the oil seal lip.

EM

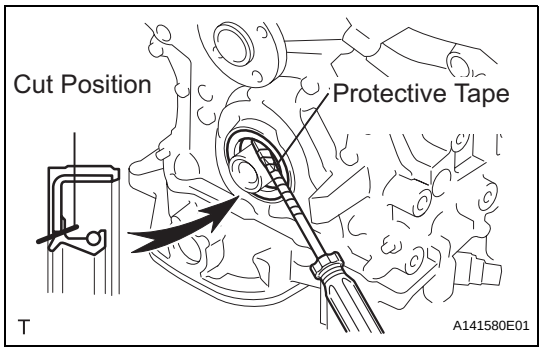

(b) Using a screwdriver, pry out the oil seal.
NOTICE:
After the removal, check the crankshaft for damage. If it is damaged, smooth the surface with 400-grit sandpaper.
HINT:
Tape the screwdriver tip before use.

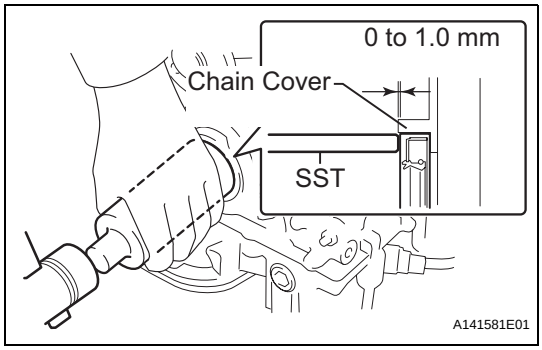

INSTALLATION

1. **INSTALL TIMING CHAIN CASE OIL SEAL**
   (a) Apply MP grease to a new oil seal lip.
   (b) Using SST and a hammer, tap in the oil seal until its surface is flush with the timing chain cover edge.
   SST 09316-60011 (09316-00011)
   Oil seal tap in depth:
   0 to 1 mm (0 to 0.039 in.)
   NOTICE:
   - **Keep the lip free of foreign matter.**
   - **Do not tap the oil seal at an angle.**

2. **INSTALL CRANKSHAFT PULLEY**
   (a) Align the pulley set key with the key groove of the pulley, and slide on the pulley.
   (b) Using SST, install the pulley bolt.
   SST 09213-70011 (09213-70020), 09330-00021
   Torque: 250 N*m (2,550 kgf*cm, 184 ft.*lbf)

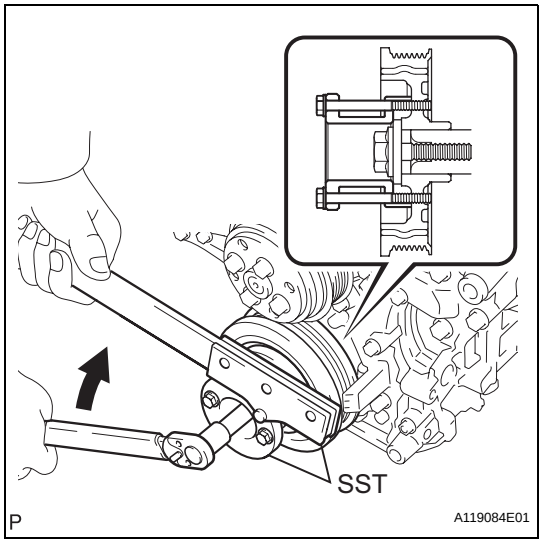

3. **INSTALL V-RIBBED BELT (See page EM-7)**
4. **INSTALL V-BANK COVER SUB-ASSEMBLY (See page EM-49)**
5. **INSTALL ENGINE ROOM SIDE COVER LH (See page EM-50)**
6. **INSTALL ENGINE ROOM SIDE COVER RH (See page EM-50)**
7. **INSTALL COOL AIR INTAKE DUCT SEAL (See page EM-50)**
8. **INSTALL FRONT FENDER APRON SEAL RH**
9. **INSTALL FRONT WHEEL RH**
   Torque: 103 N*m (1,050 kgf*cm, 76 ft.*lbf)

ENGINE REAR OIL SEAL

COMPONENTS

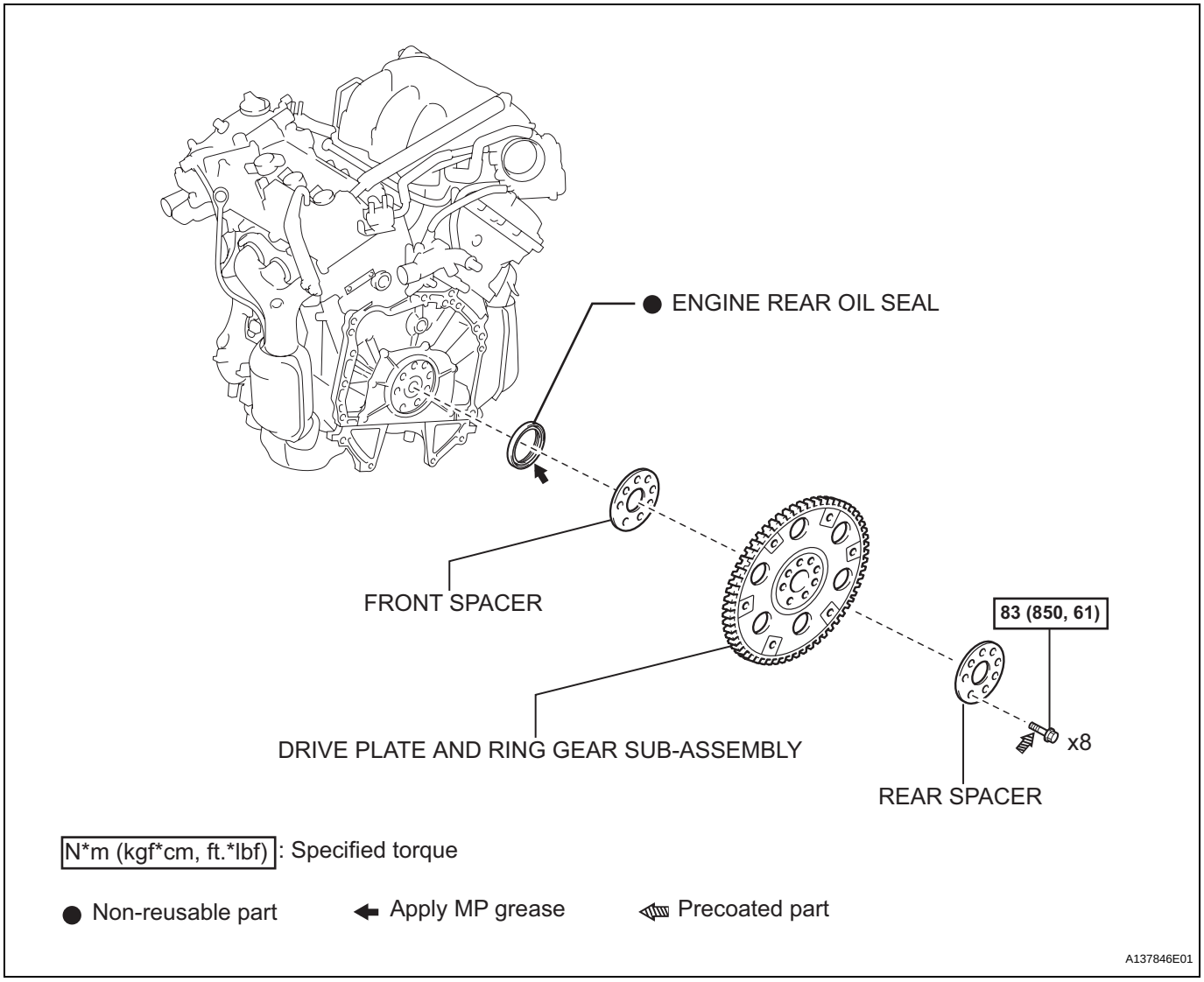

EM

REMOVAL

1. REMOVE AUTOMATIC TRANSAXLE ASSEMBLY

HINT:

See page AX-215.

2. REMOVE DRIVE PLATE AND RING GEAR SUB-ASSEMBLY

(a) Using SST, hold the crankshaft.

SST 09213-70011 (09213-70020), 09330-00021

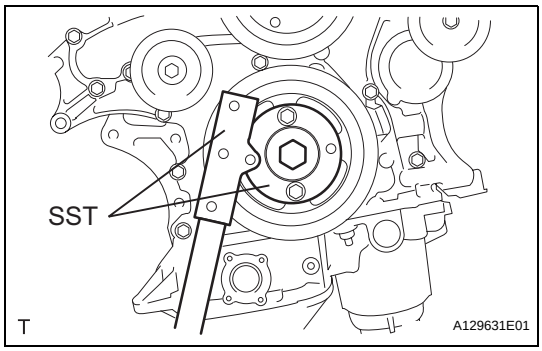

(b) Remove the 8 bolts, front spacer, drive plate and rear spacer.

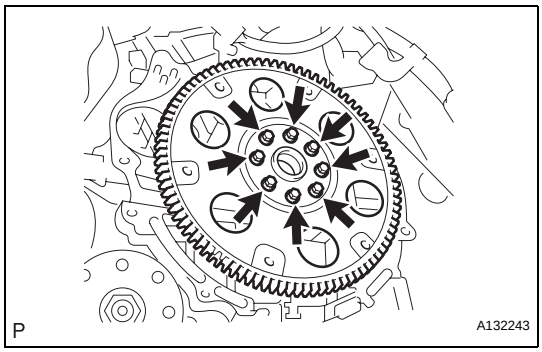

3. REMOVE ENGINE REAR OIL SEAL

(a) Using a knife, cut off the oil seal lip.

(b) Using a screwdriver, pry out the oil seal.

NOTICE:

Be careful not to damage the crankshaft.

HINT:

Tape the screwdriver tip before use.

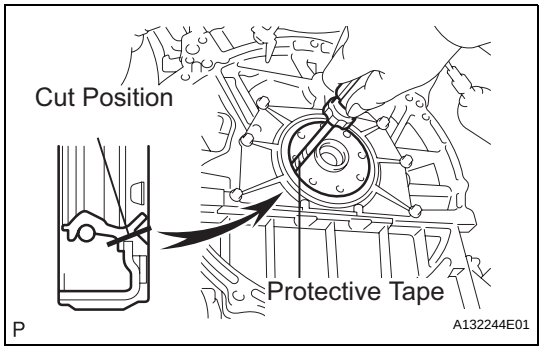

INSTALLATION

1. INSTALL ENGINE REAR OIL SEAL

(a) Apply MP grease to a new oil seal lip.

(b) Using SST and a hammer, tap in the oil seal.

SST 09223-15030, 09950-70010 (09951-07150)

Oil seal tap in depth:

-0.5 to 0.5 mm (-0.020 to 0.020 in.)

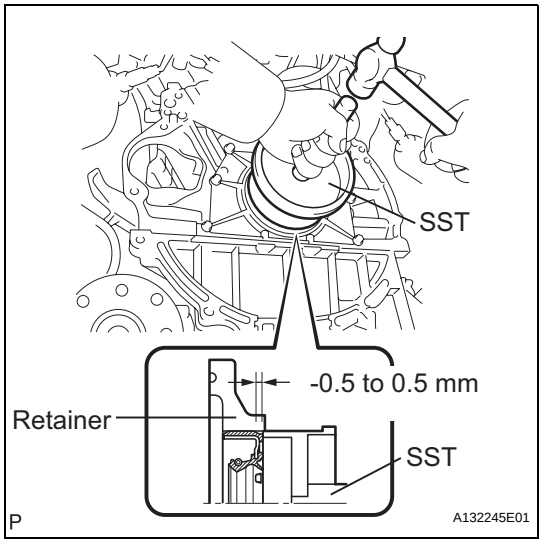

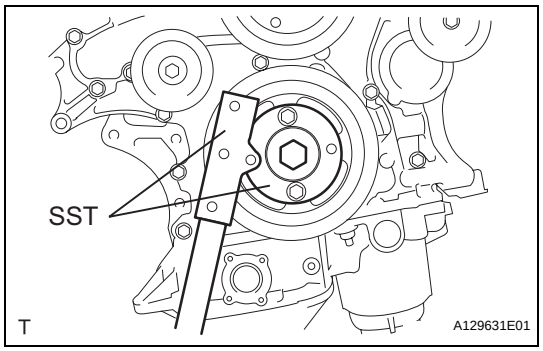

2. INSTALL DRIVE PLATE AND RING GEAR SUB-ASSEMBLY

(a) Using SST, hold the crankshaft.
SST 09213-70011 (09213-70020), 09330-00021

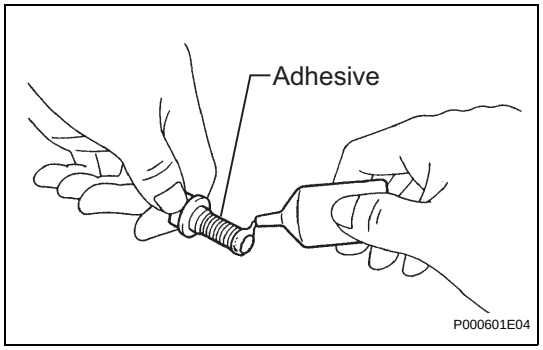

(b) Apply adhesive to 2 or 3 threads of the mounting bolt end.
Adhesive:
Toyota Genuine Adhesive 1324, Three Bond 1324 or equivalent

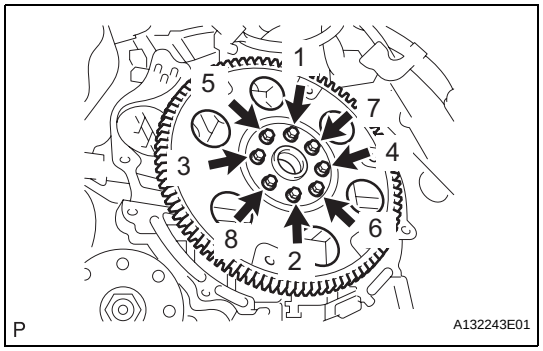

(c) Install the front spacer, drive plate and rear spacer on the crankshaft.
(d) Install and tighten the 8 mounting bolts uniformly in several steps.
Torque: 83 N*m (850 kgf*cm, 61 ft.*lbf)

3. INSTALL AUTOMATIC TRANSAXLE ASSEMBLY

HINT:
See page AX-222.

EM

ENGINE ASSEMBLY

COMPONENTS

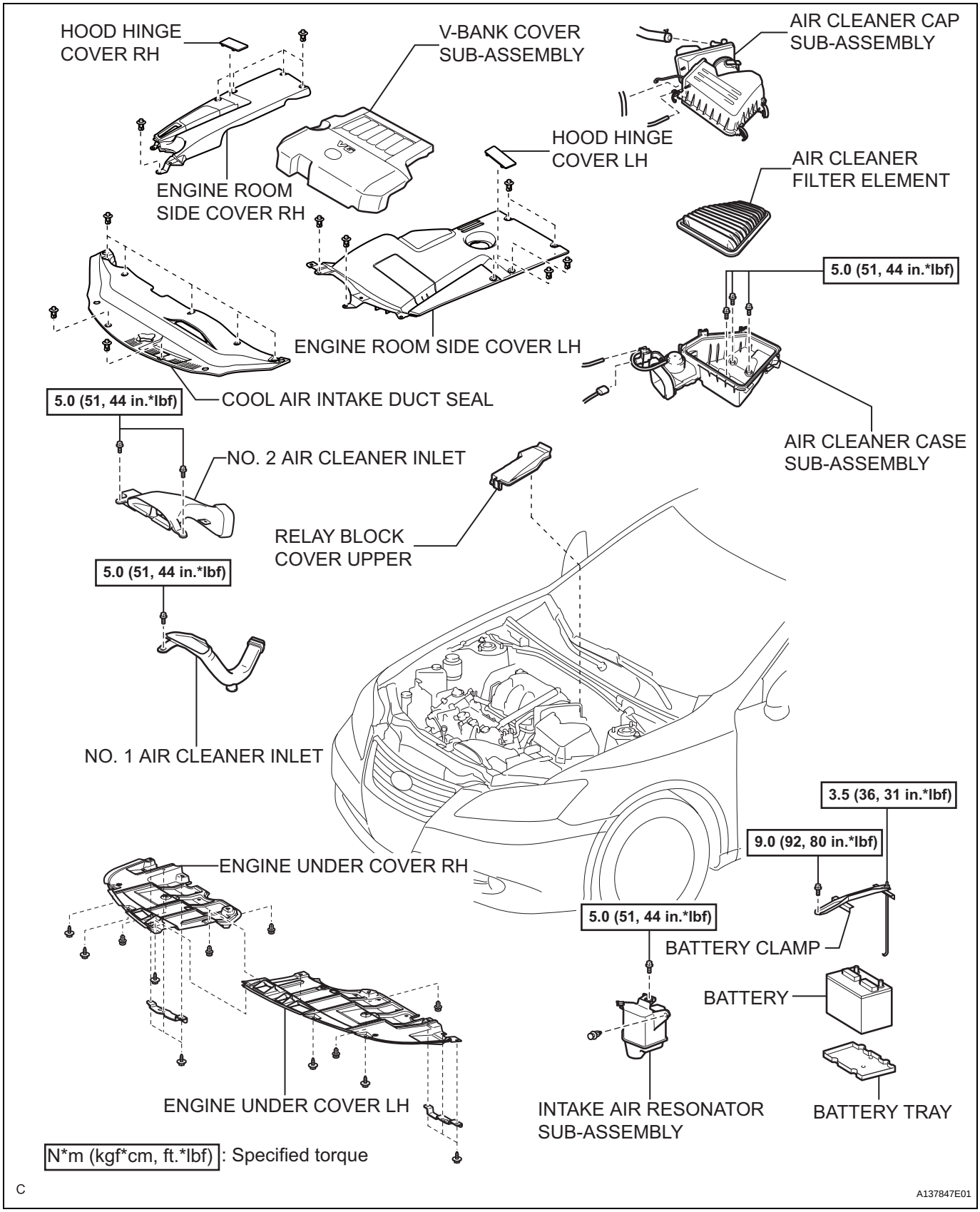

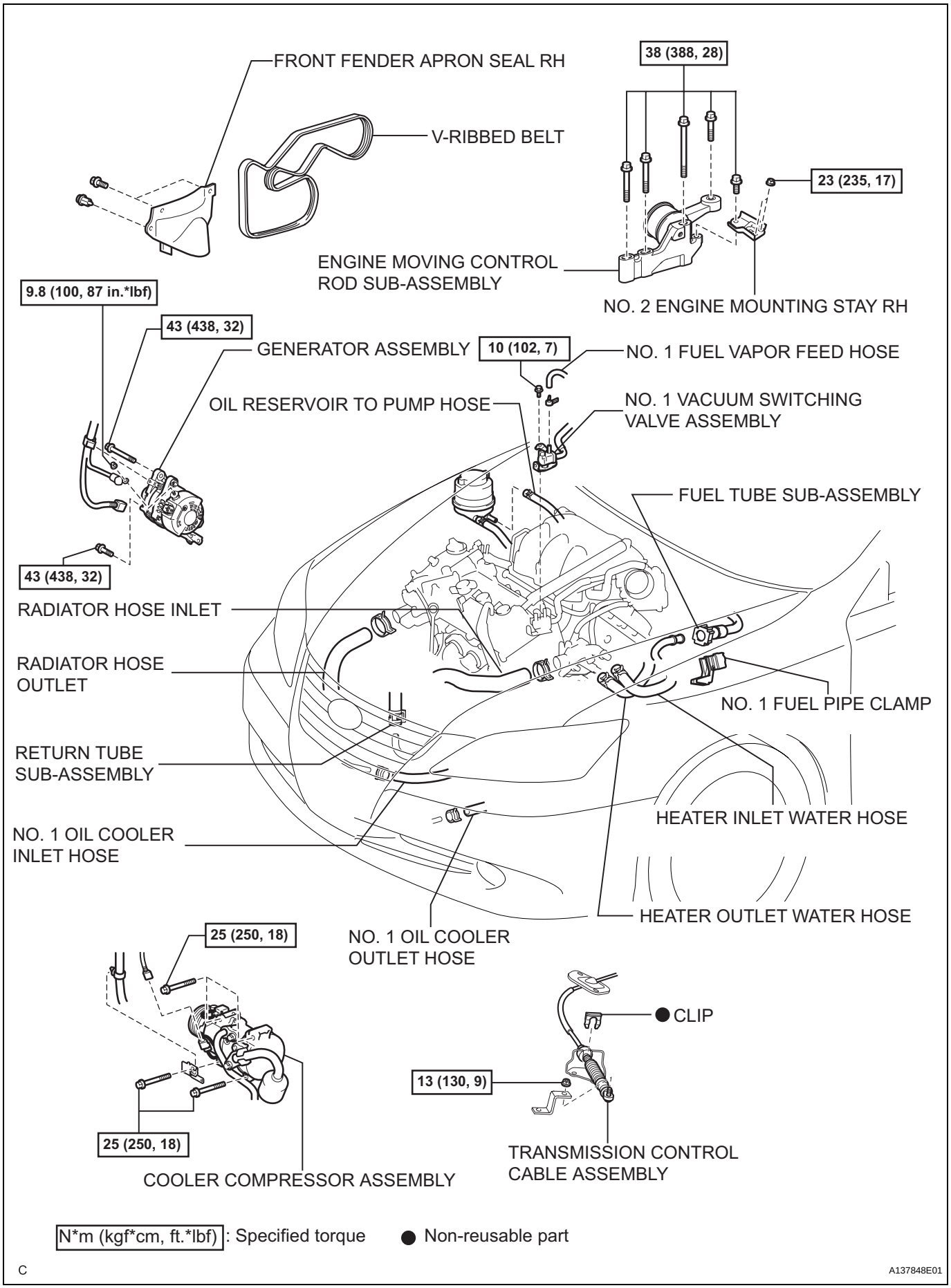
FRONT FENDER APRON SEAL RH
V-RIBBED BELT
38 (388, 28)
23 (235, 17)
ENGINE MOVING CONTROL ROD SUB-ASSEMBLY
NO. 2 ENGINE MOUNTING STAY RH
9.8 (100, 87 in.*lbf)
43 (438, 32)
GENERATOR ASSEMBLY
10 (102, 7)
NO. 1 FUEL VAPOR FEED HOSE
OIL RESERVOIR TO PUMP HOSE
NO. 1 VACUUM SWITCHING VALVE ASSEMBLY
FUEL TUBE SUB-ASSEMBLY
43 (438, 32)
RADIATOR HOSE INLET
RADIATOR HOSE OUTLET
NO. 1 FUEL PIPE CLAMP
RETURN TUBE SUB-ASSEMBLY
HEATER INLET WATER HOSE
NO. 1 OIL COOLER INLET HOSE
HEATER OUTLET WATER HOSE
25 (250, 18)
NO. 1 OIL COOLER OUTLET HOSE
CLIP
13 (130, 9)
25 (250, 18)
TRANSMISSION CONTROL CABLE ASSEMBLY
COOLER COMPRESSOR ASSEMBLY
N*m (kgf*cm, ft.*lbf) : Specified torque
Non-reusable part
C
A137848E01

EM

EM

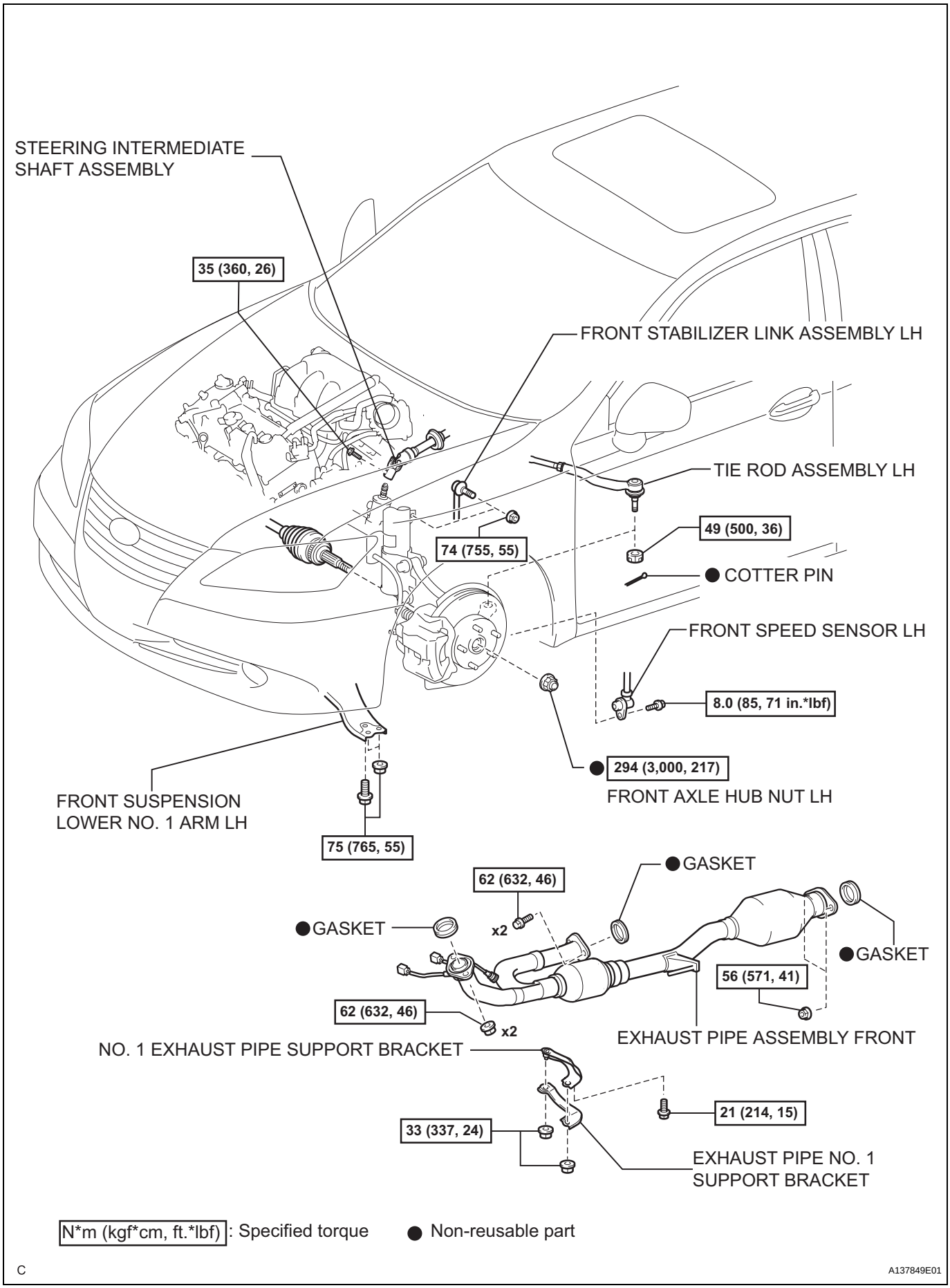

N*m (kgf*cm, ft.*lbf) : Specified torque ● Non-reusable part

C A137849E01

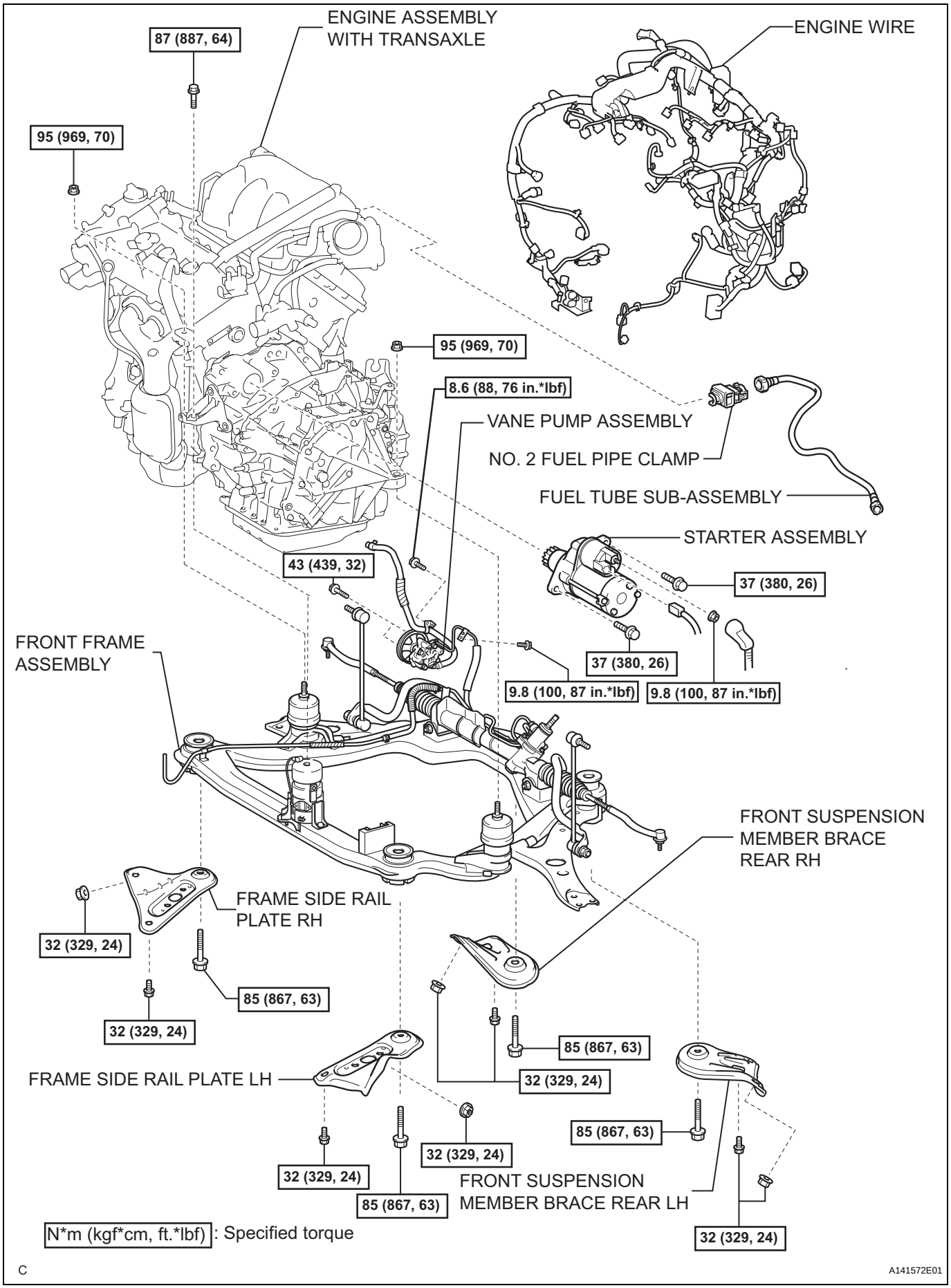
ENGINE ASSEMBLY WITH TRANSAXLE
ENGINE WIRE
87 (887, 64)
95 (969, 70)
95 (969, 70)
8.6 (88, 76 in.*lbf)
VANE PUMP ASSEMBLY
NO. 2 FUEL PIPE CLAMP
FUEL TUBE SUB-ASSEMBLY
STARTER ASSEMBLY
43 (439, 32)
37 (380, 26)
37 (380, 26)
9.8 (100, 87 in.*lbf)
9.8 (100, 87 in.*lbf)
FRONT FRAME ASSEMBLY
FRONT SUSPENSION MEMBER BRACE REAR RH
FRAME SIDE RAIL PLATE RH
32 (329, 24)
85 (867, 63)
32 (329, 24)
85 (867, 63)
FRAME SIDE RAIL PLATE LH
32 (329, 24)
85 (867, 63)
32 (329, 24)
32 (329, 24)
85 (867, 63)
FRONT SUSPENSION MEMBER BRACE REAR LH
32 (329, 24)
N*m (kgf*cm, ft.*lbf): Specified torque
C
A141572E01

EM

EM

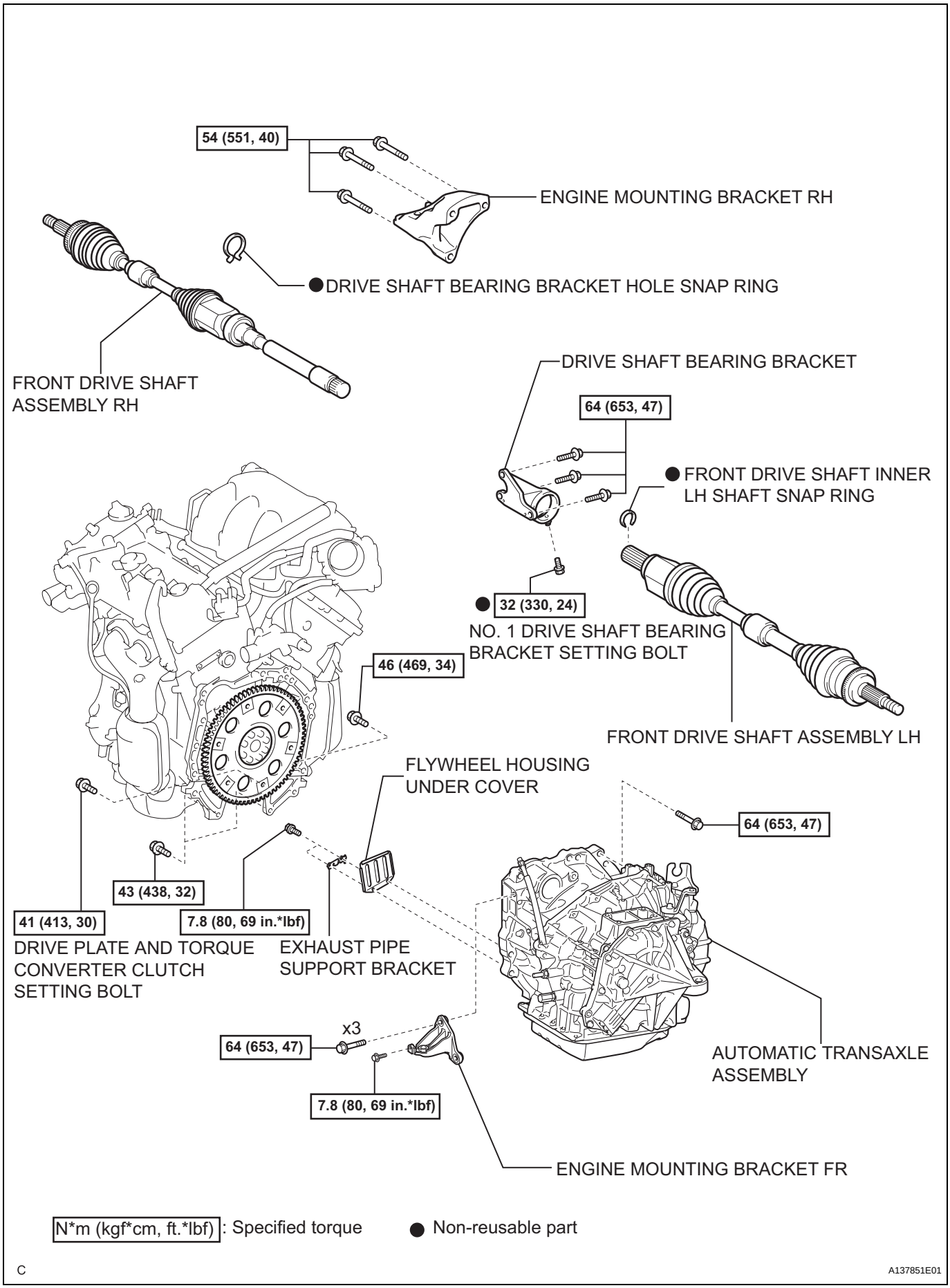

N*m (kgf*cm, ft.*lbf) : Specified torque ● Non-reusable part

C A137851E01

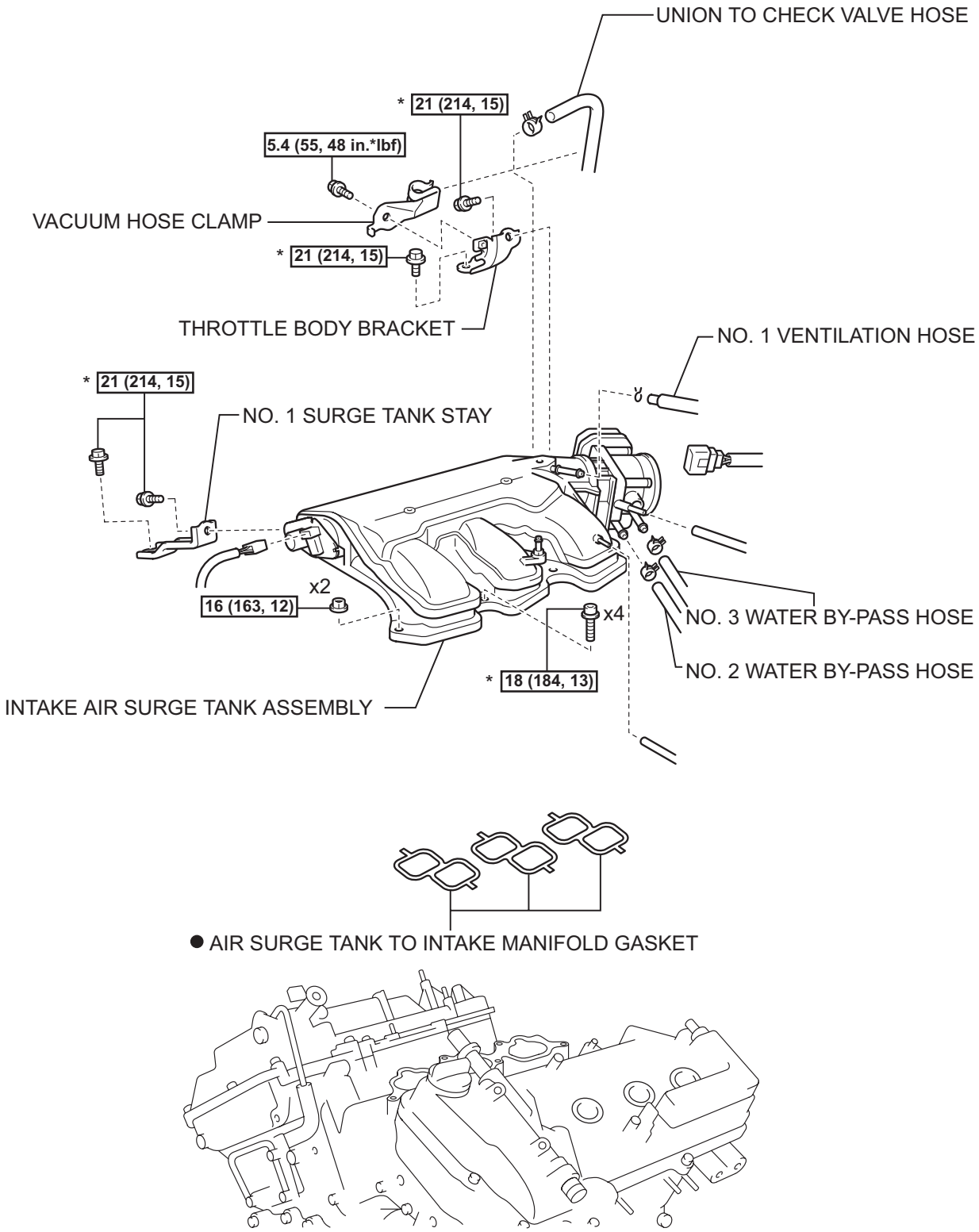

N*m (kgf*cm, ft.*lbf) : Specified torque

● Non-reusable part

* DO NOT apply oil

A134939E07

EM

EM

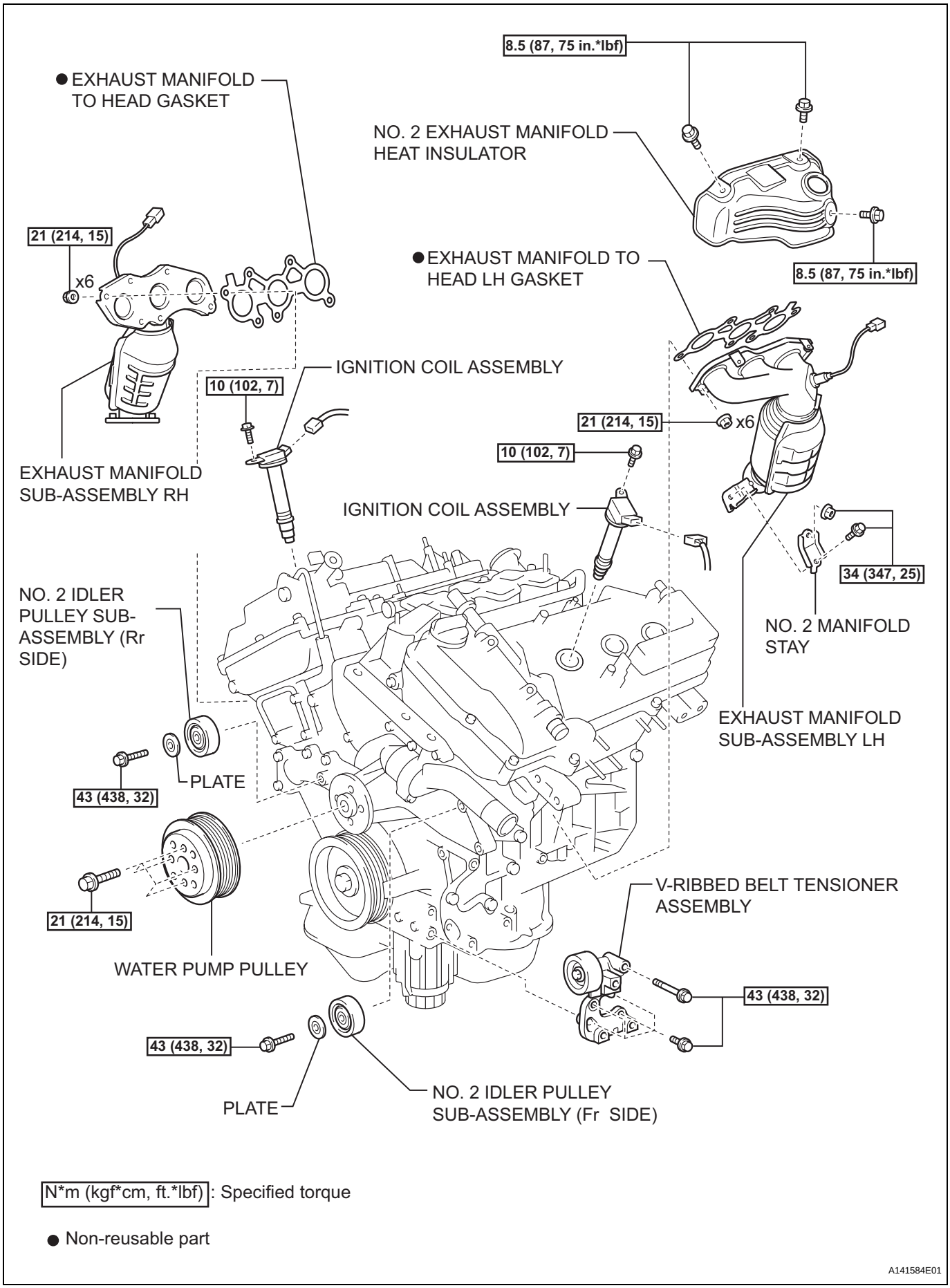

N*m (kgf*cm, ft.*lbf) : Specified torque

● Non-reusable part

A141584E01

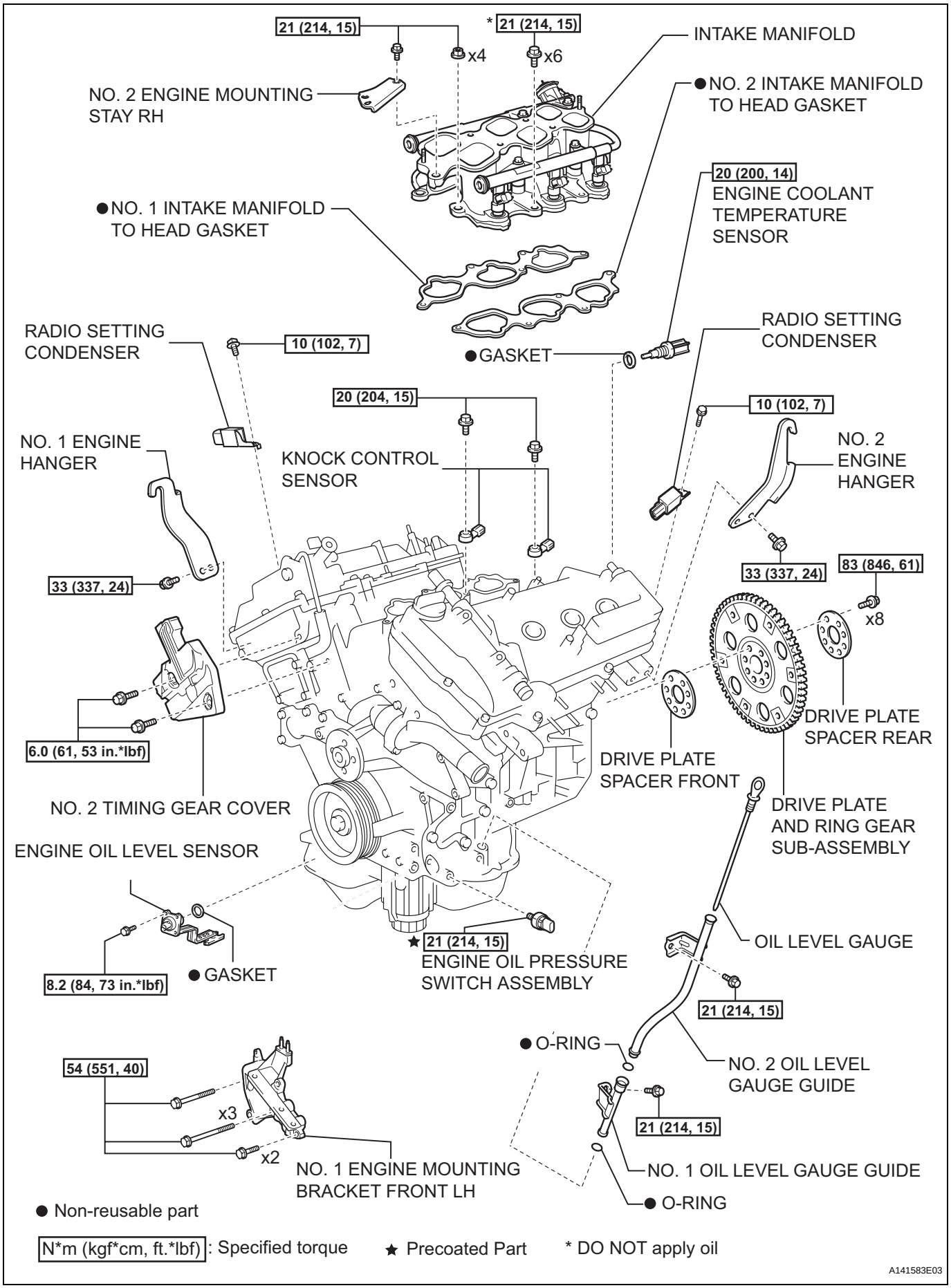
21 (214, 15)
* 21 (214, 15)
x4
x6
INTAKE MANIFOLD
NO. 2 ENGINE MOUNTING STAY RH
● NO. 2 INTAKE MANIFOLD TO HEAD GASKET
20 (200, 14)
ENGINE COOLANT TEMPERATURE SENSOR
● NO. 1 INTAKE MANIFOLD TO HEAD GASKET
RADIO SETTING CONDENSER
10 (102, 7)
● GASKET
RADIO SETTING CONDENSER
20 (204, 15)
10 (102, 7)
NO. 1 ENGINE HANGER
KNOCK CONTROL SENSOR
NO. 2 ENGINE HANGER
33 (337, 24)
33 (337, 24)
83 (846, 61)
x8
DRIVE PLATE SPACER REAR
6.0 (61, 53 in.*lbf)
DRIVE PLATE SPACER FRONT
NO. 2 TIMING GEAR COVER
DRIVE PLATE AND RING GEAR SUB-ASSEMBLY
ENGINE OIL LEVEL SENSOR
★ 21 (214, 15)
ENGINE OIL PRESSURE SWITCH ASSEMBLY
OIL LEVEL GAUGE
8.2 (84, 73 in.*lbf)
● GASKET
21 (214, 15)
● O-RING
NO. 2 OIL LEVEL GAUGE GUIDE
54 (551, 40)
x3
x2
21 (214, 15)
NO. 1 ENGINE MOUNTING BRACKET FRONT LH
NO. 1 OIL LEVEL GAUGE GUIDE
● O-RING
● Non-reusable part
N*m (kgf*cm, ft.*lbf): Specified torque
★ Precoated Part
* DO NOT apply oil
A141583E03

EM

ENGINE UNIT

COMPONENTS

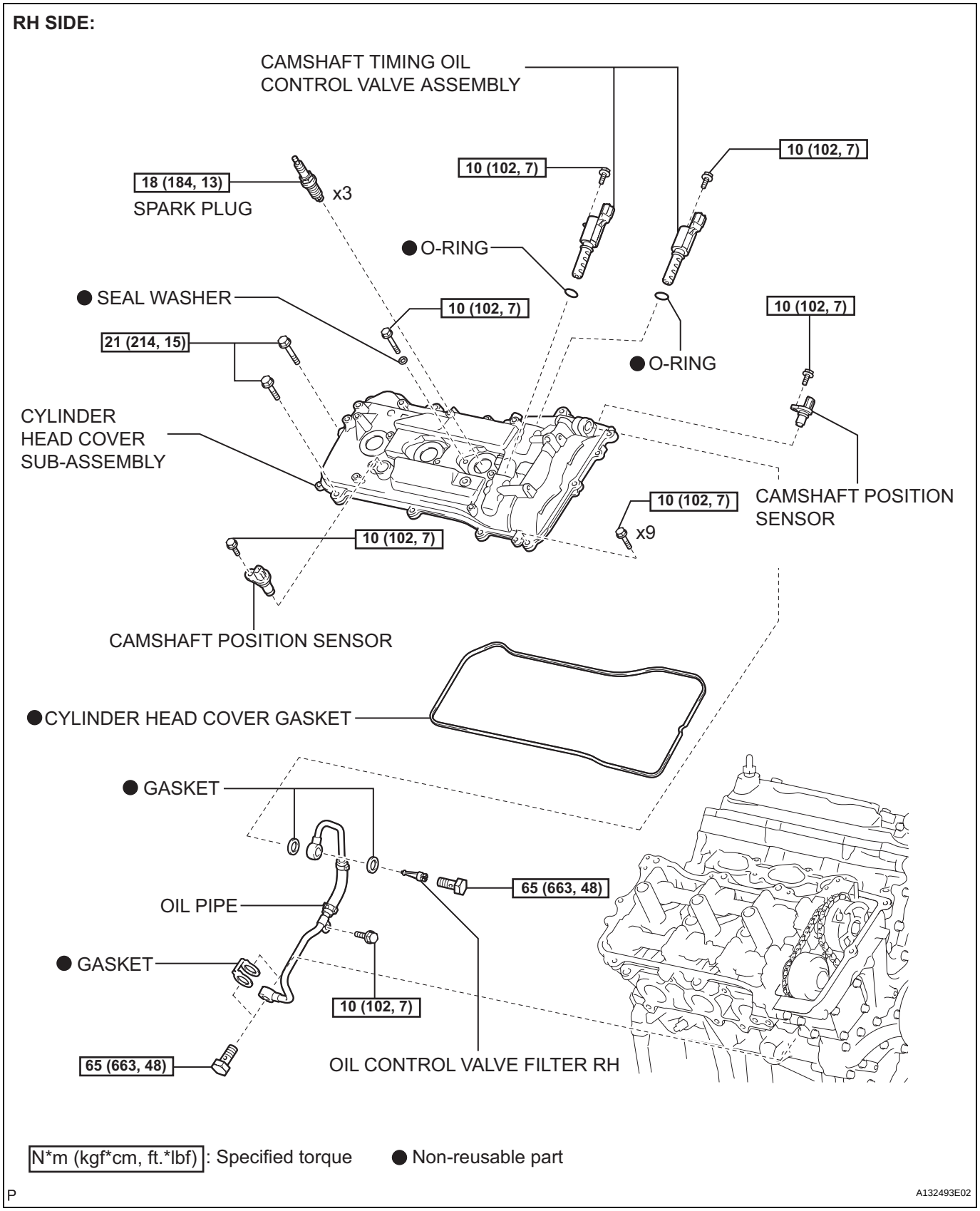

EM

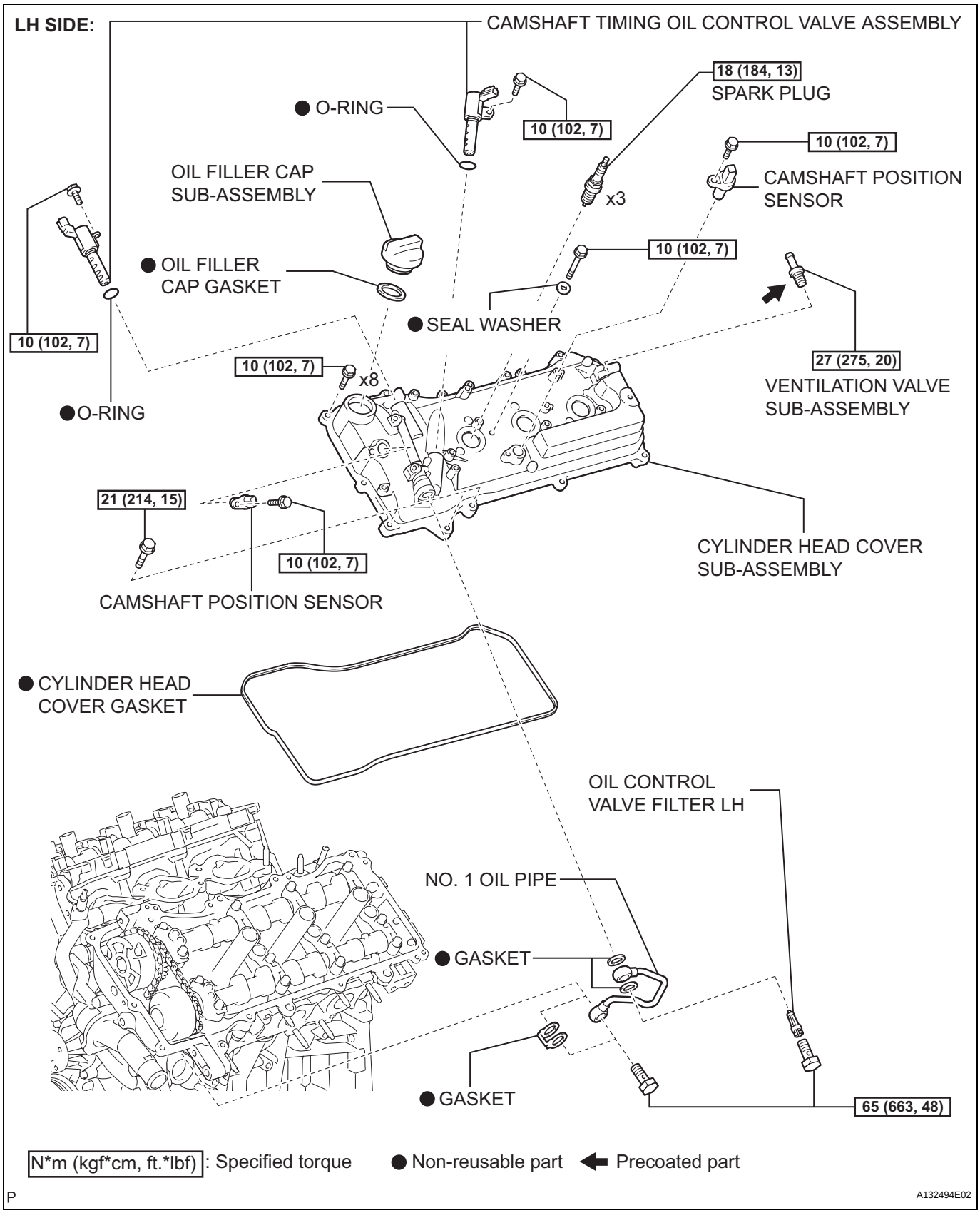
LH SIDE:
CAMSHAFT TIMING OIL CONTROL VALVE ASSEMBLY
18 (184, 13)
SPARK PLUG
● O-RING
10 (102, 7)
10 (102, 7)
OIL FILLER CAP SUB-ASSEMBLY
x3
CAMSHAFT POSITION SENSOR
10 (102, 7)
● OIL FILLER CAP GASKET
● SEAL WASHER
10 (102, 7)
27 (275, 20)
VENTILATION VALVE SUB-ASSEMBLY
10 (102, 7)
x8
●O-RING
21 (214, 15)
10 (102, 7)
CYLINDER HEAD COVER SUB-ASSEMBLY
CAMSHAFT POSITION SENSOR
● CYLINDER HEAD COVER GASKET
OIL CONTROL VALVE FILTER LH
NO. 1 OIL PIPE
● GASKET
● GASKET
65 (663, 48)
N*m (kgf*cm, ft.*lbf): Specified torque
● Non-reusable part
Precoated part
P
A132494E02

EM

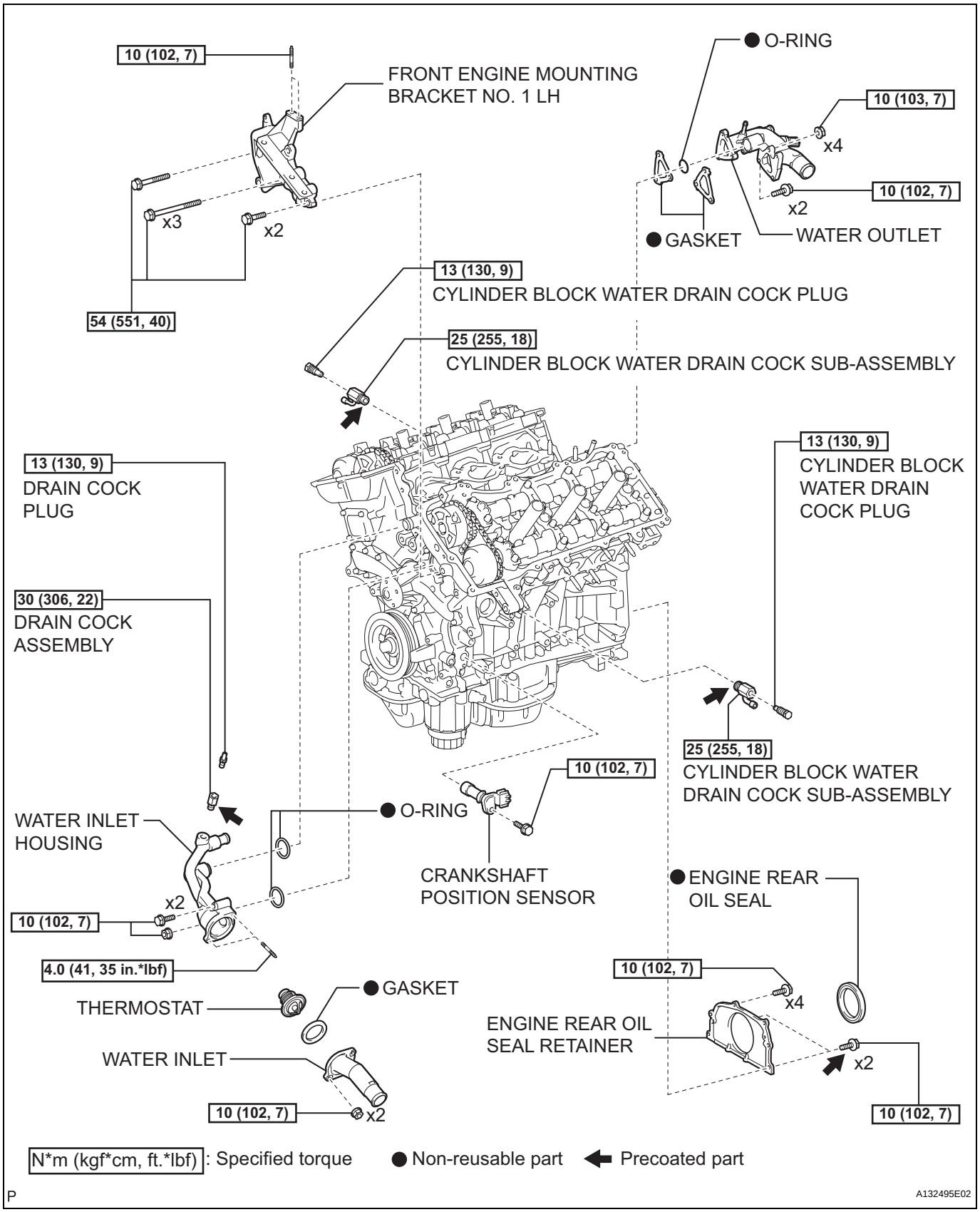
10 (102, 7)
FRONT ENGINE MOUNTING BRACKET NO. 1 LH
x3
x2
54 (551, 40)
● O-RING
10 (103, 7)
x4
10 (102, 7)
x2
● GASKET
WATER OUTLET
13 (130, 9)
CYLINDER BLOCK WATER DRAIN COCK PLUG
25 (255, 18)
CYLINDER BLOCK WATER DRAIN COCK SUB-ASSEMBLY
13 (130, 9)
DRAIN COCK PLUG
30 (306, 22)
DRAIN COCK ASSEMBLY
13 (130, 9)
CYLINDER BLOCK WATER DRAIN COCK PLUG
25 (255, 18)
CYLINDER BLOCK WATER DRAIN COCK SUB-ASSEMBLY
10 (102, 7)
● O-RING
WATER INLET HOUSING
CRANKSHAFT POSITION SENSOR
● ENGINE REAR OIL SEAL
x2
10 (102, 7)
4.0 (41, 35 in.*lbf)
10 (102, 7)
x4
● GASKET
THERMOSTAT
ENGINE REAR OIL SEAL RETAINER
WATER INLET
x2
10 (102, 7)
x2
10 (102, 7)
N*m (kgf*cm, ft.*lbf): Specified torque
● Non-reusable part
Precoated part
P
A132495E02

EM

EM

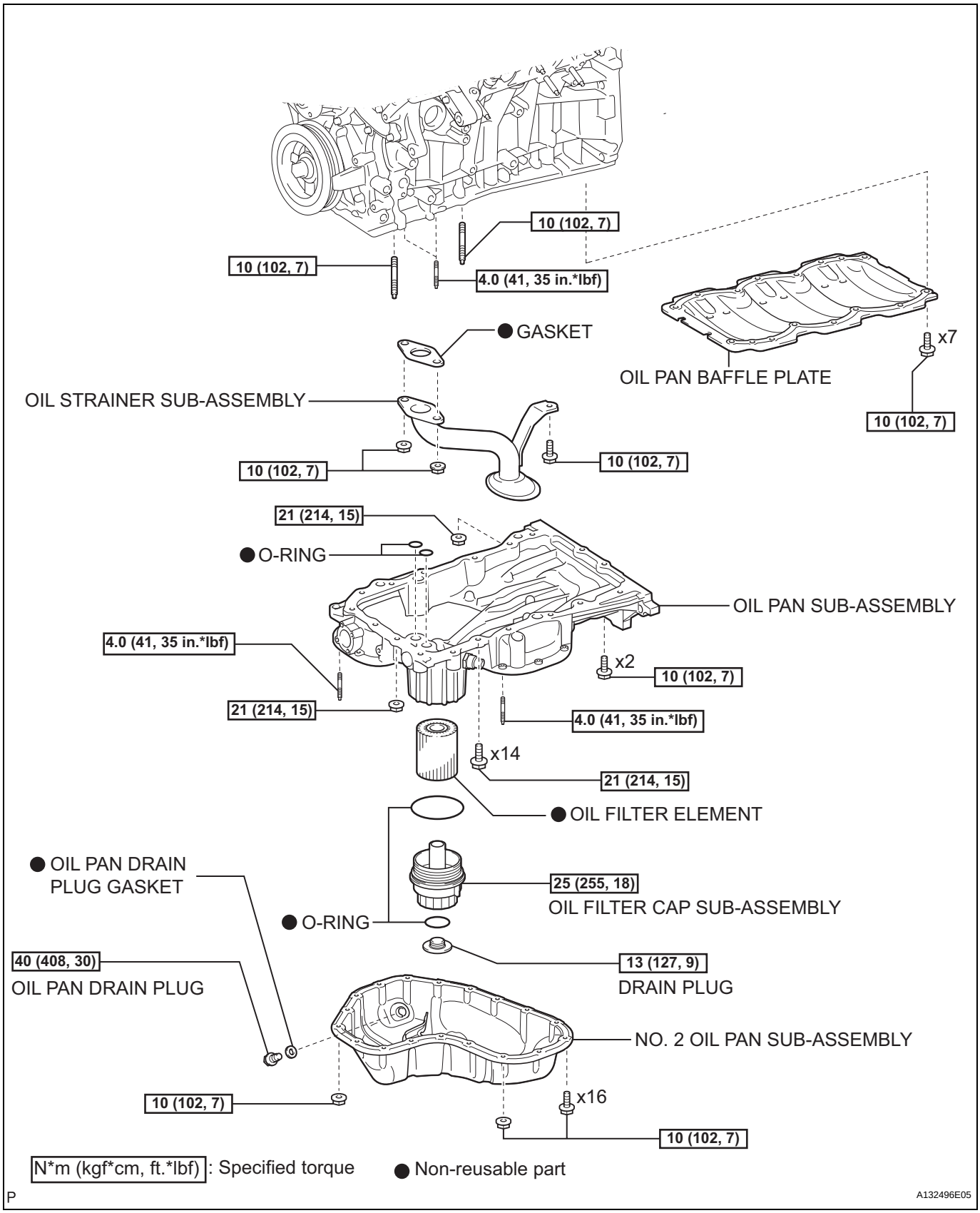
10 (102, 7)
10 (102, 7)
4.0 (41, 35 in.*lbf)
● GASKET
x7
OIL PAN BAFFLE PLATE
OIL STRAINER SUB-ASSEMBLY
10 (102, 7)
10 (102, 7)
10 (102, 7)
21 (214, 15)
● O-RING
OIL PAN SUB-ASSEMBLY
4.0 (41, 35 in.*lbf)
x2
10 (102, 7)
21 (214, 15)
4.0 (41, 35 in.*lbf)
x14
21 (214, 15)
● OIL FILTER ELEMENT
● OIL PAN DRAIN PLUG GASKET
25 (255, 18)
OIL FILTER CAP SUB-ASSEMBLY
● O-RING
40 (408, 30)
OIL PAN DRAIN PLUG
13 (127, 9)
DRAIN PLUG
NO. 2 OIL PAN SUB-ASSEMBLY
10 (102, 7)
x16
10 (102, 7)
N*m (kgf*cm, ft.*lbf): Specified torque
● Non-reusable part
P
A132496E05

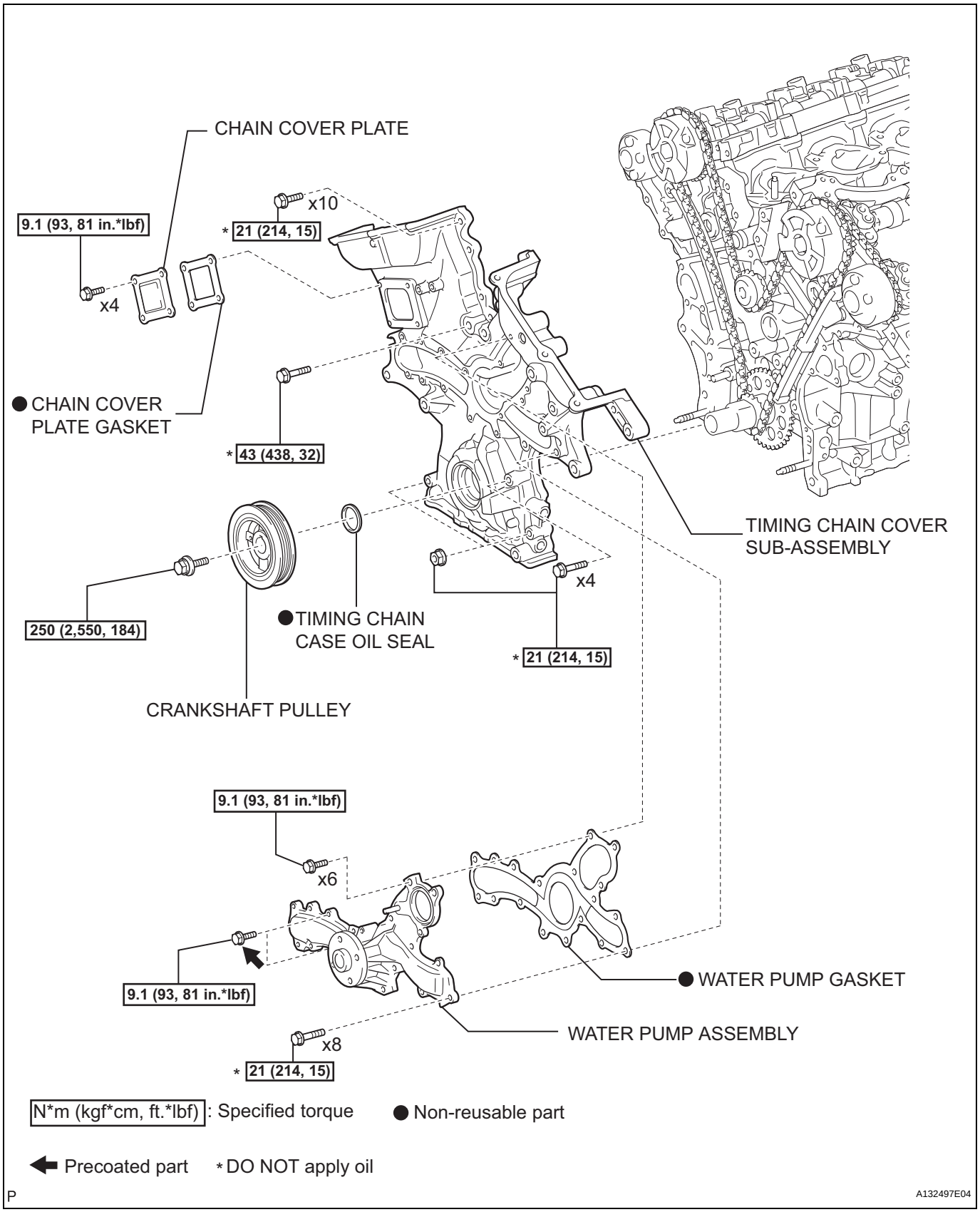
CHAIN COVER PLATE
9.1 (93, 81 in.*lbf)
x4
x10
* 21 (214, 15)
● CHAIN COVER PLATE GASKET
* 43 (438, 32)
TIMING CHAIN COVER SUB-ASSEMBLY
250 (2,550, 184)
● TIMING CHAIN CASE OIL SEAL
x4
* 21 (214, 15)
CRANKSHAFT PULLEY
9.1 (93, 81 in.*lbf)
x6
9.1 (93, 81 in.*lbf)
● WATER PUMP GASKET
WATER PUMP ASSEMBLY
x8
* 21 (214, 15)
N*m (kgf*cm, ft.*lbf) : Specified torque
● Non-reusable part
Precoated part
* DO NOT apply oil
P
A132497E04

EM

EM

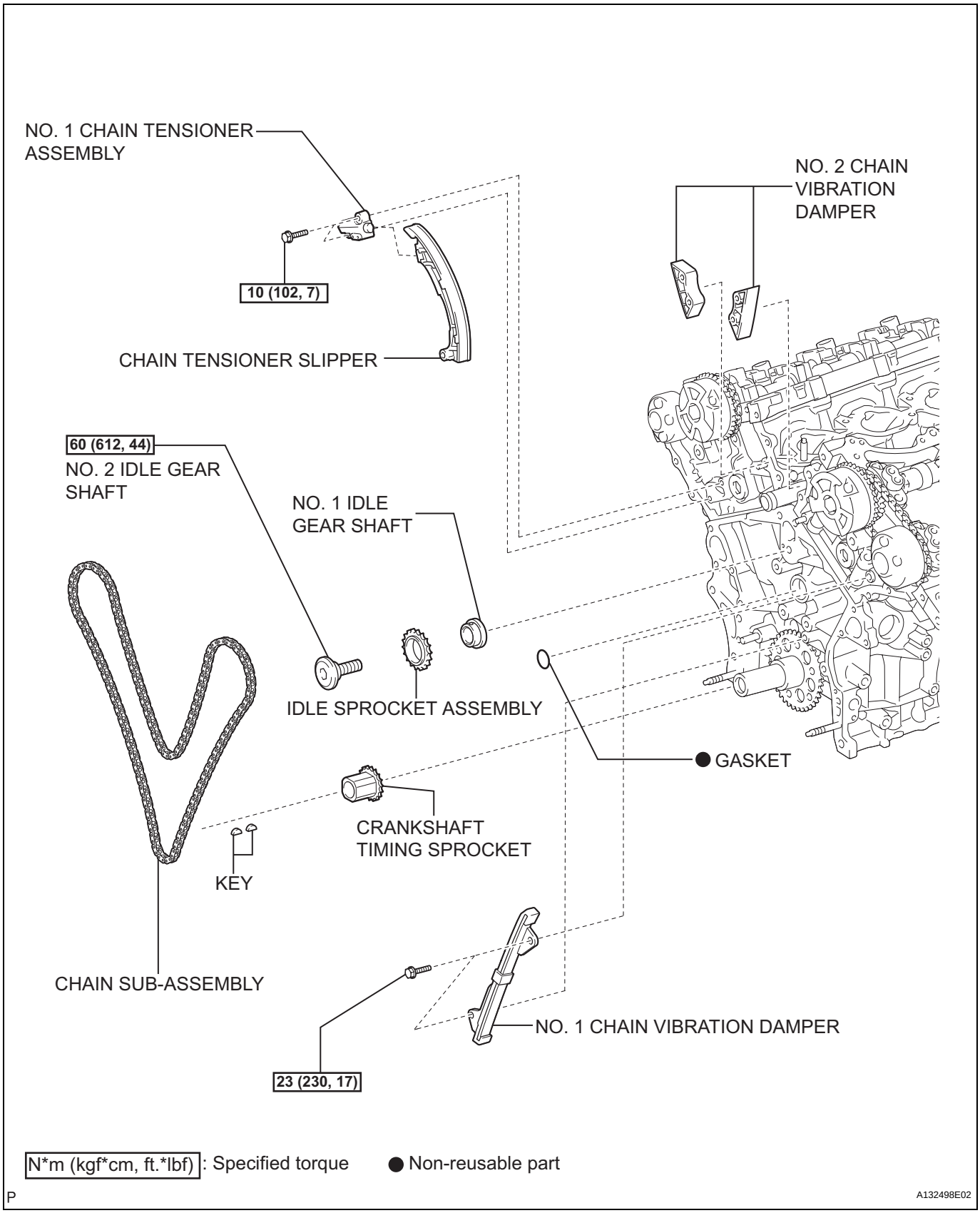

N*m (kgf*cm, ft.*lbf) : Specified torque ● Non-reusable part

P A132498E02

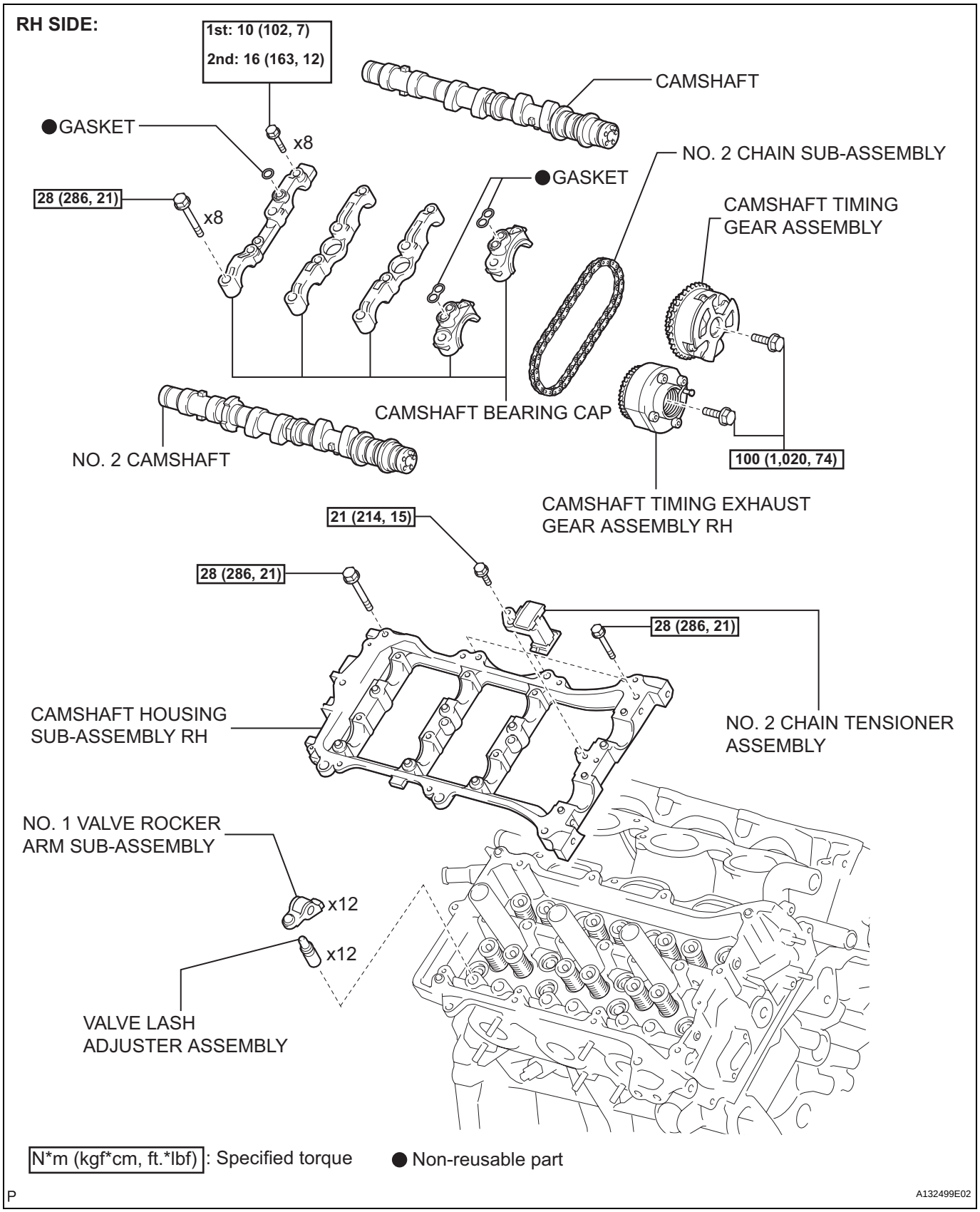
RH SIDE:
1st: 10 (102, 7)
2nd: 16 (163, 12)
CAMSHAFT
●GASKET
x8
NO. 2 CHAIN SUB-ASSEMBLY
●GASKET
28 (286, 21)
x8
CAMSHAFT TIMING
GEAR ASSEMBLY
CAMSHAFT BEARING CAP
NO. 2 CAMSHAFT
100 (1,020, 74)
CAMSHAFT TIMING EXHAUST
GEAR ASSEMBLY RH
21 (214, 15)
28 (286, 21)
28 (286, 21)
CAMSHAFT HOUSING
SUB-ASSEMBLY RH
NO. 2 CHAIN TENSIONER
ASSEMBLY
NO. 1 VALVE ROCKER
ARM SUB-ASSEMBLY
x12
x12
VALVE LASH
ADJUSTER ASSEMBLY
N*m (kgf*cm, ft.*lbf) : Specified torque
● Non-reusable part
P
A132499E02

EM

LH SIDE:

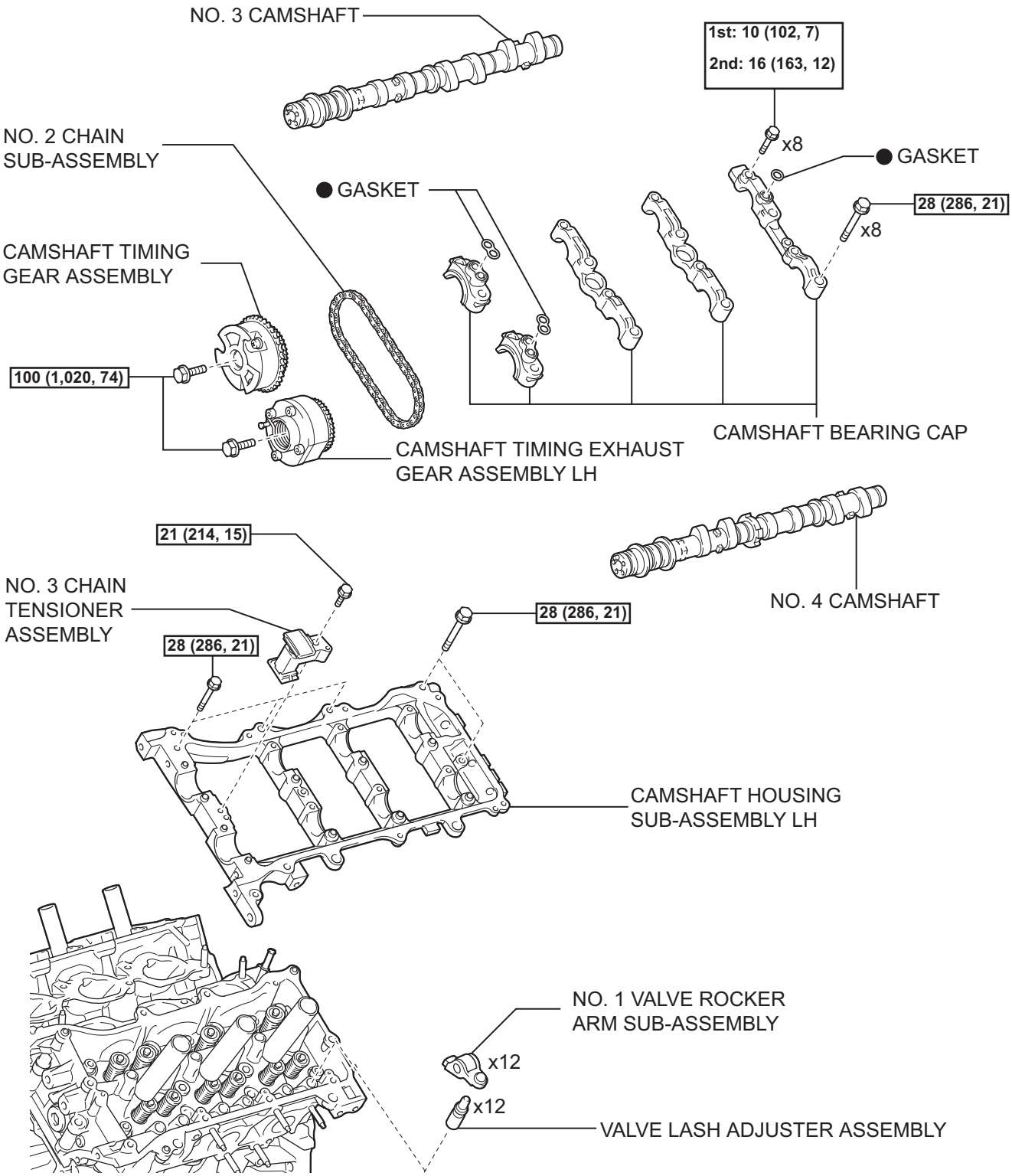

N*m (kgf*cm, ft.*lbf) : Specified torque ● Non-reusable part

P A132500E02

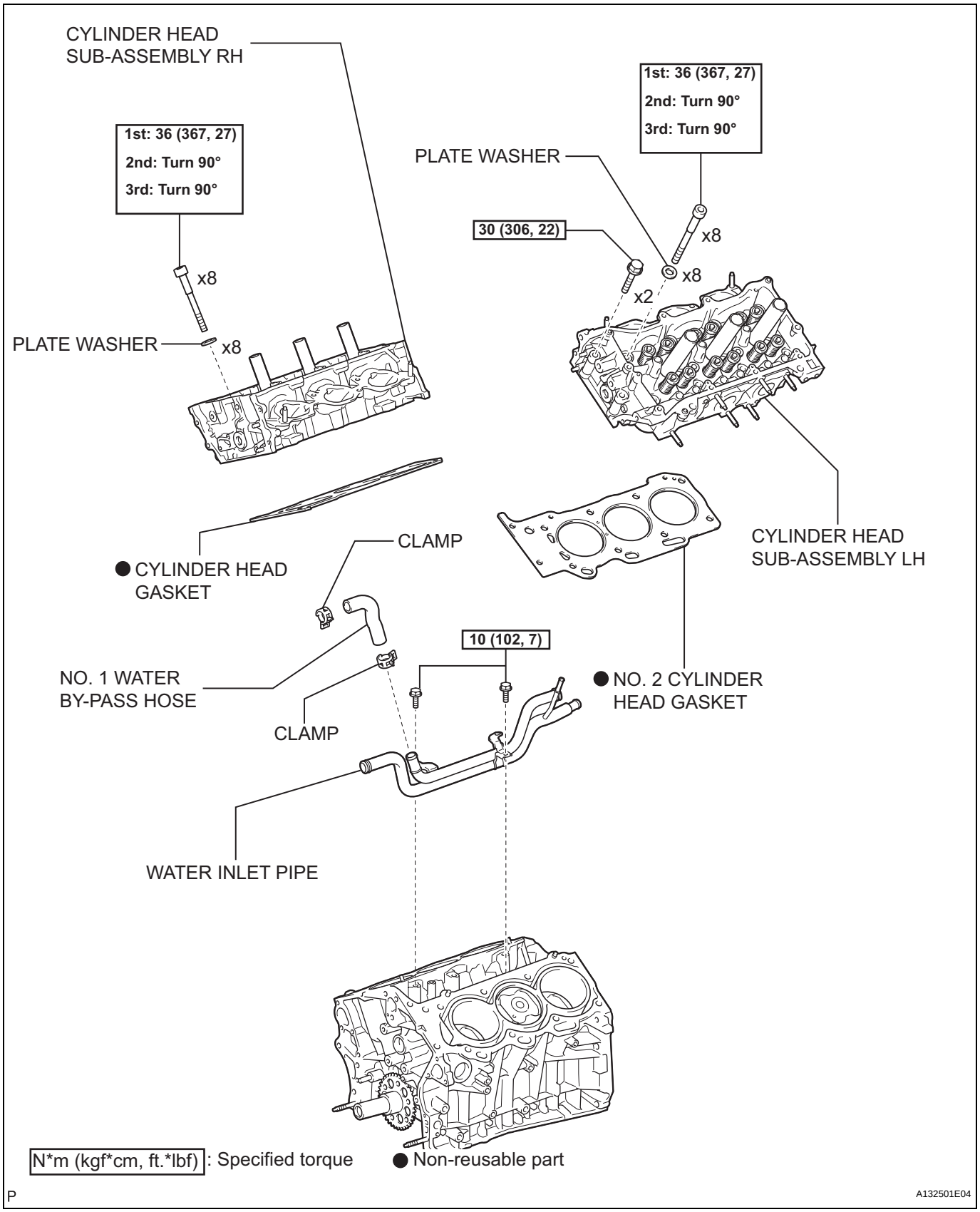
CYLINDER HEAD SUB-ASSEMBLY RH
1st: 36 (367, 27)
2nd: Turn 90°
3rd: Turn 90°
x8
PLATE WASHER
x8
1st: 36 (367, 27)
2nd: Turn 90°
3rd: Turn 90°
PLATE WASHER
30 (306, 22)
x8
x8
x2
● CYLINDER HEAD GASKET
CLAMP
CYLINDER HEAD SUB-ASSEMBLY LH
10 (102, 7)
NO. 1 WATER BY-PASS HOSE
● NO. 2 CYLINDER HEAD GASKET
CLAMP
WATER INLET PIPE
N*m (kgf*cm, ft.*lbf) : Specified torque
● Non-reusable part
P
A132501E04

EM

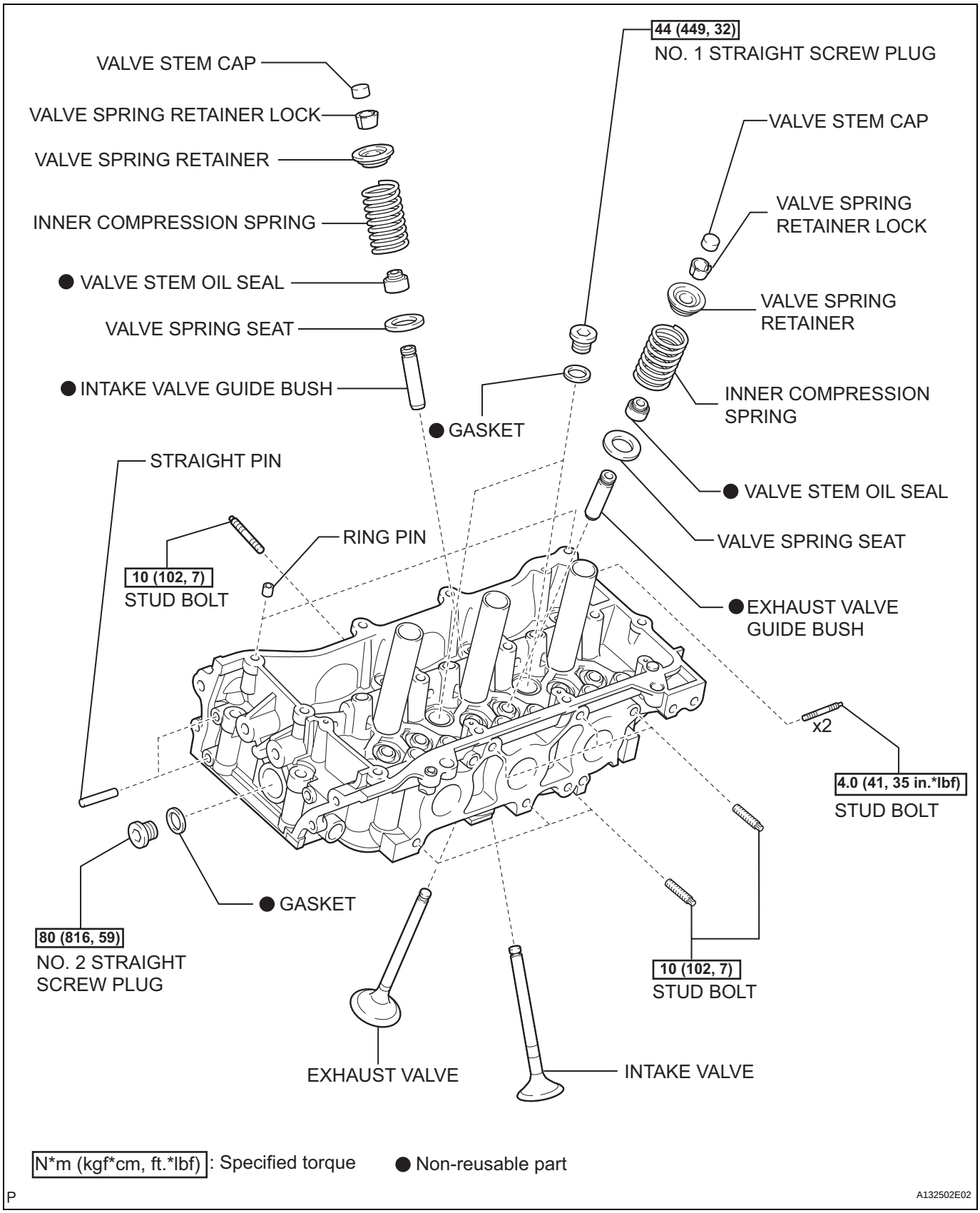
44 (449, 32)
NO. 1 STRAIGHT SCREW PLUG
VALVE STEM CAP
VALVE SPRING RETAINER LOCK
VALVE SPRING RETAINER
INNER COMPRESSION SPRING
● VALVE STEM OIL SEAL
VALVE SPRING SEAT
● INTAKE VALVE GUIDE BUSH
● GASKET
VALVE STEM CAP
VALVE SPRING RETAINER LOCK
VALVE SPRING RETAINER
INNER COMPRESSION SPRING
● VALVE STEM OIL SEAL
VALVE SPRING SEAT
● EXHAUST VALVE GUIDE BUSH
STRAIGHT PIN
RING PIN
10 (102, 7)
STUD BOLT
x2
4.0 (41, 35 in.*lbf)
STUD BOLT
● GASKET
80 (816, 59)
NO. 2 STRAIGHT SCREW PLUG
10 (102, 7)
STUD BOLT
EXHAUST VALVE
INTAKE VALVE
N*m (kgf*cm, ft.*lbf): Specified torque
● Non-reusable part
P
A132502E02

EM

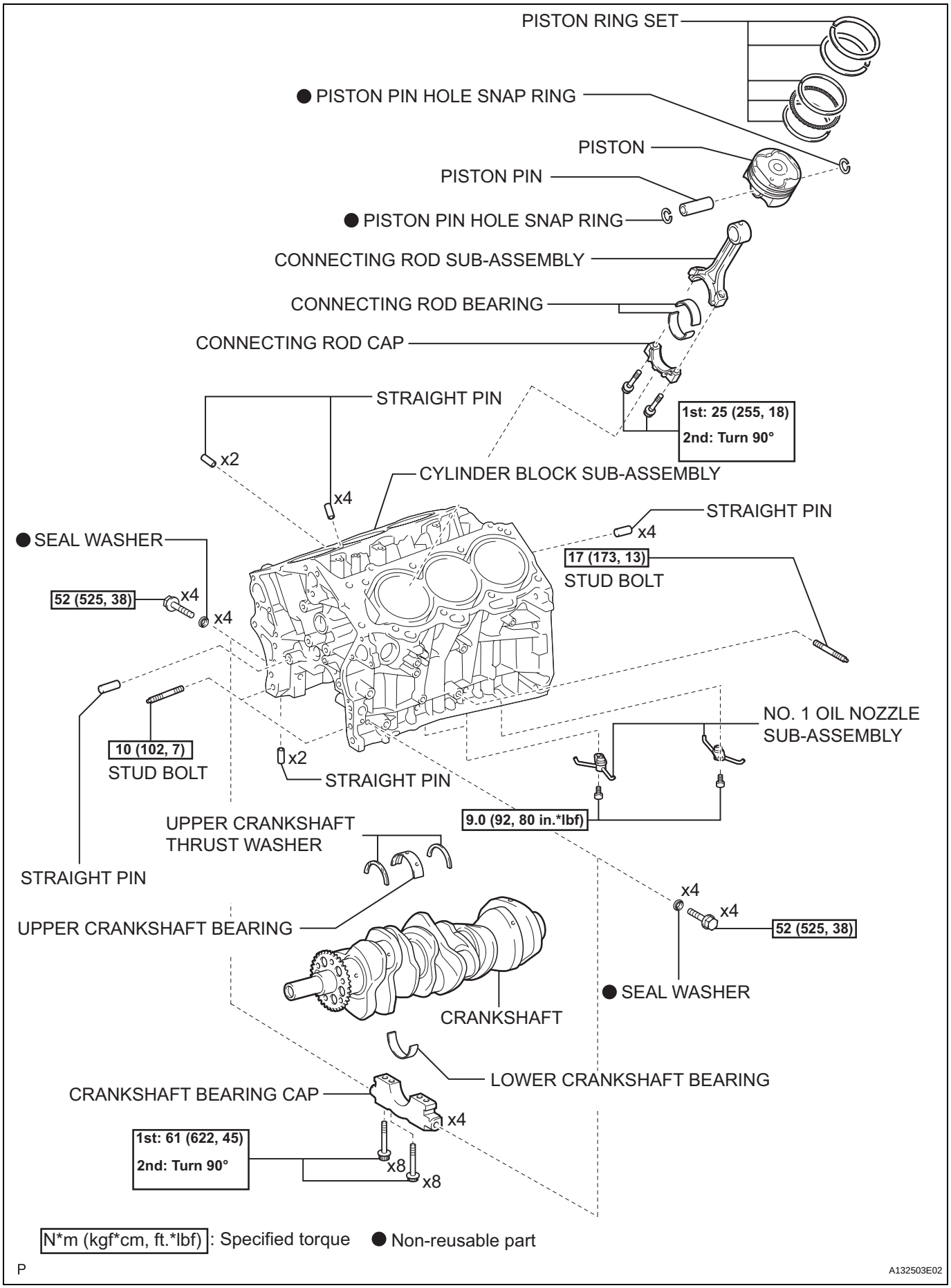
PISTON RING SET
● PISTON PIN HOLE SNAP RING
PISTON
PISTON PIN
● PISTON PIN HOLE SNAP RING
CONNECTING ROD SUB-ASSEMBLY
CONNECTING ROD BEARING
CONNECTING ROD CAP
STRAIGHT PIN
1st: 25 (255, 18)
2nd: Turn 90°
x2
CYLINDER BLOCK SUB-ASSEMBLY
x4
STRAIGHT PIN
x4
● SEAL WASHER
17 (173, 13)
STUD BOLT
52 (525, 38)
x4
x4
10 (102, 7)
STUD BOLT
x2
STRAIGHT PIN
NO. 1 OIL NOZZLE
SUB-ASSEMBLY
9.0 (92, 80 in.*lbf)
UPPER CRANKSHAFT
THRUST WASHER
STRAIGHT PIN
x4
x4
52 (525, 38)
UPPER CRANKSHAFT BEARING
● SEAL WASHER
CRANKSHAFT
LOWER CRANKSHAFT BEARING
CRANKSHAFT BEARING CAP
x4
1st: 61 (622, 45)
2nd: Turn 90°
x8
x8
N*m (kgf*cm, ft.*lbf) : Specified torque
● Non-reusable part
P
A132503E02

EM

FUEL SYSTEM

PRECAUTION

1. PRECAUTION

(a) Before inspecting and repairing the fuel system, disconnect the cable from the negative (-) battery terminal.

(b) Do not smoke or work near fire when handling the fuel system.

(c) Keep gasoline away from rubber or leather parts.

2. DISCHARGE FUEL SYSTEM PRESSURE

CAUTION:

- **Perform the following procedures to prevent fuel from spilling out before removing any fuel system parts.**
- **Pressure will still remain in the fuel line even after performing the following procedures. When disconnecting the fuel line, cover it with a shop rag or a piece of cloth to prevent fuel from spraying or coming out.**

(a) Remove the rear seat cushion assembly.

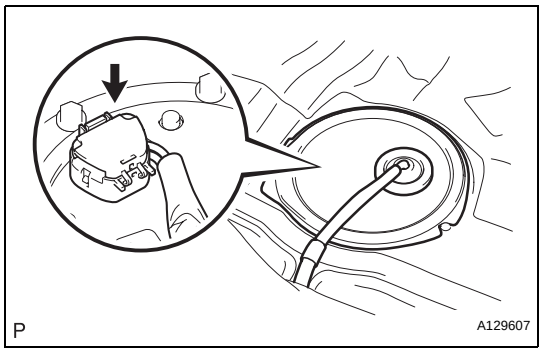

(b) Remove the rear floor service hole cover.

(c) Disconnect the fuel pump connector.

(d) Start the engine.

(e) After the engine stops, turn the engine switch off.
HINT:
DTC P0171/25 (fuel problem) may be detected.

(f) Crank the engine again. Check that the engine does not start.

(g) Remove the fuel tank cap to discharge pressure from the fuel tank.

(h) Disconnect the cable from the negative (-) battery terminal.

(i) Reconnect the fuel pump connector.

(j) Install the rear floor service hole cover.

(k) Install the rear seat.

3. FUEL SYSTEM

(a) When disconnecting the high pressure fuel line, a large amount of gasoline will spill out, so observe the following procedures:

(1) Discharge the fuel system pressure (step 2).

(2) Disconnect the fuel pump tube (See page FU-26).

(3) Drain the fuel that remains in the fuel pump tube.

FU

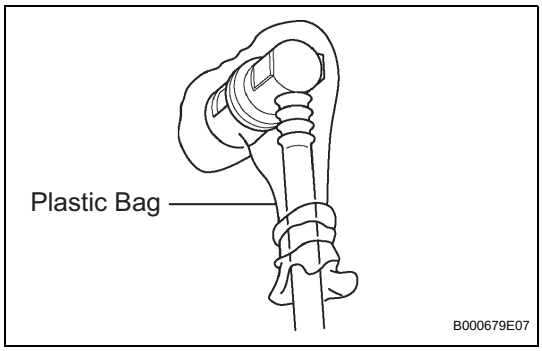

(4) To protect the disconnected fuel pump tube from damage and contamination, cover it with a plastic bag.
(5) Put a container under the connectors.

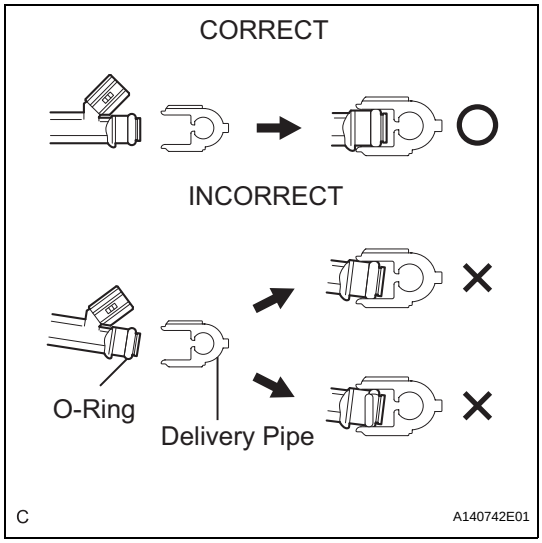

(b) Observe the following precautions when removing and installing the fuel injectors:
(1) Never reuse an O-ring.
(2) When placing a new O-ring on the injector, do not damage the O-ring.
(3) Coat a new O-ring with spindle oil or gasoline before installing it.
NOTICE:
Do not use engine oil, gear oil or brake fluid.

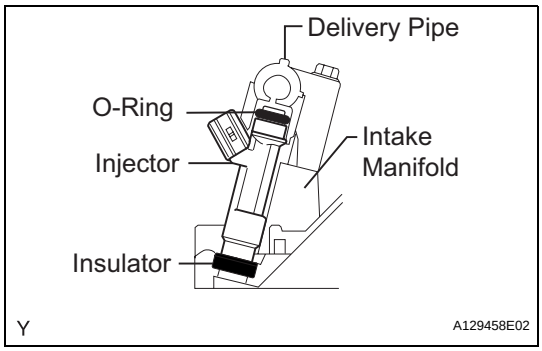

(c) Install the injector to the delivery pipe and the lower intake manifold as shown in the illustration.
NOTICE:
Before installing the injector, be sure to apply appropriate lubricant or gasoline to the place where the delivery pipe or cylinder head contacts the injector O-rings.

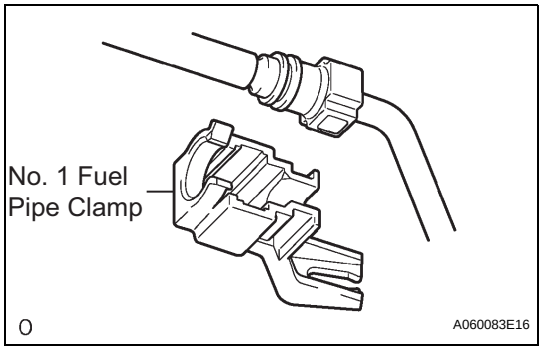

(d) Observe the following precautions when disconnecting the fuel tube connectors (Quick type A):
(1) Remove the No. 1 fuel pipe clamp.
(2) Check that there is no dirt or other foreign objects on the pipe and around the connector before disconnecting them. Clean them if necessary.

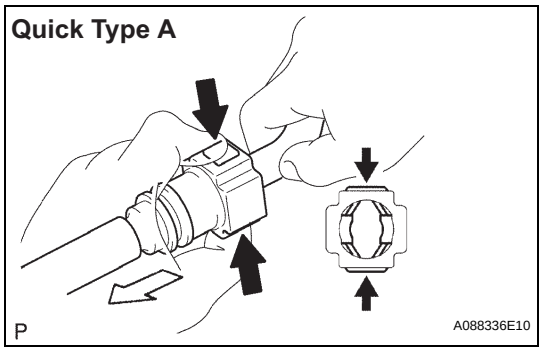

(3) Disconnect the connector from the pipe by hand.
(4) If the connector and the pipe are stuck, push in and pull on the connector to release it. Pull the connector out of the pipe carefully.
(5) Check that there is no dirt or other foreign objects on the sealing surface of the disconnected pipe. Clean the surfaces if necessary.

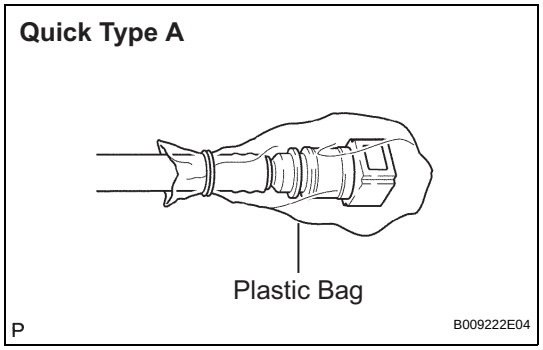

(6) Do not damage the disconnected pipe or connector. Prevent entry of foreign objects by covering the connectors with plastic bags.

FU

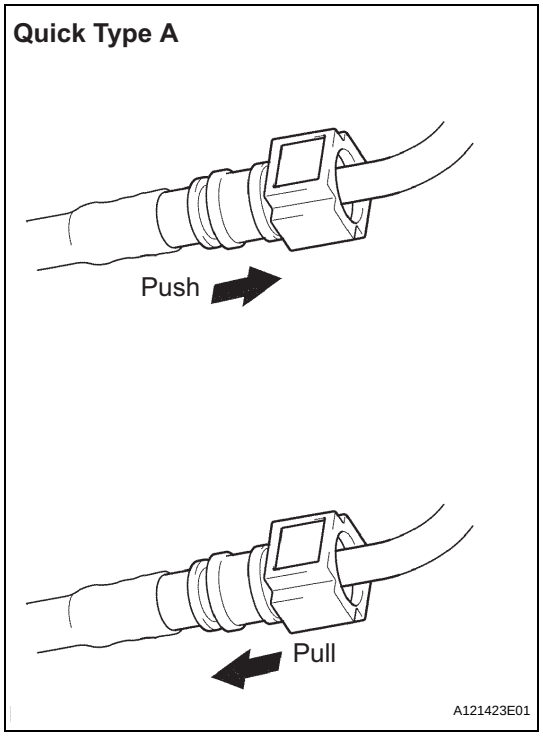

(e) Observe the following precautions when connecting the fuel tube connectors (Quick Type A):
(1) Check if there is any damage or foreign objects on the connecting parts of the pipes.
(2) Line up the two parts of the pipes to be connected, and push them together until the connector makes a "click" sound. If the pipe is difficult to push into the connector, apply a small amount of clean engine oil to the tip of the pipe and reinsert it.
(3) After connecting the pipes, check that the pipe and connector are securely connected by pulling on them.
(4) Check for fuel leaks.

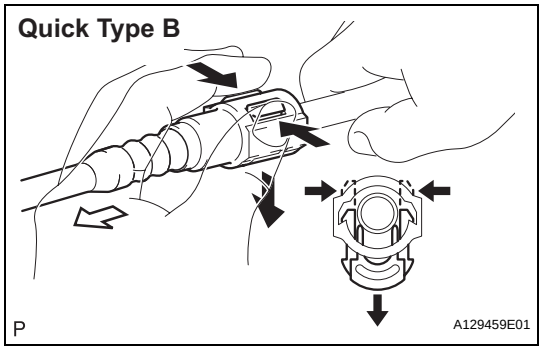

(f) Observe the following precautions when disconnecting the fuel tube connector (Quick type B):
(1) Before disconnecting the connector, clean off any dirt that may be present.
(2) Pinch the tabs of the fuel tube retainer to disengage the 2 claws. Push the retainer down as shown in the illustration.
HINT:
Be sure to disconnect the connector by hand.

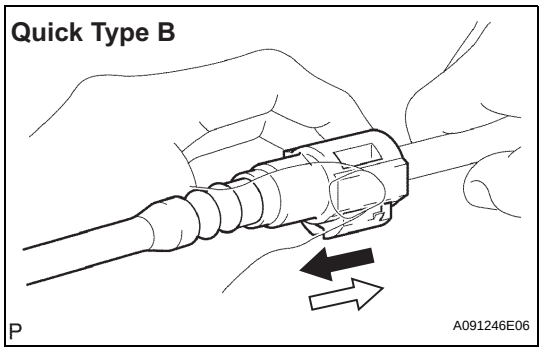

(3) If the connector and pipe are stuck, hold the fuel pipe by hand, and push and pull on the connector. Pull the two pipes apart to separate the connector.
(4) Check if there is any dirt or any other foreign objects on the sealing surfaces of the disconnected pipes. Clean the sealing surfaces if necessary.

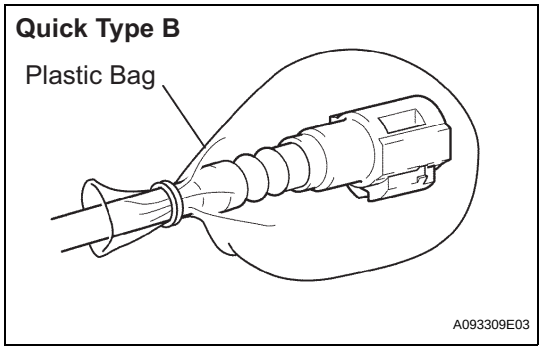

(5) Do not damage the disconnected pipe or connector. Prevent entry of foreign objects by covering the connectors with plastic bags.

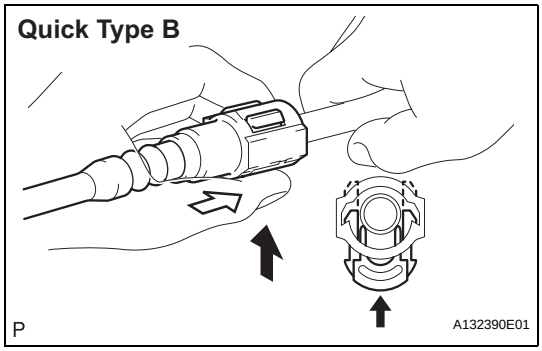

(g) Observe the following precautions when connecting the fuel tube connector (Quick Type B):
(1) Line up the two parts of the pipes to be connected, and fully push the fuel tube connector and pipe together until they are fully seated. Next, push the retainer into the connector until its claws lock. If the pipe is difficult to push in to the connector, apply a small amount of clean engine oil to the tip of the pipe and reinsert it.
(2) After connecting the pipes, check that the pipe and connector are securely connected by pulling on them.
(3) Check for fuel leaks.
(h) Observe the following precautions when handling a nylon tube:
CAUTION:
- **Do not twist the connector part of the nylon tube or the quick connector when connecting them.**
- **Do not bend or twist the nylon tube.**
- **Do not remove the EPDM protector on the outside of the nylon tube.**
- **Do not pinch or kink the nylon tubes to prevent fuel leakage.**

4. CHECK FOR FUEL LEAKS
(a) Check that there are no fuel leaks from the fuel system after doing any maintenance or repairs (See page FU-7).

FUEL INJECTOR

COMPONENTS

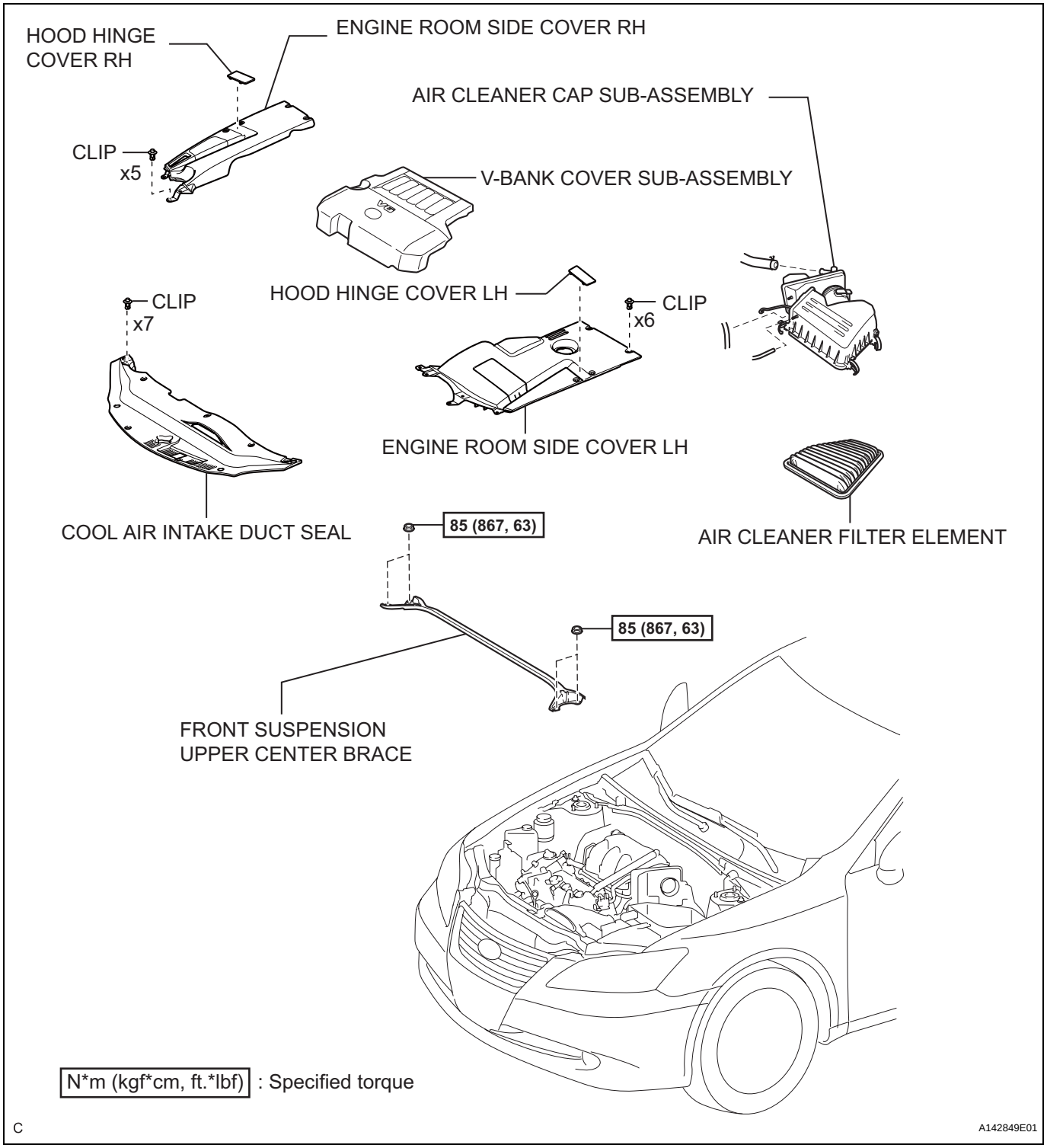

FU

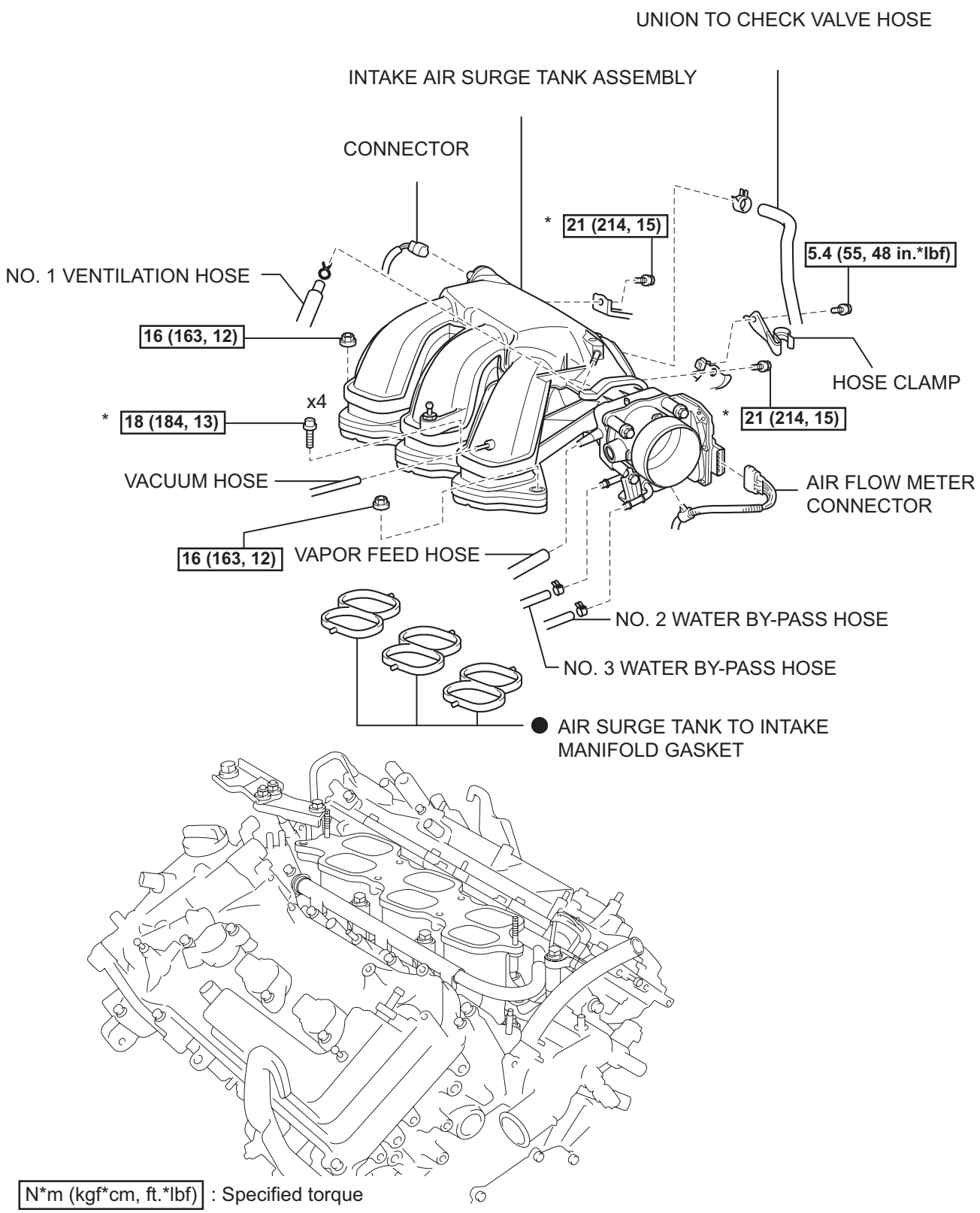

N*m (kgf*cm, ft.*lbf) : Specified torque

● Non-reusable part

* DO NOT apply oil

C

A114551E03

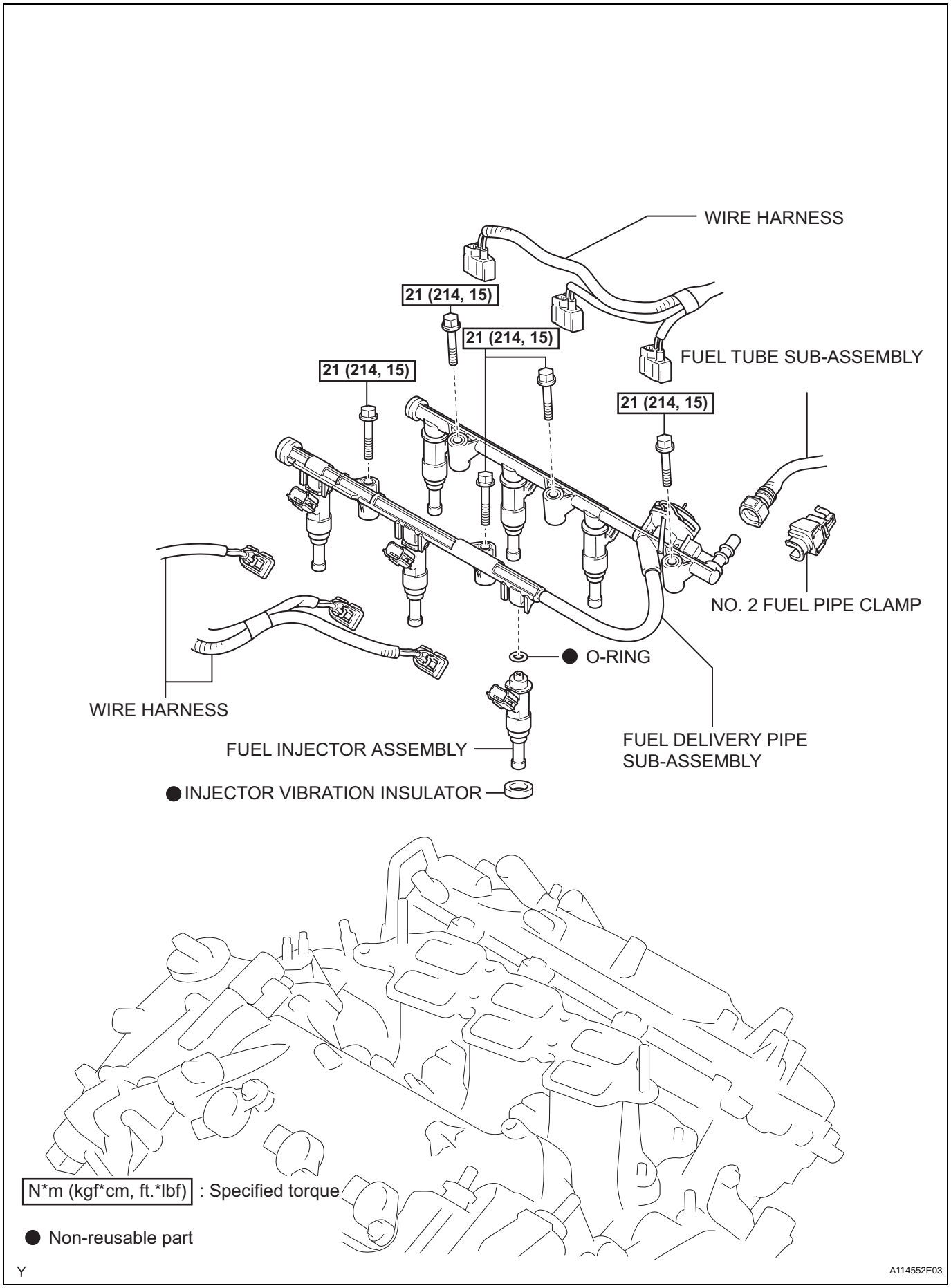
WIRE HARNESS
21 (214, 15)
21 (214, 15)
21 (214, 15)
21 (214, 15)
FUEL TUBE SUB-ASSEMBLY
NO. 2 FUEL PIPE CLAMP
O-RING
WIRE HARNESS
FUEL INJECTOR ASSEMBLY
FUEL DELIVERY PIPE SUB-ASSEMBLY
INJECTOR VIBRATION INSULATOR
N*m (kgf*cm, ft.*lbf) : Specified torque
Non-reusable part
Y
A114552E03

FUEL PRESSURE PULSATION DAMPER

COMPONENTS

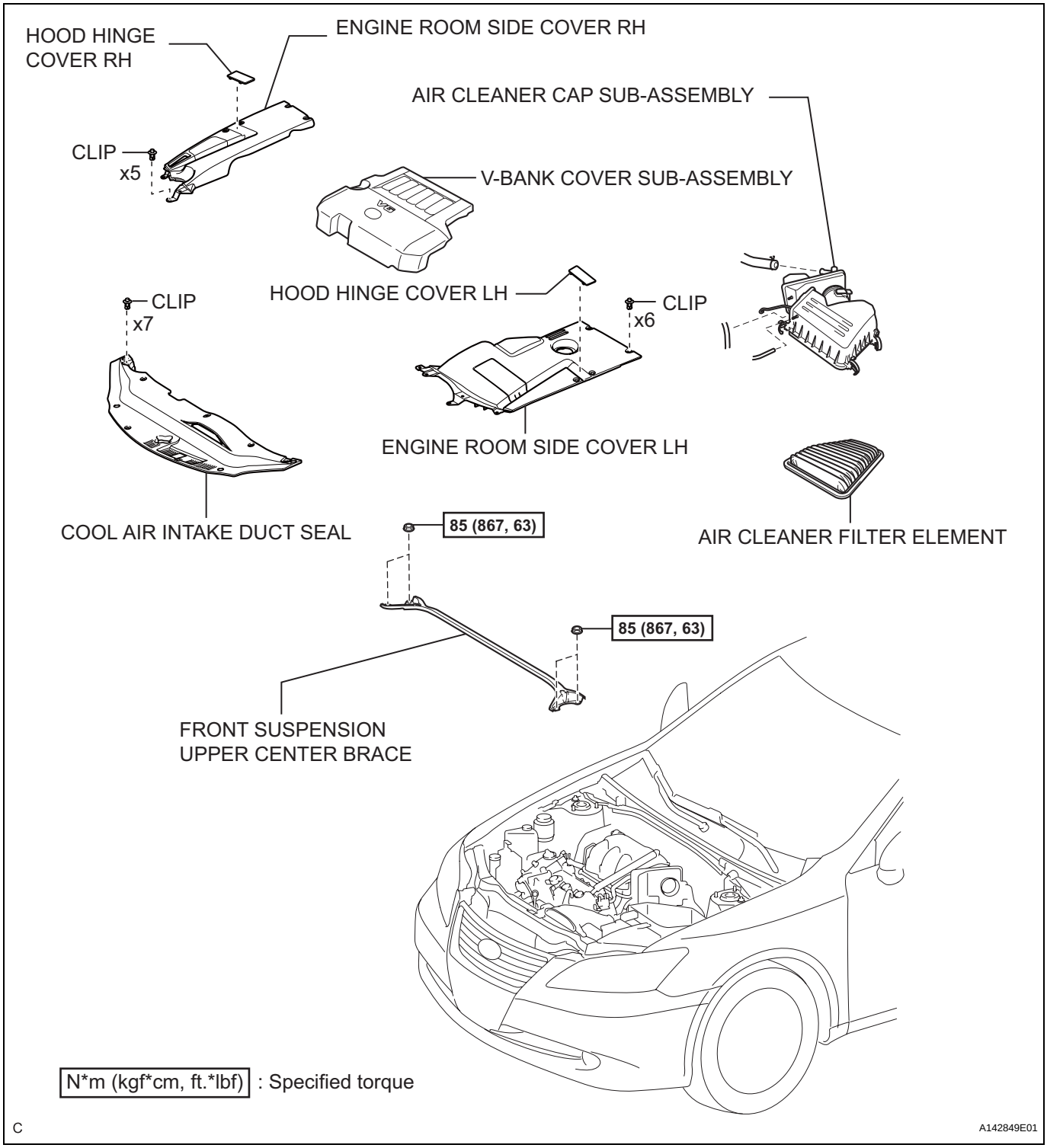

FU

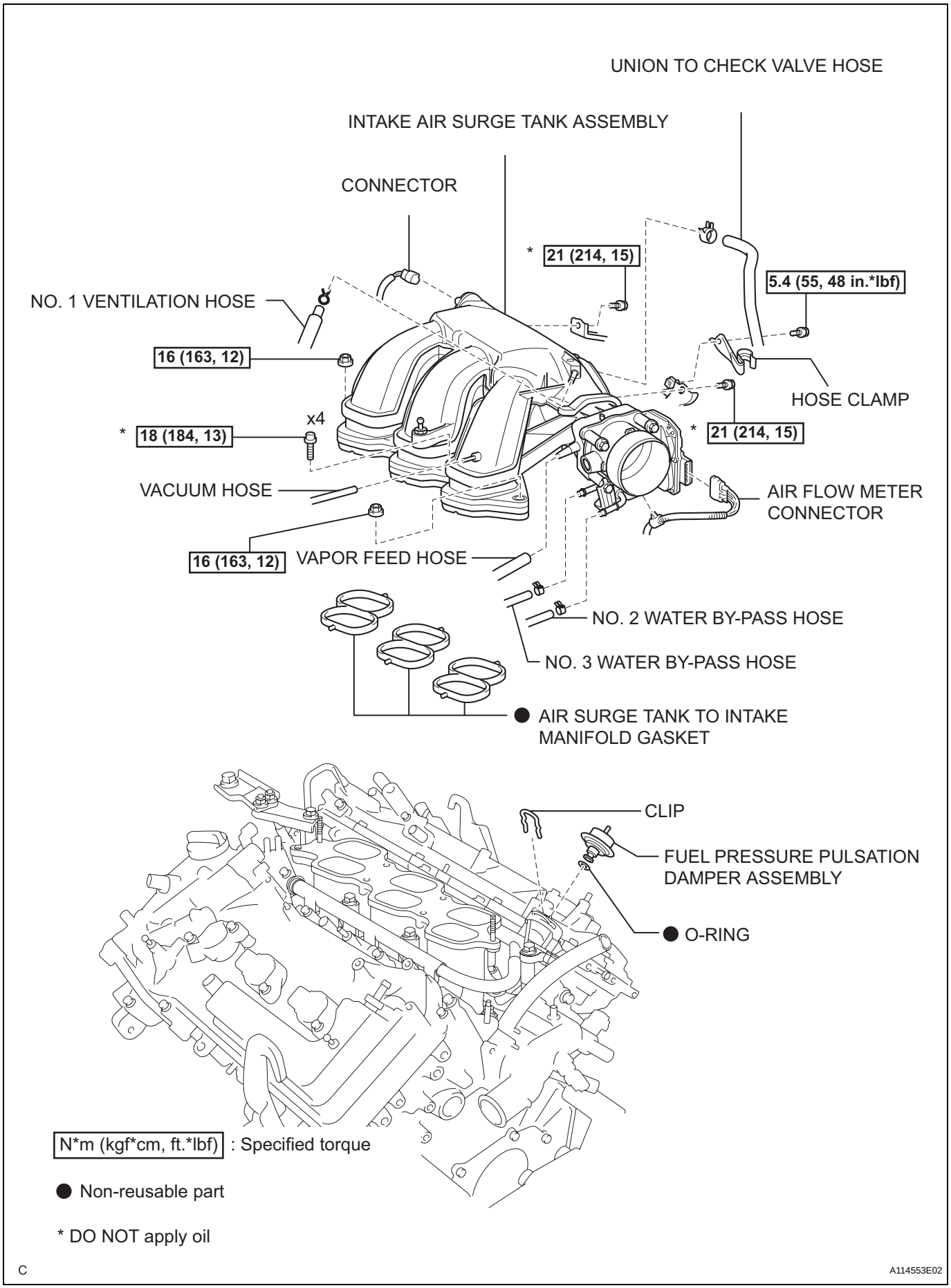
UNION TO CHECK VALVE HOSE
INTAKE AIR SURGE TANK ASSEMBLY
CONNECTOR
* 21 (214, 15)
5.4 (55, 48 in.*lbf)
NO. 1 VENTILATION HOSE
16 (163, 12)
HOSE CLAMP
x4
* 18 (184, 13)
* 21 (214, 15)
VACUUM HOSE
AIR FLOW METER CONNECTOR
16 (163, 12)
VAPOR FEED HOSE
NO. 2 WATER BY-PASS HOSE
NO. 3 WATER BY-PASS HOSE
● AIR SURGE TANK TO INTAKE MANIFOLD GASKET
CLIP
FUEL PRESSURE PULSATION DAMPER ASSEMBLY
● O-RING
N*m (kgf*cm, ft.*lbf) : Specified torque
● Non-reusable part
* DO NOT apply oil
C
A114553E02

FU

FUEL PUMP

COMPONENTS

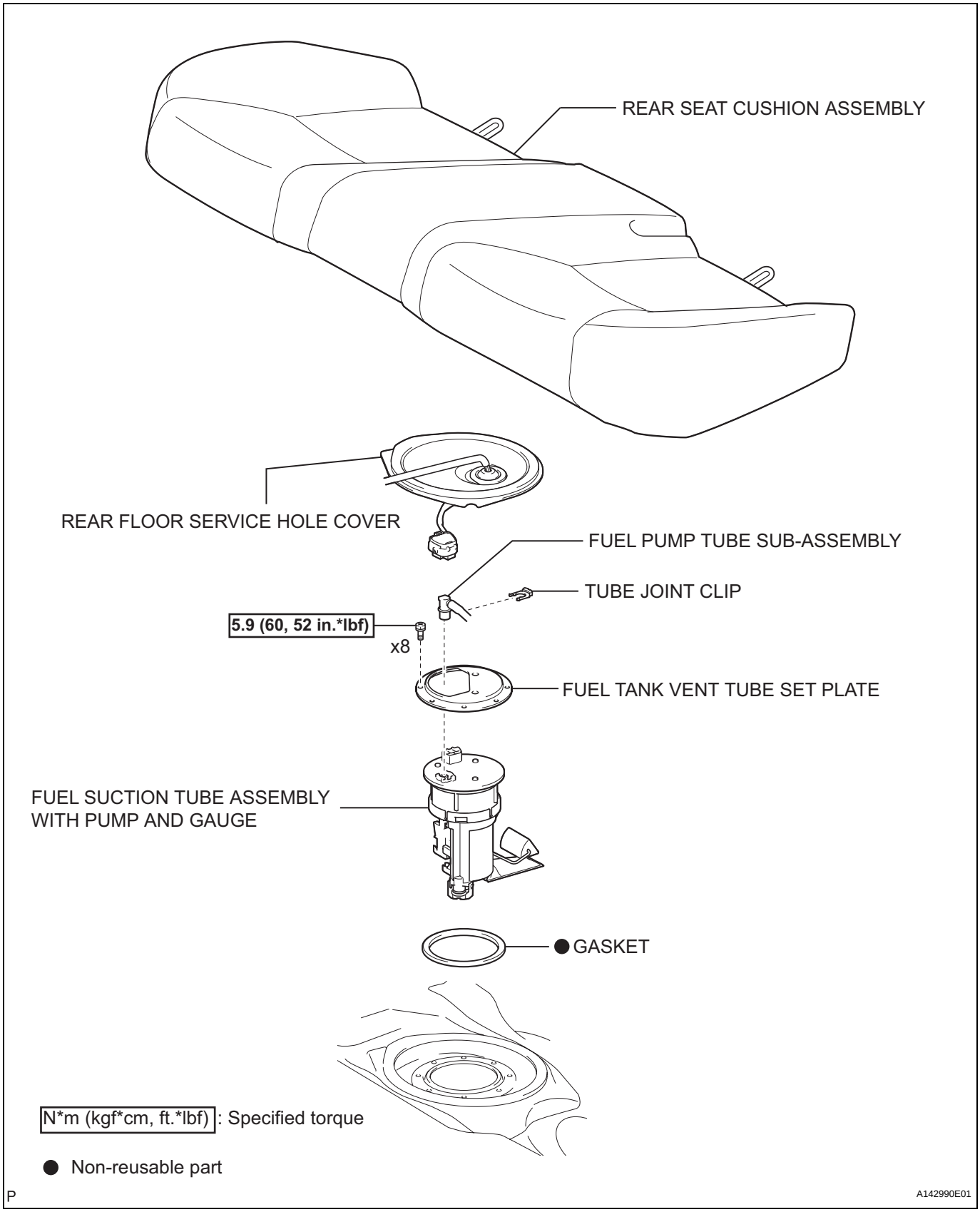

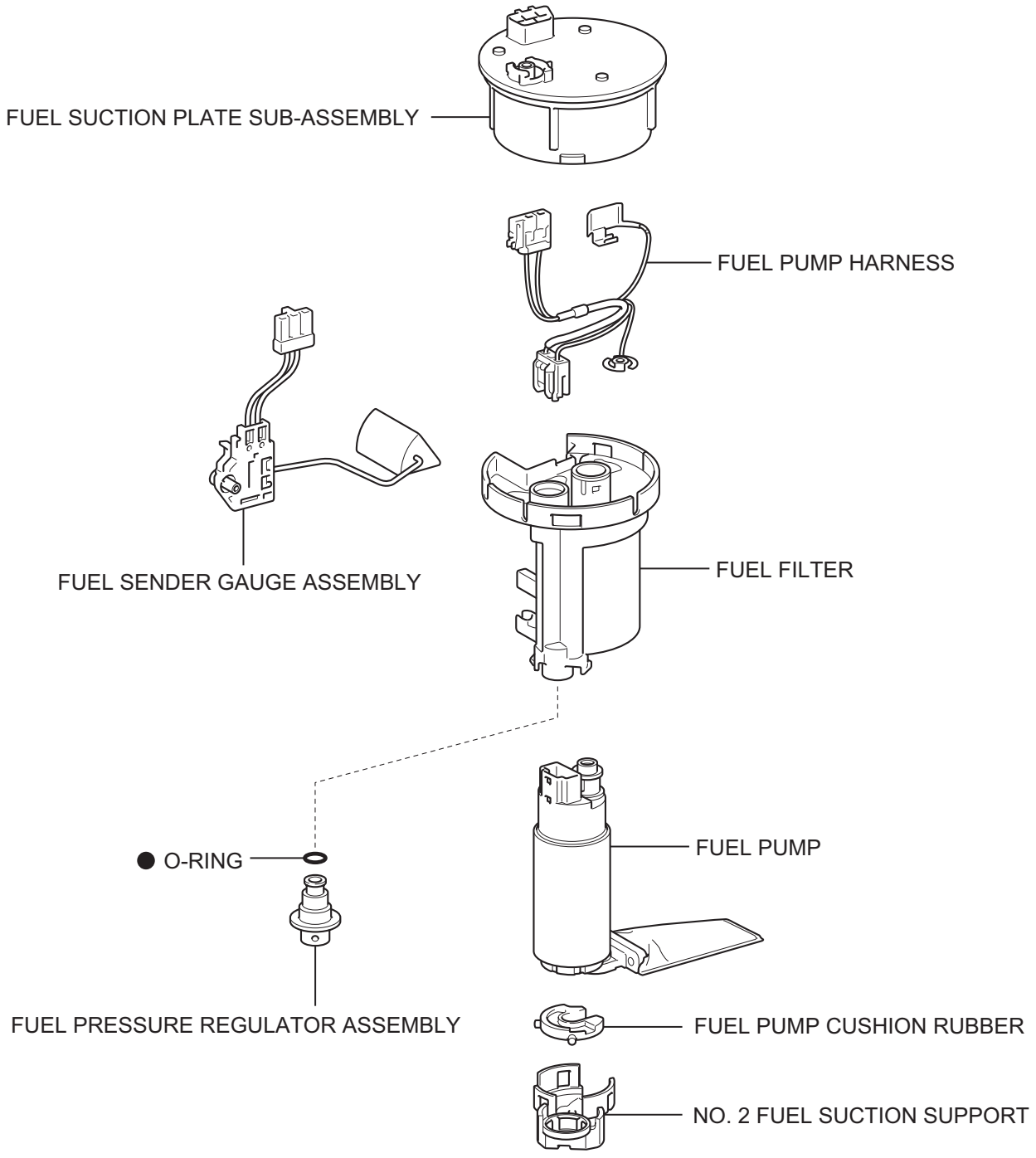

● Non-reusable part

C

A136243E01

FUEL TANK

COMPONENTS

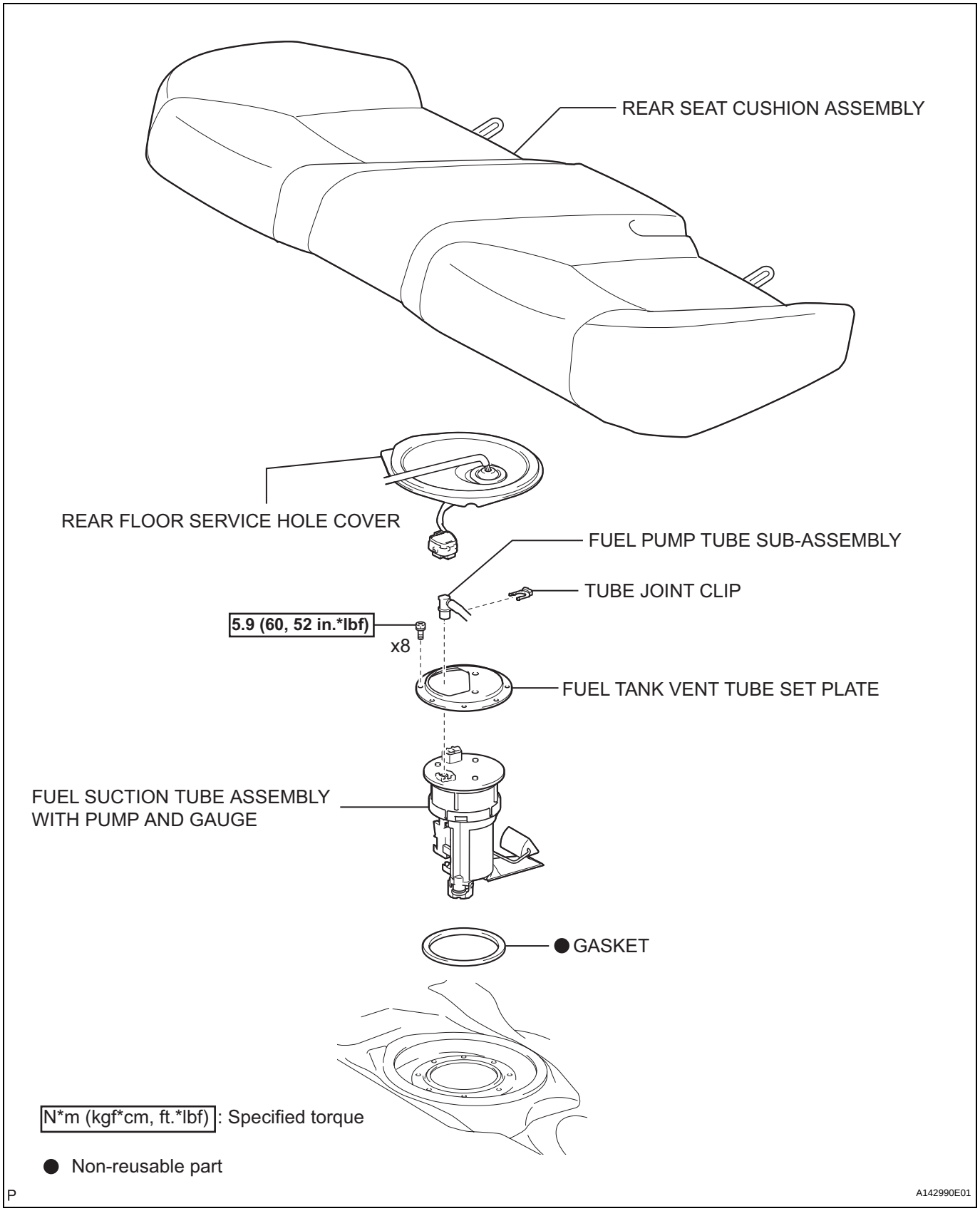

FU

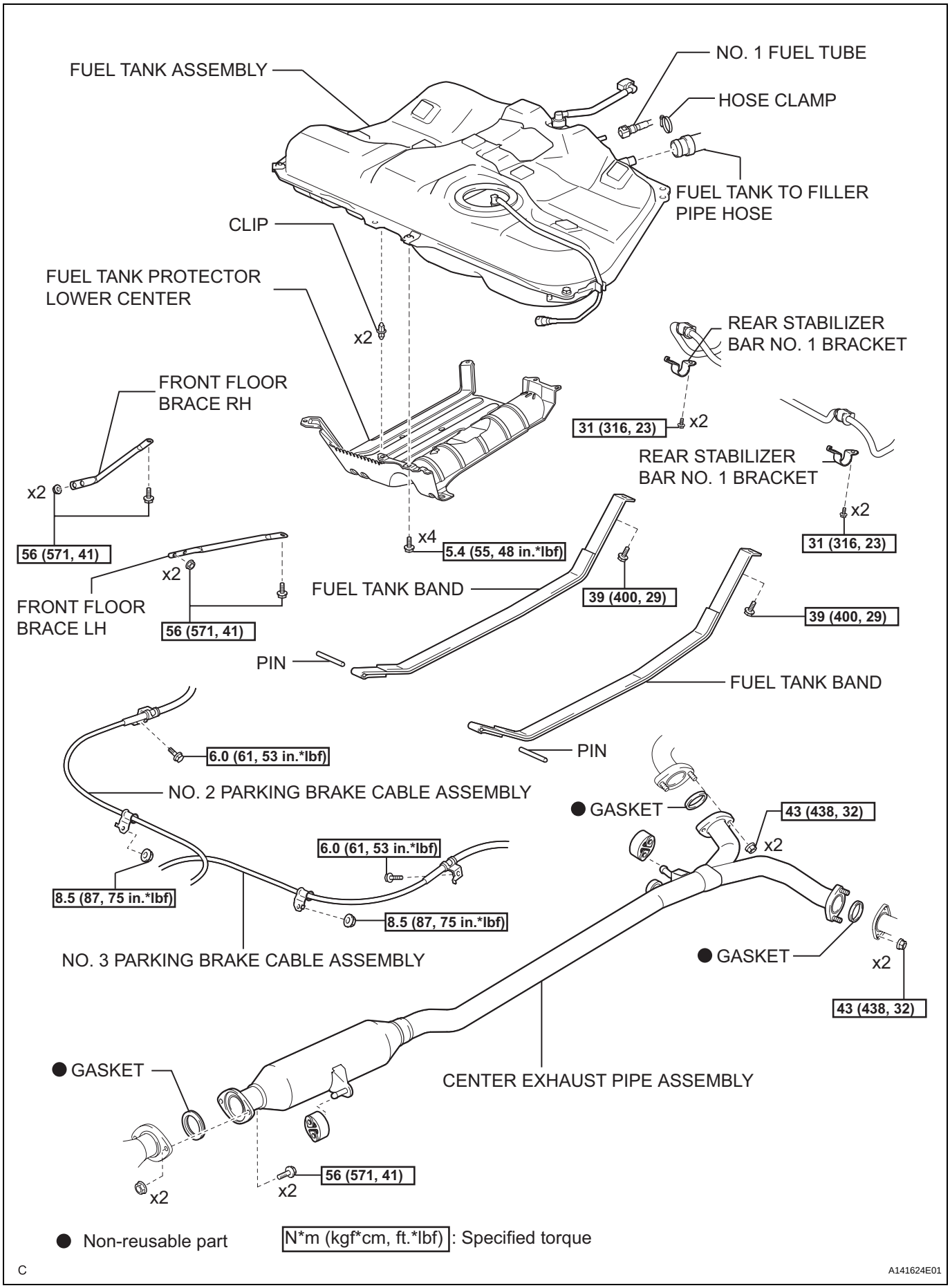
FUEL TANK ASSEMBLY
NO. 1 FUEL TUBE
HOSE CLAMP
FUEL TANK TO FILLER PIPE HOSE
CLIP
FUEL TANK PROTECTOR LOWER CENTER
x2
REAR STABILIZER BAR NO. 1 BRACKET
FRONT FLOOR BRACE RH
31 (316, 23)
x2
REAR STABILIZER BAR NO. 1 BRACKET
x2
x2
56 (571, 41)
x4
5.4 (55, 48 in.*lbf)
31 (316, 23)
x2
FUEL TANK BAND
39 (400, 29)
FRONT FLOOR BRACE LH
56 (571, 41)
39 (400, 29)
PIN
FUEL TANK BAND
PIN
6.0 (61, 53 in.*lbf)
NO. 2 PARKING BRAKE CABLE ASSEMBLY
GASKET
43 (438, 32)
x2
6.0 (61, 53 in.*lbf)
8.5 (87, 75 in.*lbf)
8.5 (87, 75 in.*lbf)
NO. 3 PARKING BRAKE CABLE ASSEMBLY
GASKET
x2
43 (438, 32)
GASKET
CENTER EXHAUST PIPE ASSEMBLY
56 (571, 41)
x2
x2
Non-reusable part
N*m (kgf*cm, ft.*lbf): Specified torque
C
A141624E01

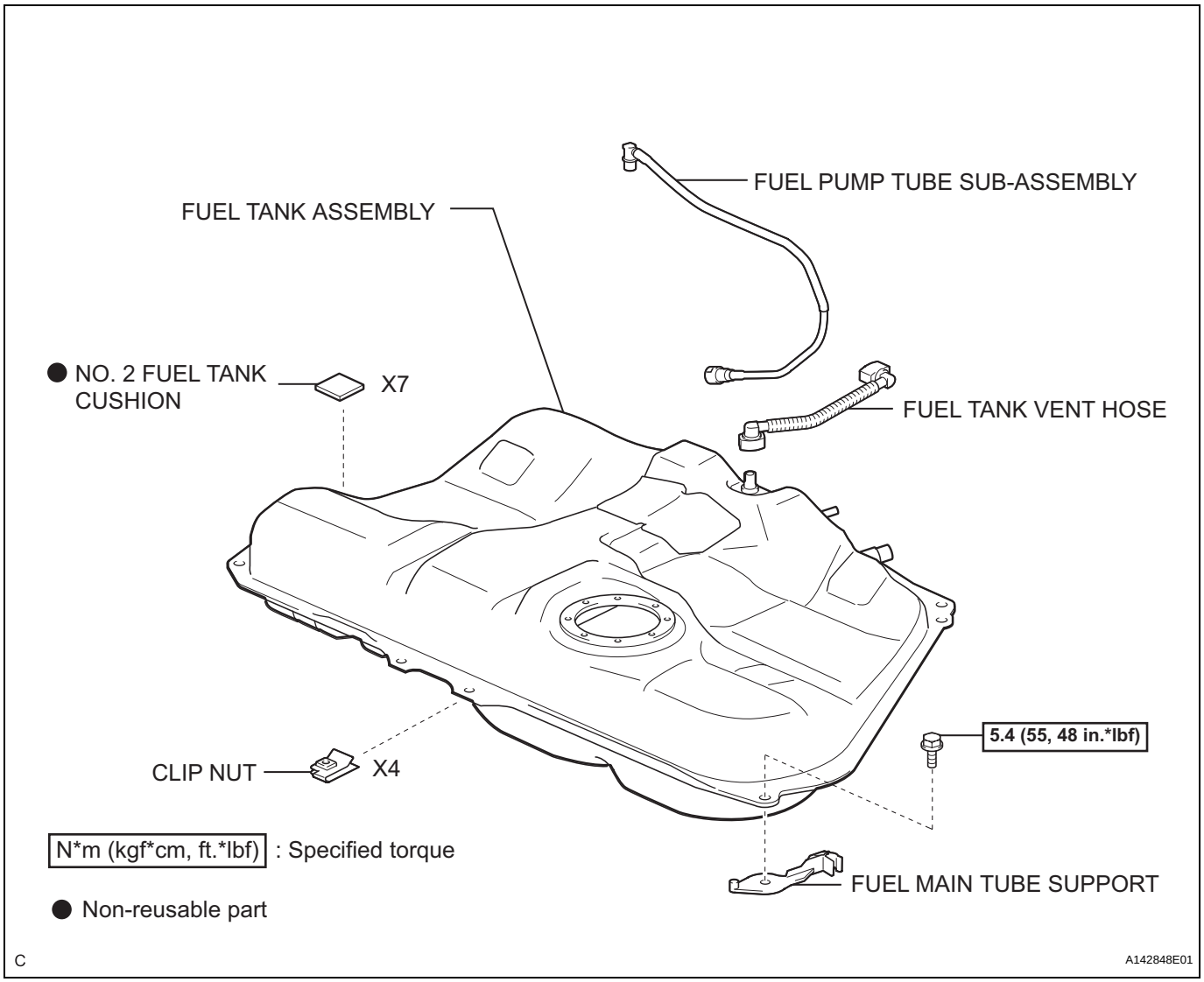
FUEL PUMP TUBE SUB-ASSEMBLY
FUEL TANK ASSEMBLY
● NO. 2 FUEL TANK CUSHION
X7
FUEL TANK VENT HOSE
5.4 (55, 48 in.*lbf)
CLIP NUT
X4
N*m (kgf*cm, ft.*lbf) : Specified torque
FUEL MAIN TUBE SUPPORT
● Non-reusable part
C
A142848E01

FU

EMISSION CONTROL SYSTEM

PARTS LOCATION

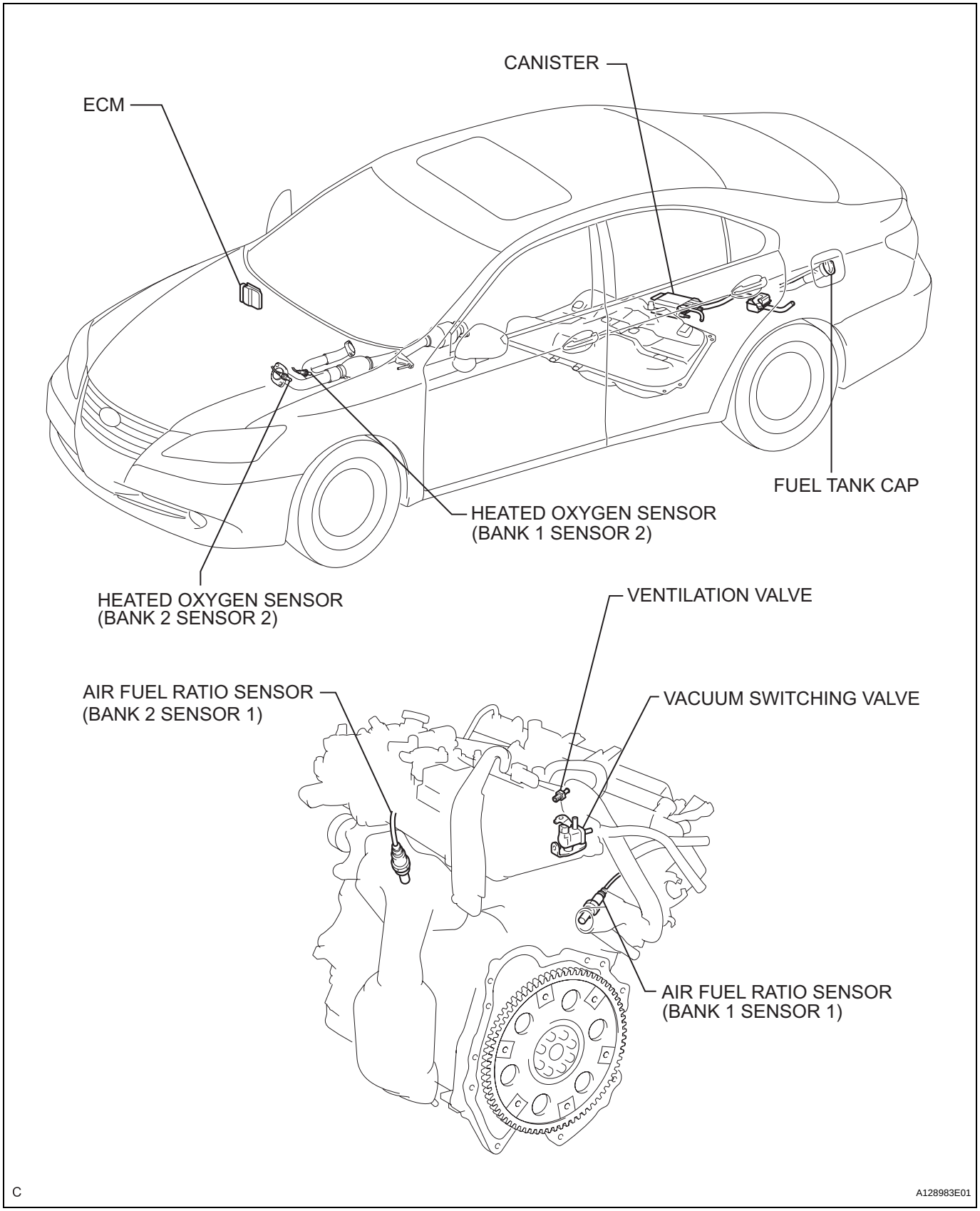

SYSTEM DIAGRAM

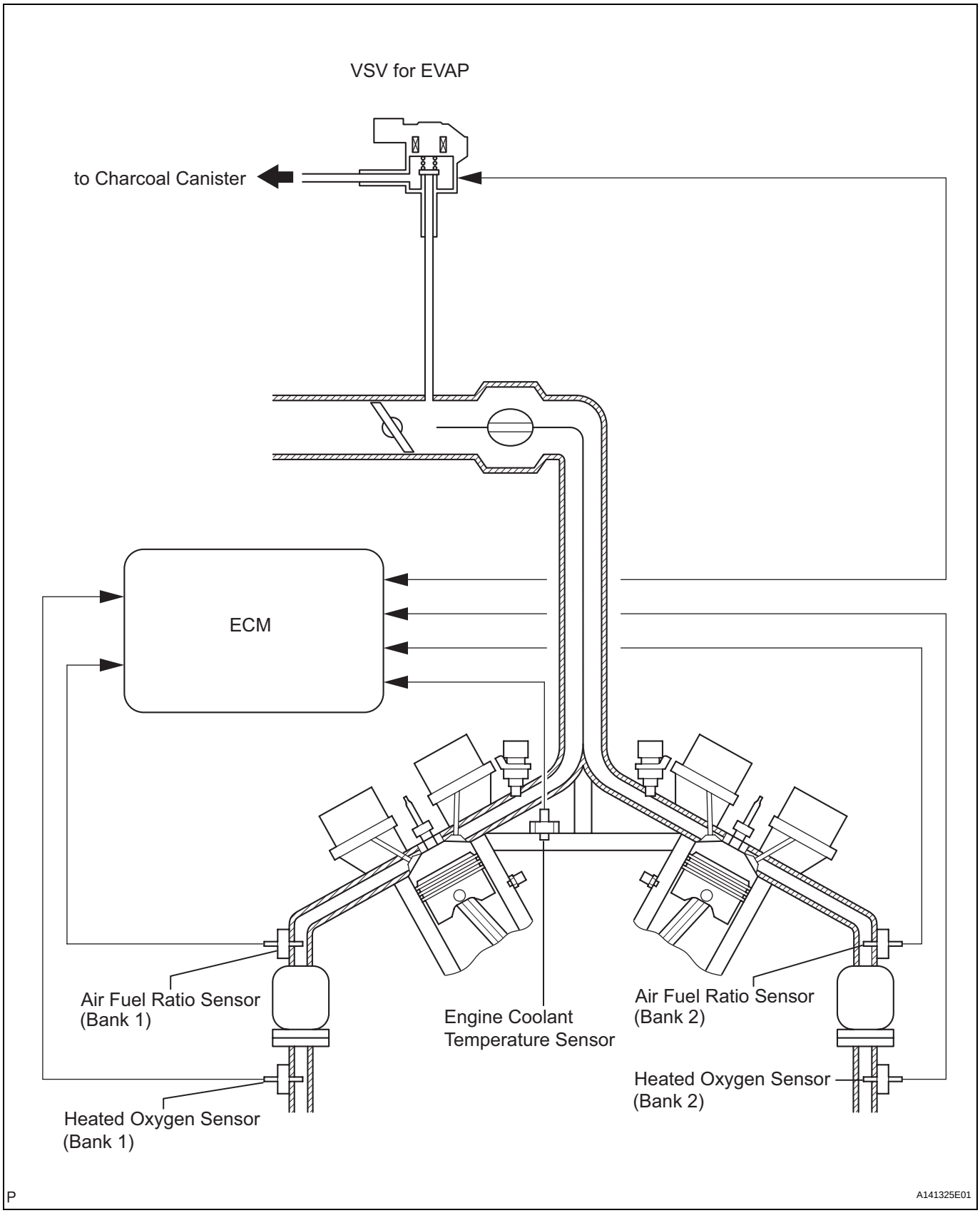

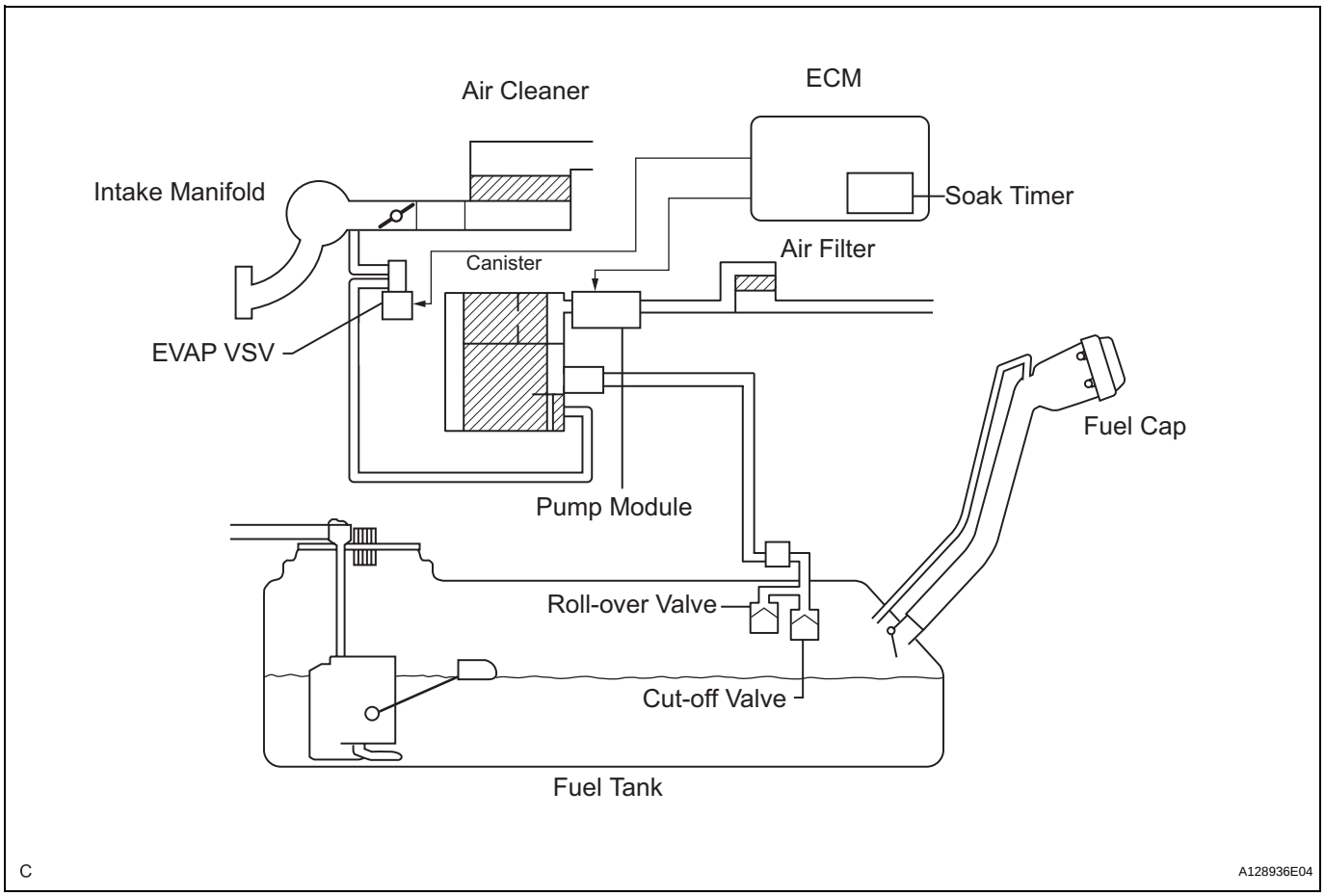
Air Cleaner
ECM
Intake Manifold
Soak Timer
Canister
Air Filter
EVAP VSV
Fuel Cap
Pump Module
Roll-over Valve
Cut-off Valve
Fuel Tank
C
A128936E04

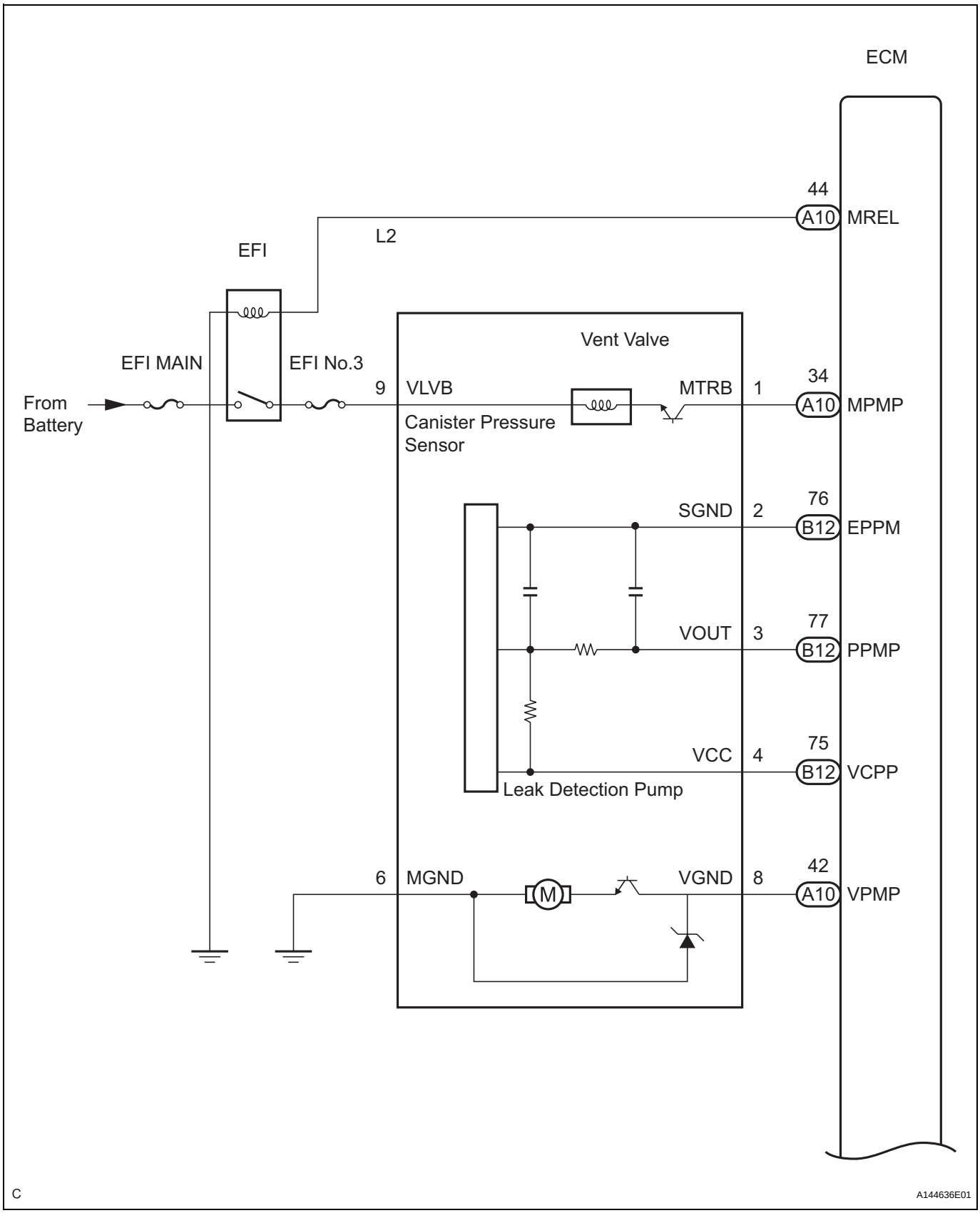
ECM
44
A10
MREL
L2
EFI
Vent Valve
EFI MAIN
EFI No.3
9
VLVB
MTRB
1
34
A10
MPMP
From
Battery
Canister Pressure
Sensor
SGND
2
76
B12
EPPM
VOUT
3
77
B12
PPMP
VCC
4
75
B12
VCPP
Leak Detection Pump
6
MGND
M
VGND
8
42
A10
VPMP
C
A144636E01

EC

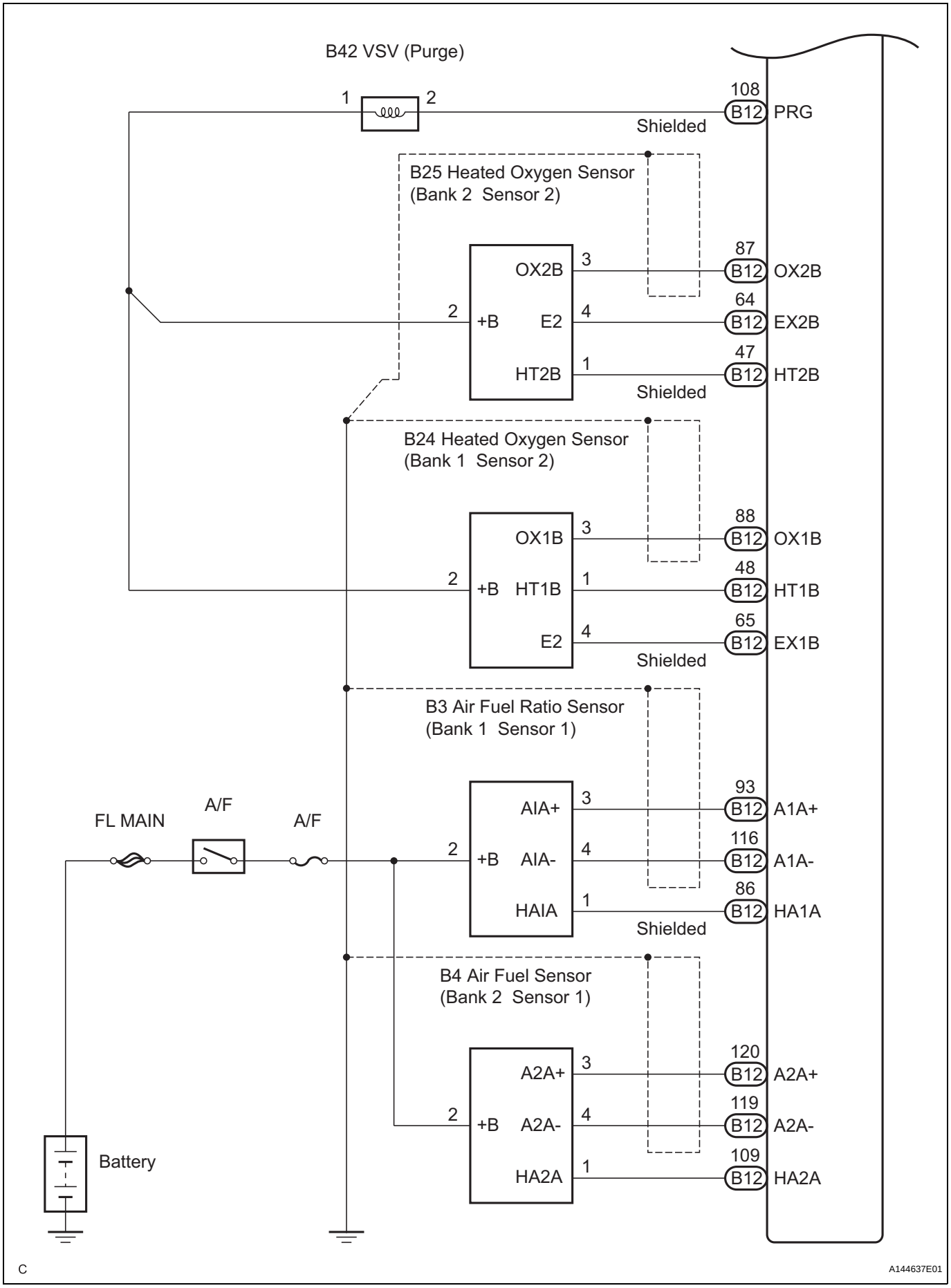
B42 VSV (Purge)
1
2
108
B12
PRG
Shielded
B25 Heated Oxygen Sensor
(Bank 2 Sensor 2)
OX2B
3
87
B12
OX2B
2
+B
E2
4
64
B12
EX2B
HT2B
1
47
B12
HT2B
Shielded
B24 Heated Oxygen Sensor
(Bank 1 Sensor 2)
OX1B
3
88
B12
OX1B
2
+B
HT1B
1
48
B12
HT1B
E2
4
65
B12
EX1B
Shielded
B3 Air Fuel Ratio Sensor
(Bank 1 Sensor 1)
FL MAIN
A/F
A/F
AIA+
3
93
B12
A1A+
2
+B
AIA-
4
116
B12
A1A-
HAIA
1
86
B12
HA1A
Shielded
B4 Air Fuel Sensor
(Bank 2 Sensor 1)
A2A+
3
120
B12
A2A+
2
+B
A2A-
4
119
B12
A2A-
HA2A
1
109
B12
HA2A
Battery
C
A144637E01

EC

CANISTER

COMPONENTS

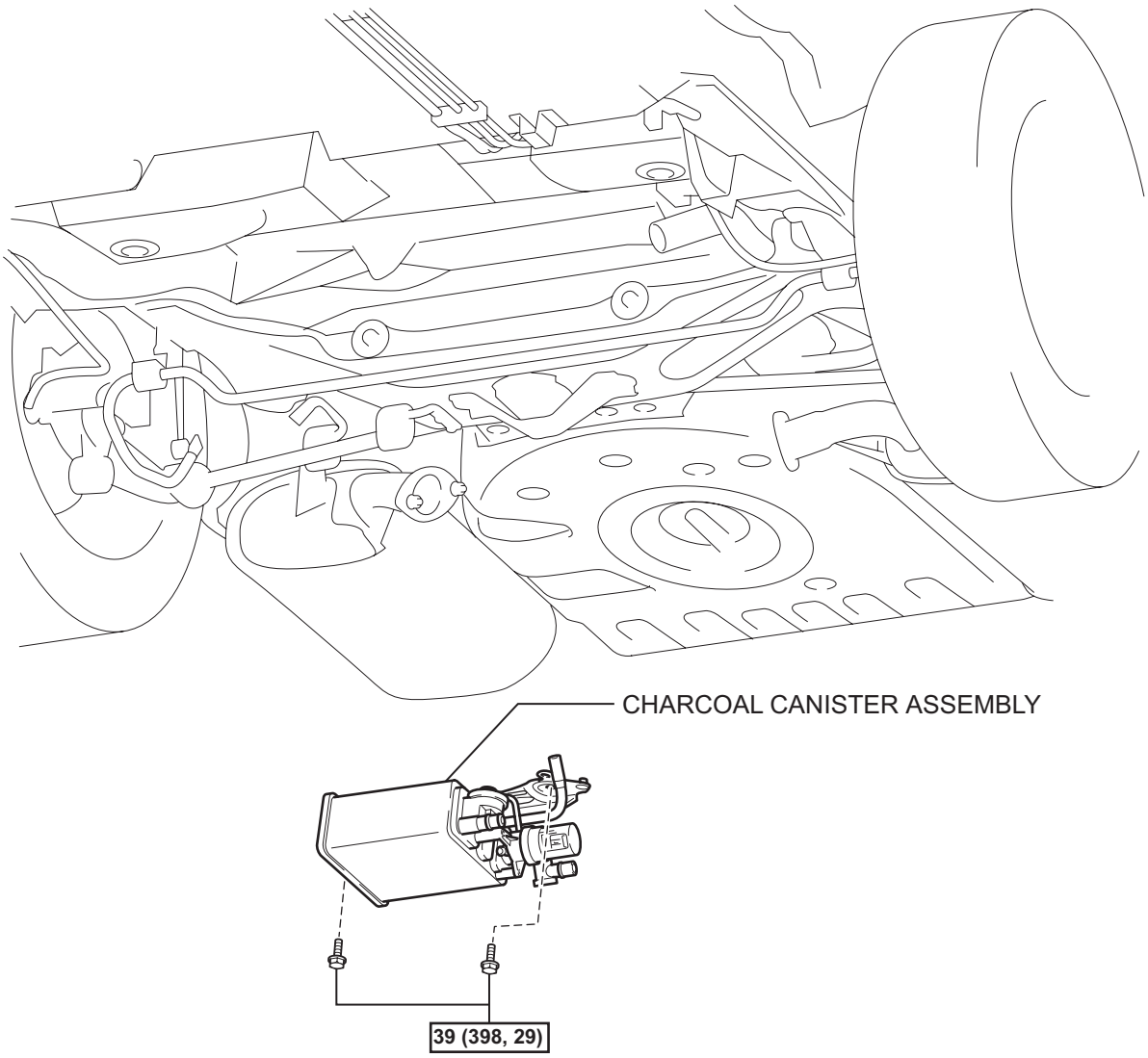

N*m (kgf*cm, ft.*lbf) : Specified torque

T

A135648E04

REMOVAL

1. REMOVE FUEL TANK ASSEMBLY

HINT:

(See page FU-35)

2. REMOVE CHARCOAL CANISTER ASSEMBLY

(a) Disconnect the fuel tank vent hose from the charcoal canister.
  (1) Push the connector deep inside.
  (2) Pinch portion A.
  (3) Pull out the connector.

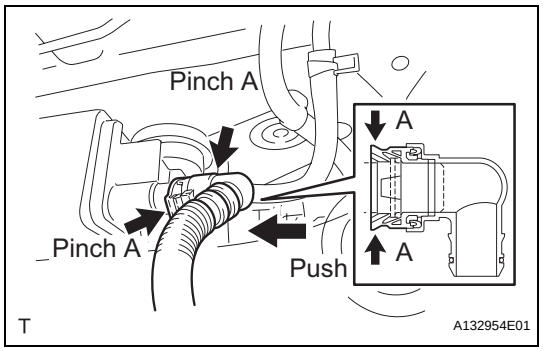

(b) Disconnect the charcoal canister filter sub-assembly from the charcoal canister.
  (1) Push the connector deep inside.
  (2) Pinch portion A.
  (3) Pull out the connector.

(c) Disconnect the vapor pressure sensor connector.

(d) Disconnect the wire harness clamp.

(e) Disconnect the purge line hose from the charcoal canister.

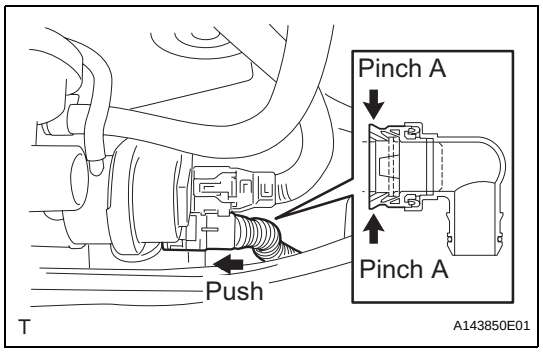

(f) Remove the 2 bolts, clip and charcoal canister.

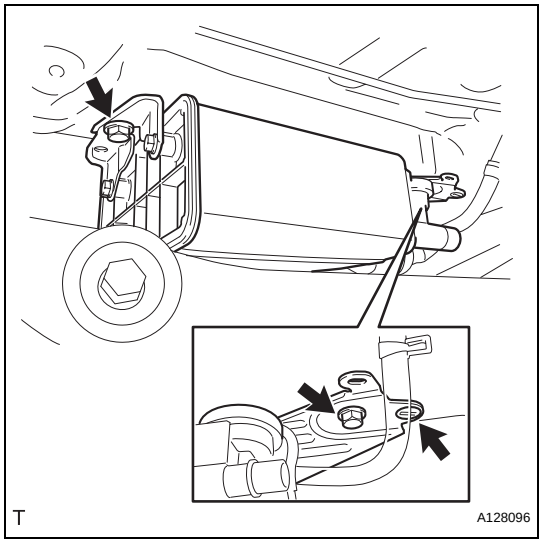

INSPECTION

1. INSPECT CHARCOAL CANISTER ASSEMBLY

(a) Visually check the charcoal canister for cracks or damage.
  If cracks or damage are found, replace the charcoal canister assembly.

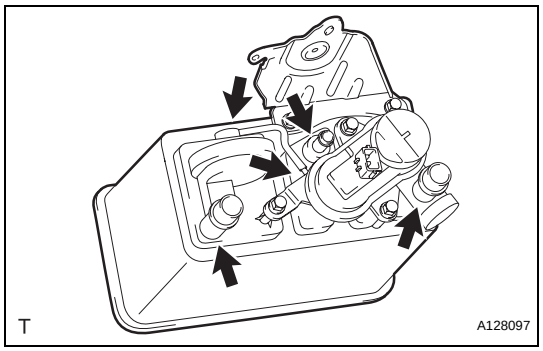

EC

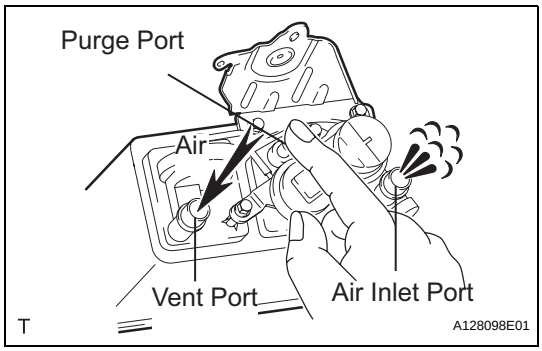

(b) Check charcoal canister operation.
(1) With the purge port closed, blow 1.67 kPa (17.0 gf/cm^2, 0.24 psi) of air into the vent port, and check that air flows from the air inlet port.
If the result is not as specified, replace the charcoal canister assembly.

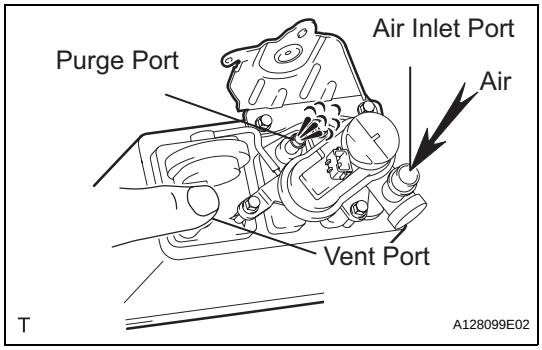

(2) With the vent port closed, blow 1.10 kPa (11.2 gf/cm^2, 0.16 psi) of air to the air inlet port, and check that air flows from the purge port.
If the result is not as specified, replace the charcoal canister assembly.

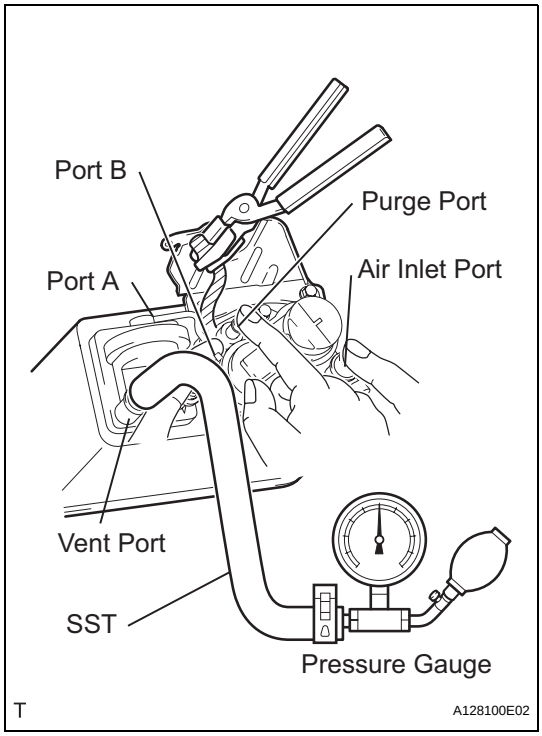

(c) Check for air leakage.
(1) Remove the air hose between ports A and B.
(2) Connect the SST (pressure gauge) to the vent port of the charcoal canister.
SST 09992-00242
(3) While holding port B, with the purge port and the air inlet port closed and port A open, apply 19.6 kPa (0.2 kgf/cm^2, 2.81 psi) of pressurized air into the vent port, then confirm that pressure is retained for 1 minute.
If the result is not as specified, replace the charcoal canister assembly.

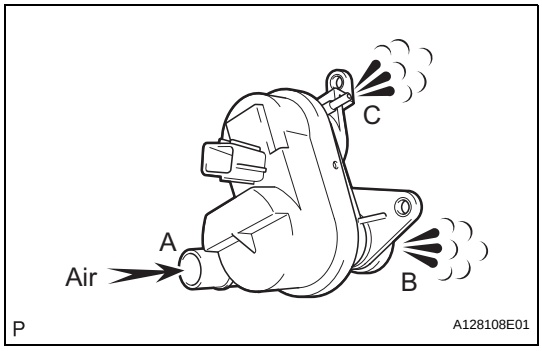

(d) Check the leak detection pump.
(1) Remove the detection pump from the charcoal canister.
(2) Check that air flows from port A to B and then C.
If the result is not as specified, replace the charcoal canister assembly.

VACUUM SWITCHING VALVE (for EVAP)

COMPONENTS

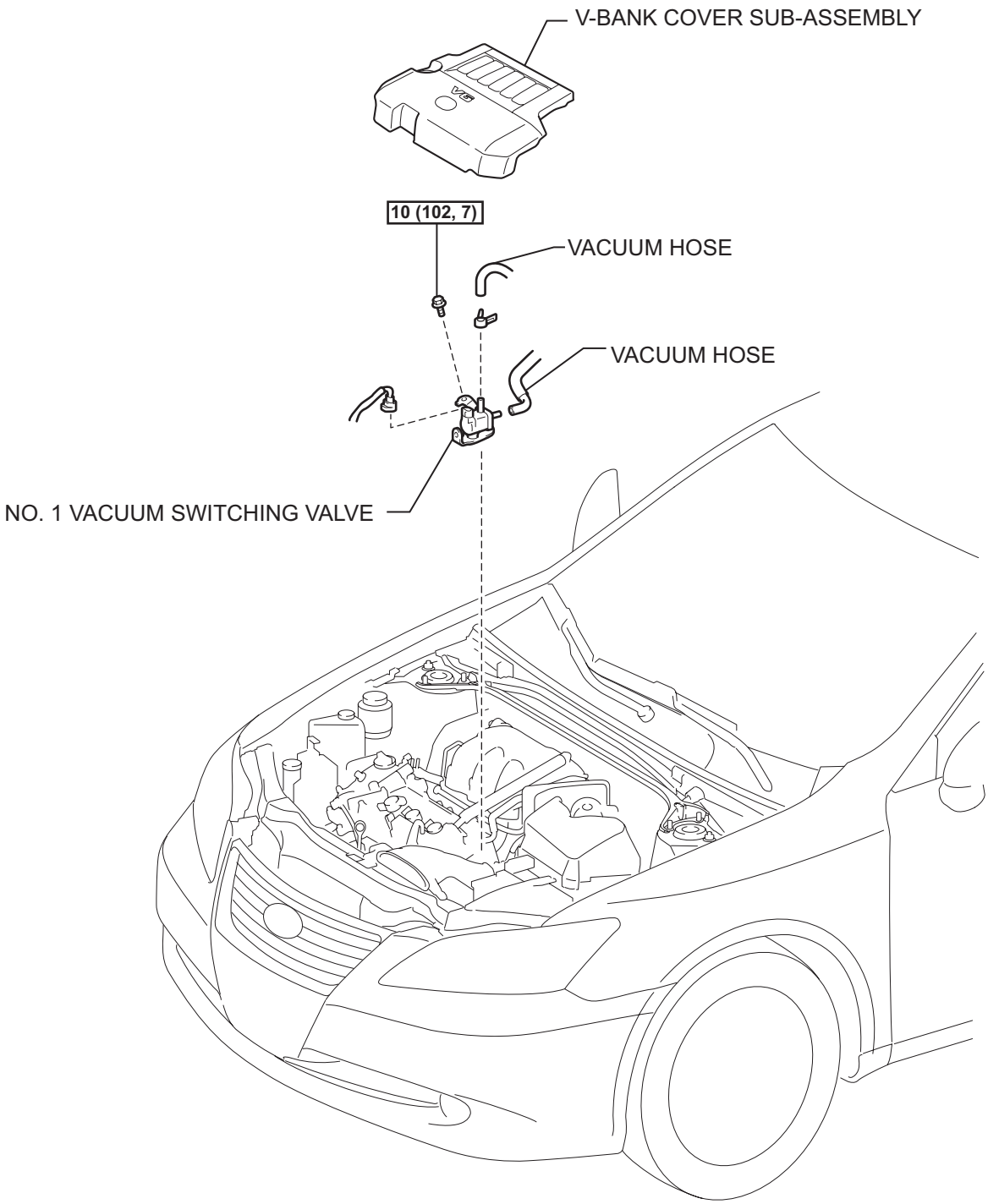

N*m (kgf*cm, ft.*lbf) : Specified torque

C

A142740E01

REMOVAL

1. REMOVE V-BANK COVER SUB-ASSEMBLY (See page EM-23)

2. REMOVE NO. 1 VACUUM SWITCHING VALVE

(a) Disconnect the 2 vacuum hoses and No. 1 vacuum switching valve connector.

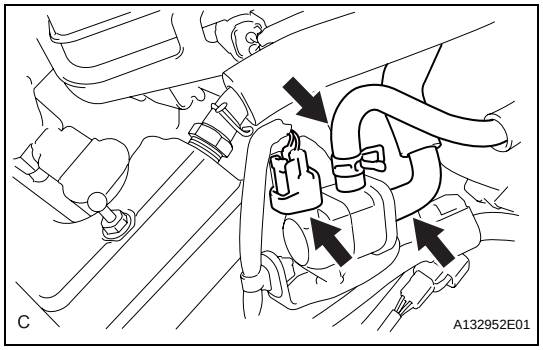

(b) Remove the bolt and No. 1 vacuum switching valve.

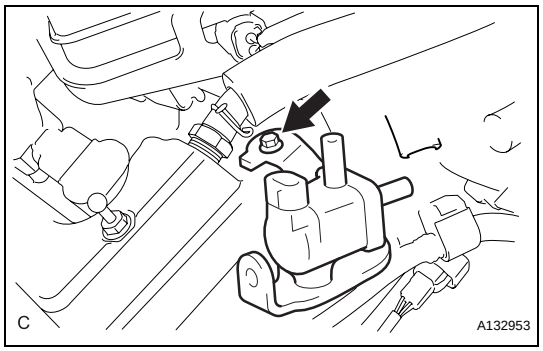

INSPECTION

1. INSPECT EVAP VSV

(a) Check the VSV for an open circuit.

(1) Measure the resistance.

Standard resistance

Tester Connection	Specified Condition
1 - 2	23 to 26 Ω at 20°C (68°F)
1 - Body ground 2 - Body ground	10 kΩ or higher

If the resistance is not as specified, replace the VSV assembly.

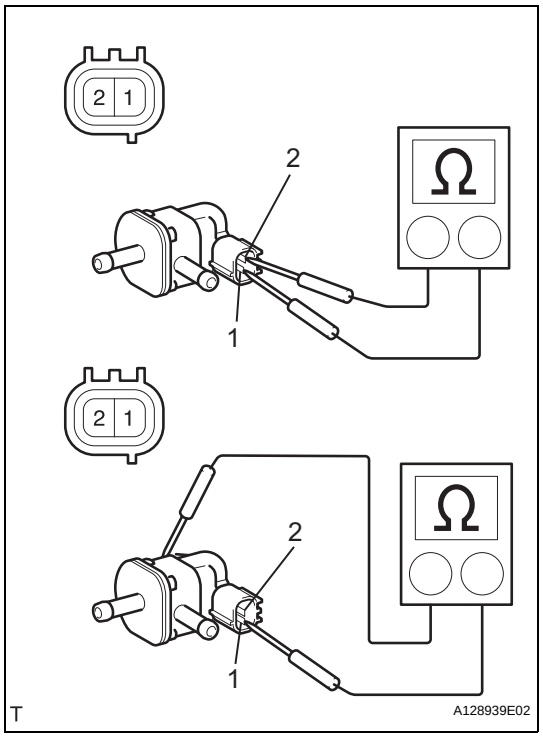

VENTILATION VALVE

COMPONENTS

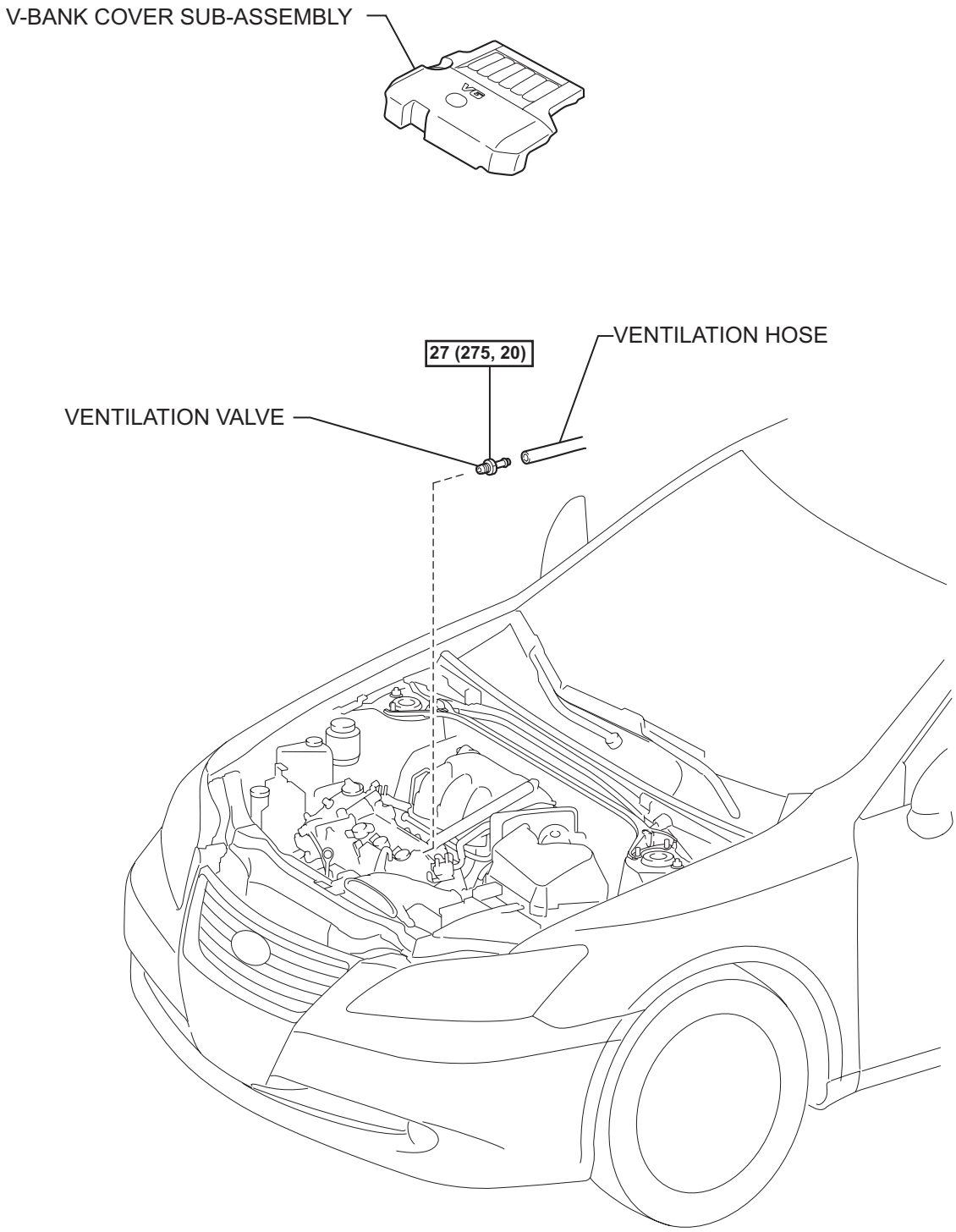

N*m (kgf*cm, ft.*lbf) : Specified torque

C

A128984E01

REMOVAL

1. REMOVE V-BANK COVER SUB-ASSEMBLY (See page EM-23)

2. DISCONNECT VENTILATION HOSE

(a) Disconnect the ventilation hose from the ventilation valve.

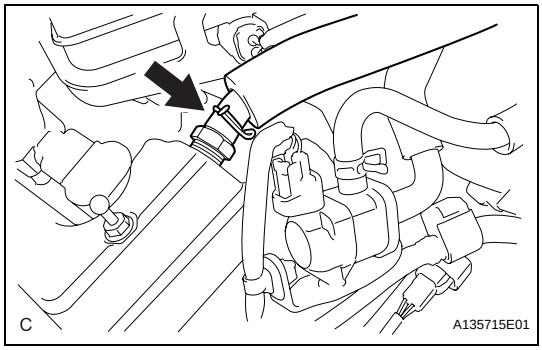

3. REMOVE VENTILATION VALVE

(a) Remove the ventilation valve.

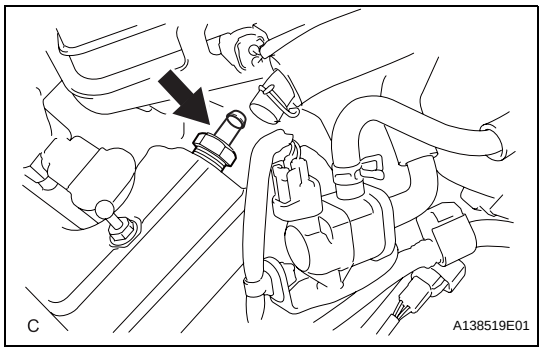

INSPECTION

1. INSPECT VENTILATION VALVE

(a) Install a clean hose to the ventilation valve.

(b) Check the ventilation valve operation.

(1) Blow air into the cylinder head side, and check that air passes through easily.

NOTICE:
Do not suck air through the valve.
Petroleum substances inside the valve are hazardous to your health.

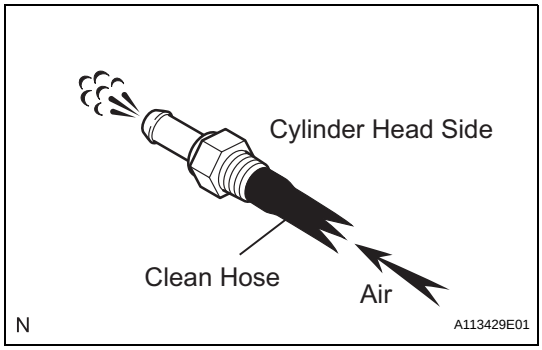

(2) Blow air into the intake manifold side, and check that air passes through with difficulty. If the result is not as specified, replace the ventilation valve.

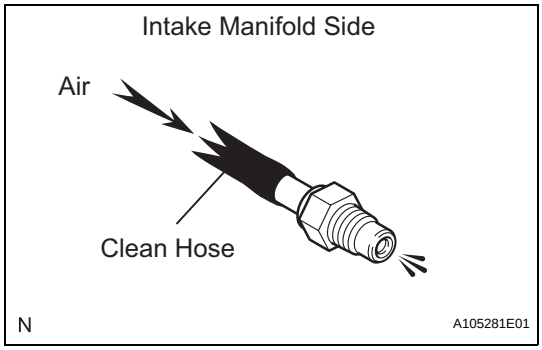

(c) Remove the clean hose from the ventilation valve.

EC

AIR FUEL RATIO SENSOR

COMPONENTS

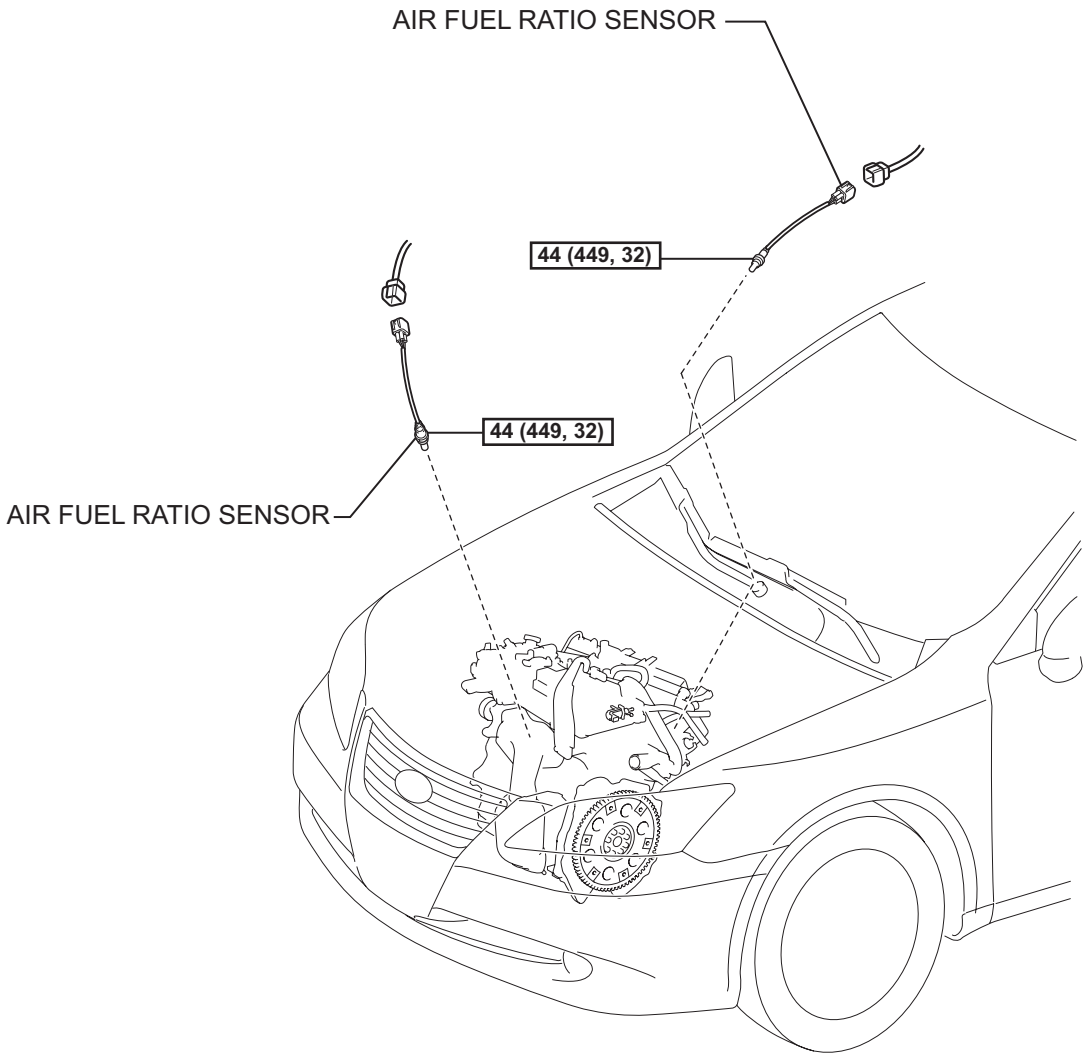

N*m (kgf*cm, ft.*lbf) : Specified torque

C

A128985E01

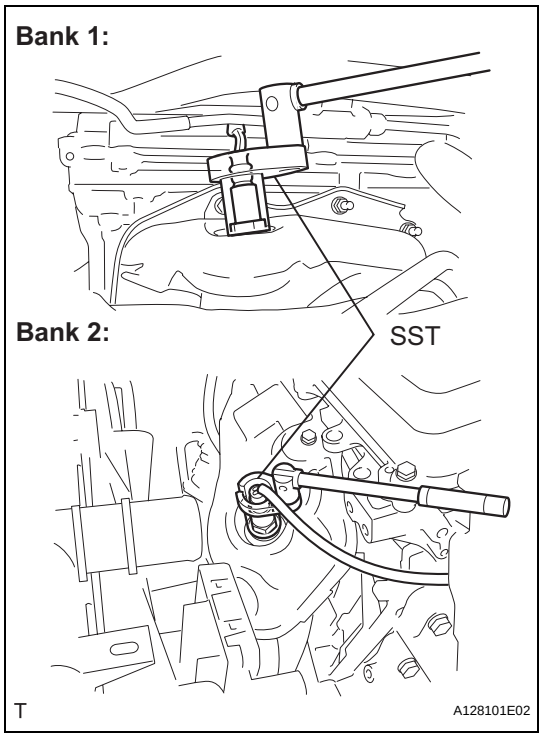

REMOVAL

1. REMOVE AIR FUEL RATIO SENSOR

(a) Disconnect the 2 air fuel ratio sensor connectors.

(b) Using SST, remove the 2 air fuel ratio sensors from the front pipe assembly.

SST 09224-00010

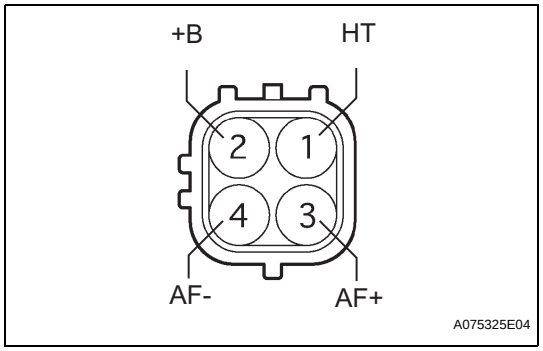

INSPECTION

1. INSPECT AIR FUEL RATIO SENSOR

(a) Measure the resistance between terminals 1 (HT) and 2 (+B).

Standard resistance

Condition	Specified Condition
20°C (68°F)	1.8 to 3.4 Ω

If the result is not as specified, replace the sensor.

EC

HEATED OXYGEN SENSOR

COMPONENTS

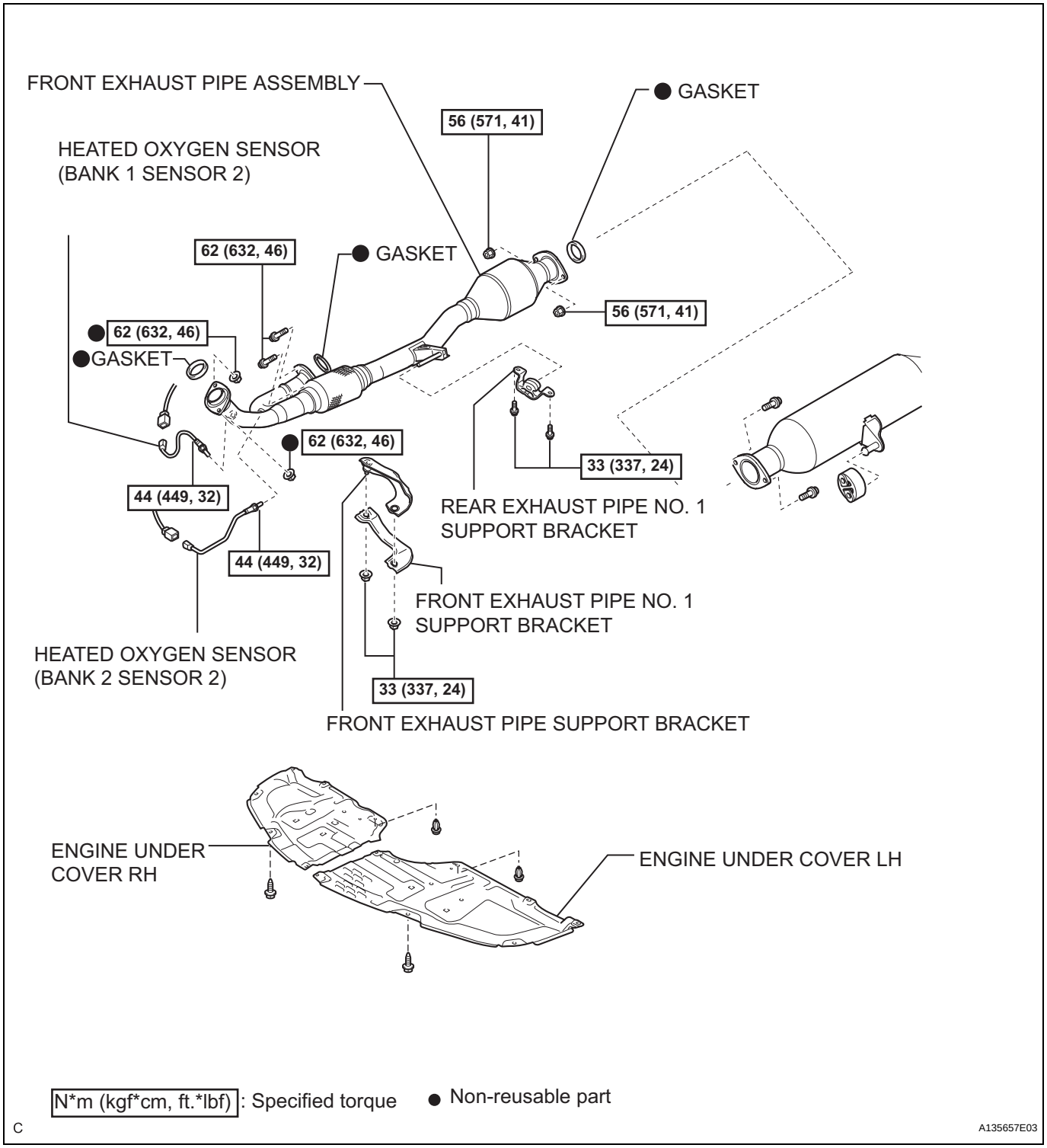

N*m (kgf*cm, ft.*lbf) : Specified torque ● Non-reusable part

C A135657E03

EC

REMOVAL

1. **REMOVE ENGINE UNDER COVER LH**
2. **REMOVE ENGINE UNDER COVER RH**
3. **REMOVE EXHAUST PIPE NO. 1 SUPPORT BRACKET (See page EX-3)**
4. **REMOVE FRONT EXHAUST PIPE ASSEMBLY (See page EX-3)**
5. **REMOVE HEATED OXYGEN SENSOR (for Bank 1)**
   (a) Using SST, remove the oxygen sensor.
   SST 09224-00010

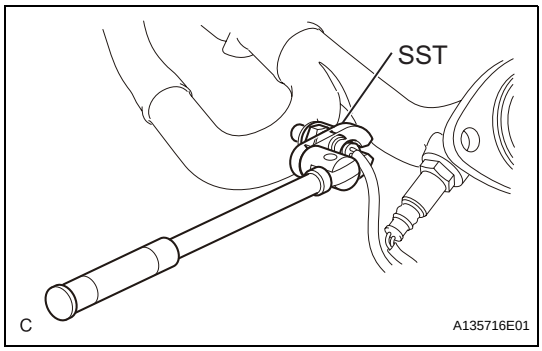

6. **REMOVE HEATED OXYGEN SENSOR (for Bank 2)**
   (a) Using SST, remove the oxygen sensor.
   SST 09224-00010

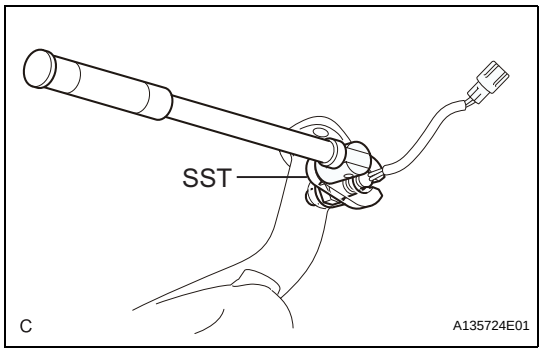

INSPECTION

1. **INSPECT HEATED OXYGEN SENSOR**
   (a) Measure the resistance between terminals 1 (HT) and 2 (+B).
   Standard resistance

Condition	Specified Condition
20°C (68°F)	11 to 16 Ω

If the result is not as specified, replace the sensor.

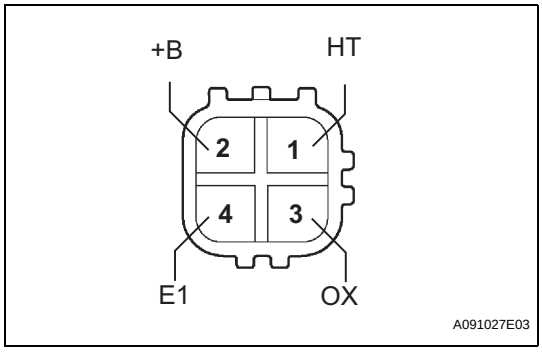

INTAKE AIR CONTROL SYSTEM

PARTS LOCATION

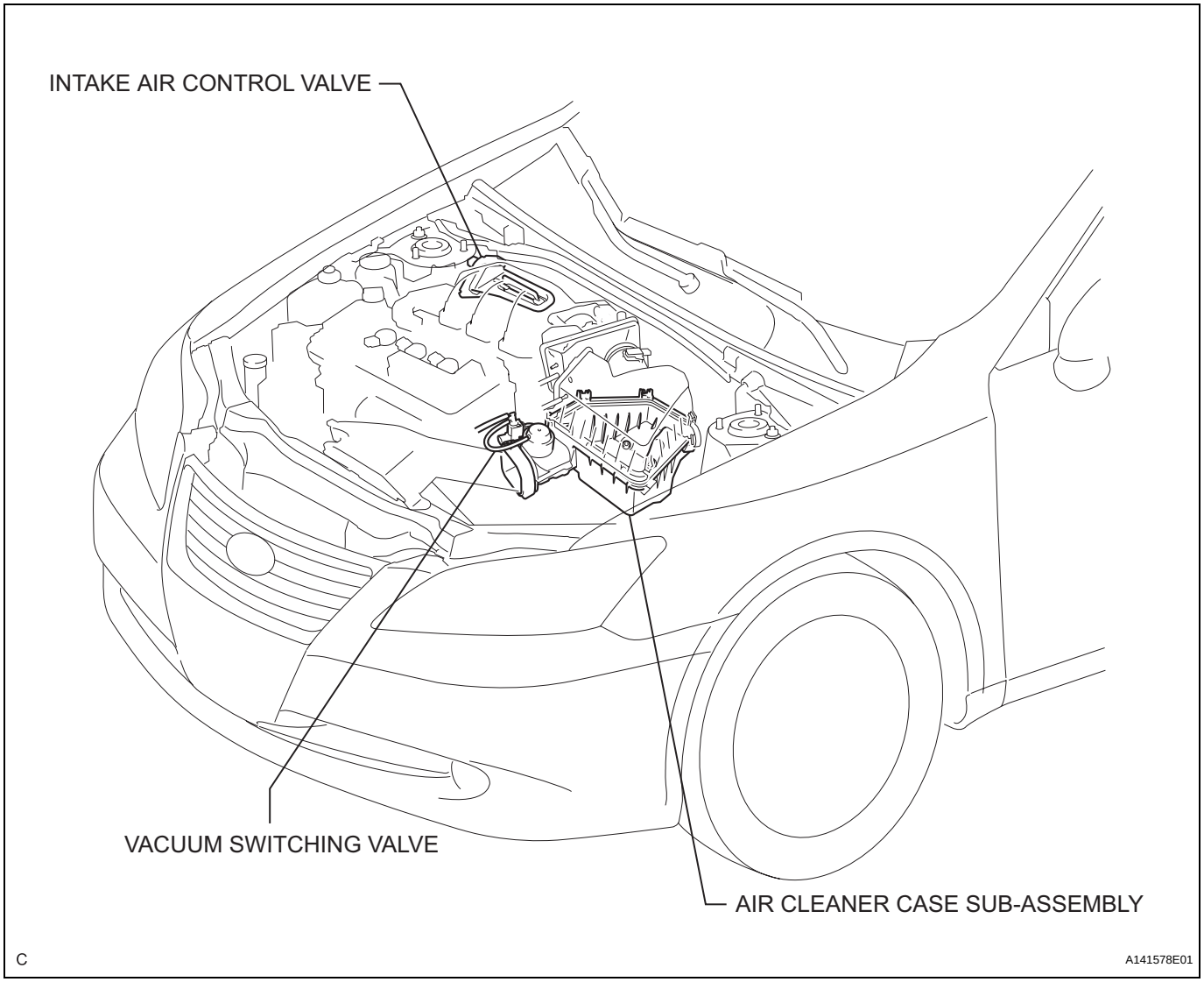

SYSTEM DIAGRAM

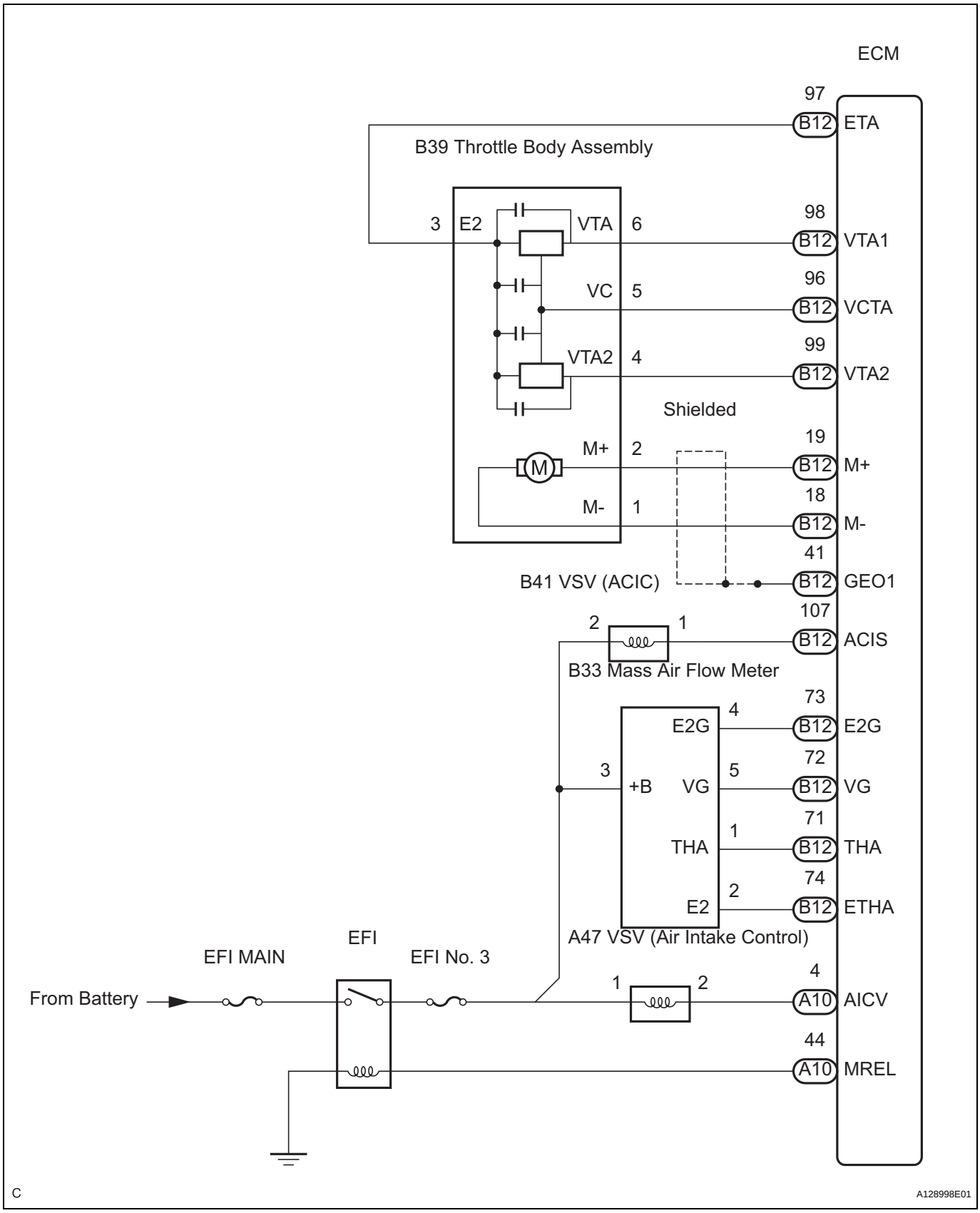

IT

VACUUM SWITCHING VALVE

COMPONENTS

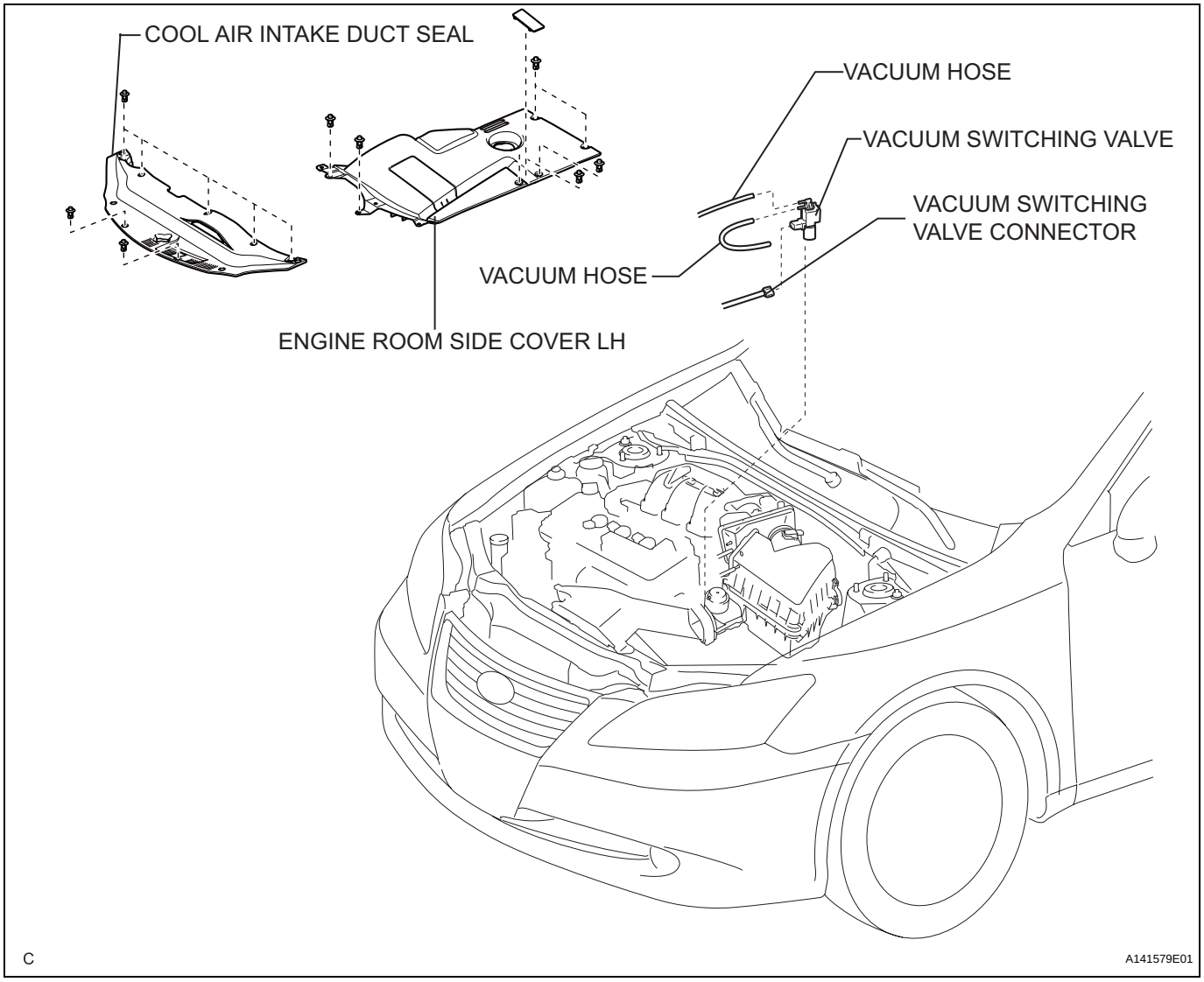

REMOVAL

1. **REMOVE COOL AIR INTAKE DUCT SEAL (See page EM-22)**

2. **REMOVE ENGINE ROOM SIDE COVER LH (See page EM-22)**

3. **REMOVE VACUUM SWITCHING VALVE**
   (a) Remove the 2 vacuum hoses and vacuum switching valve connector.

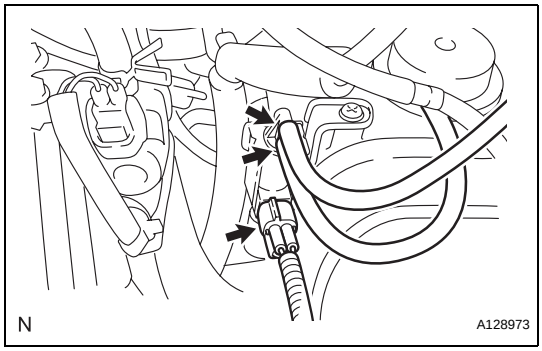

   (b) Remove the screw and vacuum switching valve.

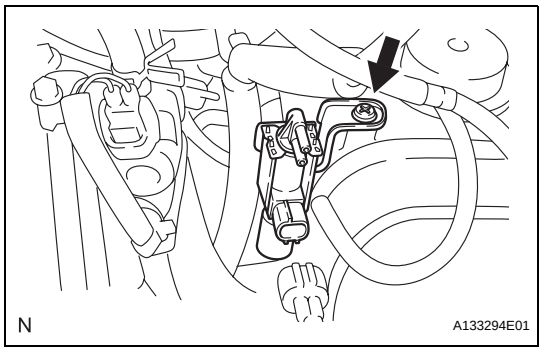

INSPECTION

1. **INSPECT VACUUM SWITCHING VALVE**
   (a) Measure the VSV resistance.
   Standard resistance

Tester Connection	Specified Condition
1-2	37 to 44 Ω at 20°C (68°F)
1 - Body ground 2 - Body ground	10 kΩ or higher

If the result is not as specified, replace the VSV.

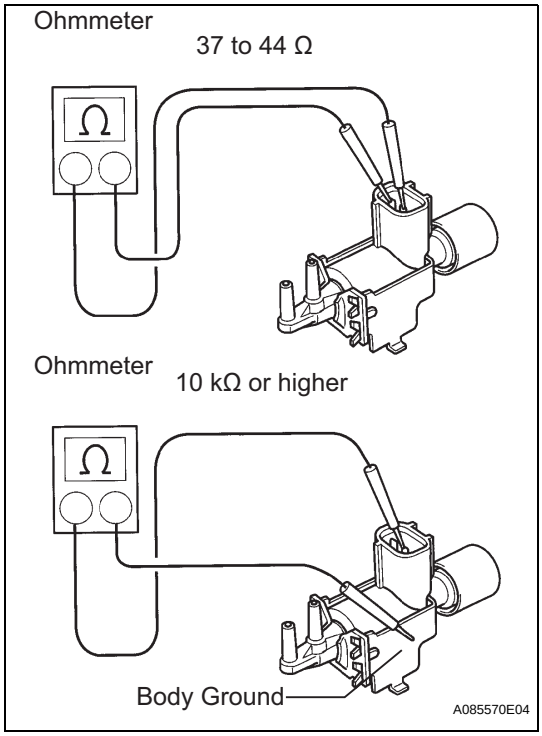

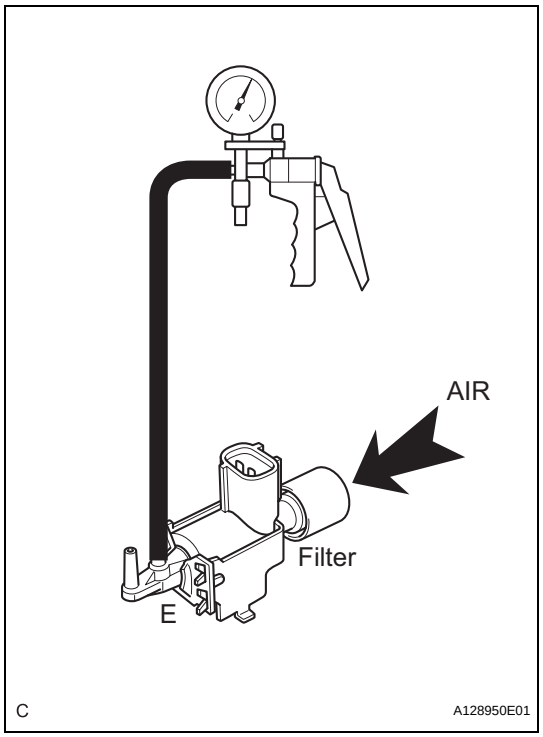

(b) Check VSV operation.
(1) When the vacuum is applied to the E port, check that air is sucked into the filter.
If the result is not as specified, replace the VSV.

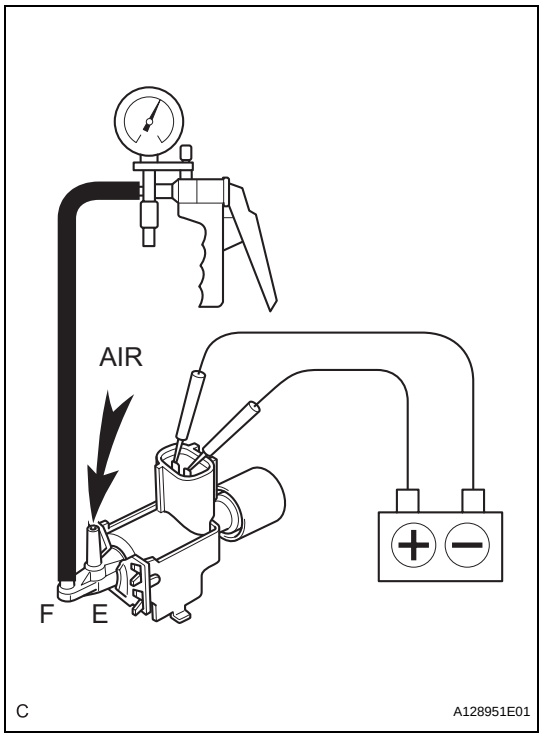

(2) Apply battery voltage across the terminals.
When the vacuum is applied to the F port, check that air is sucked into the E port.
If the result is not as specified, replace the VSV.

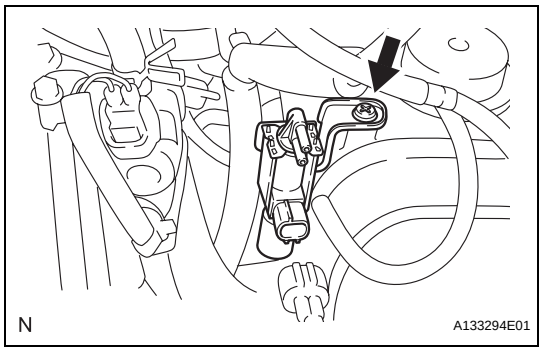

INSTALLATION

1. INSTALL VACUUM SWITCHING VALVE

(a) Install the vacuum switching valve with the screw.

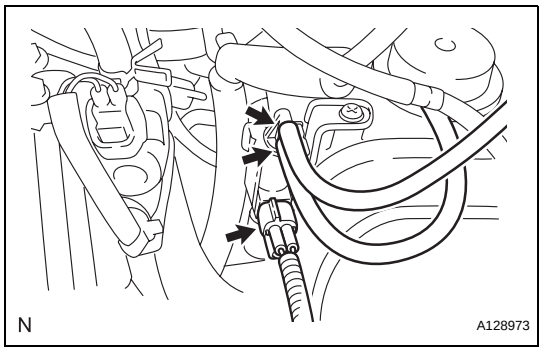

(b) Install the 2 vacuum hoses and vacuum switching valve connector.

2. INSTALL ENGINE ROOM SIDE COVER LH (See page EM-50)

3. INSTALL COOL AIR INTAKE DUCT SEAL (See page EM-50)

EXHAUST PIPE

COMPONENTS

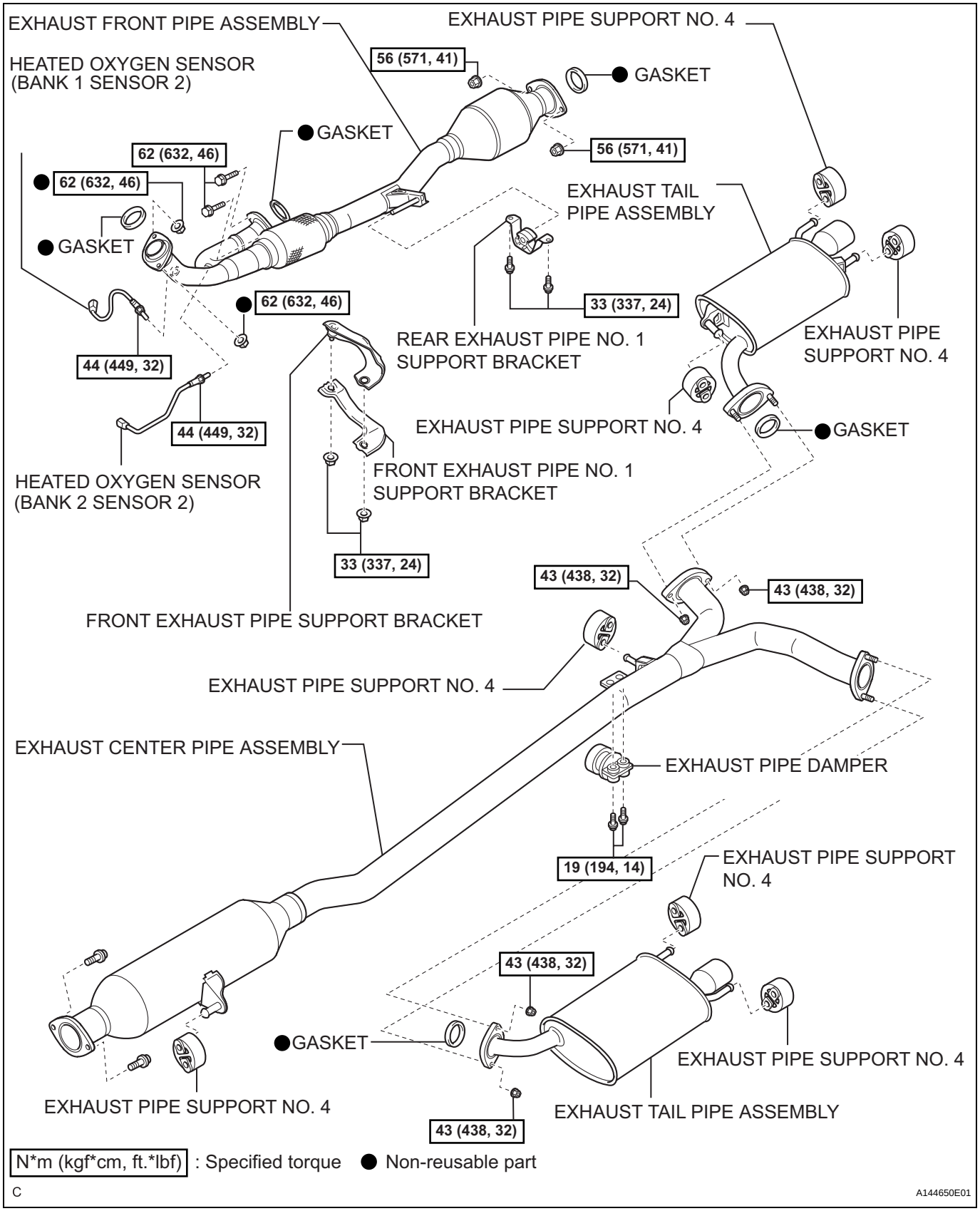

EX

REMOVAL

1. REMOVE EXHAUST TAIL PIPE ASSEMBLY

(a) Remove the 4 nuts and 2 exhaust tail pipes.

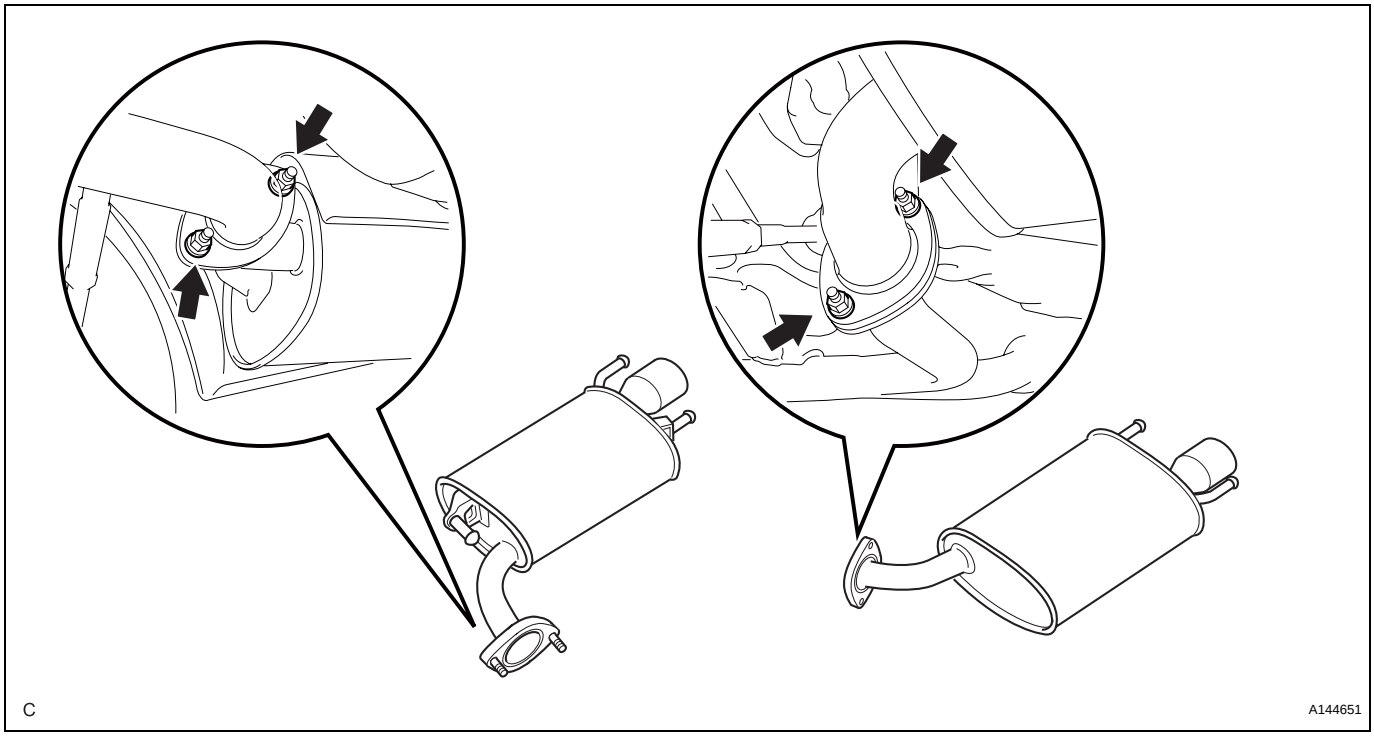

(b) Remove the 2 gaskets from the exhaust center pipe assembly.

2. REMOVE EXHAUST CENTER PIPE ASSEMBLY

(a) Remove the 2 bolts, 2 nuts and exhaust center pipe assembly.

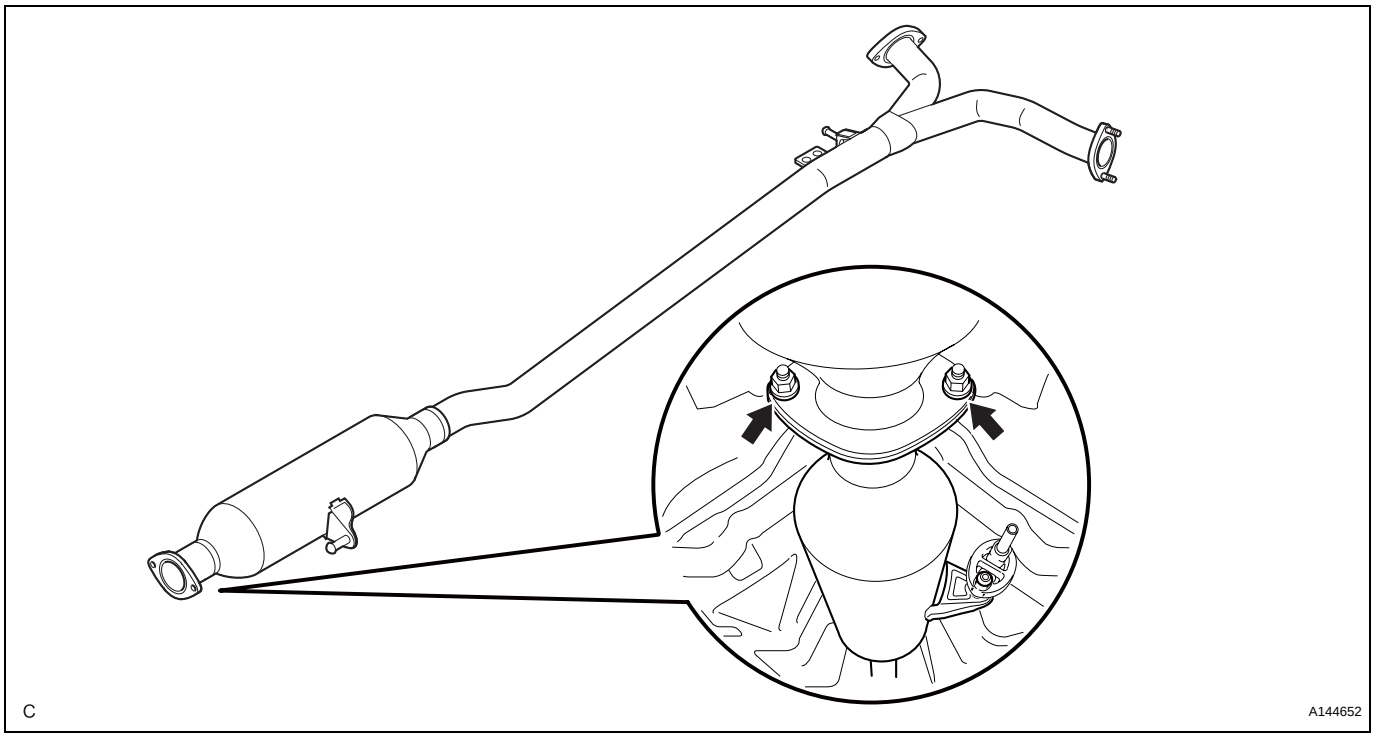

(b) Remove the gasket from the exhaust front pipe assembly.

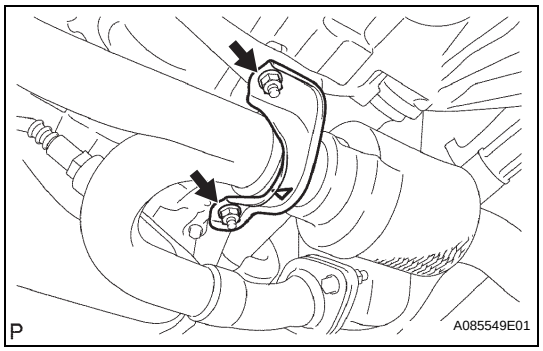

3. REMOVE FRONT EXHAUST PIPE NO. 1 SUPPORT BRACKET

(a) Remove the 2 nuts and front support brackets.

4. REMOVE EXHAUST FRONT PIPE ASSEMBLY

(a) Disconnect the 2 heated oxygen sensor (bank 1, 2 sensor 2) connectors.

(b) Remove the 2 nuts from the exhaust front pipe (left bank exhaust manifold side).

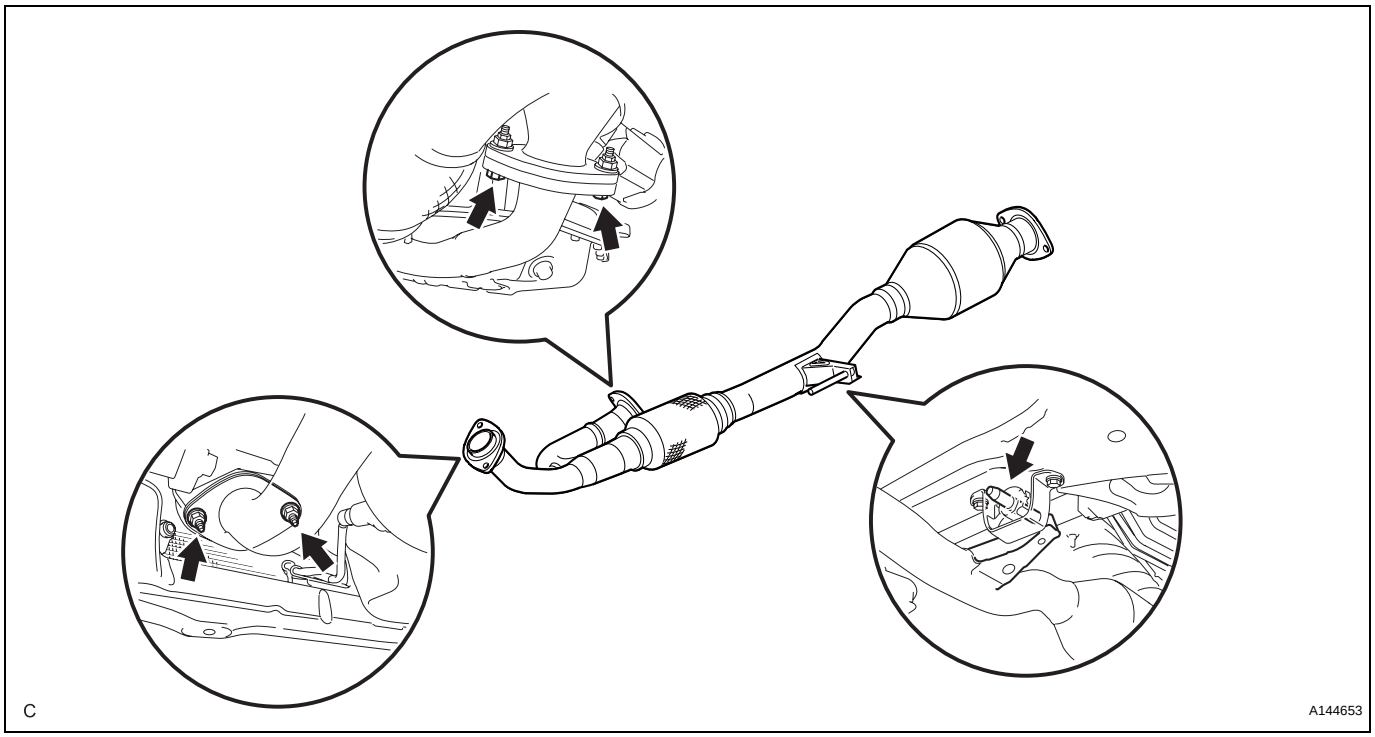

(c) Remove the 2 bolts from the exhaust front pipe (right bank exhaust pipe manifold side).

(d) Remove the exhaust front pipe.

(e) Remove the 2 gaskets from the exhaust front pipe.

5. REMOVE HEATED OXYGEN SENSOR (for Bank 1) (See page EC-22)

6. REMOVE HEATED OXYGEN SENSOR (for Bank 2) (See page EC-22)

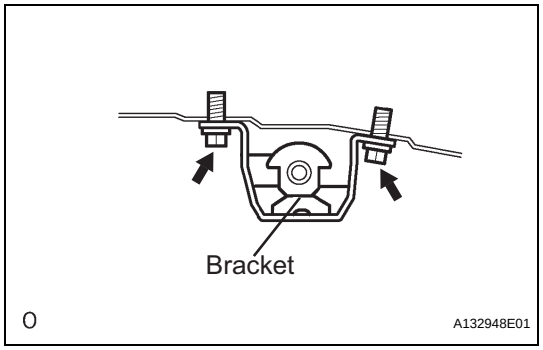

7. REMOVE REAR EXHAUST PIPE NO. 1 SUPPORT BRACKET

(a) Remove the 2 bolts and rear support bracket.

EX

COOLING SYSTEM

ON-VEHICLE INSPECTION

1. CHECK FOR ENGINE COOLANT LEAKS

CAUTION:

Do not remove the radiator cap while the engine and radiator are still hot. Pressurized, hot engine coolant and steam may be released and cause serious burns.

NOTICE:

Before performing each inspection, turn the A/C switch OFF.

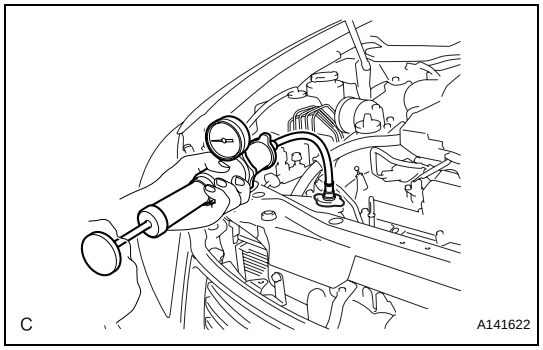

(a) Fill the radiator with coolant and attach a radiator cap tester.

(b) Warm up the engine.

(c) Using a radiator cap tester, increase the pressure inside the radiator to 118 kPa (1.2 kgf*cm, 17 psi), and check that the pressure does not drop.
If the pressure drops, check the hoses, radiator and water pump for leaks. If no external leaks are found, check the heater core, cylinder block and cylinder head.

2. INSPECT ENGINE COOLANT LEVEL IN RESERVOIR

(a) Check that the engine coolant level is between the LOW and FULL lines when the engine is cold.
If the engine coolant level is low, check for leaks and add "TOYOTA Super Long Life Coolant" or similar high quality ethylene glycol based non-silicate, non-amine, non-nitrite and non-borate coolant with long-life hybrid organic acid technology to the FULL line.
NOTICE:
Do not substitute plain water for engine coolant.

3. INSPECT ENGINE COOLANT QUALITY

(a) Remove the radiator cap.
CAUTION:
Do not remove the radiator cap while the engine and radiator are still hot. Pressurized, hot engine coolant and steam may be released and cause serious burns.

(b) Check if there are any excessive deposits of rust or scales around the radiator cap and radiator filler hole. Also, the coolant should be free of oil.
If excessively dirty, clean the coolant passage and replace the coolant.

(c) Install the radiator cap.

COOLING FAN SYSTEM

PARTS LOCATION

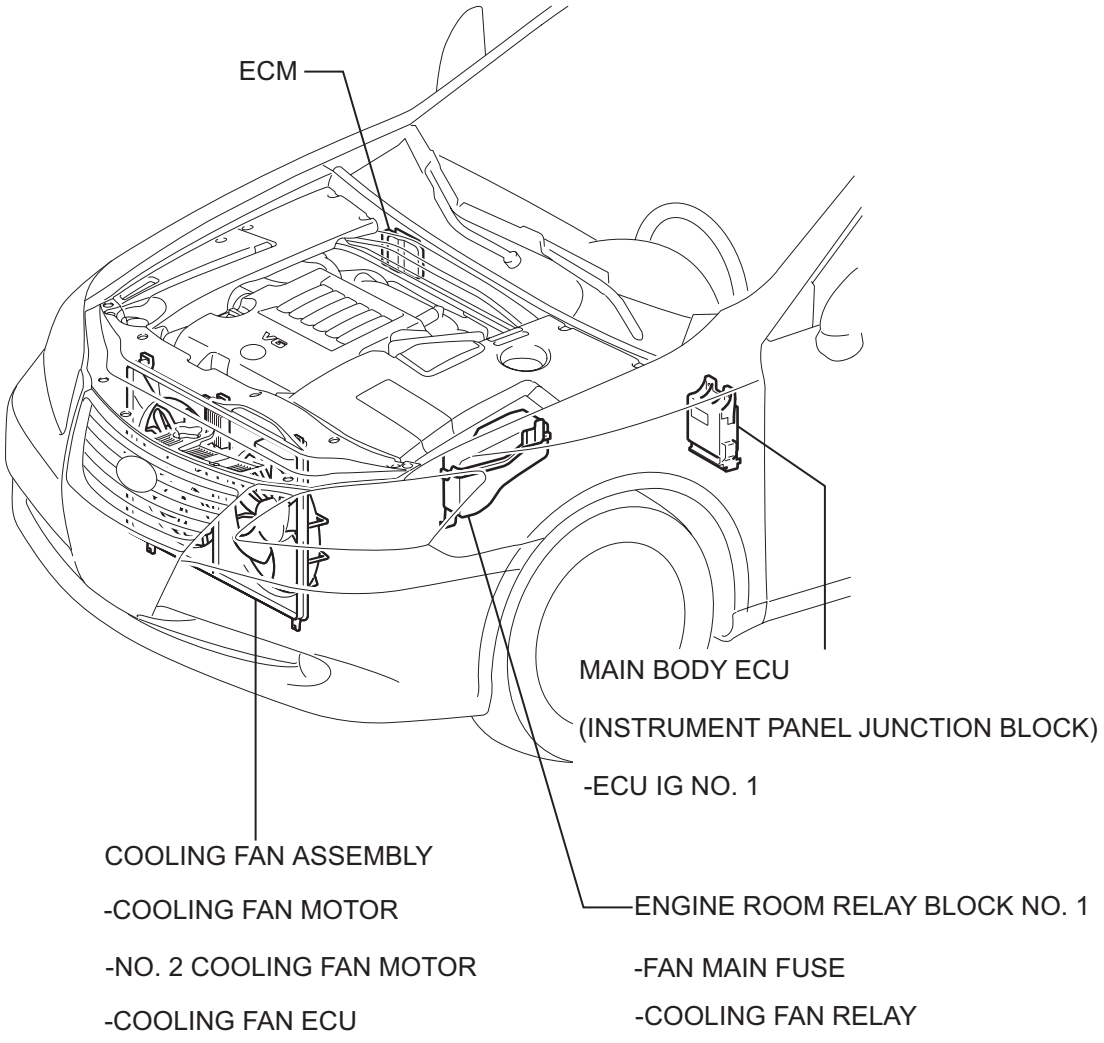

A141770E01

SYSTEM DIAGRAM

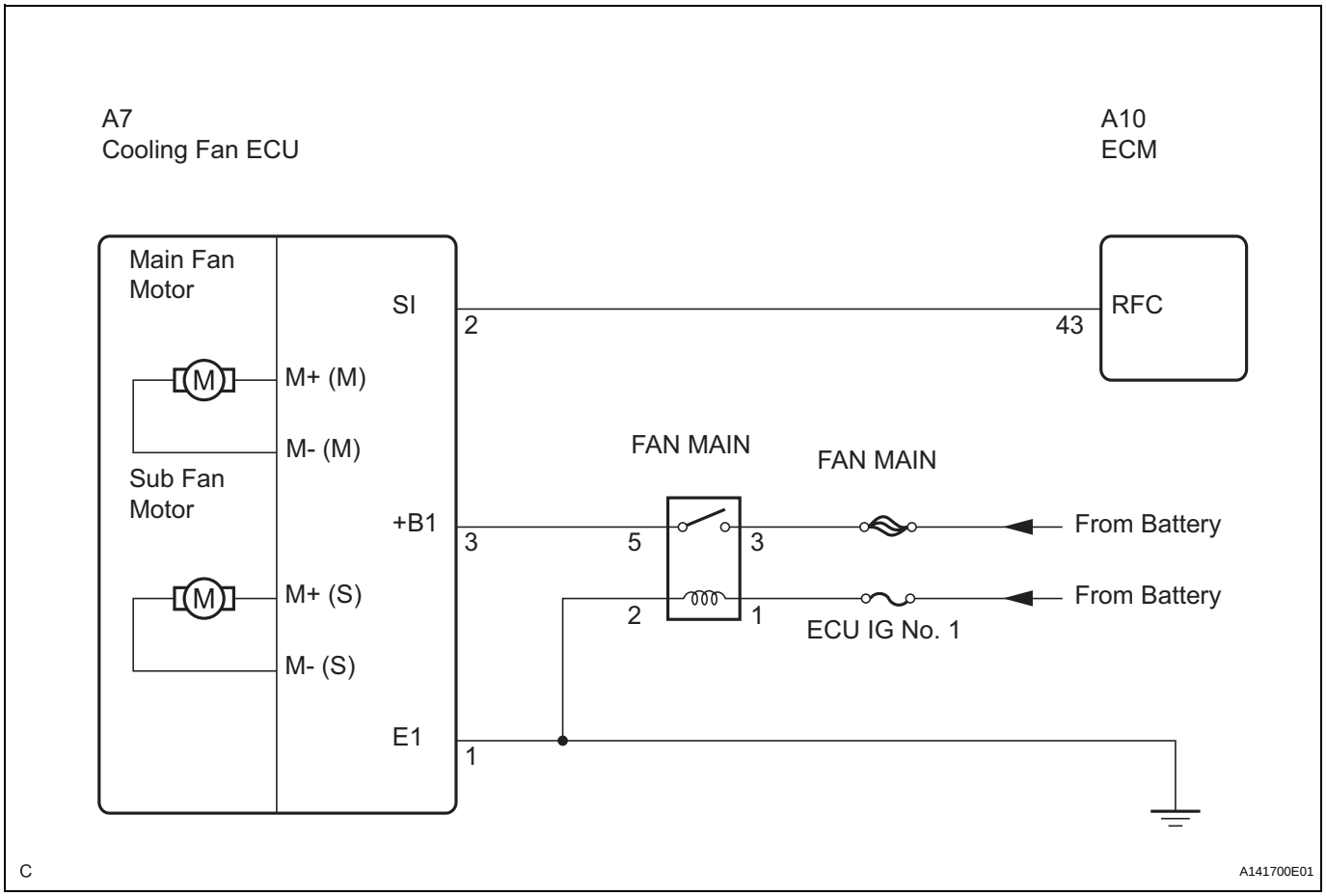

CO

COOLANT

ON-VEHICLE INSPECTION

1. **REMOVE FRONT WHEEL OPENING EXTENSION PAD LH**
2. **REMOVE FRONT WHEEL OPENING EXTENSION PAD RH**
3. **REMOVE ENGINE UNDER COVER RH**
4. **REMOVE ENGINE UNDER COVER LH**
5. **REMOVE V-BANK COVER SUB-ASSEMBLY (See page EM-23)**
6. **REMOVE COOL AIR INTAKE DUCT SEAL (See page EM-22)**
7. **REMOVE ENGINE ROOM COVER SIDE RH**
8. **DRAIN ENGINE COOLANT**
   NOTICE:
   Do not remove the radiator cap sub-assembly while the engine and radiator are still hot. Pressurized, hot engine coolant and steam may be released and cause serious burns.
   (a) Remove the radiator cap sub-assembly from the radiator assembly.
   (b) Loosen the radiator drain cock plug and 2 cylinder block drain cock plugs, then drain the coolant.

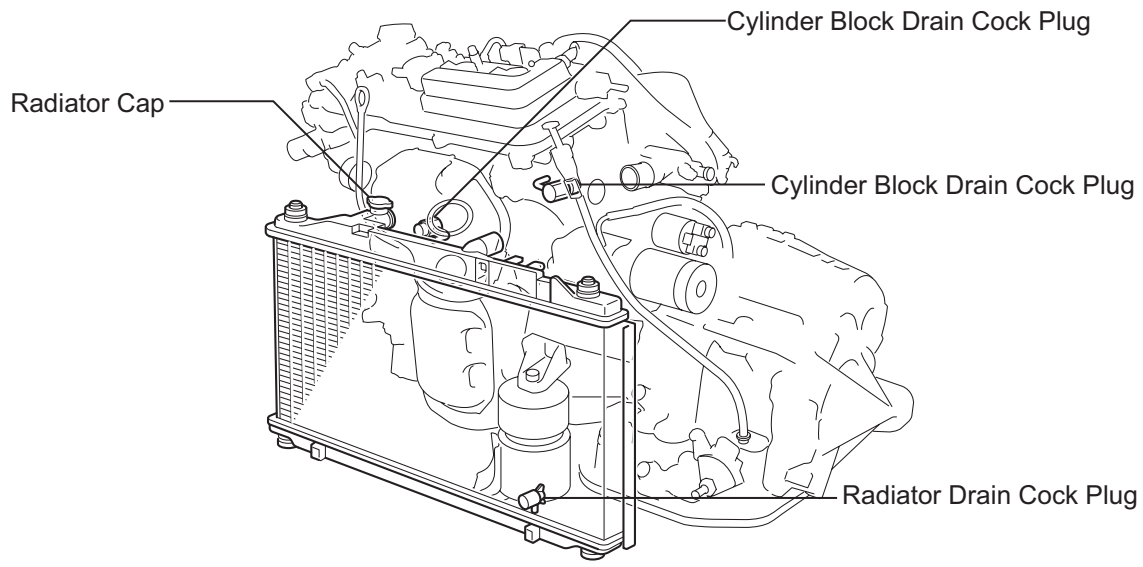

HINT:
Collect the coolant in a container and dispose of it according to the regulations in your area.

CO

9. ADD ENGINE COOLANT

(a) Close the radiator drain cock plug and 2 cylinder block drain cock plugs.
Torque: 13 N*m (130 kgf*cm, 9 ft.*lbf) for cylinder block drain cock plug

(b) Slowly fill the radiator with TOYOTA Super Long Life Coolant (SLLC).
Specified capacity:
9.0 liters (9.5 US qts, 7.9 Imp. qts)
HINT:
- TOYOTA vehicles are filled with TOYOTA SLLC at the factory. In order to avoid damage to the engine cooling system and other technical problems, only use TOYOTA SLLC or similar high quality ethylene glycol based non-silicate, non-amine, non-nitrite, non-borate coolant with long-life hybrid organic acid technology (coolant with long-life hybrid organic acid technology consists of a combination of low phosphates and organic acids).
- Contact your TOYOTA dealer for further details.

(c) Slowly pour coolant into the radiator reservoir tank until it reaches the FULL line.

(d) Press the inlet and outlet radiator hoses several times by hand, and then check the level of the coolant.
If the coolant level is low, add coolant.

(e) Install the radiator cap sub-assembly and reservoir tank cap.

(f) Start the engine, and warm it up.
HINT:
Adjust the air conditioner set temperature to MAX (HOT).

(g) Stop the engine, and wait until the engine coolant cools down.

(h) Add engine coolant to the FULL line on the radiator reservoir.

10. CHECK FOR ENGINE COOLANT LEAKS (See page CO-1)

11. INSTALL V-BANK COVER SUB-ASSEMBLY (See page EM-49)

12. INSTALL ENGINE UNDER COVER RH

13. INSTALL ENGINE UNDER COVER LH

14. INSTALL FRONT WHEEL OPENING EXTENSION PAD LH

15. INSTALL FRONT WHEEL OPENING EXTENSION PAD RH

16. INSTALL ENGINE ROOM COVER SIDE RH

17. INSTALL COOL AIR INTAKE DUCT SEAL (See page EM-50)

WATER PUMP

COMPONENTS

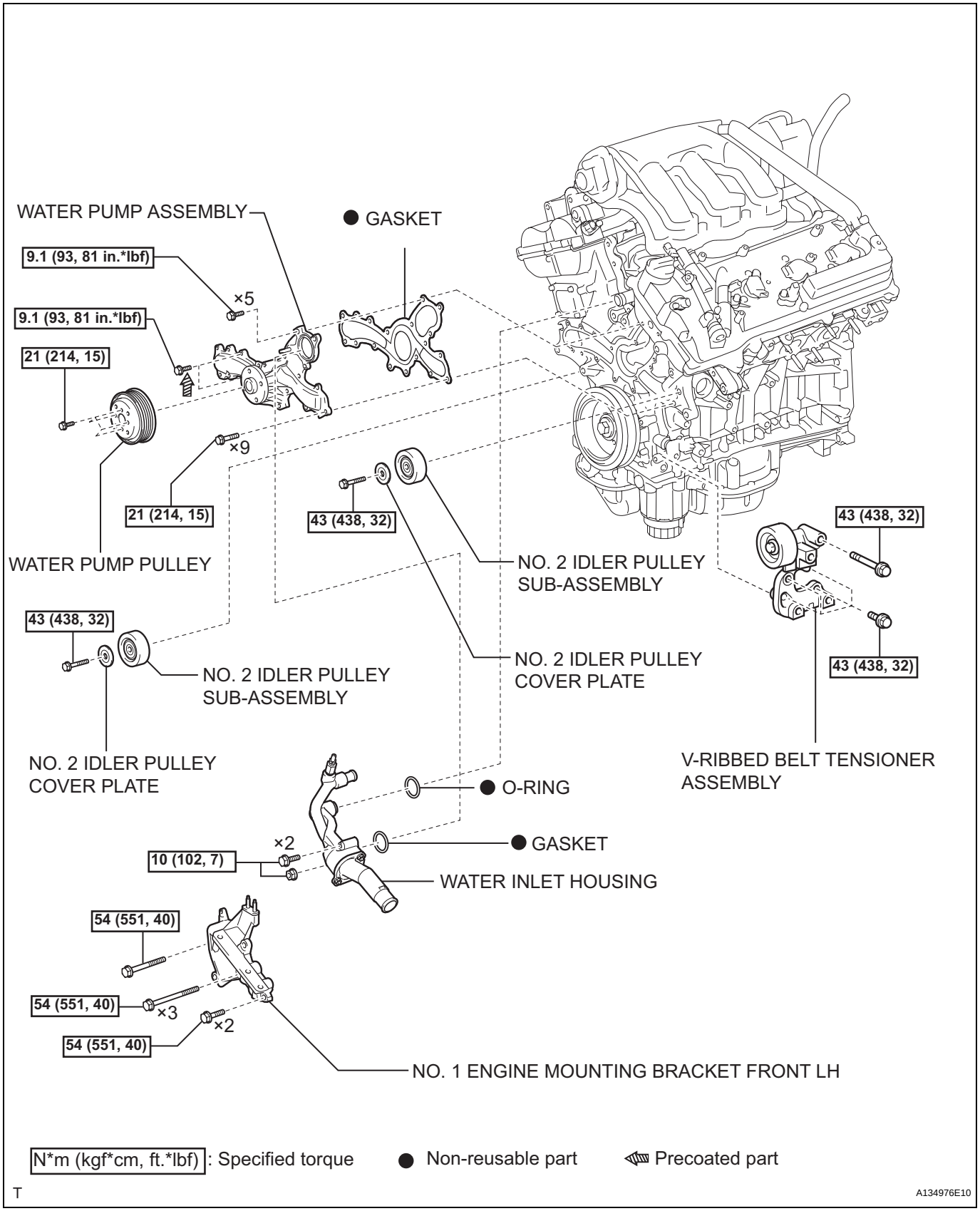

CO

REMOVAL

1. **REMOVE ENGINE ASSEMBLY WITH TRANSAXLE**
   HINT:
   See page EM-28.

2. **SECURE ENGINE STAND**
   HINT:
   See page EM-30.

3. **REMOVE NO. 1 ENGINE MOUNTING BRACKET FRONT LH (See page EM-33)**

4. **REMOVE NO. 2 IDLER PULLEY SUB-ASSEMBLY**
   (a) Remove the 2 bolts, 2 idler pulley cover plates and 2 idler pulley sub-assemblies.

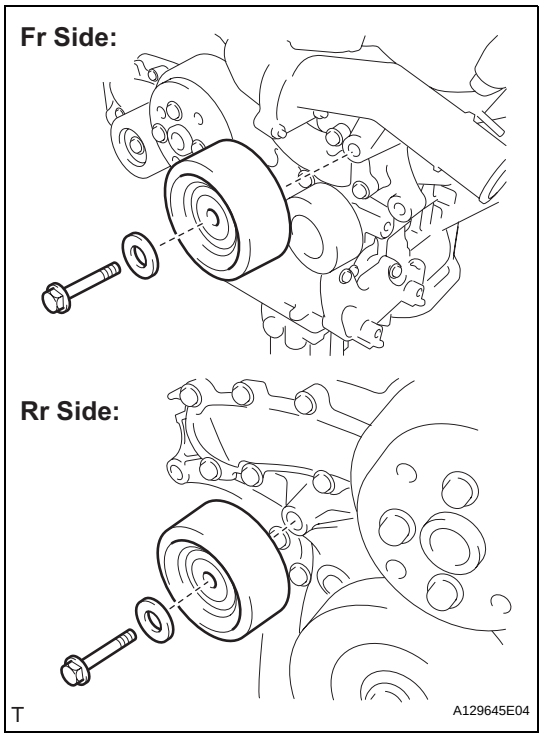

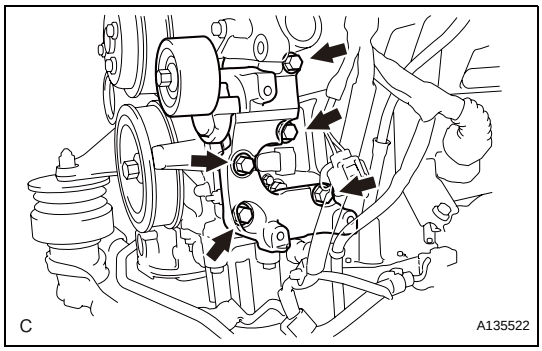

5. **REMOVE V-RIBBED BELT TENSIONER ASSEMBLY**
   (a) Remove the 5 bolts and the V-ribbed belt tensioner assembly.

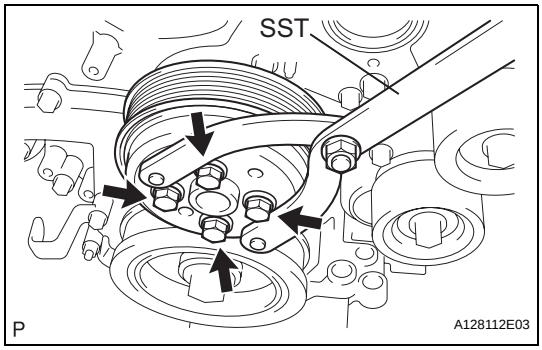

6. **REMOVE WATER PUMP PULLEY**
   (a) Using SST, hold the water pump pulley.
   SST 09960-10010 (09962-01000, 09963-00700)
   (b) Remove the 4 bolts and water pump pulley.

THERMOSTAT

COMPONENTS

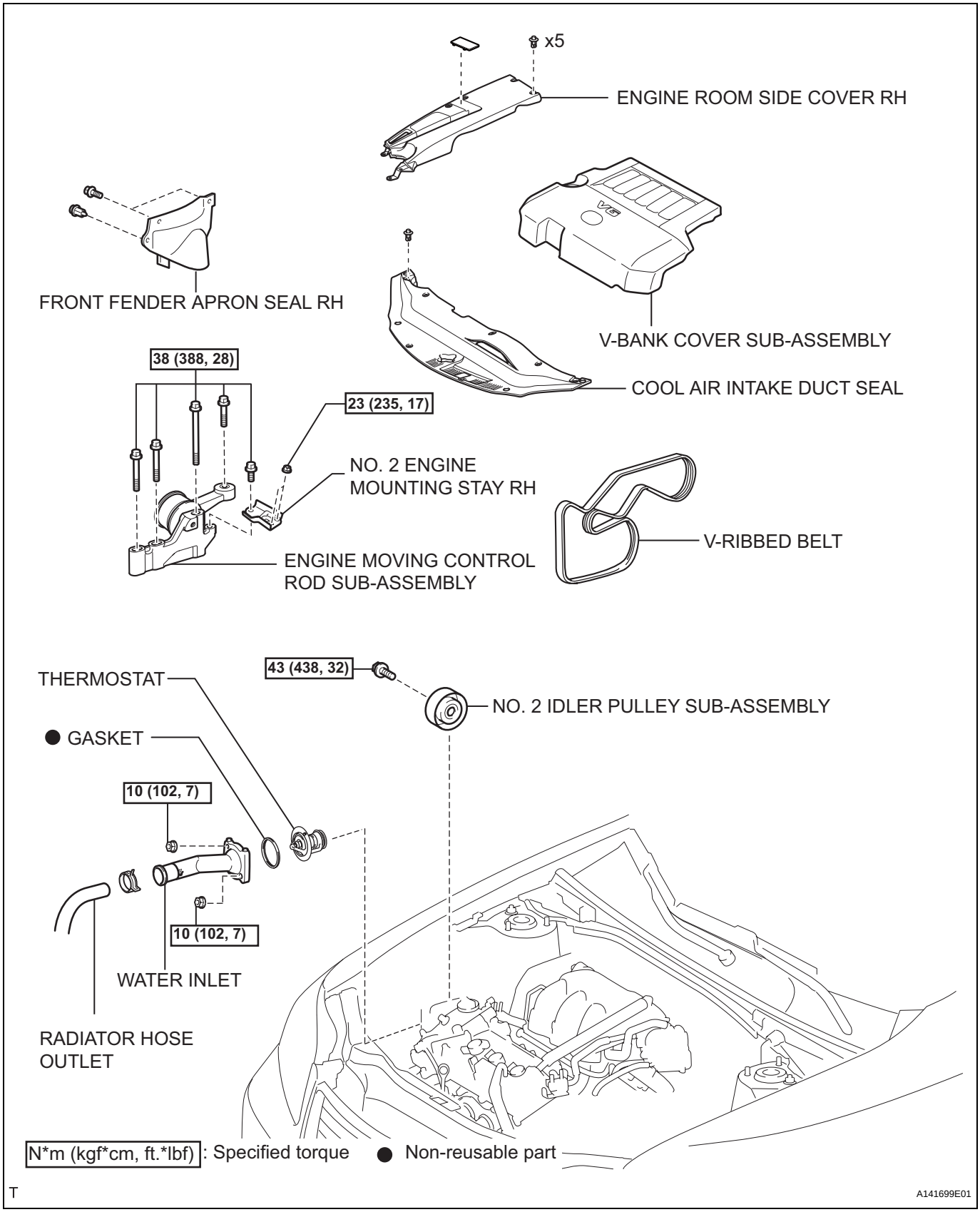

CO

REMOVAL

1. **DRAIN ENGINE COOLANT**
2. **REMOVE V-BANK COVER SUB-ASSEMBLY (See page EM-23)**
3. **REMOVE COOL AIR INTAKE DUCT SEAL**
4. **REMOVE ENGINE ROOM SIDE COVER RH**
5. **REMOVE FRONT FENDER APRON SEAL RH**
6. **REMOVE NO. 2 ENGINE MOUNTING STAY RH (See page EM-24)**
7. **REMOVE ENGINE MOVING CONTROL ROD SUB-ASSEMBLY (See page EM-24)**
8. **REMOVE V-RIBBED BELT (See page EM-6)**
9. **REMOVE NO. 2 IDLER PULLEY SUB-ASSEMBLY (See page EM-33)**
10. **DISCONNECT RADIATOR HOSE OUTLET (See page EM-25)**
11. **REMOVE WATER INLET**
    (a) Remove the 2 nuts and water inlet.
12. **REMOVE THERMOSTAT**
    (a) Remove the gasket from the thermostat.

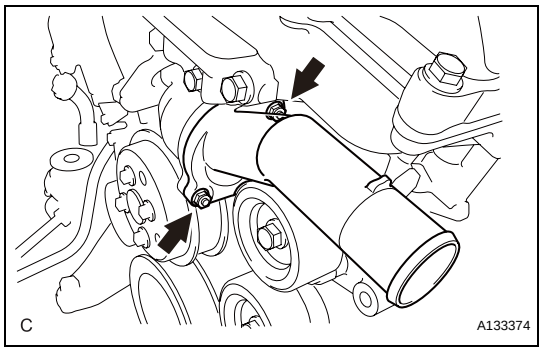

INSPECTION

1. **INSPECT THERMOSTAT**
    (a) Inspect the thermostat.
    HINT:
    The valve opening temperature is inscribed on the thermostat.

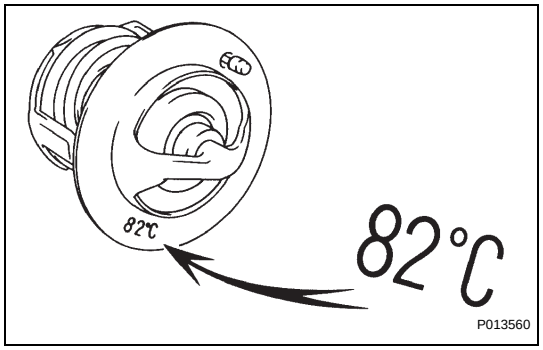

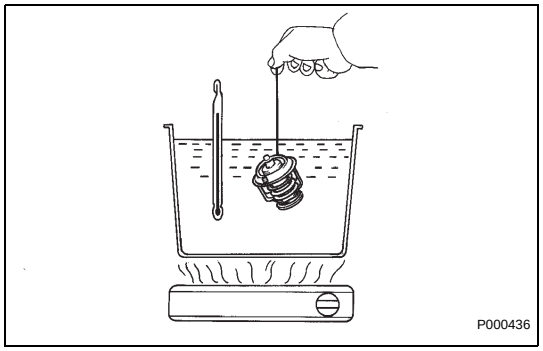

(b) Immerse the thermostat in water and gradually heat the water.
(c) Check the valve opening temperature.
Valve opening temperature:
80 to 84°C (176 to 183°F)
If the valve opening temperature is not as specified, replace the thermostat.

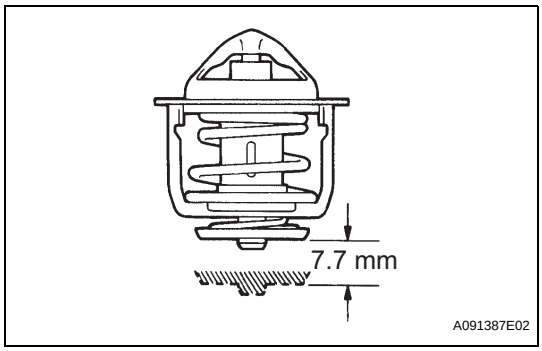

(d) Check the valve lift.
Valve lift:
7.7 mm (0.3031 in.) or more at 95°C (203°F)
If the valve lift is not as specified, replace the thermostat.

(e) Check that the valve is fully closed when the thermostat is at low temperatures (below 40°C (104°F)).
If it is not fully closed, replace the thermostat.

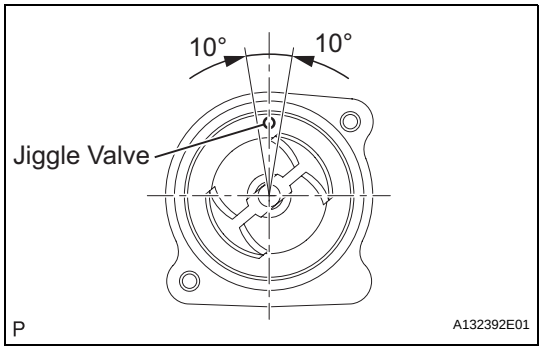

INSTALLATION

1. INSTALL THERMOSTAT

(a) Install a new gasket to the thermostat.

(b) Install the thermostat with the jiggle valve facing up.
HINT:
The jiggle valve may be set within 10° on either side of the prescribed position.

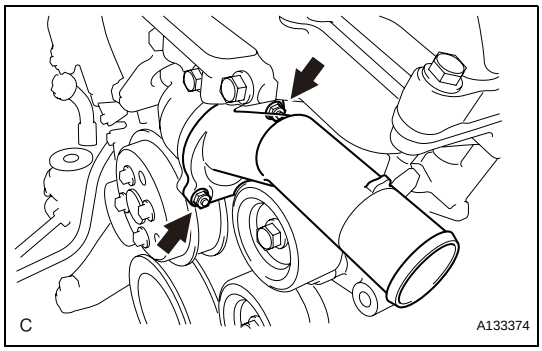

2. INSTALL WATER INLET

(a) Install the water inlet with the 2 nuts .
Torque: 10 N*m (102 kgf*cm, 7 ft.*lbf)

3. CONNECT RADIATOR HOSE OUTLET (See page EM-46)

4. INSTALL NO. 2 IDLER PULLEY SUB-ASSEMBLY (See page EM-37)

5. INSTALL V-RIBBED BELT (See page EM-7)

6. INSTALL ENGINE MOVING CONTROL ROD SUB-ASSEMBLY (See page EM-47)

7. INSTALL NO. 2 ENGINE MOUNTING STAY RH (See page EM-40)

8. INSTALL FRONT FENDER APRON SEAL RH

9. ADD ENGINE COOLANT (See page CO-6)

10. CHECK FOR ENGINE COOLANT LEAKS (See page CO-1)

11. INSTALL V-BANK COVER SUB-ASSEMBLY (See page EM-49)

12. INSTALL ENGINE ROOM SIDE COVER RH

13. INSTALL COOL AIR INTAKE DUCT SEAL

COOLING FAN MOTOR

ON-VEHICLE INSPECTION

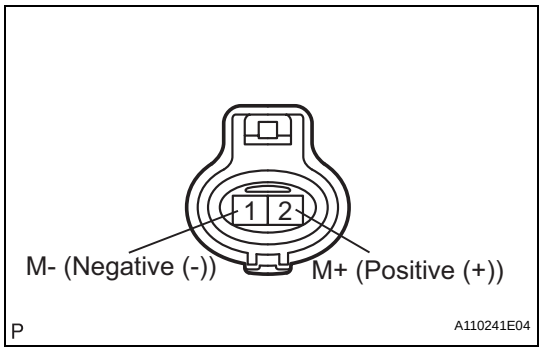

1. COOLING FAN MOTOR

(a) Check that the motor turns smoothly when the battery is connected to the fan motor connector.

(b) Measure the current while the motor is turning.

Standard current:

With trailer hitch:

11.8 to 14.8 A at 20°C (68°F)

Without trailer hitch:

6.8 to 9.8 A at 20°C (68°F)

If the result is not as specified, replace the cooling fan motor.

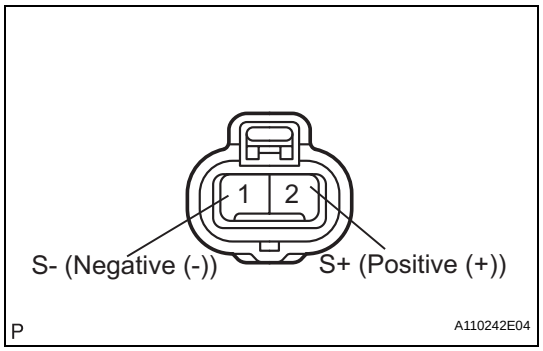

2. NO. 2 COOLING FAN MOTOR

(a) Check that the motor turns smoothly when the battery is connected to the fan motor connector.

(b) Measure the current while the motor is turning.

Standard current:

With trailer hitch:

6.8 to 9.8 A at 20°C (68°F)

Without trailer hitch:

6.8 to 9.8 A at 20°C (68°F)

If the result is not as specified, replace the cooling fan motor No. 2.

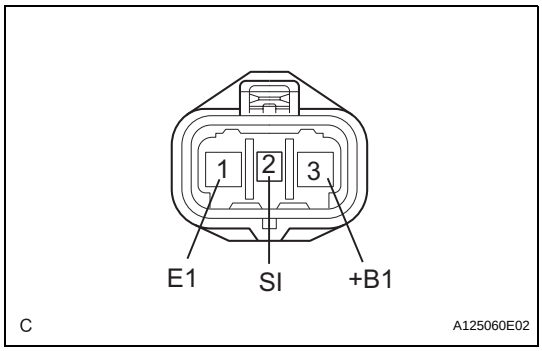

COOLING FAN ECU

ON-VEHICLE INSPECTION

1. INSPECT COOLING FAN ECU

(a) Inspect the input voltage.

(1) Disconnect the cooling fan ECU connector.

(2) Turn the engine switch on (IG). Check the voltage of the +B terminal of the disconnected wire harness side connector.

Standard voltage:

9 to 14 V

If the result is not as specified, inspect the power source system (fusible link, fuse, wire harness and relay).

(b) Inspect the cooling fan motor (see page CO-15).

(c) Measure the resistance between terminals RFC (ECM) and SI (cooling fan ECU) of the wire harness side connectors.

Standard resistance (Check for open)

Tester Connection	Specified Condition
RFC (A10-43) - SI (A7-2)	Below 1Ω

Standard resistance (Check for short)

Tester Connection	Specified Condition
RFC (A10-43) or SI (A7-2) - Body ground	10kΩ or higher

HINT:

- If the fan does not operate, there may be a short circuit.
- If the fan remains operating, there may be an open circuit.

(d) Inspect the ECM power source circuit and ground circuit (see page ES-30).

CO

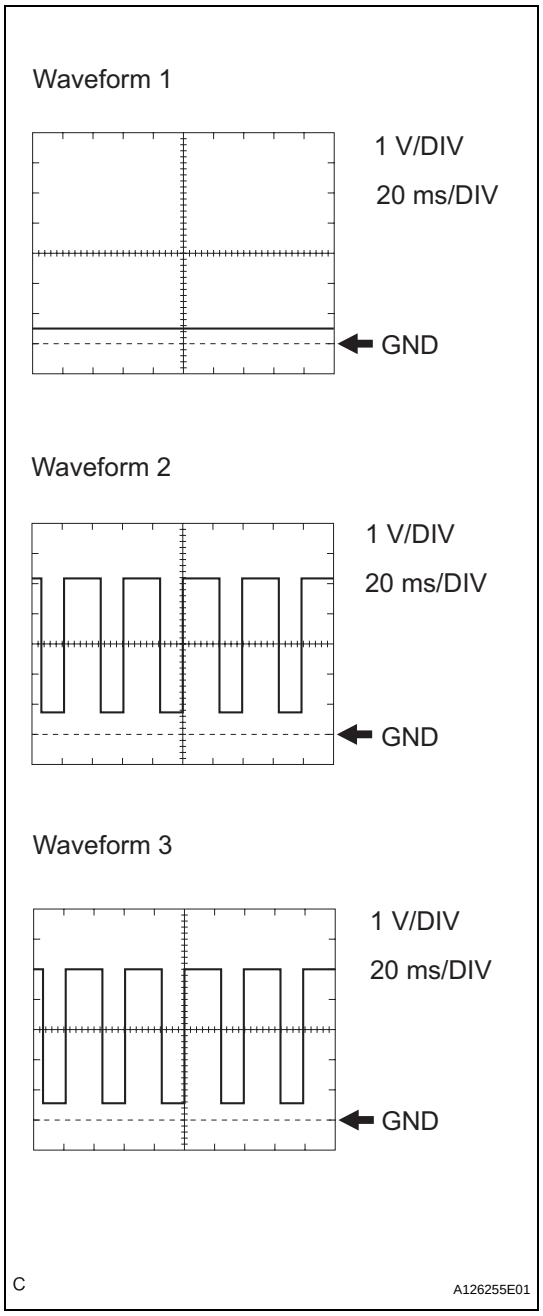

(e) Inspect the input signal and output current.
NOTICE:
Be sure to perform the inspection with the radiator coolant temperature less than 95°C (203 °F).
(1) Connect the 400 A probe of the ammeter to terminal M+ of the cooling fan motor.
(2) Set the intelligent tester to the oscilloscope function.
(3) Using the intelligent tester, check the waveform between terminals RFC and E1 of the ECM.
Standard waveform

Condition	Input Signal	Output Current
Engine stopped (Engine switch on (IG))	**Waveform 1 (Duty ratio 0 %)**	**(Fan stops)**
Engine idling (A/C OFF)	**Waveform 1 (0 %)**	**(Fan stops)**
Engine idling (A/C ON)	**Waveform 2 (30 to 70 %)**	**2 to 11 A (Fan operates)**
Engine idling (Coolant temperature sensor connector disconnected)	**Waveform 3 (30 to 70 %)**	**2 to 11 A (Fan operates)**

HINT:
- If the input signal is abnormal, there is a malfunction in the ECM or cooling fan ECU.
- If the output current is abnormal even when the input signal is normal, there is a malfunction in the cooling fan ECU (RFC) or motor.

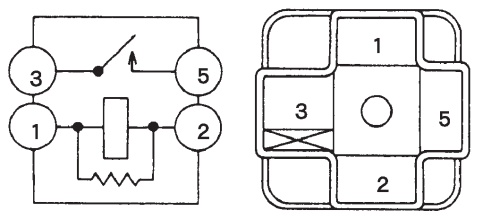

A035654

COOLING FAN RELAY

ON-VEHICLE INSPECTION

1. COOLING FAN RELAY

(a) Remove the relay from engine room relay block No. 1.

(b) Measure the resistance of the relay.

Standard resistance

Tester Connection	Specified Condition
3 - 5	10 kΩ or higher
3 - 5	Below 1 Ω (when battery voltage is applied to terminals 1 and 2)

If the result is not as specified, replace the cooling fan relay.

(c) Install the relay to engine room relay block No. 1.

RADIATOR

COMPONENTS

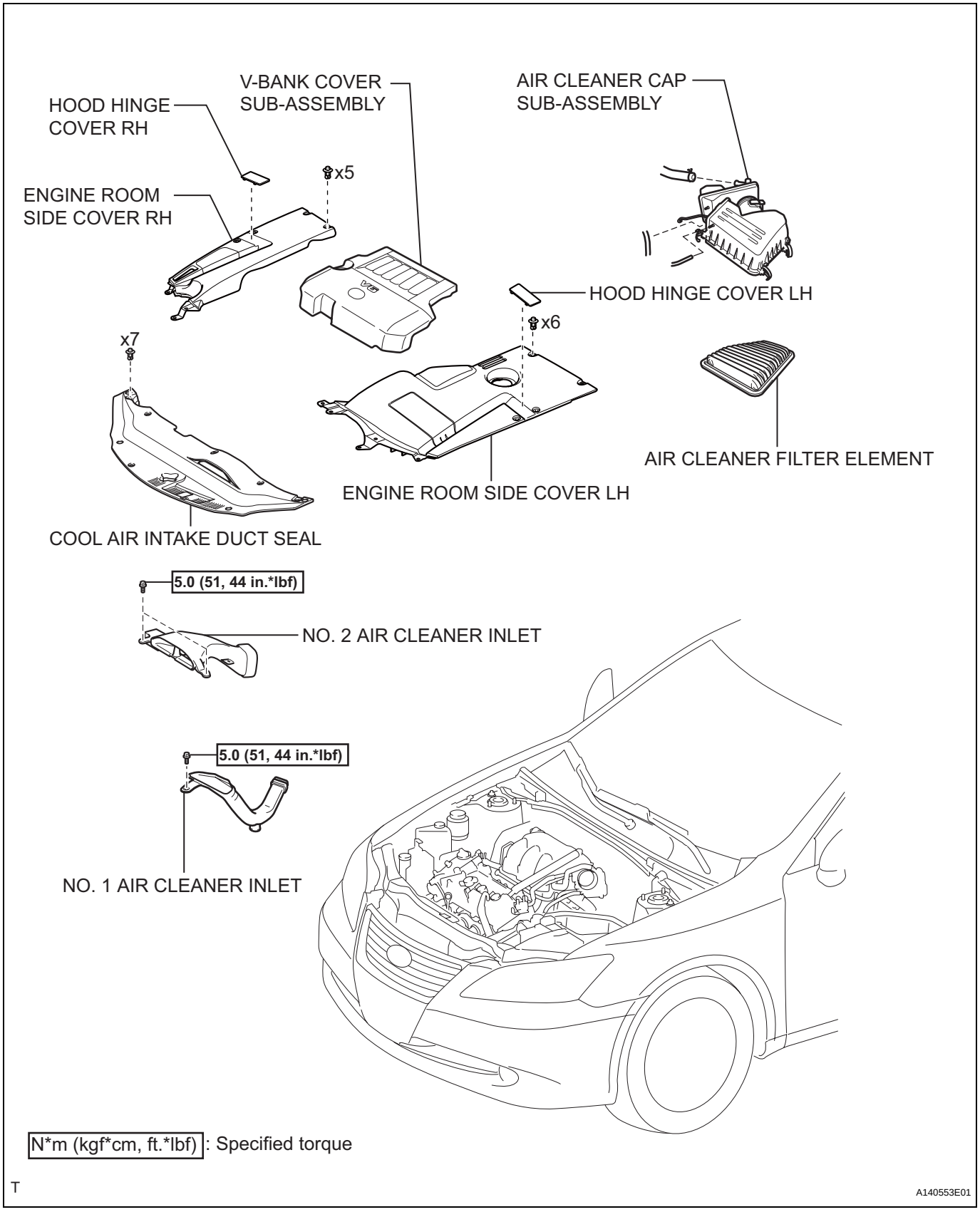

CO

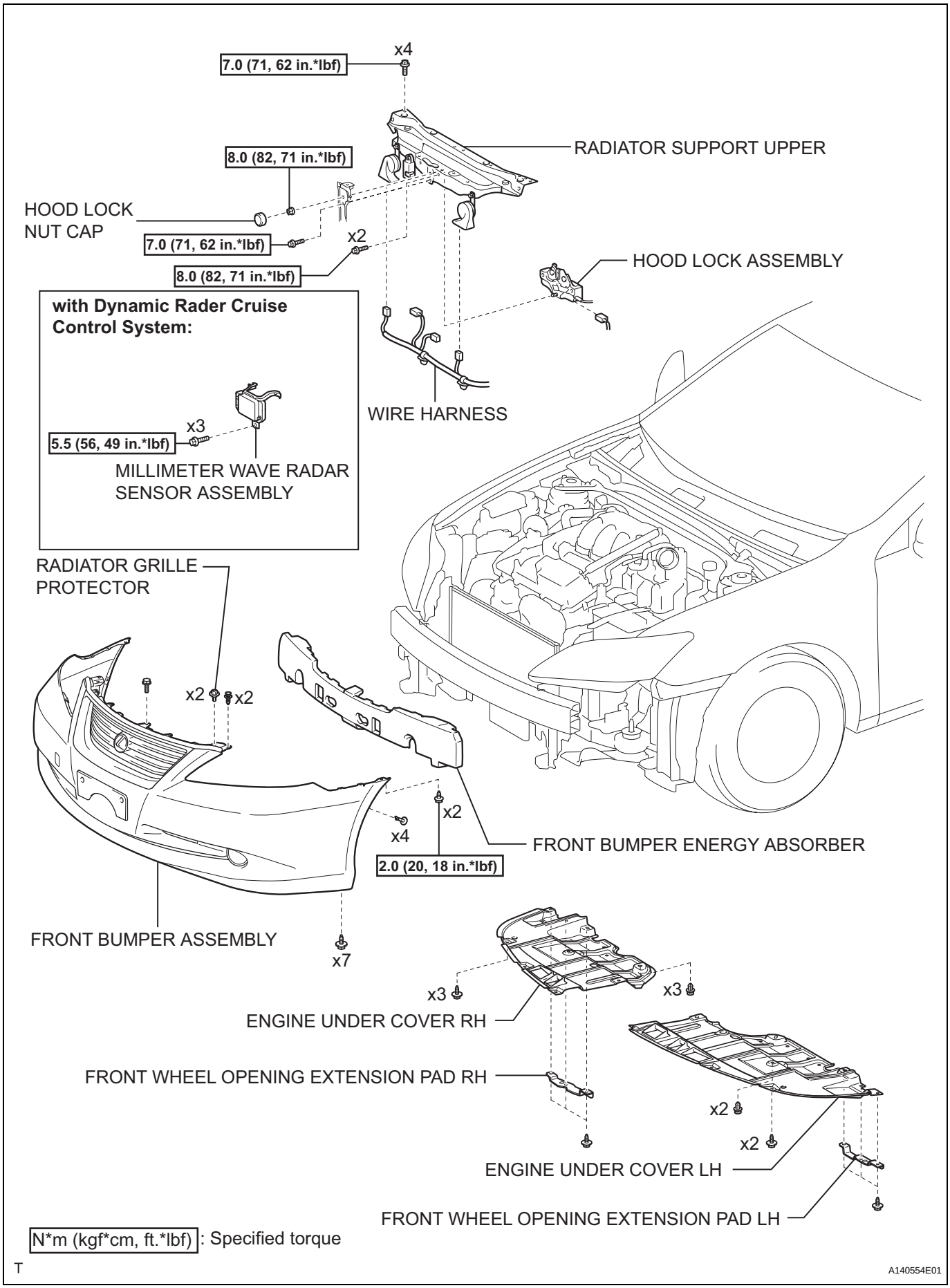
7.0 (71, 62 in.*lbf)
x4
RADIATOR SUPPORT UPPER
8.0 (82, 71 in.*lbf)
HOOD LOCK NUT CAP
7.0 (71, 62 in.*lbf)
x2
8.0 (82, 71 in.*lbf)
HOOD LOCK ASSEMBLY
with Dynamic Rader Cruise Control System:
x3
5.5 (56, 49 in.*lbf)
MILLIMETER WAVE RADAR SENSOR ASSEMBLY
WIRE HARNESS
RADIATOR GRILLE PROTECTOR
x2
x2
x2
x4
2.0 (20, 18 in.*lbf)
FRONT BUMPER ENERGY ABSORBER
FRONT BUMPER ASSEMBLY
x7
x3
x3
ENGINE UNDER COVER RH
FRONT WHEEL OPENING EXTENSION PAD RH
x2
x2
ENGINE UNDER COVER LH
FRONT WHEEL OPENING EXTENSION PAD LH
N*m (kgf*cm, ft.*lbf): Specified torque
T
A140554E01

CO

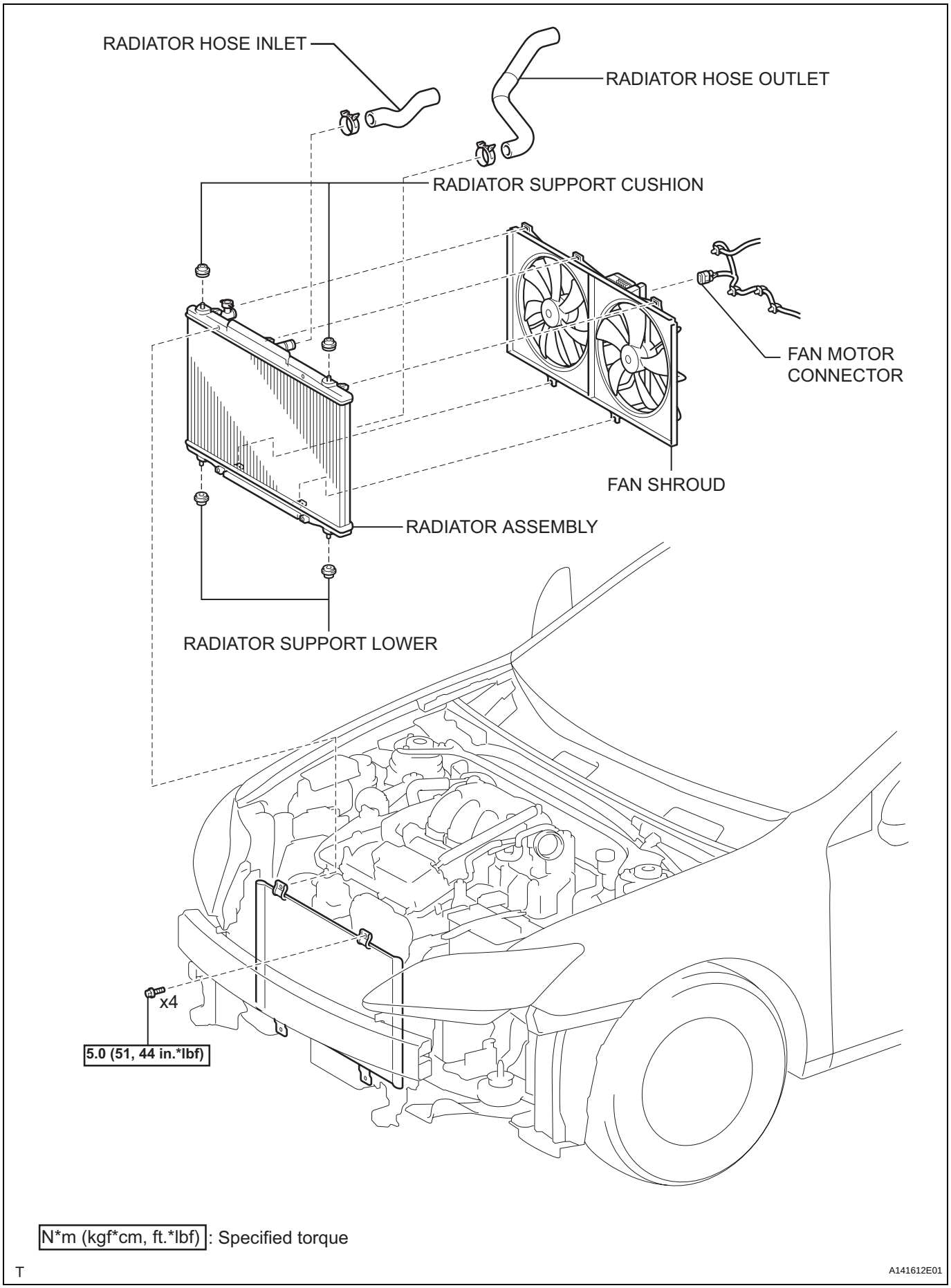
RADIATOR HOSE INLET
RADIATOR HOSE OUTLET
RADIATOR SUPPORT CUSHION
FAN MOTOR CONNECTOR
FAN SHROUD
RADIATOR ASSEMBLY
RADIATOR SUPPORT LOWER
x4
5.0 (51, 44 in.*lbf)
N*m (kgf*cm, ft.*lbf) : Specified torque
T
A141612E01

Without Hose:

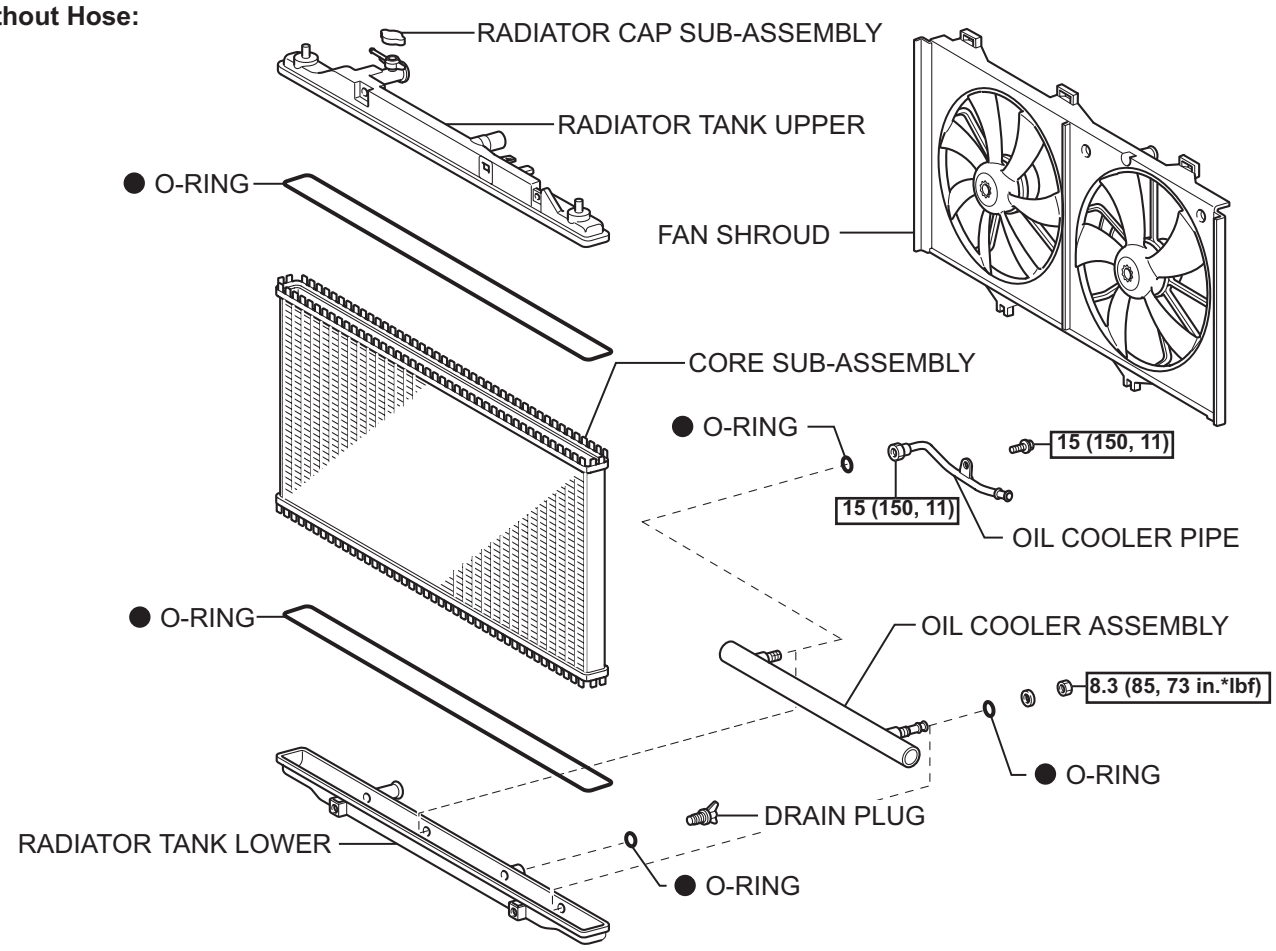

N*m (kgf*cm, ft.*lbf) : Specified torque ● Non-reusable part

T

A145068E01

CO

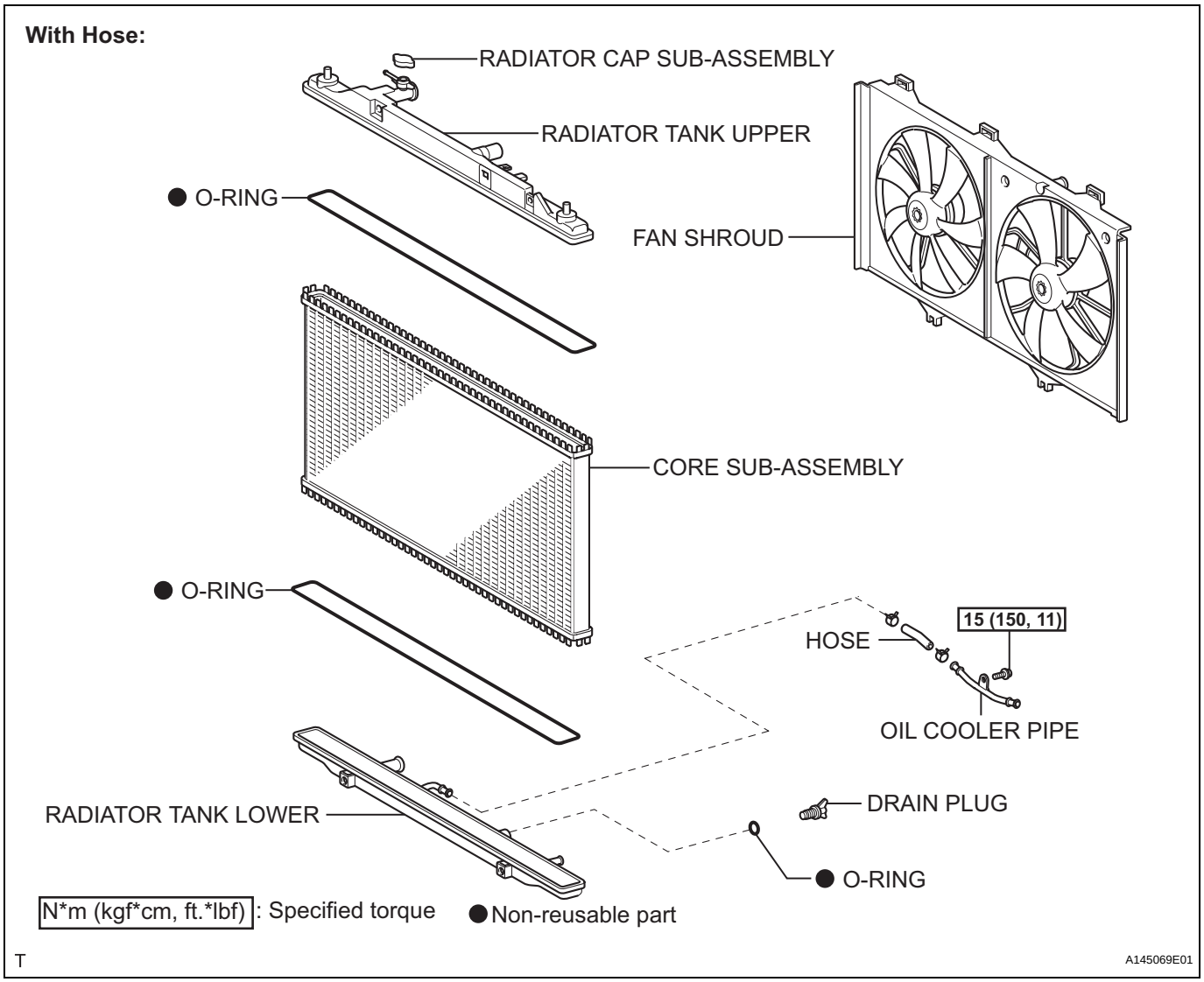

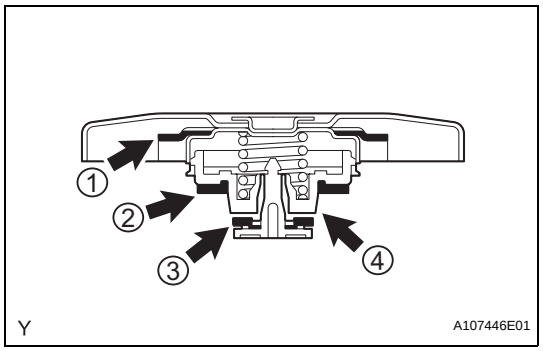

ON-VEHICLE INSPECTION

1. CHECK RADIATOR CAP SUB-ASSEMBLY

(a) Measure the valve opening pressure.

(1) If there are water stains or foreign matter on rubber packings 1, 2 or 3, clean the part(s) with water and finger scouring.

(2) Check that rubber packings 1, 2 and 3 are not deformed, cracked or swollen.

(3) Check that rubber packings 3 and 4 are not stuck together.

(4) Apply engine coolant to rubber packings 2 and 3 before using the radiator cap tester.

(5) When using the cap tester, tilt it to 30° or more above the horizontal.

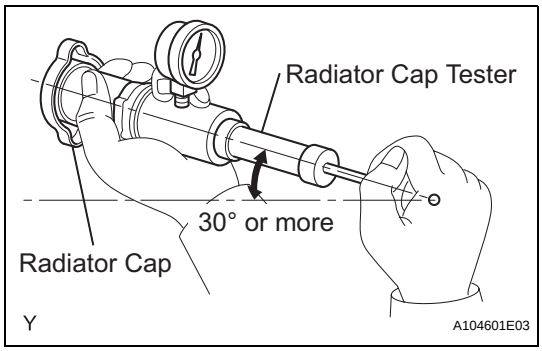

(6) Pump the cap tester several times, and check the maximum pressure. *1
Pumping speed:
1 pump every second
*1: Even if the cap cannot maintain the maximum pressure, it is not a defect.
Judgment Criteria

Item	Specified Condition
Standard valve (for brand-new cap)	93.3 to 122.7 kPa (0.95 to 1.25 kgf/cm^2, 13.5 to 17.8 psi)
Minimum standard valve (after using cap)	78.5 kPa (0.8 kgf/cm^2, 11.4 psi)

If the maximum pressure is less than the specified pressure for the minimum standard valve, replace the radiator cap sub-assembly.

ON-VEHICLE CLEANING

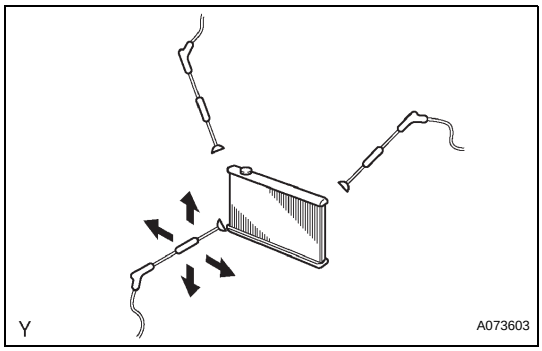

1. INSPECT FINS BLOCKAGE

(a) If the fins are clogged, wash them with water or a steam cleaner. Dry with compressed air.
NOTICE:
- **If the distance between the steam cleaner and the core is too close, the fins may become damaged. Keep the following injection distance.**
Standard

Injection Distance	Injection Pressure
300 mm (11.81 in.)	2,942 to 4,903 kPa (30 to 50 kg/cm^2, 427 to 711 psi)
500 mm (19.69 in.)	4,903 to 7,845 kPa (50 to 80 kg/cm^2, 711 to 1,138 psi)

- **If the fins are bent, straighten them with a screwdriver or pliers.**
- **Never apply water directly onto the electronic components.**

LUBRICATION SYSTEM

ON-VEHICLE INSPECTION

1. CHECK ENGINE OIL LEVEL

(a) Warm up the engine, stop it and wait 5 minutes. The oil level should be between the dipstick's low level mark and full level mark.
If low, check for leakage and add oil up to the full level mark.
NOTICE:
Do not fill above the full level mark.

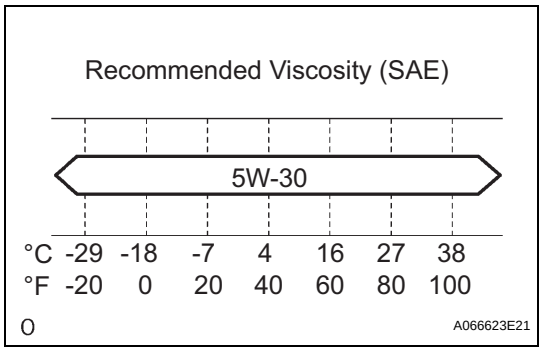

2. CHECK ENGINE OIL QUALITY

(a) Check the oil for deterioration, water contamination, discoloring or thinning.
If the quality is visibly poor, replace the oil.
Oil grade:
Use ILSAC multigrade engine oil. SAE 5W-30 engine oil may be used. However, SAE 5W-30 is the best choice for good fuel economy and good starting in cold weather.

3. CHECK OIL PRESSURE

(a) Remove the engine under cover LH.
(b) Remove the engine under cover RH.
(c) Disconnect the oil pressure switch connector.
(d) Using a 24 mm deep socket wrench, remove the oil pressure switch.

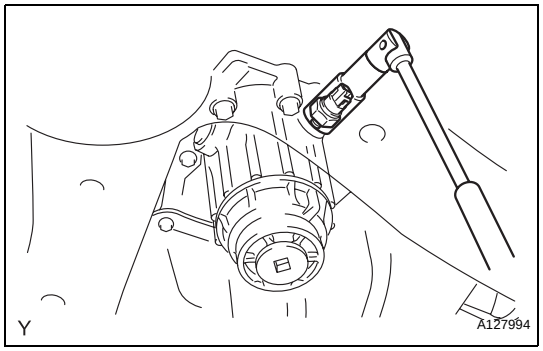

(e) Install the oil pressure gauge with adapter.
(f) Warm up the engine.
(g) Measure the oil pressure.
Standard oil pressure

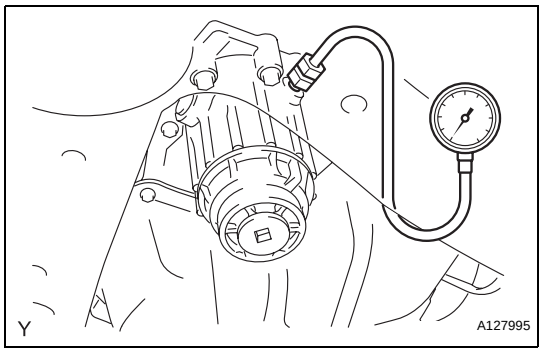

Engine Condition	Oil Pressure
Idle	80 kPa (0.8 kgf*cm^2, 11.6 psi) or more
6,000 rpm	380 kPa (3.9 kgf*cm^2, 55.5 psi) or more

If the oil pressure is not as specified, check the oil pump (See page LU-13).

LU

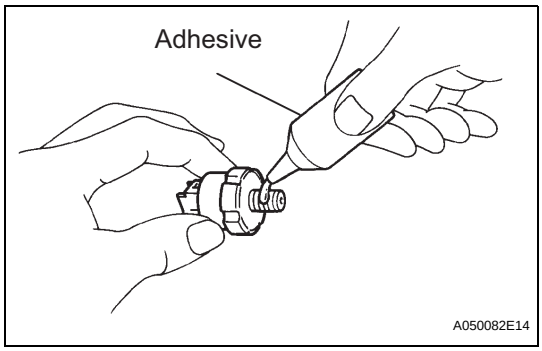

(h) Remove the oil pressure gauge.
(i) Apply adhesive to 2 or 3 threads of the oil pressure switch.
Adhesive:
Toyota Genuine Adhesive 1344, Three Bond 1344 or equivalent

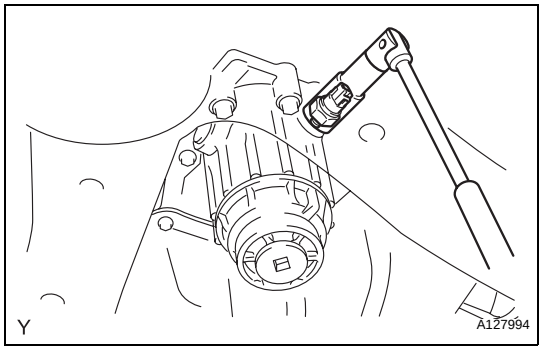

(j) Using a 24 mm deep socket wrench, install the oil pressure switch.
Torque: 15 N*m (153 kgf*cm, 11 ft.*lbf)
NOTICE:
Do not start the engine within 1 hour after installation.
(k) Connect the oil pressure switch connector.
(l) Check for engine oil leaks.
(m) Remove the engine under cover RH.
(n) Remove the engine under cover LH.

OIL FILTER

COMPONENTS

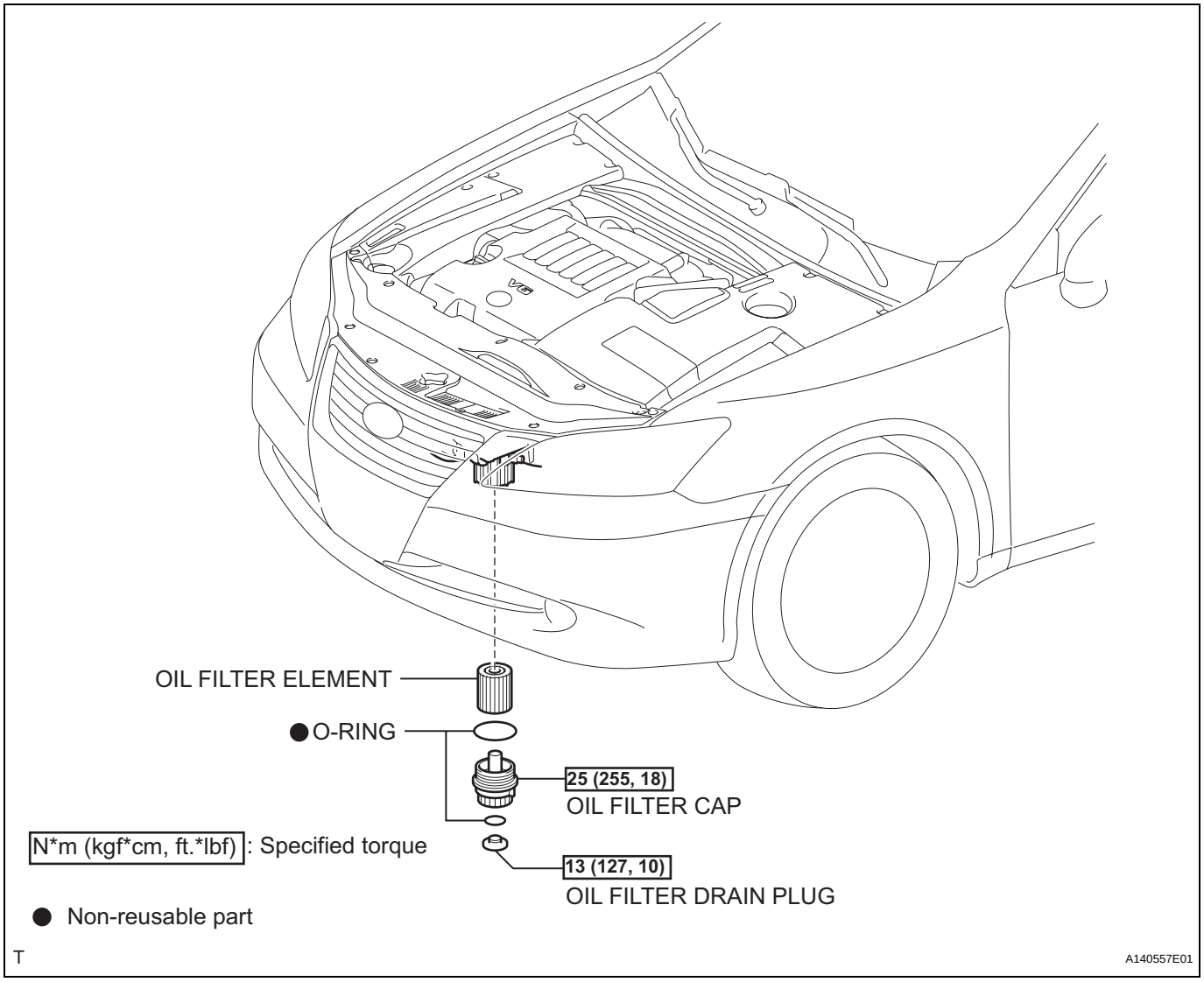

REPLACEMENT

CAUTION:

- **Prolonged and repeated contact with engine oil will result in the removal of natural oils from the skin, leading to dryness, irritation and dermatitis. In addition, used engine oil contains potentially harmful contaminants which may cause skin cancer.**
- **Precautions should be taken when replacing engine oil to minimize the risk of your skin making contact with used engine oil. Protective clothing and gloves that cannot be penetrated by oil should be worn. The skin should be washed with soap and water, or use water-less hand cleaner, to remove any used engine oil thoroughly. Do not use gasoline, thinners, or solvents.**
- **In order to preserve the environment, used oil and used oil filters must be disposed of at designated disposal sites.**

1. DRAIN ENGINE OIL

(a) Remove the oil filler cap.

(b) Remove the oil drain plug and drain the oil into a container.

2. REMOVE OIL FILTER ELEMENT

(a) Connect the hose with an inside diameter of 15 mm (0.59 in.) to the pipe.

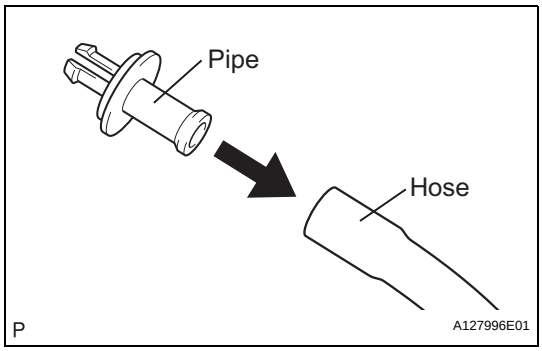

(b) Remove the oil filter drain plug from the oil filter cap.

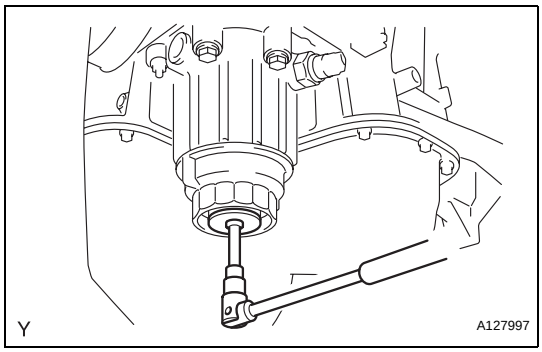

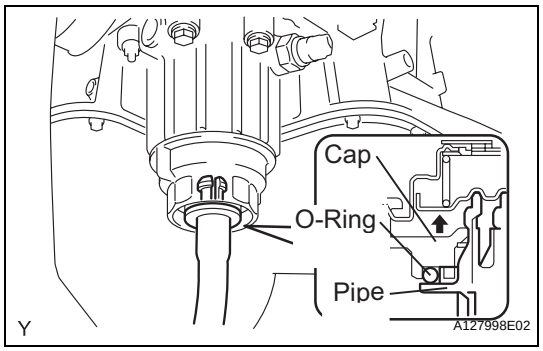

(c) Insert the pipe with the hose into the oil filter cap.
NOTICE:
Be sure to insert the pipe with the O-ring installed on the oil filter cap side.
HINT:
Place the hose end into a container before draining the oil from the hose.

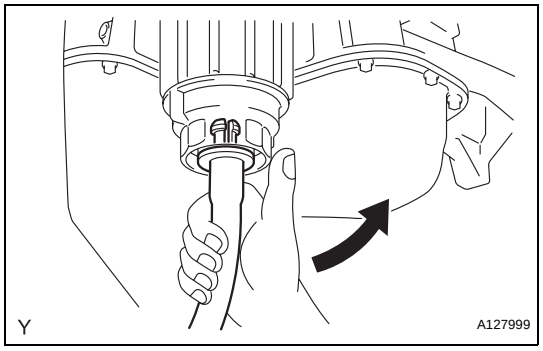

(d) Make sure that oil is completely drained, and remove the pipe and O-ring.
HINT:
Be sure to turn the pipe in the direction of the arrow to remove it.

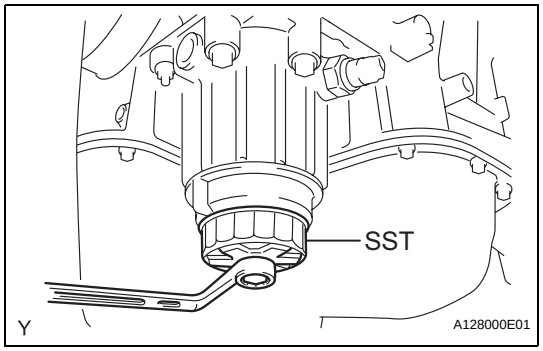

(e) Using SST, remove the oil filter cap.
SST 09228-06501

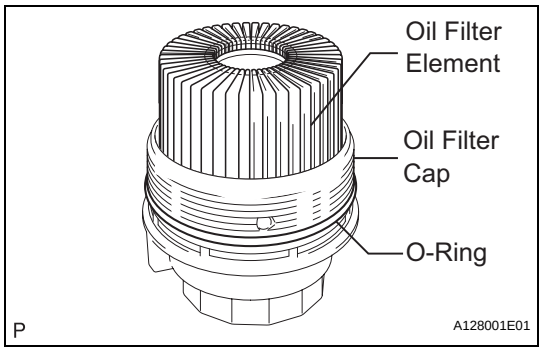

(f) Remove the oil filter element and O-ring from the oil filter cap.
NOTICE:
Do not use any tools to remove the O-ring in order to prevent the cap from being damaged. Be sure to remove it by hand.

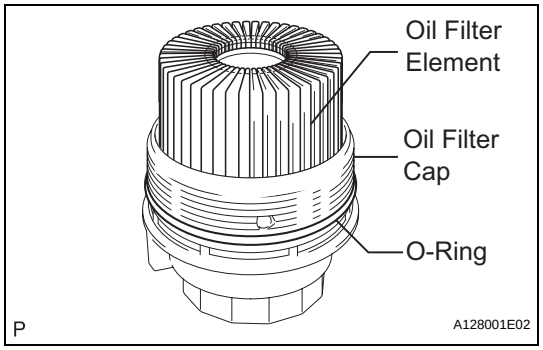

3. INSTALL OIL FILTER ELEMENT

(a) Clean the inside of the oil filter cap, threads, and O-ring groove.

(b) Apply a light coat of engine oil to a new O-ring and install it to the oil filter cap.
NOTICE:
Make sure that the O-ring does not get twisted on the groove.

(c) Install a new oil filter element to the oil filter cap.

(d) Remove all dirt and foreign matter from the installation surface and the inside of the cap on the engine side.

(e) Apply a light coat of engine oil to the O-ring again and install the oil filter cap.
NOTICE:
Make sure that the O-ring does not get caught between the parts.

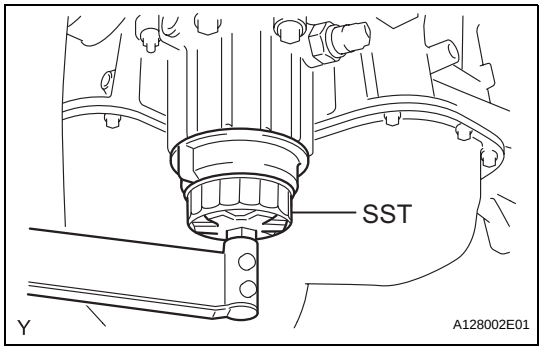

(f) Using SST, install the oil filter cap.
SST 09228-06501
Torque: 25 N*m (255 kgf*cm, 18 ft.*lbf)
NOTICE:
Make sure that there is no clearance between the parts after tightening the oil filter cap.

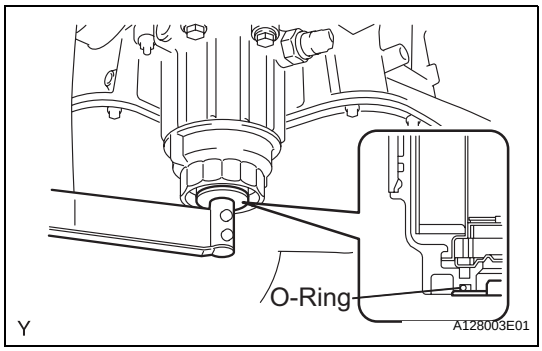

(g) Apply a light coat of engine oil to a new O-ring and install it to the oil filter cap.
NOTICE:
Remove all dirt and foreign matter from the installation surface.

(h) Install the oil filter drain plug to the oil filter cap.
Torque: 13 N*m (127 kgf*cm, 10 ft.*lbf)
NOTICE:
Make sure that the O-ring does not get caught between the parts.

4. ADD ENGINE OIL

(a) Clean and install the oil drain plug with a new gasket.
Torque: 40 N*m (408 kgf*cm, 30 ft.*lbf)

(b) Add new oil.
Standard capacity

Item	Standard Condition
Drain and refill with oil filter change	6.1 liters (6.4 US qts, 5.4 Imp. qts)
Drain and refill without oil filter change	5.7 liters (6.0 US qts, 5.0 Imp. qts)
Dry fill	6.5 liters (6.9 US qts, 5.7 Imp. qts)

(c) Install the oil filler cap.

5. CHECK FOR ENGINE OIL LEAKS

(a) Start the engine. Check for engine oil leaks from the connected parts of the oil filter cap and oil filter drain plug.

OIL PUMP

COMPONENTS

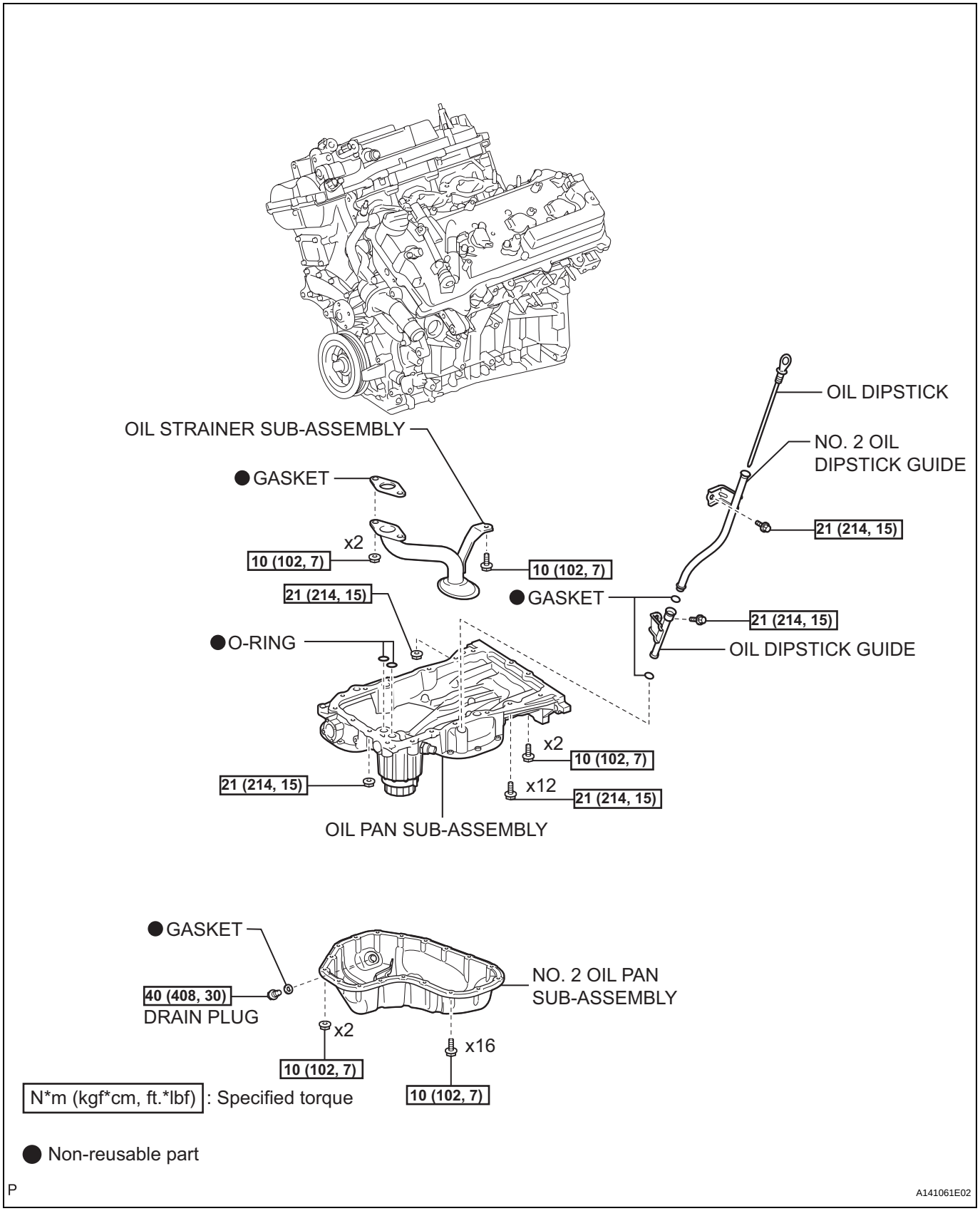

LU

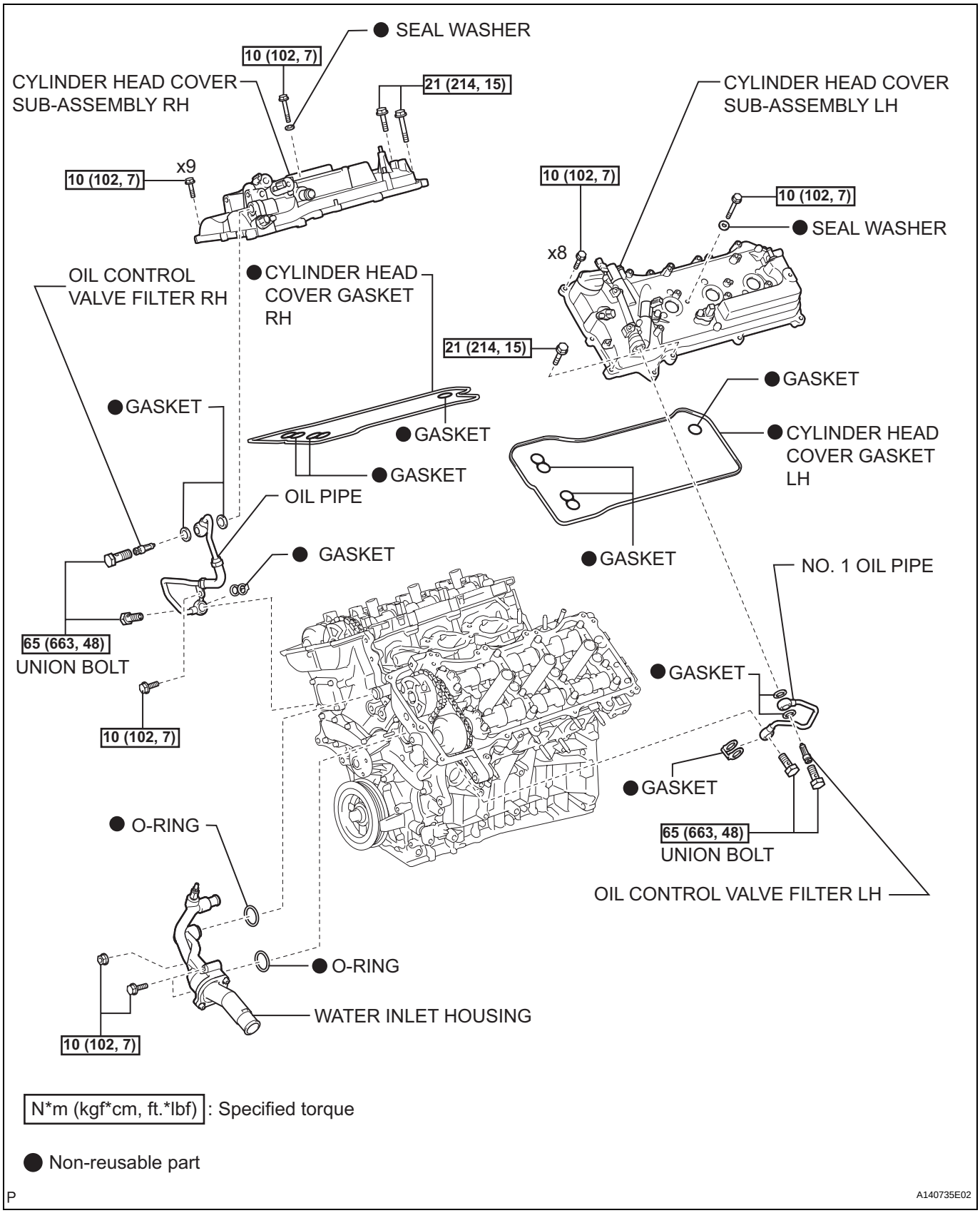
● SEAL WASHER
10 (102, 7)
CYLINDER HEAD COVER SUB-ASSEMBLY RH
21 (214, 15)
CYLINDER HEAD COVER SUB-ASSEMBLY LH
10 (102, 7)
x9
10 (102, 7)
10 (102, 7)
● SEAL WASHER
x8
OIL CONTROL VALVE FILTER RH
● CYLINDER HEAD COVER GASKET RH
21 (214, 15)
● GASKET
● GASKET
● GASKET
● CYLINDER HEAD COVER GASKET LH
● GASKET
OIL PIPE
● GASKET
● GASKET
NO. 1 OIL PIPE
65 (663, 48)
UNION BOLT
● GASKET
10 (102, 7)
● GASKET
● O-RING
65 (663, 48)
UNION BOLT
OIL CONTROL VALVE FILTER LH
● O-RING
WATER INLET HOUSING
10 (102, 7)
N*m (kgf*cm, ft.*lbf) : Specified torque
● Non-reusable part
P
A140735E02

LU

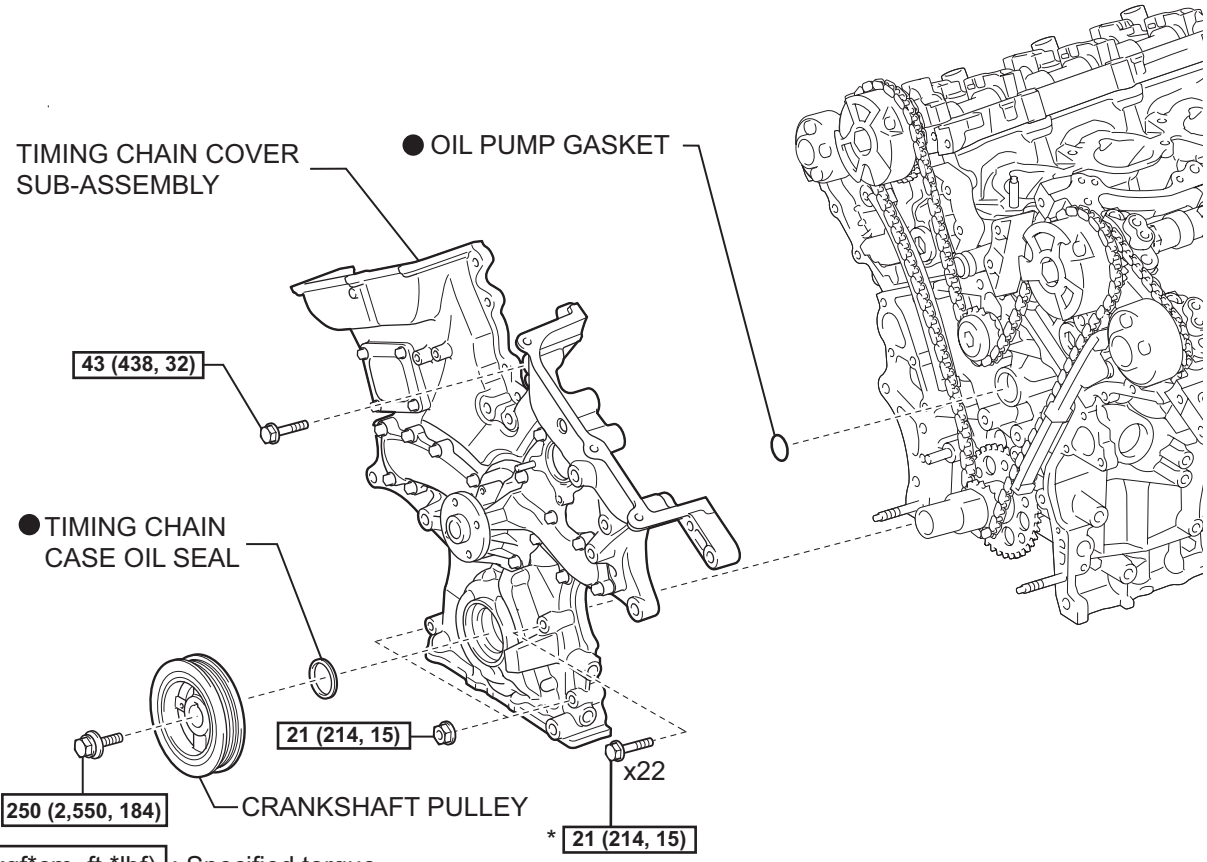

N*m (kgf*cm, ft.*lbf) : Specified torque

● Non-reusable part

* DO NOT apply oil

P

A132051E03

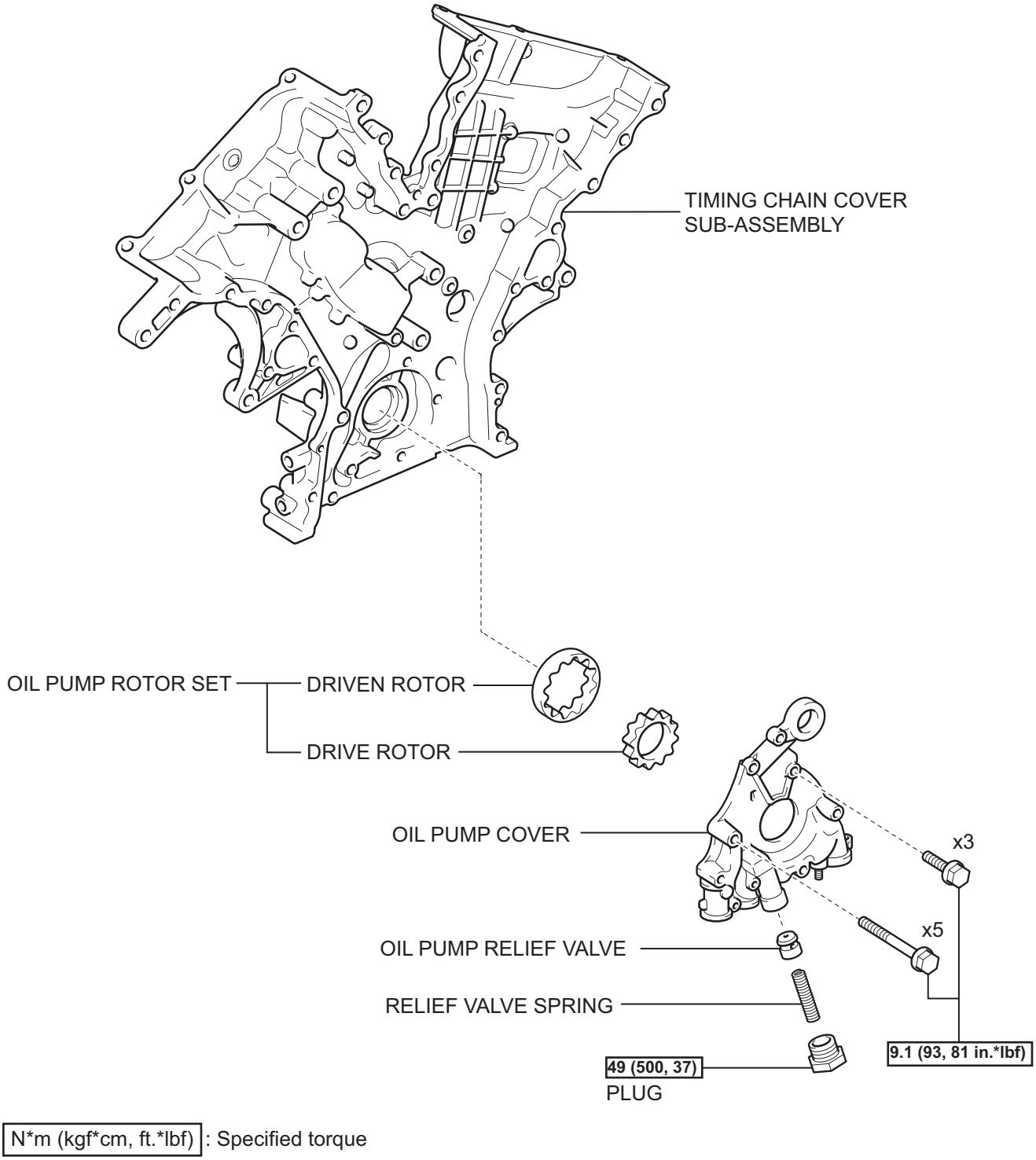

N*m (kgf*cm, ft.*lbf) : Specified torque

P

A132054E05

IGNITION SYSTEM

PARTS LOCATION

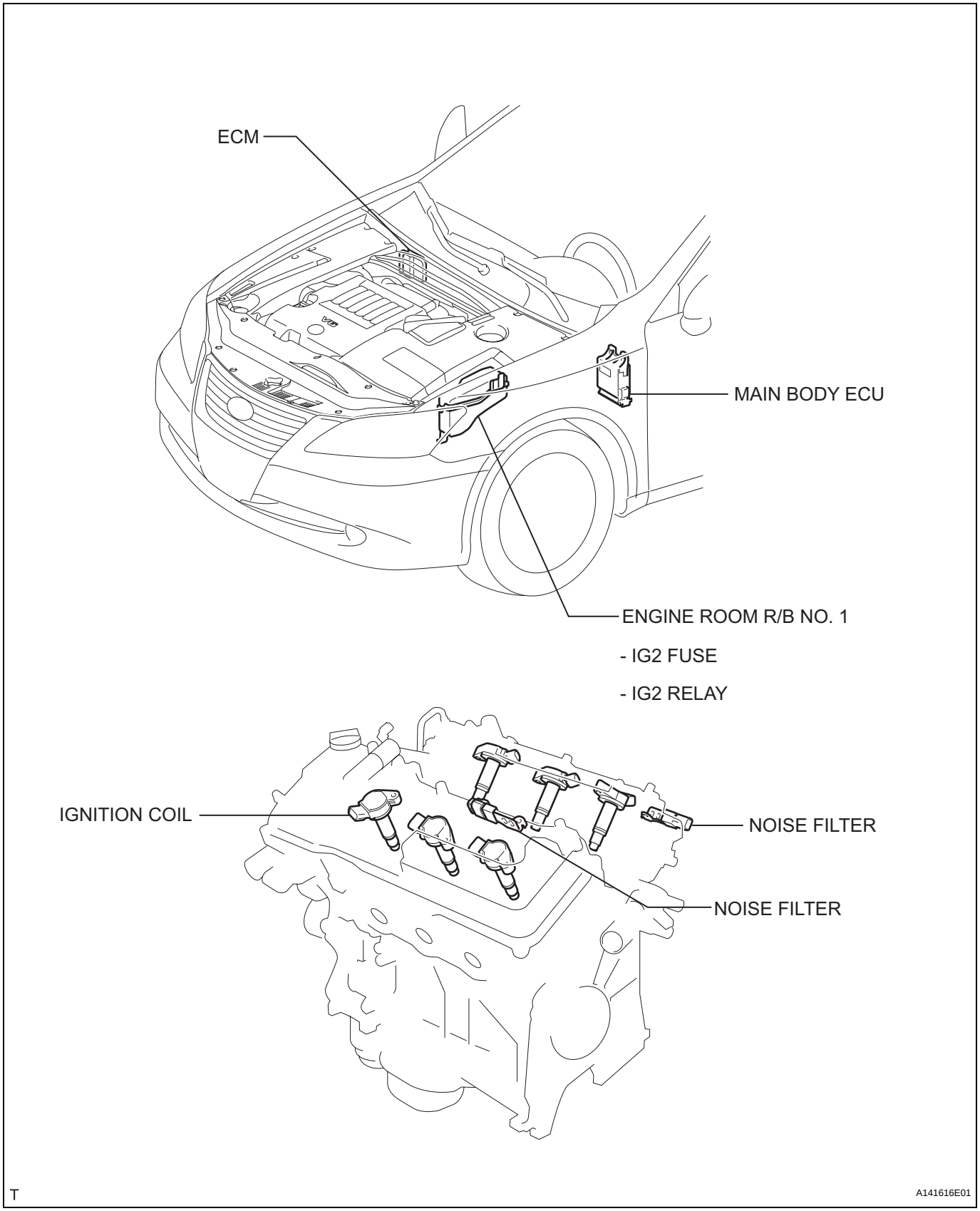

SYSTEM DIAGRAM

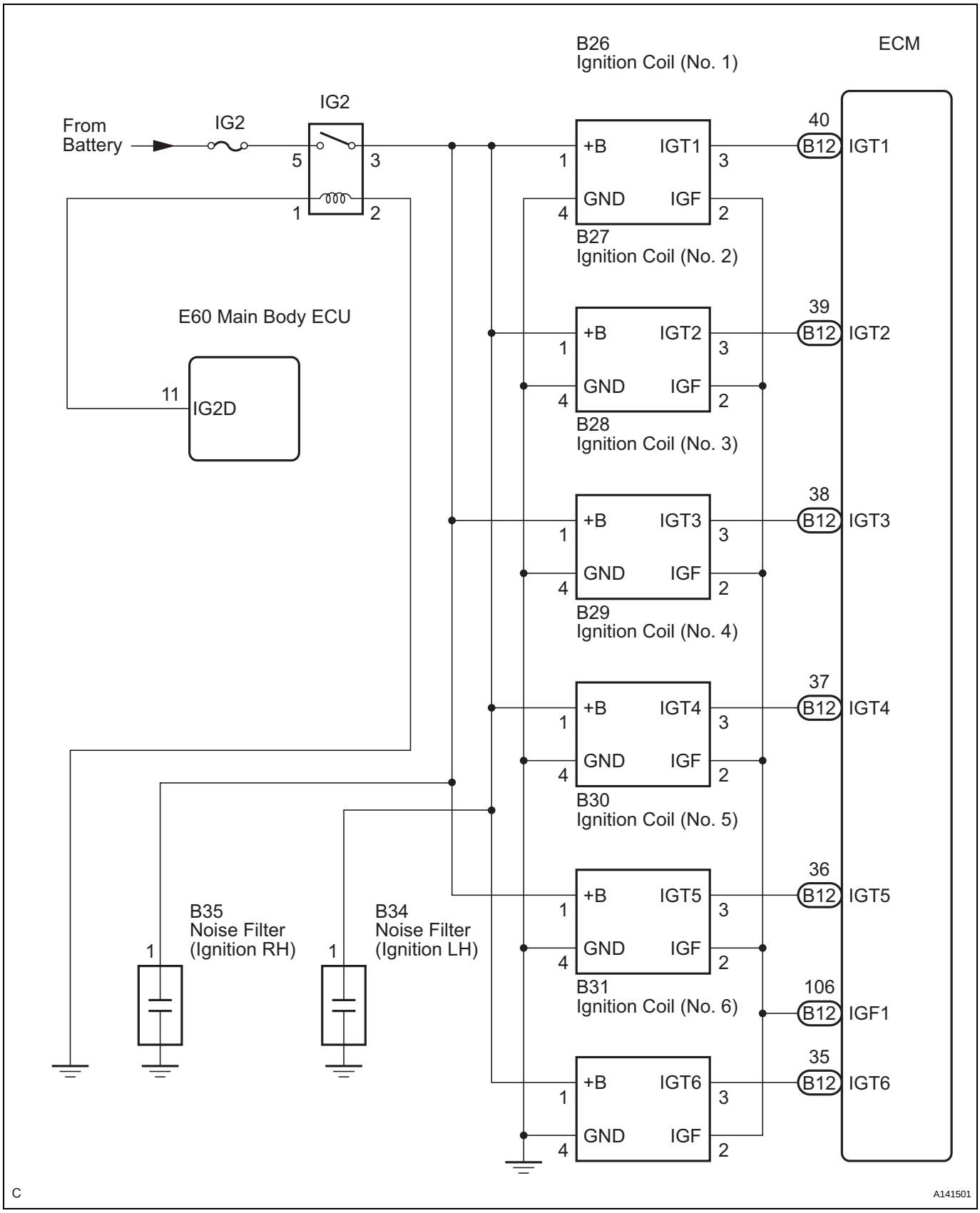

IG

IGNITION COIL

COMPONENTS

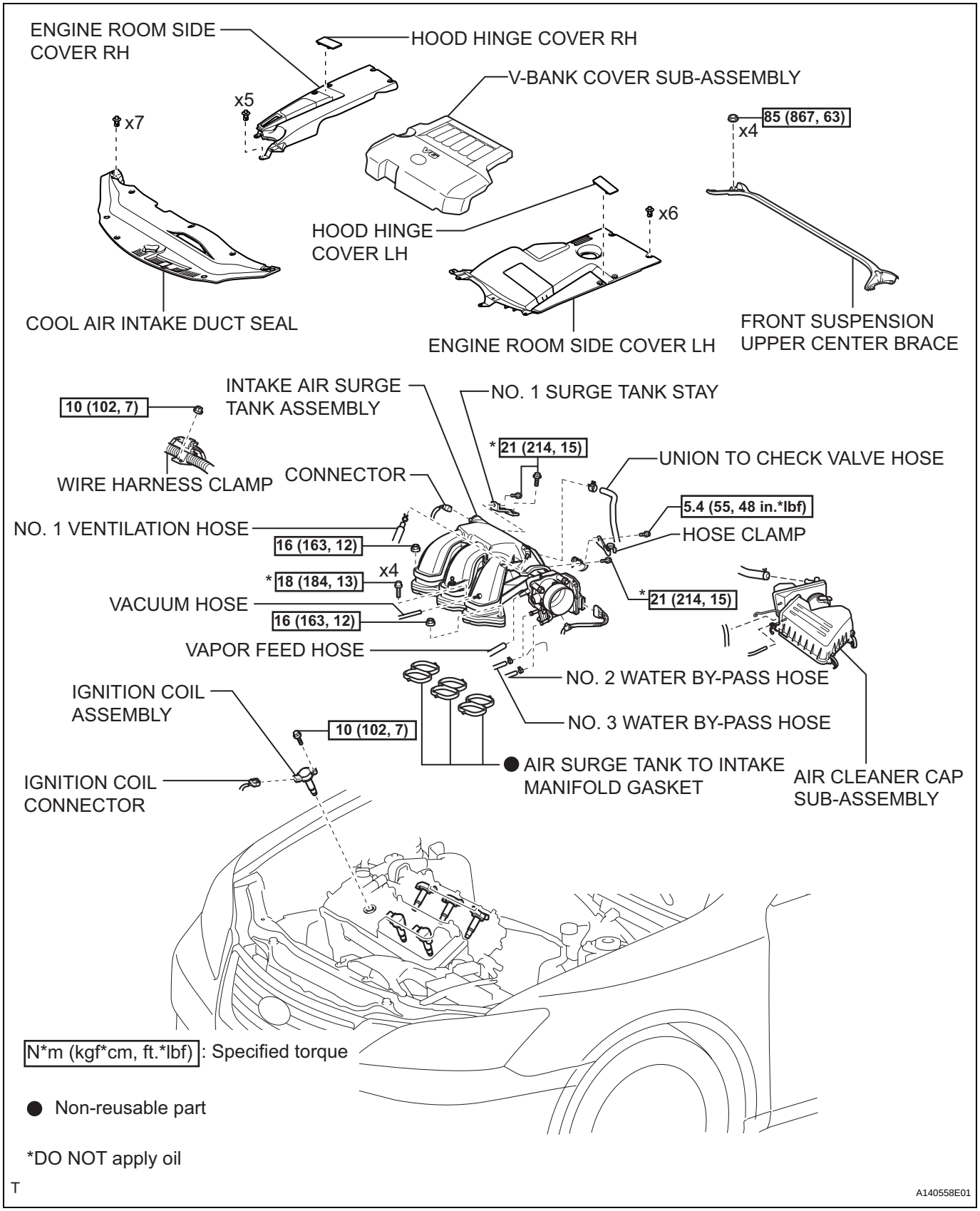

IG

REMOVAL

1. **DISCONNECT CABLE FROM NEGATIVE BATTERY TERMINAL**
2. **REMOVE COOL AIR INTAKE DUCT SEAL (See page EM-22)**
3. **REMOVE ENGINE ROOM SIDE COVER LH (See page EM-22)**
4. **REMOVE ENGINE ROOM SIDE COVER RH (See page EM-22)**
5. **REMOVE FRONT SUSPENSION UPPER CENTER BRACE (See page BR-22)**
6. **REMOVE V-BANK COVER SUB-ASSEMBLY (See page EM-23)**
7. **DRAIN ENGINE COOLANT (See page CO-5)**
8. **REMOVE AIR CLEANER CAP SUB-ASSEMBLY (See page ES-519)**
9. **REMOVE INTAKE AIR SURGE TANK ASSEMBLY (See page FU-12)**
10. **REMOVE NO. 1 SURGE TANK STAY**
    (a) Remove the bolt and disconnect the harness clamp.

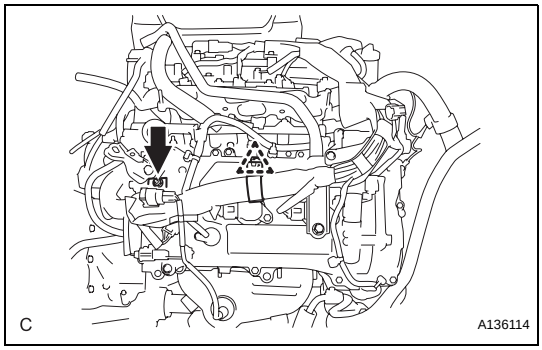

(b) Remove the bolt and No. 1 surge tank stay.

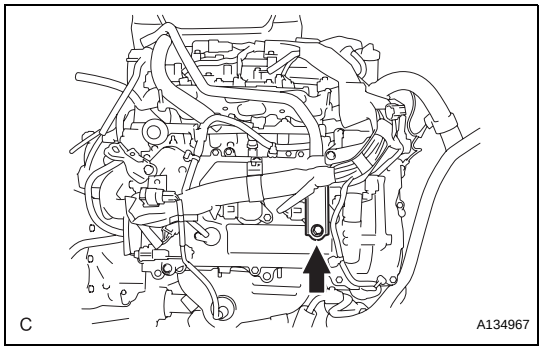

STARTING SYSTEM

PARTS LOCATION

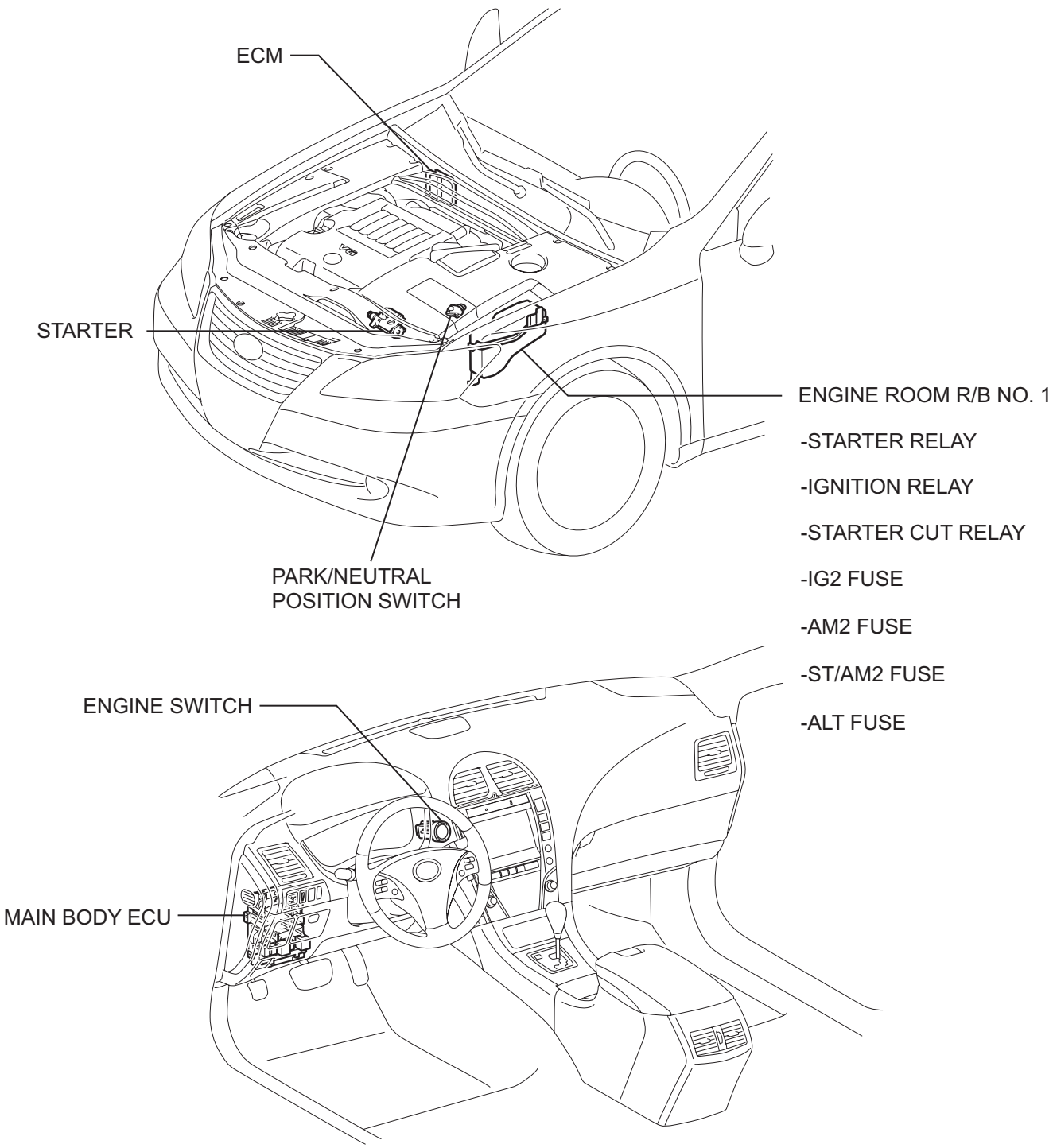

T

A141617E01

ST

SYSTEM DIAGRAM

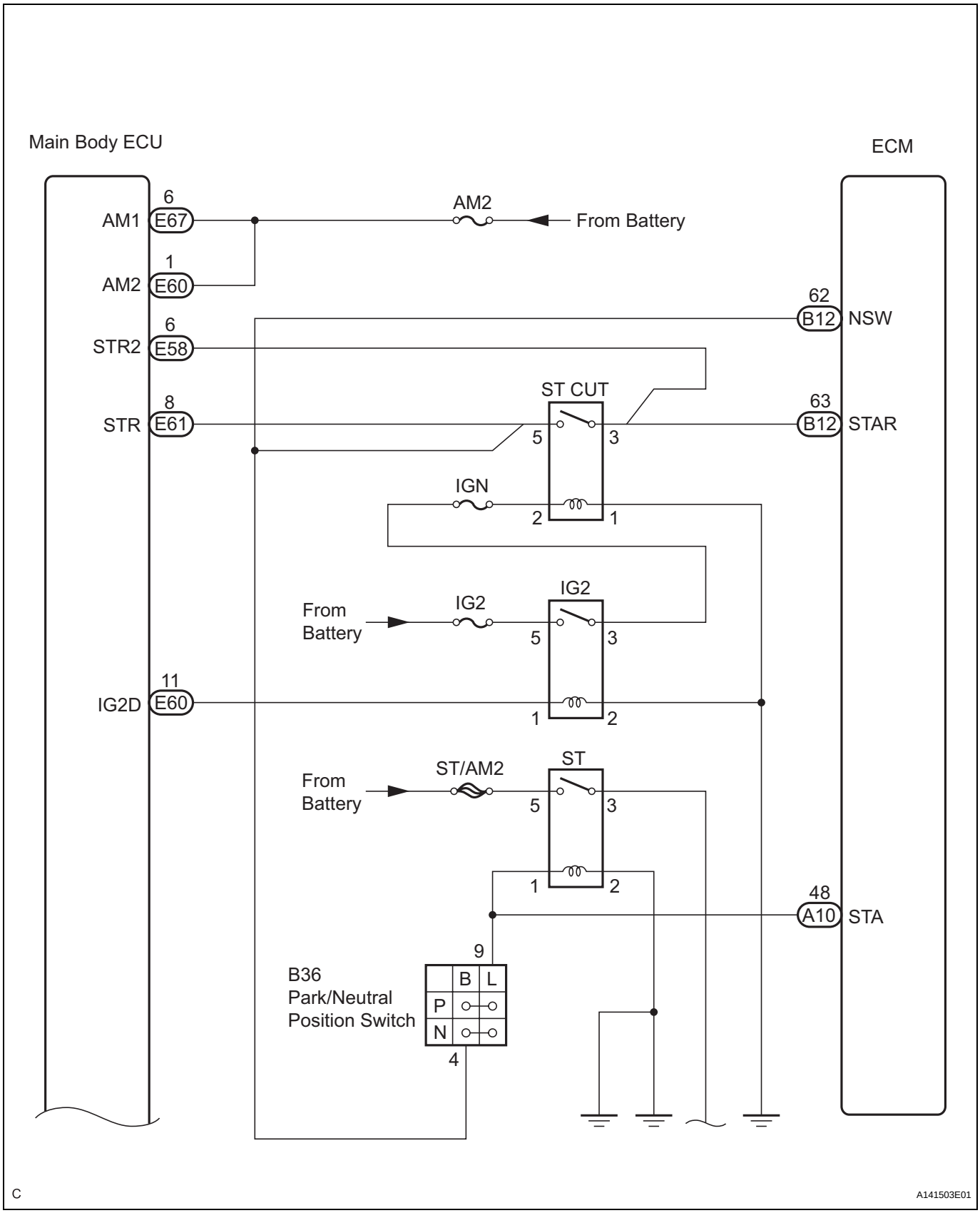

ST

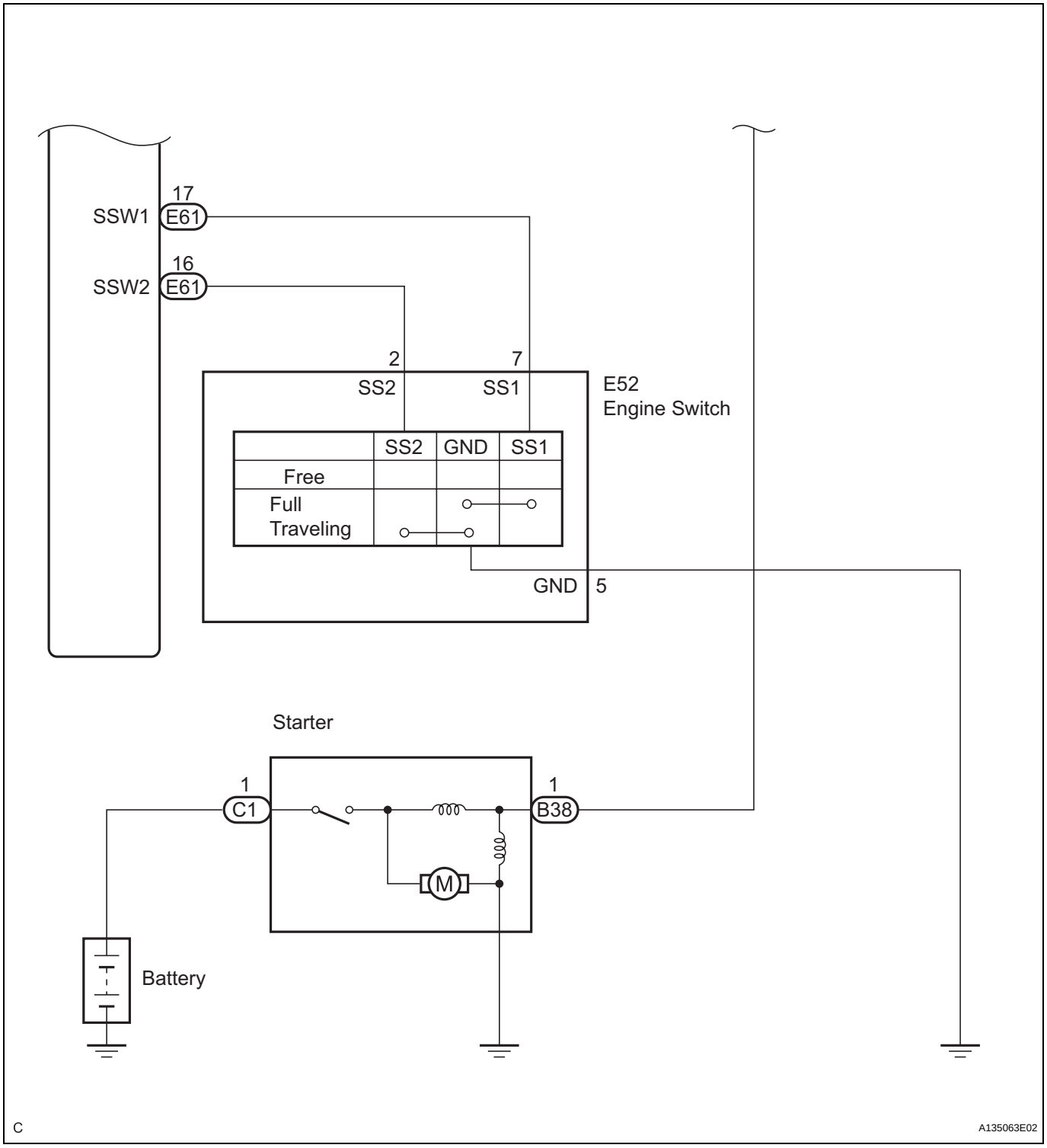
SSW1
17
E61
SSW2
16
E61
2
7
SS2
SS1
E52
Engine Switch
SS2
GND
SS1
Free
Full
Traveling
GND
5
Starter
1
C1
1
B38
M
Battery
C
A135063E02

ST

SMART ACCESS SYSTEM WITH PUSH-BUTTON START

PRECAUTION

NOTICE:
Some systems need to be initialized after reconnecting the negative (-) battery terminal (See page IN-33).

1. EMERGENCY ENGINE START CONTROL

(a) If there is a malfunction in the stop light switch or STOP fuse, their signals may not be correctly transmitted to the main body ECU. This may result in the engine not starting even if the engine switch is pressed while the brake pedal is depressed and the shift lever is in the P position.
To activate the starter:
(1) Turn the engine switch from off to on (ACC).
(2) Press and hold the engine switch for 15 seconds.

2. PRECAUTIONS FOR PUSH-BUTTON START FUNCTION:

(a) Before starting the engine, firmly depress the brake pedal until the indicator in the engine switch turns green.

(b) The power source mode (off, on (ACC), on (IG)) is always retained in memory by the vehicle. If the battery is disconnected, the power source mode that was present before disconnection will be restored after the battery is reconnected. Be sure to turn the engine switch off before disconnecting the cable from the negative battery terminal. Be careful if the power source mode of a vehicle with a discharged battery is not known.

(c) After the battery is reconnected, be sure to wait 10 seconds or more before attempting to start the engine. The engine may not start immediately after the battery is reconnected.

(d) If the electrical key is held near the engine switch to start the engine when the electrical key battery is depleted, the following warnings will sound:
(1) Driver's door open → closed
- An exit warning will sound if the shift lever is in a position other than P and the power source is in a mode other than off.
- An exit warning will sound if the shift lever is in the P position and the power source is in a mode other than off.

(2) Doors other than the driver door open → closed
- A warning will sound to indicate that the electrical key has been taken out of the vehicle.

These warnings will sound because it is not possible for the vehicle to determine if the key is present in the vehicle (due to the depleted key battery). These warnings do not indicate system malfunctions.

STARTER

COMPONENTS

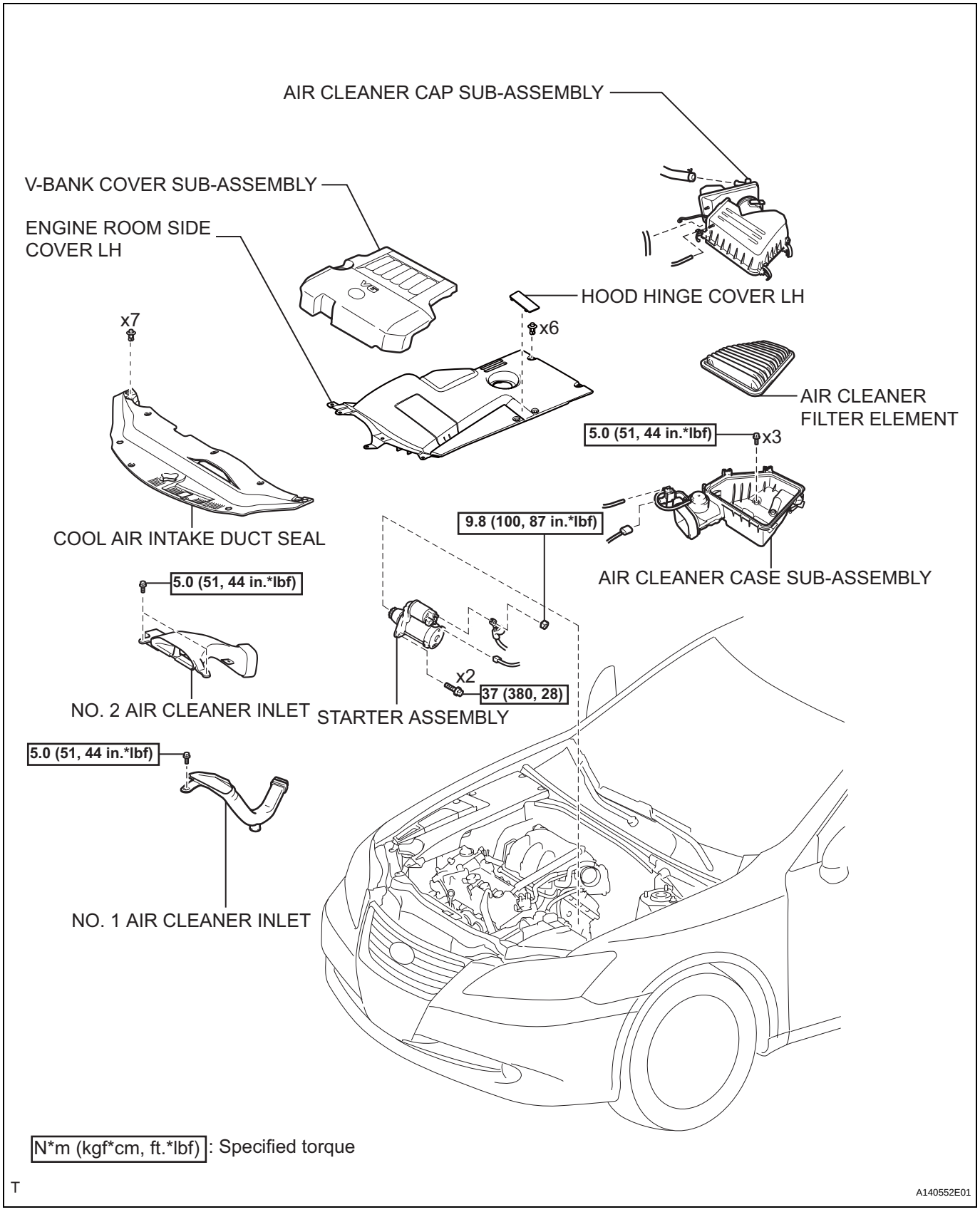

ST

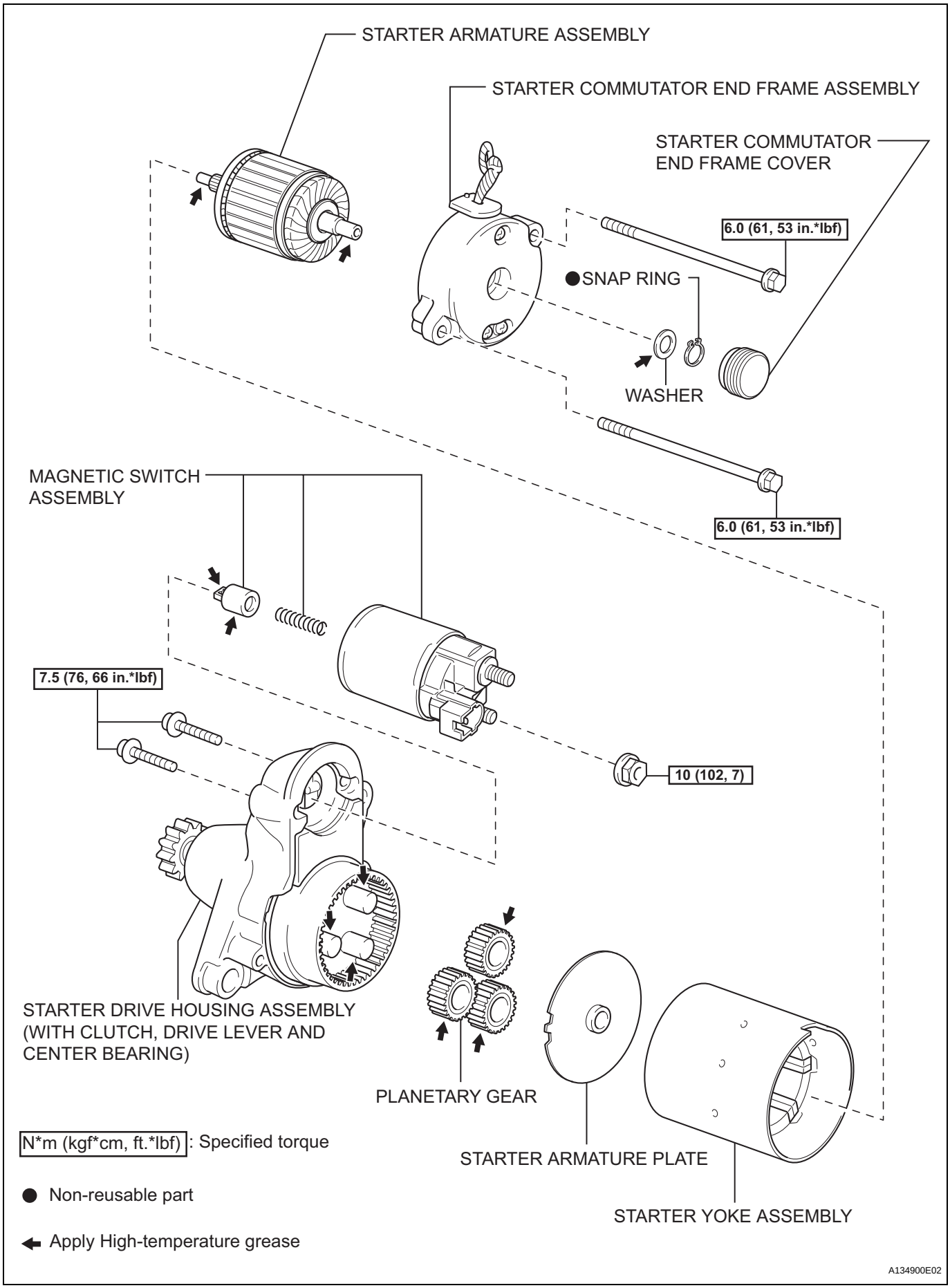
STARTER ARMATURE ASSEMBLY
STARTER COMMUTATOR END FRAME ASSEMBLY
STARTER COMMUTATOR END FRAME COVER
6.0 (61, 53 in.*lbf)
●SNAP RING
WASHER
6.0 (61, 53 in.*lbf)
MAGNETIC SWITCH ASSEMBLY
7.5 (76, 66 in.*lbf)
10 (102, 7)
STARTER DRIVE HOUSING ASSEMBLY (WITH CLUTCH, DRIVE LEVER AND CENTER BEARING)
PLANETARY GEAR
STARTER ARMATURE PLATE
STARTER YOKE ASSEMBLY
N*m (kgf*cm, ft.*lbf) : Specified torque
● Non-reusable part
Apply High-temperature grease
A134900E02

ST

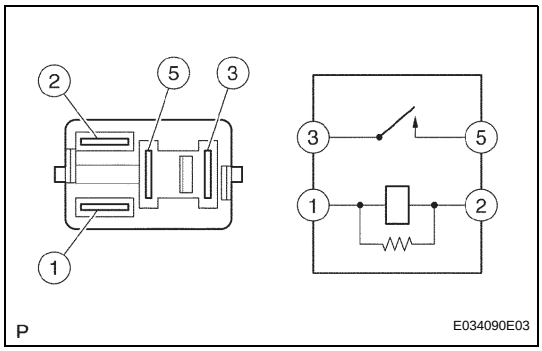

STARTER RELAY

ON-VEHICLE INSPECTION

1. INSPECT STARTER RELAY ASSEMBLY

(a) Using an ohmmeter, measure the resistance between each terminal.

Standard resistance

Tester Connection	Specified Condition
3 - 5	10 kΩ or higher
	Below 1 Ω (when battery voltage is applied to terminals 1 and 2)

If the result is not as specified, replace the starter relay assembly.

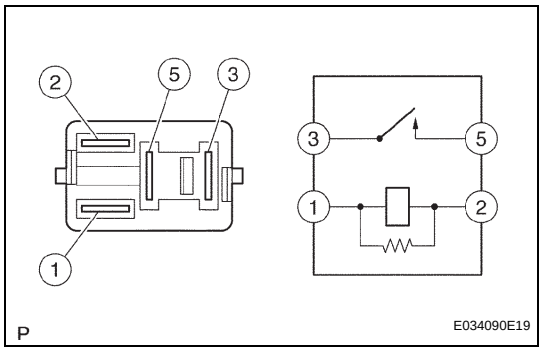

STARTER CUT RELAY

ON-VEHICLE INSPECTION

1. INSPECT STARTER CUT RELAY

(a) Using an ohmmeter, measure the resistance between each terminal.

Standard resistance

Tester Connection	Specified Condition
3 - 5	10 kΩ or higher
	Below 1 Ω (when battery voltage is applied to terminals 1 and 2)

If the result is not as specified, replace the starter cut relay.

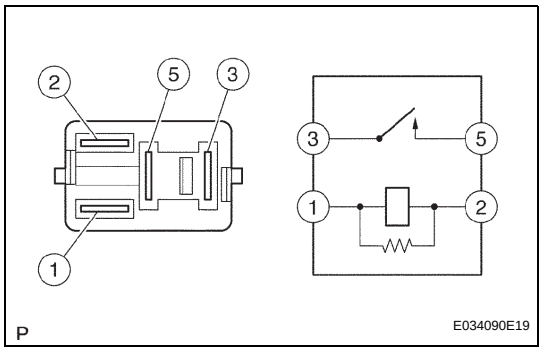

IGNITION RELAY

ON-VEHICLE INSPECTION

1. INSPECT NO. 2 IGNITION RELAY

(a) Using an ohmmeter, measure the resistance between each terminal.

Standard resistance

Tester Connection	Specified Condition
3 - 5	10 kΩ or higher
	Below 1 Ω (Apply battery voltage between terminals 1 and 2)

If the result is not as specified, replace the No. 2 ignition relay.

ENGINE SWITCH

COMPONENTS

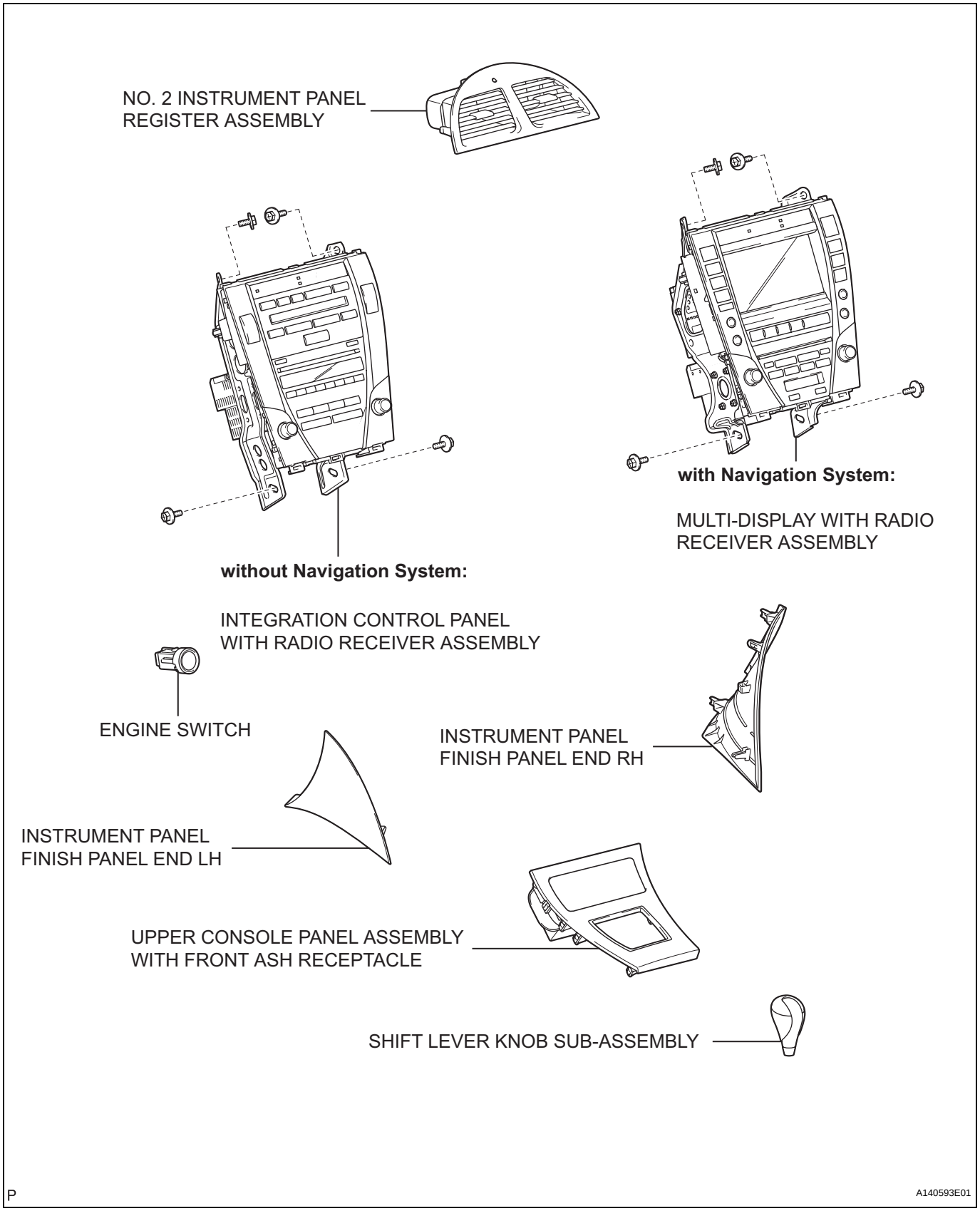

ST

REMOVAL

1. **REMOVE SHIFT LEVER KNOB SUB-ASSEMBLY (See page IP-16)**
2. **REMOVE UPPER CONSOLE PANEL ASSEMBLY WITH FRONT ASH RECEPTACLE (See page IP-16)**
3. **REMOVE INSTRUMENT PANEL FINISH PANEL END LH (See page IP-13)**
4. **REMOVE INSTRUMENT PANEL FINISH PANEL END RH (See page IP-15)**
5. **REMOVE NO. 2 INSTRUMENT PANEL REGISTER ASSEMBLY (See page IP-17)**
6. **REMOVE INTEGRATION CONTROL PANEL WITH RADIO RECEIVER ASSEMBLY (w/o Navigation System) (See page AV-168)**
7. **REMOVE MULTI-DISPLAY WITH RADIO RECEIVER ASSEMBLY (w/ Navigation System) (See page AV-170)**
8. **REMOVE ENGINE SWITCH**
   (a) Disconnect the switch connector.
   (b) Detach the 2 claws and remove the switch.

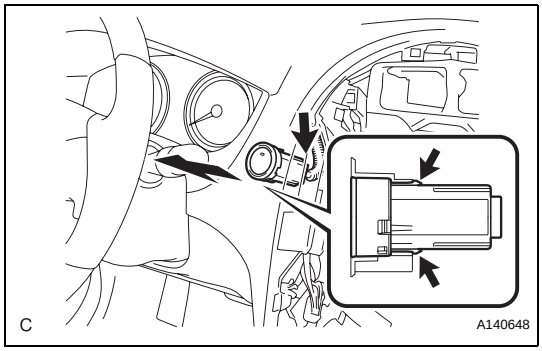

CHARGING SYSTEM

PRECAUTION

1. **Check that the battery cables are connected to the correct terminals.**
2. **Disconnect the battery cables when the battery is given a quick charge.**
3. **Do not perform tests with a high voltage insulation resistance tester.**
4. **Never disconnect the battery while the engine is running.**
5. **Check that the charging cable nut is tightened on terminal B of the generator and the engine room R/B.**

PARTS LOCATION

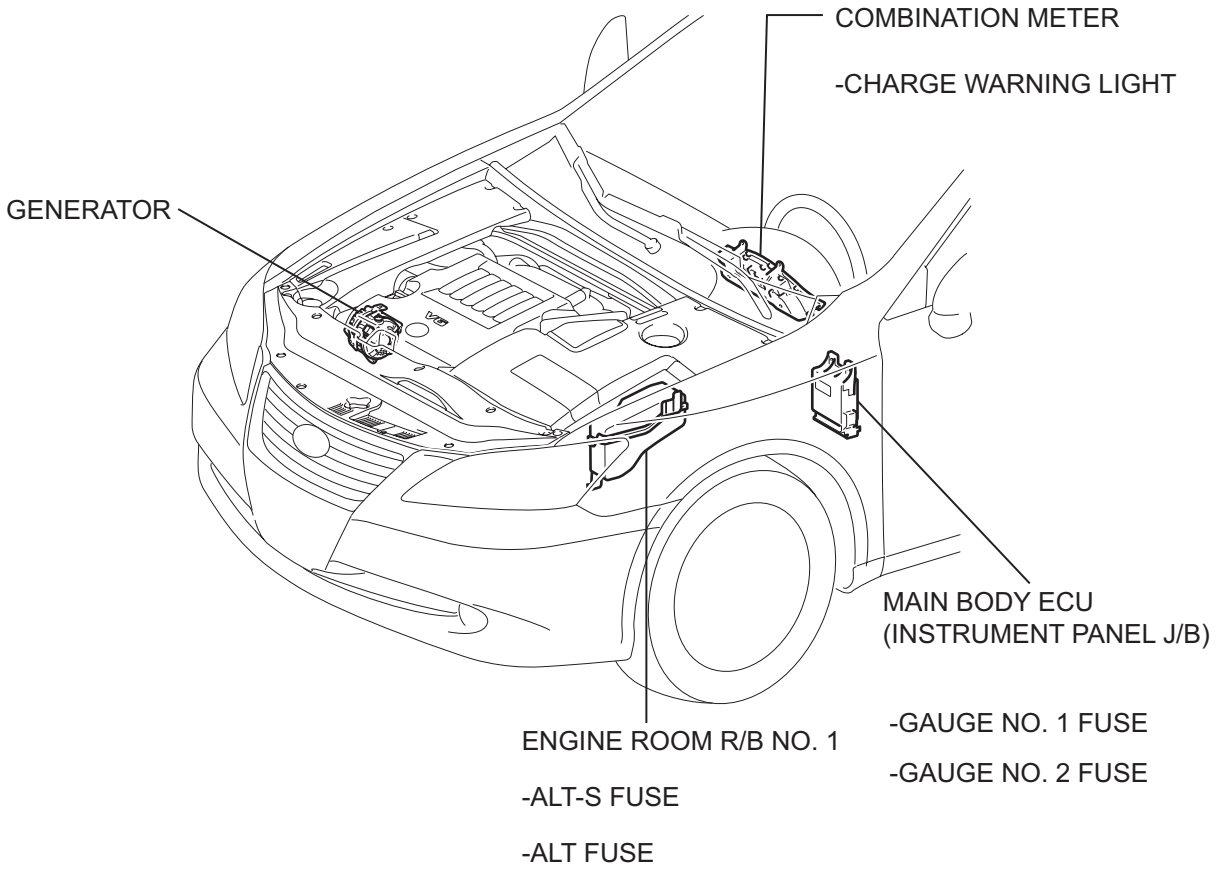

T

A141618E01

GENERATOR

COMPONENTS

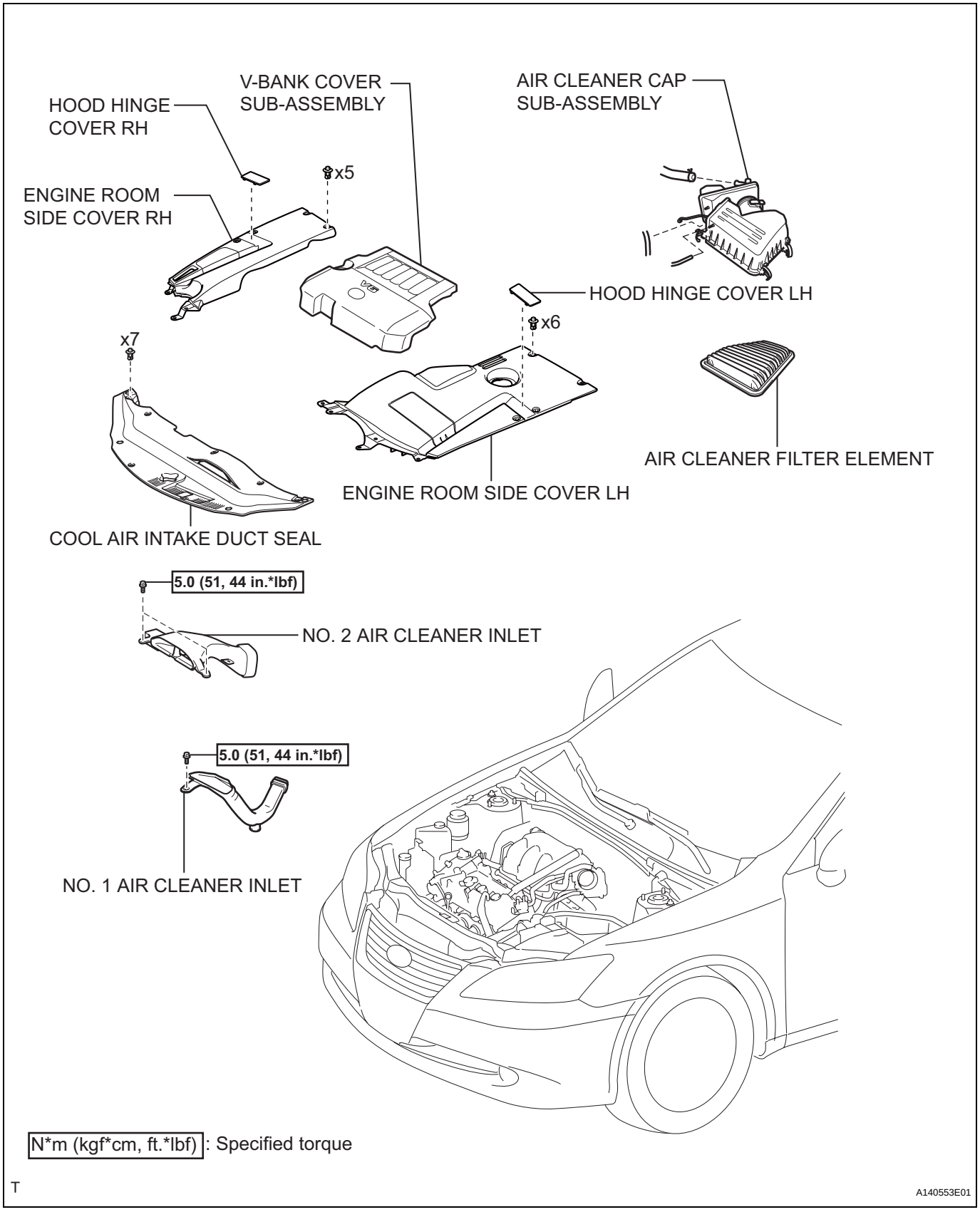

N*m (kgf*cm, ft.*lbf) : Specified torque

T

A140553E01

CH

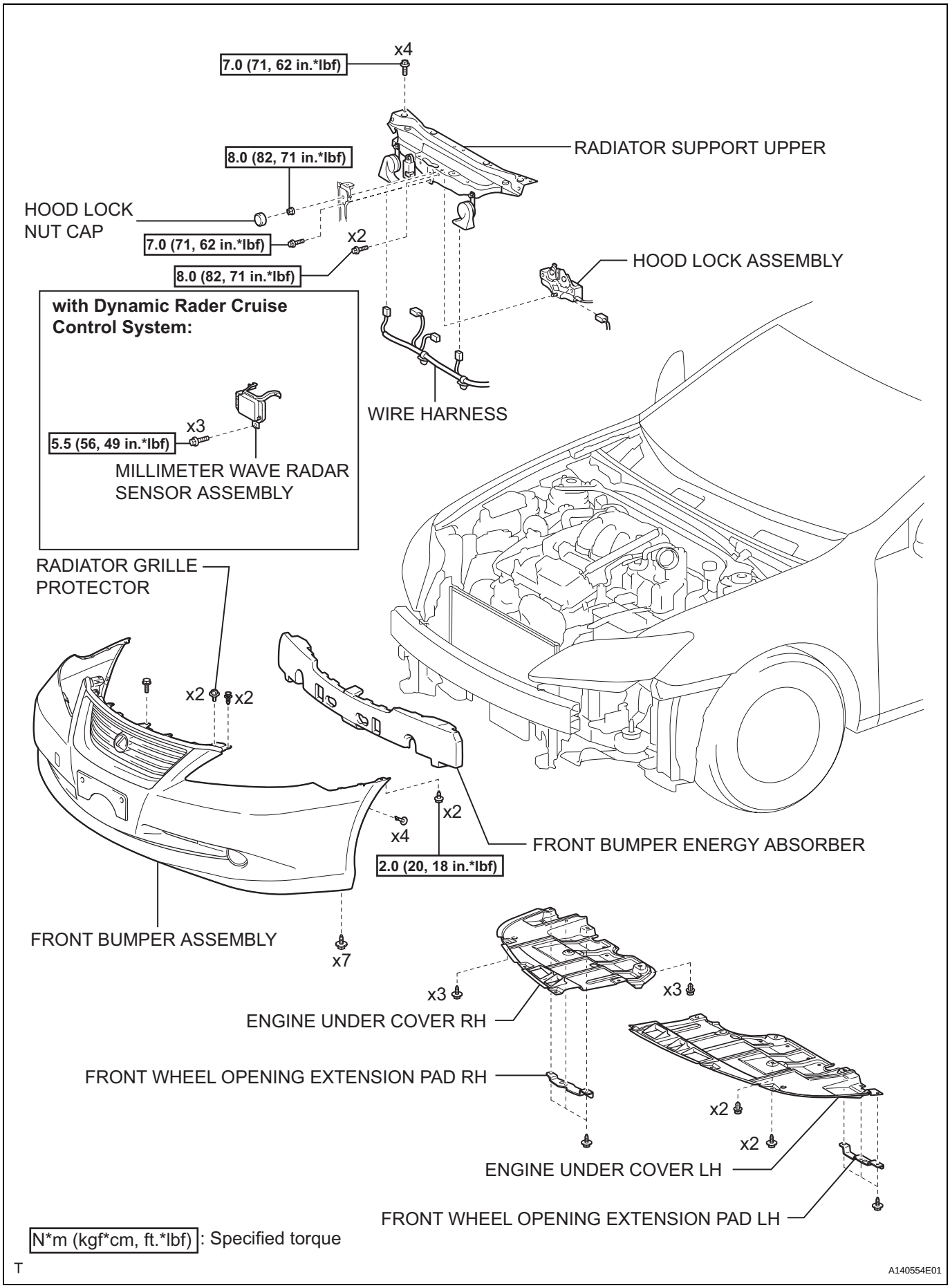
7.0 (71, 62 in.*lbf)
x4
RADIATOR SUPPORT UPPER
8.0 (82, 71 in.*lbf)
HOOD LOCK NUT CAP
7.0 (71, 62 in.*lbf)
x2
8.0 (82, 71 in.*lbf)
HOOD LOCK ASSEMBLY
with Dynamic Rader Cruise Control System:
x3
5.5 (56, 49 in.*lbf)
MILLIMETER WAVE RADAR SENSOR ASSEMBLY
WIRE HARNESS
RADIATOR GRILLE PROTECTOR
x2
x2
x2
x4
2.0 (20, 18 in.*lbf)
FRONT BUMPER ENERGY ABSORBER
FRONT BUMPER ASSEMBLY
x7
x3
x3
ENGINE UNDER COVER RH
FRONT WHEEL OPENING EXTENSION PAD RH
x2
x2
ENGINE UNDER COVER LH
FRONT WHEEL OPENING EXTENSION PAD LH
N*m (kgf*cm, ft.*lbf) : Specified torque
T
A140554E01

CH

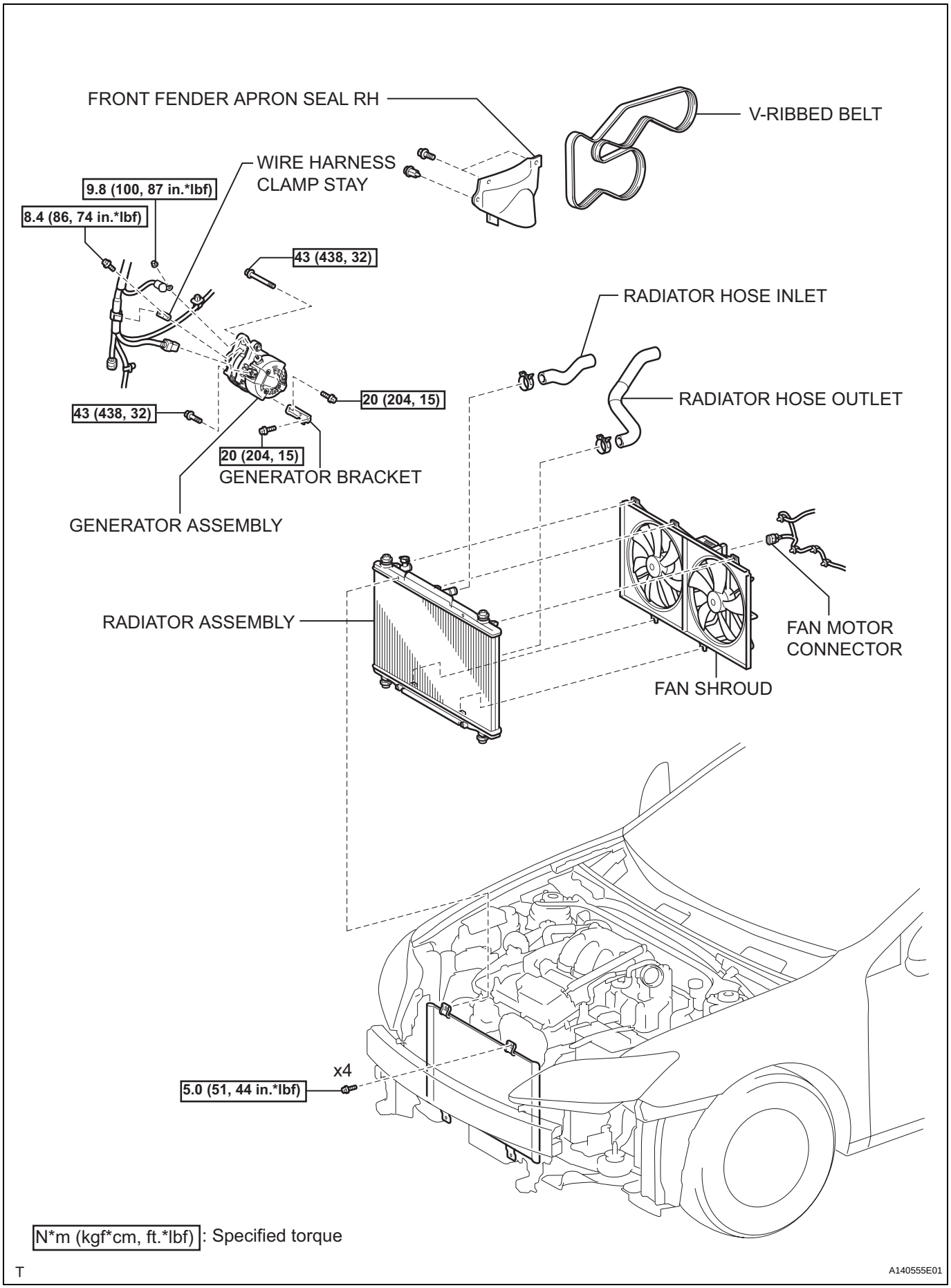
FRONT FENDER APRON SEAL RH
V-RIBBED BELT
WIRE HARNESS CLAMP STAY
9.8 (100, 87 in.*lbf)
8.4 (86, 74 in.*lbf)
43 (438, 32)
RADIATOR HOSE INLET
RADIATOR HOSE OUTLET
20 (204, 15)
43 (438, 32)
20 (204, 15)
GENERATOR BRACKET
GENERATOR ASSEMBLY
RADIATOR ASSEMBLY
FAN MOTOR CONNECTOR
FAN SHROUD
x4
5.0 (51, 44 in.*lbf)
N*m (kgf*cm, ft.*lbf) : Specified torque
T
A140555E01

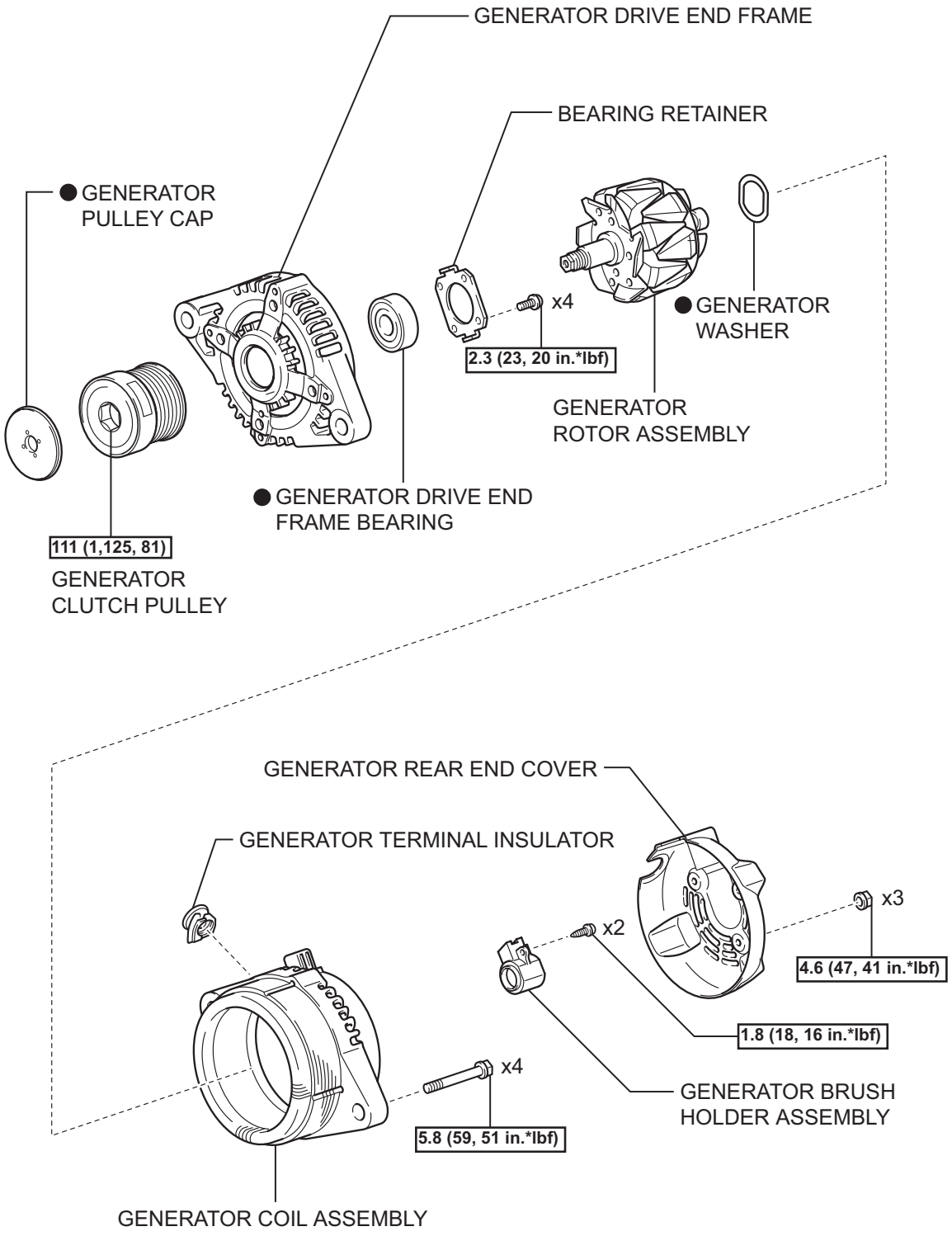

N*m (kgf*cm, ft.*lbf) : Specified torque

● Non-reusable part

T

A135482E01

CH

AUTOMATIC TRANSAXLE SYSTEM

PRECAUTION

NOTICE:

- **Some systems need to be initialized after reconnecting the negative (-) battery terminal (See page IN-33).**
- **If the automatic transaxle parts are replaced, perform the following as necessary referring to the table below:**
  - **Registration of the transaxle compensation code (See page AX-18).**
  - **Initialization of the transaxle compensation code (See page AX-24).**
  - **Road test (See page AX-24).**
  - **Reset of the MEMORY (learned values) (See page AX-24).**

Replaced Parts		Transaxle Compensation Code	Road Test	MEMORY (Learned Values)
Automatic Transaxle Assembly		Input	-	Reset
Valve Body Assembly		Initialize	Necessary	Reset
Shift Solenoid Valve SL1 and/or SL2		-	Necessary	-
Shift Solenoid Valve SL3 and/or SL4		Initialize	Necessary	Reset
TCM (If possible, read the transaxle compensation code from the previous TCM)	Possible	Input (Into the new TCM)	-	-
	Impossible	-	Necessary	-

1. **The automatic transaxle is composed of highly precision-finished parts which need careful inspection before reassembly. Even a small nick could cause fluid leakage or affect transmission performance. The instructions here are organized so that you work on only one component group at a time. This will help avoid confusion caused by similar-looking parts of different sub-assemblies being on your workbench at the same time. The component groups are inspected and repaired from the converter housing side. Complete as much of the inspection, repair and reassembly as possible before proceeding to the next component group. If a defect is found in a certain component group during reassembly, inspect and repair this group immediately. If a component group cannot be assembled because some parts are being ordered, be sure to keep all parts of the group in a separate container while proceeding with disassembly, inspection, repair and reassembly of other component groups. Recommended: ATF WS**
2. **All disassembled parts should be washed clean and any fluid passages and holes should be blown through with compressed air.**

3. **Dry all parts with compressed air. Never use a shop rag or a piece of cloth to dry them.**
4. **When using compressed air, always aim away from yourself to prevent accidentally spraying ATF or kerosene in your face.**
5. **Only recommended automatic transmission fluid or kerosene should be used for cleaning.**
6. **After cleaning, the parts should be arranged in the correct order for efficient inspection, repair, and reassembly.**
7. **When disassembling a valve body, be sure to match each valve together with its corresponding spring.**
8. **New discs for the brakes and clutches must be soaked in ATF for at least 15 minutes before reassembly.**
9. **All oil seal rings, clutch discs, clutch plates, rotating parts, and sliding surfaces should be coated with ATF prior to reassembly.**
10. **All gaskets, seals, and rubber O-rings should be replaced with new ones.**
11. **Do not apply adhesive cements to gaskets and similar parts.**
12. **Make sure that the ends of a snap ring are not aligned with one of the cutouts and that the snap ring is installed in the groove correctly.**
13. **When replacing a worn bushing, the sub-assembly containing the bushing must also be replaced.**
14. **Check thrust bearings and races for wear or damage. If they are damaged, replace them.**
15. **When working with FIPG material, you must observe the following:**
    - **Using a razor blade and a gasket scraper, remove all the old packing (FIPG) material from the gasket surface.**
    - **Thoroughly clean all components to remove any loose material.**
    - **Clean both sealing surfaces with a non-residue solvent.**
    - **Parts must be reassembled within 10 minutes of application. Otherwise, the packing (FIPG) material must be removed and reapplied.**

AUTOMATIC TRANSAXLE FLUID

ADJUSTMENT

1. BEFORE FILLING TRANSAXLE WITH FLUID

- This transaxle requires Genuine ATF WS transmission fluid.
- After servicing the transaxle, you must refill the transaxle with the correct amount of fluid.
- Maintain the vehicle in a horizontal position while adjusting fluid level.
- Proceed to step 2 if the oil pan, valve body, drive shaft, and/or torque converter has been removed or if the oil seal has been replaced.
- Proceed to step 3 if oil leakage has been repaired or if the oil cooler and cooler hose have been removed.

2. FILL TRANSAXLE PAN WITH FLUID

(a) Remove the engine under cover LH.
(b) Remove the engine under cover RH.
(c) Remove the under front fender apron seal LH.
(d) Remove the refill plug and overflow plug.

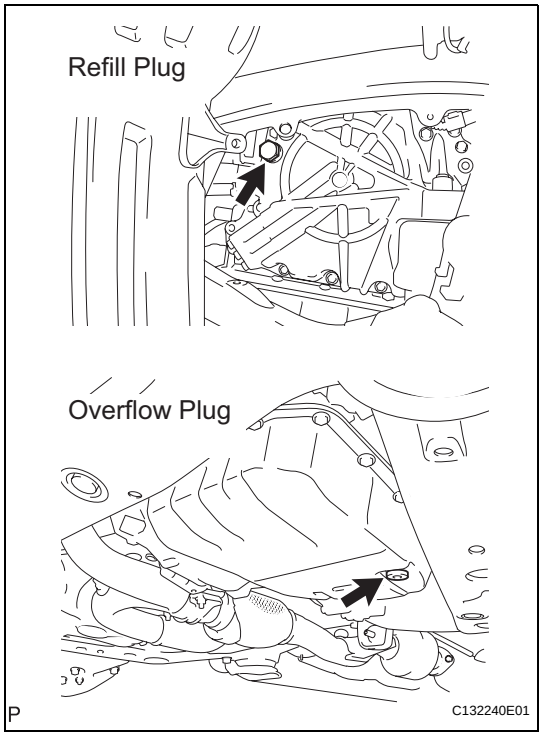

AX

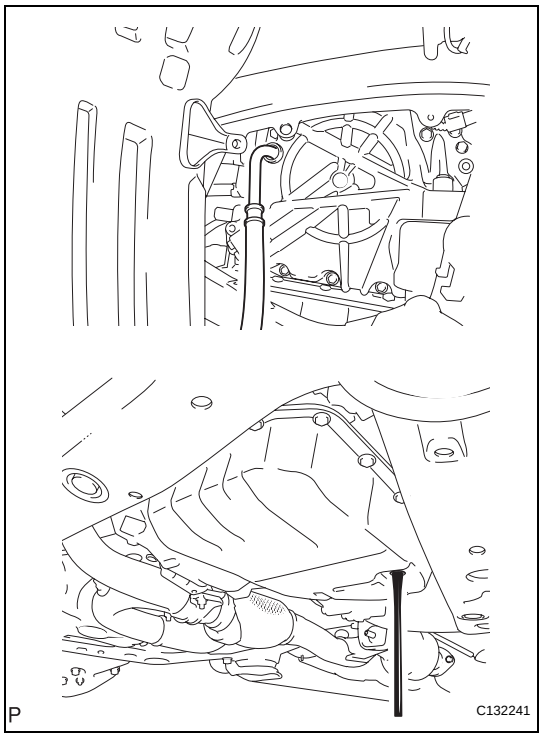

(e) Fill the transaxle through the refill hole until fluid begins to trickle out of the overflow tube.

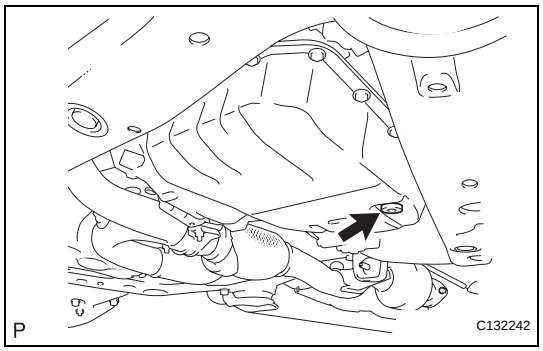

(f) Temporarily install the overflow plug.

3. FILL TRANSAXLE WITH FLUID

(a) Fill the transaxle with the correct amount of fluid as listed in the table below.

Standard capacity

Performed Repair	Fill Amount
Replacement of transaxle (a new torque converter is used)	5.3 liters (5.6 US qts, 4.7 Imp. qts)
Replacement of transaxle (the torque converter is reused)	3.4 liters (3.6 US qts, 3.0 Imp. qts)
Removal & installation of oil pan (including oil drain) Removal & installation of drive shaft	2.8 liters (3.0 US qts, 2.5 Imp. qts)
Removal & installation of valve body	3.2 liters (3.4 US qts, 2.8 Imp. qts)
Removal & installation of torque converter	4.8 liters (5.1 US qts, 4.2 Imp. qts)
Repair of oil leakage and removal of oil cooler and cooler hose	0.5 liters (0.5 US qts, 0.4 Imp. qts)

HINT:
If you cannot add the listed amount of fluid, do the following:
(1) Temporarily install the refill plug.
(2) Allow the engine to idle with the air conditioning OFF.
(3) Move the shift lever through entire gear range to circulate fluid.
(4) Move the shift lever to the P position.
(5) Wait for 30 seconds with the engine idling.
(6) Stop the engine.
(7) Remove the refill plug and add fluid.
(8) Reinstall the refill plug.

(b) Temporarily install the refill plug to avoid fluid splash.

4. CIRCULATE AUTOMATIC TRANSAXLE FLUID

(a) Allow the engine to idle with the air conditioning OFF.

(b) Move the shift lever through entire gear range to circulate the fluid.

5. CHECK FLUID TEMPERATURE

NOTICE:

The fluid temperature should be less than 40°C (104°F) before beginning the fluid temperature check.

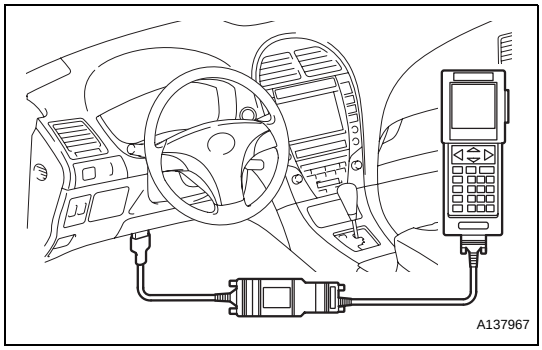

(a) With the intelligent tester:

(1) Connect the intelligent tester to the DLC3.

(2) Select the tester menus: OBD/MOBD, ENGINE, DATA LIST and A/T.

(3) Check A/T OIL TEMP.

(4) Allow the engine to idle until the fluid temperature reaches 39°C (102°F).

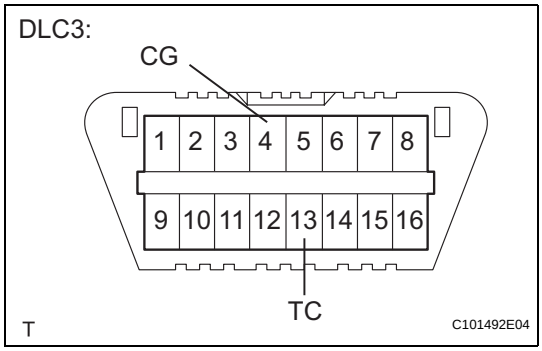

(b) Without the intelligent tester (Using D shift indicator):

(1) Connect terminals CG (4) and TC (13) of the DLC3 using SST.
SST 09843-18040

(2) Move the shift lever back and forth between N and D at 1.5 seconds interval for 6 seconds.

(3) The D shift indicator on the combination meter comes on for 2 seconds when the fluid temperature is within the appropriate temperature range.

(4) The D shift indicator will come on again when the fluid temperature reaches 40°C (104°F) and will blink when it exceeds 45°C (113°F).

(5) After confirming that the D shift indicator turns off, move the shift lever to the P position and remove the SST from terminals CG and TC.

6. CHECK TRANSAXLE FLUID LEVEL

NOTICE:

The fluid temperature must be between 40°C (104°F) and 45°C (113°F) to accurately check the fluid level.

(a) Remove the overflow plug with the engine idling.

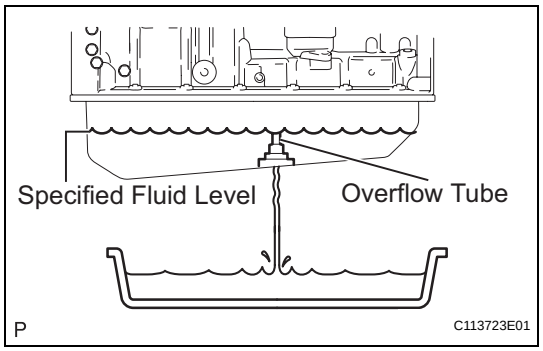

(b) Check that the fluid comes out of the overflow tube.
If fluid does not come out, proceed to step 7.
If fluid comes out, wait until the overflow slows to a trickle and proceed to step 8.

7. ADD FLUID

(a) Install the overflow plug.
(b) Remove the refill plug.
(c) Add fluid until it comes out of the overflow plug.
(d) Wait until the overflow slows to a trickle.
(e) Install the overflow plug with a new gasket.
(f) Install the refill plug with a new gasket.
(g) Stop the engine.

8. AFTER FILLING TRANSMISSION

(a) Install the overflow plug with a new gasket.
Torque: 40 N*m (408 kgf*cm, 30 ft.*lbf)
(b) Install the refill plug with a new gasket.
Torque: 49 N*m (500 kgf*cm, 36 ft.*lbf)
(c) Stop the engine.

ATF TEMPERATURE SENSOR

COMPONENTS

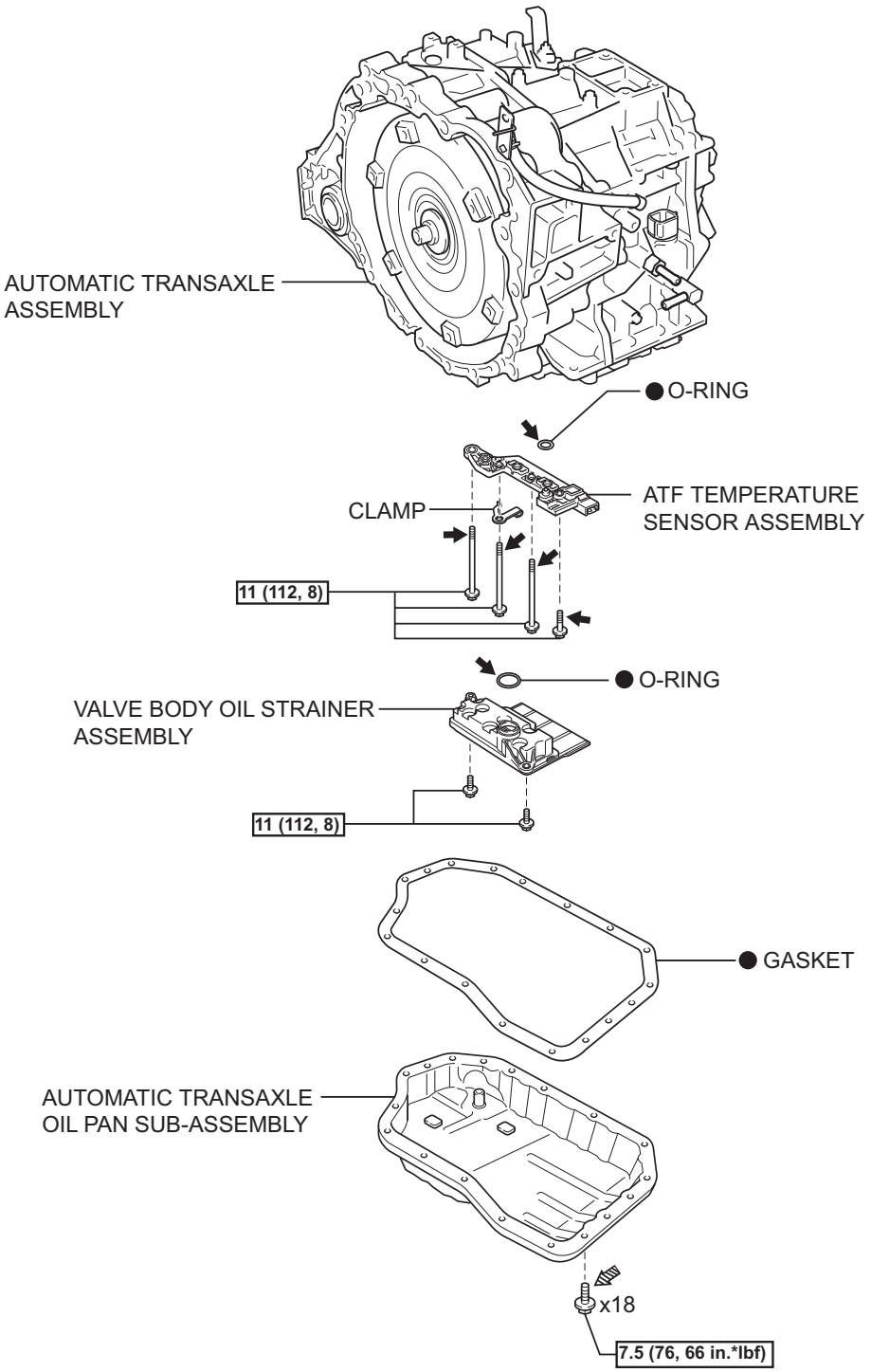

N*m (kgf*cm, ft.*lbf) : Specified torque ● Non-reusable part ← Apply ATF WS Precoated part

C

C138308E01

AX

REMOVAL

1. **REMOVE AUTOMATIC TRANSAXLE ASSEMBLY**
   HINT:
   (See page AX-215)

2. **REMOVE AUTOMATIC TRANSAXLE OIL PAN SUB-ASSEMBLY (See page AX-192)**

3. **REMOVE VALVE BODY OIL STRAINER ASSEMBLY (See page AX-192)**

4. **REMOVE ATF TEMPERATURE SENSOR ASSEMBLY**
   (a) Disconnect the connector.
   (b) Remove the 4 bolts, ATF temperature sensor assembly and clamp from the valve body.

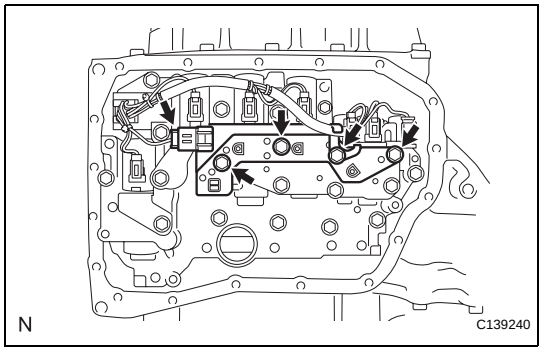

   (c) Remove the O-ring from the ATF temperature sensor assembly.

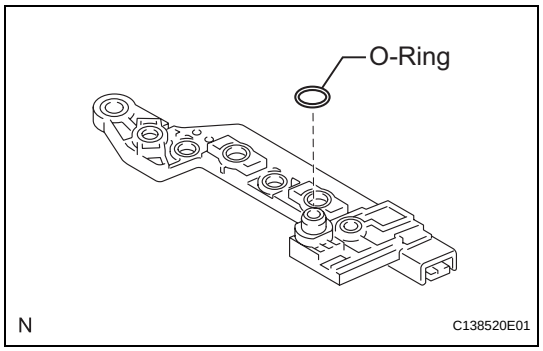

INSPECTION

1. **INSPECT ATF TEMPERATURE SENSOR ASSEMBLY**
   (a) Measure the resistance according to the value(s) in the table below.
   Standard resistance

Tester Connection	Specified Condition
E2 - THO1	90 Ω to 156 kΩ
E2 - Body ground	10 kΩ or higher
THO1 - Body ground	10 kΩ or higher

   HINT:
   If the resistance is out of the specified range with the ATF temperature shown in the table below, the driveability of the vehicle may decrease.
   Standard resistance

ATF Temperature	Specified Condition
10°C (50°F)	5.8 to 7.1 kΩ
110°C (230°F)	0.22 to 0.28 kΩ

   If the result is not specified, replace the ATF temperature sensor assembly.

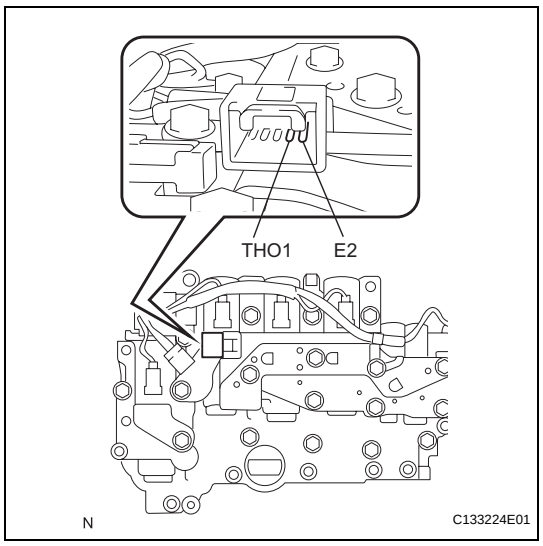

AX

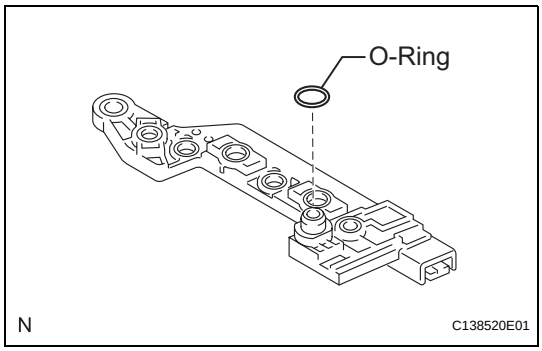

INSTALLATION

1. INSTALL ATF TEMPERATURE SENSOR ASSEMBLY

(a) Coat a new O-ring with ATF and install it to the ATF temperature sensor assembly.

(b) Coat the 4 bolts with ATF.

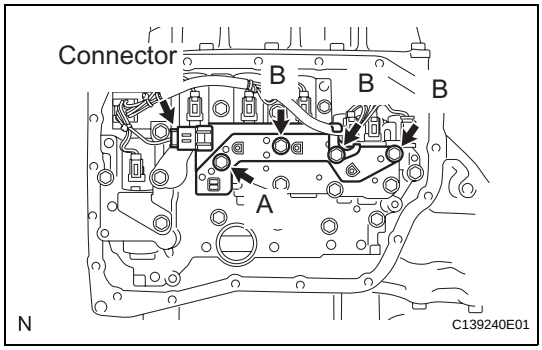

(c) Install the ATF temperature sensor assembly and clamp to the valve body with the 4 bolts.
Torque: 11 N*m (112 kgf*cm, 8 ft.*lbf)
Bolt length:
Bolt A:
25 mm (0.98 in.)
Bolt B:
85 mm (3.35 in.)

(d) Connect the connector.

2. INSTALL VALVE BODY OIL STRAINER ASSEMBLY (See page AX-194)

3. INSTALL AUTOMATIC TRANSAXLE OIL PAN SUB-ASSEMBLY (See page AX-195)

4. INSTALL AUTOMATIC TRANSAXLE ASSEMBLY

HINT:
(See page AX-222)

PARK / NEUTRAL POSITION SWITCH

COMPONENTS

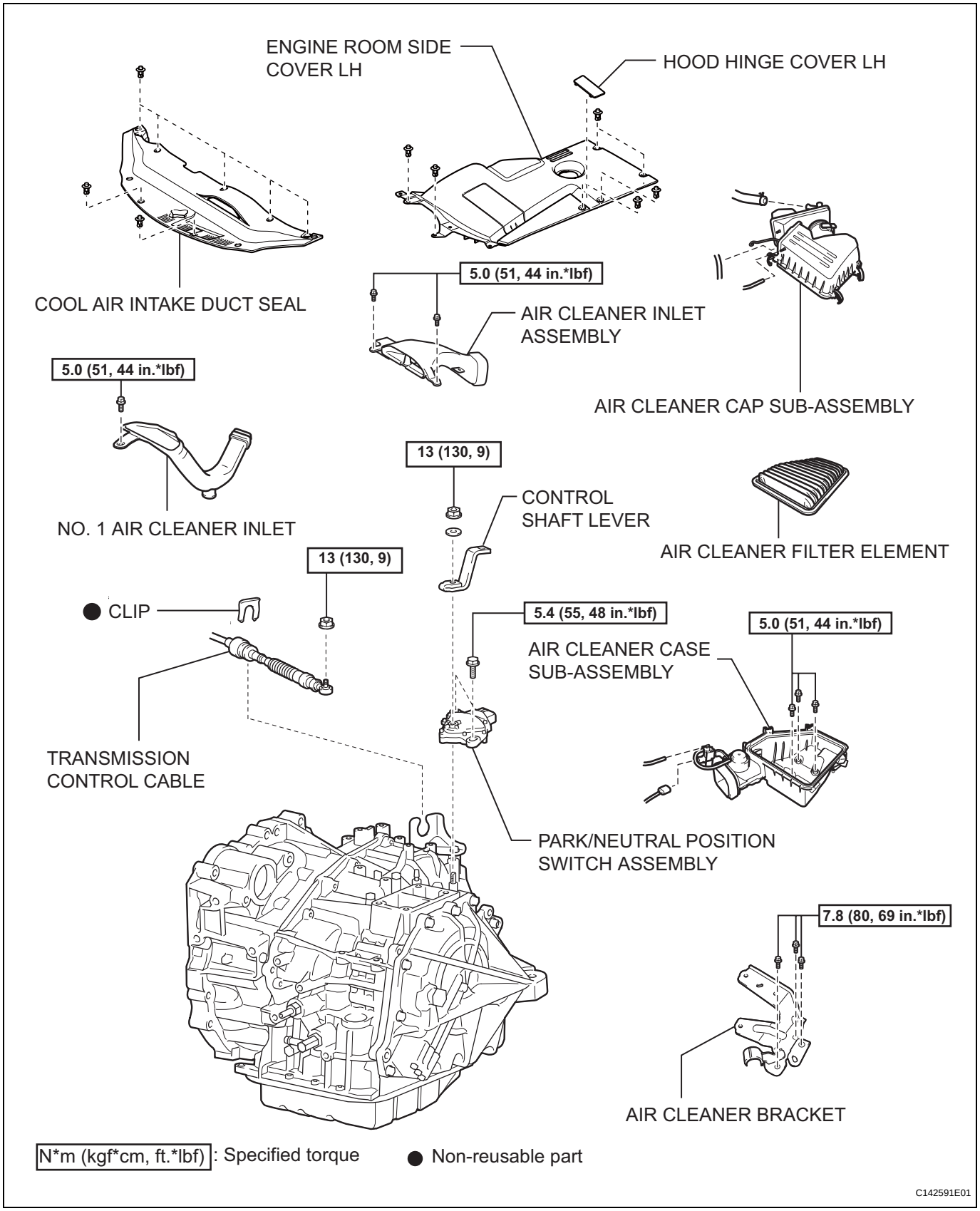

AX

ON-VEHICLE INSPECTION

1. INSPECT PARK/NEUTRAL POSITION SWITCH ASSEMBLY OPERATION

(a) Apply the parking brake.

(b) Turn the engine switch on (IG).

(c) Depress the brake pedal and check that the engine starts when the shift lever is set in the N or P position, but does not start in other positions.

(d) Check that the back-up light comes on and the reverse warning buzzer sounds when the shift lever is set in the R position, but the light and buzzer do not operate in other positions. If a failure is found, check the park/neutral position switch for continuity.

TRANSMISSION WIRE

COMPONENTS

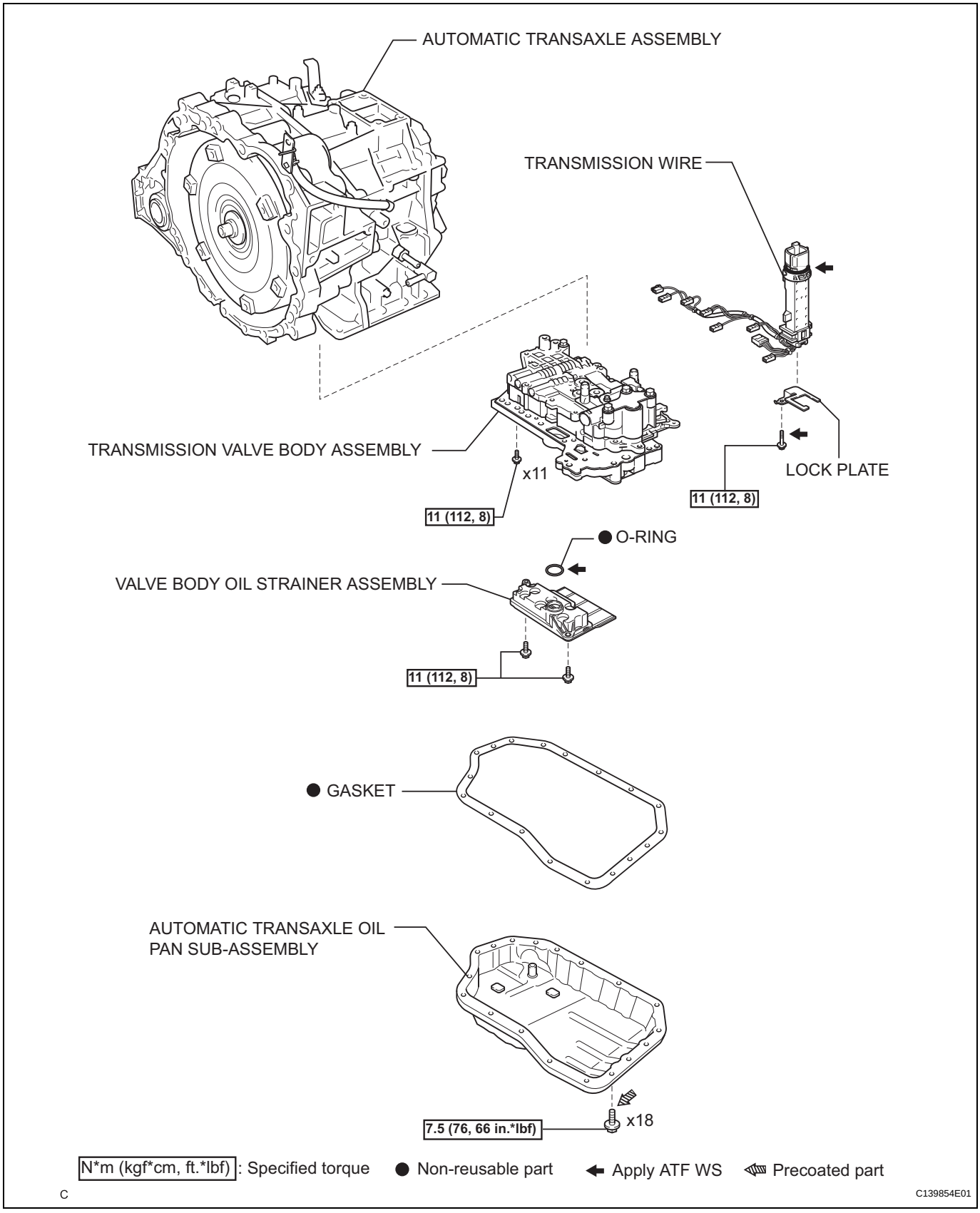

AX

REMOVAL

1. **REMOVE AUTOMATIC TRANSAXLE ASSEMBLY**
   HINT:
   (See page AX-215)
2. **REMOVE AUTOMATIC TRANSAXLE OIL PAN SUB-ASSEMBLY (See page AX-192)**
3. **REMOVE VALVE BODY OIL STRAINER ASSEMBLY (See page AX-192)**
4. **REMOVE TRANSMISSION VALVE BODY ASSEMBLY (See page AX-193)**
5. **REMOVE TRANSMISSION WIRE**
   (a) Disconnect the 9 connectors.
   (b) Remove the transmission wire from the clamp.

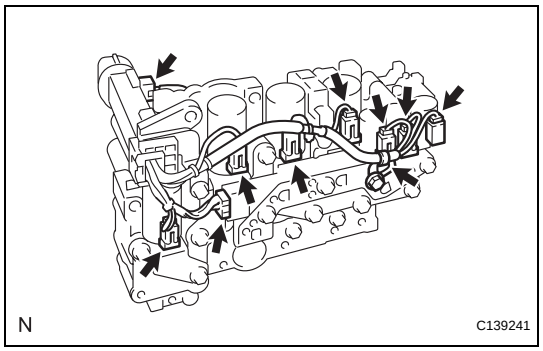

   (c) Remove the bolt, lock plate and transmission wire from the valve body.

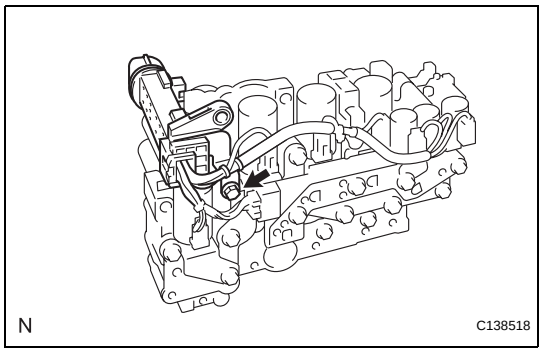

INSTALLATION

1. **INSTALL TRANSMISSION WIRE**
   (a) Coat the O-ring with ATF.
   (b) Coat the bolt with ATF.

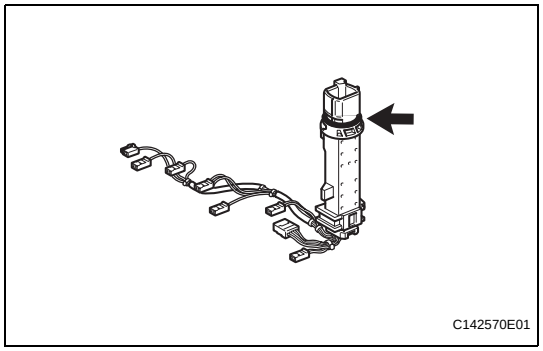

AX

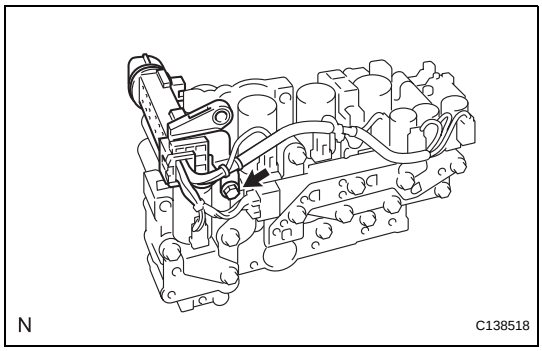

(c) Install the transmission wire and lock plate to the valve body with the bolt.
Torque: 11 N*m (112 kgf*cm, 8 ft.*lbf)

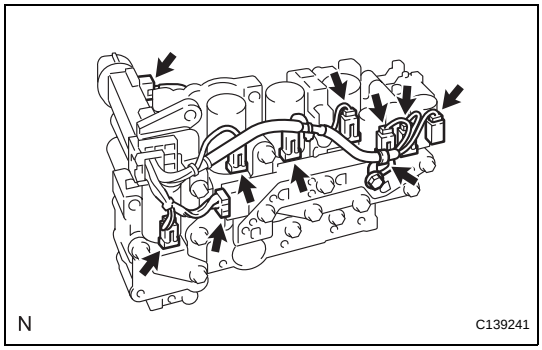

(d) Install the transmission wire to the clamp.
(e) Connect the 9 connectors.

2. INSTALL TRANSMISSION VALVE BODY ASSEMBLY (See page AX-193)

3. INSTALL VALVE BODY OIL STRAINER ASSEMBLY (See page AX-194)

4. INSTALL AUTOMATIC TRANSAXLE OIL PAN SUB-ASSEMBLY (See page AX-195)

5. INSTALL AUTOMATIC TRANSAXLE ASSEMBLY
HINT:
(See page AX-222)

VALVE BODY ASSEMBLY

COMPONENTS

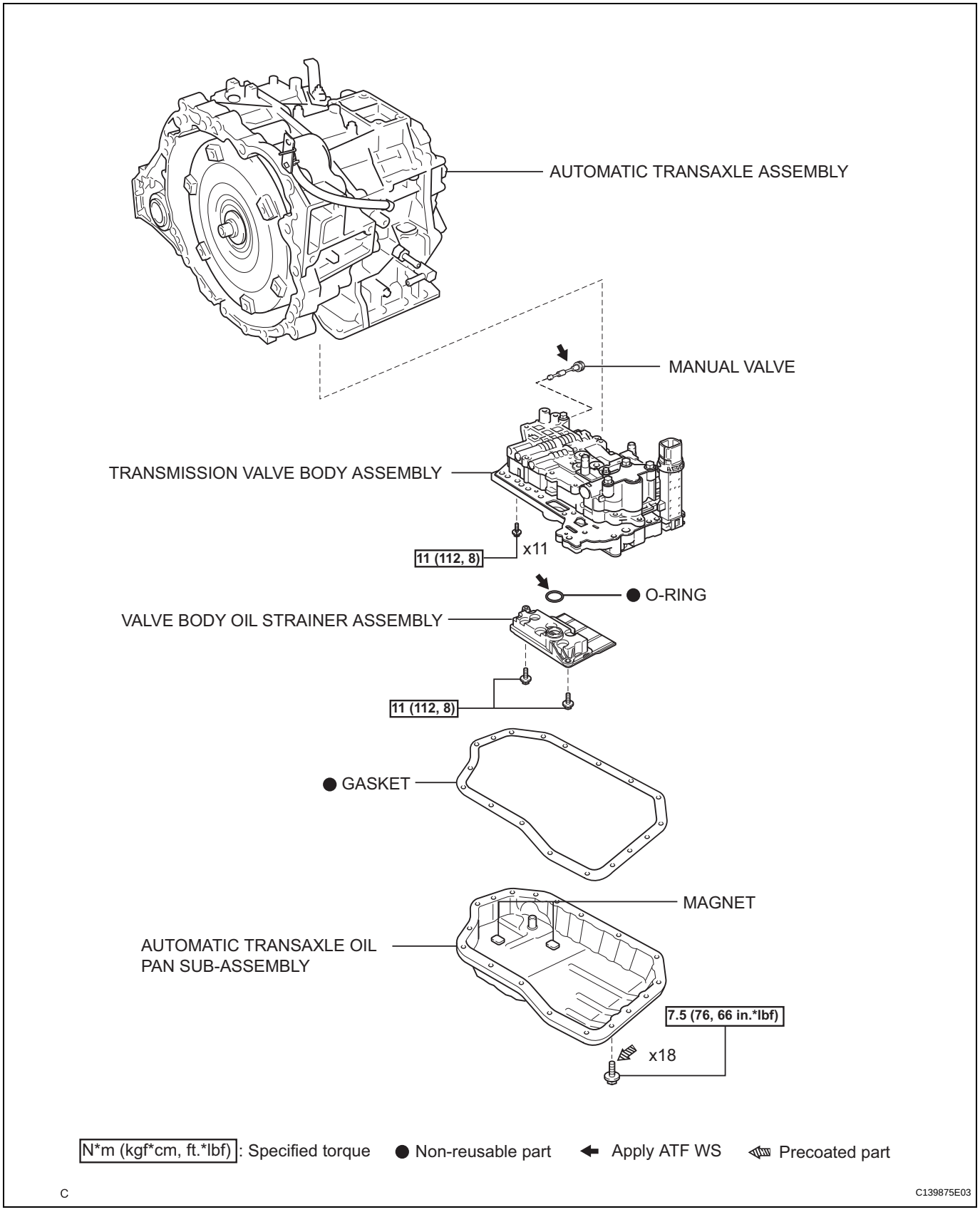

AX

REMOVAL

1. REMOVE AUTOMATIC TRANSAXLE ASSEMBLY

HINT:

(See page AX-215)

2. REMOVE AUTOMATIC TRANSAXLE OIL PAN SUB-ASSEMBLY

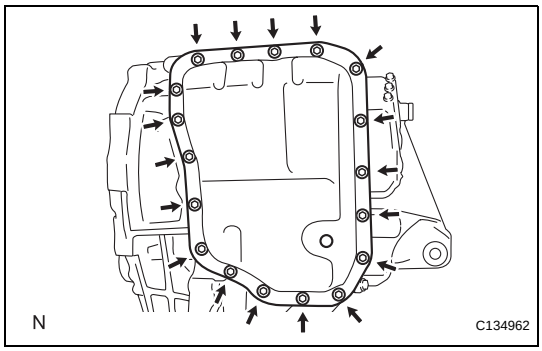

(a) Remove the 18 bolts and oil pan from the transaxle.

NOTICE:

Some fluid will remain in the oil pan. Remove all the pan bolts, and carefully remove the oil pan assembly.

(b) Remove the gasket from the oil pan.

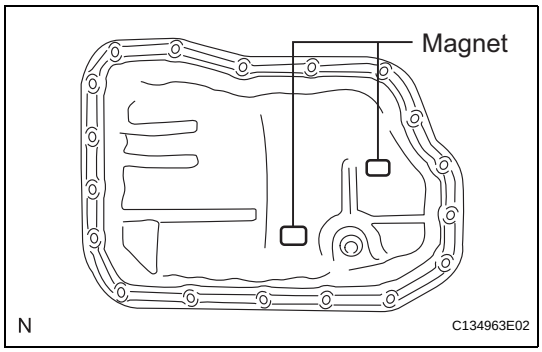

(c) Remove the 2 magnets from the oil pan.

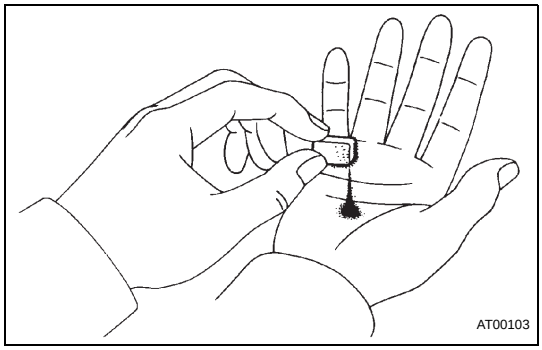

(d) Examine particles in the oil pan.

(1) Collect any steel chips with the removed magnets. Look carefully at the chips and particles in the oil pan and on the magnets to see the type of wear which might be found in the transaxle.

Result:

Steel (magnetic):

Bearing, gear and plate wear

Brass (non-magnetic):

Bearing wear

3. REMOVE VALVE BODY OIL STRAINER ASSEMBLY

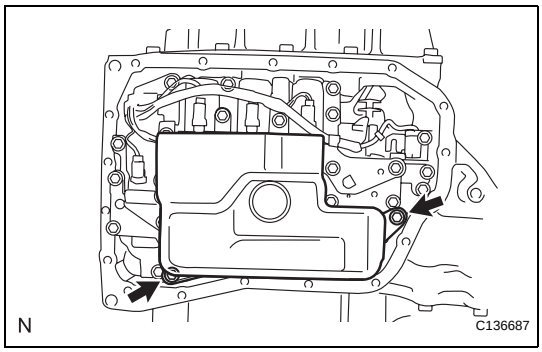

(a) Remove the 2 bolts and oil strainer from the valve body.

AX

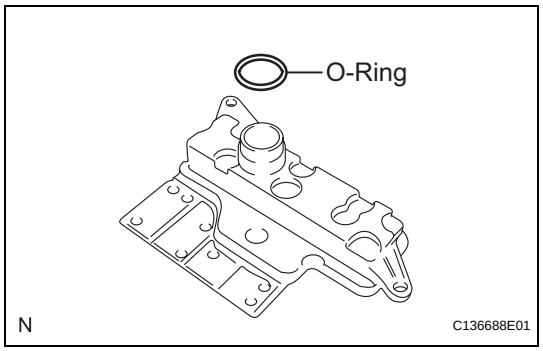

(b) Remove the O-ring from the oil strainer.

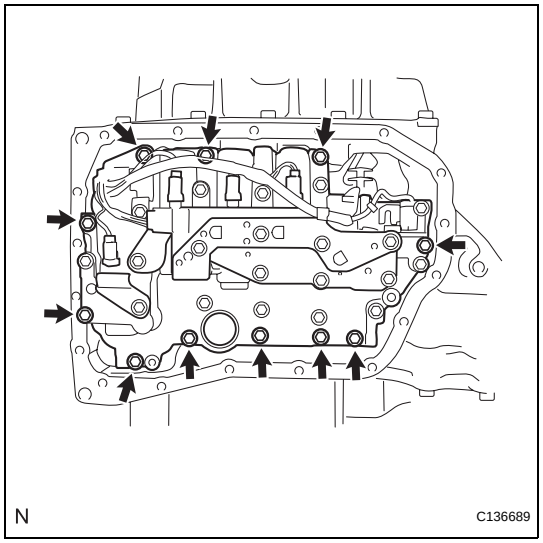

4. REMOVE TRANSMISSION VALVE BODY ASSEMBLY

(a) Remove the 11 bolts and valve body from the transaxle.

NOTICE:

When removing the transmission valve body assembly, be careful not to allow the transmission revolution sensor and the transaxle case to interfere with each other.

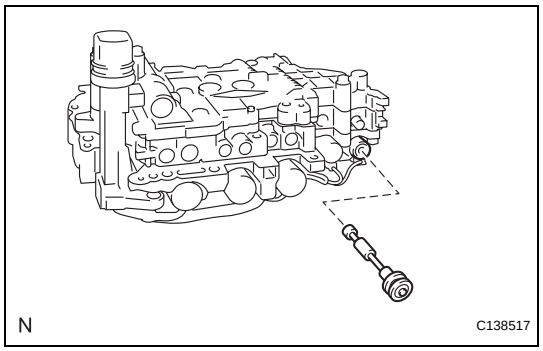

5. REMOVE MANUAL VALVE

(a) Remove the manual valve from the valve body.

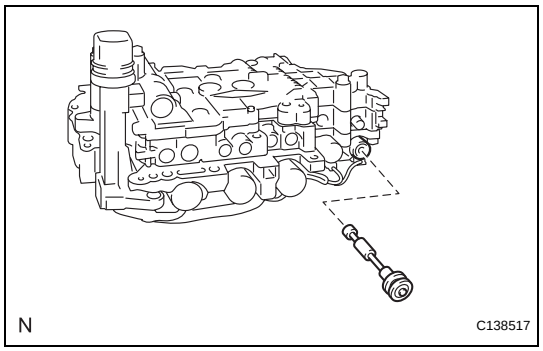

INSTALLATION

1. INSTALL MANUAL VALVE

(a) Coat the manual valve with ATF and install it to the valve body.

2. INSTALL TRANSMISSION VALVE BODY ASSEMBLY

(a) Coat the O-ring of the transmission wire with ATF.

AX

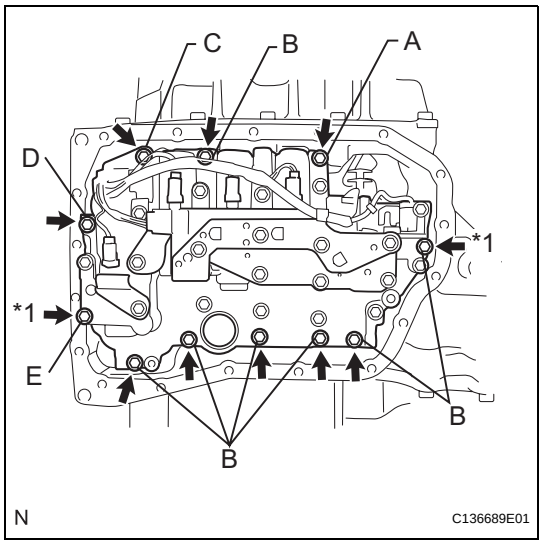

(b) Confirm that the manual valve lever is positioned as shown in the illustration and install the valve body assembly to the transaxle case with the 11 bolts.
Torque: 11 N*m (112 kgf*cm, 8 ft.*lbf)
Bolt length:
Bolt A:
25 mm (0.98 in.)
Bolt B:
30 mm (1.18 in.)
Bolt C:
35 mm (1.38 in.)
Bolt D:
45 mm (1.77 in.)
Bolt E:
55 mm (2.17 in.)
NOTICE:
- **When installing the transmission valve body assembly, be careful not to allow the transmission revolution sensor and transaxle case to interfere with each other.**
- **Be sure to insert the pin of the manual valve lever into the groove on the end of the manual valve.**
- **First, temporarily tighten the bolts marked by (*1) in the illustration because they are positioning bolts.**

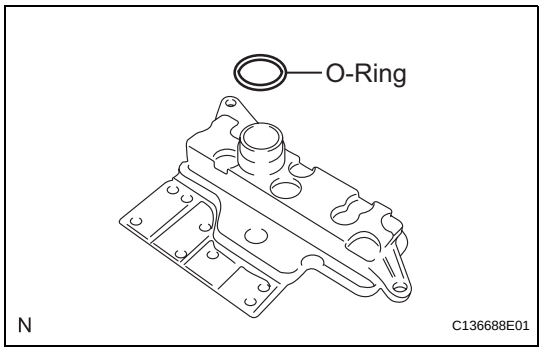

3. INSTALL VALVE BODY OIL STRAINER ASSEMBLY

(a) Coat a new O-ring with ATF and install it to the oil strainer.
NOTICE:
Ensure that the O-ring is not twisted or pinched.

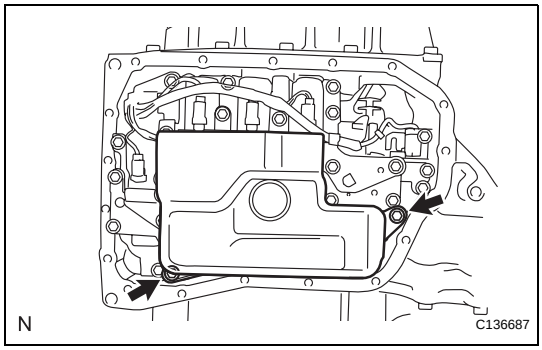

(b) Install the oil strainer to the valve body with the 2 bolts.
Torque: 11 N*m (112 kgf*cm, 8 ft.*lbf)

AX

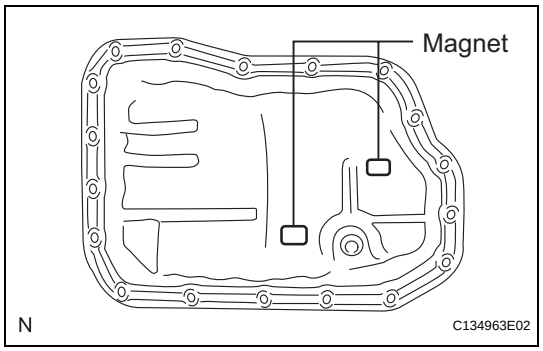

4. INSTALL AUTOMATIC TRANSAXLE OIL PAN SUB-ASSEMBLY

(a) Install the 2 magnets to the oil pan.

(b) Install a new gasket to the oil pan.

(c) Apply adhesive to the 18 bolts.

Adhesive:

Toyota Genuine Adhesive 1344, Three Bond 1344 or equivalent.

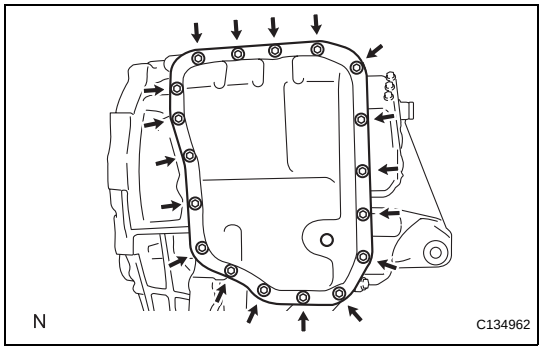

(d) Install the oil pan to the automatic transaxle with the 18 bolts.

Torque: 7.5 N*m (76 kgf*cm, 66 in.*lbf)

NOTICE:

- **In order to ensure proper sealing of the transmission oil pan bolts, apply sealant to the bolts and install them within 10 minutes of sealant application.**
- **Completely remove any oil or grease from the contact surface of the transaxle case and oil pan sub-assembly with the gasket before installation.**

5. INSTALL AUTOMATIC TRANSAXLE ASSEMBLY

HINT:

(See page AX-222)

SHIFT LOCK SYSTEM

ON-VEHICLE INSPECTION

1. CHECK SHIFT LOCK OPERATION

(a) Move the shift lever to the P position.
(b) Turn the engine switch off.
(c) Check that the shift lever cannot be moved to any position other than P.
(d) Turn the engine switch on (IG), depress the brake pedal and check that the shift lever can be moved to another position.
If operation cannot be done as specified, inspect the shift lock control unit.

2. CHECK SHIFT LOCK RELEASE BUTTON OPERATION

(a) Using a screwdriver, remove the shift lock release cover.
(b) When operating the shift lever with the shift lock release button pressed, check that the lever can be moved to any position other than P.
If operation cannot be done as specified, check the shift lever assembly installation condition.

3. INSPECT SHIFT LOCK CONTROL UNIT ASSEMBLY

(a) Measure the voltage according to the value(s) in the table below.
HINT:
Do not disconnect the shift lock control unit assembly connector.

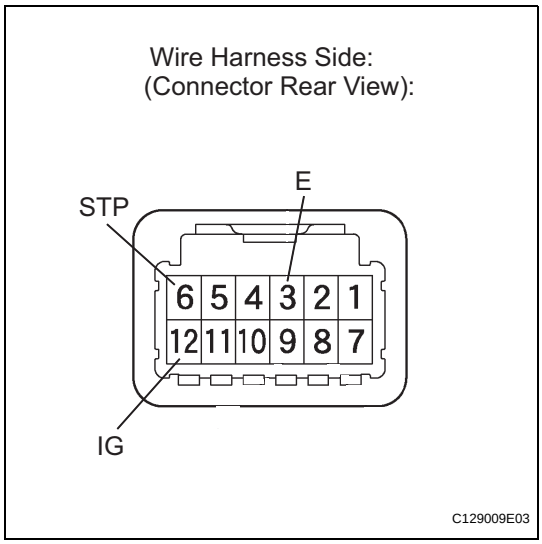

Standard voltage

Terminal	Measuring Condition	Voltage (V)
12 (IG) - 3 (E)	Engine switch on (IG)	10 to 14
12 (IG) - 3 (E)	Engine switch off	Below 1
6 (STP) - 3 (E)	Brake pedal depressed	10 to 14
6 (STP) - 3 (E)	Brake pedal released	Below 1

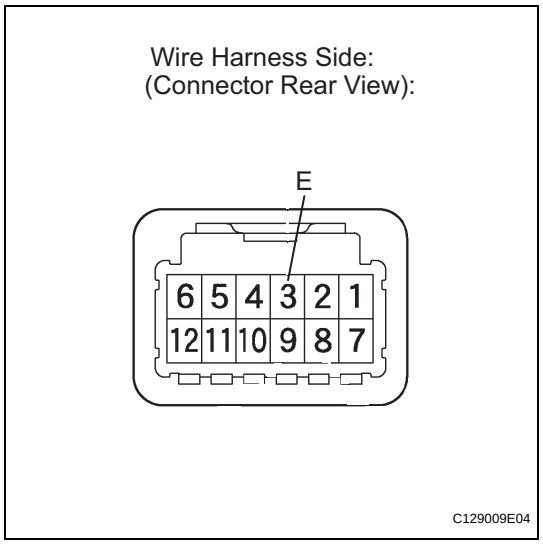

(b) Measure the resistance according to the value(s) in the table below.
HINT:
Do not disconnect the shift lock control unit assembly connector.
If the result is not as specified, replace the shift lever assembly.

Standard resistance

Terminal	Measuring Condition	Specified Value
3 (E) - Body ground	Always	Below 1 Ω

TRANSMISSION CONTROL CABLE ASSEMBLY

COMPONENTS

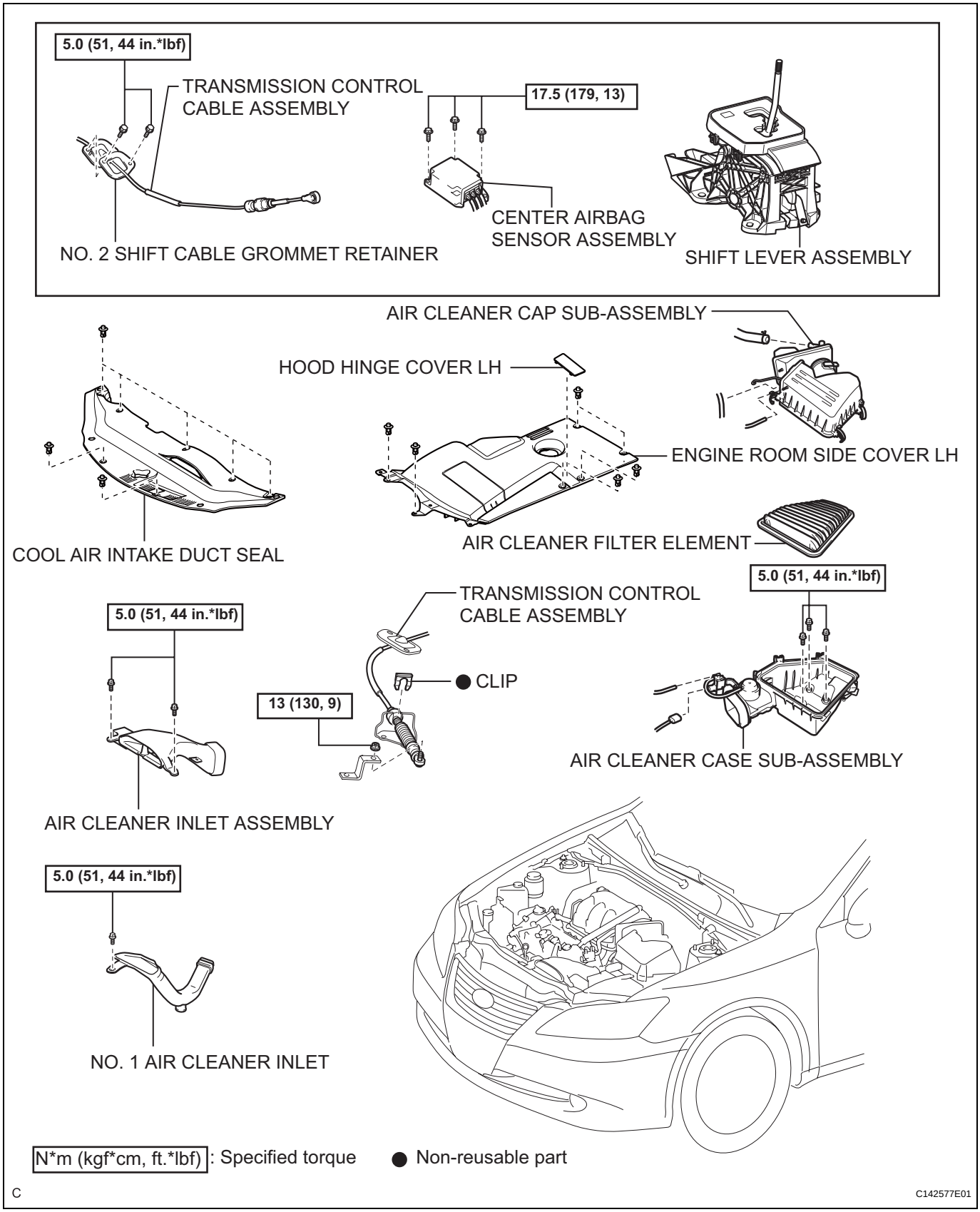

AX

REMOVAL

1. **REMOVE AIR CONDITIONING UNIT**
   HINT:
   (See page AC-144)
2. **REMOVE CENTER AIRBAG SENSOR ASSEMBLY (See page RS-469)**
3. **REMOVE COOL AIR INTAKE DUCT SEAL (See page EM-22)**
4. **REMOVE ENGINE ROOM SIDE COVER LH (See page EM-22)**
5. **REMOVE AIR CLEANER INLET ASSEMBLY (See page EM-23)**
6. **REMOVE AIR CLEANER CAP SUB-ASSEMBLY**
7. **REMOVE AIR CLEANER CASE SUB-ASSEMBLY (See page EM-23)**
8. **REMOVE NO. 1 AIR CLEANER INLET (See page EM-23)**
9. **DISCONNECT NO. 2 SHIFT CABLE GROMMET RETAINER**
   (a) Turn back the carpet.
   (b) Remove the 2 bolts and disconnect the No. 2 shift cable grommet retainer.
   (c) Remove the No. 2 shift cable grommet retainer.

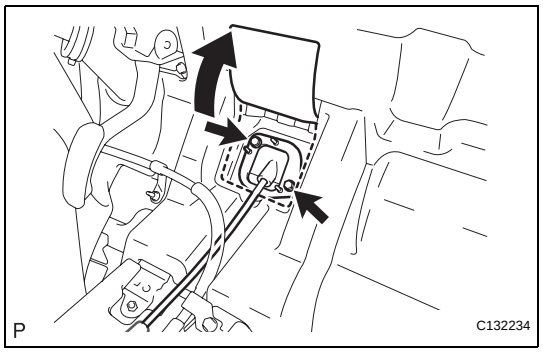

10. **REMOVE TRANSMISSION CONTROL CABLE ASSEMBLY**
    (a) Disconnect the end of the transmission control cable assembly from the shift lever assembly.
    (b) Disconnect the transmission control cable assembly from the shift lever assembly while pushing the 2 claws of the floor shift cable.

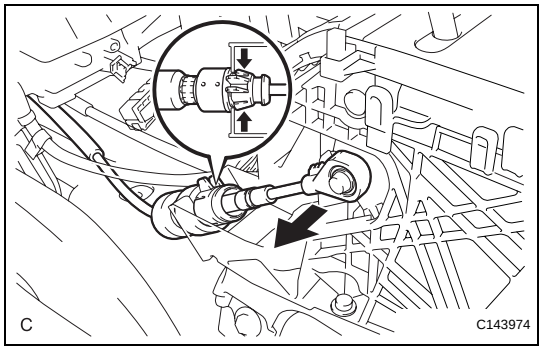

    (c) Remove the nut and transmission control cable from the control shaft lever.

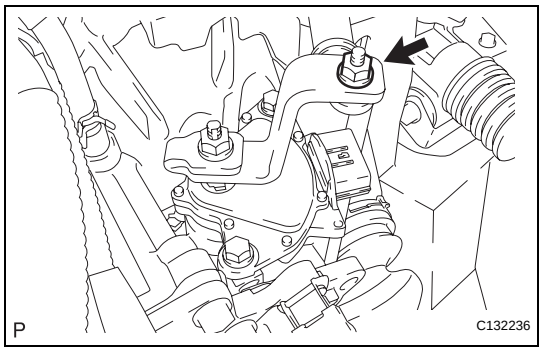

AX

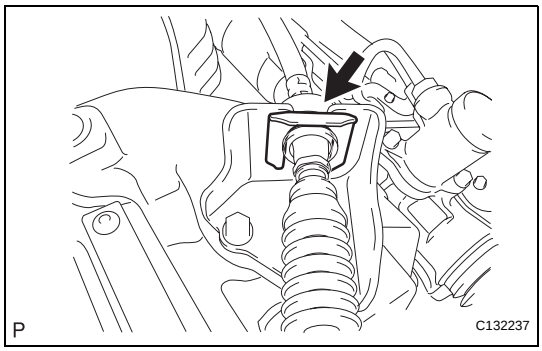

(d) Remove the clip and disconnect the transmission control cable assembly from the No. 1 control cable bracket.

(e) Pull out the transmission control cable assembly from the body.

DIFFERENTIAL OIL SEAL

COMPONENTS

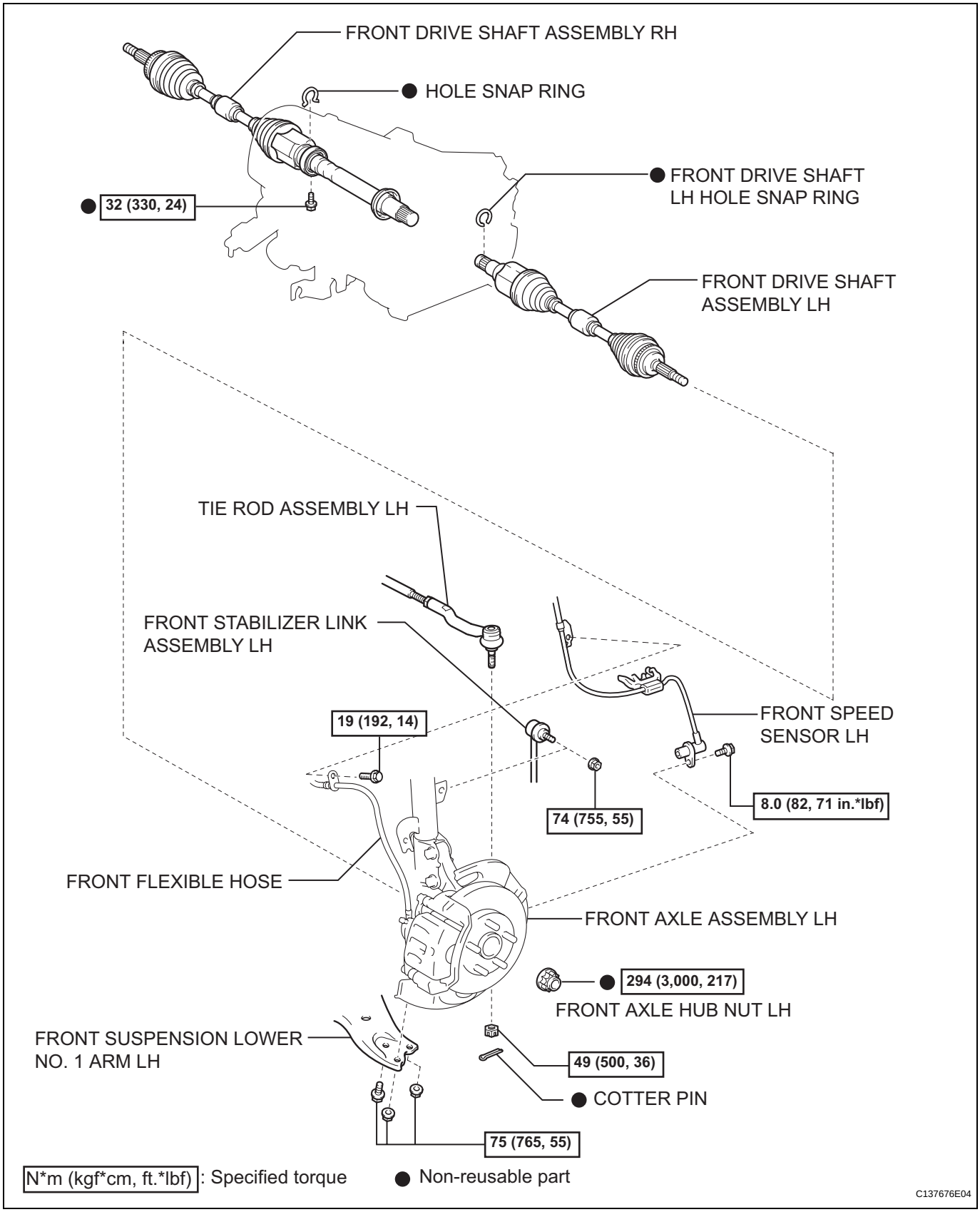

AX

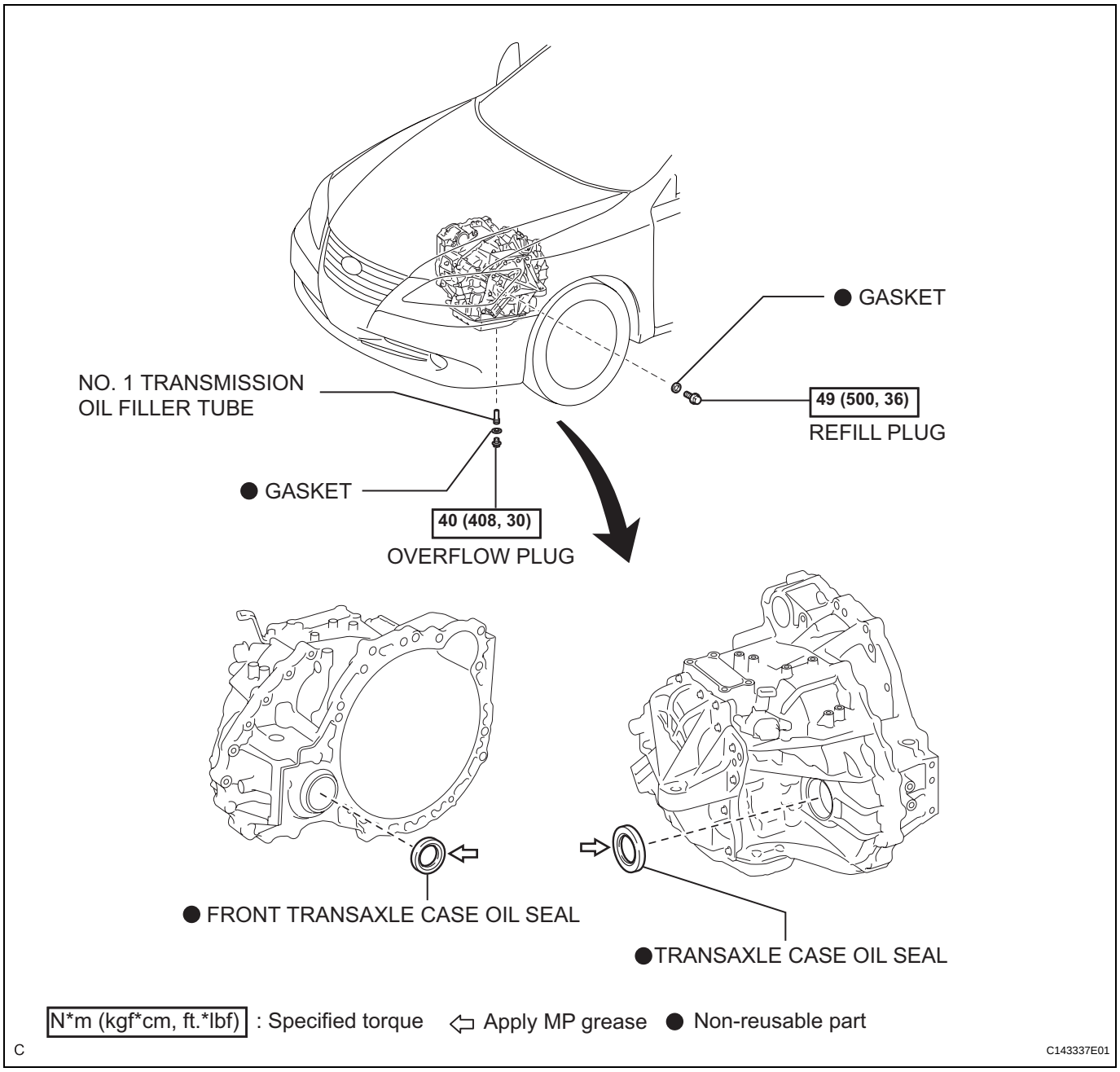
● GASKET
NO. 1 TRANSMISSION
OIL FILLER TUBE
49 (500, 36)
REFILL PLUG
● GASKET
40 (408, 30)
OVERFLOW PLUG
● FRONT TRANSAXLE CASE OIL SEAL
●TRANSAXLE CASE OIL SEAL
N*m (kgf*cm, ft.*lbf) : Specified torque
Apply MP grease
● Non-reusable part
C
C143337E01

AX

AUTOMATIC TRANSAXLE ASSEMBLY

COMPONENTS

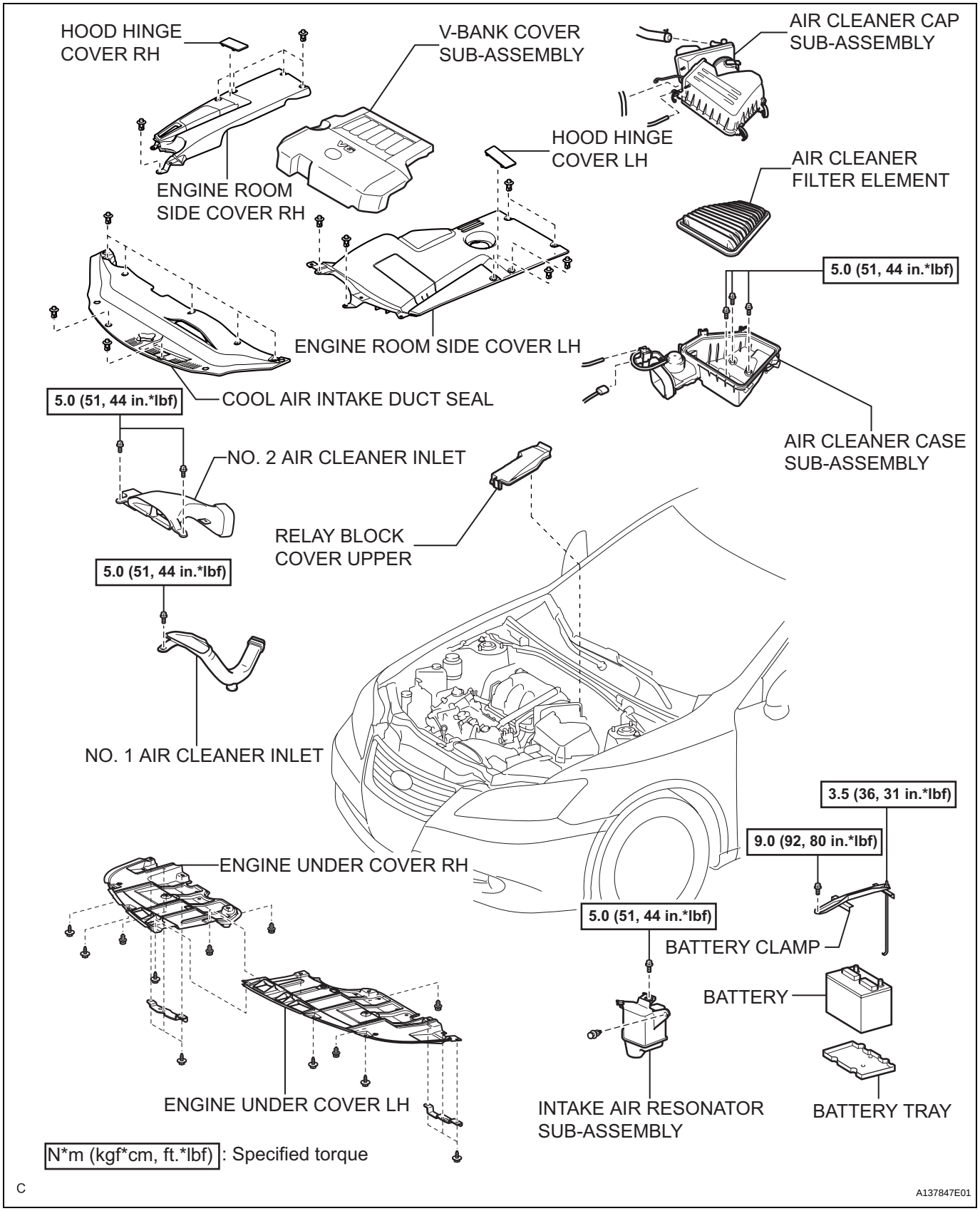

AX

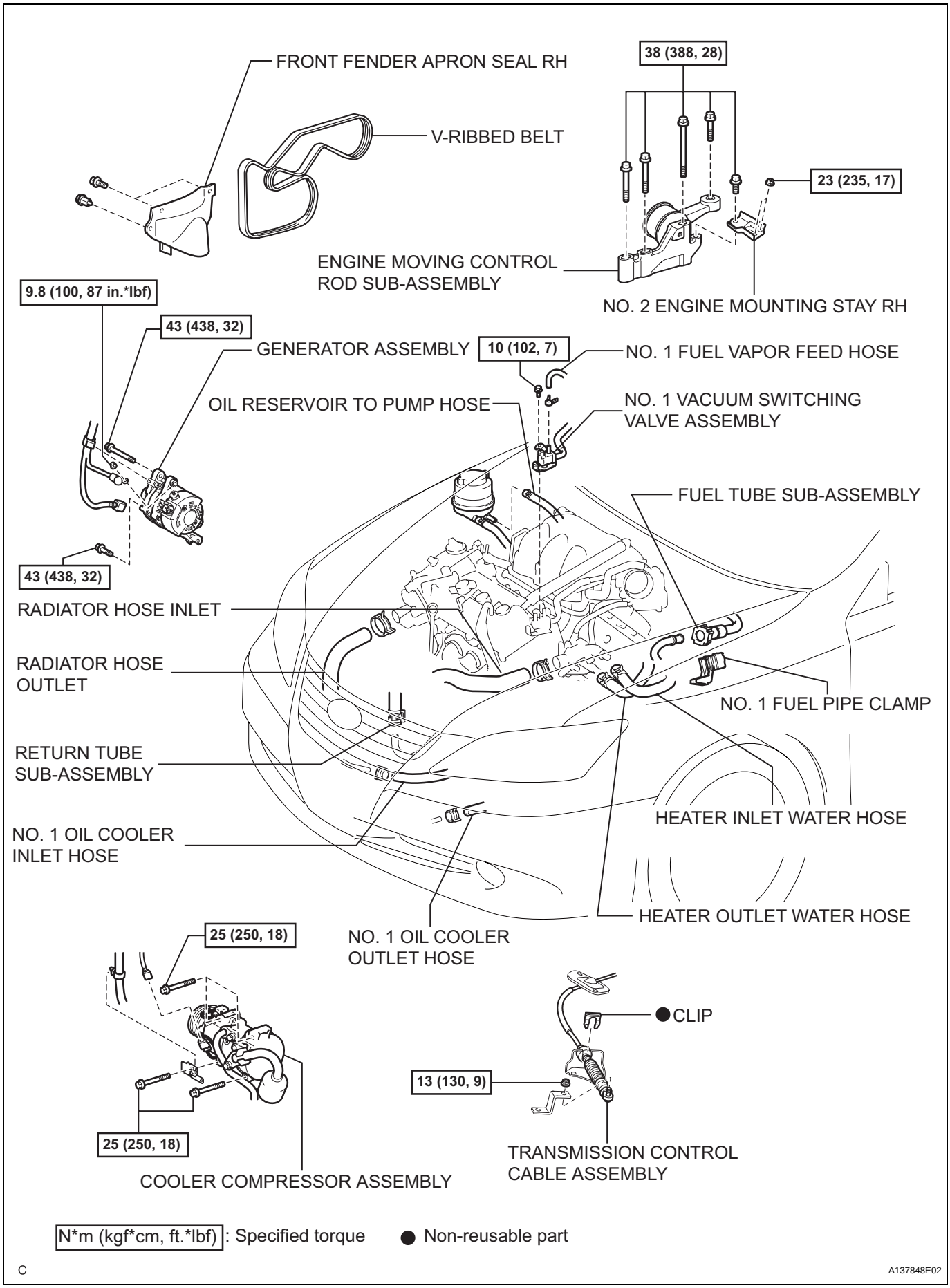
FRONT FENDER APRON SEAL RH
V-RIBBED BELT
38 (388, 28)
23 (235, 17)
ENGINE MOVING CONTROL ROD SUB-ASSEMBLY
NO. 2 ENGINE MOUNTING STAY RH
9.8 (100, 87 in.*lbf)
43 (438, 32)
GENERATOR ASSEMBLY
10 (102, 7)
NO. 1 FUEL VAPOR FEED HOSE
OIL RESERVOIR TO PUMP HOSE
NO. 1 VACUUM SWITCHING VALVE ASSEMBLY
FUEL TUBE SUB-ASSEMBLY
43 (438, 32)
RADIATOR HOSE INLET
RADIATOR HOSE OUTLET
NO. 1 FUEL PIPE CLAMP
RETURN TUBE SUB-ASSEMBLY
HEATER INLET WATER HOSE
NO. 1 OIL COOLER INLET HOSE
HEATER OUTLET WATER HOSE
25 (250, 18)
NO. 1 OIL COOLER OUTLET HOSE
CLIP
13 (130, 9)
25 (250, 18)
TRANSMISSION CONTROL CABLE ASSEMBLY
COOLER COMPRESSOR ASSEMBLY
N*m (kgf*cm, ft.*lbf): Specified torque
Non-reusable part
C
A137848E02

AX

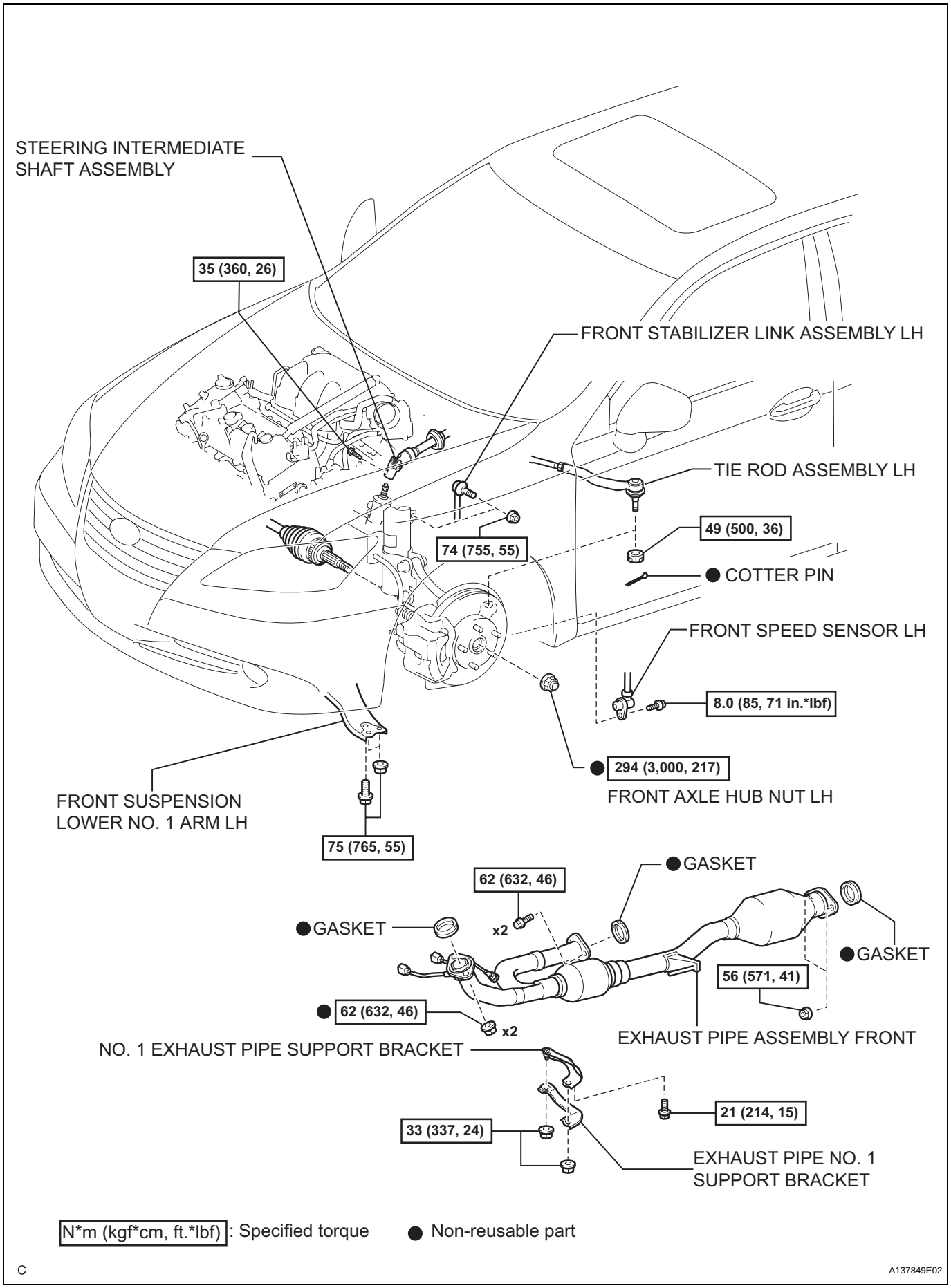
STEERING INTERMEDIATE SHAFT ASSEMBLY
35 (360, 26)
FRONT STABILIZER LINK ASSEMBLY LH
TIE ROD ASSEMBLY LH
49 (500, 36)
74 (755, 55)
● COTTER PIN
FRONT SPEED SENSOR LH
8.0 (85, 71 in.*lbf)
● 294 (3,000, 217)
FRONT AXLE HUB NUT LH
FRONT SUSPENSION LOWER NO. 1 ARM LH
75 (765, 55)
● GASKET
62 (632, 46)
x2
● GASKET
● GASKET
56 (571, 41)
● 62 (632, 46)
x2
EXHAUST PIPE ASSEMBLY FRONT
NO. 1 EXHAUST PIPE SUPPORT BRACKET
21 (214, 15)
33 (337, 24)
EXHAUST PIPE NO. 1 SUPPORT BRACKET
N*m (kgf*cm, ft.*lbf): Specified torque
● Non-reusable part
C
A137849E02

AX

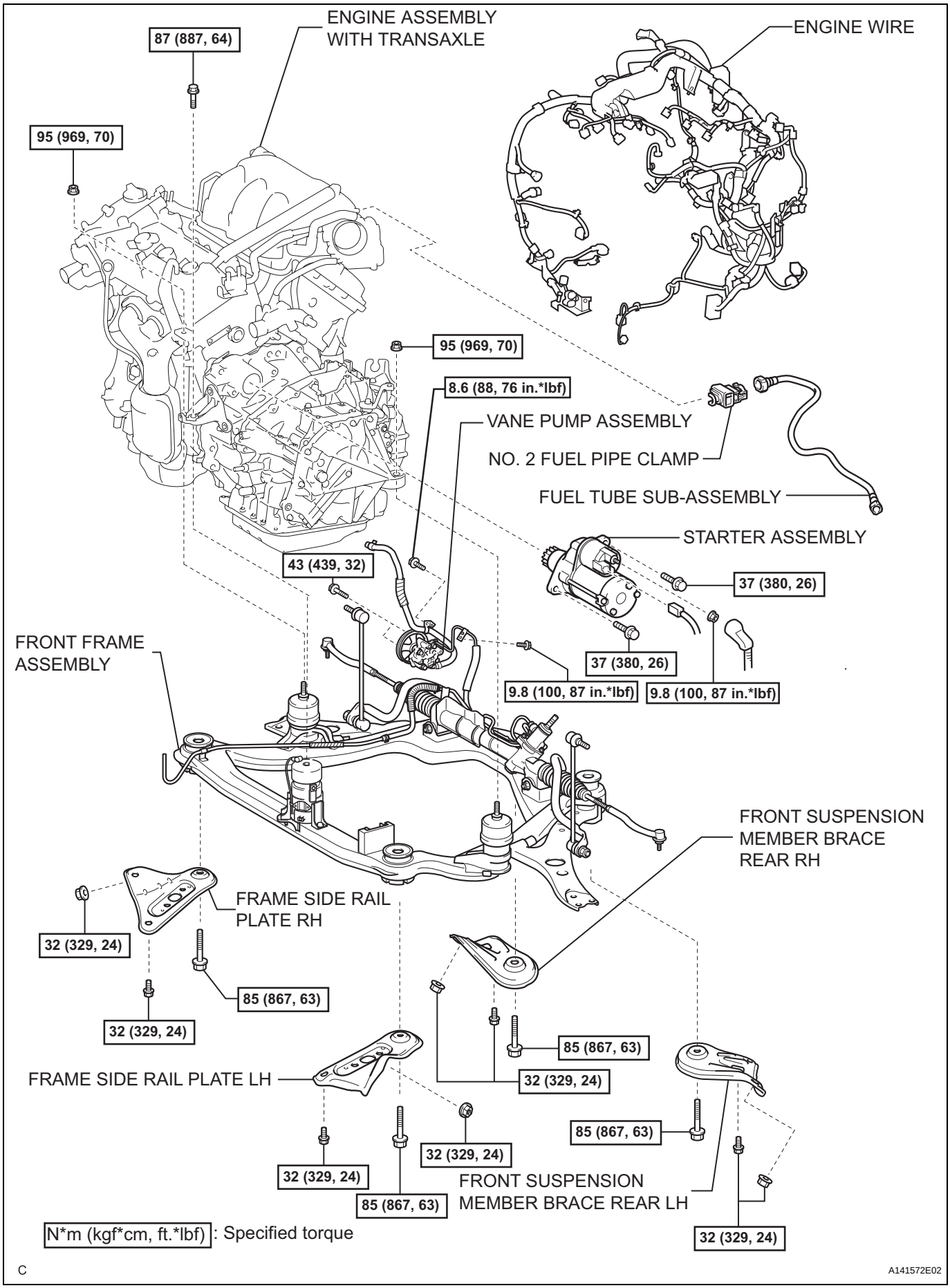
ENGINE ASSEMBLY WITH TRANSAXLE
ENGINE WIRE
87 (887, 64)
95 (969, 70)
95 (969, 70)
8.6 (88, 76 in.*lbf)
VANE PUMP ASSEMBLY
NO. 2 FUEL PIPE CLAMP
FUEL TUBE SUB-ASSEMBLY
STARTER ASSEMBLY
43 (439, 32)
37 (380, 26)
37 (380, 26)
FRONT FRAME ASSEMBLY
9.8 (100, 87 in.*lbf)
9.8 (100, 87 in.*lbf)
FRONT SUSPENSION MEMBER BRACE REAR RH
FRAME SIDE RAIL PLATE RH
32 (329, 24)
85 (867, 63)
32 (329, 24)
85 (867, 63)
FRAME SIDE RAIL PLATE LH
32 (329, 24)
85 (867, 63)
32 (329, 24)
32 (329, 24)
85 (867, 63)
FRONT SUSPENSION MEMBER BRACE REAR LH
32 (329, 24)
N*m (kgf*cm, ft.*lbf): Specified torque
C
A141572E02

AX

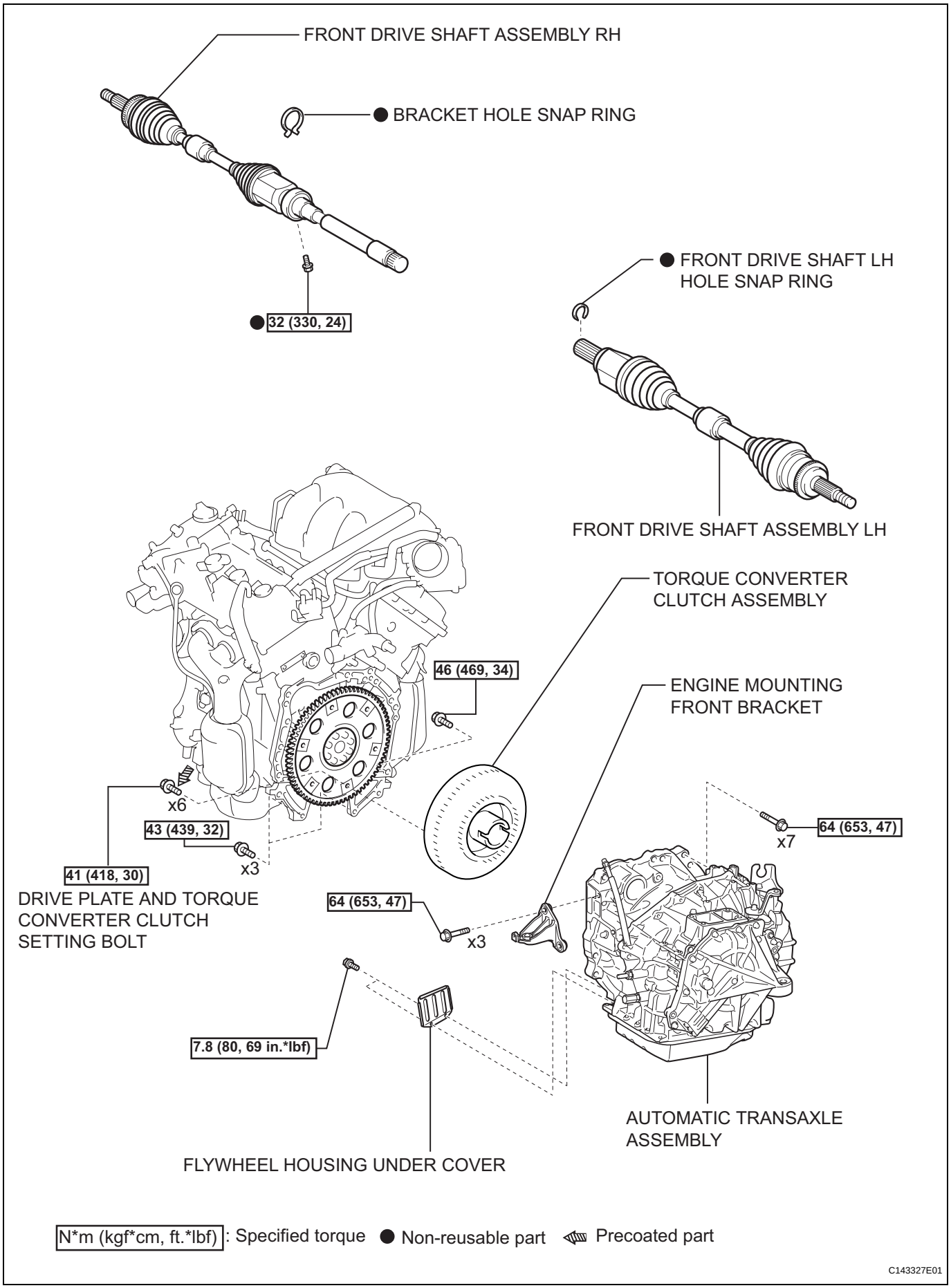
FRONT DRIVE SHAFT ASSEMBLY RH
● BRACKET HOLE SNAP RING
● 32 (330, 24)
● FRONT DRIVE SHAFT LH HOLE SNAP RING
FRONT DRIVE SHAFT ASSEMBLY LH
TORQUE CONVERTER CLUTCH ASSEMBLY
46 (469, 34)
ENGINE MOUNTING FRONT BRACKET
x6
43 (439, 32)
x3
41 (418, 30)
DRIVE PLATE AND TORQUE CONVERTER CLUTCH SETTING BOLT
64 (653, 47)
x7
64 (653, 47)
x3
7.8 (80, 69 in.*lbf)
AUTOMATIC TRANSAXLE ASSEMBLY
FLYWHEEL HOUSING UNDER COVER
N*m (kgf*cm, ft.*lbf): Specified torque
● Non-reusable part
Precoated part
C143327E01

AX

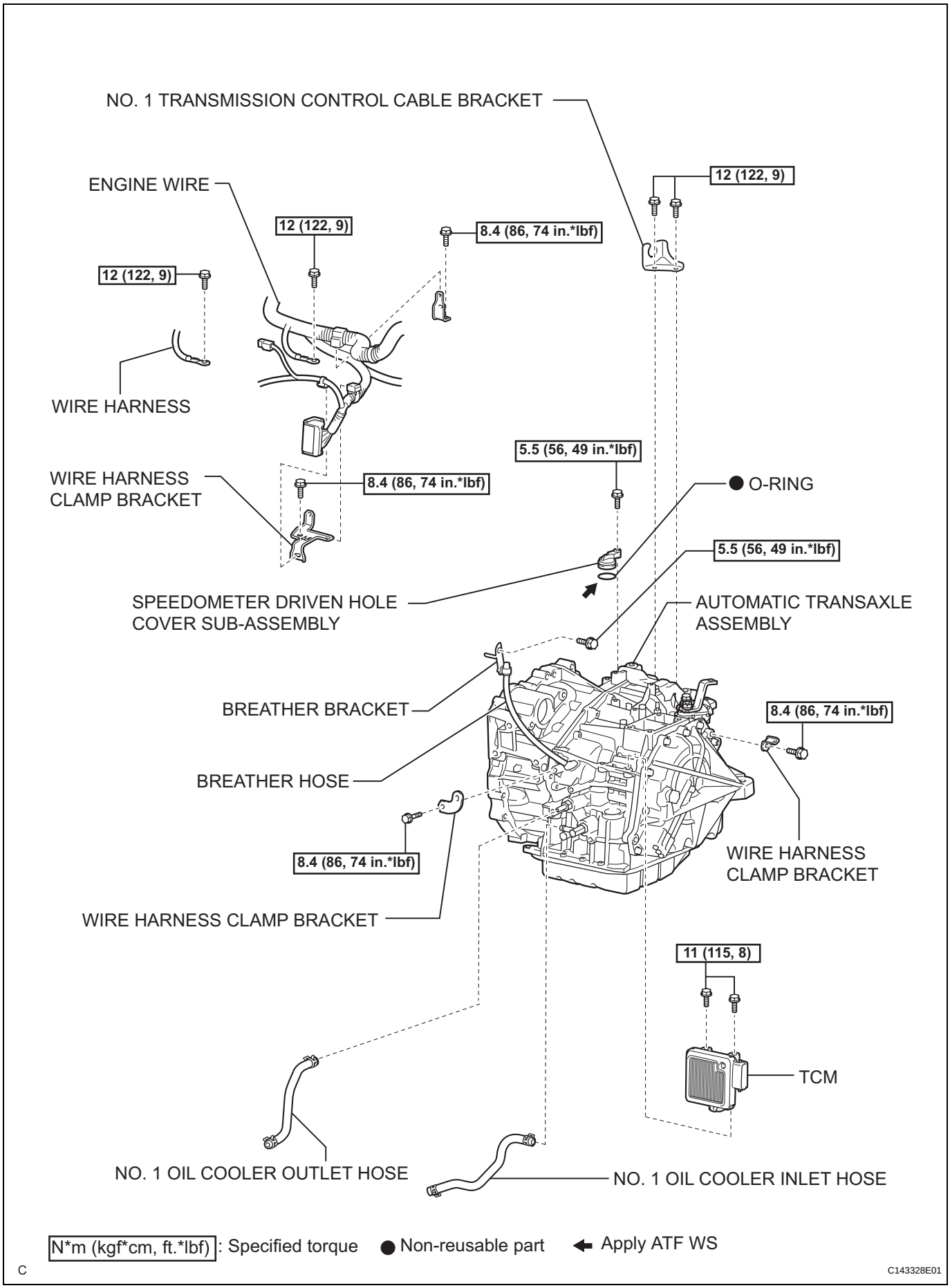
NO. 1 TRANSMISSION CONTROL CABLE BRACKET
12 (122, 9)
ENGINE WIRE
12 (122, 9)
8.4 (86, 74 in.*lbf)
12 (122, 9)
WIRE HARNESS
5.5 (56, 49 in.*lbf)
WIRE HARNESS CLAMP BRACKET
8.4 (86, 74 in.*lbf)
O-RING
5.5 (56, 49 in.*lbf)
SPEEDOMETER DRIVEN HOLE COVER SUB-ASSEMBLY
AUTOMATIC TRANSAXLE ASSEMBLY
BREATHER BRACKET
8.4 (86, 74 in.*lbf)
BREATHER HOSE
8.4 (86, 74 in.*lbf)
WIRE HARNESS CLAMP BRACKET
WIRE HARNESS CLAMP BRACKET
11 (115, 8)
TCM
NO. 1 OIL COOLER OUTLET HOSE
NO. 1 OIL COOLER INLET HOSE
N*m (kgf*cm, ft.*lbf): Specified torque
Non-reusable part
Apply ATF WS
C
C143328E01

AX

SHIFT LEVER

COMPONENTS

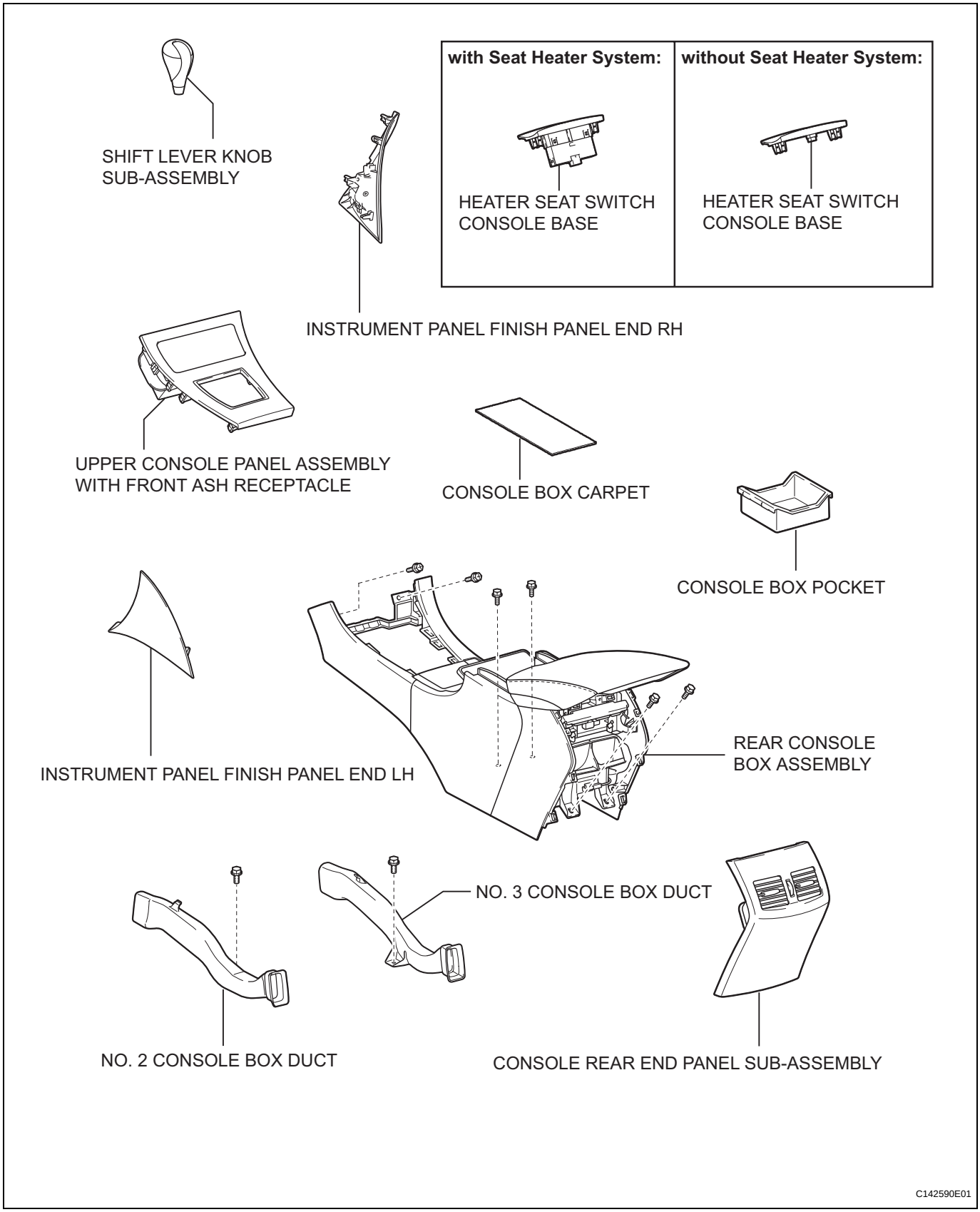

AX

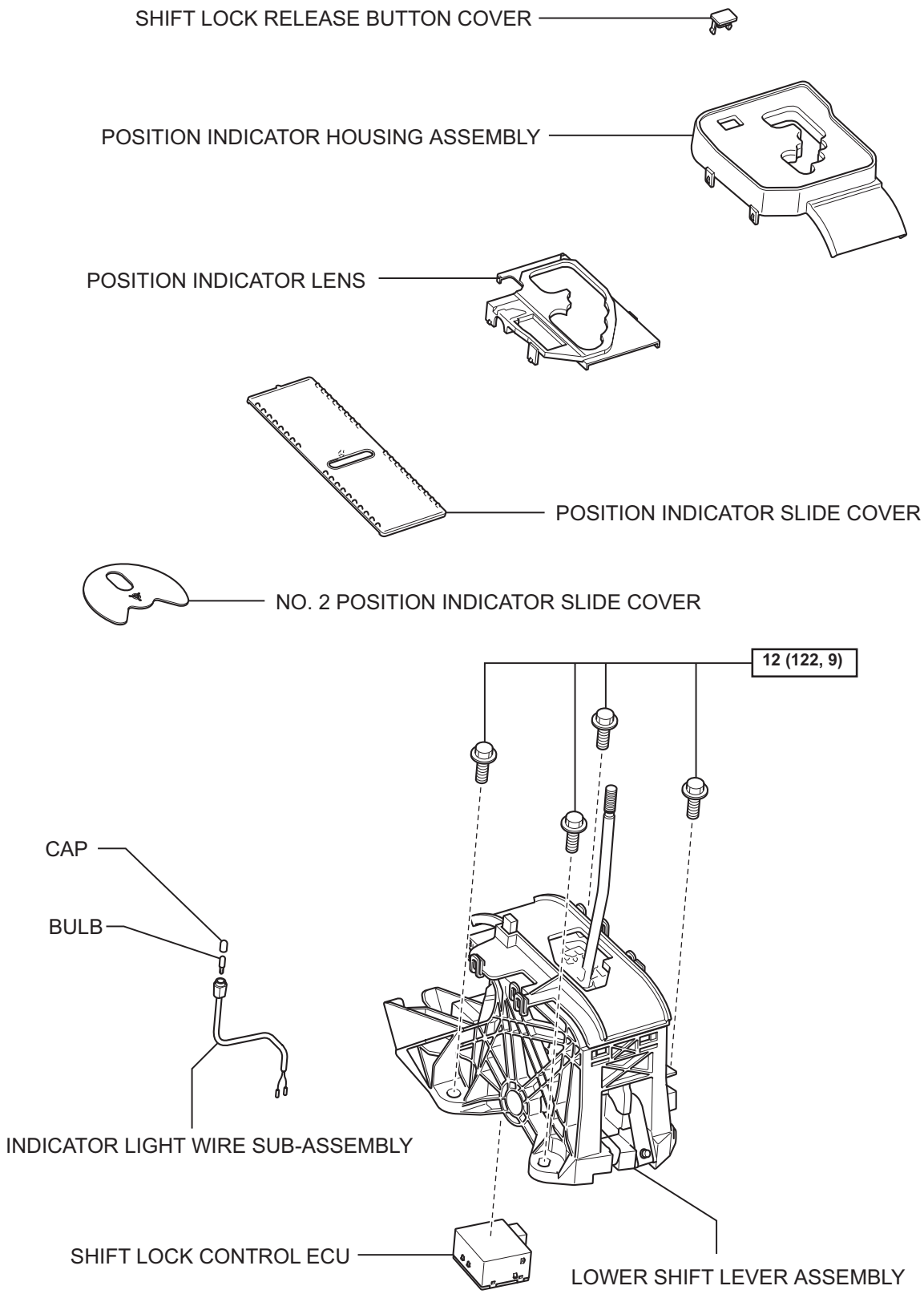

N*m (kgf*cm, ft.*lbf) : Specified torque

C

C142578E01

AX

TORQUE CONVERTER CLUTCH AND DRIVE PLATE

COMPONENTS

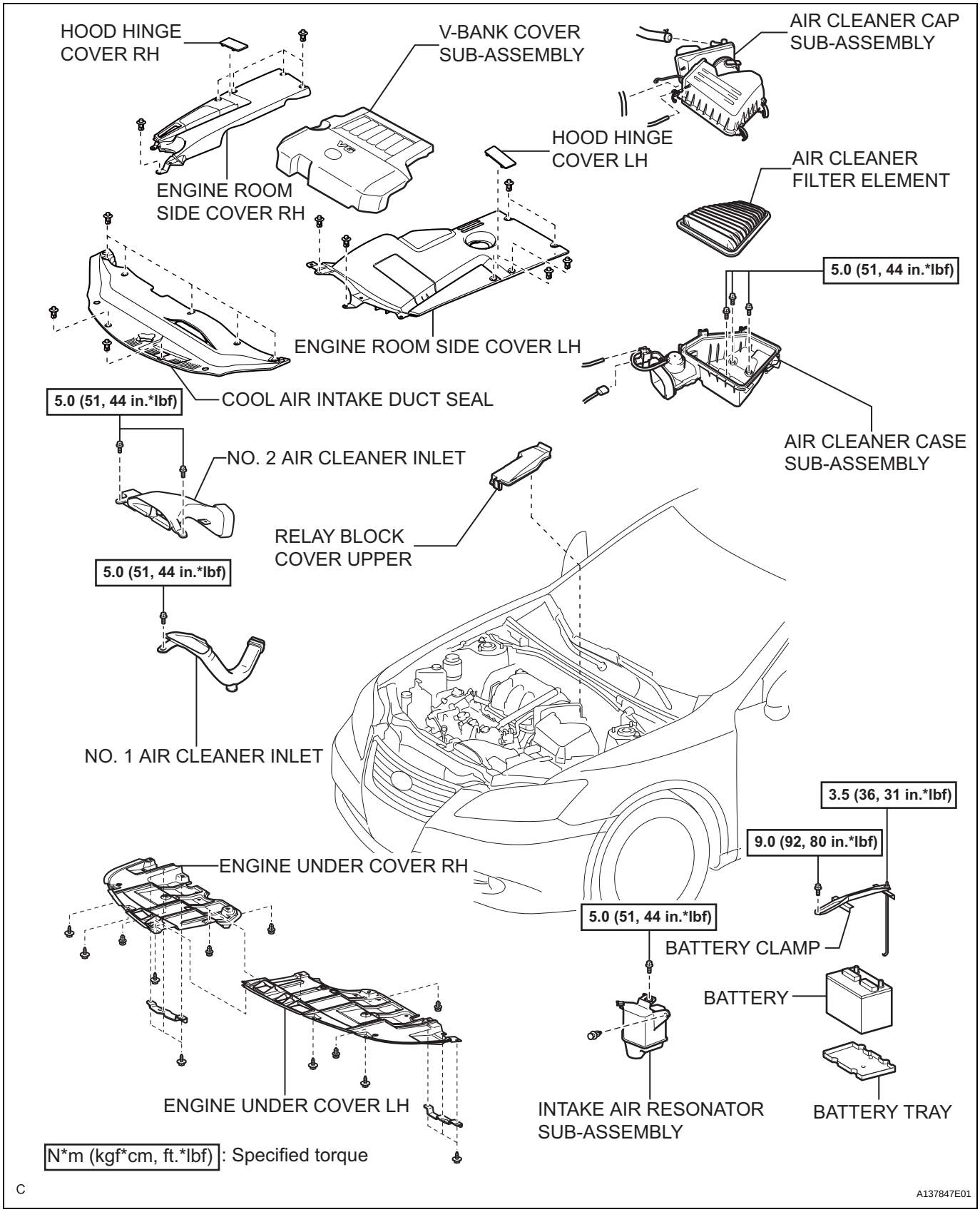

AX

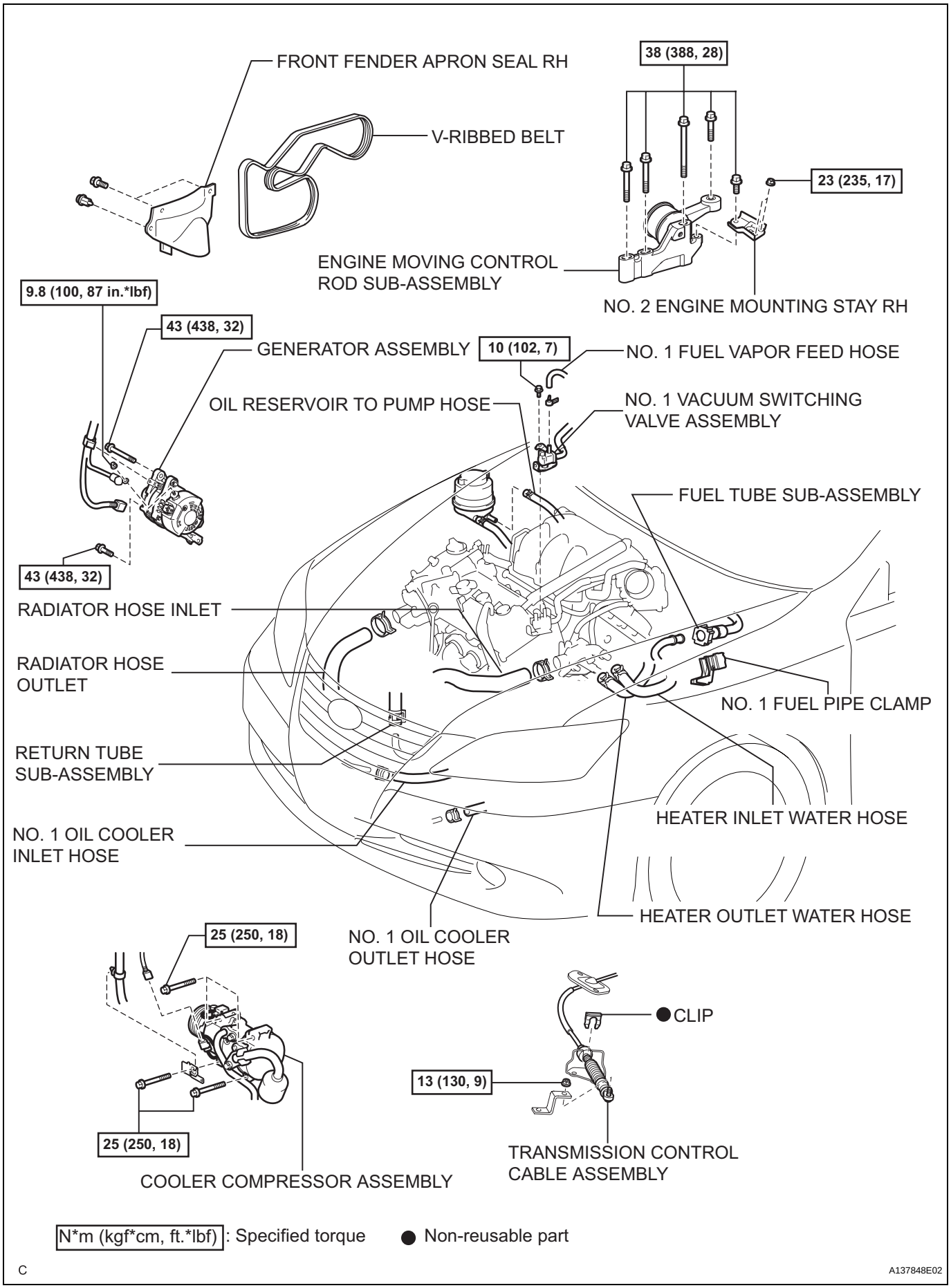
FRONT FENDER APRON SEAL RH
V-RIBBED BELT
38 (388, 28)
23 (235, 17)
ENGINE MOVING CONTROL ROD SUB-ASSEMBLY
NO. 2 ENGINE MOUNTING STAY RH
9.8 (100, 87 in.*lbf)
43 (438, 32)
GENERATOR ASSEMBLY
10 (102, 7)
NO. 1 FUEL VAPOR FEED HOSE
OIL RESERVOIR TO PUMP HOSE
NO. 1 VACUUM SWITCHING VALVE ASSEMBLY
FUEL TUBE SUB-ASSEMBLY
43 (438, 32)
RADIATOR HOSE INLET
RADIATOR HOSE OUTLET
NO. 1 FUEL PIPE CLAMP
RETURN TUBE SUB-ASSEMBLY
HEATER INLET WATER HOSE
NO. 1 OIL COOLER INLET HOSE
HEATER OUTLET WATER HOSE
25 (250, 18)
NO. 1 OIL COOLER OUTLET HOSE
CLIP
13 (130, 9)
25 (250, 18)
TRANSMISSION CONTROL CABLE ASSEMBLY
COOLER COMPRESSOR ASSEMBLY
N*m (kgf*cm, ft.*lbf) : Specified torque
Non-reusable part
C
A137848E02

AX

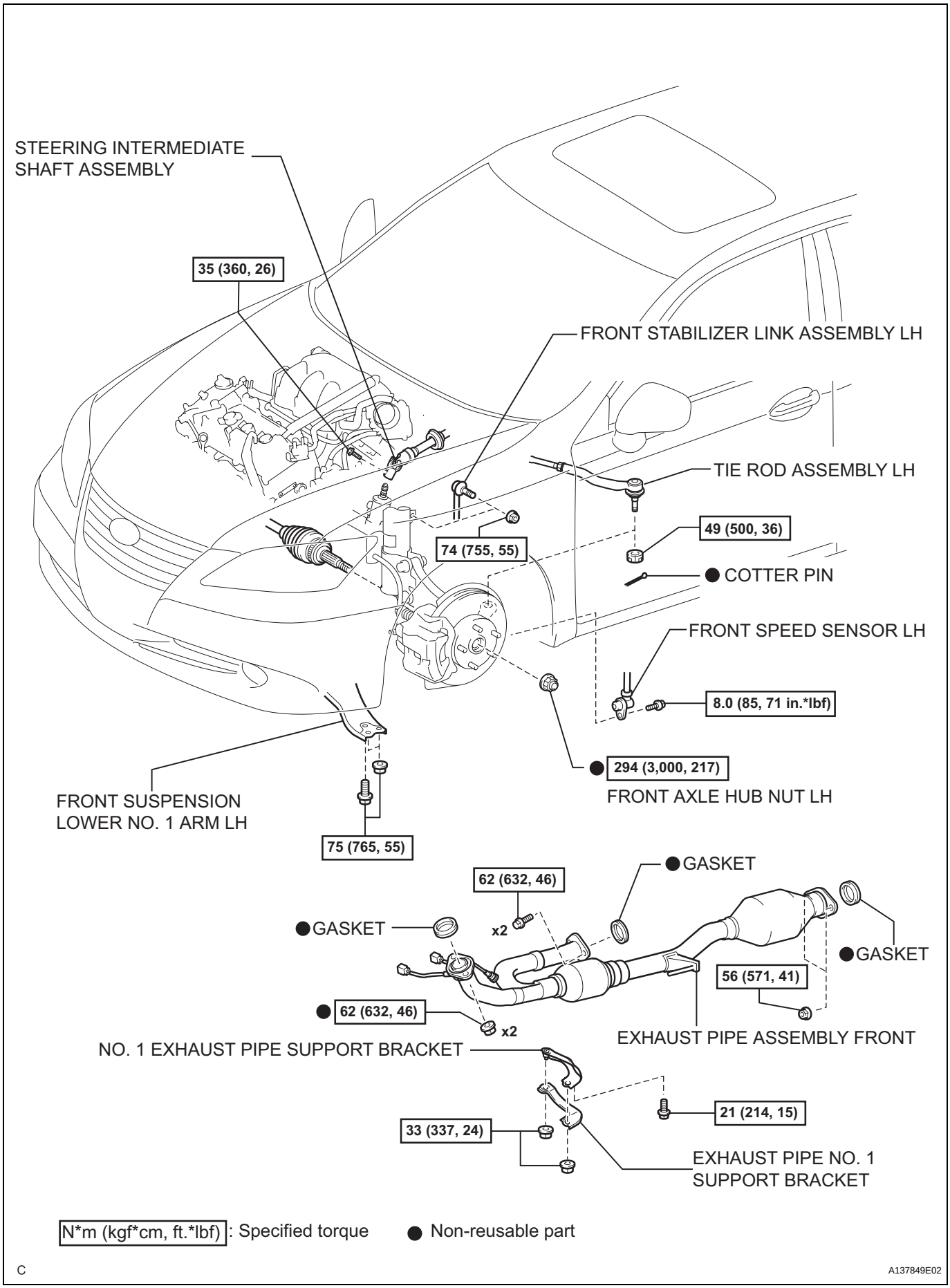
STEERING INTERMEDIATE SHAFT ASSEMBLY
35 (360, 26)
FRONT STABILIZER LINK ASSEMBLY LH
TIE ROD ASSEMBLY LH
49 (500, 36)
74 (755, 55)
● COTTER PIN
FRONT SPEED SENSOR LH
8.0 (85, 71 in.*lbf)
● 294 (3,000, 217)
FRONT AXLE HUB NUT LH
FRONT SUSPENSION LOWER NO. 1 ARM LH
75 (765, 55)
● GASKET
62 (632, 46)
x2
● GASKET
● GASKET
56 (571, 41)
● 62 (632, 46)
x2
EXHAUST PIPE ASSEMBLY FRONT
NO. 1 EXHAUST PIPE SUPPORT BRACKET
21 (214, 15)
33 (337, 24)
EXHAUST PIPE NO. 1 SUPPORT BRACKET
N*m (kgf*cm, ft.*lbf): Specified torque
● Non-reusable part
C
A137849E02

AX

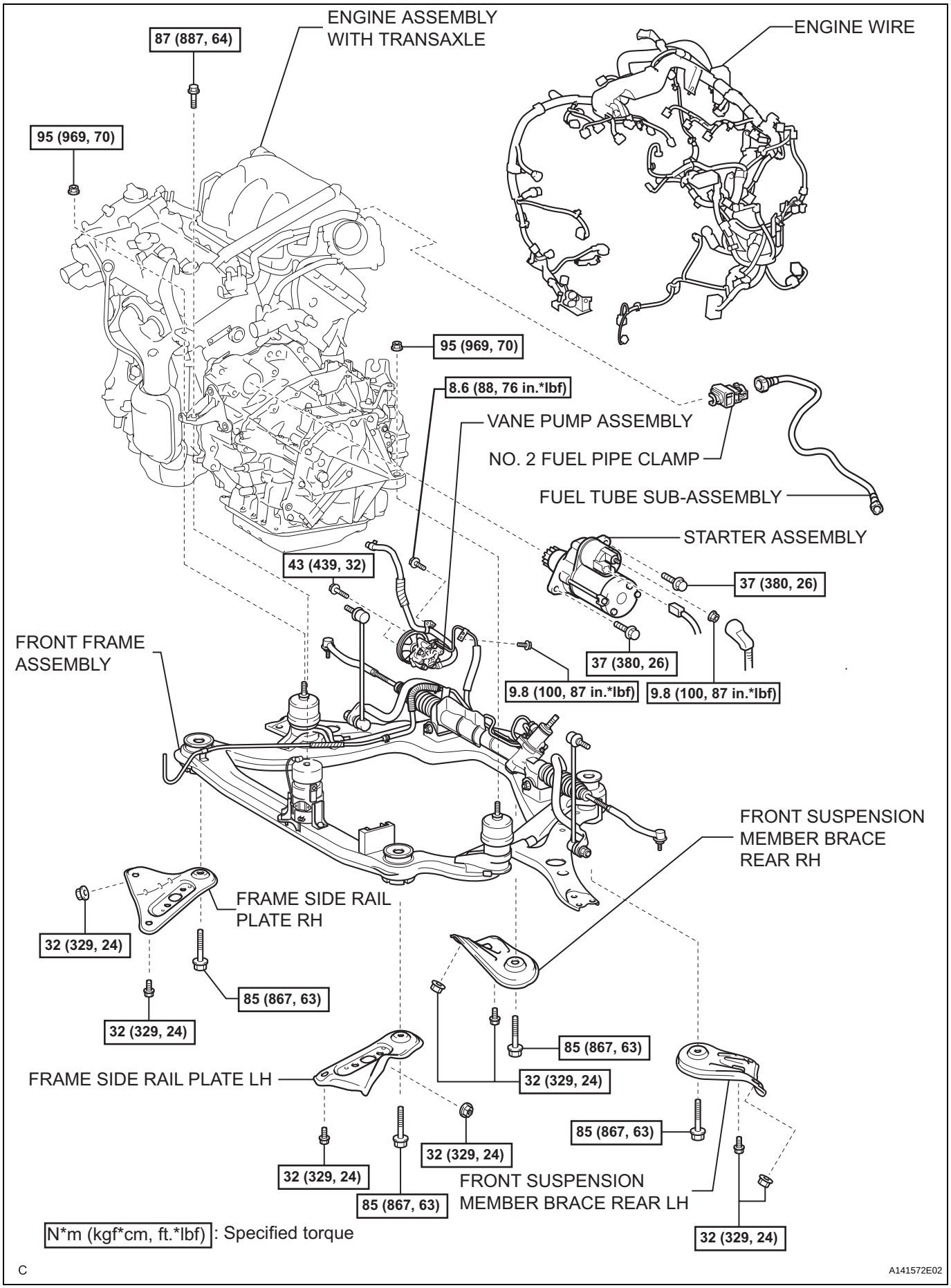
ENGINE ASSEMBLY WITH TRANSAXLE
ENGINE WIRE
87 (887, 64)
95 (969, 70)
95 (969, 70)
8.6 (88, 76 in.*lbf)
VANE PUMP ASSEMBLY
NO. 2 FUEL PIPE CLAMP
FUEL TUBE SUB-ASSEMBLY
STARTER ASSEMBLY
43 (439, 32)
37 (380, 26)
37 (380, 26)
9.8 (100, 87 in.*lbf)
9.8 (100, 87 in.*lbf)
FRONT FRAME ASSEMBLY
FRONT SUSPENSION MEMBER BRACE REAR RH
FRAME SIDE RAIL PLATE RH
32 (329, 24)
85 (867, 63)
32 (329, 24)
85 (867, 63)
FRAME SIDE RAIL PLATE LH
32 (329, 24)
85 (867, 63)
32 (329, 24)
32 (329, 24)
85 (867, 63)
FRONT SUSPENSION MEMBER BRACE REAR LH
32 (329, 24)
N*m (kgf*cm, ft.*lbf): Specified torque
C
A141572E02

AX

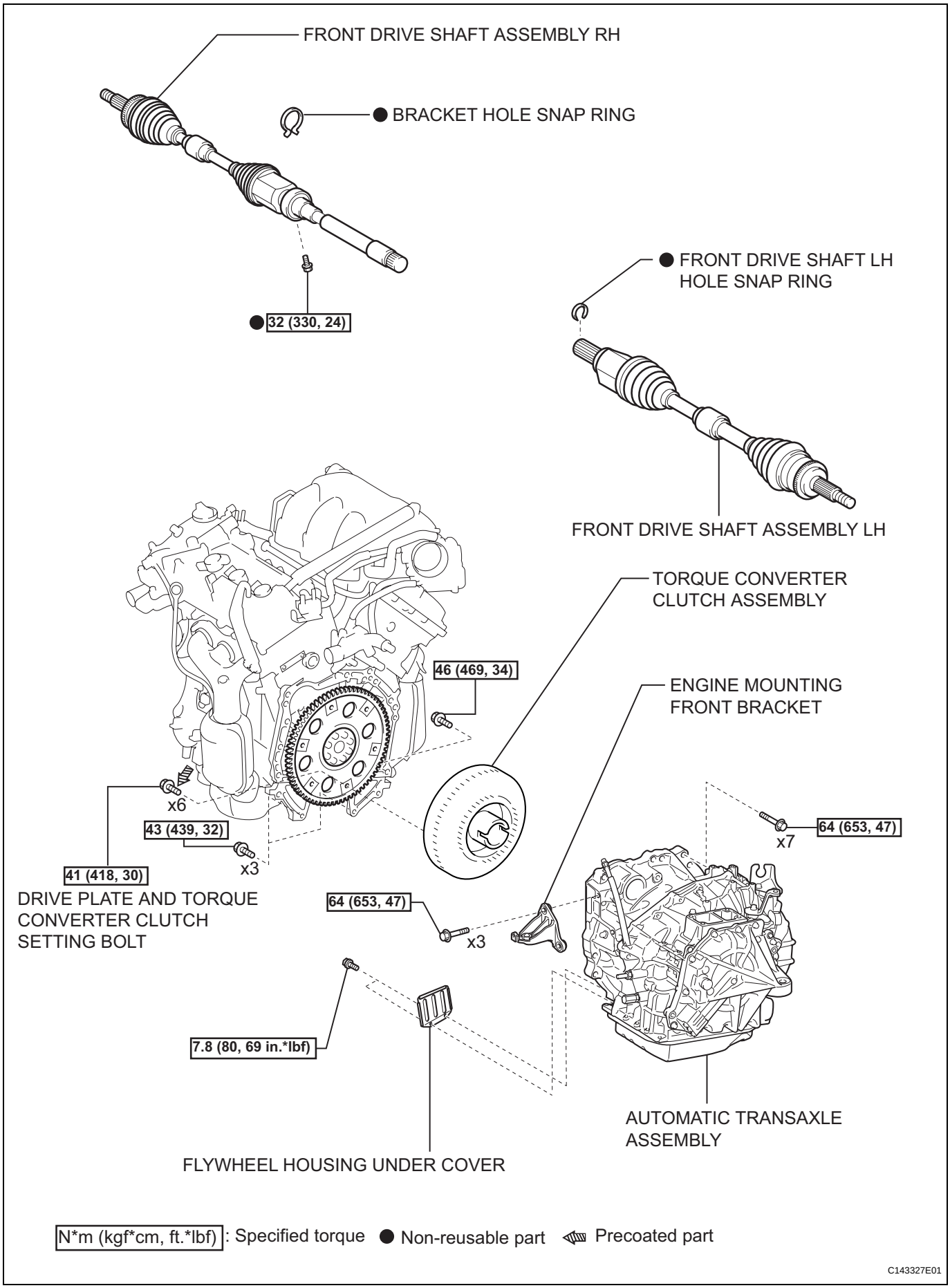
FRONT DRIVE SHAFT ASSEMBLY RH
● BRACKET HOLE SNAP RING
● 32 (330, 24)
● FRONT DRIVE SHAFT LH HOLE SNAP RING
FRONT DRIVE SHAFT ASSEMBLY LH
TORQUE CONVERTER CLUTCH ASSEMBLY
46 (469, 34)
ENGINE MOUNTING FRONT BRACKET
x6
43 (439, 32)
x3
41 (418, 30)
DRIVE PLATE AND TORQUE CONVERTER CLUTCH SETTING BOLT
64 (653, 47)
x7
64 (653, 47)
x3
7.8 (80, 69 in.*lbf)
AUTOMATIC TRANSAXLE ASSEMBLY
FLYWHEEL HOUSING UNDER COVER
N*m (kgf*cm, ft.*lbf): Specified torque
● Non-reusable part
Precoated part
C143327E01

AX

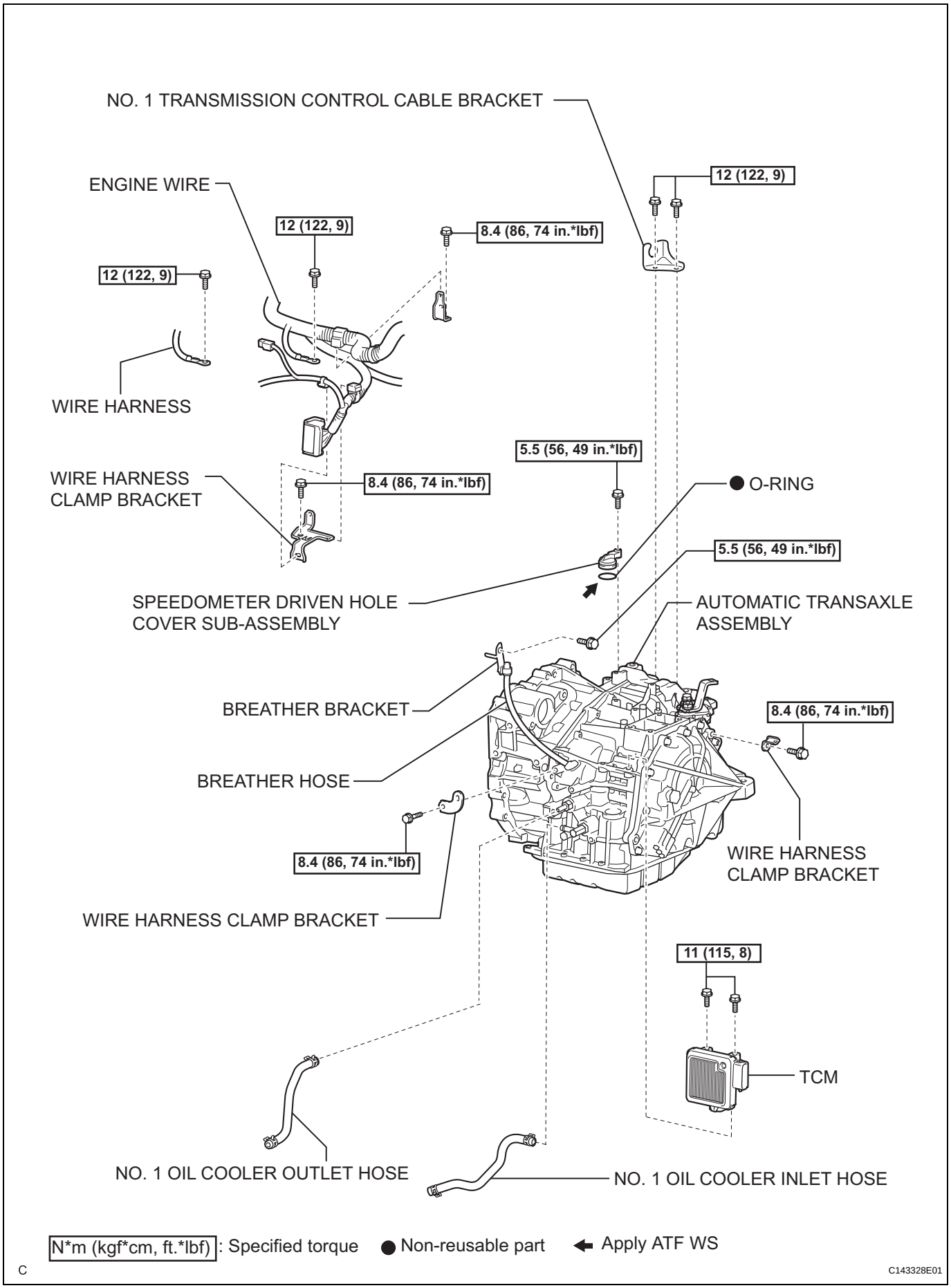
NO. 1 TRANSMISSION CONTROL CABLE BRACKET
12 (122, 9)
ENGINE WIRE
12 (122, 9)
8.4 (86, 74 in.*lbf)
12 (122, 9)
WIRE HARNESS
5.5 (56, 49 in.*lbf)
WIRE HARNESS CLAMP BRACKET
8.4 (86, 74 in.*lbf)
O-RING
5.5 (56, 49 in.*lbf)
SPEEDOMETER DRIVEN HOLE COVER SUB-ASSEMBLY
AUTOMATIC TRANSAXLE ASSEMBLY
BREATHER BRACKET
8.4 (86, 74 in.*lbf)
BREATHER HOSE
8.4 (86, 74 in.*lbf)
WIRE HARNESS CLAMP BRACKET
WIRE HARNESS CLAMP BRACKET
11 (115, 8)
TCM
NO. 1 OIL COOLER OUTLET HOSE
NO. 1 OIL COOLER INLET HOSE
N*m (kgf*cm, ft.*lbf): Specified torque
Non-reusable part
Apply ATF WS
C
C143328E01

AX

TCM

COMPONENTS

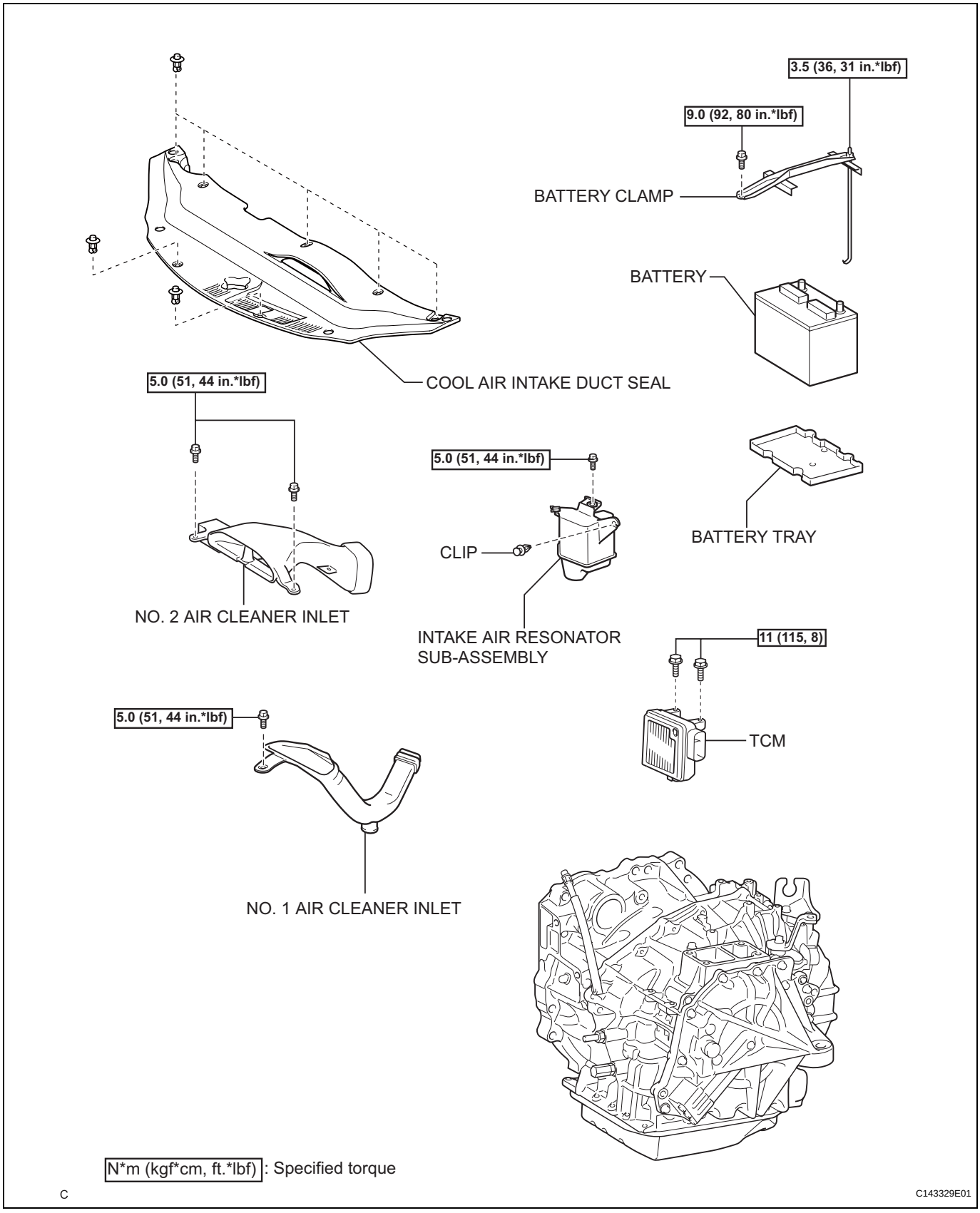

AX

REMOVAL

NOTICE:
When the TCM is replaced, the existing transaxle compensation codes must be input into the new TCM (See page AX-21).

1. **REMOVE COOL AIR INTAKE DUCT SEAL (See page EM-22)**
2. **REMOVE BATTERY (See page EM-24)**
3. **REMOVE AIR CLEANER INLET ASSEMBLY (See page EM-23)**
4. **REMOVE NO. 1 AIR CLEANER INLET (See page EM-23)**
5. **REMOVE INTAKE AIR RESONATOR SUB-ASSEMBLY (See page EM-24)**
6. **REMOVE TCM**
   (a) Turn the lock lever and disconnect the connector from the TCM.

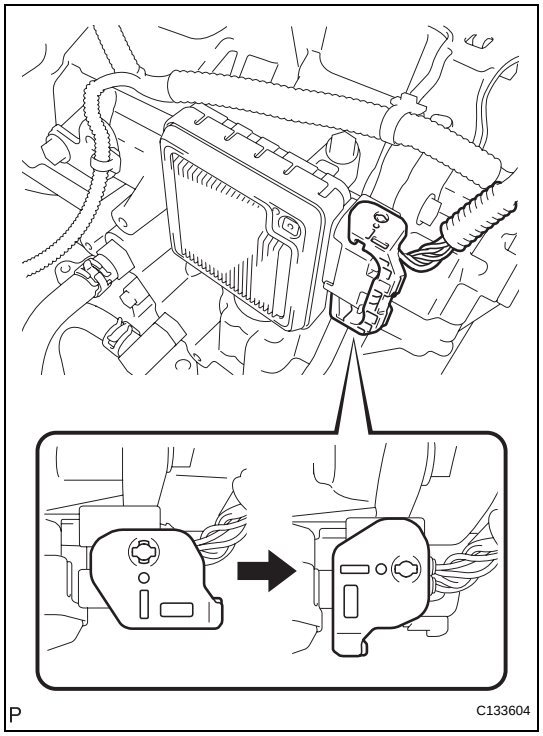

   (b) Remove the 2 bolts and TCM from the transaxle.

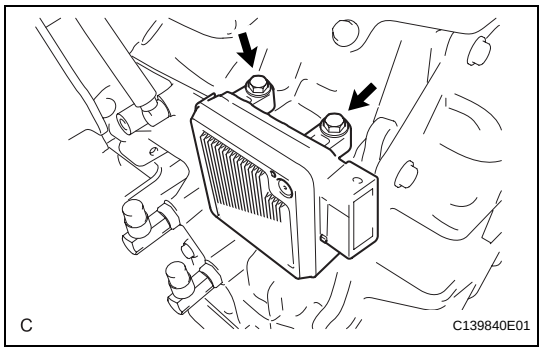

AX

AUTOMATIC TRANSAXLE UNIT

COMPONENTS

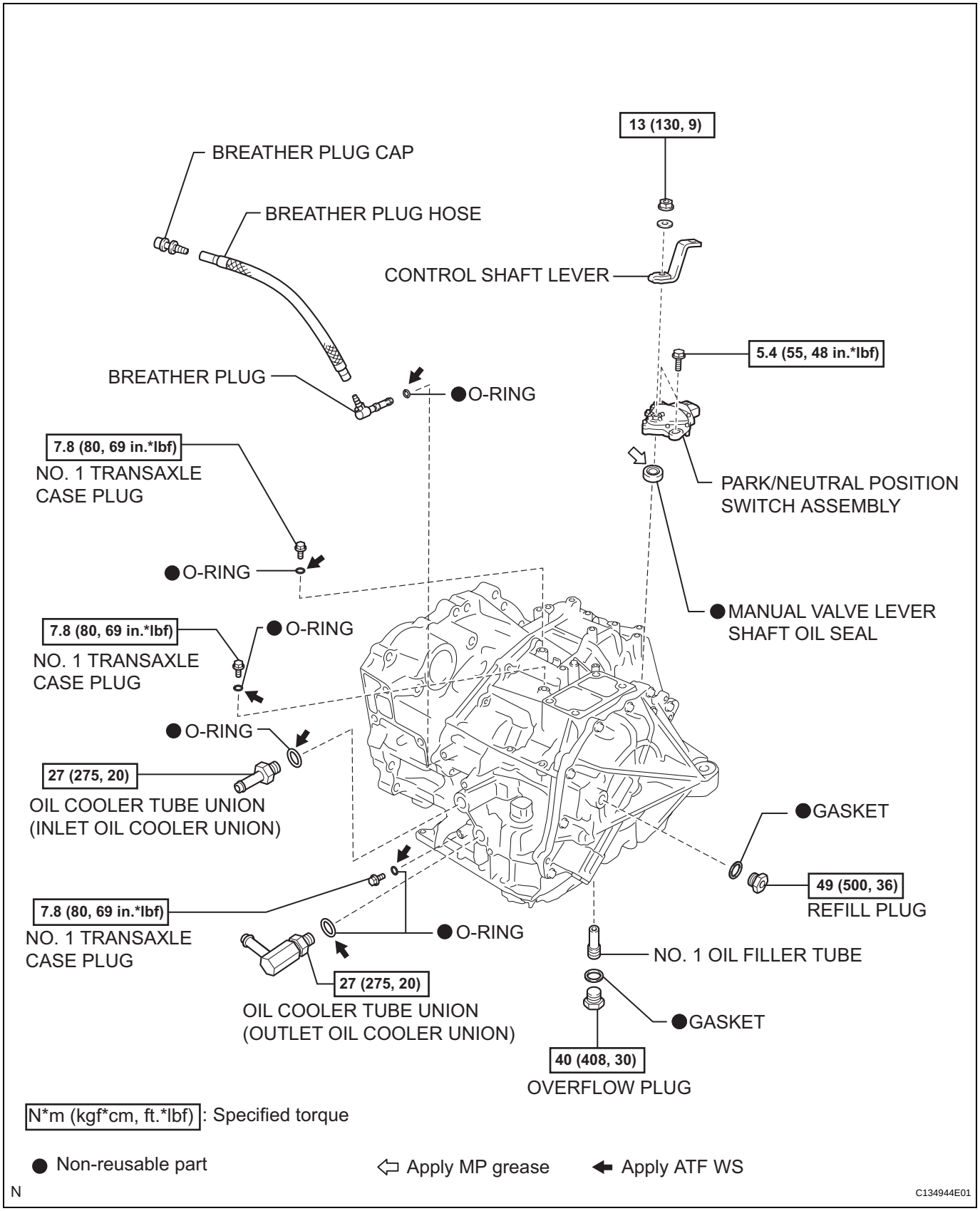

AX

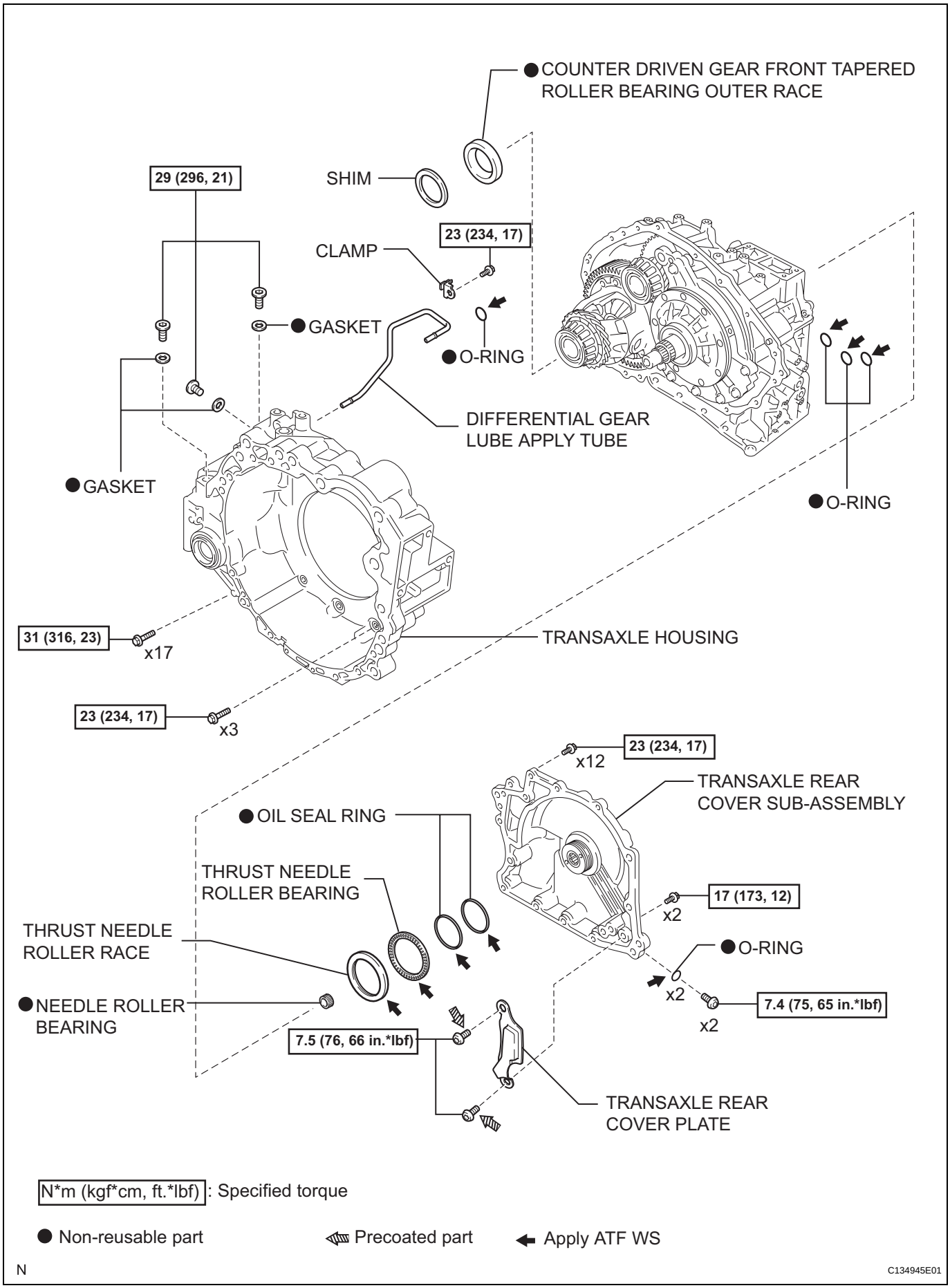
● COUNTER DRIVEN GEAR FRONT TAPERED ROLLER BEARING OUTER RACE
SHIM
29 (296, 21)
23 (234, 17)
CLAMP
● GASKET
● O-RING
DIFFERENTIAL GEAR LUBE APPLY TUBE
● GASKET
● O-RING
31 (316, 23)
x17
TRANSAXLE HOUSING
23 (234, 17)
x3
23 (234, 17)
x12
TRANSAXLE REAR COVER SUB-ASSEMBLY
● OIL SEAL RING
THRUST NEEDLE ROLLER BEARING
17 (173, 12)
x2
THRUST NEEDLE ROLLER RACE
● O-RING
x2
● NEEDLE ROLLER BEARING
7.4 (75, 65 in.*lbf)
x2
7.5 (76, 66 in.*lbf)
TRANSAXLE REAR COVER PLATE
N*m (kgf*cm, ft.*lbf) : Specified torque
● Non-reusable part
Precoated part
Apply ATF WS
N
C134945E01

AX

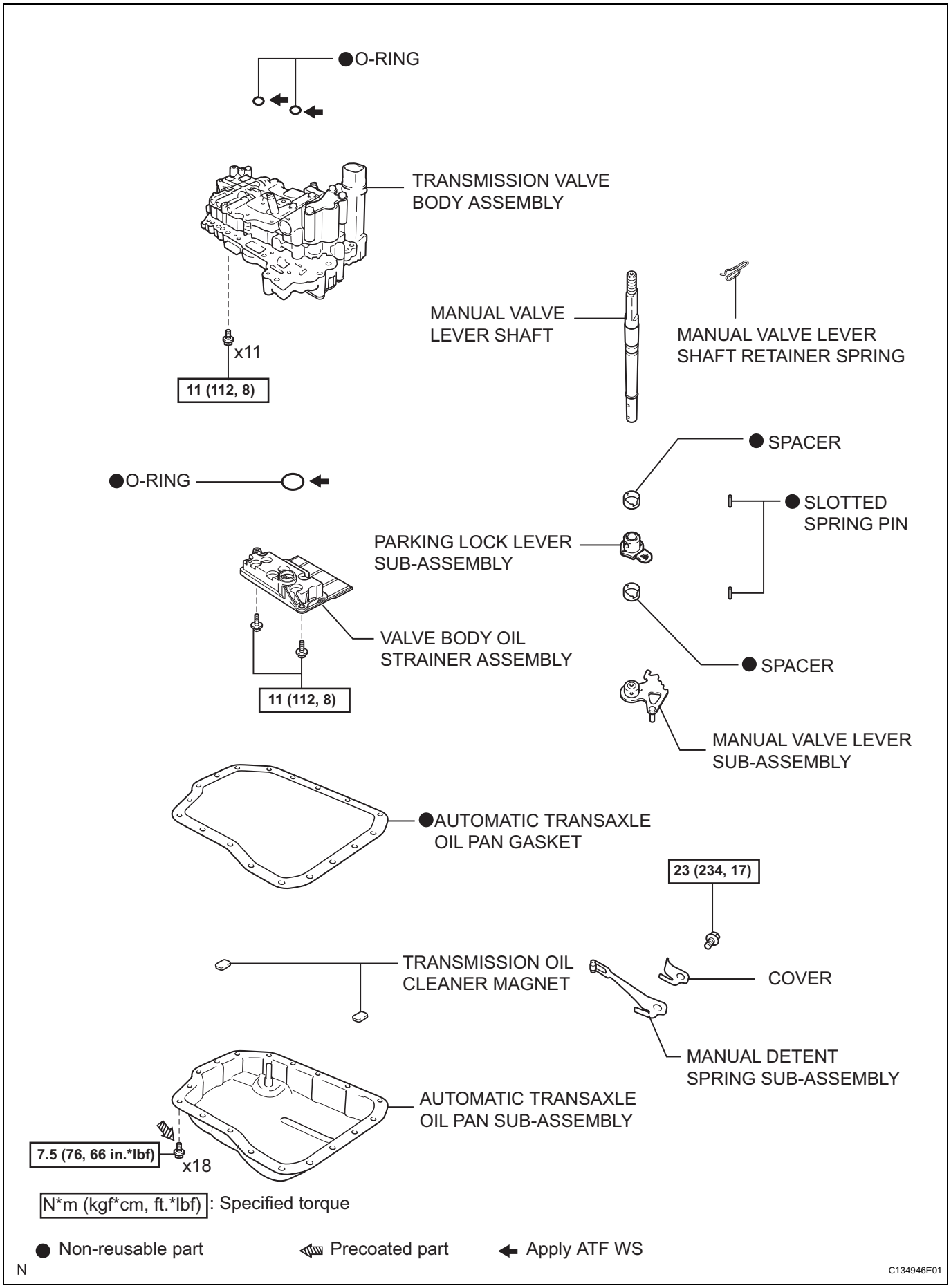
●O-RING
TRANSMISSION VALVE BODY ASSEMBLY
x11
11 (112, 8)
MANUAL VALVE LEVER SHAFT
MANUAL VALVE LEVER SHAFT RETAINER SPRING
● SPACER
●O-RING
● SLOTTED SPRING PIN
PARKING LOCK LEVER SUB-ASSEMBLY
VALVE BODY OIL STRAINER ASSEMBLY
● SPACER
11 (112, 8)
MANUAL VALVE LEVER SUB-ASSEMBLY
●AUTOMATIC TRANSAXLE OIL PAN GASKET
23 (234, 17)
TRANSMISSION OIL CLEANER MAGNET
COVER
MANUAL DETENT SPRING SUB-ASSEMBLY
AUTOMATIC TRANSAXLE OIL PAN SUB-ASSEMBLY
7.5 (76, 66 in.*lbf)
x18
N*m (kgf*cm, ft.*lbf): Specified torque
● Non-reusable part
Precoated part
Apply ATF WS
N
C134946E01

AX

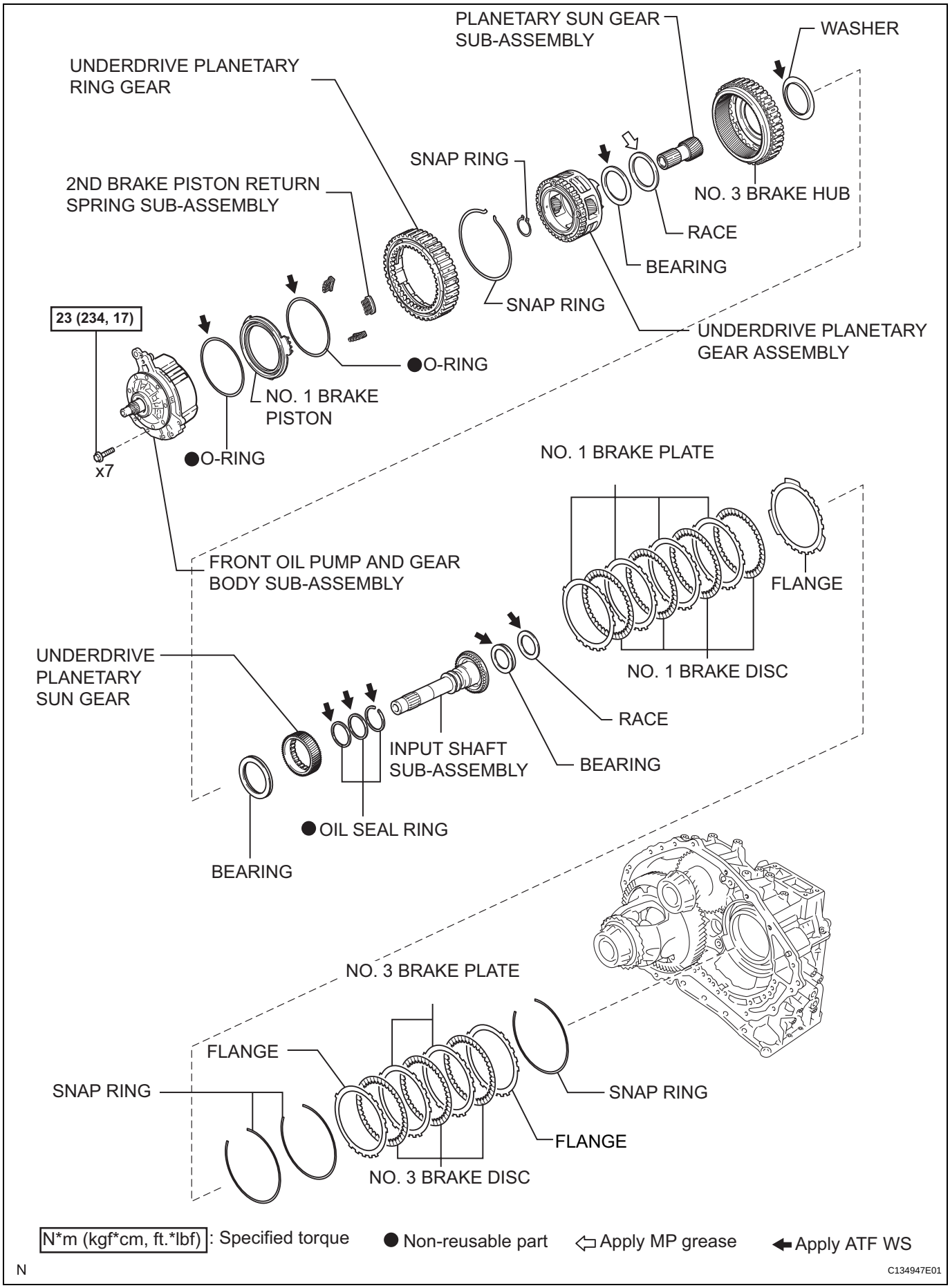
PLANETARY SUN GEAR SUB-ASSEMBLY
WASHER
UNDERDRIVE PLANETARY RING GEAR
SNAP RING
2ND BRAKE PISTON RETURN SPRING SUB-ASSEMBLY
NO. 3 BRAKE HUB
RACE
BEARING
SNAP RING
UNDERDRIVE PLANETARY GEAR ASSEMBLY
23 (234, 17)
●O-RING
NO. 1 BRAKE PISTON
x7
●O-RING
NO. 1 BRAKE PLATE
FRONT OIL PUMP AND GEAR BODY SUB-ASSEMBLY
FLANGE
NO. 1 BRAKE DISC
UNDERDRIVE PLANETARY SUN GEAR
RACE
INPUT SHAFT SUB-ASSEMBLY
BEARING
●OIL SEAL RING
BEARING
NO. 3 BRAKE PLATE
FLANGE
SNAP RING
SNAP RING
FLANGE
NO. 3 BRAKE DISC
N*m (kgf*cm, ft.*lbf): Specified torque
● Non-reusable part
Apply MP grease
Apply ATF WS
N
C134947E01

AX

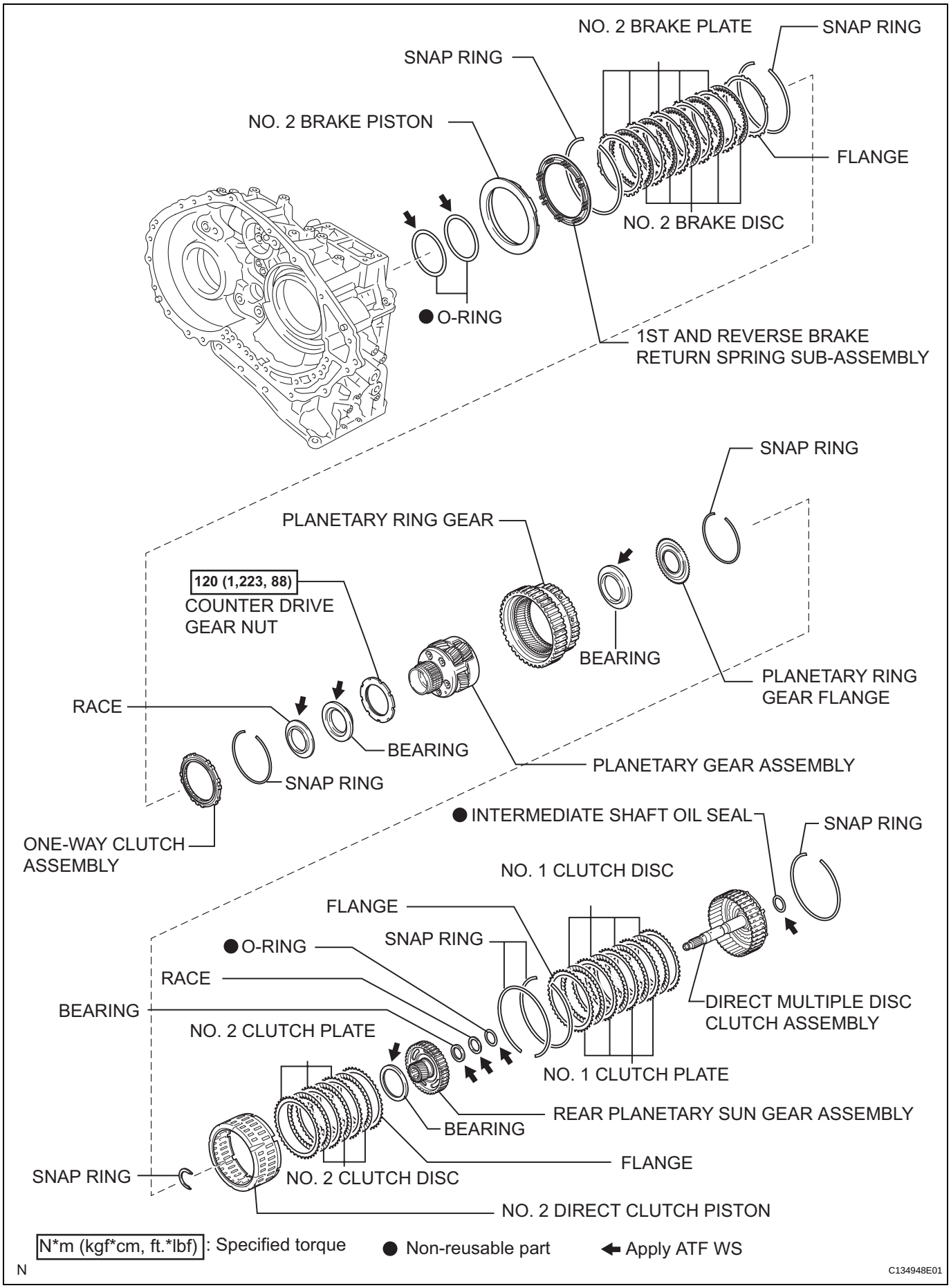
NO. 2 BRAKE PLATE
SNAP RING
SNAP RING
NO. 2 BRAKE PISTON
FLANGE
NO. 2 BRAKE DISC
● O-RING
1ST AND REVERSE BRAKE RETURN SPRING SUB-ASSEMBLY
SNAP RING
PLANETARY RING GEAR
120 (1,223, 88)
COUNTER DRIVE GEAR NUT
BEARING
PLANETARY RING GEAR FLANGE
RACE
BEARING
PLANETARY GEAR ASSEMBLY
SNAP RING
ONE-WAY CLUTCH ASSEMBLY
● INTERMEDIATE SHAFT OIL SEAL
SNAP RING
NO. 1 CLUTCH DISC
FLANGE
SNAP RING
● O-RING
RACE
BEARING
NO. 2 CLUTCH PLATE
DIRECT MULTIPLE DISC CLUTCH ASSEMBLY
NO. 1 CLUTCH PLATE
REAR PLANETARY SUN GEAR ASSEMBLY
BEARING
FLANGE
SNAP RING
NO. 2 CLUTCH DISC
NO. 2 DIRECT CLUTCH PISTON
N*m (kgf*cm, ft.*lbf) : Specified torque
● Non-reusable part
Apply ATF WS
N
C134948E01

AX

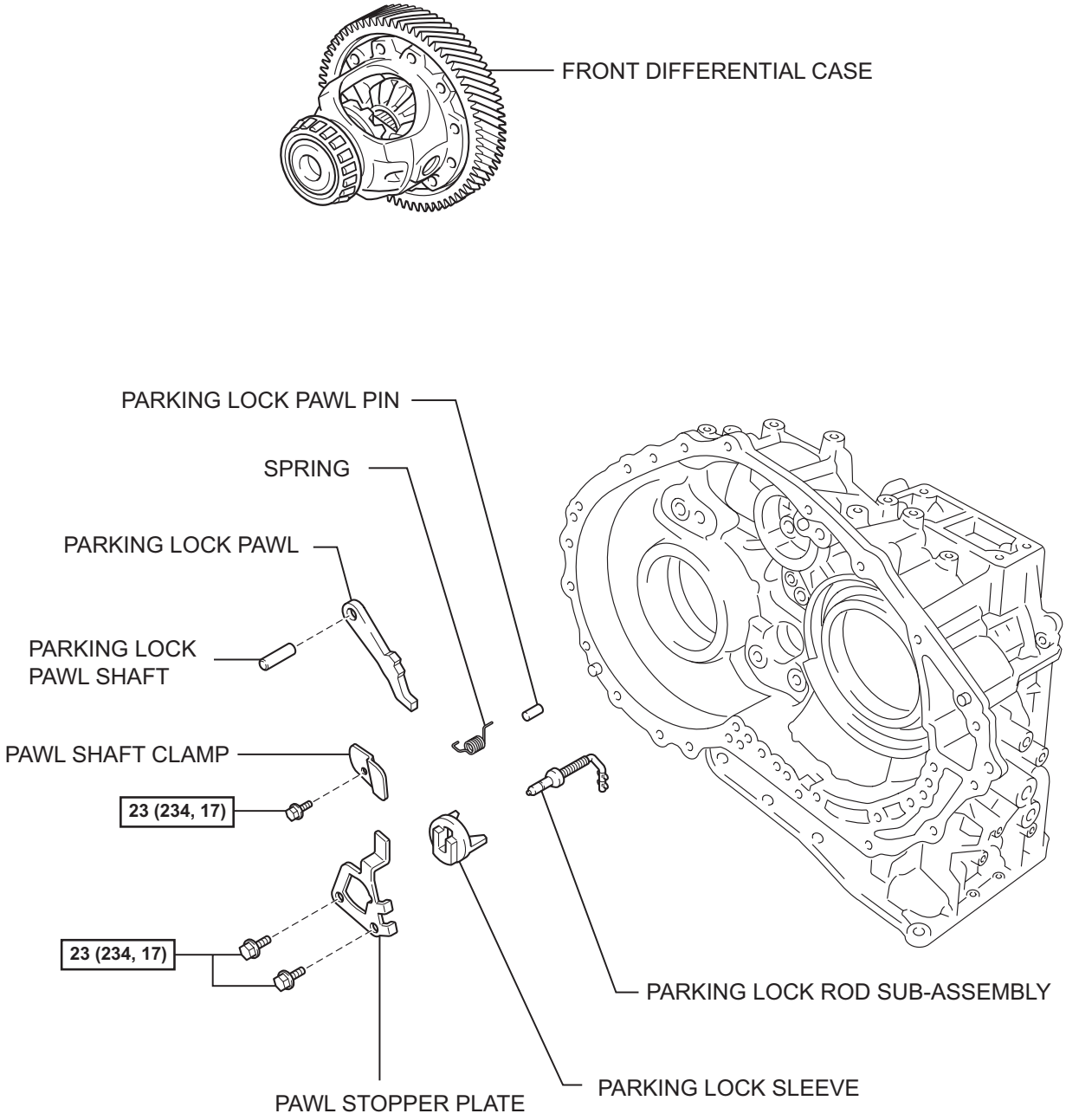

AX

N*m (kgf*cm, ft.*lbf) : Specified torque

N

C134949E01

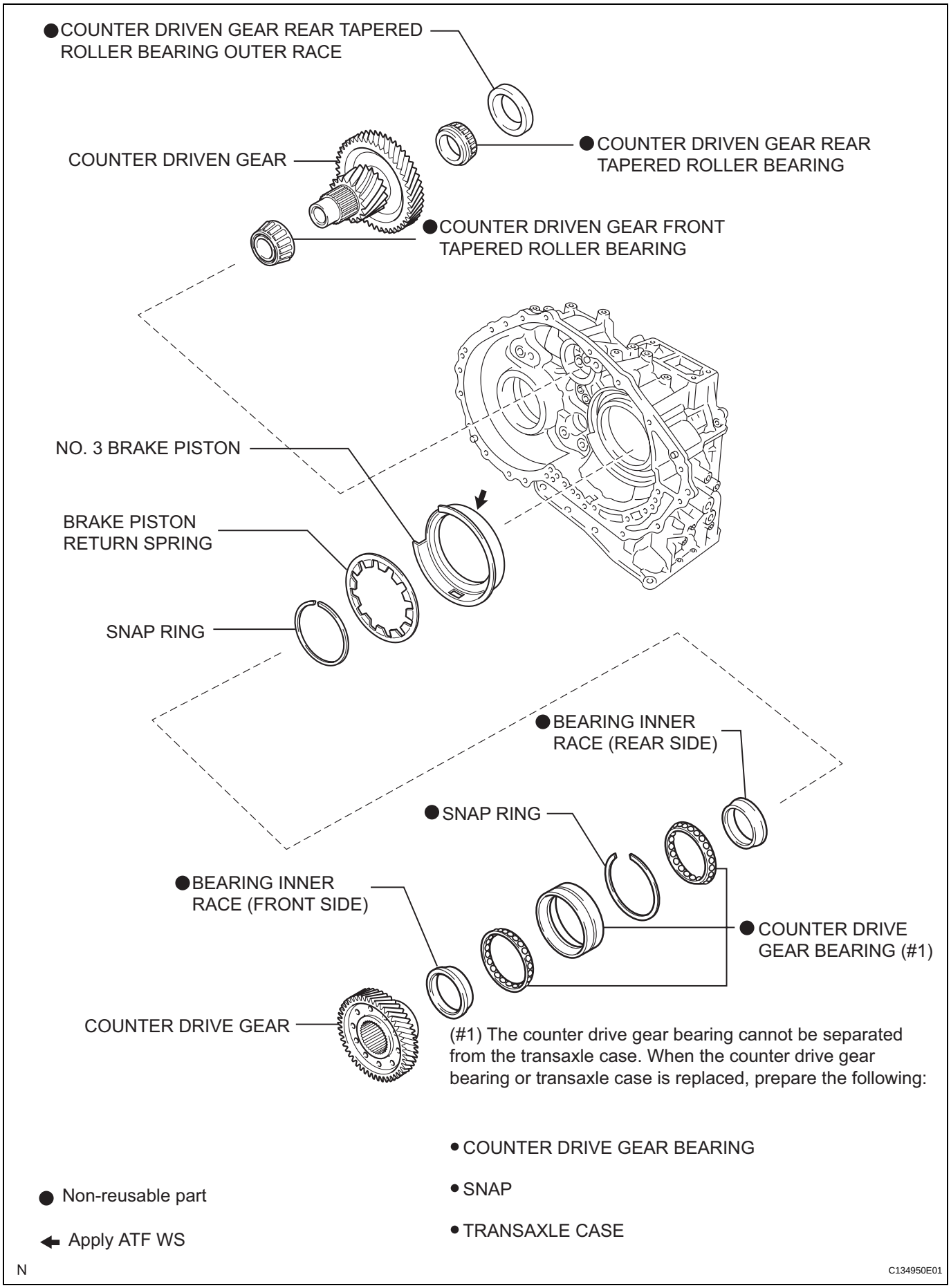
●COUNTER DRIVEN GEAR REAR TAPERED ROLLER BEARING OUTER RACE
COUNTER DRIVEN GEAR
●COUNTER DRIVEN GEAR REAR TAPERED ROLLER BEARING
●COUNTER DRIVEN GEAR FRONT TAPERED ROLLER BEARING
NO. 3 BRAKE PISTON
BRAKE PISTON RETURN SPRING
SNAP RING
●BEARING INNER RACE (REAR SIDE)
●SNAP RING
●BEARING INNER RACE (FRONT SIDE)
●COUNTER DRIVE GEAR BEARING (#1)
COUNTER DRIVE GEAR
(#1) The counter drive gear bearing cannot be separated from the transaxle case. When the counter drive gear bearing or transaxle case is replaced, prepare the following:
• COUNTER DRIVE GEAR BEARING
• SNAP
• TRANSAXLE CASE
● Non-reusable part
Apply ATF WS
N
C134950E01

AX

OIL PUMP

COMPONENTS

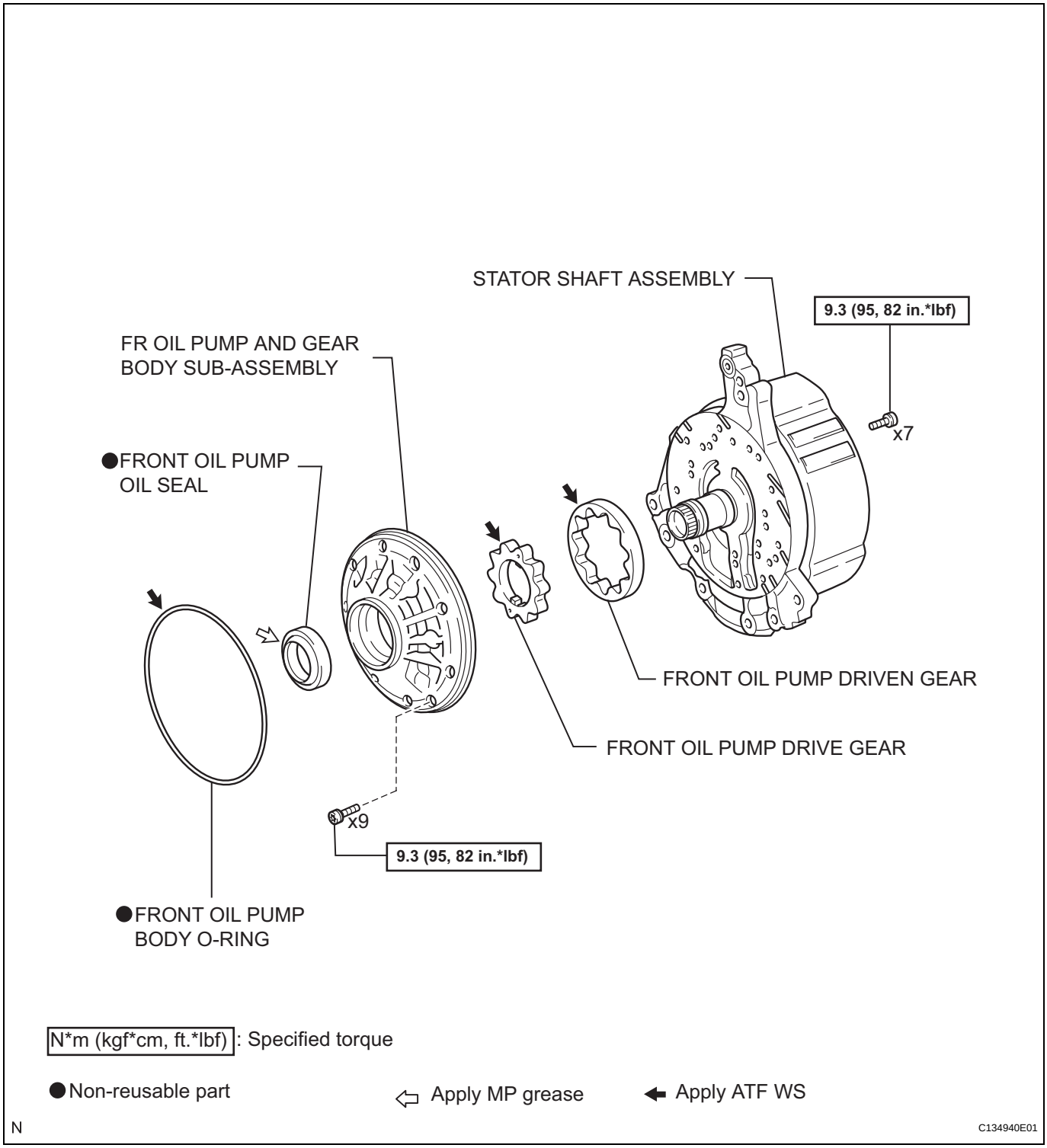

AX

DISASSEMBLY

1. **INSPECT FRONT OIL PUMP AND GEAR BODY SUB-ASSEMBLY (See page AX-326)**

2. **REMOVE STATOR SHAFT ASSEMBLY**
   (a) Using a "TORX" wrench (T30), remove the 16 bolts and stator shaft assembly from the oil pump body.
   NOTICE:
   Keep the gears in the order of installation.

3. **INSPECT CLEARANCE OF FRONT OIL PUMP AND GEAR BODY SUB-ASSEMBLY (See page AX-326)**

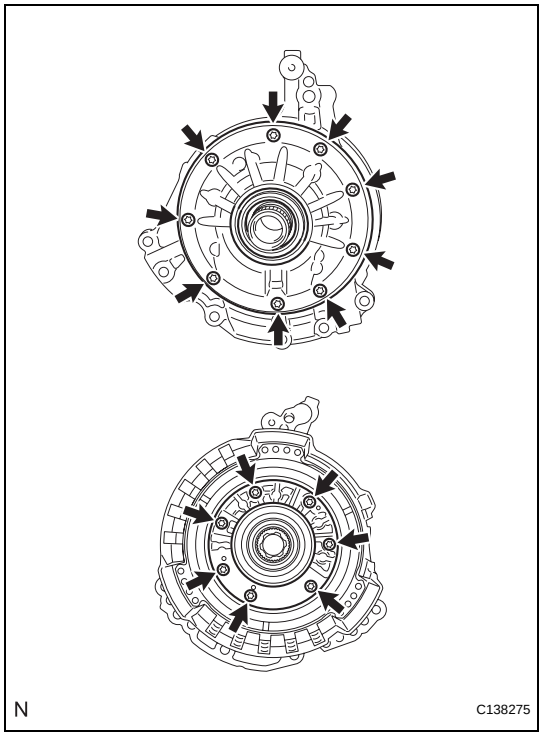

4. **REMOVE FRONT OIL PUMP BODY O-RING**
   (a) Remove the O-ring from the oil pump body.

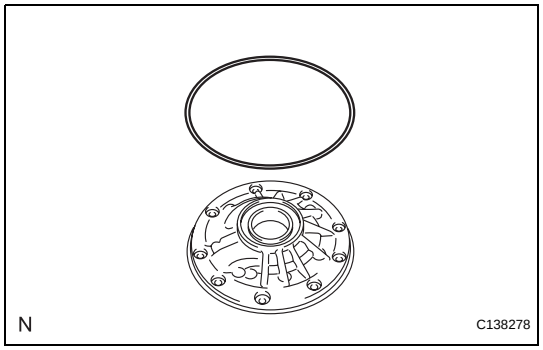

5. **REMOVE FRONT OIL PUMP DRIVE GEAR**
   (a) Remove the front oil pump drive gear from the oil pump body.

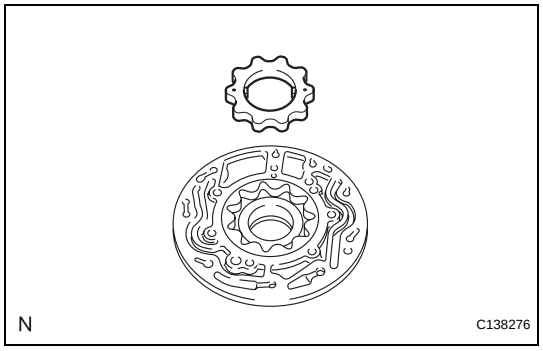

AX

SHIFT SOLENOID VALVE

COMPONENTS

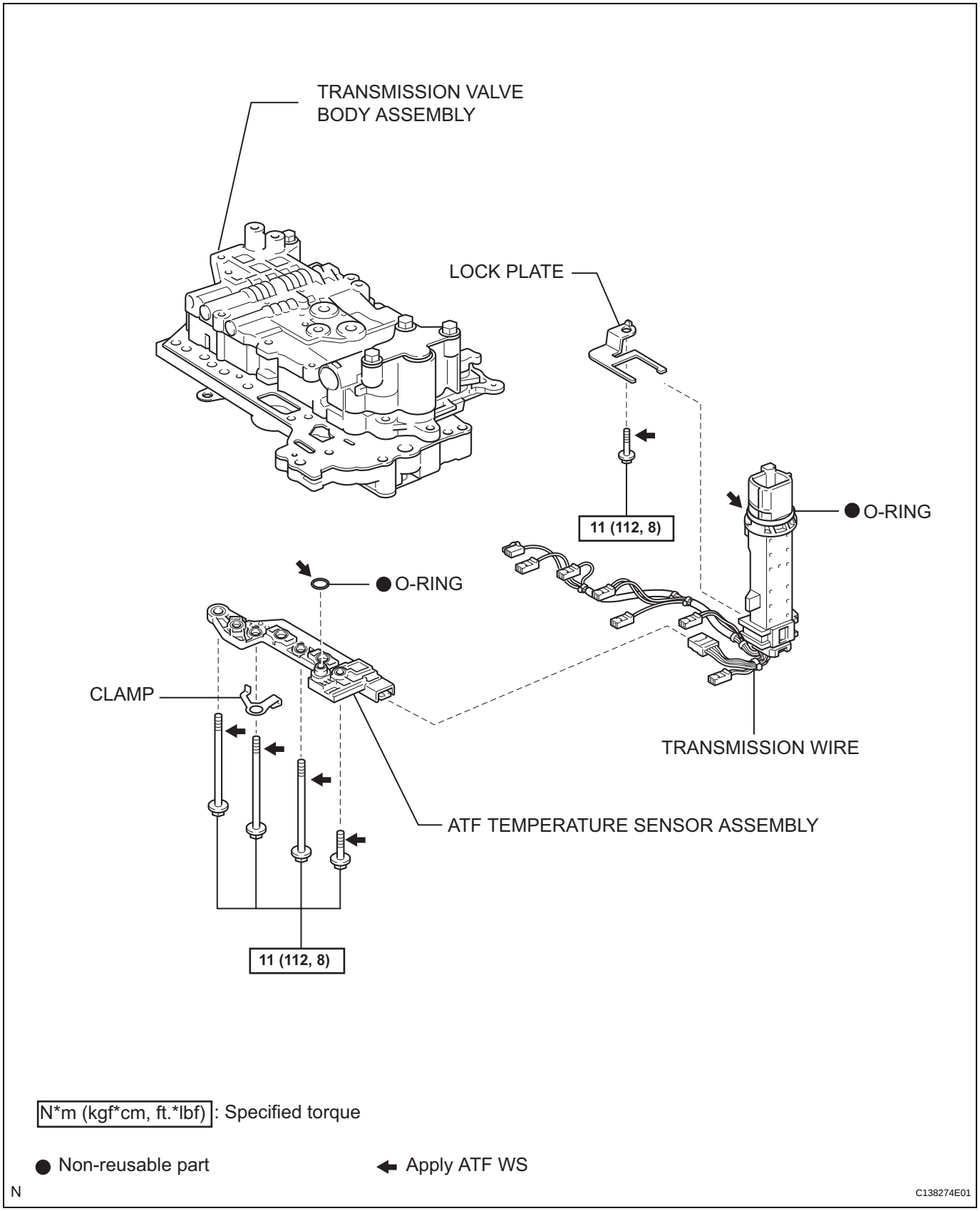

AX

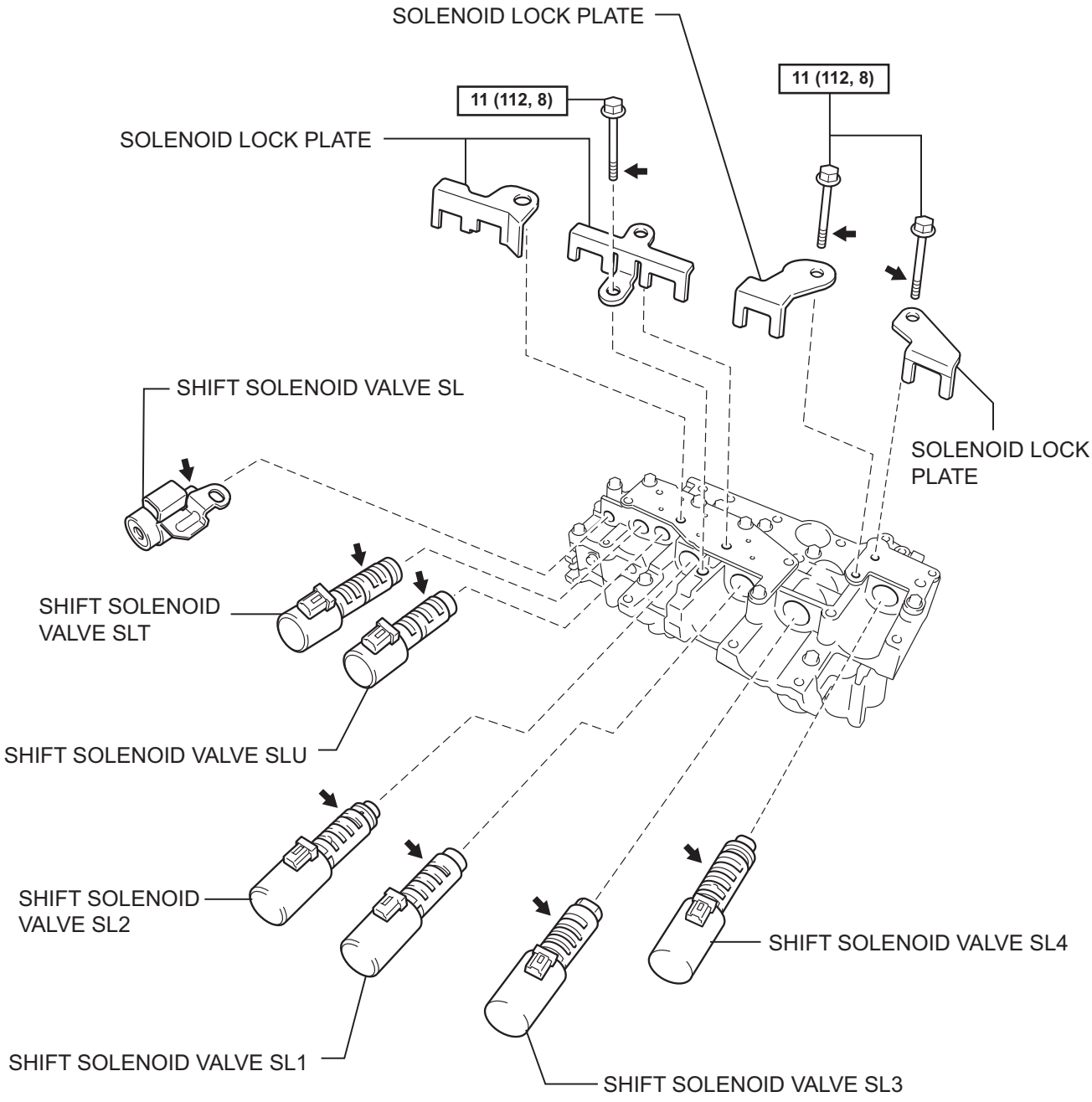

N*m (kgf*cm, ft.*lbf) : Specified torque

Apply ATF WS

N

C138719E01

DIFFERENTIAL CASE

COMPONENTS

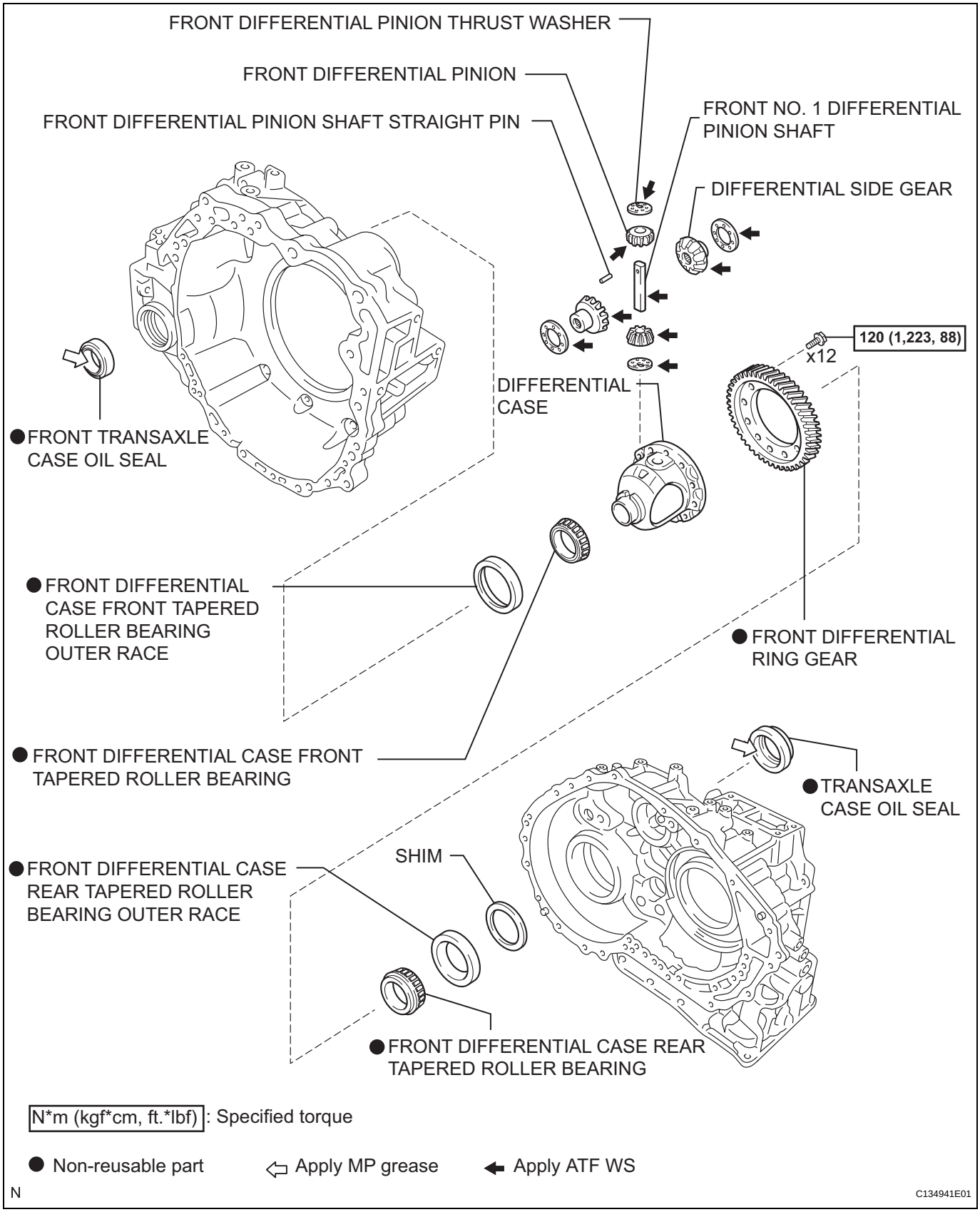

AX

DISASSEMBLY

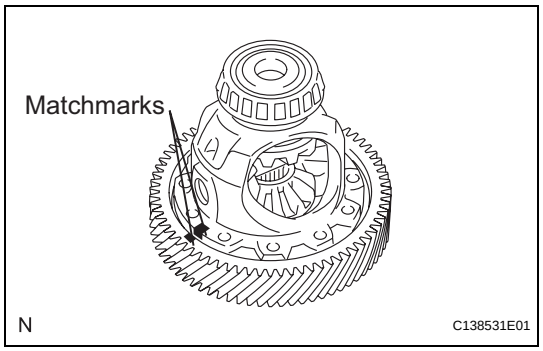

1. REMOVE FRONT DIFFERENTIAL RING GEAR

(a) Put matchmarks on the front differential ring gear and differential case.

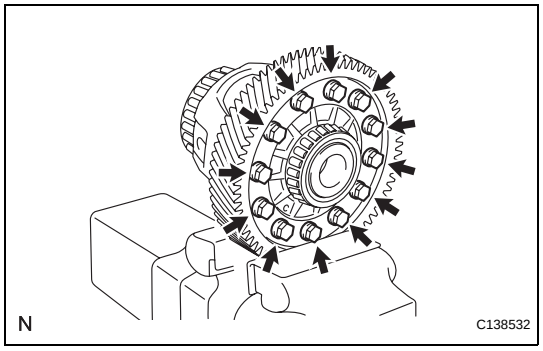

(b) Remove the 12 bolts.

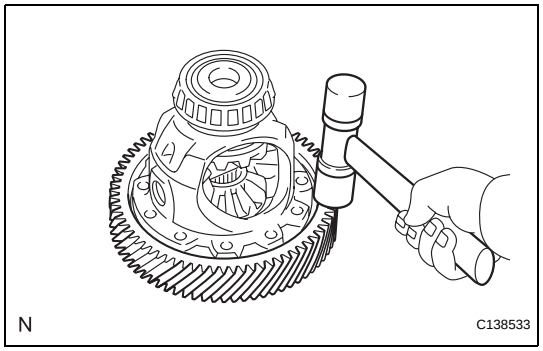

(c) Using a plastic hammer, tap on the front differential ring gear to remove it from the case.

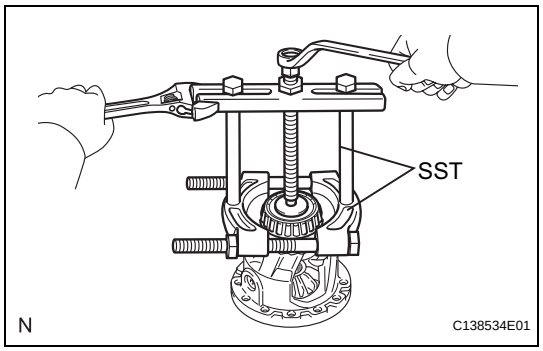

2. REMOVE FRONT DIFFERENTIAL CASE FRONT TAPERED ROLLER BEARING

(a) Using SST, remove the front differential case front tapered roller bearing from the differential case.
SST 09950-00020, 09950-00030, 09950-60010 (09951-00480)

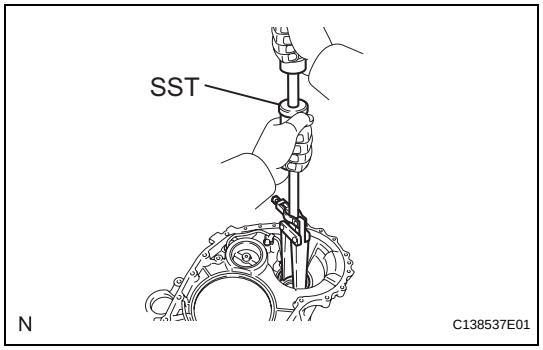

(b) Using SST, remove the front differential case front tapered roller bearing outer race and shim from the transaxle housing.
SST 09308-00010

AX

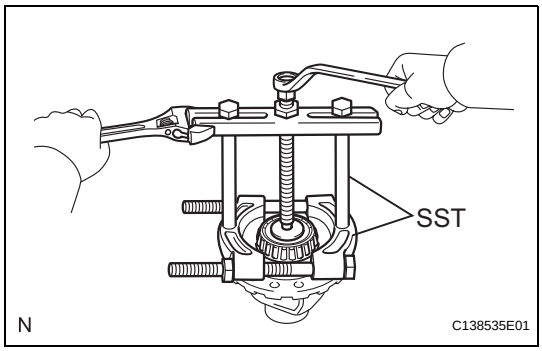

3. REMOVE FRONT DIFFERENTIAL CASE REAR TAPERED ROLLER BEARING

(a) Using SST, remove the front differential case rear tapered roller bearing from the differential case.
SST 09950-00020, 09950-00030, 09950-60010 (09951-00480)

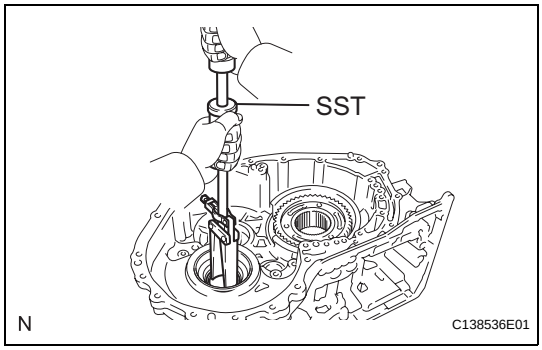

(b) Using SST, remove the front differential case rear tapered roller bearing outer race from the transaxle case.
SST 09308-00010

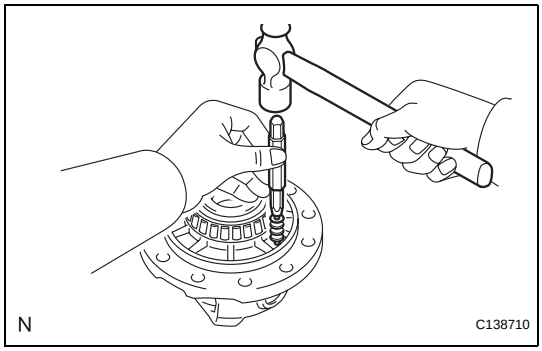

4. REMOVE FRONT DIFFERENTIAL PINION SHAFT STRAIGHT PIN

(a) Using a pin punch (3 mm) and hammer, remove the straight pin.
NOTICE:
Before removing the straight pin, unstake it with a pin punch.

AX

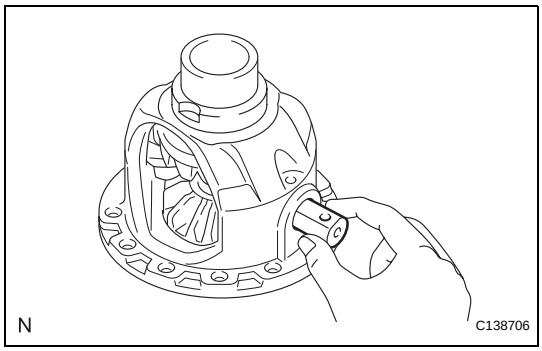

5. REMOVE FRONT NO. 1 DIFFERENTIAL PINION SHAFT

(a) Remove the front No. 1 differential pinion shaft from the differential case.

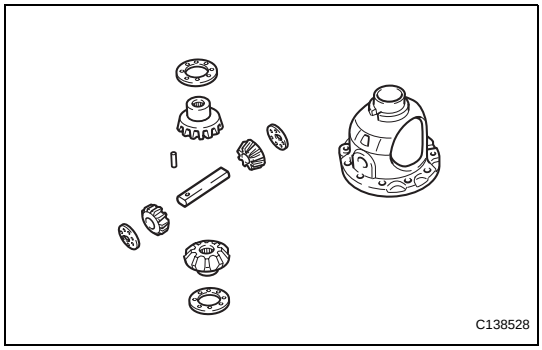

6. REMOVE DIFFERENTIAL SIDE GEAR

(a) Remove the 2 front differential pinions, 2 pinion thrust washers, 2 front differential side gears, and 2 side gear thrust washers from the differential case.

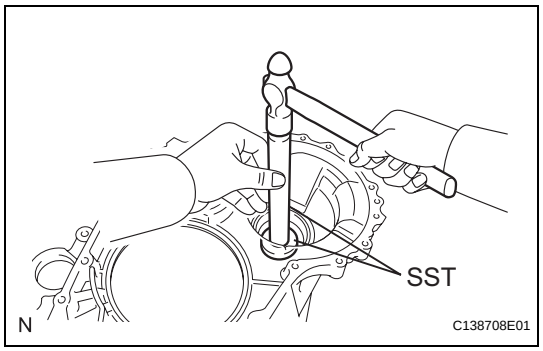

7. REMOVE FRONT TRANSAXLE CASE OIL SEAL

(a) Using SST and a hammer, remove the front transaxle case oil seal from the transaxle housing.
SST 09950-60010 (09951-00540), 09950-70010 (09951-07200)

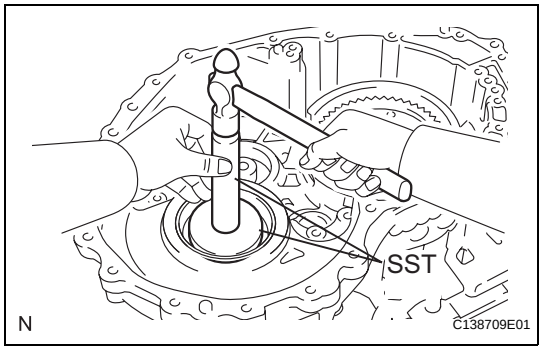

8. REMOVE TRANSAXLE CASE OIL SEAL

(a) Using SST and a hammer, remove the transaxle case oil seal from transaxle case.
SST 09950-60010 (09951-00650), 09950-70010 (09951-07100)

INSPECTION

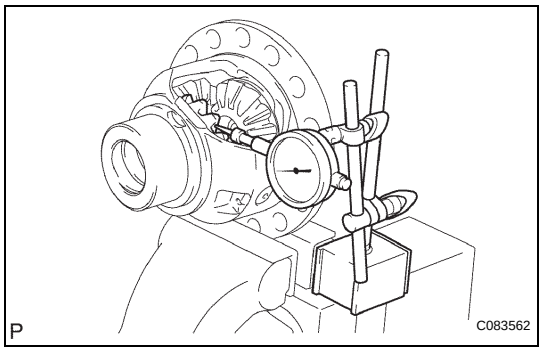

1. INSPECT DIFFERENTIAL SIDE GEAR BACKLASH

(a) Hold the differential case in a vise between aluminum plates.
NOTICE:
Do not overtighten the vise.

(b) Place a dial indicator on the tip of the side gear tooth at a right angle.

(c) Hold the pinion gear in the differential case and measure the backlash of the side gear.
Standard backlash:
0 to 0.15 mm (0 to 0.0059 in.)
Thrust washer thickness

Thickness	Thickness
1.50 mm (0.0591 in.)	1.75 mm (0.0689 in.)
1.55 mm (0.0610 in.)	1.80 mm (0.0709 in.)
1.60 mm (0.0630 in.)	1.85 mm (0.07283 in.)
1.65 mm (0.0650 in.)	1.90 mm (0.07480 in.)
1.70 mm (0.0669 in.)	-

If the backlash is greater than the standard range, select another side gear thrust washer.

REASSEMBLY

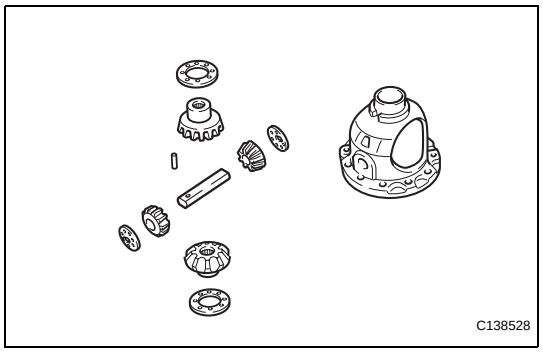

1. INSTALL DIFFERENTIAL SIDE GEAR

(a) Coat the 2 front differential side gears, 2 side gear thrust washers, 2 front differential pinions and 2 pinion thrust washers with ATF and install them to the differential case.

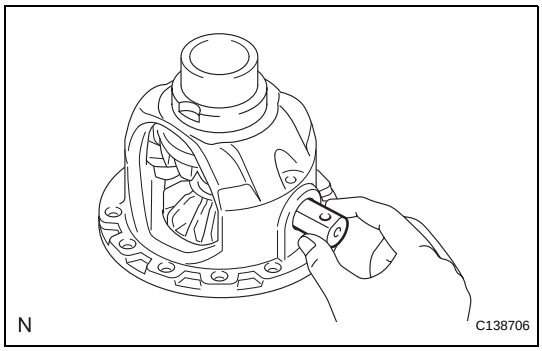

2. INSTALL FRONT NO. 1 DIFFERENTIAL PINION SHAFT

(a) Coat the front No. 1 differential pinion shaft with ATF, and install it to the differential case.

3. INSPECT DIFFERENTIAL SIDE GEAR BACKLASH (See page AX-343)

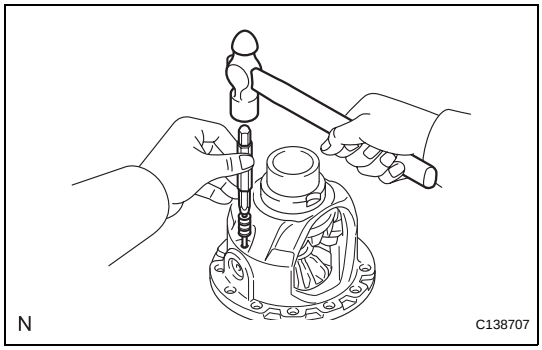

4. INSTALL FRONT DIFFERENTIAL PINION SHAFT STRAIGHT PIN

(a) Using a pin punch (3 mm) and hammer, install the pinion shaft straight pin.
NOTICE:
Align the holes, and install the pinion shaft straight pin.

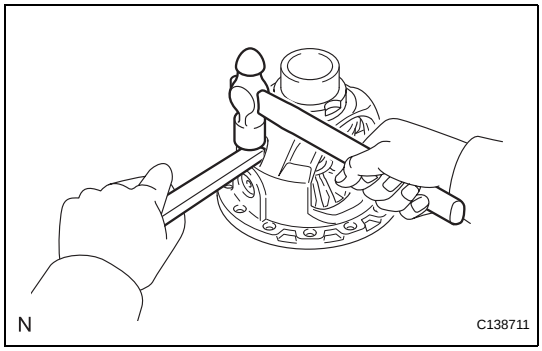

(b) Using a chisel and hammer, stake the differential case.
NOTICE:
Stake the differential case after adjusting the backlash.

AX

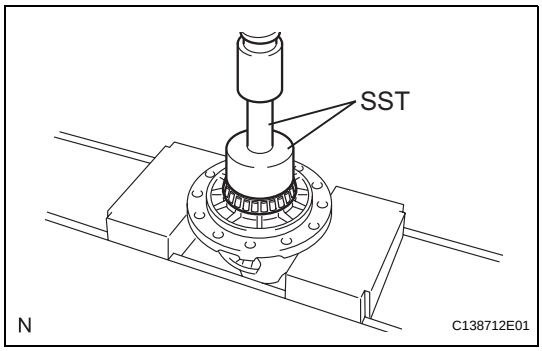

5. INSTALL FRONT DIFFERENTIAL CASE REAR TAPERED ROLLER BEARING

(a) Using SST and a press, install the front differential case rear tapered roller bearing to the differential case.
SST 09710-04081, 09950-60010 (09951-00480), 09950-70010 (09951-07100)
NOTICE:
Do not damage the bearing cage during bearing inner race installation.

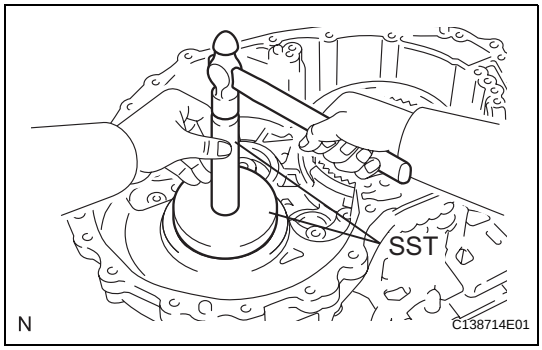

(b) Using SST and a hammer, install the front differential case rear tapered roller bearing outer race to the transaxle case.
SST 09950-70010 (09951-07150), 09950-60020 (09951-00790)
NOTICE:
Ensure that there is no clearance between the bearing and transaxle case.

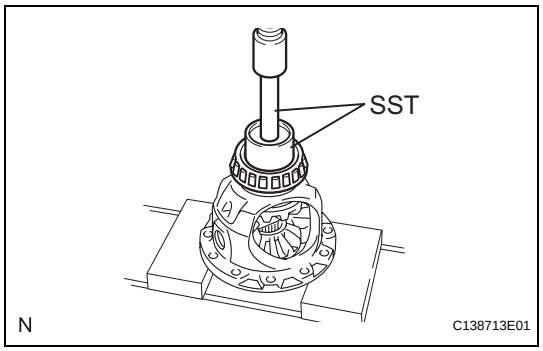

6. INSTALL FRONT DIFFERENTIAL CASE FRONT TAPERED ROLLER BEARING

(a) Using SST and a press, install the front differential case front tapered roller bearing to the differential case.

SST 09710-04081, 09950-60010 (09951-00480), 09950-70010 (09951-07100)

NOTICE:
Do not damage the bearing cage during bearing inner race installation.

(b) Install the shim to the transaxle housing.

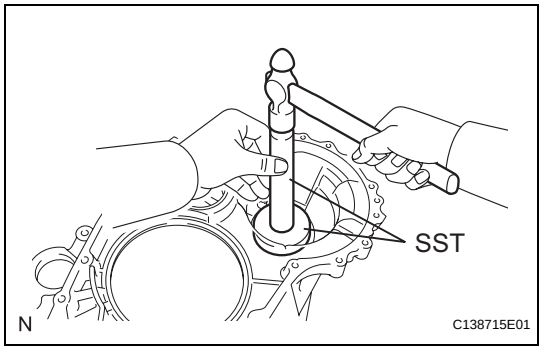

(c) Using SST and a hammer, install the front differential case front tapered roller bearing outer race to the transaxle housing.

NOTICE:
Ensure that there is no clearance between the bearing and transaxle housing.

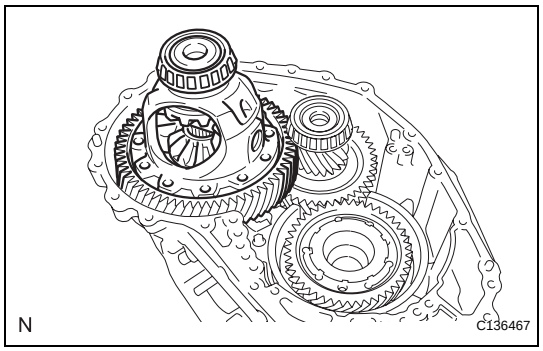

7. ADJUST DIFFERENTIAL SIDE BEARING PRELOAD

(a) Install the differential assembly to the transaxle case.

(b) Clean the contact surfaces of the transaxle case and transaxle housing.

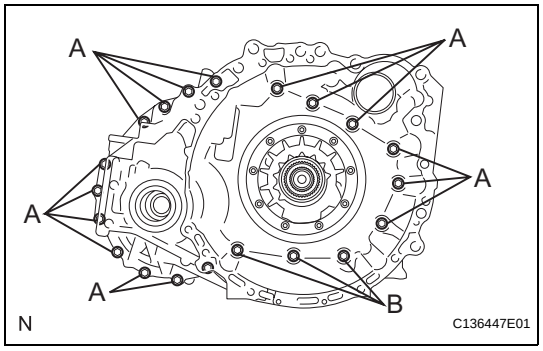

(c) Install the transaxle housing to the transaxle case with the 20 bolts.

Torque: Bolt A
31 N*m (316 kgf*cm, 23 ft.*lbf)
Bolt B
23 N*m (234 kgf*cm, 17 ft.*lbf)

AX

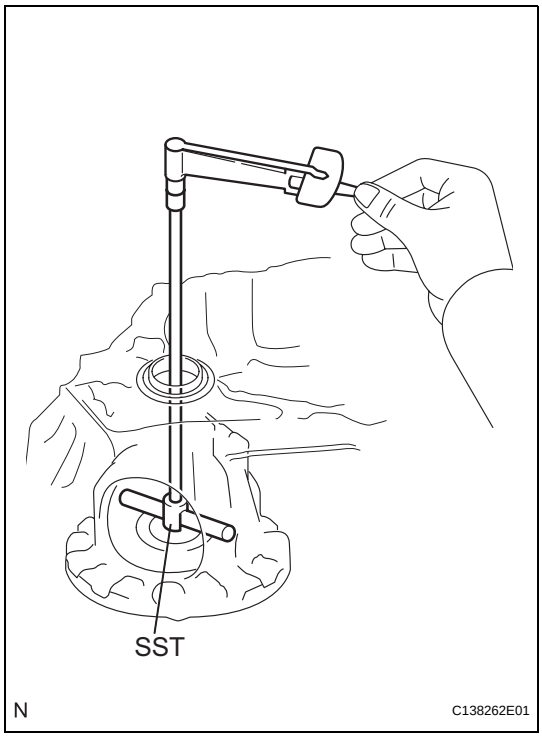

(d) Using SST, turn the differential assembly right and left 2 or 3 times to settle the bearing.
SST 09564-33010

(e) Using SST and a torque wrench, measure the turning torque of the differential side bearing while rotating SST at 10 rpm.
SST 09564-33010
Turning torque:
1.05 to 1.93 N*m (10.70 to 19.67 kgf*cm, 9.29 to 17.08 in.*lbf)
If the turning torque is not within the specified range, refer to the table below to select a shim so that the turning torque is within the specified range.
Shim thickness: mm (in.)

Thickness	Thickness	Thickness	Thickness
2.000 (0.0787)	2.225 (0.0876)	2.450 (0.0965)	2.675 (0.1054)
2.025 (0.0797)	2.250 (0.0886)	2.475 (0.0974)	2.700 (0.1063)
2.050 (0.0807)	2.275 (0.0896)	2.500 (0.0984)	2.725 (0.1073)
2.075 (0.0817)	2.300 (0.0906)	2.525 (0.0994)	2.750 (0.1083)
2.100 (0.0827)	2.325 (0.0915)	2.550 (0.1004)	2.775 (0.1093)
2.125 (0.0837)	2.350 (0.0925)	2.575 (0.1014)	2.800 (0.1102)
2.150 (0.0847)	2.375 (0.0935)	2.600 (0.1024)	2.825 (0.1112)
2.175 (0.0856)	2.400 (0.0945)	2.625 (0.1034)	2.850 (0.1122)
2.200 (0.0866)	2.425 (0.0955)	2.650 (0.1043)	2.875 (0.1132)

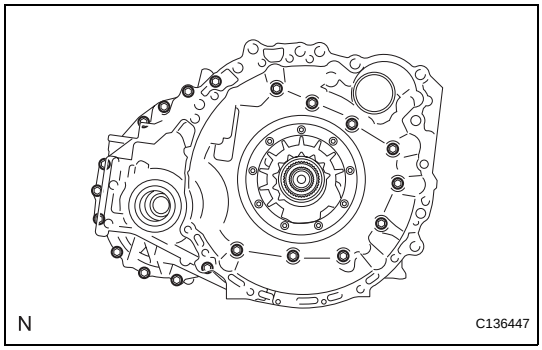

(f) Remove the 20 bolts and the transaxle housing from the transaxle case.

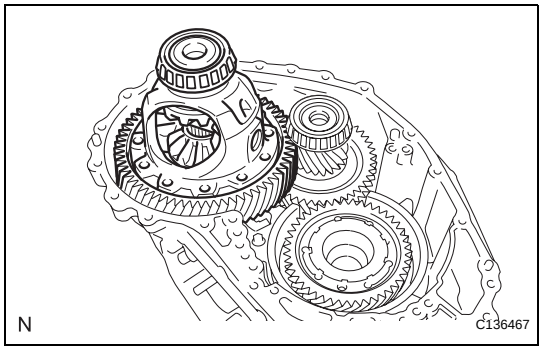

(g) Remove the differential assembly from the transaxle case.

AX

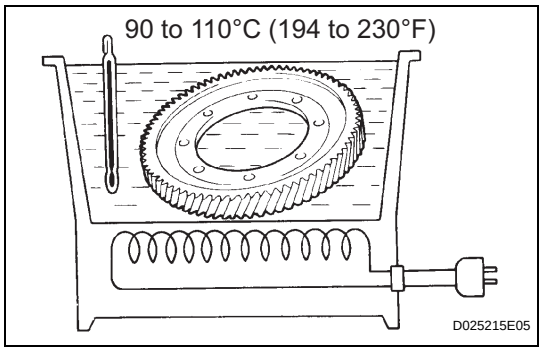

8. INSTALL FRONT DIFFERENTIAL RING GEAR

(a) Using ATF and a heater, heat the front differential ring gear to 90 to 110°C (194.0 to 230.0°F).
NOTICE:
Do not heat the ring gear to more than 110°C (230.0°F).

(b) Clean the contact surface of the front differential case.

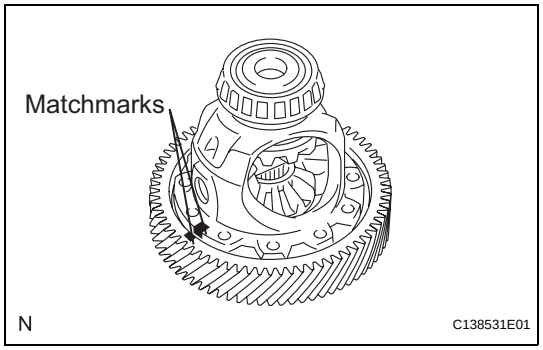

(c) Align the matchmarks, and install the front differential ring gear case quickly.
NOTICE:
Do not install the bolts while the ring gear is hot.

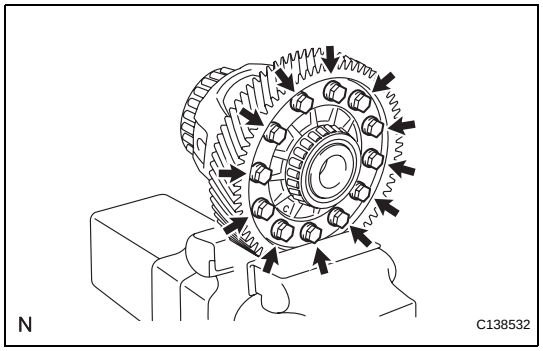

(d) Tighten the 12 bolts.
Torque: 120 N*m (1,223 kgf*cm, 88 ft.*lbf)
NOTICE:
Tighten the bolts a little at a time in diagonal order.

9. INSTALL TRANSAXLE CASE OIL SEAL

(a) Coat the lip of a new oil seal with MP grease.

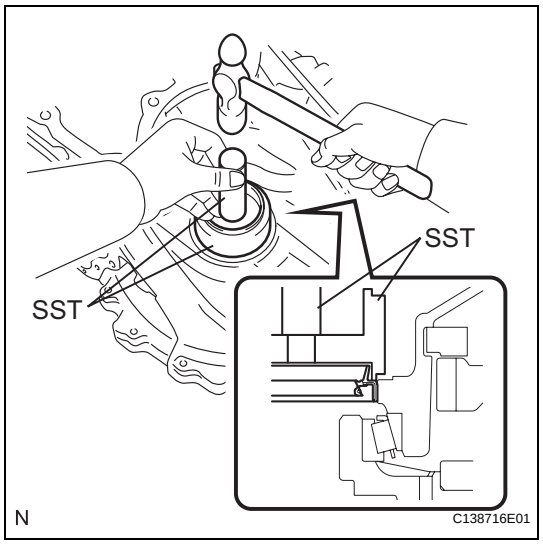

(b) Using SST and a hammer, install the oil seal.
SST 09316-10010, 09950-70010 (09951-07100)
Oil seal drive in depth:
-0.5 to 0.5 mm (-0.0197 to 0.0197 in.)

10. INSTALL FRONT TRANSAXLE CASE OIL SEAL

(a) Coat the lip of a new oil seal with MP grease.

AX

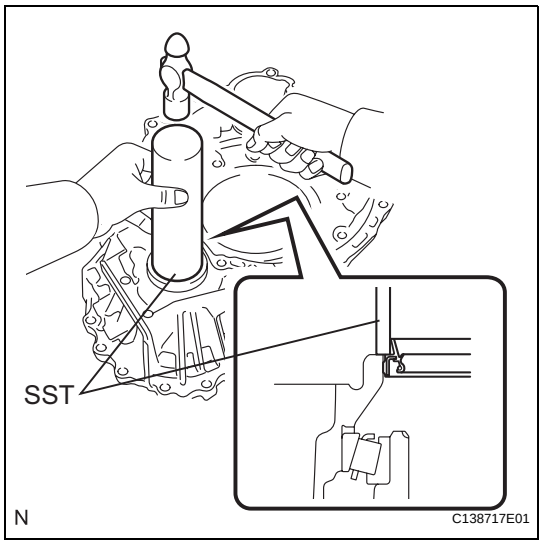

(b) Using SST and a hammer, install the oil seal.
SST 09308-14010
Oil seal drive in depth:
-0.5 to 0.5 mm (-0.0197 to 0.0197 in.)

SPEED SENSOR

COMPONENTS

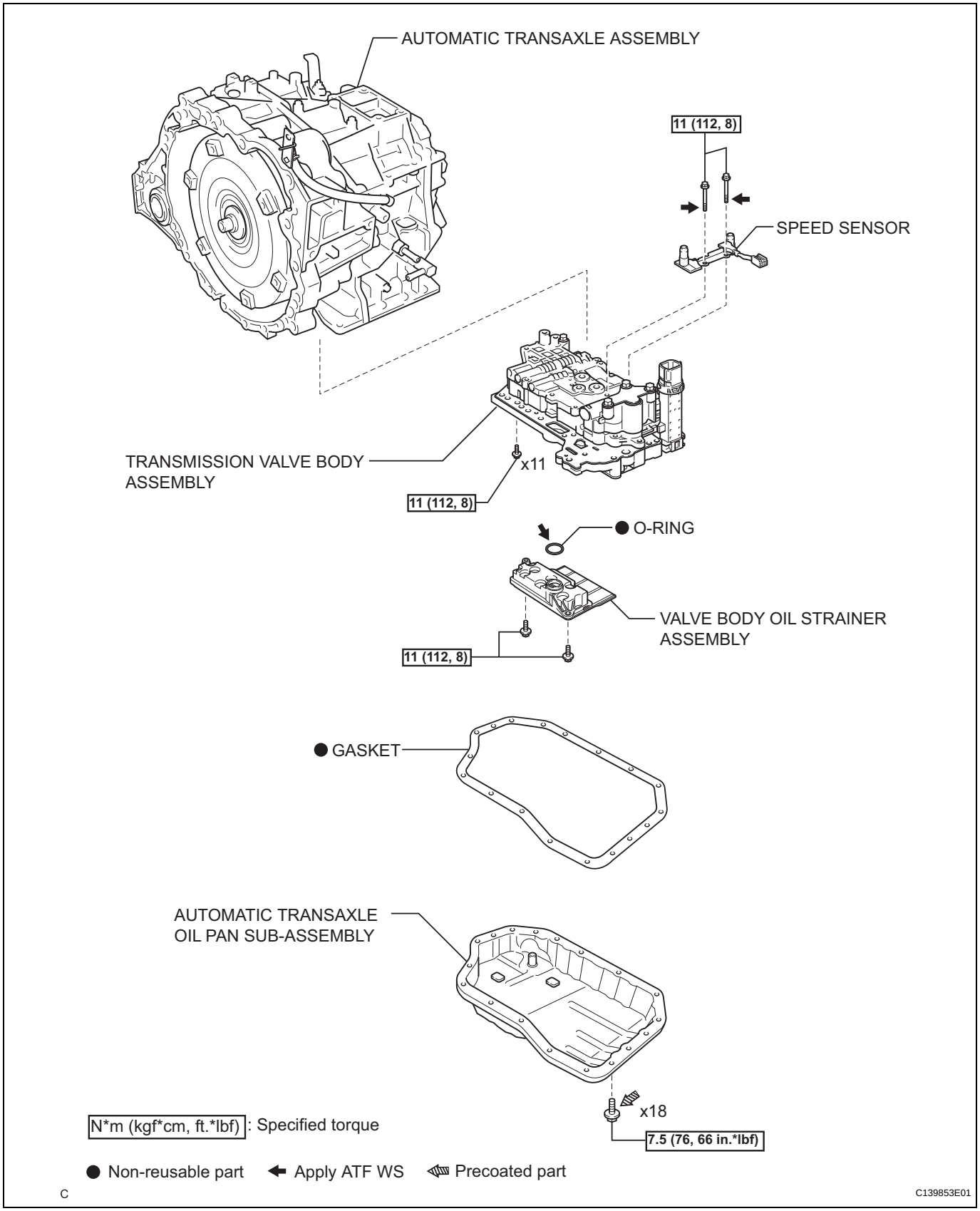

AX

REMOVAL

1. **REMOVE AUTOMATIC TRANSAXLE ASSEMBLY**
   HINT:
   (See page AX-215)
2. **REMOVE AUTOMATIC TRANSAXLE OIL PAN SUB-ASSEMBLY (See page AX-192)**
3. **REMOVE VALVE BODY OIL STRAINER ASSEMBLY (See page AX-192)**
4. **REMOVE TRANSMISSION VALVE BODY ASSEMBLY (See page AX-193)**
5. **REMOVE SPEED SENSOR**
   (a) Disconnect the connector.
   (b) Remove the 2 bolts and speed sensor from the valve body.

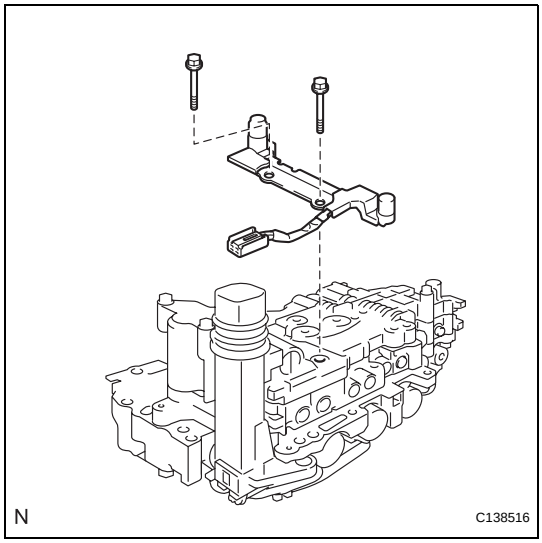

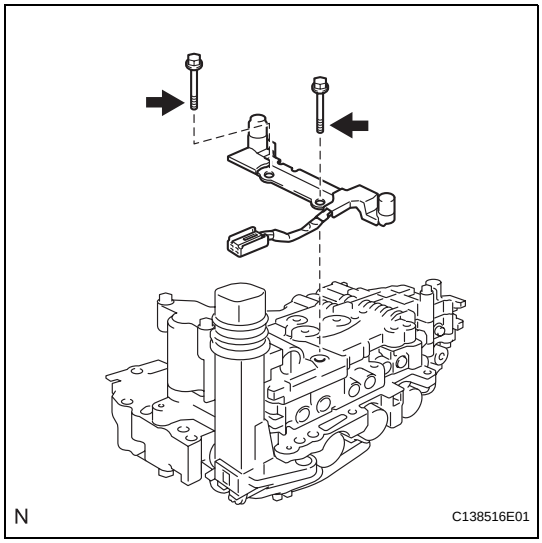

INSTALLATION

1. **INSTALL SPEED SENSOR**
   (a) Coat the 2 bolts with ATF.
   (b) Install the speed sensor to the valve body with the 2 bolts.
   Torque: 11 N*m (112 kgf*cm, 8 ft.*lbf)
   (c) Connect the connector.
2. **INSTALL TRANSMISSION VALVE BODY ASSEMBLY (See page AX-193)**
3. **INSTALL VALVE BODY OIL STRAINER ASSEMBLY (See page AX-194)**
4. **INSTALL AUTOMATIC TRANSAXLE OIL PAN SUB-ASSEMBLY (See page AX-195)**
5. **INSTALL AUTOMATIC TRANSAXLE ASSEMBLY**
   HINT:
   (See page AX-222)

DRIVE SHAFT SYSTEM

PROBLEM SYMPTOMS TABLE

Use the table below to help find the cause of the problem. Check each part. If necessary, replace these parts.

Symptom	Suspected Area	See page
Noise (Front drive shaft)	Inboard or outboard joint (Worn)	DS-10

FRONT DRIVE SHAFT

COMPONENTS

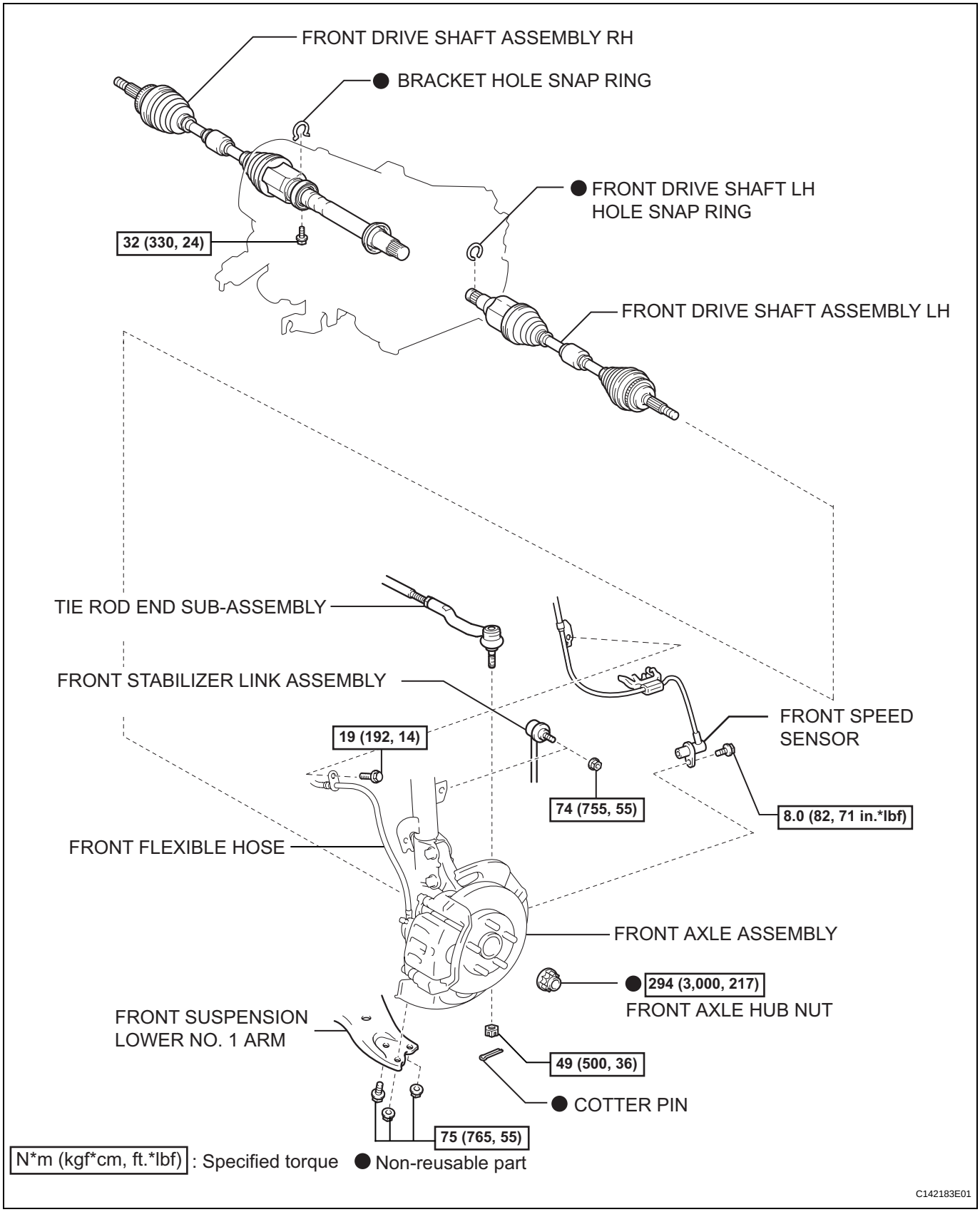

DS

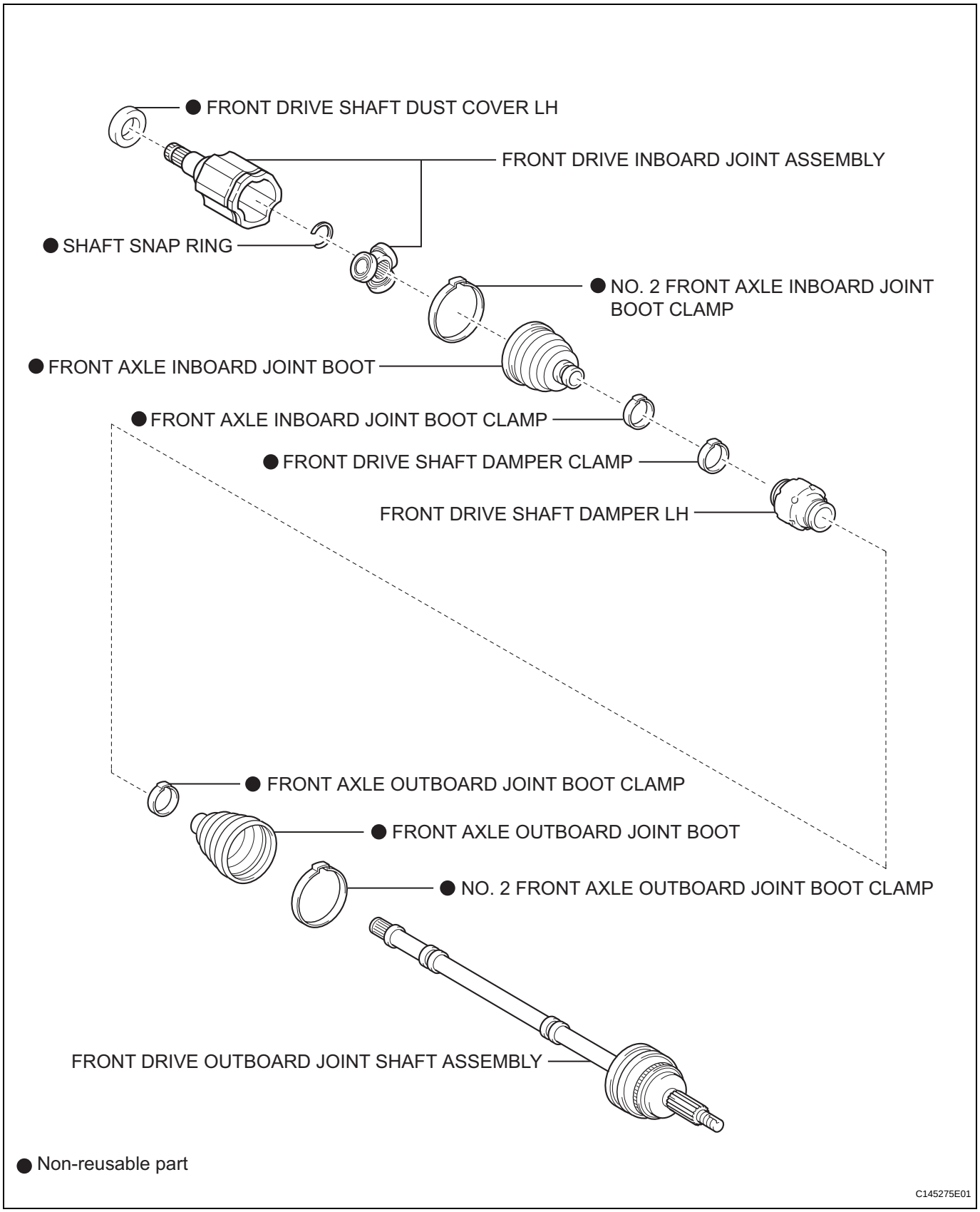
● FRONT DRIVE SHAFT DUST COVER LH
FRONT DRIVE INBOARD JOINT ASSEMBLY
● SHAFT SNAP RING
● NO. 2 FRONT AXLE INBOARD JOINT BOOT CLAMP
● FRONT AXLE INBOARD JOINT BOOT
● FRONT AXLE INBOARD JOINT BOOT CLAMP
● FRONT DRIVE SHAFT DAMPER CLAMP
FRONT DRIVE SHAFT DAMPER LH
● FRONT AXLE OUTBOARD JOINT BOOT CLAMP
● FRONT AXLE OUTBOARD JOINT BOOT
● NO. 2 FRONT AXLE OUTBOARD JOINT BOOT CLAMP
FRONT DRIVE OUTBOARD JOINT SHAFT ASSEMBLY
● Non-reusable part
C145275E01

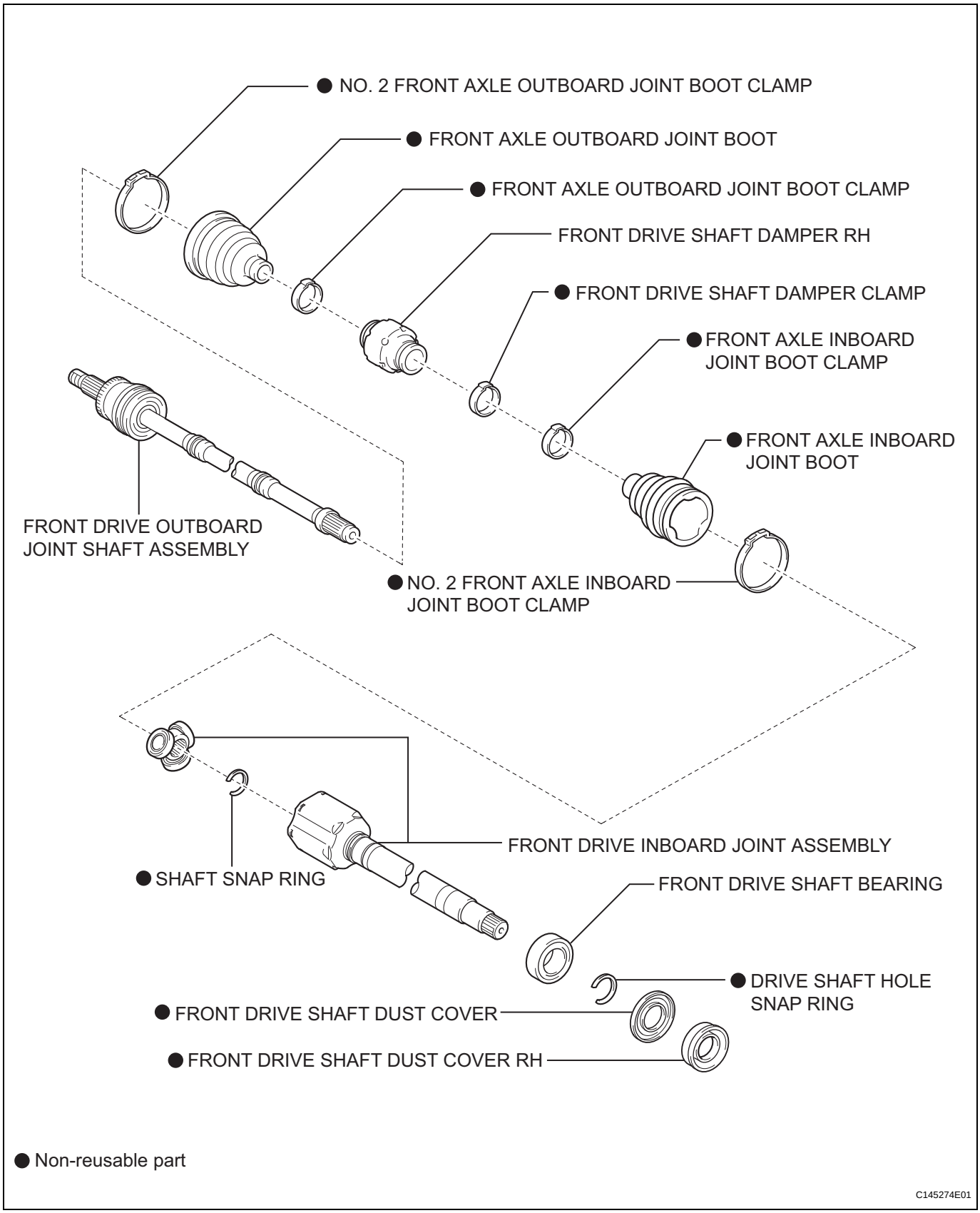
● NO. 2 FRONT AXLE OUTBOARD JOINT BOOT CLAMP
● FRONT AXLE OUTBOARD JOINT BOOT
● FRONT AXLE OUTBOARD JOINT BOOT CLAMP
FRONT DRIVE SHAFT DAMPER RH
● FRONT DRIVE SHAFT DAMPER CLAMP
● FRONT AXLE INBOARD JOINT BOOT CLAMP
● FRONT AXLE INBOARD JOINT BOOT
FRONT DRIVE OUTBOARD JOINT SHAFT ASSEMBLY
● NO. 2 FRONT AXLE INBOARD JOINT BOOT CLAMP
FRONT DRIVE INBOARD JOINT ASSEMBLY
● SHAFT SNAP RING
FRONT DRIVE SHAFT BEARING
● DRIVE SHAFT HOLE SNAP RING
● FRONT DRIVE SHAFT DUST COVER
● FRONT DRIVE SHAFT DUST COVER RH
● Non-reusable part
C145274E01

DS

AXLE SYSTEM

PROBLEM SYMPTOMS TABLE

Use the table below to help find the cause of the problem. Check each part. If necessary, replace these parts.

Symptom	Suspected Area	See page
Wander	1. Wheel alignment (Front)	SP-4
	2. Wheel alignment (Rear)	SP-11
	3. Steering linkage	PS-37
	4. Hub bearing (Front)	AH-5
	5. Hub bearing (Rear)	AH-14
	6. Stabilizer bar (Front)	SP-30
	7. Stabilizer bar (Rear)	SP-66
Front wheel shimmy	1. Shock absorber (Front)	SP-16
	2. Lower ball joint	SP-25
	3. Hub bearing	AH-5

FRONT AXLE HUB BOLT

COMPONENTS

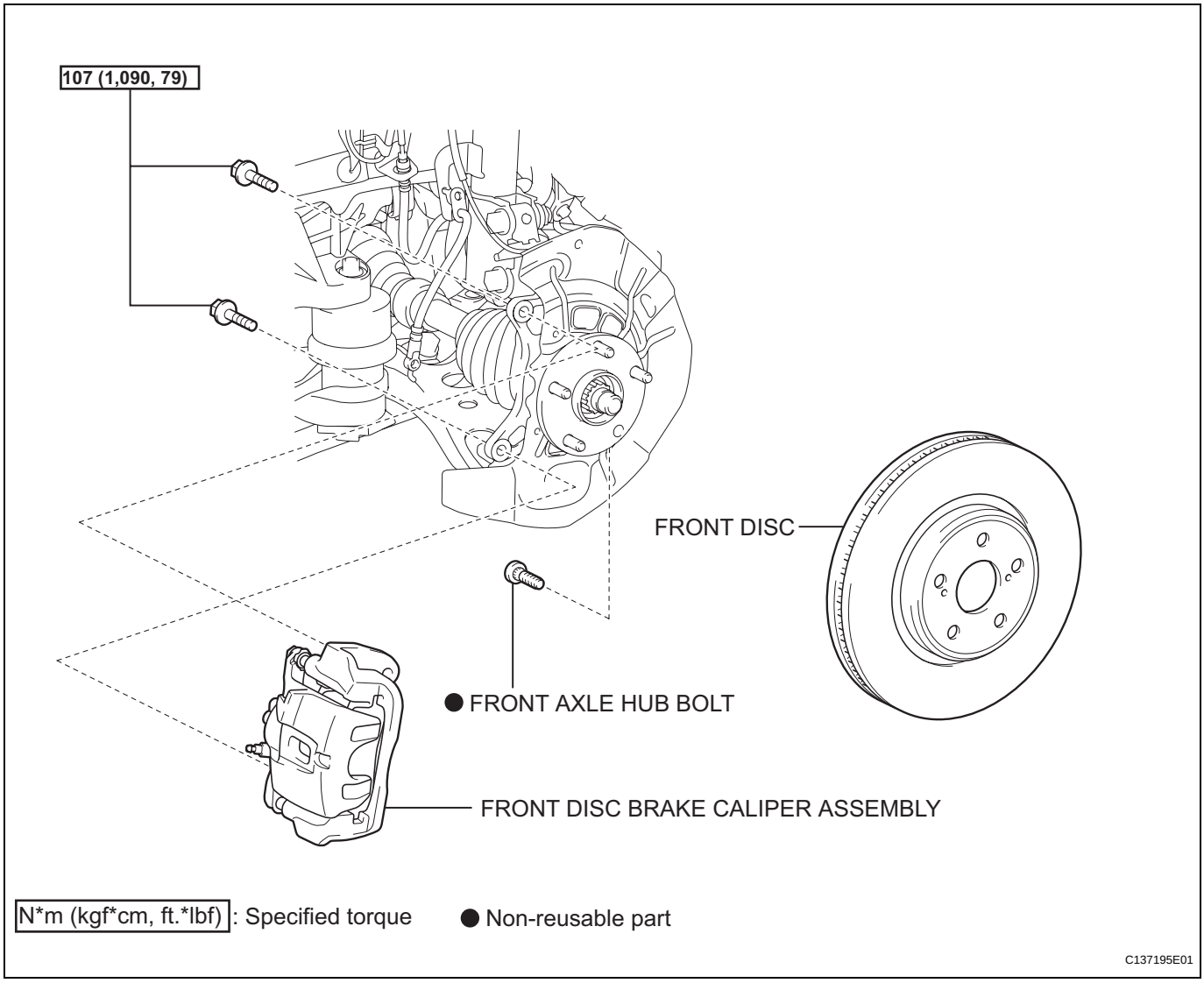

REPLACEMENT

1. **REMOVE FRONT WHEEL**
2. **SEPARATE FRONT DISC BRAKE CALIPER ASSEMBLY (See page AH-6)**
3. **REMOVE FRONT DISC (See page BR-37)**
4. **REMOVE FRONT AXLE HUB BOLT**
   (a) Temporarily install the 2 nuts and washers to the front axle hub bolt as shown in the illustration.
   (b) Using SST and a brass bar or a similar tool to hold the front axle, remove the front axle hub bolt.
   SST 09628-10011

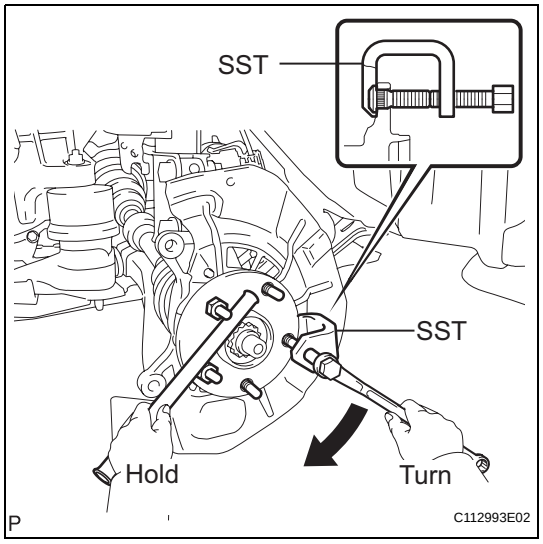

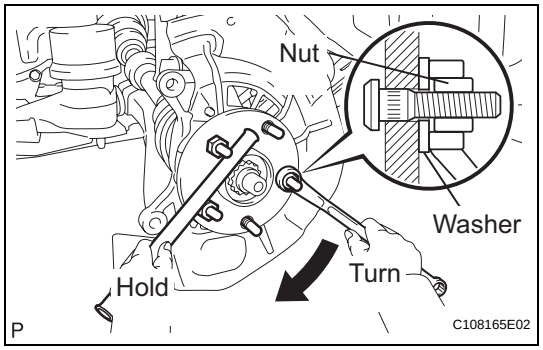

5. **INSTALL FRONT AXLE HUB BOLT**
   (a) Install a washer and nut to a new front axle hub bolt as shown in the illustration.
   (b) Using a brass bar or a similar tool to hold the front axle, install the hub bolt by torquing the nut.
6. **INSTALL FRONT DISC (See page BR-39)**
7. **INSTALL FRONT DISC BRAKE CALIPER ASSEMBLY (See page AH-10)**
8. **INSTALL FRONT WHEEL**
   Torque: 103 N*m (1,050 kgf*cm, 76 ft.*lbf)

FRONT AXLE HUB

COMPONENTS

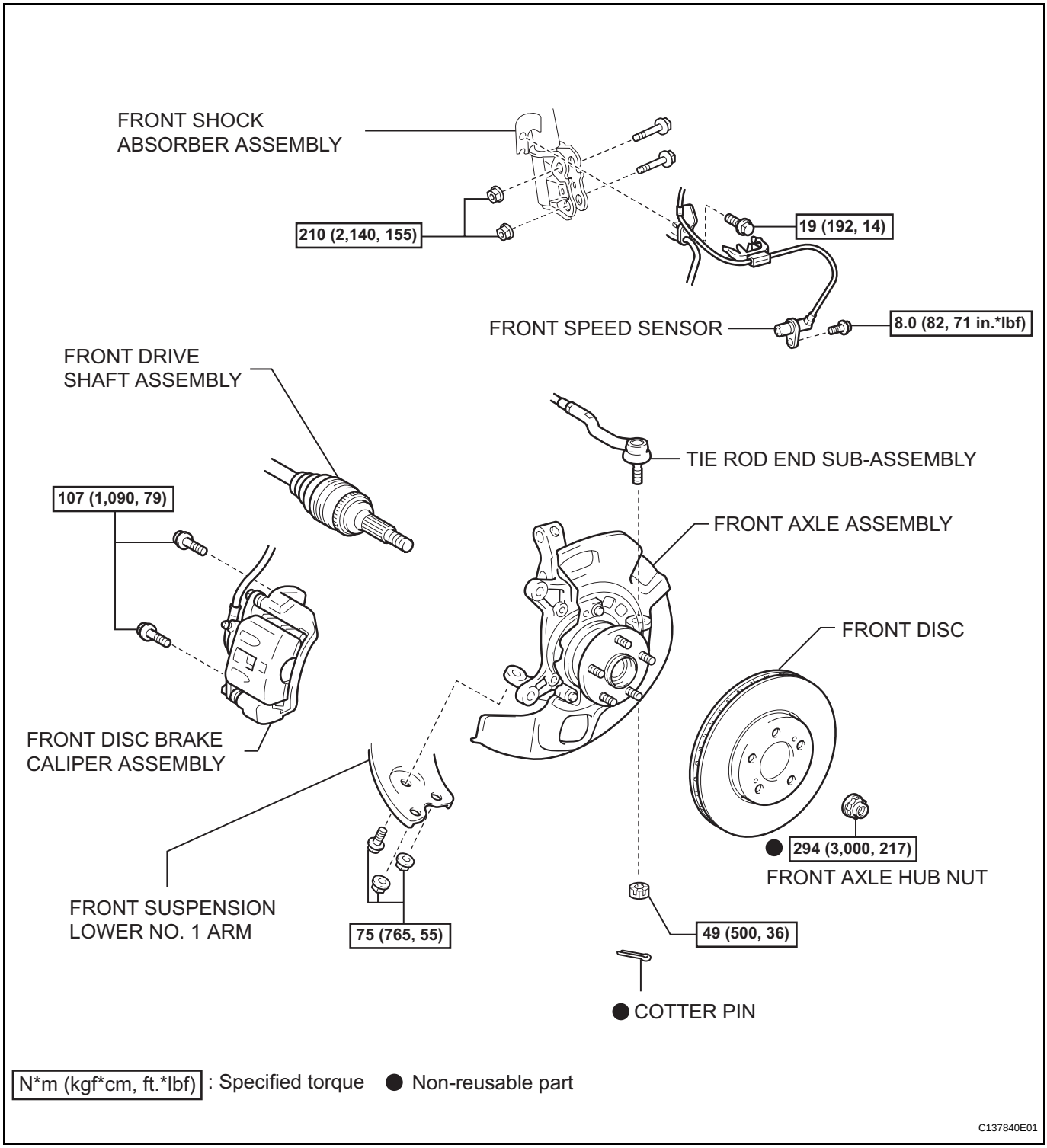

AH

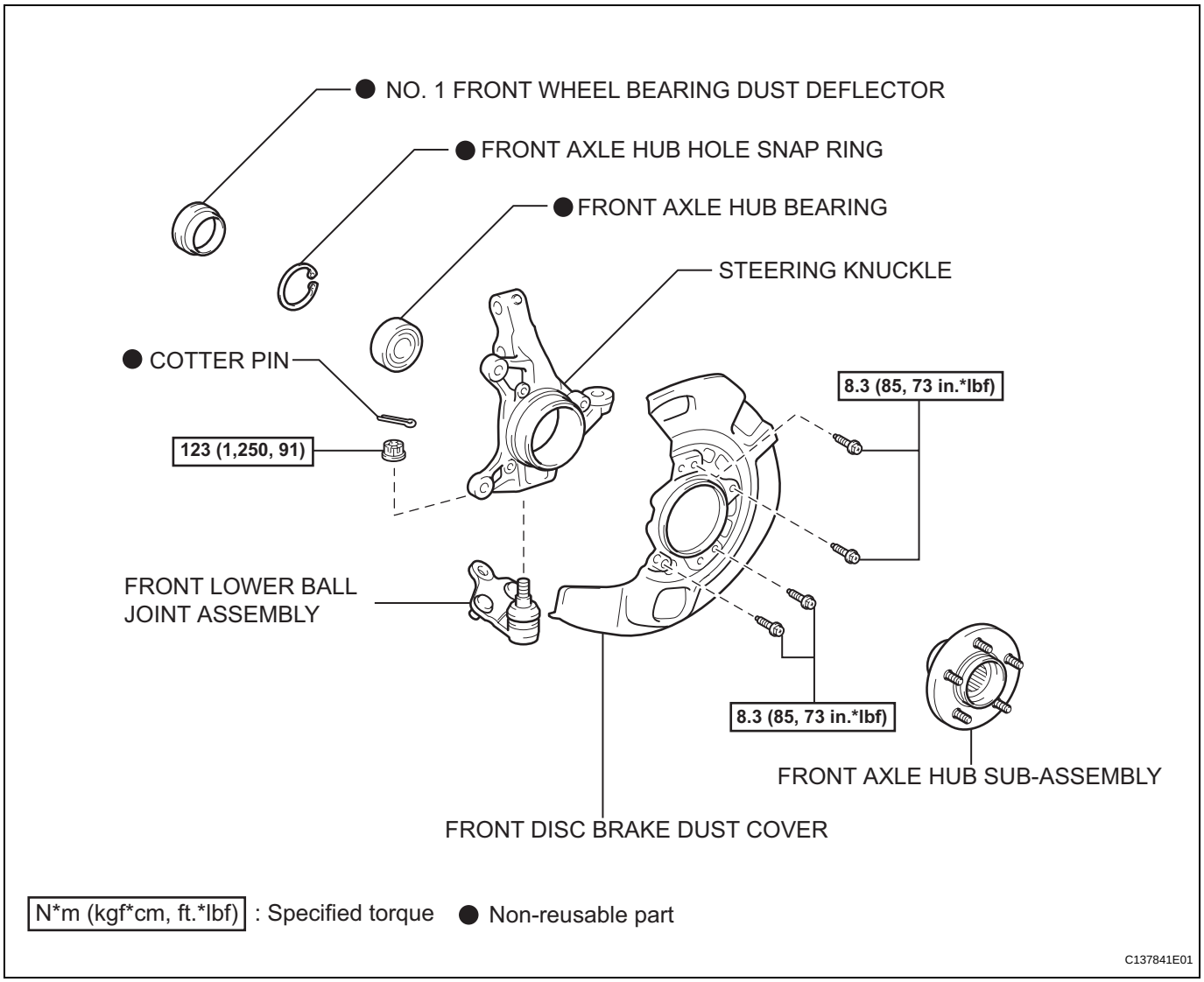
● NO. 1 FRONT WHEEL BEARING DUST DEFLECTOR
● FRONT AXLE HUB HOLE SNAP RING
● FRONT AXLE HUB BEARING
STEERING KNUCKLE
● COTTER PIN
123 (1,250, 91)
8.3 (85, 73 in.*lbf)
FRONT LOWER BALL JOINT ASSEMBLY
8.3 (85, 73 in.*lbf)
FRONT AXLE HUB SUB-ASSEMBLY
FRONT DISC BRAKE DUST COVER
N*m (kgf*cm, ft.*lbf) : Specified torque
● Non-reusable part
C137841E01

REAR AXLE HUB BOLT

COMPONENTS

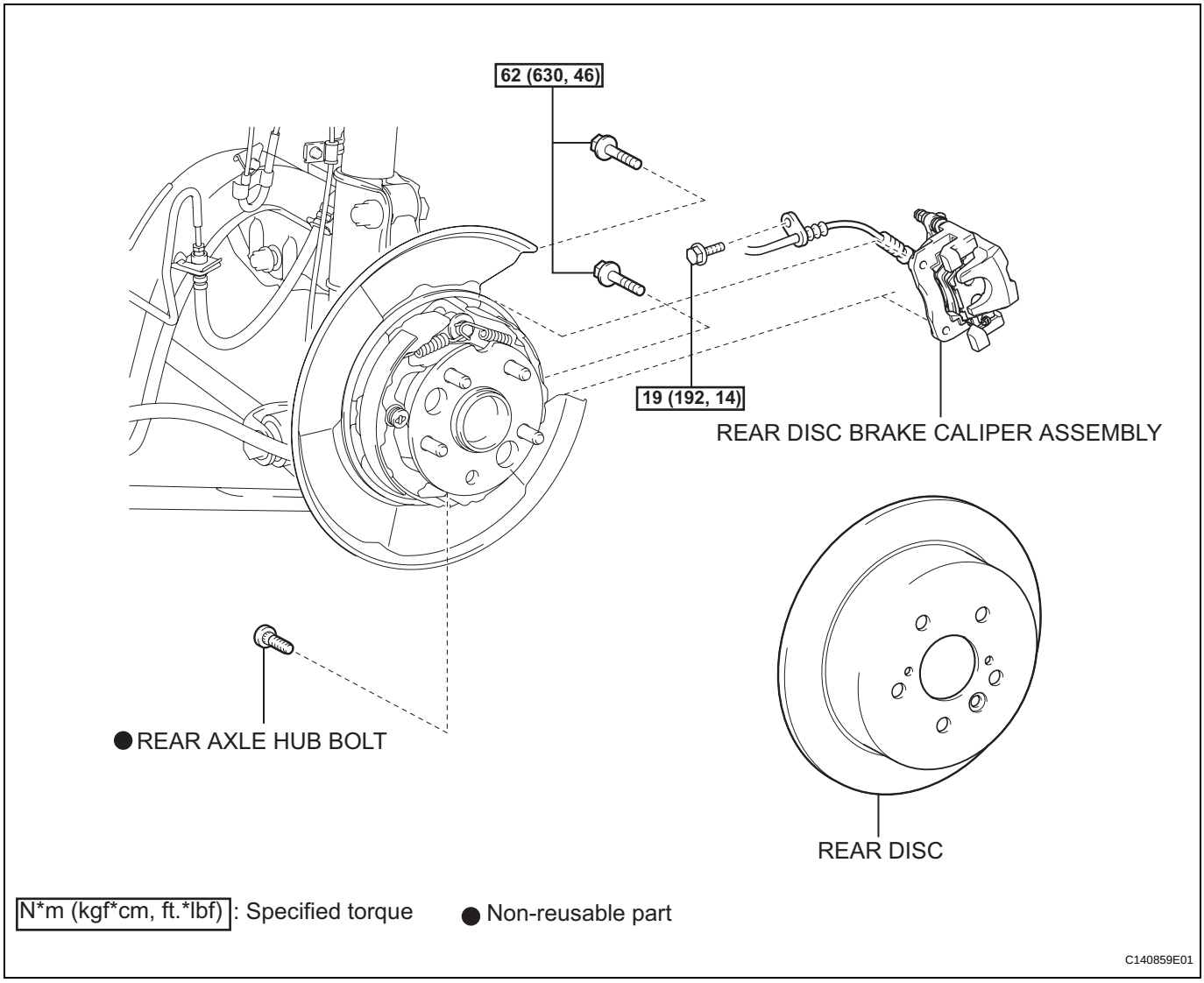

REPLACEMENT

1. **REMOVE REAR WHEEL**
2. **REMOVE REAR DISC BRAKE CALIPER ASSEMBLY (See page AH-18)**
3. **REMOVE REAR DISC (See page PB-38)**
4. **REMOVE REAR AXLE HUB BOLT**
   (a) Temporarily install the 2 nuts and washers to the rear axle hub bolt as shown in the illustration.
   (b) Using SST and a brass bar or a similar tool to hold the hub and bearing assembly, remove the rear axle hub bolt.
   SST 09628-10011

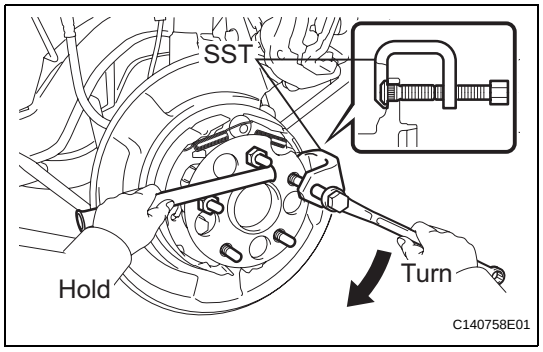

5. **INSTALL REAR AXLE HUB BOLT**
   (a) Install a washer and nut to a new bolt as shown in the illustration.
   (b) Using a brass bar or a similar tool to hold the hub and bearing assembly, install the rear axle hub bolt by tightening the nut.

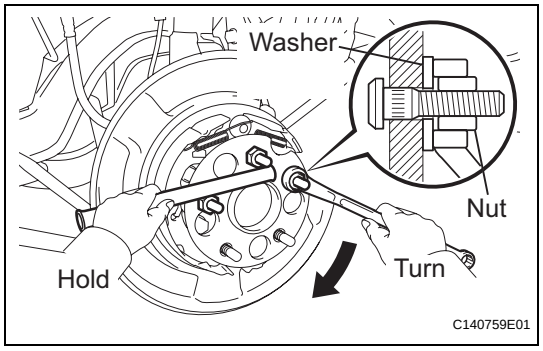

6. **INSTALL REAR DISC (See page PB-43)**
7. **INSTALL REAR DISC BRAKE CALIPER ASSEMBLY (See page AH-20)**
8. **INSTALL REAR WHEEL**
   Torque: 103 N*m (1,050 kgf*cm, 76 ft.*lbf)

REAR AXLE HUB AND BEARING

COMPONENTS

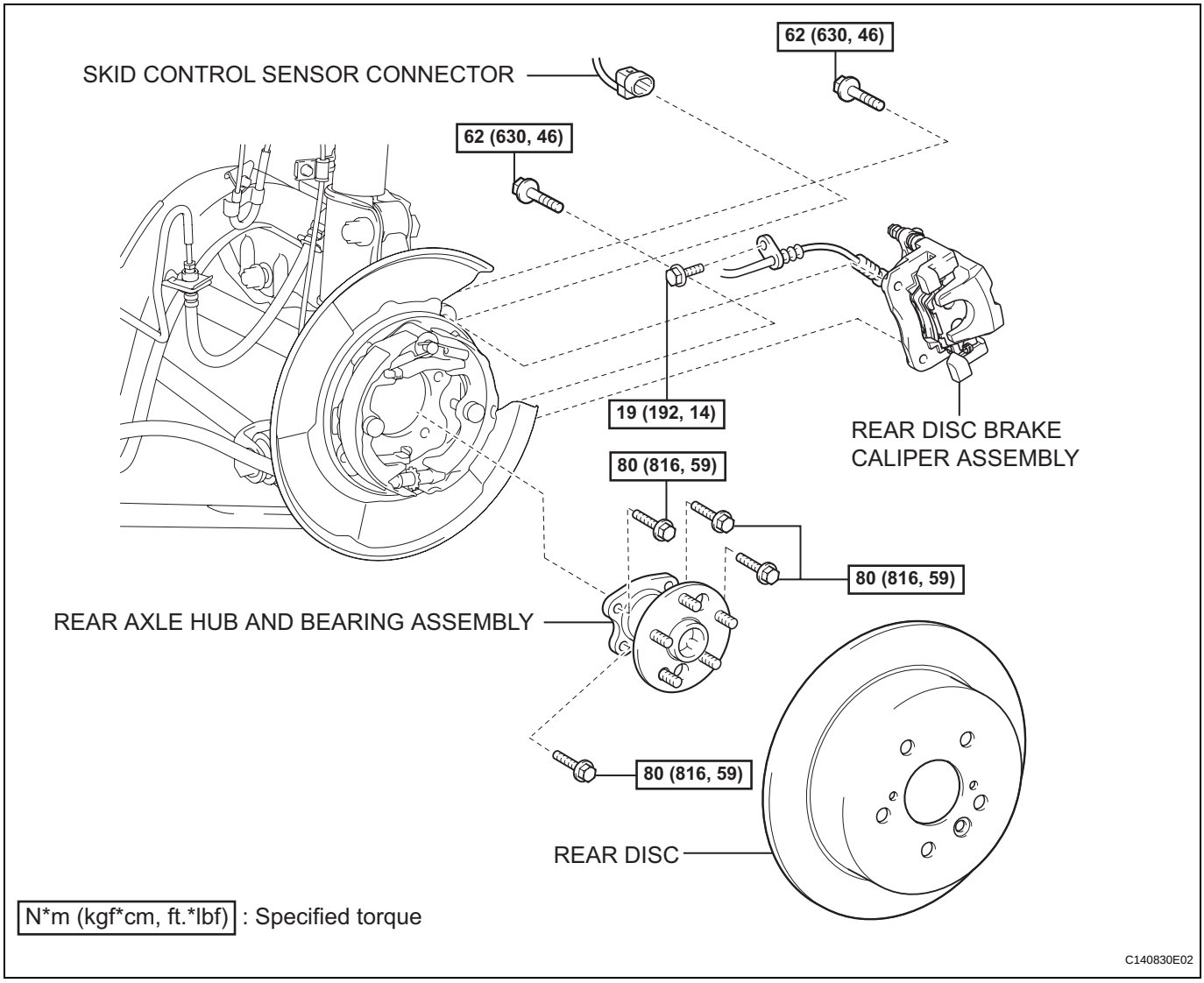

ON-VEHICLE INSPECTION

1. **REMOVE REAR WHEEL**
2. **SEPARATE REAR DISC BRAKE CALIPER ASSEMBLY (See page AH-18)**
3. **REMOVE REAR DISC (See page BR-37)**
4. **INSPECT REAR AXLE HUB BEARING LOOSENESS**
   (a) Using a dial indicator, check for looseness near the center of the axle hub.
   Maximum:
   0.05 mm (0.0020 in.)
   NOTICE:
   Ensure that the dial indicator is set perpendicular to the measurement surface.
   If looseness exceeds the maximum, replace the axle hub assembly.

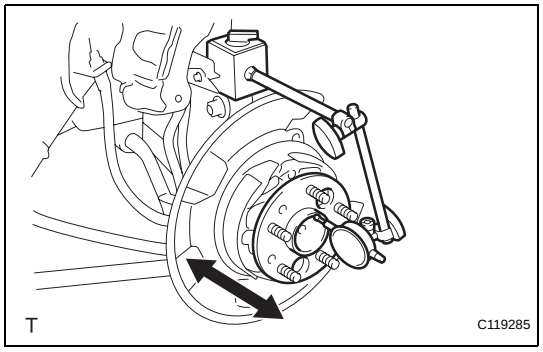

5. **INSPECT REAR AXLE HUB RUNOUT**
   (a) Using a dial indicator, check for runout on the surface of the axle hub outside the hub bolt.
   Maximum:
   0.07 mm (0.0027 in.)
   NOTICE:
   Ensure that the dial indicator is set perpendicular to the measurement surface.
   If runout exceeds the maximum, replace the axle hub assembly.

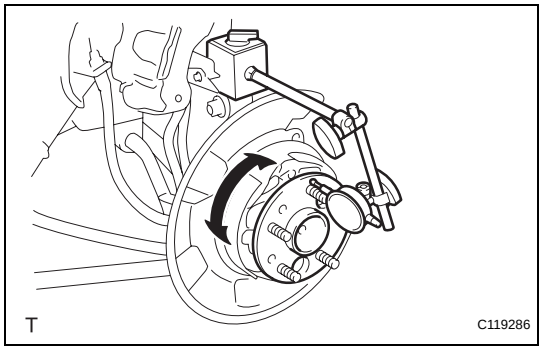

6. **INSTALL REAR DISC (See page PB-43)**
7. **INSTALL REAR DISC BRAKE CALIPER ASSEMBLY (See page AH-20)**
8. **INSTALL REAR WHEEL**
   Torque: 103 N*m (1,050 kgf*cm, 76 ft.*lbf)

REAR AXLE CARRIER

COMPONENTS

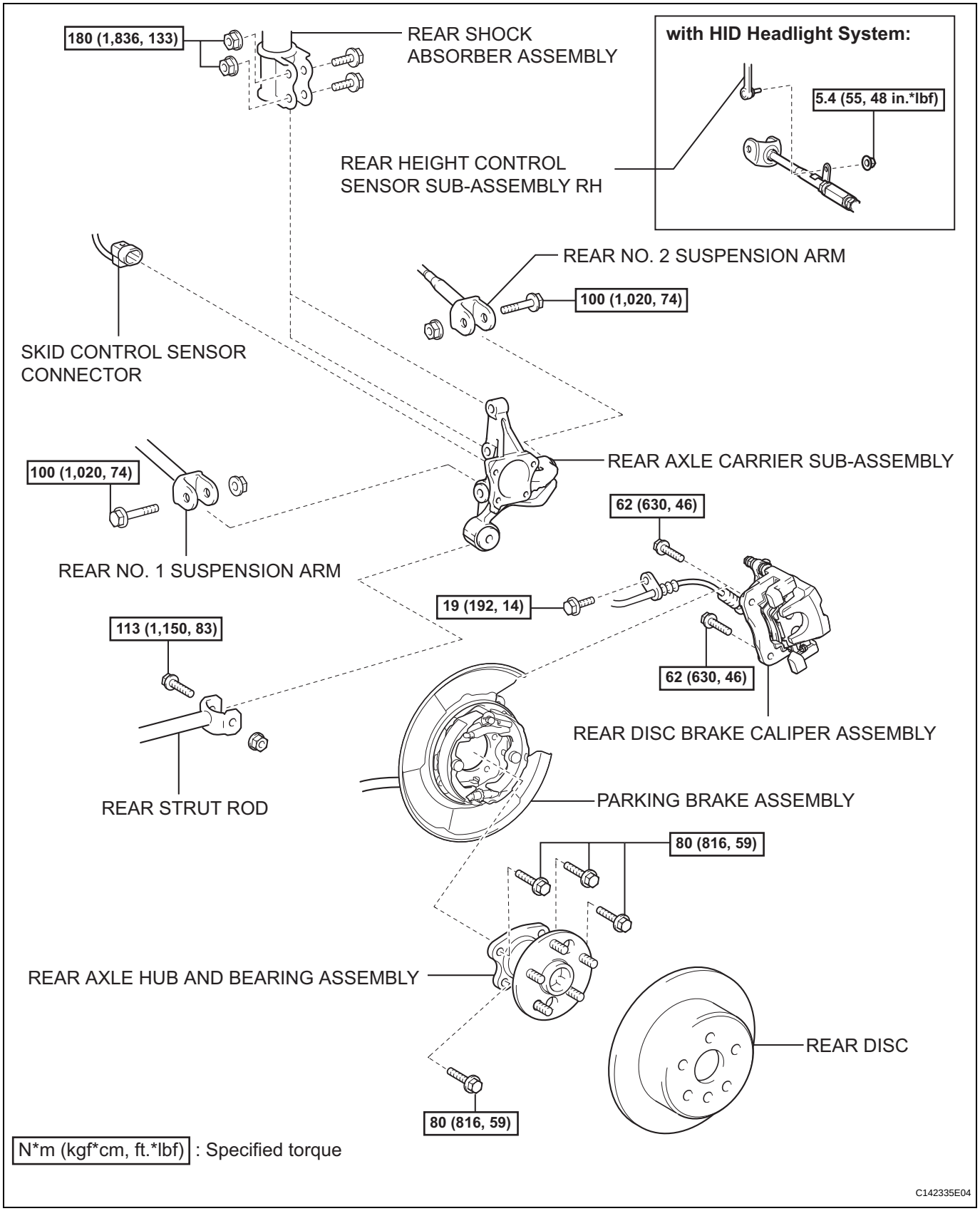

AH

REMOVAL

1. REMOVE REAR WHEEL

2. SEPARATE REAR DISC BRAKE CALIPER ASSEMBLY

(a) Remove the bolt and separate the flexible hose from the shock absorber.

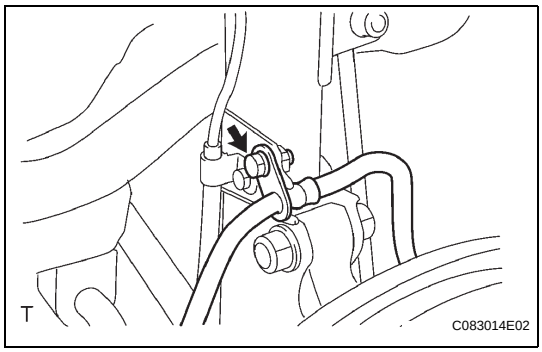

(b) Remove the 2 bolts and separate the rear disc brake caliper assembly.

NOTICE:
Use wire or an equivalent tool to keep the brake caliper from hanging by its flexible hose.

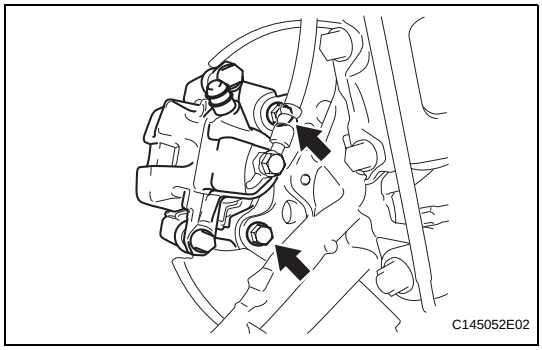

3. REMOVE REAR DISC (See page PB-38)

4. DISCONNECT SKID CONTROL SENSOR CONNECTOR (See page BC-192)

5. REMOVE REAR AXLE HUB AND BEARING ASSEMBLY (See page AH-15)

6. SEPARATE REAR HEIGHT CONTROL SENSOR SUB-ASSEMBLY RH (w/ HID Headlight System)

HINT:
Perform the procedure only when removing the RH side.
(See page SP-60)

7. SEPARATE REAR STRUT ROD

(a) Remove the bolt and nut, and separate the rear strut rod (rear axle carrier side) from the rear axle carrier sub-assembly.

HINT:
When removing the bolt, keep the nut from rotating.

8. SEPARATE REAR NO. 2 SUSPENSION ARM

(a) Remove the bolt and nut, and separate the rear No. 2 suspension arm (rear axle carrier side) from the rear axle carrier sub-assembly.

HINT:
When removing the bolt, keep the nut from rotating.

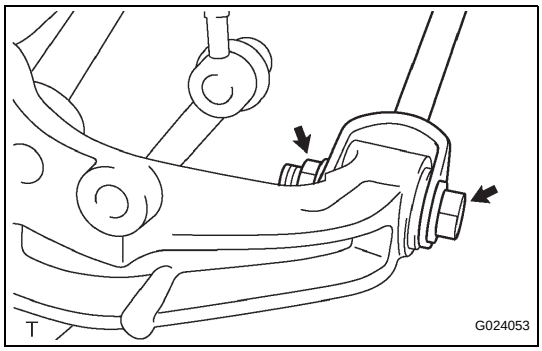

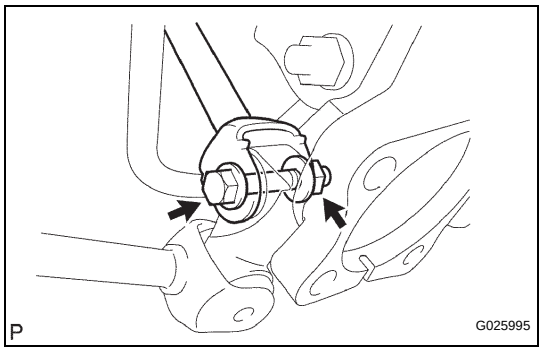

9. SEPARATE REAR NO. 1 SUSPENSION ARM

(a) Remove the bolt and nut, and separate the rear No. 1 suspension arm (rear axle carrier side) from the rear axle carrier sub-assembly.
HINT:
When removing the bolt, keep the nut from rotating.

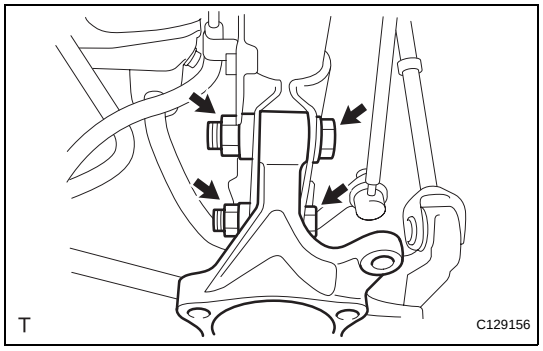

10. REMOVE REAR AXLE CARRIER SUB-ASSEMBLY

(a) Remove the 2 bolts and 2 nuts, and remove the rear axle carrier sub-assembly from the shock absorber.

INSTALLATION

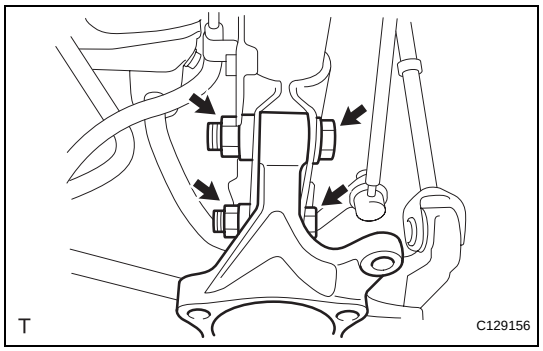

1. INSTALL REAR AXLE CARRIER SUB-ASSEMBLY

(a) Install the rear axle carrier sub-assembly to the shock absorber with the 2 bolts and 2 nuts.
Torque: 180 N*m (1,836 kgf*cm, 133 ft.*lbf)

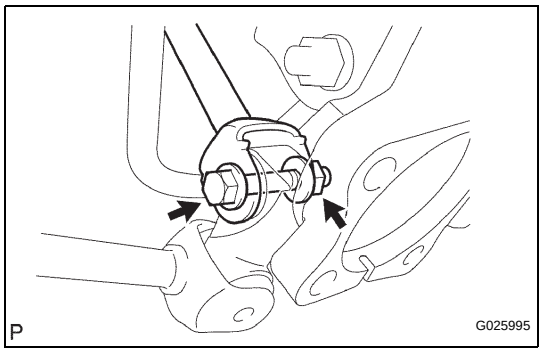

2. TEMPORARILY TIGHTEN REAR NO. 1 SUSPENSION ARM

(a) Temporarily tighten the rear No. 1 suspension arm with the bolt and nut.
HINT:
Insert the bolt from the rear side of the vehicle and temporarily tighten the bolt.

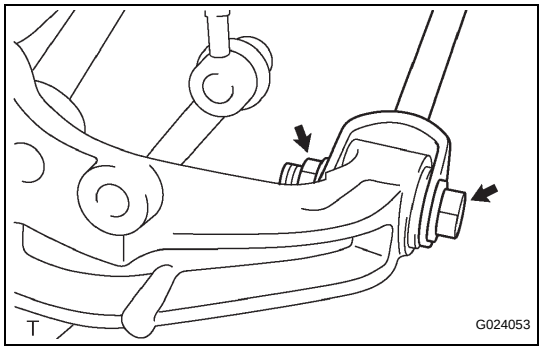

3. TEMPORARILY TIGHTEN REAR NO. 2 SUSPENSION ARM

(a) Temporarily tighten the rear No. 2 suspension arm with the bolt and nut.
HINT:
Insert the bolt from the rear side of the vehicle and temporarily tighten the bolt.

4. TEMPORARILY TIGHTEN REAR STRUT ROD

(a) Temporarily tighten the rear strut rod with the bolt and nut.
HINT:
Insert the bolt from the inside of the vehicle and temporarily tighten the bolt.

5. INSTALL REAR AXLE HUB AND BEARING ASSEMBLY (See page AH-16)

6. INSPECT REAR AXLE HUB BEARING LOOSENESS (See page AH-15)

7. INSPECT REAR AXLE HUB RUNOUT (See page AH-15)

8. INSTALL REAR DISC (See page PB-43)

9. INSTALL REAR DISC BRAKE CALIPER ASSEMBLY

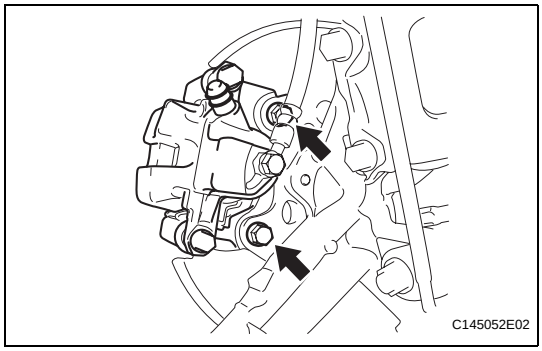

(a) Install the rear disc brake caliper with the 2 bolts.
Torque: 62 N*m (630 kgf*cm, 46 ft.*lbf)
NOTICE:
Do not twist the brake hose when installing the rear disc brake caliper assembly LH.

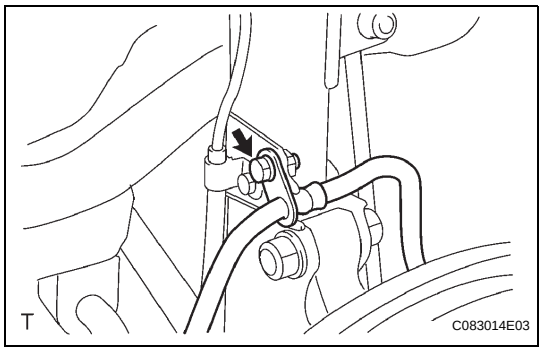

(b) Install the rear flexible hose with the bolt.
Torque: 19 N*m (192 kgf*cm, 14 ft.*lbf)

10. INSTALL REAR WHEEL
Torque: 103 N*m (1,050 kgf*cm, 76 ft.*lbf)

11. STABILIZE SUSPENSION (See page SP-48)

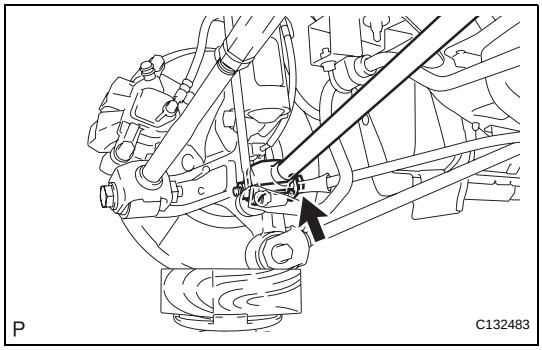

12. FULLY TIGHTEN REAR NO. 1 SUSPENSION ARM

(a) Fully tighten the bolt.
Torque: 100 N*m (1,020 kgf*cm, 74 ft.*lbf)

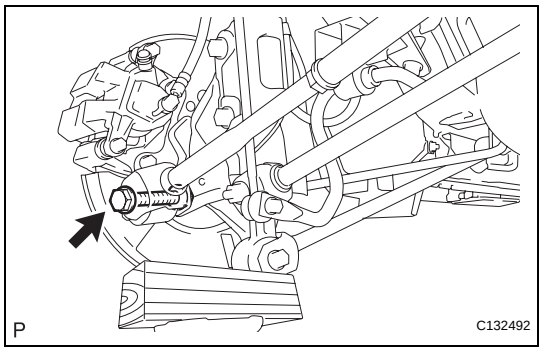

13. FULLY TIGHTEN REAR NO. 2 SUSPENSION ARM

(a) Fully tighten the bolt.
Torque: 100 N*m (1,020 kgf*cm, 74 ft.*lbf)

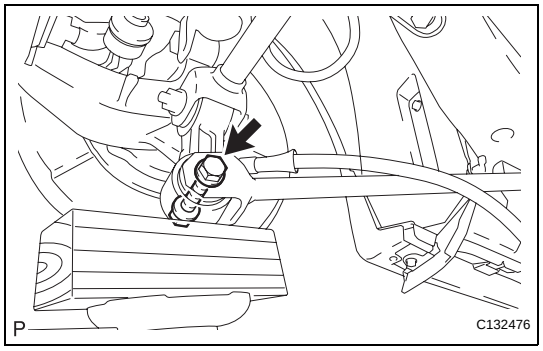

14. FULLY TIGHTEN REAR STRUT ROD

(a) Fully tighten the bolt.
Torque: 113 N*m (1,150 kgf*cm, 83 ft.*lbf)

15. CONNECT SKID CONTROL SENSOR CONNECTOR (See page BC-194)

16. INSTALL REAR HEIGHT CONTROL SENSOR SUB-ASSEMBLY RH (w/ HID Headlight System)

HINT:
Perform the procedure only when installing the RH side.
(See page SP-62)

17. ADJUST REAR WHEEL ALIGNMENT

HINT:
See page SP-11

18. CHECK ABS SPEED SENSOR SIGNAL

HINT:
See page BC-24

19. HEIGHT CONTROL SENSOR SIGNAL INITIALIZATION (w/ HID Headlight System)

HINT:
See page LI-30

SUSPENSION SYSTEM

PARTS LOCATION

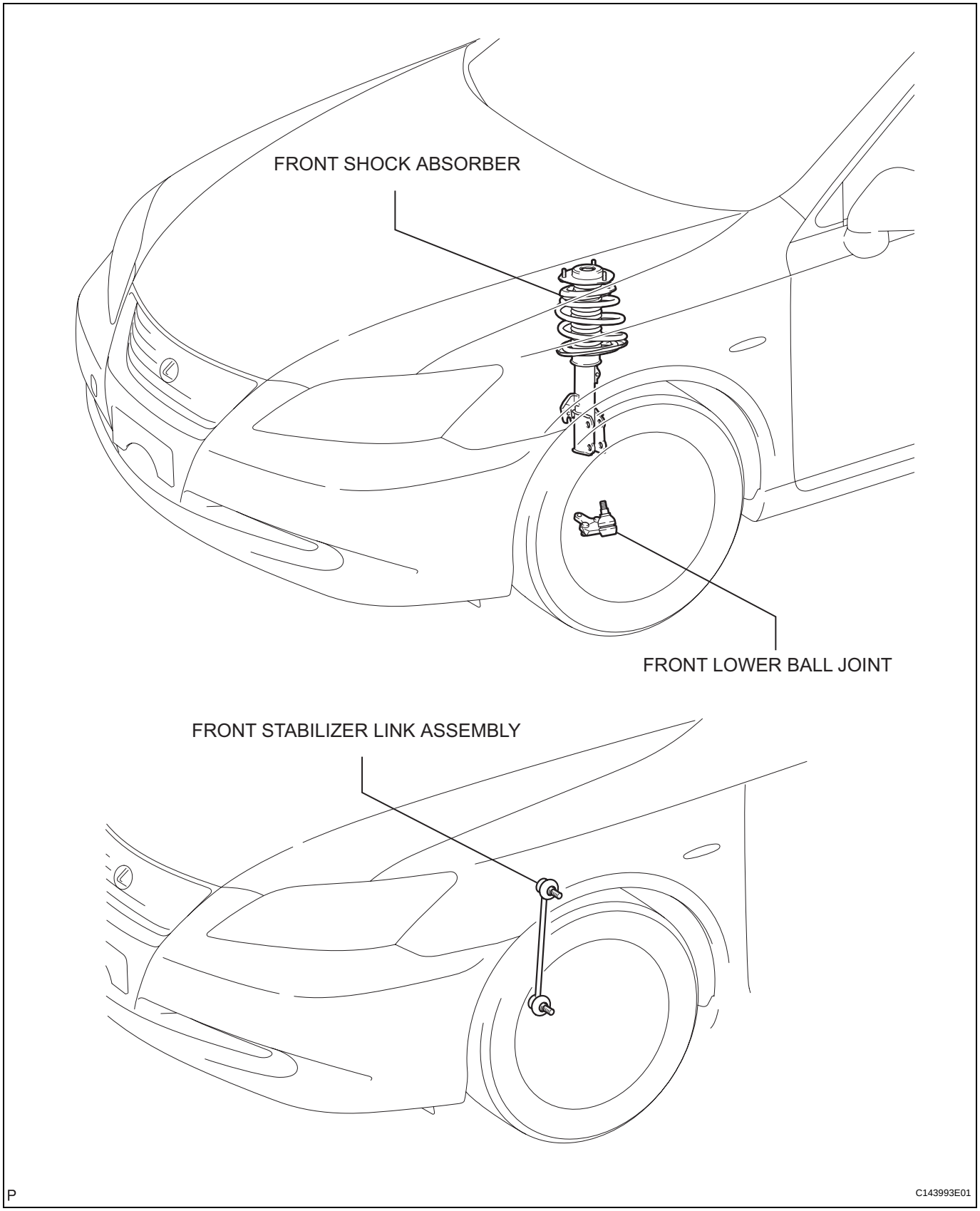

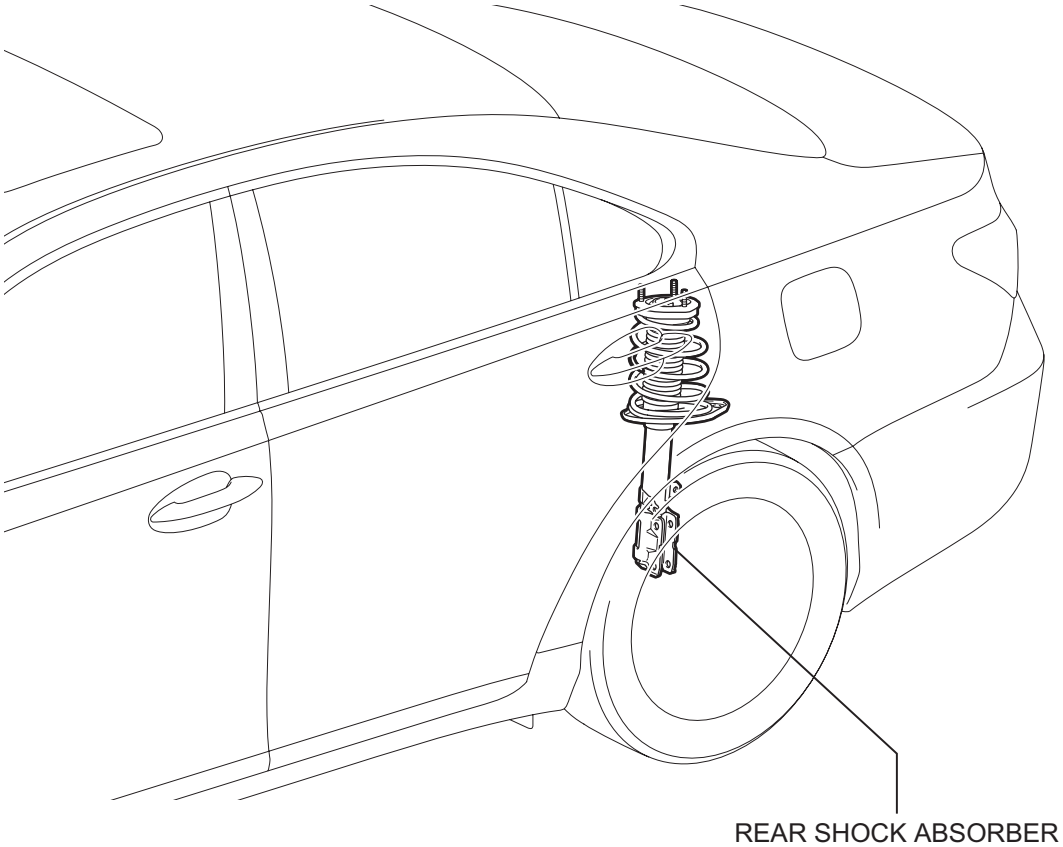

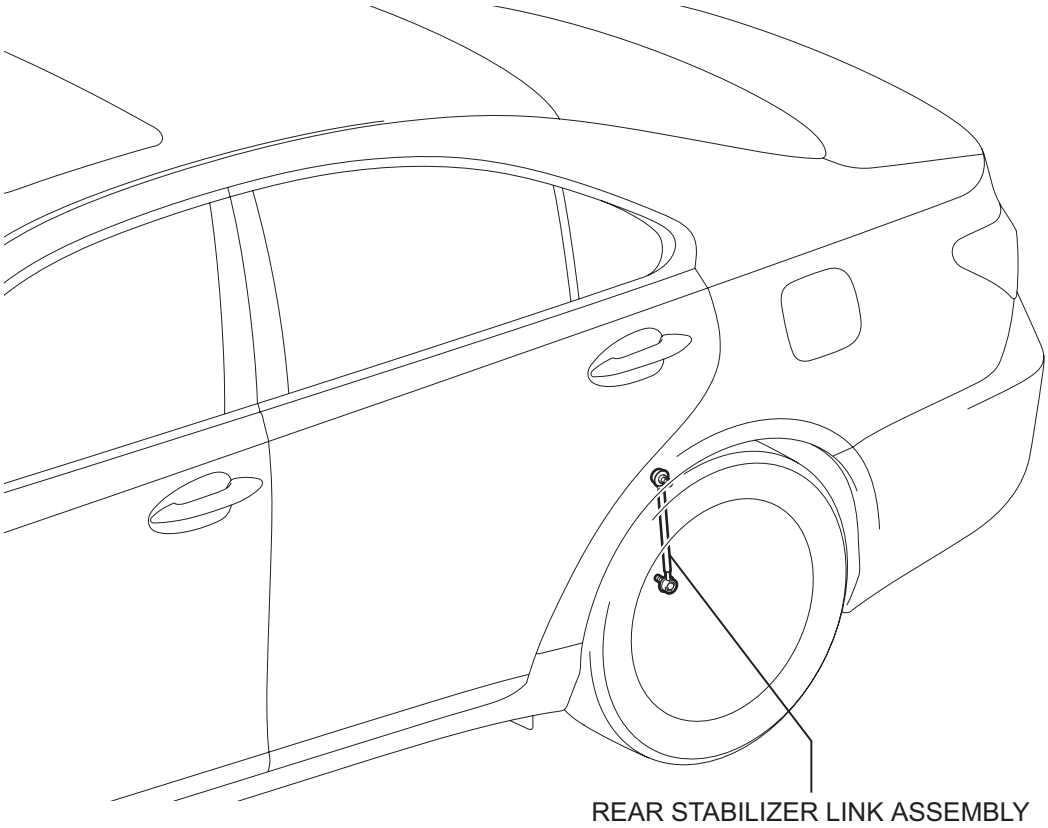

P

C143994E01

FRONT WHEEL ALIGNMENT

ADJUSTMENT

1. INSPECT TIRES
(See page TW-3)

2. MEASURE VEHICLE HEIGHT

(a) Bounce the vehicle up and down at the corners to stabilize the suspension. Inspect the vehicle height.
Vehicle height

Front A - B	Rear C - D
126 mm (4.96 in.)	57 mm (2.24 in.)

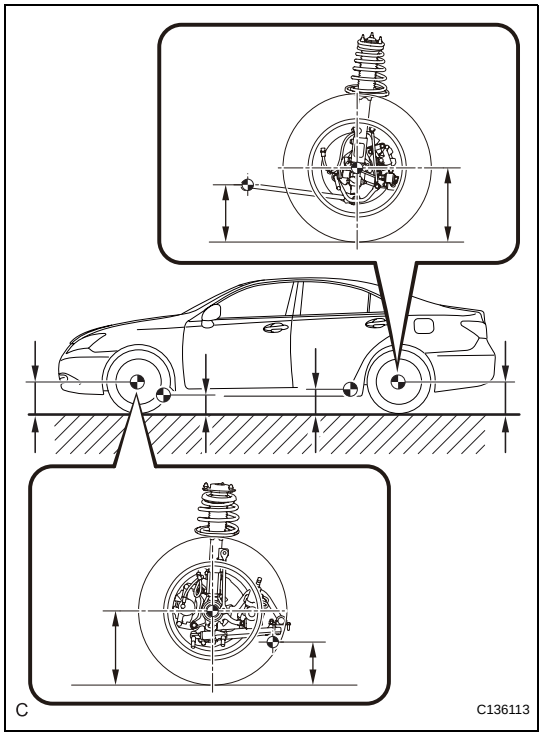

Measuring points:
A:
Ground clearance of front wheel center
B:
Ground clearance of lower suspension arm No. 2 bushing set bolt head center
C:
Ground clearance of rear wheel center
D:
Ground clearance of strut rod set bolt center

NOTICE:
- **Before inspecting the wheel alignment, adjust the vehicle height to the specified value.**
- **Be sure to perform measurement on a level surface.**
- **If it is necessary to go under the vehicle for measurement, confirm that the parking brake is applied and the vehicle is secured with chocks.**

3. INSPECT TOE-IN

(a) Bounce the vehicle up and down at the corners to stabilize the suspension.
(b) Release the parking brake and move the shift lever to the neutral position.
(c) Push the vehicle straight ahead approximately 5 m (16.4 ft). (*1)
(d) Put tread center marks on the rearmost points of the front wheels and measure the distance between the marks (dimension B).
(e) Slowly push the vehicle straight ahead to cause the front wheels to rotate 180° using the front tire valve as a reference point.
HINT:
Do not allow the wheels to rotate more than 180°. If the wheels rotate more than 180°, perform the procedure from *1 again.

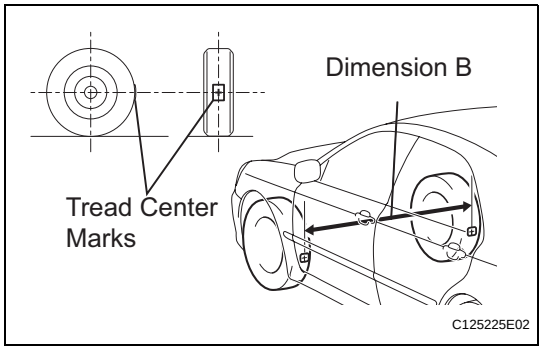

SP

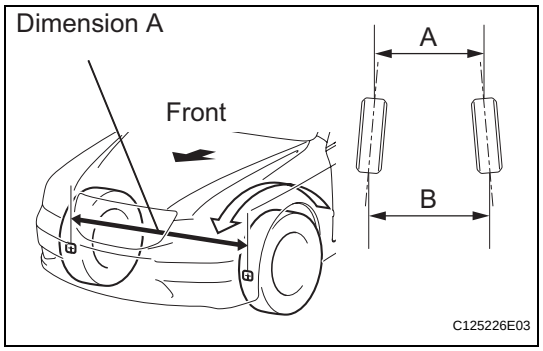

(f) Measure the distance between the tread center marks on the front side of the wheels.
Toe-in

Toe-in (total)	**-**
A - B:	**0 +- 2 mm (0 +- 0.08 in.)**

HINT:
If toe-in is not within the specified range, adjust it at the rack ends.

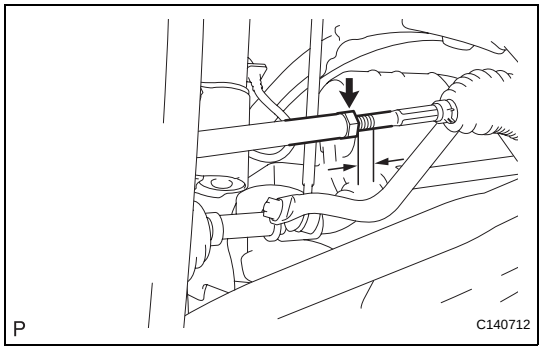

4. ADJUST TOE-IN

(a) Measure the thread lengths of the right and left rack ends.
Standard:
Difference in thread length between the right and left rack ends is 1.5 mm (0.06 in.) or less.

(b) Remove the rack boot set clips.

(c) Loosen the tie rod end lock nuts.

(d) Adjust the rack ends if the difference in thread length between the right and left rack ends is not within the specified range.
(1) Extend the shorter rack end if the measured toe-in deviates toward the outside.
(2) Shorten the longer rack end if the measured toe-in deviates toward the inside.

(e) Turn the right and left rack ends by equal amounts to adjust the toe-in.
HINT:
Try to adjust the toe-in to the center of the specified range.

(f) Make sure that the lengths of the right and left rack ends are the same.

(g) Tighten the tie rod end lock nuts.
Torque: 74 N*m (755 kgf*cm, 55 ft.*lbf)
NOTICE:
Temporarily tighten the lock nut while holding the hexagonal part of the steering rack end so that the lock nut and the steering rack end do not turn together. Hold the flats on the tie rod end and tighten the lock nut.

(h) Place the boots on the seats and install the clips.
HINT:
Make sure that the boots are not twisted.

5. INSPECT WHEEL ANGLE

(a) Put tread center marks on the rearmost points of the turning radius gauge.

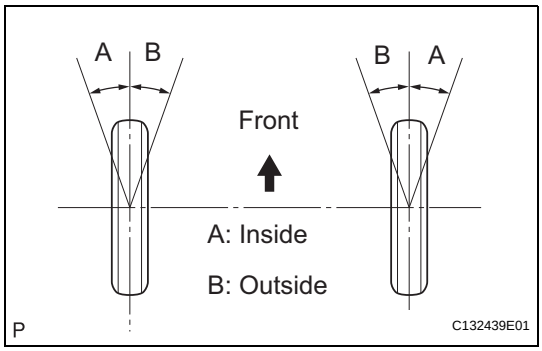

(b) Turn the steering wheel fully to the left and right and measure the turning angle.

Wheel turning angle

Inside wheel	Outside wheel reference
38°31' +-2° (38.52° +-2°)	33°43' (33.72°)

If the right and left inside wheel angles differ from the specified value, check the right and left rack end lengths.

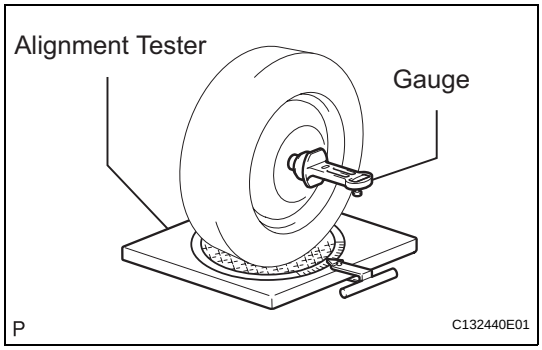

6. INSPECT CAMBER, CASTER AND STEERING AXIS INCLINATION

(a) Put the front wheel on the center of the alignment tester.

(b) Remove the center ornament.

(c) Set the camber-caster-king pin gauge and attachment at the center of the axle hub or drive shaft.

(d) Inspect the camber, caster, and steering axis inclination.

Camber

Camber	Right-left difference
-0°43' +-45' (-0.72° +-0.75°)	45' (0.75°) or less

Caster

Caster	Right-left difference
2°57' +-45' (2.95° +-0.75°)	45' (0.75°) or less

Steering axis inclination

Steering axis inclination
12°20' (12.33°)

NOTICE:

- **Perform the inspection while the vehicle is unloaded.**
- **The maximum tolerance of the right and left difference for the camber and caster is 45' (0.75°) or less.**

(e) Remove the camber-caster-king pin gauge and attachment.

(f) Install the center ornament.

(g) If the caster and steering axis inclination are not within the specified range after the camber has been correctly adjusted, recheck the suspension parts for damage and/or wear.

7. ADJUST CAMBER

NOTICE:

Inspect toe-in after the camber has been adjusted.

(a) Remove the front wheel.

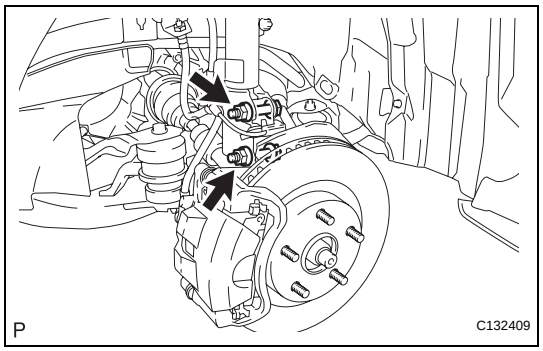

(b) Remove the 2 nuts on the lower side of the front shock absorber.
NOTICE:
Keep the bolts inserted.

(c) Clean the installation surfaces of the front shock absorber and the steering knuckle.

(d) Temporarily install the 2 nuts (Step A).

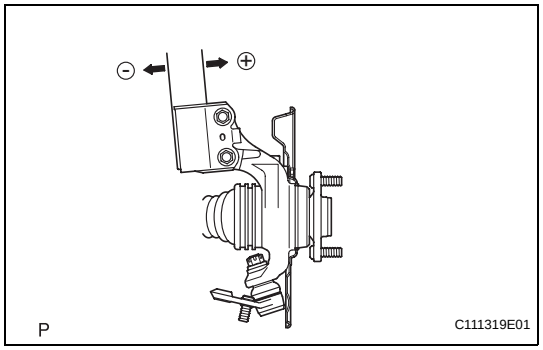

(e) Fully push or pull the front axle hub in the direction of the required adjustment (Step B).

(f) Tighten the nuts.
Torque: 210 N*m (2,141 kgf*cm, 155 ft.*lbf)
NOTICE:
Keep the bolts from rotating when tightening the nuts.

(g) Install the front wheel.
Torque: 103 N*m (1,050 kgf*cm, 76 ft.*lbf)

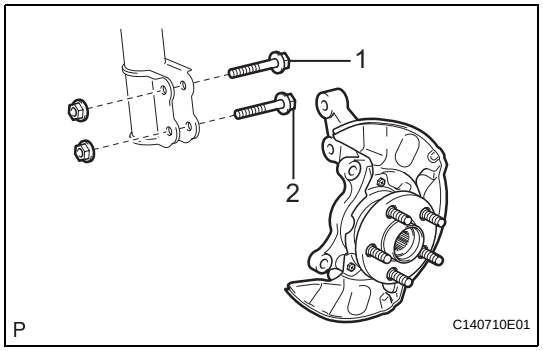

(h) Check the camber.
If the measured value is not within the specification, calculate the required adjustment amount using the formula below.
Camber adjustment amount = center of the specified range center - measured value
Check the combination of installed bolts. Select appropriate bolts from the table below to adjust the camber to the specified values.
HINT:
Try to adjust the camber to the center of the specified values.

Move the axle toward (+) in step (B)	Move the axle toward (-) in step (B)
Refer to table (1) (Move the axle toward the positive side)	Refer to table (2) (Move the axle toward the negative side)

Table (1) (Move the axle toward the positive side)

Installed Bolt / Adjusting Value	1						
	90105-17012	90105-17012	90105-17012	90105-17012	90105-17013	90105-17014	90105-17015
2	90105-17012	90105-17013	90105-17014	90105-17015	90105-17015	90105-17015	90105-17015
-1°30' to -1°15' (-1.50° to -1.25°)							G
-1°15' to -1°00' (-1.25° to -1°)						G	A
-1°00' to -0°45' (-1° to -0.75°)					G	A	B
-0°45' to -0°30' (-0.75° to -0.5°)				G	A	B	C
-0°30' to -0°15' (-0.5° to -0.25°)			G	A	B	C	D
-0°15' to 0° (-0.25° to 0°)		G	A	B	C	D	E
0° to 0°15' (0° to 0.25°)	A	B	C	D	E	F	
0°15' to 0°30' (0.25° to 0.5°)	B	C	D	E	F		
0°30' to 0°45' (0.50° to 0.75°)	C	D	E	F			
0°45' to 1°00' (0.75° to 1°)	D	E	F				
1°00' to 1°15' (1° to 1.25°)	E	F					
1°15' to 1°30' (1.25° to 1.5°)	F						

Selected Bolt Combination

	A	B	C	D	E	F	G
1	90105-17012	90105-17012	90105-17012	90105-17013	90105-17014	90105-17015	90105-17012
2	90105-17013	90105-17014	90105-17015	90105-17015	90105-17015	90105-17015	90105-17012

C138332E01

SP

Table (2) (Move the axle toward the negative side)

Installed Bolt / Adjusting Value	1	2
	90105-17012	90105-17012
	90105-17012	90105-17013
	90105-17012	90105-17014
	90105-17012	90105-17015
	90105-17013	90105-17015
	90105-17014	90105-17015
	90105-17015	90105-17015
-1°30' to -1°15' (-1.50° to -1.25°)	F	
-1°15' to -1°00' (-1.25° to -1°)	E	F
-1°00' to -0°45' (-1° to -0.75°)	D	E	F
-0°45' to -0°30' (-0.75° to -0.5°)	C	D	E	F
-0°30' to -0°15' (-0.5° to -0.25°)	B	C	D	E	F
-0°15' to 0° (-0.25° to 0°)	A	B	C	D	E	F
0° to 0°15' (0° to 0.25°)	G	A	B	C	D	E
0°15' to 0°30' (0.25° to 0.5°)	G	A	B	C	D
0°30' to 0°45' (0.50° to 0.75°)	G	A	B	C
0°45' to 1°00' (0.75° to 1°)	G	A	B
1°00' to 1°15' (1° to 1.25°)	G	A
1°15' to 1°30' (1.25° to 1.5°)	G

Selected Bolt Combination

	A	B	C	D	E	F	G
1	90105-17012	90105-17012	90105-17012	90105-17013	90105-17014	90105-17015	90105-17012
2	90105-17013	90105-17014	90105-17015	90105-17015	90105-17015	90105-17015	90105-17012

C138332E02

SP

The body and suspension may be damaged if the camber is not correctly adjusted according to the above table.

NOTICE:

Replace the nut with a new one when replacing the bolt.

(i) Repeat the steps mentioned above. In step (A), replace 1 or 2 selected bolts.

HINT:

Replace one bolt at a time when replacing 2 bolts.

REAR WHEEL ALIGNMENT

ADJUSTMENT

1. INSPECT TIRES
(See page TW-3)

2. MEASURE VEHICLE HEIGHT (See page SP-4)

3. INSPECT TOE-IN

(a) Bounce the vehicle up and down at the corners to stabilize the suspension. Inspect the toe-in.
Toe-in

Toe-in (total)	-
A + B: C - D:	0° +- 24' (0° +- 0.4°) 4 +- 2 mm (0.16 +- 0.08 in.)

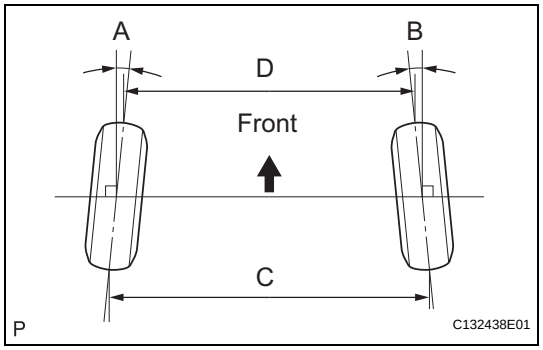

If the toe-in is not within the specified range, inspect the suspension parts and replace them if necessary.

4. ADJUST TOE-IN

(a) Measure the lengths of the right and left rear No. 2 suspension arms.
Difference in the length between the right and left rear No. 2 suspension arms:
1.5 mm (0.06 in.) or less
If the left-right difference is larger than 1.5 mm (0.06 in.), adjust it by following the procedures below.

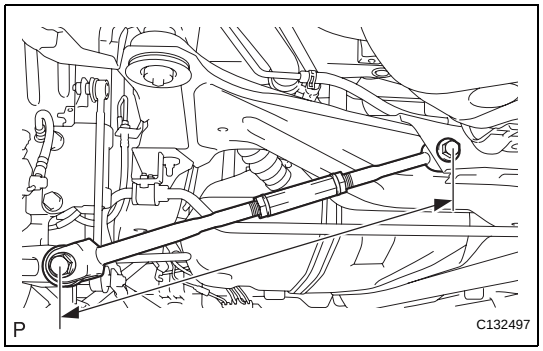

(b) Loosen the lock nuts.

(c) Turn the right and left adjusting tubes by an equal amount to adjust toe-in.
HINT:
- Try to adjust toe-in to the center of the specified range.
- One turn of each adjusting tube will adjust toe-in by approximately 10.8 mm (0.425 in.).

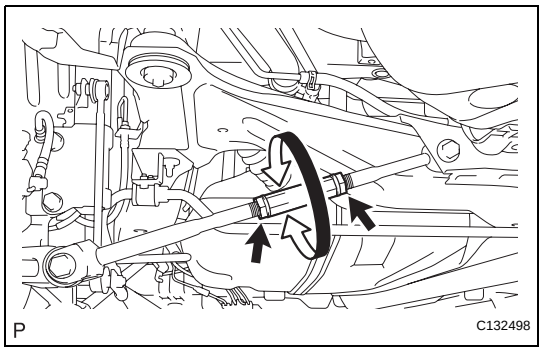

(d) Tighten the lock nuts.
Torque: 56 N*m (571 kgf*cm, 41 ft.*lbf)

5. INSPECT CAMBER
Camber

Camber	Right-left difference
-1°21' +-45' (-1.35° +-0.75°)	45' (0.75°) or less

HINT:
Camber is not adjustable. If the measurement is not within the specification range, inspect the suspension parts for damage and/or wear, and replace them if necessary.

SP

FRONT SHOCK ABSORBER

COMPONENTS

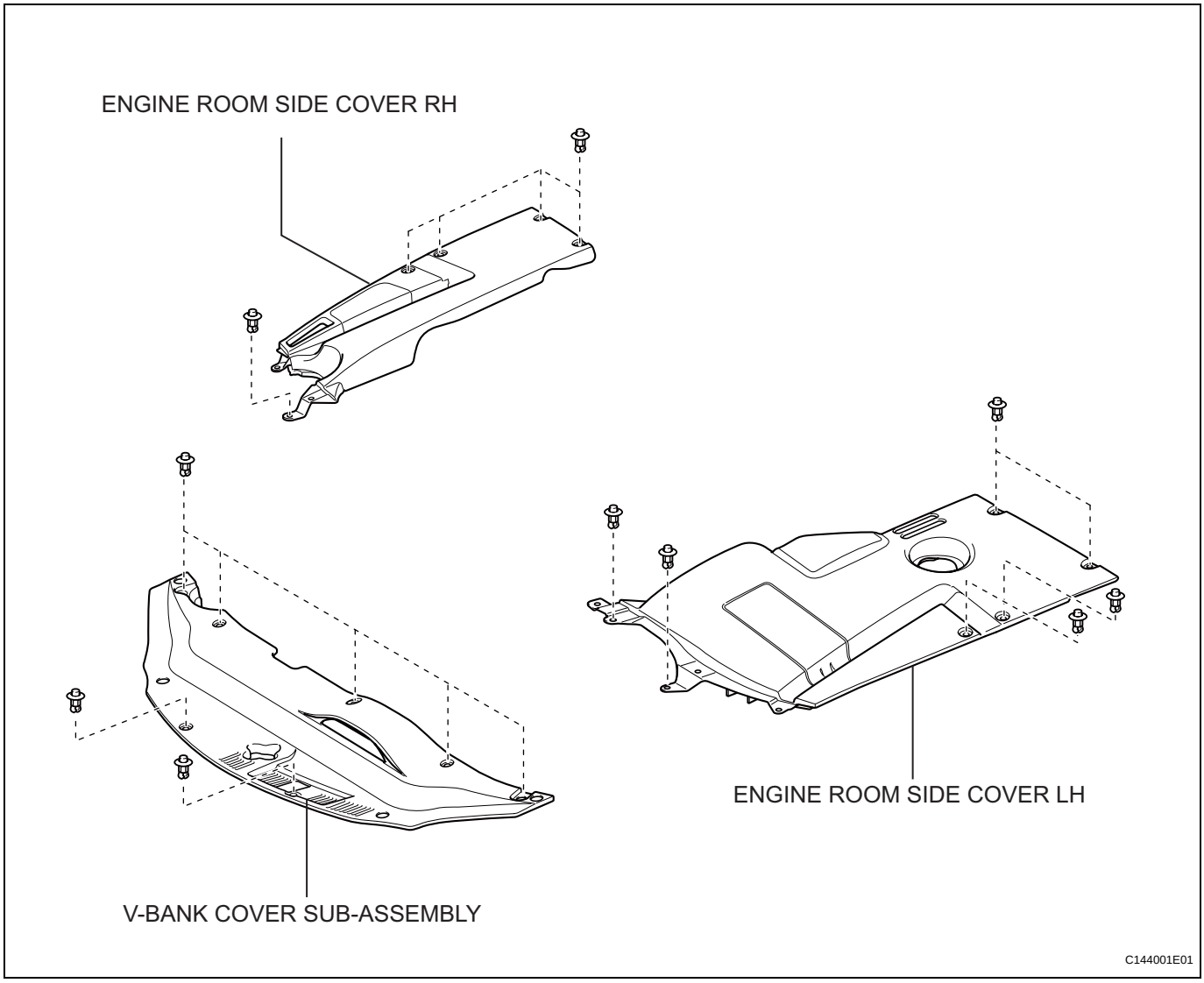

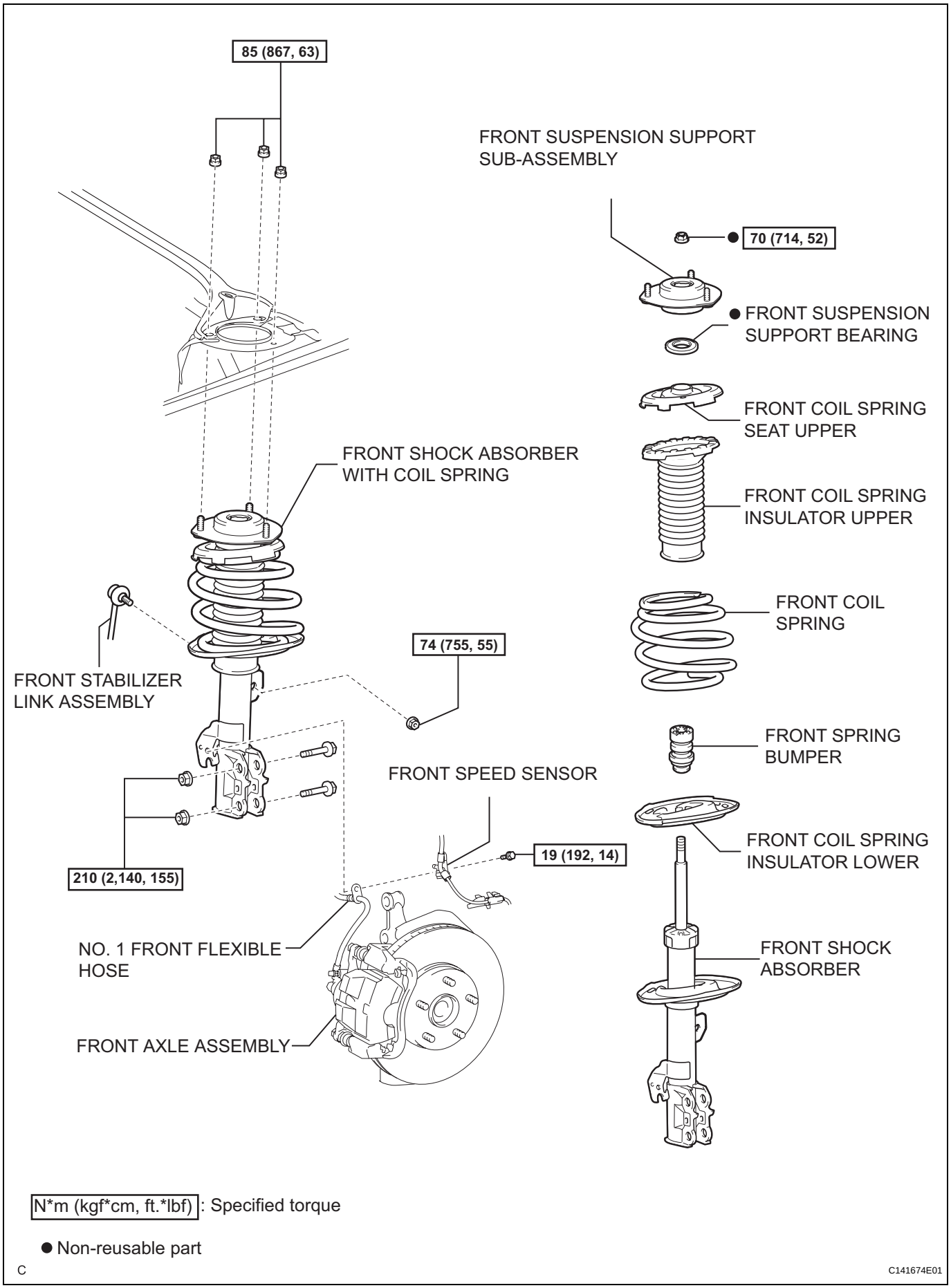
85 (867, 63)
FRONT SUSPENSION SUPPORT SUB-ASSEMBLY
70 (714, 52)
FRONT SUSPENSION SUPPORT BEARING
FRONT COIL SPRING SEAT UPPER
FRONT SHOCK ABSORBER WITH COIL SPRING
FRONT COIL SPRING INSULATOR UPPER
FRONT COIL SPRING
74 (755, 55)
FRONT STABILIZER LINK ASSEMBLY
FRONT SPRING BUMPER
FRONT SPEED SENSOR
FRONT COIL SPRING INSULATOR LOWER
19 (192, 14)
210 (2,140, 155)
NO. 1 FRONT FLEXIBLE HOSE
FRONT SHOCK ABSORBER
FRONT AXLE ASSEMBLY
N*m (kgf*cm, ft.*lbf) : Specified torque
● Non-reusable part
C
C141674E01

SP

FRONT SUSPENSION LOWER NO. 1 ARM

COMPONENTS

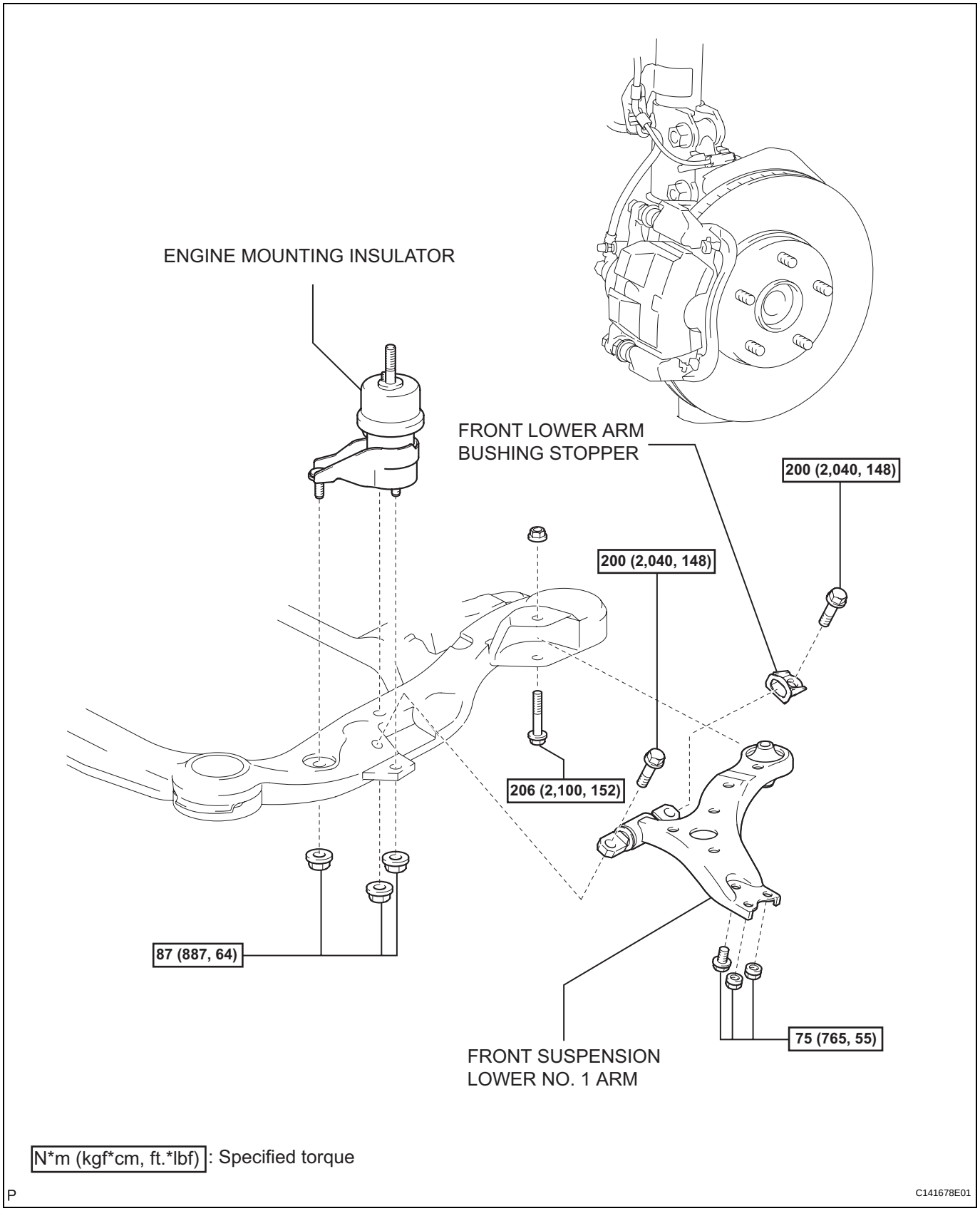

SP

REMOVAL

HINT:
- Use the same procedures for the RH side and the LH side.
- The procedures listed below are for the LH side.

1. REMOVE ENGINE ASSEMBLY WITH TRANSAXLE

HINT:
Refer to the instructions for installation of the engine assembly (See page EM-28).

2. REMOVE ENGINE MOUNTING INSULATOR

(a) Remove the 3 nuts and the engine mounting insulator.

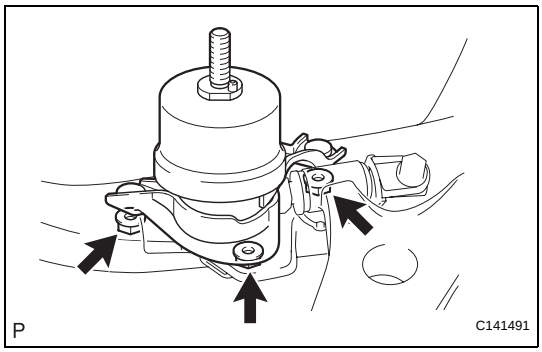

3. REMOVE FRONT SUSPENSION LOWER NO. 1 ARM

(a) Remove the 3 bolts and the nut on the front suspension lower No. 1 arm and remove it from the front frame assembly.

(b) Remove the front lower arm bushing stopper.

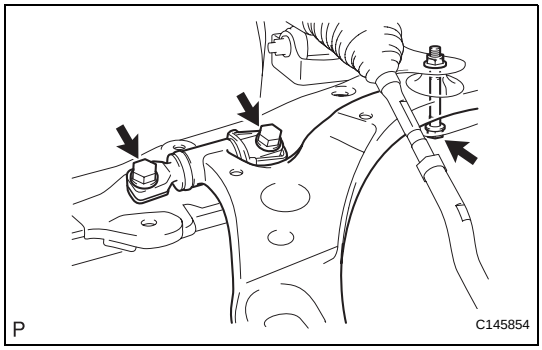

FRONT LOWER BALL JOINT

COMPONENTS

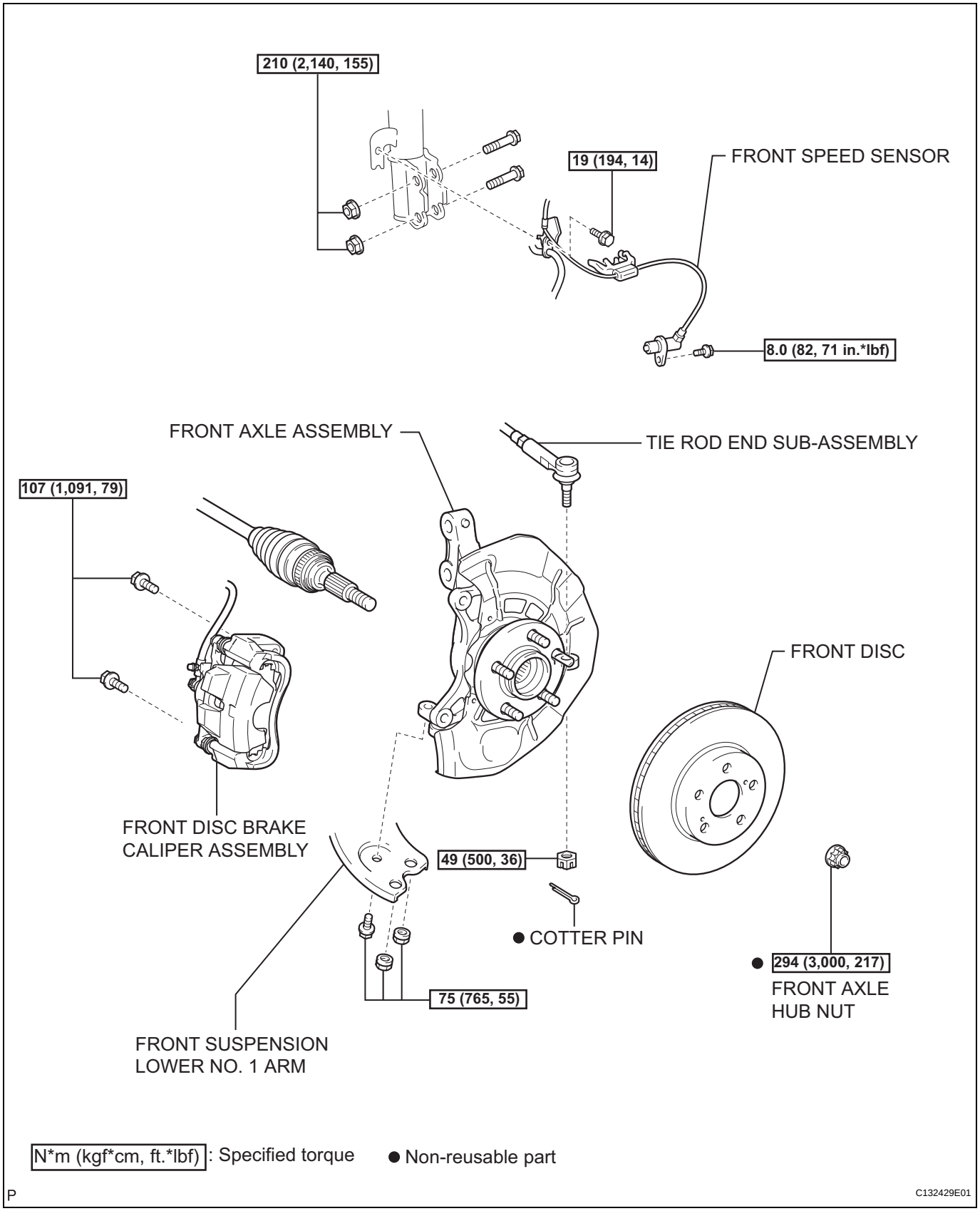

SP

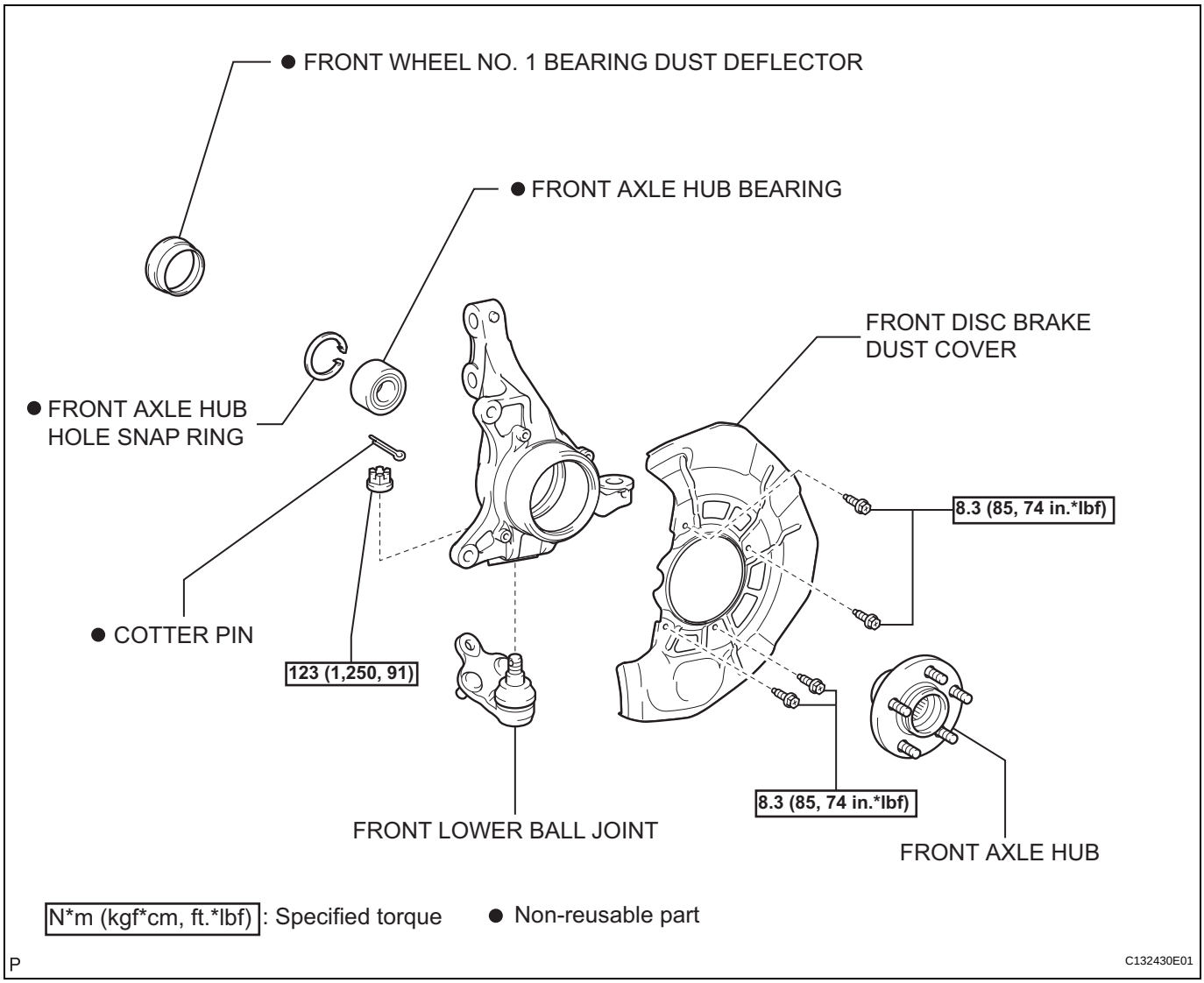
● FRONT WHEEL NO. 1 BEARING DUST DEFLECTOR
● FRONT AXLE HUB BEARING
FRONT DISC BRAKE DUST COVER
● FRONT AXLE HUB HOLE SNAP RING
8.3 (85, 74 in.*lbf)
● COTTER PIN
123 (1,250, 91)
8.3 (85, 74 in.*lbf)
FRONT LOWER BALL JOINT
FRONT AXLE HUB
N*m (kgf*cm, ft.*lbf) : Specified torque
● Non-reusable part
P
C132430E01

FRONT STABILIZER BAR

COMPONENTS

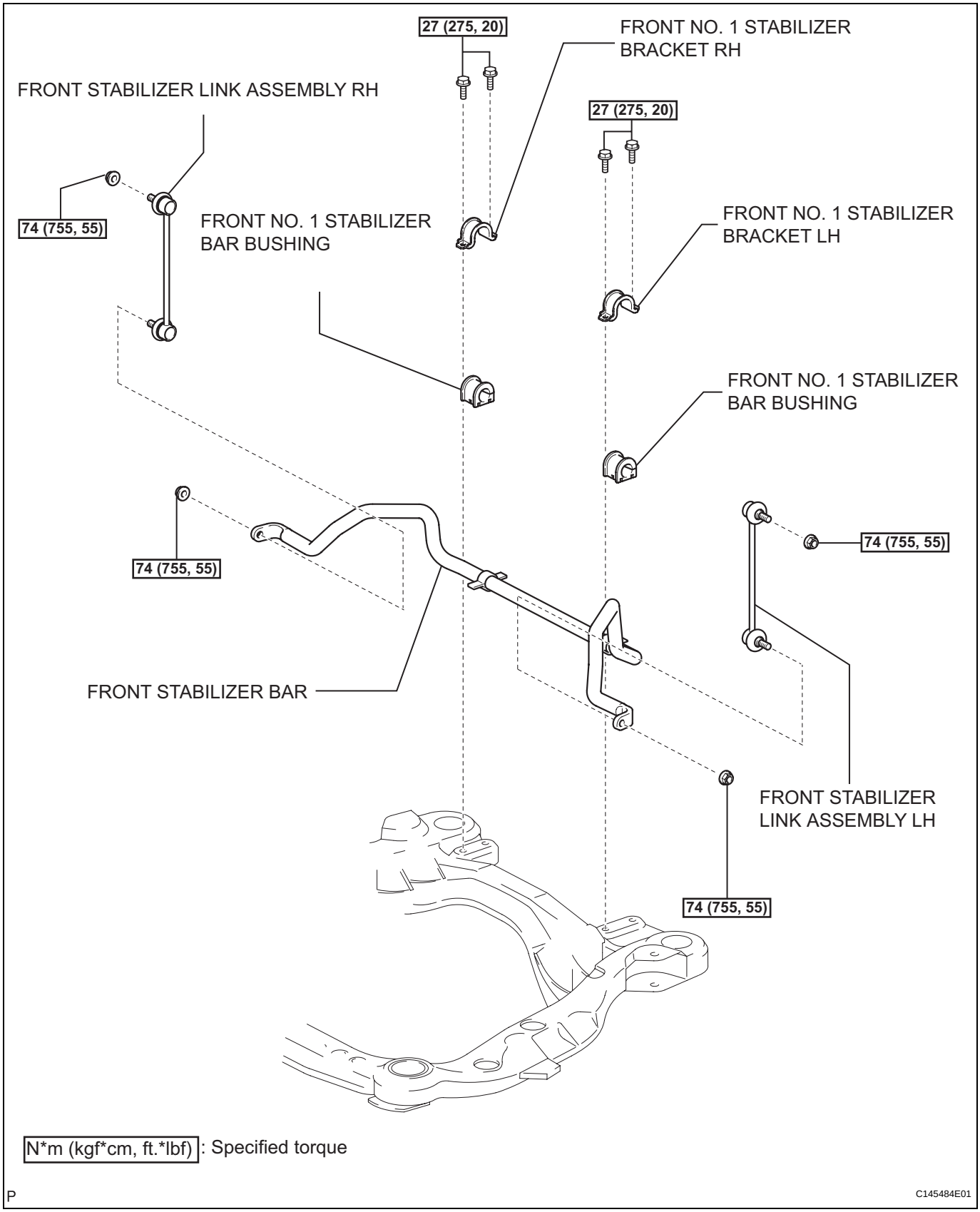

SP

REMOVAL

1. **DISCONNECT CABLE FROM NEGATIVE BATTERY TERMINAL**
2. **PLACE FRONT WHEELS FACING STRAIGHT AHEAD**
3. **REMOVE FRONT WHEELS**
4. **SEPARATE STEERING INTERMEDIATE SHAFT ASSEMBLY (See page SR-81)**
5. **SEPARATE TIE ROD END SUB-ASSEMBLY (See page DS-6)**
6. **REMOVE FRONT STABILIZER LINK ASSEMBLY LH**
   (a) Remove the 2 nuts and the front stabilizer link assembly LH.
   HINT:
   If the ball joint turns together with the nut, use a hexagon wrench (6 mm) to hold the stud.

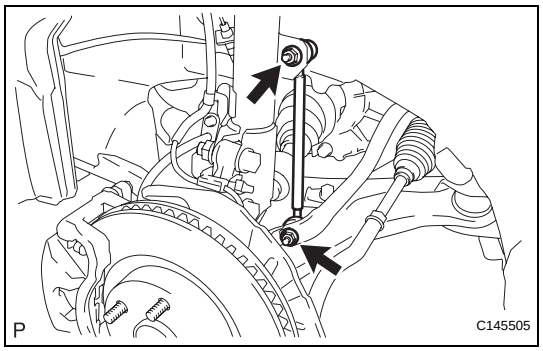

7. **REMOVE FRONT STABILIZER LINK ASSEMBLY RH**
   (a) Remove the 2 nuts and the front stabilizer link assembly RH.
   HINT:
   If the ball joint turns together with the nut, use a hexagon wrench (6 mm) to hold the stud.

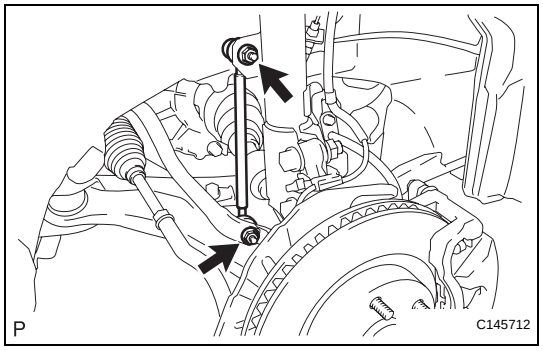

8. **REMOVE ENGINE ASSEMBLY WITH TRANSAXLE**
   HINT:
   Refer to the instructions for removal of the engine assembly (See page EM-28).
9. **REMOVE FRONT NO. 1 STABILIZER BRACKET LH**
   (a) Remove the 2 bolts and the front No. 1 stabilizer bracket LH from the front frame assembly.

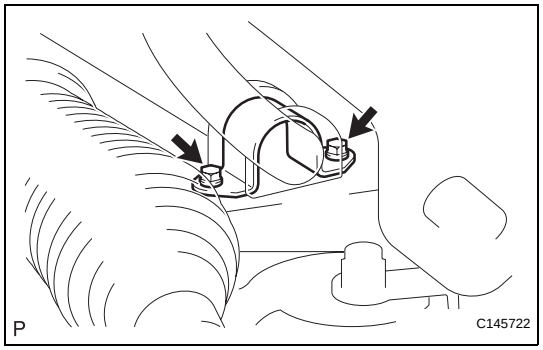

REAR SHOCK ABSORBER

COMPONENTS

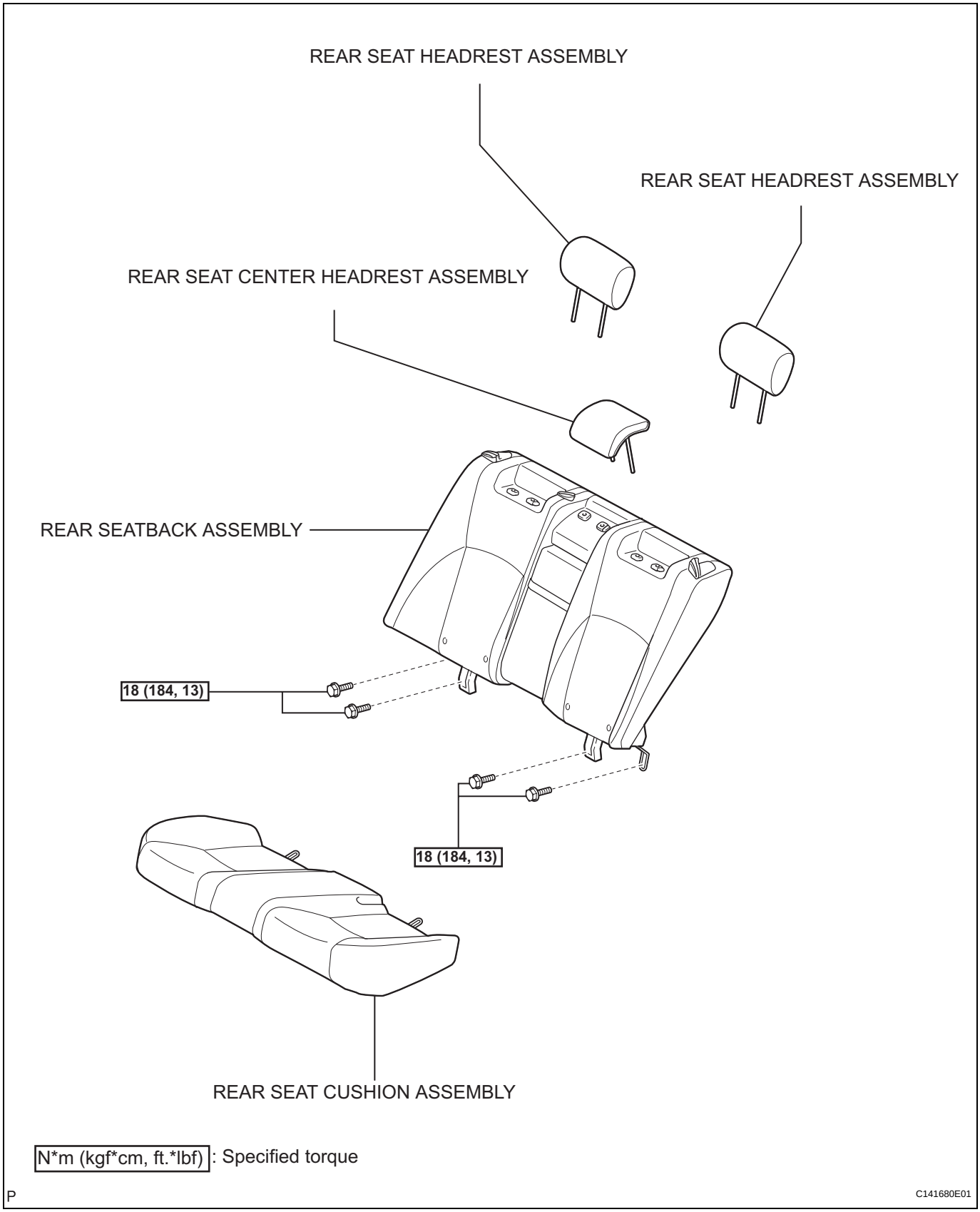

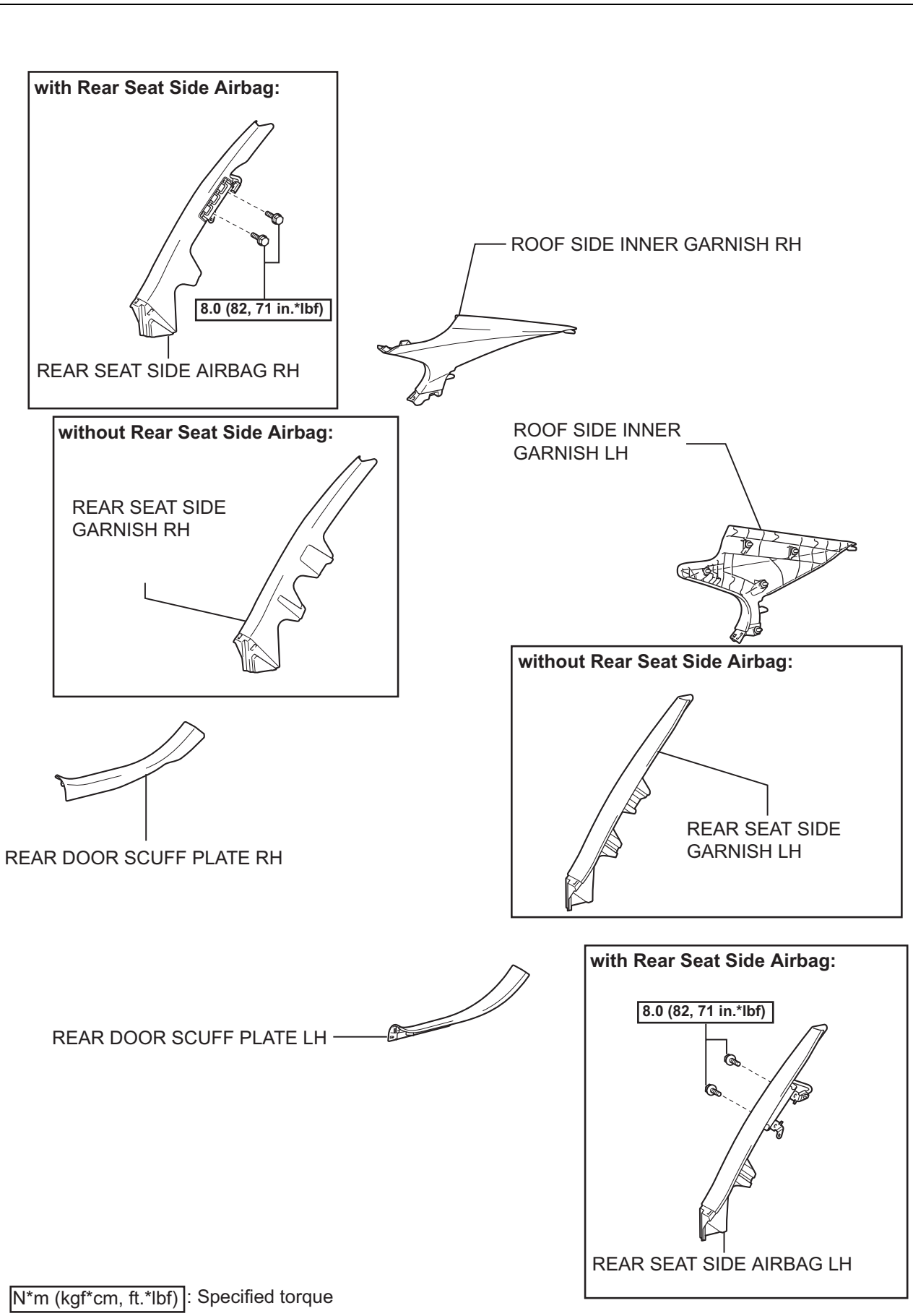
with Rear Seat Side Airbag:
8.0 (82, 71 in.*lbf)
REAR SEAT SIDE AIRBAG RH
ROOF SIDE INNER GARNISH RH
without Rear Seat Side Airbag:
REAR SEAT SIDE GARNISH RH
ROOF SIDE INNER GARNISH LH
REAR DOOR SCUFF PLATE RH
without Rear Seat Side Airbag:
REAR SEAT SIDE GARNISH LH
REAR DOOR SCUFF PLATE LH
with Rear Seat Side Airbag:
8.0 (82, 71 in.*lbf)
REAR SEAT SIDE AIRBAG LH
N*m (kgf*cm, ft.*lbf): Specified torque
P
C141941E01

SP

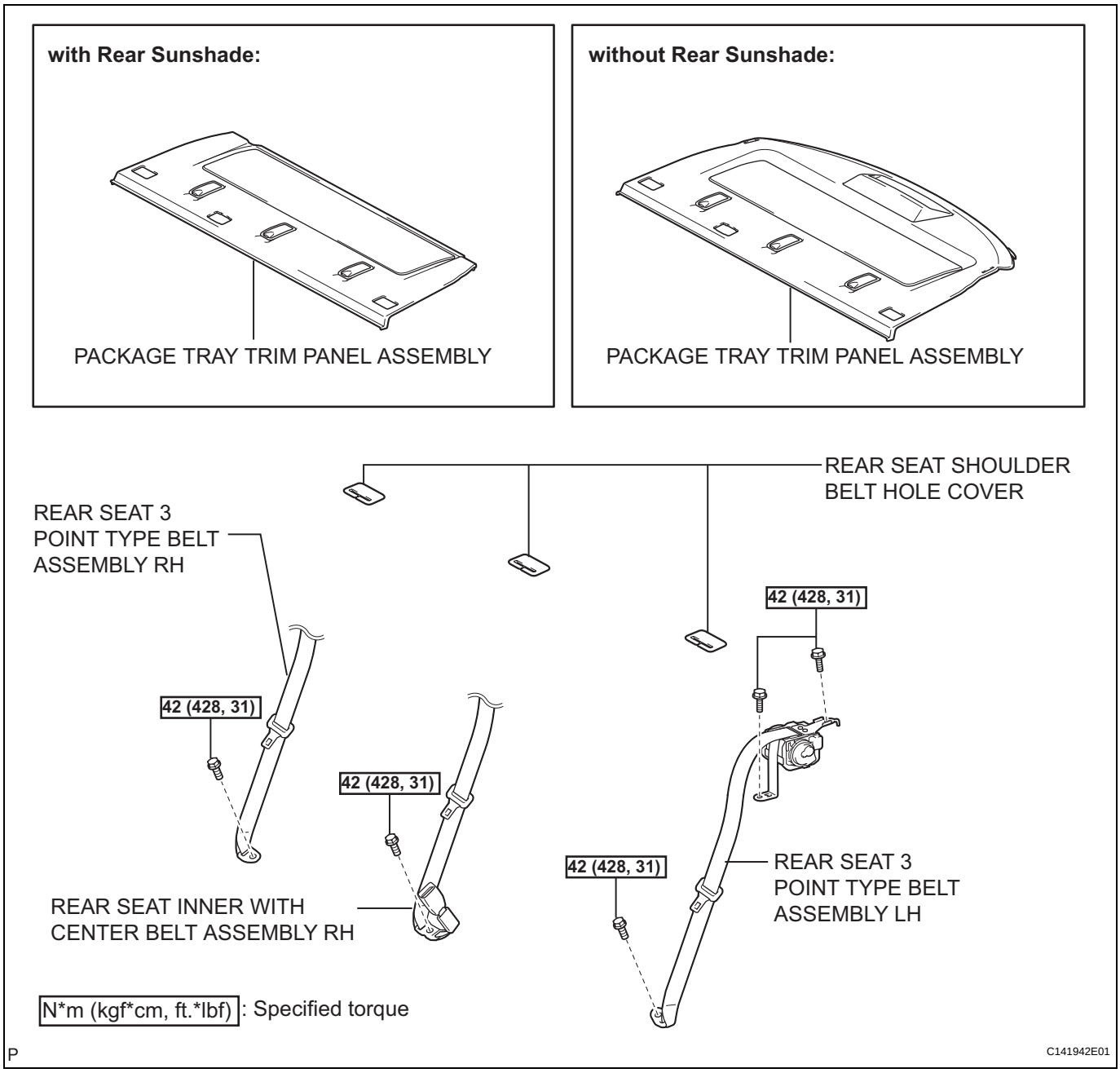
with Rear Sunshade:
PACKAGE TRAY TRIM PANEL ASSEMBLY
without Rear Sunshade:
PACKAGE TRAY TRIM PANEL ASSEMBLY
REAR SEAT SHOULDER BELT HOLE COVER
REAR SEAT 3 POINT TYPE BELT ASSEMBLY RH
42 (428, 31)
42 (428, 31)
42 (428, 31)
42 (428, 31)
REAR SEAT INNER WITH CENTER BELT ASSEMBLY RH
REAR SEAT 3 POINT TYPE BELT ASSEMBLY LH
N*m (kgf*cm, ft.*lbf): Specified torque
P
C141942E01

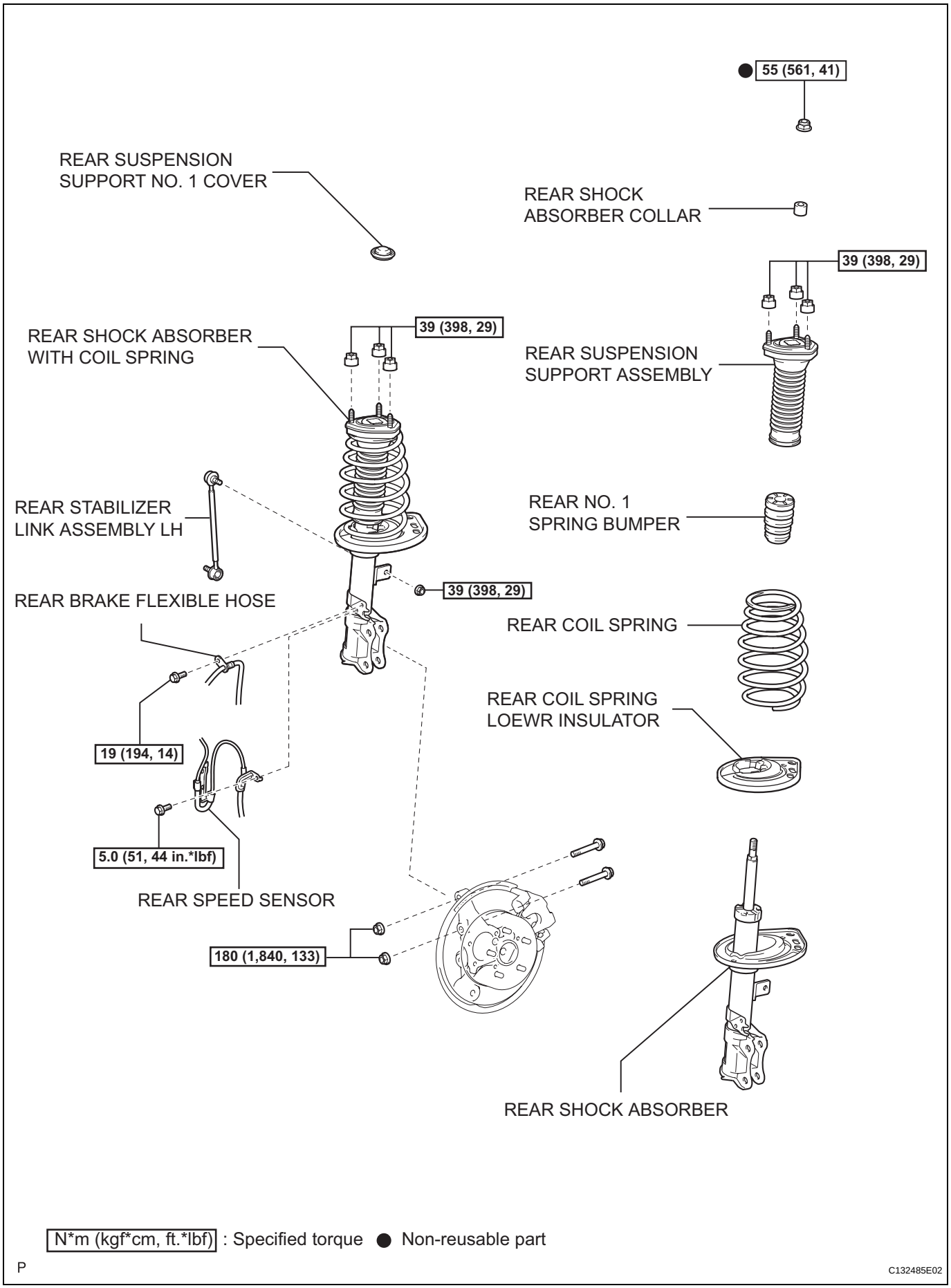
55 (561, 41)
REAR SUSPENSION SUPPORT NO. 1 COVER
REAR SHOCK ABSORBER COLLAR
39 (398, 29)
REAR SHOCK ABSORBER WITH COIL SPRING
39 (398, 29)
REAR SUSPENSION SUPPORT ASSEMBLY
REAR STABILIZER LINK ASSEMBLY LH
REAR NO. 1 SPRING BUMPER
39 (398, 29)
REAR BRAKE FLEXIBLE HOSE
REAR COIL SPRING
REAR COIL SPRING LOEWR INSULATOR
19 (194, 14)
5.0 (51, 44 in.*lbf)
REAR SPEED SENSOR
180 (1,840, 133)
REAR SHOCK ABSORBER
N*m (kgf*cm, ft.*lbf) : Specified torque ● Non-reusable part
P
C132485E02

SP

REAR STRUT ROD

COMPONENTS

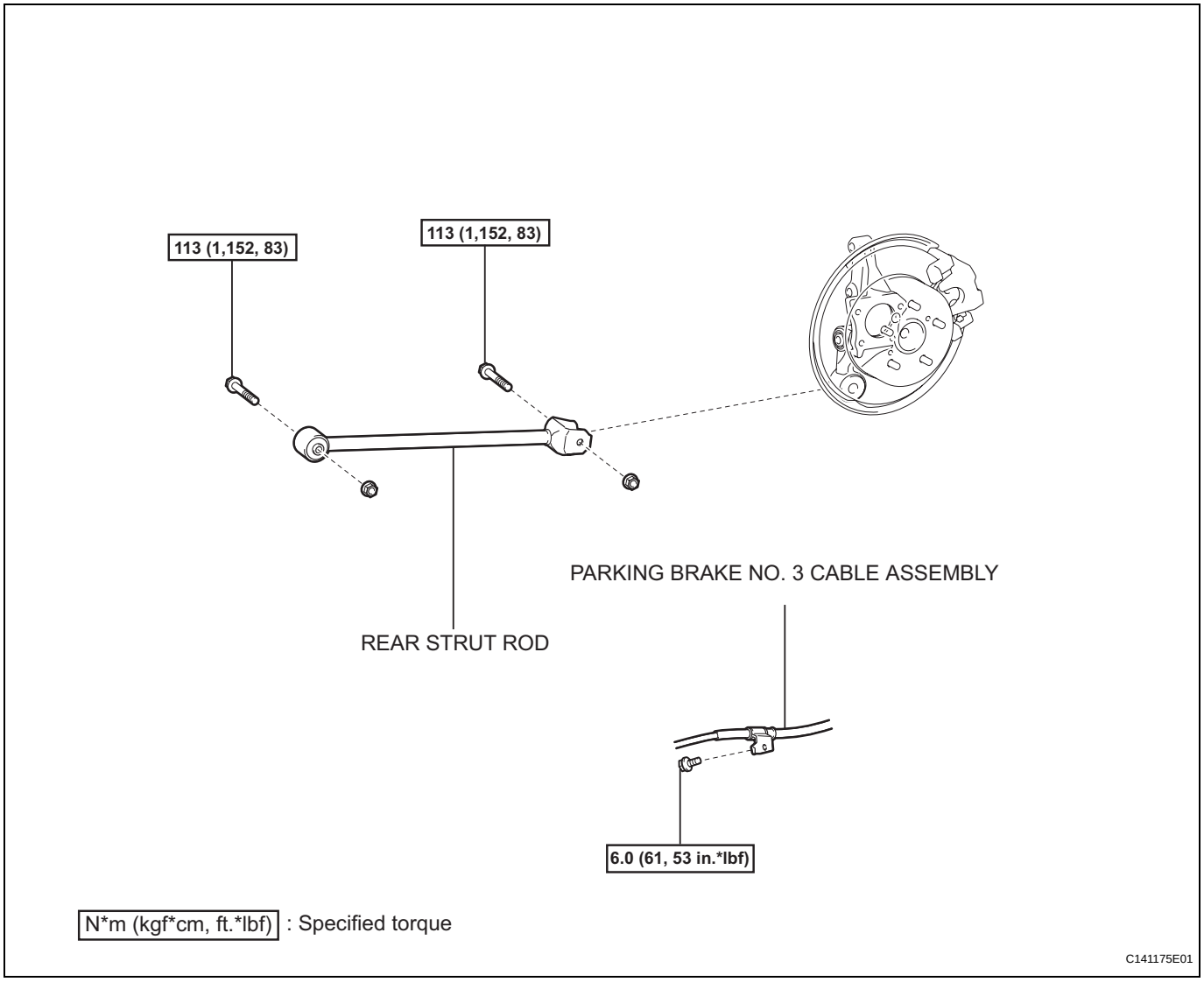

REMOVAL

1. REMOVE REAR WHEEL

2. SEPARATE PARKING BRAKE NO. 3 CABLE ASSEMBLY

(a) Remove the bolt, and separate the parking brake No. 3 cable assembly.

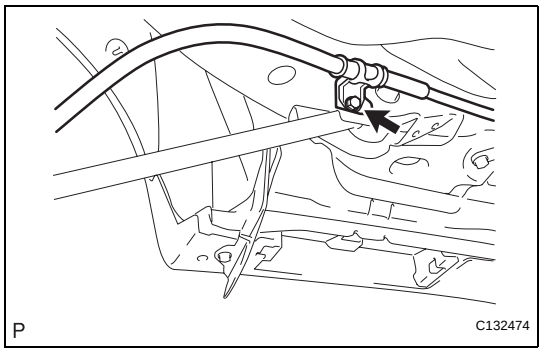

3. REMOVE REAR STRUT ROD

(a) Support the rear axle carrier with a jack.

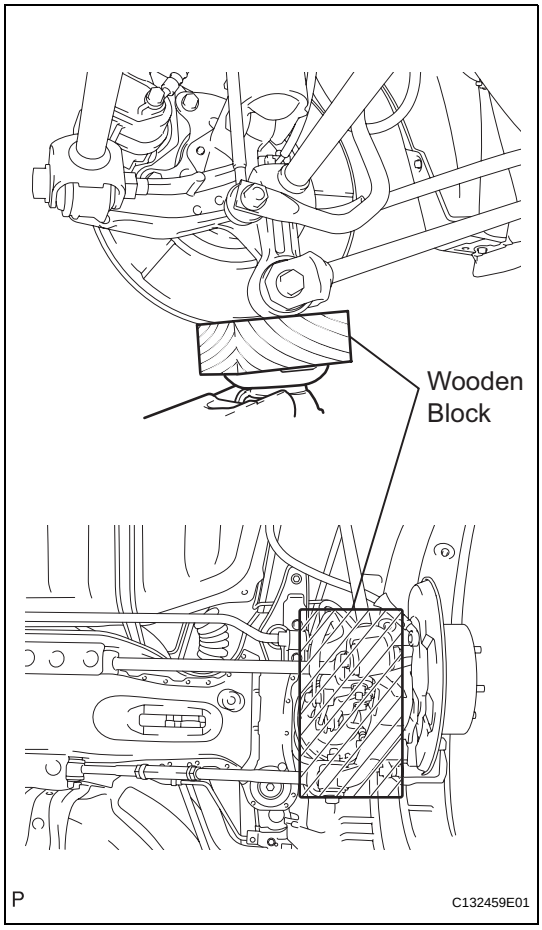

(b) Remove the bolt and nut, and disconnect the strut rod (front side).

NOTICE:

When removing the bolt, keep the nut from rotating.

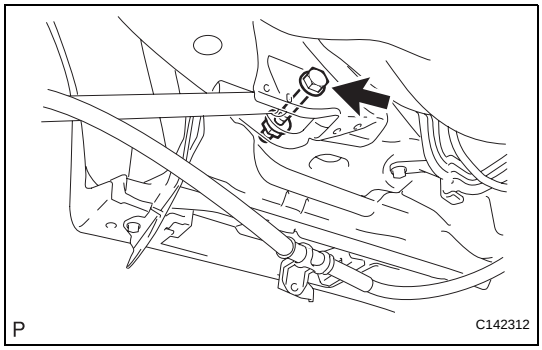

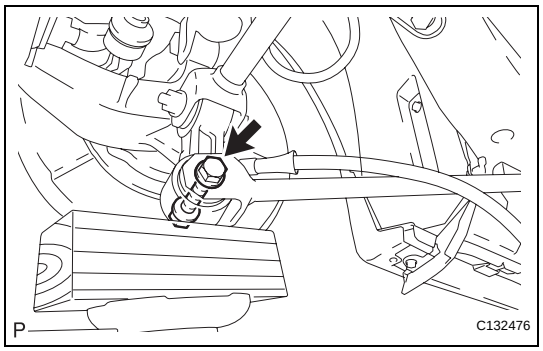

(c) Remove the bolt, nut and strut rod from the rear axle carrier.
NOTICE:
When removing the bolt, keep the nut from rotating.

INSTALLATION

1. TEMPORARILY TIGHTEN REAR STRUT ROD

(a) Install the rear strut rod (rear side), bolt and nut, and temporarily tighten the bolt.
NOTICE:
When temporarily tightening the bolt, keep the nut from rotating.

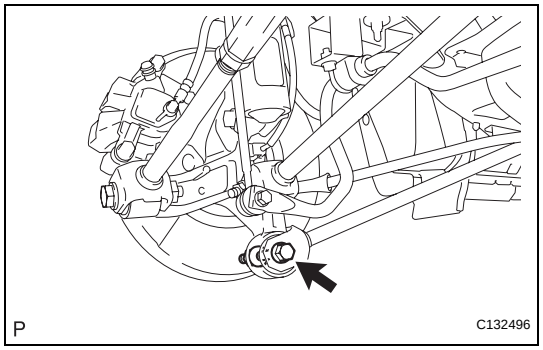

(b) Support the rear axle carrier.

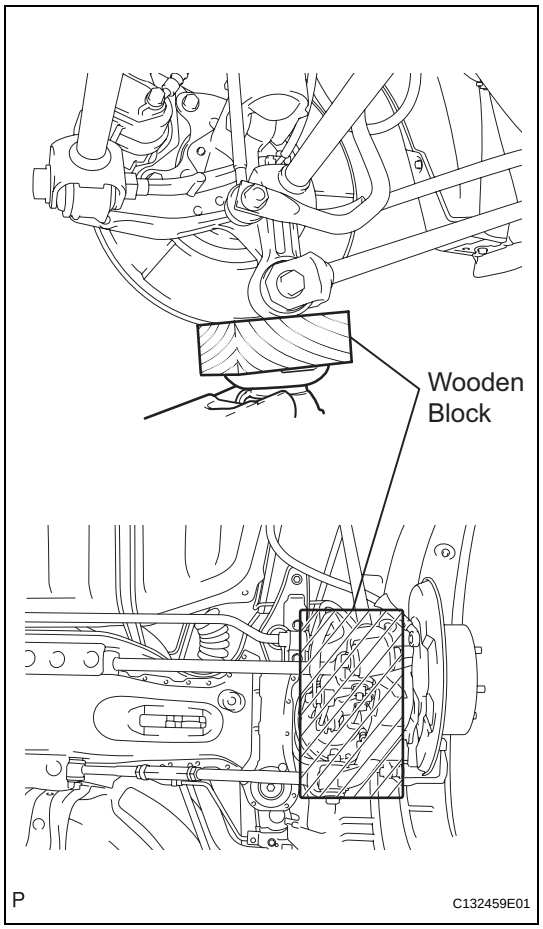

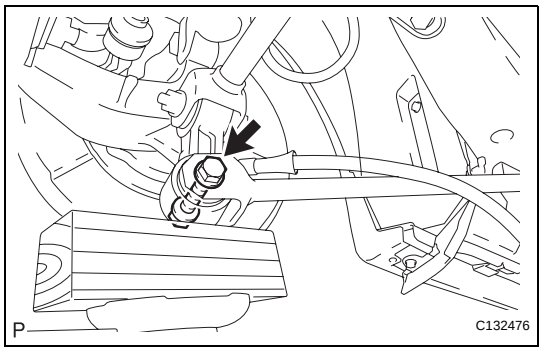

(c) Connect the rear strut rod (inner side) with the bolt and nut.
NOTICE:
When temporarily tightening the bolt, keep the nut from rotating.

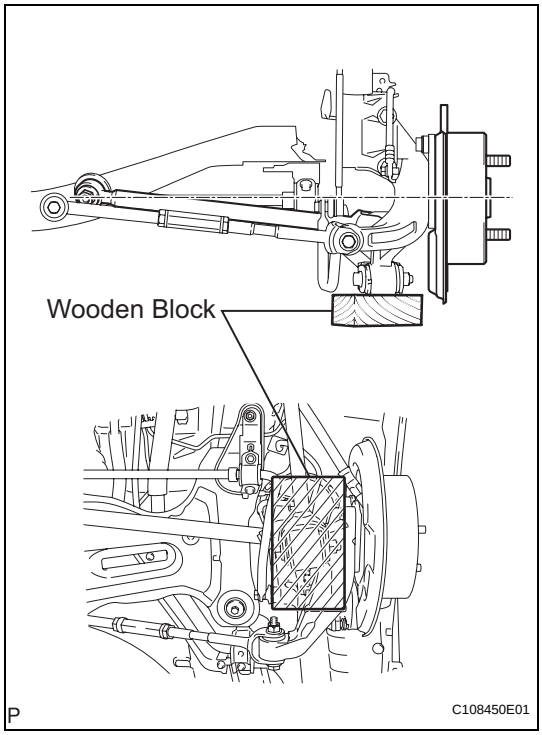

2. STABILIZE SUSPENSION

(a) Jack up the rear axle carrier, placing a wooden block to avoid damage. Apply load to the suspension so that the installed bolt of the rear suspension No. 1 arm (inner side of vehicle) is horizontally aligned with the center of the rear axle hub.

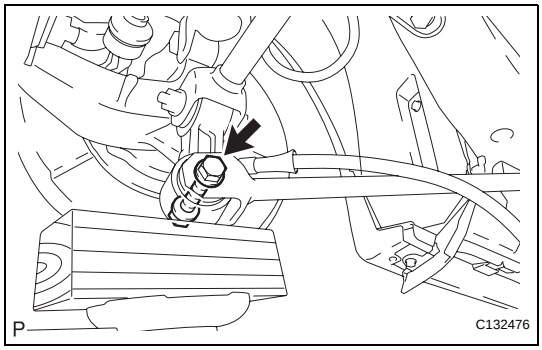

3. FULLY TIGHTEN REAR STRUT ROD

(a) Fully tighten the bolt.
Torque: 113 N*m (1,152 kgf*cm, 83 ft.*lbf)

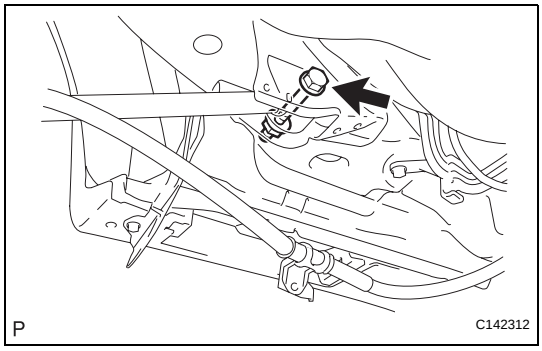

(b) Fully tighten the bolt.
Torque: 113 N*m (1,152 kgf*cm, 83 ft.*lbf)

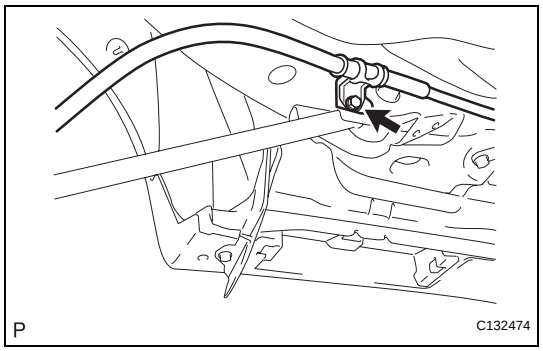

4. CONNECT PARKING BRAKE NO. 3 CABLE ASSEMBLY

(a) Install the parking brake No. 3 cable assembly with the bolt.
Torque: 6.0 N*m (61 kgf*cm, 53 in.*lbf)

5. INSTALL REAR WHEEL
Torque: 103 N*m (1,050 kgf*cm, 76 ft.*lbf)

REAR NO. 1 SUSPENSION ARM

COMPONENTS

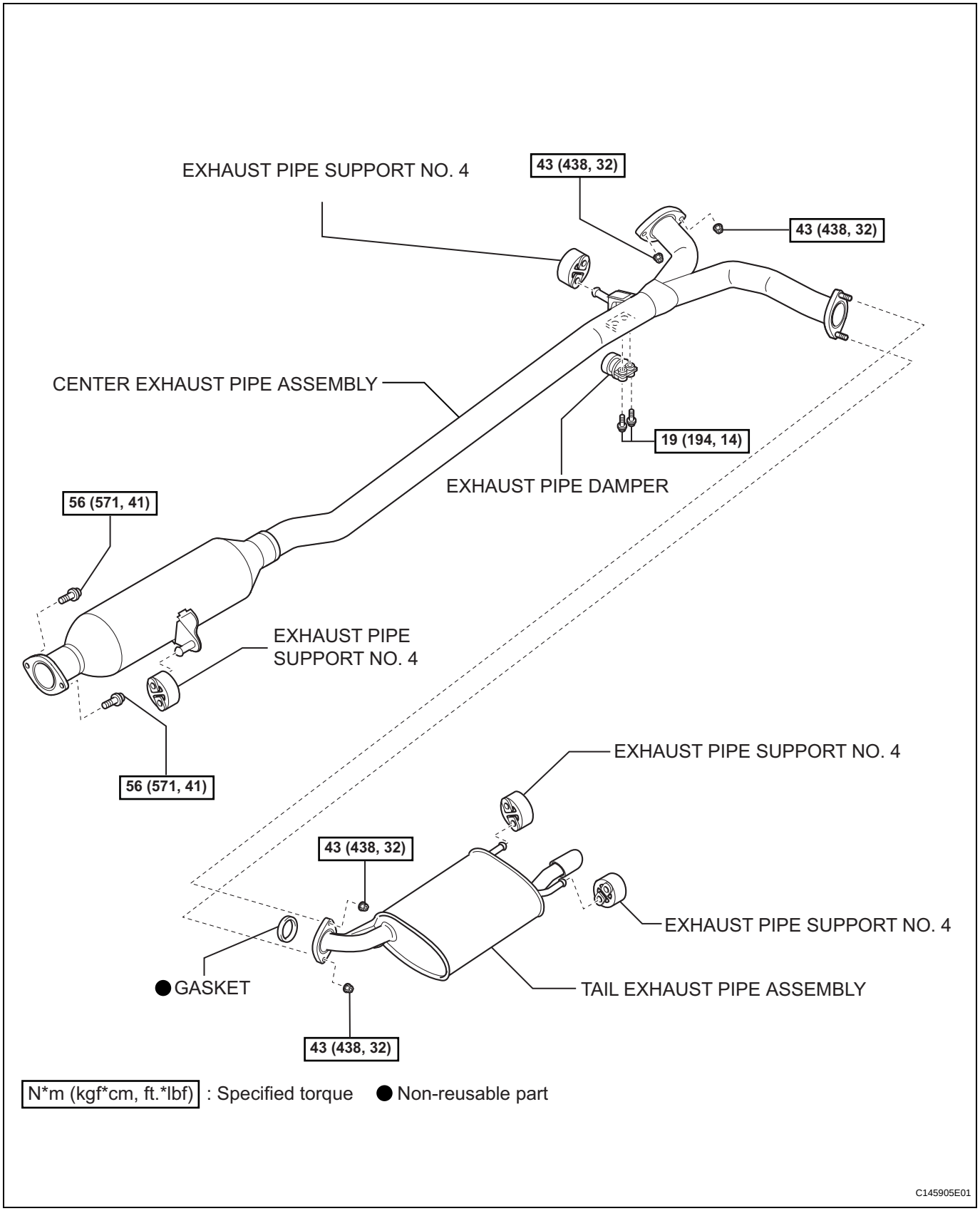

SP

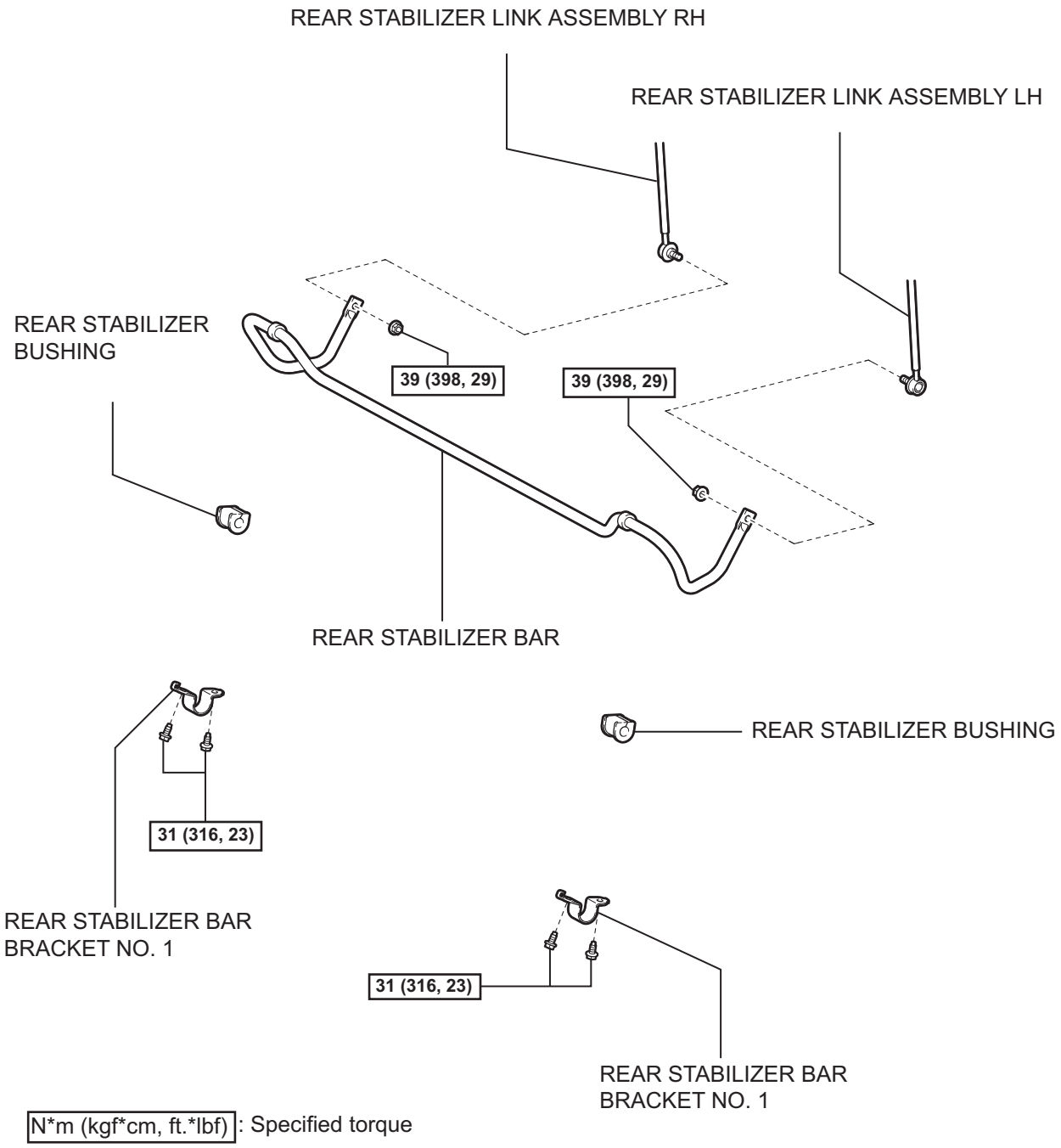

N*m (kgf*cm, ft.*lbf) : Specified torque

P

C145507E01

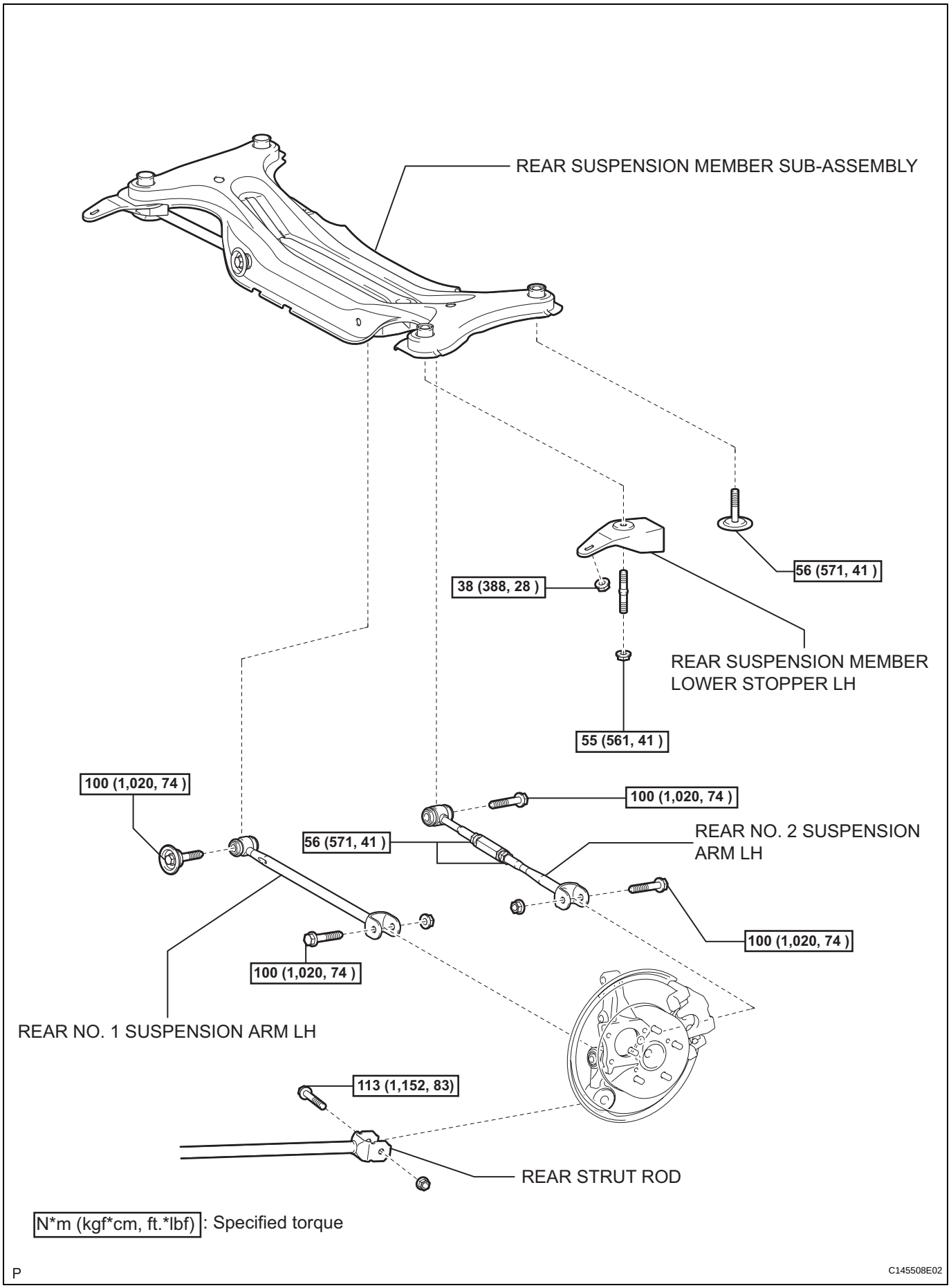
REAR SUSPENSION MEMBER SUB-ASSEMBLY
56 (571, 41)
38 (388, 28)
REAR SUSPENSION MEMBER LOWER STOPPER LH
55 (561, 41)
100 (1,020, 74)
100 (1,020, 74)
56 (571, 41)
REAR NO. 2 SUSPENSION ARM LH
100 (1,020, 74)
100 (1,020, 74)
REAR NO. 1 SUSPENSION ARM LH
113 (1,152, 83)
REAR STRUT ROD
N*m (kgf*cm, ft.*lbf) : Specified torque
P
C145508E02

REAR NO. 2 SUSPENSION ARM

COMPONENTS

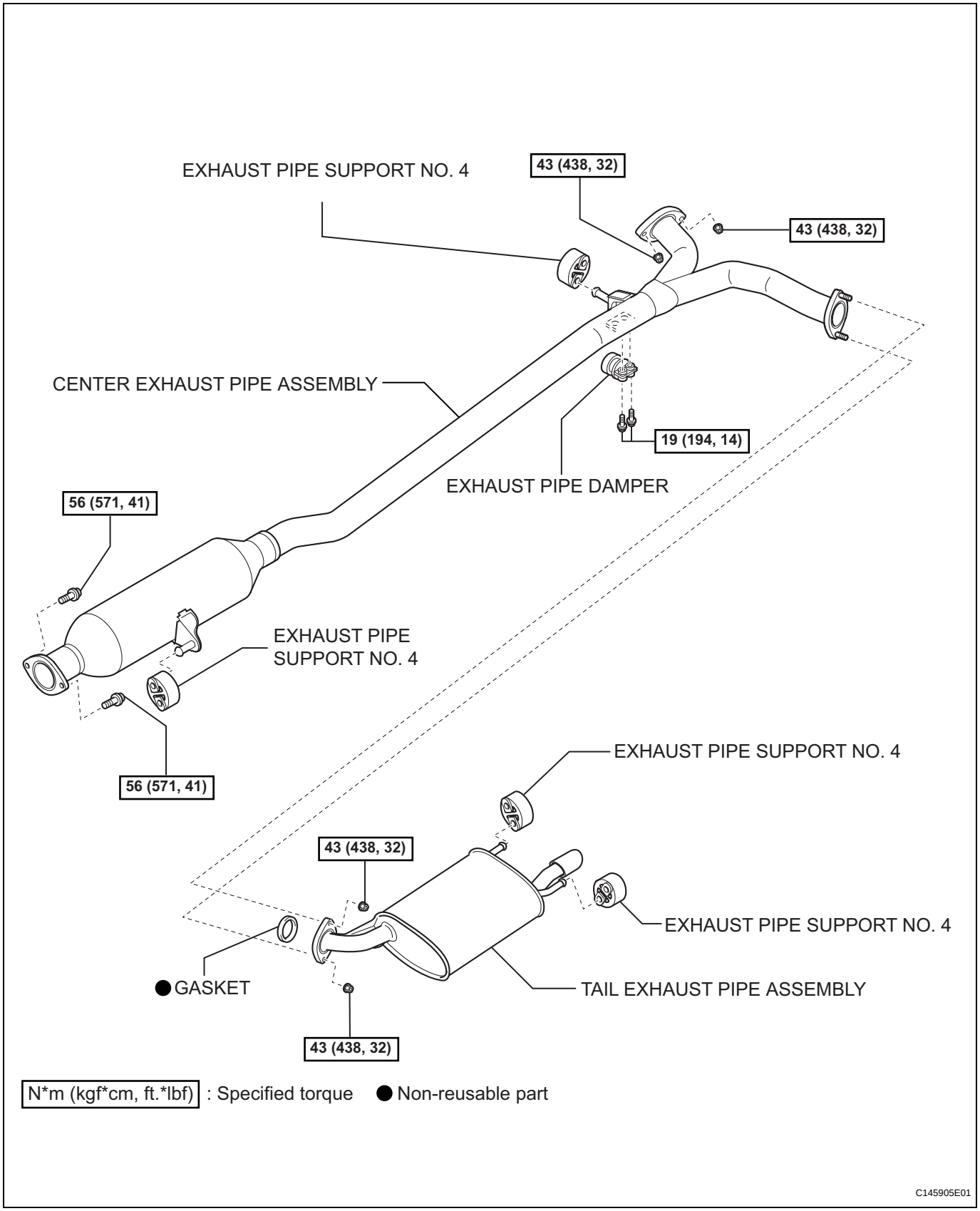

SP

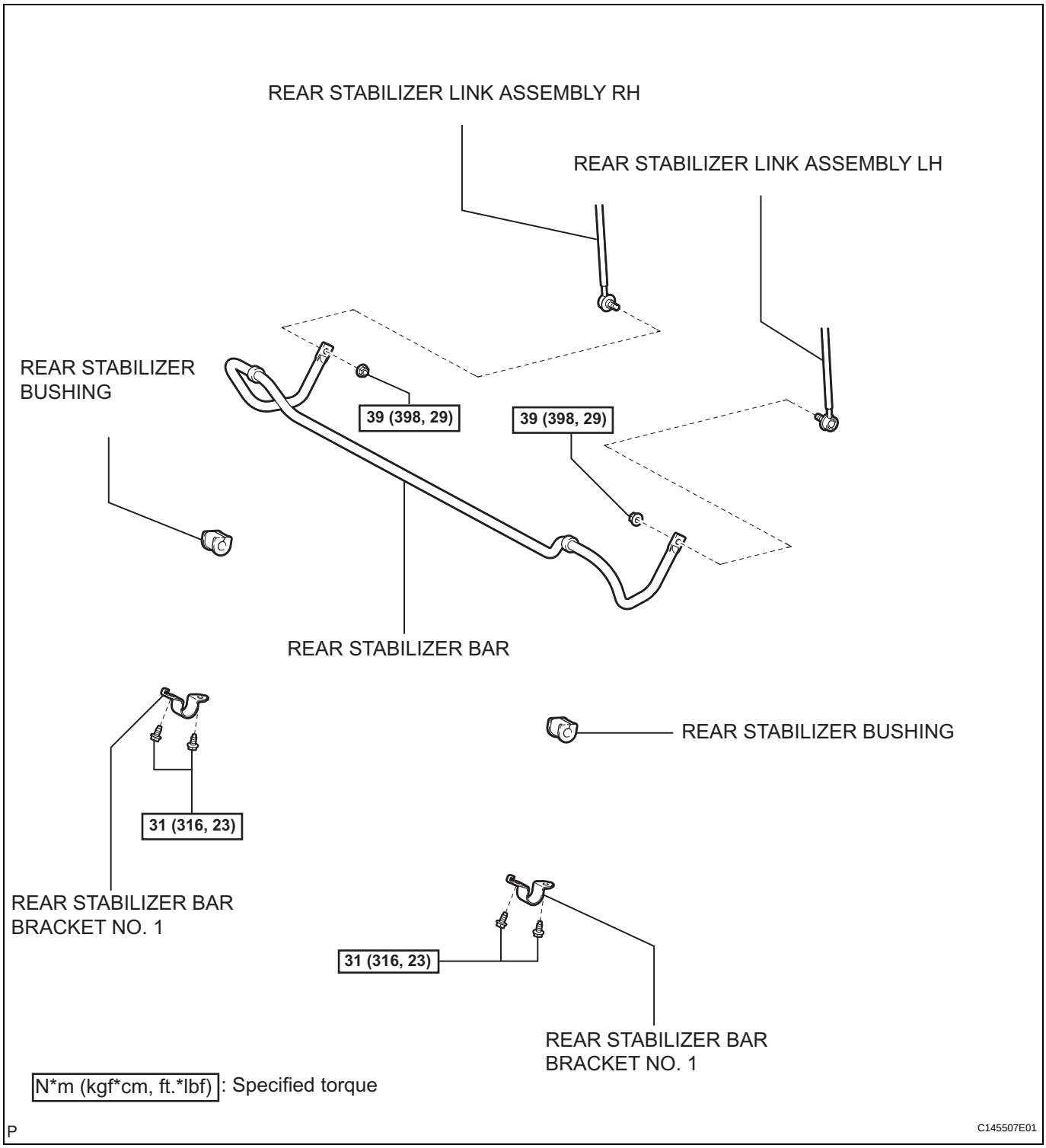
REAR STABILIZER LINK ASSEMBLY RH
REAR STABILIZER LINK ASSEMBLY LH
REAR STABILIZER BUSHING
39 (398, 29)
39 (398, 29)
REAR STABILIZER BAR
REAR STABILIZER BUSHING
31 (316, 23)
REAR STABILIZER BAR BRACKET NO. 1
31 (316, 23)
REAR STABILIZER BAR BRACKET NO. 1
N*m (kgf*cm, ft.*lbf) : Specified torque
P
C145507E01

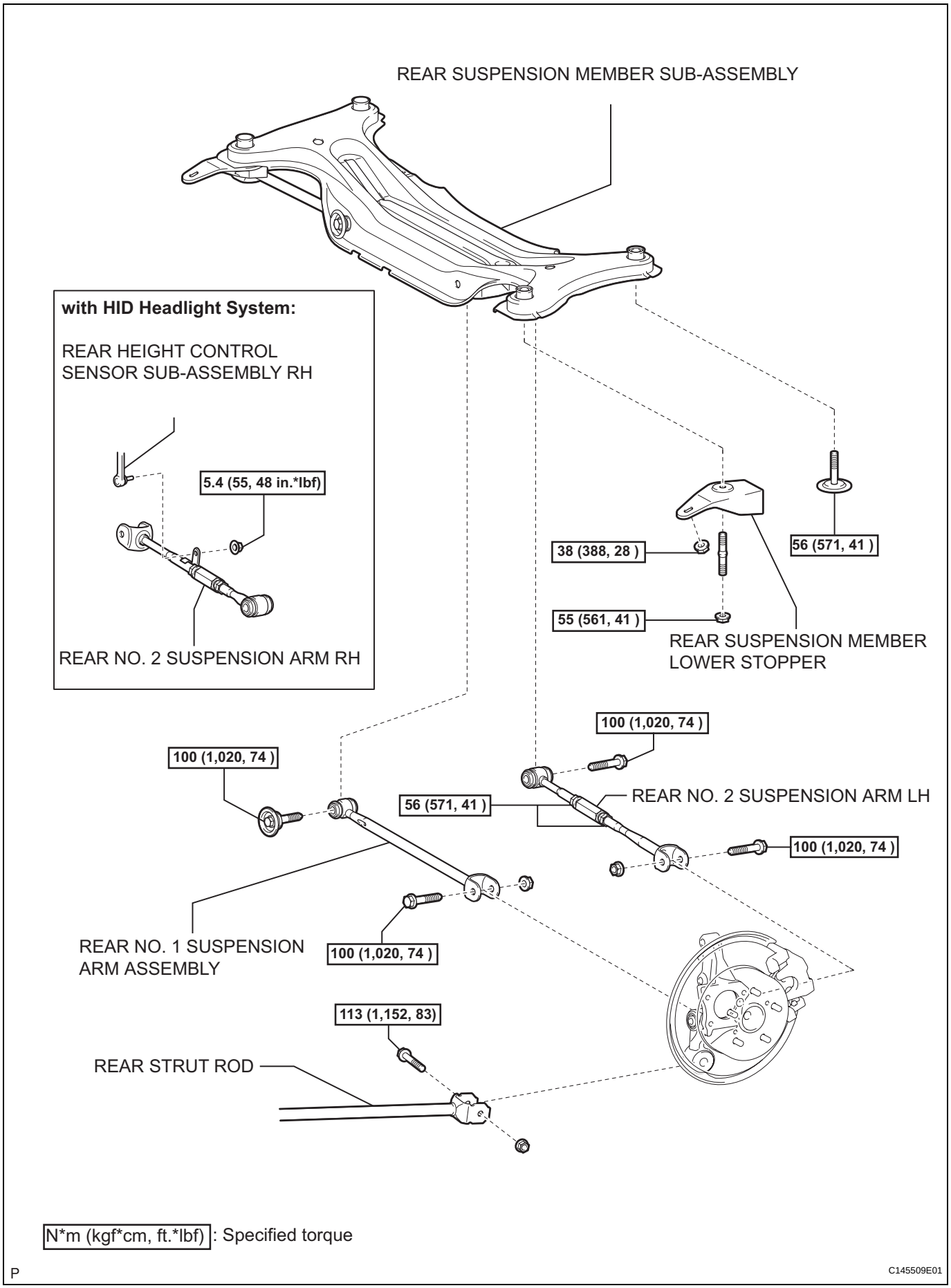
REAR SUSPENSION MEMBER SUB-ASSEMBLY
with HID Headlight System:
REAR HEIGHT CONTROL SENSOR SUB-ASSEMBLY RH
5.4 (55, 48 in.*lbf)
REAR NO. 2 SUSPENSION ARM RH
38 (388, 28)
56 (571, 41)
55 (561, 41)
REAR SUSPENSION MEMBER LOWER STOPPER
100 (1,020, 74)
100 (1,020, 74)
56 (571, 41)
REAR NO. 2 SUSPENSION ARM LH
100 (1,020, 74)
REAR NO. 1 SUSPENSION ARM ASSEMBLY
100 (1,020, 74)
113 (1,152, 83)
REAR STRUT ROD
N*m (kgf*cm, ft.*lbf) : Specified torque
P
C145509E01

SP

REAR STABILIZER BAR

COMPONENTS

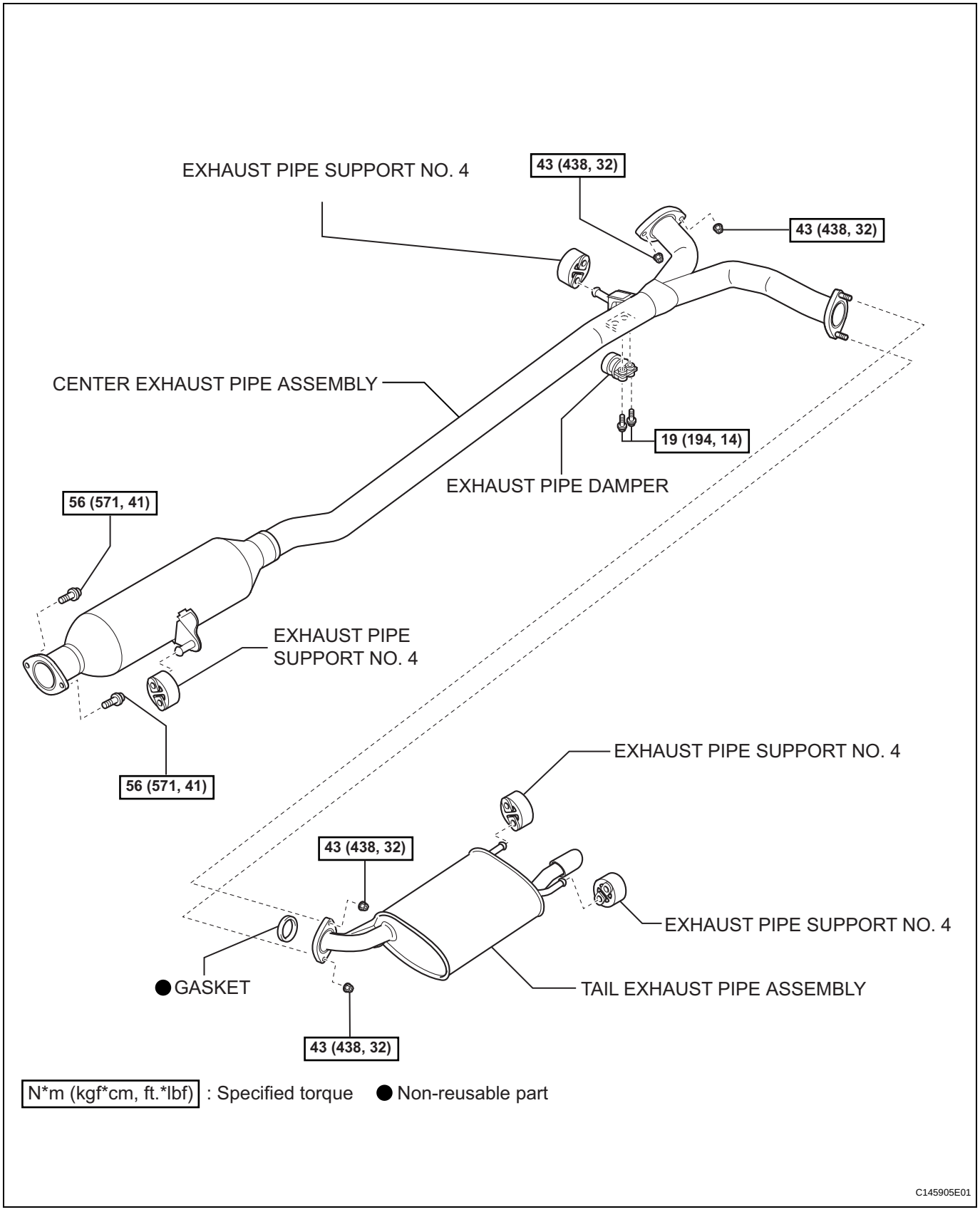

SP

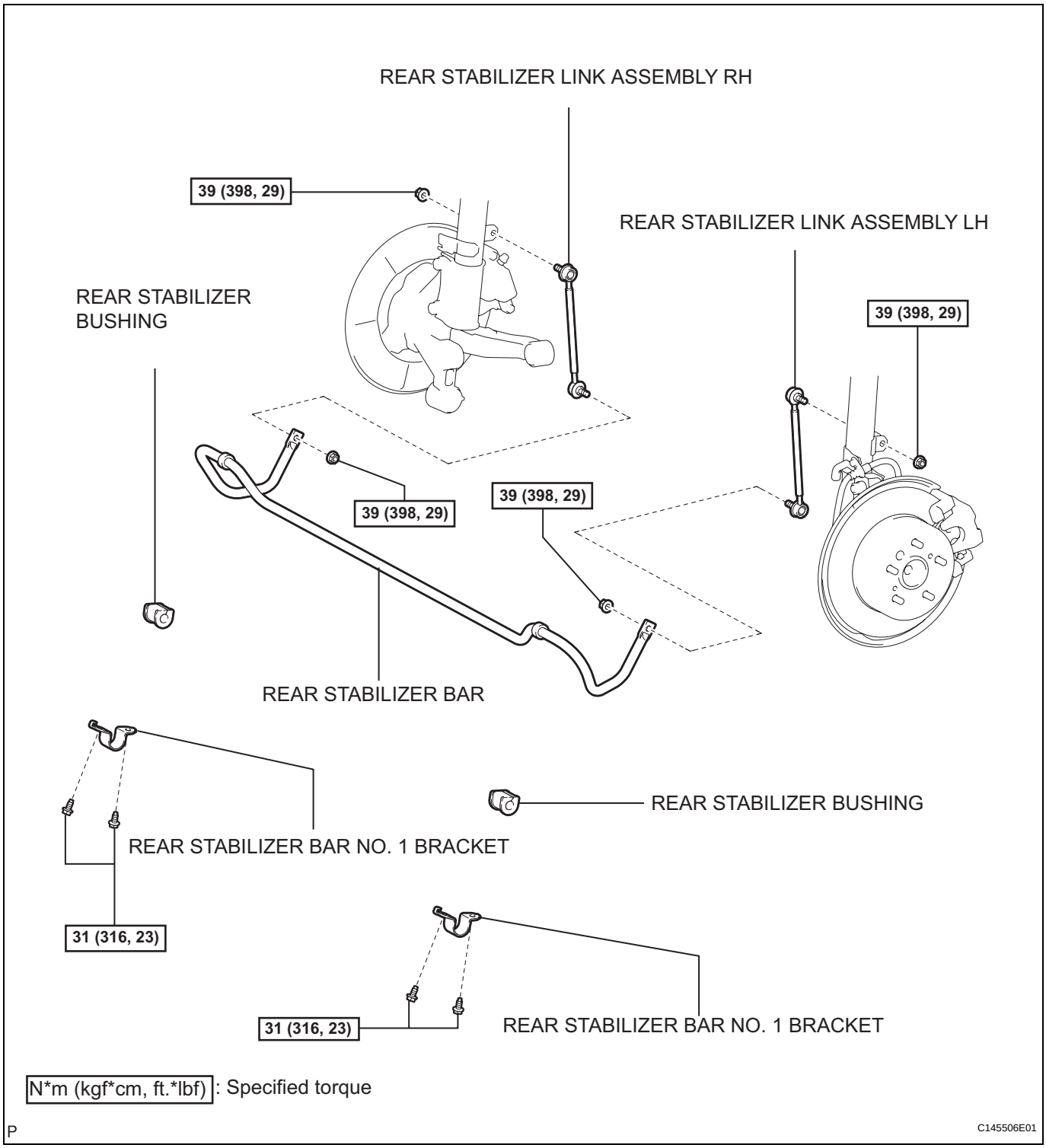
REAR STABILIZER LINK ASSEMBLY RH
39 (398, 29)
REAR STABILIZER LINK ASSEMBLY LH
REAR STABILIZER BUSHING
39 (398, 29)
39 (398, 29)
39 (398, 29)
REAR STABILIZER BAR
REAR STABILIZER BUSHING
REAR STABILIZER BAR NO. 1 BRACKET
31 (316, 23)
31 (316, 23)
REAR STABILIZER BAR NO. 1 BRACKET
N*m (kgf*cm, ft.*lbf) : Specified torque
P
C145506E01

SP

TIRE AND WHEEL SYSTEM

PRECAUTION

1. REMOVAL AND INSTALLATION OF THE TIRE PRESSURE WARNING VALVE SUB-ASSEMBLY

(a) When installing a tire, make sure that the tire pressure warning valve sub-assembly does not interfere with the tire bead in order to prevent damage to the tire pressure warning valve sub-assembly.

(b) After completing the operation, remove the valve core to rapidly release the air in the tire and check that the warning light comes on. If the warning light does not come on, the system may be defective.

(c) If there is air leakage, tighten the nut to a torque of 4.0 N*m (41 kgf*cm, 35 in.*lbf) and push the valve core 2 or 3 times to remove any dirt attached to the valve core. If air continues to leak, replace the grommet, washer, and nut.

(d) When installing the tire pressure warning valve sub-assembly, check whether the rim, grommet, washer, and nut are clean. Use a manufacturer-specified cap.

(e) When putting air into the tire, first install the tire pressure valve straight onto the stem of the tire pressure warning valve sub-assembly.

2. TIRE AND WHEEL REPLACEMENT

(a) If replacing a tire, be sure to check the grommet of the tire valve for damage. If the grommet is damaged, replace the grommet, washer, and nut.

(b) If tires and wheels are replaced, register the transmitter ID (See page TW-15).

HOW TO PROCEED WITH TROUBLESHOOTING

1. DIAGNOSIS OF TIRE VIBRATION

(a) Inspection procedure

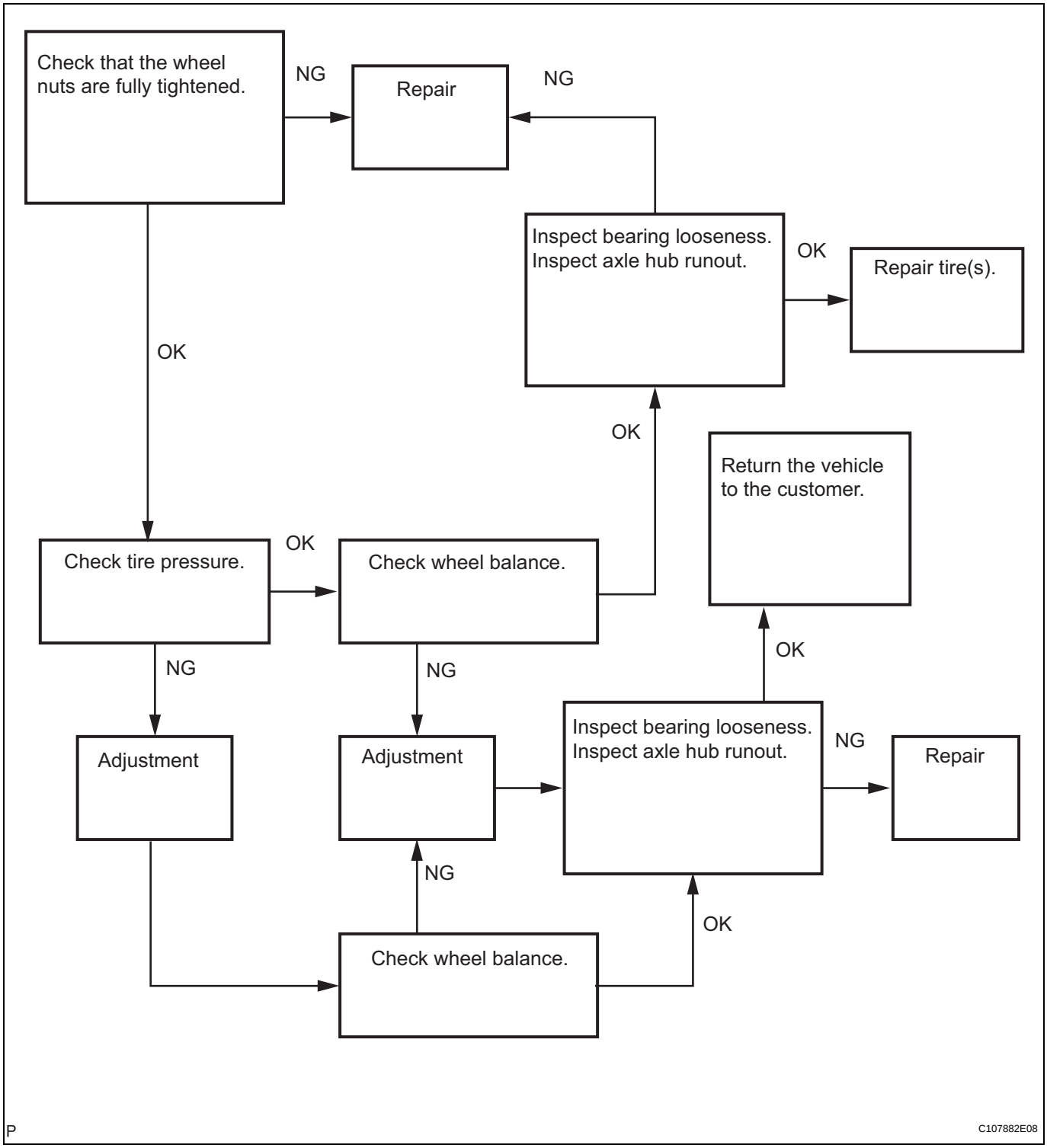

2. DIAGNOSIS OF IRREGULAR TIRE WEAR

(a) Inspection procedure

TW

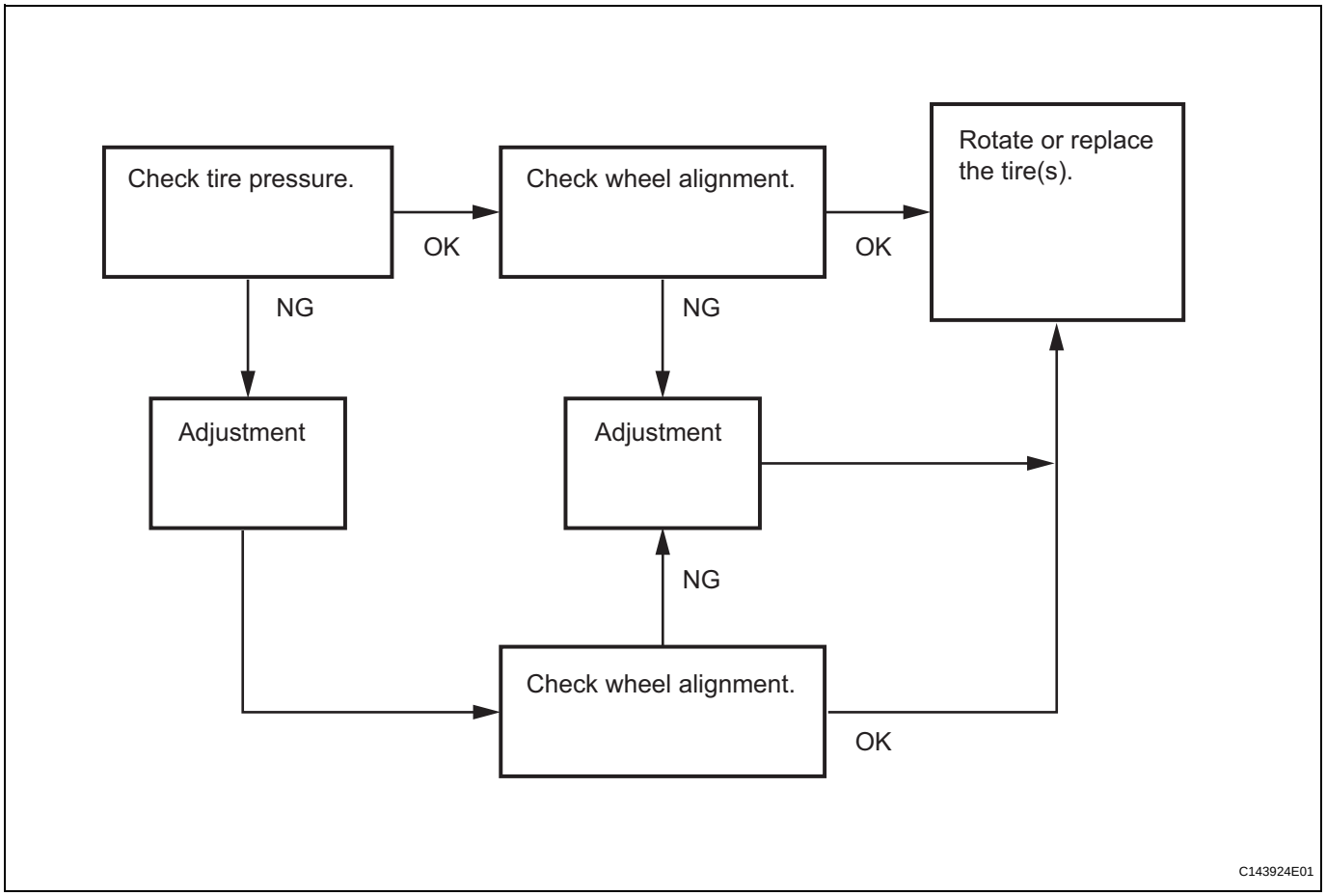
Check tire pressure.
OK
Check wheel alignment.
OK
Rotate or replace the tire(s).
NG
NG
Adjustment
Adjustment
NG
Check wheel alignment.
OK
C143924E01

TIRE PRESSURE WARNING SYSTEM

PRECAUTION

NOTICE:
Some systems need to be initialized after reconnecting the negative (-) battery terminal (See page IN-33).

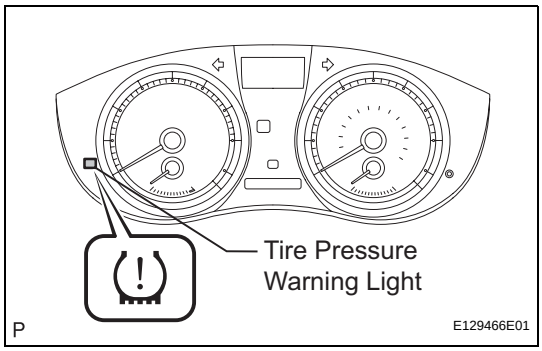

1. TIRE PRESSURE WARNING SYSTEM PRECAUTION

(a) When the tire pressure warning light comes on, immediately check the tire pressure of the tire and adjust it to the specified value. (The tire pressure warning light will blink (come on after blinking for 1 minute) if there is an open in the tire pressure warning light circuit.)
NOTICE:
Make sure to adjust the tire pressure for the full-size spare tire because this system monitors tire pressure for all the tires including the spare tire.

Cold tire inflation pressure

Tire size	Front kPa (kgf/cm^2, psi)	Rear kPa (kgf/cm^2, psi)
P215/55R17 93V	210 (2.1, 30)	210 (2.1, 30)

(b) When the tire pressure warning light blinks (comes on after blinking for 1 minute), there is a malfunction in the system. Check for DTCs.

(c) It is necessary to register the transmitter ID in the tire pressure warning ECU after replacing the tire pressure warning valve and transmitter and/or tire pressure warning ECU (See page TW-15).

(d) When replacing the tire pressure warning ECU;
(1) Using the DATA LIST, read the transmitter IDs registered in the ECU and make a note of them before removing the tire pressure warning ECU.
(2) Register the transmitter IDs after installing a new tire pressure warning ECU.

(e) When replacing the tire pressure warning valve and transmitter;

(1) Take a note of the 7 digit number (transmitter ID) written on the new tire pressure warning valve and transmitter when replacing it. Register the transmitter IDs in the tire pressure warning ECU after replacing the tire pressure warning valve and transmitter and installing the tires and wheels on the vehicle.

Tire pressure warning valve and transmitter:

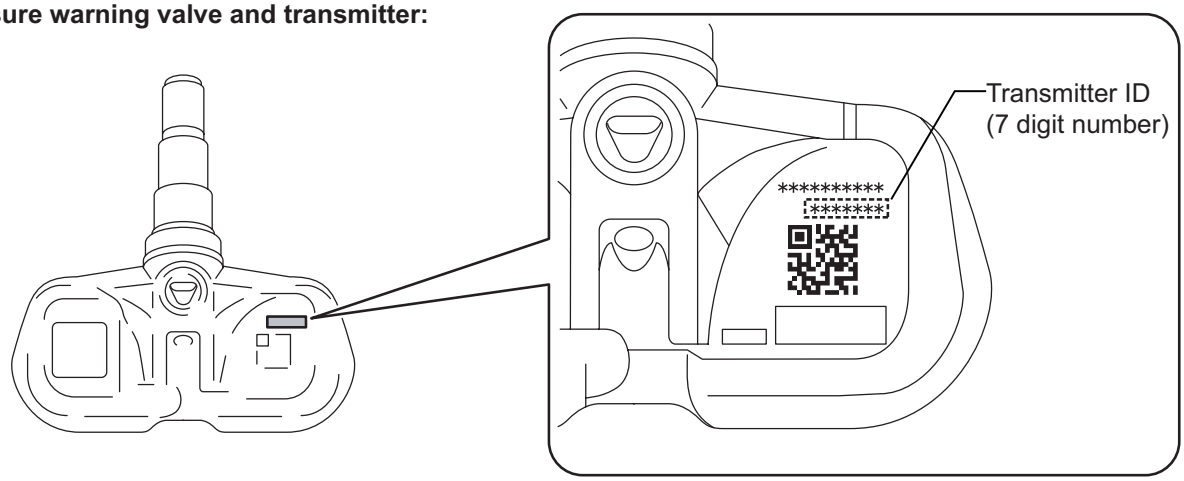

H E128762E02

NOTICE:
The transmitter ID is written on the tire pressure warning valve and transmitter. It will be unable to be read after installing the tire pressure warning valve and transmitter on the tire and wheel. Therefore, take a note of the transmitter ID before installing the tire pressure warning valve and transmitter.

(f) When replacing the tire pressure warning ECU and the tire pressure warning valves and transmitters; It is necessary to perform the initialization (See page TW-18) after the registration (See page TW-15).

(g) Precautions about the tire pressure;

- The tire pressures decrease naturally.
- In winter, tire pressure may decrease due to low ambient temperatures (tire pressure decreases by approximately 10 kPa (0.2 kgf/cm^2, 1.45 psi) for every 10°C (50°F) drop in the ambient temperature). Therefore, the tire pressure warning is more likely to operate if the tire pressures are not adjusted appropriately. If the daily temperature variation is large, pressurize the tires high so that the tire pressures are suitable under cold conditions. Incorrect tire pressure warning operation becomes less likely.

2. IN CASE OF TIRE AND WHEEL REPLACEMENT

(a) When tires and wheels are replaced, always ensure that each transmitter ID is correctly registered.

3. IN CASE OF REPLACEMENT OF TIRE PRESSURE WARNING ECU, TIRE PRESSURE WARNING VALVE AND TRANSMITTER, OR TIRE(S) WITH DIFFERENT TIRE PRESSURE

(a) Initialize the tire pressure warning system after any of the following is performed:
- Replacing the tire pressure warning ECU or the tire pressure warning valve and transmitter
- Installing tire(s) which require different tire pressure

HINT:
The tire pressure warning system will not operate properly if it is not initialized (See page TW-18).

4. FAIL-SAFE FUNCTION

(a) When a system malfunction occurs in the tire pressure warning system, the tire pressure warning light blinks (comes on after blinking for 1 minute) and informs the driver of the system failure.

(b) The result of this diagnosis is stored in the tire pressure warning ECU.

TIRE PRESSURE WARNING RECEIVER (w/ Antenna)

COMPONENTS

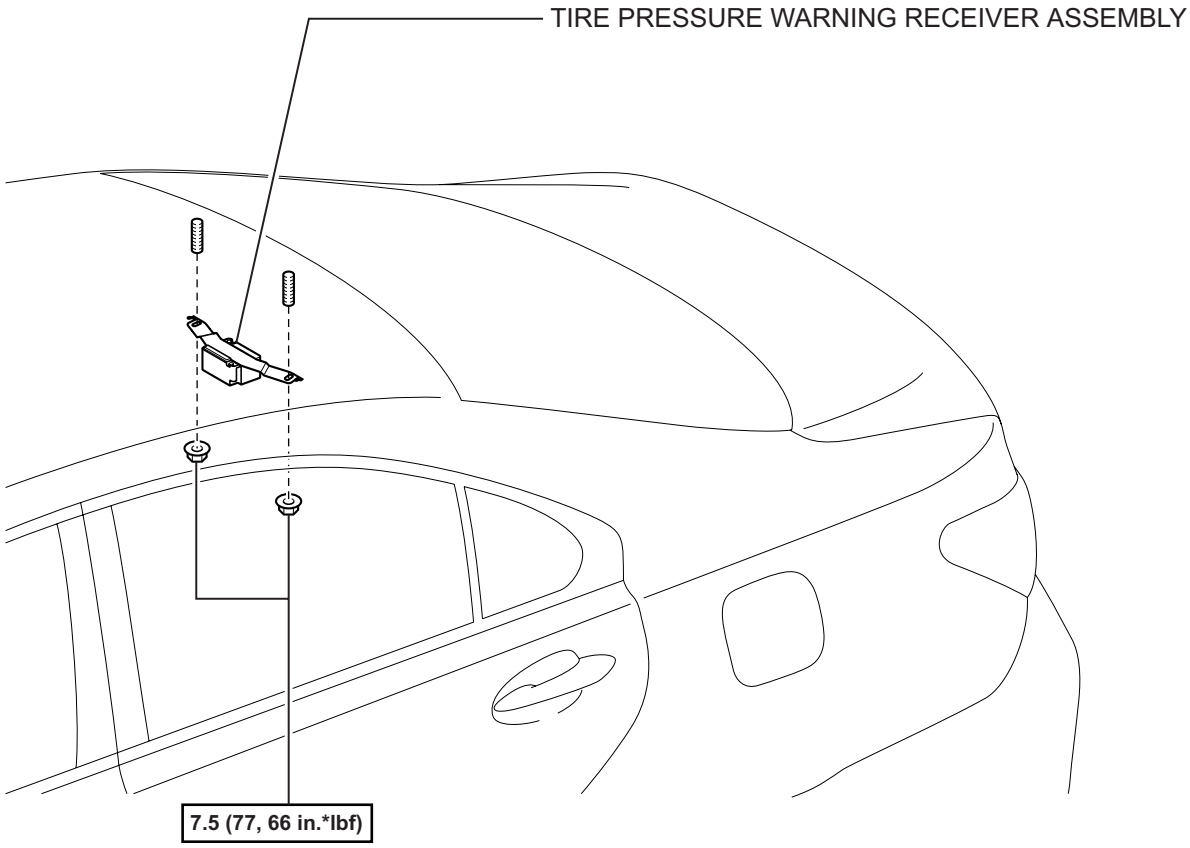

N*m (kgf*cm, ft.*lbf) : Specified torque

C

C137872E01

REMOVAL

1. **DISCONNECT CABLE FROM NEGATIVE BATTERY TERMINAL**

2. **REMOVE ROOF HEADLINING ASSEMBLY**
   HINT:
   Refer to the instructions for REMOVAL of the ROOF HEADLINING (See page IR-38).

3. **REMOVE TIRE PRESSURE WARNING RECEIVER ASSEMBLY**
   (a) Disconnect the connector.
   (b) Remove the 2 nuts and the tire pressure warning receiver assembly.

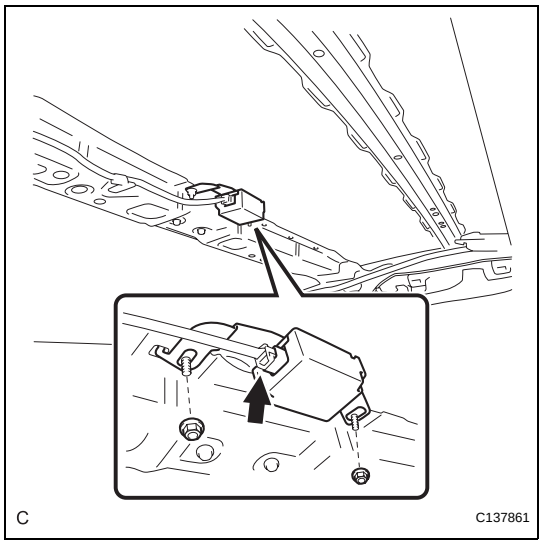

INSTALLATION

1. **INSTALL TIRE PRESSURE WARNING RECEIVER ASSEMBLY**
   (a) Install the tire pressure warning receiver assembly with the 2 nuts.
   Torque: 7.5 N*m (77 kgf*cm, 66 in.*lbf)
   (b) Connect the connector.

2. **INSTALL ROOF HEADLINING ASSEMBLY**
   HINT:
   Refer to the instructions for INSTALLATION of the ROOF HEADLINING (See page IR-52).

3. **CONNECT CABLE TO NEGATIVE BATTERY TERMINAL**

4. **PERFORM INITIALIZATION**
   NOTICE:
   Some systems need initialization after reconnecting the cable to the negative battery terminal (See page IN-33).

5. **INSPECT TIRE PRESSURE WARNING SYSTEM**
   HINT:
   (See page TW-20)

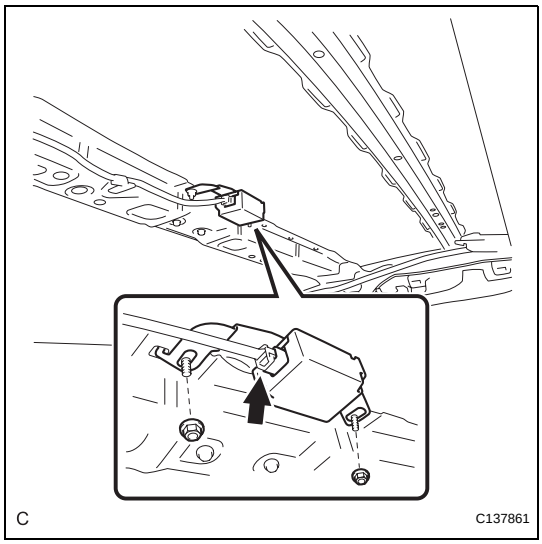

TIRE PRESSURE WARNING VALVE AND TRANSMITTER

COMPONENTS

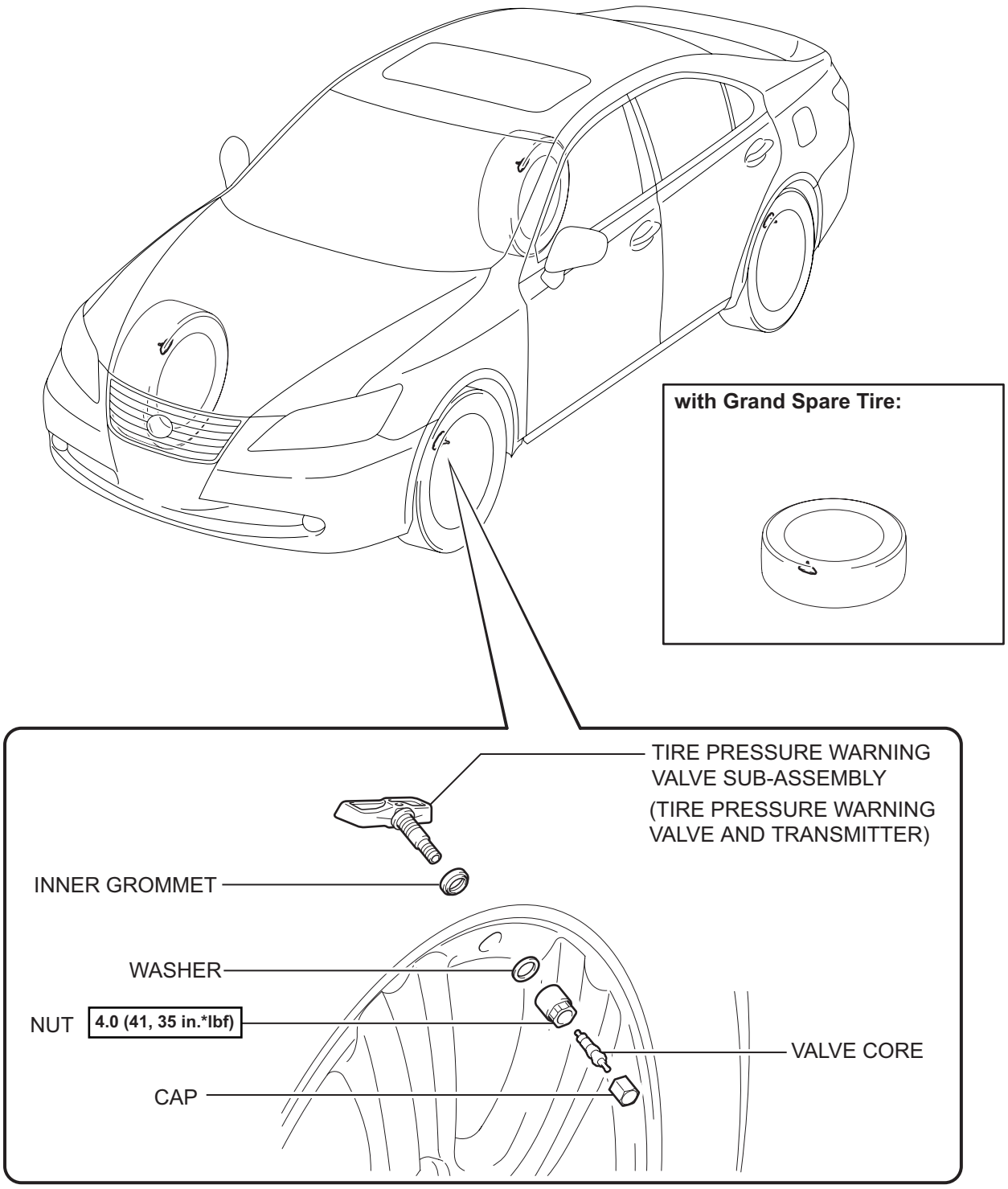

N*m (kgf*cm, ft.*lbf) : Specified torque

C

C137873E01

TW

REMOVAL

1. REMOVE FRONT WHEEL

2. REMOVE REAR WHEEL

3. REMOVE GRAND SPARE TIRE (w/ Grand Spare Tire)

4. REMOVE TIRE PRESSURE WARNING VALVE SUB-ASSEMBLY

(a) Remove the valve core and cap, and release the air from the tire.

(b) After ensuring that a sufficient amount of air has been released, remove the nut and washer that are used to secure the tire pressure warning valve and transmitter. Drop the tire pressure warning valve and transmitter inside the tire.
HINT:
Keep the removed cap, valve core, nut, and washer.

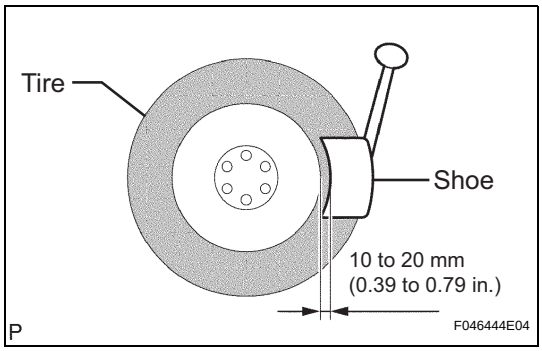

(c) After dropping the tire pressure warning valve and transmitter into the tire, disengage the bead using the shoe of the tire remover.
NOTICE:
Be careful not to damage the tire pressure warning valve and transmitter due to interference between the valve and the tire bead.

(d) Remove the bead on the upper side in the usual way.

(e) Take out the tire pressure warning valve and transmitter from the tire and remove the bead on the lower side in the usual way.
HINT:
Check that no cracks or damage are identified on the grommet. If any damage is found, replace the grommet, washer and nut.

TIRE PRESSURE WARNING ECU

COMPONENTS

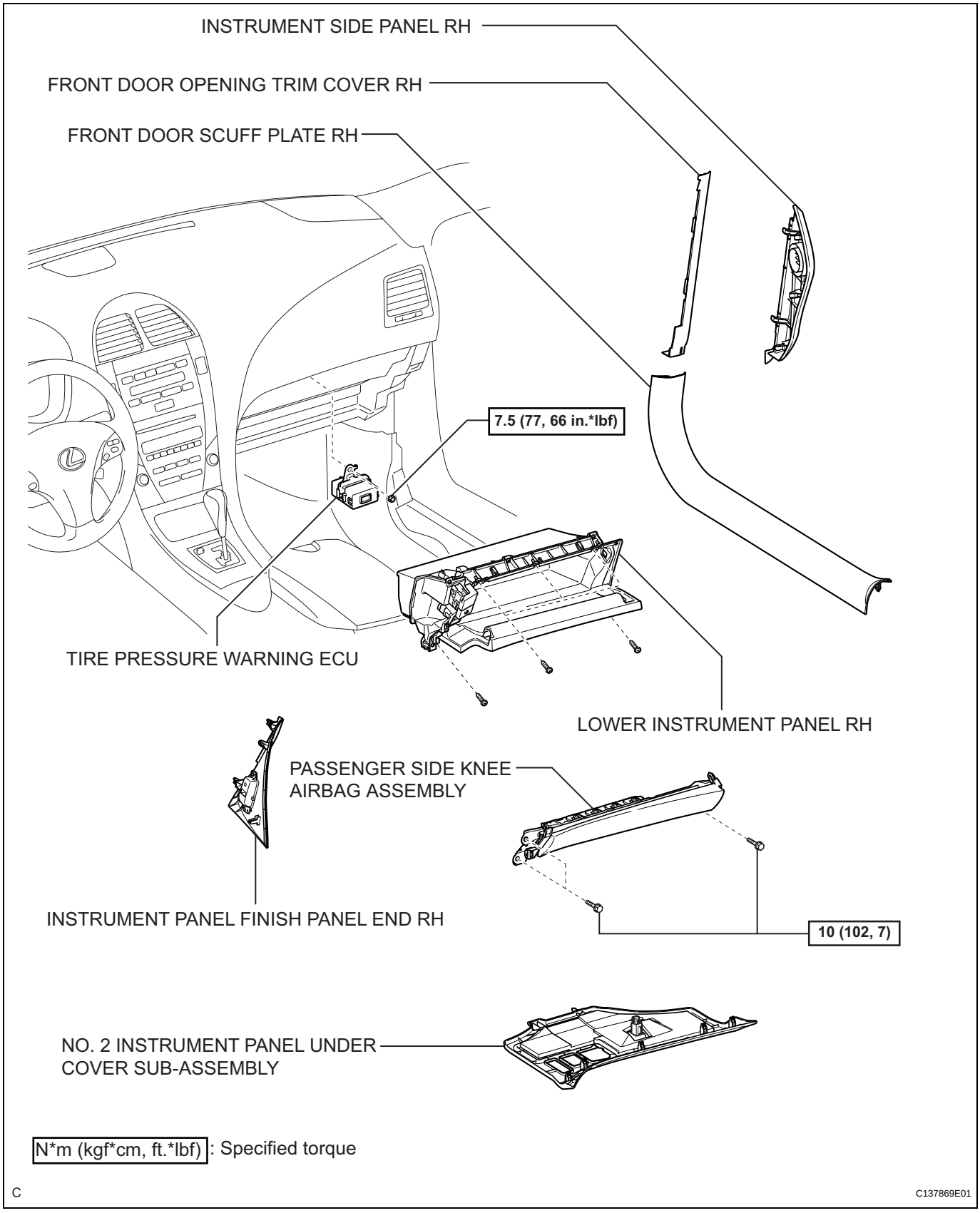

TW

REMOVAL

NOTICE:
Before removing the tire pressure warning ECU, read the registered transmitter IDs of all wheels and write them down to use for re-registration of transmitter IDs (See page TW-15).

1. **DISCONNECT CABLE FROM NEGATIVE BATTERY TERMINAL**
   CAUTION:
   Wait at least 90 seconds after disconnecting the cable from the negative (-) battery terminal to prevent airbag and seat belt pretensioner activation.
2. **REMOVE FRONT DOOR SCUFF PLATE RH (See page IR-42)**
3. **REMOVE FRONT DOOR OPENING TRIM COVER RH (See page IR-42)**
4. **REMOVE INSTRUMENT SIDE PANEL RH (See page IP-15)**
5. **REMOVE INSTRUMENT PANEL FINISH PANEL END RH (See page IP-15)**
6. **REMOVE NO. 2 INSTRUMENT PANEL UNDER COVER SUB-ASSEMBLY (See page IP-15)**
7. **REMOVE PASSENGER SIDE KNEE AIRBAG ASSEMBLY (See page RS-396)**
8. **REMOVE LOWER INSTRUMENT PANEL RH (See page IP-16)**
9. **REMOVE TIRE PRESSURE WARNING ECU**
   (a) Remove the nut.
   (b) Disconnect the connector and remove the tire pressure warning ECU.

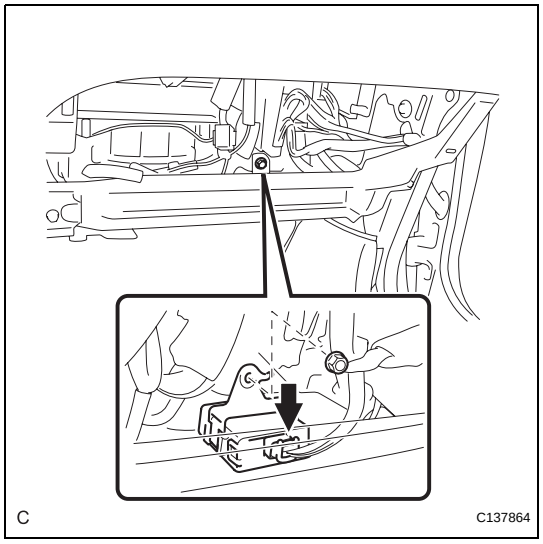

TW

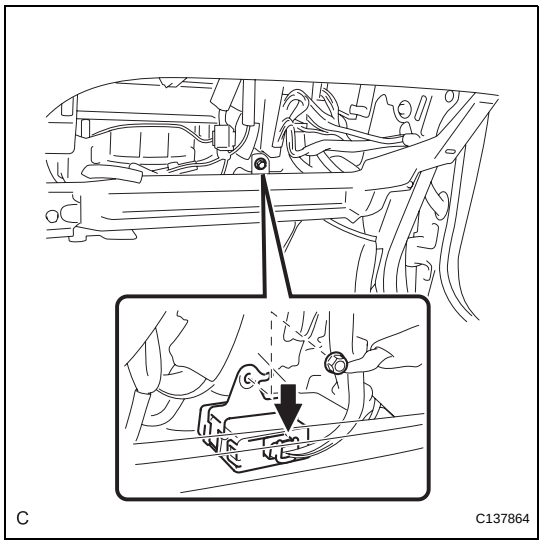

INSTALLATION

1. **INSTALL TIRE PRESSURE WARNING ECU**
   (a) Connect the connector to the tire pressure warning ECU.
   (b) Install the tire pressure warning ECU with the nut.
   Torque: 7.5 N*m (77 kgf*cm, 66 in.*lbf)
2. **INSTALL LOWER INSTRUMENT PANEL RH (See page IP-42)**
3. **INSTALL PASSENGER SIDE KNEE AIRBAG ASSEMBLY (See page RS-396)**
4. **INSTALL NO. 2 INSTRUMENT PANEL UNDER COVER SUB-ASSEMBLY (See page IP-44)**
5. **INSTALL INSTRUMENT PANEL FINISH PANEL END RH (See page IP-44)**
6. **INSTALL INSTRUMENT SIDE PANEL RH (See page IP-43)**
7. **INSTALL FRONT DOOR OPENING TRIM COVER RH (See page IR-65)**
8. **INSTALL FRONT DOOR SCUFF PLATE RH (See page IR-65)**
9. **CONNECT CABLE TO BATTERY NEGATIVE TERMINAL**
10. **PERFORM INITIALIZATION**
    NOTICE:
    Some systems need initialization after reconnecting the cable to the negative battery terminal (See page IN-33).
11. **REGISTER TRANSMITTER ID**
    HINT:
    (See page TW-15)
12. **INSPECT TIRE PRESSURE WARNING SYSTEM**
    HINT:
    (See page TW-20)
13. **INITIALIZE SYSTEM**
    NOTICE:
    - **Be sure to register the transmitter IDs of all tires including the grand spare tire in the ECU before initialization.**
    - **Be sure to inflate all tires including the grand spare tire to the proper inflation pressure before initialization.**

    HINT:
    (See page TW-18)

TIRE PRESSURE WARNING RESET SWITCH

COMPONENTS

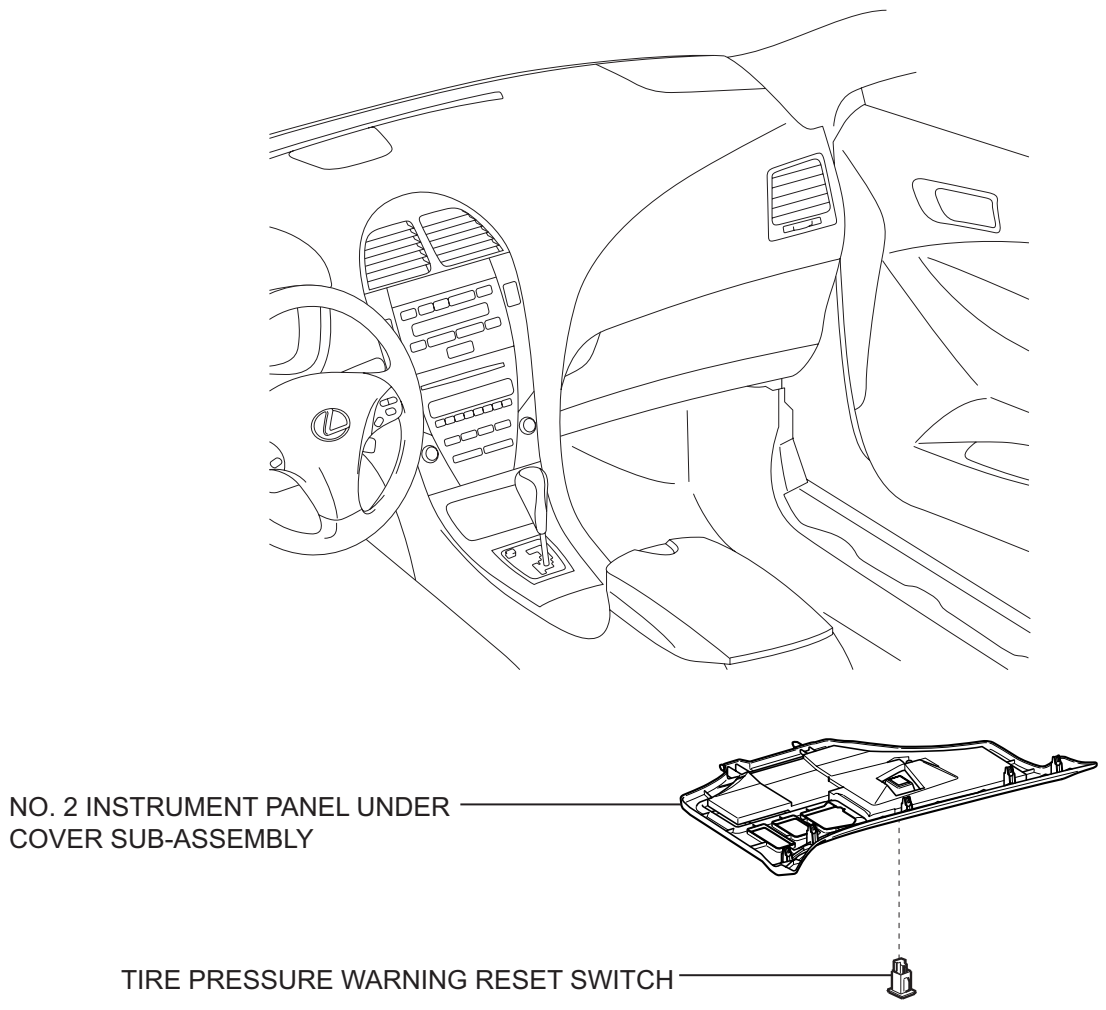

REMOVAL

1. **DISCONNECT CABLE FROM NEGATIVE BATTERY TERMINAL**
2. **REMOVE NO. 2 INSTRUMENT PANEL UNDER COVER SUB-ASSEMBLY (See page IP-15)**
3. **REMOVE TIRE PRESSURE WARNING RESET SWITCH**
   (a) Disengage the 2 claws and remove the tire pressure warning reset switch from the No. 2 instrument panel under cover sub-assembly.

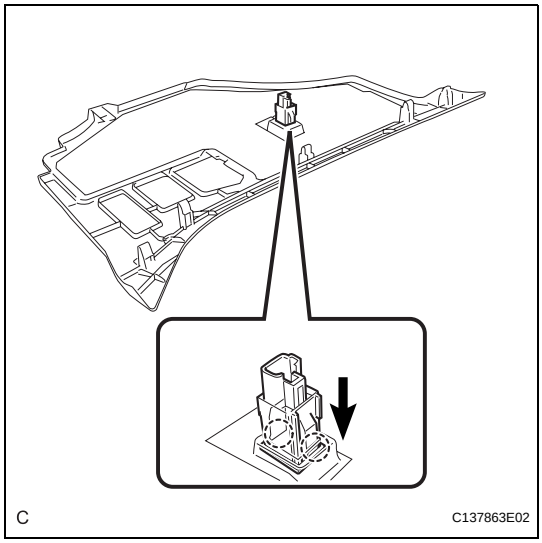

INSPECTION

1. **INSPECT TIRE PRESSURE WARNING RESET SWITCH**
   (a) Remove the tire pressure warning reset switch.
   (b) Measure the resistance between terminals 1 and 2 of the tire pressure warning reset switch when the tire pressure warning switch is ON and OFF.
   Standard resistance

Switch Condition	Specified Condition
ON	Below 1Ω
OFF	10 kΩ or higher

If the result is not as specified, replace the tire pressure warning reset switch.

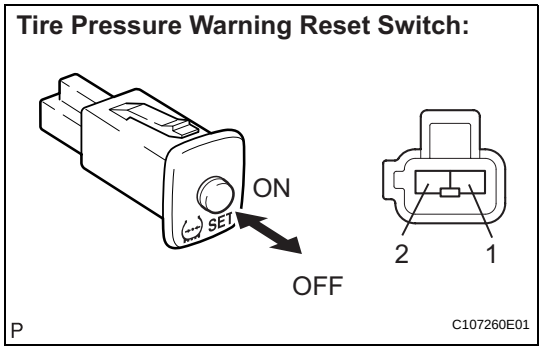

INSTALLATION

1. **INSTALL TIRE PRESSURE WARNING RESET SWITCH**
   (a) Engage the 2 claws to install the tire pressure warning reset switch to the No. 2 instrument panel under cover sub-assembly.
2. **INSTALL NO. 2 INSTRUMENT PANEL UNDER COVER SUB-ASSEMBLY (See page IP-44)**
3. **CONNECT CABLE TO NEGATIVE BATTERY TERMINAL**
4. **PERFORM INITIALIZATION**
   NOTICE:
   Some systems need initialization after reconnecting the cable to the negative battery terminal (See page IN-33).

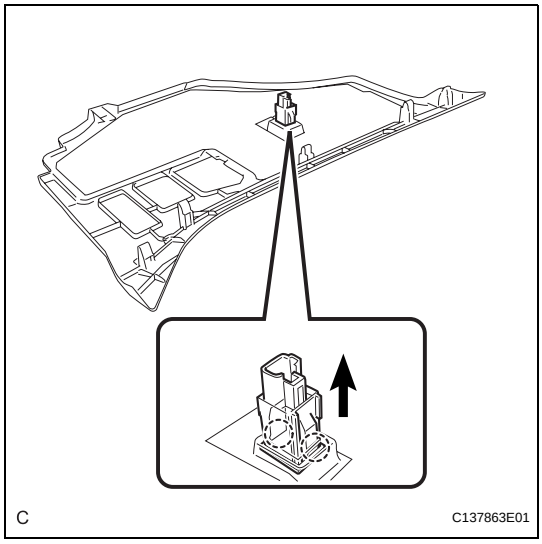

TW

5. INSPECT TIRE PRESSURE WARNING SYSTEM

HINT:

(See page TW-20)

TIRE PRESSURE WARNING SELECT SWITCH

COMPONENTS

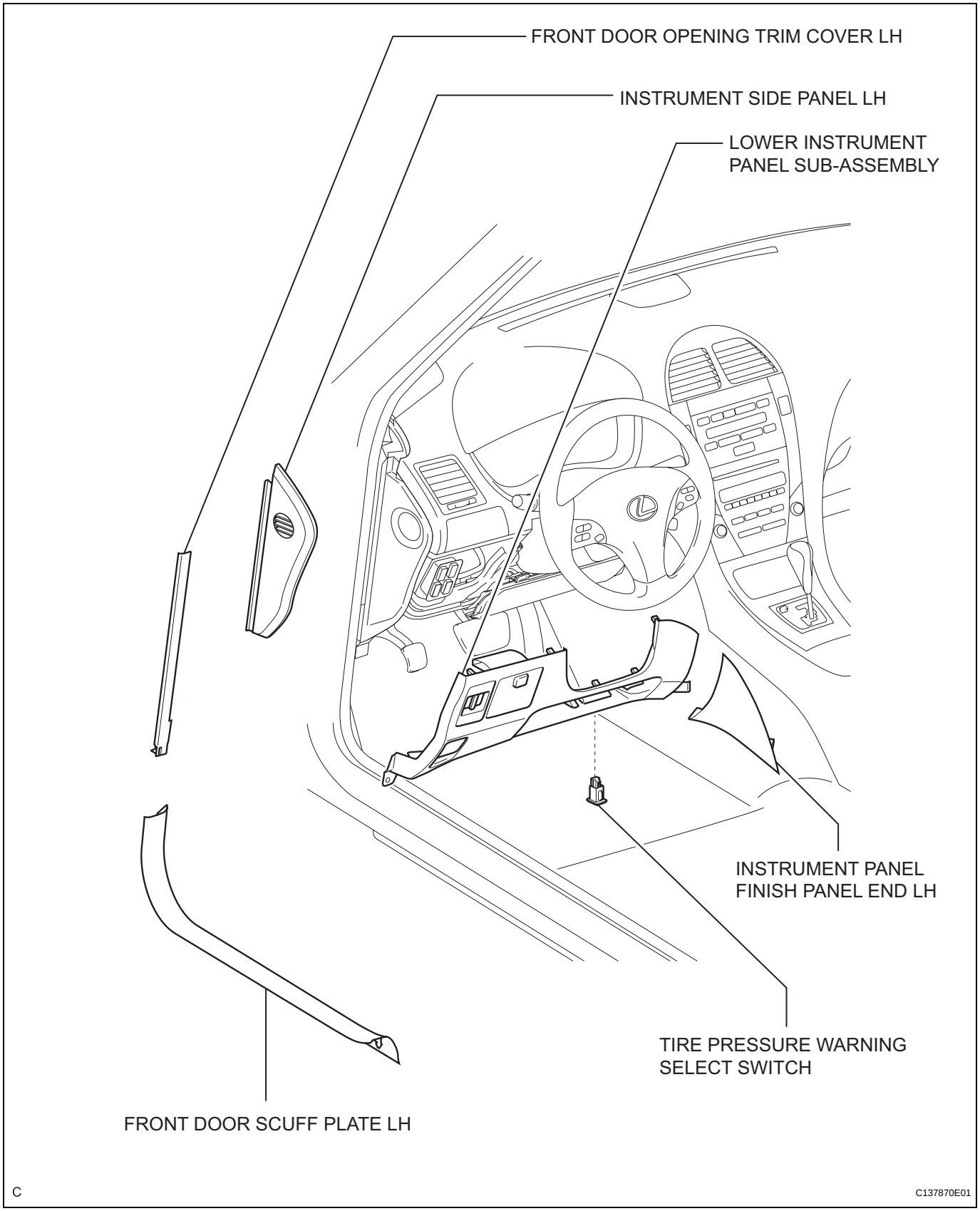

REMOVAL

1. **DISCONNECT CABLE FROM NEGATIVE BATTERY TERMINAL**
2. **REMOVE FRONT DOOR SCUFF PLATE LH (See page IR-39)**
3. **REMOVE FRONT DOOR OPENING TRIM COVER LH (See page IR-39)**
4. **REMOVE INSTRUMENT SIDE PANEL LH (See page IP-12)**
5. **REMOVE INSTRUMENT PANEL FINISH PANEL END LH (See page IP-13)**
6. **REMOVE LOWER INSTRUMENT PANEL SUB-ASSEMBLY (See page IP-13)**
7. **REMOVE TIRE PRESSURE WARNING SELECT SWITCH**
   (a) Disengage the 2 claws and remove the tire pressure warning select switch from the lower instrument panel sub-assembly.

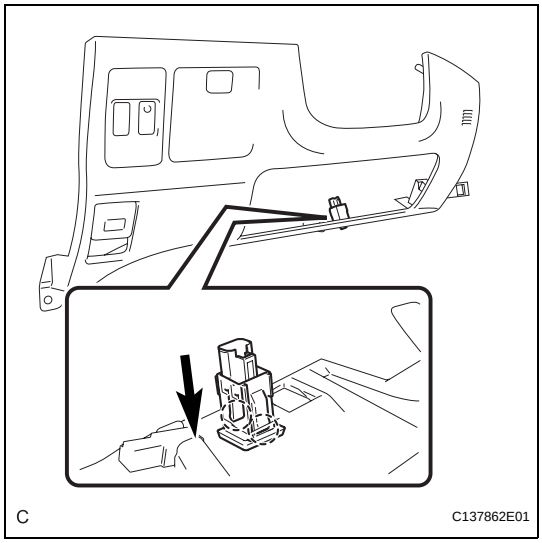

INSPECTION

1. **INSPECT TIRE PRESSURE WARNING SELECT SWITCH**
   (a) Remove the tire pressure warning select switch.
   (b) Measure the resistance according to the value(s) in the table below.
   Standard resistance

Switch Position	Tester Connection	Specified Condition
MAIN	2 (INT) - 1 (E)	10 kΩ or higher
2nd	2 (INT) - 1 (E)	Below 1Ω

If the result is not as specified, replace the tire pressure warning select switch.

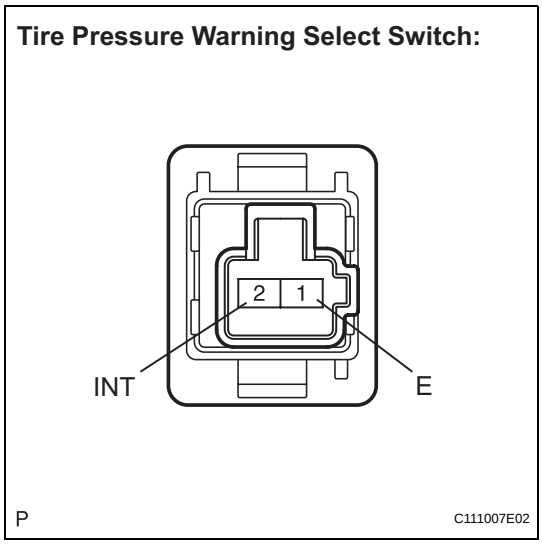

TW

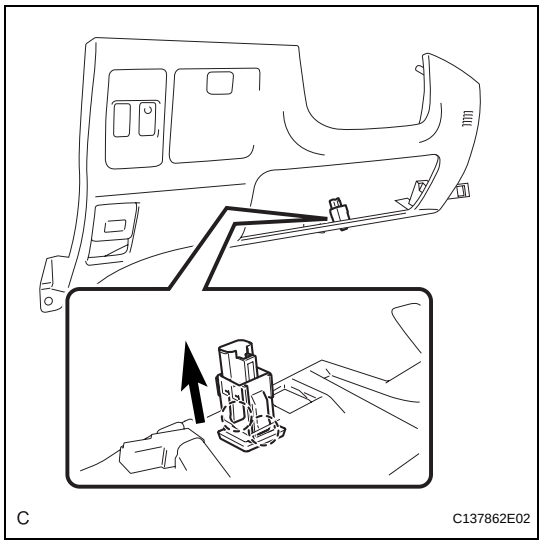

INSTALLATION

1. **INSTALL TIRE PRESSURE WARNING SELECT SWITCH**
   (a) Engage the 2 claws to install the tire pressure warning reset switch to the lower instrument panel sub-assembly.
2. **INSTALL LOWER INSTRUMENT PANEL SUB-ASSEMBLY (See page IP-46)**
3. **INSTALL INSTRUMENT PANEL FINISH PANEL END LH (See page IP-46)**
4. **INSTALL INSTRUMENT SIDE PANEL LH (See page IP-47)**
5. **INSTALL FRONT DOOR OPENING TRIM COVER LH (See page IR-64)**
6. **INSTALL FRONT DOOR SCUFF PLATE LH (See page IR-65)**
7. **CONNECT CABLE TO NEGATIVE BATTERY TERMINAL**
8. **PERFORM INITIALIZATION**
   NOTICE:
   Some systems need initialization after reconnecting the cable to the negative battery terminal (See page IN-33).
9. **INSPECT TIRE PRESSURE WARNING SYSTEM**
   HINT:
   (See page TW-20)

VEHICLE STABILITY CONTROL SYSTEM

PRECAUTION

NOTICE:
Some systems need to be initialized after reconnecting the negative battery cable terminal (See page IN-33).

1. TROUBLESHOOTING PRECAUTIONS

(a) When there is a malfunction with terminal contact points or part installation problems, removal and installation of the suspected problem parts may return the system to the normal condition either completely or temporarily.

(b) In order to determine the malfunctioning area, be sure to check the conditions at the time the malfunction occurred, such as DTC output and the Freeze Frame Data, and record it before disconnecting each connector or removing and installing parts.

(c) Since the system may be influenced by malfunctions in systems other than the brake control system, be sure to check for DTCs in other systems.

2. HANDLING PRECAUTIONS

(a) Do not remove or install VSC parts such as the steering angle sensor or yaw rate sensor (acceleration sensor included) except when required, as they cannot be adjusted correctly after removal or installation.

(b) Be sure to perform preparation before work and confirmation after work is completed by following the direction in the repair manual when working on the VSC system.

(c) Be sure to remove and install the ECU, actuator, each sensor, etc. with the engine switch off unless it is not specified in the inspection procedure.

(d) If the ECU, brake actuator, or a sensor has been removed and installed, it is necessary to check the system for problems after the parts have been reassembled. Check for DTCs using the intelligent tester, also check that system functions and signals received by the ECU are normal using Test Mode.

3. DTC PRECAUTION

(a) Warnings for some DTCs cannot be cleared only by repairing the malfunctioning parts. If the warning is displayed after repair work, the DTC should be cleared after turning the engine switch off.
NOTICE:
If a DTC for a malfunctioning part reappears after it was cleared, then it has been stored again.

4. CHASSIS DYNAMOMETER PRECAUTION

(a) Enter Test Mode to disable TRAC and VSC control when using a chassis dynamometer.
HINT:
The vehicle may move unexpectedly out of the dynamometer because of TRAC and VSC operations.
NOTICE:
- **Make sure that the "VSC TEST MODE" is displayed on the multi information display (Test Mode is achieved).**
- **Secure the vehicle with the lock chain for safety.**

5. CAN COMMUNICATION SYSTEM PRECAUTIONS

(a) The CAN communication system is used for the data communication between the skid control ECU, the steering angle sensor, the yaw rate sensor (acceleration sensor included) and other ECUs. If there is trouble in the CAN communication line, corresponding DTCs in the communication line are output.

(b) If the DTC in the CAN communication line is output, repair the malfunction in the communication line and troubleshoot the VSC system while data communication is normal.

(c) In order to enable CAN communication, a specific type of wiring is used for the CAN communication lines. The wiring used for each communication line is a twisted pair of wires that have an equal length. A bypass wire should not be used, because the data being transmitted will be corrupted.

BRAKE ACTUATOR

COMPONENTS

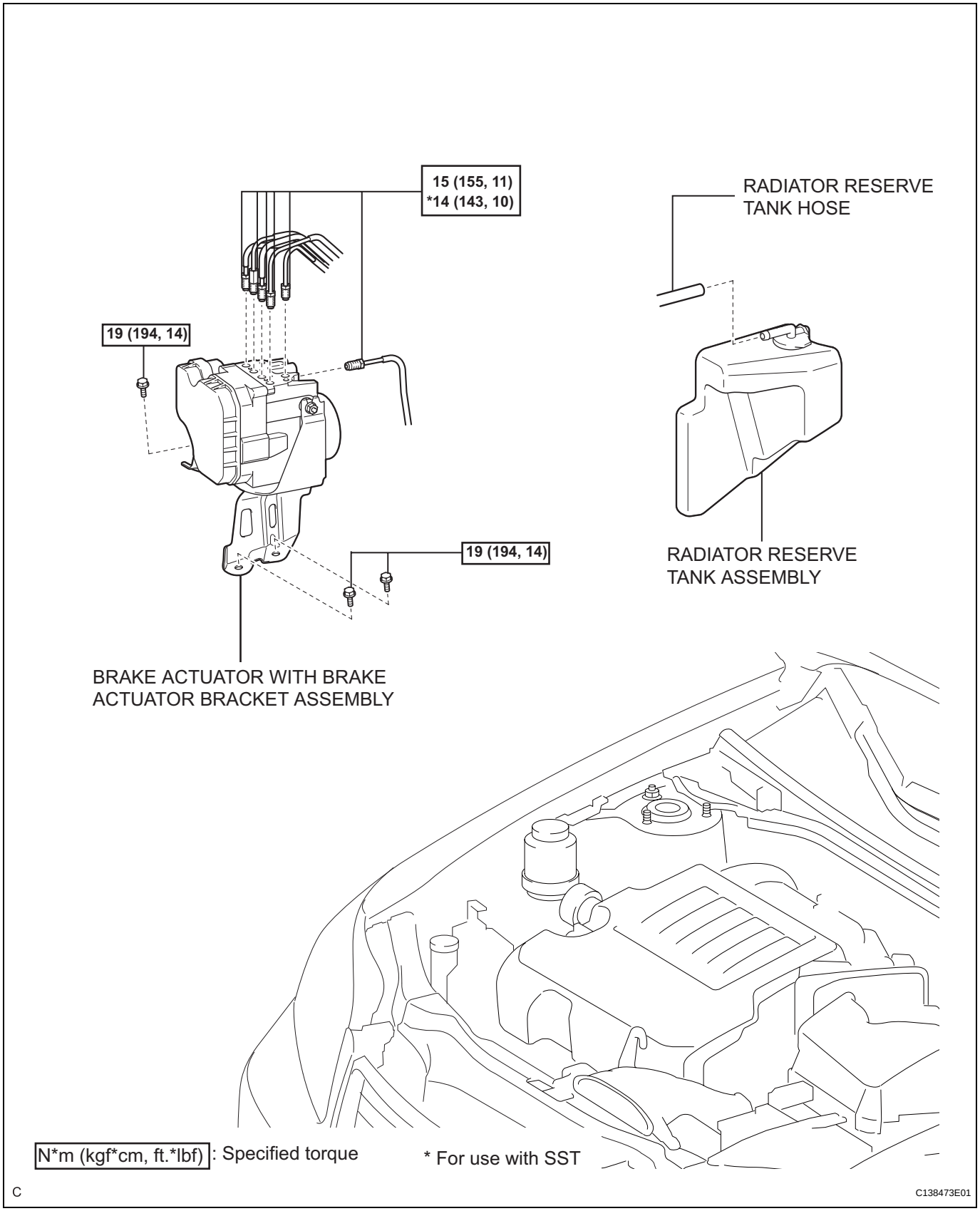

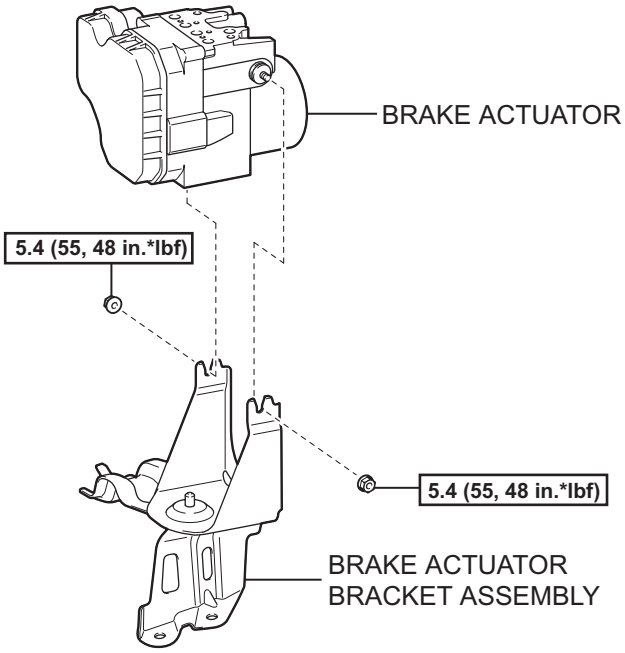

N*m (kgf*cm, ft.*lbf) : Specified torque

C144097E04

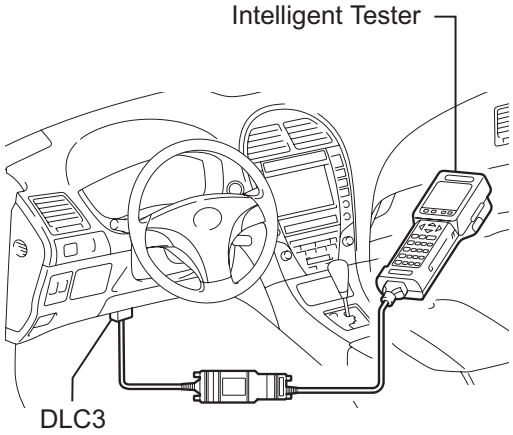

P C135812E01

ON-VEHICLE INSPECTION

1. CONNECT INTELLIGENT TESTER

(a) Connect the intelligent tester to the DLC3.
(b) Start the engine and run it at idle.
(c) Select the Active Test mode on the intelligent tester.
HINT:
Refer to the intelligent tester operator's manual for further details.

2. INSPECT ACTUATOR MOTOR OPERATION

NOTICE:
Do not keep a motor relay on continuously for more than 5 seconds. When operating it continuously, set an interval of more than 20 seconds.

(a) With the motor relay on, check the actuator motor operation sounds.
(b) Turn the motor relay off.
(c) Depress the brake pedal and hold it for approximately 15 seconds. Check that the brake pedal cannot be depressed farther.
(d) With the motor relay on, check that the pedal does not pulsate.
(e) Turn the motor relay off and release the brake pedal.

3. INSPECT RIGHT FRONT WHEEL OPERATION

NOTICE:

Do not turn on a solenoid in a manner different than described below.

(a) Depress the brake pedal and hold it.

(b) Turn the SFRH and SFRR solenoids on simultaneously, and check that the pedal cannot be depressed.

(c) Turn the SFRH and SFRR solenoids off simultaneously, and check that the pedal can be depressed.

NOTICE:

Do not keep a motor relay on continuously for more than 5 seconds. When operating them continuously, set an interval of more than 20 seconds.

(d) Turn the motor relay on and check that the pedal returns.

NOTICE:

Do not keep a motor relay on continuously for more than 5 seconds. When operating it continuously, set an interval of more than 20 seconds.

(e) Turn the motor relay off and release the brake pedal.

4. INSPECT OTHER WHEEL OPERATION

(a) Using the same procedure, check the solenoids of the other wheels.

HINT:

- Left front wheel: SFLH, SFLR
- Right rear wheel: SRRH, SRRR
- Left rear wheel: SRLH, SRLR

FRONT SPEED SENSOR

COMPONENTS

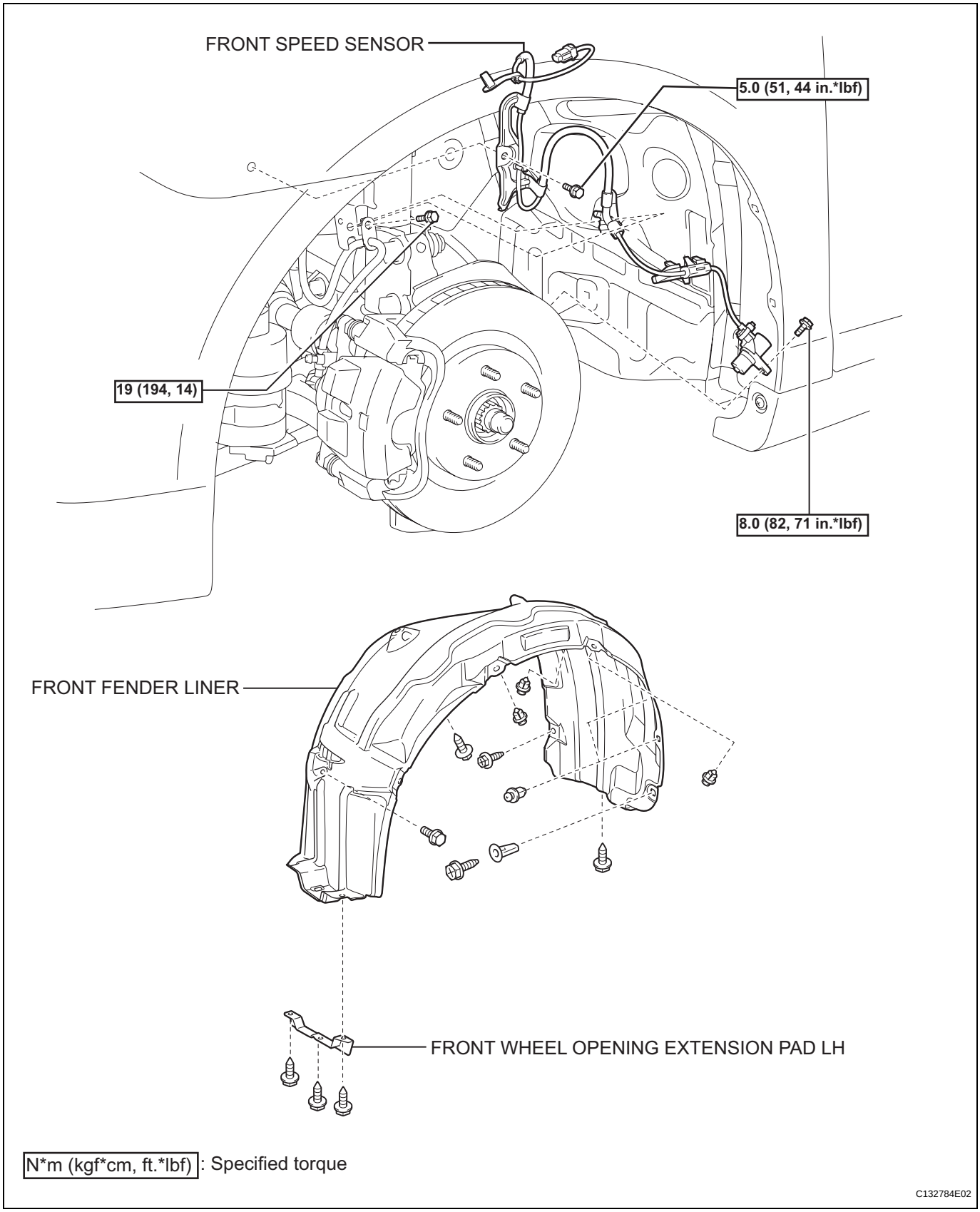

REMOVAL

HINT:
- Use the same procedure for the RH side and LH side.
- The procedures listed below are for the LH side.

1. REMOVE FRONT WHEEL

2. REMOVE FRONT WHEEL OPENING EXTENSION PAD LH (See page ED-24)

3. REMOVE FRONT FENDER LINER (See page ED-24)

4. REMOVE FRONT SPEED SENSOR

(a) Disconnect the front speed sensor connector and clamp.

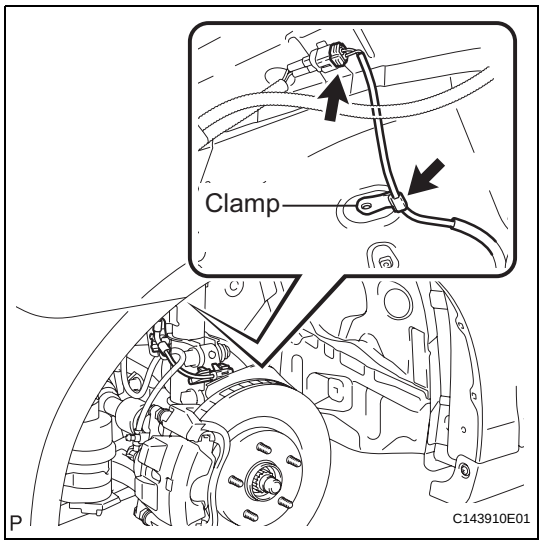

(b) Remove the 2 bolts from the body and the shock absorber assembly.

(c) Disengage the 2 claws from the steering knuckle and body.

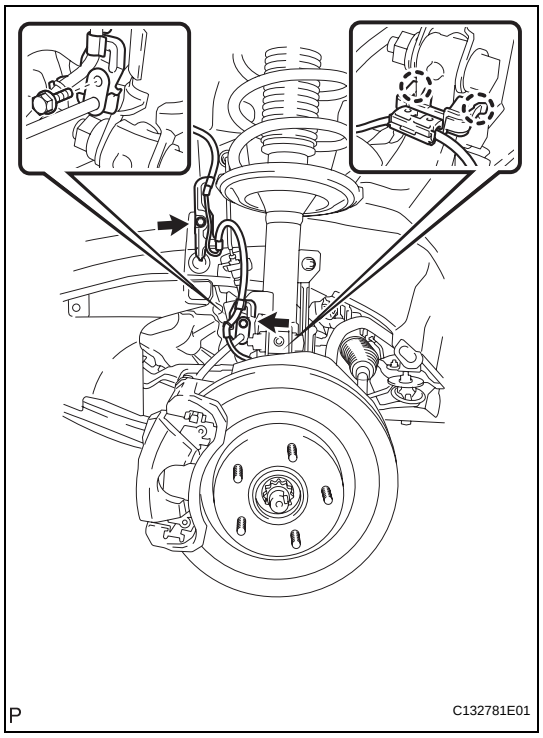

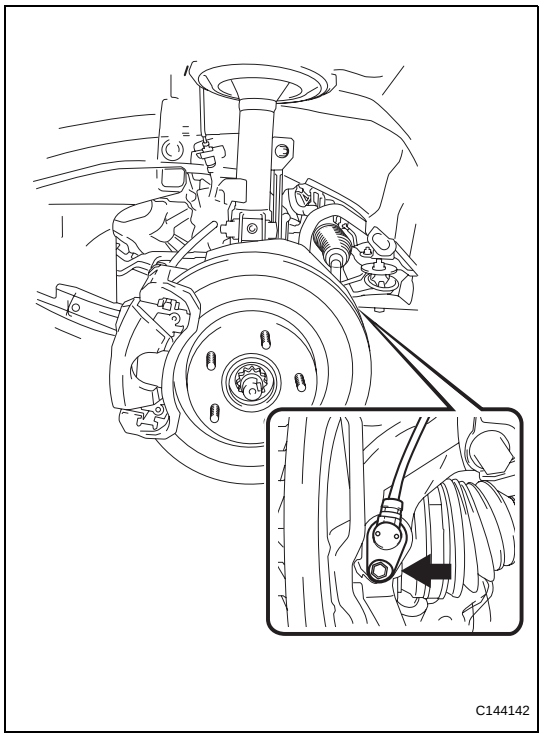

(d) Remove the bolt and the front speed sensor.
NOTICE:
- **Prevent foreign matter from attaching to the sensor tip.**
- **Clean the installation hole and the surface for the speed sensor every time the speed sensor is removed.**

SKID CONTROL SENSOR

COMPONENTS

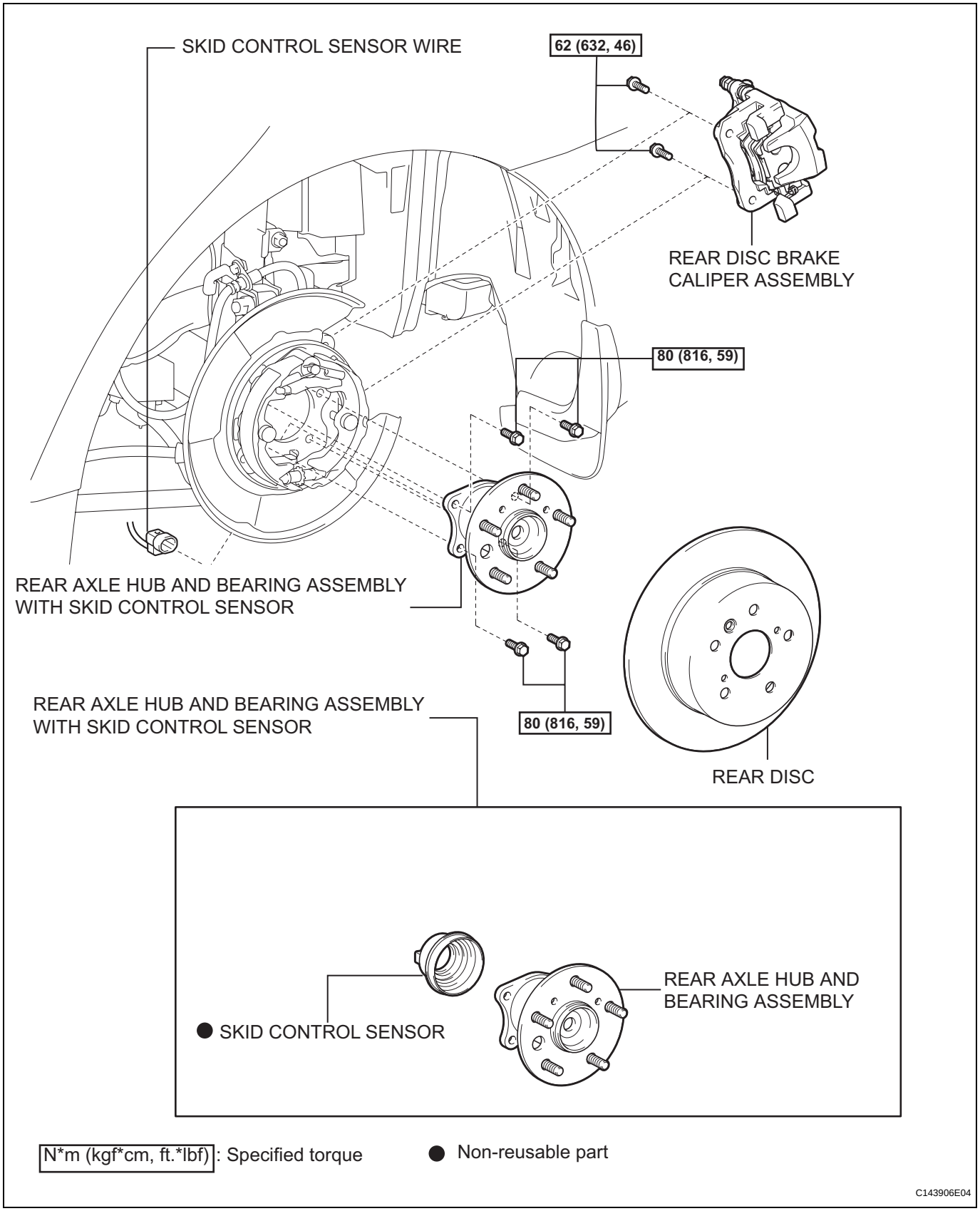

BC

REMOVAL

HINT:
- Use the same procedure for the RH side and LH side.
- The procedures listed below are for the LH side.

1. REMOVE REAR WHEEL

2. DISCONNECT SKID CONTROL SENSOR WIRE

(a) Disconnect the connector from the skid control sensor.

NOTICE:
Be careful not to damage the skid control speed sensor.

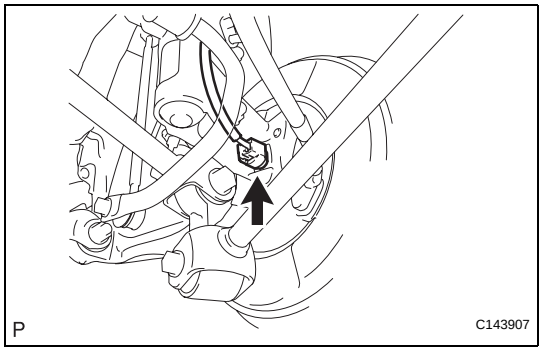

3. REMOVE REAR DISC BRAKE CALIPER ASSEMBLY (See page AH-18)

4. REMOVE REAR DISC (See page BR-49)

5. REMOVE REAR AXLE HUB AND BEARING ASSEMBLY WITH SKID CONTROL SENSOR (See page AH-15)

6. REMOVE SKID CONTROL SENSOR

(a) Mount the rear axle hub and bearing assembly in a vise using aluminum plates.

NOTICE:
Replace the rear axle hub and bearing assembly if it is dropped or receives a strong shock.

(b) Using a pin punch and hammer, drive out the 2 pins and remove the 2 attachments from SST.

SST 09520-00031 (09521-00010, 09520-00040), 09521-00020

(c) Using SST and 2 bolts (Diameter: 12 mm, pitch: 1.5 mm), remove the skid control sensor from the rear axle hub and bearing assembly.

SST 09520-00031 (09521-00010, 09520-00040), 09521-00020, 09950-00020

NOTICE:
- **Keep the skid control sensor away from magnets.**
- **Pull the skid control sensor off straight, taking care not to make contact with the skid control sensor rotor.**
- **If the skid control speed sensor rotor is damaged or deformed, replace the rear axle hub and bearing assembly.**
- **Do not scratch the contact surface between rear axle hub and bearing assembly and the skid control sensor.**
- **Do not attach foreign matter to the skid control speed sensor rotor and tip.**

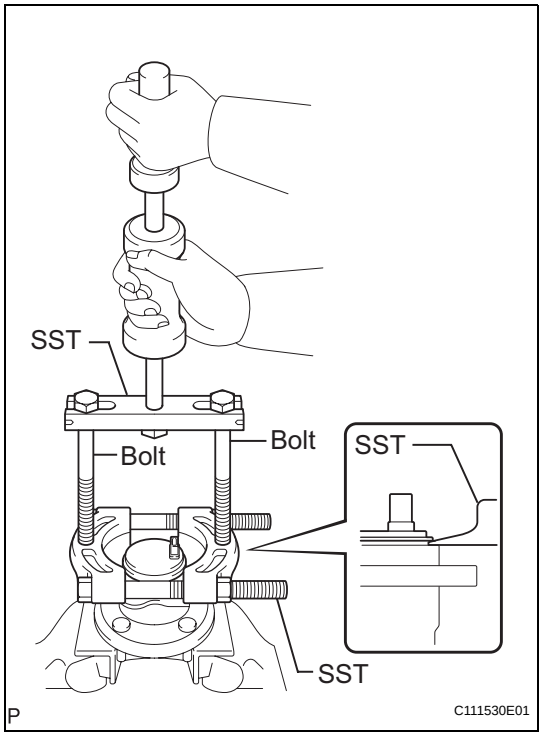

YAW RATE AND ACCELERATION SENSOR

COMPONENTS

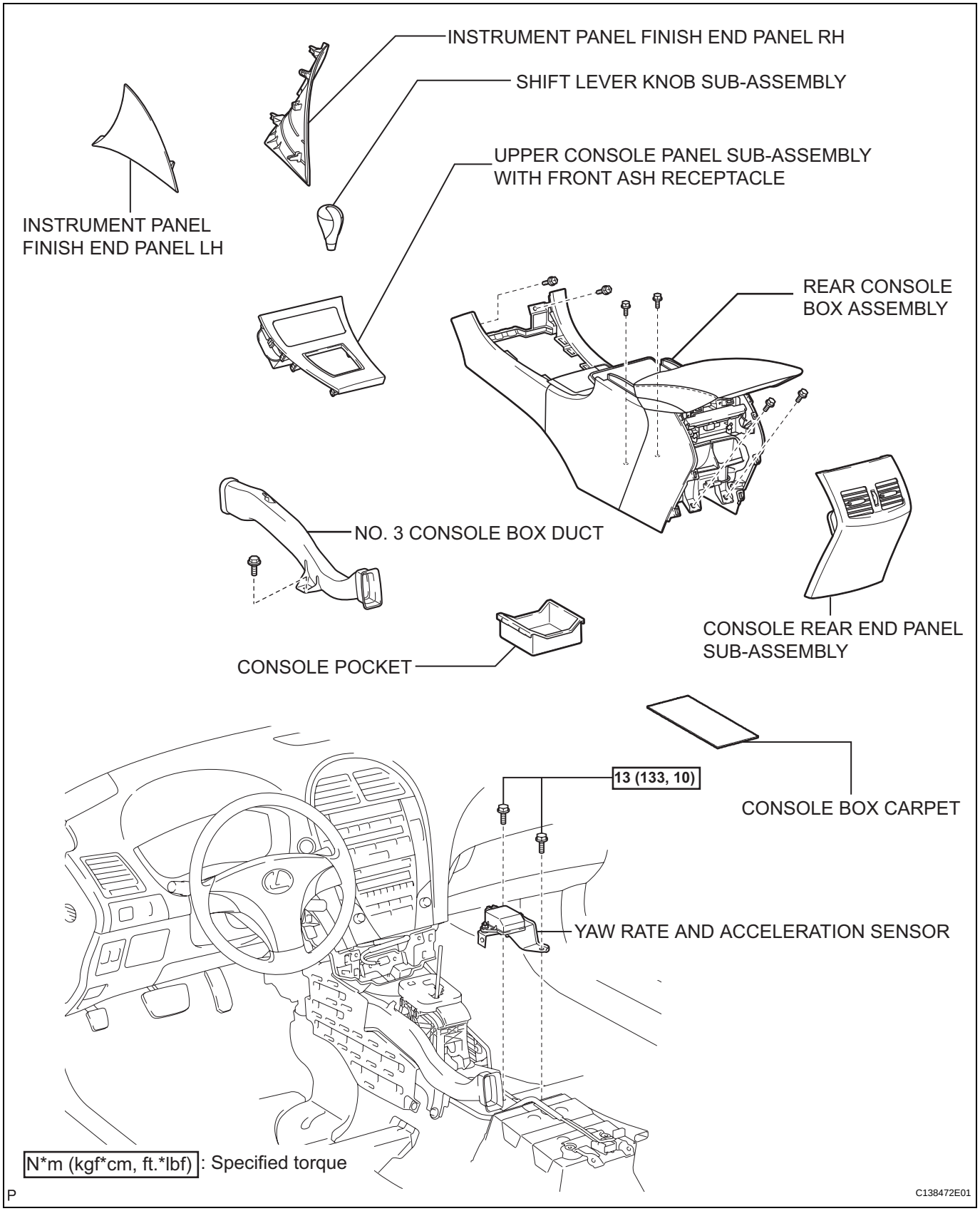

BC

REMOVAL

1. **DISCONNECT CABLE FROM NEGATIVE BATTERY TERMINAL**
2. **REMOVE SHIFT LEVER KNOB SUB-ASSEMBLY (See page IP-16)**
3. **REMOVE UPPER CONSOLE PANEL SUB-ASSEMBLY WITH FRONT ASH RECEPTACLE (See page IP-16)**
4. **REMOVE INSTRUMENT PANEL FINISH END PANEL LH (See page IP-13)**
5. **REMOVE INSTRUMENT PANEL FINISH END PANEL RH (See page IP-15)**
6. **REMOVE CONSOLE POCKET (See page IP-52)**
7. **REMOVE CONSOLE BOX CARPET (See page IP-52)**
8. **REMOVE CONSOLE REAR END PANEL SUB-ASSEMBLY (See page IP-53)**
9. **REMOVE REAR CONSOLE BOX ASSEMBLY (See page IP-53)**
10. **REMOVE NO. 3 CONSOLE BOX DUCT (See page PB-12)**
11. **REMOVE YAW RATE AND ACCELERATION SENSOR**
    (a) Disconnect the yaw rate sensor connector and clamp.
    (b) Remove the 2 bolts and yaw rate sensor.
    NOTICE:
    Do not remove the sensor from the bracket.

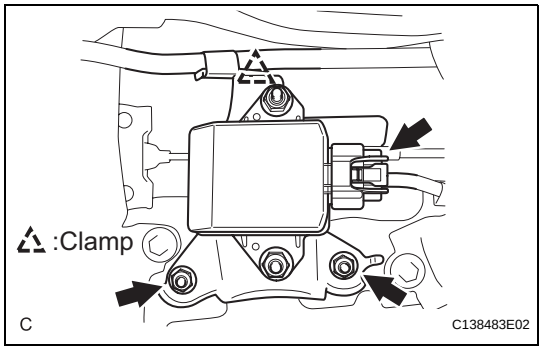

STEERING ANGLE SENSOR

COMPONENTS

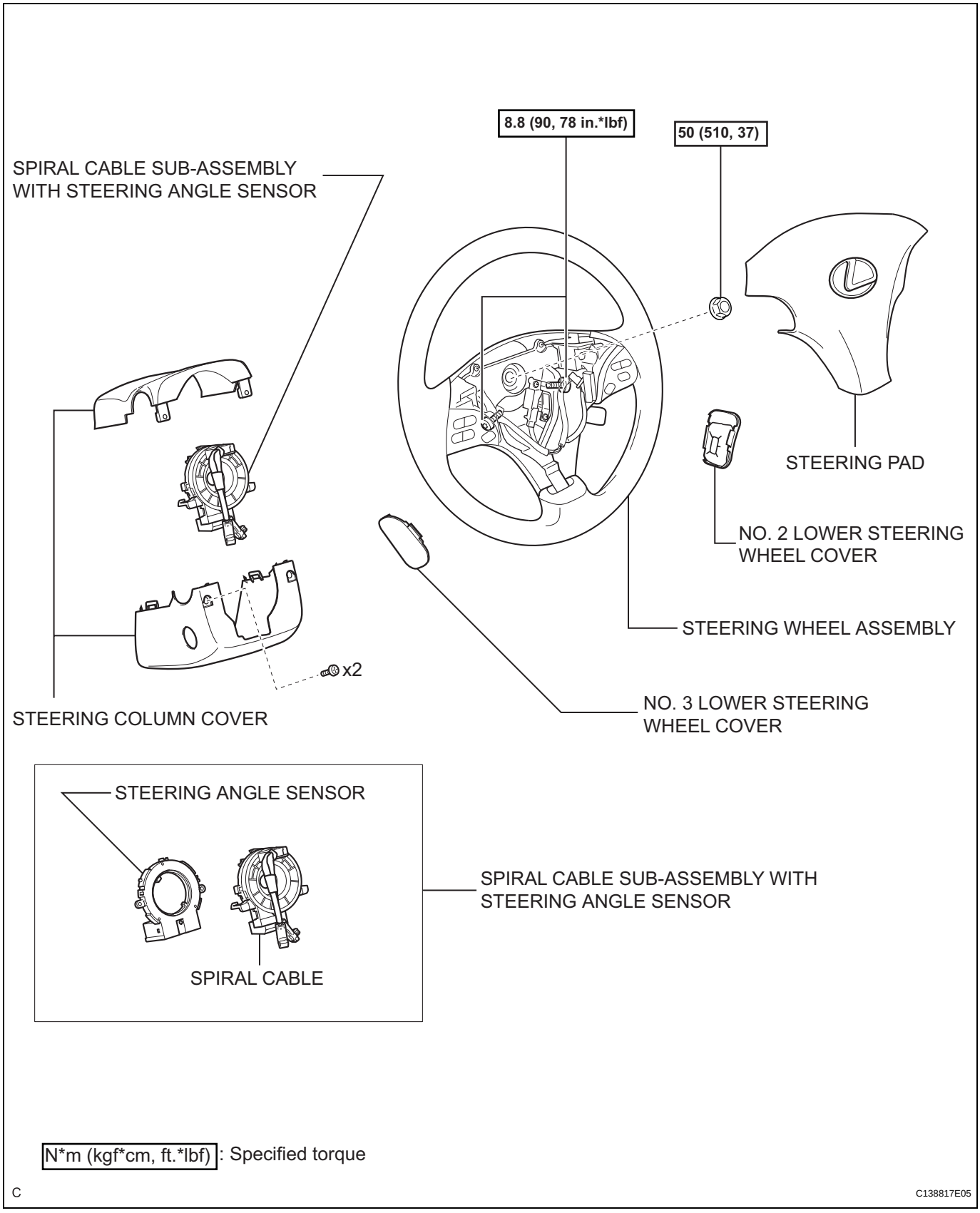

BC

REMOVAL

1. **PRECAUTION**
   CAUTION:
   Be sure to read "PRECAUTION" thoroughly before servicing (See page RS-1).
2. **DISCONNECT CABLE FROM NEGATIVE BATTERY TERMINAL**
   CAUTION:
   Wait for 90 seconds after disconnecting the cable to prevent airbag deployment.
3. **PLACE FRONT WHEELS FACING STRAIGHT AHEAD**
   NOTICE:
   When reconnecting the cable to the negative battery terminal after installing the steering sensor, check that the front tires and steering wheel are kept aligned straight ahead before and after connecting the cable to the negative battery terminal.
4. **REMOVE NO. 2 LOWER STEERING WHEEL COVER (See page RS-367)**
5. **REMOVE NO. 3 LOWER STEERING WHEEL COVER (See page RS-367)**
6. **REMOVE STEERING PAD (See page RS-367)**
7. **REMOVE STEERING WHEEL ASSEMBLY (See page SR-80)**
8. **REMOVE STEERING COLUMN COVER (See page SR-80)**
9. **REMOVE SPIRAL CABLE SUB-ASSEMBLY WITH STEERING ANGLE SENSOR (See page RS-379)**
10. **REMOVE STEERING ANGLE SENSOR**
    (a) Disengage the claws and remove the steering angle sensor from the spiral cable.

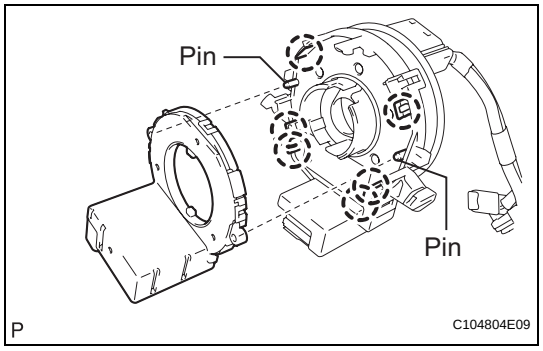

BC

SKID CONTROL BUZZER

COMPONENTS

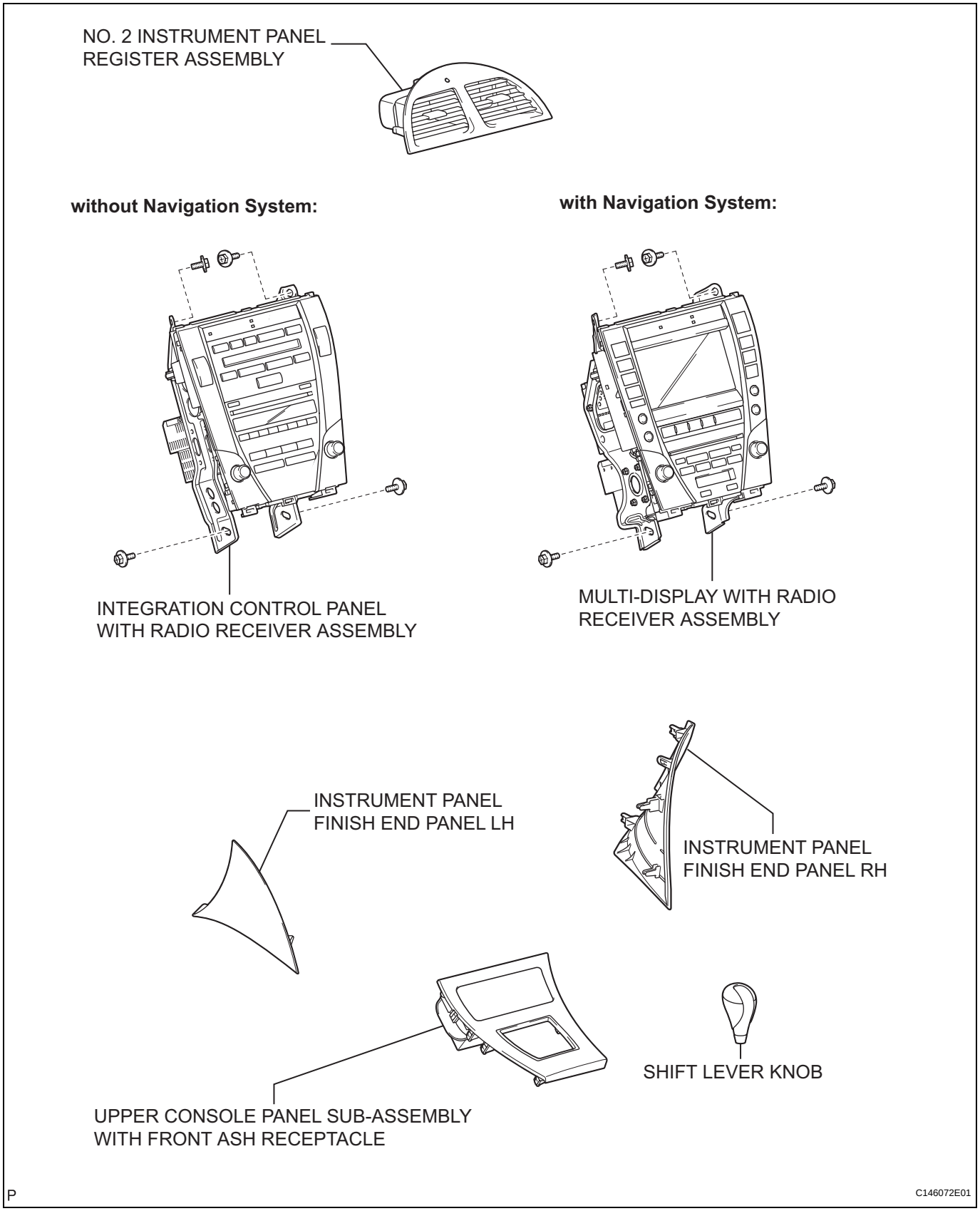

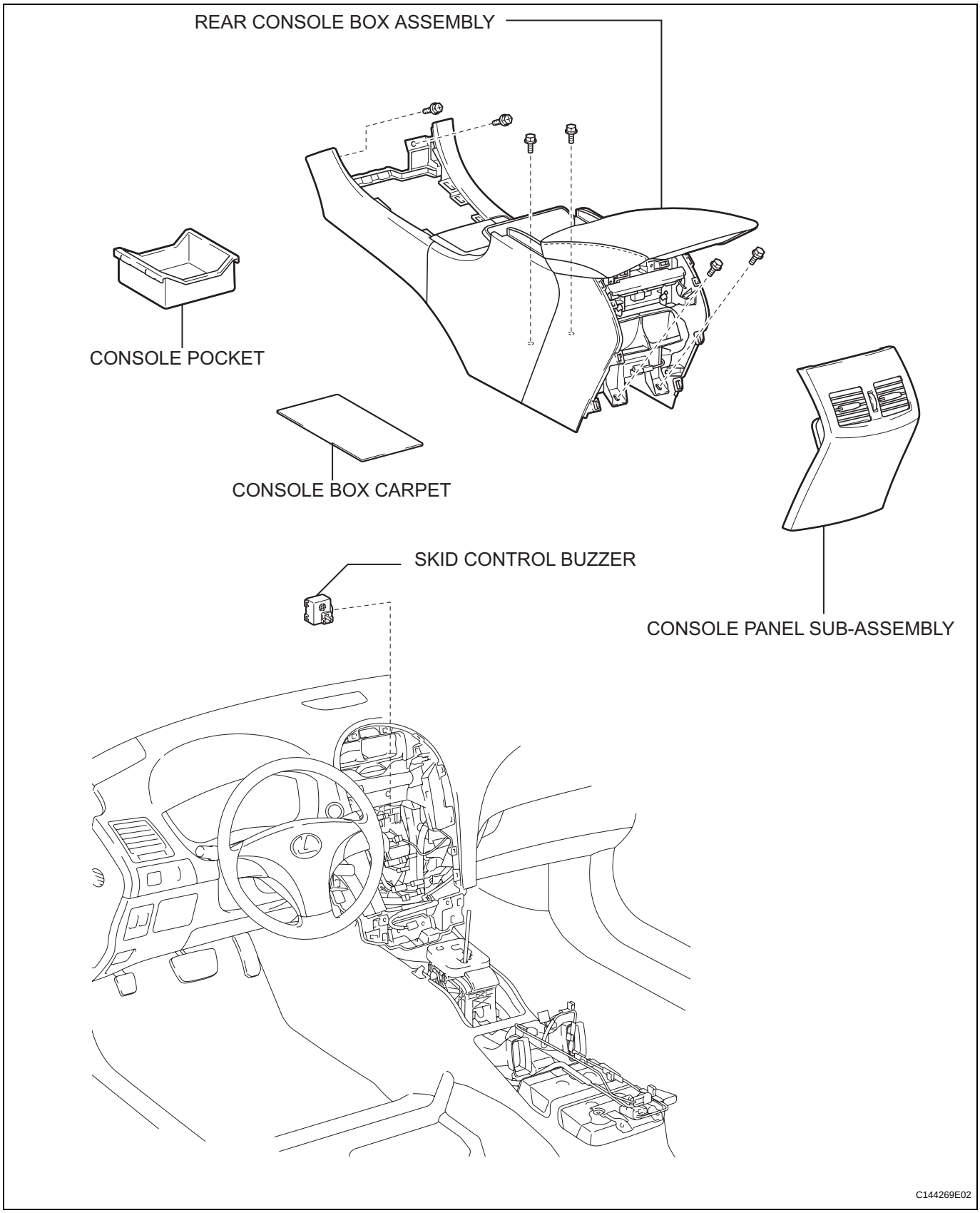
REAR CONSOLE BOX ASSEMBLY
CONSOLE POCKET
CONSOLE BOX CARPET
SKID CONTROL BUZZER
CONSOLE PANEL SUB-ASSEMBLY
C144269E02

STOP LIGHT CONTROL RELAY (w/ Dynamic Radar Cruise Control System)

ON-VEHICLE INSPECTION

1. INSPECT STOP LIGHT CONTROL RELAY

(a) Remove the stop light control relay.

(b) Measure the resistance according to the value(s) in the table below.

Standard resistance

Tester Connection	Condition	Specified Condition
3 - 4	Always	Below 1 Ω
3 - 5	Always	10 kΩ or higher
3 - 4	When battery positive voltage is applied to terminal 1 and battery negative voltage to terminal 2	10 kΩ or higher
3 - 5	When battery positive voltage is applied to terminal 1 and battery negative voltage to terminal 2	Below 1 Ω

If the value is not as specified, replace the stop light control relay.

Stop Light Control Relay:

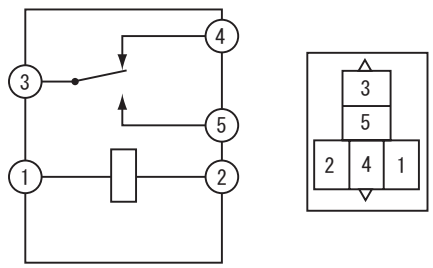

C126459E03

ABS MOTOR RELAY

ON-VEHICLE INSPECTION

1. INSPECT VSC NO. 1 (FAIL SAFE) RELAY

(a) Remove the VSC No. 1 (fail safe) relay.

(b) Measure the resistance according to the value(s) in the table below.

Standard resistance

Tester Connection	Condition	Specified Condition
3 - 5	Always	10 kΩ or higher
3 - 5	Apply B+ between terminals 1 and 2	Below 1 Ω

If the value is not as specified, replace the VSC No. 1 (fail safe) relay.

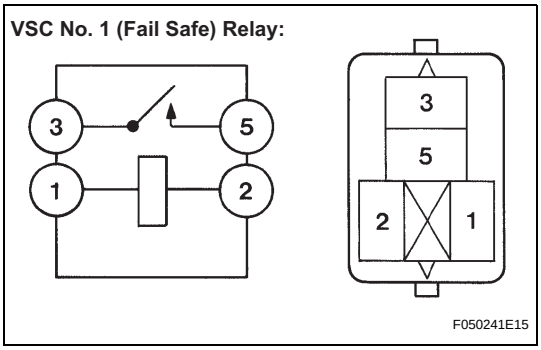

2. INSPECT VSC NO. 2 RELAY

(a) Remove the VSC No. 2 relay.

(b) Measure the resistance according to the value(s) in the table below.

Standard resistance

Tester Connection	Condition	Specified Condition
3 - 5	Always	10 kΩ or higher
3 - 5	Apply B+ between terminals 1 and 2	Below 1 Ω

If the value is not as specified, replace the VSC No. 2 relay.

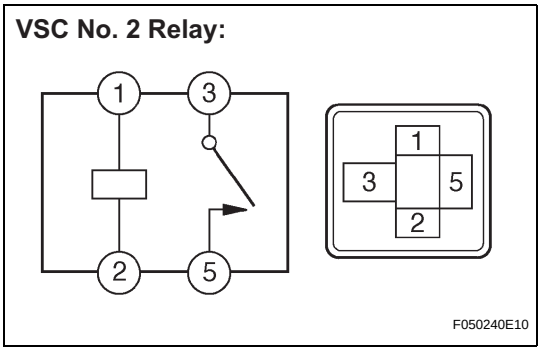

BRAKE SYSTEM

PRECAUTION

1. TROUBLESHOOTING PRECAUTION

NOTICE:

- **Care must be taken to replace each part properly as it could affect the performance of the brake system and result in a driving hazard. Replace the parts with those having the same part number or equivalent.**
- **It is very important to keep parts and the area clean when repairing the brake system.**
- **If the vehicle is equipped with a mobile communication system, refer to the precaution in the INTRODUCTION section.**
- **Care must be taken when using magnets as they could affect the performance of the speed sensors.**
- **Since the brake line is classified as one of the critical safety related parts, be sure to disassemble the components if a brake fluid leak is found. If any abnormality is found, replace the component with a new one.**
- **When removing brake components, cover the brake tube connections to prevent foreign matter such as dust or dirt from entering the tubes.**
- **Do not damage or deform the brake tubes when removing or installing them.**
- **When installing a grommet to the body, ensure that the brake tube passes through the center of the grommet.**
- **When installing a brake tube or flexible hose, ensure that they are free from twisting or bending.**
- **If the cap of the flexible hose does not match the groove on the bracket, twist the hose slightly to insert it.**
- **Flexible hoses must be free from absorber oil, grease, etc.**
- **When installing a brake tube to a plastic clamp, ensure that the brake tube is not loose or being pinched.**
- **Do not reuse a clip or plastic clamp removed from a flexible hose.**
- **After installing a brake tube and flexible hose, ensure that they do not interfere with any other components.**
- **Do not allow brake fluid to adhere to any painted surface such as the vehicle body. If brake fluid leaks onto any painted surface, immediately wash it off.**

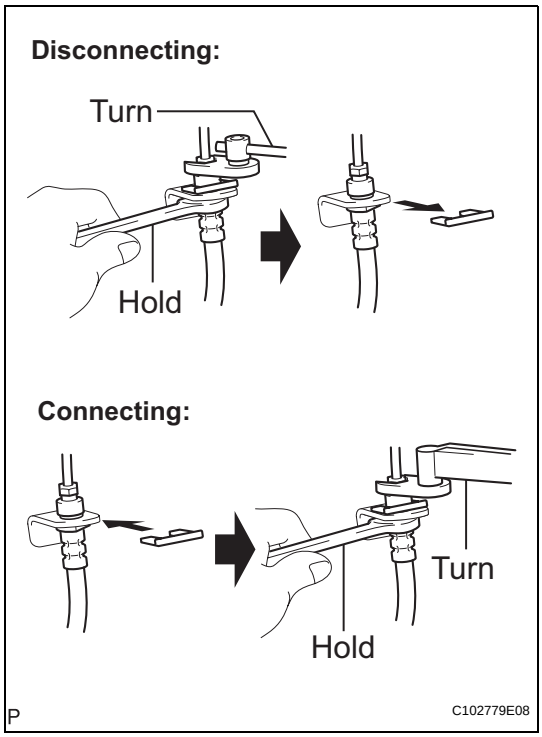

- **Disconnect and connect the flexible hose and brake tube:**
  (a) Hold the flexible hose with a wrench and disconnect the brake tube with a union nut wrench without deforming the tube.
  (b) Remove the clip.
  (c) Install a new clip.
  (d) Connect the brake tube with a union nut wrench without deforming the tube.

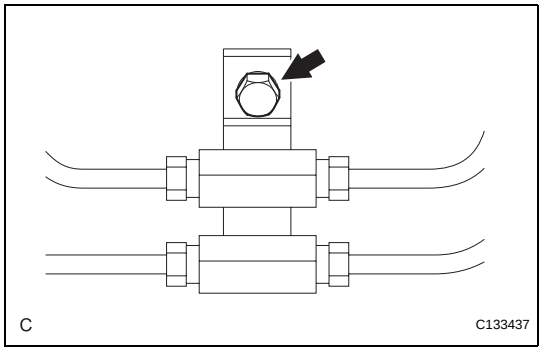

- **Connect the brake tube and way:**
  (a) Support the way to prevent deformation of the brake tube and connect the brake tube to the way with a union nut wrench.
  (b) Support the way to prevent deformation of the brake tube and install the bolt to fix the way to the body.

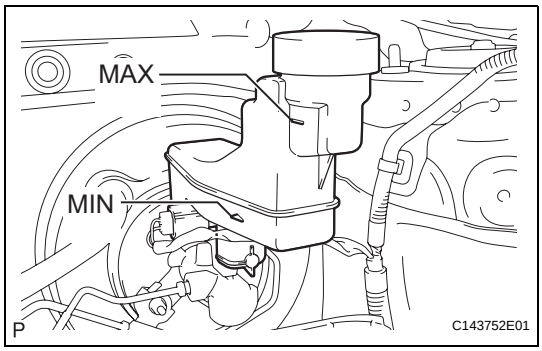

BRAKE FLUID

ON-VEHICLE INSPECTION

1. INSPECT FLUID LEVEL IN RESERVOIR

(a) Inspect the fluid level.
If brake fluid level is low, check for leakage and inspect the disc brake pad. If necessary, refill the reservoir with brake fluid after repair and replacement.
Fluid:
SAE J1703 or FMVSS No. 116 DOT 3

BLEEDING

HINT:
If any work is performed on the brake system or if air in the brake lines is suspected, bleed the air from the brake system.
NOTICE:
- **Move the shift lever to the P position and apply the parking brake before bleeding the brakes.**
- **Add brake fluid to keep the level between the MIN and MAX lines of the reservoir while bleeding the brakes.**
- **If brake fluid leaks onto any painted surface, wash off and remove it completely.**

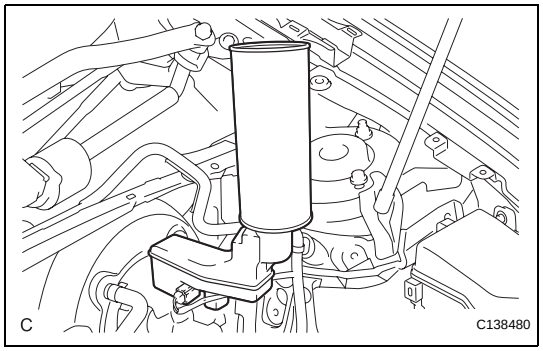

1. FILL RESERVOIR WITH BRAKE FLUID
(a) Fill the reservoir with brake fluid.
Fluid:
SAE J1703 or FMVSS No. 116 DOT3

2. BLEED MASTER CYLINDER
HINT:
- If the master cylinder is reinstalled or if the reservoir becomes empty, bleed the air from the master cylinder.
- To avoid brake fluid from adhering, cover the painted surface with a shop rag or piece of cloth.

(a) Using SST, disconnect the 2 brake lines from the master cylinder.
SST 09023-00101

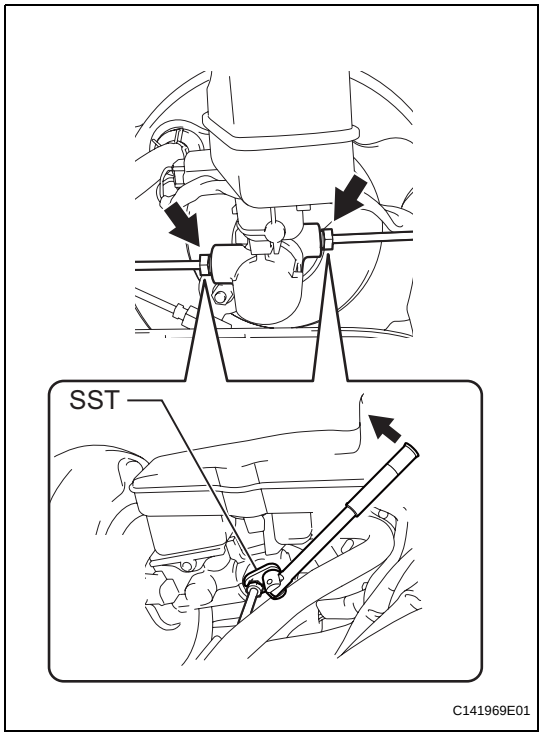

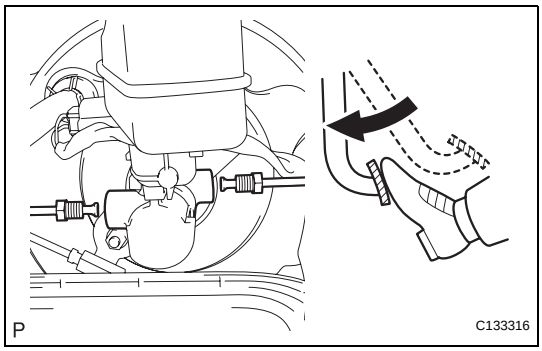

(b) Slowly depress the brake pedal and hold it (*1).

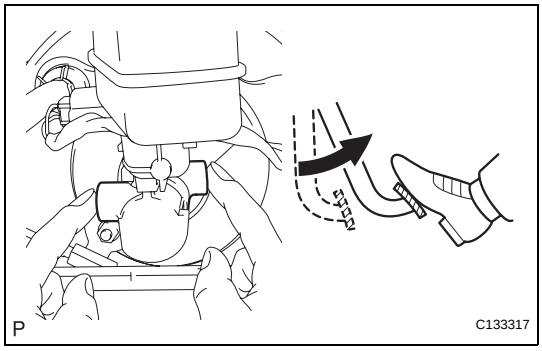

(c) Cover the 2 outer holes with fingers, and release the brake pedal (*2).
(d) Repeat (*1) and (*2) 3 or 4 times.

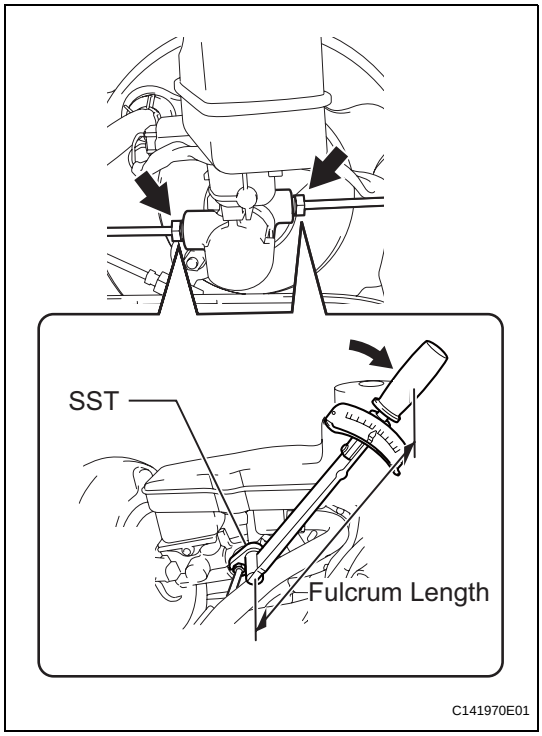

(e) Using SST, connect the brake lines to the master cylinder.
SST 09023-00101
Torque: Without SST
15 N*m (155 kgf*cm, 11 ft.*lbf)
With SST
14 N*m (143 kgf*cm, 10 ft.*lbf)
NOTICE:
- **Use a torque wrench with a fulcrum length of 250 mm (9.84 in.).**
- **This torque value is effective when SST is parallel to a torque wrench.**

3. BLEED BRAKE LINE
NOTICE:
Bleed the air from the brake line of the wheel farthest from the master cylinder.

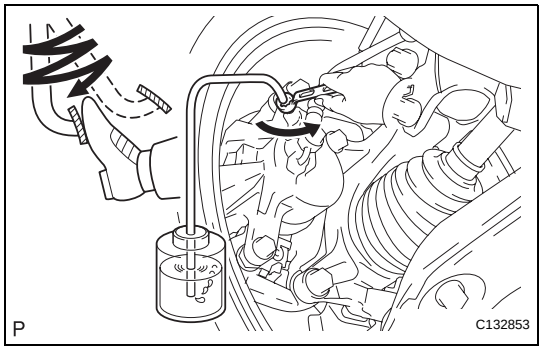

(a) Connect a vinyl tube to the bleeder plug.
(b) Depress the brake pedal several times, then loosen the bleeder plug with the pedal depressed (*3).

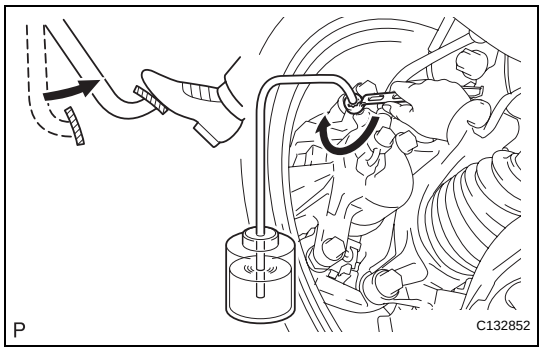

(c) When fluid stops coming out, tighten the bleeder plug, then release the brake pedal (*4).
(d) Repeat (*3) and (*4) until all the air in the fluid is completely bled out.
(e) Tighten the bleeder plug completely.
Torque: 8.3 N*m (85 kgf*cm, 73 in.*lbf)
(f) Repeat the above procedures for each wheel to bleed the air from the brake line.

4. BLEED BRAKE ACTUATOR ASSEMBLY

NOTICE:
After bleeding the air from the brake system, if the height or feel of the brake pedal cannot be obtained, bleed the air from the brake actuator assembly with the intelligent tester by following the procedure below.

(a) Depress the brake pedal more than 20 times with the engine switch off.

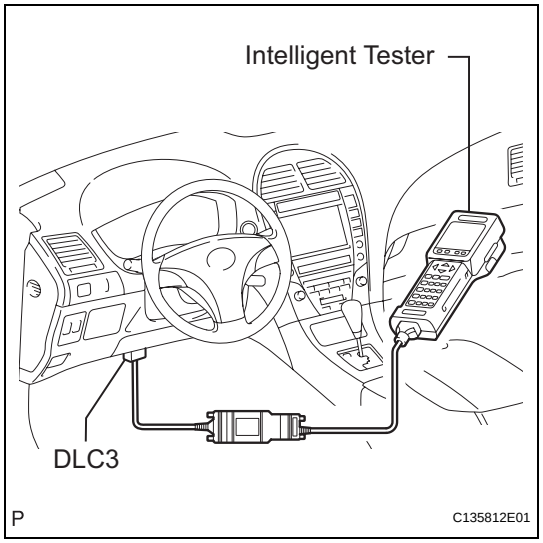

(b) Connect the intelligent tester to the DLC3, then turn the engine switch on (IG).
NOTICE:
Do not start the engine.
(c) Turn the intelligent tester on and select "AIR BLEEDING" on the screen.
NOTICE:
- **Refer to the intelligent tester operator's manual for farther details.**
- **Perform air bleeding by following the steps displayed on the intelligent tester.**

(d) Perform air bleeding according to "Step 1: Increase" on the intelligent tester display.
NOTICE:
Make sure that the master cylinder reservoir tank does not become empty of brake fluid.

(1) Connect a vinyl tube to either one of the bleeder plugs.
(2) Depress the brake pedal several times, then loosen the bleeder plug connected to the vinyl tube with the pedal depressed (*5).

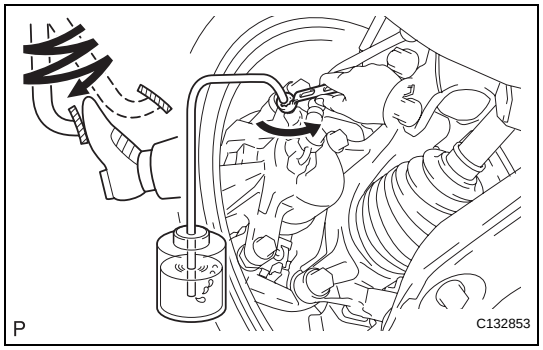

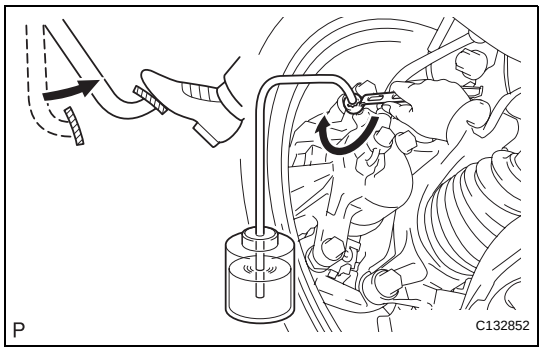

(3) When fluid stops coming out, tighten the bleeder plug, then release the brake pedal (*6).
(4) Repeat (*5) and (*6) until all the air in the fluid is completely bled out.
(5) Tighten the bleeder plug completely.
Torque: 8.3 N*m (85 kgf*cm, 73 in.*lbf)
(6) Repeat the above procedures for the rest of the wheels to bleed the air from the brake line.

(e) Bleed the air from the suction line according to "Step 2: Inhalation" on the intelligent tester display.
NOTICE:
- **Bleed the suction line by following the steps displayed on the intelligent tester.**
- **Make sure that the master cylinder reservoir tank does not become empty of brake fluid.**

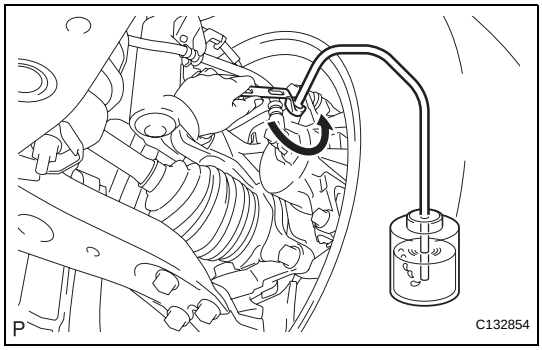

(1) Connect a vinyl tube to the bleeder plug at the right front wheel or the right rear wheel and loosen the bleeder plug.
(2) Operate the brake actuator assembly to perform air bleeding using the intelligent tester (*7).
NOTICE:
- **The operation stops automatically in 4 seconds.**
- **At this time, be sure to release the brake pedal.**

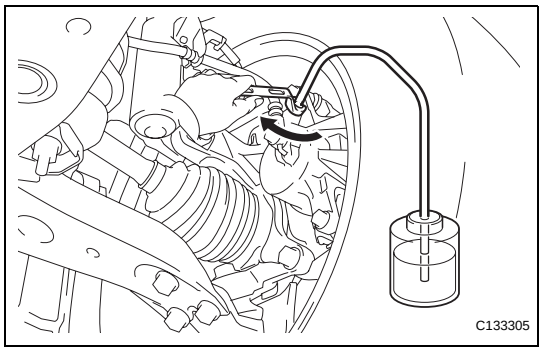

(3) Check that the operation has stopped by referring to the intelligent tester display and tighten the bleeder plug (*8).
(4) Repeat (*7) and (*8) until all the air in the fluid is completely bled out.
(5) Tighten the bleeder plug completely.
Torque: 8.3 N*m (85 kgf*cm, 73 in.*lbf)
(6) For the rest of the wheels, perform air bleeding in the same way as stated in the above procedure.

(f) Bleed the air from the pressure reduction line according to "Step 3: Decrease" on the intelligent tester display.
NOTICE:
- **Bleed the pressure reduction line by following the steps displayed on the intelligent tester.**
- **Make sure that the master cylinder reservoir tank does not become empty of brake fluid.**

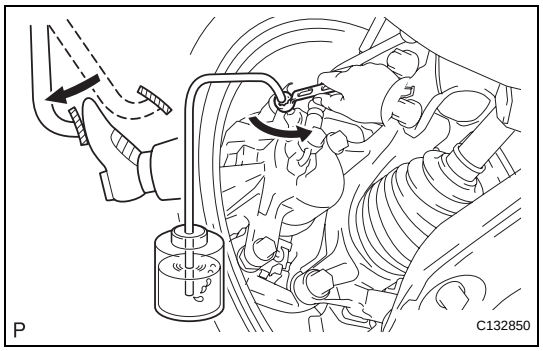

(1) Connect a vinyl tube to either one of the bleeder plugs.
(2) Loosen the bleeder plug (*9).
(3) Using the intelligent tester, operate the brake actuator assembly, completely depress the brake pedal, and hold it.
NOTICE:
- **The operation stops automatically in 4 seconds. When performing this procedure continuously, an interval of at least 20 seconds is required.**
- **When the operation is completed, the brake pedal goes down slightly. This is a normal phenomenon when the solenoid opens.**
- **During this procedure, the pedal seems heavy, but completely depress it so that the brake fluid comes out from the bleeder plug.**
- **Be sure to keep the brake pedal depressed. Never depress and release the pedal repeatedly.**

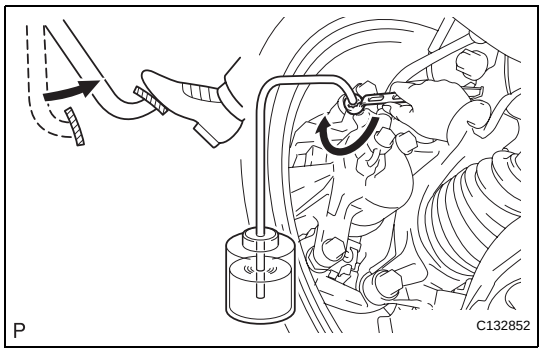

(4) Tighten the bleeder plug, then release the brake pedal (*10).
(5) Repeat (*9) to (*10) until all the air in the fluid is completely bled out.
(6) Tighten the bleeder plug completely.
Torque: 8.3 N*m (85 kgf*cm, 73 in.*lbf)
(7) Repeat the above procedures for the rest of the brakes to bleed the air from the brake line.

(g) Bleed the air from the brake line again according to "Step 4: Increase" on the intelligent tester display.
NOTICE:
- **Bleed the brake line by following the steps displayed on the intelligent tester.**
- **Make sure that the master cylinder reservoir tank does not become empty of brake fluid.**

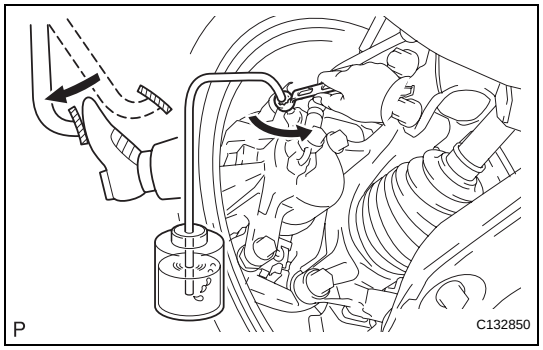

(1) Connect a vinyl tube to either one of the bleeder plugs.
(2) Depress the brake pedal several times, then loosen the bleeder plug connected to the vinyl tube with the pedal depressed (*11).

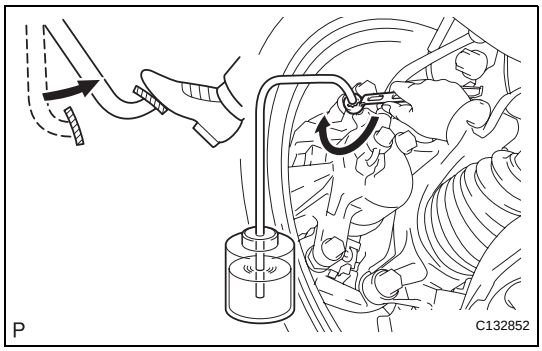

(3) When fluid stops coming out, tighten the bleeder plug, then release the brake pedal (*12).
(4) Repeat (*11) and (*12) until all the air in the fluid is completely bled out.
(5) Tighten the bleeder plug completely.
Torque: 8.3 N*m (85 kgf*cm, 73 in.*lbf)
(6) Repeat the above procedures for each brake to bleed the air from the brake line.

(h) Finish "AIR BLEEDING" on the intelligent tester and turn off the tester.
(i) Disconnect the intelligent tester from the DLC3.
(j) Turn the engine switch off.

5. INSPECT FLUID LEVEL IN RESERVOIR

(a) Check the fluid level and add fluid if necessary.
Fluid:
SAE J1703 or FMVSS No. 116 DOT3
If fluid leaks, tighten or replace the leaking part.

BRAKE PEDAL

COMPONENTS

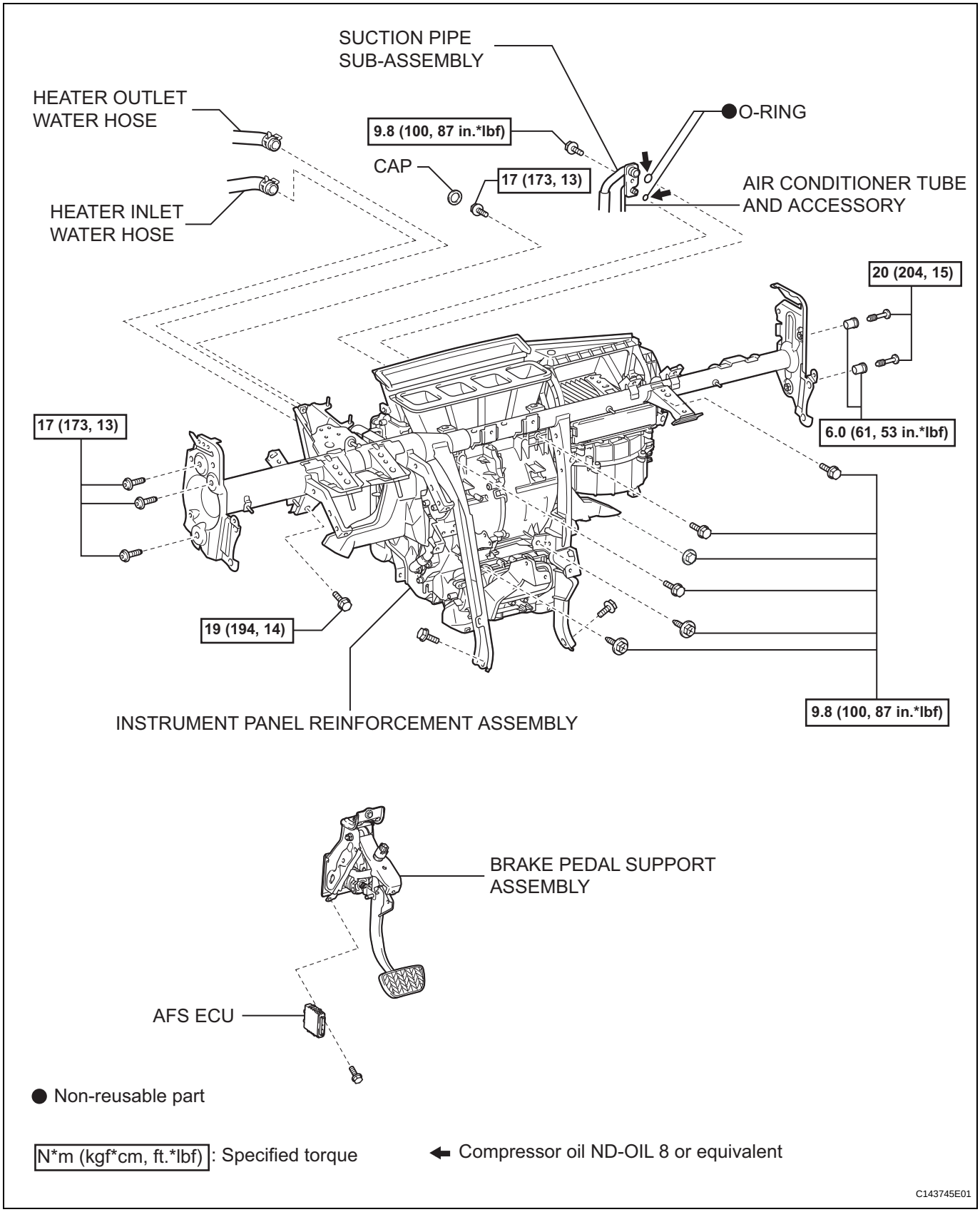

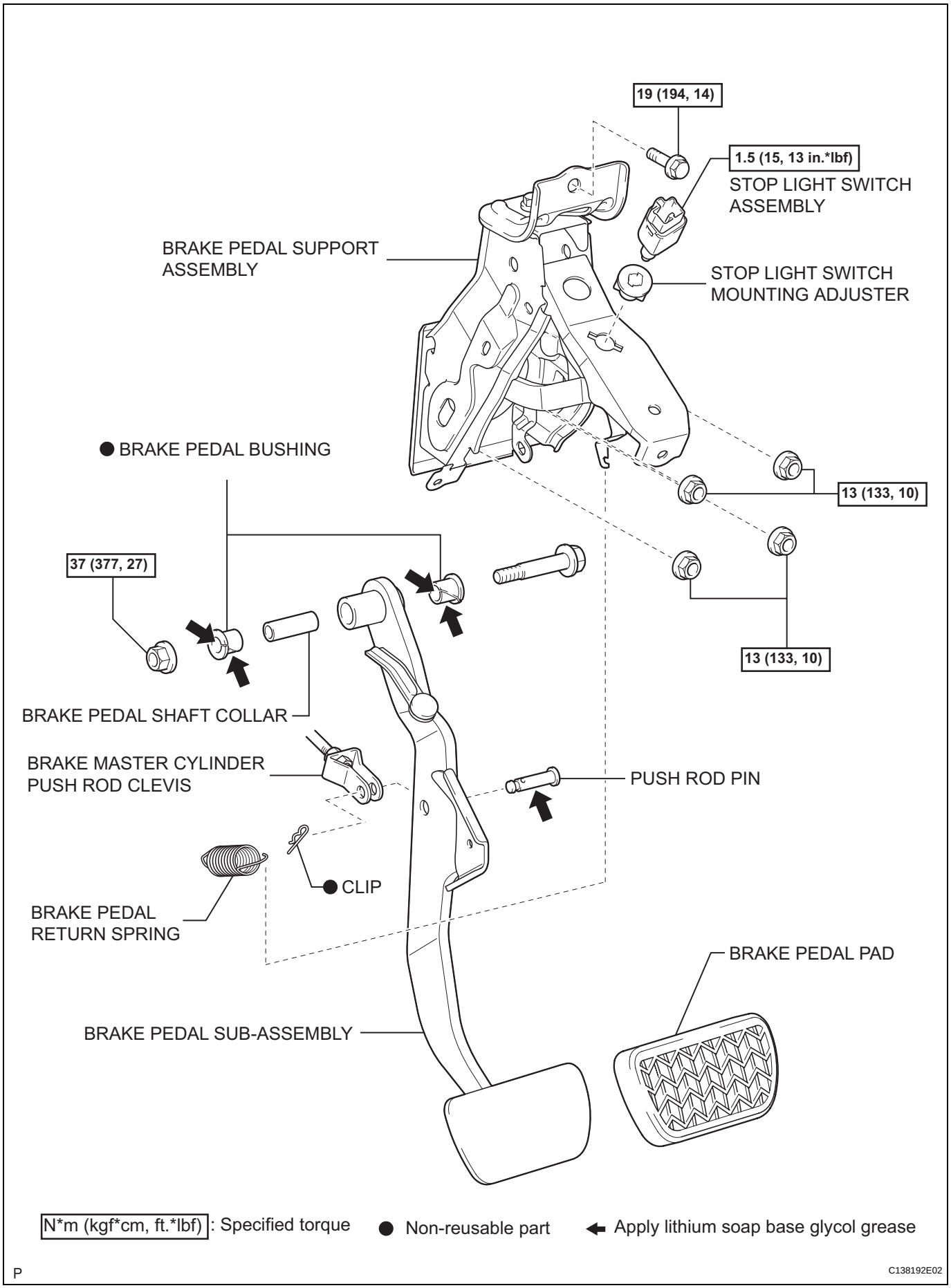
19 (194, 14)
1.5 (15, 13 in.*lbf)
STOP LIGHT SWITCH ASSEMBLY
BRAKE PEDAL SUPPORT ASSEMBLY
STOP LIGHT SWITCH MOUNTING ADJUSTER
● BRAKE PEDAL BUSHING
13 (133, 10)
37 (377, 27)
13 (133, 10)
BRAKE PEDAL SHAFT COLLAR
BRAKE MASTER CYLINDER PUSH ROD CLEVIS
PUSH ROD PIN
● CLIP
BRAKE PEDAL RETURN SPRING
BRAKE PEDAL PAD
BRAKE PEDAL SUB-ASSEMBLY
N*m (kgf*cm, ft.*lbf) : Specified torque
● Non-reusable part
Apply lithium soap base glycol grease
P
C138192E02

BRAKE MASTER CYLINDER

COMPONENTS

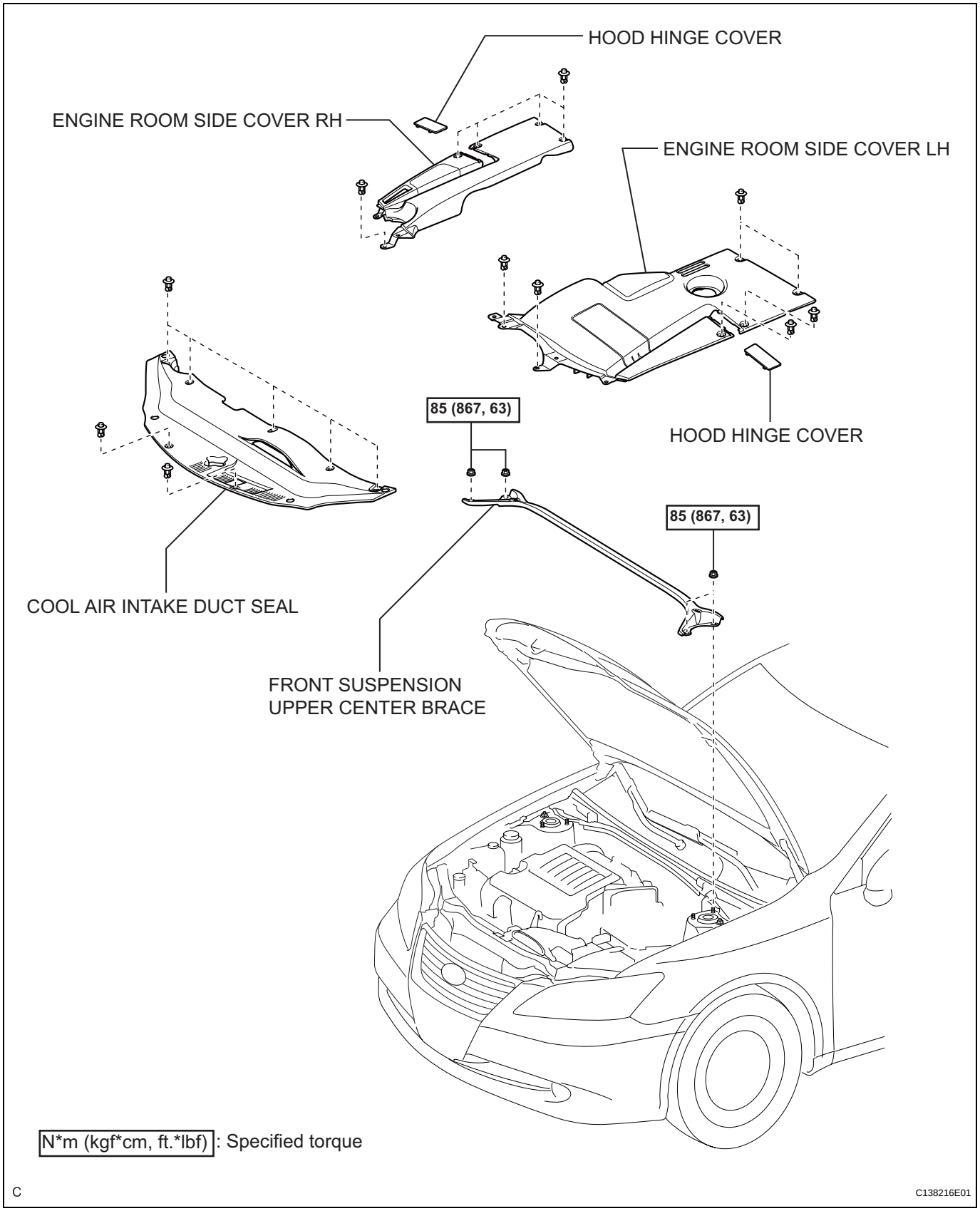

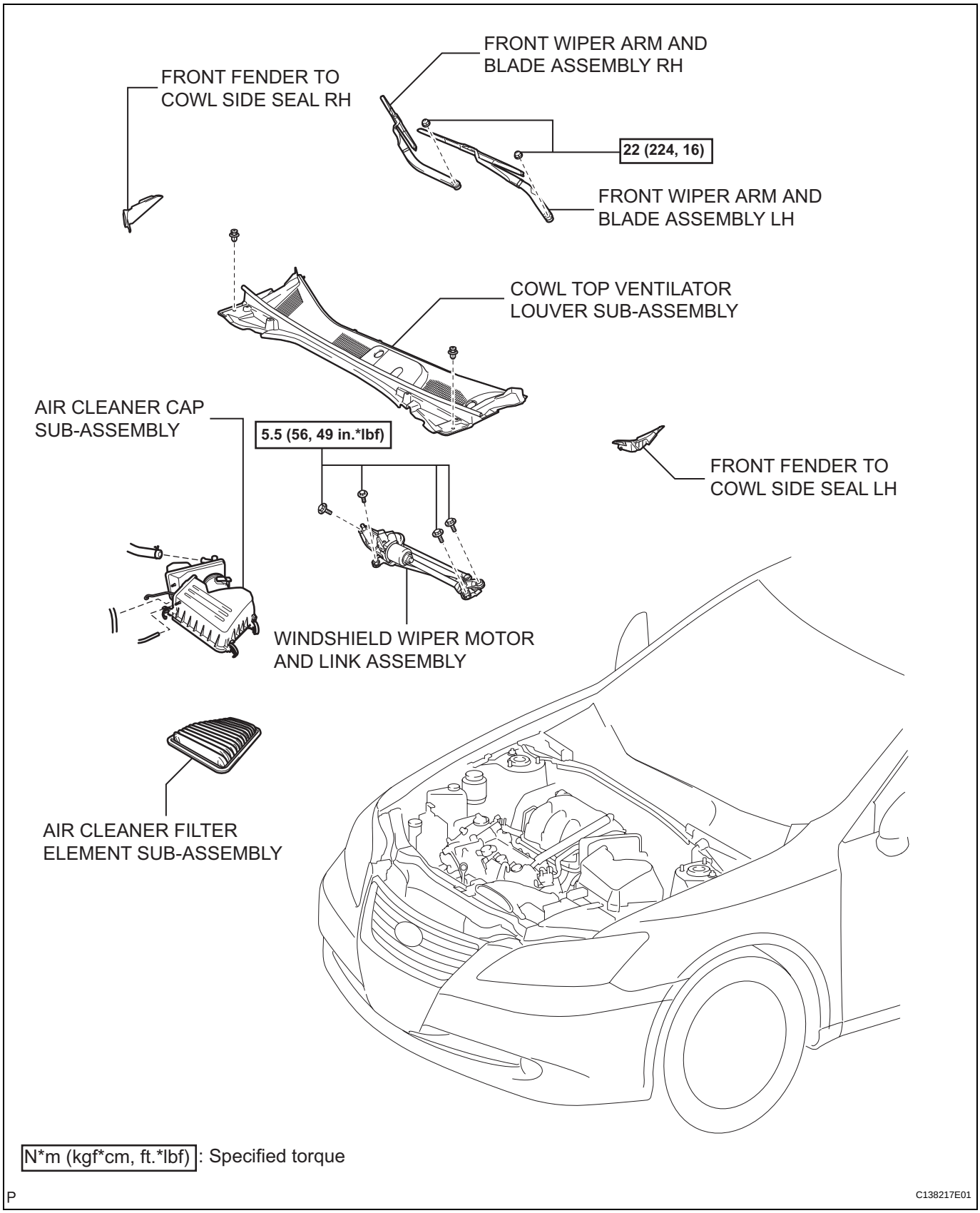

N*m (kgf*cm, ft.*lbf) : Specified torque

P

C138217E01

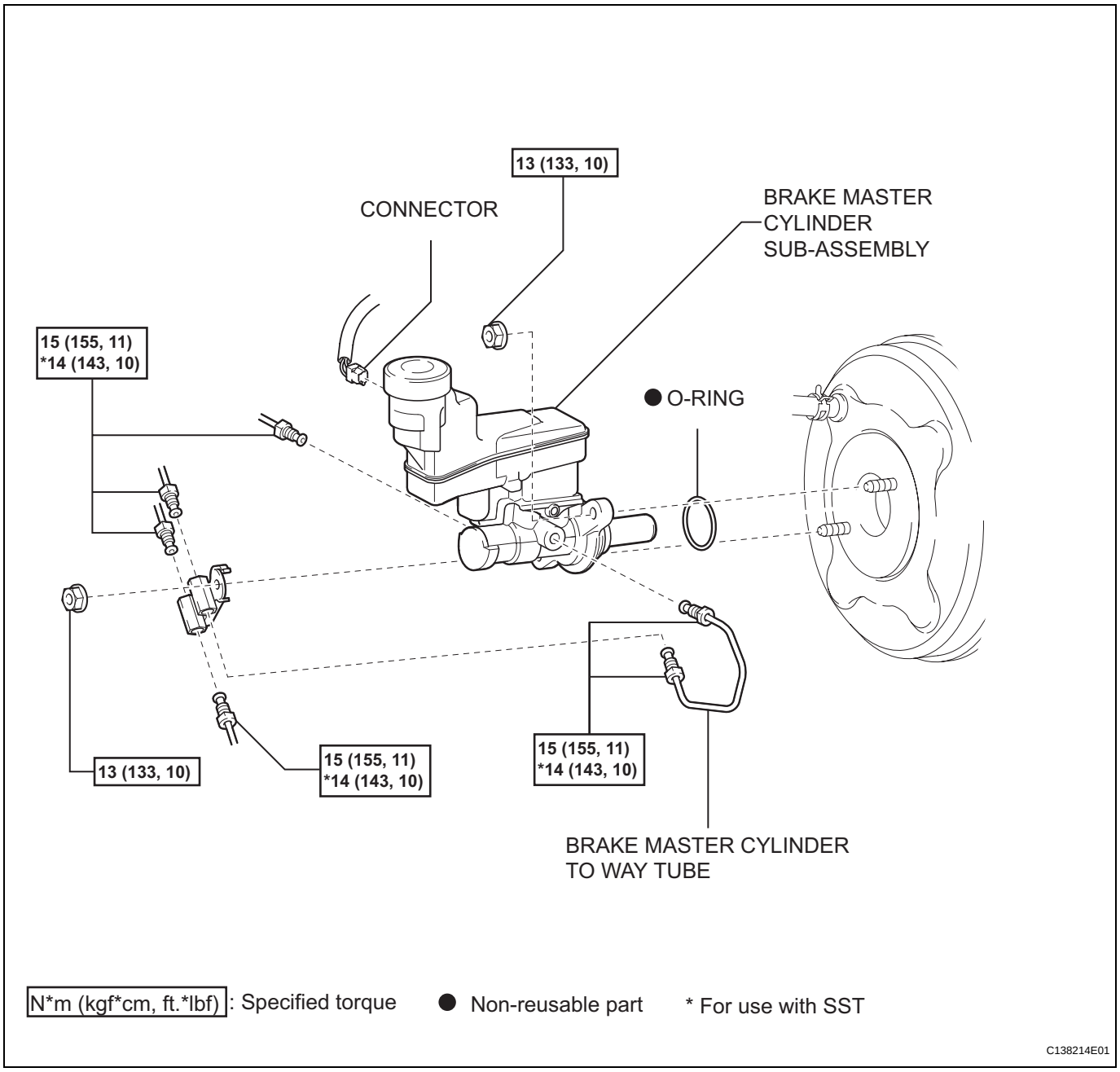
13 (133, 10)
CONNECTOR
BRAKE MASTER CYLINDER SUB-ASSEMBLY
15 (155, 11)
*14 (143, 10)
● O-RING
13 (133, 10)
15 (155, 11)
*14 (143, 10)
15 (155, 11)
*14 (143, 10)
BRAKE MASTER CYLINDER TO WAY TUBE
N*m (kgf*cm, ft.*lbf) : Specified torque
● Non-reusable part
* For use with SST
C138214E01

BRAKE BOOSTER

COMPONENTS

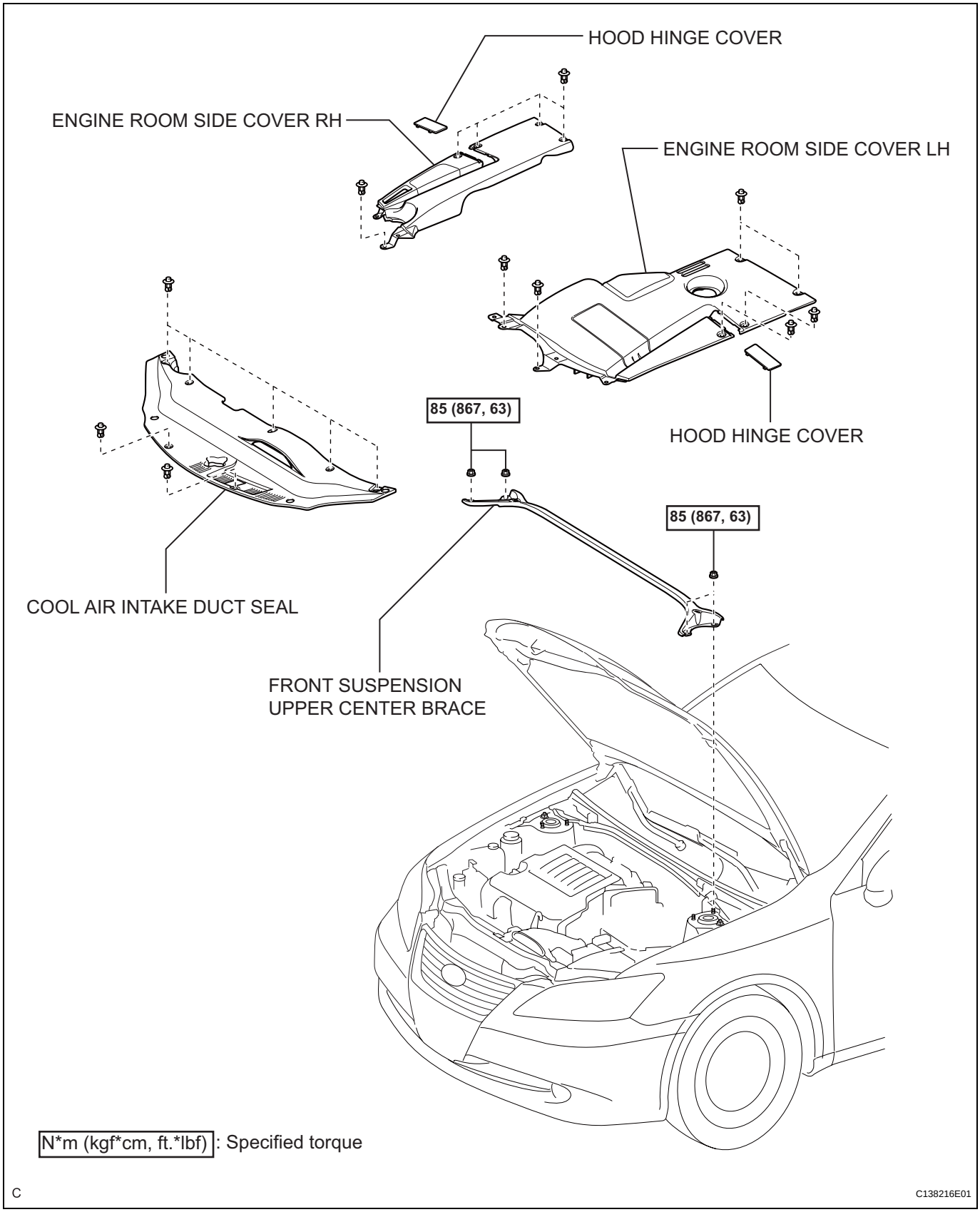

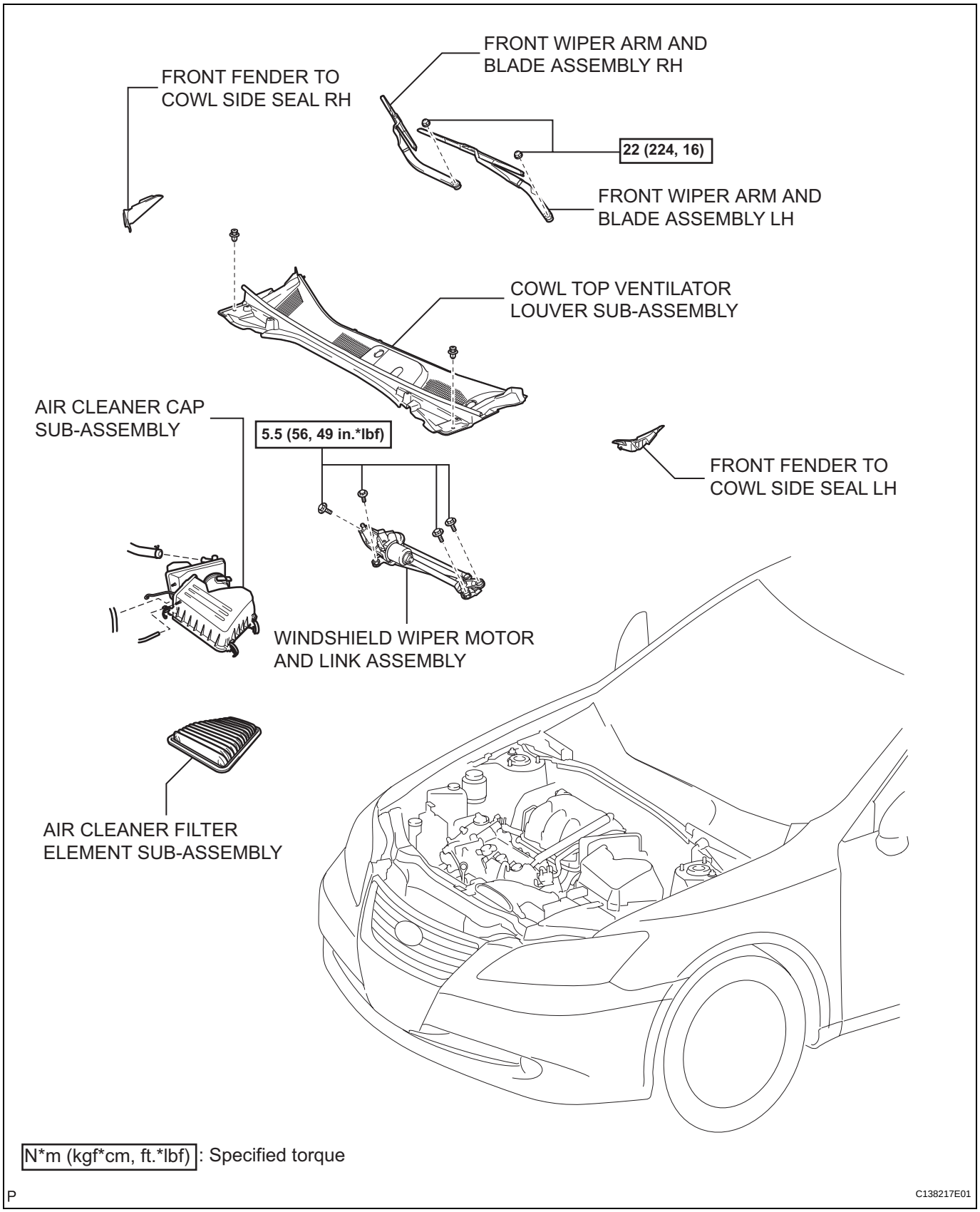
FRONT WIPER ARM AND BLADE ASSEMBLY RH
FRONT FENDER TO COWL SIDE SEAL RH
22 (224, 16)
FRONT WIPER ARM AND BLADE ASSEMBLY LH
COWL TOP VENTILATOR LOUVER SUB-ASSEMBLY
AIR CLEANER CAP SUB-ASSEMBLY
5.5 (56, 49 in.*lbf)
FRONT FENDER TO COWL SIDE SEAL LH
WINDSHIELD WIPER MOTOR AND LINK ASSEMBLY
AIR CLEANER FILTER ELEMENT SUB-ASSEMBLY
N*m (kgf*cm, ft.*lbf) : Specified torque
P
C138217E01

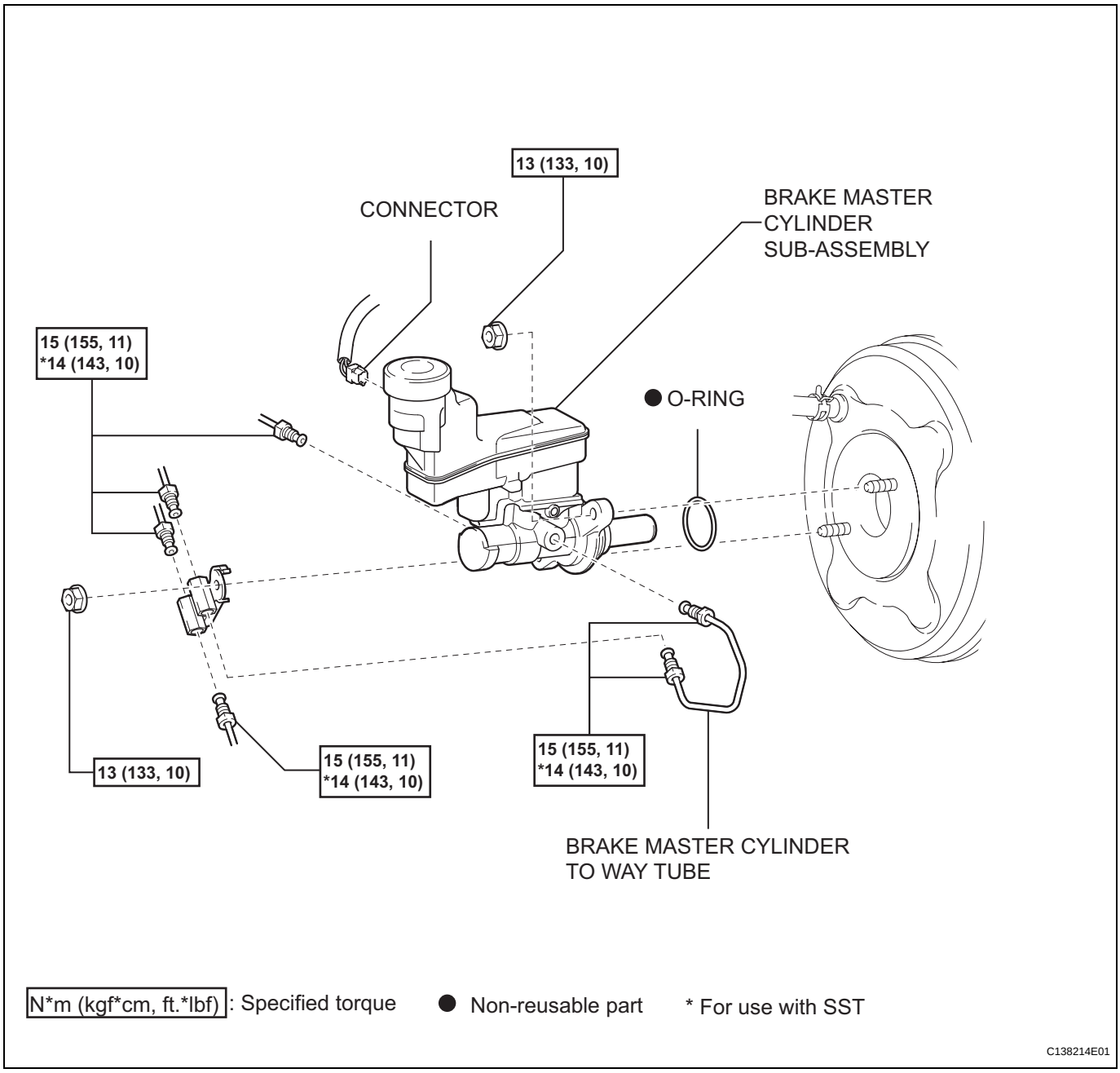
13 (133, 10)
CONNECTOR
BRAKE MASTER CYLINDER SUB-ASSEMBLY
15 (155, 11)
*14 (143, 10)
● O-RING
13 (133, 10)
15 (155, 11)
*14 (143, 10)
15 (155, 11)
*14 (143, 10)
BRAKE MASTER CYLINDER TO WAY TUBE
N*m (kgf*cm, ft.*lbf): Specified torque
● Non-reusable part
* For use with SST
C138214E01

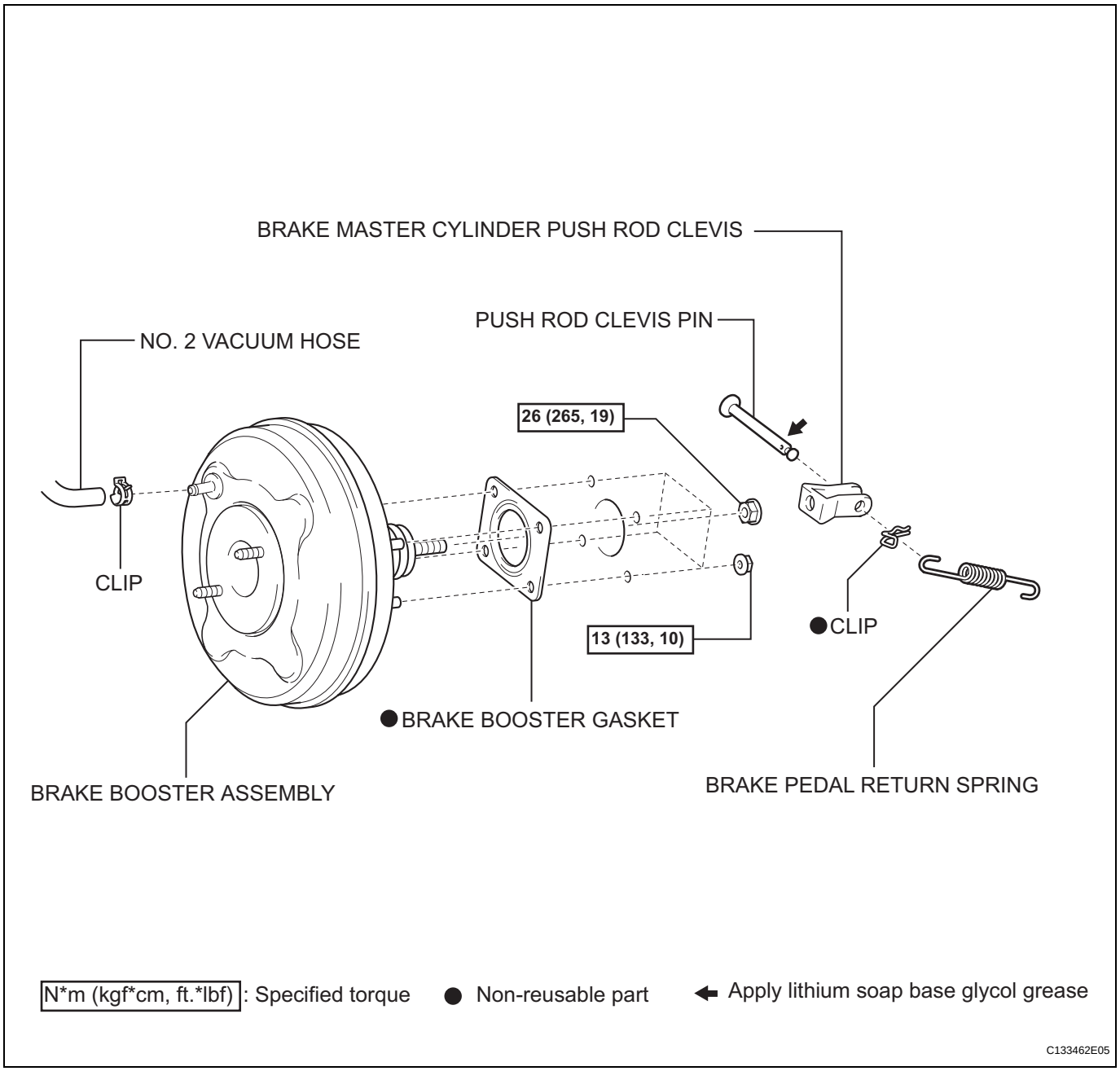

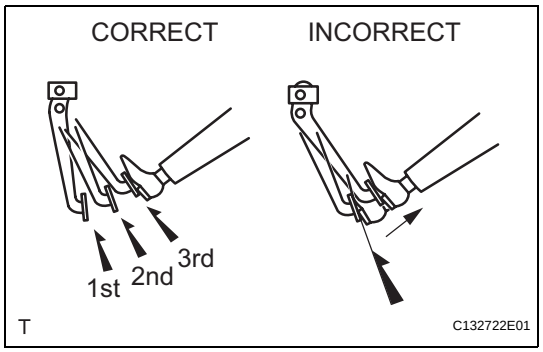

ON-VEHICLE INSPECTION

1. INSPECT BRAKE BOOSTER ASSEMBLY

(a) Airtightness check.

(1) Start the engine and stop it after 1 or 2 minutes. Slowly depress the brake pedal several times.
HINT:
If the pedal can be depressed to the floor on the first time, but on the 2nd and 3rd time cannot be depressed as far, the booster is airtight.

(2) Depress the brake pedal while the engine is running, and stop the engine with the pedal depressed.
HINT:
If there is no change in the pedal reserve distance while holding the pedal for 30 seconds, the booster is airtight.

(b) Operation check.

(1) Depress the brake pedal several times with the engine switch off and check that there is no change in the pedal reserve distance when the pedal is depressed.

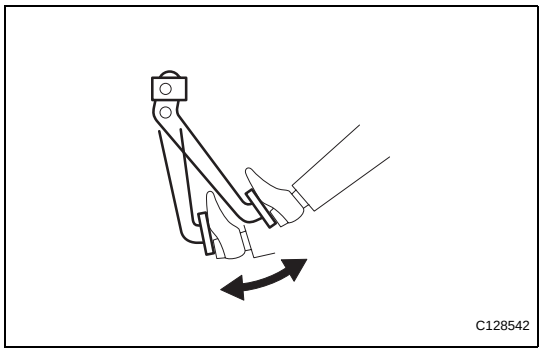

(2) Depress and hold down the pedal, and start the engine.
HINT:
If the pedal goes down slightly, operation is normal.

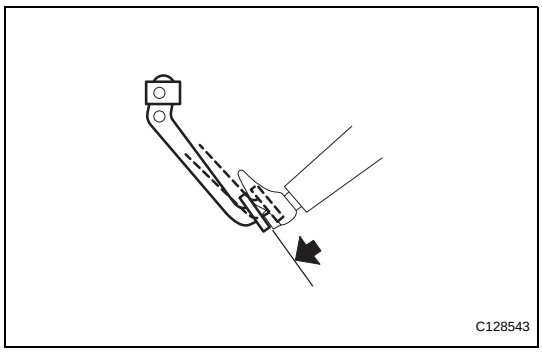

REMOVAL

1. REMOVE BRAKE PEDAL RETURN SPRING

(a) Remove the brake pedal return spring.

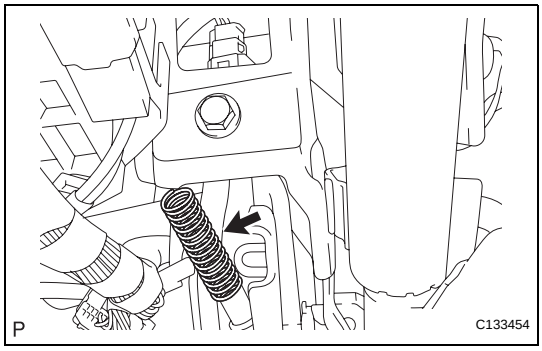

2. SEPARATE BRAKE MASTER CYLINDER PUSH ROD CLEVIS

(a) Remove the clip and push rod pin, and separate the brake master cylinder push rod clevis from the brake pedal sub-assembly.

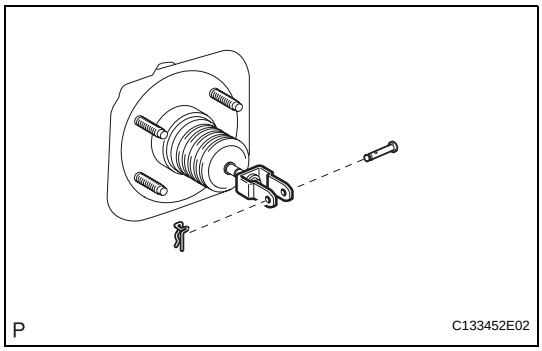

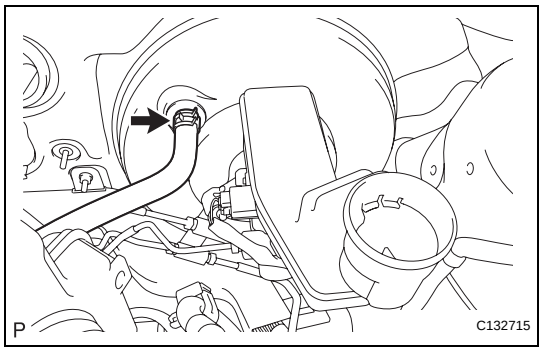

3. DISCONNECT NO. 2 VACUUM HOSE

(a) Move the clip and disconnect the No. 2 vacuum hose.

4. REMOVE BRAKE MASTER CYLINDER SUB-ASSEMBLY

HINT:
Refer to the procedures up to "REMOVE MASTER CYLINDER". (See page BR-21)

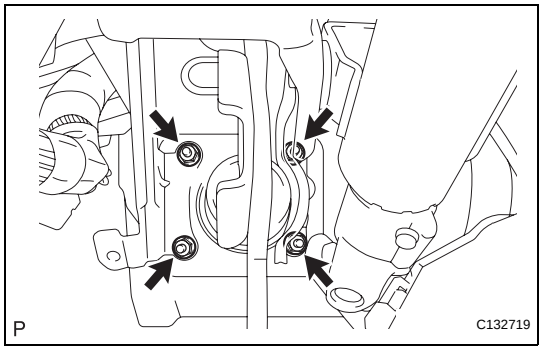

5. REMOVE BRAKE BOOSTER ASSEMBLY

(a) Remove the 4 nuts and the brake booster assembly.
NOTICE:
Do not damage the brake lines.

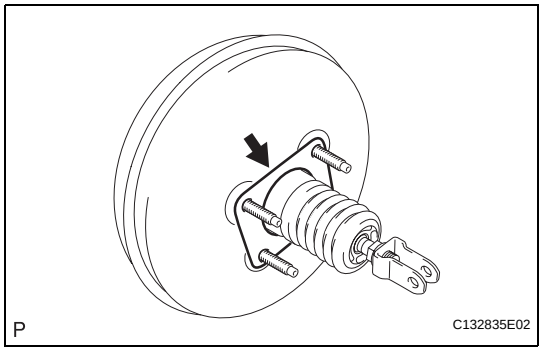

6. REMOVE BRAKE BOOSTER GASKET

(a) Remove the brake booster gasket.

7. REMOVE BRAKE MASTER CYLINDER PUSH ROD CLEVIS

(a) Loosen the lock nut.
(b) Remove the brake master cylinder push rod clevis and the lock nut.

FRONT BRAKE

COMPONENTS

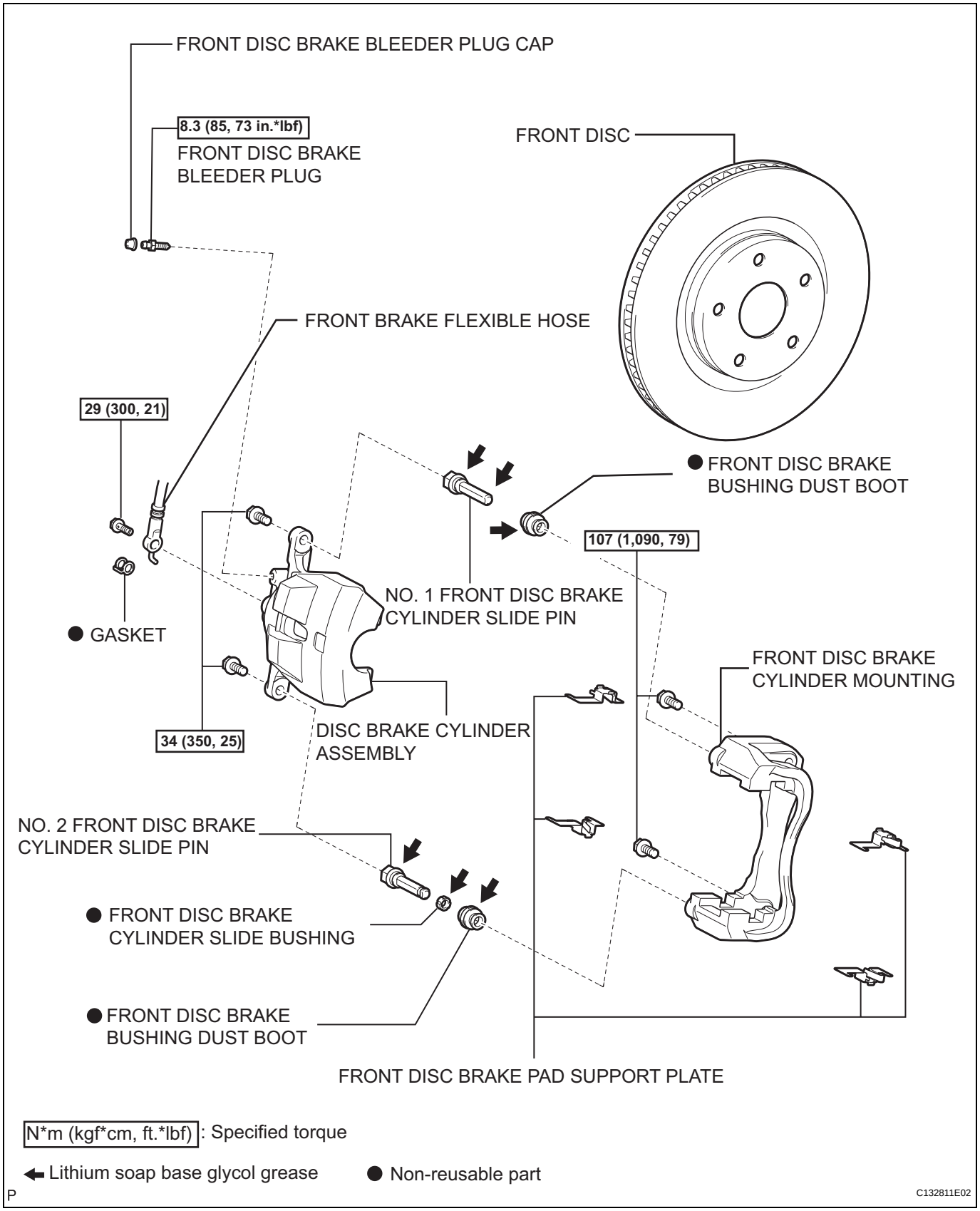

BR

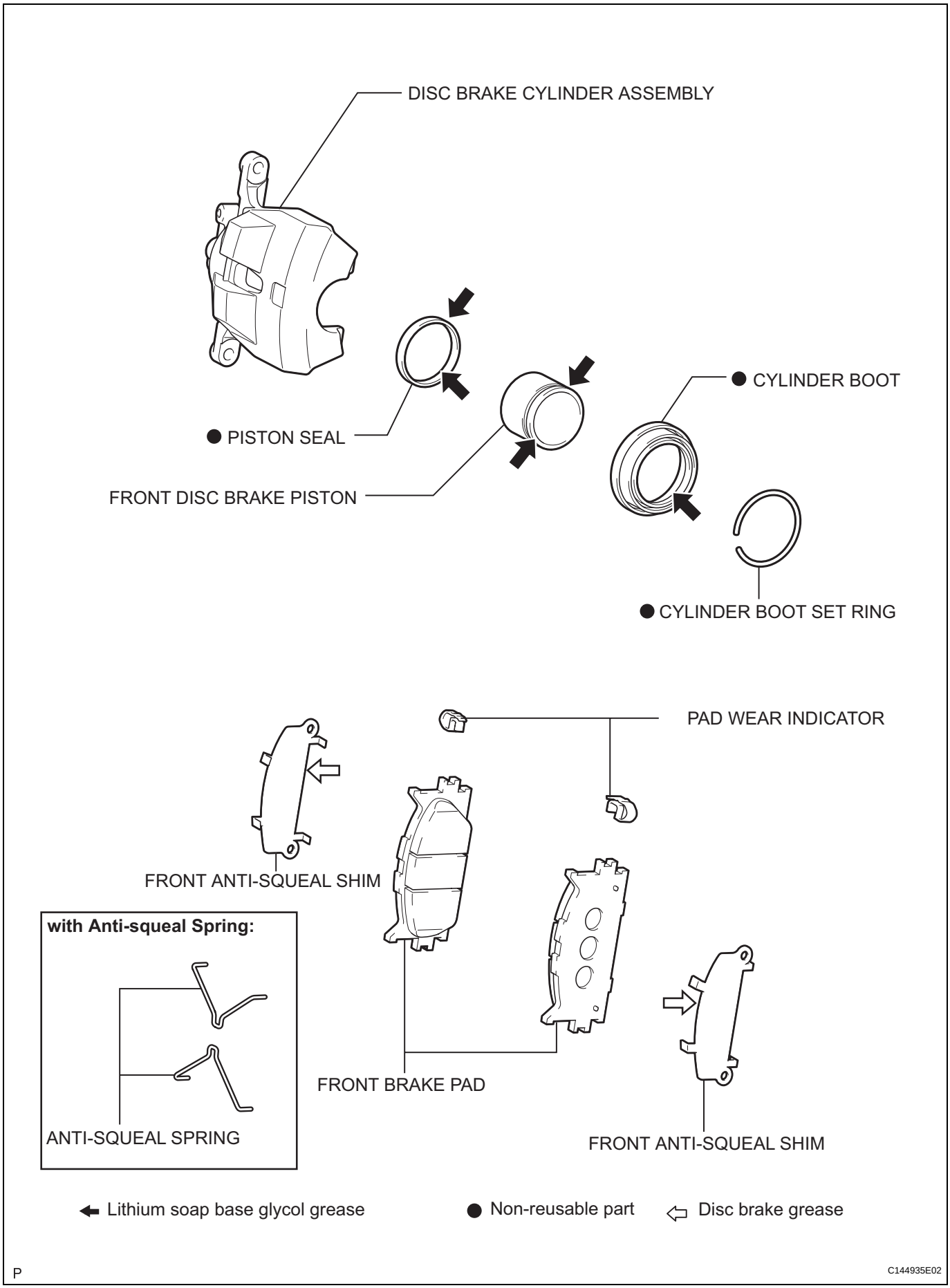
DISC BRAKE CYLINDER ASSEMBLY
● CYLINDER BOOT
● PISTON SEAL
FRONT DISC BRAKE PISTON
● CYLINDER BOOT SET RING
PAD WEAR INDICATOR
FRONT ANTI-SQUEAL SHIM
with Anti-squeal Spring:
ANTI-SQUEAL SPRING
FRONT BRAKE PAD
FRONT ANTI-SQUEAL SHIM
Lithium soap base glycol grease
● Non-reusable part
Disc brake grease
P
C144935E02

FRONT BRAKE FLEXIBLE HOSE

COMPONENTS

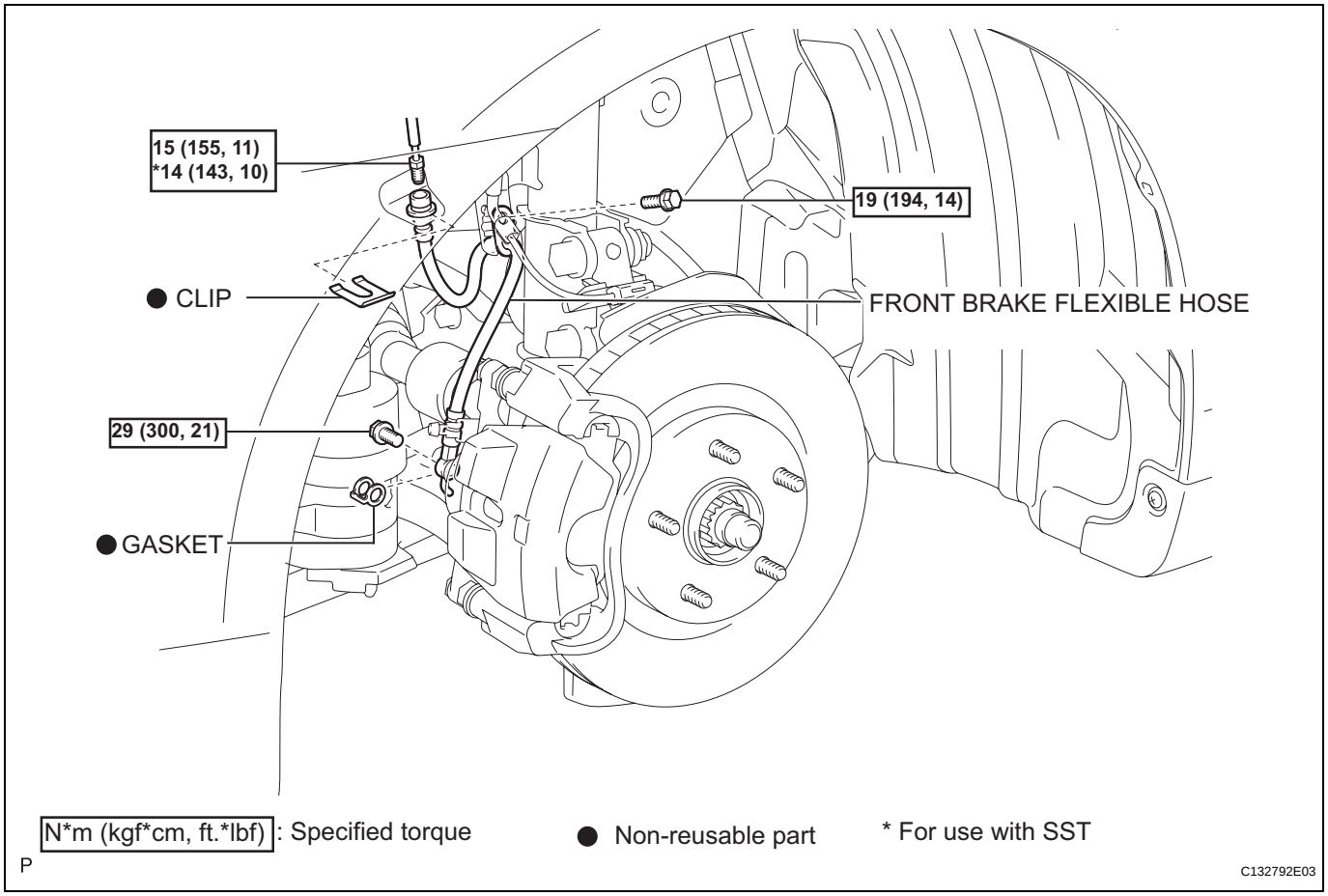

REMOVAL

1. REMOVE FRONT WHEEL

2. DRAIN BRAKE FLUID

3. REMOVE FRONT BRAKE FLEXIBLE HOSE

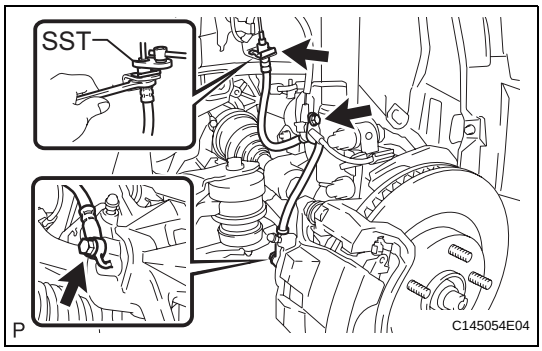

(a) Using SST, disconnect the brake line while holding the front brake flexible hose with a wrench.
SST 09023-00101
NOTICE:
- **Do not bend or damage the brake line.**
- **Do not allow any foreign matter such as dirt and dust to enter the brake line from the connecting points.**

(b) Remove the clip.

(c) Remove the bolt, and separate the front brake flexible hose and the speed sensor from the shock absorber.

(d) Remove the union bolt and the front brake flexible hose from the front disc brake cylinder assembly.

(e) Remove the gasket from the front brake flexible hose.

INSTALLATION

1. INSTALL FRONT BRAKE FLEXIBLE HOSE

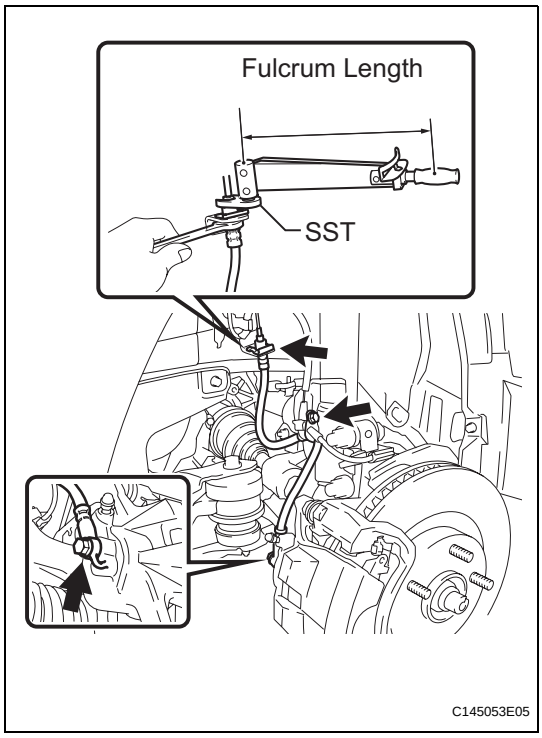

(a) Connect the front brake flexible hose with the union bolt and a new gasket.
Torque: 29 N*m (300 kgf*cm, 21 ft.*lbf)

(b) Connect the front brake flexible hose and the speed sensor to the shock absorber with the bolt.
Torque: 19 N*m (194 kgf*cm, 14 ft.*lbf)
NOTICE:
When installing the front brake flexible hose and the speed sensor, the bracket must face toward the exterior of the vehicle.

(c) Install the front brake flexible hose with a new clip.
NOTICE:
- **When installing the front brake flexible hose, face the identification mark toward the exterior of the vehicle and minimize twisting of the hose.**
- **Install the clip as far as it will go.**

(d) Using SST, connect the brake line to the front brake flexible hose while holding the front brake flexible hose with a wrench.
SST 09023-00101
Torque: Without SST
15 N*m (155 kgf*cm, 11 ft.*lbf)
With SST
14 N*m (143 kgf*cm, 10 ft.*lbf)
NOTICE:
- **Do not bend or damage the brake line.**
- **Do not allow any foreign matter such as dirt and dust to enter the brake line from the connecting points.**

- **Use a torque wrench with a fulcrum length of 250 mm (9.84 in.).**
- **This torque value is effective when SST is parallel to a torque wrench.**

2. **FILL RESERVOIR WITH BRAKE FLUID (See page BR-6)**
3. **BLEED BRAKE LINE (See page BR-8)**
4. **BLEED BRAKE ACTUATOR ASSEMBLY (See page BR-8)**
5. **INSPECT BRAKE FLUID LEVEL IN RESERVOIR (See page BR-11)**
6. **CHECK FOR BRAKE FLUID LEAKS**
7. **INSTALL FRONT WHEEL**
   Torque: 103 N*m (1,050 kgf*cm, 76 ft.*lbf)

REAR BRAKE

COMPONENTS

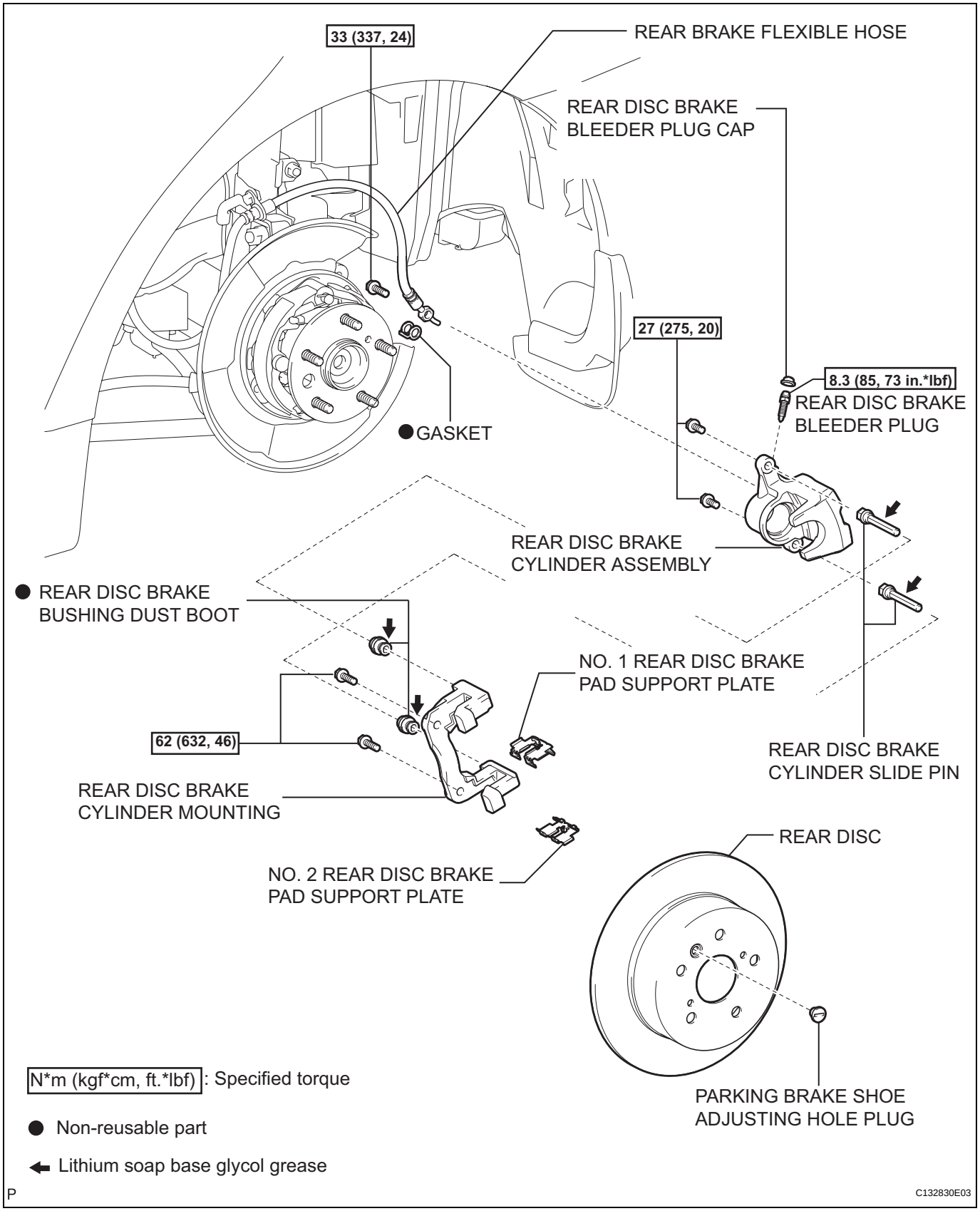

BR

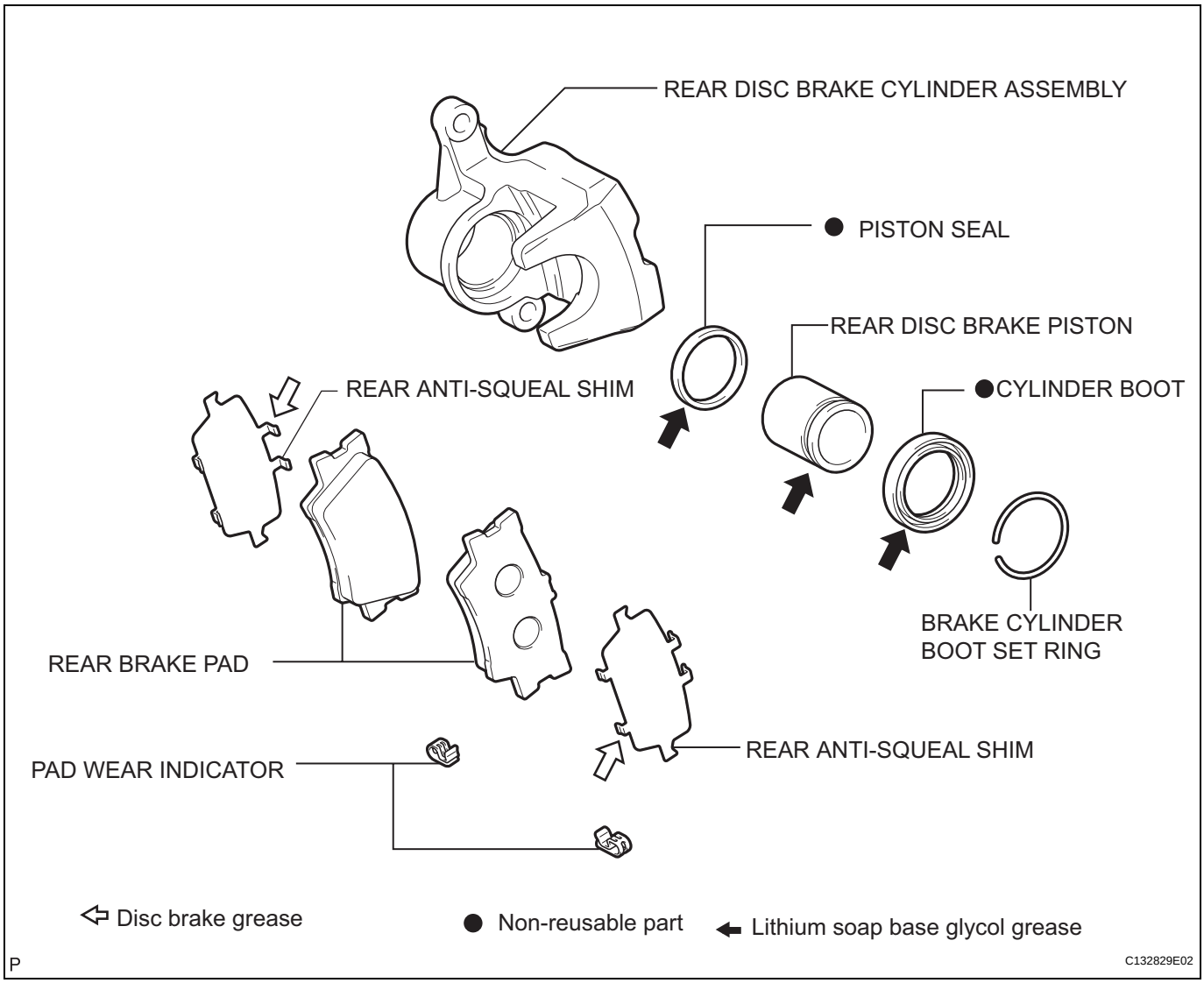
REAR DISC BRAKE CYLINDER ASSEMBLY
● PISTON SEAL
REAR DISC BRAKE PISTON
REAR ANTI-SQUEAL SHIM
●CYLINDER BOOT
BRAKE CYLINDER
BOOT SET RING
REAR BRAKE PAD
REAR ANTI-SQUEAL SHIM
PAD WEAR INDICATOR
Disc brake grease
● Non-reusable part
Lithium soap base glycol grease
P
C132829E02

REAR BRAKE FLEXIBLE HOSE

COMPONENTS

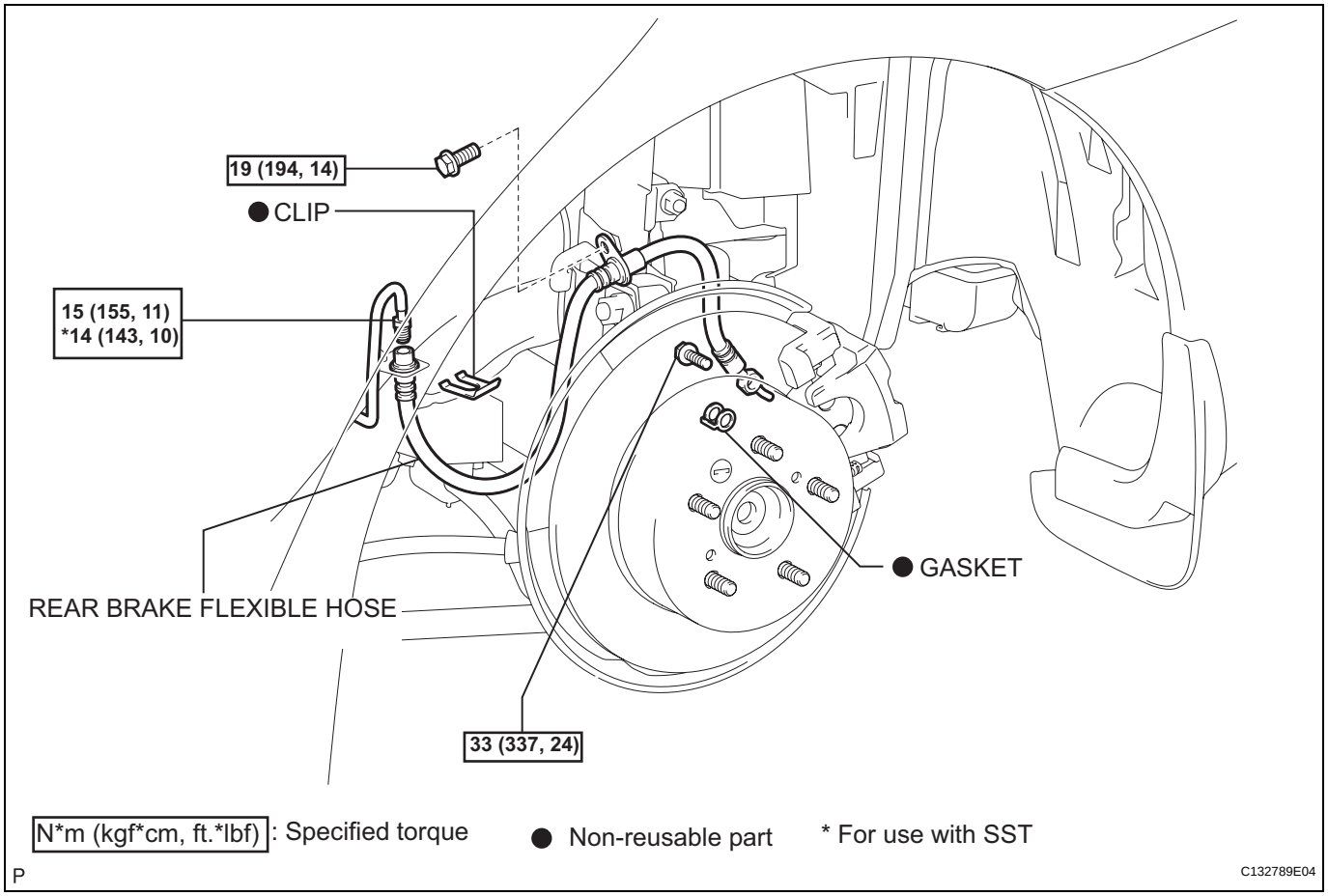

REMOVAL

1. REMOVE REAR WHEEL

2. DRAIN BRAKE FLUID

3. REMOVE REAR BRAKE FLEXIBLE HOSE

(a) Remove the union bolt and separate the rear brake flexible hose.

(b) Remove the gasket from the rear brake flexible hose.

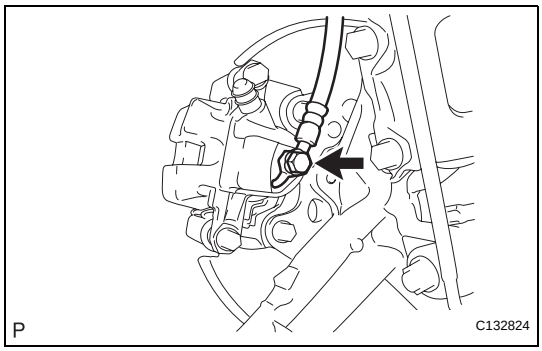

(c) Remove the bolt and separate the rear brake flexible hose.

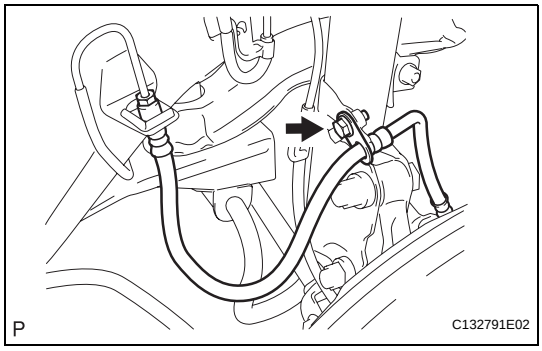

(d) Using SST, remove the brake line while holding the rear brake flexible hose with a wrench.
SST 09023-00101
NOTICE:
- **Do not bend or damage the brake line.**
- **Do not allow any foreign matter such as dirt and dust to enter the brake tube from the connecting points.**

(e) Remove the clip.

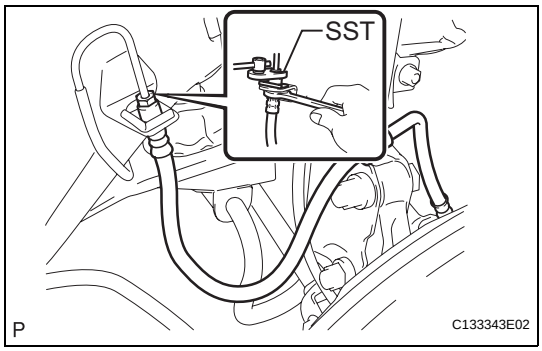

STOP LIGHT SWITCH

COMPONENTS

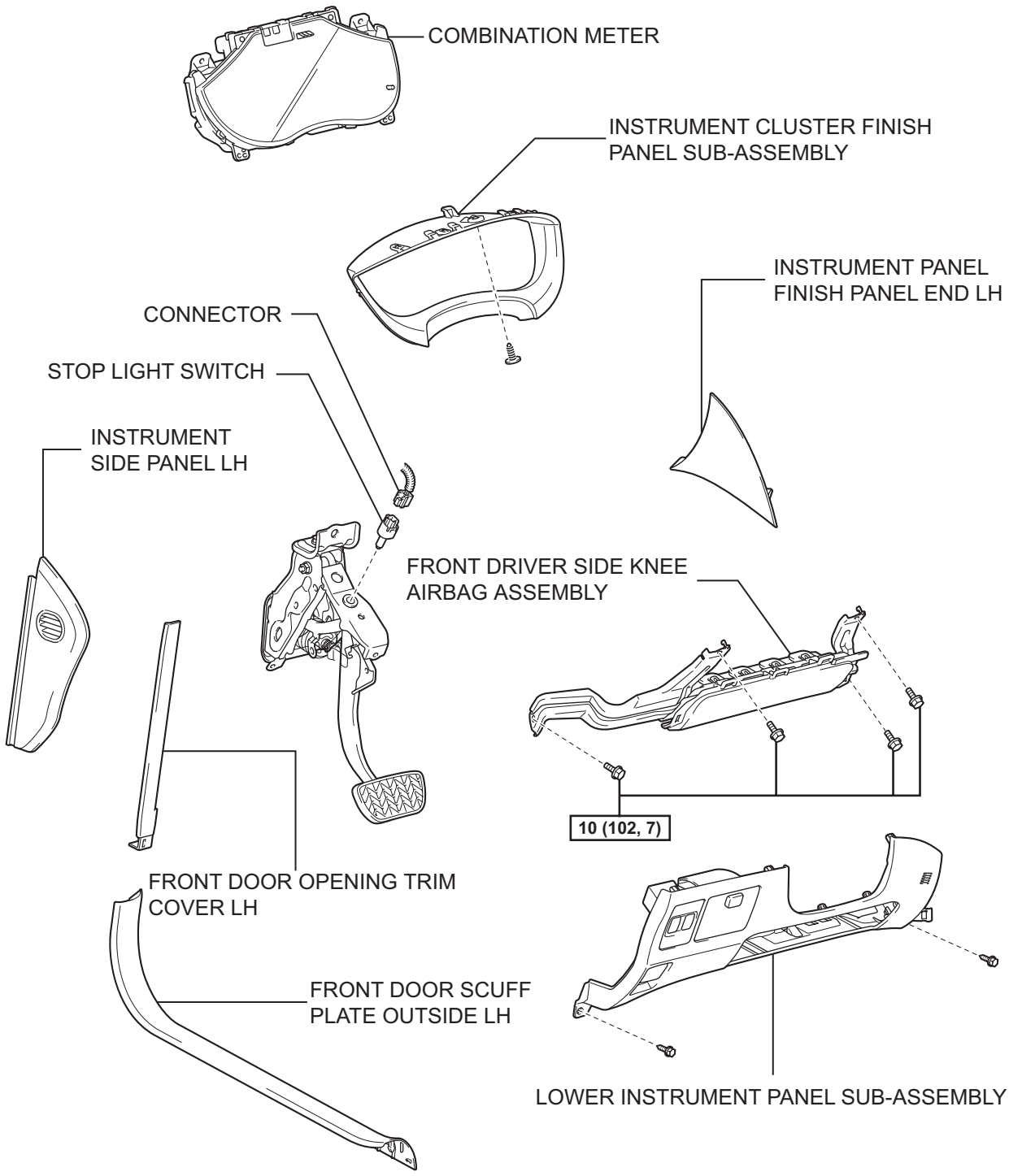

N*m (kgf*cm, ft.*lbf) : Specified torque

P

C138470E01

BR

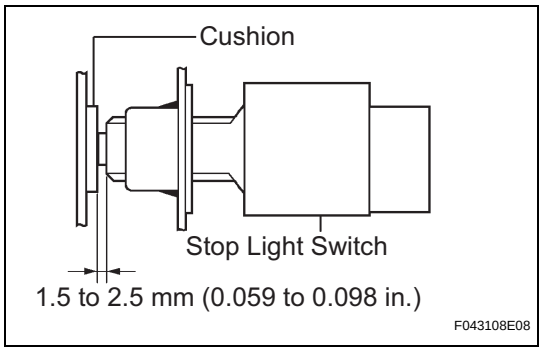

ON-VEHICLE INSPECTION

1. INSPECT STOP LIGHT SWITCH

(a) Check the protrusion of the rod.

Protrusion of the rod:

1.5 to 2.5 mm (0.059 to 0.098 in.)

If the protrusion is not within the specified range, adjust it.

NOTICE:

Do not depress the brake pedal.

PARKING BRAKE SYSTEM

PROBLEM SYMPTOMS TABLE

Use the table below to help determine the cause of the problem. The numbers indicate the priority of the likely cause of the problem. Check each part in order. If necessary, replace these parts.

Symptom	Suspected Area	See page
Brake drag	1. Parking brake pedal travel (Out of adjustment)	PB-2
	2. Parking brake cable (Sticking) [No. 1 cable]	PB-30
	3. Parking brake cable (Sticking) [No. 2/No. 3 cable]	PB-30
	4. Parking brake shoe clearance (Out of adjustment)	PB-1
	5. Parking brake shoe lining (Cracked or distorted)	PB-38
	6. Tension or return spring (Damaged)	PB-38

ADJUSTMENT

1. REMOVE REAR WHEEL

2. ADJUST PARKING BRAKE SHOE CLEARANCE

(a) Temporarily install the hub nuts.
(b) Remove the shoe adjusting hole plug.

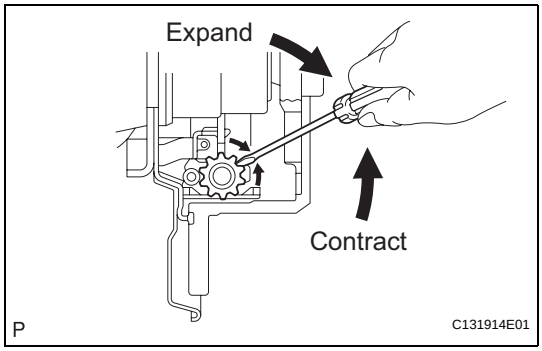

(c) Turn the shoe adjuster and expand the shoe until the disc locks.
(d) Turn and contract the shoe adjuster until the disc can rotate smoothly.
Standard:
Return 8 notches.
(e) Check that there is no brake drag against the shoe.
(f) Install the shoe adjusting hole plug.
(g) Remove the hub nuts.

3. INSTALL REAR WHEEL
Torque: 103 N*m (1,050 kgf*cm, 76 ft.*lbf)

4. INSPECT PARKING BRAKE PEDAL TRAVEL

(a) Fully depress the parking brake pedal and release it to engage the parking brake.
(b) Depress the pedal to the floor again, and release it to disengage the parking brake.

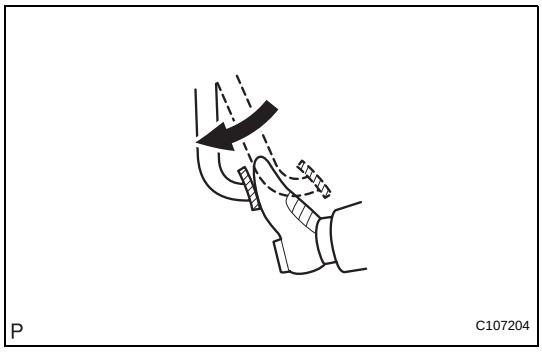

(c) Slowly depress the parking brake pedal to the floor, and count the number of clicks.
Parking brake pedal travel:
7 to 10 notches at 300 N (31 kgf, 67 lbf)

5. ADJUST PARKING BRAKE PEDAL TRAVEL

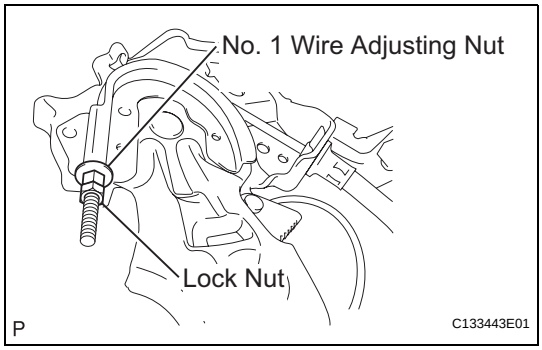

(a) Depress the parking brake pedal. Hold the No. 1 wire adjusting nut using a wrench and loosen the lock nut.
(b) Release the parking brake pedal.
(c) Turn the No. 1 wire adjusting nut until the parking brake pedal travel meets the above specification.
(d) Hold the No. 1 wire adjusting nut using a wrench or an equivalent tool and tighten the lock nut.
Torque: 5.4 N*m (55 kgf*cm, 48 in.*lbf)
(e) Count the number of clicks after depressing and releasing the parking brake pedal 3 or 4 times.
(f) Check whether the parking brake drags.
(g) When operating the parking brake pedal, check that the parking brake indicator light comes on.

PARKING BRAKE PEDAL

COMPONENTS

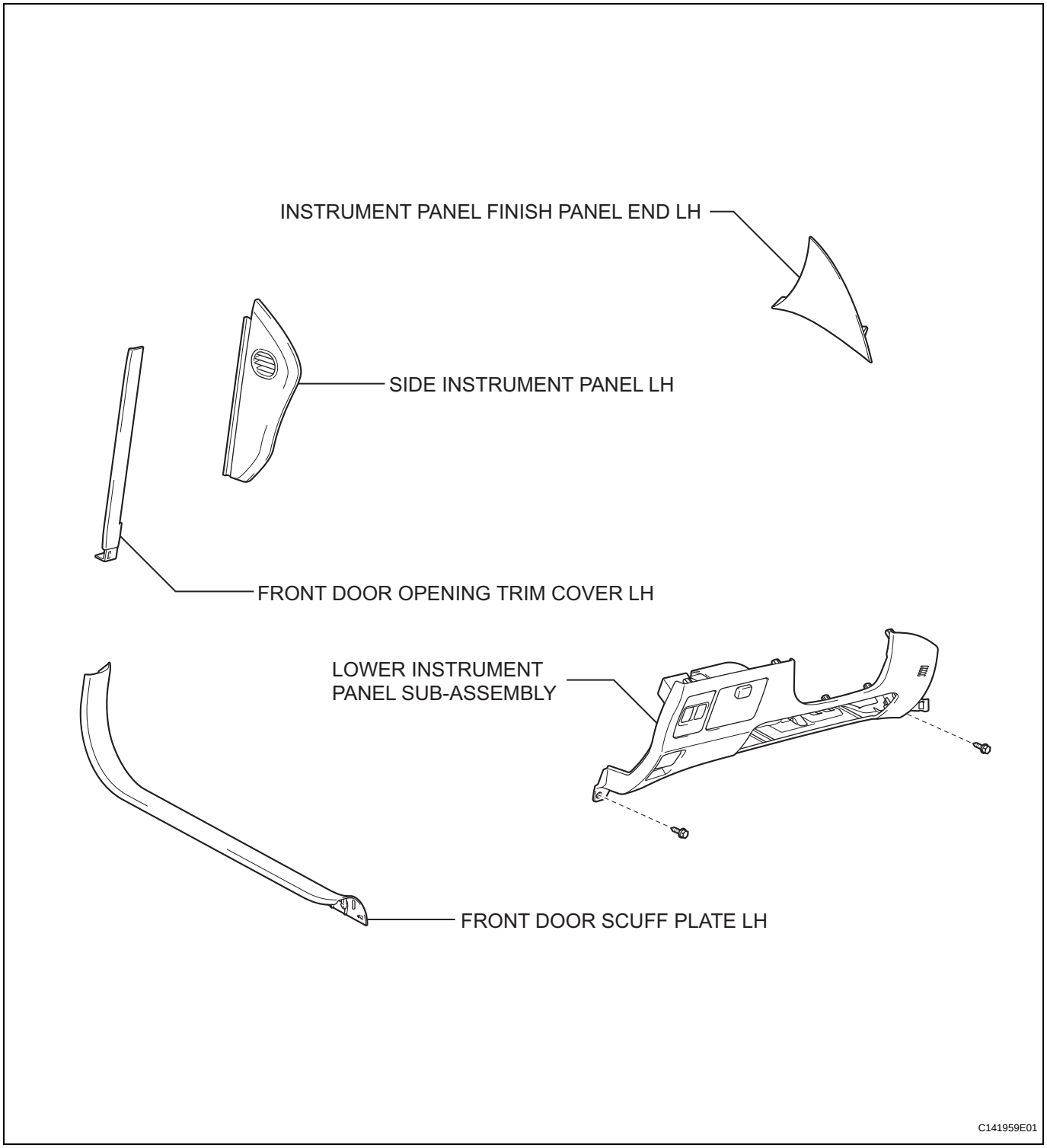

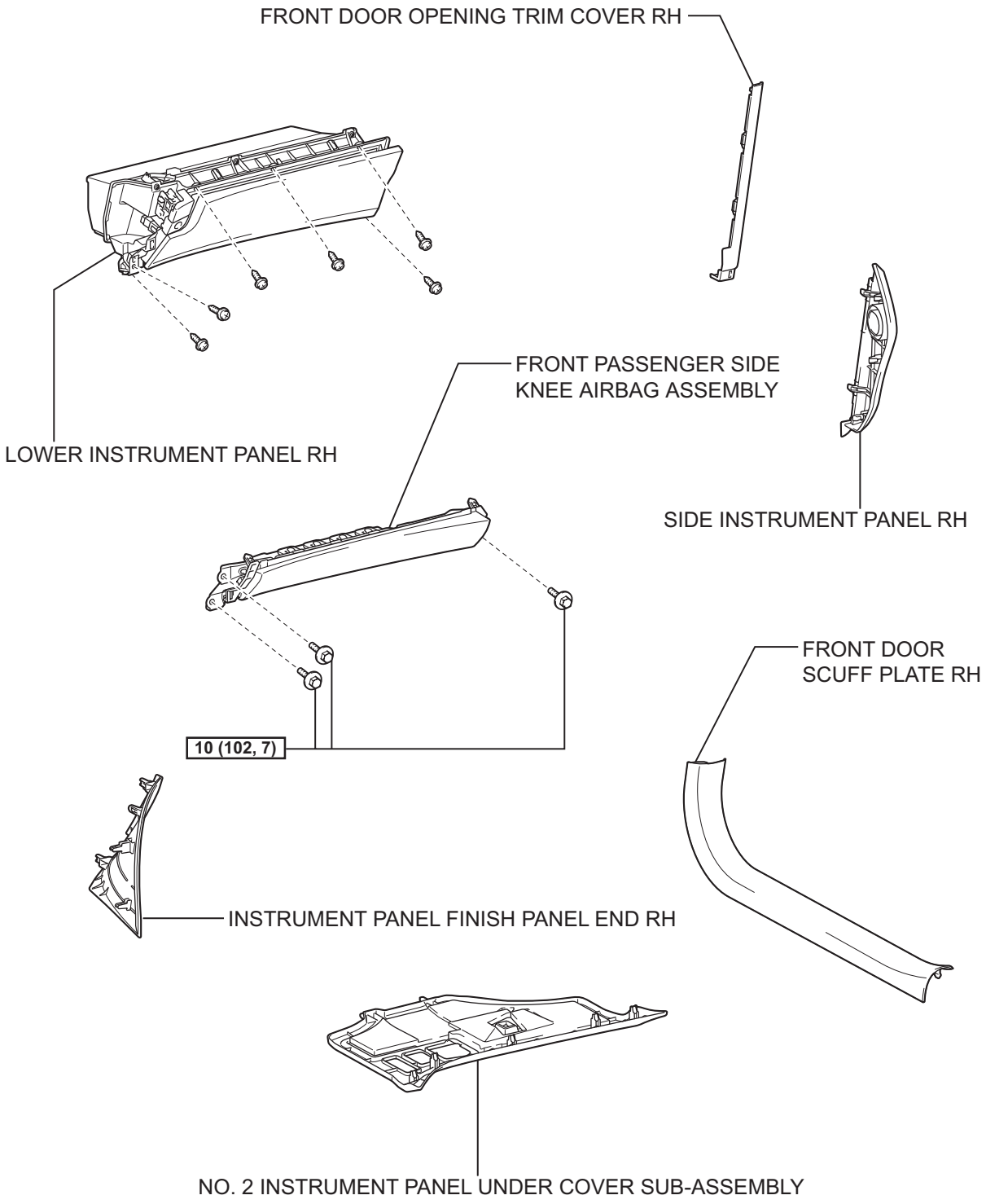

N*m (kgf*cm, ft.*lbf) : Specified torque

P

B145855E02

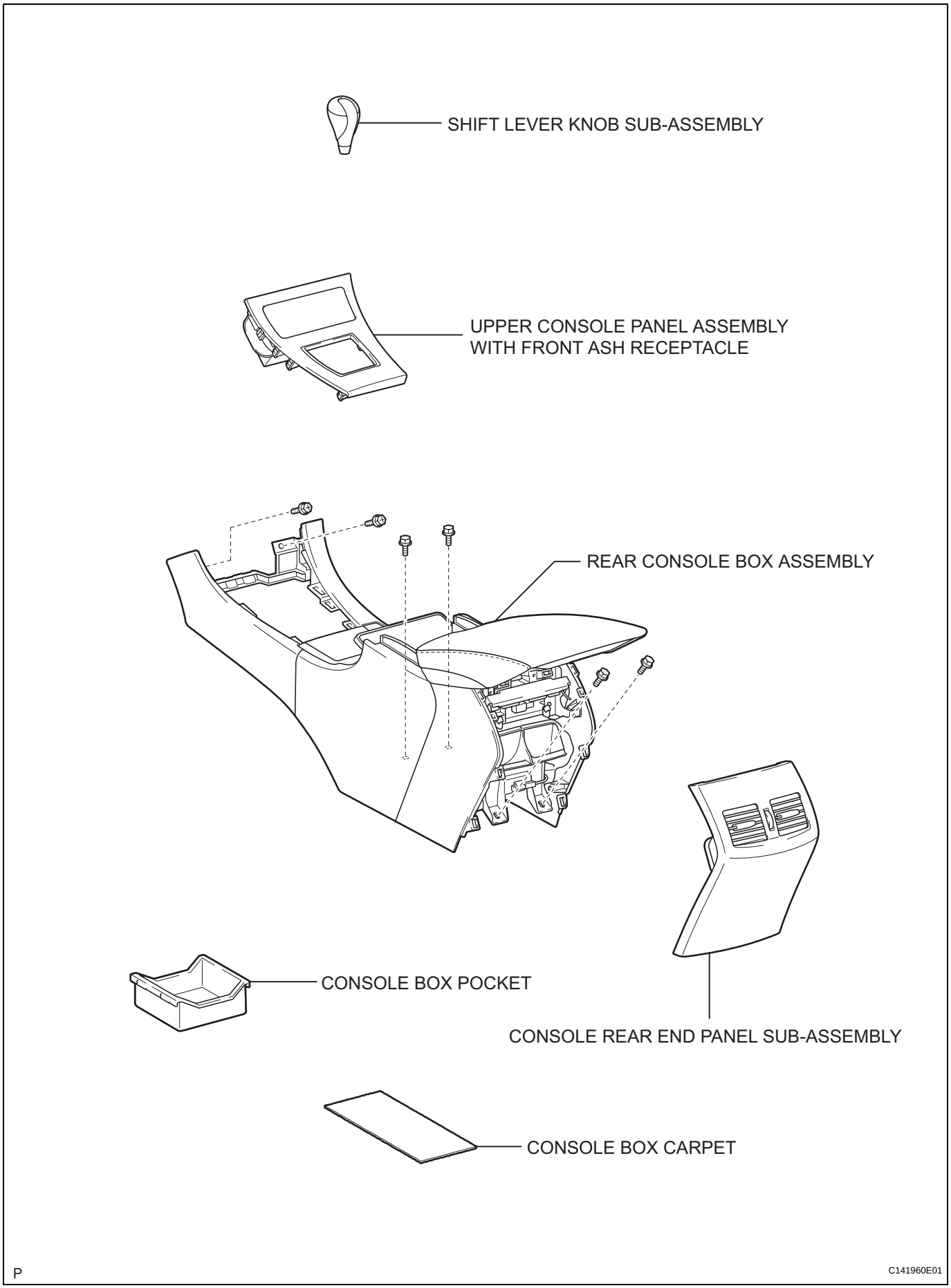
SHIFT LEVER KNOB SUB-ASSEMBLY
UPPER CONSOLE PANEL ASSEMBLY
WITH FRONT ASH RECEPTACLE
REAR CONSOLE BOX ASSEMBLY
CONSOLE BOX POCKET
CONSOLE REAR END PANEL SUB-ASSEMBLY
CONSOLE BOX CARPET
P
C141960E01

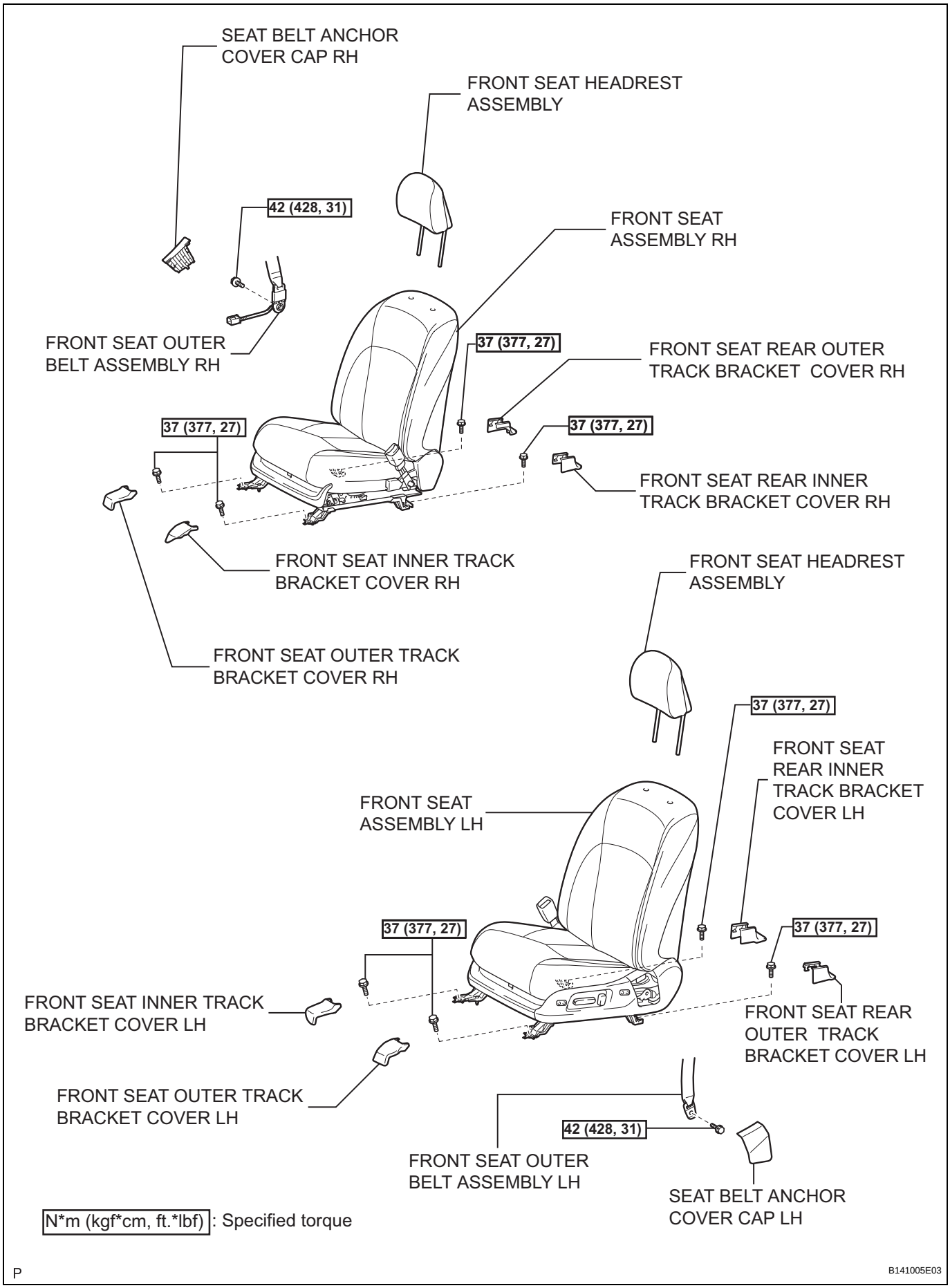
SEAT BELT ANCHOR COVER CAP RH
FRONT SEAT HEADREST ASSEMBLY
42 (428, 31)
FRONT SEAT ASSEMBLY RH
FRONT SEAT OUTER BELT ASSEMBLY RH
37 (377, 27)
FRONT SEAT REAR OUTER TRACK BRACKET COVER RH
37 (377, 27)
37 (377, 27)
FRONT SEAT REAR INNER TRACK BRACKET COVER RH
FRONT SEAT INNER TRACK BRACKET COVER RH
FRONT SEAT HEADREST ASSEMBLY
FRONT SEAT OUTER TRACK BRACKET COVER RH
37 (377, 27)
FRONT SEAT REAR INNER TRACK BRACKET COVER LH
FRONT SEAT ASSEMBLY LH
37 (377, 27)
37 (377, 27)
FRONT SEAT INNER TRACK BRACKET COVER LH
FRONT SEAT REAR OUTER TRACK BRACKET COVER LH
FRONT SEAT OUTER TRACK BRACKET COVER LH
42 (428, 31)
FRONT SEAT OUTER BELT ASSEMBLY LH
SEAT BELT ANCHOR COVER CAP LH
N*m (kgf*cm, ft.*lbf): Specified torque
P
B141005E03

PB

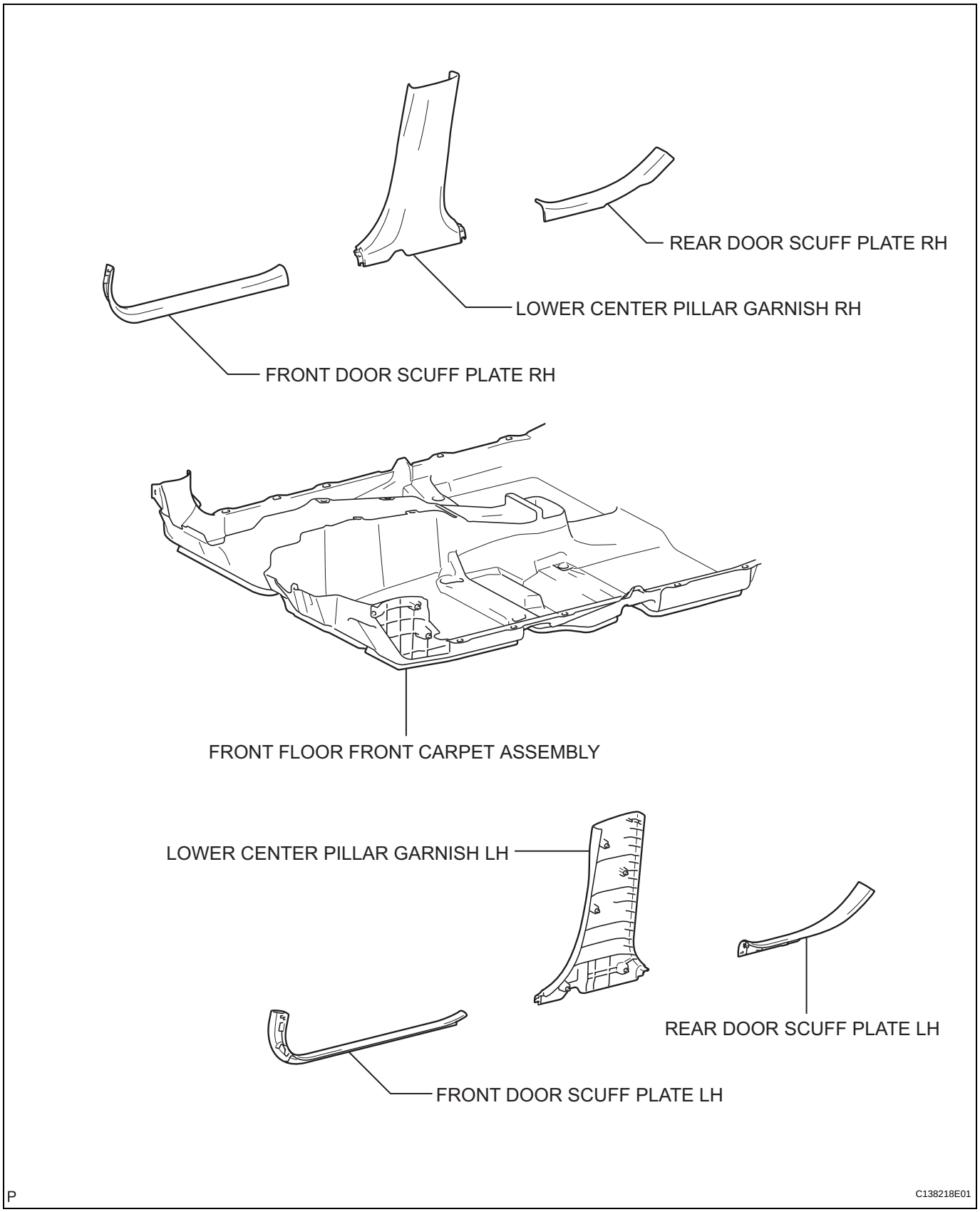
REAR DOOR SCUFF PLATE RH
LOWER CENTER PILLAR GARNISH RH
FRONT DOOR SCUFF PLATE RH
FRONT FLOOR FRONT CARPET ASSEMBLY
LOWER CENTER PILLAR GARNISH LH
REAR DOOR SCUFF PLATE LH
FRONT DOOR SCUFF PLATE LH
P
C138218E01

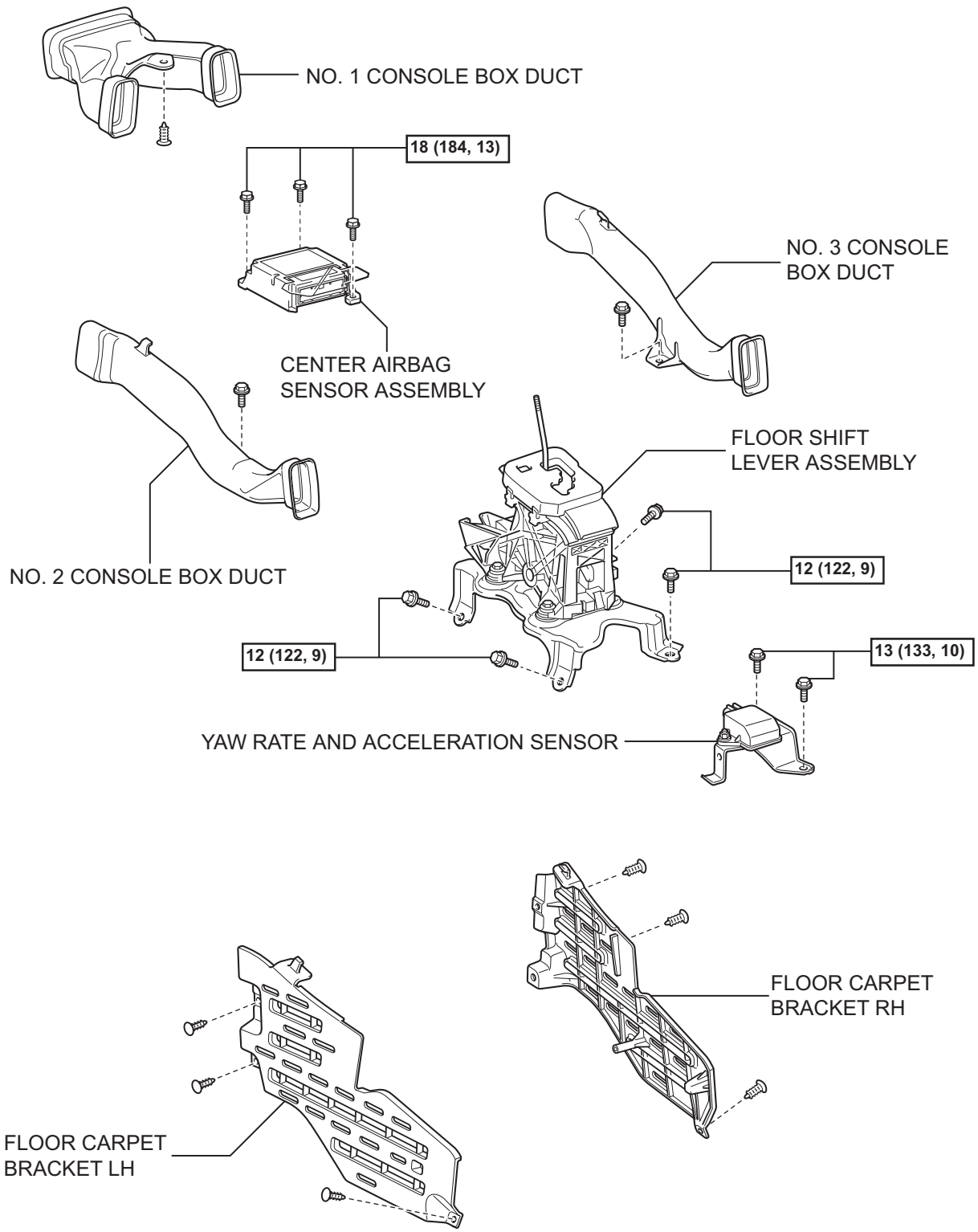

N*m (kgf*cm, ft.*lbf) : Specified torque

C

C138188E01

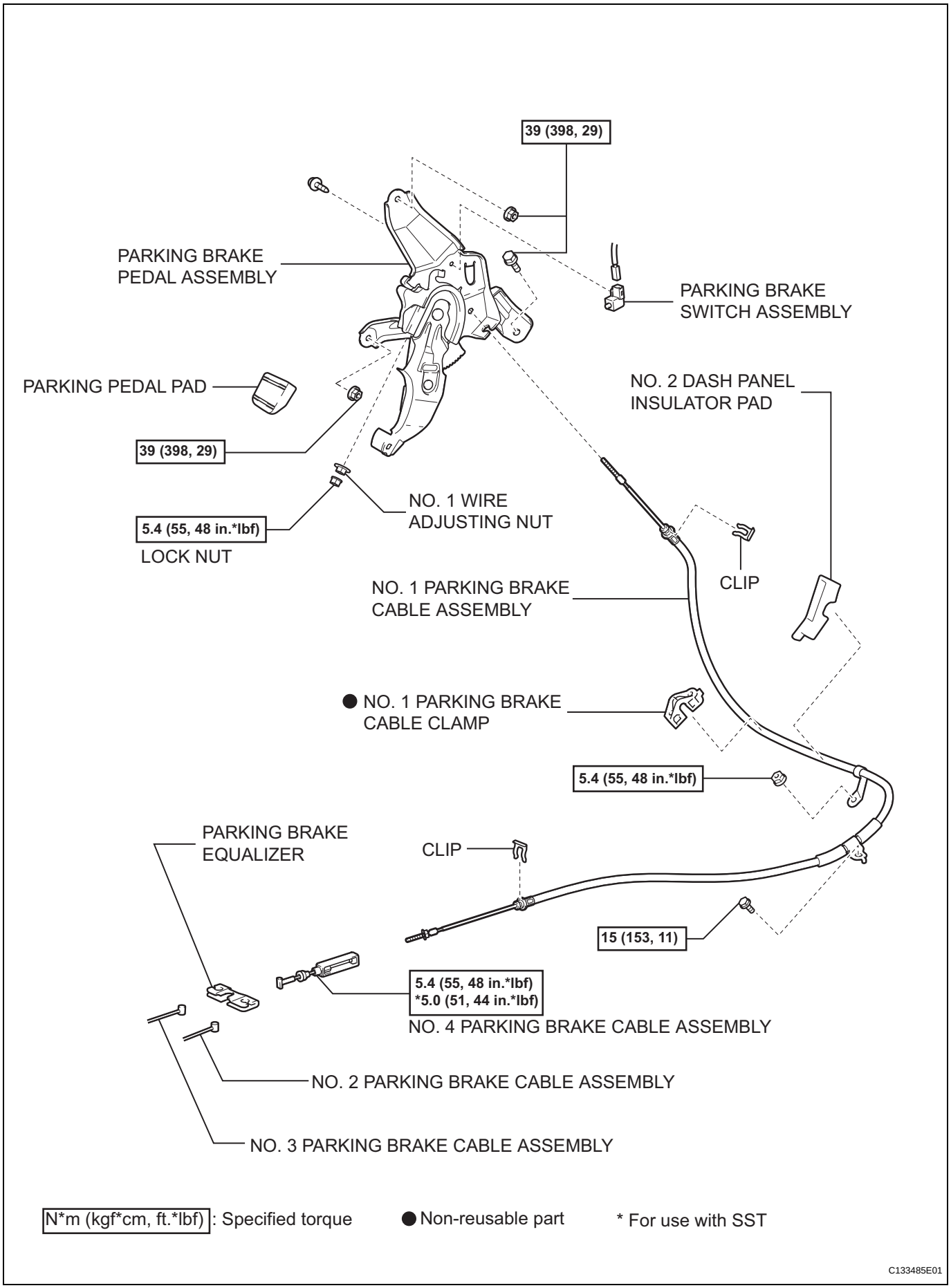
39 (398, 29)
PARKING BRAKE PEDAL ASSEMBLY
PARKING BRAKE SWITCH ASSEMBLY
PARKING PEDAL PAD
NO. 2 DASH PANEL INSULATOR PAD
39 (398, 29)
NO. 1 WIRE ADJUSTING NUT
5.4 (55, 48 in.*lbf)
LOCK NUT
CLIP
NO. 1 PARKING BRAKE CABLE ASSEMBLY
● NO. 1 PARKING BRAKE CABLE CLAMP
5.4 (55, 48 in.*lbf)
PARKING BRAKE EQUALIZER
CLIP
15 (153, 11)
5.4 (55, 48 in.*lbf)
*5.0 (51, 44 in.*lbf)
NO. 4 PARKING BRAKE CABLE ASSEMBLY
NO. 2 PARKING BRAKE CABLE ASSEMBLY
NO. 3 PARKING BRAKE CABLE ASSEMBLY
N*m (kgf*cm, ft.*lbf): Specified torque
● Non-reusable part
* For use with SST
C133485E01

PARKING BRAKE CABLE

COMPONENTS

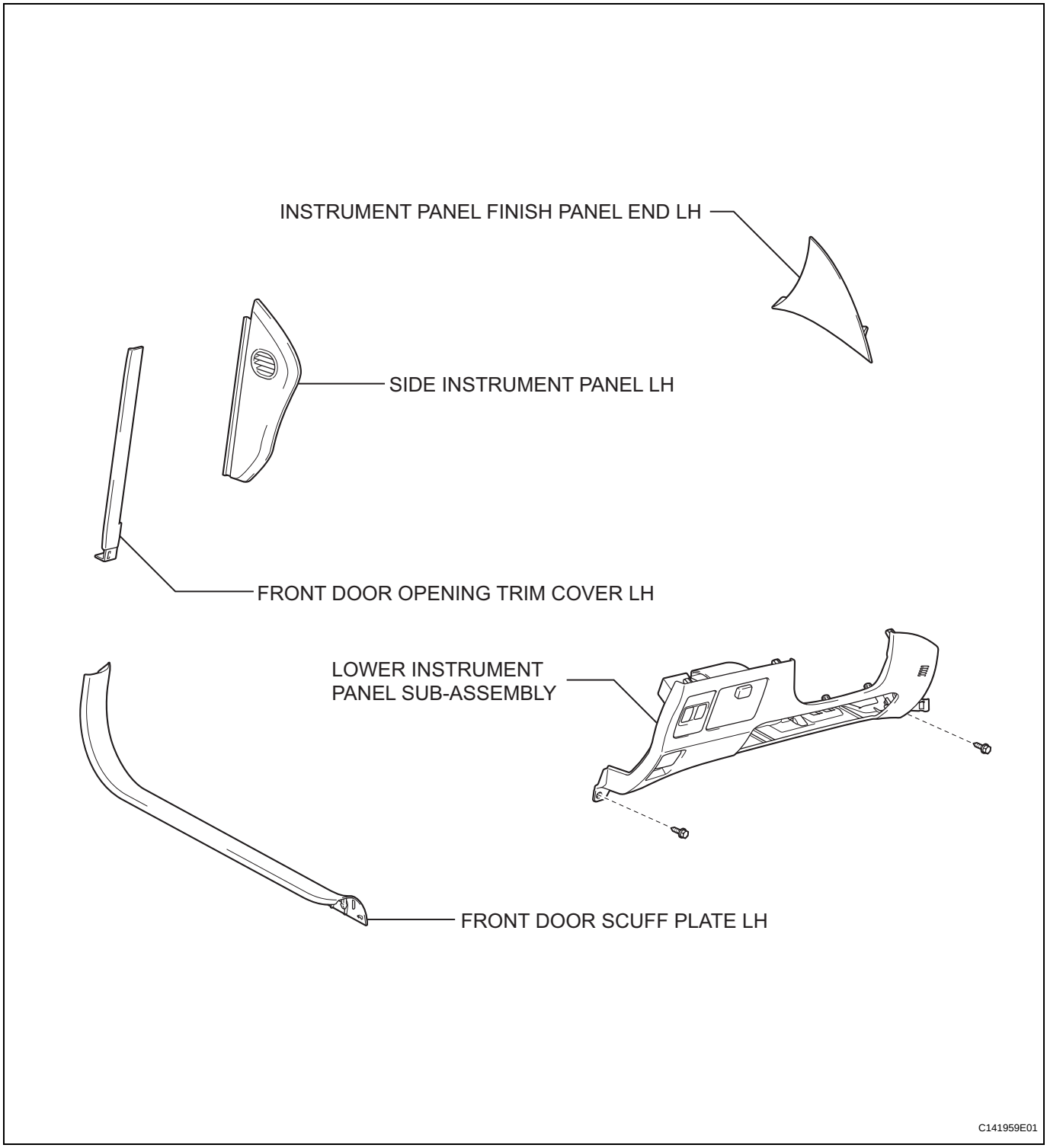

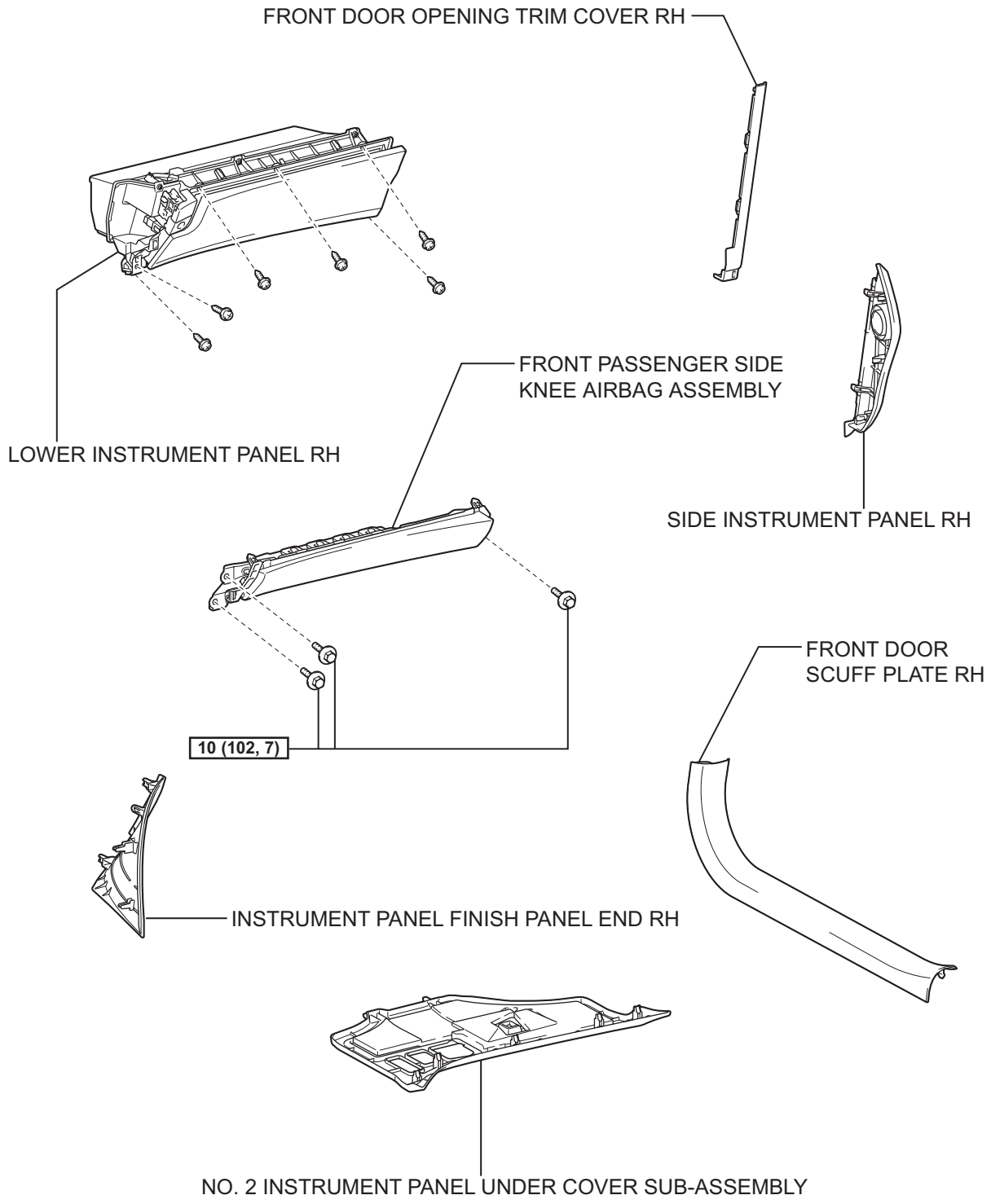

N*m (kgf*cm, ft.*lbf) : Specified torque

P

B145855E02

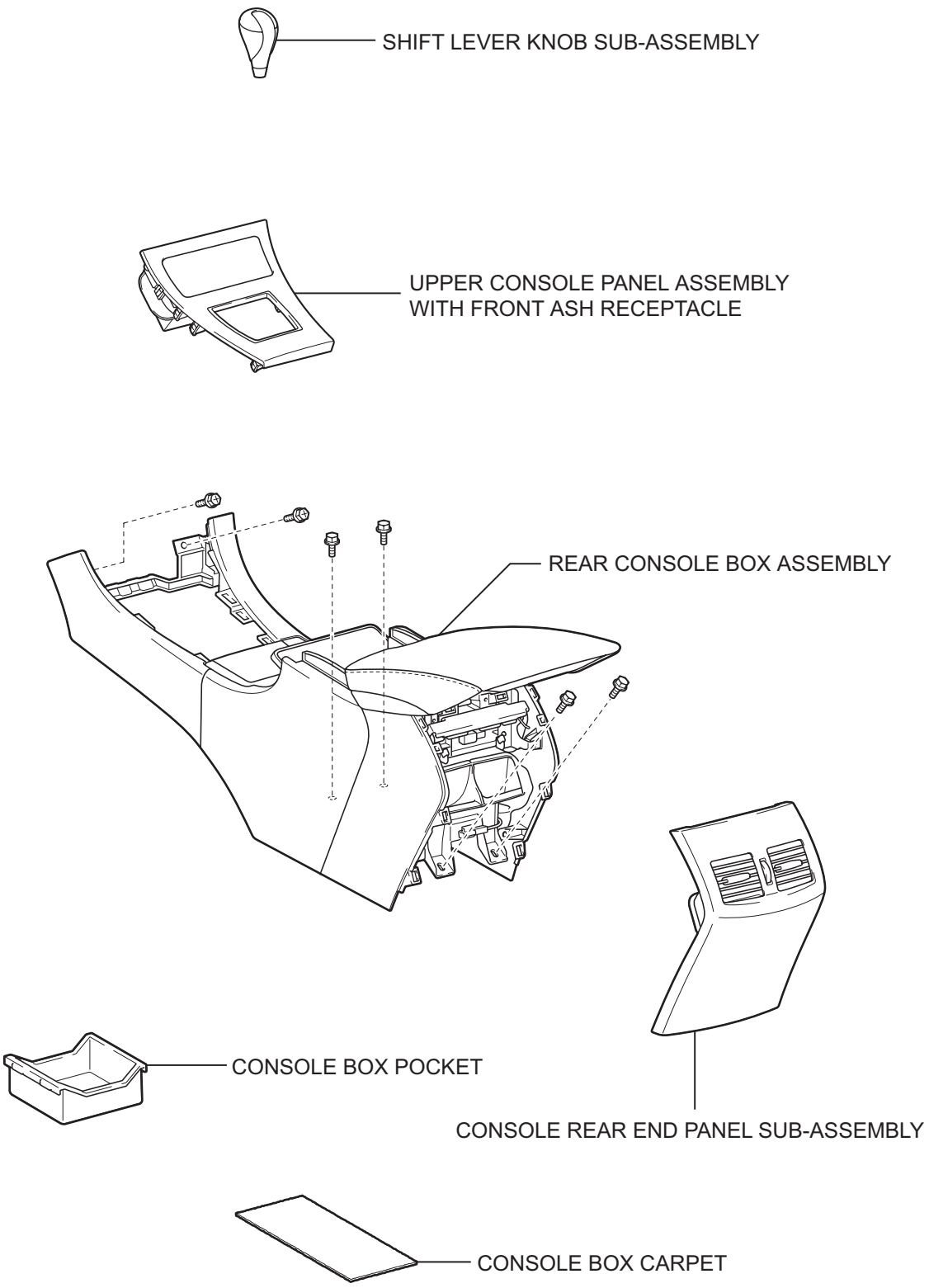

P

C141960E01

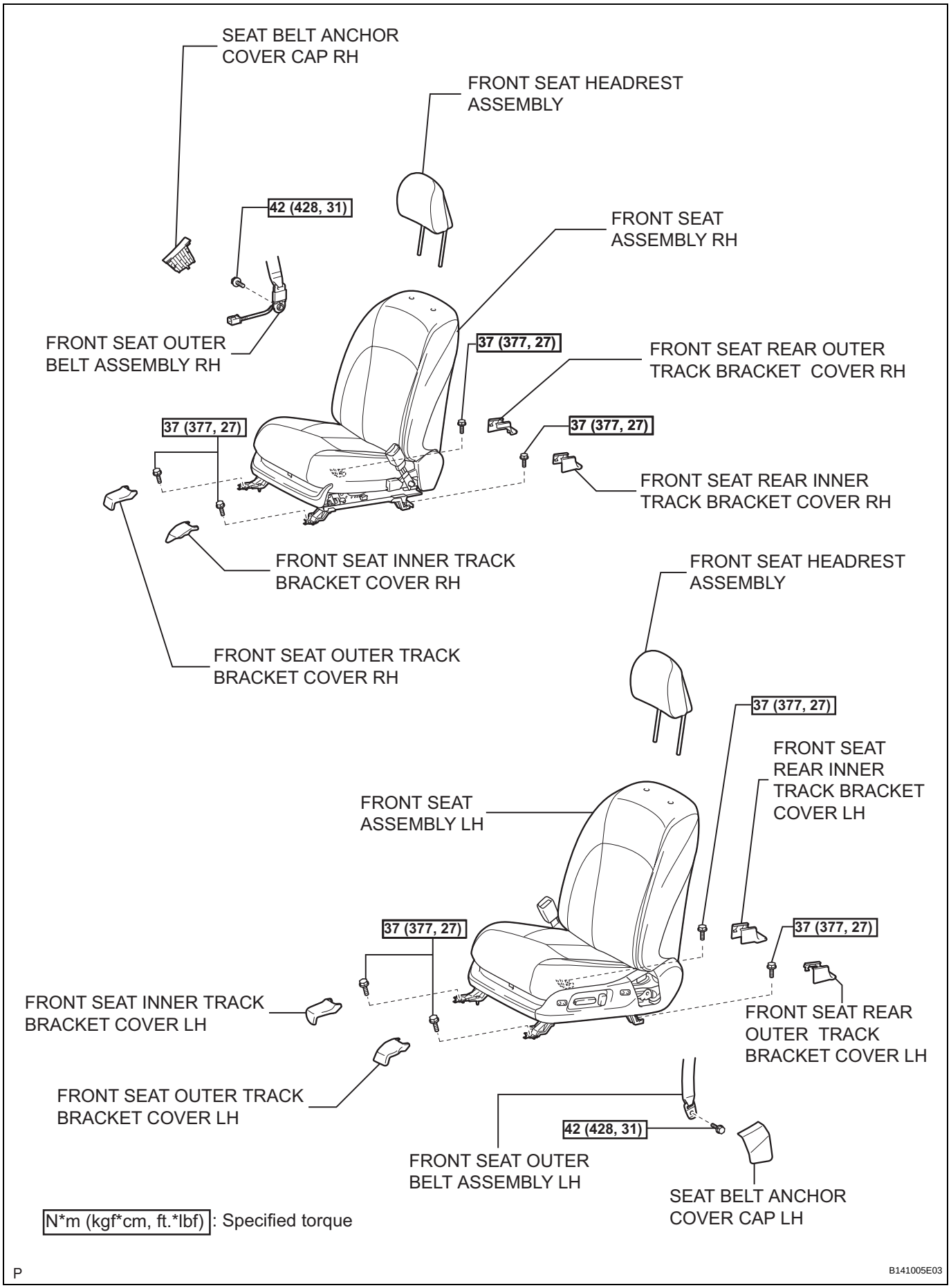
SEAT BELT ANCHOR COVER CAP RH
FRONT SEAT HEADREST ASSEMBLY
42 (428, 31)
FRONT SEAT ASSEMBLY RH
FRONT SEAT OUTER BELT ASSEMBLY RH
37 (377, 27)
FRONT SEAT REAR OUTER TRACK BRACKET COVER RH
37 (377, 27)
37 (377, 27)
FRONT SEAT REAR INNER TRACK BRACKET COVER RH
FRONT SEAT INNER TRACK BRACKET COVER RH
FRONT SEAT HEADREST ASSEMBLY
FRONT SEAT OUTER TRACK BRACKET COVER RH
37 (377, 27)
FRONT SEAT REAR INNER TRACK BRACKET COVER LH
FRONT SEAT ASSEMBLY LH
37 (377, 27)
37 (377, 27)
FRONT SEAT INNER TRACK BRACKET COVER LH
FRONT SEAT REAR OUTER TRACK BRACKET COVER LH
FRONT SEAT OUTER TRACK BRACKET COVER LH
42 (428, 31)
FRONT SEAT OUTER BELT ASSEMBLY LH
SEAT BELT ANCHOR COVER CAP LH
N*m (kgf*cm, ft.*lbf): Specified torque
P
B141005E03

PB

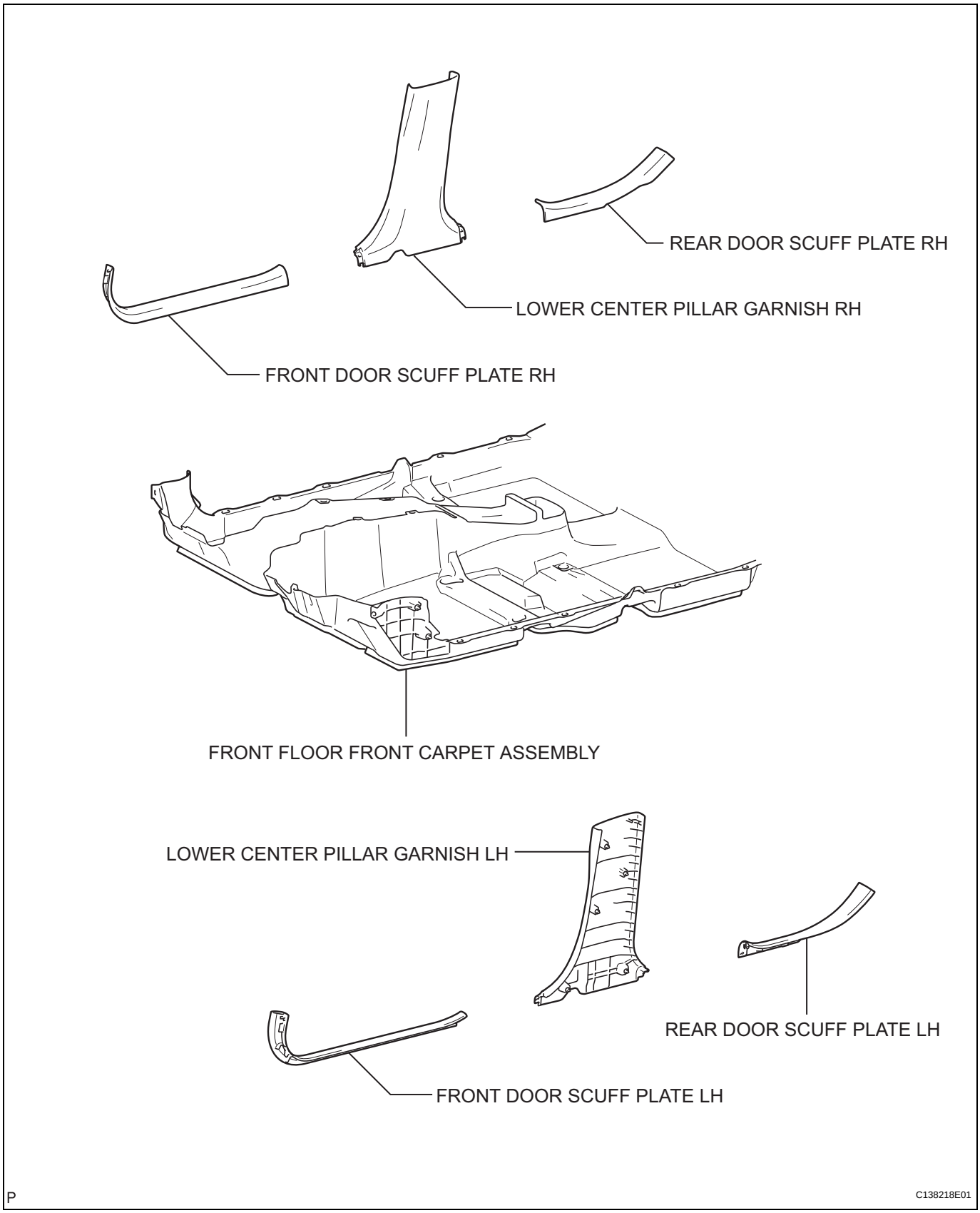
REAR DOOR SCUFF PLATE RH
LOWER CENTER PILLAR GARNISH RH
FRONT DOOR SCUFF PLATE RH
FRONT FLOOR FRONT CARPET ASSEMBLY
LOWER CENTER PILLAR GARNISH LH
REAR DOOR SCUFF PLATE LH
FRONT DOOR SCUFF PLATE LH
P
C138218E01

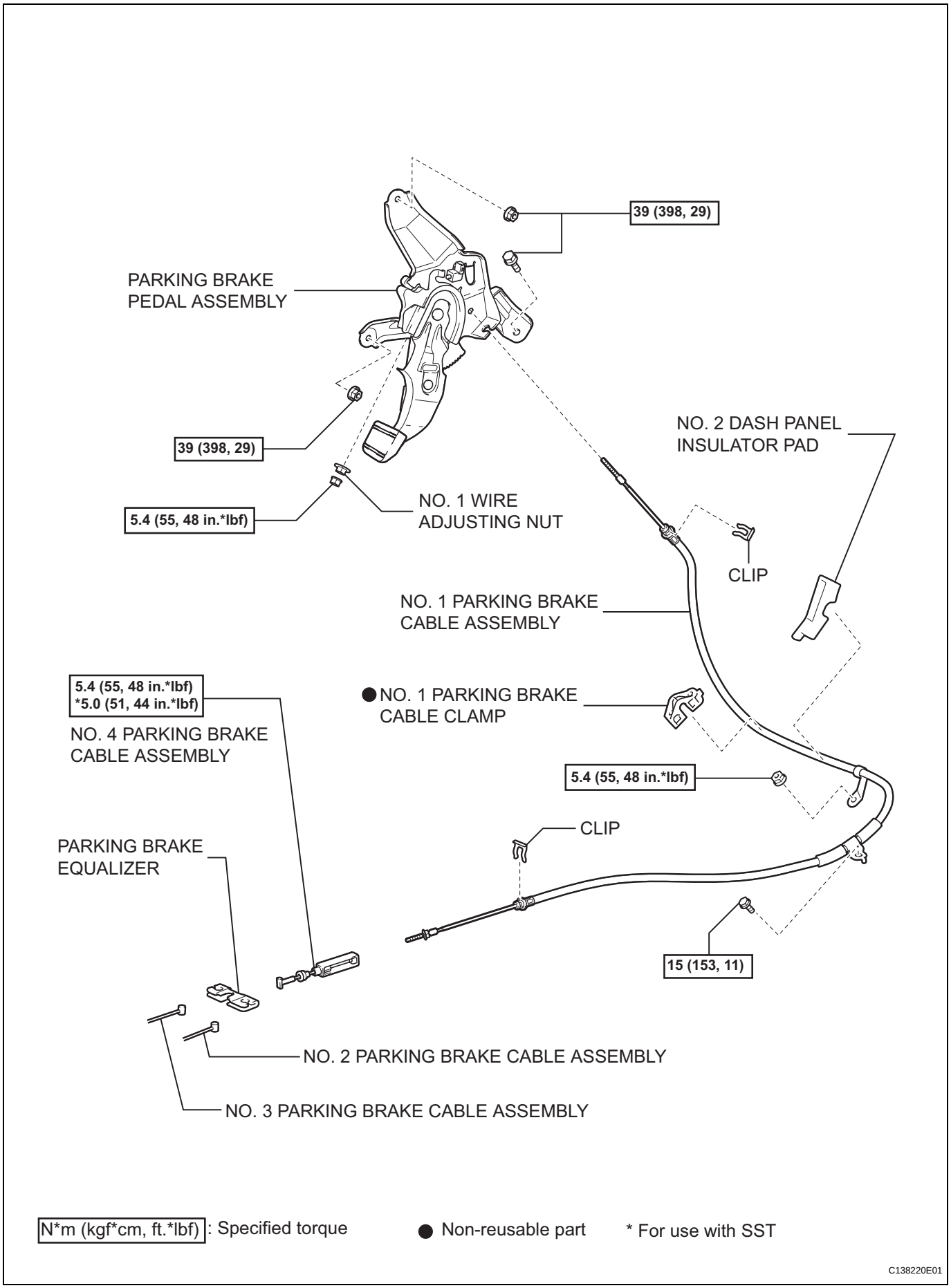
39 (398, 29)
PARKING BRAKE PEDAL ASSEMBLY
39 (398, 29)
5.4 (55, 48 in.*lbf)
NO. 1 WIRE ADJUSTING NUT
NO. 2 DASH PANEL INSULATOR PAD
CLIP
NO. 1 PARKING BRAKE CABLE ASSEMBLY
5.4 (55, 48 in.*lbf) *5.0 (51, 44 in.*lbf)
NO. 4 PARKING BRAKE CABLE ASSEMBLY
● NO. 1 PARKING BRAKE CABLE CLAMP
5.4 (55, 48 in.*lbf)
CLIP
PARKING BRAKE EQUALIZER
15 (153, 11)
NO. 2 PARKING BRAKE CABLE ASSEMBLY
NO. 3 PARKING BRAKE CABLE ASSEMBLY
N*m (kgf*cm, ft.*lbf) : Specified torque
● Non-reusable part
* For use with SST
C138220E01

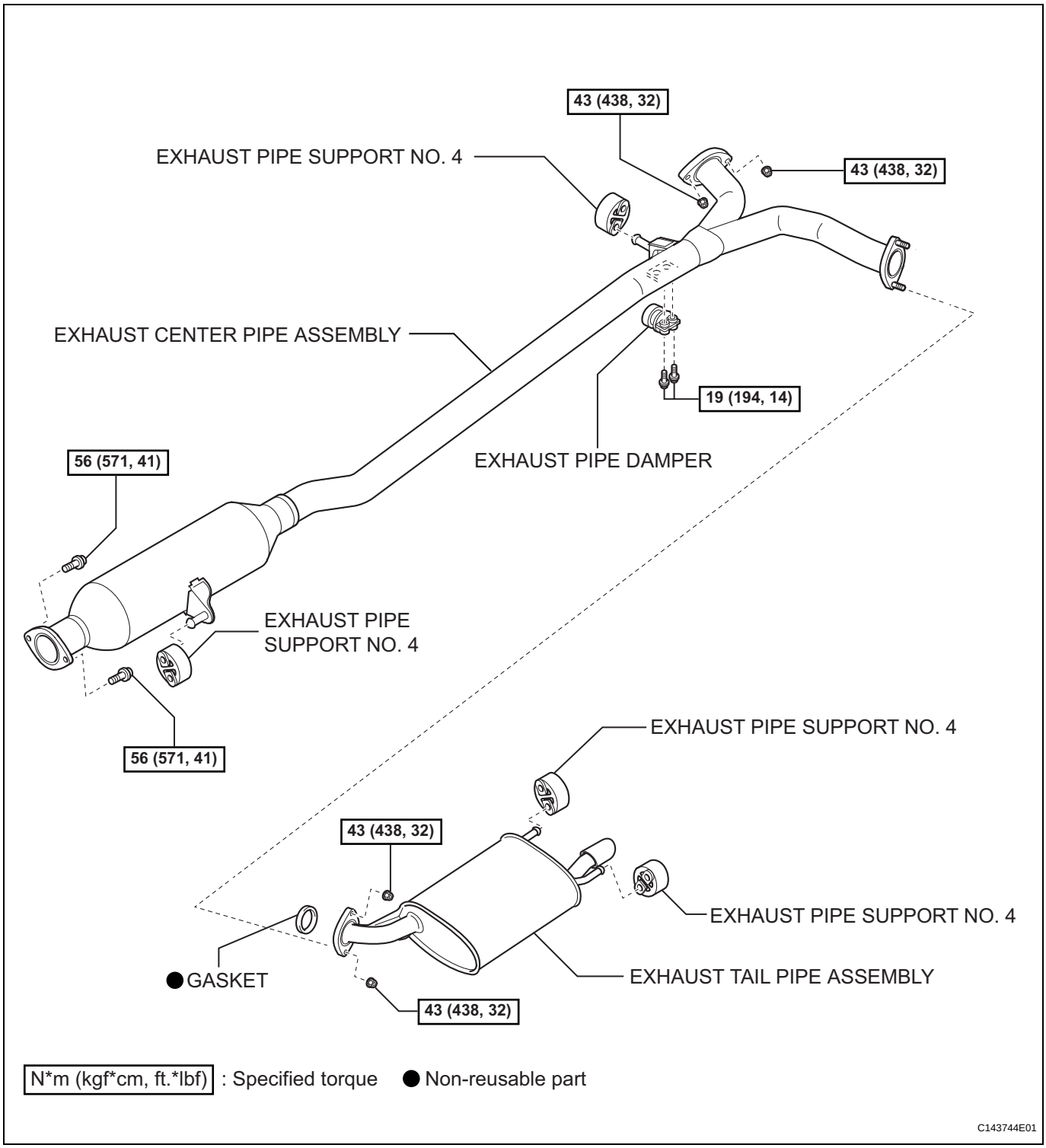
43 (438, 32)
EXHAUST PIPE SUPPORT NO. 4
43 (438, 32)
EXHAUST CENTER PIPE ASSEMBLY
19 (194, 14)
EXHAUST PIPE DAMPER
56 (571, 41)
EXHAUST PIPE
SUPPORT NO. 4
56 (571, 41)
EXHAUST PIPE SUPPORT NO. 4
43 (438, 32)
EXHAUST PIPE SUPPORT NO. 4
GASKET
EXHAUST TAIL PIPE ASSEMBLY
43 (438, 32)
N*m (kgf*cm, ft.*lbf) : Specified torque
Non-reusable part
C143744E01

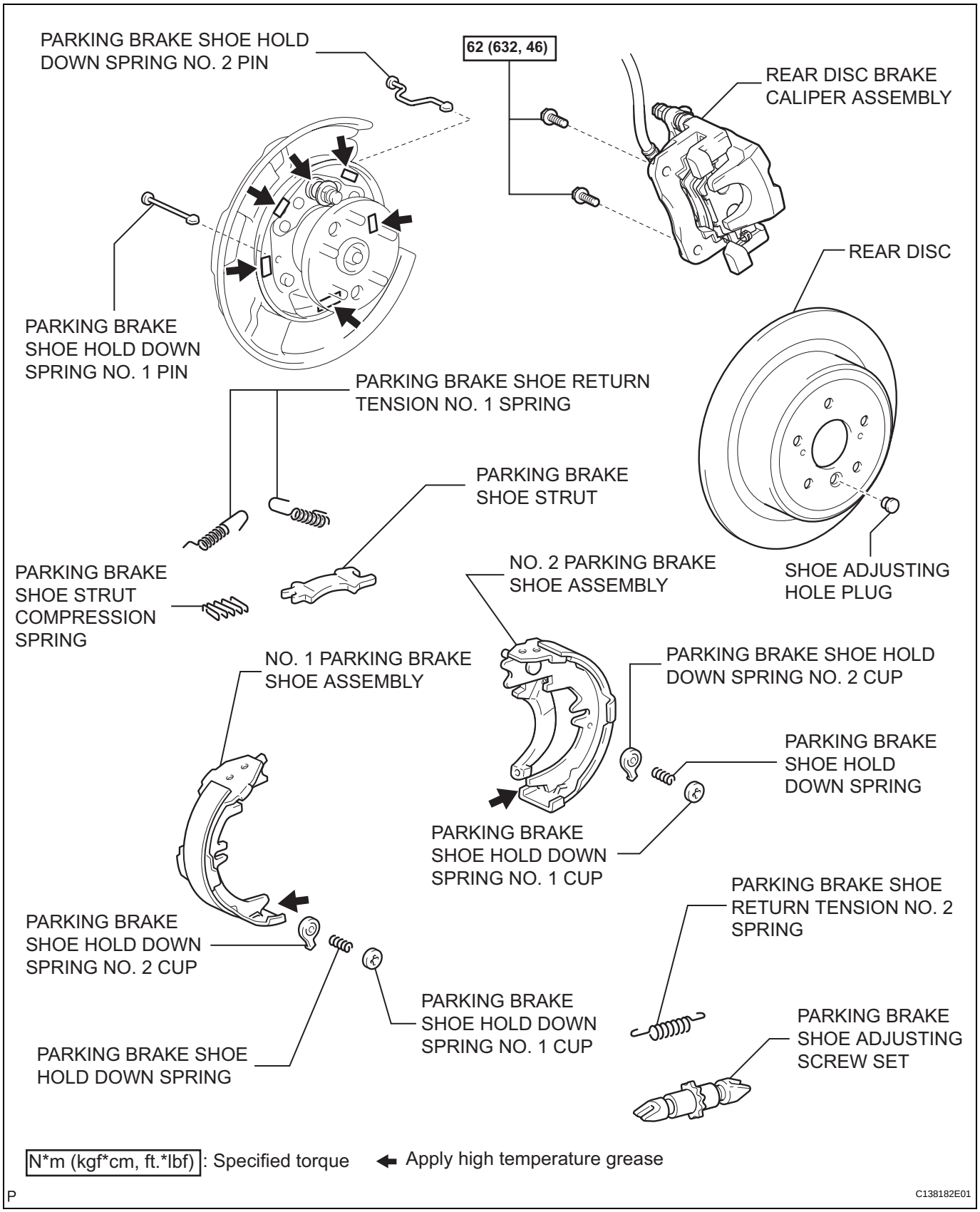
PARKING BRAKE SHOE HOLD DOWN SPRING NO. 2 PIN
62 (632, 46)
REAR DISC BRAKE CALIPER ASSEMBLY
REAR DISC
PARKING BRAKE SHOE HOLD DOWN SPRING NO. 1 PIN
PARKING BRAKE SHOE RETURN TENSION NO. 1 SPRING
PARKING BRAKE SHOE STRUT
PARKING BRAKE SHOE STRUT COMPRESSION SPRING
NO. 2 PARKING BRAKE SHOE ASSEMBLY
SHOE ADJUSTING HOLE PLUG
NO. 1 PARKING BRAKE SHOE ASSEMBLY
PARKING BRAKE SHOE HOLD DOWN SPRING NO. 2 CUP
PARKING BRAKE SHOE HOLD DOWN SPRING
PARKING BRAKE SHOE HOLD DOWN SPRING NO. 1 CUP
PARKING BRAKE SHOE RETURN TENSION NO. 2 SPRING
PARKING BRAKE SHOE HOLD DOWN SPRING NO. 2 CUP
PARKING BRAKE SHOE HOLD DOWN SPRING NO. 1 CUP
PARKING BRAKE SHOE ADJUSTING SCREW SET
PARKING BRAKE SHOE HOLD DOWN SPRING
N*m (kgf*cm, ft.*lbf) : Specified torque
Apply high temperature grease
P
C138182E01

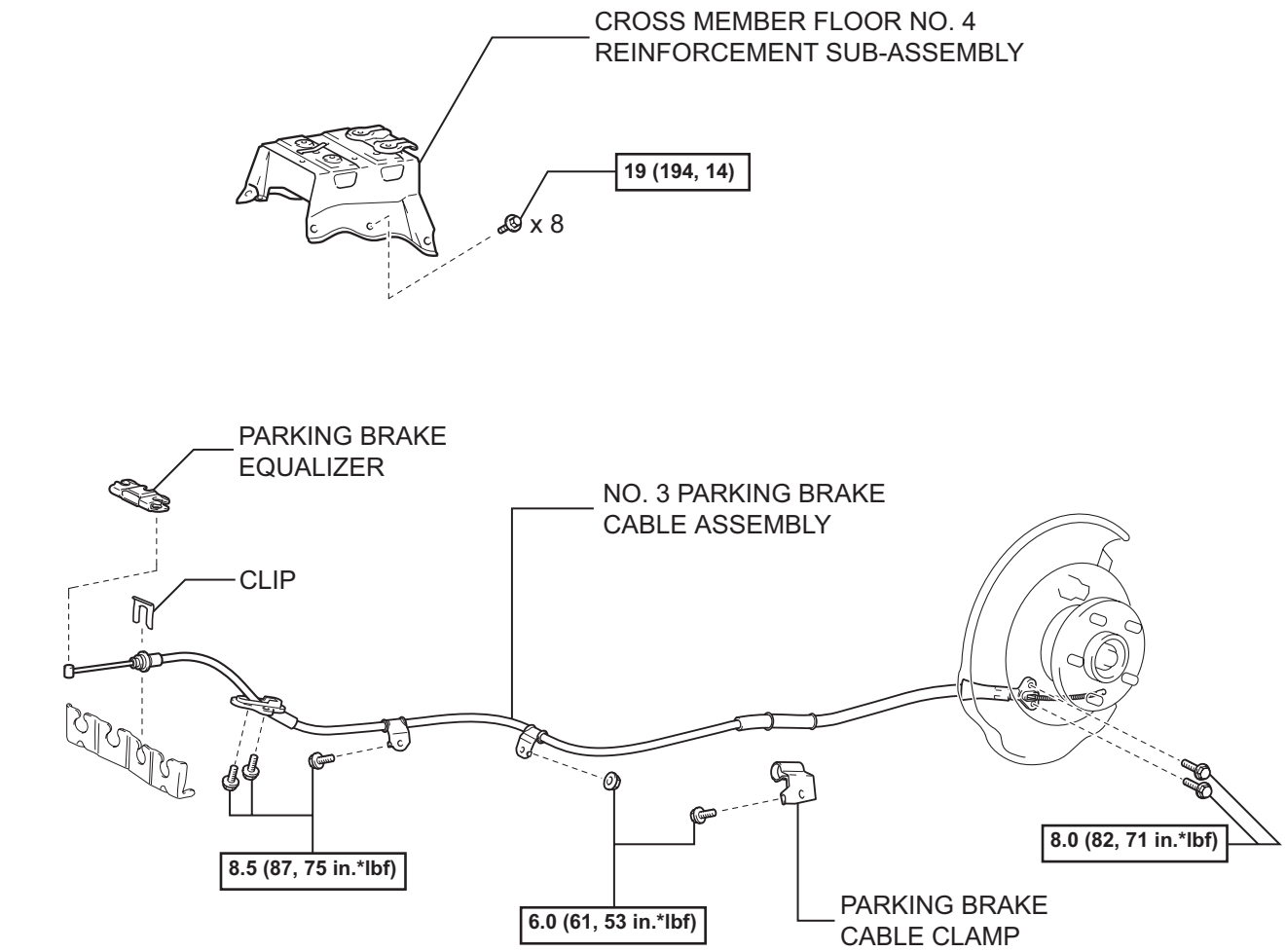

N*m (kgf*cm, ft.*lbf) : Specified torque

C138219E01

PARKING BRAKE ASSEMBLY

COMPONENTS

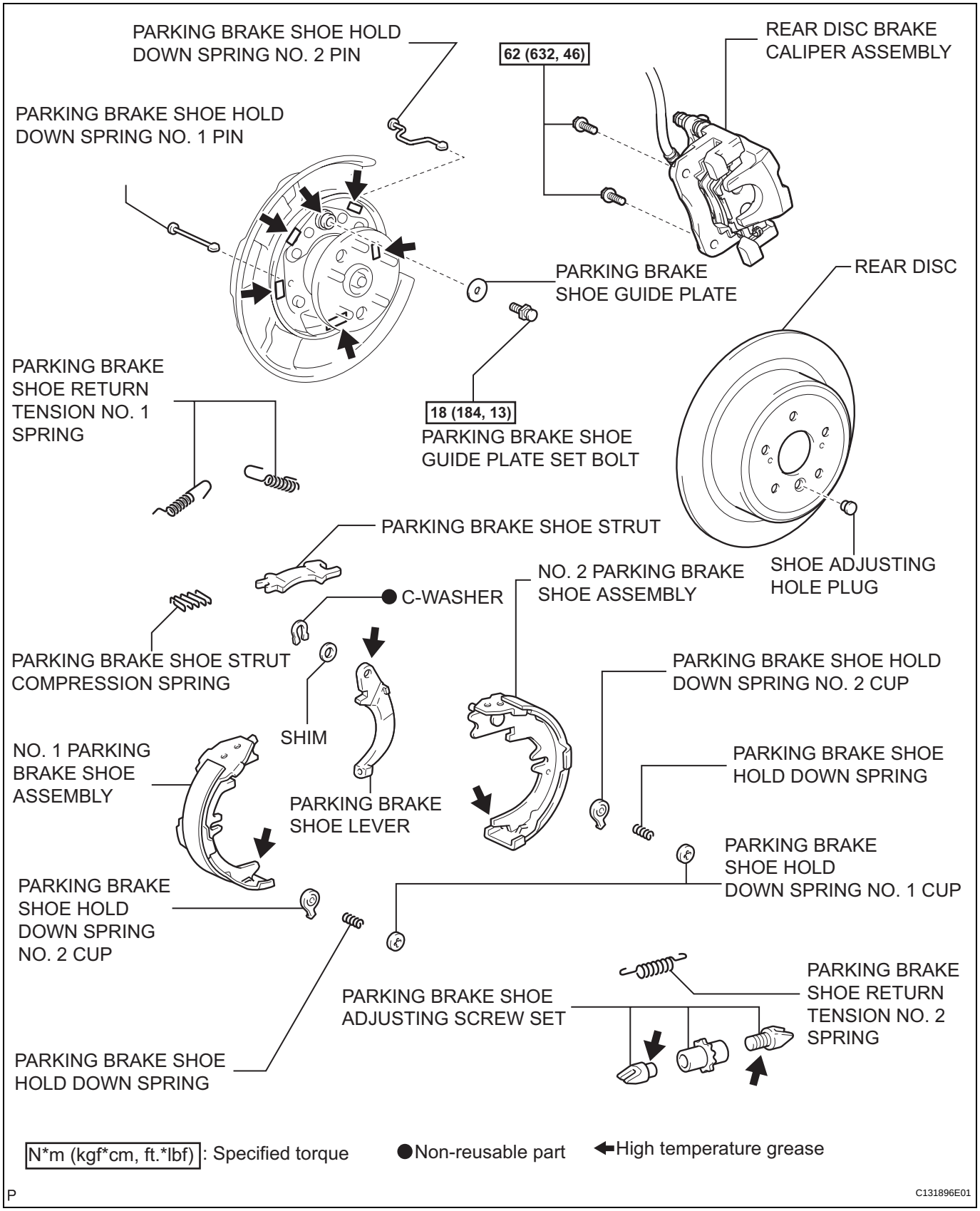

PB

DISASSEMBLY

HINT:
- Use the same procedures for the RH side and the LH side.
- The procedures listed below are for the LH side.

1. REMOVE REAR WHEEL

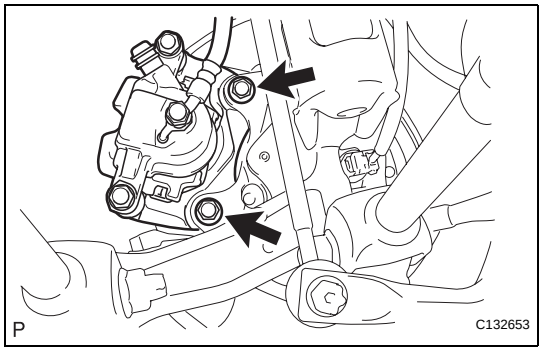

2. SEPARATE REAR DISC BRAKE CALIPER ASSEMBLY

(a) Remove the 2 bolts and separate the rear disc brake caliper assembly.
HINT:
Do not disconnect the flexible hose from the disc brake caliper assembly.

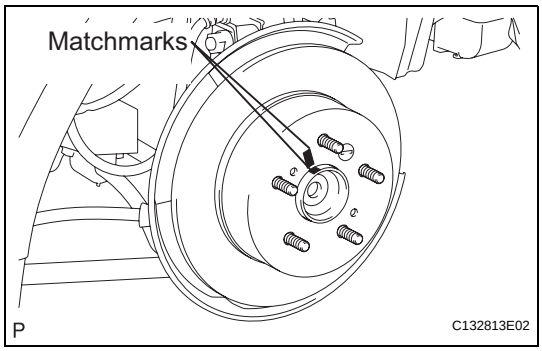

3. REMOVE REAR DISC

(a) Release the parking brake and place the matchmarks on the rear disc and the axle hub.
(b) Remove the rear disc.
HINT:
If the disc cannot be removed easily, turn the shoe adjuster until the wheel turns freely.

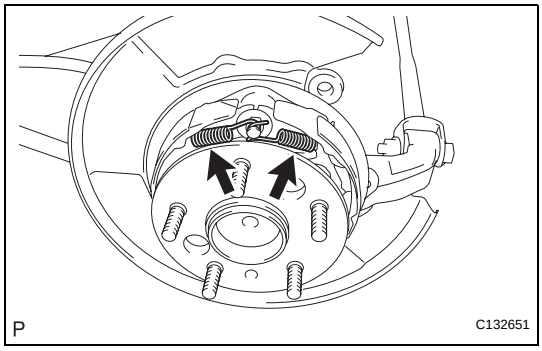

4. REMOVE PARKING BRAKE SHOE RETURN TENSION NO. 1 SPRING

(a) Using needle-nose pliers, remove the 2 parking brake shoe return tension No. 1 springs.

5. REMOVE PARKING BRAKE SHOE STRUT

(a) Remove the parking brake shoe strut and the parking brake shoe strut compression spring.

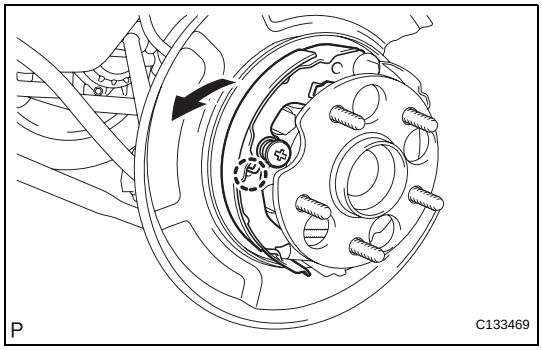

6. REMOVE NO. 1 PARKING BRAKE SHOE ASSEMBLY

(a) Release the claw of the parking brake shoe hold down spring No. 1 cup.
(b) Remove the No. 1 parking brake shoe assembly as shown in the illustration.
(c) Remove the parking brake shoe hold down spring No. 1 cup, the parking brake shoe hold down spring, the parking brake shoe hold down spring No. 2 cup, and the parking brake shoe hold down spring No. 1 pin.

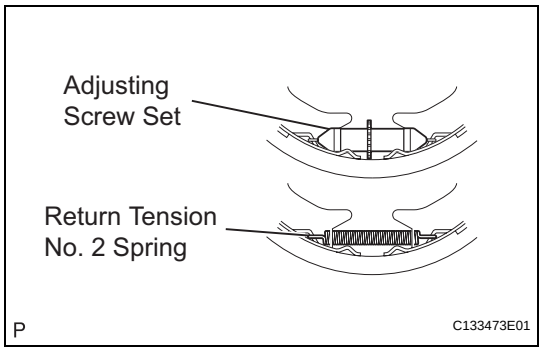

7. REMOVE PARKING BRAKE SHOE ADJUSTING SCREW SET

(a) Remove the parking brake shoe adjusting screw set.

(b) Remove the parking brake shoe return tension No. 2 spring.

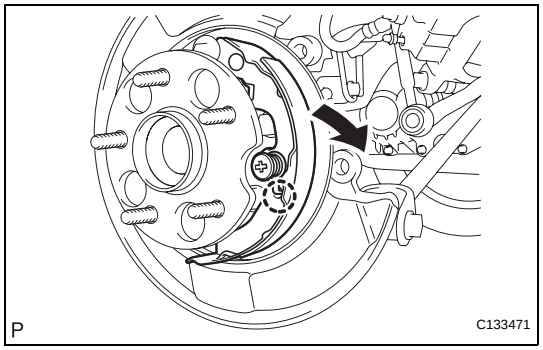

8. REMOVE NO. 2 PARKING BRAKE SHOE ASSEMBLY

(a) Release the claw of the parking brake shoe hold down spring No. 1 cup.

(b) Remove the No. 2 parking brake shoe assembly as shown in the illustration.

(c) Remove the parking brake shoe hold down spring No. 1 cup, the parking brake shoe hold down spring, the parking brake shoe hold down spring No. 2 cup, and the parking brake shoe hold down spring No. 2 pin.

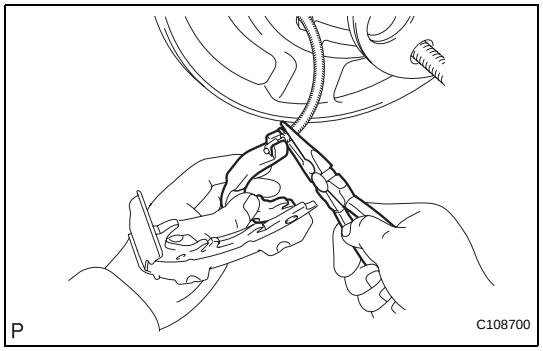

(d) Using needle-nose pliers, disconnect the No. 3 parking brake cable assembly from the parking brake shoe lever.

NOTICE:

Be careful not to damage the No. 3 parking brake cable assembly.

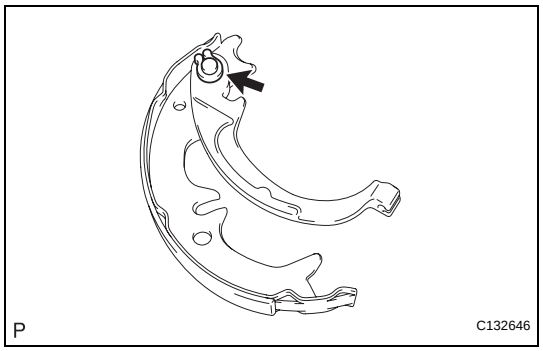

9. REMOVE PARKING BRAKE SHOE LEVER

(a) Using a screwdriver, remove the C-washer, shim and the parking brake shoe lever.

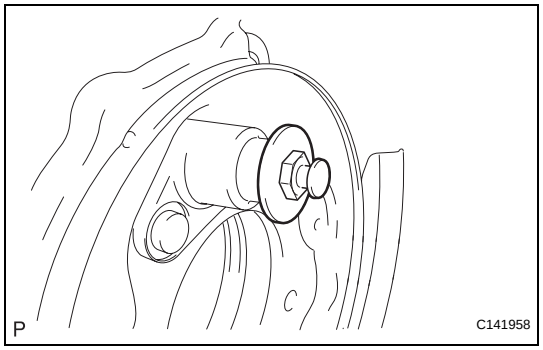

10. REMOVE PARKING BRAKE SHOE GUIDE PLATE

(a) Remove the parking brake shoe guide plate set bolt and the parking brake shoe guide plate.

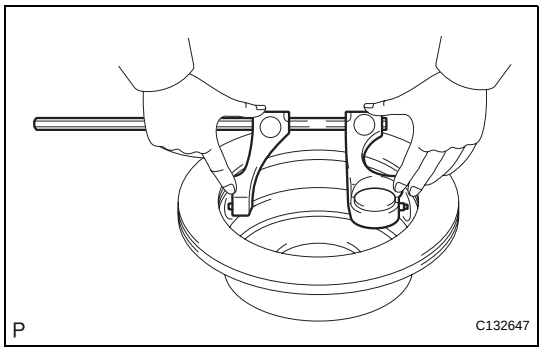

INSPECTION

1. INSPECT BRAKE DISC INSIDE DIAMETER

(a) Using a brake drum gauge or an equivalent tool, measure the inside diameter of the disc.

Standard inside diameter:
170 mm (6.69 in.)
Maximum inside diameter:
171 mm (6.73 in.)

If the inside diameter is more than the maximum, replace the rear disc.

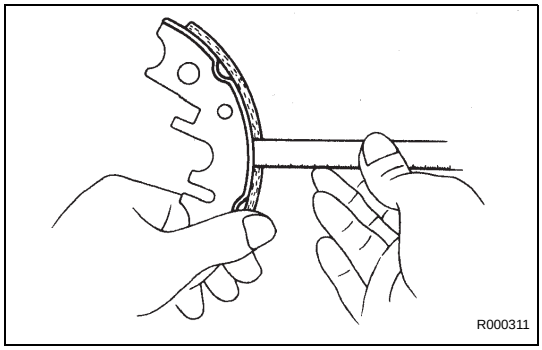

2. INSPECT PARKING BRAKE SHOE LINING THICKNESS

(a) Using a ruler, measure the thickness of the shoe lining.

Standard thickness:
2.0 mm (0.079 in.)
Minimum thickness:
1.0 mm (0.039 in.)

If the lining thickness is less than the minimum, or if there is severe or uneven wear, replace the brake shoe.

NOTICE:
Always replace both the right and left parking brake shoes together.

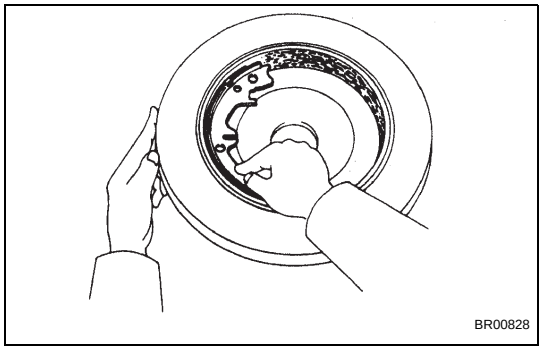

3. INSPECT BRAKE DISC AND PARKING BRAKE SHOE LINING FOR PROPER CONTACT

(a) Apply chalk to the inside surface of the disc, then grind down the brake shoe lining to fit the disc.
If the contact between the disc and the brake shoe lining is improper, repair it using a brake shoe grinder or replace the brake shoe.

STEERING SYSTEM

PRECAUTION

NOTICE:
When disconnecting the cable from the negative (-) battery terminal, some systems require initialization after the cable is reconnected (See page IN-33).

1. **HANDLING PRECAUTIONS FOR STEERING SYSTEM**
   (a) Care must be taken when replacing parts. Incorrect replacement may affect the performance of the steering system and result in driving hazards.
2. **HANDLING PRECAUTIONS FOR SRS AIRBAG SYSTEM**
   (a) The vehicle is equipped with an SRS (Supplemental Restraint System) such as airbags. Failure to carry out service operations in the correct sequence could cause the SRS to unexpectedly deploy during servicing. This may cause a serious accident. Before servicing (including inspection, replacement, removal and installation of parts), be sure to read the precautionary notices for the Supplemental Restraint System (See page RS-1).

PROBLEM SYMPTOMS TABLE

HINT:
Use the table below to help determine the cause of the problem. The numbers indicate likely causes of the problem in descending order. Check each part in order. If necessary, repair or replace faulty parts.

STEERING SYSTEM

Symptom	Suspected Area	See page
Hard steering	1. Tires (Improperly inflated)	TW-3
	2. Front wheel alignment (Incorrect)	SP-4
	3. Steering system joints (Worn)	-
	4. Suspension arm ball joints (Worn)	SP-25
	5. Steering column (Binding)	SR-78
	6. Power steering gear	PS-28
Poor return	1. Tires (Improperly inflated)	TW-3
	2. Front wheel alignment (Incorrect)	SP-4
	3. Steering column (Binding)	SR-78
	4. Power steering gear	PS-28
Excessive free play	1. Steering system joints (Worn)	-
	2. Suspension arm ball joints (Worn)	SP-25
	3. Intermediate shaft, universal joint, sliding yoke (Worn)	-
	4. Front wheel bearing (Worn)	AH-5
	5. Power steering gear	PS-28
Abnormal noise	1. Steering system joints (Worn)	-
	2. Power steering gear	PS-28

POWER TILT AND POWER TELESCOPIC STEERING COLUMN SYSTEM

PRECAUTION

NOTICE:
Some systems need to be initialized after reconnecting the negative (-) battery terminal (See page IN-33).

PARTS LOCATION

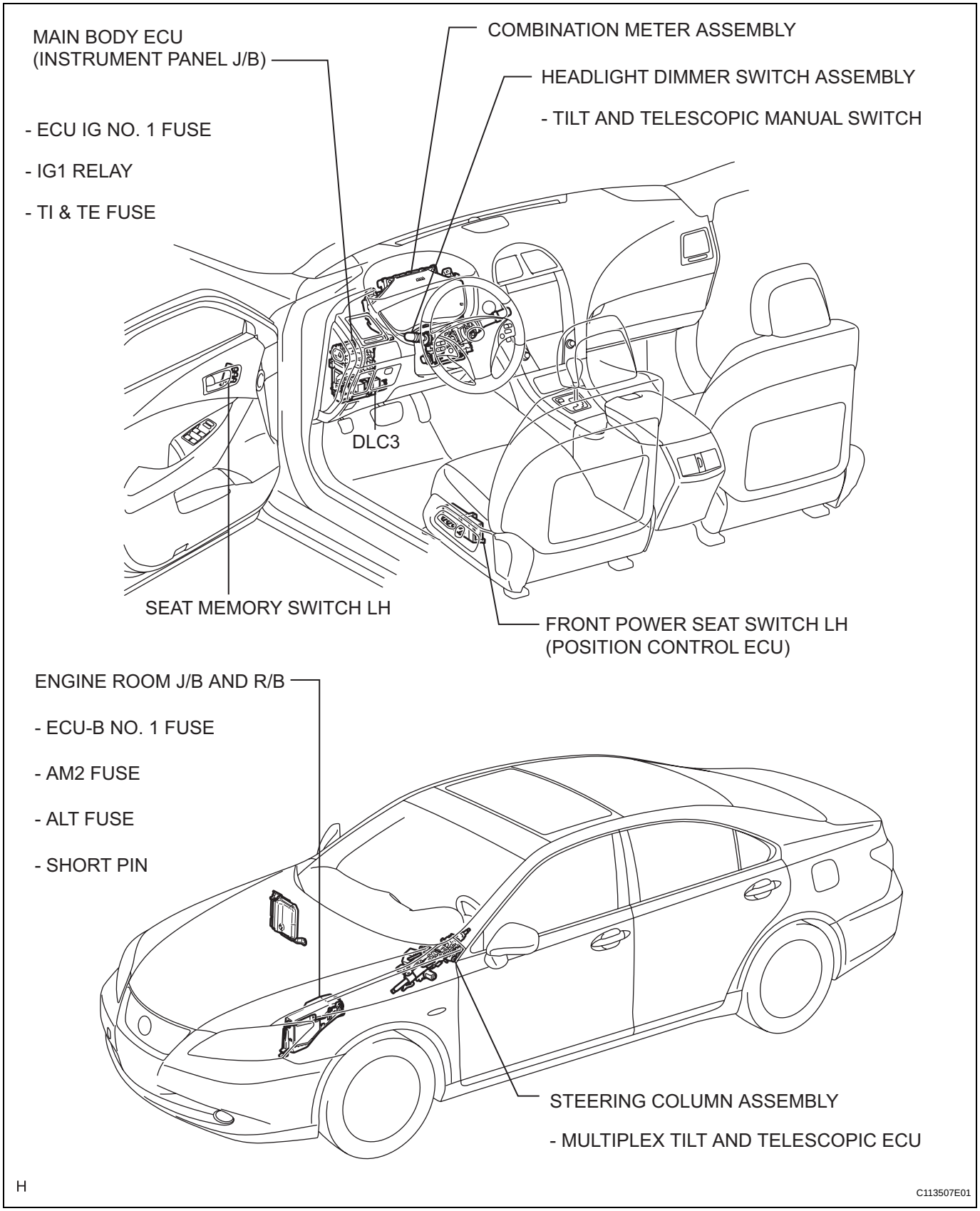

SR

ELECTRIC STEERING LOCK

PRECAUTION

NOTICE:
Some systems need to be initialized after reconnecting the negative (-) battery terminal (See page IN-33).

1. PRECAUTIONS WHEN WORKING ON ELECTRIC STEERING LOCK

(a) After replacing the steering lock actuator assembly (steering lock ECU), perform the key ID code registration.

(b) If the steering lock actuator assembly is replaced, open and close the driver's door. The engine may not start until the driver's door is opened or closed.
HINT:
Opening and closing the driver's door causes the steering lock actuator assembly (steering lock ECU) to memorize the correct steering lock bar position.

(c) If checking for DTCs of the smart access system with push-button start function or if checking the DATA LIST with the engine switch off, make sure that the driver's door is open.
HINT:
When the engine switch is off, the main body ECU may be in a sleep mode. If the main body ECU is in this sleep mode, it will not be possible for the intelligent tester to communicate with it. Opening and closing the driver's door will cause the ECU to exit the sleep mode.

PARTS LOCATION

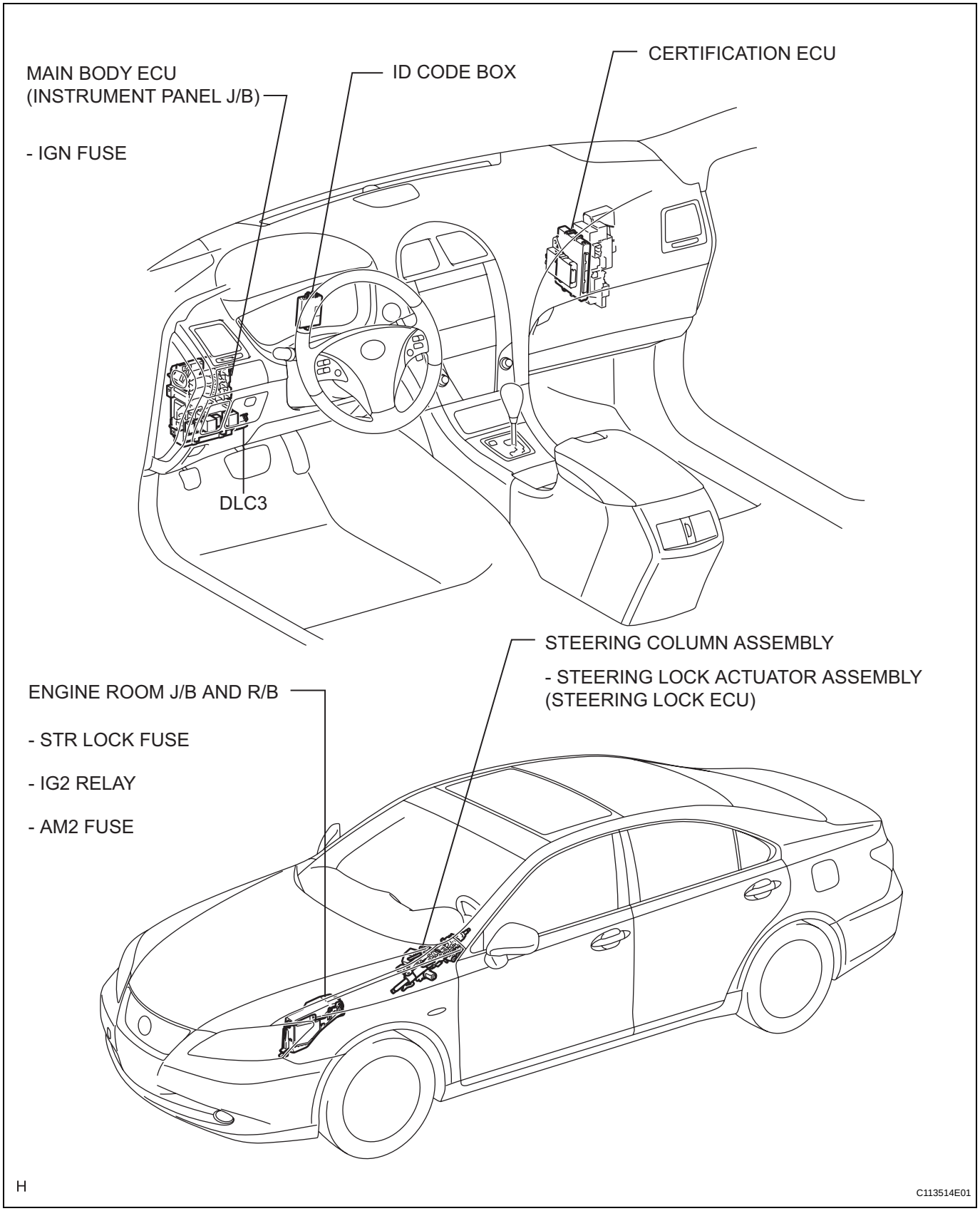

STEERING COLUMN ASSEMBLY

COMPONENTS

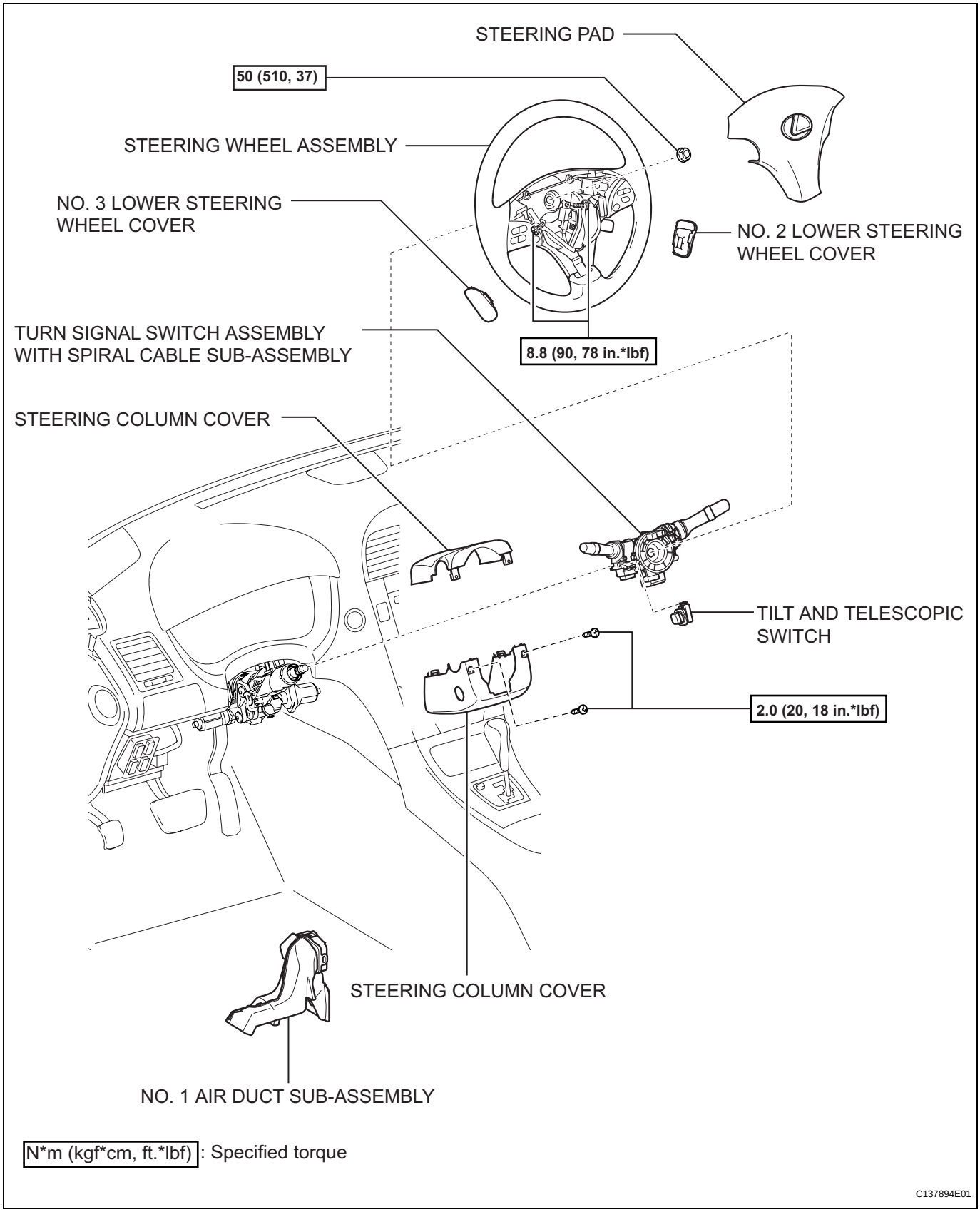

SR

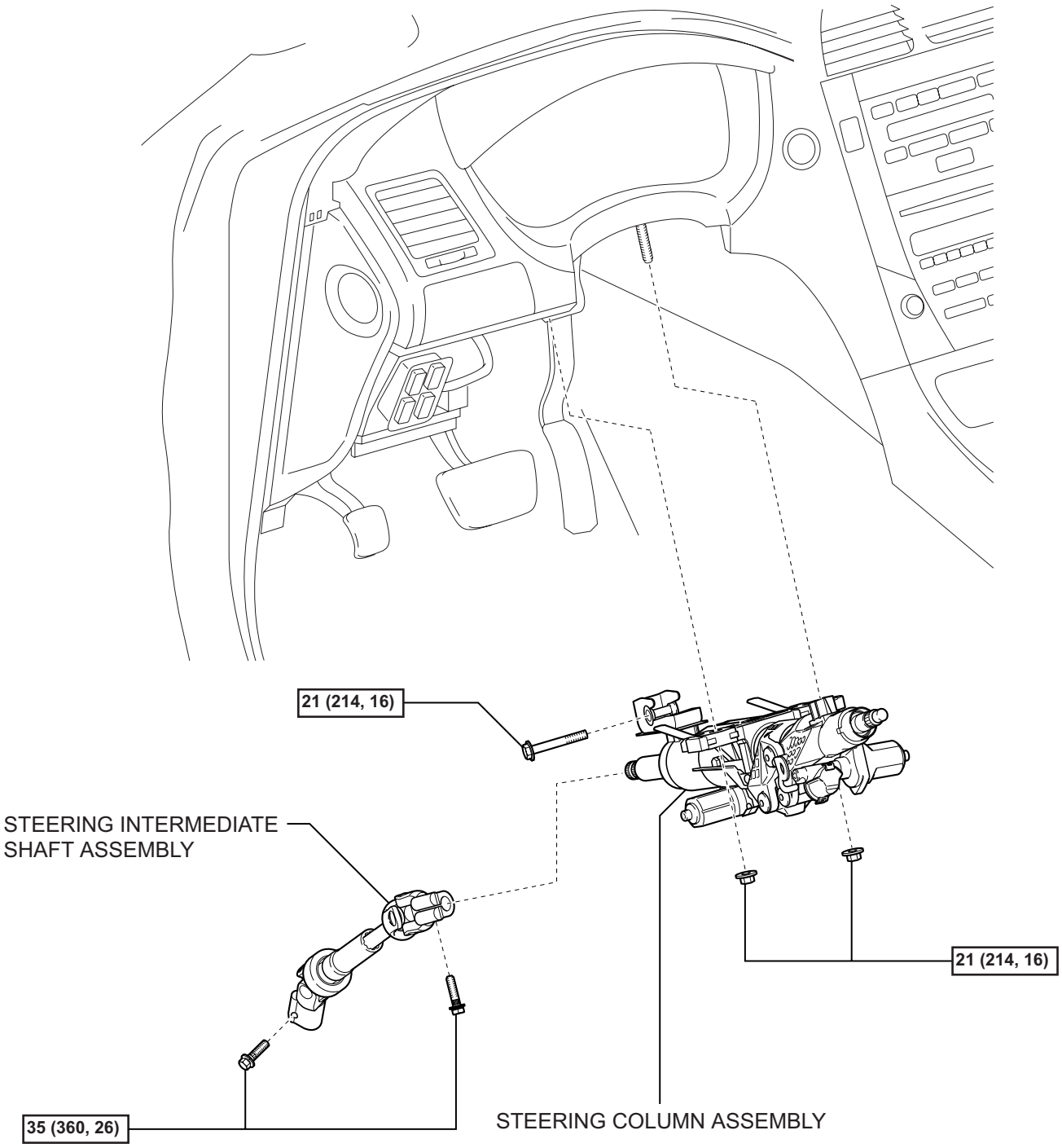

N*m (kgf*cm, ft.*lbf) : Specified torque

C137895E01

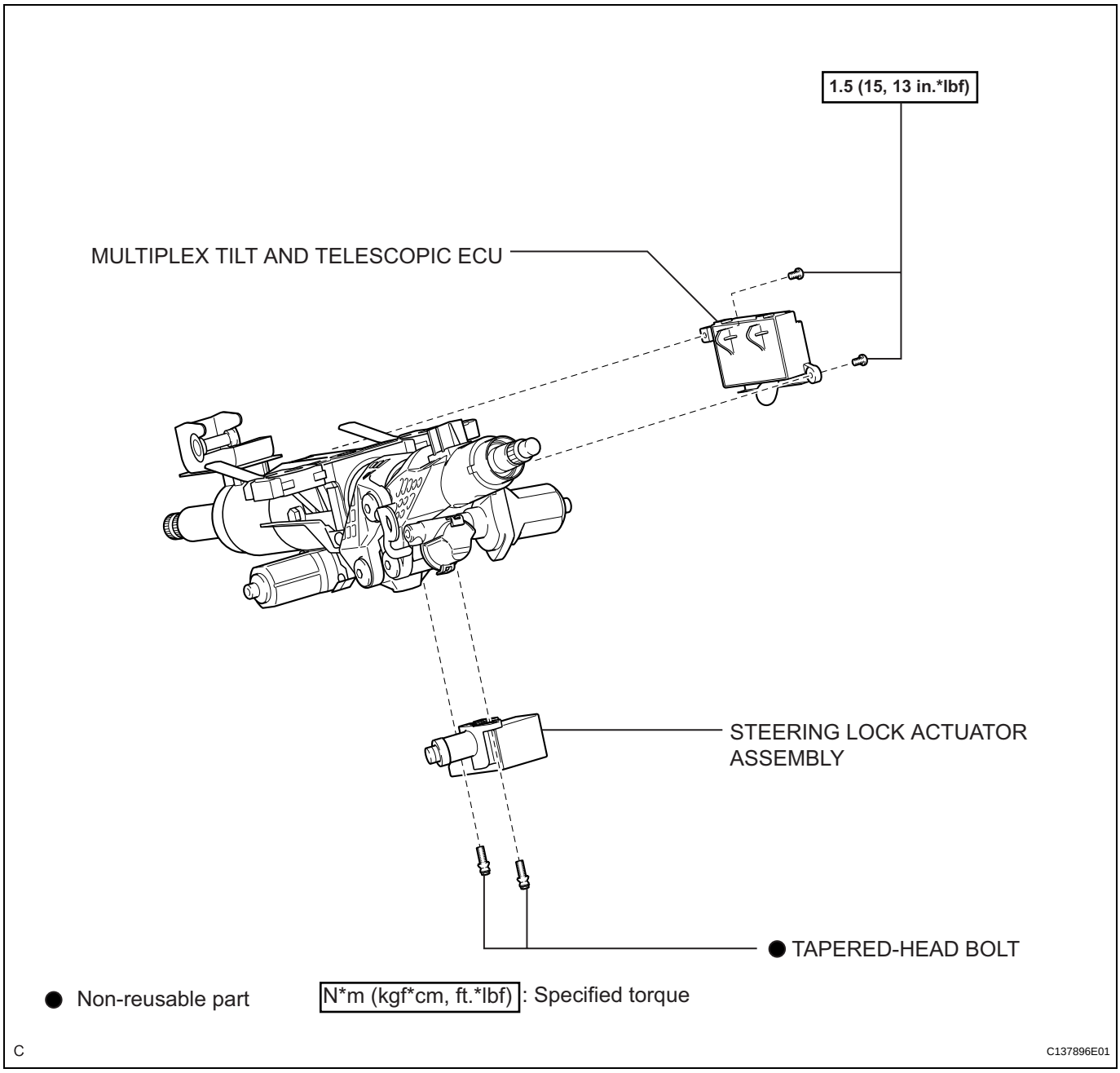
1.5 (15, 13 in.*lbf)
MULTIPLEX TILT AND TELESCOPIC ECU
STEERING LOCK ACTUATOR ASSEMBLY
● TAPERED-HEAD BOLT
● Non-reusable part
N*m (kgf*cm, ft.*lbf) : Specified torque
C
C137896E01

MULTIPLEX TILT AND TELESCOPIC ECU

COMPONENTS

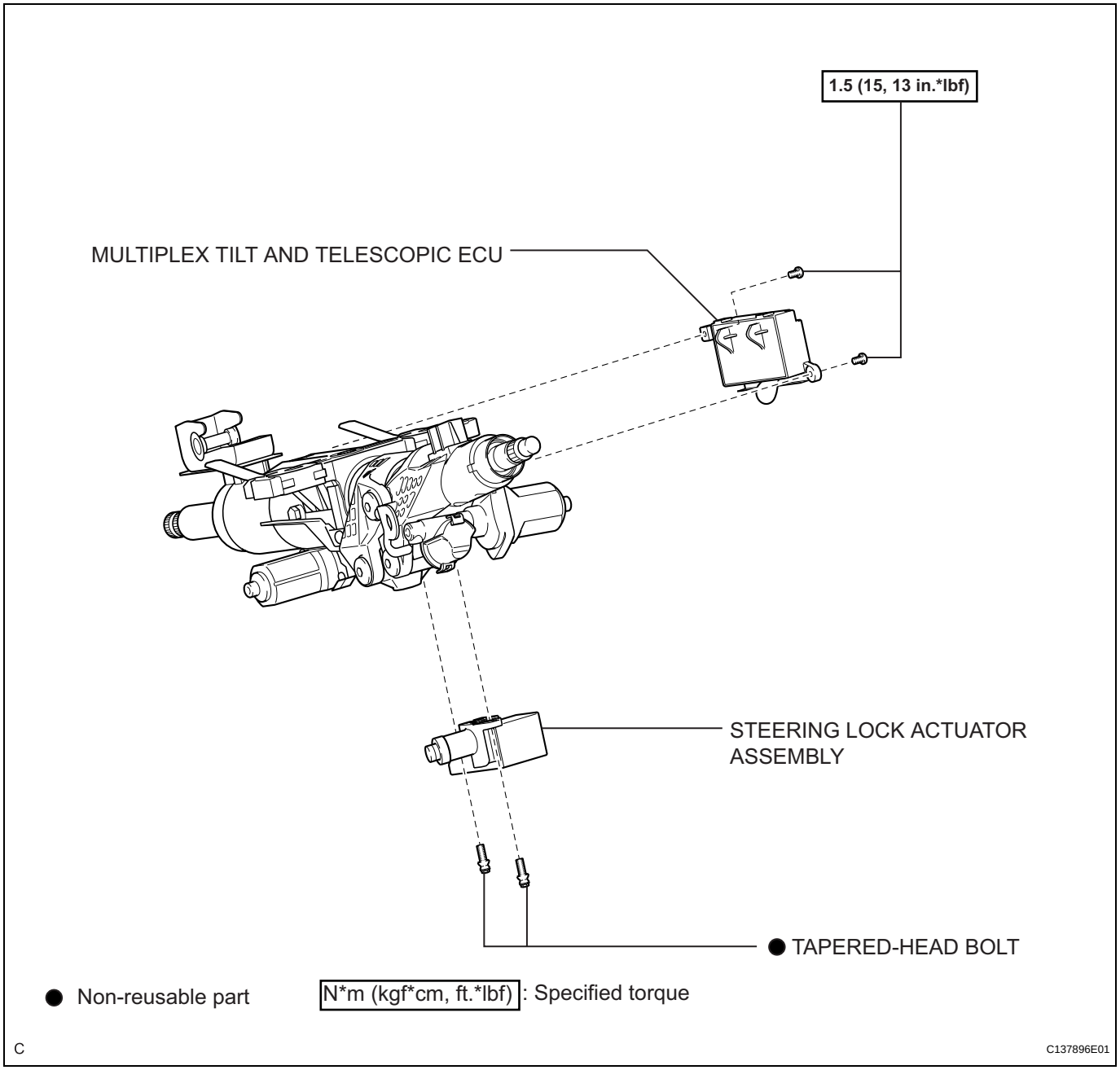

REMOVAL

1. REMOVE STEERING COLUMN ASSEMBLY

HINT:
Refer to the instructions for REMOVAL of the STEERING COLUMN ASSEMBLY (See page SR-78).

2. REMOVE STEERING LOCK ACTUATOR ASSEMBLY

(a) Using a center punch, mark the center of the 2 tapered-head bolts.

(b) Using a 3 to 4 mm (0.12 to 0.16 in.) drill, drill a hole in the 2 bolts.

(c) Using a screw extractor, remove the 2 bolts and steering lock actuator assembly from the steering column assembly.

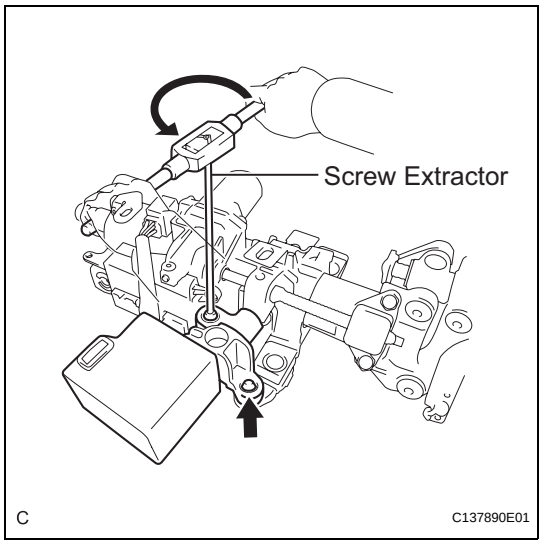

3. REMOVE MULTIPLEX TILT AND TELESCOPIC ECU

(a) Disconnect the connector from the multiplex tilt and telescopic ECU.

(b) Remove the 2 screws and multiplex tilt and telescopic ECU.

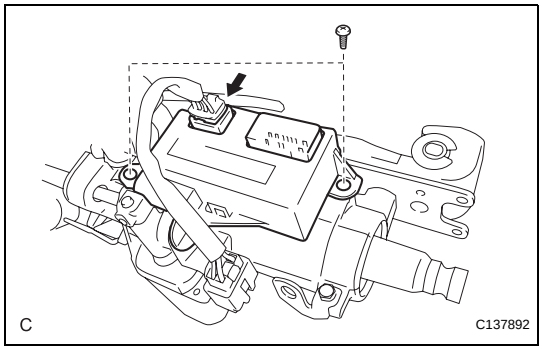

INSTALLATION

1. INSTALL MULTIPLEX TILT AND TELESCOPIC ECU

(a) Install the multiplex tilt and telescopic ECU with the 2 screws.
Torque: 1.5 N*m (15 kgf*cm, 13 in.*lbf)

(b) Connect the connector to the multiplex tilt and telescopic ECU.
NOTICE:
- **The connectors on both ends of the wire harness between the telescopic motor and ECU are the same shape.**
- **When installing them, connect the connectors of the same color.**

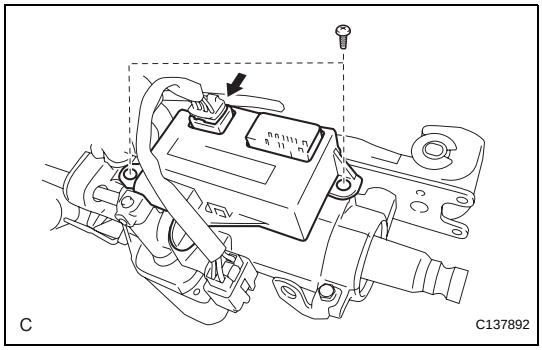

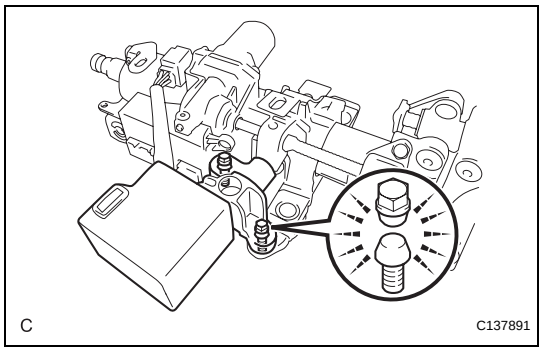

2. INSTALL STEERING LOCK ACTUATOR ASSEMBLY

(a) Temporarily install the steering lock actuator assembly with 2 new tapered-head bolts.

(b) Tighten the 2 tapered-head bolts until the bolt heads break off.

3. INSTALL STEERING COLUMN ASSEMBLY

HINT:

Refer to the instructions for INSTALLATION of the STEERING COLUMN ASSEMBLY (See page SR-84).

POWER STEERING SYSTEM

PRECAUTION

NOTICE:
When disconnecting the cable from the negative (-) battery terminal, initialize the following system after reconnecting the cable to the negative (-) battery terminal (See page IN-33).

1. **HANDLING PRECAUTIONS FOR SRS AIRBAG SYSTEM**
   (a) The vehicle is equipped with an SRS (Supplemental Restraint System) such as airbags. Failure to carry out service operations in the correct sequence could cause the SRS to unexpectedly deploy during servicing. This may cause a serious accident. Before servicing (including inspection, replacement, removal and installation of parts), be sure to read the precautionary notices for the Supplemental Restraint System (See page RS-1).
2. **PRECAUTIONS FOR REMOVAL, INSTALLATION AND REPLACEMENT OF POWER STEERING COMPONENTS**
   (a) Be sure to turn the front wheels straight ahead when removing and installing the power steering link assembly.
   (b) If disconnecting the steering sliding yoke and the pinion shaft of the power steering link assembly, be sure to put matchmarks before starting the operation.

PARTS LOCATION

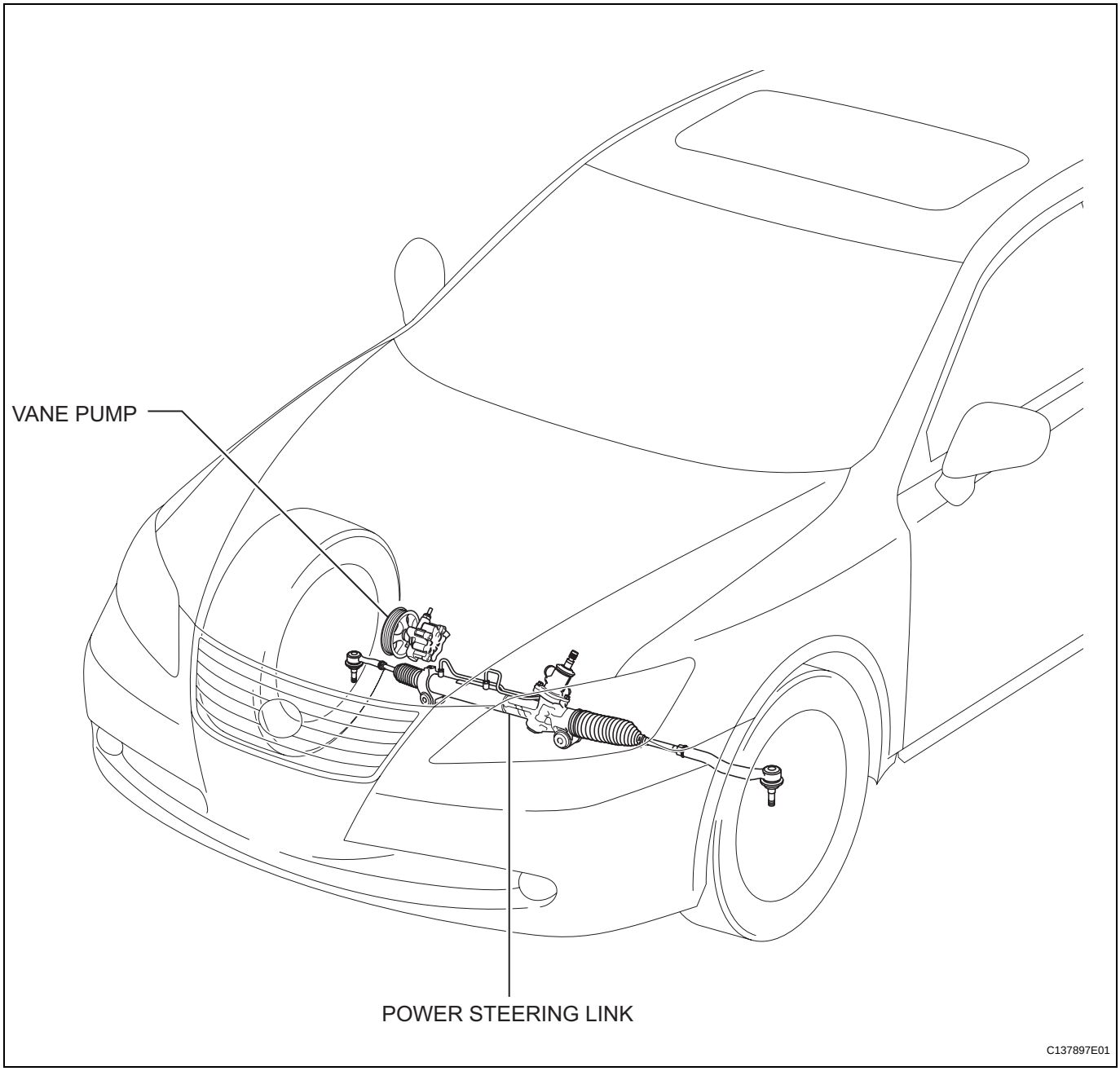

POWER STEERING FLUID

BLEEDING

1. BLEED POWER STEERING SYSTEM

(a) Check the fluid level (See page PS-3).

(b) Jack up the front of the vehicle and support it with stands.

(c) Turn the steering wheel.

(1) With the engine stopped, turn the steering wheel slowly from lock to lock several times.

(d) Lower the vehicle.

(e) Start the engine.

(1) Run the engine at idle for a few minutes.

(f) Turn the steering wheel.

(1) With the engine idling, turn the steering wheel left or right to the full lock position and keep it in that position for 2 to 3 seconds, then turn the steering wheel to the opposite full lock position and keep it there for 2 to 3 seconds.

(2) Repeat this procedure several times.

(g) Stop the engine.

(h) Check for foaming or emulsification.
Be sure to check for fluid leaks in the system especially if the system has to be bled twice because of forming or emulsification.

(i) Check the fluid level (See page PS-3).

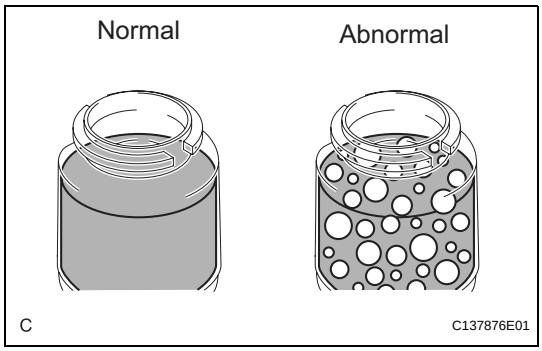

VANE PUMP

COMPONENTS

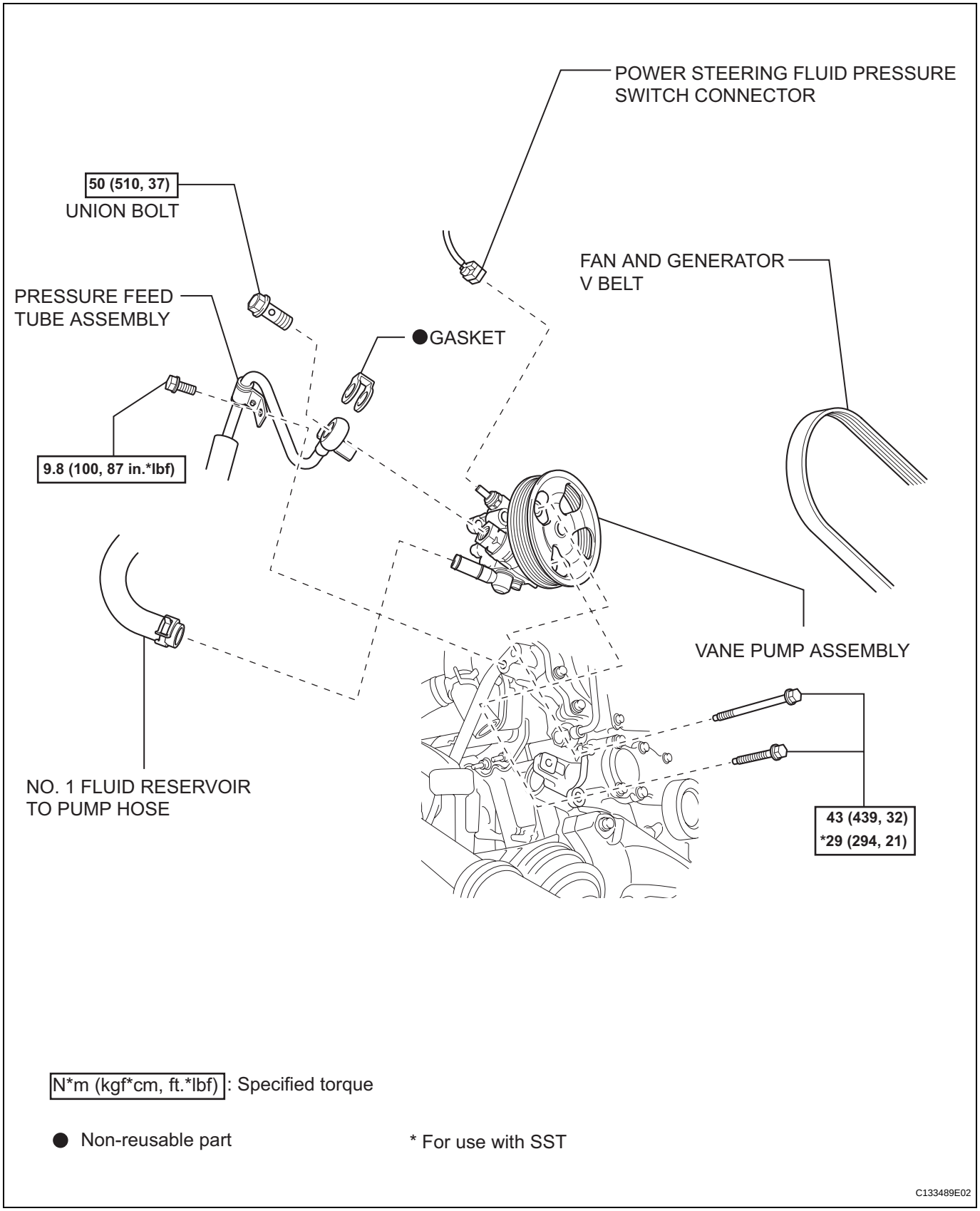

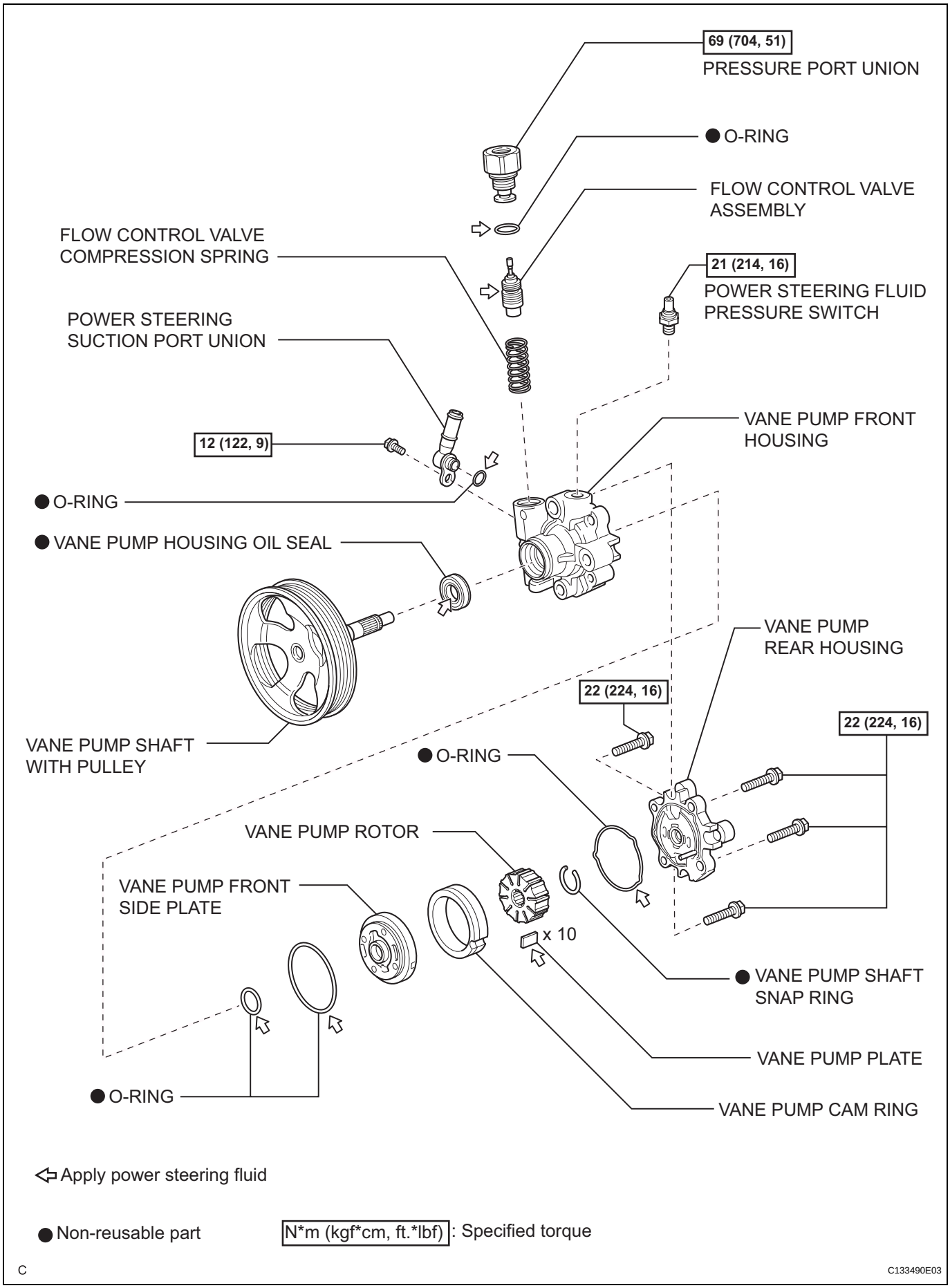
69 (704, 51)
PRESSURE PORT UNION
● O-RING
FLOW CONTROL VALVE ASSEMBLY
FLOW CONTROL VALVE COMPRESSION SPRING
21 (214, 16)
POWER STEERING FLUID PRESSURE SWITCH
POWER STEERING SUCTION PORT UNION
VANE PUMP FRONT HOUSING
12 (122, 9)
● O-RING
● VANE PUMP HOUSING OIL SEAL
VANE PUMP REAR HOUSING
22 (224, 16)
22 (224, 16)
VANE PUMP SHAFT WITH PULLEY
● O-RING
VANE PUMP ROTOR
VANE PUMP FRONT SIDE PLATE
x 10
● VANE PUMP SHAFT SNAP RING
VANE PUMP PLATE
● O-RING
VANE PUMP CAM RING
PS
Apply power steering fluid
● Non-reusable part
N*m (kgf*cm, ft.*lbf): Specified torque
C
C133490E03

POWER STEERING LINK

COMPONENTS

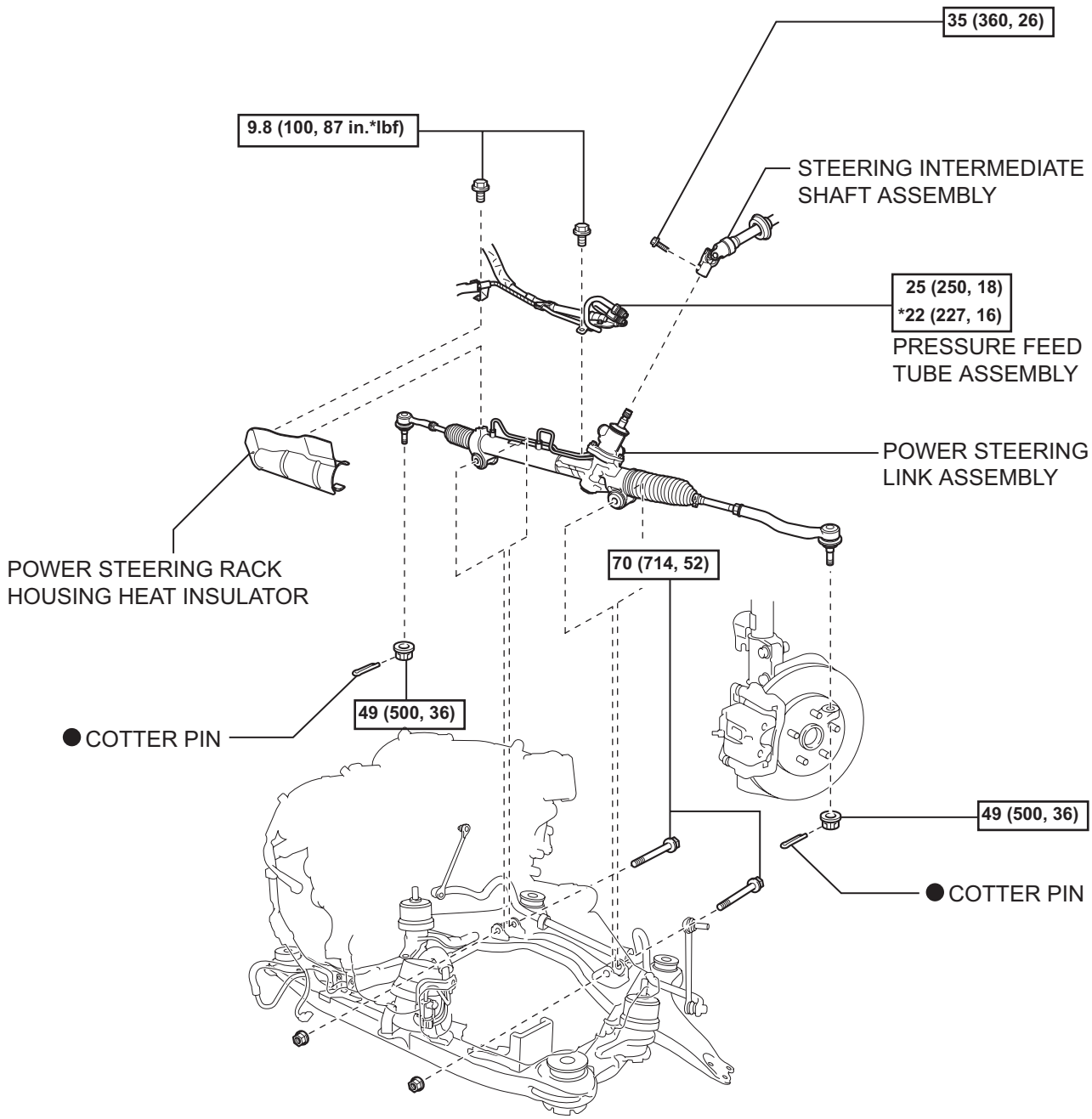

PS

N*m (kgf*cm, ft.*lbf) : Specified torque

● Non-reusable part

* For use with SST

C137899E01

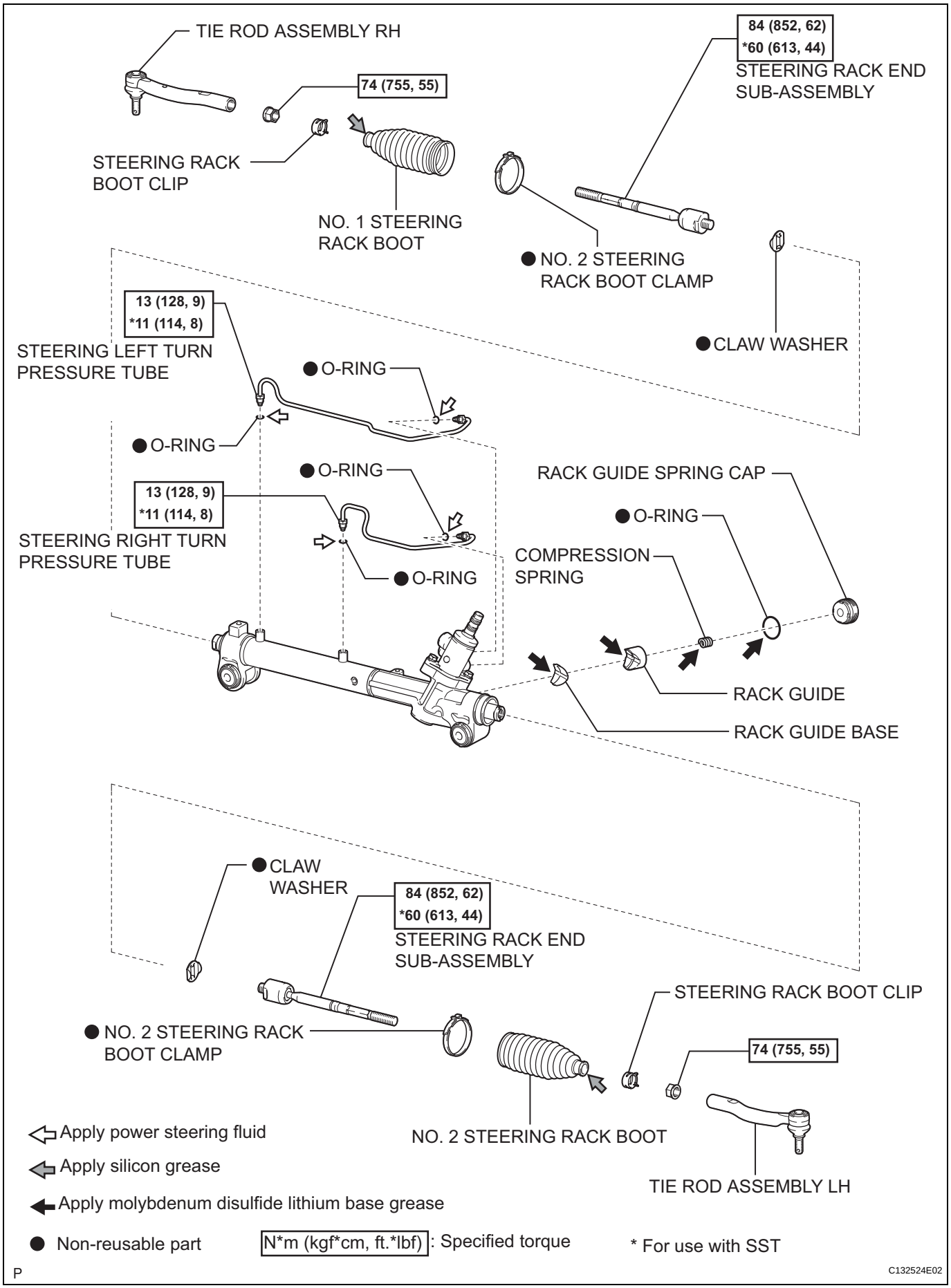
TIE ROD ASSEMBLY RH
74 (755, 55)
84 (852, 62)
*60 (613, 44)
STEERING RACK END SUB-ASSEMBLY
STEERING RACK BOOT CLIP
NO. 1 STEERING RACK BOOT
● NO. 2 STEERING RACK BOOT CLAMP
● CLAW WASHER
13 (128, 9)
*11 (114, 8)
STEERING LEFT TURN PRESSURE TUBE
● O-RING
● O-RING
● O-RING
13 (128, 9)
*11 (114, 8)
STEERING RIGHT TURN PRESSURE TUBE
● O-RING
RACK GUIDE SPRING CAP
● O-RING
COMPRESSION SPRING
RACK GUIDE
RACK GUIDE BASE
● CLAW WASHER
84 (852, 62)
*60 (613, 44)
STEERING RACK END SUB-ASSEMBLY
STEERING RACK BOOT CLIP
● NO. 2 STEERING RACK BOOT CLAMP
74 (755, 55)
NO. 2 STEERING RACK BOOT
TIE ROD ASSEMBLY LH
Apply power steering fluid
Apply silicon grease
Apply molybdenum disulfide lithium base grease
● Non-reusable part
N*m (kgf*cm, ft.*lbf): Specified torque
* For use with SST
P
C132524E02

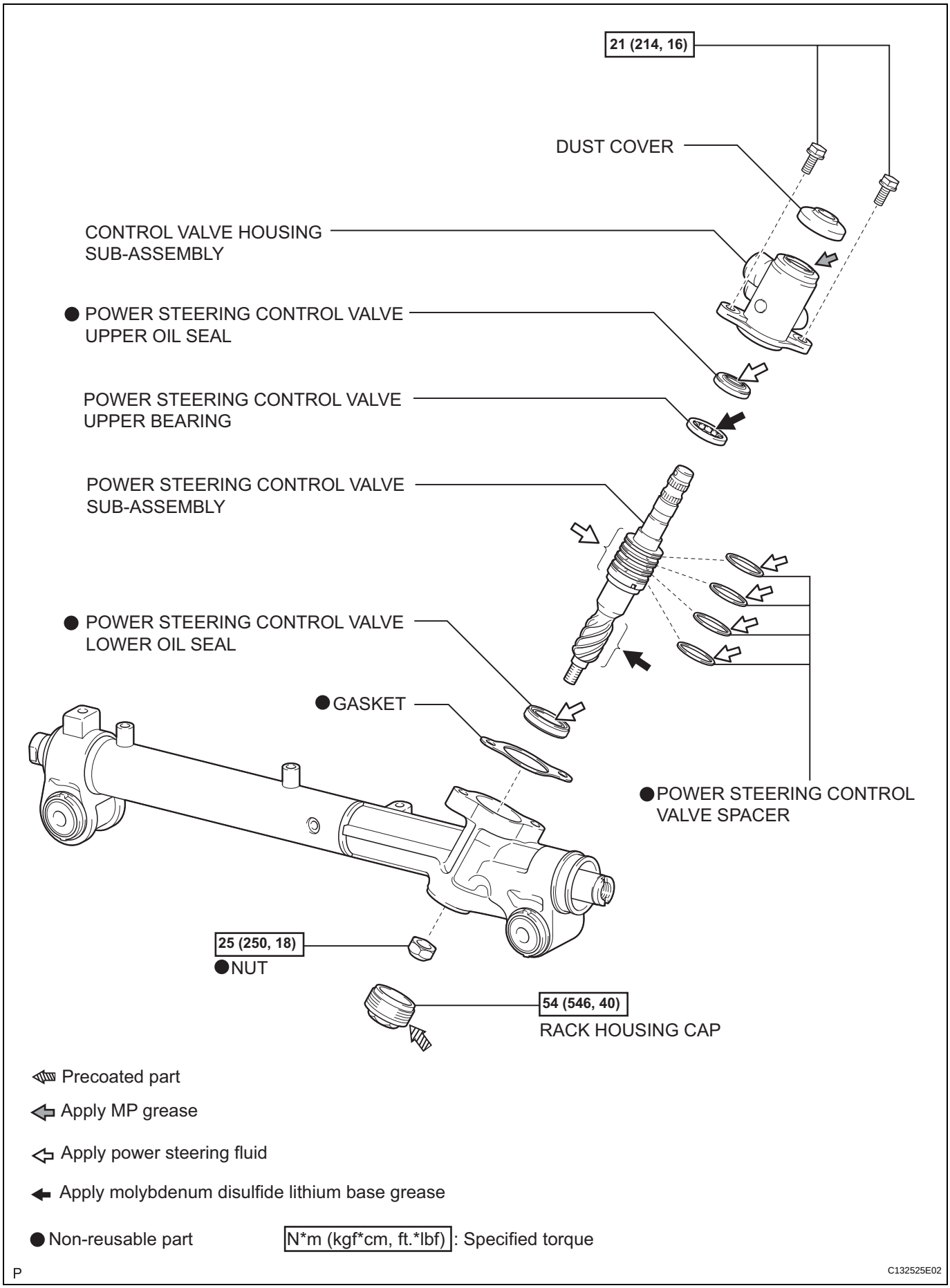
21 (214, 16)
DUST COVER
CONTROL VALVE HOUSING SUB-ASSEMBLY
● POWER STEERING CONTROL VALVE UPPER OIL SEAL
POWER STEERING CONTROL VALVE UPPER BEARING
POWER STEERING CONTROL VALVE SUB-ASSEMBLY
● POWER STEERING CONTROL VALVE LOWER OIL SEAL
●GASKET
●POWER STEERING CONTROL VALVE SPACER
25 (250, 18)
●NUT
54 (546, 40)
RACK HOUSING CAP
Precoated part
Apply MP grease
Apply power steering fluid
Apply molybdenum disulfide lithium base grease
● Non-reusable part
N*m (kgf*cm, ft.*lbf): Specified torque
P
C132525E02

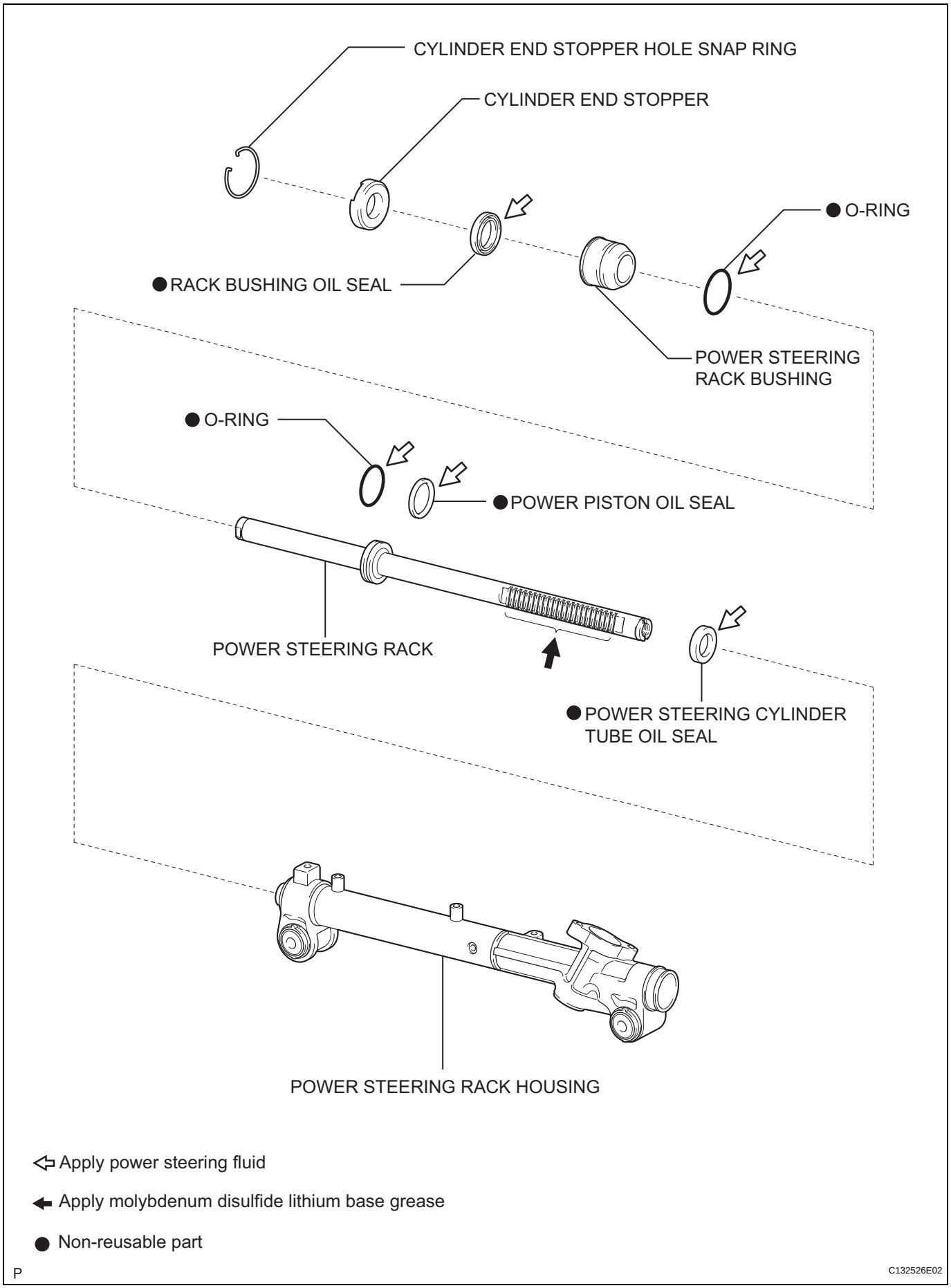
CYLINDER END STOPPER HOLE SNAP RING
CYLINDER END STOPPER
● O-RING
● RACK BUSHING OIL SEAL
POWER STEERING RACK BUSHING
● O-RING
● POWER PISTON OIL SEAL
POWER STEERING RACK
● POWER STEERING CYLINDER TUBE OIL SEAL
POWER STEERING RACK HOUSING
⇦ Apply power steering fluid
🡄 Apply molybdenum disulfide lithium base grease
● Non-reusable part
P
C132526E02

AIR CONDITIONING SYSTEM

PRECAUTION

NOTICE:
Some systems need to be initialized after reconnecting the negative (-) battery terminal (See page IN-33).

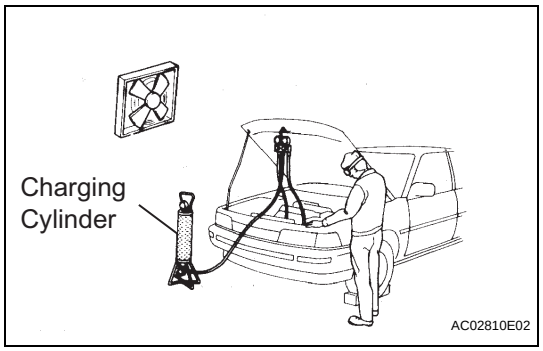

1. **DO NOT HANDLE REFRIGERANT IN AN ENCLOSED AREA OR NEAR AN OPEN FLAME**
2. **ALWAYS WEAR EYE PROTECTION**

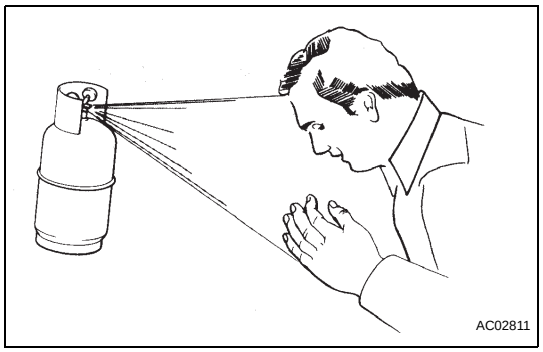

3. **BE CAREFUL NOT TO GET LIQUID REFRIGERANT IN YOUR EYES OR ON YOUR SKIN**
   If liquid refrigerant gets in your eyes or on your skin:
   (a) Wash the area with lots of cold water.
   CAUTION:
   Do not rub your eyes or skin.
   (b) Apply clean petroleum jelly to the skin.
   (c) Go immediately to a hospital or see a physician for professional treatment.
4. **NEVER HEAT CONTAINER OR EXPOSE THE CONTAINER TO OPEN FLAME**
5. **BE CAREFUL NOT TO DROP CONTAINER OR APPLY PHYSICAL SHOCKS TO IT**

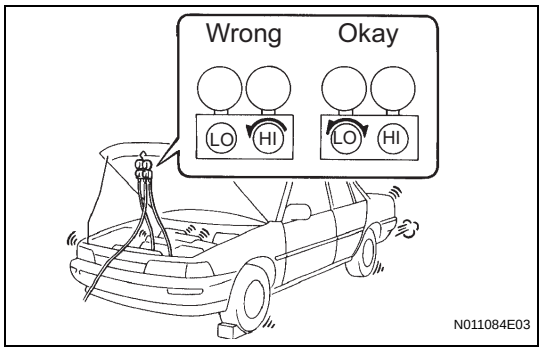

6. **DO NOT OPERATE COMPRESSOR WITHOUT ENOUGH REFRIGERANT IN REFRIGERANT SYSTEM**
   If there is not enough refrigerant in the A/C system, oil lubrication will be insufficient and the compressor may be damaged.
   Necessary care should be taken to avoid this.
7. **DO NOT OPEN HIGH PRESSURE MANIFOLD VALVE WHILE COMPRESSOR IS OPERATING**
   (a) Open and close only the low pressure valve.
   If the high pressure valve is opened, refrigerant flows in the reverse direction causing the charging cylinder to rupture.
8. **BE CAREFUL NOT TO OVERCHARGE SYSTEM WITH REFRIGERANT**
   If refrigerant is overcharged, it causes problems such as insufficient cooling, poor fuel economy, engine overheating, etc.

9. **DO NOT OPERATE ENGINE AND COMPRESSOR WITH NO REFRIGERANT**
   CAUTION:
   Doing so may damage the inside of the compressor because the compressor parts always move regardless of whether the A/C system is turned on or off.
10. **SUPPLEMENTAL RESTRAINT SYSTEM (SRS)**
    (a) This vehicle is equipped with an SRS (Supplemental Restraint System) such as the driver, front passenger, side, and curtain shield air bags. Failure to carry out service operation in the correct sequence could cause the SRS to unexpectedly deploy during servicing, possibly leading to a serious accident. Before servicing (including removal or installation of parts, inspection or replacement), be sure to read the precautionary notices (See page RS-1).
11. **GENERAL PRECAUTION**
    (a) While using the battery during inspection, do not bring the positive and negative tester probes too close to each other as a short circuit may occur.

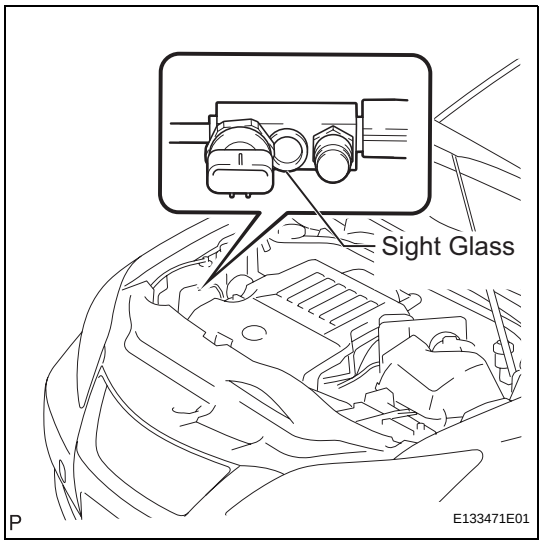

REFRIGERANT

ON-VEHICLE INSPECTION

1. INSPECT REFRIGERANT VOLUME

(a) Check the sight glass on the air conditioning tube & accessory assembly.

(1) Prepare the vehicle according to the chart below.

Item	Condition
Vehicle door	Fully open
Temperature setting	MAX COLD
Blower speed	HI
A/C	ON

(2) Compare the sight glass to the following chart.

Item	Symptom	Amount of refrigerant	Corrective Actions
1	Bubbles exist	Insufficient*	1. Check for gas leakage and repair if necessary 2. Recharge with proper amount of refrigerant
2	No bubbles exist	Empty, insufficient, or excessive	Refer to 3 and 4
3	No temperature difference between compressor inlet and outlet	Empty or nearly empty	1. Check for gas leakage and repair if necessary 2. Evacuate the AC system and recharge with the proper amount of refrigerant
4	Considerable temperature difference between compressor inlet and outlet	Proper or excessive	Refer to 5 and 6
5	Immediately after air conditioning is turned off, refrigerant remains clear	Excessive	1. Recover refrigerant 2. Evacuate the AC system and recharge with the proper amount of refrigerant
6	Immediately after air conditioning is turned off, refrigerant foams and then becomes clear	Proper	-

*: Bubbles in the sight glass with the vehicle's interior temperature above 35°C (95°F) can be considered normal if cooling is sufficient.

2. INSPECT REFRIGERANT PRESSURE WITH MANIFOLD GAUGE SET

HINT:
This is a method where a manifold gauge set is used to help locate the problem.

(a) Read the manifold gauge pressure when the following conditions are established.
Test conditions:
- Temperature at the air inlet with the switch set at RECIRC is 30 to 35°C (86 to 95°F).
- Engine is running at 1,500 rpm.
- Blower speed control switch is at "HI".
- Temperature control dial is at "COOL".
- A/C switch is ON.
- Doors are fully open.
- Ignition switch is in a position that enables the AC compressor to run.

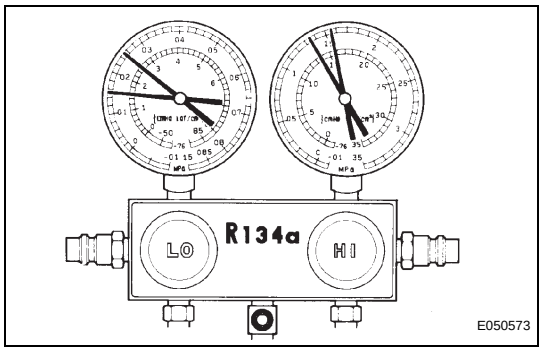

(1) Normally functioning refrigeration system
Gauge reading

Pressure side	Refrigerant volume
Low	0.15 to 0.25 MPa (1.5 to 2.5 kgf/cm^2, 21.3 to 35.5 psi)
High	1.37 to 1.57 MPa (14 to 16 kgf/cm^2, 199.1 to 227.5 psi)

(2) Moisture is present in refrigeration system.

Condition:
Periodically cools and then fails to cool

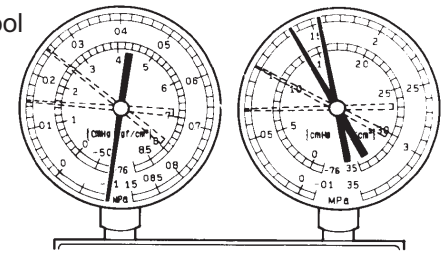

I022117E21

Symptom	Probable Cause	Diagnosis	Corrective Actions
During operation, pressure on low pressure side cycles between normal and vacuum	Moisture in AC system will freeze at the expansion valve orifice, causing the refrigeration cycle to temporarily stop After the system stops, and warms up again, the ice will melt and normal operation will be temporarily restored	• Cooler dryer integrated into condenser tank in oversaturated state • Moisture in refrigeration system freezes at expansion valve orifice and blocks circulation of refrigerant	1. Replace cooler dryer 2. Remove moisture in system by repeatedly evacuating air 3. Supply a proper amount of new refrigerant

(3) Insufficient cooling

Condition: Cooling system does not function effectively.

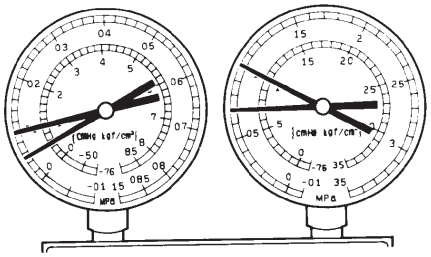

I022118E13

Symptom	Probable Cause	Diagnosis	Corrective Actions
• Pressure is low on both low and high pressure sides • Bubbles are seen through sight glass continuously • Insufficient cooling performance	Gas leakage from the refrigeration system	• Insufficient refrigerant • Refrigerant leaking	1. Check for gas leakage and repair if necessary 2. Supply a proper amount of new refrigerant 3. If the gauge indicates a pressure of close to 0, then it will be necessary to evacuate the system after repairing the leak

(4) Poor circulation of refrigerant

Condition: Cooling system does not function effectively.

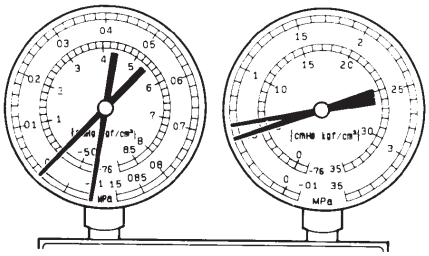

I022119E14

Symptom	Probable Cause	Diagnosis	Corrective Actions
• Pressure is low on both low and high pressure sides • Frost exists on pipe from condenser to unit	Refrigerant flow is obstructed by dirt inside the pipes of the condenser core	Receiver is clogged	Replace condenser

(5) Refrigerant does not circulate.

Condition: Cooling system does not function. (Sometimes it may function.)

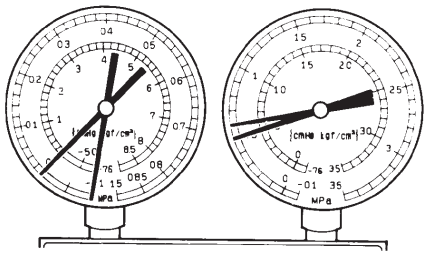

I022120E14

Symptom	Probable Cause	Diagnosis	Corrective Actions
• Vacuum is indicated on low pressure side and very low pressure is indicated on high pressure side • Frost or condensation is seen on piping on both sides of receiver/drier or expansion valve	• Refrigerant flow is obstructed by moisture or dirt in refrigeration system • Refrigerant flow is disrupted by gas leaking internally through the expansion valve	Refrigerant does not circulate	1. Check the expansion valve 2. Replace expansion valve 3. Replace condenser 4. Evacuate air and supply a proper amount of new refrigerant 5. For internal gas leak at expansion valve, replace expansion valve

(6) Refrigerant is overcharged or cooling effectiveness of condenser is insufficient.

Condition: Cooling system does not function.

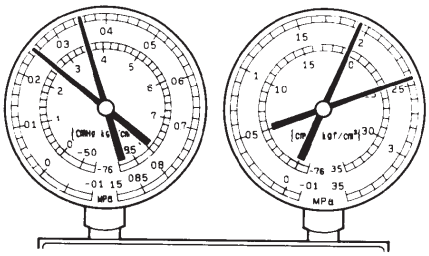

I022121E14

Symptom	Probable Cause	Diagnosis	Corrective Actions
• Pressure is too high on both low and high pressure sides • No air bubbles are seen through sight glass even when engine rpm lowers	• Unable to develop sufficient performance due to excessive use of refrigeration system • Cooling effectiveness of condenser is insufficient	• Excessive refrigerant in cycle → excessive refrigerant was added during recharging • Condenser cooling effectiveness is insufficient → condenser fins are clogged at cooling fan	1. Clean condenser 2. Check the operation of the condenser cooling fan 3. If 1 and 2 are normal state, check the amount of refrigerant and supply proper amount of refrigerant

(7) Air is present in refrigeration system.

Condition: Cooling system does not function.

NOTE: These gauge indications occur when the refrigeration system opens and the refrigerant is charged without vacuum purging.

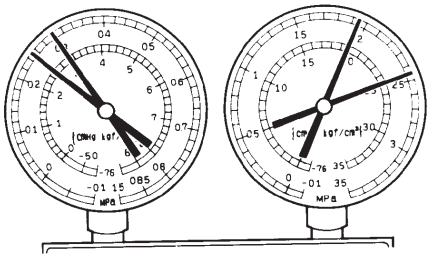

I022122E06

Symptom	Probable Cause	Diagnosis	Corrective Actions
• Pressure is too high on both low and high pressure sides • The low pressure piping is too hot to touch • Bubbles can be seen through sight glass	Air in system	• Air present in refrigeration system • Insufficient vacuum purging	1. Check compressor oil to see if it is dirty or insufficient 2. Evacuate the system and recharge it with new or purified refrigerant

(8) Expansion valve malfunction

Condition: Insufficient cooling

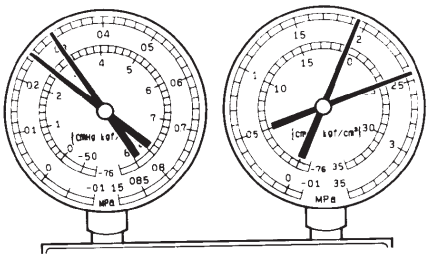

I022123E05

Symptom	Probable Cause	Diagnosis	Corrective Actions
• Pressure is too high on both low and high pressure sides • Frost or a large amount of condensation on piping on low pressure side	Expansion valve may be sticking	• Excessive refrigerant in low pressure piping • Expansion valve opened too wide	Check expansion valve

(9) Insufficient compressor compression

Condition: Insufficient cooling

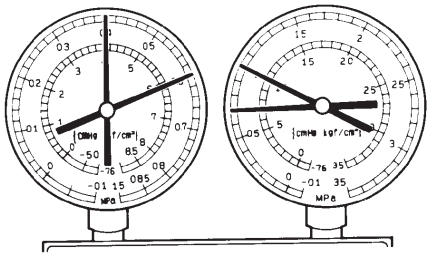

I022124E05

Symptom	Probable Cause	Diagnosis	Corrective Actions
• Pressure is too high both on low and high pressure sides • Pressure is too low on high pressure side	Internal leak in compressor	• Low compression • Leak from a damaged valve, or parts may be broken	Replace compressor

Gauge readings (Reference)

Pressure on low pressure side

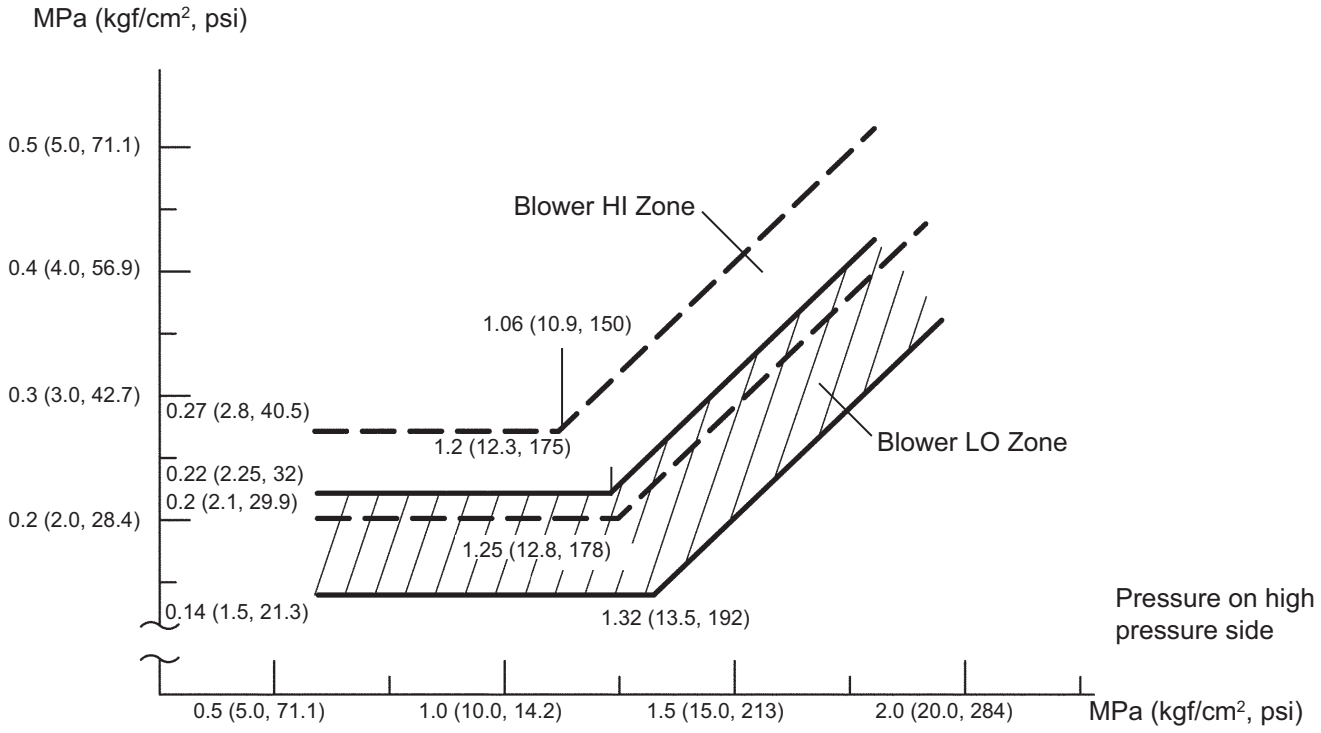

I030081E07

REFRIGERANT LINE

COMPONENTS

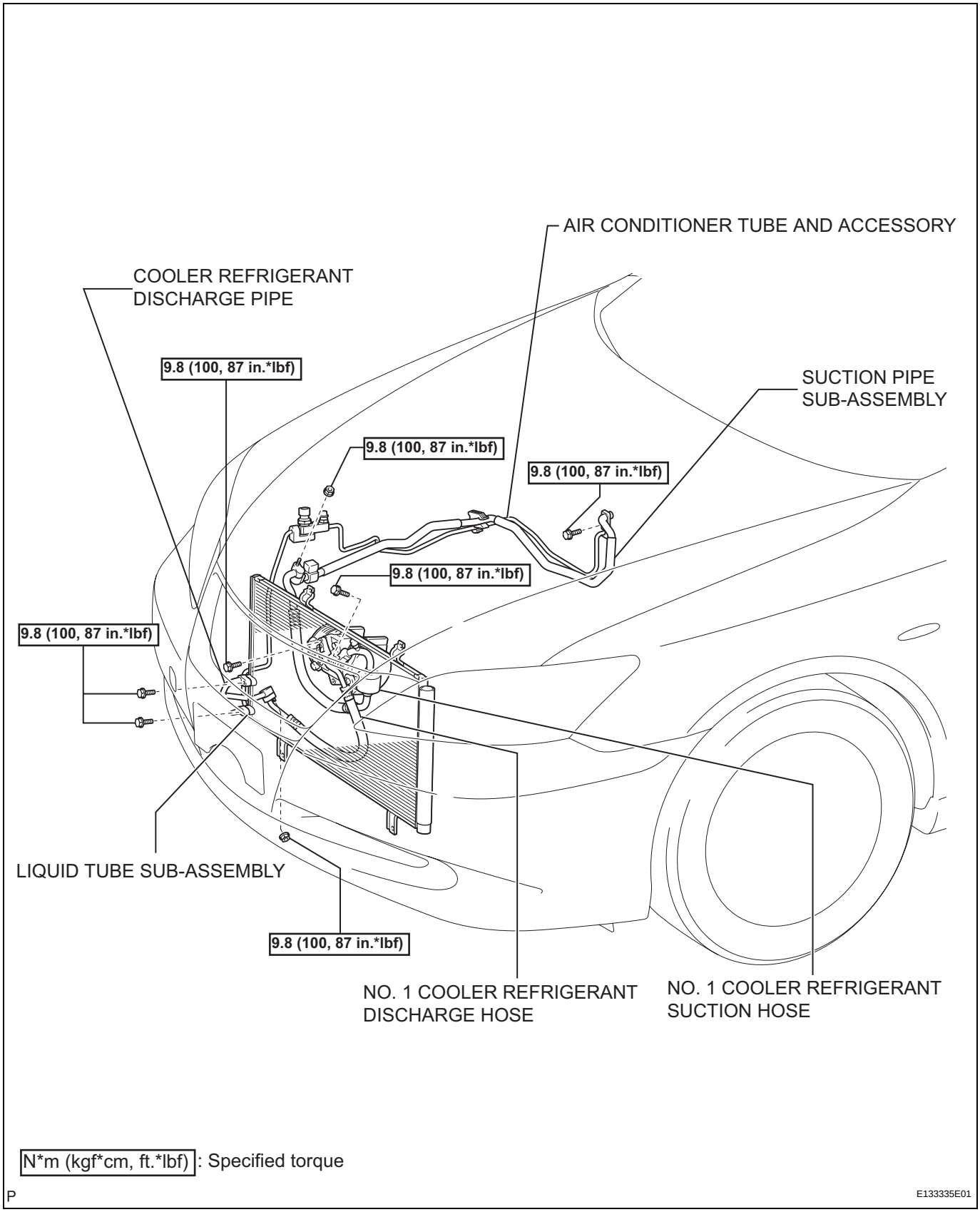

AC

AIR CONDITIONING UNIT

COMPONENTS

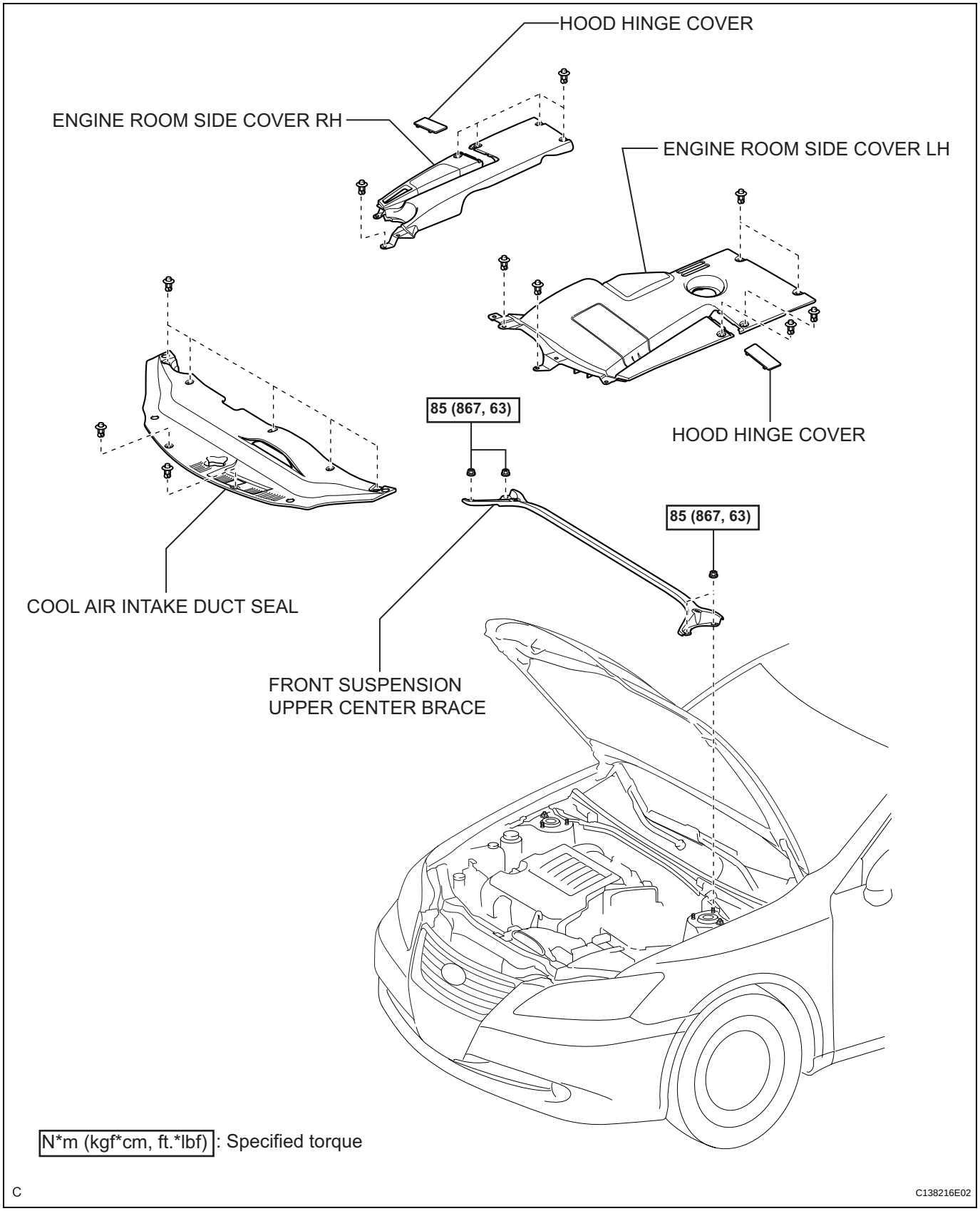

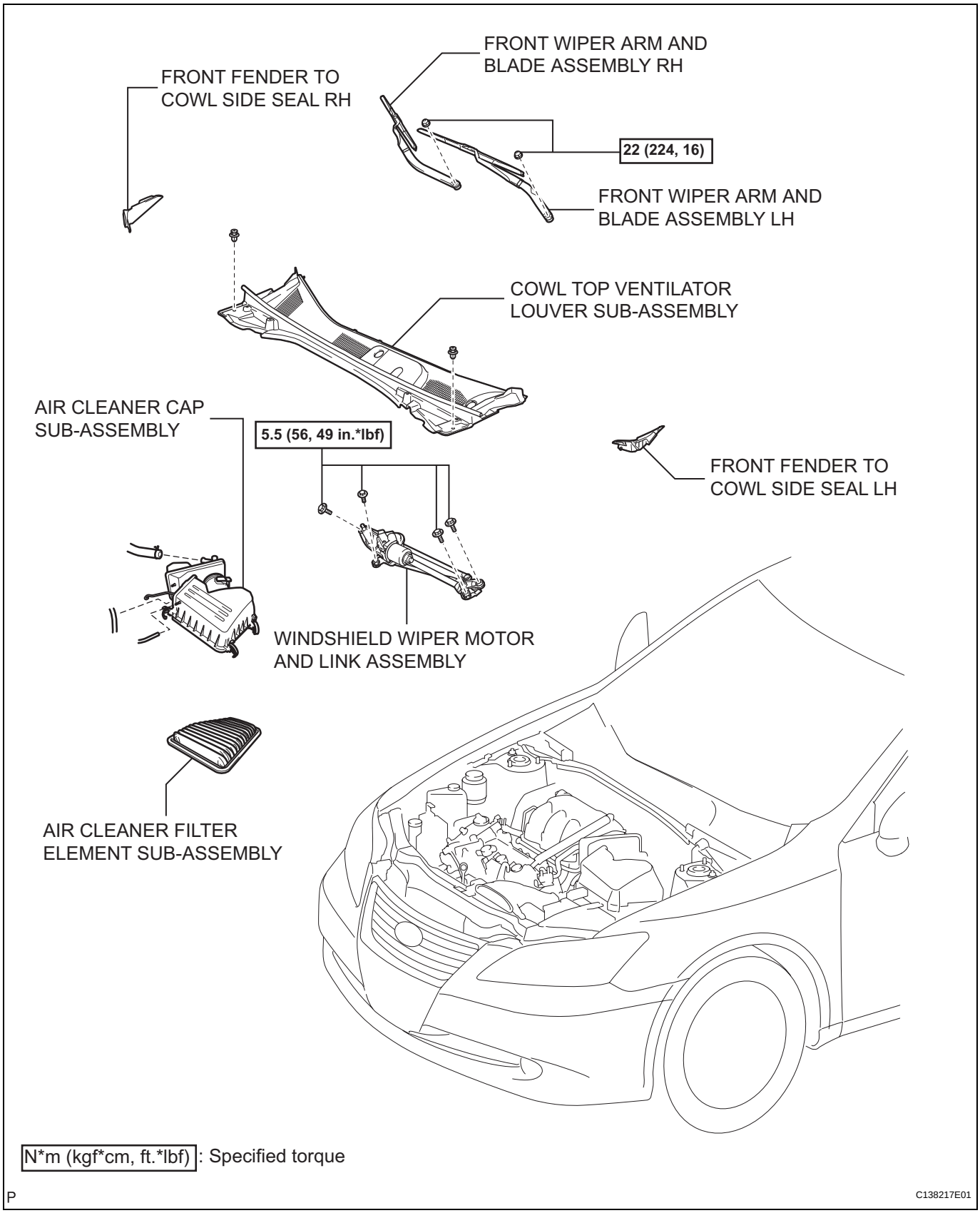
FRONT WIPER ARM AND BLADE ASSEMBLY RH
FRONT FENDER TO COWL SIDE SEAL RH
22 (224, 16)
FRONT WIPER ARM AND BLADE ASSEMBLY LH
COWL TOP VENTILATOR LOUVER SUB-ASSEMBLY
AIR CLEANER CAP SUB-ASSEMBLY
5.5 (56, 49 in.*lbf)
FRONT FENDER TO COWL SIDE SEAL LH
WINDSHIELD WIPER MOTOR AND LINK ASSEMBLY
AIR CLEANER FILTER ELEMENT SUB-ASSEMBLY
N*m (kgf*cm, ft.*lbf) : Specified torque
P
C138217E01

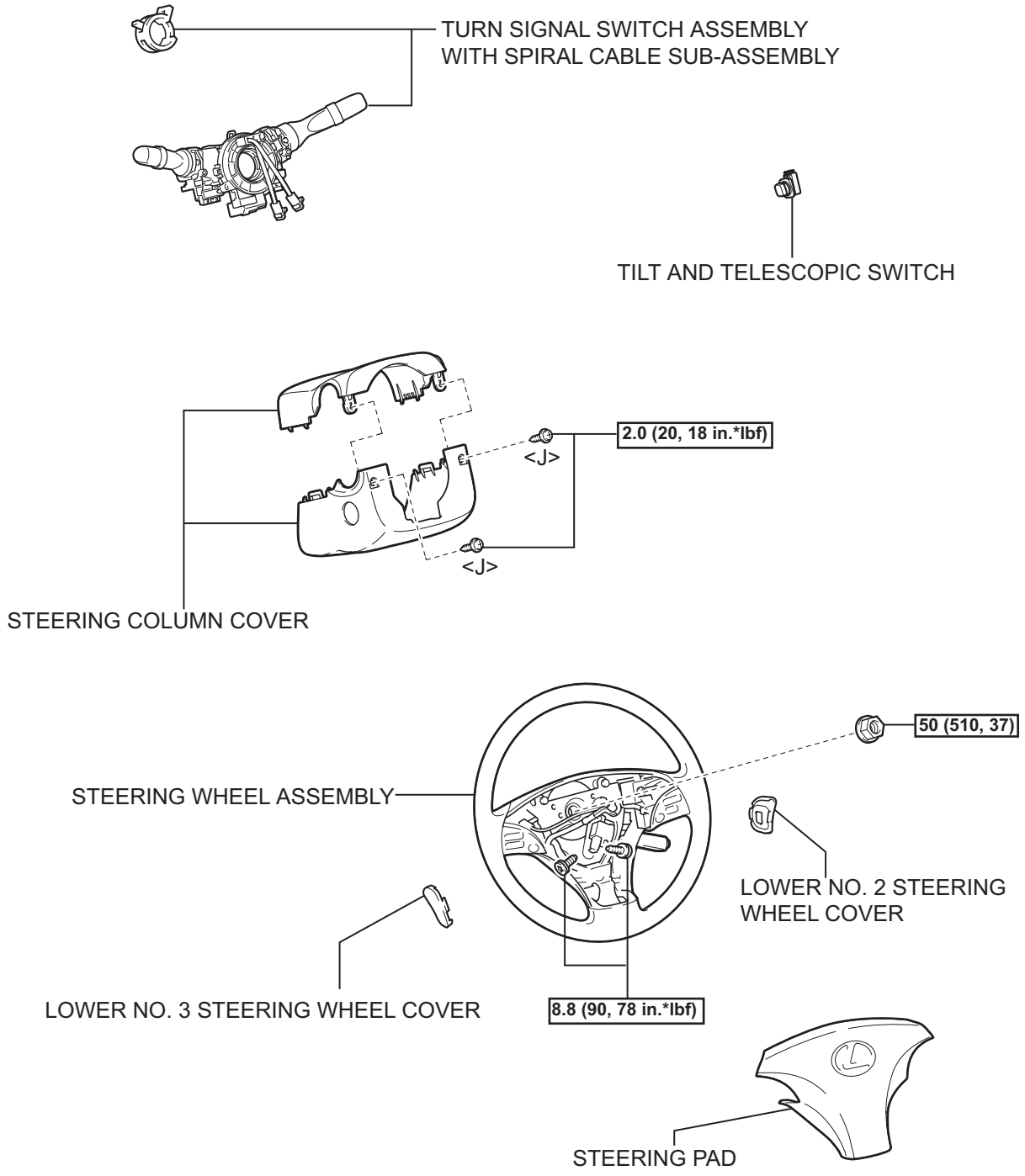

N*m (kgf*cm, ft.*lbf) : Specified torque

P

B145852E01

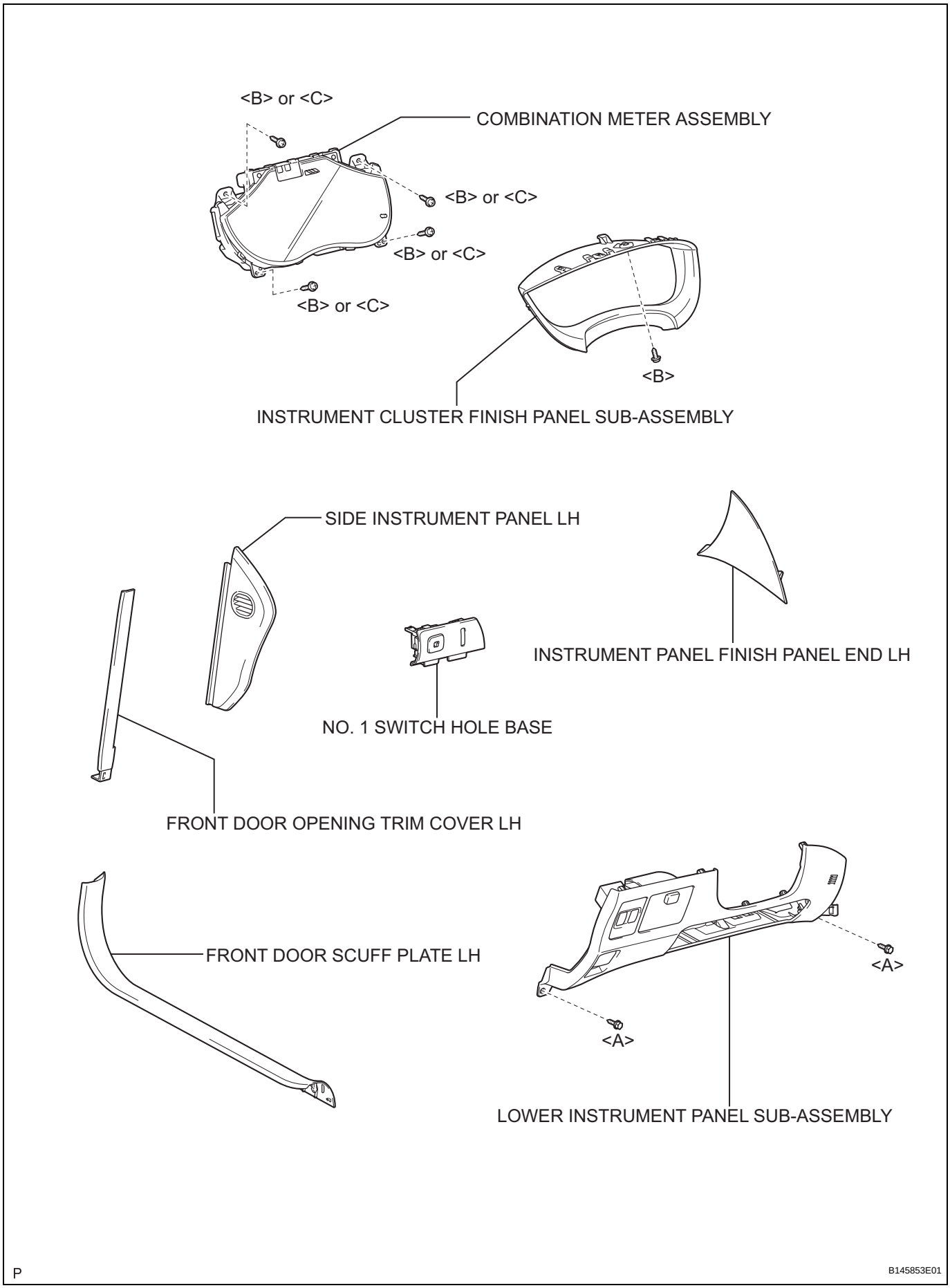
<B> or <C>
COMBINATION METER ASSEMBLY
<B> or <C>
<B> or <C>
<B> or <C>
<B>
INSTRUMENT CLUSTER FINISH PANEL SUB-ASSEMBLY
SIDE INSTRUMENT PANEL LH
INSTRUMENT PANEL FINISH PANEL END LH
NO. 1 SWITCH HOLE BASE
FRONT DOOR OPENING TRIM COVER LH
FRONT DOOR SCUFF PLATE LH
<A>
<A>
LOWER INSTRUMENT PANEL SUB-ASSEMBLY
P
B145853E01

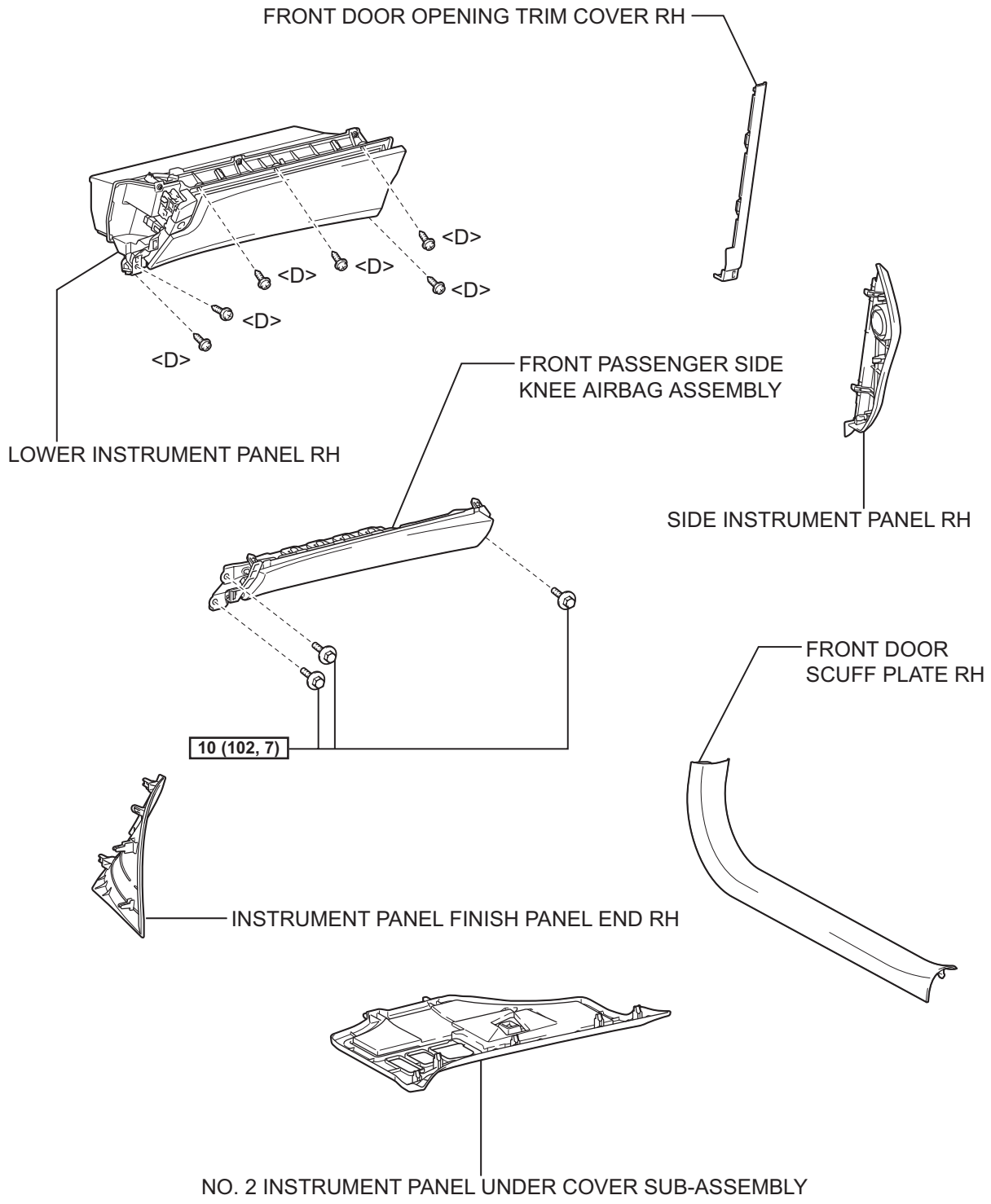

N*m (kgf*cm, ft.*lbf) : Specified torque

P

B145855E01

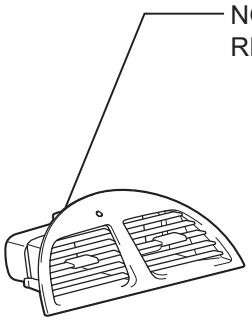

without Navigation System:

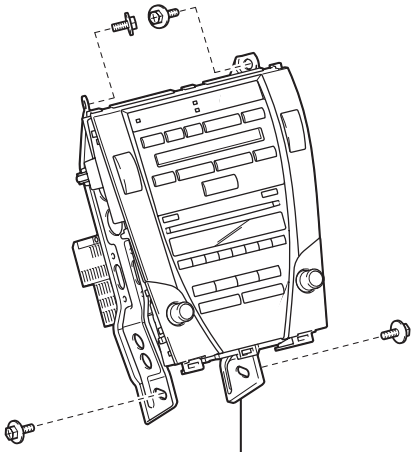

with Navigation System:

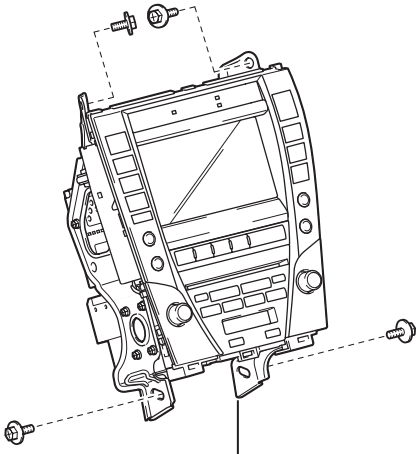

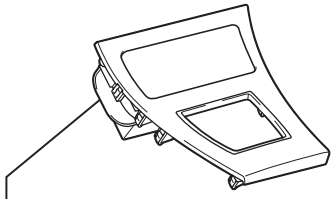

AC

P

B145856E01

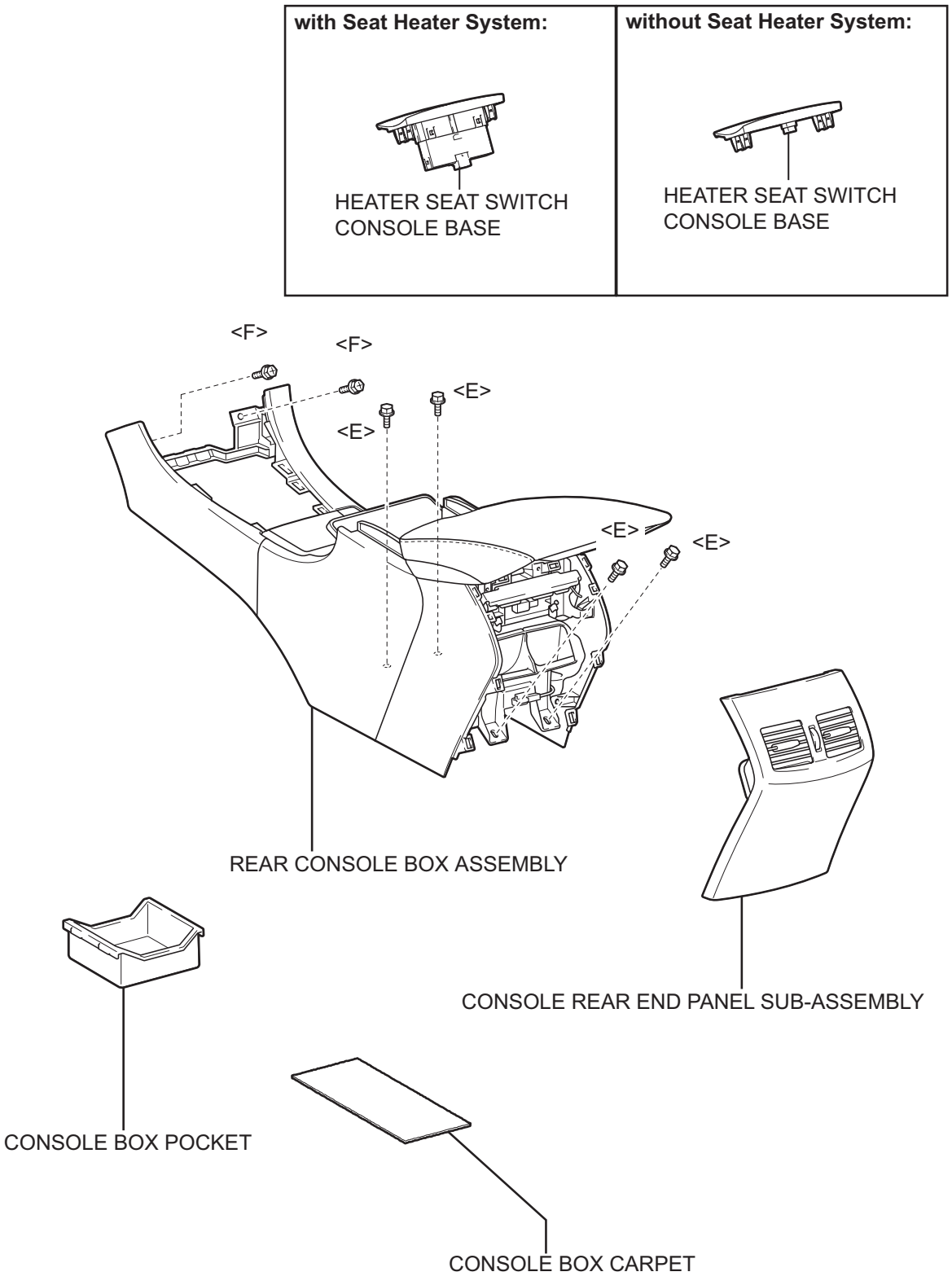

P

B145857E01

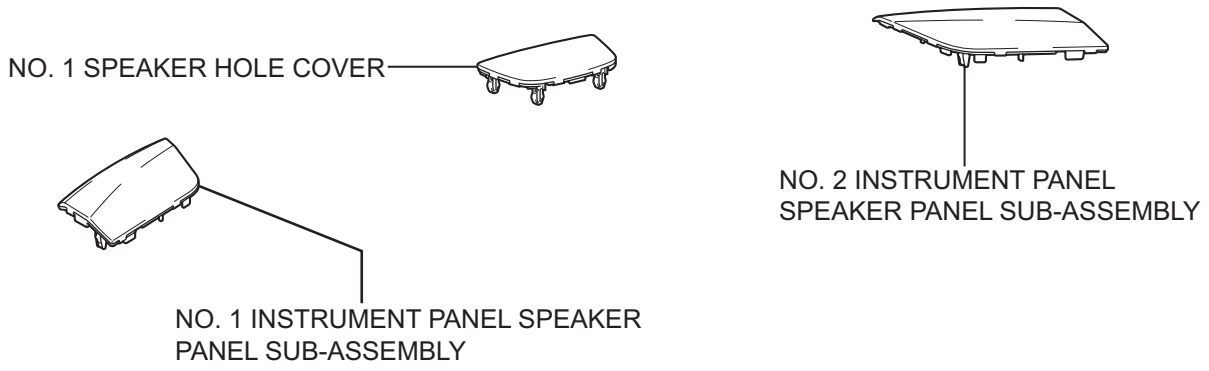

without Rear Header Speaker:

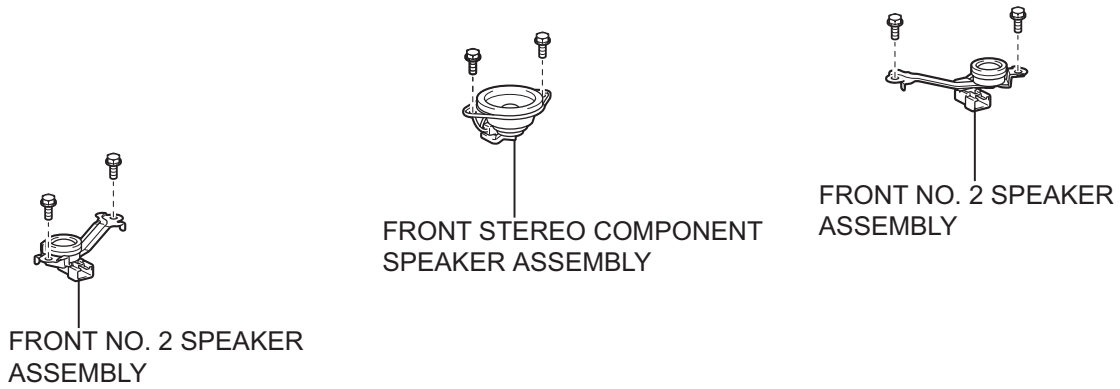

with Rear Header Speaker:

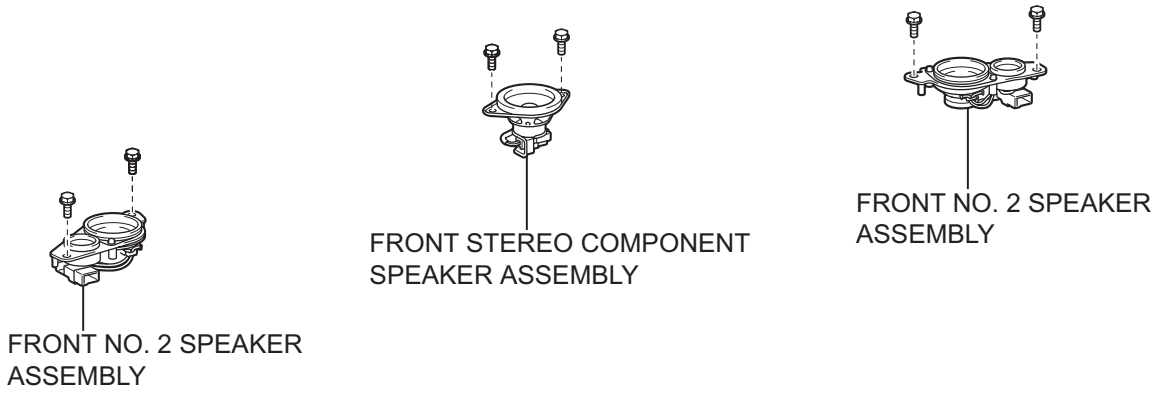

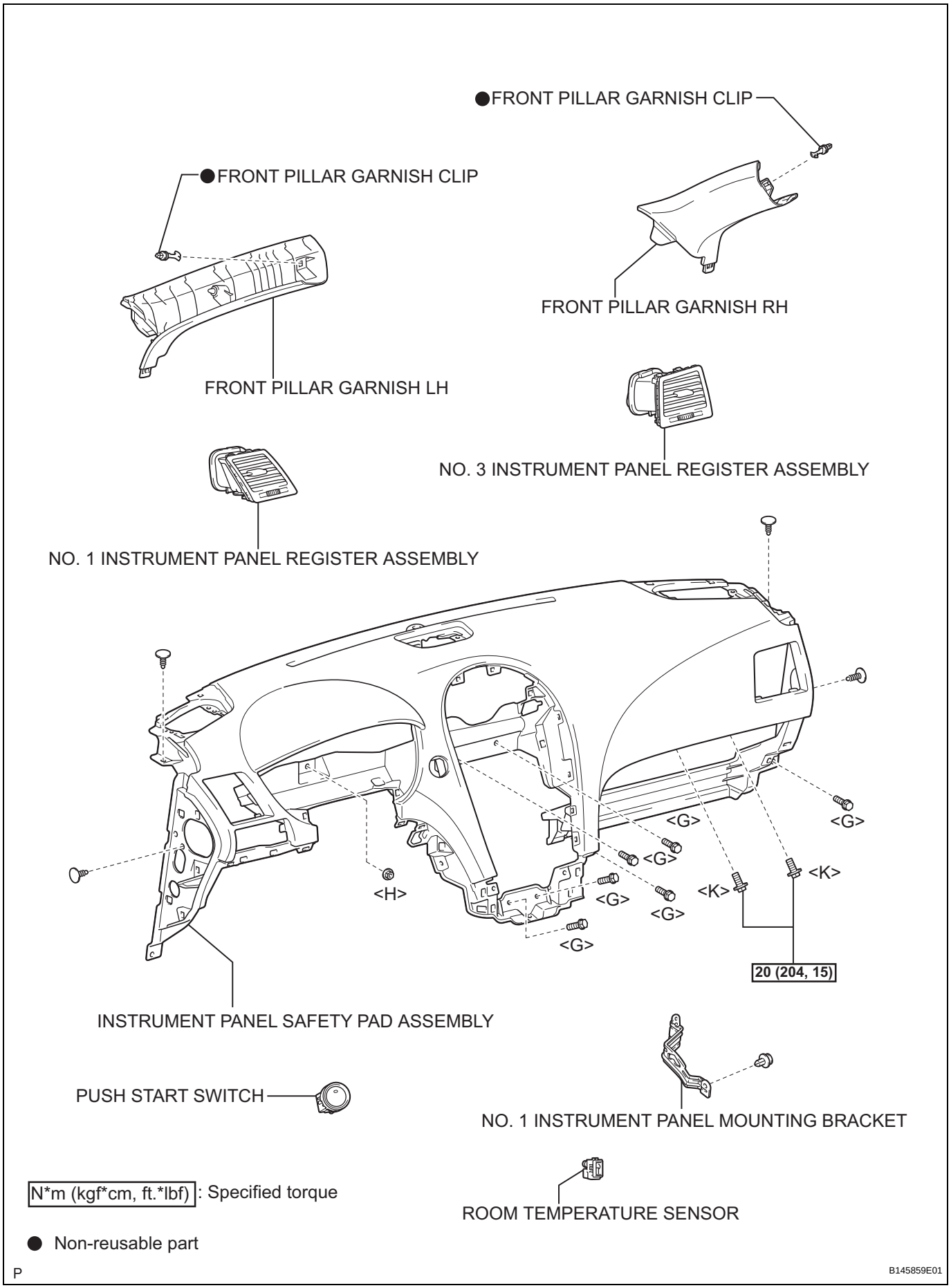

N*m (kgf*cm, ft.*lbf) : Specified torque

● Non-reusable part

P

B145859E01

AC

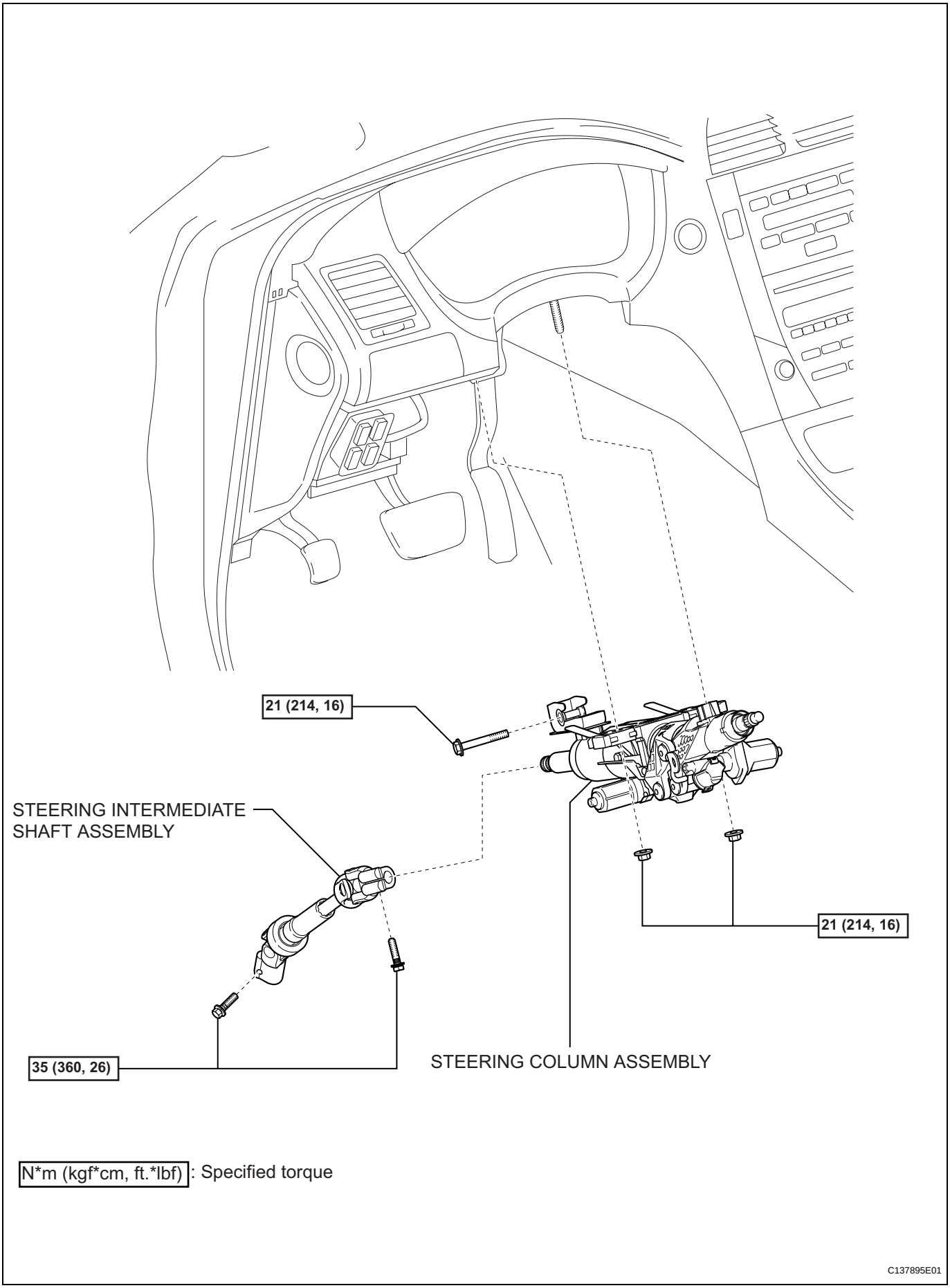
21 (214, 16)
STEERING INTERMEDIATE SHAFT ASSEMBLY
21 (214, 16)
35 (360, 26)
STEERING COLUMN ASSEMBLY
N*m (kgf*cm, ft.*lbf): Specified torque
C137895E01

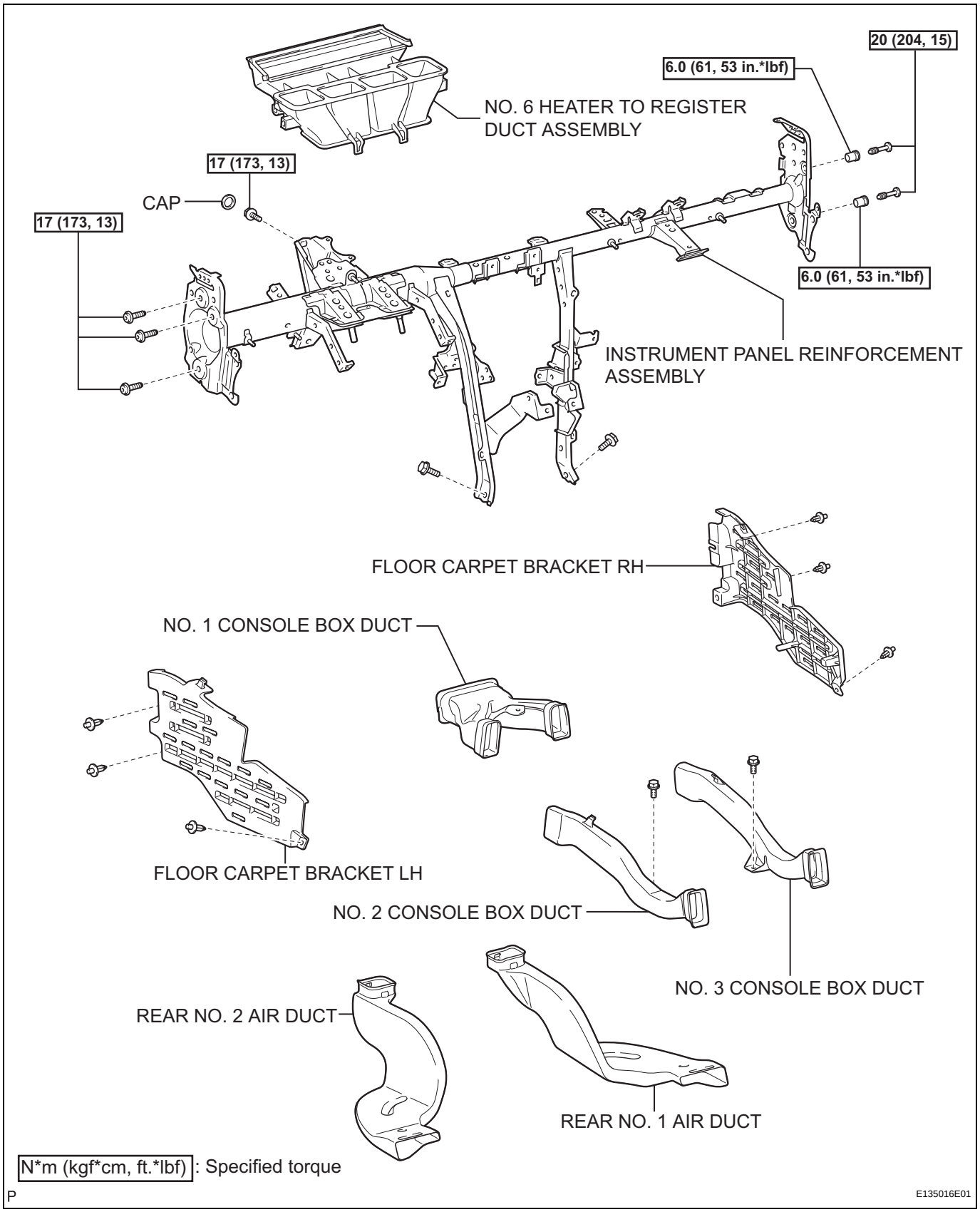
20 (204, 15)
6.0 (61, 53 in.*lbf)
NO. 6 HEATER TO REGISTER DUCT ASSEMBLY
17 (173, 13)
CAP
17 (173, 13)
6.0 (61, 53 in.*lbf)
INSTRUMENT PANEL REINFORCEMENT ASSEMBLY
FLOOR CARPET BRACKET RH
NO. 1 CONSOLE BOX DUCT
FLOOR CARPET BRACKET LH
NO. 2 CONSOLE BOX DUCT
NO. 3 CONSOLE BOX DUCT
REAR NO. 2 AIR DUCT
REAR NO. 1 AIR DUCT
N*m (kgf*cm, ft.*lbf) : Specified torque
P
E135016E01

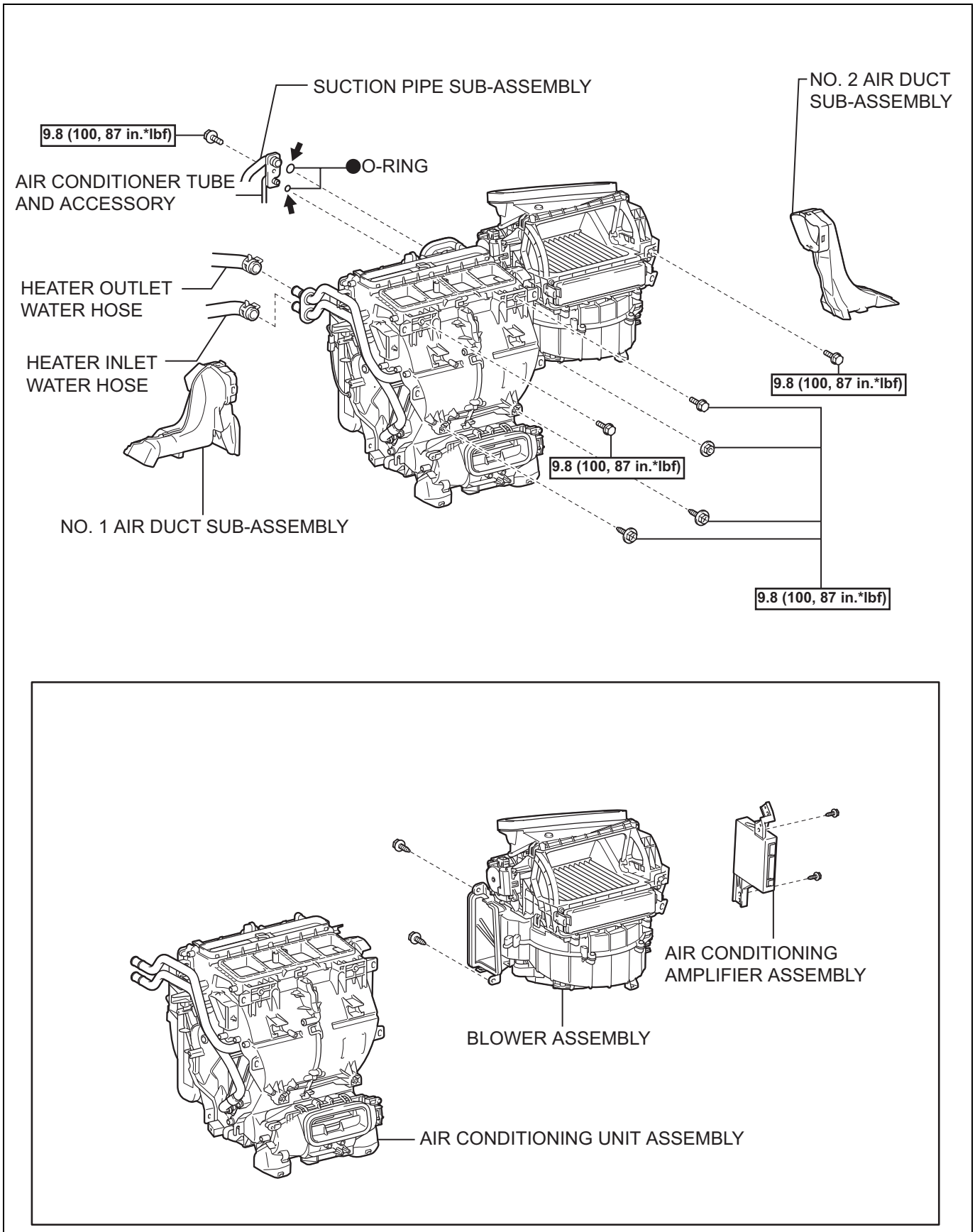

AC

← Compressor oil ND-OIL 8 or equivalent

● Non-reusable part N*m (kgf*cm, ft.*lbf): Specified torque

P

E133475E01

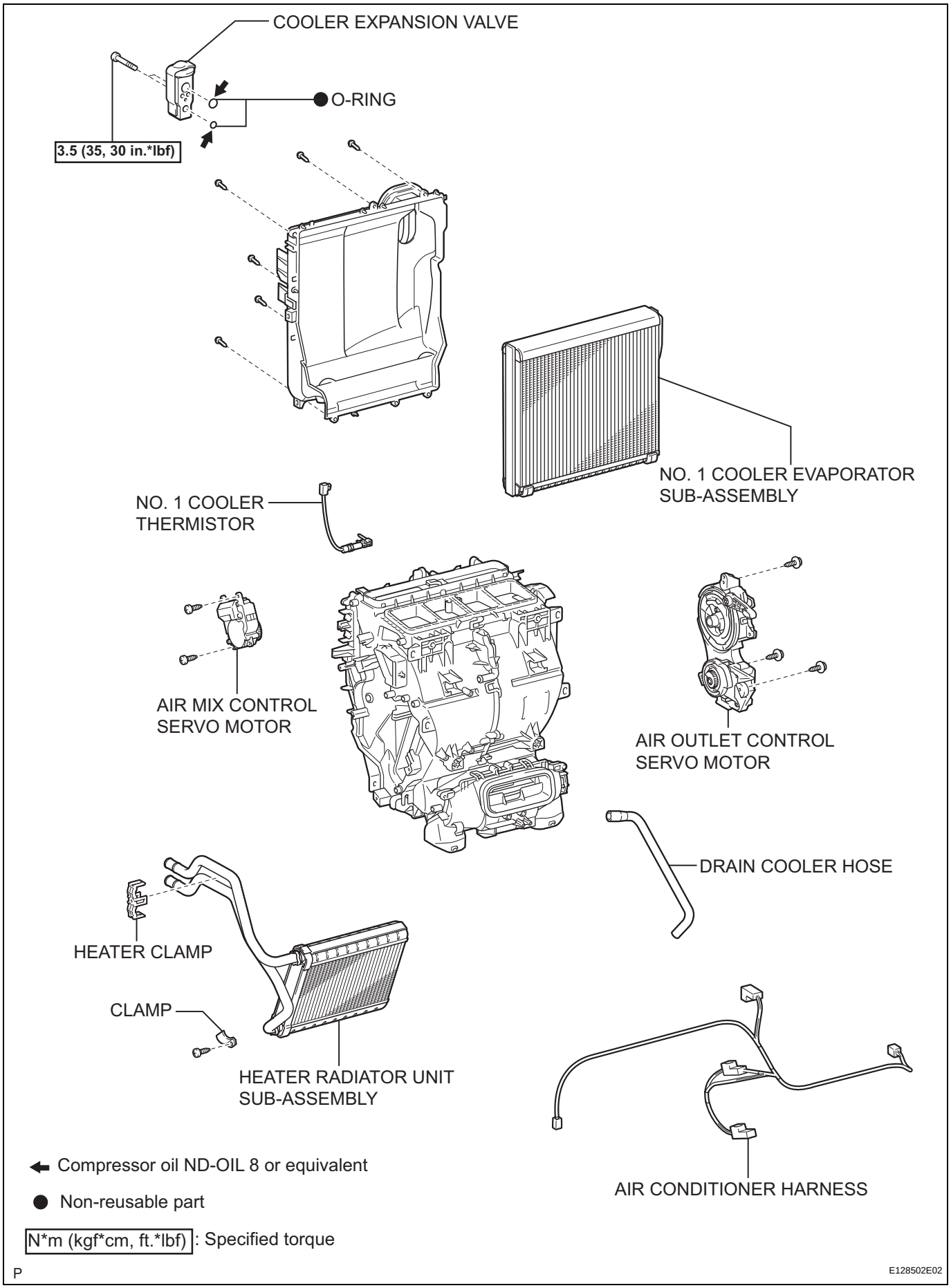
COOLER EXPANSION VALVE
O-RING
3.5 (35, 30 in.*lbf)
NO. 1 COOLER EVAPORATOR SUB-ASSEMBLY
NO. 1 COOLER THERMISTOR
AIR MIX CONTROL SERVO MOTOR
AIR OUTLET CONTROL SERVO MOTOR
DRAIN COOLER HOSE
HEATER CLAMP
CLAMP
HEATER RADIATOR UNIT SUB-ASSEMBLY
AIR CONDITIONER HARNESS
Compressor oil ND-OIL 8 or equivalent
Non-reusable part
N*m (kgf*cm, ft.*lbf) : Specified torque
P
E128502E02

BLOWER UNIT

COMPONENTS

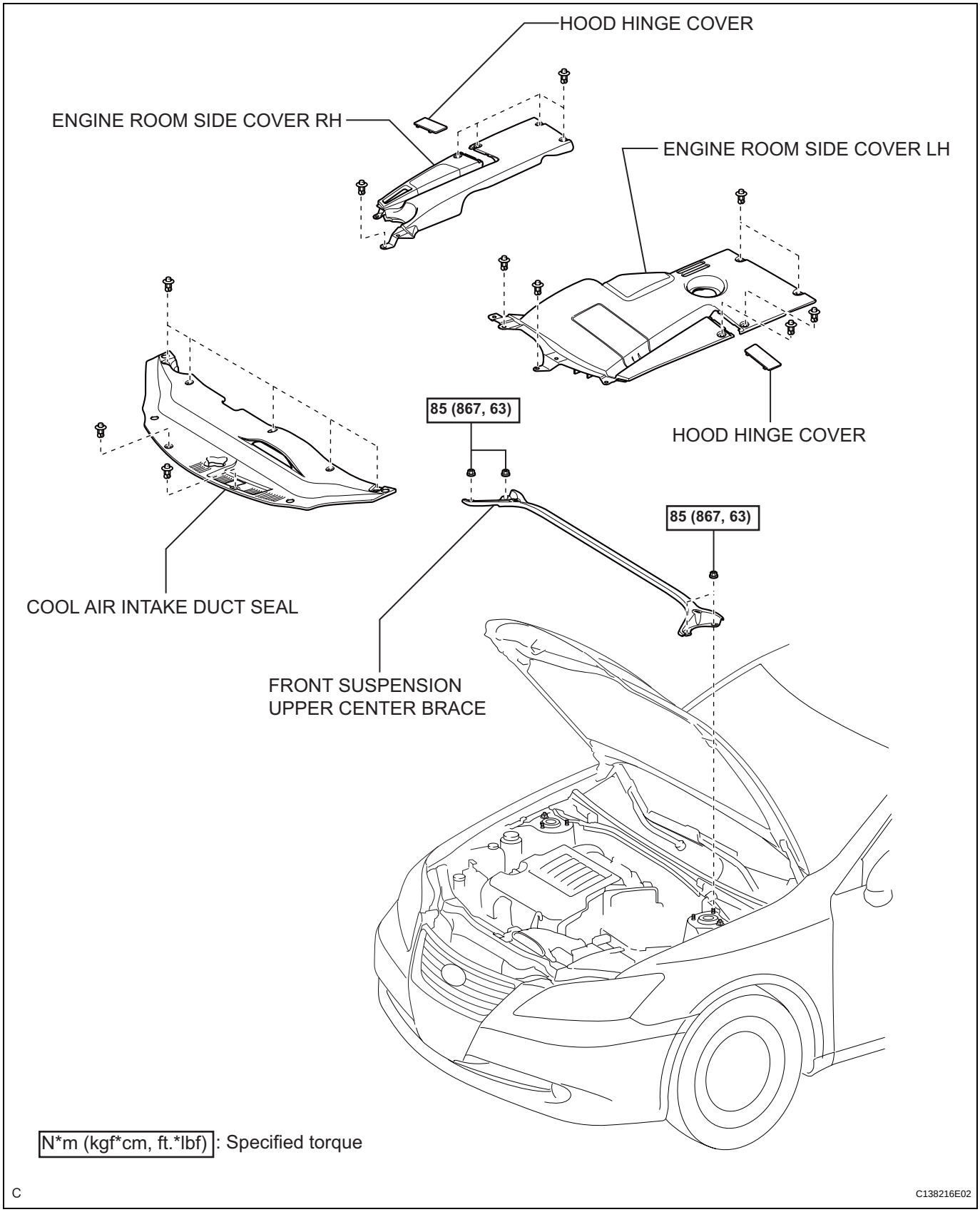

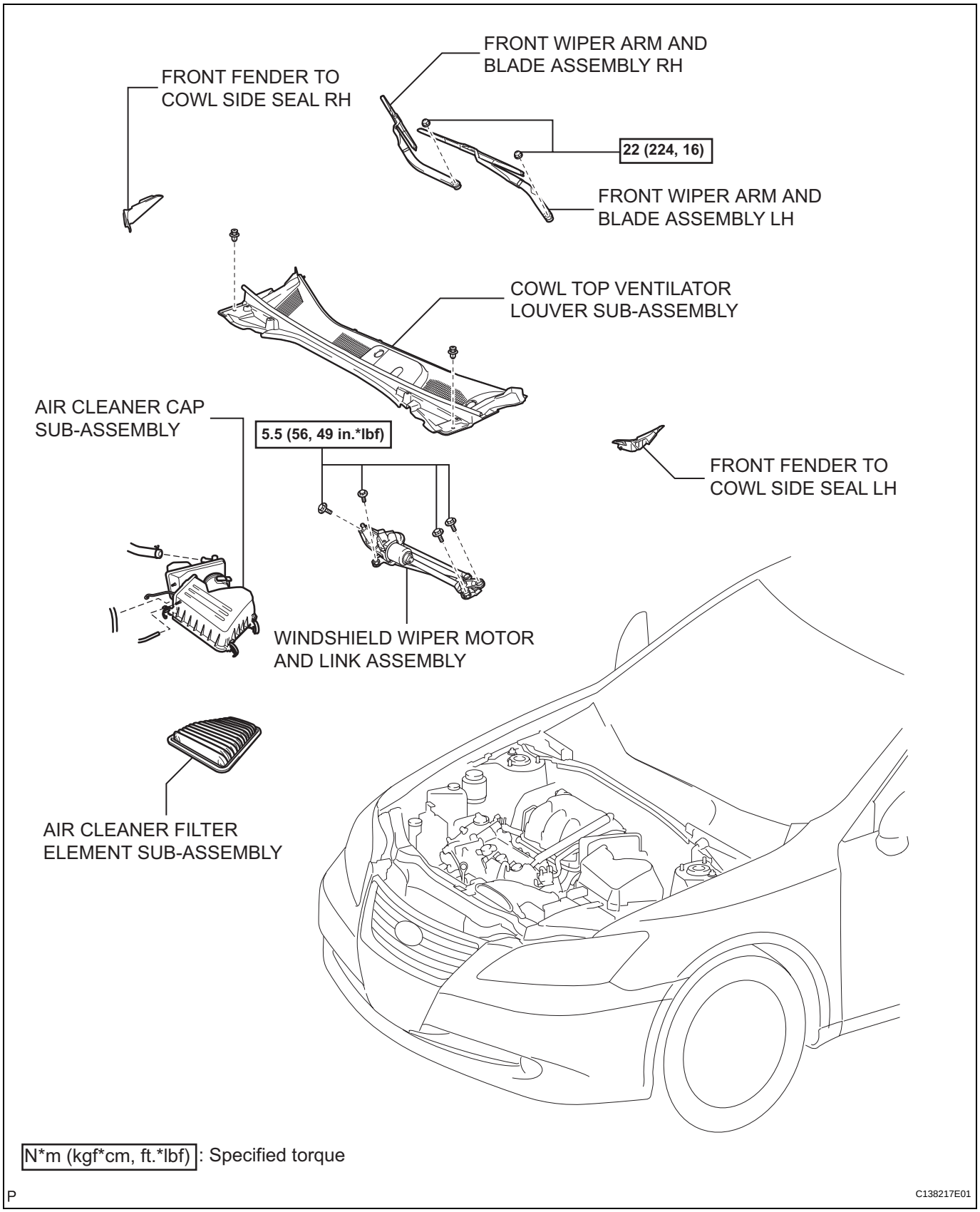
FRONT WIPER ARM AND BLADE ASSEMBLY RH
FRONT FENDER TO COWL SIDE SEAL RH
22 (224, 16)
FRONT WIPER ARM AND BLADE ASSEMBLY LH
COWL TOP VENTILATOR LOUVER SUB-ASSEMBLY
AIR CLEANER CAP SUB-ASSEMBLY
5.5 (56, 49 in.*lbf)
FRONT FENDER TO COWL SIDE SEAL LH
WINDSHIELD WIPER MOTOR AND LINK ASSEMBLY
AIR CLEANER FILTER ELEMENT SUB-ASSEMBLY
N*m (kgf*cm, ft.*lbf) : Specified torque
P
C138217E01

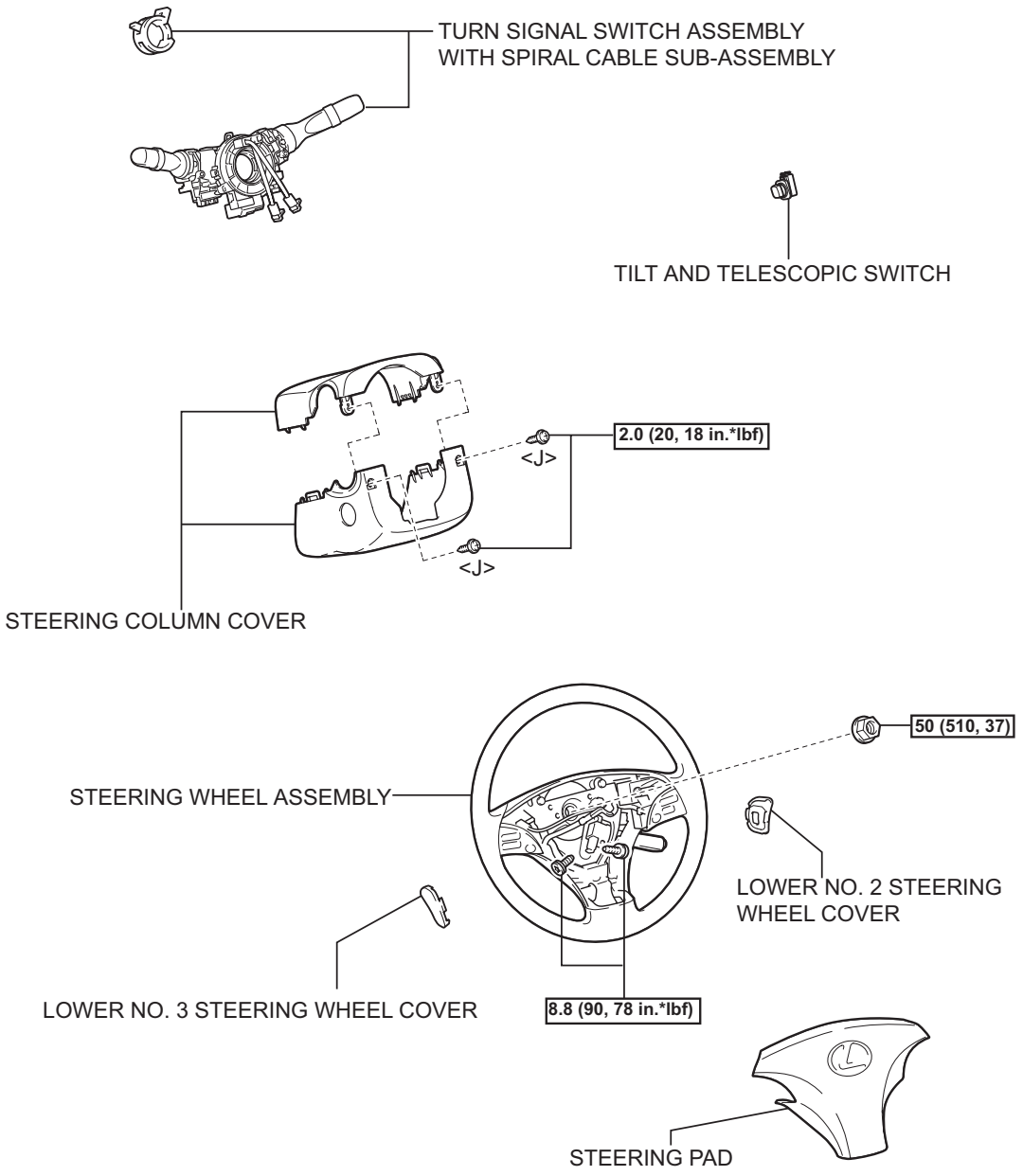

N*m (kgf*cm, ft.*lbf) : Specified torque

P

B145852E01

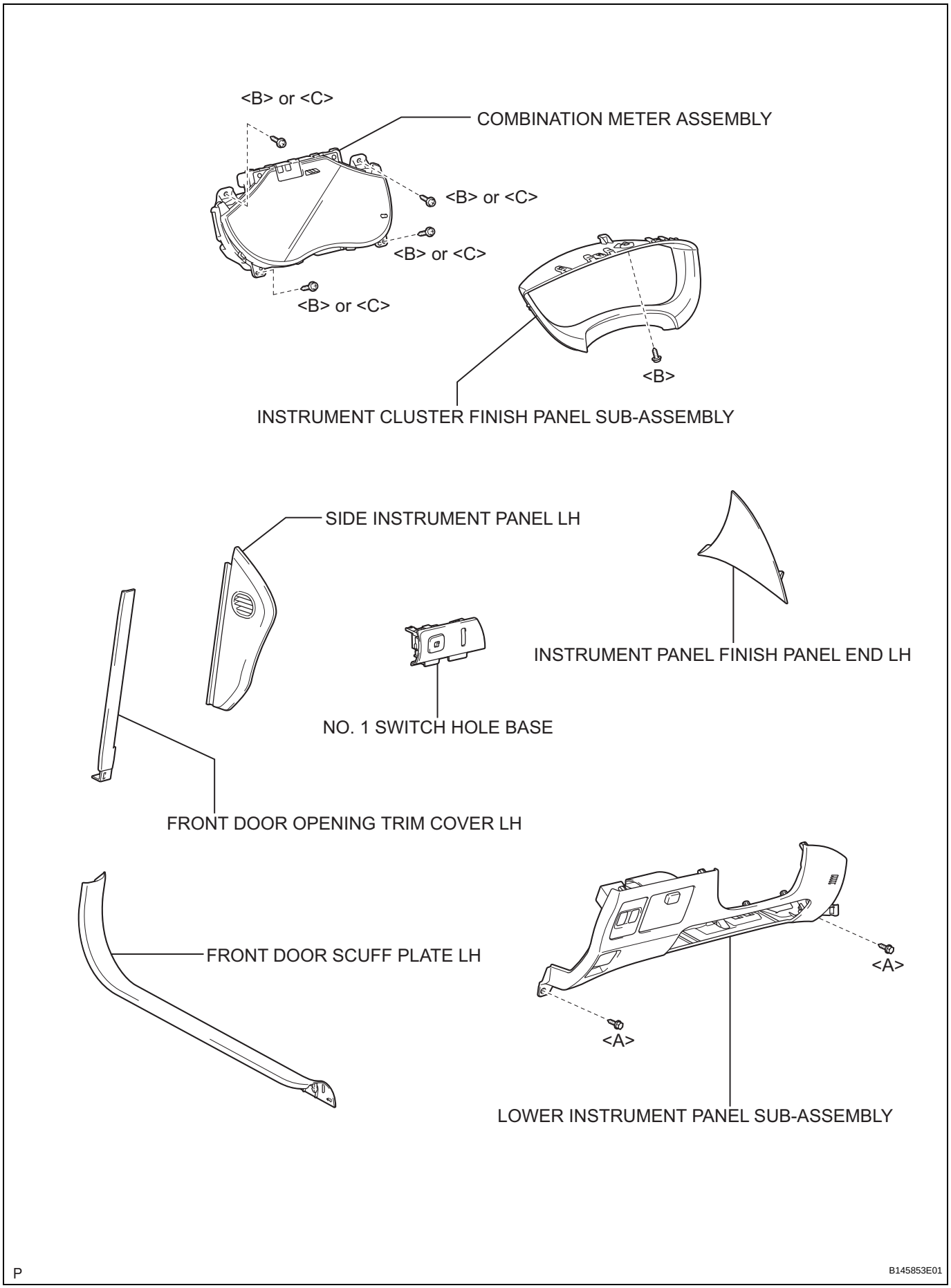
<B> or <C>
COMBINATION METER ASSEMBLY
<B> or <C>
<B> or <C>
<B> or <C>
<B>
INSTRUMENT CLUSTER FINISH PANEL SUB-ASSEMBLY
SIDE INSTRUMENT PANEL LH
INSTRUMENT PANEL FINISH PANEL END LH
NO. 1 SWITCH HOLE BASE
FRONT DOOR OPENING TRIM COVER LH
FRONT DOOR SCUFF PLATE LH
<A>
<A>
LOWER INSTRUMENT PANEL SUB-ASSEMBLY
P
B145853E01

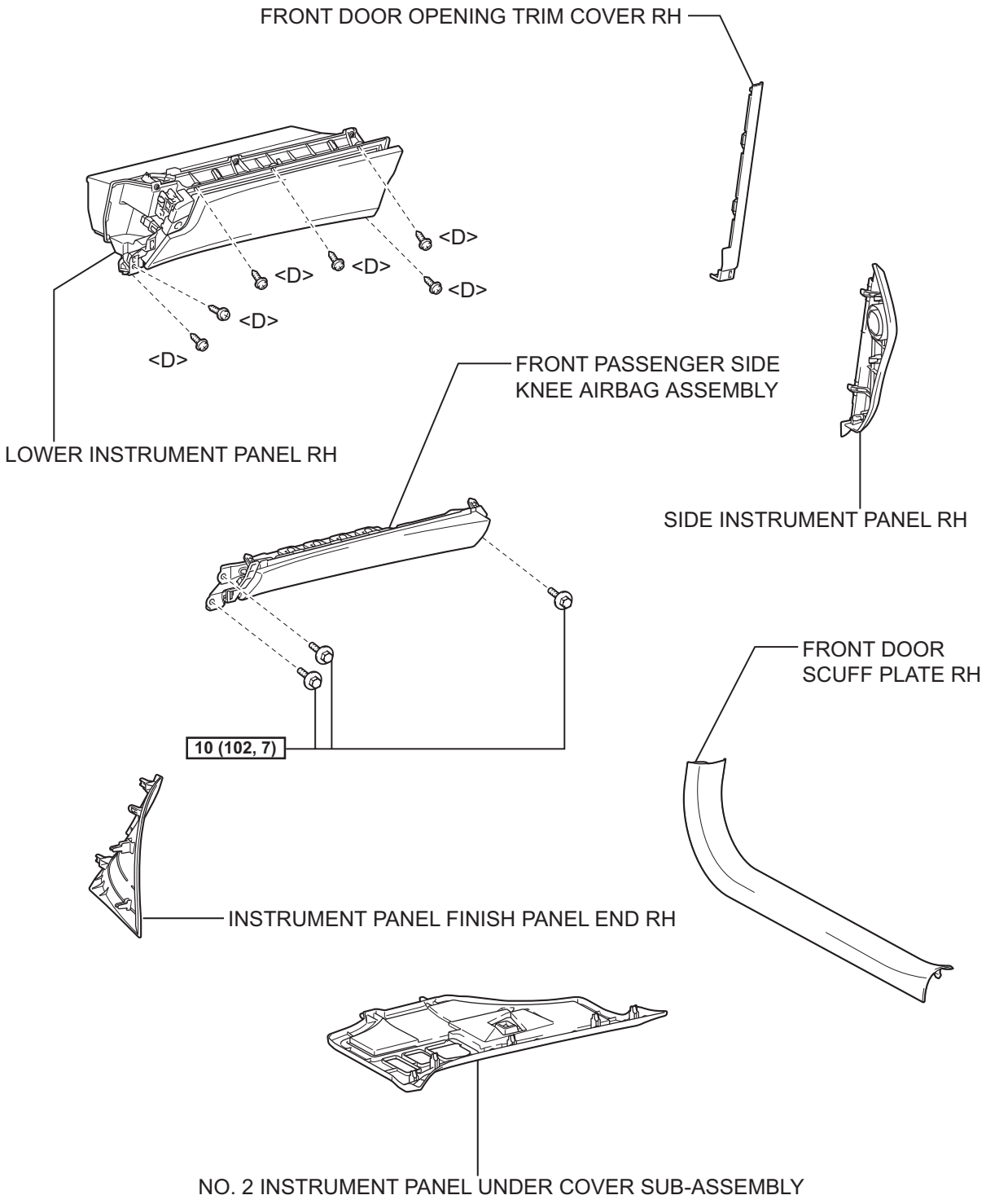

AC

N*m (kgf*cm, ft.*lbf) : Specified torque

P

B145855E01

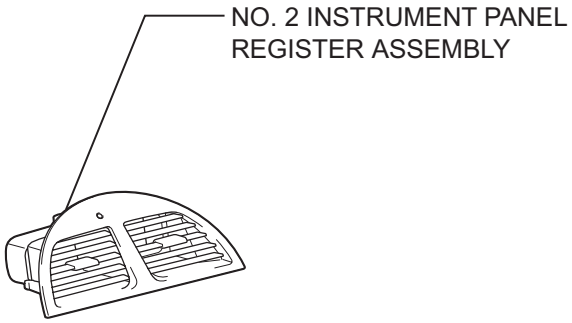

without Navigation System:

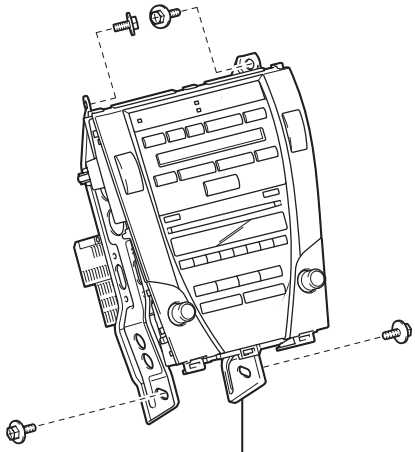

with Navigation System:

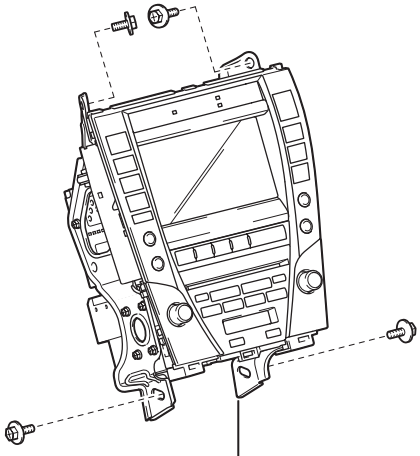

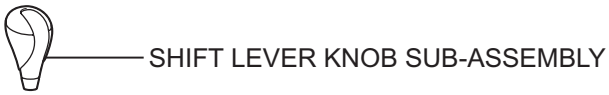

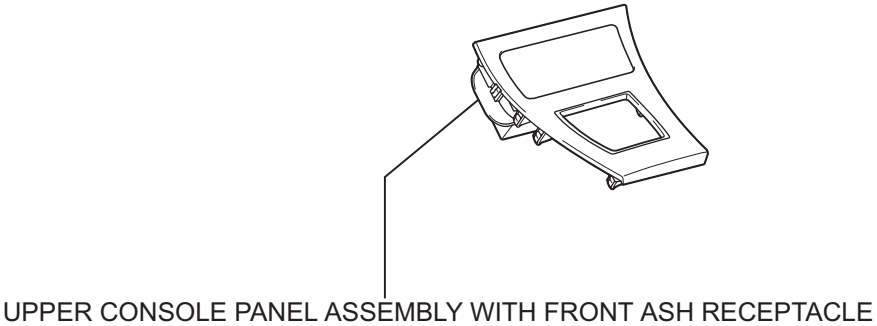

AC

P

B145856E01

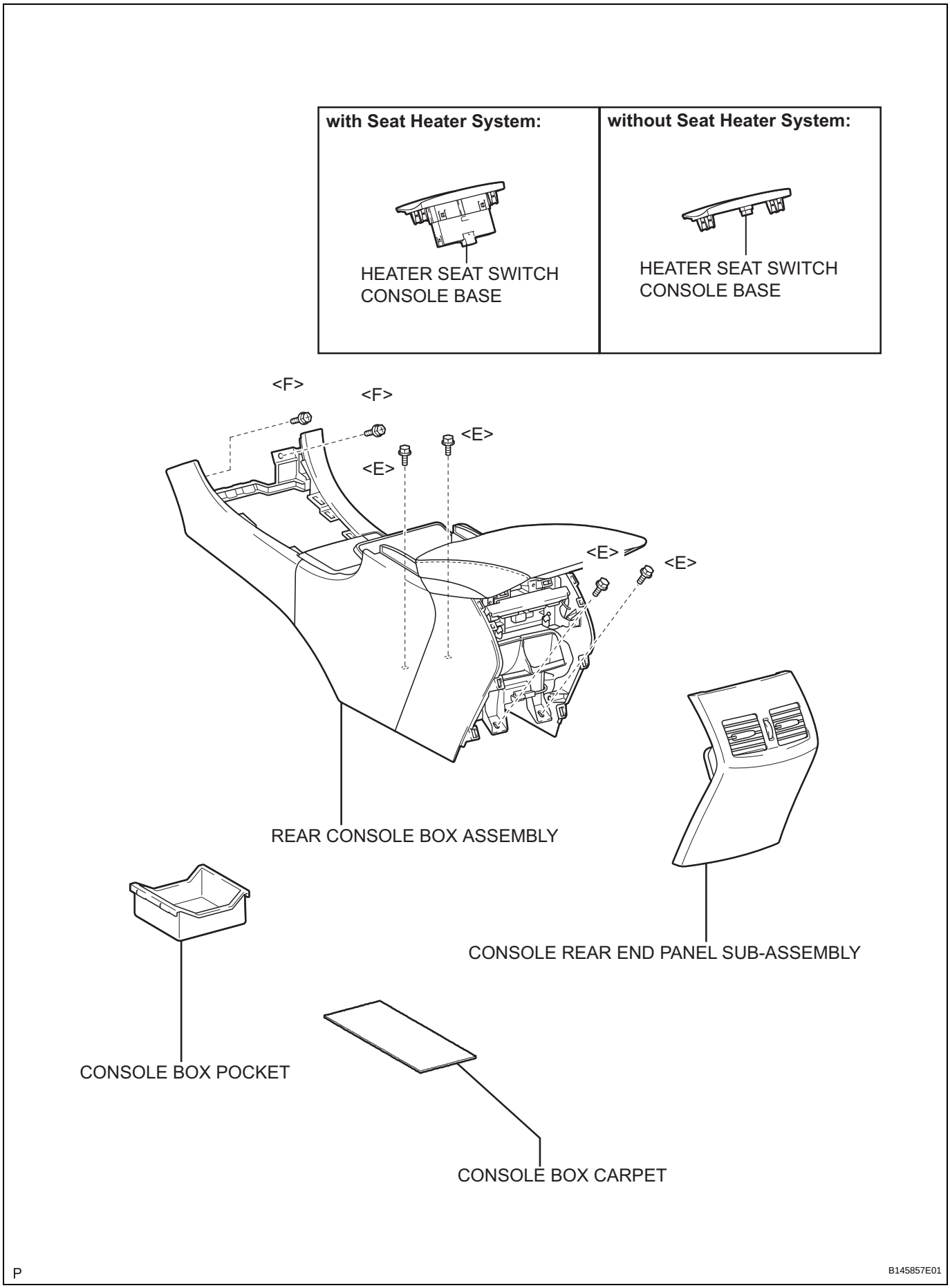
with Seat Heater System:
HEATER SEAT SWITCH CONSOLE BASE
without Seat Heater System:
HEATER SEAT SWITCH CONSOLE BASE
<F>
<F>
<E>
<E>
<E>
<E>
REAR CONSOLE BOX ASSEMBLY
CONSOLE REAR END PANEL SUB-ASSEMBLY
CONSOLE BOX POCKET
CONSOLE BOX CARPET
P
B145857E01

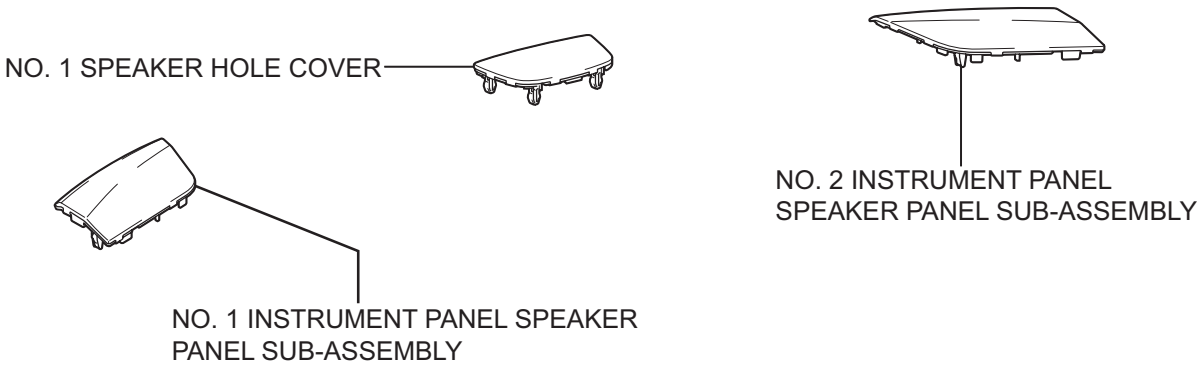

without Rear Header Speaker:

with Rear Header Speaker:

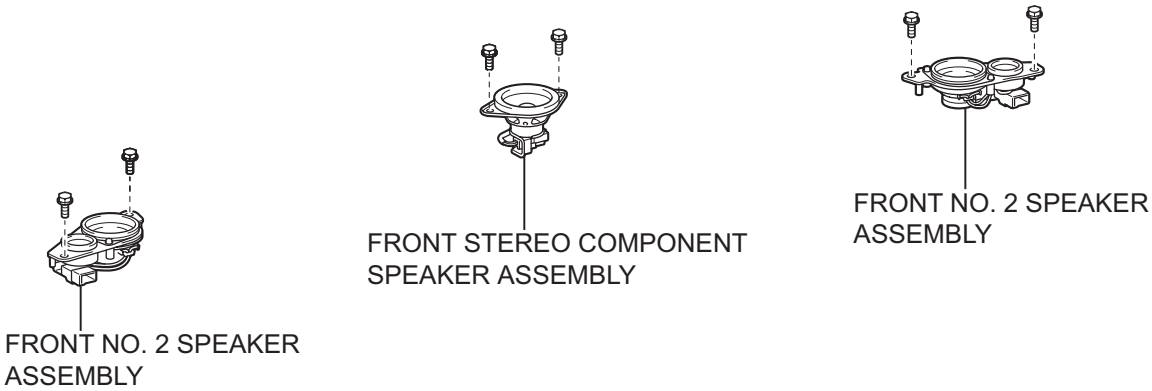

AC

P

B145858E02

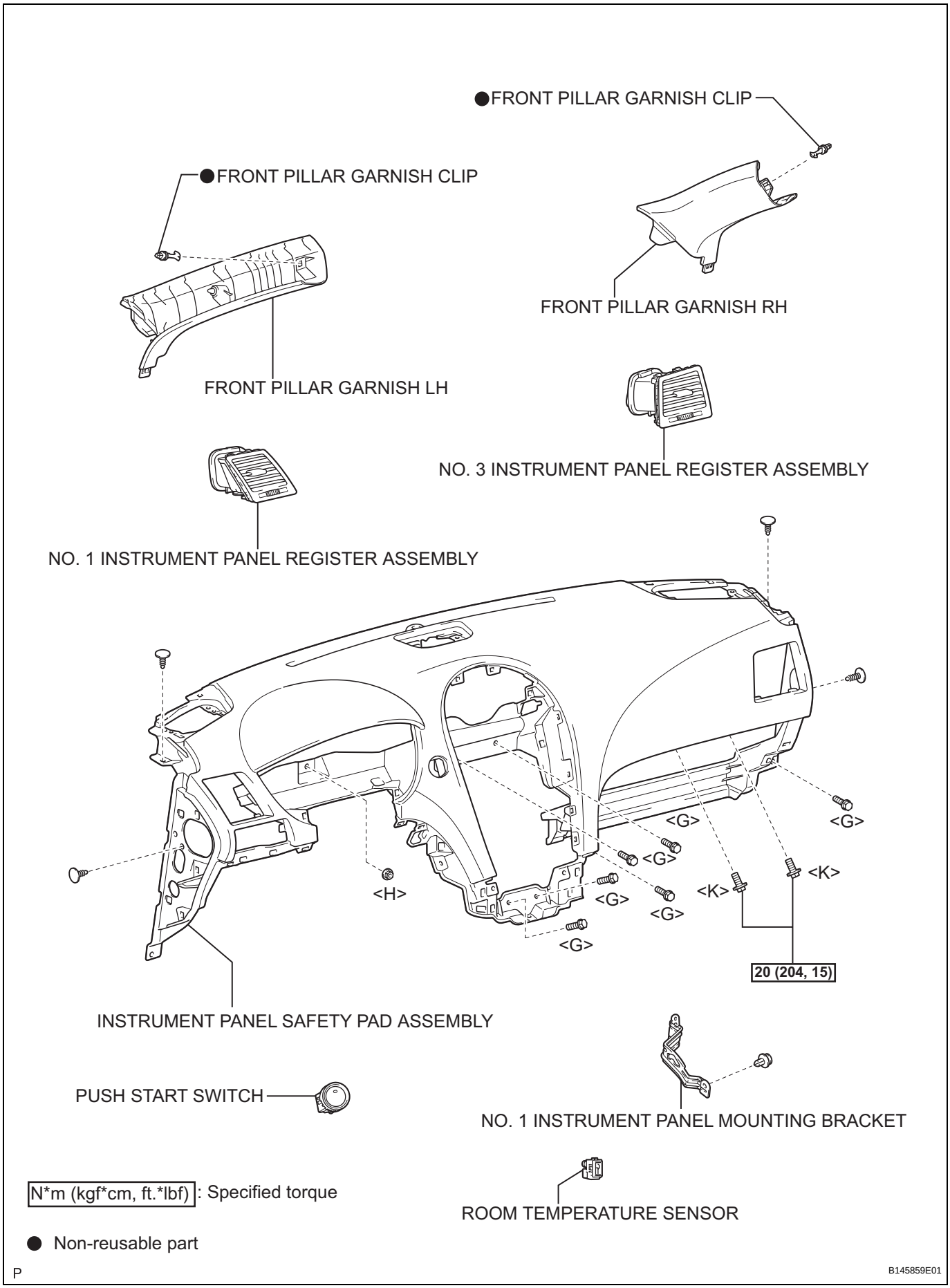
●FRONT PILLAR GARNISH CLIP
●FRONT PILLAR GARNISH CLIP
FRONT PILLAR GARNISH RH
FRONT PILLAR GARNISH LH
NO. 3 INSTRUMENT PANEL REGISTER ASSEMBLY
NO. 1 INSTRUMENT PANEL REGISTER ASSEMBLY
<G>
<G>
<G>
<K>
<K>
<H>
<G>
<G>
<G>
20 (204, 15)
INSTRUMENT PANEL SAFETY PAD ASSEMBLY
PUSH START SWITCH
NO. 1 INSTRUMENT PANEL MOUNTING BRACKET
ROOM TEMPERATURE SENSOR
N*m (kgf*cm, ft.*lbf) : Specified torque
● Non-reusable part
P
B145859E01

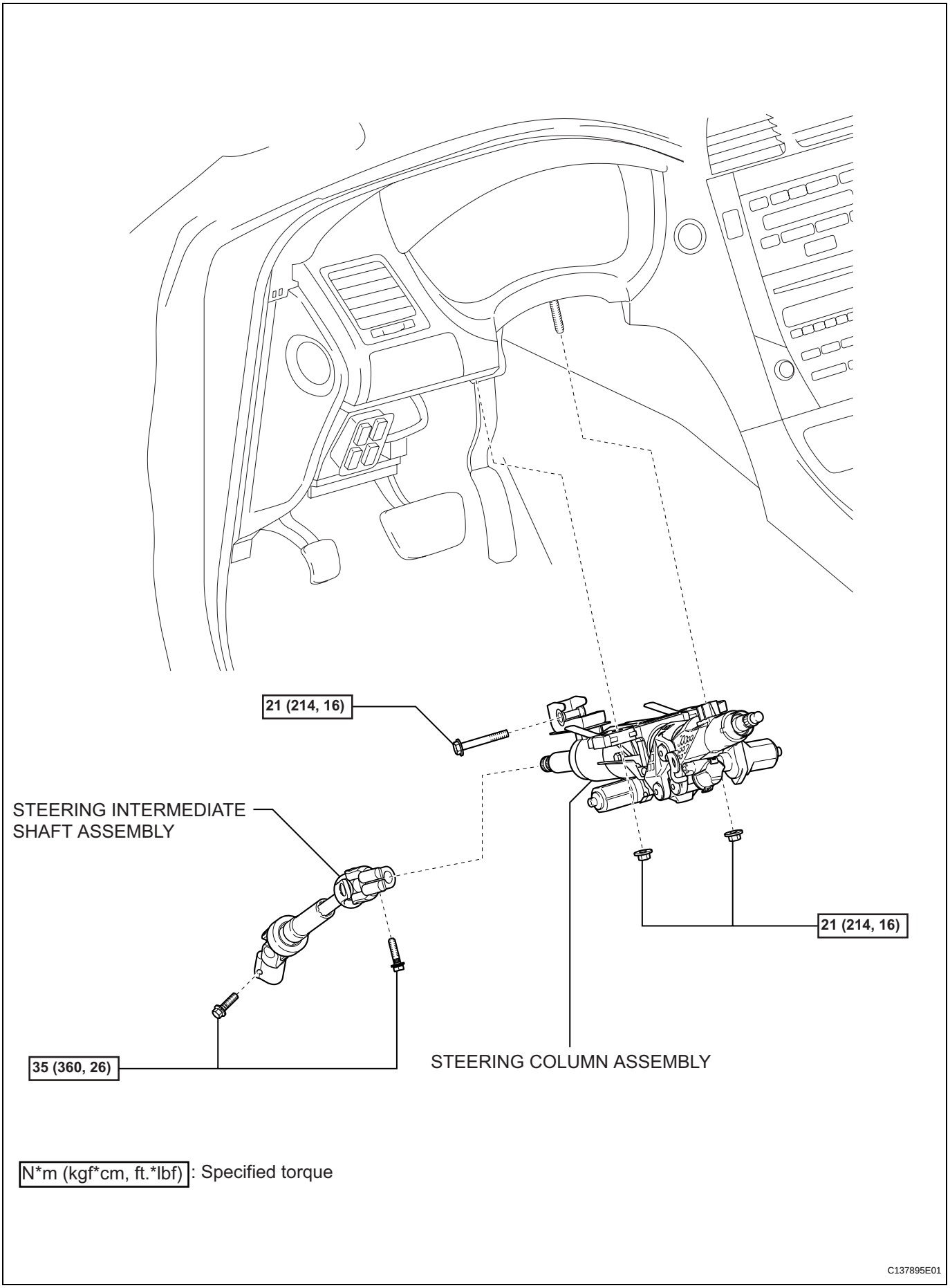
21 (214, 16)
STEERING INTERMEDIATE SHAFT ASSEMBLY
21 (214, 16)
35 (360, 26)
STEERING COLUMN ASSEMBLY
N*m (kgf*cm, ft.*lbf): Specified torque
C137895E01

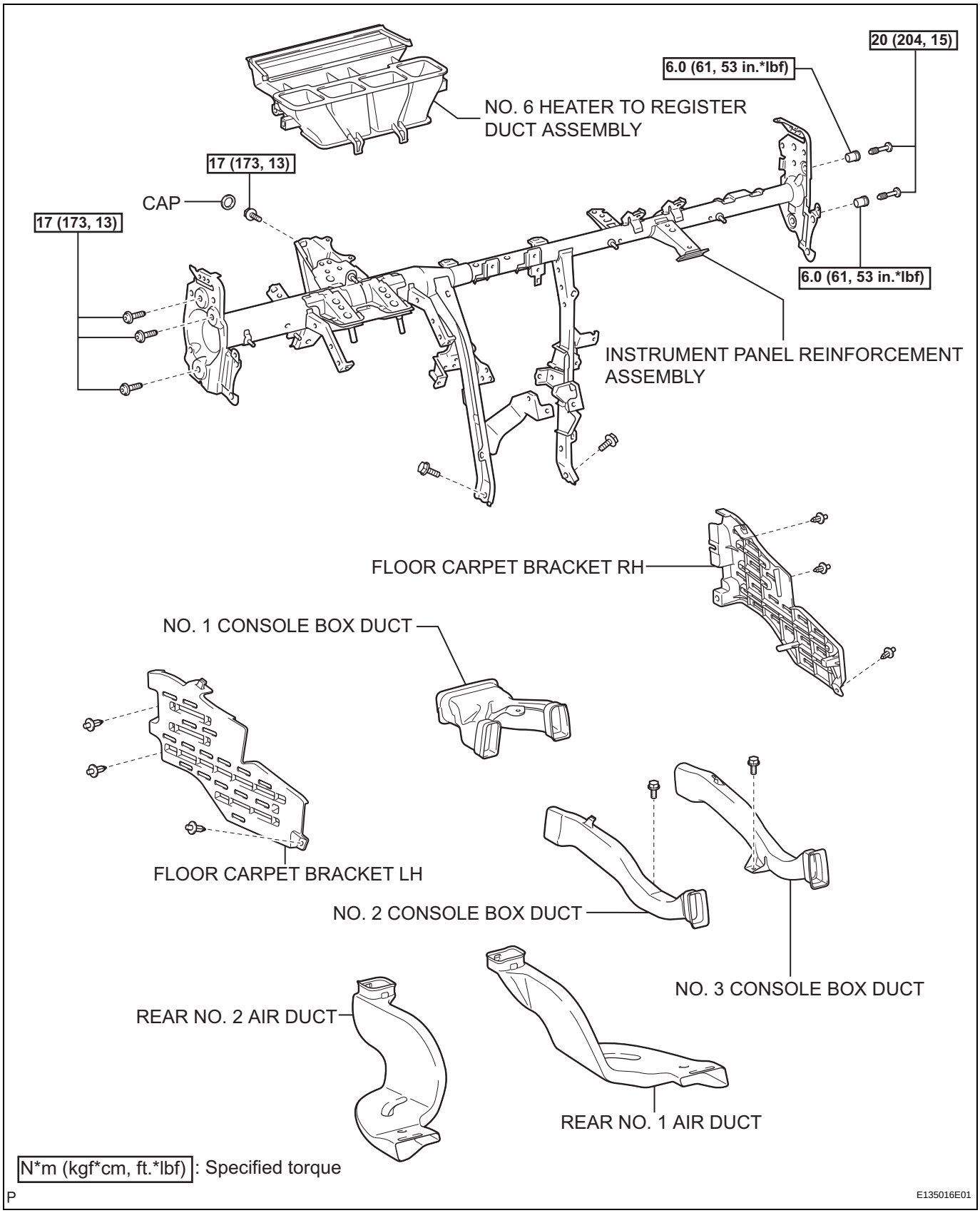
20 (204, 15)
6.0 (61, 53 in.*lbf)
NO. 6 HEATER TO REGISTER DUCT ASSEMBLY
17 (173, 13)
CAP
17 (173, 13)
6.0 (61, 53 in.*lbf)
INSTRUMENT PANEL REINFORCEMENT ASSEMBLY
FLOOR CARPET BRACKET RH
NO. 1 CONSOLE BOX DUCT
FLOOR CARPET BRACKET LH
NO. 2 CONSOLE BOX DUCT
NO. 3 CONSOLE BOX DUCT
REAR NO. 2 AIR DUCT
REAR NO. 1 AIR DUCT
N*m (kgf*cm, ft.*lbf) : Specified torque
P
E135016E01

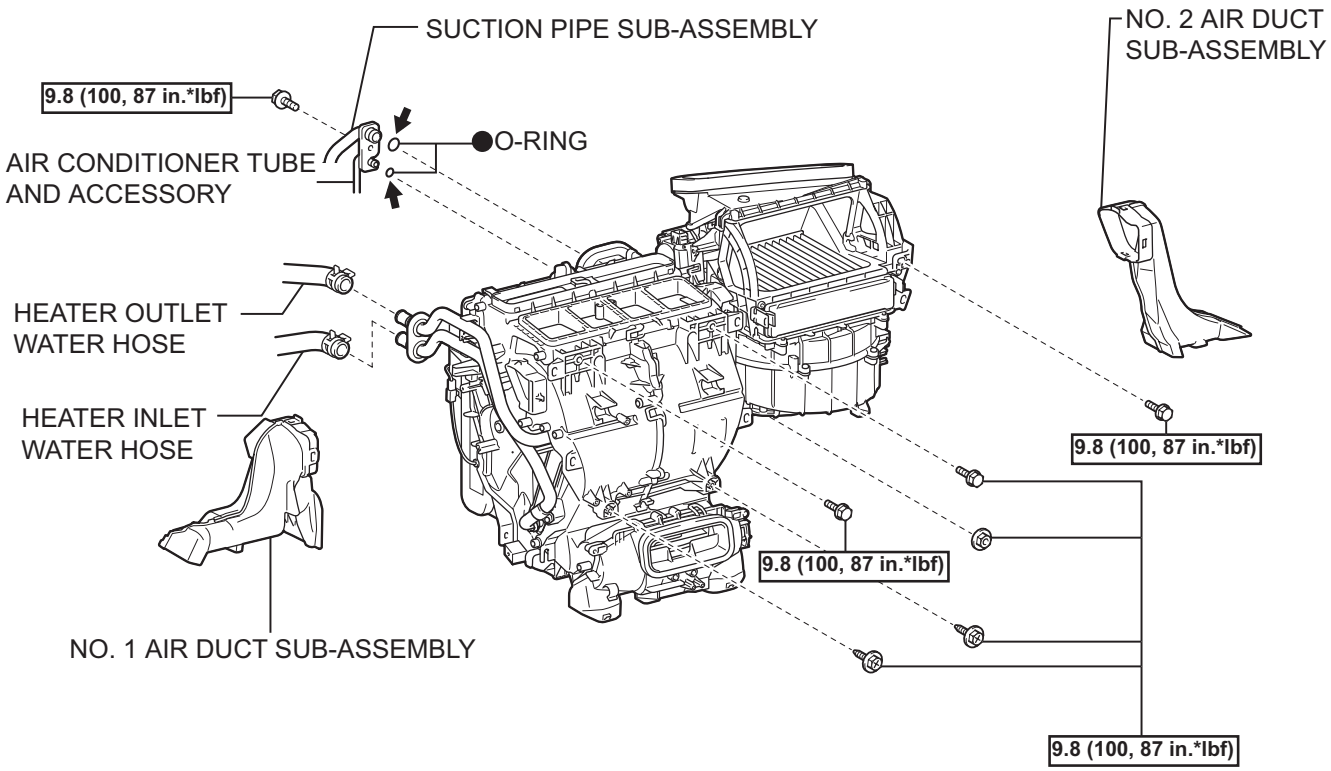

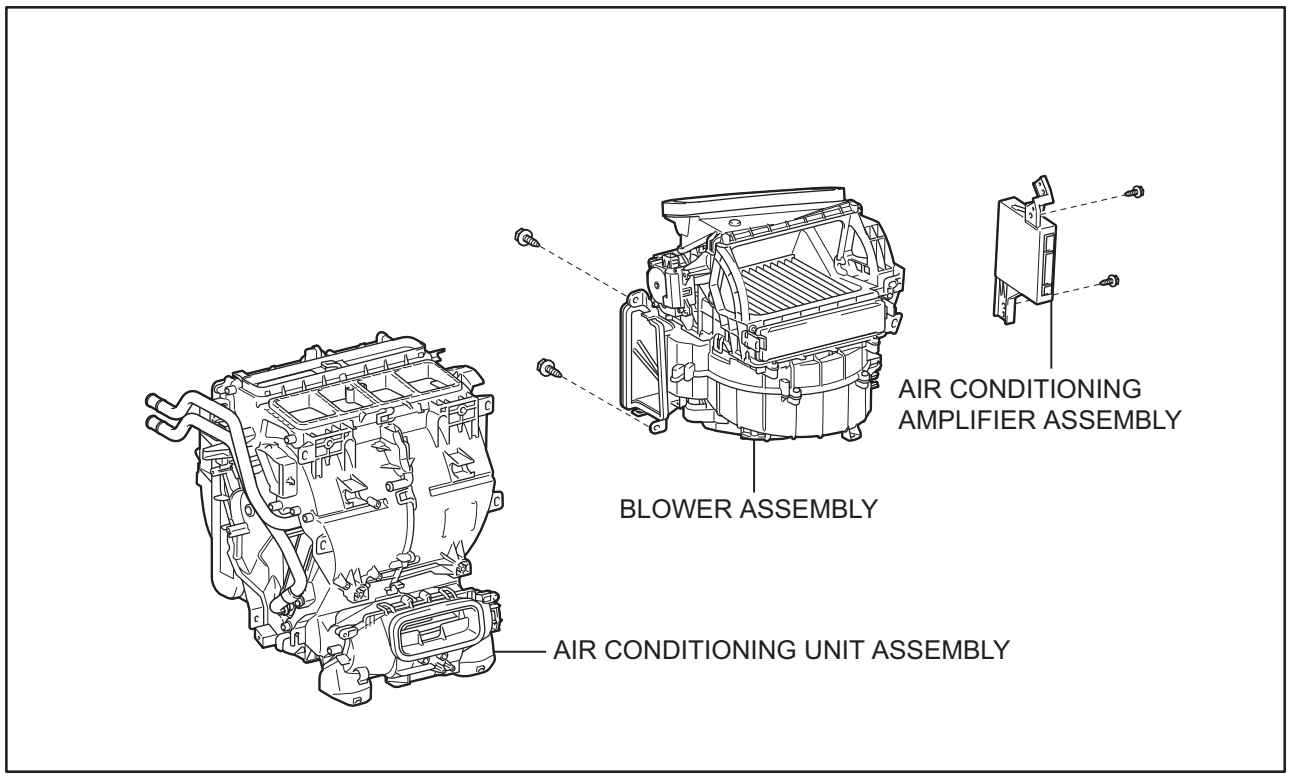

⬅ Compressor oil ND-OIL 8 or equivalent

● Non-reusable part N*m (kgf*cm, ft.*lbf): Specified torque

P

E133475E01

AC

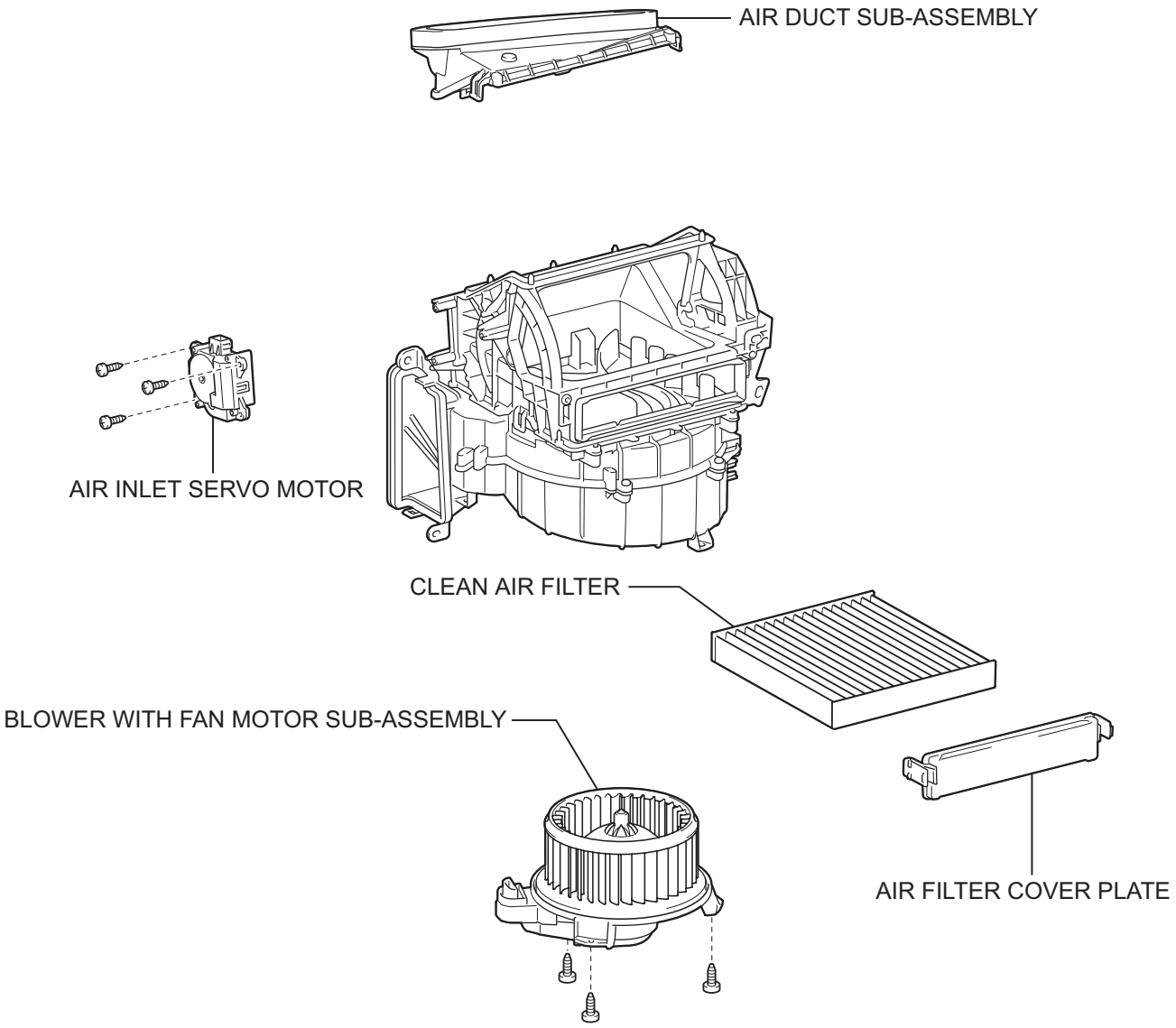

P

E133476E01

COMPRESSOR AND MAGNETIC CLUTCH

COMPONENTS

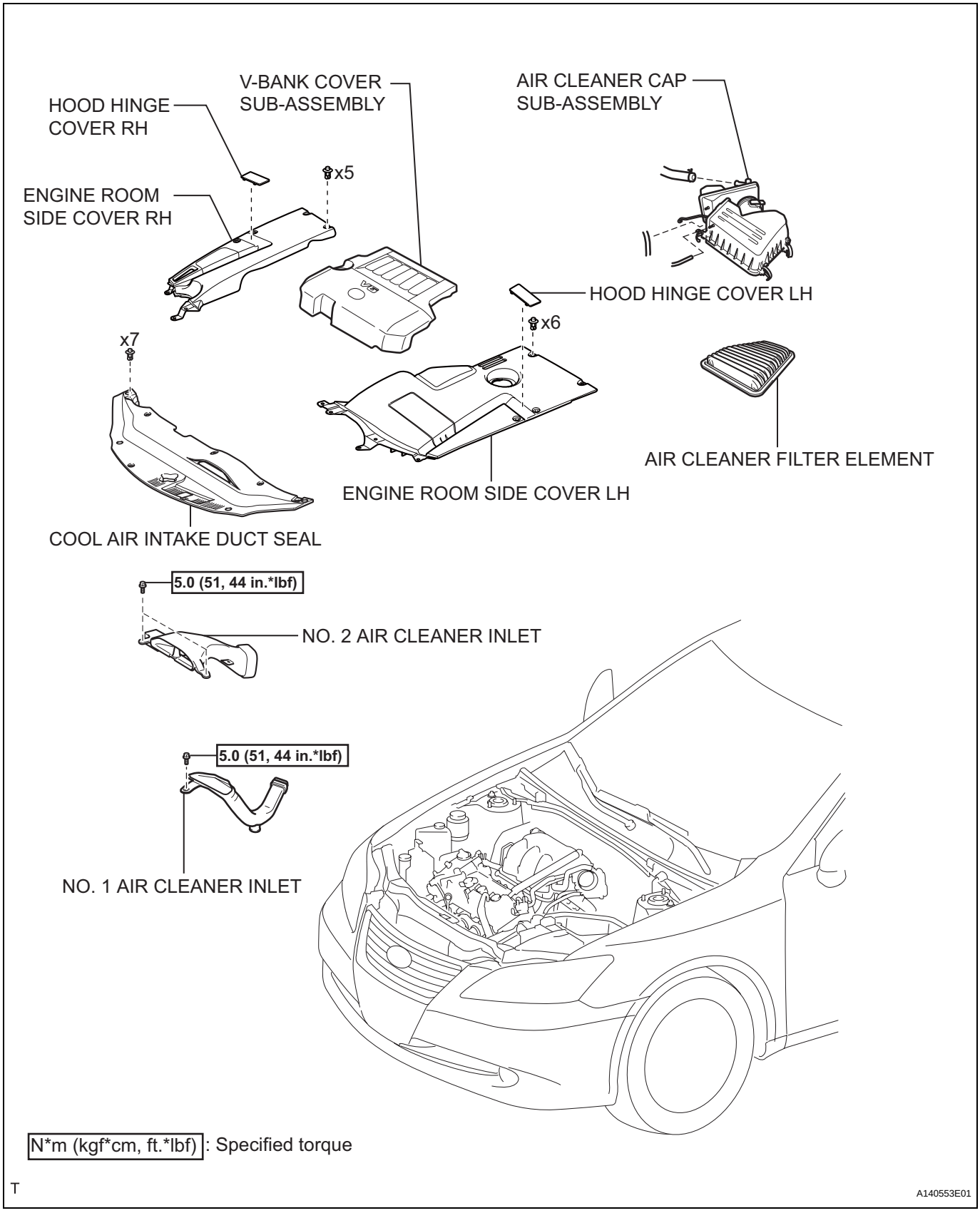

N*m (kgf*cm, ft.*lbf) : Specified torque

T

A140553E01

AC

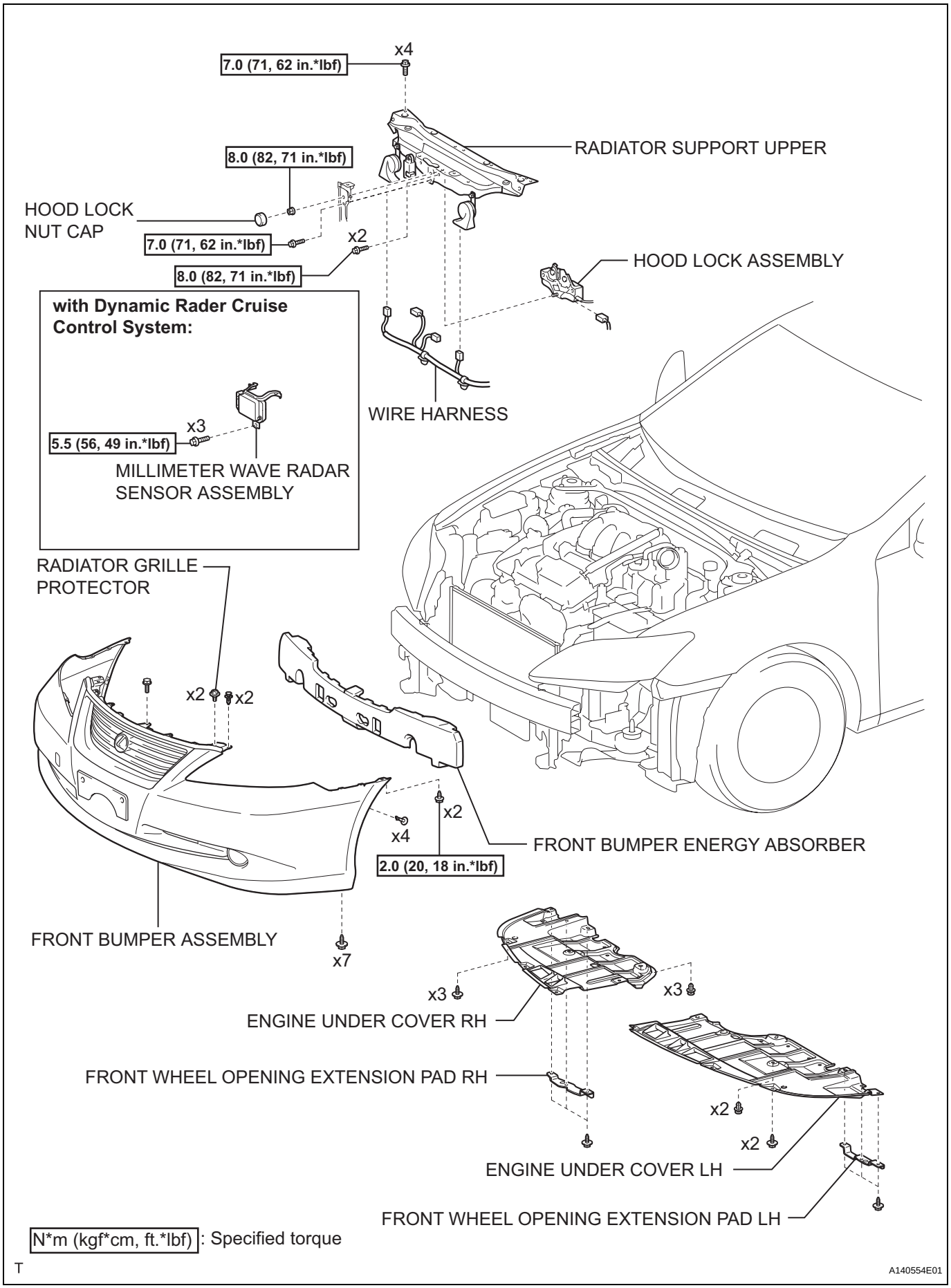
7.0 (71, 62 in.*lbf)
x4
RADIATOR SUPPORT UPPER
8.0 (82, 71 in.*lbf)
HOOD LOCK NUT CAP
7.0 (71, 62 in.*lbf)
x2
8.0 (82, 71 in.*lbf)
HOOD LOCK ASSEMBLY
with Dynamic Rader Cruise Control System:
x3
5.5 (56, 49 in.*lbf)
MILLIMETER WAVE RADAR SENSOR ASSEMBLY
WIRE HARNESS
RADIATOR GRILLE PROTECTOR
x2
x2
x2
x4
2.0 (20, 18 in.*lbf)
FRONT BUMPER ENERGY ABSORBER
FRONT BUMPER ASSEMBLY
x7
x3
x3
ENGINE UNDER COVER RH
FRONT WHEEL OPENING EXTENSION PAD RH
x2
x2
ENGINE UNDER COVER LH
FRONT WHEEL OPENING EXTENSION PAD LH
N*m (kgf*cm, ft.*lbf): Specified torque
T
A140554E01

AC

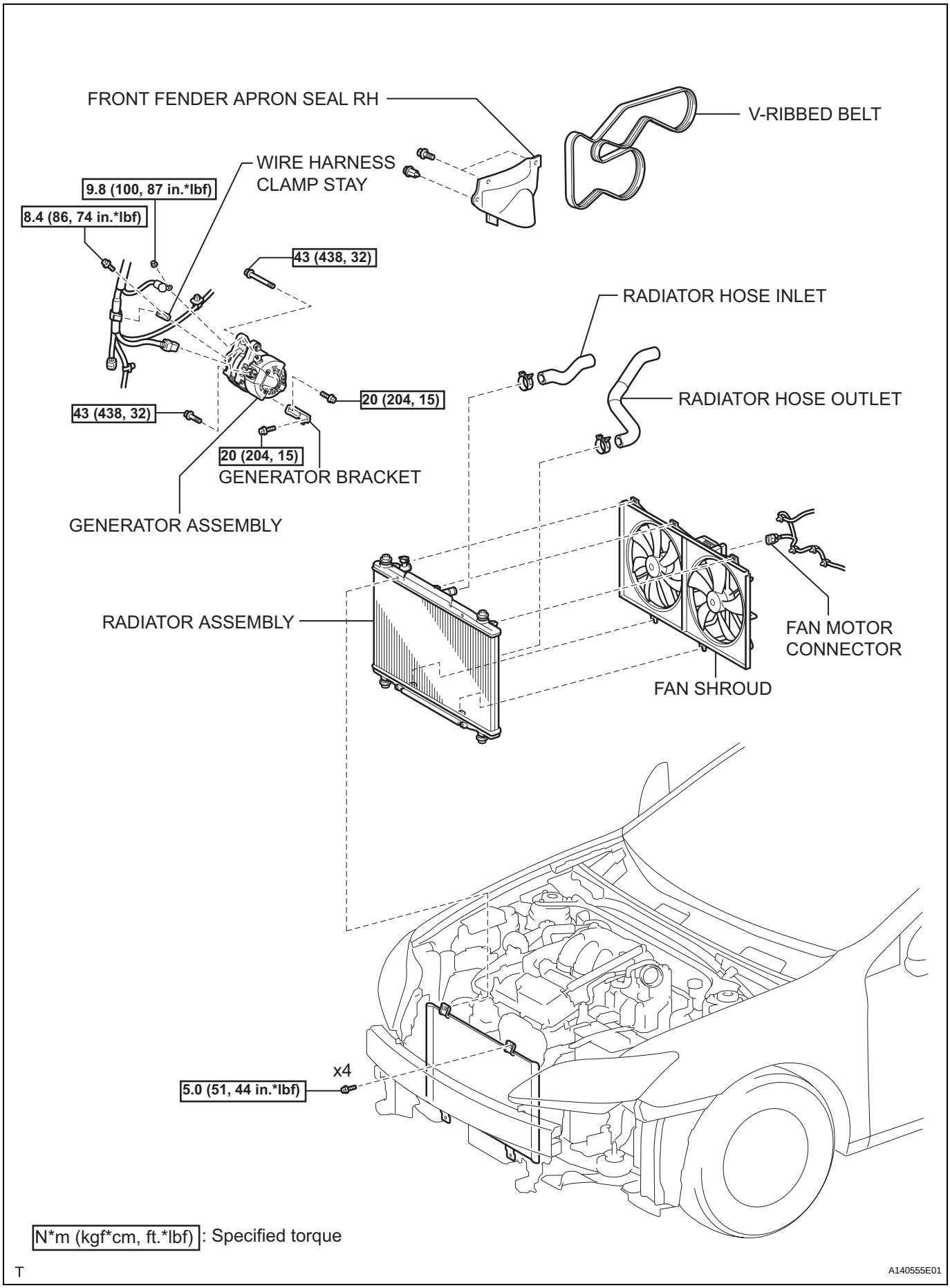
FRONT FENDER APRON SEAL RH
V-RIBBED BELT
WIRE HARNESS CLAMP STAY
9.8 (100, 87 in.*lbf)
8.4 (86, 74 in.*lbf)
43 (438, 32)
RADIATOR HOSE INLET
20 (204, 15)
RADIATOR HOSE OUTLET
43 (438, 32)
20 (204, 15)
GENERATOR BRACKET
GENERATOR ASSEMBLY
RADIATOR ASSEMBLY
FAN MOTOR CONNECTOR
FAN SHROUD
x4
5.0 (51, 44 in.*lbf)
N*m (kgf*cm, ft.*lbf): Specified torque
T
A140555E01

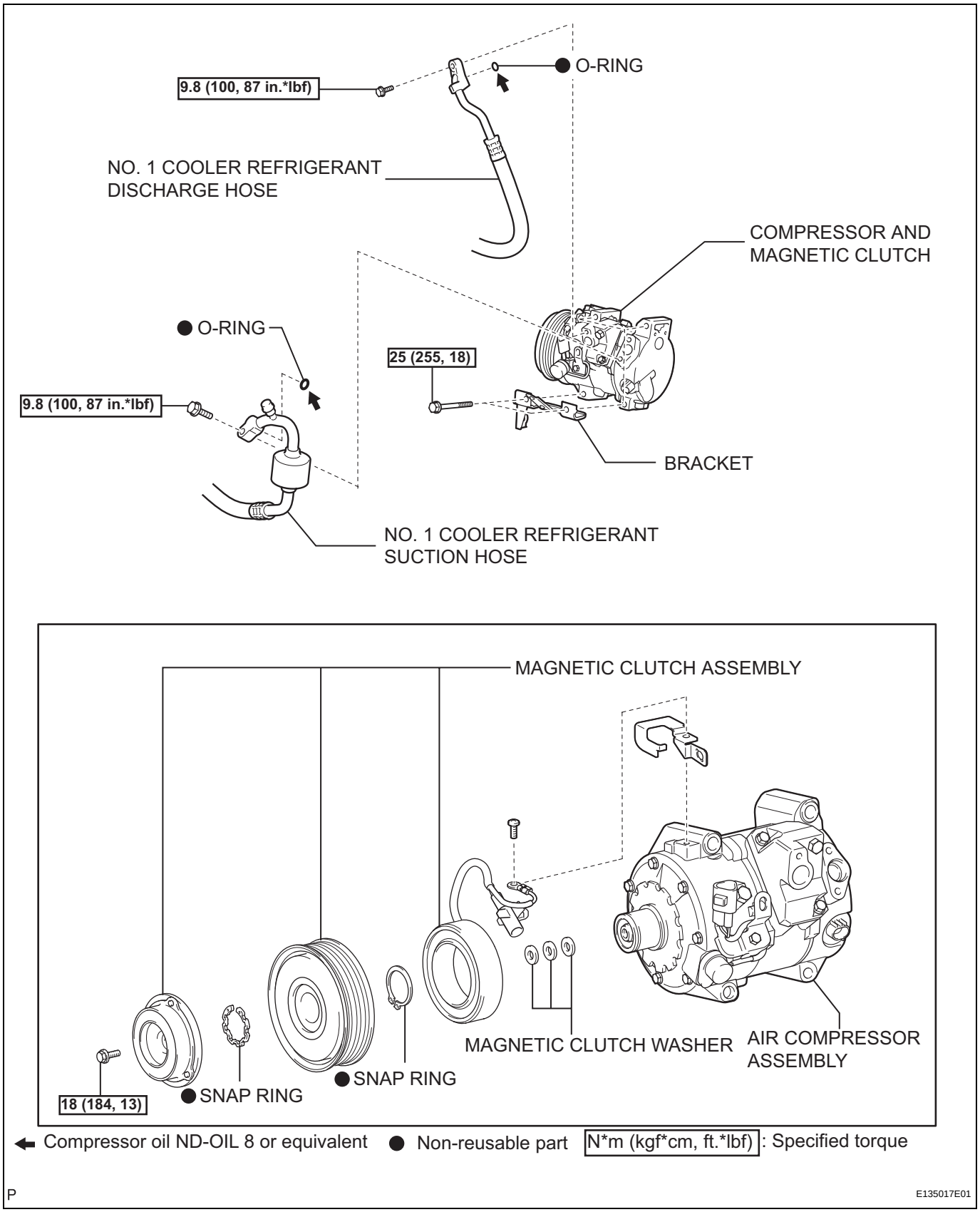
9.8 (100, 87 in.*lbf)
O-RING
NO. 1 COOLER REFRIGERANT DISCHARGE HOSE
COMPRESSOR AND MAGNETIC CLUTCH
O-RING
25 (255, 18)
9.8 (100, 87 in.*lbf)
BRACKET
NO. 1 COOLER REFRIGERANT SUCTION HOSE
MAGNETIC CLUTCH ASSEMBLY
MAGNETIC CLUTCH WASHER
AIR COMPRESSOR ASSEMBLY
SNAP RING
SNAP RING
18 (184, 13)
Compressor oil ND-OIL 8 or equivalent
Non-reusable part
N*m (kgf*cm, ft.*lbf) : Specified torque
P
E135017E01

CONDENSER

COMPONENTS

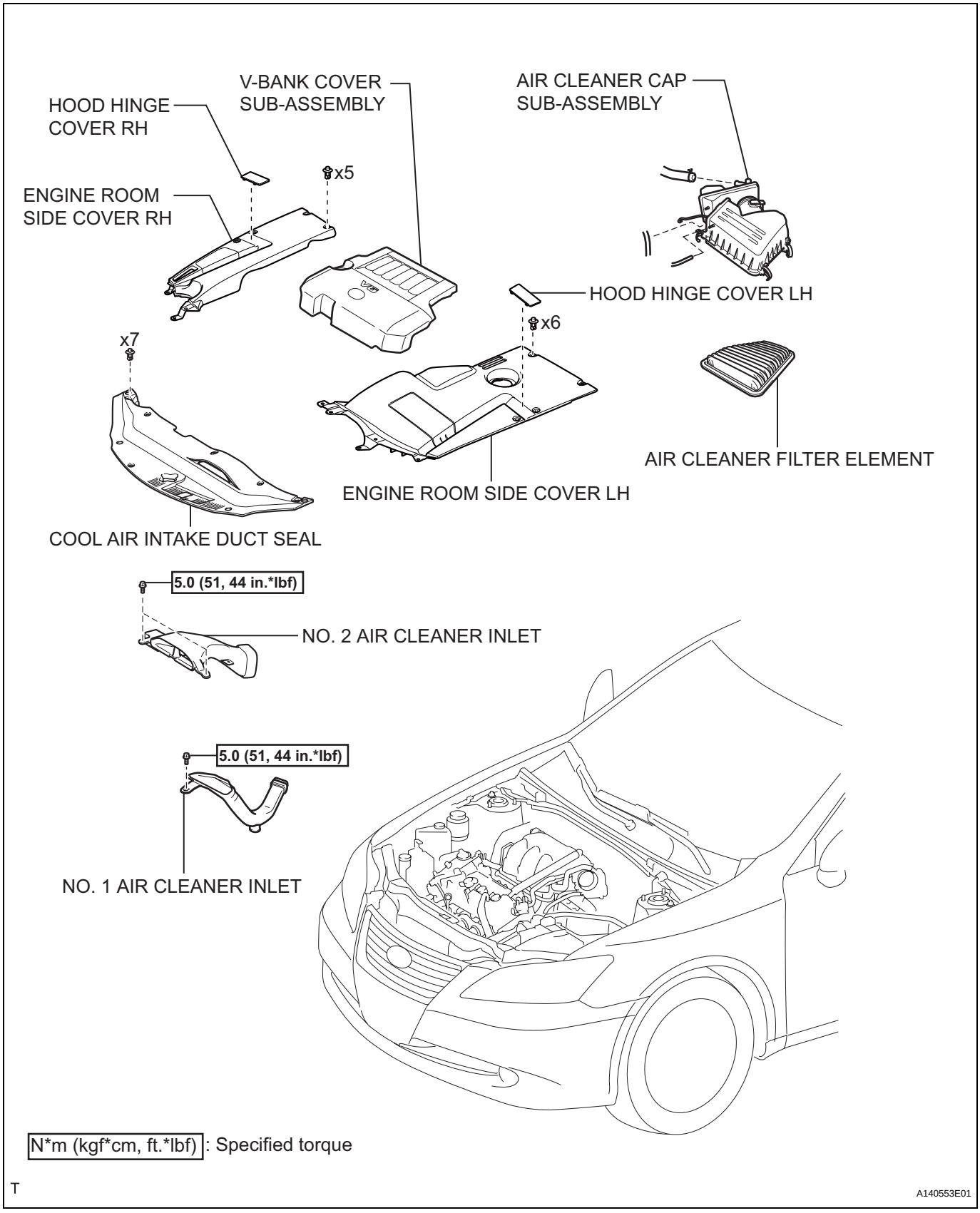

N*m (kgf*cm, ft.*lbf) : Specified torque

T

A140553E01

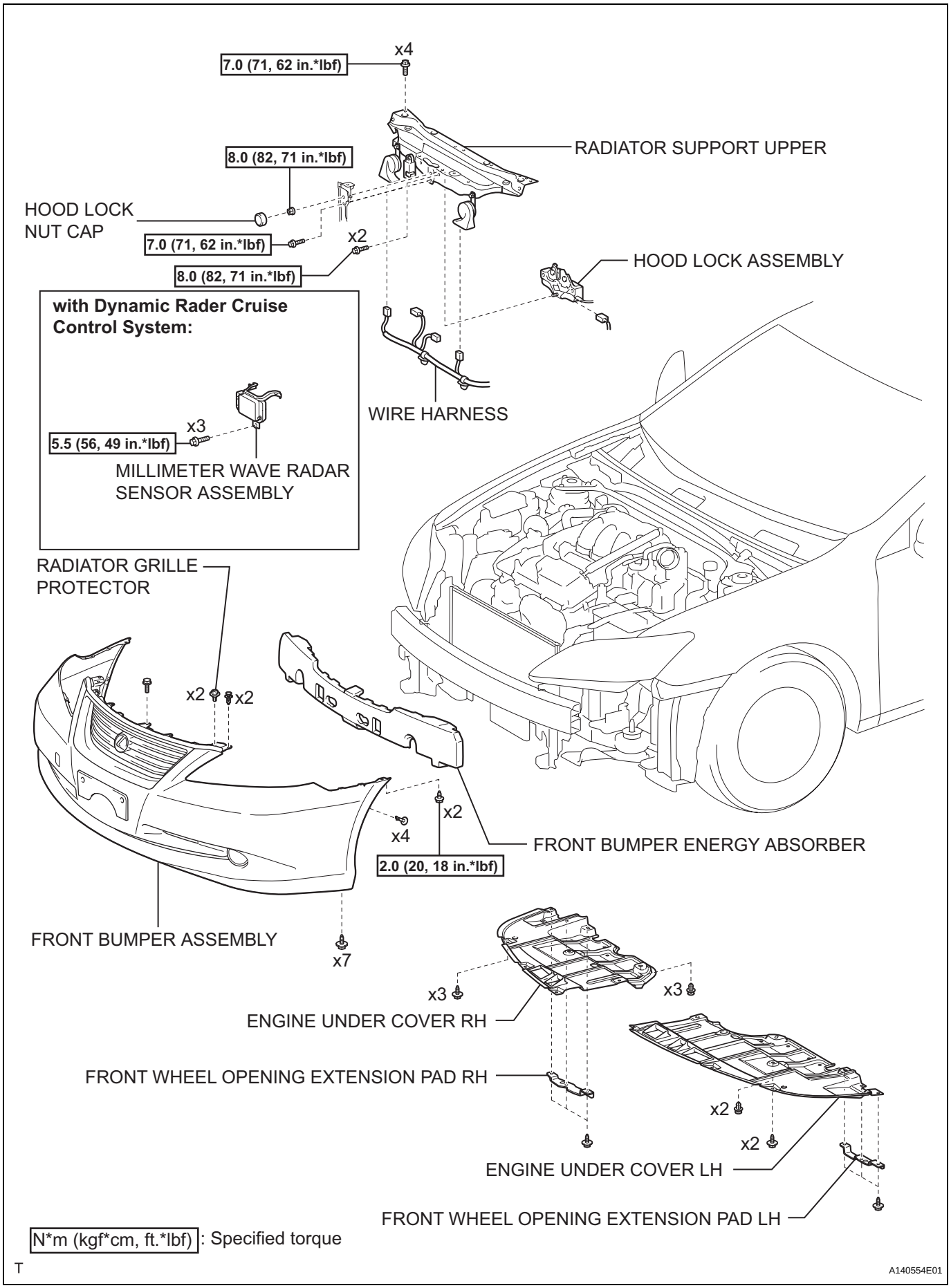
7.0 (71, 62 in.*lbf)
x4
RADIATOR SUPPORT UPPER
8.0 (82, 71 in.*lbf)
HOOD LOCK NUT CAP
7.0 (71, 62 in.*lbf)
x2
8.0 (82, 71 in.*lbf)
HOOD LOCK ASSEMBLY
with Dynamic Rader Cruise Control System:
x3
5.5 (56, 49 in.*lbf)
MILLIMETER WAVE RADAR SENSOR ASSEMBLY
WIRE HARNESS
RADIATOR GRILLE PROTECTOR
x2
x2
x2
x4
2.0 (20, 18 in.*lbf)
FRONT BUMPER ENERGY ABSORBER
FRONT BUMPER ASSEMBLY
x7
x3
x3
ENGINE UNDER COVER RH
FRONT WHEEL OPENING EXTENSION PAD RH
x2
x2
ENGINE UNDER COVER LH
FRONT WHEEL OPENING EXTENSION PAD LH
N*m (kgf*cm, ft.*lbf): Specified torque
T
A140554E01

AC

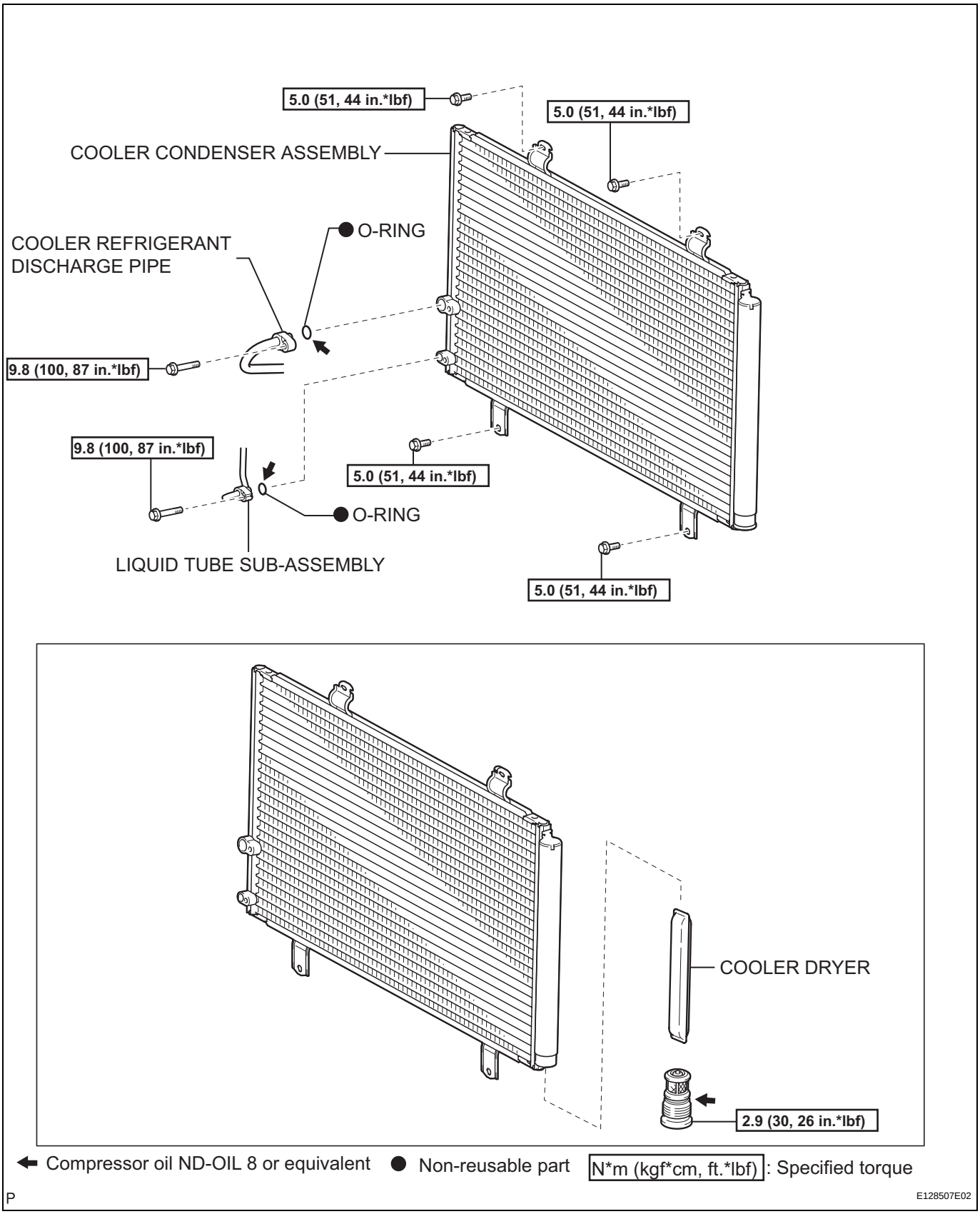

Compressor oil ND-OIL 8 or equivalent ● Non-reusable part N*m (kgf*cm, ft.*lbf): Specified torque

P

E128507E02

ROOM TEMPERATURE SENSOR

COMPONENTS

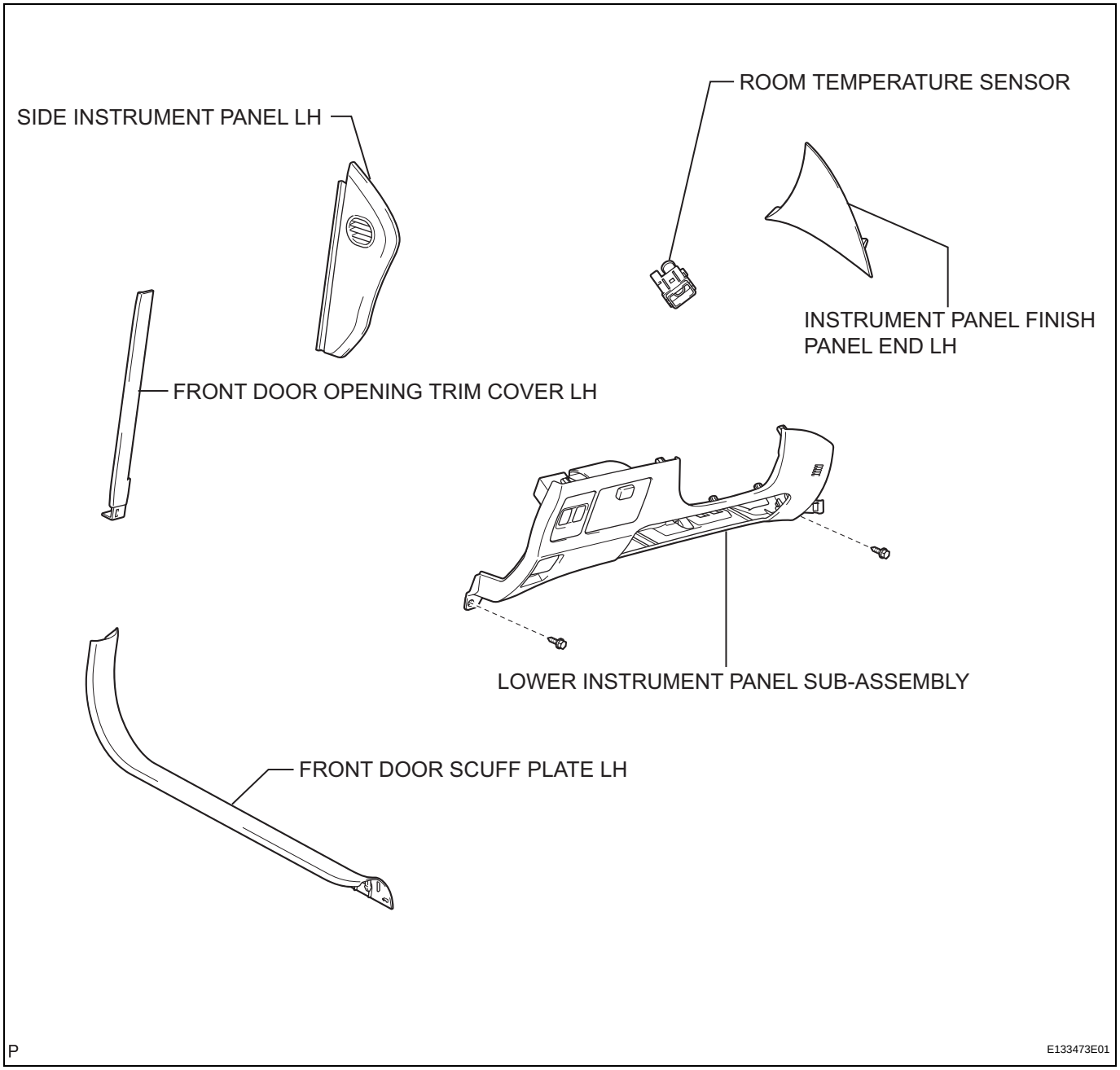

REMOVAL

1. **REMOVE FRONT DOOR SCUFF PLATE LH (See page IR-39)**
2. **REMOVE FRONT DOOR OPENING TRIM COVER LH (See page IR-39)**
3. **REMOVE SIDE INSTRUMENT PANEL LH (See page IP-12)**
4. **REMOVE INSTRUMENT PANEL FINISH PANEL END LH (See page IP-13)**
5. **REMOVE LOWER INSTRUMENT PANEL SUB-ASSEMBLY (See page IP-13)**
6. **REMOVE ROOM TEMPERATURE SENSOR**
   (a) Disconnect the connector and air hose.
   (b) Release the claw and remove the sensor.

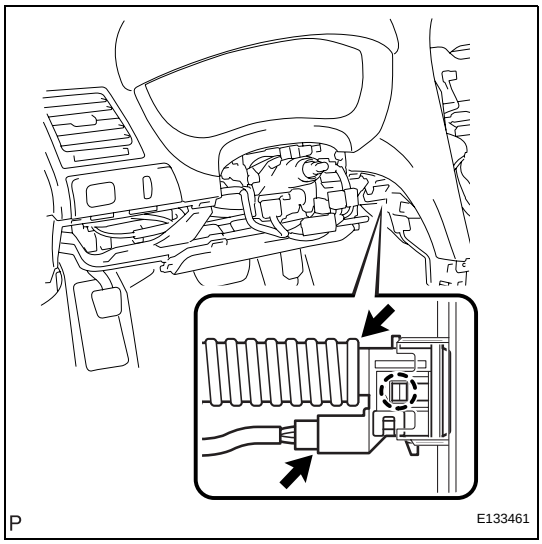

AMBIENT TEMPERATURE SENSOR

COMPONENTS

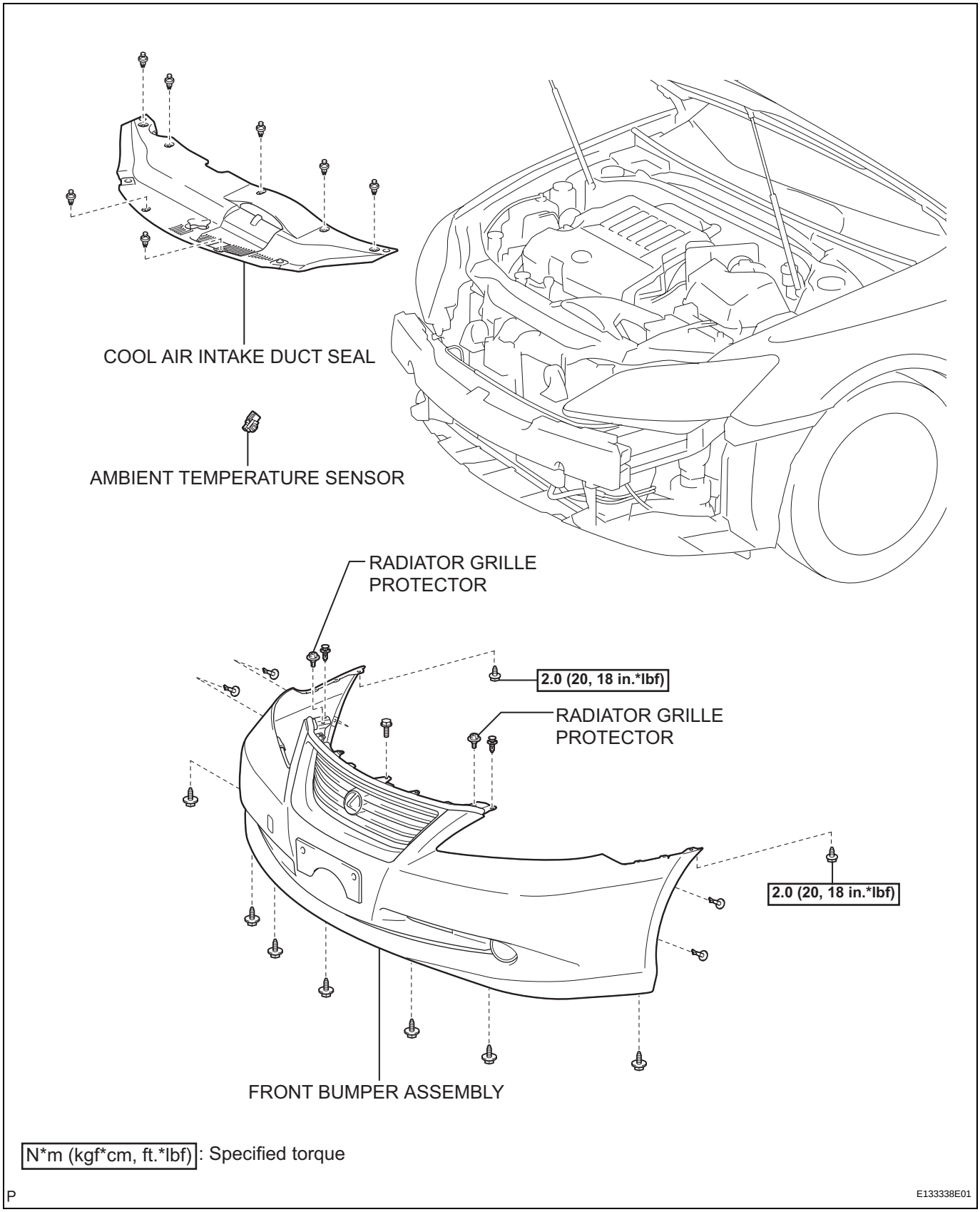

REMOVAL

1. **REMOVE COOL AIR INTAKE DUCT SEAL (See page ET-4)**
2. **REMOVE FRONT BUMPER ASSEMBLY (See page ET-5)**
3. **REMOVE AMBIENT TEMPERATURE SENSOR**
   (a) Disconnect the connector and detach the clamp.
   (b) Remove the ambient temperature sensor.

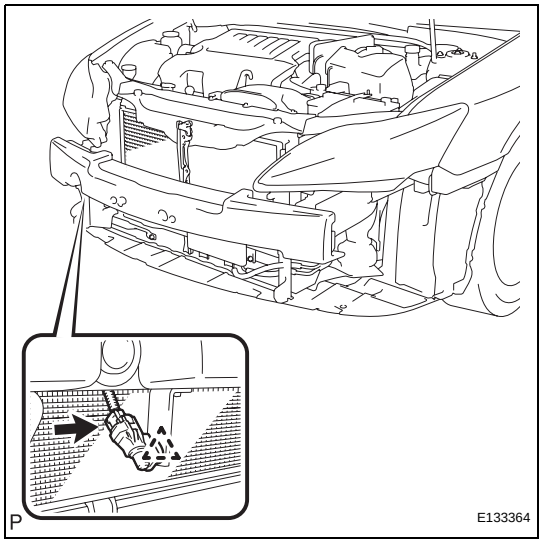

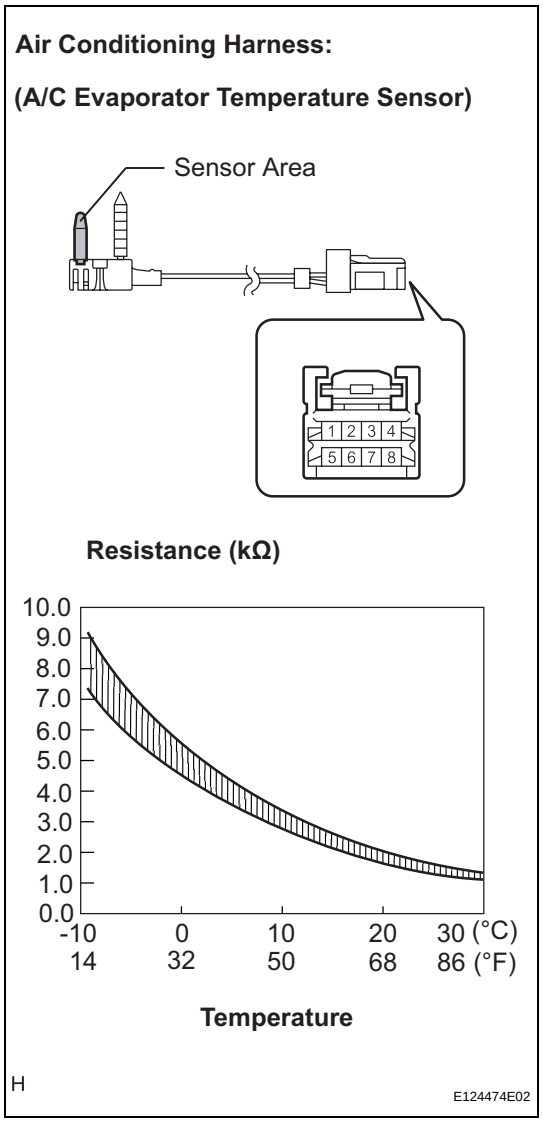

EVAPORATOR TEMPERATURE SENSOR

ON-VEHICLE INSPECTION

1. INSPECT EVAPORATOR TEMPERATURE SENSOR

(a) Measure the resistance according to the value(s) in the table below.

Standard resistance

Tester Connection	Condition	Specified Condition
5 - 6	-10°C (14°F)	7.30 to 9.10 kΩ
5 - 6	-5°C (23°F)	5.65 to 6.95 kΩ
5 - 6	0°C (32°F)	4.40 to 5.35 kΩ
5 - 6	5°C (41°F)	3.40 to 4.15 kΩ
5 - 6	10°C (50°F)	2.70 to 3.25 kΩ
5 - 6	15°C (59°F)	2.14 to 2.58 kΩ
5 - 6	20°C (68°F)	1.71 to 2.05 kΩ
5 - 6	25°C (77°F)	1.38 to 1.64 kΩ
5 - 6	30°C (86°F)	1.11 to 1.32 kΩ

NOTICE:

- **Even slightly touching the sensor may change the resistance value. Be sure to hold the connector of the sensor.**
- **When measuring, the sensor temperature must be the same as the ambient temperature.**

HINT:

As the temperature increases, the resistance decreases (see the graph).

If the resistance is not as specified, replace the air conditioning harness (evaporator temperature sensor).

SMOG VENTILATION SENSOR

COMPONENTS

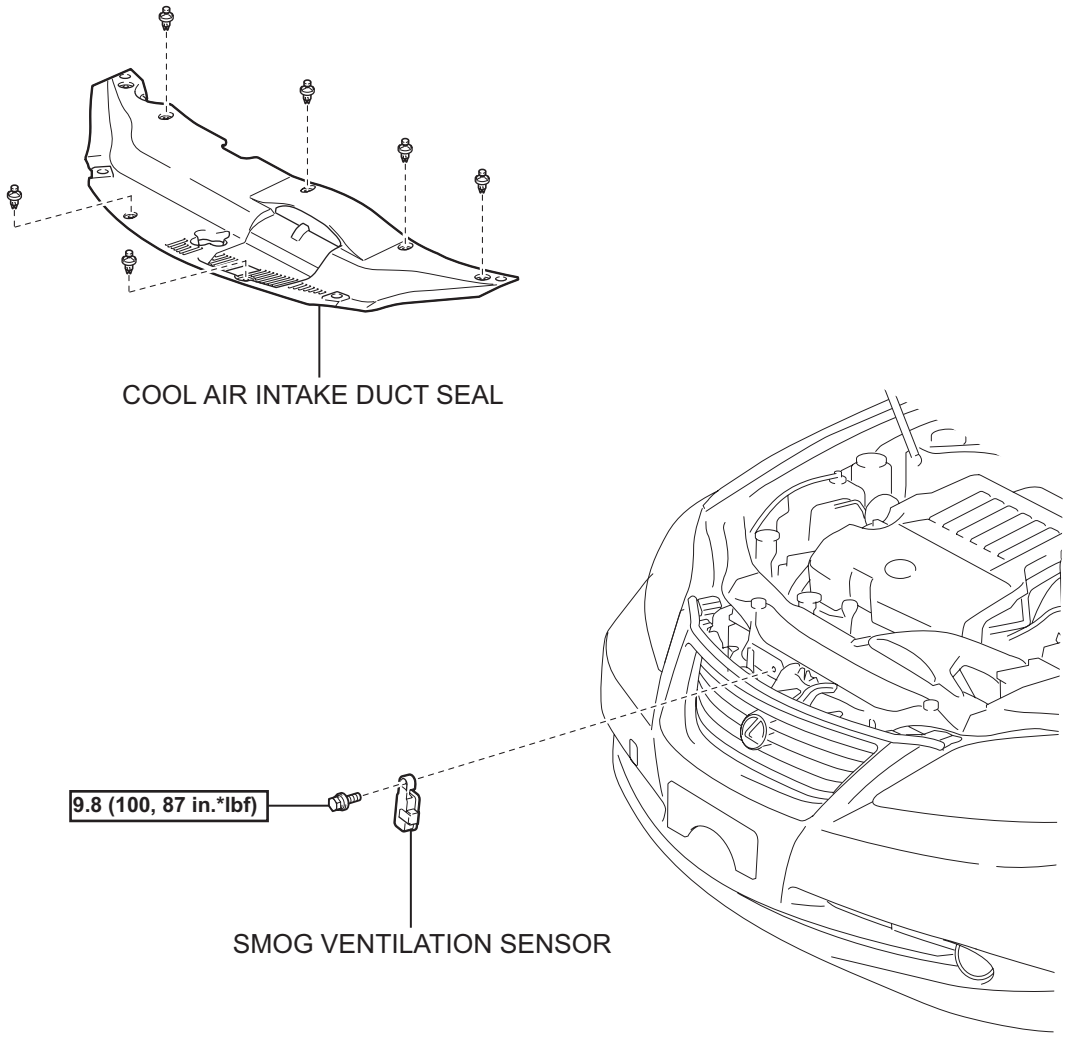

N*m (kgf*cm, ft.*lbf) : Specified torque

P

E133339E01

REMOVAL

1. **REMOVE COOL AIR INTAKE DUCT SEAL (See page ET-4)**

2. **REMOVE SMOG VENTILATION SENSOR**
   (a) Disconnect the connector.
   (b) Remove the bolt and smog ventilation sensor.

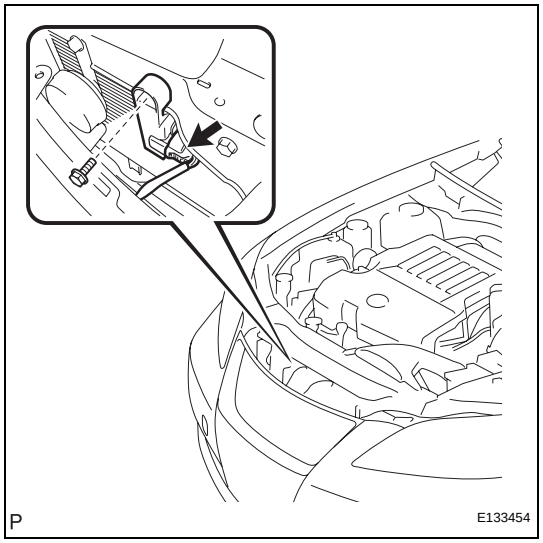

INSPECTION

1. **INSPECT SMOG VENTILATION SENSOR**
   (a) HC, CO
      (1) Apply battery voltage between terminals 3 (IG) and 6 (E).
      (2) Allow exhaust gas (HC, CO) to travel to the sensing portion of the smog ventilation sensor, and measure the resistance between terminals 1 (SG) and 2 (DGS).
      OK:
      When the sensor is exposed to the exhaust gas, the resistance increases.
      HINT:
      The resistance before blowing exhaust gas is 10 kΩ to 40 kΩ.
      If the resistance is not as specified, replace the smog ventilation sensor.

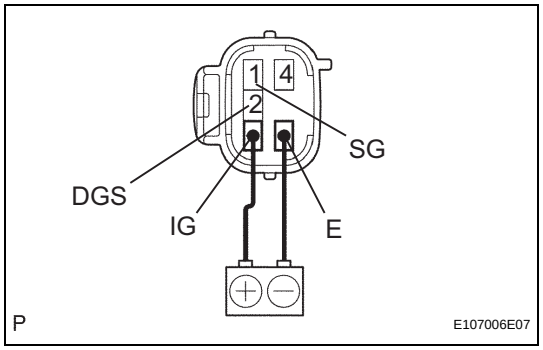

   (b) NOx
      (1) Apply battery voltage between terminals 3 (IG) and 6 (E).
      (2) Allow exhaust gas (NOx) to travel to the sensing portion of the smog ventilation sensor, and measure the resistance between terminals 1 (SG) and 4 (DGS1).
      OK:
      When the sensor is exposed to the exhaust gas, the resistance increases.
      HINT:
      The resistance before blowing exhaust gas is 10 kΩ to 40 kΩ.
      If the resistance is not as specified, replace the smog ventilation sensor.

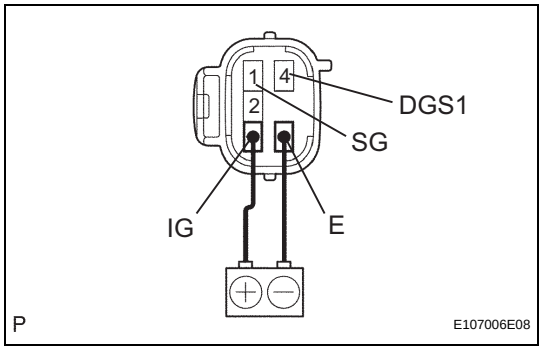

AIR CONDITIONING PRESSURE SENSOR

ON-VEHICLE INSPECTION

1. INSPECT PRESSURE SENSOR

(a) Install the manifold gauge set (See page AC-122).

(b) Connect the three 1.5 V dry cell batterie's positive (+) lead to terminal 3 and the negative (-) lead to terminal 1. Then connect the voltmeter's positive (+) lead to terminal 2 and the negative (-) lead to terminal 1. Measure the voltage.

OK:

The voltage changes according to refrigerant pressure, as shown in the graph.

If the voltage is not as specified, replace the pressure sensor.

A/C Pressure Sensor Connector Front View:

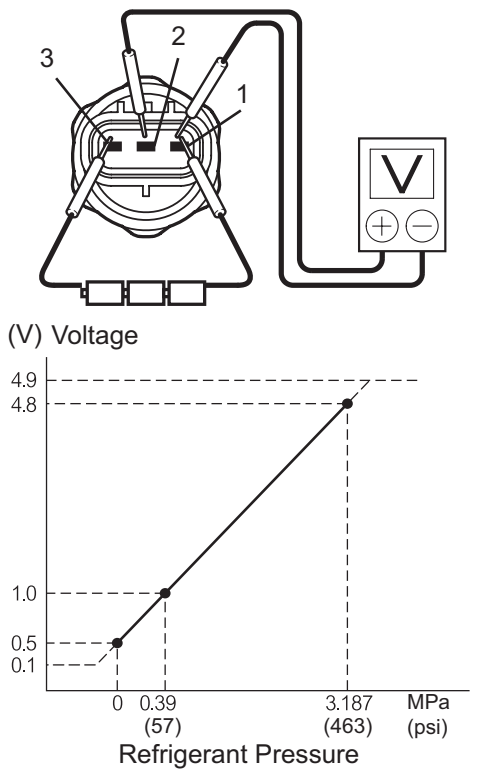

AIR CONDITIONING CONTROL ASSEMBLY

COMPONENTS

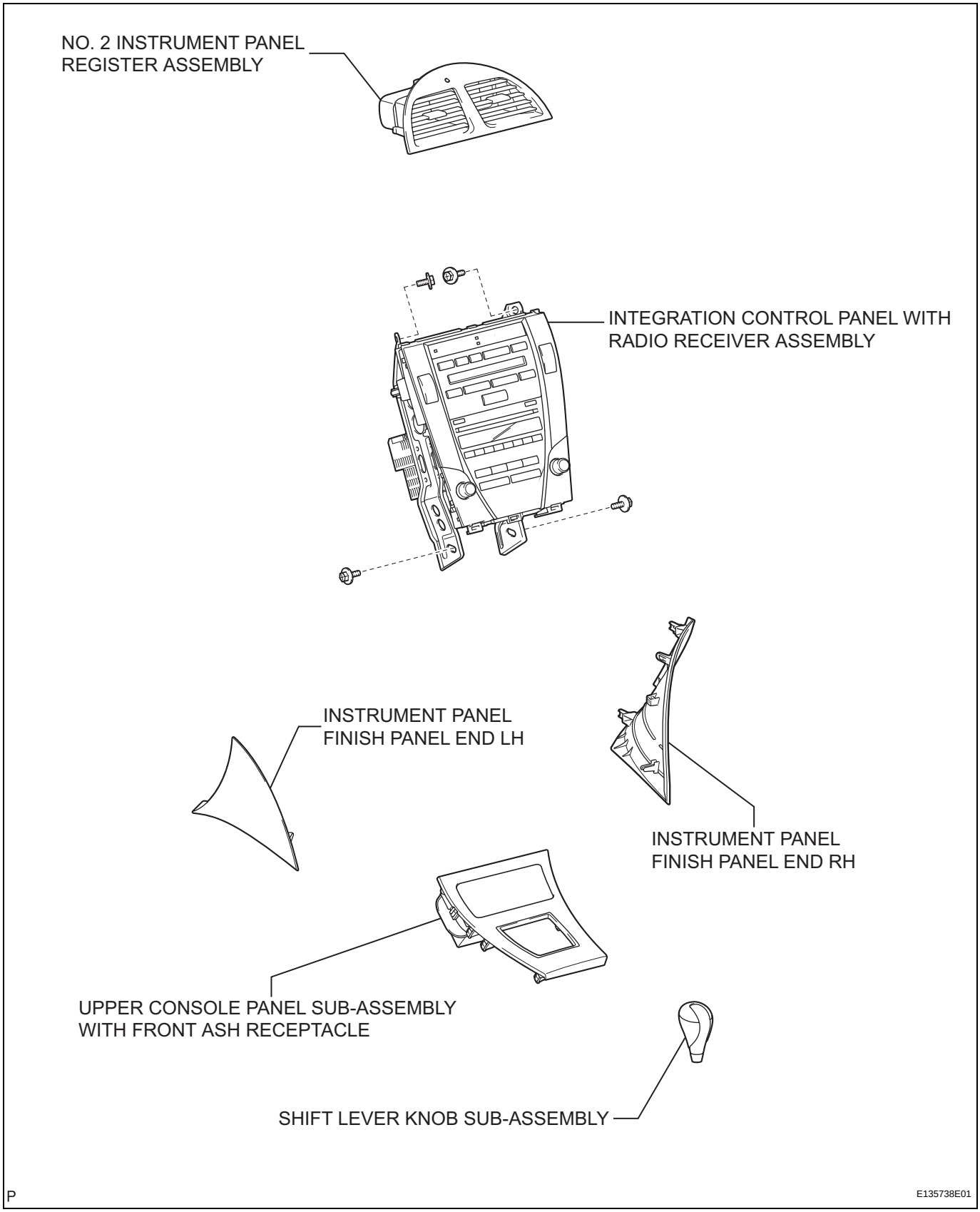

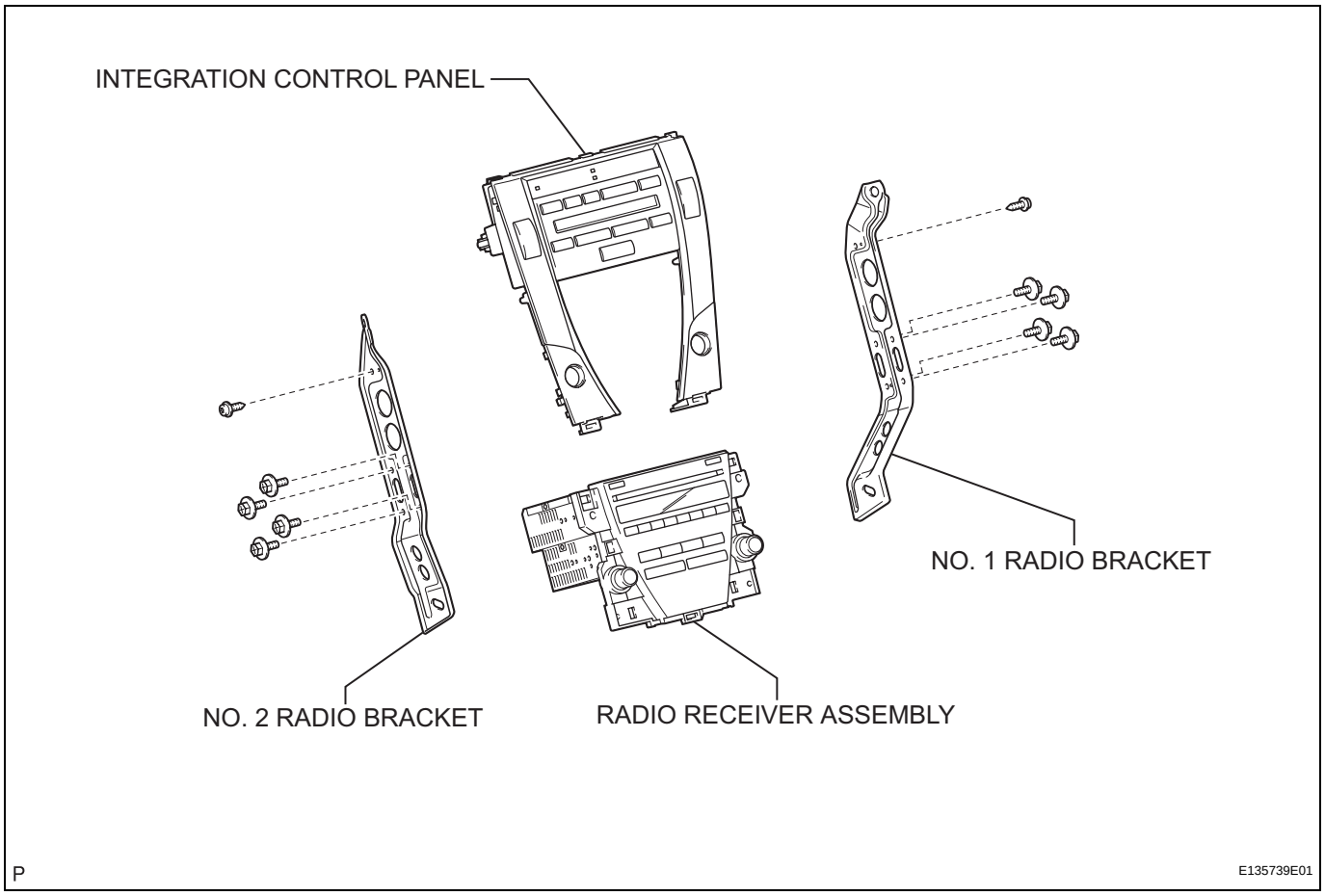
INTEGRATION CONTROL PANEL
NO. 1 RADIO BRACKET
NO. 2 RADIO BRACKET
RADIO RECEIVER ASSEMBLY
P
E135739E01

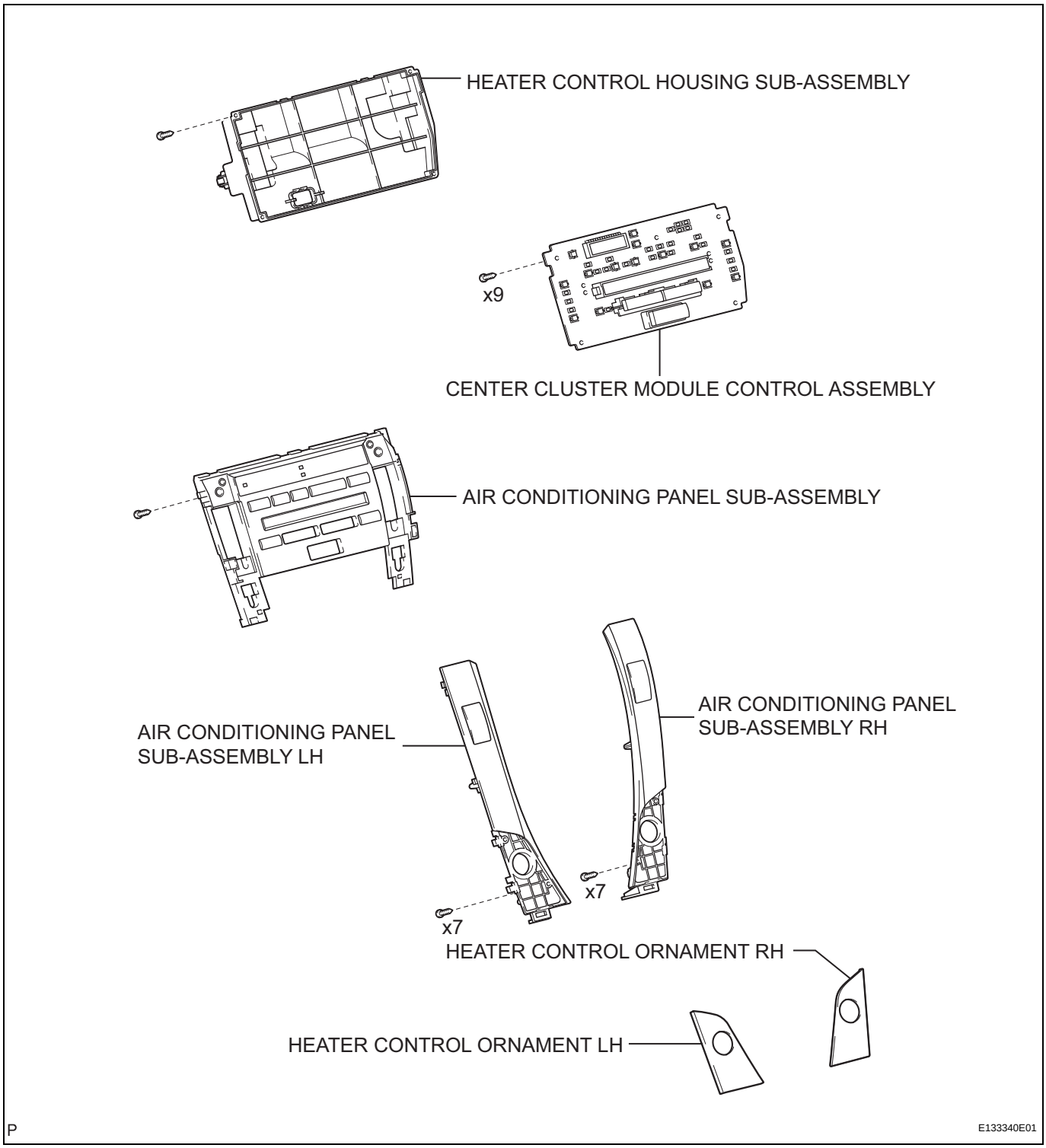
HEATER CONTROL HOUSING SUB-ASSEMBLY
x9
CENTER CLUSTER MODULE CONTROL ASSEMBLY
AIR CONDITIONING PANEL SUB-ASSEMBLY
AIR CONDITIONING PANEL SUB-ASSEMBLY LH
AIR CONDITIONING PANEL SUB-ASSEMBLY RH
x7
x7
HEATER CONTROL ORNAMENT RH
HEATER CONTROL ORNAMENT LH
P
E133340E01

AIR CONDITIONING AMPLIFIER

COMPONENTS

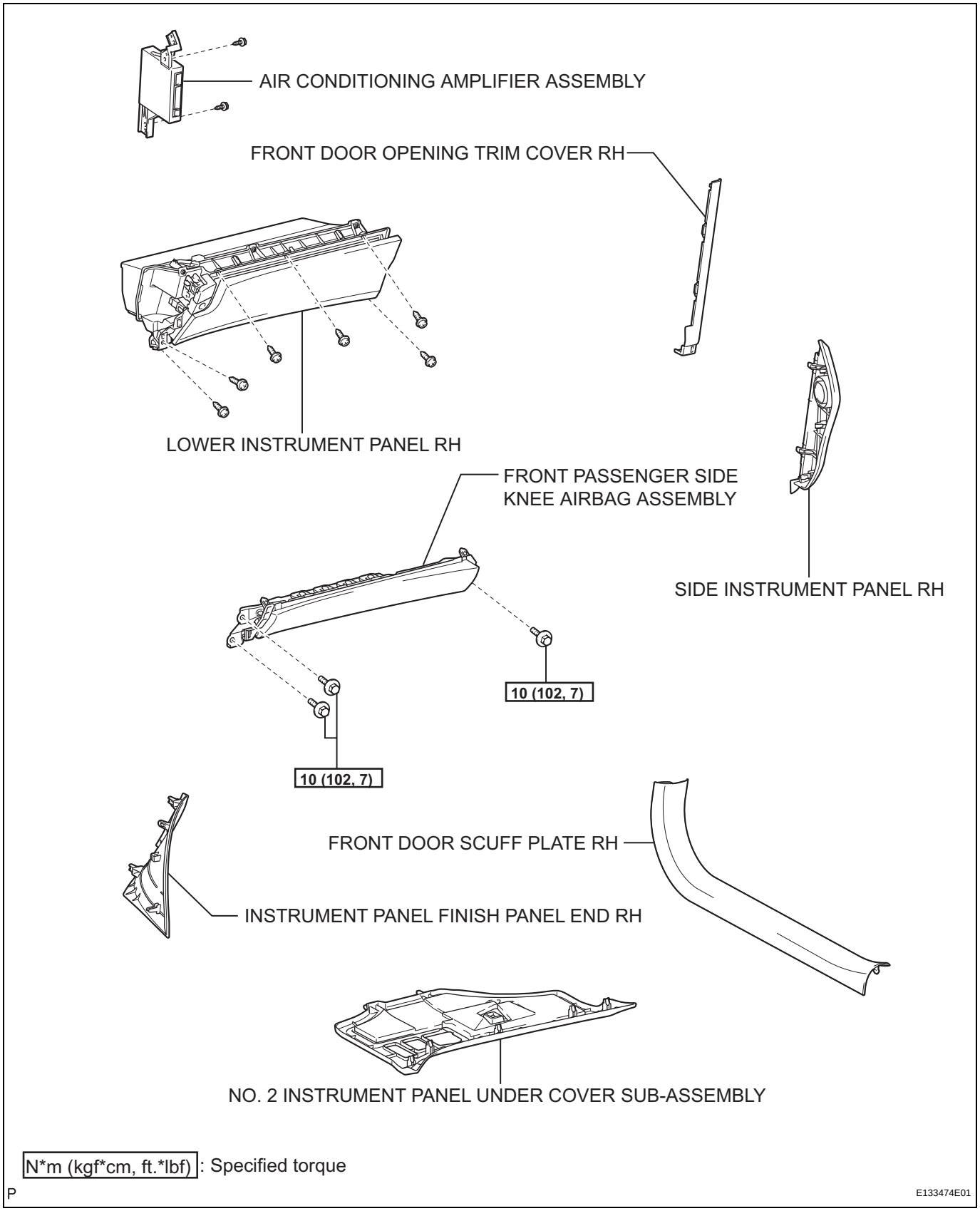

AC

REMOVAL

1. **DISCONNECT CABLE FROM NEGATIVE BATTERY TERMINAL**
   NOTICE:
   Wait for 90 seconds after disconnecting the cable to prevent airbag deployment (See page RS-1).
2. **REMOVE FRONT DOOR SCUFF PLATE RH (See page IR-42)**
3. **REMOVE FRONT DOOR OPENING TRIM COVER RH (See page IR-42)**
4. **REMOVE NO. 2 INSTRUMENT PANEL UNDER COVER SUB-ASSEMBLY (See page IP-15)**
5. **REMOVE SIDE INSTRUMENT PANEL RH (See page IP-15)**
6. **REMOVE FRONT PASSENGER SIDE KNEE AIR BAG ASSEMBLY (See page RS-396)**
7. **REMOVE LOWER INSTRUMENT PANEL RH (See page IP-16)**
8. **REMOVE AIR CONDITIONING AMPLIFIER ASSEMBLY**
   (a) Disconnect the 3 connectors.
   (b) Remove the 2 bolts and air conditioning amplifier assembly.

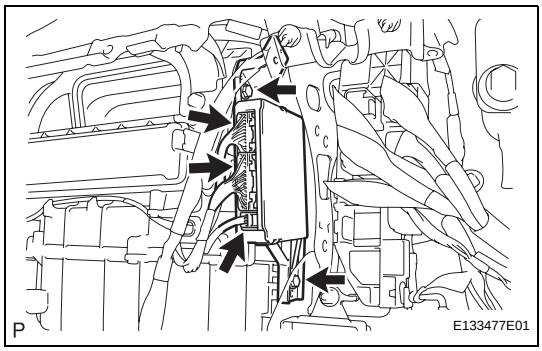

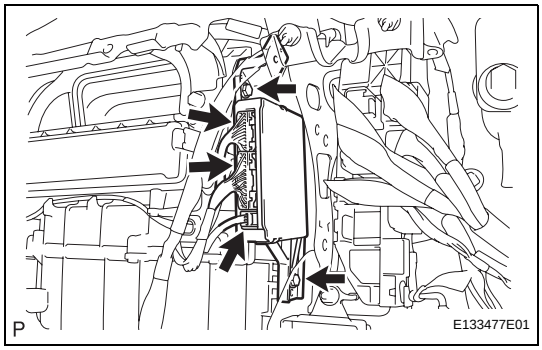

INSTALLATION

1. **INSTALL AIR CONDITIONING AMPLIFIER ASSEMBLY**
   (a) Install the air conditioning amplifier assembly with the 2 bolts.
   (b) Connect the 3 connectors.
2. **INSTALL LOWER INSTRUMENT PANEL RH (See page IP-42)**
3. **INSTALL FRONT PASSENGER SIDE KNEE AIRBAG ASSEMBLY (See page RS-396)**
4. **INSTALL SIDE INSTRUMENT PANEL RH (See page IP-43)**
5. **INSTALL NO. 2 INSTRUMENT PANEL UNDER COVER SUB-ASSEMBLY (See page IP-44)**
6. **INSTALL FRONT DOOR OPENING TRIM COVER RH (See page IR-65)**
7. **INSTALL FRONT DOOR SCUFF PLATE RH (See page IR-65)**

8. **INSTALL INSTRUMENT PANEL FINISH PANEL END RH (See page IP-44)**

9. **CONNECT CABLE TO NEGATIVE BATTERY TERMINAL**

10. **INSPECT FRONT PASSENGER SIDE KNEE AIRBAG ASSEMBLY (See page RS-395)**

11. **INSPECT SRS WARNING LIGHT**
    (a) Inspect the SRS warning light (See page RS-37).

12. **PERFORM INITIALIZATION**
    NOTICE:
    Some systems need initialization after reconnecting the negative battery terminal (See page IN-33).

PRE-COLLISION SYSTEM

PRECAUTION

NOTICE:
Some systems need to be initialized after reconnecting the negative (-) battery terminal (See page IN-33).

1. TROUBLESHOOTING PRECAUTIONS

(a) If a terminal contact point malfunction or part installation problem occurs, removal and reinstallation of the suspected part may return the system to normal. However, be aware that the normal condition may only be temporary.

(b) Before disconnecting connectors or removing/installing parts, determine the malfunctioning area by checking and writing down the vehicle's condition at the time of the malfunction (DTC outputs, etc.).

(c) Be sure to check for DTCs related to other systems. The pre-collision system may be influenced by malfunctions in other systems.

2. HANDLING PRECAUTIONS

(a) When removing and installing the ECU, sensor, switch or other pre-collision system related parts, perform the following:

- Make sure the engine switch is off unless otherwise specified in the inspection procedures.
- After the removal/installation, check for DTCs and confirm that a normal system code is output.

PARTS LOCATION

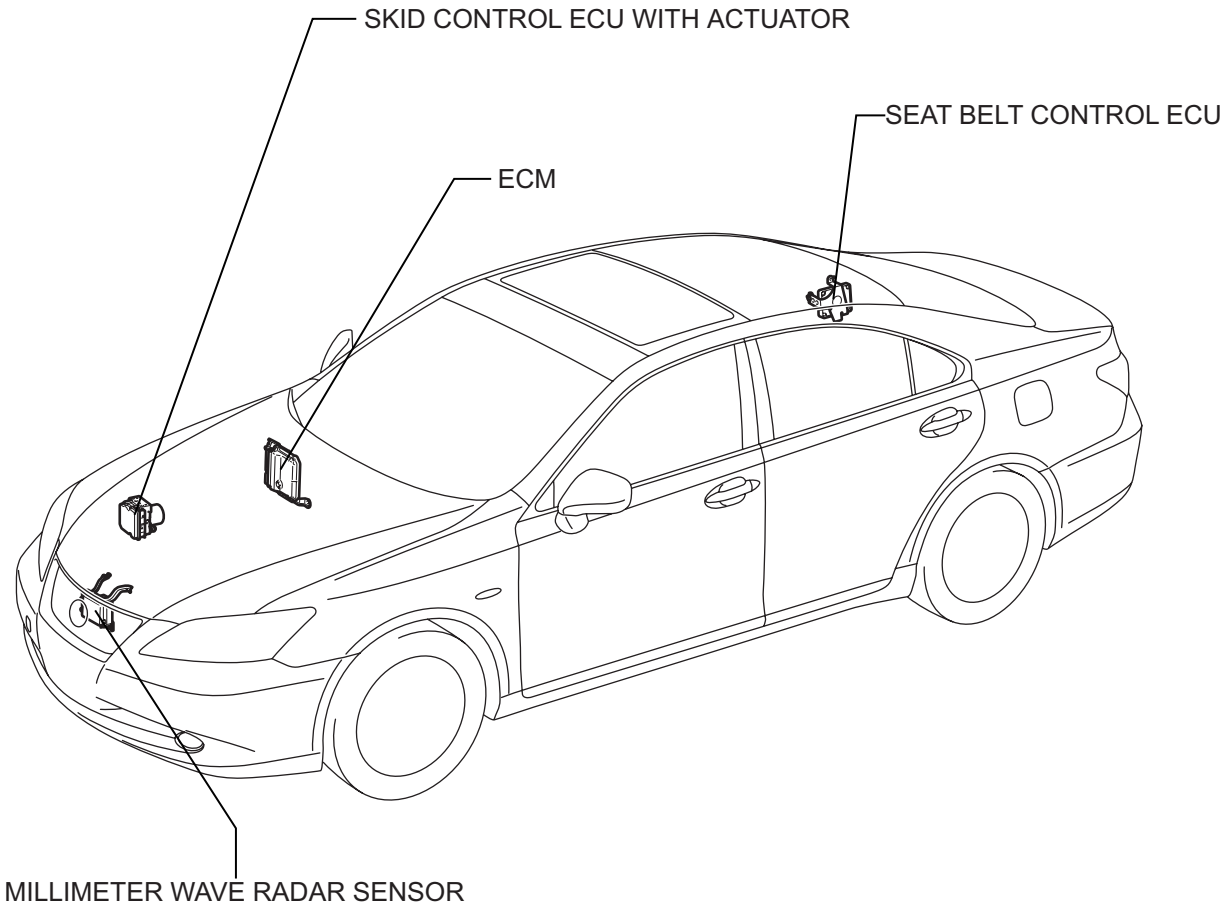

H

B139243E01

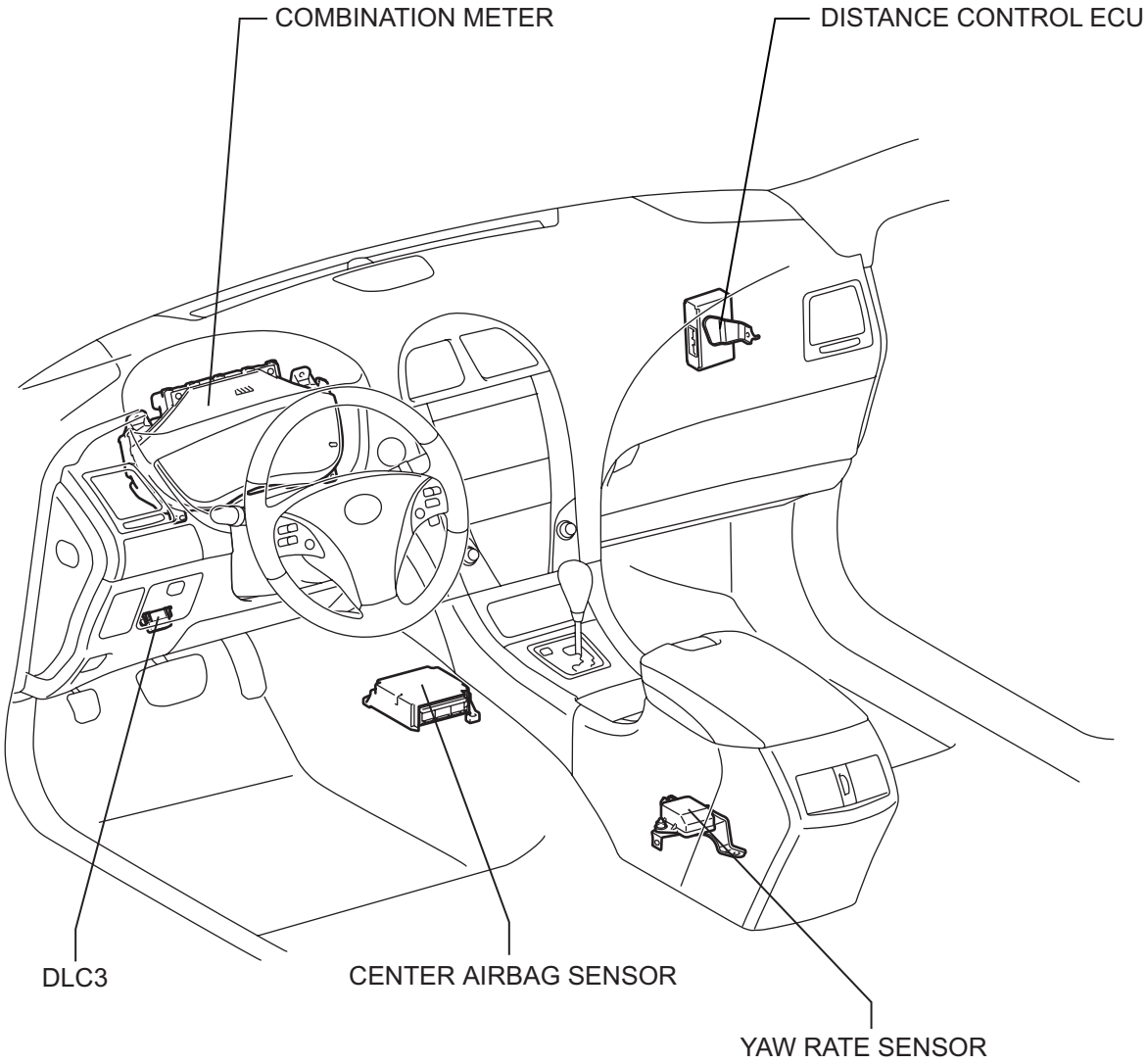

H

B139244E01

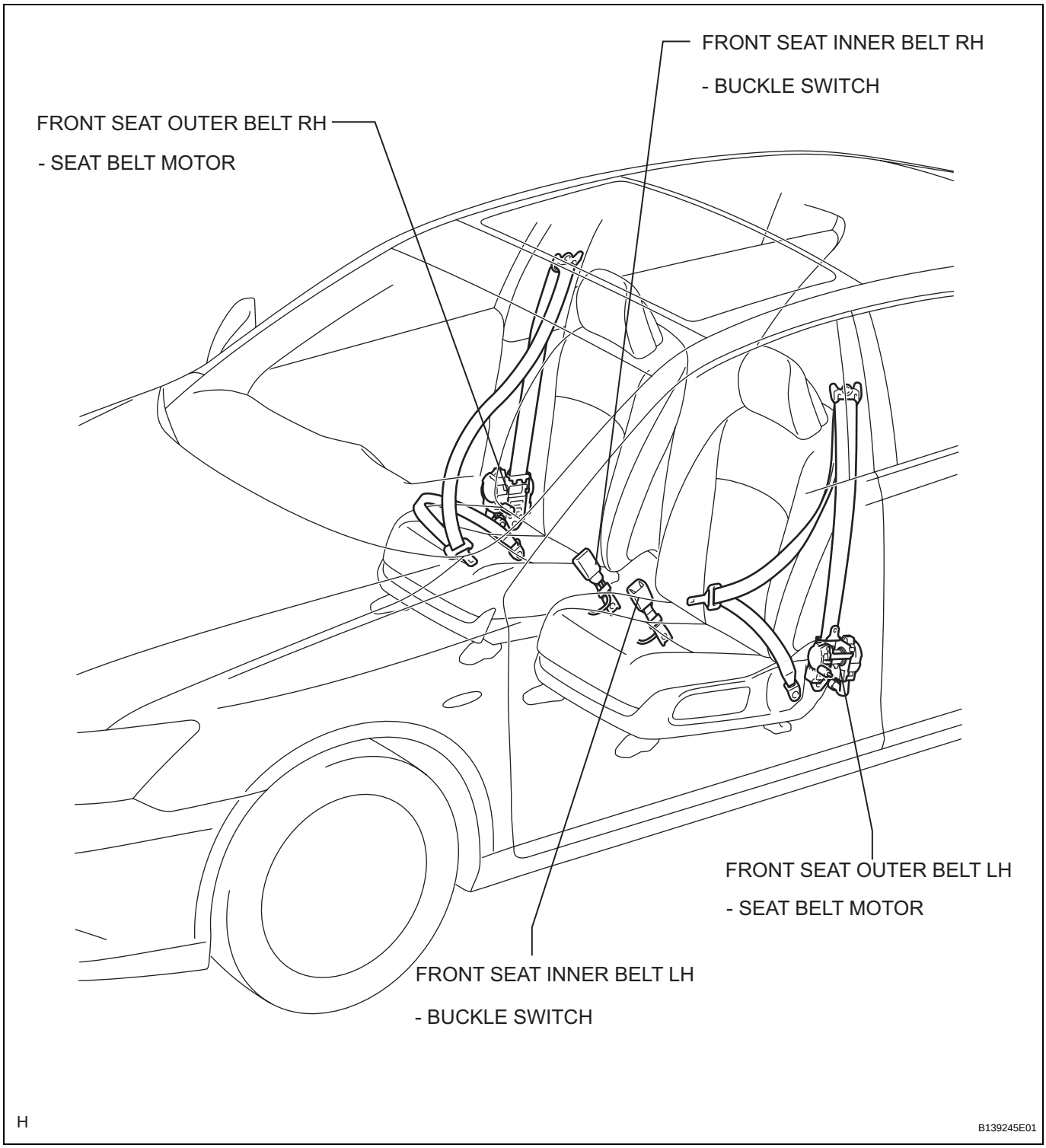
FRONT SEAT INNER BELT RH
- BUCKLE SWITCH
FRONT SEAT OUTER BELT RH
- SEAT BELT MOTOR
FRONT SEAT OUTER BELT LH
- SEAT BELT MOTOR
FRONT SEAT INNER BELT LH
- BUCKLE SWITCH
H
B139245E01

AIRBAG SYSTEM

PRECAUTION

CAUTION:

- **The vehicle is equipped with a Supplemental Restraint System (SRS). It consists of a driver airbag, front passenger airbag, driver side knee airbag, front passenger side knee airbag, front side airbag, rear side airbag, curtain shield airbag, front seat belt pretensioner, and rear seat belt pretensioner. Failure to carry out service operations in the correct sequence could cause the SRS to unexpectedly deploy during servicing, possibly leading to a serious accident. Further, if a mistake is made when servicing the SRS, it is possible that the SRS may fail to operate when required. Before performing servicing (including removal or installation of parts, inspection or replacement), be sure to read the following items carefully, then follow the procedures exactly as indicated in the repair manual.**
- **Wait at least 90 seconds after the engine switch is turned off and the negative (-) terminal cable is disconnected from the battery before starting the operation.**
  (The SRS is equipped with a backup power source, so if work is started within 90 seconds after disconnecting the negative (-) terminal cable from the battery, the SRS may be deployed.)
- **Do not expose any of these components of the SRS directly to hot air or flames: the steering pad, front passenger airbag assembly, driver side knee airbag assembly, front passenger side knee airbag assembly, center airbag sensor assembly, front airbag sensor, front seat inner belt assembly, seat position airbag sensor, occupant classification ECU, front seat side airbag assembly, rear seat side airbag assembly, side airbag sensor, curtain shield airbag assembly, rear airbag sensor, front seat outer belt assembly, and rear seat outer belt assembly.**

NOTICE:

- **Malfunction symptoms of the SRS are difficult to confirm, so DTCs are the most important source of information when troubleshooting. When troubleshooting the SRS, always inspect DTCs before disconnecting the battery.**

- **Even in the case of a minor collision that does not cause the SRS to deploy, the following components of the SRS should be inspected: the steering pad, front passenger airbag assembly, driver side knee airbag assembly, front passenger side knee airbag assembly, center airbag sensor assembly, front airbag sensor, front seat inner belt assembly, seat position airbag sensor, occupant classification ECU, front seat side airbag assembly, rear seat side airbag assembly, side airbag sensor, curtain shield airbag assembly, rear airbag sensor, front seat outer belt assembly, and rear seat outer belt assembly.**
- **Before beginning repairs, remove the airbag sensor if any kind of shock is likely to occur to the airbag sensor during the operation.**
- **Never use SRS parts from another vehicle. When replacing parts, replace them with new ones.**
- **Never disassemble or repair any of the following parts in order to reuse them. If any of these parts have been dropped, or any defect is found (e.g. cracks, dents or any other defects) in any of the housings, brackets or connectors, replace the part with a new one.**
  (a) Steering Pad
  (b) Front Passenger Airbag Assembly
  (c) Driver Side Knee Airbag Assembly
  (d) Front Passenger Side Knee Airbag Assembly
  (e) Front Seat Side Airbag Assembly
  (f) Rear Seat Side Airbag Assembly
  (g) Curtain Shield Airbag Assembly
  (h) Center Airbag Sensor Assembly
  (i) Front Airbag Sensor
  (j) Front Seat Inner Belt Assembly
  (k) Seat Position Airbag Sensor
  (l) Occupant Classification ECU
  (m) Side Airbag Sensor
  (n) Rear Airbag Sensor
  (o) Front Seat Outer Belt Assembly
  (p) Rear Seat Outer Belt Assembly
- **Use a volt/ohmmeter with high impedance (10 kΩ/V minimum) for troubleshooting the electrical circuits.**
- **Information labels are attached near the SRS components. Follow the instructions noted in the caution.**
- **After work on the SRS is completed, perform on SRS warning light (See page RS-37).**
- **When the negative (-) terminal cable is disconnected from the battery, the memory will be cleared. Because of this, be sure to make a record of the contents memorized in each system before starting work. When work is finished, adjust each system to its previous state. Never use a backup power supply for the purpose of retaining the memory of vehicle electronic systems.**

- **If the vehicle is equipped with a mobile communication system, refer to the precaution in the INTRODUCTION section.**
- **Some systems need to be initialized after reconnecting the negative (-) battery terminal (See page IN-33).**

HINT:
In the airbag system, the center airbag sensor assembly, front airbag sensor LH and RH, side airbag sensor LH and RH, and rear airbag sensor LH and RH are collectively referred to as the airbag sensors.

1. HANDLING PRECAUTIONS FOR AIRBAG SENSORS

(a) Before starting the following operations, wait for at least 90 seconds after disconnecting the negative (-) terminal cable from the battery:
(1) Replacement of the airbag sensors.
(2) Adjustment of the front/rear doors of the vehicle equipped with side airbags and curtain shield airbags (fitting adjustment).

(b) When connecting or disconnecting the airbag sensor connectors, ensure that each sensor is installed in the vehicle.

(c) Do not use airbag sensors which have been dropped during the operation or transportation.

(d) Do not disassemble the airbag sensors.

2. INSPECTION PROCEDURE FOR VEHICLE INVOLVED IN ACCIDENT

(a) When the airbag has not deployed, confirm the DTCs by checking the SRS warning light. If there is any malfunction in the SRS airbag system, perform troubleshooting.

(b) When any of the airbags have deployed, replace the airbag sensors and check the installation condition.

3. SRS CONNECTORS

(a) SRS connectors are located as shown in the following illustration.

RS

Driver Side (with Rear Side Airbag):

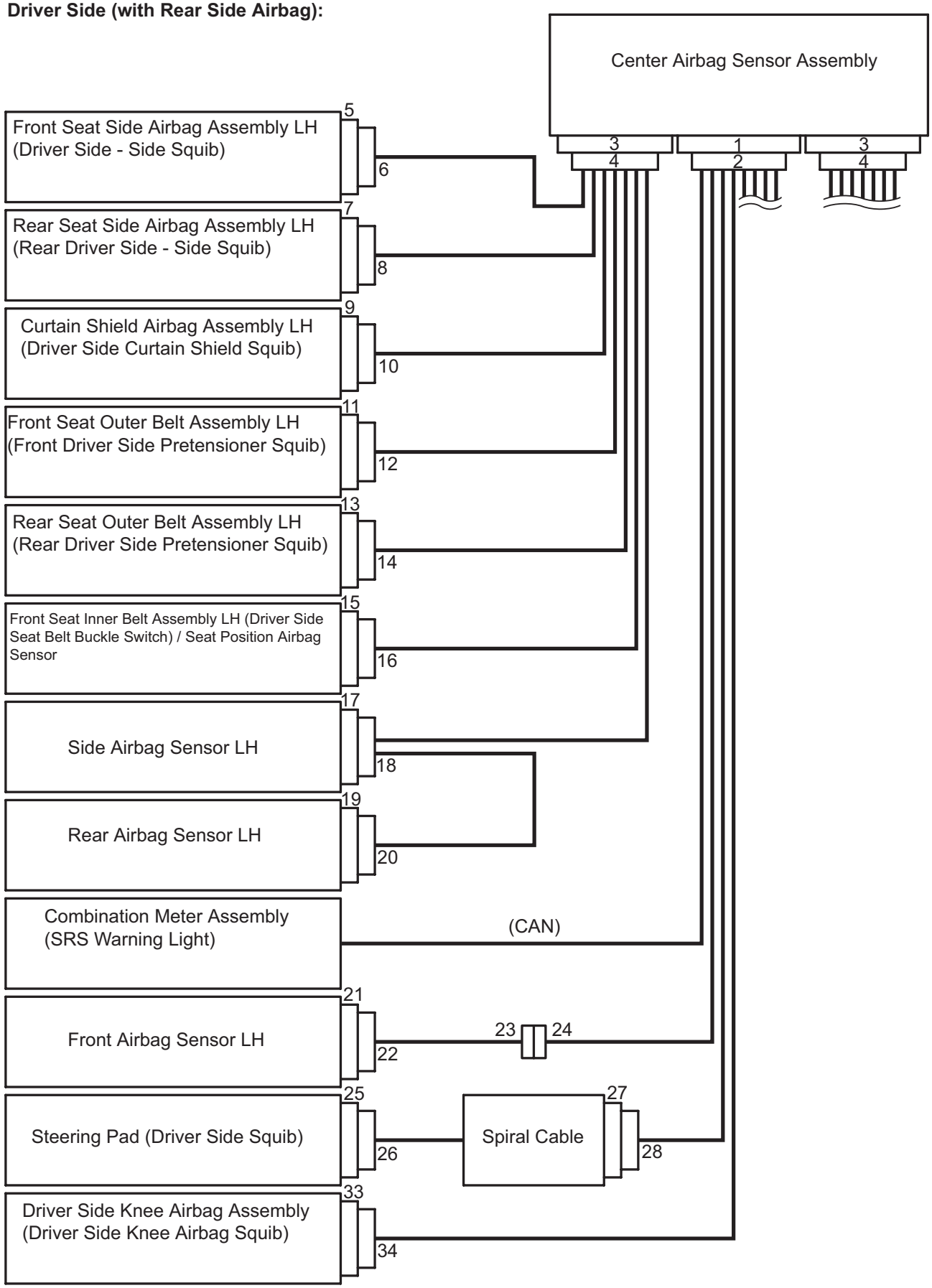

RS

Passenger Side (with Rear Side Airbag):

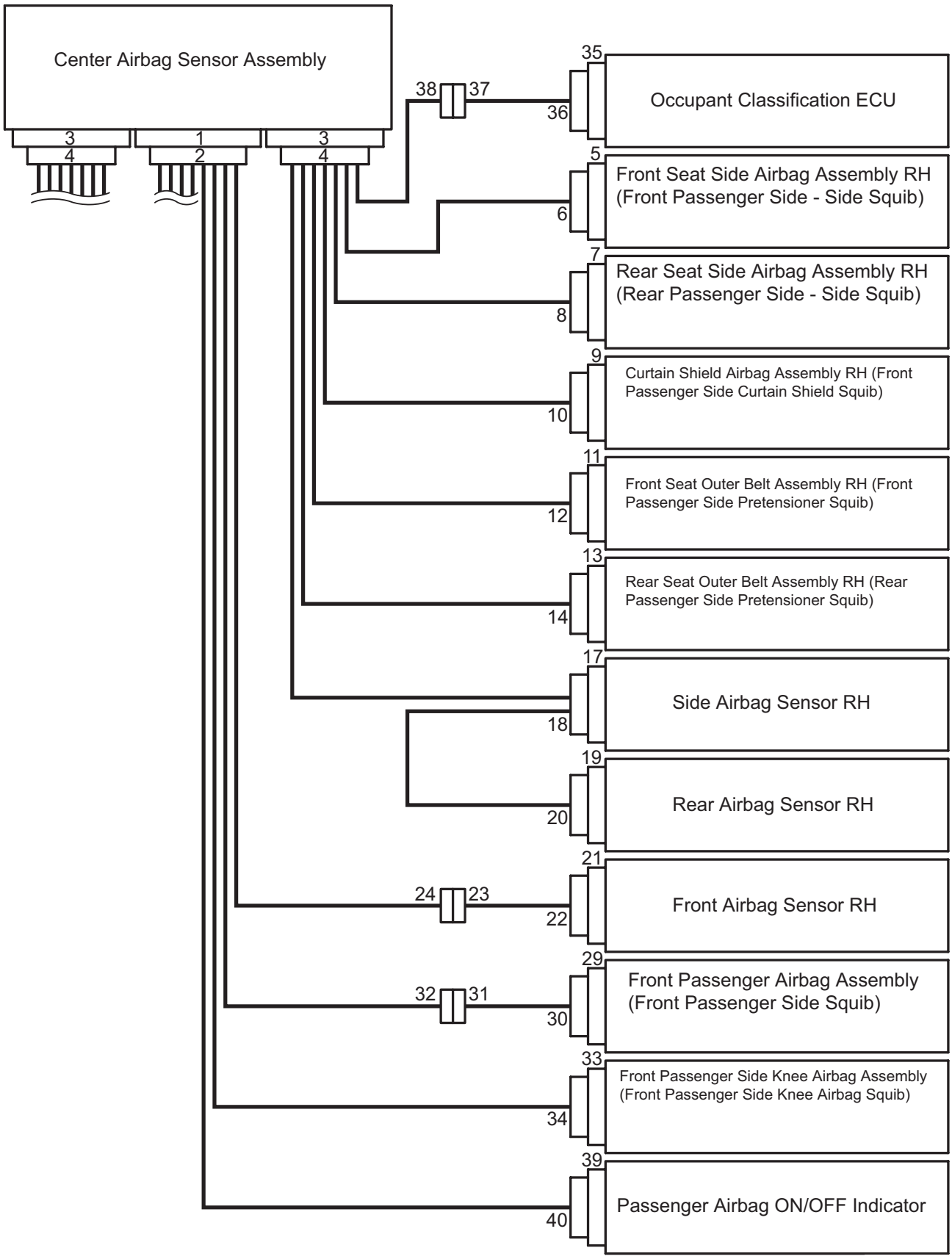

RS

Driver Side (without Rear Side Airbag):

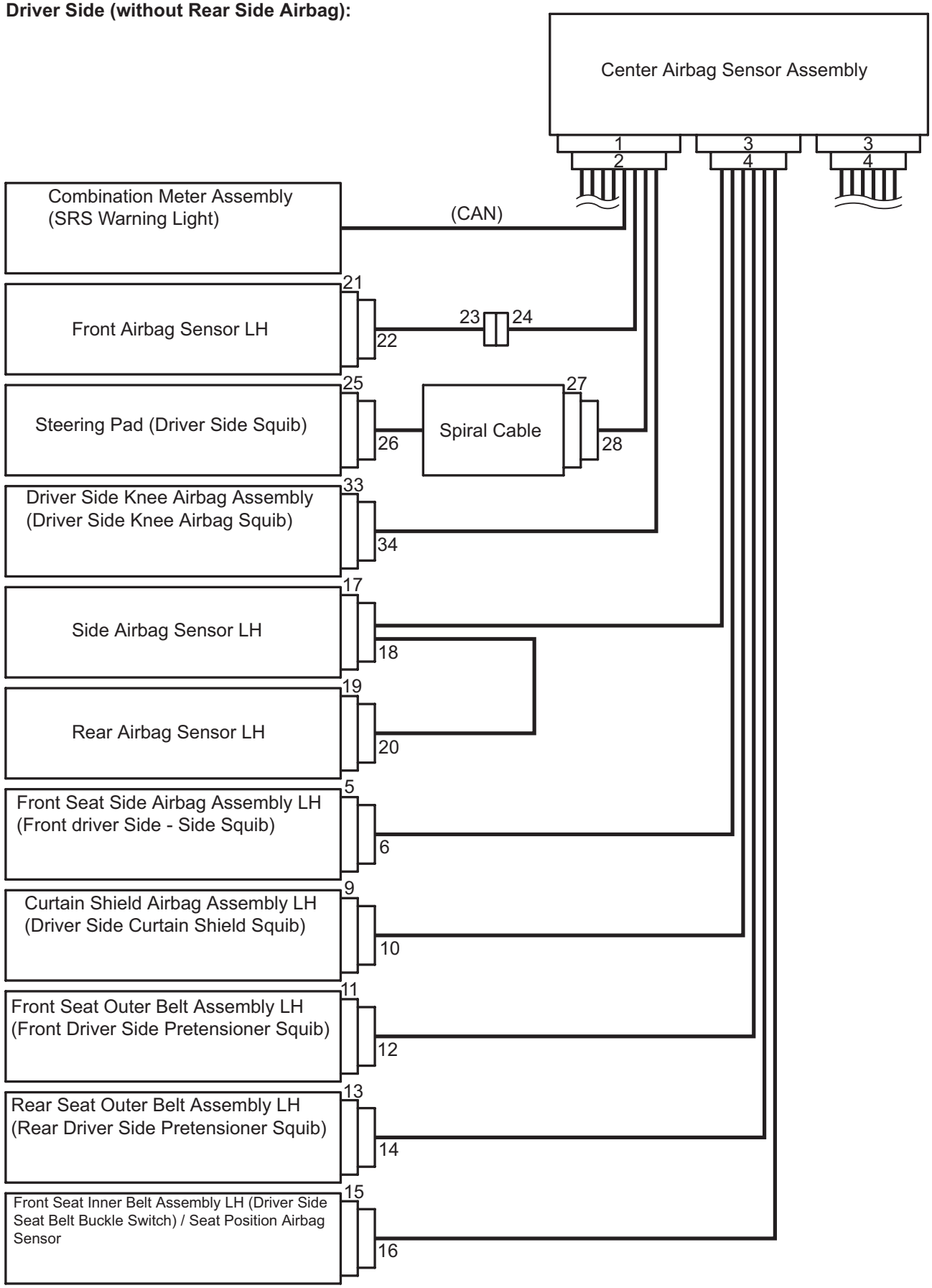

RS

Passenger Side (without Rear Side Airbag):

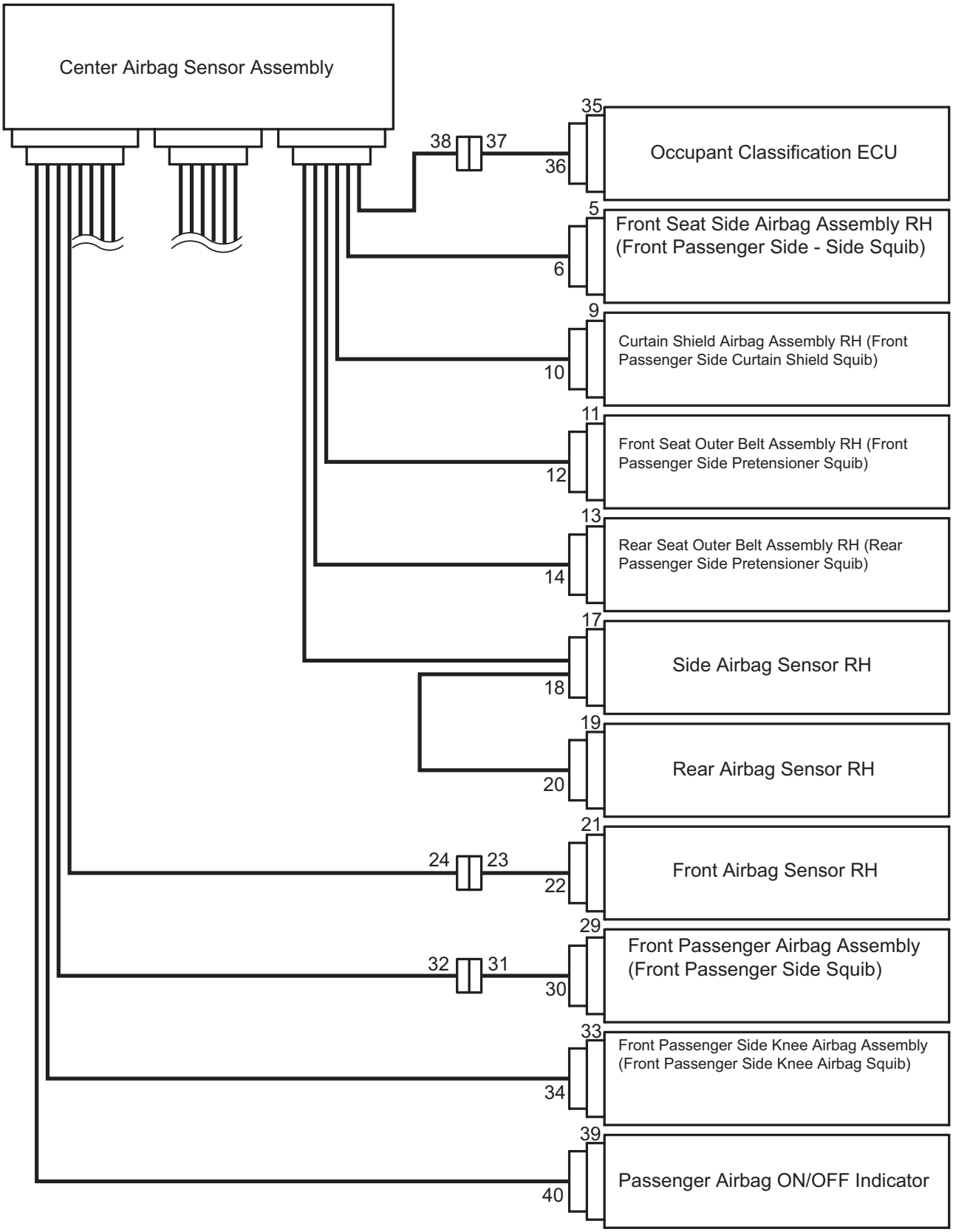

P

C123795E01

No.	Item	Application
(1)	Terminal Twin-Lock Mechanism	Connectors 5, 6, 7, 8, 18, 20, 23, 24, 27, 28, 31, 32, 38
(2)	Activation Prevention Mechanism	Connectors 5, 7, 27, 31
(3)	Half Connection Prevention Mechanism	Connectors 6, 8, 18, 20, 23, 28, 32
(4)	Connector Position Assurance Mechanism	Connector 22
(5)	Connector Lock Mechanism (1)	Connectors 10, 12, 14, 26, 30, 34
(6)	Connector Lock Mechanism (2)	Connectors 2, 4
(7)	Improper Connection Prevention Lock Mechanism	Connectors 1, 3

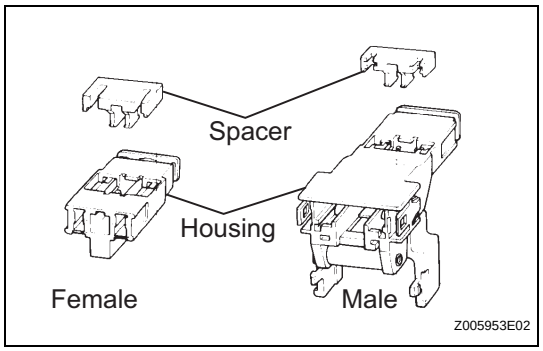

(b) All connectors in the SRS, except the seat position airbag sensor connector, are colored yellow to distinguish them from other connectors. These connectors have special functions, and are specially designed for the SRS. All SRS connectors use durable gold-plated terminals, and are placed in the locations shown on the previous page to ensure high reliability.

(1) Terminal twin-lock mechanism:
All connectors with a terminal twin-lock mechanism have a two-piece component consisting of a housing and a spacer. This design enables the terminal to be locked securely by two locking devices (the retainer and the lance) to prevent terminals from coming out.

RS

(2) Activation prevention mechanism:
All connectors with an activation prevention mechanism contain a short spring plate. When these connectors are disconnected, the short spring plate creates a short circuit by automatically connecting the positive (+) and negative (-) terminals of the squib.

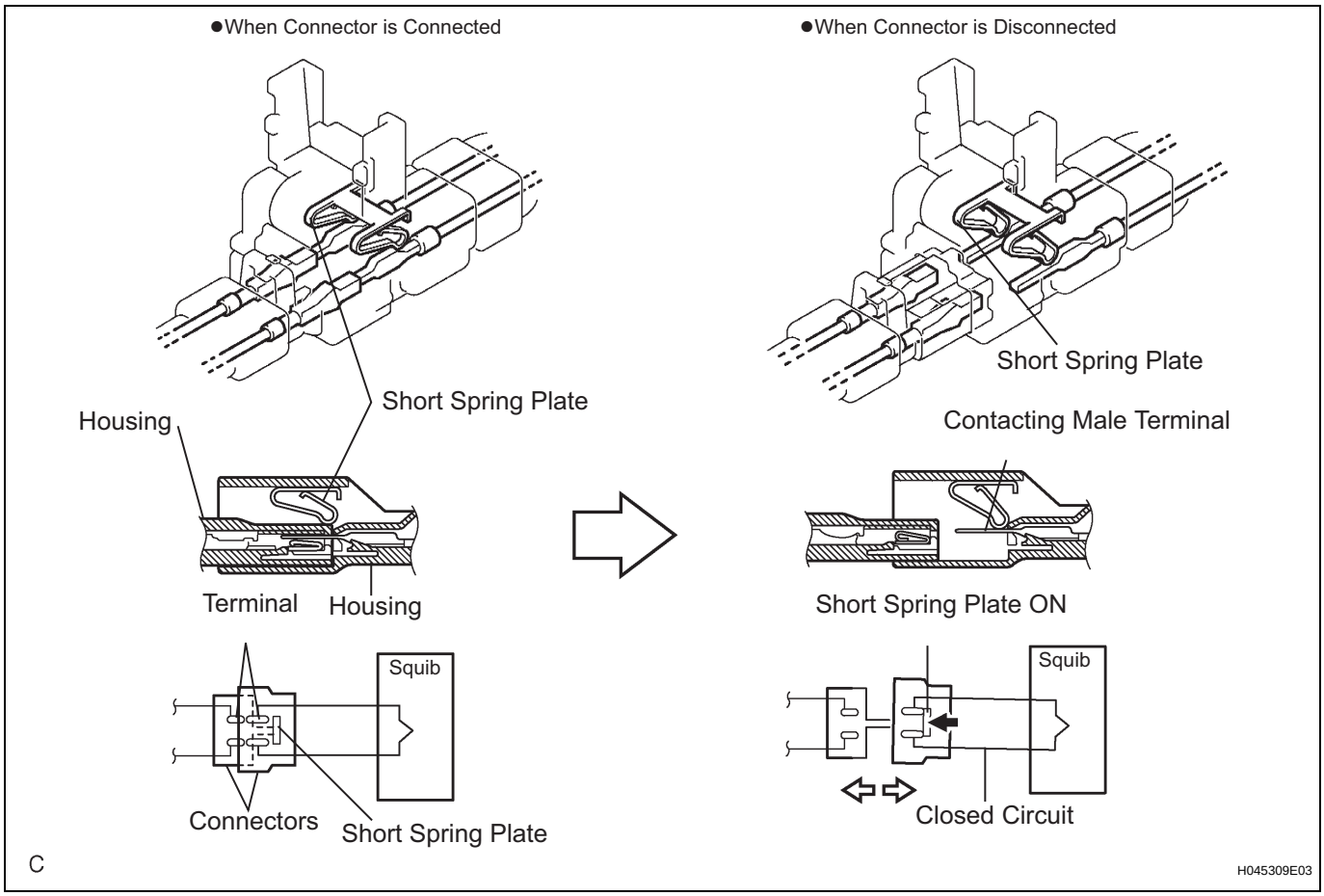

(3) Half connection prevention mechanism:
If the connector is not completely connected, the connector is disconnected due to the spring force so that no continuity exists.

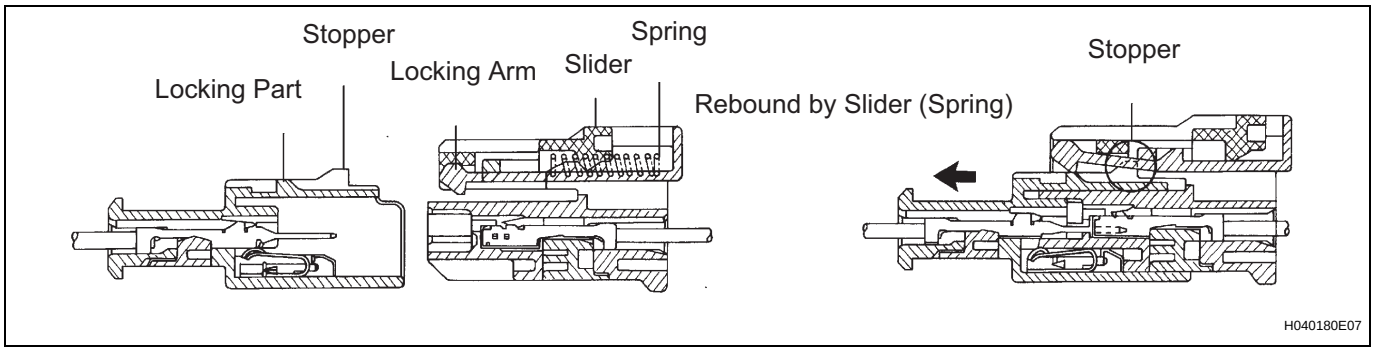

(4) Connector position assurance mechanism:
Only when the housing lock (white part) is completely engaged, the CPA (yellow part) slides, which completes the connector engagement.

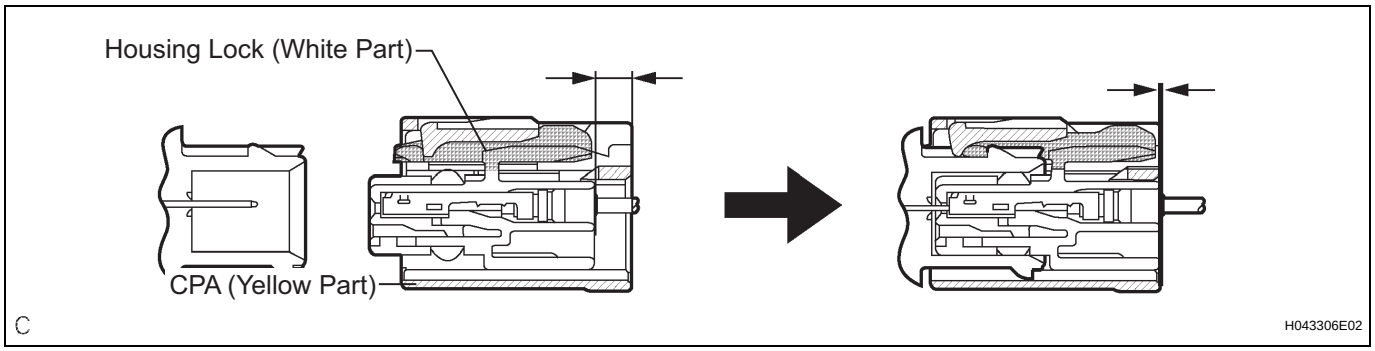

(5) Connector lock mechanism (1):
Locking the connector lock button connects the connector securely.

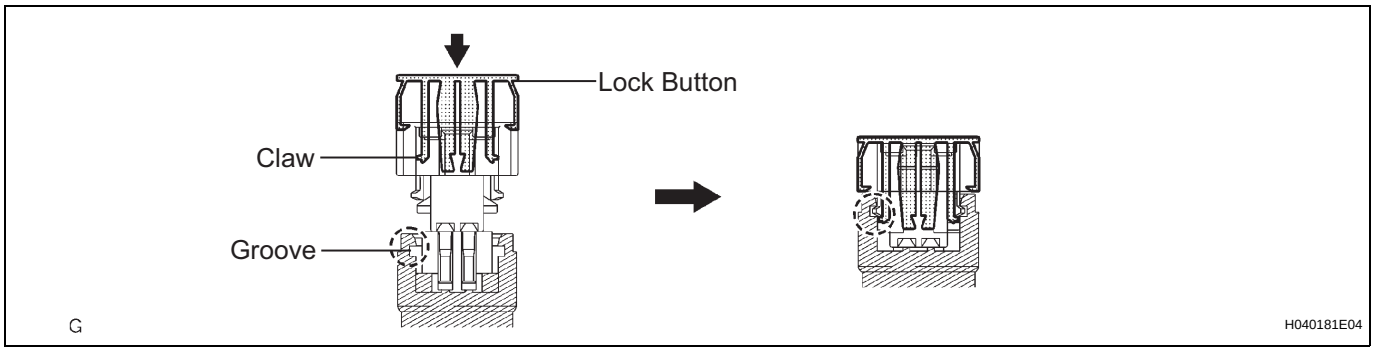

(6) Connector lock mechanism (2):
Both the primary lock with holder lances and the secondary lock with retainer prevent the connectors from becoming disconnected.

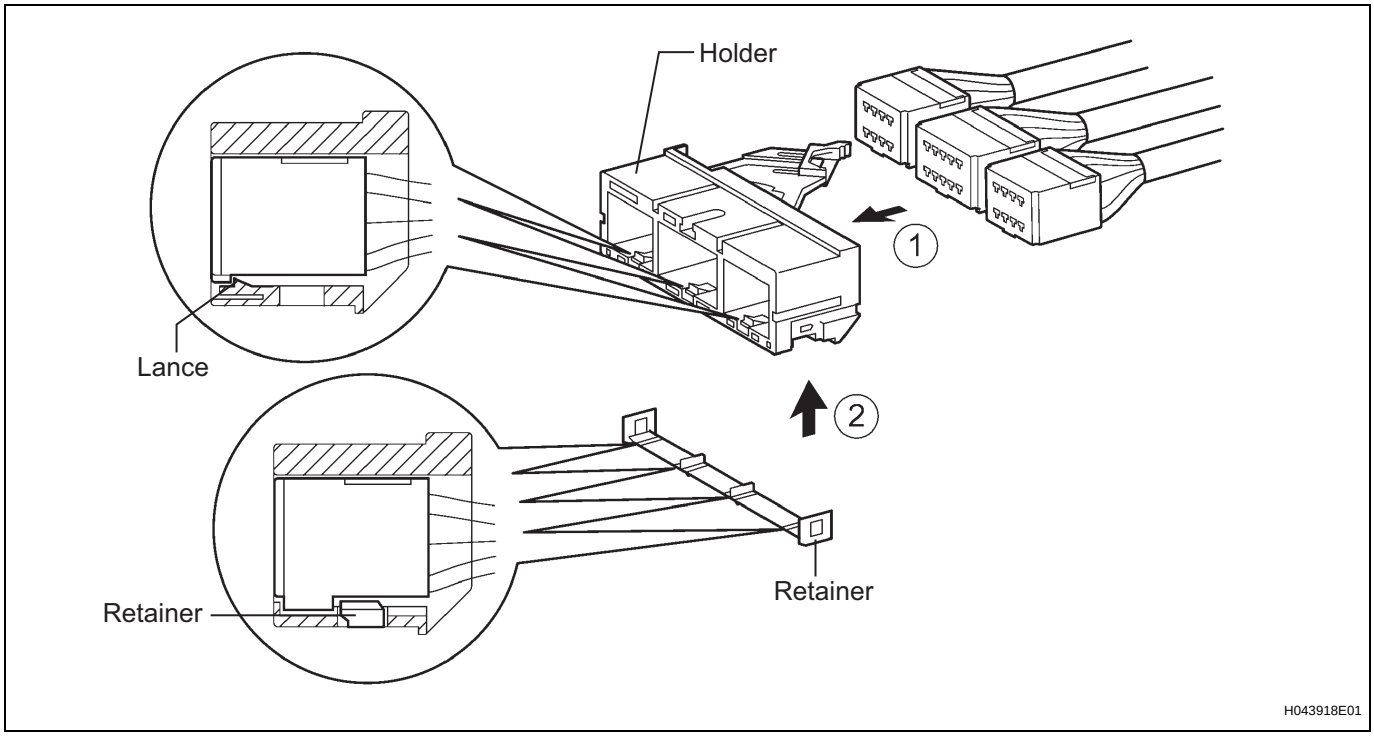

(7) Improper connection prevention lock mechanism:
When connecting the holder, the lever is pushed into the end by rotating around the A axis to lock the holder securely.

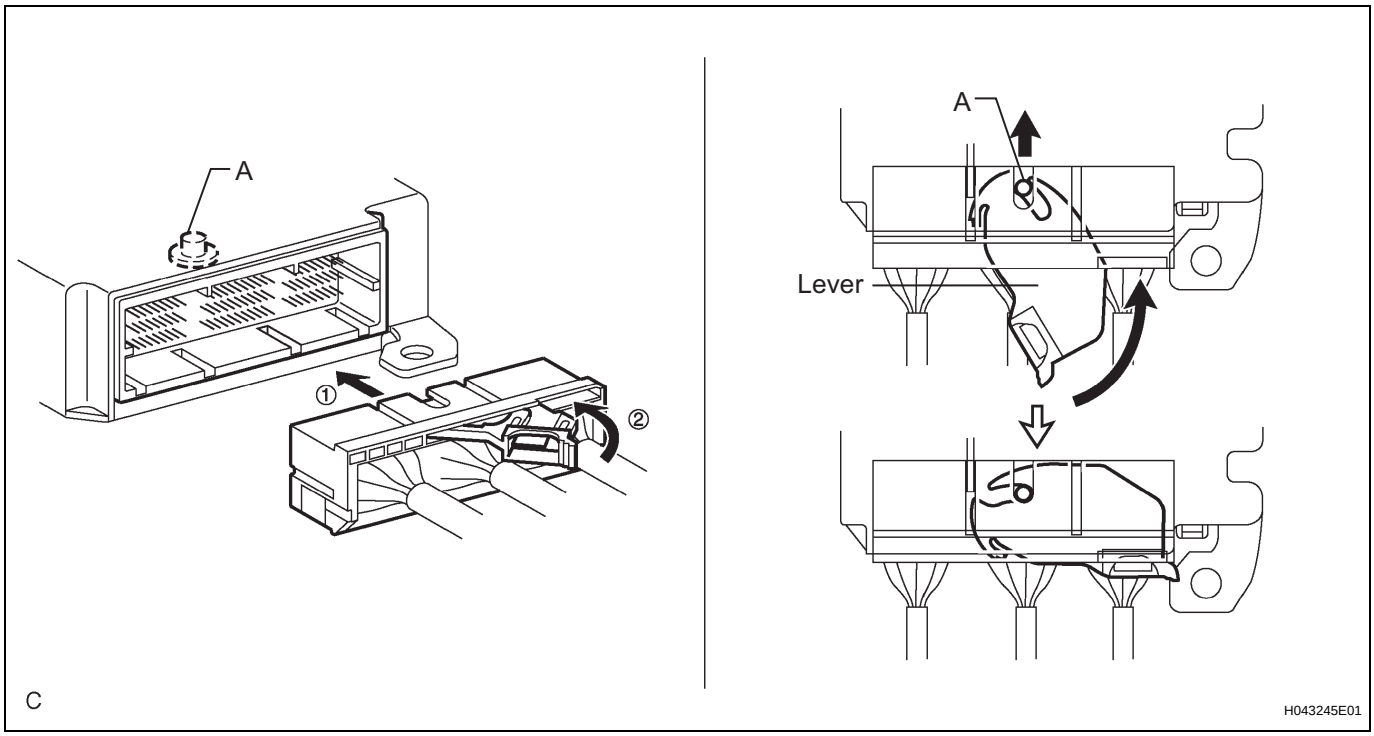

4. DISCONNECTION OF CONNECTORS FOR STEERING PAD, FRONT PASSENGER AIRBAG ASSEMBLY (SQUIB SIDE), DRIVER SIDE KNEE AIRBAG ASSEMBLY, FRONT PASSENGER SIDE KNEE AIRBAG ASSEMBLY, CURTAIN SHIELD AIRBAG ASSEMBLY, FRONT SEAT OUTER BELT ASSEMBLY, AND REAR SEAT OUTER BELT ASSEMBLY

HINT:

Tape up the screwdriver tip before use.

(a) Release the lock button (yellow part) of the connector using a screwdriver.

(b) Insert the screwdriver tip between the connector and the base, and then raise the connector.

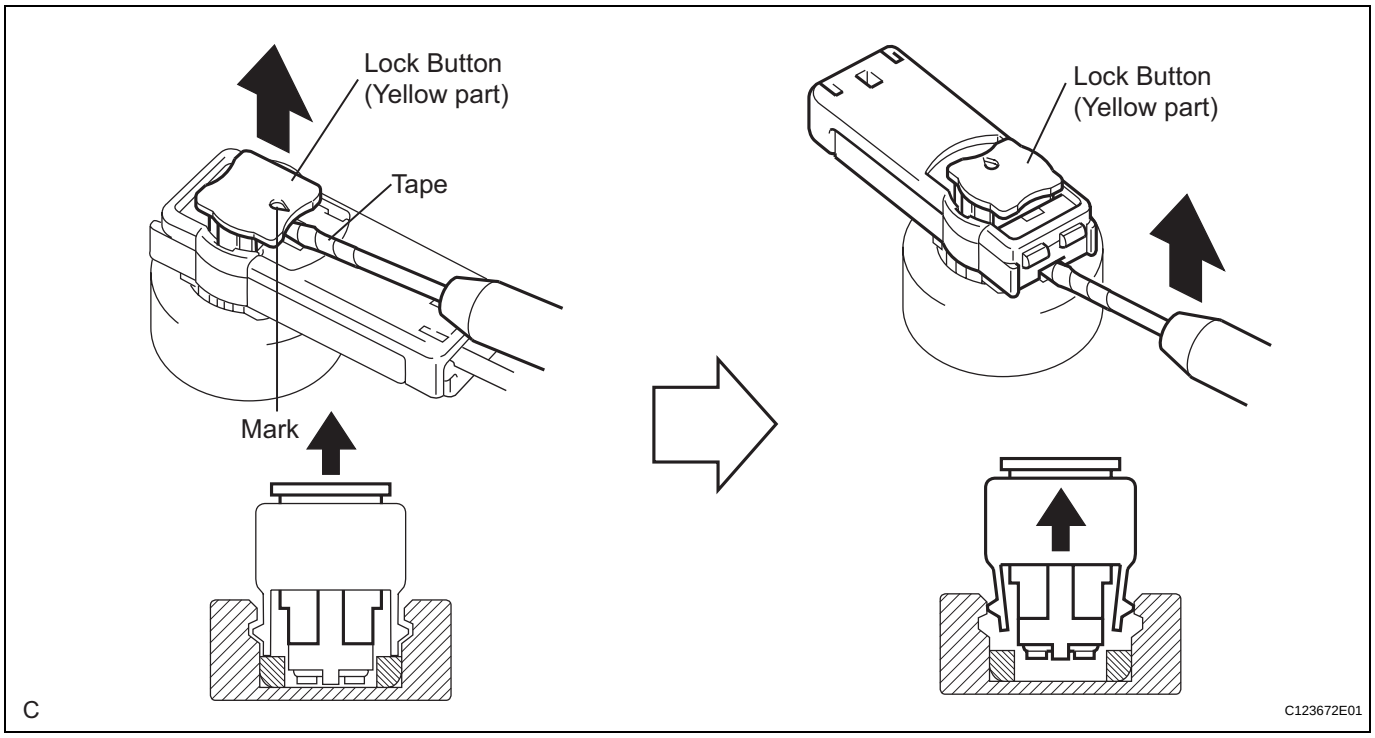

5. CONNECTION OF CONNECTORS FOR STEERING PAD, FRONT PASSENGER AIRBAG ASSEMBLY (SQUIB SIDE), DRIVER SIDE KNEE AIRBAG ASSEMBLY, FRONT PASSENGER SIDE KNEE AIRBAG ASSEMBLY CURTAIN SHIELD AIRBAG ASSEMBLY, FRONT SEAT OUTER BELT ASSEMBLY, AND REAR SEAT OUTER BELT ASSEMBLY

(a) Connect the connector.

(b) Push down securely on the lock button (yellow part) of the connector. (When locked, a click sound can be heard.)

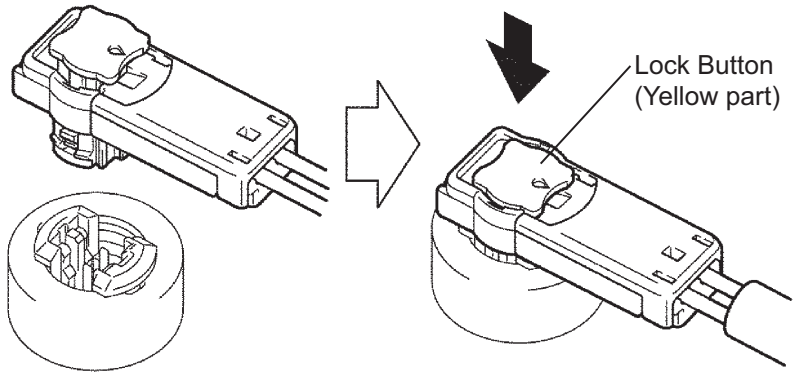

H043151E04

6. DISCONNECTION OF CONNECTOR FOR SPIRAL CABLE (INSTRUMENT PANEL WIRE SIDE) AND FRONT PASSENGER AIRBAG ASSEMBLY (INSTRUMENT PANEL WIRE SIDE)

(a) Place a finger on the slider, slide the slider to release the lock, and then disconnect the connector.

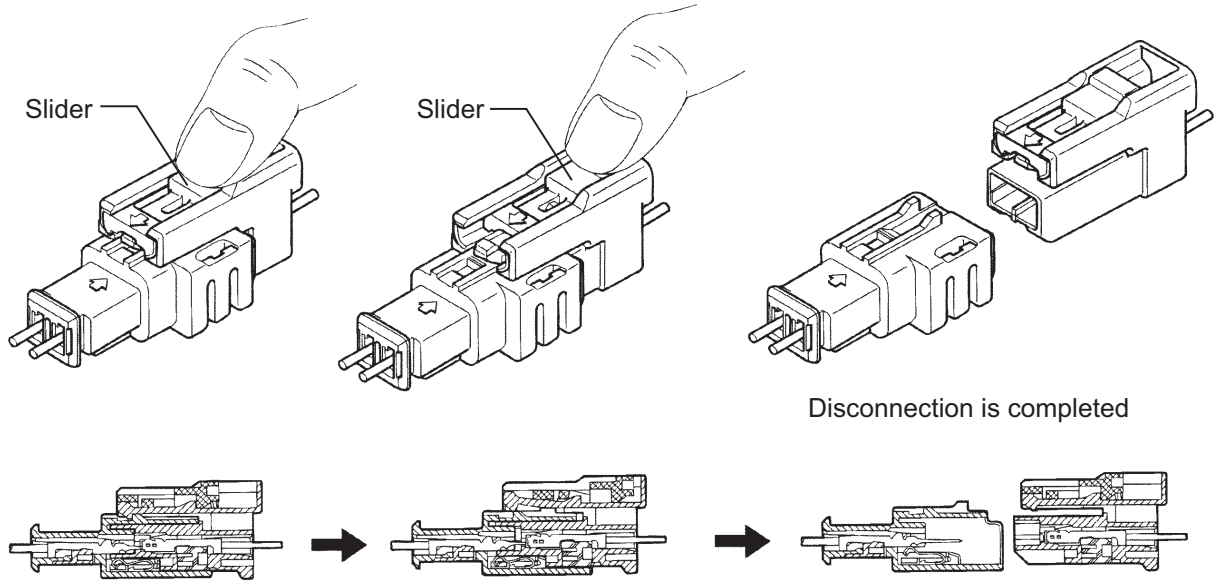

H001586E02

7. CONNECTION OF CONNECTOR FOR SPIRAL CABLE (INSTRUMENT PANEL WIRE SIDE) AND FRONT PASSENGER AIRBAG ASSEMBLY (INSTRUMENT PANEL WIRE SIDE)

(a) Connect the connector as shown in the illustration. (When locking, make sure that the slider returns to its original position and a click sound can be heard.)
HINT:
When connecting, the slider will slide. Be sure not to touch the slider while connecting, as it may result in an insecure fit.

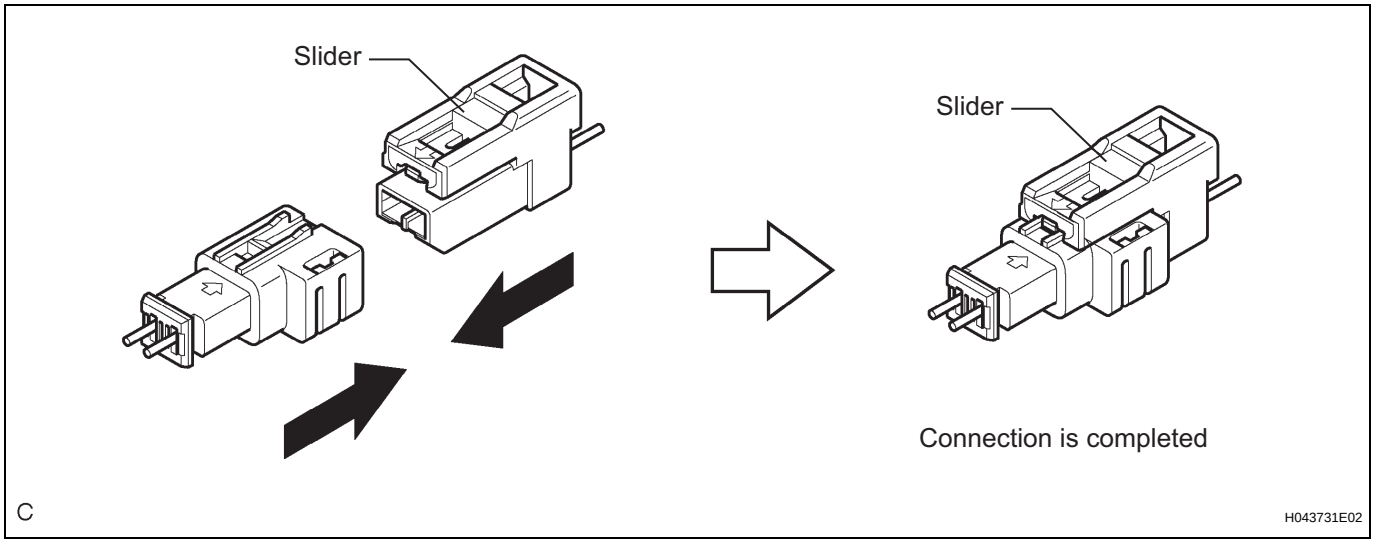

8. DISCONNECTION OF CONNECTORS FOR FRONT SEAT SIDE AIRBAG ASSEMBLY AND REAR SEAT SIDE AIRBAG ASSEMBLY

(a) Place a finger on the slider, slide the slider to release the lock, and then disconnect the connector.

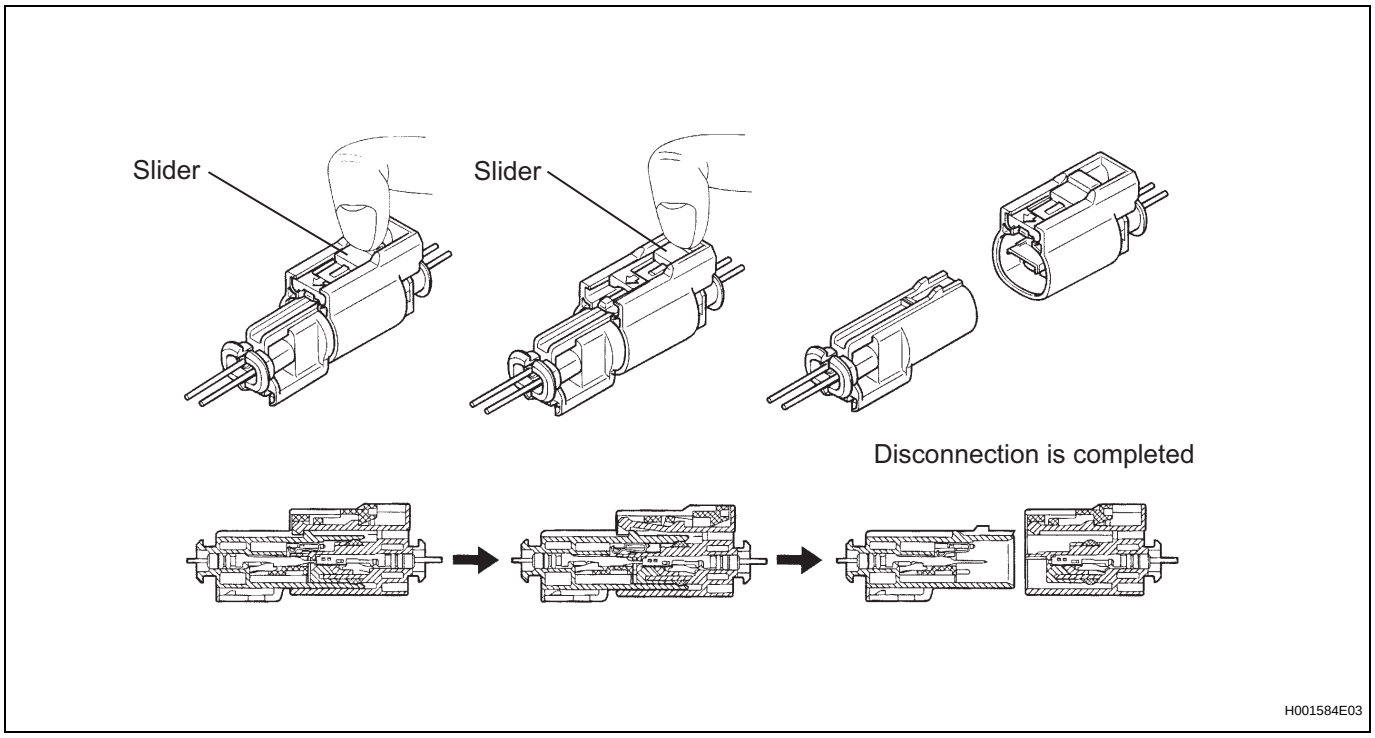

RS

9. CONNECTION OF CONNECTORS FOR FRONT SEAT SIDE AIRBAG ASSEMBLY AND REAR SEAT SIDE AIRBAG ASSEMBLY

(a) Connect the connector as shown in the illustration. (When locking, make sure that the slider returns to its original position and a click sound can be heard.)
HINT:
When connecting, the slider will slide. Be sure not to touch the slider while connecting, as it may result in an insecure fit.

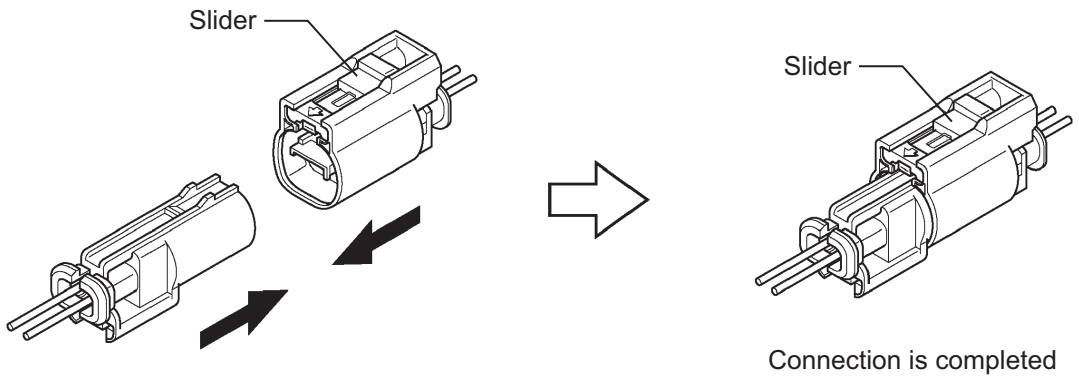

10. DISCONNECTION OF CONNECTOR FOR CENTER AIRBAG SENSOR ASSEMBLY

(a) Pull the lever by pushing part A as shown in the illustration and disconnect the holder (with connectors).

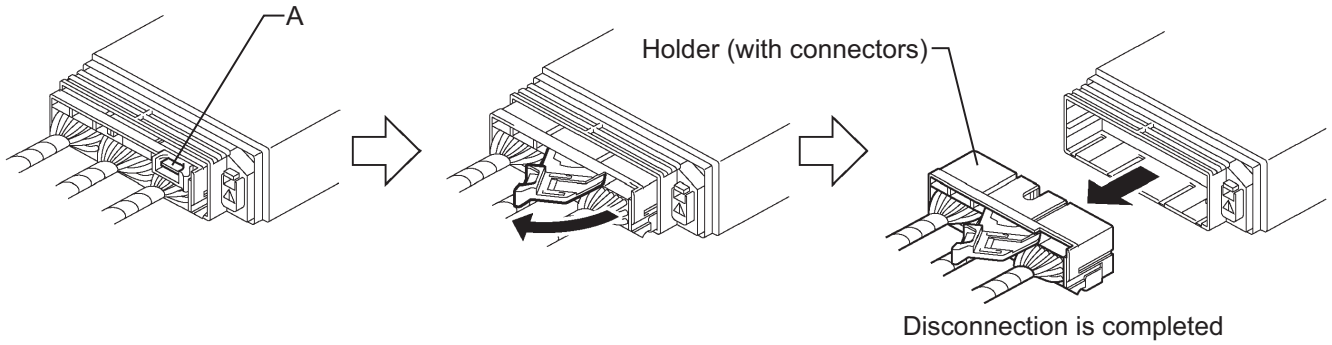

HINT:
Perform the following procedures when replacing the holder.

(b) Remove the holder.
(1) Using a screwdriver, unlock the retainer.

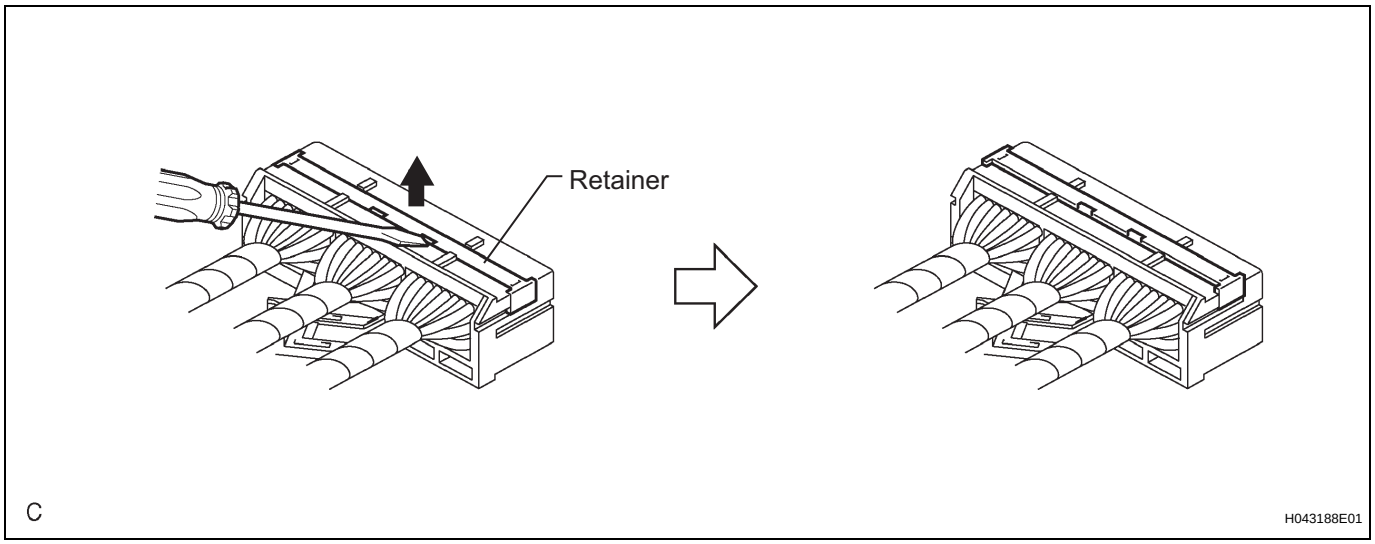

(2) Release the fitting lance and remove the holder.

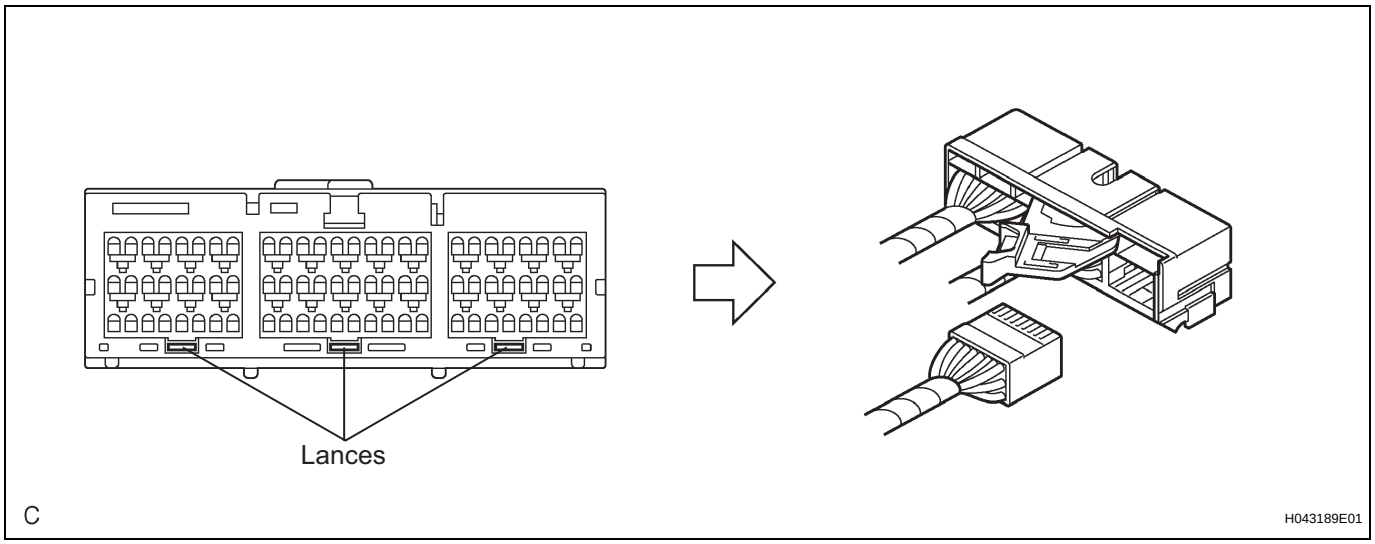

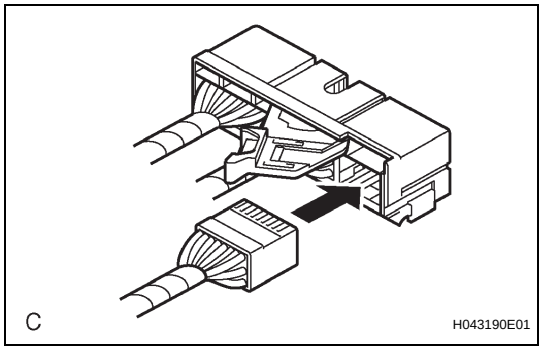

(c) Install the holder.
(1) Install the connectors to the holder. (When locked, a click sound can be heard.)
HINT:
The retainer is locked when the holder is connected.

11. CONNECTION OF CONNECTOR FOR CENTER AIRBAG SENSOR ASSEMBLY

(a) Firmly insert the holder (with connectors) into the center airbag sensor assembly until it cannot be pushed any further.

(b) Push the lever to connect the holder (with connectors). (When locked, a click sound can be heard.)
HINT:
The holder slides into the center airbag sensor assembly when it is being connected. Be sure not to hold the holder while connecting, as it may result in an insecure fit.

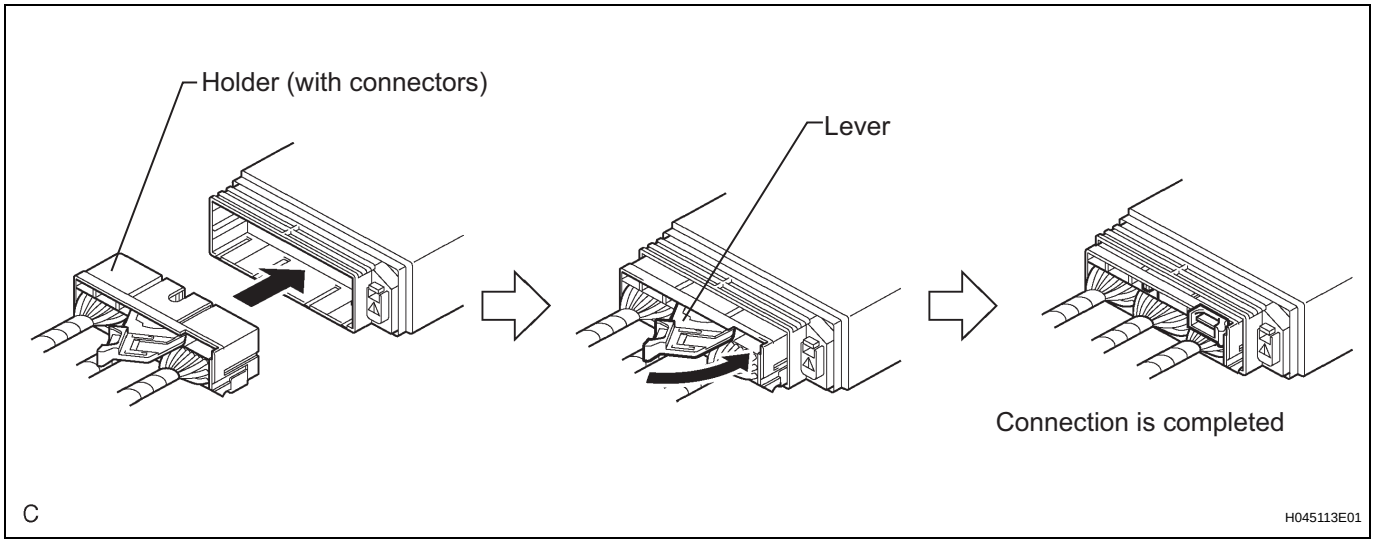

12. DISCONNECTION OF CONNECTOR FOR FRONT AIRBAG SENSOR

(a) Push down the housing lock (white part) and slide the CPA (yellow part). (At this time, the connector cannot be disconnected yet.)

(b) Push down the housing lock (white part) again and disconnect the connector.
HINT:
Do not push down the A part shown in the illustration when disconnecting.

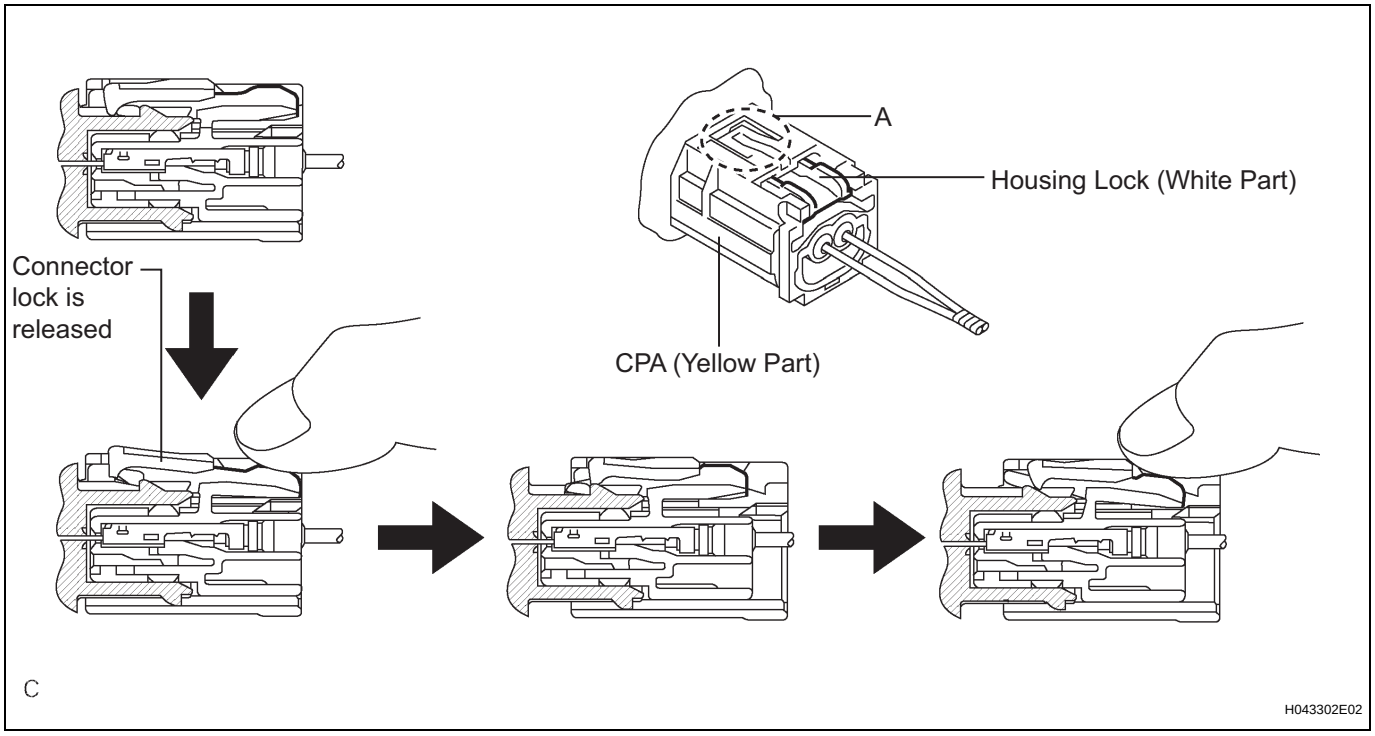

(c) After disconnecting the connector, check that the position of the housing lock (white part) is as shown in the illustration.

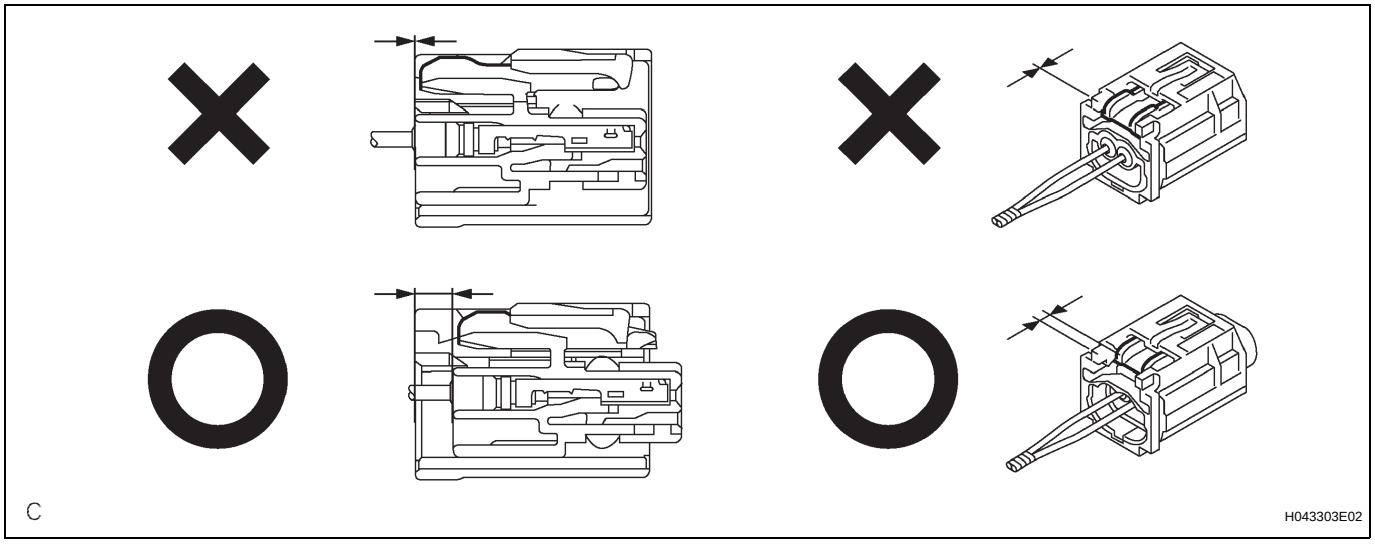

RS

13. CONNECTION OF CONNECTOR FOR FRONT AIRBAG SENSOR

(a) Before connecting the connectors, check that the position of the housing lock (white part) is as shown in the illustration.

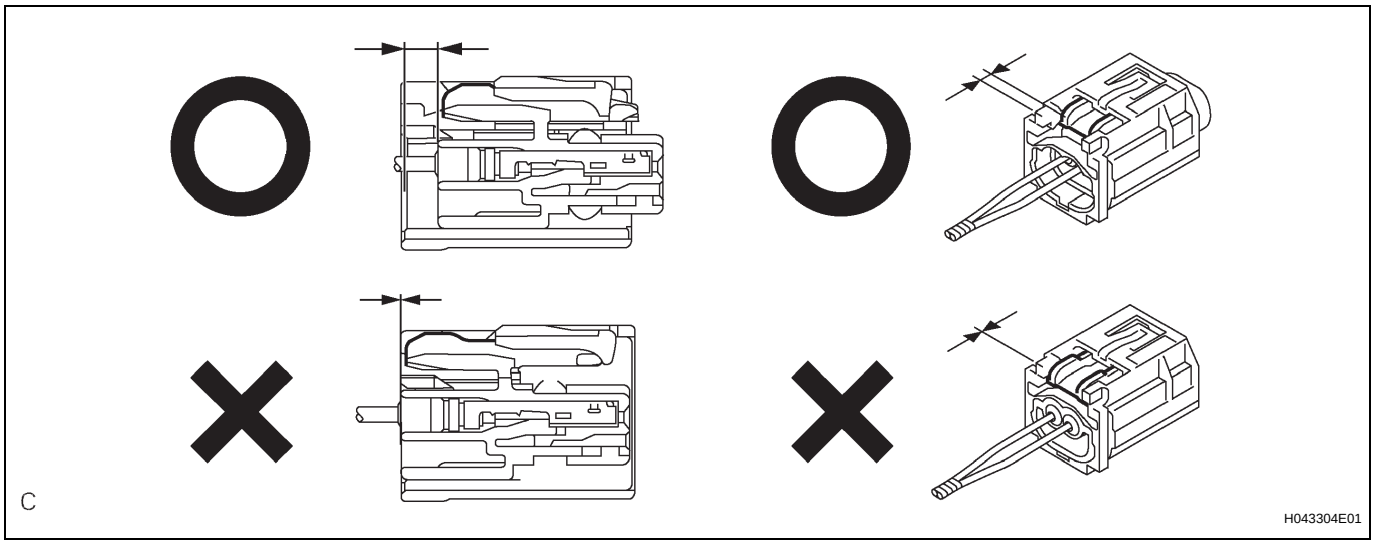

(b) Be sure to engage the connectors until they are locked. (When locking, make sure that a click sound can be heard.)
HINT:
When connecting them, the housing lock (white part) slides. Be sure not to hold the housing lock (white part) and A part, as it may result in an insecure fit.

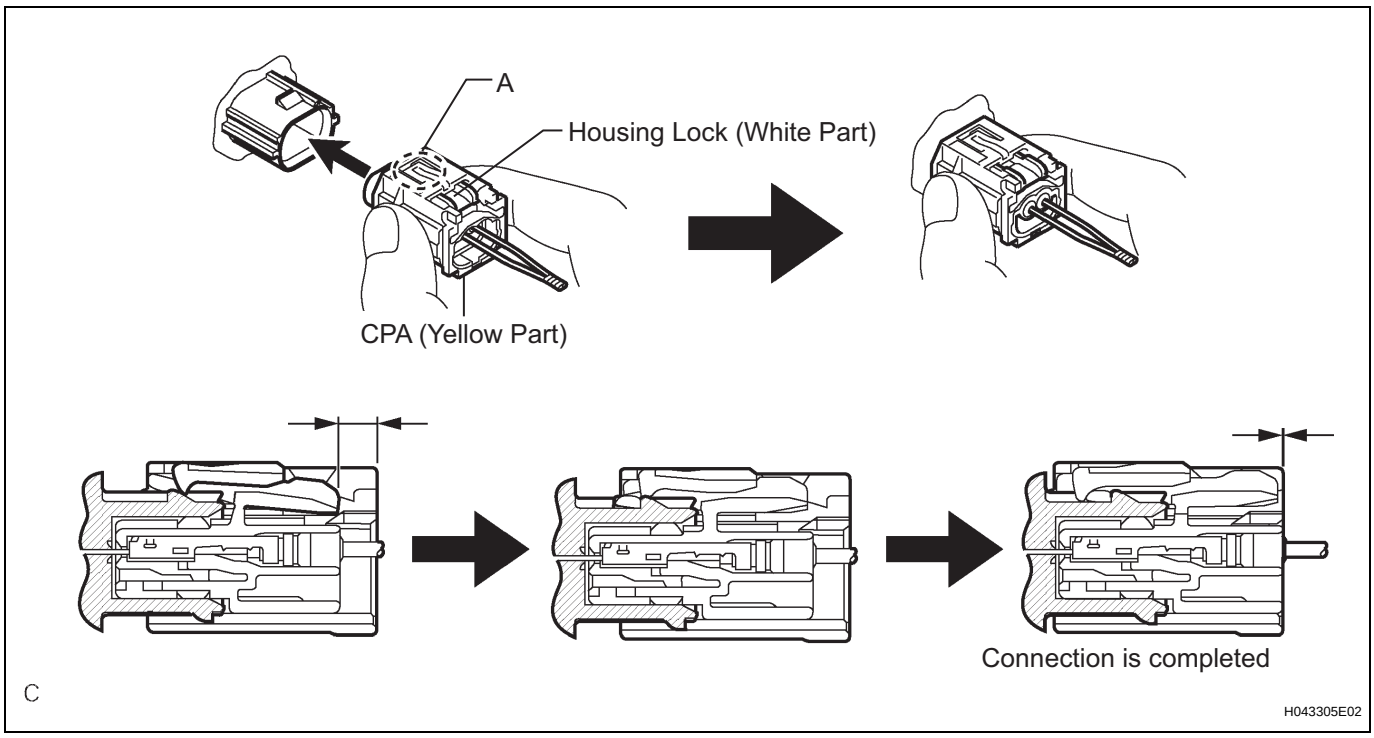

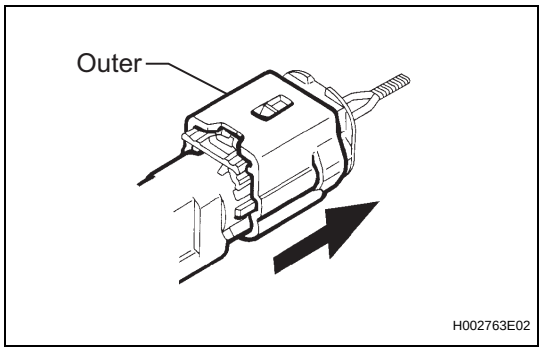

14. DISCONNECTION OF CONNECTORS FOR SIDE AIRBAG SENSOR AND REAR AIRBAG SENSOR

(a) While holding the sides of the outer connector locking sleeve, slide the outer in the direction shown by the arrow.

(b) When the connector lock is released, the connectors are disconnected.
HINT:
Be sure to hold both outer flank sides. Holding the top and bottom will make disconnection difficult.

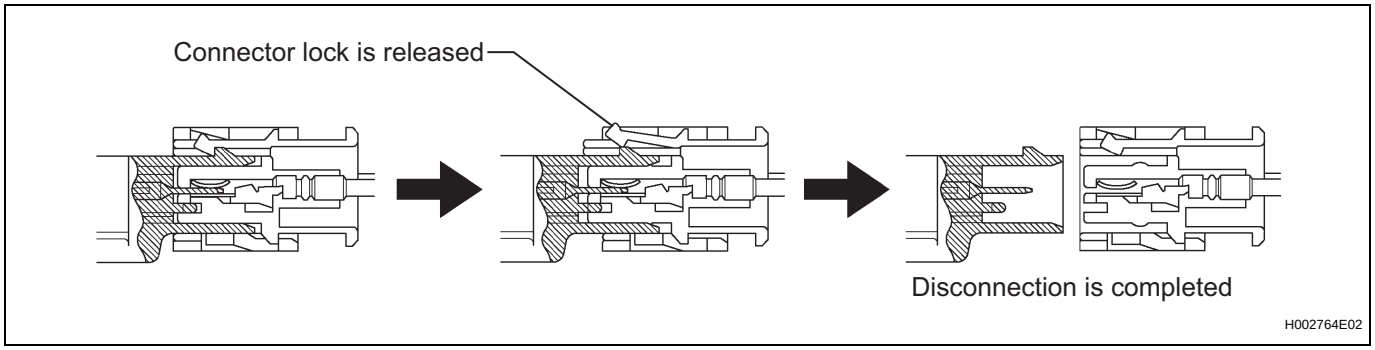

15. CONNECTION OF CONNECTORS FOR SIDE AIRBAG SENSOR AND REAR AIRBAG SENSOR

(a) Connect the connector as shown in the illustration (When locking, make sure that the outer returns to its original position and a click sound can be heard).
HINT:
When connecting, the outer will slide. Be sure not to hold the outer while connecting, as it may result in an insecure fit.

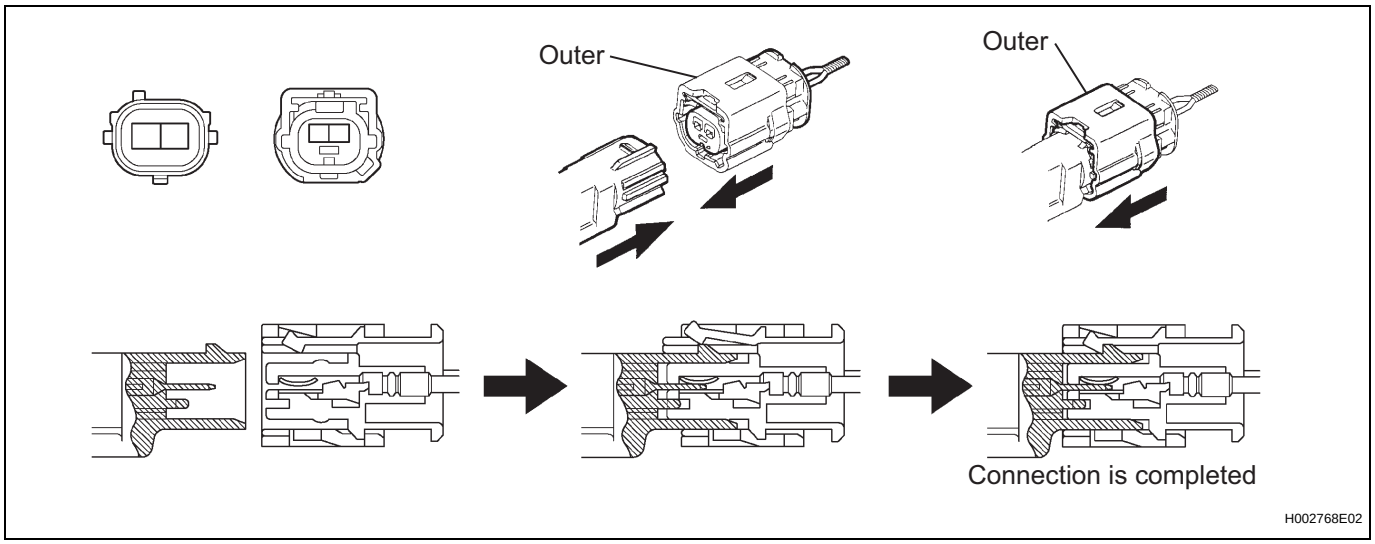

OCCUPANT CLASSIFICATION SYSTEM

PRECAUTION

NOTICE:
Some systems need to be initialized after reconnecting the negative (-) battery terminal (See page IN-33).

1. INSPECTION PROCEDURE FOR VEHICLE INVOLVED IN ACCIDENT

(a) Perform zero point calibration and sensitivity check if any of the following conditions apply.
- The occupant classification ECU is replaced.
- The passenger airbag ON/OFF indicator indicates OFF when the front passenger seat is not occupied.
- The vehicle is brought to the workshop for repair due to an accident or a collision.

RS

PARTS LOCATION

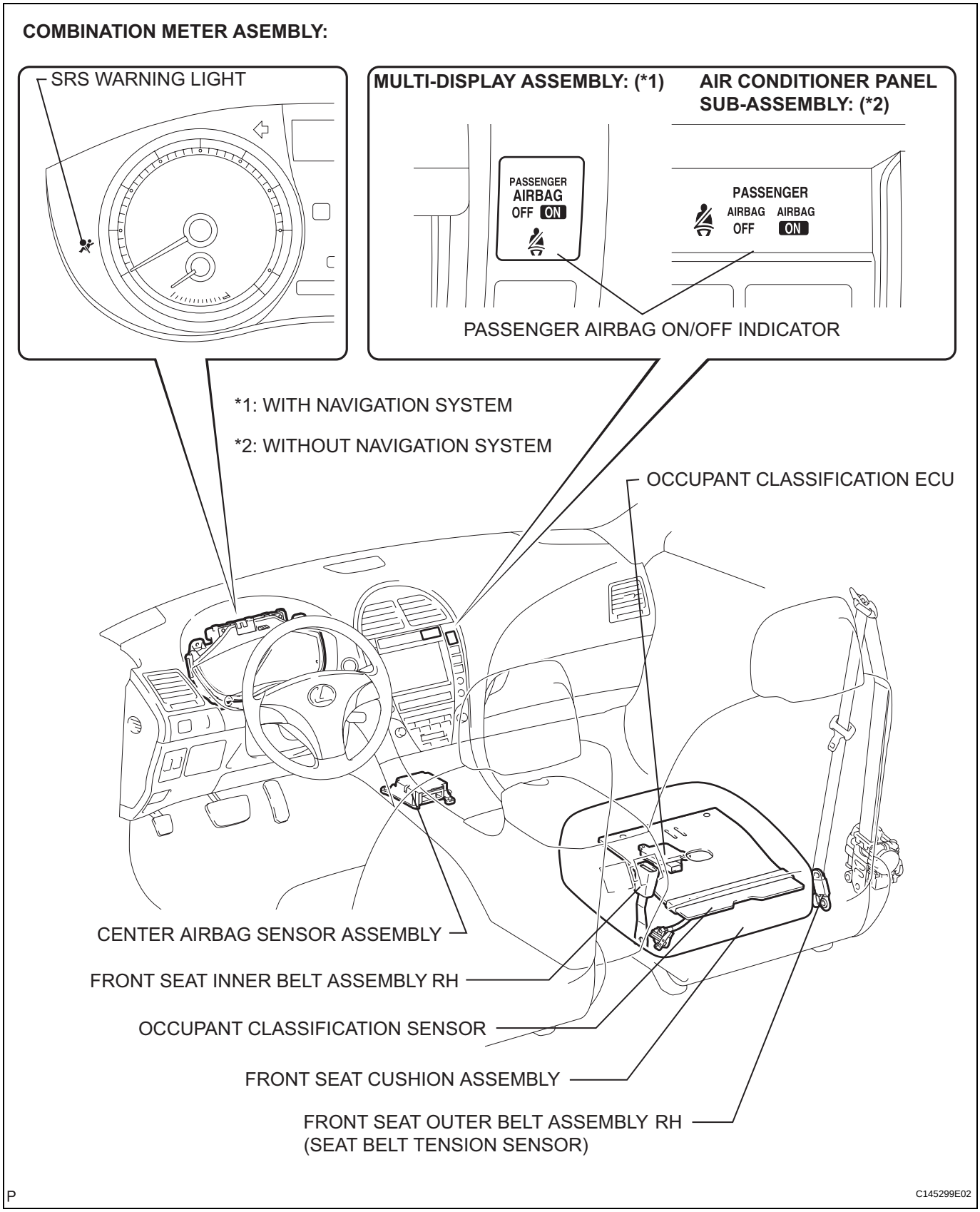

STEERING PAD

COMPONENTS

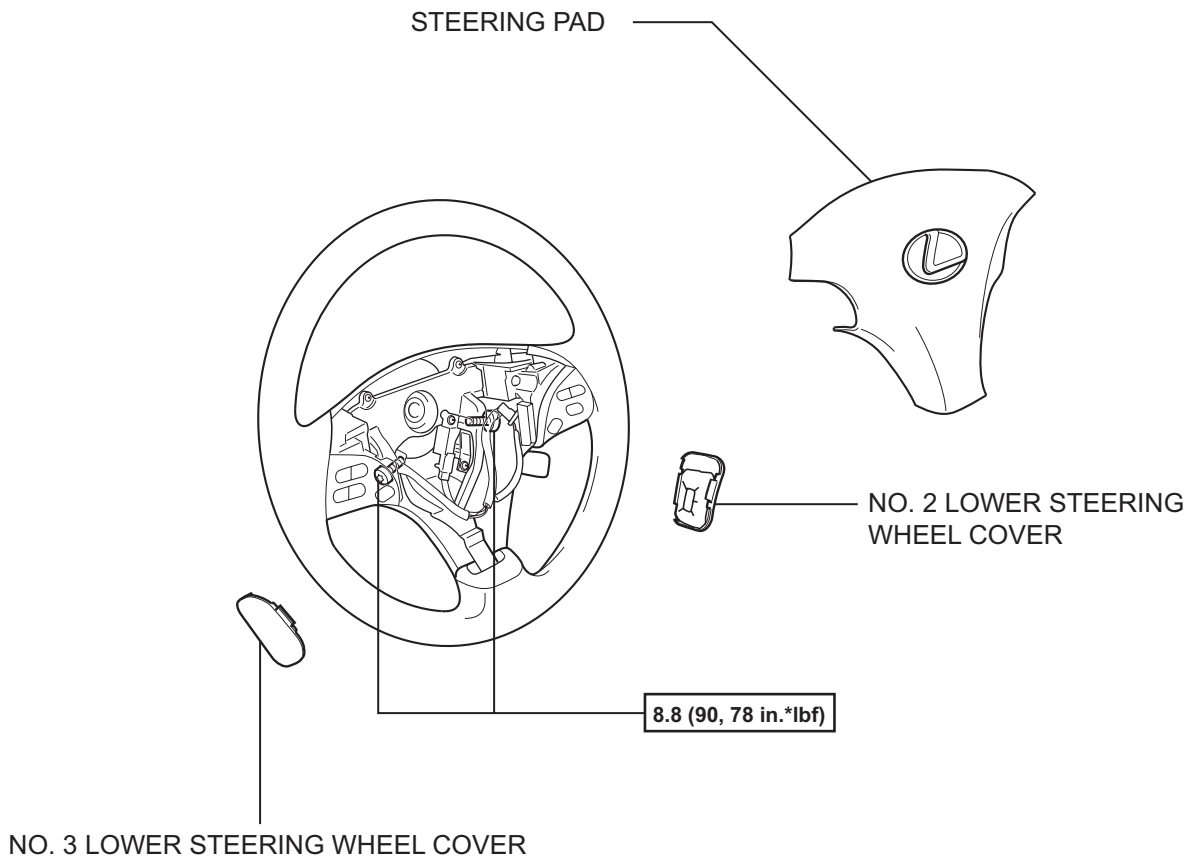

N*m (kgf*cm, ft.*lbf) : Specified torque

C

C133914E01

RS

ON-VEHICLE INSPECTION

1. INSPECT STEERING PAD (VEHICLE NOT INVOLVED IN COLLISION)

(a) Perform a diagnostic system check (See page RS-37).

(b) With the steering pad installed on the vehicle, perform a visual check. If there are any defects as mentioned below, replace the steering pad with a new one:
Cuts, minute cracks or marked discoloration on the steering pad top surface or in the grooved portion.

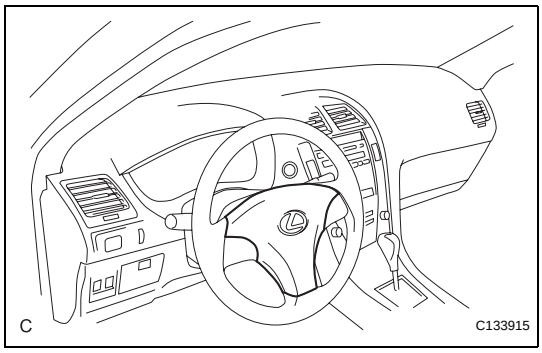

2. INSPECT STEERING PAD (VEHICLE INVOLVED IN COLLISION AND AIRBAG HAS NOT DEPLOYED)

(a) Perform a diagnostic system check (See page RS-37).

(b) With the steering pad removed from the vehicle, perform a visual check. If there are any defects as mentioned below, replace the steering pad or steering wheel assembly with a new one:
- Cuts, minute cracks or marked discoloration on the steering pad top surface or in the grooved portion.
- Cracks or other damage to the connectors.
- Deformation of the steering wheel assembly.
- Deformation of the horn button contact plate of the steering pad.
- There should be no interference between the steering pad and steering wheel assembly, and the clearance should be uniform all the way around when the new steering pad is installed on the steering wheel assembly.

CAUTION:
Be sure to follow the correct removal and installation procedures.

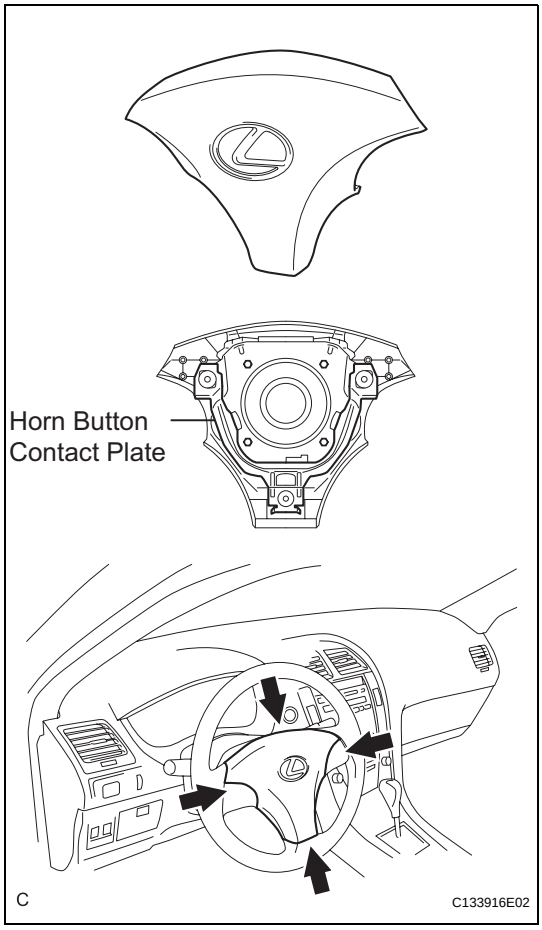

SPIRAL CABLE

COMPONENTS

RS

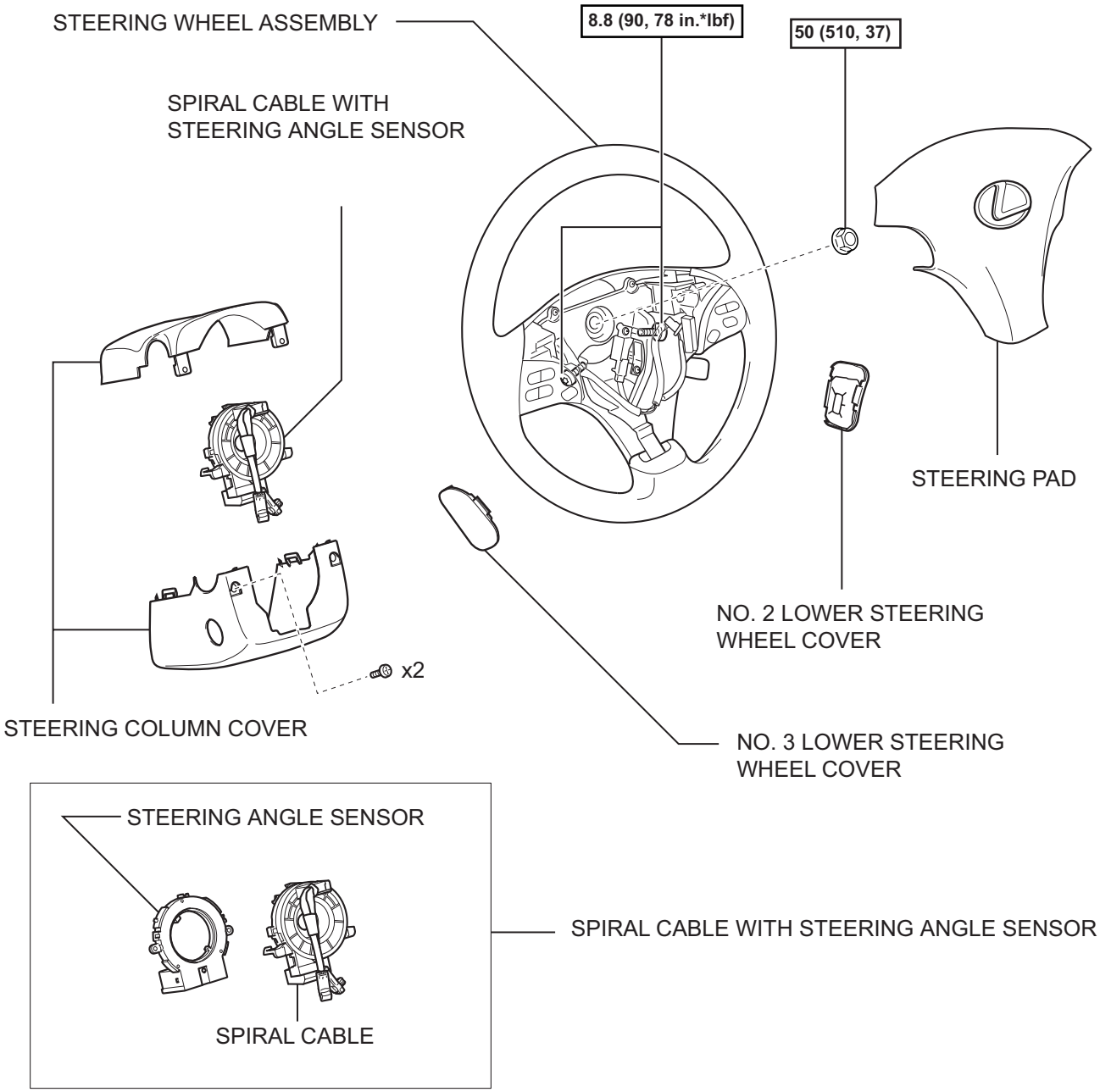

N*m (kgf*cm, ft.*lbf) : Specified torque

C

C138817E02

REMOVAL

1. **PRECAUTION**
   CAUTION:
   Be sure to read "PRECAUTION" thoroughly before servicing (See page RS-1).
2. **DISCONNECT CABLE FROM NEGATIVE BATTERY TERMINAL**
   NOTICE:
   Wait for 90 seconds after disconnecting the cable to prevent airbag deployment.
3. **ALIGN FRONT WHEELS FACING STRAIGHT AHEAD**
4. **REMOVE NO. 3 LOWER STEERING WHEEL COVER (See page RS-367)**
5. **REMOVE NO. 2 LOWER STEERING WHEEL COVER (See page RS-367)**
6. **REMOVE STEERING PAD (See page RS-367)**
7. **REMOVE STEERING WHEEL ASSEMBLY (See page SR-80)**
8. **REMOVE STEERING COLUMN COVER (See page SR-80)**
9. **REMOVE SPIRAL CABLE WITH STEERING ANGLE SENSOR**
   (a) Disconnect the connectors from the spiral cable with steering angle sensor.
   NOTICE:
   When handling the airbag connector, take care not to damage the airbag wire harness.
   (b) Disengage the 3 claws and remove the spiral cable with steering angle sensor.

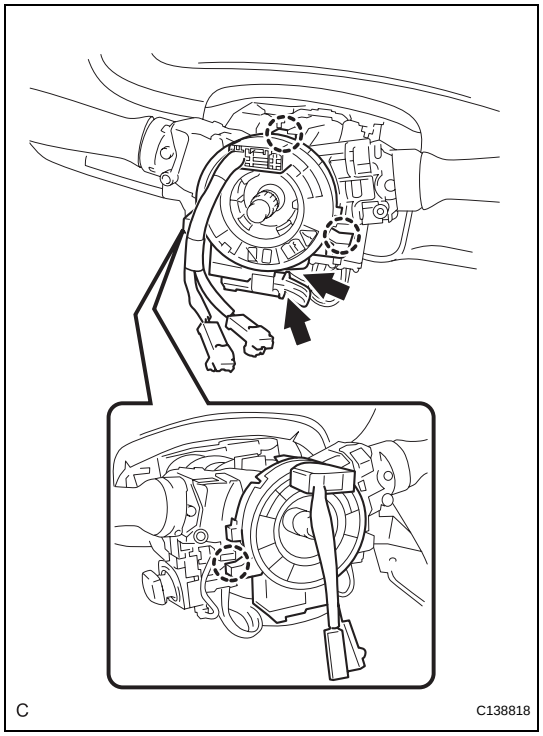

RS

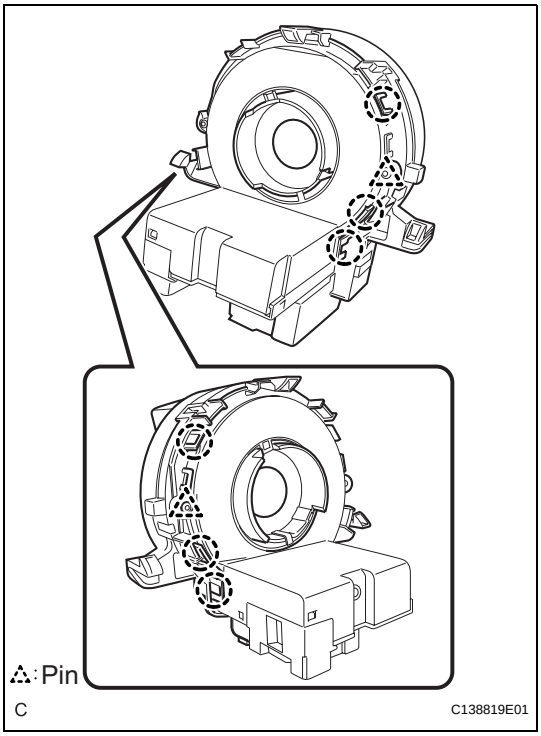

10. REMOVE SPIRAL CABLE

(a) Disengage the 6 claws and 2 pins, and remove the spiral cable from the steering angle sensor.

DRIVER SIDE KNEE AIRBAG ASSEMBLY

COMPONENTS

RS

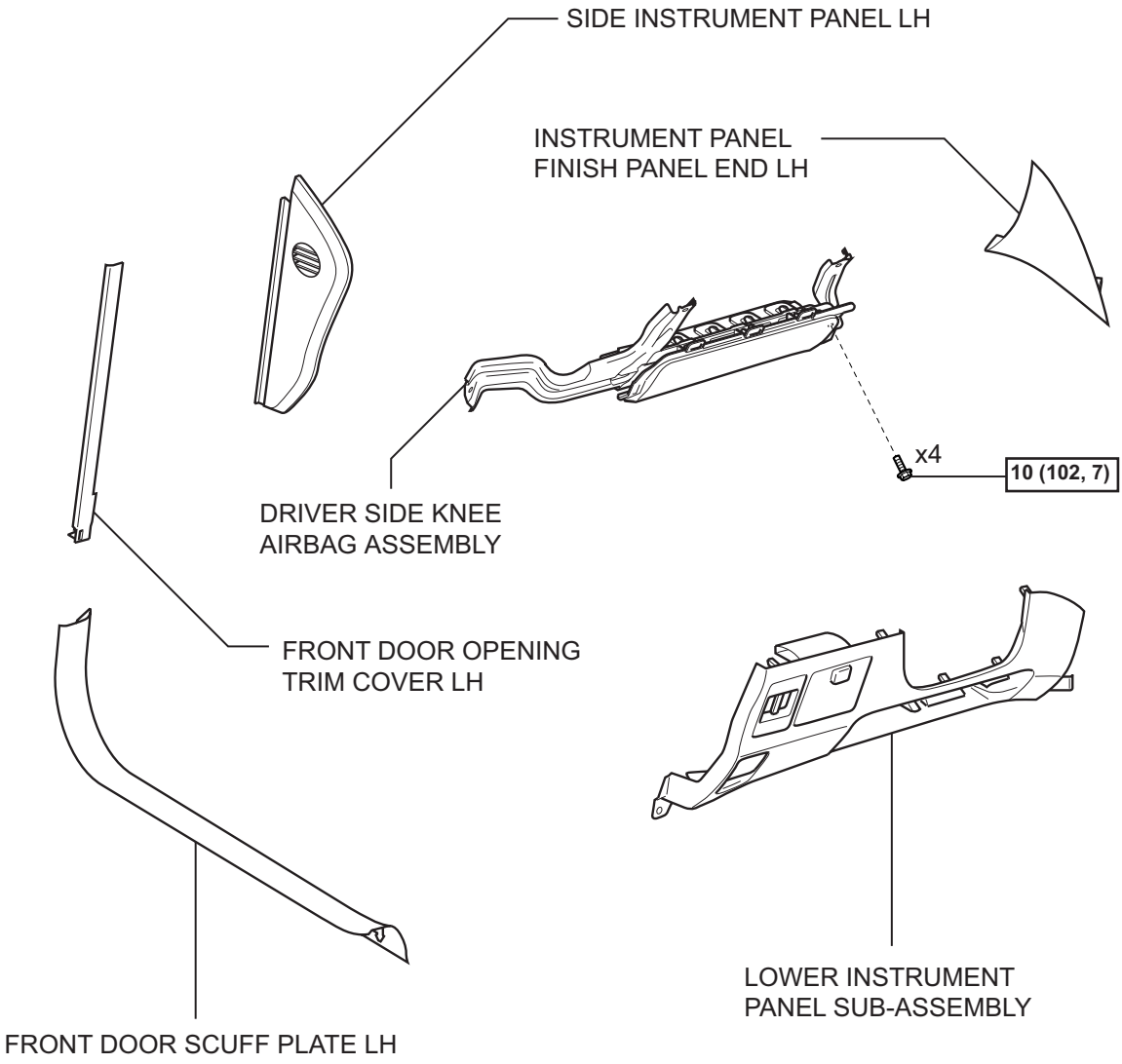

N*m (kgf*cm, ft.*lbf) : Specified torque

C

C138822E01

ON-VEHICLE INSPECTION

1. INSPECT DRIVER SIDE KNEE AIRBAG ASSEMBLY (VEHICLE NOT INVOLVED IN COLLISION)

(a) Perform a diagnostic system check (See page RS-37).

(b) With the driver side knee airbag assembly installed on the vehicle, perform a visual check. If there are any defects as mentioned below, replace the driver side knee airbag assembly with a new one:
Cuts, minute cracks or marked discoloration on the driver side knee airbag assembly.

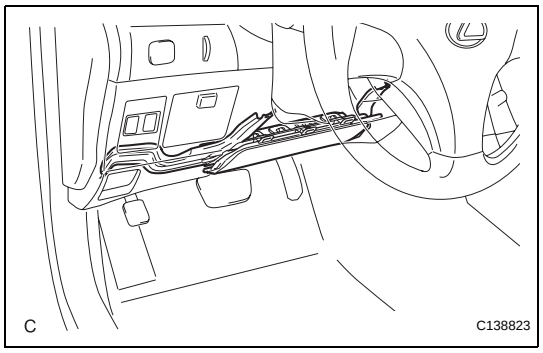

2. INSPECT DRIVER SIDE KNEE AIRBAG ASSEMBLY (VEHICLE INVOLVED IN COLLISION AND AIRBAG HAS NOT DEPLOYED)

(a) Perform a diagnostic system check (See page RS-37).

(b) With the driver side knee airbag assembly removed from the vehicle, perform a visual check. If there are any defects as mentioned below, replace the driver side knee airbag assembly with a new one:
- Cuts, minute cracks or marked discoloration on the driver side knee airbag assembly.
- Cracks or other damage to the connector.
- Deformation or cracks on the instrument panel reinforcement.

CAUTION:
Be sure to follow the correct removal and installation procedures.

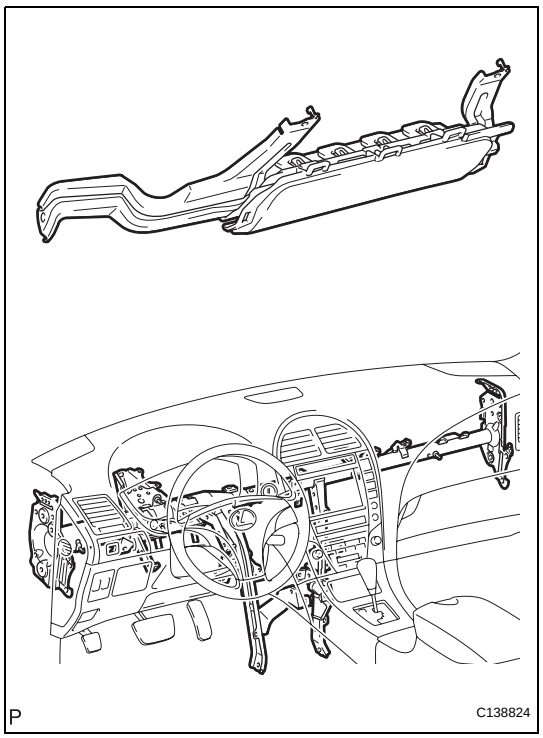

FRONT PASSENGER SIDE KNEE AIRBAG ASSEMBLY

COMPONENTS

RS

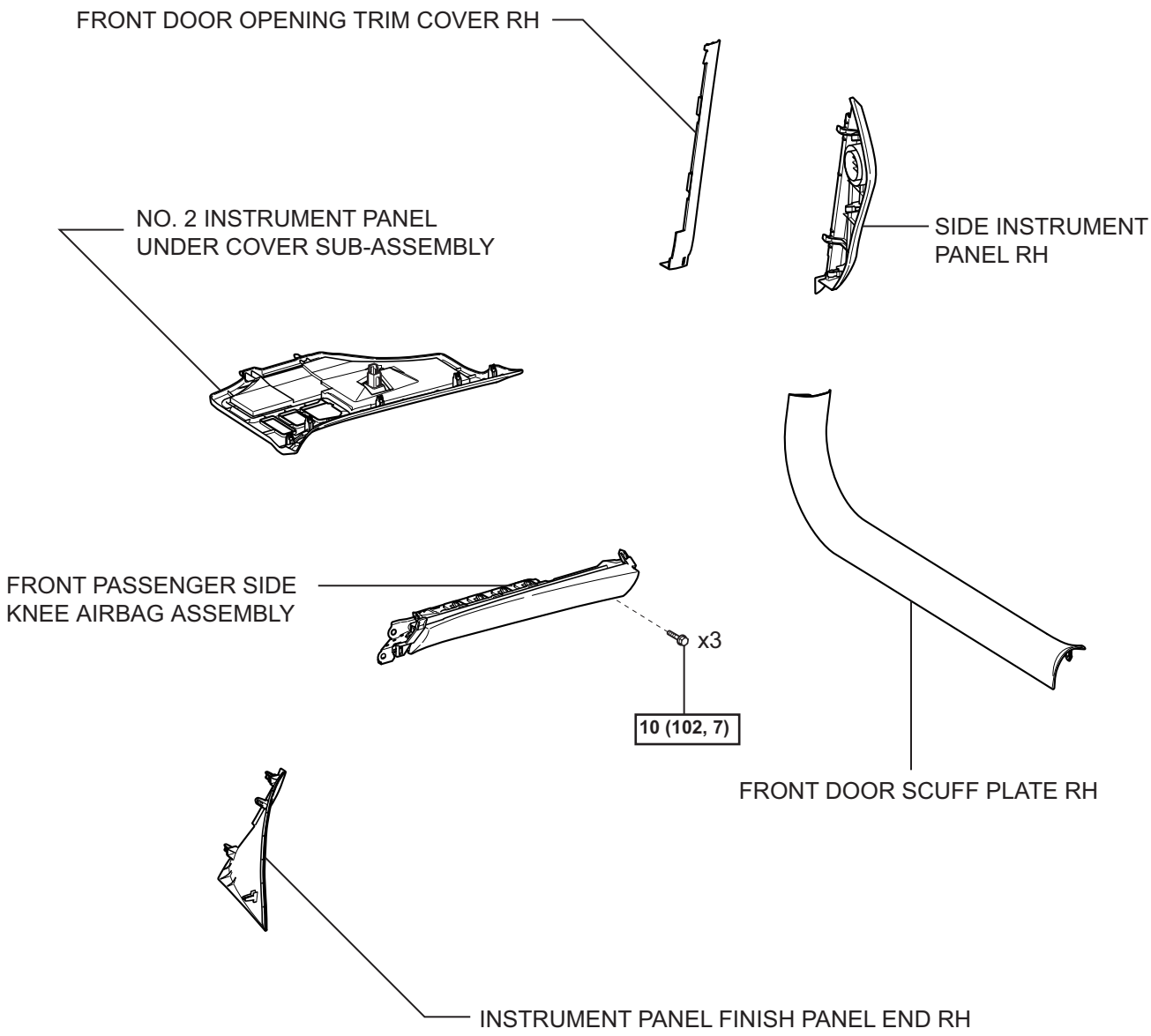

N*m (kgf*cm, ft.*lbf) : Specified torque

C

C138846E01

ON-VEHICLE INSPECTION

1. INSPECT FRONT PASSENGER SIDE KNEE AIRBAG ASSEMBLY (VEHICLE NOT INVOLVED IN COLLISION)

(a) Perform a diagnostic system check (see page RS-37).

(b) With the front passenger side knee airbag assembly installed on the vehicle, perform a visual check. If there are any defects as mentioned below, replace the front passenger side knee airbag assembly with a new one:
Cuts, minute cracks or marked discoloration on the front passenger side knee airbag assembly.

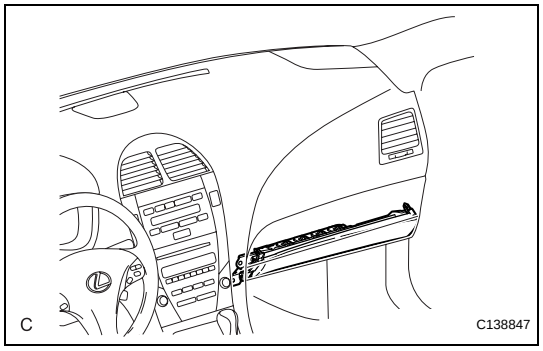

2. INSPECT FRONT PASSENGER SIDE KNEE AIRBAG ASSEMBLY (VEHICLE INVOLVED IN COLLISION AND AIRBAG HAS NOT DEPLOYED)

(a) Perform a diagnostic system check (see page RS-37).

(b) With the front passenger side knee airbag assembly removed from the vehicle, perform a visual check. If there are any defects as mentioned below, replace the front passenger side knee airbag assembly with a new one:
- Cuts, minute cracks or marked discoloration on the front passenger side knee airbag assembly.
- Cracks or other damage to the connector.
- Deformation or cracks on the instrument panel reinforcement.

CAUTION:
Be sure to follow the correct removal and installation procedure.

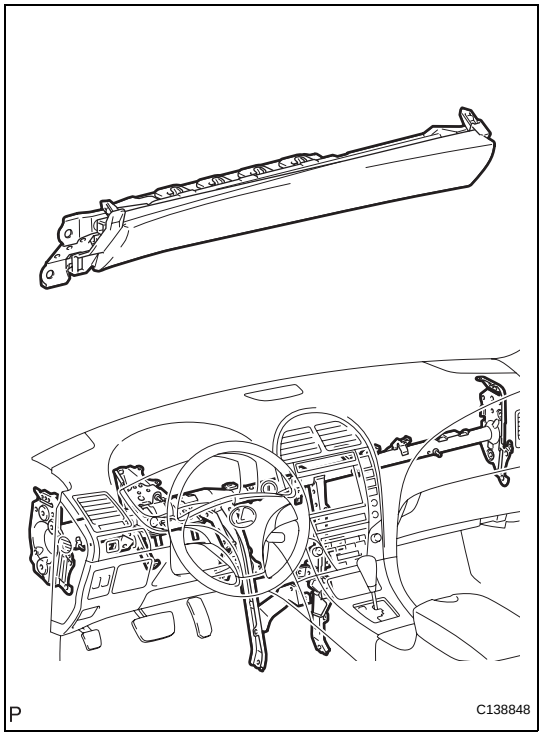

FRONT PASSENGER AIRBAG ASSEMBLY

COMPONENTS

RS

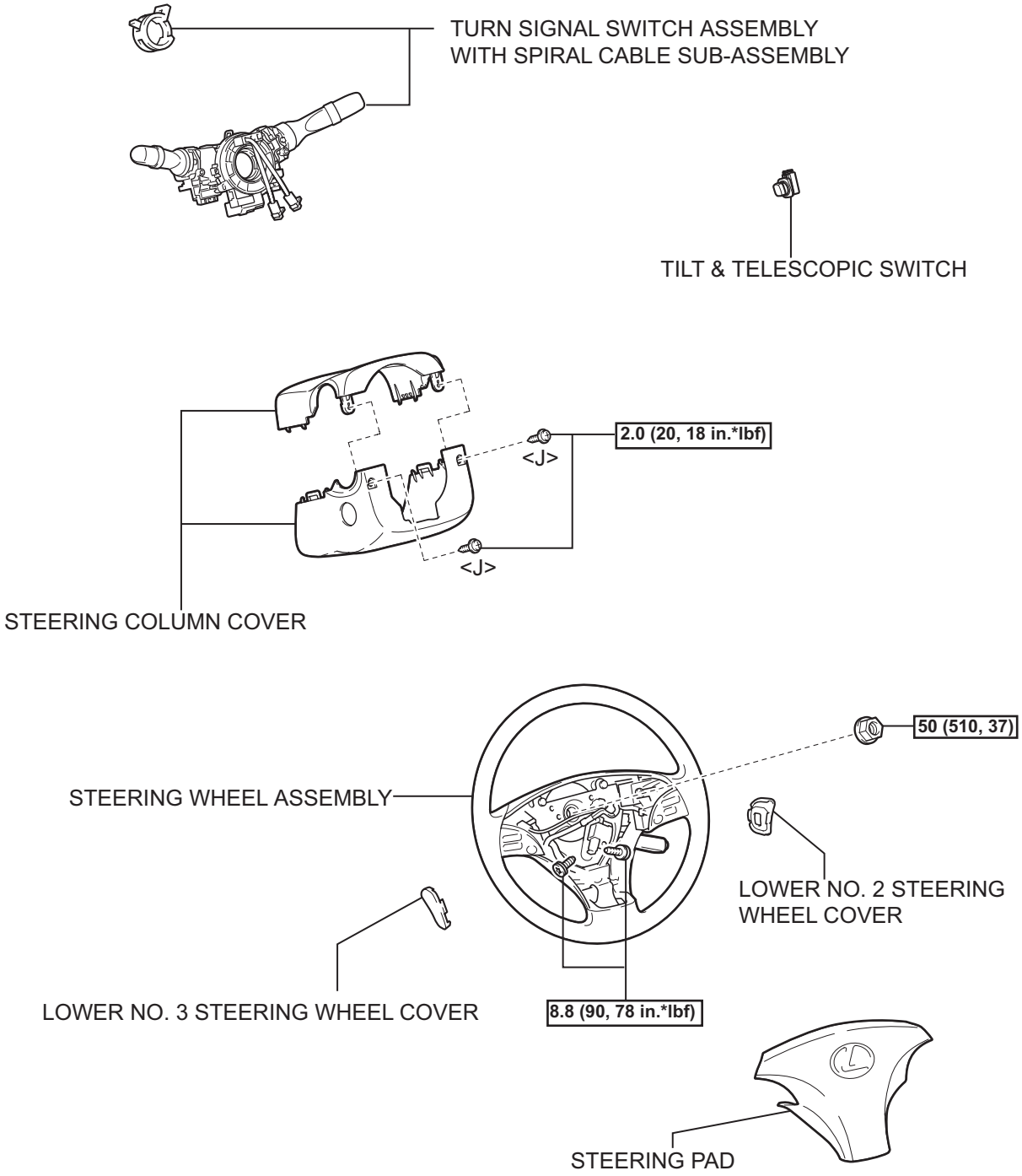

N*m (kgf*cm, ft.*lbf) : Specified torque

P

B145852E04

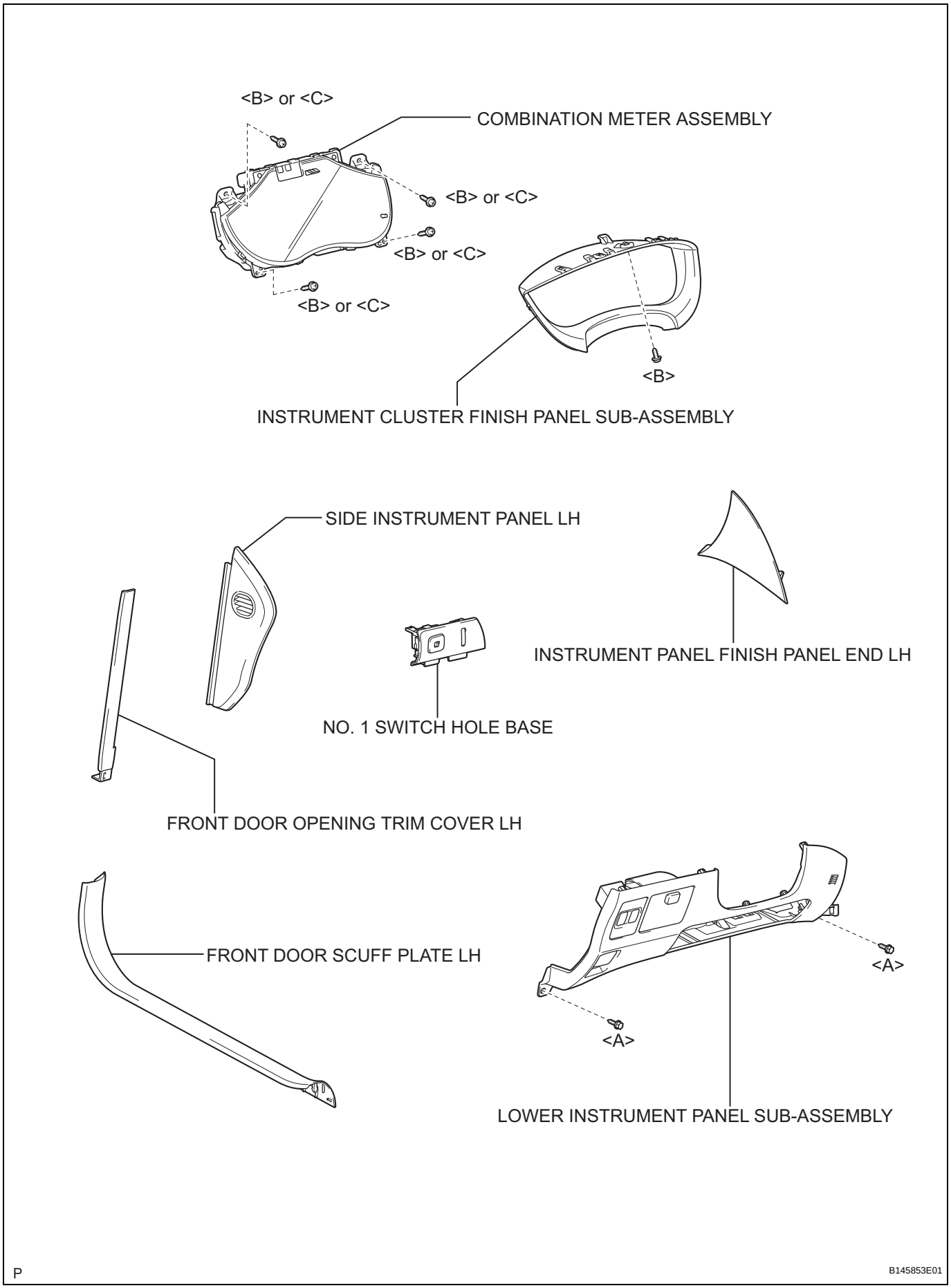
<B> or <C>
COMBINATION METER ASSEMBLY
<B> or <C>
<B> or <C>
<B> or <C>
<B>
INSTRUMENT CLUSTER FINISH PANEL SUB-ASSEMBLY
SIDE INSTRUMENT PANEL LH
INSTRUMENT PANEL FINISH PANEL END LH
NO. 1 SWITCH HOLE BASE
FRONT DOOR OPENING TRIM COVER LH
FRONT DOOR SCUFF PLATE LH
<A>
<A>
LOWER INSTRUMENT PANEL SUB-ASSEMBLY
P
B145853E01

RS

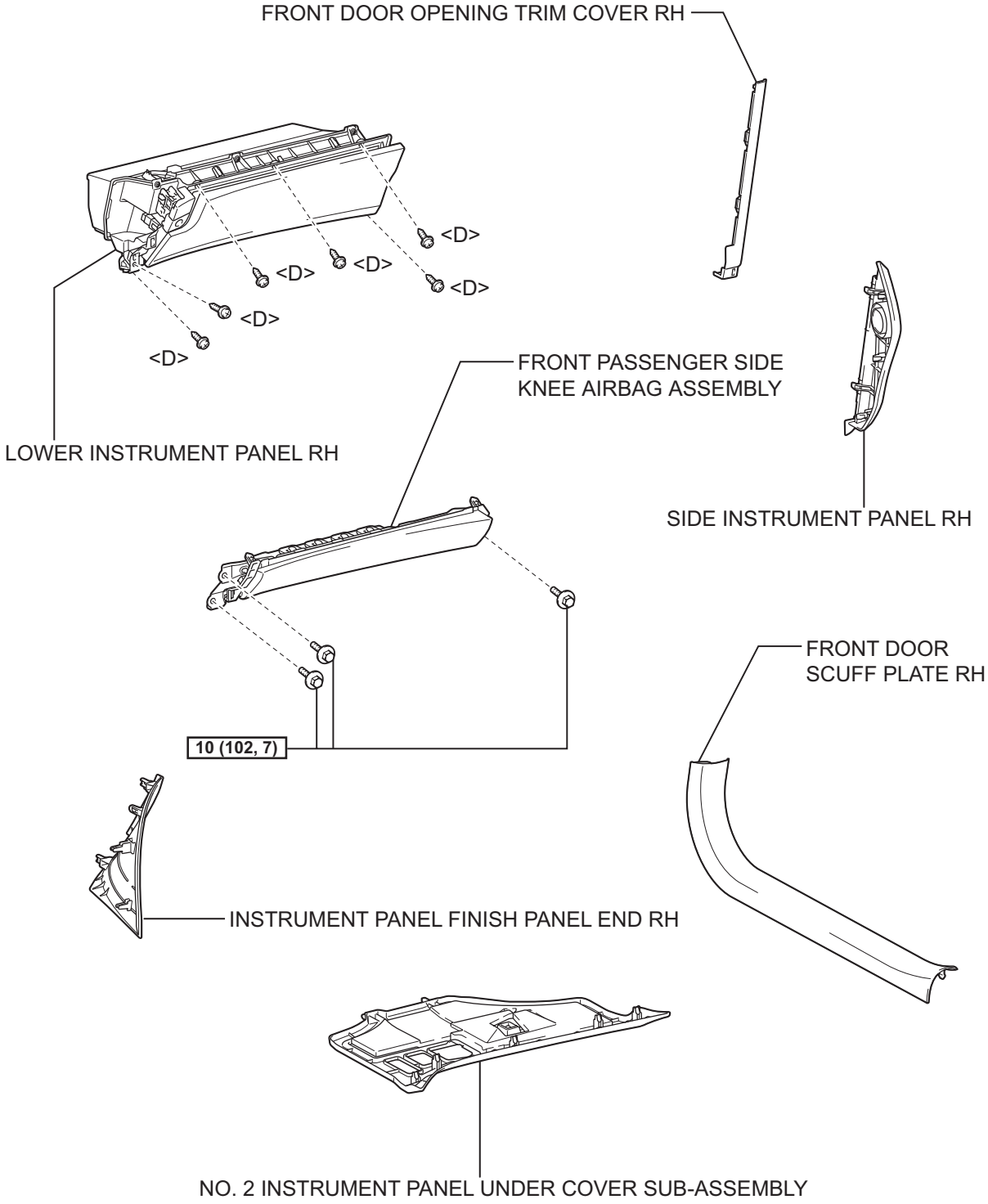

N*m (kgf*cm, ft.*lbf) : Specified torque

P

B145855E01

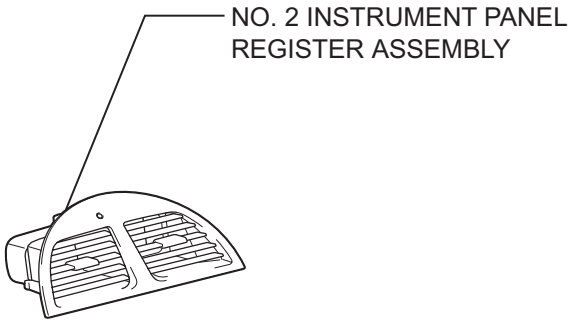

without Navigation System:

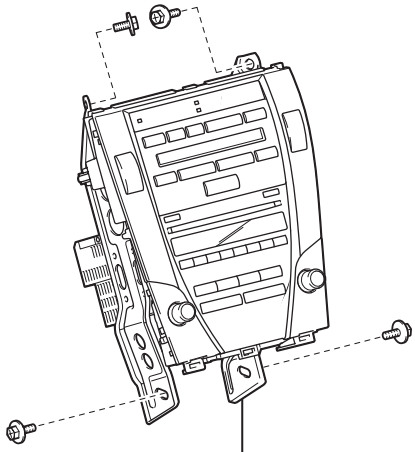

with Navigation System:

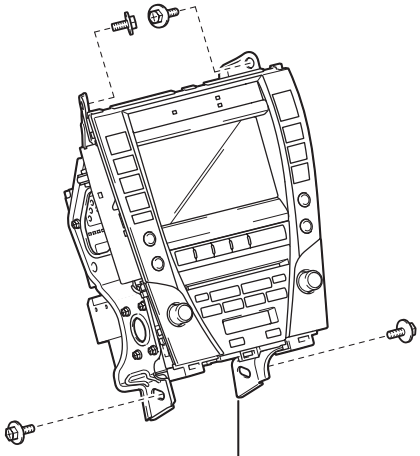

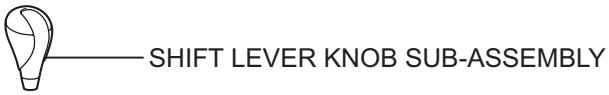

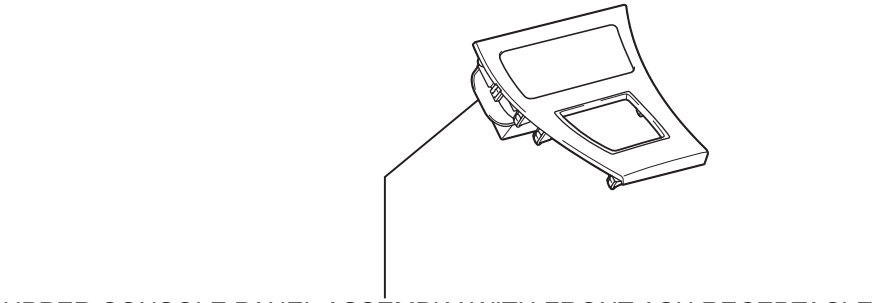

P

B145856E01

RS

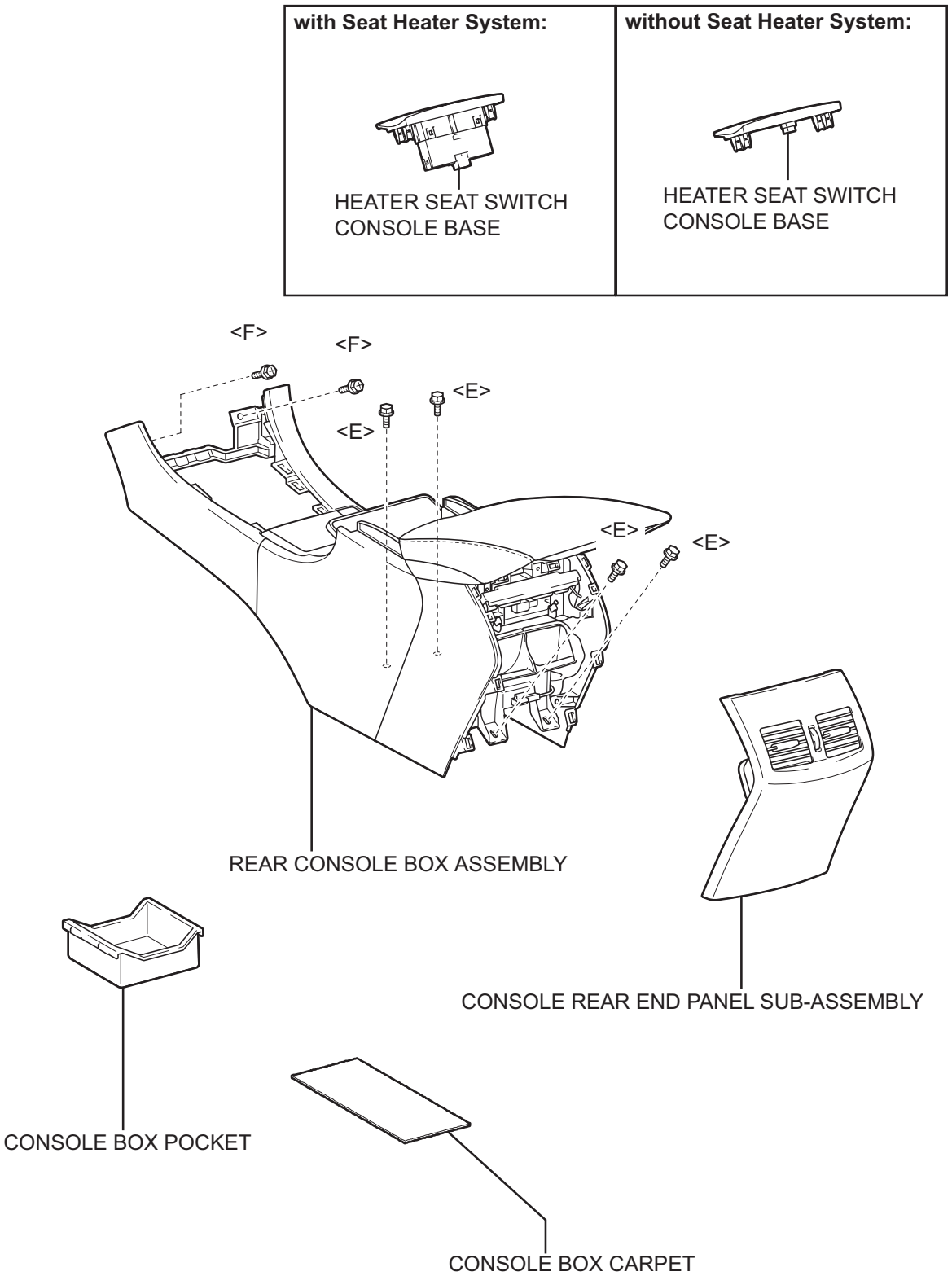

P

B145857E01

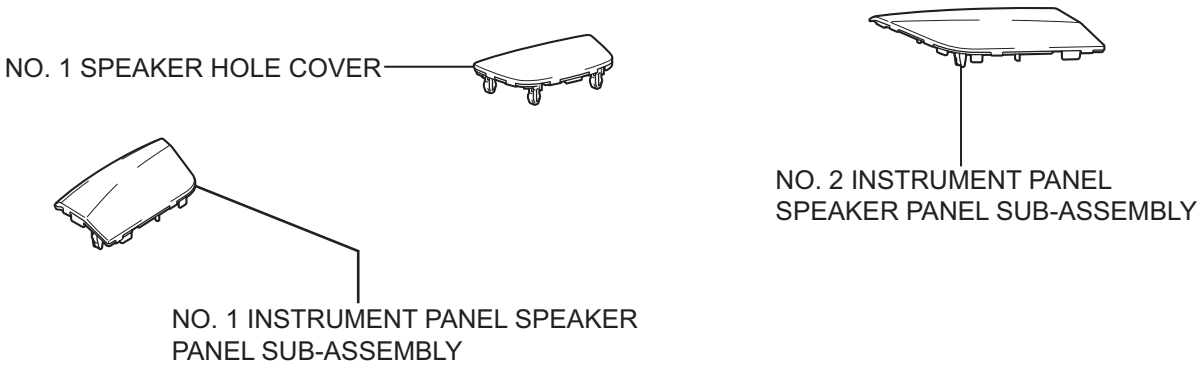

without Rear Header Speaker:

with Rear Header Speaker:

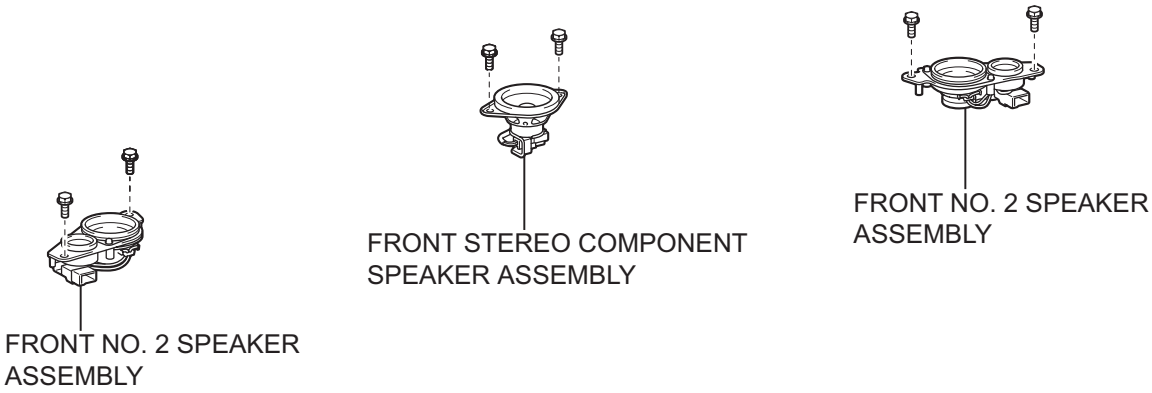

P

B145858E02

RS

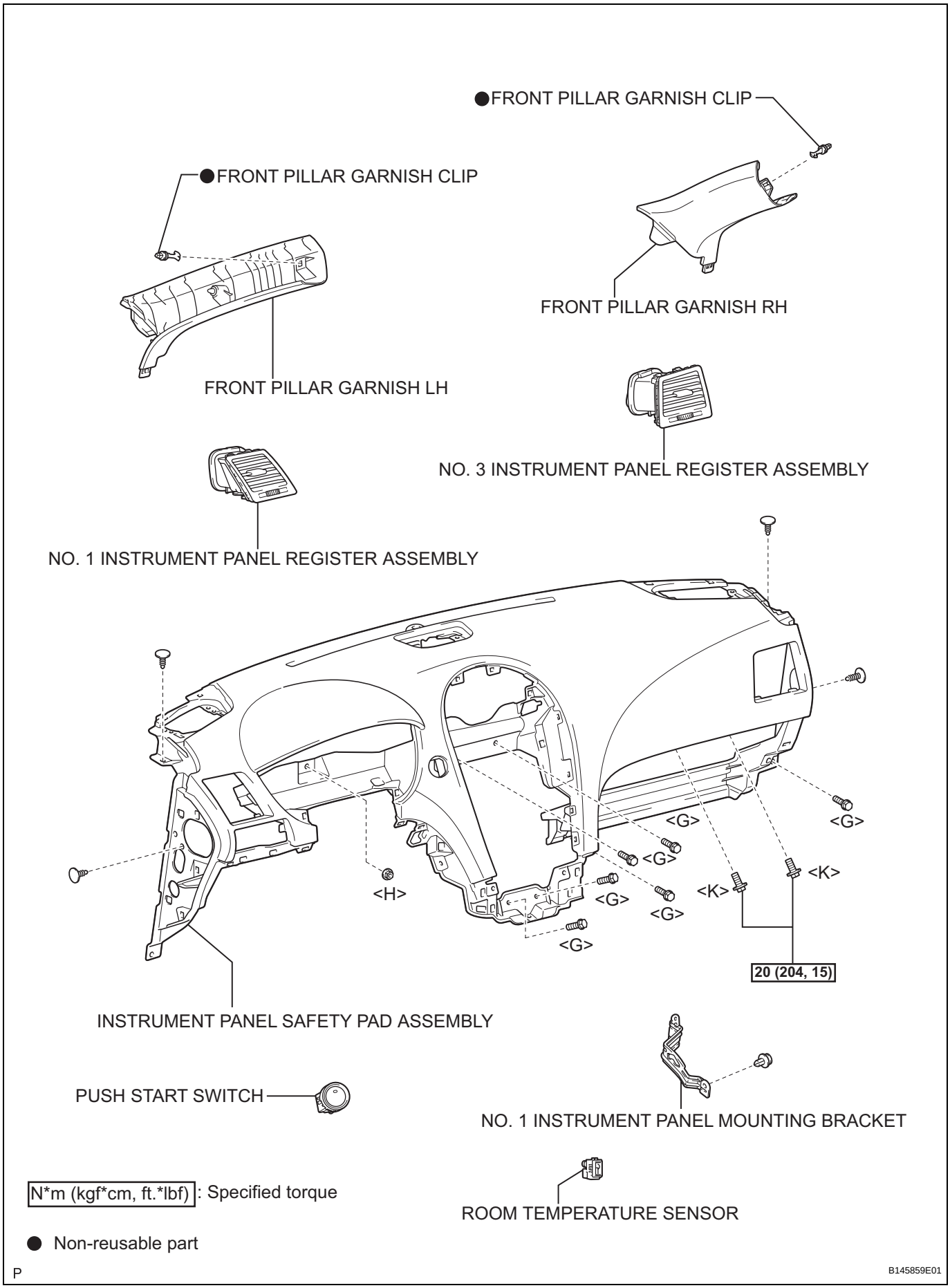

N*m (kgf*cm, ft.*lbf) : Specified torque

● Non-reusable part

P

B145859E01

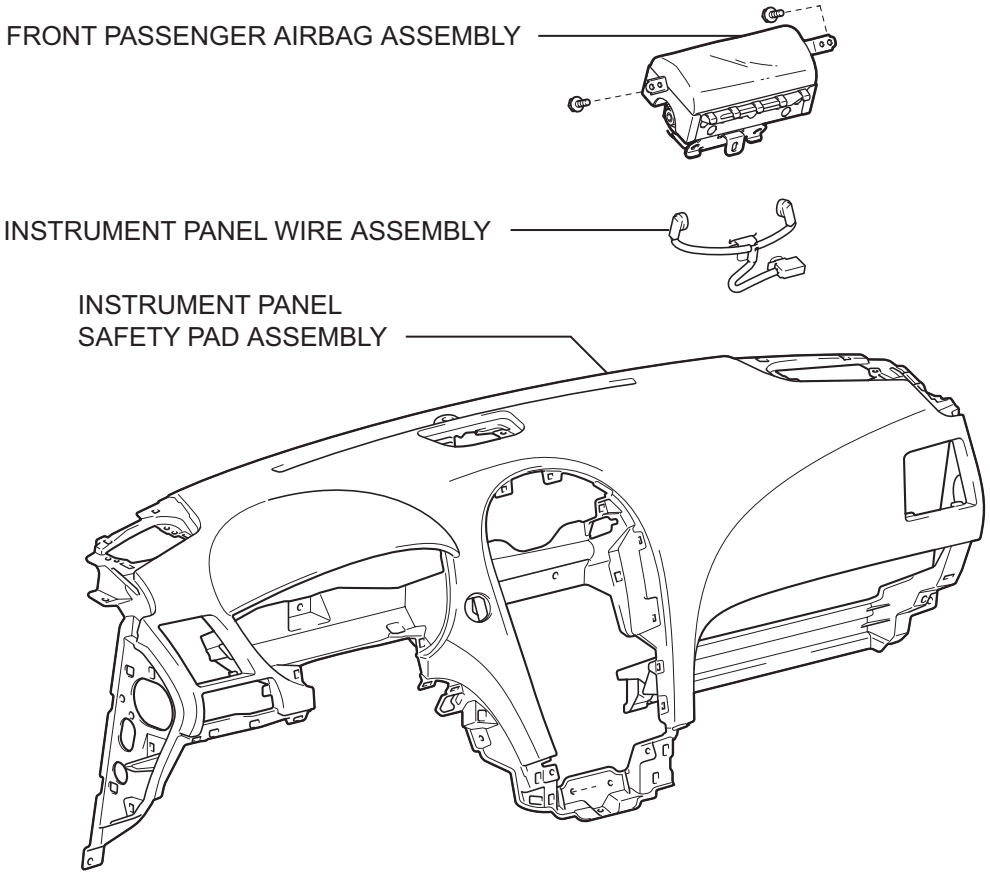
FRONT PASSENGER AIRBAG ASSEMBLY
INSTRUMENT PANEL WIRE ASSEMBLY
INSTRUMENT PANEL
SAFETY PAD ASSEMBLY

C142025E01

CURTAIN SHIELD AIRBAG ASSEMBLY

COMPONENTS

RS

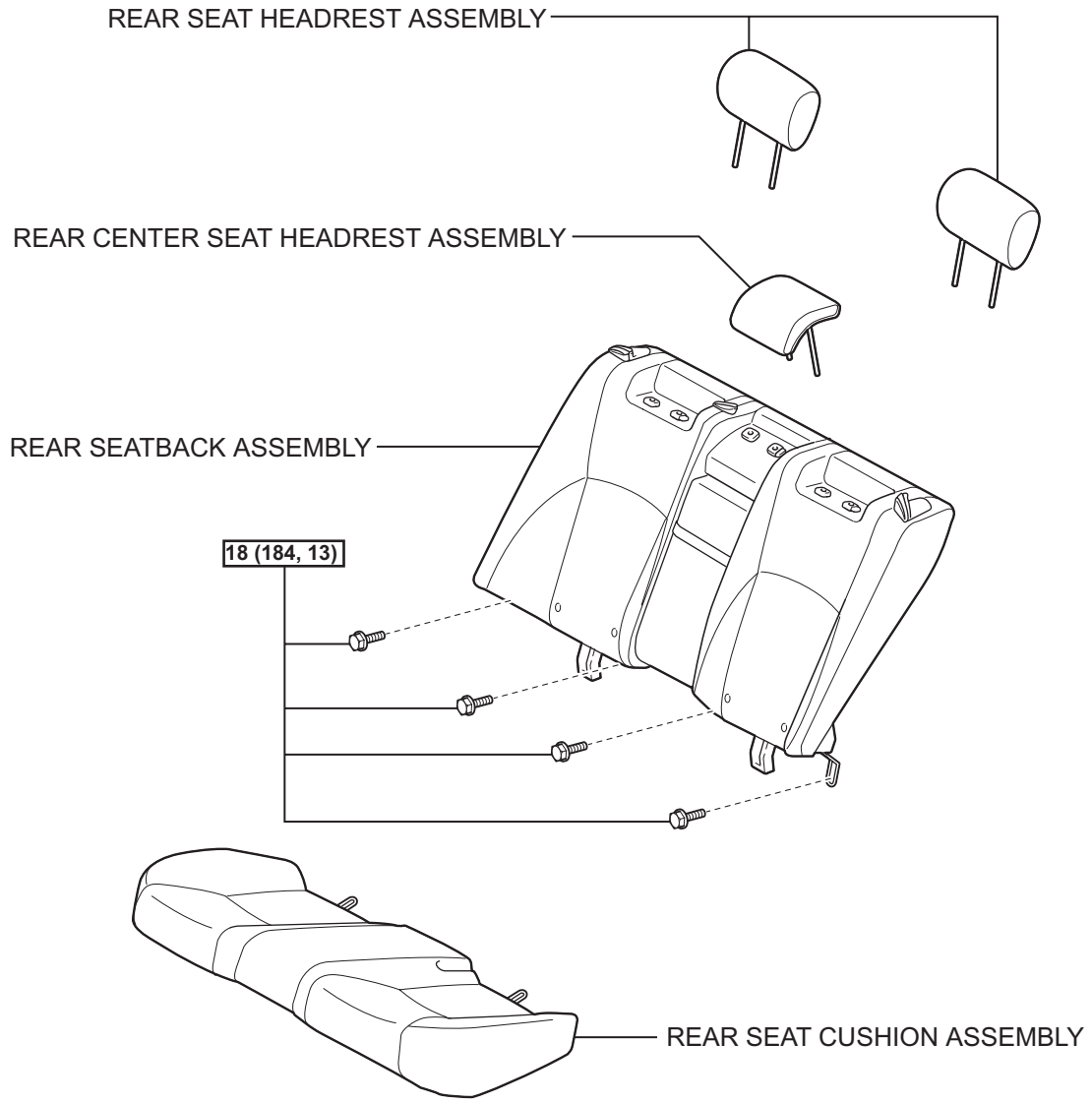

N*m (kgf*cm, ft.*lbf) : Specified torque

P

B145388E01

RS

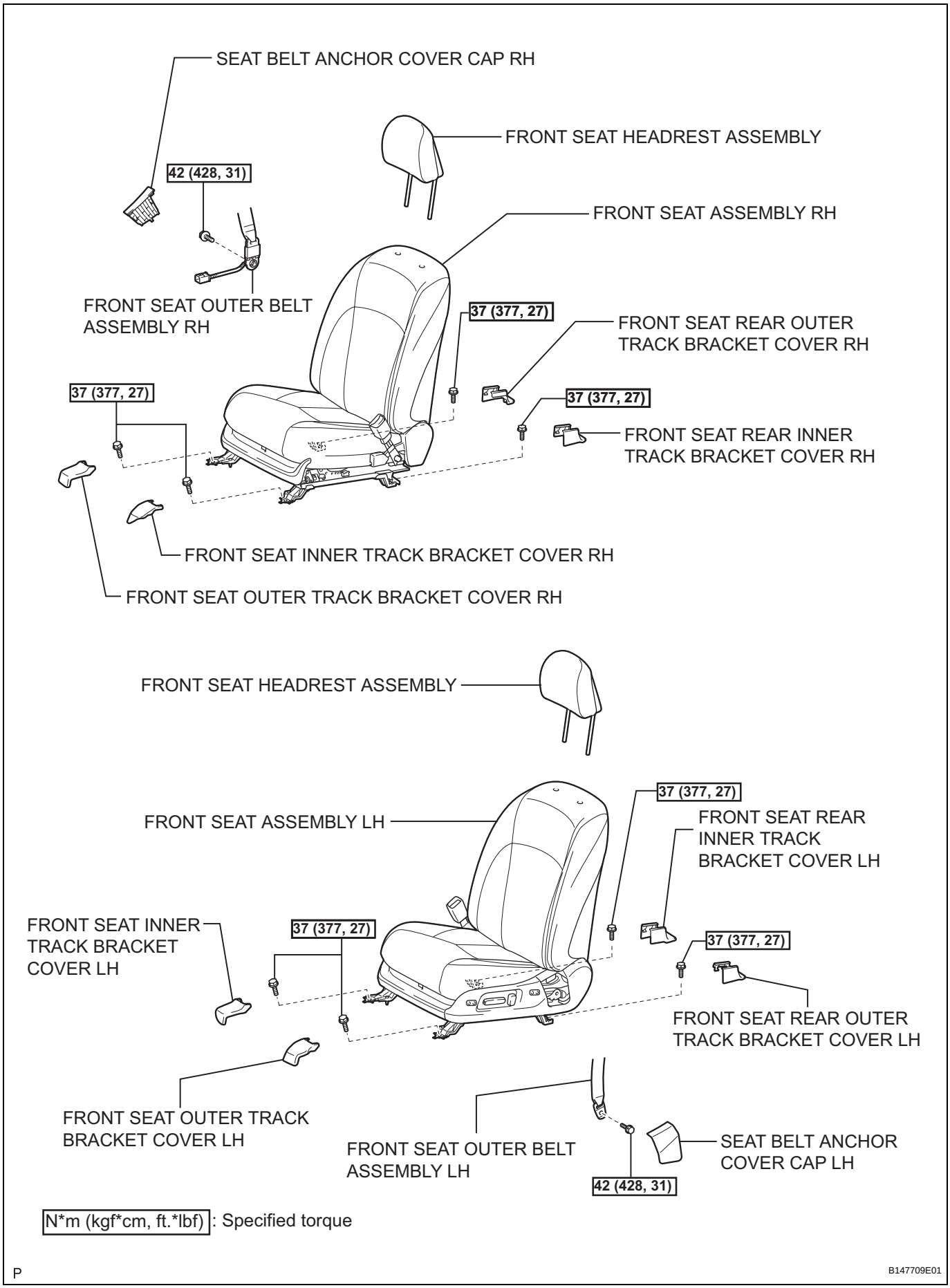
SEAT BELT ANCHOR COVER CAP RH
FRONT SEAT HEADREST ASSEMBLY
42 (428, 31)
FRONT SEAT ASSEMBLY RH
FRONT SEAT OUTER BELT ASSEMBLY RH
37 (377, 27)
FRONT SEAT REAR OUTER TRACK BRACKET COVER RH
37 (377, 27)
37 (377, 27)
FRONT SEAT REAR INNER TRACK BRACKET COVER RH
FRONT SEAT INNER TRACK BRACKET COVER RH
FRONT SEAT OUTER TRACK BRACKET COVER RH
FRONT SEAT HEADREST ASSEMBLY
37 (377, 27)
FRONT SEAT ASSEMBLY LH
FRONT SEAT REAR INNER TRACK BRACKET COVER LH
FRONT SEAT INNER TRACK BRACKET COVER LH
37 (377, 27)
37 (377, 27)
FRONT SEAT REAR OUTER TRACK BRACKET COVER LH
FRONT SEAT OUTER TRACK BRACKET COVER LH
FRONT SEAT OUTER BELT ASSEMBLY LH
SEAT BELT ANCHOR COVER CAP LH
42 (428, 31)
N*m (kgf*cm, ft.*lbf): Specified torque
P
B147709E01

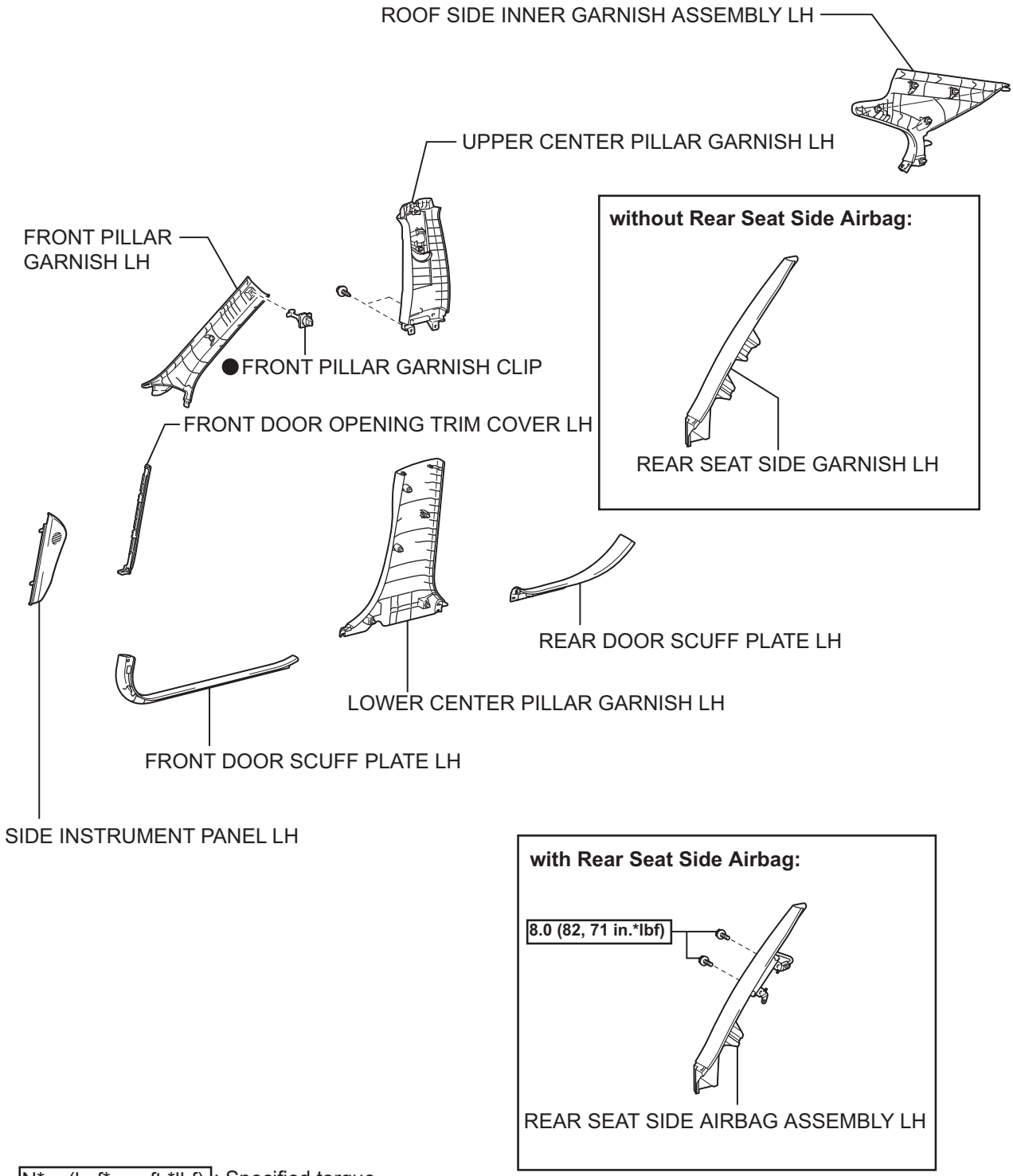

N*m (kgf*cm, ft.*lbf) : Specified torque

● Non-reusable part

P

B149196E01

RS

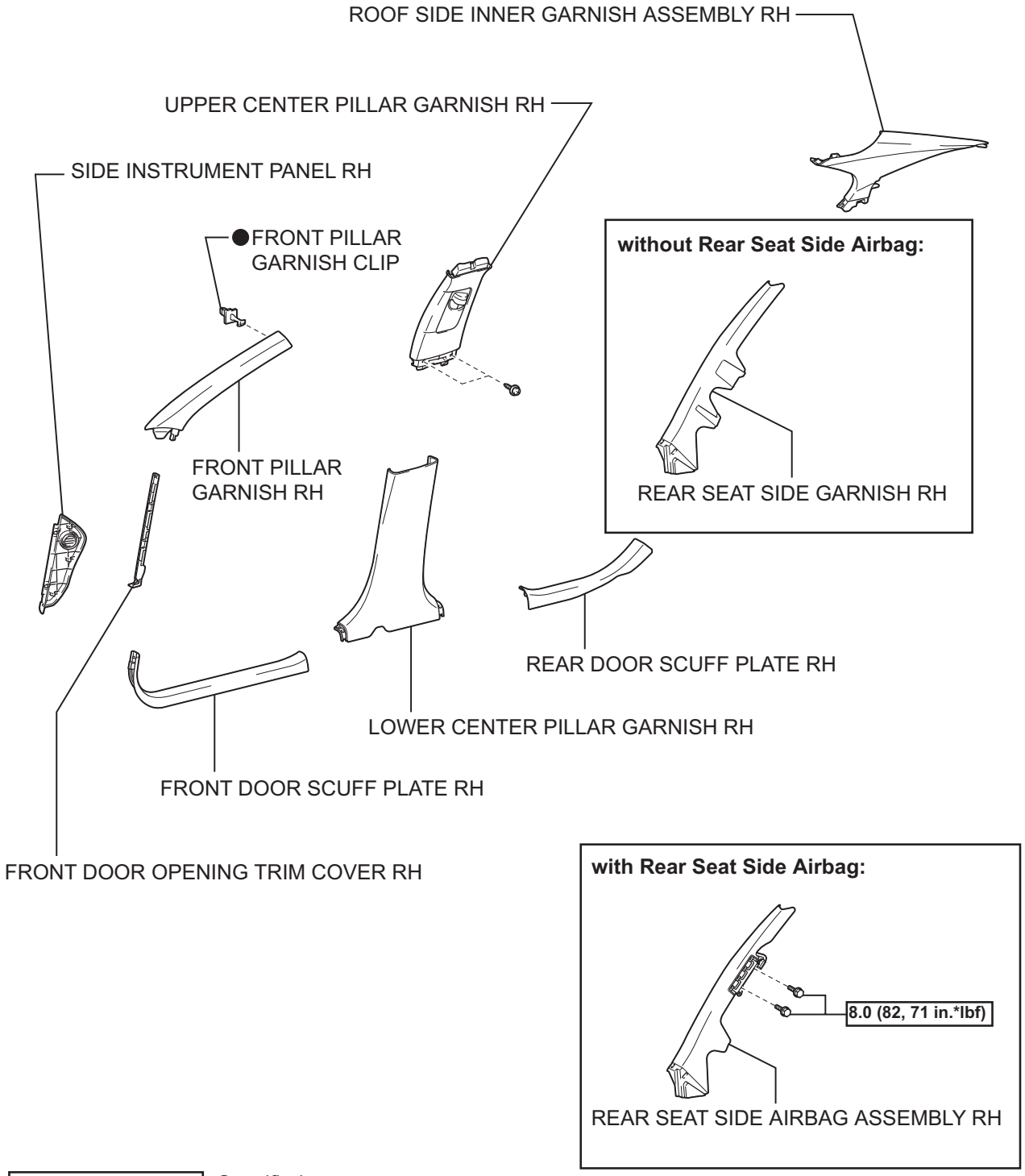

N*m (kgf*cm, ft.*lbf) : Specified torque

● Non-reusable part

P

B149195E01

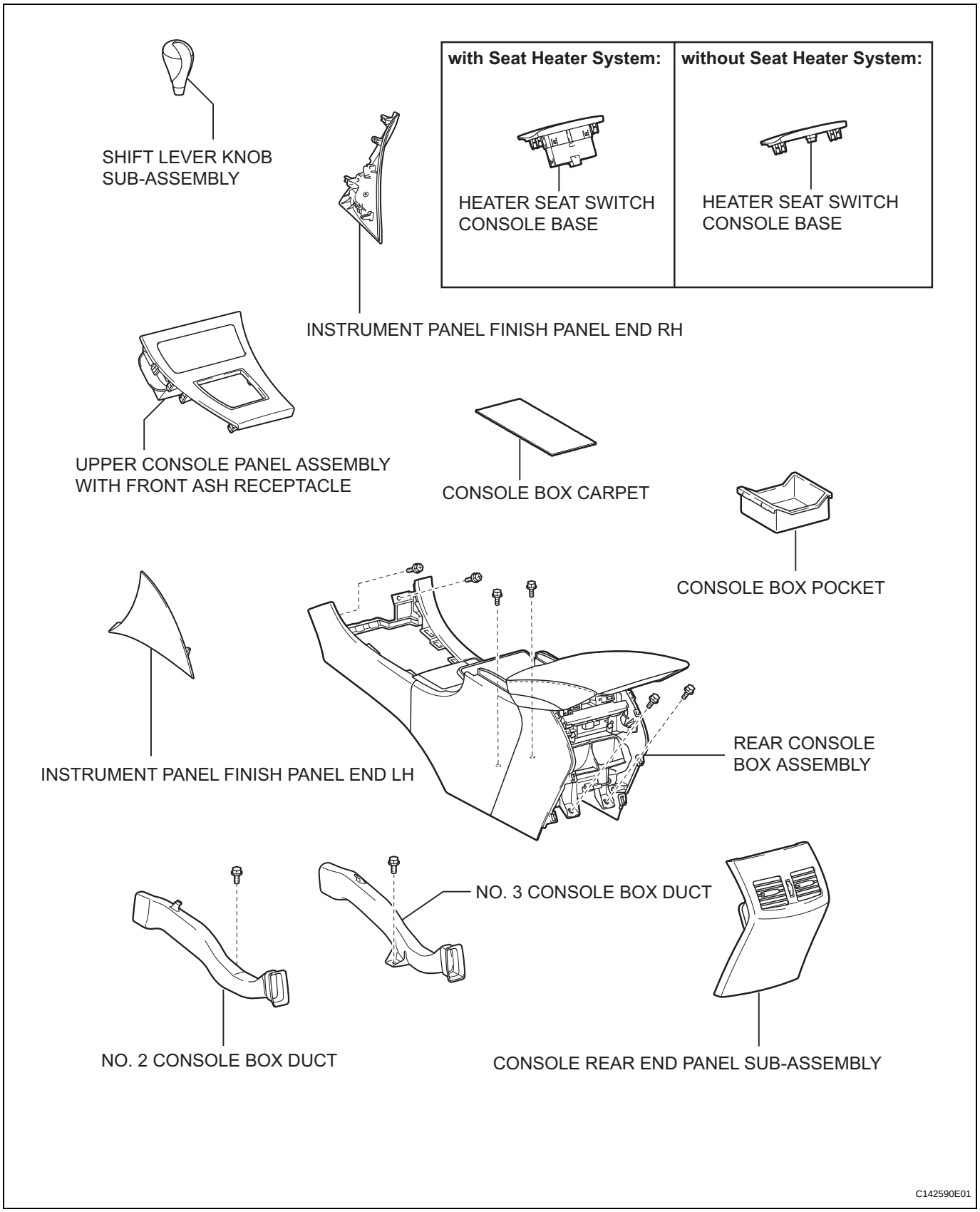
SHIFT LEVER KNOB SUB-ASSEMBLY
with Seat Heater System:
HEATER SEAT SWITCH CONSOLE BASE
without Seat Heater System:
HEATER SEAT SWITCH CONSOLE BASE
INSTRUMENT PANEL FINISH PANEL END RH
UPPER CONSOLE PANEL ASSEMBLY WITH FRONT ASH RECEPTACLE
CONSOLE BOX CARPET
CONSOLE BOX POCKET
INSTRUMENT PANEL FINISH PANEL END LH
REAR CONSOLE BOX ASSEMBLY
NO. 3 CONSOLE BOX DUCT
NO. 2 CONSOLE BOX DUCT
CONSOLE REAR END PANEL SUB-ASSEMBLY
C142590E01

RS

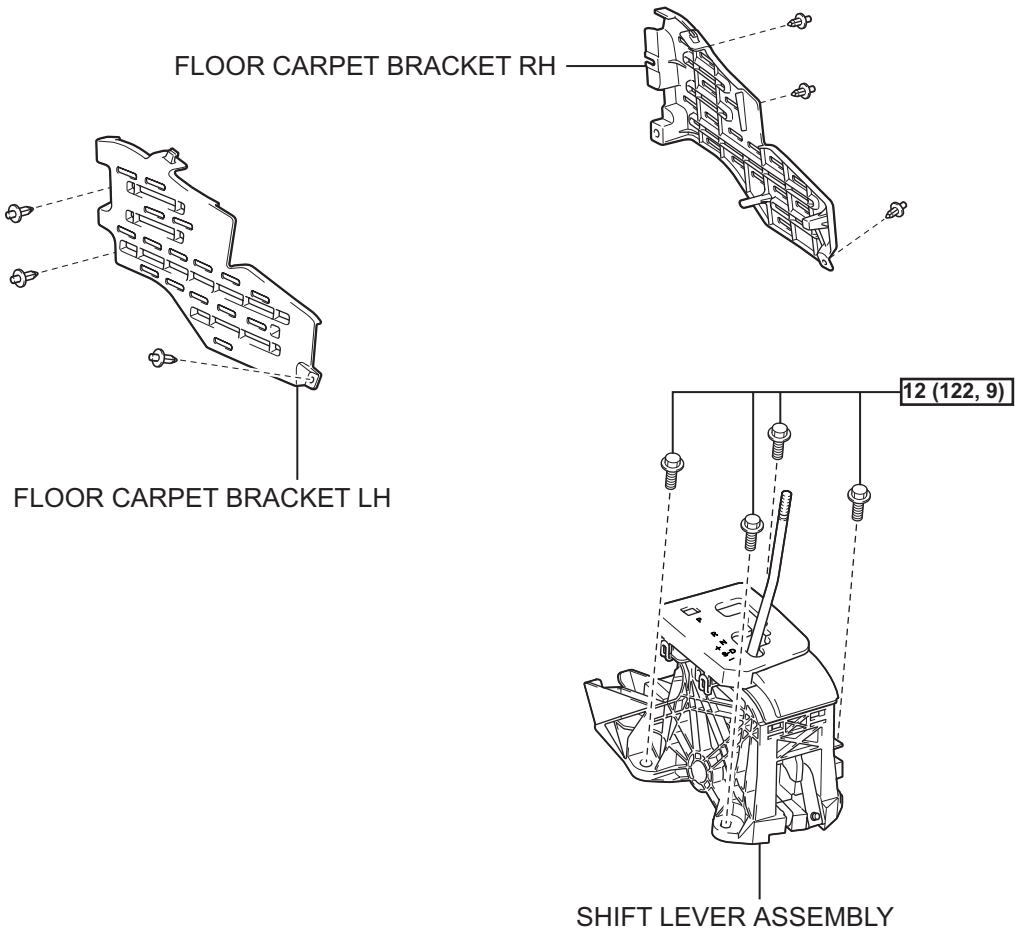

N*m (kgf*cm, ft.*lbf) : Specified torque

P

B147710E01

with DVD Player:

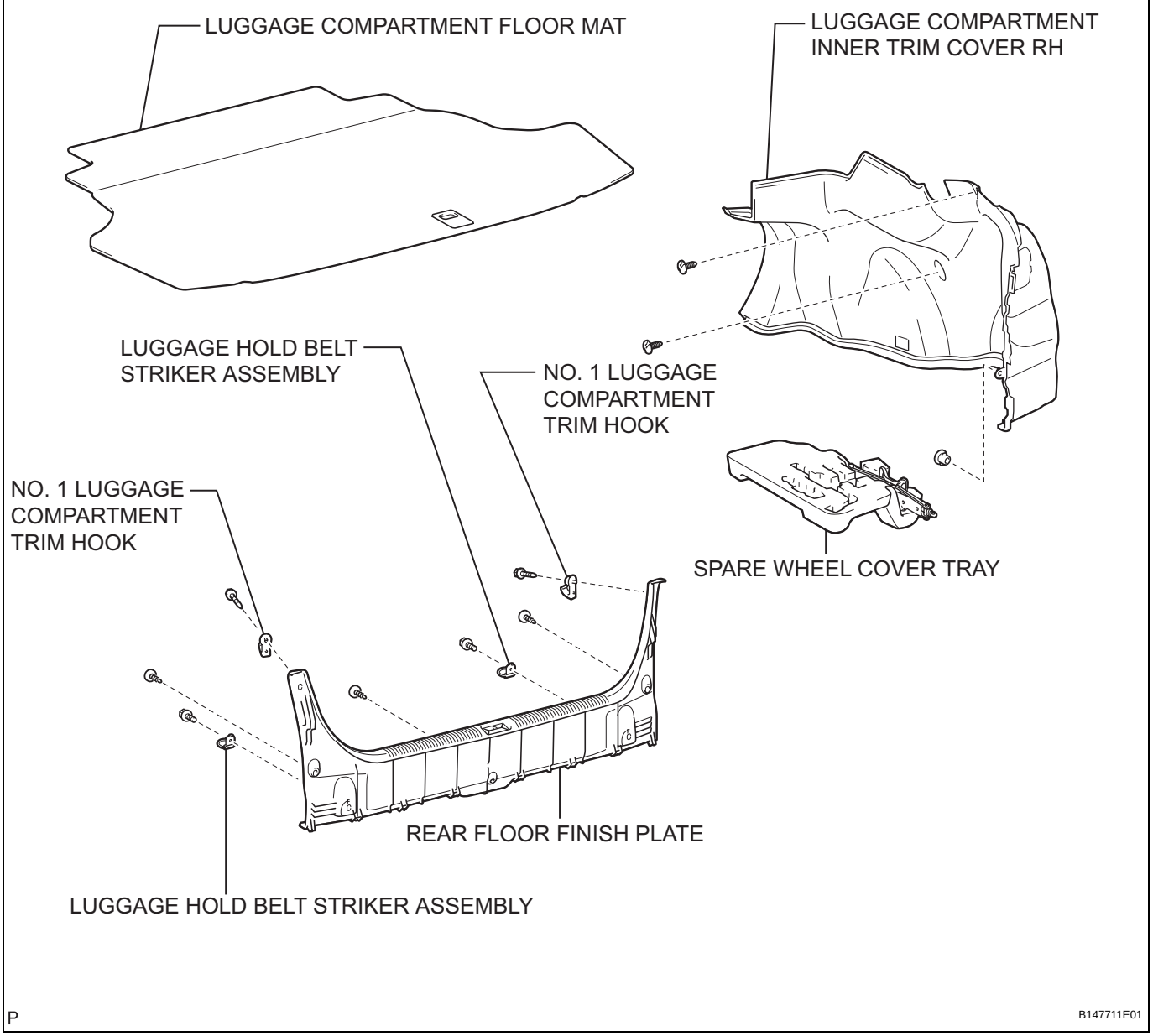

P

B147711E01

RS

for Standard:

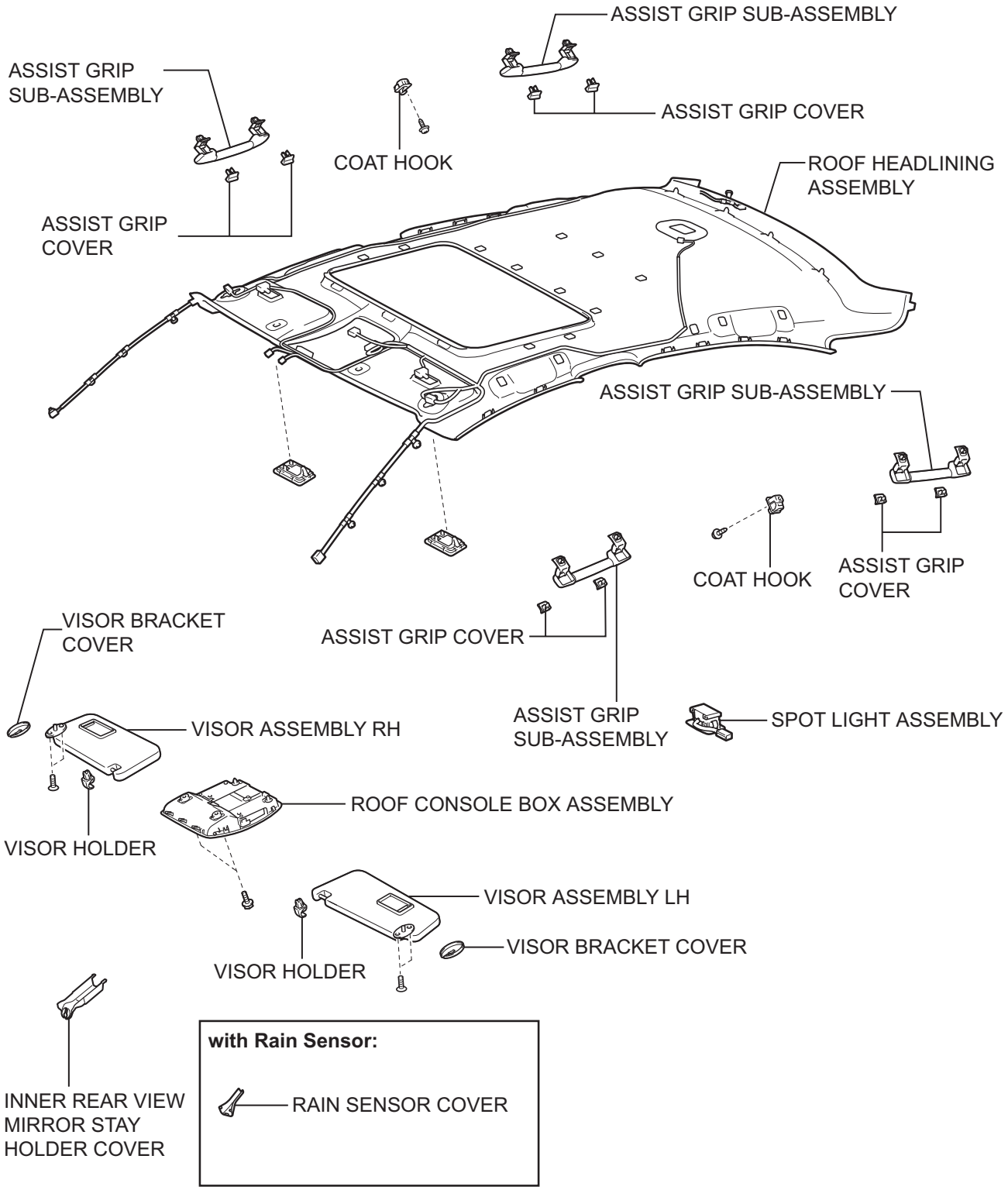

P

B140934E04

for Glass Roof:

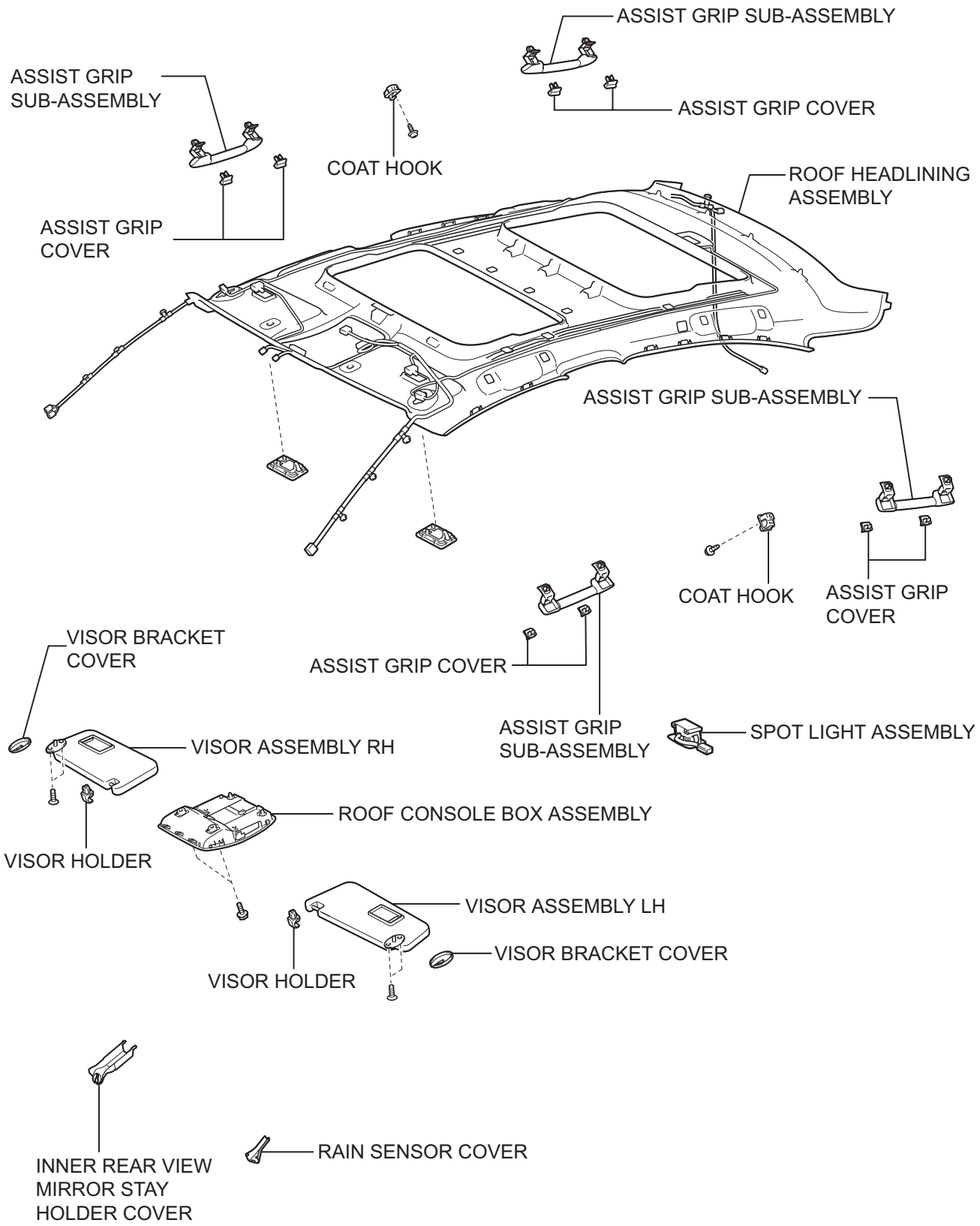

P

B140973E05

RS

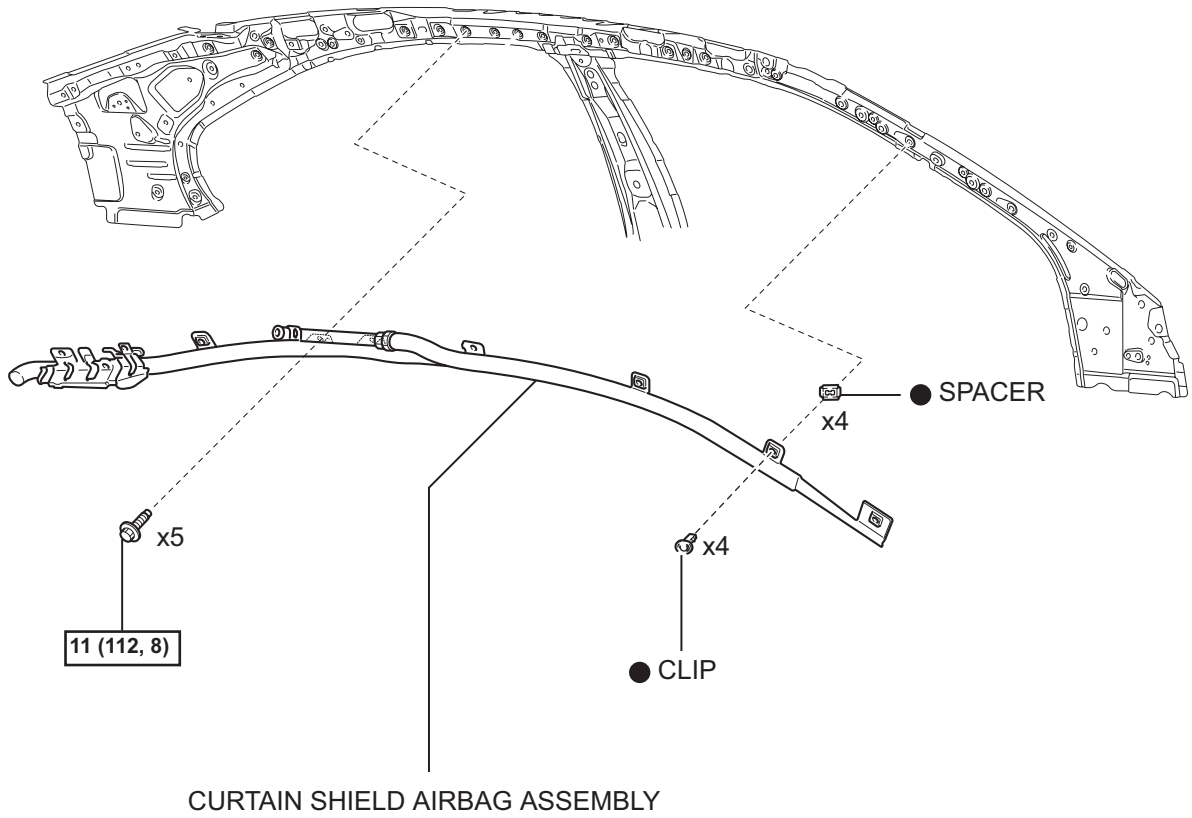

N*m (kgf*cm, ft.*lbf) : Specified torque ● Non-reusable part

C

C144077E01

RS

FRONT SEAT SIDE AIRBAG ASSEMBLY

ON-VEHICLE INSPECTION

1. FRONT SEAT SIDE AIRBAG ASSEMBLY (VEHICLE NOT INVOLVED IN COLLISION)

(a) Perform a diagnostic system check (See page RS-37).

(b) With the front seat side airbag assembly installed on the vehicle, perform a visual check. If there are any defects as mentioned below, replace the front seat assembly with a new one:
Cuts, minute cracks or marked discoloration on the front seatback assembly around the front seat side airbag assembly.

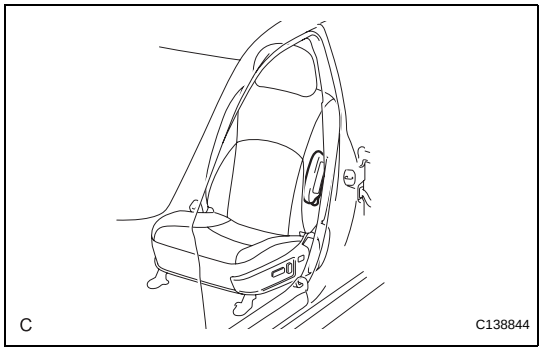

2. FRONT SEAT SIDE AIRBAG ASSEMBLY (VEHICLE INVOLVED IN COLLISION AND AIRBAG HAS NOT DEPLOYED)

(a) Perform a diagnostic system check (See page RS-37).

(b) With the front seat side airbag assembly removed from the vehicle, perform a visual check. If there are any defects as mentioned below, replace the front seat assembly with a new one:
- Cuts, minute cracks or marked discoloration on the front seat side airbag assembly.
- Cracks or other damage to the wire harness or connector.
- Deformation or cracks on the front seat assembly.

CAUTION:
Be sure to follow the correct removal and installation procedures.

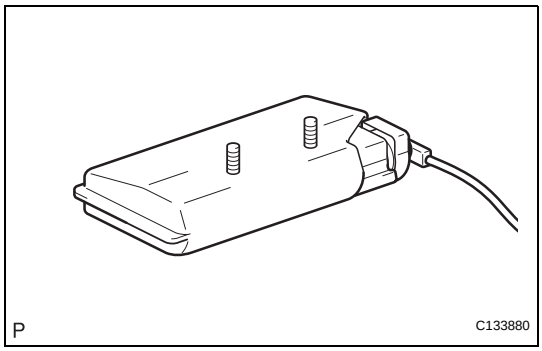

DISPOSAL

HINT:
When scrapping a vehicle equipped with the SRS or disposing of the front seat side airbag assembly, be sure to deploy the airbag first in accordance with the procedure described below. If any abnormality occurs with the airbag deployment, contact the SERVICE DEPT. of TOYOTA MOTOR SALES, U.S.A., INC.

CAUTION:

- **Never dispose of a front seat side airbag assembly that has an undeployed airbag.**
- **The airbag produces an exploding sound when it is deployed, so perform the operation outdoors and where it will not create a nuisance to nearby residents.**
- **When deploying the airbag, always use the specified SST (SRS Airbag Deployment Tool). Perform the operation in a place away from electrical noise.**
- **When deploying the airbag, perform the operation at least 10 m (33 ft) away from the front seat side airbag assembly.**
- **The front seat side airbag assembly becomes extremely hot when the airbag is deployed, so do not touch it for at least 30 minutes after deployment.**
- **Use gloves and safety glasses when handling a front seat side airbag assembly with a deployed airbag.**
- **Do not apply water, etc. to a front seat side airbag assembly with a deployed airbag.**
- **Always wash your hands with water after completing the operation.**

1. DISPOSE OF FRONT SEAT SIDE AIRBAG ASSEMBLY (WHEN INSTALLED IN VEHICLE)

HINT:
Prepare a battery as the power source to deploy the airbag.

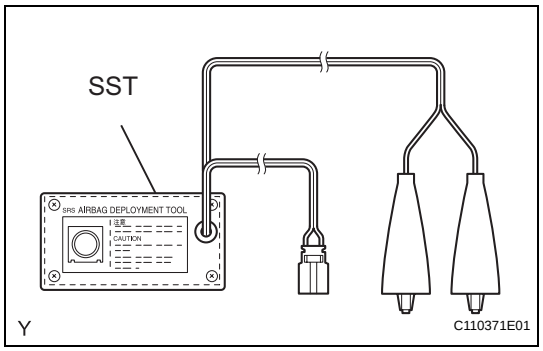

(a) Check the function of the SST (See page RS-370).
(b) Refer to PRECAUTION (See page RS-1).
(c) Disconnect the cable from the negative battery terminal.
CAUTION:
Wait for 90 seconds after disconnecting the cable to prevent airbag deployment.
(d) Remove the front seat assembly (See page SE-83).
(e) Install the SST.
(1) Disconnect the connector (yellow colored one) from the front seat side airbag assembly.
NOTICE:
When handling the airbag connector, take care not to damage the airbag wire harness.

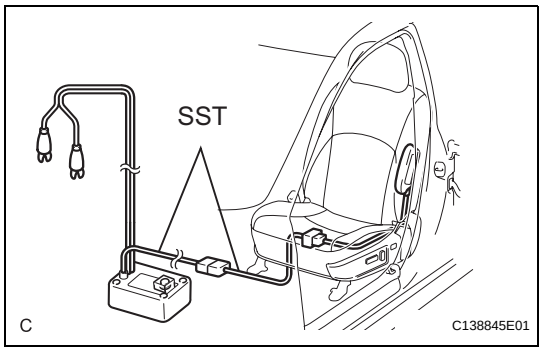

(2) Connect the SST connector to the front seat side airbag assembly connector.
SST 09082-00700, 09082-00750
NOTICE:
To avoid damaging the SST connector and wire harness, do not lock the secondary lock of the twin lock.

(3) Install the front seat assembly (See page SE-109).

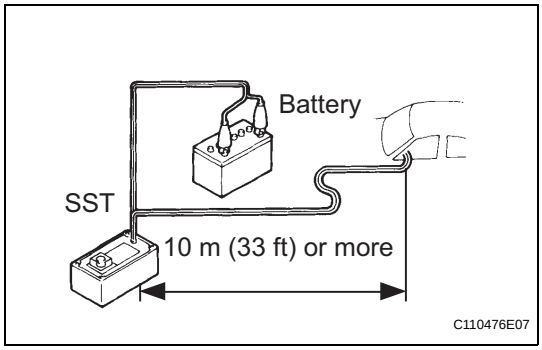

(4) Move the SST at least 10 m (33 ft) away from the vehicle front side window.

(5) Maintaining enough clearance for the SST wire harness in the front side window, close all doors and windows of the vehicle.
NOTICE:
Take care not to damage the SST wire harness.

(6) Connect the red clip of the SST to the battery positive (+) terminal and the black clip of the SST to the battery negative (-) terminal.

(f) Deploy the airbag.

(1) Check that no one is inside the vehicle or within a 10 m (33 ft) radius of the vehicle.

(2) Press the SST activation switch and deploy the airbag.
CAUTION:
- **When deploying the airbag, make sure that no one is near the vehicle.**
- **The front seat side airbag assembly becomes extremely hot when the airbag is deployed, so do not touch it for at least 30 minutes after deployment.**
- **Use gloves and safety glasses when handling a front seat side airbag assembly with a deployed airbag.**
- **Do not apply water, etc. to a front seat side airbag assembly with a deployed airbag.**
- **Always wash your hands with water after completing the operation.**

HINT:
The airbag is deployed as the LED of the SST activation switch comes on.

2. DISPOSE OF FRONT SEAT SIDE AIRBAG ASSEMBLY (WHEN NOT INSTALLED IN VEHICLE)
NOTICE:
- **When disposing of the front seat side airbag assembly, never use the customer's vehicle to deploy the airbag.**
- **Be sure to follow the procedure detailed below when deploying the airbag.**

HINT:
Prepare a battery as the power source to deploy the airbag.

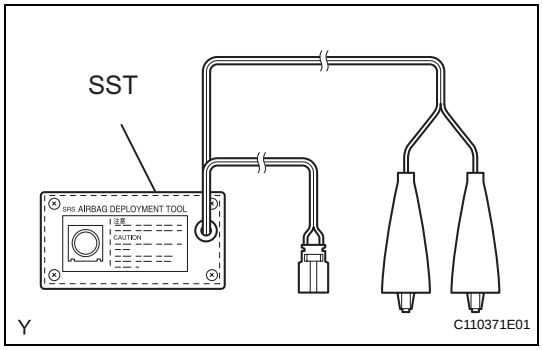

(a) Check the function of the SST (See page RS-372).
(b) Remove the front seat side airbag assembly.
  (1) Remove the front seat assembly (See page SE-83).
  (2) Remove the 2 nuts and the front seat side airbag assembly from the seatback assembly. (See page SE-84)
  CAUTION:
  - **When removing the front seat side airbag assembly, work must be started 90 seconds after the engine switch is turned off and the negative (-) terminal cable is disconnected from the battery.**
  - **When storing the front seat side airbag assembly, keep the airbag deployment side facing upward.**

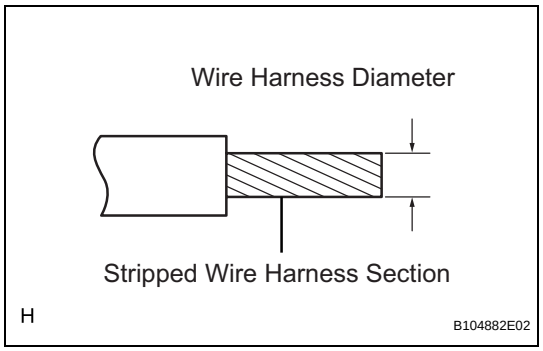

(c) Using a service-purpose wire harness for the vehicle, tie down the front seat side airbag assembly to the tire.
Wire harness:
Stripped wire harness section
1.25 mm^2 or more (0.0019 in.^{2} or more)
CAUTION:
If the wire harness is too thin or an alternative object is used to tie down the front seat side airbag assembly, it may be snapped by the shock when the airbag is deployed. Always use a wire harness for vehicle use with an area of at least 1.25 mm^2 (0.0019 in.^{2}).
HINT:
To calculate the area of the stripped wire harness section:
Area = 3.14 x (Diameter)^2 divided by 4

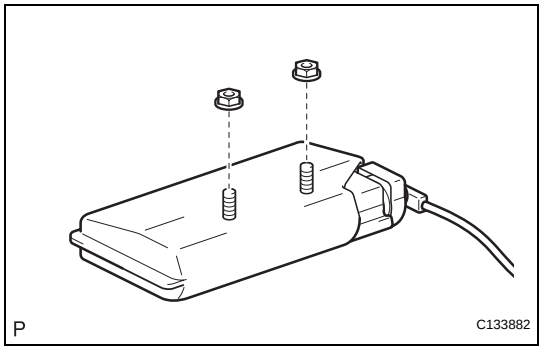

  (1) Install the 2 nuts to the front seat side airbag assembly.

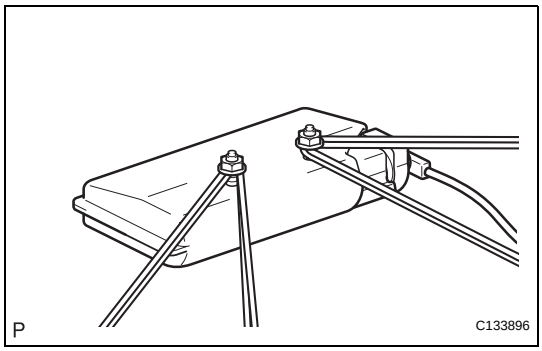

(2) Wind the wire harness around the stud bolts of the front seat side airbag assembly as shown in the illustration.

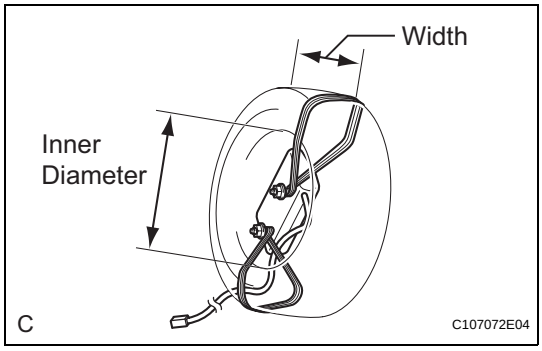

(3) Position the front seat side airbag assembly inside the tire.
Tire size:
Must exceed the following dimensions
Width:
185 mm (7.28 in.)
Inner diameter:
360 mm (14.17 in.)
CAUTION:
- **Make sure that the wire harness is tight. If there is slack in wire harness, the front seat side airbag assembly may become loose due to the shock when the airbag is deployed.**
- **Always tie down the front seat side airbag assembly with the airbag deployment direction facing inside the tire.**

NOTICE:
The tire will be marked by the airbag deployment, so use an extra tire.

(d) Install the SST.
(1) Connect the SST connector to the front seat side airbag assembly connector.
SST 09082-00750

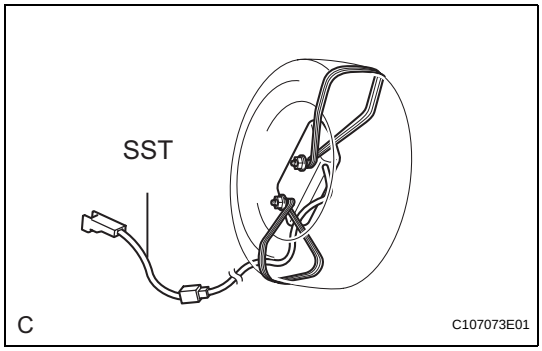

(e) Place the tires.
(1) Place at least 2 tires under the tire which the front seat side airbag assembly is tied to.
(2) Place at least 2 tires over the tire which the front seat side airbag assembly is tied to. The top tire should have the disc wheel installed.
NOTICE:
Do not place the SST connector under the tire because it could be damaged.

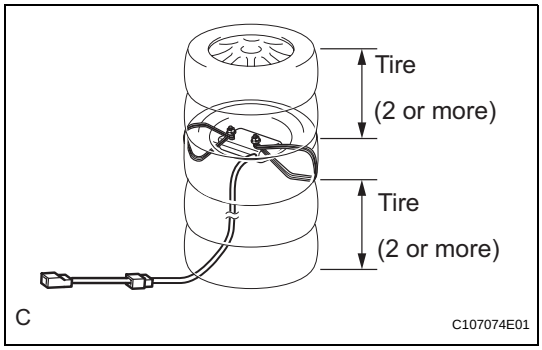

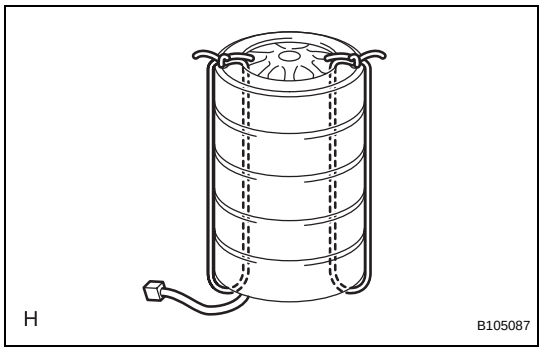

(3) Tie the tires together with 2 wire harnesses.
CAUTION:
Make sure that the wire harness is tight. Looseness in the wire harness results in the tires coming free due to the shock when the airbag is deployed.

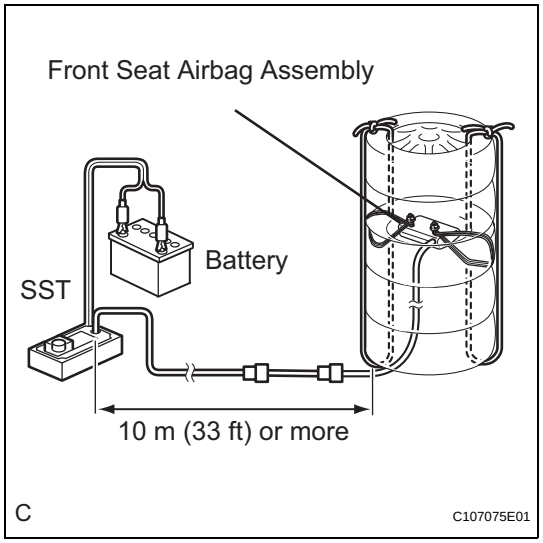

(f) Install the SST.
(1) Connect the SST connector.
SST 09082-00700
NOTICE:
To avoid damaging the SST connector and wire harness, do not lock the secondary lock of the twin lock. Also, secure some slack for the SST wire harness inside the tire.
(2) Move the SST at least 10 m (33 ft) away from the airbag tied down to the tire.

(g) Deploy the airbag.
(1) Connect the red clip of the SST to the battery positive (+) terminal and the black clip of the SST to the battery negative (-) terminal.
(2) Check that no one is within a 10 m (33 ft) radius of the tire which the front seat side airbag assembly is tied to.
(3) Press the SST activation switch and deploy the airbag.
CAUTION:
When deploying the airbag, make sure that no one is near the tire.
HINT:
The airbag is deployed as the LED of the SST activation switch comes on.

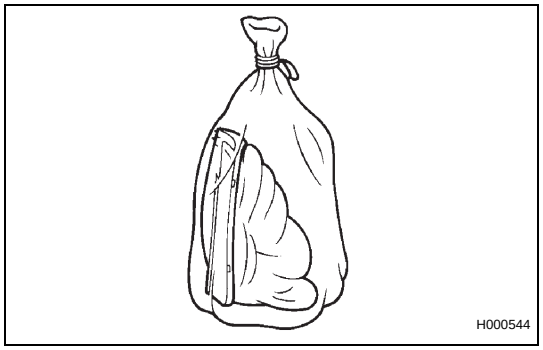

(h) Dispose of the front seat side airbag assembly.
CAUTION:
- **The front seat side airbag assembly becomes extremely hot when the airbag is deployed, so do not touch it for at least 30 minutes after deployment.**
- **Use gloves and safety glasses when handling a front seat side airbag assembly with a deployed airbag.**
- **Do not apply water, etc. to a front seat side airbag assembly with a deployed airbag.**
- **Always wash your hands with water after completing the operation.**

(1) Remove the front seat side airbag assembly from the tire.

(2) Place the front seat side airbag assembly in a plastic bag, tie it tightly and dispose of it as other general part disposal.

REAR SEAT SIDE AIRBAG ASSEMBLY

COMPONENTS

RS

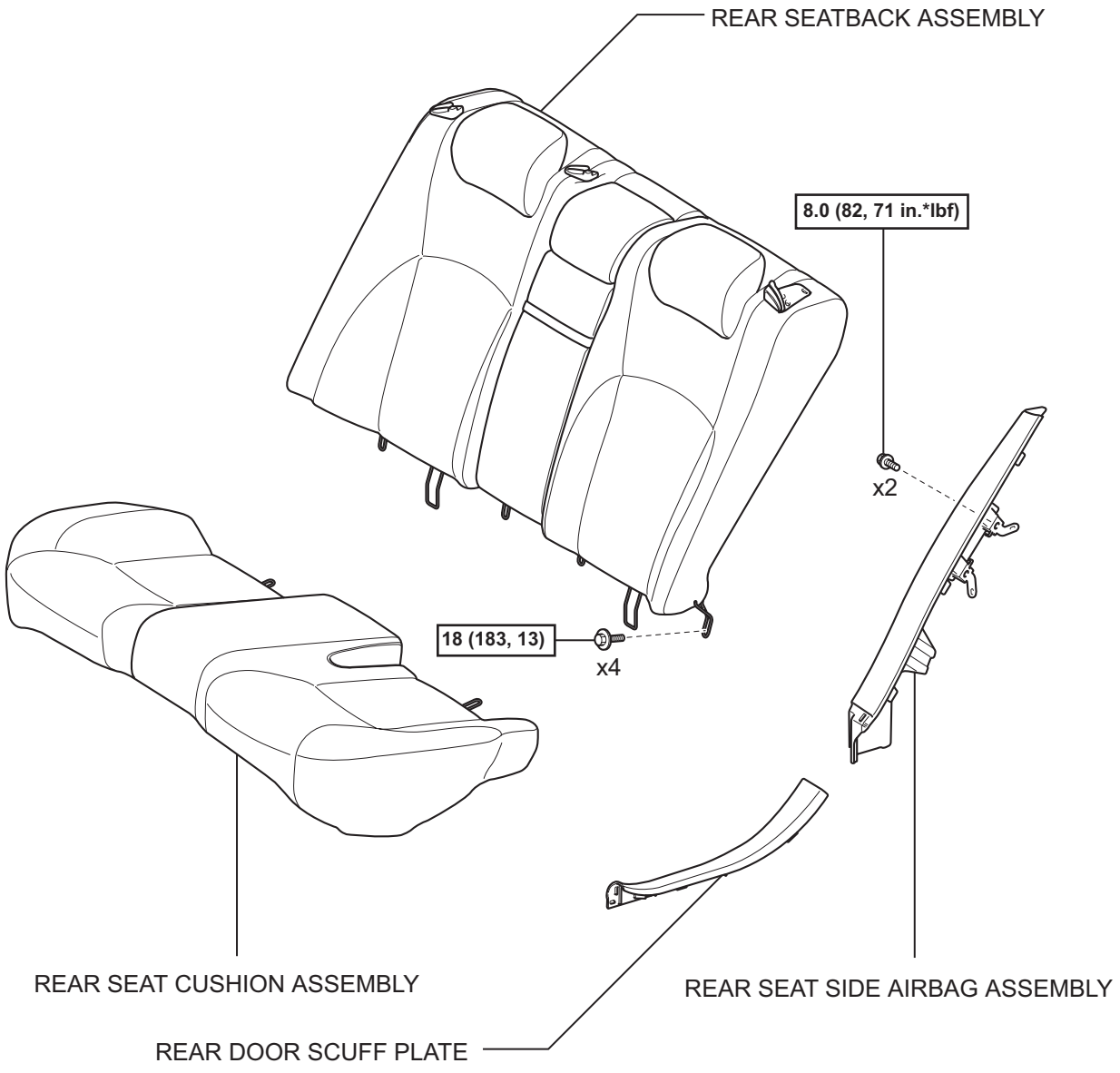

N*m (kgf*cm, ft.*lbf) : Specified torque

C

C138902E01

ON-VEHICLE INSPECTION

1. INSPECT REAR SEAT SIDE AIRBAG ASSEMBLY (VEHICLE NOT INVOLVED IN COLLISION)

(a) Perform a diagnostic system check (see page RS-37).

(b) With the rear seat side airbag assembly installed on the vehicle, perform a visual check. If there are any defects as mentioned below, replace the rear seat side airbag assembly with a new one:
Cuts, minute cracks or marked discoloration on the rear seat side airbag assembly.

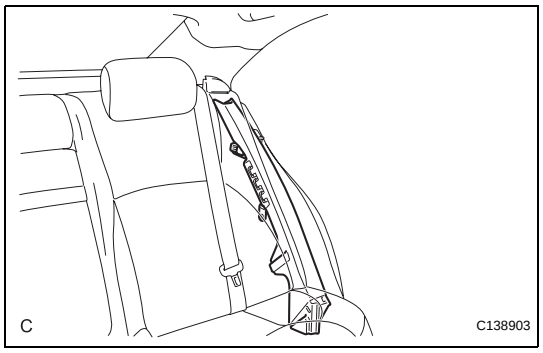

2. INSPECT REAR SEAT SIDE AIRBAG ASSEMBLY (VEHICLE INVOLVED IN COLLISION AND AIRBAG HAS NOT DEPLOYED)

(a) Perform a diagnostic system check (see page RS-37).

(b) With the rear seat side airbag assembly removed from the vehicle, perform a visual check. If there are any defects as mentioned below, replace the rear seat side airbag assembly with a new one:
- Cuts, minute cracks or marked discoloration on the rear seat side airbag assembly.
- Cracks or other damage to the connector.

CAUTION:
Be sure to follow the correct removal and installation procedure.

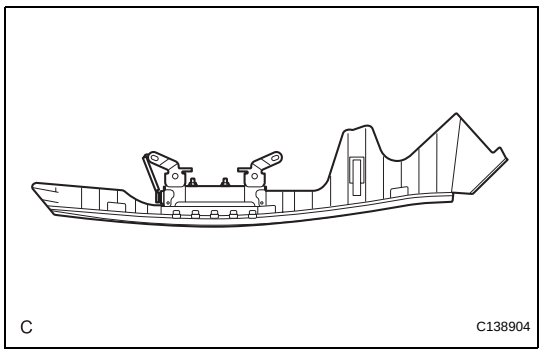

CENTER AIRBAG SENSOR ASSEMBLY

COMPONENTS

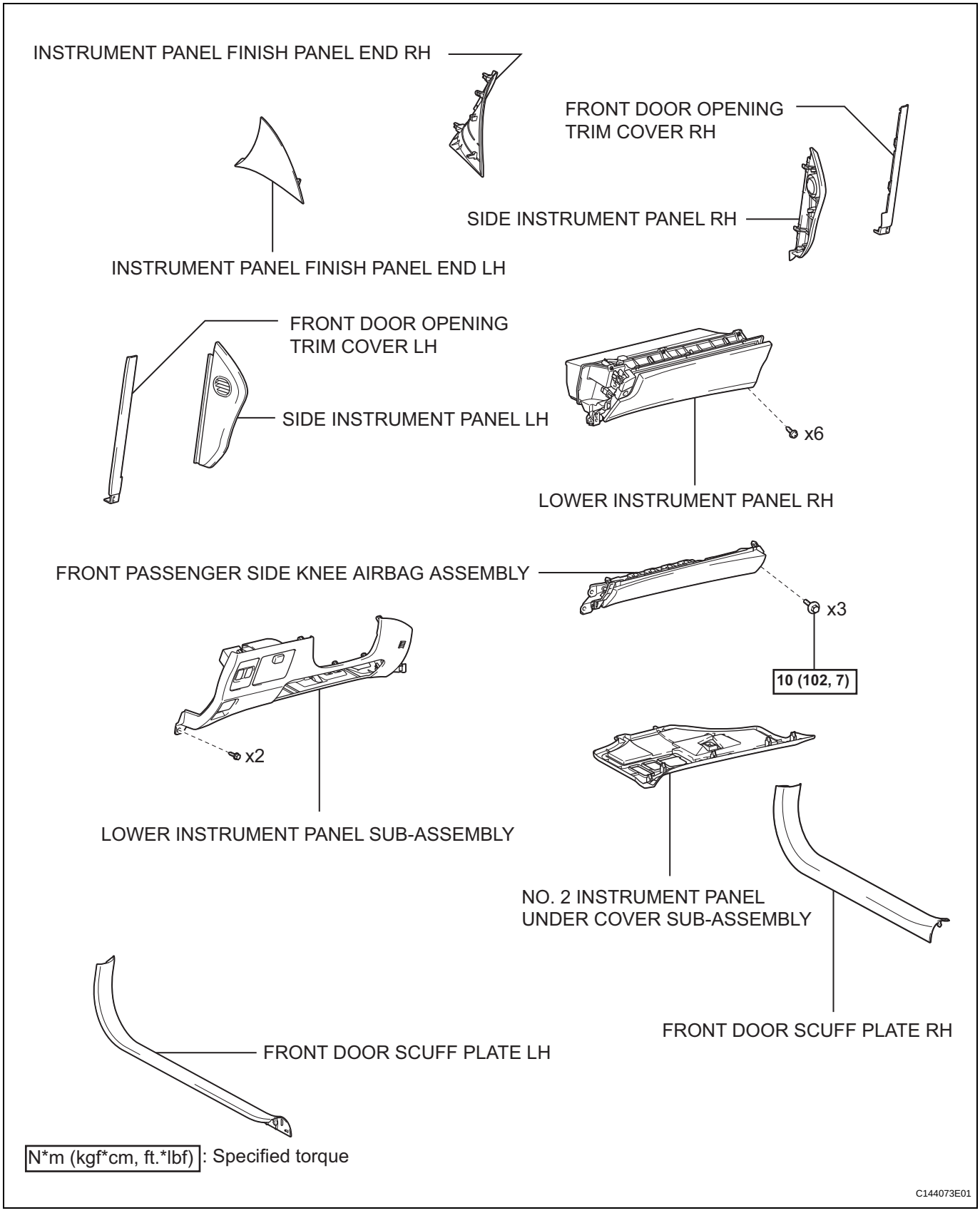

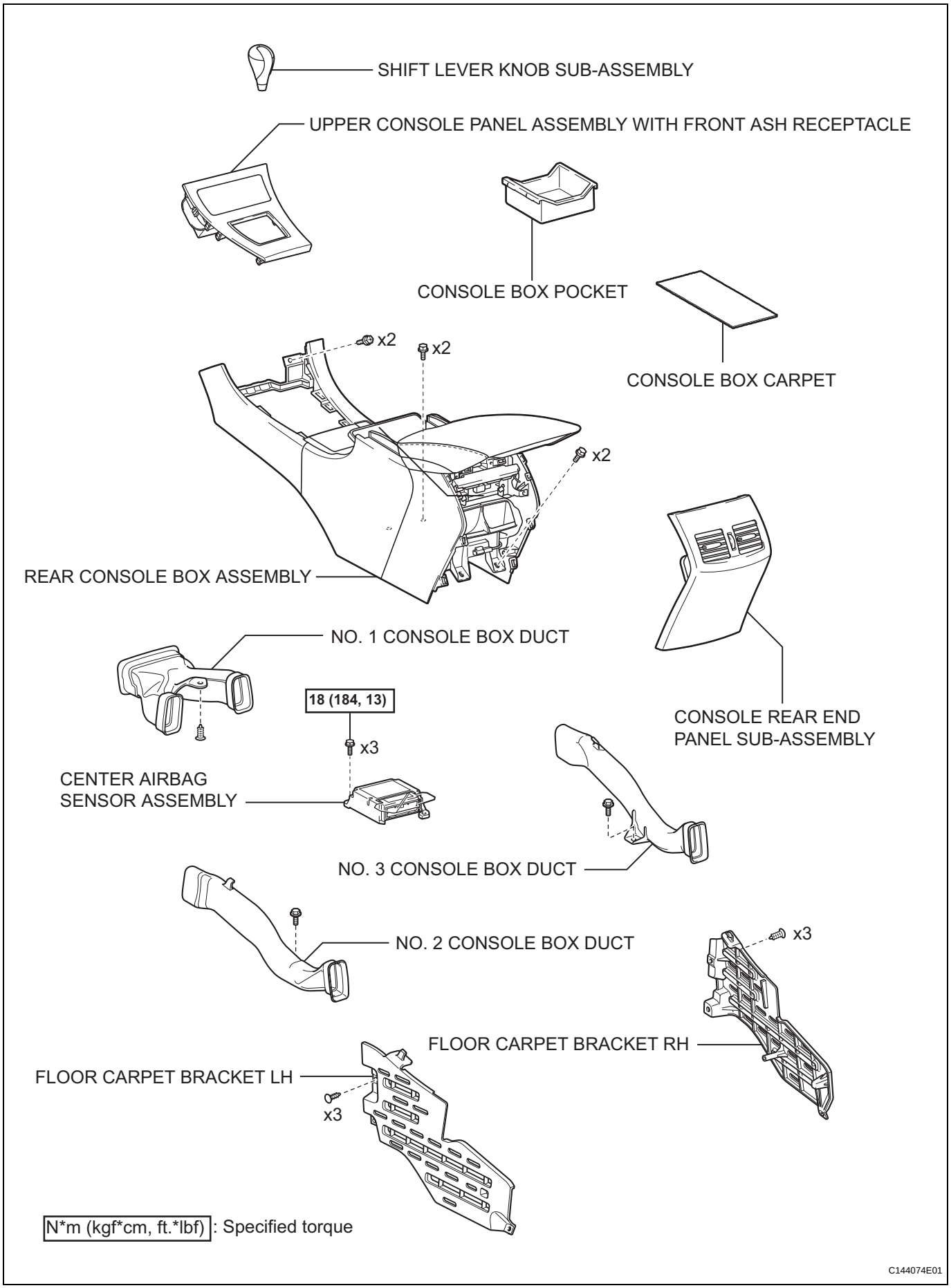
SHIFT LEVER KNOB SUB-ASSEMBLY
UPPER CONSOLE PANEL ASSEMBLY WITH FRONT ASH RECEPTACLE
CONSOLE BOX POCKET
CONSOLE BOX CARPET
x2
x2
x2
REAR CONSOLE BOX ASSEMBLY
NO. 1 CONSOLE BOX DUCT
18 (184, 13)
x3
CENTER AIRBAG
SENSOR ASSEMBLY
CONSOLE REAR END
PANEL SUB-ASSEMBLY
NO. 3 CONSOLE BOX DUCT
NO. 2 CONSOLE BOX DUCT
x3
FLOOR CARPET BRACKET RH
FLOOR CARPET BRACKET LH
x3
N*m (kgf*cm, ft.*lbf) : Specified torque
C144074E01

FRONT AIRBAG SENSOR

COMPONENTS

RS

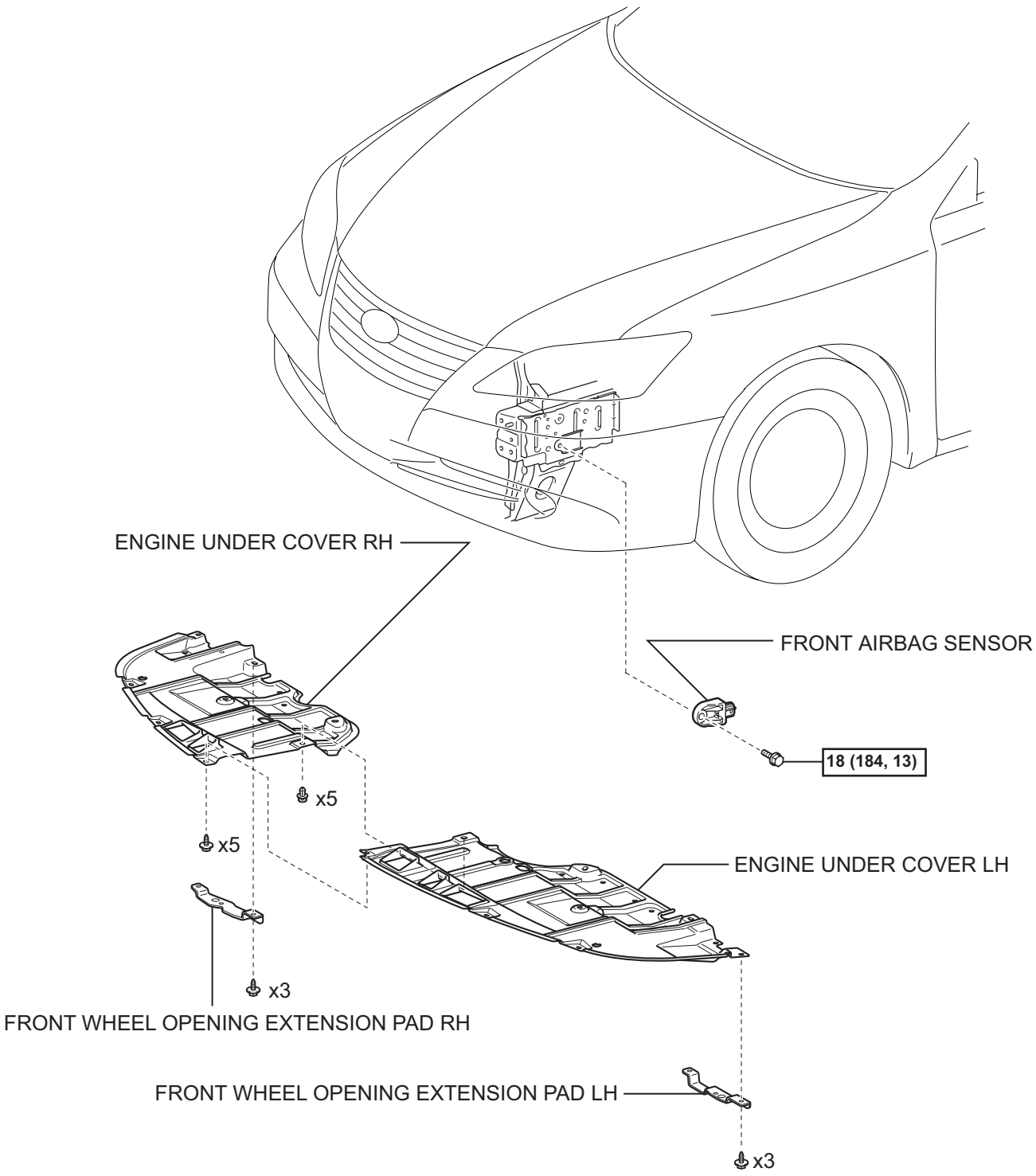

N*m (kgf*cm, ft.*lbf): Specified torque

C

C138857E01

ON-VEHICLE INSPECTION

1. INSPECT FRONT AIRBAG SENSOR (VEHICLE NOT INVOLVED IN COLLISION)

(a) Perform a diagnostic system check (See page RS-37).

2. INSPECT FRONT AIRBAG SENSOR (VEHICLE INVOLVED IN COLLISION AND AIRBAG HAS NOT DEPLOYED)

(a) Perform a diagnostic system check (See page RS-37).

(b) When the front bumper of the vehicle or its area is damaged, check if there is any damage to the front airbag sensor. If there are any defects as mentioned below, replace the front airbag sensor with a new one:

- Cracks, dents or chips on the sensor housing.
- Cracks or other damage to the connector.
- Peeling off of the label or damage to the serial number.

CAUTION:
Be sure to follow the correct removal and installation procedures.

3. INSPECT FRONT AIRBAG SENSOR (VEHICLE INVOLVED IN COLLISION AND AIRBAG IS DEPLOYED)

(a) Replace the front airbag sensor.

CAUTION:
Be sure to follow the correct removal and installation procedures.

HINT:
The front airbag sensor on the impacted side should be replaced after the steering pad, front passenger airbag assembly, driver side knee airbag assembly or front passenger side knee airbag assembly has deployed.

SIDE AIRBAG SENSOR

COMPONENTS

RS

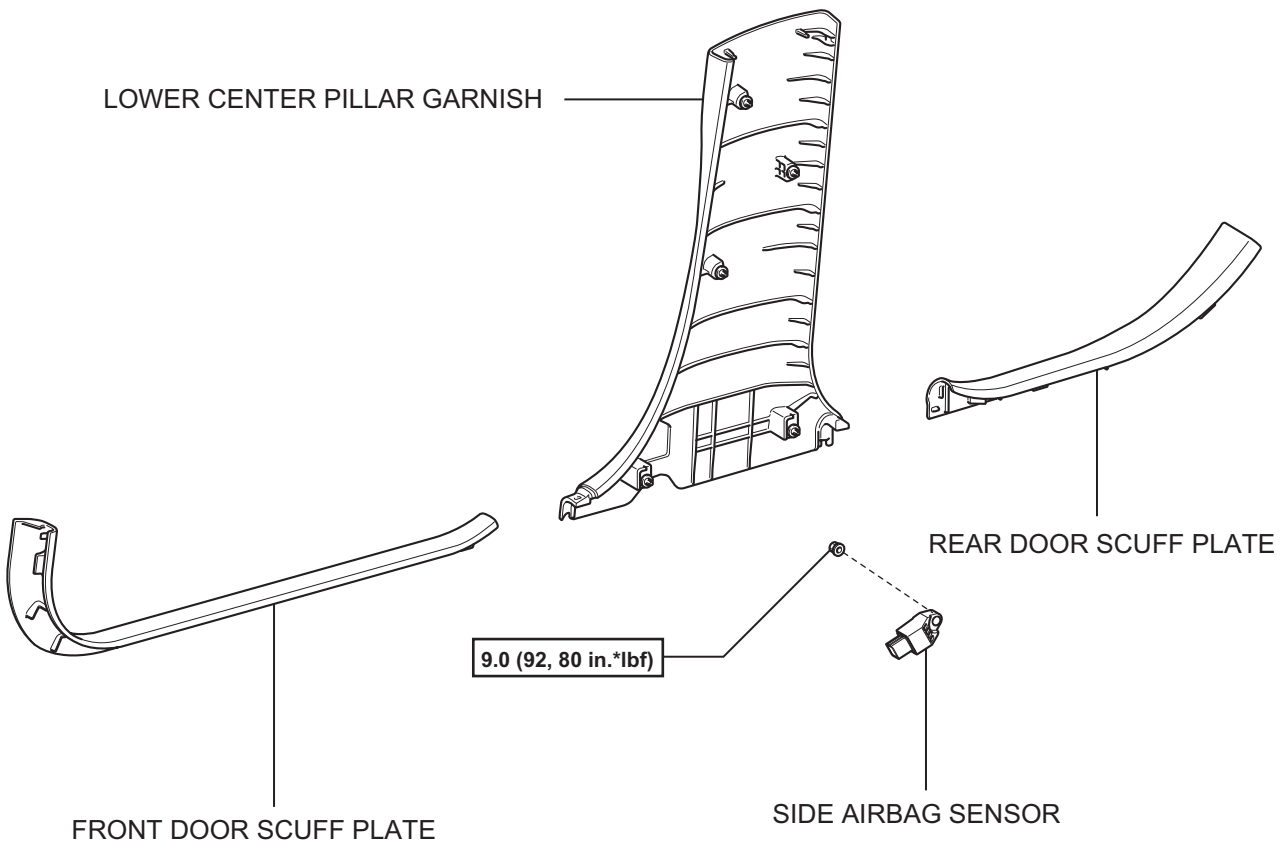

N*m (kgf*cm, ft.*lbf) : Specified torque

C

C138893E01

ON-VEHICLE INSPECTION

1. INSPECT SIDE AIRBAG SENSOR (VEHICLE NOT INVOLVED IN COLLISION)

(a) Perform a diagnostic system check (See page RS-37).

2. INSPECT SIDE AIRBAG SENSOR (VEHICLE INVOLVED IN COLLISION AND AIRBAG HAS NOT DEPLOYED)

(a) Perform a diagnostic system check (See page RS-37).

(b) When the center pillar of the vehicle or its area is damaged, check if there is any damage to the side airbag sensor. If there are any defects as mentioned below, replace the side airbag sensor with a new one:

- Cracks, dents or chips on the sensor housing.
- Cracks or other damage to the connector.
- Peeling off of the label or damage to the serial number.

CAUTION:
Be sure to follow the correct removal and installation procedures.

3. INSPECT SIDE AIRBAG SENSOR (VEHICLE INVOLVED IN COLLISION AND AIRBAG IS DEPLOYED)

(a) Replace the side airbag sensor.

CAUTION:
Be sure to follow the correct removal and installation procedures.

HINT:
The side airbag sensor on the impacted side should be replaced after the front seat side airbag assembly and curtain shield airbag assembly have deployed.

REAR AIRBAG SENSOR

COMPONENTS

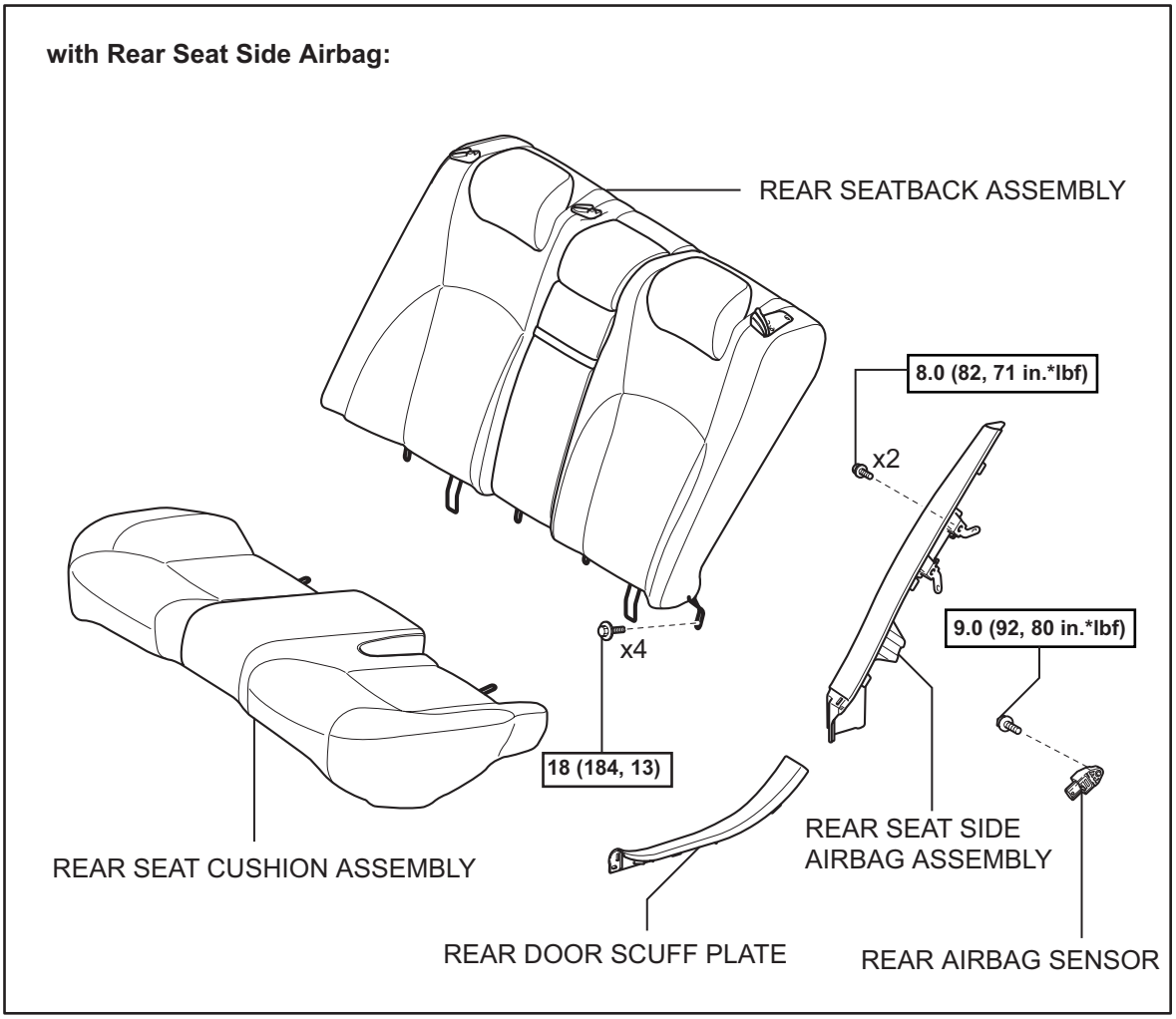

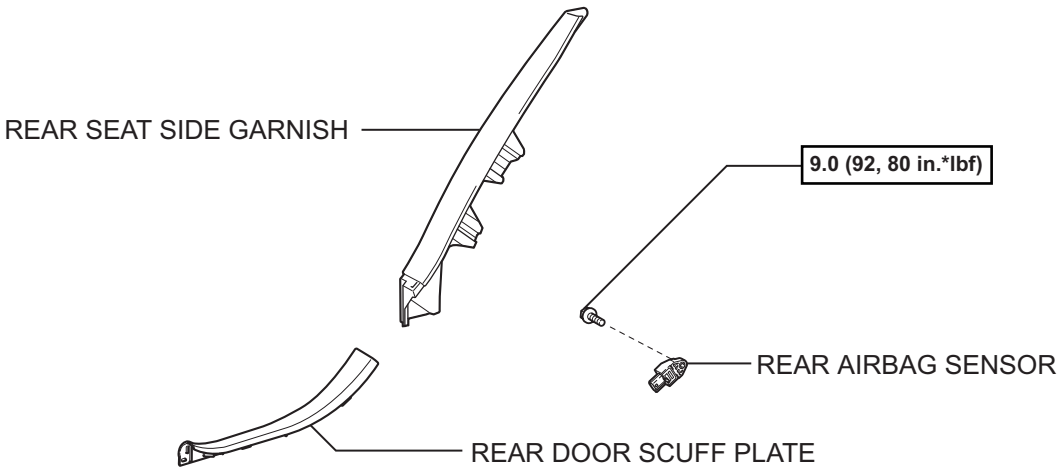

N*m (kgf*cm, ft.*lbf) : Specified torque

C138895E01

ON-VEHICLE INSPECTION

1. INSPECT REAR AIRBAG SENSOR (VEHICLE NOT INVOLVED IN COLLISION)

(a) Perform a diagnostic system check (See page RS-37).

2. INSPECT REAR AIRBAG SENSOR (VEHICLE INVOLVED IN COLLISION AND AIRBAG HAS NOT DEPLOYED)

(a) Perform a diagnostic system check (See page RS-37).

(b) When the quarter panel of the vehicle or its area is damaged, check if there is any damage to the rear airbag sensor. If there are any defects as mentioned below, replace the rear airbag sensor with a new one:

- Cracks, dents or chips on the sensor housing.
- Cracks or other damage to the connector.
- Peeling off of the label or damage to the serial number.

CAUTION:
Be sure to follow the correct removal and installation procedures.

3. INSPECT REAR AIRBAG SENSOR (VEHICLE INVOLVED IN COLLISION AND AIRBAG IS DEPLOYED)

(a) Replace the rear airbag sensor.

CAUTION:
Be sure to follow the correct removal and installation procedures.

HINT:
The rear airbag sensor on the impacted side should be replaced after the curtain shield airbag assembly has deployed.

SEAT POSITION SENSOR

COMPONENTS

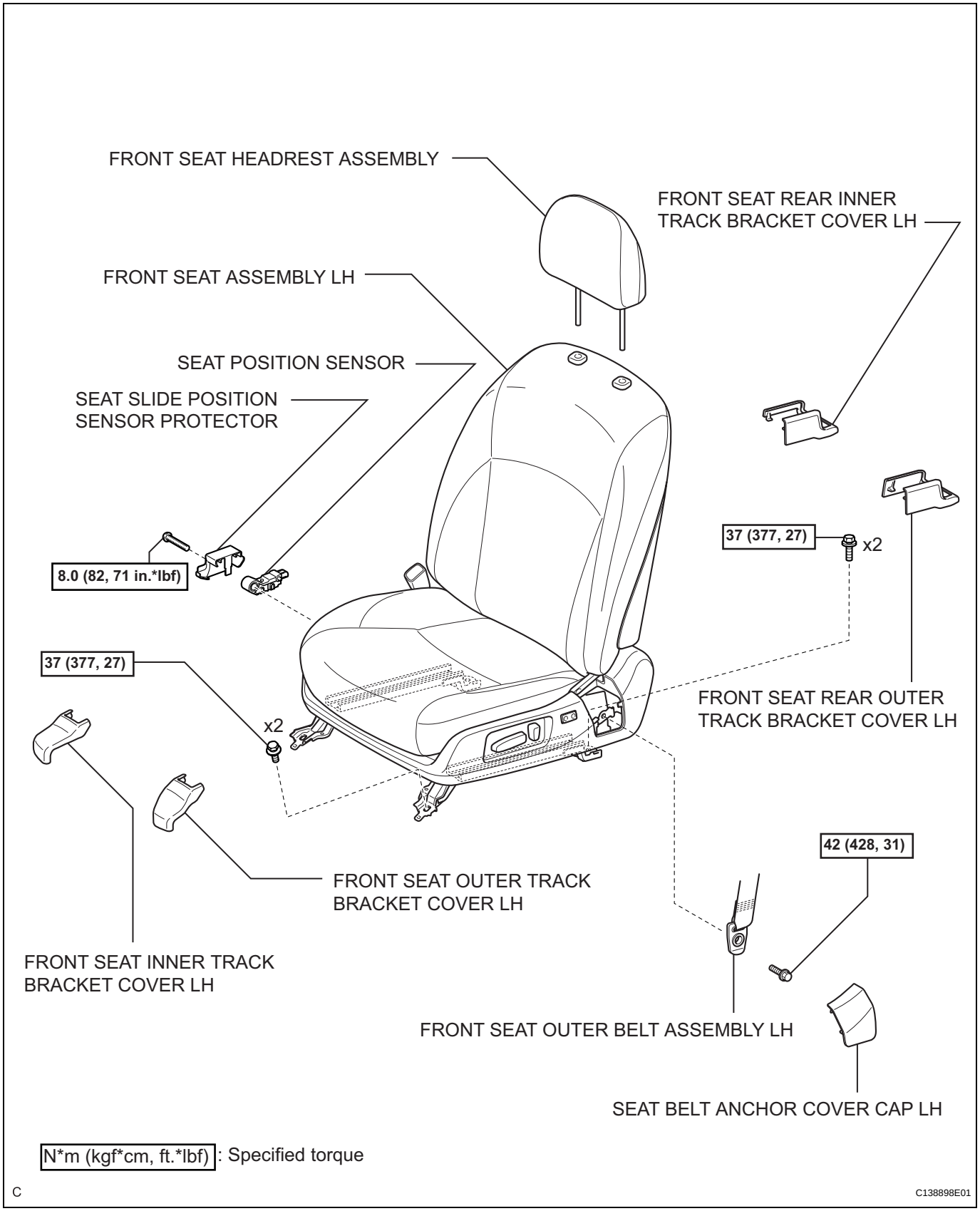

ON-VEHICLE INSPECTION

1. INSPECT SEAT POSITION SENSOR (VEHICLE NOT INVOLVED IN COLLISION)

(a) Perform a diagnostic system check (See page RS-37).

2. INSPECT SEAT POSITION SENSOR (VEHICLE INVOLVED IN COLLISION)

(a) Perform a diagnostic system check (See page RS-37).

(b) Even if the airbag was not deployed, check if there is any damage to the seat position sensor.
If there are any defects as mentioned below, replace the seat position sensor with a new one:
- Cracks, dents or chips on the sensor housing.
- Cracks or other damage to the connector.

CAUTION:
Be sure to follow the correct removal and installation procedures.

FRONT SEAT CUSHION ASSEMBLY (w/ Occupant Classification ECU, Occupant Classification Sensor)

COMPONENTS

RS

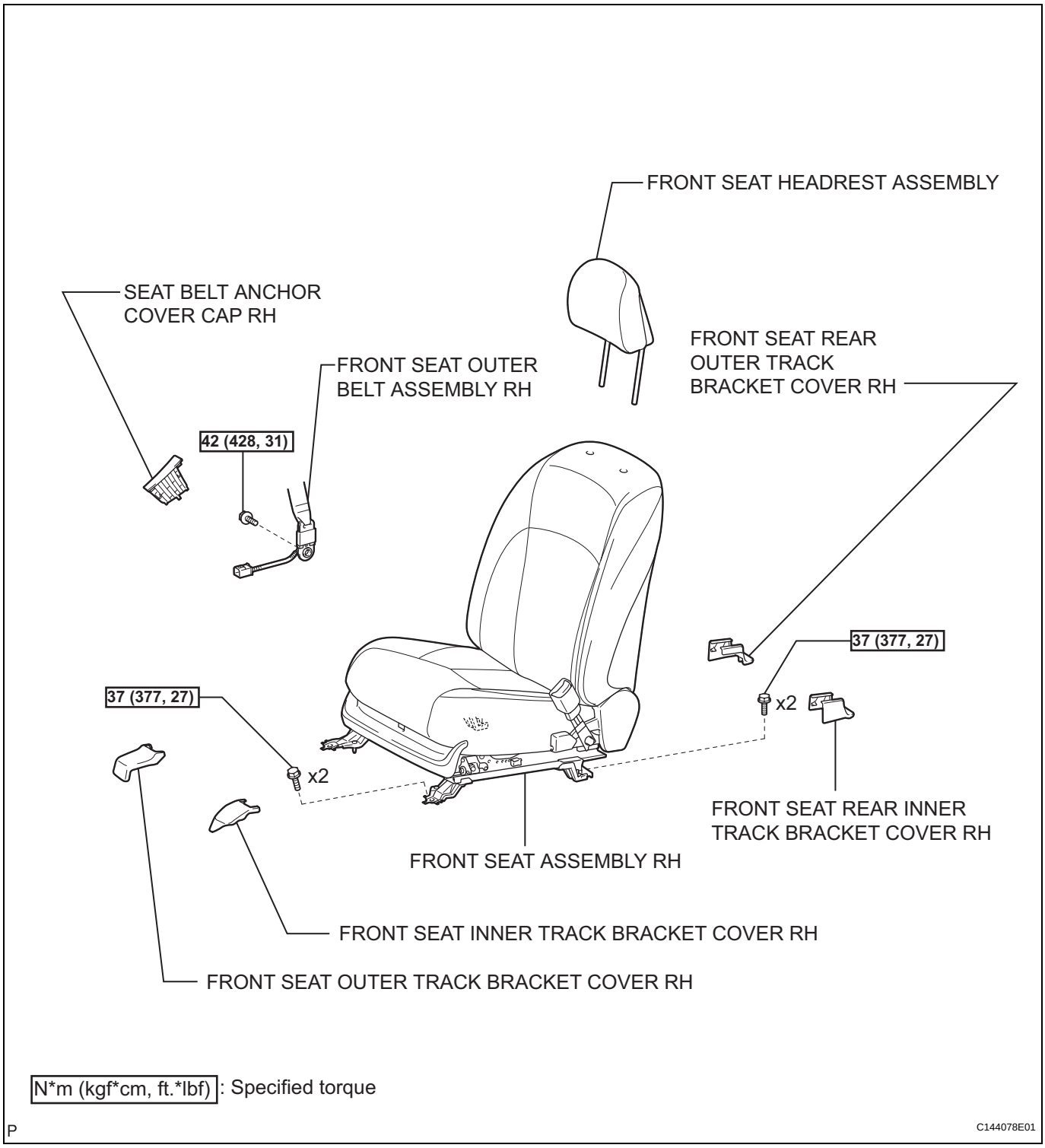

RS

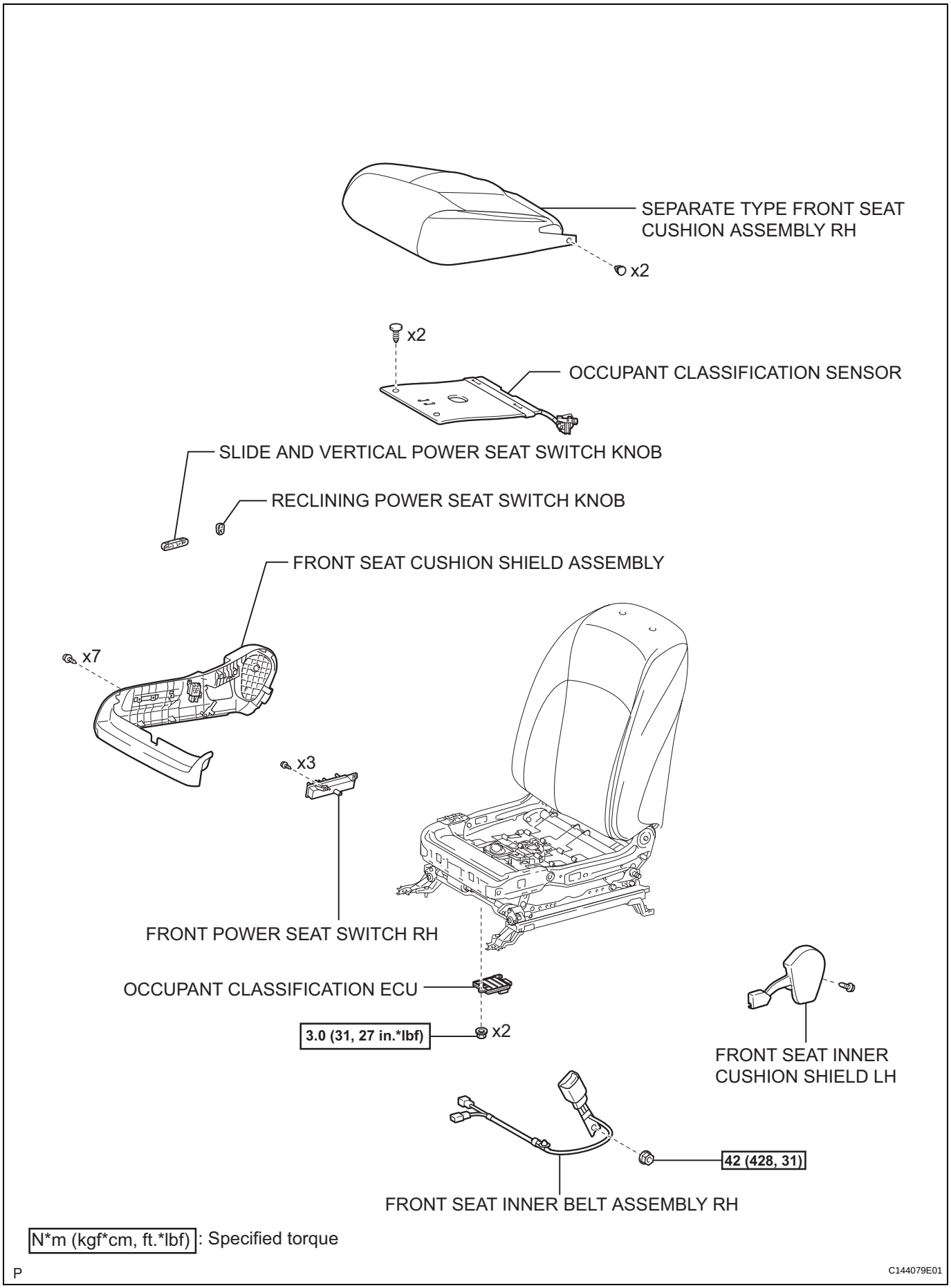
SEPARATE TYPE FRONT SEAT CUSHION ASSEMBLY RH
x2
x2
OCCUPANT CLASSIFICATION SENSOR
SLIDE AND VERTICAL POWER SEAT SWITCH KNOB
RECLINING POWER SEAT SWITCH KNOB
FRONT SEAT CUSHION SHIELD ASSEMBLY
x7
x3
FRONT POWER SEAT SWITCH RH
OCCUPANT CLASSIFICATION ECU
3.0 (31, 27 in.*lbf)
x2
FRONT SEAT INNER CUSHION SHIELD LH
42 (428, 31)
FRONT SEAT INNER BELT ASSEMBLY RH
N*m (kgf*cm, ft.*lbf) : Specified torque
P
C144079E01

REMOVAL

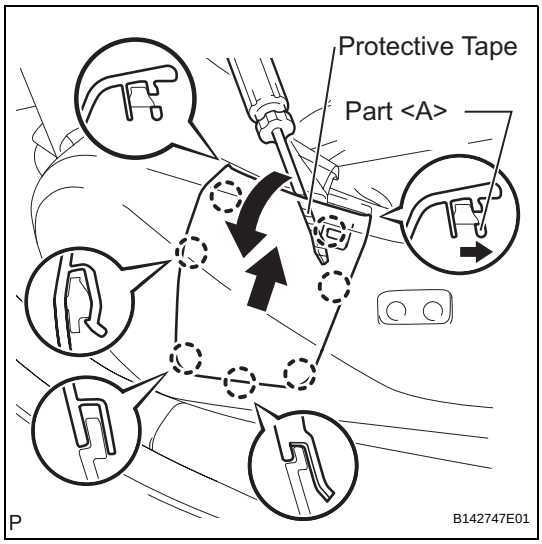

1. REMOVE SEAT BELT ANCHOR COVER CAP RH

(a) Hook a screwdriver to part A to bend it toward the inside of the cabin and release the claws. Pull the seat belt anchor cover cap RH upward and remove it.

NOTICE:
Do not damage the seat belt.

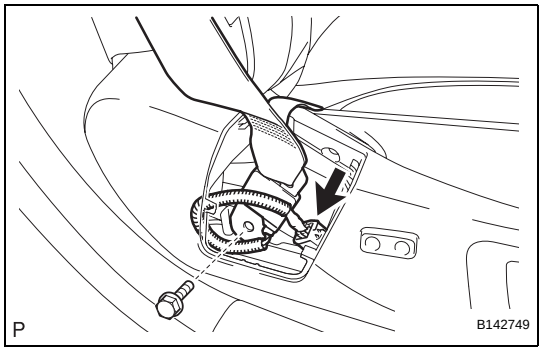

2. DISCONNECT FRONT SEAT OUTER BELT ASSEMBLY RH

(a) Disconnect the connector.

(b) Remove the bolt and disconnect the floor end of the front seat outer belt assembly RH.

3. REMOVE FRONT SEAT HEADREST ASSEMBLY

4. REMOVE FRONT SEAT OUTER TRACK BRACKET COVER RH

(a) Move the front seat assembly to the rearmost position by operating the slide and vertical power seat switch knob.

(b) Using a screwdriver, disengage the 2 claws and remove the front seat outer track bracket cover RH.
HINT:
Tape the screwdriver tip before use.

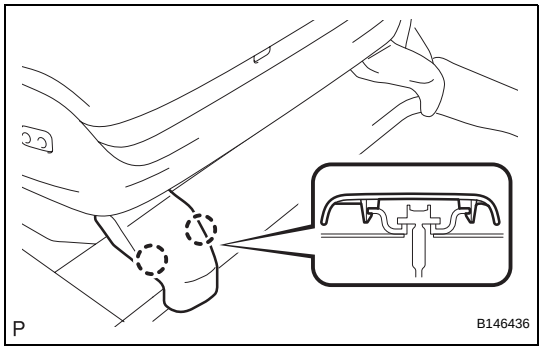

5. REMOVE FRONT SEAT INNER TRACK BRACKET COVER RH

HINT:
Use the same procedure for the inner side and outer side.

6. REMOVE FRONT SEAT REAR OUTER TRACK BRACKET COVER RH

(a) Move the front seat assembly fully forward by operating the slide and vertical power seat switch knob.

(b) Using a screwdriver, disengage the 4 claws and remove the front seat rear outer track bracket cover RH.
HINT:
Tape the screwdriver tip before use.

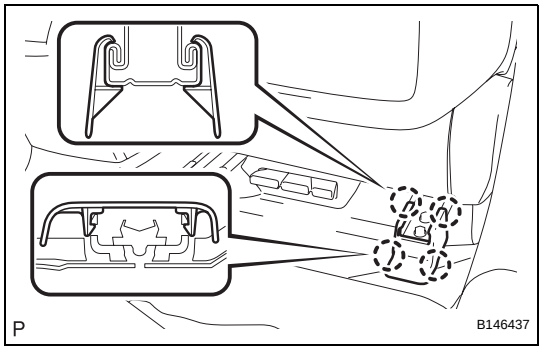

7. REMOVE FRONT SEAT REAR INNER TRACK BRACKET COVER RH

HINT:
Use the same procedure for the inner side and outer side.

8. REMOVE FRONT SEAT ASSEMBLY RH

(a) Move the front seat assembly to the rearmost position by operating the slide and vertical power seat switch knob.

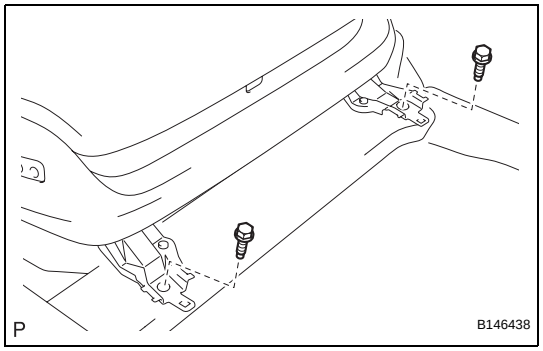

(b) Remove the 2 bolts on the front side.

(c) Move the front seat assembly fully forward by operating the slide and vertical power seat switch knob.

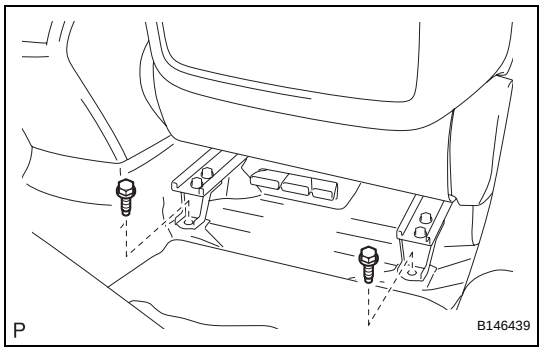

(d) Remove the 2 bolts on the rear side.

(e) Move the front seat assembly to the center position and adjust the seatback to the vertical position by operating the slide and vertical power seat switch knob and the reclining power seat switch knob.

(f) Turn the engine switch off.

(g) Disconnect the negative battery cable from the battery, and wait 90 seconds or more.

CAUTION:

Wait 90 seconds or more after disconnecting the negative terminal cable to prevent airbag deployment (See page RS-1).

(h) Disconnect the connectors and clamp.

(i) Remove the front seat assembly RH.

NOTICE:

When removing the front seat assembly RH, be careful not to step on the yaw rate sensor mounted on the floor under the seat.

9. REMOVE FRONT SEAT INNER BELT ASSEMBLY RH (See page SB-23)

10. REMOVE SLIDE AND VERTICAL POWER SEAT SWITCH KNOB

(a) Using a screwdriver, remove the slide and vertical power seat switch knob.

HINT:

Tape the screwdriver tip before use.

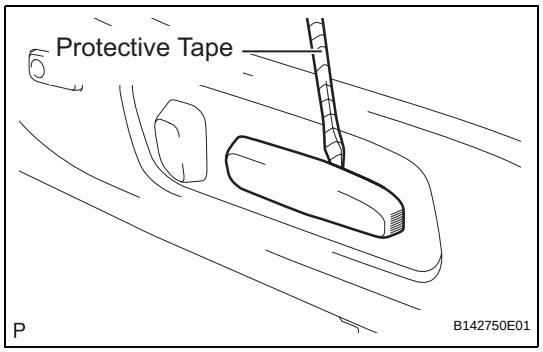

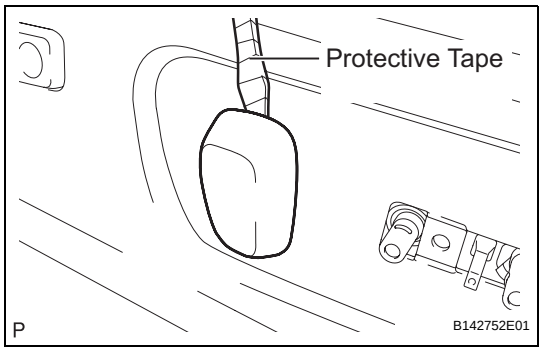

11. REMOVE RECLINING POWER SEAT SWITCH KNOB

(a) Using a screwdriver, remove the reclining power seat switch knob.
HINT:
Tape the screwdriver tip before use.

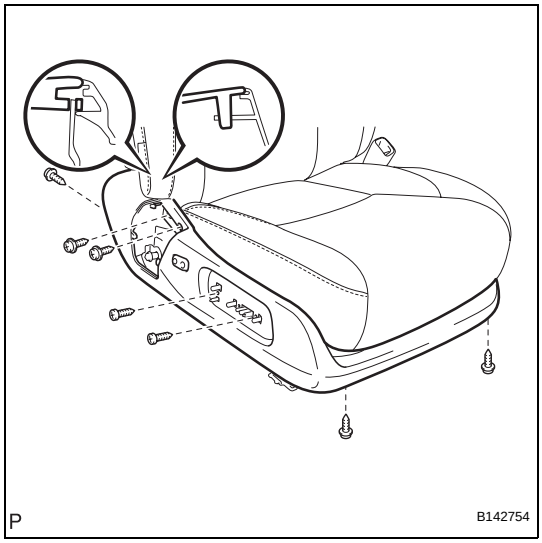

12. REMOVE FRONT SEAT CUSHION SHIELD ASSEMBLY

(a) Remove the 7 screws.
(b) Disengage the 2 claws and separate the front seat cushion shield assembly.
(c) Disconnect the connector and then remove the front seat cushion shield assembly.

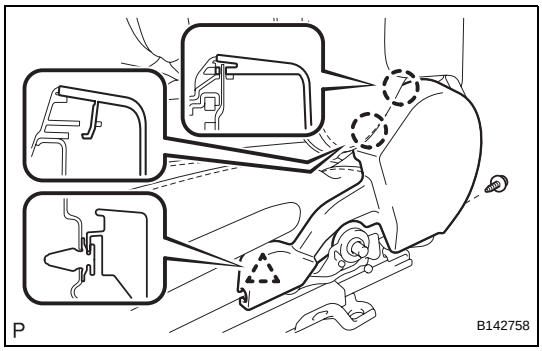

13. REMOVE FRONT SEAT INNER CUSHION SHIELD LH

(a) Remove the screw.
(b) Disengage the 2 claws and clip, and then remove the front seat inner cushion shield LH.

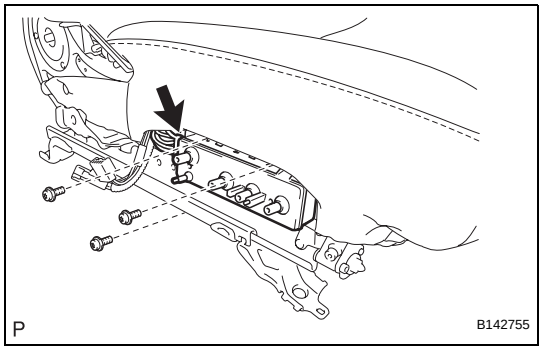

14. REMOVE FRONT POWER SEAT SWITCH RH

(a) Remove the 3 screws.
(b) Disconnect the connector and remove the front power seat switch RH.

15. REMOVE OCCUPANT CLASSIFICATION ECU (See page RS-502)

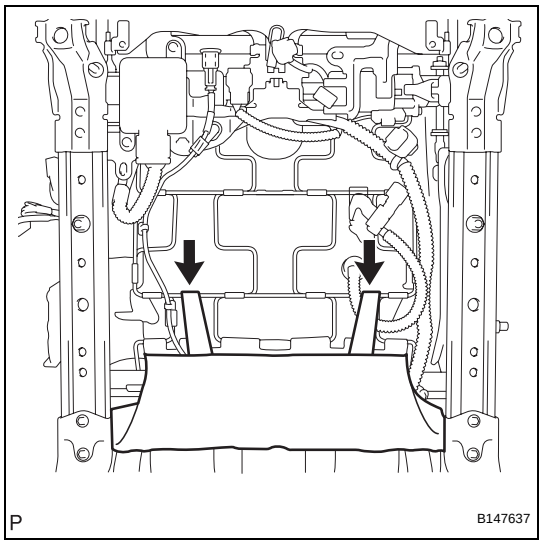

16. REMOVE SEPARATE TYPE FRONT SEAT CUSHION ASSEMBLY RH

(a) Disengage the 2 hooks.

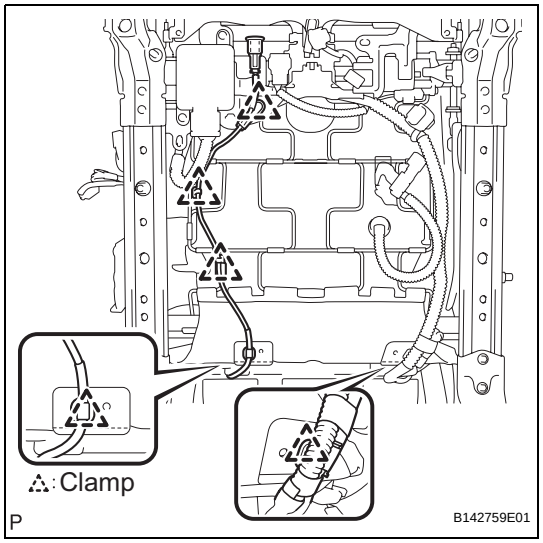

(b) Disengage the clamps.

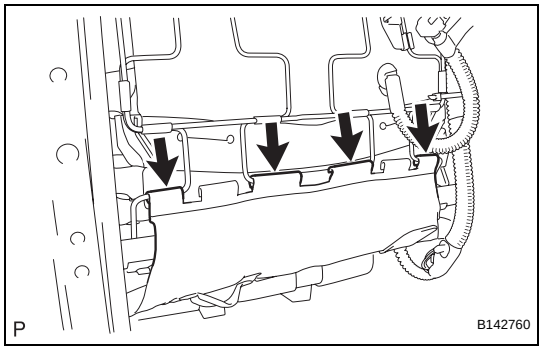

(c) Disengage the 4 hooks.

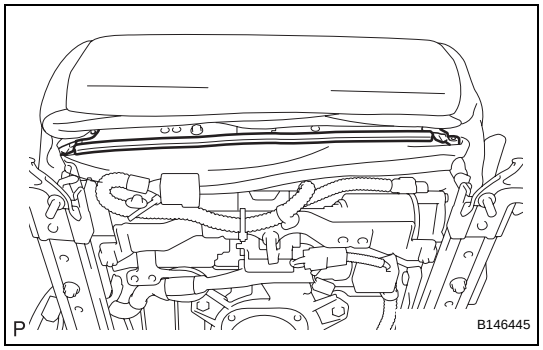

(d) Using a screwdriver, disengage the hooks.

OCCUPANT CLASSIFICATION ECU

COMPONENTS

RS

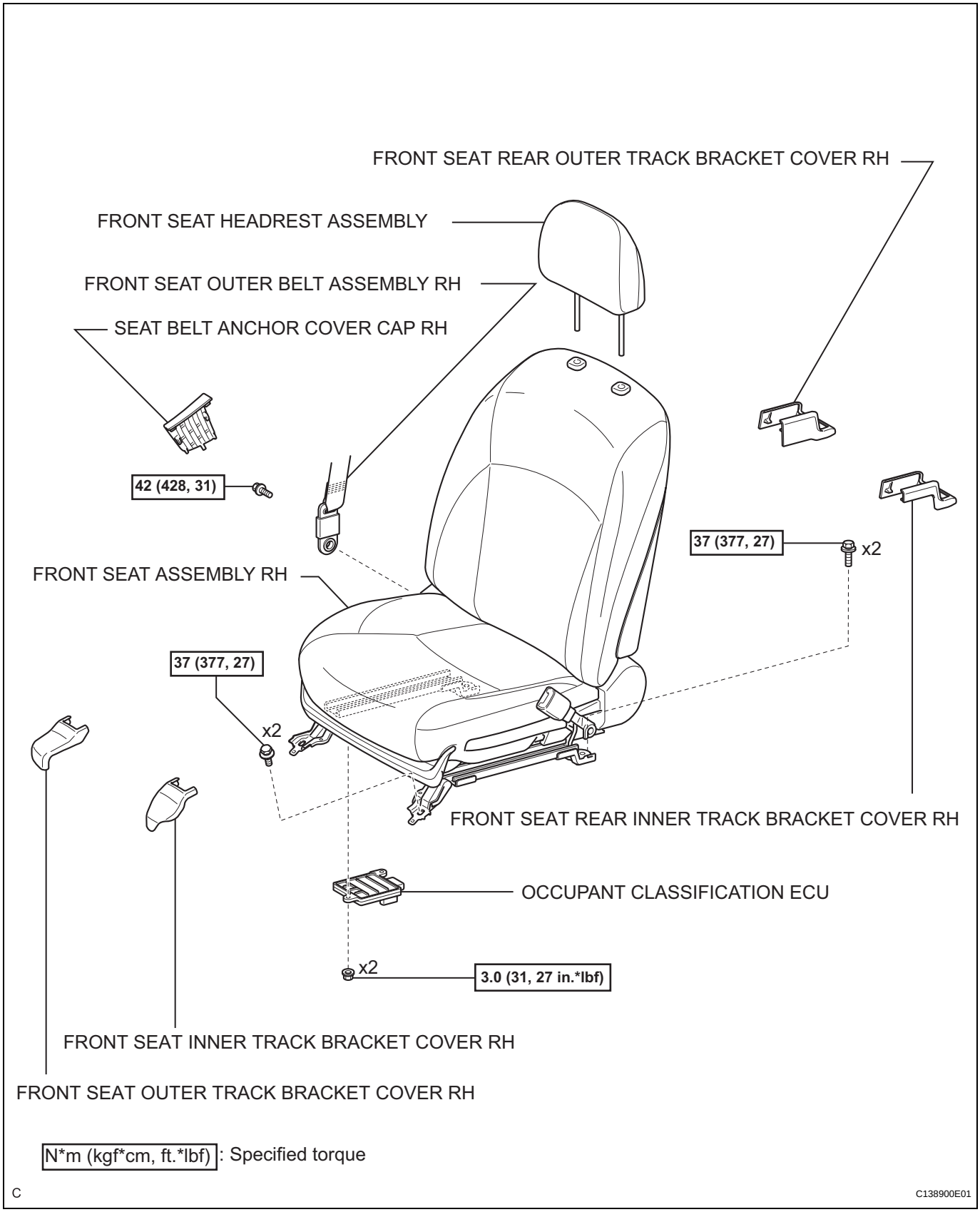

N*m (kgf*cm, ft.*lbf): Specified torque

C

C138900E01

ON-VEHICLE INSPECTION

1. INSPECT OCCUPANT CLASSIFICATION ECU (VEHICLE NOT INVOLVED IN COLLISION)

(a) Perform a diagnostic system check (See page RS-315).

2. INSPECT OCCUPANT CLASSIFICATION ECU (VEHICLE INVOLVED IN COLLISION)

(a) Perform a diagnostic system check (See page RS-315).

(b) Even if the airbag was not deployed, check if there is any damage to the occupant classification ECU. If there are any defects as mentioned below, replace the occupant classification ECU with a new one:

- Cracks, dents or chips on the case.
- Cracks or other damage to the connector.

CAUTION:
Be sure to follow the correct removal and installation procedures.

SEAT BELT TENSION REDUCER

PARTS LOCATION

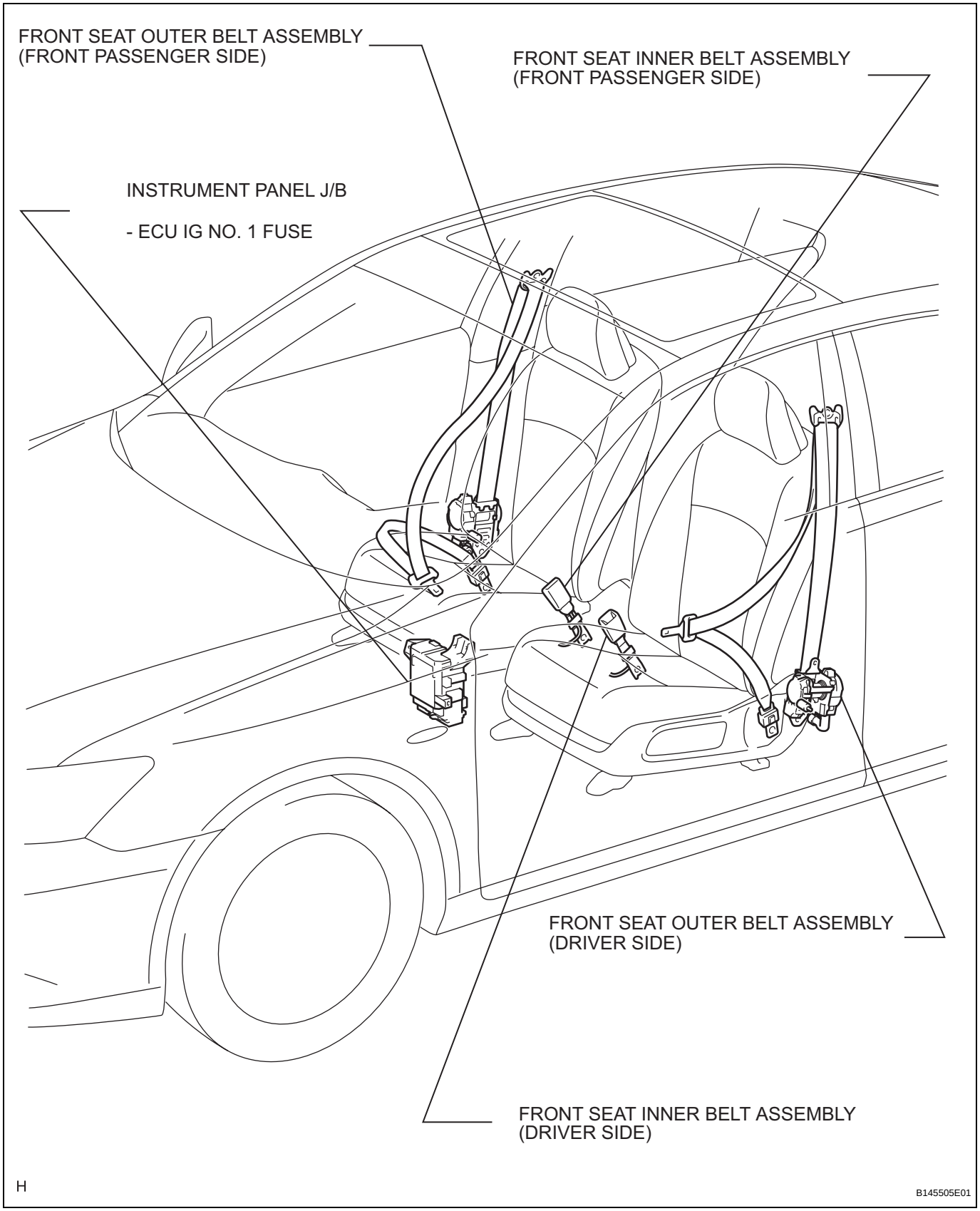

SB

SYSTEM DIAGRAM

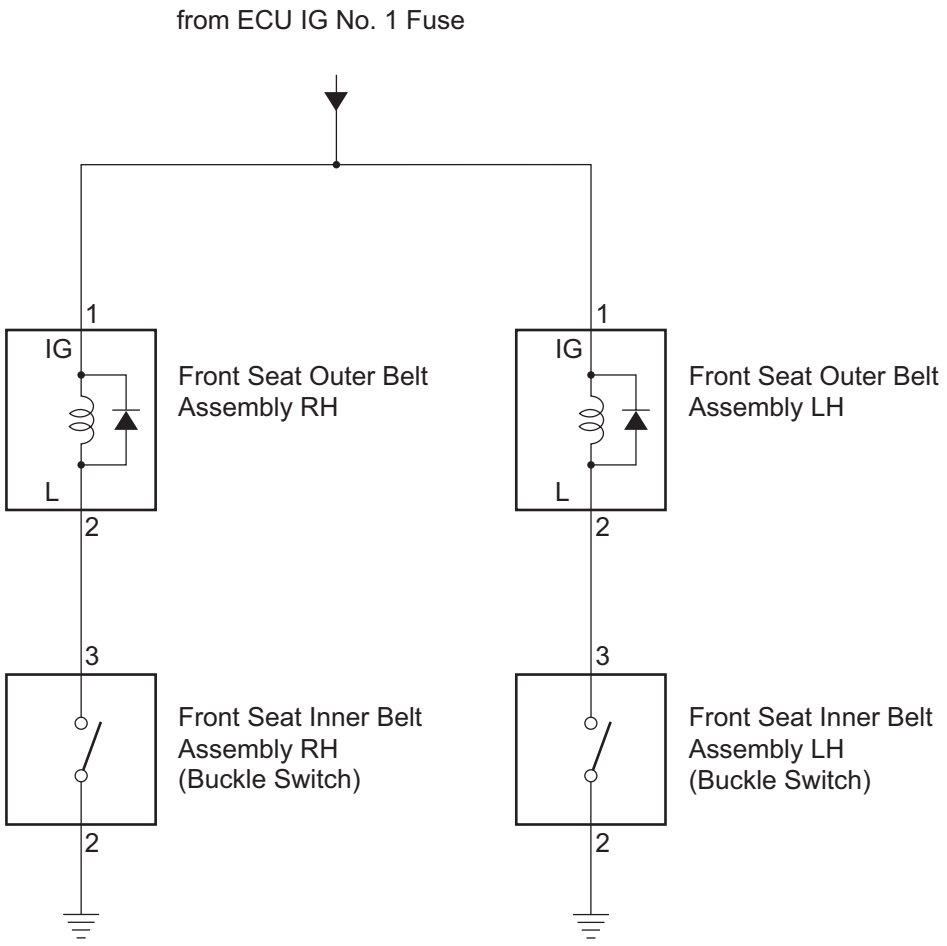

H

B140714E03

SEAT BELT WARNING SYSTEM

PRECAUTION

NOTICE:
Some systems need to be initialized after reconnecting the negative (-) battery terminal (See page IN-33).

SB

PARTS LOCATION

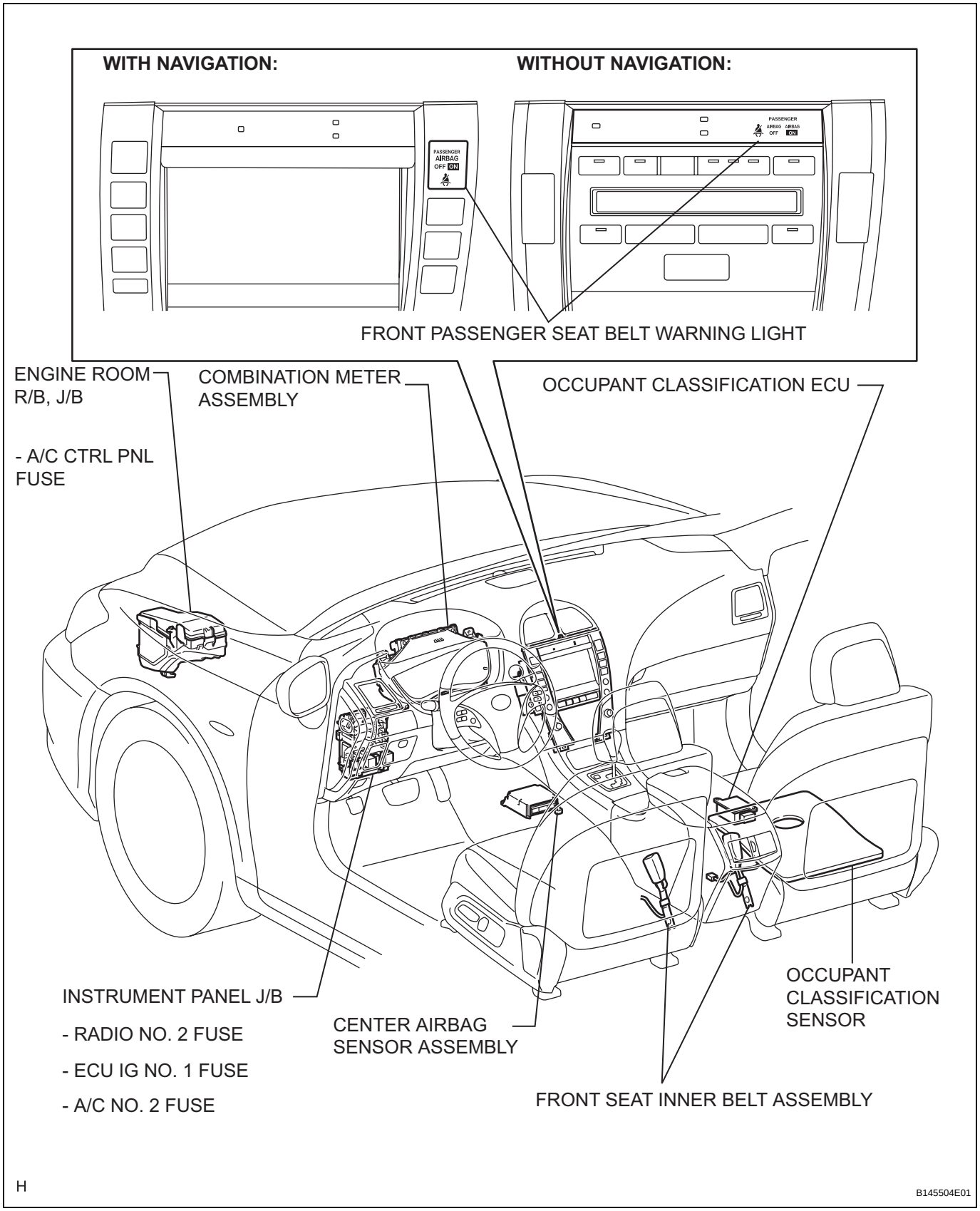

FRONT SEAT INNER BELT ASSEMBLY

COMPONENTS

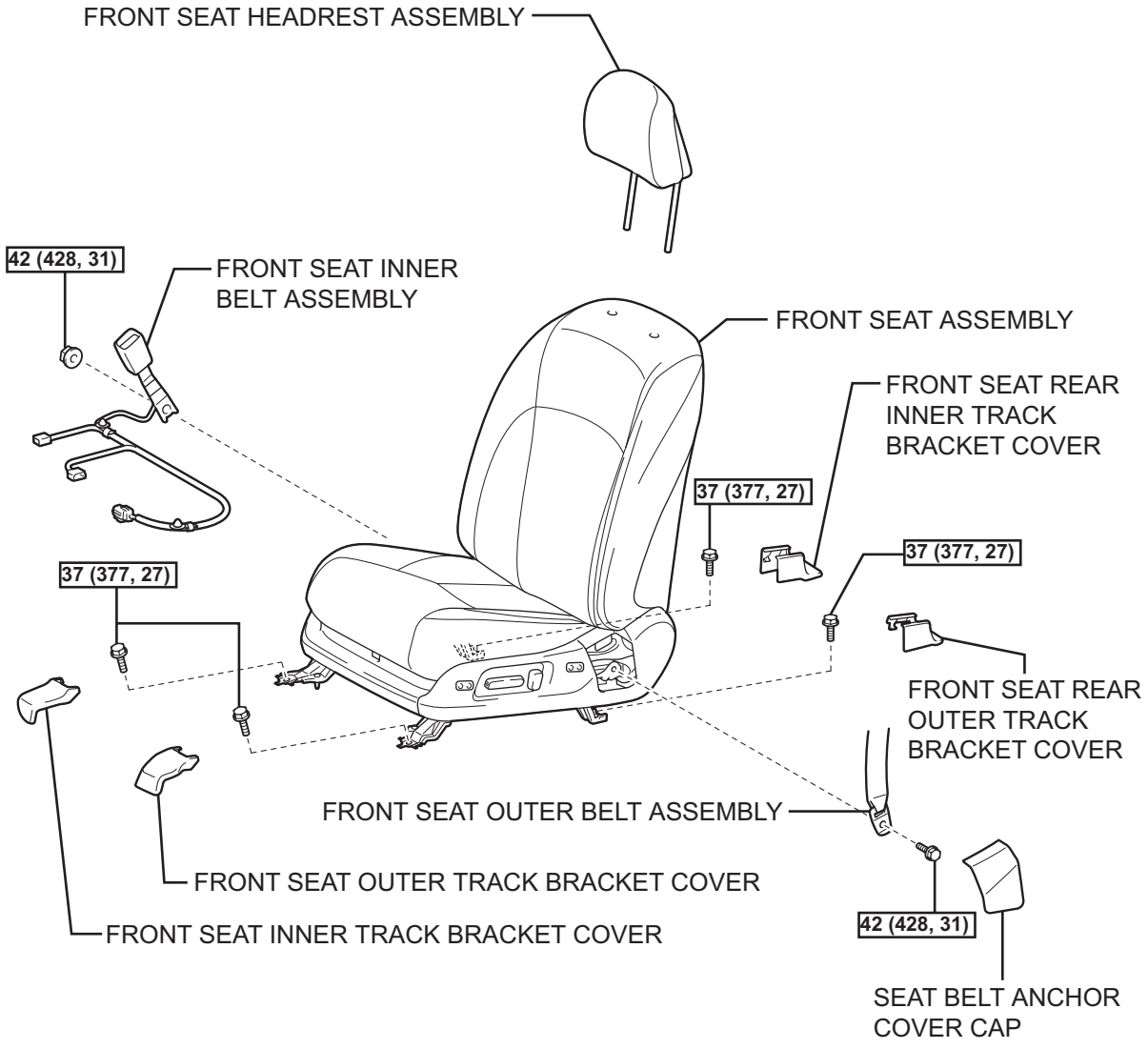

N*m (kgf*cm, ft.*lbf) : Specified torque

P

B142763E01

SB

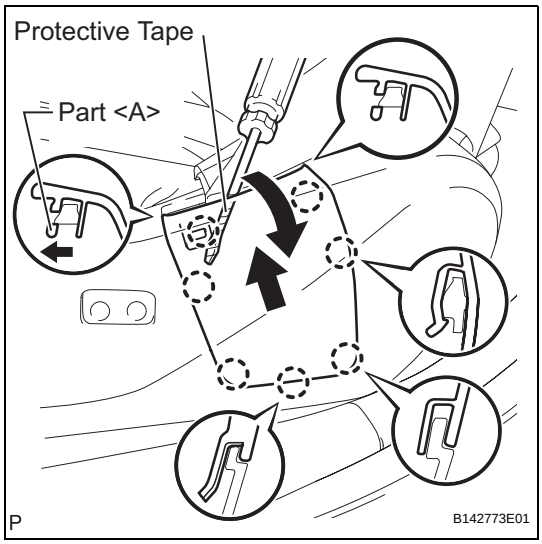

REMOVAL

1. REMOVE SEAT BELT ANCHOR COVER CAP

(a) Hook a screwdriver to part A to bend it toward the inside of the cabin and release the claws. Pull the seat belt anchor cover cap upward and remove it.
NOTICE:
Do not damage the seat belt.

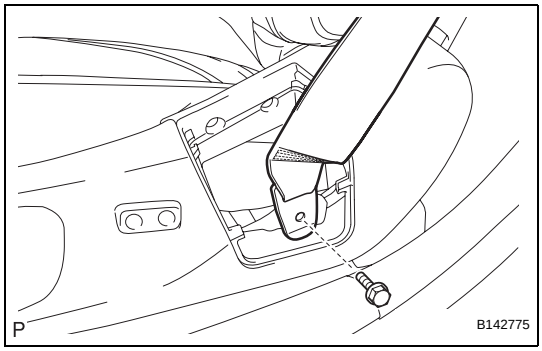

2. DISCONNECT FRONT SEAT OUTER BELT ASSEMBLY

(a) for Driver seat:
(1) Remove the bolt and disconnect the front seat outer belt assembly.

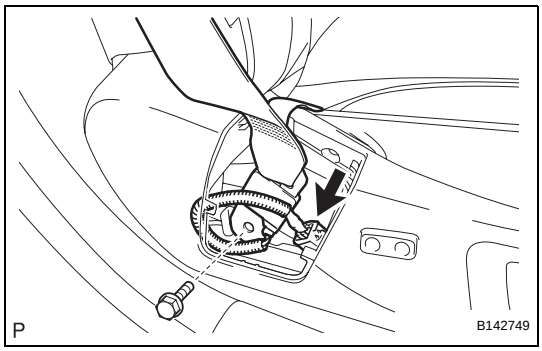

(b) for Passenger seat:
(1) Disconnect the connector.
(2) Remove the bolt and disconnect the front seat outer belt assembly.

3. REMOVE FRONT SEAT HEADREST ASSEMBLY

4. REMOVE FRONT SEAT OUTER TRACK BRACKET COVER (See page SE-83)

5. REMOVE FRONT SEAT INNER TRACK BRACKET COVER (See page SE-83)

6. REMOVE FRONT SEAT REAR OUTER TRACK BRACKET COVER (See page SE-83)

7. REMOVE FRONT SEAT REAR INNER TRACK BRACKET COVER (See page SE-83)

8. REMOVE FRONT SEAT ASSEMBLY (See page SE-83)

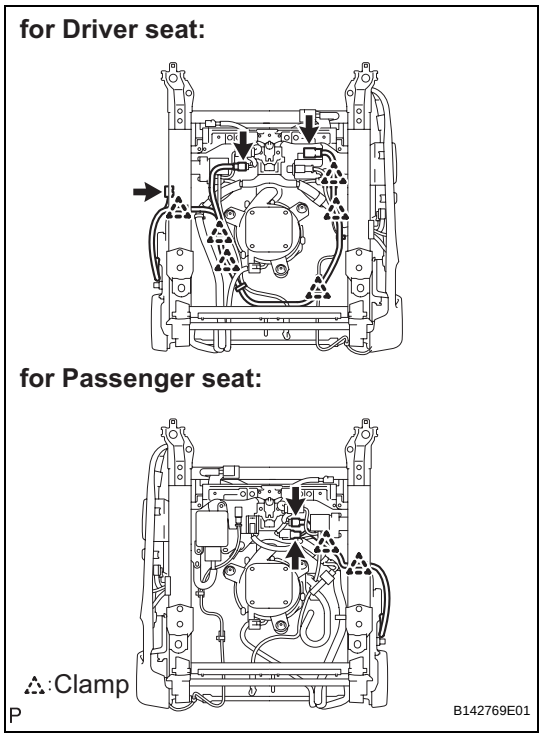

9. REMOVE FRONT SEAT INNER BELT ASSEMBLY

(a) for Driver seat:

(1) Disconnect the connectors and disengage the 6 clamps.

(b) for Passenger seat:

(1) Disconnect the connectors and disengage the 2 clamps.

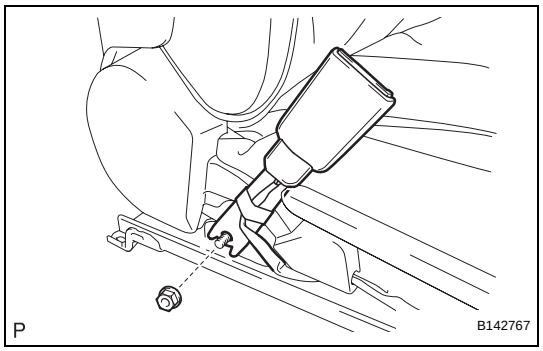

(c) Remove the nut and front seat inner belt assembly.

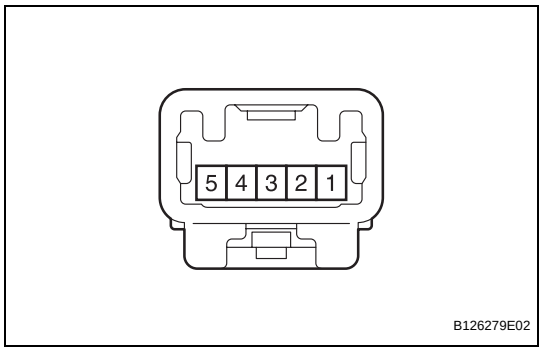

INSPECTION

1. INSPECT FRONT SEAT INNER BELT ASSEMBLY RH

(a) Measure the resistance between terminals of the switch when the switch is operated.

HINT:

This is the inspection procedure of the inner belt switch for the tension reducer.

Standard resistance

Tester Connection	Condition	Specified Condition
2 - 3	Seat belt is fastened	Below 1 Ω
2 - 3	Seat belt is unfastened	10 kΩ or higher

SB

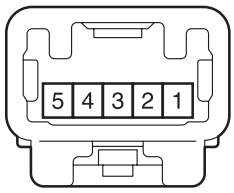

B126279E02

2. INSPECT FRONT SEAT INNER BELT ASSEMBLY LH

(a) Measure the resistance between terminals of the switch when the switch is operated.
HINT:
This is the inspection procedure of the inner belt switch for the tension reducer.
Standard resistance

Tester Connection	Condition	Specified Condition
2 - 3	Seat belt is fastened	Below 1 Ω
2 - 3	Seat belt is unfastened	10 kΩ or higher

INSTALLATION

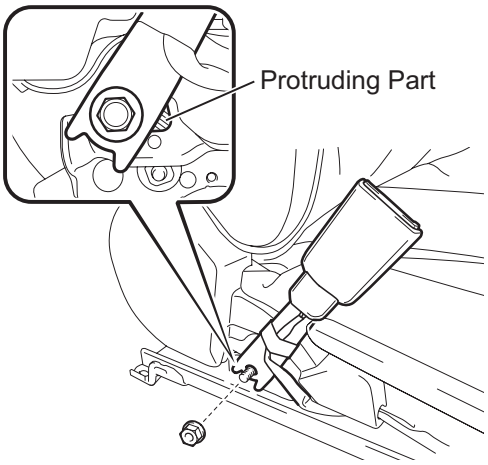

P
B142768E01

1. INSTALL FRONT SEAT INNER BELT ASSEMBLY

(a) Install the front seat inner belt assembly with the nut.
Torque: 42 N*m (428 kgf*cm, 31 ft.*lbf)
NOTICE:
Do not allow the anchor part of the front seat inner belt assembly to overlap the protruding part of the front seat adjuster.

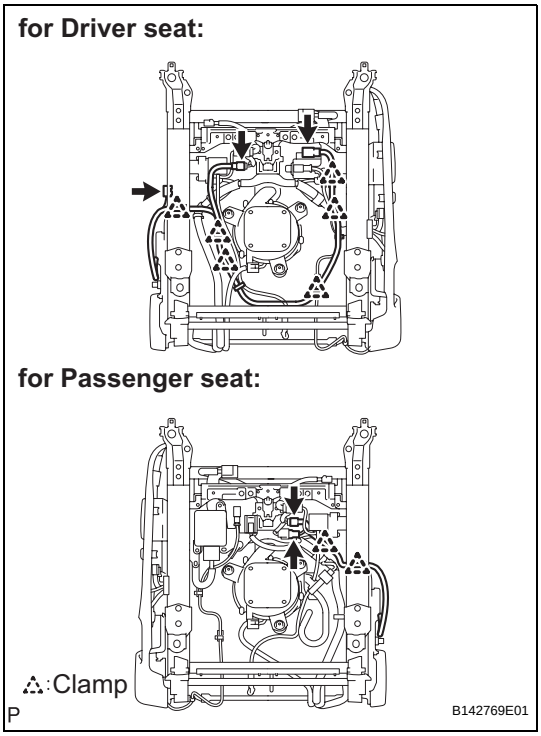

P
B142769E01

(b) for Driver seat:
(1) Connect the connectors and engage the 6 clamps.

(c) for Passenger seat:
(1) Connect the connectors and engage the 2 clamps.

2. INSTALL FRONT SEAT ASSEMBLY (See page SE-109)

3. INSTALL FRONT SEAT REAR OUTER TRACK BRACKET COVER (See page SE-110)

4. INSTALL FRONT SEAT REAR INNER TRACK BRACKET COVER (See page SE-110)

5. INSTALL FRONT SEAT OUTER TRACK BRACKET COVER (See page SE-110)

6. INSTALL FRONT SEAT INNER TRACK BRACKET COVER (See page SE-110)

7. INSTALL FRONT SEAT HEADREST ASSEMBLY

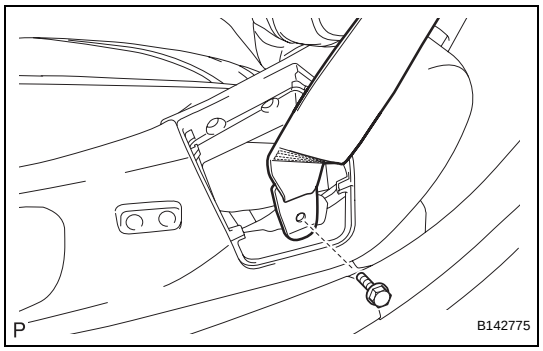

8. CONNECT FRONT SEAT OUTER BELT ASSEMBLY

(a) for Driver seat:

(1) Connect the front seat outer belt assembly with the bolt.
Torque: 42 N*m (428 kgf*cm, 31 ft.*lbf)

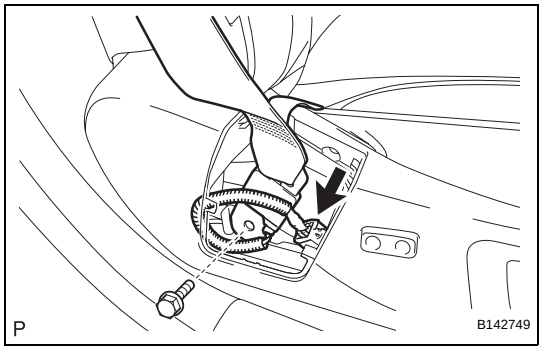

(b) for Passenger seat:

(1) Connect the front seat outer belt assembly with the bolt.
Torque: 42 N*m (428 kgf*cm, 31 ft.*lbf)

(2) Connect the connector.

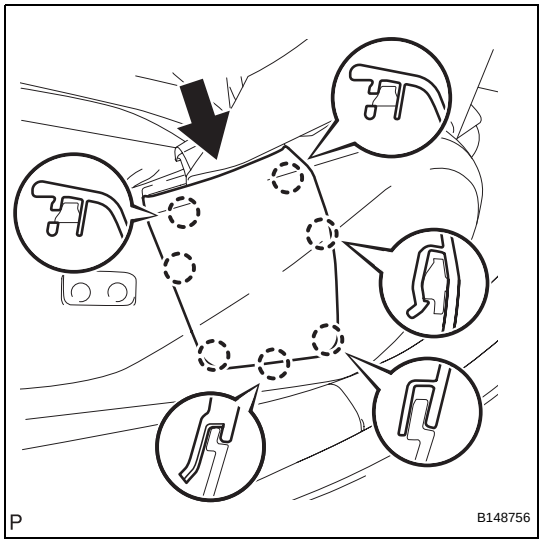

9. INSTALL SEAT BELT ANCHOR COVER CAP

(a) Engage the 7 claws and install the seat belt anchor cover cap.

10. PERFORM INITIALIZATION

NOTICE:
Some systems need initialization after reconnecting the cable to the negative battery terminal (See page IN-33).

11. INSPECT FRONT SEAT ASSEMBLY (See page SE-110)

12. INSPECT SRS WARNING LIGHT
(See page RS-37)

FRONT SEAT OUTER BELT ASSEMBLY

COMPONENTS

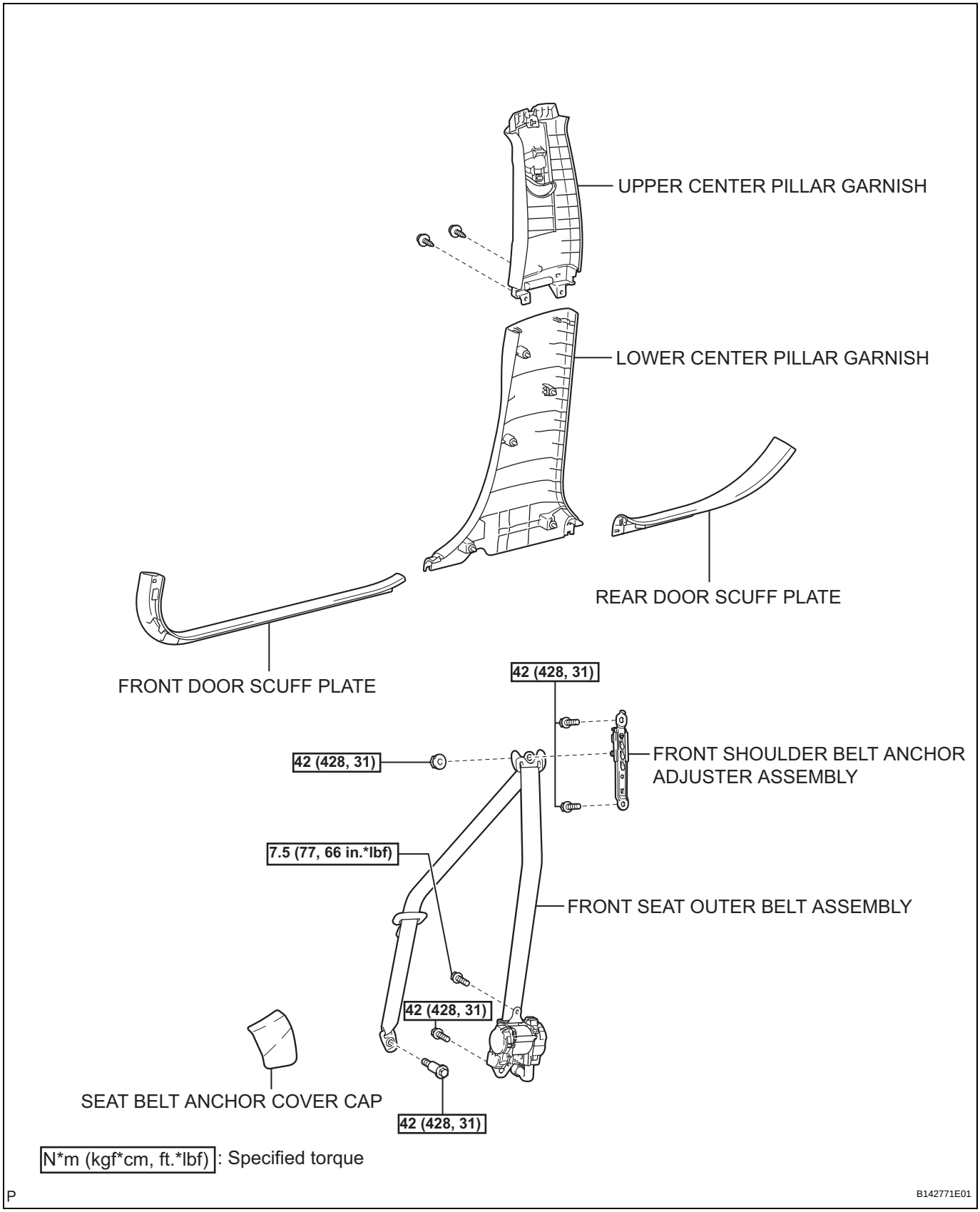

REMOVAL

1. **DISCONNECT CABLE FROM NEGATIVE BATTERY TERMINAL**
   CAUTION:
   Wait for 90 seconds after disconnecting the cable to prevent airbag deployment (See page RS-1).

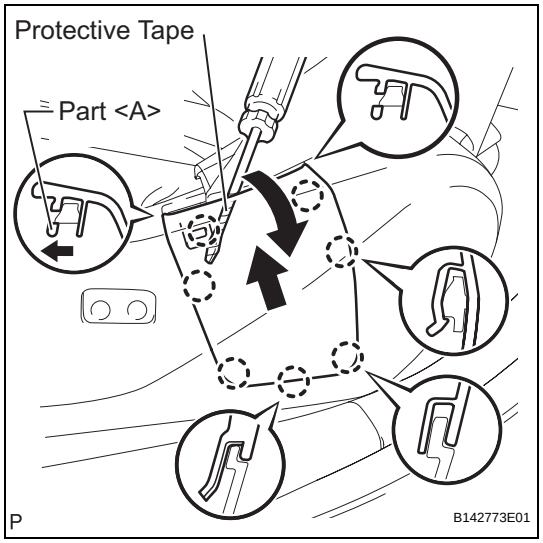

2. **REMOVE SEAT BELT ANCHOR COVER CAP**
   (a) Hook a screwdriver to part A to bend it toward the inside of the cabin and release the claws. Pull the seat belt anchor cover cap RH upward and remove it.
   NOTICE:
   Do not damage the seat belt.

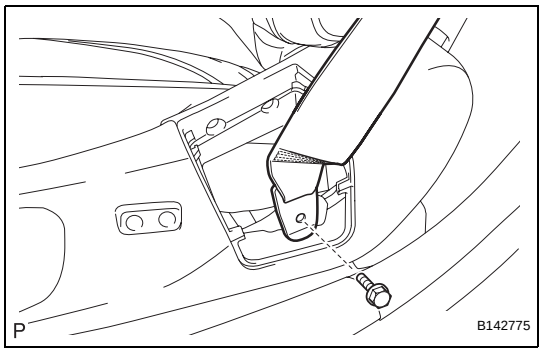

3. **DISCONNECT FRONT SEAT OUTER BELT ASSEMBLY**
   (a) for Driver seat:
      (1) Remove the bolt and disconnect the floor end of the front seat outer belt assembly.

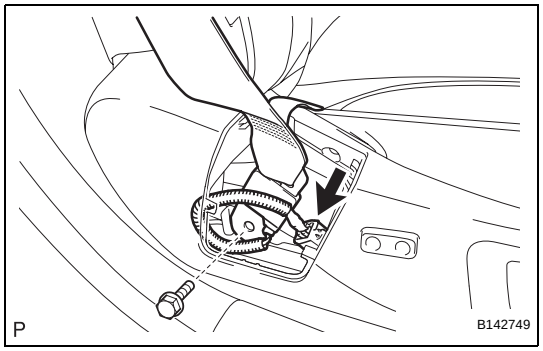

   (b) for Passenger seat:
      (1) Remove the bolt and disconnect the floor end of the front seat outer belt assembly.

4. **REMOVE FRONT DOOR SCUFF PLATE (See page IR-39)**
5. **REMOVE REAR DOOR SCUFF PLATE (See page IR-40)**
6. **REMOVE LOWER CENTER PILLAR GARNISH (See page IR-40)**
7. **REMOVE UPPER CENTER PILLAR GARNISH (See page IR-41)**

SB

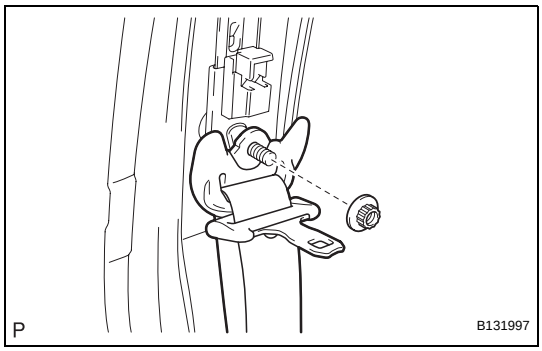

8. DISCONNECT FRONT SEAT OUTER BELT ASSEMBLY

(a) Remove the nut and disconnect the shoulder anchor of the front seat outer belt assembly.

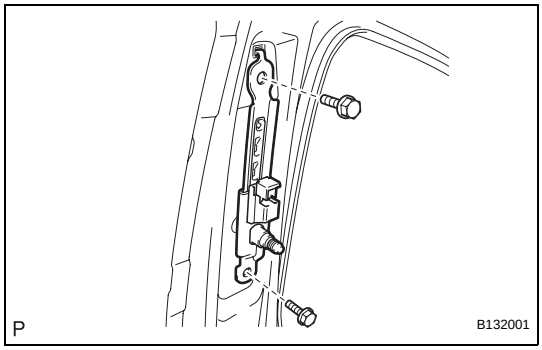

9. REMOVE FRONT SHOULDER BELT ANCHOR ADJUSTER ASSEMBLY

(a) Remove the 2 bolts and the front shoulder belt anchor adjuster assembly.

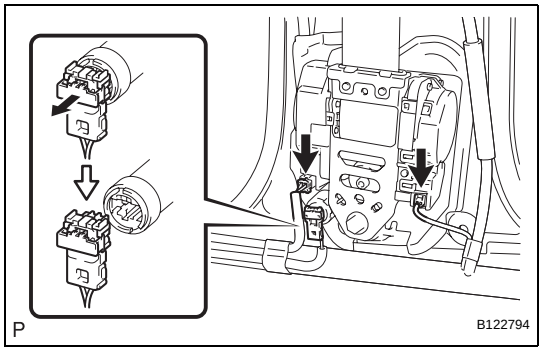

10. REMOVE FRONT SEAT OUTER BELT ASSEMBLY

(a) Using a screwdriver, pull out the locking button in the direction shown by the arrow to release the lock, and disconnect the pretensioner connector as shown in the illustration.
HINT:
Tape the screwdriver tip before use.

(b) Disconnect the connectors.

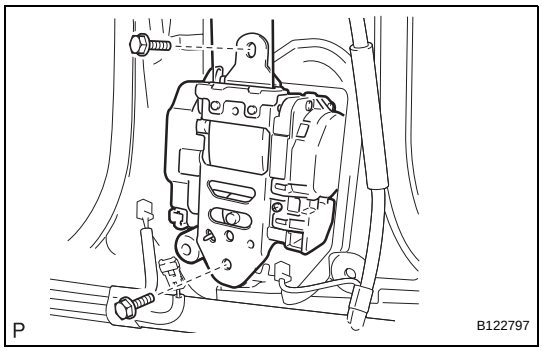

(c) Remove the 2 bolts and the front seat outer belt assembly.

REAR SEAT INNER BELT ASSEMBLY

COMPONENTS

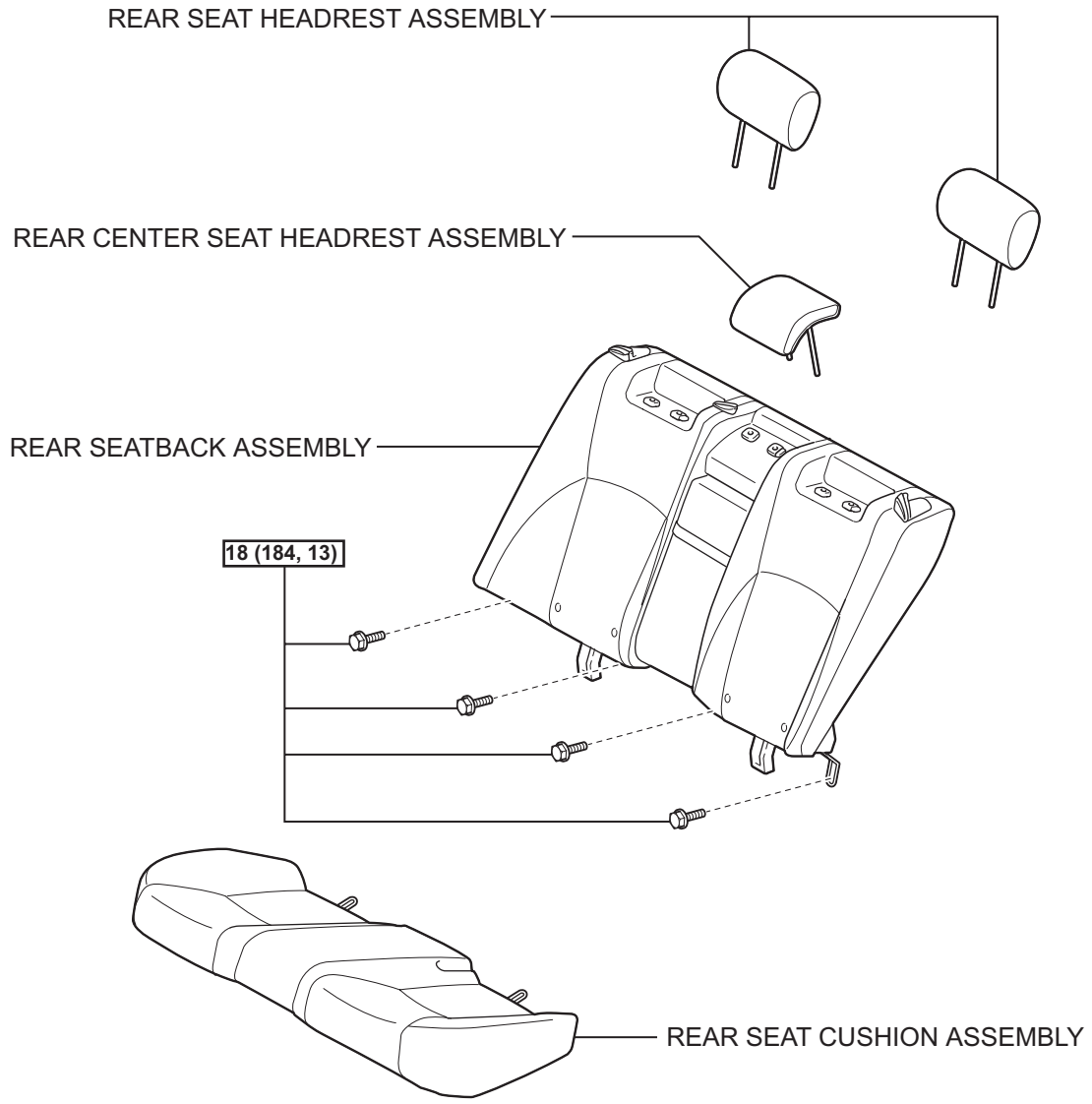

N*m (kgf*cm, ft.*lbf) : Specified torque

P

B145388E01

SB

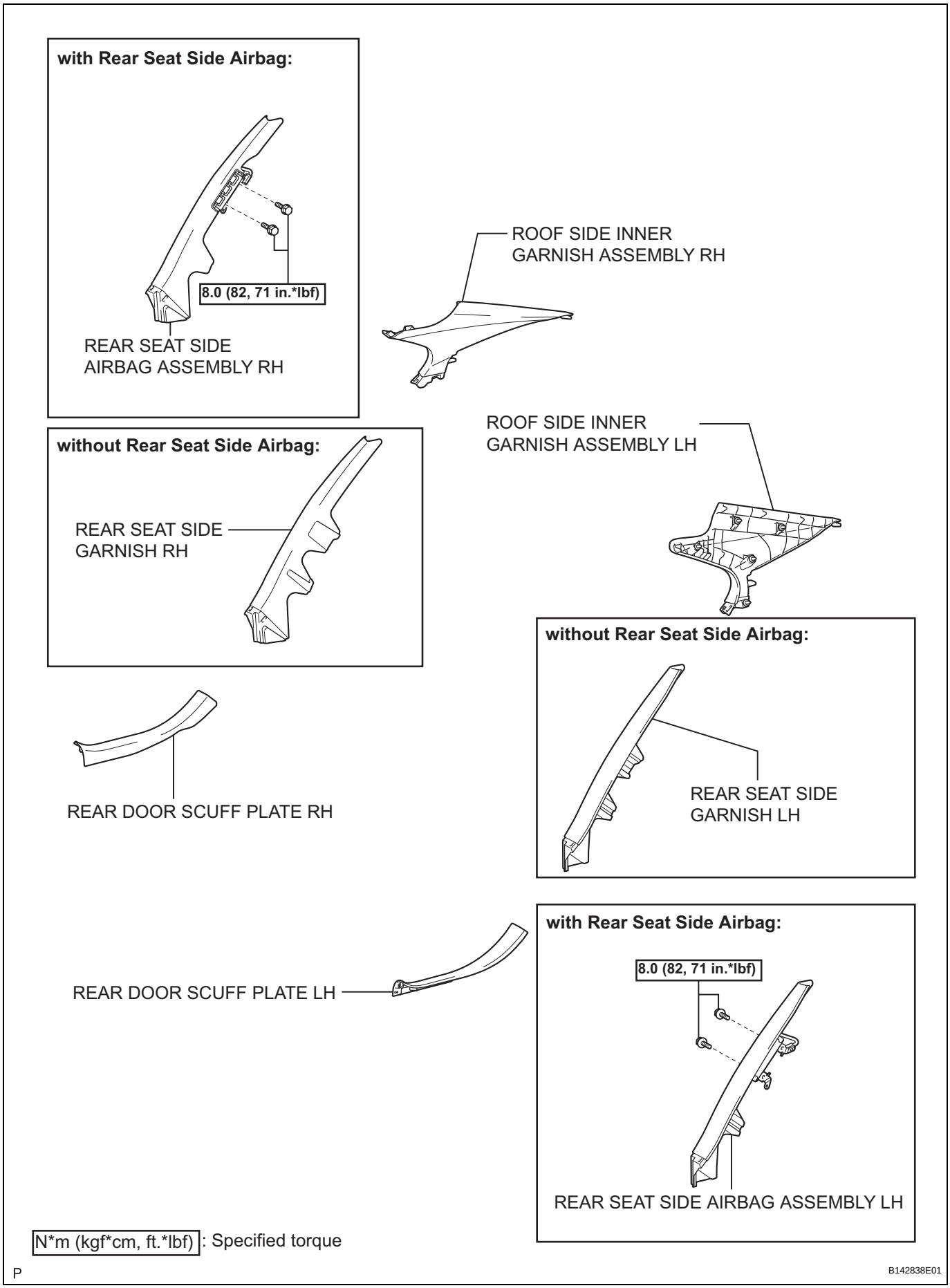
with Rear Seat Side Airbag:
8.0 (82, 71 in.*lbf)
REAR SEAT SIDE AIRBAG ASSEMBLY RH
ROOF SIDE INNER GARNISH ASSEMBLY RH
ROOF SIDE INNER GARNISH ASSEMBLY LH
without Rear Seat Side Airbag:
REAR SEAT SIDE GARNISH RH
REAR DOOR SCUFF PLATE RH
without Rear Seat Side Airbag:
REAR SEAT SIDE GARNISH LH
REAR DOOR SCUFF PLATE LH
with Rear Seat Side Airbag:
8.0 (82, 71 in.*lbf)
REAR SEAT SIDE AIRBAG ASSEMBLY LH
N*m (kgf*cm, ft.*lbf): Specified torque
P
B142838E01

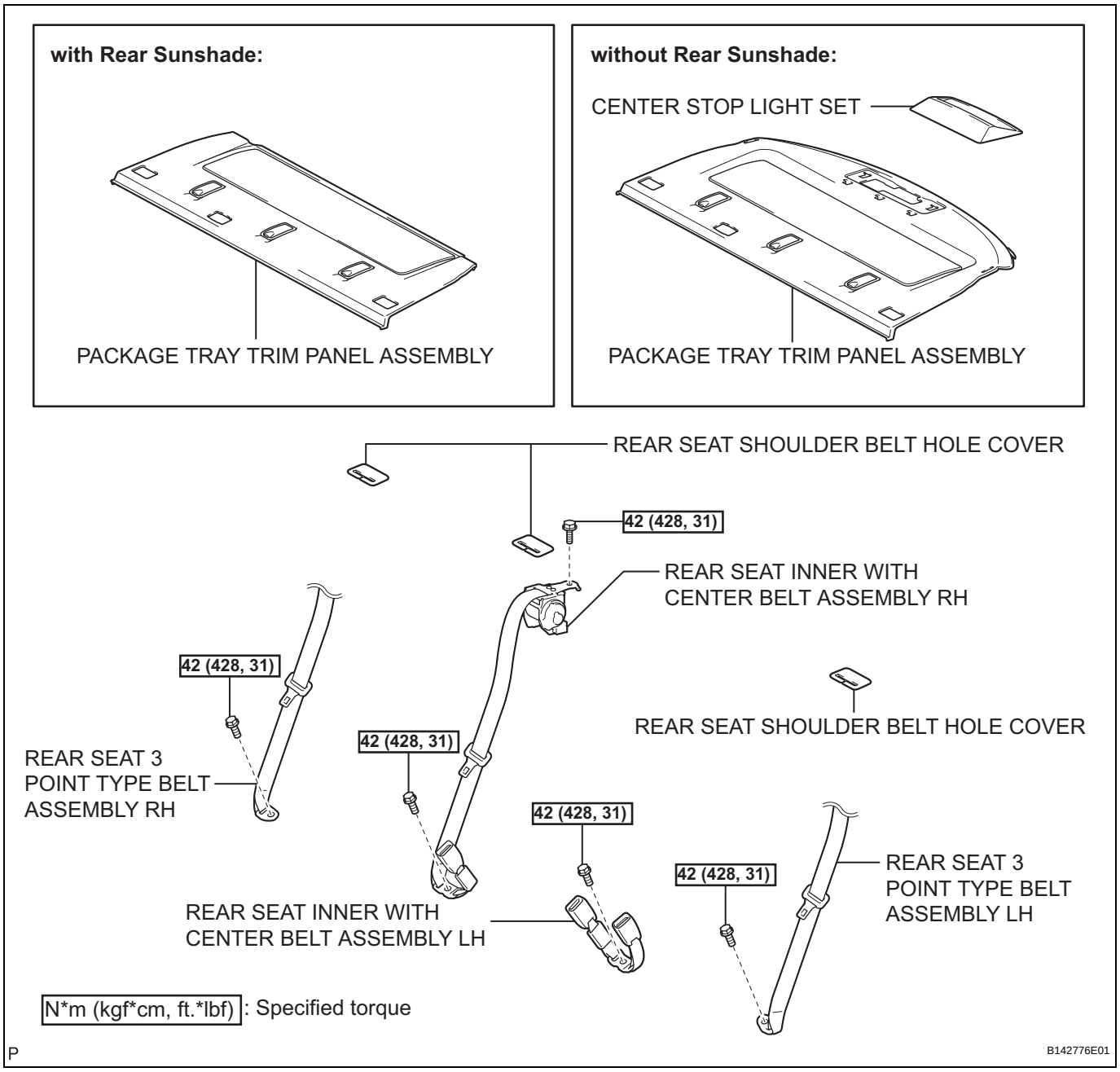
with Rear Sunshade:
PACKAGE TRAY TRIM PANEL ASSEMBLY
without Rear Sunshade:
CENTER STOP LIGHT SET
PACKAGE TRAY TRIM PANEL ASSEMBLY
REAR SEAT SHOULDER BELT HOLE COVER
42 (428, 31)
REAR SEAT INNER WITH
CENTER BELT ASSEMBLY RH
42 (428, 31)
REAR SEAT SHOULDER BELT HOLE COVER
42 (428, 31)
REAR SEAT 3
POINT TYPE BELT
ASSEMBLY RH
42 (428, 31)
42 (428, 31)
REAR SEAT 3
POINT TYPE BELT
ASSEMBLY LH
REAR SEAT INNER WITH
CENTER BELT ASSEMBLY LH
N*m (kgf*cm, ft.*lbf) : Specified torque
P
B142776E01

REAR SEAT OUTER BELT ASSEMBLY

COMPONENTS

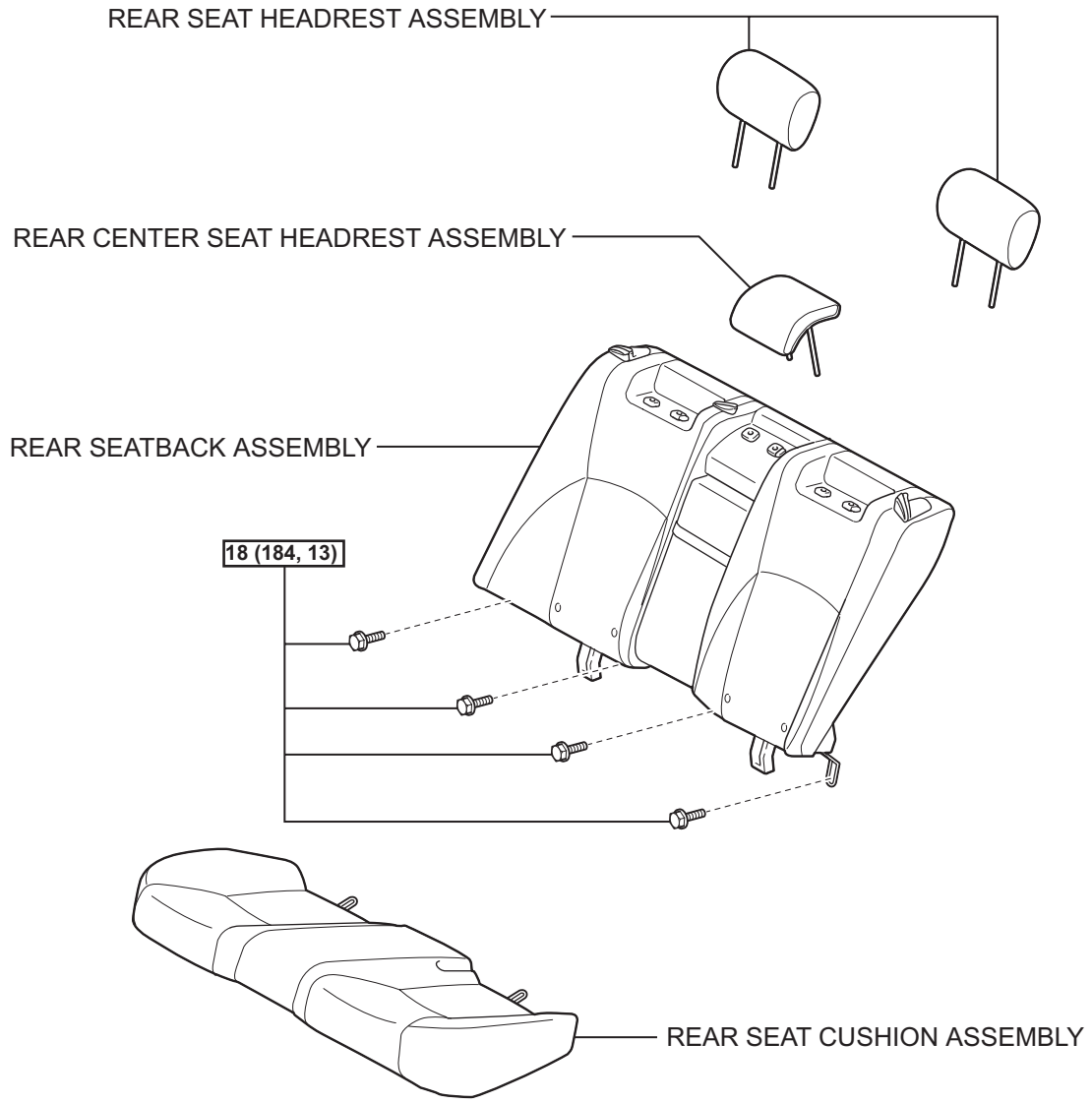

N*m (kgf*cm, ft.*lbf) : Specified torque

P

B145388E01

SB

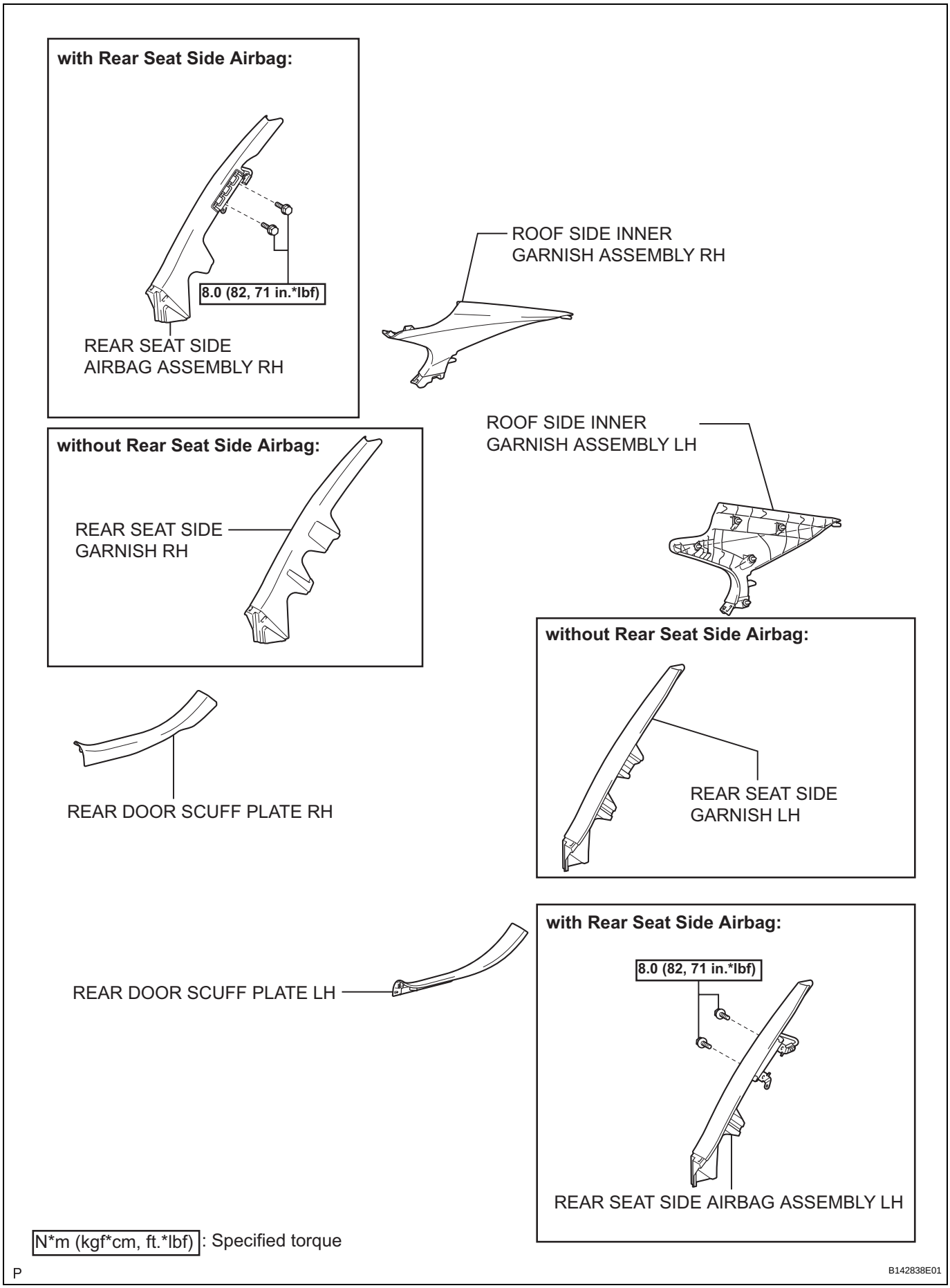
with Rear Seat Side Airbag:
8.0 (82, 71 in.*lbf)
REAR SEAT SIDE AIRBAG ASSEMBLY RH
ROOF SIDE INNER GARNISH ASSEMBLY RH
ROOF SIDE INNER GARNISH ASSEMBLY LH
without Rear Seat Side Airbag:
REAR SEAT SIDE GARNISH RH
REAR DOOR SCUFF PLATE RH
without Rear Seat Side Airbag:
REAR SEAT SIDE GARNISH LH
REAR DOOR SCUFF PLATE LH
with Rear Seat Side Airbag:
8.0 (82, 71 in.*lbf)
REAR SEAT SIDE AIRBAG ASSEMBLY LH
N*m (kgf*cm, ft.*lbf): Specified torque
P
B142838E01

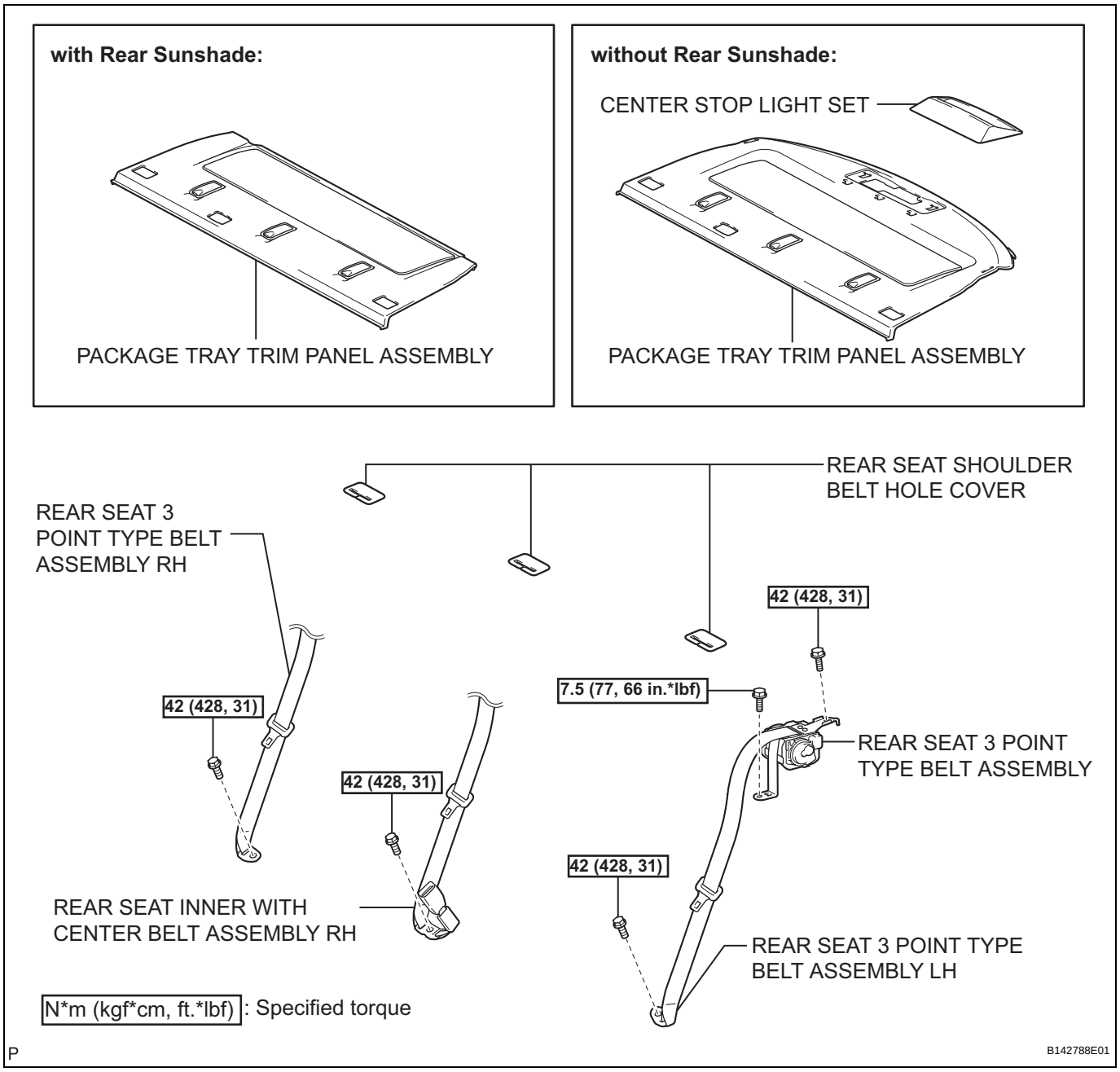
with Rear Sunshade:
PACKAGE TRAY TRIM PANEL ASSEMBLY
without Rear Sunshade:
CENTER STOP LIGHT SET
PACKAGE TRAY TRIM PANEL ASSEMBLY
REAR SEAT SHOULDER BELT HOLE COVER
REAR SEAT 3 POINT TYPE BELT ASSEMBLY RH
42 (428, 31)
42 (428, 31)
7.5 (77, 66 in.*lbf)
42 (428, 31)
REAR SEAT 3 POINT TYPE BELT ASSEMBLY
42 (428, 31)
REAR SEAT INNER WITH CENTER BELT ASSEMBLY RH
REAR SEAT 3 POINT TYPE BELT ASSEMBLY LH
N*m (kgf*cm, ft.*lbf) : Specified torque
P
B142788E01

CHILD RESTRAINT SEAT TETHER ANCHOR

COMPONENTS

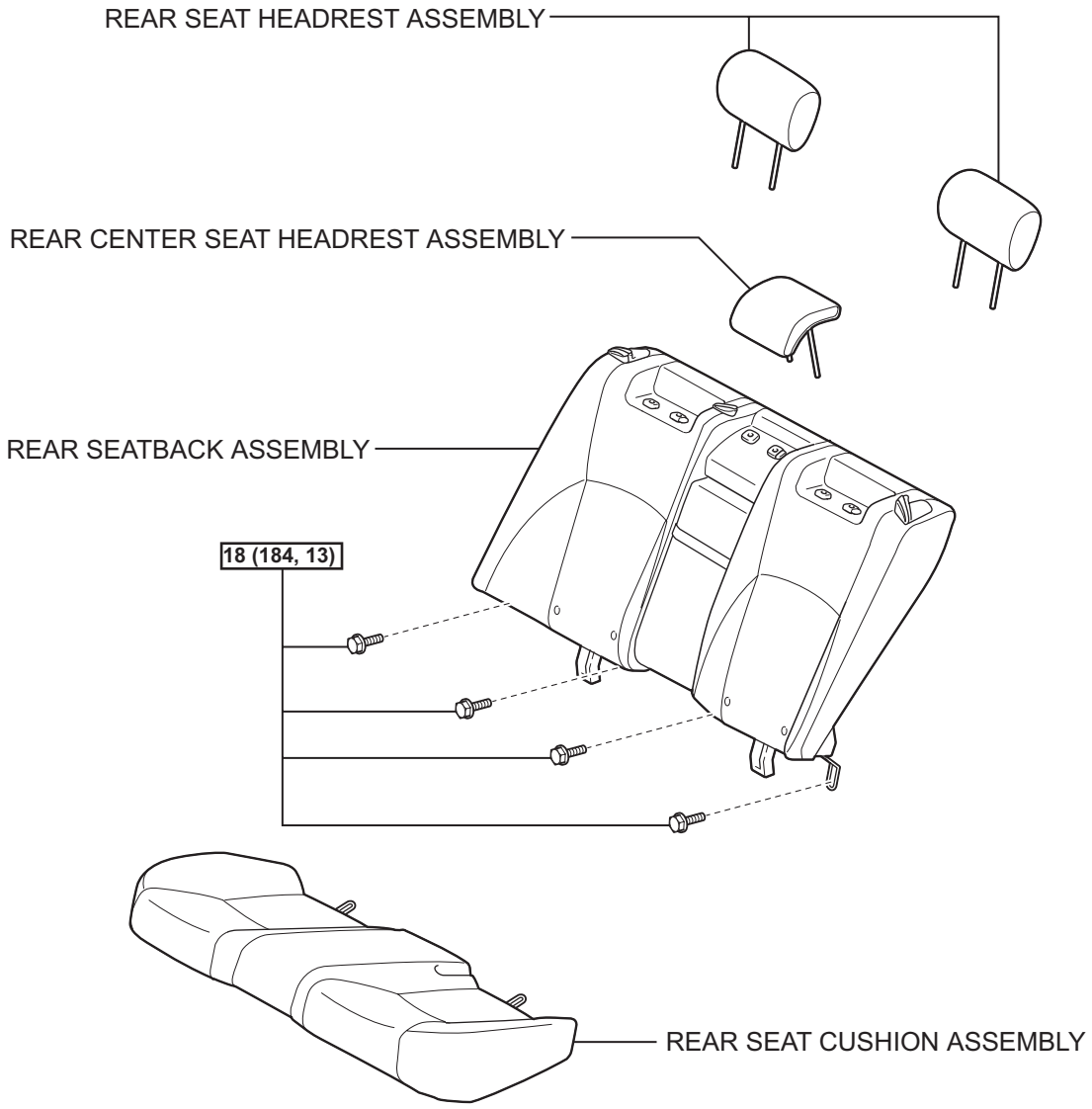

N*m (kgf*cm, ft.*lbf) : Specified torque

P

B145388E01

SB

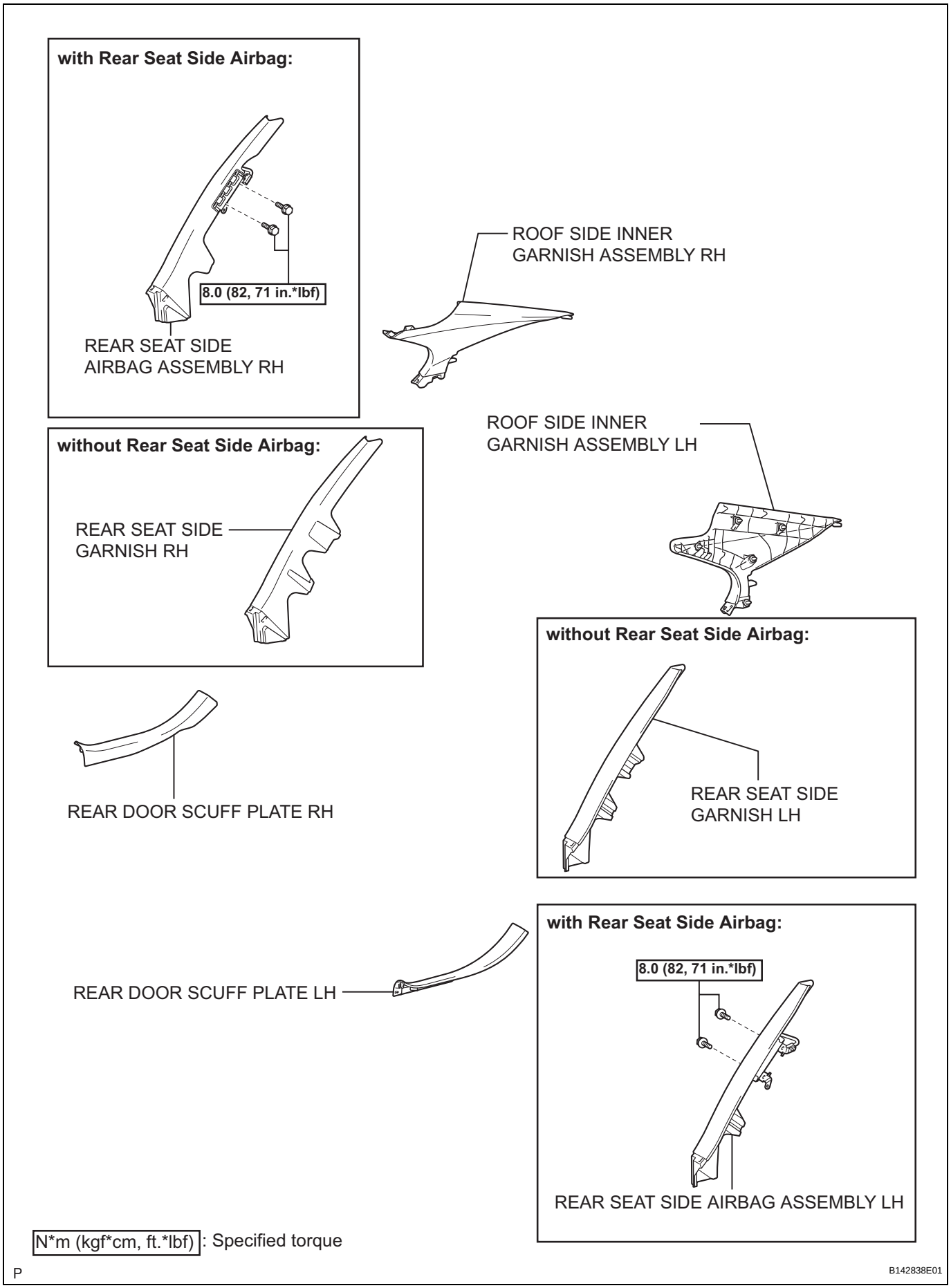
with Rear Seat Side Airbag:
8.0 (82, 71 in.*lbf)
REAR SEAT SIDE AIRBAG ASSEMBLY RH
ROOF SIDE INNER GARNISH ASSEMBLY RH
without Rear Seat Side Airbag:
REAR SEAT SIDE GARNISH RH
ROOF SIDE INNER GARNISH ASSEMBLY LH
without Rear Seat Side Airbag:
REAR SEAT SIDE GARNISH LH
REAR DOOR SCUFF PLATE RH
REAR DOOR SCUFF PLATE LH
with Rear Seat Side Airbag:
8.0 (82, 71 in.*lbf)
REAR SEAT SIDE AIRBAG ASSEMBLY LH
N*m (kgf*cm, ft.*lbf): Specified torque
P
B142838E01

SB

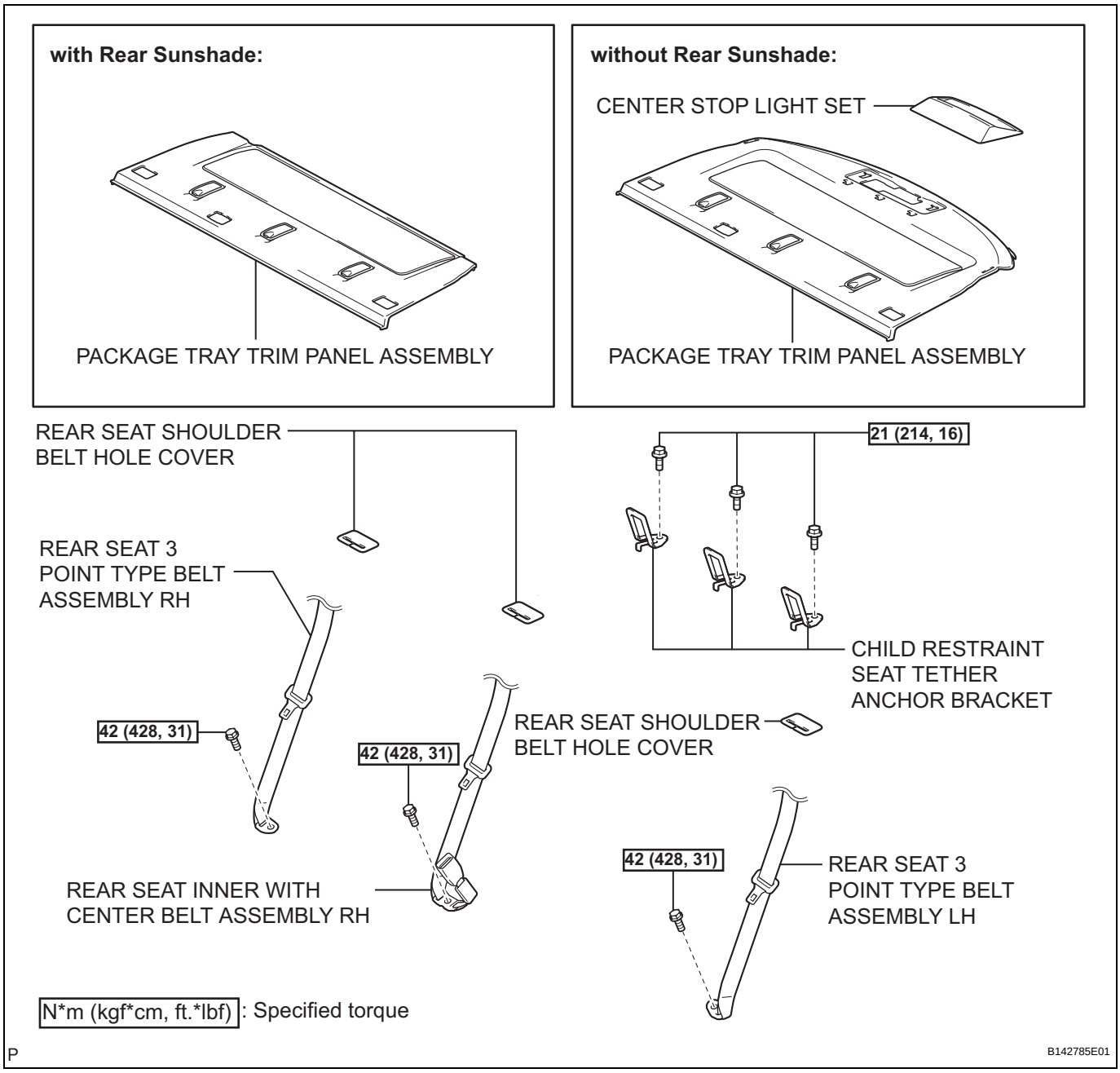
with Rear Sunshade:
PACKAGE TRAY TRIM PANEL ASSEMBLY
without Rear Sunshade:
CENTER STOP LIGHT SET
PACKAGE TRAY TRIM PANEL ASSEMBLY
REAR SEAT SHOULDER BELT HOLE COVER
21 (214, 16)
REAR SEAT 3 POINT TYPE BELT ASSEMBLY RH
CHILD RESTRAINT SEAT TETHER ANCHOR BRACKET
42 (428, 31)
42 (428, 31)
REAR SEAT SHOULDER BELT HOLE COVER
42 (428, 31)
REAR SEAT INNER WITH CENTER BELT ASSEMBLY RH
REAR SEAT 3 POINT TYPE BELT ASSEMBLY LH
N*m (kgf*cm, ft.*lbf) : Specified torque
P
B142785E01

CHILD RESTRAINT SEAT ANCHOR BRACKET

COMPONENTS

SB

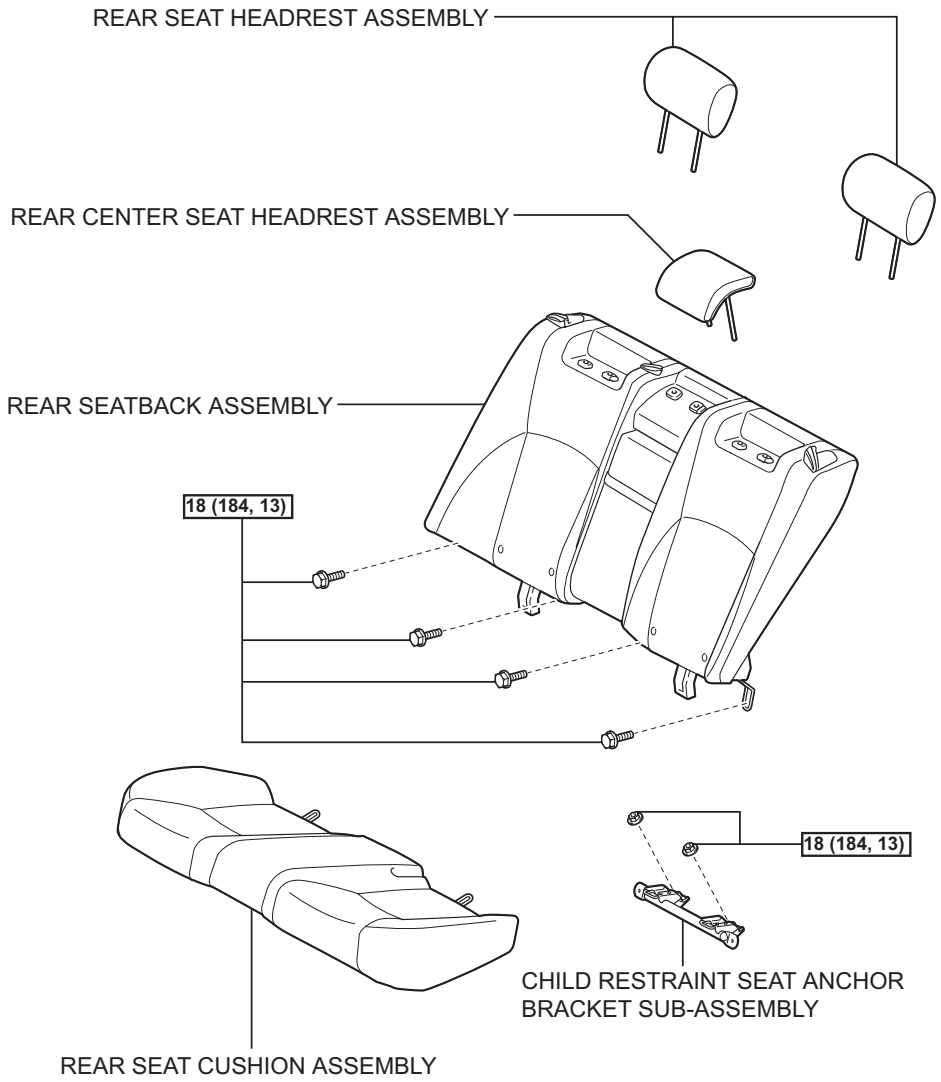

N*m (kgf*cm, ft.*lbf) : Specified torque

P

B142786E01

REMOVAL

1. **REMOVE REAR SEAT CUSHION ASSEMBLY (See page SE-113)**
2. **REMOVE REAR SEAT HEADREST ASSEMBLY**
3. **REMOVE REAR CENTER SEAT HEADREST ASSEMBLY**
4. **REMOVE REAR SEATBACK ASSEMBLY (See page SE-113)**
5. **REMOVE CHILD RESTRAINT SEAT ANCHOR BRACKET SUB-ASSEMBLY**
   (a) Remove the 2 nuts and child restraint seat anchor bracket sub-assembly.

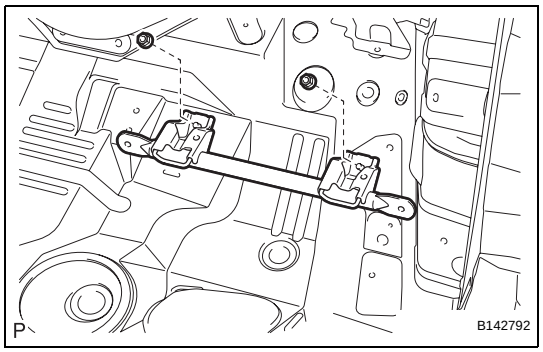

INSTALLATION

1. **INSTALL CHILD RESTRAINT SEAT ANCHOR BRACKET SUB-ASSEMBLY**
   (a) Install the child restraint seat anchor bracket sub-assembly with the 2 nuts.
   Torque: 18 N*m (184 kgf*cm, 13 ft.*lbf)
2. **INSTALL REAR SEATBACK ASSEMBLY (See page SE-121)**
3. **INSTALL REAR CENTER SEAT HEADREST ASSEMBLY**
4. **INSTALL REAR SEAT HEADREST ASSEMBLY**
5. **INSTALL REAR SEAT CUSHION ASSEMBLY (See page SE-121)**

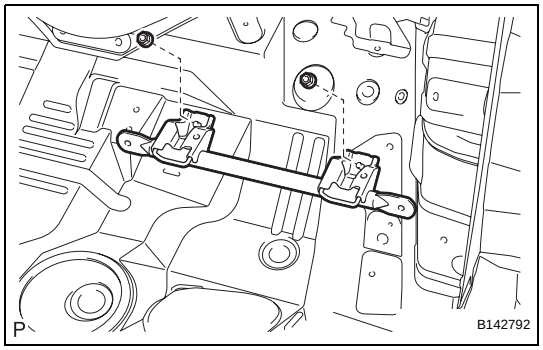

SEAT BELT CONTROL ECU

COMPONENTS

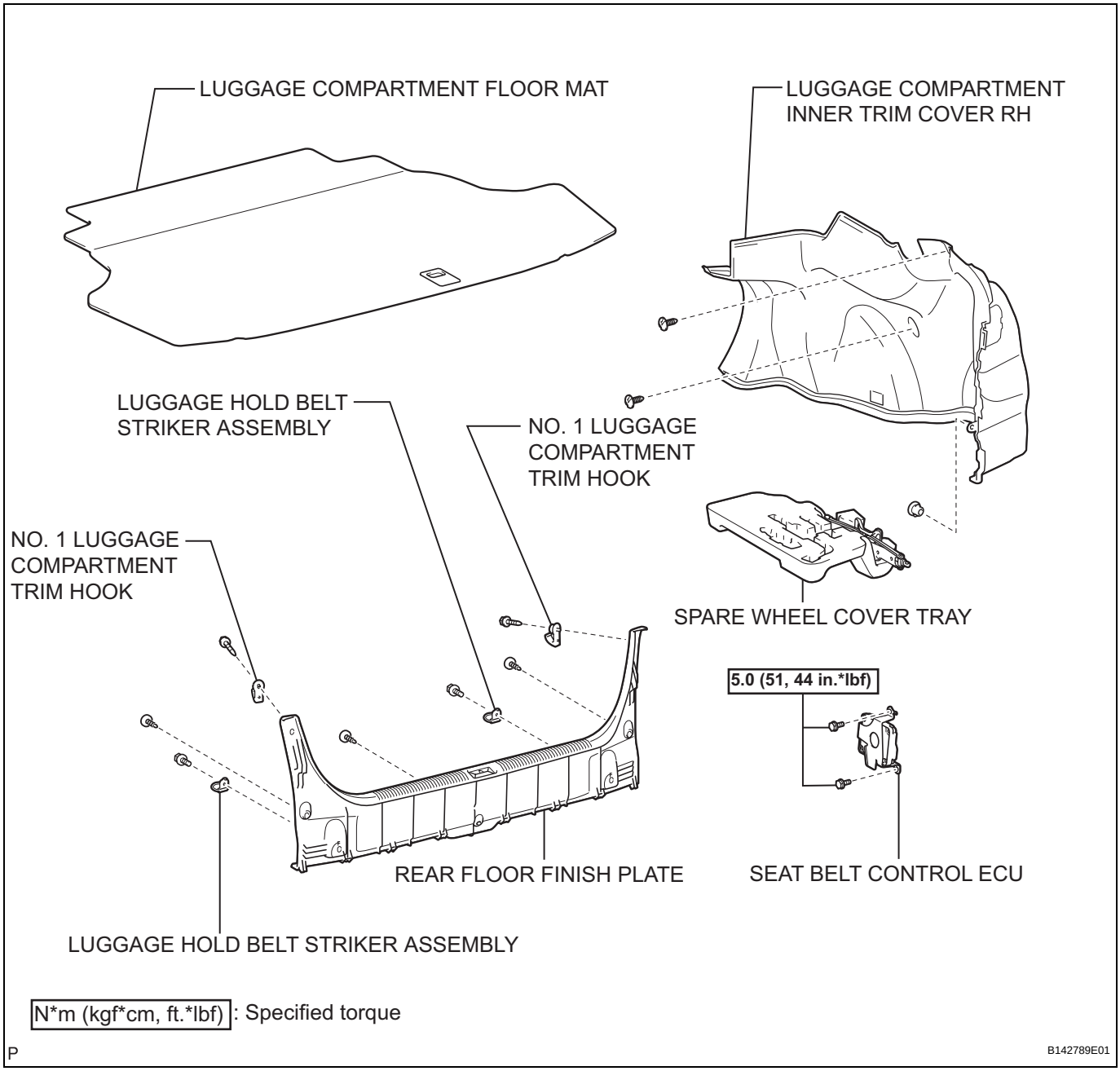

REMOVAL

1. **DISCONNECT CABLE FROM NEGATIVE BATTERY TERMINAL**
   CAUTION:
   Wait for 90 seconds after disconnecting the cable to prevent airbag deployment (See page RS-1).
2. **REMOVE LUGGAGE COMPARTMENT FLOOR MAT**
3. **REMOVE SPARE WHEEL COVER TRAY**
4. **REMOVE LUGGAGE HOLD BELT STRIKER ASSEMBLY (See page ED-82)**
5. **REMOVE NO. 1 LUGGAGE COMPARTMENT TRIM HOOK (See page ED-83)**
6. **REMOVE REAR FLOOR FINISH PLATE (See page ED-83)**
7. **REMOVE LUGGAGE COMPARTMENT INNER TRIM COVER RH (See page ED-83)**
8. **REMOVE SEAT BELT CONTROL ECU**
   (a) Disconnect the connector.
   (b) Remove the 2 bolts.
   (c) Disengage the claw and clip and remove the seat belt control ECU.

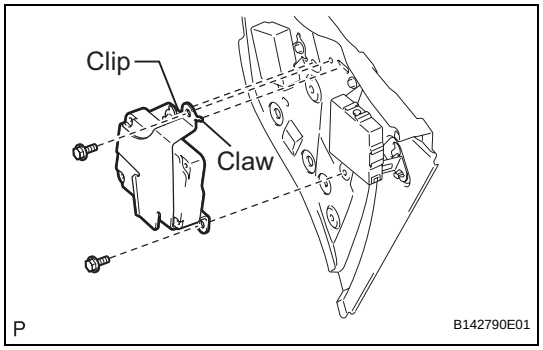

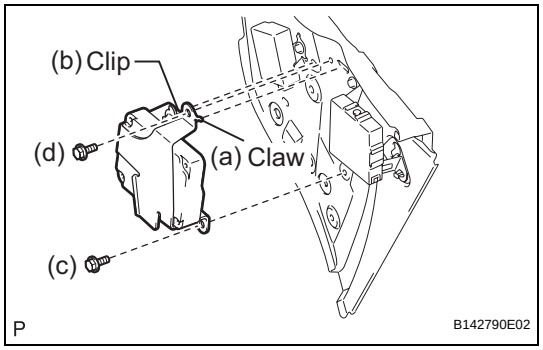

INSTALLATION

1. **INSTALL SEAT BELT CONTROL ECU**
   (a) Engage the claw.
   (b) Engage the clip.
   (c) Install the seat belt control ECU with the 2 bolts.
   Torque: 5.0 N*m (51 kgf*cm, 44 in.*lbf)
   (d) Connect the connector.
2. **INSTALL LUGGAGE COMPARTMENT INNER TRIM COVER RH (See page ED-88)**
3. **INSTALL REAR FLOOR FINISH PLATE (See page ED-88)**
4. **INSTALL NO. 1 LUGGAGE COMPARTMENT TRIM HOOK (See page ED-89)**
5. **INSTALL LUGGAGE HOLD BELT STRIKER ASSEMBLY (See page ED-89)**
6. **INSTALL SPARE WHEEL COVER TRAY**
7. **INSTALL LUGGAGE COMPARTMENT FLOOR MAT**
8. **CONNECT CABLE TO NEGATIVE BATTERY TERMINAL**

9. PERFORM INITIALIZATION

NOTICE:

Some systems need initialization after reconnecting the cable to the negative battery terminal (See page IN-33).

10. INSPECT SRS WARNING LIGHT

(See page RS-37)

THEFT DETERRENT SYSTEM

PRECAUTION

NOTICE:
Some systems need to be initialized after reconnecting the negative (-) battery terminal (See page IN-33).

TD

PARTS LOCATION

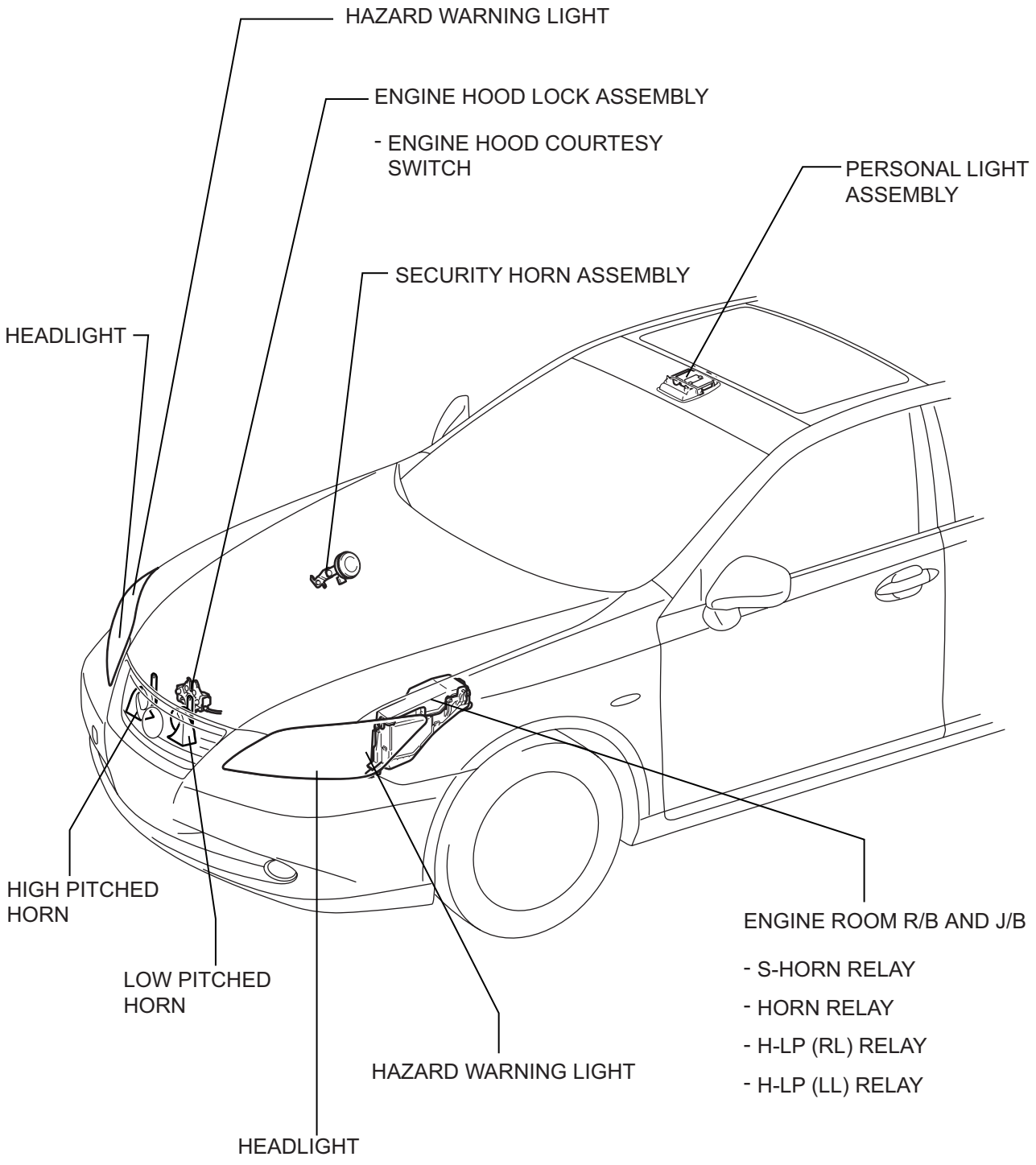

H

B144385E01

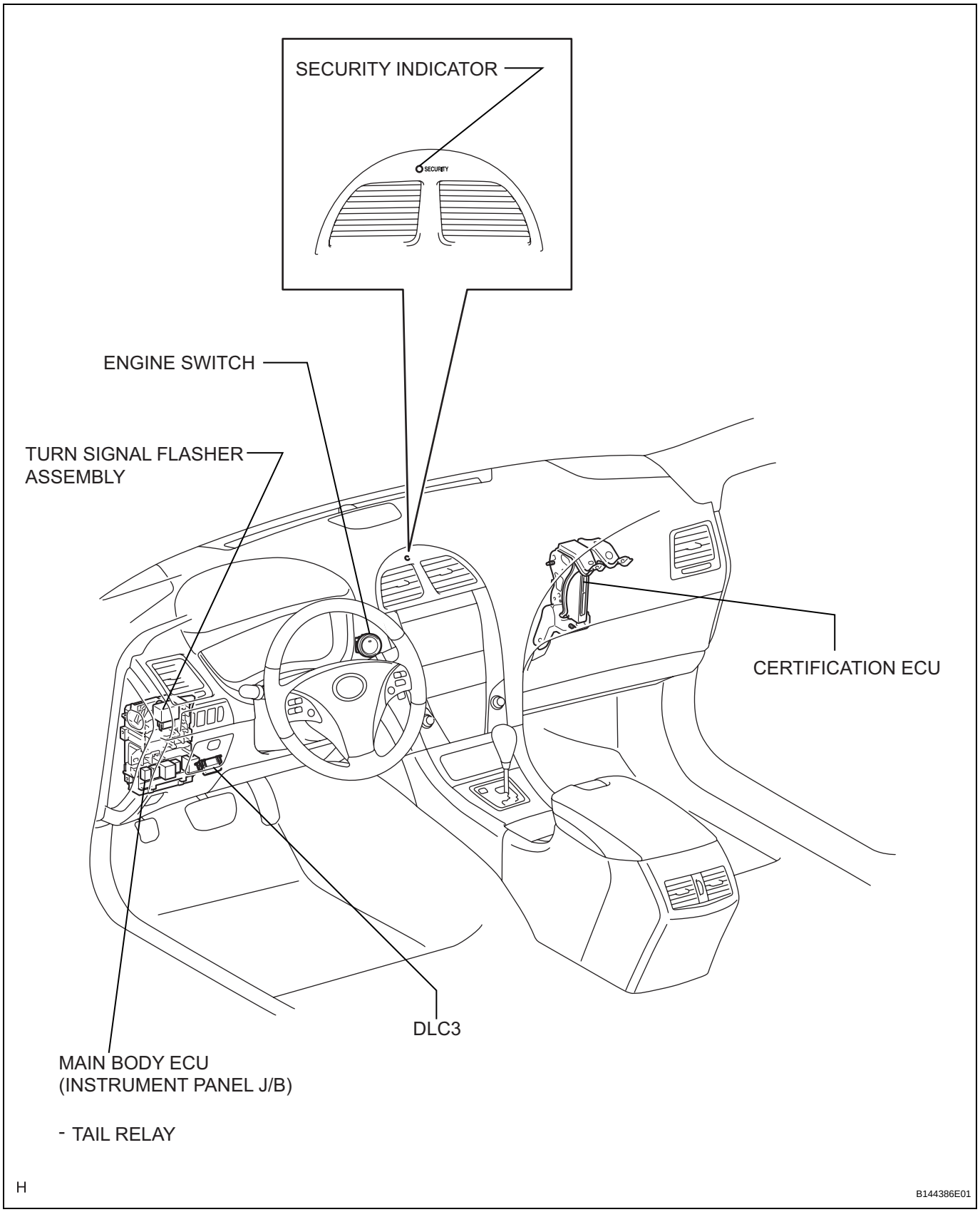
SECURITY INDICATOR
SECURITY
ENGINE SWITCH
TURN SIGNAL FLASHER ASSEMBLY
CERTIFICATION ECU
DLC3
MAIN BODY ECU (INSTRUMENT PANEL J/B)
- TAIL RELAY
H
B144386E01

TD

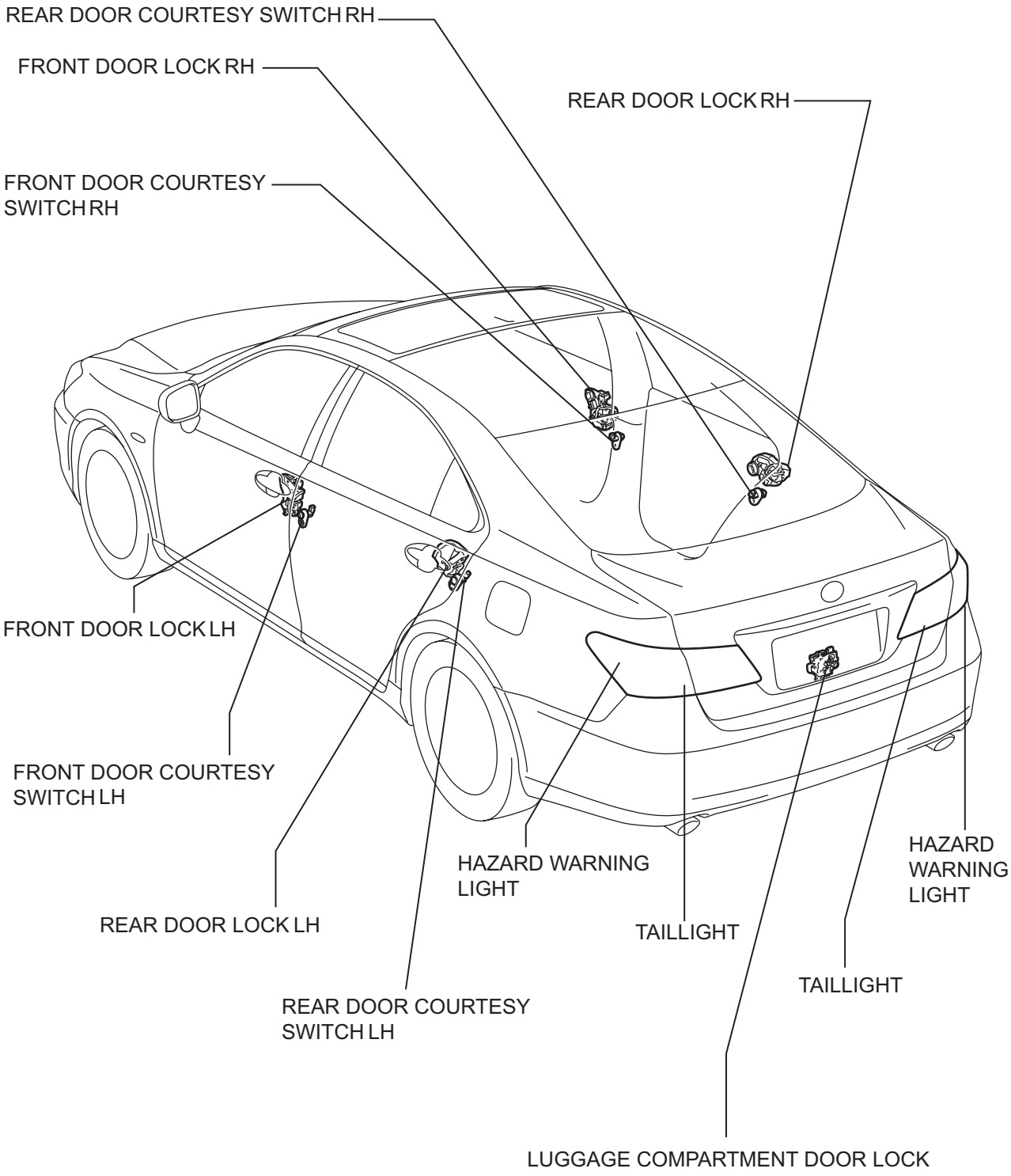

H

B144387E01

ENGINE HOOD COURTESY SWITCH

COMPONENTS

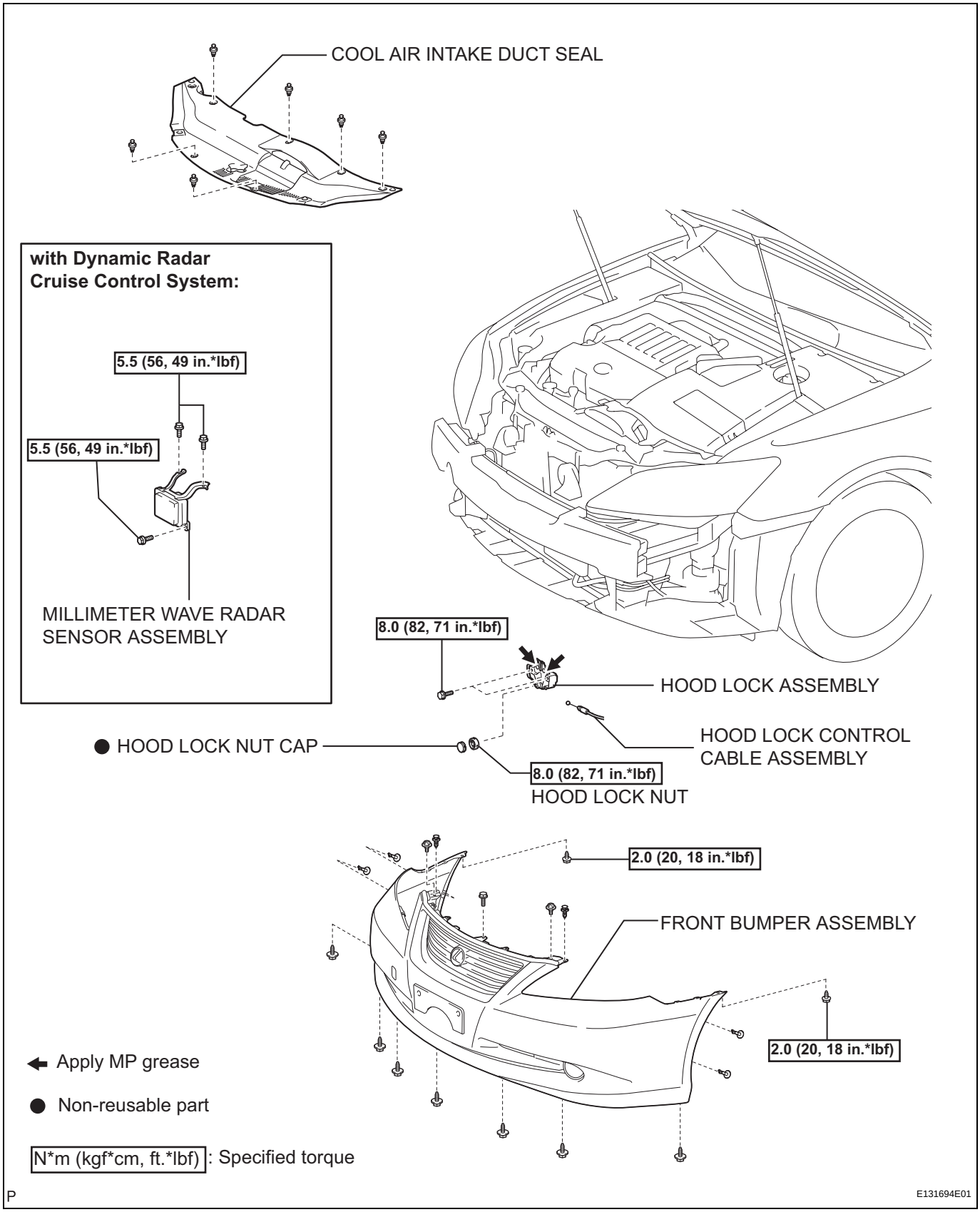

REMOVAL

1. **REMOVE COOL AIR INTAKE DUCT SEAL (See page ET-4)**
2. **REMOVE FRONT BUMPER ASSEMBLY (See page ET-5)**
3. **REMOVE MILLIMETER WAVE RADAR SENSOR ASSEMBLY (w/ Dynamic Radar Cruise Control System) (See page CC-122)**
4. **REMOVE HOOD LOCK ASSEMBLY**
   (a) Using a screwdriver, remove the hood lock nut cap as shown in the illustration.
   HINT:
   Tape the screwdriver tip before use.

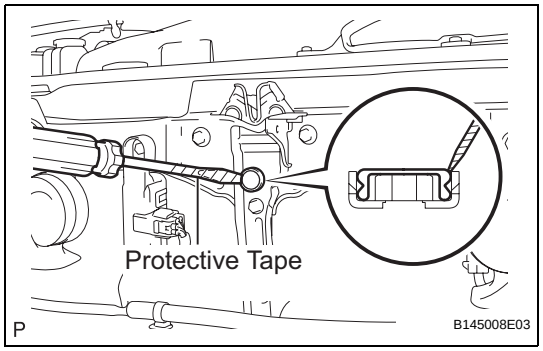

   (b) Remove the 2 bolts and nut.

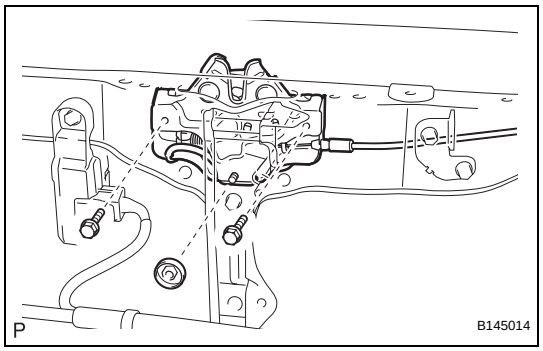

   (c) Disconnect the hood lock control cable and connector.
   (d) Remove the hood lock assembly.

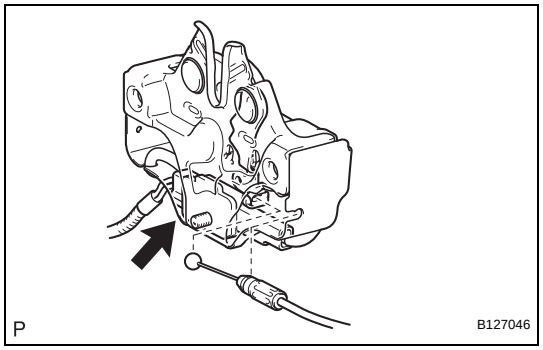

SECURITY HORN ASSEMBLY

COMPONENTS

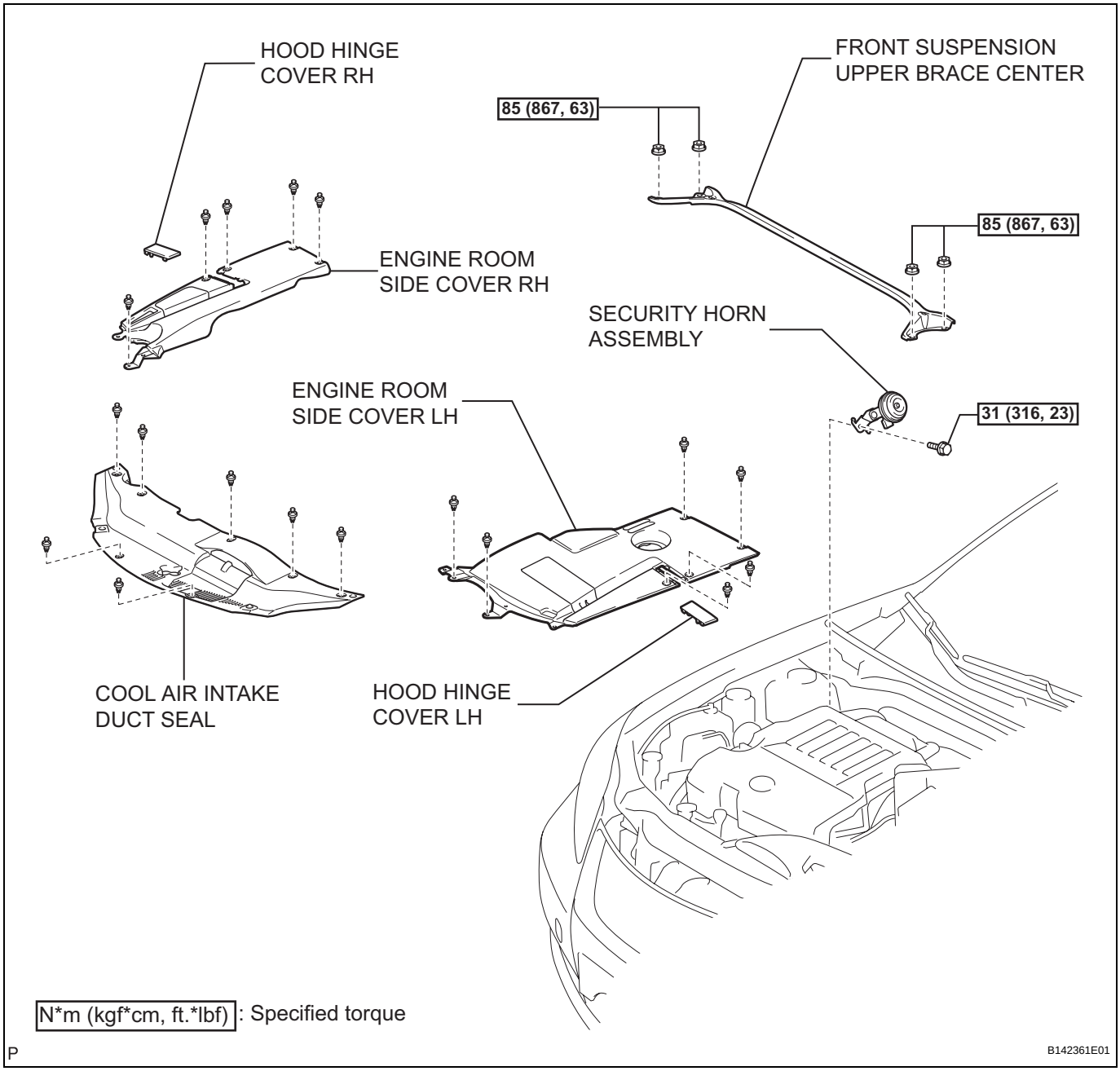

TD

REMOVAL

1. **REMOVE COOL AIR INTAKE DUCT SEAL (See page ET-4)**
2. **REMOVE HOOD HINGE COVER LH (See page WW-38)**
3. **REMOVE ENGINE ROOM SIDE COVER LH (See page WW-39)**
4. **REMOVE HOOD HINGE COVER RH (See page WW-39)**
5. **REMOVE ENGINE ROOM SIDE COVER RH (See page WW-39)**
6. **REMOVE FRONT SUSPENSION UPPER BRACE CENTER (See page BR-22)**
7. **REMOVE SECURITY HORN ASSEMBLY**
   (a) Remove the bolt.
   (b) Disconnect the connector and remove the security horn assembly.

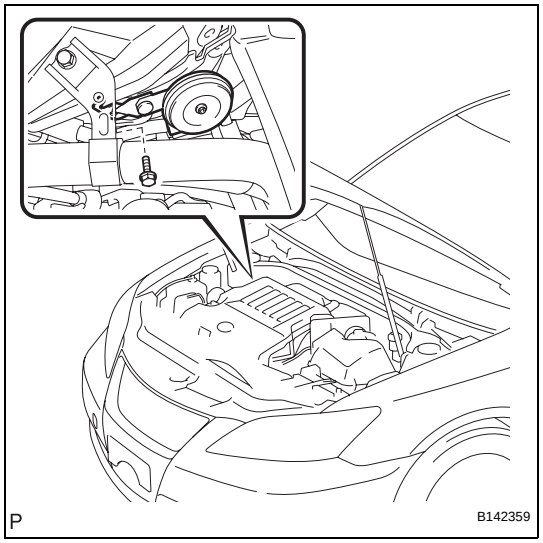

INSPECTION

1. **INSPECT SECURITY HORN ASSEMBLY**
   (a) Check operation of the horn.
   Standard

Measurement Condition	Specified Condition
Battery positive (+) → Terminal 1	Horn sounds
Battery negative (-) → Horn body	

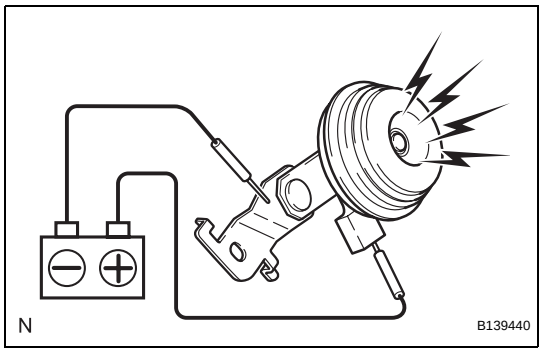

If the result is not as specified, replace the security horn assembly.

ENGINE IMMOBILISER SYSTEM

PRECAUTION

NOTICE:
Some systems need to be initialized after reconnecting the negative (-) battery terminal (See page IN-33).

1. PRECAUTIONS WHEN USING INTELLIGENT TESTER

(a) When using the intelligent tester to troubleshoot the smart access system with push button start: Connect the intelligent tester to the DLC3 while the engine switch is off, and turn a door courtesy light switch on and off at 1.5-second intervals until communication between the tester and vehicle begins.

2. PRECAUTIONS FOR EACH FUNCTION

(a) Precautions for the electrical key:
The electrical key is a precision instrument. Be sure to observe the following:
(1) Do not drop or strike the electrical key.
(2) Do not allow the electrical key to be kept in a high temperature place for a long time.
(3) Do not use an ultrasonic washing machine to clean the electrical key.
(4) Keep the electrical key away from magnets or magnetized items during use.
(5) Do not attach any stickers to the electrical key.

(b) Precautions for the engine start function:
(1) Before starting the engine, firmly depress the brake pedal until the indicator of the engine switch illuminates in green.
(2) Be sure to turn the engine switch off before disconnecting the negative (-) battery terminal. When the battery terminal is disconnected, the power source mode (off, on (ACC), on (IG)) will remain in memory. When the vehicle's battery becomes discharged, be careful to remember the power source mode.
(3) After the battery is removed and reinstalled, be sure to wait 10 seconds or more before the next engine start. The engine may not start immediately after the battery is reinstalled.

(c) Precautions for the battery built into the electrical key and the vehicle battery:
(1) When the doors are locked (locked state), signals are emitted by the vehicle at a predetermined interval. If the vehicle were to remain parked for a long time, the vehicle battery could become discharged. To prevent this, periodically charge the vehicle battery, or disable the smart access system with push button start.

(2) When the doors are locked (locked state), and the electrical key remains in the door oscillator detection area, the system will maintain periodic communication with the electrical key. If the vehicle remains parked in this state for a long time, the vehicle and key batteries could become discharged. If the vehicle is not being used, keep the electrical key at least 2 m (6.56 ft) from the vehicle.

CRUISE CONTROL SYSTEM

PRECAUTION

NOTICE:
Some systems need to be initialized after reconnecting the negative (-) battery terminal (See page IN-33).

1. HANDLING PRECAUTION FOR CRUISE CONTROL SYSTEM

(a) Turn the cruise control main switch off when not using the cruise control system.

(b) Be careful as the vehicle speed increases when driving downhill with the cruise control system on.

(c) The + (ACCEL)/RES (RESUME) operation changes according to the cruise control system status. When the cruise control system is operating, the + (ACCEL) function operates. When the cruise control system is not operating, the RES (RESUME) function operates.

(d) If the CRUISE main indicator light blinks while the cruise control system is operating, turn the cruise control main switch off to reset the cruise control system. After the reset, if the cruise control main switch cannot be turned on, or the cruise control system is canceled immediately after turning the cruise control main switch on, the system may have a malfunction.

(e) Do not use the cruise control system where the road conditions are as follows:
- Heavy traffic
- Steep decline
- Roads with sharp turns
- Icy or snowy roads
- Slippery roads

PARTS LOCATION

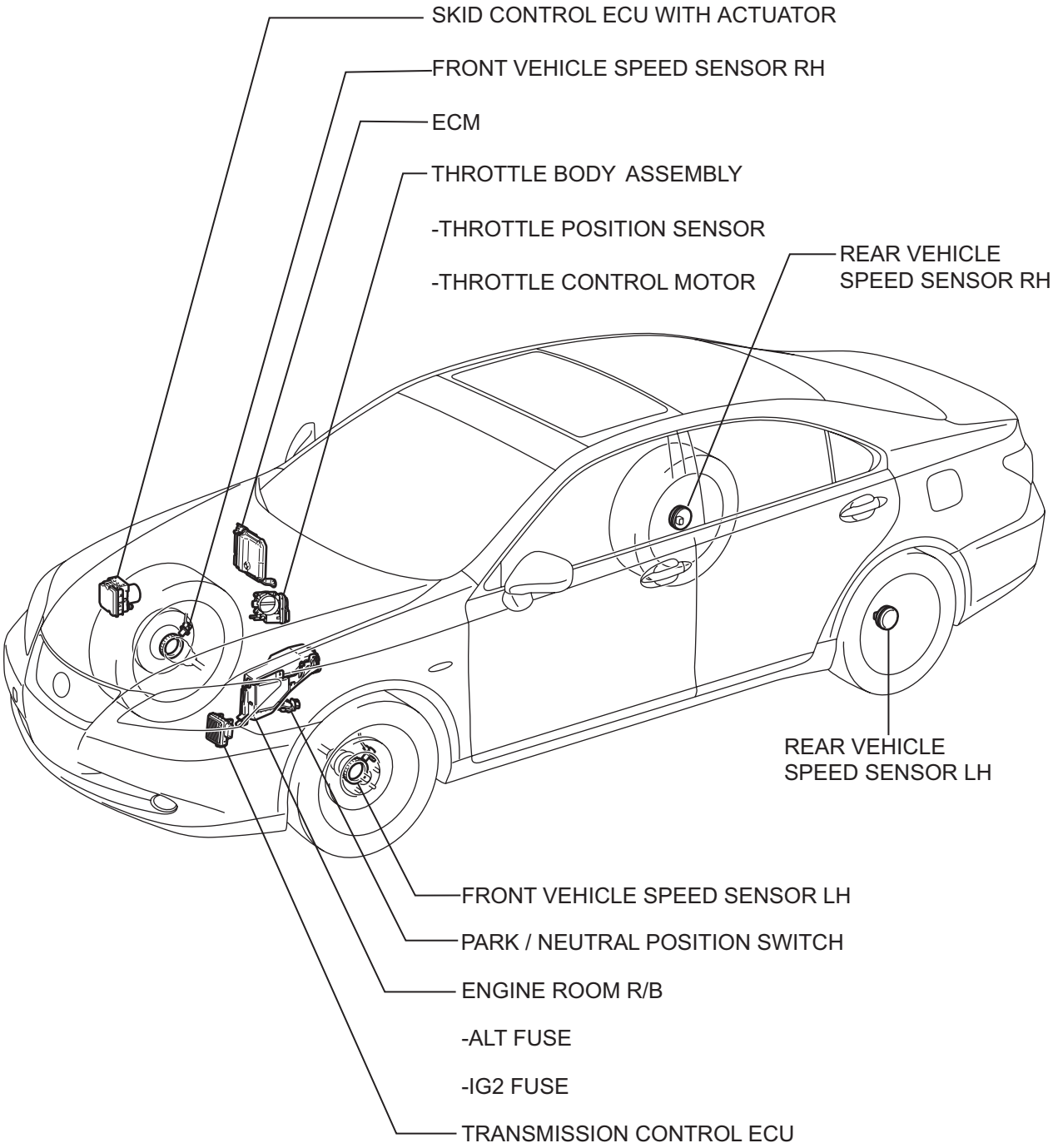

H

E133064E01

CC

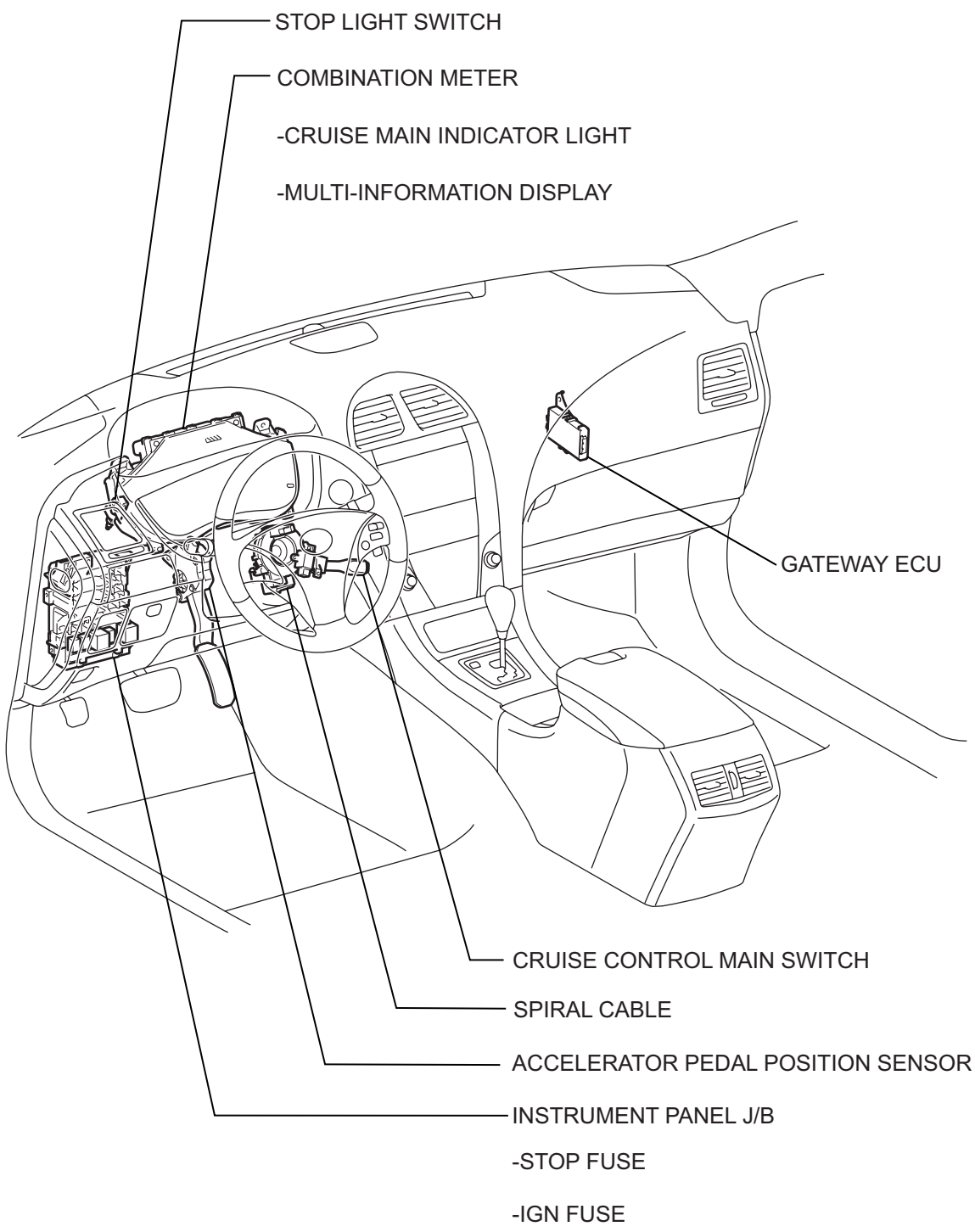

H

E133065E01

DYNAMIC RADAR CRUISE CONTROL SYSTEM

PRECAUTION

NOTICE:
Some systems need to be initialized after reconnecting the negative (-) battery terminal (See page IN-33).
Keep in mind the following points when inspecting the dynamic radar cruise control system.

- As there is a limitation on the vehicle-to-vehicle distance controlling capability, do not overly rely on the dynamic radar cruise control system.
- Do not neglect to pay constant attention to the vehicle-to-vehicle distance and the traffic conditions when using the dynamic radar cruise control system. Decelerate with the brake pedal, or accelerate with the accelerator pedal, according to the situation, to keep an appropriate distance with the vehicle in front.
- When the vehicle in front decelerates rapidly or another vehicle moves in front of the vehicle, decelerating in time to avoid a collision may not be possible without additional braking.
- The dynamic radar cruise control system is designed to assist in maintaining an appropriate distance with the vehicle in front. However, the system alone is not sufficient. It is imperative that the driver pays attention at all times.
- The millimeter wave radar sensor can automatically detect dirt on the sensor face and inform the driver, but dirt may not always be detected. Keep the sensor face clean.
- The dynamic radar cruise control system does not work, or give vehicle-approaching warning, for vehicles which are stopped or driving at significantly slower speeds. Always pay attention to those other vehicles.
- The millimeter wave radar sensor detection area is narrow at close range, so detection of a vehicle moving just in front may be delayed, or a motorcycle running on the side of the same lane may not be detected. The distance to the vehicle in front may not be maintained properly due to these reasons.
- Even if ACCEL is operated to increase the set vehicle speed, the vehicle does not accelerate because the speed is controlled in accordance with the speed of the vehicle in front while driving with the vehicle-to-vehicle distance control mode on (follow-up cruising). However, as the set vehicle speed has been increased by ACCEL operation, the vehicle keeps accelerating when there is no vehicle in front. Check the set speed with the set vehicle speed indication on the display.
- The controlled vehicle distance may be shorter than the set vehicle distance when cruising on a long downhill road.

- The cruise control main switch must be turned OFF and then ON if all of the following occur: 1) the CRUISE main indicator light blinks, 2) the master warning light illuminates at the same time as a "pong" sound, and 3) the fail message is shown on the display.
- The vehicle-approaching warning buzzer does not sound in the constant speed control mode because the presence of the vehicle in front and the distance to it are not judged as in the vehicle-to-vehicle distance control mode. Pay attention to the distance to the vehicle in front.
- The dynamic radar cruise control system has 2 cruise control modes: the constant speed control mode and vehicle-to-vehicle distance control mode. Confirm which mode is selected when using the dynamic radar cruise control system.

CRUISE CONTROL MAIN SWITCH

COMPONENTS

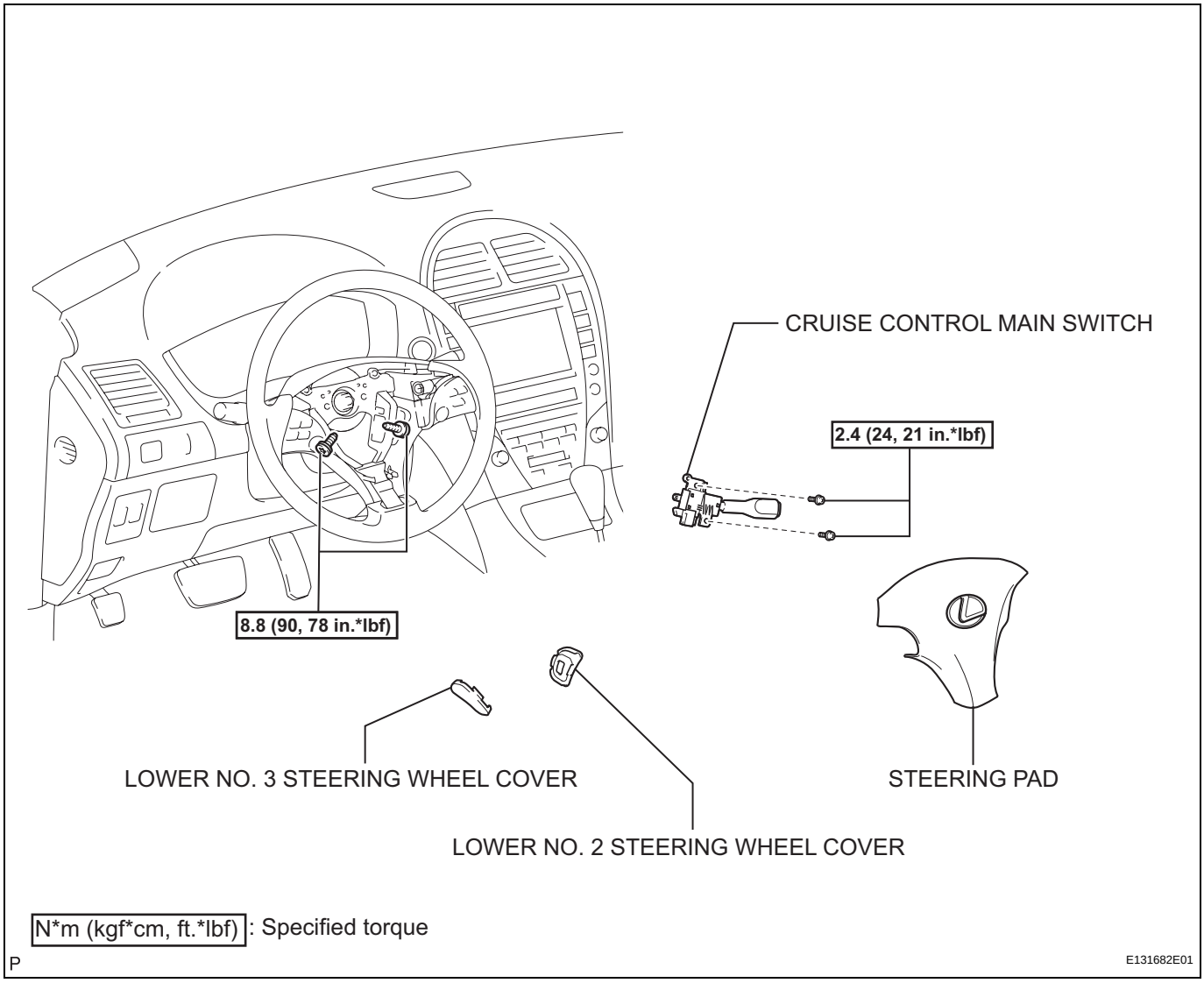

N*m (kgf*cm, ft.*lbf) : Specified torque

P

E131682E01

REMOVAL

1. **DISCONNECT CABLE FROM NEGATIVE BATTERY TERMINAL**
   CAUTION:
   Wait for 90 seconds after disconnecting the cable to prevent airbag deployment (See page RS-1).
2. **REMOVE LOWER NO. 3 STEERING WHEEL COVER (See page RS-367)**
3. **REMOVE LOWER NO. 2 STEERING WHEEL COVER (See page RS-367)**
4. **REMOVE STEERING PAD (See page RS-367)**
5. **REMOVE CRUISE CONTROL MAIN SWITCH**
   (a) Disconnect the connector.
   (b) Remove the 2 screws and the cruise control main switch.

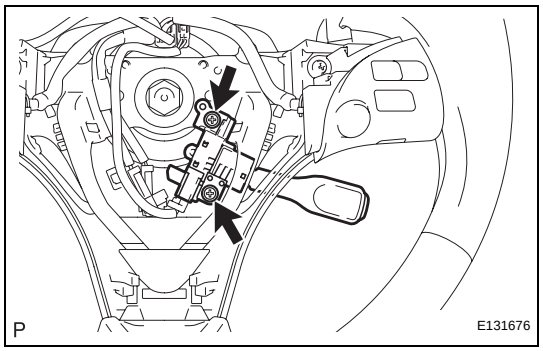

DISTANCE CONTROL ECU

COMPONENTS

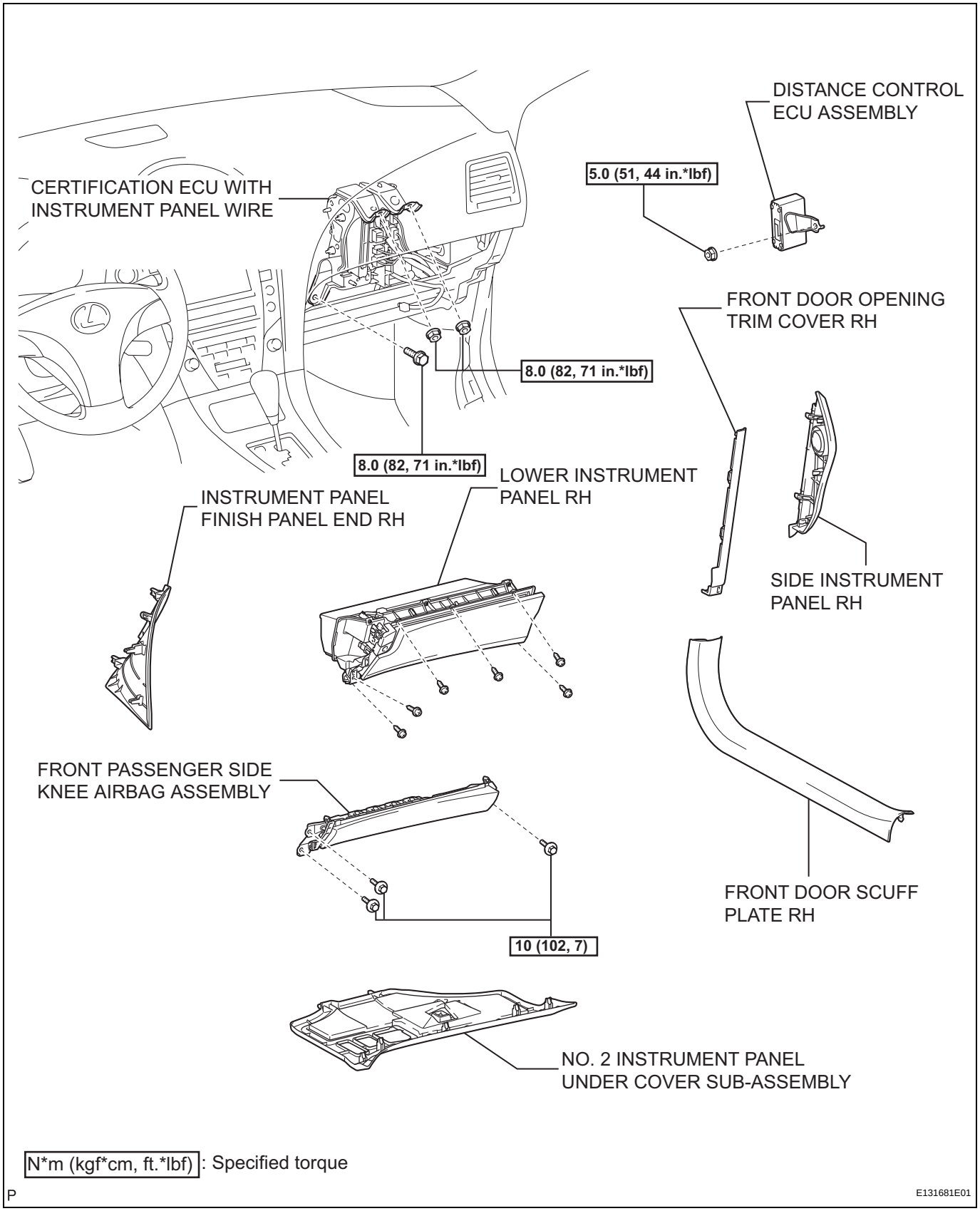

CC

CC

REMOVAL

1. **DISCONNECT CABLE FROM NEGATIVE BATTERY TERMINAL**
   CAUTION:
   Wait for 90 seconds after disconnecting the cable to prevent airbag deployment (See page RS-1).
2. **REMOVE INSTRUMENT PANEL FINISH PANEL END RH (See page IP-15)**
3. **REMOVE FRONT DOOR SCUFF PLATE RH (See page IR-42)**
4. **REMOVE FRONT DOOR OPENING TRIM COVER RH (See page IR-42)**
5. **REMOVE NO. 2 INSTRUMENT PANEL UNDER COVER SUB-ASSEMBLY (See page IP-15)**
6. **REMOVE SIDE INSTRUMENT PANEL RH (See page IP-15)**
7. **REMOVE FRONT PASSENGER SIDE KNEE AIRBAG ASSEMBLY (See page RS-396)**
8. **REMOVE LOWER INSTRUMENT PANEL RH (See page IP-16)**
9. **REMOVE DISTANCE CONTROL ECU ASSEMBLY**
   (a) Remove the 2 nuts and the bolt and disengage the certification ECU with instrument panel wire.

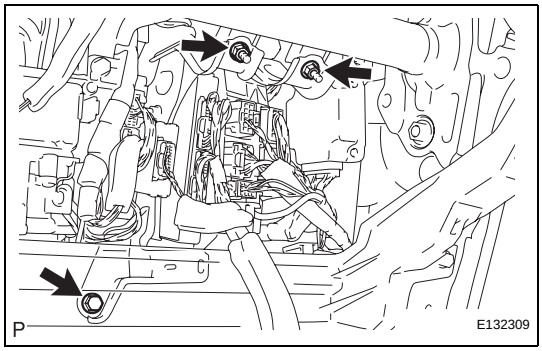

   (b) Turn the certification ECU with instrument panel wire in the direction indicated by the arrow.
   NOTICE:
   Do not apply excessive force.
   (c) Disconnect the connectors.

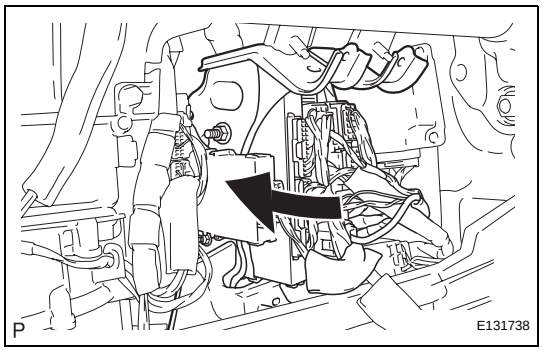

MILLIMETER WAVE RADAR SENSOR

COMPONENTS

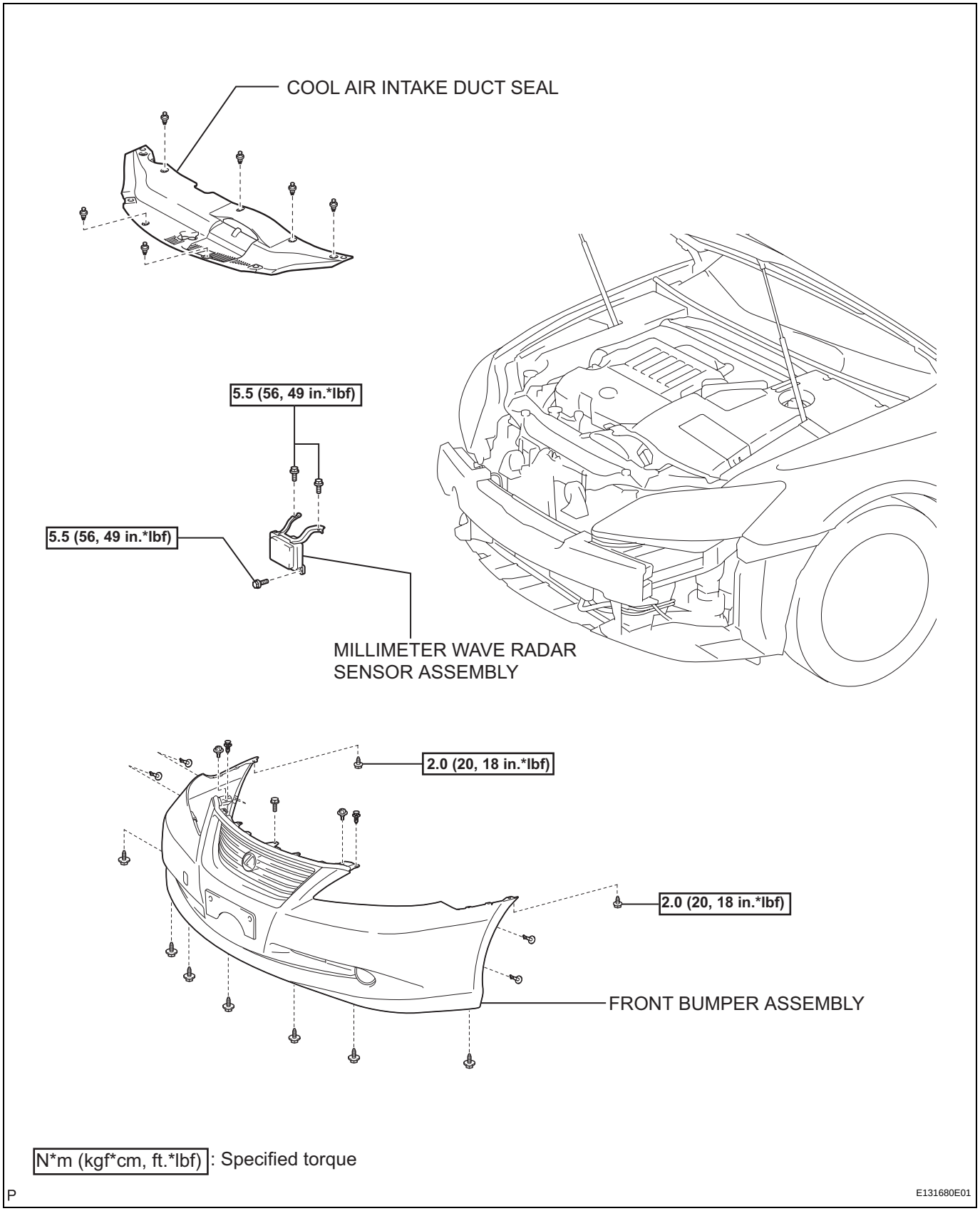

CC

REMOVAL

1. **DISCONNECT CABLE FROM NEGATIVE BATTERY TERMINAL**
   CAUTION:
   Wait for 90 seconds after disconnecting the cable to prevent airbag deployment (See page RS-1).
2. **REMOVE COOL AIR INTAKE DUCT SEAL (See page EM-22)**
3. **REMOVE FRONT BUMPER ASSEMBLY (See page ET-5)**
4. **REMOVE MILLIMETER WAVE RADAR SENSOR ASSEMBLY**
   (a) Disconnect the connector.
   (b) Remove the 3 bolts and the millimeter wave radar sensor assembly.

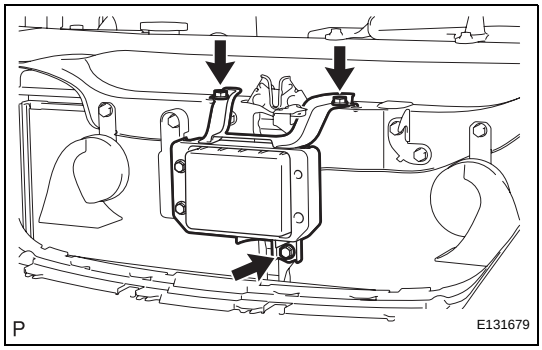

LIGHTING SYSTEM

PRECAUTION

NOTICE:
Some systems need to be initialized after reconnecting the negative (-) battery terminal (See page IN-33).

1. **PRECAUTION FOR USING BATTERY DURING INSPECTION**
   (a) While using the battery during inspection, do not bring the positive and negative tester probes too close to each other as a short circuit may occur.
2. **PRECAUTION FOR HEADLIGHT BULB REPLACEMENT (FOR HALOGEN HEADLIGHT)**
   (a) If even a thin film of oil is left on the surface of the halogen light, the bulb may be damaged because the light will burn at a higher temperature.
   (b) Handle any halogen light with great care. Dropping, hitting or damaging the bulb, in any way, may result in exploding and shattering because the internal pressure is high.
   (c) Always prepare a new bulb for immediate replacement. The lens may attract dust and moisture if removed from the vehicle for too long while replacing the bulb.
   (d) Always use a bulb of the same wattage for replacement.
   (e) Firmly reinstall the socket after bulb replacement. The lens may become cloudy or the light cavity may fill with water through the gaps around the socket.
3. **PRECAUTION FOR HEADLIGHT BULB REPLACEMENT (FOR HID HEADLIGHT)**
   (a) When any defects such as deformation, cracks, dents, chipping, etc. is identified on the discharge headlight (especially, on the light control ECU), replace it with a new one.
   (b) Even if the operation seems to be normal, the fail-safe function may be defective.
   (c) Since the bulb of the discharge headlight and halogen bulbs (for headlight or fog light) have pressurized gas inside and can easily be broken if scratched or dropped, special care should be taken. When handling the bulb, hold the plastic or metal part and do not touch the glass part with bare hands.
   (d) Never touch the high voltage socket of the discharge headlight with the light control switch in the HEAD position, as this could generate momentary high voltage of 20,000 V and lead to a serious accident.
   (e) Never connect a tester to the high voltage socket of the discharge headlight for measurement, as this may result in a serious accident because of high voltage.

(f) When servicing the discharge headlight, do not allow the discharge headlight to come into contact with water. Turn off the light control switch and disconnect the cable from the negative (-) battery terminal and the connector of the light control ECU in advance to avoid electric shocks.

(g) When performing an operation related to the discharge headlight, operate it after assembling has been finished and never turn on the lights without a bulb installed.

(h) Do not turn on the discharge headlight using a power source other than the vehicle battery.

HEADLIGHT ASSEMBLY

COMPONENTS

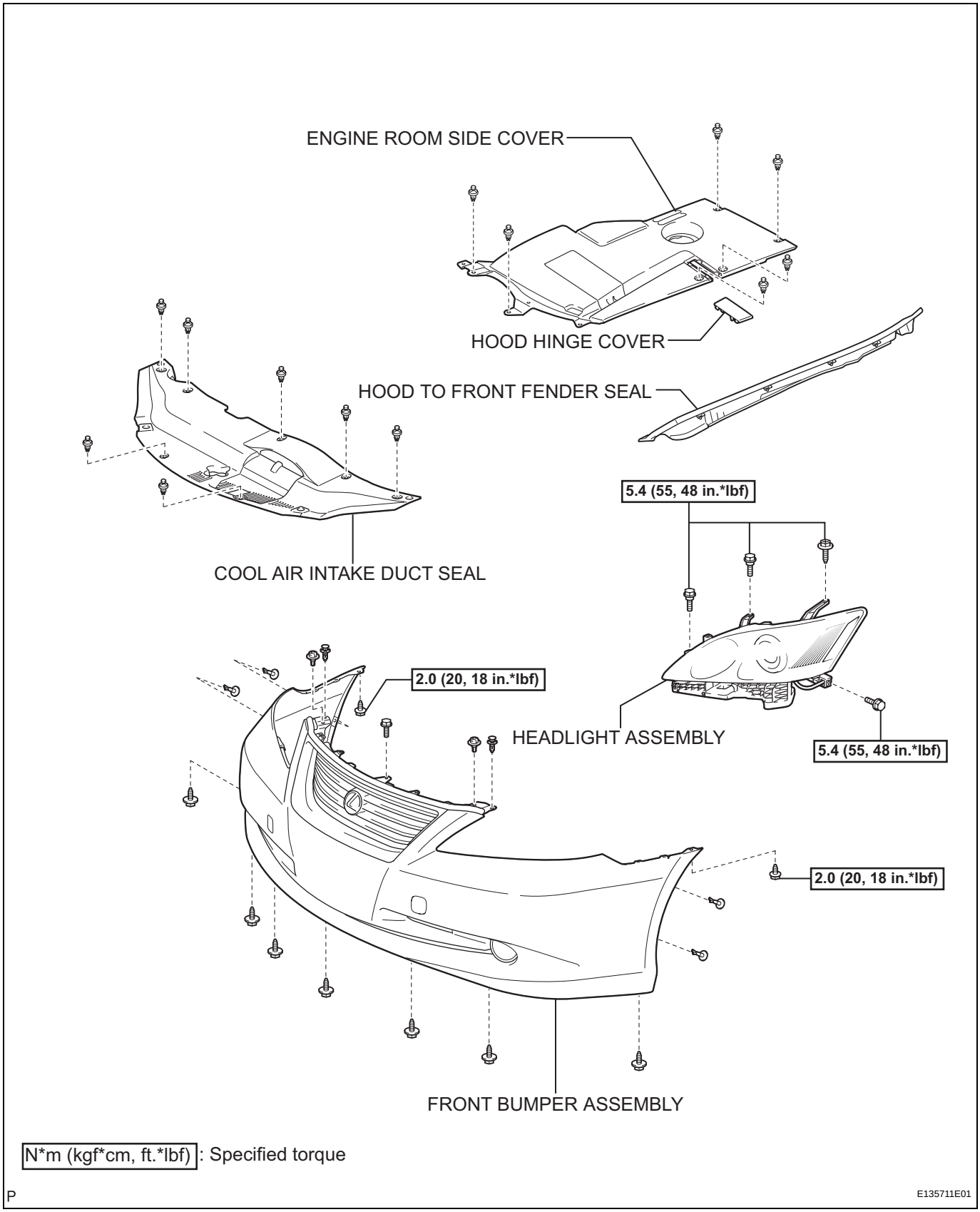

LI

for Halogen Headlight:

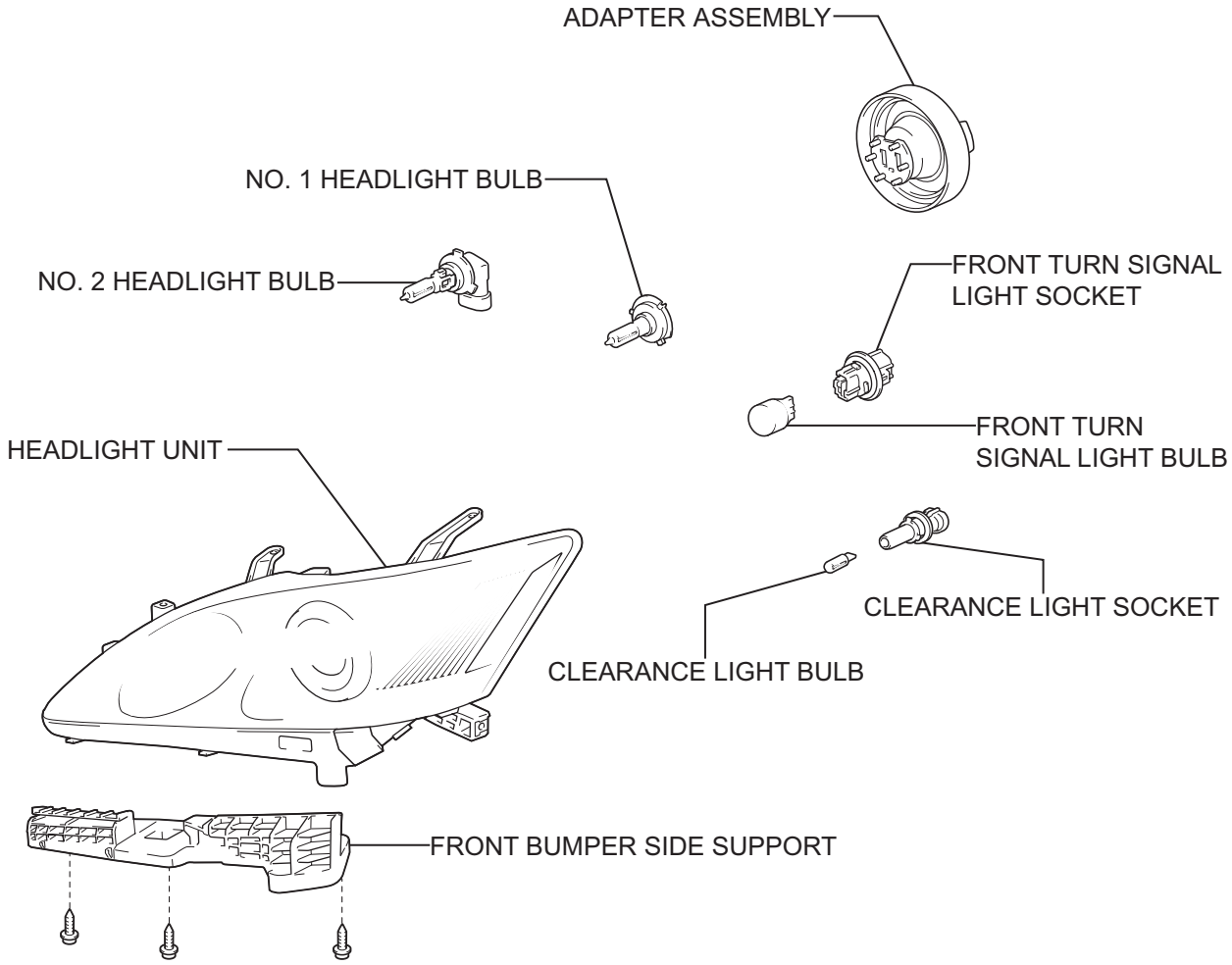

P

E130249E01

for HID Headlight:

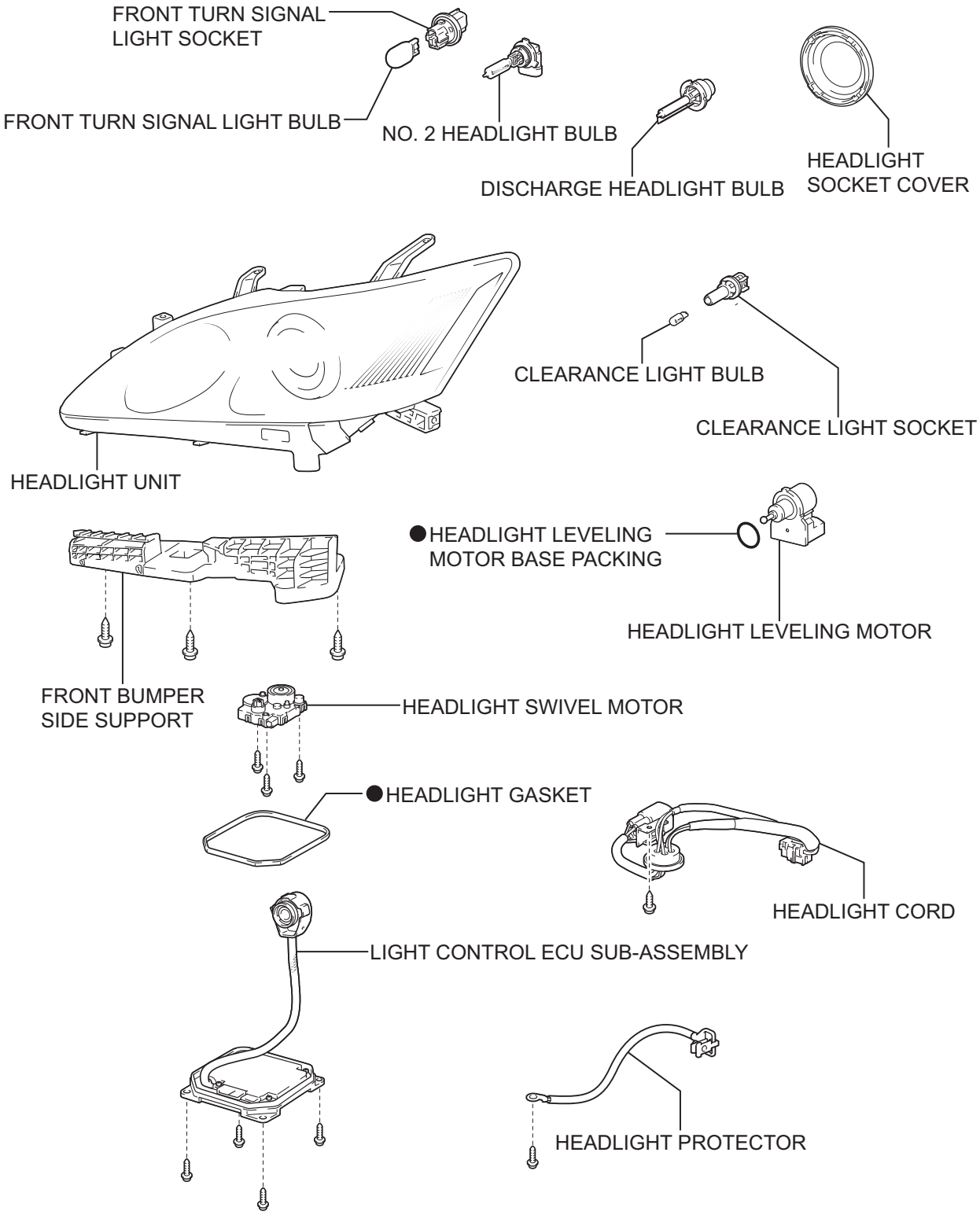

● Non-reusable part

P

E135712E01

HIGH INTENSITY DISCHARGE HEADLIGHT BULB

COMPONENTS

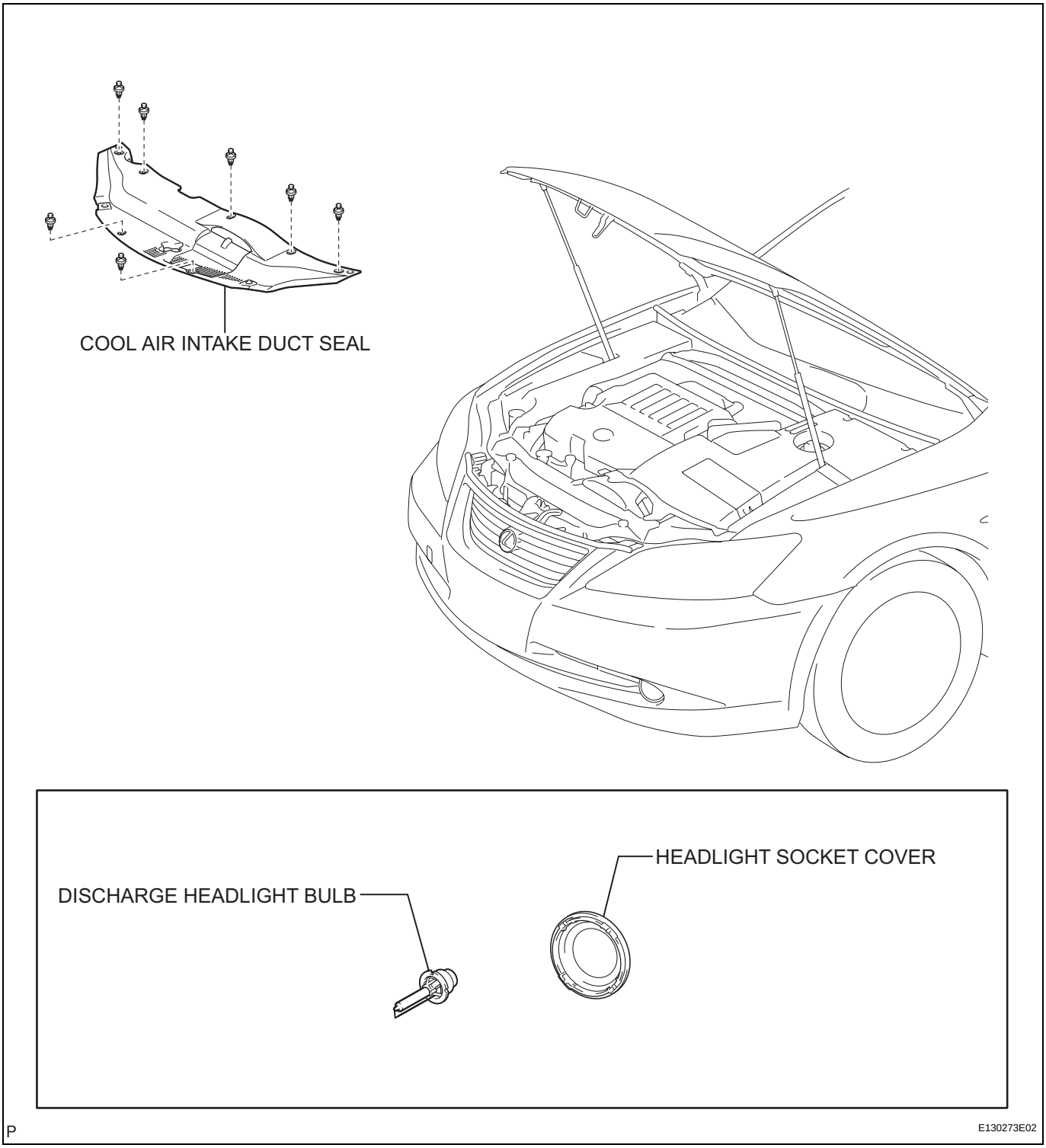

REMOVAL

1. **DISCONNECT CABLE FROM NEGATIVE BATTERY TERMINAL**
2. **REMOVE COOL AIR INTAKE DUCT SEAL (See page ET-4)**
3. **REMOVE HEADLIGHT SOCKET COVER (See page LI-126)**
4. **REMOVE DISCHARGE HEADLIGHT BULB (See page LI-126)**

FOG LIGHT ASSEMBLY

COMPONENTS

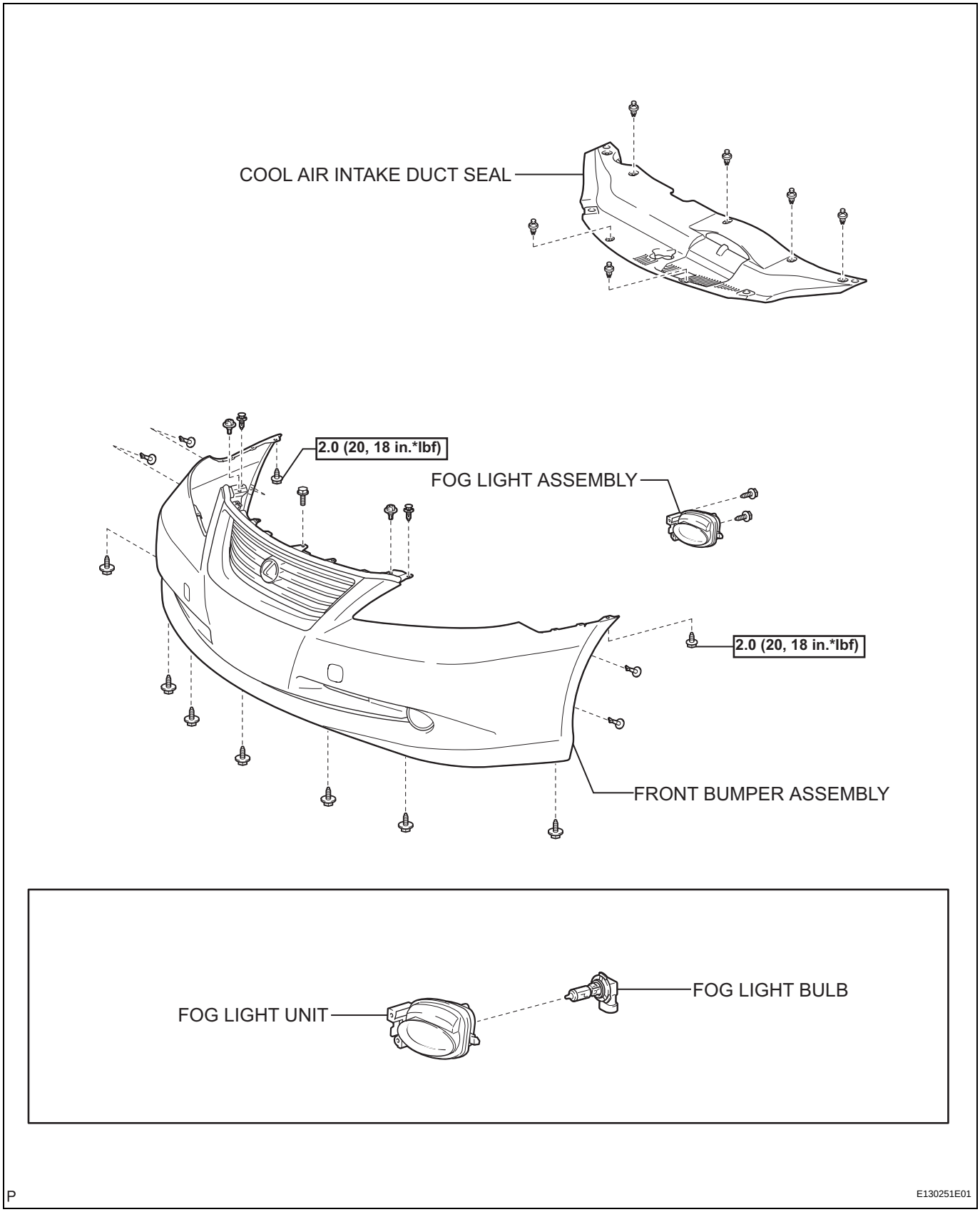

REMOVAL

1. **REMOVE COOL AIR INTAKE DUCT SEAL (See page ET-4)**
2. **REMOVE FRONT BUMPER ASSEMBLY (See page ET-5)**
3. **REMOVE FOG LIGHT ASSEMBLY**
   (a) Remove the 2 screws.
   (b) Disengage the claw and remove the fog light assembly.

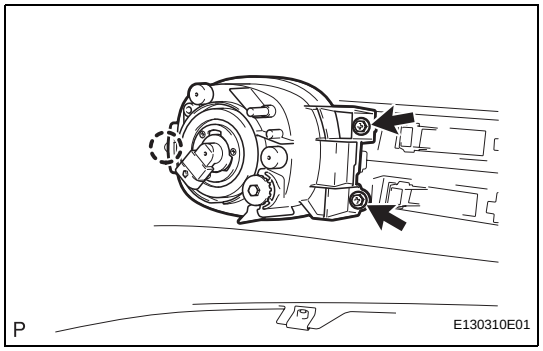

DISASSEMBLY

1. **REMOVE FOG LIGHT BULB**
   (a) Remove the fog light bulb as shown in the illustration.

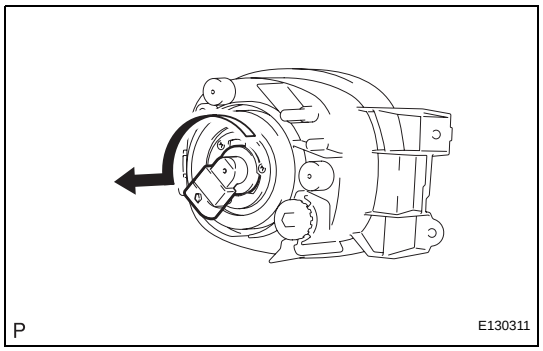

REAR COMBINATION LIGHT ASSEMBLY

COMPONENTS

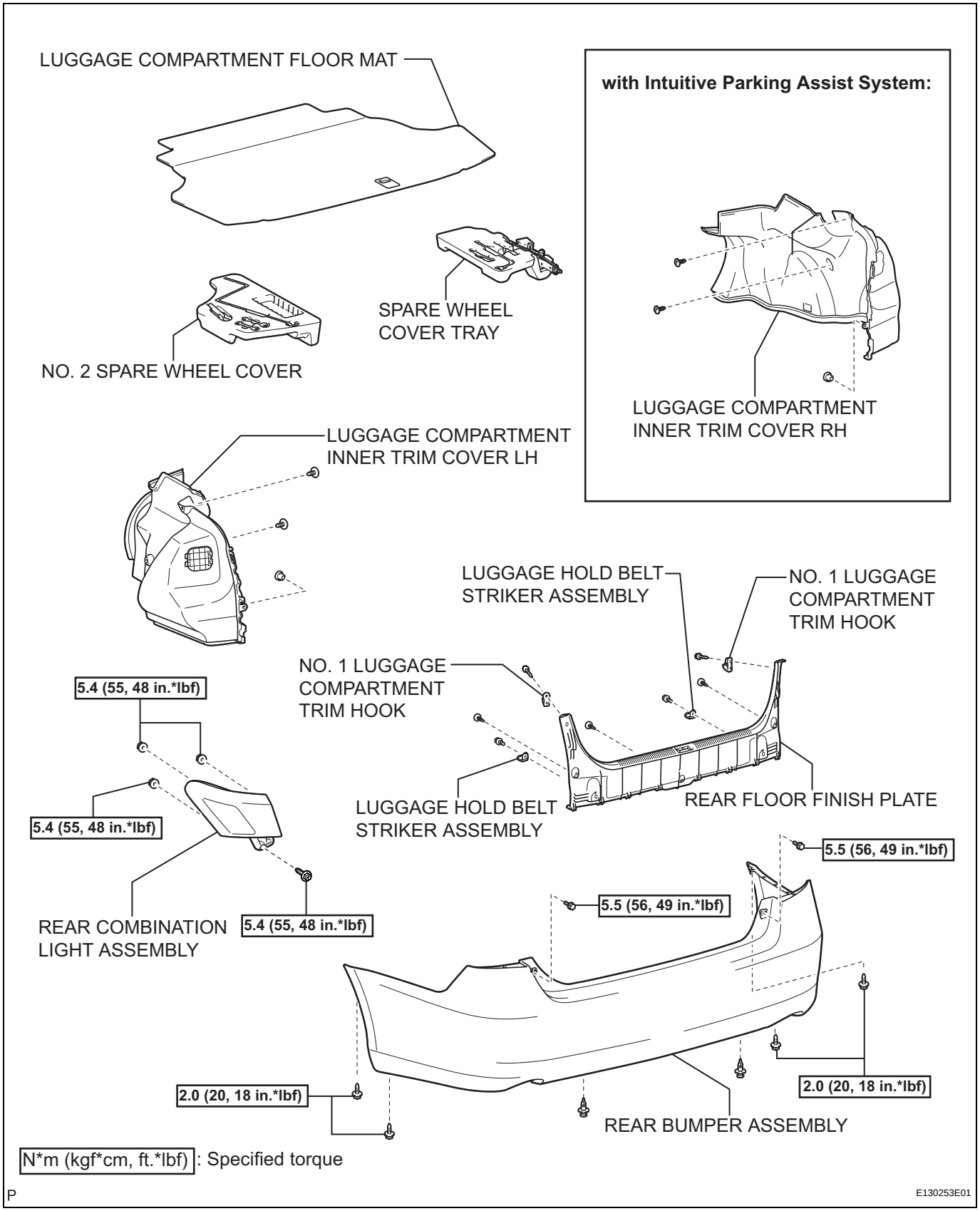

LI

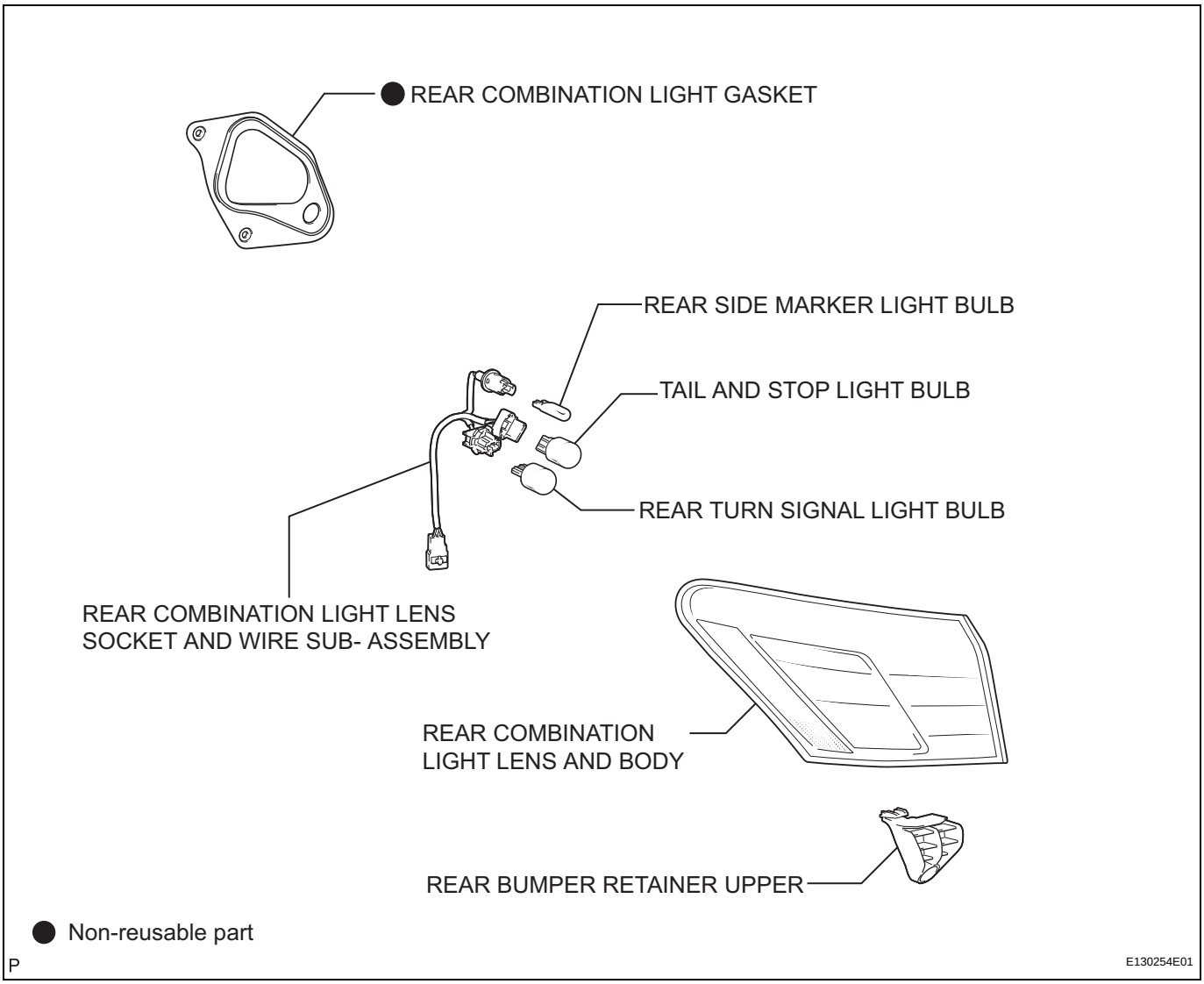
● REAR COMBINATION LIGHT GASKET
REAR SIDE MARKER LIGHT BULB
TAIL AND STOP LIGHT BULB
REAR TURN SIGNAL LIGHT BULB
REAR COMBINATION LIGHT LENS SOCKET AND WIRE SUB- ASSEMBLY
REAR COMBINATION LIGHT LENS AND BODY
REAR BUMPER RETAINER UPPER
● Non-reusable part
P
E130254E01

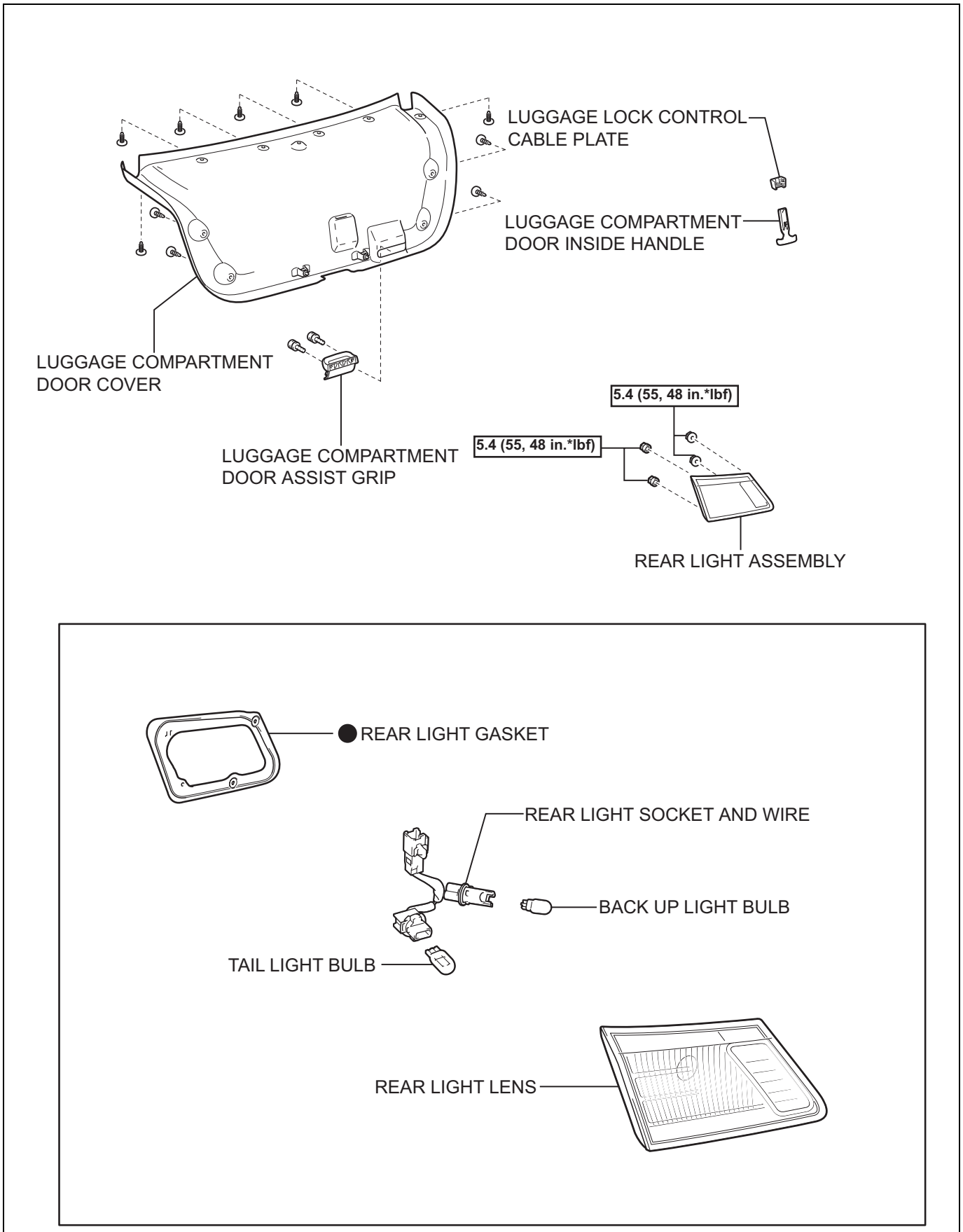

N*m (kgf*cm, ft.*lbf) : Specified torque

● Non-reusable part

P

E130255E01

LICENSE PLATE LIGHT ASSEMBLY

COMPONENTS

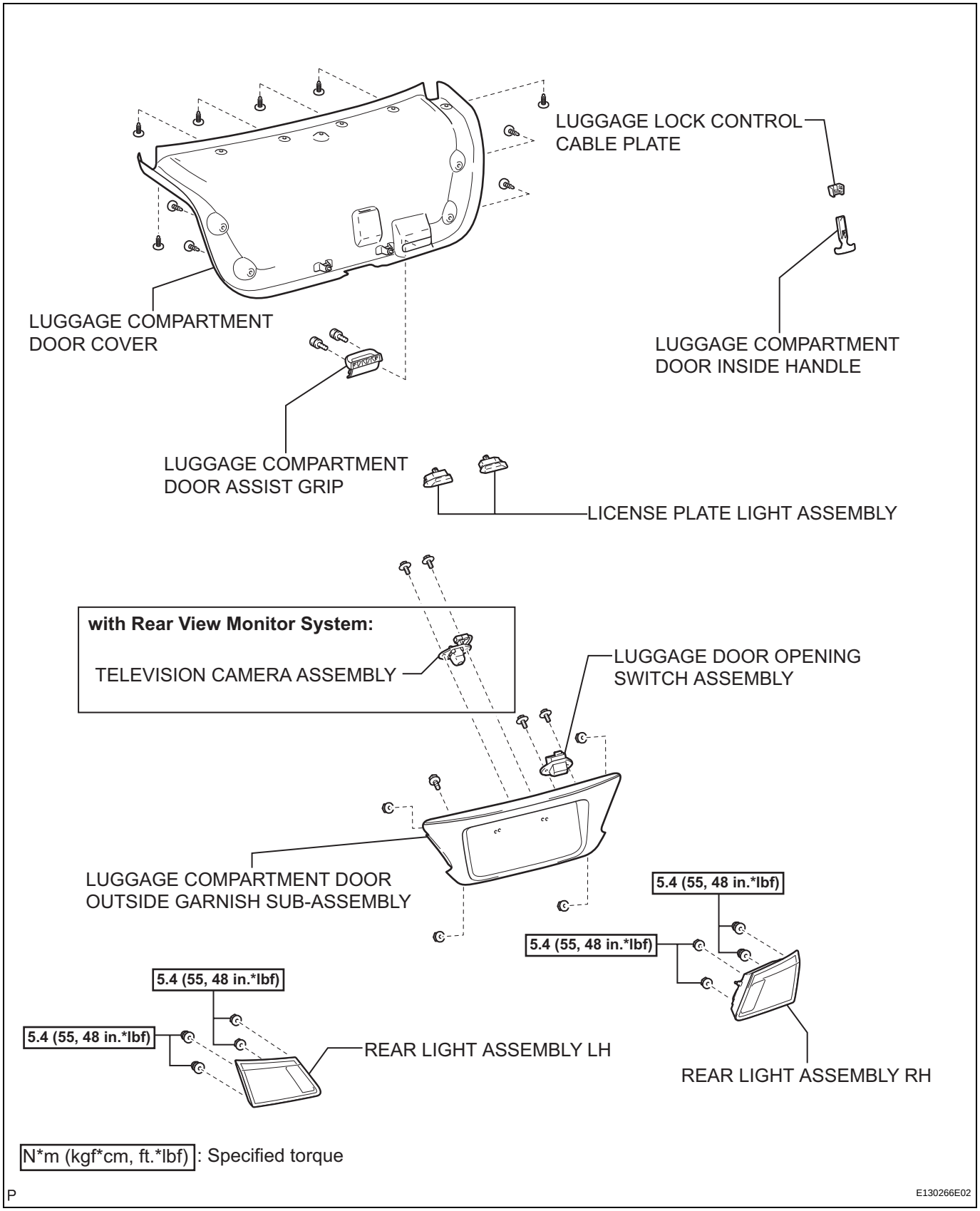

LI

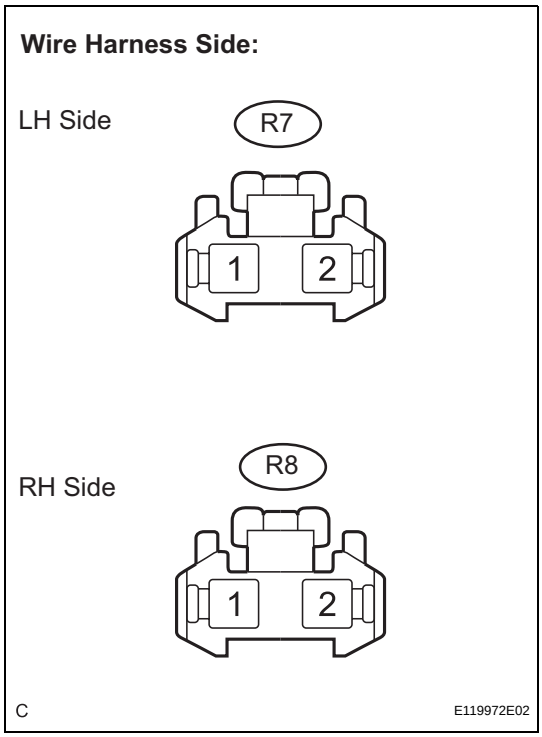

ON-VEHICLE INSPECTION

1. INSPECT LICENSE PLATE LIGHT ASSEMBLY

(a) Disconnect the connector from the license plate light assembly.

(b) Measure the voltage according to the value(s) in the table below.

Standard voltage:

LH Side

Tester Connection	Condition	Specified Condition
R7-1 - R7-2	Light control switch OFF → TAIL	Below 1 V → 10 to 14 V
R7-1 - R7-2	Light control switch OFF → TAIL	Below 1 V → 10 to 14 V

RH Side

Tester Connection	Condition	Specified Condition
R7-1 - R7-2	Light control switch OFF → TAIL	Below 1 V → 10 to 14 V
R7-1 - R7-2	Light control switch OFF → TAIL	Below 1 V → 10 to 14 V

If the result is not as specified, there is a malfunction on the wire harness side.

HIGH MOUNTED STOP LIGHT ASSEMBLY

COMPONENTS

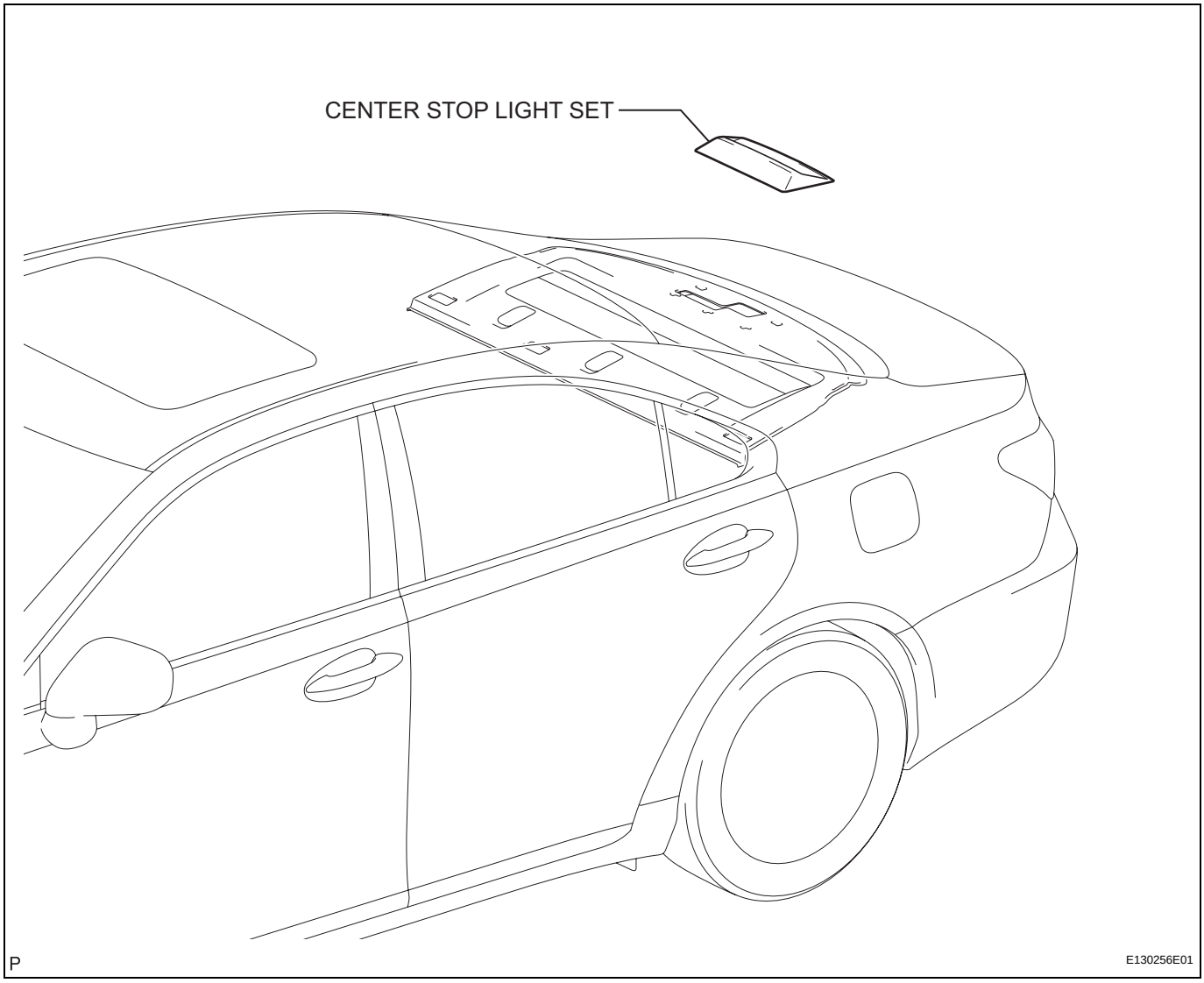

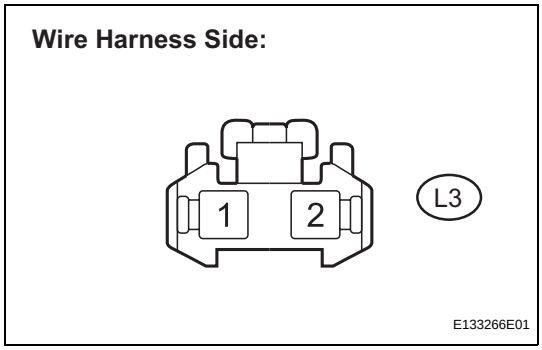

ON-VEHICLE INSPECTION

1. INSPECT HIGH MOUNTED STOP LIGHT ASSEMBLY

(a) Disconnect the high mounted stop light connector.

(b) Measure the voltage according to the value(s) in the table below.

Standard voltage

Tester Connection	Condition	Specified Condition
L3-1 - L3-2	Brake pedal released	Below 1 V
L3-1 - L3-2	Brake pedal depressed	10 to 14 V

If the result is not as specified, there is a malfunction on the wire harness side.

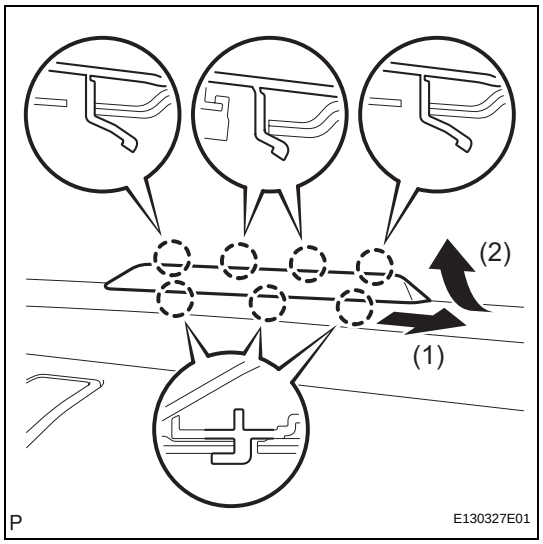

REMOVAL

1. REMOVE CENTER STOP LIGHT SET

(a) Disengage the 7 claws and disconnect the center stop light set as shown in the illustration.

(b) Disconnect the connector and remove the center stop light set.

PERSONAL LIGHT ASSEMBLY

COMPONENTS

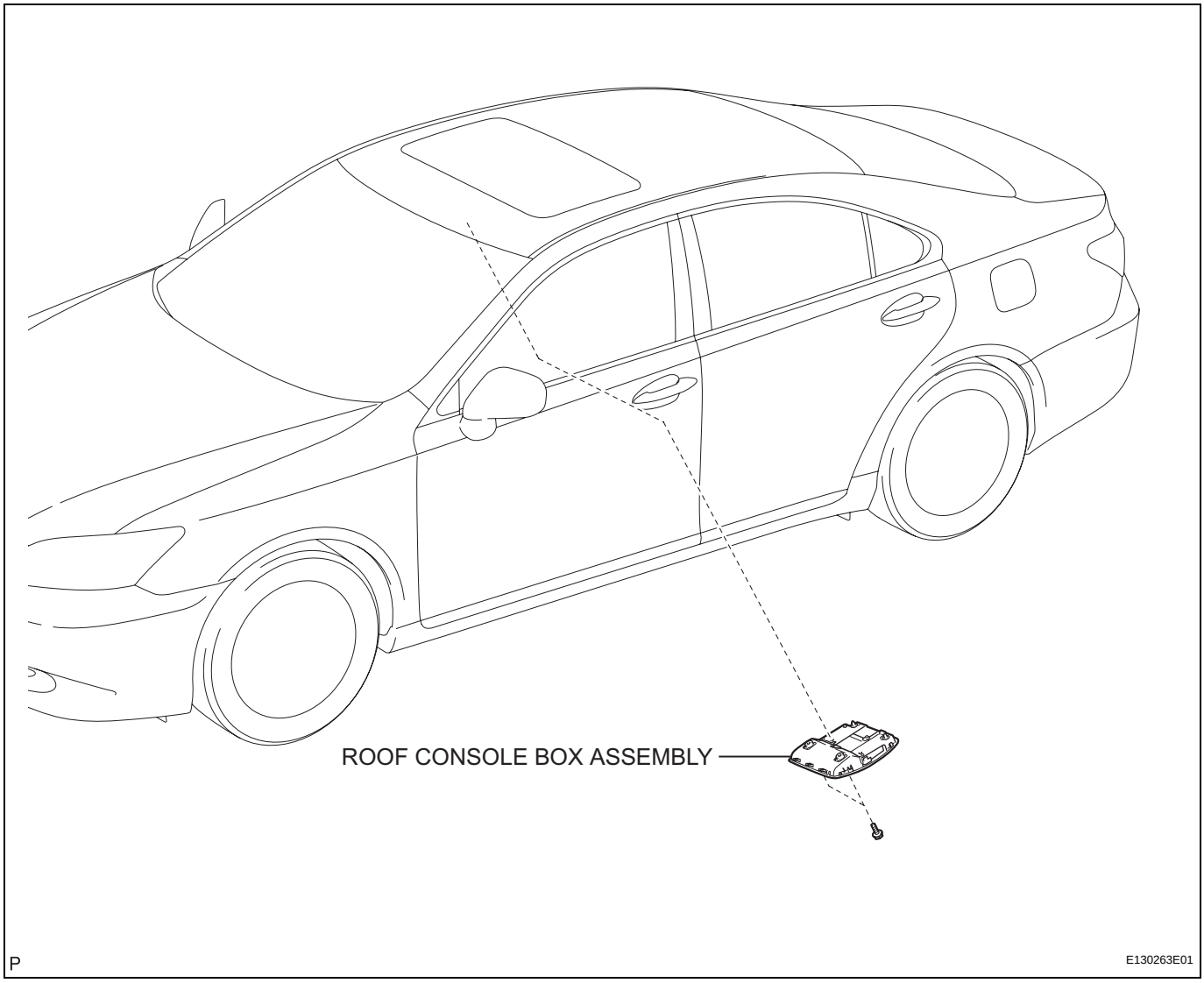

REMOVAL

1. REMOVE ROOF CONSOLE BOX ASSEMBLY (See page IR-44)

INSPECTION

1. INSPECT ROOF CONSOLE BOX ASSEMBLY (PERSONAL LIGHT ASSEMBLY)

(a) Disconnect the Q2 personal light assembly connector.

(b) Measure the voltage and resistance according to the value(s) in the table below.

Standard voltage

Tester Connection	Condition	Specified Condition
Q2-22 (+B1) - Body ground	Always	10 to 14 V

Standard resistance

Tester Connection	Condition	Specified Condition
Q2-5 (GND3) - Body ground	Always	Below 1 Ω

If the result is not specified, there is a malfunction on the wire harness side.

(c) Apply battery voltage to the roof console box assembly connector.

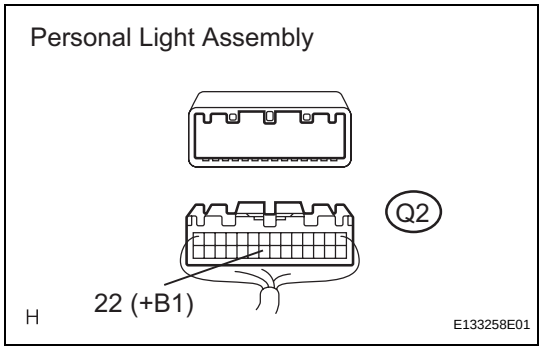

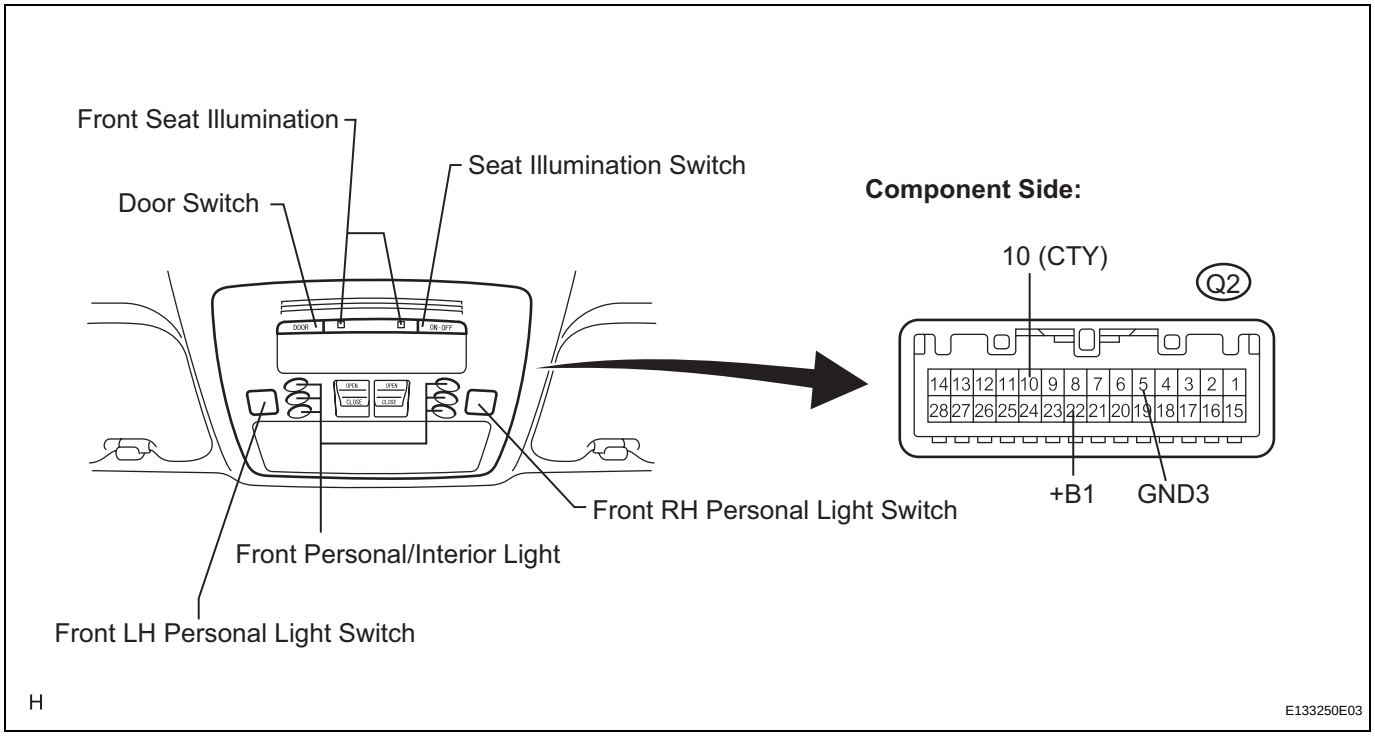

LI

(d) Check that each light comes on.
OK

Measurement Condition	Switch Condition	Specified Condition
Battery positive (+) → Terminal Q2-22 (+B1) Battery negative (-) → Terminal Q2-10 (CTY)	DOOR switch is pushed (ON), seat illumination switch is not pushed (OFF), and personal light switch is not pushed (OFF)	Interior light and front seat illumination come on
Battery positive (+) → Terminal Q2-22 (+B1) Battery negative (-) → Terminal Q2-5 (GND3)	Front RH personal light switch ON	Front RH personal light comes on
	Front LH personal light switch ON	Front LH personal light comes on
Battery positive (+) → Terminal Q2-22 (+B1) Battery negative (-) → Body ground	Front seat illumination switch is pushed (ON)	Front seat illumination comes on

If the result is not as specified, replace the roof console box assembly.

REAR ROOM LIGHT ASSEMBLY

COMPONENTS

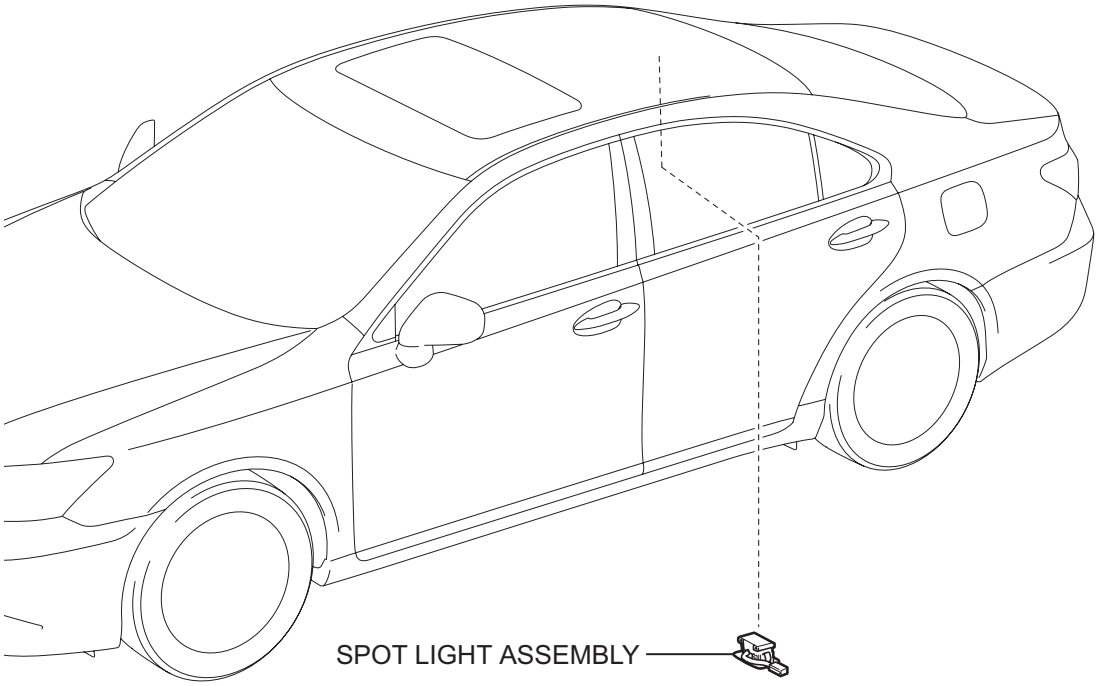

P

E135646E01

REMOVAL

1. **REMOVE SPOT LIGHT ASSEMBLY (for Standard) (See page IR-46)**
2. **REMOVE SPOT LIGHT ASSEMBLY (for Glass Roof) (See page IR-46)**

INSPECTION

1. **INSPECT SPOT LIGHT ASSEMBLY (REAR SEAT ILLUMINATION)**
   (a) Disconnect the Q6 spot light assembly connector.
   (b) Measure the voltage according to the value(s) in the table below.
   Standard voltage

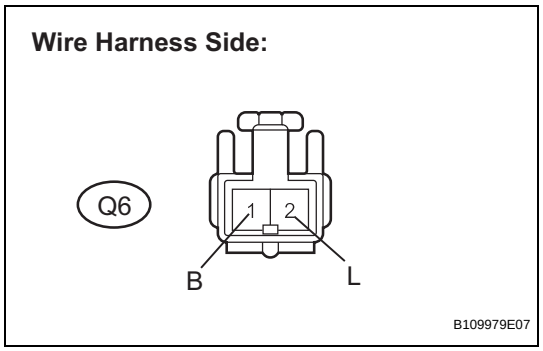

Tester Connection	Condition	Specified Condition
Q6-1 (B) - Q6-2 (L)	Seat illumination switch is not pushed (OFF)	Below 1 V
Q6-1 (B) - Q6-2 (L)	Seat illumination switch is pushed (ON)	10 to 14 V

If the result is not as specified, there is a malfunction on the wire harness side.

   (c) Apply battery voltage to the spot light assembly connector.
   (d) Check that the rear seat illumination comes on.
   OK

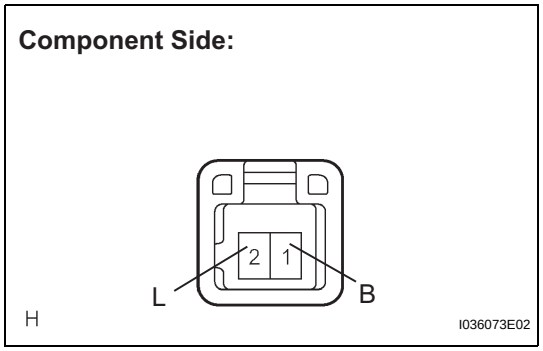

Measurement Condition	Switch Condition	Specified Condition
Battery positive (+) → Terminal Q6-1 (B) Battery negative (-) → Terminal Q6-2 (L)	Always	Rear seat illumination comes on

If the result is not as specified, replace the spot light assembly.

LI

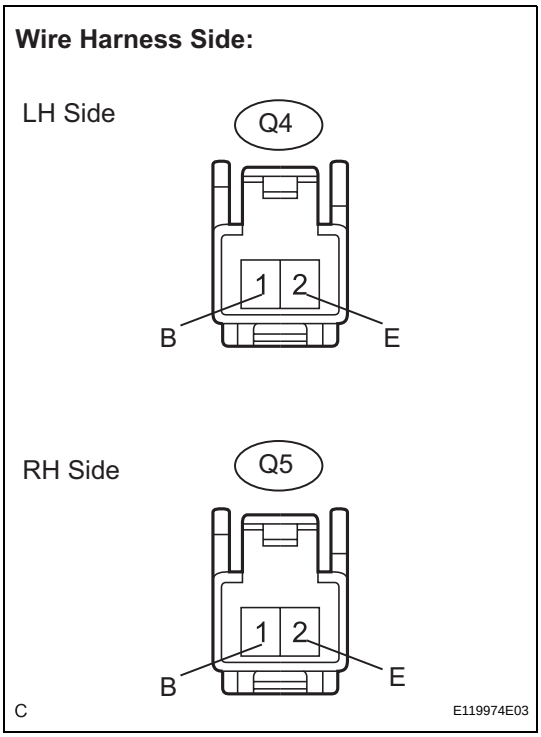

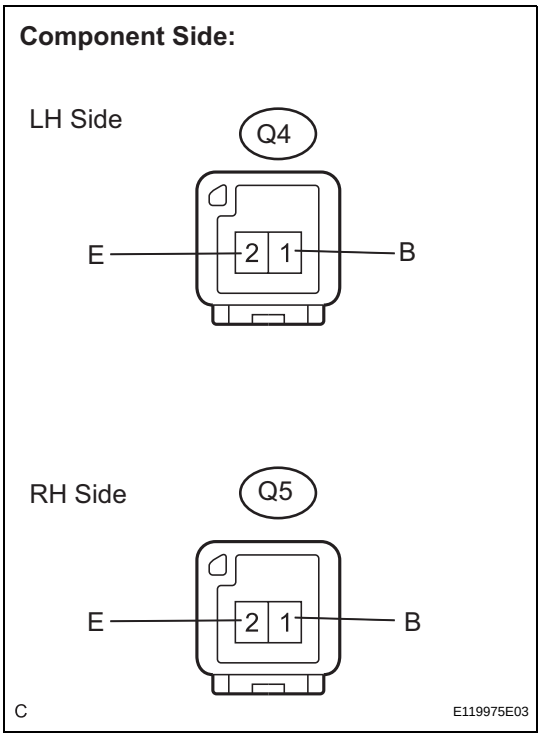

2. INSPECT REAR ROOM LIGHT ASSEMBLY (REAR PERSONAL LIGHT)

(a) Disconnect the Q4 or Q5 rear room light assembly connector.

(b) Measure the voltage according to the value(s) in the table below.

Standard voltage

Tester Connection	Condition	Specified Condition
Q4-1 (B) - Q4-2 (E)	Front LH personal light switch is not pushed (OFF)	Below 1 V
Q4-1 (B) - Q4-2 (E)	Front LH personal light switch is pushed (ON)	10 to 14 V
Q5-1 (B) - Q5-2 (E)	Front RH personal light switch is not pushed (OFF)	Below 1 V
Q5-1 (B) - Q5-2 (E)	Front RH personal light switch is pushed (ON)	10 to 14 V

If the result is not specified, there is a malfunction on the wire harness side.

(c) Apply battery voltage to the spot light assembly connector.

(d) Check that the rear personal light comes on.

OK

Measurement Condition	Switch Condition	Specified Condition
Battery positive (+) → Terminal Q4-1 Battery negative (-) → Terminal Q4-2	Rear LH personal light switch is pushed (ON)	Rear LH personal light comes on
Battery positive (+) → Terminal Q5-1 Battery negative (-) → Terminal Q5-2	Rear RH personal light switch is pushed (ON)	Rear RH personal light comes on

If the result is not as specified, replace the rear room light assembly.

DOOR COURTESY LIGHT

COMPONENTS

for Front Side:

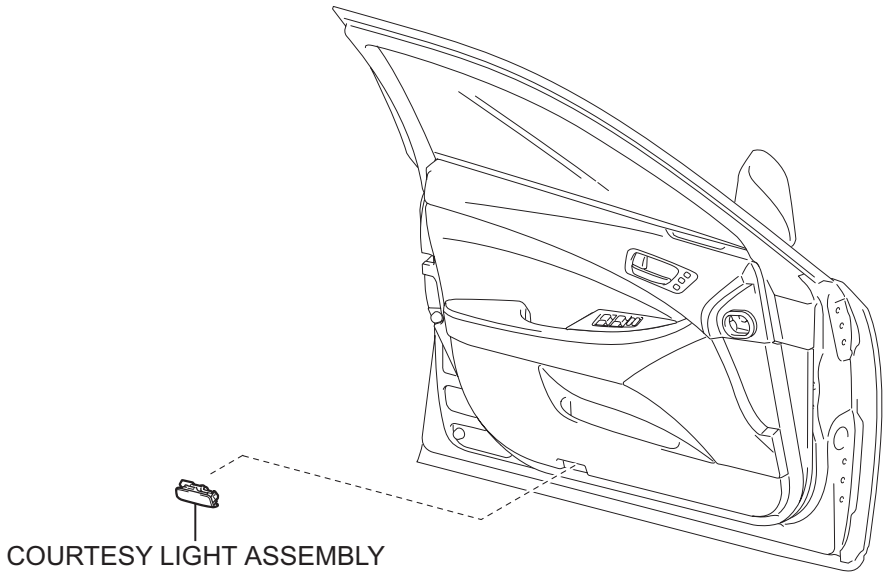

for Rear Side:

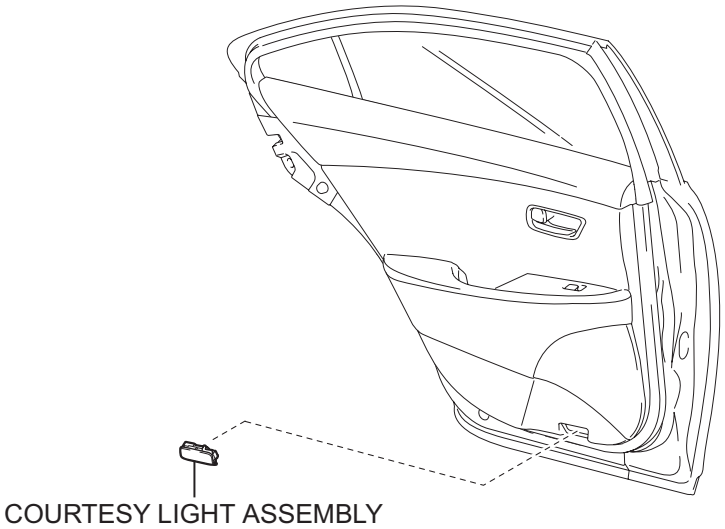

P

E130258E01

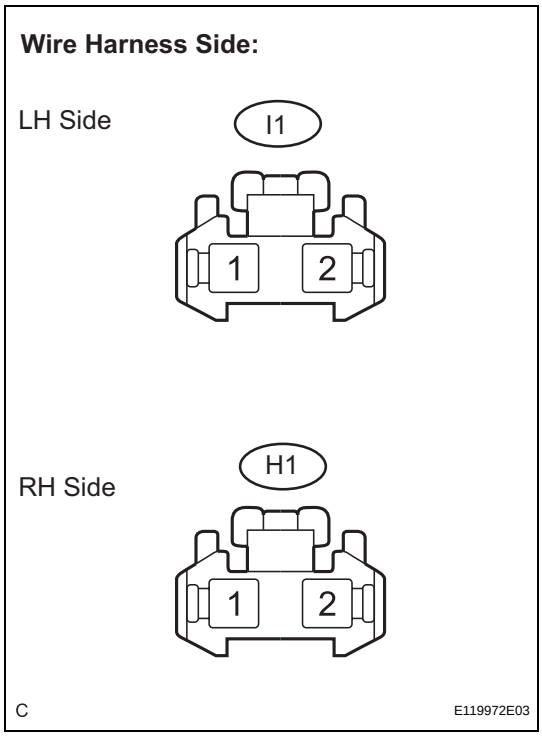

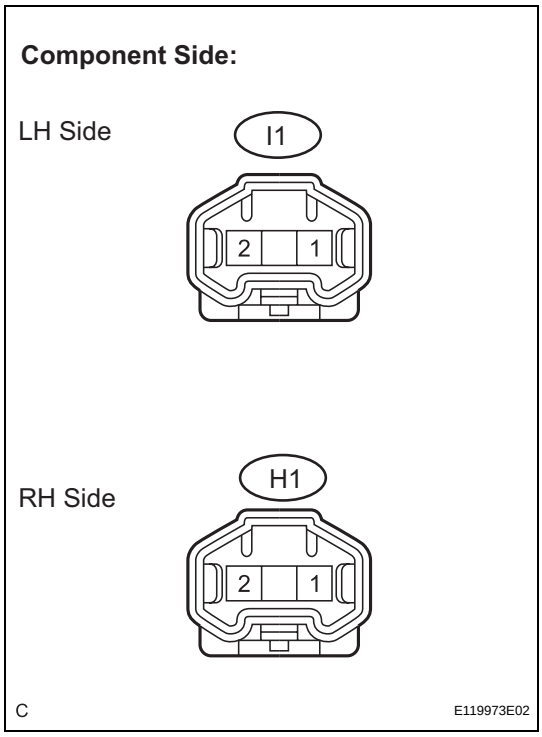

REMOVAL

1. **REMOVE COURTESY LIGHT ASSEMBLY (for Front Side) (See page ED-34)**
2. **REMOVE COURTESY LIGHT ASSEMBLY (for Rear Side) (See page ED-59)**

INSPECTION

1. **INSPECT COURTESY LIGHT ASSEMBLY (for Front Side)**
   (a) Disconnect the I1 or H1 front courtesy light assembly connector.
   (b) Measure the voltage according to the value(s) in the table below.
   Standard voltage:
   LH Side

Tester Connection	Condition	Specified Condition
I1-1 - I1-2	Front LH door is opened	10 to 14 V
	Front LH door is closed	Below 1 V

RH Side

Tester Connection	Condition	Specified Condition
H1-1 - H1-2	Front RH door is opened	10 to 14 V
	Front RH door is closed	Below 1 V

If the result is not as specified, there is a malfunction on the wire harness side.

   (c) Apply battery voltage to the courtesy light assembly connector.
   (d) Check that the courtesy light comes on.
   OK

Measurement Condition	Specified Condition
Battery positive (+) → Terminal 1 Battery negative (-) → Terminal 2	Courtesy light comes on

If the result is not as specified, replace the bulb or courtesy light assembly.

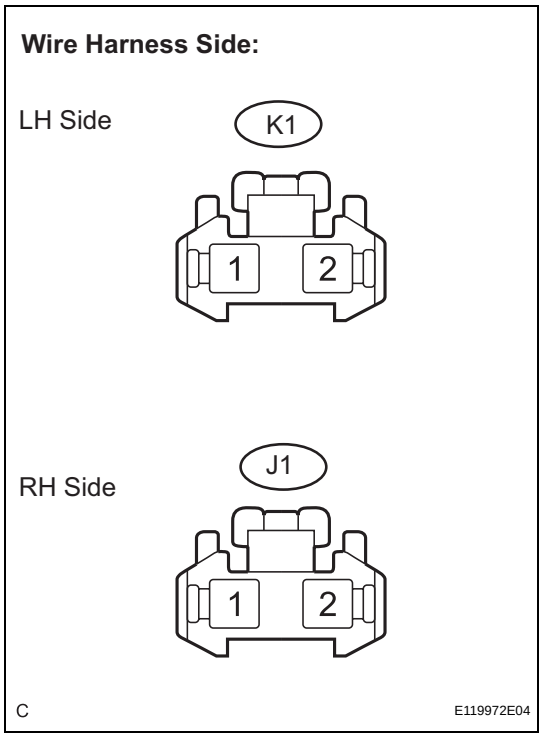

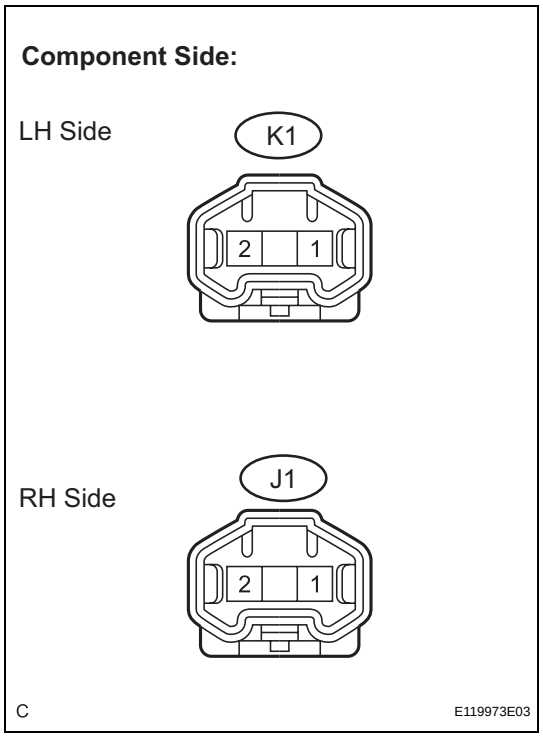

2. INSPECT COURTESY LIGHT ASSEMBLY (for Rear Side)

(a) Disconnect the K1 or J1 rear courtesy light assembly connector.

(b) Measure the voltage according to the value(s) in the table below.

Standard voltage:

LH Side

Tester Connection	Condition	Specified Condition
K1-1 - K1-2	Rear LH door is opened	10 to 14 V
	Rear LH door is closed	Below 1 V

RH Side

Tester Connection	Condition	Specified Condition
J1-1 - J1-2	Rear RH door is opened	10 to 14 V
	Rear RH door is closed	Below 1 V

If the result is not as specified, there is a malfunction on the wire harness side.

(c) Apply battery voltage to the courtesy light assembly connector.

(d) Check that the courtesy light comes on.

OK

Measurement Condition	Specified Condition
Battery positive (+) → Terminal 1 Battery negative (-) → Terminal 2	Courtesy light comes on

If the result is not as specified, replace the bulb or courtesy light assembly.

LUGGAGE COMPARTMENT ROOM LIGHT

COMPONENTS

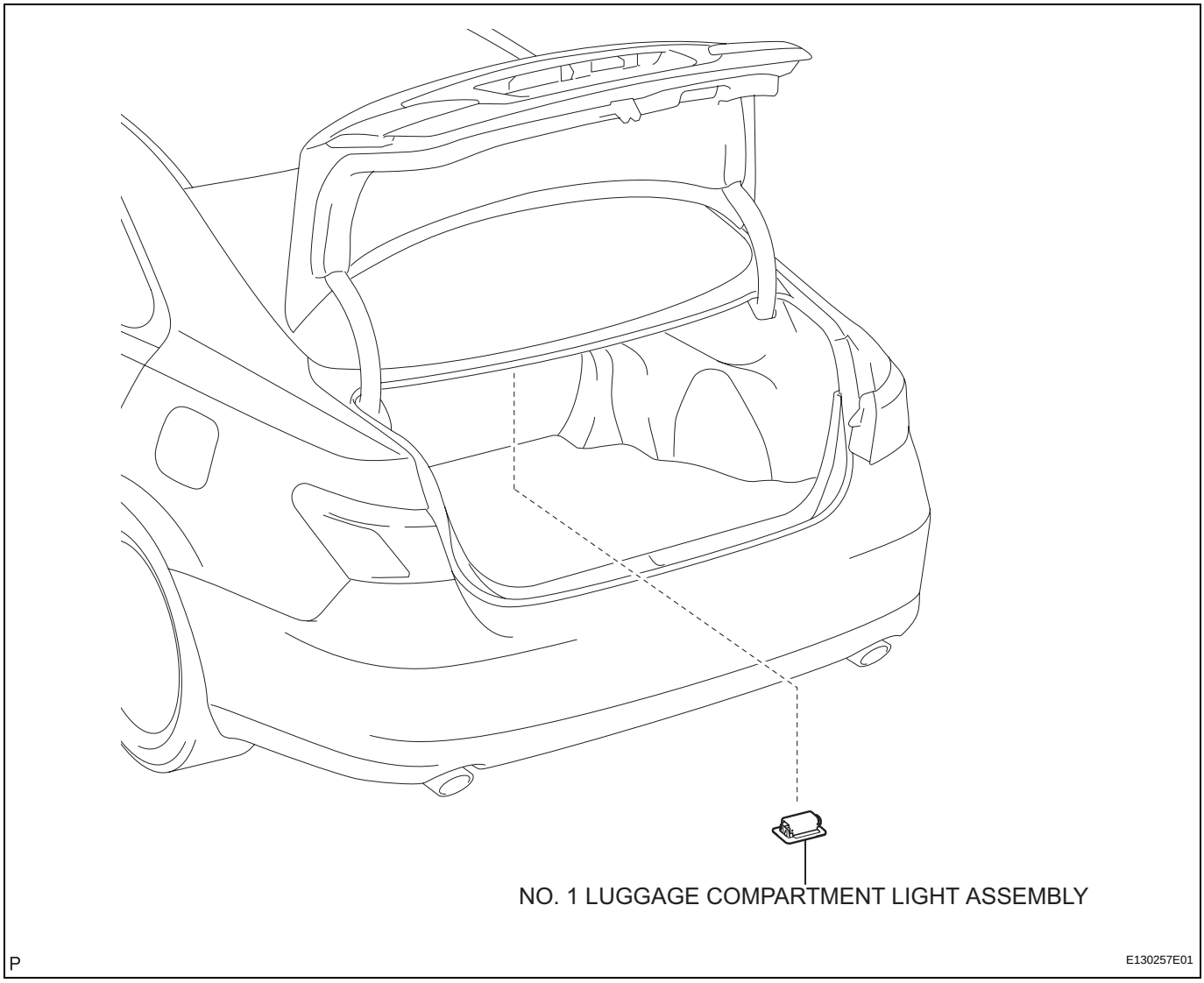

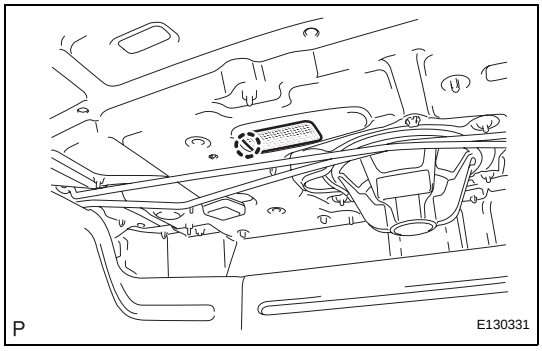

REMOVAL

1. REMOVE NO. 1 LUGGAGE COMPARTMENT LIGHT ASSEMBLY

(a) Disengage the claw and disconnect the No. 1 luggage compartment light assembly.

(b) Disconnect the connector and remove the No. 1 luggage compartment light assembly.

Wire Harness Side:

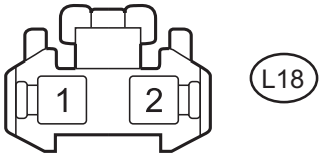

E133266E02

INSPECTION

1. INSPECT NO. 1 LUGGAGE COMPARTMENT LIGHT ASSEMBLY

(a) Disconnect the L18 No. 1 luggage compartment light assembly connector.

(b) Measure the voltage according to the value(s) in the table below.

Standard voltage

Tester Connection	Condition	Specified Condition
L18-1 - L18-2	Luggage compartment door is closed	Below 1 V
	Luggage compartment door is opened	10 to 14 V

If the result is not specified, there is a malfunction on the wire harness side.

Component Side:

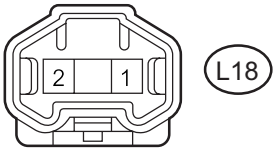

H

B113722E01

(c) Apply battery voltage to the No. 1 luggage compartment light assembly connector.

(d) Check that the No. 1 luggage compartment light comes on.

OK

Measurement Condition	Specified Condition
Battery positive (+) → Terminal L18-1 Battery negative (-) → Terminal L18-2	Luggage compartment light comes on

If the result is not as specified, replace the bulb or No. 1 luggage compartment light assembly.

LI

GLOVE BOX LIGHT

COMPONENTS

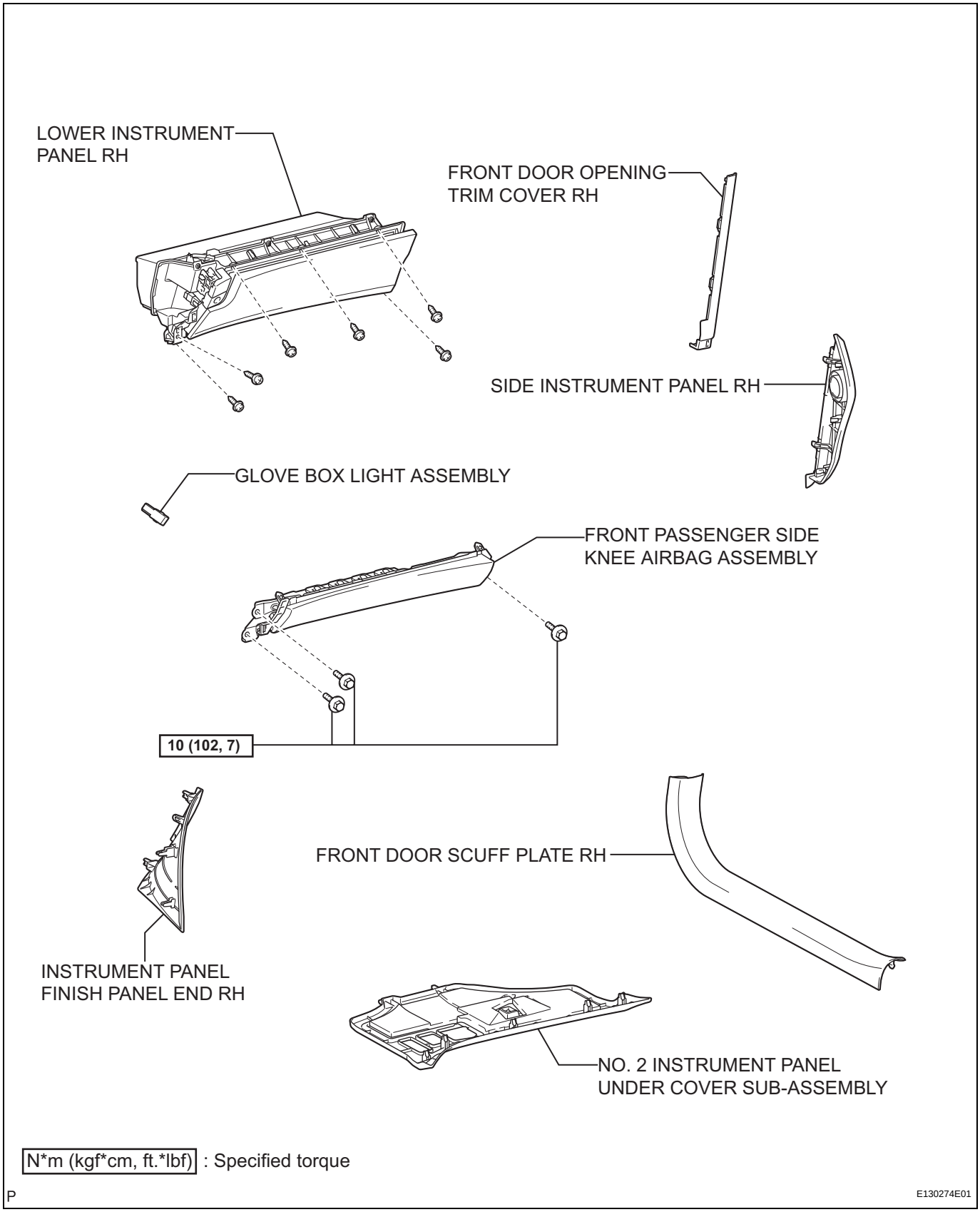

REMOVAL

1. **PRECAUTION**
   CAUTION:
   Be sure to read "PRECAUTION" thoroughly before servicing (See page RS-1).
2. **DISCONNECT CABLE FROM NEGATIVE BATTERY TERMINAL**
   NOTICE:
   Wait for 90 seconds after disconnecting the cable to prevent airbag deployment.
3. **REMOVE INSTRUMENT PANEL FINISH PANEL END RH (See page IP-15)**
4. **REMOVE FRONT DOOR SCUFF PLATE RH (See page IR-42)**
5. **REMOVE FRONT DOOR OPENING TRIM COVER RH (See page IR-42)**
6. **REMOVE NO. 2 INSTRUMENT PANEL UNDER COVER SUB-ASSEMBLY (See page IP-15)**
7. **REMOVE SIDE INSTRUMENT PANEL RH (See page IP-15)**
8. **REMOVE FRONT PASSENGER SIDE KNEE AIRBAG ASSEMBLY (See page RS-396)**
9. **REMOVE LOWER INSTRUMENT PANEL RH (See page IP-16)**
10. **REMOVE GLOVE BOX LIGHT ASSEMBLY**
    (a) Remove the glove box light assembly as shown in the illustration.

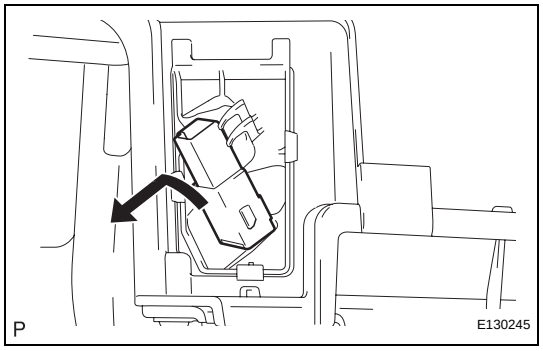

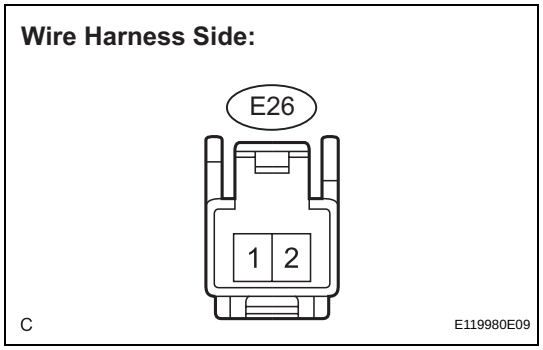

INSPECTION

1. **INSPECT GLOVE BOX LIGHT ASSEMBLY**
   (a) Disconnect the E26 glove box light assembly connector.
   (b) Measure the voltage according to the value(s) in the table below.
   Standard voltage

Tester Connection	Condition	Specified Condition
E26-2 - E26-1	Light control switch in TAIL	10 to 14 V
	Light control switch OFF	Below 1 V

If the result is not as specified, there is a malfunction on the wire harness side.

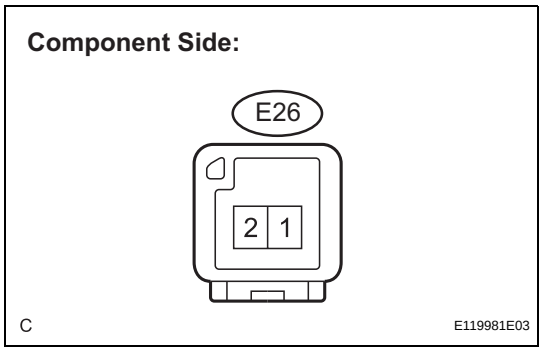

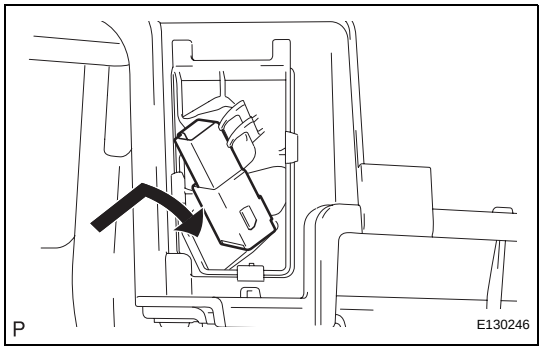

(c) Apply battery voltage to the glove box light assembly connector.

(d) Check that the glove box light comes on.

OK

Measurement Condition	Condition	Specified Condition
Battery positive (+) → Terminal 2 Battery negative (-) → Terminal 1	**Glove box light switch ON**	**Glove box light comes on**

If the result is not as specified, replace the glove box light assembly.

INSTALLATION

1. INSTALL GLOVE BOX LIGHT ASSEMBLY

(a) Install the glove box light assembly as shown in the illustration.

2. INSTALL LOWER INSTRUMENT PANEL RH (See page IP-42)

3. INSTALL FRONT PASSENGER SIDE KNEE AIRBAG ASSEMBLY (See page RS-396)

4. INSTALL SIDE INSTRUMENT PANEL RH (See page IP-43)

5. INSTALL NO. 2 INSTRUMENT PANEL UNDER COVER SUB-ASSEMBLY (See page IP-44)

6. INSTALL FRONT DOOR OPENING TRIM COVER RH (See page IR-65)

7. INSTALL FRONT DOOR SCUFF PLATE RH (See page IR-65)

8. INSTALL INSTRUMENT PANEL FINISH PANEL END RH (See page IP-44)

9. CONNECT CABLE TO NEGATIVE BATTERY TERMINAL

10. INSPECT SRS WARNING LIGHT

(See page RS-37)

11. PERFORM INITIALIZATION

NOTICE:

Some systems need initialization after reconnecting the cable to the negative battery terminal (See page IN-33).

VANITY LIGHT

COMPONENTS

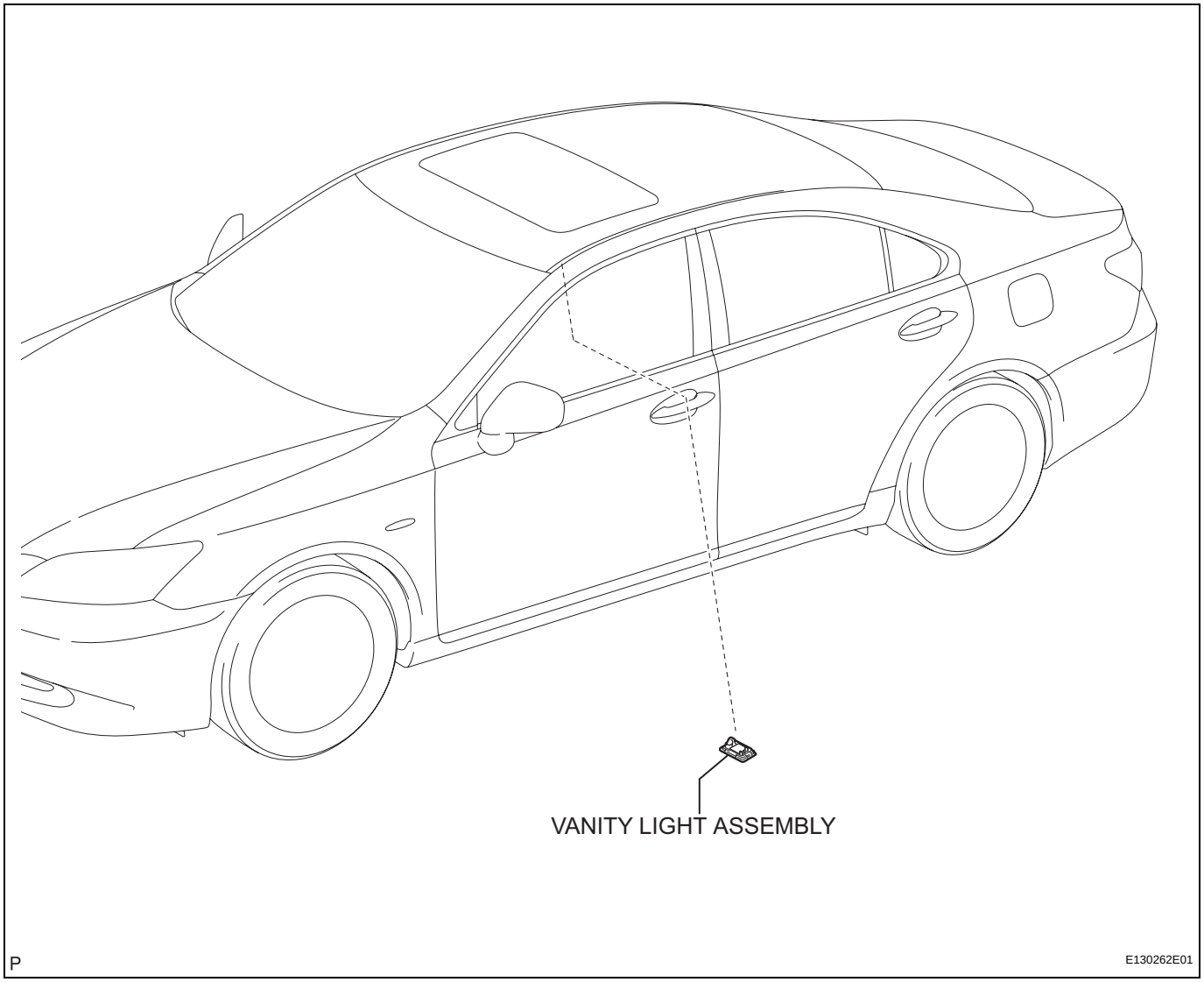

REMOVAL

1. **REMOVE VANITY LIGHT ASSEMBLY (See page IR-50)**

INSPECTION

1. **INSPECT VANITY LIGHT ASSEMBLY**
   (a) Disconnect the Q8 or Q9 vanity light assembly connector.
   (b) Measure the voltage according to the value(s) in the table below.
   Standard voltage:
   LH Side

Tester Connection	Condition	Specified Condition
Q8-1 - Q8-2	Vanity light switch ON	10 to 14 V
	Vanity light switch OFF	Below 1 V

RH Side

Tester Connection	Condition	Specified Condition
Q9-1 - Q9-2	Vanity light switch ON	10 to 14 V
	Vanity light switch OFF	Below 1 V

If the result is not as specified, there is a malfunction on the wire harness side.

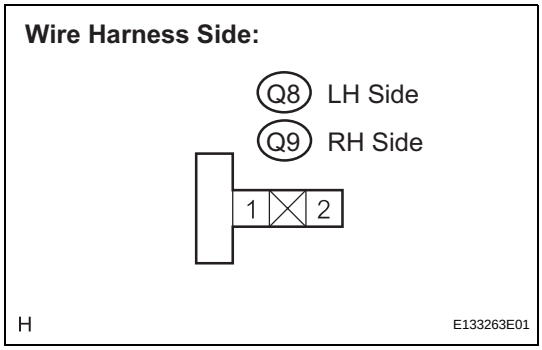

   (c) Apply battery voltage to the vanity light assembly connector.
   (d) Check that the vanity light comes on.
   OK

Measurement Condition	Specified Condition
Battery positive (+) → Terminal 1 Battery negative (-) → Terminal 2	Vanity light comes on

If the result is not as specified, replace the bulb or vanity light assembly.

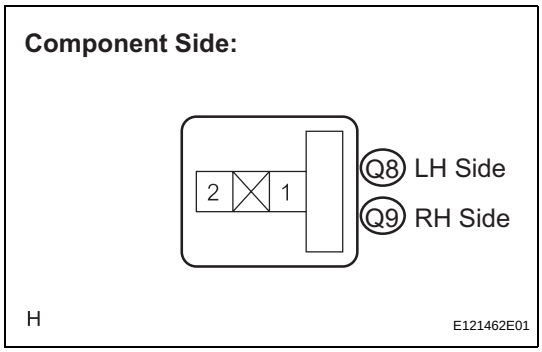

LI

CONSOLE BOX LIGHT

COMPONENTS

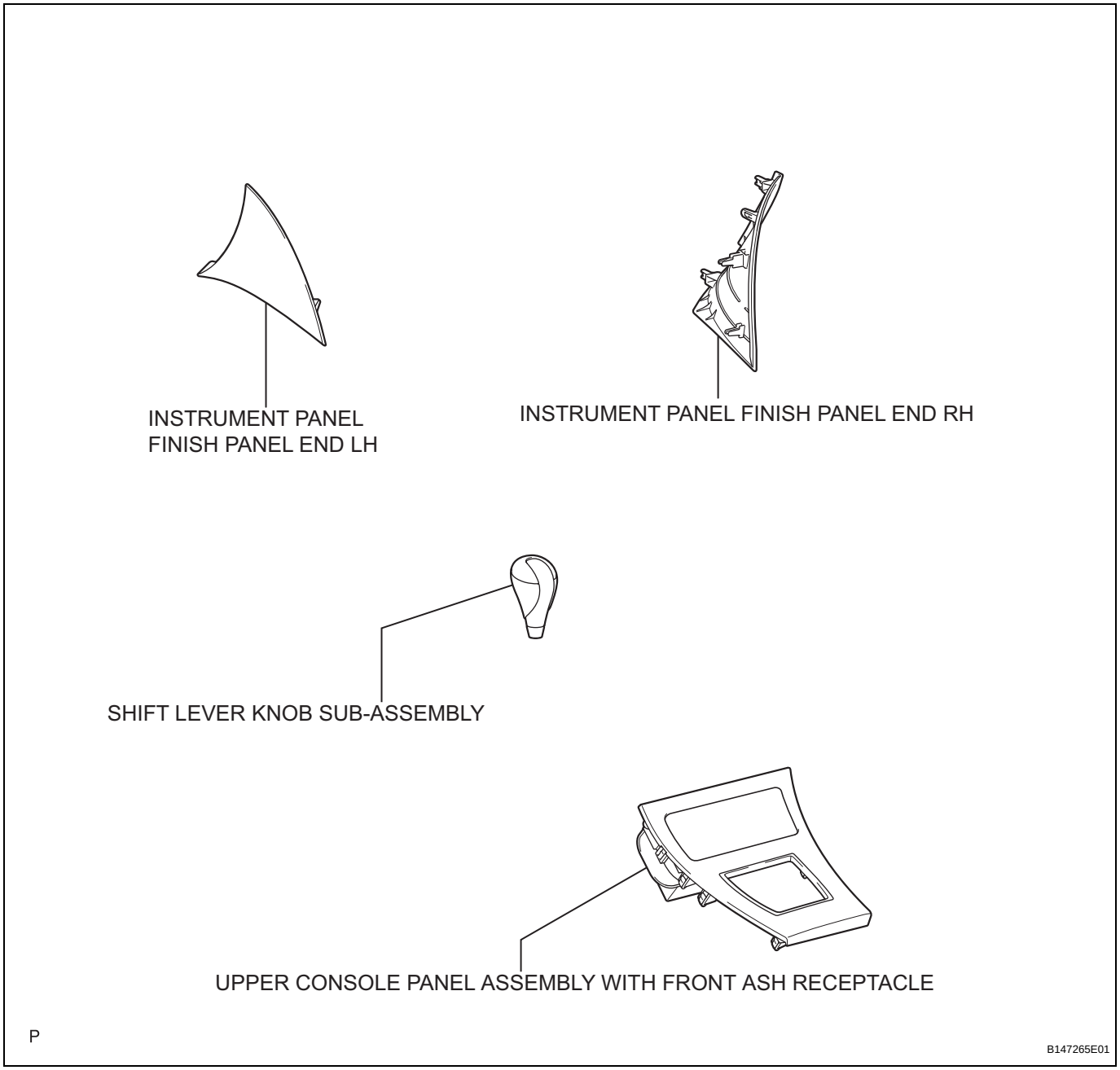

LI

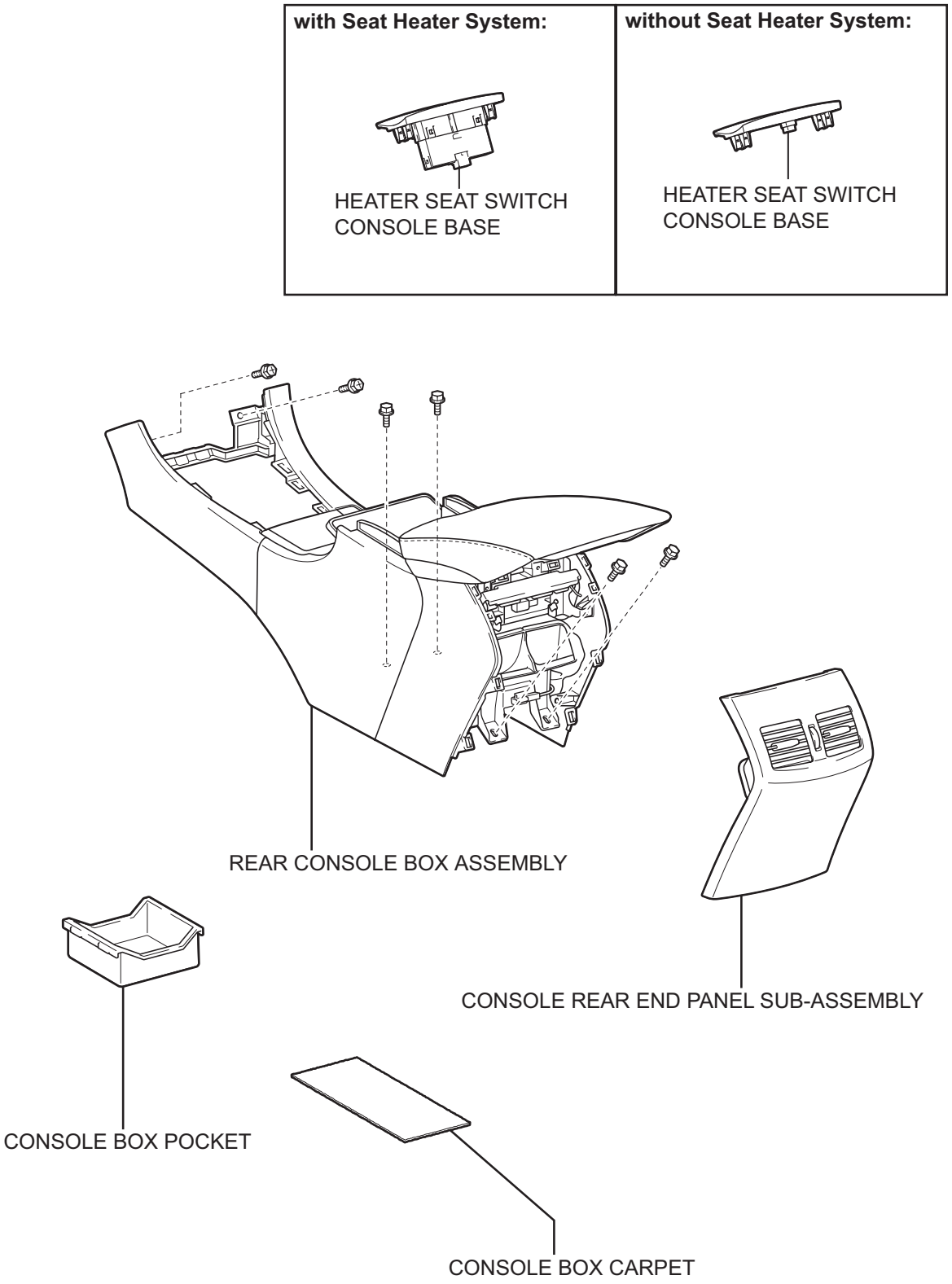

P

B145857E03

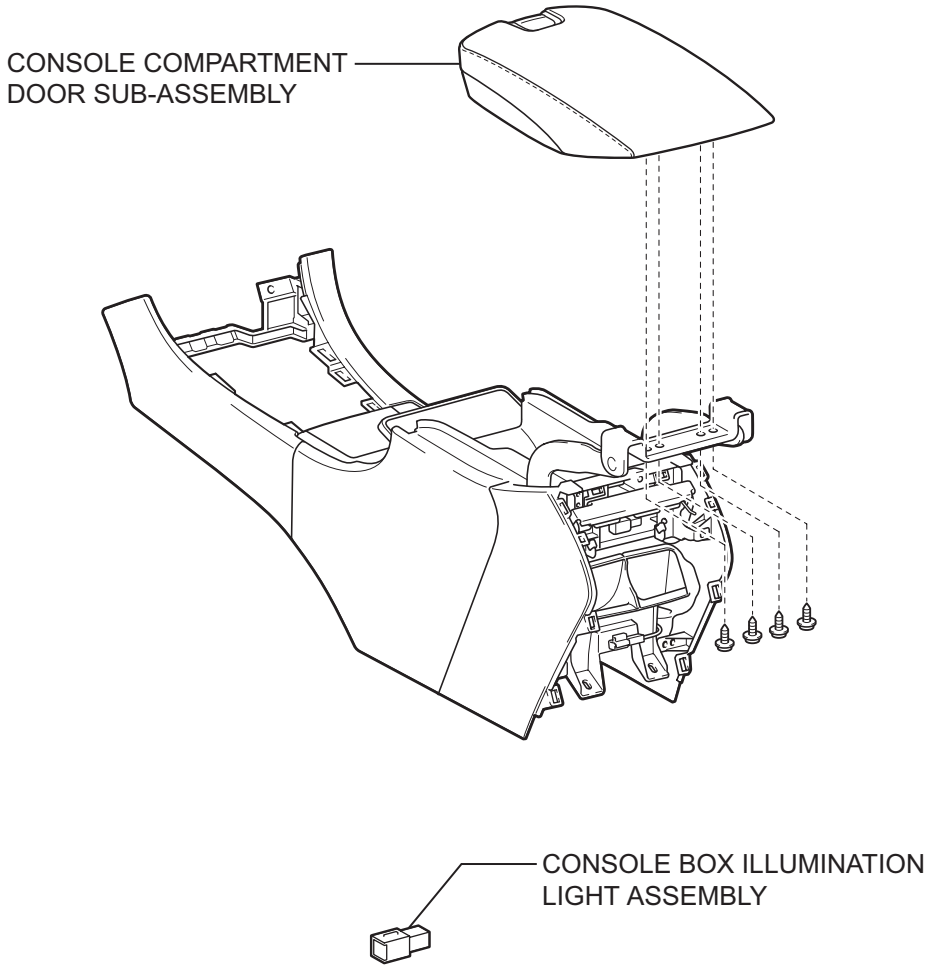

P

E130275E01

FOOTWELL LIGHT

COMPONENTS

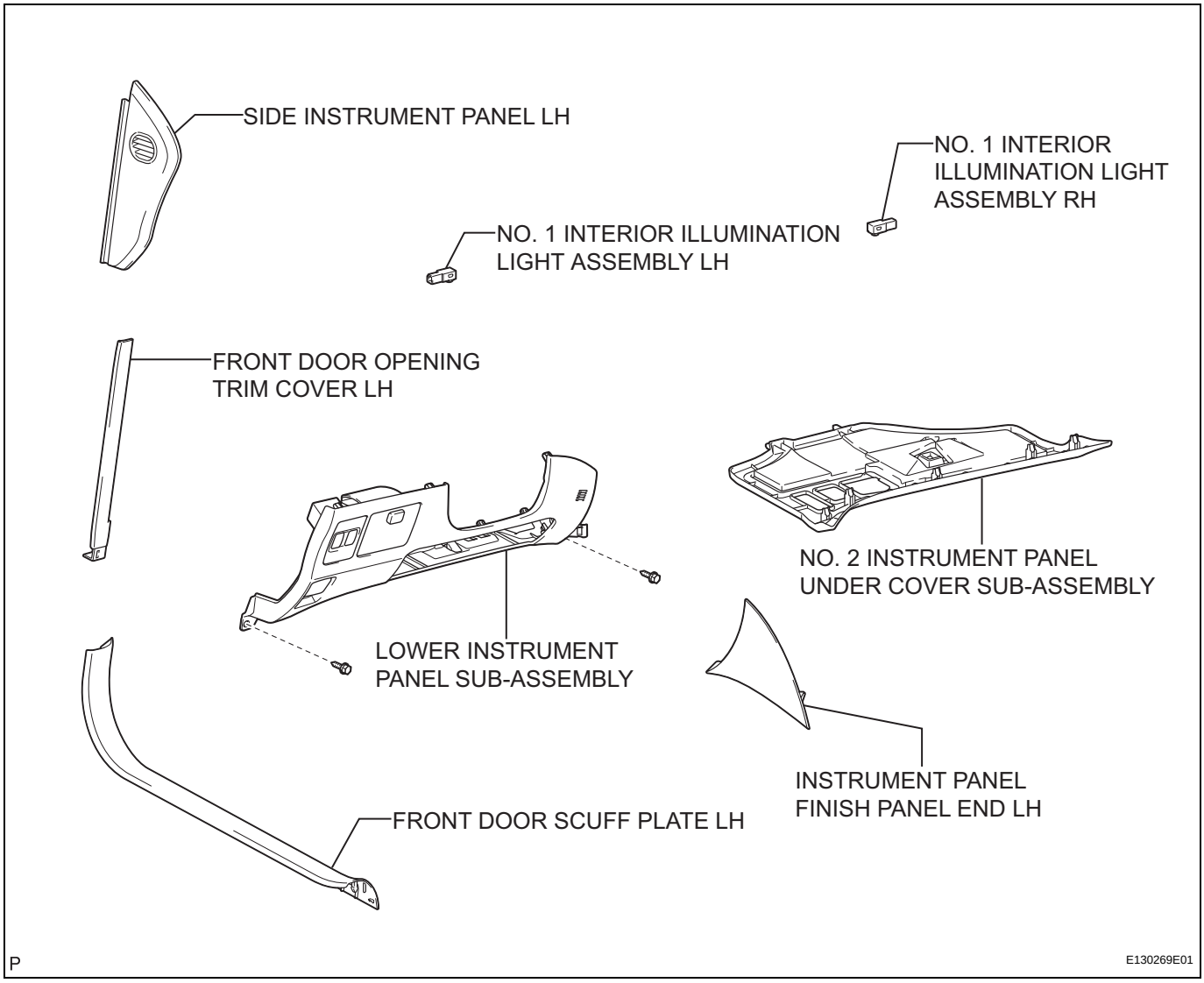

REMOVAL

1. **REMOVE FRONT DOOR SCUFF PLATE LH (See page IR-39)**
2. **REMOVE FRONT DOOR OPENING TRIM COVER LH (See page IR-39)**
3. **REMOVE SIDE INSTRUMENT PANEL LH (See page IP-12)**
4. **REMOVE INSTRUMENT PANEL FINISH PANEL END LH (See page IP-13)**
5. **REMOVE LOWER INSTRUMENT PANEL SUB-ASSEMBLY (See page IP-13)**
6. **REMOVE NO. 1 INTERIOR ILLUMINATION LIGHT ASSEMBLY LH**
   (a) Disengage the 2 claws and remove the No. 1 interior illumination light assembly LH.
7. **REMOVE NO. 2 INSTRUMENT PANEL UNDER COVER SUB-ASSEMBLY (See page IP-15)**

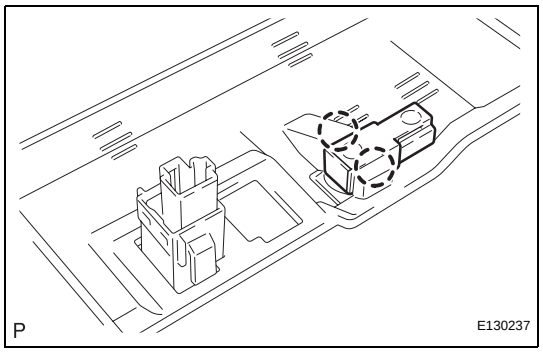

8. **REMOVE NO. 1 INTERIOR ILLUMINATION LIGHT ASSEMBLY RH**
   Disengage the 2 claws and remove the No. 1 interior illumination light assembly RH.

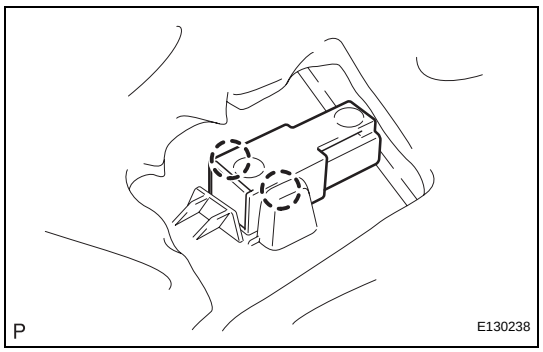

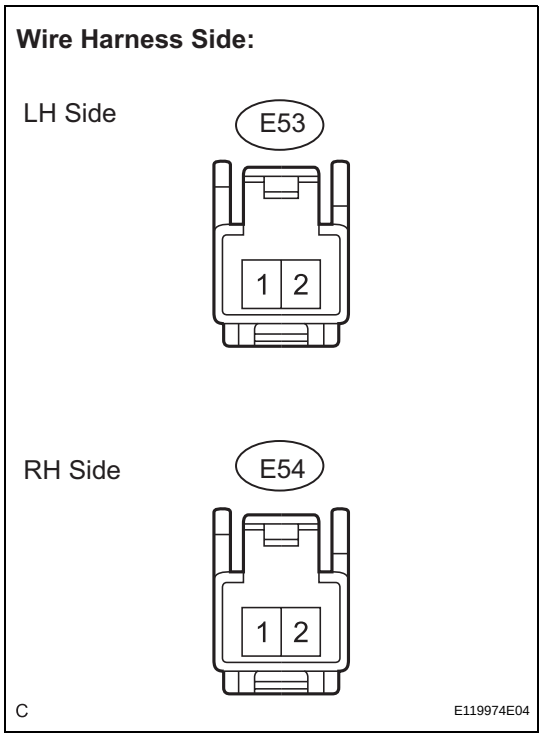

INSPECTION

1. INSPECT FOOTWELL LIGHT

(a) Disconnect the E53 or E54 footwell light connector.

(b) Measure the voltage according to the value(s) in the tables below.

Standard voltage:

LH Side

Tester Connection	Condition	Specified Condition
E53-2 - E53-1	Any door is opened.	10 to 14 V
	Any door is unlocked when the engine switch is off and all doors are closed.	10 to 14 V
	The engine switch is turned from off to on (IG) when all doors are closed.	10 to 14 V
	The engine switch is turned from on (IG) to off when all door are closed.	Below 1 V
	All doors are locked when the engine switch is off.	Below 1 V

RH Side

Tester Connection	Condition	Specified Condition
E54-2 - E54-1	Any door is opened.	10 to 14 V
	Any door is unlocked when the engine switch is off and all doors are closed.	10 to 14 V
	The engine switch is turned from off to on (IG) when all doors are closed.	10 to 14 V
	The engine switch is turned from on (IG) to off when all door are closed.	Below 1 V
	All doors are locked when the engine switch is off.	Below 1 V

If the result is not as specified, there is a malfunction on the wire harness side.

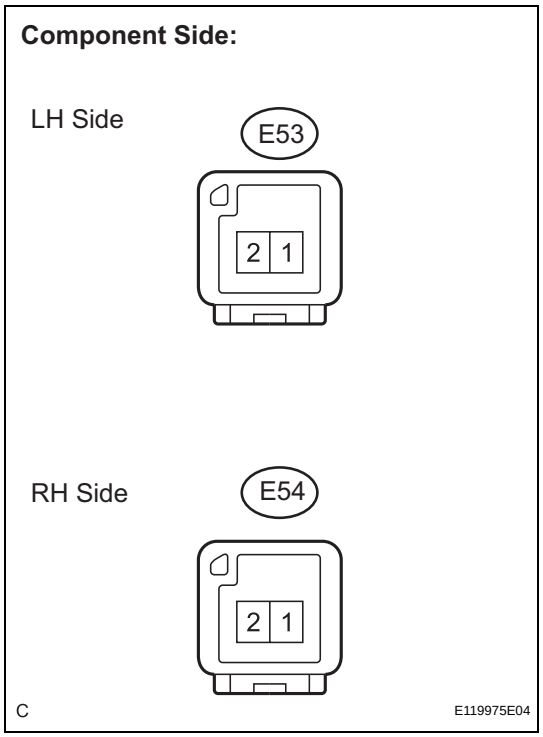

(c) Apply battery voltage to the footwell light connector.
(d) Check that the footwell light comes on.
OK

Measurement Condition	Specified Condition
Battery positive (+) → Terminal 2 Battery negative (-) → Terminal 1	Footwell light comes on

If the result is not as specified, replace the footwell light assembly.

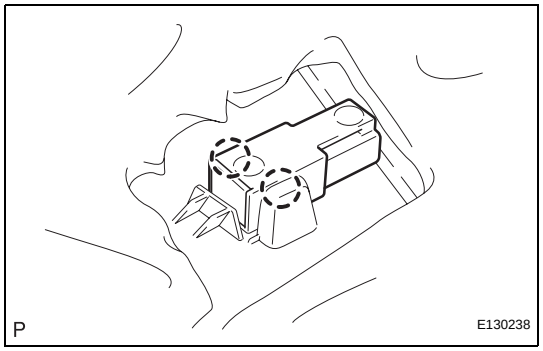

INSTALLATION

1. **INSTALL NO. 1 INTERIOR ILLUMINATION LIGHT ASSEMBLY RH**
   (a) Engage the 2 claws and install the No. 1 interior illumination light assembly RH.
2. **INSTALL NO. 2 INSTRUMENT PANEL UNDER COVER SUB-ASSEMBLY (See page IP-44)**

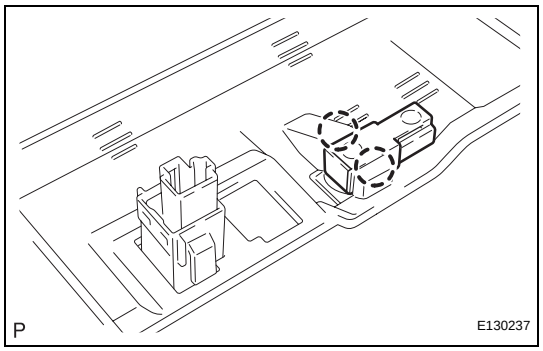

3. **INSTALL NO. 1 INTERIOR ILLUMINATION LIGHT ASSEMBLY LH**
   (a) Engage the 2 claws and install the No. 1 interior illumination light assembly LH.
4. **INSTALL LOWER INSTRUMENT PANEL SUB-ASSEMBLY (See page IP-46)**
5. **INSTALL INSTRUMENT PANEL FINISH PANEL END LH (See page IP-46)**
6. **INSTALL SIDE INSTRUMENT PANEL LH (See page IP-47)**
7. **INSTALL FRONT DOOR OPENING TRIM COVER LH (See page IR-64)**
8. **INSTALL FRONT DOOR SCUFF PLATE LH (See page IR-65)**

DOOR MIRROR FOOT LIGHT

COMPONENTS

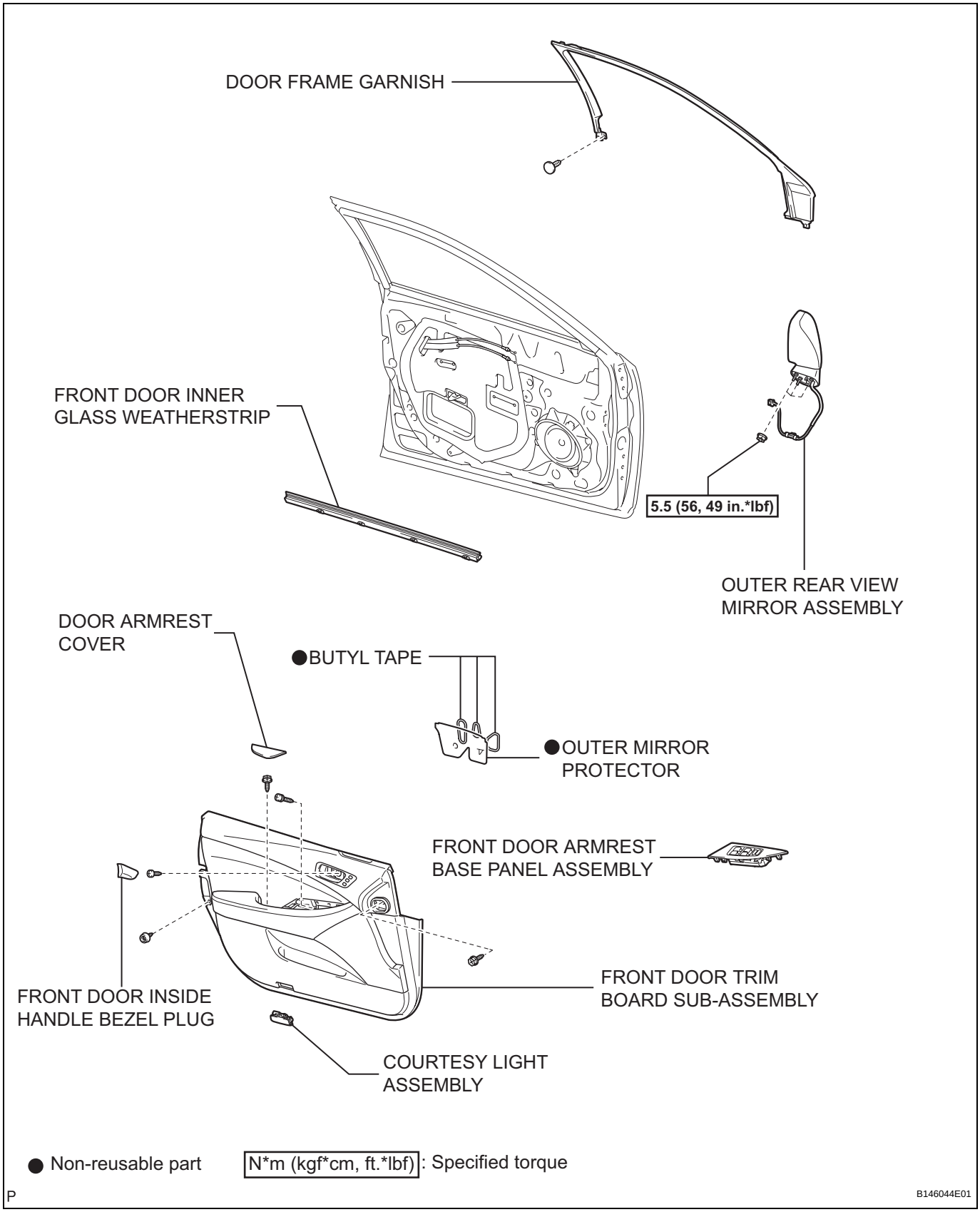

REMOVAL

1. **REMOVE FRONT DOOR INSIDE HANDLE BEZEL PLUG (See page ED-32)**
2. **REMOVE FRONT DOOR ARMREST BASE PANEL ASSEMBLY (See page ED-33)**
3. **REMOVE COURTESY LIGHT ASSEMBLY (See page ED-34)**
4. **REMOVE DOOR ARMREST COVER (See page ED-34)**
5. **REMOVE FRONT DOOR TRIM BOARD SUB-ASSEMBLY (See page ED-34)**
6. **REMOVE FRONT DOOR INNER GLASS WEATHERSTRIP (See page ED-35)**
7. **REMOVE DOOR FRAME GARNISH (See page ED-35)**
8. **REMOVE OUTER MIRROR PROTECTOR (See page ED-35)**
9. **REMOVE OUTER REAR VIEW MIRROR ASSEMBLY (See page MI-46)**

INSPECTION

1. **INSPECT DOOR MIRROR FOOT LIGHT**
   (a) Disconnect the connector from the outer rear view mirror assembly.
   (b) Measure the voltage according to the value(s) in the tables below.
   Standard voltage:
   LH Side

Tester Connection	Condition	Specified Condition
I3-2 - I3-12	Doors are unlocked by the transmitter	10 to 14 V
I3-2 - I3-12	All doors are locked	Below 1 V

RH Side

Tester Connection	Condition	Specified Condition
H4-2 - H4-12	Doors are unlocked by the transmitter	10 to 14 V
H4-2 - H4-12	All doors are locked	Below 1 V

If the result is not as specified, there is a malfunction on the wire harness side.

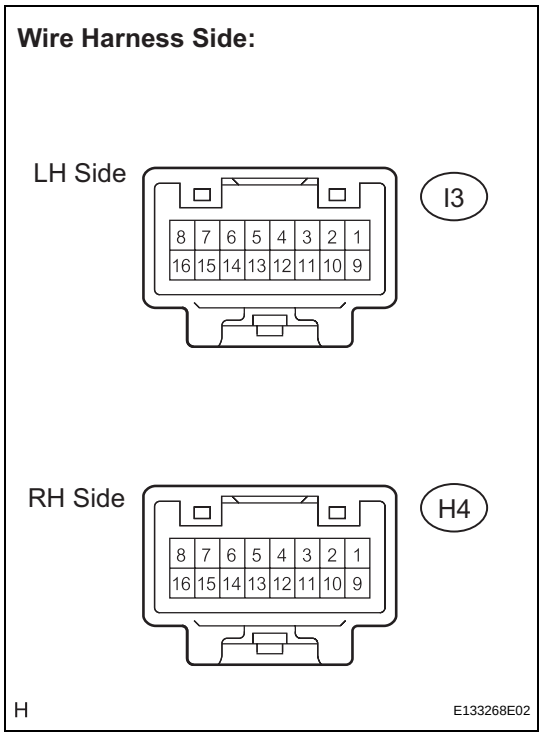

Component Side:

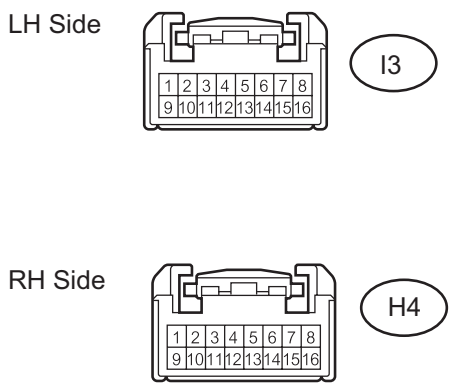

E133267E03

(c) Apply battery voltage to the outer rear view mirror assembly connector.

(d) Check that the door mirror foot light comes on.

OK

Measurement Condition	Specified Condition
Battery positive (+) → Terminal 2 **Battery negative (-) → Terminal 12**	**Door mirror foot light comes on**

If the result is not as specified, replace the outer rear view mirror assembly.

HEADLIGHT DIMMER SWITCH

COMPONENTS

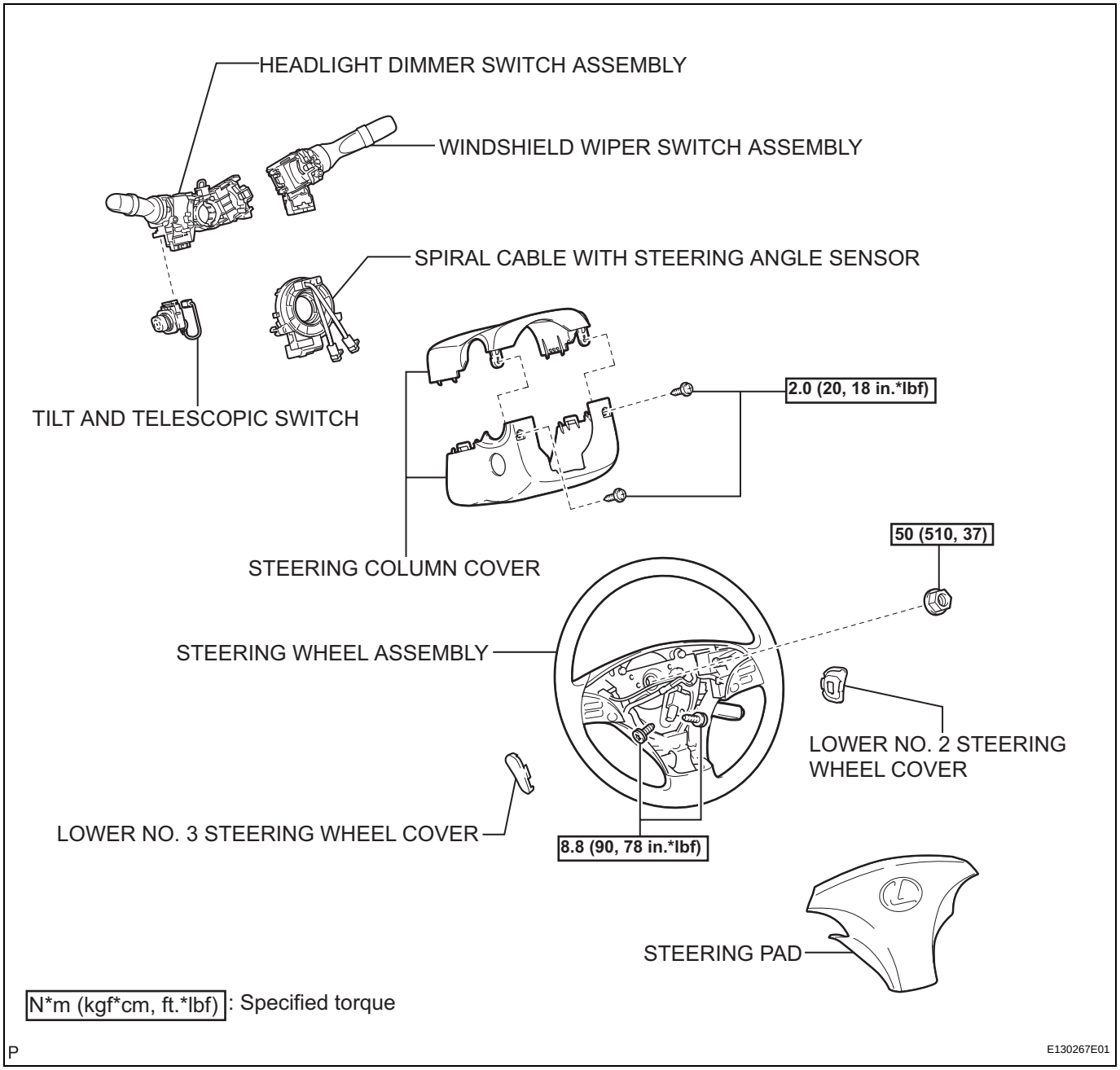

LI

LI

REMOVAL

1. **PRECAUTION**
   CAUTION:
   Be sure to read "PRECAUTION" thoroughly before servicing (See page RS-1).
2. **ALIGN FRONT WHEELS FACING STRAIGHT AHEAD**
3. **DISCONNECT CABLE FROM NEGATIVE BATTERY TERMINAL**
   NOTICE:
   Wait for 90 seconds after disconnecting the cable to prevent airbag deployment.
4. **REMOVE LOWER NO. 2 STEERING WHEEL COVER (See page RS-367)**
5. **REMOVE LOWER NO. 3 STEERING WHEEL COVER (See page RS-367)**
6. **REMOVE STEERING PAD (See page RS-367)**
7. **REMOVE STEERING WHEEL ASSEMBLY (See page SR-80)**
8. **REMOVE STEERING COLUMN COVER (See page SR-80)**
9. **REMOVE SPIRAL CABLE WITH STEERING ANGLE SENSOR (See page RS-379)**
10. **REMOVE WINDSHIELD WIPER SWITCH ASSEMBLY (See page WW-54)**
11. **REMOVE TILT AND TELESCOPIC SWITCH (See page SR-80)**
12. **REMOVE HEADLIGHT DIMMER SWITCH ASSEMBLY**
    (a) Disconnect the connector.
    (b) Disengage the clamp as shown in the illustration.

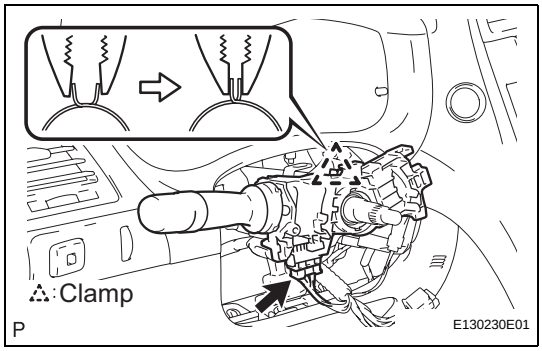

(c) Disengage the claw and remove the headlight dimmer switch assembly as shown in the illustration.

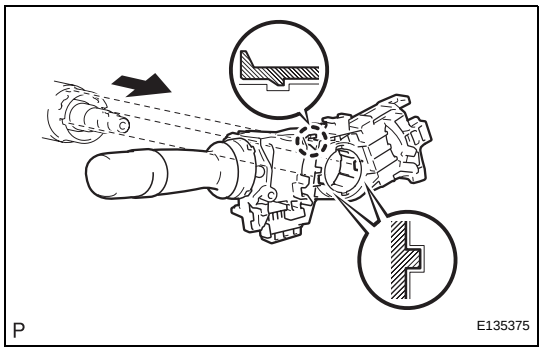

HAZARD WARNING SWITCH

COMPONENTS

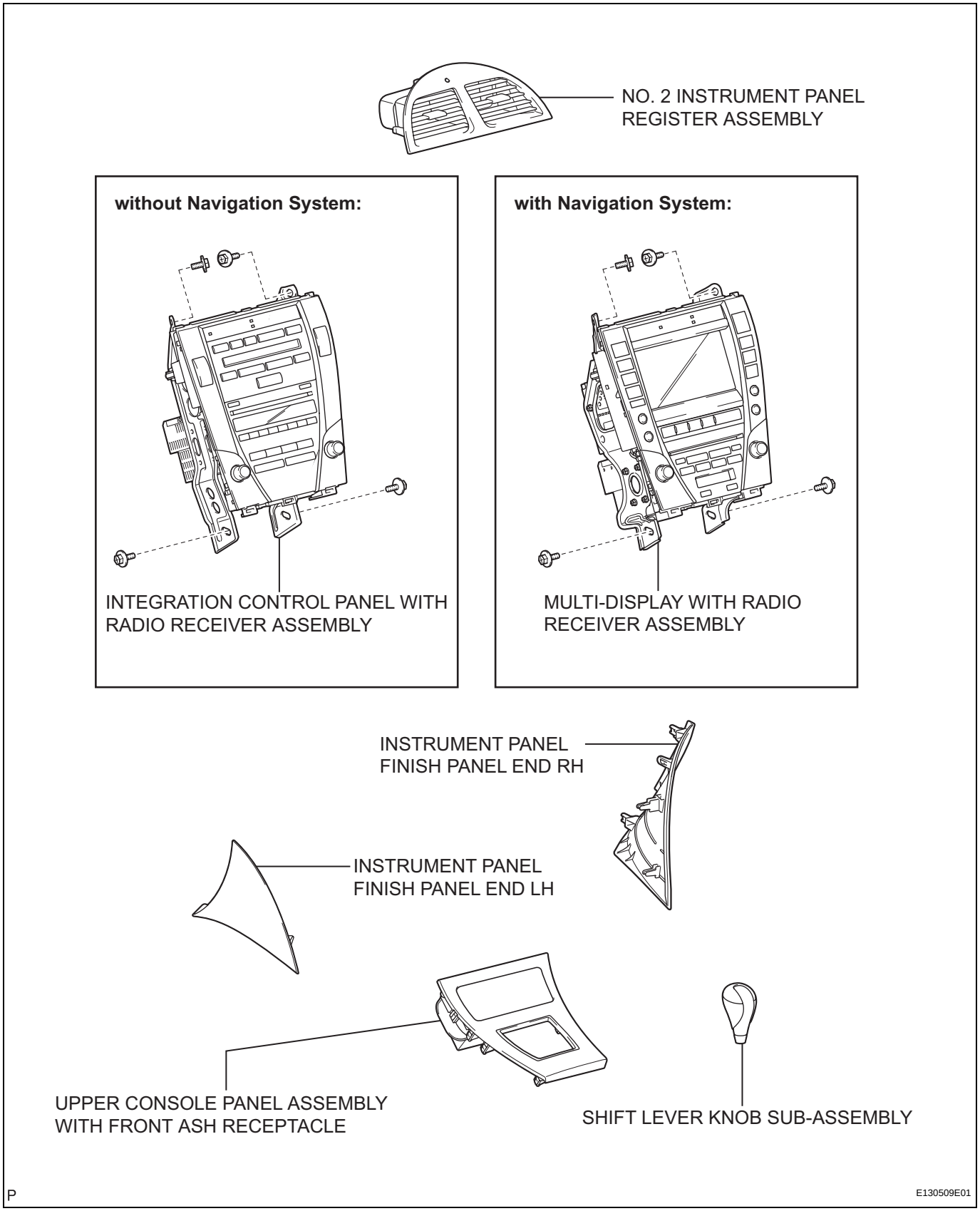

without Navigation System:

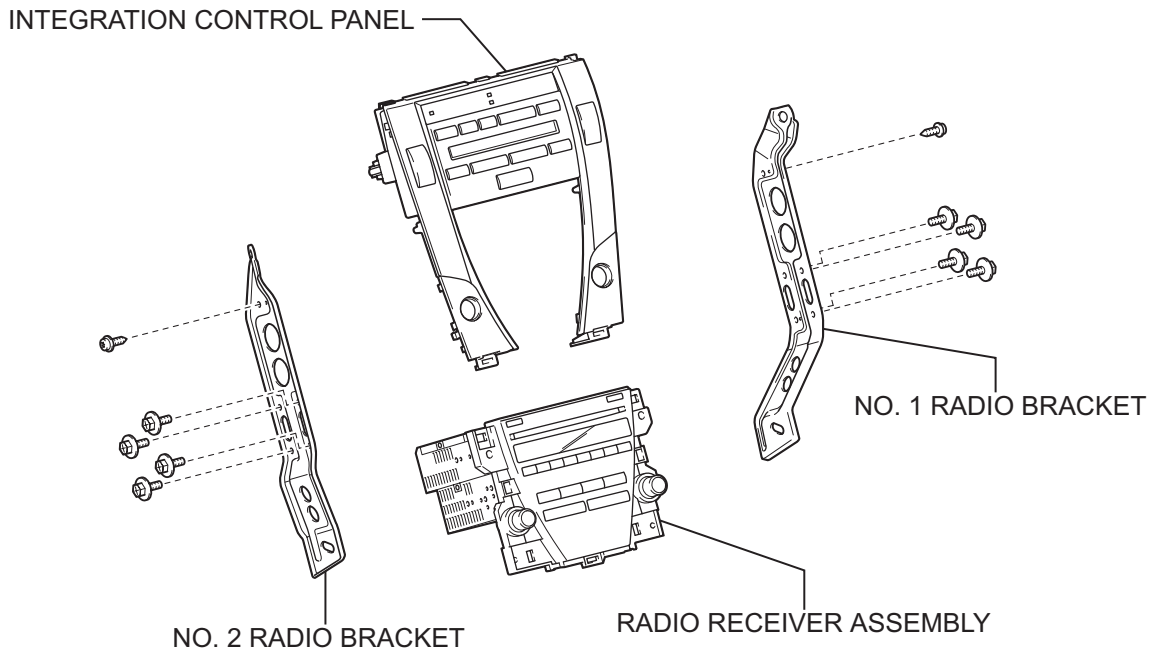

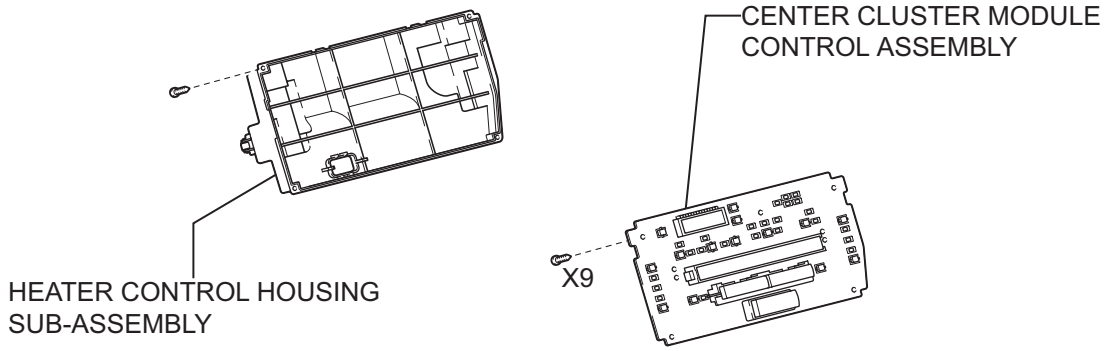

P

E130278E01

with Navigation System:

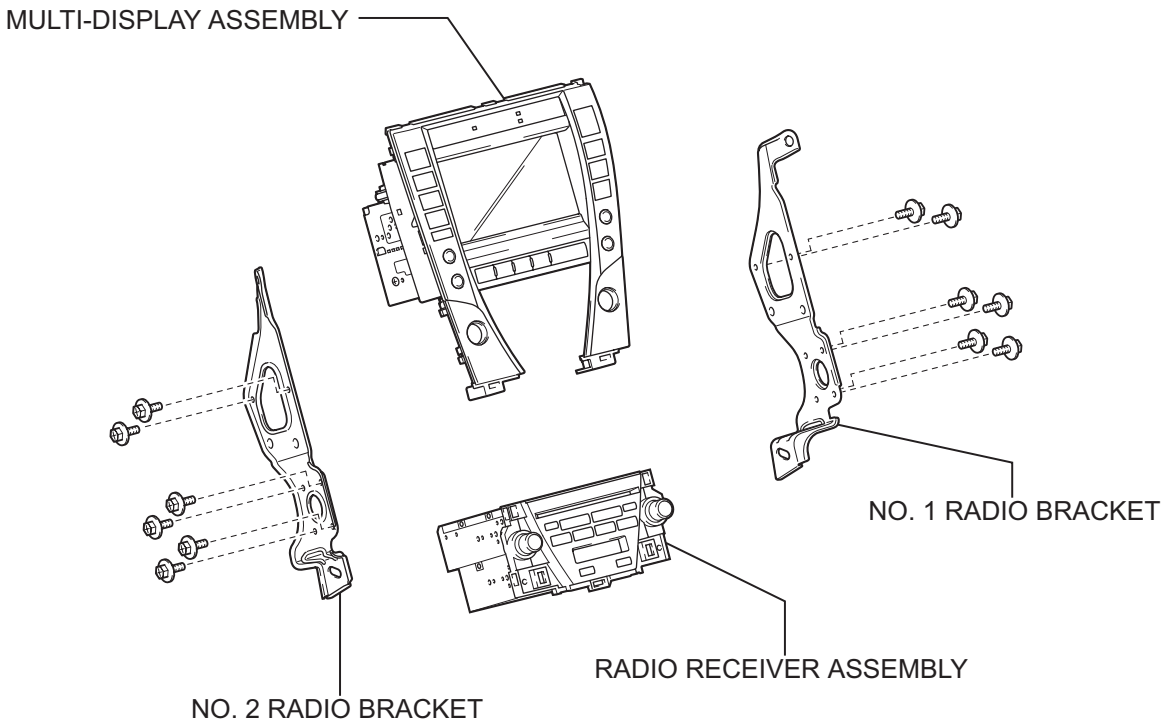

P

E130279E01

AFS OFF SWITCH

COMPONENTS

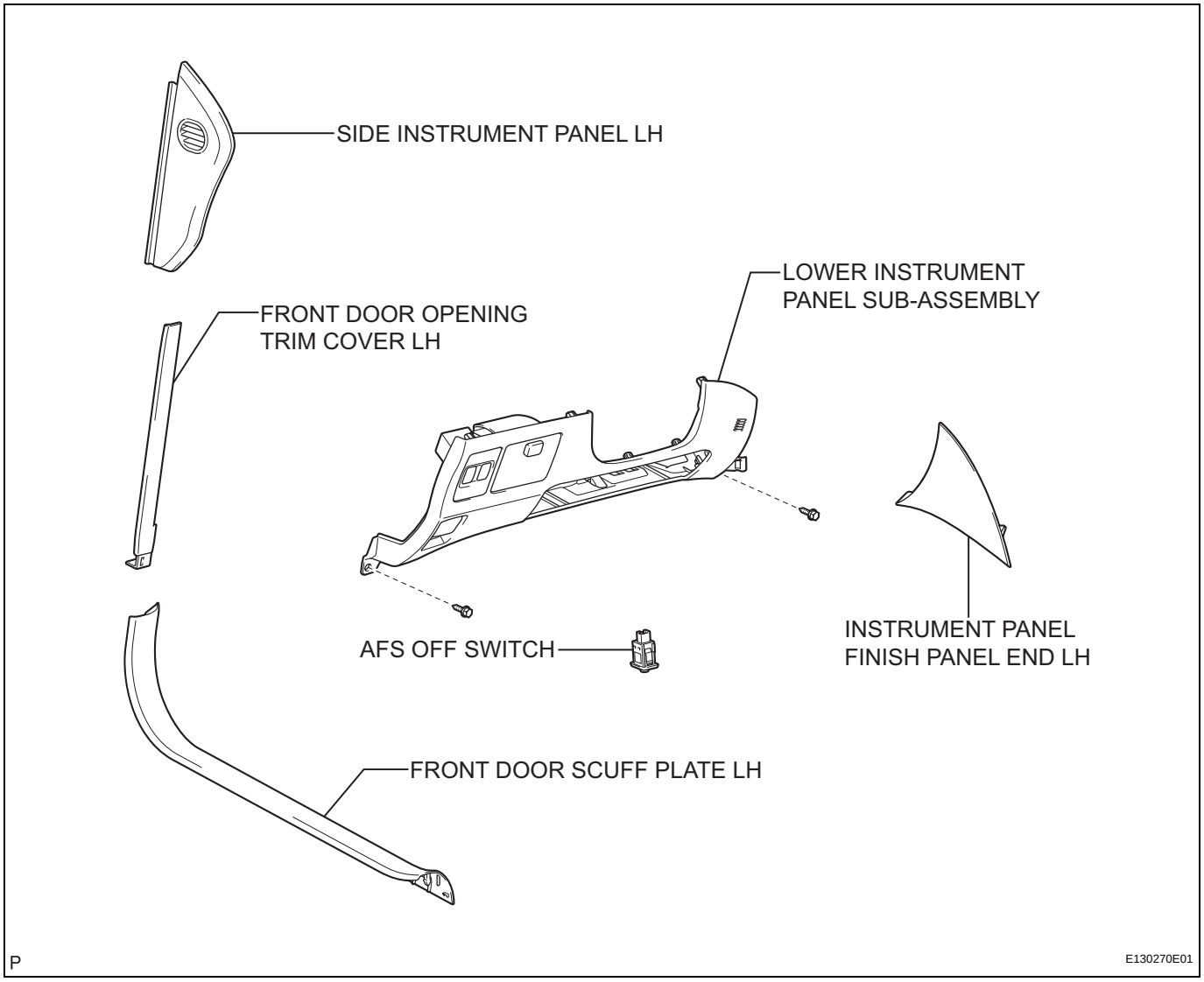

LI

REMOVAL

1. **REMOVE FRONT DOOR SCUFF PLATE LH (See page IR-39)**
2. **REMOVE FRONT DOOR OPENING TRIM COVER LH (See page IR-39)**
3. **REMOVE SIDE INSTRUMENT PANEL LH (See page IP-12)**
4. **REMOVE INSTRUMENT PANEL FINISH PANEL END LH (See page IP-13)**
5. **REMOVE LOWER INSTRUMENT PANEL SUB-ASSEMBLY (See page IP-13)**
6. **REMOVE AFS OFF SWITCH**
   (a) Disengage the 2 claws and remove the AFS OFF switch.

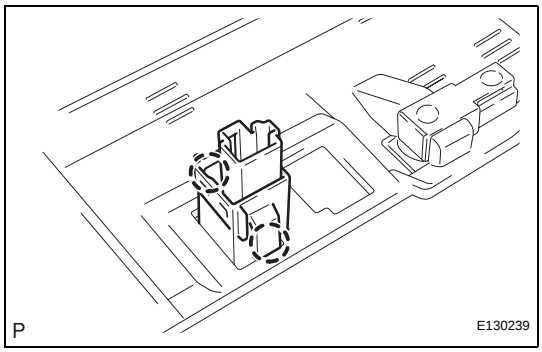

INSPECTION

1. **INSPECT AFS OFF SWITCH**
   (a) Measure the resistance according to the value(s) in the table below.
   Standard resistance

Tester Connection	Switch Condition	Specified Condition
1 - 2	Not pushed (OFF)	10 kΩ or higher
	Pushed (ON)	Below 1 Ω

If the result is not specified, replace the AFS OFF switch

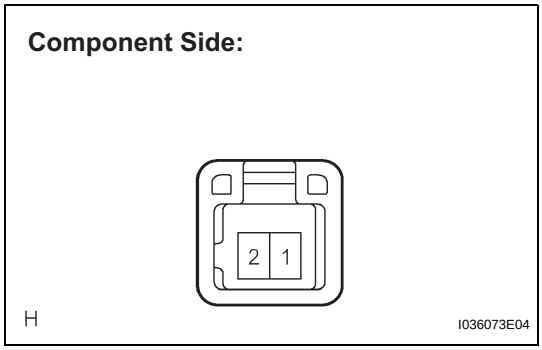

INSTALLATION

1. **INSTALL AFS OFF SWITCH**
   (a) Engage the 2 claws and install the AFS OFF switch.
2. **INSTALL LOWER INSTRUMENT PANEL SUB-ASSEMBLY (See page IP-46)**
3. **INSTALL INSTRUMENT PANEL FINISH PANEL END LH (See page IP-46)**
4. **INSTALL SIDE INSTRUMENT PANEL LH (See page IP-47)**
5. **INSTALL FRONT DOOR OPENING TRIM COVER LH (See page IR-64)**
6. **INSTALL FRONT DOOR SCUFF PLATE LH (See page IR-65)**

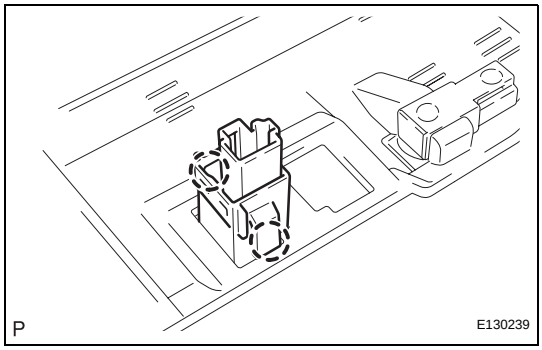

STOP LIGHT SWITCH

COMPONENTS

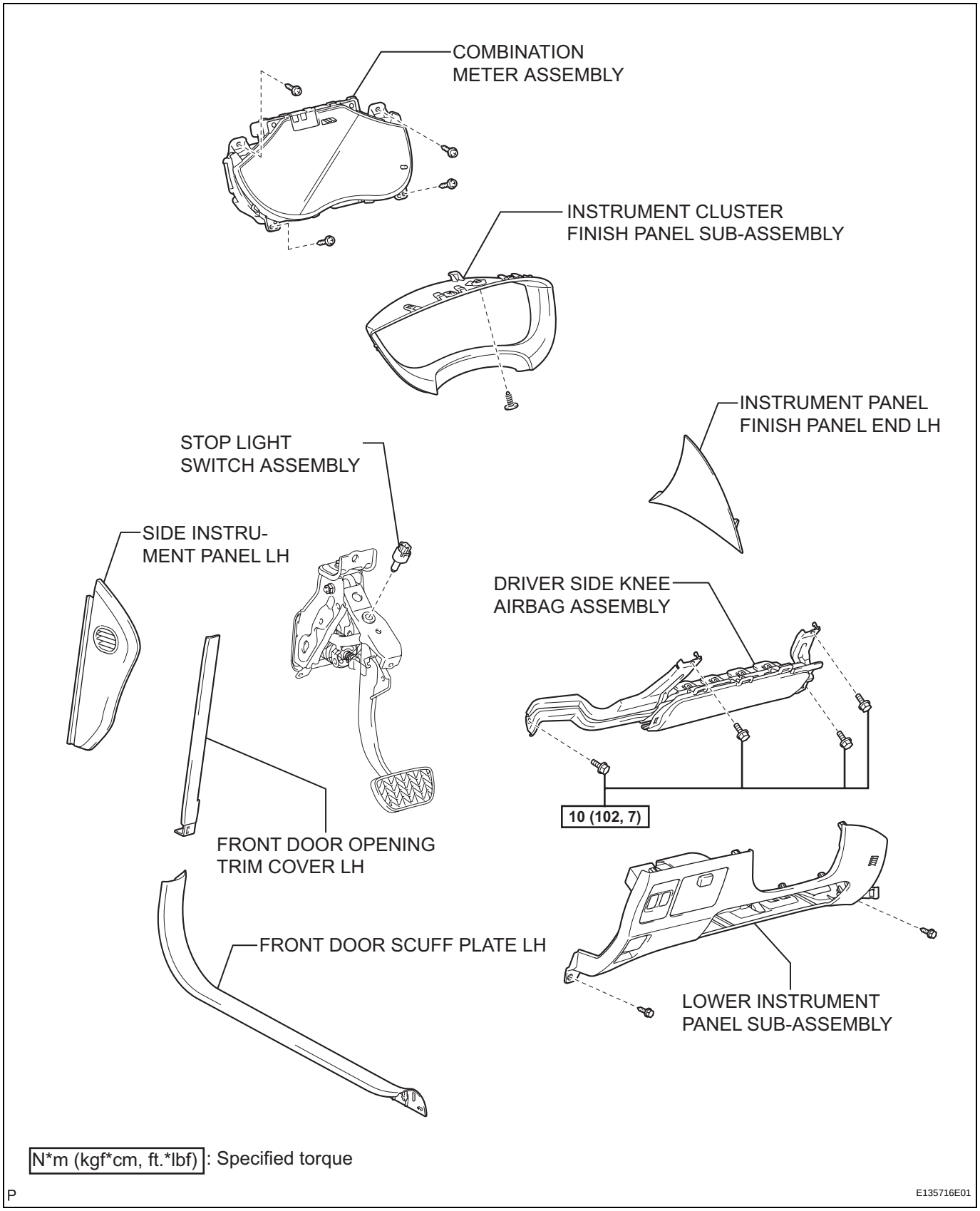

LI

LI

REMOVAL

1. **PRECAUTION**
   CAUTION:
   Be sure to read "PRECAUTION" thoroughly before servicing (See page RS-1).
2. **DISCONNECT CABLE FROM NEGATIVE BATTERY TERMINAL**
   NOTICE:
   Wait for 90 seconds after disconnecting the cable to prevent airbag deployment.
3. **REMOVE FRONT DOOR SCUFF PLATE LH (See page IR-39)**
4. **REMOVE FRONT DOOR OPENING TRIM COVER LH (See page IR-39)**
5. **REMOVE SIDE INSTRUMENT PANEL LH (See page IP-12)**
6. **REMOVE INSTRUMENT PANEL FINISH PANEL END LH (See page IP-13)**
7. **REMOVE LOWER INSTRUMENT PANEL SUB-ASSEMBLY (See page IP-13)**
8. **REMOVE DRIVER SIDE KNEE AIRBAG ASSEMBLY (See page RS-386)**
9. **REMOVE INSTRUMENT CLUSTER FINISH PANEL SUB-ASSEMBLY (See page ME-68)**
10. **REMOVE COMBINATION METER ASSEMBLY (See page ME-69)**
11. **REMOVE STOP LIGHT SWITCH ASSEMBLY (See page BR-59)**

INSPECTION

1. **INSPECT STOP LIGHT SWITCH ASSEMBLY**
   (a) Measure the resistance according to the value(s) in the table below.
   Standard resistance

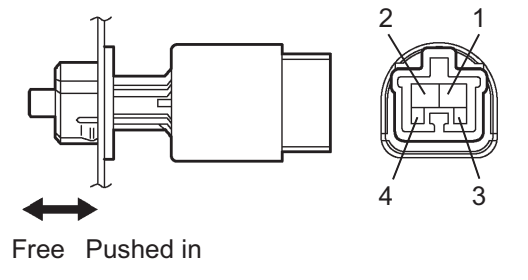

Tester Connection	Switch Position	Specified Condition
1 - 2	Switch pin free	10 kΩ or higher
3 - 4	Switch pin free	Below 1 Ω
1 - 2	Switch pin pushed in	Below 1 Ω
3 - 4	Switch pin pushed in	10 kΩ or higher

If the result is not as specified, replace the stop light switch assembly.

FRONT DOOR COURTESY SWITCH

COMPONENTS

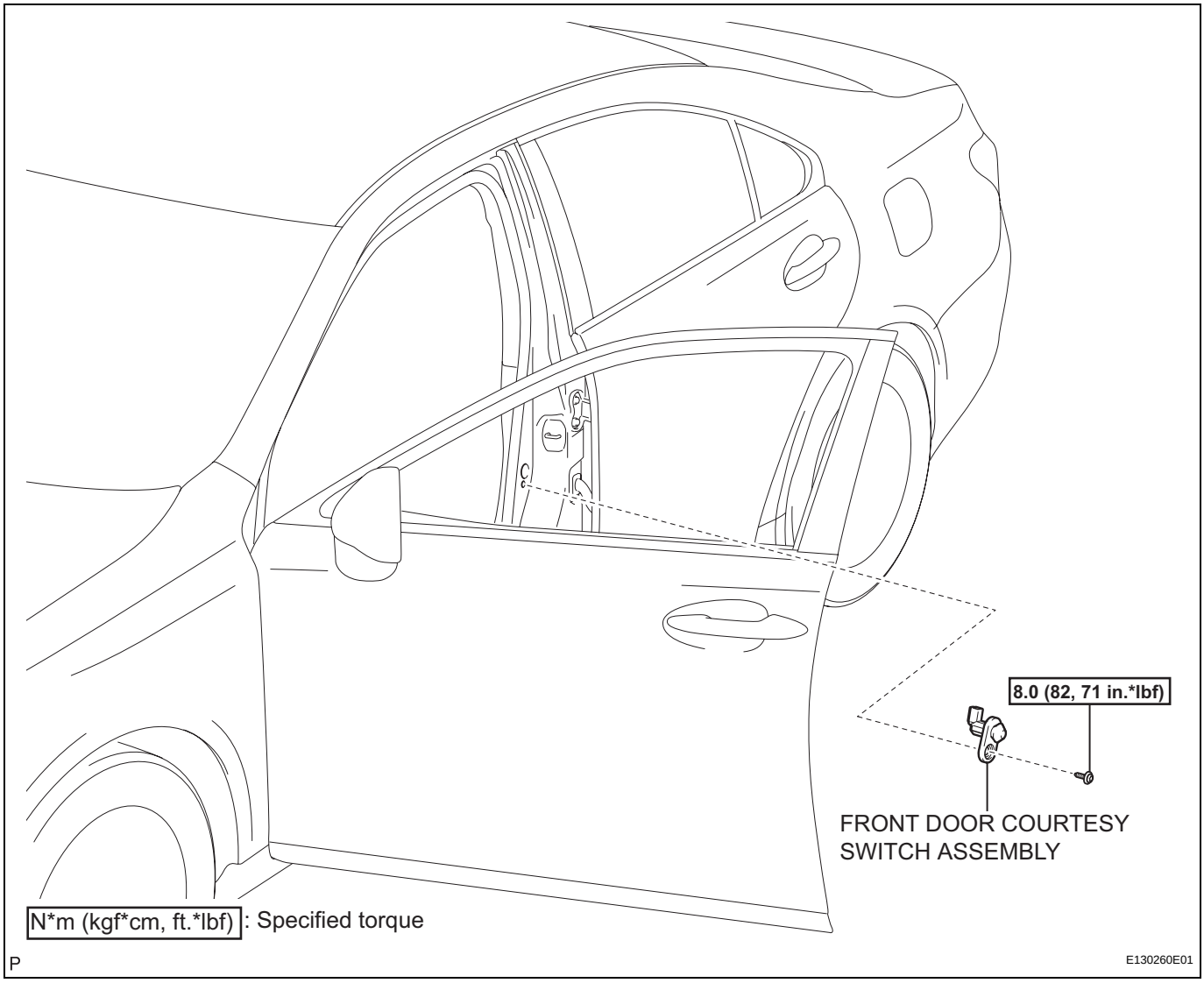

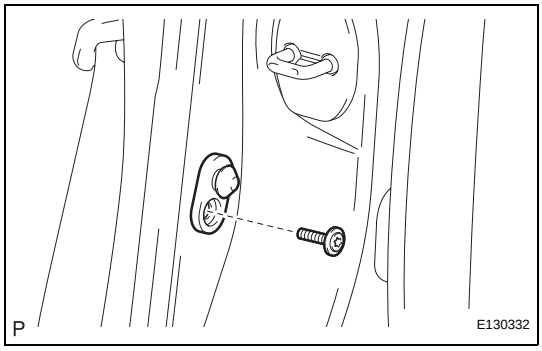

REMOVAL

1. **REMOVE FRONT DOOR COURTESY SWITCH ASSEMBLY**
   (a) Using a "TORX" socket wrench (T30), remove the "TORX" bolt.
   (b) Disconnect the connector and remove the front door courtesy switch assembly.

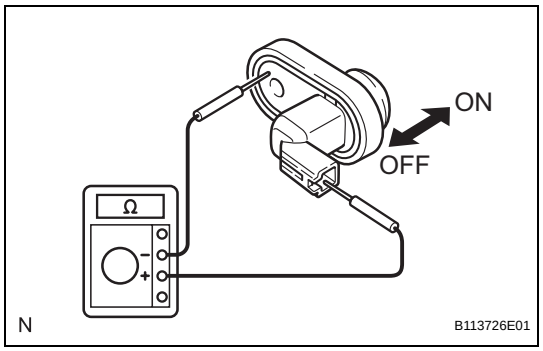

INSPECTION

1. INSPECT FRONT DOOR COURTESY SWITCH

(a) Measure the resistance according to the value(s) in the table below.

Standard resistance

Tester Connection	Switch Condition	Specified Condition
1 - Switch body	Pushed (OFF)	10 kΩ or higher
1 - Switch body	Not pushed (ON)	Below 1 Ω

If the result is not as specified, replace the front door courtesy switch.

REAR DOOR COURTESY SWITCH

COMPONENTS

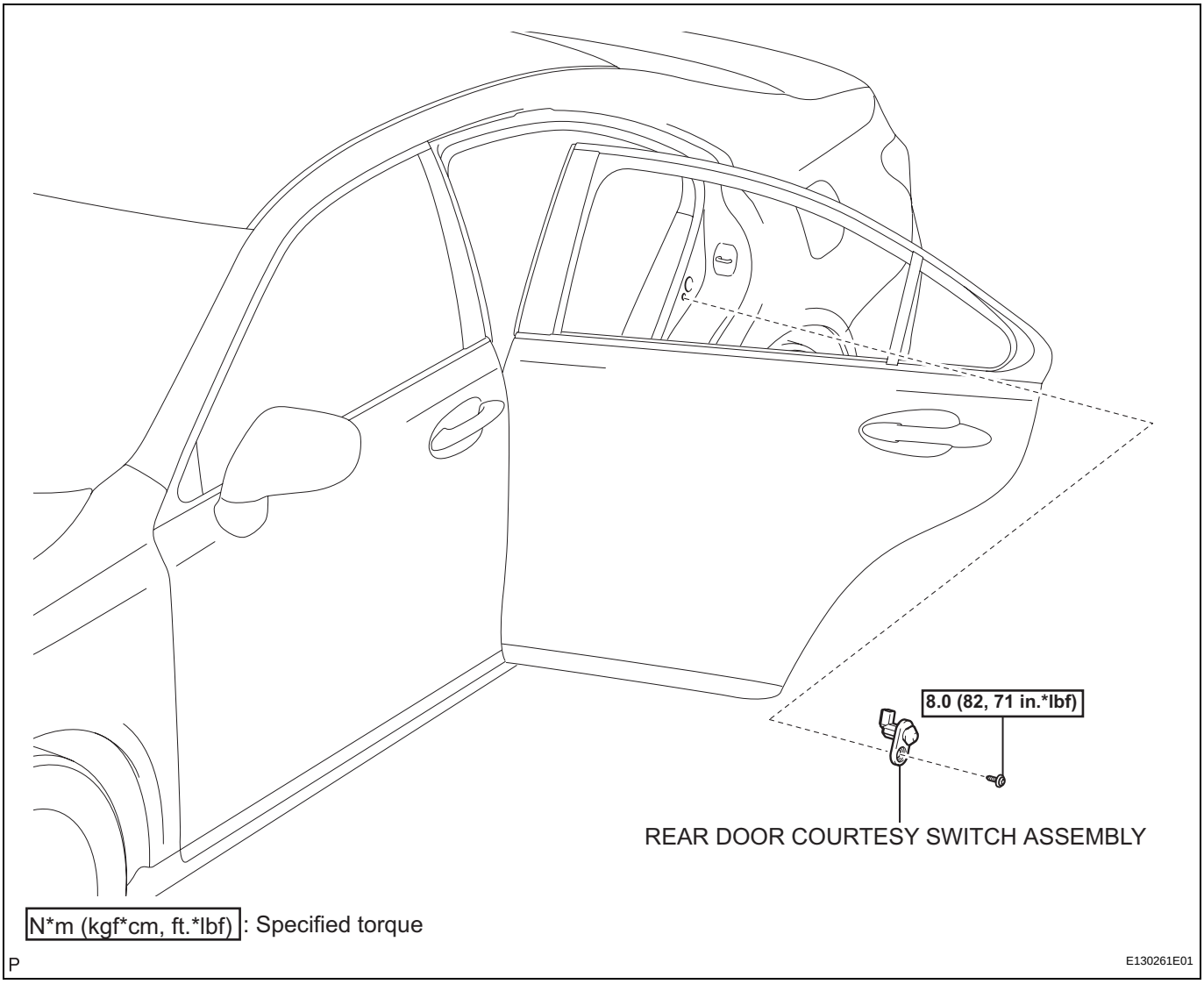

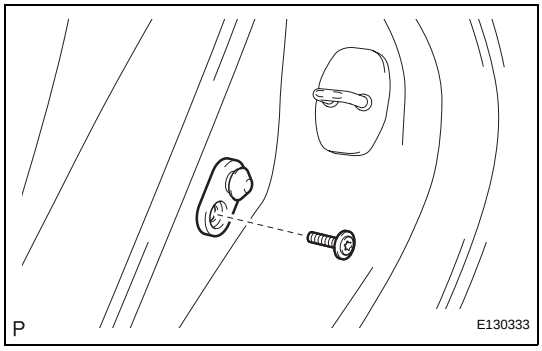

REMOVAL

1. **REMOVE REAR DOOR COURTESY SWITCH ASSEMBLY**
   (a) Using a "TORX" socket wrench (T30), remove the "TORX" bolt.
   (b) Disconnect the connector and remove the rear door courtesy switch assembly.

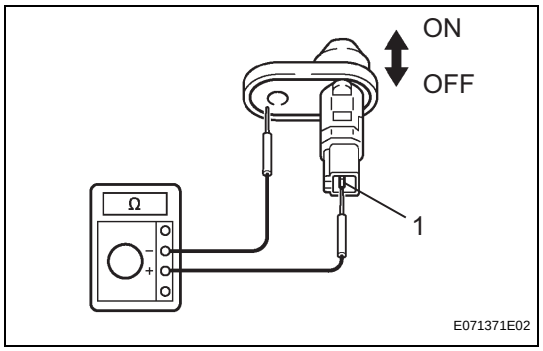

INSPECTION

1. INSPECT REAR DOOR COURTESY SWITCH

(a) Measure the resistance according to the value(s) in the table below.

Standard resistance

Tester Connection	Switch Condition	Specified Condition
1 - Switch body	Pushed (OFF)	10 kΩ or higher
1 - Switch body	Not pushed (ON)	Below 1 Ω

If the result is not as specified, replace the rear door courtesy switch.

BACK DOOR COURTESY SWITCH

COMPONENTS

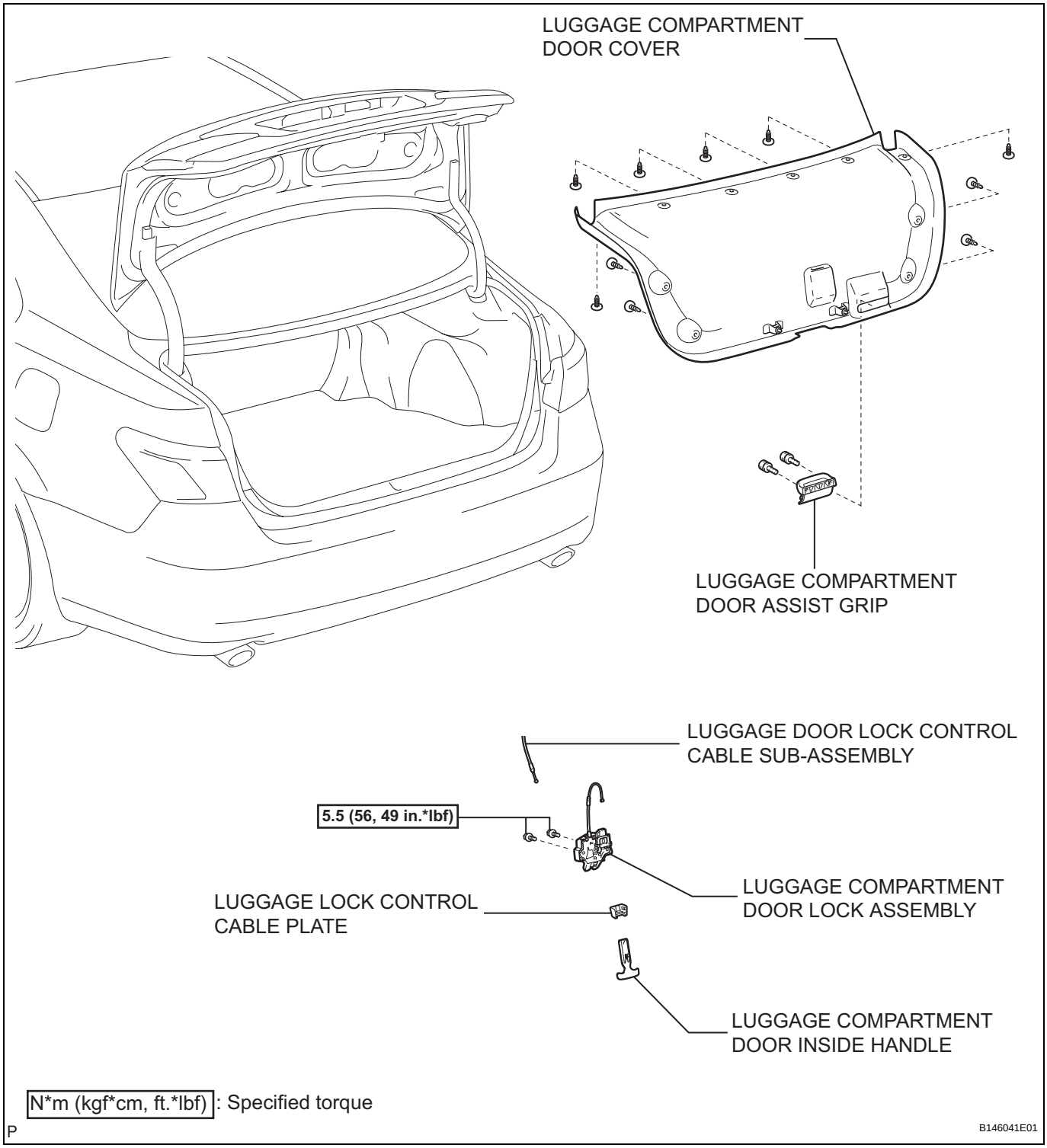

REMOVAL

1. **REMOVE LUGGAGE COMPARTMENT DOOR ASSIST GRIP (See page ET-71)**
2. **REMOVE LUGGAGE LOCK CONTROL CABLE PLATE (See page ET-71)**
3. **REMOVE LUGGAGE COMPARTMENT DOOR INSIDE HANDLE (See page ET-71)**
4. **REMOVE LUGGAGE COMPARTMENT DOOR COVER (See page ET-72)**
5. **REMOVE LUGGAGE COMPARTMENT DOOR LOCK ASSEMBLY (See page ED-91)**

INSPECTION

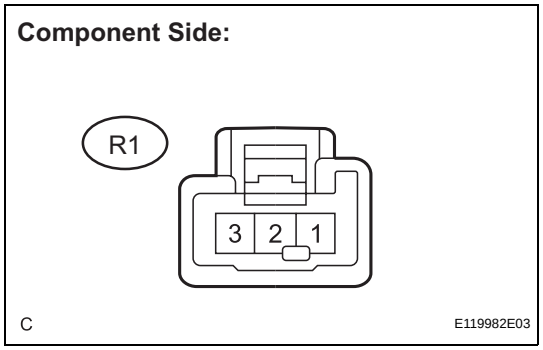

1. **INSPECT LUGGAGE COMPARTMENT DOOR LOCK ASSEMBLY (BACK DOOR COURTESY SWITCH)**
   (a) Measure the resistance according to the value(s) in the table below.
   Standard resistance

Tester Connection	Switch Condition	Specified Condition
R1-2 - R1-3	Back door courtesy switch OFF	10 kΩ or higher
	Back door courtesy switch ON	Below 1 Ω

If the result is not as specified, replace the luggage compartment door lock assembly.

LI

AUTOMATIC LIGHT CONTROL SENSOR

COMPONENTS

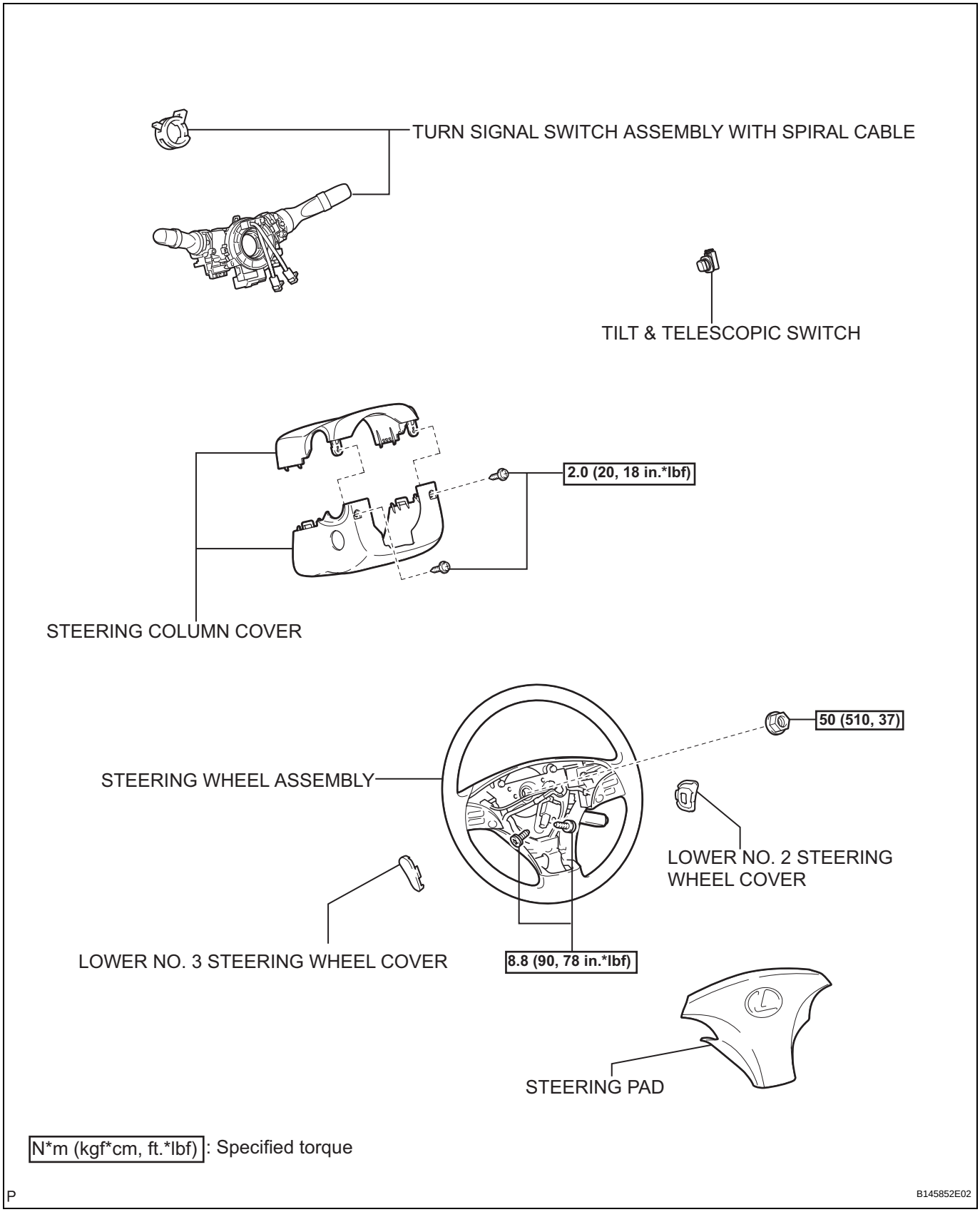

LI

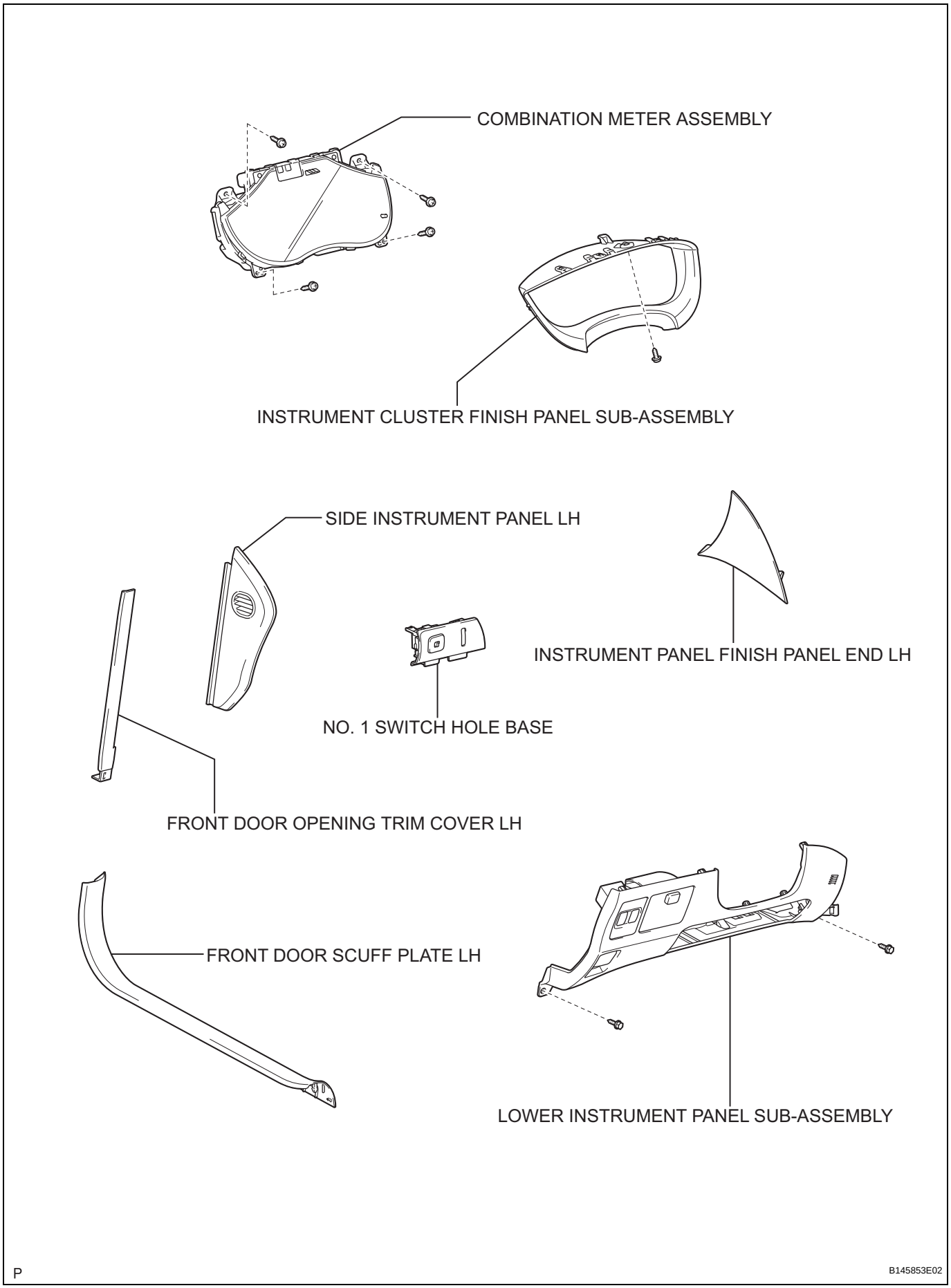
COMBINATION METER ASSEMBLY
INSTRUMENT CLUSTER FINISH PANEL SUB-ASSEMBLY
SIDE INSTRUMENT PANEL LH
INSTRUMENT PANEL FINISH PANEL END LH
NO. 1 SWITCH HOLE BASE
FRONT DOOR OPENING TRIM COVER LH
FRONT DOOR SCUFF PLATE LH
LOWER INSTRUMENT PANEL SUB-ASSEMBLY
P
B145853E02

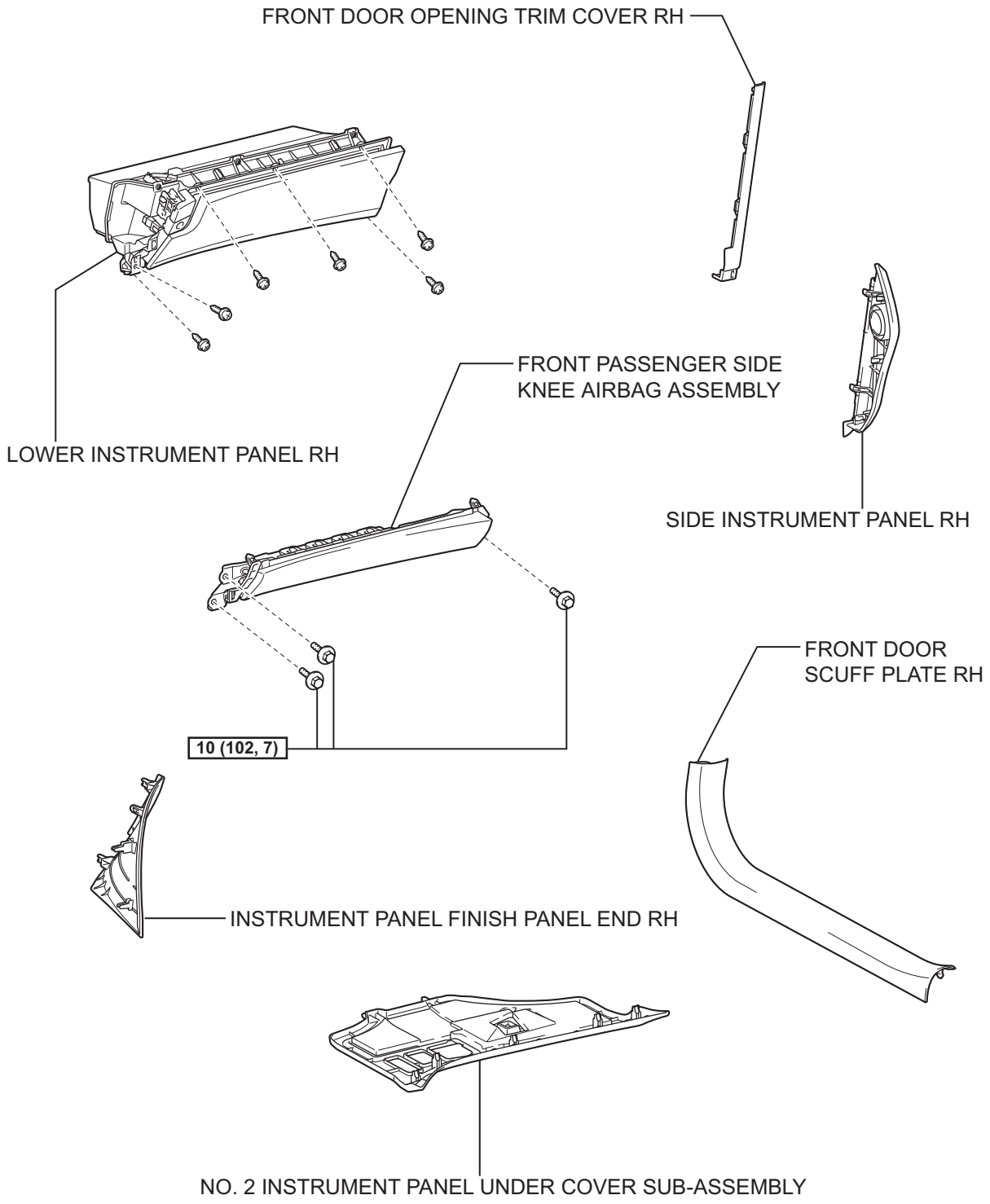

N*m (kgf*cm, ft.*lbf) : Specified torque

P

B145855E02

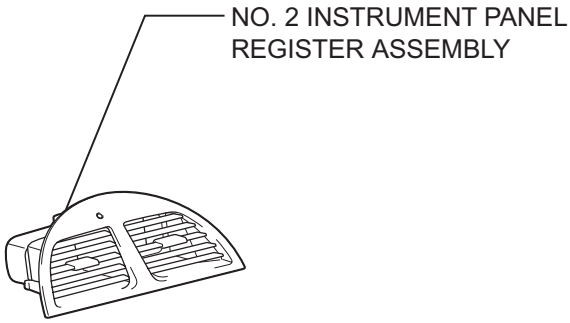

without Navigation System:

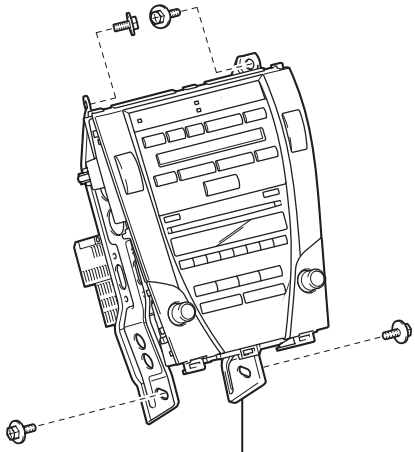

with Navigation System:

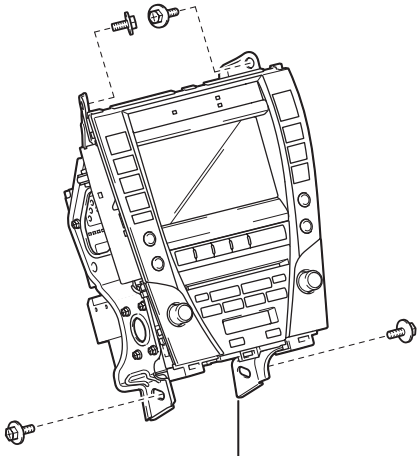

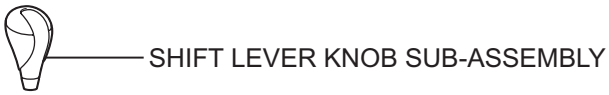

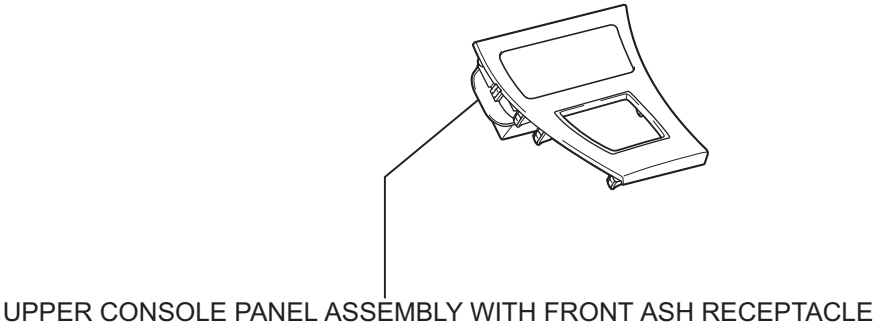

P

B145856E01

LI

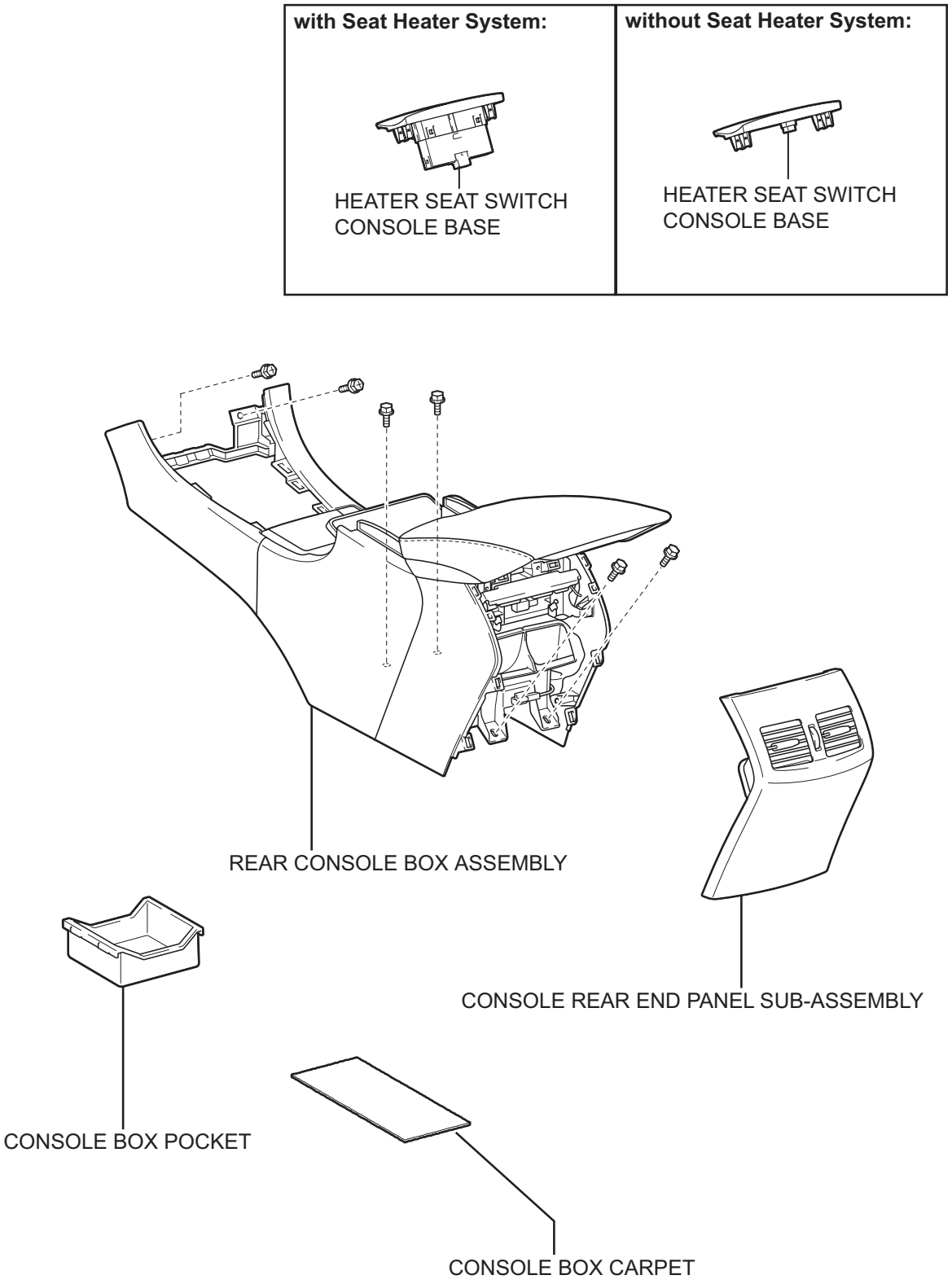

P

B145857E04

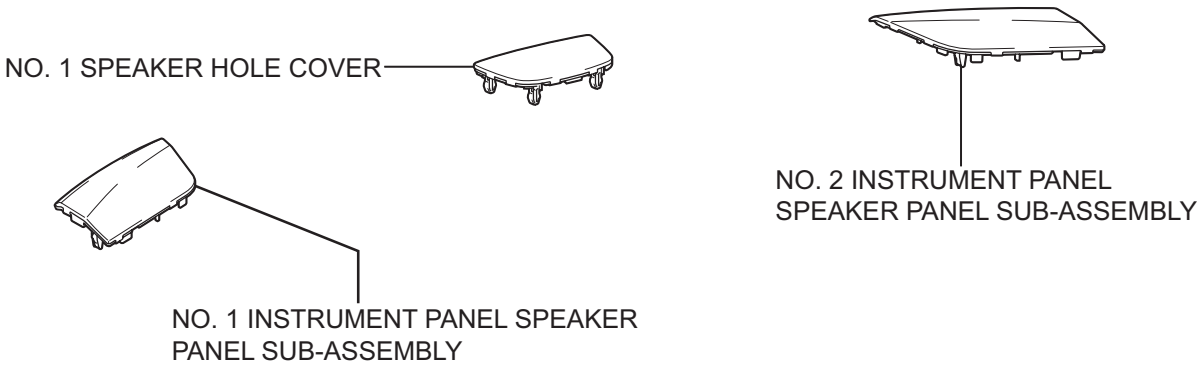

without Rear Header Speaker:

with Rear Header Speaker:

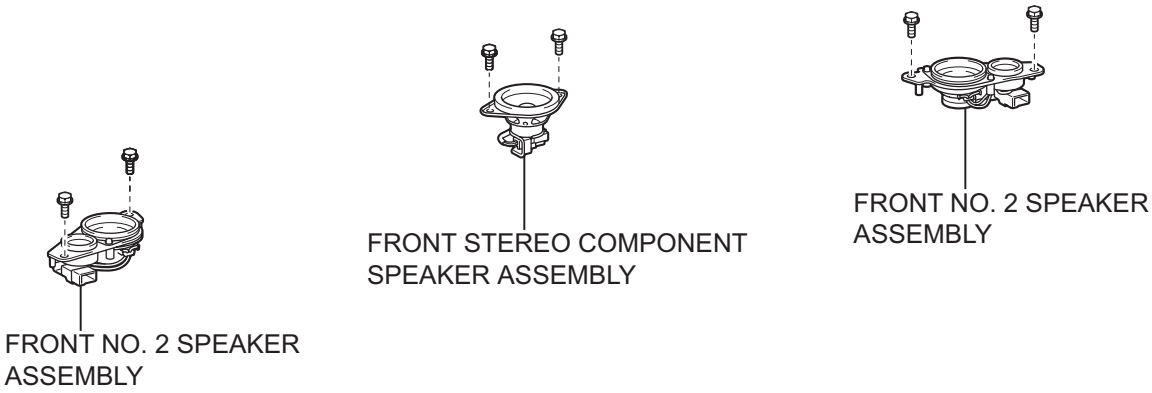

P

B145858E02

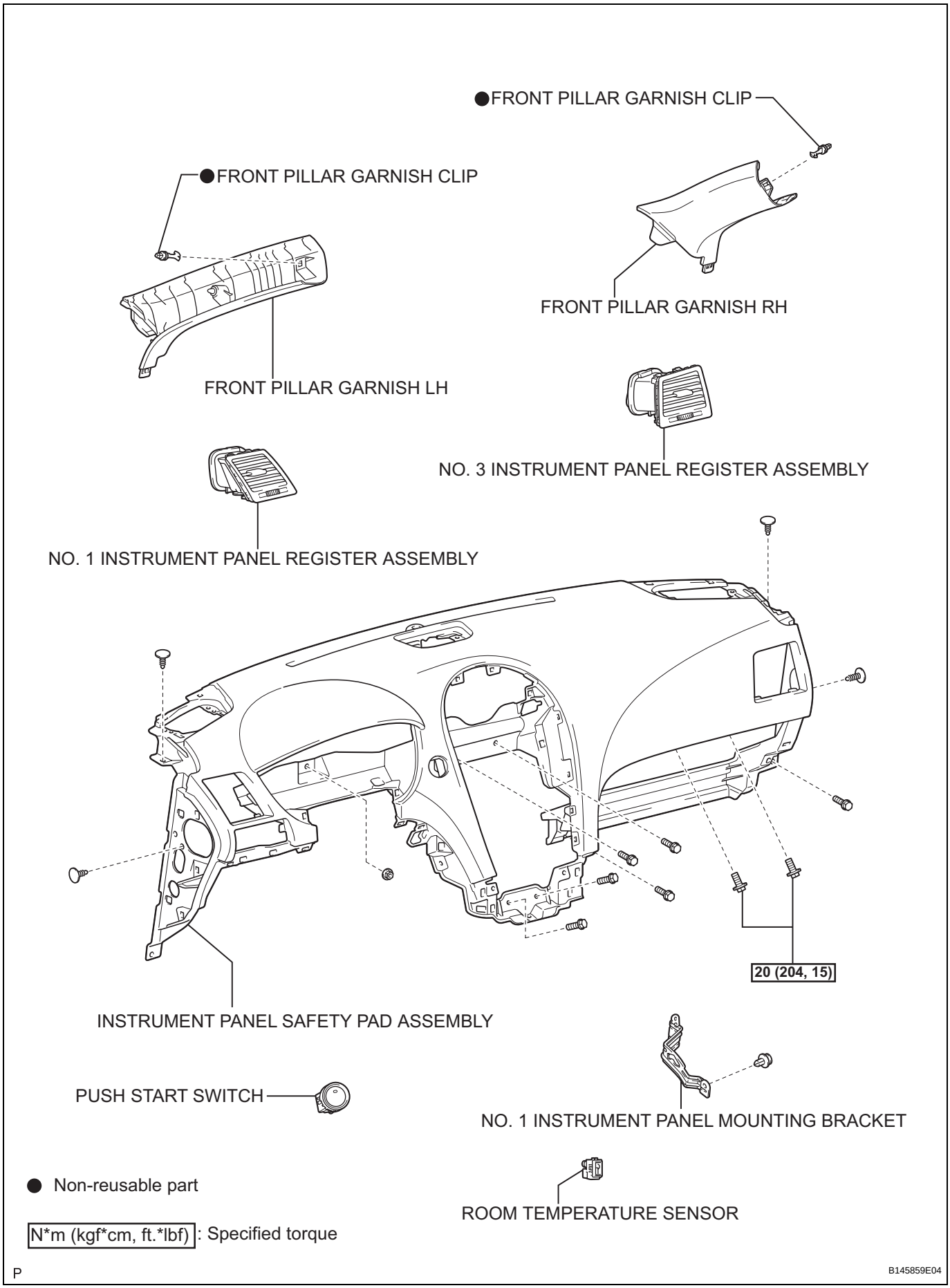
●FRONT PILLAR GARNISH CLIP
●FRONT PILLAR GARNISH CLIP
FRONT PILLAR GARNISH RH
FRONT PILLAR GARNISH LH
NO. 3 INSTRUMENT PANEL REGISTER ASSEMBLY
NO. 1 INSTRUMENT PANEL REGISTER ASSEMBLY
20 (204, 15)
INSTRUMENT PANEL SAFETY PAD ASSEMBLY
PUSH START SWITCH
NO. 1 INSTRUMENT PANEL MOUNTING BRACKET
ROOM TEMPERATURE SENSOR
● Non-reusable part
N*m (kgf*cm, ft.*lbf) : Specified torque
P
B145859E04

LI

HEIGHT CONTROL SENSOR

COMPONENTS

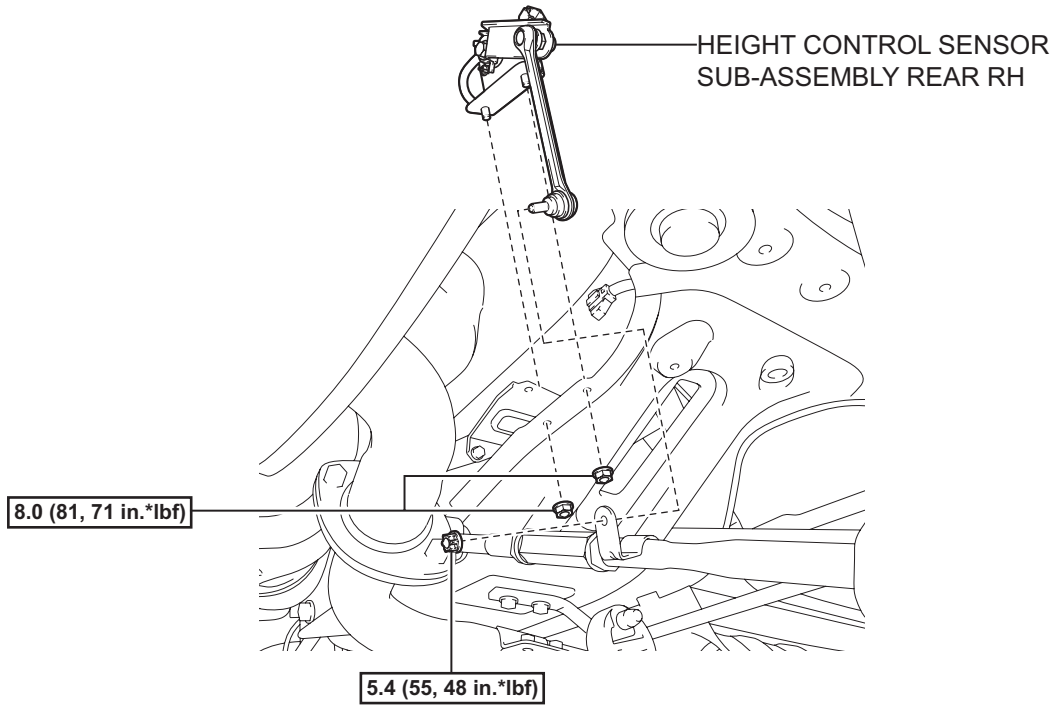

N*m (kgf*cm, ft.*lbf) : Specified torque

P

E130272E01

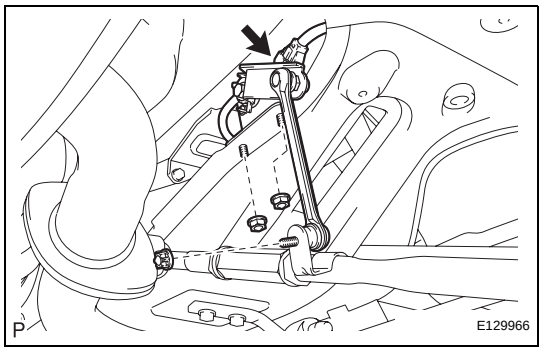

REMOVAL

1. REMOVE HEIGHT CONTROL SENSOR SUB-ASSEMBLY REAR RH

(a) Disconnect the connector.

(b) Remove the 3 nuts and the height control sensor sub-assembly rear RH.

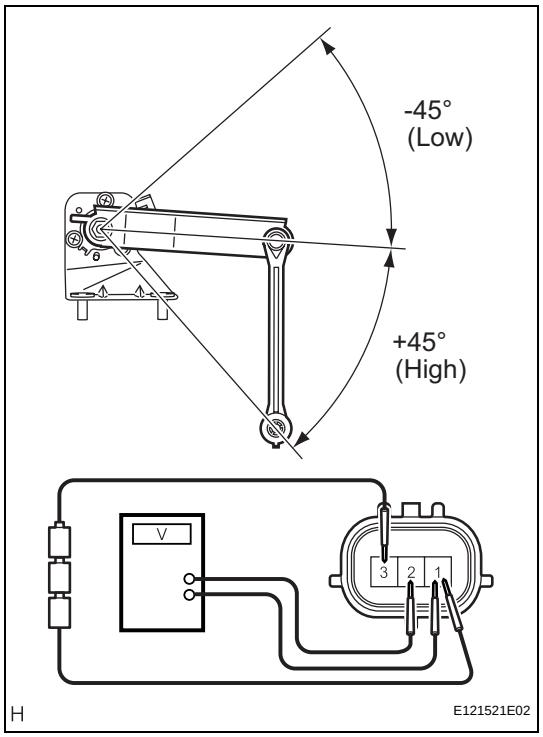

INSPECTION

1. INSPECT REAR HEIGHT CONTROL SENSOR SUB-ASSEMBLY

(a) Connect 3 dry cell batteries (1.5 V) in series.

(b) Connect positive (+) lead from the batteries to terminal 3, and the negative (-) lead from the batteries to terminal 1.

(c) Measure the voltage between terminals 2 and 1 while slowly moving the link up and down.

Standard voltage

Tester Connection	Condition	Specified Condition
2 (SHRL) - 1 (SHG)	+45° (High)	Approx. 4.05 V
	0° (normal)	Approx. 2.25 V
	-45° (Low)	Approx. 0.45 V

If the result is not as specified, replace the rear height control sensor sub-assembly.

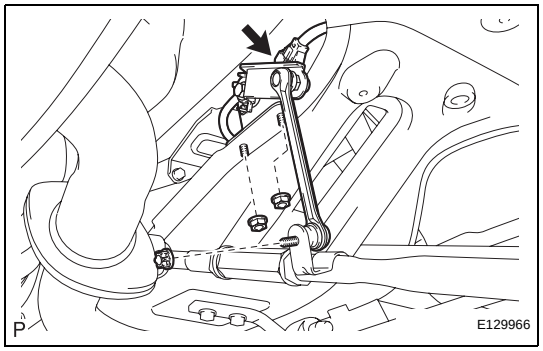

INSTALLATION

1. INSTALL HEIGHT CONTROL SENSOR SUB-ASSEMBLY REAR RH

(a) Install the height control sensor sub-assembly rear RH with the 3 nuts.

Torque: Rear suspension member side
8.0 N*m (82 kgf*cm, 71 in.*lbf)
Lower arm side
5.4 N*m (55 kgf*cm, 48 in.*lbf)

(b) Connect the connector.

2. HEIGHT CONTROL SENSOR SIGNAL INITIALIZATION
(See page LI-30).

3. VEHICLE PREPARATION FOR HEADLIGHT AIM ADJUSTMENT (See page LI-129)

4. PREPARATION FOR HEADLIGHT AIMING (Using a headlight aim test machine) (See page LI-129)

5. PREPARATION FOR HEADLIGHT AIMING (Using a Screen) (See page LI-130)

6. HEADLIGHT AIMING INSPECTION (See page LI-131)

7. HEADLIGHT AIMING ADJUSTMENT (See page LI-133)

LIGHT FAILURE SENSOR

COMPONENTS

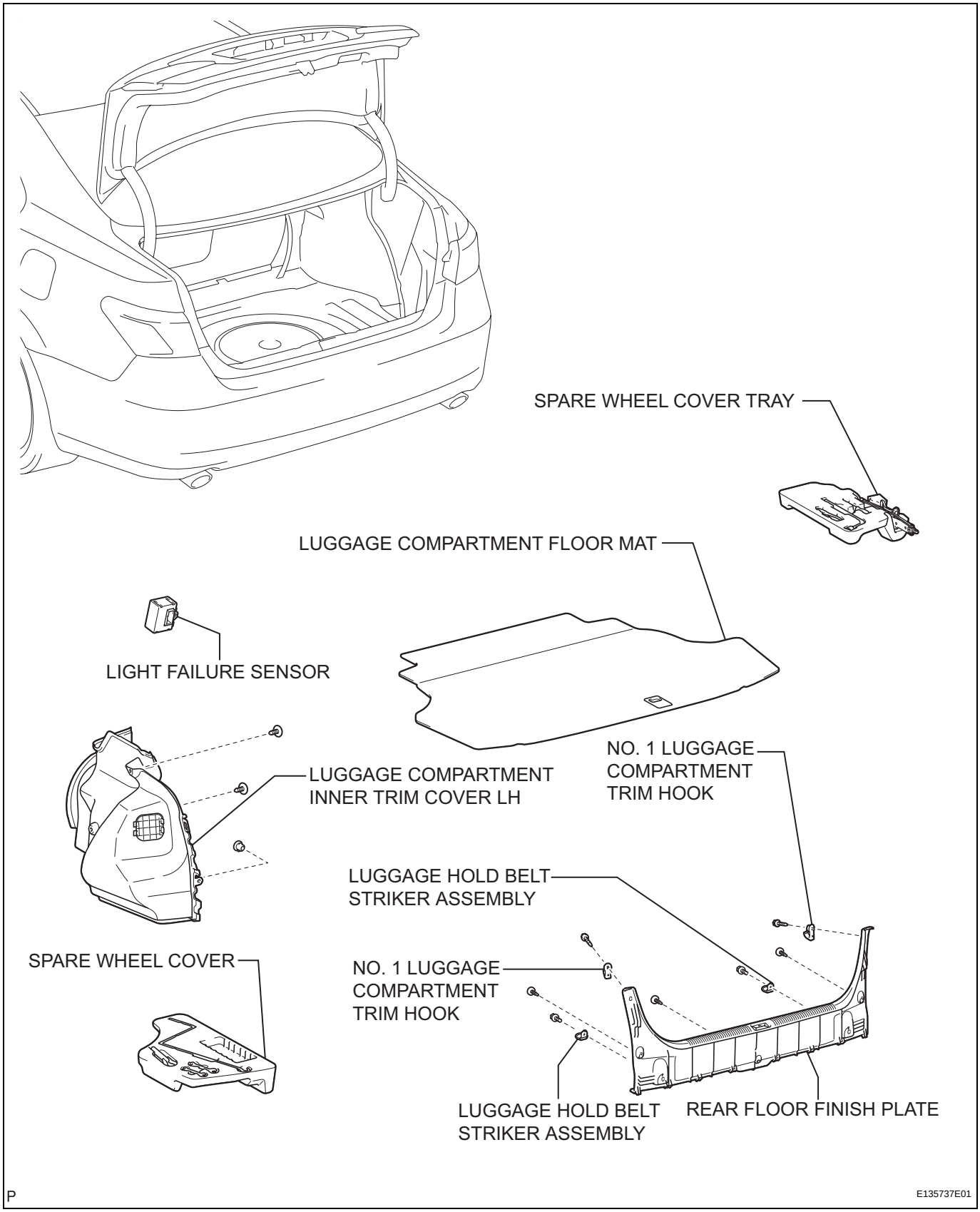

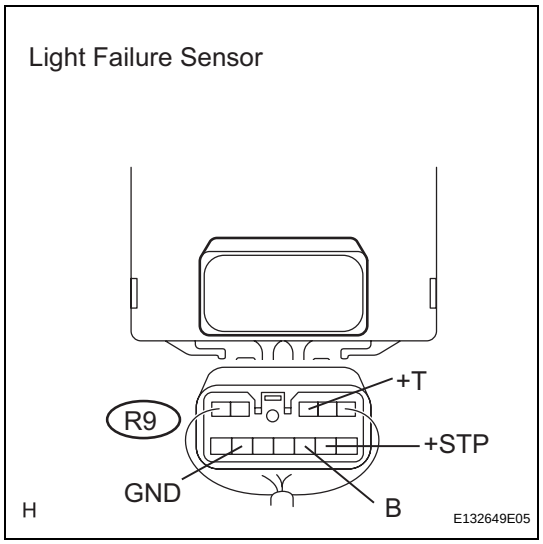

ON-VEHICLE INSPECTION

1. INSPECT LIGHT FAILURE SENSOR

(a) Disconnect the R9 light failure sensor connector.

(b) Measure the voltage and resistance according to the value(s) in the table below.

Standard voltage

Tester Connection	Condition	Specified Condition
R9-3 (+T) - R9-11 (E)	Light control switch in TAIL	10 to 14 V
	Light control switch OFF	Below 1 V
R9-7 (+STP) - R9-11 (E)	Brake pedal depressed	10 to 14 V
	Brake pedal released	Below 1 V
R9-8 (B) - R9-11 (E)	Always	10 to 14 V

Standard resistance

Tester Connection	Condition	Specified Condition
R9-11 (E) - Body ground	Always	Below 1 Ω

If the result is not as specified, there is a malfunction on the wire harness side.

(c) Reconnect the light failure indicator sensor connector.

(d) Measure the voltage according to the value(s) in the table below.

Standard voltage

Tester Connection	Condition	Specified Condition
R9-2 (-STP) - Body ground)	Brake pedal depressed	10 to 14 V
	Brake pedal released	Below 1 V
R9-5 (-TL) - Body ground)	Light control switch in TAIL	10 to 14 V
	Light control switch OFF	Below 1 V
R9-9 (-TR) - Body ground)	Light control switch in TAIL	10 to 14 V
	Light control switch OFF	Below 1 V

If the result is not as specified, repair or replace the wire harness between the sensor and bulb, or replace the light failure indicator sensor.

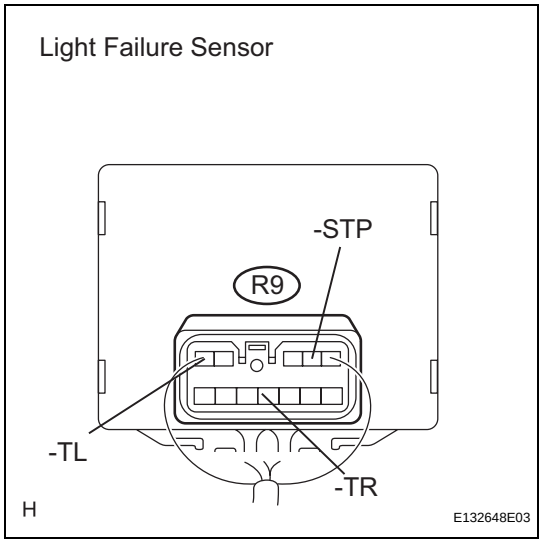

AFS ECU

COMPONENTS

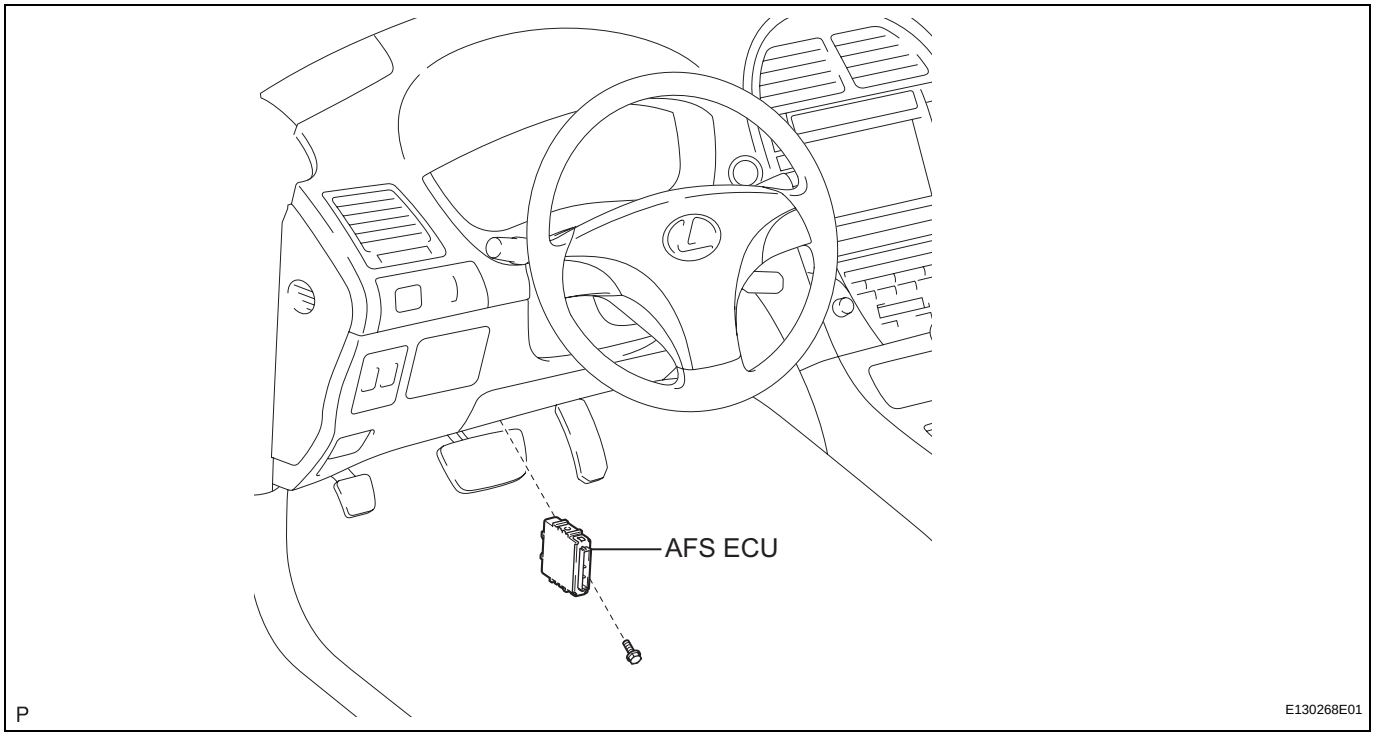

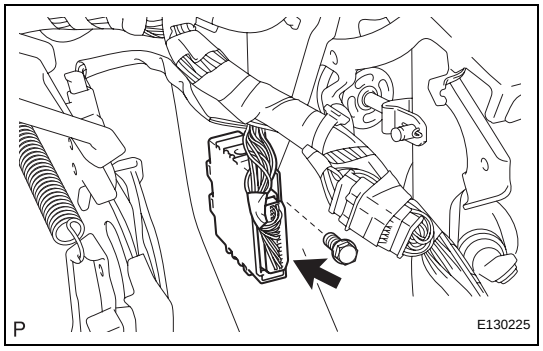

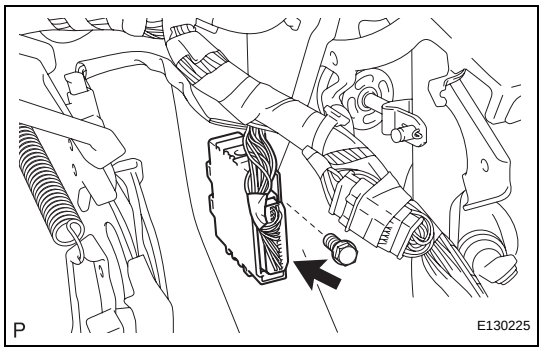

REMOVAL

1. **REMOVE AFS ECU**
   (a) Disconnect the connector.
   (b) Remove the bolt and the AFS ECU.

INSTALLATION

1. **INSTALL AFS ECU**
   (a) Install the AFS ECU with the bolt.
   (b) Connect the connector.
2. **HEIGHT CONTROL SENSOR SIGNAL INITIALIZATION**
   (See page LI-30).
3. **VEHICLE PREPARATION FOR HEADLIGHT AIM ADJUSTMENT (See page LI-129)**
4. **PREPARATION FOR HEADLIGHT AIMING (Using a headlight aim test machine) (See page LI-129)**
5. **PREPARATION FOR HEADLIGHT AIMING (Using a Screen) (See page LI-130)**
6. **HEADLIGHT AIMING INSPECTION (See page LI-131)**

7. **HEADLIGHT AIMING ADJUSTMENT (See page LI-133)**

TURN SIGNAL FLASHER ASSEMBLY

COMPONENTS

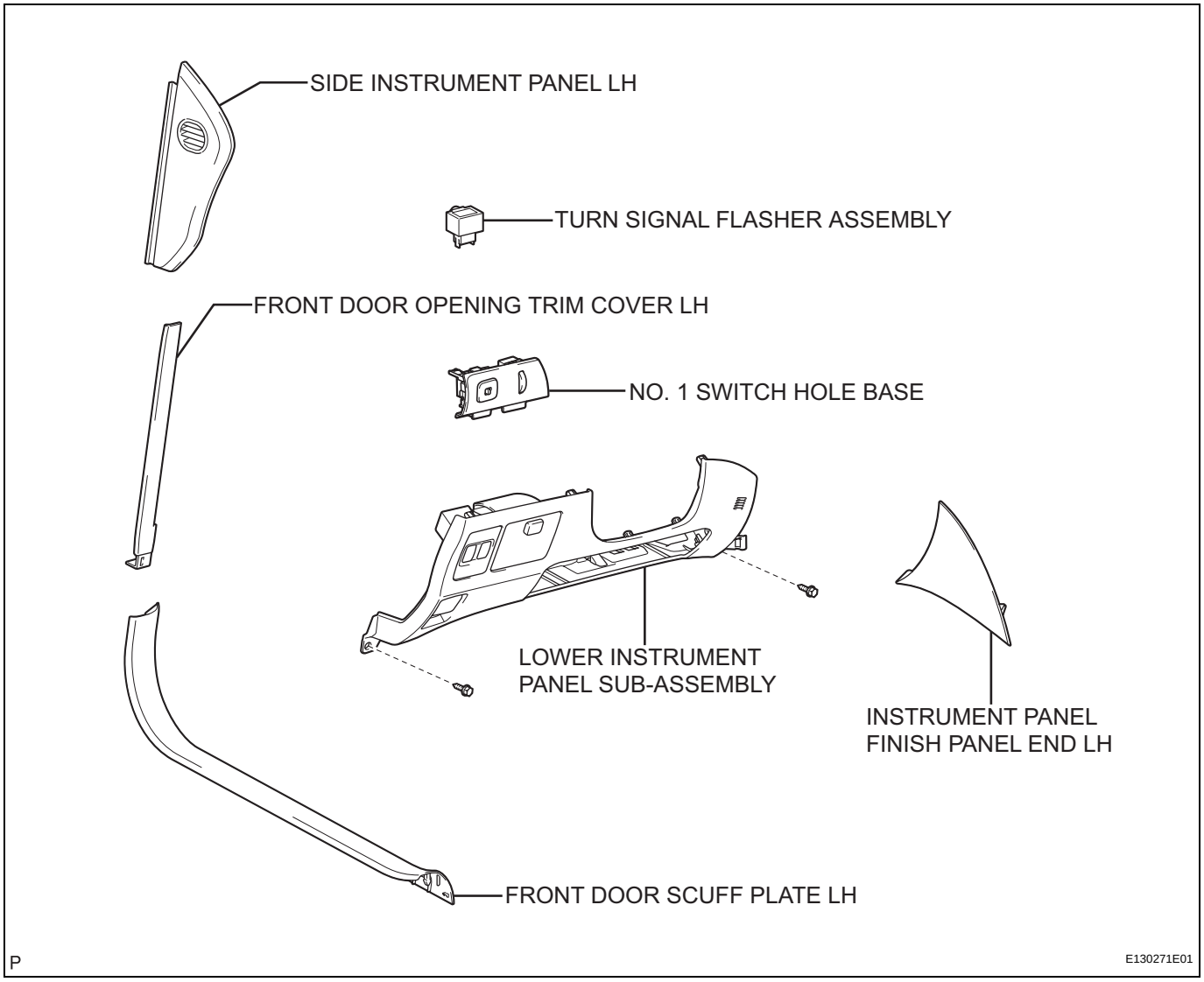

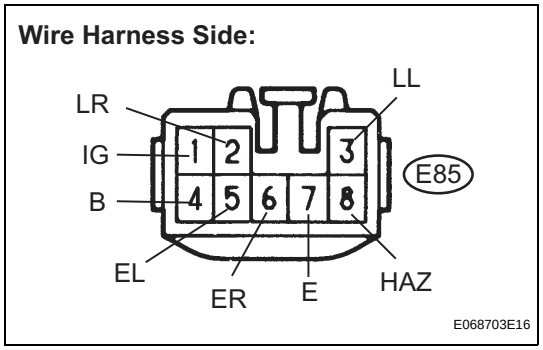

ON-VEHICLE INSPECTION

1. INSPECT TURN SIGNAL FLASHER ASSEMBLY

(a) Disconnect the E85 turn signal flasher assembly connector.

(b) Measure the voltage and resistance according the value(s) in the table below.

Standard voltage

Tester Connection	Condition	Specified Condition
E85-1 (IG) - Body ground	Engine switch off	Below 1 V
E85-1 (IG) - Body ground	Engine switch on (IG)	10 to 14 V
E85-4 (B) - Body ground	Always	10 to 14 V

Standard resistance

Tester Connection	Condition	Specified Condition
E85-5 (EL) - Body ground	Turn signal switch OFF	10 kΩ or higher
E85-5 (EL) - Body ground	Turn signal switch in LH position	Below 1 Ω
E85-6 (ER) - Body ground	Turn signal switch OFF	10 kΩ or higher
E85-6 (ER) - Body ground	Turn signal switch in RH position	Below 1 Ω
E85-7 (E) - Body ground	Always	Below 1 Ω
E85-8 (HAZ) - Body ground	Hazard warning switch OFF	10 kΩ or higher
E85-8 (HAZ) - Body ground	Hazard warning switch ON	Below 1 Ω

If the result is not as specified, there is a malfunction on the wire harness side.

(c) Reconnect the turn signal flasher assembly connector.

(d) Measure the voltage according to the valve(s) in the table below.

Standard voltage

Tester Connection	Condition	Specified Condition
E85-2 (LR) - Body ground	Hazard warning switch OFF	Below 1 V
E85-2 (LR) - Body ground	Hazard warning switch ON	10 to 14 V (60 to 120 times per minute)
E85-2 (LR) - Body ground	Turn signal switch OFF	Below 1 V
E85-2 (LR) - Body ground	Engine switch on (IG) and turn signal switch in RH position	10 to 14 V (60 to 120 times per minute)
E85-3 (LL)- Body ground	Hazard warning switch OFF	Below 1 V
E85-3 (LL) - Body ground	Hazard warning switch ON	10 to 14 V (60 to 120 times per minute)
E85-3 (LL) - Body ground	Turn signal switch OFF	Below 1 V
E85-3 (LL) - Body ground	Engine switch on (IG) and turn signal switch in LH position	10 to 14 V (60 to 120 times per minute)
E85-5 (EL) - Body ground	Engine switch on (IG) and turn signal switch OFF	10 to 14 V
E85-5 (EL) - Body ground	Engine switch on (IG) and turn signal switch in LH position	Below 1 V
E85-6 (ER) - Body ground	Engine switch on (IG) and turn signal switch OFF	10 to 14 V
E85-6 (ER) - Body ground	Engine switch on (IG) and turn signal switch in RH position	Below 1 V
E85-8 (HAZ) - Body ground	Hazard warning switch OFF	10 to 14 V
E85-8 (HAZ) - Body ground	Hazard warning switch ON	Below 1 V

If the result is not as specified, replace the turn signal flasher assembly.

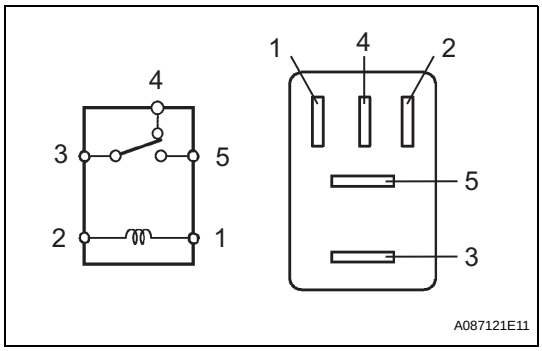

TAILLIGHT RELAY

ON-VEHICLE INSPECTION

1. INSPECT TAILLIGHT RELAY

(a) Remove the taillight relay from the instrument panel J/B assembly.

(b) Measure the resistance according to the value(s) in the table below.

Standard resistance

Tester Connection	Specified Condition
3 - 5	10 kΩ or higher
	Below 1 Ω (When battery voltage is applied to terminals 1 and 2)
3 - 4	Below 1 Ω
	10 kΩ or higher (When battery voltage is applied to terminals 1 and 2)

If the result is not as specified, replace the taillight relay.

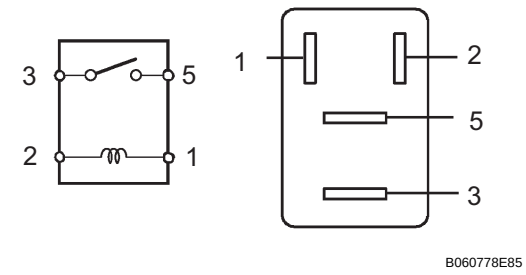

FOG LIGHT RELAY

ON-VEHICLE INSPECTION

1. INSPECT FOG LIGHT RELAY

(a) Remove the fog light relay from the instrument panel J/B assembly.

(b) Measure the resistance according to the value(s) in the table below.

Standard resistance

Tester Connection	Specified Condition
3 - 5	10 kΩ or higher
	Below 1 Ω (When battery voltage is applied to terminals 1 and 2)

If the result is not as specified, replace the fog light relay.

WIPER AND WASHER SYSTEM (w/ Rain Sensor)

PRECAUTION

NOTICE:
Some systems need to be initialized after reconnecting the negative (-) battery terminal (See page IN-33).

1. PRECAUTION OF WASHER NOZZLE ADJUSTMENT

(a) Do not clean or adjust the washer nozzle with a safety pin, etc. because:

(1) The washer nozzle tip is made of resin and could be damaged.

(2) Adjustment is not necessary for this spray type washer nozzle. If it is necessary to change the nozzle angle, replace the washer nozzle with one that has a different nozzle angle. (See page WW-61)

(b) In case the washer nozzle is clogged with wax, etc., remove it and clean the nozzle hole with a soft resin brush or other cleaning tool.

PARTS LOCATION

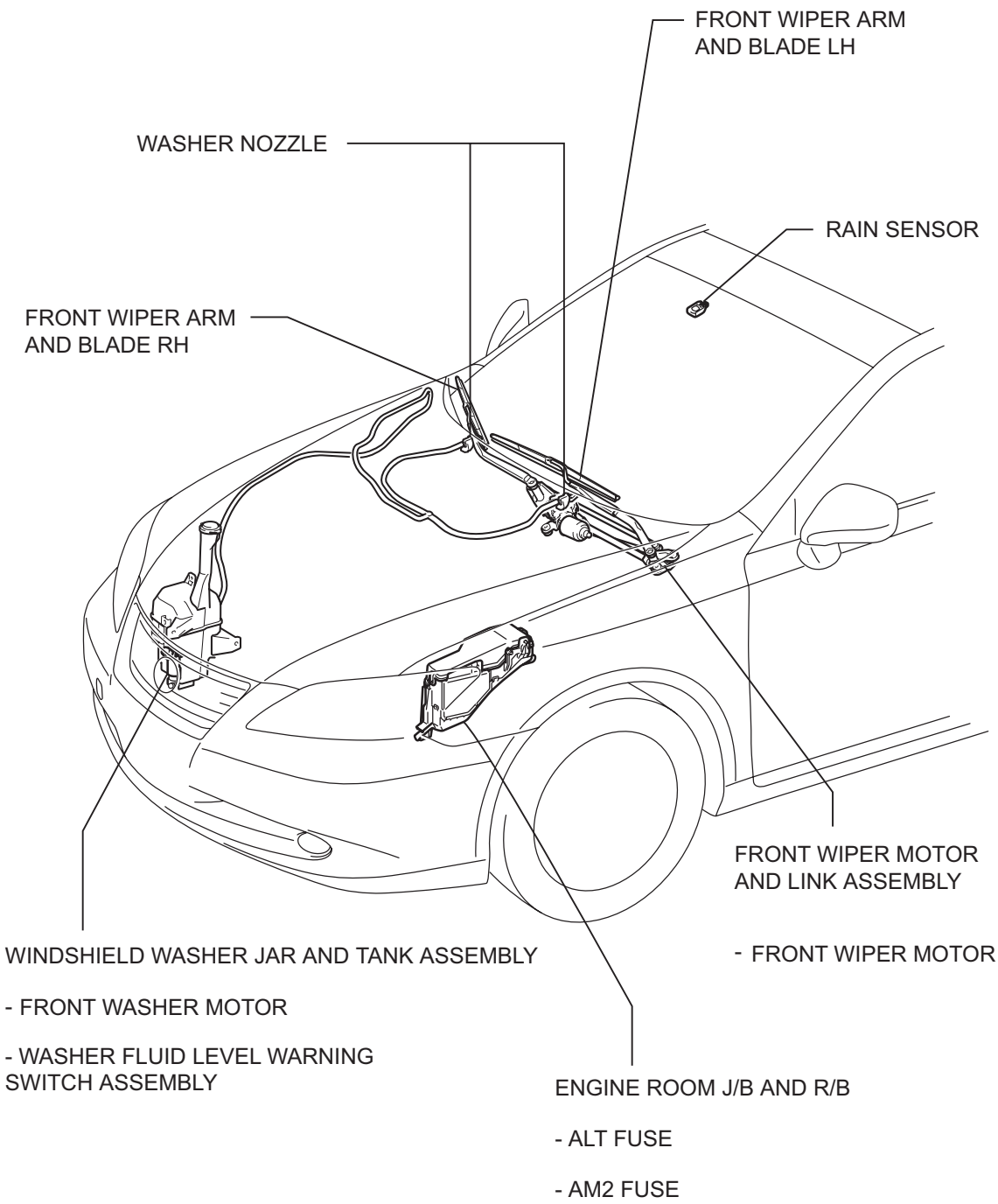

H

E135502E01

WW

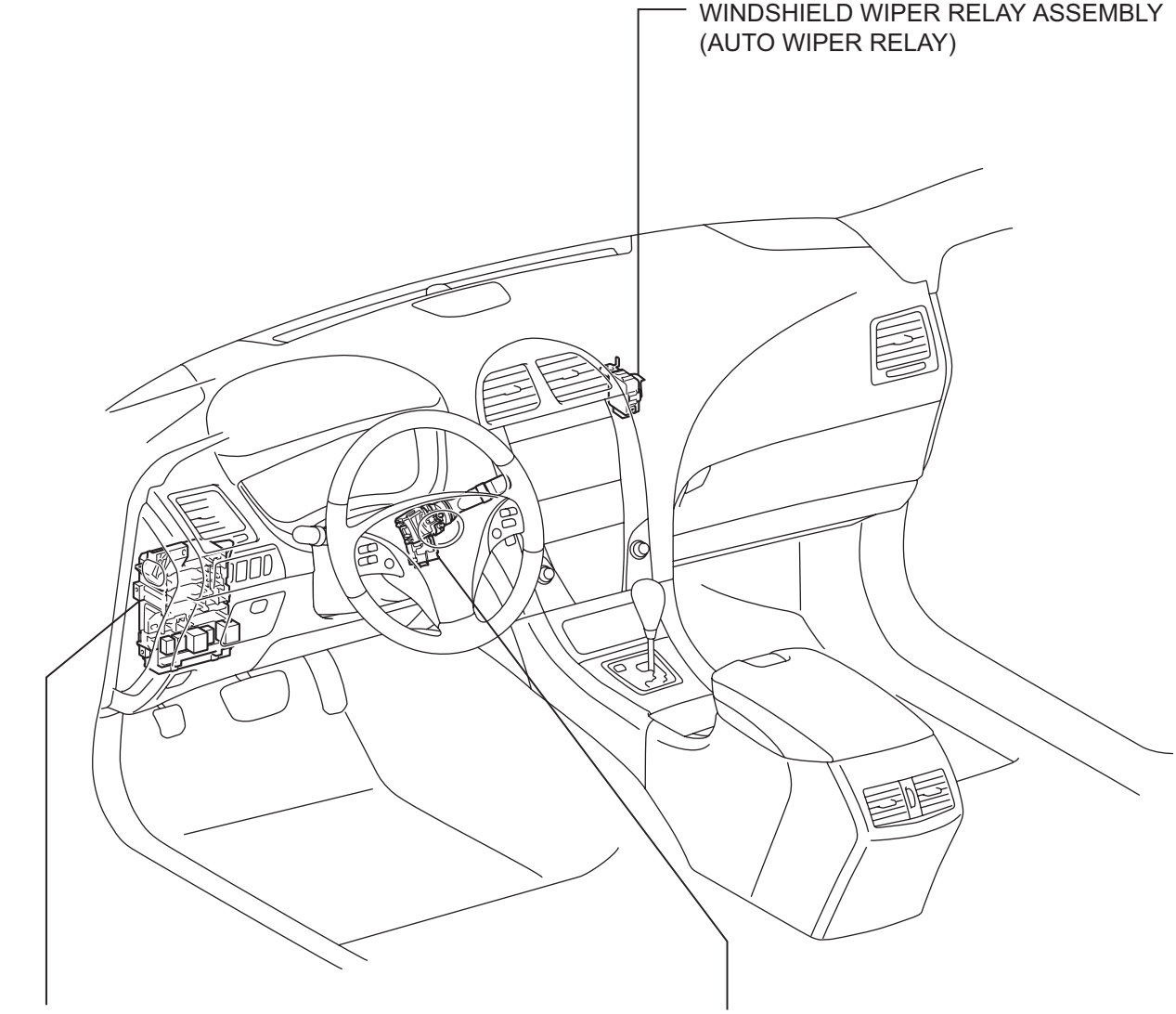

- ECU IG NO. 1 FUSE
- WIP FUSE
- WASH FUSE

H

E119106E01

WW

WIPER AND WASHER SYSTEM (w/o Rain Sensor)

PRECAUTION

NOTICE:
Some systems need to be initialized after reconnecting the negative (-) battery terminal (See page IN-33).

1. PRECAUTION OF WASHER NOZZLE ADJUSTMENT

(a) Do not clean or adjust the washer nozzle with a safety pin, etc. because:

(1) The washer nozzle tip is made of resin and could be damaged.

(2) Adjustment is not necessary for this spray type washer nozzle. If it is necessary to change the nozzle angle, replace the washer nozzle with one that has a different nozzle angle. (See page WW-61)

(b) In case the washer nozzle is clogged with wax, etc., remove it and clean the nozzle hole with a soft resin brush or other cleaning tool.

PARTS LOCATION

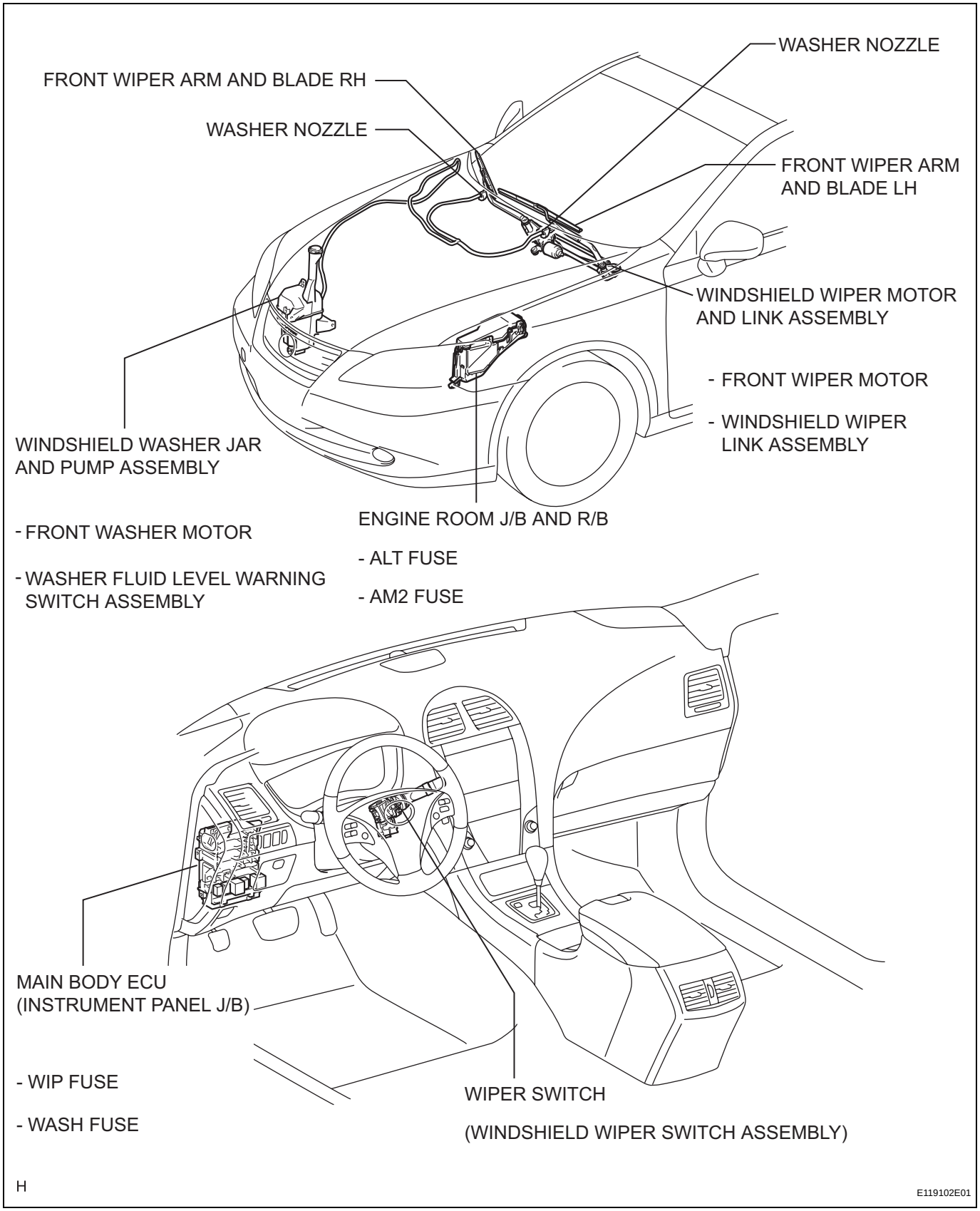

WW

FRONT WIPER MOTOR

COMPONENTS

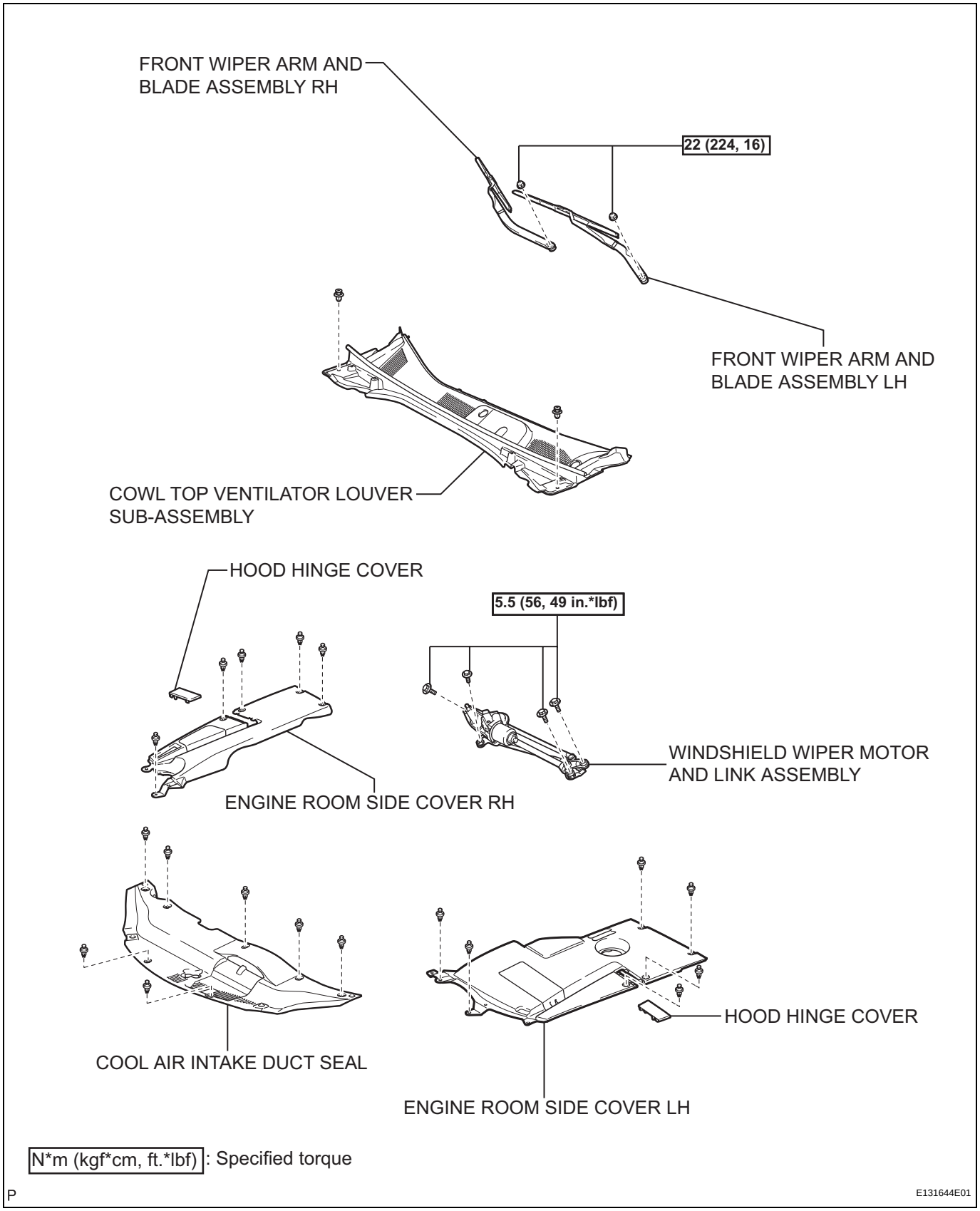

N*m (kgf*cm, ft.*lbf) : Specified torque

P

E131644E01

WW

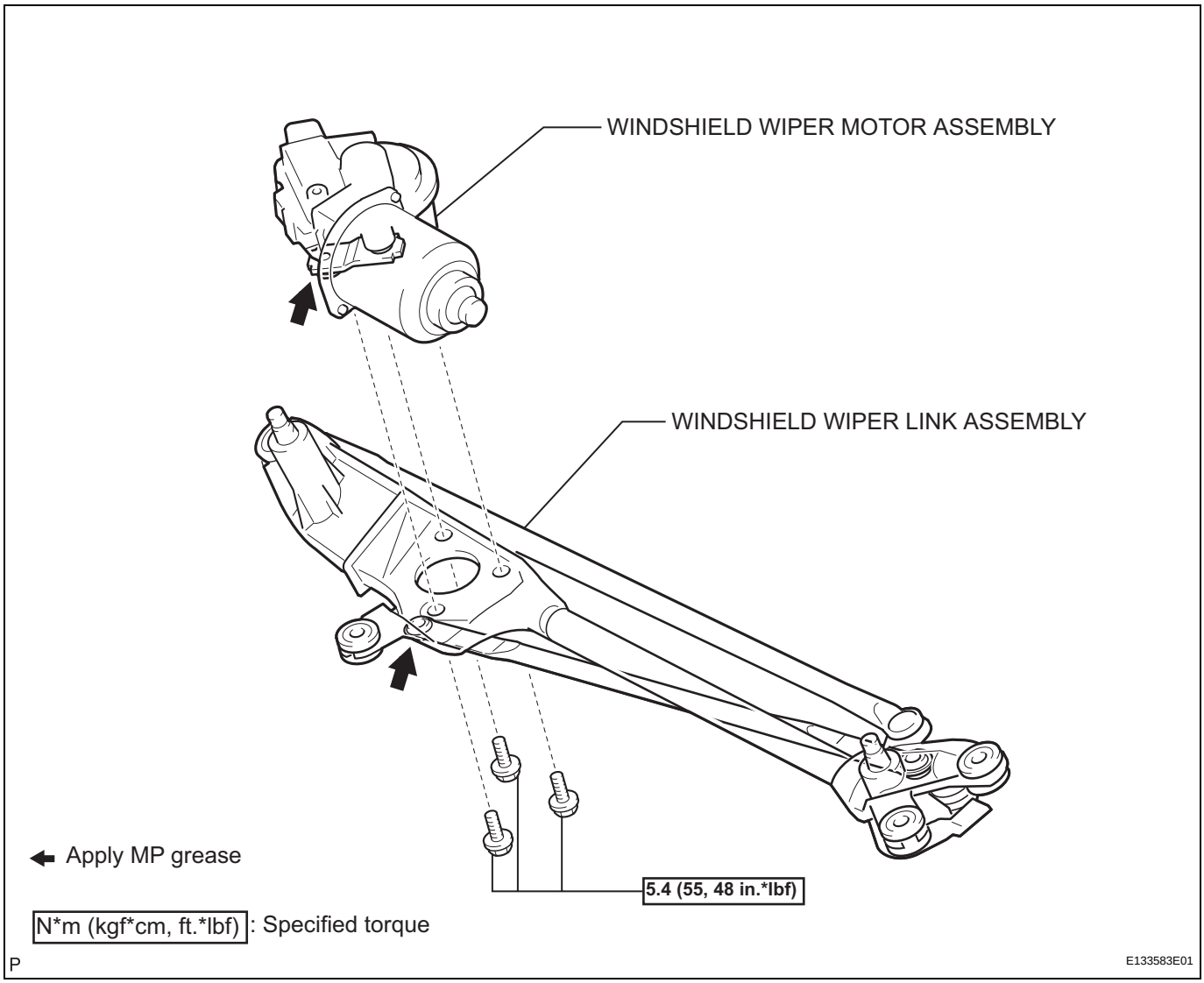
WINDSHIELD WIPER MOTOR ASSEMBLY
WINDSHIELD WIPER LINK ASSEMBLY
Apply MP grease
5.4 (55, 48 in.*lbf)
N*m (kgf*cm, ft.*lbf) : Specified torque
P
E133583E01

FRONT WIPER RUBBER

COMPONENTS

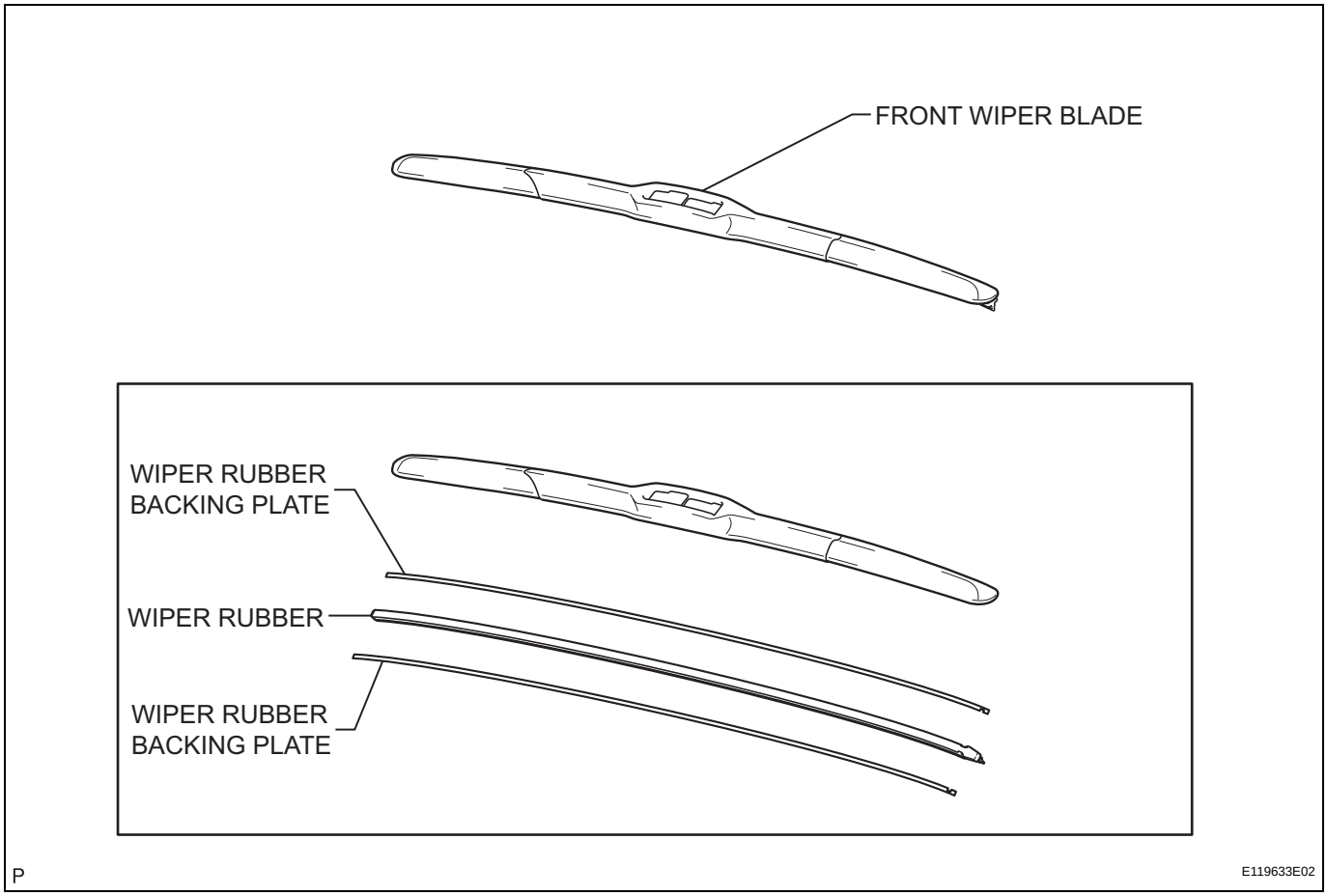

REMOVAL

1. REMOVE FRONT WIPER BLADE

(a) Disengage the holder of the front wiper blade.

(b) Remove the front wiper blade from the front wiper arm as shown in the illustration.

NOTICE:

Do not bend the front wiper arm with the front wiper blade removed because the arm tip could damage the windshield surface.

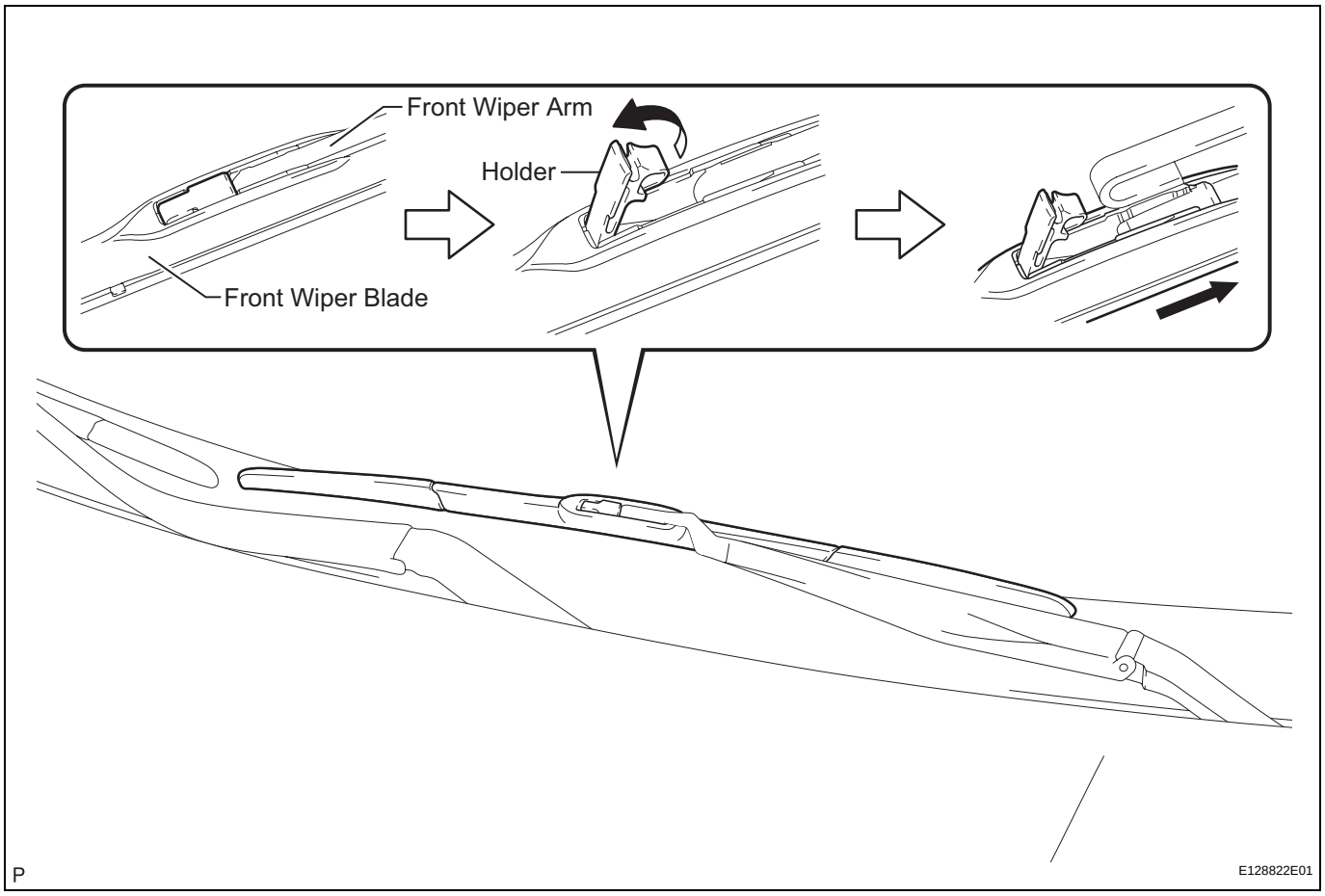

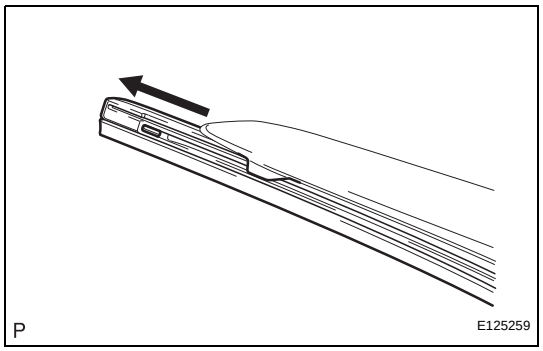

2. REMOVE WIPER RUBBER

(a) Remove the wiper rubber and the wiper rubber backing plates from the front wiper blade.

WIPER RELAY

COMPONENTS

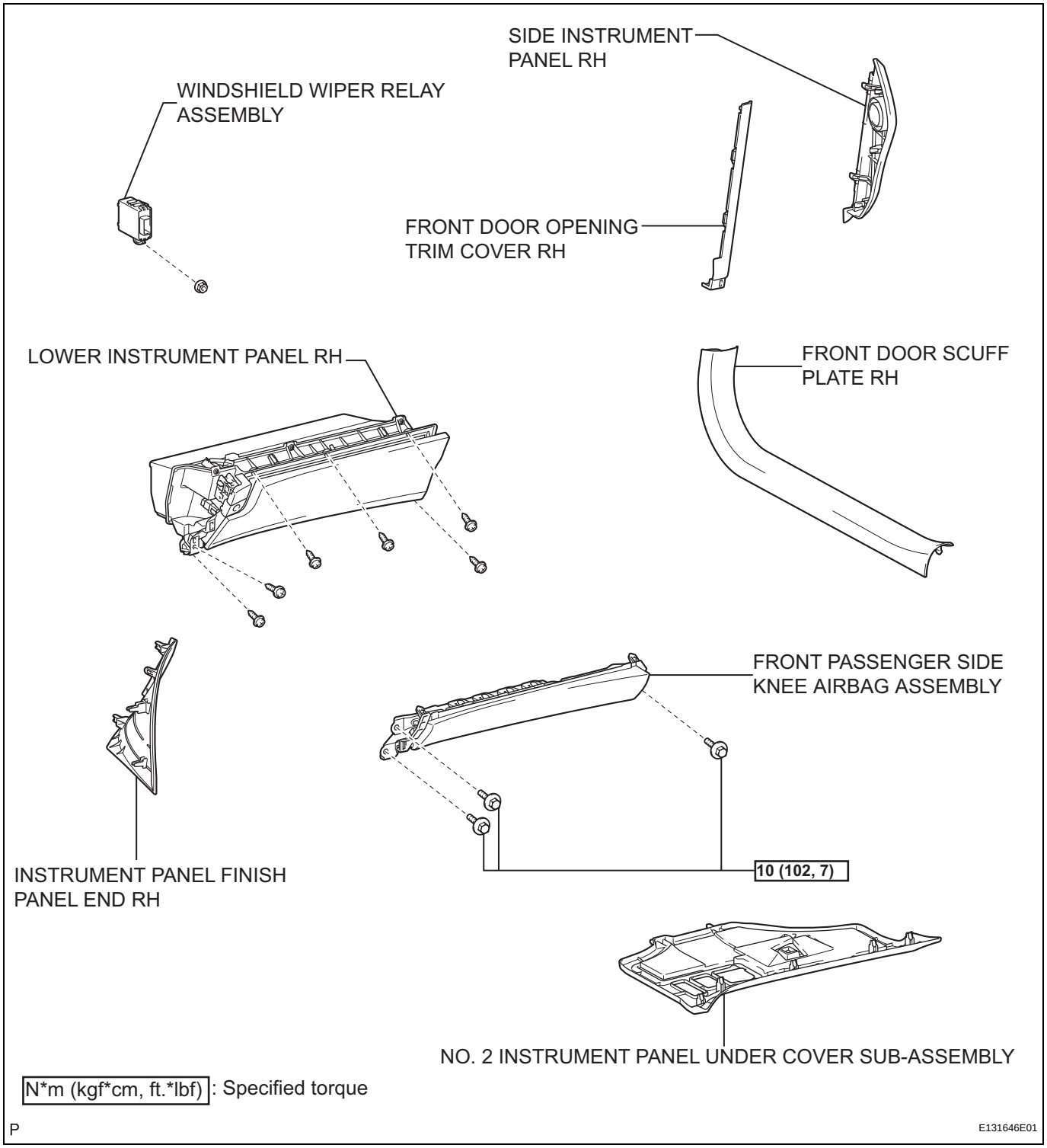

WW

WW

REMOVAL

1. **DISCONNECT CABLE FROM NEGATIVE BATTERY TERMINAL**
   CAUTION:
   Wait for 90 seconds after disconnecting the cable to prevent airbag deployment (see page RS-1).
2. **REMOVE INSTRUMENT PANEL FINISH PANEL END RH (See page IP-15)**
3. **REMOVE FRONT DOOR SCUFF PLATE RH (See page IR-42)**
4. **REMOVE FRONT DOOR OPENING TRIM COVER RH (See page IR-42)**
5. **REMOVE NO. 2 INSTRUMENT PANEL UNDER COVER SUB-ASSEMBLY (See page IP-15)**
6. **REMOVE SIDE INSTRUMENT PANEL RH (See page IP-15)**
7. **REMOVE FRONT PASSENGER SIDE KNEE AIRBAG ASSEMBLY (See page RS-396)**
8. **REMOVE LOWER INSTRUMENT PANEL RH (See page IP-16)**
9. **REMOVE WINDSHIELD WIPER RELAY ASSEMBLY**
   (a) Disconnect the connector.
   (b) Remove the nut and the windshield wiper relay assembly.

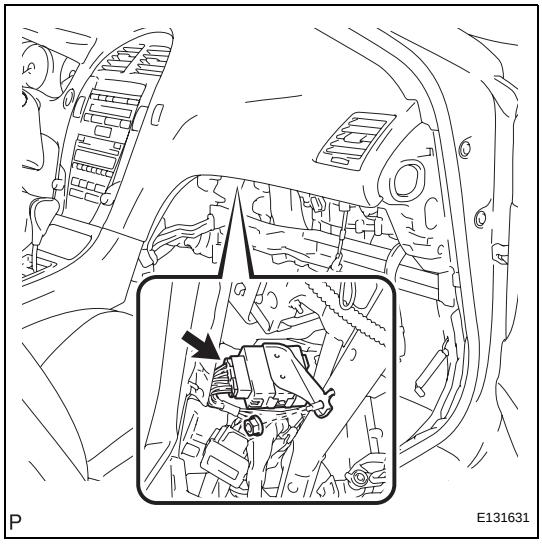

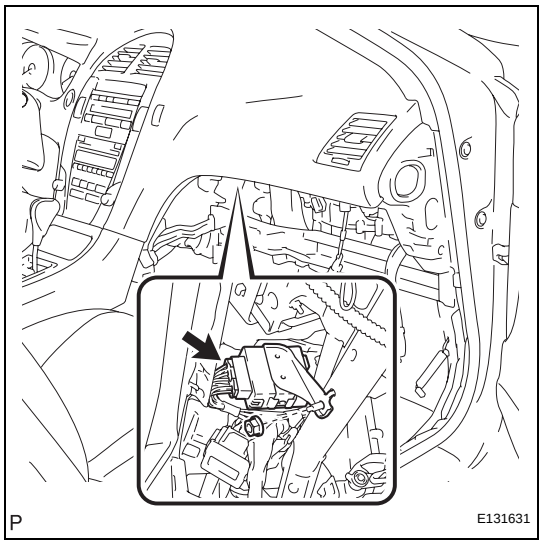

INSTALLATION

1. **INSTALL WINDSHIELD WIPER RELAY ASSEMBLY**
   (a) Install the windshield wiper relay assembly with the nut.
   (b) Connect the connector.
2. **INSTALL LOWER INSTRUMENT PANEL RH (See page IP-42)**
3. **INSTALL FRONT PASSENGER SIDE KNEE AIRBAG ASSEMBLY (See page RS-396)**
4. **INSTALL SIDE INSTRUMENT PANEL RH (See page IP-43)**
5. **INSTALL NO. 2 INSTRUMENT PANEL UNDER COVER SUB-ASSEMBLY (See page IP-44)**
6. **INSTALL FRONT DOOR OPENING TRIM COVER RH (See page IR-65)**
7. **INSTALL FRONT DOOR SCUFF PLATE RH (See page IR-65)**
8. **INSTALL INSTRUMENT PANEL FINISH PANEL END RH (See page IP-44)**
9. **CONNECT CABLE TO NEGATIVE BATTERY TERMINAL**
10. **INSPECT FRONT PASSENGER SIDE KNEE AIRBAG ASSEMBLY (See page RS-395)**
11. **INSPECT SRS WARNING LIGHT (See page RS-397)**
12. **PERFORM INITIALIZATION**
    NOTICE:
    Some systems need initialization after reconnecting the cable to the negative battery terminal (see page IN-33).

WIPER SWITCH

COMPONENTS

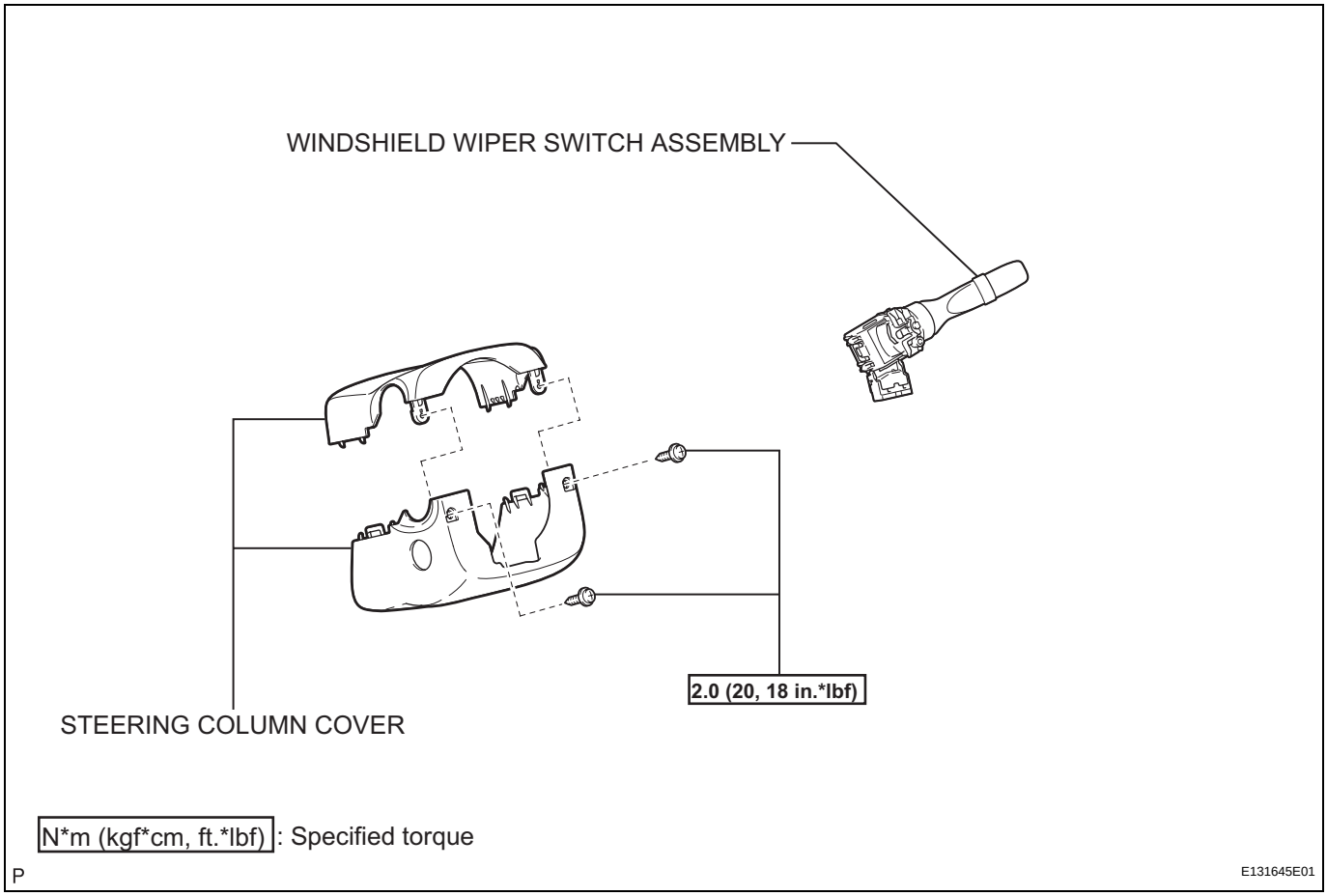

WW

REMOVAL

1. **REMOVE STEERING COLUMN COVER (See page SR-80)**

2. **REMOVE WINDSHIELD WIPER SWITCH ASSEMBLY**
   (a) Disconnect the 2 connectors.
   (b) Disengage the claw and remove the windshield wiper switch assembly as shown in the illustration.
   NOTICE:
   If the claw is pushed with excessive force, it may break.

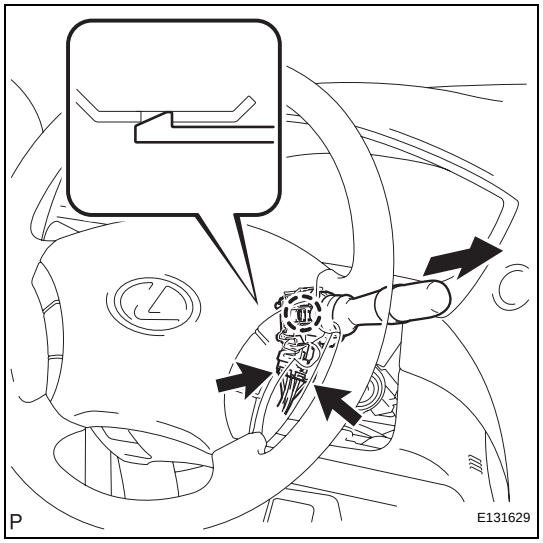

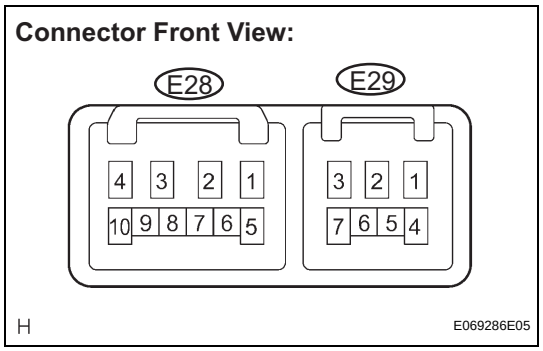

INSPECTION

1. **INSPECT WINDSHIELD WIPER SWITCH ASSEMBLY**
   (a) Check for continuity of the windshield wiper switch assembly.
   (1) Measure the resistance according to the value(s) in the table below.
   Standard resistance:
   Front Wiper Switch

Tester Connection	Switch Condition	Specified Condition
E28-3 (+1) - E28-2 (+B)	MIST	Below 1 Ω
	LO	
E28-3 (+1) - E28-1 (+S)	OFF	
E28-9 (AUTO) - E28-10 (E)	AUTO	
E28-2 (+B) - E28-4 (+2)	HI	

Front Washer Switch

Tester Connection	Switch Position	Specified Resistance
E29-3 (WF) - E29-2 (EW)	OFF	10 kΩ or higher
E29-3 (WF) - E29-2 (EW)	ON	Below 1 Ω

   (b) Intermittent Operation Check
   (1) Connect the voltmeter (+) terminal to terminal E28-3 (+1) of the connector and the voltmeter (-) terminal to terminal E29-2 (EW).
   (2) Connect a positive (+) battery lead to terminal E28-2 (+B) of the connector and a negative (-) battery lead to terminals E29-2 (EW) and E28-1 (+S).
   (3) Turn the wiper switch to the INT position.
   (4) Connect a positive (+) battery lead to terminal E28-1 (+S) of the connector for 5 seconds.

WW

(5) Connect a negative (-) battery lead to terminal E28-4 (+2) of the connector. Operate the intermittent wiper adjustment ring and measure the voltage between terminals E28-3 (+1) and E29-2 (EW).

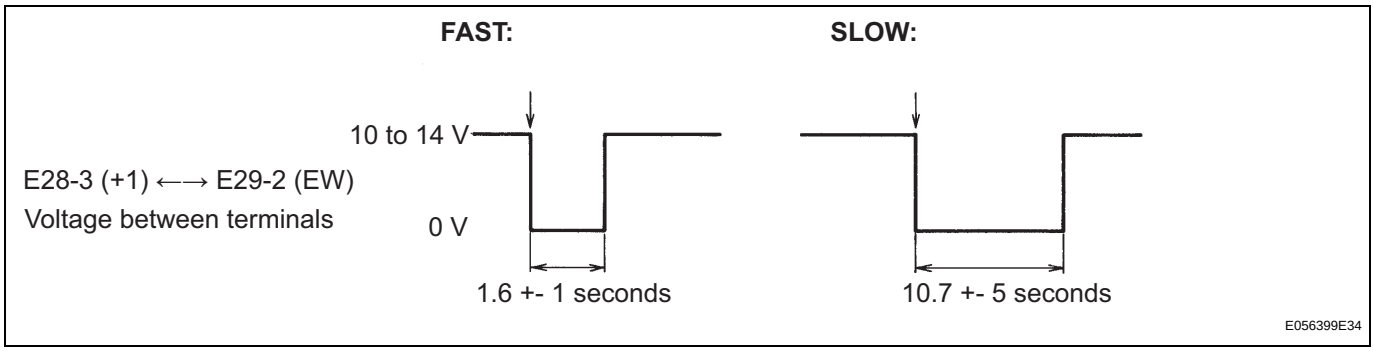

WW

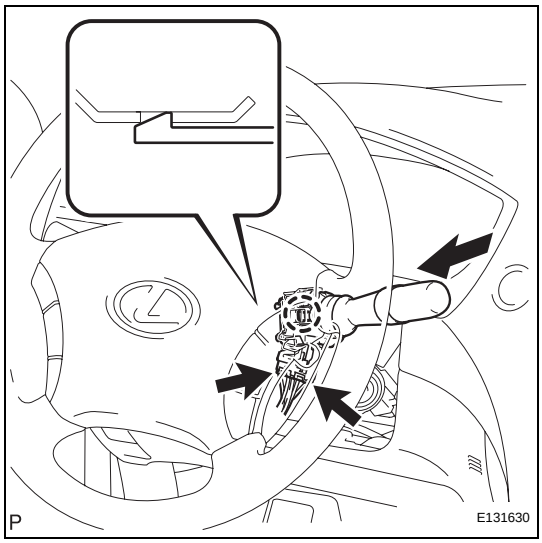

INSTALLATION

1. INSTALL WINDSHIELD WIPER SWITCH ASSEMBLY

(a) Engage the claw and install the windshield wiper switch assembly as shown in the illustration.

(b) Connect the 2 connectors.

2. INSTALL STEERING COLUMN COVER (See page SR-87)

FRONT WASHER MOTOR

COMPONENTS

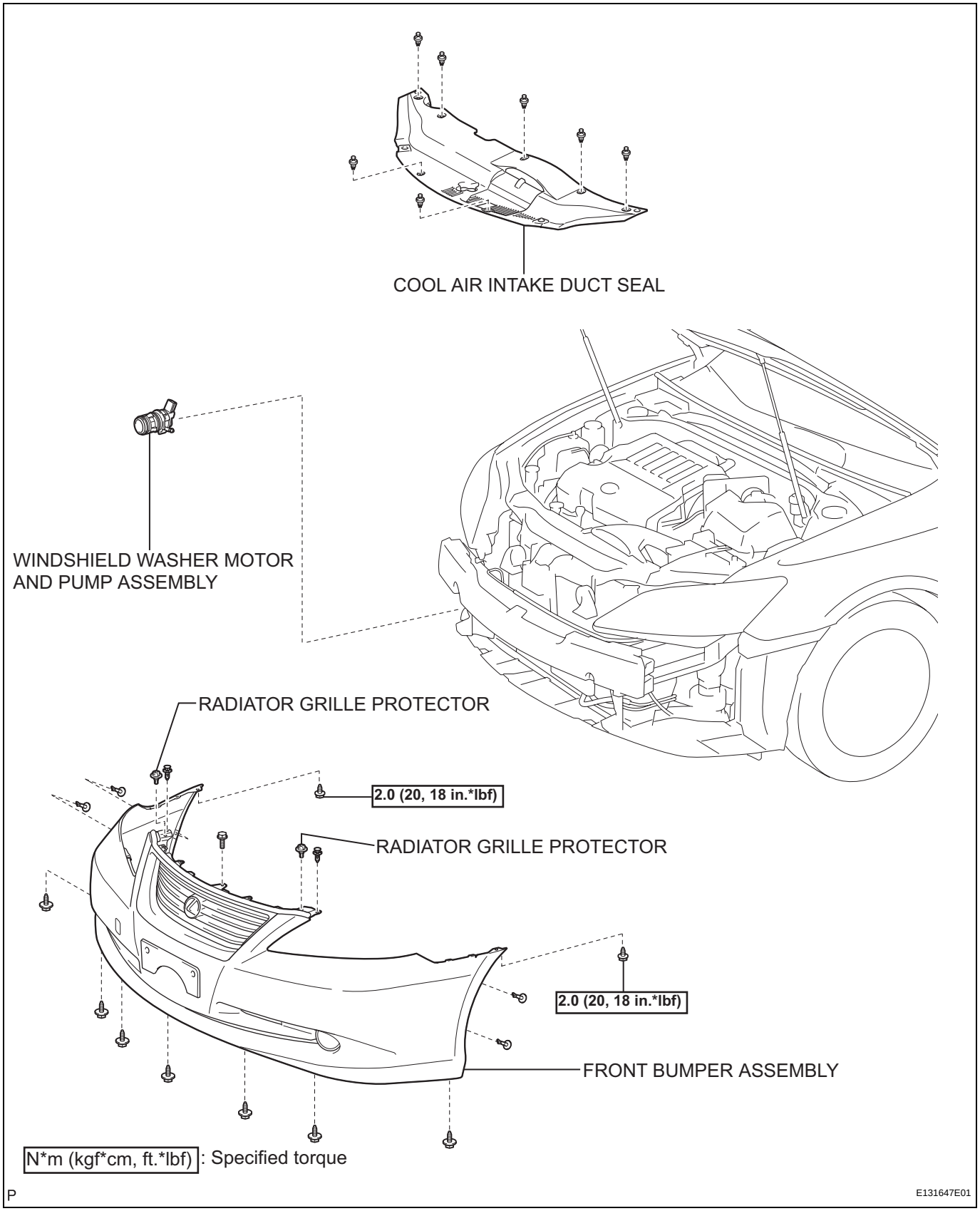

WW

REMOVAL

1. **REMOVE COOL AIR INTAKE DUCT SEAL (See page ET-4)**

2. **REMOVE FRONT BUMPER ASSEMBLY (See page ET-5)**

3. **DRAIN WASHER FLUID**
   (a) Disconnect the washer hose from the windshield washer motor and pump assembly, and drain the washer fluid.

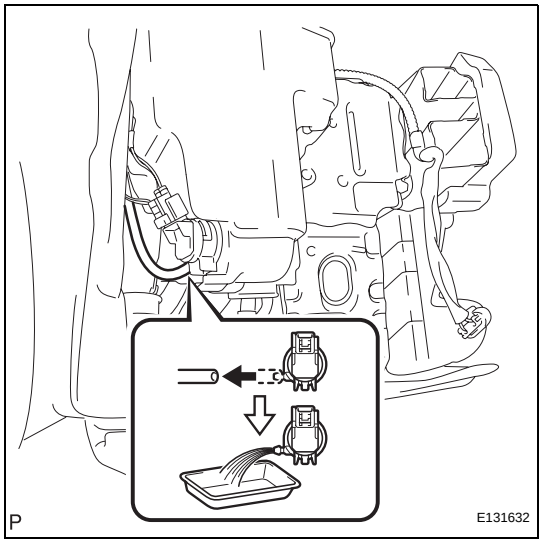

4. **REMOVE WINDSHIELD WASHER MOTOR AND PUMP ASSEMBLY**
   (a) Disconnect the connector.
   (b) Remove the windshield washer motor and pump assembly.

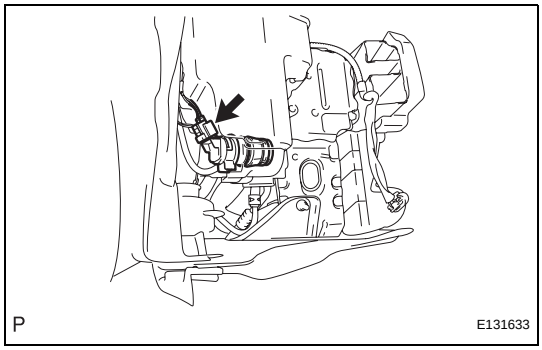

WASHER NOZZLE

ON-VEHICLE INSPECTION

1. INSPECT WASHER NOZZLE SUB-ASSEMBLY

(a) With the engine running, check the position that the washer fluid hits the windshield.

Standard:

Washer fluid hits the windshield in the areas shown in the illustration.

HINT:

If the result is not as specified, replace the washer nozzle.

for Standard:

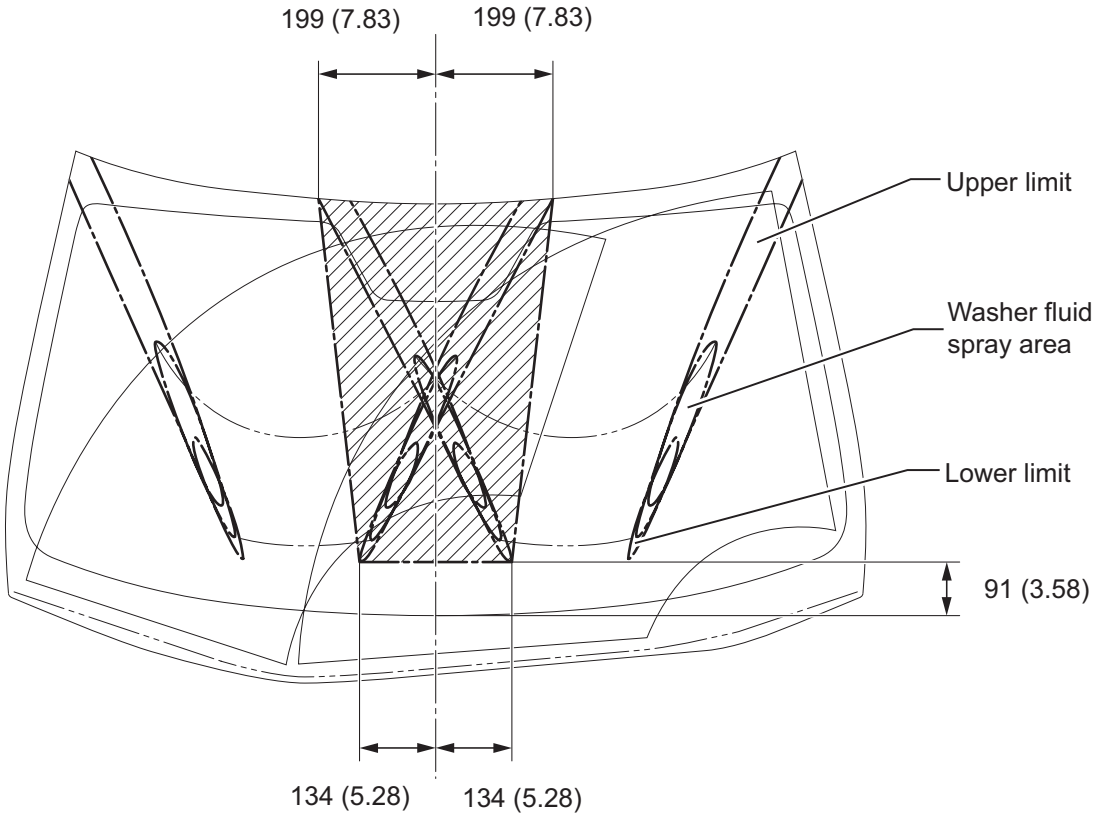

for Glass Roof:

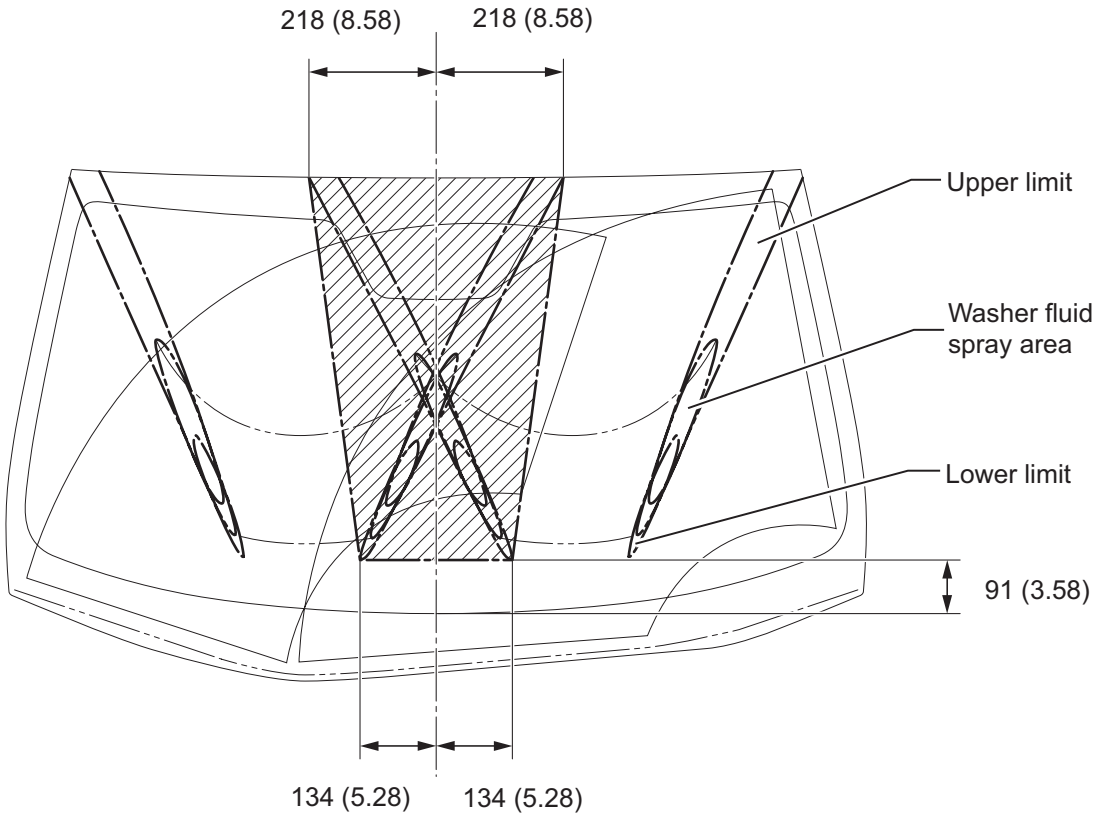

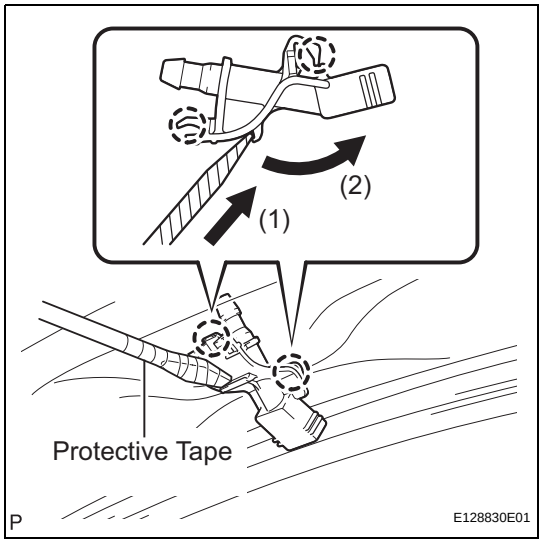

ADJUSTMENT

1. ADJUST WASHER NOZZLE SUB-ASSEMBLY

(a) Using a screwdriver, disengage the 2 claws and separate the washer nozzle sub-assembly as shown in the illustration.

NOTICE:

Be careful not to damage the windshield.

HINT:

Tape the screwdriver tip before use.

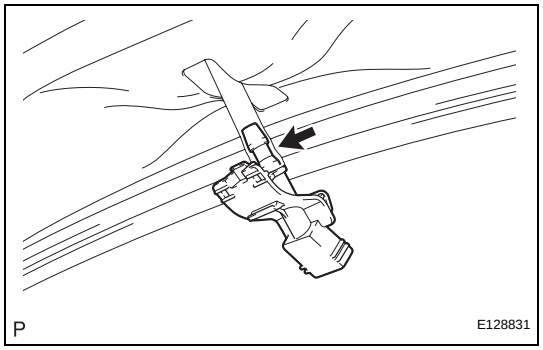

(b) Disconnect the washer nozzle sub-assembly from the washer hose.

NOTICE:

Washer nozzles cannot be reused.

(c) Select a washer nozzle sub-assembly so that the washer fluid spray area is within the standard.

Available Washer Nozzles:

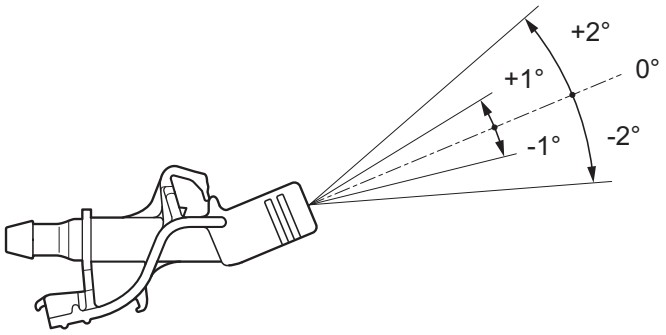

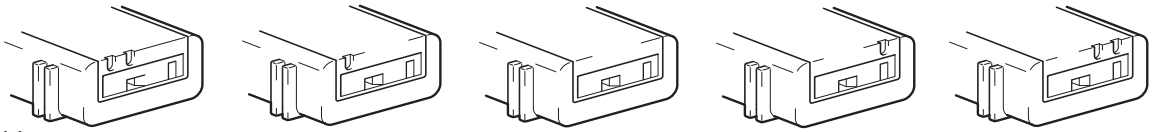

Washer Fluid Spray Angle	-2°	-1°	0°	+1°	+2°
Part Number	85381-30210	85381-30190	85381-30170	85381-30180	85381-30200

P

E128832E03

(d) Connect the selected washer nozzle sub-assembly to the washer hose.

(e) Engage the 2 claws and install the washer nozzle sub-assembly.

WW

RAIN SENSOR

COMPONENTS

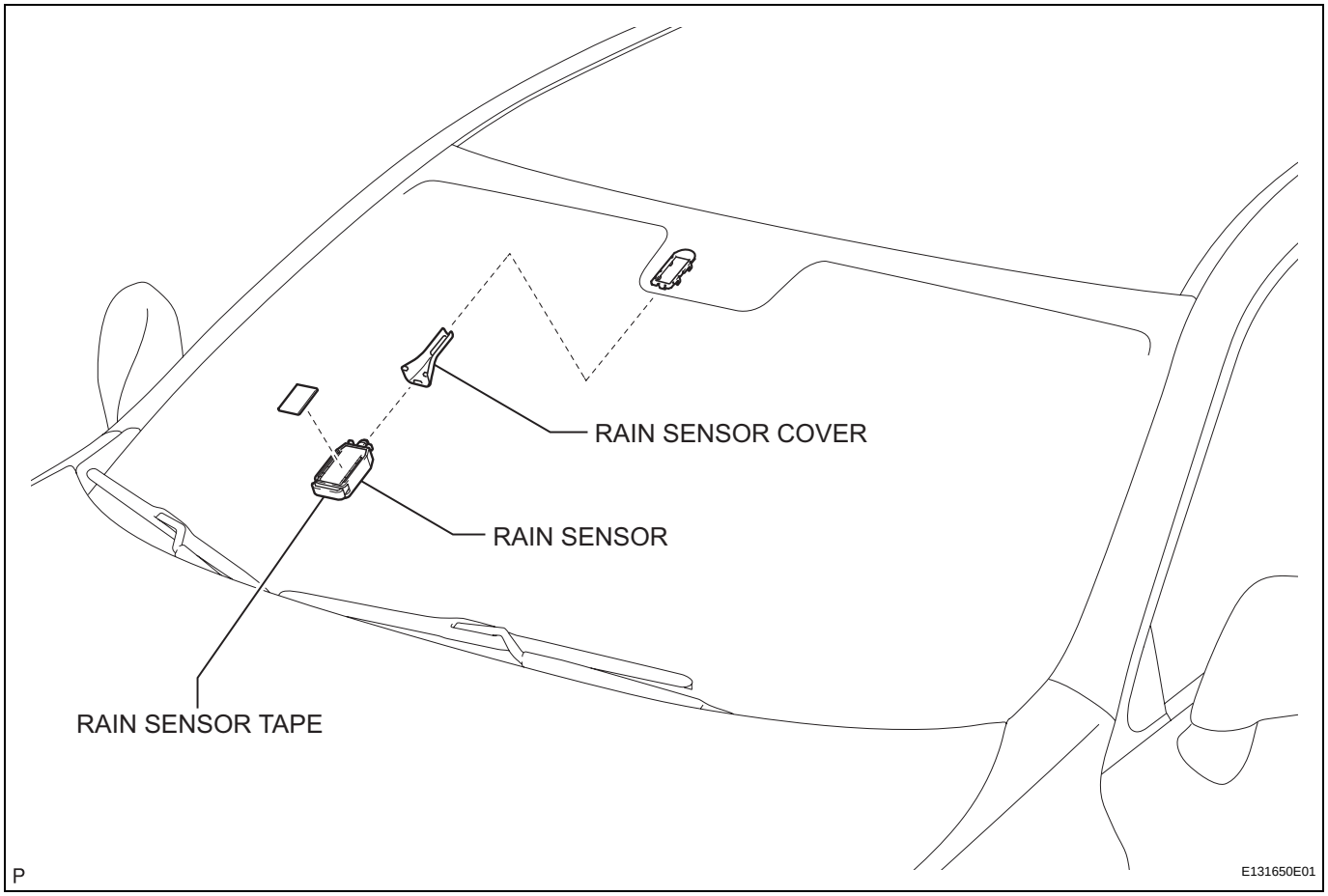

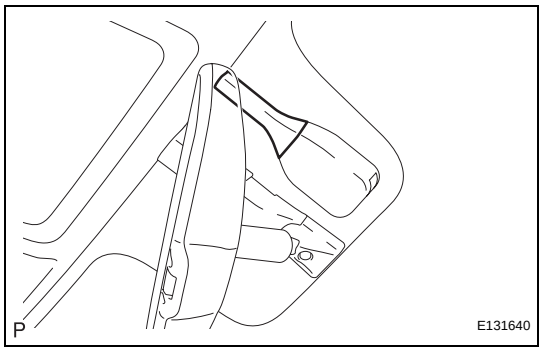

REMOVAL

1. REMOVE RAIN SENSOR COVER

(a) Remove the rain sensor cover.

2. REMOVE RAIN SENSOR

HINT:
This step should be performed only when the rain sensor tape needs to be replaced.

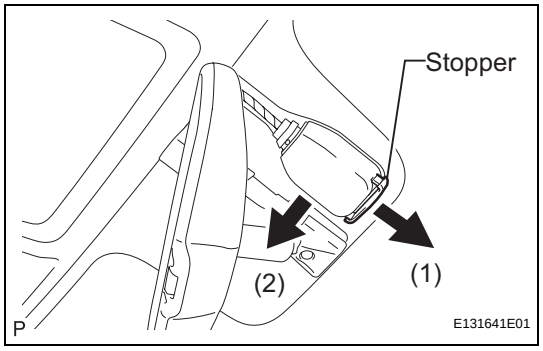

(a) Release the stopper by pulling the stopper down and disconnect the rain sensor as shown in the illustration.

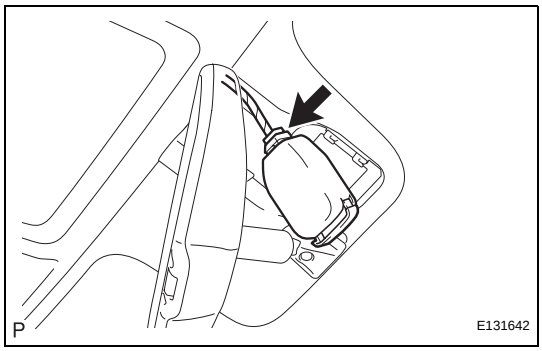

(b) Disconnect the connector and remove the rain sensor.

3. REMOVE RAIN SENSOR TAPE

HINT:
This step should be performed only when the rain sensor tape needs to be replaced.

(a) Remove the rain sensor tape.
NOTICE:
The rain sensor tape can be reused, however, replace it with a new one if it is dirty or damaged.

POWER DOOR LOCK CONTROL SYSTEM

PRECAUTION

NOTICE:
Some systems need to be initialized after reconnecting the negative (-) battery terminal (See page IN-33).

PARTS LOCATION

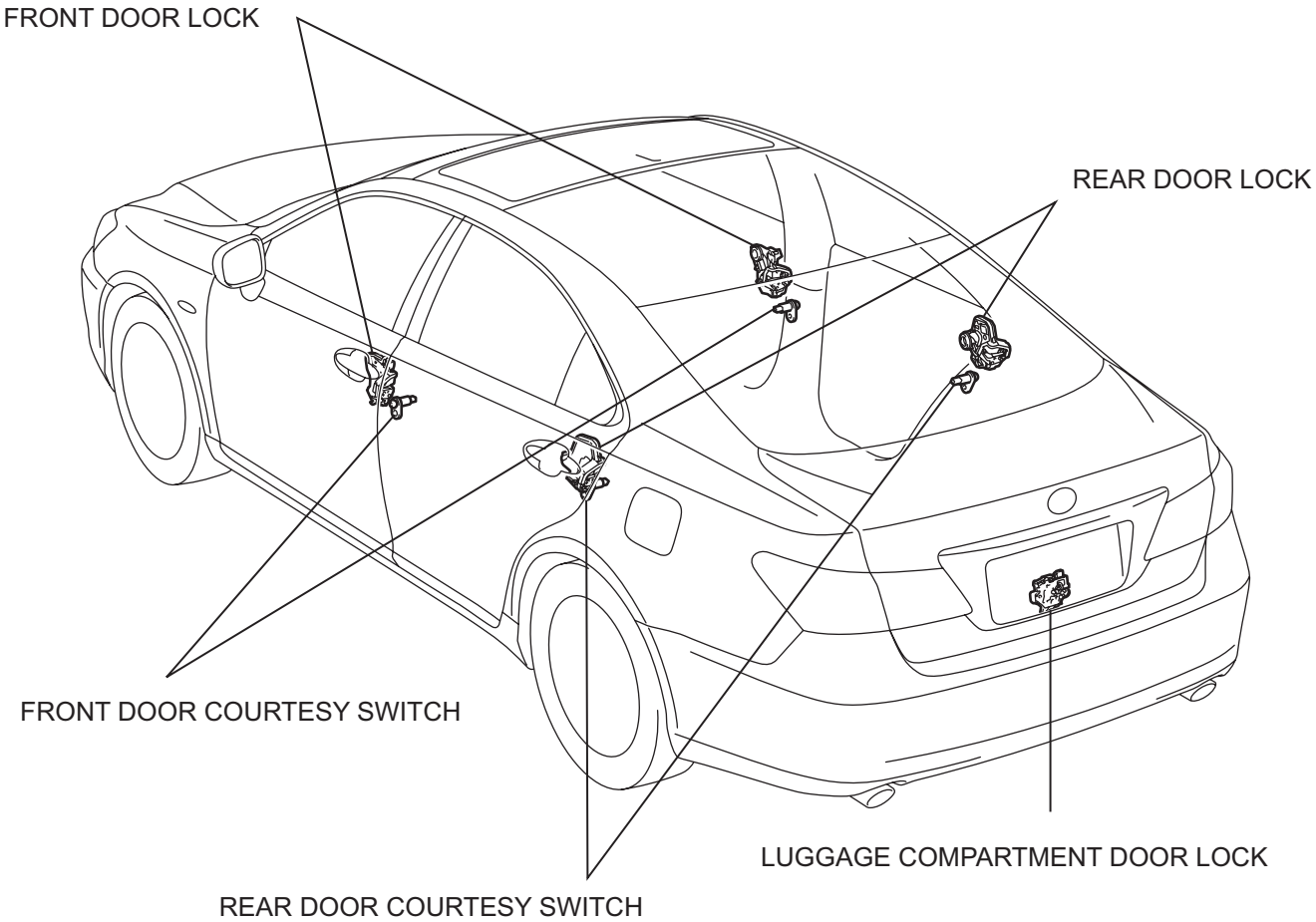

H

B138041E01

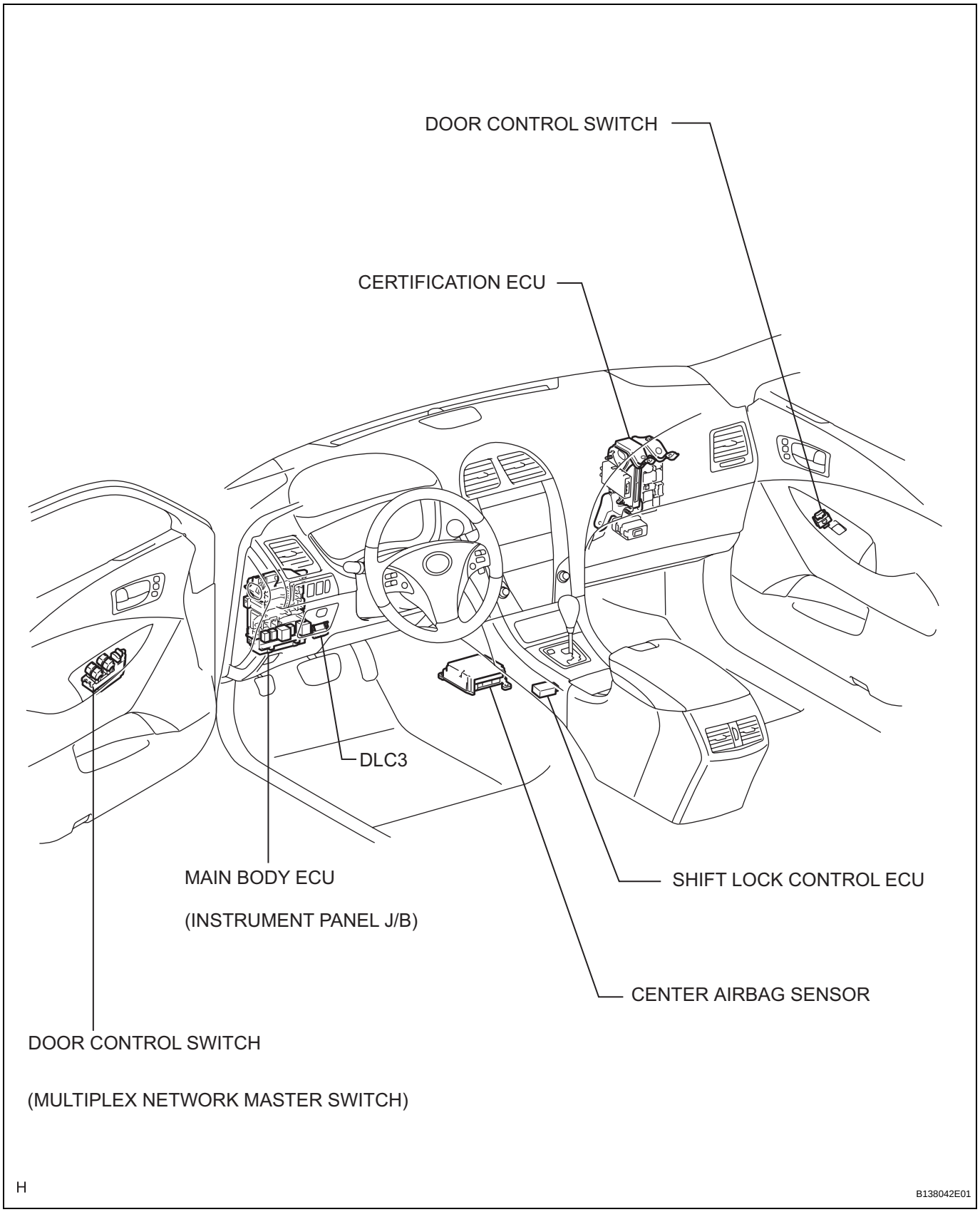
DOOR CONTROL SWITCH
CERTIFICATION ECU
DLC3
MAIN BODY ECU
(INSTRUMENT PANEL J/B)
SHIFT LOCK CONTROL ECU
CENTER AIRBAG SENSOR
DOOR CONTROL SWITCH
(MULTIPLEX NETWORK MASTER SWITCH)
H
B138042E01

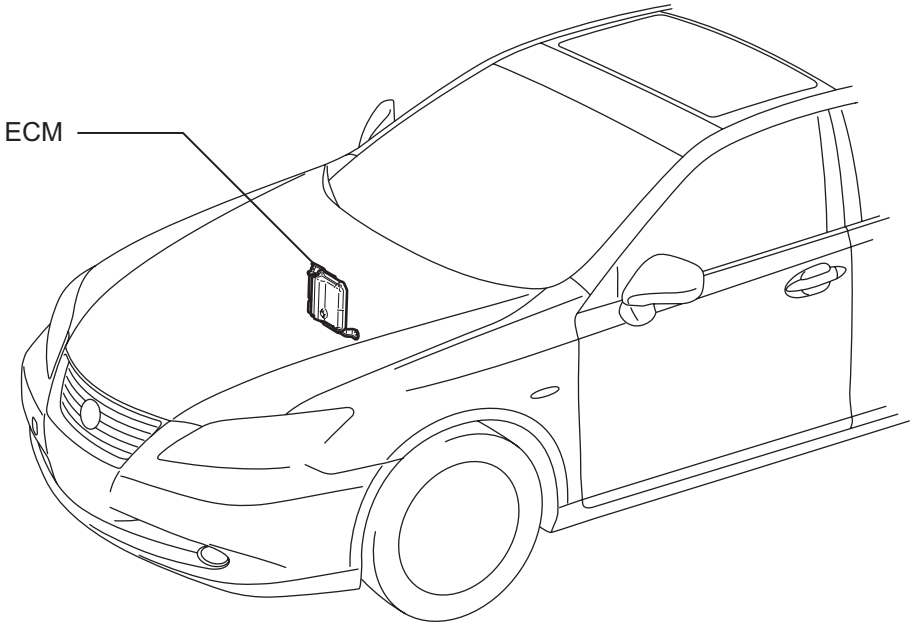

B138083E01

WIRELESS DOOR LOCK CONTROL SYSTEM

PRECAUTION

NOTICE:
Some systems need to be initialized after reconnecting the negative (-) battery terminal (See page IN-33).

PARTS LOCATION

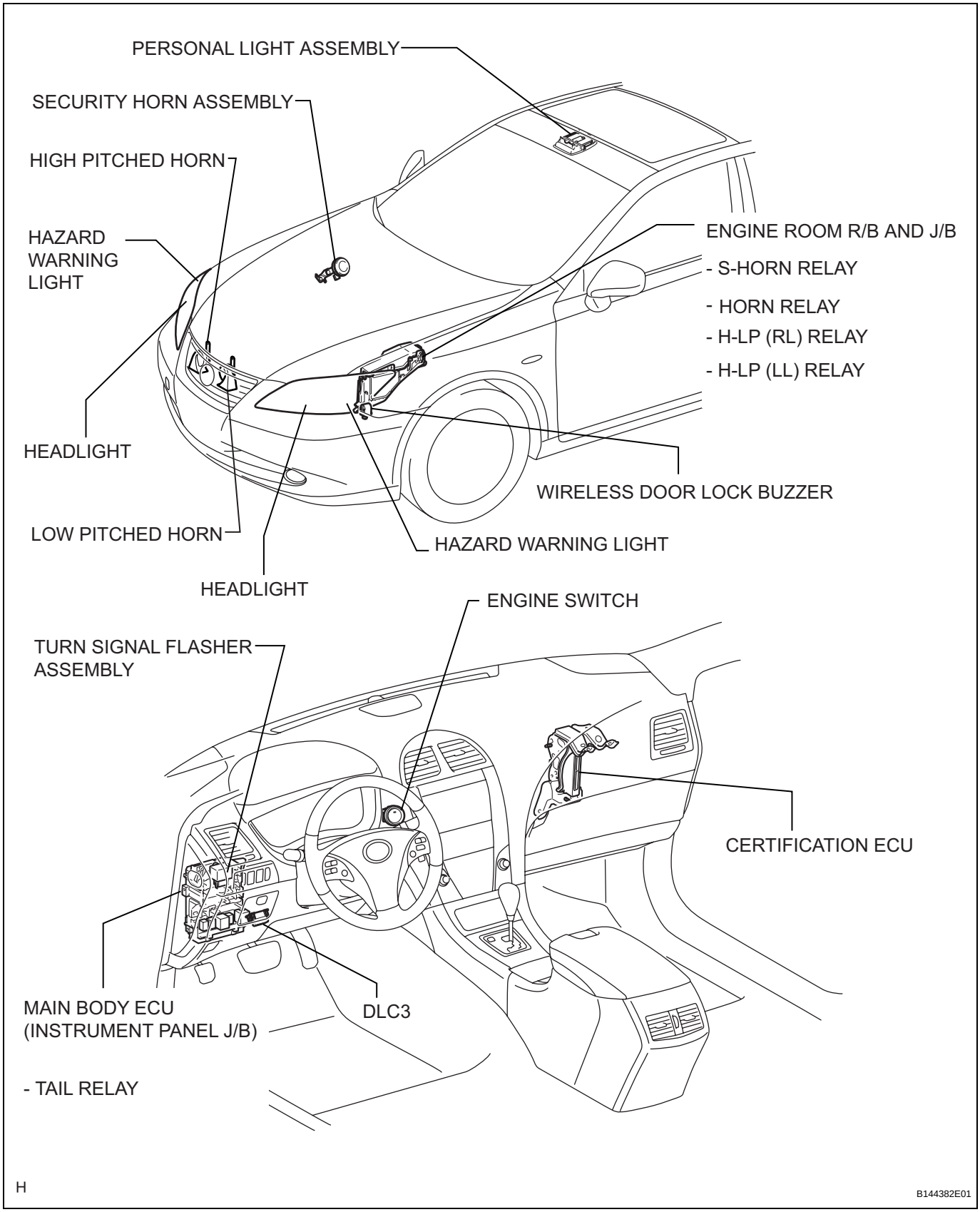

DL

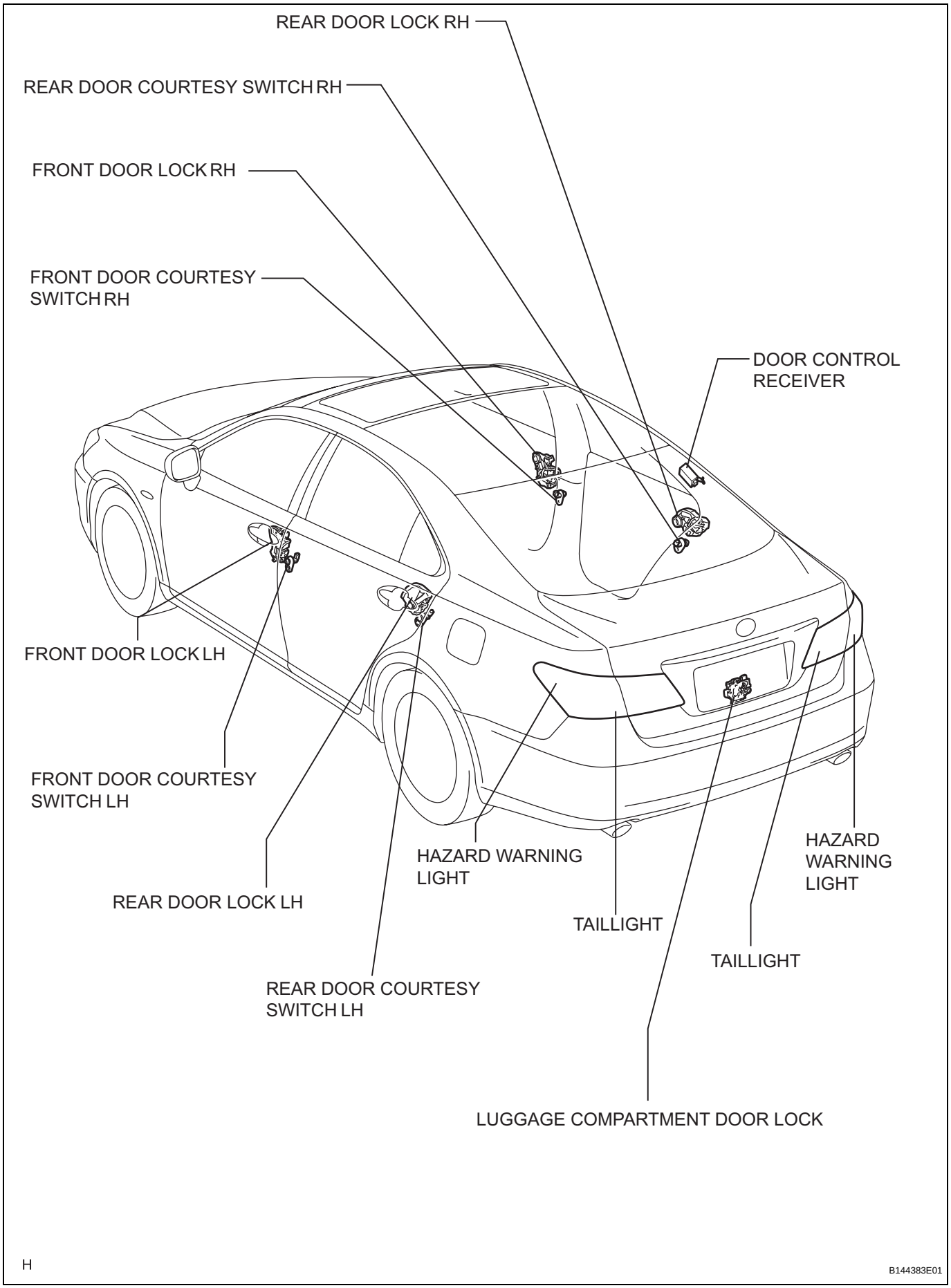
REAR DOOR LOCK RH
REAR DOOR COURTESY SWITCH RH
FRONT DOOR LOCK RH
FRONT DOOR COURTESY SWITCH RH
DOOR CONTROL RECEIVER
FRONT DOOR LOCK LH
FRONT DOOR COURTESY SWITCH LH
REAR DOOR LOCK LH
HAZARD WARNING LIGHT
TAILLIGHT
HAZARD WARNING LIGHT
TAILLIGHT
REAR DOOR COURTESY SWITCH LH
LUGGAGE COMPARTMENT DOOR LOCK
H
B144383E01

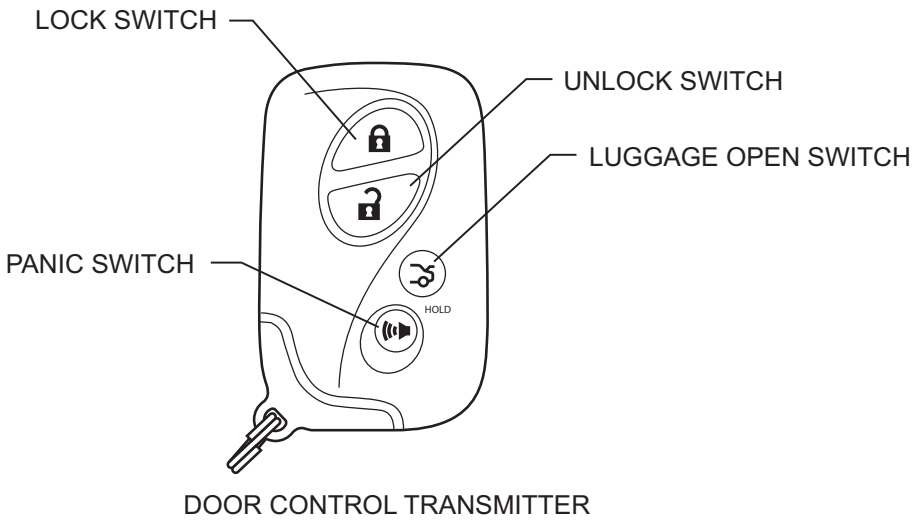

H

B144384E01

SMART ACCESS SYSTEM WITH PUSH-BUTTON START

PRECAUTION

NOTICE:
Some systems need to be initialized after reconnecting the negative (-) battery terminal (See page IN-33).

1. PRECAUTIONS WHEN USING INTELLIGENT TESTER

(a) When troubleshooting the smart access system with push-button start using the intelligent tester with the engine switch off, connect the intelligent tester to the vehicle and repeat turning any of the courtesy light switches on and off until communication between the tester and the vehicle begins (the interval between ON and OFF should be less than 1.5 seconds).

(b) After DTCs are all cleared, check if the trouble occurs again 6 seconds after the engine switch is turned on (IG).

2. PRECAUTIONS FOR EACH FUNCTION

(a) Precautions for the electrical key:
The electrical key is a precision instrument. Be sure to observe the following:
(1) Do not drop or strike the electrical key.
(2) Do not keep the electrical key in a high temperature area for a long time.
(3) Do not use an ultrasonic washing machine to clean the electrical key.
(4) Keep the electrical key away from magnets or magnetized items during use.
(5) Do not attach any stickers to the electrical key.
(6) If an electrical key is lost, delete all registered electrical key ID codes and then reregister the remaining electrical keys.

(b) Precautions for the entry unlock function:
(1) As the sensor is built into the backside of the outside door handle, the user must touch the backside of the handle when performing the unlock function.
(2) If touched with gloved hands, the response of the door may be delayed.
(3) During the entry unlock operation, if the door handle is pulled before the door unlocks, the unlock function cannot be completed. Confirm that the door has been unlocked before pulling the door handle to open the door.

(4) Make sure that the doors are unlocked when touching the touch sensor on the outside door handle while the electrical key is being carried.
If the doors cannot be unlocked, the certification ECU orders the main body ECU to perform the door unlock operation 4 times at intervals of 0.75 seconds.
At this time, the door may not be unlocked because the handle is being pulled due to some mechanical reasons.
Be sure to return the door handle to its original position.
If the door cannot be opened by pulling the handle, perform the entry unlock operation again.

(5) If the electrical key is too close to the oscillator on the outside of the vehicle, the door may not be unlocked because the electrical key cannot react to the strong wave output from the transmitter.

(6) If the electrical key is within the vehicle exterior detection area, the door can be unlocked even when a person other than the person carrying the electrical key holds the door handle.
However, the doors other than the door that the codes match will not be unlocked.
(If the electrical key is within the driver side door's detection area outside the vehicle, the doors will be unlocked when the person carrying the electrical key holds the driver side door handle. However, if any door handle other than that of the driver side door is held, the doors will not be unlocked.)

(7) If a door is not opened after the door unlock operation, the doors automatically lock after approximately 60 seconds.

(8) If a large amount of water is applied to the door handle due to a car wash or heavy rain, the electrical key being within the vehicle exterior detection area may cause the doors to be unlocked.
However, the doors will be locked again after approximately 60 seconds if a door is not opened.

(9) If the electrical key of the smart access system with push-button start is used while it is being carried with the electrical key of another smart access system with push-button start, the time before the entry unlock operation will become longer than usual. This is not a malfunction.

(c) Precautions for the entry lock function:

(1) When performing the entry lock operation, firmly press the lock switch on the outside door handle. If pressed too quickly or lightly, the entry lock may not operate.

(2) It is possible that signals output from the indoor electrical key antenna may leak through the window. Also, if the electrical key is too close to a door oscillator, the oscillator output signals are too strong and the electrical key cannot respond. As a result, when the electrical key is near the vehicle interior (window, door handle), the entry lock function may not operate. Also, the electrical key reminder warning buzzer may sound and the entry unlock operation may stop functioning. In this situation, move the electrical key away from the vehicle interior (window, door handle), perform the entry lock operation and perform the entry unlock operation.

(3) Do not touch the lock switch while opening or closing the door.
If the lock switch is pressed when opening or closing the door while the electrical key is being carried, the door ajar warning buzzer sounds (beeps outside the vehicle for 10 seconds).

(4) If the electrical key is on the instrument panel, rear package tray, floor, or in the glove box, the electrical key reminder function may not operate and the electrical key may be locked in the vehicle. Always carry the electrical key.

(5) If the electrical key is outside the vehicle but is very close to a window or door handle (the ECU determines that the electrical key is inside the vehicle) and the transmitter or mechanical key is used to lock the doors (entry lock is not used), entry unlock will not operate. To unlock the doors, perform a wireless door unlock operation. The entry lock function operates in this way to prevent the user from unintentionally unlocking the doors from outside the vehicle. For example, when a user operates the wireless door lock operation from inside the vehicle, radio waves from a door oscillator may leak into the vehicle interior and the doors may unlock.

(6) To allow the user enough time to check if the doors are locked after performing a door lock operation (entry lock function or wireless door lock operation), the entry unlock function will not be permitted for 3 seconds after the door lock operation.

(d) Precautions for the entry ignition function:

(1) To start the engine, first depress the brake pedal firmly until the engine switch indicator illuminates green.

(2) When operating the engine switch, firmly press the switch. If the switch is pressed too quickly, power source control and engine starting may not operate.
(3) While driving the vehicle, continuously pressing the engine switch for 3 seconds or more will turn off the engine. Do not touch the engine switch while driving, except in an emergency.
(4) Do not touch the engine switch with oily hands.
(5) If the vehicle has been in a high temperature location for an extended period of time, be careful when touching the engine switch. It may be very hot and lead to burns.
(6) Take care to avoid spilling beverages on the engine switch. Keep all liquids away from the engine switch.
(7) Do not use the engine switch if it seems to be sticking or feels abnormal.
(8) The vehicle continually records the power source mode (off, on (ACC), on (IG), start). When the battery cable is disconnected and reconnected, the power source mode will return to the mode that was selected before disconnecting the battery cable. Always turn the power off before disconnecting the battery cable. When the vehicle battery is fully depleted, power will be cut. As a result, the power source mode before the power was cut cannot be recognized, so be extremely careful.
(9) Do not connect any electronic products to the ACC, IG1 or IG2 coil side wiring, as the vehicle power supply may be unable to be turned on, or other problems may occur.
(10) After the battery cable has been disconnected and reconnected, the engine will not start on the first attempt. The engine will start normally on the second attempt.
(11) When starting the engine immediately after reconnecting the battery cable, connect the cable and wait at least 10 seconds before attempting to start the engine. The engine may not start when attempting an engine start immediately after disconnecting and reconnecting the battery cable.
(12) If the electrical key is held over the engine switch to start the engine because the electrical key battery is depleted, the following warnings will sound:
- Driver's door open → closed:
  - An exit warning if the shift lever is in a position other than P and the power source is in a mode other than off.

– An exit warning if the shift lever is in the P position and the power source is in a mode other than off.

- Doors other than the driver door open → closed:
  Warning to inform that the electrical key has been taken out of the vehicle.

These warnings will sound because whether the electrical key is in the cabin or not cannot be determined. They do not indicate system malfunctions.

(e) Precautions for luggage compartment door entry function:
Even if the electrical key is within the electrical key oscillator (outside luggage compartment) detection area, the luggage compartment door cannot be opened if the electrical key is in the following areas:
- Near the center of the bumper
- Too close to the ground or in a high place

(f) Precautions for the function to prevent electrical key confinement in the luggage compartment:
(1) Do not place the electrical key in the luggage compartment.
If the luggage compartment is closed with the electrical key in it when all the doors are locked, the alarm to indicate electrical key confinement will operate (beeping sound for 2 seconds outside of the vehicle). However, the alarm may not operate for some reason relating to the electrical key location (near the spare tire or the side of the luggage compartment), the electrical key condition (covered with metal or near metal), or ambient radio waves.
(2) If the luggage compartment is closed with the electrical key in it when any of the doors is unlocked or open, the electrical key confinement prevention function will not operate. In this case, use the luggage compartment opener in the cabin to open the luggage compartment and take out the electrical key.

(3) The alarm may erroneously operate in the following conditions. If you can confirm that you are carrying the electrical key or that the electrical key is in the cabin, there is no problem. The entry luggage compartment open function may not operate if the alarm erroneously operates. In this case, use the luggage compartment opener in the cabin or perform a wireless operation to open the luggage compartment.
- The electrical key is brought into the cabin after the luggage compartment is opened, and then the luggage compartment is closed.
- The luggage compartment is closed by the person who is carrying the electrical key.

(4) If the alarm operates when the luggage compartment is closed with all the doors locked, the electrical key is in the cabin or luggage compartment. Check the cabin and luggage compartment to find the electrical key.

(5) If the luggage compartment is closed with the electrical key in it when all the doors are locked, the alarm will sound and the luggage compartment can be opened. This may increase the risk of the vehicle being stolen.

(6) Do not open or close the luggage compartment after all the doors are locked if you want to keep the spare electrical keys in the cabin. As a result, the alarm may sound and the luggage compartment can be opened. This may increase the risk of the vehicle being stolen.

(g) Precautions for the battery built into the electrical key and the vehicle battery:

(1) The electrical key is constantly checking for signals from the vehicle, which requires power from the electrical key's built-in battery. The life of the battery is approximately 1 to 2 years depending on the usage conditions. Be sure to replace the battery when its power is low. When replacing the battery, do not touch the inner circuit board or other inner parts.

(2) The electrical key is constantly checking for signals from the vehicle using battery power to determine whether the electrical key is being used or not. Even if the user is carrying 2 electrical keys and only 1 electrical key is used, both electrical keys will consume battery power.

(3) The electrical key receives radio waves at approximately 314 MHz. If the electrical key continuously receives strong, identical frequency waves, this may drain the electrical key's battery. Store the electrical key at least 1 m (3.3 ft) from TVs, personal computers, or other electrical products.

(4) When a door is being locked, the vehicle battery is used to transmit radio waves. The battery may be dead if the vehicle remains stopped for a long time. If the vehicle is not used for a long time, remove the battery from the vehicle or cancel the smart key system.

(5) When a door is being locked with the electrical key in the detection area of a door oscillator, the battery is used for regular communication between the electrical key and vehicle. If the vehicle is not used, keep the electrical key away from the vehicle (more than 2 m (6.6 ft)).

(6) After disconnecting and reconnecting the battery cable, the entry unlock function may not operate. If this occurs, perform a wireless door unlock and lock operation.

(h) Precautions for the entry unlock mode switching function:

(1) Perform the entry unlock mode switching function within a 1 m (3.3 ft) area around the vehicle.

(2) The entry unlock mode switching function cannot be performed within 5 seconds of the previous mode change. Wait 5 seconds or more before performing a mode change.

DOOR CONTROL TRANSMITTER

COMPONENTS

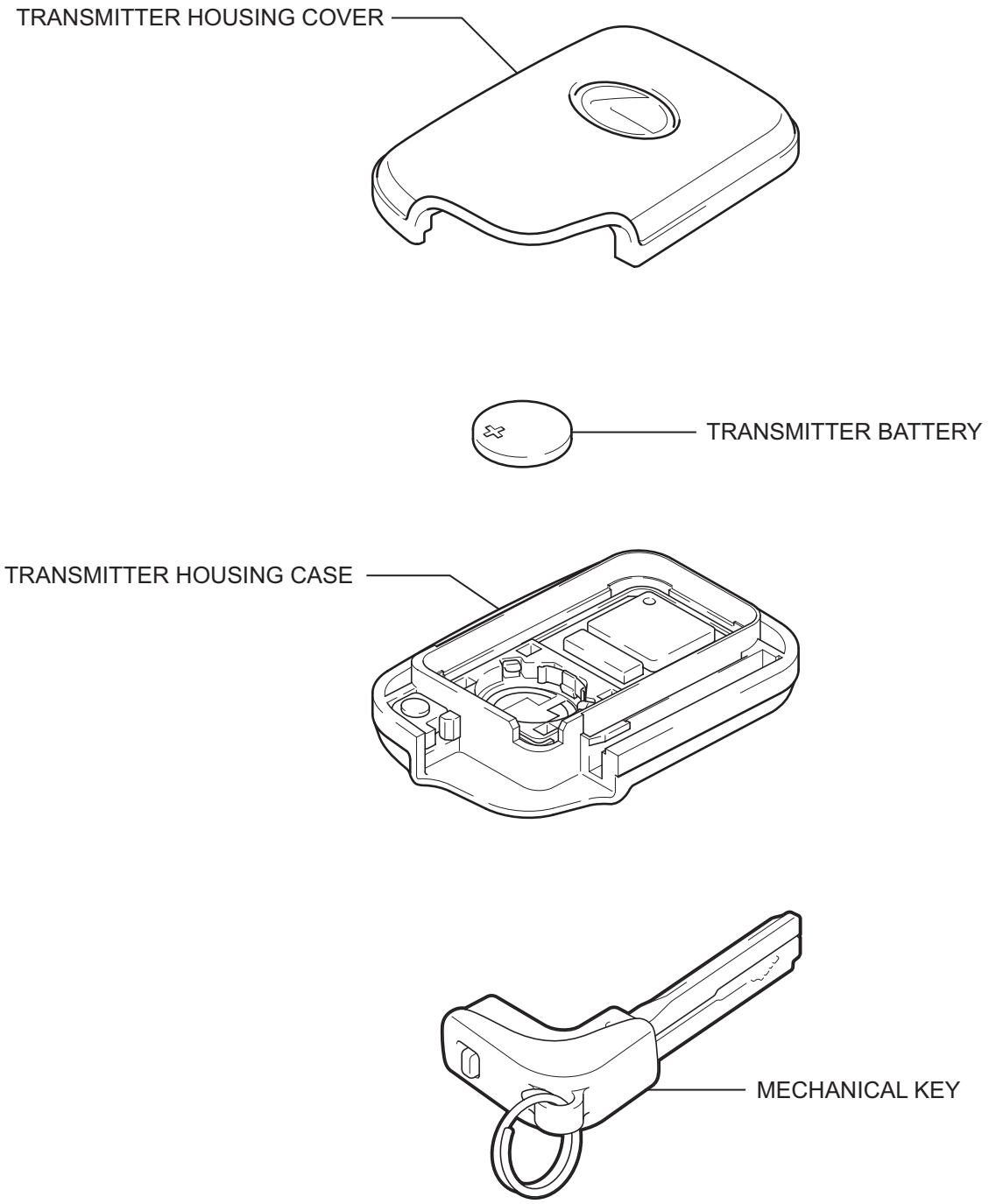

P

B128442E01

REMOVAL

1. REMOVE TRANSMITTER BATTERY

NOTICE:

Take extra care when handling these precision electronic components.

(a) Remove the mechanical key.

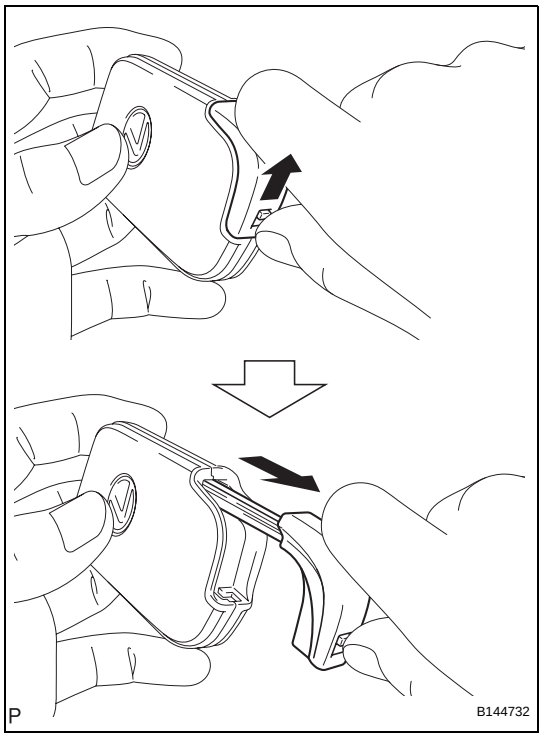

(b) Insert a screwdriver into the gap, and turn the screwdriver to detach the cover.

HINT:

Tape the screwdriver tip before use.

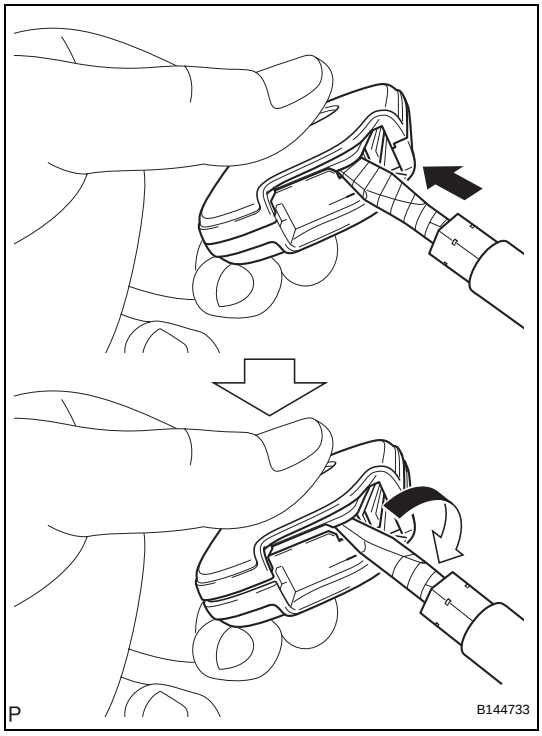

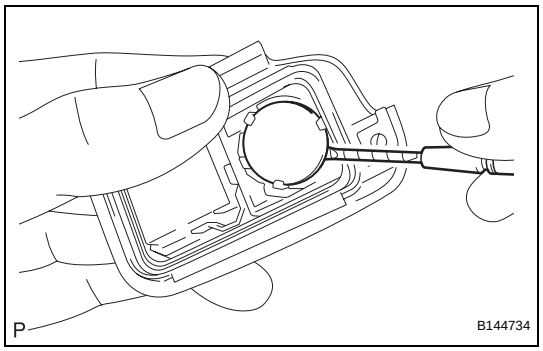

(c) Insert a screwdriver into the gap and gently remove the battery (lithium battery).

NOTICE:

- **Do not push the terminals with your finger.**
- **Do not forcibly pry up the battery (lithium battery) because doing so will deform the terminals.**
- **Do not touch the battery with wet hands. Water may result in corrosion.**
- **Do not touch or move any components inside the transmitter because handling the components may interfere with proper operation of the transmitter.**

DOOR CONTROL SWITCH

COMPONENTS

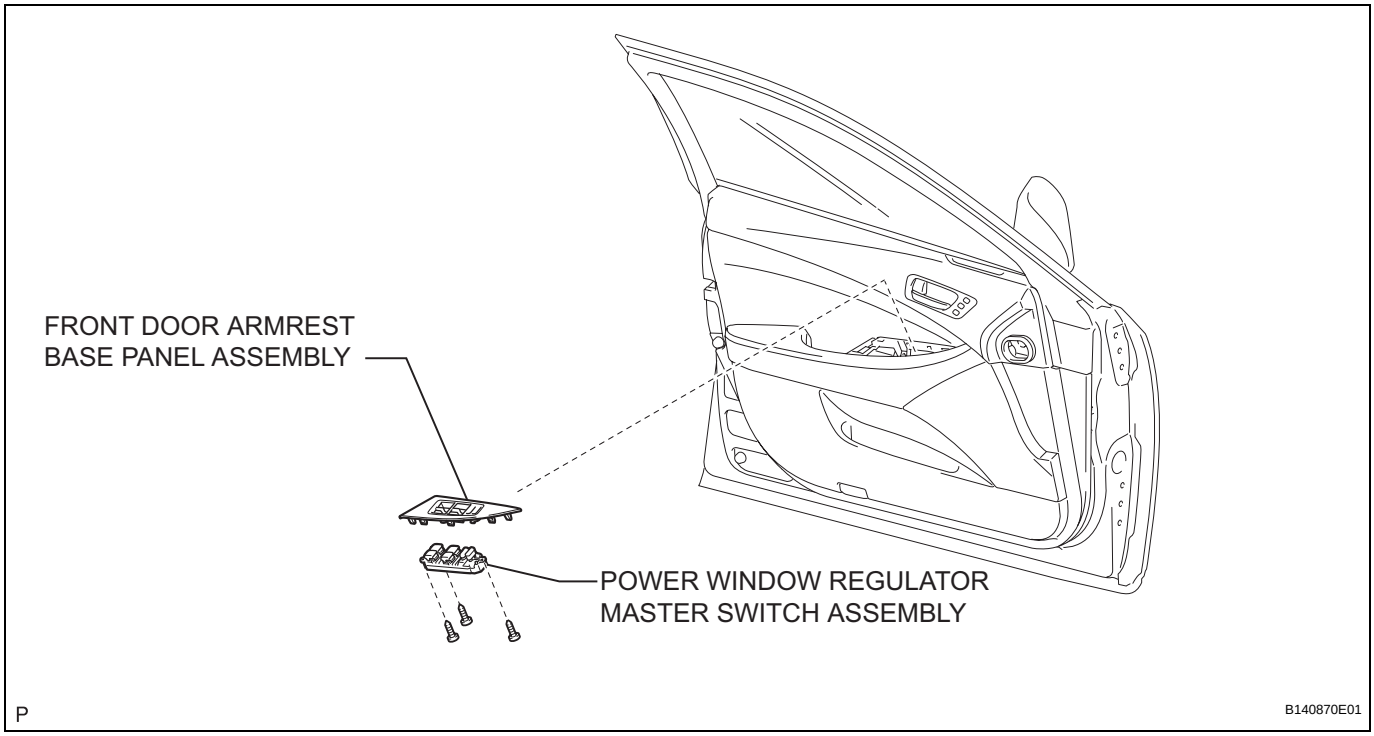

REMOVAL

1. **REMOVE FRONT DOOR ARMREST BASE PANEL ASSEMBLY (See page ED-33)**
2. **REMOVE POWER WINDOW REGULATOR MASTER SWITCH ASSEMBLY**
   (a) Remove the 3 screws and the power window regulator master switch assembly.

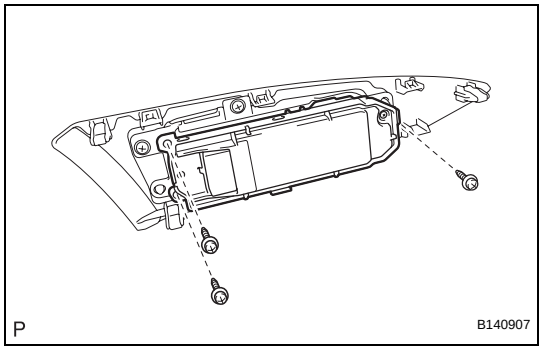

INSPECTION

1. **INSPECT DOOR CONTROL SWITCH (for Front Passenger Side)**
   (a) Remove the door control switch assembly.
   (b) Measure the resistance according to the value(s) in the table below.
   Standard resistance

Tester Connection	Condition	Specified Condition
2 - 3	Lock	Below 1 Ω
2 - 3 3 - 4	OFF (Free)	10 kΩ or higher
3 - 4	Unlock	Below 1 Ω

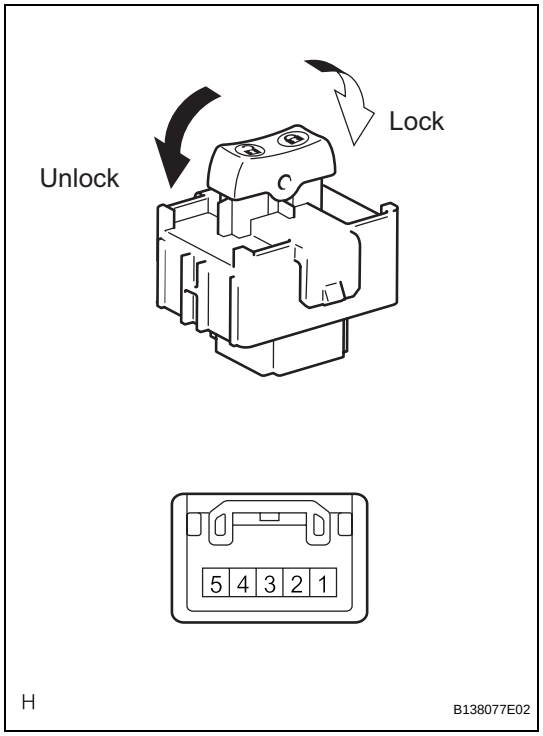

INSTALLATION

1. **INSTALL POWER WINDOW REGULATOR MASTER SWITCH ASSEMBLY**
   (a) Install the power window regulator master switch assembly with the 3 screws.
2. **INSTALL FRONT DOOR ARMREST BASE PANEL ASSEMBLY (See page ED-53)**

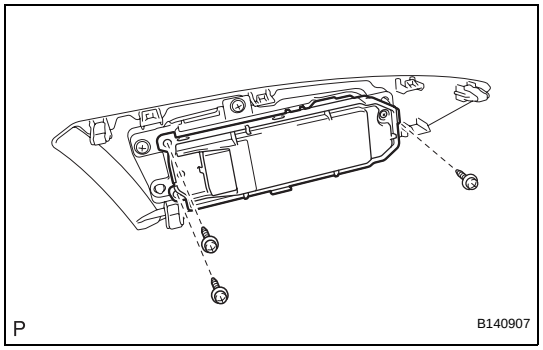

DL

FRONT DOOR LOCK

COMPONENTS

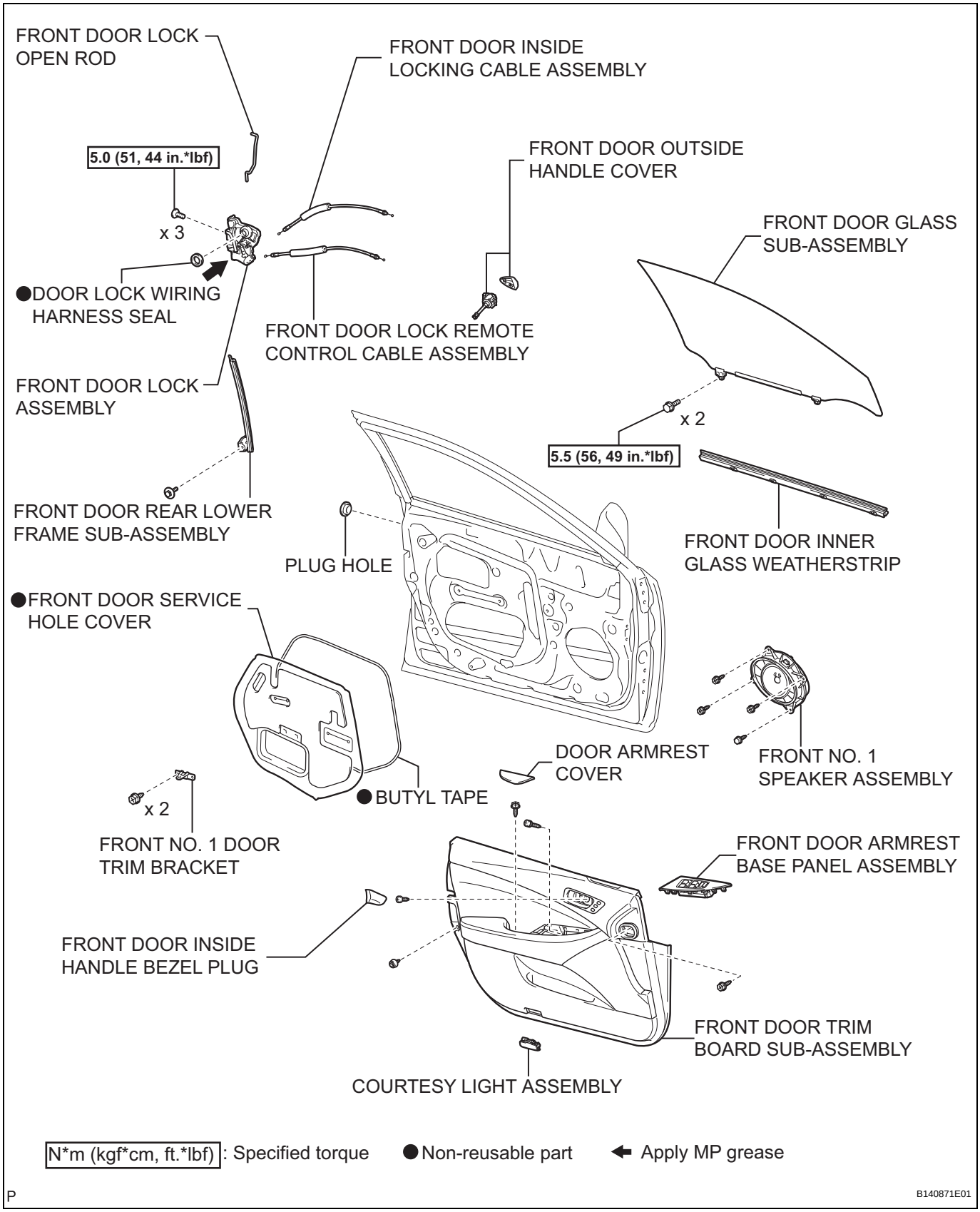

REMOVAL

1. **REMOVE FRONT DOOR INSIDE HANDLE BEZEL PLUG (See page ED-32)**
2. **REMOVE FRONT DOOR ARMREST BASE PANEL ASSEMBLY (See page ED-33)**
3. **REMOVE COURTESY LIGHT ASSEMBLY (See page ED-34)**
4. **REMOVE DOOR ARMREST COVER (See page ED-34)**
5. **REMOVE FRONT DOOR TRIM BOARD SUB-ASSEMBLY (See page ED-34)**
6. **REMOVE FRONT DOOR INNER GLASS WEATHERSTRIP (See page ED-35)**
7. **REMOVE FRONT NO. 1 SPEAKER ASSEMBLY (See page AV-184)**
8. **REMOVE FRONT NO. 1 DOOR TRIM BRACKET (See page ED-36)**
9. **REMOVE FRONT DOOR SERVICE HOLE COVER (See page ED-36)**
10. **REMOVE FRONT DOOR GLASS SUB-ASSEMBLY (See page ED-36)**
11. **REMOVE FRONT DOOR REAR LOWER FRAME SUB-ASSEMBLY (See page ED-38)**
12. **REMOVE FRONT DOOR OUTSIDE HANDLE COVER (See page ED-38)**
13. **REMOVE FRONT DOOR LOCK ASSEMBLY**
    (a) Using a "TORX" socket wrench (T30), remove the 3 screws.
    (b) Slide the front door lock assembly downward, pull out the front door lock open rod from the outside handle frame, and remove the front door lock assembly and cables as a unit.
    (c) Remove the front door lock open rod from the front door lock assembly.
    (d) Remove the door lock wiring harness seal from the front door lock assembly.

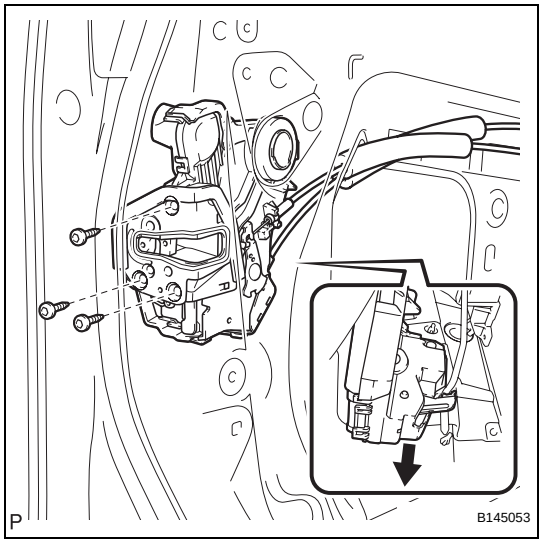

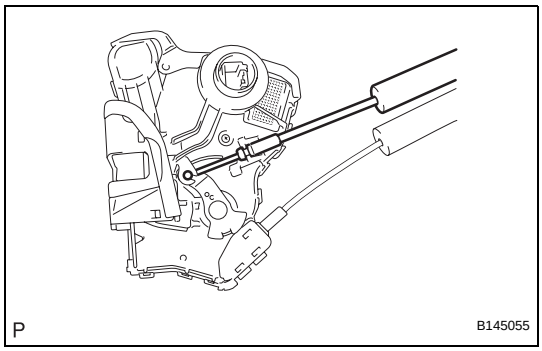

(e) Remove the front door lock remote control cable assembly.

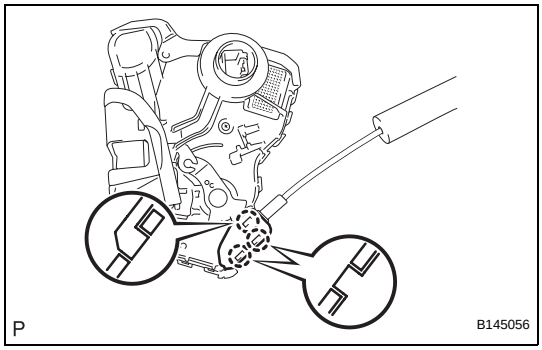

(f) Using a screwdriver, disengage the 3 claws.
HINT:
Tape the screwdriver tip before use.

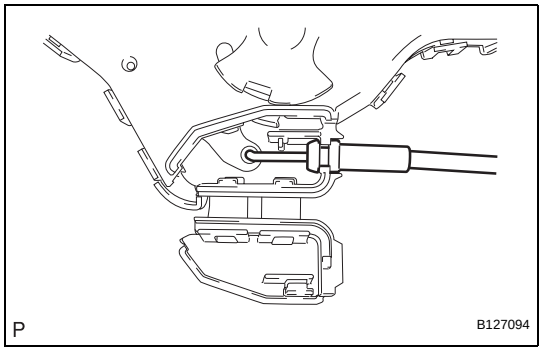

(g) Remove the front door inside locking cable assembly.

REAR DOOR LOCK

COMPONENTS

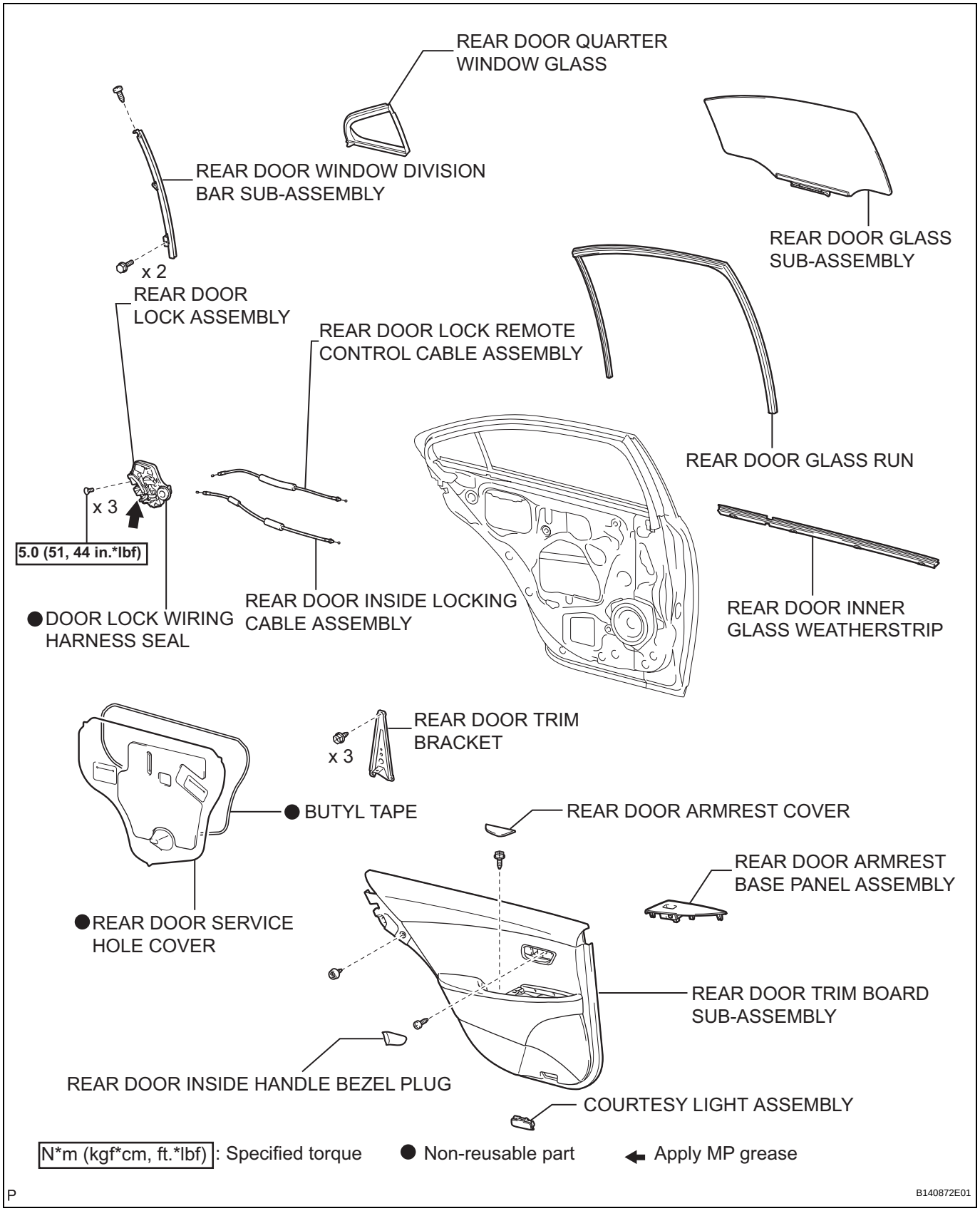

DL

DL

REMOVAL

1. **REMOVE REAR DOOR INSIDE HANDLE BEZEL PLUG (See page ED-58)**
2. **REMOVE REAR DOOR ARMREST BASE PANEL ASSEMBLY (See page ED-59)**
3. **REMOVE COURTESY LIGHT ASSEMBLY (See page ED-59)**
4. **REMOVE REAR DOOR ARMREST COVER (See page ED-59)**
5. **REMOVE REAR DOOR TRIM BOARD SUB-ASSEMBLY (See page ED-60)**
6. **REMOVE REAR DOOR INNER GLASS WEATHERSTRIP (See page ED-61)**
7. **REMOVE REAR DOOR SERVICE HOLE COVER (See page ED-61)**
8. **REMOVE REAR DOOR TRIM BRACKET (See page ED-62)**
9. **REMOVE REAR DOOR GLASS RUN (See page ED-63)**
10. **REMOVE REAR DOOR WINDOW DIVISION BAR SUB-ASSEMBLY (See page ED-63)**
11. **REMOVE REAR DOOR QUARTER WINDOW GLASS (See page ED-63)**
12. **REMOVE REAR DOOR GLASS SUB-ASSEMBLY (See page ED-63)**
13. **REMOVE REAR DOOR LOCK ASSEMBLY**
    (a) Using a "TORX" socket wrench (T30), remove the 3 screws.
    (b) Move the rear door lock assembly downward and pull the release plate out of the rear door outside handle frame.
    (c) Remove the door lock wiring harness seal from the rear door lock assembly.

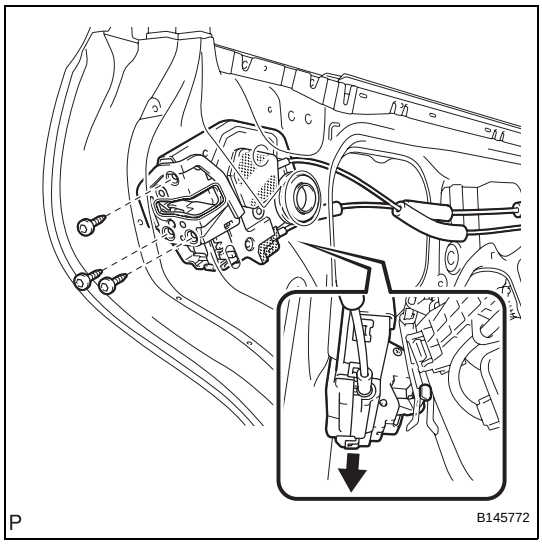

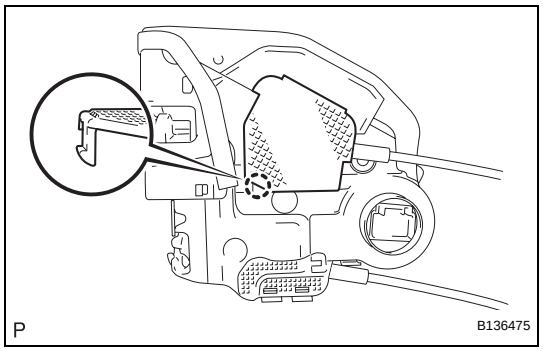

(d) Using a screwdriver, disengage the claw.
HINT:
Tape the screwdriver tip before use.

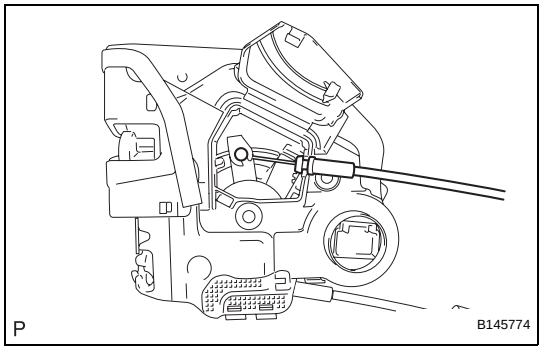

(e) Remove the rear door inside locking cable assembly.

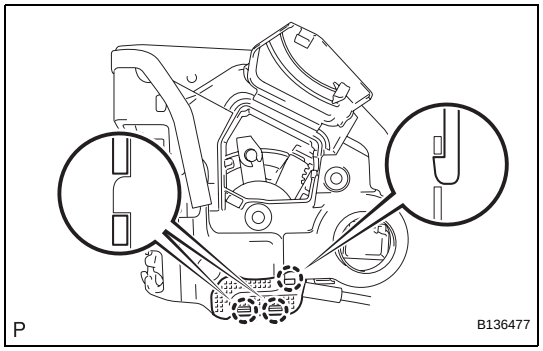

(f) Using a screwdriver, disengage the 3 claws.
HINT:
Tape the screwdriver tip before use.

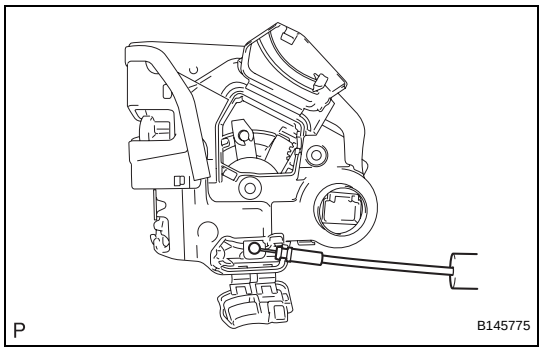

(g) Remove the rear door inside locking cable assembly.

ENTRY LOCK AND UNLOCK SWITCH (for Front Side)

COMPONENTS

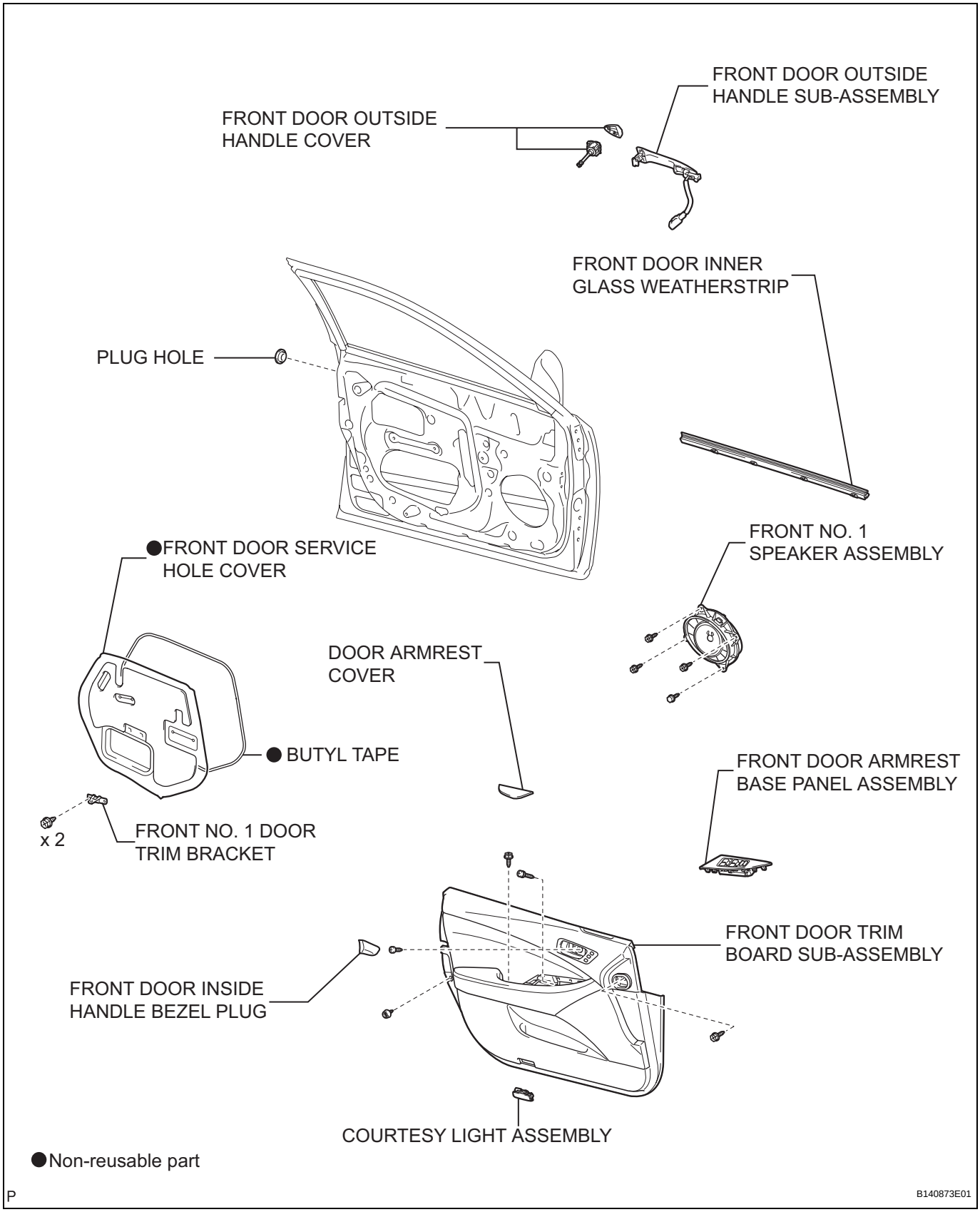

DL

REMOVAL

1. **REMOVE FRONT DOOR INSIDE HANDLE BEZEL PLUG (See page ED-32)**
2. **REMOVE FRONT DOOR ARMREST BASE PANEL ASSEMBLY (See page ED-33)**
3. **REMOVE COURTESY LIGHT ASSEMBLY (See page ED-34)**
4. **REMOVE DOOR ARMREST COVER (See page ED-34)**
5. **REMOVE FRONT DOOR TRIM BOARD SUB-ASSEMBLY (See page ED-34)**
6. **REMOVE FRONT DOOR INNER GLASS WEATHERSTRIP (See page ED-35)**
7. **REMOVE FRONT NO. 1 SPEAKER ASSEMBLY (See page AV-184)**
8. **REMOVE FRONT NO. 1 DOOR TRIM BRACKET (See page ED-36)**
9. **REMOVE FRONT DOOR SERVICE HOLE COVER (See page ED-36)**
10. **REMOVE FRONT DOOR OUTSIDE HANDLE COVER (See page ED-38)**
11. **REMOVE FRONT DOOR OUTSIDE HANDLE SUB-ASSEMBLY**
    (a) Remove the hole plug.
    (b) Using a "TORX" socket wrench (T30), loosen the screw and remove the front door outside handle cover and the door lock key cylinder as a unit.
    HINT:
    The screw cannot be removed because it is integrated into the front door outside handle frame sub-assembly.

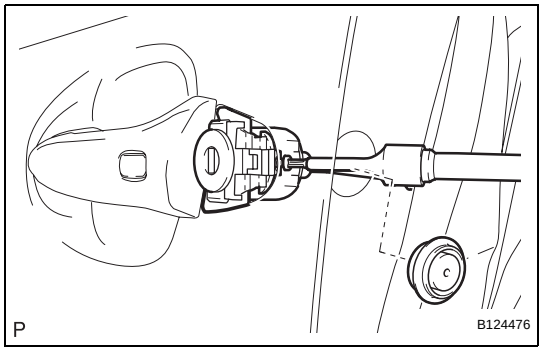

    (c) Disconnect the connector.
    (d) Using a "TORX" socket wrench (T30), loosen the screw.

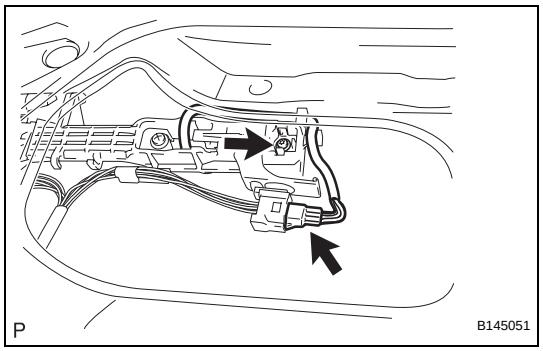

DL

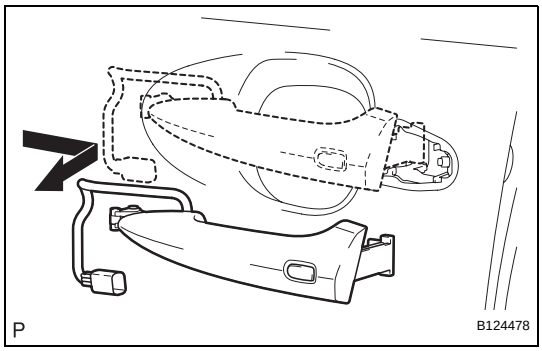

(e) Remove the front door outside handle assembly as shown in the illustration.

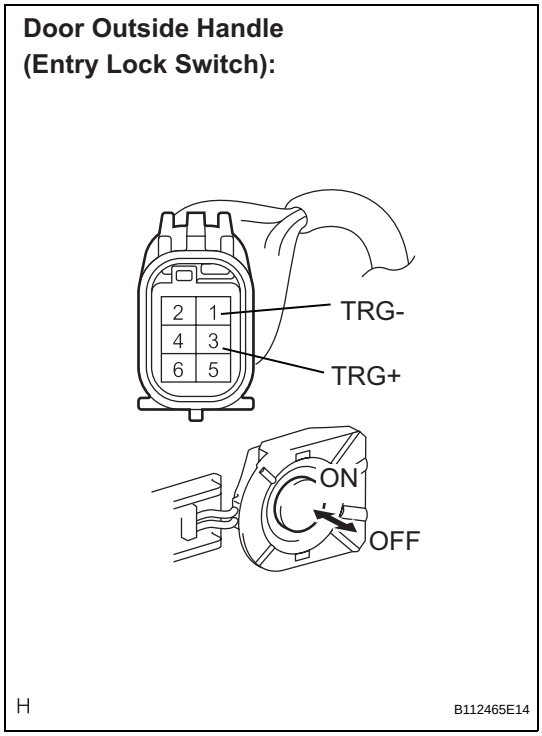

INSPECTION

1. INSPECT ENTRY LOCK AND UNLOCK SWITCH

(a) Remove the outside handle.

(b) Disconnect the connectors.

(c) Measure the resistance according to the value(s) in the table below.

Standard resistance

Tester Connection (Symbols)	Condition	Specified Condition
1 (TRG-) - 3 (TRG+)	Lock switch not pushed	10 kΩ or higher
	Lock switch pushed	Below 1 Ω

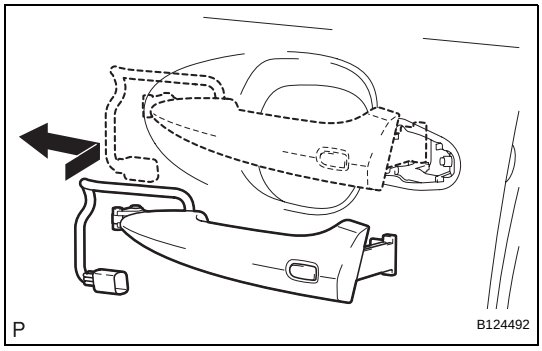

INSTALLATION

1. INSTALL FRONT DOOR OUTSIDE HANDLE SUB-ASSEMBLY

(a) Insert the front end of the front door outside handle assembly into the front door outside handle frame.

(b) Insert the rear end of the front door outside handle assembly into the front door outside handle frame. Next, slide the front door outside handle assembly toward the front of the vehicle to install it.

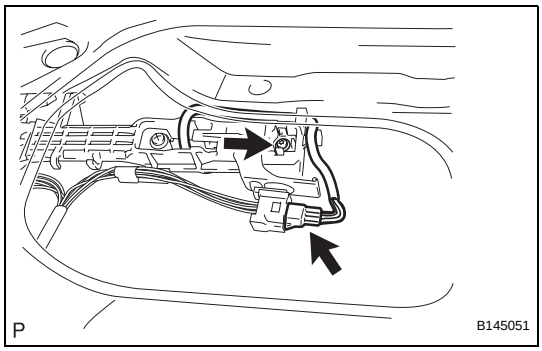

(c) Using a "TORX" socket wrench (T30), install the front door handle assembly outside with the screw.
Torque: 4.0 N*m (41 kgf*cm, 35 in.*lbf)

(d) Connect the connector.

2. INSTALL FRONT DOOR OUTSIDE HANDLE COVER (See page ED-48)

3. INSTALL FRONT DOOR SERVICE HOLE COVER (See page ED-50)

4. **INSTALL FRONT NO. 1 DOOR TRIM BRACKET (See page ED-51)**
5. **INSTALL FRONT NO. 1 SPEAKER ASSEMBLY (See page AV-184)**
6. **INSTALL FRONT DOOR INNER GLASS WEATHERSTRIP (See page ED-52)**
7. **INSTALL FRONT DOOR TRIM BOARD SUB-ASSEMBLY (See page ED-52)**
8. **INSTALL DOOR ARMREST COVER (See page ED-53)**
9. **INSTALL COURTESY LIGHT ASSEMBLY (See page ED-53)**
10. **INSTALL FRONT DOOR ARMREST BASE PANEL ASSEMBLY (See page ED-53)**
11. **INSTALL FRONT DOOR INSIDE HANDLE BEZEL PLUG (See page ED-54)**

ENTRY LOCK AND UNLOCK SWITCH (for Rear Side)

COMPONENTS

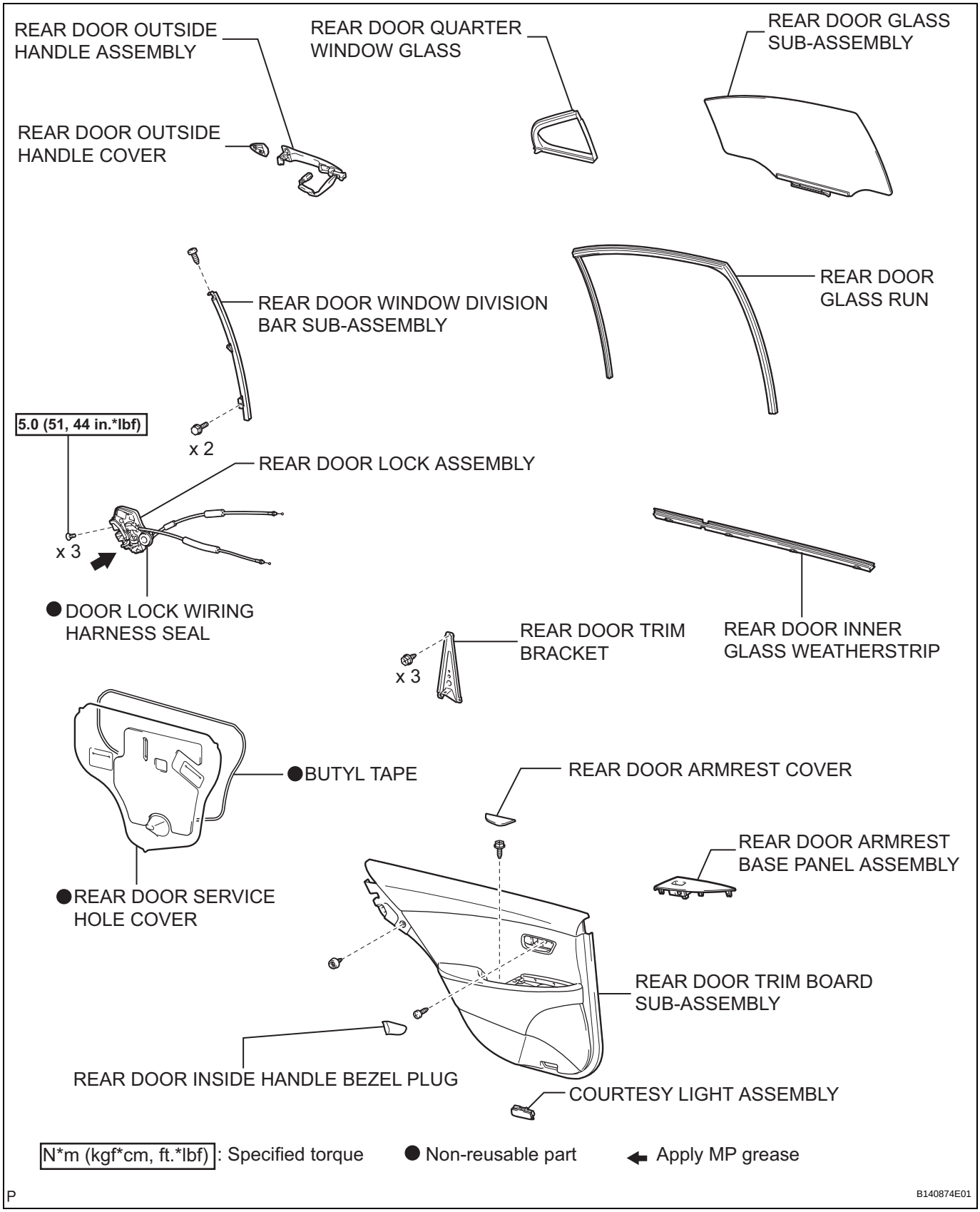

DL

REMOVAL

1. **REMOVE REAR DOOR INSIDE HANDLE BEZEL PLUG (See page ED-58)**
2. **REMOVE REAR DOOR ARMREST BASE PANEL ASSEMBLY (See page ED-59)**
3. **REMOVE COURTESY LIGHT ASSEMBLY (See page ED-59)**
4. **REMOVE REAR DOOR ARMREST COVER (See page ED-59)**
5. **REMOVE REAR DOOR TRIM BOARD SUB-ASSEMBLY (See page ED-60)**
6. **REMOVE REAR DOOR INNER GLASS WEATHERSTRIP (See page ED-61)**
7. **REMOVE REAR DOOR SERVICE HOLE COVER (See page ED-61)**
8. **REMOVE REAR DOOR TRIM BRACKET (See page ED-62)**
9. **REMOVE REAR DOOR GLASS RUN (See page ED-63)**
10. **REMOVE REAR DOOR WINDOW DIVISION BAR SUB-ASSEMBLY (See page ED-63)**
11. **REMOVE REAR DOOR QUARTER WINDOW GLASS (See page ED-63)**
12. **REMOVE REAR DOOR GLASS SUB-ASSEMBLY (See page ED-63)**
13. **REMOVE REAR DOOR LOCK ASSEMBLY (See page ED-64)**
14. **REMOVE REAR DOOR OUTSIDE HANDLE COVER (See page ED-65)**
15. **REMOVE REAR DOOR OUTSIDE HANDLE ASSEMBLY**
    (a) Disconnect the connector.
    (b) Using a "TORX" socket wrench (T30), loosen the screw.

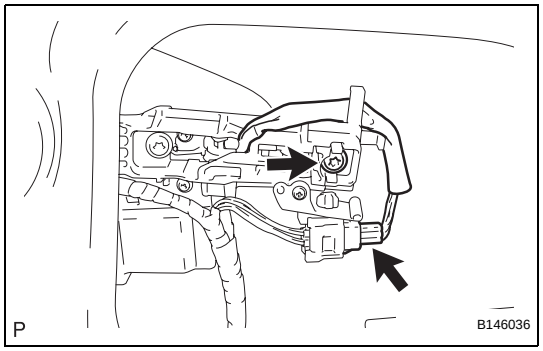

DL

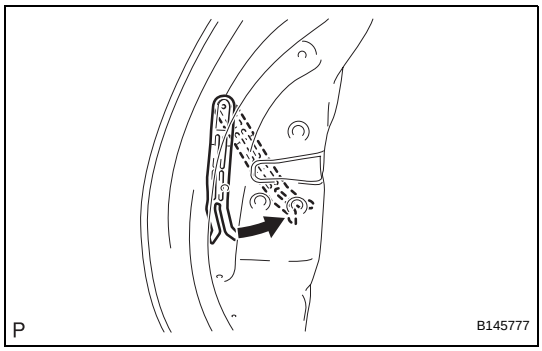

(c) Pull and hold the release plate of the outside handle frame as shown in the illustration.
NOTICE:
The release plate may interfere with the outside handle and may be damaged when removing the handle, unless the release plate of the outside handle frame is pulled and held.

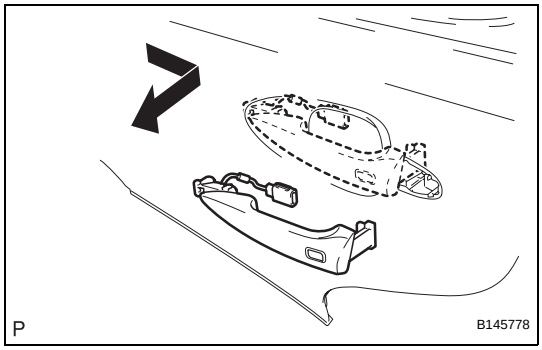

(d) Remove the rear door outside handle assembly as shown in the illustration.

Door Outside Handle (Entry Lock Switch):

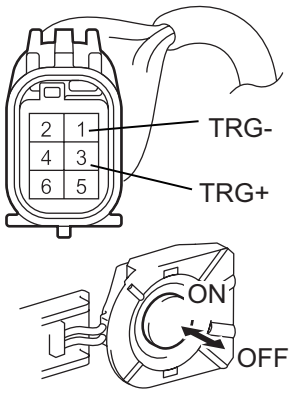

INSPECTION

1. INSPECT ENTRY LOCK AND UNLOCK SWITCH

(a) Remove the outside handle.
(b) Disconnect the connectors.
(c) Measure the resistance according to the value(s) in the table below.
Standard resistance

Tester Connection (Symbols)	Condition	Specified Condition
1 (TRG-) - 3 (TRG+)	Lock switch not pushed	10 kΩ or higher
	Lock switch pushed	Below 1 Ω

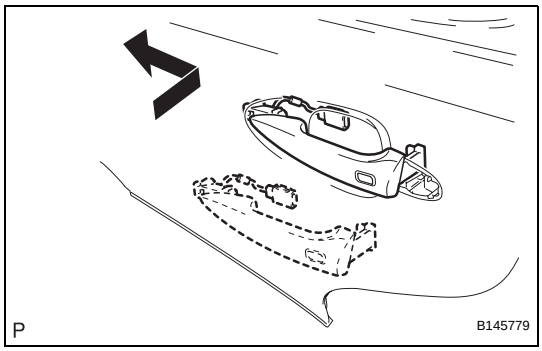

INSTALLATION

1. INSTALL REAR DOOR OUTSIDE HANDLE ASSEMBLY

(a) Insert the front end of the rear door outside handle assembly into the rear door outside handle frame.
NOTICE:
If the bellcrank lever is not pulled and held when installing the outside handle, the bellcrank lever will interfere with the outside handle and the release plate will be damaged.

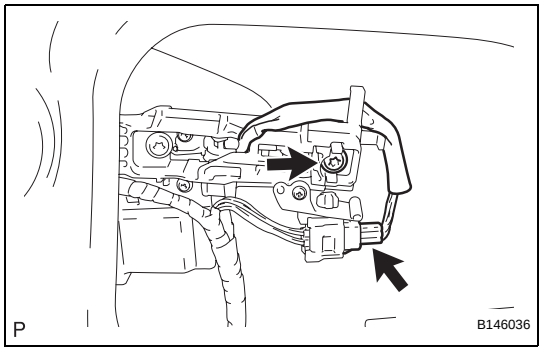

(b) Insert the rear end of the rear door outside handle assembly into the rear door outside handle frame. Next, slide the rear door outside handle assembly toward the front of the vehicle to install it.

(c) Using a "TORX" socket wrench (T30), install the rear door outside handle assembly with the screw.
Torque: 4.0 N*m (41 kgf*cm, 35 in.*lbf)

(d) Connect the connector.

2. **INSTALL REAR DOOR OUTSIDE HANDLE COVER (See page ED-71)**
3. **INSTALL REAR DOOR LOCK ASSEMBLY (See page ED-72)**
4. **INSTALL REAR DOOR GLASS RUN (See page ED-73)**
5. **INSTALL REAR DOOR GLASS SUB-ASSEMBLY (See page ED-74)**
6. **INSTALL REAR DOOR QUARTER WINDOW GLASS (See page ED-74)**
7. **INSTALL REAR DOOR WINDOW DIVISION BAR SUB-ASSEMBLY (See page ED-74)**
8. **INSTALL REAR DOOR TRIM BRACKET (See page ED-75)**
9. **INSTALL REAR DOOR SERVICE HOLE COVER (See page ED-75)**
10. **INSTALL REAR DOOR INNER GLASS WEATHERSTRIP (See page ED-76)**
11. **INSTALL REAR DOOR TRIM BOARD SUB-ASSEMBLY (See page ED-76)**
12. **INSTALL REAR DOOR ARMREST COVER (See page ED-77)**
13. **INSTALL COURTESY LIGHT ASSEMBLY (See page ED-77)**
14. **INSTALL REAR DOOR ARMREST BASE PANEL ASSEMBLY (See page ED-78)**
15. **INSTALL REAR DOOR INSIDE HANDLE BEZEL PLUG (See page ED-78)**

LUGGAGE COMPARTMENT DOOR OPENER OUTER SWITCH

COMPONENTS

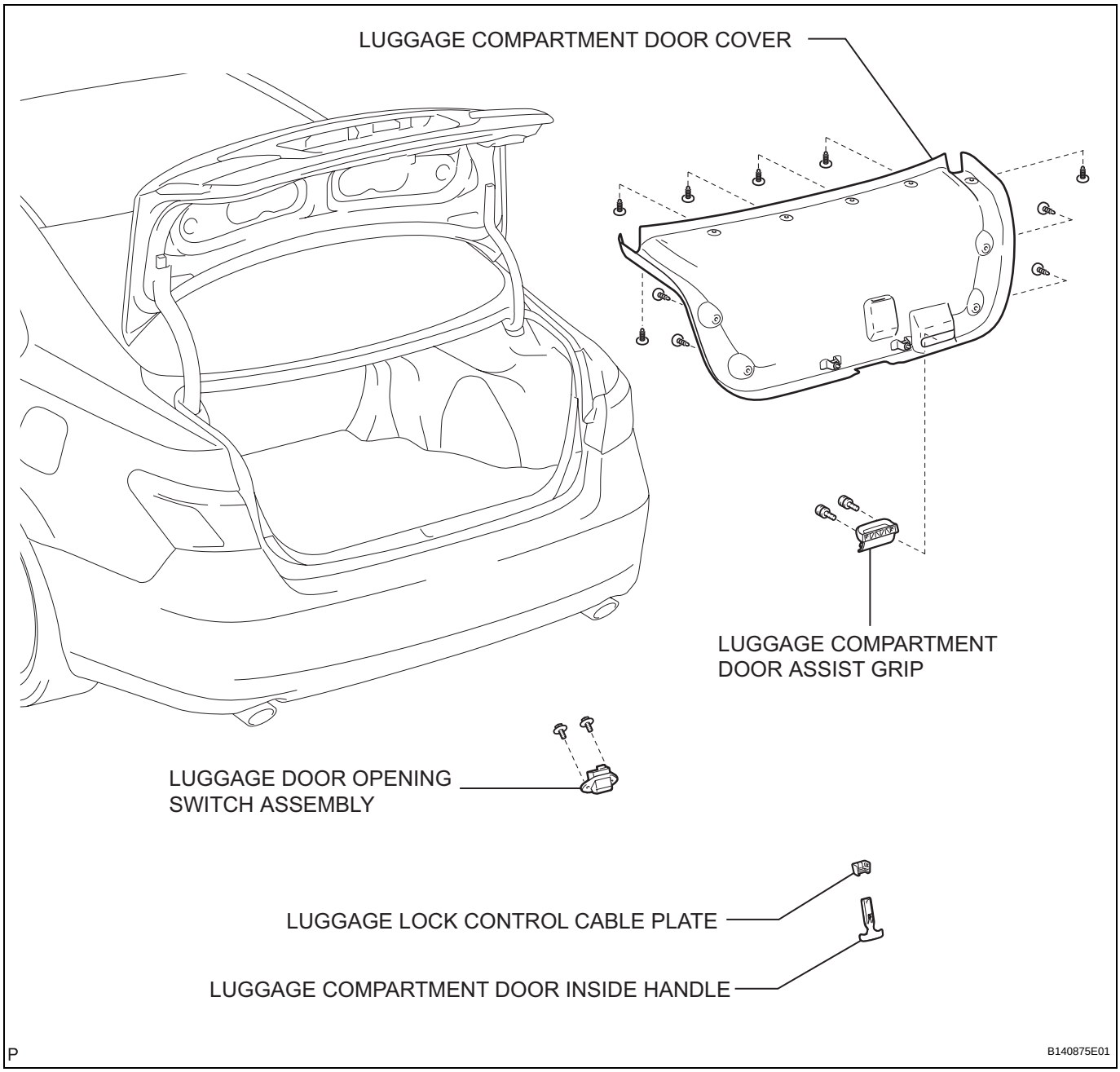

REMOVAL

1. **REMOVE LUGGAGE COMPARTMENT DOOR ASSIST GRIP (See page ET-71)**
2. **REMOVE LUGGAGE LOCK CONTROL CABLE PLATE (See page ET-71)**
3. **REMOVE LUGGAGE COMPARTMENT DOOR INSIDE HANDLE (See page ET-71)**
4. **REMOVE LUGGAGE COMPARTMENT DOOR COVER (See page ET-72)**
5. **REMOVE LUGGAGE DOOR OPENING SWITCH ASSEMBLY**
   (a) Disconnect the connector.
   (b) Remove the 2 bolts and the luggage door opening switch assembly.

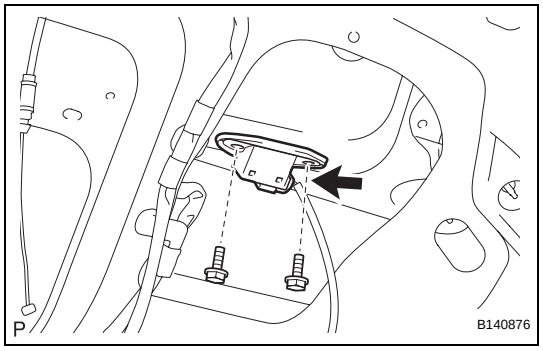

INSPECTION

1. **INSPECT LUGGAGE KEY ELECTRICAL SWITCH**
   (a) Disconnect the switch connector.
   (b) Measure the resistance according to the value(s) in the table below.
   Standard resistance

Tester connection	Condition	Specified condition
R10-1 - R10-2	Luggage compartment open switch not pushed (OFF)	10 kΩ or higher
	Luggage compartment open switch pushed (ON)	Below 1 Ω

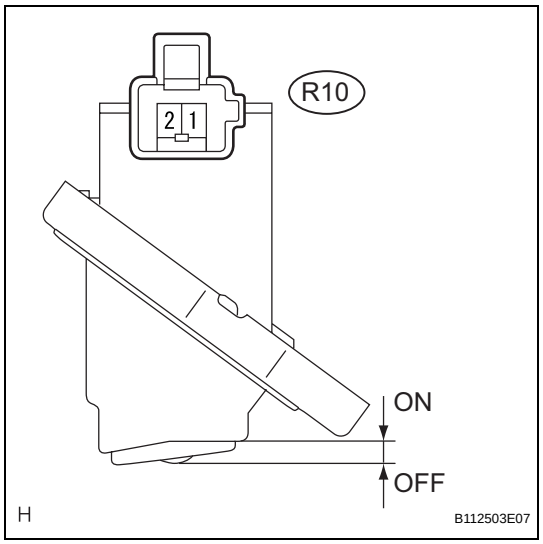

INSTALLATION

1. **INSTALL LUGGAGE DOOR OPENING SWITCH ASSEMBLY**
   (a) Install the luggage door opening switch assembly with the 2 bolts.
   (b) Connect the connector.
2. **INSTALL LUGGAGE COMPARTMENT DOOR COVER (See page ET-74)**
3. **INSTALL LUGGAGE COMPARTMENT DOOR INSIDE HANDLE (See page ET-74)**
4. **INSTALL LUGGAGE LOCK CONTROL CABLE PLATE (See page ET-75)**
5. **INSTALL LUGGAGE COMPARTMENT DOOR ASSIST GRIP (See page ET-75)**

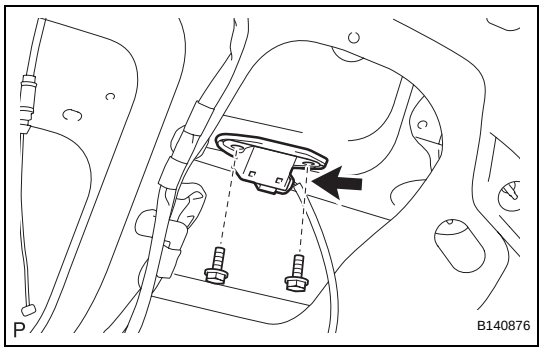

METER / GAUGE SYSTEM

PRECAUTION

NOTICE:
Some systems need to be initialized after reconnecting the negative (-) battery terminal (See page IN-33).

PARTS LOCATION

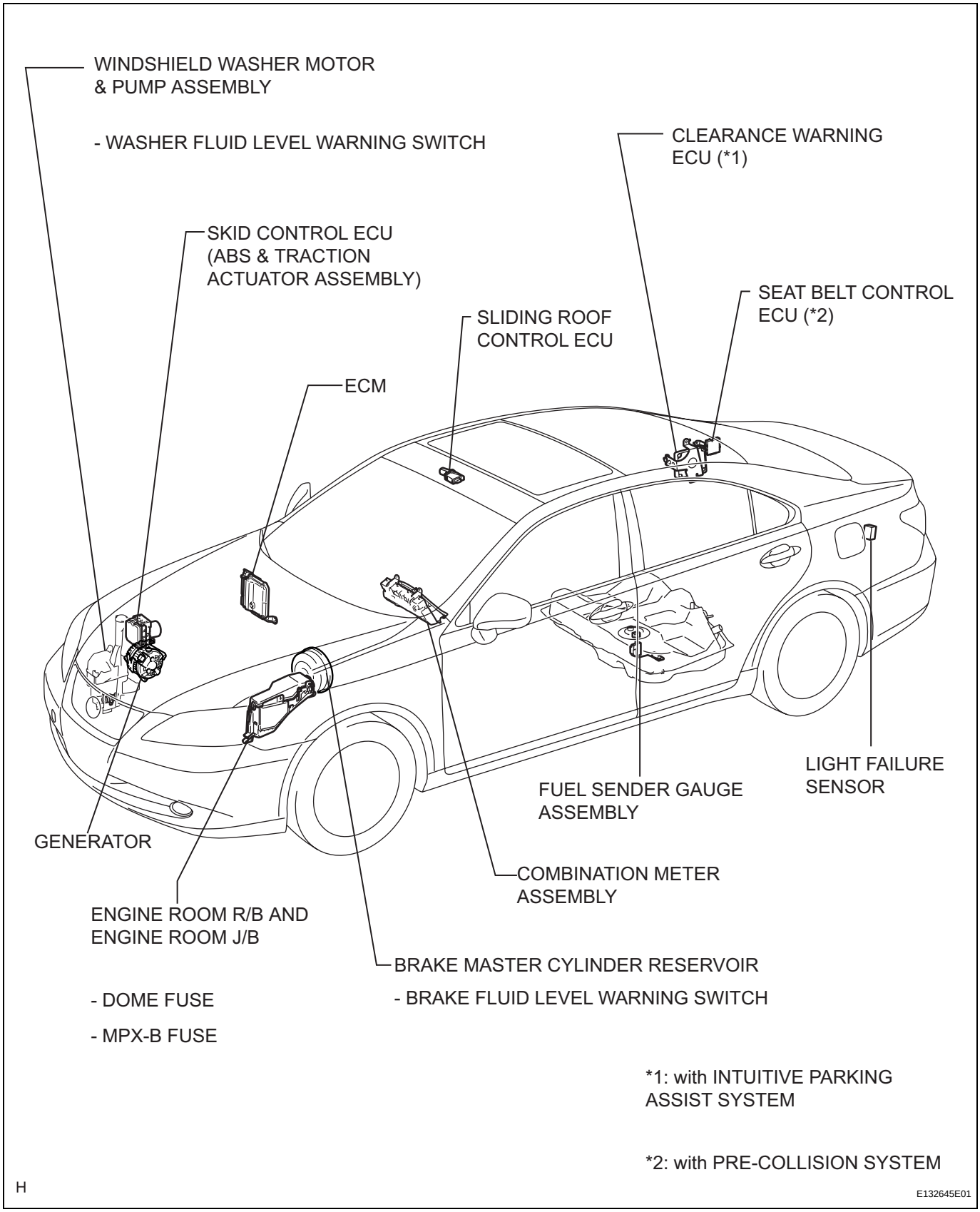

ME

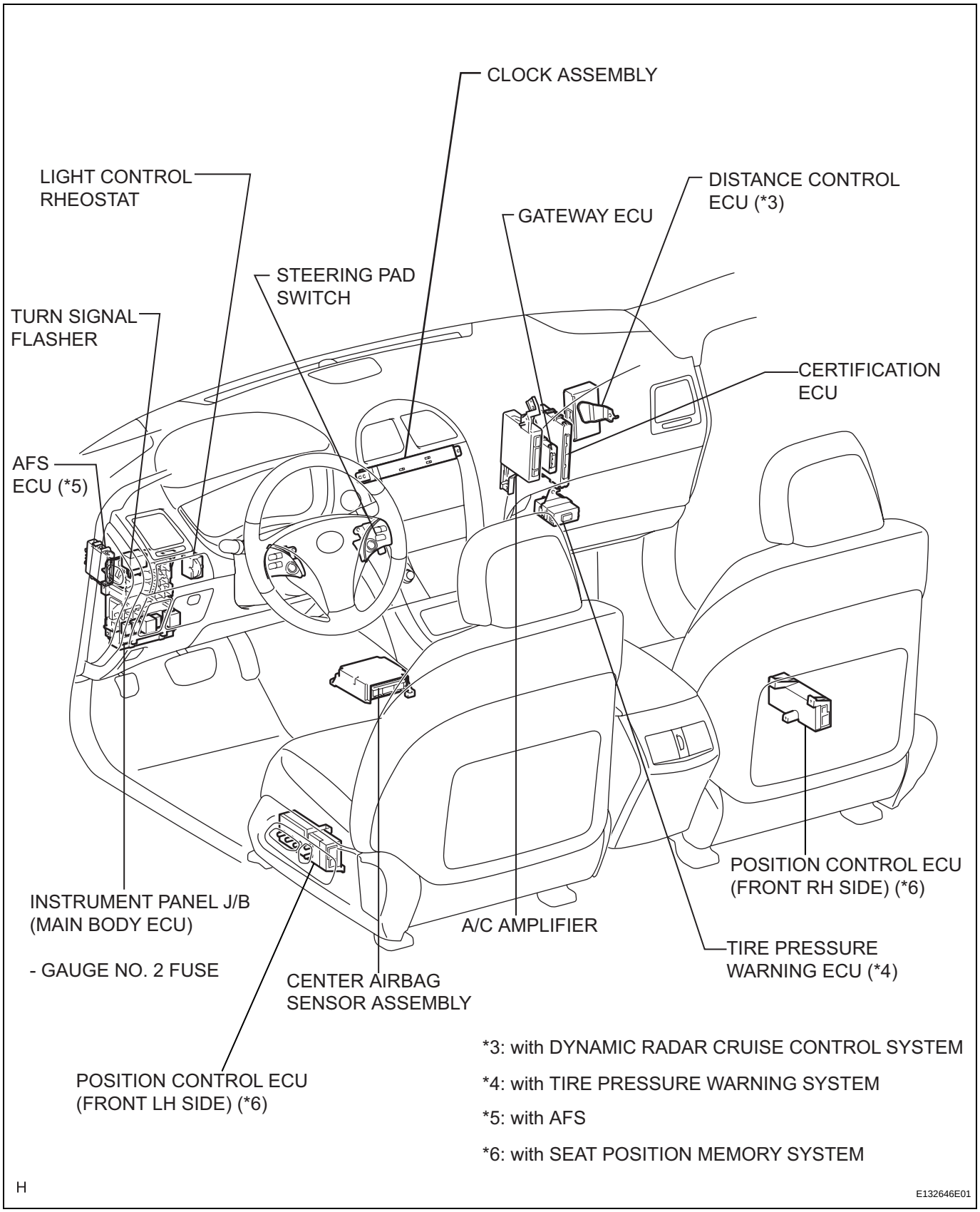
CLOCK ASSEMBLY
LIGHT CONTROL RHEOSTAT
DISTANCE CONTROL ECU (*3)
GATEWAY ECU
STEERING PAD SWITCH
TURN SIGNAL FLASHER
CERTIFICATION ECU
AFS ECU (*5)
POSITION CONTROL ECU (FRONT RH SIDE) (*6)
INSTRUMENT PANEL J/B (MAIN BODY ECU)
- GAUGE NO. 2 FUSE
A/C AMPLIFIER
TIRE PRESSURE WARNING ECU (*4)
CENTER AIRBAG SENSOR ASSEMBLY
POSITION CONTROL ECU (FRONT LH SIDE) (*6)
*3: with DYNAMIC RADAR CRUISE CONTROL SYSTEM
*4: with TIRE PRESSURE WARNING SYSTEM
*5: with AFS
*6: with SEAT POSITION MEMORY SYSTEM
H
E132646E01

ME

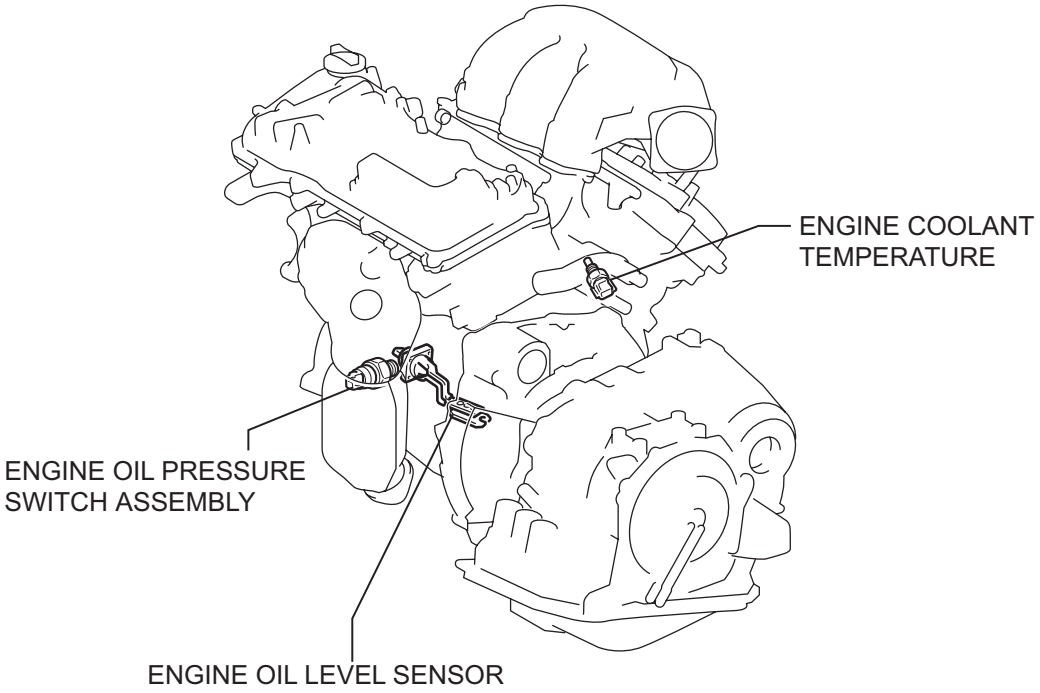

H

E132668E01

COMBINATION METER

COMPONENTS

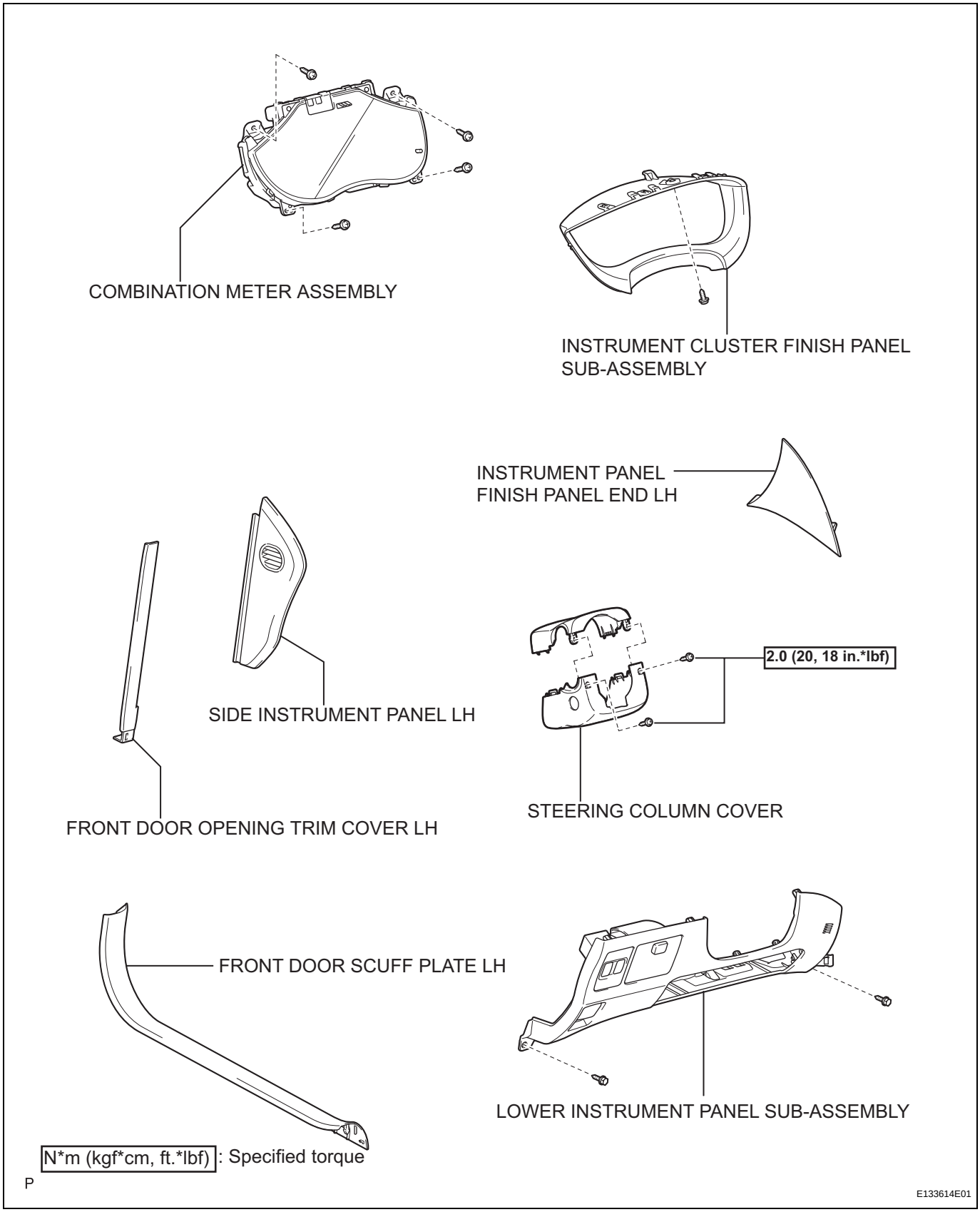

ME

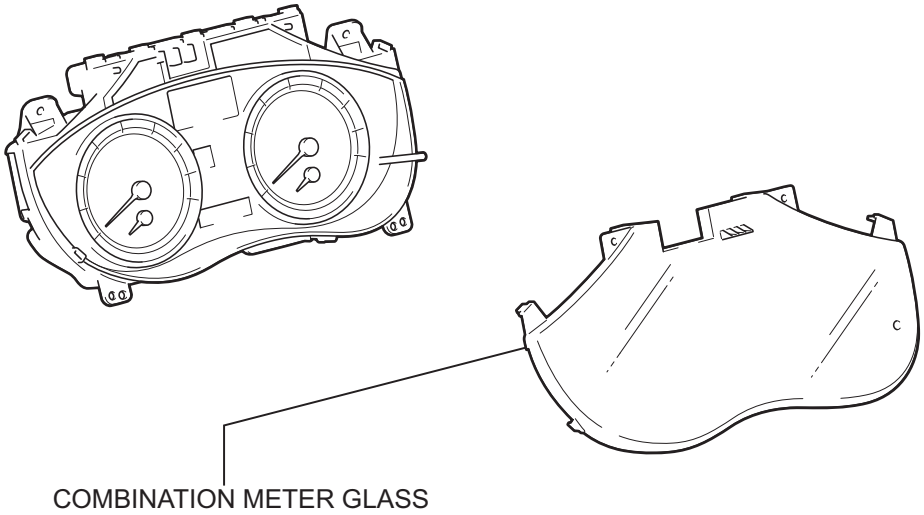

P

E133609E01

FUEL SENDER GAUGE ASSEMBLY

COMPONENTS

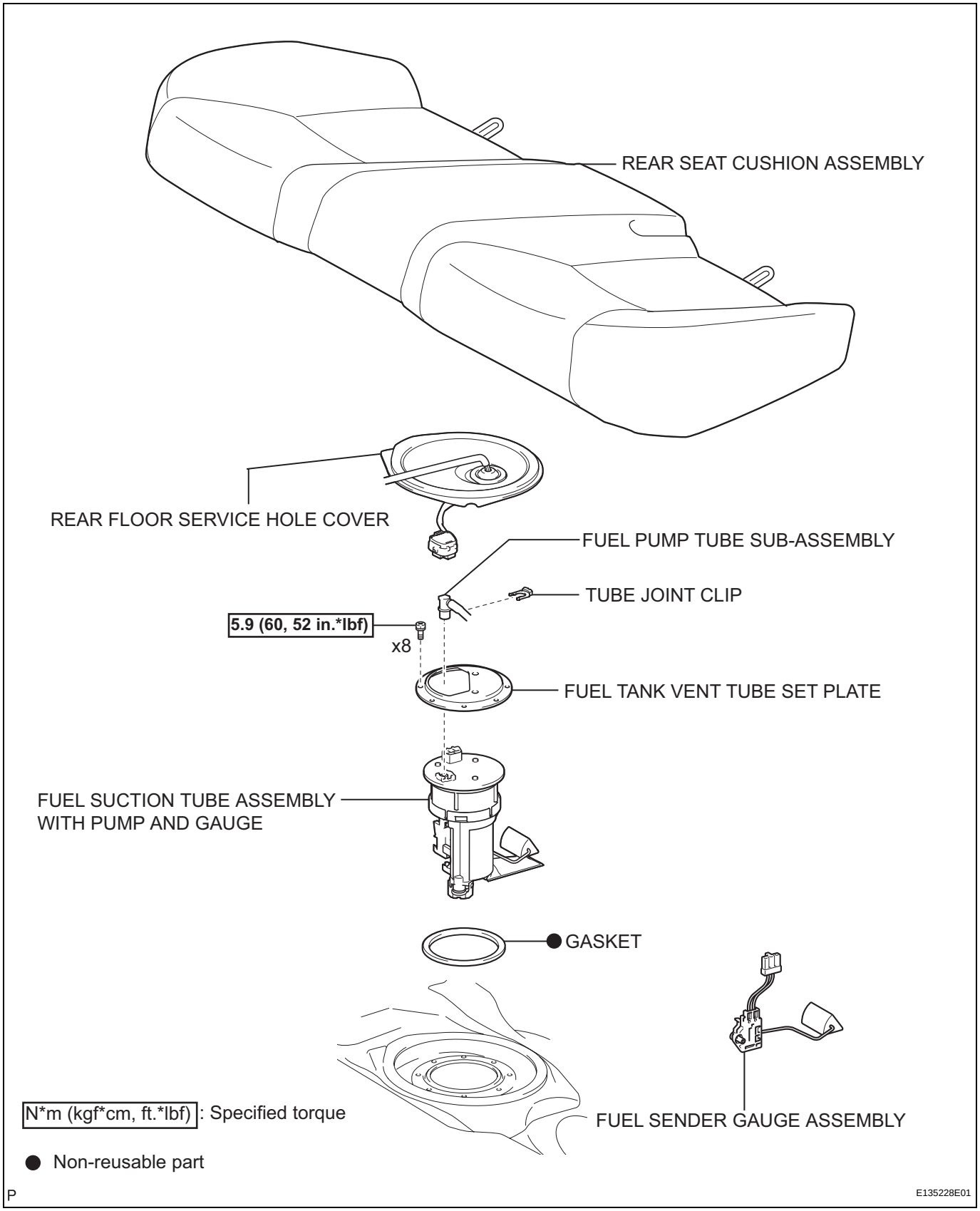

ME

ME

REMOVAL

1. **DISCHARGE FUEL SYSTEM PRESSURE**
   HINT:
   (See page FU-1)
2. **DISCONNECT CABLE FROM NEGATIVE BATTERY TERMINAL**
   CAUTION:
   Wait for 90 seconds after disconnecting the cable to prevent airbag deployment (See page RS-1).
3. **REMOVE REAR SEAT CUSHION ASSEMBLY (See page SE-113)**
4. **REMOVE REAR FLOOR SERVICE HOLE COVER (See page FU-26)**
5. **SEPARATE FUEL PUMP TUBE SUB-ASSEMBLY (See page FU-26)**
6. **REMOVE FUEL TANK VENT TUBE SET PLATE (See page FU-26)**
7. **REMOVE FUEL SUCTION TUBE ASSEMBLY WITH PUMP AND GAUGE (See page FU-27)**
8. **REMOVE FUEL SENDER GAUGE ASSEMBLY (See page FU-27)**

INSPECTION

1. **INSPECT FUEL SENDER GAUGE ASSEMBLY**
   (a) Remove the fuel sender gauge assembly.
   (b) Check that the float moves smoothly between F and E.
   (c) Measure the resistance between the terminals 2 (S) and 3 (FE) of the connector according to the value(s) in the table below.
   Standard resistance:
   Main

Float Level	Resistance (Ω)
F	13.5 to 16.5
Between E and F	13.5 to 414.5 (Gradually changes)
E	405.5 to 414.5

HINT:
If the value is not as specified, replace the fuel sender gauge assembly.

Fuel Sender Gauge Assembly:

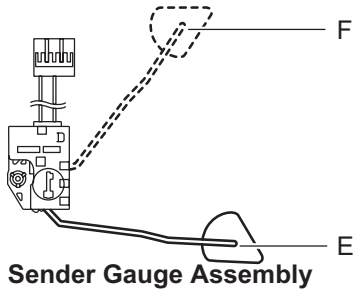

Fuel Sender Gauge Assembly Wire Harness View:

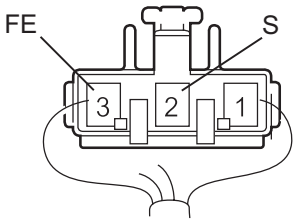

E132659E01

ENGINE OIL PRESSURE SWITCH

ON-VEHICLE INSPECTION

1. INSPECT ENGINE OIL PRESSURE SWITCH ASSEMBLY

(a) Disconnect the connector from the oil pressure switch assembly.

(b) With the switch still installed, measure the resistance between the terminal of the engine oil pressure switch and engine ground.

Standard resistance:

Engine stopped:

Below 1 Ω

Engine idling:

10 kΩ or higher

HINT:

If the value is not as specified, replace the engine oil pressure switch.

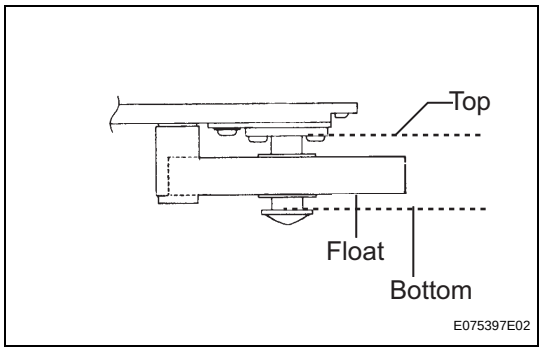

ENGINE OIL LEVEL SENSOR

ON-VEHICLE INSPECTION

1. INSPECT ENGINE OIL LEVEL SENSOR

(a) Remove the engine oil level sensor.

(b) Measure the resistance according to the value(s) in the table below.

Standard resistance

Tester Connection	Condition	Specified Condition
1 - 2	Float position is at the top	Below 1 Ω
1 - 2	Float position is at the bottom	10 kΩ or higher

HINT:
If the value is not as specified, replace the engine oil level sensor.

STEERING PAD SWITCH

COMPONENTS

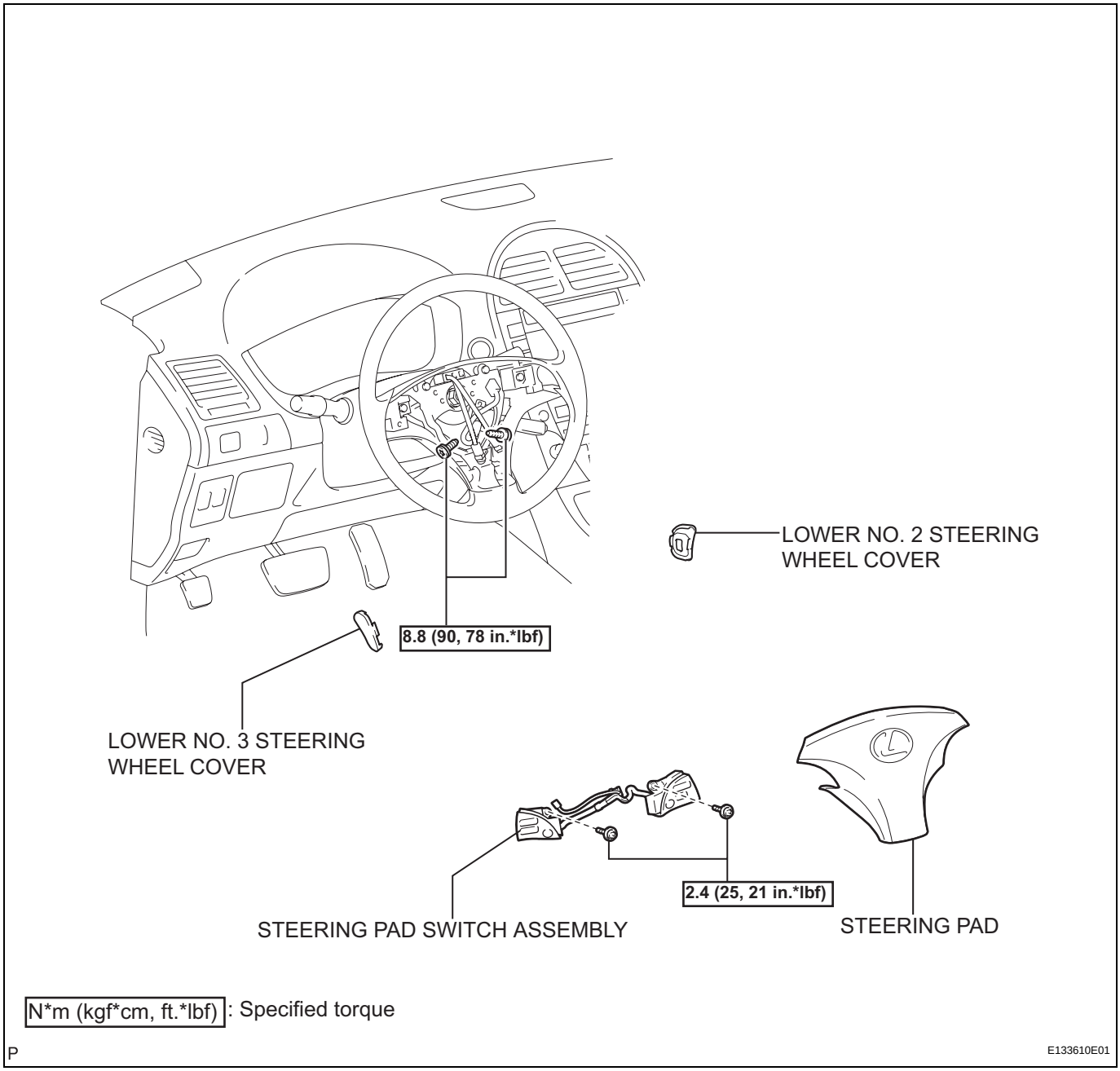

ME

REMOVAL

1. **DISCONNECT CABLE FROM NEGATIVE BATTERY TERMINAL**
   CAUTION:
   Wait for 90 seconds after disconnecting the cable to prevent airbag deployment (See page RS-1).
2. **REMOVE LOWER NO. 3 STEERING WHEEL COVER (See page RS-367)**
3. **REMOVE LOWER NO. 2 STEERING WHEEL COVER (See page RS-367)**
4. **REMOVE STEERING PAD (See page RS-367)**
5. **REMOVE STEERING PAD SWITCH ASSEMBLY**
   (a) Disconnect the pad switch connector from the spiral cable.
   (b) Remove the 2 screws.
   (c) Disengage the 4 claws and remove the steering pad switch assembly.

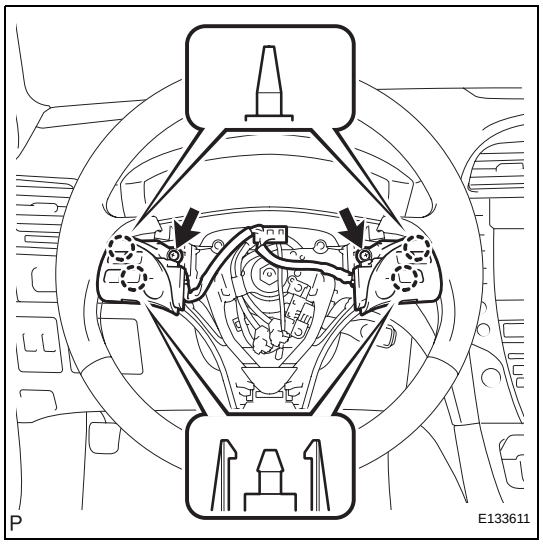

LIGHT CONTROL RHEOSTAT

COMPONENTS

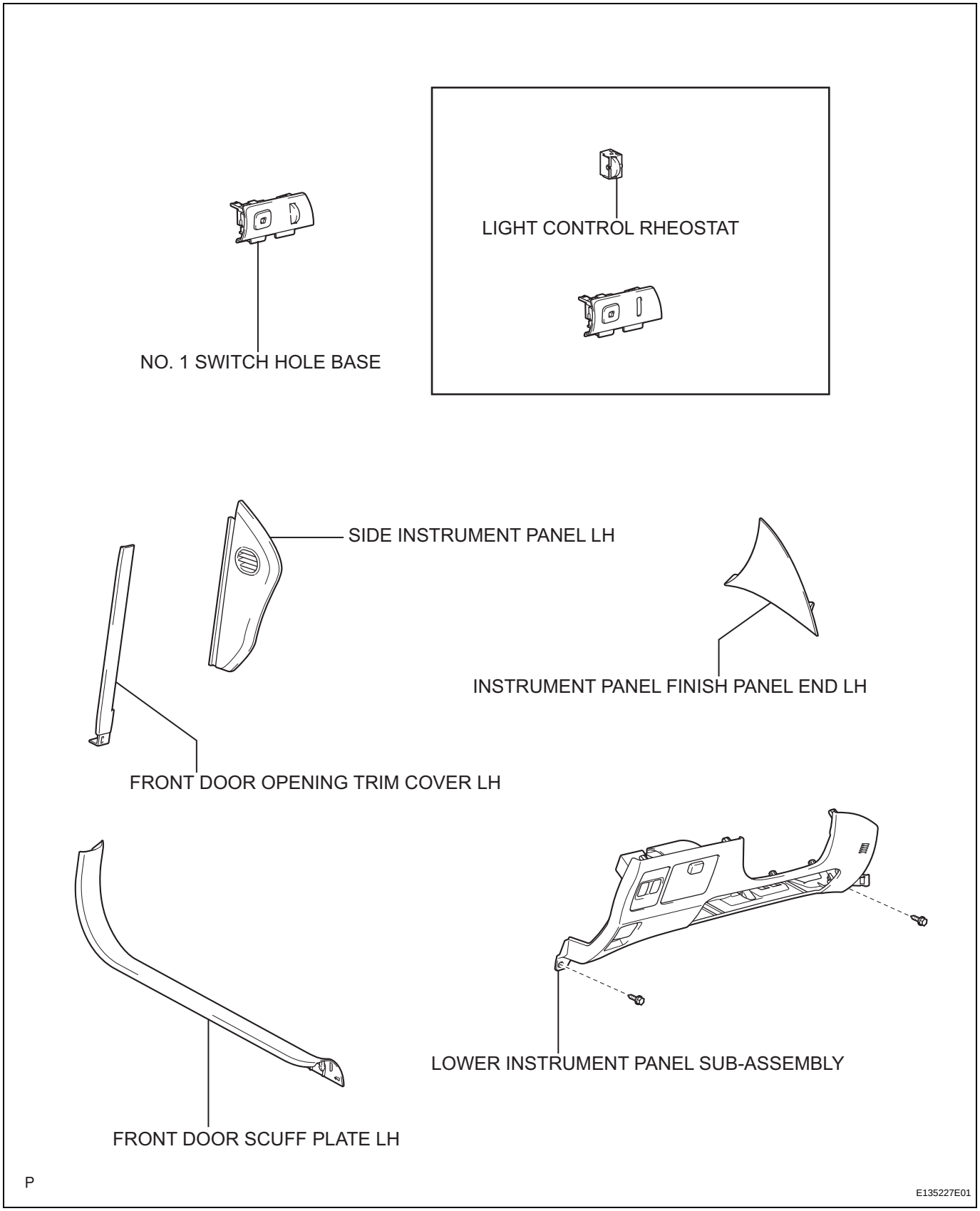

REMOVAL

1. **REMOVE FRONT DOOR SCUFF PLATE LH (See page IR-39)**
2. **REMOVE FRONT DOOR OPENING TRIM COVER LH (See page IR-39)**
3. **REMOVE SIDE INSTRUMENT PANEL LH (See page IP-12)**
4. **REMOVE INSTRUMENT PANEL FINISH PANEL END LH (See page IP-13)**
5. **REMOVE LOWER INSTRUMENT PANEL SUB-ASSEMBLY (See page IP-13)**
6. **REMOVE NO. 1 SWITCH HOLE BASE**
   (a) Disengage the 4 clips.
   (b) Disconnect each connector and remove the No. 1 switch hole base.

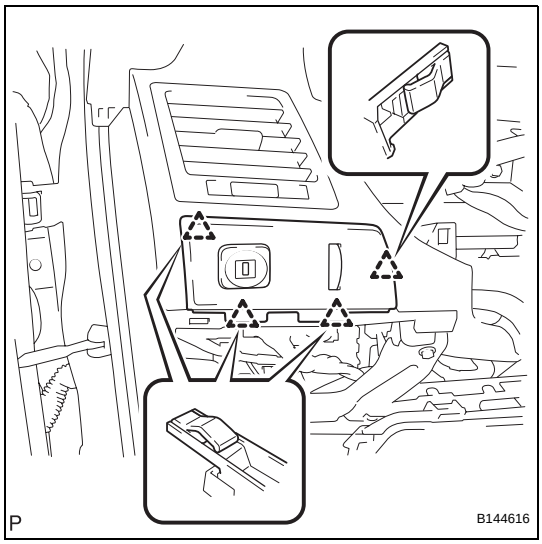

7. **REMOVE LIGHT CONTROL RHEOSTAT**
   (a) Disengage the 2 claws and remove the light control rheostat.

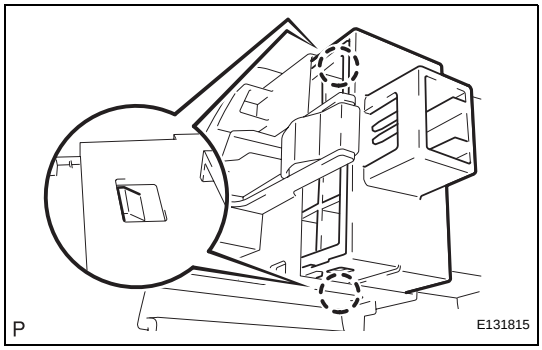

ME

LIGHT FAILURE SENSOR

INSPECTION

1. INSPECT LIGHT FAILURE SENSOR

(a) Remove the taillight bulb or stop light bulb.

(b) Turn the engine switch on (IG) and check the rear light indicator light.

(c) OK:

The rear light indicator light comes on.

HINT:

If the indicator light does not come on, check the light failure indicator (See page LI-32).

AUDIO AND VISUAL SYSTEM

PRECAUTION

NOTICE:
Some systems need to be initialized after reconnecting the negative (-) battery terminal (See page IN-33).

PARTS LOCATION

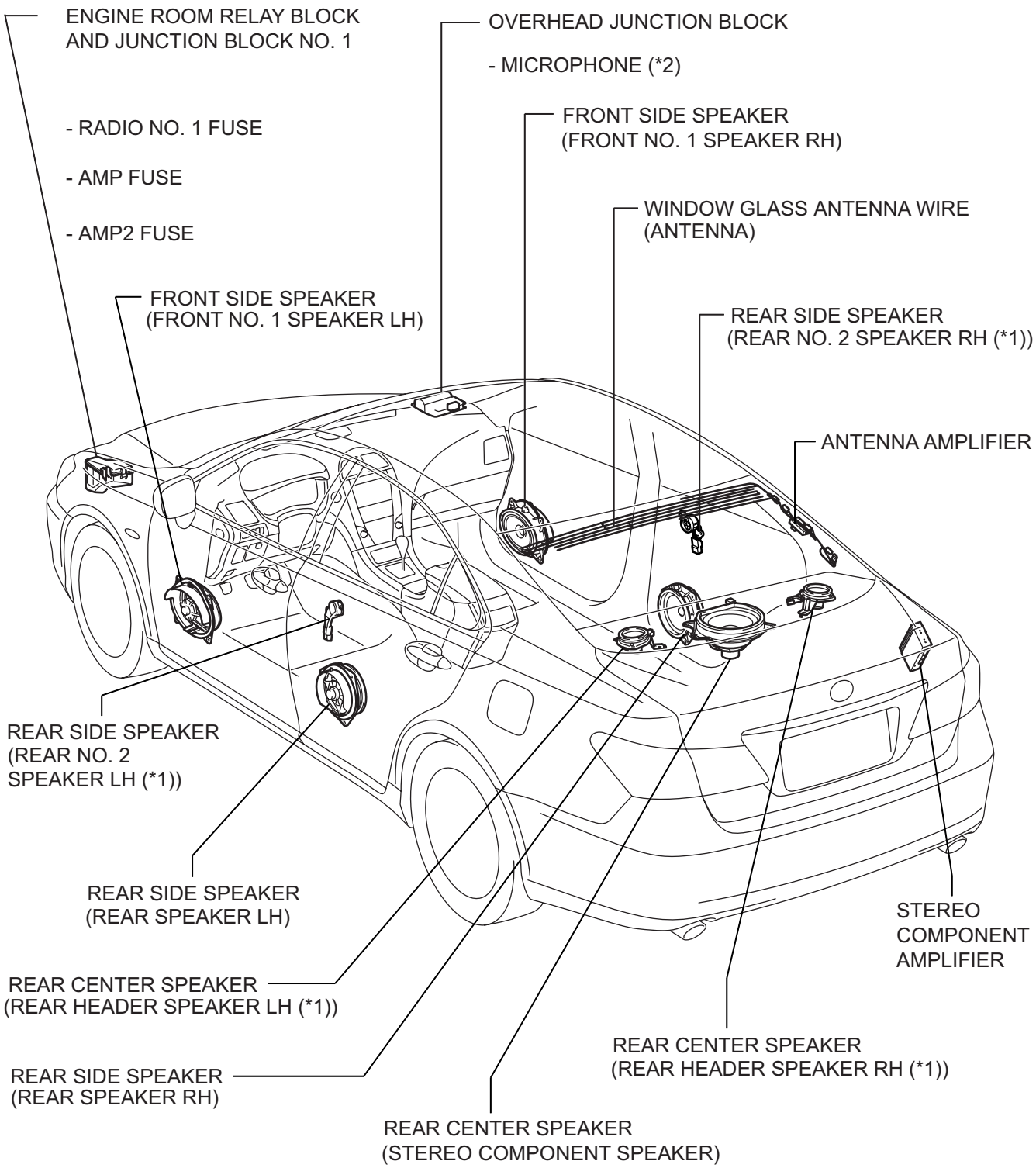

*1: with Rear Header Speaker

*2: for Radio Receiver with Built-in “Bluetooth” Handsfree Function

E133939E01

AV

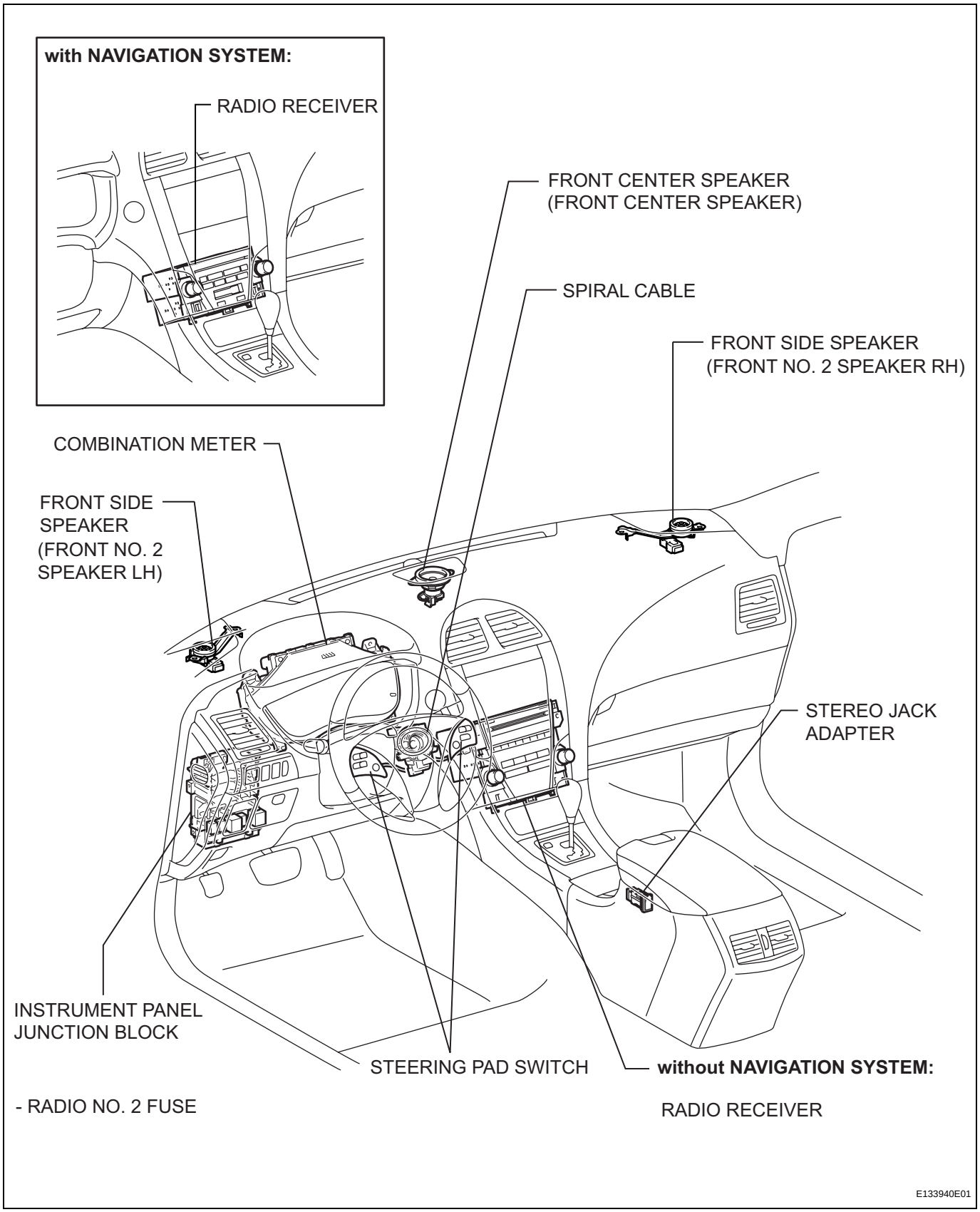
with NAVIGATION SYSTEM:
RADIO RECEIVER
FRONT CENTER SPEAKER
(FRONT CENTER SPEAKER)
SPIRAL CABLE
FRONT SIDE SPEAKER
(FRONT NO. 2 SPEAKER RH)
COMBINATION METER
FRONT SIDE
SPEAKER
(FRONT NO. 2
SPEAKER LH)
STEREO JACK
ADAPTER
INSTRUMENT PANEL
JUNCTION BLOCK
STEERING PAD SWITCH
without NAVIGATION SYSTEM:
RADIO RECEIVER
- RADIO NO. 2 FUSE
E133940E01

RADIO RECEIVER

COMPONENTS

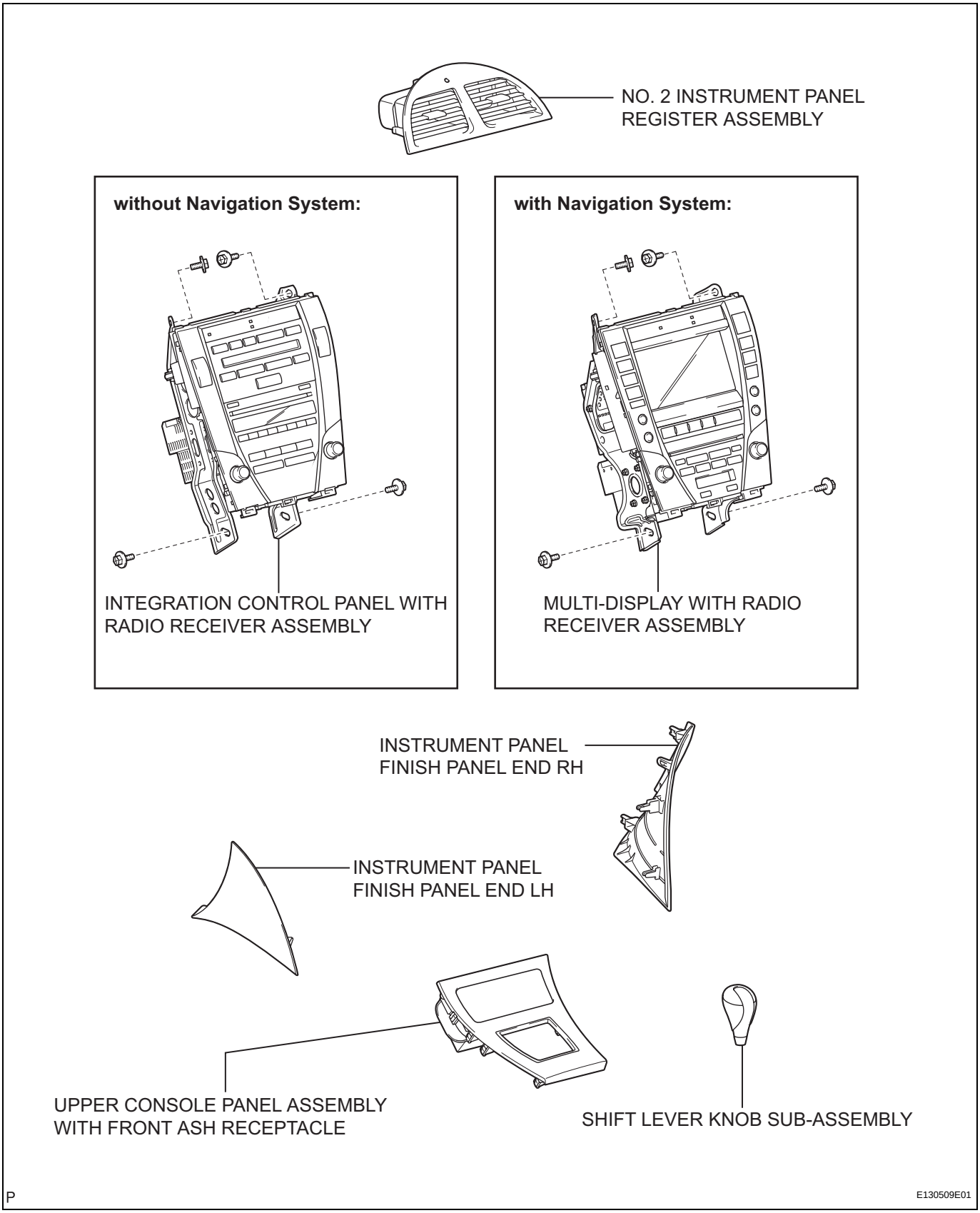

without Navigation System:

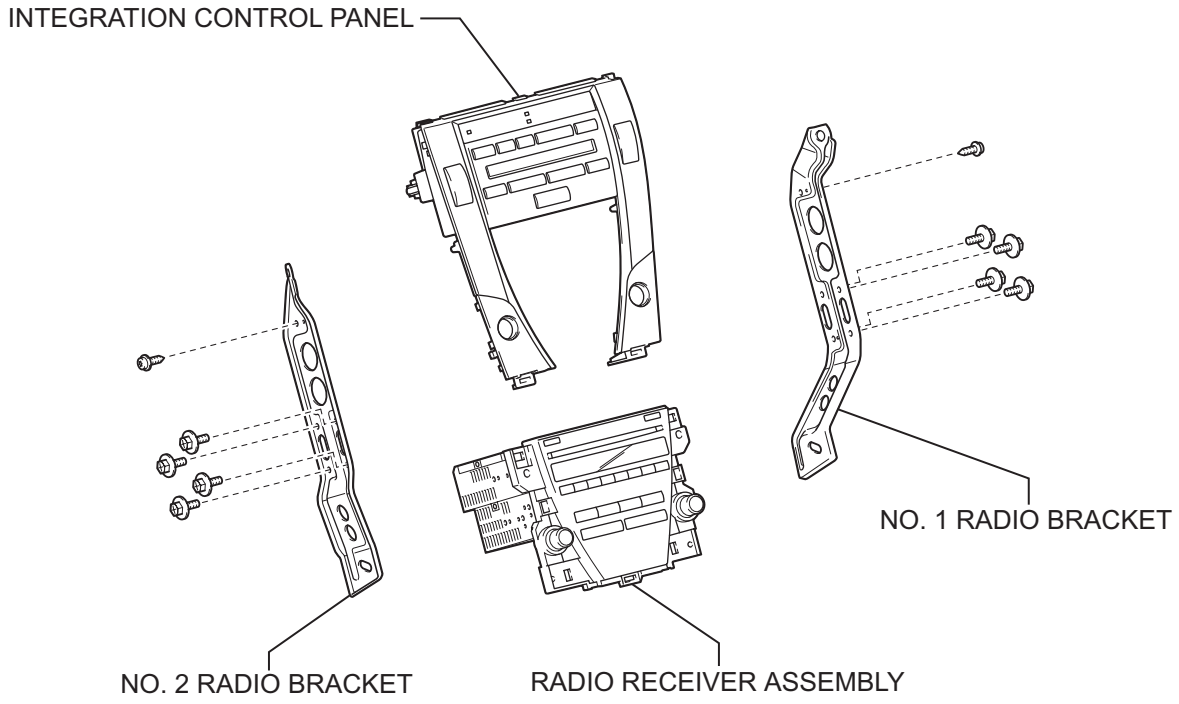

with Navigation System:

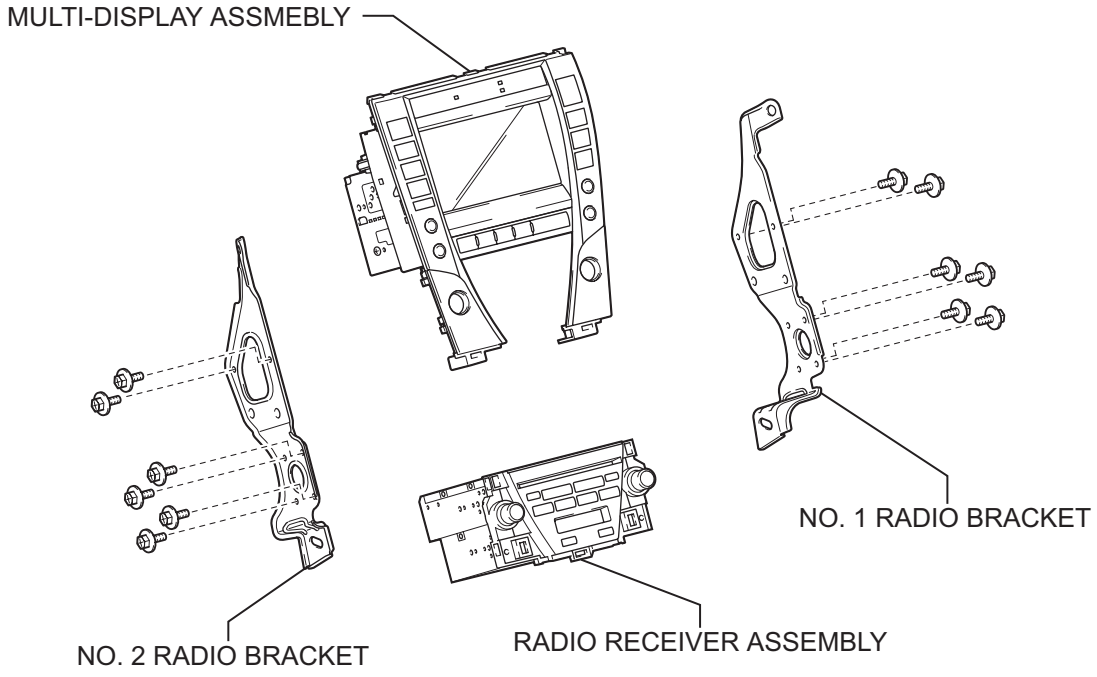

P

E130510E01

STEREO COMPONENT AMPLIFIER

COMPONENTS

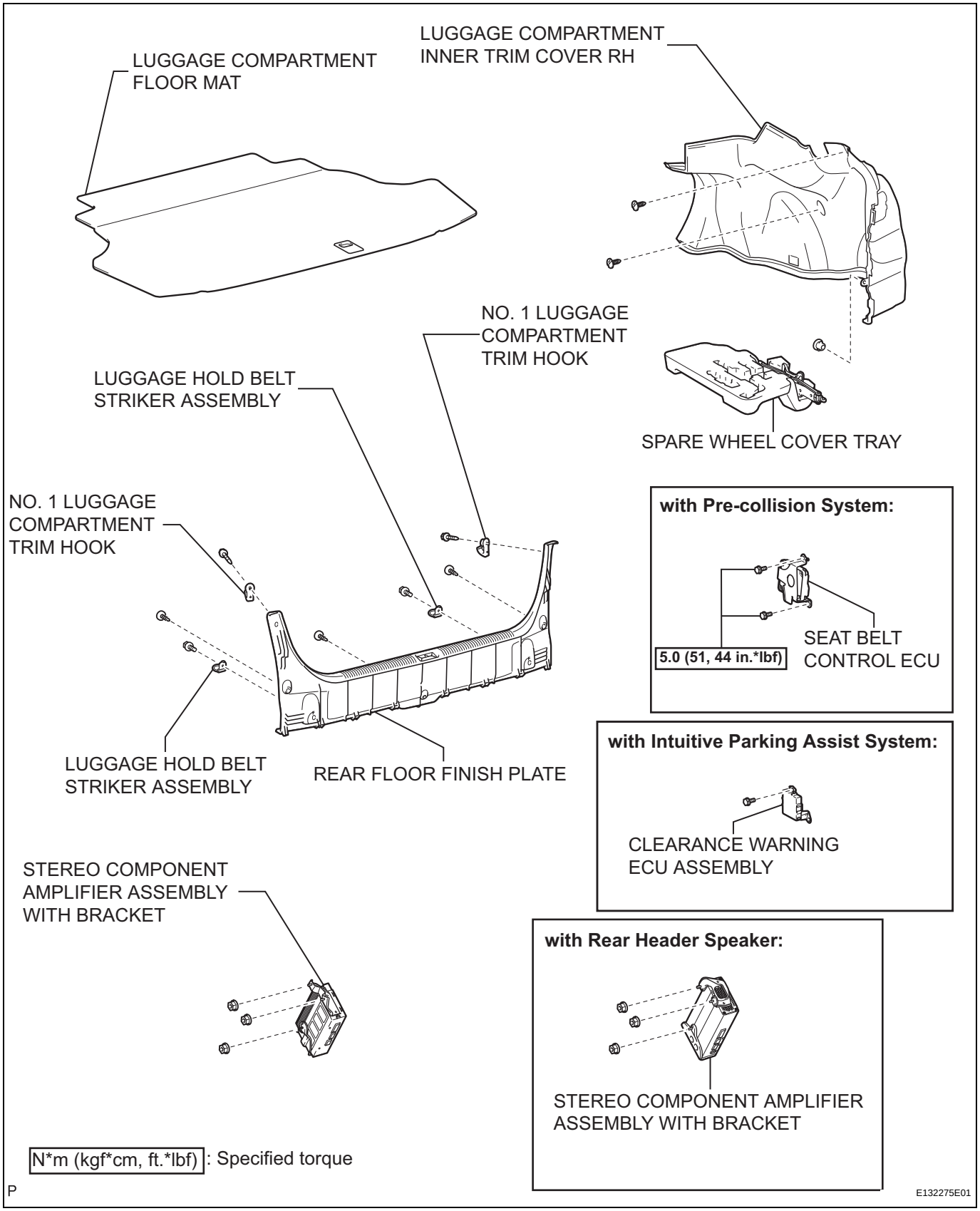

AV

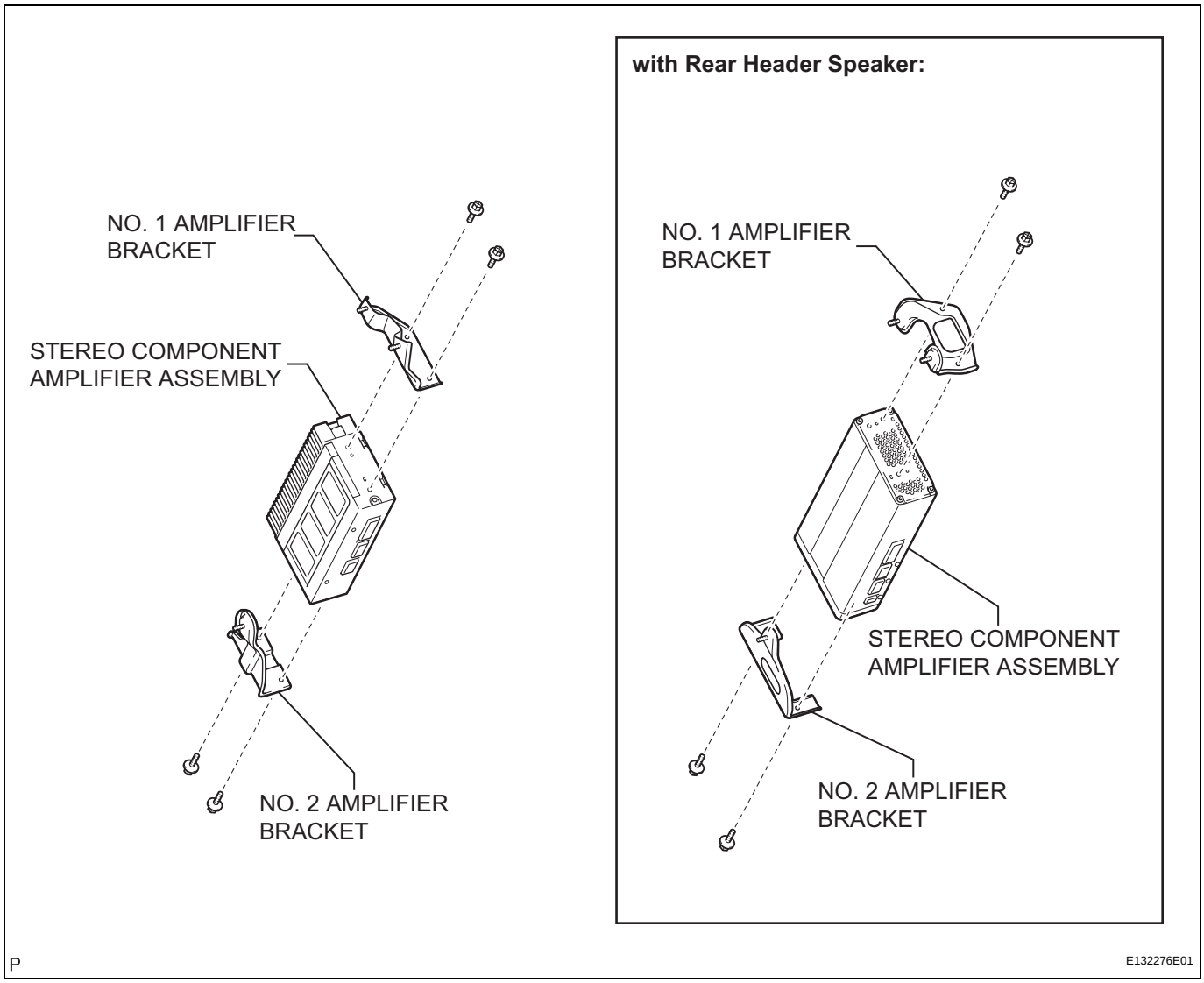
NO. 1 AMPLIFIER BRACKET
STEREO COMPONENT AMPLIFIER ASSEMBLY
NO. 2 AMPLIFIER BRACKET
with Rear Header Speaker:
NO. 1 AMPLIFIER BRACKET
STEREO COMPONENT AMPLIFIER ASSEMBLY
NO. 2 AMPLIFIER BRACKET
P
E132276E01

FRONT SIDE SPEAKER

COMPONENTS

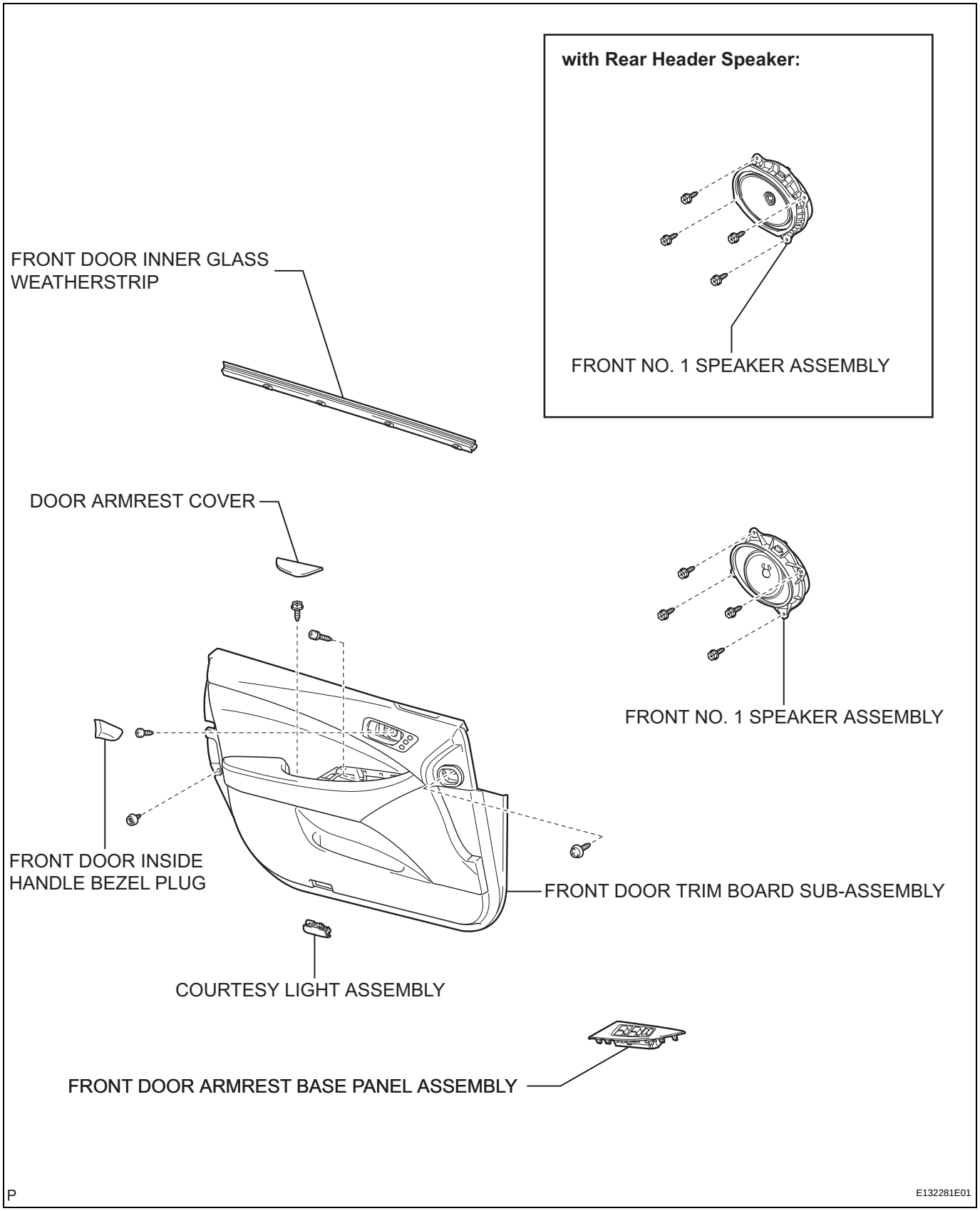

AV

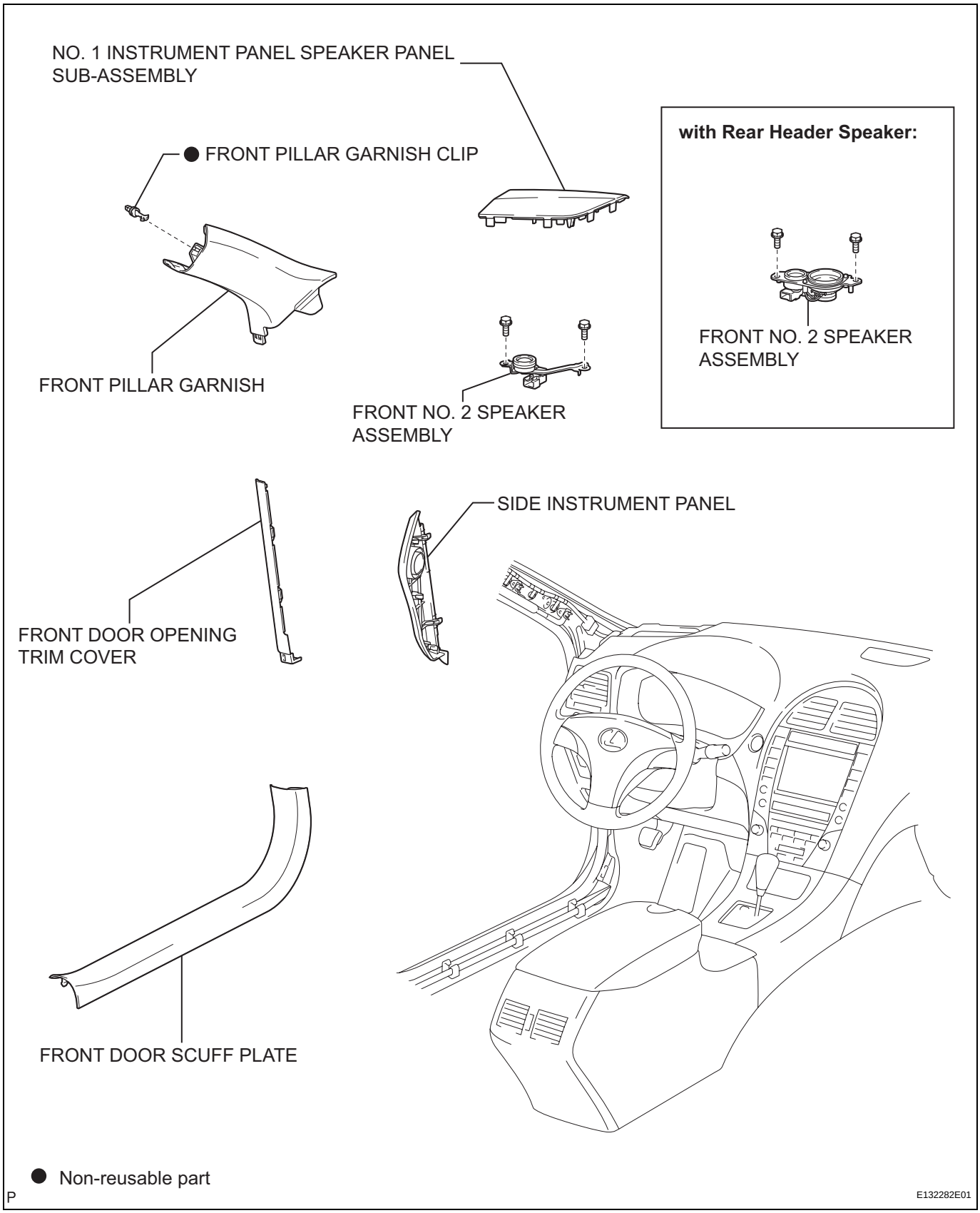
NO. 1 INSTRUMENT PANEL SPEAKER PANEL SUB-ASSEMBLY
● FRONT PILLAR GARNISH CLIP
FRONT PILLAR GARNISH
FRONT NO. 2 SPEAKER ASSEMBLY
with Rear Header Speaker:
FRONT NO. 2 SPEAKER ASSEMBLY
SIDE INSTRUMENT PANEL
FRONT DOOR OPENING TRIM COVER
FRONT DOOR SCUFF PLATE
● Non-reusable part
P
E132282E01

FRONT CENTER SPEAKER

COMPONENTS

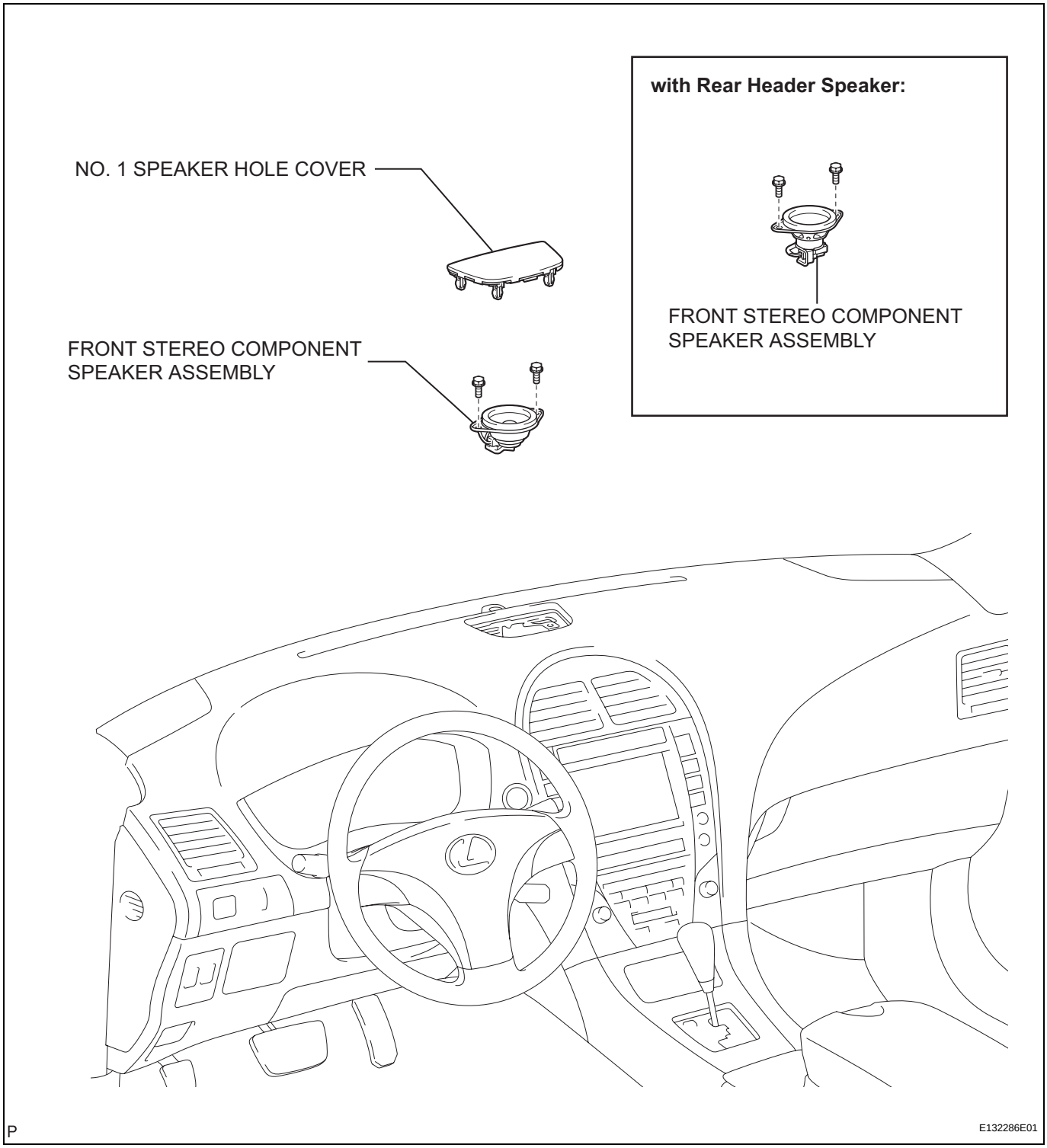

ON-VEHICLE INSPECTION

1. INSPECT FRONT CENTER SPEAKER

HINT:
Remove interior parts so that the front center speaker can be seen.

(a) Check the speaker installation.
OK:
The speaker is securely installed.
If the result is not as specified, reinstall the front center speaker.

(b) Visually check the speaker.
OK:
The cone paper of the speaker is not torn.
If the result is not as specified, replace the front center speaker.

(c) Speaker resistance check
(1) Disconnect the front center speaker connector.
(2) Measure the resistance between the terminals of the speaker.
Standard resistance:
7 to 9 Ω
If the result is not as specified, replace the front center speaker.

REMOVAL

1. REMOVE NO. 1 SPEAKER HOLE COVER

(a) Apply protective tape to the area shown in the illustration.

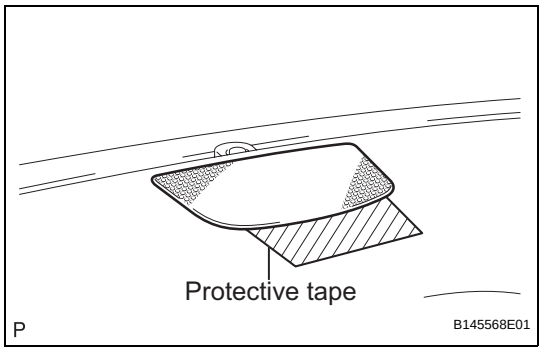

(b) Using a molding remover, disengage the 4 clips and remove the No. 1 speaker hole cover.

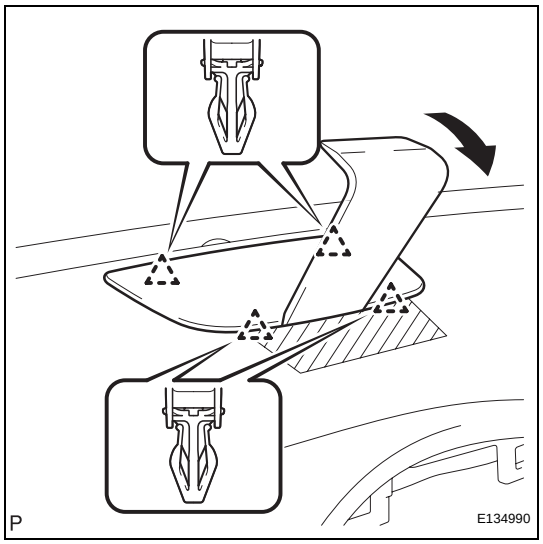

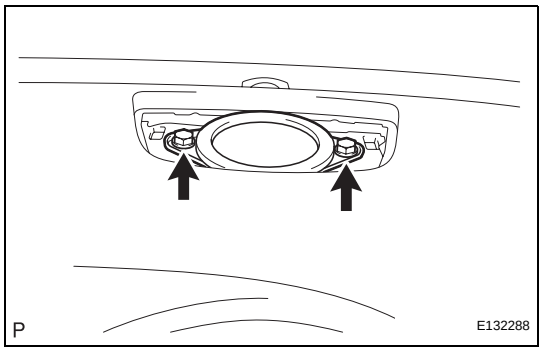

2. REMOVE FRONT STEREO COMPONENT SPEAKER ASSEMBLY

(a) Remove the 2 bolts.

(b) Lift the front stereo component speaker assembly and disconnect the connector to remove the stereo component speaker assembly.

NOTICE:

Do not touch the cone part of the speaker.

REAR SIDE SPEAKER

COMPONENTS

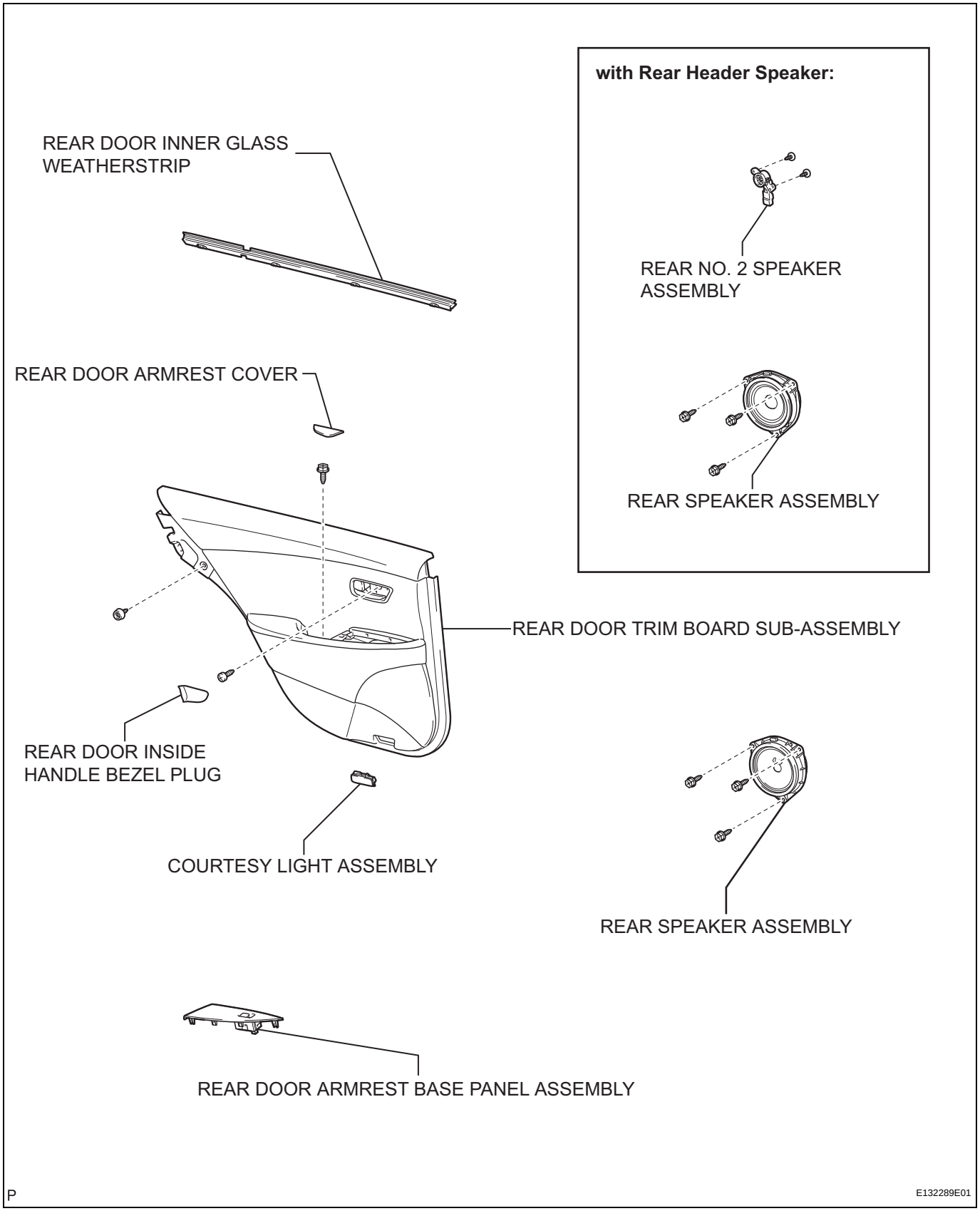

AV

ON-VEHICLE INSPECTION

1. INSPECT REAR SPEAKER (w/ Rear Header Speaker)

HINT:
Remove interior parts so that the rear speaker can be seen.

(a) Check the speaker installation.
OK:
The speaker is securely installed.
If the result is not as specified, reinstall the rear speaker.

(b) Visually check the speaker.
OK:
The cone paper of the speaker is not torn.
If the result is not as specified, replace the rear speaker.

(c) Speaker resistance check
(1) Disconnect the rear speaker connector.
(2) Measure the resistance between the terminals of the speaker.
Standard resistance:
Approximately 8 Ω
If the result is not as specified, replace the rear speaker.

2. INSPECT REAR SPEAKER

HINT:
Remove interior parts so that the rear speaker can be seen.

(a) Check the speaker installation.
OK:
The speaker is securely installed.
If the result is not as specified, reinstall the rear speaker.

(b) Visually check the speaker.
OK:
The cone paper of the speaker is not torn.
If the result is not as specified, replace the rear speaker.

(c) Speaker resistance check
(1) Disconnect the rear speaker connector.
(2) Measure the resistance between the terminals of the speaker.
Standard resistance:
Approximately 4 Ω
If the result is not as specified, replace the rear speaker.

3. INSPECT REAR NO. 2 SPEAKER (w/ Rear Header Speaker)

HINT:
Remove interior parts so that the rear No. 2 speaker can be seen.

(a) Check the speaker installation.
OK:
The speaker is securely installed.

If the result is not as specified, reinstall the rear No. 2 speaker.

(b) Visually check the speaker.

OK:

The cone paper of the speaker is not torn.

If the result is not as specified, replace the rear No. 2 speaker.

REAR CENTER SPEAKER

COMPONENTS

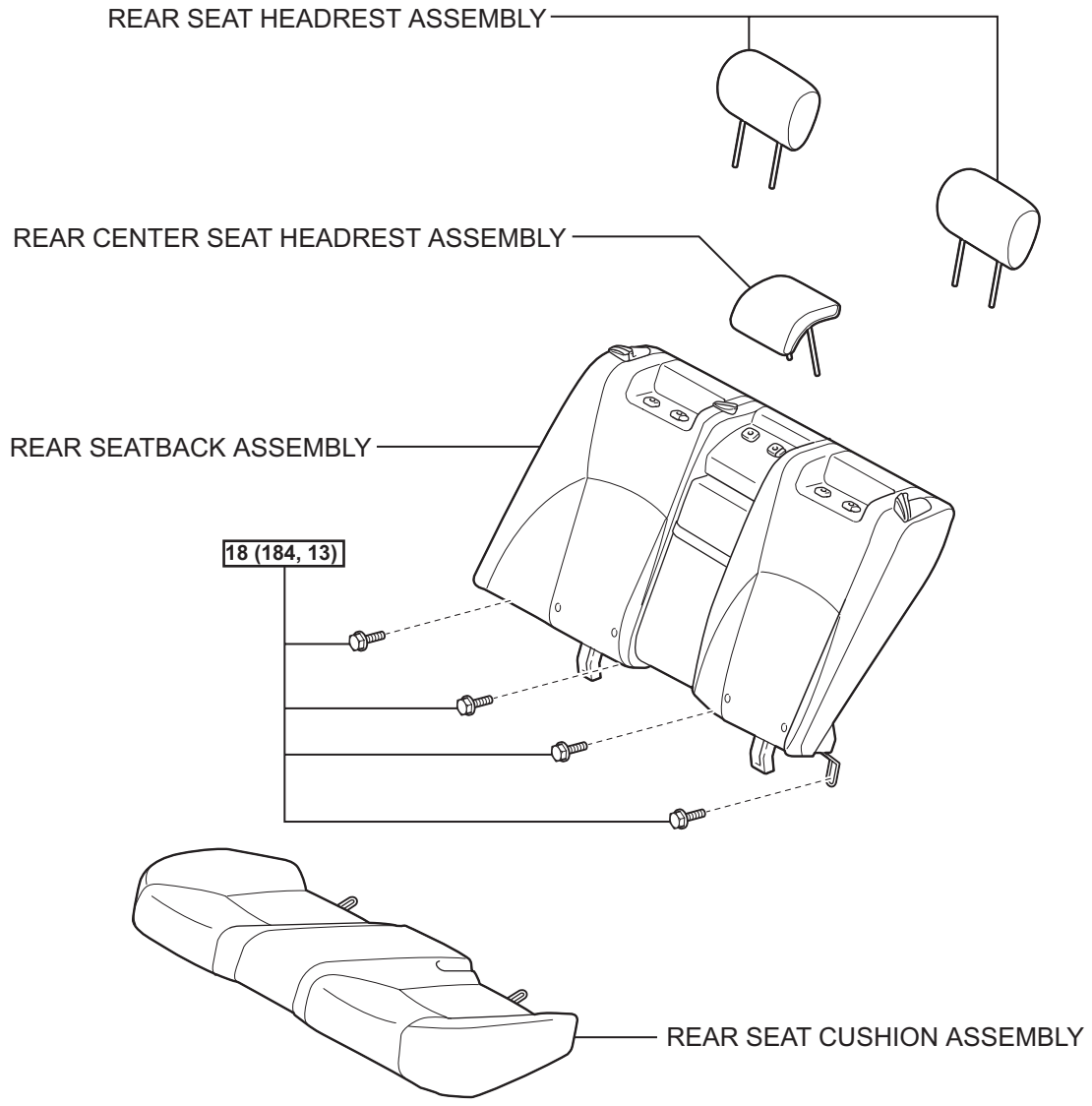

N*m (kgf*cm, ft.*lbf) : Specified torque

P

B145388E01

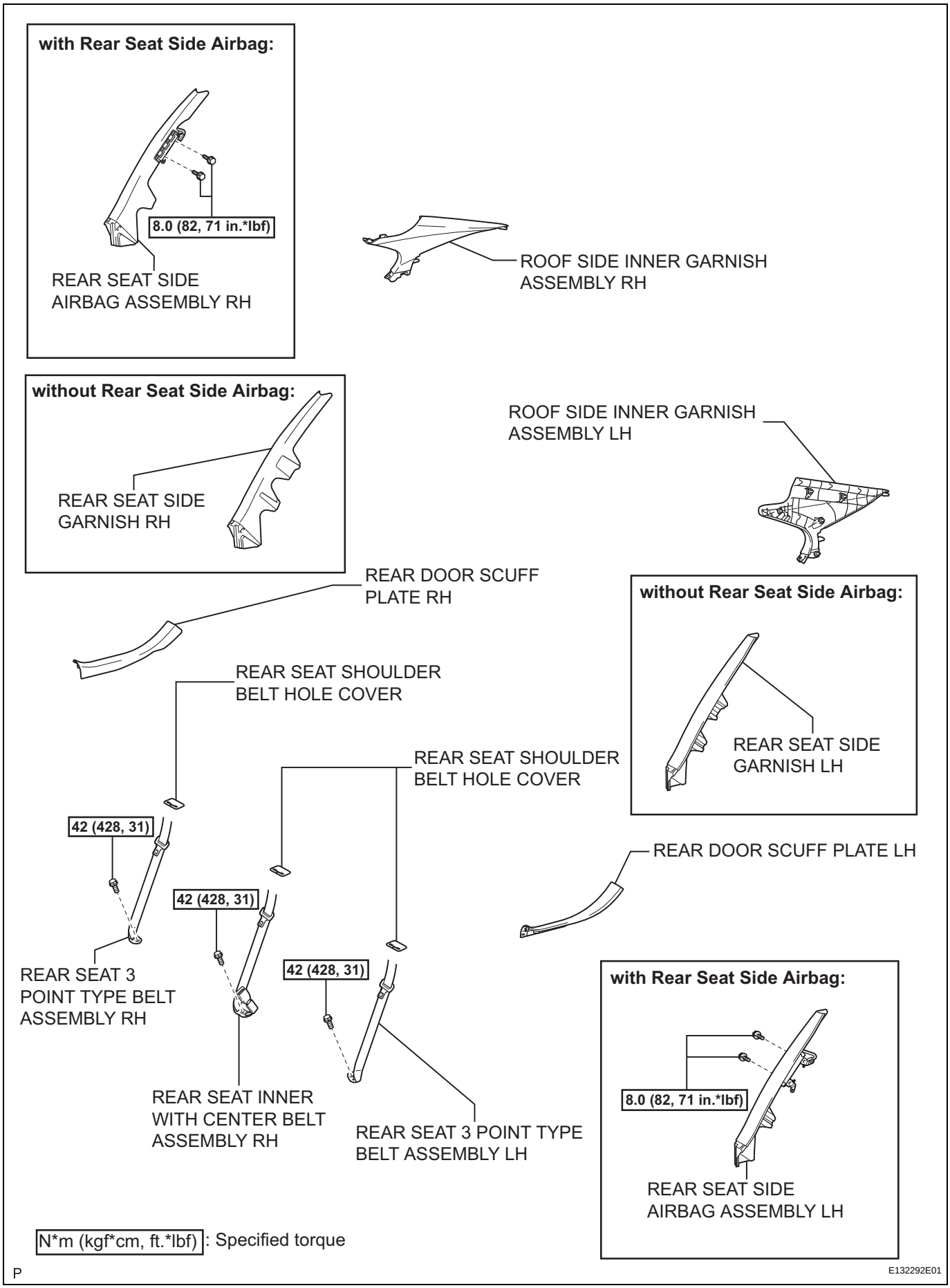
with Rear Seat Side Airbag:
8.0 (82, 71 in.*lbf)
REAR SEAT SIDE AIRBAG ASSEMBLY RH
ROOF SIDE INNER GARNISH ASSEMBLY RH
without Rear Seat Side Airbag:
REAR SEAT SIDE GARNISH RH
ROOF SIDE INNER GARNISH ASSEMBLY LH
REAR DOOR SCUFF PLATE RH
without Rear Seat Side Airbag:
REAR SEAT SIDE GARNISH LH
REAR SEAT SHOULDER BELT HOLE COVER
REAR SEAT SHOULDER BELT HOLE COVER
42 (428, 31)
42 (428, 31)
42 (428, 31)
REAR DOOR SCUFF PLATE LH
REAR SEAT 3 POINT TYPE BELT ASSEMBLY RH
REAR SEAT INNER WITH CENTER BELT ASSEMBLY RH
REAR SEAT 3 POINT TYPE BELT ASSEMBLY LH
with Rear Seat Side Airbag:
8.0 (82, 71 in.*lbf)
REAR SEAT SIDE AIRBAG ASSEMBLY LH
N*m (kgf*cm, ft.*lbf) : Specified torque
P
E132292E01

AV

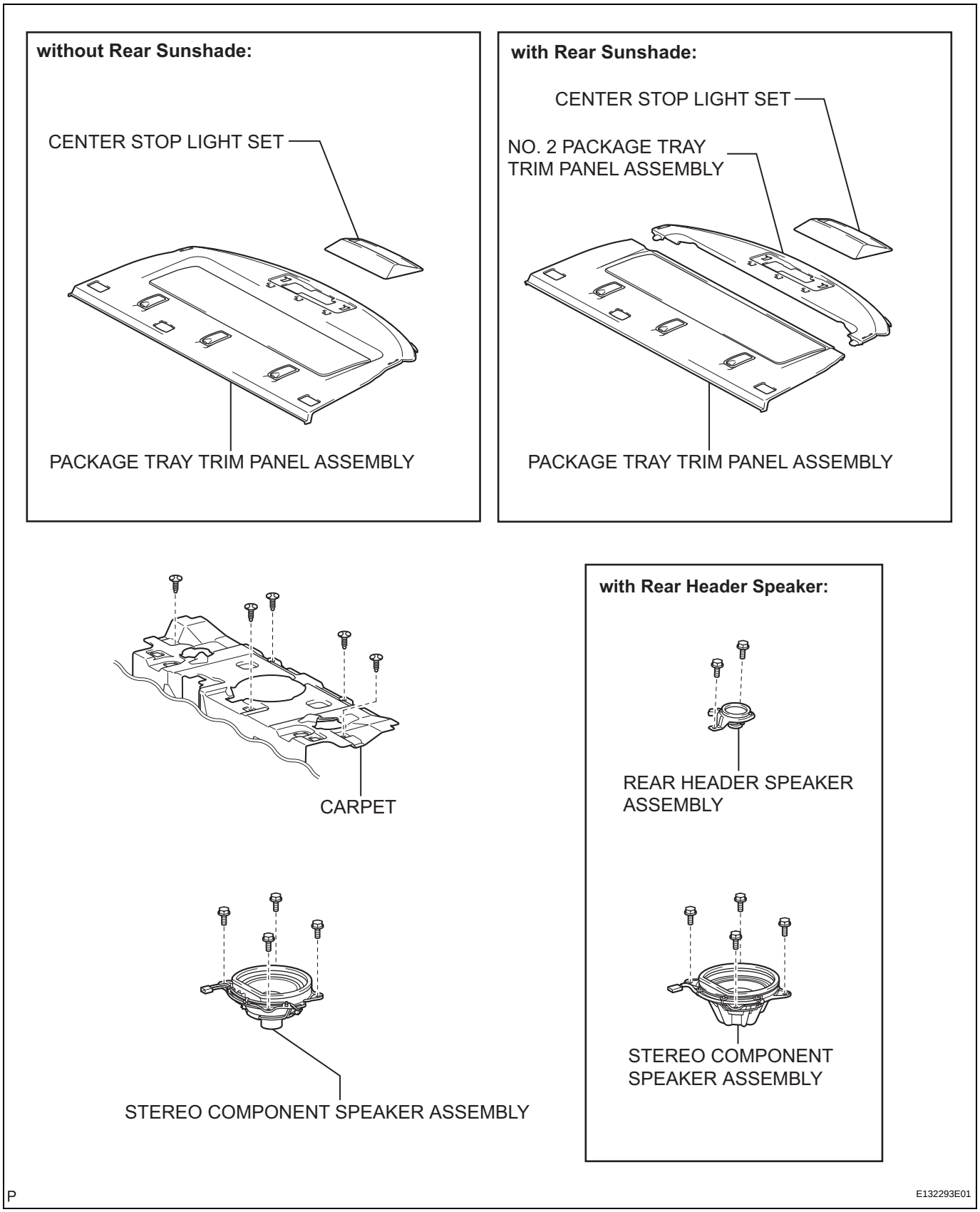
without Rear Sunshade:
CENTER STOP LIGHT SET
PACKAGE TRAY TRIM PANEL ASSEMBLY
with Rear Sunshade:
CENTER STOP LIGHT SET
NO. 2 PACKAGE TRAY TRIM PANEL ASSEMBLY
PACKAGE TRAY TRIM PANEL ASSEMBLY
CARPET
STEREO COMPONENT SPEAKER ASSEMBLY
with Rear Header Speaker:
REAR HEADER SPEAKER ASSEMBLY
STEREO COMPONENT SPEAKER ASSEMBLY
P
E132293E01

RADIO ANTENNA CORD

COMPONENTS

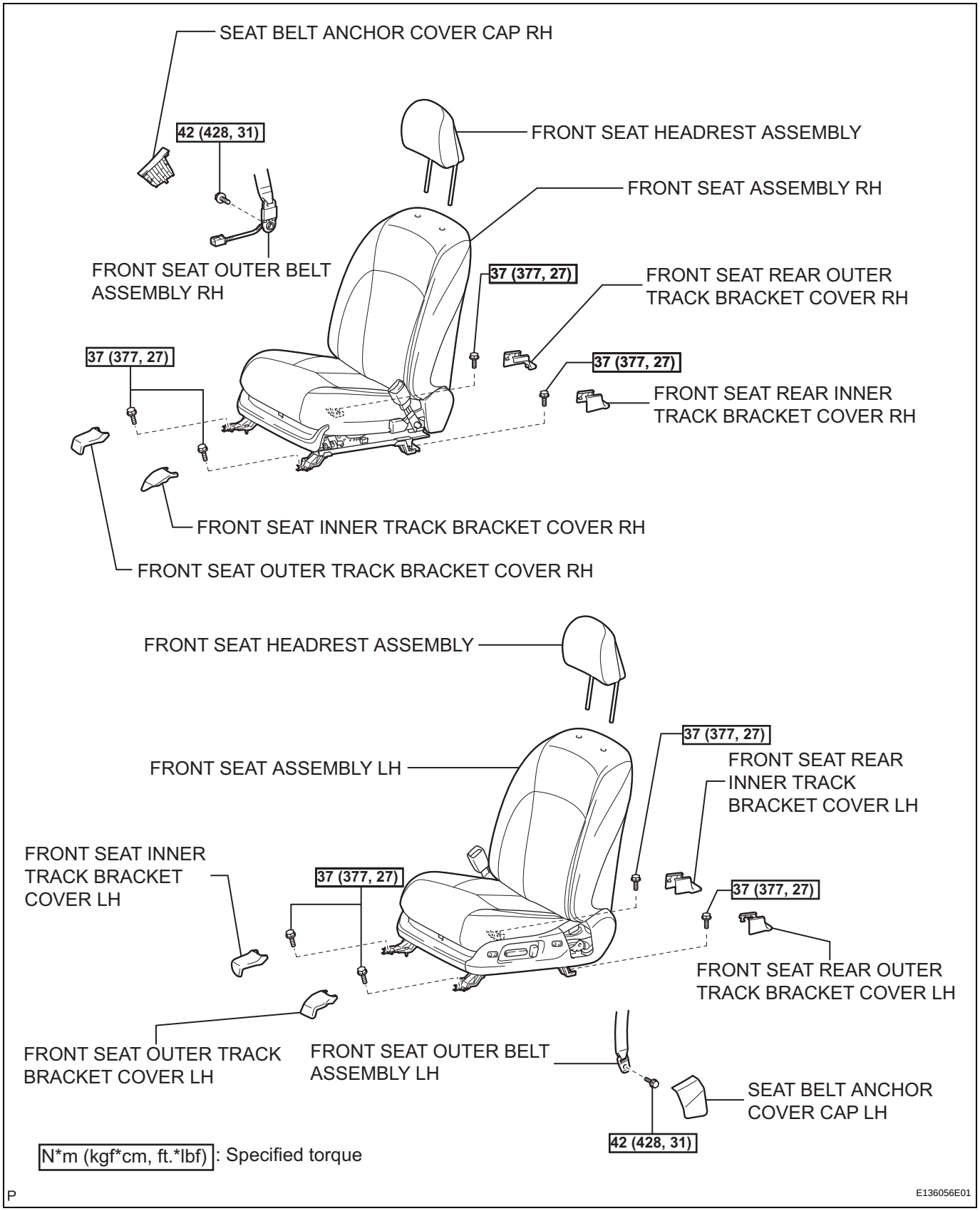

AV

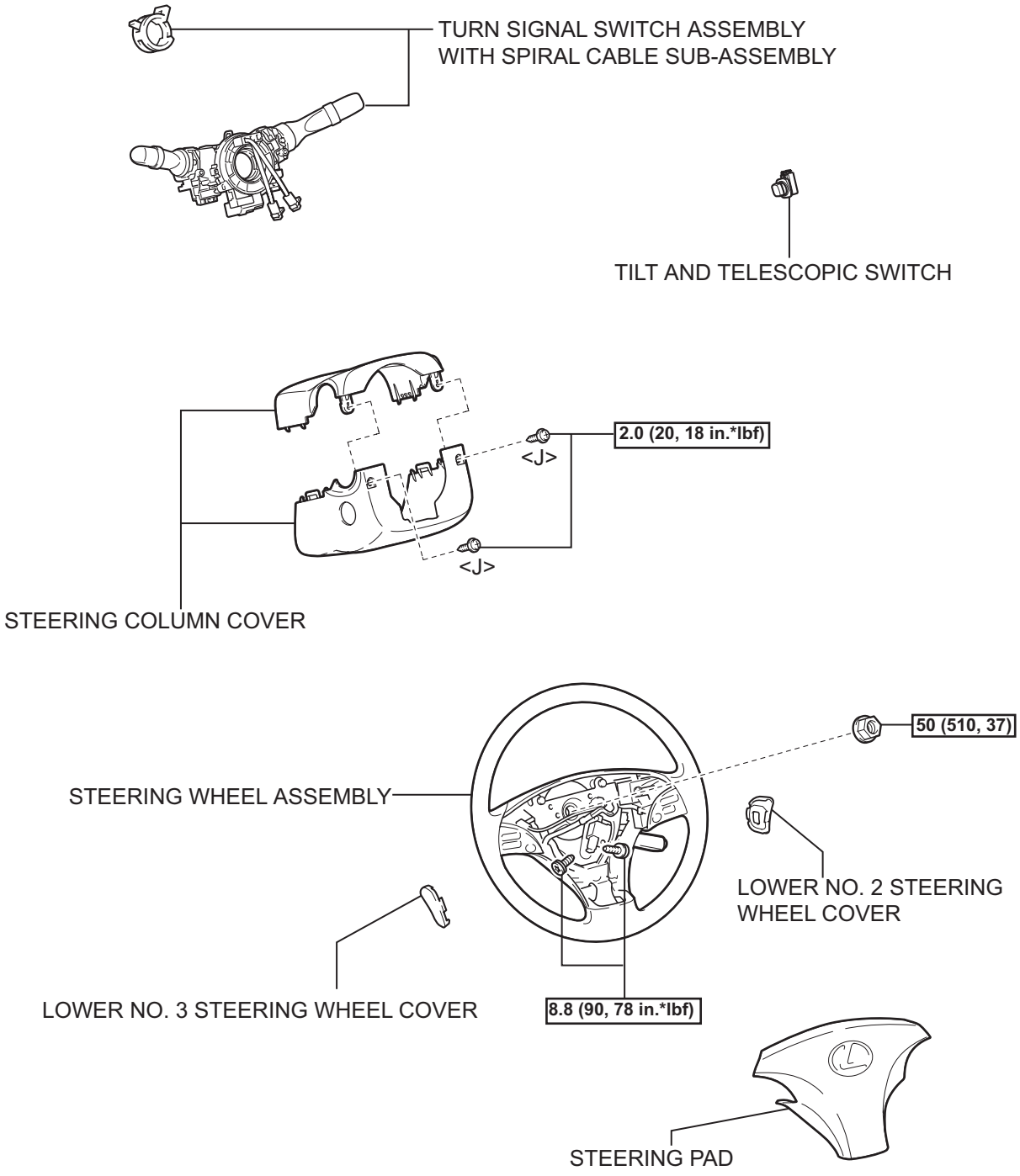

N*m (kgf*cm, ft.*lbf) : Specified torque

P

B145852E01

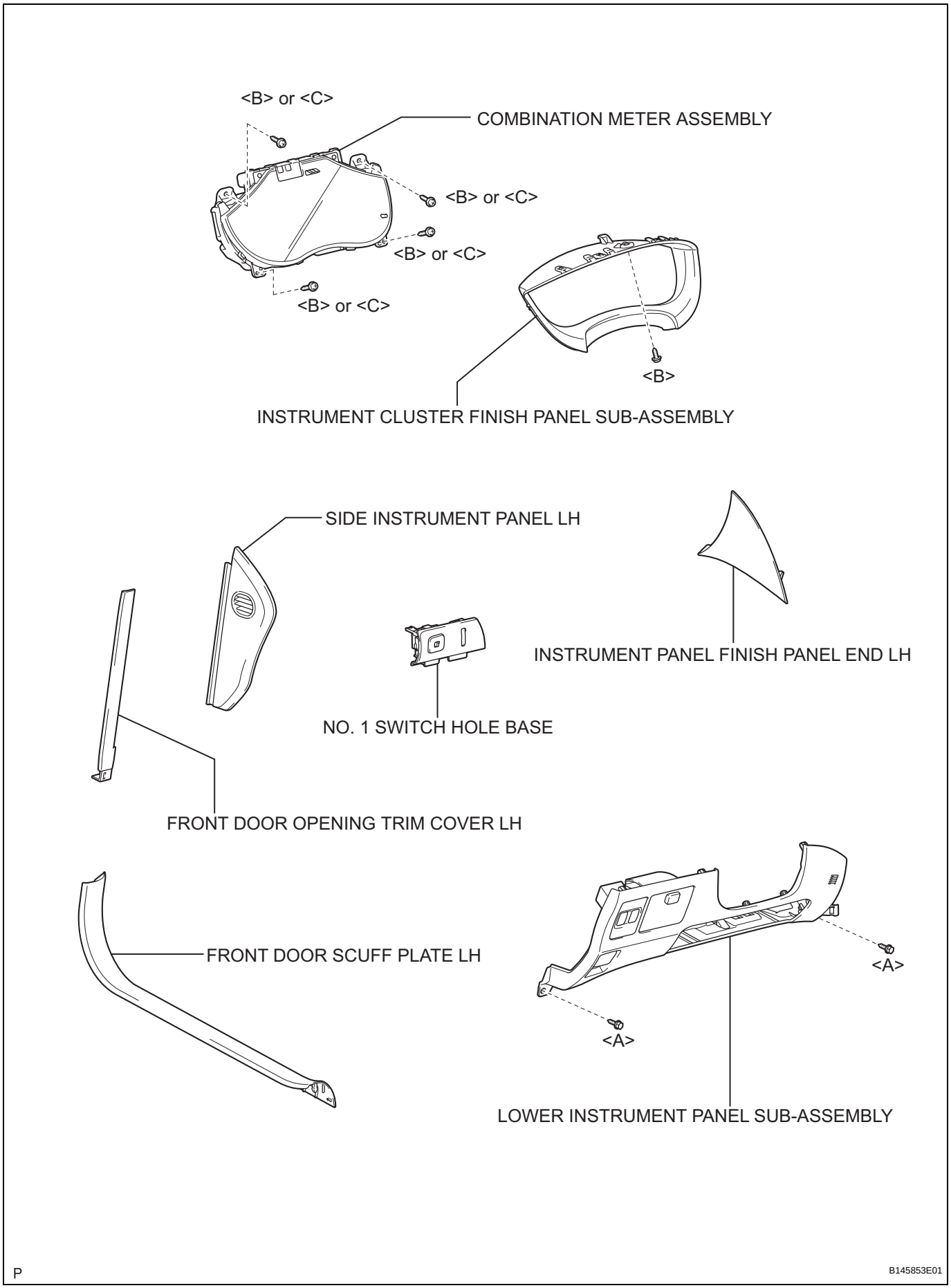
<B> or <C>
COMBINATION METER ASSEMBLY
<B> or <C>
<B> or <C>
<B> or <C>
<B>
INSTRUMENT CLUSTER FINISH PANEL SUB-ASSEMBLY
SIDE INSTRUMENT PANEL LH
INSTRUMENT PANEL FINISH PANEL END LH
NO. 1 SWITCH HOLE BASE
FRONT DOOR OPENING TRIM COVER LH
FRONT DOOR SCUFF PLATE LH
<A>
<A>
LOWER INSTRUMENT PANEL SUB-ASSEMBLY
P
B145853E01

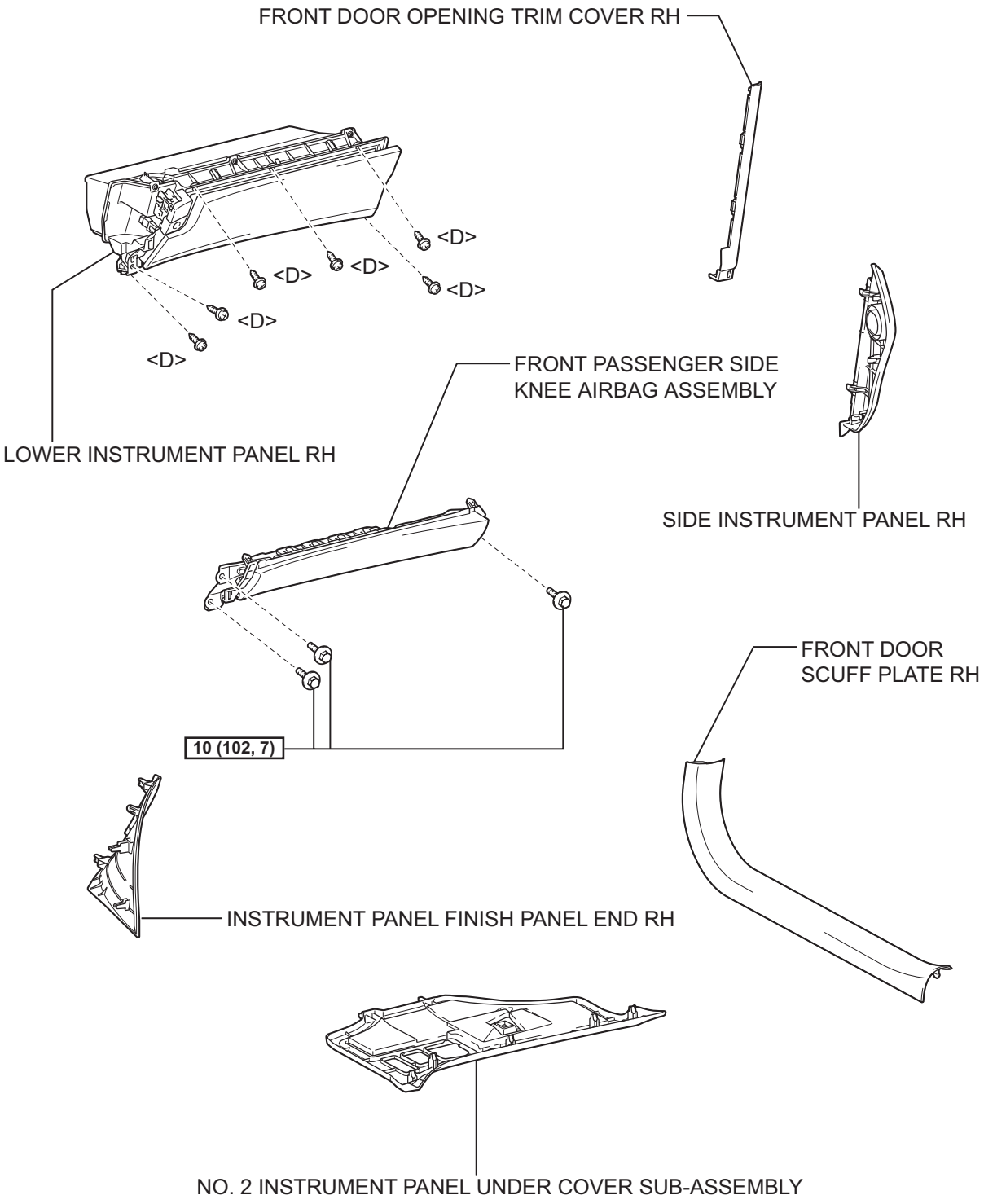

N*m (kgf*cm, ft.*lbf) : Specified torque

P

B145855E01

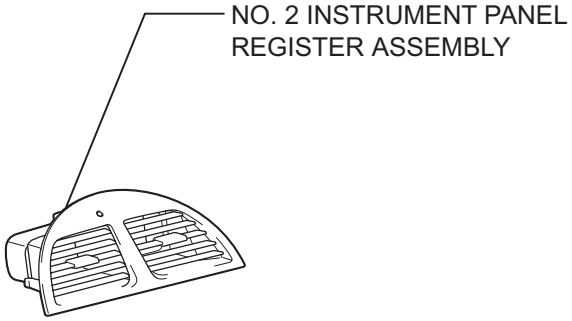

without Navigation System:

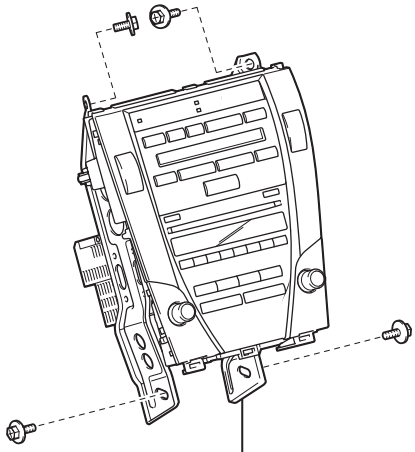

with Navigation System:

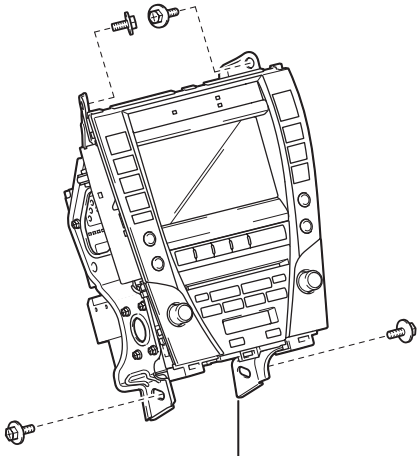

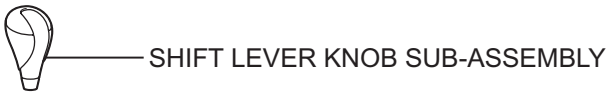

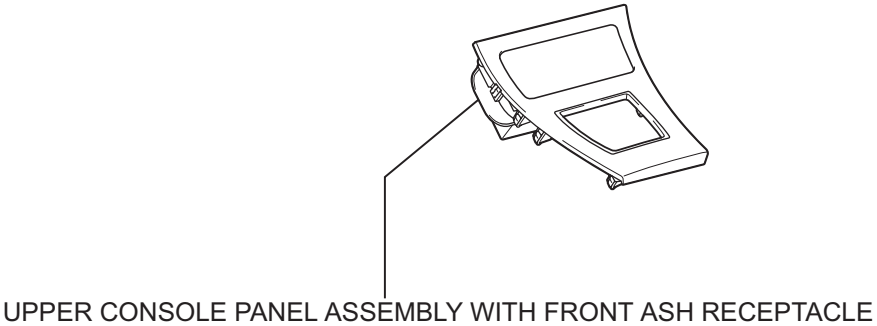

P

B145856E01

AV

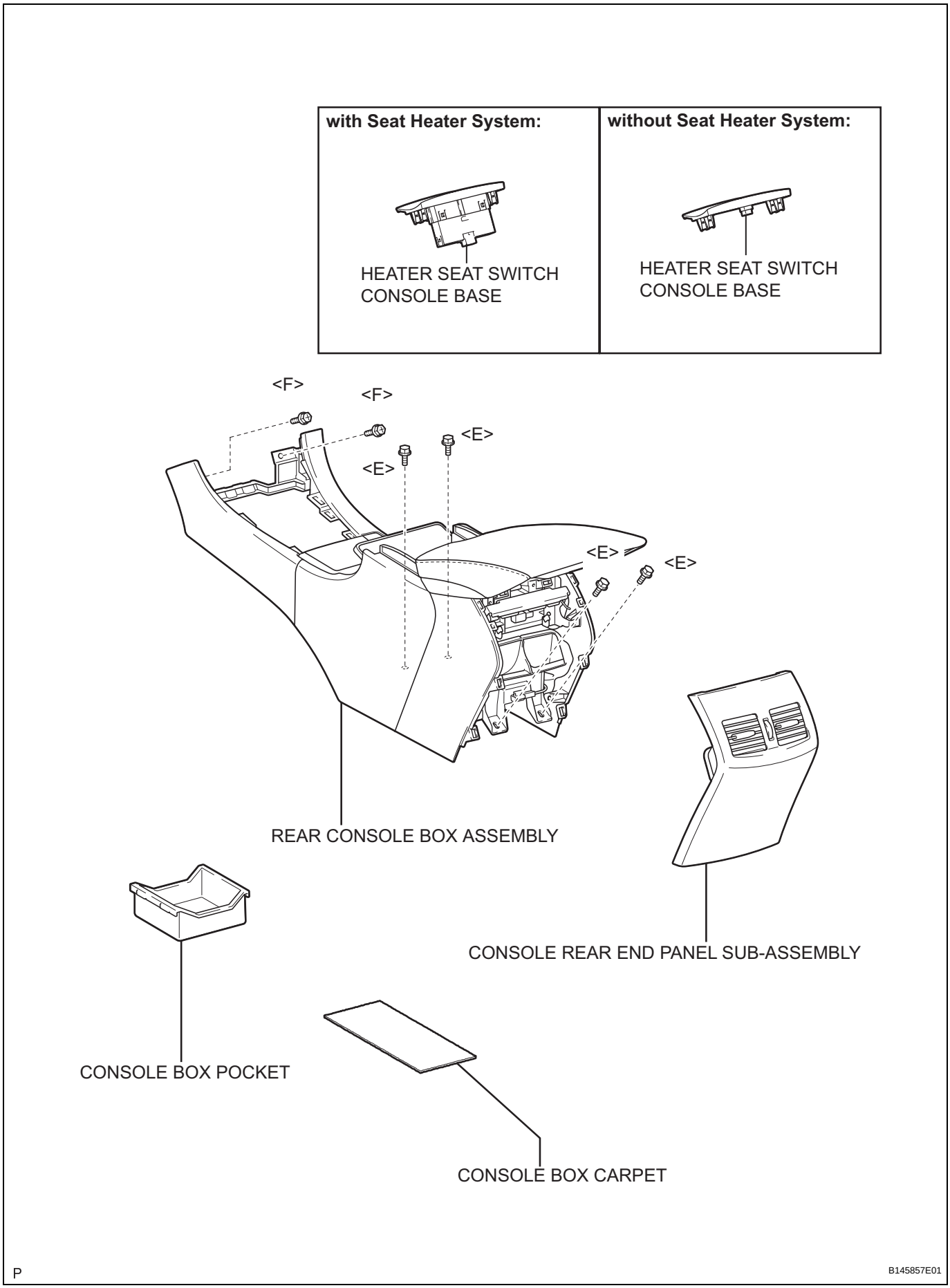
with Seat Heater System:
HEATER SEAT SWITCH CONSOLE BASE
without Seat Heater System:
HEATER SEAT SWITCH CONSOLE BASE
<F>
<F>
<E>
<E>
<E>
<E>
REAR CONSOLE BOX ASSEMBLY
CONSOLE REAR END PANEL SUB-ASSEMBLY
CONSOLE BOX POCKET
CONSOLE BOX CARPET
P
B145857E01

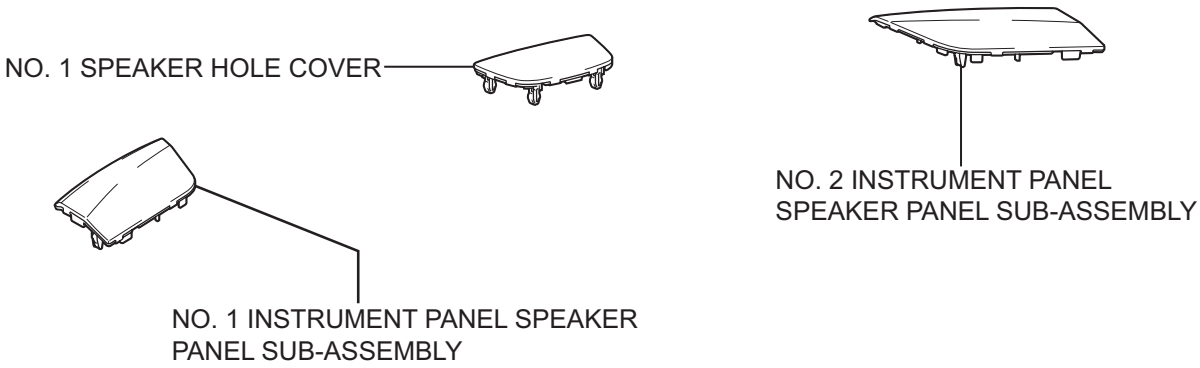

without Rear Header Speaker:

with Rear Header Speaker:

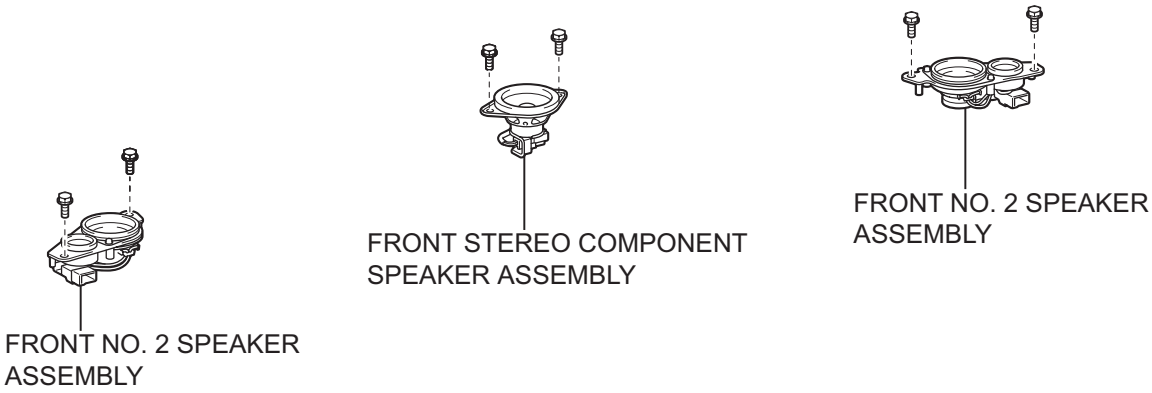

AV

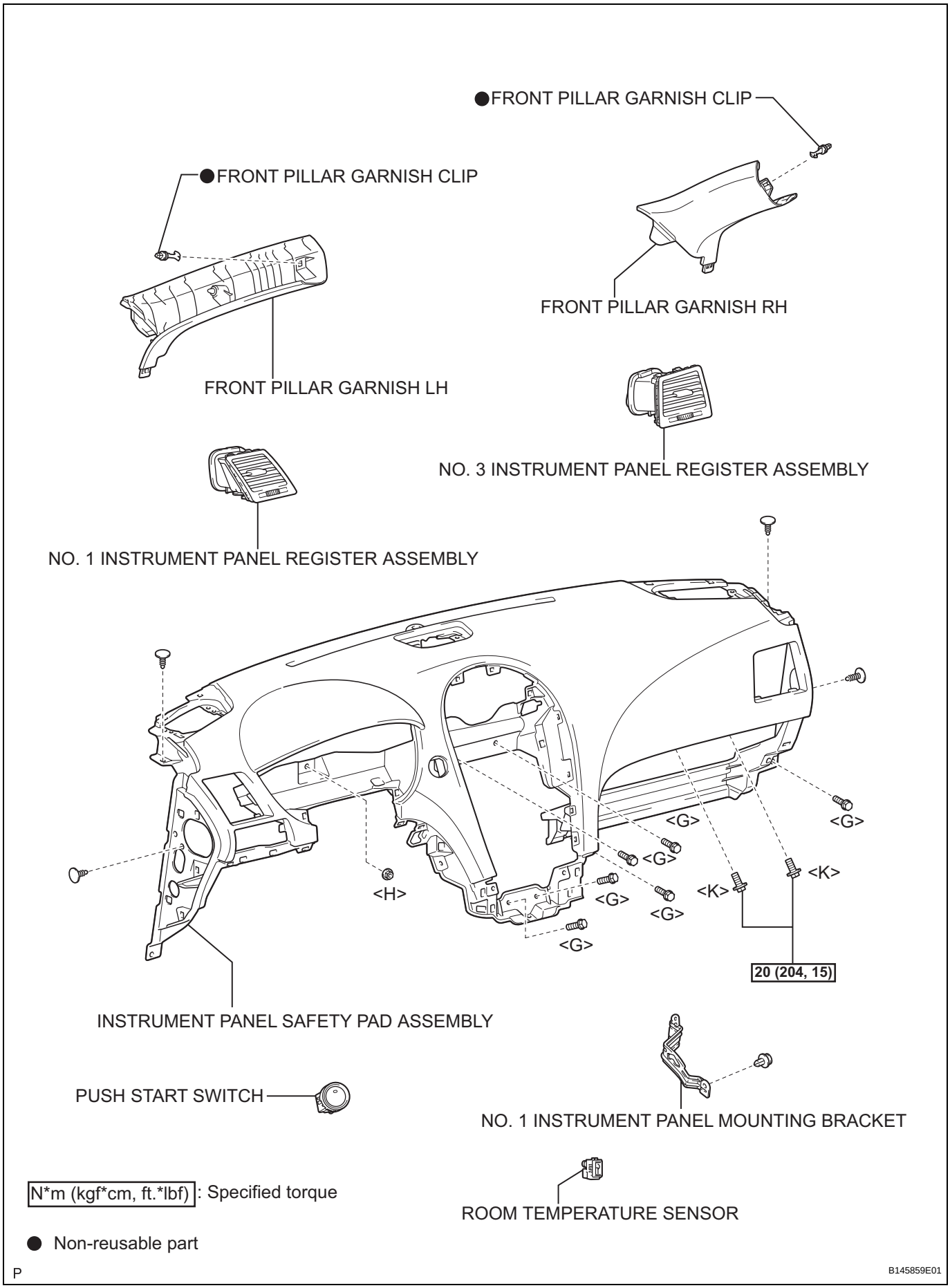

N*m (kgf*cm, ft.*lbf) : Specified torque

● Non-reusable part

P

B145859E01

AV

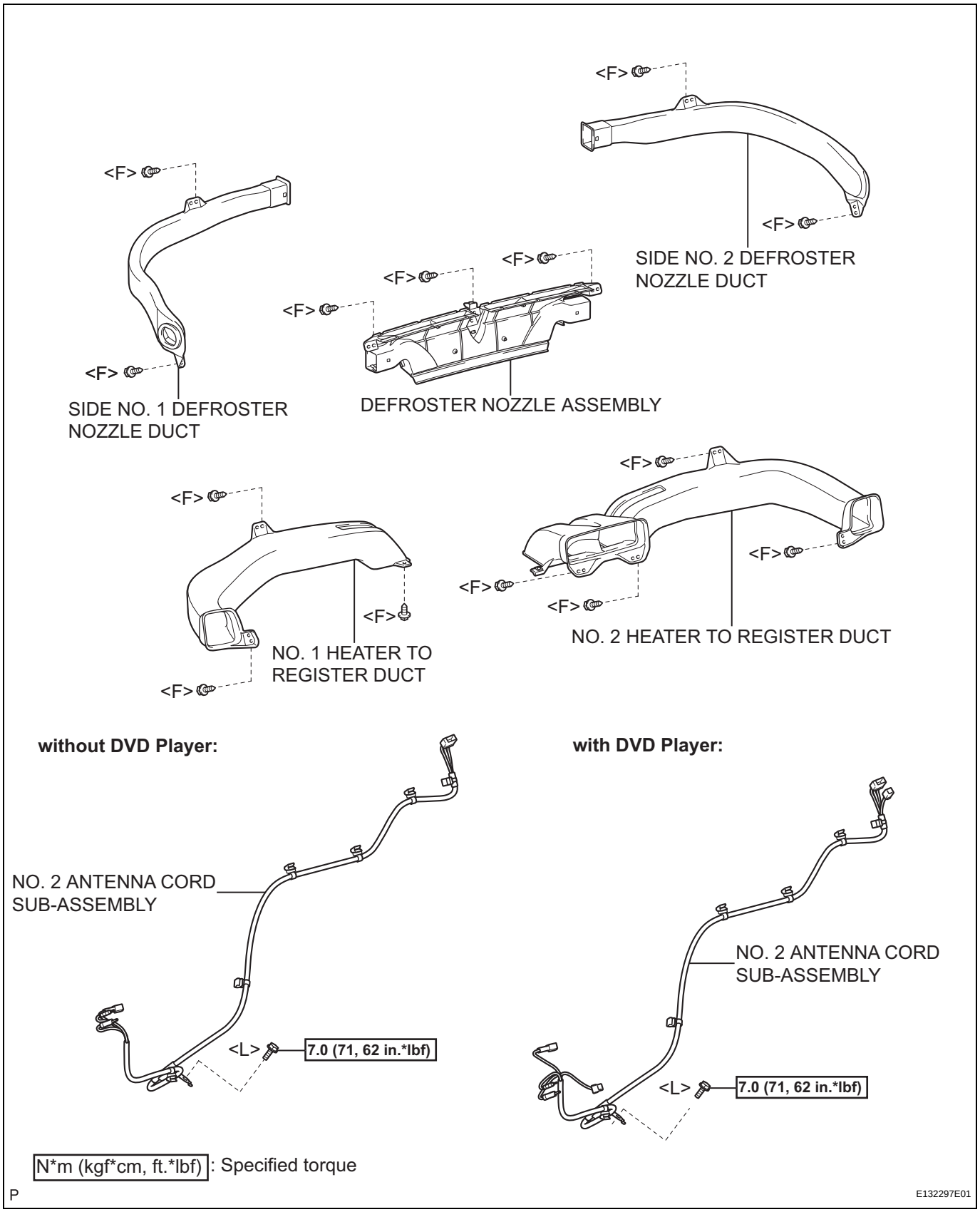
<F>
SIDE NO. 2 DEFROSTER NOZZLE DUCT
SIDE NO. 1 DEFROSTER NOZZLE DUCT
DEFROSTER NOZZLE ASSEMBLY
NO. 1 HEATER TO REGISTER DUCT
NO. 2 HEATER TO REGISTER DUCT
without DVD Player:
with DVD Player:
NO. 2 ANTENNA CORD SUB-ASSEMBLY
<L>
7.0 (71, 62 in.*lbf)
N*m (kgf*cm, ft.*lbf) : Specified torque
P
E132297E01

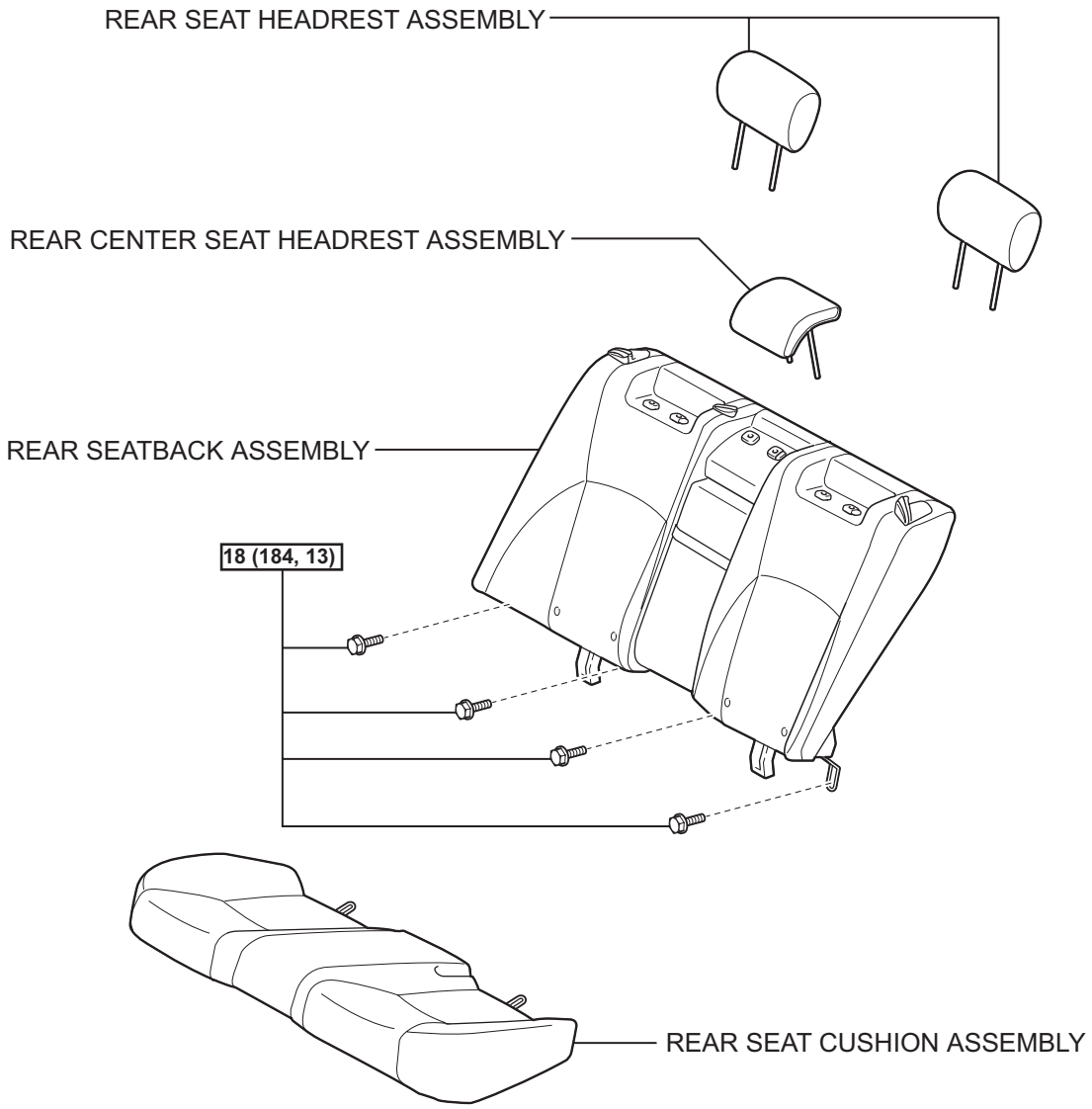

N*m (kgf*cm, ft.*lbf) : Specified torque

P

B145388E01

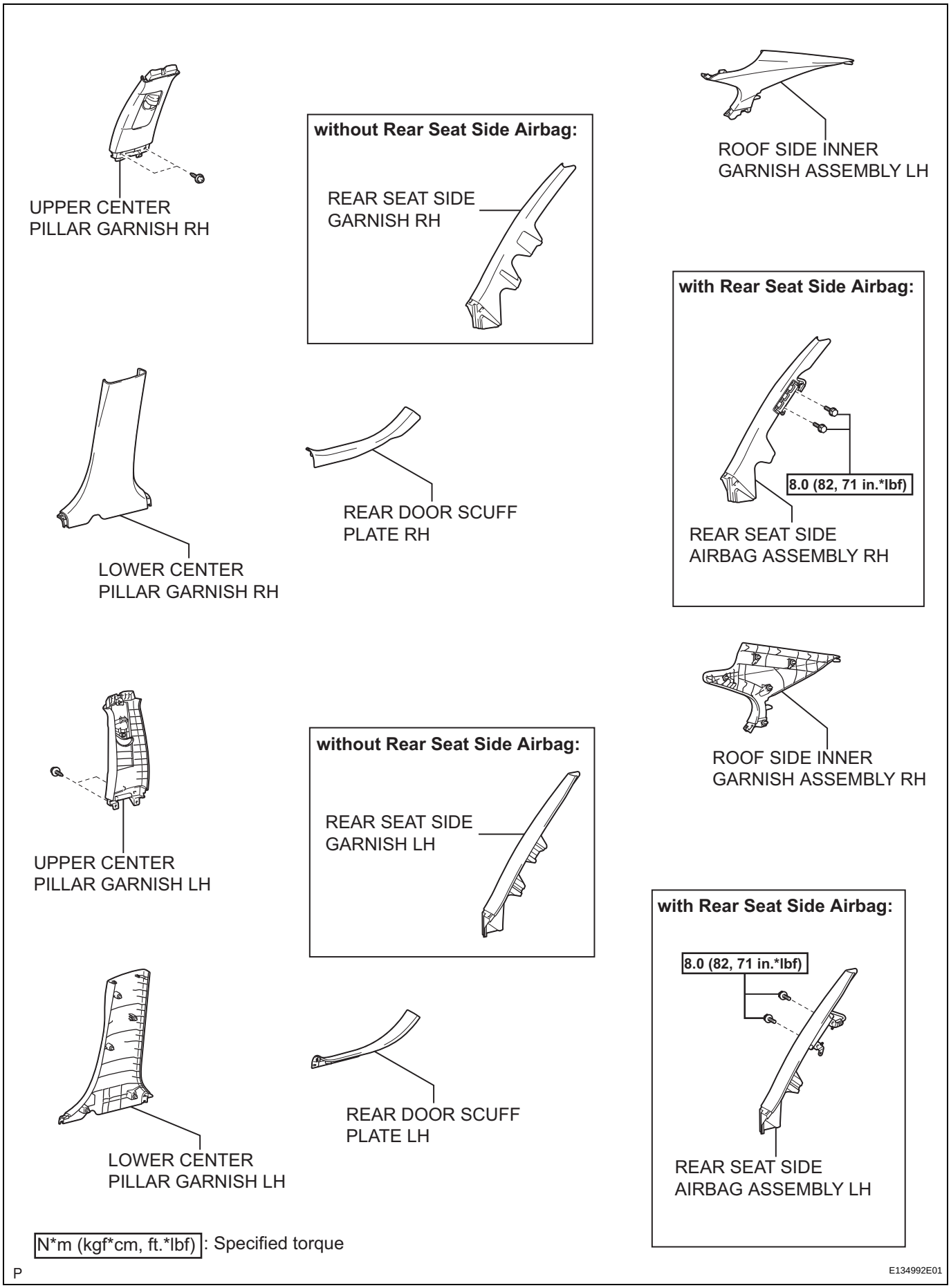
UPPER CENTER PILLAR GARNISH RH
without Rear Seat Side Airbag:
REAR SEAT SIDE GARNISH RH
ROOF SIDE INNER GARNISH ASSEMBLY LH
with Rear Seat Side Airbag:
8.0 (82, 71 in.*lbf)
REAR SEAT SIDE AIRBAG ASSEMBLY RH
LOWER CENTER PILLAR GARNISH RH
REAR DOOR SCUFF PLATE RH
ROOF SIDE INNER GARNISH ASSEMBLY RH
UPPER CENTER PILLAR GARNISH LH
without Rear Seat Side Airbag:
REAR SEAT SIDE GARNISH LH
with Rear Seat Side Airbag:
8.0 (82, 71 in.*lbf)
REAR SEAT SIDE AIRBAG ASSEMBLY LH
LOWER CENTER PILLAR GARNISH LH
REAR DOOR SCUFF PLATE LH
N*m (kgf*cm, ft.*lbf) : Specified torque
P
E134992E01

AV

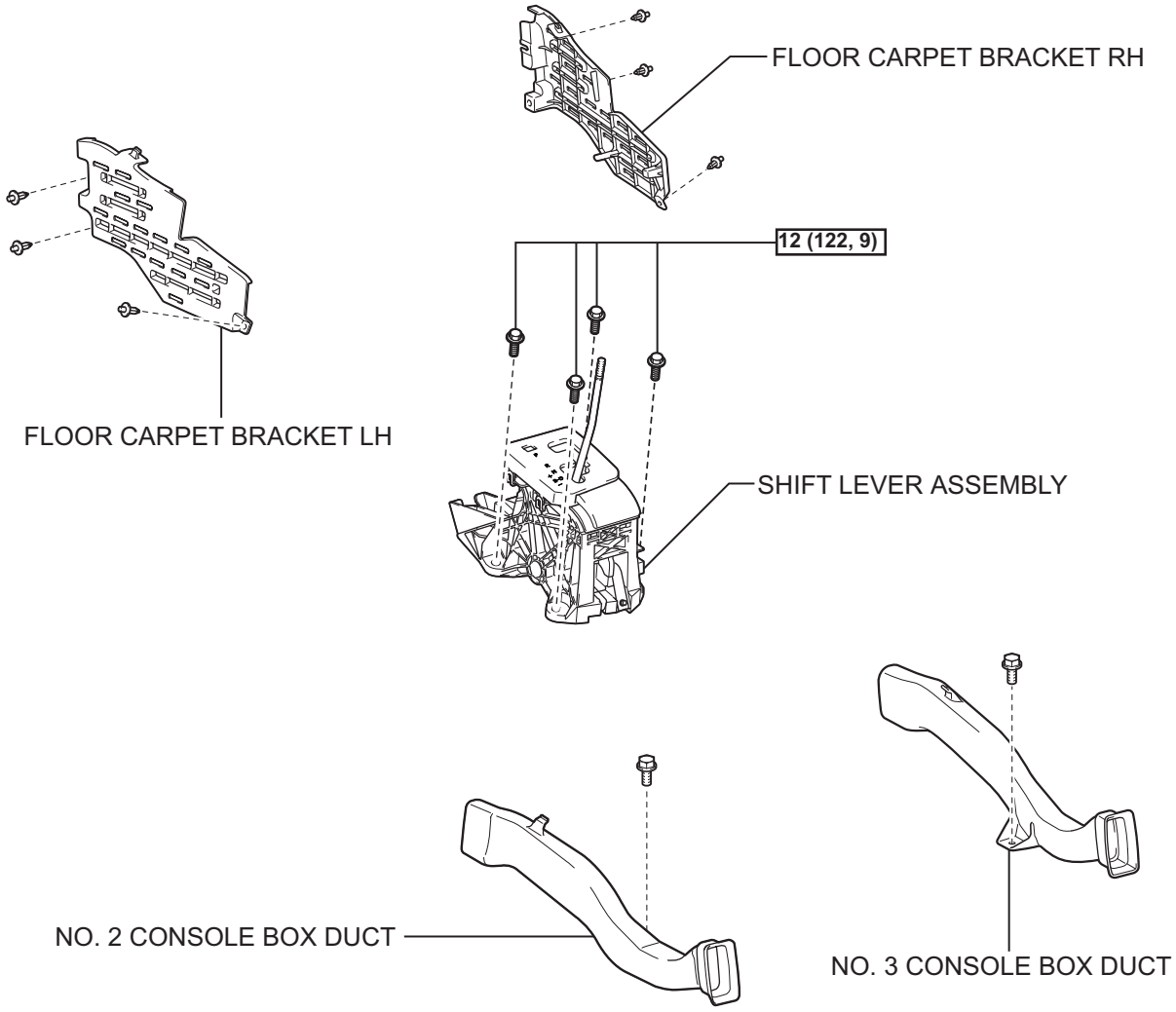

N*m (kgf*cm, ft.*lbf) : Specified torque

P

E134993E01

with DVD Player:

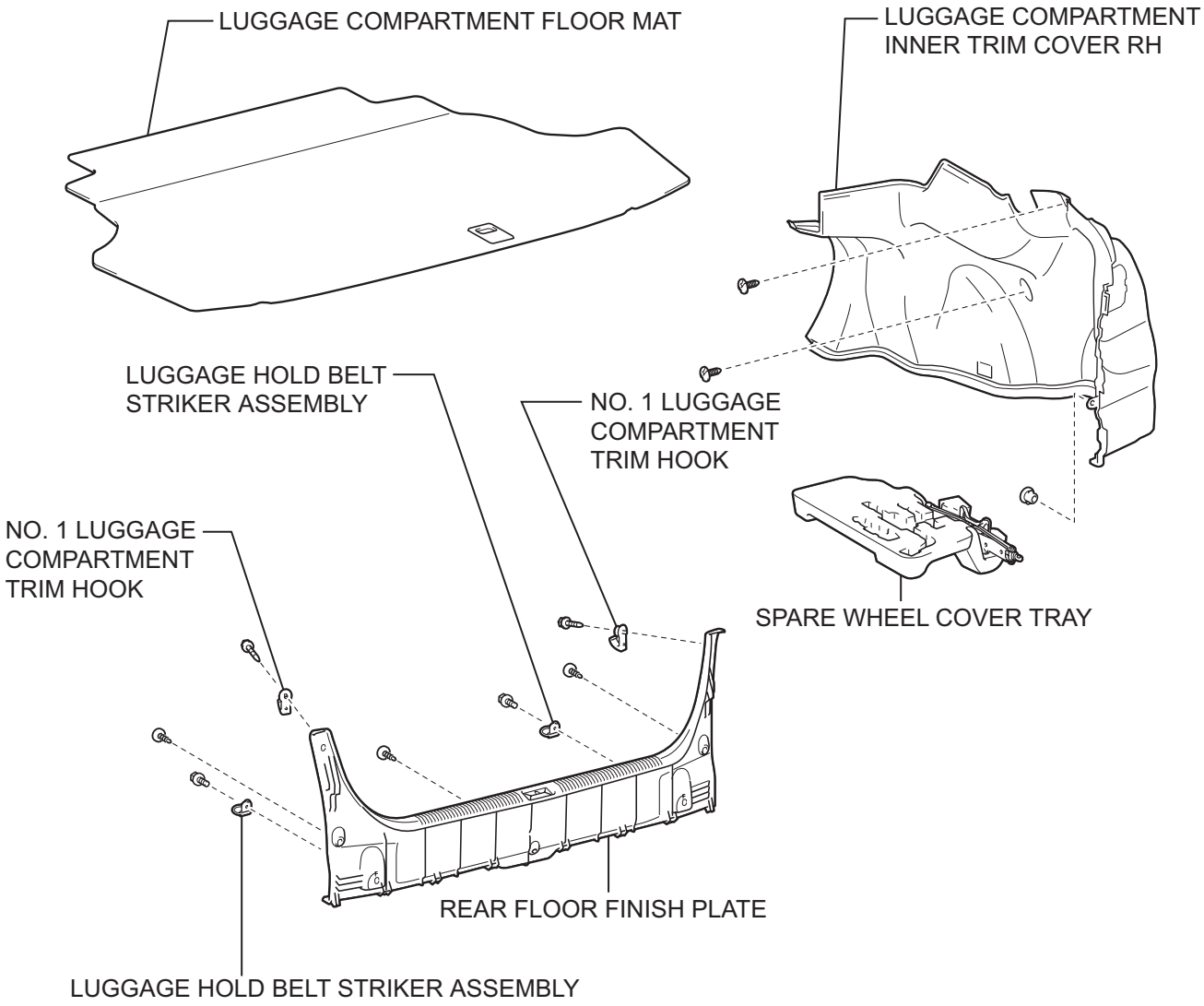

P

B147711E01

for Standard:

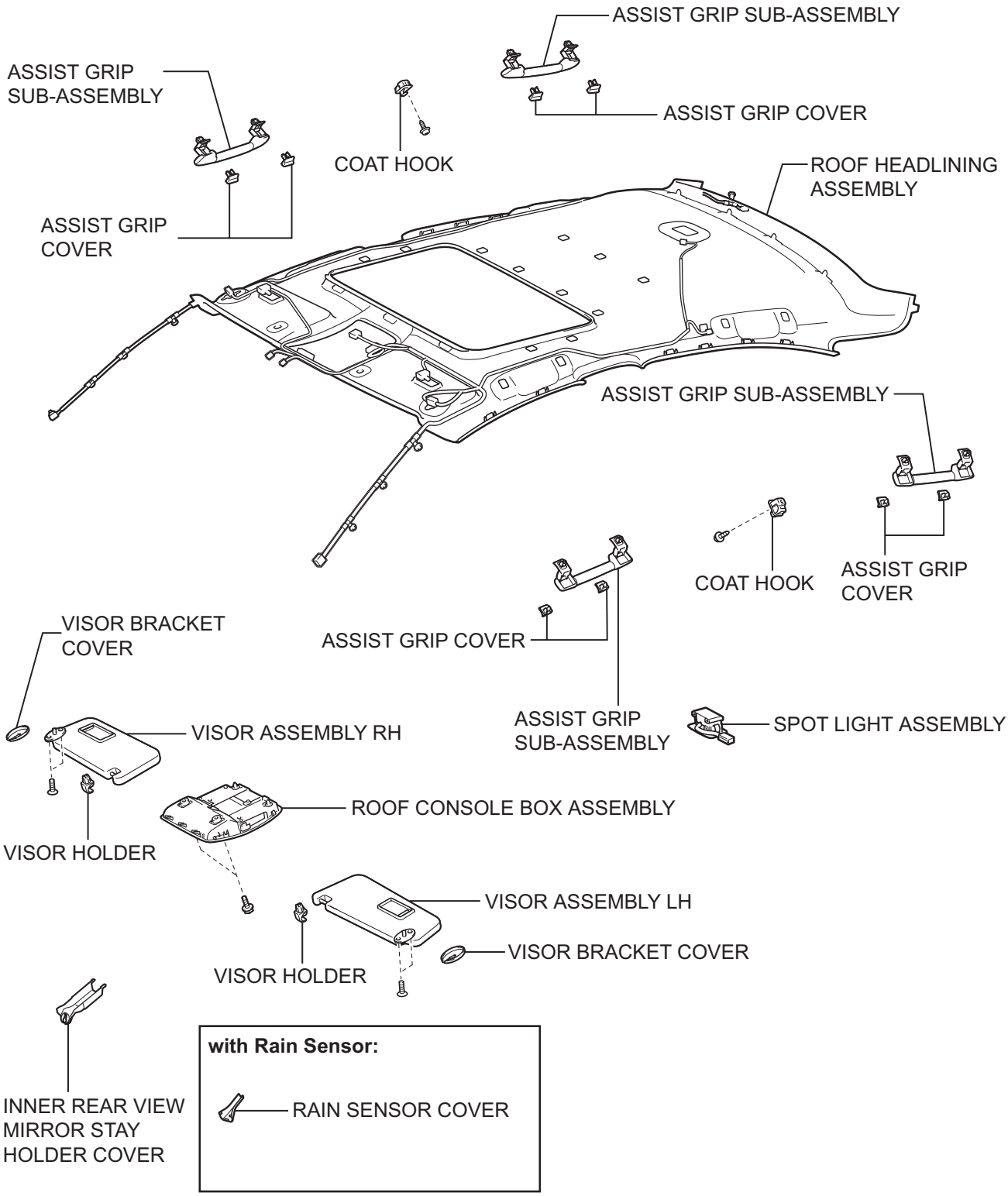

P

B147722E02

AV

for Glass Roof:

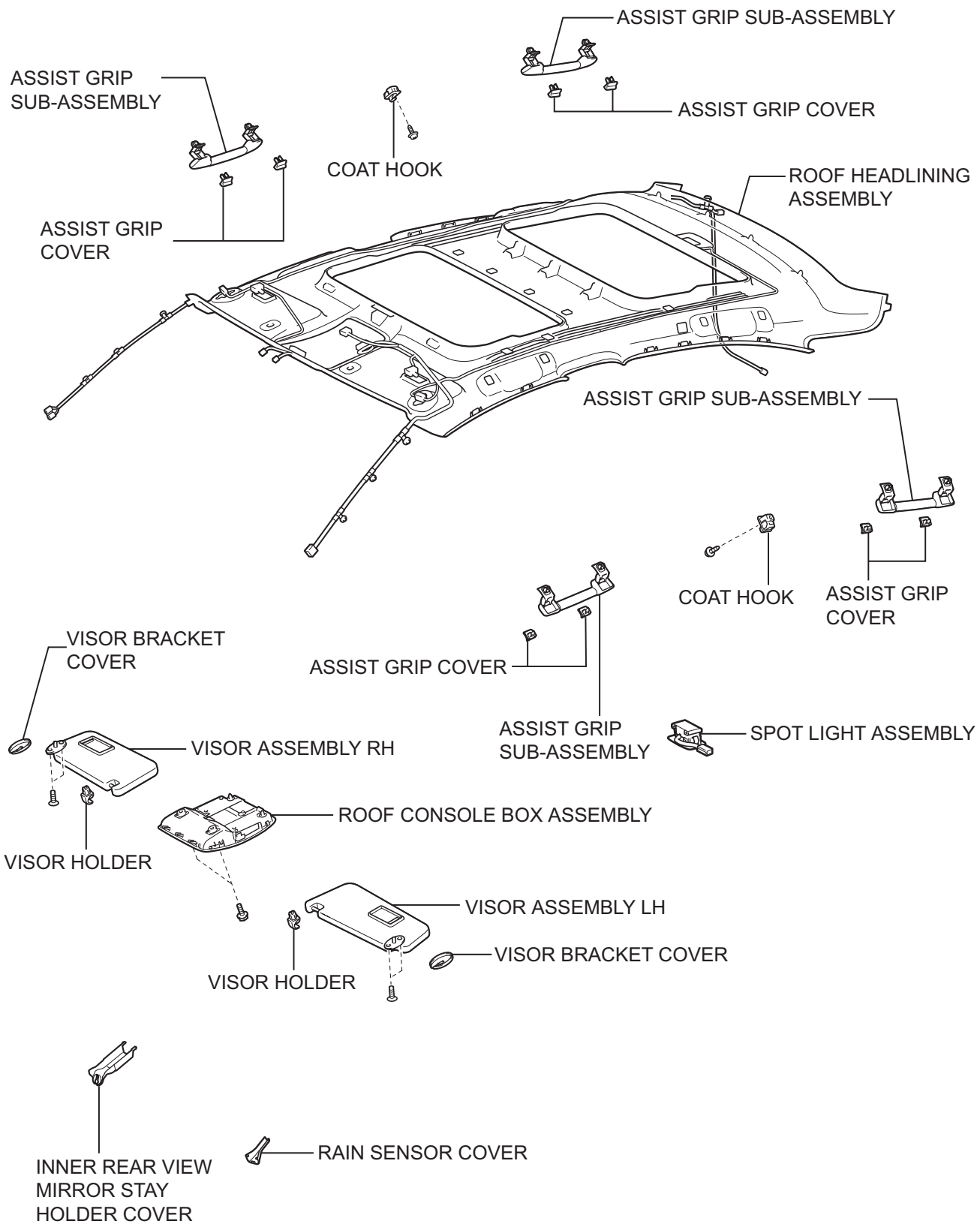

P

B147721E02

AV

without DVD Player:

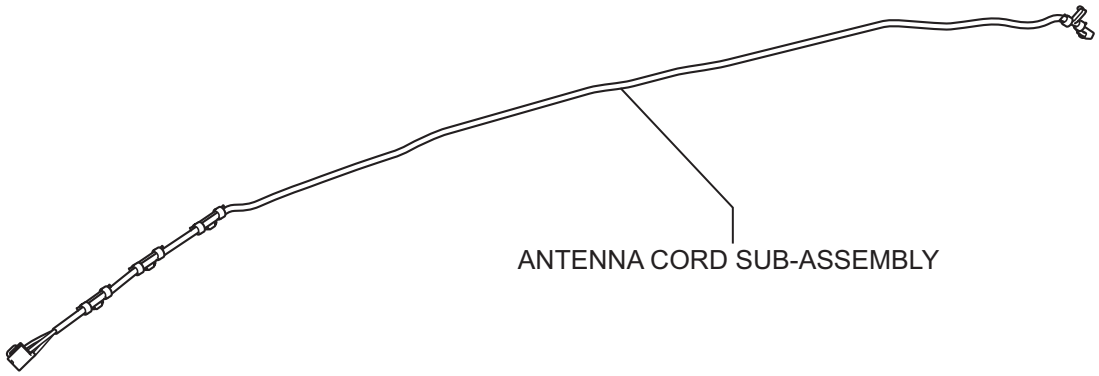

with DVD Player:

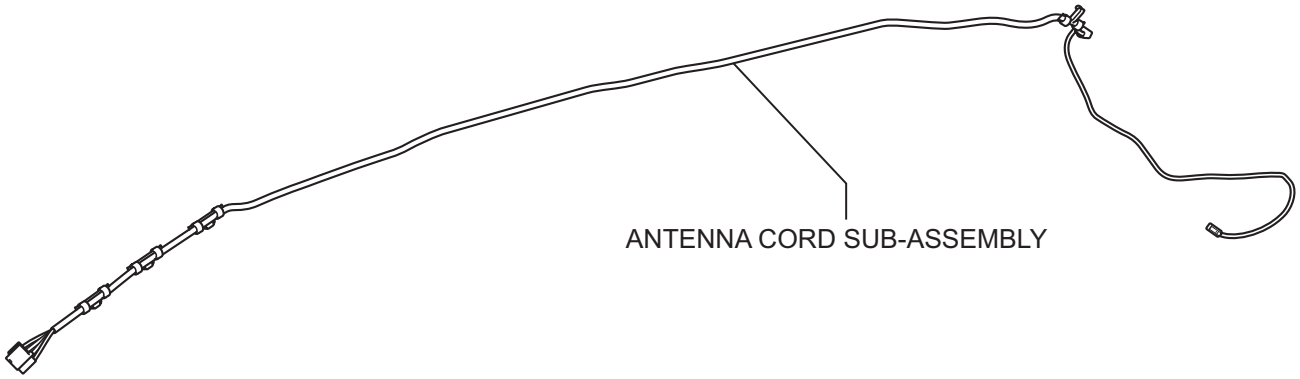

P

E132298E01

AMPLIFIER ANTENNA

COMPONENTS

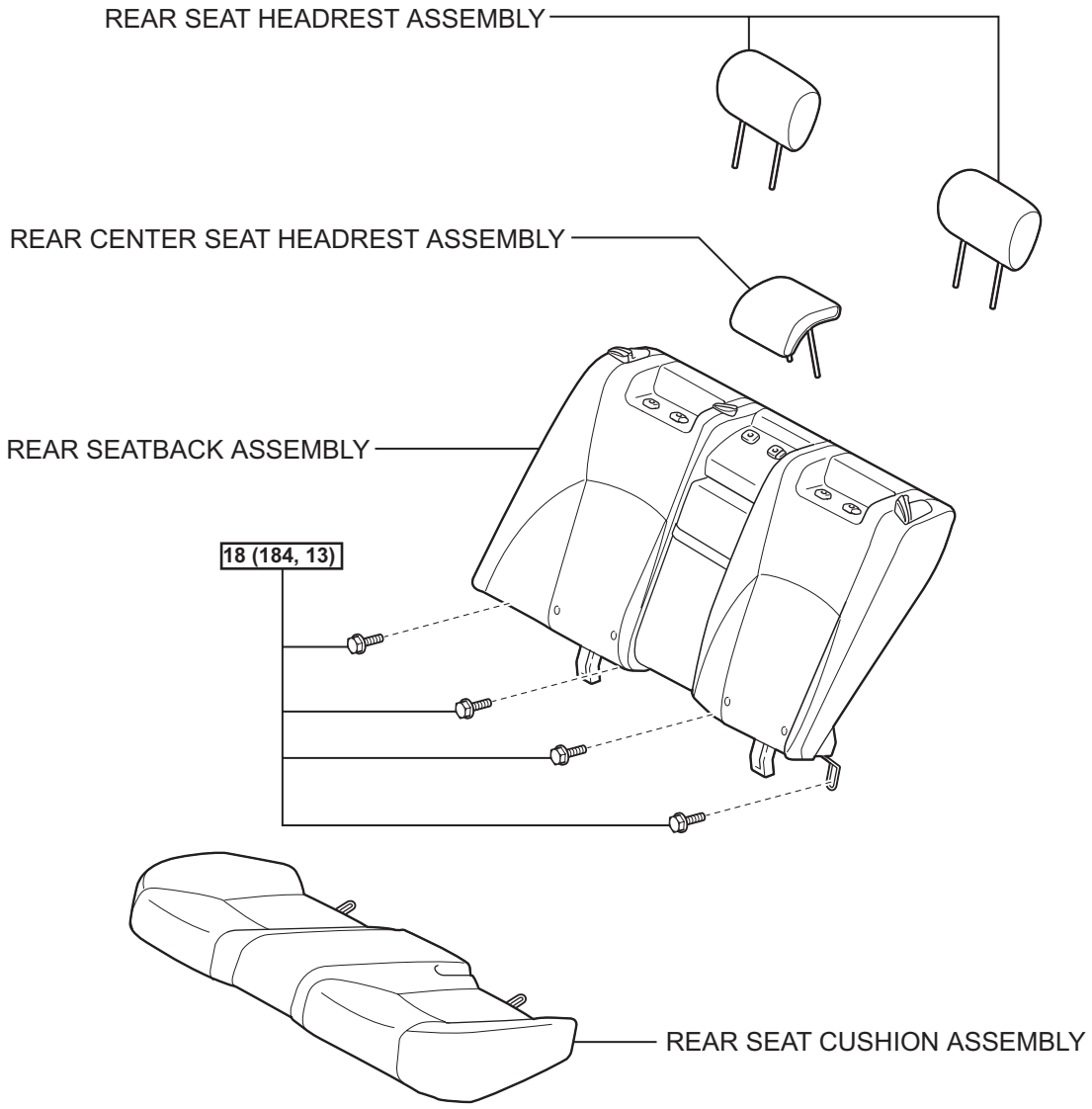

N*m (kgf*cm, ft.*lbf) : Specified torque

P

B145388E01

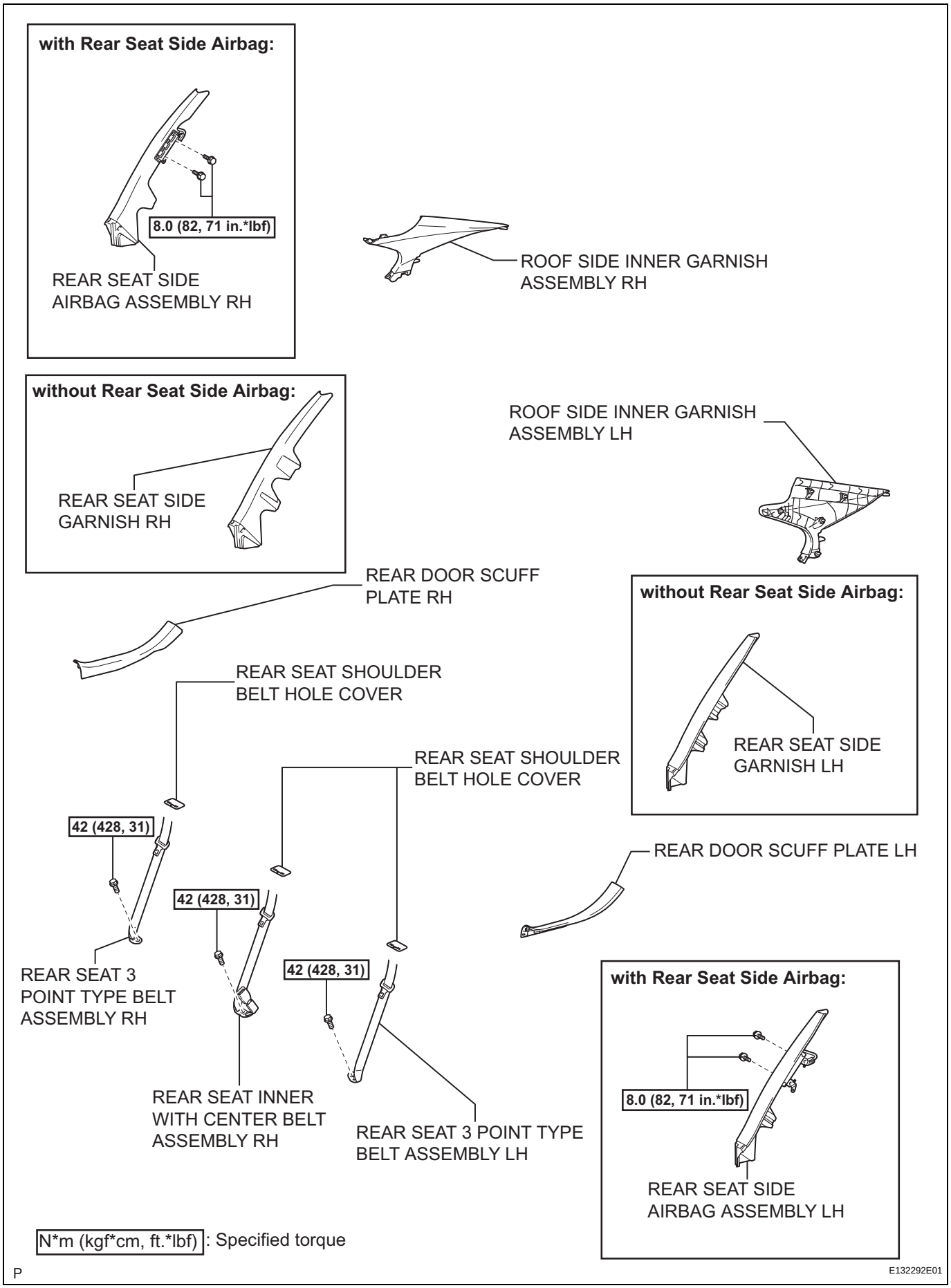
with Rear Seat Side Airbag:
8.0 (82, 71 in.*lbf)
REAR SEAT SIDE AIRBAG ASSEMBLY RH
ROOF SIDE INNER GARNISH ASSEMBLY RH
without Rear Seat Side Airbag:
REAR SEAT SIDE GARNISH RH
ROOF SIDE INNER GARNISH ASSEMBLY LH
REAR DOOR SCUFF PLATE RH
without Rear Seat Side Airbag:
REAR SEAT SIDE GARNISH LH
REAR SEAT SHOULDER BELT HOLE COVER
REAR SEAT SHOULDER BELT HOLE COVER
42 (428, 31)
REAR DOOR SCUFF PLATE LH
42 (428, 31)
42 (428, 31)
REAR SEAT 3 POINT TYPE BELT ASSEMBLY RH
with Rear Seat Side Airbag:
8.0 (82, 71 in.*lbf)
REAR SEAT INNER WITH CENTER BELT ASSEMBLY RH
REAR SEAT 3 POINT TYPE BELT ASSEMBLY LH
REAR SEAT SIDE AIRBAG ASSEMBLY LH
N*m (kgf*cm, ft.*lbf) : Specified torque
P
E132292E01

AV

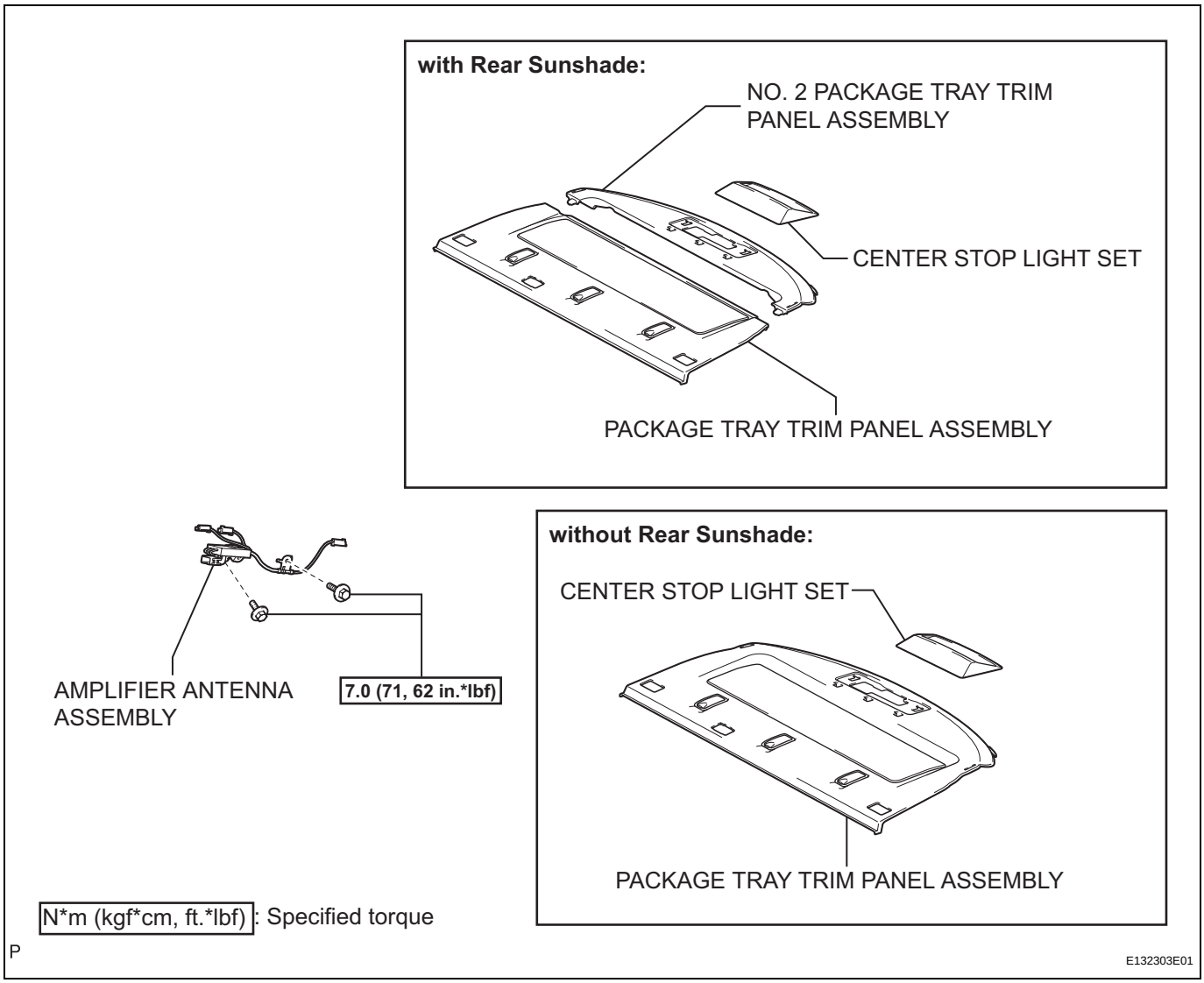
with Rear Sunshade:
NO. 2 PACKAGE TRAY TRIM PANEL ASSEMBLY
CENTER STOP LIGHT SET
PACKAGE TRAY TRIM PANEL ASSEMBLY
AMPLIFIER ANTENNA ASSEMBLY
7.0 (71, 62 in.*lbf)
without Rear Sunshade:
CENTER STOP LIGHT SET
PACKAGE TRAY TRIM PANEL ASSEMBLY
N*m (kgf*cm, ft.*lbf): Specified torque
P
E132303E01

AUDIO TERMINAL

COMPONENTS

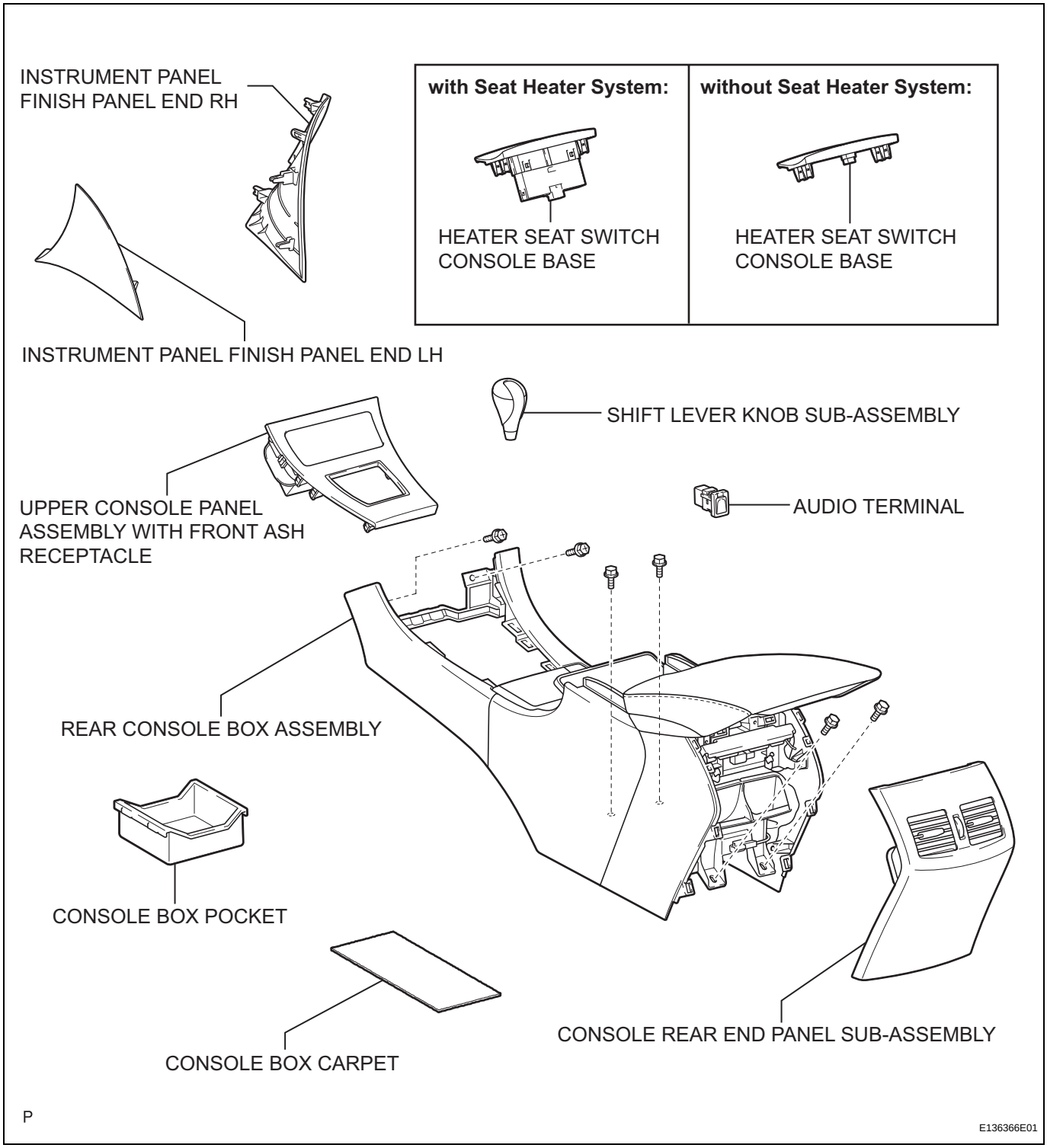

AV

REMOVAL

1. **REMOVE SHIFT LEVER KNOB SUB-ASSEMBLY (See page IP-16)**
2. **REMOVE INSTRUMENT PANEL FINISH PANEL END LH (See page IP-13)**
3. **REMOVE INSTRUMENT PANEL FINISH PANEL END RH (See page IP-15)**
4. **REMOVE UPPER CONSOLE PANEL ASSEMBLY WITH FRONT ASH RECEPTACLE (See page IP-16)**
5. **REMOVE HEATER SEAT SWITCH CONSOLE BASE (w/o Seat Heater System) (See page IP-17)**
6. **REMOVE HEATER SEAT SWITCH CONSOLE BASE (w/ Seat Heater System) (See page IP-18)**
7. **REMOVE CONSOLE BOX POCKET (See page IP-18)**
8. **REMOVE CONSOLE BOX CARPET (See page IP-18)**
9. **REMOVE CONSOLE REAR END PANEL SUB-ASSEMBLY (See page IP-19)**
10. **REMOVE REAR CONSOLE BOX ASSEMBLY (See page IP-19)**
11. **REMOVE AUDIO TERMINAL**
    (a) Disconnect the connector.

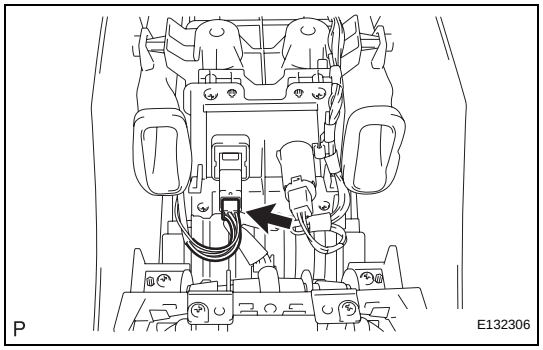

(b) Disengage the 2 claws and remove the audio terminal.

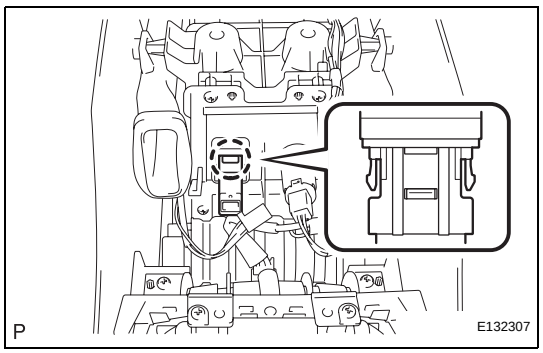

AV

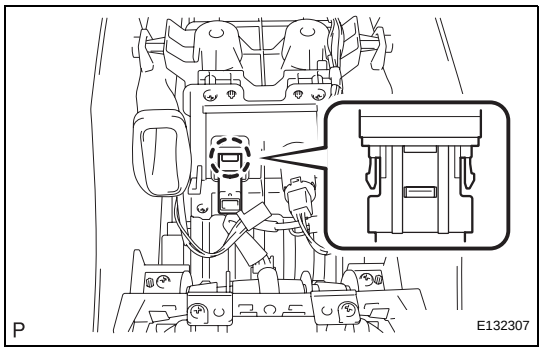

INSTALLATION

1. **INSTALL AUDIO TERMINAL**
   (a) Engage the 2 claws and install the audio terminal.

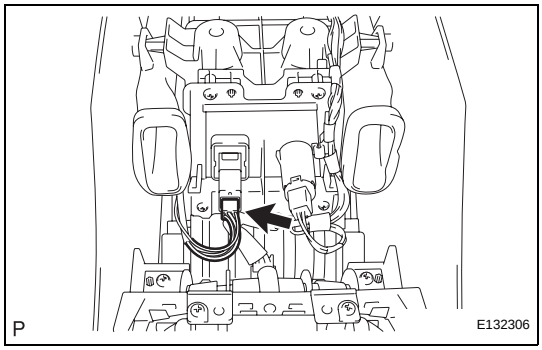

   (b) Connect the connector.

2. **INSTALL REAR CONSOLE BOX ASSEMBLY (See page IP-39)**
3. **INSTALL CONSOLE REAR END PANEL SUB-ASSEMBLY (See page IP-40)**
4. **INSTALL CONSOLE BOX CARPET (See page IP-41)**
5. **INSTALL CONSOLE BOX POCKET (See page IP-41)**
6. **INSTALL HEATER SEAT SWITCH CONSOLE BASE (w/o Seat Heater System) (See page IP-41)**
7. **INSTALL HEATER SEAT SWITCH CONSOLE BASE (w/ Seat Heater System) (See page IP-41)**
8. **INSTALL UPPER CONSOLE PANEL ASSEMBLY WITH FRONT ASH RECEPTACLE (See page IP-42)**
9. **INSTALL INSTRUMENT PANEL FINISH PANEL END RH (See page IP-44)**
10. **INSTALL INSTRUMENT PANEL FINISH PANEL END LH (See page IP-46)**
11. **INSTALL SHIFT LEVER KNOB SUB-ASSEMBLY (See page IP-42)**

NETWORK GATEWAY ECU

COMPONENTS

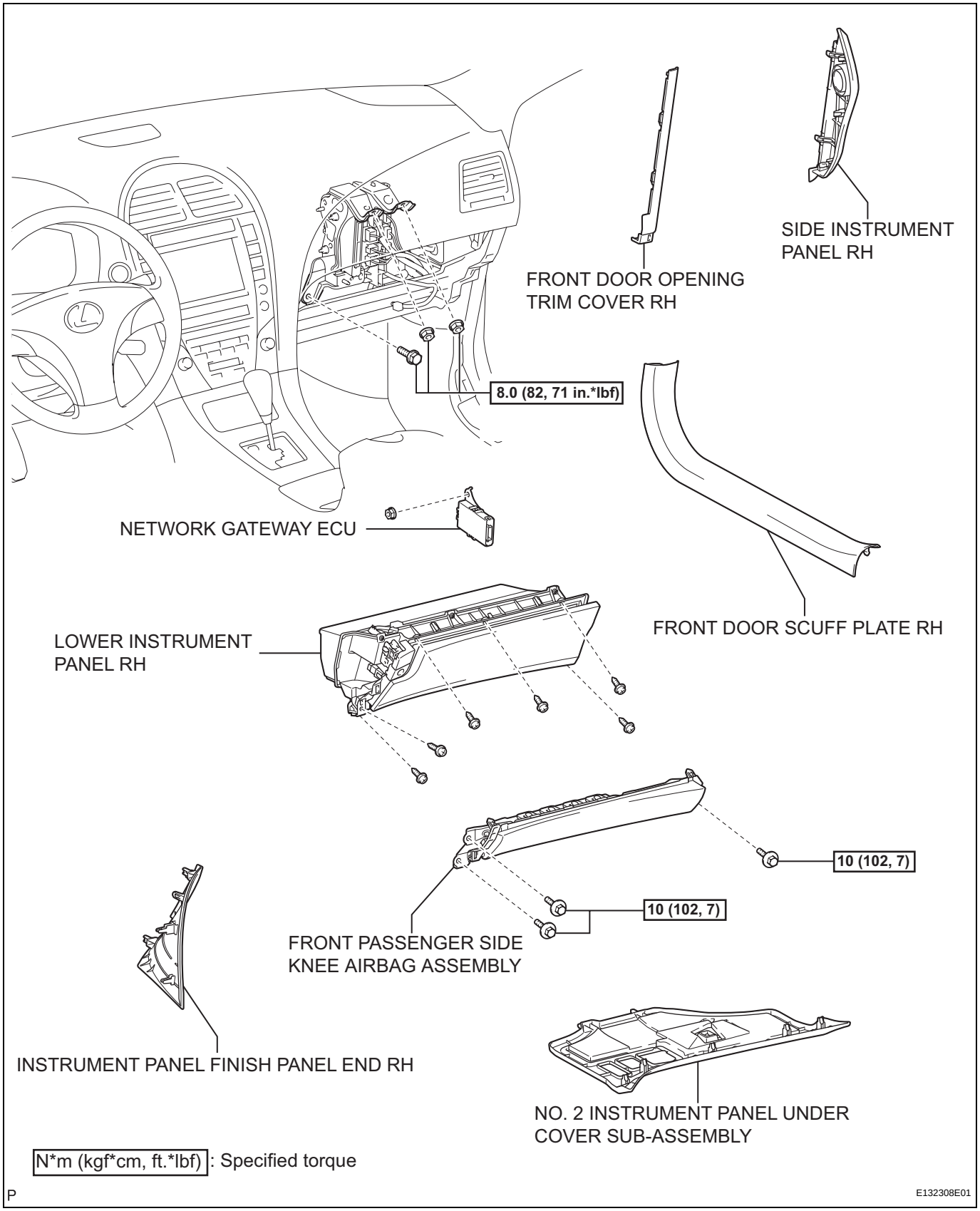

AV

REMOVAL

1. **DISCONNECT CABLE FROM NEGATIVE BATTERY TERMINAL**
   CAUTION:
   Wait for 90 seconds after disconnecting the cable to prevent airbag deployment (See page RS-1).

2. **REMOVE INSTRUMENT PANEL FINISH PANEL END RH (See page IP-15)**

3. **REMOVE FRONT DOOR SCUFF PLATE RH**
   HINT:
   Use the same procedure for the RH side and the LH side (See page IP-12).

4. **REMOVE FRONT DOOR OPENING TRIM COVER RH**
   HINT:
   Use the same procedure for the RH side and the LH side (See page IP-12).

5. **REMOVE SIDE INSTRUMENT PANEL RH (See page IP-15)**

6. **REMOVE NO. 2 INSTRUMENT PANEL UNDER COVER SUB-ASSEMBLY (See page IP-15)**

7. **REMOVE LOWER INSTRUMENT PANEL RH (See page IP-16)**

8. **REMOVE FRONT PASSENGER SIDE KNEE AIRBAG ASSEMBLY (See page RS-396)**

9. **REMOVE NETWORK GATEWAY ECU**
   (a) Remove the 2 nuts and the bolt and disengage the certification ECU with instrument panel wire.

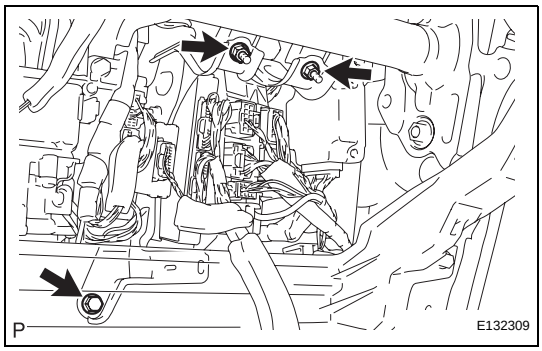

   (b) Turn the certification ECU with instrument panel wire in the direction indicated by the arrow.
   NOTICE:
   Do not apply excessive force.

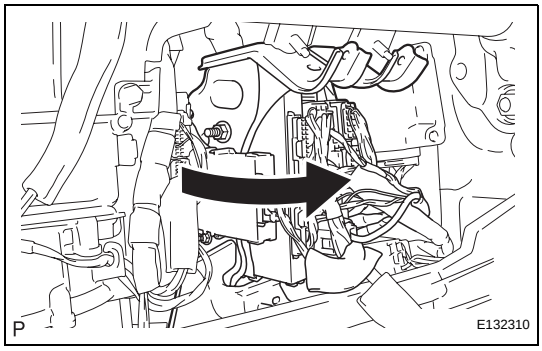

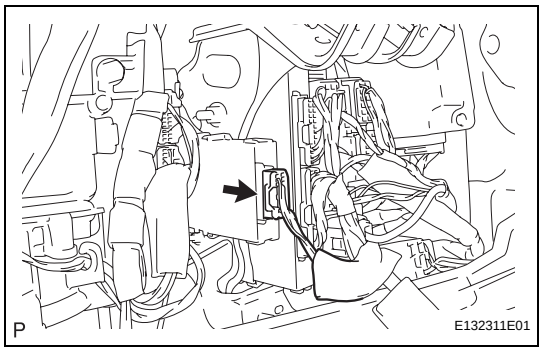

(c) Disconnect the connector.

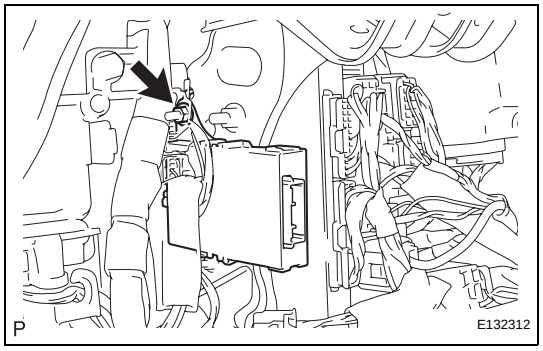

(d) Remove the nut and network gateway ECU.

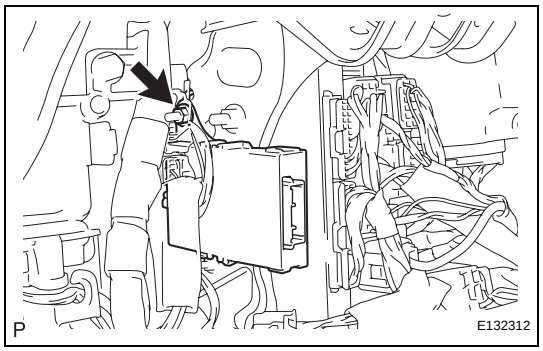

INSTALLATION

AV

1. INSTALL NETWORK GATEWAY ECU

(a) Install the network gateway ECU with the nut.

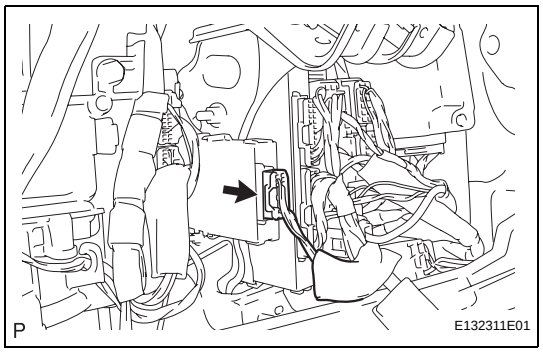

(b) Connect the connector.

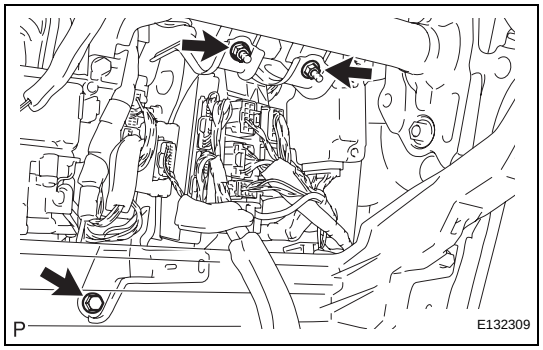

(c) Install the certification ECU with instrument panel wire with the bolt and 2 nuts.
Torque: 8.0 N*m (82 kgf*cm, 71 in.*lbf)

2. INSTALL FRONT PASSENGER SIDE KNEE AIRBAG ASSEMBLY (See page RS-396)

3. INSTALL LOWER INSTRUMENT PANEL RH (See page IP-42)

4. INSTALL SIDE INSTRUMENT PANEL RH (See page IP-43)

5. **INSTALL FRONT DOOR OPENING TRIM COVER RH**
   HINT:
   Use the same procedure for the RH side and the LH side (See page IP-47).

6. **INSTALL FRONT DOOR SCUFF PLATE RH**
   HINT:
   Use the same procedure for the RH side and the LH side (See page IP-47).

7. **INSTALL NO. 2 INSTRUMENT PANEL UNDER COVER SUB-ASSEMBLY (See page IP-44)**

8. **INSTALL INSTRUMENT PANEL FINISH PANEL END RH (See page IP-44)**

9. **CONNECT CABLE TO NEGATIVE BATTERY TERMINAL**

10. **PERFORM INITIALIZATION**
    NOTICE:
    Some systems need initialization after reconnecting the cable to the negative battery terminal (See page IN-33).

11. **INSPECT FRONT PASSENGER SIDE KNEE AIRBAG ASSEMBLY (See page RS-395)**

12. **INSPECT SRS WARNING LIGHT**
    (See page RS-37)

STEERING PAD SWITCH

COMPONENTS

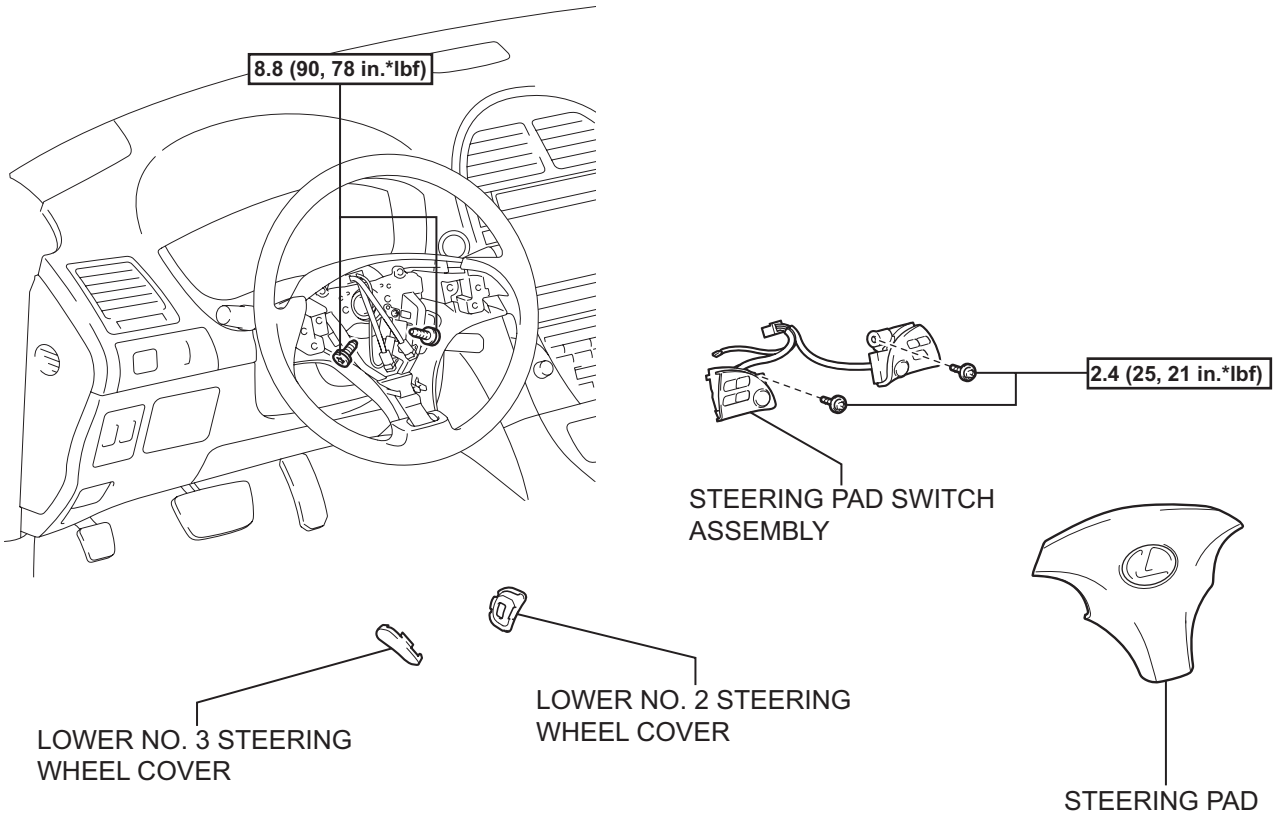

N*m (kgf*cm, ft.*lbf) : Specified torque

P

E132313E01

AV

REMOVAL

1. **DISCONNECT CABLE FROM NEGATIVE BATTERY TERMINAL**
   CAUTION:
   Wait for 90 seconds after disconnecting the cable to prevent airbag deployment (See page RS-1).
2. **REMOVE LOWER NO. 3 STEERING WHEEL COVER (See page RS-367)**
3. **REMOVE LOWER NO. 2 STEERING WHEEL COVER (See page RS-367)**
4. **REMOVE STEERING PAD (See page RS-367)**
5. **REMOVE STEERING PAD SWITCH ASSEMBLY**
   (a) Disconnect the pad switch connector from the spiral cable.
   (b) Remove the 2 screws.
   (c) Disengage the 4 claws and remove the steering pad switch assembly.

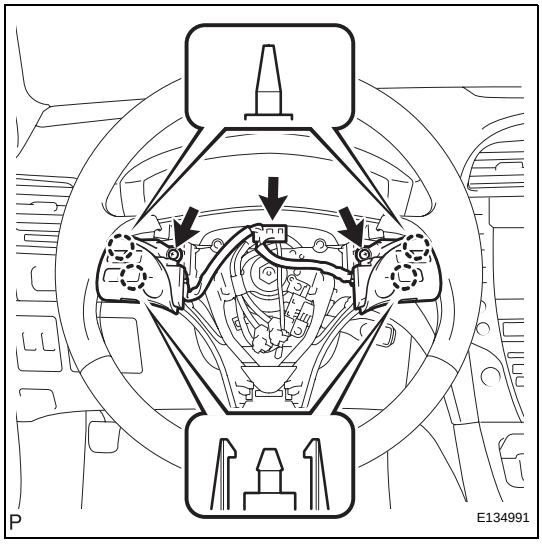

MICROPHONE

COMPONENTS

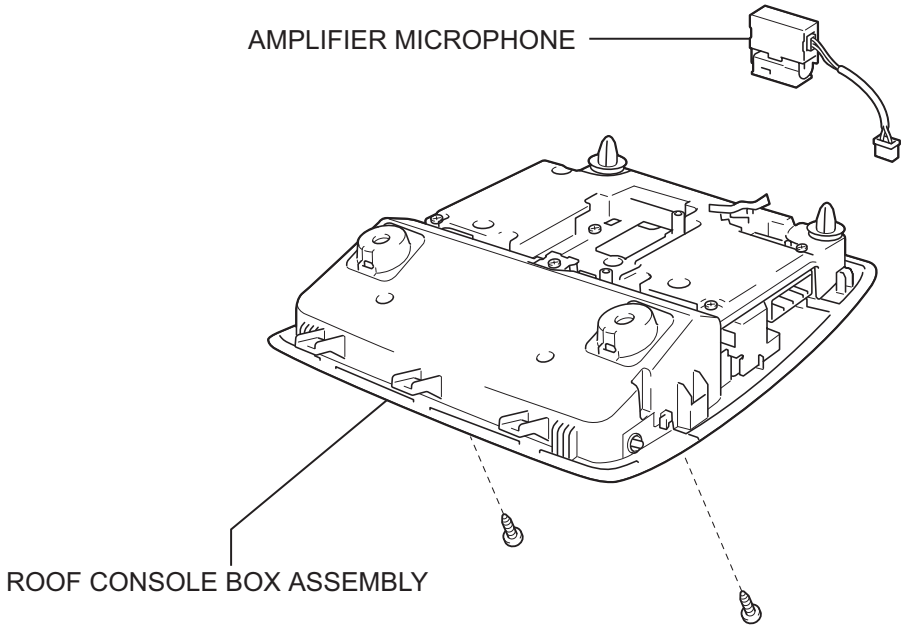

P

E132316E01

REMOVAL

1. **REMOVE ROOF CONSOLE BOX ASSEMBLY (See page IR-44)**

2. **REMOVE AMPLIFIER MICROPHONE**
   (a) Disconnect the connector.
   (b) Disengage the 2 claws and remove the amplifier microphone.

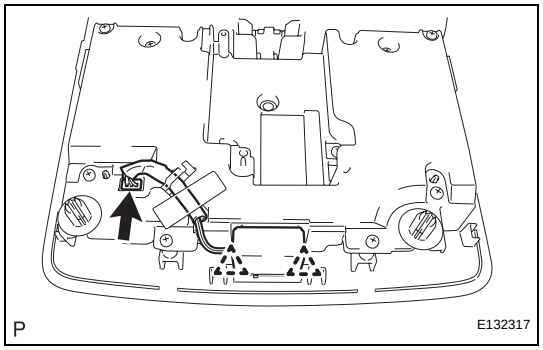

INSTALLATION

1. **INSTALL AMPLIFIER MICROPHONE**
   (a) Engage the 2 claws and install the amplifier microphone.
   (b) Connect the connector.

2. **INSTALL ROOF CONSOLE BOX ASSEMBLY (See page IR-60)**

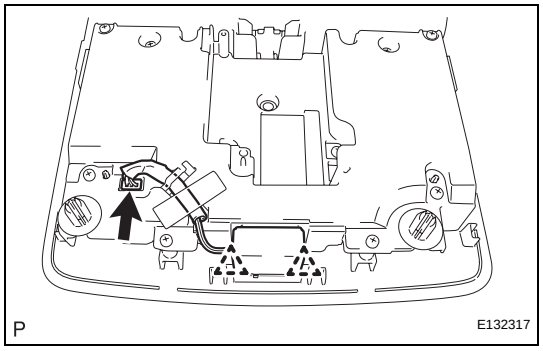

WINDOW GLASS ANTENNA WIRE

ON-VEHICLE INSPECTION

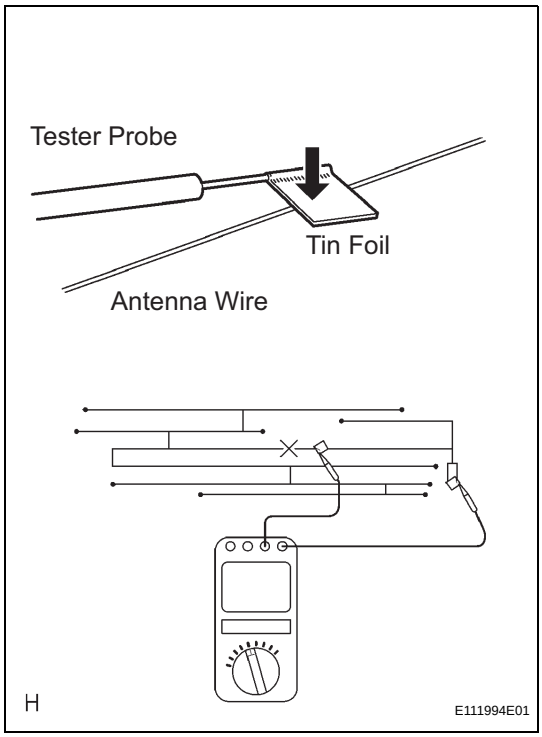

1. INSPECT WINDOW GLASS ANTENNA WIRE

(a) Check for continuity of the antenna.

HINT:

Check for continuity at the center of each antenna wire as shown in the illustration.

NOTICE:

- **When cleaning the glass, wipe it in the direction of the wire with a soft dry cloth. Take care not to damage the wire. Do not use detergents or glass cleaners with abrasive ingredients.**
- **When measuring voltage, wrap a piece of tin foil around the tip of the negative probe and press the foil against the wire with your finger, as shown in the illustration.**

OK:

There is continuity in the antenna.

If the result is not specified, repair the window glass antenna wire.

AV

REPAIR

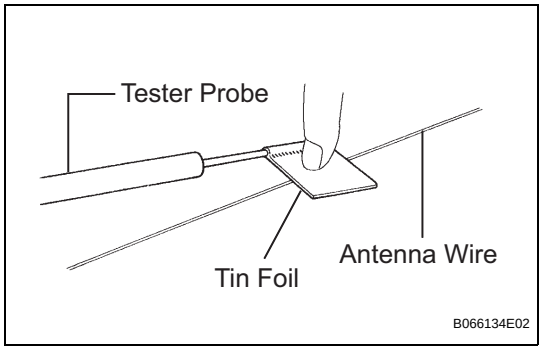

1. INSPECT WINDOW GLASS ANTENNA WIRE

NOTICE:

- **When cleaning the glass, wipe it in the direction of the wire with a soft dry cloth. Take care not to damage the wire. Do not use detergents or glass cleaners with abrasive ingredients.**
- **When measuring voltage, wrap a piece of tin foil around the tip of the negative probe and press the foil against the wire with your finger, as shown in the illustration.**

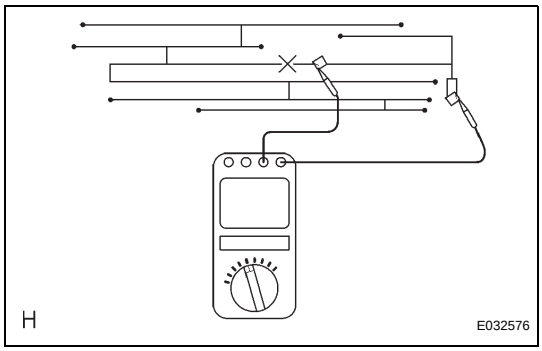

(a) Check the voltage at the center of each wire, as shown in the illustration.

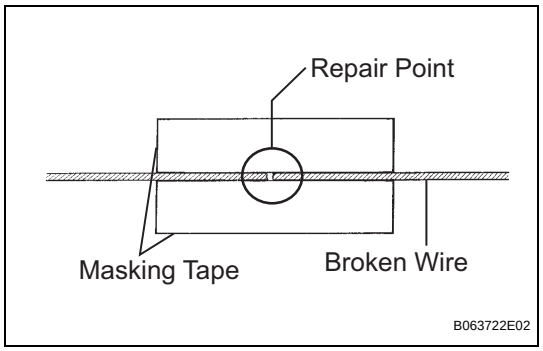

2. REPAIR WINDOW GLASS ANTENNA WIRE

(a) Clean the broken wire tips with grease, wax and silicone remover.

(b) Place masking tape along both sides of the wire to be repaired.

(c) Thoroughly mix the repair agent (Dupont paste No. 4817 or equivalent).

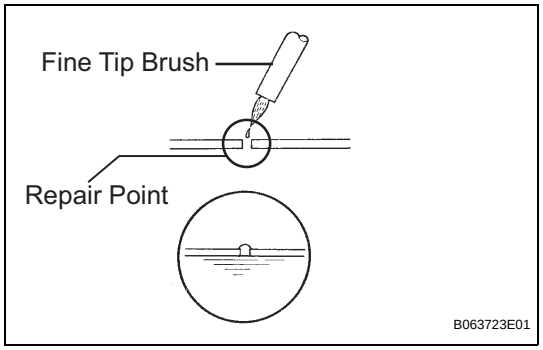

(d) Using a fine tip brush, apply a small amount of the repair agent to the wire.

(e) After a few minutes, remove the masking tape.
NOTICE:
Do not repair the antenna wire for at least 24 hours.

NAVIGATION SYSTEM

PRECAUTION

NOTICE:
Some systems need to be initialized after reconnecting the negative (-) battery terminal (See page IN-33).

PARTS LOCATION

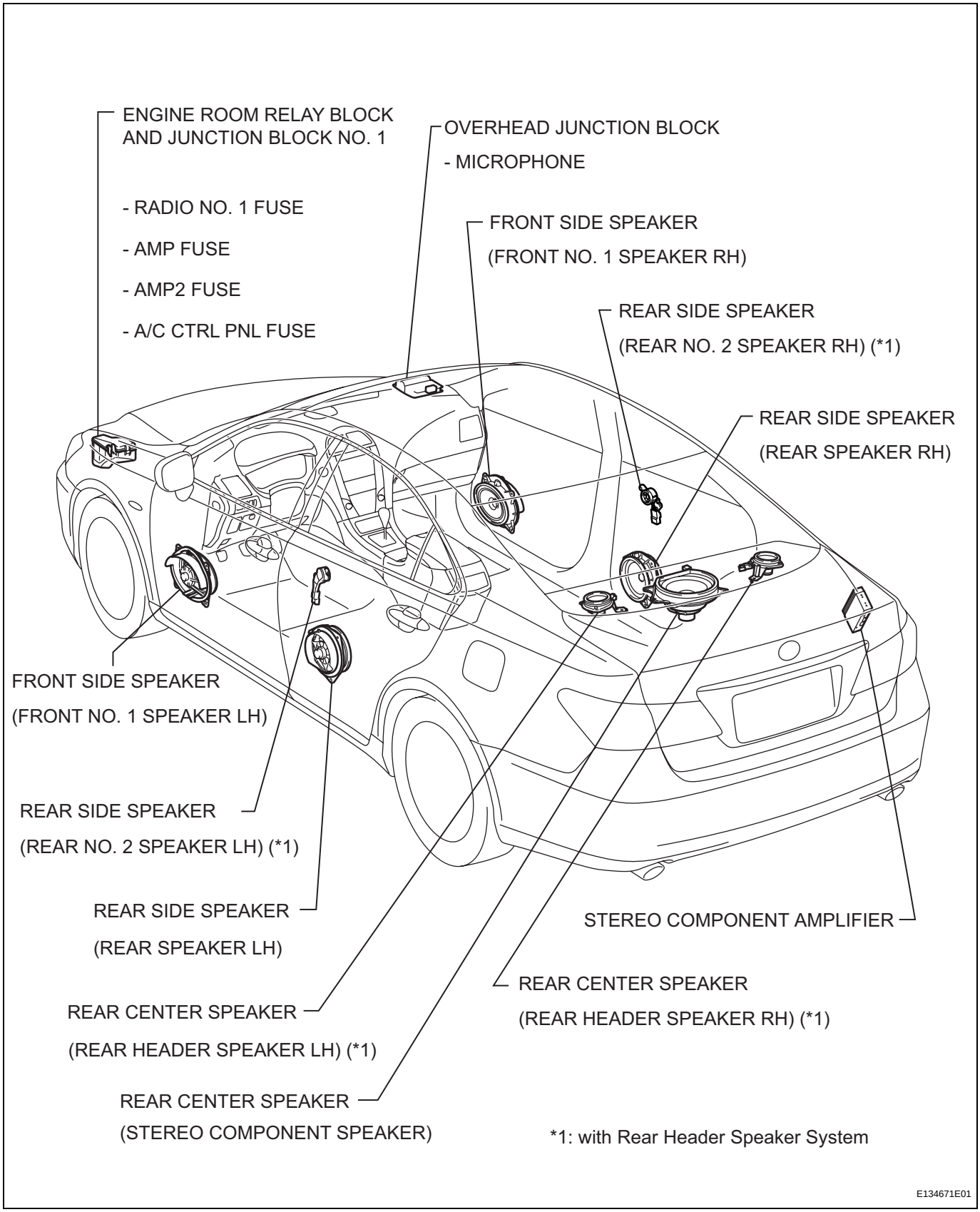

NS

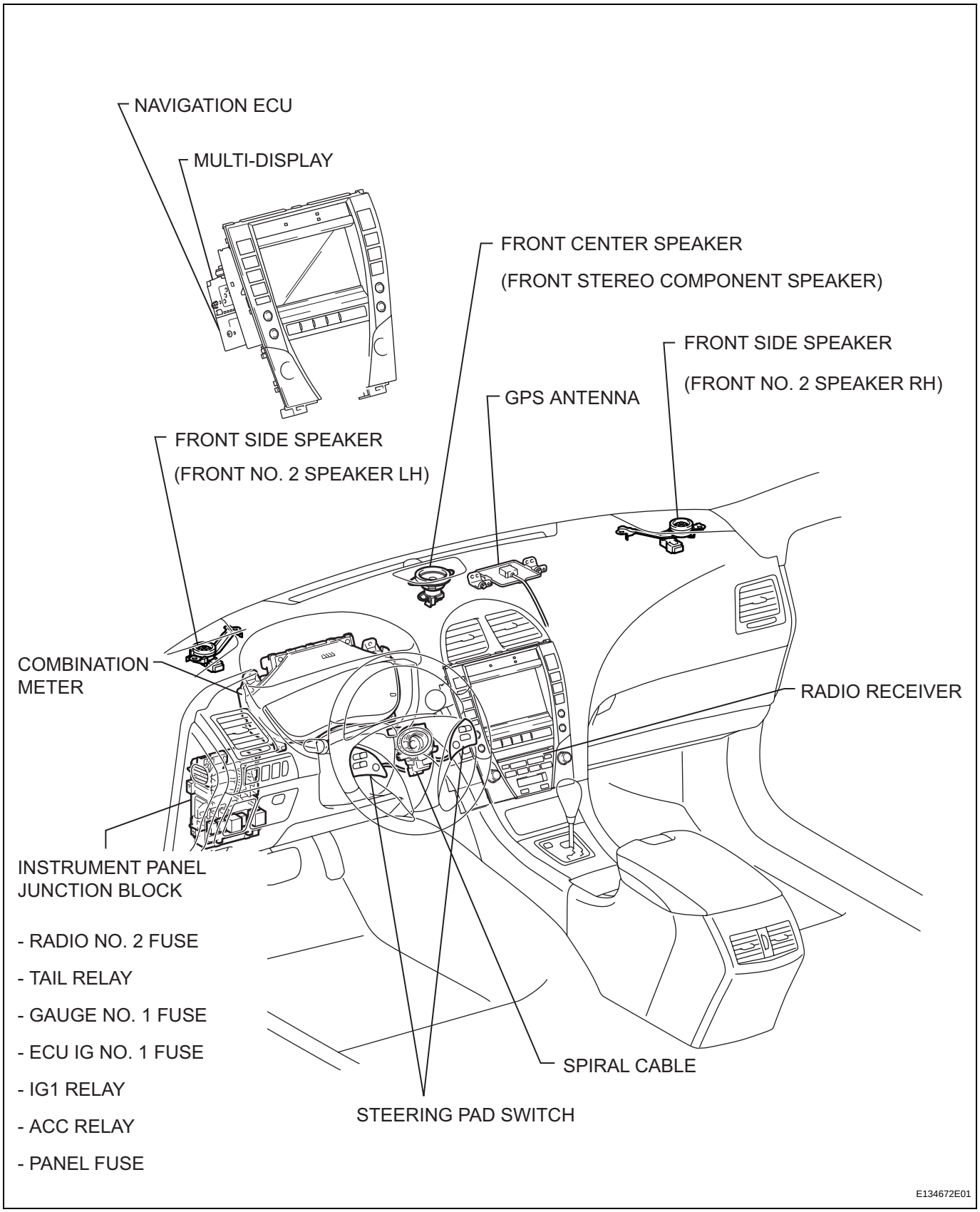
NAVIGATION ECU
MULTI-DISPLAY
FRONT CENTER SPEAKER
(FRONT STEREO COMPONENT SPEAKER)
FRONT SIDE SPEAKER
(FRONT NO. 2 SPEAKER RH)
GPS ANTENNA
FRONT SIDE SPEAKER
(FRONT NO. 2 SPEAKER LH)
COMBINATION METER
RADIO RECEIVER
INSTRUMENT PANEL JUNCTION BLOCK
- RADIO NO. 2 FUSE
- TAIL RELAY
- GAUGE NO. 1 FUSE
- ECU IG NO. 1 FUSE
- IG1 RELAY
- ACC RELAY
- PANEL FUSE
SPIRAL CABLE
STEERING PAD SWITCH
E134672E01

NS

MULTI-DISPLAY

COMPONENTS

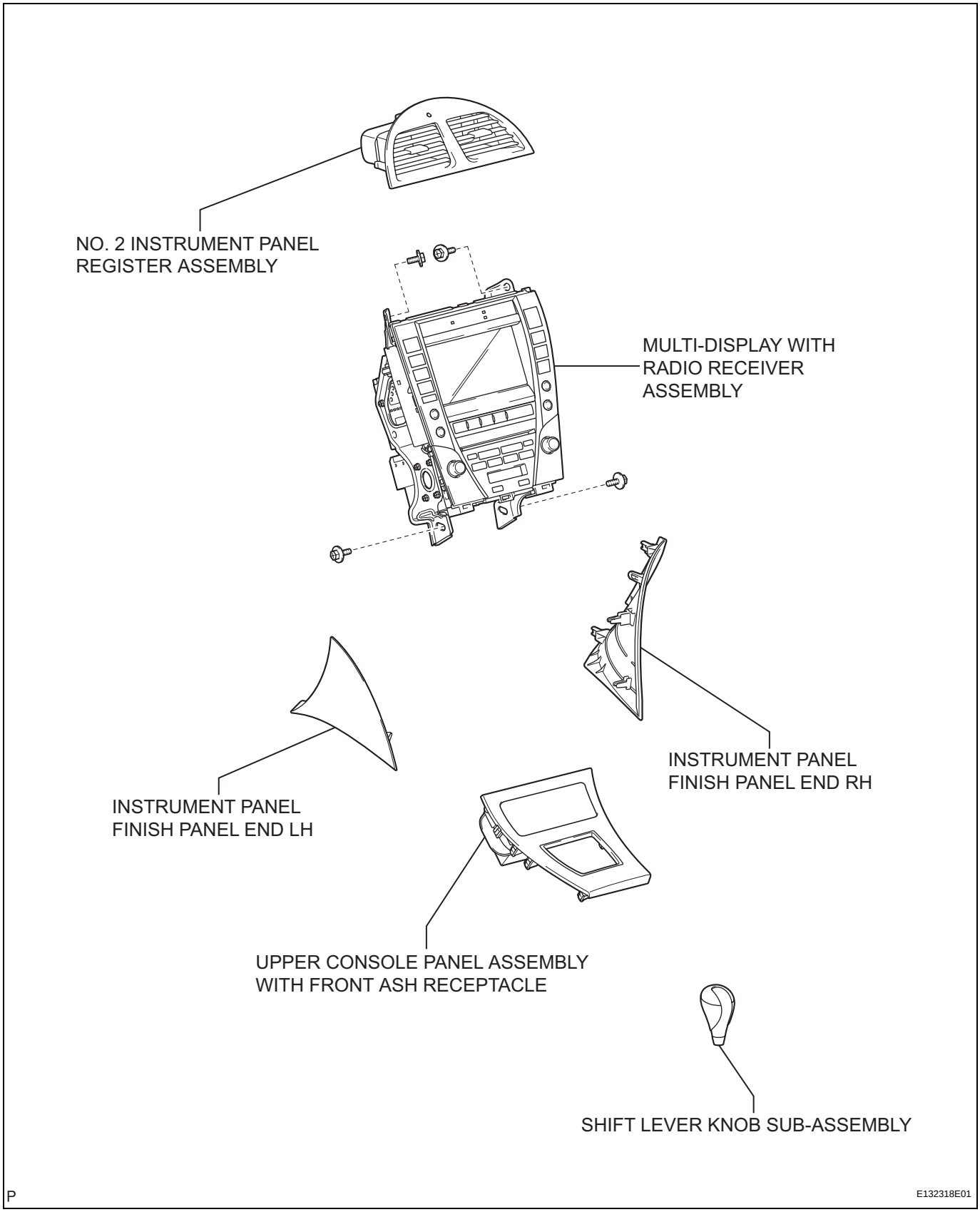

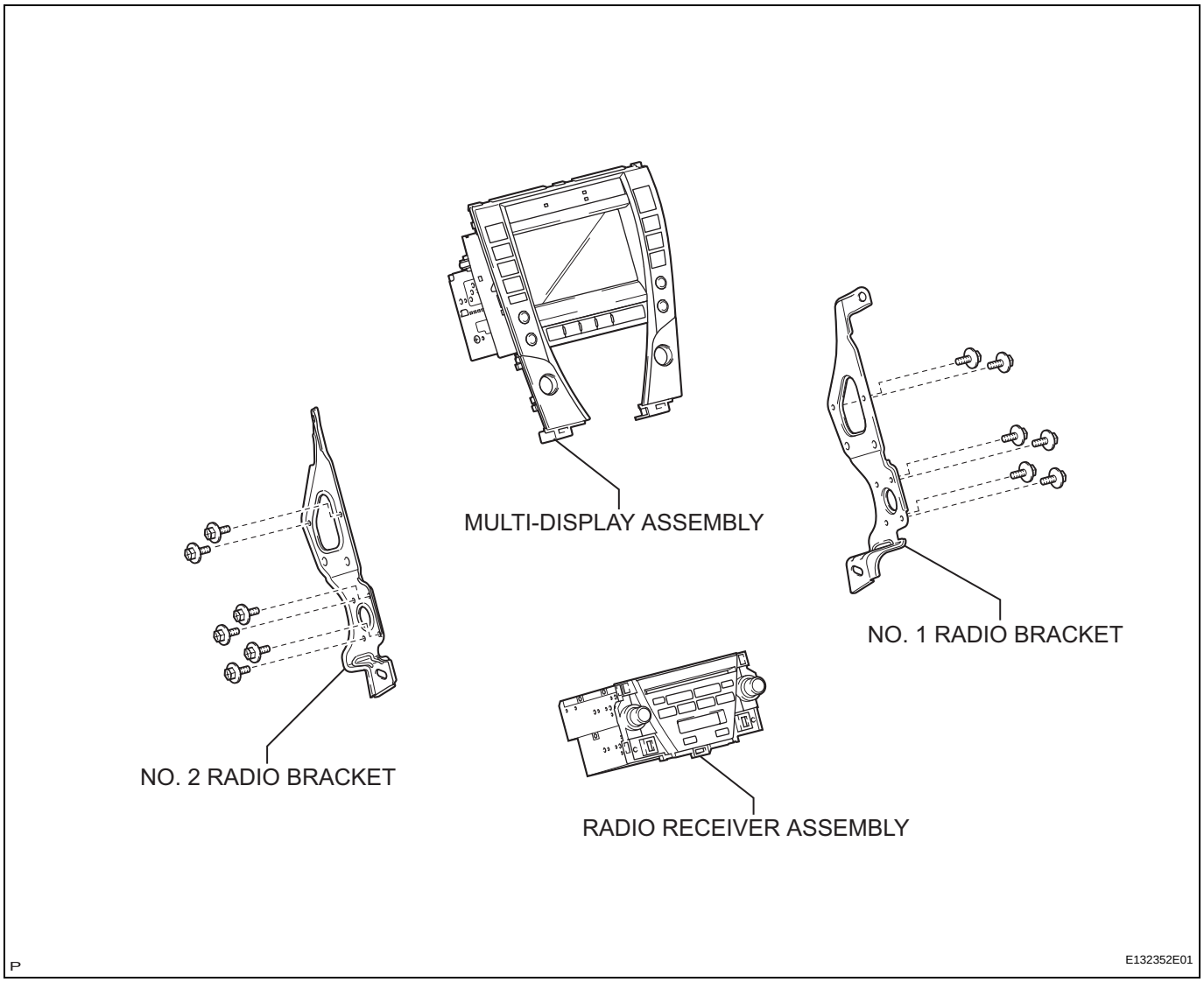
MULTI-DISPLAY ASSEMBLY
NO. 1 RADIO BRACKET
NO. 2 RADIO BRACKET
RADIO RECEIVER ASSEMBLY
P
E132352E01

NAVIGATION ECU

COMPONENTS

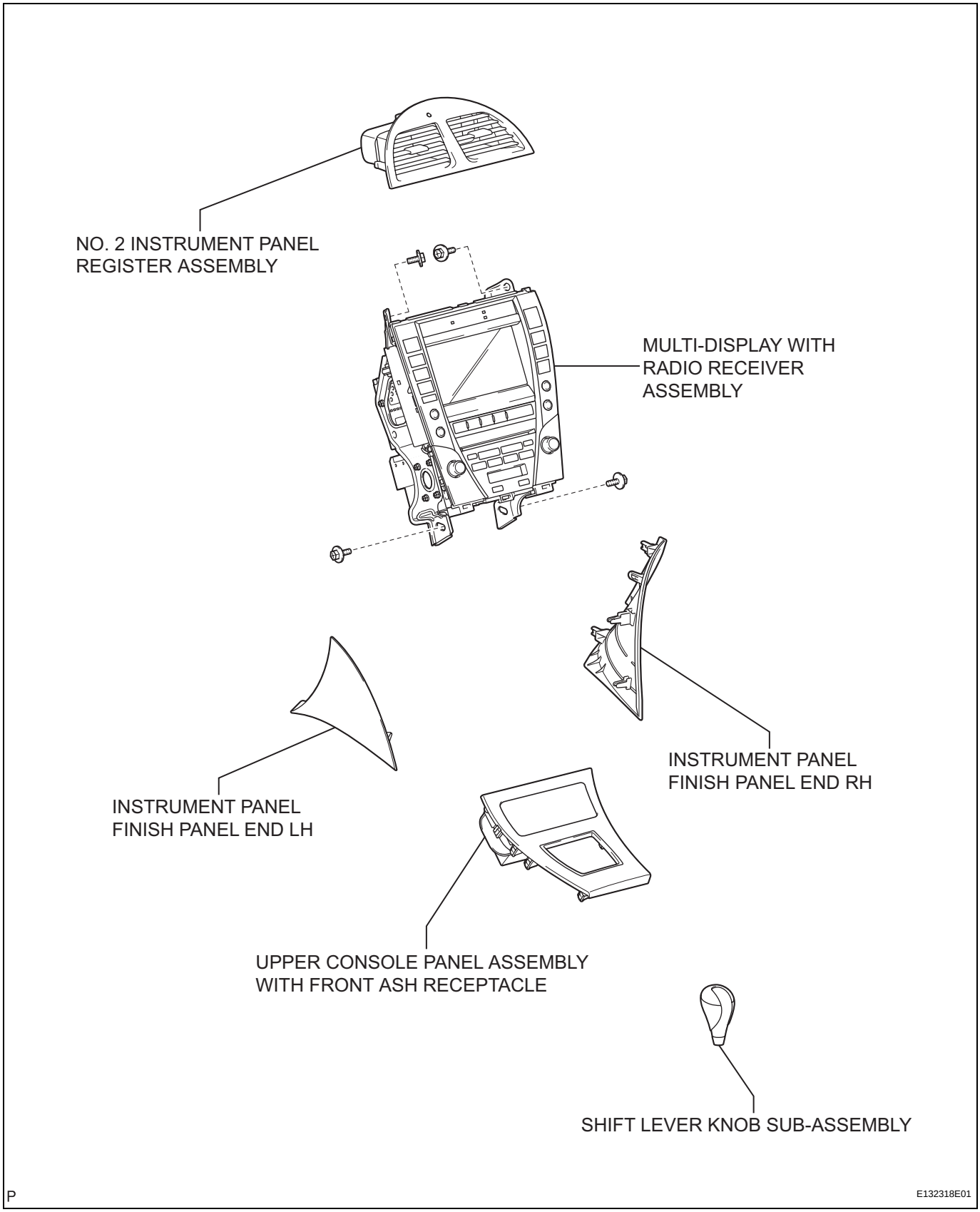

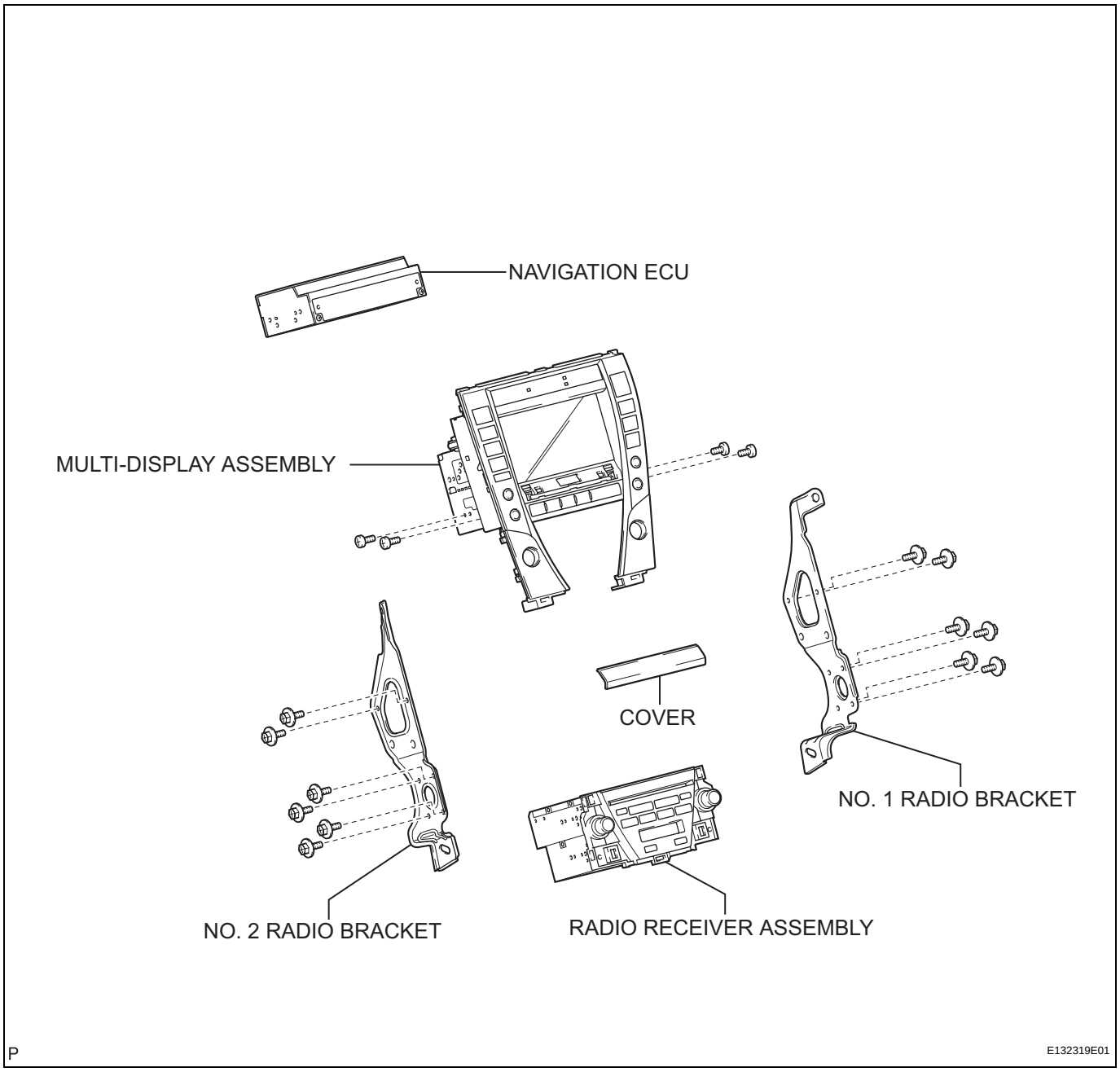
NAVIGATION ECU
MULTI-DISPLAY ASSEMBLY
COVER
NO. 1 RADIO BRACKET
NO. 2 RADIO BRACKET
RADIO RECEIVER ASSEMBLY
P
E132319E01

NAVIGATION ANTENNA

COMPONENTS

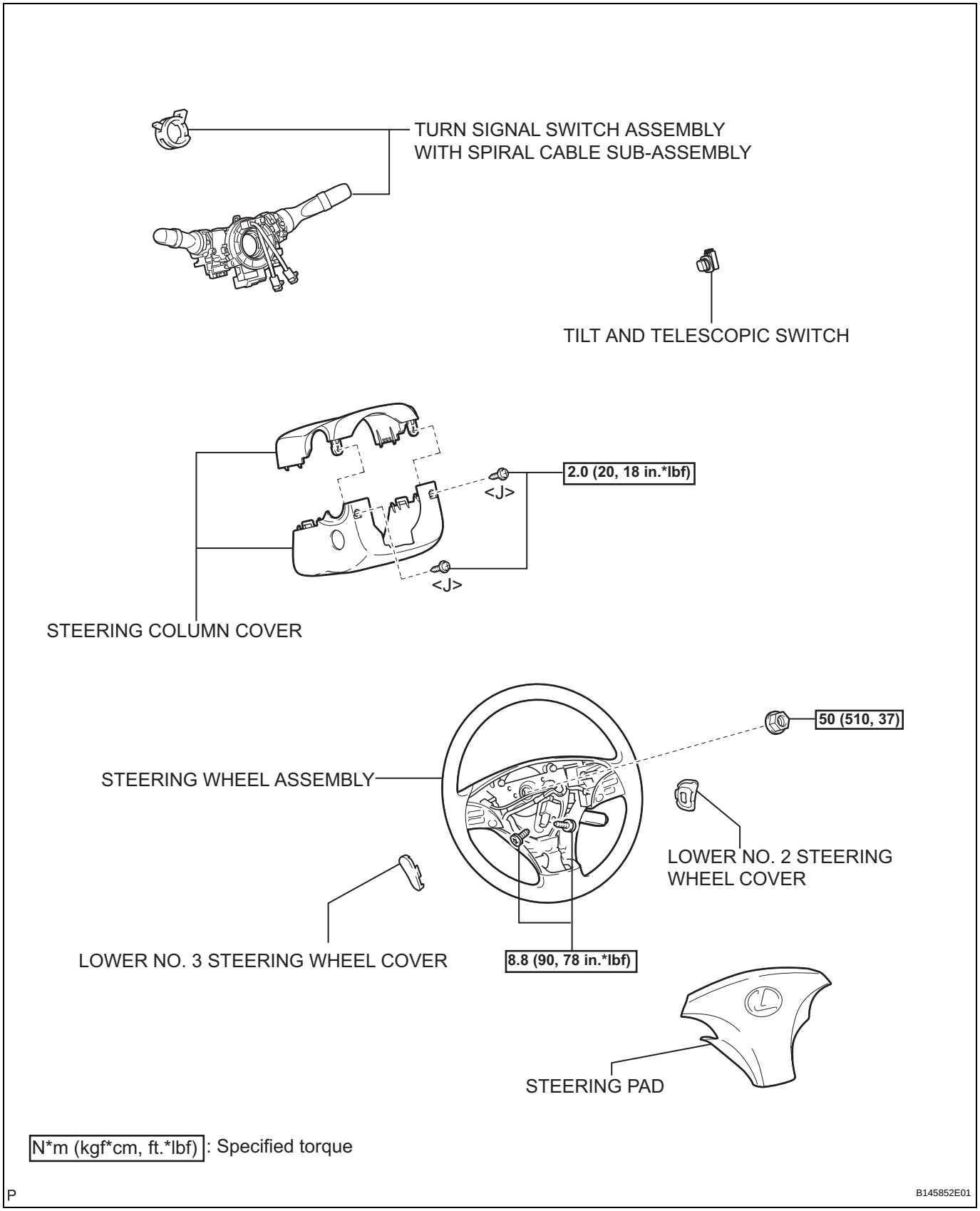

NS

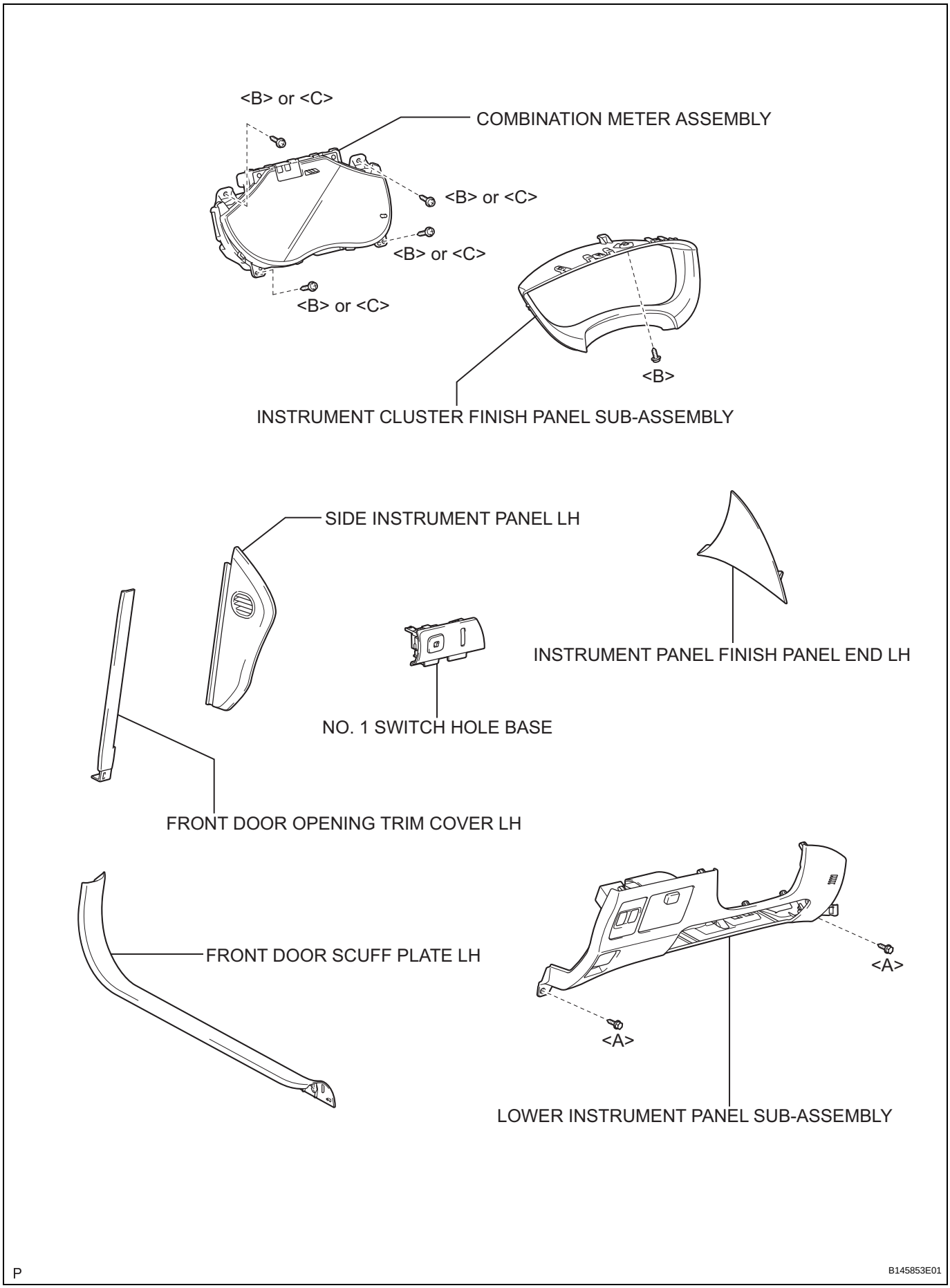
<B> or <C>
COMBINATION METER ASSEMBLY
<B> or <C>
<B> or <C>
<B> or <C>
<B>
INSTRUMENT CLUSTER FINISH PANEL SUB-ASSEMBLY
SIDE INSTRUMENT PANEL LH
INSTRUMENT PANEL FINISH PANEL END LH
NO. 1 SWITCH HOLE BASE
FRONT DOOR OPENING TRIM COVER LH
FRONT DOOR SCUFF PLATE LH
<A>
<A>
LOWER INSTRUMENT PANEL SUB-ASSEMBLY
P
B145853E01

NS

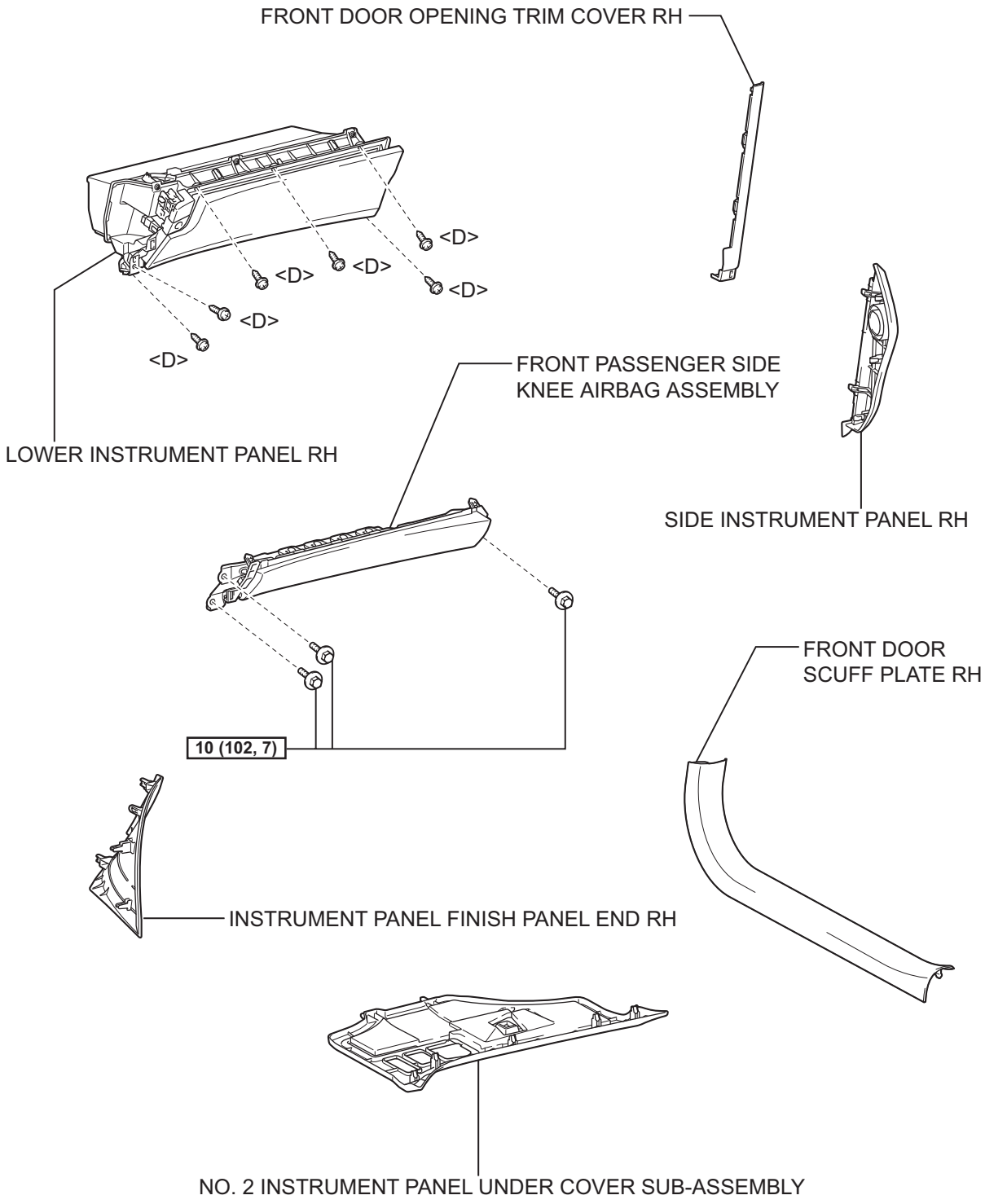

N*m (kgf*cm, ft.*lbf) : Specified torque

P

B145855E01

NS

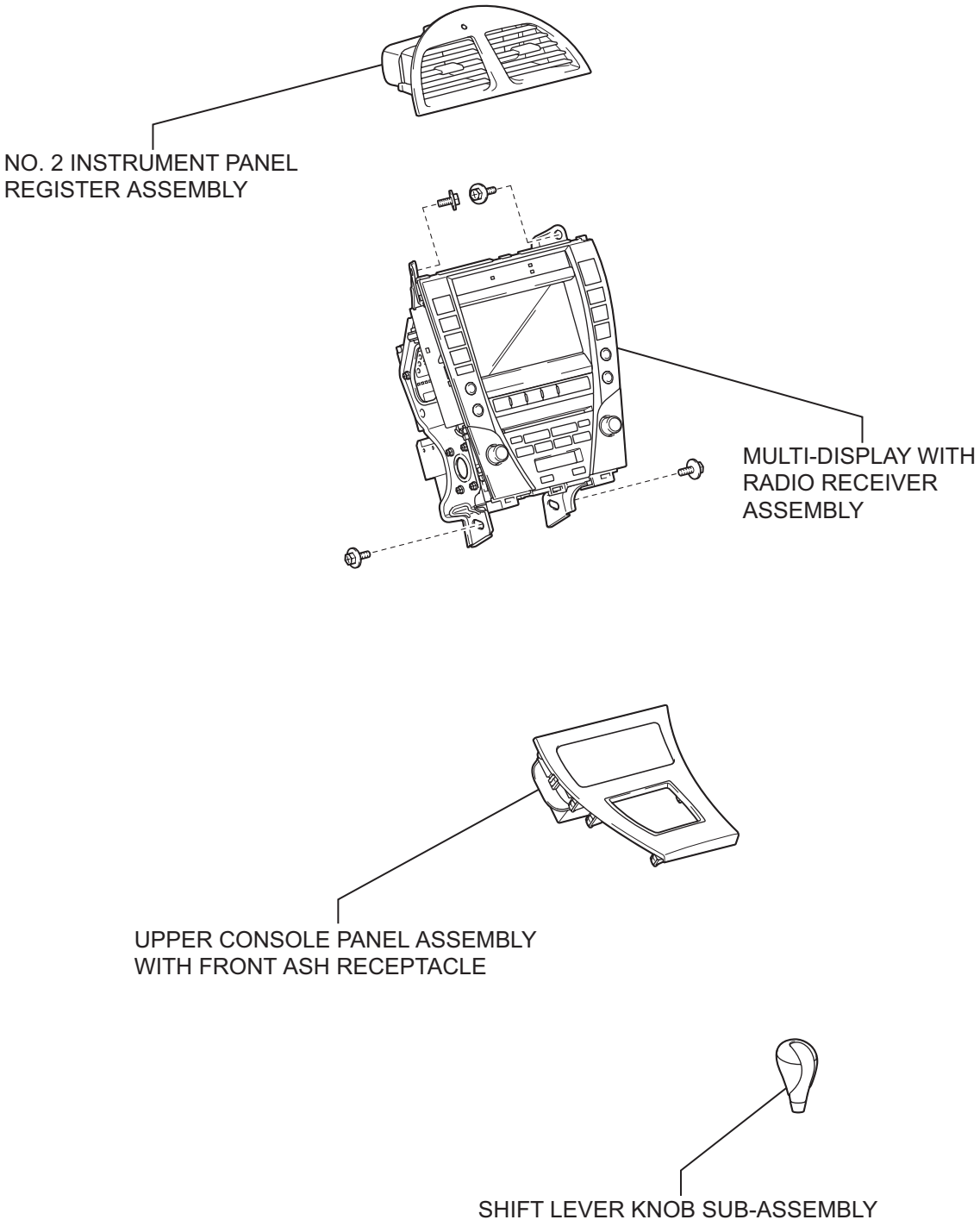

P

E132360E01

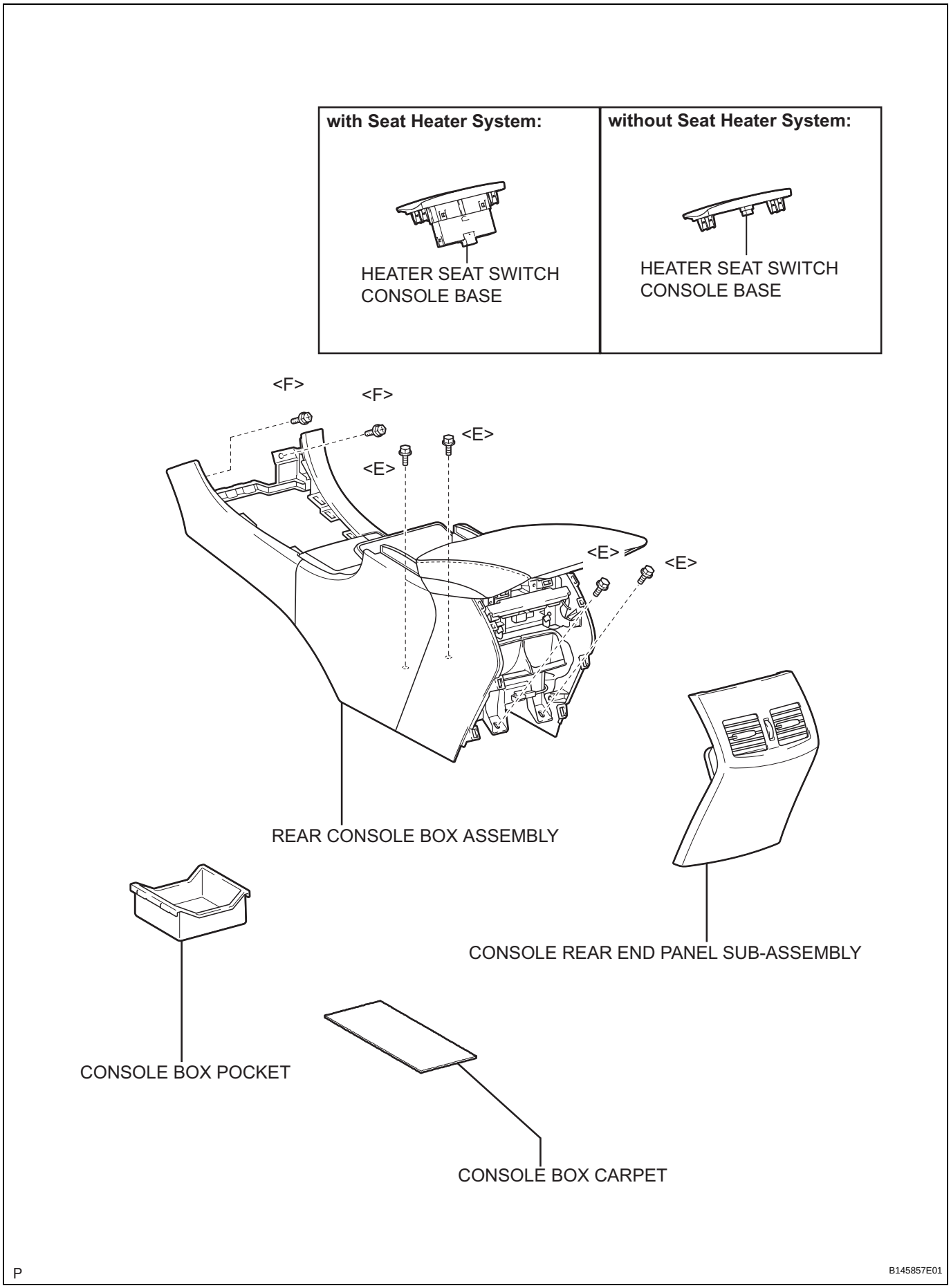
with Seat Heater System:
HEATER SEAT SWITCH CONSOLE BASE
without Seat Heater System:
HEATER SEAT SWITCH CONSOLE BASE
<F>
<F>
<E>
<E>
<E>
<E>
REAR CONSOLE BOX ASSEMBLY
CONSOLE REAR END PANEL SUB-ASSEMBLY
CONSOLE BOX POCKET
CONSOLE BOX CARPET
P
B145857E01

NS

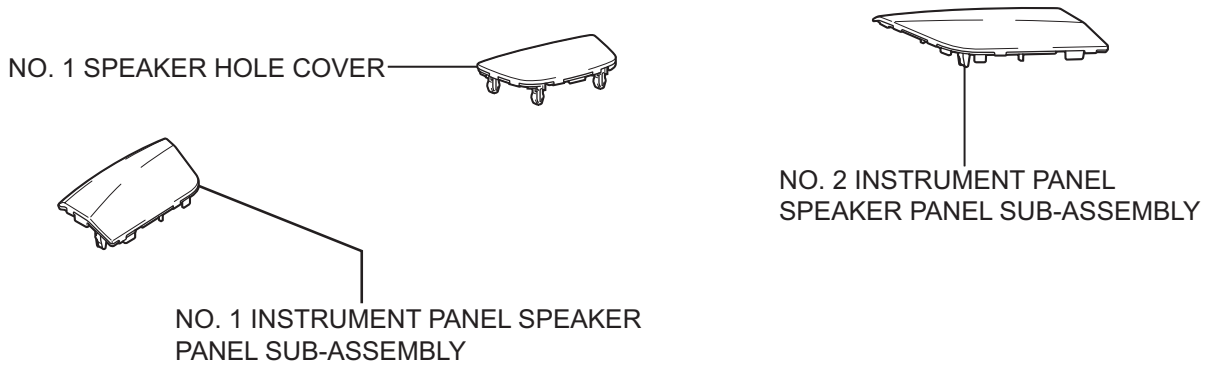

without Rear Header Speaker:

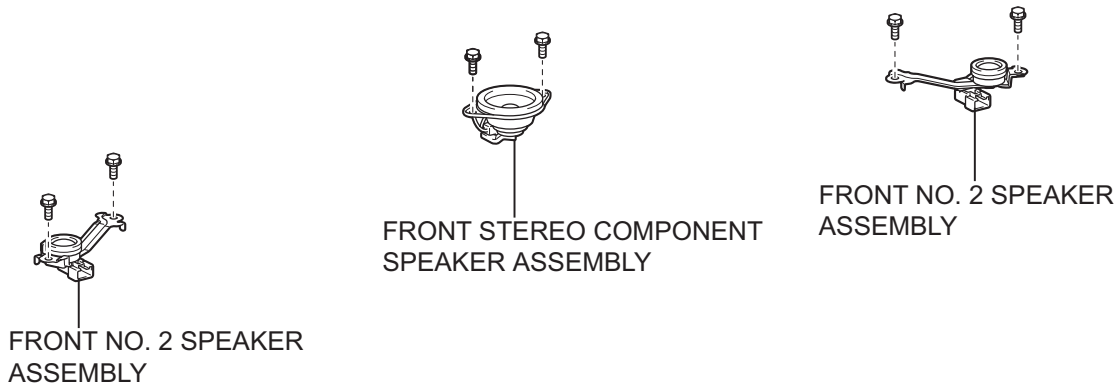

with Rear Header Speaker:

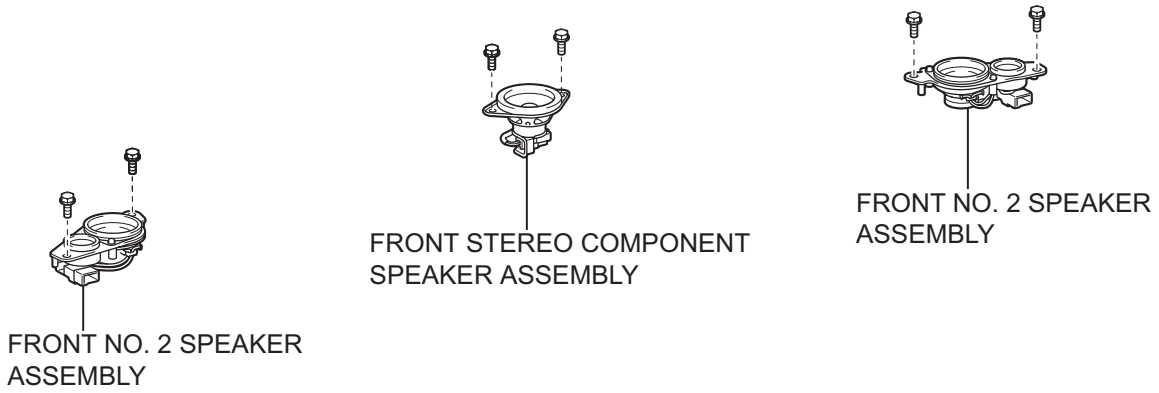

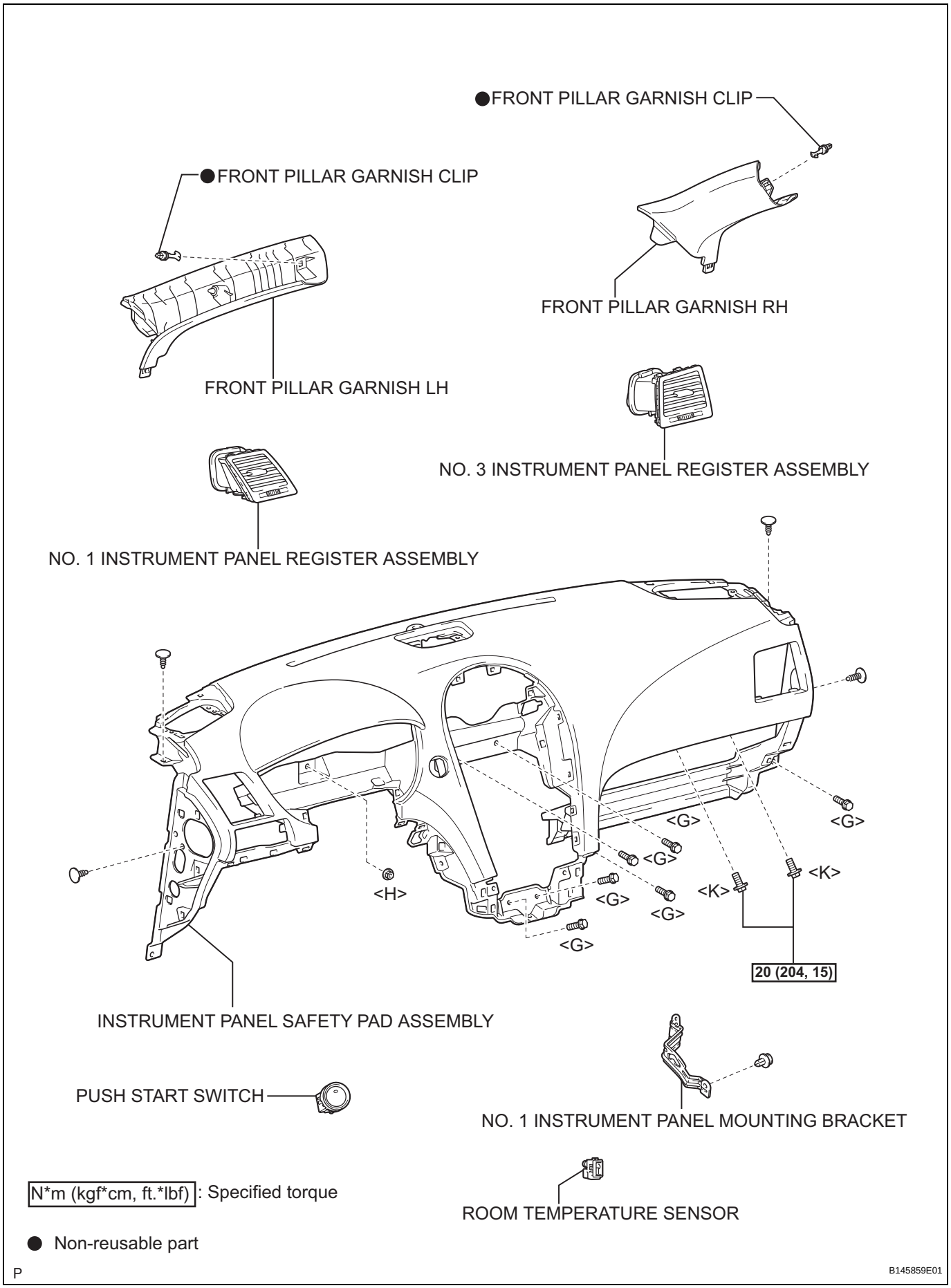
●FRONT PILLAR GARNISH CLIP
●FRONT PILLAR GARNISH CLIP
FRONT PILLAR GARNISH RH
FRONT PILLAR GARNISH LH
NO. 3 INSTRUMENT PANEL REGISTER ASSEMBLY
NO. 1 INSTRUMENT PANEL REGISTER ASSEMBLY
<G>
<G>
<G>
<K>
<H>
<G>
<K>
<G>
<G>
20 (204, 15)
INSTRUMENT PANEL SAFETY PAD ASSEMBLY
PUSH START SWITCH
NO. 1 INSTRUMENT PANEL MOUNTING BRACKET
N*m (kgf*cm, ft.*lbf) : Specified torque
ROOM TEMPERATURE SENSOR
● Non-reusable part
P
B145859E01

NS

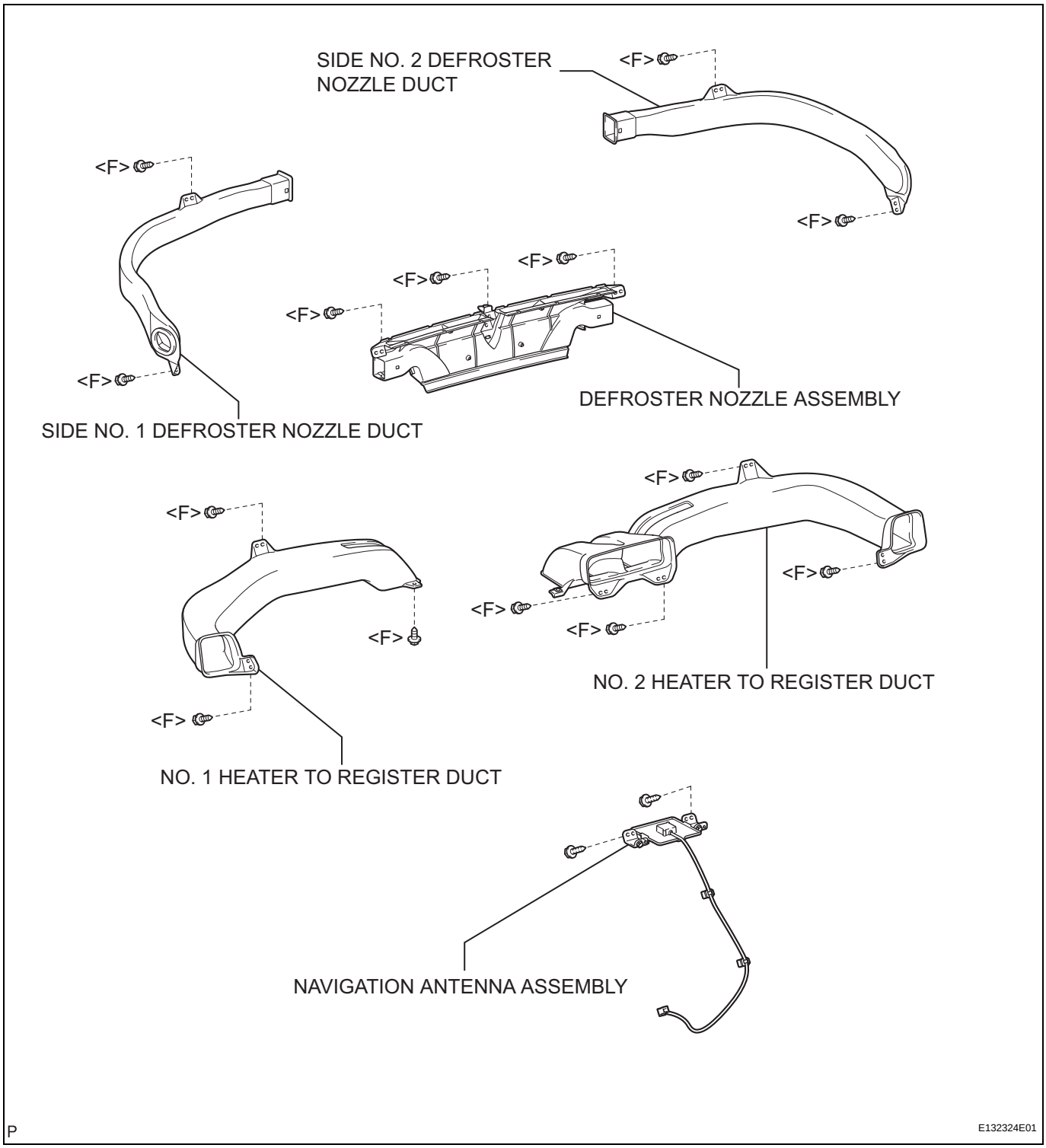
SIDE NO. 2 DEFROSTER NOZZLE DUCT
<F>
<F>
<F>
<F>
<F>
<F>
<F>
DEFROSTER NOZZLE ASSEMBLY
SIDE NO. 1 DEFROSTER NOZZLE DUCT
<F>
<F>
<F>
<F>
<F>
<F>
<F>
<F>
NO. 2 HEATER TO REGISTER DUCT
NO. 1 HEATER TO REGISTER DUCT
NAVIGATION ANTENNA ASSEMBLY
P
E132324E01

NS

INTUITIVE PARKING ASSIST SYSTEM

PRECAUTION

NOTICE:
Some systems need to be initialized after reconnecting the negative (-) battery terminal (See page IN-33).

1. PRECAUTIONS FOR INTUITIVE PARKING ASSIST SYSTEM

(a) Under the following conditions, the detection function may not function properly:
(1) The sensor is covered with foreign matter, such as mud or snow (detection function returns to normal when the sensor is cleaned).
(2) The sensor is frozen (detection function returns to normal when the temperature of the sensor rises).
(3) The sensor is covered with a hand.
HINT:
- In very cold weather where a malfunction display appears, the sensor may not be able to detect obstacles.
- If the malfunction display appears, visually check the sensor first. If the sensor is free of foreign matter but the malfunction display remains, the sensor may have a malfunction.

(b) The detection range may be affected by the following conditions:
(1) The sensor is covered with foreign matter, such as mud or snow.
(2) The vehicle is in an excessively hot or cold area.

(c) Under the following conditions, a detection error may occur:
(1) Driving on a bumpy road, an unpaved road, or in tall grass.
(2) Ultrasonic waves from items such as another vehicle's horn, motorcycle engine sounds, a large vehicle's air brake sound, or another vehicle's sonar are transmitted near the vehicle.
(3) It is raining heavily or the sensor comes into contact with water (sprayed).
(4) The vehicle is tilted at a large angle.
(5) The vehicle is equipped with a commercial fender pole or a wireless mechanism antenna.
(6) The sensor is covered with foreign matter, such as mud or snow.
(7) The vehicle is moving toward a high curb or the corner of a pointed object.

(d) The sensor cannot detect some objects such as the following:
(1) Thin objects, such as wires and ropes.
(2) Materials that absorb ultrasonic waves, such as cotton, snow, etc.

(3) Objects with sharp edges.
(4) Short objects.
(5) Tall, overhanging objects.

(e) Other notices:
(1) The sensor cannot detect objects directly under the bumper. (The sensor may detect low objects and thin poles, and then lose track of the objects.)
(2) The sensor may not be able to detect obstacles that are too close to the sensor.
(3) The sensor may not be able to detect obstacles if it is dropped or subjected to a strong impact.

REAR VIEW MONITOR SYSTEM

PRECAUTION

NOTICE:
Some systems need to be initialized after reconnecting the negative (-) battery terminal (See page IN-33),

PARTS LOCATION

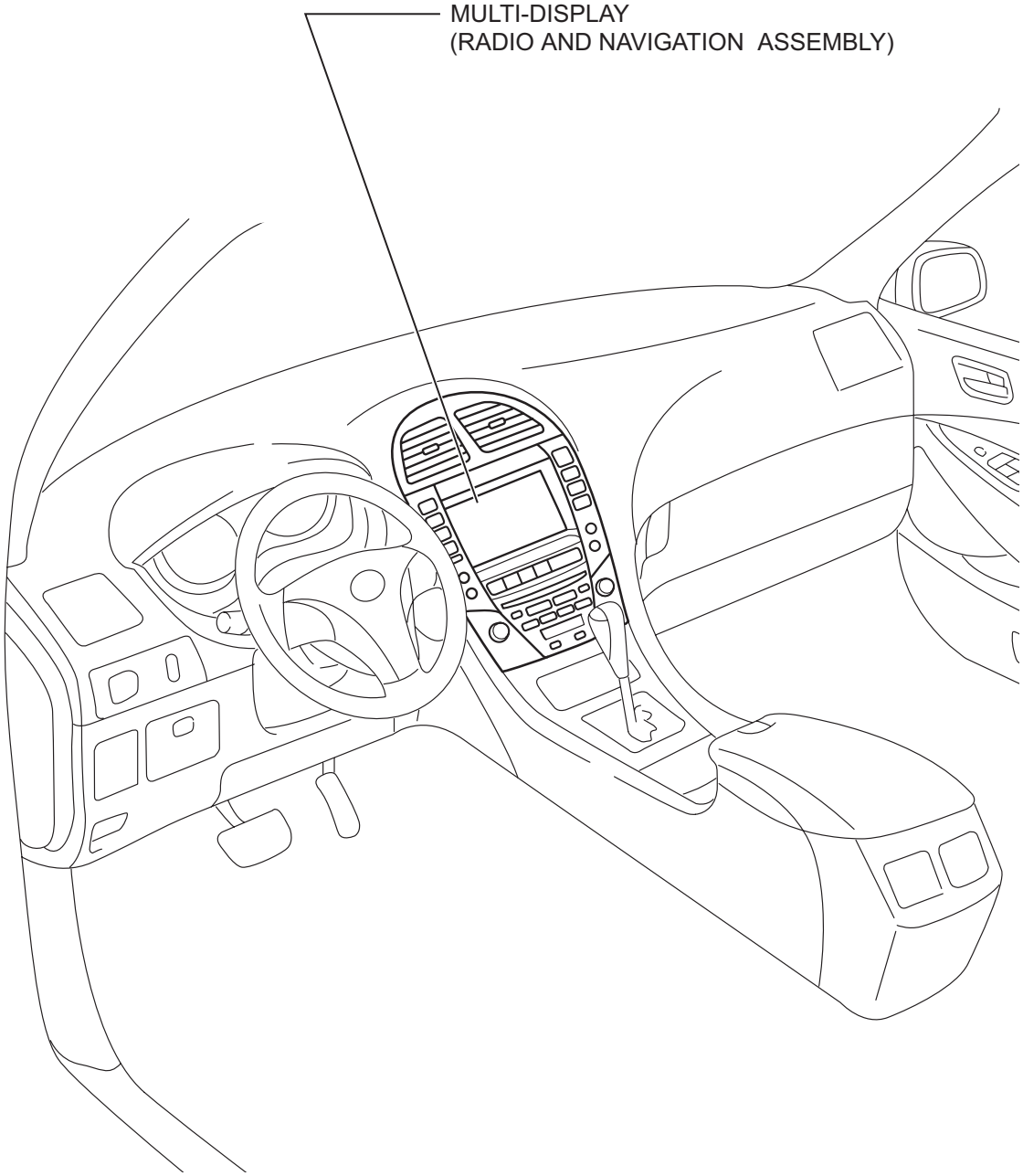

N

E132808E01

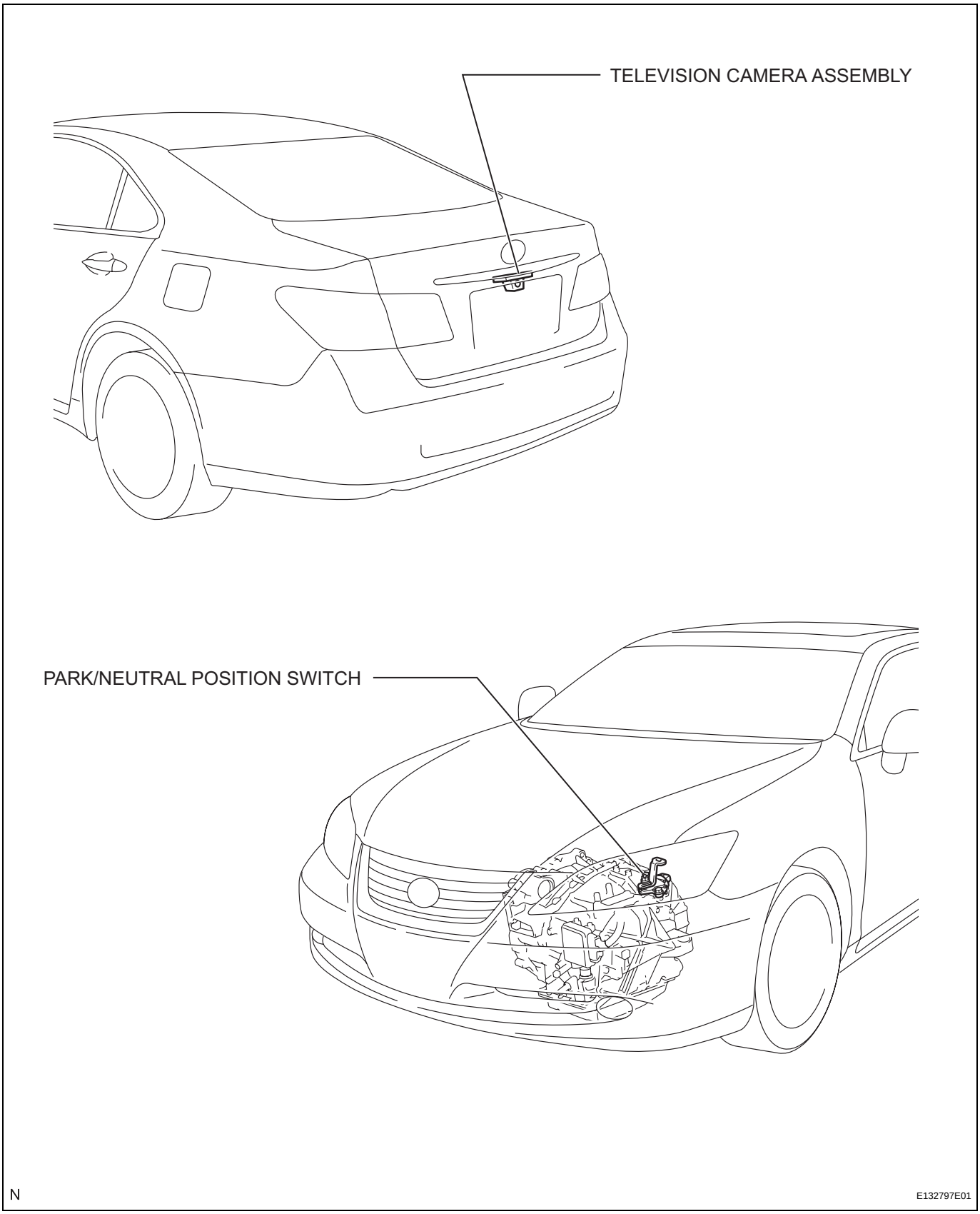
TELEVISION CAMERA ASSEMBLY
PARK/NEUTRAL POSITION SWITCH
N
E132797E01

CLEARANCE WARNING ECU

COMPONENTS

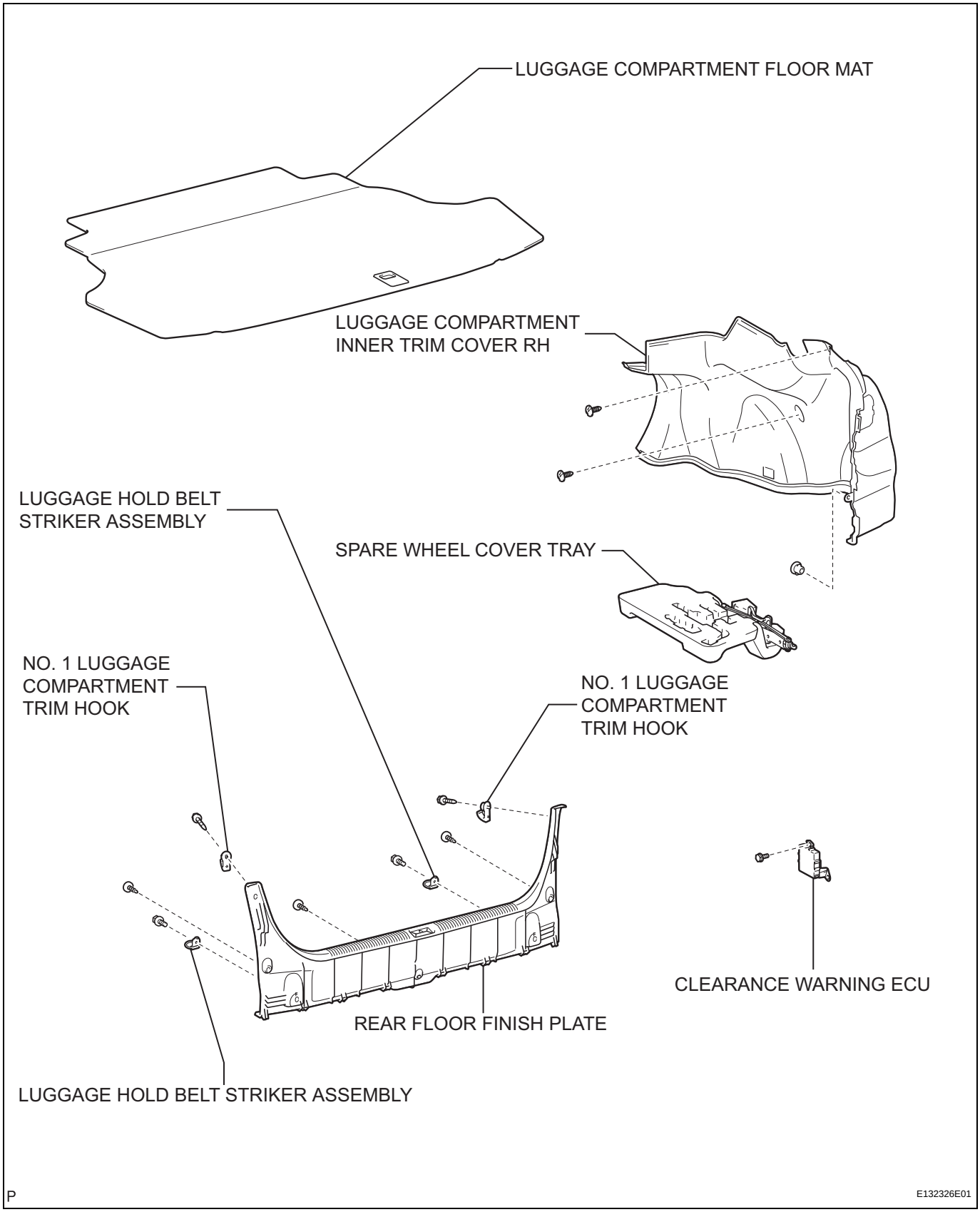

PM

REMOVAL

1. **REMOVE LUGGAGE COMPARTMENT FLOOR MAT**
2. **REMOVE SPARE WHEEL COVER TRAY**
3. **REMOVE LUGGAGE HOLD BELT STRIKER ASSEMBLY (See page ED-82)**
4. **REMOVE NO. 1 LUGGAGE COMPARTMENT TRIM HOOK (See page ED-83)**
5. **REMOVE REAR FLOOR FINISH PLATE (See page ED-83)**
6. **REMOVE LUGGAGE COMPARTMENT INNER TRIM COVER RH (See page ED-83)**
7. **REMOVE CLEARANCE WARNING ECU**
   (a) Disconnect the connector.
   (b) Remove the bolt and clearance warning ECU.

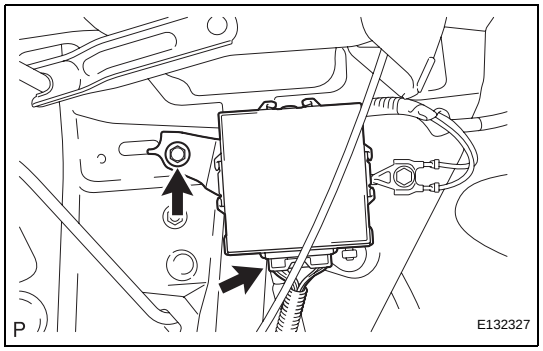

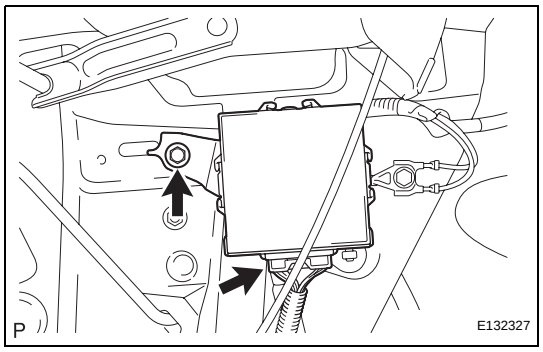

INSTALLATION

1. **INSTALL CLEARANCE WARNING ECU**
   (a) Install the clearance warning ECU with the bolt.
   (b) Connect the connector.
2. **INSTALL LUGGAGE COMPARTMENT INNER TRIM COVER RH (See page ED-88)**
3. **INSTALL REAR FLOOR FINISH PLATE (See page ED-88)**
4. **INSTALL NO. 1 LUGGAGE COMPARTMENT TRIM HOOK (See page ED-89)**
5. **INSTALL LUGGAGE HOLD BELT STRIKER ASSEMBLY (See page ED-89)**
6. **INSTALL SPARE WHEEL COVER TRAY**
7. **INSTALL LUGGAGE COMPARTMENT FLOOR MAT**

CLEARANCE WARNING BUZZER

COMPONENTS

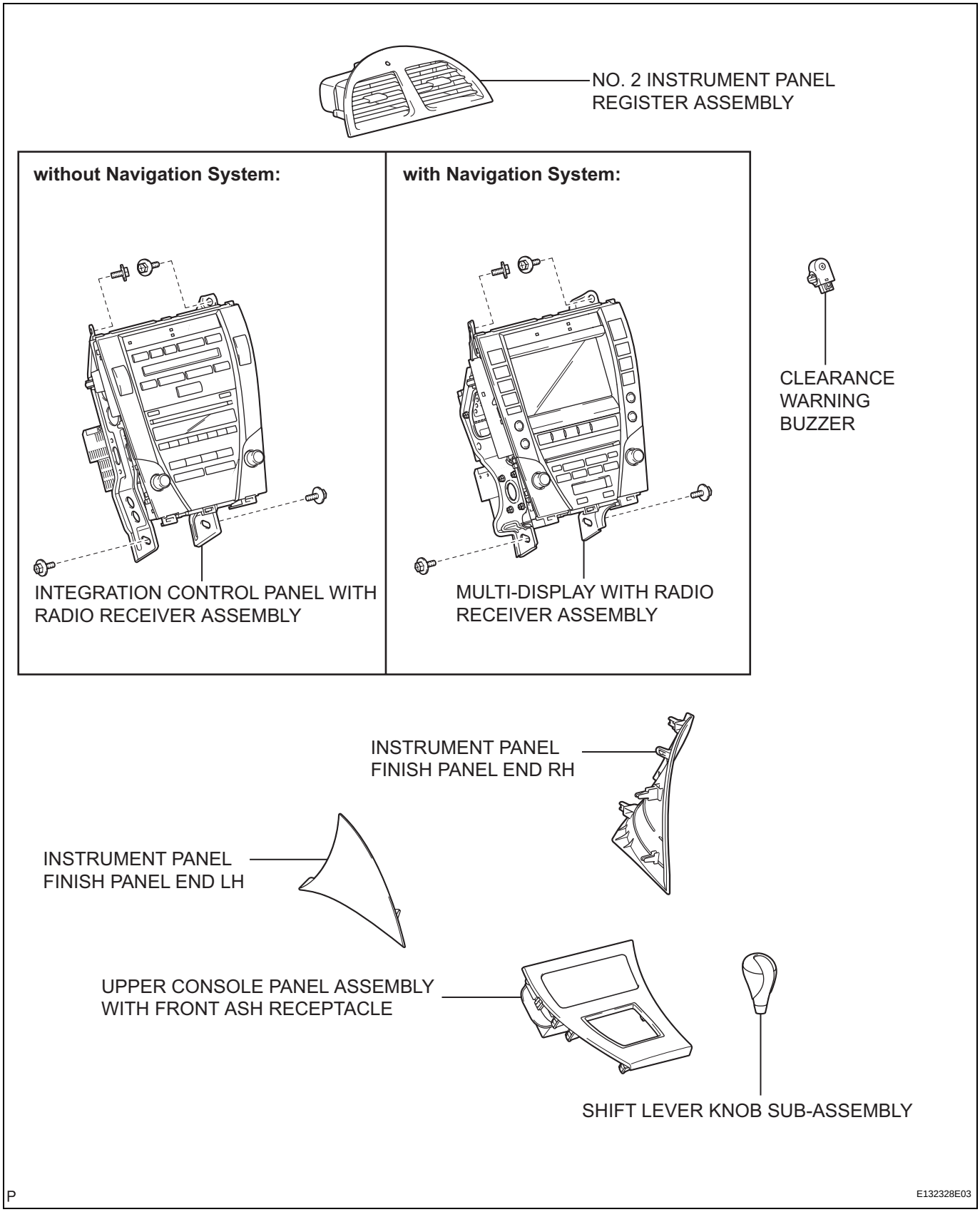

PM

REMOVAL

1. **REMOVE SHIFT LEVER KNOB SUB-ASSEMBLY (See page IP-16)**
2. **REMOVE UPPER CONSOLE PANEL ASSEMBLY WITH FRONT ASH RECEPTACLE (See page IP-16)**
3. **REMOVE INSTRUMENT PANEL FINISH PANEL END LH (See page IP-13)**
4. **REMOVE INSTRUMENT PANEL FINISH PANEL END RH (See page IP-15)**
5. **REMOVE NO. 2 INSTRUMENT PANEL REGISTER ASSEMBLY (See page IP-17)**
6. **REMOVE INTEGRATION CONTROL PANEL WITH RADIO RECEIVER ASSEMBLY (w/o Navigation System) (See page AV-168)**
7. **REMOVE MULTI-DISPLAY WITH RADIO RECEIVER ASSEMBLY (w/ Navigation System) (See page AV-170)**
8. **REMOVE CLEARANCE WARNING BUZZER**
   (a) Disconnect the connector.

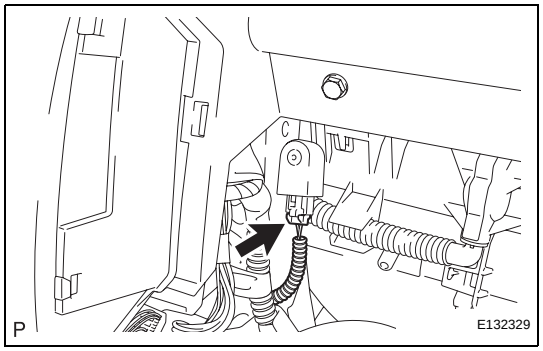

   (b) Disengage the clamp and remove the clearance warning buzzer.

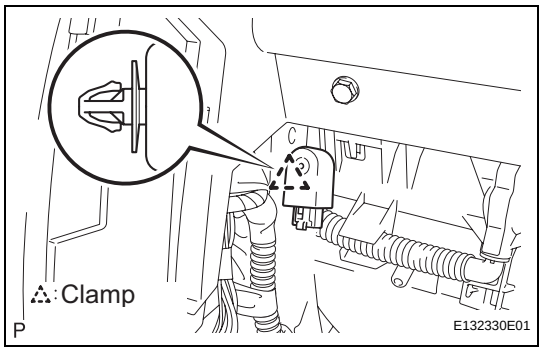

PM

ULTRASONIC SENSOR

COMPONENTS

for Front Side:

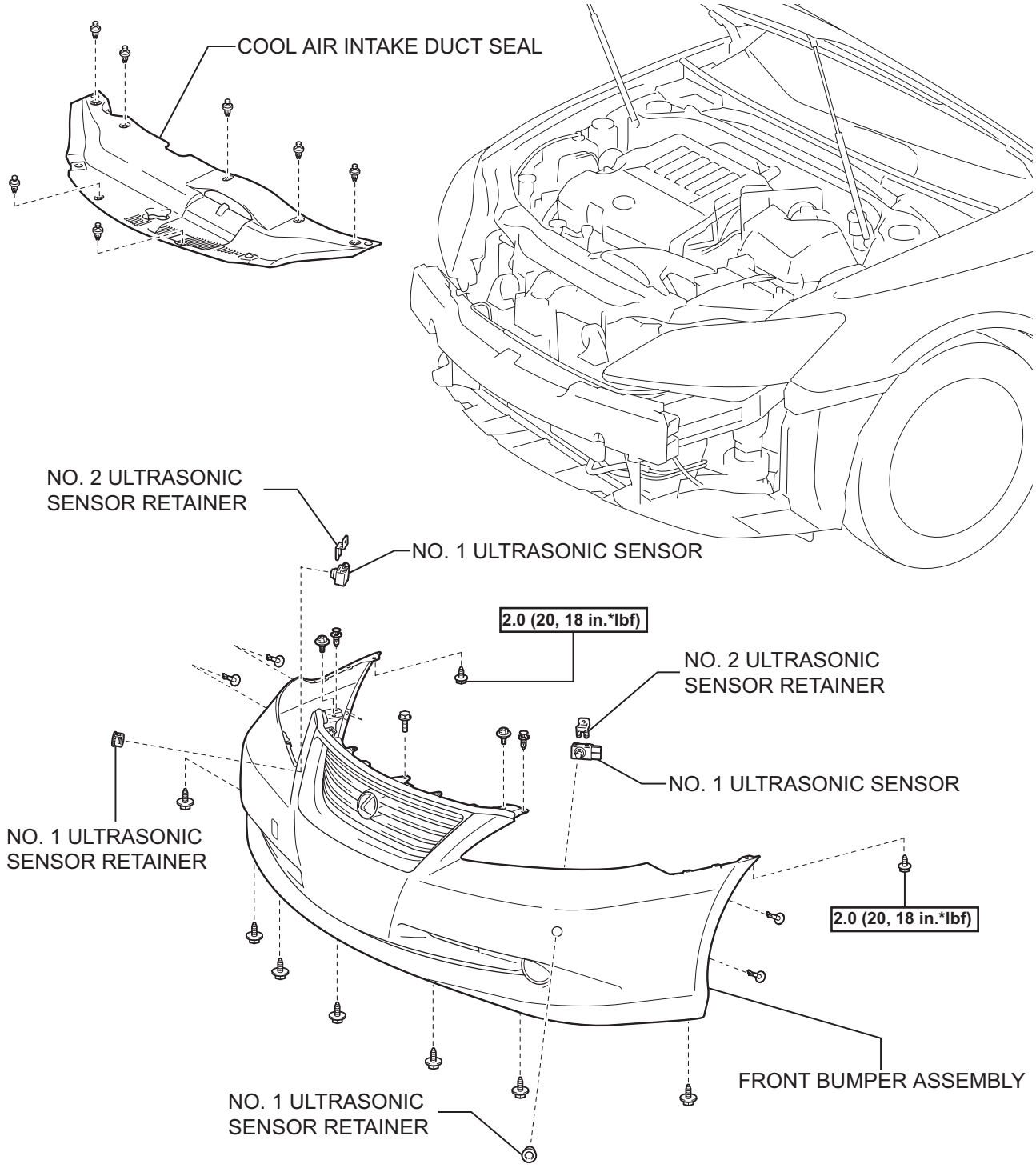

N*m (kgf*cm, ft.*lbf): Specified torque

P

E132331E01

PM

for Rear Side:

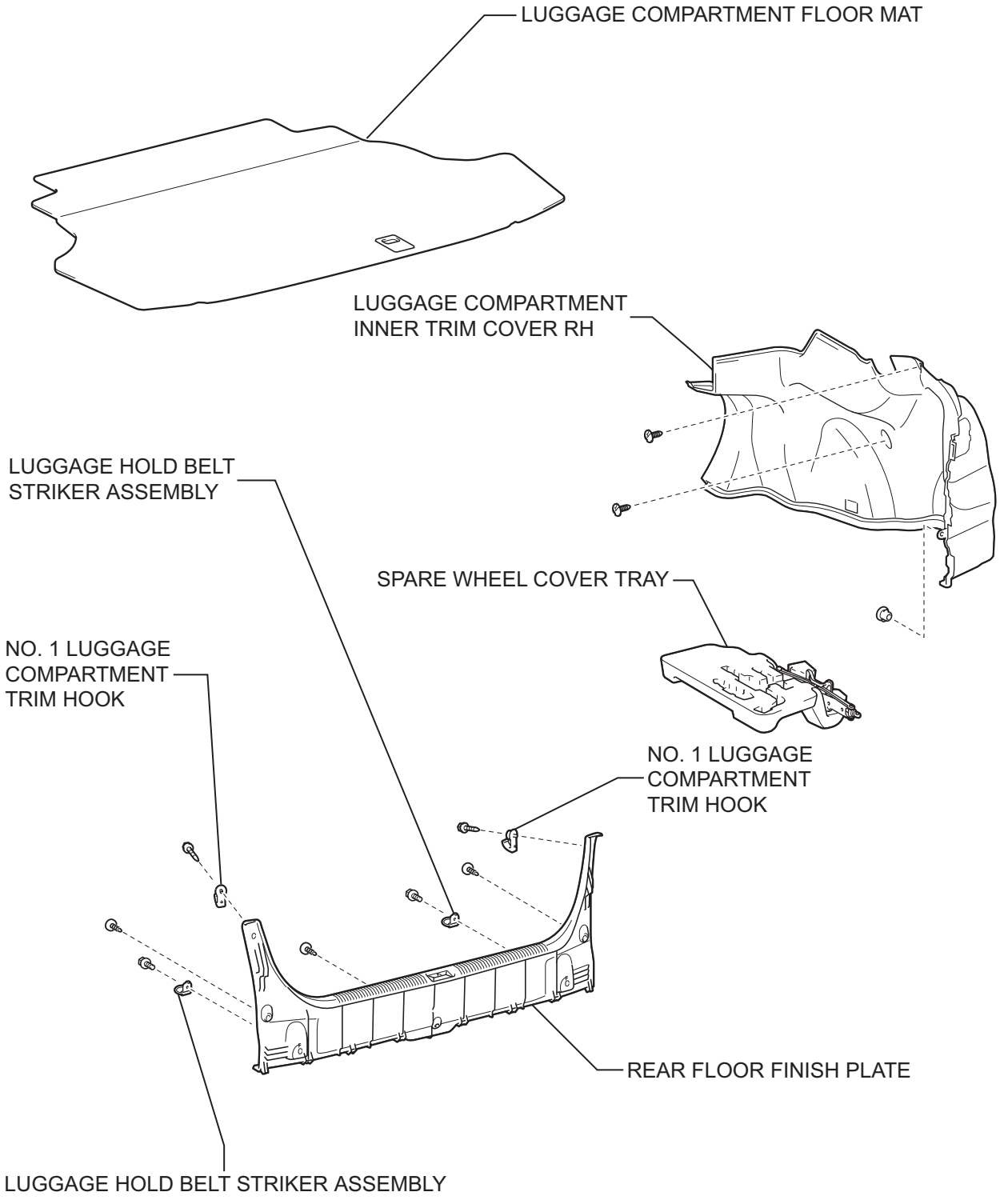

P

E132351E01

for Rear Side:

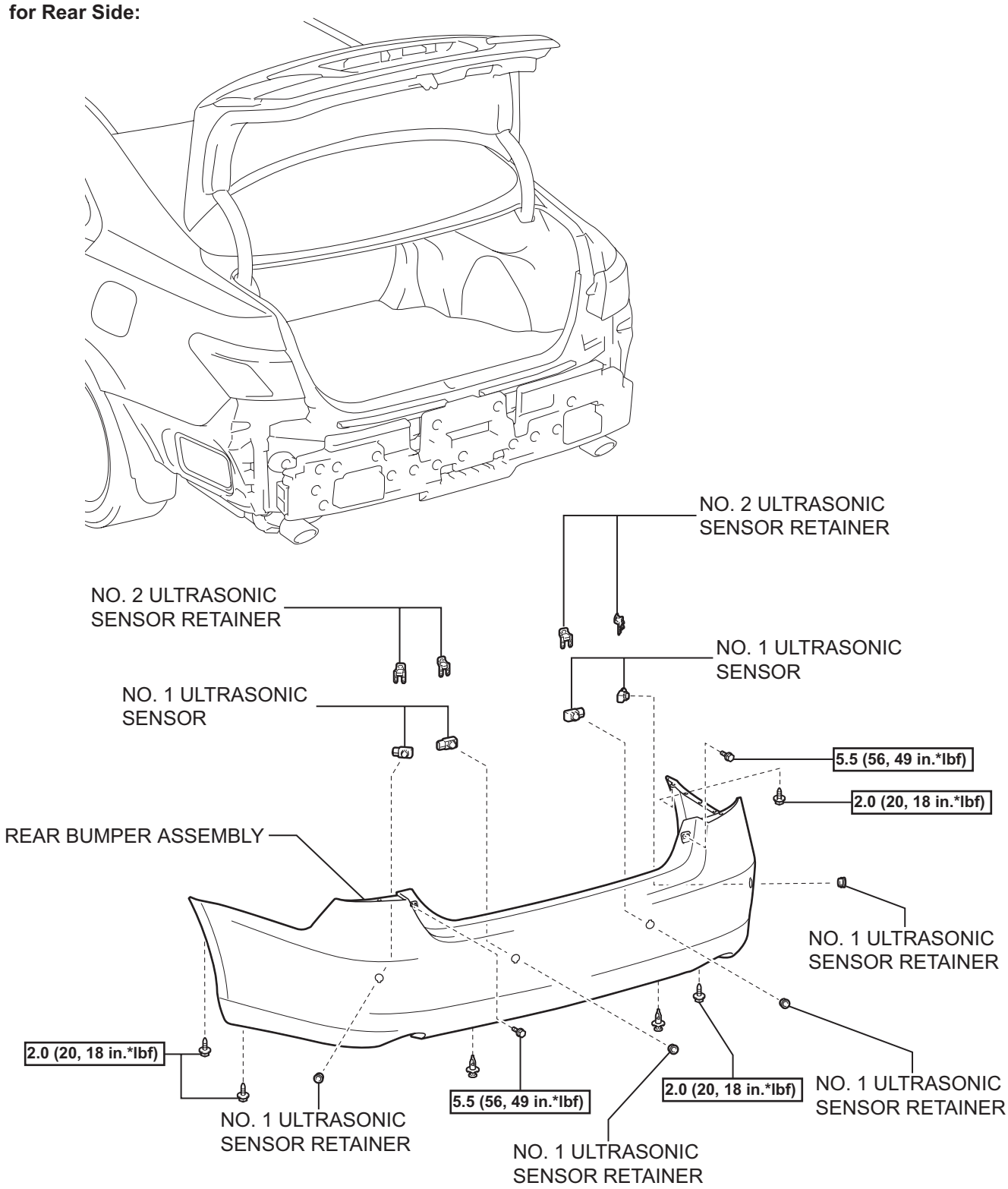

N*m (kgf*cm, ft.*lbf): Specified torque

P

E132332E01

PM

TELEVISION CAMERA

COMPONENTS

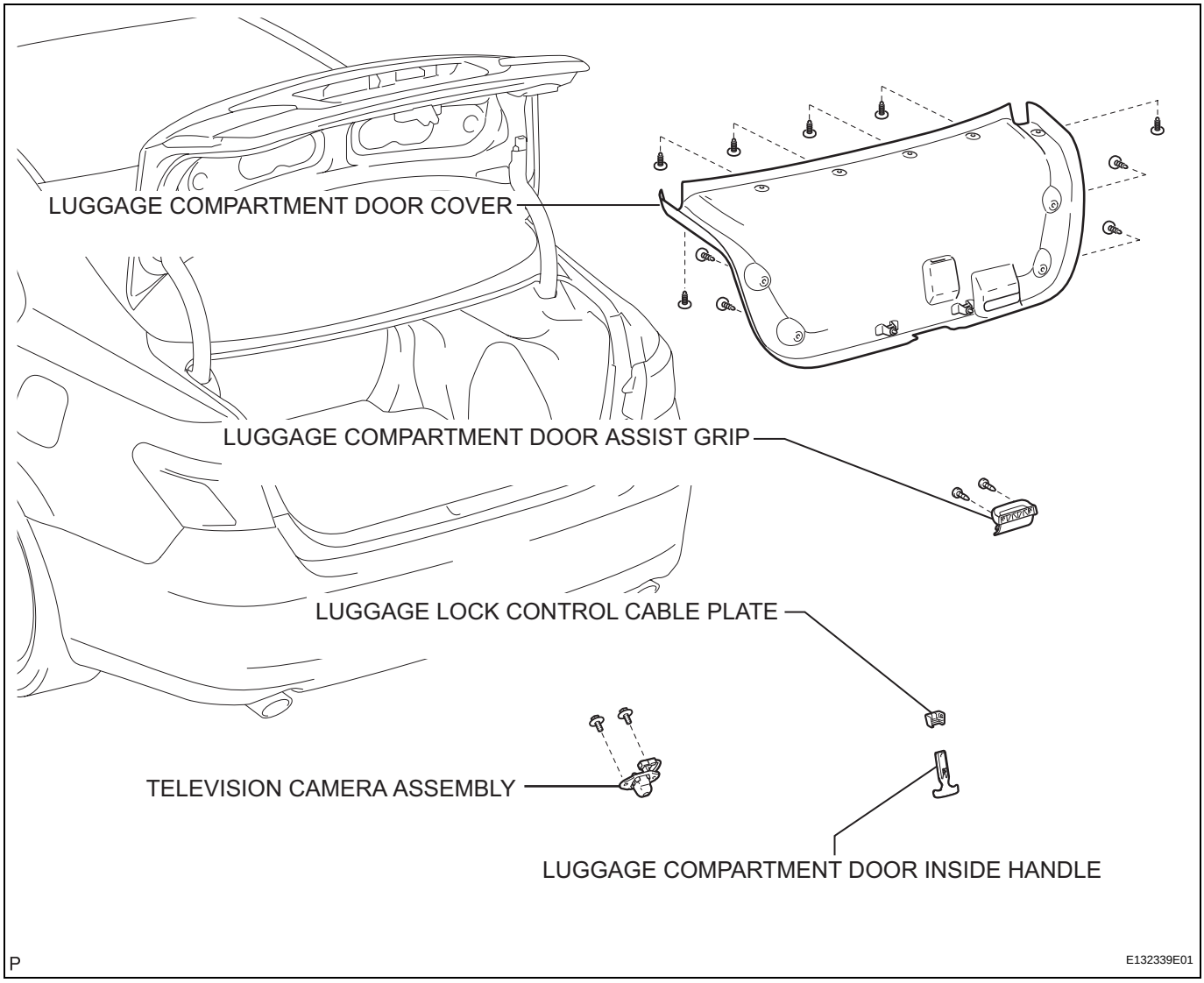

REMOVAL

1. **REMOVE LUGGAGE COMPARTMENT DOOR ASSIST GRIP (See page ET-71)**
2. **REMOVE LUGGAGE LOCK CONTROL CABLE PLATE (See page ET-71)**
3. **REMOVE LUGGAGE COMPARTMENT DOOR INSIDE HANDLE (See page ET-71)**
4. **REMOVE LUGGAGE COMPARTMENT DOOR COVER (See page ET-72)**
5. **REMOVE TELEVISION CAMERA ASSEMBLY**
   (a) Disconnect the television camera connector.
   (b) Remove the 2 bolts.

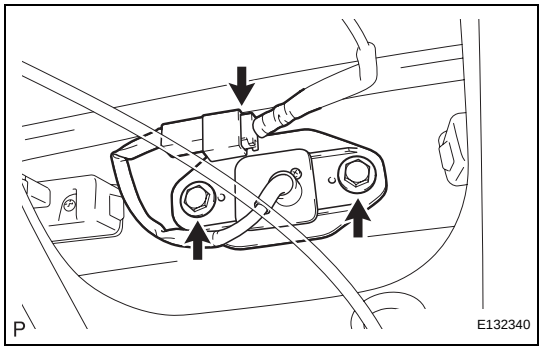

   (c) Disengage the 2 claws and remove the television camera assembly as shown in the illustration.

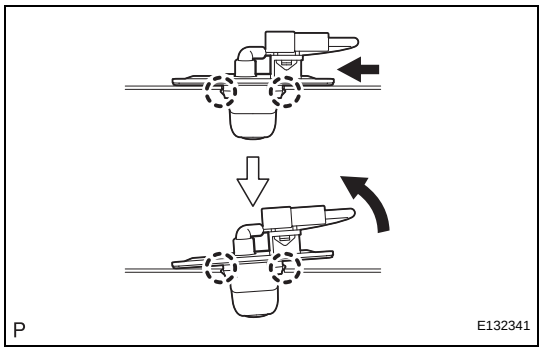

PM

INSTALLATION

1. **INSTALL TELEVISION CAMERA ASSEMBLY**
   (a) Engage the 2 claws and temporarily install the television camera assembly to the luggage compartment as shown in the illustration.

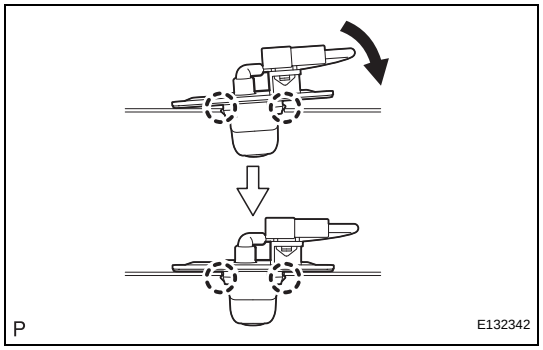

   (b) Install the television camera assembly with the 2 bolts.
   (c) Connect the television camera connector.

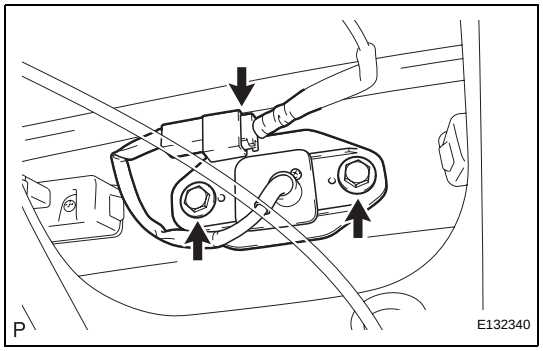

2. **INSTALL LUGGAGE COMPARTMENT DOOR COVER (See page ET-74)**
3. **INSTALL LUGGAGE COMPARTMENT DOOR INSIDE HANDLE (See page ET-74)**
4. **INSTALL LUGGAGE LOCK CONTROL CABLE PLATE (See page ET-75)**

5. **INSTALL LUGGAGE COMPARTMENT DOOR ASSIST GRIP (See page ET-75)**

HORN SYSTEM

PRECAUTION

NOTICE:
Some systems need to be initialized after reconnecting the negative (-) battery terminal (See page IN-33).

PARTS LOCATION

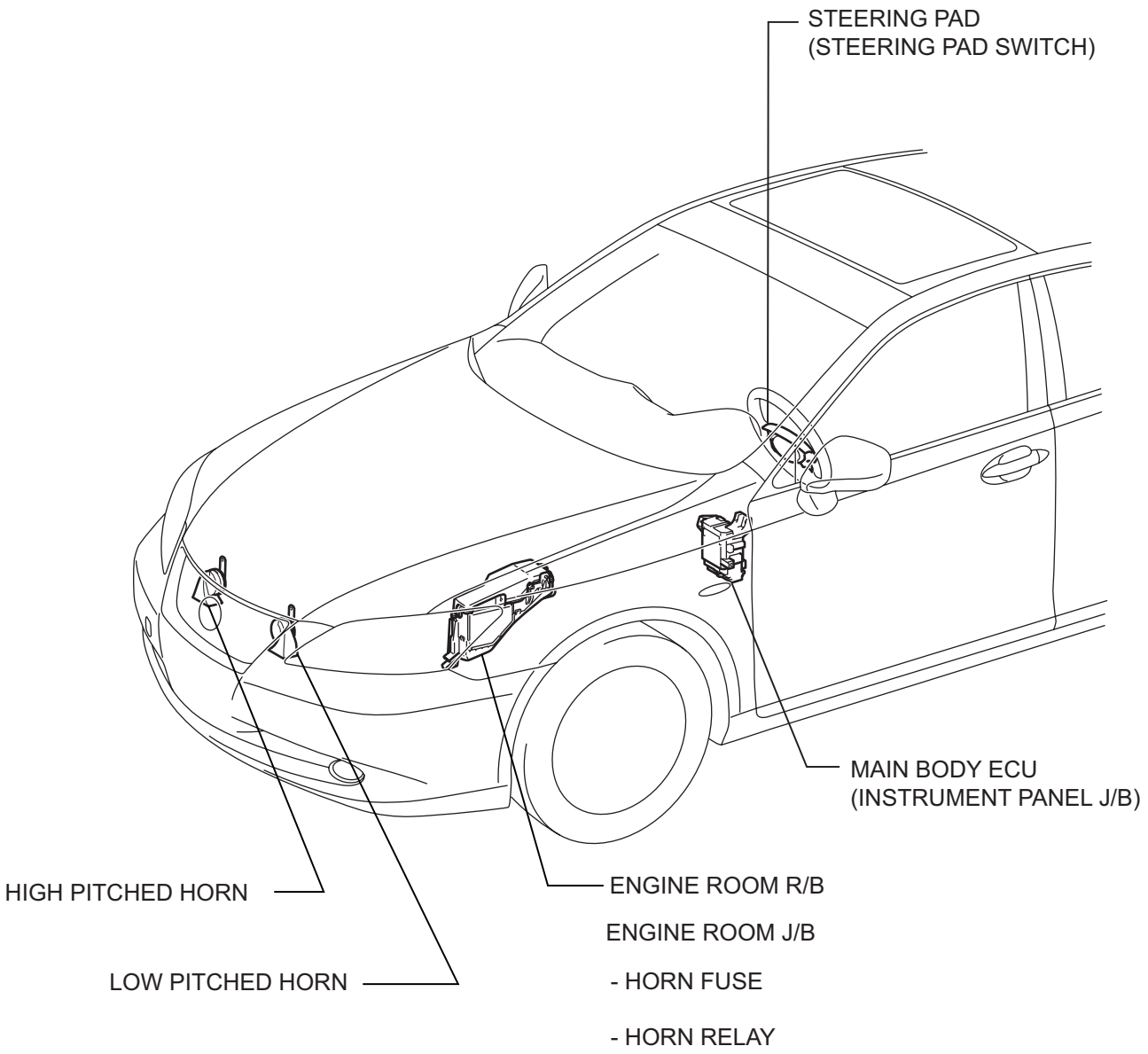

H

B131183E02

HORN RELAY

INSPECTION

1. INSPECT FUSE (HORN)

(a) Check the resistance of the HORN fuse.

Standard:

Below 1 Ω

2. INSPECT HORN RELAY

(a) Remove the engine room R/B and J/B (horn relay).

(b) Measure the resistance according to the value(s) in the table below.

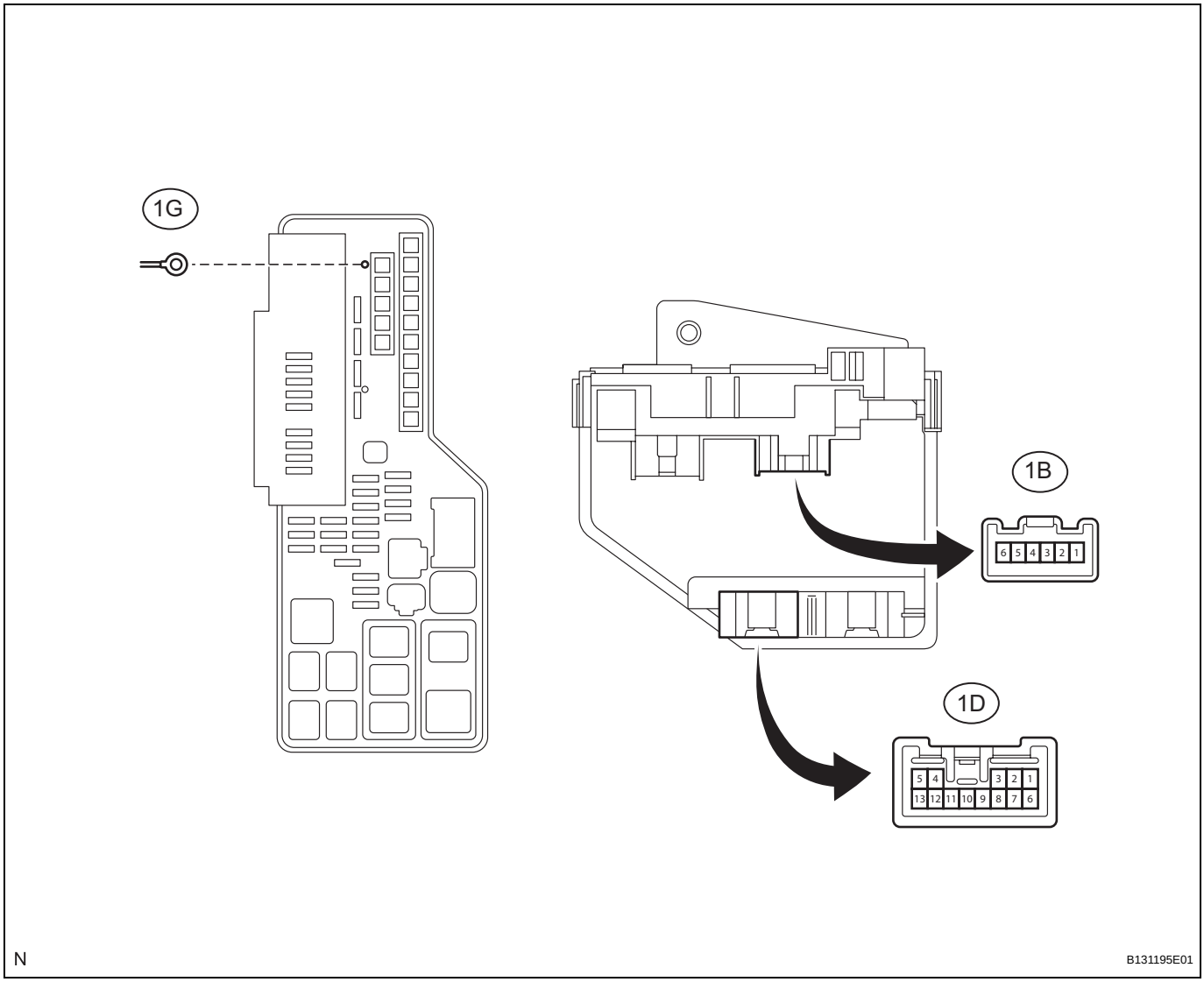

Standard resistance

Tester Connection	Condition	Specified Condition
1G-1 - 1B-6	When battery voltage is not applied to terminals 1G-1 and 1D-10	10 kΩ or higher
1G-1 - 1B-6	When battery voltage is applied to terminals 1G-1 and 1D-10	Below 1 Ω

LOW PITCHED HORN

COMPONENTS

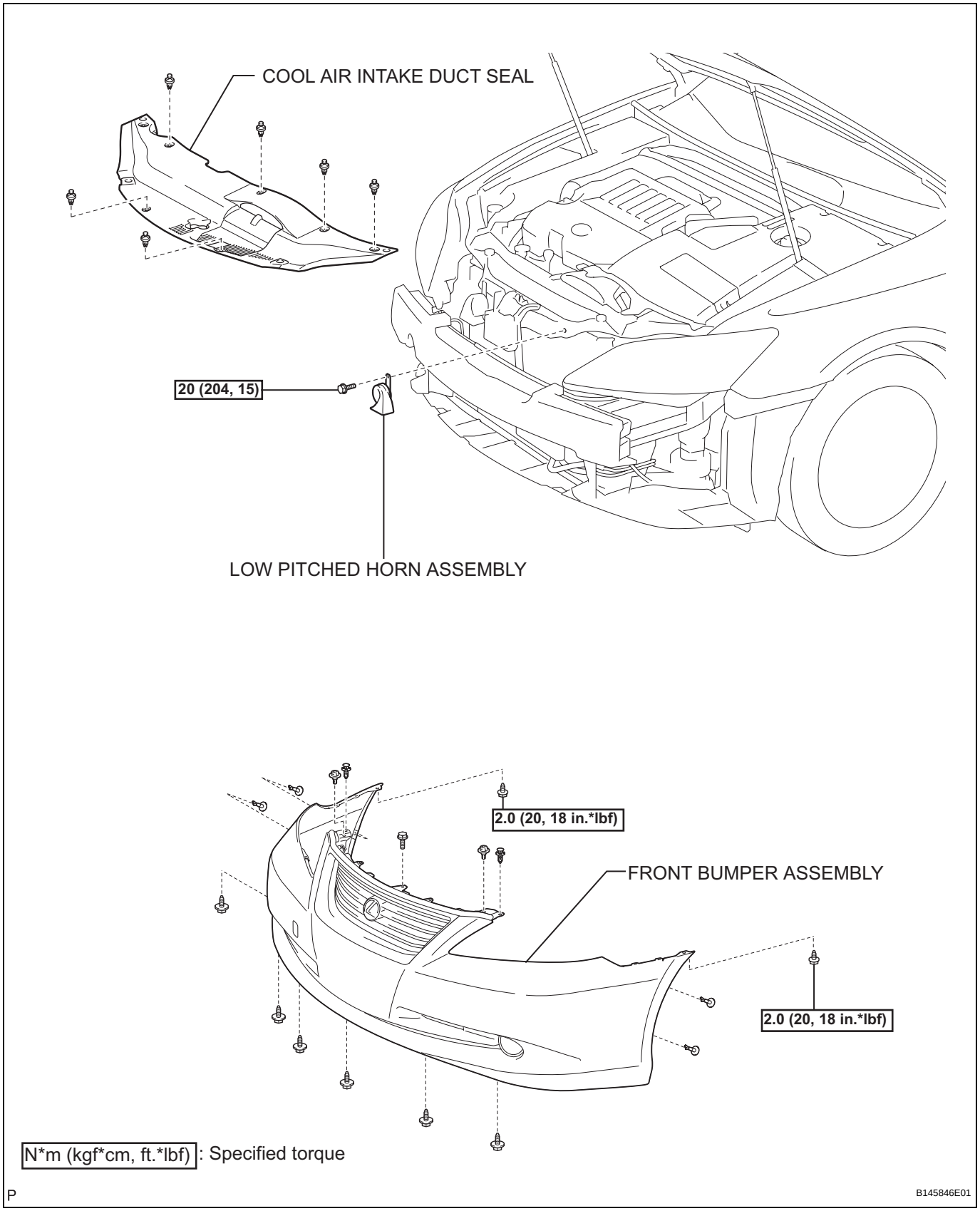

REMOVAL

1. **REMOVE COOL AIR INTAKE DUCT SEAL (See page ET-4)**
2. **REMOVE FRONT BUMPER ASSEMBLY (See page ET-5)**
3. **REMOVE LOW PITCHED HORN ASSEMBLY**
   (a) Disconnect the connector.
   (b) Remove the bolt and the low pitched horn assembly.

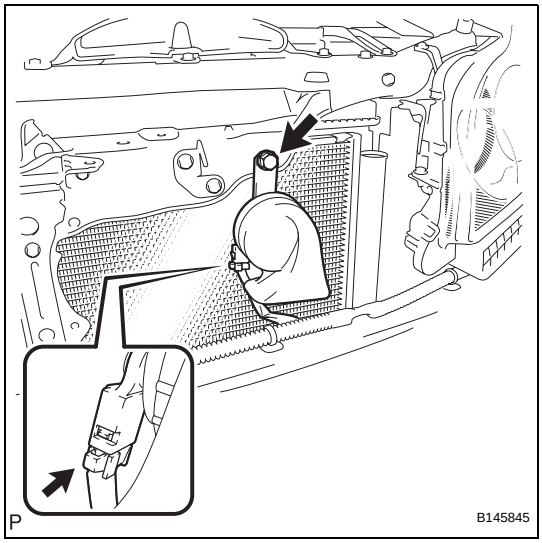

INSPECTION

1. **INSPECT LOW PITCHED HORN**
   (a) Apply battery voltage and check operation of the horn, as shown in the table below.
   Standard

Measurement Condition	Specified Condition
Battery positive (+) → Terminal 1 Battery negative (-) → Body ground	Horn sounds

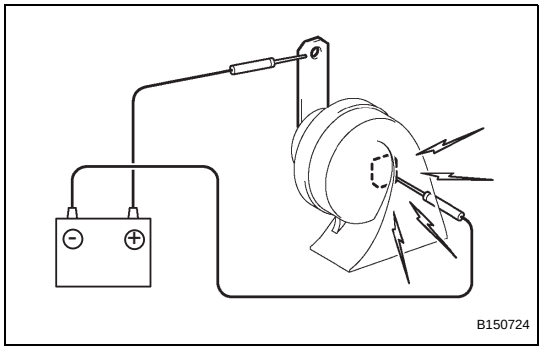

HO

INSTALLATION

1. **INSTALL LOW PITCHED HORN ASSEMBLY**
   (a) Install the low pitched horn assembly with the bolt.
   Torque: 20 N*m (204 kgf*cm, 15 ft.*lbf)
   (b) Connect the connector.
2. **INSTALL FRONT BUMPER ASSEMBLY (See page ET-14)**
3. **INSTALL COOL AIR INTAKE DUCT SEAL (See page ET-14)**
4. **VEHICLE PREPARATION FOR FOG LIGHT AIM ADJUSTMENT (See page LI-141)**
5. **PREPARATION FOR FOG LIGHT AIMING (See page LI-142)**
6. **FOG LIGHT AIMING INSPECTION (See page LI-143)**
7. **FOG LIGHT AIMING ADJUSTMENT (See page LI-144)**

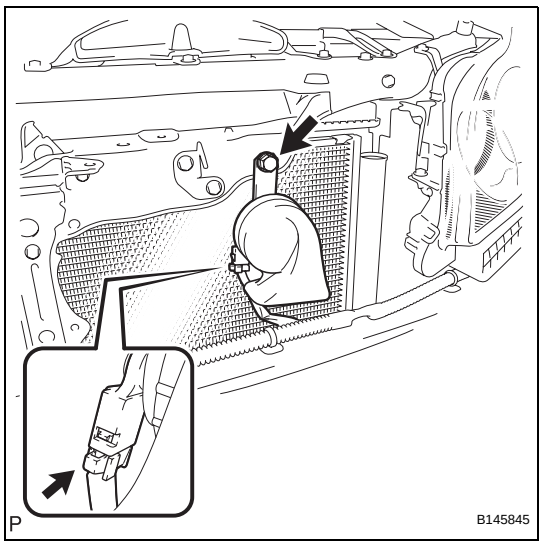

HIGH PITCHED HORN

COMPONENTS

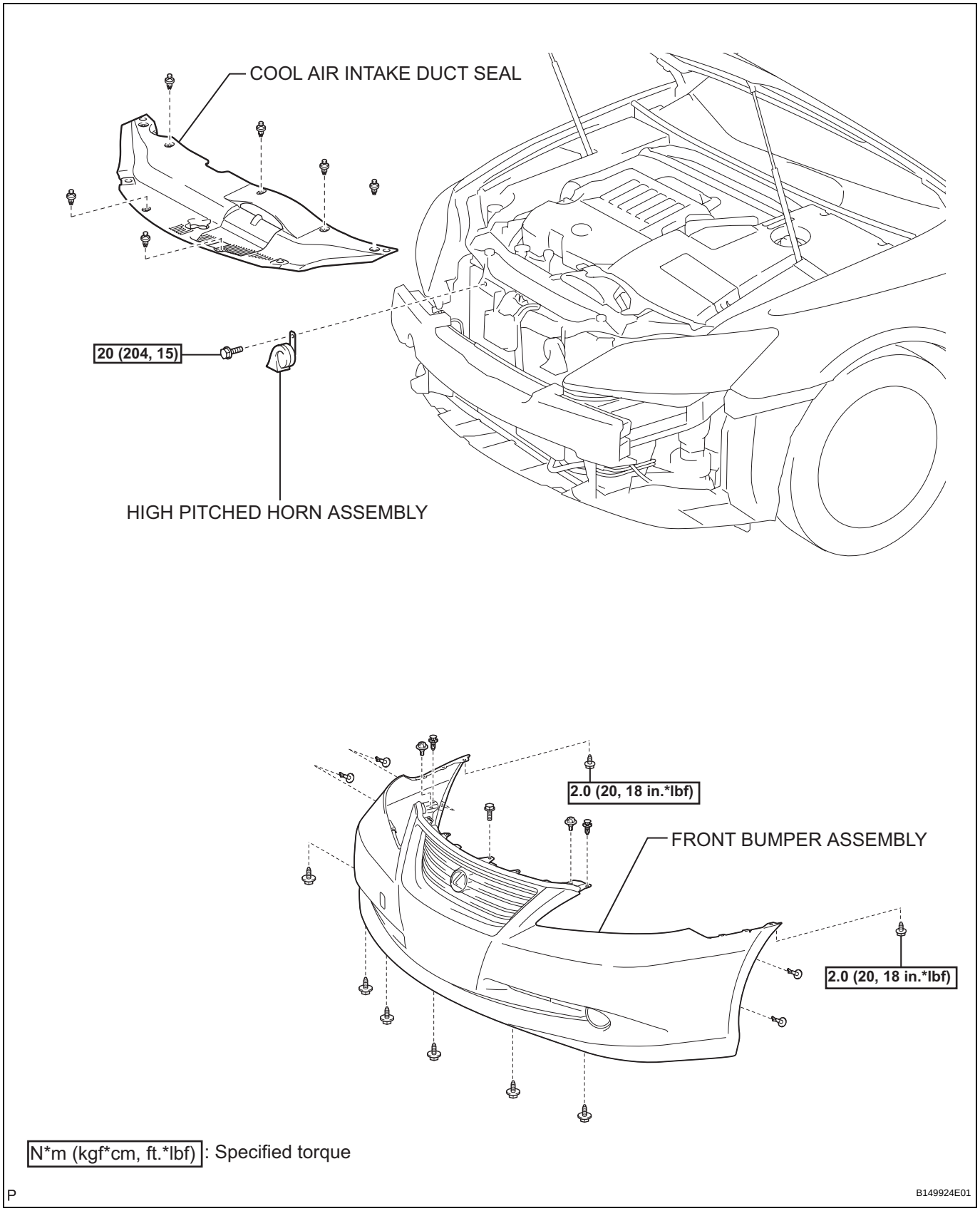

HO

REMOVAL

1. **REMOVE COOL AIR INTAKE DUCT SEAL (See page ET-4)**
2. **REMOVE FRONT BUMPER ASSEMBLY (See page ET-5)**
3. **REMOVE HIGH PITCHED HORN ASSEMBLY**
   (a) Disconnect the connector.
   (b) Remove the bolt and the high pitched horn assembly.

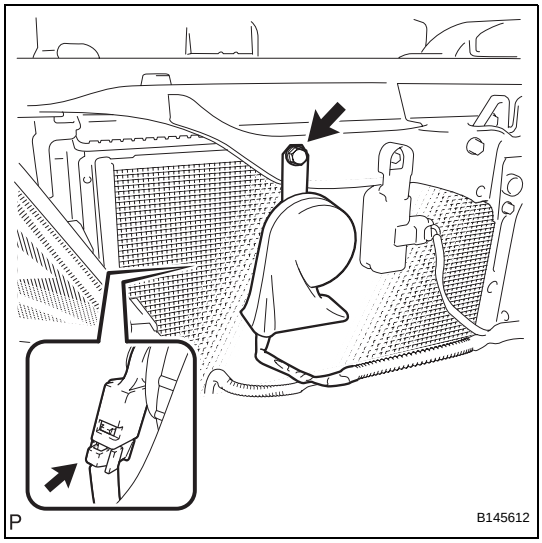

INSPECTION

1. **INSPECT HIGH PITCHED HORN**
   (a) Apply battery voltage and check operation of the horn, as shown in the table below.
   Standard

Measurement Condition	Specified Condition
Battery positive (+) → Terminal 1 Battery negative (-) → Body ground	Horn sounds

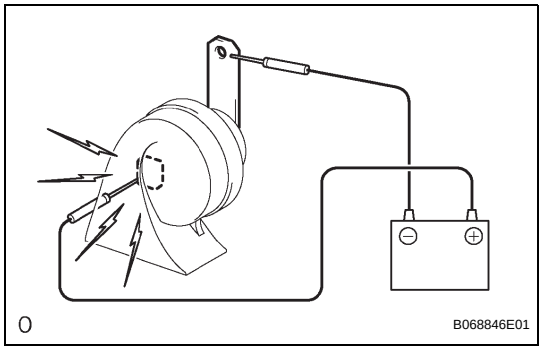

INSTALLATION

1. **INSTALL HIGH PITCHED HORN ASSEMBLY**
   (a) Install the high pitched horn assembly with the bolt.
   Torque: 20 N*m (204 kgf*cm, 15 ft.*lbf)
   (b) Connect the connector.
2. **INSTALL FRONT BUMPER ASSEMBLY (See page ET-14)**
3. **INSTALL COOL AIR INTAKE DUCT SEAL (See page ET-14)**
4. **VEHICLE PREPARATION FOR FOG LIGHT AIM ADJUSTMENT (See page LI-141)**
5. **PREPARATION FOR FOG LIGHT AIMING (See page LI-142)**
6. **FOG LIGHT AIMING INSPECTION (See page LI-143)**
7. **FOG LIGHT AIMING ADJUSTMENT (See page LI-144)**

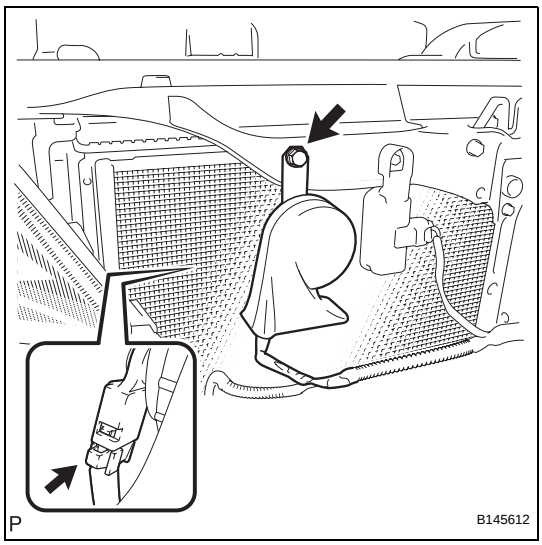

GARAGE DOOR OPENER SYSTEM

SYSTEM DIAGRAM

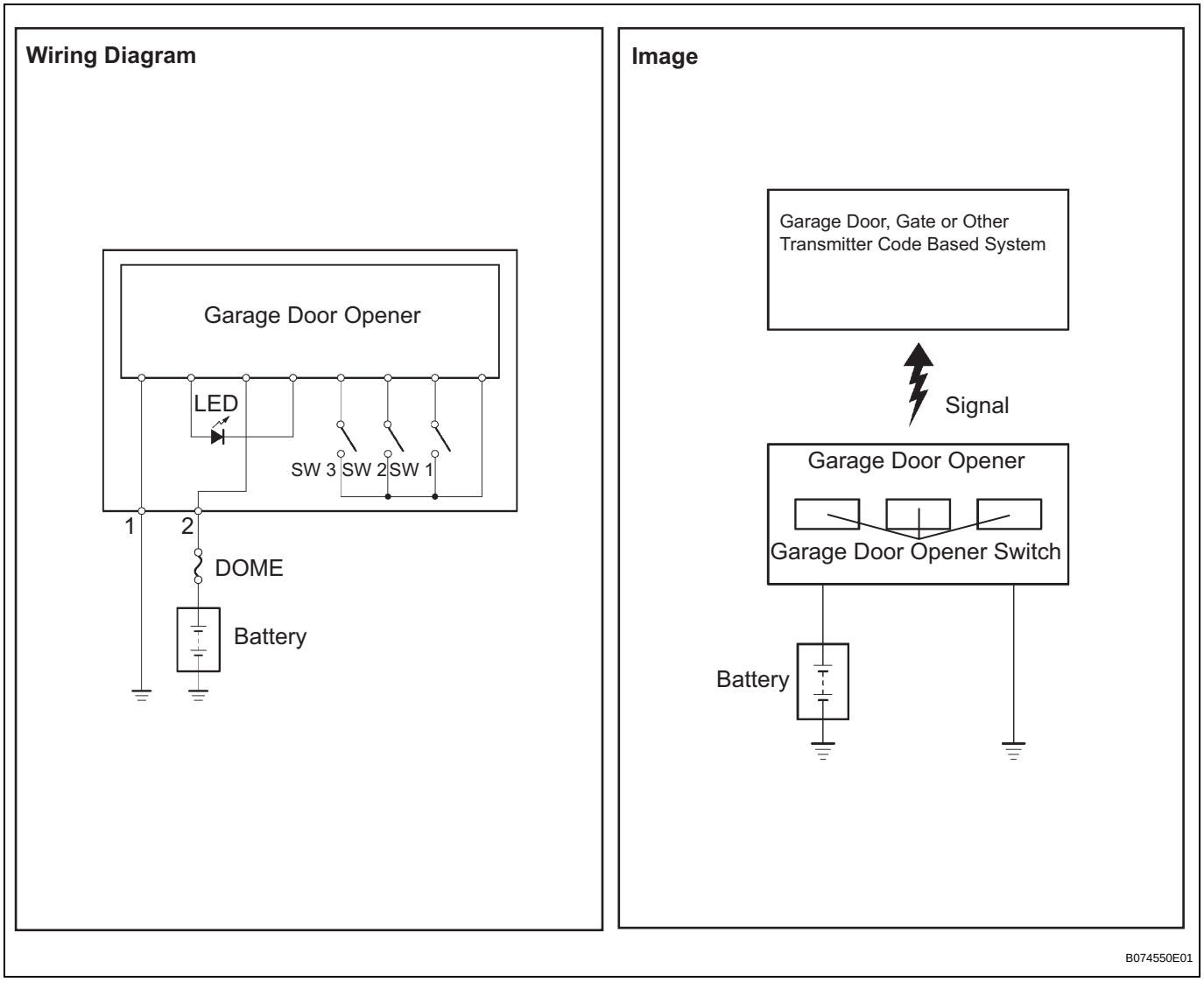

1. DESCRIPTION

(a) A maximum of three codes for transmitter code based systems such as garage doors, gates, and entry gates can be registered to the vehicle's garage door opener system. These stored codes can then be used to activate the transmitter controlled systems. It will not be necessary to keep the original handheld transmitters in the vehicle.

REGISTRATION

1. REGISTER TRANSMITTER CODE

HINT:

- The vehicle's garage door opener system records transmitter codes for systems such as garage doors, gates, door locks, home lighting systems, security systems, or other transmitter-code based systems.
- The garage door opener system is built into the roof console box assembly. If the roof console box assembly is replaced, transmitter codes previously registered in the garage door opener system must be re-registered.
- Ensure that the customer is aware that existing codes may be cleared from the garage door opener system while performing diagnosis of the system. All remotes required to reprogram the system should be made available at the time of inspection or repair of the garage door opener system.

(a) Re-registration of codes in the garage door opener system. (registration mode)

NOTICE:

- **When programming a garage door opener system, you may operate a garage door or other device. To prevent injury, it is necessary to make sure that people and objects are out of the way of the garage door or other device.**
- **Before beginning programming of the garage door opener system, turn off the engine and remove the key from the ignition key cylinder.**
- **The garage door opener system cannot be used with openers that:**
  (1) Were manufactured before April 1, 1982.
  (2) Do not meet Federal Safety Standards (for example, garage doors without a jam protection function).

HINT:

- 3 transmitter codes can be registered with the garage door opener system. It is possible to register one handheld transmitter code (original transmitter) for each of the three garage door opener system switches.
- Disconnecting the vehicle's battery will not erase the transmitter codes registered in the garage door opener system.
- An attempt to overwrite a previously registered code may fail. In this case, the previously registered handheld transmitter code will not be erased.
- To successfully program the garage door opener system, it may be necessary to replace the handheld transmitter battery before programming.

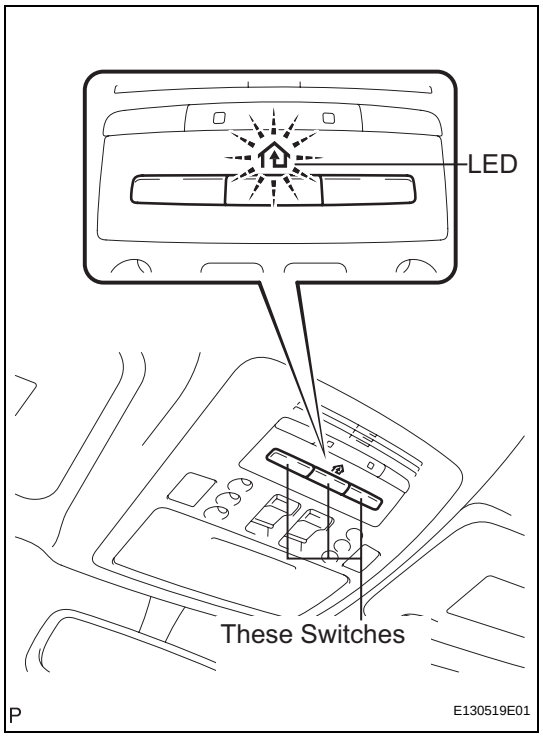

(1) Select one of the garage door opener system switches to program.

(2) Press and hold the selected switch for 20 seconds. The garage door opener system will enter registration mode. Continue to hold this switch during steps 3 and 4.
HINT:
The garage door opener system LED should stay on while holding the selected switch for the 20 second period. After entering registration mode, the LED will flash approximately 1 time per second (1 Hz). This indicates that the garage door opener system has entered registration mode and is listening for a code from a handheld transmitter.

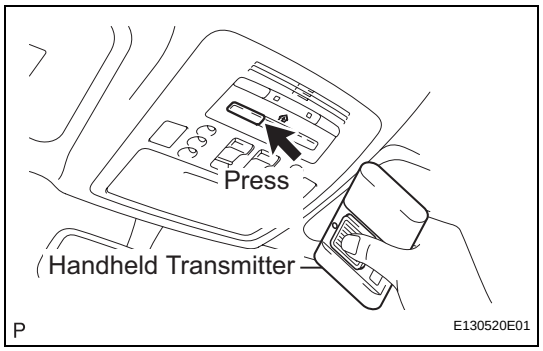

(3) After the garage door opener system has entered registration mode, bring the original handheld transmitter within 2 to 9 cm (1 to 3 in.) of the garage door opener system. Press and hold the switch on the handheld transmitter. If the flashing speed of the garage door indicator light changes from the slow speed to a faster speed, proceed to step 4.
HINT:
Some handheld transmitters stop transmitting after 1 to 2 seconds. In this case, continue to hold the selected garage door opener system switch while pressing the handheld transmitter switch for two seconds at a time. Repeat the cycle of pressing and releasing the transmitter switch while monitoring for a change of the flashing speed of the indicator LED.

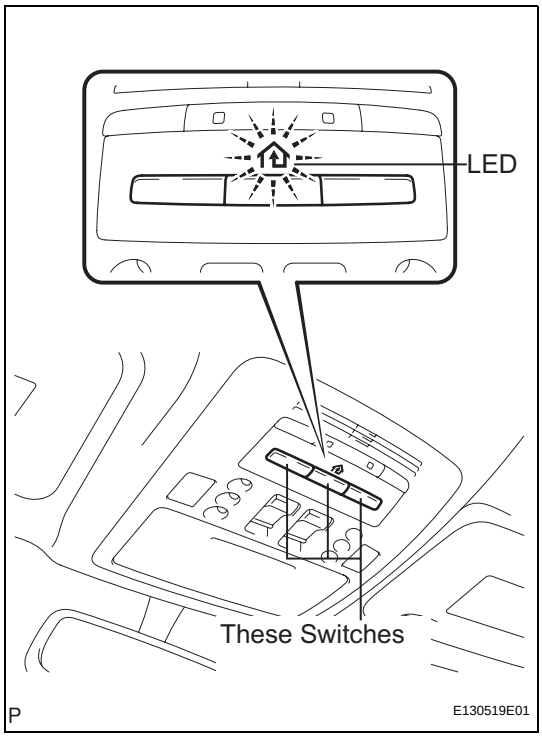

(4) When the indicator light begins to flash more rapidly, release both switches. This indicates that the garage door opener system has been successfully programmed. If the garage door opener system fails to program, review all hints before trying the programming process again.

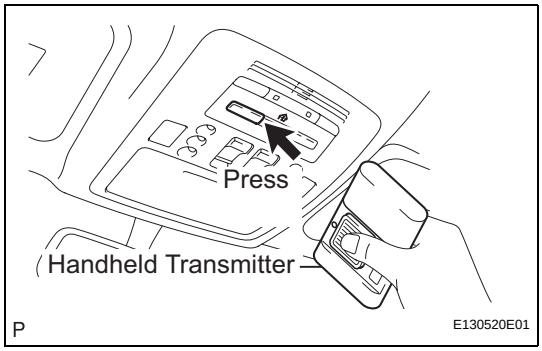

HINT:

- If transmitter registration fails:
  (1) The battery in the handheld transmitter may be weak or need to be replaced.
  (2) The handheld transmitter and opener device to be registered may not be compatible with the vehicle's garage door opener system.
- After entering the garage door opener system registration mode, registration of the handheld transmitter code must be completed within 90 seconds. If 90 seconds have elapsed, the garage door opener system will enter low power mode.
- For first time programming it may be necessary to press and hold the two outer switches until the indicator light begins to flash rapidly. The length of time that it is necessary to hold the switches for in this case should be approximately 20 seconds.
- In some cases, the garage door indicator light may flash slowly (1 time per second (1 Hz)) as soon as the selected garage door opener system switch is pressed. This indicates that the system is ready or "listening" for a code from a handheld transmitter. Continue to hold the switch and proceed from step 3.

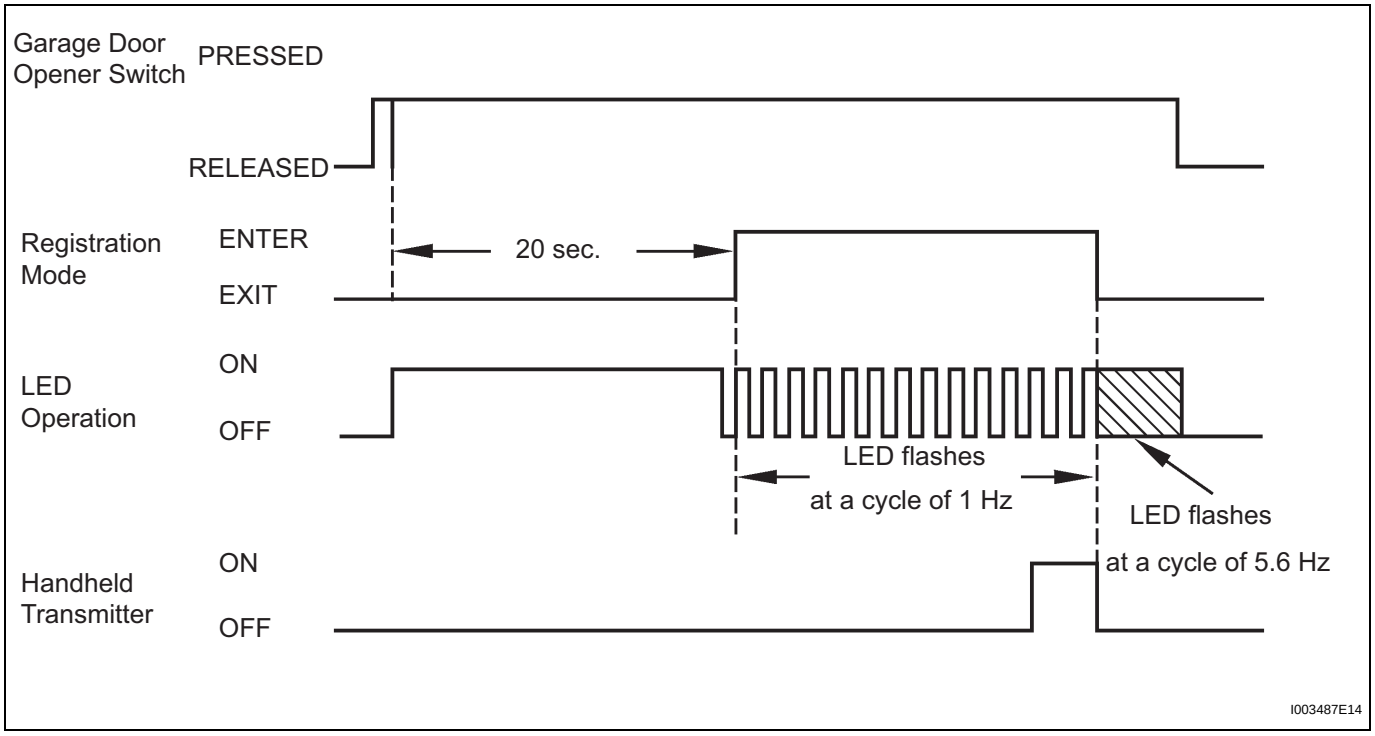

(b) Erasure of transmitter codes in the garage door opener system. (clear mode)

HINT:

All three codes registered in the garage door opener system will be erased. No option exists for erasing only one transmitter code.

(1) Press and hold the left and right switches of the garage door opener system for 20 seconds. The LED will begin to flash approximately 5 times per second (5.6 Hz.). This indicates that the codes contained in the vehicle garage door opener system have been erased. Releasing the switches ends clear mode.

HINT:

- If the switches are released within 10 seconds after the transmitter codes have been erased, the system will enter registration mode immediately the next time a garage door opener system switch is pressed.
- If the switches are held for 10 seconds or more after the transmitter codes have been erased, default codes will be set to the three switches of the garage door opener system. These default codes may in some cases be used for training an opener device that uses rolling codes.

(c) Low power mode:

(1) If the garage door opener switch is stuck or held for 100 seconds or more, the garage door opener will enter low power mode to economize on power consumption. When the garage door opener has entered low power mode, the LED turns off. When the garage door opener switch is released, low power mode will end.

Example:

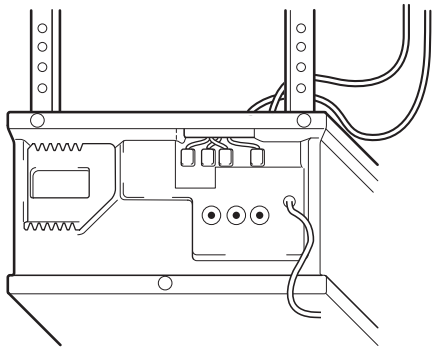

P

E129942E01

2. ROLLING CODE SYSTEMS

(a) If the handheld transmitter for the opener device (customer's garage door) being programmed uses a rolling code, it may be necessary to "train" the garage door opener device.

HINT:

- "Train" refers to causing the opener device (customer's ceiling mounted garage door opener) to recognize a non-rolling code.
- The steps required to "train" an opener device may vary depending on the model, type, age, and manufacturer of the device.

(1) Locate the "training" button on the opener device.

(2) Press the training button.

(3) Within 30 seconds press and release the vehicle's programmed "HomeLink" switch twice. Some opener devices may require the vehicle's switch to be pressed three times.

(4) The vehicle's garage door opener system should now operate the opener device.

HINT:

Opener device refers to a device such as a ceiling mounted garage door opener, which is located at the customer's residence. It is necessary to read the instructions for the customer's opener device, to allow the above procedure to be performed safely and successfully. The customer should be aware that performing this procedure will result in a lowered level of security for the customer's opener device.

INSPECTION

1. INSPECT GARAGE DOOR OPENER

(a) To inspect the garage door opener system, press each switch and check that the LED in the "HomeLink" logo illuminates as illustrated. If one or more of the switches do not cause the LED to illuminate, confirm that the fuse and the wiring to the garage door opener system unit is normal. If the fuse and wiring are normal, and the LED does not work, replace the garage door opener system unit located in the roof console box assembly.

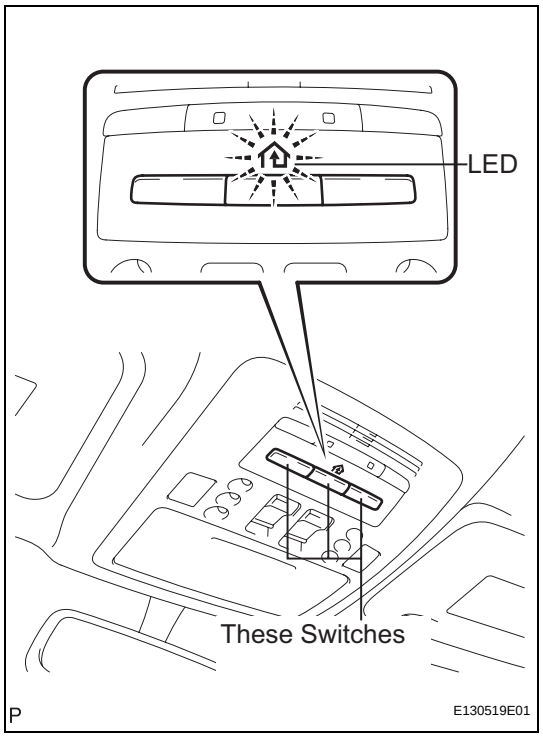

2. INSPECT GARAGE DOOR OPENER REGISTRATION AND TRANSMITTIMG OPERATION

HINT:
Use the KENT-MOORE "HomeLink" tester, and the KENT-MOORE handheld transmitter for this test. First erase the customer's transmitter codes, and then register the tester's handheld transmitter code to the garage door opener system.

(a) Check if the tester's handheld transmitter code was successfully registered.
HINT:
If the handheld transmitter's code cannot be registered, replace the garage door opener system unit.

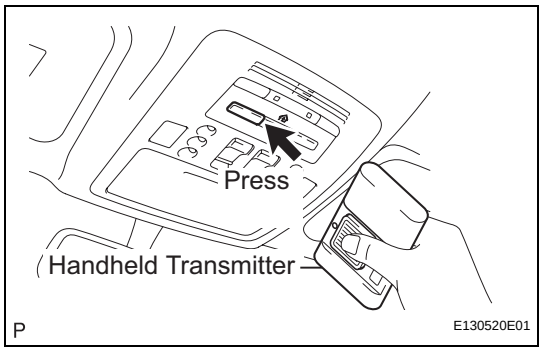

(b) Press the garage door opener switch that was used to copy the signal from the handheld transmitter. Check if the "HomeLink" tester's green LED illuminates.
HINT:
If the green LED does not illuminate, replace the garage door opener system unit that is located in the roof console box assembly.

(c) When the inspection is complete, re-register the customer's handheld transmitter codes.

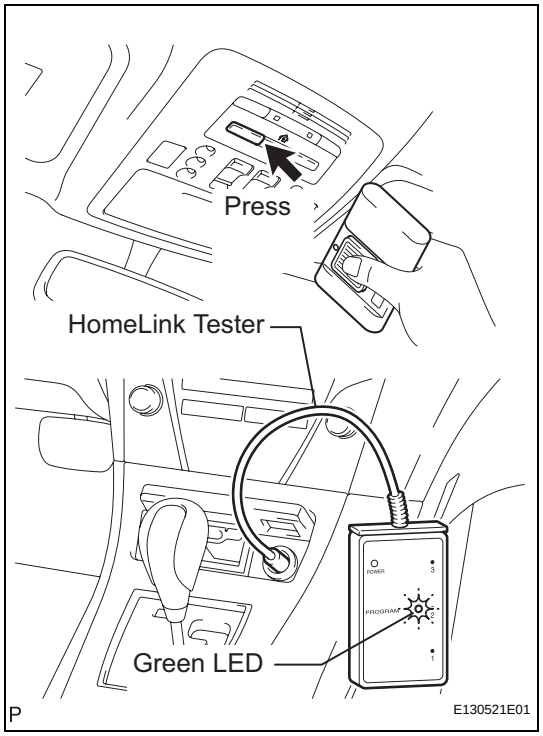

GD

GARAGE DOOR OPENER SWITCH

COMPONENTS

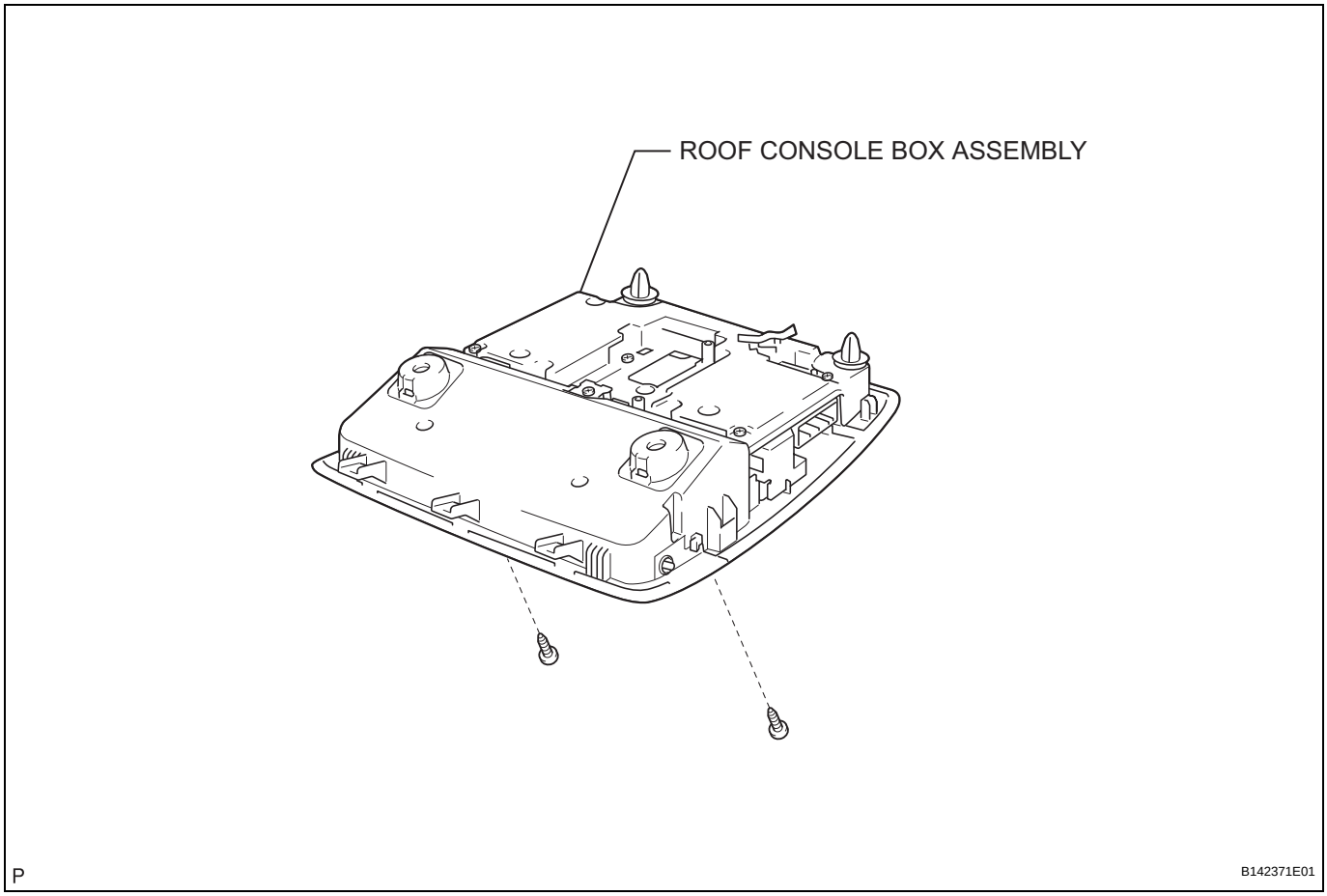

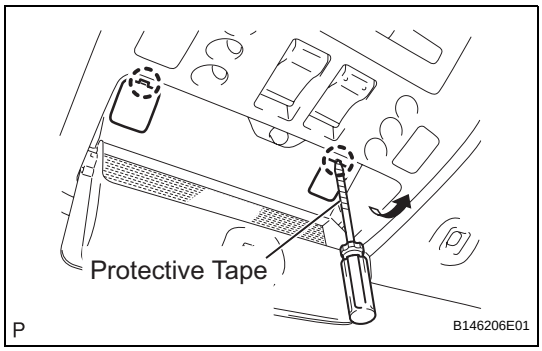

REMOVAL

1. REMOVE ROOF CONSOLE BOX ASSEMBLY

(a) Using a screwdriver, disengage the 2 claws and open the 2 covers.
HINT:
- Tape the screwdriver tip before use.

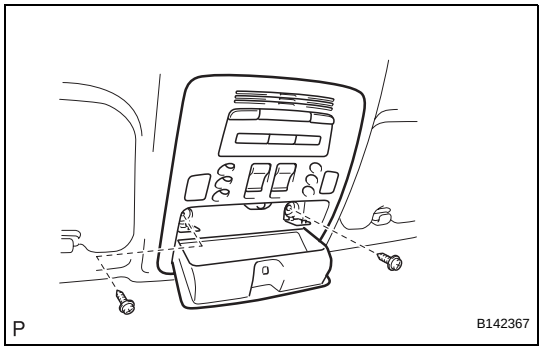

(b) Remove the 2 screws.

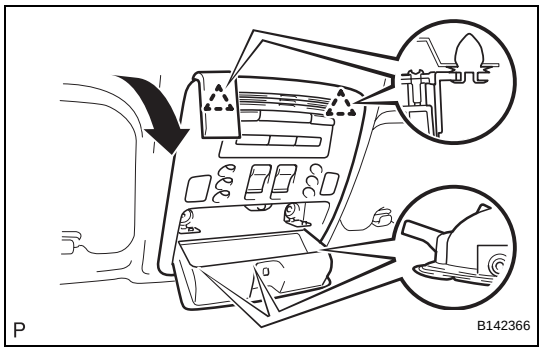

(c) Using a moulding remover, disengage the 2 clips.
(d) Disconnect the connectors and remove the roof console box assembly.

INSTALLATION

1. INSTALL ROOF CONSOLE BOX ASSEMBLY

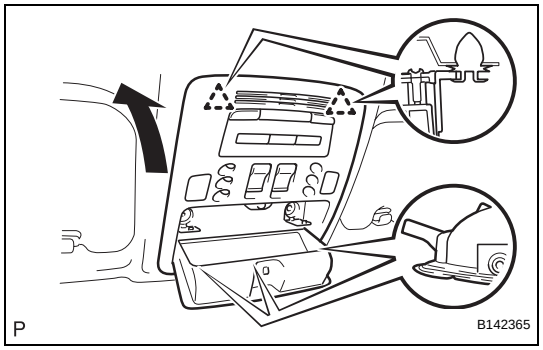

(a) Connect the connectors.
(b) Engage the 2 clips and install the console box assembly.

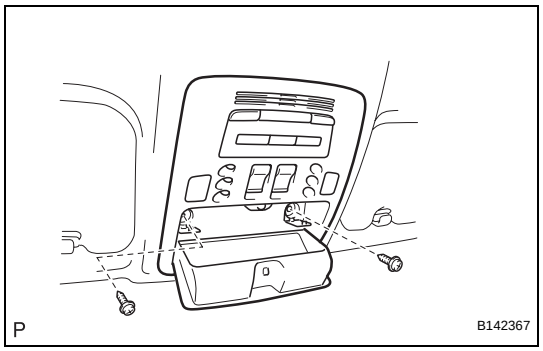

(c) Install the 2 screws.

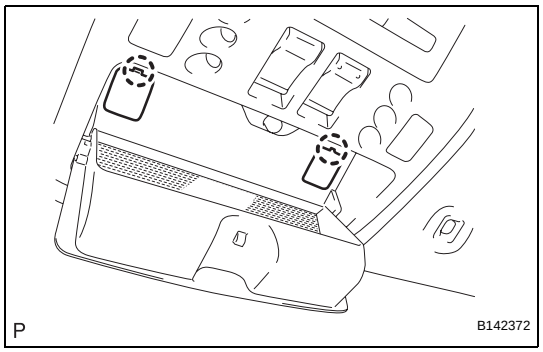

(d) Engage the 2 claws and close the 2 covers.

CLOCK

PRECAUTION

NOTICE:
Some systems need to be initialized after reconnecting the negative (-) battery terminal (See page IN-33).

PARTS LOCATION

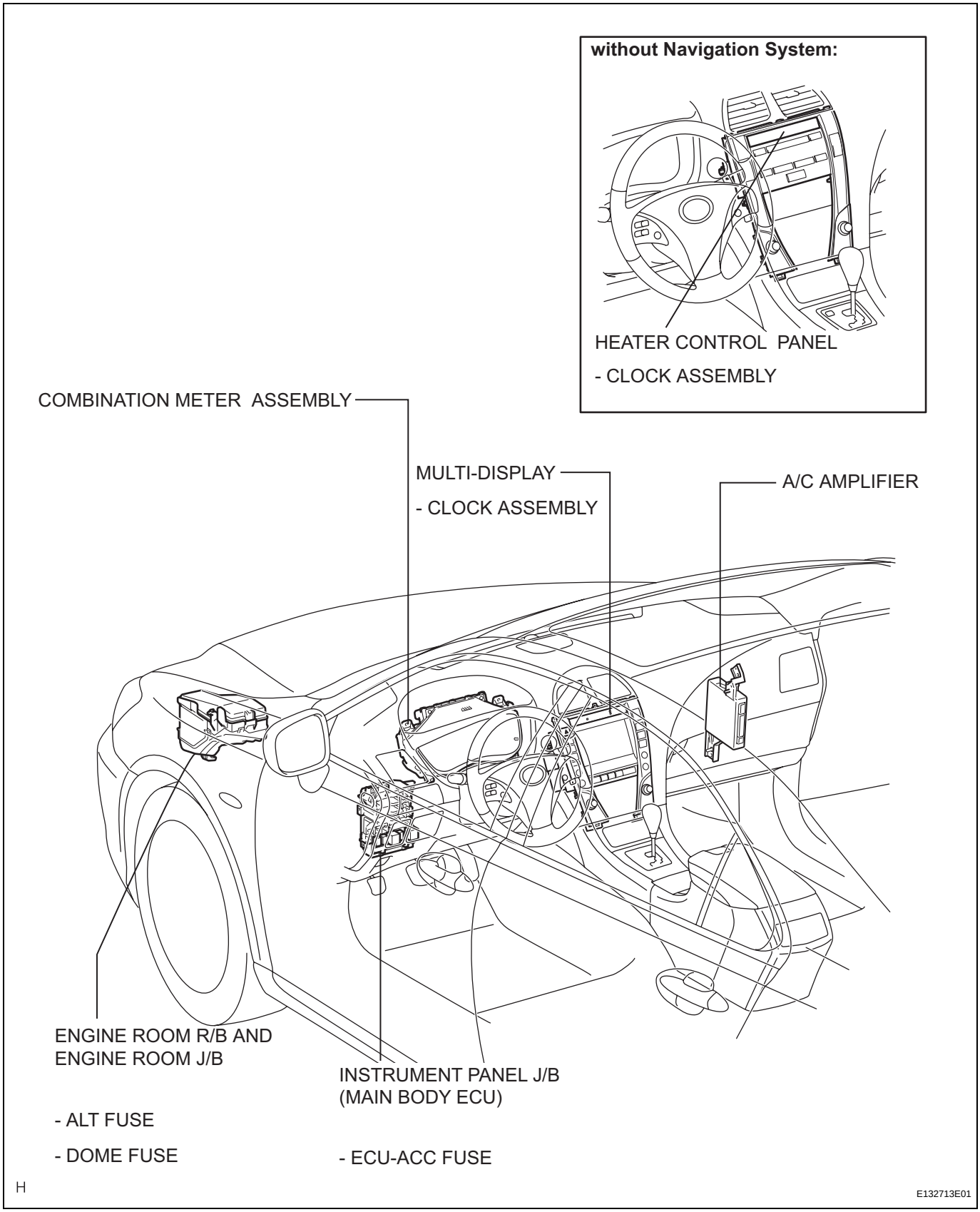

CIGARETTE LIGHTER

COMPONENTS

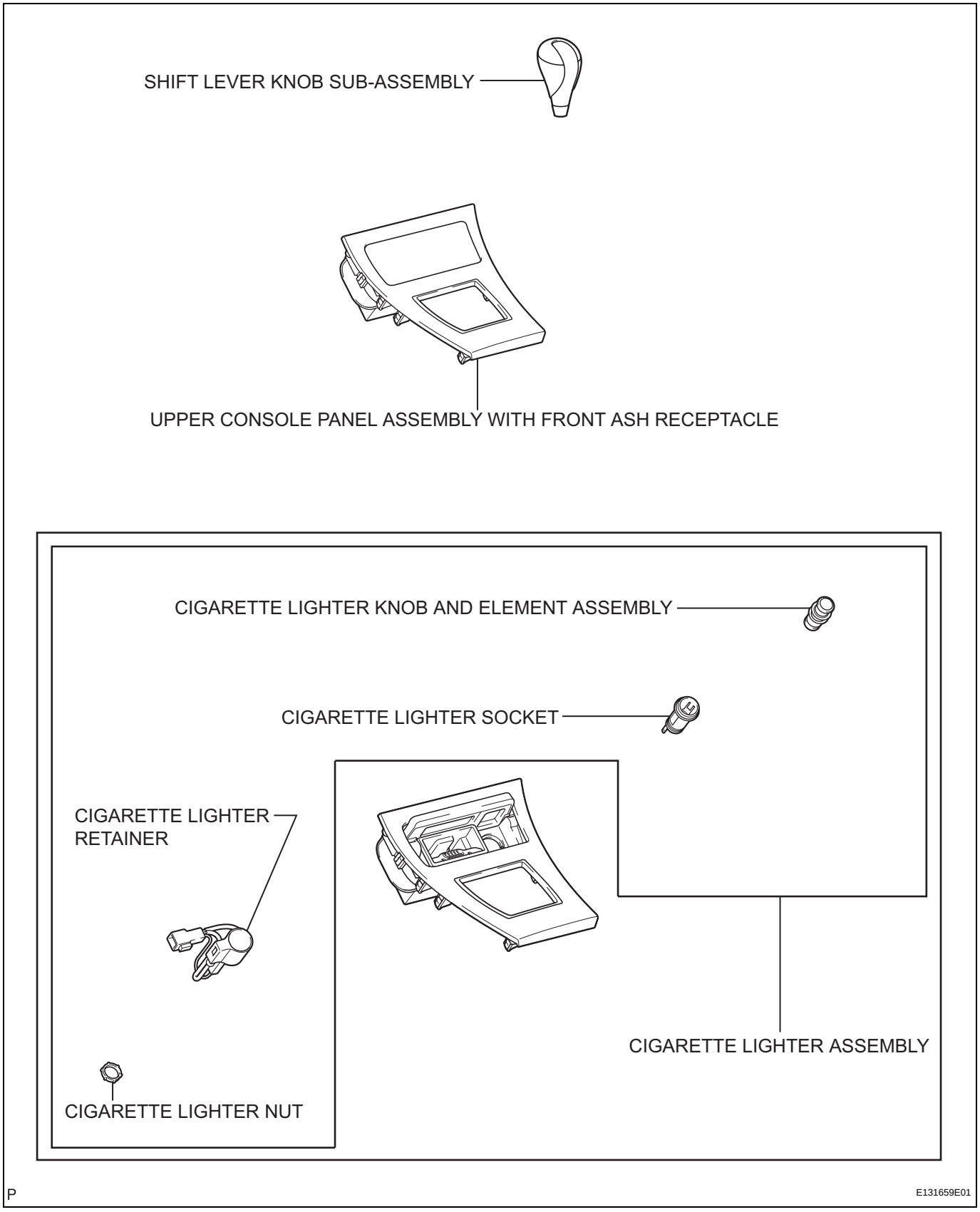

REMOVAL

1. **REMOVE SHIFT LEVER KNOB SUB-ASSEMBLY (See page IP-16)**
2. **REMOVE UPPER CONSOLE PANEL ASSEMBLY WITH FRONT ASH RECEPTACLE (See page IP-16)**
3. **REMOVE CIGARETTE LIGHTER ASSEMBLY**
   (a) Remove the cigarette lighter knob and element assembly.
   (b) Disconnect the connector.

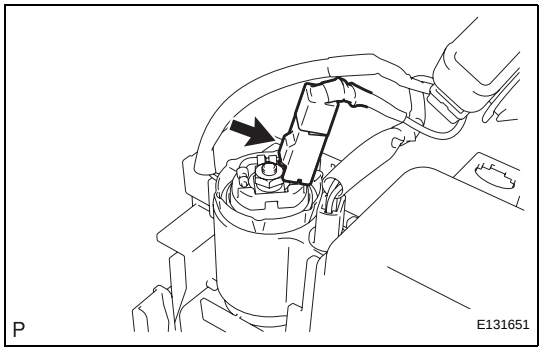

   (c) Turn the cigarette lighter nut in the direction indicated by the arrow to remove it.

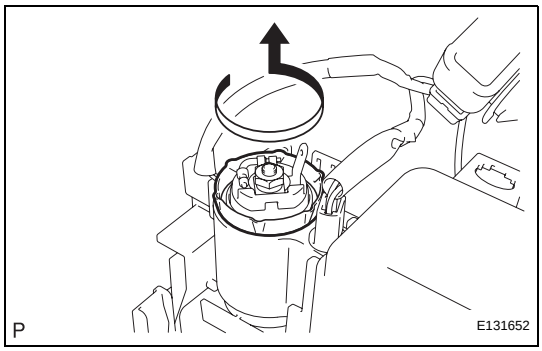

   (d) Remove the cigarette lighter retainer.
   (e) Remove the cigarette lighter socket.

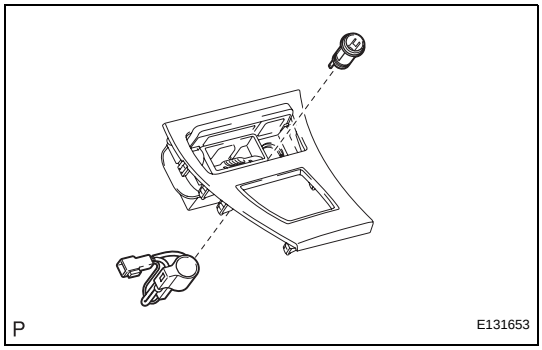

INSTALLATION

1. **INSTALL CIGARETTE LIGHTER ASSEMBLY**
   (a) Install the cigarette lighter socket.
   (b) Install the cigarette lighter retainer.

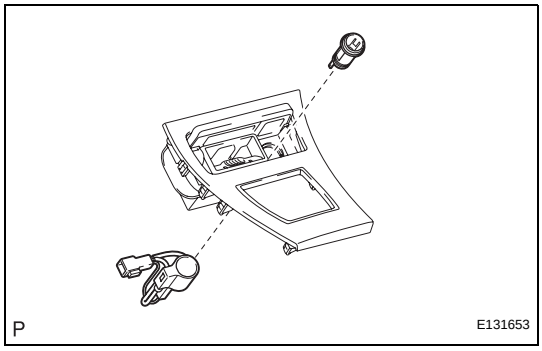

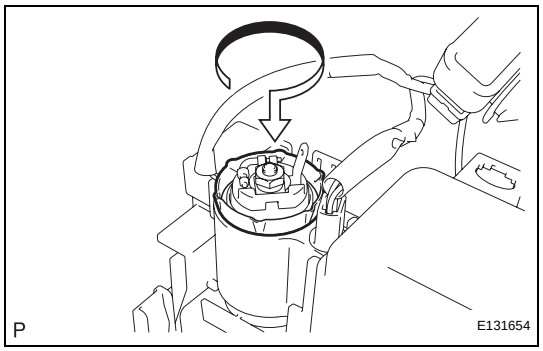

(c) Turn the cigarette lighter nut in the direction indicated by the arrow to install it.

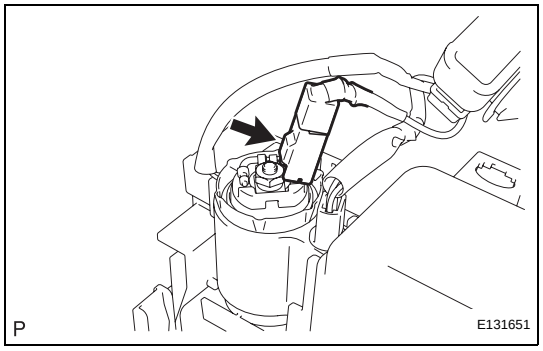

(d) Connect the connector.
(e) Install the cigarette lighter knob and element assembly.

2. INSTALL UPPER CONSOLE PANEL ASSEMBLY WITH FRONT ASH RECEPTACLE (See page IP-42)

3. INSTALL SHIFT LEVER KNOB SUB-ASSEMBLY (See page IP-42)

POWER OUTLET SOCKET

COMPONENTS

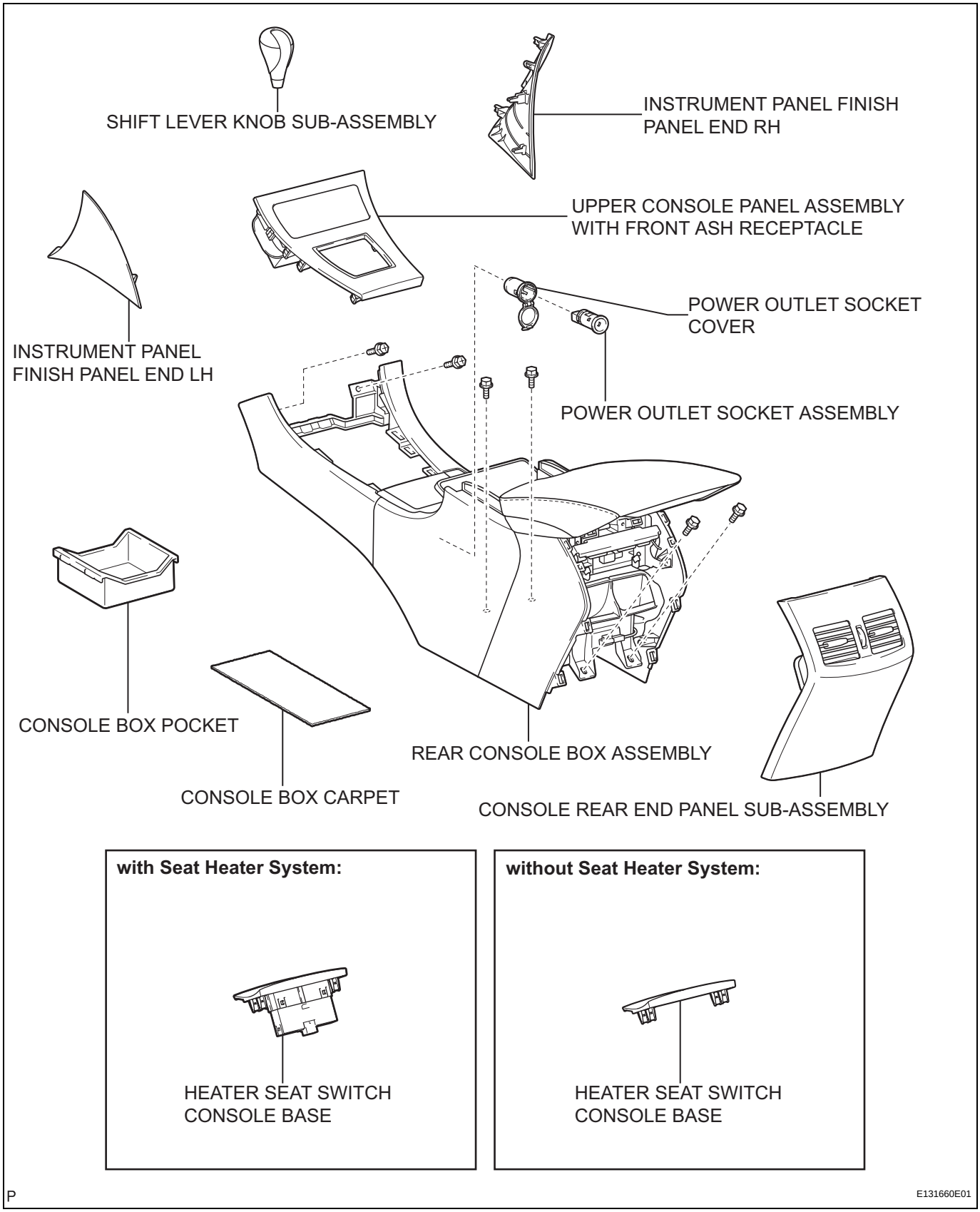

OT

REMOVAL

1. **REMOVE INSTRUMENT PANEL FINISH PANEL END LH (See page IP-13)**
2. **REMOVE INSTRUMENT PANEL FINISH PANEL END RH (See page IP-15)**
3. **REMOVE SHIFT LEVER KNOB SUB-ASSEMBLY (See page IP-16)**
4. **REMOVE UPPER CONSOLE PANEL ASSEMBLY WITH FRONT ASH RECEPTACLE (See page IP-16)**
5. **REMOVE HEATER SEAT SWITCH CONSOLE BASE (w/o Seat Heater System) (See page IP-17)**
6. **REMOVE HEATER SEAT SWITCH CONSOLE BASE (w/ Seat Heater System) (See page IP-18)**
7. **REMOVE CONSOLE BOX POCKET (See page IP-18)**
8. **REMOVE CONSOLE BOX CARPET (See page IP-18)**
9. **REMOVE CONSOLE REAR END PANEL SUB-ASSEMBLY (See page IP-19)**
10. **REMOVE REAR CONSOLE BOX ASSEMBLY (See page IP-19)**
11. **REMOVE POWER OUTLET SOCKET ASSEMBLY**
    (a) Disconnect the connector.
    (b) Disengage the claw and remove the power outlet socket assembly.

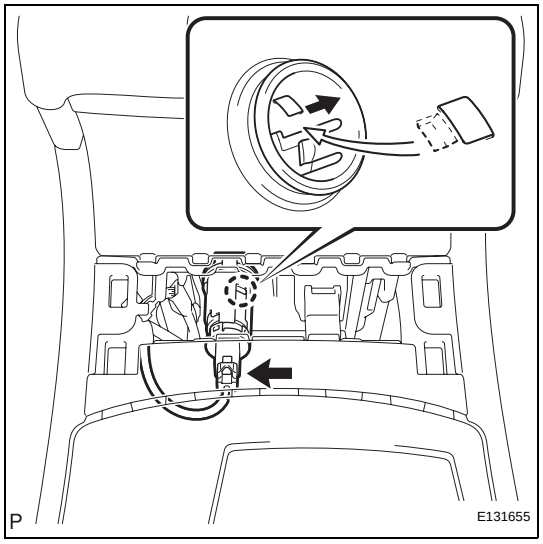

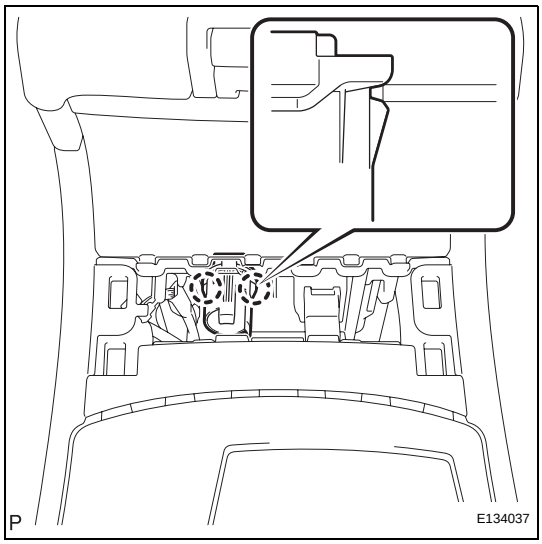

12. REMOVE POWER OUTLET SOCKET COVER

(a) Disengage the 2 claws and remove the power outlet socket cover.

INSTALLATION

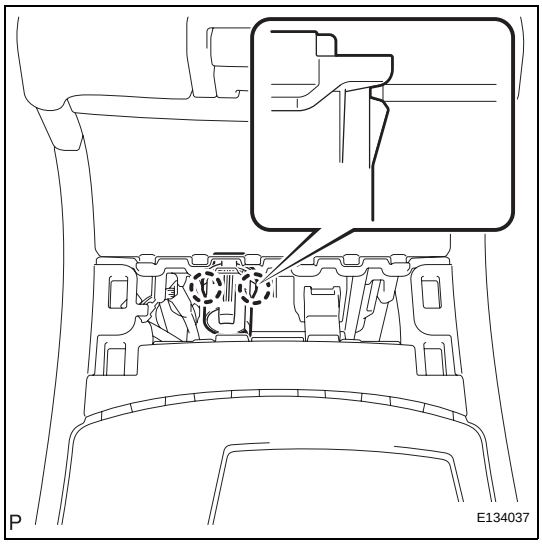

1. INSTALL POWER OUTLET SOCKET COVER

(a) Engage the 2 claws and install the power outlet socket cover.

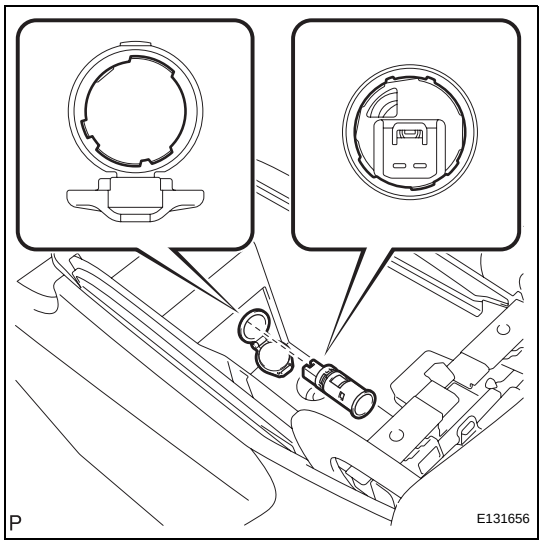

2. INSTALL POWER OUTLET SOCKET ASSEMBLY

(a) Referring to the shape of the parts, align the power outlet socket assembly with the power outlet socket cover and install the power outlet socket assembly.

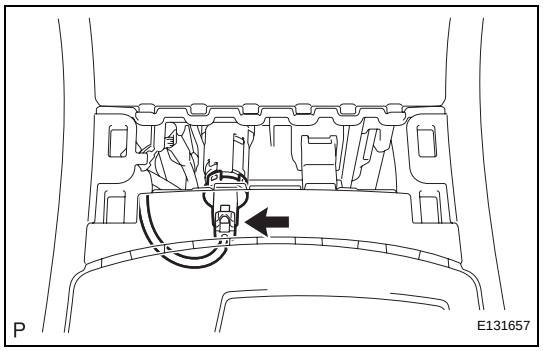

(b) Connect the connector.

3. **INSTALL REAR CONSOLE BOX ASSEMBLY (See page IP-39)**
4. **INSTALL CONSOLE REAR END PANEL SUB-ASSEMBLY (See page IP-40)**
5. **INSTALL CONSOLE BOX CARPET (See page IP-41)**
6. **INSTALL CONSOLE BOX POCKET (See page IP-41)**
7. **INSTALL HEATER SEAT SWITCH CONSOLE BASE (w/ Seat Heater System) (See page IP-41)**
8. **INSTALL HEATER SEAT SWITCH CONSOLE BASE (w/o Seat Heater System) (See page IP-41)**
9. **INSTALL UPPER CONSOLE PANEL ASSEMBLY WITH FRONT ASH RECEPTACLE (See page IP-42)**
10. **INSTALL SHIFT LEVER KNOB SUB-ASSEMBLY (See page IP-42)**
11. **INSTALL INSTRUMENT PANEL FINISH PANEL END RH (See page IP-44)**
12. **INSTALL INSTRUMENT PANEL FINISH PANEL END LH (See page IP-46)**

POWER WINDOW CONTROL SYSTEM

PRECAUTION

NOTICE:
Some systems need to be initialized after reconnecting the negative (-) battery terminal (See page IN-33).

PARTS LOCATION

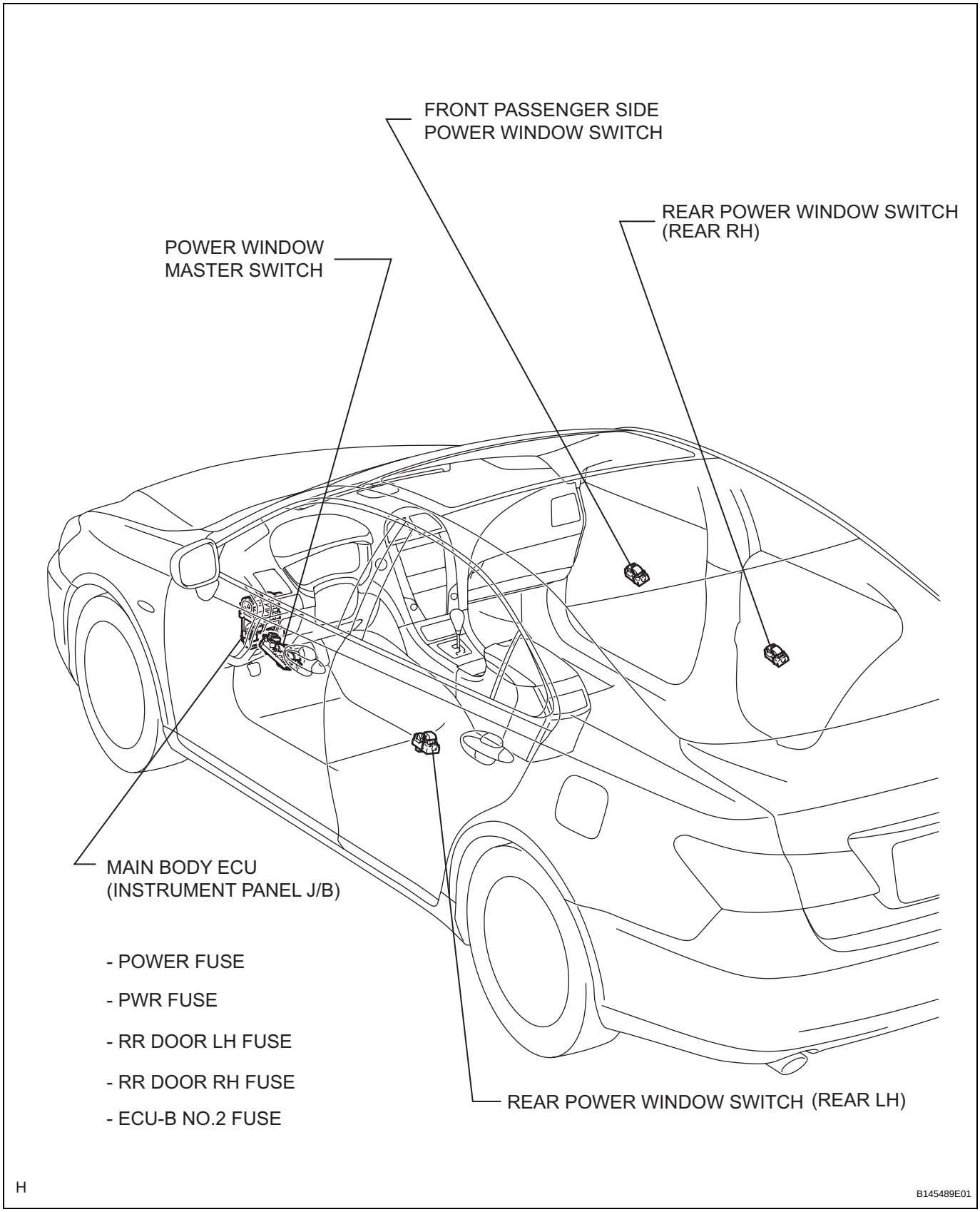

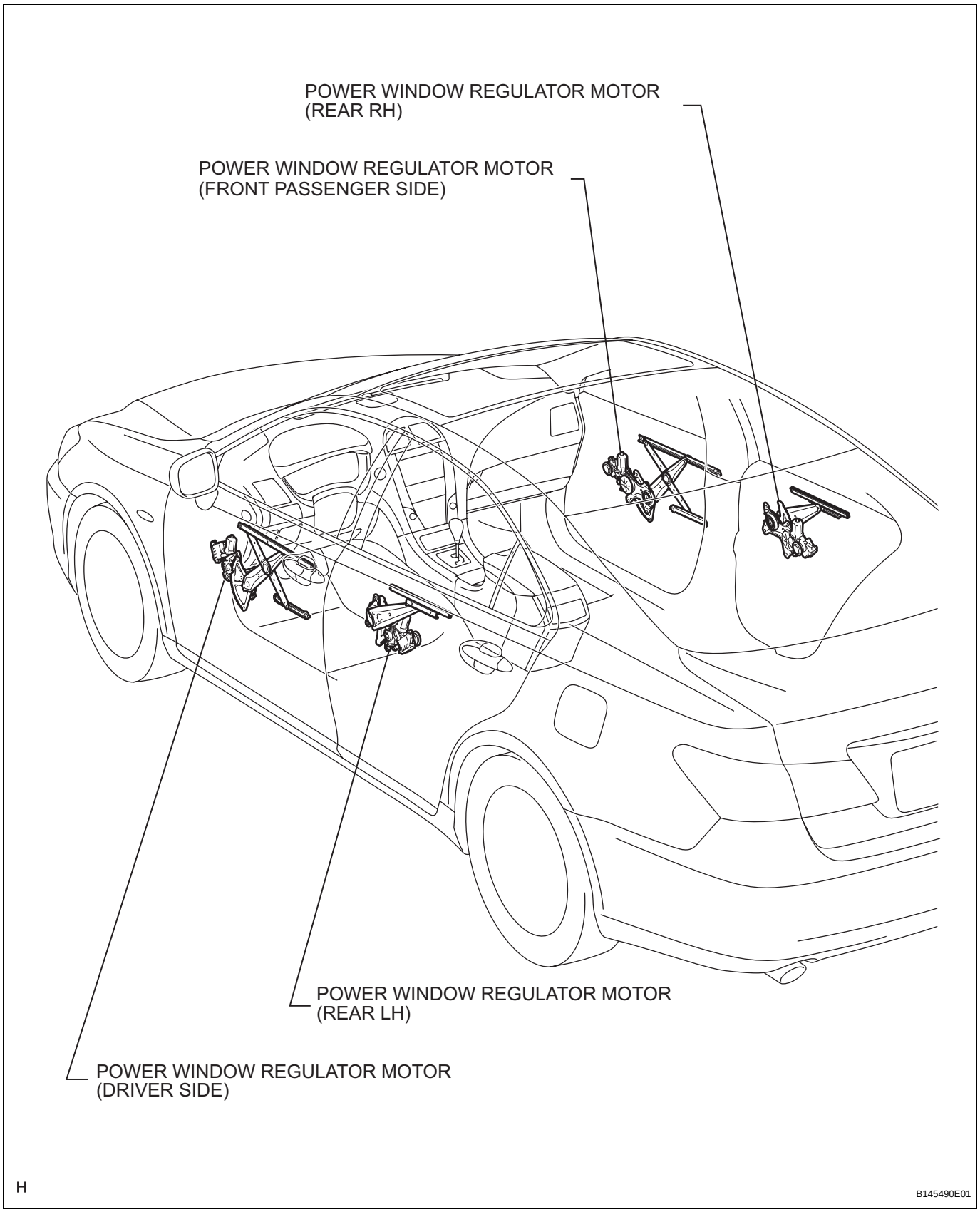
POWER WINDOW REGULATOR MOTOR
(REAR RH)
POWER WINDOW REGULATOR MOTOR
(FRONT PASSENGER SIDE)
POWER WINDOW REGULATOR MOTOR
(REAR LH)
POWER WINDOW REGULATOR MOTOR
(DRIVER SIDE)
H
B145490E01

POWER WINDOW MASTER SWITCH

COMPONENTS

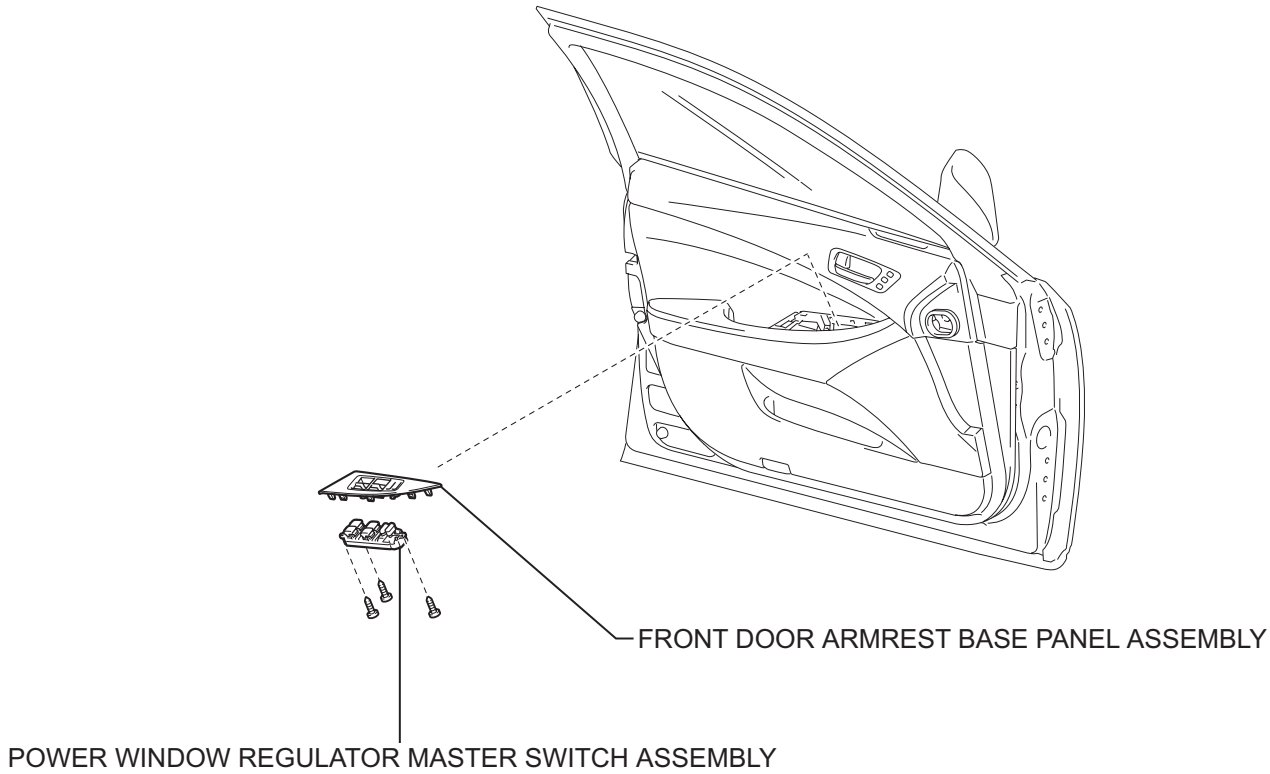

P

B149101E01

REMOVAL

1. **REMOVE FRONT DOOR ARMREST BASE PANEL ASSEMBLY (See page ED-33)**
2. **REMOVE POWER WINDOW REGULATOR MASTER SWITCH ASSEMBLY (See page ED-33)**

INSPECTION

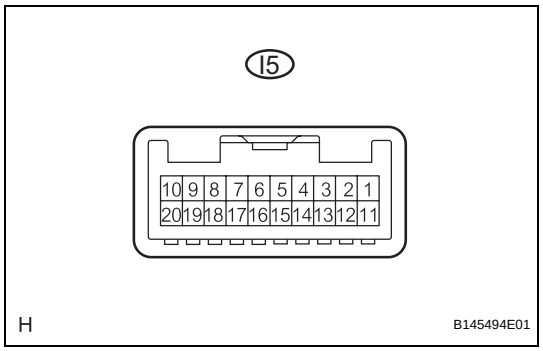

1. **INSPECT POWER WINDOW MASTER SWITCH**
   (a) Measure the resistance when the switch is operated according to the value(s) in the table below.
   Standard resistance

Tester Connection	Switch Condition	Specified Condition
20 (U) - 12 (E)	Manual UP	Below 1 Ω
15 (D) - 12 (E)	Manual DOWN	Below 1 Ω

FRONT PASSENGER SIDE POWER WINDOW SWITCH

COMPONENTS

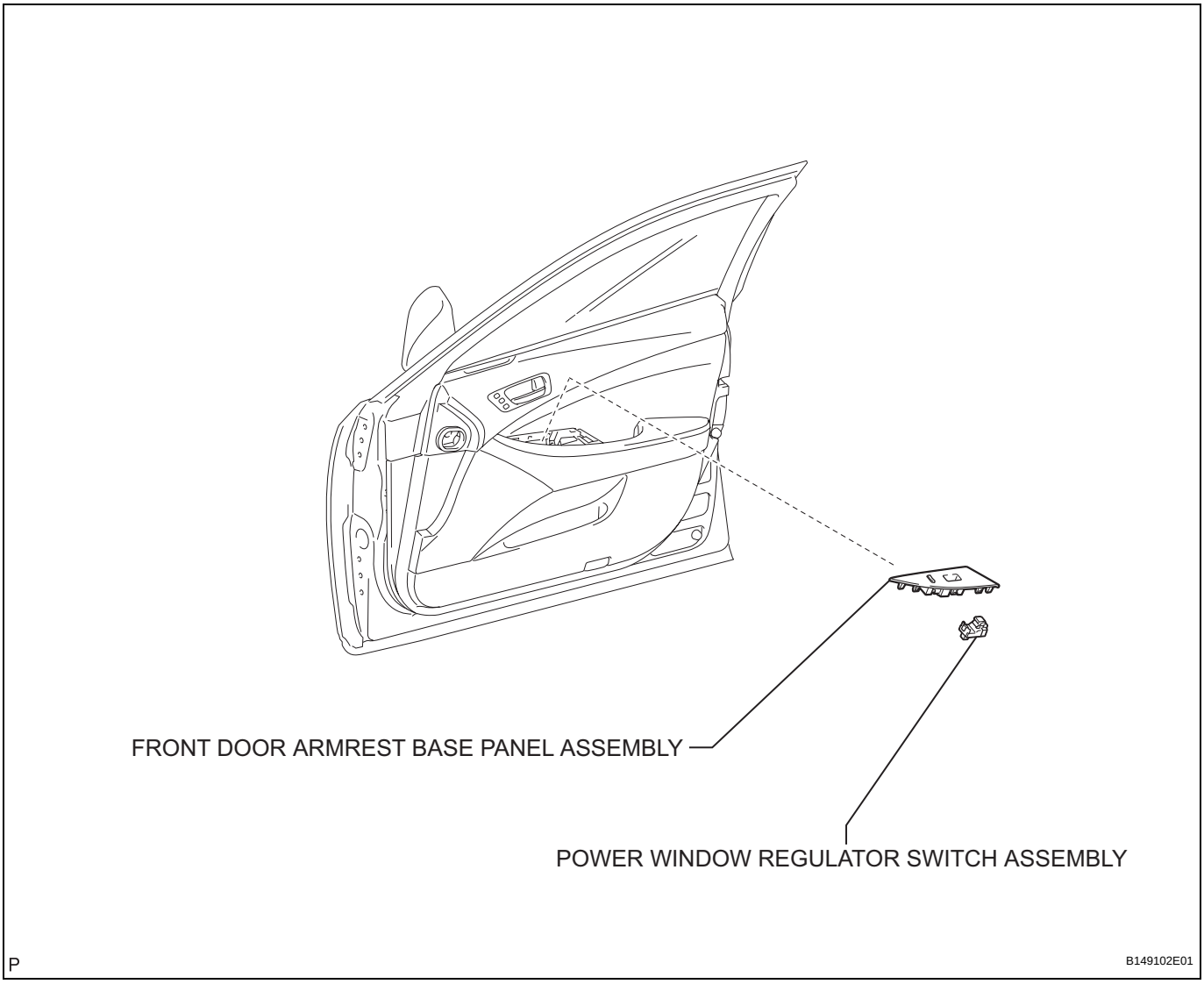

REMOVAL

1. **REMOVE FRONT DOOR ARMREST BASE PANEL ASSEMBLY (See page ED-33)**

2. **REMOVE POWER WINDOW REGULATOR SWITCH ASSEMBLY (See page ED-33)**

INSPECTION

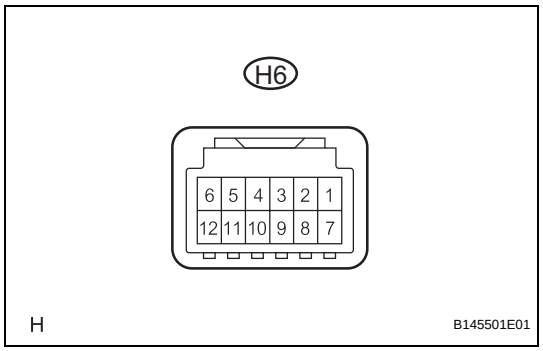

1. **INSPECT POWER WINDOW SWITCH**
   (a) Remove the power window switch.
   (b) Measure the resistance when the switch is operated according to the value(s) in the table below.
   Standard resistance

Tester Connection	Switch Condition	Specified Condition
2 (E) - 4 (A) - 5 (E)	Auto UP	Below 1 Ω
2 (U) - 5 (E)	Manual UP	Below 1 Ω
5 (E) - 10 (D)	Manual DOWN	Below 1 Ω
4 (A) - 10 (D) - 5 (E)	Auto DOWN	Below 1 Ω

REAR POWER WINDOW SWITCH

COMPONENTS

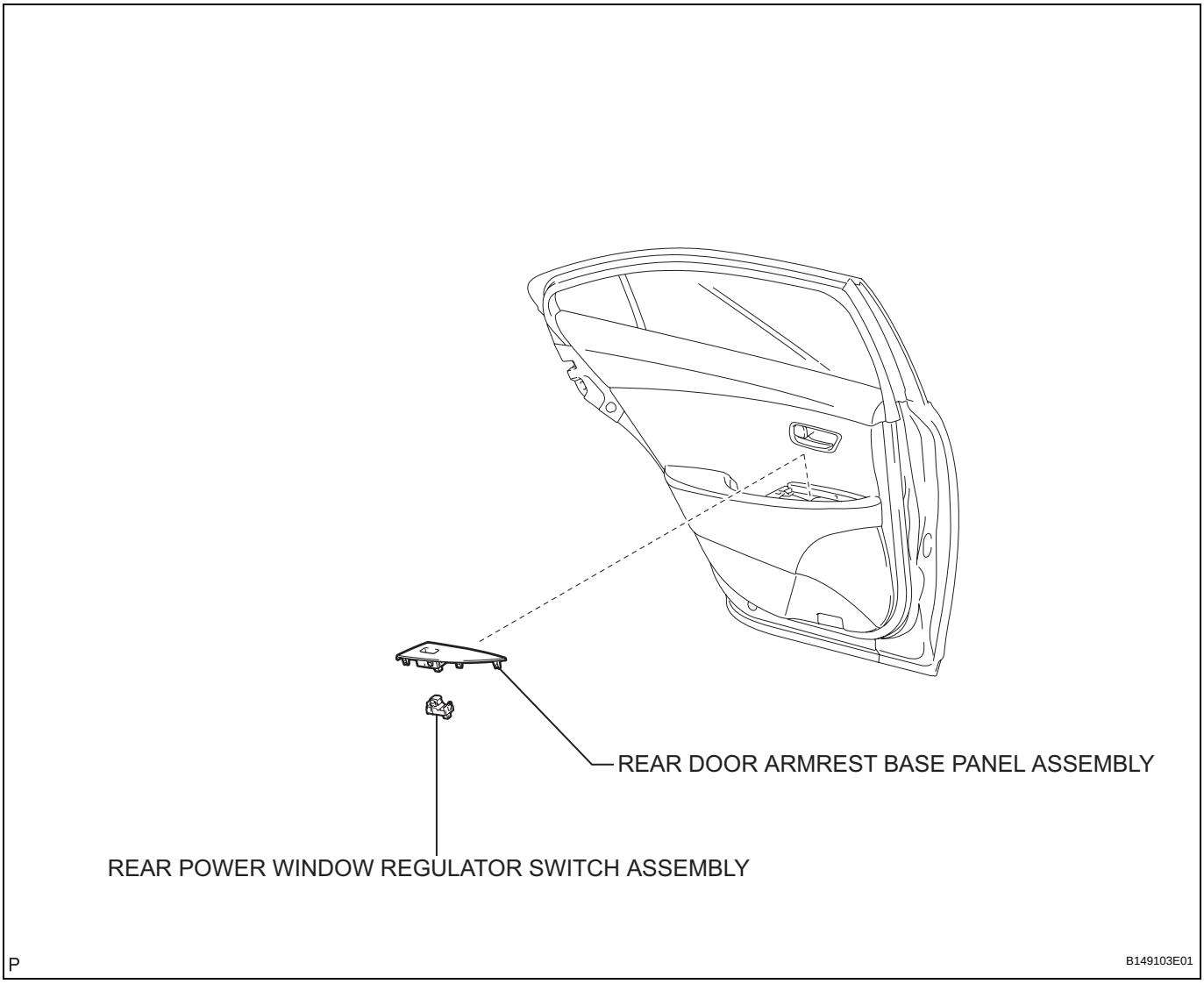

REMOVAL

1. **REMOVE REAR DOOR ARMREST BASE PANEL ASSEMBLY (See page ED-59)**

2. **REMOVE REAR POWER WINDOW REGULATOR SWITCH ASSEMBLY (See page ED-59)**

INSPECTION

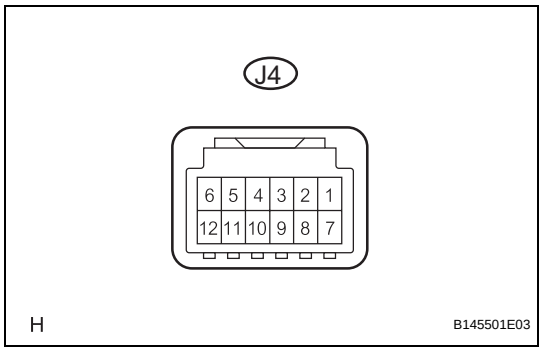

1. **INSPECT POWER WINDOW SWITCH (for Rear RH)**
   (a) Remove the power window switch.
   (b) Measure the resistance when the switch is operated according to the value(s) in the table below.
   Standard resistance

Tester Connection	Switch Condition	Specified Condition
2 (E) - 4 (A) - 5 (E)	Auto UP	Below 1 Ω
2 (U) - 5 (E)	Manual UP	Below 1 Ω
5 (E) - 10 (D)	Manual DOWN	Below 1 Ω
4 (A) - 10 (D) - 5 (E)	Auto DOWN	Below 1 Ω

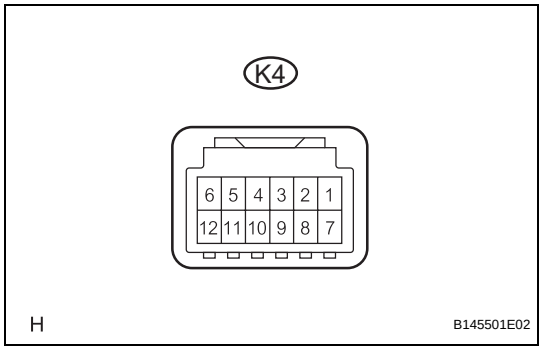

2. **REMOVE POWER WINDOW SWITCH (for Rear LH)**
   (a) Remove the power window switch.
   (b) Measure the resistance when the switch is operated according to the value(s) in the table below.
   Standard resistance

Tester Connection	Switch Condition	Specified Condition
2 (E) - 4 (A) - 5 (E)	Auto UP	Below 1 Ω
2 (U) - 5 (E)	Manual UP	Below 1 Ω
5 (E) - 10 (D)	Manual DOWN	Below 1 Ω
4 (A) - 10 (D) - 5 (E)	Auto DOWN	Below 1 Ω

POWER WINDOW REGULATOR MOTOR

COMPONENTS

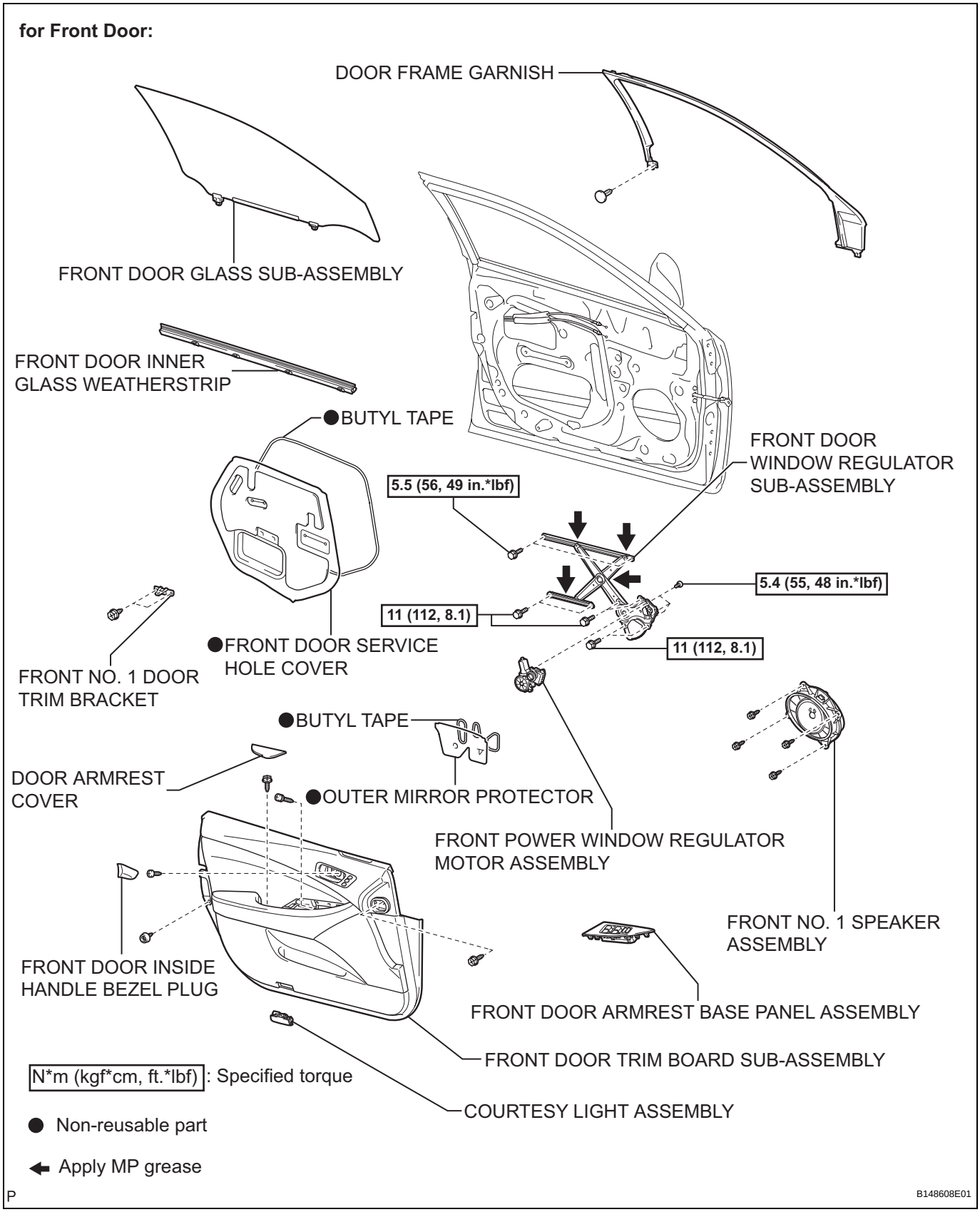

WS

for Rear Door:

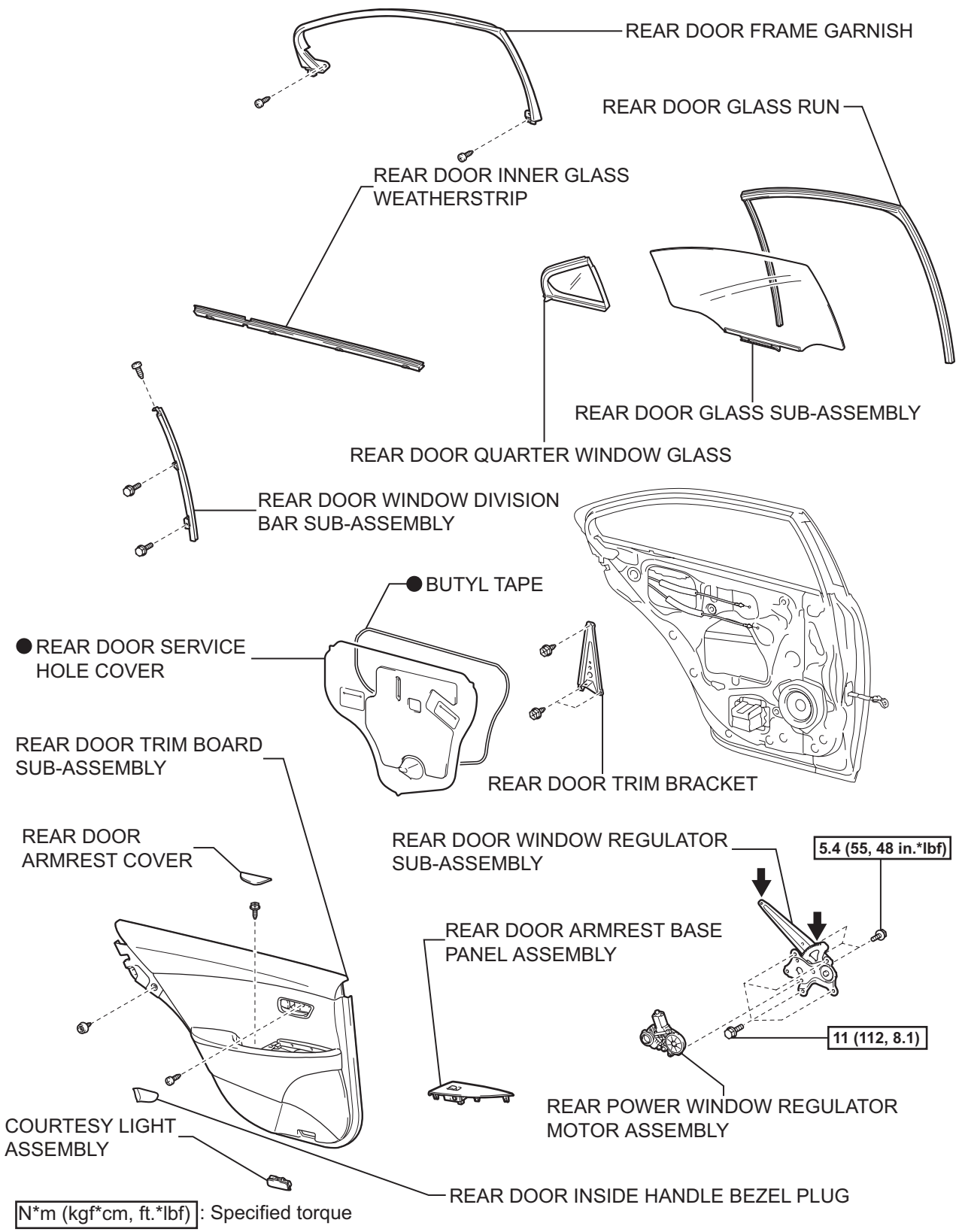

N*m (kgf*cm, ft.*lbf) : Specified torque

● Non-reusable part

⬅ Apply MP grease

P

B148609E01

WS

WINDSHIELD GLASS

COMPONENTS

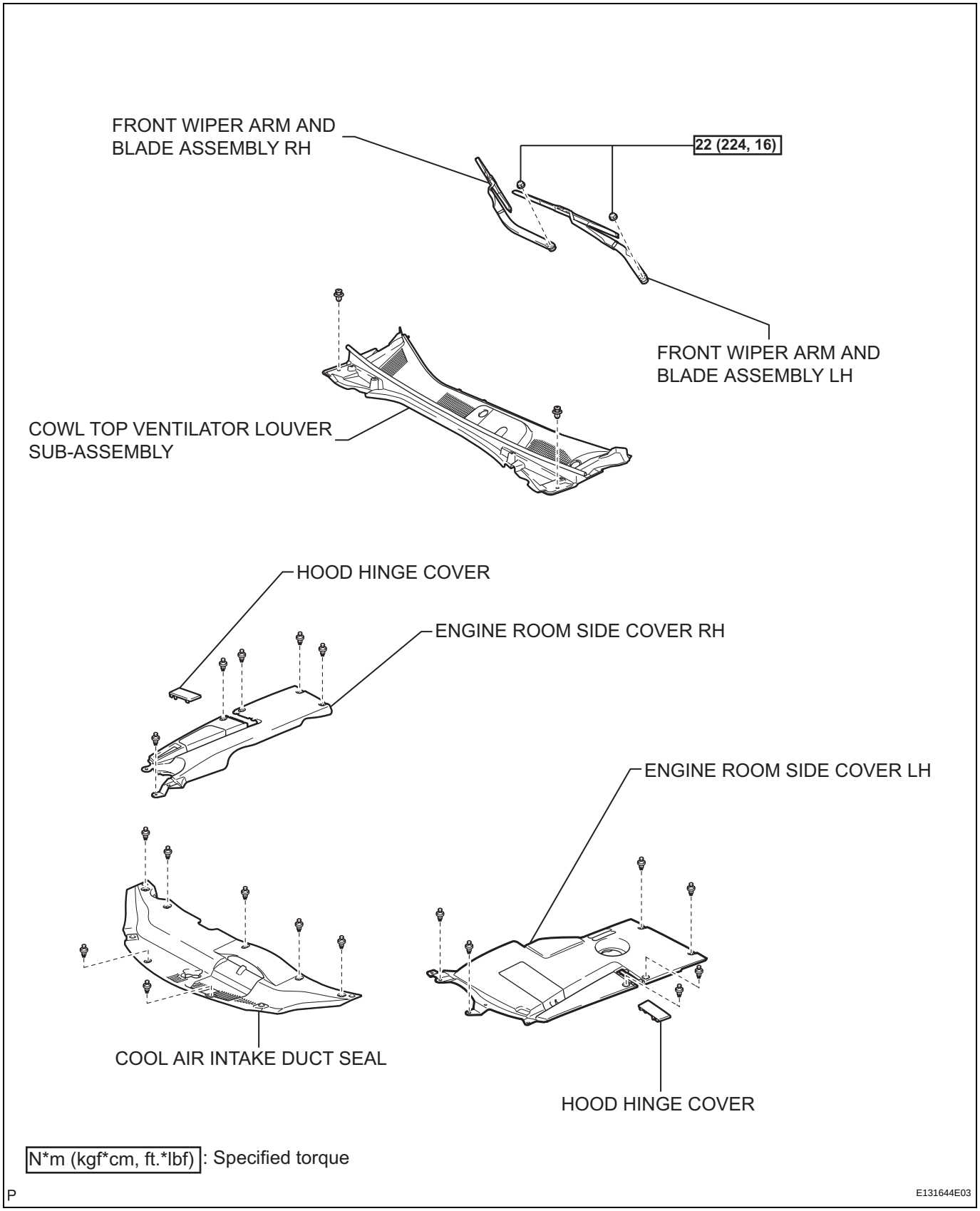

for Glass Roof:

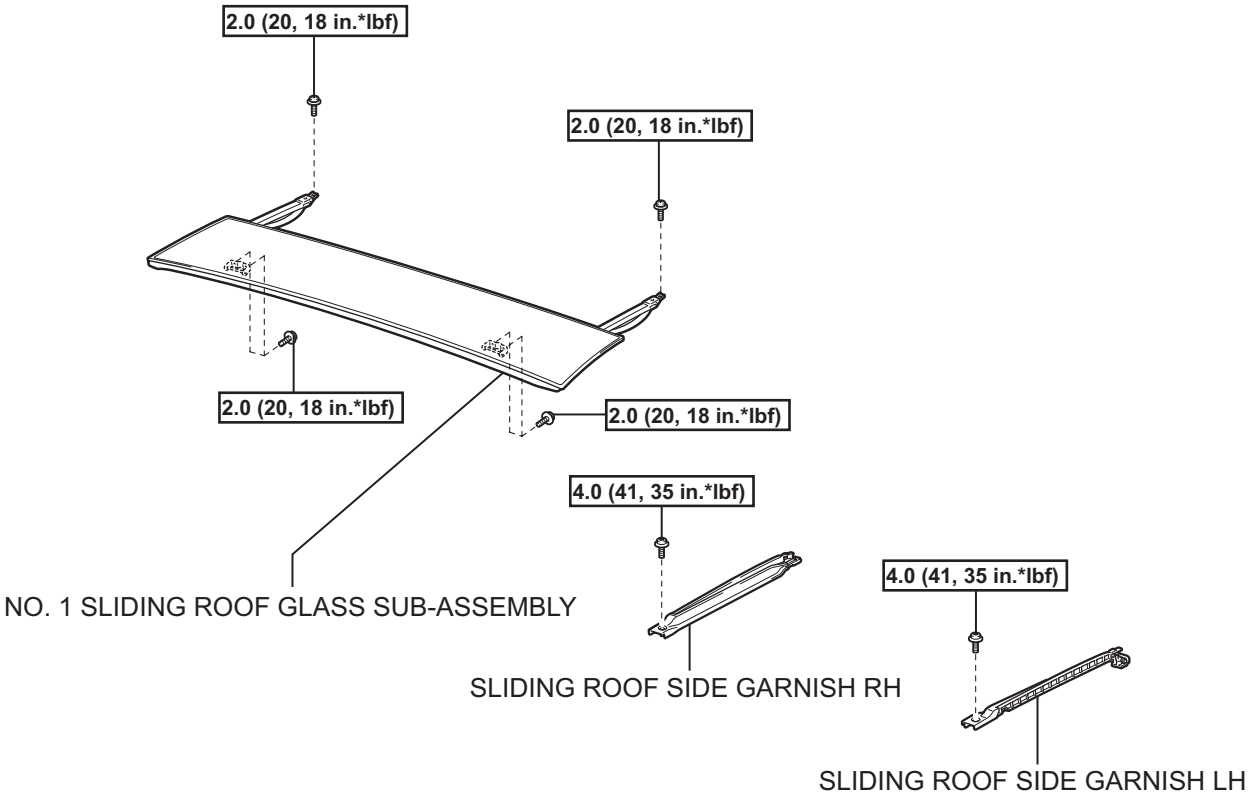

N*m (kgf*cm, ft.*lbf) : Specified torque

P

B142806E02

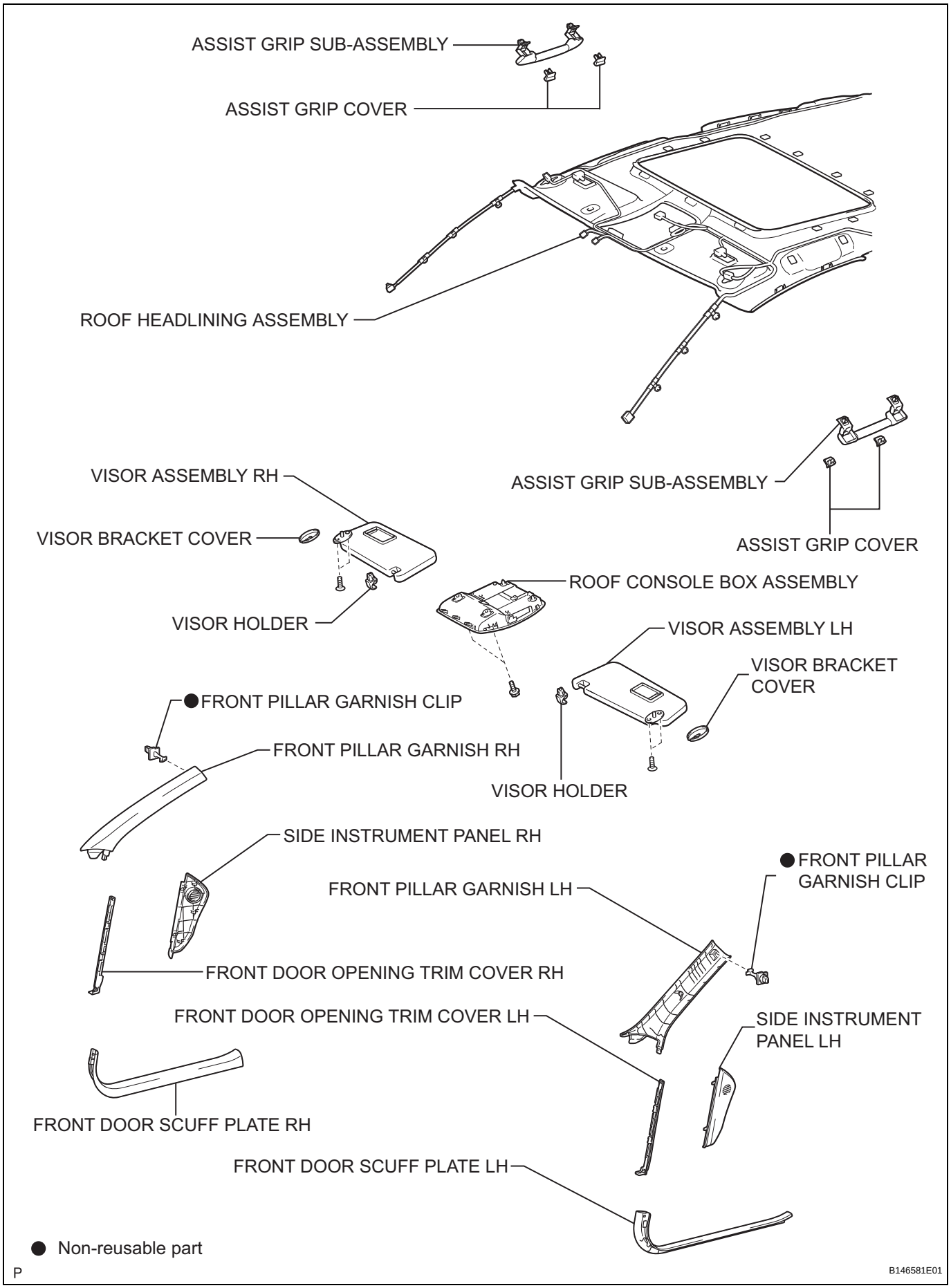
ASSIST GRIP SUB-ASSEMBLY
ASSIST GRIP COVER
ROOF HEADLINING ASSEMBLY
VISOR ASSEMBLY RH
VISOR BRACKET COVER
VISOR HOLDER
ASSIST GRIP SUB-ASSEMBLY
ASSIST GRIP COVER
ROOF CONSOLE BOX ASSEMBLY
VISOR ASSEMBLY LH
VISOR BRACKET COVER
● FRONT PILLAR GARNISH CLIP
FRONT PILLAR GARNISH RH
VISOR HOLDER
SIDE INSTRUMENT PANEL RH
● FRONT PILLAR GARNISH CLIP
FRONT PILLAR GARNISH LH
FRONT DOOR OPENING TRIM COVER RH
FRONT DOOR OPENING TRIM COVER LH
SIDE INSTRUMENT PANEL LH
FRONT DOOR SCUFF PLATE RH
FRONT DOOR SCUFF PLATE LH
● Non-reusable part
P
B146581E01

WS

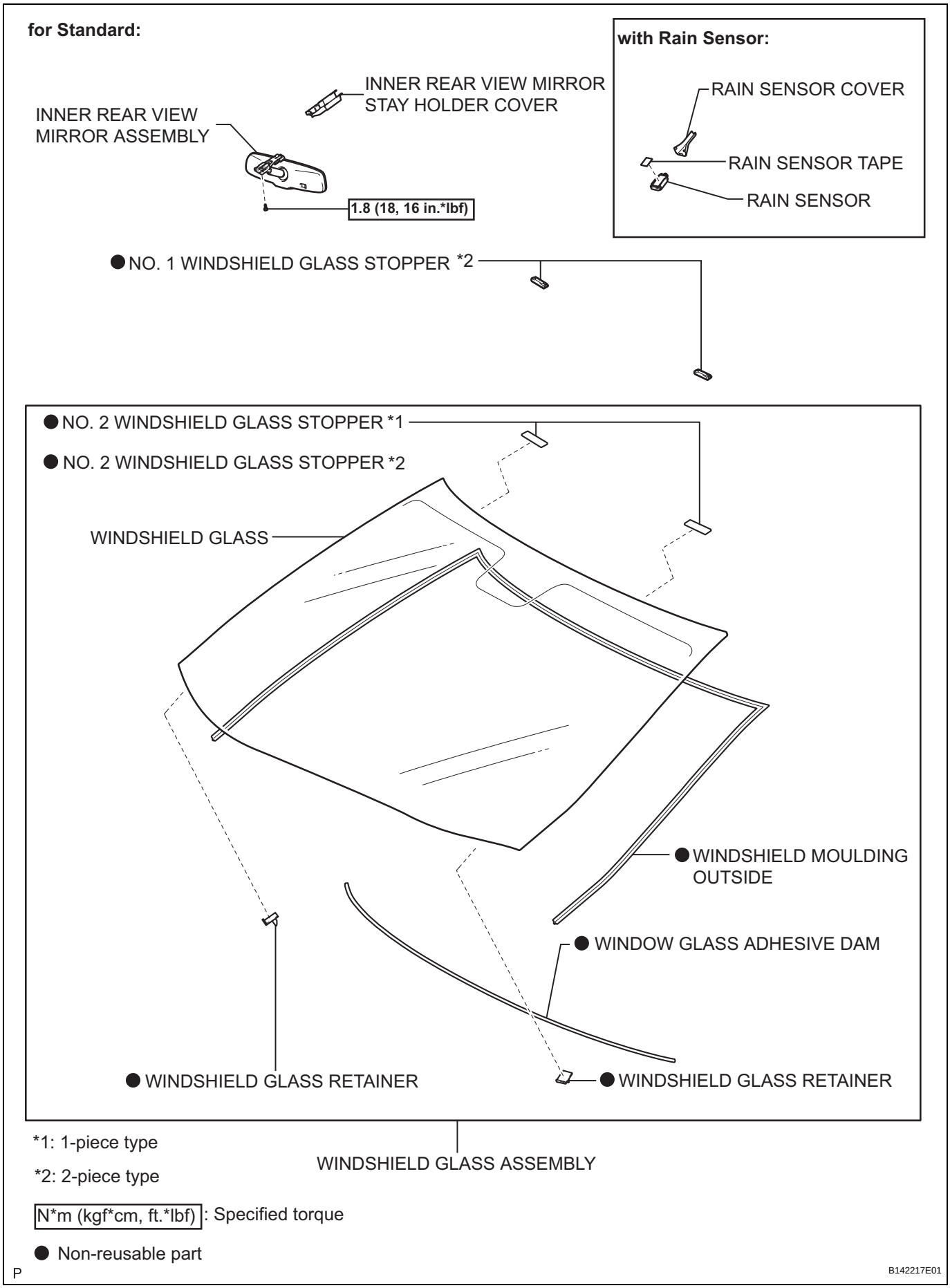
for Standard:
with Rain Sensor:
INNER REAR VIEW MIRROR STAY HOLDER COVER
INNER REAR VIEW MIRROR ASSEMBLY
1.8 (18, 16 in.*lbf)
RAIN SENSOR COVER
RAIN SENSOR TAPE
RAIN SENSOR
● NO. 1 WINDSHIELD GLASS STOPPER *2
● NO. 2 WINDSHIELD GLASS STOPPER *1
● NO. 2 WINDSHIELD GLASS STOPPER *2
WINDSHIELD GLASS
● WINDSHIELD MOULDING OUTSIDE
● WINDOW GLASS ADHESIVE DAM
● WINDSHIELD GLASS RETAINER
● WINDSHIELD GLASS RETAINER
WINDSHIELD GLASS ASSEMBLY
*1: 1-piece type
*2: 2-piece type
N*m (kgf*cm, ft.*lbf): Specified torque
● Non-reusable part
P
B142217E01

WS

for Glass Roof:

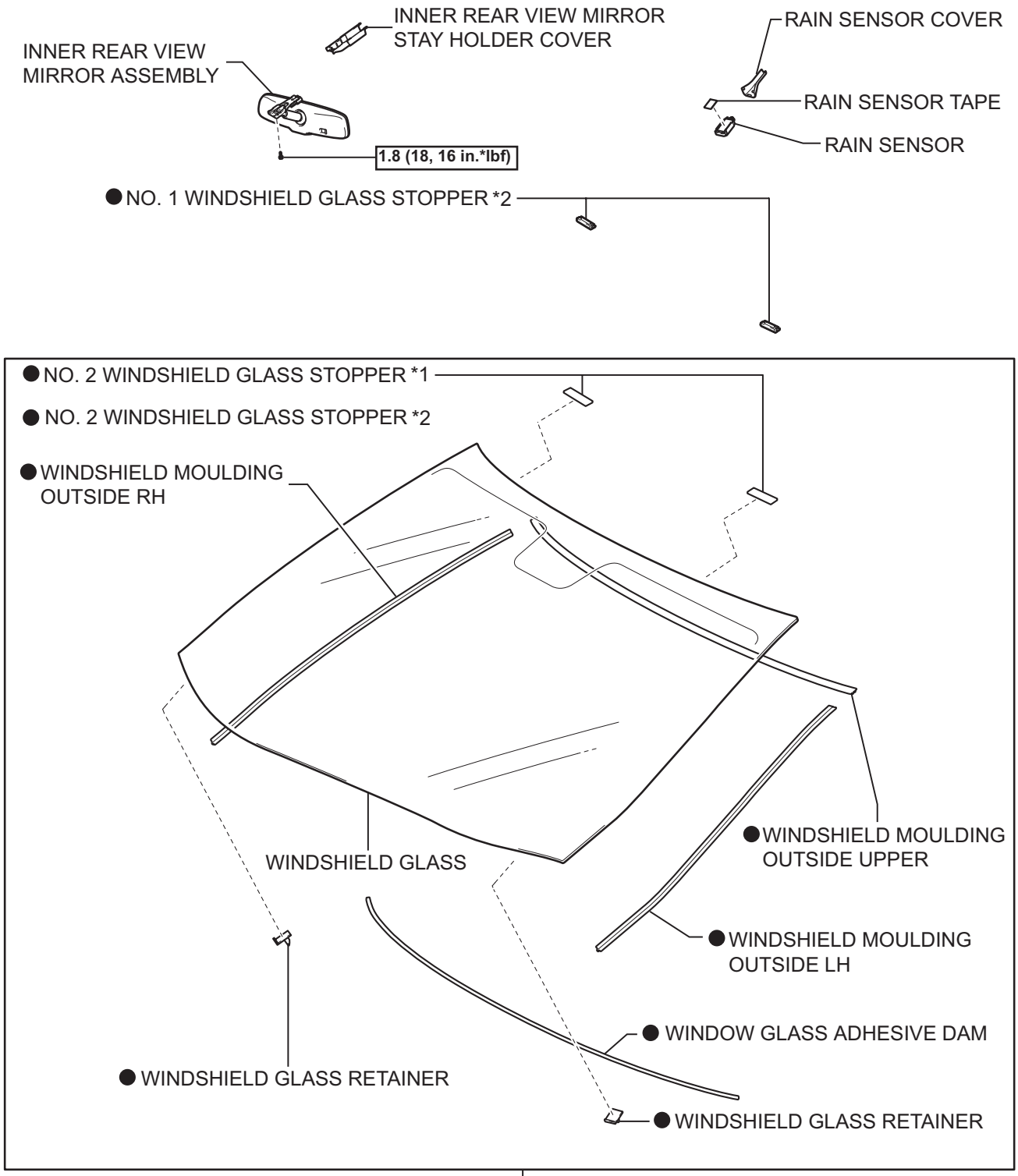

*1: 1-piece type

*2: 2-piece type

N*m (kgf*cm, ft.*lbf) : Specified torque

● Non-reusable part

P

B142218E01

WS

BACK WINDOW GLASS

COMPONENTS

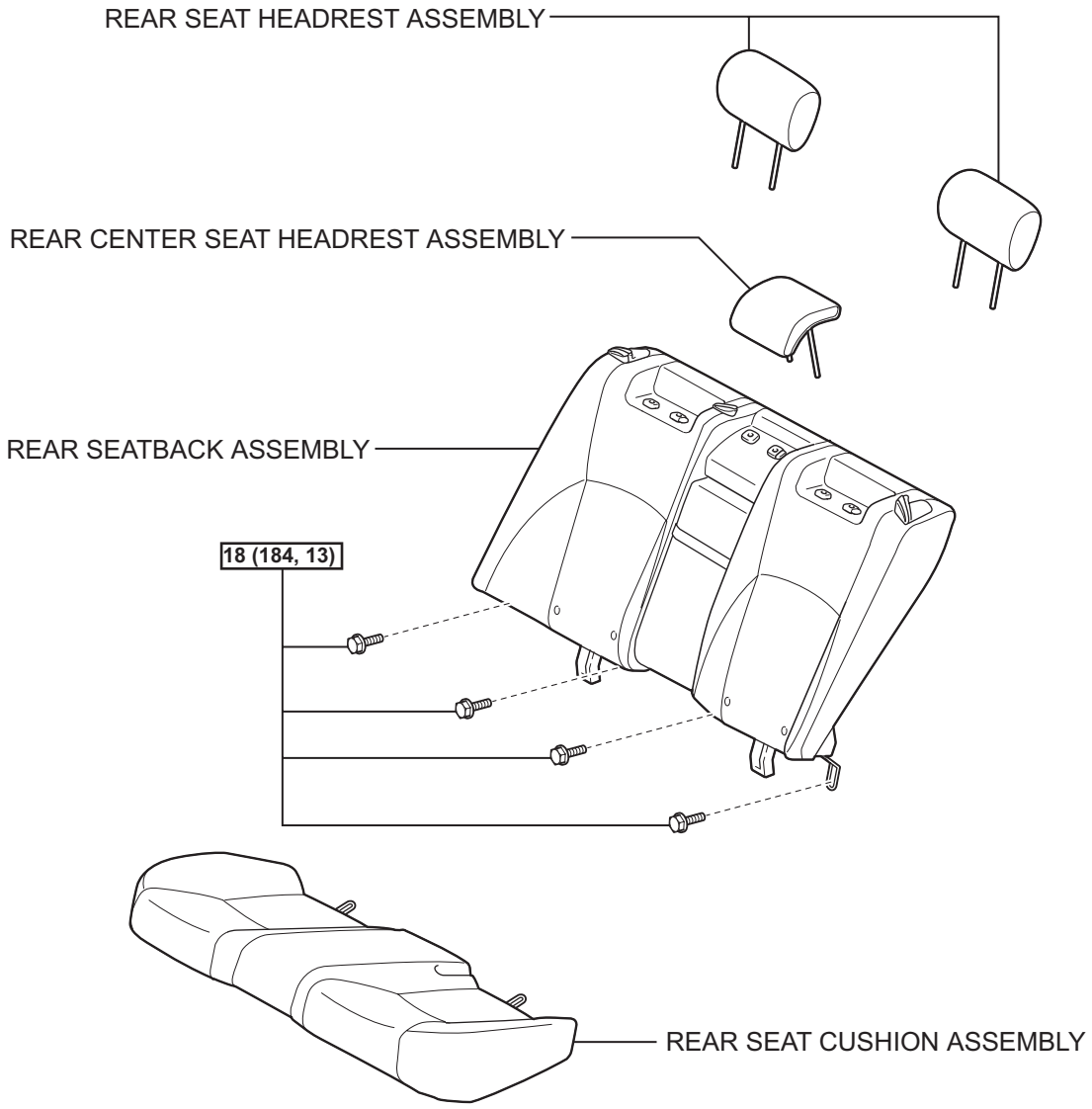

N*m (kgf*cm, ft.*lbf) : Specified torque

P

B145388E01

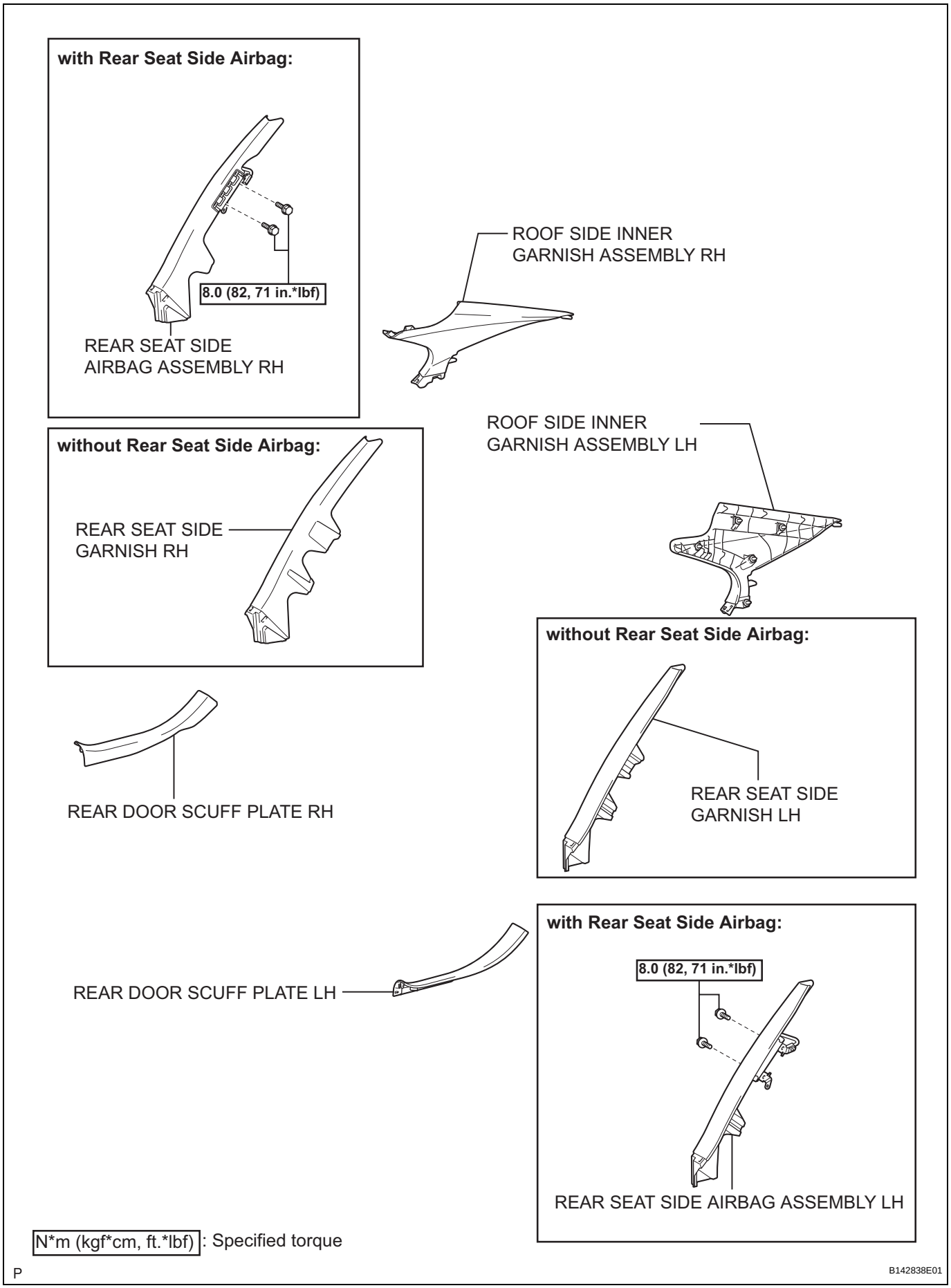
with Rear Seat Side Airbag:
8.0 (82, 71 in.*lbf)
REAR SEAT SIDE AIRBAG ASSEMBLY RH
ROOF SIDE INNER GARNISH ASSEMBLY RH
without Rear Seat Side Airbag:
REAR SEAT SIDE GARNISH RH
ROOF SIDE INNER GARNISH ASSEMBLY LH
without Rear Seat Side Airbag:
REAR SEAT SIDE GARNISH LH
REAR DOOR SCUFF PLATE RH
REAR DOOR SCUFF PLATE LH
with Rear Seat Side Airbag:
8.0 (82, 71 in.*lbf)
REAR SEAT SIDE AIRBAG ASSEMBLY LH
N*m (kgf*cm, ft.*lbf): Specified torque
P
B142838E01

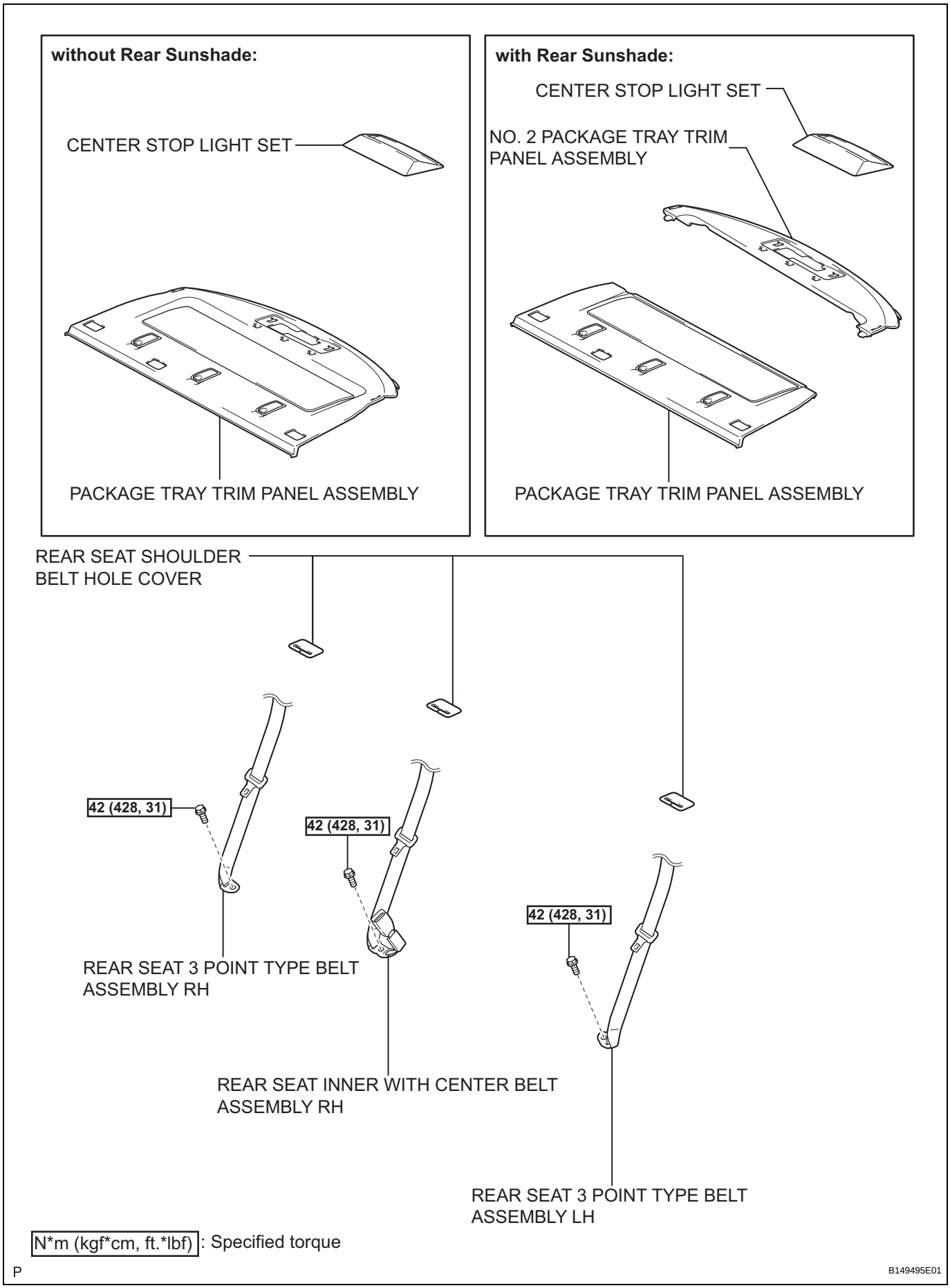
without Rear Sunshade:
CENTER STOP LIGHT SET
PACKAGE TRAY TRIM PANEL ASSEMBLY
with Rear Sunshade:
CENTER STOP LIGHT SET
NO. 2 PACKAGE TRAY TRIM PANEL ASSEMBLY
PACKAGE TRAY TRIM PANEL ASSEMBLY
REAR SEAT SHOULDER BELT HOLE COVER
42 (428, 31)
42 (428, 31)
42 (428, 31)
REAR SEAT 3 POINT TYPE BELT ASSEMBLY RH
REAR SEAT INNER WITH CENTER BELT ASSEMBLY RH
REAR SEAT 3 POINT TYPE BELT ASSEMBLY LH
N*m (kgf*cm, ft.*lbf) : Specified torque
P
B149495E01

WS

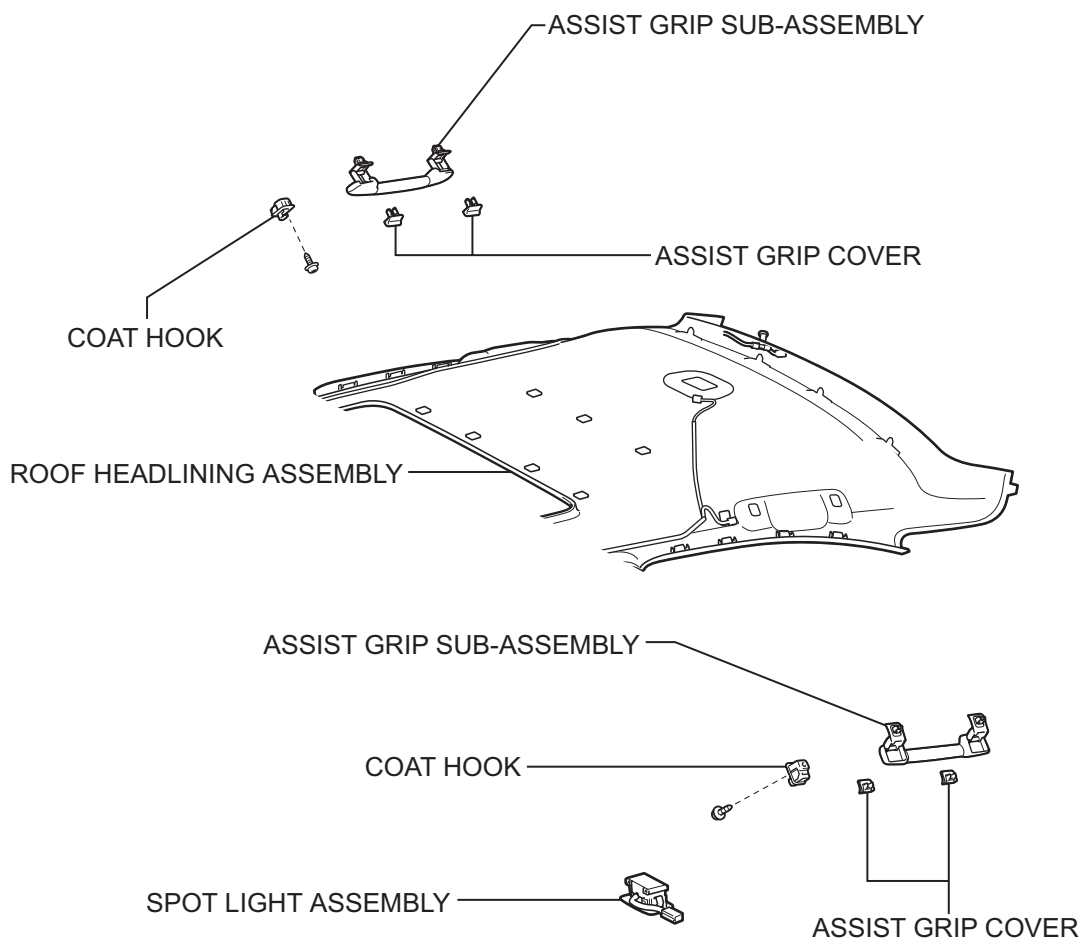

P

B146582E01

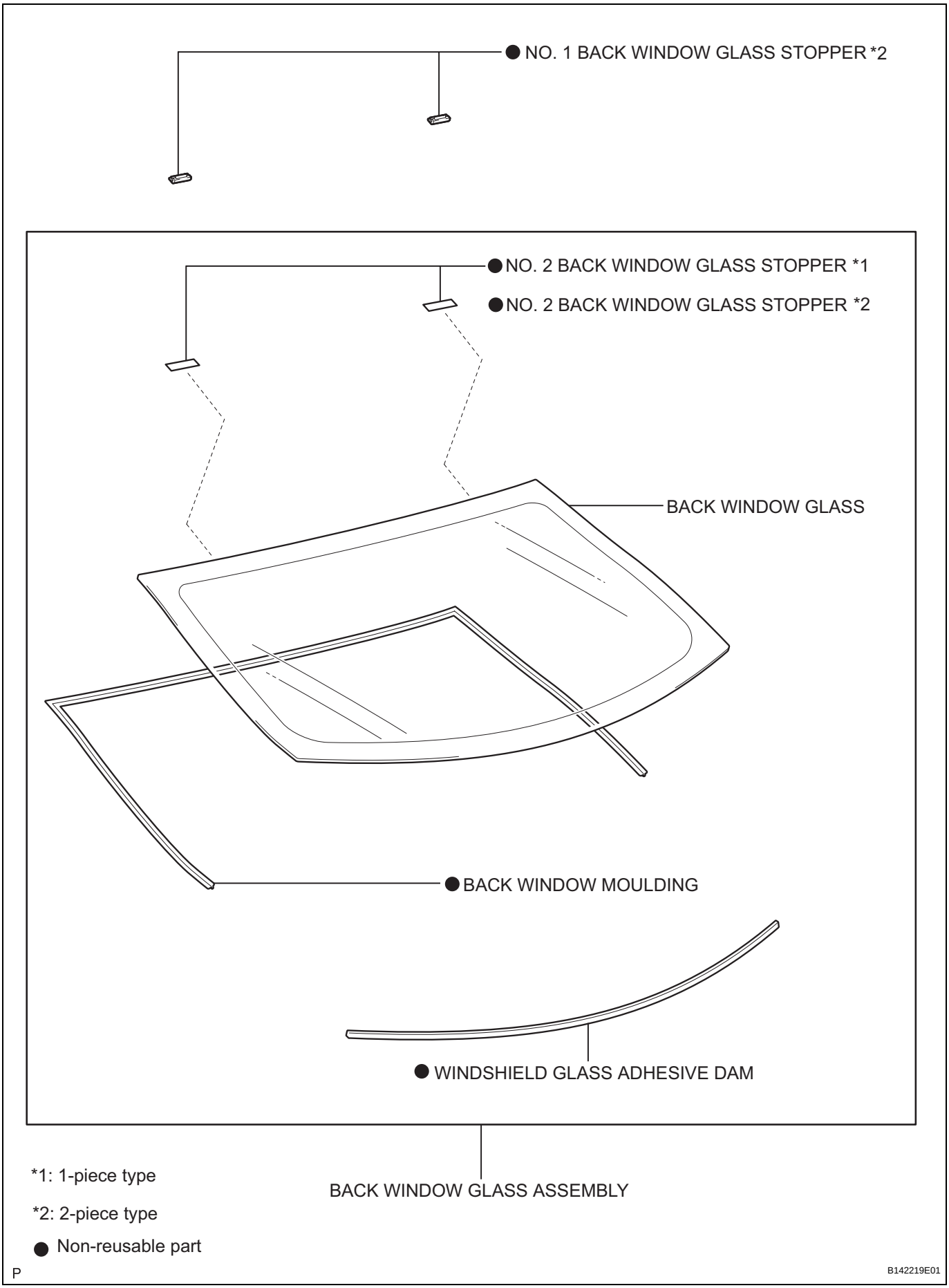
● NO. 1 BACK WINDOW GLASS STOPPER *2
● NO. 2 BACK WINDOW GLASS STOPPER *1
● NO. 2 BACK WINDOW GLASS STOPPER *2
BACK WINDOW GLASS
● BACK WINDOW MOULDING
● WINDSHIELD GLASS ADHESIVE DAM
BACK WINDOW GLASS ASSEMBLY
*1: 1-piece type
*2: 2-piece type
● Non-reusable part
P
B142219E01

WINDOW DEFOGGER SYSTEM

PRECAUTION

NOTICE:
Some systems need to be initialized after reconnecting the negative (-) battery terminal (See page IN-33).

PARTS LOCATION

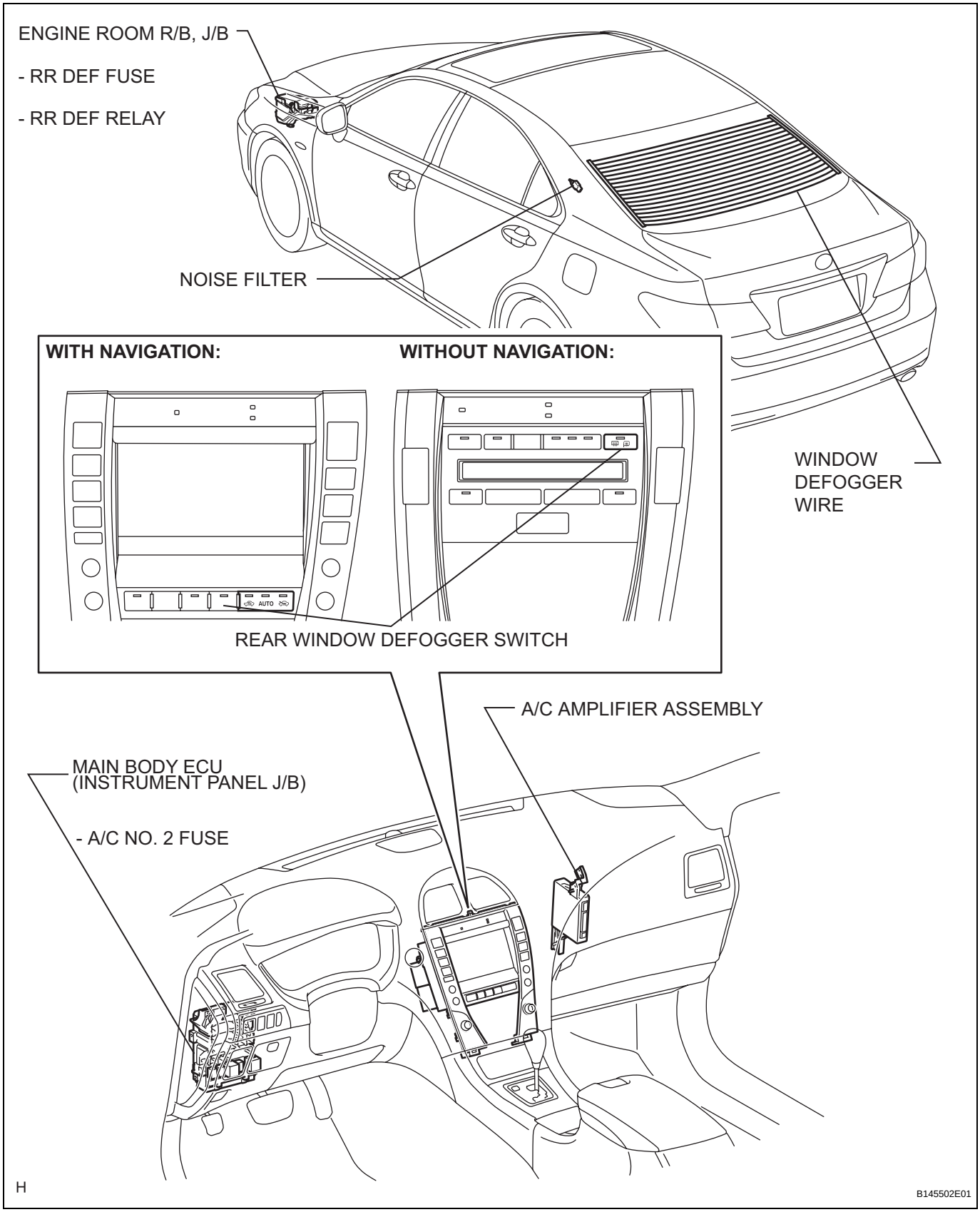

WS

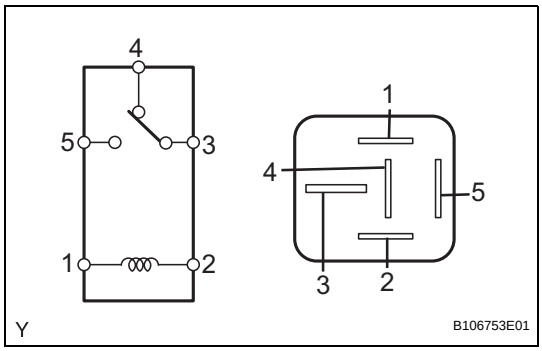

DEFOGGER RELAY

ON-VEHICLE INSPECTION

1. INSPECT DEFOGGER RELAY (Marking: RR DEF)

(a) Measure the resistance according to the value(s) in the table below.

Standard resistance

Tester Condition	Specified Condition
3 - 4	Below 1 Ω (when battery voltage is not applied between terminals)
3 - 5	10 kΩ or higher (when battery voltage is not applied between terminals)
3 - 5	Below 1 Ω (when battery voltage is applied to terminals 1 and 2)

If the result is not as specified, replace the relay.

POWER MIRROR CONTROL SYSTEM (w/ Memory)

PRECAUTION

NOTICE:
Some systems need to be initialized after reconnecting the negative (-) battery terminal (See page IN-33).

PARTS LOCATION

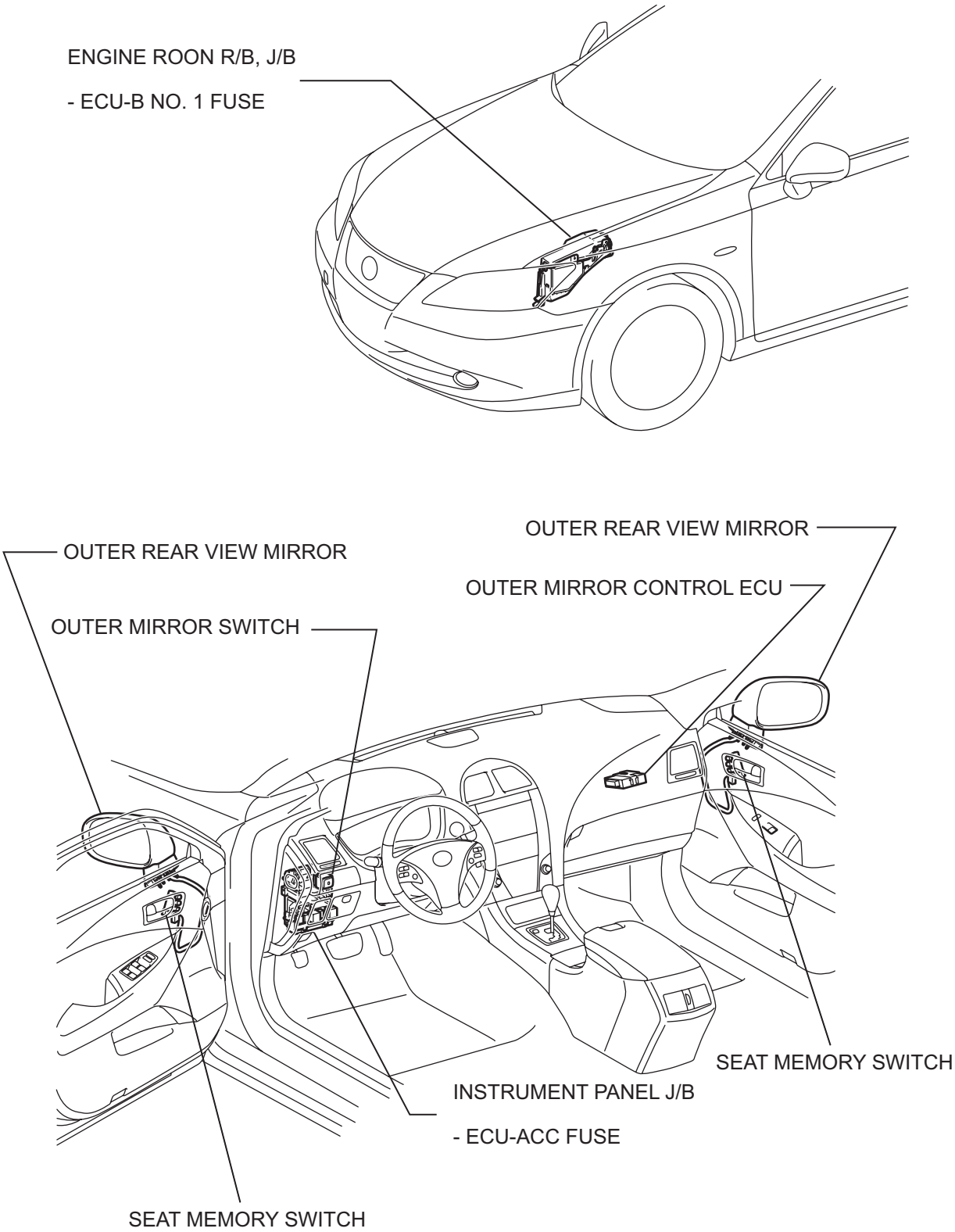

H

B145474E01

POWER MIRROR CONTROL SYSTEM (w/o Memory)

PARTS LOCATION

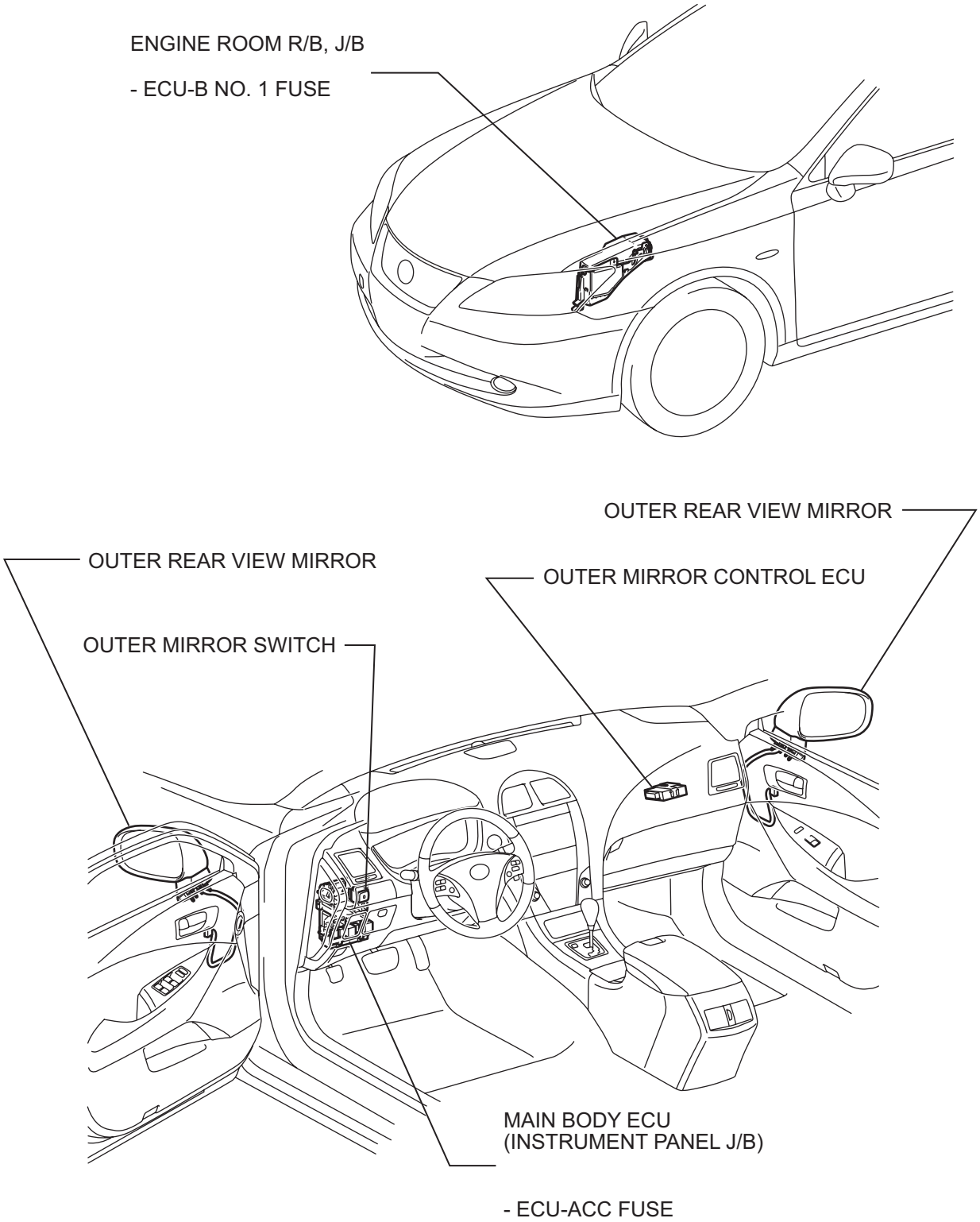

H

B145488E01

SYSTEM DIAGRAM

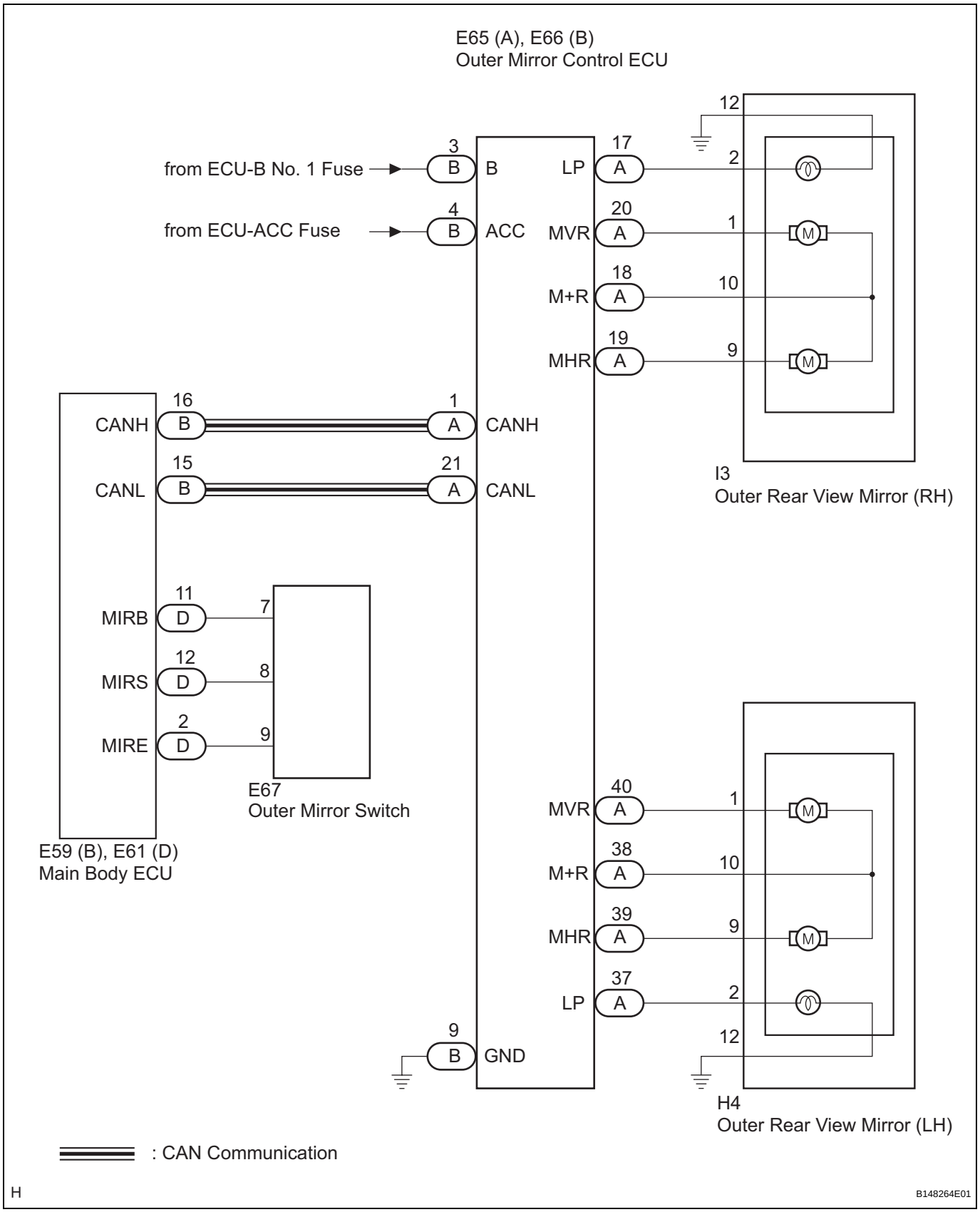

MI

INNER REAR VIEW MIRROR

PARTS LOCATION

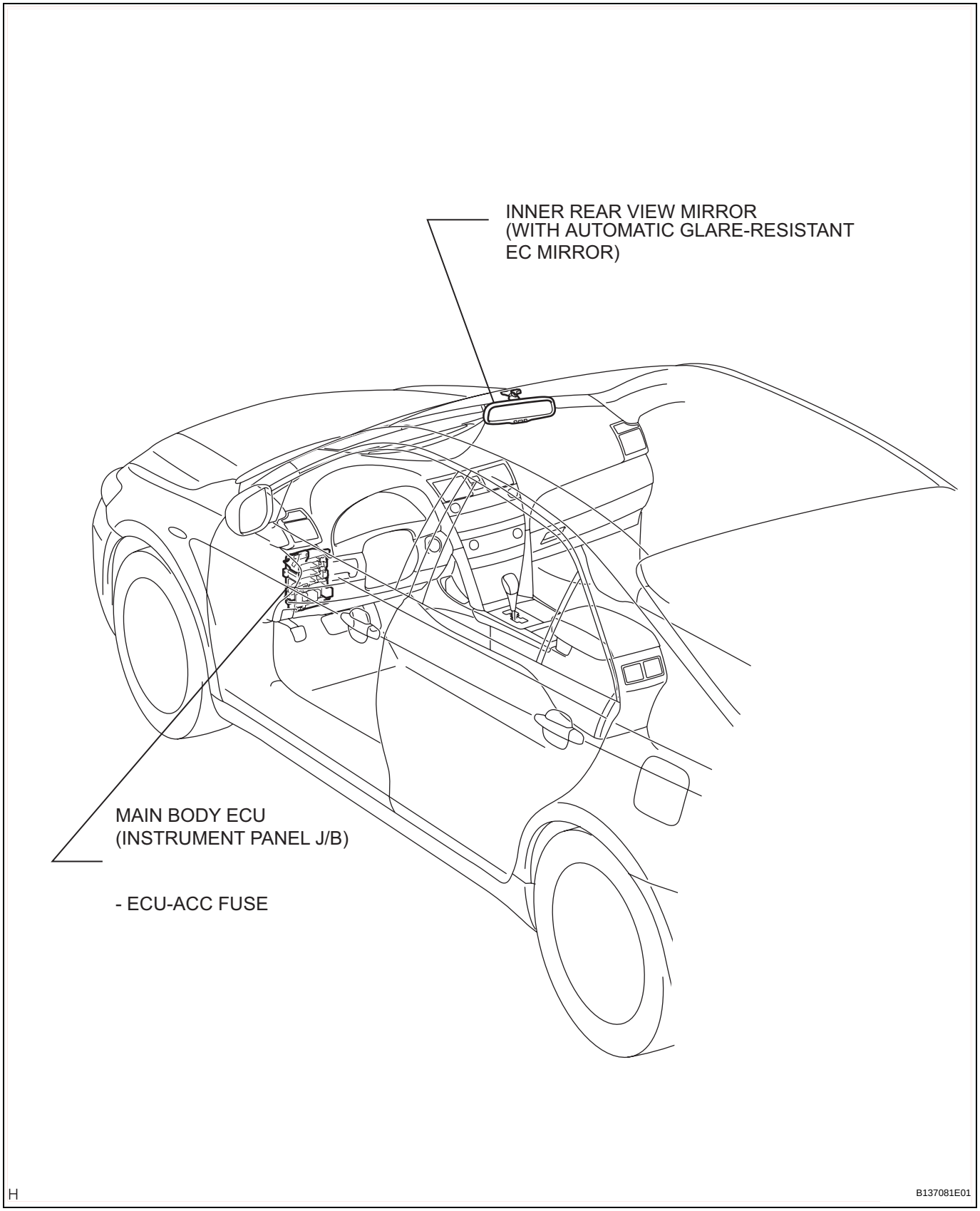

COMPONENTS

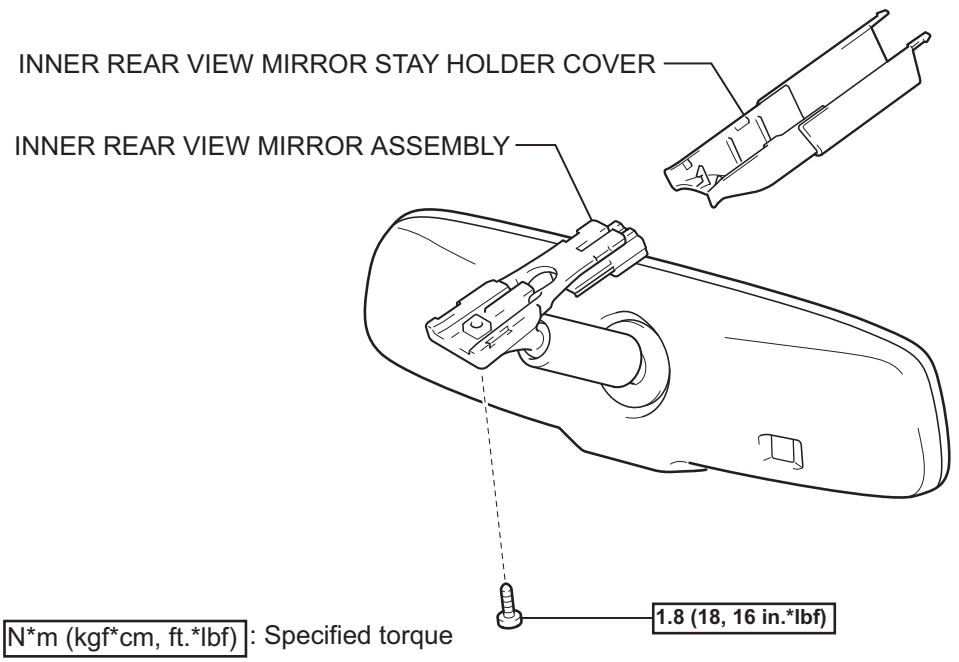

N*m (kgf*cm, ft.*lbf) : Specified torque

P

B136832E03

OUTER REAR VIEW MIRROR

COMPONENTS

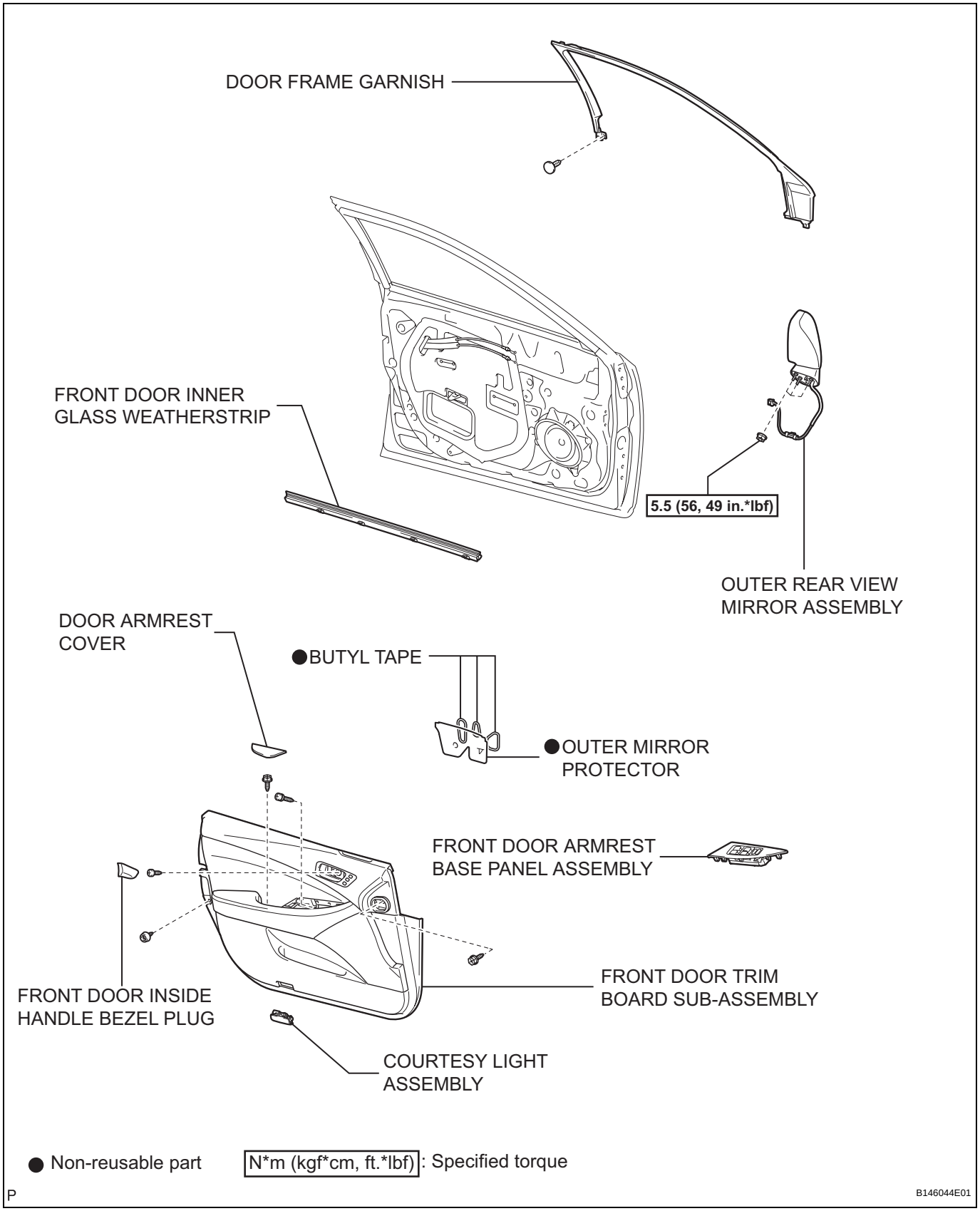

REMOVAL

1. **REMOVE FRONT DOOR INSIDE HANDLE BEZEL PLUG (See page ED-32)**
2. **REMOVE FRONT DOOR ARMREST BASE PANEL ASSEMBLY (See page ED-33)**
3. **REMOVE COURTESY LIGHT ASSEMBLY (See page ED-34)**
4. **REMOVE DOOR ARMREST COVER (See page ED-34)**
5. **REMOVE FRONT DOOR TRIM BOARD SUB-ASSEMBLY (See page ED-34)**
6. **REMOVE FRONT DOOR INNER GLASS WEATHERSTRIP (See page ED-35)**
7. **REMOVE DOOR FRAME GARNISH (See page ED-35)**
8. **REMOVE OUTER MIRROR PROTECTOR (See page ED-35)**
9. **REMOVE OUTER REAR VIEW MIRROR ASSEMBLY**
   (a) Remove the 3 nuts.
   (b) Disconnect the connector.
   (c) Disengage the clamp.

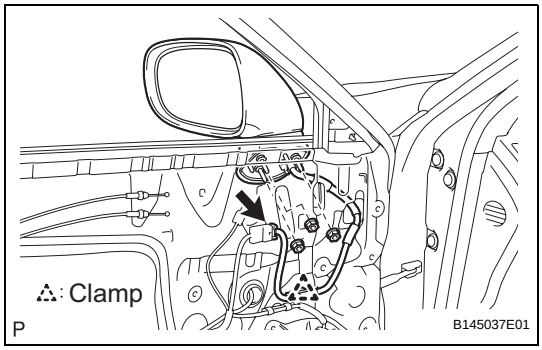

   (d) Disengage the claw and remove the outer rear view mirror assembly.

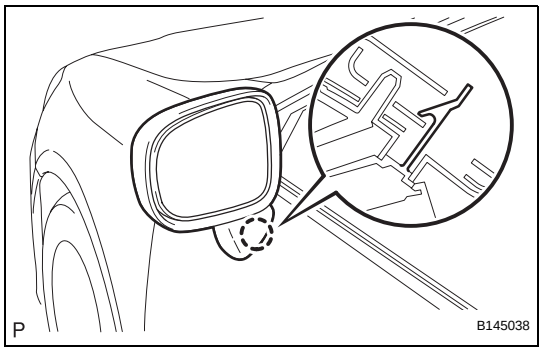

OUTER REAR VIEW MIRROR GLASS

COMPONENTS

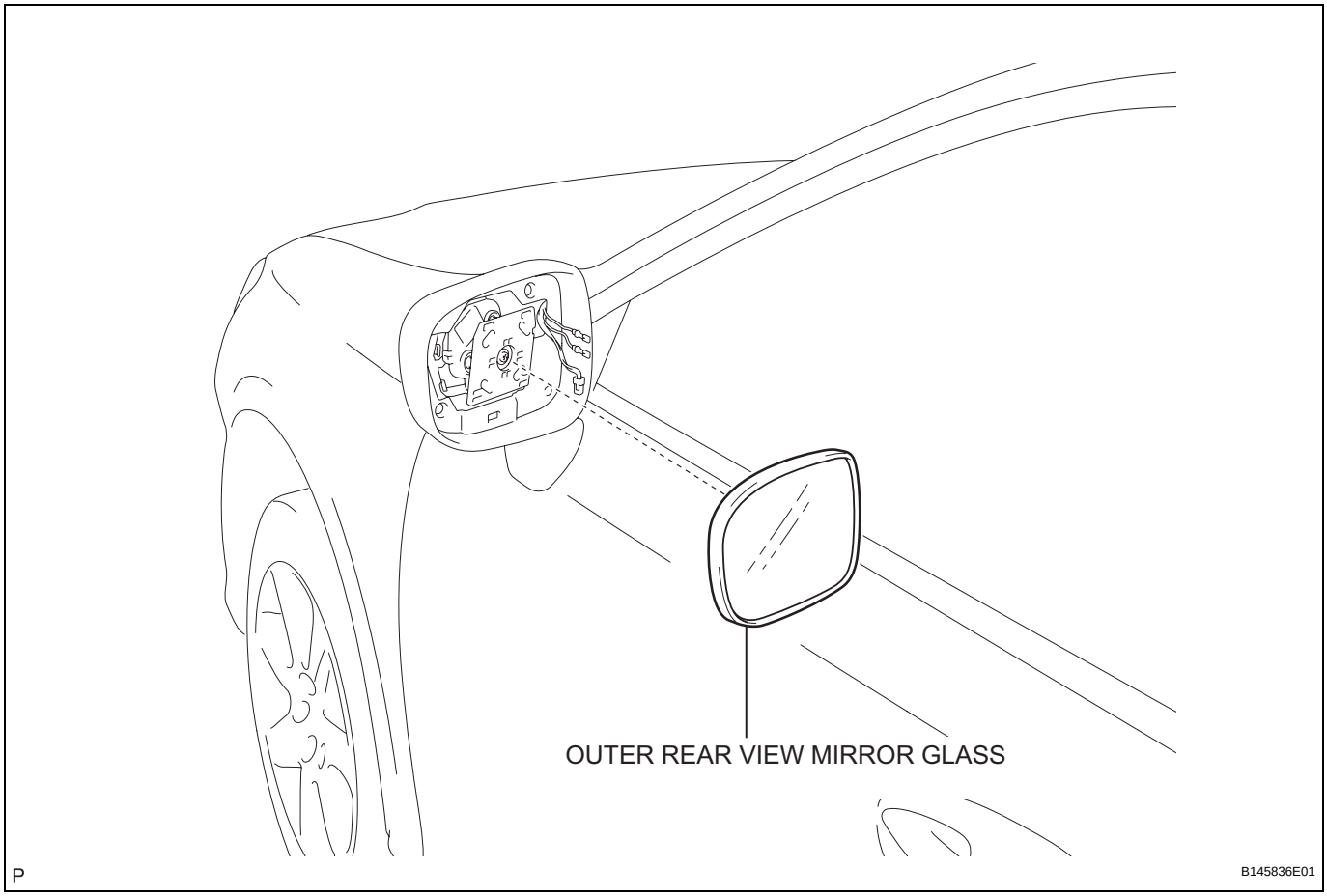

REPLACEMENT

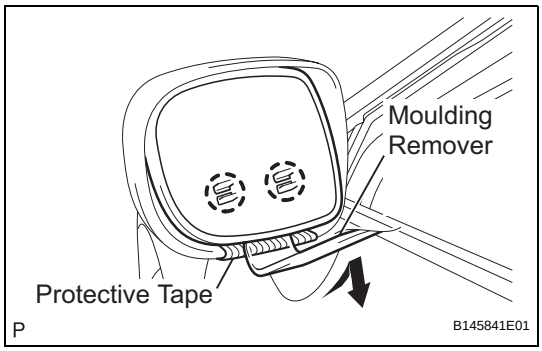

1. REMOVE OUTER REAR VIEW MIRROR GLASS

(a) Push the upper part of the mirror surface and tilt it.

(b) Using a moulding remover, disengage the 2 claws at the lower part of the outer rear view mirror, and separate the outer rear view mirror glass.

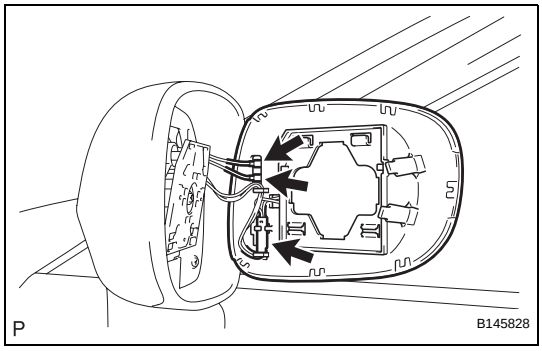

(c) Disconnect each connector and remove the outer rear view mirror glass.

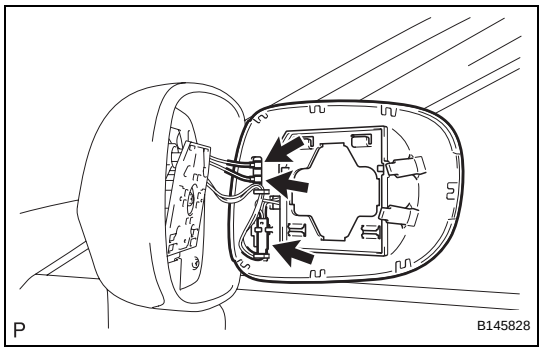

2. INSTALL OUTER REAR VIEW MIRROR GLASS

(a) Connect each connector.

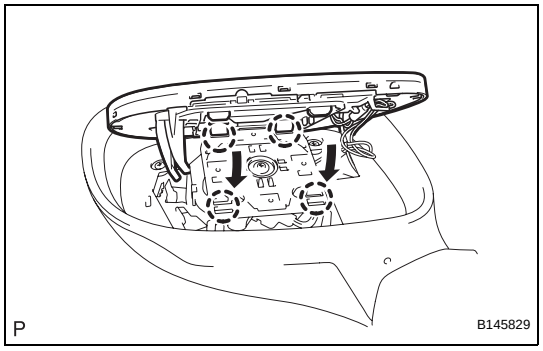

(b) Engage the 2 claws on the upper part of the outer rear view mirror glass to the outer rear view mirror.

(c) Engage the 2 claws on the lower part of the outer rear view mirror glass to the outer rear view mirror as shown in the illustration.

OUTER MIRROR SWITCH

COMPONENTS

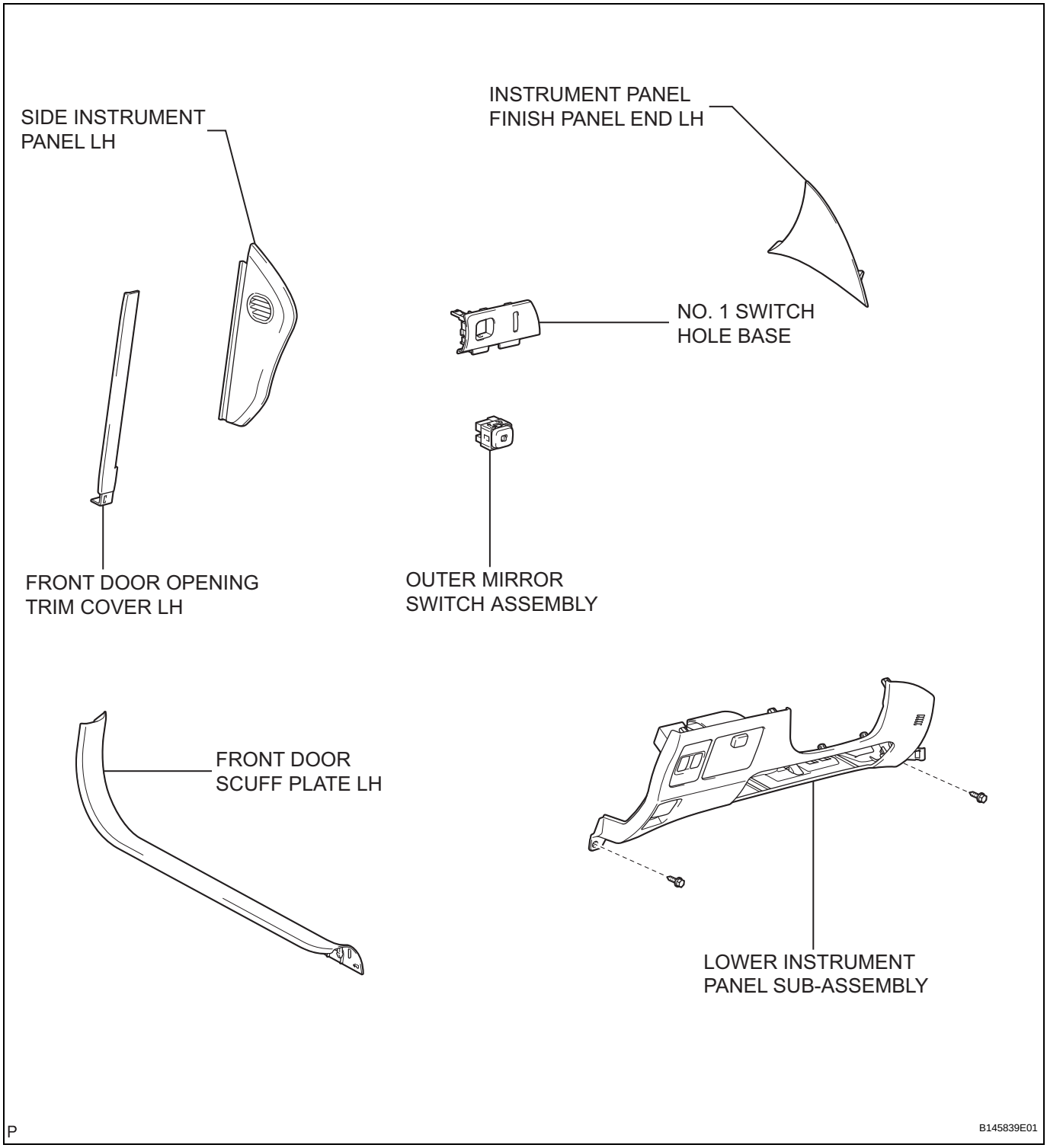

REMOVAL

1. **REMOVE FRONT DOOR SCUFF PLATE LH (See page IR-39)**
2. **REMOVE FRONT DOOR OPENING TRIM COVER LH (See page IR-39)**
3. **REMOVE SIDE INSTRUMENT PANEL LH (See page IP-12)**
4. **REMOVE INSTRUMENT PANEL FINISH PANEL END LH (See page IP-13)**
5. **REMOVE LOWER INSTRUMENT PANEL SUB-ASSEMBLY (See page IP-13)**
6. **REMOVE NO. 1 SWITCH HOLE BASE (See page IP-14)**
7. **REMOVE OUTER MIRROR SWITCH ASSEMBLY**
   (a) Disengage the 3 claws and remove the outer mirror switch assembly.

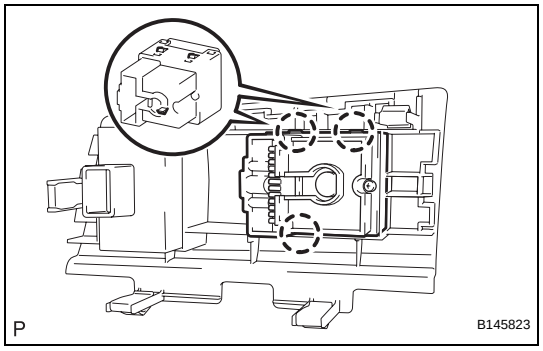

INSPECTION

1. **INSPECT OUTER MIRROR SWITCH**
   (a) Inspect the outer mirror switch.
      (1) Measure the resistance according to the value(s) in the table below when the switch is operated.
      Standard resistance:
      Select "L" on the left/right adjustment switch

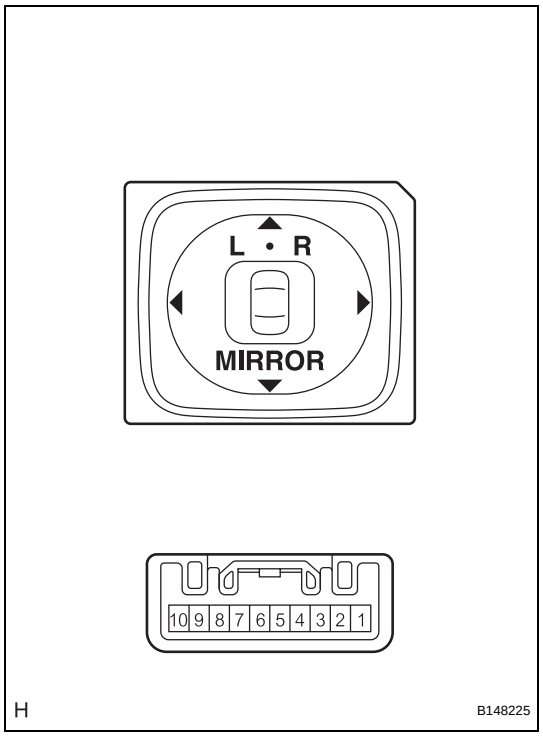

Tester Connection	Switch Position	Specified Condition
7 - 9	UP	100 Ω
	DOWN	470 Ω
	LEFT	800 Ω
	RIGHT	250 Ω

Select "R" on the left/right adjustment switch

Tester Connection	Switch Position	Specified Condition
7 - 9	UP	100 Ω
	DOWN	470 Ω
	LEFT	800 Ω
	RIGHT	250 Ω

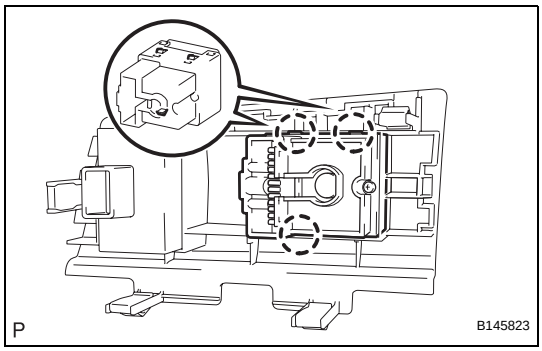

INSTALLATION

1. **INSTALL OUTER MIRROR SWITCH ASSEMBLY**
   (a) Engage the 3 claws and install the outer mirror switch assembly.
2. **INSTALL NO. 1 SWITCH HOLE BASE (See page IP-44)**
3. **INSTALL LOWER INSTRUMENT PANEL SUB-ASSEMBLY (See page IP-46)**
4. **INSTALL INSTRUMENT PANEL FINISH PANEL END LH (See page IP-46)**
5. **INSTALL SIDE INSTRUMENT PANEL LH (See page IP-47)**
6. **INSTALL FRONT DOOR OPENING TRIM COVER LH (See page IR-64)**
7. **INSTALL FRONT DOOR SCUFF PLATE LH (See page IR-65)**

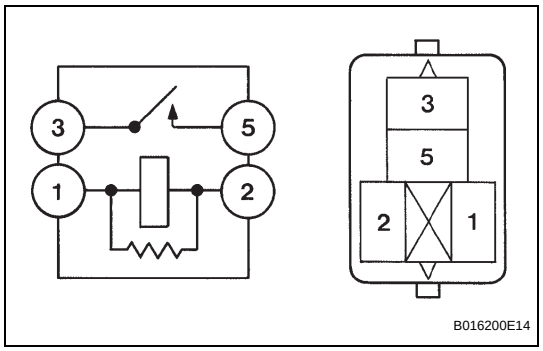

MIRROR HEATER RELAY

ON-VEHICLE INSPECTION

1. INSPECT MIR HTR RELAY

(a) Measure the resistance of the DEFOG relay.

Standard resistance

Tester Condition	Specified Condition
1 - 2	**Below 1 Ω**
3 - 5	**10 kΩ or higher (when battery voltage is not applied between terminals)**
3 -5	**Below 1 Ω (when battery voltage is applied to terminals 1 and 2)**

If the result is not as specified, replace the relay.

OUTER MIRROR CONTROL ECU

COMPONENTS

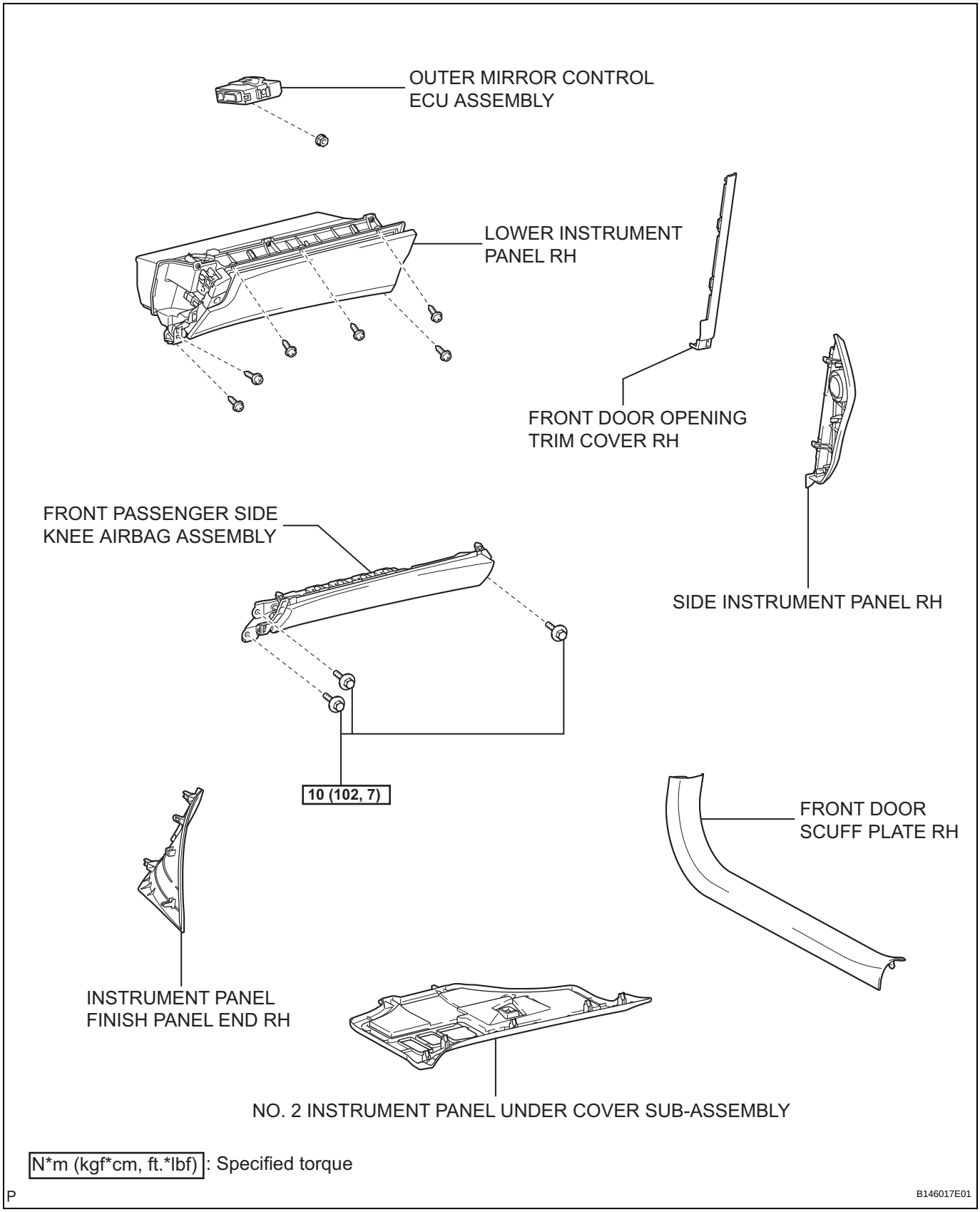

MI

REMOVAL

1. **DISCONNECT CABLE FROM NEGATIVE BATTERY TERMINAL**
   CAUTION:
   Wait for 90 seconds after disconnecting the cable to prevent airbag deployment (See page RS-1).
2. **REMOVE INSTRUMENT PANEL FINISH PANEL END RH (See page IP-15)**
3. **REMOVE FRONT DOOR SCUFF PLATE RH (See page IR-42)**
4. **REMOVE FRONT DOOR OPENING TRIM COVER RH (See page IR-42)**
5. **REMOVE NO. 2 INSTRUMENT PANEL UNDER COVER SUB-ASSEMBLY (See page IP-15)**
6. **REMOVE SIDE INSTRUMENT PANEL RH (See page IP-15)**
7. **REMOVE FRONT PASSENGER SIDE KNEE AIRBAG ASSEMBLY (See page RS-396)**
8. **REMOVE LOWER INSTRUMENT PANEL RH (See page IP-16)**
9. **REMOVE OUTER MIRROR CONTROL ECU ASSEMBLY**
   (a) Disconnect the 2 connectors.
   (b) Remove the nut and the outer mirror control ECU assembly.

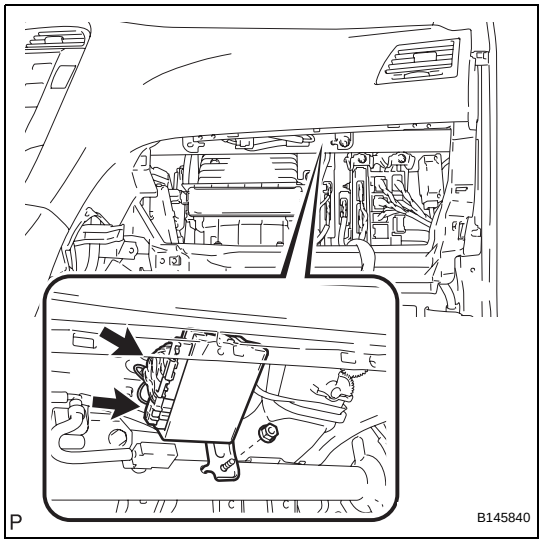

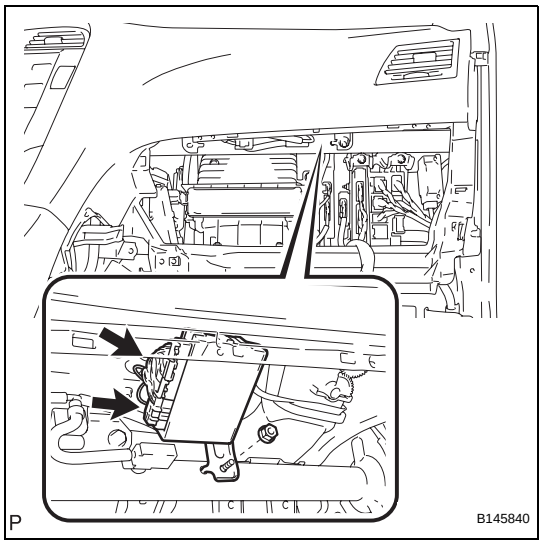

INSTALLATION

1. **INSTALL OUTER MIRROR CONTROL ECU ASSEMBLY**
   (a) Install the outer mirror control ECU assembly with the nut.
   (b) Connect the 2 connectors.
2. **INSTALL LOWER INSTRUMENT PANEL RH (See page IP-42)**
3. **INSTALL FRONT PASSENGER SIDE KNEE AIRBAG ASSEMBLY (See page RS-396)**
4. **INSTALL SIDE INSTRUMENT PANEL RH (See page IP-43)**
5. **INSTALL NO. 2 INSTRUMENT PANEL UNDER COVER SUB-ASSEMBLY (See page IP-44)**
6. **INSTALL FRONT DOOR OPENING TRIM COVER RH (See page IR-65)**
7. **INSTALL FRONT DOOR SCUFF PLATE RH (See page IR-65)**
8. **INSTALL INSTRUMENT PANEL FINISH PANEL END RH (See page IP-44)**
9. **CONNECT CABLE TO NEGATIVE BATTERY TERMINAL**
10. **PERFORM INITIALIZATION**
    NOTICE:
    Some systems need initialization after reconnecting the cable to the negative battery terminal (See page IN-33).
11. **INSPECT SRS WARNING LIGHT**
    (See page RS-37)

INSTRUMENT PANEL SAFETY PAD

PRECAUTION

1. PRECAUTION FOR VEHICLE WITH SRS AIRBAG AND SEAT BELT PRETENSIONER

(a) Some operations in this section may affect the SRS airbags. Prior to performing the corresponding operations, read the SRS airbag NOTICE.

2. TABLE OF BOLT, SCREW AND NUT

Code	Shape	Size	Parts No.
<A>	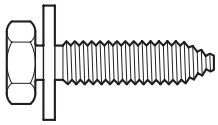	ϕ = 6 mm (0.24 in.) Length = 25 mm (0.98 in.)	91635-60625
<B>	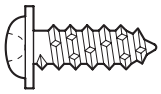	ϕ = 5 mm (0.20 in.) Length = 16 mm (0.63 in.)	93567-55016
<C>		ϕ = 5 mm (0.20 in.) Length = 20 mm (0.79 in.)	93567-55020
<D>	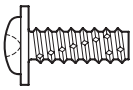	ϕ = 5 mm (0.20 in.) Length = 14 mm (0.55 in.)	93568-55014
<E>	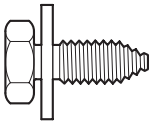	ϕ = 6 mm (0.24 in.) Length = 16 mm (0.63 in.)	91635-40616
<F>	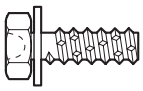	ϕ = 5 mm (0.20 in.) Length = 15 mm (0.59 in.)	90159-50327
<G>	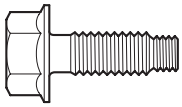	ϕ = 6 mm (0.24 in.) Length = 18 mm (0.71 in.)	91553-80614

Code	Shape	Size	Parts No.
<H>	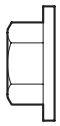	ϕ = 6 mm (0.24 in.)	90179-06307
<I>		ϕ = 5 mm (0.20 in.) Length = 14 mm (0.55 in.)	93568-15014
<J>	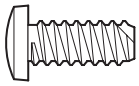	ϕ = 5 mm (0.20 in.) Length = 15 mm (0.59 in.)	90164-50034
<K>	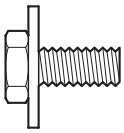	ϕ = 8 mm (0.31 in.) Length = 18 mm (0.71 in.)	91626-60818
<L>	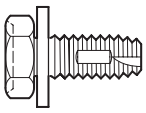	ϕ = 6 mm (0.24 in.) Length = 15 mm (0.59 in.)	90119-06915
<M>	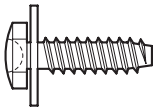	ϕ = 5 mm (0.20 in.) Length = 16 mm (0.63 in.)	90159-50068

REAR CONSOLE BOX

COMPONENTS

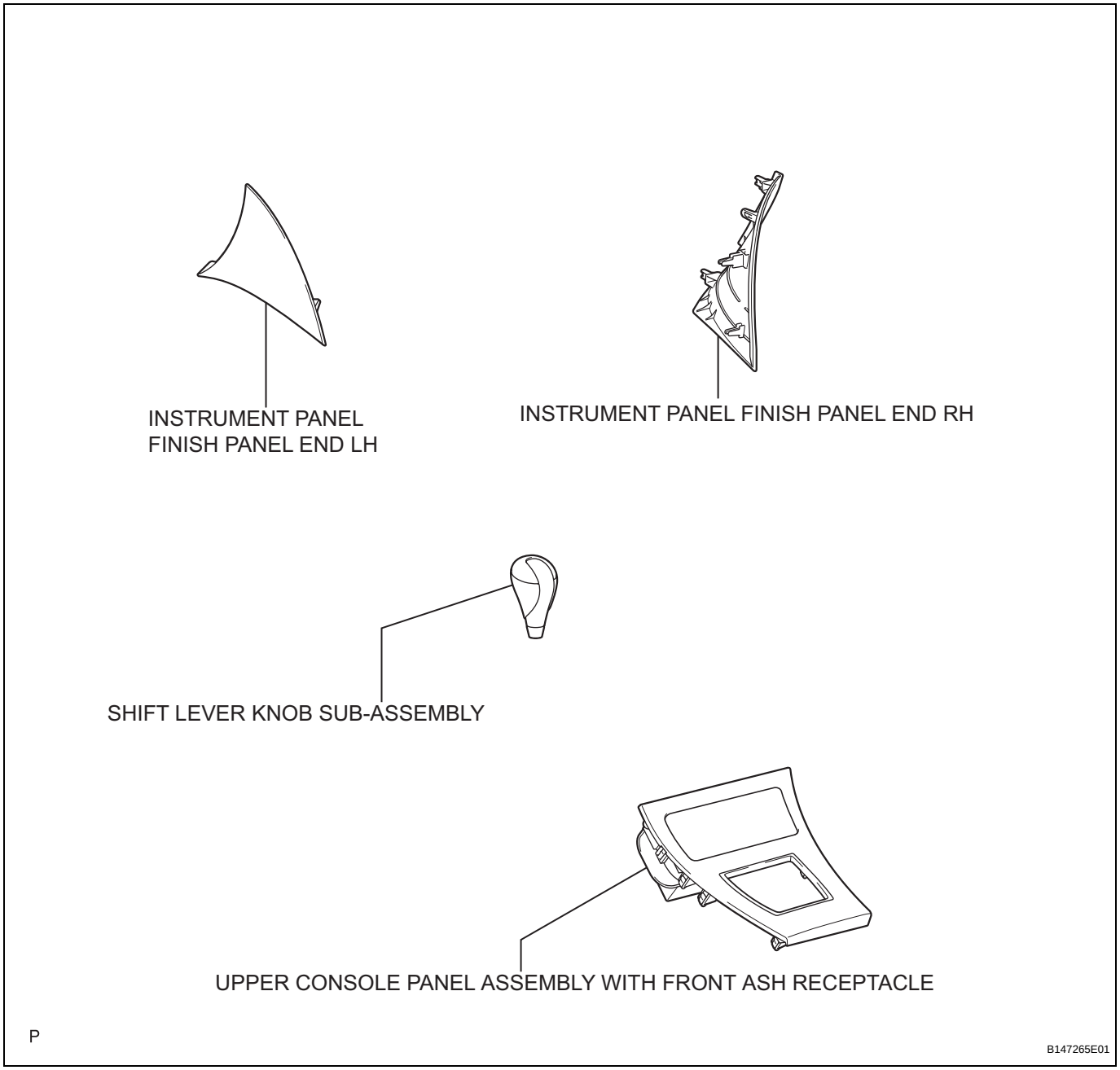

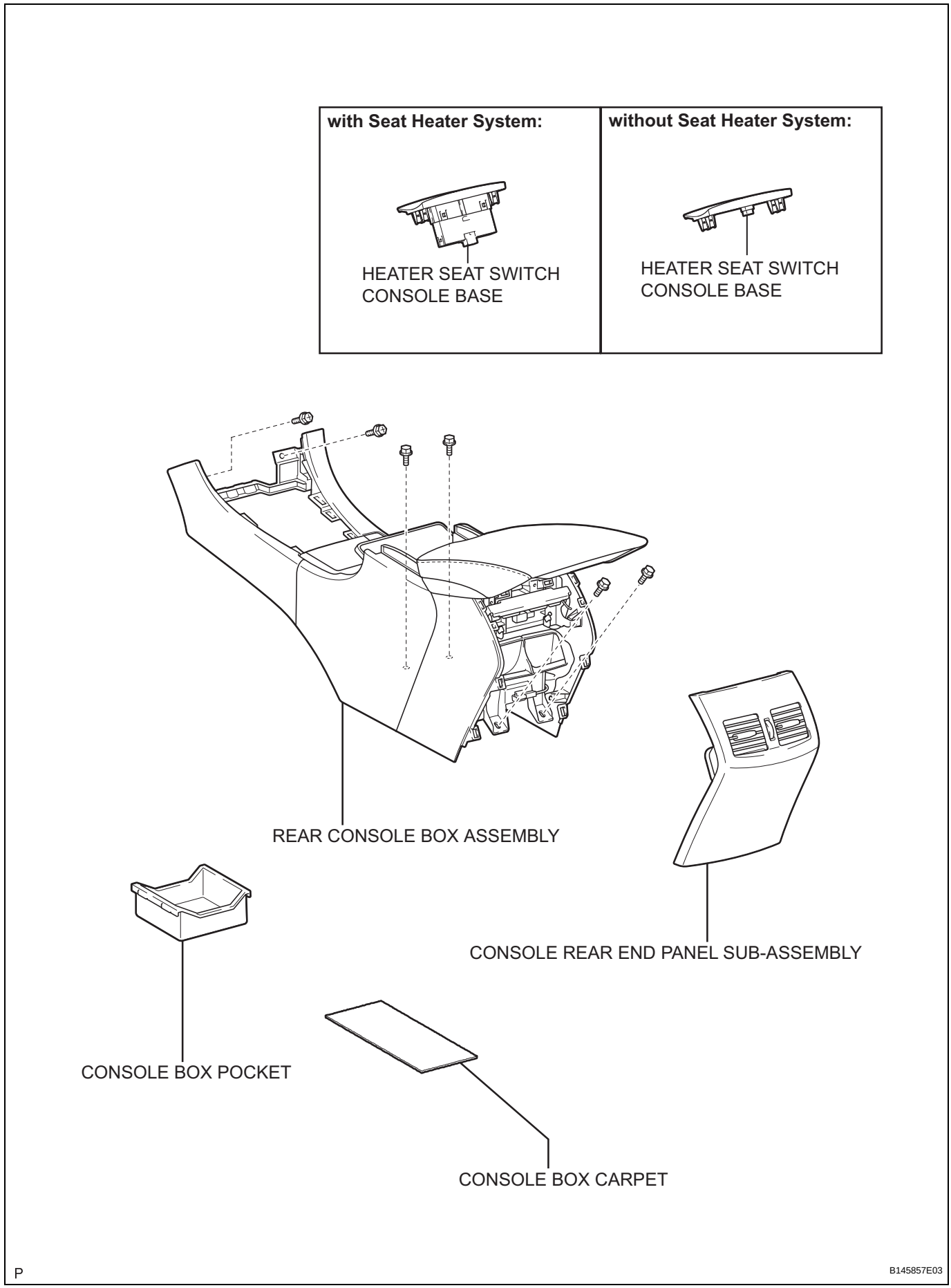
with Seat Heater System:
HEATER SEAT SWITCH
CONSOLE BASE
without Seat Heater System:
HEATER SEAT SWITCH
CONSOLE BASE
REAR CONSOLE BOX ASSEMBLY
CONSOLE REAR END PANEL SUB-ASSEMBLY
CONSOLE BOX POCKET
CONSOLE BOX CARPET
P
B145857E03

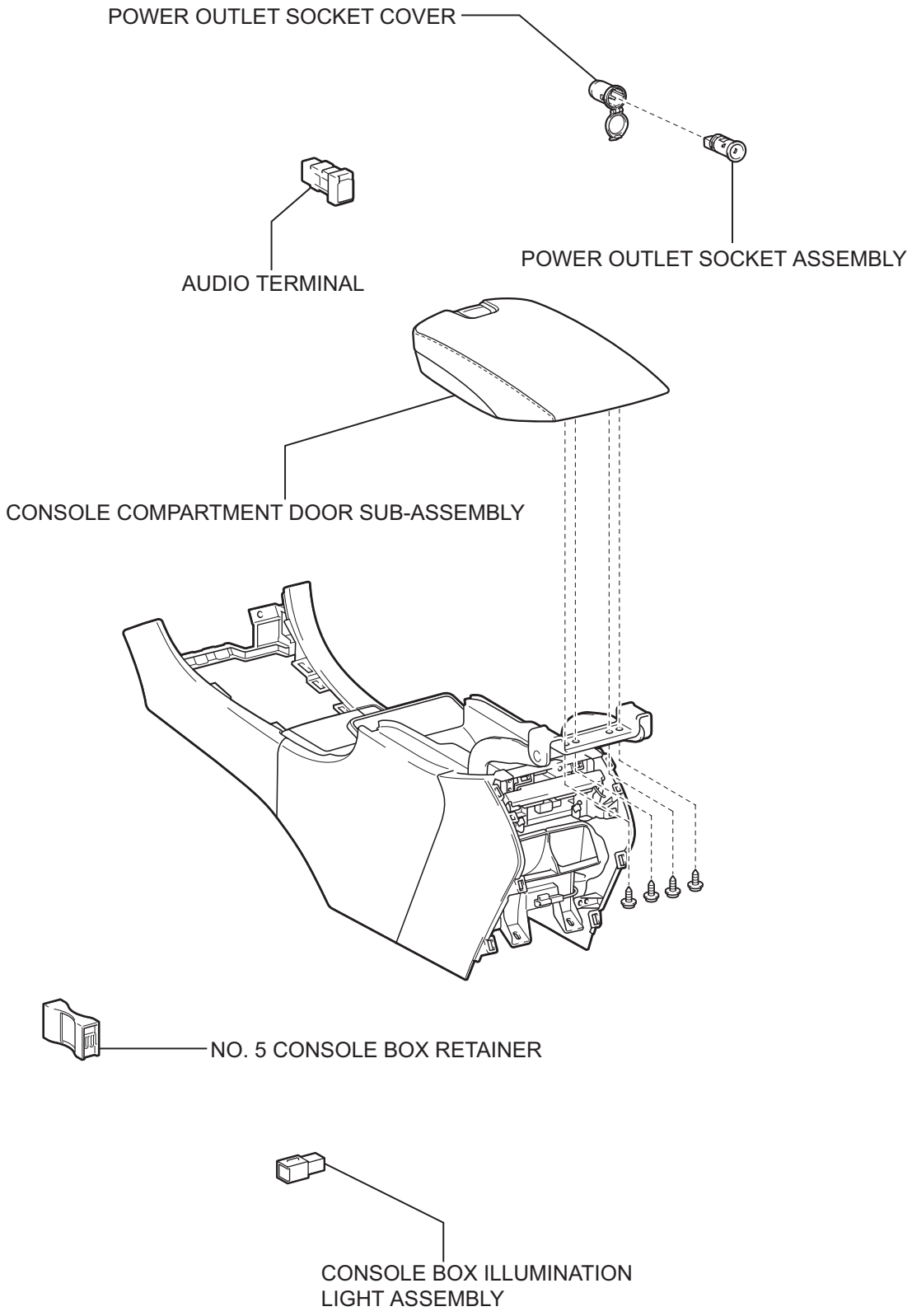

P

B145862E01

FRONT POWER SEAT CONTROL SYSTEM (w/ Seat Position Memory System)

PRECAUTION

NOTICE:
Some systems need to be initialized after reconnecting the negative (-) battery terminal (See page IN-33).

PARTS LOCATION

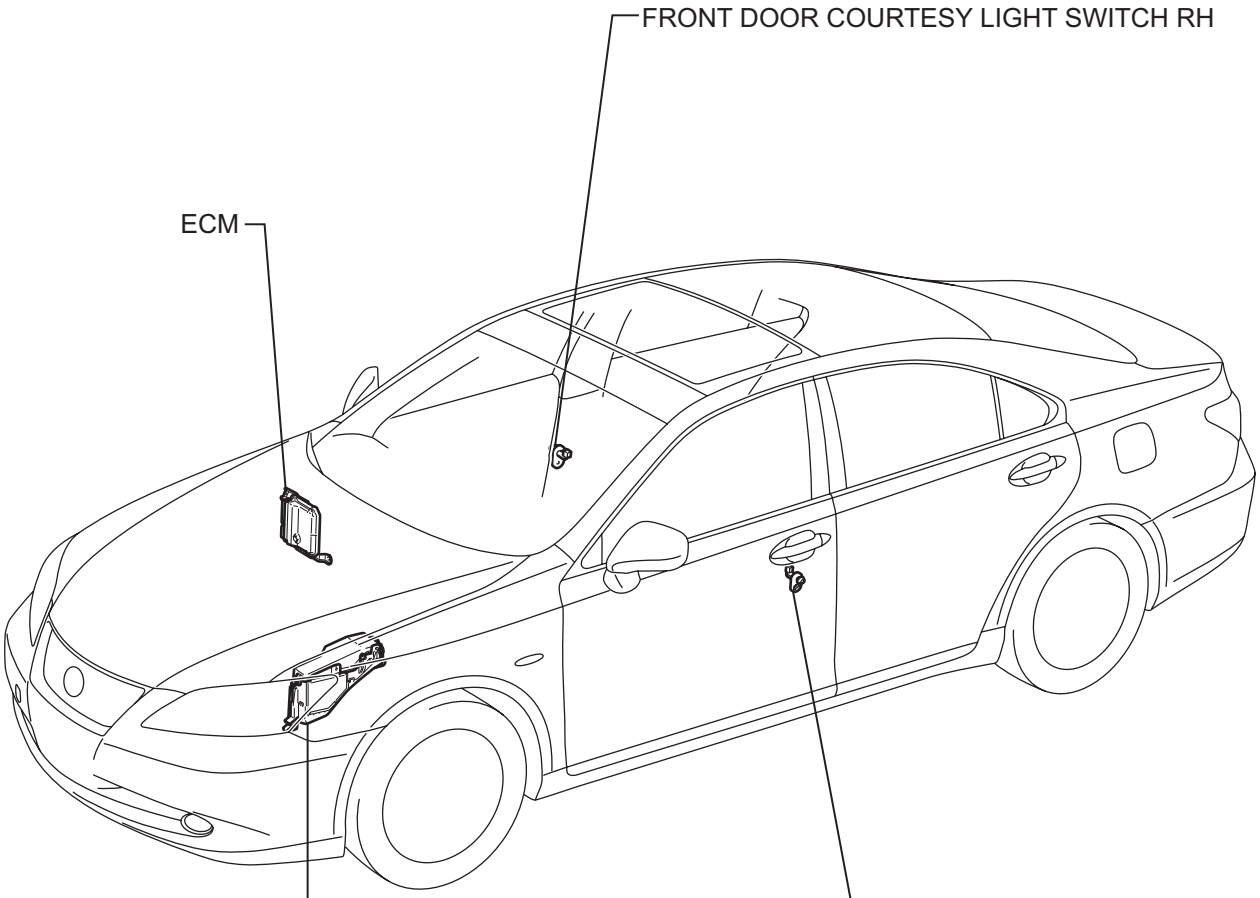

ENGINE ROOM J/B AND R/B

- ALT FUSE
- P-P/SEAT FUSE
- SHORT PIN
- ECU-B NO. 1 FUSE

H

B126248E01

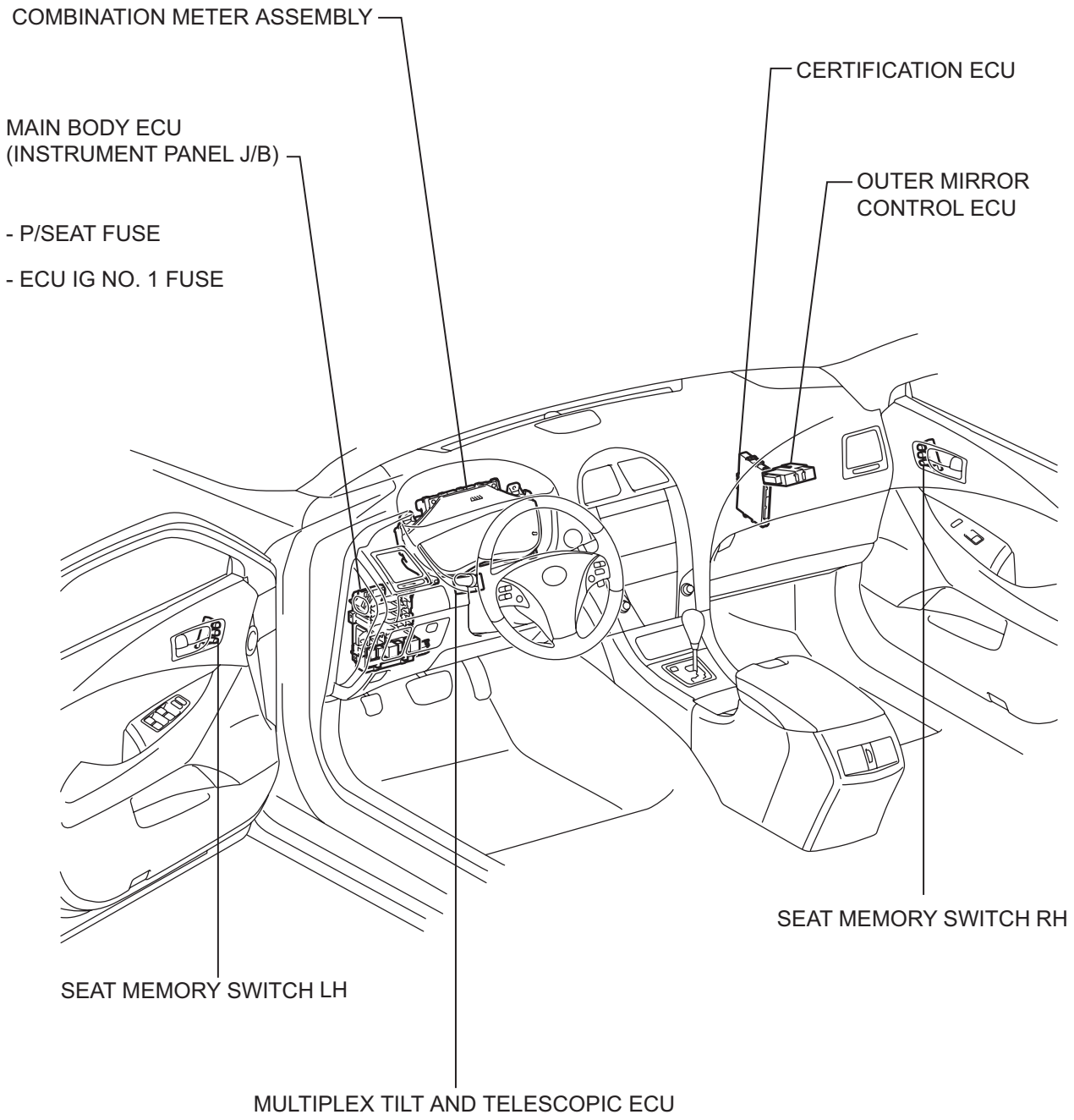

H

B126249E01

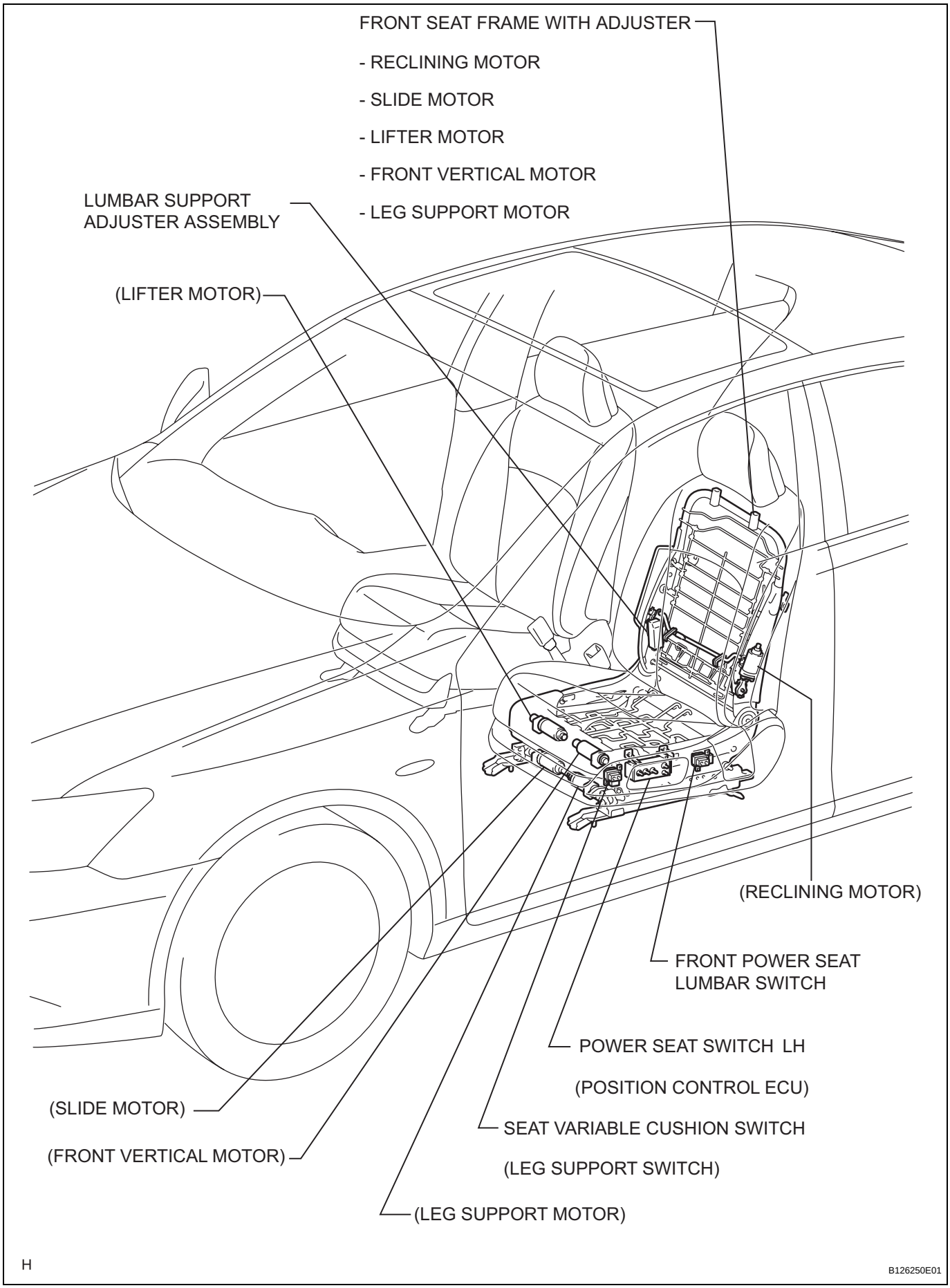
FRONT SEAT FRAME WITH ADJUSTER
- RECLINING MOTOR
- SLIDE MOTOR
- LIFTER MOTOR
- FRONT VERTICAL MOTOR
- LEG SUPPORT MOTOR
LUMBAR SUPPORT ADJUSTER ASSEMBLY
(LIFTER MOTOR)
(RECLINING MOTOR)
FRONT POWER SEAT LUMBAR SWITCH
POWER SEAT SWITCH LH
(POSITION CONTROL ECU)
SEAT VARIABLE CUSHION SWITCH
(LEG SUPPORT SWITCH)
(SLIDE MOTOR)
(FRONT VERTICAL MOTOR)
(LEG SUPPORT MOTOR)
H
B126250E01

SE

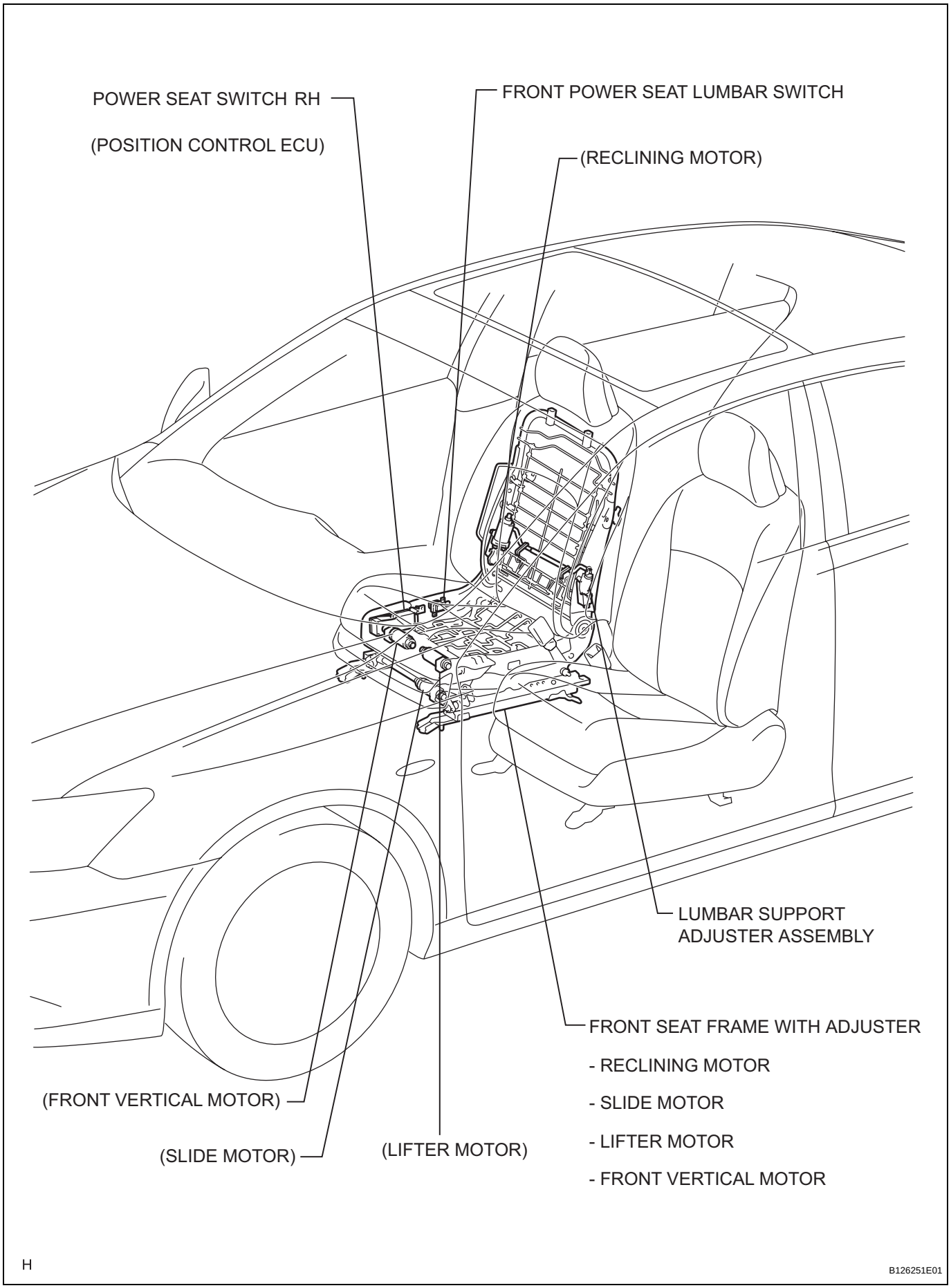
POWER SEAT SWITCH RH
(POSITION CONTROL ECU)
FRONT POWER SEAT LUMBAR SWITCH
(RECLINING MOTOR)
LUMBAR SUPPORT
ADJUSTER ASSEMBLY
FRONT SEAT FRAME WITH ADJUSTER
- RECLINING MOTOR
- SLIDE MOTOR
- LIFTER MOTOR
- FRONT VERTICAL MOTOR
(FRONT VERTICAL MOTOR)
(SLIDE MOTOR)
(LIFTER MOTOR)
H
B126251E01

SE

FRONT POWER SEAT CONTROL SYSTEM (w/o Seat Position Memory System)

PRECAUTION

NOTICE:
Some systems need to be initialized after reconnecting the negative (-) battery terminal (See page IN-33).

PARTS LOCATION

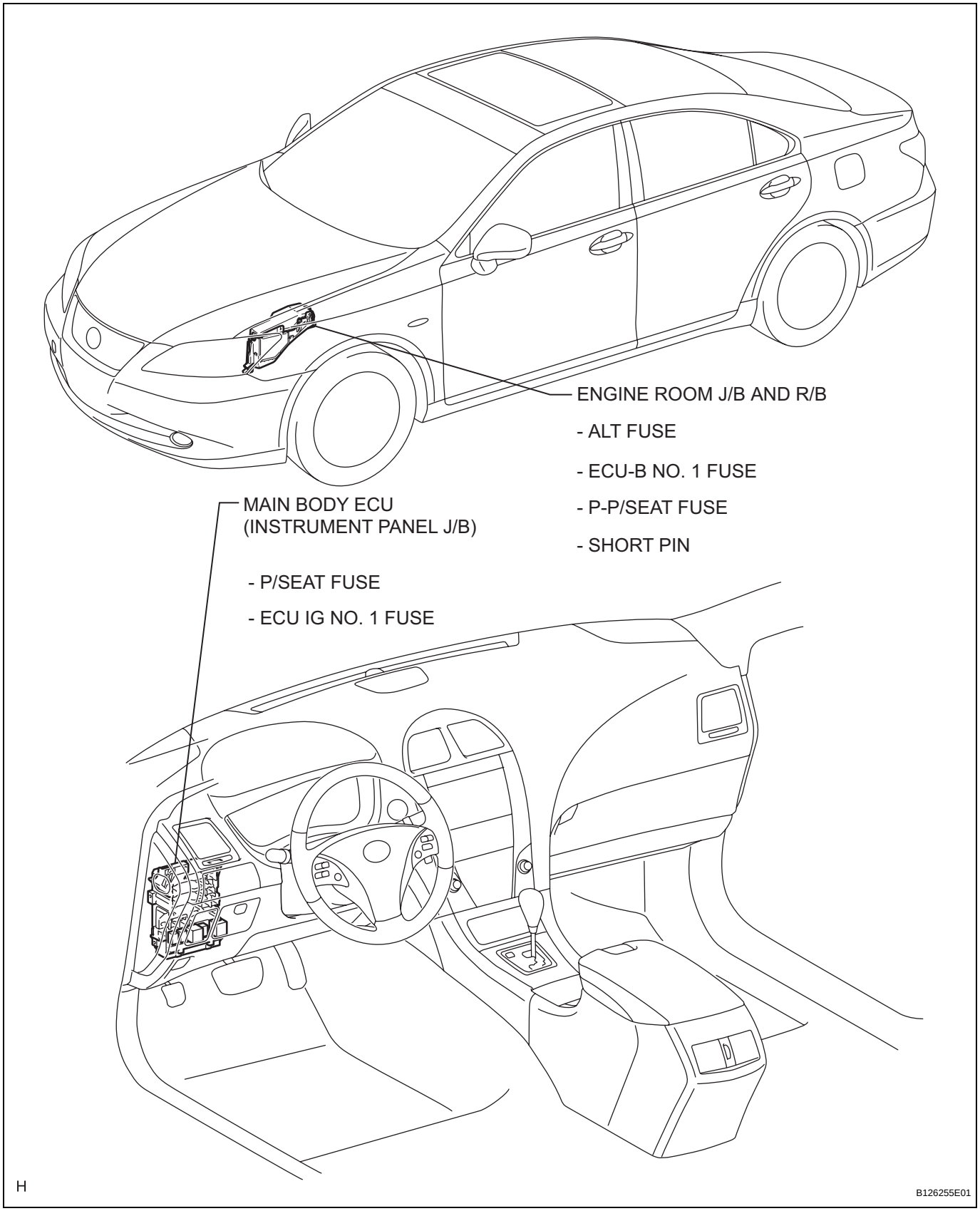

SE

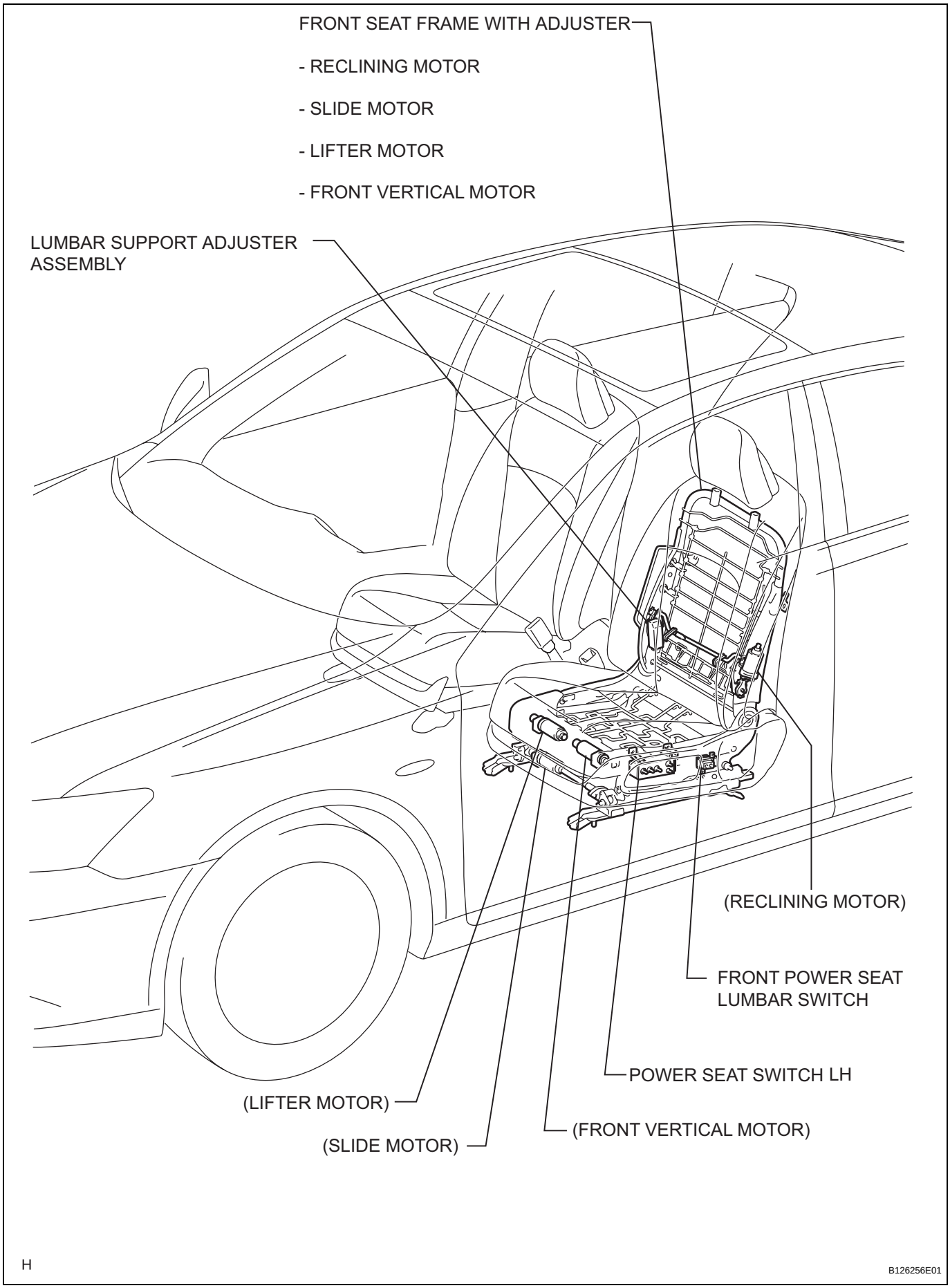
FRONT SEAT FRAME WITH ADJUSTER
- RECLINING MOTOR
- SLIDE MOTOR
- LIFTER MOTOR
- FRONT VERTICAL MOTOR
LUMBAR SUPPORT ADJUSTER ASSEMBLY
(RECLINING MOTOR)
FRONT POWER SEAT LUMBAR SWITCH
POWER SEAT SWITCH LH
(LIFTER MOTOR)
(FRONT VERTICAL MOTOR)
(SLIDE MOTOR)
H
B126256E01

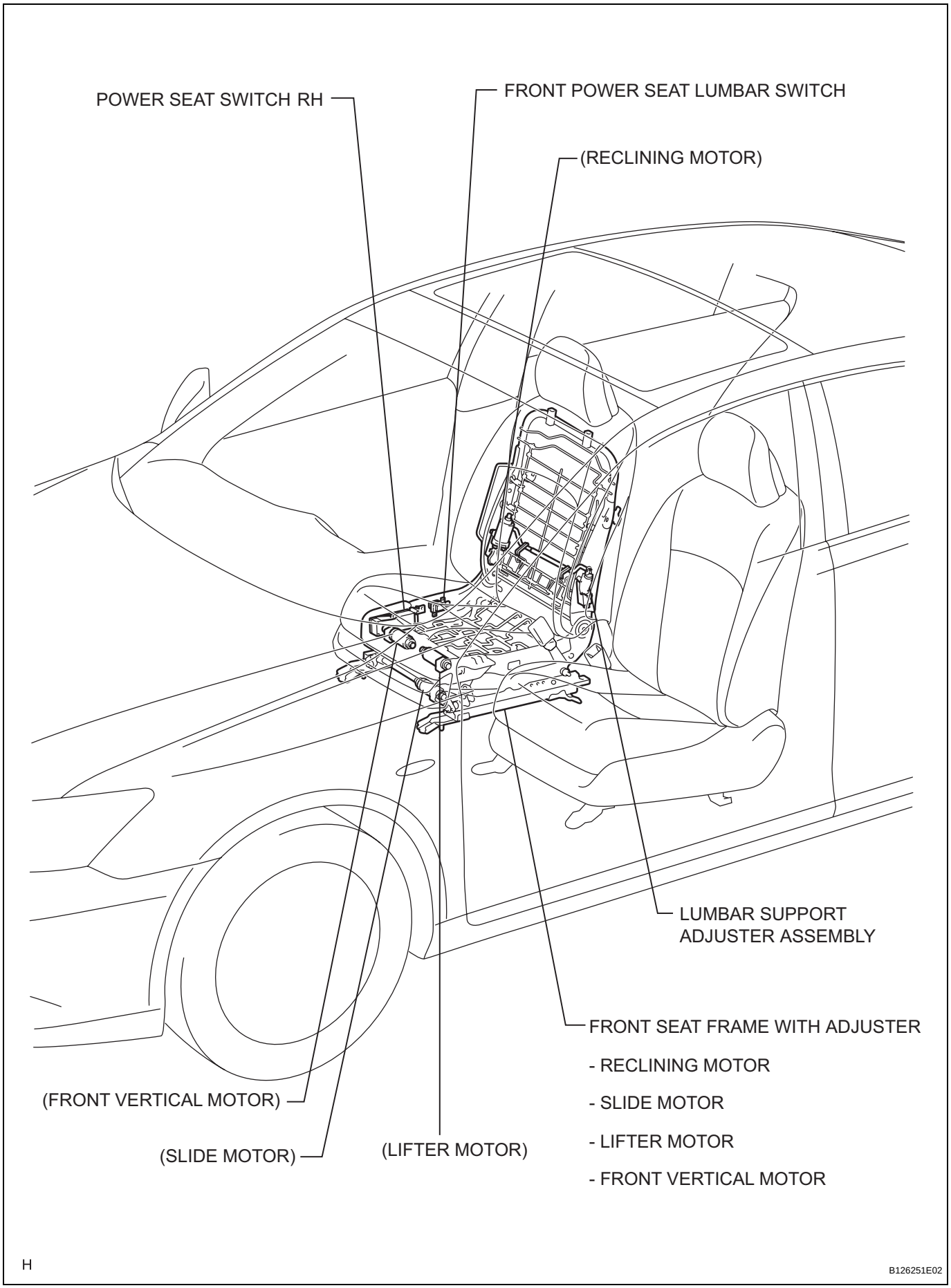
POWER SEAT SWITCH RH
FRONT POWER SEAT LUMBAR SWITCH
(RECLINING MOTOR)
LUMBAR SUPPORT
ADJUSTER ASSEMBLY
FRONT SEAT FRAME WITH ADJUSTER
- RECLINING MOTOR
- SLIDE MOTOR
- LIFTER MOTOR
- FRONT VERTICAL MOTOR
(FRONT VERTICAL MOTOR)
(SLIDE MOTOR)
(LIFTER MOTOR)
H
B126251E02

SE

SEAT HEATER SYSTEM

PRECAUTION

NOTICE:
Some systems need to be initialized after reconnecting the negative (-) battery terminal (See page IN-33).

PARTS LOCATION

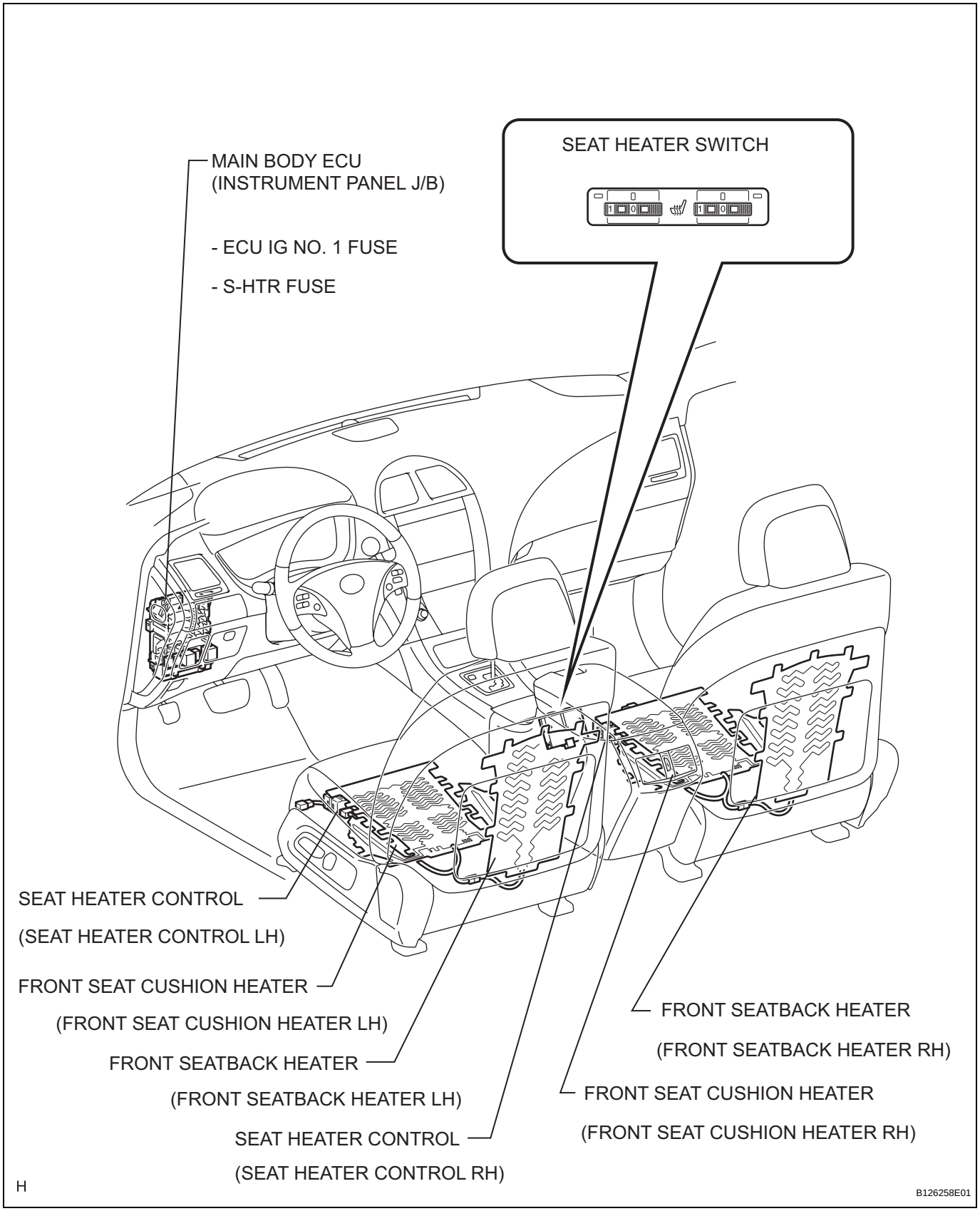

SE

CLIMATE CONTROL SEAT SYSTEM

PRECAUTION

NOTICE:
Some systems need to be initialized after reconnecting the negative (-) battery terminal (See page IN-33).

PARTS LOCATION

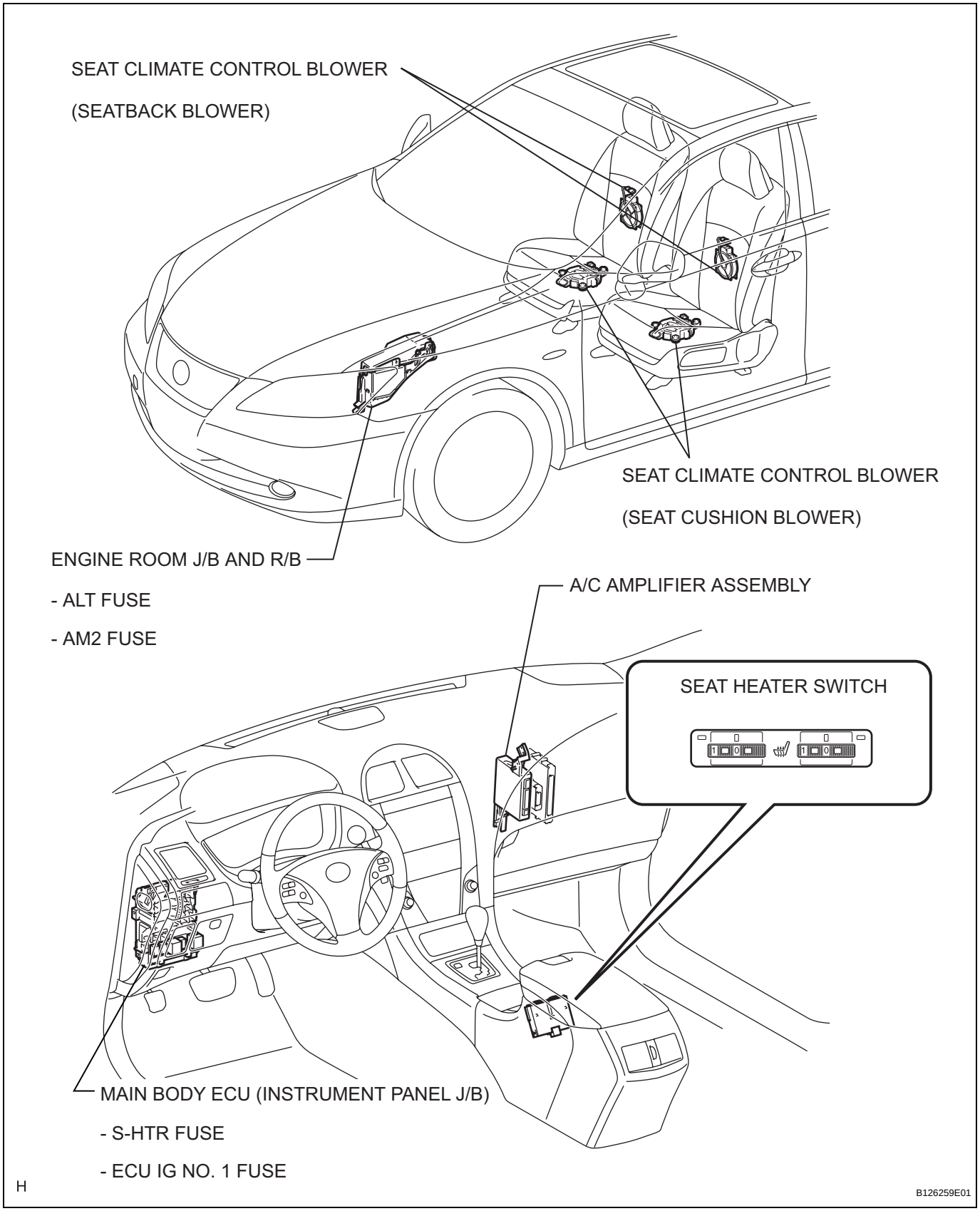

SE

FRONT SEAT ASSEMBLY

COMPONENTS

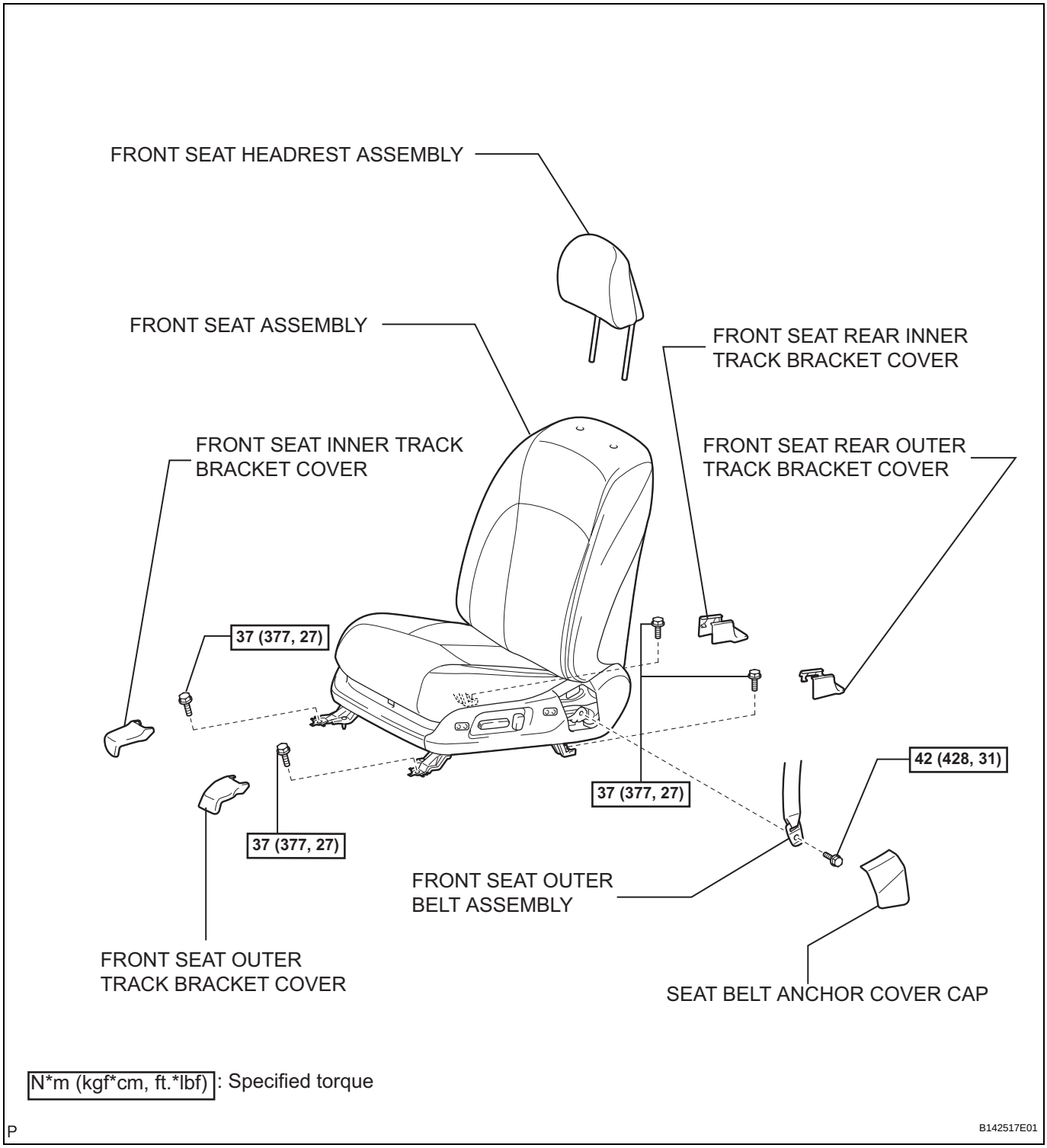

SE

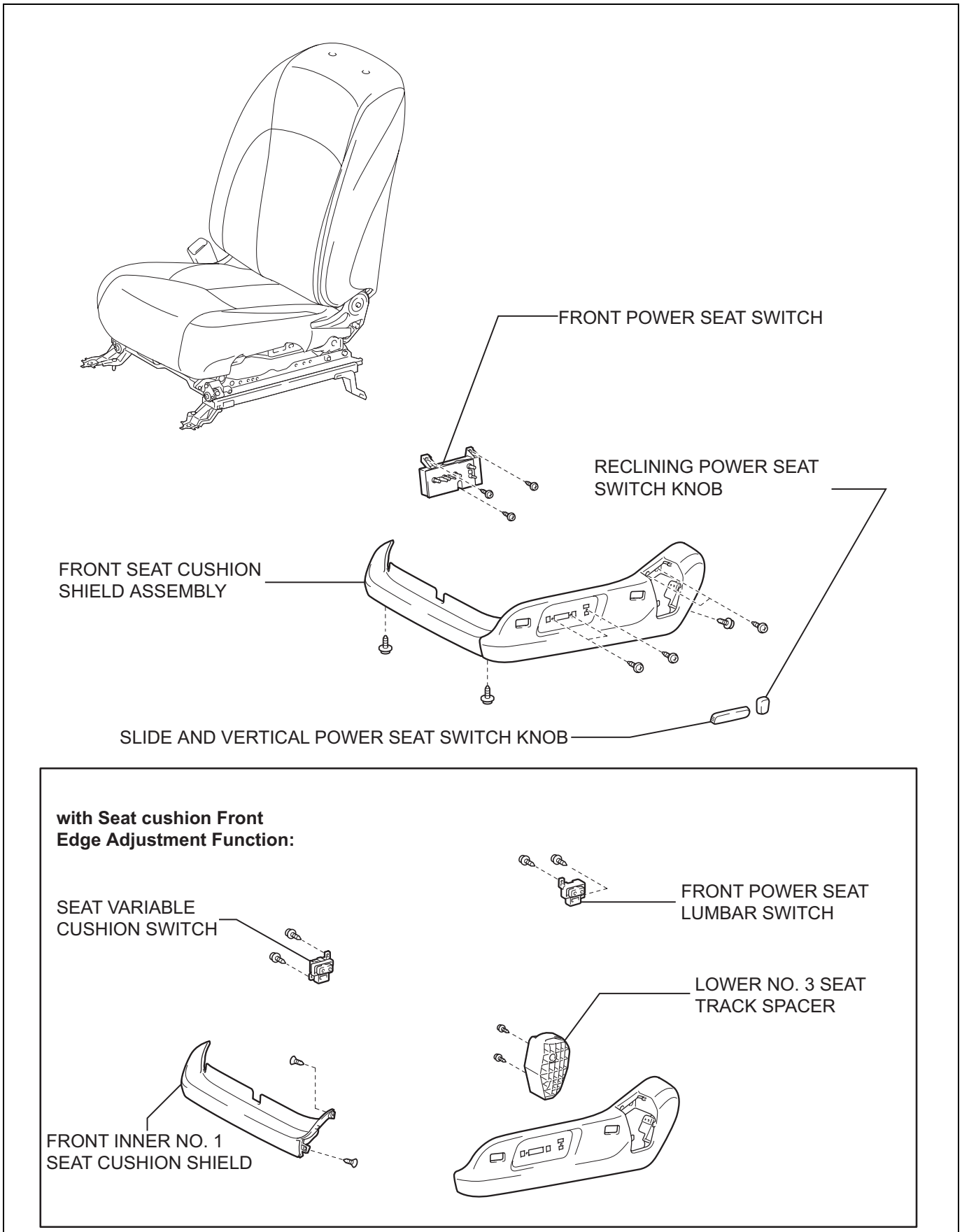
FRONT POWER SEAT SWITCH
RECLINING POWER SEAT SWITCH KNOB
FRONT SEAT CUSHION SHIELD ASSEMBLY
SLIDE AND VERTICAL POWER SEAT SWITCH KNOB
with Seat cushion Front Edge Adjustment Function:
FRONT POWER SEAT LUMBAR SWITCH
SEAT VARIABLE CUSHION SWITCH
LOWER NO. 3 SEAT TRACK SPACER
FRONT INNER NO. 1 SEAT CUSHION SHIELD
P
B142518E01

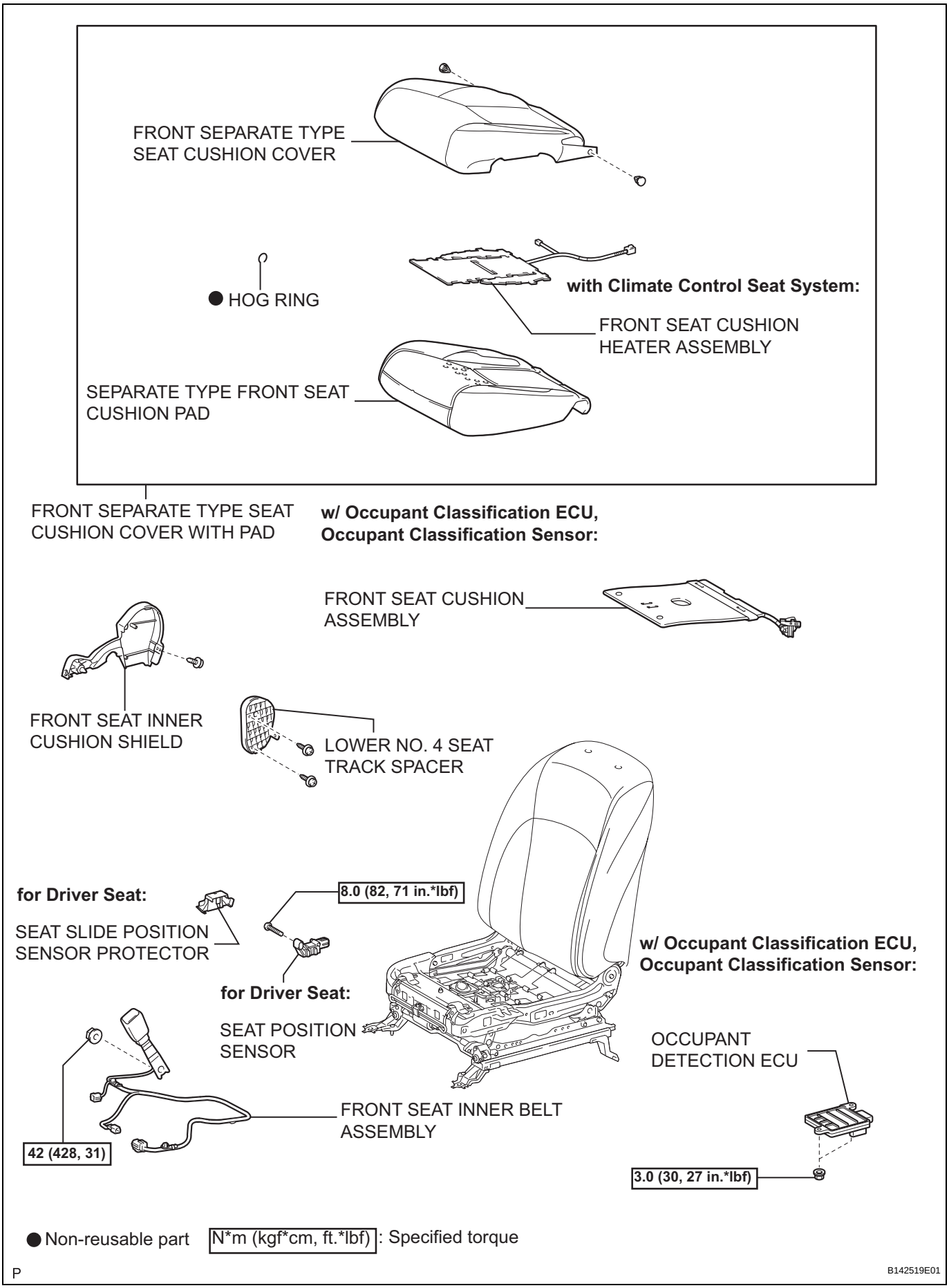
FRONT SEPARATE TYPE SEAT CUSHION COVER
● HOG RING
with Climate Control Seat System:
FRONT SEAT CUSHION HEATER ASSEMBLY
SEPARATE TYPE FRONT SEAT CUSHION PAD
FRONT SEPARATE TYPE SEAT CUSHION COVER WITH PAD
w/ Occupant Classification ECU, Occupant Classification Sensor:
FRONT SEAT CUSHION ASSEMBLY
FRONT SEAT INNER CUSHION SHIELD
LOWER NO. 4 SEAT TRACK SPACER
for Driver Seat:
SEAT SLIDE POSITION SENSOR PROTECTOR
8.0 (82, 71 in.*lbf)
for Driver Seat:
SEAT POSITION SENSOR
w/ Occupant Classification ECU, Occupant Classification Sensor:
OCCUPANT DETECTION ECU
FRONT SEAT INNER BELT ASSEMBLY
42 (428, 31)
3.0 (30, 27 in.*lbf)
● Non-reusable part
N*m (kgf*cm, ft.*lbf): Specified torque
P
B142519E01

SE

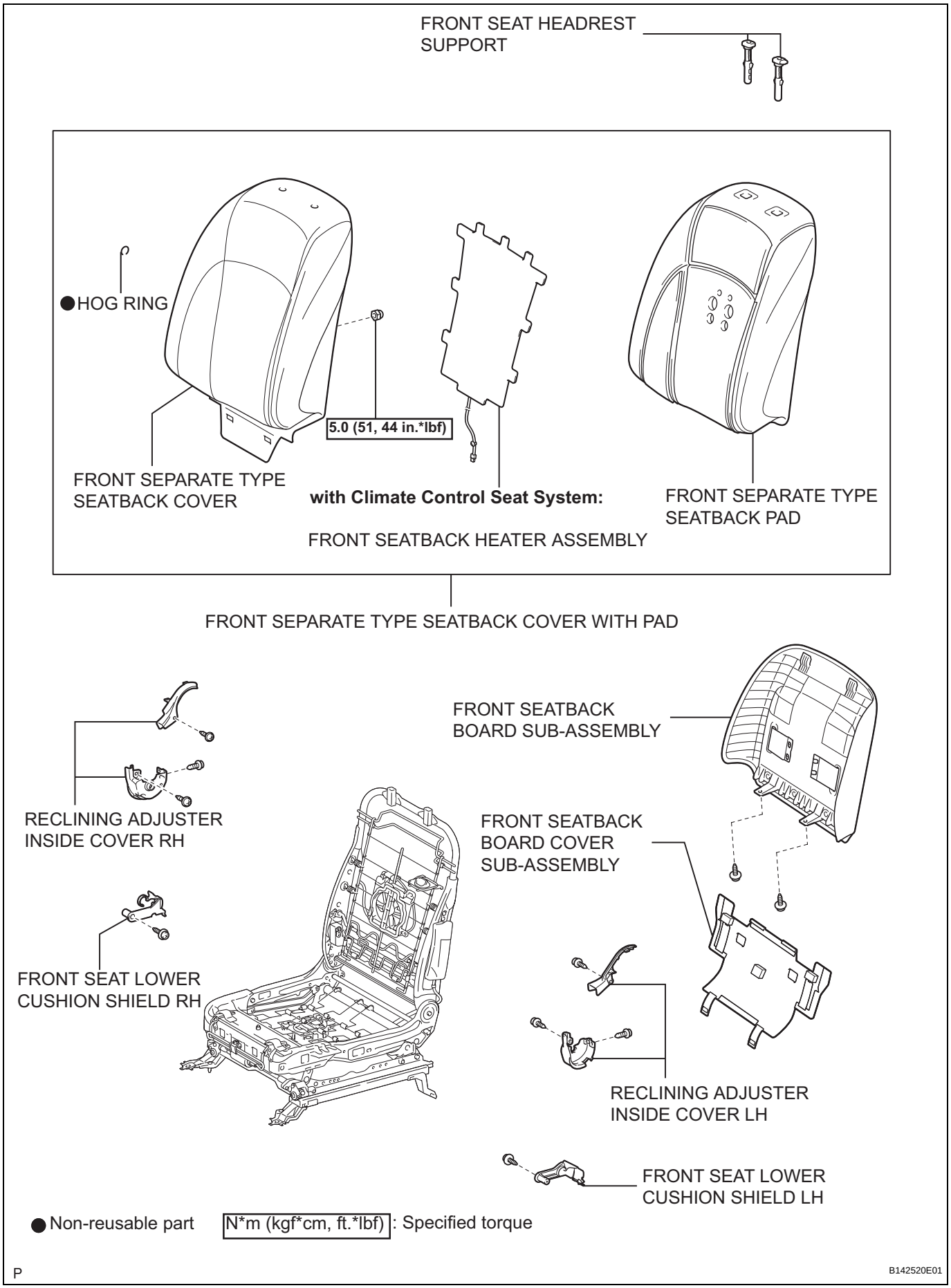
FRONT SEAT HEADREST SUPPORT
●HOG RING
5.0 (51, 44 in.*lbf)
FRONT SEPARATE TYPE SEATBACK COVER
with Climate Control Seat System:
FRONT SEATBACK HEATER ASSEMBLY
FRONT SEPARATE TYPE SEATBACK PAD
FRONT SEPARATE TYPE SEATBACK COVER WITH PAD
FRONT SEATBACK BOARD SUB-ASSEMBLY
RECLINING ADJUSTER INSIDE COVER RH
FRONT SEATBACK BOARD COVER SUB-ASSEMBLY
FRONT SEAT LOWER CUSHION SHIELD RH
RECLINING ADJUSTER INSIDE COVER LH
FRONT SEAT LOWER CUSHION SHIELD LH
● Non-reusable part
N*m (kgf*cm, ft.*lbf): Specified torque
P
B142520E01

SE

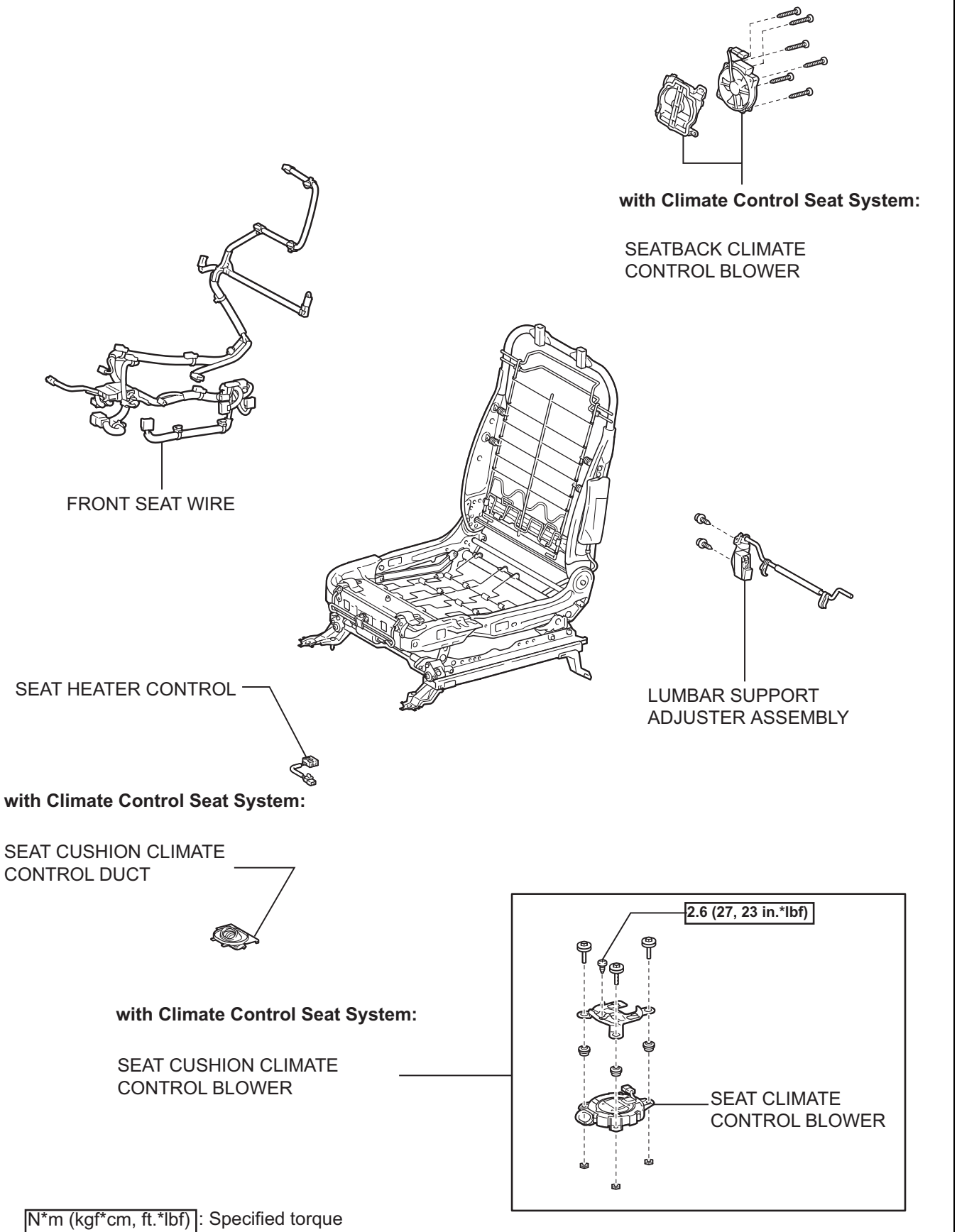

N*m (kgf*cm, ft.*lbf): Specified torque

P

B142521E01

SE

REAR SEAT ASSEMBLY

COMPONENTS

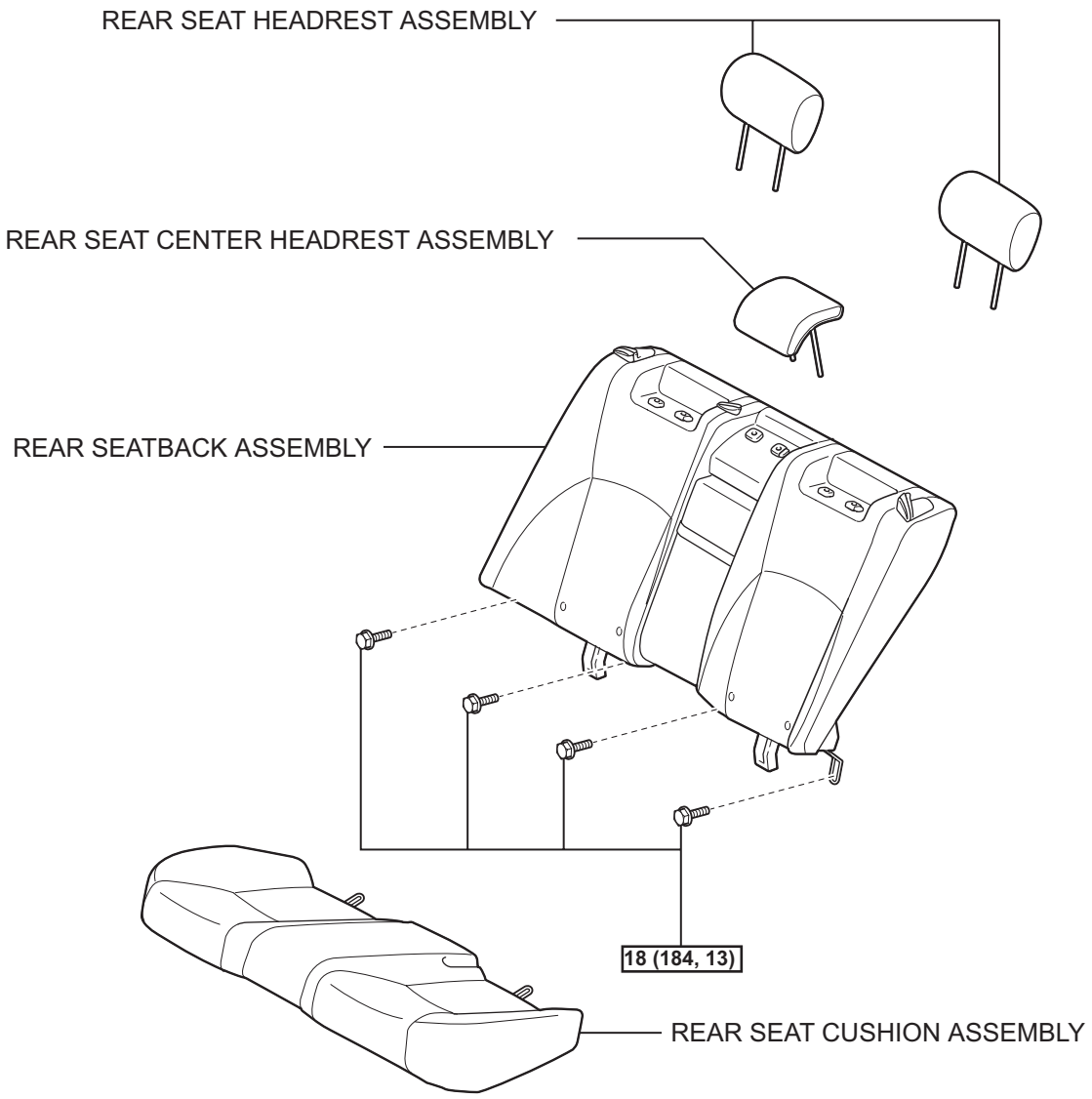

N*m (kgf*cm, ft.*lbf) : Specified torque

P

B145388E03

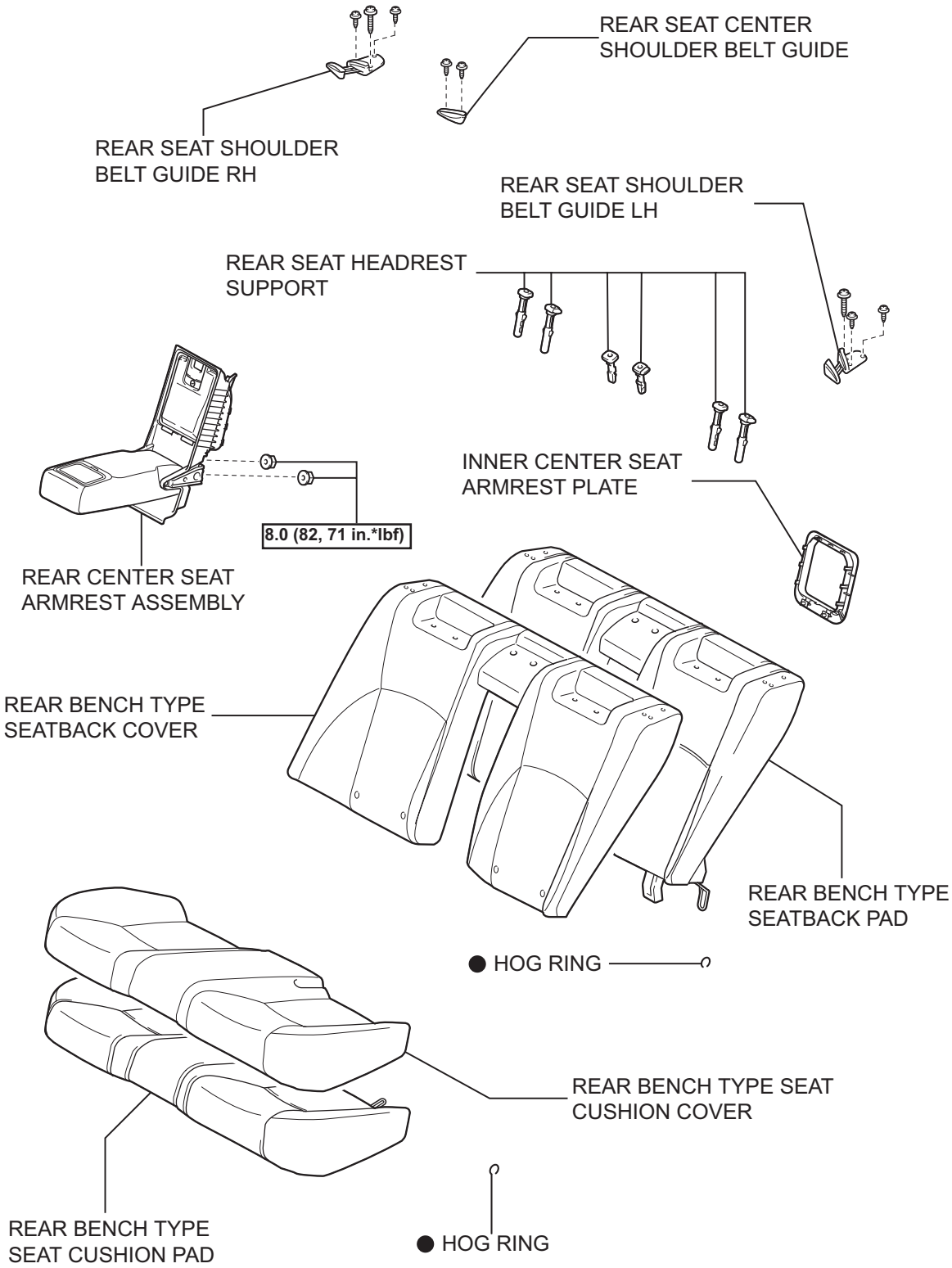

● Non-reusable part N*m (kgf*cm, ft.*lbf) : Specified torque

P B145389E01

SE

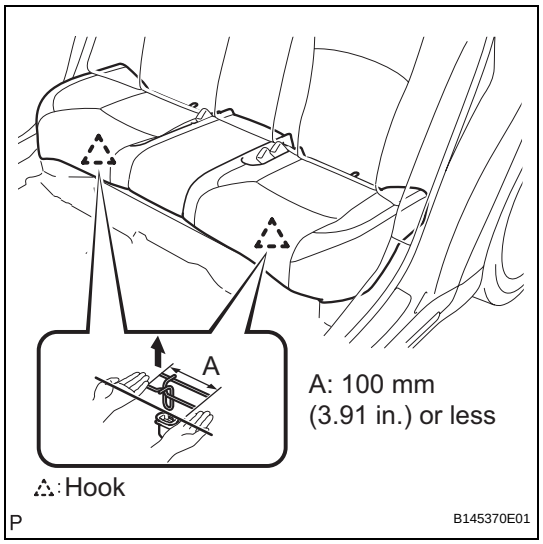

REMOVAL

1. REMOVE REAR SEAT CUSHION ASSEMBLY

(a) Detach the 2 front hooks of the rear seat cushion assembly from the vehicle body.

NOTICE:

Follow the instructions below carefully as the cushion frame deforms easily.

(1) Choose a hook to detach first. Place your hands near the hook as shown in the illustration. Then lift the seat cushion to detach the hook.

(2) Repeat for the other hook.

(b) Detach the 2 rear hooks of the seat cushion from the seatback.

(c) Remove the seat cushion.

2. REMOVE REAR SEAT HEADREST ASSEMBLY

3. REMOVE REAR SEAT CENTER HEADREST ASSEMBLY

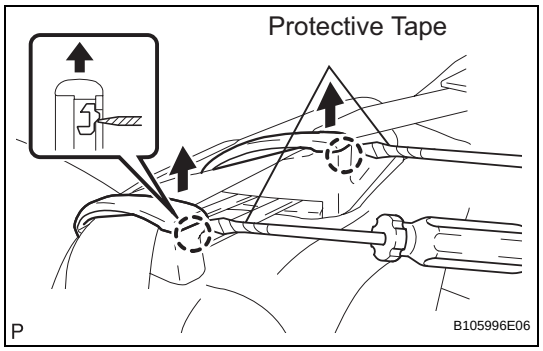

4. REMOVE REAR SEATBACK ASSEMBLY

(a) Using a screwdriver, detach the claws to open the caps of the rear seat shoulder belt guide RH.

(b) Remove the 3 screws and rear seat shoulder belt guide RH.

HINT:

- Tape the screwdriver tip before use.
- Use the same procedure for the LH side and RH side

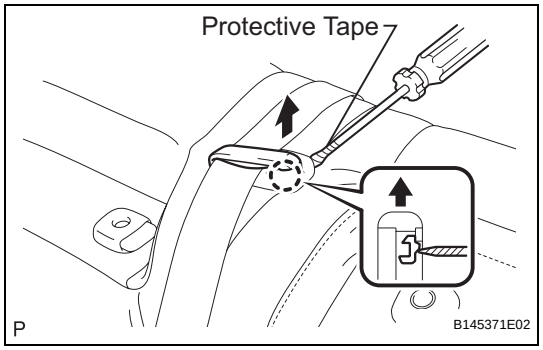

(c) Using a screwdriver, detach the claw to open the cap of the rear seat shoulder belt guide.

HINT:

Tape the screwdriver tip before use.

(d) Remove the 2 screws and rear seat shoulder belt guide.

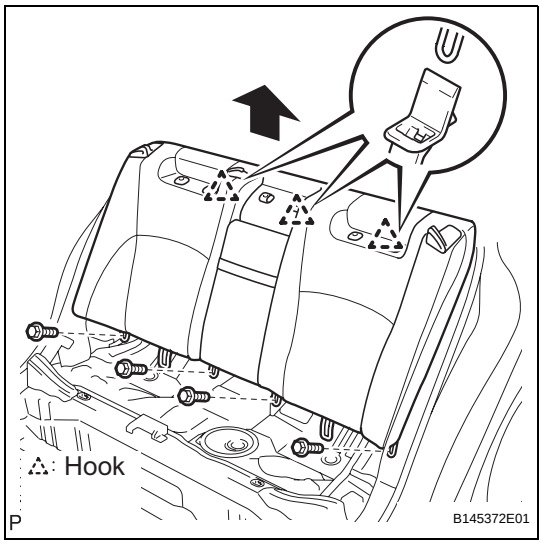

(e) Remove the 4 bolts and rear seatback assembly.
(f) Detach the 3 upper hooks of the rear seatback assembly from the vehicle body.

SEAT MEMORY SWITCH

COMPONENTS

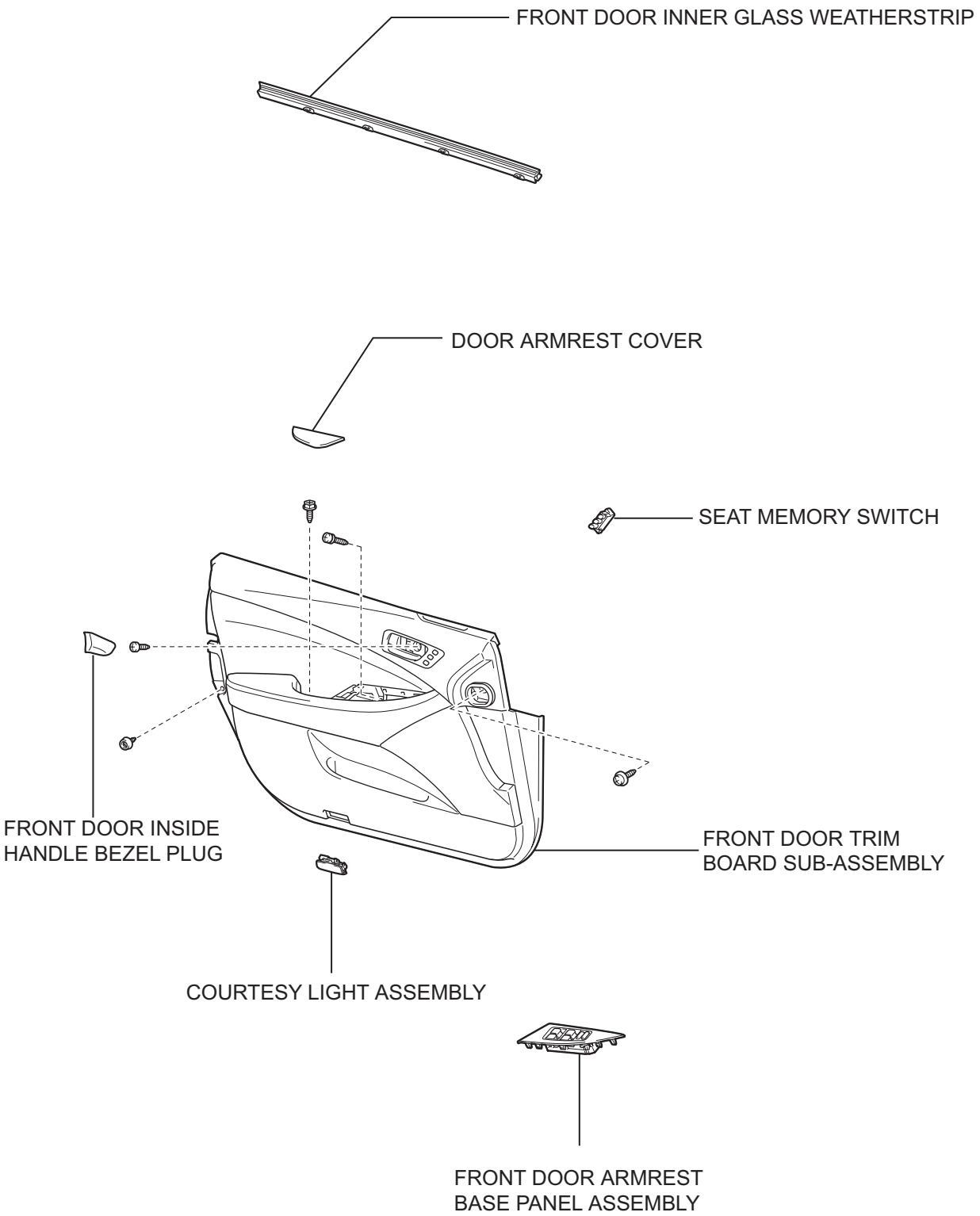

P

B146632E01

REMOVAL

1. **REMOVE FRONT DOOR INSIDE HANDLE BEZEL PLUG (See page ED-32)**
2. **REMOVE FRONT DOOR ARMREST BASE PANEL ASSEMBLY (See page ED-33)**
3. **REMOVE COURTESY LIGHT ASSEMBLY (See page ED-34)**
4. **REMOVE DOOR ARMREST COVER (See page ED-34)**
5. **REMOVE FRONT DOOR TRIM BOARD SUB-ASSEMBLY (See page ED-34)**
6. **REMOVE FRONT DOOR INNER GLASS WEATHERSTRIP (See page ED-35)**
7. **REMOVE SEAT MEMORY SWITCH**
   (a) Remove the 2 screws.
   (b) Disengage the 4 claws of the inside handle.
   HINT:
   The inside handle cannot be removed from the trim board sub-assembly.

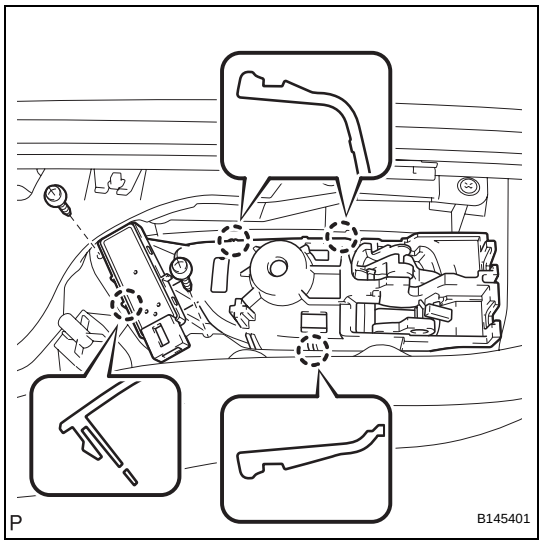

   (c) Disengage the 4 claws, and remove the seat memory switch.

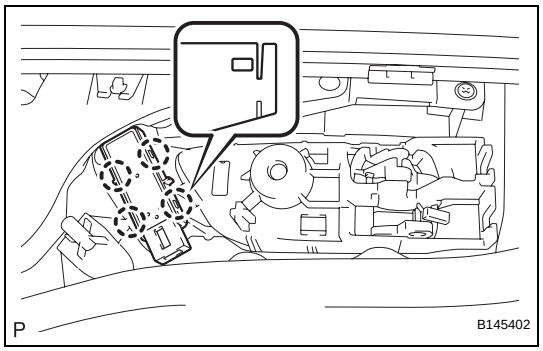

POWER SEAT SWITCH

COMPONENTS

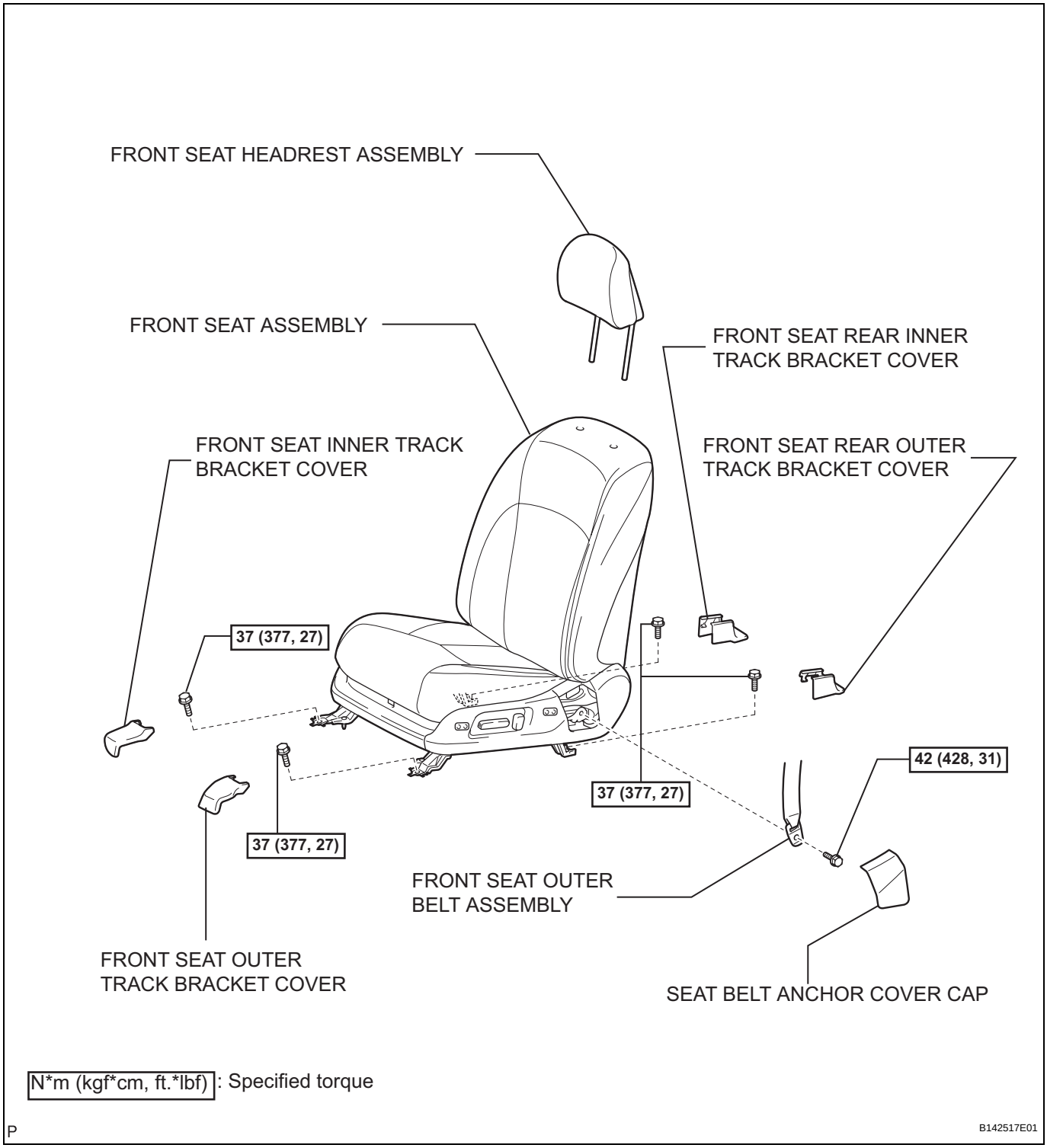

SE

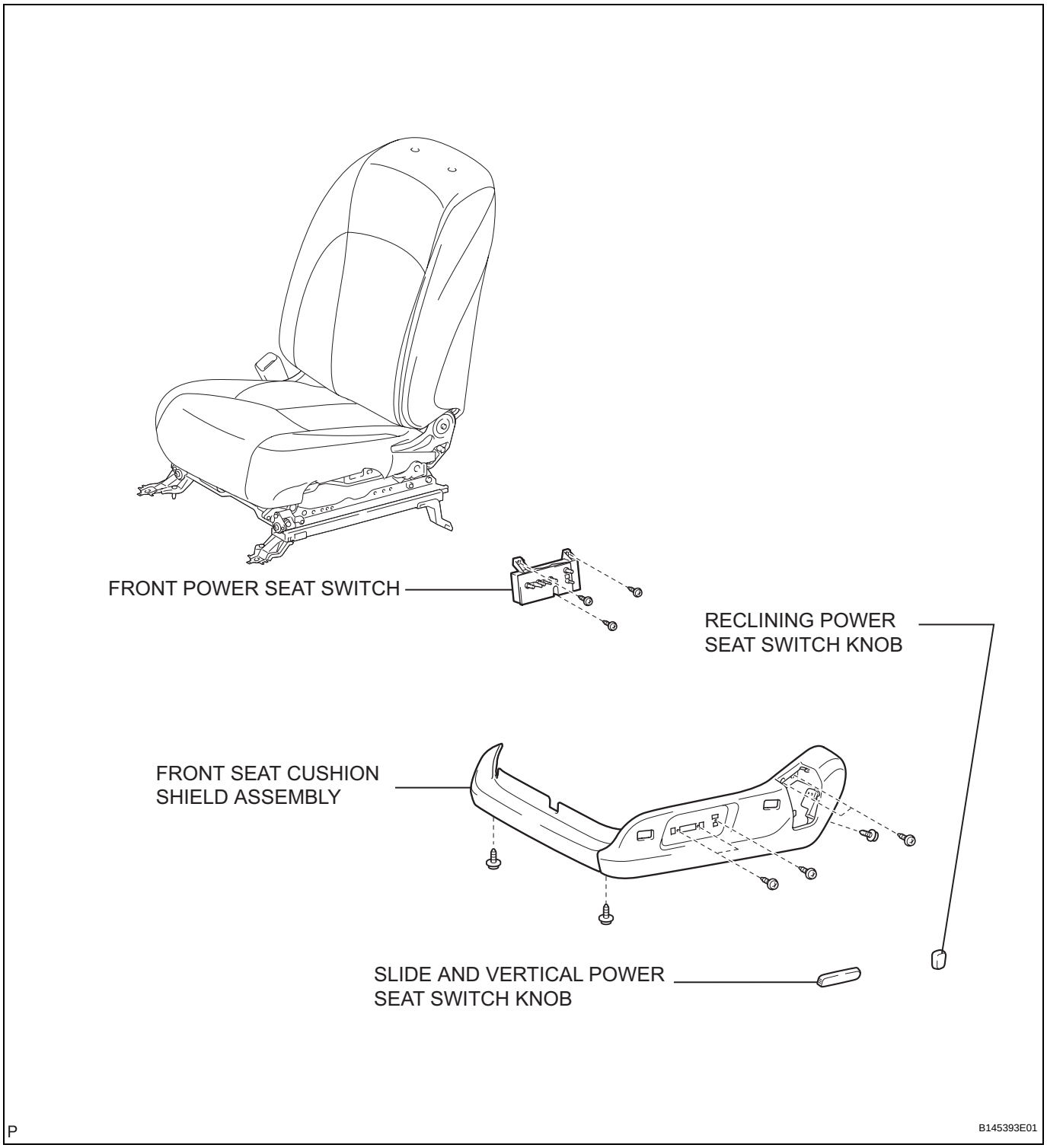
FRONT POWER SEAT SWITCH
RECLINING POWER SEAT SWITCH KNOB
FRONT SEAT CUSHION SHIELD ASSEMBLY
SLIDE AND VERTICAL POWER SEAT SWITCH KNOB
P
B145393E01

FRONT POWER SEAT LUMBAR SWITCH

COMPONENTS

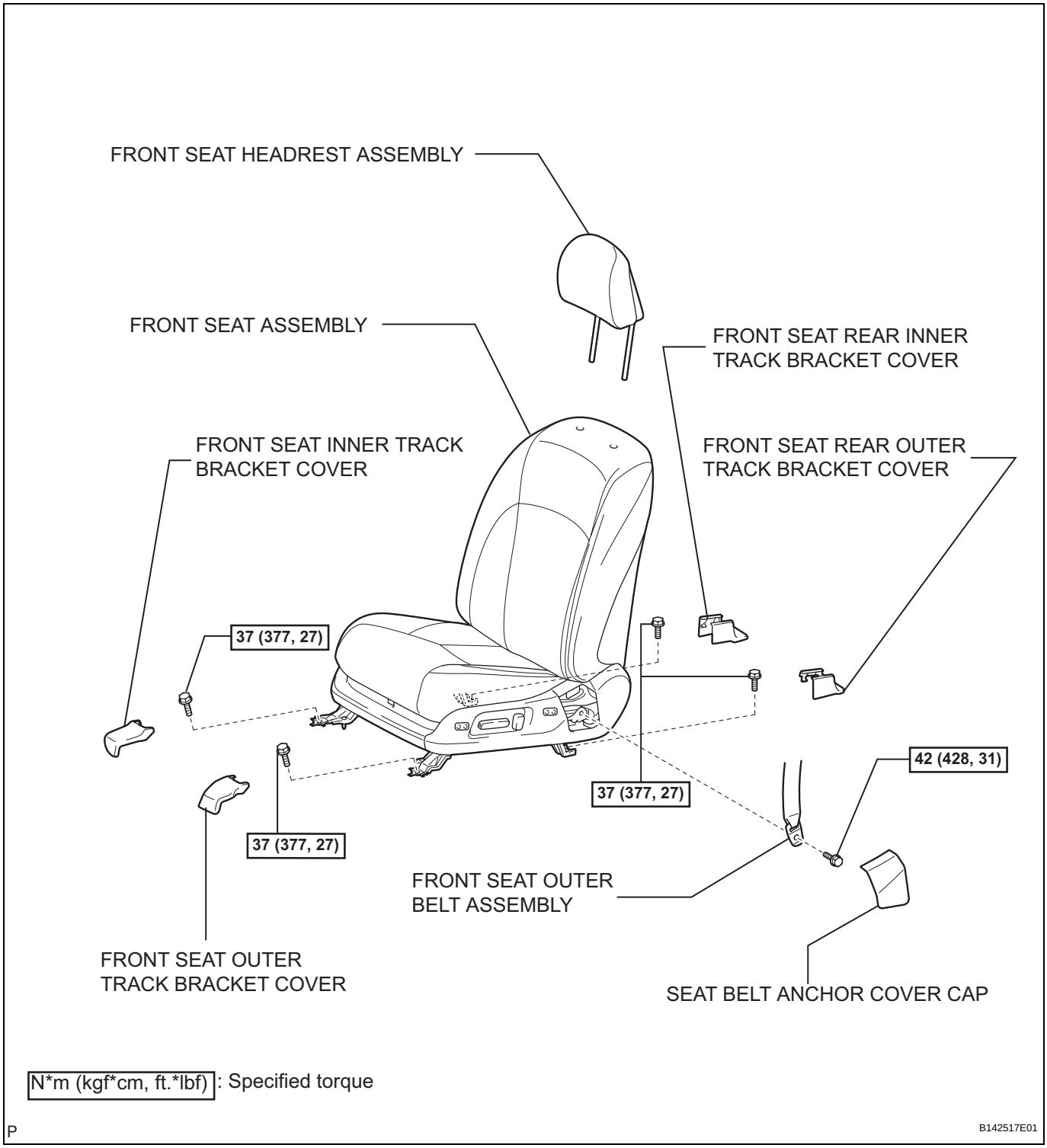

SE

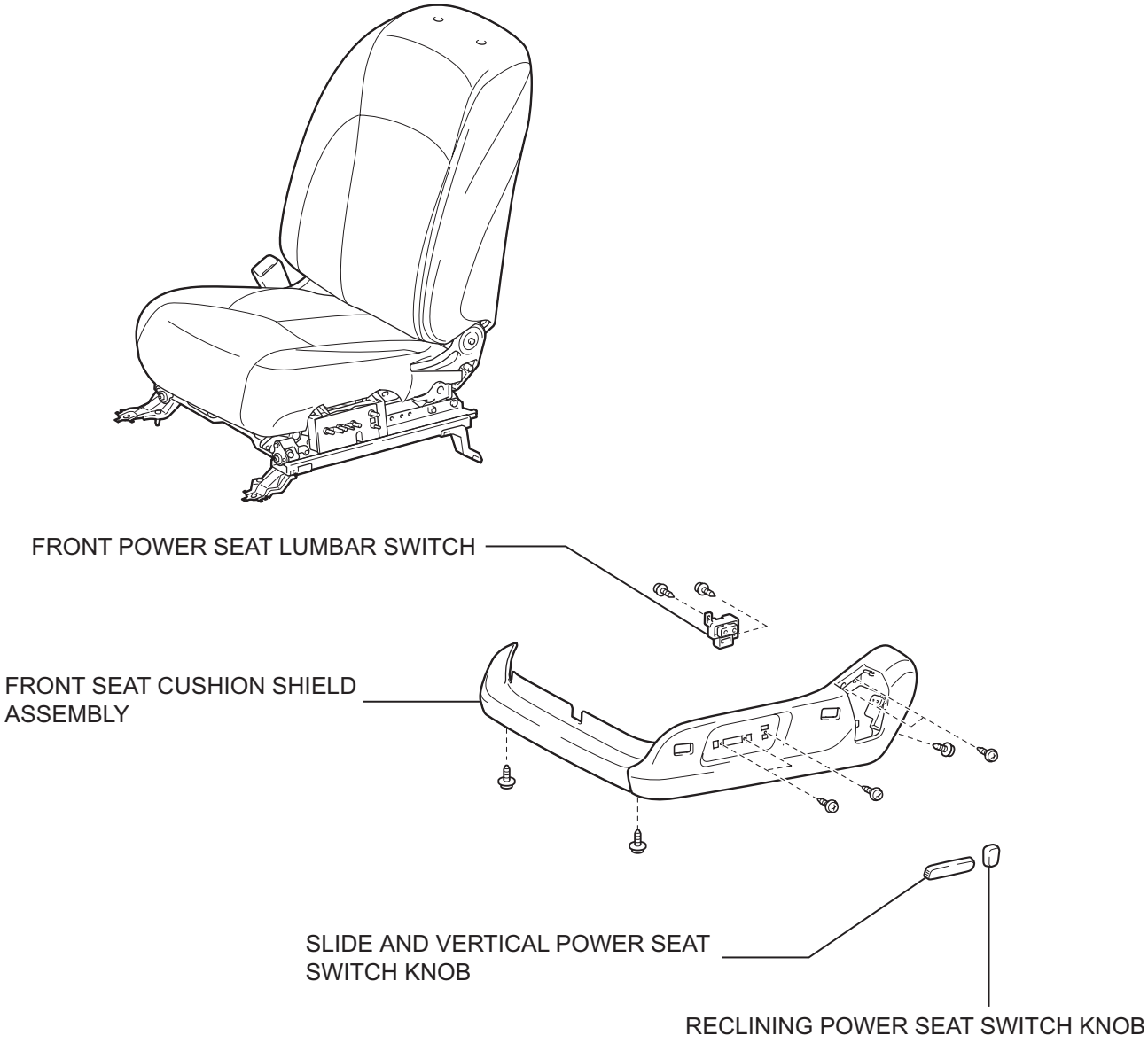

P

B145394E01

LUMBAR SUPPORT ADJUSTER ASSEMBLY

COMPONENTS

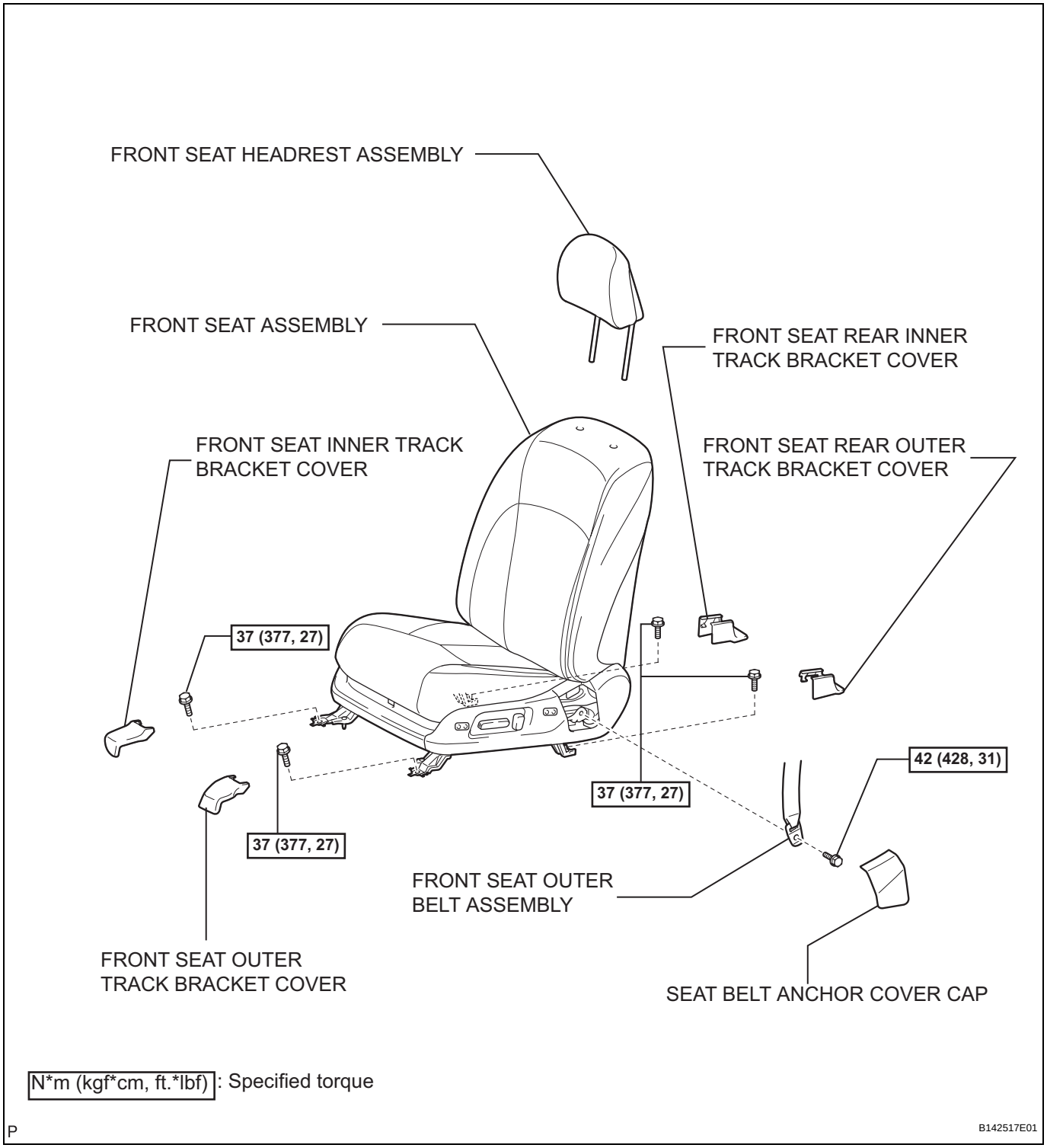

SE

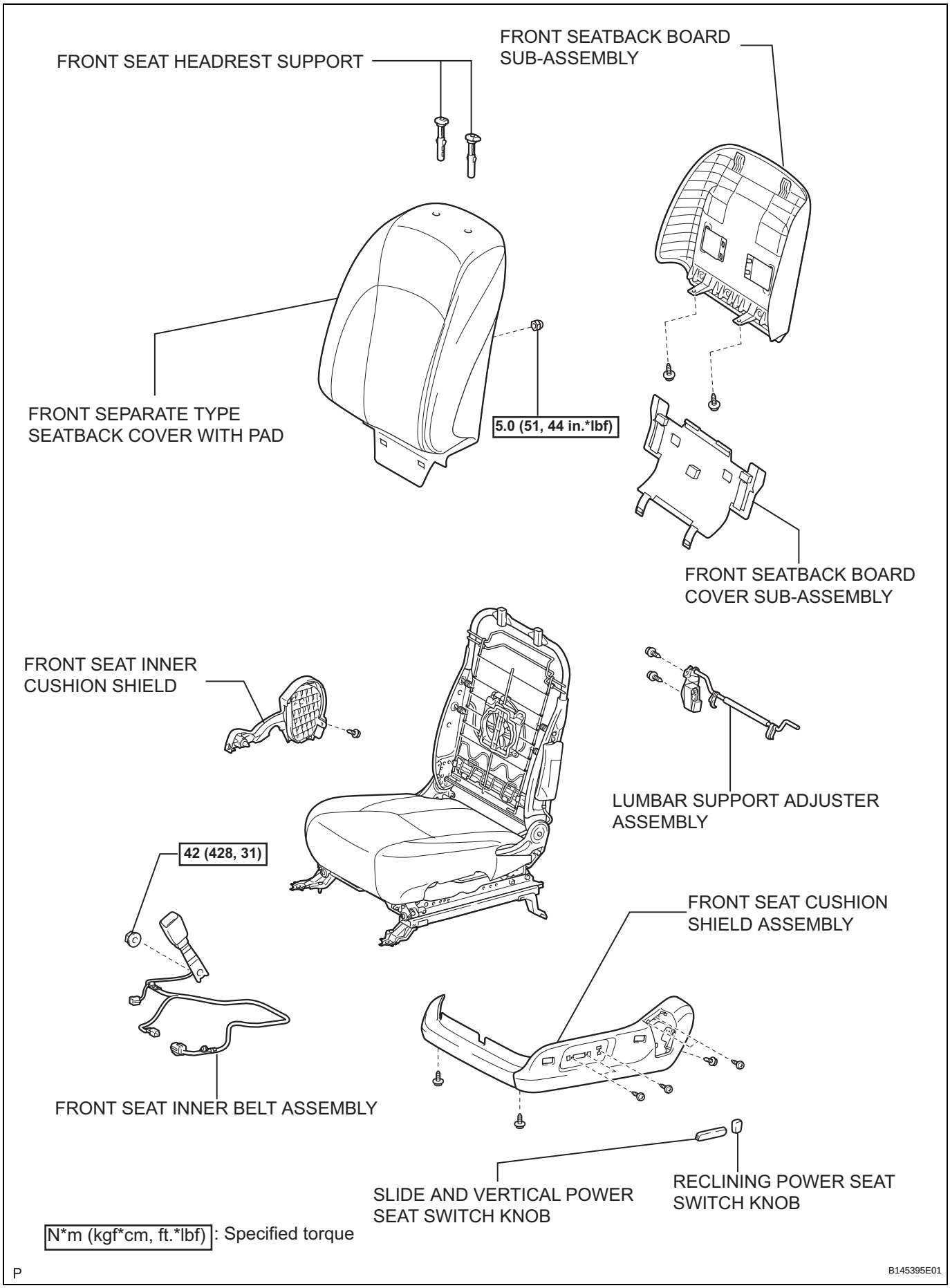
FRONT SEAT HEADREST SUPPORT
FRONT SEATBACK BOARD SUB-ASSEMBLY
FRONT SEPARATE TYPE SEATBACK COVER WITH PAD
5.0 (51, 44 in.*lbf)
FRONT SEATBACK BOARD COVER SUB-ASSEMBLY
FRONT SEAT INNER CUSHION SHIELD
LUMBAR SUPPORT ADJUSTER ASSEMBLY
42 (428, 31)
FRONT SEAT CUSHION SHIELD ASSEMBLY
FRONT SEAT INNER BELT ASSEMBLY
SLIDE AND VERTICAL POWER SEAT SWITCH KNOB
RECLINING POWER SEAT SWITCH KNOB
N*m (kgf*cm, ft.*lbf) : Specified torque
P
B145395E01

SEAT VARIABLE CUSHION SWITCH

COMPONENTS

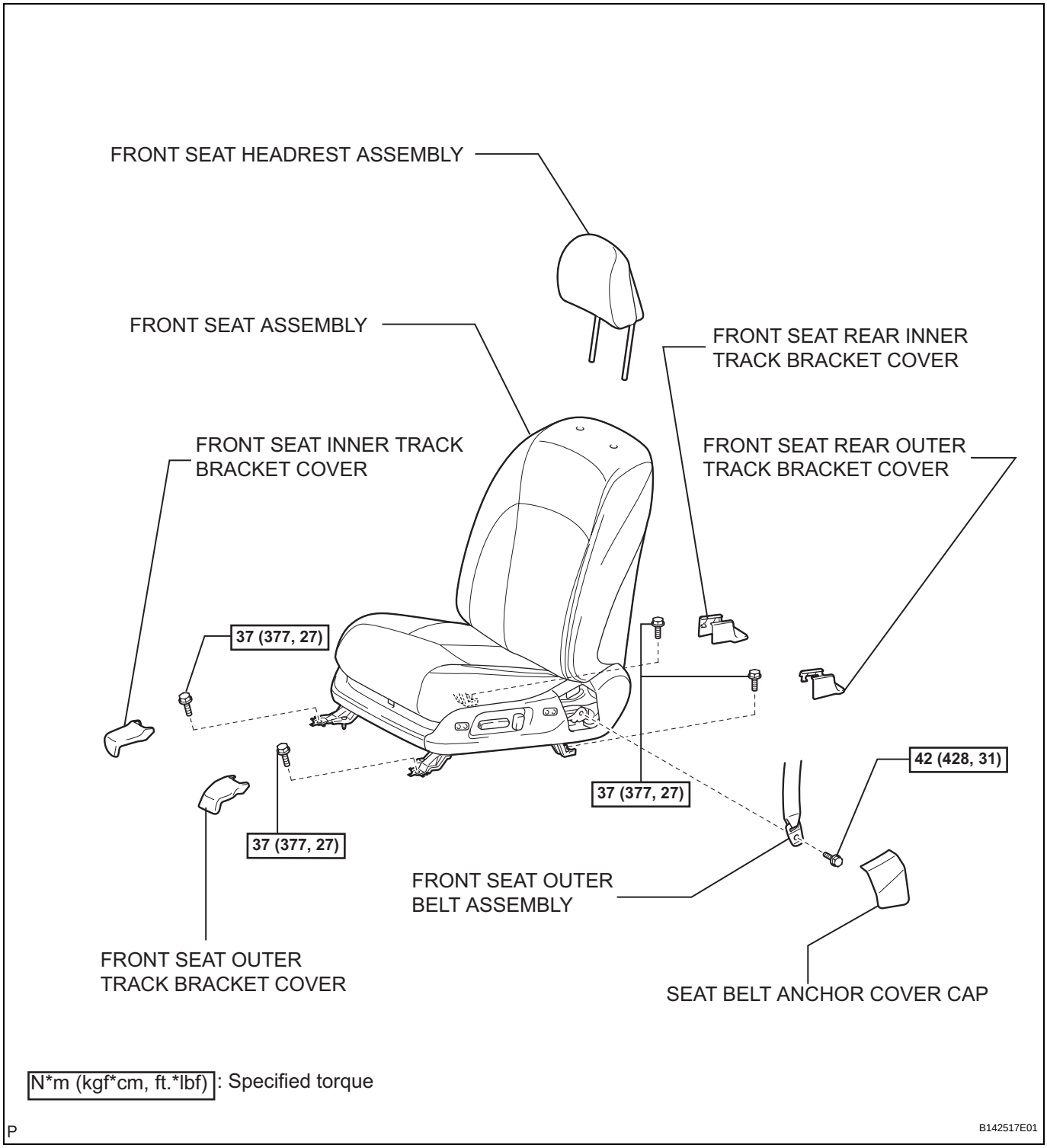

SE

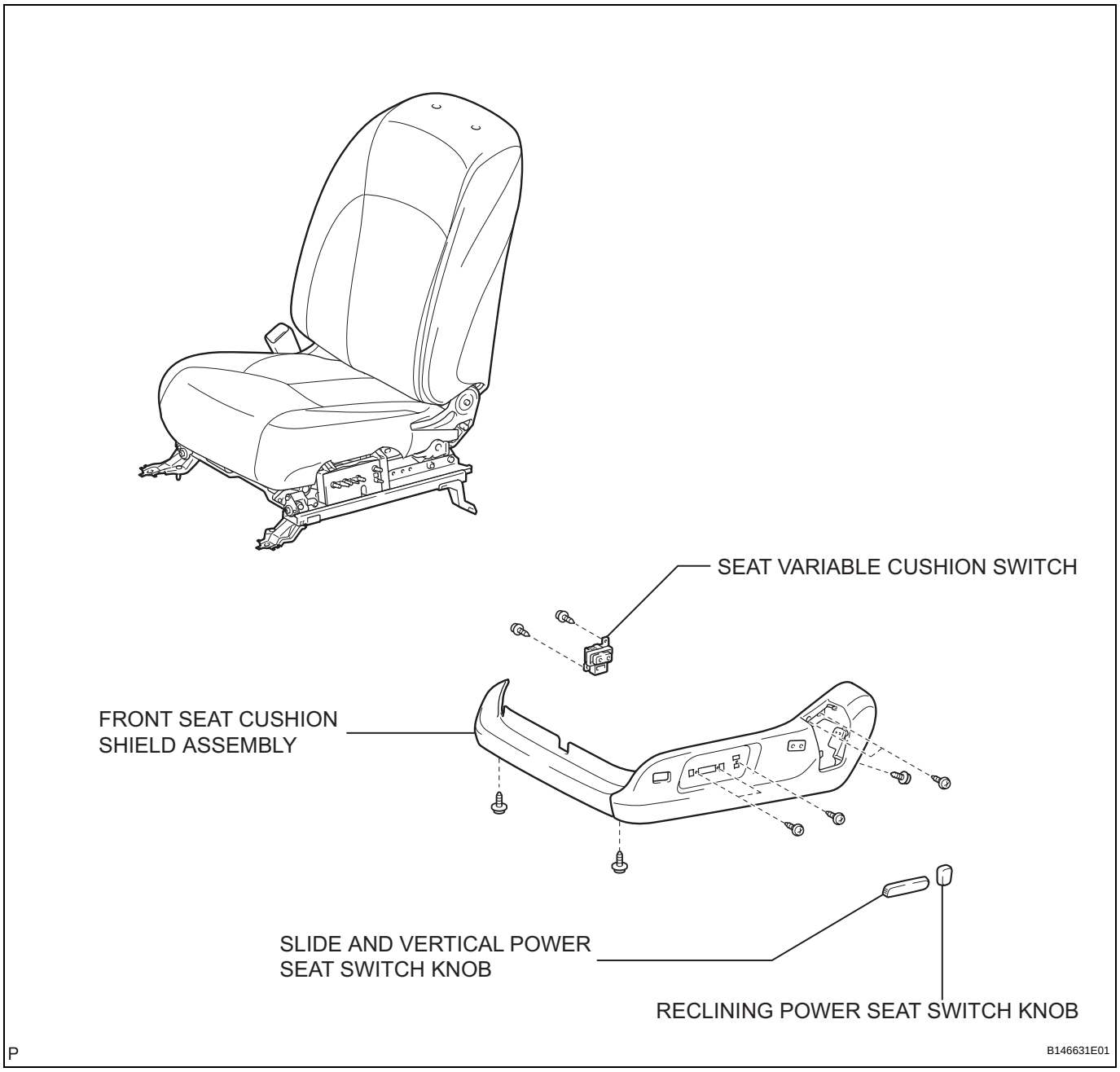
SEAT VARIABLE CUSHION SWITCH
FRONT SEAT CUSHION
SHIELD ASSEMBLY
SLIDE AND VERTICAL POWER
SEAT SWITCH KNOB
RECLINING POWER SEAT SWITCH KNOB
P
B146631E01

SEAT CLIMATE CONTROL BLOWER (for Seatback)

COMPONENTS

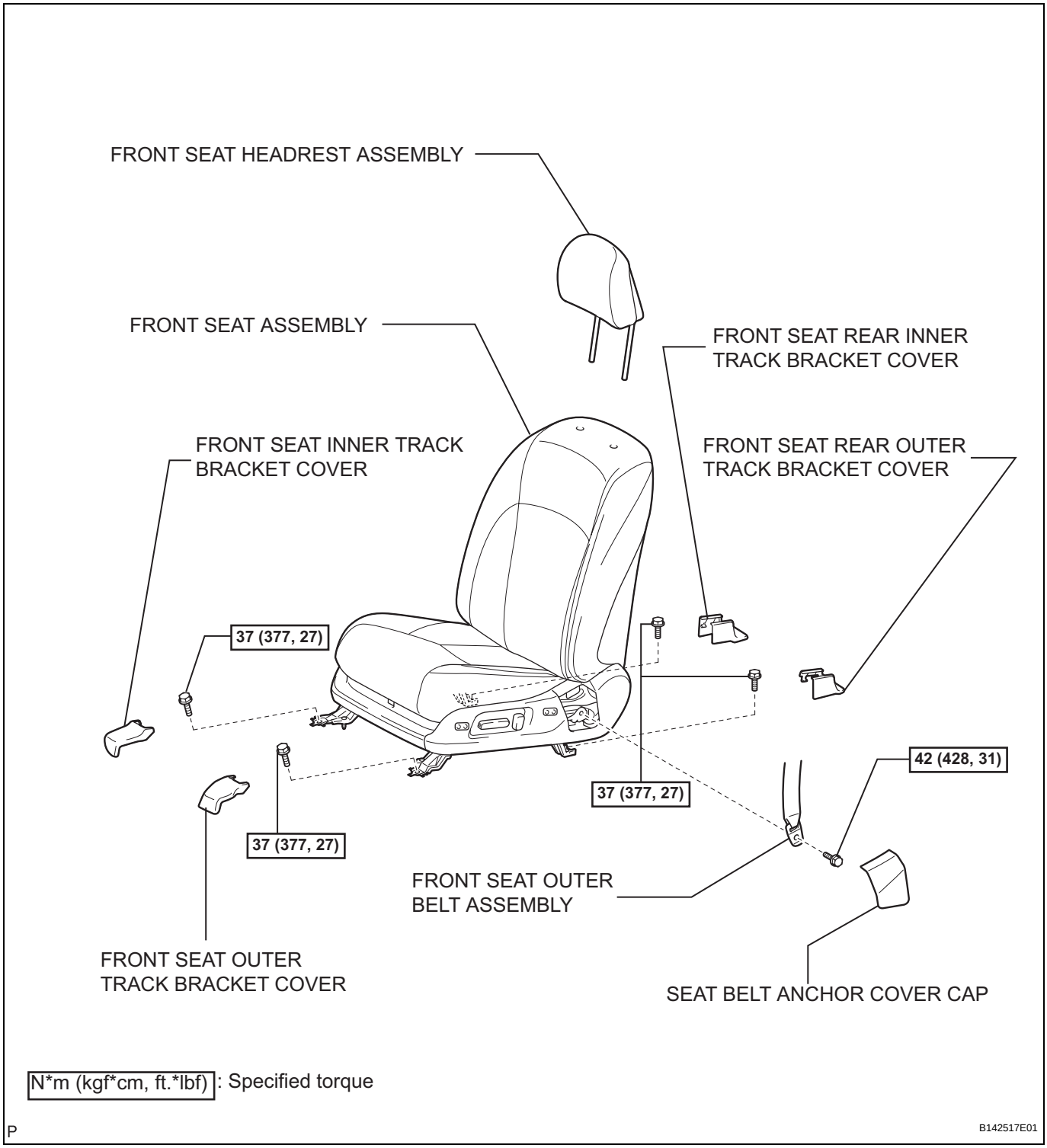

SE

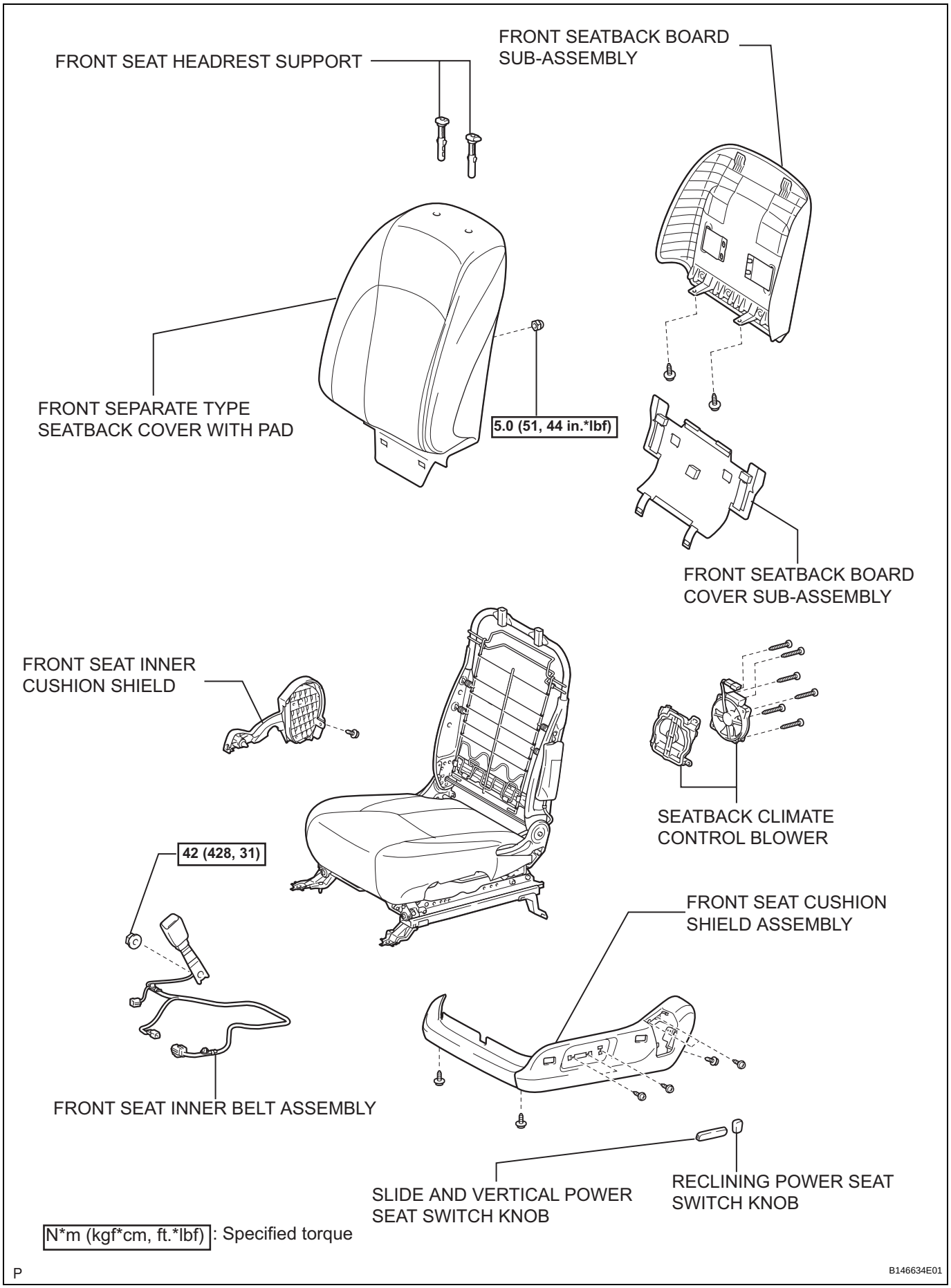
FRONT SEAT HEADREST SUPPORT
FRONT SEATBACK BOARD SUB-ASSEMBLY
FRONT SEPARATE TYPE SEATBACK COVER WITH PAD
5.0 (51, 44 in.*lbf)
FRONT SEATBACK BOARD COVER SUB-ASSEMBLY
FRONT SEAT INNER CUSHION SHIELD
SEATBACK CLIMATE CONTROL BLOWER
42 (428, 31)
FRONT SEAT CUSHION SHIELD ASSEMBLY
FRONT SEAT INNER BELT ASSEMBLY
SLIDE AND VERTICAL POWER SEAT SWITCH KNOB
RECLINING POWER SEAT SWITCH KNOB
N*m (kgf*cm, ft.*lbf): Specified torque
P
B146634E01

SE

SEAT CLIMATE CONTROL BLOWER (for Seat Cushion)

COMPONENTS

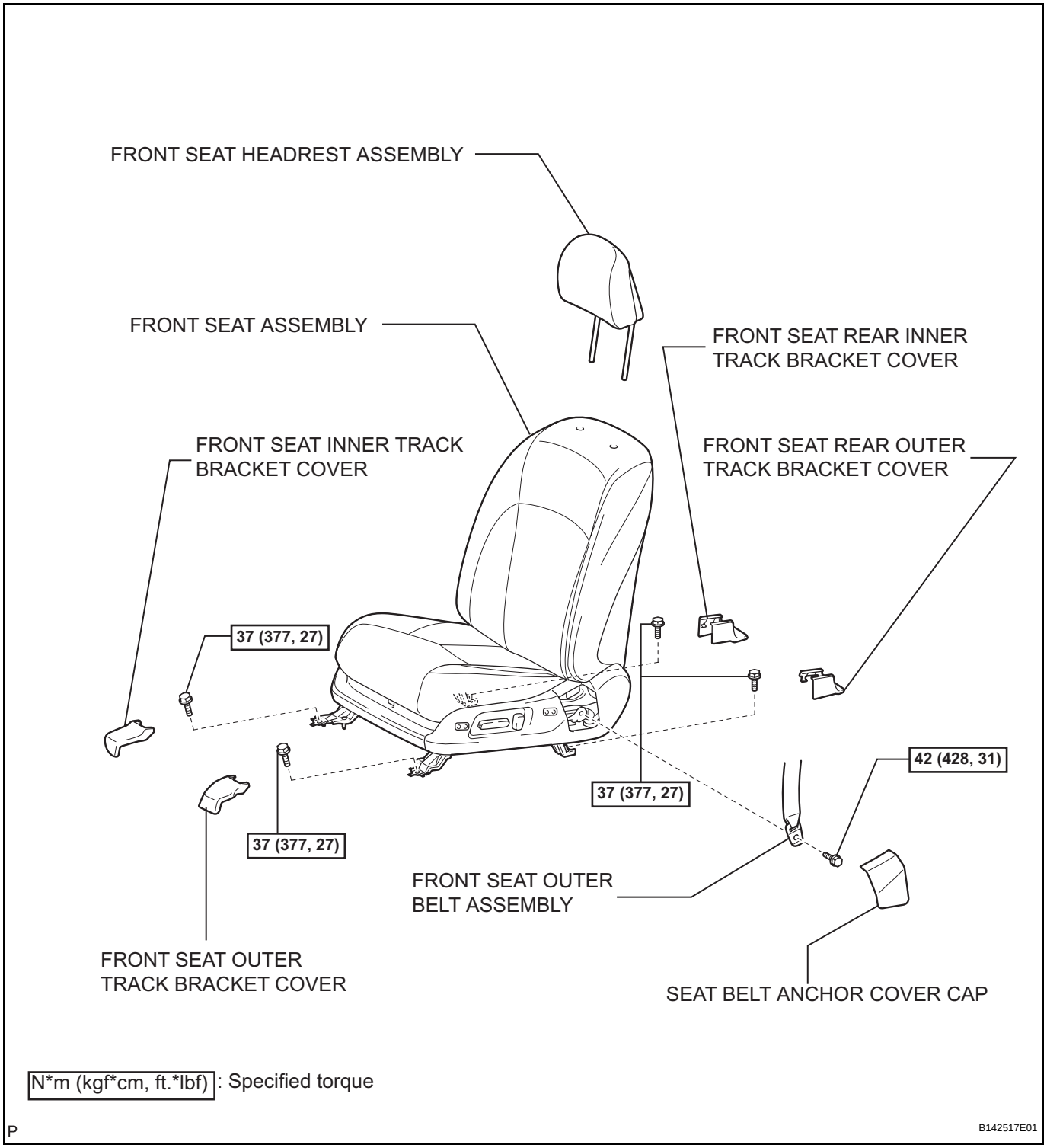

SE

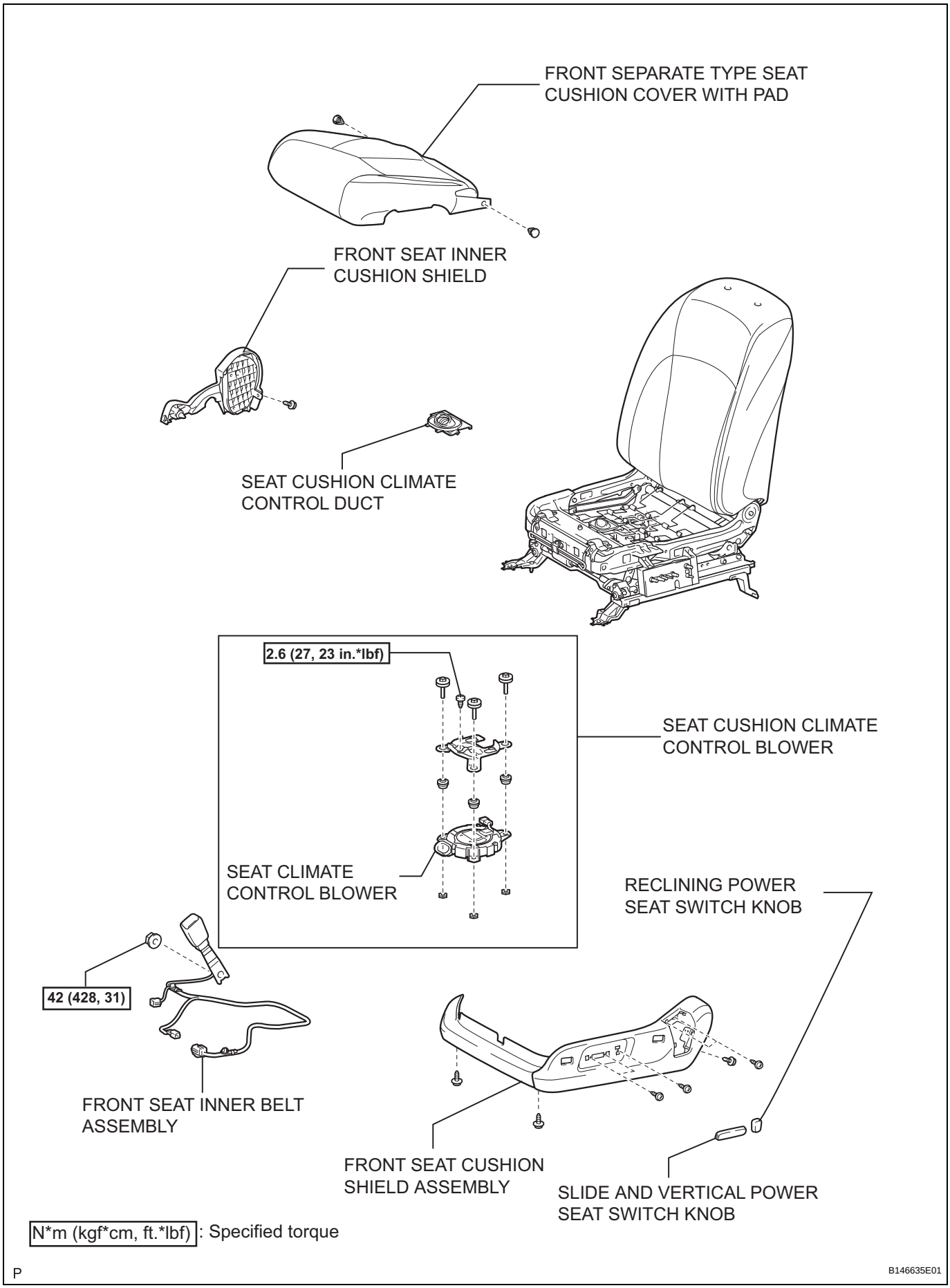
FRONT SEPARATE TYPE SEAT CUSHION COVER WITH PAD
FRONT SEAT INNER CUSHION SHIELD
SEAT CUSHION CLIMATE CONTROL DUCT
2.6 (27, 23 in.*lbf)
SEAT CUSHION CLIMATE CONTROL BLOWER
SEAT CLIMATE CONTROL BLOWER
RECLINING POWER SEAT SWITCH KNOB
42 (428, 31)
FRONT SEAT INNER BELT ASSEMBLY
FRONT SEAT CUSHION SHIELD ASSEMBLY
SLIDE AND VERTICAL POWER SEAT SWITCH KNOB
N*m (kgf*cm, ft.*lbf) : Specified torque
P
B146635E01

SE

SEAT HEATER SWITCH

COMPONENTS

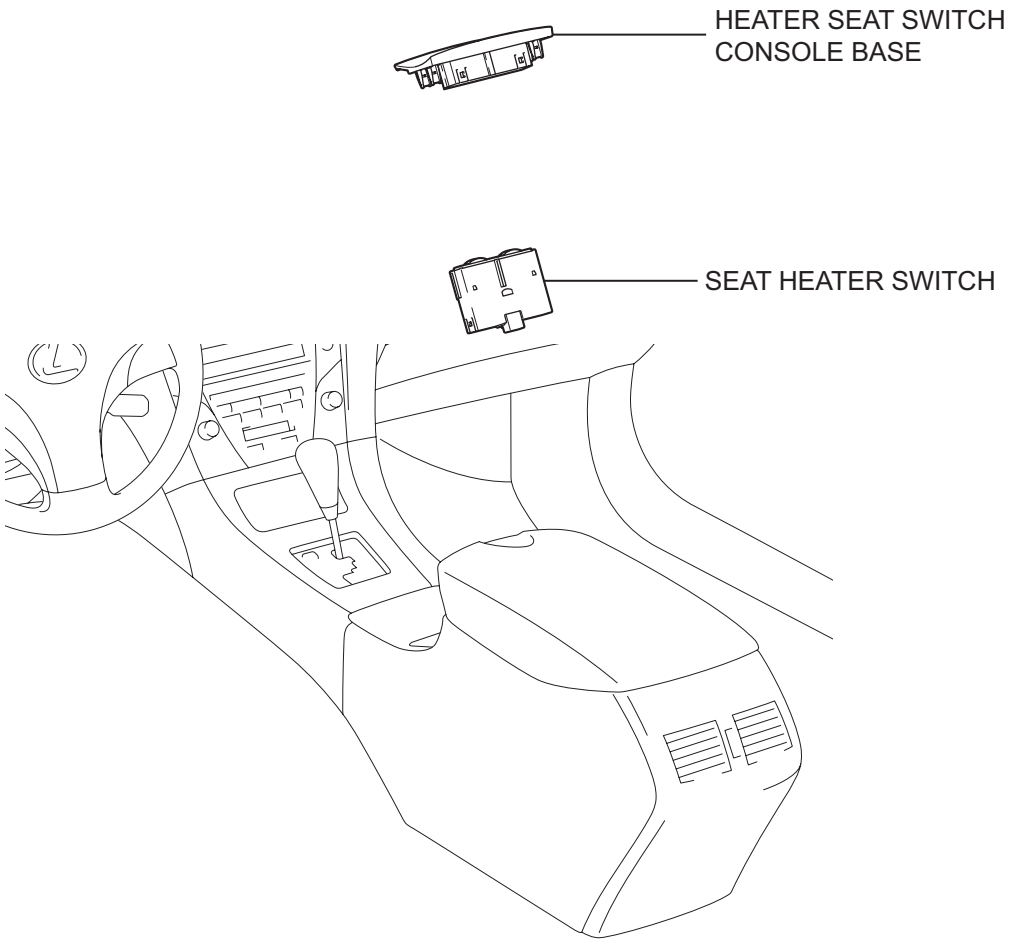

P

B145397E01

REMOVAL

1. REMOVE HEATER SEAT SWITCH CONSOLE BASE (See page IP-18)

2. REMOVE SEAT HEATER SWITCH

(a) Disengage the 4 claws and remove the seat heater switch.

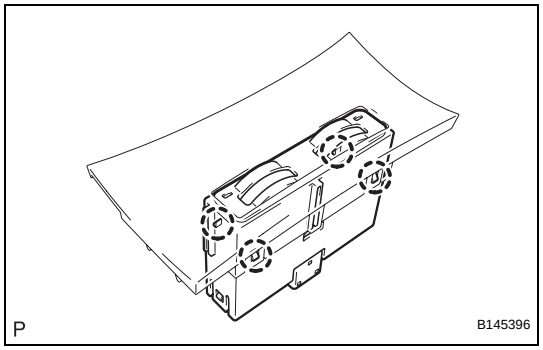

INSPECTION

1. INSPECT SEAT HEATER SWITCH

(a) Inspect seat heater switch operation.

(1) Measure the resistance according to the value(s) in the table below.

Standard resistance

Tester Connection	Switch Position	Specified Condition
F3-1 (RV) - F3-6 (SW)	OFF: Front RH Vol: 0	Below 2.5 kΩ
	OFF: Front RH Vol: 3	Below 376 Ω
F3-2 (REL1) - F3-11 (SW)	OFF: Front LH Vol: 0	Below 2.5 kΩ
	OFF: Front LH Vol: 3	Below 376 Ω
F3-7 (BLLH) - F3-10 (SVSG)	OFF: Front RH Vol: 0	Below 1.1 kΩ
	OFF: Front RH Vol: 3	Below 111 Ω
F3-8 (SVS5) - F3-10 (SVSG)	Always	Below 770 Ω to 1.43 kΩ
F3-9 (BLRH) - F3-10 (SVSG)	OFF: Front LH Vol: 0	Below 1.1 kΩ
	OFF: Front LH Vol: 3	Below 111 Ω

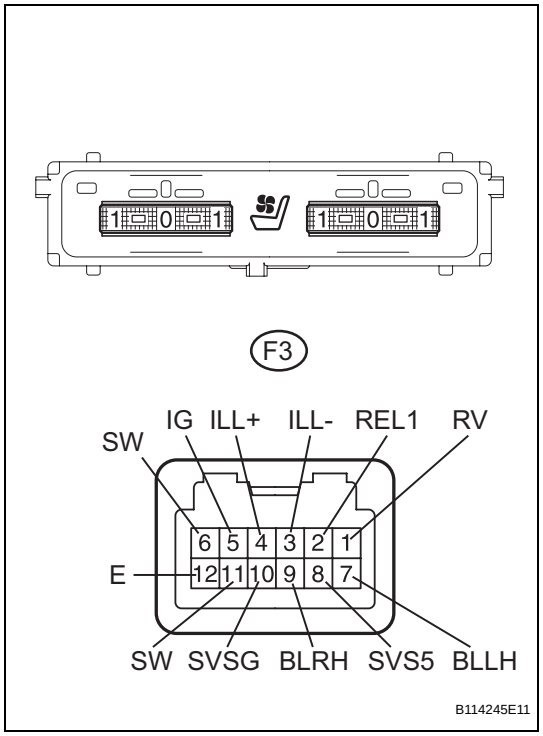

(b) Inspect seat heater switch indicator operation.

(1) Apply battery voltage and check operation of the switch, as shown in the table below.

OK

Measurement Condition	Condition	Specified Condition
Battery positive (+) → Terminal F3-5 (IG) Battery negative (-) → Terminal F3-12 (E)	Seat heater switch ON	Indicator comes on

SE

FRONT SEATBACK HEATER

COMPONENTS

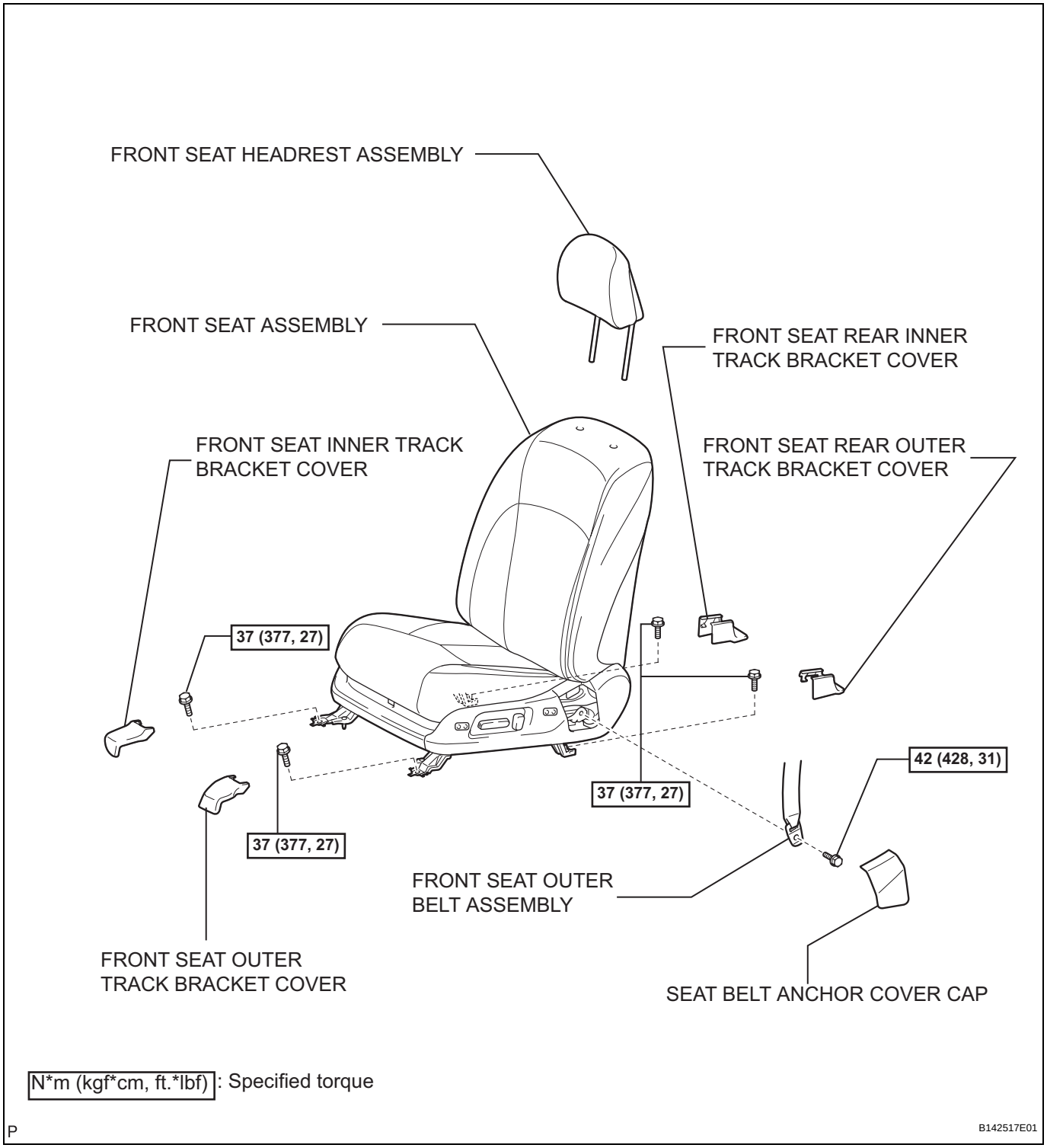

SE

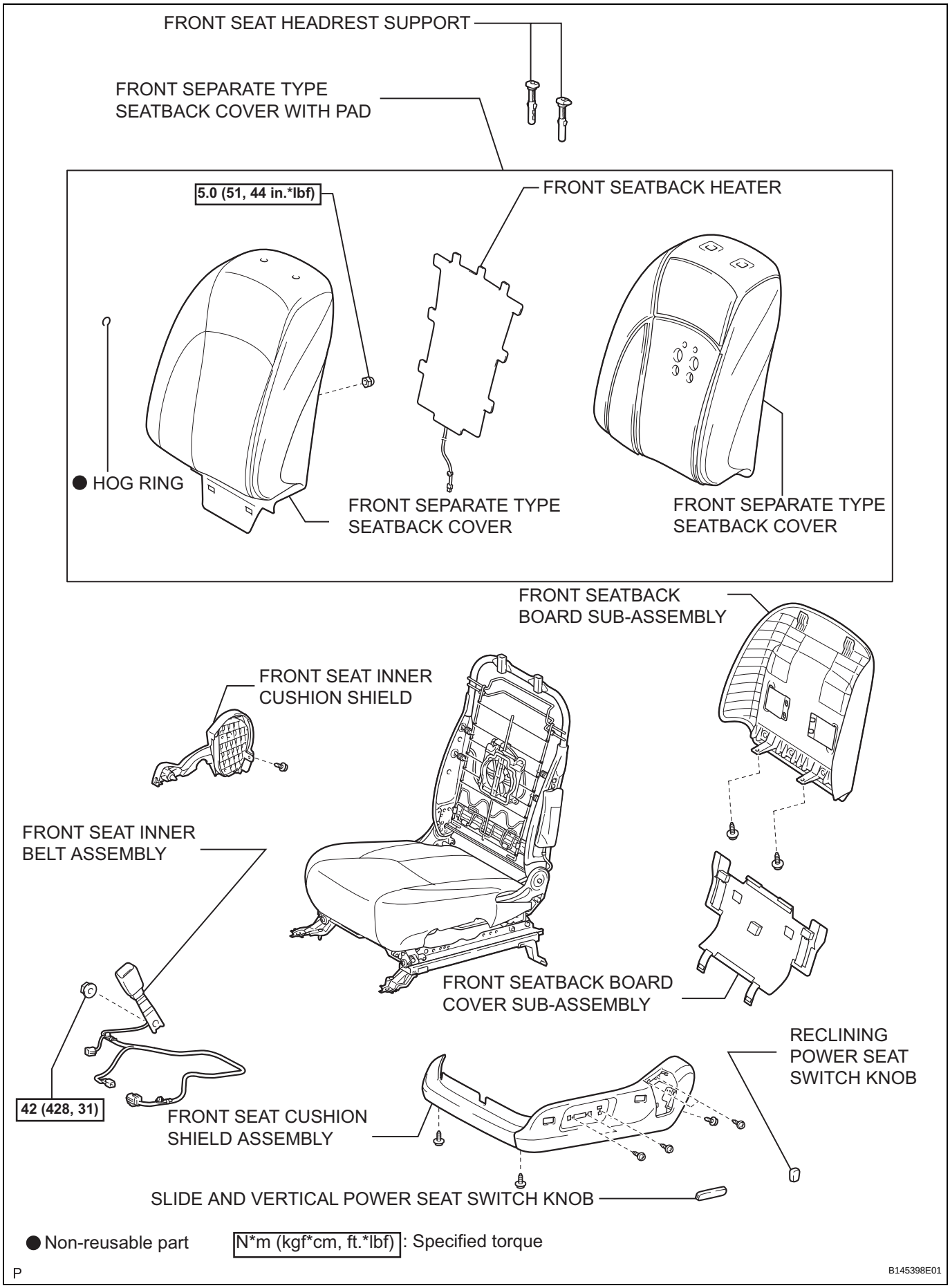

● Non-reusable part N*m (kgf*cm, ft.*lbf) : Specified torque

P B145398E01

SE

FRONT SEAT CUSHION HEATER

COMPONENTS

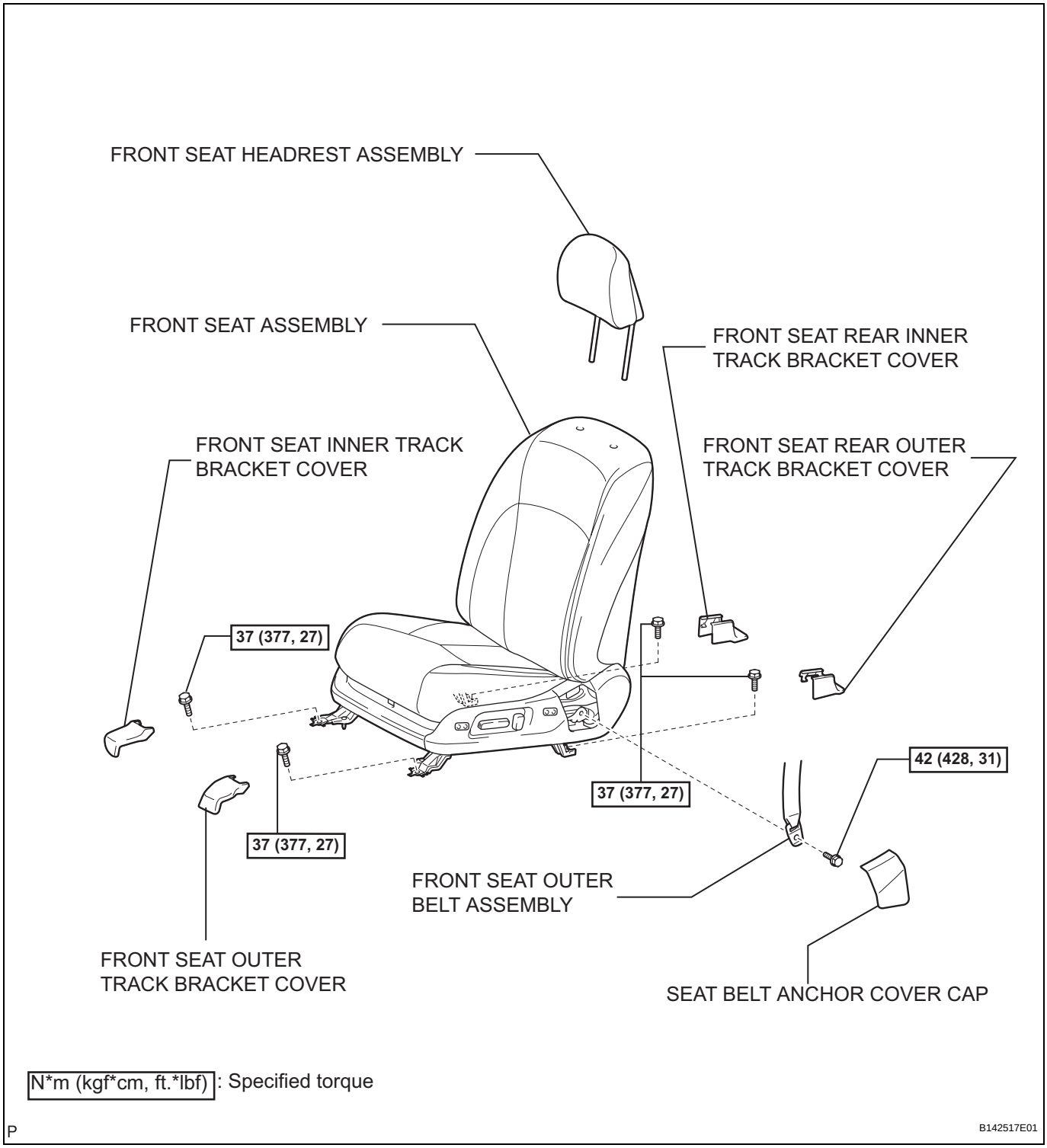

SE

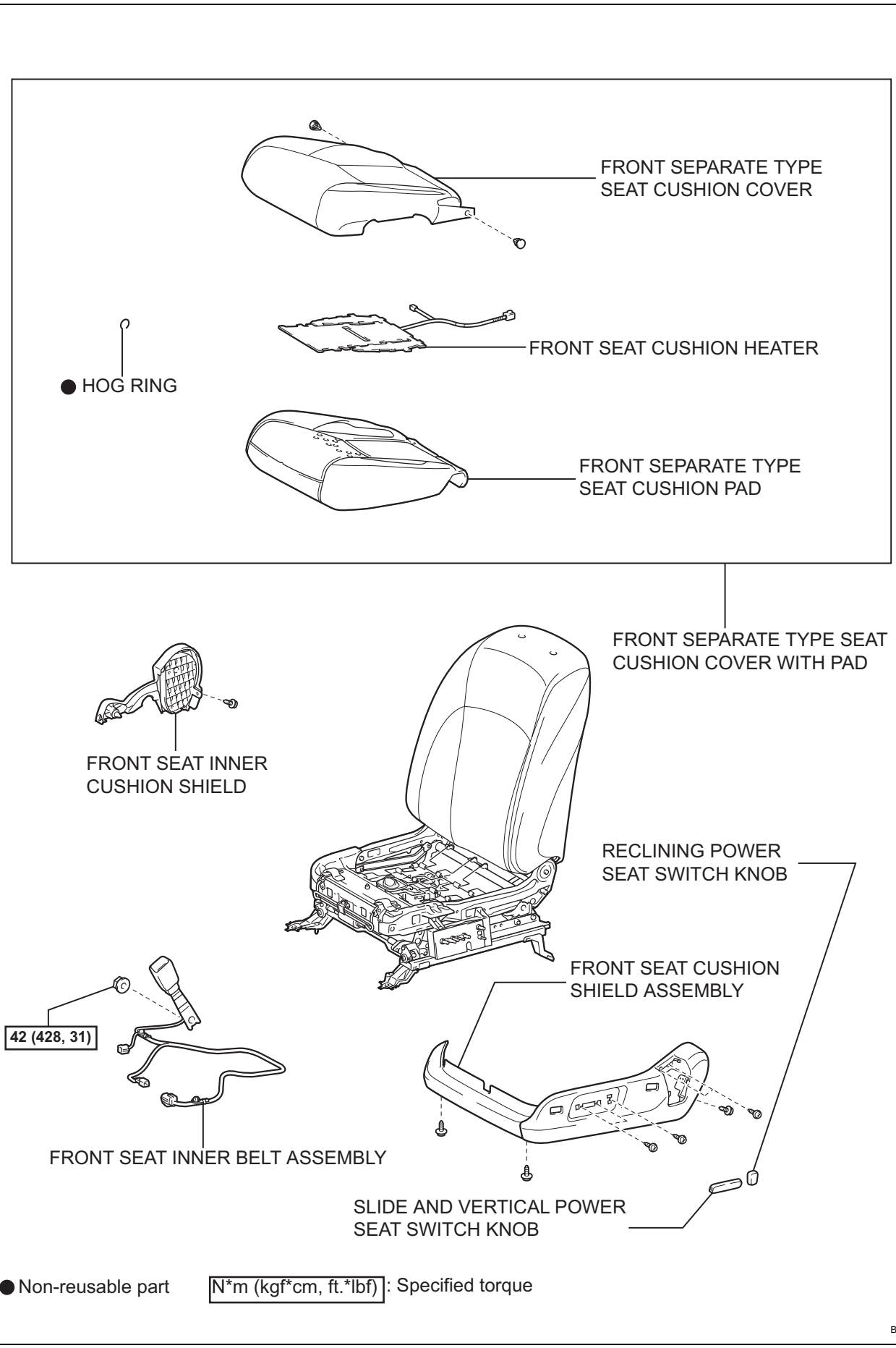

● Non-reusable part N*m (kgf*cm, ft.*lbf): Specified torque

P

B145399E01

SEAT HEATER CONTROL

COMPONENTS

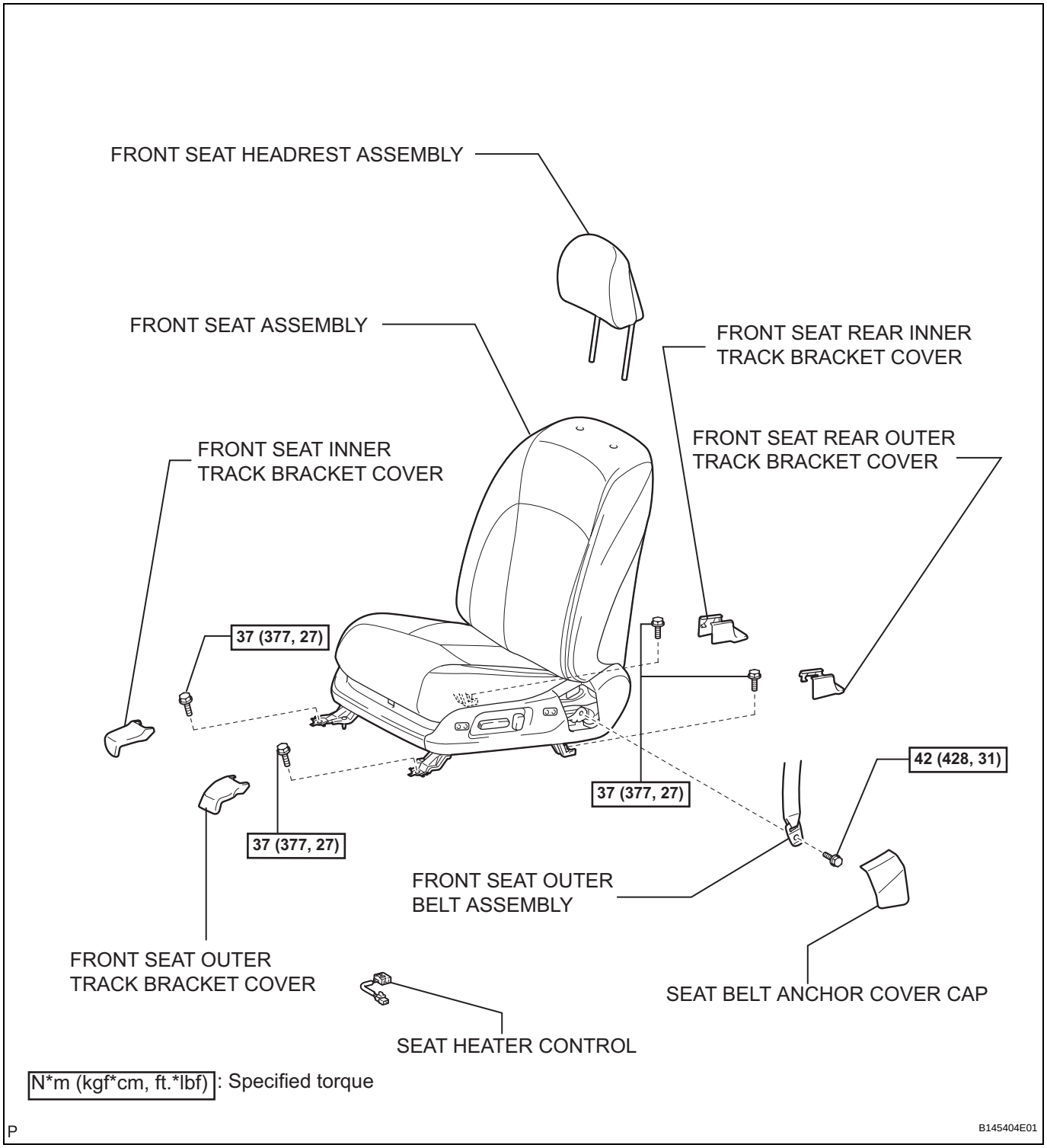

SE

REMOVAL

1. **REMOVE SEAT BELT ANCHOR COVER CAP (See page SB-22)**
2. **DISCONNECT FRONT SEAT OUTER BELT ASSEMBLY (See page SB-22)**
3. **REMOVE FRONT SEAT HEADREST ASSEMBLY**
4. **REMOVE FRONT SEAT OUTER TRACK BRACKET COVER (See page SE-83)**
5. **REMOVE FRONT SEAT INNER TRACK BRACKET COVER (See page SE-83)**
6. **REMOVE FRONT SEAT REAR OUTER TRACK BRACKET COVER (See page SE-83)**
7. **REMOVE FRONT SEAT REAR INNER TRACK BRACKET COVER (See page SE-83)**
8. **REMOVE FRONT SEAT ASSEMBLY (See page SE-83)**
9. **REMOVE SEAT HEATER CONTROL**
   (a) Disconnect the 2 connectors.
   (b) Disconnect the clamp and claw, and remove the seat heater control sub-assembly.

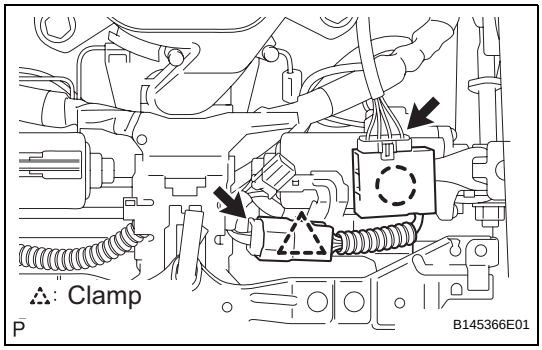

LUGGAGE COMPARTMENT DOOR OPENER SYSTEM

PRECAUTION

NOTICE:
Some systems need to be initialized after reconnecting the negative (-) battery terminal (See page IN-33).

PARTS LOCATION

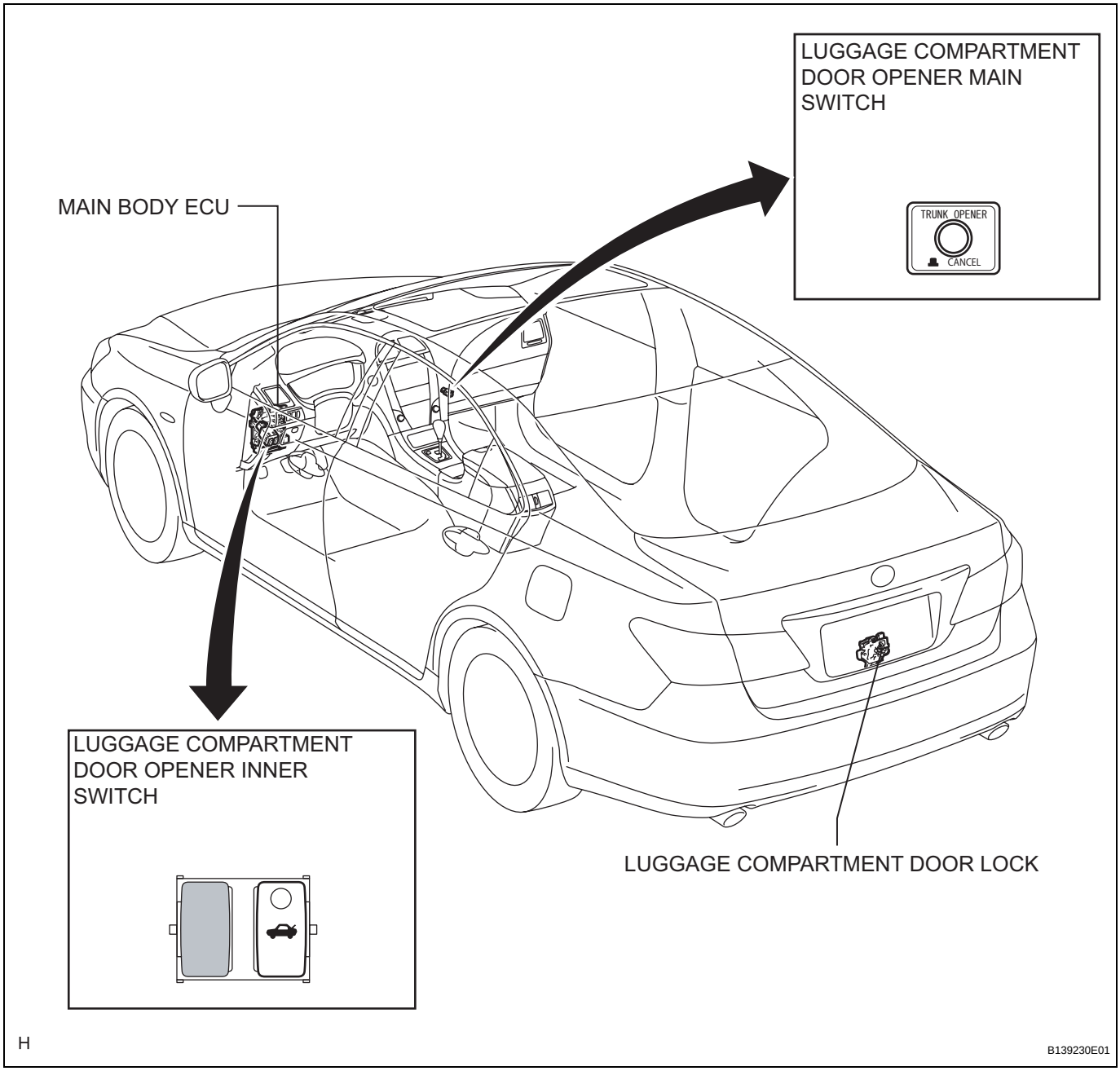

FUEL LID OPENER SYSTEM

PRECAUTION

NOTICE:
Some systems need to be initialized after reconnecting the negative (-) battery terminal (See page IN-33).

PARTS LOCATION

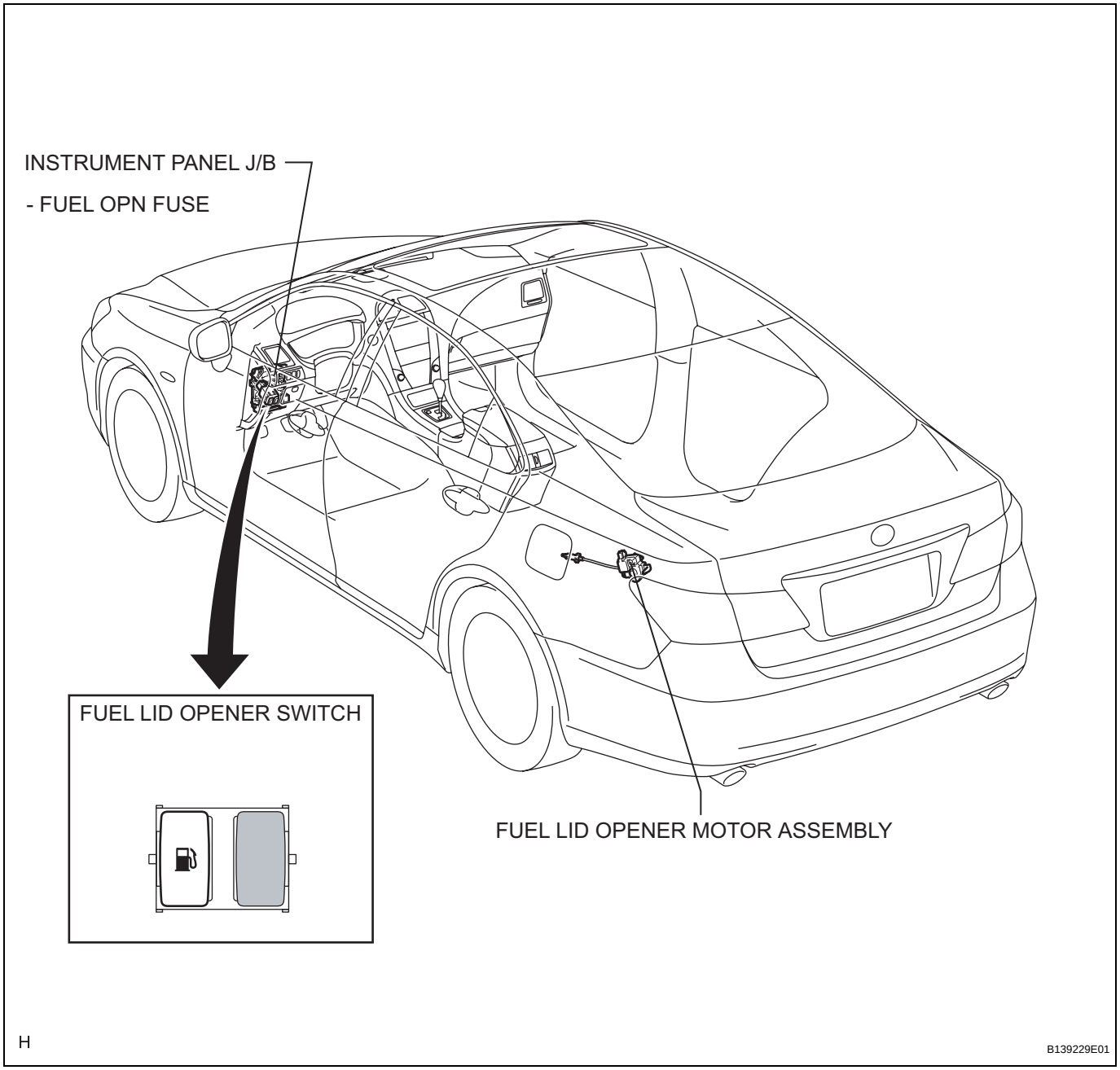

HOOD

ON-VEHICLE INSPECTION

1. INSPECT HOOD SUB-ASSEMBLY

(a) Check that the clearance measurements of areas A through D are within each standard range.

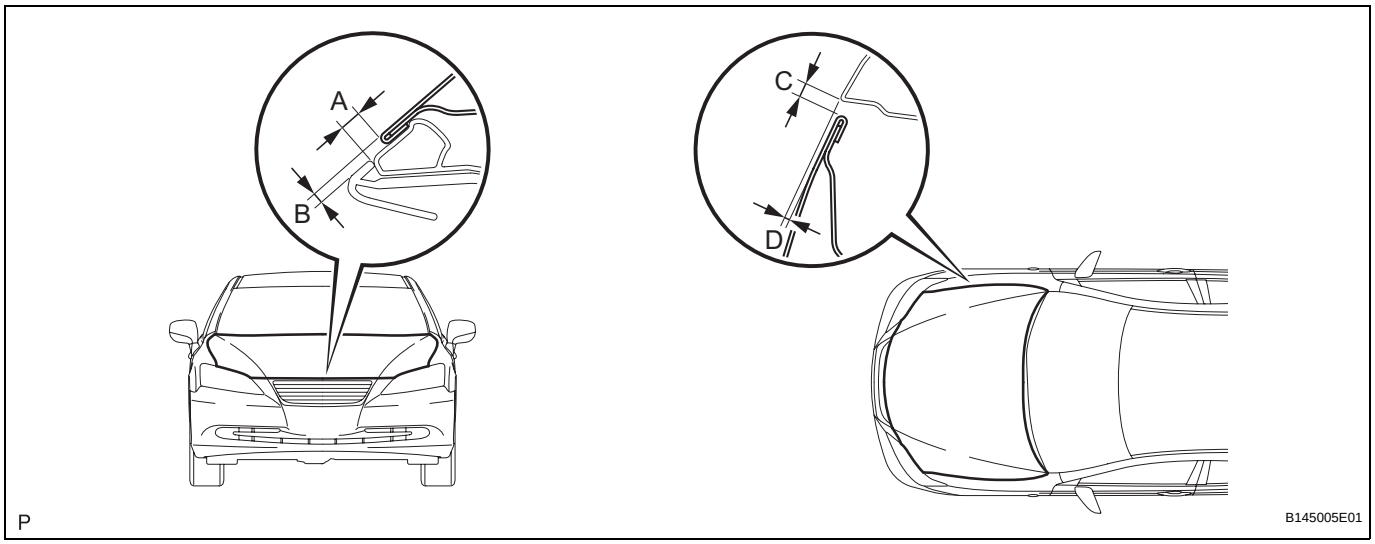

Standard clearance

Area	Measurement	Area	Measurement
A	2.8 to 5.8 mm (0.110 to 0.228 in.)	C	2.0 to 5.0 mm (0.079 to 0.197 in.)
B	0.8 to 3.8 mm (0.032 to 0.150 in.)	D	-1.3 to 1.7 mm (-0.051 to 0.067 in.)

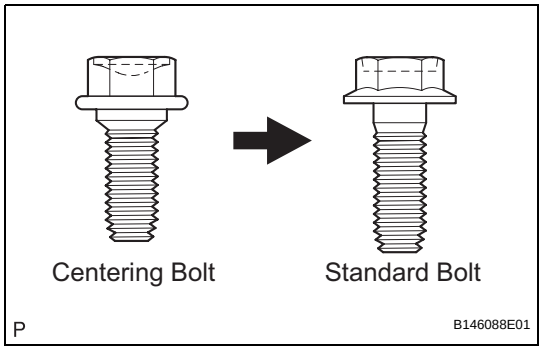

ADJUSTMENT

HINT:

- Centering bolts are used to mount the hood hinge and hood lock. The hood and hood lock cannot be adjusted with the centering bolts on. Substitute the centering bolts with standard bolts (with washers) when making adjustments.
- A bolt without a torque specification is shown in the standard bolt chart (See page SS-2).

1. REMOVE COOL AIR INTAKE DUCT SEAL (See page EM-22)

2. REMOVE FRONT BUMPER ASSEMBLY (See page ET-5)

3. REMOVE MILLIMETER WAVE RADAR SENSOR ASSEMBLY (w/ Dynamic Radar Cruise Control System) (See page CC-122)

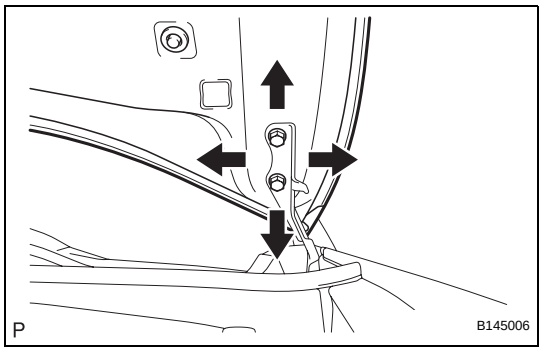

4. ADJUST HOOD SUB-ASSEMBLY

(a) Horizontally and vertically adjust the hood.
  (1) Loosen the 4 hinge bolts of the hood.
  (2) Adjust the clearance between the hood and front fender by moving the hood.
  (3) Tighten the 4 hinge bolts after the adjustment.
  Torque: 13 N*m (133 kgf*cm, 10 ft.*lbf)

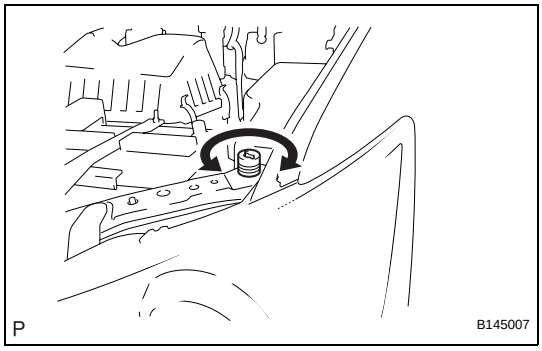

(b) Adjust the height of the front end of the hood using the cushion rubber.
  (1) Adjust the cushion rubber so that the height of the hood and fender are aligned.
  HINT:
  Raise or lower the front end of the hood by turning the cushion rubber.

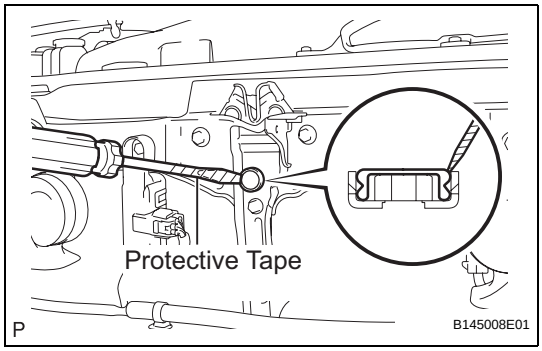

(c) Adjust the hood lock.
  (1) Using a screwdriver, remove the hood lock nut cap as shown in the illustration.
  HINT:
  Tape the screwdriver tip before use.

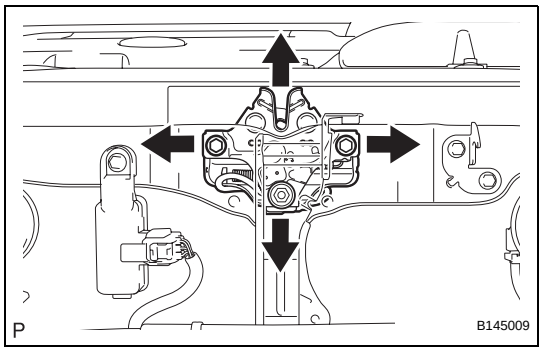

  (2) Loosen the 2 bolts and hood lock nut.
  (3) Tighten the bolts and nut after the adjustment.
  Torque: 8.0 N*m (82 kgf*cm, 71 in.*lbf)
  (4) Check that the striker can engage with the hood lock smoothly.
  (5) Install a new cap.

5. INSTALL MILLIMETER WAVE RADAR SENSOR ASSEMBLY (w/ Dynamic Radar Cruise Control System) (See page CC-128)

6. INSTALL FRONT BUMPER ASSEMBLY

7. INSTALL COOL AIR INTAKE DUCT SEAL (See page EM-50)

8. ADJUST MILLIMETER WAVE RADAR SENSOR ASSEMBLY (w/ Dynamic Radar Cruise Control System) (See page CC-122)

9. VEHICLE PREPARATION FOR FOG LIGHT AIM (See page LI-141)

10. PREPARATION FOR FOG LIGHT AIMING (See page LI-142)

11. **FOG LIGHT AIMING INSPECTION (See page LI-143)**
12. **FOG LIGHT AIMING ADJUSTMENT (See page LI-144)**

HOOD SUPPORT ROD

COMPONENTS

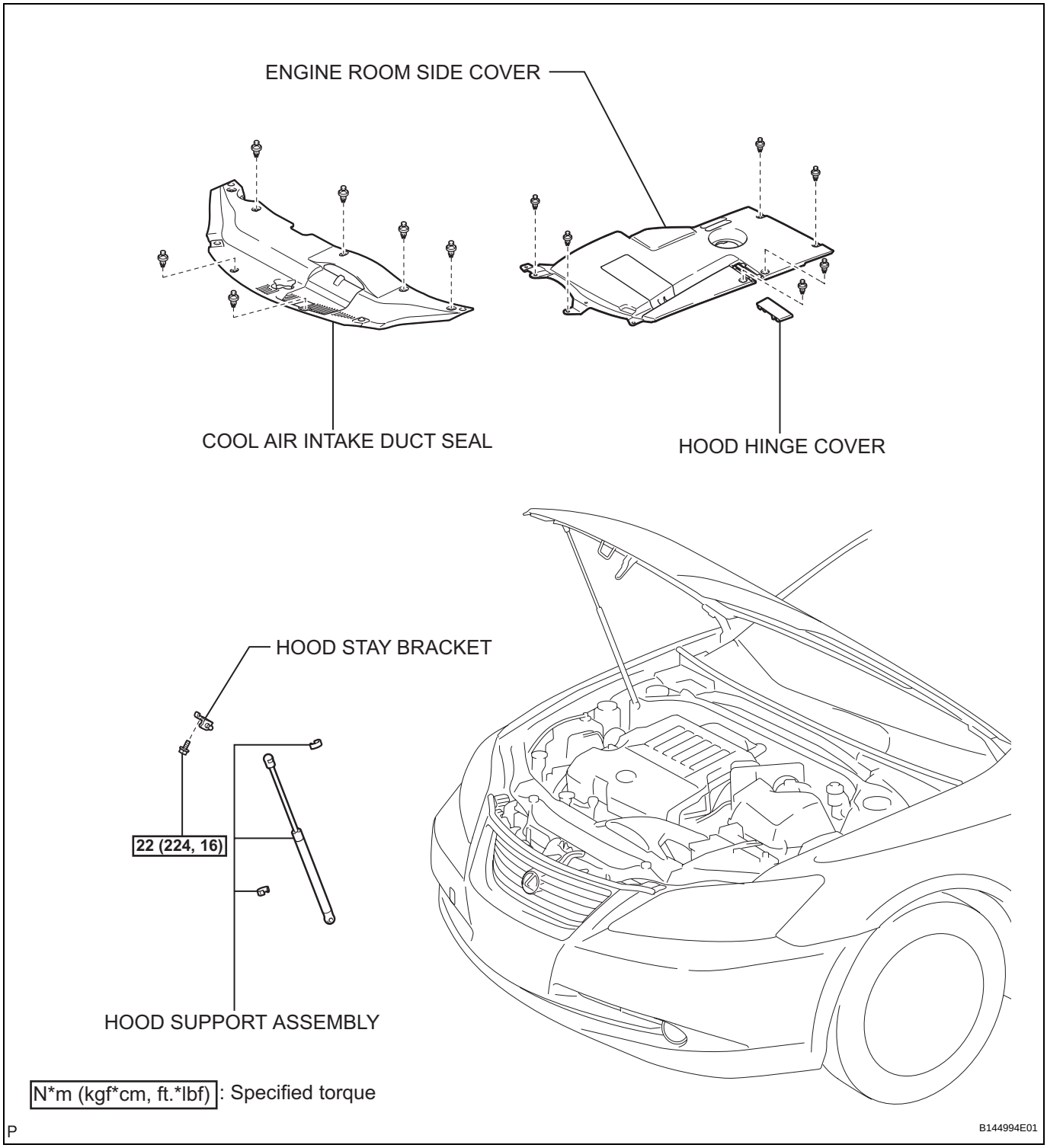

REMOVAL

NOTICE:

- **Avoid touching the stroke portions of the rod as much as possible to prevent foreign matter from attaching to the stroke portions. Be sure to hold the cylinders while servicing.**
- **Do not wear cotton gloves or other similar materials when handling the rod. Fibers may attach to the rod and result in gas leaks.**
- **Do not apply any load to the cylinders in the horizontal direction in order to prevent the rod from being deformed.**

1. **REMOVE COOL AIR INTAKE DUCT SEAL (See page EM-22)**
2. **REMOVE HOOD HINGE COVER (See page WW-38)**
3. **REMOVE ENGINE ROOM SIDE COVER (See page WW-39)**
4. **REMOVE HOOD SUPPORT ASSEMBLY**
   (a) Using a screwdriver, disengage the 2 clips and remove the hood support assembly.
   NOTICE:
   Remove the hood support assembly while supporting the hood by hand.

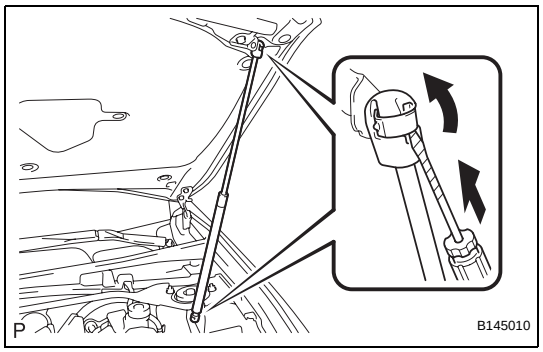

5. **REMOVE HOOD STAY BRACKET**
   (a) Remove the bolt and the hood stay bracket.

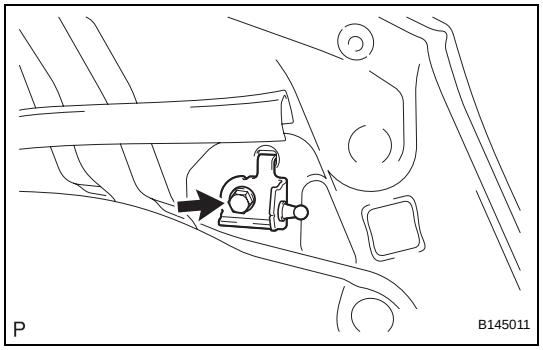

HOOD LOCK CONTROL CABLE ASSEMBLY

COMPONENTS

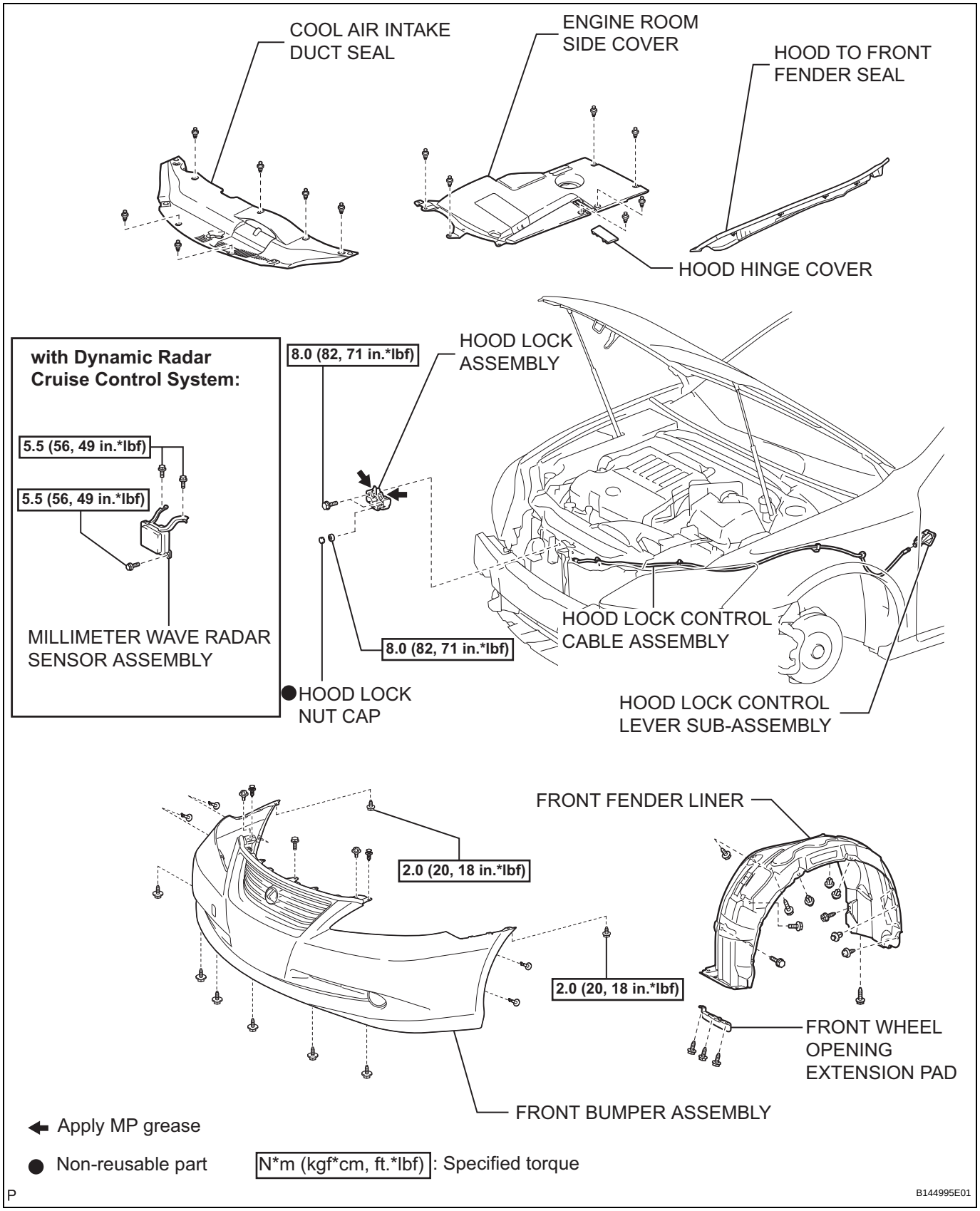

ED

REMOVAL

1. **REMOVE COOL AIR INTAKE DUCT SEAL (See page EM-22)**
2. **REMOVE HOOD HINGE COVER (See page WW-38)**
3. **REMOVE ENGINE ROOM SIDE COVER (See page WW-39)**
4. **REMOVE HOOD TO FRONT FENDER SEAL**
5. **REMOVE FRONT WHEEL**
6. **REMOVE FRONT WHEEL OPENING EXTENSION PAD**
   (a) Remove the 3 screws and the front wheel opening extension pad.
7. **REMOVE FRONT BUMPER ASSEMBLY (See page ET-5)**

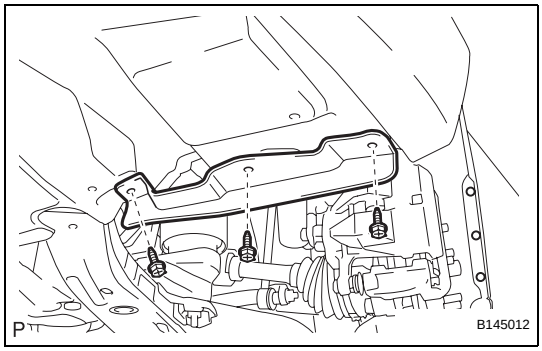

8. **REMOVE FRONT FENDER LINER**
   (a) Remove the 6 clips and 5 screws.
   (b) Remove the 2 bolts and the front fender liner.
9. **REMOVE MILLIMETER WAVE RADAR SENSOR ASSEMBLY (w/ Dynamic Radar Cruise Control System) (See page CC-122)**

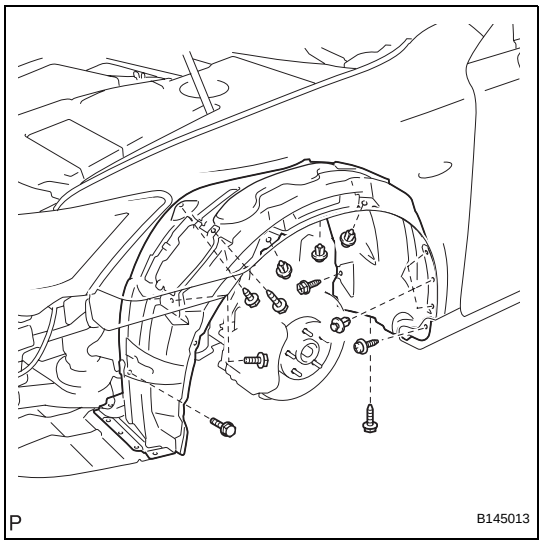

10. **REMOVE HOOD LOCK ASSEMBLY**
    (a) Using a screwdriver, remove the hood lock nut cap as shown in the illustration.
    HINT:
    Tape the screwdriver tip before use.

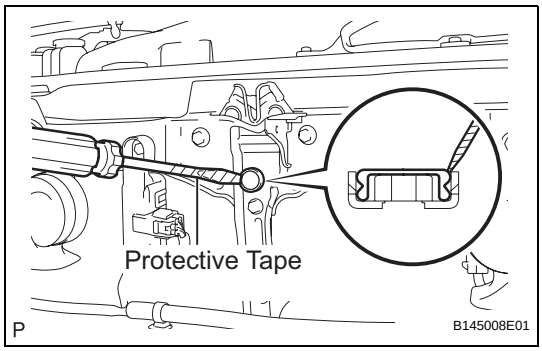

ED

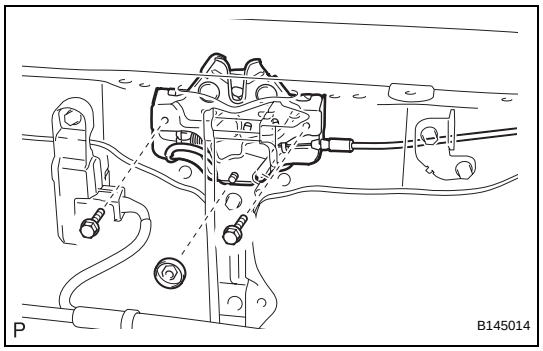

(b) Remove the 2 bolts and nut.

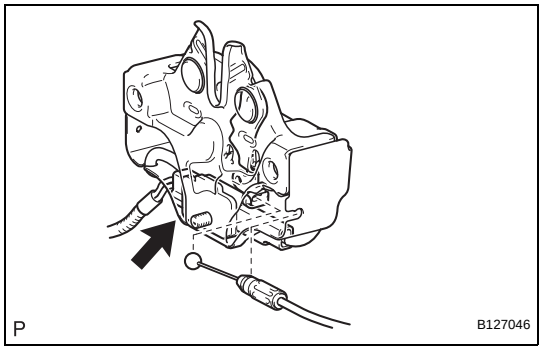

(c) Disconnect the hood lock control cable and connector.
(d) Remove the hood lock assembly.

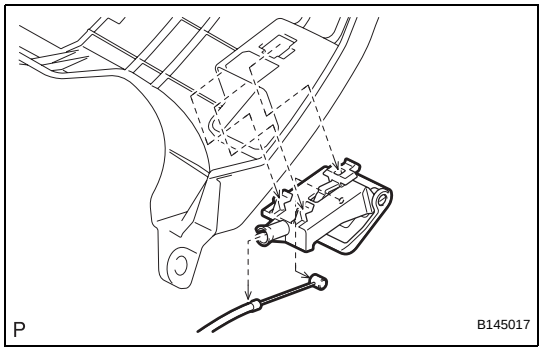

11. REMOVE HOOD LOCK CONTROL LEVER SUB-ASSEMBLY
(a) Detach the 3 claws.
(b) Disconnect the hood lock control cable and remove the hood lock control lever.

12. REMOVE HOOD LOCK CONTROL CABLE ASSEMBLY
(a) Using a screwdriver, disconnect the clamps shown in the illustration.

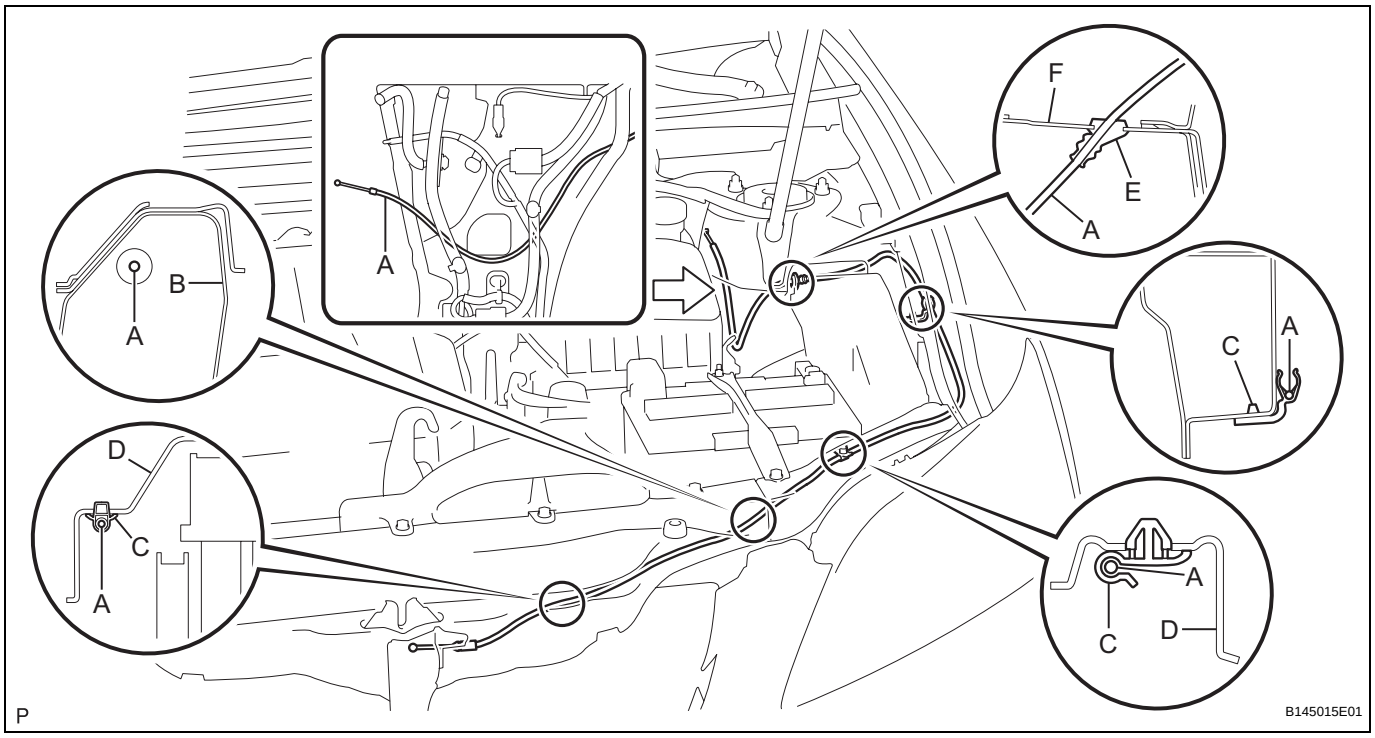

ED

Area	Part Name	Area	Part Name
A	Hood lock control cable	D	Radiator support upper
B	Radiator support brace	E	Grommet
C	Clamp	F	Side member outer panel

HINT:
Tape the screwdriver tip before use.

(b) Pull the cable from the engine compartment and remove it.

FRONT DOOR

COMPONENTS

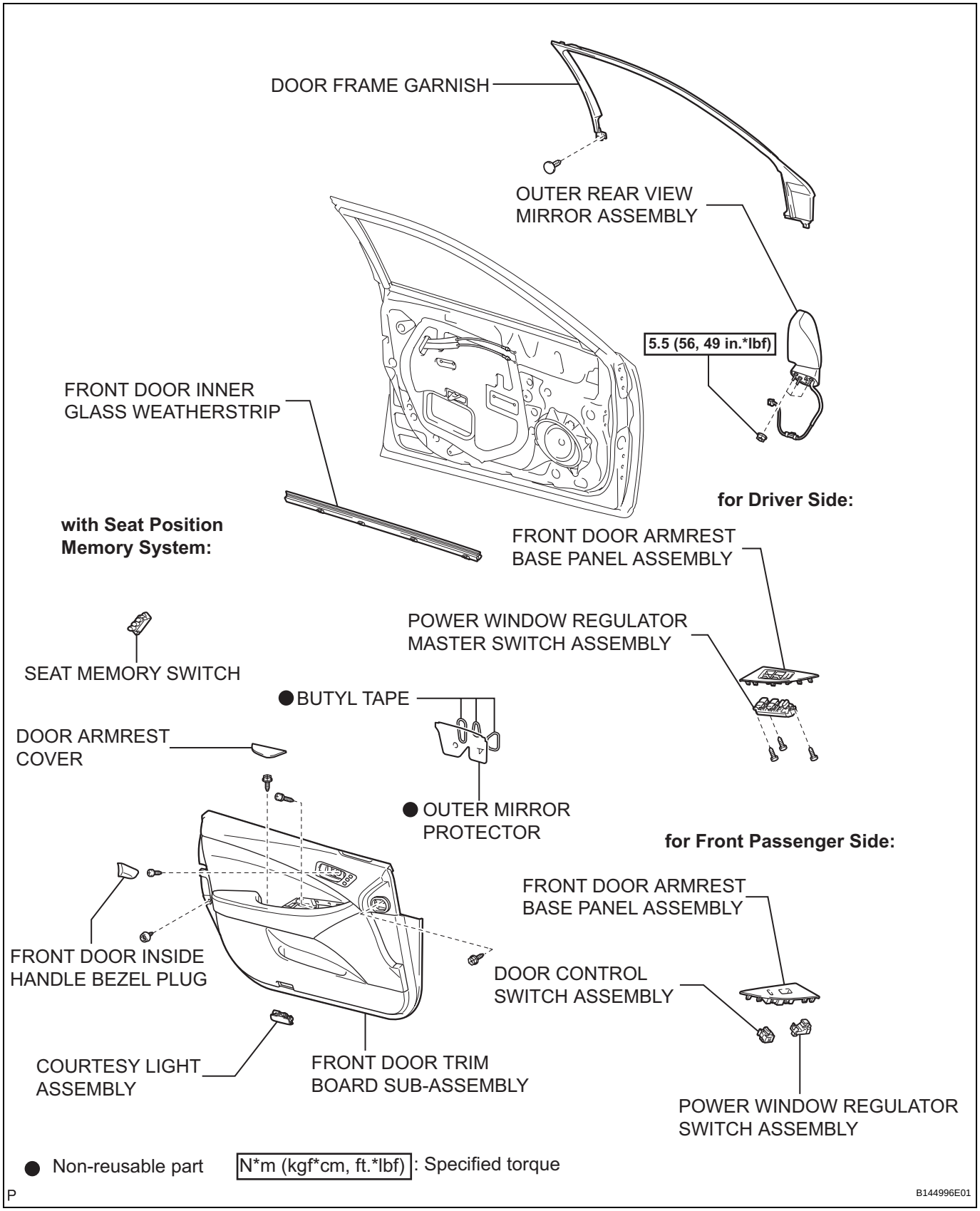

ED

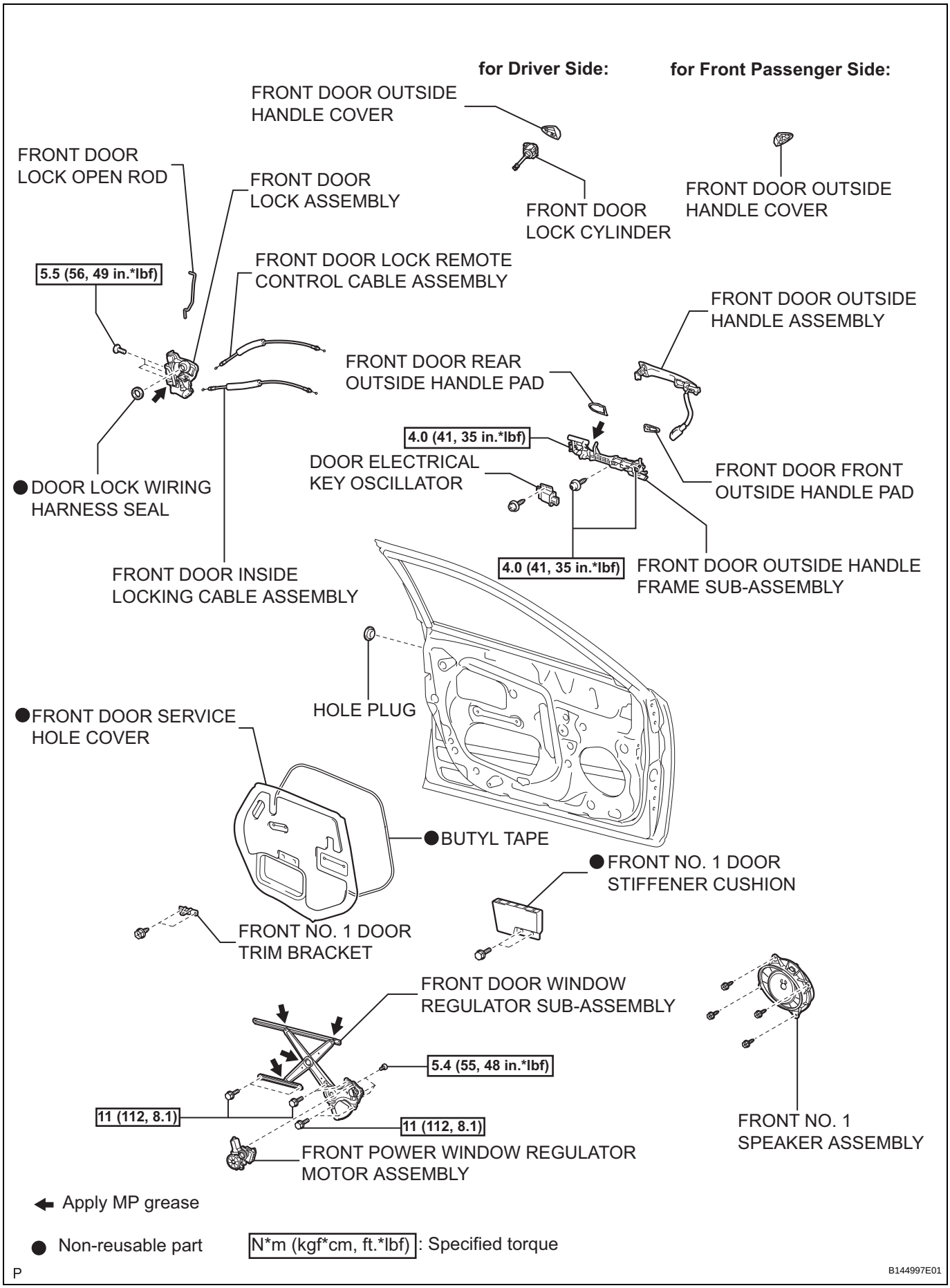
for Driver Side:
for Front Passenger Side:
FRONT DOOR OUTSIDE HANDLE COVER
FRONT DOOR LOCK OPEN ROD
FRONT DOOR LOCK ASSEMBLY
FRONT DOOR LOCK CYLINDER
FRONT DOOR OUTSIDE HANDLE COVER
5.5 (56, 49 in.*lbf)
FRONT DOOR LOCK REMOTE CONTROL CABLE ASSEMBLY
FRONT DOOR OUTSIDE HANDLE ASSEMBLY
FRONT DOOR REAR OUTSIDE HANDLE PAD
4.0 (41, 35 in.*lbf)
DOOR ELECTRICAL KEY OSCILLATOR
FRONT DOOR FRONT OUTSIDE HANDLE PAD
● DOOR LOCK WIRING HARNESS SEAL
4.0 (41, 35 in.*lbf)
FRONT DOOR OUTSIDE HANDLE FRAME SUB-ASSEMBLY
FRONT DOOR INSIDE LOCKING CABLE ASSEMBLY
HOLE PLUG
● FRONT DOOR SERVICE HOLE COVER
● BUTYL TAPE
● FRONT NO. 1 DOOR STIFFENER CUSHION
FRONT NO. 1 DOOR TRIM BRACKET
FRONT DOOR WINDOW REGULATOR SUB-ASSEMBLY
5.4 (55, 48 in.*lbf)
11 (112, 8.1)
11 (112, 8.1)
FRONT NO. 1 SPEAKER ASSEMBLY
FRONT POWER WINDOW REGULATOR MOTOR ASSEMBLY
Apply MP grease
● Non-reusable part
N*m (kgf*cm, ft.*lbf) : Specified torque
P
B144997E01

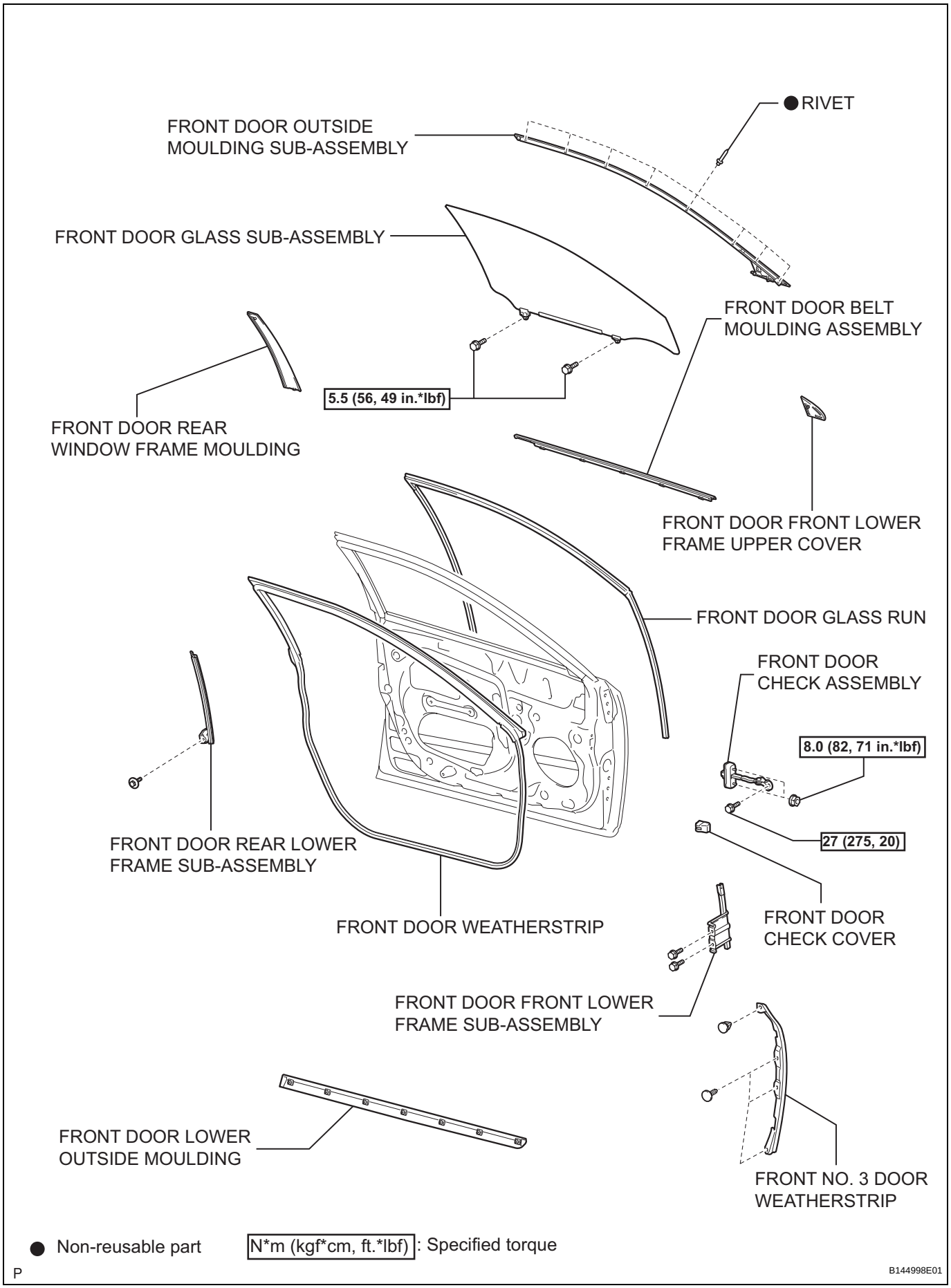
● RIVET
FRONT DOOR OUTSIDE MOULDING SUB-ASSEMBLY
FRONT DOOR GLASS SUB-ASSEMBLY
FRONT DOOR BELT MOULDING ASSEMBLY
5.5 (56, 49 in.*lbf)
FRONT DOOR REAR WINDOW FRAME MOULDING
FRONT DOOR FRONT LOWER FRAME UPPER COVER
FRONT DOOR GLASS RUN
FRONT DOOR CHECK ASSEMBLY
8.0 (82, 71 in.*lbf)
27 (275, 20)
FRONT DOOR REAR LOWER FRAME SUB-ASSEMBLY
FRONT DOOR WEATHERSTRIP
FRONT DOOR CHECK COVER
FRONT DOOR FRONT LOWER FRAME SUB-ASSEMBLY
FRONT DOOR LOWER OUTSIDE MOULDING
FRONT NO. 3 DOOR WEATHERSTRIP
● Non-reusable part
N*m (kgf*cm, ft.*lbf): Specified torque
P
B144998E01

ED

REAR DOOR

COMPONENTS

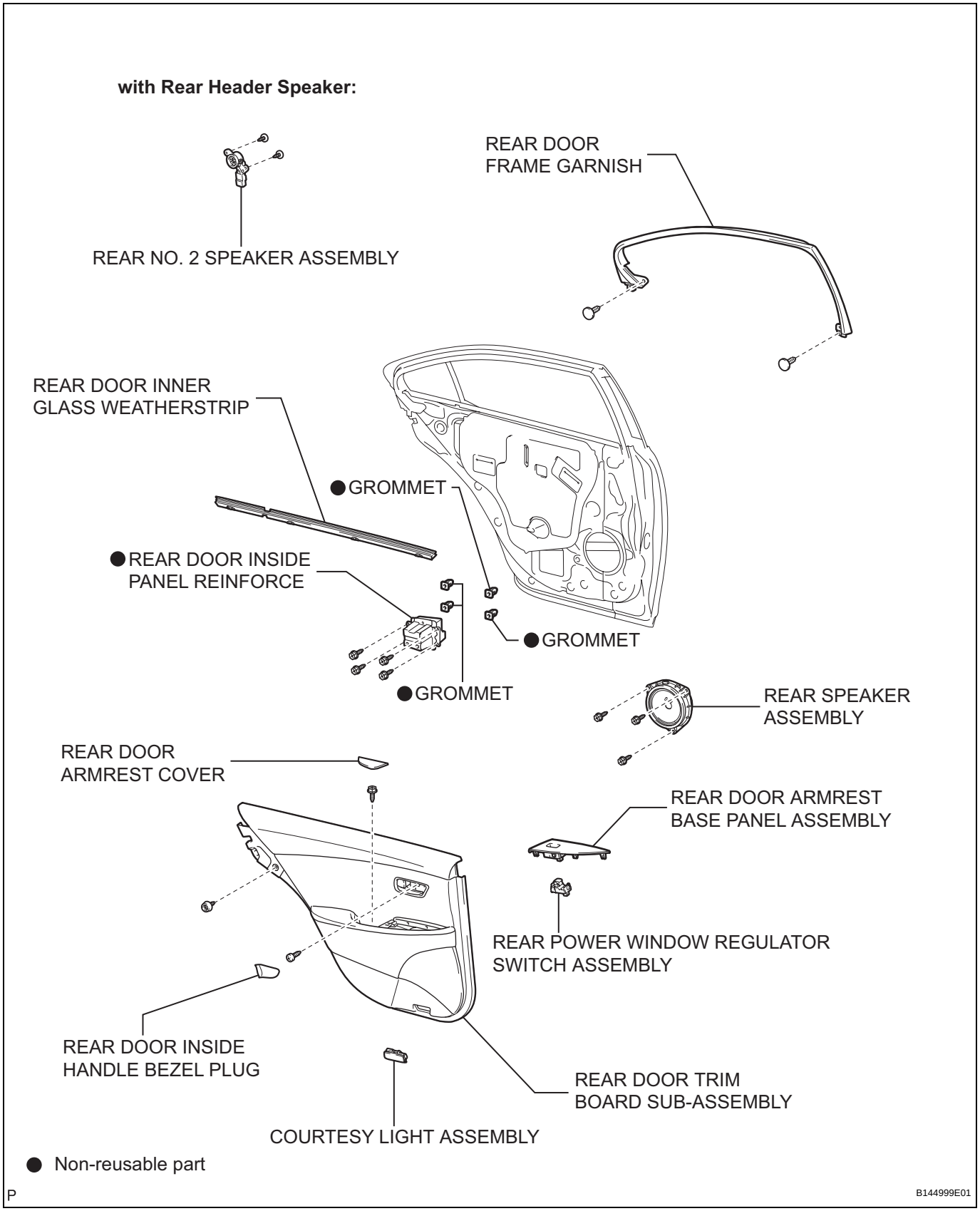

ED

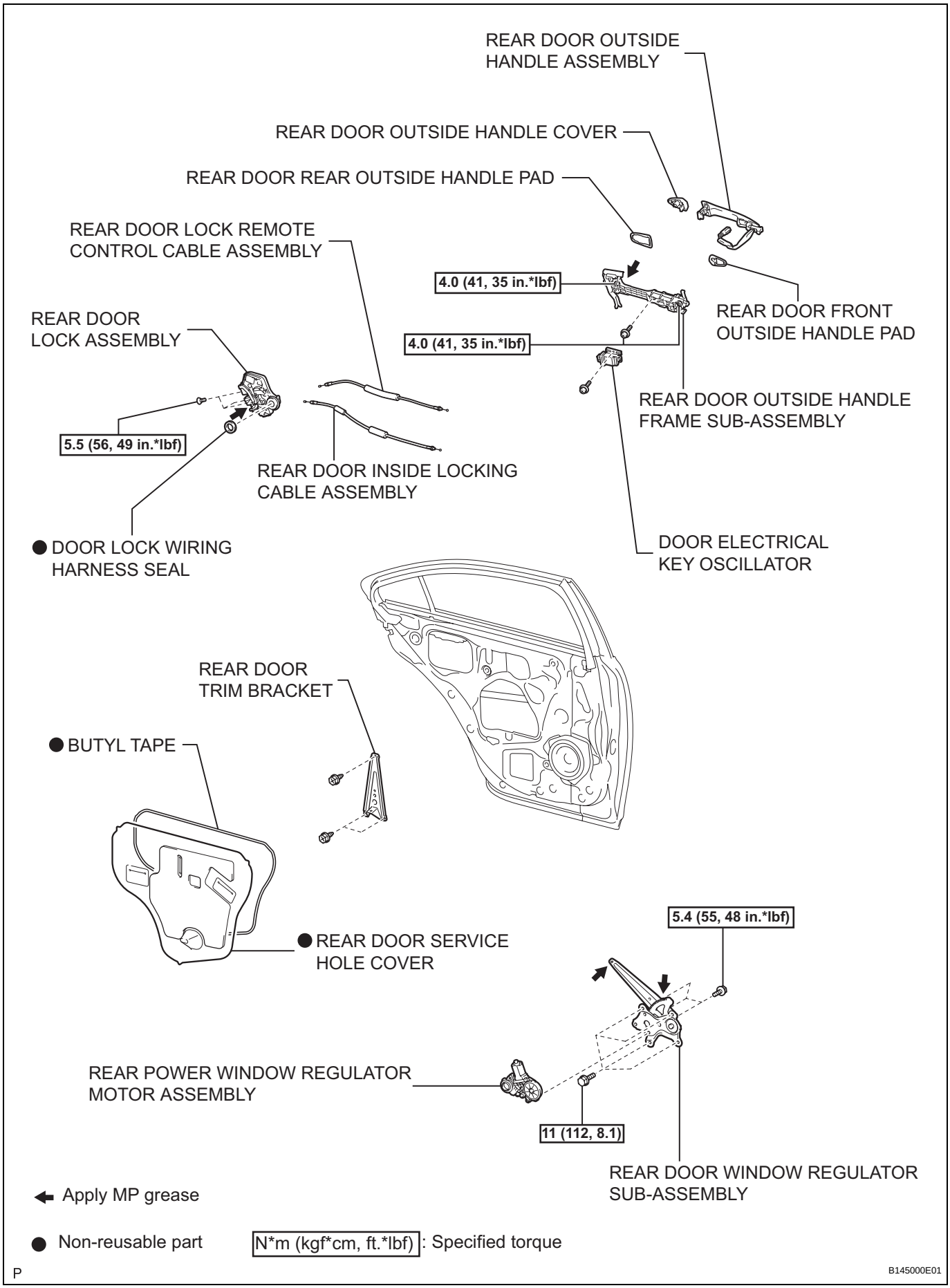
REAR DOOR OUTSIDE HANDLE ASSEMBLY
REAR DOOR OUTSIDE HANDLE COVER
REAR DOOR REAR OUTSIDE HANDLE PAD
REAR DOOR LOCK REMOTE CONTROL CABLE ASSEMBLY
4.0 (41, 35 in.*lbf)
REAR DOOR FRONT OUTSIDE HANDLE PAD
REAR DOOR LOCK ASSEMBLY
4.0 (41, 35 in.*lbf)
REAR DOOR OUTSIDE HANDLE FRAME SUB-ASSEMBLY
5.5 (56, 49 in.*lbf)
REAR DOOR INSIDE LOCKING CABLE ASSEMBLY
● DOOR LOCK WIRING HARNESS SEAL
DOOR ELECTRICAL KEY OSCILLATOR
REAR DOOR TRIM BRACKET
● BUTYL TAPE
● REAR DOOR SERVICE HOLE COVER
5.4 (55, 48 in.*lbf)
REAR POWER WINDOW REGULATOR MOTOR ASSEMBLY
11 (112, 8.1)
REAR DOOR WINDOW REGULATOR SUB-ASSEMBLY
Apply MP grease
● Non-reusable part
N*m (kgf*cm, ft.*lbf) : Specified torque
P
B145000E01

ED

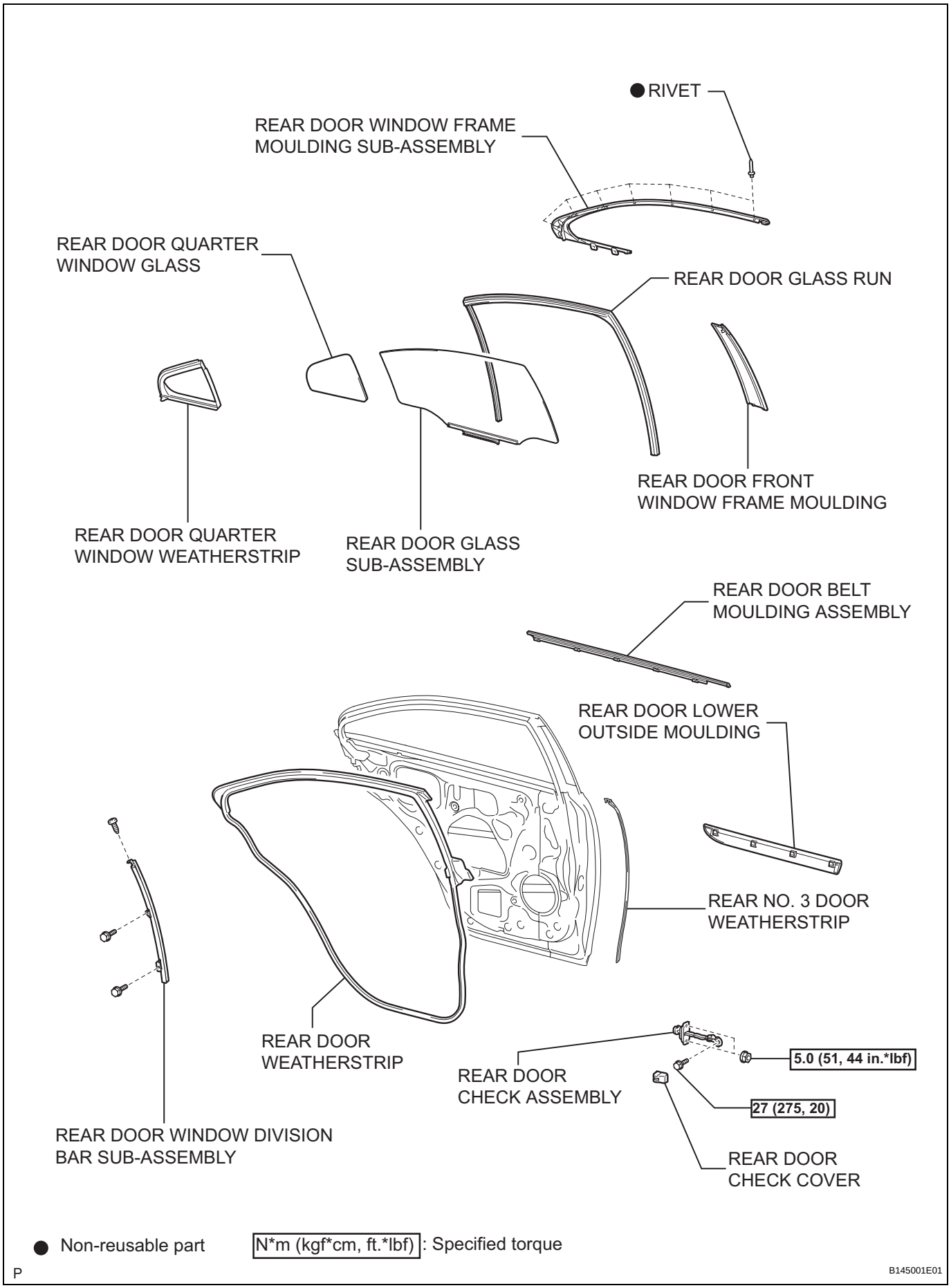

● Non-reusable part N*m (kgf*cm, ft.*lbf) : Specified torque

P

B145001E01

ED

LUGGAGE COMPARTMENT DOOR

COMPONENTS

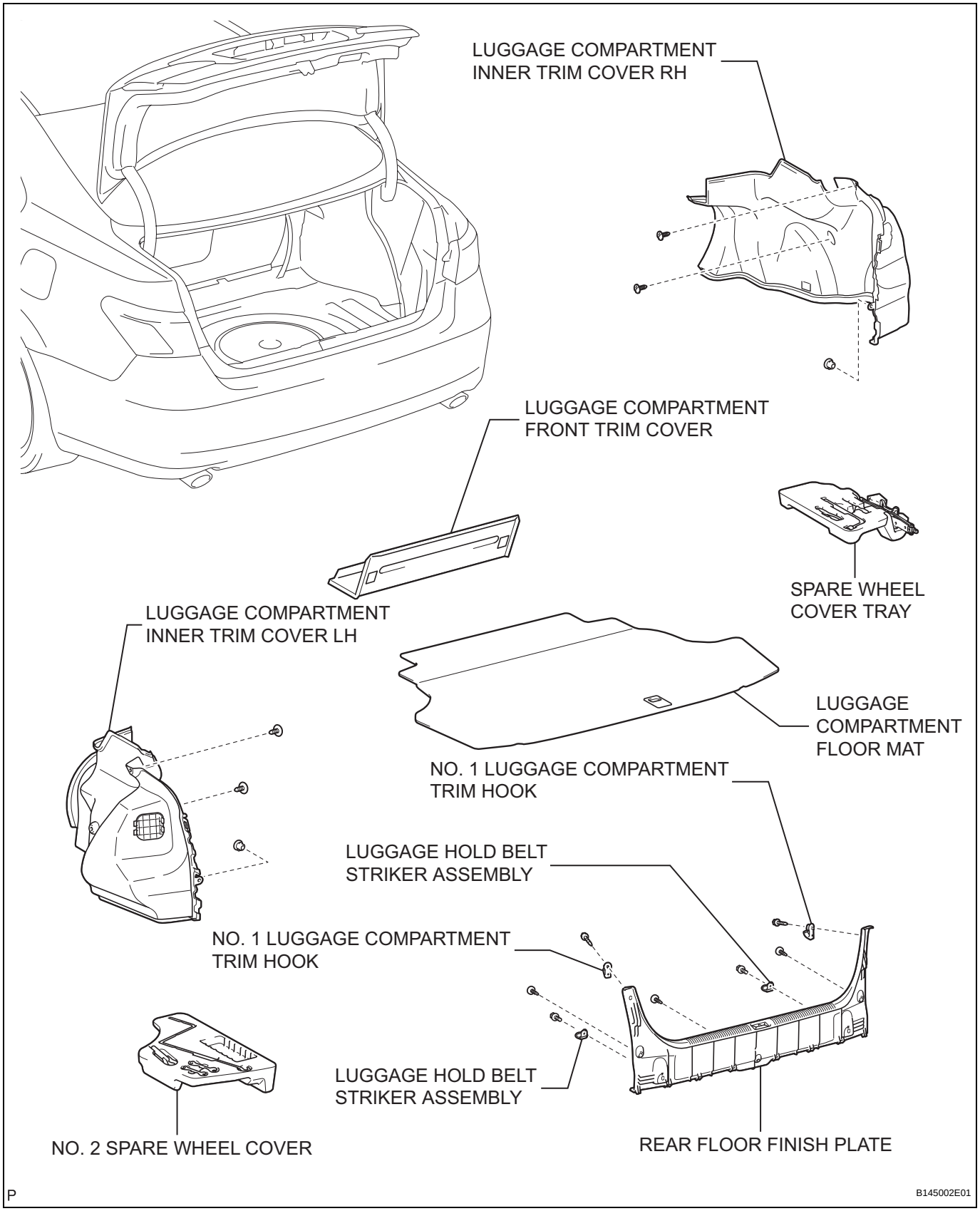

ED

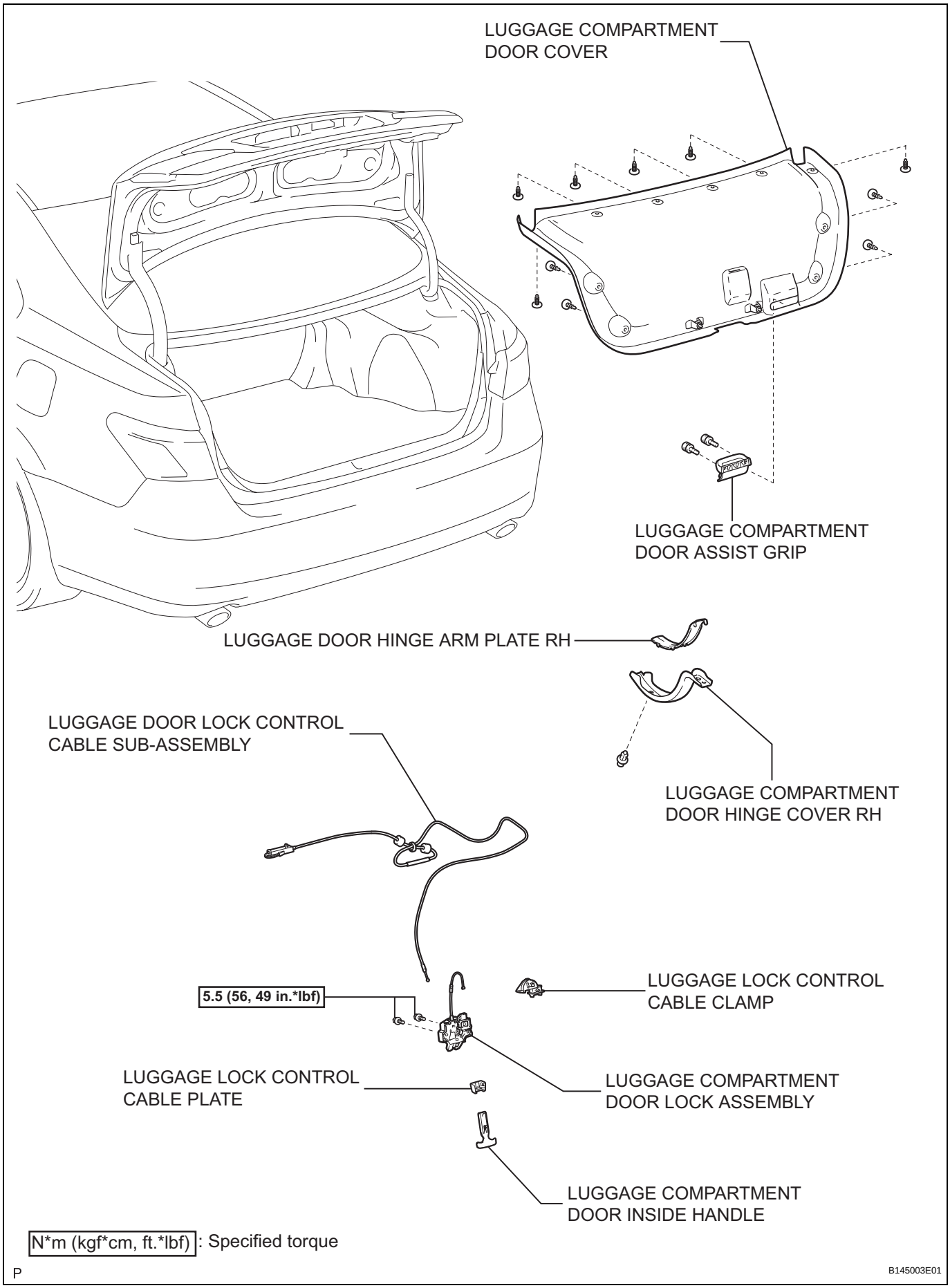
LUGGAGE COMPARTMENT DOOR COVER
LUGGAGE COMPARTMENT DOOR ASSIST GRIP
LUGGAGE DOOR HINGE ARM PLATE RH
LUGGAGE DOOR LOCK CONTROL CABLE SUB-ASSEMBLY
LUGGAGE COMPARTMENT DOOR HINGE COVER RH
5.5 (56, 49 in.*lbf)
LUGGAGE LOCK CONTROL CABLE CLAMP
LUGGAGE LOCK CONTROL CABLE PLATE
LUGGAGE COMPARTMENT DOOR LOCK ASSEMBLY
LUGGAGE COMPARTMENT DOOR INSIDE HANDLE
N*m (kgf*cm, ft.*lbf) : Specified torque
P
B145003E01

ED

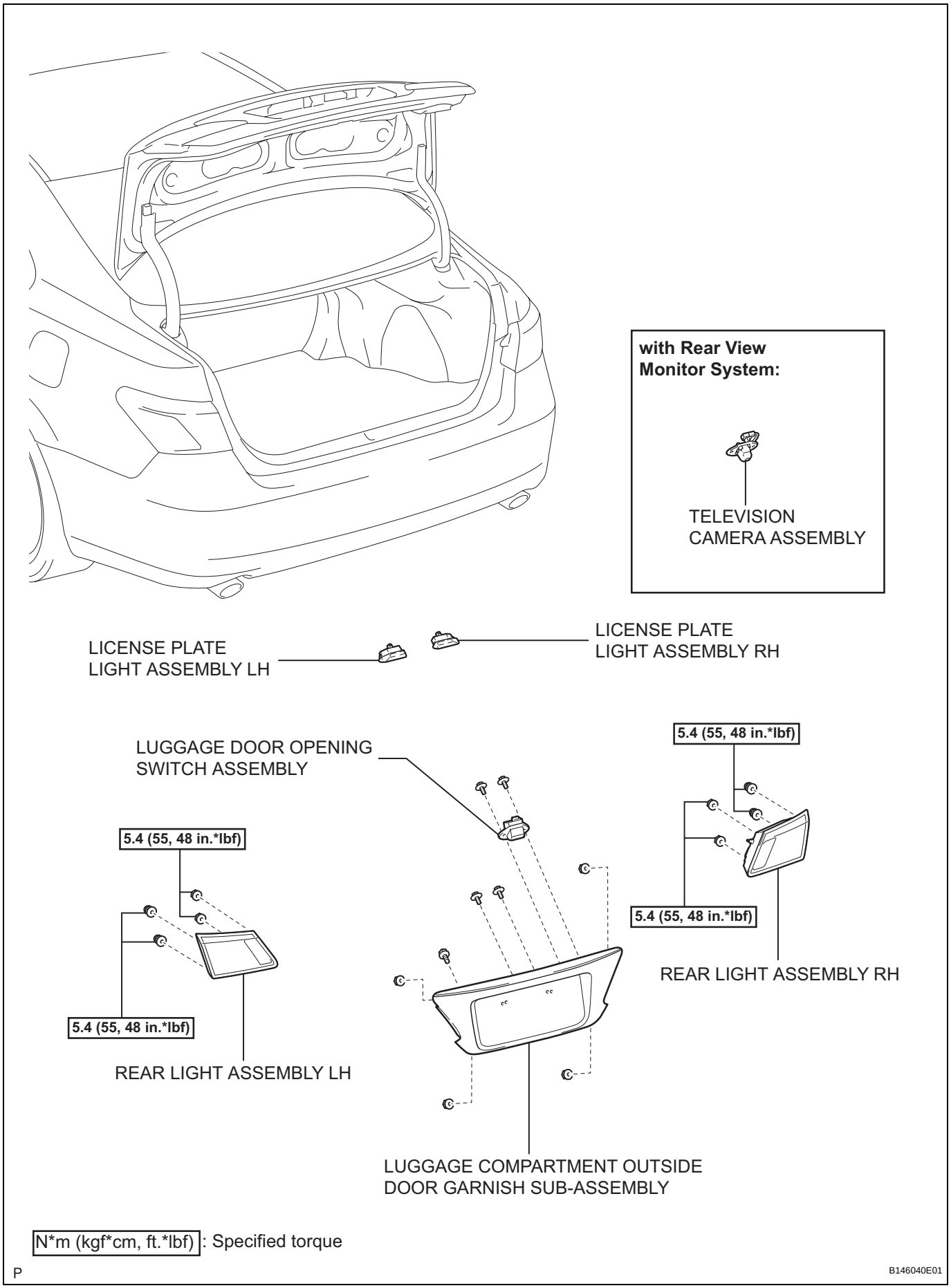
with Rear View Monitor System:
TELEVISION CAMERA ASSEMBLY
LICENSE PLATE LIGHT ASSEMBLY LH
LICENSE PLATE LIGHT ASSEMBLY RH
LUGGAGE DOOR OPENING SWITCH ASSEMBLY
5.4 (55, 48 in.*lbf)
5.4 (55, 48 in.*lbf)
5.4 (55, 48 in.*lbf)
5.4 (55, 48 in.*lbf)
REAR LIGHT ASSEMBLY RH
REAR LIGHT ASSEMBLY LH
LUGGAGE COMPARTMENT OUTSIDE DOOR GARNISH SUB-ASSEMBLY
N*m (kgf*cm, ft.*lbf): Specified torque
P
B146040E01

ED

LUGGAGE COMPARTMENT DOOR LOCK

COMPONENTS

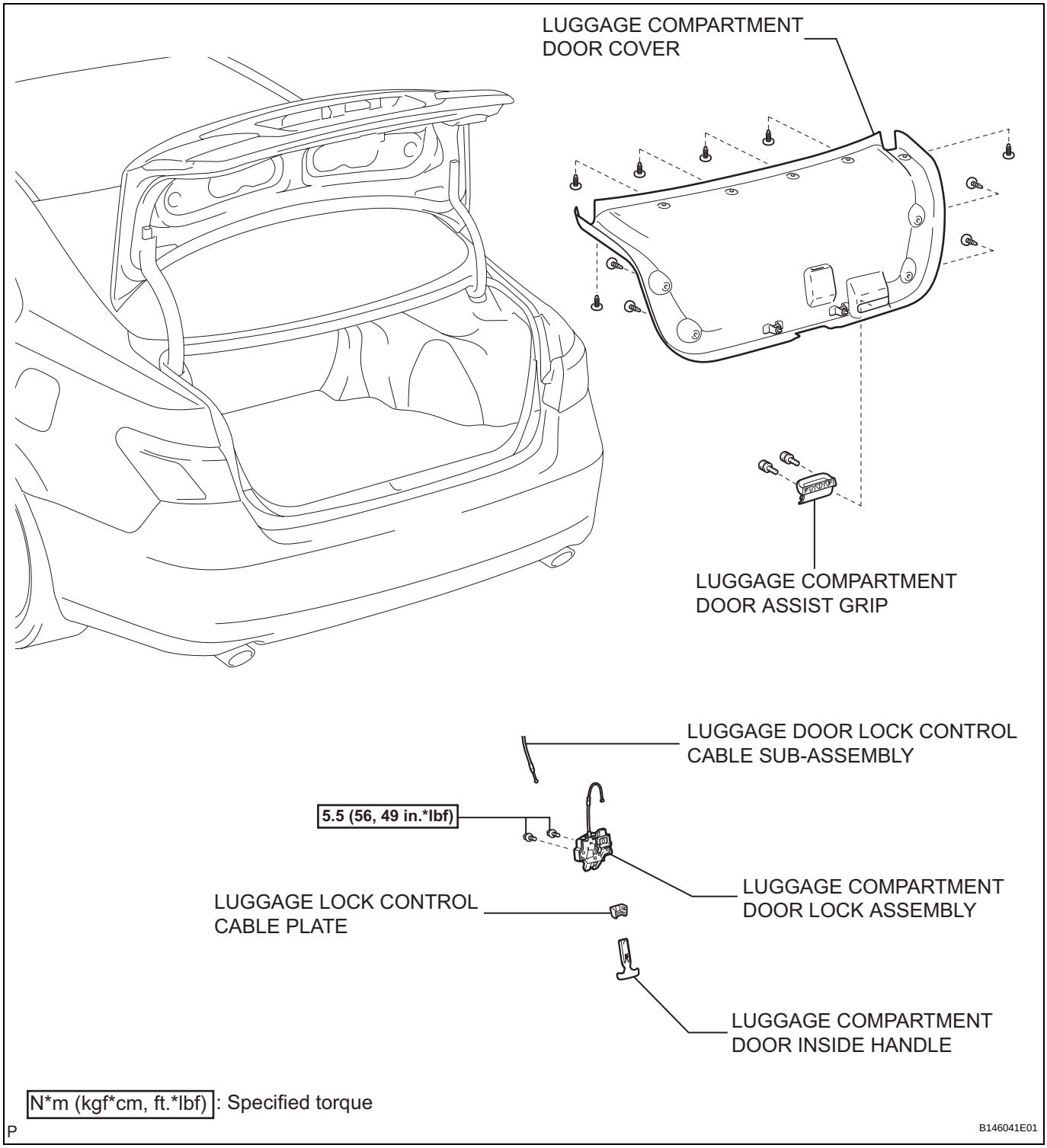

REMOVAL

1. **REMOVE LUGGAGE COMPARTMENT DOOR ASSIST GRIP (See page ET-71)**
2. **REMOVE LUGGAGE LOCK CONTROL CABLE PLATE (See page ET-71)**
3. **REMOVE LUGGAGE COMPARTMENT DOOR INSIDE HANDLE (See page ET-71)**
4. **REMOVE LUGGAGE COMPARTMENT DOOR COVER (See page ET-72)**
5. **REMOVE LUGGAGE COMPARTMENT DOOR LOCK ASSEMBLY**
   (a) Raise the cover of the luggage compartment door lock as shown in the illustration.
   (b) Separate the luggage door lock control cable sub-assembly.
   (c) Return the cover of the luggage compartment door lock to its original position.

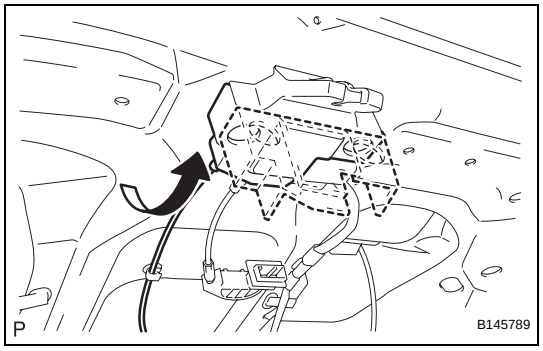

   (d) Disconnect the connector and cable.
   (e) Remove the 2 bolts and luggage compartment door lock assembly.

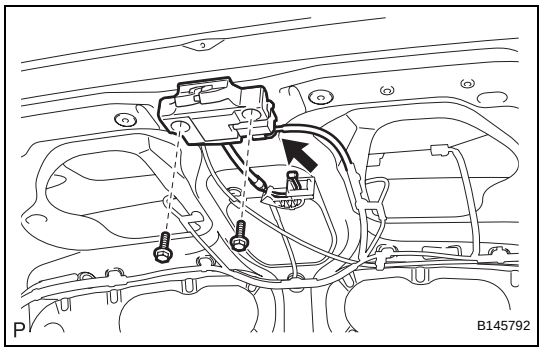

INSPECTION

1. **INSPECT LUGGAGE COMPARTMENT DOOR LOCK**
   (a) Move the door lock to the lock position.
   (b) Apply battery voltage to the door lock motor and check operation of the door lock motor.
   OK

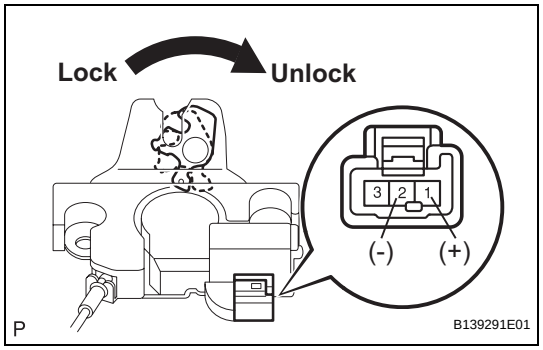

Measurement Condition	Specified Condition
Battery positive (+) → Terminal 1 Battery negative (-) → Terminal 2	Luggage compartment door lock motor unlock

If the result is not as specified, replace the door lock assembly.

ED

LUGGAGE DOOR HINGE TORSION BAR

COMPONENTS

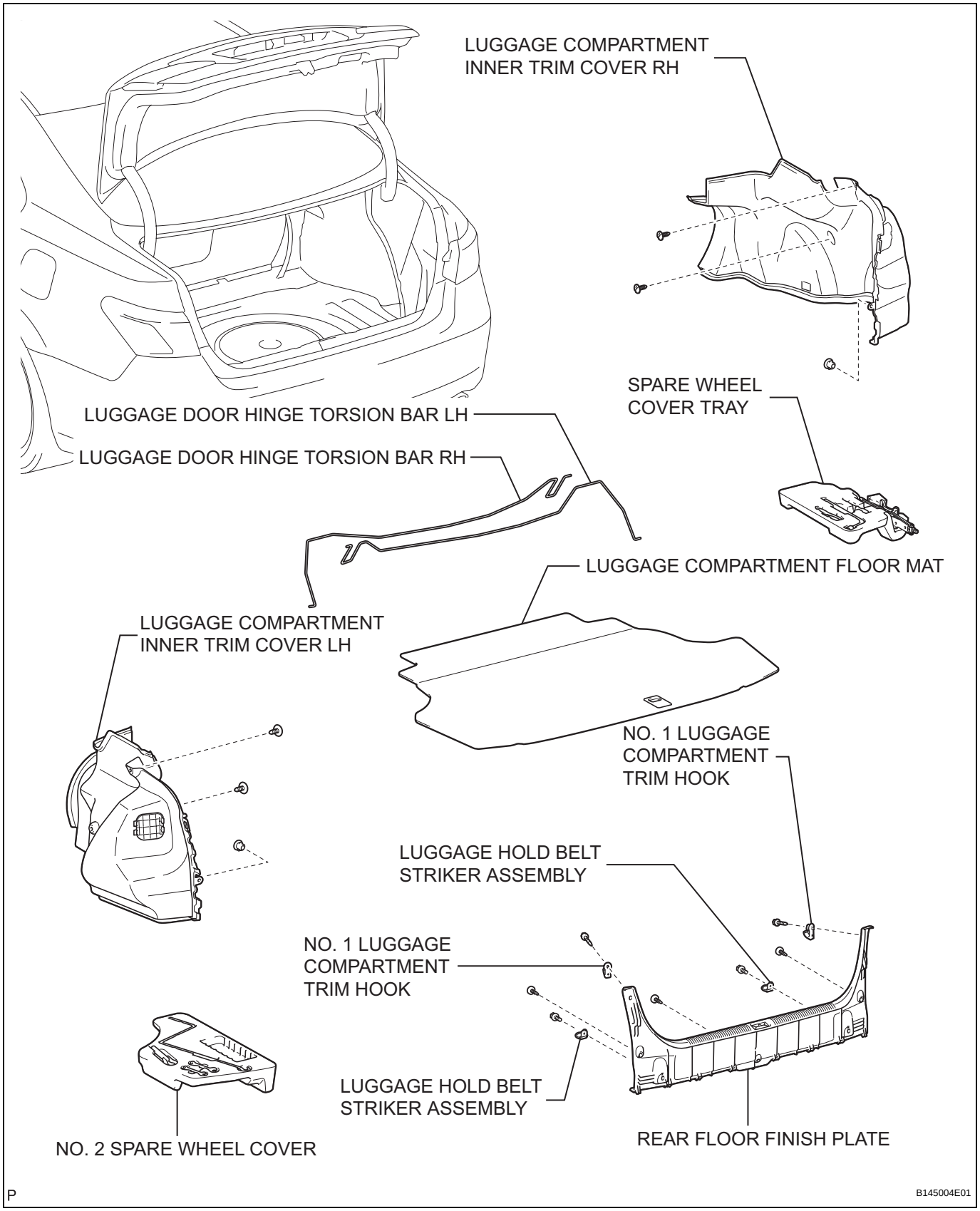

ED

REMOVAL

1. **REMOVE LUGGAGE COMPARTMENT FLOOR MAT**
2. **REMOVE NO. 2 SPARE WHEEL COVER**
3. **REMOVE SPARE WHEEL COVER TRAY**
4. **REMOVE LUGGAGE HOLD BELT STRIKER ASSEMBLY (See page ED-82)**
5. **REMOVE NO. 1 LUGGAGE COMPARTMENT TRIM HOOK (See page ED-83)**
6. **REMOVE REAR FLOOR FINISH PLATE (See page ED-83)**
7. **REMOVE LUGGAGE COMPARTMENT INNER TRIM COVER LH (See page ED-83)**
8. **REMOVE LUGGAGE COMPARTMENT INNER TRIM COVER RH (See page ED-83)**
9. **REMOVE LUGGAGE DOOR HINGE TORSION BAR LH**
   (a) Disconnect the luggage door hinge torsion bar LH from the body RH side as shown in the illustration.

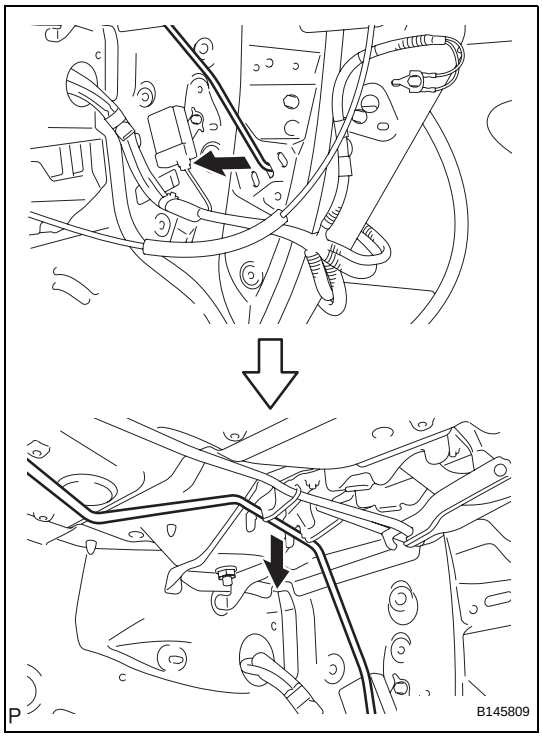

ED

   (b) Disconnect the luggage door hinge torsion bar LH from the luggage compartment door torsion bar support as shown in the illustration.

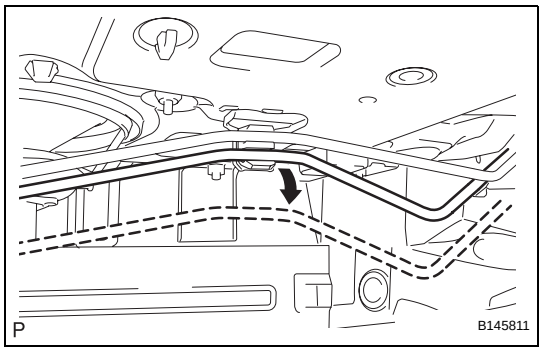

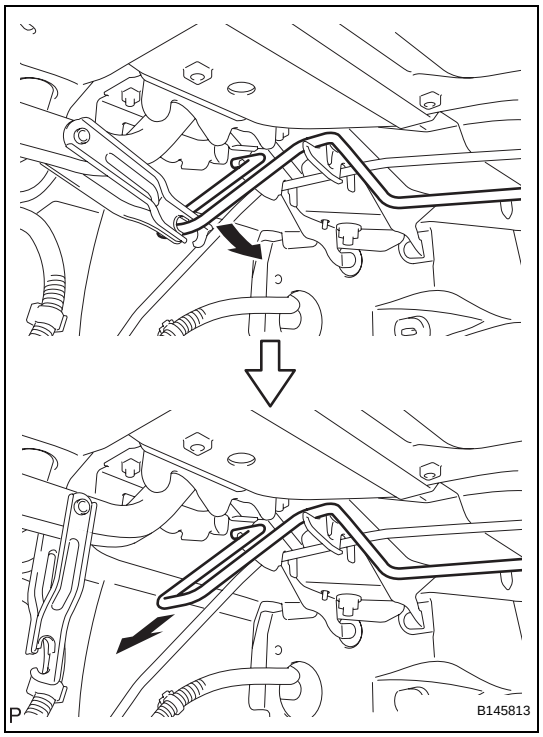

(c) Remove the luggage door hinge torsion bar LH from the luggage door hinge and body LH side as shown in the illustration.

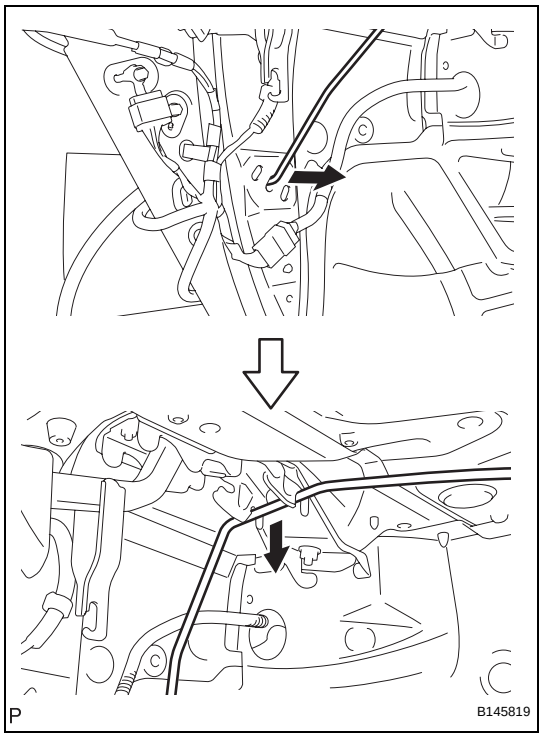

10. REMOVE LUGGAGE DOOR HINGE TORSION BAR RH

(a) Disconnect the luggage door hinge torsion bar RH from the body LH side as shown in the illustration.

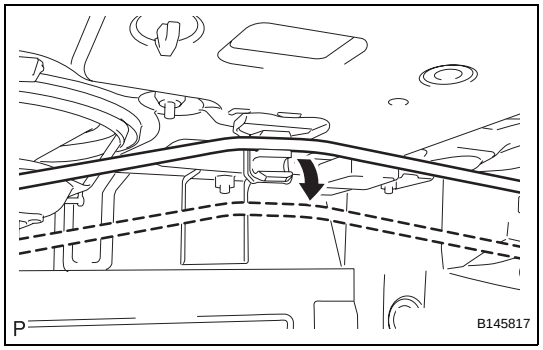

(b) Disconnect the luggage door hinge torsion bar RH from the luggage compartment door torsion bar support as shown in the illustration.

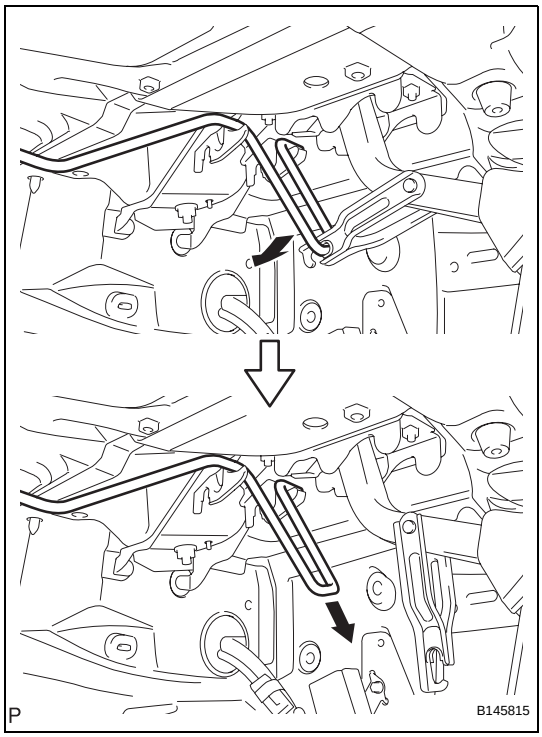

(c) Remove the luggage door hinge torsion bar RH from the luggage door hinge and body RH side as shown in the illustration.

LUGGAGE COMPARTMENT DOOR OPENER INNER SWITCH

COMPONENTS

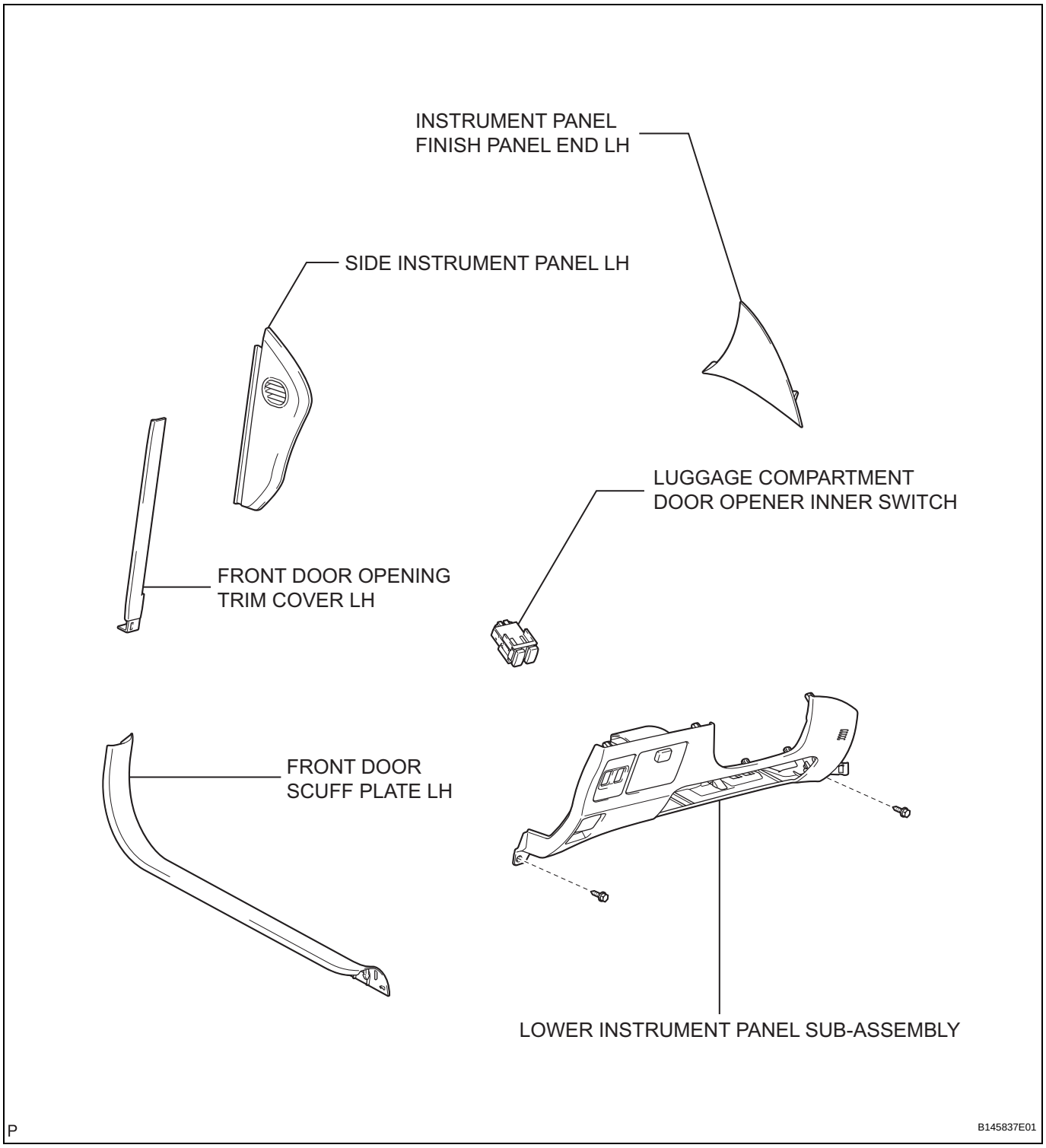

REMOVAL

1. **REMOVE FRONT DOOR SCUFF PLATE LH (See page IR-39)**
2. **REMOVE FRONT DOOR OPENING TRIM COVER LH (See page IR-39)**
3. **REMOVE SIDE INSTRUMENT PANEL LH (See page IP-12)**
4. **REMOVE INSTRUMENT PANEL FINISH PANEL END LH (See page IP-13)**
5. **REMOVE LOWER INSTRUMENT PANEL SUB-ASSEMBLY (See page IP-13)**
6. **REMOVE LUGGAGE COMPARTMENT DOOR OPENER INNER SWITCH**
   (a) Disengage the 2 claws and remove the luggage compartment door opener inner switch.

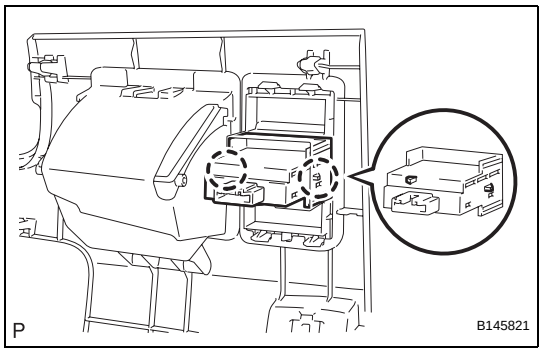

INSPECTION

1. **INSPECT LUGGAGE COMPARTMENT DOOR OPENER INNER SWITCH**
   (a) Measure the resistance according to the value(s) in the table below.
   Standard resistance

Tester Connection	Switch Condition	Specified Condition
5 - 6	Switch pushed (ON)	Below 1 Ω
	Switch free (OFF)	10 kΩ or higher

If the result is not as specified, replace the switch assembly.

Luggage Compartment Door Opener Inner Switch:

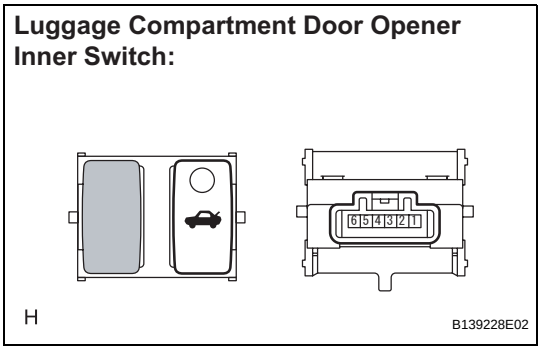

INSTALLATION

1. **INSTALL LUGGAGE COMPARTMENT DOOR OPENER INNER SWITCH**
   (a) Engage the 2 claws and install the luggage compartment door opener inner switch.
2. **INSTALL LOWER INSTRUMENT PANEL SUB-ASSEMBLY (See page IP-46)**
3. **INSTALL INSTRUMENT PANEL FINISH PANEL END LH (See page IP-46)**
4. **INSTALL SIDE INSTRUMENT PANEL LH (See page IP-47)**
5. **INSTALL FRONT DOOR OPENING TRIM COVER LH (See page IR-64)**

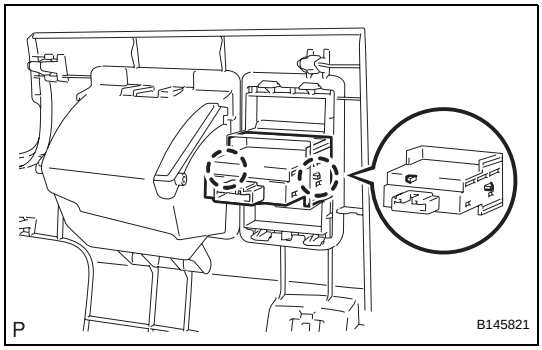

6. **INSTALL FRONT DOOR SCUFF PLATE LH (See page IR-65)**

LUGGAGE COMPARTMENT DOOR OPENER MAIN SWITCH

COMPONENTS

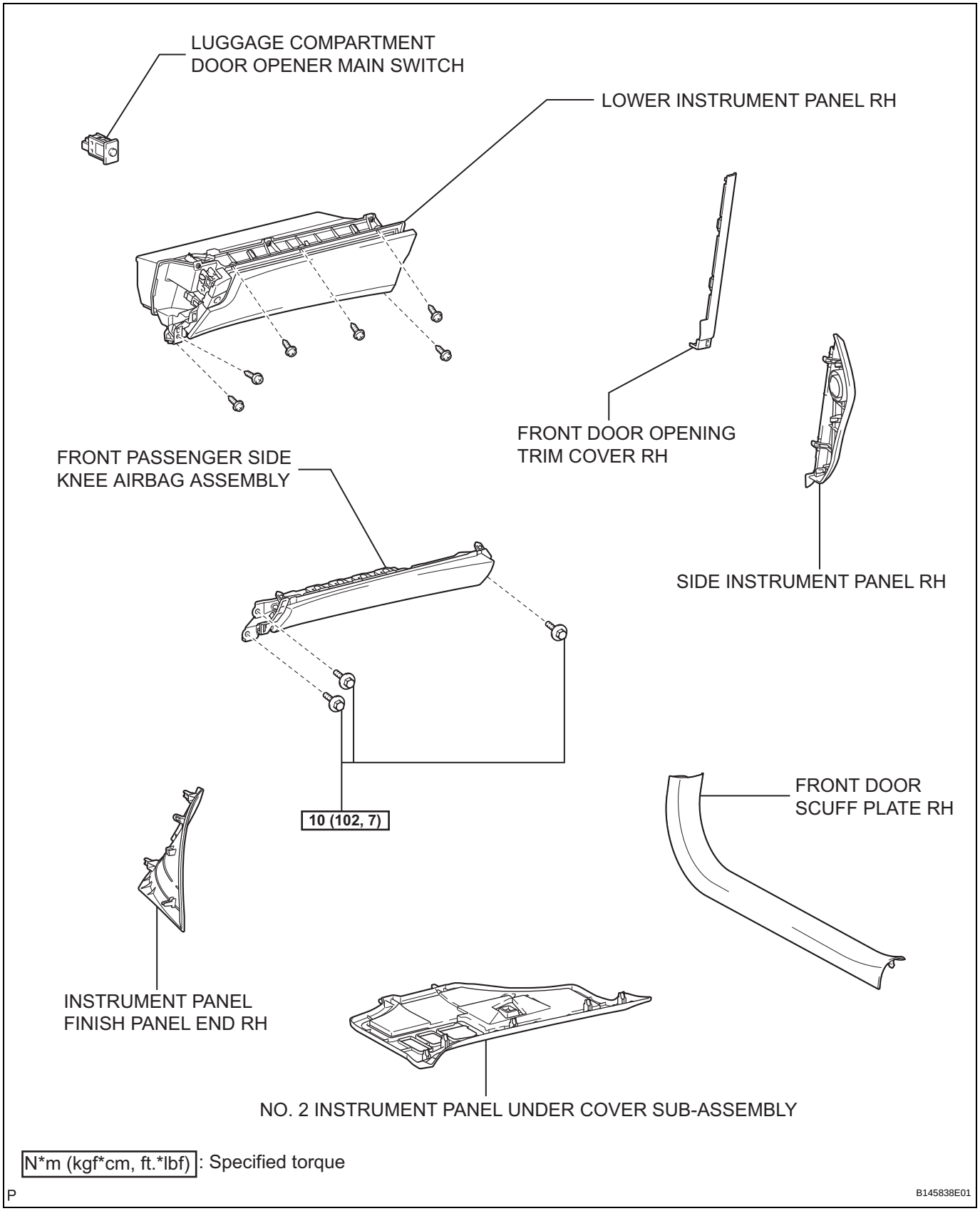

ED

REMOVAL

1. **DISCONNECT CABLE FROM NEGATIVE BATTERY TERMINAL**
   CAUTION:
   Wait for 90 seconds after disconnecting the cable to prevent airbag deployment (See page RS-1).
2. **REMOVE INSTRUMENT PANEL FINISH PANEL END RH (See page IP-15)**
3. **REMOVE FRONT DOOR SCUFF PLATE RH (See page IR-42)**
4. **REMOVE FRONT DOOR OPENING TRIM COVER RH (See page IR-42)**
5. **REMOVE NO. 2 INSTRUMENT PANEL UNDER COVER SUB-ASSEMBLY (See page IP-15)**
6. **REMOVE SIDE INSTRUMENT PANEL RH (See page IP-15)**
7. **REMOVE FRONT PASSENGER SIDE KNEE AIRBAG ASSEMBLY (See page RS-396)**
8. **REMOVE LOWER INSTRUMENT PANEL RH (See page IP-16)**
9. **REMOVE LUGGAGE COMPARTMENT DOOR OPENER MAIN SWITCH**
   (a) Disengage the 2 claws and remove the luggage compartment door opener main switch.

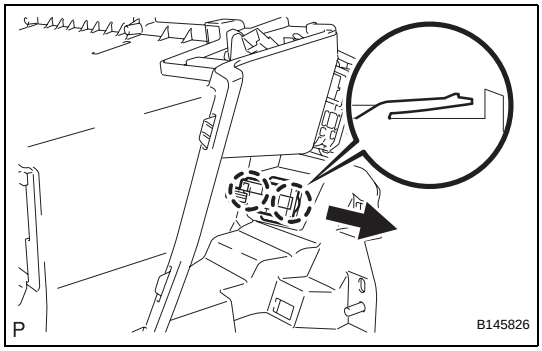

INSPECTION

1. **INSPECT LUGGAGE COMPARTMENT DOOR OPENER MAIN SWITCH**
   (a) Measure the resistance according to the value(s) in the table below.
   Standard resistance

Tester Connection	Switch Condition	Specified Condition
1 - 2	Switch pushed (ON)	Below 1 Ω
	Switch free (OFF)	10 kΩ or higher

If the result is not as specified, replace the switch assembly.

Luggage Compartment Door Opener Main Switch:

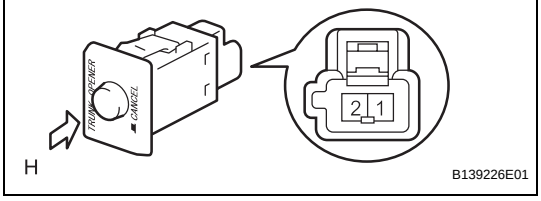

ED

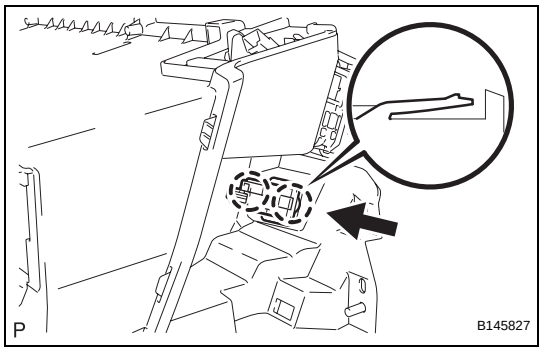

INSTALLATION

1. **INSTALL LUGGAGE COMPARTMENT DOOR OPENER MAIN SWITCH**
   (a) Engage the 2 claws and install the luggage compartment door opener main switch.
2. **INSTALL LOWER INSTRUMENT PANEL RH (See page IP-42)**
3. **INSTALL FRONT PASSENGER SIDE KNEE AIRBAG ASSEMBLY (See page RS-396)**
4. **INSTALL SIDE INSTRUMENT PANEL RH (See page IP-43)**
5. **INSTALL NO. 2 INSTRUMENT PANEL UNDER COVER SUB-ASSEMBLY (See page IP-44)**
6. **INSTALL FRONT DOOR OPENING TRIM COVER RH (See page IR-65)**
7. **INSTALL FRONT DOOR SCUFF PLATE RH (See page IR-65)**
8. **INSTALL INSTRUMENT PANEL FINISH PANEL END RH (See page IP-44)**
9. **CONNECT CABLE TO NEGATIVE BATTERY TERMINAL**
10. **PERFORM INITIALIZATION**
    NOTICE:
    Some systems need initialization after reconnecting the cable to the negative battery terminal (See page IN-33).
11. **INSPECT SRS WARNING LIGHT**
    (See page RS-37)

FUEL LID OPENER MOTOR ASSEMBLY

COMPONENTS

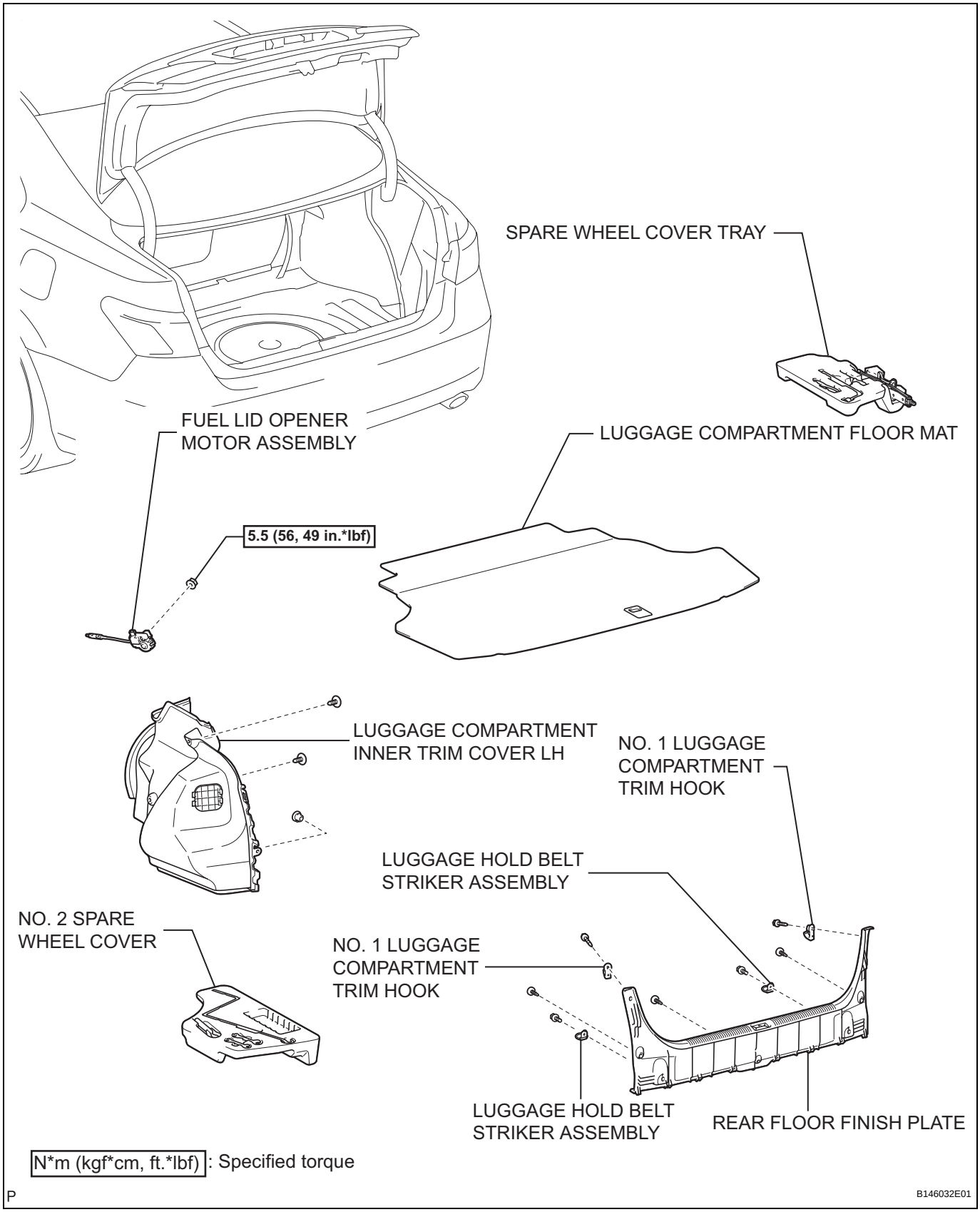

ED

REMOVAL

1. **REMOVE LUGGAGE COMPARTMENT FLOOR MAT**
2. **REMOVE NO. 2 SPARE WHEEL COVER**
3. **REMOVE SPARE WHEEL COVER TRAY**
4. **REMOVE LUGGAGE HOLD BELT STRIKER ASSEMBLY (See page ED-82)**
5. **REMOVE NO. 1 LUGGAGE COMPARTMENT TRIM HOOK (See page ED-83)**
6. **REMOVE REAR FLOOR FINISH PLATE (See page ED-83)**
7. **REMOVE LUGGAGE COMPARTMENT INNER TRIM COVER LH (See page ED-83)**
8. **REMOVE FUEL LID OPENER MOTOR ASSEMBLY**
   (a) Disconnect the connector.
   (b) Remove the lock and nut as shown in the illustration.
   (c) Remove the fuel lid with motor lock assembly.

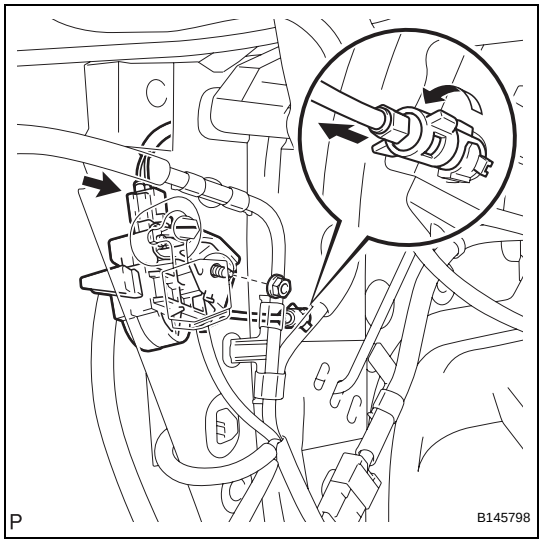

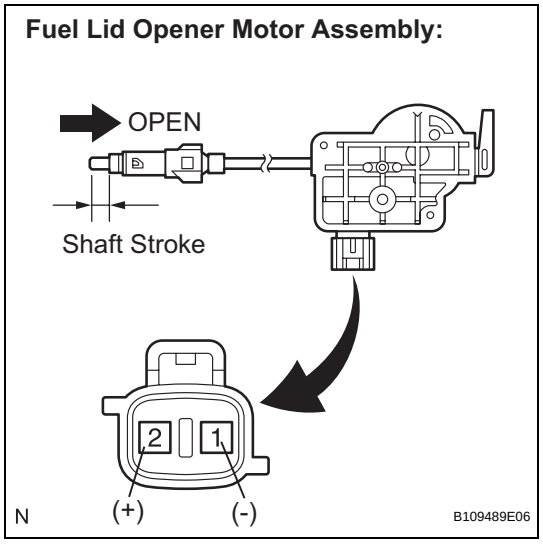

INSPECTION

1. **INSPECT FUEL LID OPENER MOTOR ASSEMBLY**
   (a) Apply battery voltage to the lock terminals and check that the motor operates and the shaft moves in the open direction.
   OK

Measurement Condition	Specified Condition
Battery positive (+) → Terminal 2 Battery negative (-) → Terminal 1	Motor operates and shaft moves in open direction

   (b) Measure the shaft stroke.
   Standard:
   10.3 mm (0.406 in.) or more
   If the result is not as specified, replace the motor assembly.

ED

FUEL LID OPENER SWITCH

COMPONENTS

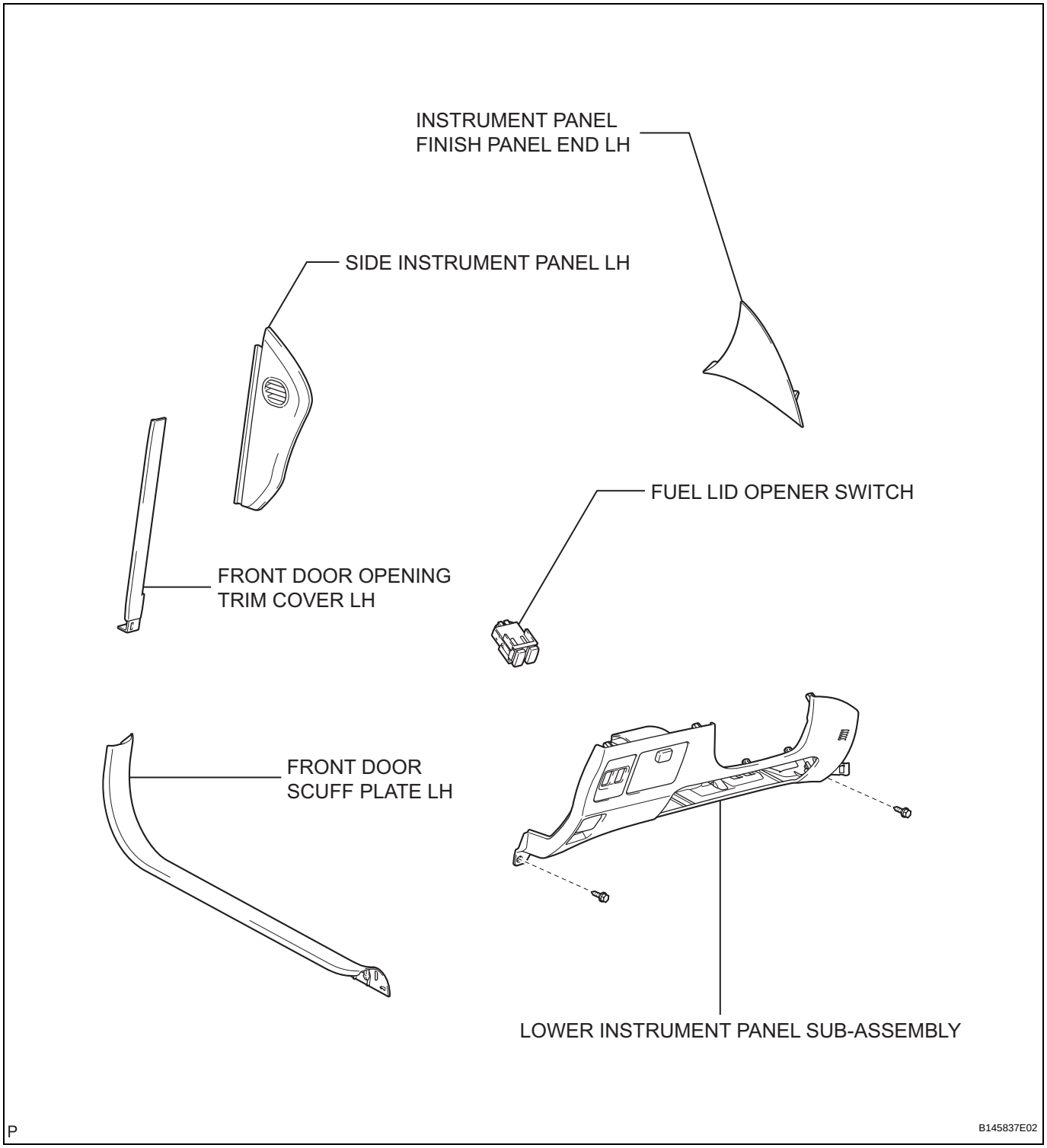

REMOVAL

1. **REMOVE FRONT DOOR SCUFF PLATE LH (See page IR-39)**
2. **REMOVE FRONT DOOR OPENING TRIM COVER LH (See page IR-39)**
3. **REMOVE SIDE INSTRUMENT PANEL LH (See page IP-12)**
4. **REMOVE INSTRUMENT PANEL FINISH PANEL END LH (See page IP-13)**
5. **REMOVE LOWER INSTRUMENT PANEL SUB-ASSEMBLY (See page IP-13)**
6. **REMOVE FUEL LID OPENER SWITCH**
   (a) Disengage the 2 claws and remove the fuel lid opener switch.

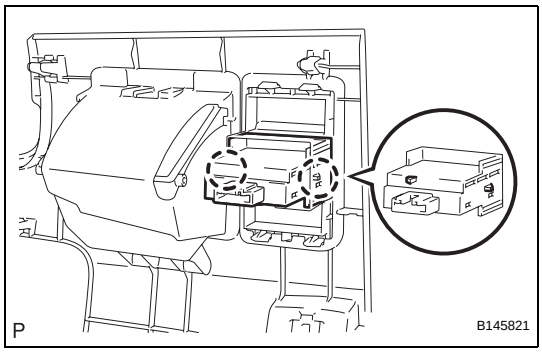

INSPECTION

1. **INSPECT FUEL LID OPENER SWITCH**
   (a) Measure the resistance according to the value(s) in the table below.
   Standard resistance

Tester Connection	Switch Condition	Specified Condition
1 - 2	Switch pushed (ON)	Below 1 Ω
	Switch free (OFF)	10 kΩ or higher

If the result is not as specified, replace the switch.

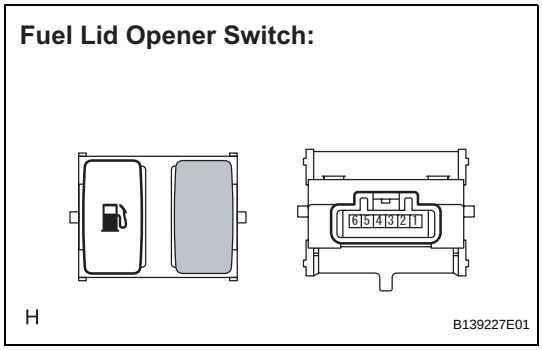

INSTALLATION

1. **INSTALL FUEL LID OPENER SWITCH**
   (a) Engage the 2 claws and install the fuel lid opener switch.
2. **INSTALL LOWER INSTRUMENT PANEL SUB-ASSEMBLY (See page IP-46)**
3. **INSTALL INSTRUMENT PANEL FINISH PANEL END LH (See page IP-46)**
4. **INSTALL SIDE INSTRUMENT PANEL LH (See page IP-47)**
5. **INSTALL FRONT DOOR OPENING TRIM COVER LH (See page IR-64)**
6. **INSTALL FRONT DOOR SCUFF PLATE LH (See page IR-65)**

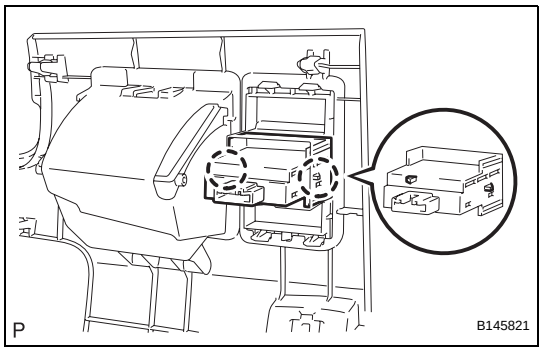

FRONT BUMPER

COMPONENTS

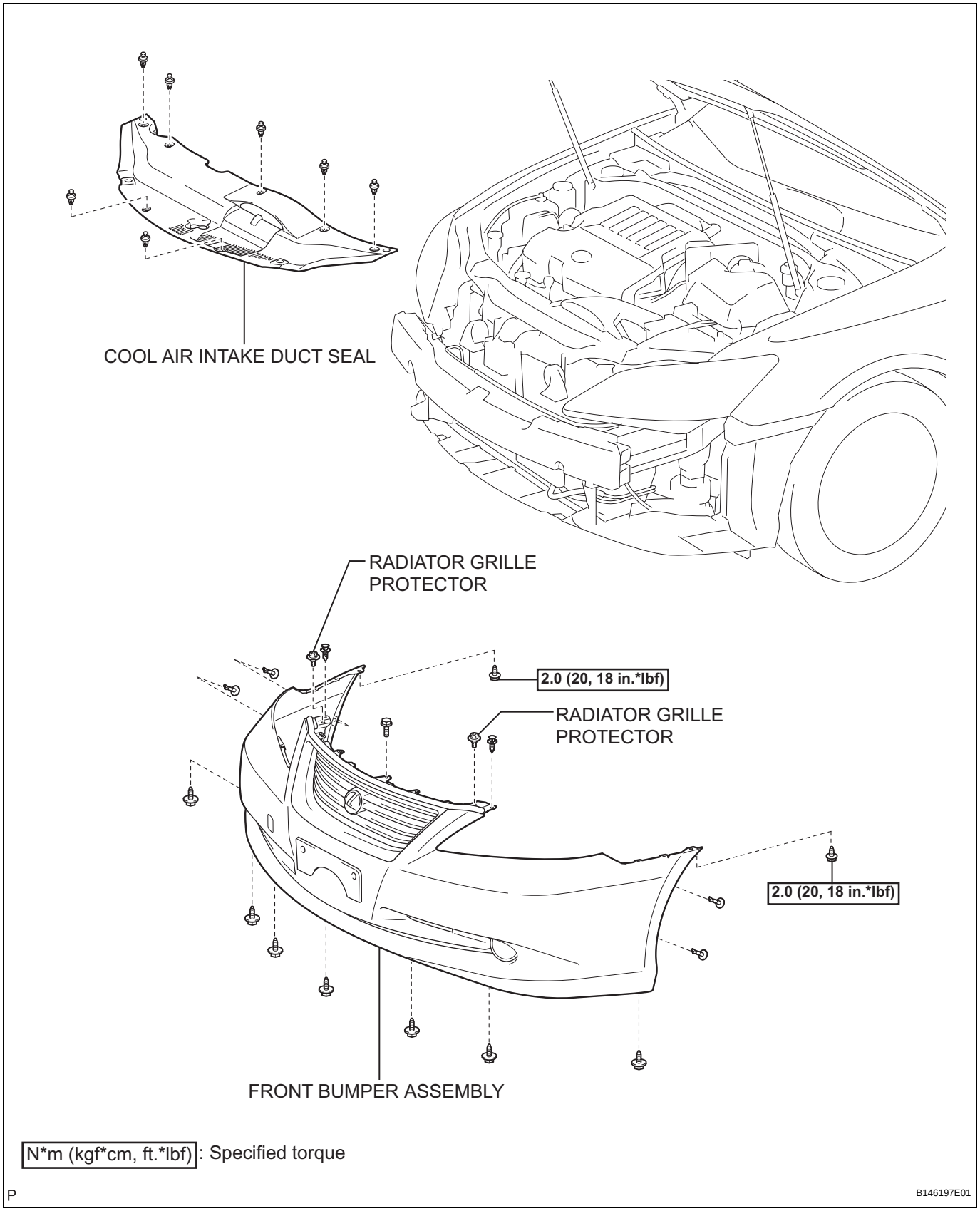

ET

with Intuitive Parking Assist System:

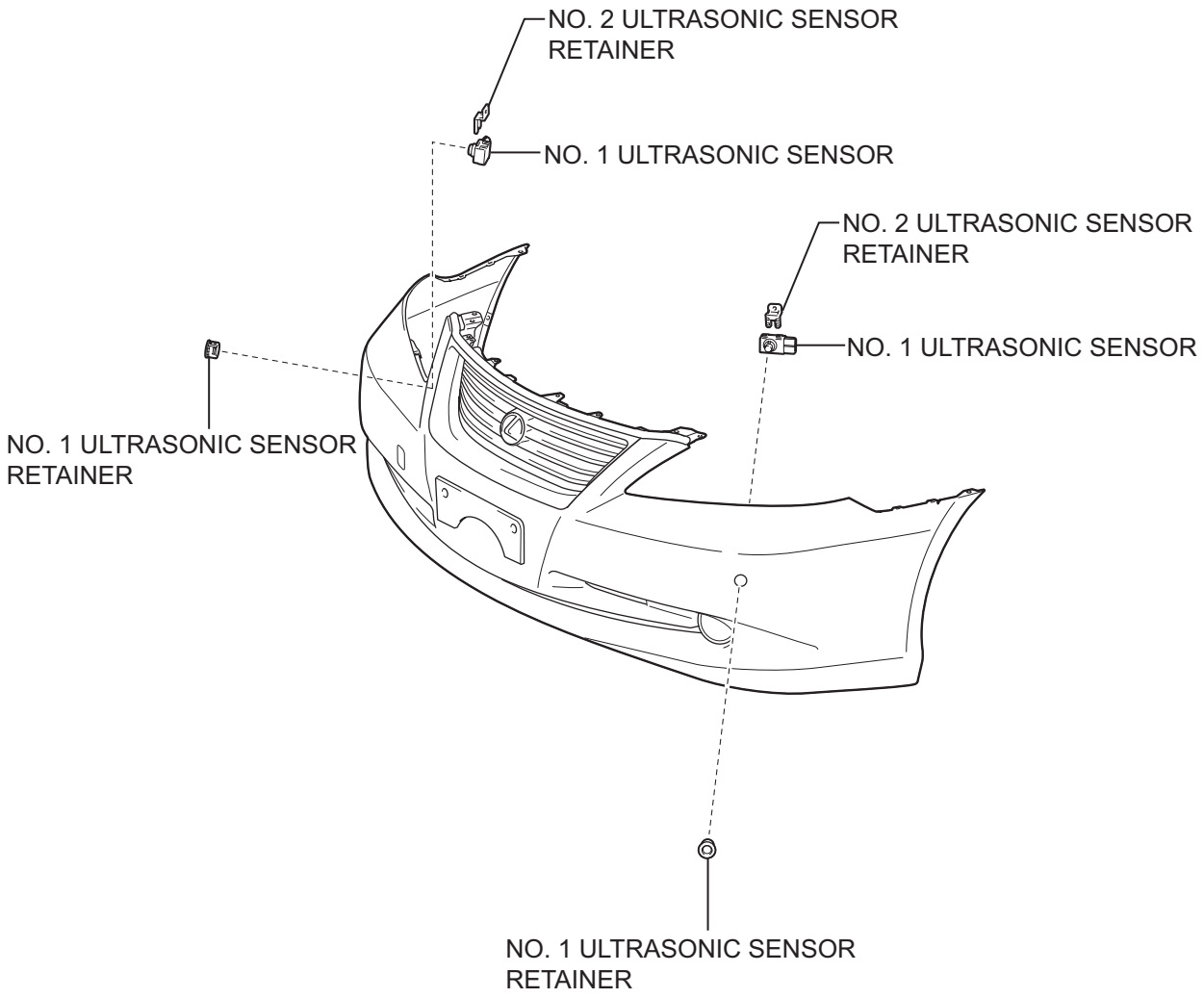

P

B146199E01

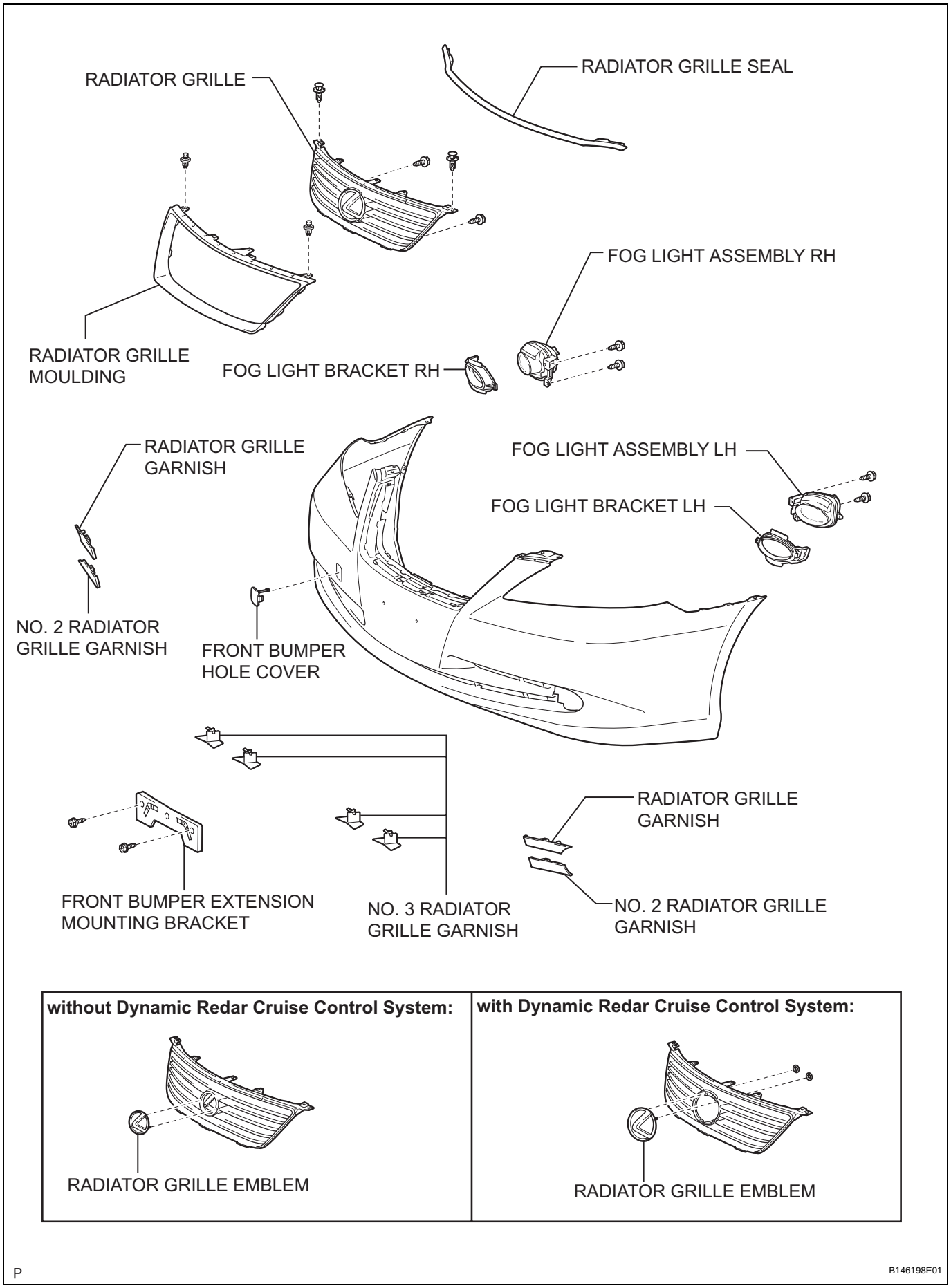
RADIATOR GRILLE
RADIATOR GRILLE SEAL
FOG LIGHT ASSEMBLY RH
RADIATOR GRILLE MOULDING
FOG LIGHT BRACKET RH
RADIATOR GRILLE GARNISH
FOG LIGHT ASSEMBLY LH
FOG LIGHT BRACKET LH
NO. 2 RADIATOR GRILLE GARNISH
FRONT BUMPER HOLE COVER
RADIATOR GRILLE GARNISH
FRONT BUMPER EXTENSION MOUNTING BRACKET
NO. 3 RADIATOR GRILLE GARNISH
NO. 2 RADIATOR GRILLE GARNISH
without Dynamic Redar Cruise Control System:
RADIATOR GRILLE EMBLEM
with Dynamic Redar Cruise Control System:
RADIATOR GRILLE EMBLEM
P
B146198E01

REAR BUMPER

COMPONENTS

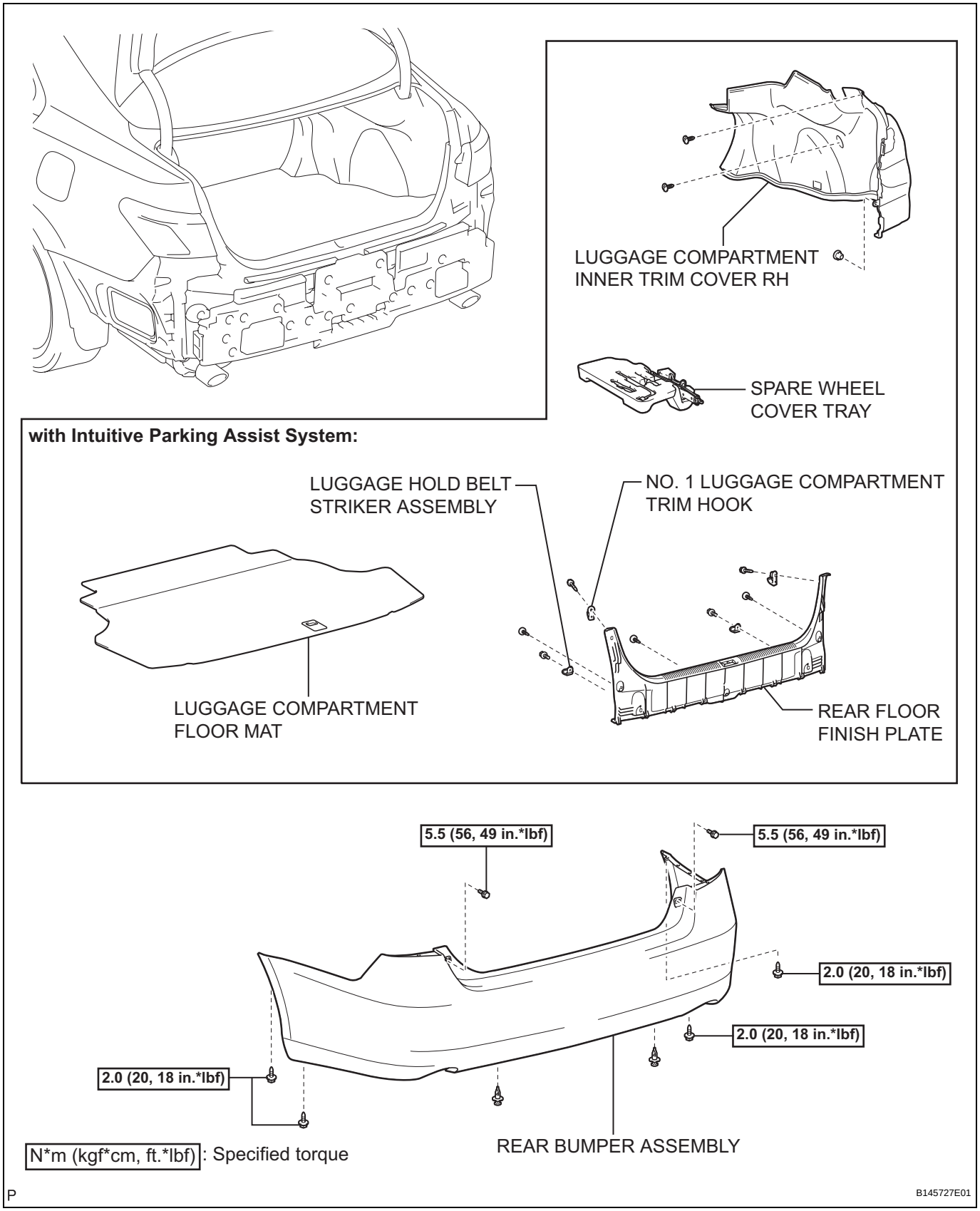

ET

with Intuitive Parking Assist System:

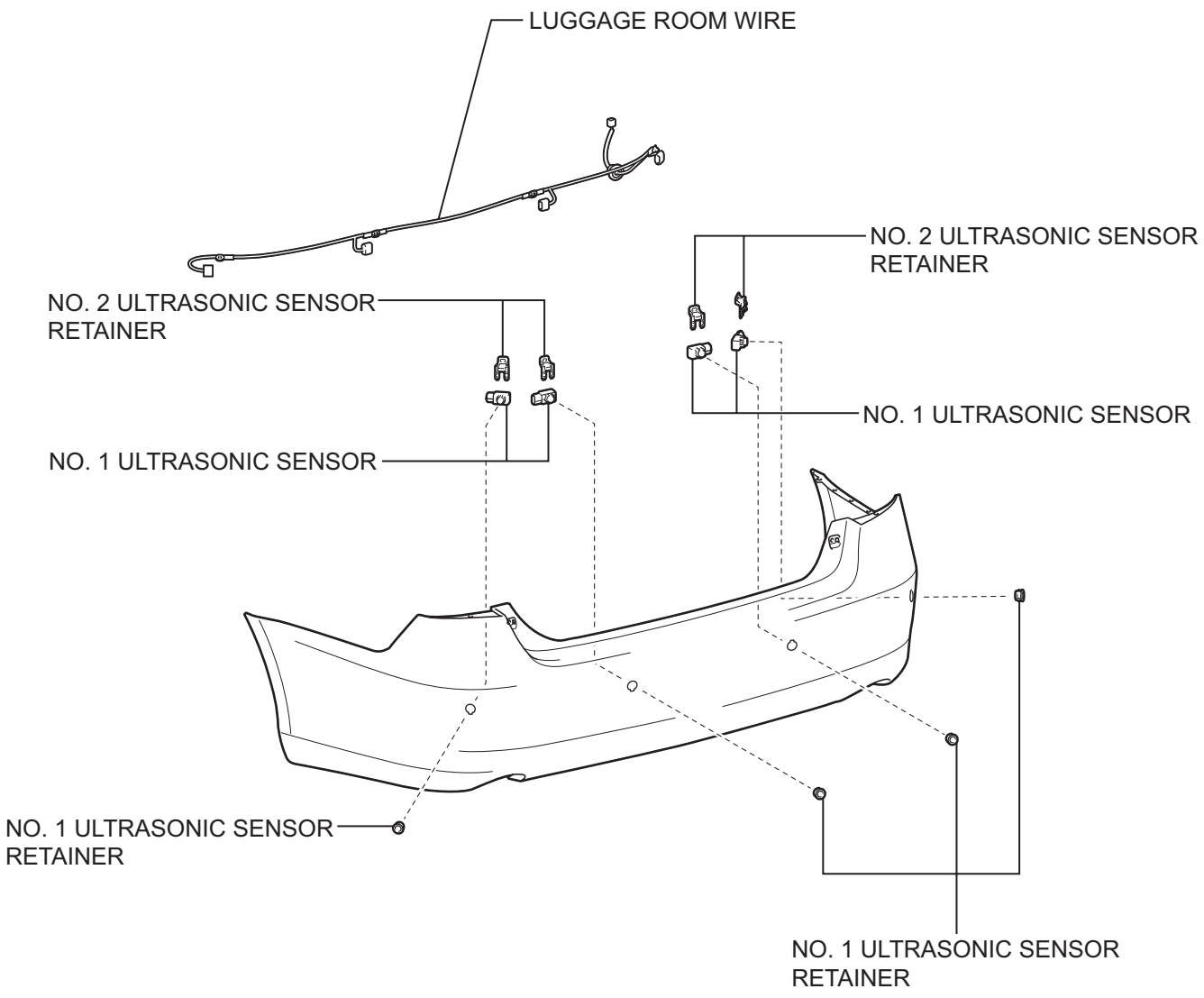

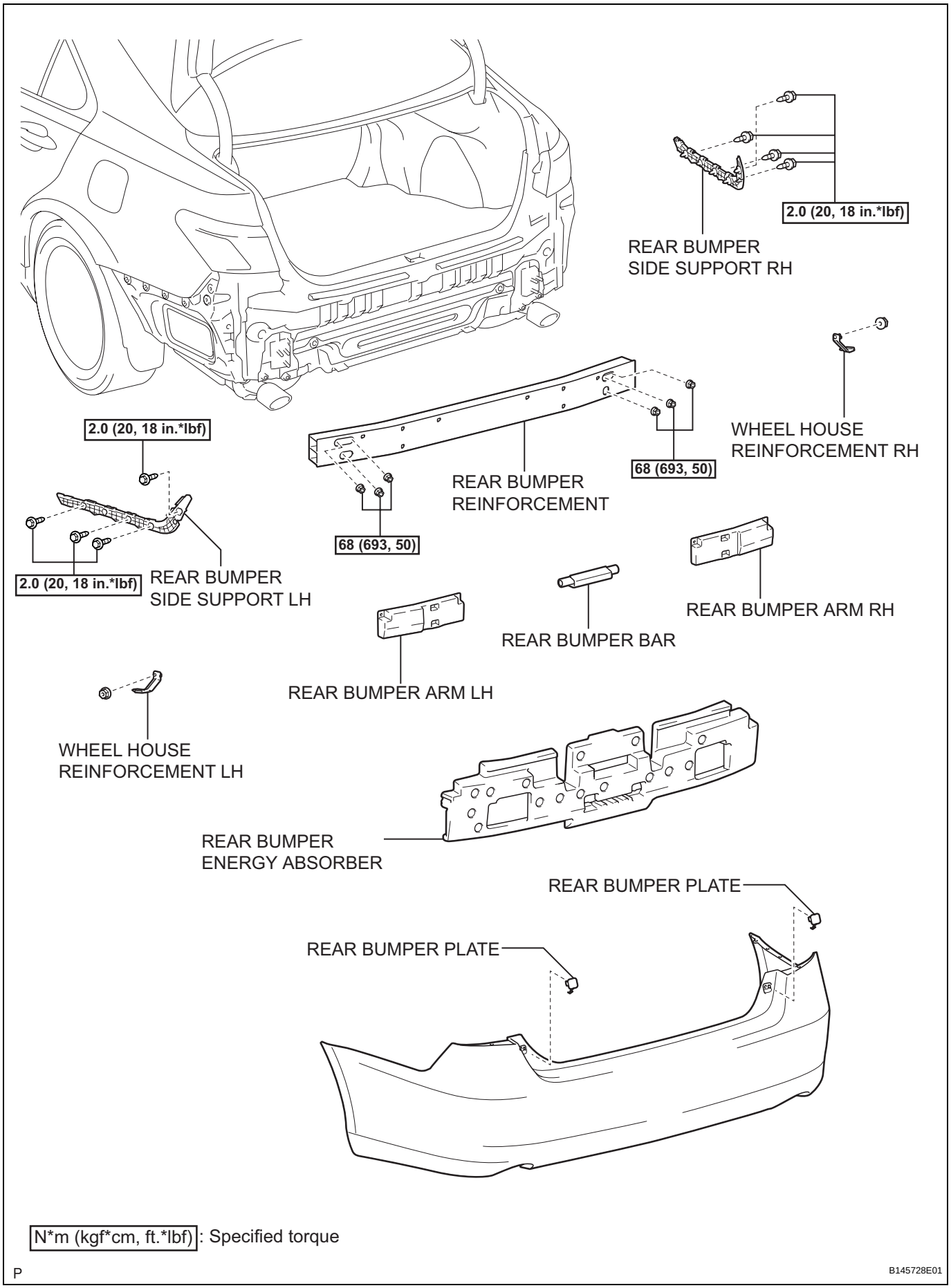

N*m (kgf*cm, ft.*lbf): Specified torque

P

B145728E01

ET

NAME PLATE

COMPONENTS

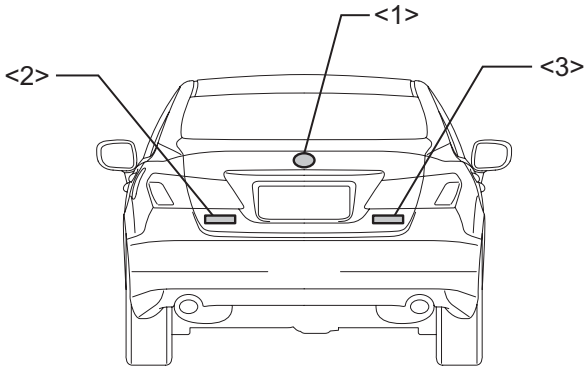

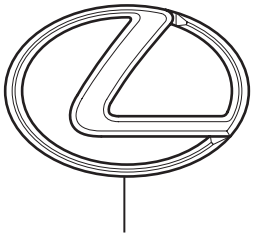

<1> SYMBOL EMBLEM

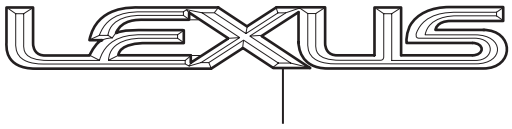

<2> NO. 7 LUGGAGE COMPARTMENT DOOR NAME PLATE

<3> NO. 2 LUGGAGE COMPARTMENT DOOR NAME PLATE

P

B145531E01

REMOVAL

HINT:
When removing the symbol emblem or name plate, heat the vehicle body and symbol emblem or name plate using a heat light.

Heating temperature

Item	Temperature
Vehicle Body	**40 to 60°C (104 to 140°F)**
Symbol Emblem	**20 to 30°C (68 to 86°F)**
Name Plate	**20 to 30°C (68 to 86°F)**

NOTICE:
Do not heat the vehicle body and symbol emblem or name plate excessively.

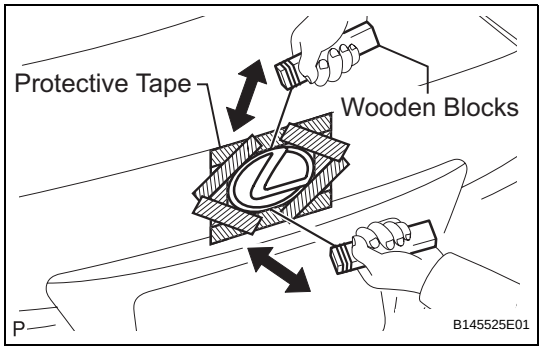

1. REMOVE SYMBOL EMBLEM
(a) Put protective tape around the symbol emblem.
(b) Insert a piano wire between the vehicle body and symbol emblem.
(c) Tie objects that can serve as handles (for example, wooden blocks) to both wire ends.
(d) Pull the piano wire and scrape off the double-sided tape that holds the symbol emblem to the vehicle body.
NOTICE:
- **If reusing the symbol emblem, take care not to damage the symbol emblem.**
- **Be careful not to damage the vehicle body.**

(e) Remove the symbol emblem.

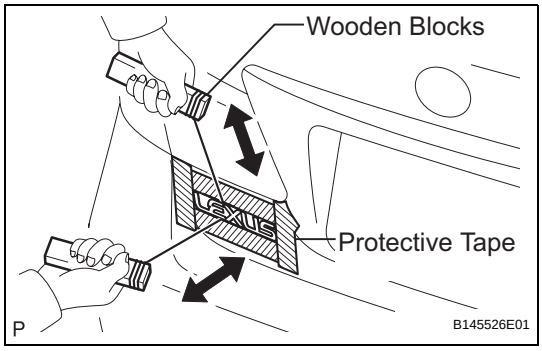

2. REMOVE NO. 7 LUGGAGE COMPARTMENT DOOR NAME PLATE
(a) Put protective tape around the name plate.
(b) Insert a piano wire between the vehicle body and name plate.
(c) Tie objects that can serve as handles (for example, wooden blocks) to both wire ends.
(d) Pull the piano wire and scrape off the double-sided tape that holds the name plate to the vehicle body.
NOTICE:
- **If reusing the name plate, take care not to damage the name plate.**
- **Be careful not to damage the vehicle body.**

(e) Remove the name plate.

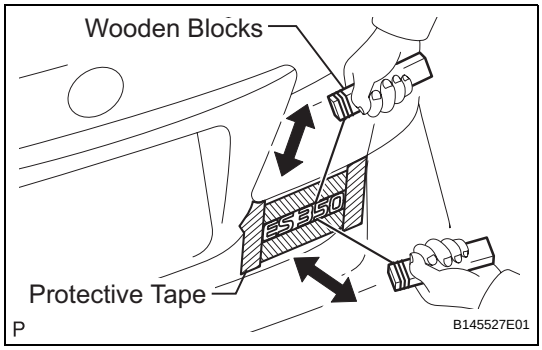

3. REMOVE NO. 2 LUGGAGE COMPARTMENT DOOR NAME PLATE
(a) Put protective tape around the name plate.
(b) Insert a piano wire between the vehicle body and name plate.
(c) Tie objects that can serve as handles (for example, wooden blocks) to both wire ends.

(d) Pull the piano wire and scrape off the double-sided tape that holds the name plate to the vehicle body.
NOTICE:
- **If reusing the name plate, take care not to damage the name plate.**
- **Be careful not to damage the vehicle body.**

(e) Remove the name plate.

FRONT DOOR BELT MOULDING

COMPONENTS

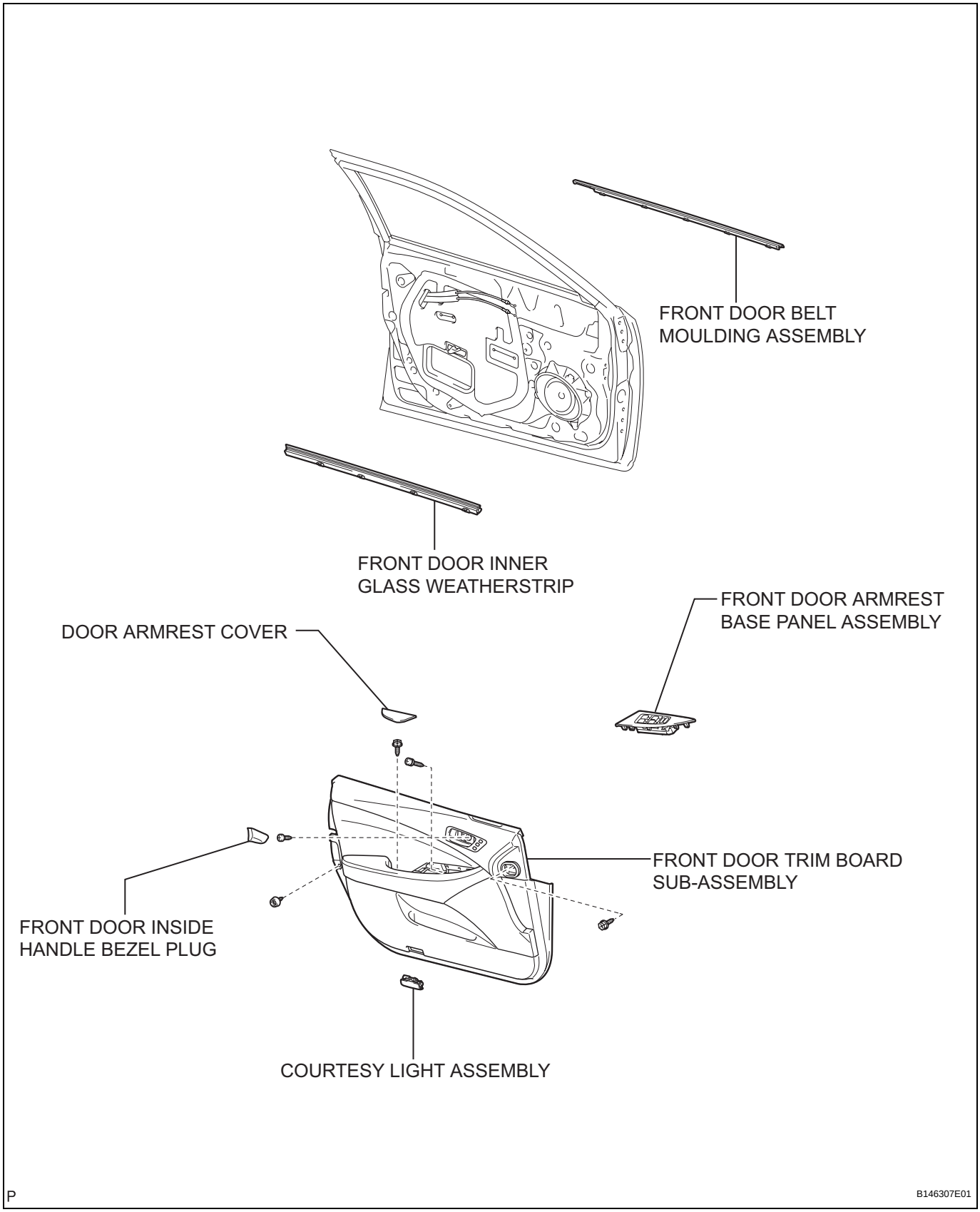

REMOVAL

1. **REMOVE FRONT DOOR INSIDE HANDLE BEZEL PLUG (See page ED-32)**
2. **REMOVE FRONT DOOR ARMREST BASE PANEL ASSEMBLY (See page ED-33)**
3. **REMOVE COURTESY LIGHT ASSEMBLY (See page ED-34)**
4. **REMOVE DOOR ARMREST COVER (See page ED-34)**
5. **REMOVE FRONT DOOR TRIM BOARD SUB-ASSEMBLY (See page ED-34)**
6. **REMOVE FRONT DOOR INNER GLASS WEATHERSTRIP (See page ED-35)**
7. **REMOVE FRONT DOOR BELT MOULDING ASSEMBLY**
   (a) Fully open the front door glass.
   (b) Put protective tape around the front door belt moulding assembly.

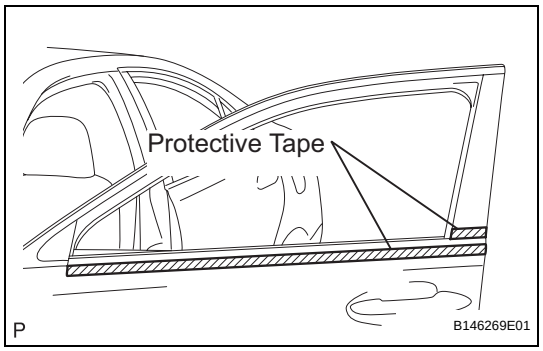

   (c) Using a moulding remover, disengage the 5 clips and remove the front door belt moulding assembly.
   HINT:
   Tape the remover tip before use.

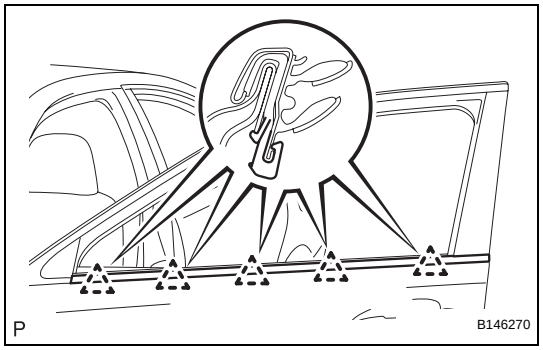

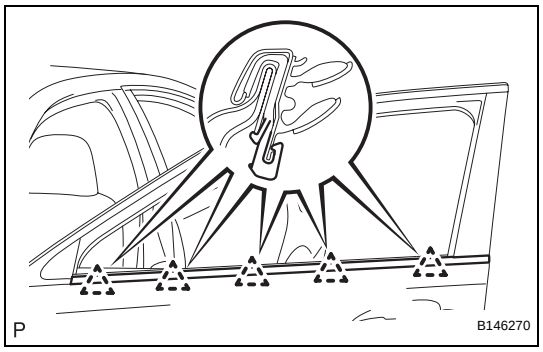

INSTALLATION

1. **INSTALL FRONT DOOR BELT MOULDING ASSEMBLY**
   (a) Engage the 5 clips and install the front door belt moulding assembly.
2. **INSTALL FRONT DOOR INNER GLASS WEATHERSTRIP (See page ED-52)**
3. **INSTALL FRONT DOOR TRIM BOARD SUB-ASSEMBLY (See page ED-52)**
4. **INSTALL DOOR ARMREST COVER (See page ED-53)**
5. **INSTALL COURTESY LIGHT ASSEMBLY (See page ED-53)**
6. **INSTALL FRONT DOOR ARMREST BASE PANEL ASSEMBLY (See page ED-53)**

7. **INSTALL FRONT DOOR INSIDE HANDLE BEZEL PLUG (See page ED-54)**

REAR DOOR BELT MOULDING

COMPONENTS

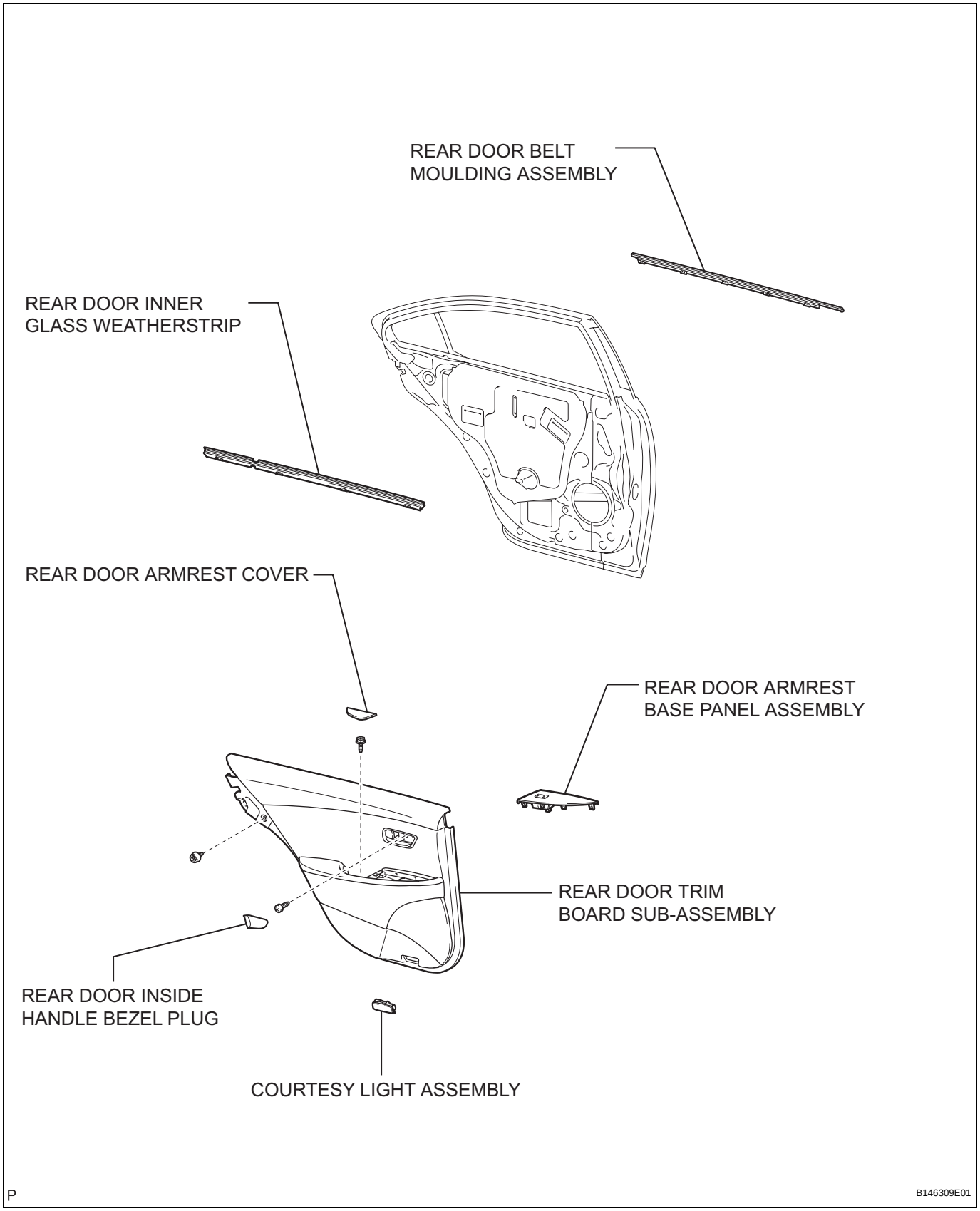

REMOVAL

1. **REMOVE REAR DOOR INSIDE HANDLE BEZEL PLUG (See page ED-58)**
2. **REMOVE REAR DOOR ARMREST BASE PANEL ASSEMBLY (See page ED-59)**
3. **REMOVE COURTESY LIGHT ASSEMBLY (See page ED-59)**
4. **REMOVE REAR DOOR ARMREST COVER (See page ED-59)**
5. **REMOVE REAR DOOR TRIM BOARD SUB-ASSEMBLY (See page ED-60)**
6. **REMOVE REAR DOOR INNER GLASS WEATHERSTRIP (See page ED-61)**
7. **REMOVE REAR DOOR BELT MOULDING ASSEMBLY**
   (a) Fully open the rear door glass.
   (b) Put protective tape around the rear door belt moulding assembly.

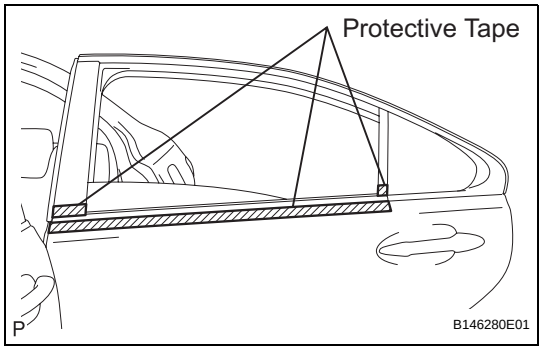

   (c) Using a moulding remover, disengage the 5 clips and remove the rear door belt moulding assembly.
   HINT:
   Tape the remover tip before use.

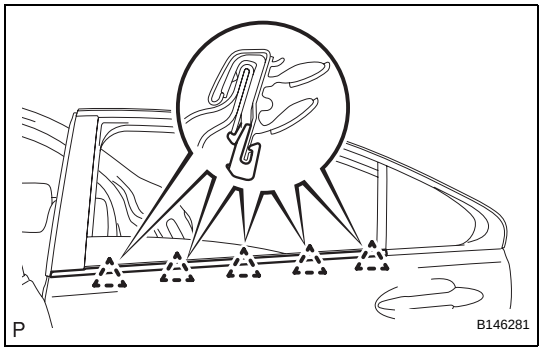

INSTALLATION

1. **INSTALL REAR DOOR BELT MOULDING ASSEMBLY**
   (a) Engage the 5 clips and install the rear door belt moulding assembly.
2. **INSTALL REAR DOOR INNER GLASS WEATHERSTRIP (See page ED-76)**
3. **INSTALL REAR DOOR TRIM BOARD SUB-ASSEMBLY (See page ED-76)**
4. **INSTALL REAR DOOR ARMREST COVER (See page ED-77)**
5. **INSTALL COURTESY LIGHT ASSEMBLY (See page ED-77)**
6. **INSTALL REAR DOOR ARMREST BASE PANEL ASSEMBLY (See page ED-78)**

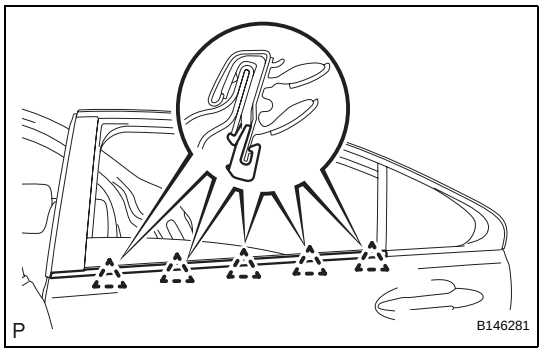

7. **INSTALL REAR DOOR INSIDE HANDLE BEZEL PLUG (See page ED-78)**

ROOF DRIP SIDE FINISH MOULDING

COMPONENTS

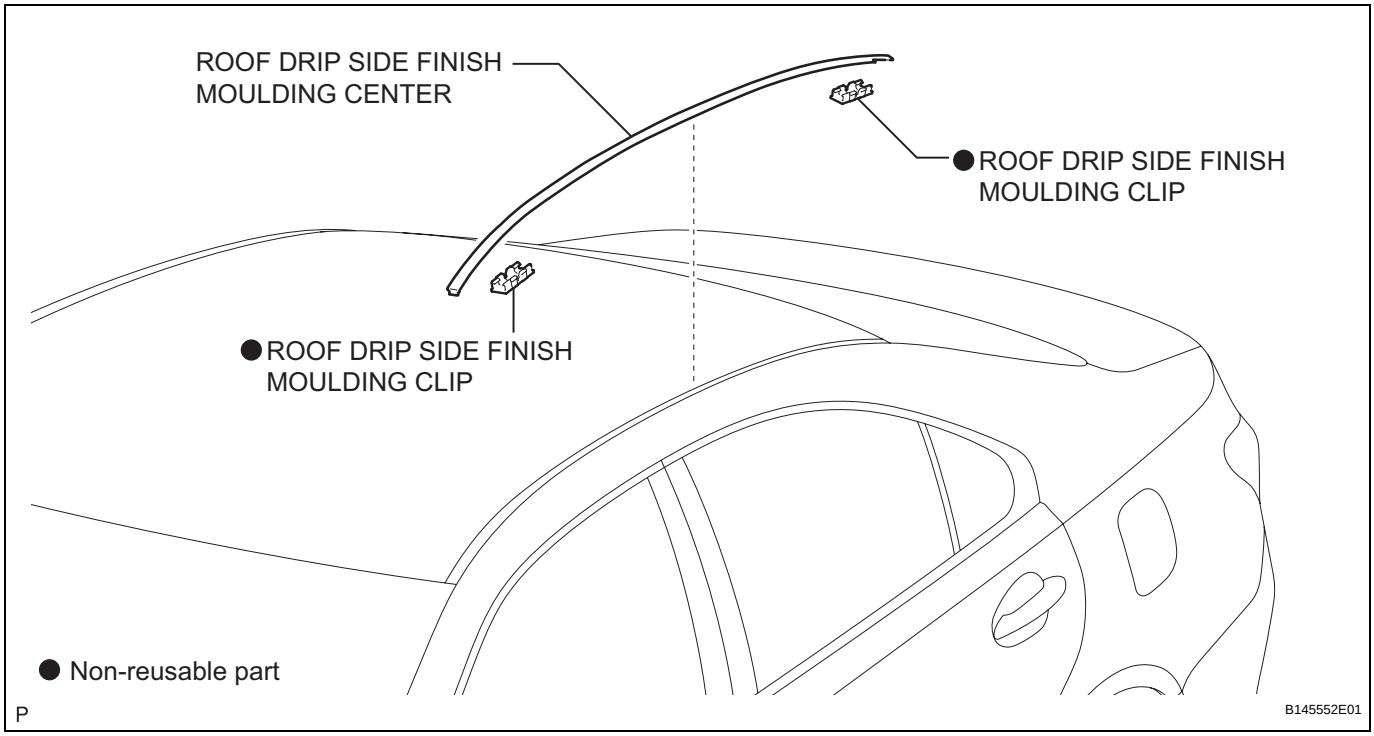

REMOVAL

1. REMOVE ROOF DRIP SIDE FINISH MOULDING CENTER

HINT:
When removing the roof drip side finish moulding center, heat the body and roof drip side finish moulding center using a heat light.

Heating temperature

Item	Temperature
Vehicle Body	**40 to 60°C (104 to 140°F)**
Moulding	**20 to 30°C (68 to 86°F)**

NOTICE:
Do not heat the vehicle body and moulding excessively.

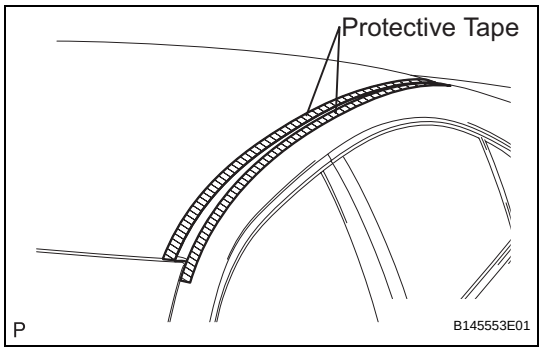

(a) Put protective tape around the roof drip side finish moulding center.

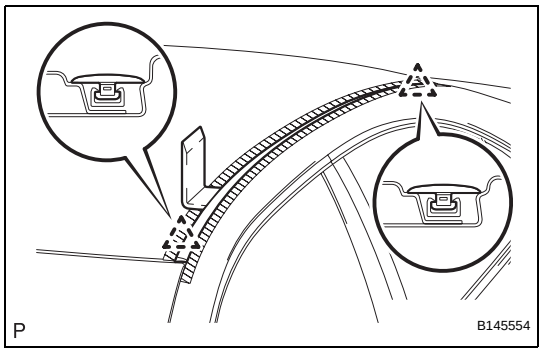

(b) Using a moulding remover, disengage the 2 clips.
NOTICE:
- **Do not remove the clips.**
- **If the clips are damaged or dropped off, replace them with new ones.**

(c) Peel off the double-sided tape and remove the roof drip side finish moulding center.

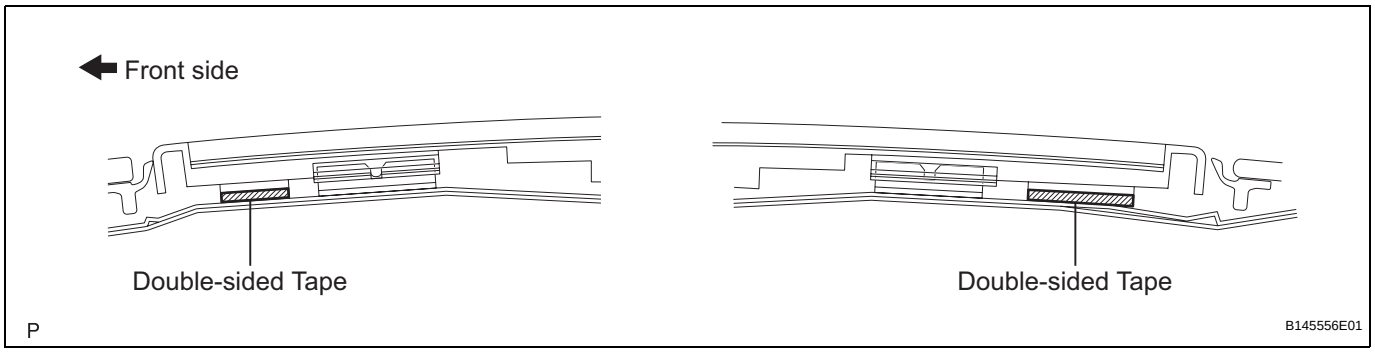

2. REMOVE ROOF DRIP SIDE FINISH MOULDING CLIP

HINT:
Perform the following procedure if replacing the roof drip side finish moulding clips.

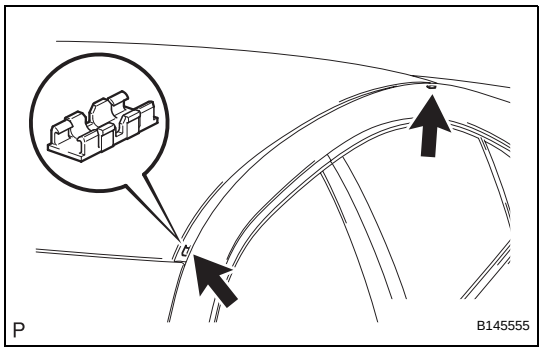

(a) Remove the 2 roof drip side finish moulding clips.

OUTSIDE MOULDING

COMPONENTS

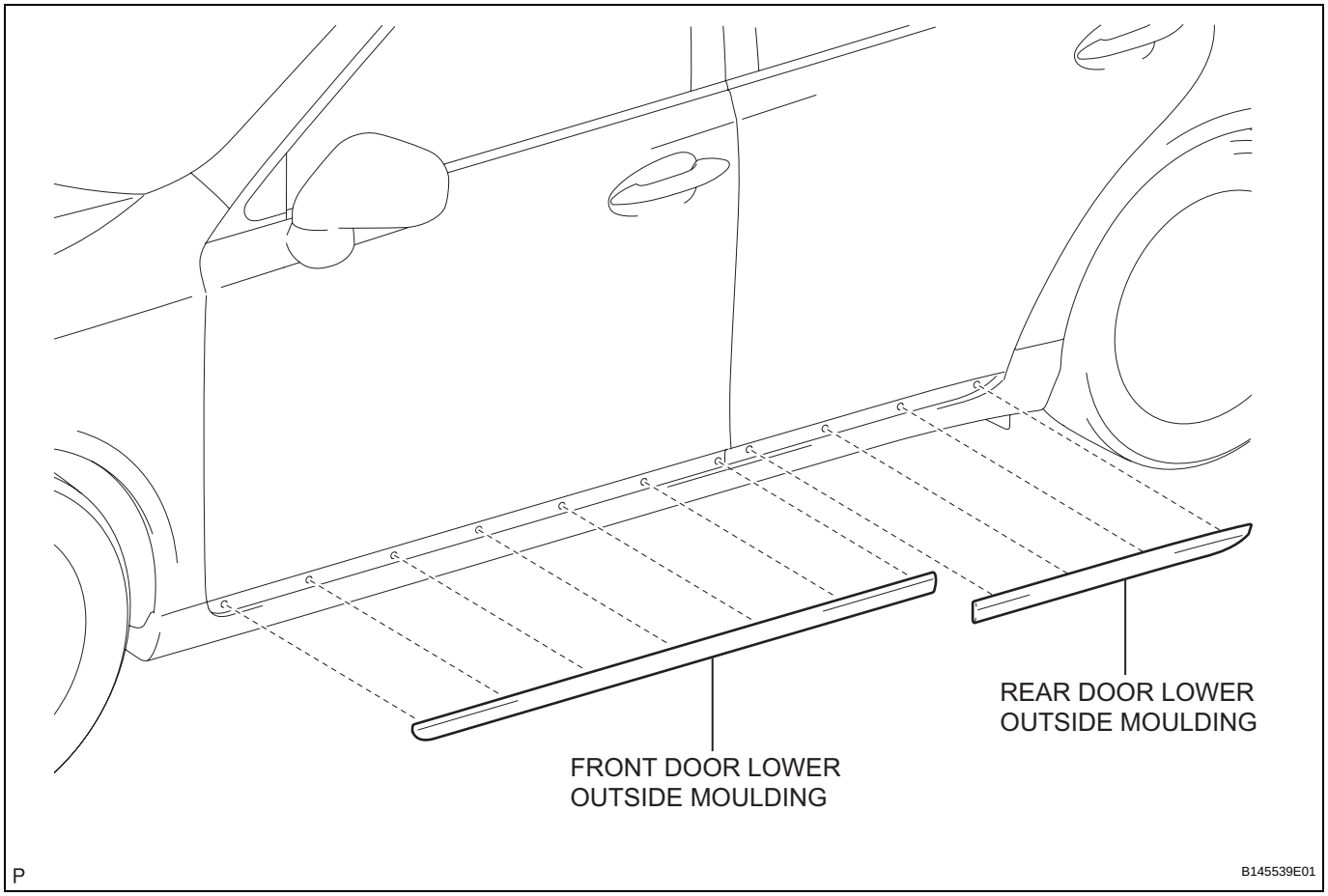

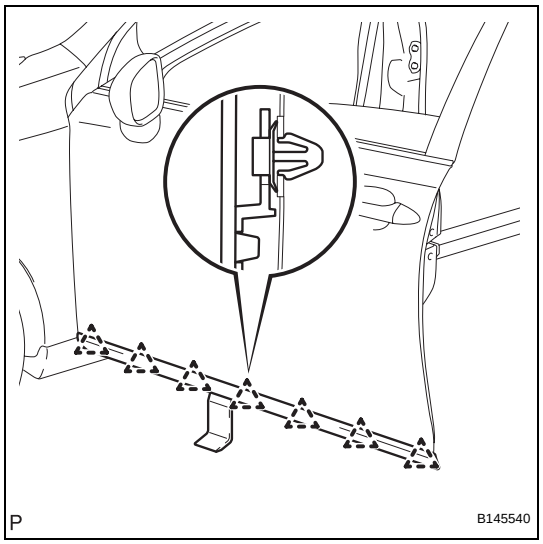

REMOVAL

1. REMOVE FRONT DOOR LOWER OUTSIDE MOULDING

(a) Using a moulding remover, disengage the 7 clips.

(b) Peel off the double-sided tape and remove the front door lower outside moulding.

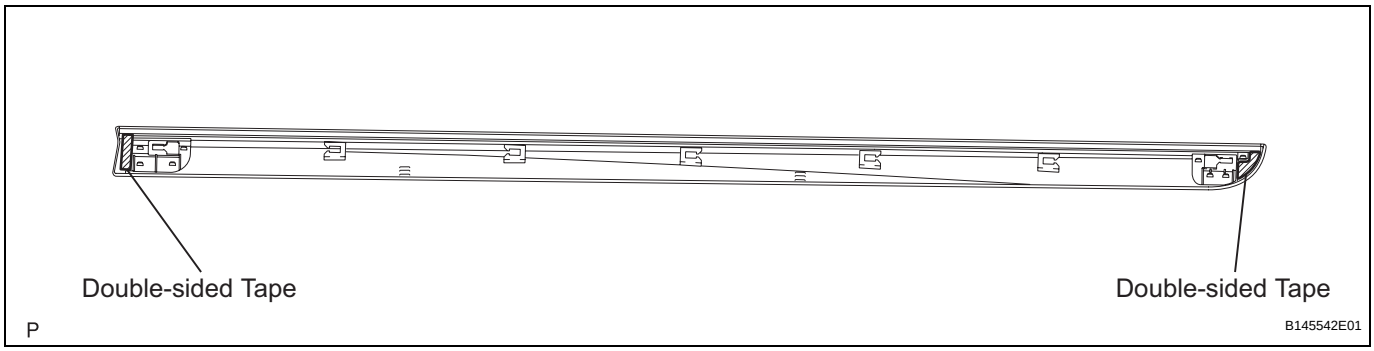

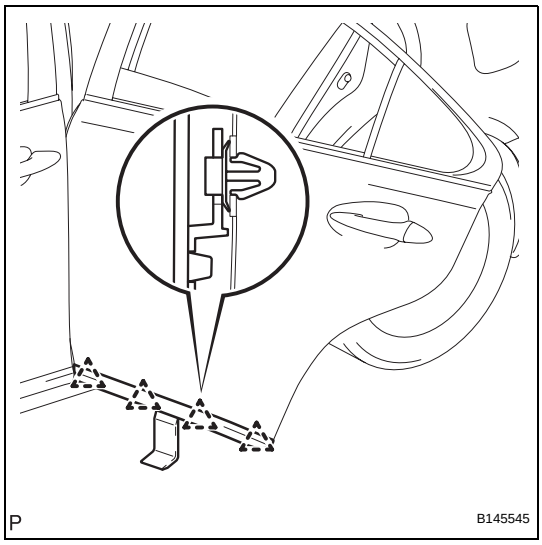

2. REMOVE REAR DOOR LOWER OUTSIDE MOULDING

(a) Using a moulding remover, disengage the 4 clips.

(b) Peel off the double-sided tape and remove the rear door lower outside moulding.

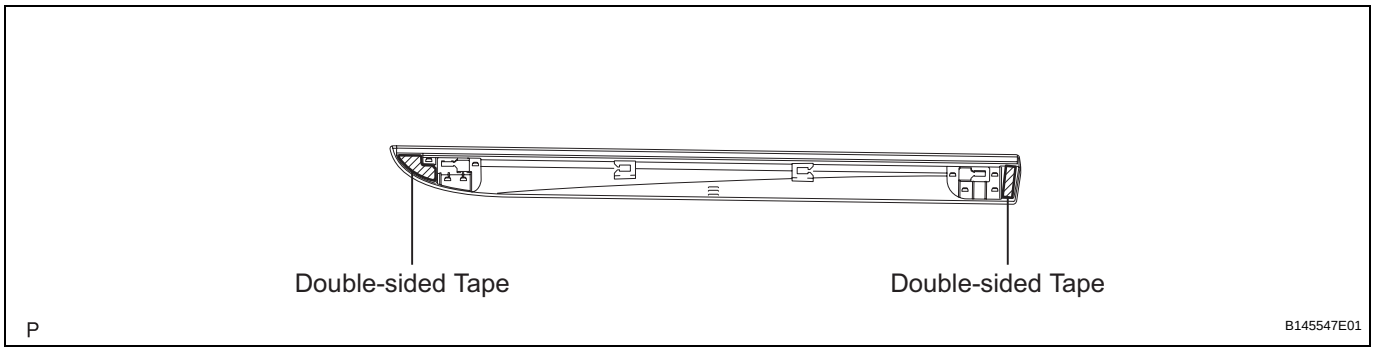

ROCKER PANEL MOULDING

COMPONENTS

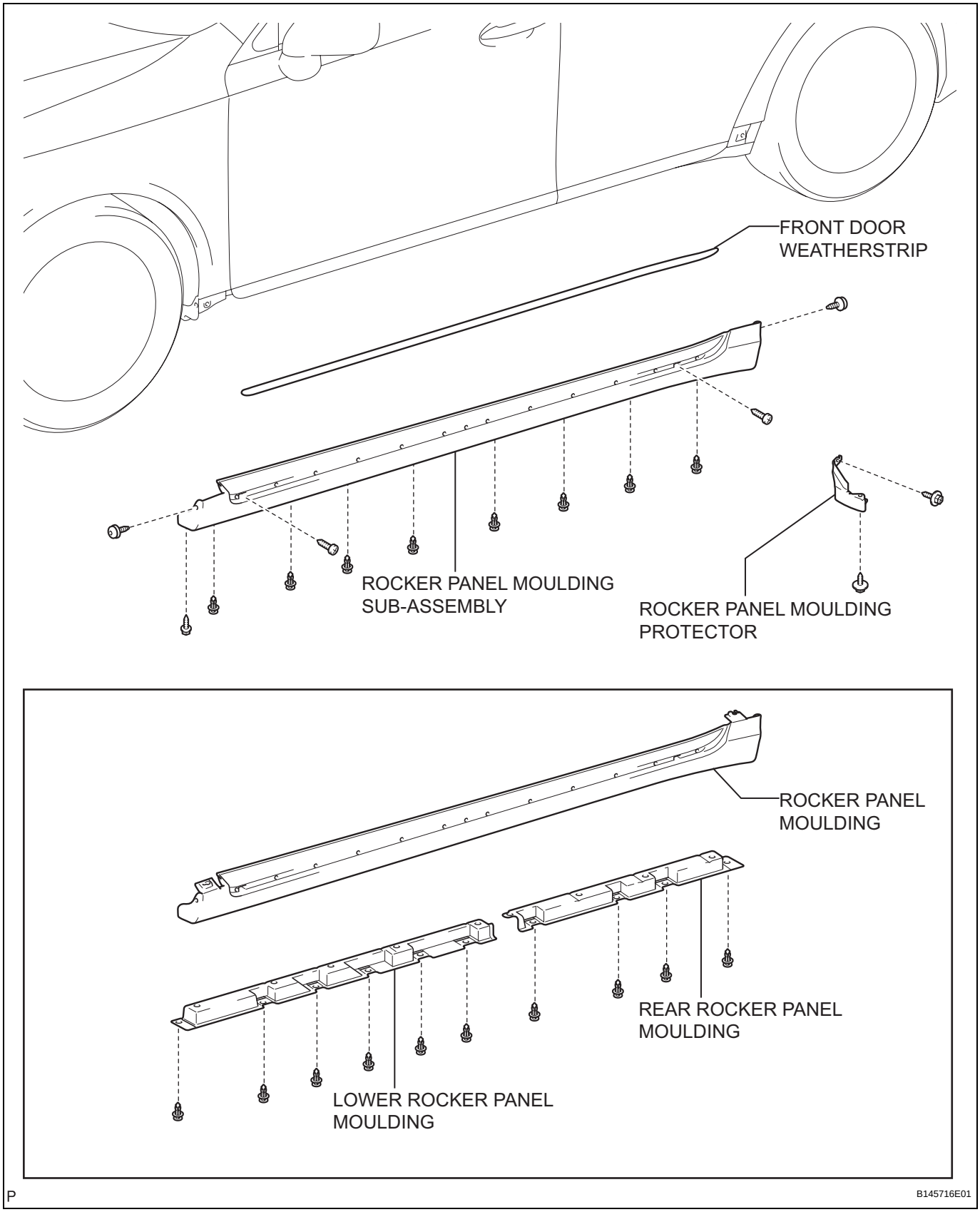

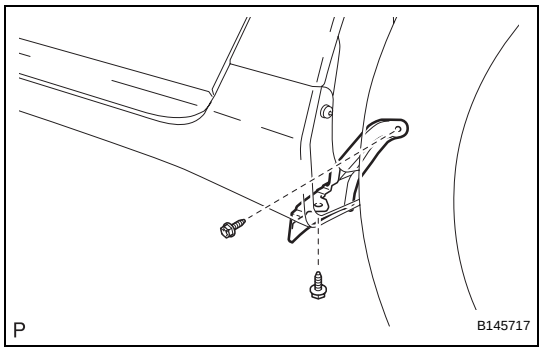

REMOVAL

1. REMOVE ROCKER PANEL MOULDING PROTECTOR

(a) Remove the 2 screws and rocker panel moulding protector.

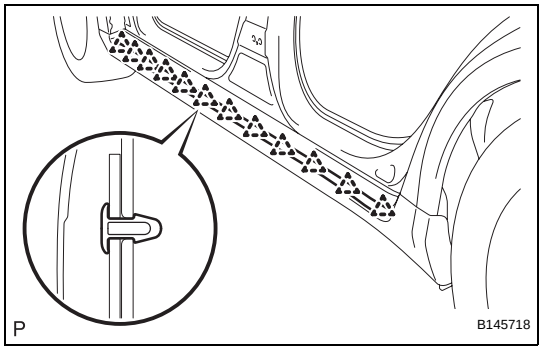

2. REMOVE FRONT DOOR WEATHERSTRIP

(a) Disengage the 12 claws and remove the front door weatherstrip.

3. REMOVE ROCKER PANEL MOULDING SUB-ASSEMBLY

(a) Put protective tape around the rocker panel moulding.

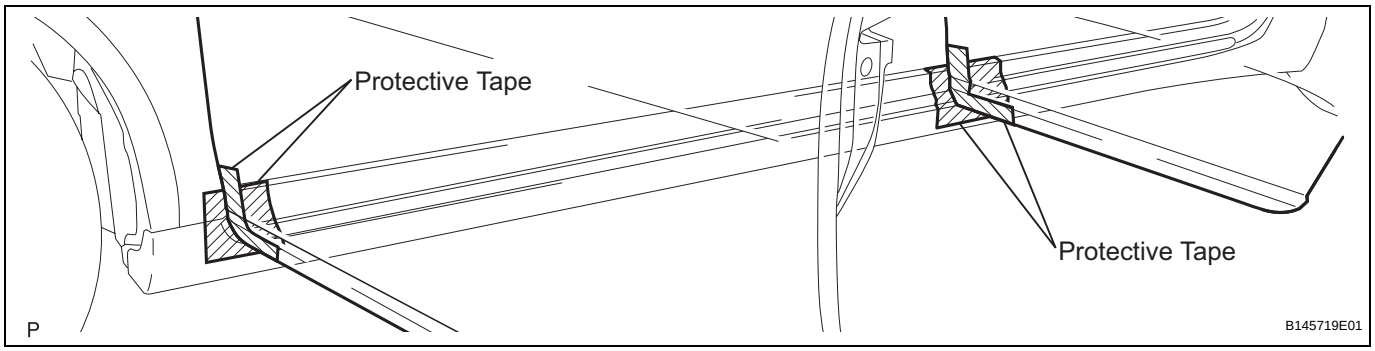

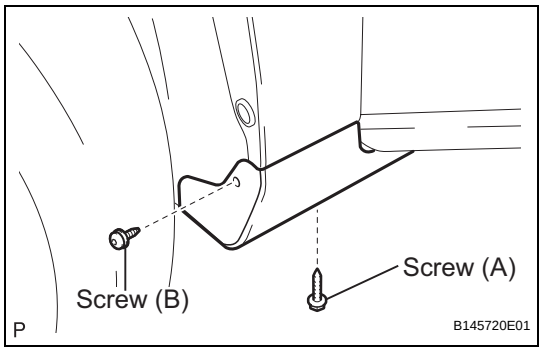

(b) Remove the screw (A).

(c) Using a 4 mm hexagon wrench, remove the screw (B).

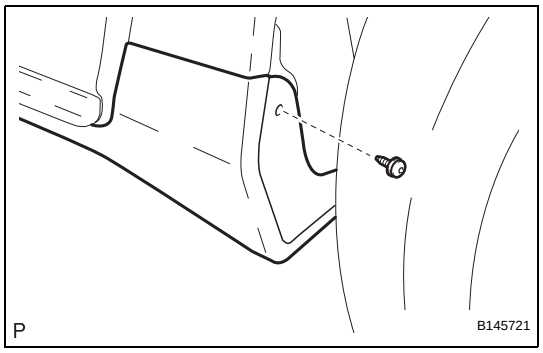

(d) Using a 4 mm hexagon wrench, remove the screw.

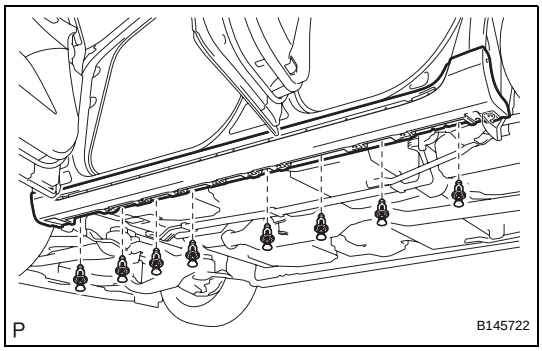

(e) Remove the 8 clips.

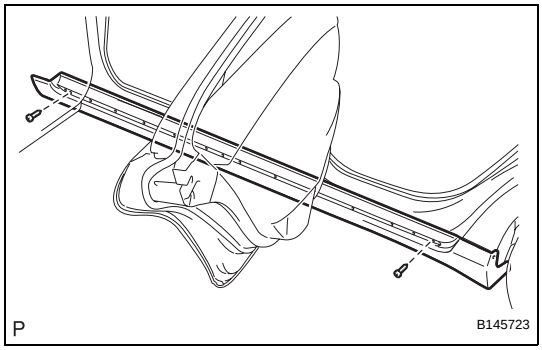

(f) Remove the 2 screws.

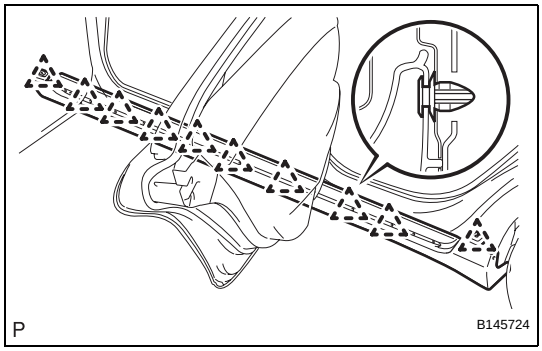

(g) Disengage the 10 clips and remove the rocker panel moulding sub-assembly.

4. REMOVE REAR ROCKER PANEL MOULDING

(a) Remove the 4 clips.

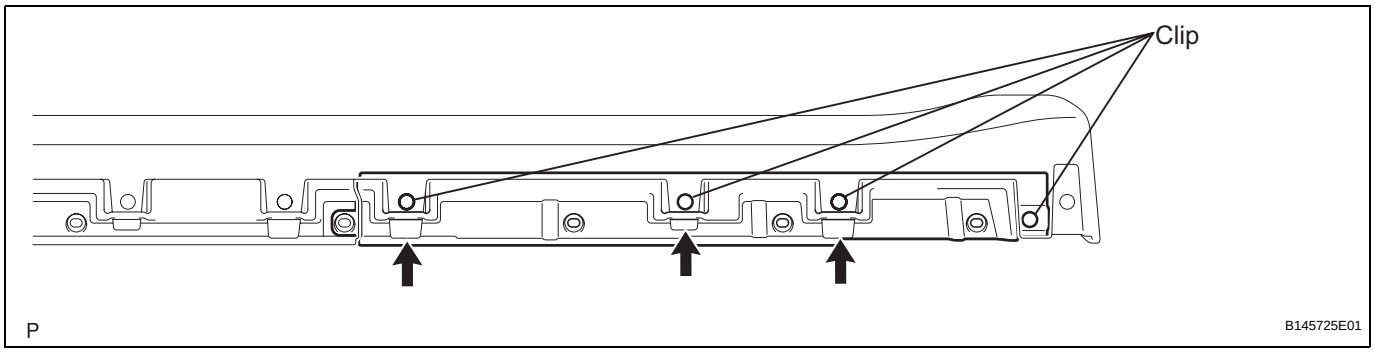

(b) Disengage the 3 guides and remove the rear rocker panel moulding.

5. REMOVE LOWER ROCKER PANEL MOULDING

(a) Remove the 6 clips.

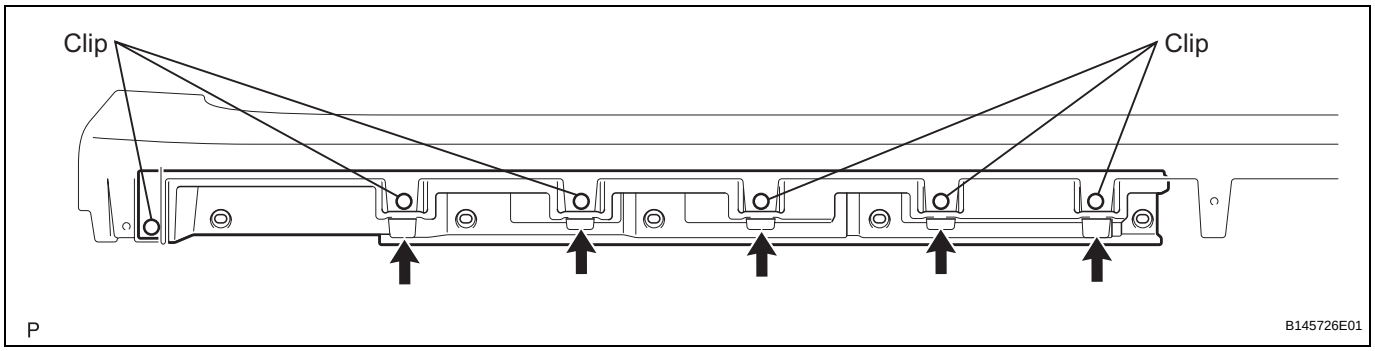

(b) Disengage the 5 guides and remove the lower rocker panel moulding.

6. REMOVE ROCKER PANEL MOULDING

FRONT DOOR WINDOW FRAME MOULDING

COMPONENTS

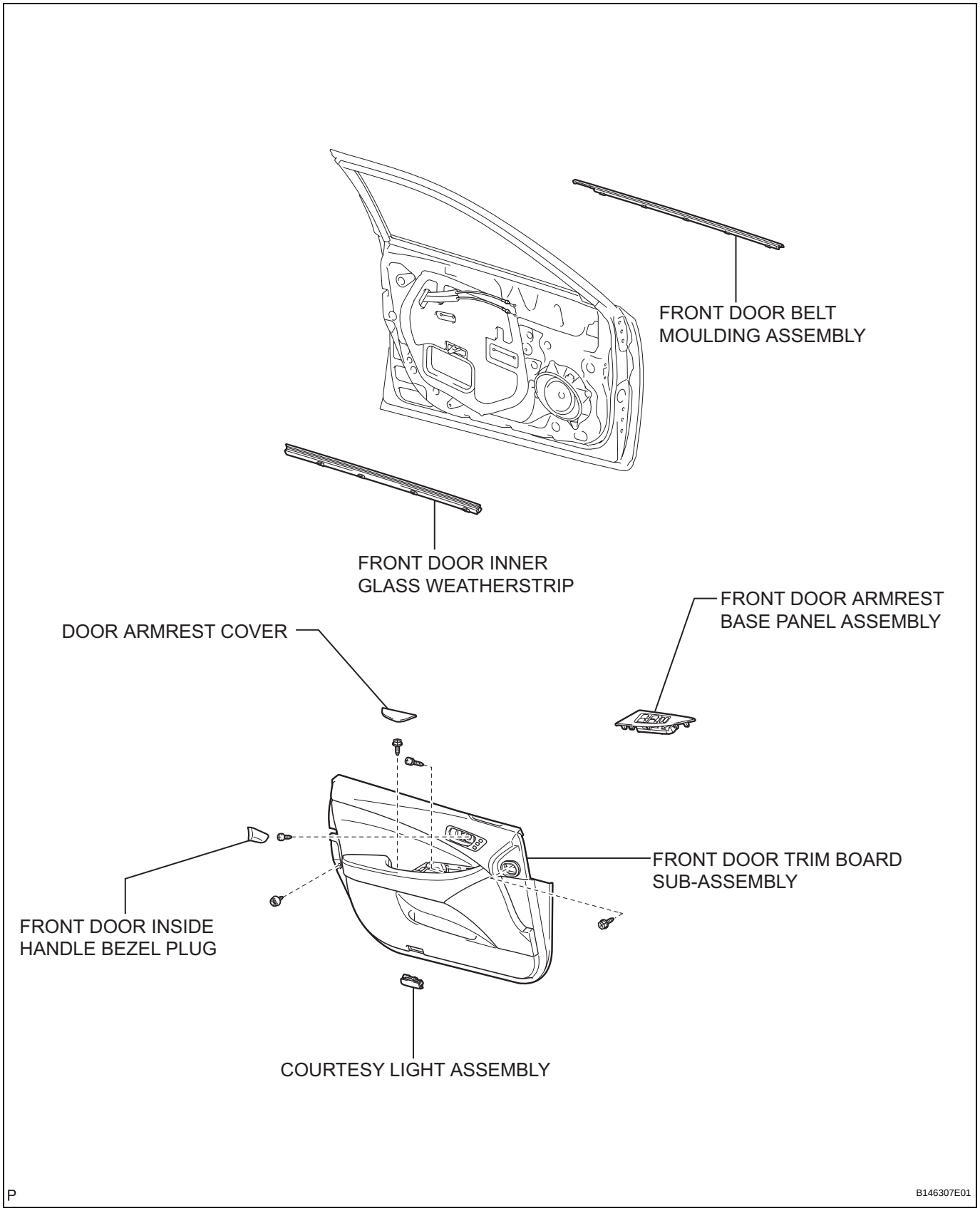

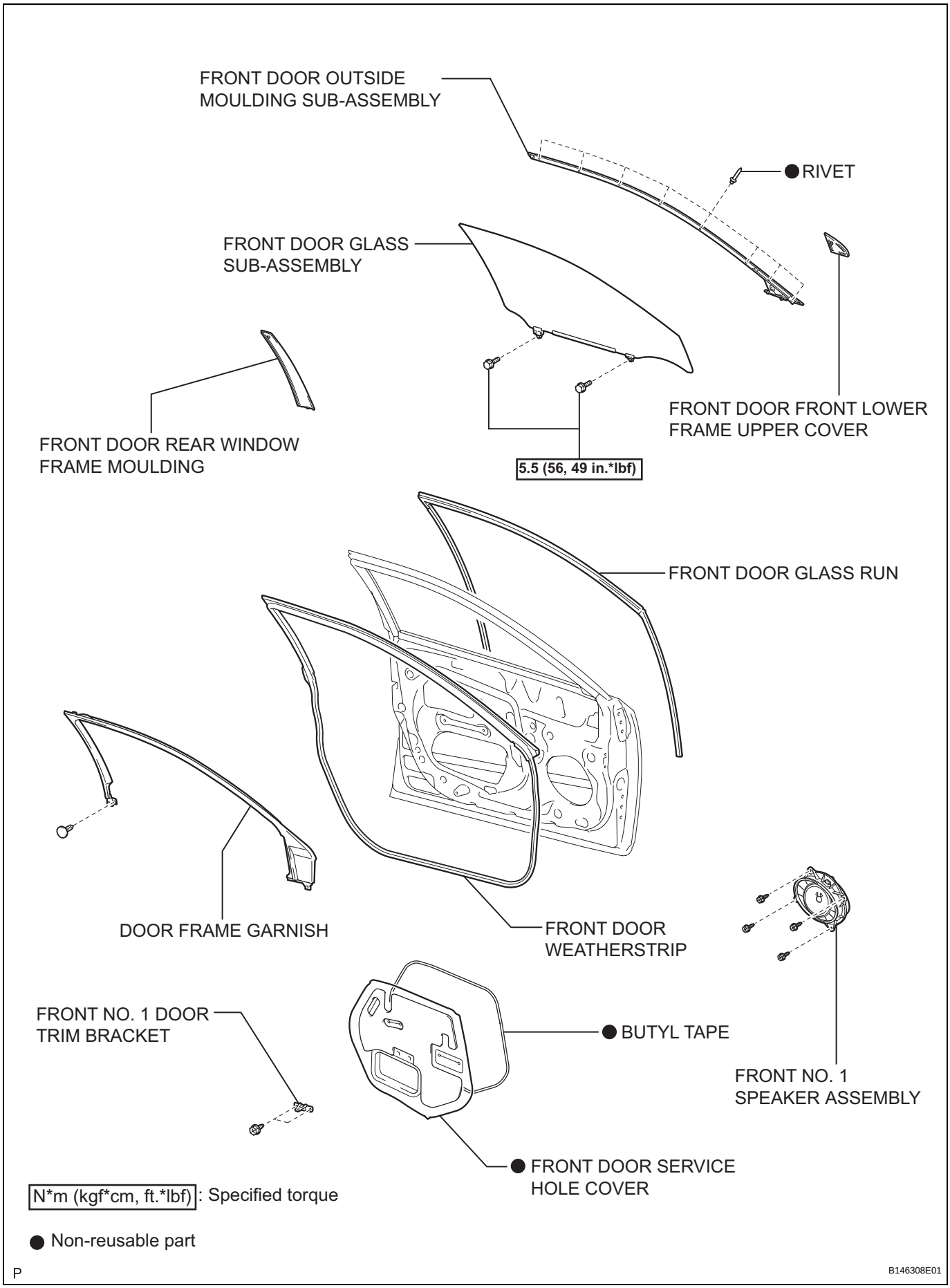
FRONT DOOR OUTSIDE MOULDING SUB-ASSEMBLY
● RIVET
FRONT DOOR GLASS SUB-ASSEMBLY
FRONT DOOR FRONT LOWER FRAME UPPER COVER
FRONT DOOR REAR WINDOW FRAME MOULDING
5.5 (56, 49 in.*lbf)
FRONT DOOR GLASS RUN
DOOR FRAME GARNISH
FRONT DOOR WEATHERSTRIP
FRONT NO. 1 DOOR TRIM BRACKET
● BUTYL TAPE
FRONT NO. 1 SPEAKER ASSEMBLY
● FRONT DOOR SERVICE HOLE COVER
N*m (kgf*cm, ft.*lbf): Specified torque
● Non-reusable part
P
B146308E01

ET

REAR DOOR WINDOW FRAME MOULDING

COMPONENTS

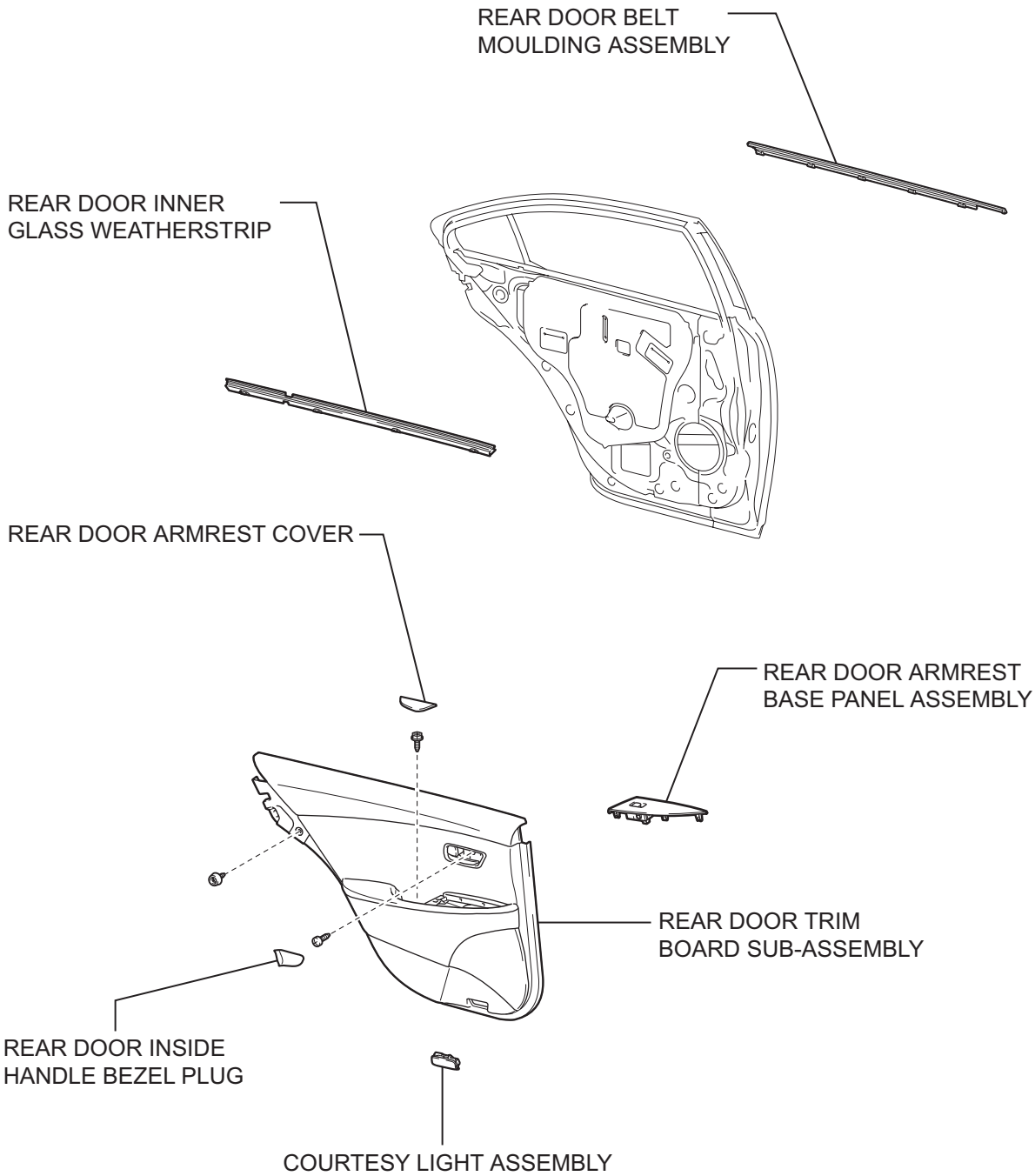

P

B146309E01

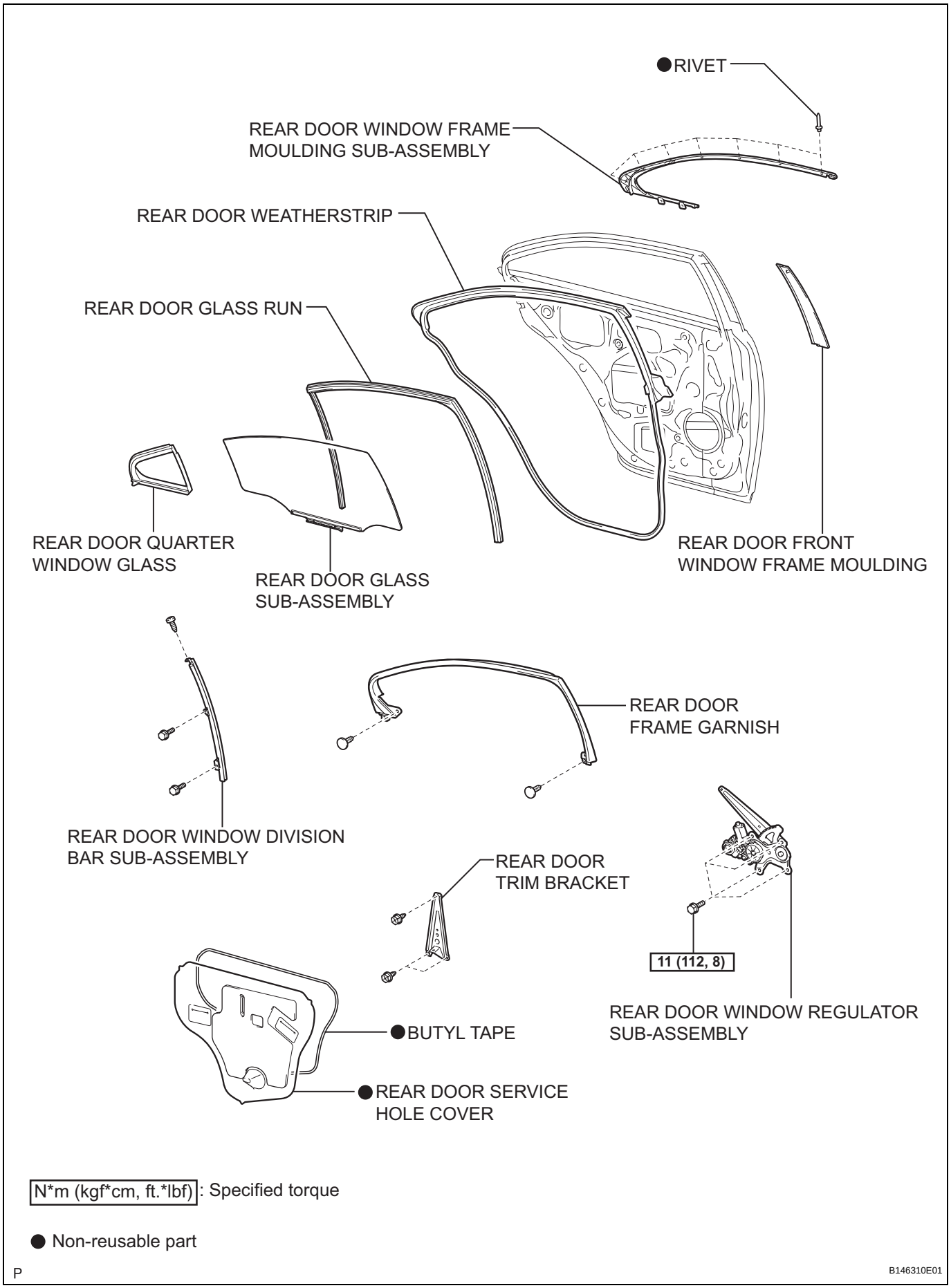
●RIVET
REAR DOOR WINDOW FRAME MOULDING SUB-ASSEMBLY
REAR DOOR WEATHERSTRIP
REAR DOOR GLASS RUN
REAR DOOR QUARTER WINDOW GLASS
REAR DOOR GLASS SUB-ASSEMBLY
REAR DOOR FRONT WINDOW FRAME MOULDING
REAR DOOR FRAME GARNISH
REAR DOOR WINDOW DIVISION BAR SUB-ASSEMBLY
REAR DOOR TRIM BRACKET
11 (112, 8)
REAR DOOR WINDOW REGULATOR SUB-ASSEMBLY
●BUTYL TAPE
●REAR DOOR SERVICE HOLE COVER
N*m (kgf*cm, ft.*lbf): Specified torque
● Non-reusable part
P
B146310E01

LUGGAGE COMPARTMENT DOOR GARNISH

COMPONENTS

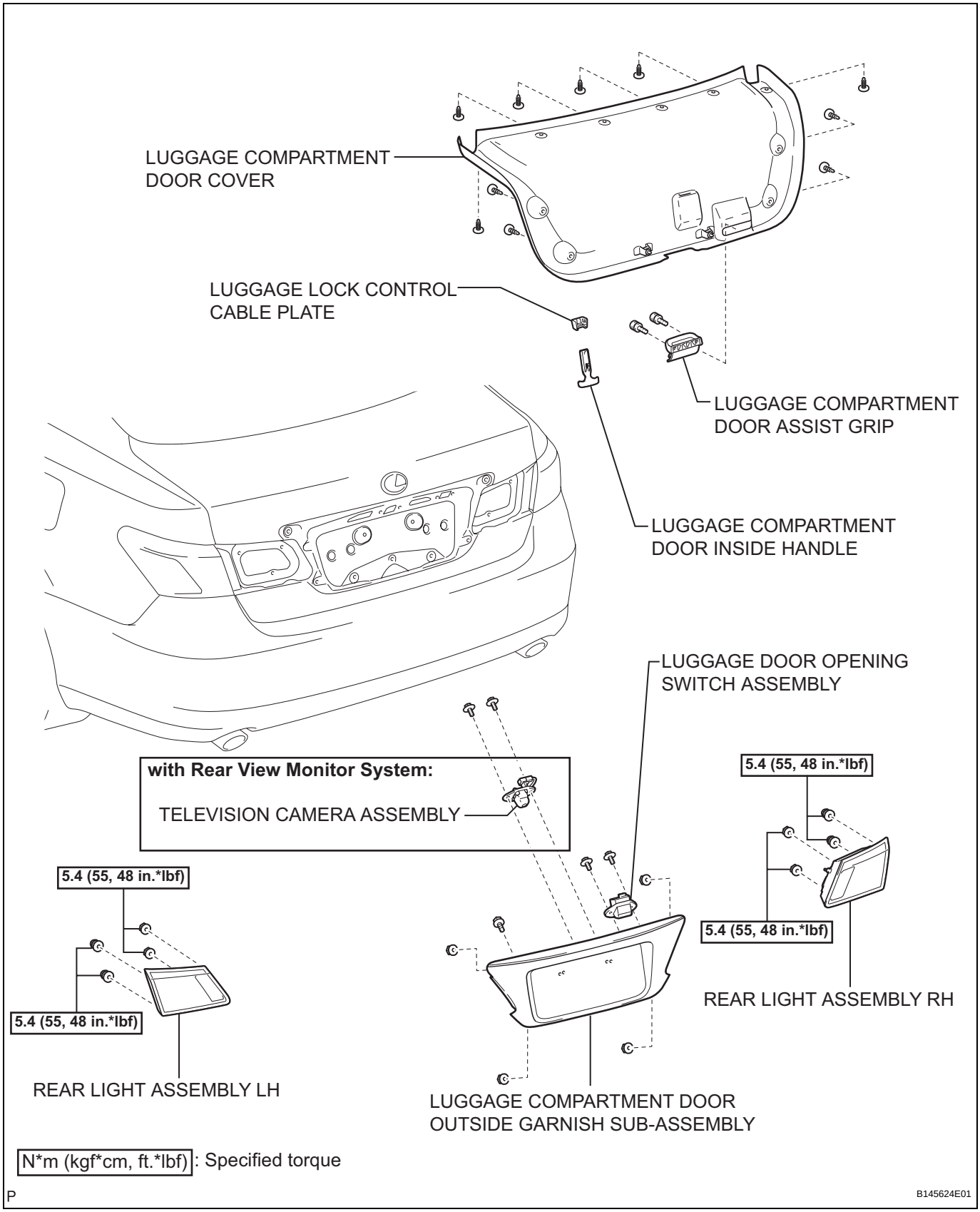

ET

REMOVAL

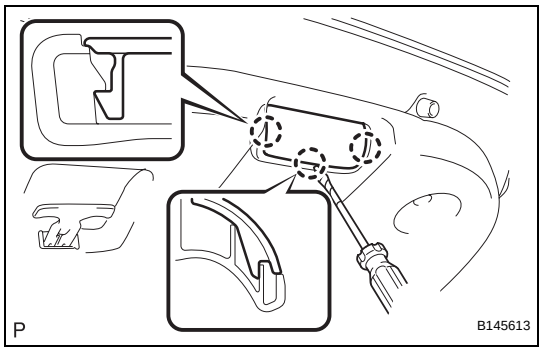

1. REMOVE LUGGAGE COMPARTMENT DOOR ASSIST GRIP

(a) Using a screwdriver, disengage the 3 claws and open the assist grip cover.
HINT:
Tape the screwdriver tip before use.

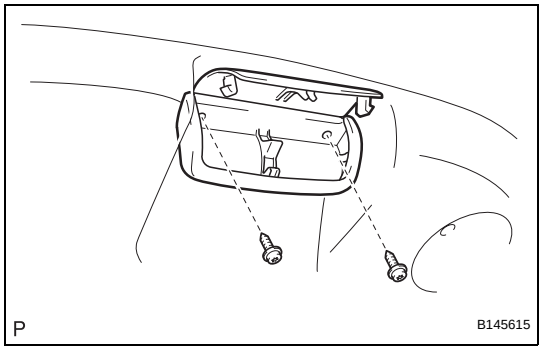

(b) Remove the 2 screws and luggage compartment door assist grip.

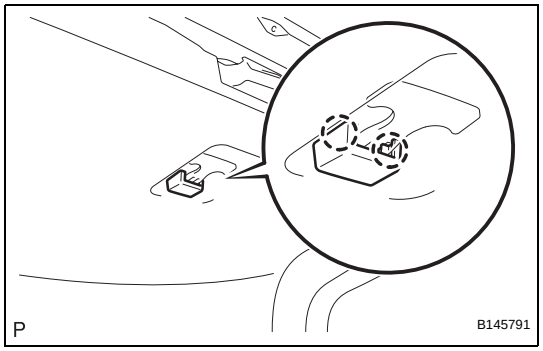

2. REMOVE LUGGAGE LOCK CONTROL CABLE PLATE

(a) Disengage the 2 claws and remove the luggage lock control cable plate.

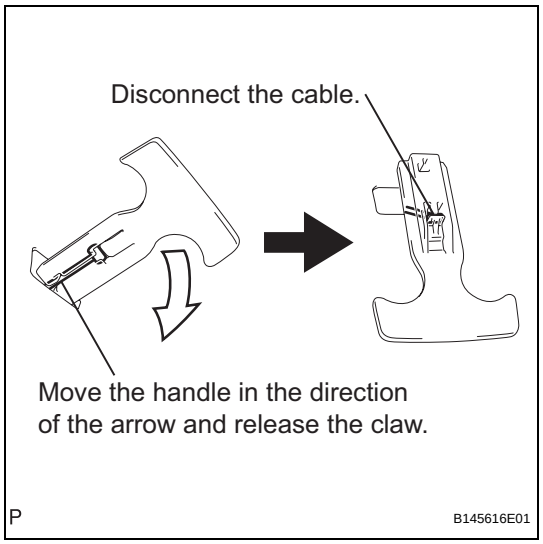

3. REMOVE LUGGAGE COMPARTMENT DOOR INSIDE HANDLE

(a) Disconnect the cable as shown in the illustration, then remove the luggage compartment door inside handle.

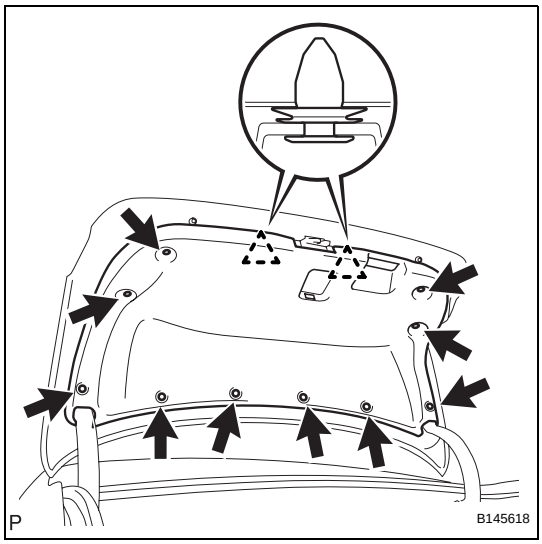

4. REMOVE LUGGAGE COMPARTMENT DOOR COVER
(a) Using a clip remover, remove the 10 clips.
(b) Disengage the 2 clips and luggage compartment door cover.

5. REMOVE REAR LIGHT ASSEMBLY LH (See page LI-149)

6. REMOVE REAR LIGHT ASSEMBLY RH

7. REMOVE LUGGAGE DOOR OPENING SWITCH ASSEMBLY (See page DL-203)

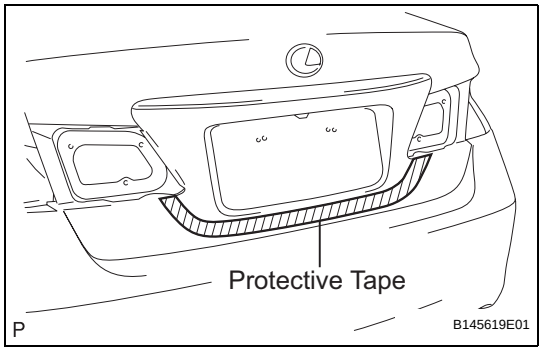

8. REMOVE LUGGAGE COMPARTMENT DOOR OUTSIDE GARNISH SUB-ASSEMBLY (w/o Rear View Monitor System)
(a) Put protective tape around the luggage compartment door outside garnish sub-assembly.

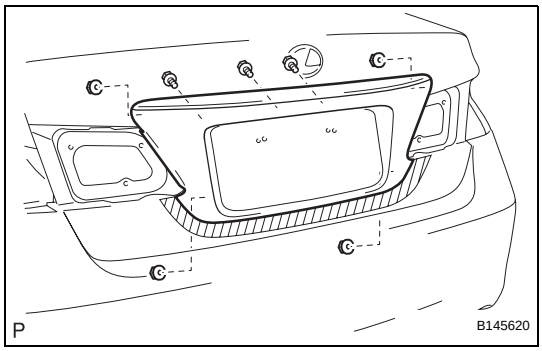

(b) Remove the 3 bolts and 4 nuts.

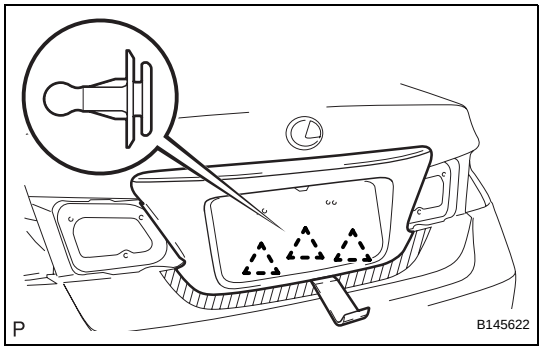

(c) Using a moulding remover, disengage the 3 clips and remove the luggage compartment door outside garnish sub-assembly.

9. REMOVE TELEVISION CAMERA ASSEMBLY (w/ Rear View Monitor System) (See page PM-105)

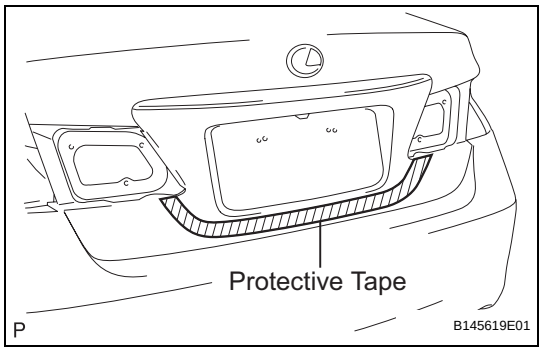

10. REMOVE LUGGAGE COMPARTMENT DOOR OUTSIDE GARNISH SUB-ASSEMBLY (w/ Rear View Monitor System)

(a) Put protective tape around the luggage compartment door outside garnish sub-assembly.

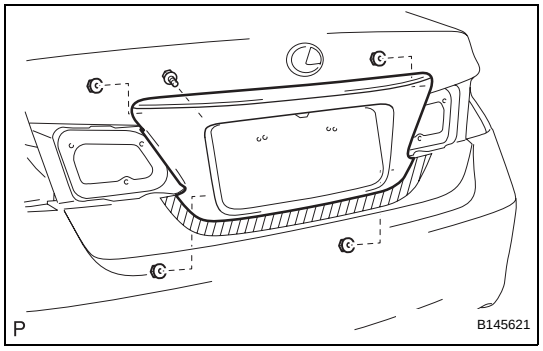

(b) Remove the bolt and 4 nuts.

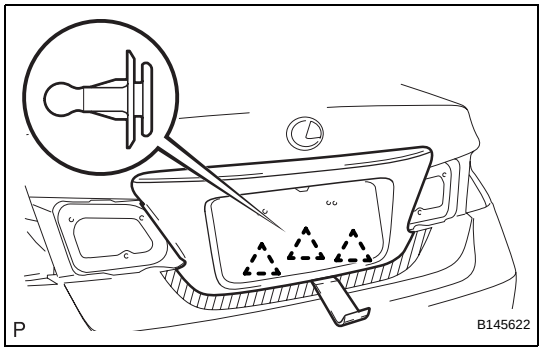

(c) Using a moulding remover, disengage the 3 clips and remove the luggage compartment door outside garnish sub-assembly.

INSTALLATION

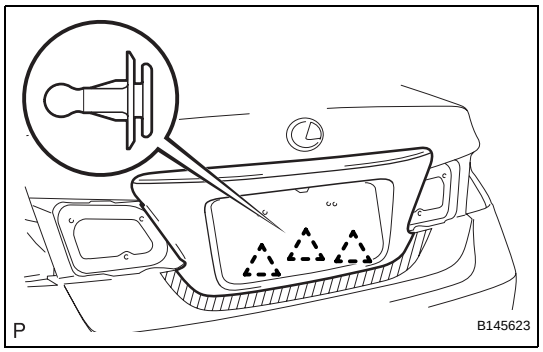

1. INSTALL LUGGAGE COMPARTMENT DOOR OUTSIDE GARNISH SUB-ASSEMBLY (w/o Rear View Monitor System)

(a) Engage the 3 clips and install the luggage compartment door outside garnish sub-assembly.

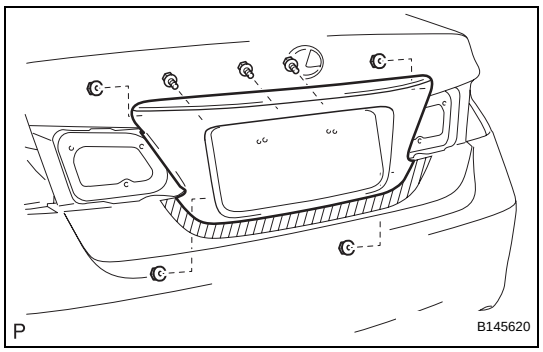

(b) Install the 3 bolts and 4 nuts.

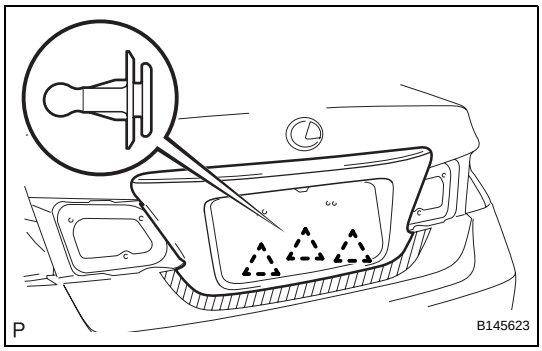

2. INSTALL LUGGAGE COMPARTMENT DOOR OUTSIDE GARNISH SUB-ASSEMBLY (w/ Rear View Monitor System)

(a) Engage the 3 clips and install the luggage compartment door outside garnish sub-assembly.

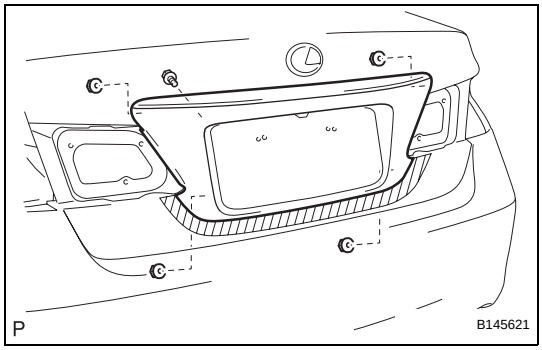

(b) Install the bolt and 4 nuts.

3. INSTALL TELEVISION CAMERA ASSEMBLY (w/ Rear View Monitor System) (See page PM-105)

4. INSTALL LUGGAGE DOOR OPENING SWITCH ASSEMBLY (See page DL-203)

5. INSTALL REAR LIGHT ASSEMBLY LH (See page LI-154)

6. INSTALL REAR LIGHT ASSEMBLY RH

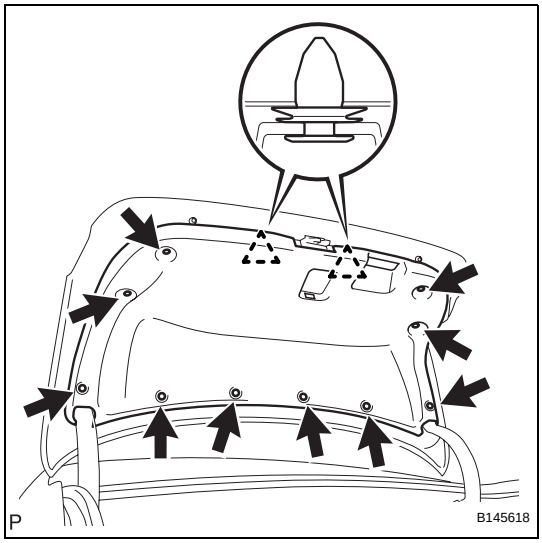

7. INSTALL LUGGAGE COMPARTMENT DOOR COVER

(a) Engage the 2 clips and install the luggage compartment door cover.

(b) Install the 10 clips.

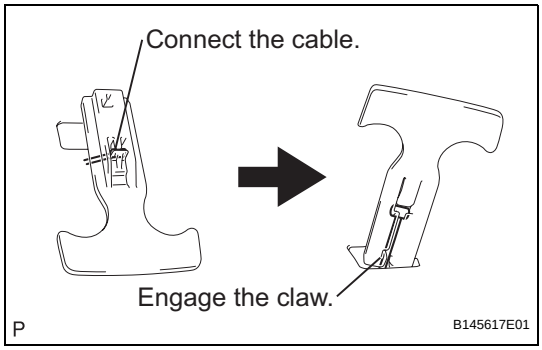

8. INSTALL LUGGAGE COMPARTMENT DOOR INSIDE HANDLE

(a) Connect the cable as shown in the illustration, then install the luggage compartment door inside handle.

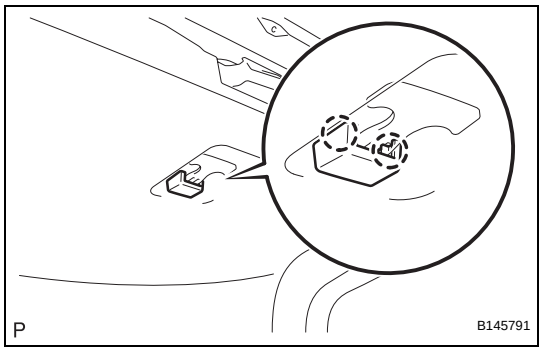

9. INSTALL LUGGAGE LOCK CONTROL CABLE PLATE

(a) Engage the 2 claws and install the luggage lock control cable plate.

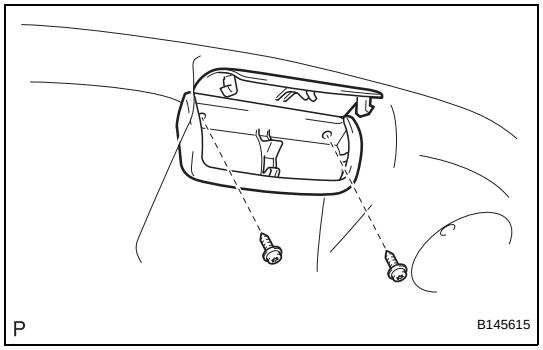

10. INSTALL LUGGAGE COMPARTMENT DOOR ASSIST GRIP

(a) Install the luggage compartment door assist grip with the 2 screws.

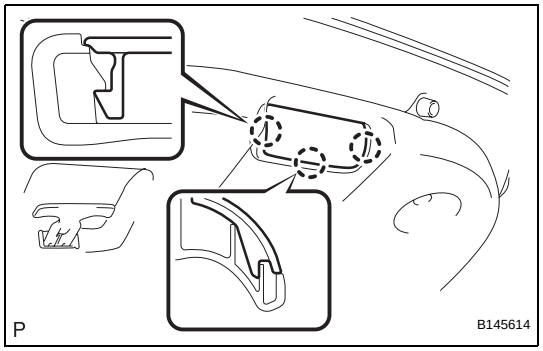

(b) Engage the 3 claws and close the assist grip cover.

REAR SUNSHADE SYSTEM

PRECAUTION

NOTICE:
Some systems need to be initialized after reconnecting the negative (-) battery terminal (See page IN-33).

PARTS LOCATION

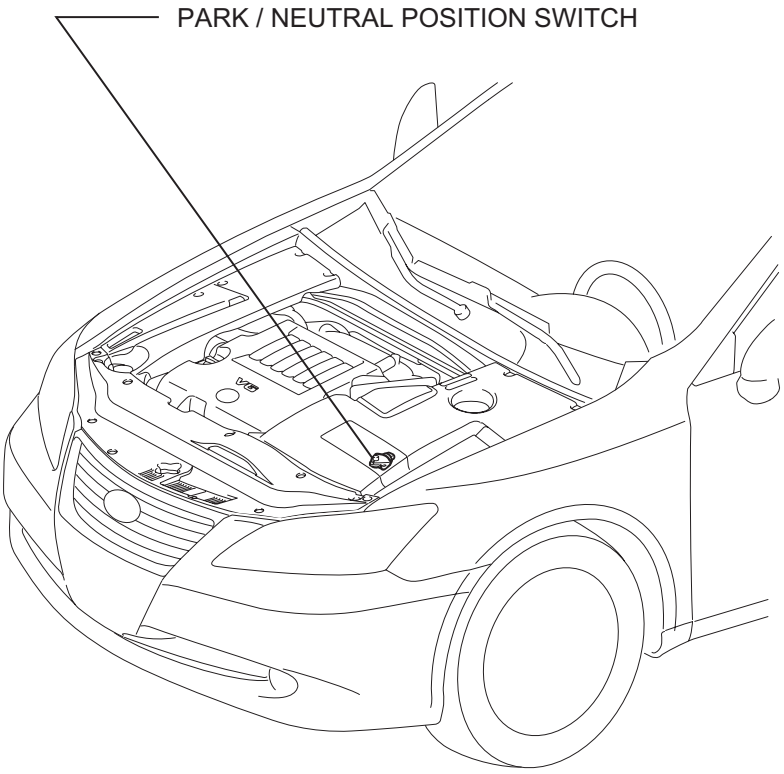

B150738E01

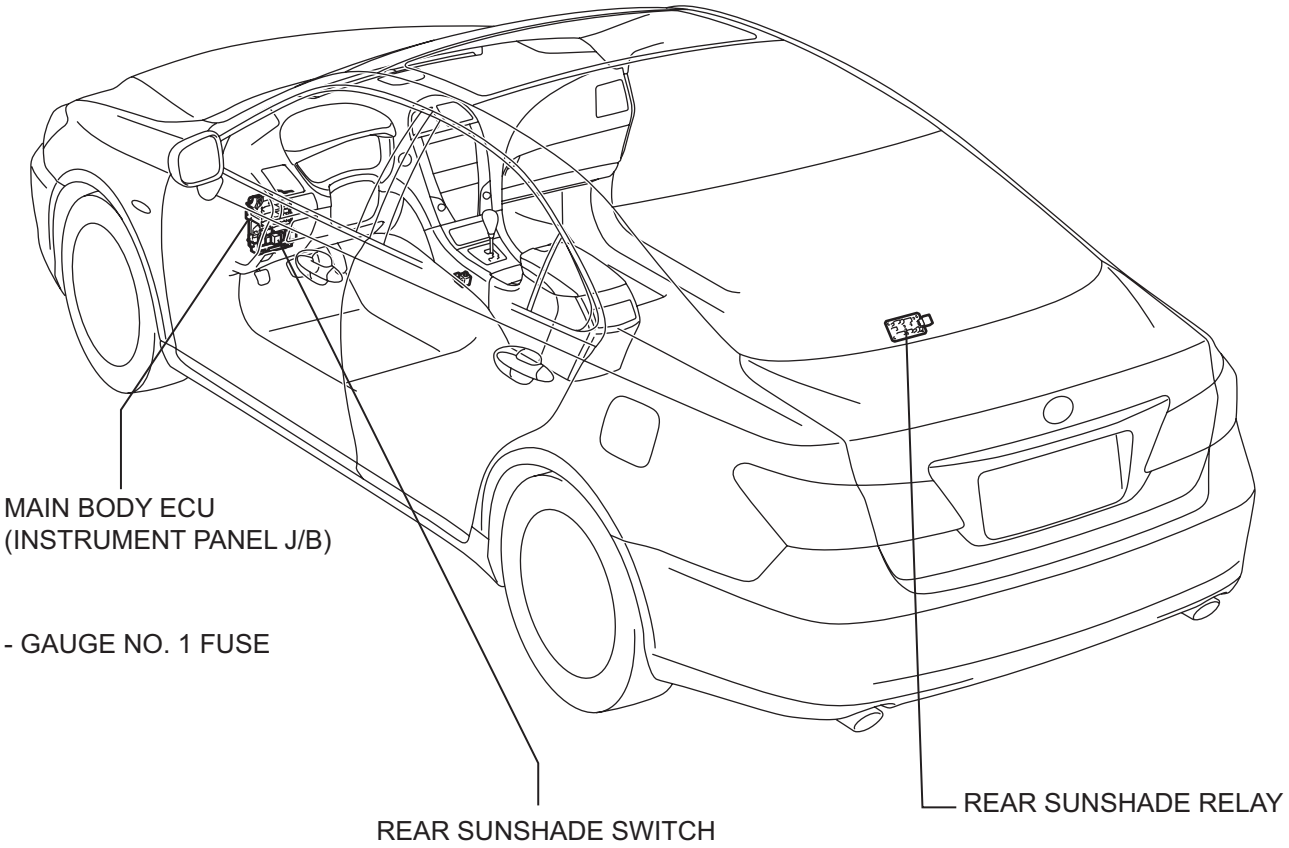

H

B131182E03

REAR SUNSHADE ASSEMBLY

COMPONENTS

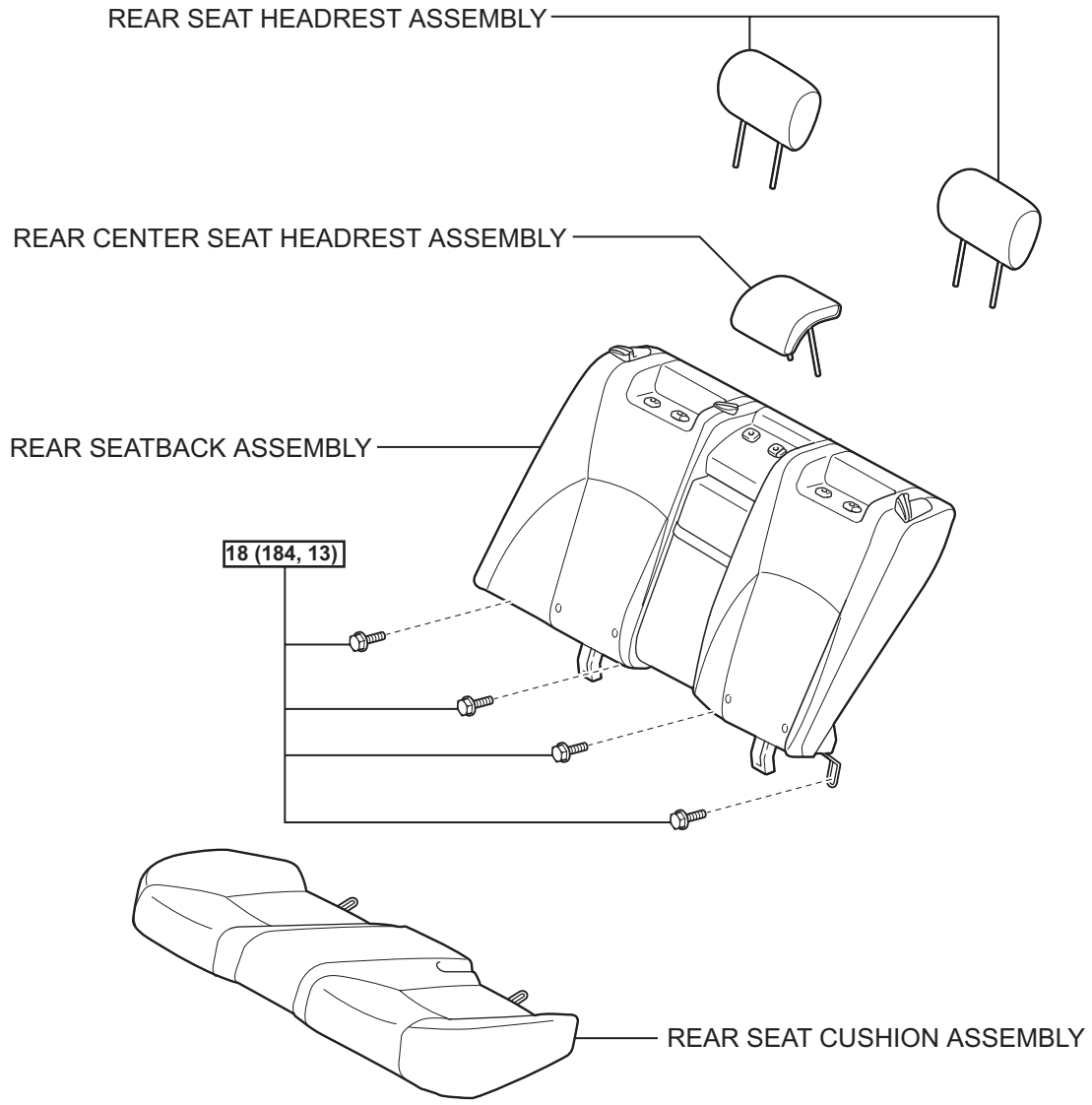

N*m (kgf*cm, ft.*lbf) : Specified torque

P

B145388E01

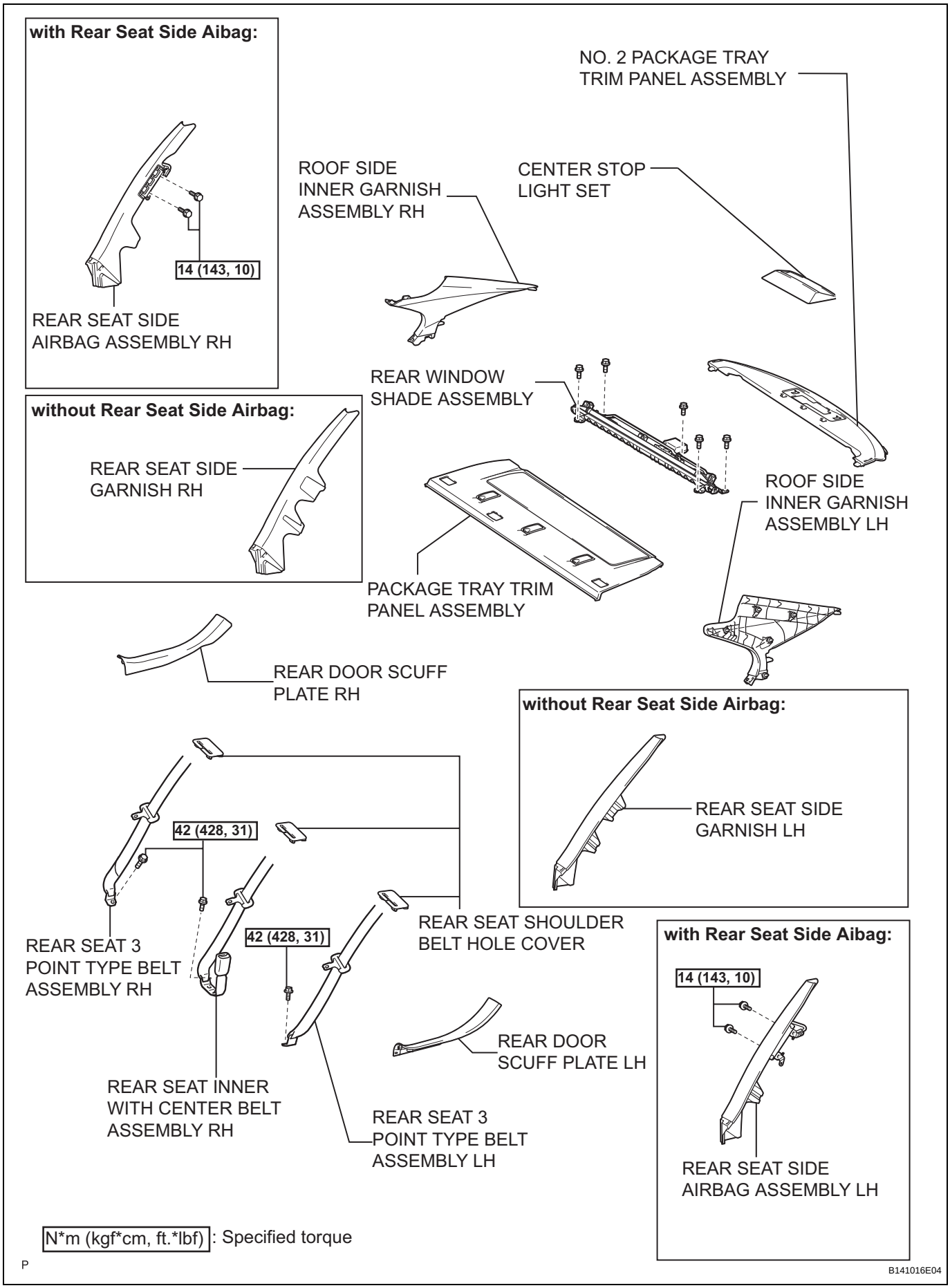
with Rear Seat Side Aibag:
14 (143, 10)
REAR SEAT SIDE AIRBAG ASSEMBLY RH
NO. 2 PACKAGE TRAY TRIM PANEL ASSEMBLY
ROOF SIDE INNER GARNISH ASSEMBLY RH
CENTER STOP LIGHT SET
REAR WINDOW SHADE ASSEMBLY
without Rear Seat Side Airbag:
REAR SEAT SIDE GARNISH RH
ROOF SIDE INNER GARNISH ASSEMBLY LH
PACKAGE TRAY TRIM PANEL ASSEMBLY
REAR DOOR SCUFF PLATE RH
without Rear Seat Side Airbag:
REAR SEAT SIDE GARNISH LH
42 (428, 31)
REAR SEAT SHOULDER BELT HOLE COVER
REAR SEAT 3 POINT TYPE BELT ASSEMBLY RH
42 (428, 31)
with Rear Seat Side Aibag:
14 (143, 10)
REAR DOOR SCUFF PLATE LH
REAR SEAT INNER WITH CENTER BELT ASSEMBLY RH
REAR SEAT 3 POINT TYPE BELT ASSEMBLY LH
REAR SEAT SIDE AIRBAG ASSEMBLY LH
N*m (kgf*cm, ft.*lbf): Specified torque
P
B141016E04

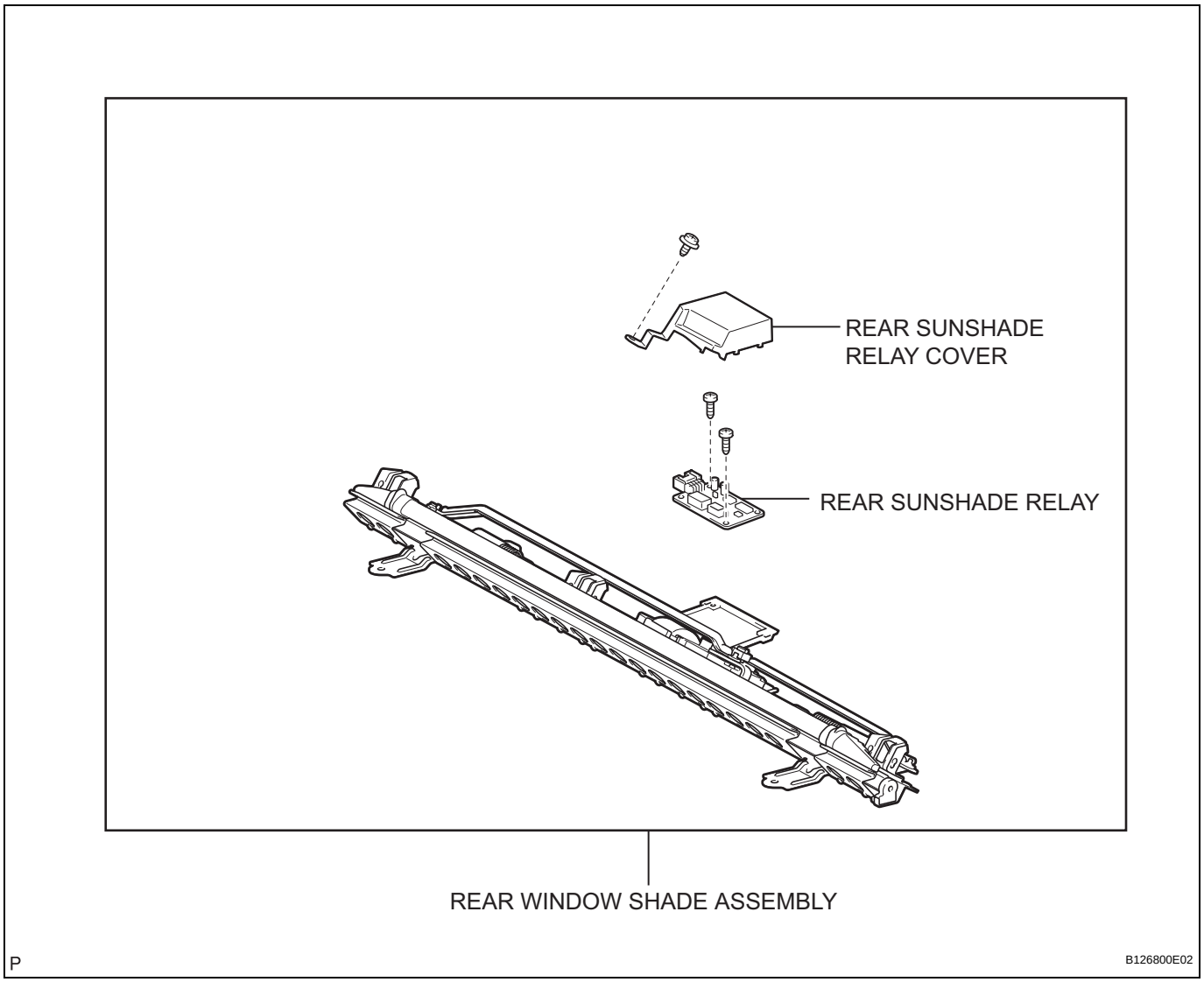
REAR SUNSHADE
RELAY COVER
REAR SUNSHADE RELAY
REAR WINDOW SHADE ASSEMBLY
P
B126800E02

ROOF HEADLINING

COMPONENTS

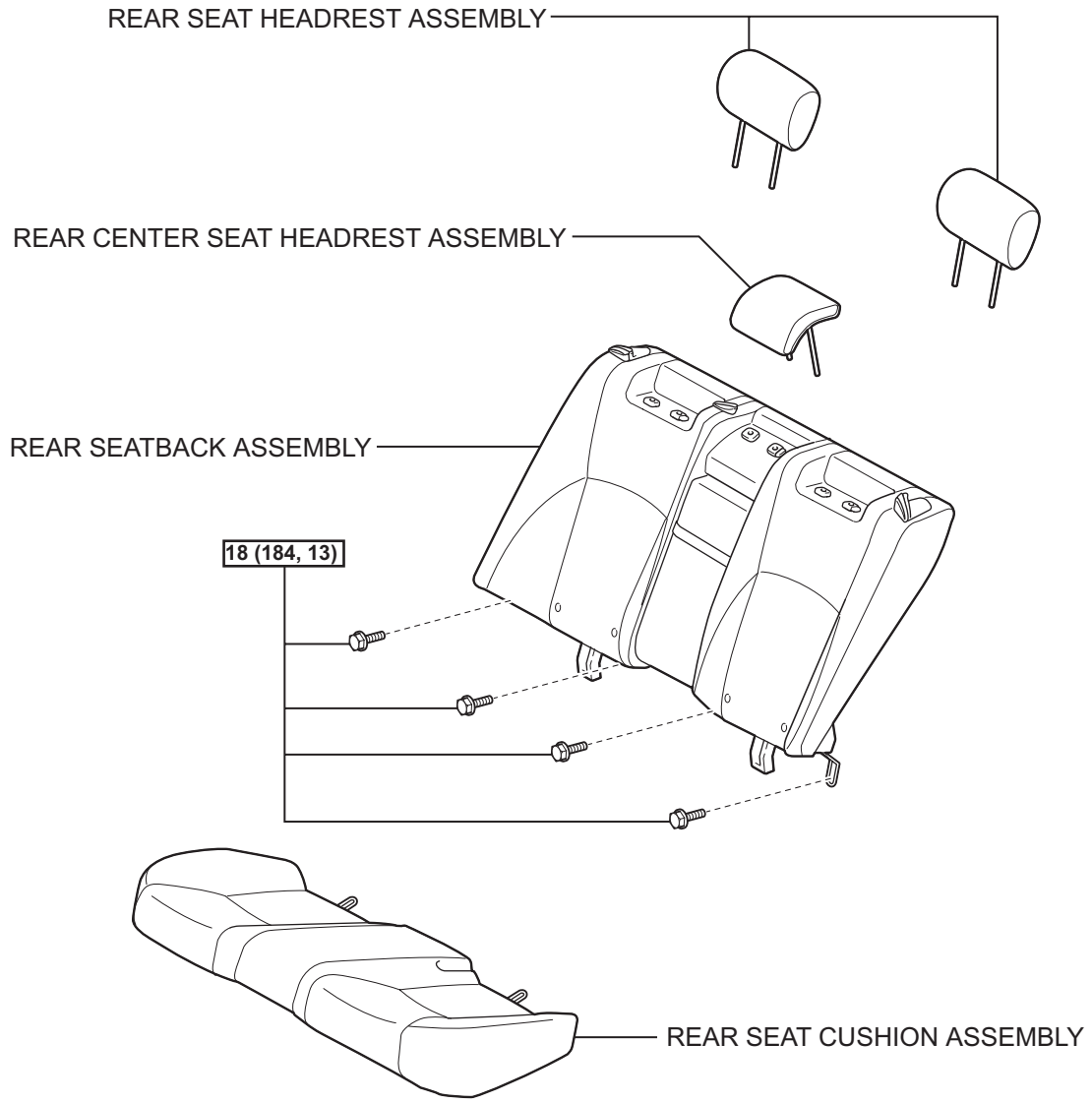

N*m (kgf*cm, ft.*lbf) : Specified torque

P

B145388E01

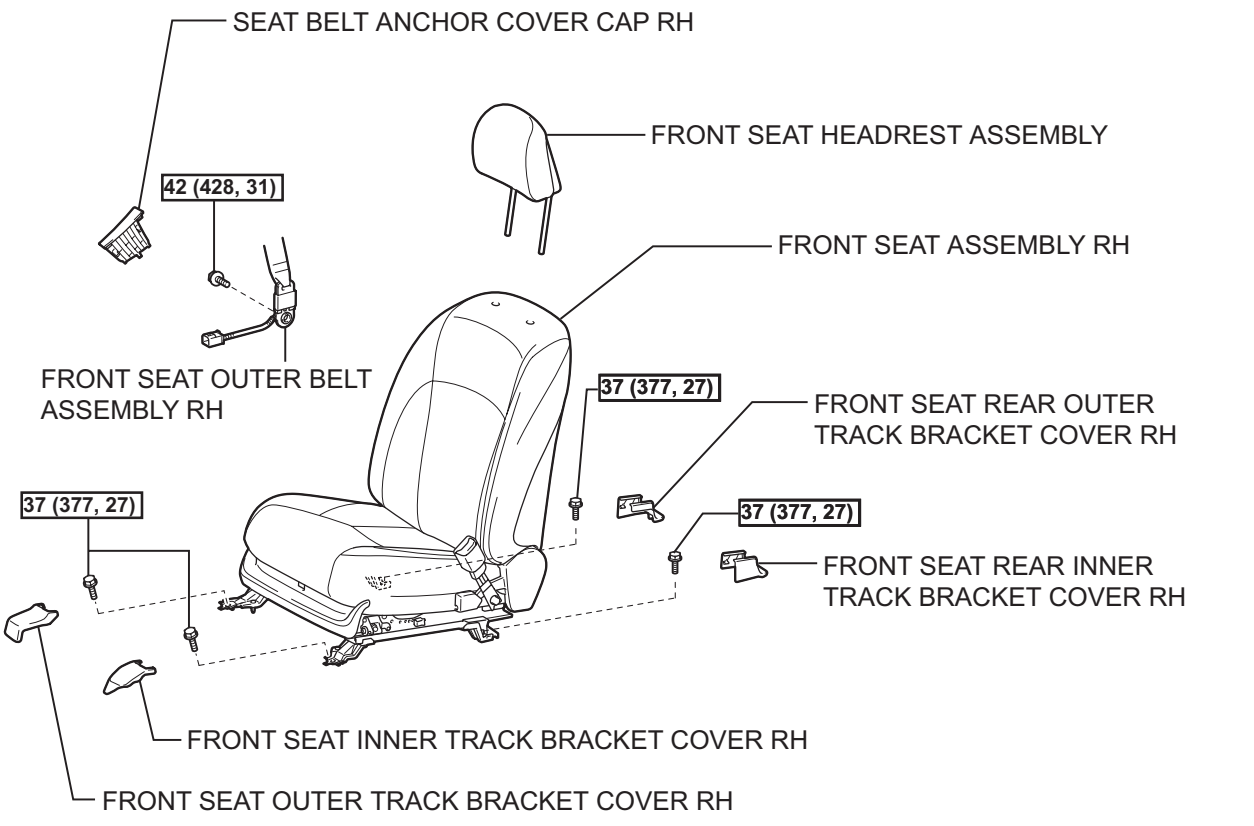

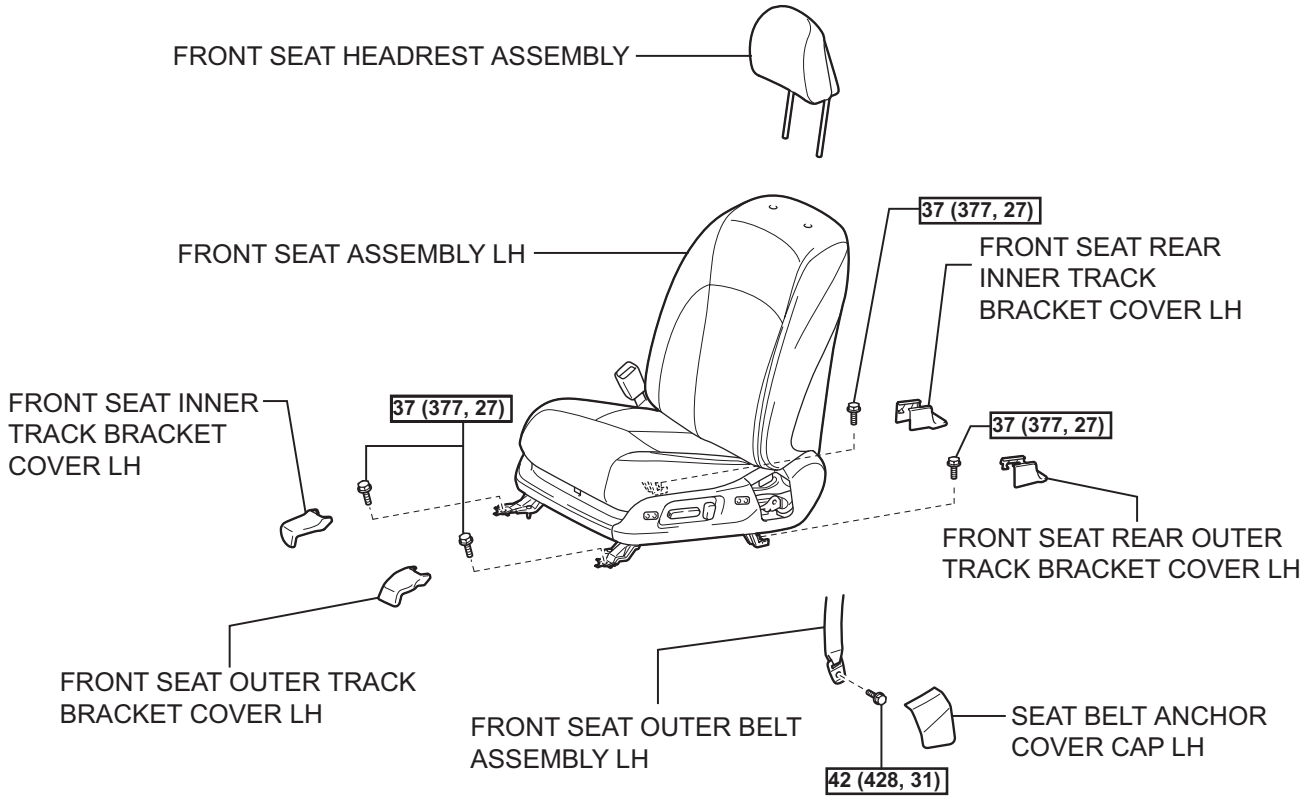

N*m (kgf*cm, ft.*lbf) : Specified torque

P

B147709E01

IR

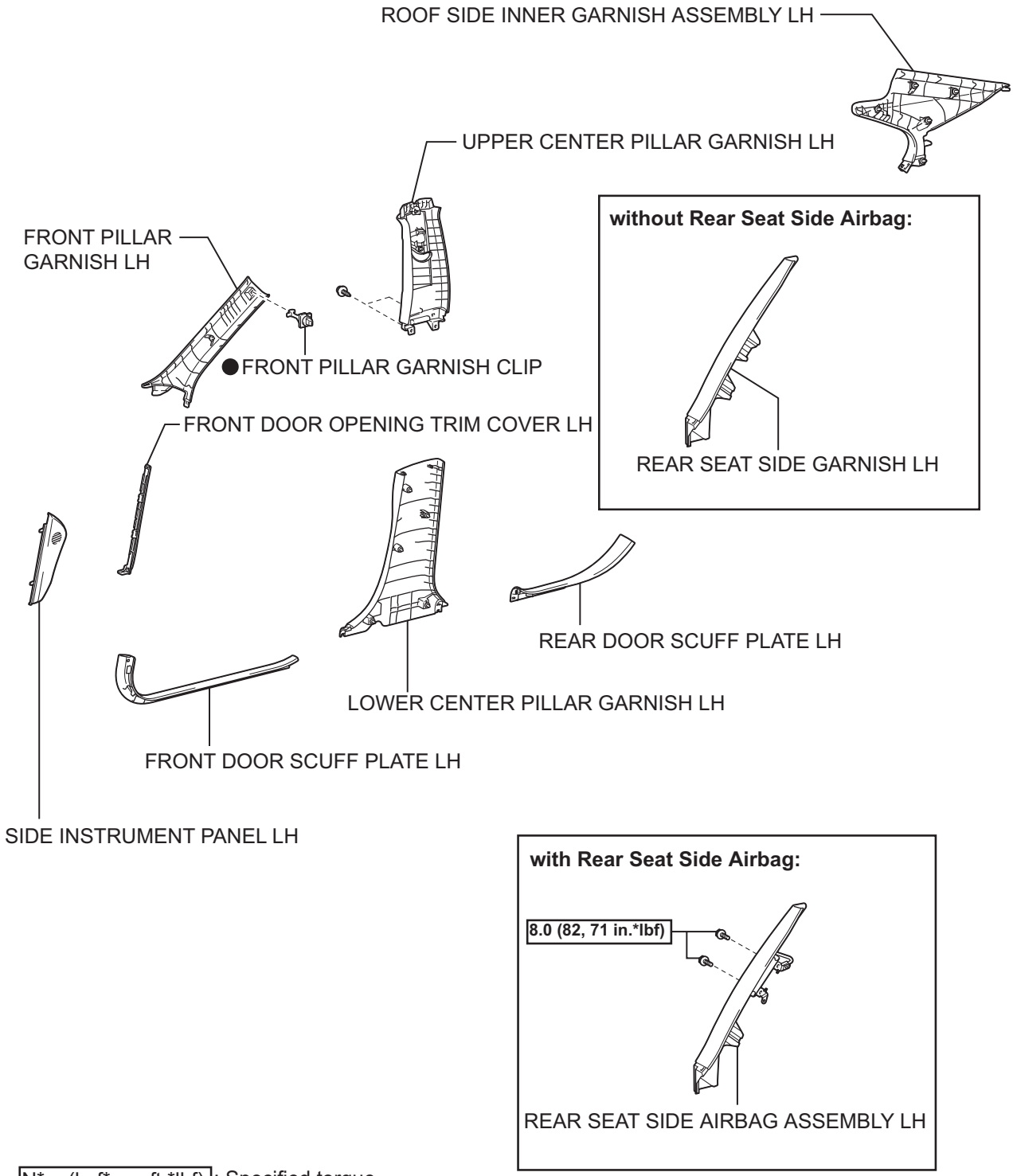

N*m (kgf*cm, ft.*lbf) : Specified torque

● Non-reusable part

P

B149196E01

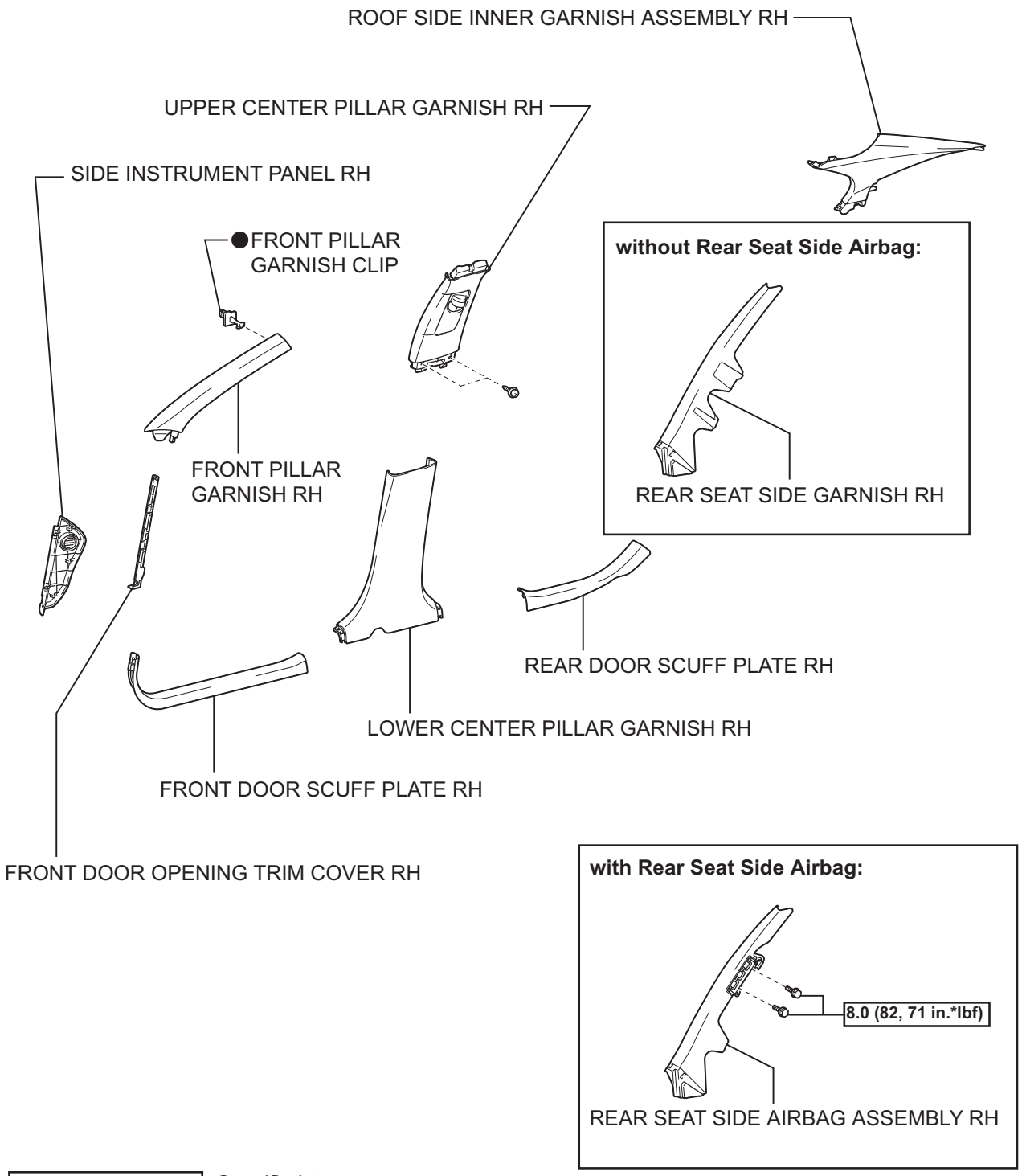

N*m (kgf*cm, ft.*lbf) : Specified torque

● Non-reusable part

P

B149195E01

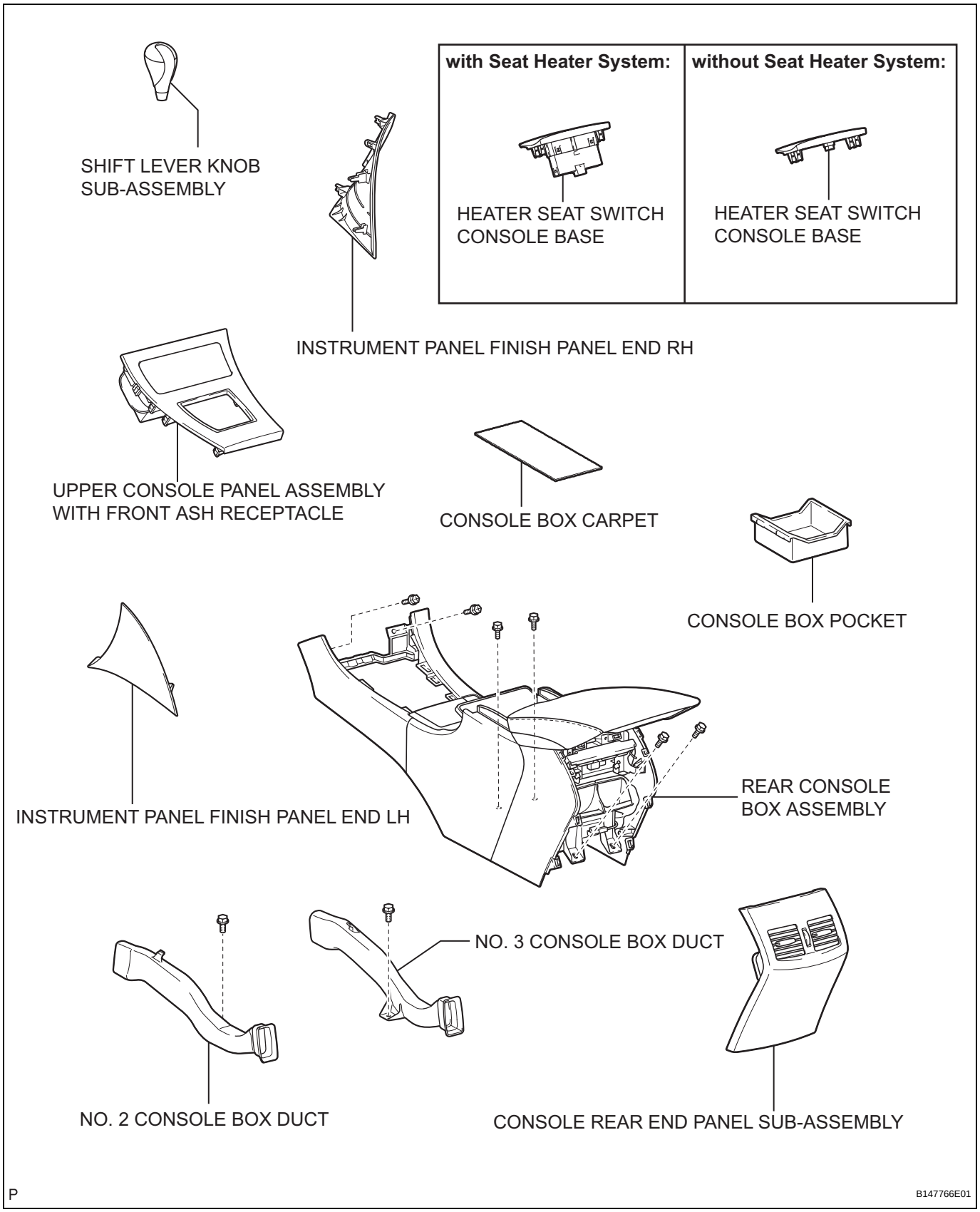
SHIFT LEVER KNOB SUB-ASSEMBLY
with Seat Heater System:
HEATER SEAT SWITCH CONSOLE BASE
without Seat Heater System:
HEATER SEAT SWITCH CONSOLE BASE
INSTRUMENT PANEL FINISH PANEL END RH
UPPER CONSOLE PANEL ASSEMBLY WITH FRONT ASH RECEPTACLE
CONSOLE BOX CARPET
CONSOLE BOX POCKET
INSTRUMENT PANEL FINISH PANEL END LH
REAR CONSOLE BOX ASSEMBLY
NO. 3 CONSOLE BOX DUCT
NO. 2 CONSOLE BOX DUCT
CONSOLE REAR END PANEL SUB-ASSEMBLY
P
B147766E01

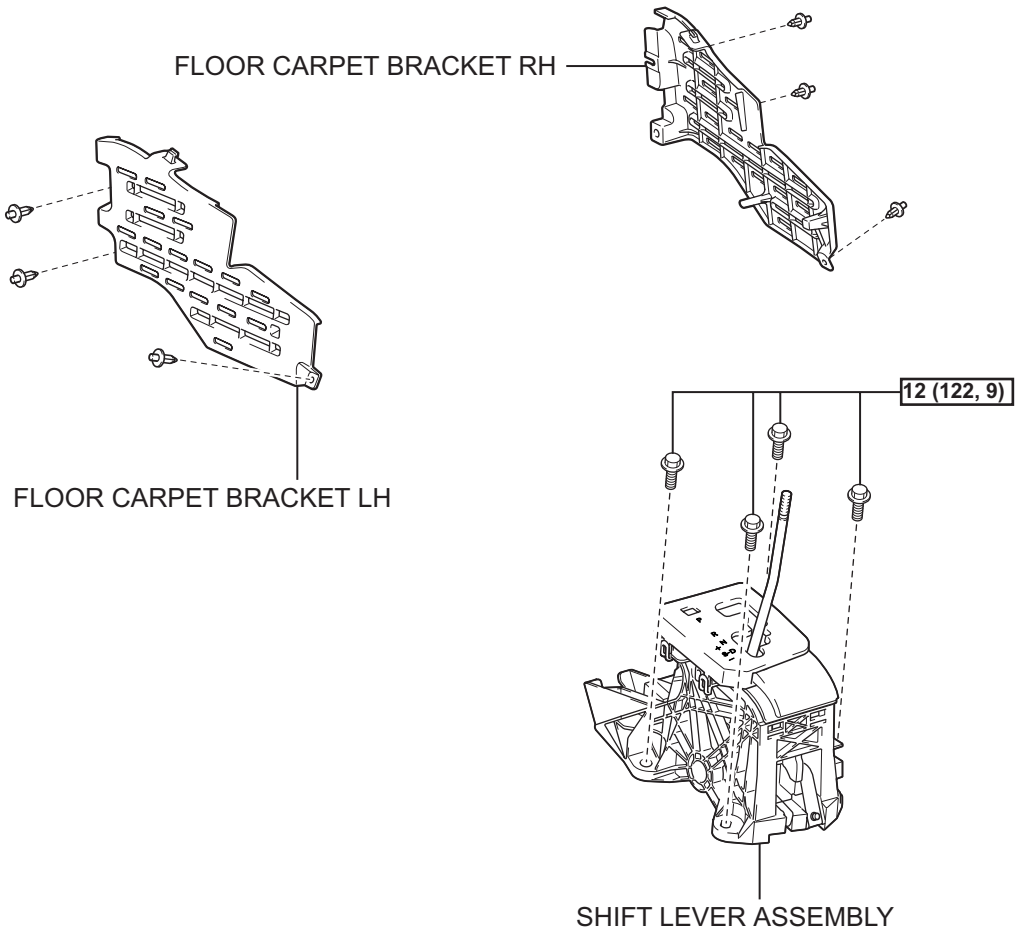

N*m (kgf*cm, ft.*lbf) : Specified torque

P

B147710E01

with DVD Player:

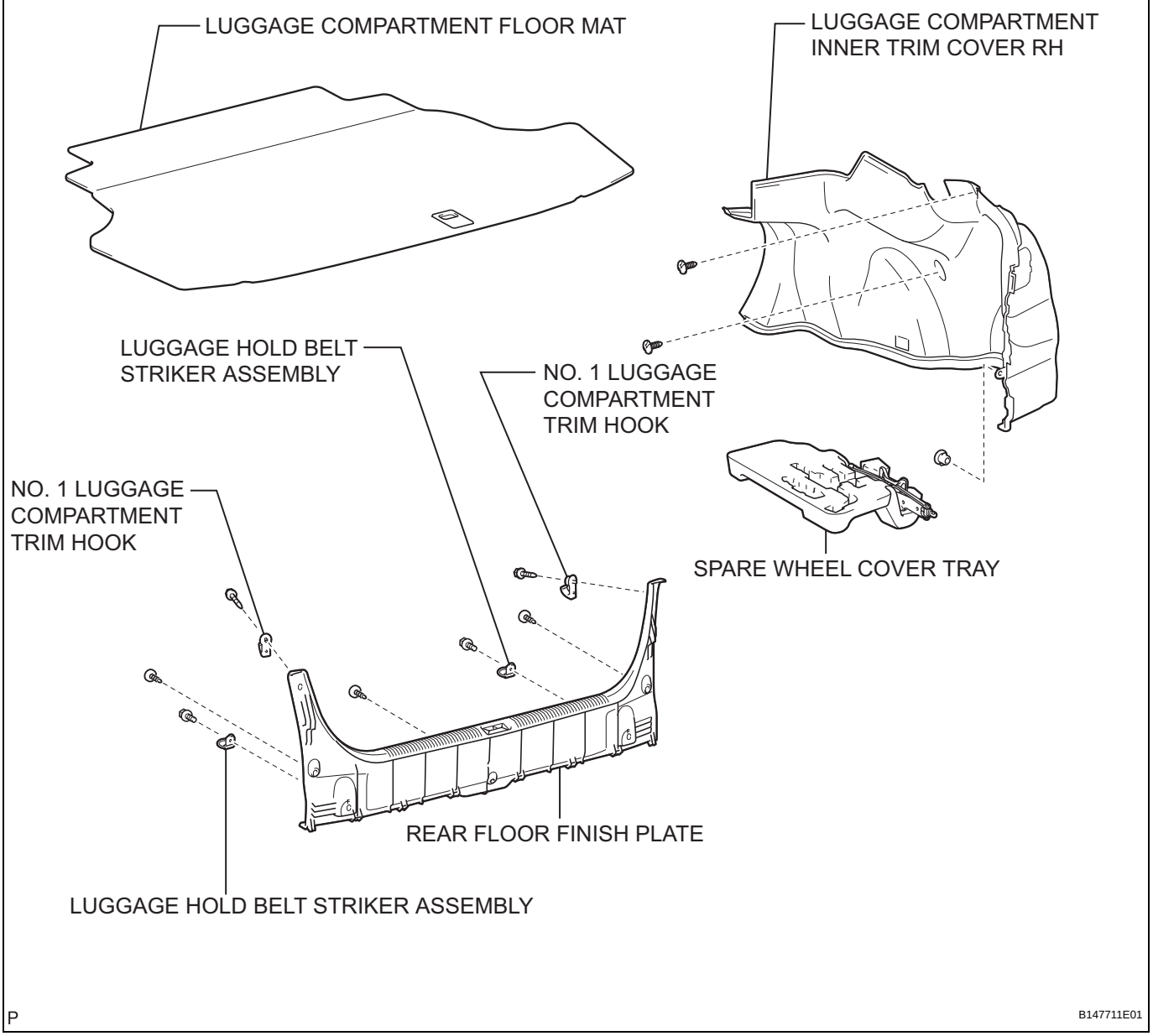

for Standard:

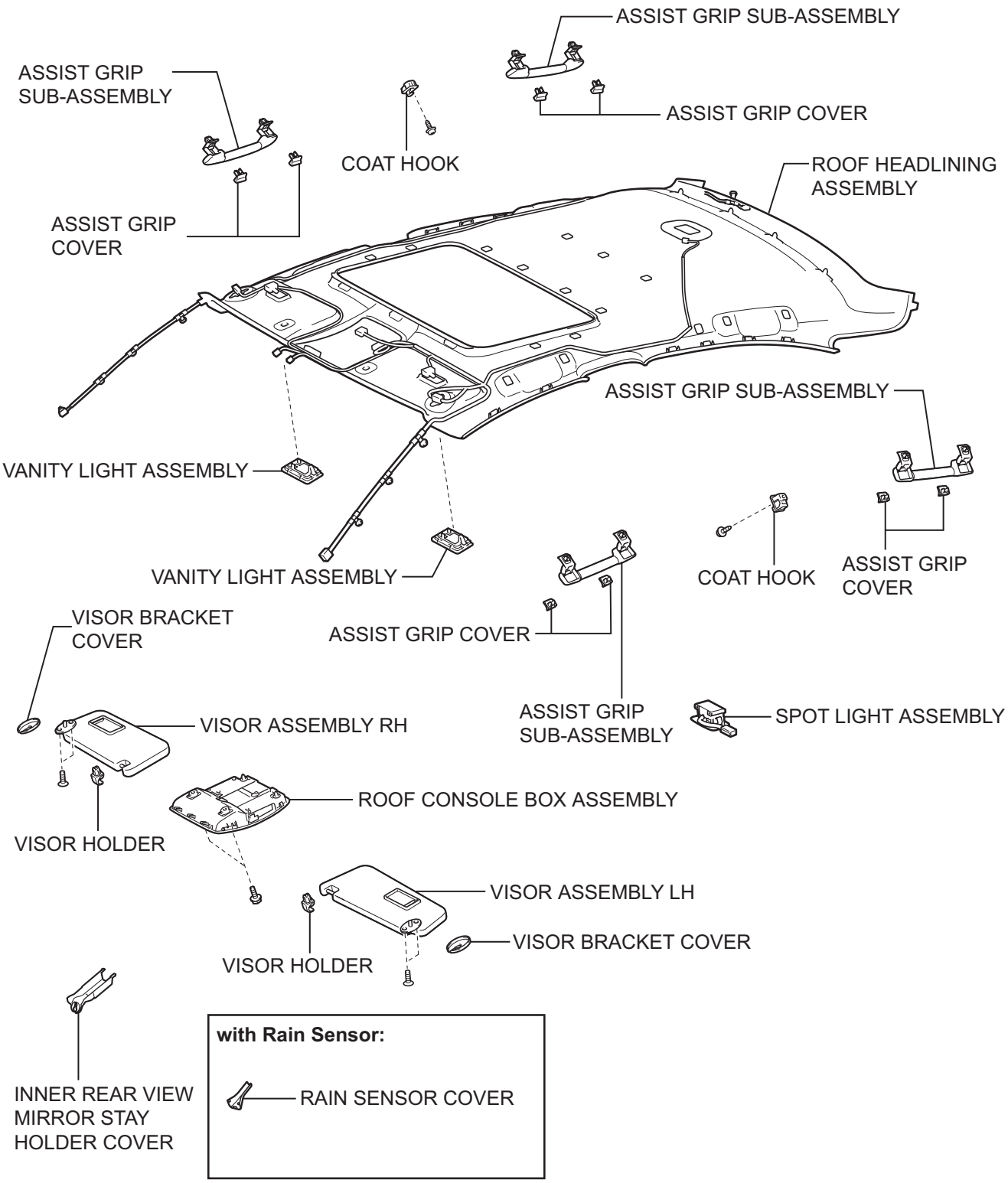

P

B140934E03

for Glass Roof:

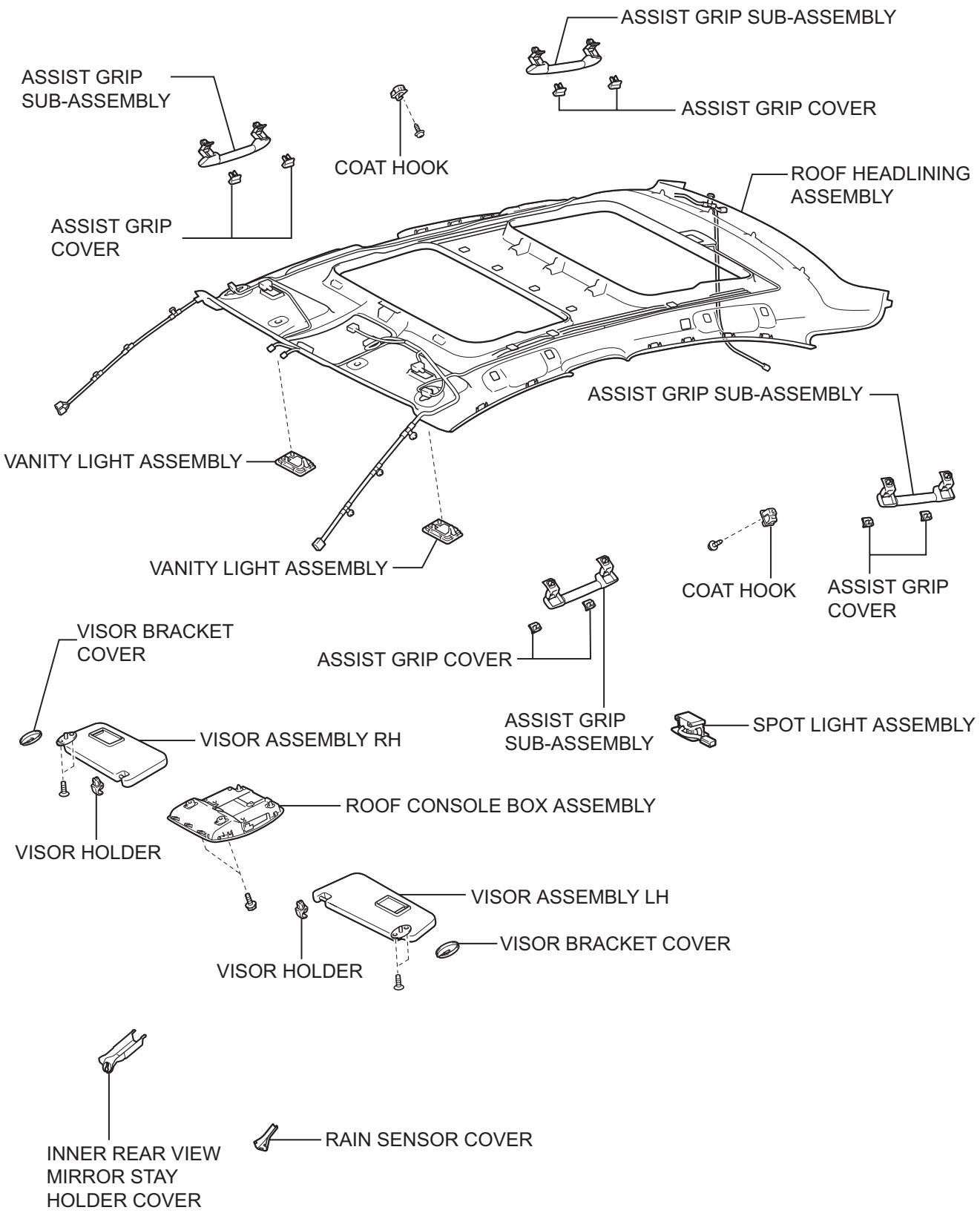

P

B140973E03

for Standard:

without DVD Player:

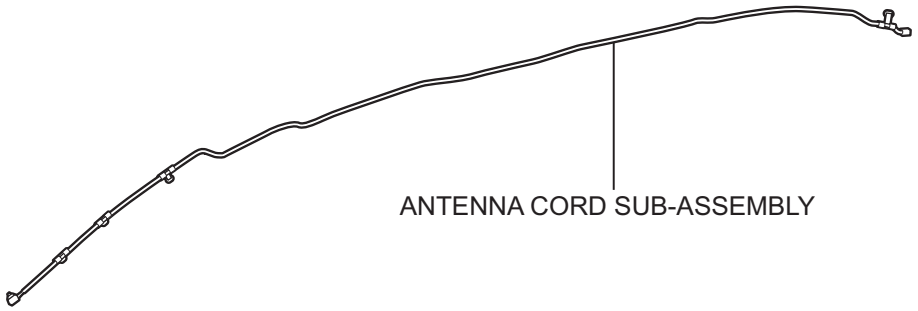

with DVD Player:

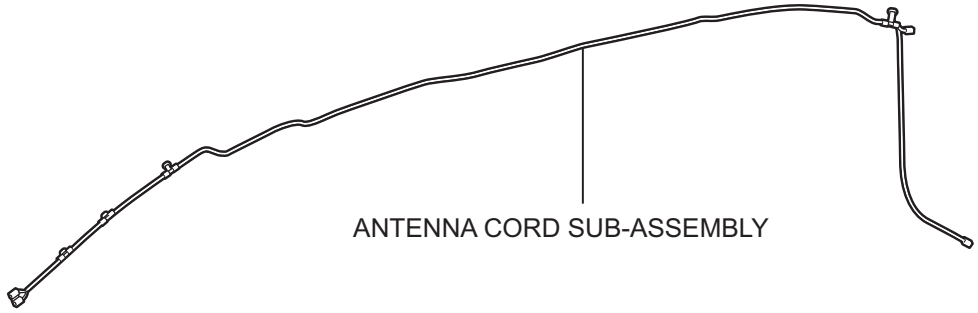

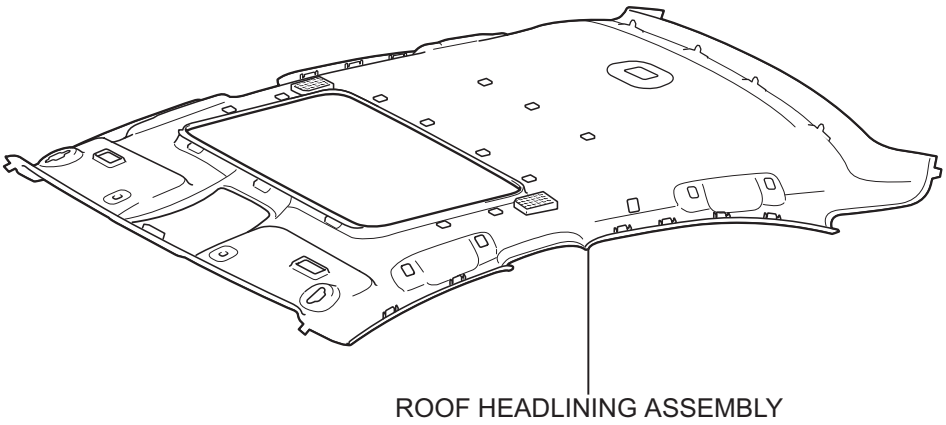

P

B146207E03

for Glass Roof:

without DVD Player:

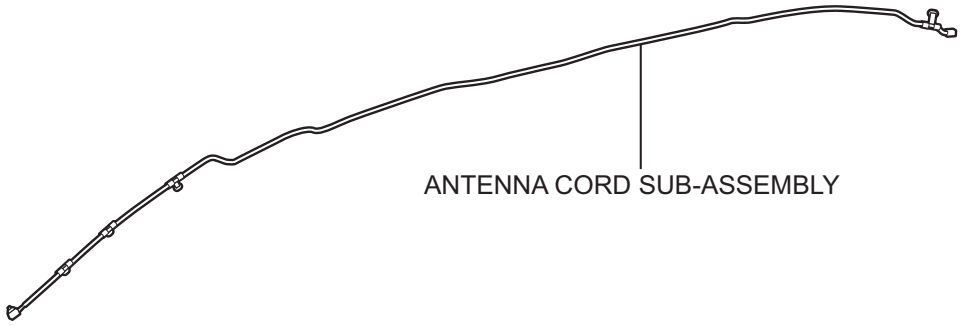

with DVD Player:

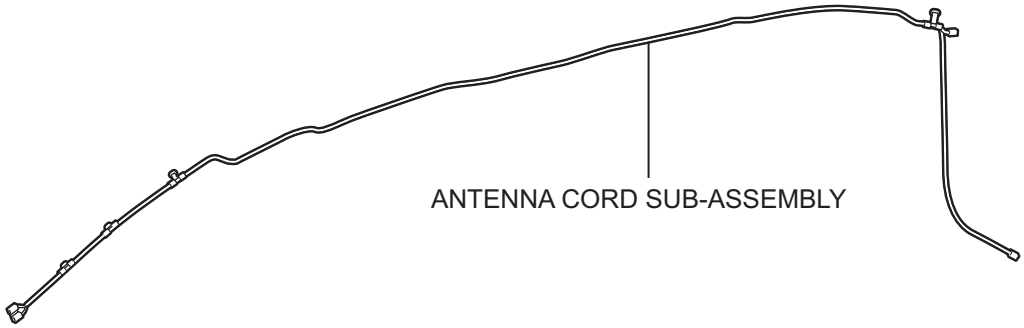

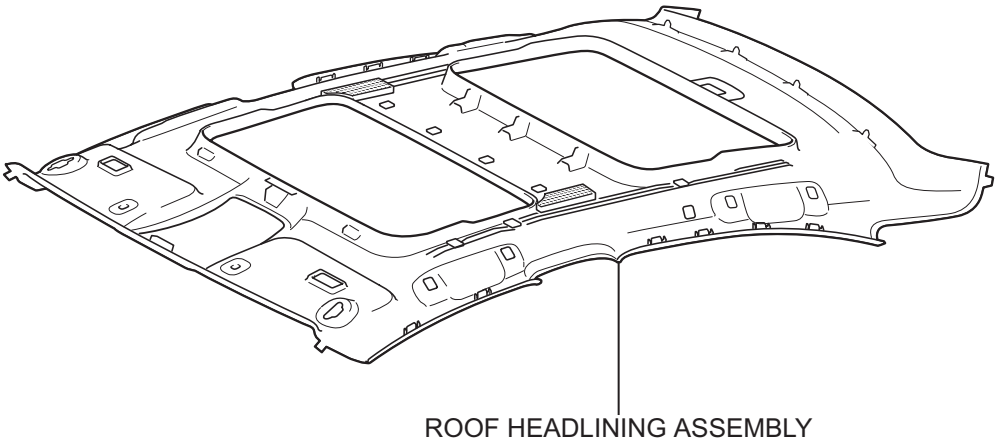

P

B141017E03

for Standard:

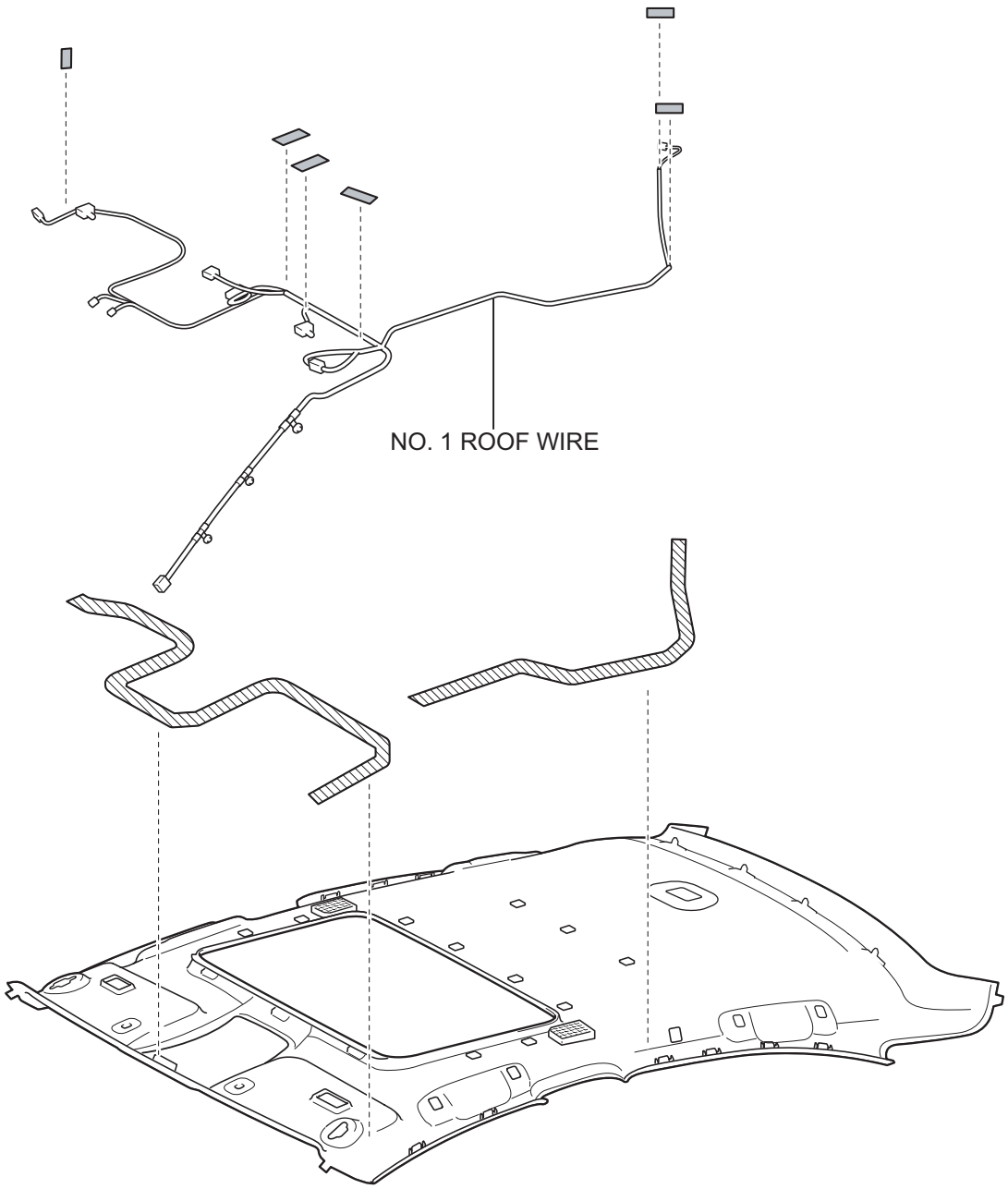

Adhesive Tape

Double-sided Tape

P

B141018E04

for Glass Roof:

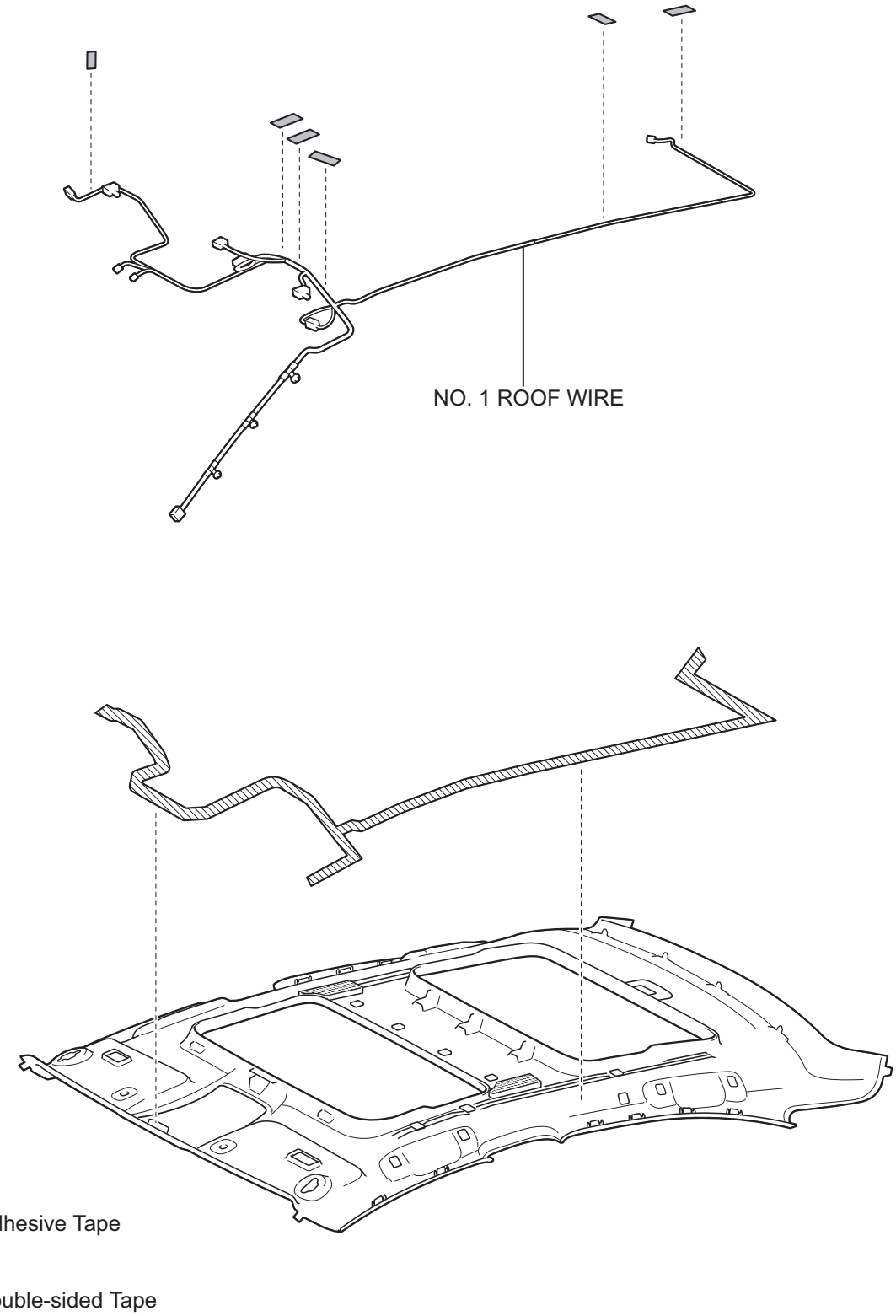

P

B145912E02

SLIDING ROOF SYSTEM

PRECAUTION

NOTICE:
Some systems need to be initialized after reconnecting the negative (-) battery terminal (See page IN-33).

PARTS LOCATION

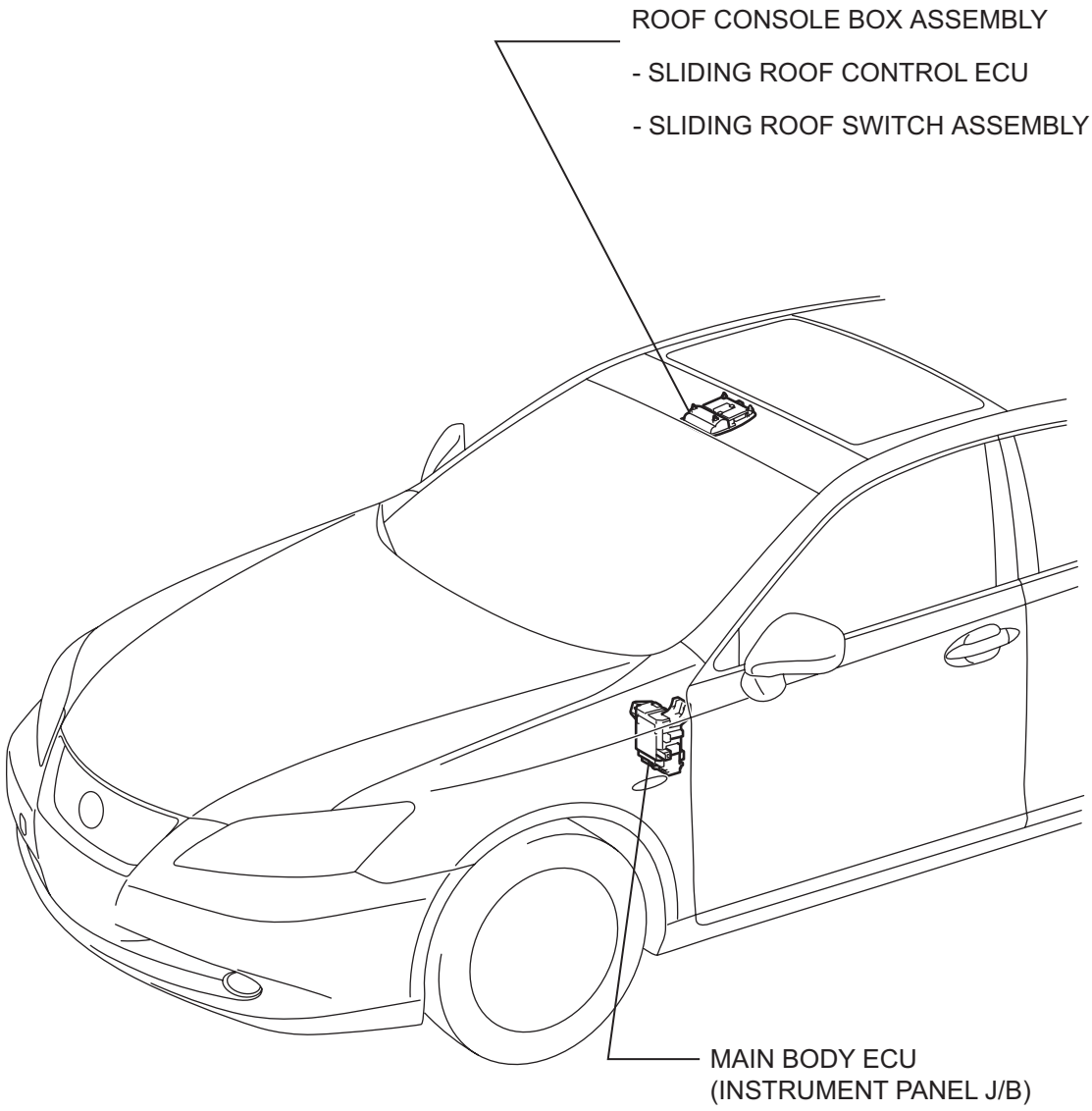

H

B131181E01

SLIDING ROOF HOUSING (for Glass Roof)

COMPONENTS

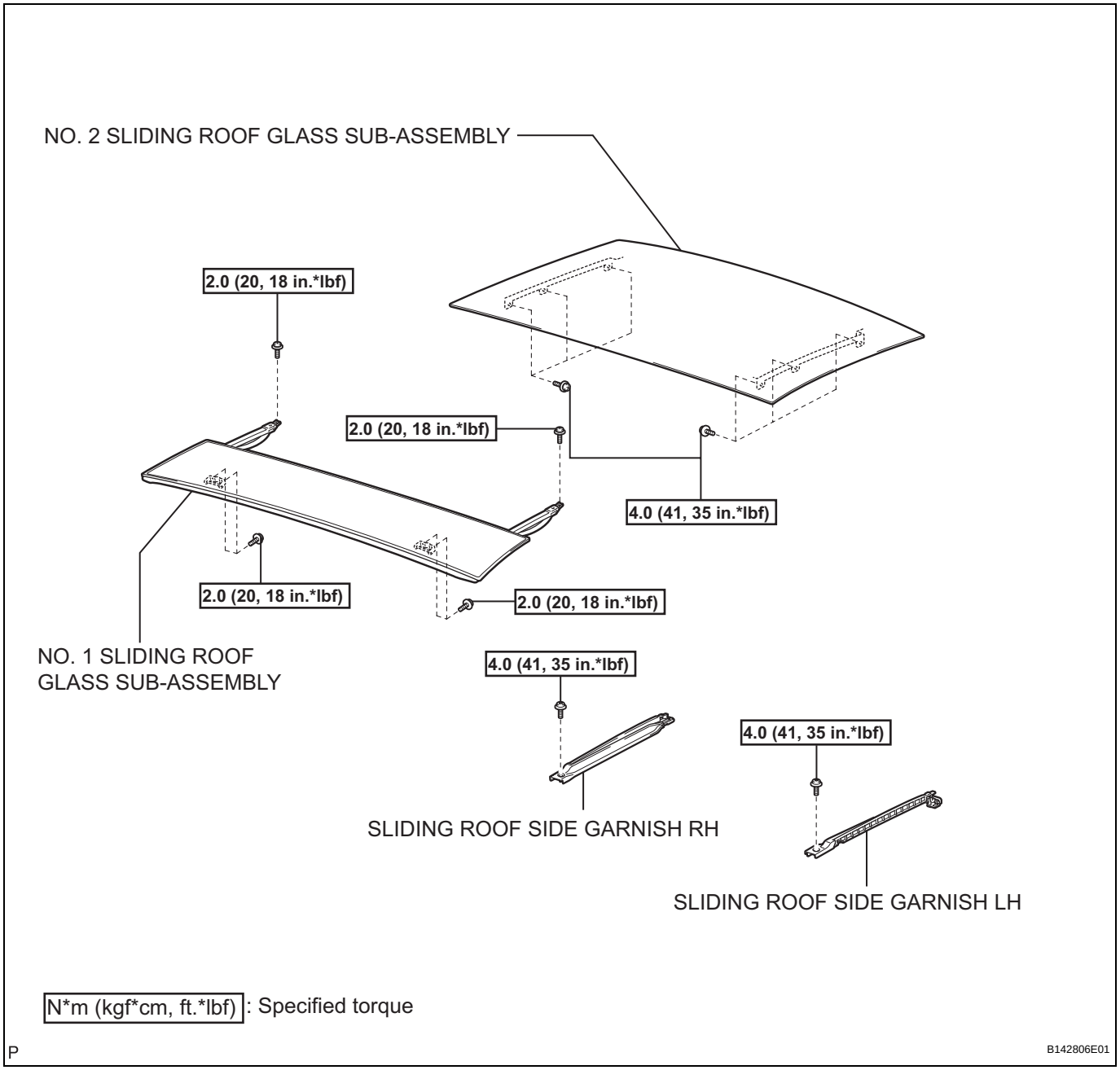

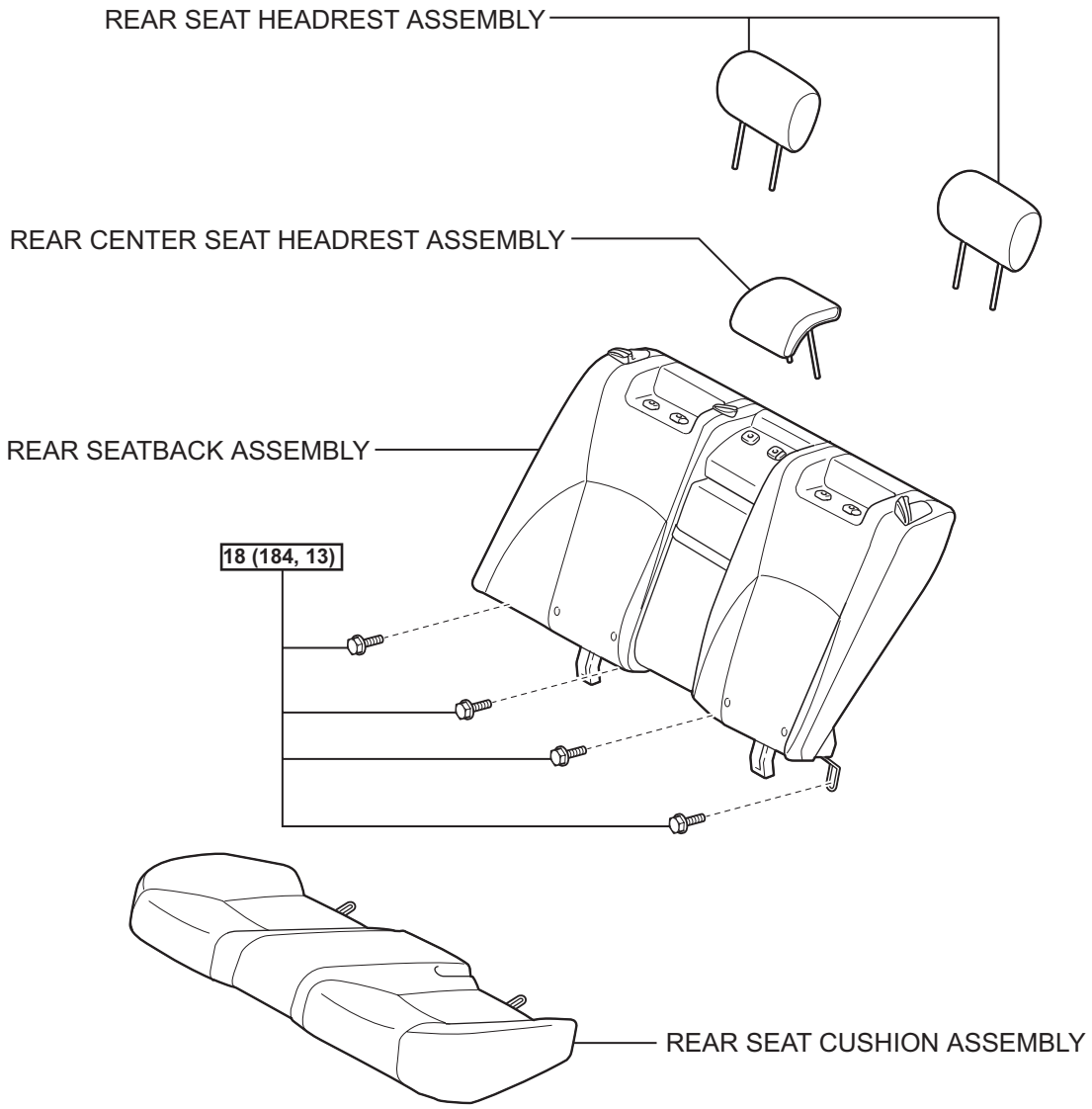

N*m (kgf*cm, ft.*lbf) : Specified torque

P

B145388E01

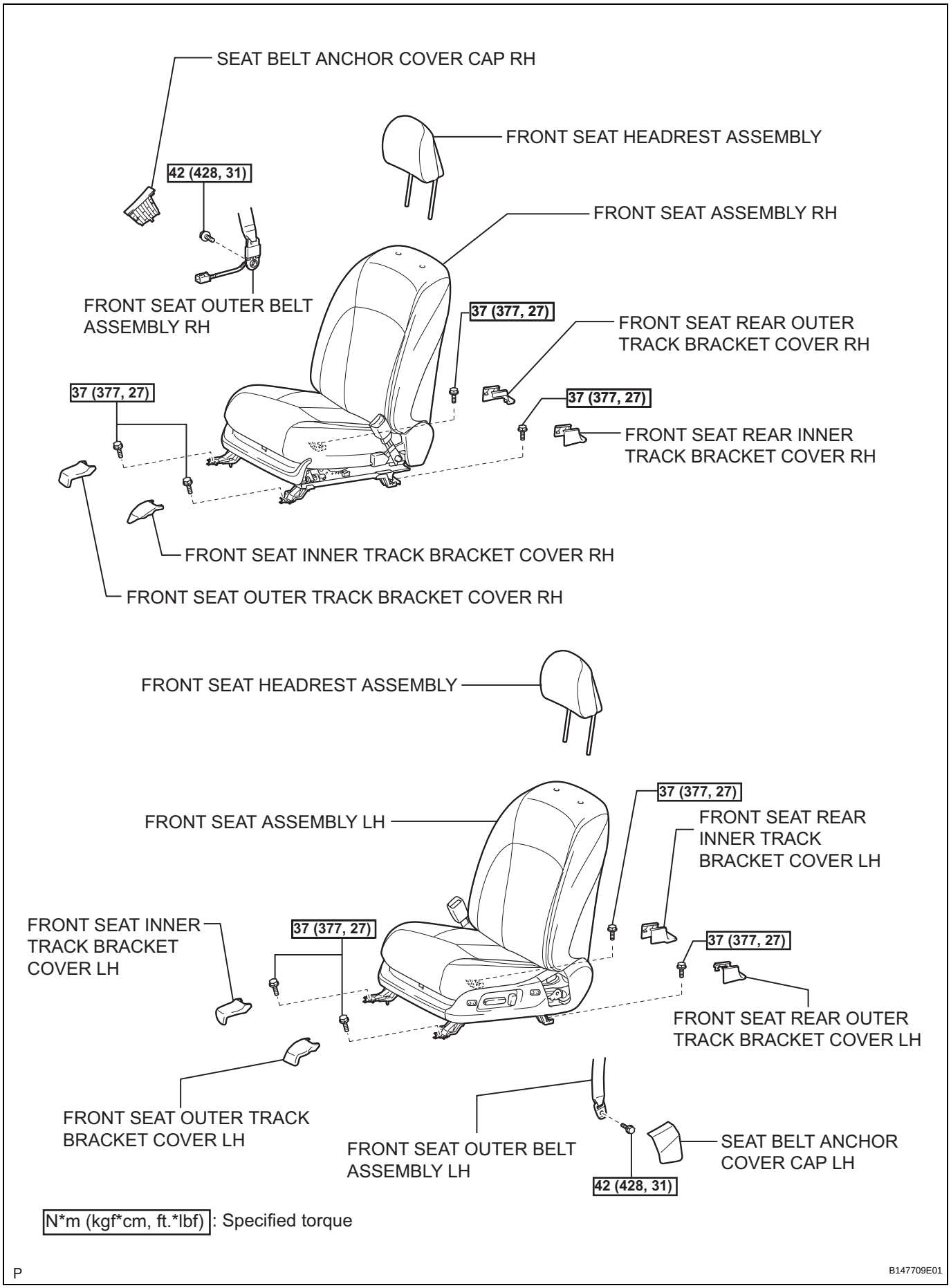
SEAT BELT ANCHOR COVER CAP RH
FRONT SEAT HEADREST ASSEMBLY
42 (428, 31)
FRONT SEAT ASSEMBLY RH
FRONT SEAT OUTER BELT ASSEMBLY RH
37 (377, 27)
FRONT SEAT REAR OUTER TRACK BRACKET COVER RH
37 (377, 27)
37 (377, 27)
FRONT SEAT REAR INNER TRACK BRACKET COVER RH
FRONT SEAT INNER TRACK BRACKET COVER RH
FRONT SEAT OUTER TRACK BRACKET COVER RH
FRONT SEAT HEADREST ASSEMBLY
37 (377, 27)
FRONT SEAT ASSEMBLY LH
FRONT SEAT REAR INNER TRACK BRACKET COVER LH
FRONT SEAT INNER TRACK BRACKET COVER LH
37 (377, 27)
37 (377, 27)
FRONT SEAT REAR OUTER TRACK BRACKET COVER LH
FRONT SEAT OUTER TRACK BRACKET COVER LH
FRONT SEAT OUTER BELT ASSEMBLY LH
SEAT BELT ANCHOR COVER CAP LH
42 (428, 31)
N*m (kgf*cm, ft.*lbf): Specified torque
P
B147709E01

RF

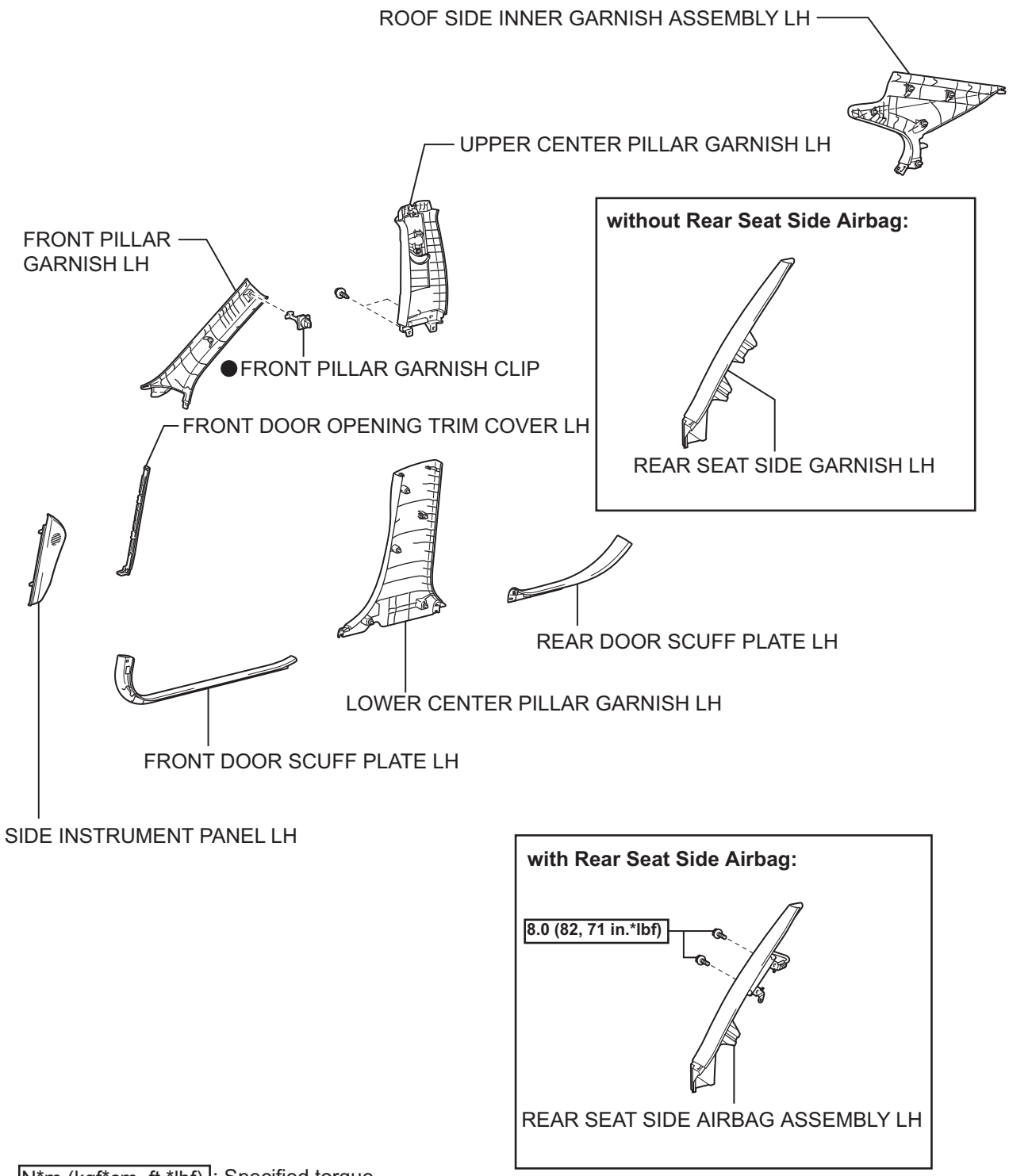

N*m (kgf*cm, ft.*lbf) : Specified torque

● Non-reusable part

P

B149196E01

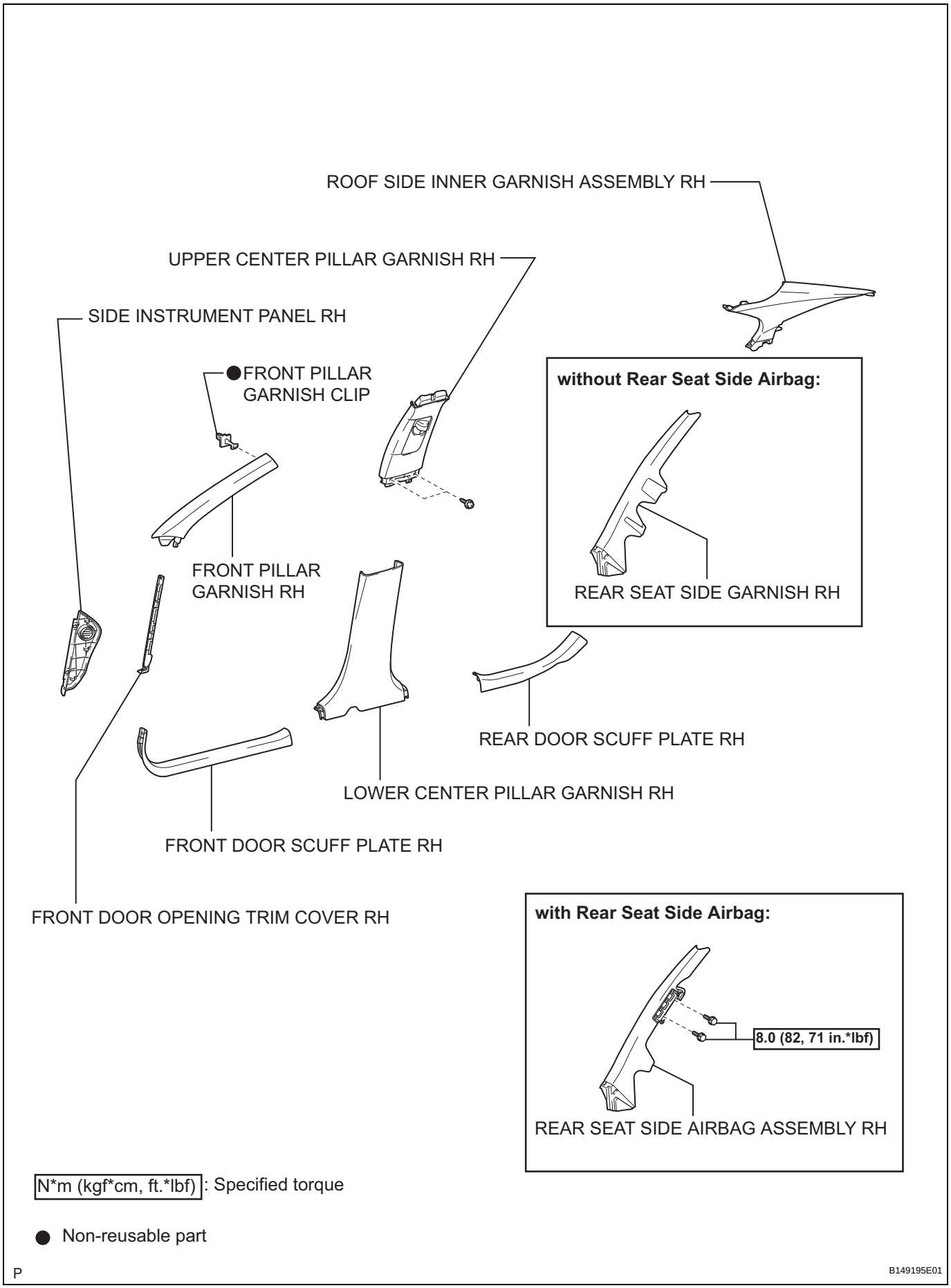
ROOF SIDE INNER GARNISH ASSEMBLY RH
UPPER CENTER PILLAR GARNISH RH
SIDE INSTRUMENT PANEL RH
●FRONT PILLAR GARNISH CLIP
FRONT PILLAR GARNISH RH
without Rear Seat Side Airbag:
REAR SEAT SIDE GARNISH RH
REAR DOOR SCUFF PLATE RH
LOWER CENTER PILLAR GARNISH RH
FRONT DOOR SCUFF PLATE RH
FRONT DOOR OPENING TRIM COVER RH
with Rear Seat Side Airbag:
8.0 (82, 71 in.*lbf)
REAR SEAT SIDE AIRBAG ASSEMBLY RH
N*m (kgf*cm, ft.*lbf): Specified torque
● Non-reusable part
P
B149195E01

RF

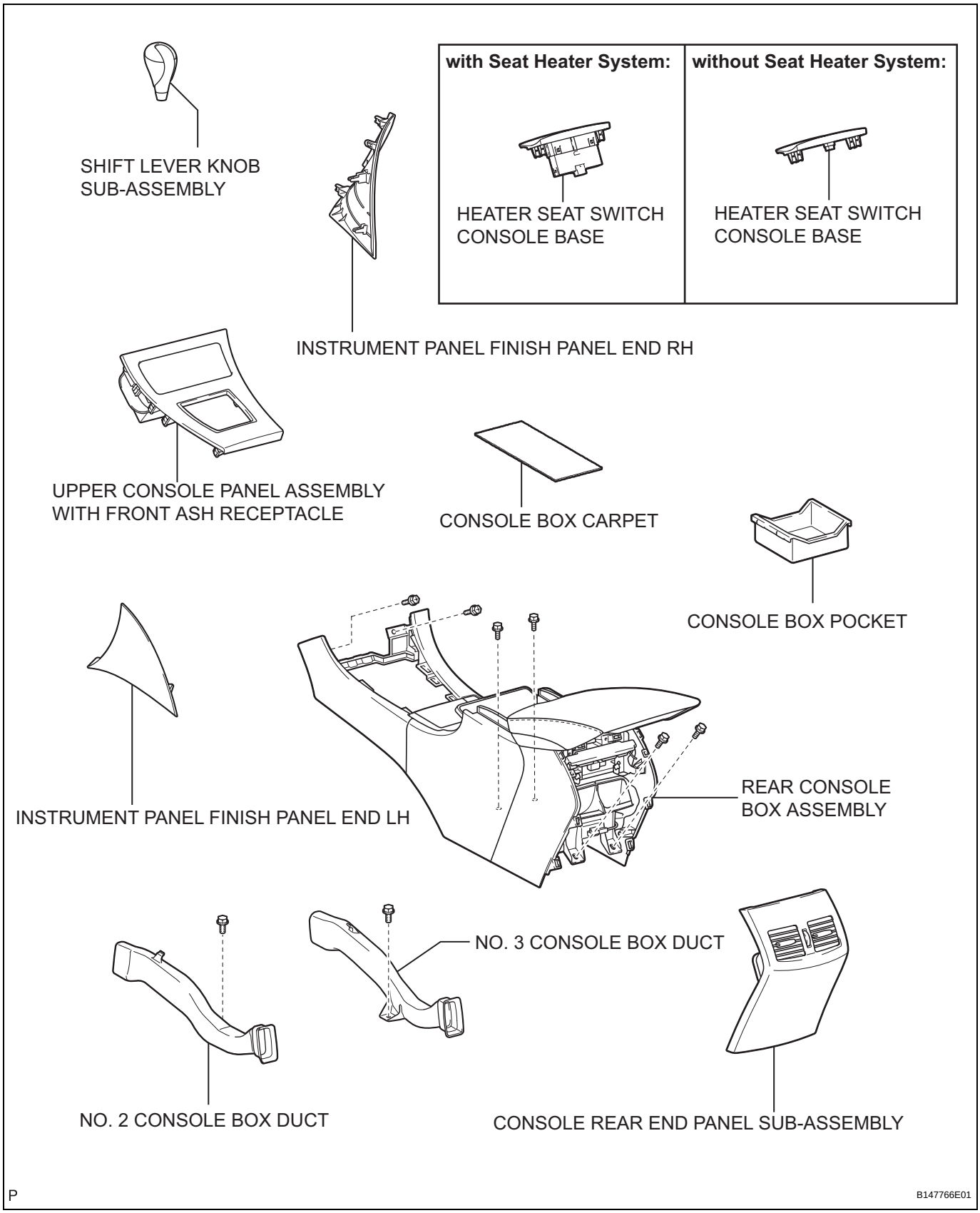
SHIFT LEVER KNOB SUB-ASSEMBLY
with Seat Heater System:
HEATER SEAT SWITCH CONSOLE BASE
without Seat Heater System:
HEATER SEAT SWITCH CONSOLE BASE
INSTRUMENT PANEL FINISH PANEL END RH
UPPER CONSOLE PANEL ASSEMBLY WITH FRONT ASH RECEPTACLE
CONSOLE BOX CARPET
CONSOLE BOX POCKET
INSTRUMENT PANEL FINISH PANEL END LH
REAR CONSOLE BOX ASSEMBLY
NO. 3 CONSOLE BOX DUCT
NO. 2 CONSOLE BOX DUCT
CONSOLE REAR END PANEL SUB-ASSEMBLY
P
B147766E01

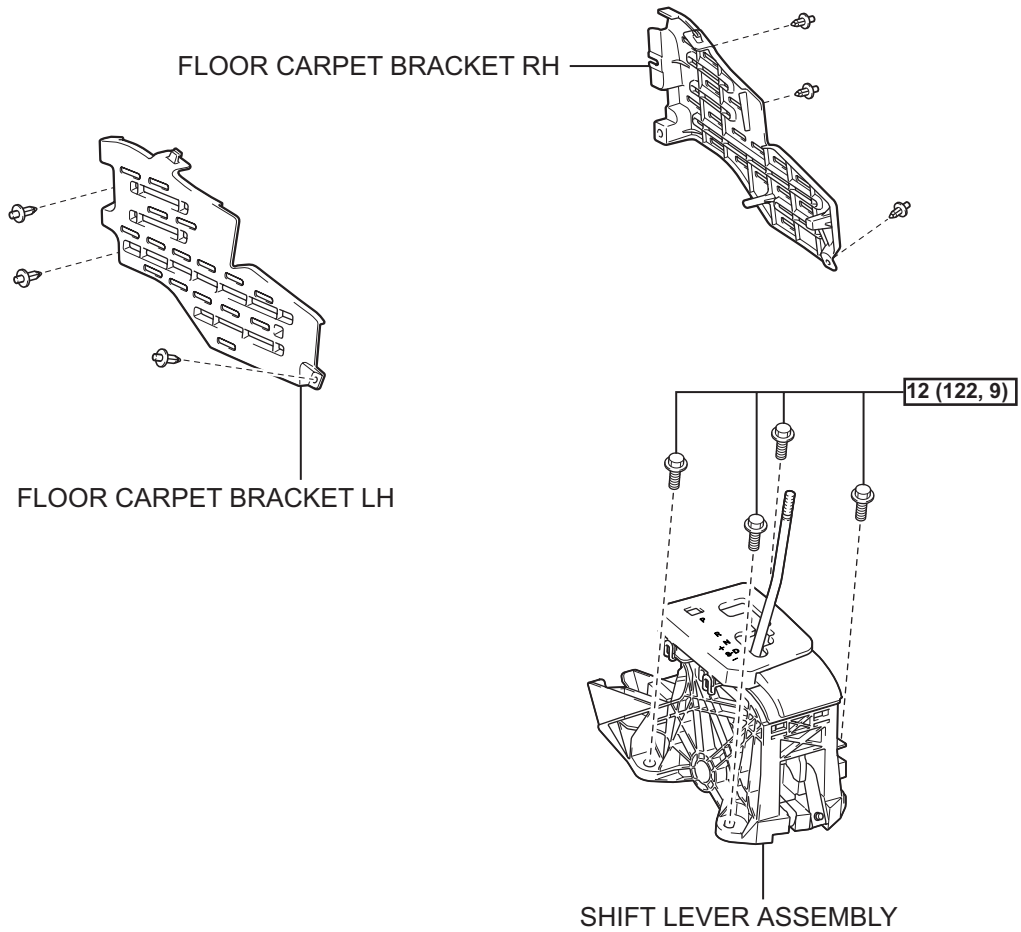

N*m (kgf*cm, ft.*lbf) : Specified torque

P

B147710E01

with DVD Player:

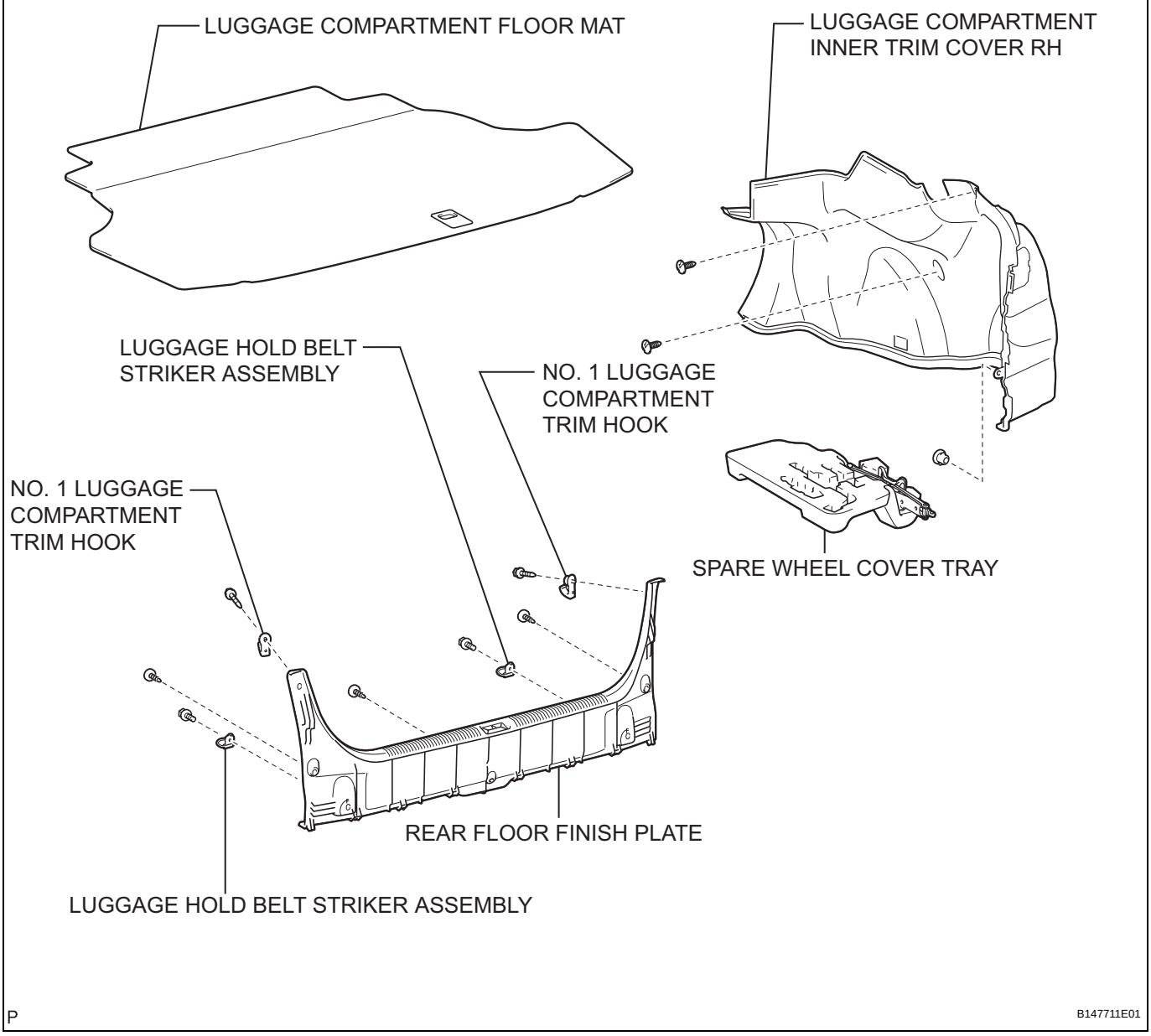

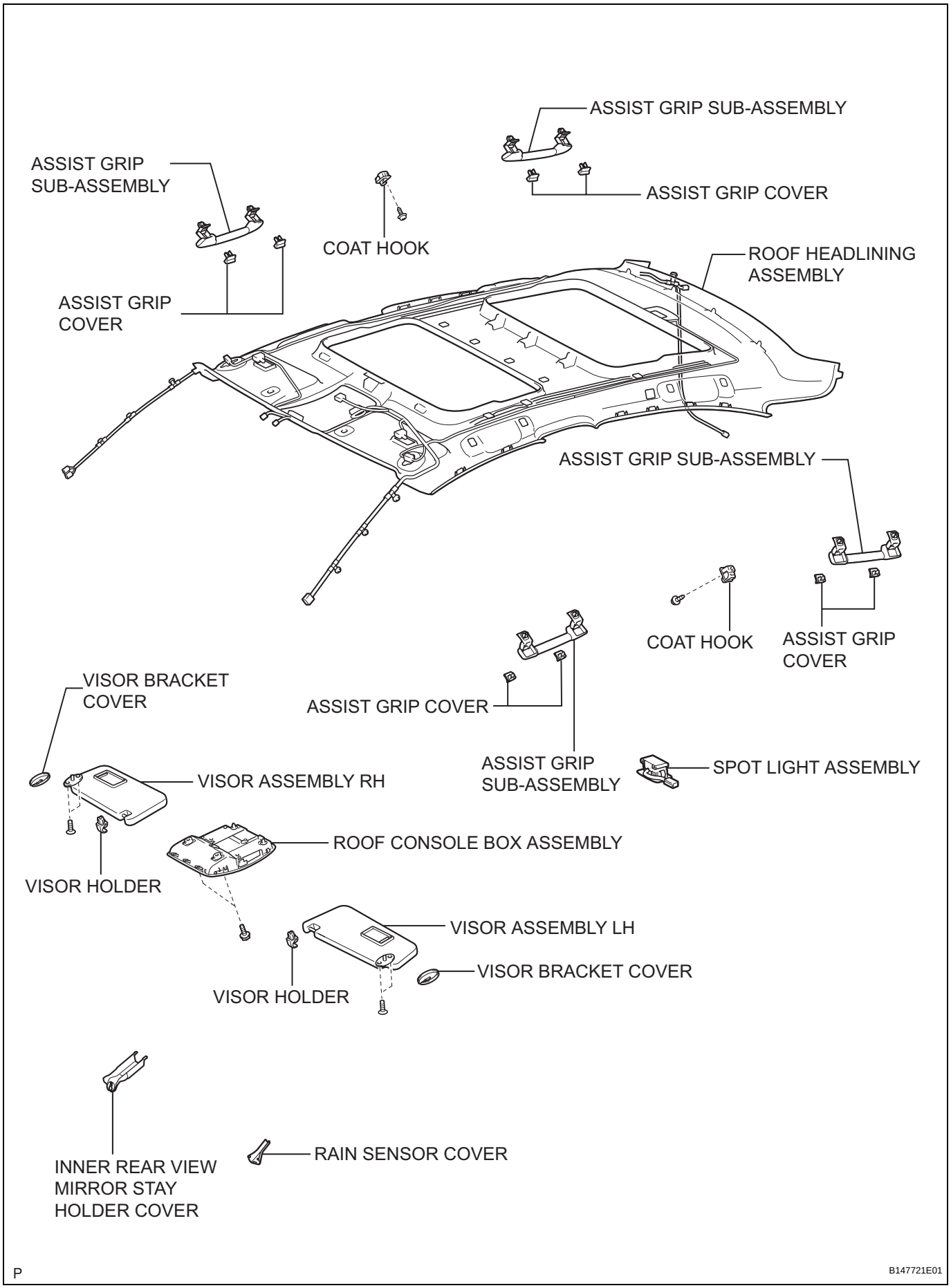
ASSIST GRIP SUB-ASSEMBLY
ASSIST GRIP COVER
ASSIST GRIP SUB-ASSEMBLY
COAT HOOK
ROOF HEADLINING ASSEMBLY
ASSIST GRIP COVER
ASSIST GRIP SUB-ASSEMBLY
COAT HOOK
ASSIST GRIP COVER
VISOR BRACKET COVER
ASSIST GRIP COVER
ASSIST GRIP SUB-ASSEMBLY
SPOT LIGHT ASSEMBLY
VISOR ASSEMBLY RH
ROOF CONSOLE BOX ASSEMBLY
VISOR HOLDER
VISOR ASSEMBLY LH
VISOR BRACKET COVER
VISOR HOLDER
INNER REAR VIEW MIRROR STAY HOLDER COVER
RAIN SENSOR COVER
P
B147721E01

RF

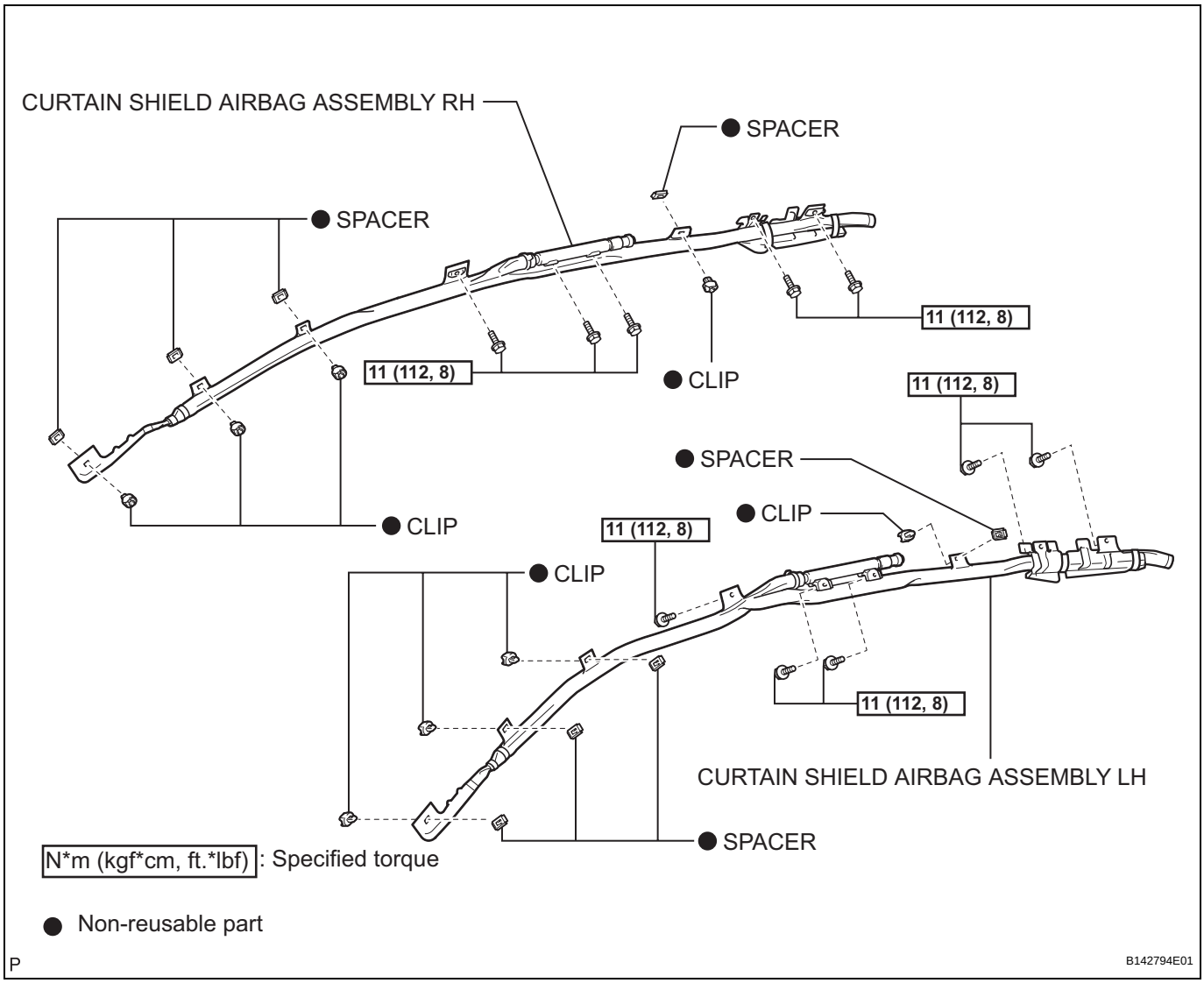
CURTAIN SHIELD AIRBAG ASSEMBLY RH
● SPACER
● SPACER
11 (112, 8)
11 (112, 8)
● CLIP
11 (112, 8)
● SPACER
● CLIP
● CLIP
11 (112, 8)
● CLIP
11 (112, 8)
CURTAIN SHIELD AIRBAG ASSEMBLY LH
● SPACER
N*m (kgf*cm, ft.*lbf) : Specified torque
● Non-reusable part
P
B142794E01

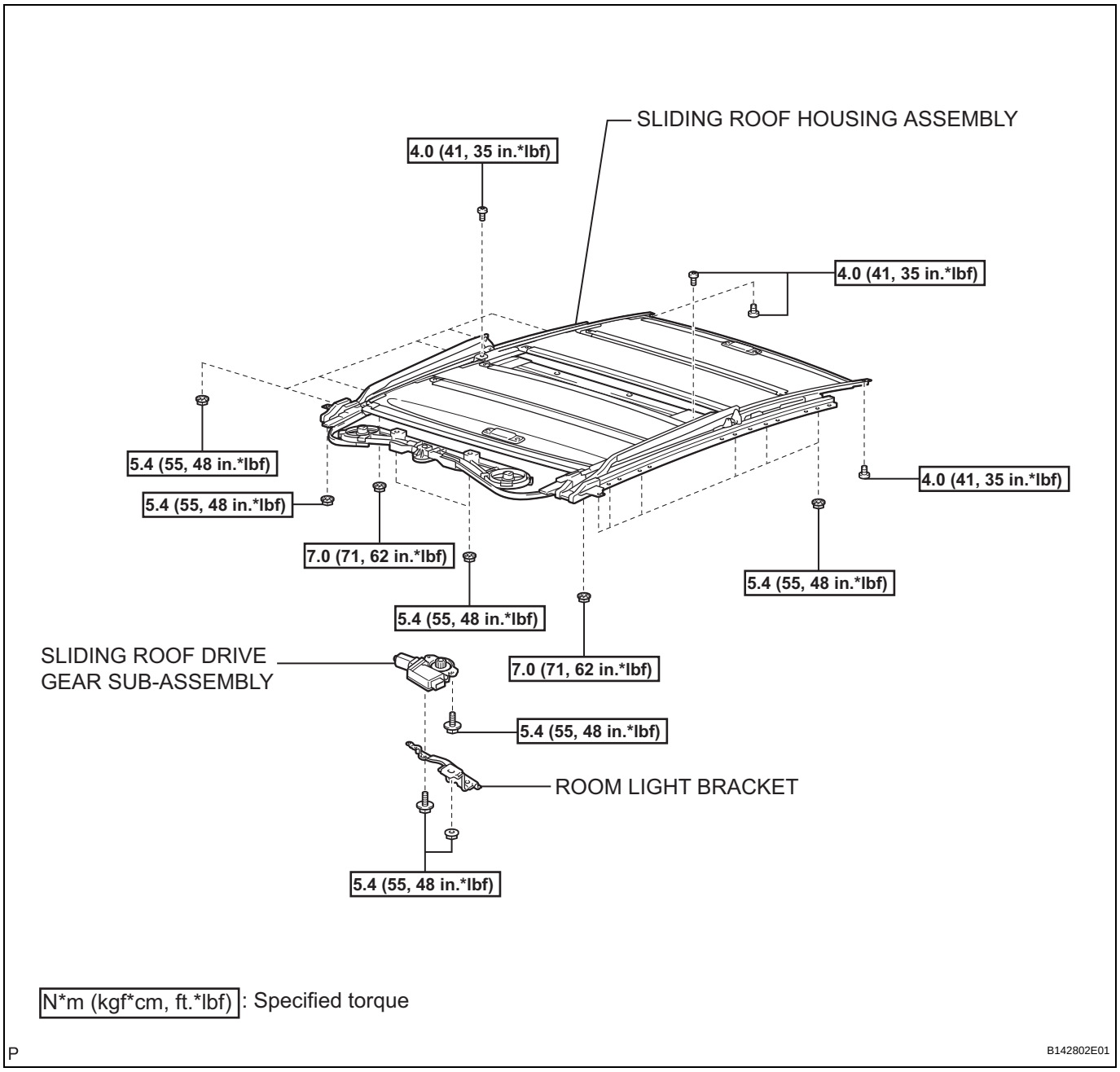
SLIDING ROOF HOUSING ASSEMBLY
4.0 (41, 35 in.*lbf)
4.0 (41, 35 in.*lbf)
5.4 (55, 48 in.*lbf)
5.4 (55, 48 in.*lbf)
4.0 (41, 35 in.*lbf)
7.0 (71, 62 in.*lbf)
5.4 (55, 48 in.*lbf)
5.4 (55, 48 in.*lbf)
SLIDING ROOF DRIVE GEAR SUB-ASSEMBLY
7.0 (71, 62 in.*lbf)
5.4 (55, 48 in.*lbf)
ROOM LIGHT BRACKET
5.4 (55, 48 in.*lbf)
N*m (kgf*cm, ft.*lbf) : Specified torque
P
B142802E01

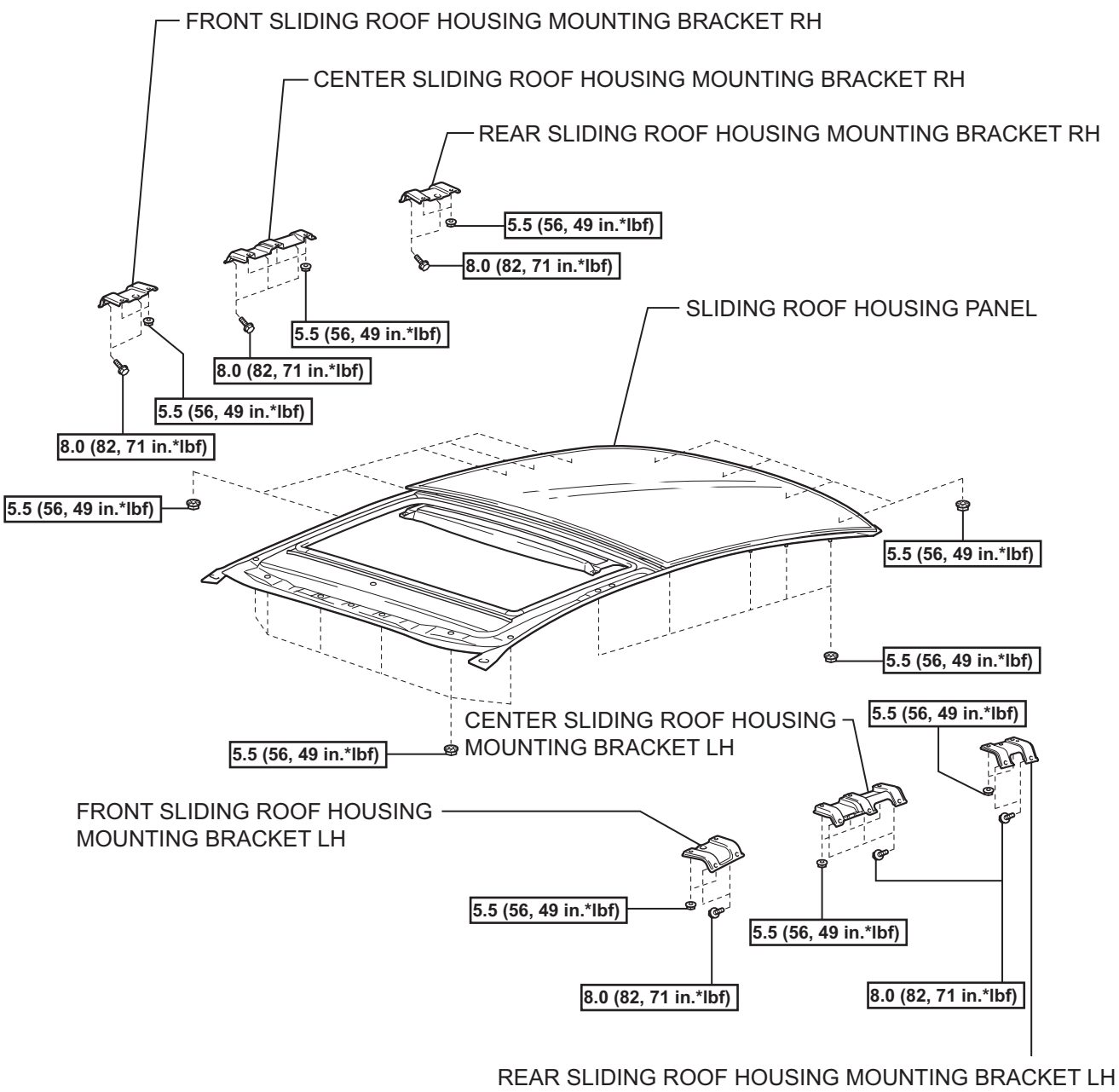

N*m (kgf*cm, ft.*lbf) : Specified torque

P

B142803E01

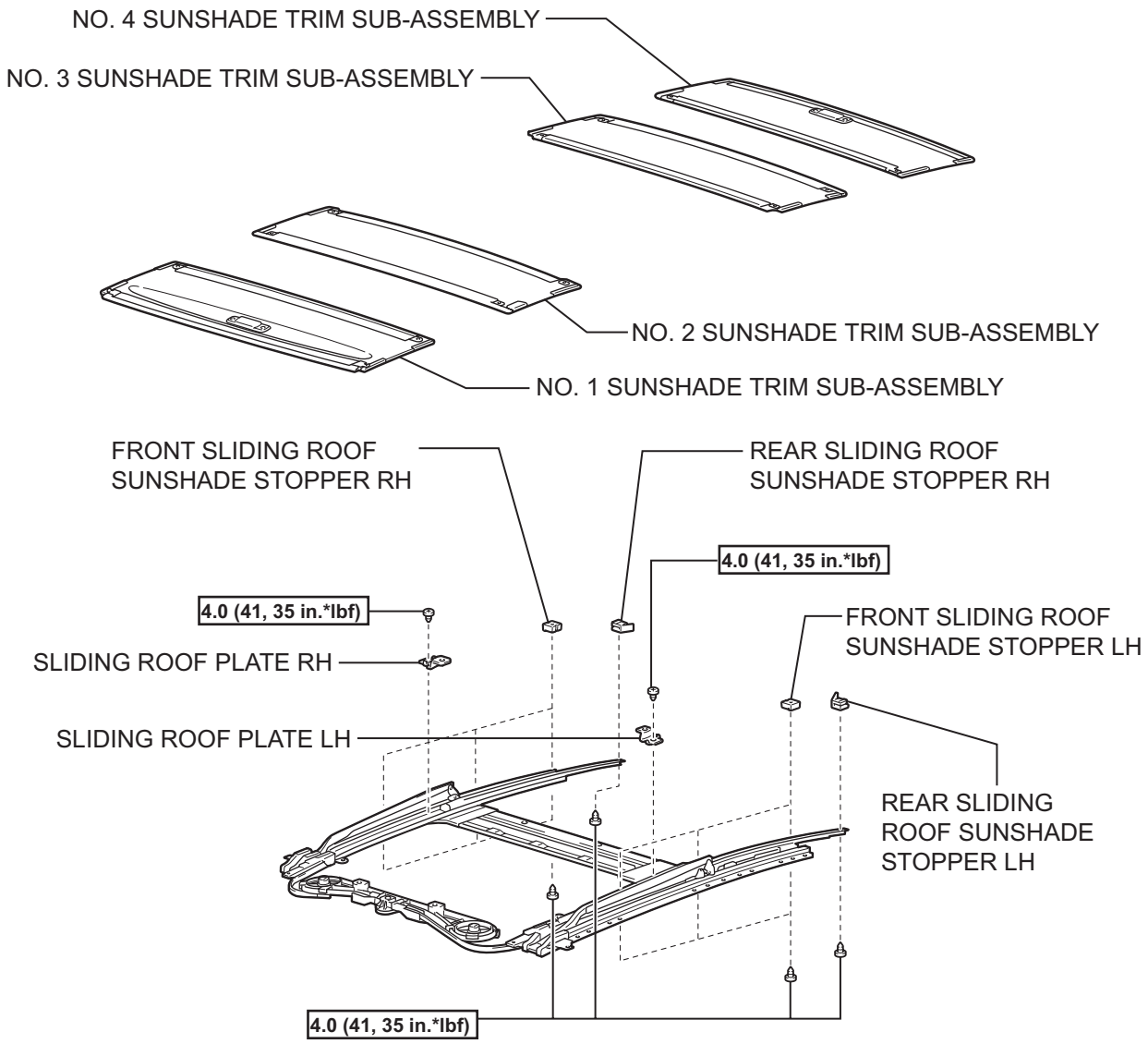

N*m (kgf*cm, ft.*lbf) : Specified torque

P

B142805E01

SLIDING ROOF HOUSING (for Standard)

COMPONENTS

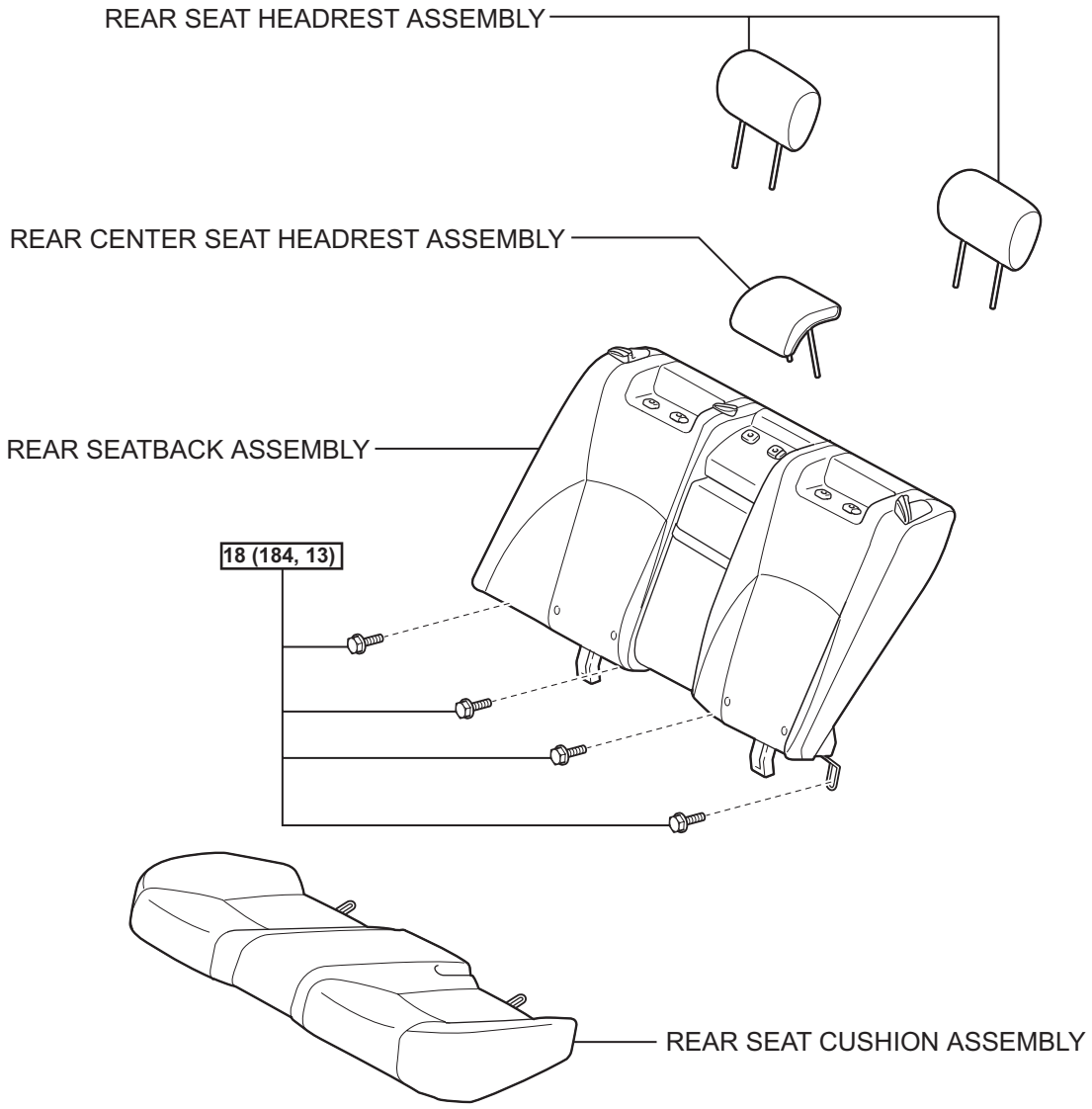

N*m (kgf*cm, ft.*lbf) : Specified torque

P

B145388E01

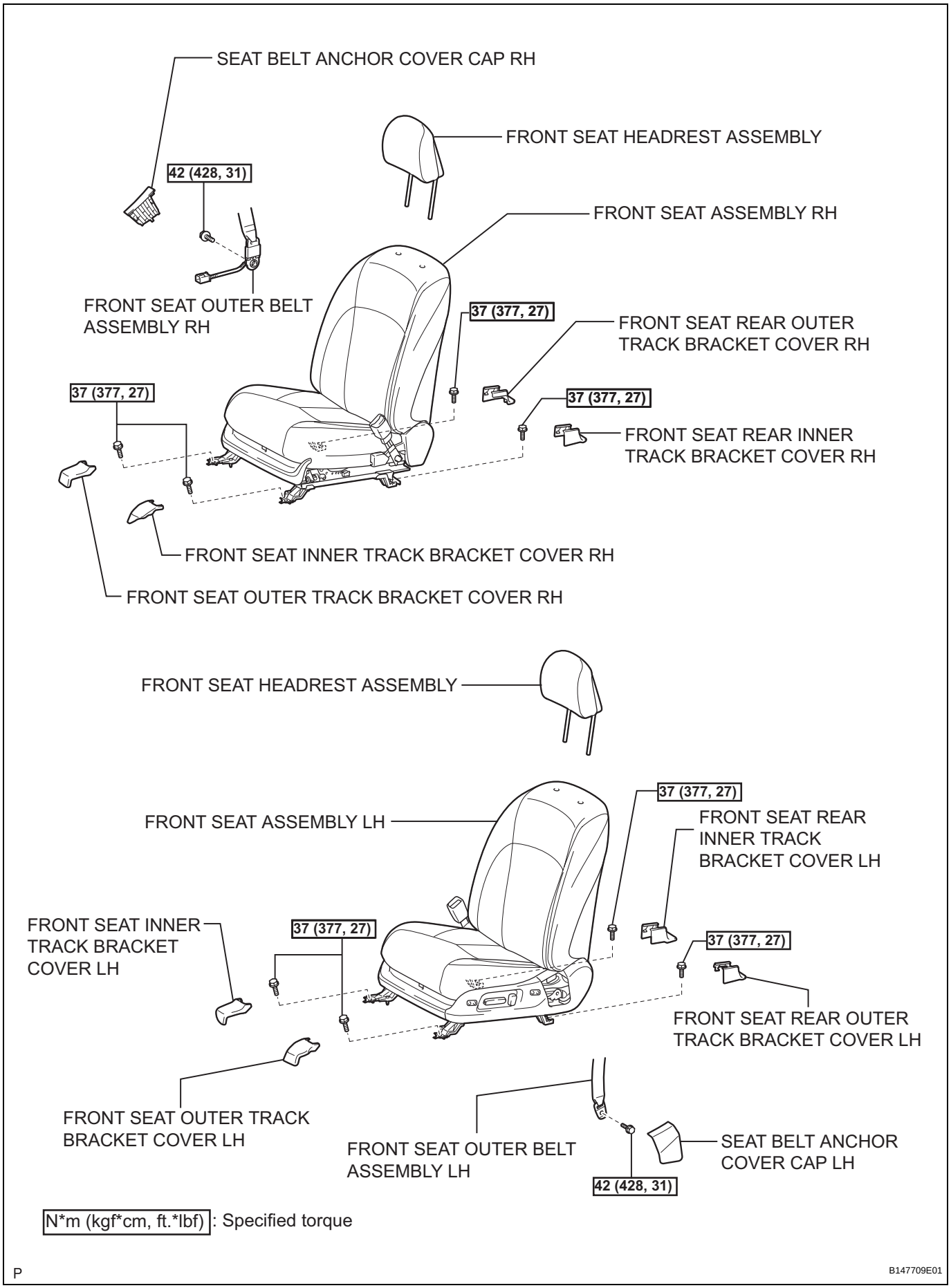
SEAT BELT ANCHOR COVER CAP RH
FRONT SEAT HEADREST ASSEMBLY
42 (428, 31)
FRONT SEAT ASSEMBLY RH
FRONT SEAT OUTER BELT ASSEMBLY RH
37 (377, 27)
FRONT SEAT REAR OUTER TRACK BRACKET COVER RH
37 (377, 27)
37 (377, 27)
FRONT SEAT REAR INNER TRACK BRACKET COVER RH
FRONT SEAT INNER TRACK BRACKET COVER RH
FRONT SEAT OUTER TRACK BRACKET COVER RH
FRONT SEAT HEADREST ASSEMBLY
37 (377, 27)
FRONT SEAT ASSEMBLY LH
FRONT SEAT REAR INNER TRACK BRACKET COVER LH
FRONT SEAT INNER TRACK BRACKET COVER LH
37 (377, 27)
37 (377, 27)
FRONT SEAT REAR OUTER TRACK BRACKET COVER LH
FRONT SEAT OUTER TRACK BRACKET COVER LH
FRONT SEAT OUTER BELT ASSEMBLY LH
SEAT BELT ANCHOR COVER CAP LH
42 (428, 31)
N*m (kgf*cm, ft.*lbf): Specified torque
P
B147709E01

RF

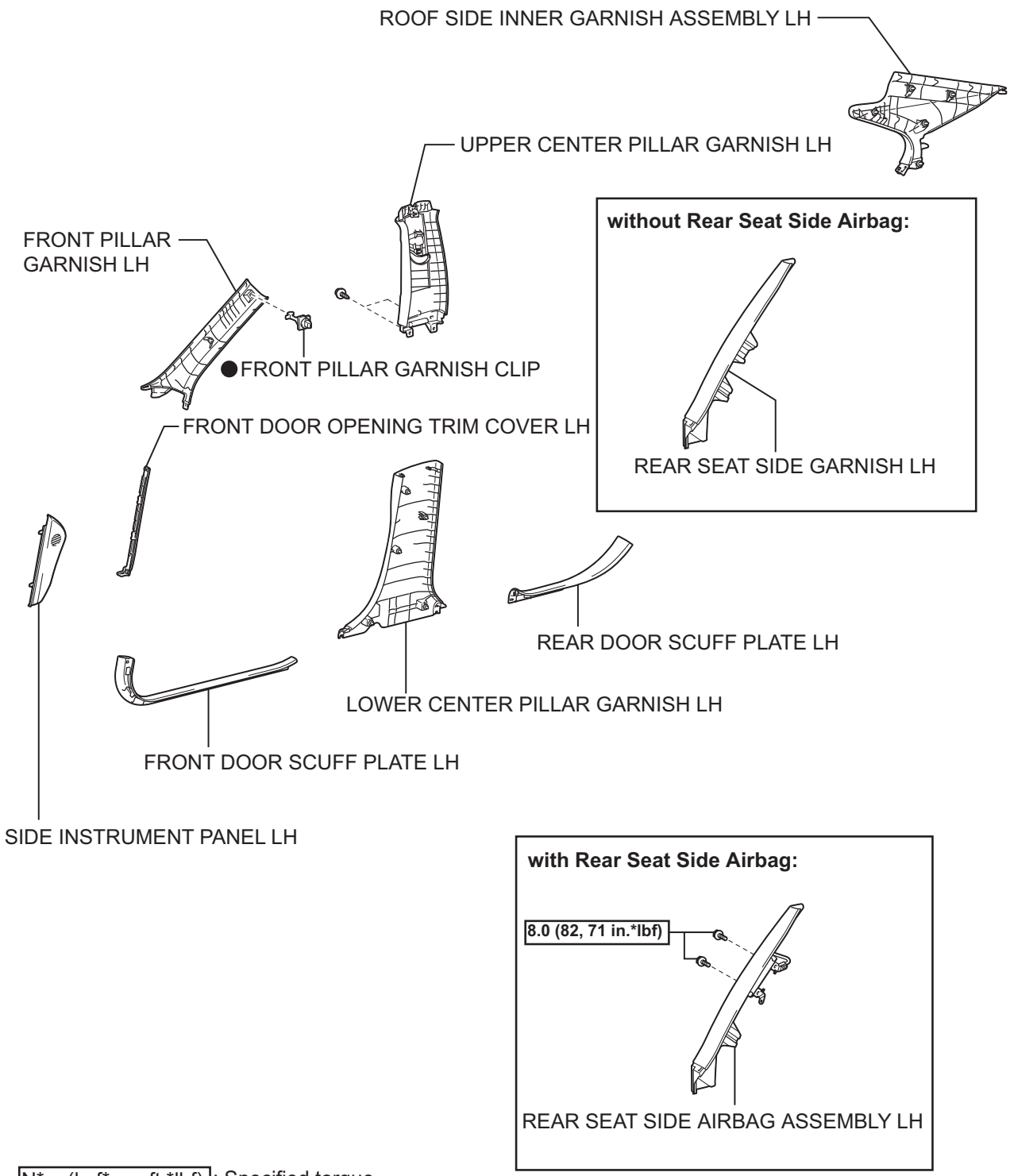

N*m (kgf*cm, ft.*lbf) : Specified torque

● Non-reusable part

P

B149196E01

RF

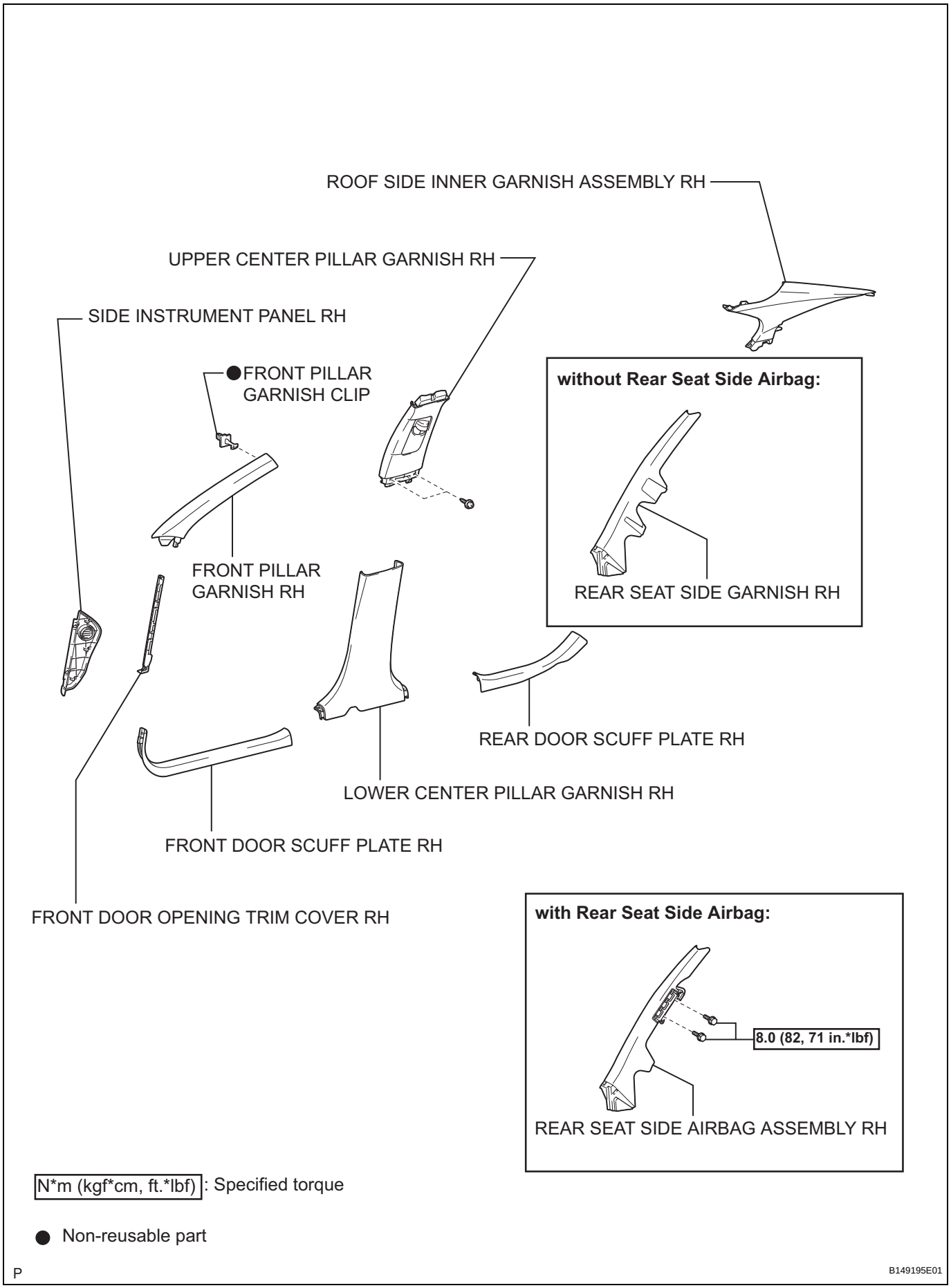
ROOF SIDE INNER GARNISH ASSEMBLY RH
UPPER CENTER PILLAR GARNISH RH
SIDE INSTRUMENT PANEL RH
●FRONT PILLAR GARNISH CLIP
FRONT PILLAR GARNISH RH
without Rear Seat Side Airbag:
REAR SEAT SIDE GARNISH RH
REAR DOOR SCUFF PLATE RH
LOWER CENTER PILLAR GARNISH RH
FRONT DOOR SCUFF PLATE RH
FRONT DOOR OPENING TRIM COVER RH
with Rear Seat Side Airbag:
8.0 (82, 71 in.*lbf)
REAR SEAT SIDE AIRBAG ASSEMBLY RH
N*m (kgf*cm, ft.*lbf): Specified torque
● Non-reusable part
P
B149195E01

RF

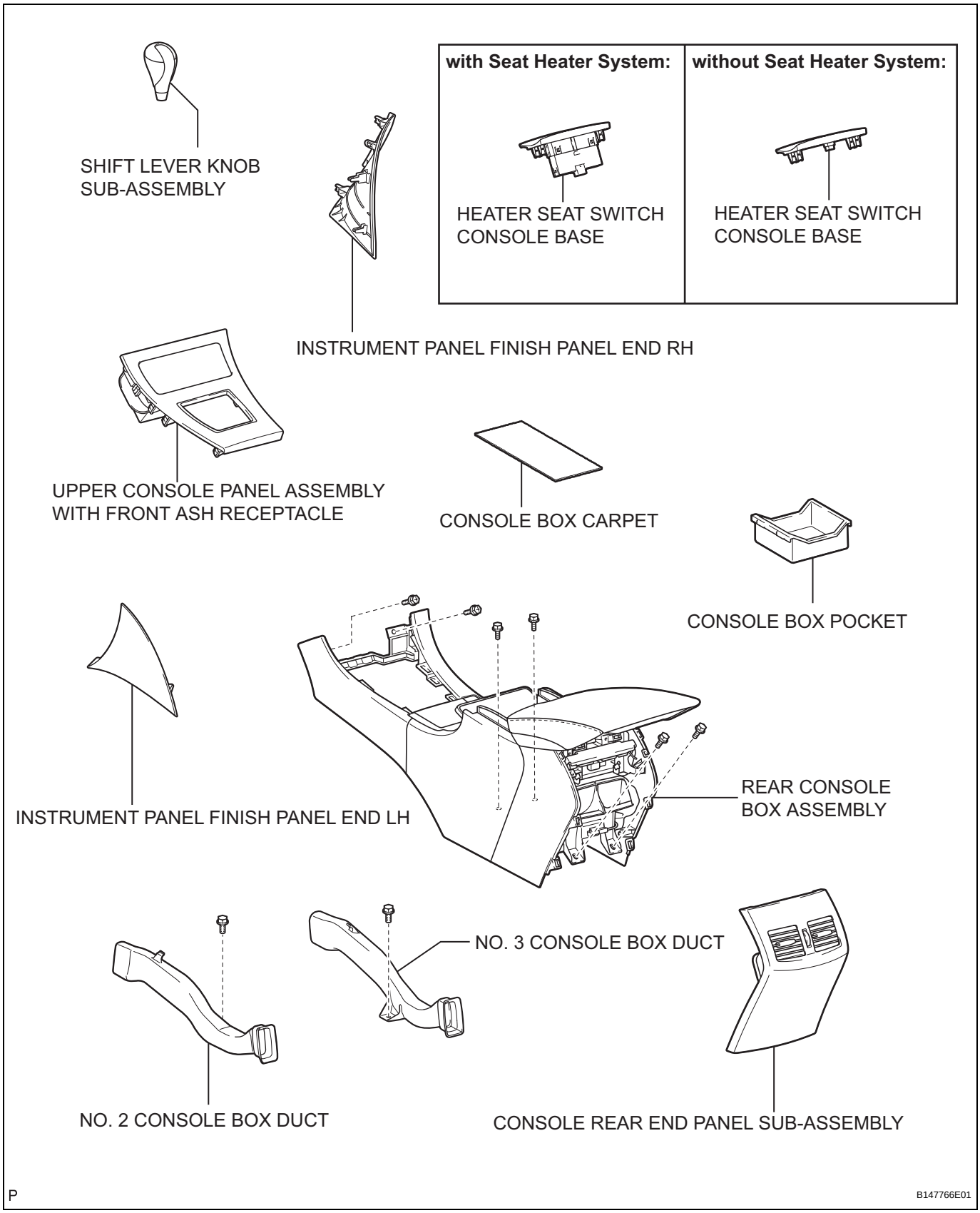
SHIFT LEVER KNOB SUB-ASSEMBLY
with Seat Heater System:
HEATER SEAT SWITCH CONSOLE BASE
without Seat Heater System:
HEATER SEAT SWITCH CONSOLE BASE
INSTRUMENT PANEL FINISH PANEL END RH
UPPER CONSOLE PANEL ASSEMBLY WITH FRONT ASH RECEPTACLE
CONSOLE BOX CARPET
CONSOLE BOX POCKET
INSTRUMENT PANEL FINISH PANEL END LH
REAR CONSOLE BOX ASSEMBLY
NO. 3 CONSOLE BOX DUCT
NO. 2 CONSOLE BOX DUCT
CONSOLE REAR END PANEL SUB-ASSEMBLY
P
B147766E01

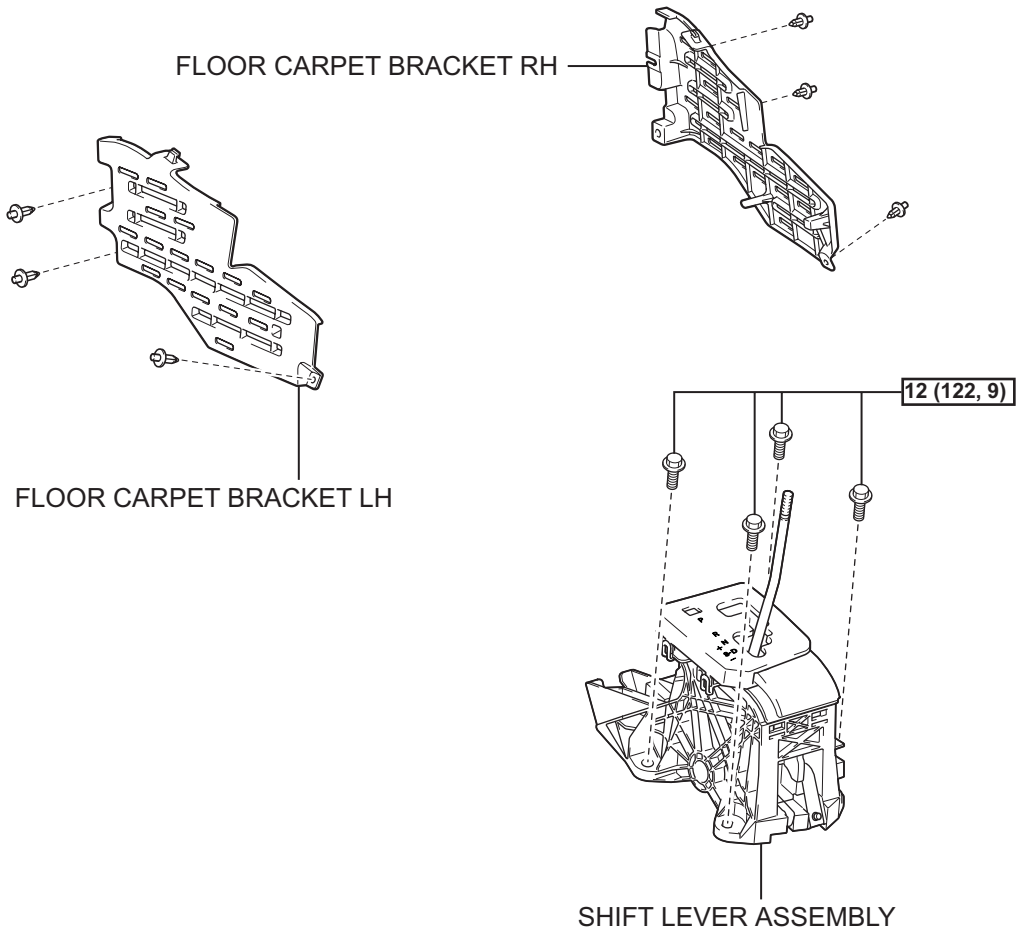

N*m (kgf*cm, ft.*lbf) : Specified torque

P

B147710E01

with DVD Player:

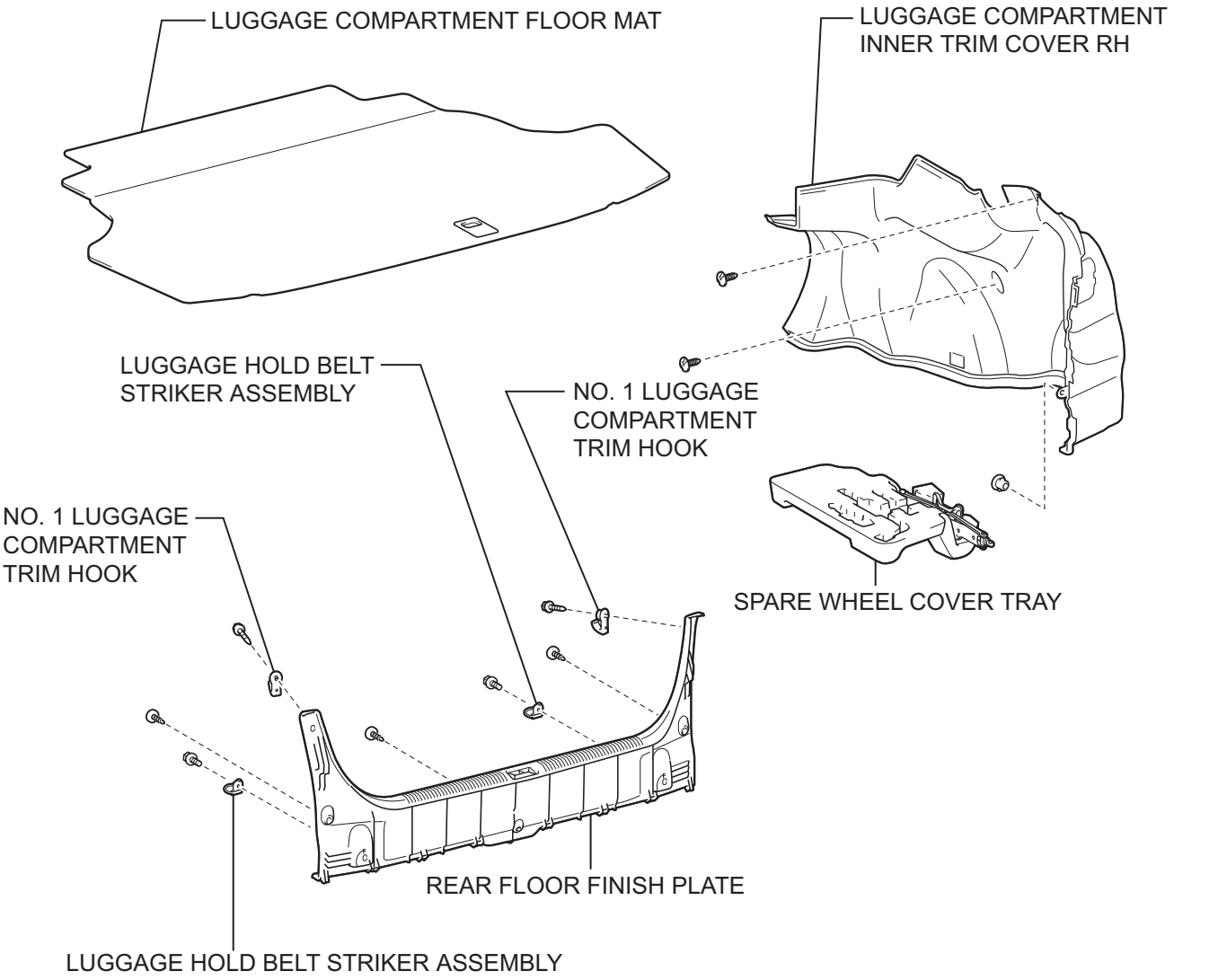

P

B147711E01

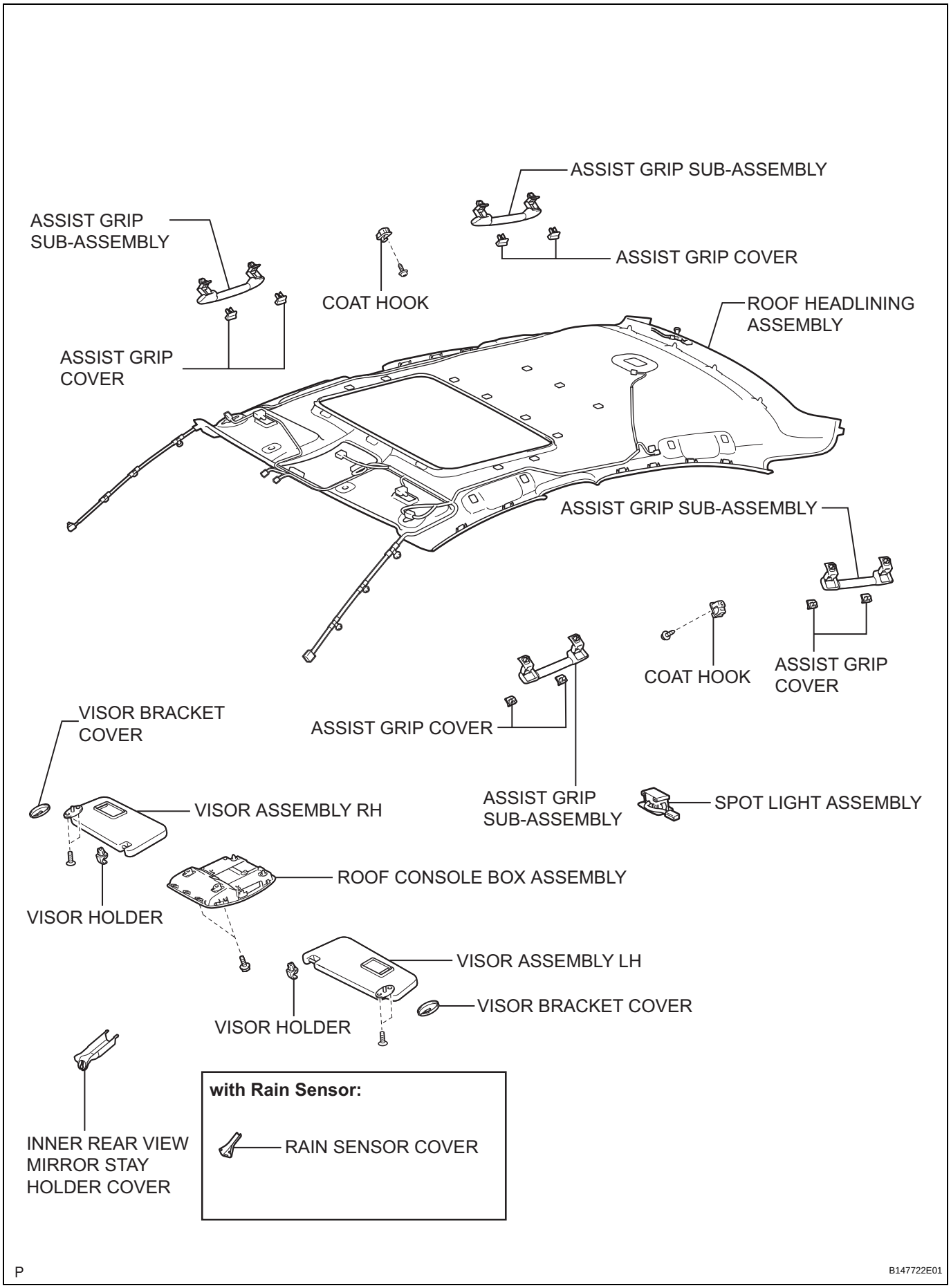
ASSIST GRIP SUB-ASSEMBLY
ASSIST GRIP SUB-ASSEMBLY
ASSIST GRIP COVER
COAT HOOK
ROOF HEADLINING ASSEMBLY
ASSIST GRIP COVER
ASSIST GRIP SUB-ASSEMBLY
COAT HOOK
ASSIST GRIP COVER
VISOR BRACKET COVER
ASSIST GRIP COVER
ASSIST GRIP SUB-ASSEMBLY
SPOT LIGHT ASSEMBLY
VISOR ASSEMBLY RH
ROOF CONSOLE BOX ASSEMBLY
VISOR HOLDER
VISOR ASSEMBLY LH
VISOR BRACKET COVER
VISOR HOLDER
INNER REAR VIEW MIRROR STAY HOLDER COVER
with Rain Sensor:
RAIN SENSOR COVER
P
B147722E01

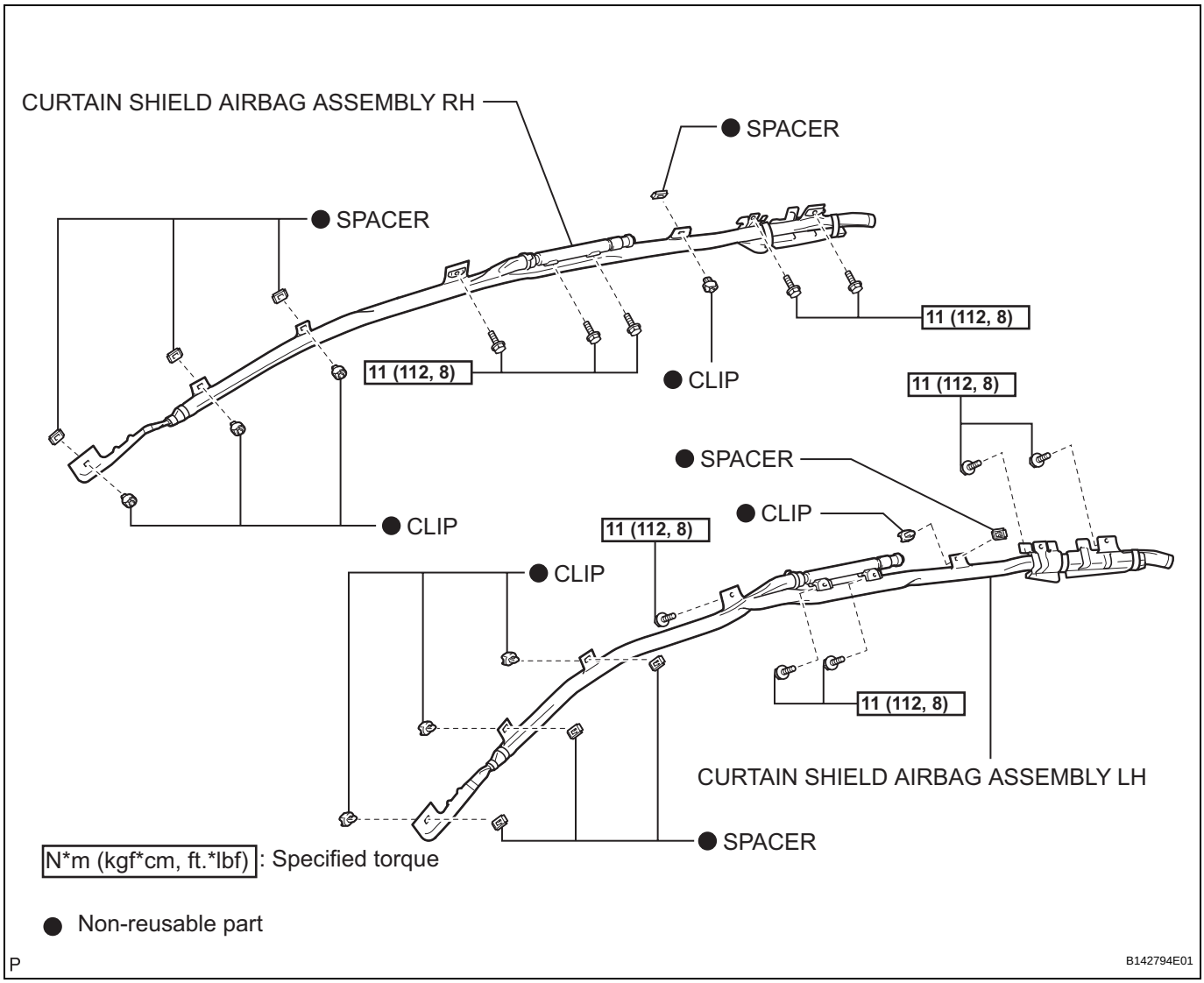
CURTAIN SHIELD AIRBAG ASSEMBLY RH
● SPACER
● SPACER
11 (112, 8)
11 (112, 8)
● CLIP
11 (112, 8)
● SPACER
● CLIP
● CLIP
11 (112, 8)
● CLIP
11 (112, 8)
CURTAIN SHIELD AIRBAG ASSEMBLY LH
● SPACER
N*m (kgf*cm, ft.*lbf) : Specified torque
● Non-reusable part
P
B142794E01

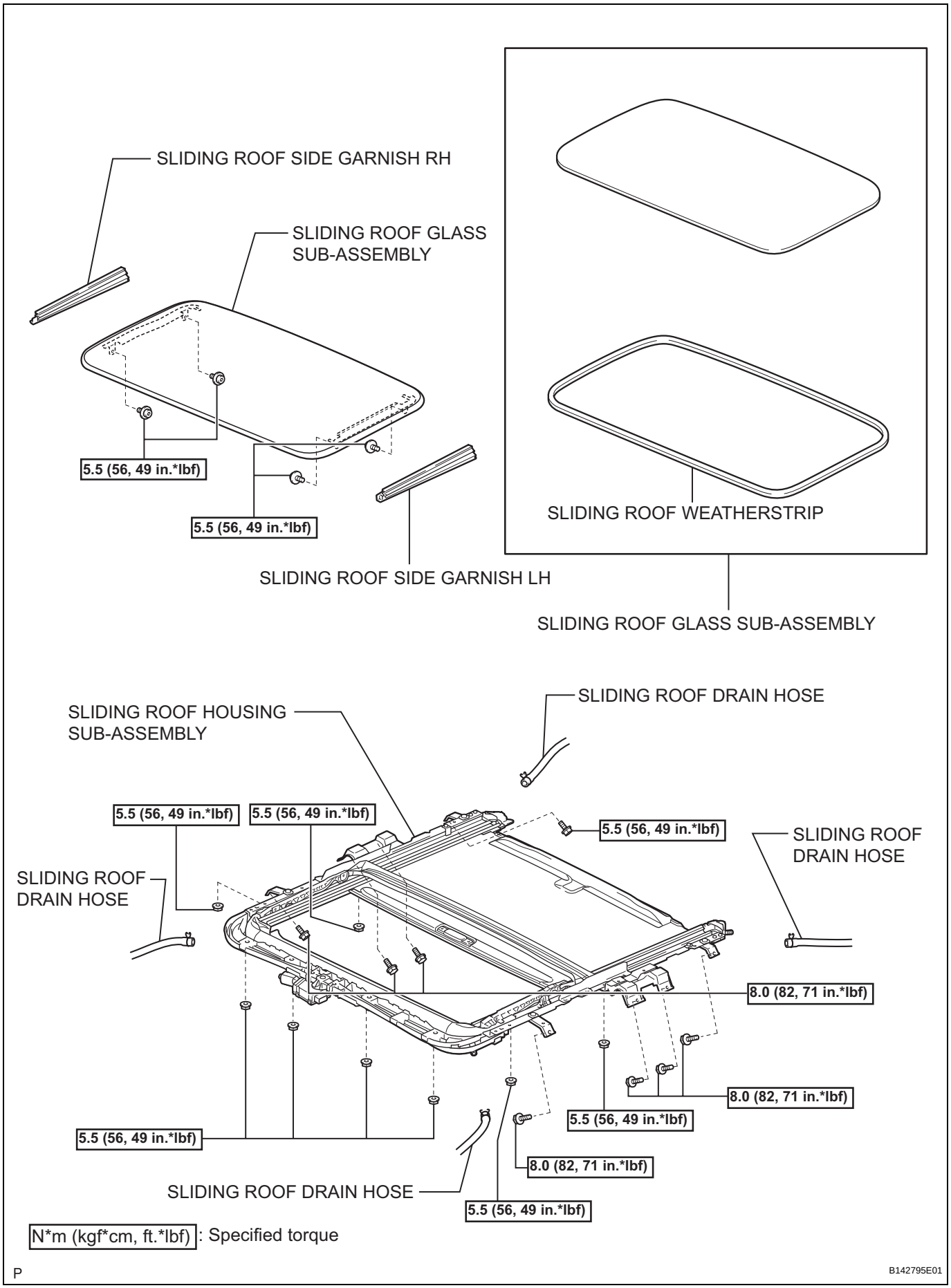
SLIDING ROOF SIDE GARNISH RH
SLIDING ROOF GLASS SUB-ASSEMBLY
5.5 (56, 49 in.*lbf)
5.5 (56, 49 in.*lbf)
SLIDING ROOF SIDE GARNISH LH
SLIDING ROOF WEATHERSTRIP
SLIDING ROOF GLASS SUB-ASSEMBLY
SLIDING ROOF DRAIN HOSE
SLIDING ROOF HOUSING SUB-ASSEMBLY
5.5 (56, 49 in.*lbf)
5.5 (56, 49 in.*lbf)
5.5 (56, 49 in.*lbf)
SLIDING ROOF DRAIN HOSE
SLIDING ROOF DRAIN HOSE
8.0 (82, 71 in.*lbf)
8.0 (82, 71 in.*lbf)
5.5 (56, 49 in.*lbf)
5.5 (56, 49 in.*lbf)
8.0 (82, 71 in.*lbf)
SLIDING ROOF DRAIN HOSE
5.5 (56, 49 in.*lbf)
N*m (kgf*cm, ft.*lbf) : Specified torque
P
B142795E01

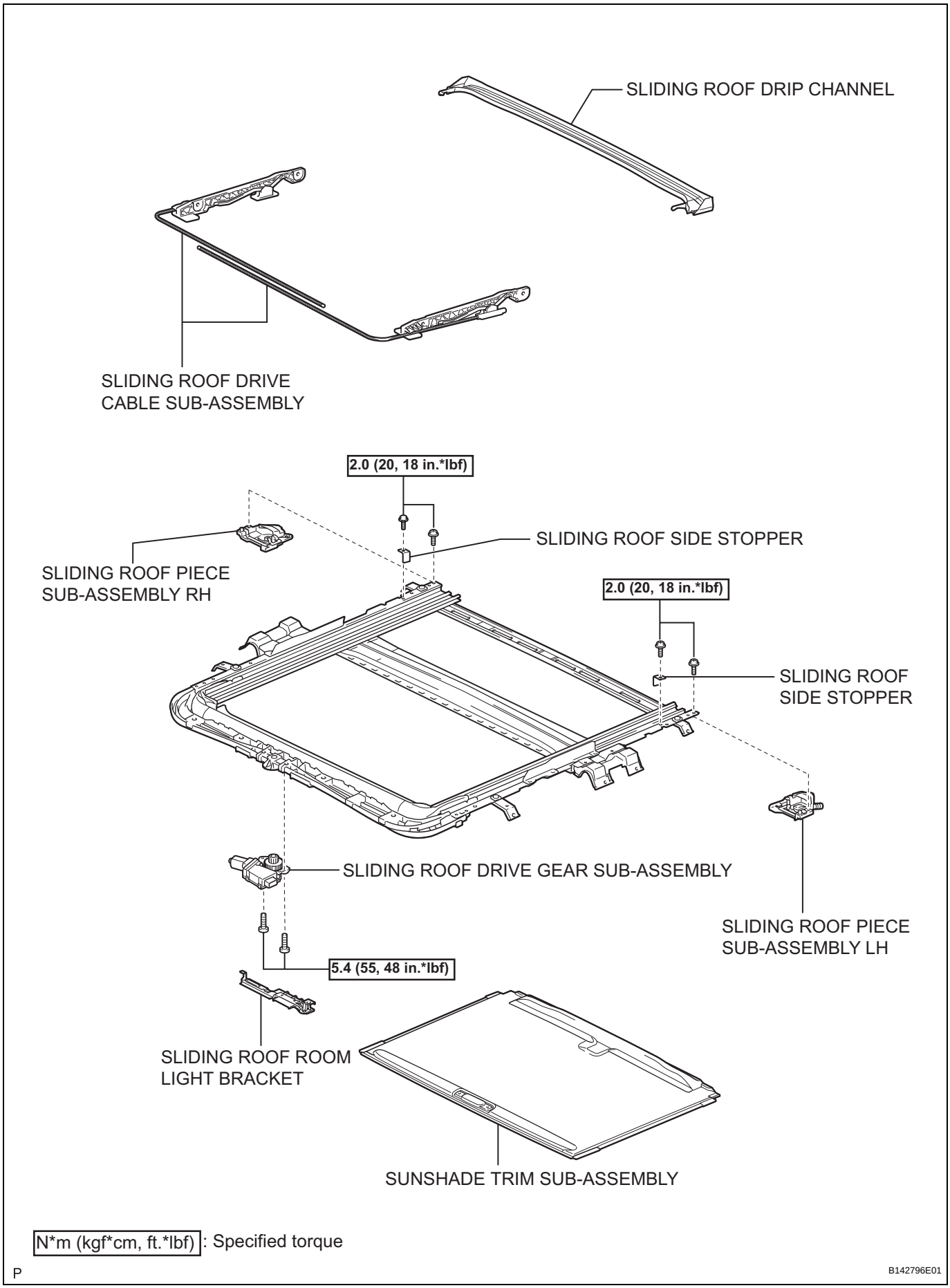
SLIDING ROOF DRIP CHANNEL
SLIDING ROOF DRIVE CABLE SUB-ASSEMBLY
2.0 (20, 18 in.*lbf)
SLIDING ROOF SIDE STOPPER
SLIDING ROOF PIECE SUB-ASSEMBLY RH
2.0 (20, 18 in.*lbf)
SLIDING ROOF SIDE STOPPER
SLIDING ROOF DRIVE GEAR SUB-ASSEMBLY
SLIDING ROOF PIECE SUB-ASSEMBLY LH
5.4 (55, 48 in.*lbf)
SLIDING ROOF ROOM LIGHT BRACKET
SUNSHADE TRIM SUB-ASSEMBLY
N*m (kgf*cm, ft.*lbf): Specified torque
P
B142796E01

Roof Console Box Assembly Connector:

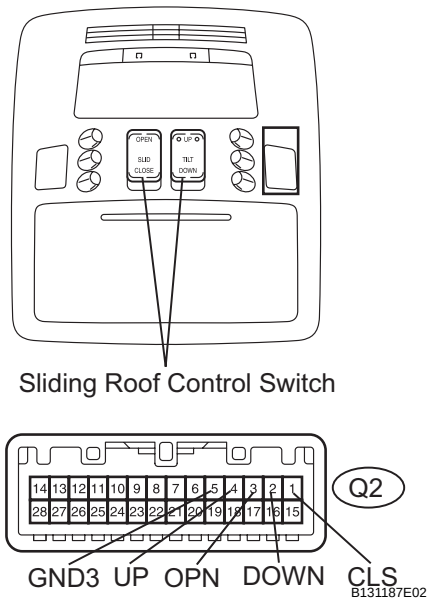

SLIDING ROOF SWITCH ASSEMBLY

ON-VEHICLE INSPECTION

1. INSPECT ROOF CONSOLE BOX ASSEMBLY

(a) Remove the roof console box assembly.

(b) Measure the resistance according to the value(s) in the table below.

Standard resistance

Tester Connection	Switch Position	Specified Condition
Q2-1 (CLS) - Q2-5 (GND3)	CLOSE	Below 100 Ω
Q2-2 (DOWN) - Q2-5 (GND3)	DOWN	Below 100 Ω
Q2-3 (OPN) - Q2-5 (GND3)	OPEN	Below 100 Ω
Q2-4 (UP) - Q2-5 (GND3)	UP	Below 100 Ω
Q2-1 (CLS) - Q2-5 (GND3)	OPEN	1 kΩ or higher
Q2-2 (DOWN) - Q2-5 (GND3)	CLOSE	1 kΩ or higher
Q2-3 (OPN) - Q2-5 (GND3)	UP	1 kΩ or higher
Q2-4 (UP) - Q2-5 (GND3)	DOWN	1 kΩ or higher

If the result is not as specified, replace the roof console box assembly.

CAN COMMUNICATION SYSTEM

PRECAUTION

1. STEERING SYSTEM HANDLING PRECAUTIONS

(a) Care must be taken when replacing parts. Incorrect replacement could affect the performance of the steering system and result in hazardous driving.

2. SRS AIRBAG SYSTEM HANDLING PRECAUTIONS

(a) This vehicle is equipped with an SRS (Supplemental Restraint System) which includes components such as the driver airbag and front passenger airbag. Failure to carry out service operations in the correct sequence could cause unexpected SRS deployment during servicing and may lead to a serious accident. Before servicing (including removal or installation of parts, inspection or replacement), be sure to read the precautionary notice for the Supplemental Restraint System (See page RS-1).

3. BUS WIRE REPAIR

(a) After repairing the bus wire with solder, wrap the repaired part with electrical tape.

NOTICE:

- **The CANL bus wire and CANH bus wire must be installed together all the times.**
- **When installing, make sure to twist them.**
- **CAN bus wires are likely to be influenced by electrical noise if they are not twisted.**
- **The difference in length between the CANL bus wire and CANH bus wire should be 100 mm (3.937 in.) or less.**
- **Leave approximately 80 mm (3.150 in.) loose in the twisted wires around the connector.**

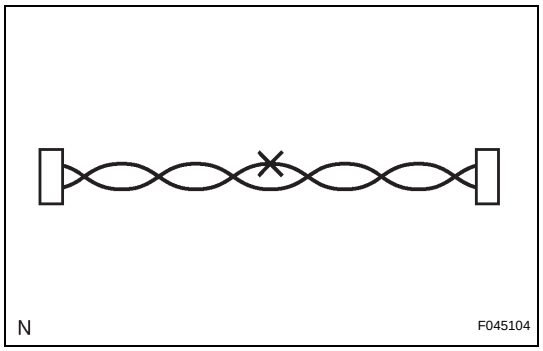

(b) Do not use bypass wiring between the connectors.

NOTICE:

The ability of the twisted bus wires to resist interference will be lost if bypass wiring is used.

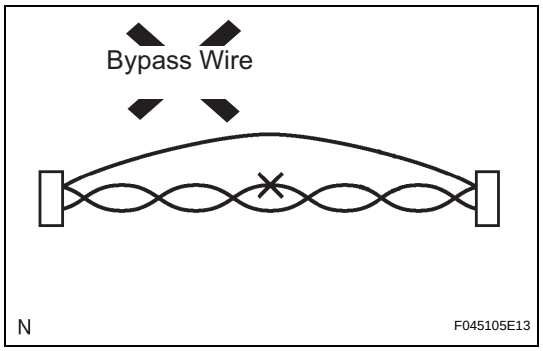

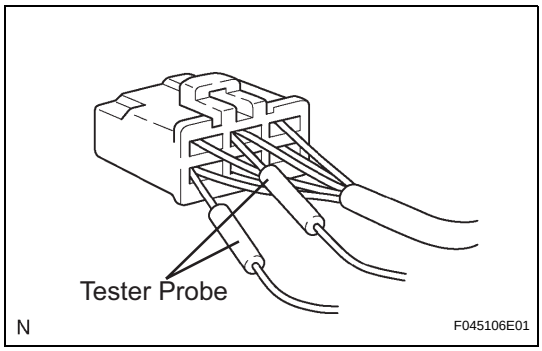

4. CONNECTOR HANDLING

(a) When checking resistance with a tester, insert the tester probes from the backside (harness side) of the connector.

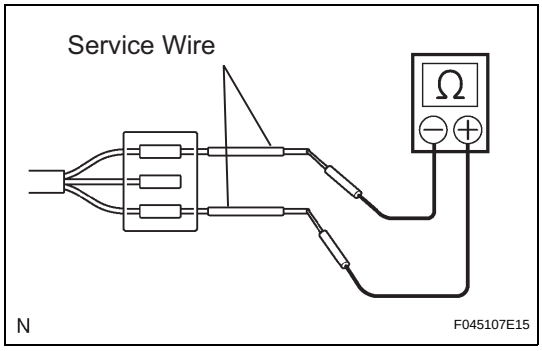

(b) Use a service wire to check the connector if it is impossible to check continuity from the rear of the connector.

5. PRECAUTION FOR DISCONNECTING THE BATTERY CABLE

NOTICE:

Some systems need to be initialized after reconnecting the negative (-) battery terminal (See page IN-33).